STATE OF OHIO
DEPARTMENT OF TRANSPORTATION

AUG-198-1.63

CITY OF WAPAKONETA
AUGLAIZE COUNTY

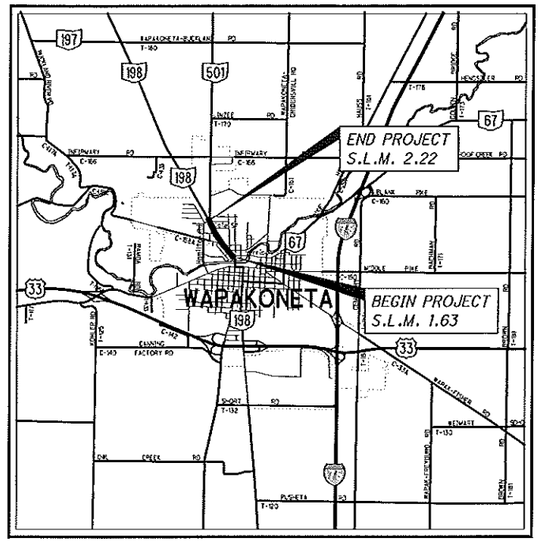

LOCATION MAP

LATITUDE: N 40° 34′ 31″ LONGITUDE: W 84° 20′ 05″

SCALE IN MILES

0 1 2 3 4

N

PORTION TO BE IMPROVED

ROUTE	ADT	TRUCKS
SR 198	7390	135

INDEX OF SHEETS:

TITLE SHEET	1
TYPICAL SECTION	2
GENERAL NOTES	3 - 4
GENERAL SUMMARY	5
PAVEMENT SUBSUMMARY	6
DRIVE DETAILS	7
TRAFFIC CONTROL SUBSUMMARY	8

PROJECT DESCRIPTION

THIS PROJECT CONSISTS OF RESURFACING WITH ASPHALT CONCRETE IN AUGLAIZE COUNTY:

SR 198 FROM SLM 1.63 TO SLM 2.22

EARTH DISTURBED AREAS

PROJECT EARTH DISTURBED AREA:	NA*
ESTIMATED CONTRACTOR EARTH DISTURBED AREA:	NA*
NOTICE OF INTENT EARTH DISTURBED AREA:	NA*

* MAINTENANCE PROJECT

2016 SPECIFICATIONS

THE STANDARD SPECIFICATIONS OF THE STATE OF OHIO, DEPARTMENT OF TRANSPORTATION, INCLUDING SUPPLEMENTAL SPECIFICATIONS LISTED IN THE PLANS AND CHANGES LISTED IN THE PROPOSAL SHALL GOVERN THIS IMPROVEMENT.

I HEREBY APPROVE THESE PLANS AND DECLARE THAT THE MAKING OF THIS IMPROVEMENT WILL NOT REQUIRE THE CLOSING TO TRAFFIC OF THE HIGHWAY AND THAT PROVISIONS FOR THE MAINTENANCE AND SAFETY OF TRAFFIC WILL BE AS SET FORTH ON THE PLANS AND ESTIMATES.

APPROVED Randy Chevalley, P.E. P.S. /RPH
DATE 1-3-19 DISTRICT DEPUTY DIRECTOR

APPROVED Jerl Marchbanks Jr.
DATE 1/28/19 DIRECTOR, DEPARTMENT OF TRANSPORTATION

UNDERGROUND UTILITIES

CONTACT BOTH SERVICES TWO WORKING DAYS BEFORE YOU DIG.

OHIO Utilities Protection SERVICE — Call Before You Dig 1-800-362-2764

(Non-members must be called directly)

OIL & GAS PRODUCERS UNDERGROUND PROTECTION SERVICE 1-800-925-0988

PLAN PREPARED BY:
OHIO DISTRICT 7 - ENGINEERING
1001 ST. MARYS AVE.
SIDNEY, OHIO

ENGINEERS SEAL:

STATE OF OHIO — CHRISTOPHER WILLIAM WEISS — E-77417 — REGISTERED PROFESSIONAL ENGINEER

SIGNED: Chris Weiss
DATE: 1-3-19

STANDARD CONSTRUCTION DRAWINGS							SUPPLEMENTAL SPECIFICATIONS		SPECIAL PROVISIONS
BP-3.1	7/18/14	TC-41.20	10/18/13				800	1/18/19	
		TC-42.20	10/18/13				832	10/19/18	
DM-4.3	1/15/16	TC-52.10	10/18/13						
DM-4.4	1/15/16	TC-52.20	7/20/18						
		TC-71.10	1/19/18						
		TC-82.10	7/17/15						
MT-97.10	7/18/14								
MT-97.12	1/20/17								
MT-99.20	7/20/16								
MT-101.90	7/21/17								
MT-105.10	7/19/13								

FEDERAL PROJECT NO. E190 (282)

PID NO. 105660

CONSTRUCTION PROJECT NO.

RAILROAD INVOLVEMENT NONE

AUG-198-1.63

AUG - SR 198-01.63
190232 PID - 105660
Dist 7 4/18/2019

Contract Proposal Available @
www.contracts.dot.state.oh.us/home

I:\ProjectData\AUG\105660_SR198-0163\Design\R

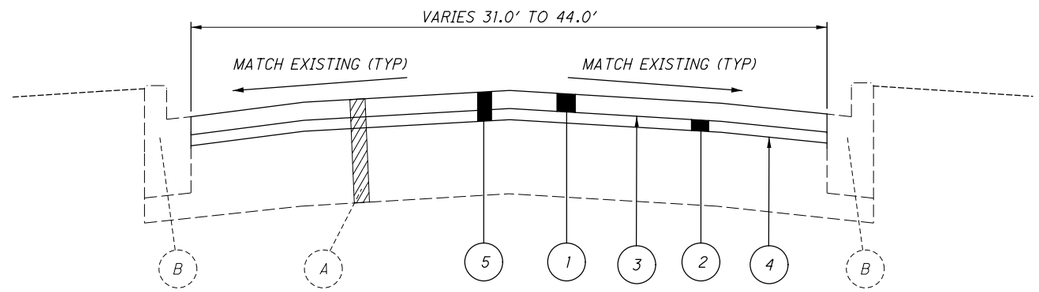

TYPICAL 1

2" MILL/FILL (441) - CURBED SECTION

AUG-SR 198-SLM 1.63 to 2.22*

LEGEND

1 - ITEM 441 - 1 1/4" ASPHALT CONCRETE SURFACE COURSE, TYPE 1, (448), PG70-22M
2 - ITEM 441 - 3/4" ASPHALT CONCRETE, INTERMEDIATE COURSE, TYPE 1, (448)
3 - ITEM 407 - NON TRACKING TACK COAT (0.055 GAL/SY)
4 - ITEM 407 - NON TRACKING TACK COAT (0.085 GAL/SY)
5 - ITEM 254 - 2" PAVEMENT PLANING, ASPHALT CONCRETE

A - EXISTING ASPHALT PAVEMENT
B - EXISTING COMBINATION CURB AND GUTTER

* PAVING AT END PROJECT

THE 2" MILL/FILL RESURFACING SHALL EXTEND THROUGH THE SR 198 (DEFIANCE ST.) X SR 501 (LINCOLN ST.) INTERSECTION ON BOTH ROUTES AND STOP AT THE NORTH ENDS OF THE EXISTING CURBS ALONG THE GRASS ISLAND.

TYPICAL SECTIONS

AUG-198-1.63

I:\ProjectData\AUG\105660_SR198-0163\Design\Roadway\Sheets\105660_GY001.dgn Sheet 1/3/2019 7:57:38 AM tknapke

NOTIFICATION OF TRAFFIC RESTRICTIONS

THROUGHOUT THE DURATION OF THE PROJECT, THE CONTRACTOR SHALL NOTIFY THE PROJECT ENGINEER IN WRITING OF ALL TRAFFIC RESTRICTIONS AND UPCOMING MAINTENANCE OF TRAFFIC CHANGES. THE CONTRACTOR SHALL ENSURE THE WRITTEN NOTIFICATION IS SUBMITTED IN A TIMELY MANNER TO ALLOW THE PROJECT ENGINEER TO MEET THE REQUIRED TIME FRAMES SET FORTH IN THE TABLE BELOW TO INFORM SPECIAL HAULING PERMITS SECTION (HAULING.PERMITS@DOT.OHIO.GOV) AND THE DISTRICT PUBLIC INFORMATION OFFICE (PIO). THIS NOTIFICATION SHALL BE RECEIVED BY THE PROJECT ENGINEER PRIOR TO THE PHYSICAL SETUP OF ANY APPLICABLE SIGNS OR MESSAGE BOARDS.

INFORMATION SHOULD INCLUDE, BUT IS NOT LIMITED TO, ALL CONSTRUCTION ACTIVITIES THAT IMPACT OR INTERFERE WITH TRAFFIC AND SHALL LIST THE SPECIFIC LOCATION, TYPE OF WORK, ROAD STATUS, DATE AND TIME OF RESTRICTION, DURATION OF RESTRICTION, NUMBER OF LANES MAINTAINED, NUMBER OF LANES CLOSED, MINIMUM VERTICAL CLEARANCE, MINIMUM WIDTH OF DRIVEABLE PAVEMENT DETOUR ROUTES, IF APPLICABLE, AND ANY OTHER INFORMATION REQUESTED BY THE PROJECT ENGINEER.

NOTIFICATION TIME TABLE

ITEM	DURATION OF CLOSURE	NOTICE DUE TO D7 PERMITS & PIO
RAMP & ROAD CLOSURES	>= 2 WKS	21 CALENDAR DAYS PRIOR TO CLOSURE
	> 12 HRS & < 2 WKS	14 CALENDAR DAYS PRIOR TO CLOSURE
	< 12 HRS	4 BUSINESS DAYS PRIOR TO CLOSURE
LANE CLOSURES AND RESTRICTIONS	>= 2 WKS	14 CALENDAR DAYS PRIOR TO CLOSURE
	< 2 WKS	5 BUSINESS DAYS PRIOR TO CLOSURE
START OF CONSTRUCTION & TRAFFIC PATTERN CHANGES	N/A	14 CALENDAR DAYS PRIOR TO IMPLEMENTATION

ANY UNFORESEEN CONDITIONS NOT SPECIFIED IN THE PLANS REQUIRING TRAFFIC RESTRICTIONS SHALL ALSO BE REPORTED TO THE PROJECT ENGINEER USING THE NOTIFICATION TIME TABLE.

ALIGNMENT AND PROFILE

THE WORK PROPOSED BY THIS PROJECT CONSISTS OF PLANING AND RESURFACING OF THE EXISTING PAVEMENT. THE ALIGNMENT OF THE EXISTING PAVEMENT WILL NOT BE CHANGED AND THE PROFILE OF THE PROPOSED SURFACE WILL BE SIMILAR TO THAT OF THE EXISTING PAVEMENT.

ITEM 253 - PAVEMENT REPAIR, AS PER PLAN

PAVEMENT REPAIR SHALL BE IN ACCORDANCE WITH ITEM 253 - PAVEMENT REPAIR, WITH THE FOLLOWING ADDITIONS:

THE AREAS OF ITEM 253, PAVEMENT REPAIR, AS PER PLAN ARE LOCATED THROUGHOUT THE PROJECT LIMITS.

THE ENGINEER SHALL DESIGNATE THE LOCATIONS AND LIMITS OF THE AREAS TO BE REPAIRED. THE AREAS SHALL BE ROUGHLY RECTANGULAR IN SHAPE AND SAWED OR MILLED TO A NEAT LINE. THE DEPTH OF REMOVAL, AS DIRECTED BY THE ENGINEER, SHALL BE SUFFICIENT TO REMOVE ALL DETERIORATED PAVEMENT. THE ENTIRE AREA INCLUDING VERTICAL FACES SHALL BE COATED PRIOR TO PLACING THE REPLACEMENT MATERIAL PER 253.03. THE REPLACEMENT MATERIAL SHALL BE ITEM 301 - ASPHALT CONCRETE BASE, PG64-22 AND DEPTH OF THE REPAIR SHALL BE MEASURED FROM THE MILLED SURFACE.

THE ESTIMATED PAVEMENT REPAIR AREAS SHALL BE A MINIMUM OF 4 FEET IN WIDTH AND 4 INCHES IN DEPTH OR AS DIRECTED BY THE ENGINEER.

THE FOLLOWING ESTIMATED QUANTITIES HAVE BEEN CARRIED TO THE GENERAL SUMMARY TO BE USED AS DIRECTED BY THE ENGINEER.

ITEM 253 - PAVEMENT REPAIR, AS PER PLAN = 500 SQ YD

ITEM 254 - PATCHING PLANED SURFACE, AS PER PLAN

PAVEMENT AREAS DESIGNATED FOR PATCHING AFTER PAVEMENT PLANING OPERATION SHALL BE MILLED 2 INCHES (2") IN DEPTH AND PATCHED PER 254.04.

THE FOLLOWING ESTIMATED QUANTITY HAS BEEN CARRIED TO THE GENERAL SUMMARY TO BE USED AS DIRECTED BY THE ENGINEER:

ITEM 254 - PATCHING PLANED SURFACE, AS PER PLAN = 200 SQ YD

ITEM 254 - PAVEMENT PLANING, ASPHALT CONCRETE

AN ESTIMATED QUANTITY OF ITEM 254 - PAVEMENT PLANING, ASPHALT CONCRETE HAS BEEN CARRIED TO THE GENERAL SUMMARY AND INCLUDED IN THE PLANS TO BE USED AS DIRECTED BY THE ENGINEER.

THE APPROXIMATE DEPTH OF PAVEMENT PLANING SHALL BE TWO INCHES (2") AS SHOWN ON THE TYPICAL SECTIONS.

THE APPROXIMATE WIDTH OF THE PAVEMENT PLANING WILL VARY FROM 31.0' TO 44.0'.

THE CONTRACTOR SHALL BEGIN PLACEMENT OF ITEM 441 - ASPHALT CONCRETE WITHIN FIVE (5) DAYS AFTER ITEM 254 - PAVEMENT PLANING, ASPHALT CONCRETE IS COMPLETED ON A DAILY OPERATION.

THERE ARE SEVEN (7) INTERSECTIONS WITHIN THE LIMITS OF THE PAVEMENT PLANING.

THERE ARE APPROXIMATELY SEVENTY FOUR (74) CASTINGS WITHIN THE PLANING AREA. THE CONTRACTOR SHALL BE RESPONSIBLE FOR FURNISHING ALL LABOR AND EQUIPMENT NECESSARY TO MAINTAIN TRAFFIC AROUND THE CASTINGS AND SHALL INCLUDE THE COST IN THE UNIT PRICE BID FOR:
ITEM 614 - MAINTAINING TRAFFIC

THE FOLLOWING ESTIMATED QUANTITIES HAVE BEEN CARRIED TO THE GENERAL SUMMARY TO BE USED AS DIRECTED BY THE ENGINEER.

ITEM 611 - MANHOLE ADJUSTED TO GRADE = 12 EACH
ITEM 623 - MONUMENT BOX ADJUSTED TO GRADE = 3 EACH
ITEM 638 - VALVE BOX ADJUSTED TO GRADE = 9 EACH

ANY CASTINGS THAT REQUIRE ADJUSTING DURING CONSTRUCTION ARE THE RESPONSIBILITY OF THE CONTRACTOR. ALL LABOR, MATERIAL AND EQUIPMENT NECESSARY FOR THE ADJUSTMENTS OF CASTINGS SHALL BE INCLUDED IN ITEMS 611, 623 AND ITEM 638. ANY NEW CASTINGS REQUIRED SHALL BE FURNISHED TO THE CONTRACTOR BY THE CITY OF WAPAKONETA. ADJUSTING DEVICES ON MANHOLE COVERS ARE PROHIBITED.

I:\ProjectData\AUG\105660_SR198-0163\Design\Roadway\Sheets\105660_GN001.dgn Sheet 1/3/2019 7:57:40 AM tknapke

ITEM 614 - MAINTAINING TRAFFIC

TRAFFIC SHALL BE MAINTAINED AT ALL TIMES. THE LENGTH OF RESTRICTED TRAFFIC ZONES SHALL BE KEPT TO A MINIMUM CONSISTENT WITH THE SPECIFICATION REQUIREMENTS FOR PROTECTION OF COMPLETED COURSES.

ALL WORK AND TRAFFIC CONTROL DEVICES SHALL BE IN ACCORDANCE WITH CMS 614 AND OTHER APPLICABLE PORTIONS OF THE SPECIFICATIONS, AS WELL AS THE OHIO MANUAL OF UNIFORM TRAFFIC CONTROL DEVICES.

THE CONTRACTOR SHALL BE REQUIRED TO FURNISH AND ERECT "GROOVED PAVEMENT" SIGNS FOR ANY PLANED SURFACE OF THE ROADWAY REMAINING OPENED AT THE CONCLUSION OF A WORK DAY.

PAYMENT FOR ALL LABOR, EQUIPMENT AND MATERIALS SHALL BE INCLUDED IN THE LUMP SUM CONTRACT PRICE FOR ITEM 614, MAINTAINING TRAFFIC, UNLESS SEPARATELY ITEMIZED IN THE PLAN.

PAVEMENT MARKINGS

IT SHALL BE THE RESPONSIBILITY OF THE CONTRACTOR TO DOCUMENT THE LAYOUT OF THE EXISTING PAVEMENT MARKINGS INCLUDING EXISTING LANE AND SHOULDER WIDTHS IN A LOG AND SUBMIT TO THE DEPARTMENT FOR ACCEPTANCE. THE DEPARTMENT WILL NOT ALLOW THE CONTRACTOR TO PERFORM ANY PAVEMENT WORK FUNCTIONS (MILLING, OVERLAY, ETC.) UNTIL ACCEPTANCE OF THE SUBMITTED EXISTING MARKING LOG.

THE CONTRACTOR SHALL COORDINATE AND CORRABORATE THE PROPOSED LAYOUT OF ALL PAVEMENT MARKINGS PER PLAN AND APPLICABLE STANDARD CONSTRUCTION DRAWINGS WITH THE CITY OF WAPAKONETA AND ODOT.

PAVEMENT MARKINGS ON INTERSECTING ROADWAYS

THE EDGE LINE SHALL BE CONTINUED AROUND ALL RADII TO MATCH THE EXISTING EDGE LINE OF THE INTERSECTING ROUTE. IF THE INTERSECTING ROUTE HAS A CENTER LINE MARKING, THE CENTER LINE SHALL BE RE-STRIPED OVER THE AREA OF RESURFACING.

ITEM 614 - LAW ENFORCEMENT OFFICER (WITH PATROL CAR) FOR ASSISTANCE DURING CONSTRUCTION OPERATIONS

USE OF LAW ENFORCEMENT OFFICERS (LEOS) BY CONTRACTORS OTHER THAN THE USES SPECIFIED BELOW WILL NOT BE PERMITTED AT PROJECT COST. LEOS SHOULD NOT BE USED WHERE THE OMUTCD INTENDS THAT FLAGGERS BE USED.

IN ADDITION TO THE REQUIREMENTS OF C&MS 614 AND THE OMUTCD, A UNIFORMED LEO WITH AN OFFICIAL PATROL CAR (CAR WITH TOP-MOUNTED EMERGENCY FLASHING LIGHTS AND COMPLETE MARKINGS OF THE APPROPRIATE LAW ENFORCEMENT AGENCY) SHALL BE PROVIDED FOR THE FOLLOWING TRAFFIC CONTROL TASKS:

* DURING THE ENTIRE ADVANCE PREPARATION AND CLOSURE SEQUENCE WHERE COMPLETE BLOCKAGE OF TRAFFIC IS REQUIRED.

* DURING A TRAFFIC SIGNAL INSTALLATION WHEN IMPACTING THE NORMAL FUNCTION OF THE SIGNAL OR THE FLOW OF TRAFFIC, OR WHEN TRAFFIC NEEDS TO BE DIRECTED THROUGH AN ENERGIZED TRAFFIC SIGNAL CONTRARY TO THE SIGNAL DISPLAY (E.G., DIRECTING MOTORISTS THROUGH A RED LIGHT).

IN ADDITION TO THE REQUIREMENT OF C&MS 614 AND THE OMUTCD, A UNIFORMED LEO WITH AN OFFICIAL PATROL CAR (CAR WITH TOP-MOUNTED EMERGENCY FLASHING LIGHTS AND COMPLETE MARKINGS OF THE APPROPRIATE LAW ENFORCEMENT AGENCY) SHOULD BE PROVIDED FOR THE FOLLOWING TRAFFIC CONTROL TASKS AS APPROVED BY THE ENGINEER:

* FOR LANE CLOSURES: DURING INITIAL SET-UP PERIODS, TEAR DOWN PERIODS, SUBSTANTIAL SHIFTS OF A CLOSURE POINT OR WHEN NEW LANE CLOSURE ARRANGEMENTS ARE INITIATED FOR LONG-TERM LANE CLOSURES/SHIFTS (FOR THE FIRST AND LAST DAY OF MAJOR CHANGES IN TRAFFIC CONTROL SETUP).

IN GENERAL, LEOS SHOULD BE POSITIONED IN ADVANCE OF AND ON THE SAME SIDE AS THE LANE RESTRICTION OR AT THE POINT OF ROAD CLOSURE, AND TO MANUALLY CONTROL TRAFFIC MOVEMENTS THROUGH SIGNALIZED INTERSECTIONS IN WORK ZONES.

LEOS SHOULD NOT FORGO THEIR TRAFFIC CONTROL RESPONSIBILITIES TO APPREHEND MOTORISTS FOR ROUTINE TRAFFIC VIOLATIONS. HOWEVER, IF A MOTORIST'S ACTIONS ARE CONSIDERED TO BE RECKLESS, THEN PURSUIT OF THE MOTORIST IS APPROPRIATE.

THE LEOS WORK AT THE DIRECTION OF THE CONTRACTOR. THE CONTRACTOR IS RESPONSIBLE FOR SECURING THE SERVICES OF THE LEOS WITH THE APPROPRIATE AGENCIES AND COMMUNICATING THE INTENTIONS OF THE PLANS WITH RESPECT TO DUTIES OF THE LEOS. THE ENGINEER SHALL HAVE FINAL CONTROL OVER THE LEOS' DUTIES AND PLACEMENT, AND WILL RESOLVE ANY ISSUES THAT MAY ARISE BETWEEN THE TWO PARTIES.

THE LEO SHALL REPORT IN TO THE CONTRACTOR PRIOR TO THE START OF THE SHIFT, IN ORDER TO RECEIVE INSTRUCTIONS REGARDING SPECIFIC WORK ASSIGNMENTS DURING HIS/HER SHIFT. THE LEO IS EXPECTED TO STAY AT THE PROJECT SITE FOR THE ENTIRE DURATION OF HIS/HER SHIFT. THE LEO SHALL REPORT TO THE CONTRACTOR AT THE END OF HIS/HER SHIFT. ONCE THE LEO HAS COMPLETED THE DUTIES DESCRIBED ABOVE AND STILL HAS TIME REMAINING ON HIS/HER SHIFT, THE LEO MAY BE ASKED TO PATROL THROUGH THE WORK ZONE (WITH FLASHING LIGHTS OFF) OR BE PLACED AT A LOCATION TO DETER MOTORISTS FROM SPEEDING. SHOULD IT BE NECESSARY TO LEAVE THE PROJECT SITE, THE LEO SHALL NOTIFY THE ENGINEER. THE CONTRACTOR SHALL PROVIDE THE LEO WITH A TWO-WAY COMMUNICATION DEVICE WHICH SHALL BE RETURNED TO THE CONTRACTOR AT THE END OF HIS/HER SHIFT.

LEOS (WITH PATROL CAR) REQUIRED BY THE TRAFFIC MAINTENANCE TASKS ABOVE SHALL BE PAID FOR ON A UNIT PRICE (HOURLY) BASIS UNDER ITEM 614, LAW ENFORCEMENT OFFICER (WITH PATROL CAR) FOR ASSISTANCE. THE FOLLOWING ESTIMATED QUANTITIES HAVE BEEN CARRIED TO THE GENERAL SUMMARY.

ITEM 614, LAW ENFORCEMENT OFFICER WITH PATROL CAR FOR ASSISTANCE 32 HOURS.

THE HOURS PAID SHALL INCLUDE ANY MINIMUM SHOW-UP TIME REQUIRED BY THE LAW ENFORCEMENT AGENCY INVOLVED.

ANY ADDITIONAL COSTS (ADMINISTRATIVE OR OTHERWISE) INCURRED BY THE CONTRACTOR TO OBTAIN THE SERVICES OF AN LEO ARE INCLUDED WITH THE BID UNIT PRICE FOR ITEM 614, LAW ENFORCEMENT OFFICER WITH PATROL CAR FOR ASSISTANCE.

ITEM 632 - LOOP DETECTOR TIE-IN, AS PER PLAN

THIS WORK SHALL CONSIST OF MAKING CONNECTIONS TO EXISTING LOOP DETECTOR LEAD-IN WIRE, WHETHER THAT WIRE IS UNDERGROUND OR AERIAL. INCLUDED IN THIS ITEM IS THE POURED WATERPROOF EPOXY INSULATED SPLICE KIT (CONFORMING TO 725.15) THAT MUST BE USED IN MAKING THESE CONNECTIONS.

ALL CONNECTIONS OF THE LOOP WIRE TO THE LOOP LEADS SHALL BE SOLDERED PRIOR TO BEING PLACED IN THE SPLICE KITS.

THIS ITEM IS NEEDED ONLY WHEN A TIE-IN SITUATION EXISTS. WHEN ALL NEW LEAD-IN WIRE IS SPECIFIED IN THE PLAN, THIS ITEM OF WORK IS NOT REQUIRED.

PAYMENT FOR THIS ITEM WILL INCLUDE ALL NECESSARY LABOR, MISCELLANEOUS HARDWARE AND EQUIPMENT REQUIRED TO PROVIDE FOR THE LOOP DETECTOR TIE-IN AND OPERATION. BASIS OF PAYMENT WILL BE AT THE CONTRACT BID PRICE PER EACH.

THE CITY OF WAPAKONETA BELIEVES THAT THE EXISTING LOOP DETECTORS ARE LOCATED IN THE PAVEMENT AT A DEPTH THAT IS BELOW THE TWO INCH PLANING DEPTH. THE FOLLOWING QUANTITIES ARE INCLUDED IN THE PLANS TO BE USED AS DIRECTED BY THE ENGINEER FOR REPLACING LOOP DETECTORS DAMAGED DURING PLANING OPERATIONS.

ITEM 632 LOOP DETECTOR TIE-IN, AS PER PLAN = 2 EACH

ITEM 632 - DETECTOR LOOP, AS PER PLAN

DURING THE COURSE OF THIS CONTRACT, IT MAY BE NECESSARY FOR THE CONTRACTOR TO COORDINATE LOOP DETECTOR WORK WITH THE OHIO DEPARTMENT OF TRANSPORTATION (ODOT) AND OTHER CONTRACTORS INVOLVED WITH ASPHALT PLANING AND RESURFACING PROJECTS. THE CONTRACTOR SHALL REPLACE LOOP DETECTORS REMOVED BY ASPHALT PLANING OPERATIONS AFTER THE PLACEMENT OF THE ASPHALT CONCRETE SURFACE COURSE.

THE CITY OF WAPAKONETA WILL PROVIDE TO THE CONTRACTOR, A SET OF PLANS SHOWING THE LOCATION OF THE LOOPS TO BE REPLACED. THE CONTRACTOR SHALL COORDINATE ALL NECESSARY WORK.

THE FRONT EDGE OF THE POWERHEAD LOOP DETECTORS SHALL BE LOCATED 1 (ONE) TO 3 (THREE) FEET BEHIND THE REAR EDGE OF THE STOP LINE.

THE CONTRACTOR SHALL COORDINATE AND CORROBORATE THE LAYOUT OF ALL LOOP DETECTORS AND PAVEMENT MARKINGS WITH THE CITY OF WAPAKONETA.

THE CITY OF WAPAKONETA SHALL BE PRESENT WHEN THE CONTRACTOR MARKS THE LOCATION WHERE THE PAVEMENT IS TO BE SAWED TO BE ASSURED THAT THE PROPOSED LOOP DETECTORS ARE IN THE SAME PLACE AS THE EXISTING LOOP DETECTORS. ALL LOOP DETECTOR INSTALLATIONS SHALL BE MADE AFTER THE ASPHALT CONCRETE SURFACE COURSE IS PLACED.

THE CITY OF WAPAKONETA SHALL BE RESPONSIBLE FOR DISCONNECTION AND RECONNECTION OF THE LOOP DETECTORS IN THE SYSTEM. THE CONTRACTOR SHALL GIVE THE CITY OF WAPAKONETA, FORTY-EIGHT (48) HOURS NOTICE BEFORE BEGINNING PAVEMENT PLANING IN AREAS WITH LOOP DETECTORS.

THE CITY OF WAPAKONETA BELIEVES THAT THE EXISTING LOOP DETECTORS ARE LOCATED IN THE PAVEMENT AT A DEPTH THAT IS BELOW THE TWO INCH PLANING DEPTH. THE FOLLOWING QUANTITIES ARE INCLUDED IN THE PLANS TO BE USED AS DIRECTED BY THE ENGINEER FOR REPLACING LOOP DETECTORS DAMAGED DURING PLANING OPERATIONS.

	QUANTITY	DIMENSION/TYPE
	1	6' X 30' POWERHEAD
	1	6' X 12' RECTANGULAR
	2	
TOTALS CARRIED TO THE GENERAL SUMMARY		

CALCULATED TMK
CHECKED CWW

GENERAL NOTES

AUG-198-1.63

I:\ProjectData\AUG\105660_SR198-0163\Design\Roadway\Sheets\105660_GN002.dgn Sheet 1/3/2019 7:57:42 AM tkrapke

SHEET NUM.													PART.	ITEM	ITEM EXT	GRAND TOTAL	UNIT	DESCRIPTION	SEE SHEET NO.
							3	4	6	8			01/SK2/PV						
																		ROADWAY	
							3						3	623	39500	3	EACH	MONUMENT BOX ADJUSTED TO GRADE	
																		DRAINAGE	
							12						12	611	99654	12	EACH	MANHOLE ADJUSTED TO GRADE	
																		PAVEMENT	
							500						500	253	01001	500	SY	PAVEMENT REPAIR, AS PER PLAN	3
									13,198				13,198	254	01000	13,198	SY	PAVEMENT PLANING, ASPHALT CONCRETE, 2" Depth	
							200						200	254	01601	200	SY	PATCHING PLANED SURFACE, AS PER PLAN	3
									1,851				1,851	407	20000	1,851	GAL	NON-TRACKING TACK COAT	
									460				460	441	50100	460	CY	ASPHALT CONCRETE SURFACE COURSE, TYPE 1, (448), PG70-22M	
									277				277	441	50200	277	CY	ASPHALT CONCRETE INTERMEDIATE COURSE, TYPE 1, (448)	
																		WATER WORK	
							9						9	638	10800	9	EACH	VALVE BOX ADJUSTED TO GRADE	
																		TRAFFIC CONTROL	
										0.22			0.22	644	00100	0.22	MILE	EDGE LINE, 4"	
										0.7			0.7	644	00300	0.7	MILE	CENTER LINE	
										584			584	644	00400	584	FT	CHANNELIZING LINE, 8"	
										285			285	644	00500	285	FT	STOP LINE	
										1,835			1,835	644	00600	1,835	FT	CROSSWALK LINE	
										58			58	644	00900	58	SF	ISLAND MARKING	
										1			1	644	01100	1	EACH	SCHOOL SYMBOL MARKING, 72"	
										14			14	644	01300	14	EACH	LANE ARROW	
										2			2	644	01400	2	EACH	WORD ON PAVEMENT, 72"	
										437			437	644	01500	437	FT	DOTTED LINE, 4"	
																		TRAFFIC SIGNALS	
								2					2	632	26501	2	EACH	DETECTOR LOOP, AS PER PLAN	4
								2					2	632	27201	2	EACH	LOOP DETECTOR TIE IN, AS PER PLAN	4
																		MAINTENANCE OF TRAFFIC	
								32					32	614	11110	32	HOUR	LAW ENFORCEMENT OFFICER WITH PATROL CAR FOR ASSISTANCE	
										2.1			2.1	614	21550	2.1	MILE	WORK ZONE CENTER LINE, CLASS III, 642 PAINT	
										1,752			1,752	614	23680	1,752	FT	WORK ZONE CHANNELIZING LINE, CLASS III, 8", 642 PAINT	
										855			855	614	26610	855	FT	WORK ZONE STOP LINE, CLASS III, 642 PAINT	
																		INCIDENTALS	
													LS	614	11000	LS		MAINTAINING TRAFFIC	
													LS	624	10000	LS		MOBILIZATION	

CALCULATED TMK
CHECKED CWW

GENERAL SUMMARY

AUG-198-1.63

i:\Project Data\AUG\105660_SR198-0.63\Design\Roadway\Sheets\105660_GG001.dgn Sheet 1/3/2019 7:57:46 AM tknapke

PARTICIPATION	ROUTE	TYPICAL SECTION	LOCATION SLM FROM	LOCATION SLM TO	LENGTH (L) MILE	LENGTH (L) FT	AVERAGE WIDTH (W) FT	SURFACE AREA (A) A=LxW SY		254 PAVEMENT PLANING, ASPHALT CONCRETE 2" Depth SY		407 NON-TRACKING TACK COAT 0.055 Gal/SY GAL	407 NON-TRACKING TACK COAT 0.085 Gal/SY GAL		441 ASPHALT CONCRETE SURFACE COURSE, TYPE 1, (448), PG70-22M 1 1/4" Thickness CY	441 ASPHALT CONCRETE INTERMEDIATE COURSE, TYPE 1, (448) 3/4" Thickness CY						
1	SR 198	1	1.63	1.66	0.03	159	44.0	774		774		43	66		27	16						
1	SR 198	1	1.66	1.69	0.03	159	39.0	686		686		38	59		24	15						
1	SR 198	1	1.69	1.86	0.17	898	34.0	3391		3391		187	289		118	71						
1	SR 198	1	1.86	2.22	0.36	1901	31.0	6547		6547		360	557		228	137						
1	SR 198	INT						1800		1800		99	153		63	38						
								PART.		SUBTOTALS												
								1		13198		727	1124		460	277						
TOTALS CARRIED TO GENERAL SUMMARY										13198		727	1124		460	277						

LEGEND FOR AUXILLARY AREAS IN "TYPICAL" COLUMN

INT: INTERSECTIONS

CALCULATED TMK
CHECKED CWW

PAVEMENT SUBSUMMARY

AUG-198-1.63

I:\ProjectData\AUG\105660_SR198-0163\Design\Roadway\Sheets\105660_GS001.dgn Sheet 1/3/2019 7:57:48 AM tknapke

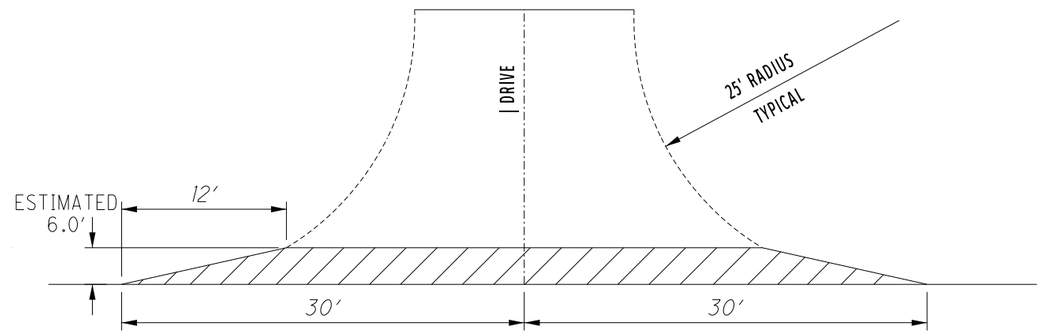

TYPICAL DRIVEWAY

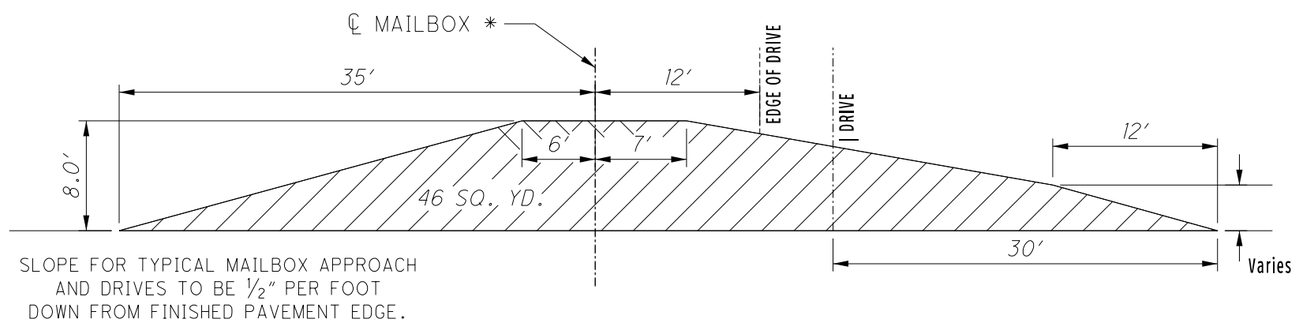

SLOPE FOR TYPICAL MAILBOX APPROACH
AND DRIVES TO BE ½" PER FOOT
DOWN FROM FINISHED PAVEMENT EDGE.

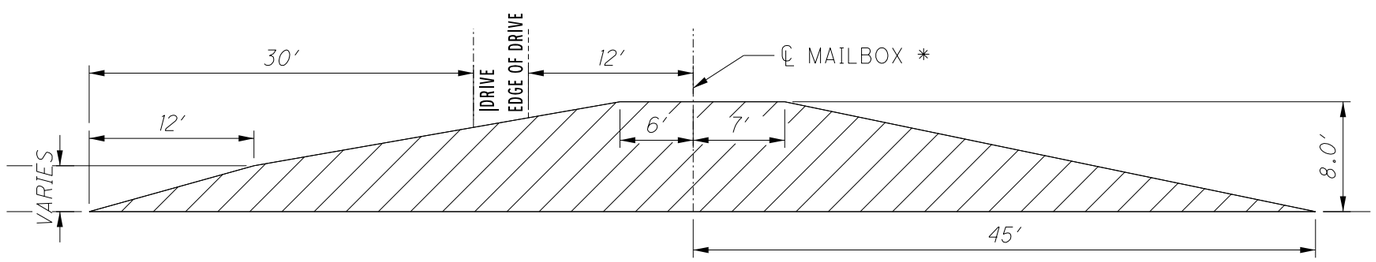

TYPICAL COMBINATION DRIVE & MAILBOX APPROACHES

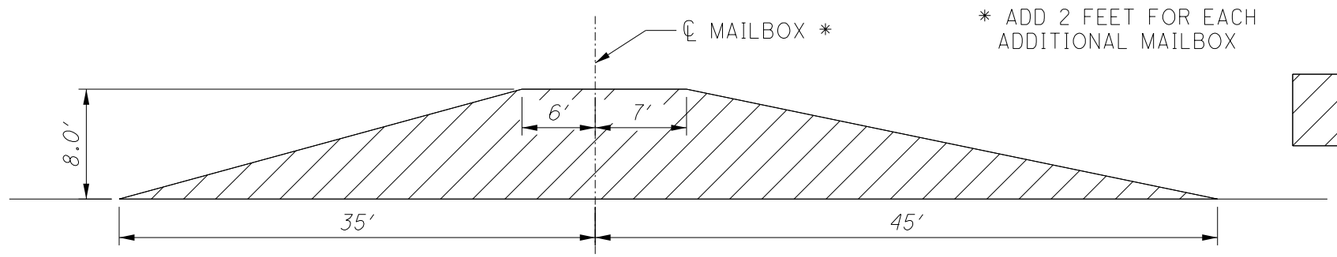

TYPICAL MAILBOX APPROACH

* ADD 2 FEET FOR EACH
ADDITIONAL MAILBOX

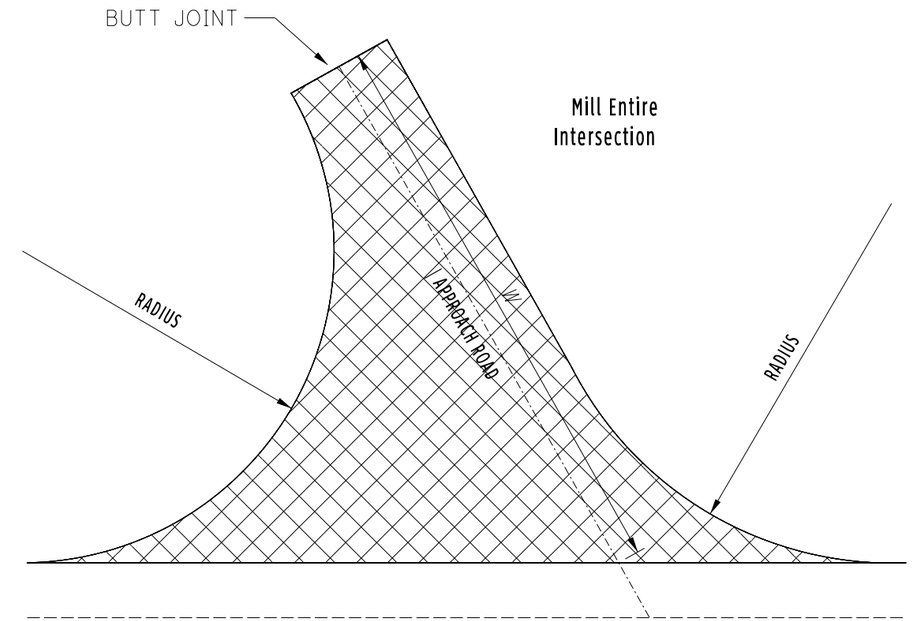

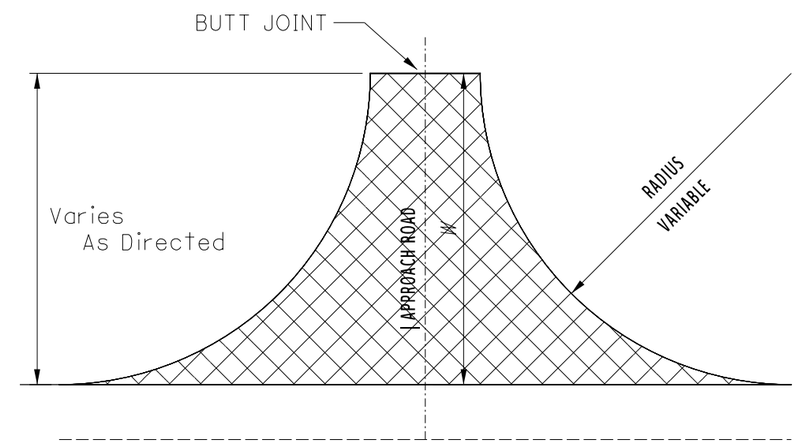

TYPICAL APPROACH ROAD PAVING

W = To Back of Radius or As Directed By the Engineer

PAVEMENT PLANING

OHIO DEPARTMENT OF TRANSPORTATION
DISTRICT SEVEN

TYPICAL APPROACHES FOR ROADS,
DRIVES, AND MAILBOXES

HORIZONTAL SCALE IN FEET
0 0 0 0

CALCULATED
CHECKED

DRIVE

AUG-198-1.63

7/8

I:\ProjectData\AUG\105660_SR198-0163\Design\Roadway\Sheets\105660_GD001.dgn Sheet 1/3/2019 7:57:49 AM tknapke

PARTICIPATION	ROUTE	SLM / LOCATION FROM	SLM / LOCATION TO	LANE WIDTH	SOLID LINE EQUIVALENT		614 WORK ZONE CENTER LINE, CLASS III, 642 PAINT	614 WORK ZONE CHANNELIZING LINE, CLASS III, 8", 642 PAINT	614 WORK ZONE STOP LINE, CLASS III, 642 PAINT		644 EDGE LINE, 4"	644 CENTER LINE	644 CHANNELIZING LINE, 8"	644 STOP LINE	644 CROSSWALK LINE	644 ISLAND MARKING YELLOW	644 SCHOOL SYMBOL MARKING, 72"	644 LANE ARROW LEFT	644 LANE ARROW COMBINATION	644 WORD ON PAVEMENT, 72"	644 DOTTED LINE, 4" WHITE	644 DOTTED LINE, 4" YELLOW	644 LANE ARROW THRU		
				FT	MILE		MILE	FT	FT		MILE	MILE	FT	FT	FT	SF	EACH	EACH	EACH	EACH	FT	FT	EACH		
1	AUG-198	1.63	2.22		4.20		2.1					0.7													
1	AUG-198	SLM 1.63 HARRISON						480	234				160	78	440			1	1						
1	AUG-198	1.63	1.71								0.02														
1	AUG-198	SLM 1.69 MURRAY							147					49	132										
1	AUG-198	SLM 1.71 SILVER							45					15	65										
1	AUG-198	1.71	1.74								0.02														
1	AUG-198	SLM 1.74 SILVER							48					16	173										
1	AUG-198	1.74	1.86								0.08														
1	AUG-198	SLM 1.86 GLYNWOOD						96	78				32	26	164	22		1					1		
1	AUG-198	1.86	2.02								0.08														
1	AUG-198	SLM 2.02 VEIT						96	51				32	17	115	36		1							
1	AUG-198	SLM 2.09 HOEPENGARDNER						660	96				220	32	186		1	2	1						
1	AUG-198	SLM 2.19 COLE_HAMILTON						420	156				140	52	560				6	2	245	192			
1	AUG-198	2.19	2.22								0.02														
					PART.		SUBTOTALS																		
TOTALS CARRIED TO GENERAL SUMMARY							2.1	1752	855		0.22	0.7	584	285	1835	58	1	5	8	2	245	192	1		

CALCULATED BAB
CHECKED TMK

TRAFFIC CONTROL SUBSUMMARY

AUG-198-1.63

I:\ProjectData\AUG\105660_SR198-0163\Design\Roadway\Sheets\105660_TS001.dgn Sheet 1/3/2019 7:57:51 AM tknapke