MICROFILMED
APR 1 - 1986

# STATE OF OHIO
# DEPARTMENT OF TRANSPORTATION

# BEL-7-8.68

## CITY OF SHADYSIDE
### MEAD TOWNSHIP
### BELMONT COUNTY

F-534 -(11)

| FHWA Region | STATE | PROJECT | |
|---|---|---|---|
| 5 | OHIO | F-534-(11) | |

1/666

BEL - 7 - 8.68

## DESIGN DESIGNATION

| | | |
|---|---|---|
| Current ADT | 5096 | (1970) |
| Design Year ADT | 8170 | (1987) |
| DHV | 1062 | |
| D (Directional Distribution) | 4902 | |
| T (Percent B & C Trucks) | 12 % | |
| V (Design Speed) | 60 M.P.H. | |

MICROFILMED
OCT 4 1982

## LIMITED ACCESS

This improvement is especially designed for through traffic and has been declared a limited access highway or freeway by action of the Director in accordance with the provisions of Section 5511.02 of the Revised Code of Ohio.

Sheet 585 revised 10-3-73. cw
Sheet 581 revised 2-22-74 EBL

## CONVENTIONAL SIGNS

State Line
County Line
Township Line
Section Line
Center Line
Corporation Line
Fence Line
Guard Rail (existing)
Guard Rail (proposed)
Railroads
Power Poles
Telephone Poles
Trees or Stumps (existing)
Property Line — P/L
Right of Way with Limited Access — LA RW
Right of Way without Limited Access — RW
Existing Right of Way
Right of Way Limited Access Only — LA

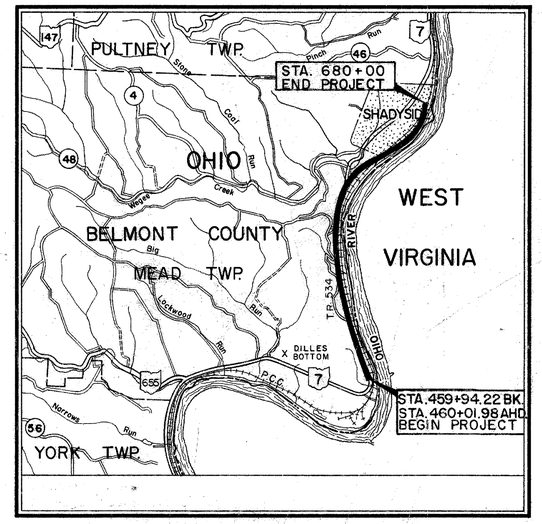


## LOCATION MAP

SCALE OF MILES 0 1 2 3 4

Portion to be improved
State Roads
Other Roads

## INDEX OF SHEETS


| | |
|---|---|
| Title Sheet | 1 |
| Schematic Plan | 2 - 3 |
| Typical Sections | 4 - 10 |
| Miscellaneous Details | 11 |
| General Notes | 12 - 14 |
| Calculations | 15 - 17 |
| General Summary | 18 - 20 |
| Survey & Reference Points | 21 - 24 |
| Plan & Profile Sheets | 25 - 49, 49A |
| Curve Tables | 50 - 51 |
| Cross Sections | 52 - 388, 388A - 388F |
| T.R. 534 | 389 - 394 |
| S.R. 7 Interchange | 395 - 402 |
| S.R. 7 Connection North | 403 - 429 |
| Ramps | 430-451, 465A - 465C |
| S.R. 7 Connection South | 466 - 471 |
| Wegee Creek Relocation | 472 - 482 |
| C.R. 48 | 483 - 486 |
| International Harvester Drive | 487, 487A, 488 - 491, 491A - 491C |
| Pavement Details | 492 - 501 |
| Structures 20' Span & Under | 502 - 550 |
| Retaining Walls & Approach Slab | 551 - 558 |
| Structures Over 20' Span | 559 - 586, 586A, 587 - 606 |
| Traffic Control | 607 - 625 |
| Lighting | 626 - 633, 633A - 633N |
| Right of Way | 634 - 666 & 666A |


(504A, 505A, 509A, 510A, 511A, 518A, 520A, 526A, 527A, 528A, 530A, 540A, 541A, 549A)

## LINE DATA
(See Sheet No. 2)

| | | |
|---|---|---|
| Begin Project | Sta. 460 + 01.98 | |
| End Project | Sta. 680 + 00 | |
| Deduct for Railroad | 197.00 | Lin. Ft. |
| Net Length of Project | 21,801.02 | Lin. Ft. or 4.128 Miles |
| Total Length of Work | 28,429.15 | Lin. Ft. |
| Deduct for Railroad | 197.00 | Lin. Ft. |
| Net Length of Work | 28,626.15 | Lin. Ft. |
| or | 5.421 | Miles |

## 1973 SPECIFICATIONS

The standard specifications of the State of Ohio, Department of Transportation, including changes and supplemental specifications listed in the proposal shall govern this improvement.

The right of way for this improvement will be provided by the State of Ohio.

I hereby approve these plans and declare that the making of this improvement will not require the closing of the highway to traffic and that provisions for the maintenance and safety of traffic will be as set forth on these plans and estimates.

Approved Robert J. Tenhover
Date 7-17-72 District Deputy Director of Transportation

Approved Robert B. Pfeifer
Date 3-6-73 Engineer, Bureau of Bridges

Approved E. J. Schaefer
Date 3-6-73 Engineer, Bureau of Roadway Design

Approved William E. Shell
Date 3-7-73 Assistant Deputy Director for Highway Design

Approved Julius J. Seeraf
Date 3-21-73 Assistant Deputy Director for Real Estate

3-6-73 Approved William Buckley
Date 3-21-73 Assistant Deputy Director for Program Development

Approved William W. Wolfe
Date 3-22-73 Chief Engineer, Division of Highways

Approved R. M. Jenkins
Date 3-22-73 Deputy Director, Division of Highways

Approved William P. McKenna
Date 3-23-73 Assistant Director, Department of Transportation

Approved Phillip Ruley
Date 3/23/73 Director, Department of Transportation

SCALE

Plans, Profile: Horizontal — 0 20 40 60 80 100
Profile: Vertical, Cross Sections — 0 4 8 12 16 20

PLANS PREPARED BY:
STICKLEN-BELSHEIM & ASSOC.
WORTHINGTON, OHIO

Supplemental Prints of Standard Construction Drawings

| Drawing No. | Date | Drawing No. | Date | Drawing No. | Date | Drawing No. | Date | Drawing No. | Date |
|---|---|---|---|---|---|---|---|---|---|
| BP-5 | 6-1-72 | | | GR-2A | 1-1-71 | L-1 | 6-1-65 | MH-1 | 10-1-68 |
| BP-6 | 6-1-65 | F-2 | 1-1-71 | GR-2B | 11-9-71 | HW-E | 6-1-65 | MH-1A | 10-1-68 |
| BP-7 | 1-1-66 | F-3 | 3-10-69 | GR-5 | 1-1-71 | SP-53 | 6-30-61 | MH-2 | 10-1-68 |
| BP-3 | 1-1-71 | F-6 | 10-1-66 | GR-6 | 1-1-71 | MC-1 | 6-13-69 | BP-2 | 12-1-68 |
| CB-2-2-A & B | 6-1-65 | | | GR-3 | 11-9-71 | MC-3 | 6-20-69 | AS-1-67 | 6-12-69 |
| CB-2-3 & 2-4 | 6-1-65 | FACI-1 | 4-20-71 | HW-1 | 6-1-65 | MC-4 | 6-13-69 | | |
| CB-2-5 & 2-6 | 6-1-65 | FACI-2 | 4-20-71 | HW-4 | 1-1-70 | MC-5 | 6-1-65 | | |
| CB-5 | 9-1-69 | | | GR-4 | 11-9-71 | MC-6 | 6-1-65 | BR-1-67 Sht. 1 | 10-15-71 |
| CB-6 | 6-1-65 | | | I-2 | 6-6-69 | MC-7 | 10-1-68 | | |
| | | | | | | MC-8 | 12-1-67 | | |

Supplemental Specifications

| No. | Date | No. | Date |
|---|---|---|---|
| 804 | 12-22-72 | 1001 | 9-20-72 |
| 808 | 1-1-71 | 941 | 11-25-70 |
| 835 | 9-20-72 | | |
| 814 | 1-1-69 | | |
| 815 | 9-20-72 | | |
| 816 | 9-20-72 | | |
| 839 | 11-25-70 | | |
| 836 | 1-1-71 | | |
| 927 | 1-1-71 | | |

DEPARTMENT OF TRANSPORTATION
FEDERAL HIGHWAY ADMINISTRATION

APPROVED:

DIVISION ENGINEER — DATE

| File No. | BELMONT CO. BEL-7-8.68 |
|---|---|
| | Date of Letting ___ ___ ___ ___ 196 |
| | Contract No. ___ ___ ___ ___ ___ |

Rev. 3-30-73

| FED. RD. DIVISION | STATE | PROJECT | |
|---|---|---|---|
| 2 | OHIO | | |

626/666

BEL - 7 - 8.68

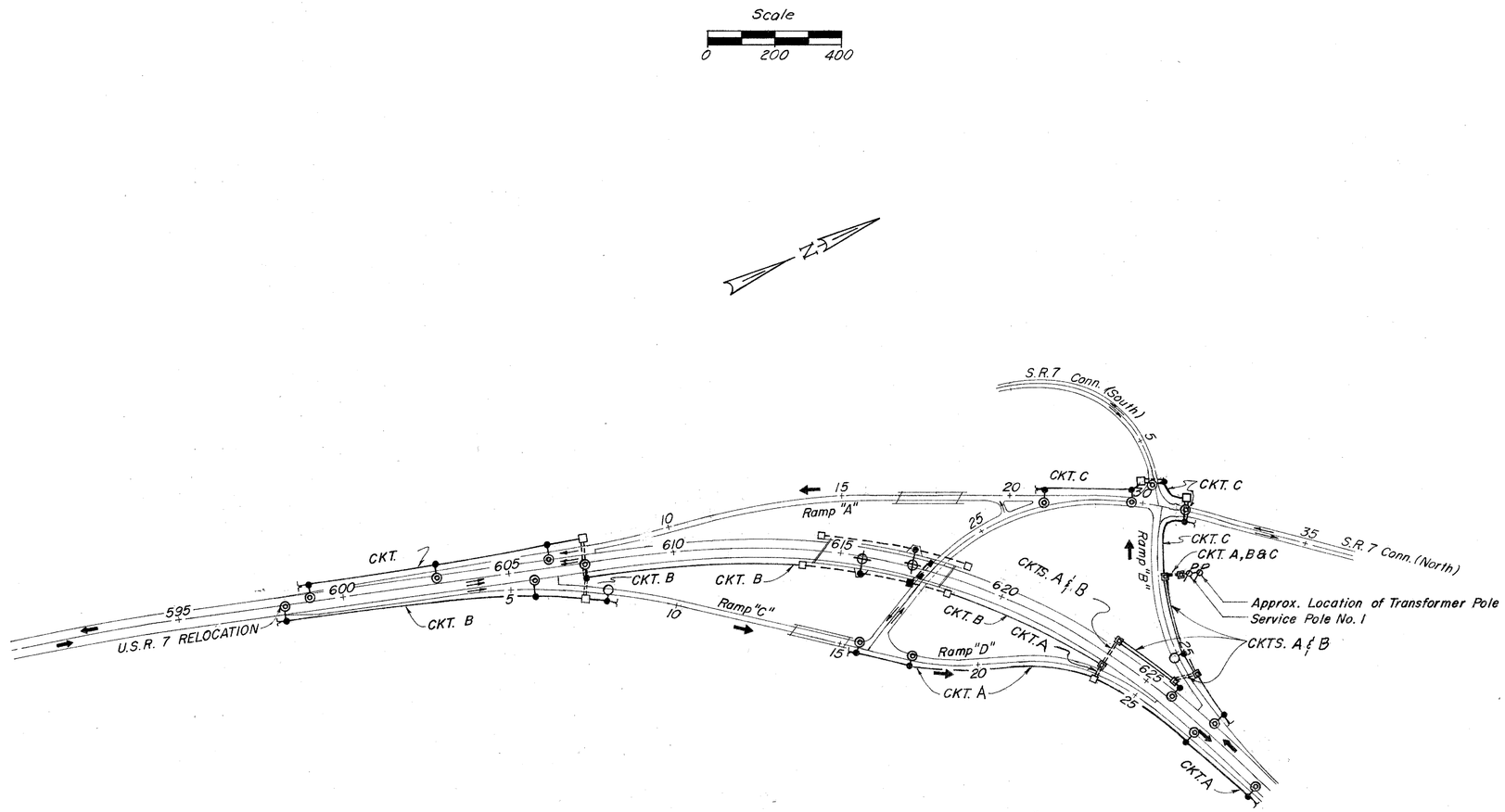


"SCHEMATIC LIGHTING PLAN"

## LEGEND

- Pilaster for Bridge Lighting Unit
- Future Lighting Unit
- Foundation and Lighting Unit – 400 Watt ANSI-IES Type II, Medium Cutoff
- Foundation and Lighting Unit – 400 Watt ANSI-IES Type III, Medium Cutoff
- Vacant Foundation Conduit, Stubbed and Capped
- 18" Pullbox
- 24" Pullbox
- Junction Box
- Structure Ground Point
- 1½" Duct-Cable 4/2-#4 AWG
- 2" Conduit
- 3" Conduit
- STATION / CIRCUIT IDENT. / SEE MECH. PROPERTIES Sheet No. 627 (7+91 B-3 / Ref. B)
- 250 Watt Underpass Unit

SCHEMATIC - S.R. 7 RELOCATION INTERCHANGE LIGHTING PLAN

| FED. RD. DIVISION | STATE | PROJECT | FISCAL YEAR |
|---|---|---|---|
| | | | |

627/666

BEL-7-8.68

# LIGHTING GENERAL NOTES

## SPECIFICATIONS

THESE NOTES ARE SUPPLEMENTAL TO ITEMS 625 AND 713 OF THE STATE OF OHIO DIVISION OF HIGHWAYS CONSTRUCTION AND MATERIAL SPECIFICATIONS.

### 625.03 GENERAL

THE POWER SUPPLYING AGENCY FOR THIS PROJECT IS: THE OHIO POWER COMPANY
340, 34th STREET
BELLAIRE, OHIO

THE COMPANY WILL SUPPLY 480 VOLT, 2-WIRE, SINGLE PHASE, GROUNDED NEUTRAL SERVICE.

### 625.07 - 713.11 LUMINAIRES

(400-WATT LUMINAIRES SHALL HAVE DUAL RATED 240/480 VOLT INTEGRAL REGULATOR BALLASTS AND SHALL BE GENERAL ELECTRIC M400, WESTINGHOUSE OV-25, McGRAW-EDISON "UNISTYLE", OR EQUAL APPROVED BY THE ENGINEER).

### 625.07 - 713.13 UNDERPASS LUMINAIRES

250-WATT UNDERPASS LUMINAIRES SHALL BE HOLOPHANE "UNDERPASS WALLPACK", OR EQUAL WESTINGHOUSE, McGRAW-EDISON, OR GENERAL ELECTRIC UNDERPASS UNIT APPROVED BY THE ENGINEER, AND SHALL BE FURNISHED WITH AN INTEGRAL FUSE HOLDER AND FUSE. THE INTEGRAL BALLAST SHALL BE OF A REGULATOR TYPE RATED FOR 480 VOLTS. THE FUSE SHALL BE RATED 10-AMPERE.

### 625.08 - 713.14 LAMPS

MERCURY LAMPS SHALL BE GENERAL ELECTRIC "BONUS LINE", WESTINGHOUSE "LIFEGUARD", SYLVANIA "ROUGH SERVICE", OR EQUAL APPROVED BY THE ENGINEER.

### LIGHT POLE ANCHOR BOLTS FOR BRIDGES

ANCHOR BOLTS FOR MOUNTING LIGHT POLES ON BRIDGES SHALL CONFORM TO THE REQUIREMENTS OF 713.01 AND DETAILS SHOWN ON THE PLANS, OR THE APPROVED SHOP DRAWINGS, FOR THE RESPECTIVE POLES TO BE PLACED THEREON. PAYMENT SHALL BE MADE AT THE UNIT PRICE BID FOR EACH SET OF BOLTS OF THE SIZE REQUIRED AND NECESSARY TO INSTALL ONE POLE AND THIS PAYMENT SHALL CONSTITUTE FULL COMPENSATION FOR FURNISHING AND PLACING THE BOLTS.

### CONDUIT ON STRUCTURES

EXPANSION FITTINGS FOR CONDUIT ON STRUCTURES SHALL BE OZ TYPE "AX-4", SPRING CITY TYPE AF, APPLETON TYPE XJ-4, OR EQUAL APPROVED BY THE ENGINEER FOR BRIDGE NUMBER BEL-7-1161 OVER WEGEE CREEK.

EACH EXPANSION FITTING SHALL HAVE A COPPER EXTERNAL BONDING JUMPER.

### ITEM 625 - SERVICE TO UNDERPASS LIGHTING, AS PER PLAN

THIS ITEM SHALL CONSIST OF PROVIDING COMPLETE ELECTRICAL SERVICE, EXCEPT FOR LUMINAIRES, LAMPS, AND STRUCTURE GROUNDING FOR AN UNDERPASS LIGHTING SYSTEM ON BRIDGE NO. BEL-7-1161 OVER WEGEE CREEK. THE INSTALLATION WORK SHALL INCLUDE CONDUITS, MOUNTINGS, FITTINGS, JUNCTION BOXES, CABLES, AND ALL INCIDENTALS NECESSARY TO COMPLETE, READY FOR USE, THE SERVICE AS DETAILED ON SHEET 633D & 631. INSTALLATION WORK SHALL ALSO INCLUDE CONDUIT GROUNDING.

THE LUMP SUM PRICE BID FOR "ITEM 625 - SERVICE TO UNDERPASS LIGHTING, AS PER PLAN" SHALL INCLUDE PAYMENT FOR ALL EQUIPMENT, LABOR, AND MATERIALS NECESSARY TO COMPLETE THE WORK AS SPECIFIED. COMPONENT PARTS NOT SPECIFICALLY MENTIONED BUT REQUIRED FOR SATISFACTORY OPERATION OF THIS ITEM SHALL BE FURNISHED AND CONSIDERED PAID FOR AS PART OF THE ITEM.

### HIGH VOLTAGE DIRECT CURRENT TEST

A HIGH VOLTAGE DIRECT CURRENT TEST, AS DESCRIBED IN SUPPLEMENTAL SPECIFICATION 839, SHALL BE PERFORMED ON ALL DISTRIBUTION CABLE, AND DUCT-CABLE SYSTEMS TO BE INSTALLED ON THIS PROJECT. THE TEST SHALL NOT BE PERFORMED UNTIL AFTER ALL NEW CONSTRUCTION, SUCH AS GUARD RAIL, FENCE, DELINEATOR POSTS, SIGN SUPPORTS, ETC., IN THE IMMEDIATE VICINITY OF THE LOCATION OF THE CABLE RUN BEING TESTED, HAS BEEN COMPLETED.

### ALTERNATE LIGHT POLE DESIGNS

ON THIS PROJECT, POLE SHAFTS SHALL BE TAPERED BUT MAY BE OF AN OVAL, SQUARE, MULTI-SIDED OR FLUTED CROSS SECTION, PROVIDED THE SECTION IS CLOSED. BRACKET ARMS MAY BE EITHER STRAIGHT OR TAPERED BUT SHALL BE OF A SECTION COMPATIBLE WITH THAT OF THE POLE. IN ADDITION, PLAN REQUIREMENTS FOR BRACKET ARM STYLES AND RISE ARE HEREBY WAIVED AND ANY ARRANGEMENT OF POLE SHAFT AND BRACKET ARM RISE AND STYLE WHICH PROVIDES THE SPECIFIED MOUNTING HEIGHT IS ACCEPTABLE. HOWEVER, ALL POLES FURNISHED FOR THE PROJECT SHALL BE OF THE SAME CROSS SECTION AND OF THE SAME STYLE OR FAMILY OF STYLES.

### TYPICAL MECHANICAL PROPERTIES FOR LIGHT POLES

| REFERENCE LETTER | DESIGN NUMBER | STYLE | SHAFT SIZE | MOUNTING HEIGHT | ARM LENGTH | TAPER INCHES PER FOOT | GAUGE | FOUNDATION ANCHOR BOLTS: SIZE DIAMETER X LENGTH | BOLT CIRCLE DIAMETER | PROJECTION ABOVE FOUNDATION | TRANSFORMER BASE STYLE | FOUNDATION SIZE |
|---|---|---|---|---|---|---|---|---|---|---|---|---|
| B | AT10B34.2 | II | 9.0"x3.97"x29'-6" | 34.2' | 10' | .14 | 11 | 1"x40" | 15" | 4½" | AT-A | 24"x6' |
| C | AT15B34.2 | II | 9.0"x 4.87"x29'-6" | 34.2' | 15' | .14 | 11 | 1"x40" | 15" | 4½" | AT-A | 24"x6' |
| D | FOR FUTURE USE | | | 34.2' | 15' | | | 1"x40" | 15" | 4½" | | BRIDGE PILASTER |
| | | | | | | | | | | | | |
| | | | | | | | | | | | | |

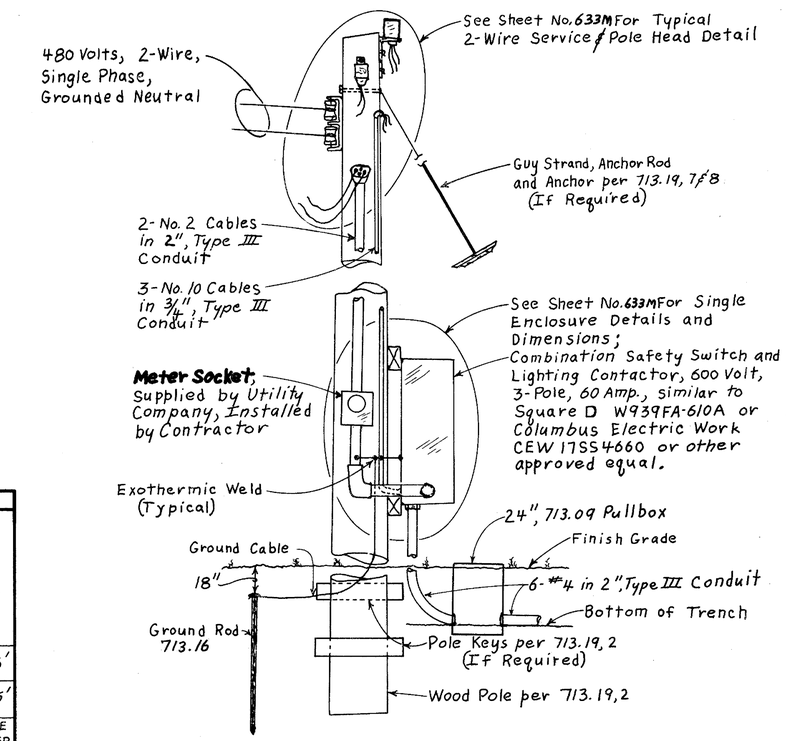


**SERVICE POLE & CONTROL CENTER**

See Additional Details on sheets 633M & 633N

# LIGHTING QUANTITIES SUB-SUMMARY

| Ref. No. | Side | Station | Station | light pole Design AT10B34.2 | light pole Design AT15B34.2 | light pole foundation 24"x 6' | luminaire, type II 400 watt | luminaire, type III 400 watt | luminaire, underpass 250 watt | lamp, 400 watt | lamp, 250 watt | ground rod | pull box, 18" circular | pull box, 24" circular | trench 24" deep | | Connector Kit Type VIII CU | Connector Kit Type VIII C | conduit 2", type III | conduit 3", type III | distribution cable No. 4 | pole and bracket cable No. 10 AWG | duct, 1 1/2", two No. 4 600 volts | connector kit, type I | connector kit, type II | connector kit, type III | connector kit type VIII B | junction box, 18"x 8"x 6" | light pole anchor bolts for structure | Structure grounding system for Br. No. 161 | Service Pole & Control Center No. 1 | Service to underpass lighting for Br. No. 161 | High Voltage Test | Connector Kit Type IV |
|---|---|---|---|---|---|---|---|---|---|---|---|---|---|---|---|---|---|---|---|---|---|---|---|---|---|---|---|---|---|---|---|---|---|---|
| | | | | Ea. | Ea. | Ea. | Ea. | Ea. | Ea. | Ea. | Ea. | Ea. | Ea. | Ea. | L.F. | | Ea. | Ea. | L.F. | L.F. | L.F. | L.F. | L.F. | Ea. | Ea. | Ea. | Ea. | Ea. | Sets | Ea. | Lump | Lump | Lump | Ea. |
| 1 | Lt. | 599+00 | | | 1 | 1 | | 1 | | 1 | | 1 | | | | | | | | | | 98 | | | 1 | 1 | | | | | | | | |
| 2 | " | 599+00 | 602+85 | | | | | | | | | | | | 385 | | | | | | | | 395 | | | | | | | | | | | |
| 3 | " | 602+85 | | | 1 | 1 | | 1 | | 1 | | 1 | | | | | | | | | | 98 | | | 1 | 1 | | | | | | | | |
| 4 | " | 602+85 | 606+26 | | | | | | | | | | | | 343 | | | | | | | | 353 | | | | | | | | | | | |
| 5 | " | 606+28 | | | 1 | 1 | | 1 | | 1 | | 1 | | | | | | | | | | 98 | | | 1 | 1 | | | | | | | | |
| 6 | " | 606+28 | 607+34 | | | | | | | | | | | | 106 | | | | | | | | 126 | | | | | | | | | | | |
| 7 | " | | | | | | | | | | | | | | | | | | | | | | | | | | | | | | | | | |
| 8 | | | | | | | | | | | | | | | | | | | | | | | | | | | | | | | | | | |
| 9 | Lt. | 607+34 | | | | | | | | | | | 1 | | | | | | | | | | | 2 | | | | | | | | | | |
| 10 | | | | | | | | | | | | | | | | | | | | | | | | | | | | | | | | | | |
| 11 | Rt. | 598+20 | | | 1 | 1 | | 1 | | 1 | | 1 | | | | | | | | | | 98 | | | 1 | 1 | | | | | | | | |
| 12 | " | 598+20 | 605+92 | | | | | | | | | | | | 772 | | | | | | | | 782 | | | | | | | | | | | |
| 13 | " | 605+92 | | | 1 | 1 | | 1 | | 1 | | 1 | | | | | | | | | | 98 | | | 1 | 1 | | | | | | | | |
| 14 | " | 605+92 | 7+26(C) | | | | | | | | | | | | 134 | | | | | | | | 144 | | | | | | | | | | | |
| 15 | " | 7+26 (C) | | | | | | | | | | | 1 | | | | | | | | | | | | | | 2 | | | | | | | |
| 16 | " | 7+26 (C) | 7+91 (C) | | | | | | | | | | | | 65 | | | | | | | | 75 | | | | | | | | | | | |
| 17 | " | 7+91 (C) | | 1 | | 1 | 1 | | | 1 | | 1 | | | | | | | | | | 88 | | | 1 | 1 | | | | | | | | |
| 18 | Rt-Lt. | 7+26 (C) | 607+34 | | | | | | | | | | | | 55 | | | | | 55 | 130 | | | | | | | | | | | | | |
| 19 | Rt | 607+34 | | | 1 | 1 | | 1 | | 1 | | 1 | | | | | 2 | 2 | | | | 98 | | | | | | | | | | | | |
| 20 | " | 607+34 | 614+65 | | | | | | | | | | | | 750 | | | | | | | | 760 | | | | | | | | | | | |
| 22 | Rt-Lt. | 607+34, S.R.7 | | | | | | | | | | | | | 100 | | | | | 100 | 210 | | | | | | | | | | | | | |
| 22 | " | 614+65 | | | | | | | | | | | 1 | | | | | | | | | | | 2 | | | | | | | | | | |
| 23 | " | 614+65 | 615+00 | | | | | | | | | | | | | | | | 35 | | 70 | | | | | | | | | | | | | |
| F-534 (11) Totals Sheet No. 630 | | | | 1 | 6 | 7 | 1 | 6 | | 7 | | 7 | 3 | | 2589 | | 2 | 2 | 35 | 155 | 410 | 676 | 2635 | 4 | 6 | 6 | 2 | | | | | | | |
| 24 | | | | | | | | | | | | | | | | | | | | | | | | | | | | | | | | | | |
| 25 | Lt. | 615+13 | | | | | | | | | | | 1 | | | | | | | | | | | | | | | | | | | | | |
| 26 | " | 615+13 | 617+20 | | | | | | | | | | | | | | | | 211 | | | | | | | | | | | | | | | |
| 27 | " | 617+20 | | | | | | | | | | | | | | | | | | | | | | | | | | 1 | 1 | | | | | |
| 28 | " | 617+20 | 618+92 | | | | | | | | | | | | | | | | 175 | | | | | | | | | | | | | | | |
| 29 | " | 618+92 | | | | | | | | | | | 1 | | | | | | | | | | | | | | | | | | | | | |
| 30 | | | | | | | | | | | | | | | | | | | | | | | | | | | | | | | | | | |
| 31 | | | | | | | | | | | | | | | | | | | | | | | | | | | | | | | | | | |
| 32 | " | 623+65 | | | | | | | | | | | 1 | | | | | | | | | | | 4 | | | | | | | | | | |
| 33 | Lt-Rt. | 623+65 S.R.7 | | | | | | | | | | | | | 70 | | | | | 70 | 300 | | | | | | | | | | | | | |
| 34 | Lt. | 623+65 | 625+80 | | | | | | | | | | | | 215 | | | | | | | | 450 | | | | | | | | | | | |
| 35 | " | 625+80 | | | | | | | | | | | 1 | | | | | | | | | | | 2 | | | 2 | | | | | | | |
| 36 | " | 625+80 | 625+90 | | | | | | | | | | | | 10 | | | | | | | | 20 | | | | | | | | | | | |
| 37 | " | 625+90 | | | 1 | 1 | | 1 | | 1 | | 1 | | | | | | | | | | 98 | | | 1 | 1 | | | | | | | | |
| 38 | Rt-Lt. | 625+80 | 25+94(B) | | | | | | | | | | | | 55 | | | | | 55 | 240 | | | | | | | | | | | | | |
| 39 | Lt. | 25+94 (B) | | | | | | | | | | | | 1 | | | | | | | | | | 2 | | | 2 | | | | | | | |
| 40 | " | 25+94 (B) | 627+32 | | | | | | | | | | | | 138 | | | | | | | | 148 | | | | | | | | | | | |
| 41 | " | 627+32 | | | 1 | 1 | | 1 | | 1 | | 1 | | | | | | | | | | 98 | | | 1 | 1 | | | | | | | | |
| 42 | " | 25+94(B) | 25+10 (B) | | | | | | | | | | | | 84 | | | | | | | | 188 | | | | | | | | | | | |
| 43 | " | 25+10 (B) | | 1 | | 1 | 1 | | | 1 | | 1 | | | | | | | | | | 88 | | | 1 | 1 | | | | | | | | |
| 44 | " | 25+10 (B) | 23+00 (B) | | | | | | | | | | | | 210 | | | | | | | | 440 | | | | | | | | | | | |
| 45 | | | | | | | | | | | | | | | | | | | | | | | | | | | | | | | | | | |
| 46 | " | 23+00 (B) | | | | | | | | | | | | 1 | | | | | | | | | | 6 | | | | | | | | | | |
| 47 | " | 23+00 (B) | 70' Lt. | | | | | | | | | | | | 70 | | | | 70 | | 480 | | | | | | | | | | | | | |
| 48 | " | 23+00 (B) | 70' Lt. | | | | | | | | | 1 | | 1 | | | | | | | | | | 6 | | | | | | | Lump | | | |
| 49 | " | 23+00 (B) | 31+30 S.R.7 C.N. | | | | | | | | | | | | 230 | | | | | | | | 250 | | | | | | | | | | | |
| 50 | | | | | | | | | | | | | | | | | | | | | | | | | | | | | | | | | | |
| 51 | | | | | | | | | | | | | | | | | | | | | | | | | | | | | | | | | | |
| 52 | Rt. | 31+30 S.R.7 C.N. | | | 1 | 1 | | 1 | | 1 | | 1 | | | | | | | | | | 98 | | | 1 | 1 | | | | | | | | |
| 53 | Rt-Lt. | 31+30 S.R.7 C.N. | | | | | | | | | | | | | 50 | | | | | 50 | 120 | | | | | | | | | | | | | |
| 54 | Lt. | 31+30 S.R.7 C.N. | | | | | | | | | | | 1 | | | | | | | | | | | 2 | | | | | | | | | | |
| 55 | " | 31+30 S.R.7 C.N. | 6+55 S.R.7 C.S. | | | | | | | | | | | | 80 | | | | | | | | 90 | | | | | | | | | | | |
| 56 | " | 6+55 S.R.7 C.S. | | | 1 | 1 | | 1 | | 1 | | 1 | | | | | | | | | | 98 | | | 1 | 1 | | | | | | | | |
| 57 | | | | | | | | | | | | | | | | | | | | | | | | | | | | | | | | | | |
| 58 | | | | | | | | | | | | | | | | | | | | | | | | | | | | | | | | | | |
| 59 | Lt-Rt. | 6+55 S.R.7 C.S. | | | | | | | | | | | | | 40 | | | | | 40 | 100 | | | | | | | | | | | | | |
| 60 | Rt. | 6+55 S.R.7 C.S. | | | | | | | | | | | 1 | | | | | | | | | | | 2 | | | | | | | | | | |
| 61 | " | 6+55 S.R.7 C.S. | 29+70 S.R.7 C.N. | | | | | | | | | | | | 60 | | | | | | | | 70 | | | | | | | | | | | |
| 62 | Lt. | 29+70 S.R.7 C.N. | | | 1 | 1 | | 1 | | 1 | | 1 | | | | | | | | | | 98 | | | 1 | 1 | | | | | | | | |
| 63 | " | 29+70 S.R.7 C.N. | 21+07 (A) | | | | | | | | | | | | 294 | | | | | | | | 304 | | | | | | | | | | | |
| 64 | " | 21+07 (A) | | | 1 | 1 | | 1 | | 1 | | 1 | | | | | | | | | | 98 | | | 1 | 1 | | | | | | | | |
| 65 | Rt. | 615+00 | 615+70 | | | | | | | | | | | | | | | | 69 | | 166 | | | | | | | | | | | | | |
| 66 | " | 615+70 | | | | | | | | | | | | | | | | | | | | | | | | | 2 | 1 | 1 | | | | | |
| 67 | " | 615+70 | 617+29.50 | | | | | | | | | | | | | | | | 163 | | 246 | | | | | | | | | | | | | |
| 68 | " | 617+29.50 | | | | | | | | | | | | | | | | | | | | | | | | | | 1 | | | | | | 2 |
| 69 | | | | | | | | | | | | | | | | | | | | | | | | | | | | | | | | | | |
| 70 | Lt. | 22+72 S.R.7 C.N. | | | | | | | 1 | | 1 | | | | | | | | | | | | | | | | | | | | | | | |
| 71 | | | | | | | | | | | | | | | | | | | | | | | | | | | | | | | | | | |
| 72 | " | 23+00 S.R.7 C.N. | | | | | | | 1 | | 1 | | | | | | | | | | | | | | | | | | | | | | | |
| 73 | Rt. | 617+29.50 | 618+65 | | | | | | | | | | | | | | | | 130 | | 280 | | | | | | | | | | | | | |
| 74 | " | 618+65 | | | | | | | | | | | 1 | | | | | | | | | | | 2 | | | | | | | | | | |
| 75 | " | 618+65 | 623+65 | | | | | | | | | | | | 500 | | | | | | | | 510 | | | | | | | | | | | |
| 76 | " | 623+65 | | | | | | | | | | | | | | | | | | | | | | 4 | | | | | | | | | | |
| 77 | " | 623+65 | 23+75 (D) | | | | | | | | | | | | 40 | | | | | 40 | 180 | | | | | | | | | | | | | |
| 78 | " | 23+75 (D) | | | | | | | | | | | 1 | | | | | | | | | | | | | | 2 | | | | | | | |
| 79 | " | 23+75 (D) | 19+14 (D) | | | | | | | | | | | | 461 | | | | | | | | 471 | | | | | | | | | | | |
| 80 | " | 19+14 (D) | | 1 | | 1 | 1 | | | 1 | | 1 | | | | | | | | | | 88 | | | 1 | 1 | | | | | | | | |
| 81 | " | 19+14 (D) | 16+07 (C) | | | | | | | | | | | | 216 | | | | | | | | 226 | | | | | | | | | | | |
| 82 | " | 16+07 (C) | | 1 | | 1 | 1 | | | 1 | | 1 | | | | | | | | | | 88 | | | 1 | 1 | | | | | | | | |
| 83 | " | 23+75 (D) | 627+10 | | | | | | | | | | | | 335 | | | | | | | | 345 | | | | | | | | | | | |
| 84 | " | 627+10 | | | 1 | 1 | | 1 | | 1 | | 1 | | | | | | | | | | 98 | | | 1 | 1 | | | | | | | | |
| 85 | " | 627+10 | 629+60 | | | | | | | | | | | | 250 | | | | | | | | 260 | | | | | | | | | | | |
| 86 | " | 629+60 | | | 1 | 1 | | 1 | | 1 | | 1 | | | | | | | | | | 98 | | | 1 | 1 | | | | | | | | |
| F-534 (11) Totals Sheet No. 631 | | | | 3 | 8 | 11 | 3 | 8 | 2 | 11 | 2 | 11 | 8 | 3 | 3408 | | | | 818 | 255 | 2112 | 1048 | 3772 | 30 | 11 | 11 | 8 | 3 | 2 | | Lump | | | 2 |
| Grand Totals | | | | 4 | 14 | 18 | 4 | 14 | 2 | 18 | 2 | 19 | 11 | 3 | 5997 | | | | 853 | 410 | 2,522 | 1724 | 6407 | 34 | 17 | 17 | 10 | 3 | 2 | 1 | Lump | Lump | Lump | 2 |

LIGHTING SUB-SUMMARY

| FED. RD. DIVISION | STATE | PROJECT | FISCAL YEAR |
|---|---|---|---|
| | | | |

BEL-7-8.68

| FED. RD. DIVISION | STATE | PROJECT | |
|---|---|---|---|
| 2 | OHIO | | |

629/666

BEL-7-8.68

# LIGHTING GENERAL SUMMARY

| LINE NO. | ITEM NO. | STRUCTURE BEL-7-1161 LT. | STRUCTURE BEL-7-1161 RT. | ROADWAY LIGHTING code 6203 | | | | | PROJECT TOTAL | UNIT | ITEM NO. | DESCRIPTION |
|---|---|---|---|---|---|---|---|---|---|---|---|---|
| SHEET NO. | | 630&631 | 630&631 | 630 | 631 | | | | | | | |
| | | F-534(11) | F-534(11) | F-534(11) | F-534(11) | | | | | | | |
| 1 | 625 | | | 1 | 3 | | | | 4 | Each | 625 | Light Pole, Design AT10B34.2 |
| 2 | 625 | | | 6 | 8 | | | | 14 | Each | 625 | Light Pole, Design AT15B34.2 |
| 3 | 625 | | | 7 | 11 | | | | 18 | Each | 625 | Light Pole Foundation, 24"x 6' Deep |
| 4 | 625 | | | 1 | 3 | | | | 4 | Each | 625 | Luminaire, Type II, 400 watt, 713.11 |
| 5 | 625 | | | 6 | 8 | | | | 14 | Each | 625 | Luminaire, Type III, 400 watt, 713.11 |
| 6 | 625 | | 2 | | | | | | 2 | Each | 625 | Luminaire, underpass, 250 watt mercury, 713.13 |
| 7 | 625 | | | 7 | 11 | | | | 18 | Each | 625 | Lamp, 400 watt mercury, 713.14 |
| 8 | 625 | | 2 | | | | | | 2 | Each | 625 | Lamp, 250 watt mercury, 713.14 |
| 9 | 625 | | | 7 | 12 | | | | 19 | Each | 625 | Ground Rod |
| 10 | 625 | | | 3 | 8 | | | | 11 | Each | 625 | Pull Box, 18" circular, 713.09 |
| 11 | 625 | | | | 3 | | | | 3 | Each | 625 | Pull Box, 24" circular, 713.09 |
| 12 | 625 | | | 2589 | 3408 | | | | 5997 | Lin.Ft. | 625 | Trench, 24" Deep |
| 13 | 625 | | | | | | | | | | | |
| 14 | 625 | | | | | | | | | | | |
| 15 | 625 | | | | | | | | | | | |
| 16 | 625 | 386 | 397 | | 70 | | | | 853 | Lin.Ft. | 625 | Conduit 2", 713.04 Type III |
| 17 | 625 | | | 155 | 255 | | | | 410 | Lin.Ft. | 625 | Conduit 3", 713.04 Type III |
| 18 | 625 | | 762 | 340 | 1420 | | | | 2522 | Lin.Ft. | 625 | No. 4 AWG, 600 volt, distribution cable |
| 19 | 625 | | | 676 | 1048 | | | | 1724 | Lin.Ft. | 625 | No. 10 AWG, Pole and Bracket cable |
| 20 | 625 | | | 2635 | | | | | 6407 | Lin.Ft. | 625 | 1 1/2" Duct-cable with 2 No.4 AWG, 600 volt cables |
| | 625 | | | 2 | | | | | 2 | Each | 625 | Connector Kit, Type VIII-CU |
| | 625 | | | 2 | | | | | 2 | Each | 625 | Connector Kit, Type VII-C |
| 21 | 625 | | | 4 | | | | | 34 | Each | 625 | Connector Kit, Type I |
| 22 | 625 | | | 6 | 11 | | | | 17 | Each | 625 | Connector Kit, Type II |
| 23 | 625 | | | 6 | 11 | | | | 17 | Each | 625 | Connector Kit, Type III |
| 24 | 625 | | | 2 | 8 | | | | 10 | Each | 625 | Connector Kit, Type VII-B |
| | 625 | | 2 | | | | | | 2 | Each | 625 | Connector Kit, Type IV |
| 25 | 625 | | | | Lump | | | | Lump | Lump | 625 | Service Pole & Control Center No. 1 |
| 26 | 625 | 1 | 2 | | | | | | 3 | Each | 625 | Junction Box, 18"x 8"x 6" |
| 27 | 625 | 1 | | | | | | | 1 | Each | 625 | Structure Grounding System for BEL-7-1161 |
| 28 | 625 | 1 | 1 | | | | | | 2 | Sets | 625 | Light Pole Anchor Bolts for structure, 713.01 |
| | | | | | | | | | Lump | Lump | 625 | Service to underpass lighting for bridge No. 1161 |
| | | | | | | | | | Lump | Lump | 839 | High Voltage Test |

| FED. RD. DIVISION | STATE | PROJECT | |
|---|---|---|---|
| 2 | OHIO | | |

630
666

BEL-7-8.68

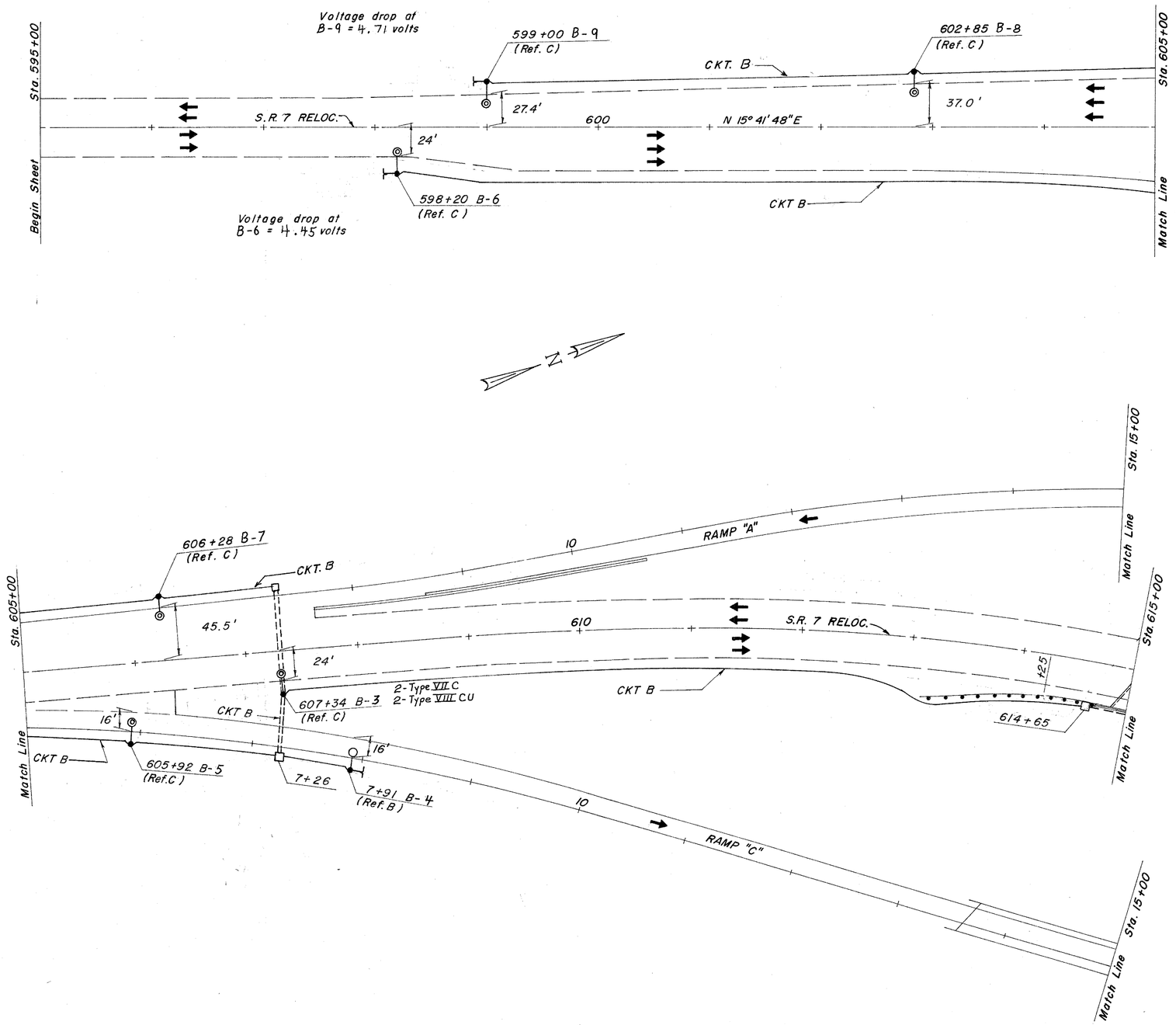


S.R. 7 RELOCATION INTERCHANGE LIGHTING PLAN

| FED. RD. DIVISION | STATE | PROJECT | |
|---|---|---|---|
| 2 | OHIO | | |

631/666

BEL-7-8.68

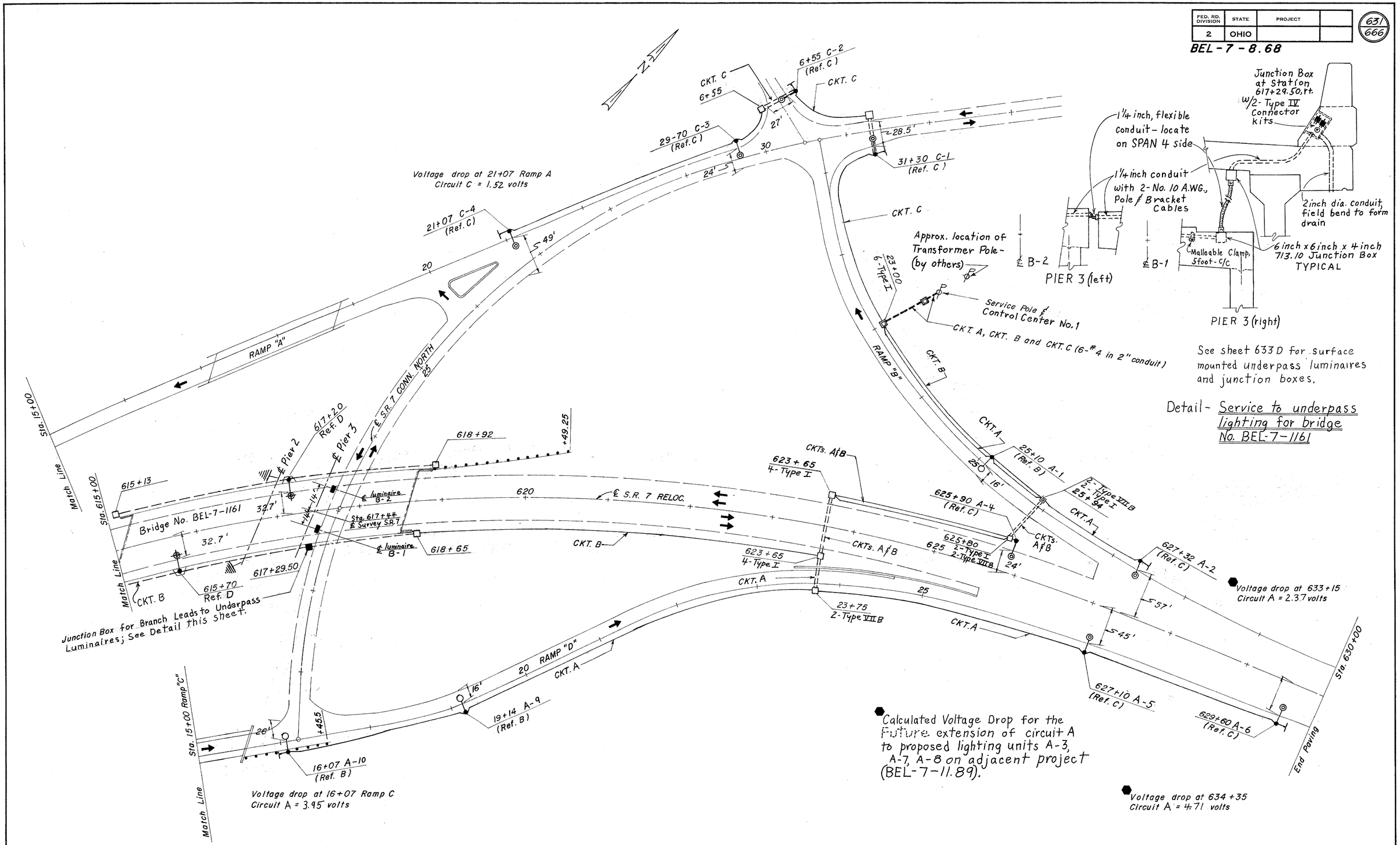


S.R. 7 RELOCATION INTERCHANGE LIGHTING PLAN

# FOUNDATION AND TRENCH DETAILS

| FED. RD. DIVISION | STATE | PROJECT | |
|---|---|---|---|
| 2 | OHIO | | |

632
666

BEL-7-8.68

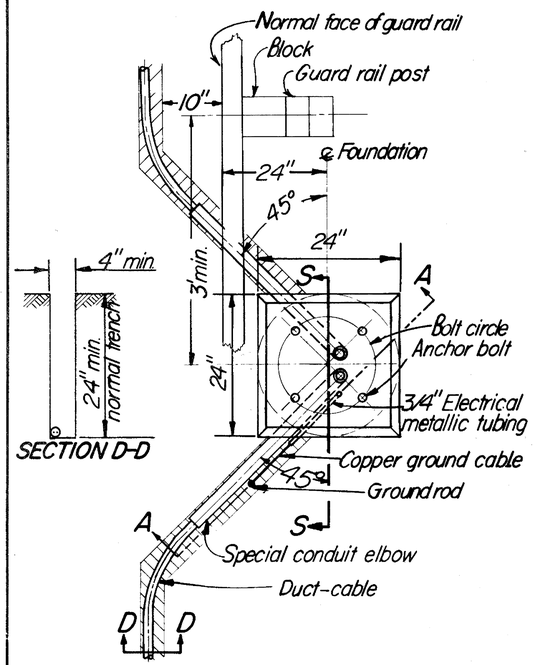


## TRENCH ALIGNMENT
(Use when specified or directed by the Engineer)

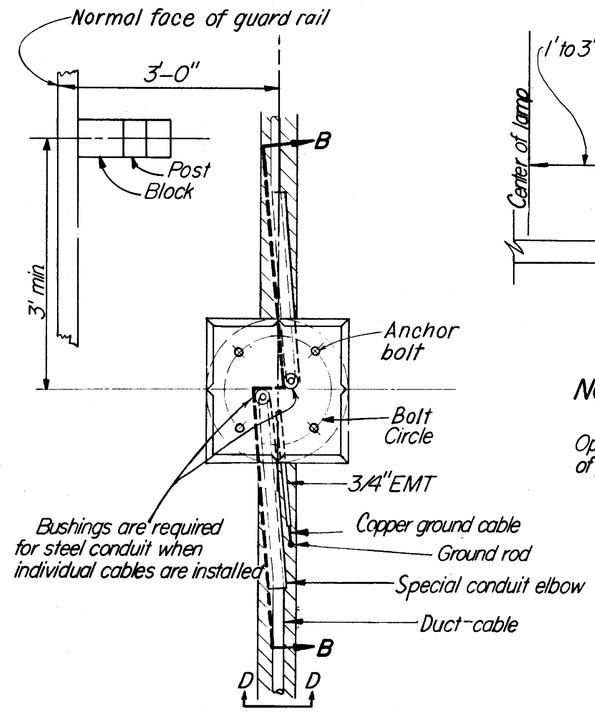


## TRENCH ALIGNMENT (NORMAL)

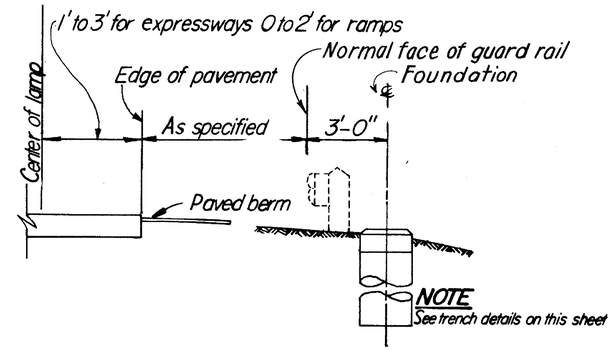


## NORMAL LOCATION OF LIGHT POLE FOUNDATION
Opposite hand for poles mounted on left side of pavement.




TOP OF FOUNDATION

R=bending radius
S=straight section
Y=R+S

| SPECIAL CONDUIT ELBOWS 90° BENDS | | | | | |
|---|---|---|---|---|---|
| 2", 2 1/2" & 3" 713.04 | | | 3"-713.05 or 713.06 | | |
| R | S | Y | R | S | Y |
| 24" | 11" | 35" | 24" | 8" | 32" |
| 30" | 11" | 41" | | | |
| 36" | 11" | 47" | 36" | 2" | 38" |
| 42" | 12" | 54" | | | |
| 48" | 12" | 60" | | | |

## NOTES

1. FOUNDATION
   Depths to be as follows:
   6 feet for poles having a mounting height less than 40 ft.
   8 feet for poles having a mounting height 40 ft. thru 44 ft.
   9 feet for poles having a mounting height 45 ft. thru 49 ft.
   10 feet for poles having a mounting height of 50 ft. thru 55 ft.
   No. 4 Tie bars required as follows:
   4 No. 4 tie bars for 6 ft. depth
   5 No. 4 tie bars for 8 and 9 ft. depth
   6 No. 4 tie bars for 10 ft. depth
   Rotate bars to clear conduits.
2. COPPER GROUND CABLE:
   No. 4 AWG, stranded insulated copper ground cable shall be used. Exothermically weld cable to ground rod, run free end through 3/4" EMT and connect as shown on "POLE WIRING."
   Use two coats of insulating varnish over exothermic weld and exposed conductor.
3. ANCHOR BOLT DATA:
   For anchor bolt data see "POLE BASE DETAILS."
4. CONDUIT:
   Where 2" or 3" diameter conduit terminates in a foundation the conduit elbows in the foundation shall be the same size as the conduit. The ends of conduit elbows containing distribution cable shall be closed as described in 625.13
   When the terminating conduit is steel the conduit elbows in the pole foundation shall also be steel.
   At the last light pole on a circuit the vacant conduit elbow in the light pole foundation shall be stubbed out and capped.
5. GROUND RODS:
   When a second ground rod is required it shall be installed in the cable trench as shown in **SECTION B-B.**
6. REINFORCING STEEL:
   Reinforcing steel may be assembled in cages by approved welding of bars.

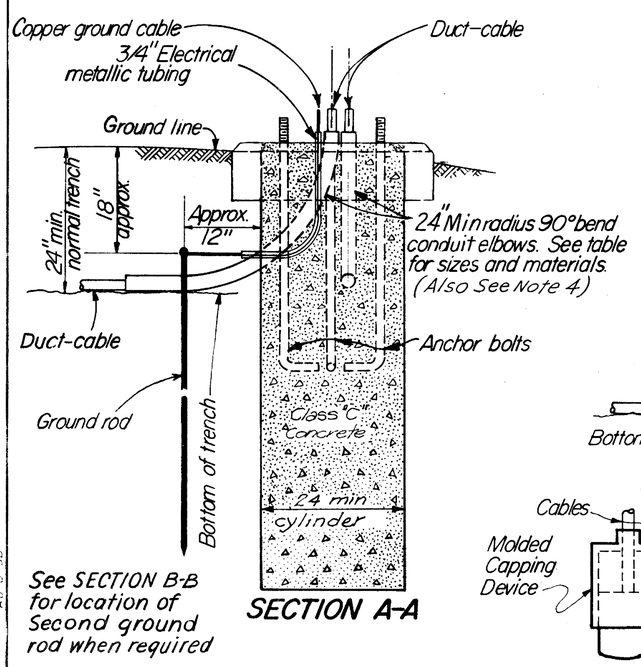


## SECTION A-A

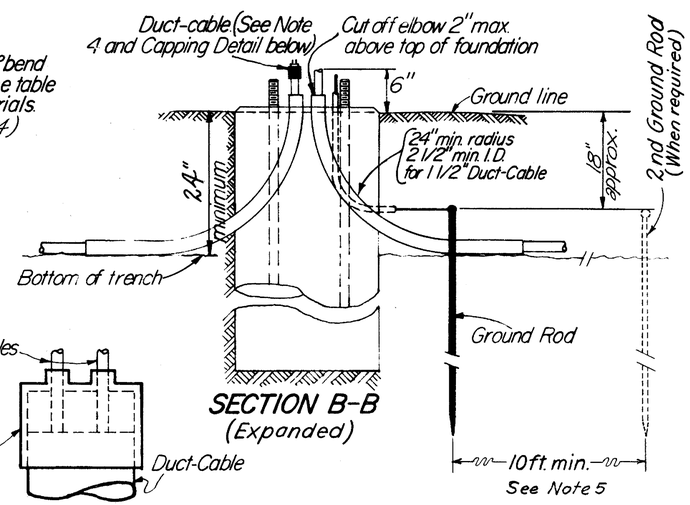


## SECTION B-B
(Expanded)

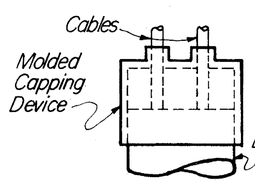


## CAPPING DETAIL

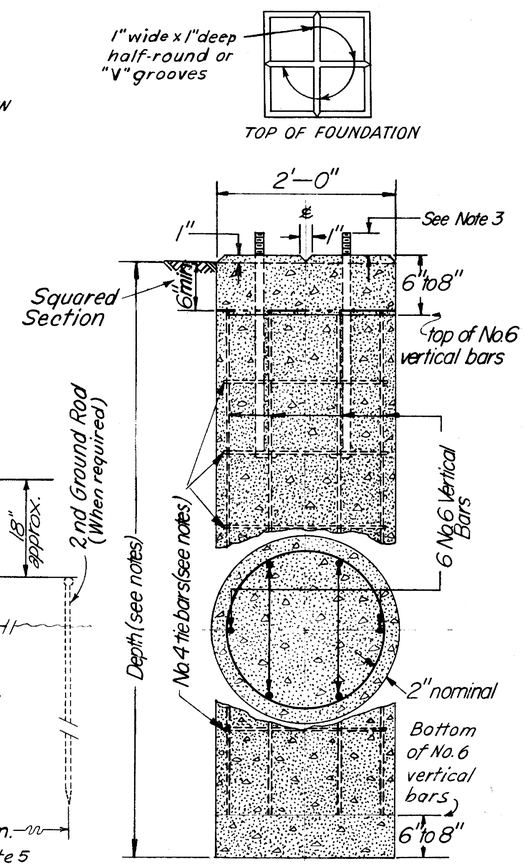


## SECTION S-S
REINFORCING STEEL

# LIGHT POLE DETAILS

| FED. RD. DIVISION | STATE | PROJECT | |
|---|---|---|---|
| 2 | OHIO | | |

633
666

BEL-7-8.68

## NOTES

1. Hand holes shall be provided on all poles not mounted on transformer bases.
2. Hand holes shall be opposite the roadway unless such location renders them inaccessible. (See NOTE 6)
3. Use of Reinforcing gussets is optional.
4. Circuit and light pole numbers shall be as scheduled on light plan sheets. Labels shall meet the requirements of 713.18 and shall contain 3 series "B" letters and numbers as per the "Standard Alphabets for Highway Signs" published by the Bureau of Public Roads.
5. Hand holes for bridge poles shall be on roadway side and 17" from center of hand hole to bottom of base.
6. All light poles mounted on raised concrete median barriers shall be equipped with handholes. Handholes shall be located beneath the bracket arm extending over the Northbound or Westbound traffic lanes.

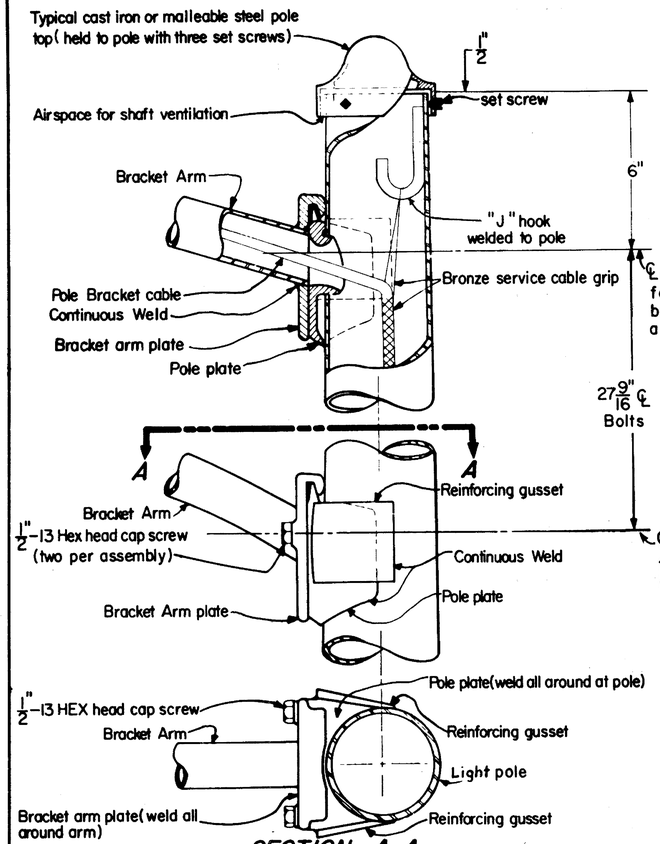


SECTION A-A

## POLE TOP and BRACKET ARM ASSEMBLIES

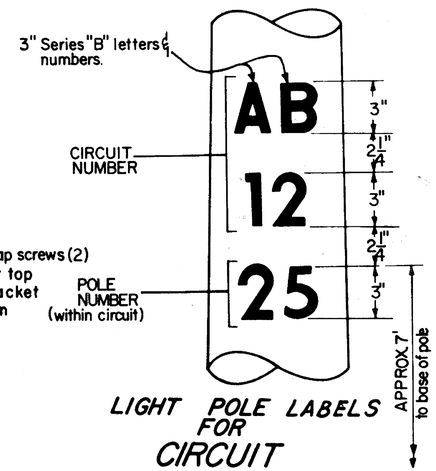


## LIGHT POLE LABELS FOR CIRCUIT IDENTIFICATION

(See note 4)

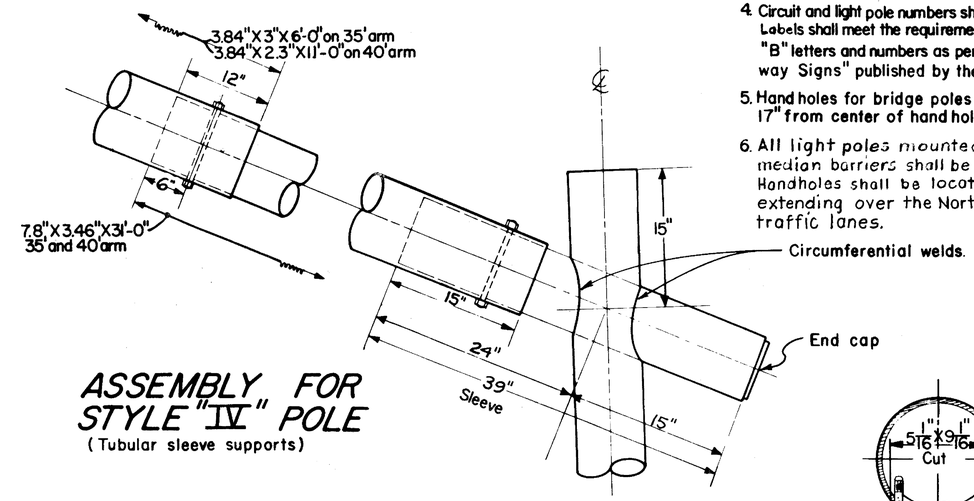


## ASSEMBLY FOR STYLE "IV" POLE

(Tubular sleeve supports)

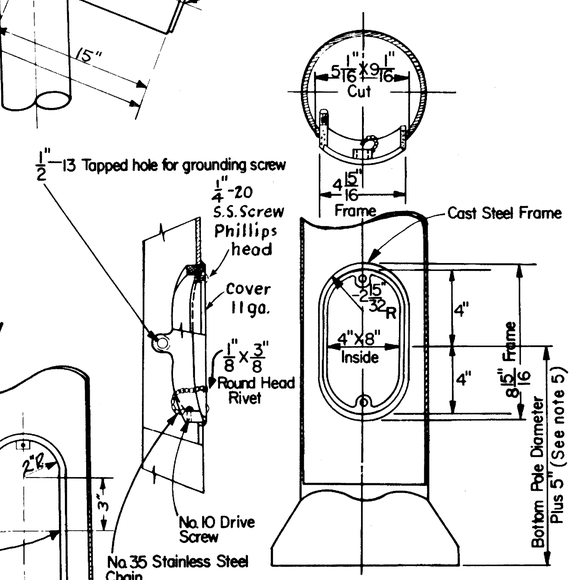


## ALTERNATE HAND HOLE

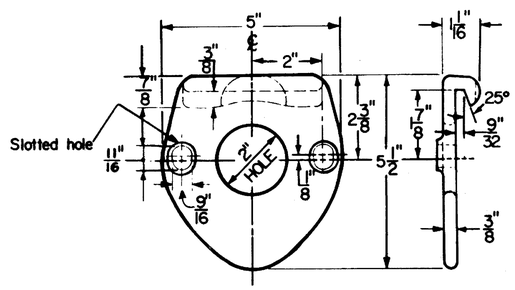


## BRACKET ARM PLATE

(CAST STEEL)

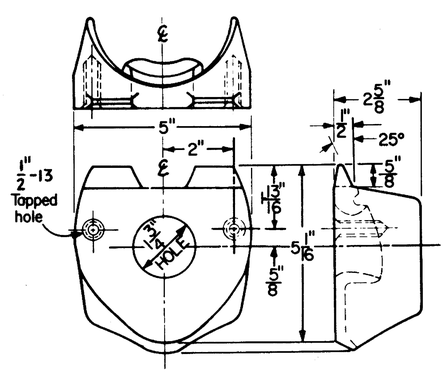


## POLE PLATE

(CAST STEEL)

SEE "POLE WIRING" FOR DETAILS OF TERMINATION FOR GROUND CABLE

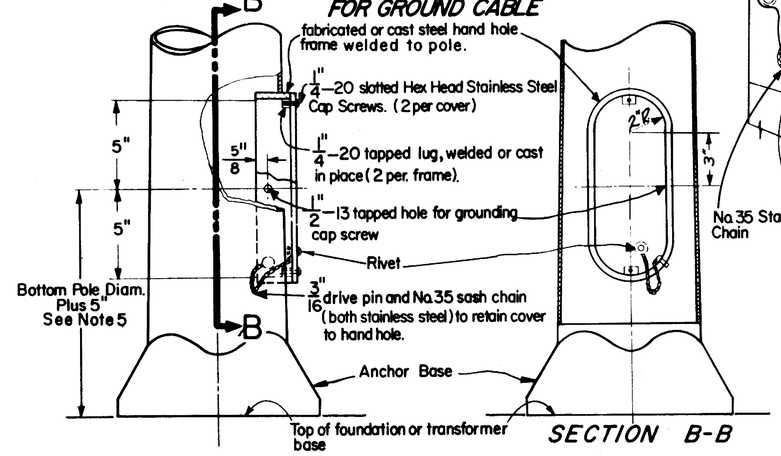


SECTION B-B

## HAND HOLE WITH COVER

See Notes 1 & 2

A-B-D-6B

| FED. RD. DIVISION | STATE | PROJECT | |
|---|---|---|---|
| 2 | OHIO | | |

633A

# POLE BASE DETAILS

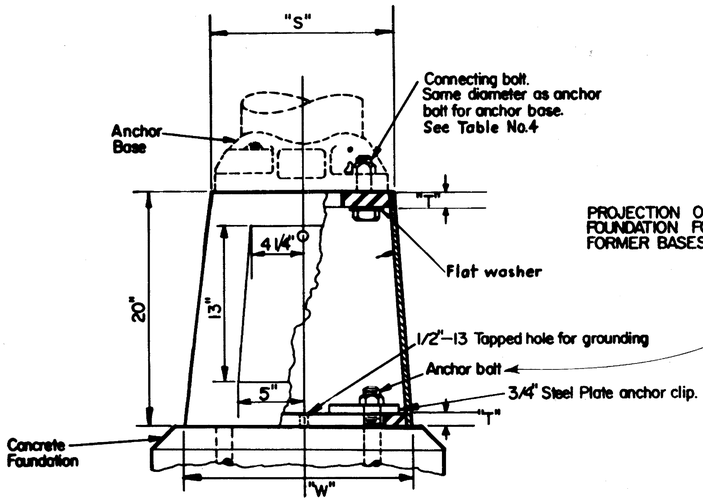


PROJECTION OF ANCHOR BOLT ABOVE TOP OF FOUNDATION FOR STEEL AND ALUMINUM TRANSFORMER BASES SHALL BE 4 1/2".

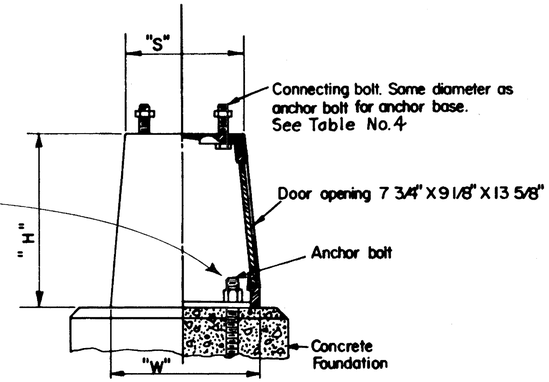


| TABLE NO.1 | | | | |
|---|---|---|---|---|
| STEEL TRANSFORMER BASES | | | | |
| SHAFT SIZE | "T" | "S" | "W" | BOLT CIRCLE |
| 6.0" thru 9.2" | 3/4" min. | 13" sq. | 16" sq. | 15" |
| 8.5" thru 10" | 1 1/4" min. | 15" sq. | 18" sq. | 17 1/4" |
| 11" and 12" | 1 1/4" | 17" sq. | 25" sq. | 22" |

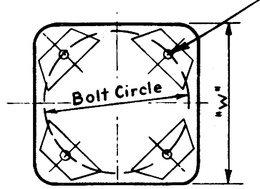


BASE FRAME

## STEEL TRANSFORMER BASES

| TABLE NO.2 | | | |
|---|---|---|---|
| TRANSFORMER BASE ANCHOR BOLTS | | | |
| SHAFT SIZE | POLE GUAGE #11 | #7 | #3 |
| 6.5" | 1" ø X 40" | 1" ø X 40" | 1" ø X 40" |
| 7" | | | |
| 7.5" | | | |
| 8" | | | |
| 8.5" | | | |
| 9" | | | |
| 9.5 | | | 1 1/4" ø X 48" |
| 10" | | 1 1/4" ø X 48" | |
| 11" | | | 1 1/2" ø X 60" |
| 12" | | | |

40" bolts include 4" bend
48" and 60" bolts include 6" bend

| TABLE NO. 3 | | | | | |
|---|---|---|---|---|---|
| ALUMINUM TRANSFORMER BASES | | | | | |
| TYPE | "H" | "S" | "W" | BOLT CIRCLE | SHAFT SIZE |
| AT-A | 20" | 13" | 16 3/8" | 15" | SEE NOTE 2 |
| AT-C | 20" | 14 5/8" | 17 1/4" | 17 1/4" | SEE NOTE 3 |

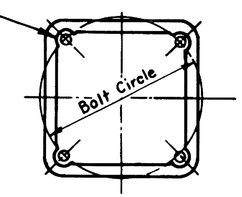


BASE FRAME

## CAST ALUMINUM TRANSFORMER BASES

*SHALL NOT BE USED WHERE OVERHEAD WIRING IS REQUIRED*

| TABLE NO. 5 | | |
|---|---|---|
| SHAFT SIZE | "F" | U-BOLT * LENGTH |
| 6.5" | 6 3/4" | 75" |
| 7.0" | 7 1/16" | 75" |
| 7.5" | 7 7/16" | 76 1/2" |
| 8.0" | 7 5/8" | 76 1/2" |
| 8.5" | 8 1/8" | 76 1/2" |
| 9.0" | 8 7/8" | 78" |
| 9.5" | 9 3/16" | 78" |
| 10.0" | 9 9/16" | 79 1/2" |
| 11.0" | 10 5/8" | 79 1/2" |
| 12.0" | 11 5 | 81" |

* See NOTES 4 & 5

## NOTES

BEL-7-8.68

1. For pole grounding details see "POLE WIRING."
2. Type AT-A base shall normally be used with anchor base poles having diameters of 6 inches through 9.2, inches inclusive, and mounting heights through 41.7 feet.
3. Type AT-C base must be used for anchor base poles having diameters of 9.5 inches and 10 inches and mounting heights through 51.7 except for exclusions listed below:
   - a All double-arm poles with mounting heights of 50 feet.
   - b All single-arm poles with mounting heights of 50 feet and arm lengths of 25 feet and 30 feet.
   - c All double-arm poles with mounting heights of 45 feet and arm lengths of 25 feet and 30 feet.
   - d All single-arm poles with mounting heights of 45 feet and arm length of 30 feet.

   On excepted poles above, transformer bases of material other than cast aluminum shall be used.
4. U-bolt lengths shown in TABLE NO.5 are developed lengths and may vary ±1/2". Lengths are for 1", 1 1/4", 1 1/2" and 1 3/4" diam. bolts. Lengths shown are for bridges with sidewalk railing. For bridges having a standard roadway railing increase these lengths by 7 inches.
5. For anchor bolt data when transformer bases are to be mounted on bridge pilasters see TABLE NO.1 and TABLE NO.2.
6. Median mounted poles require a pole plate as per Drawing No. 17B.

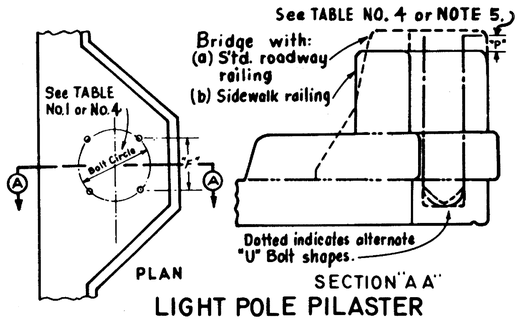


LIGHT POLE PILASTER

## BRIDGE MOUNTED POLES

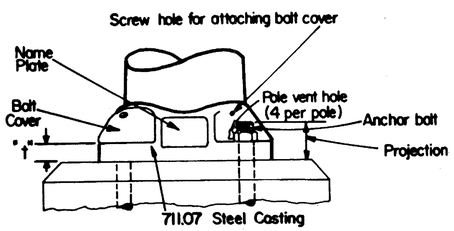


CAST STEEL

| TABLE NO. 4 | | | | | | |
|---|---|---|---|---|---|---|
| ANCHOR BOLTS FOR STEEL ANCHOR BASES | | | | | | |
| SHAFT SIZE | BOLT CIRCLE | BOLT* PROJ. | "t" | POLE GUAGE NO.11 | NO. 7 | NO.3 |
| 6.5" | 9 1/2" | 2 1/8" | 7/8" | 1" x 40" | 1 1/4" x 48" | 1 1/4" x 48" |
| 7" | 10" | 2 1/4" | 1" | | | |
| 7.5" | 10 1/2" | 2 5/8" | 1 1/8" | | | |
| 8" | 11" | 2 5/8" | 1 3/16" | | | |
| 8.5" | 11 1/2" | 2 3/4" | 1 1/4" | | | |
| 9" | 12 1/2" | 3" | 1 5/16" | | | 1 1/2" x 60" |
| 9.5 | 13" | 3 1/8" | 1 3/8" | 1 1/4" x 48" | | |
| 10" | 13 1/2" | 3 3/8" | 1 7/16" | | | |
| 11" | 15" | 3 5/8" | 1 5/8" | | 1 1/2" x 60" | 1 3/4" x 90" |
| 12" | 16" | 4 | 1 11/16" | | | |

* Based on cast steel anchor bases only. Plate bases may deviate.

## STEEL ANCHOR BASES

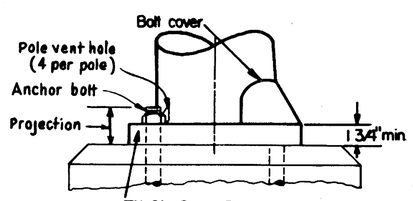


STEEL PLATE

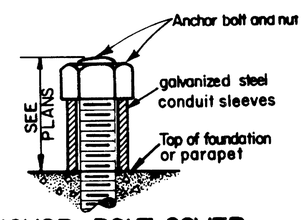


ANCHOR BOLT COVER

Note: To be placed on all light pole anchor bolts provided for future lighting installations.

A.B.-U.-GB

| FED. RD. DIVISION | STATE | PROJECT | |
|---|---|---|---|
| 2 | OHIO | | |

633B

BEL-7-8.68

# STRUCTURE LIGHTING I

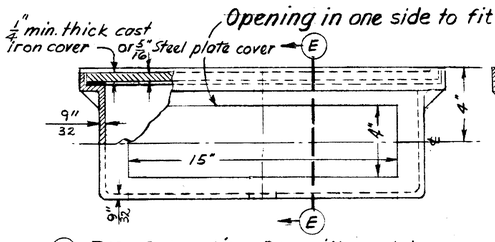


(c) Type I Junction Box with cast iron or steel plate cover.

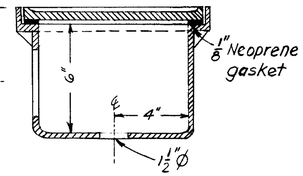


Section "E-E"

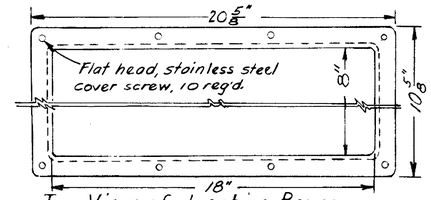


Top View of Junction Boxes
(Conduit openings not shown)

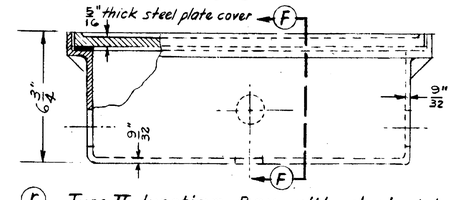


(r) Type II Junction Box with steel plate cover only

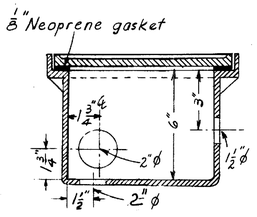


Section "F-F"

## NOTES

1. For grounding details see "STRUCTURE GROUNDING."
2. For anchor bolt details see "POLE BASE DETAILS"
3. Junction Boxes shall conform to 713.10, except that base material composition of galvanized steel plate covers shall conform to ASTM A-242 or A-36.
4. All conduit openings in junction boxes shall be bossed, drilled and tapped.
5. Payment for pilaster reinforcing steel and concrete shall be included in 509 and 511 items for the structure.
6. Where conduit is provided for future installation of poles the conduit shall be capped.

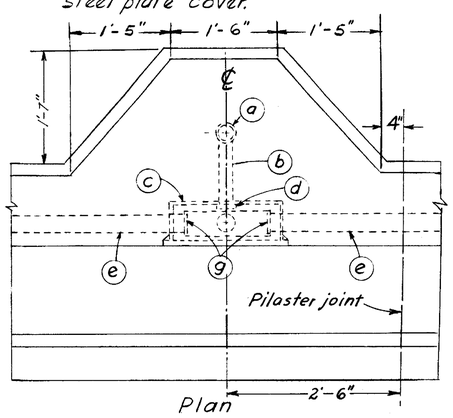


Plan

List of Items Shown Below

(a) Bushing for 1 1/2" Ø conduit
(b) Modified 1 1/2" Ø conduit long radius 90° elbow, 713.04, Type III
(c) Type I Junction Box
(d) Bushing and locknut for 1 1/2" Ø
(e) 2" Ø conduit, 713.04, Type III
(f) 2" Ø conduit drain
(g) Bushing for 2" Ø conduit

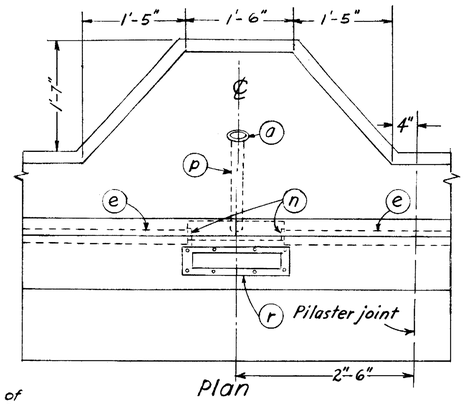


Plan

List of Items Shown Below

(a) Bushing for 1 1/2" Ø conduit
(d) Bushing and locknut for 1 1/2" Ø conduit
(e) 2" Ø conduit, 713.04, Type III
(f) 2" Ø conduit, field bend to form drain
(n) Bushings & locknuts for 2" Ø conduit
(p) 1 1/2" Ø conduit, 713.04, Type III
(r) Type II Junction Box

| REINFORCING STEEL LIST - ONE PILASTER | | | | | | | | | |
|---|---|---|---|---|---|---|---|---|---|
| Mark | No. | Length | Weight | Shape | Type | A | B | C | D |
| L501 | 4 | 3'-1" | 13 | B | 1 | 2'-1" | | | |
| L502 | 4 | 7'-4" | 31 | B | 1 | 2'-1" | 2'-9" | 2'-9" | |
| L503 | 6 | 8'-0" | 50 | B | 3 | 2'-1" | 1'-4" | 2'-1" | 0'-6" |
| L504 | 4 | 2'-9" | 11 | S | | | | | |
| L505 | 4 | 2'-10" | 12 | B | 1 | 1'-10" | | | |
| L506 | 4 | 8'-1" | 34 | B | 2 | 2'-4" | 3'-0" | 3'-0" | 0'-6 1/2" |
| L507 | 6 | 7'-3" | 45 | B | 3 | 1'-10" | 1'-4" | 1'-10" | 0'-6" |
| L508 | 4 | 3'-0" | 13 | S | | | | | |

BAR SIZE is indicated in the bar mark. The first digit where three digits are used indicates the bar size number. For example: L501 is a No. 5 size bar.

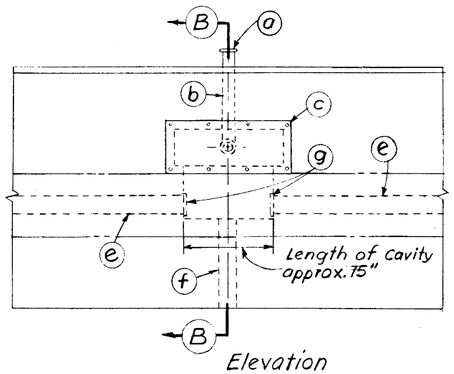


Elevation

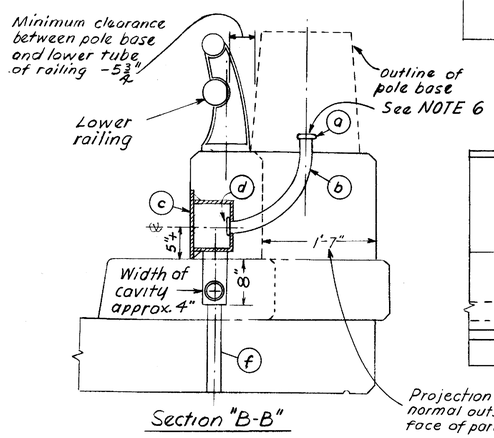


Section "B-B"

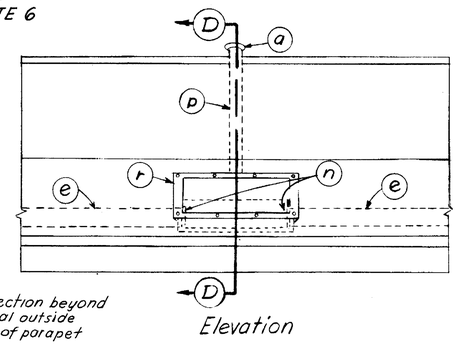


Elevation

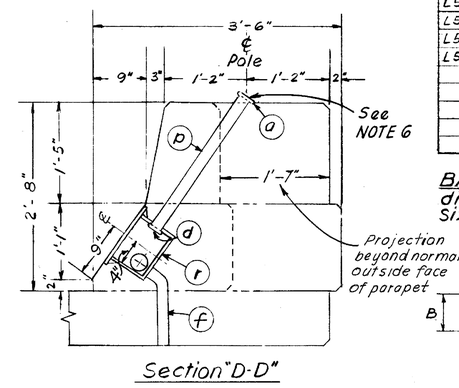


Section "D-D"

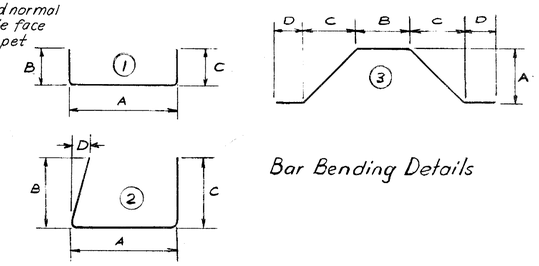


Bar Bending Details

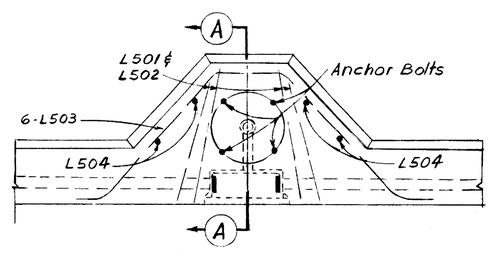


Plan

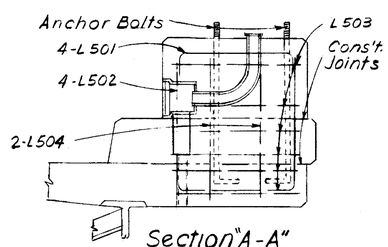


Section "A-A"

## REINFORCING STEEL
## LIGHT POLE PILASTER FOR BRIDGE WITH SIDEWALK RAILING

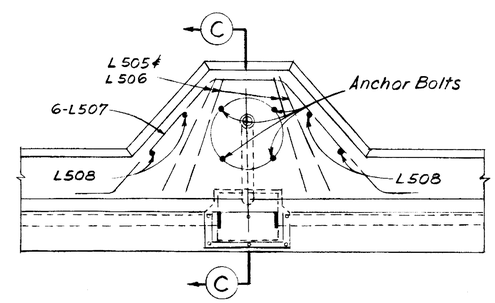


Plan

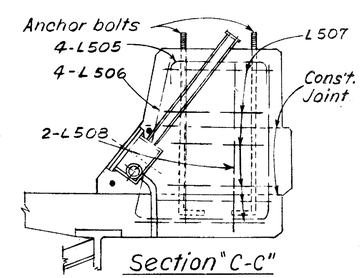


Section "C-C"

## REINFORCING STEEL
## LIGHT POLE PILASTER FOR BRIDGE WITH STANDARD ROADWAY RAILING

AB-D-GB

# STRUCTURE LIGHTING II

| FED. RD. DIVISION | STATE | PROJECT | |
|---|---|---|---|
| 2 | OHIO | | |

633C

BEL-7-8.68

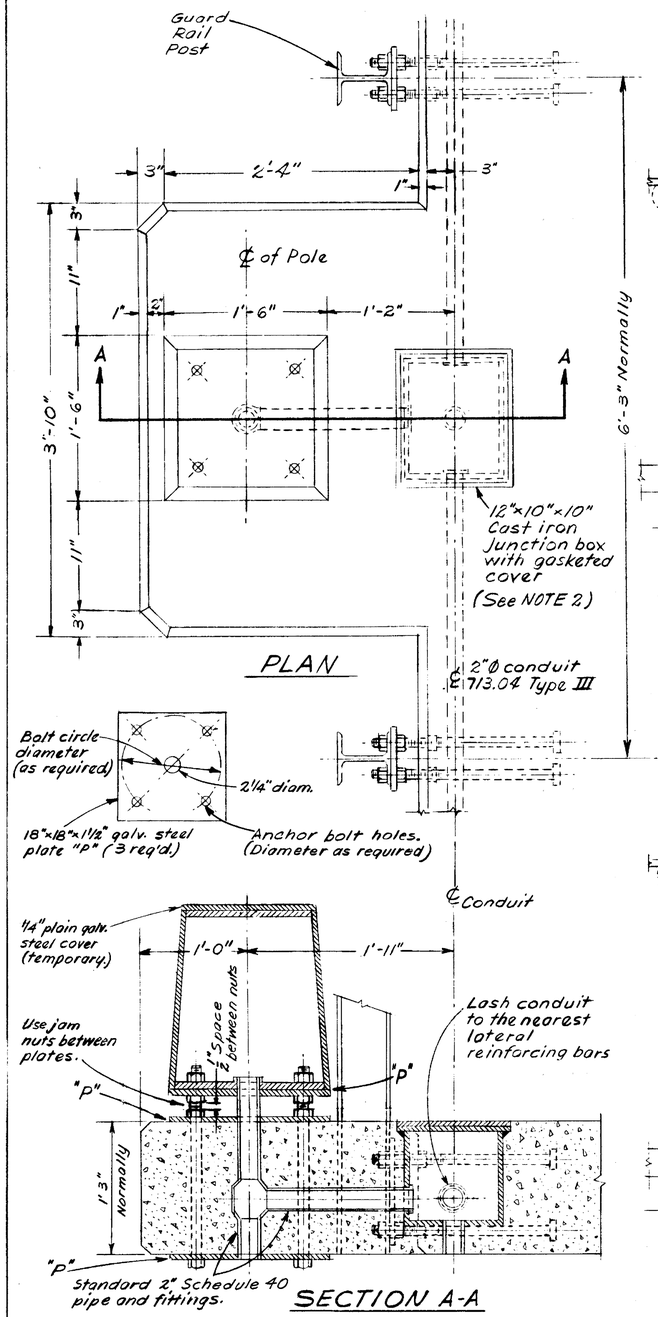


LIGHT POLE PILASTER FOR BRIDGE WITHOUT CURBS AND WITH HIGHWAY GUARD RAIL

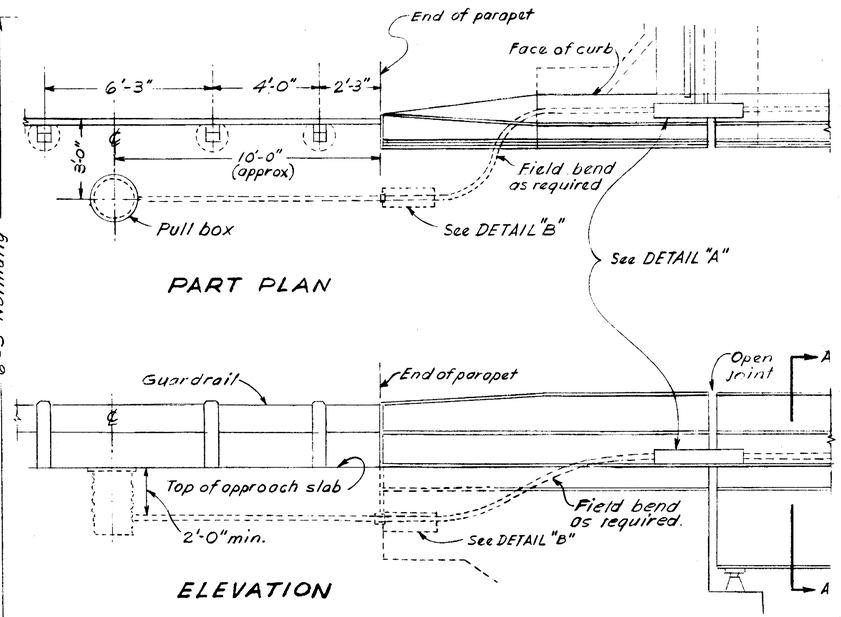


CONDUIT DETAILS FOR BRIDGE WITH STANDARD ROADWAY RAILING

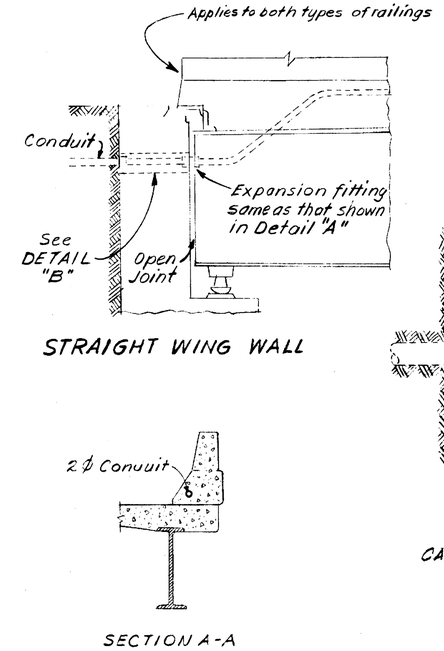


## NOTES

1. Fill space around the conduit and/or fittings within the cavity with an approved synthetic, compressable material.
2. All conduit openings in junction boxes shall be bossed drilled and tapped. Covers shall be ¼" min. thick cast iron.

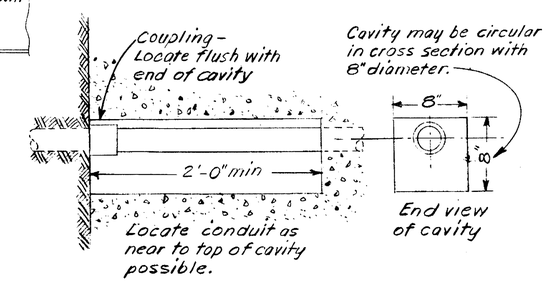


DETAIL "B"

CAVITY FOR CONDUIT CONNECTION AT BRIDGE ABUTMENTS

Dimensions may be altered to fit abutment design

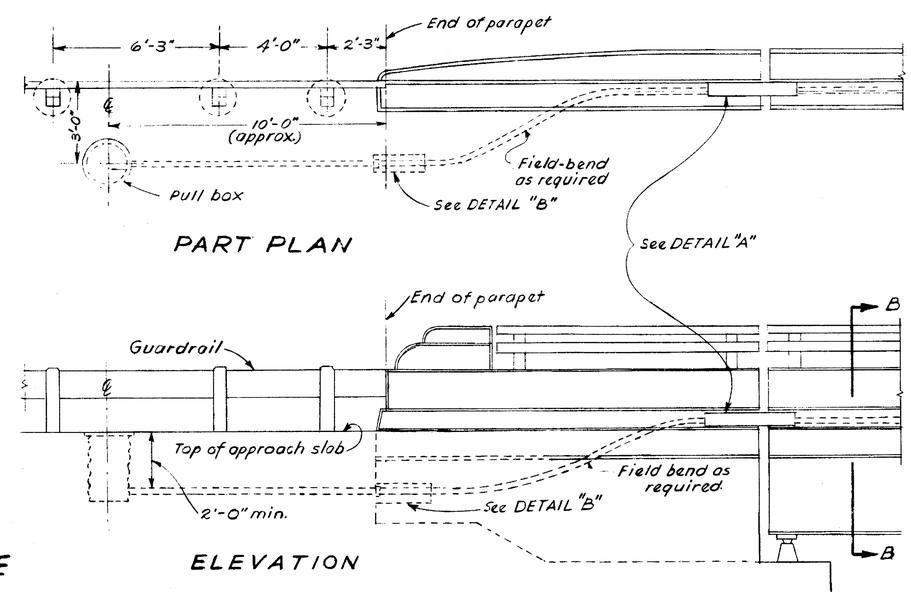


CONDUIT DETAILS FOR BRIDGE WITH SIDEWALK RAILING

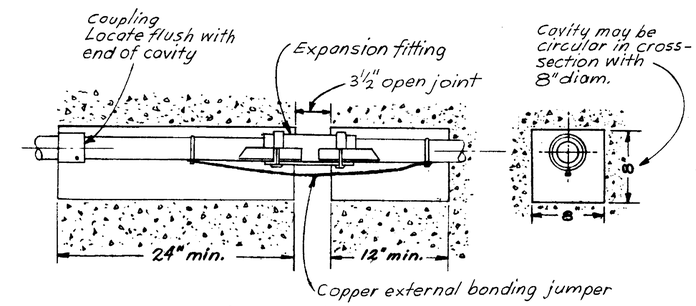


Locate conduit and fittings as near to top cavity as possible.

DETAIL "A"

CAVITY FOR CONDUIT EXPANSION FITTING

Dimensions may be altered to fit abutment design.

AB-D-GB

| FED. RD. DIVISION | STATE | PROJECT | |
|---|---|---|---|
| 2 | OHIO | | |

633D

BEL-7-8.68

# UNDERPASS LIGHTING

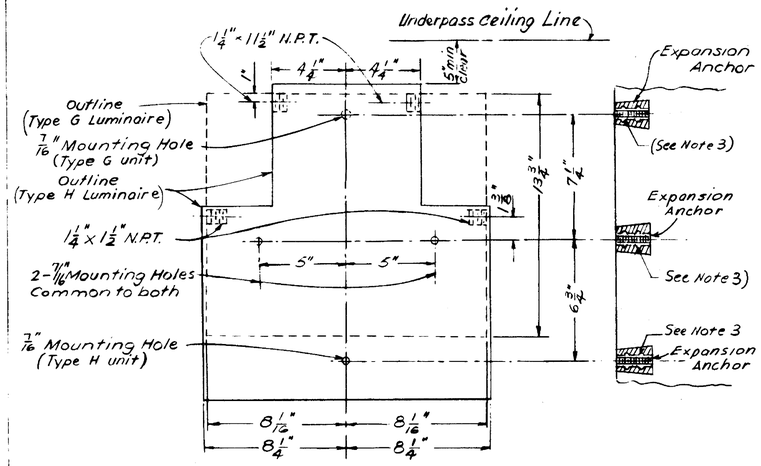


WALL MOUNTED UNDERPASS LUMINAIRES

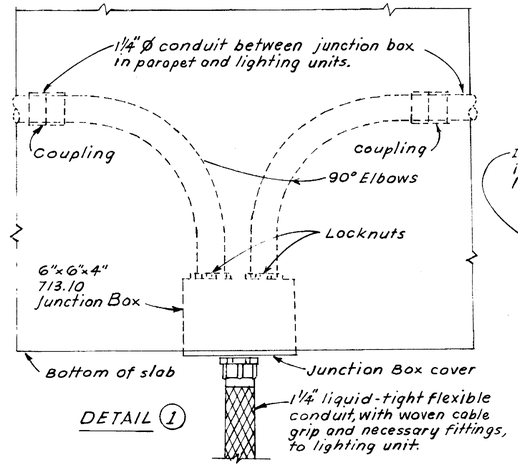


DETAIL 1

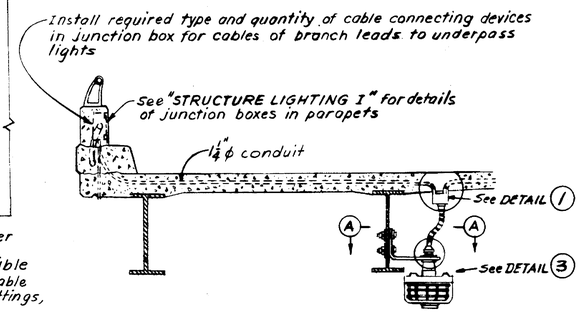


LUMINAIRE MOUNTED ON GIRDER

## NOTES...

2. All conduit for underpass lighting encased in or surface-mounted to a structure shall be 1¼" Ø per 713.04, Type III, except as otherwise noted on the plans.

3. Holes for expansion anchors shall be drilled at the time of installation of luminaire or cast in place initially. Expansion anchors shall be "Double" wedge type 1⅞" long for ⅜" Ø machine bolt. Use 11/16" Ø drill. Other methods of anchoring the fixture may be used with the approval of the Engineer.

4. See "STRUCTURE GROUNDING" for grounding details

5. For pay purposes the Junction boxes detailed on this drawing are considered as conduit fittings and shall be included in the conduit item.

6. Sections of flexible conduit shall not exceed 30" in length unless otherwise directed by the Engineer.

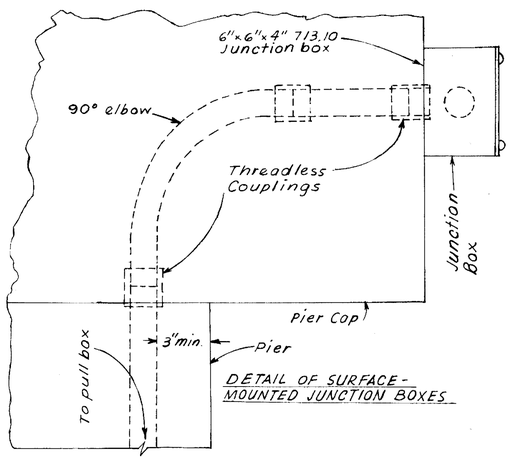


DETAIL OF SURFACE-MOUNTED JUNCTION BOXES

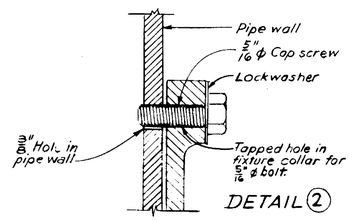


DETAIL 2

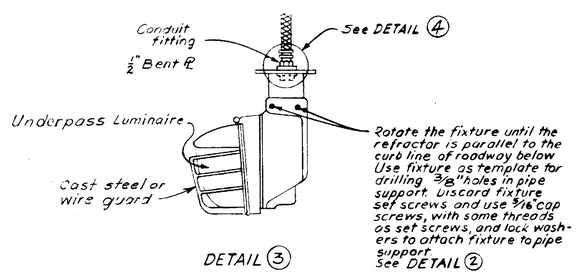


DETAIL 3

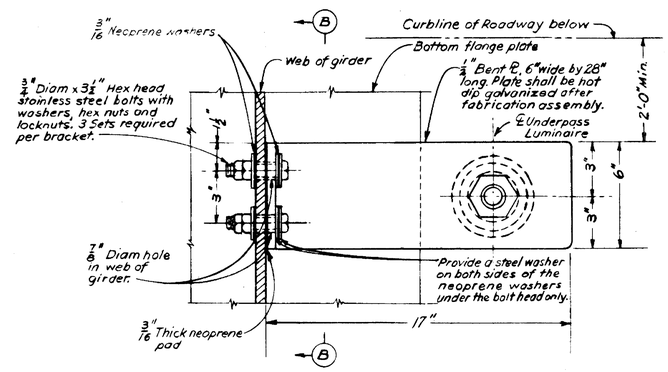


SECTION "A-A"

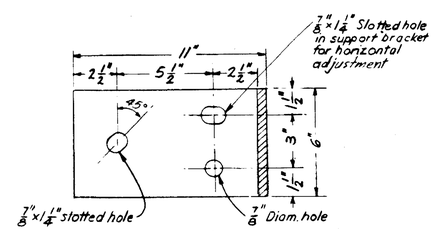


SECTION "B-B"

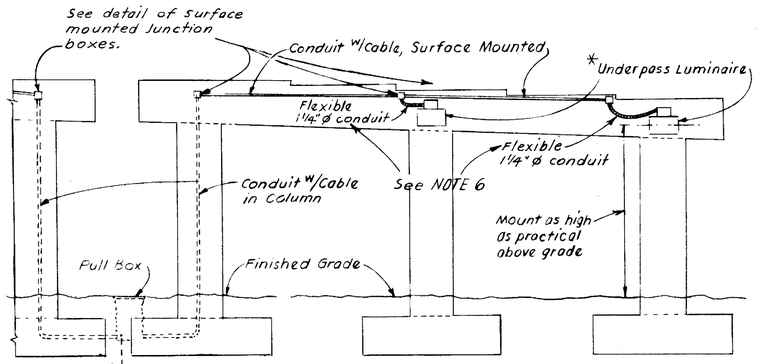


ELEVATION - TYPICAL PIER-CAP MOUNTING

* Horizontal spacing of luminaires will be specified on project plans

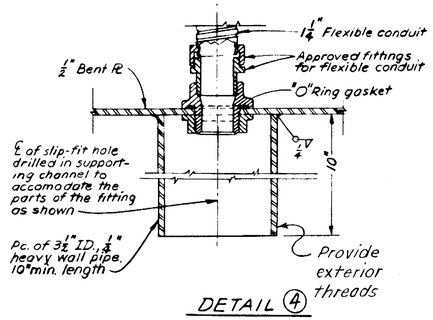


DETAIL 4

AB-D-68

# STRUCTURE GROUNDING

| FED. RD. DIVISION | STATE | PROJECT | |
|---|---|---|---|
| 2 | OHIO | | |

633E

BEL-7-8.68

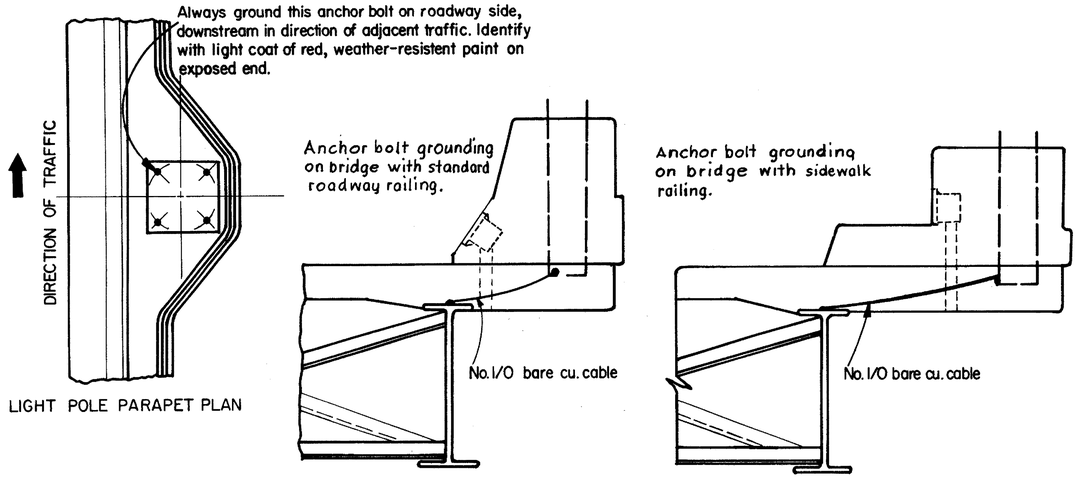


## STEEL BEAM BRIDGES

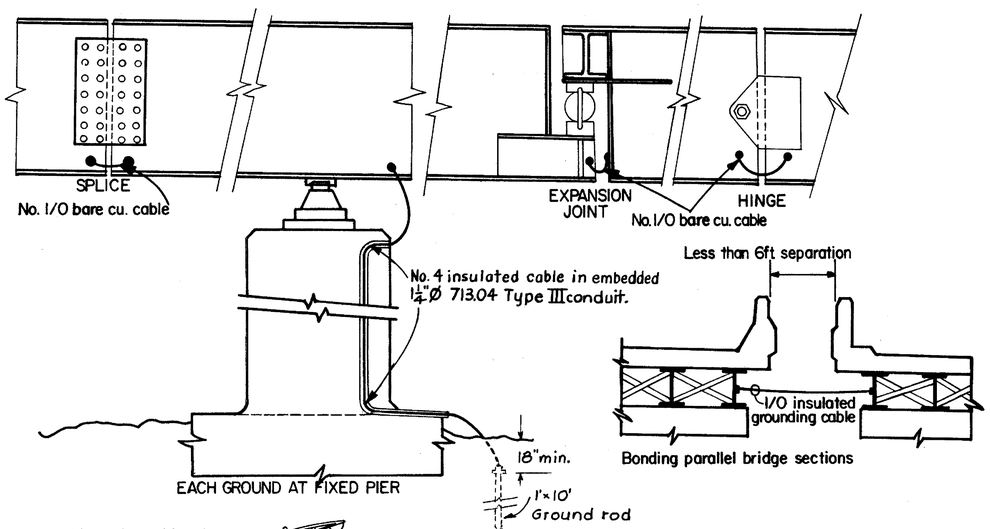


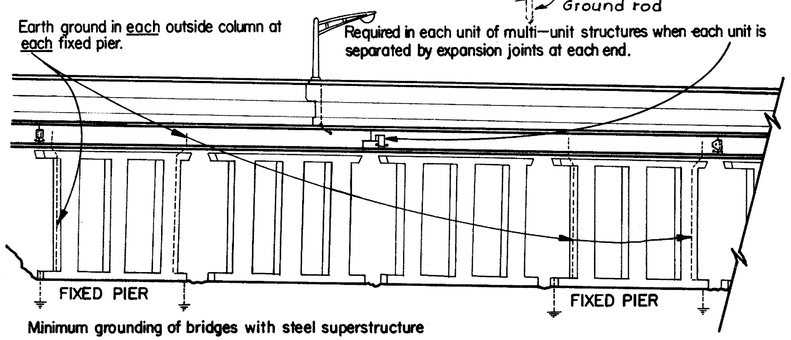


Minimum grounding of bridges with steel superstructure

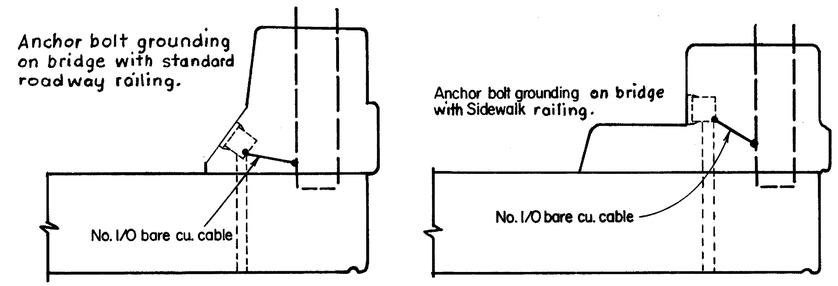


NOTES

1. Copper grounding cable shall be connected to structural steel, pile encasement, piling, ground rods and/or light pole anchor bolts by means of exothermic welding. Two coats of insulating varnish shall be applied over the exothermic weld and exposed cable.

## CONCRETE SLAB BRIDGES

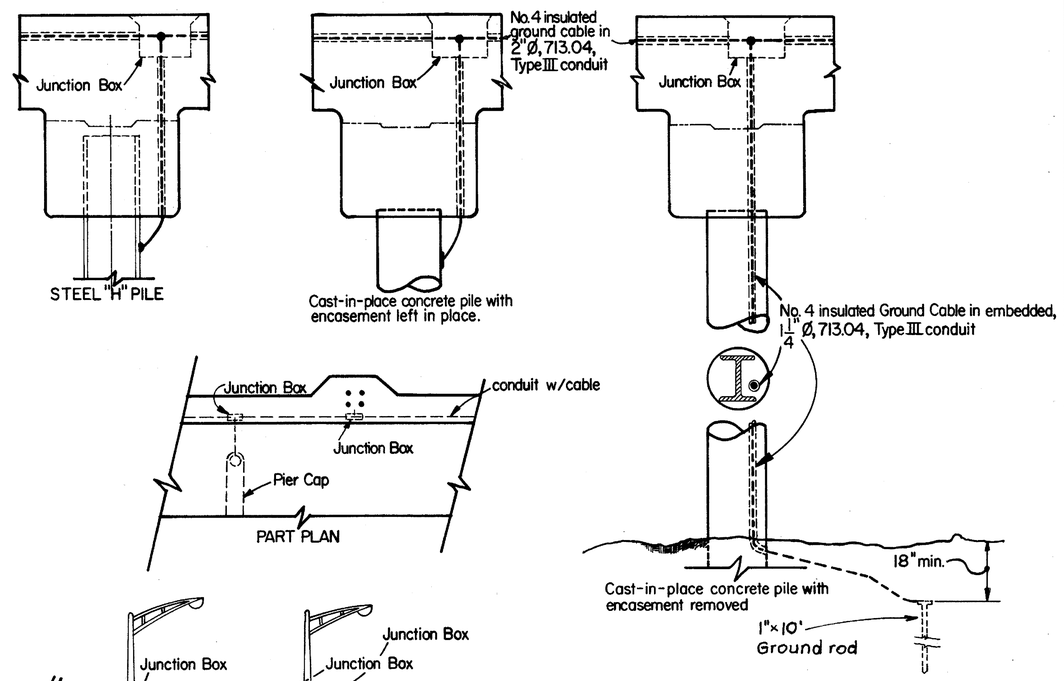


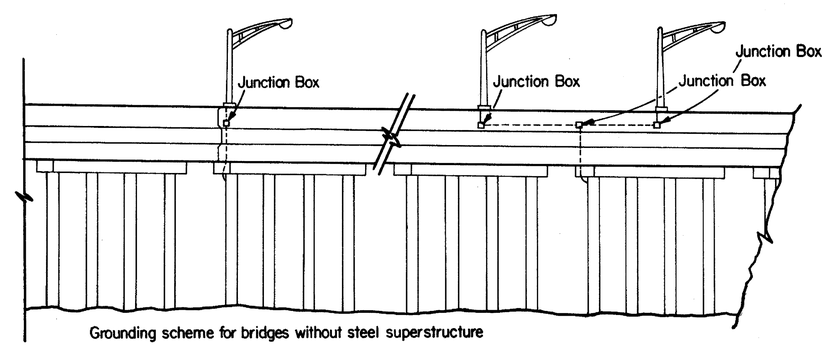


Grounding scheme for bridges without steel superstructure

A.B.-D.-GB
BRUNING 44-560 10943

# LIGHT POLE STYLES

| FED. RD. DIVISION | STATE | PROJECT | |
|---|---|---|---|
| 2 | OHIO | | |

633F

BEL-7-8.68

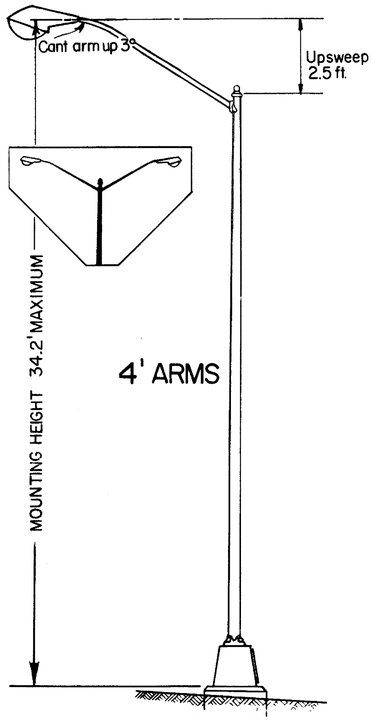


STYLE I

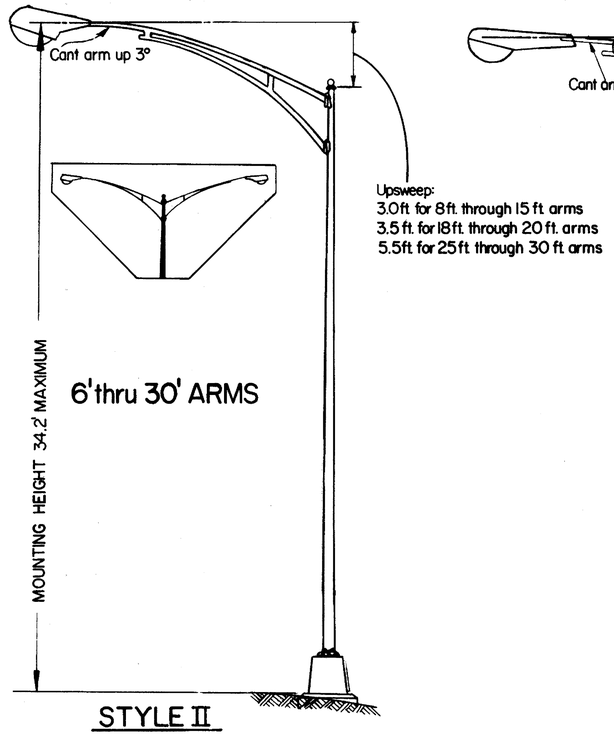


STYLE II

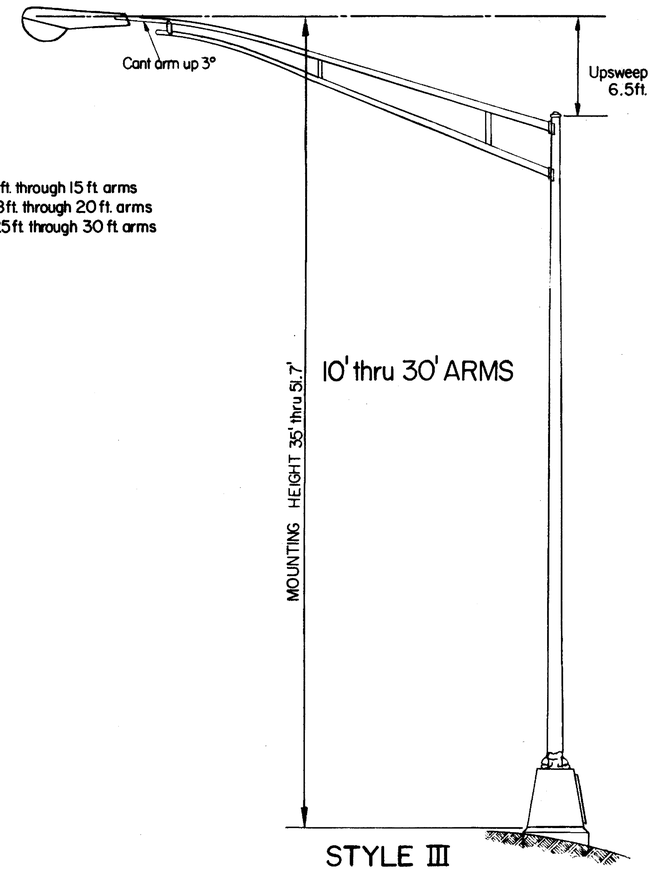


STYLE III

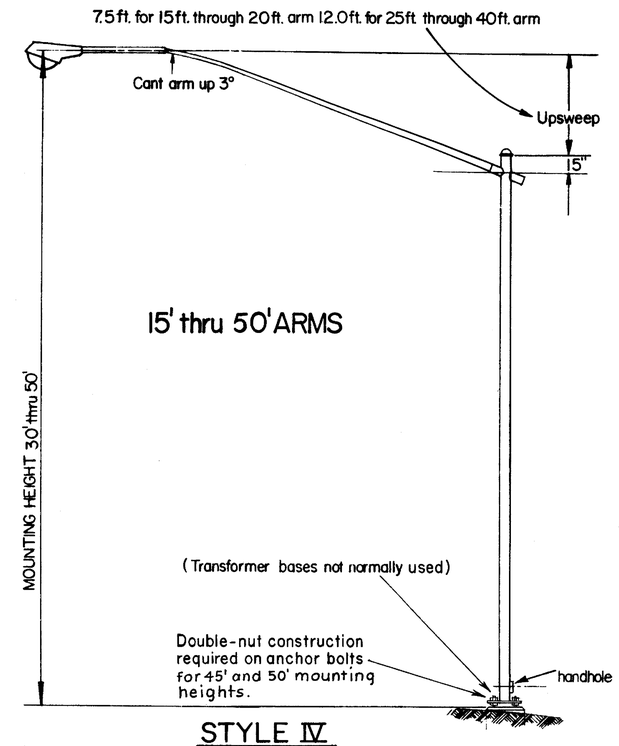


STYLE IV

NOTE: *Subject to the approval of the Engineer, modification of the ratio of bracket upsweep to arm length is permissible provided the basic pole proportions are maintained as shown.*

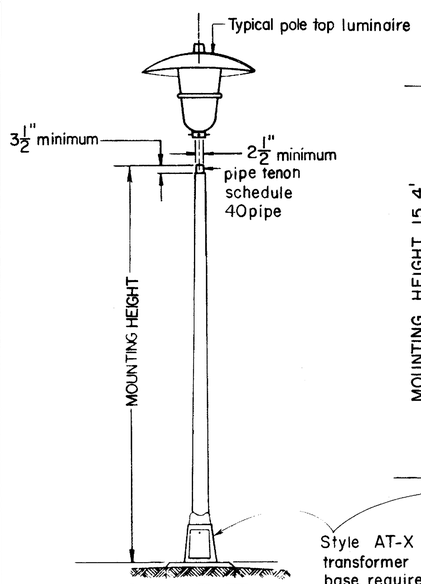


STYLE V

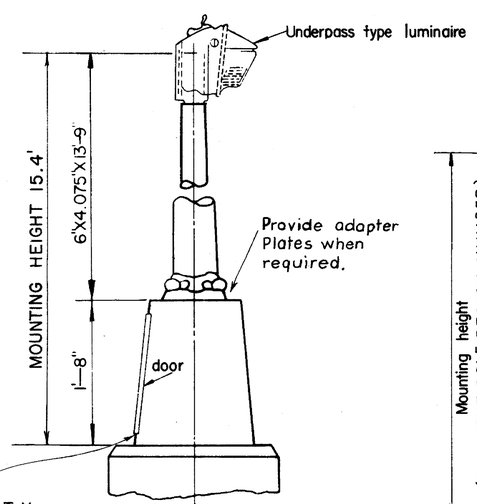


STYLE VI

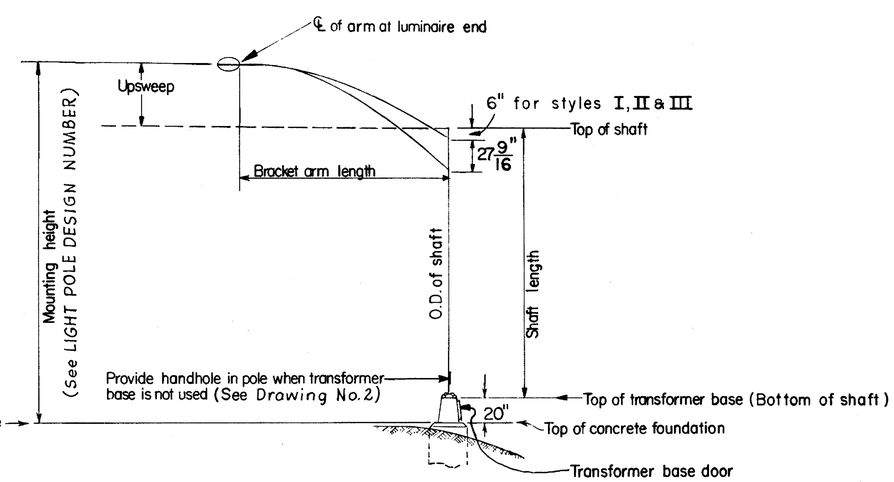


*Base type: A = Anchor*
*AT = Aluminum Transformer*
*ST = Steel Transformer*
*T = Steel or Aluminum Transformer*

*Bracket arm(s)*
*Special features (see details).*
*Mounting height.*

A 4B25D

*Arm Length.*

*(The distance from top of foundation, retaining wall or bridge parapet to the center of the bracket arm at the luminaire end.)*

*"B" = Single arm*
*"BB" = Double arm (If unequal arms Ex. 10B15B)*
*"ON" = Post top*

## *LIGHT POLE DESIGN NUMBER*

AB-D-GB

# POLE WIRING

| FED. RD. DIVISION | STATE | PROJECT | |
|---|---|---|---|
| 2 | OHIO | | |

633G

BEL-7-8.68

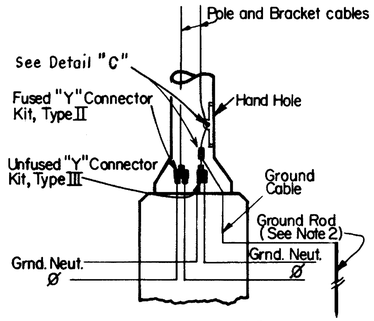


ANCHOR BASE POLE

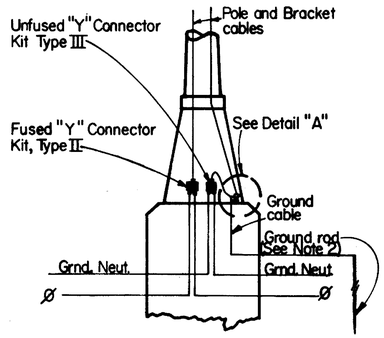


TRANSFORMER BASE POLE

*480 VOLT, TWO-WIRE, GROUNDED NEUTRAL*

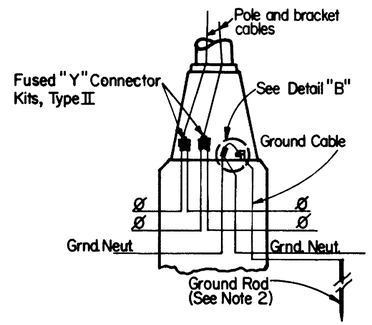


TRANSFORMER BASE POLE

*120/240 VOLTS, THREE WIRE, GROUNDED NEUTRAL*

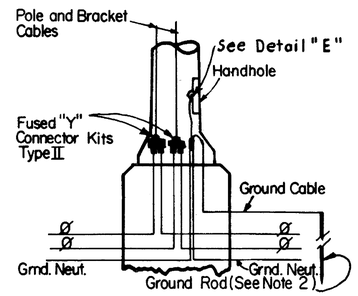


ANCHOR BASE POLE

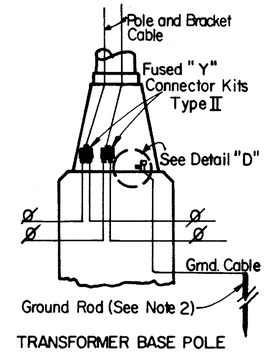


TRANSFORMER BASE POLE

*240 or 480 VOLTS, TWO-WIRE, UNGROUNDED*

## NOTES

1. Provide sufficient slack in all cables to permit bringing Kits outside of pole base through handhole of anchor base poles or door in transformer base poles.
2. For structure-mounted poles substitute "Structure grounding system" for "ground rod."
3. See Drawing No. 13 for fusing details.

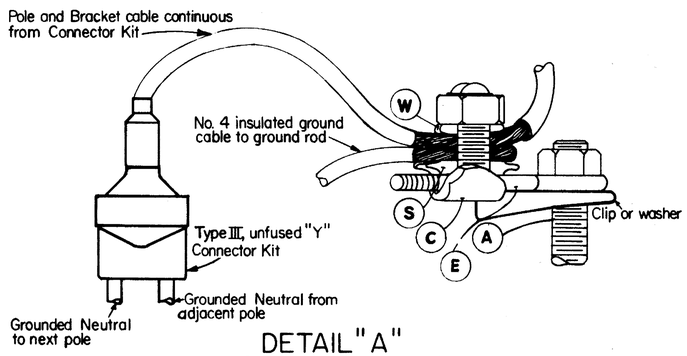


DETAIL "A"
2-Wire Grounded Neutral
**Transformer Base Pole**

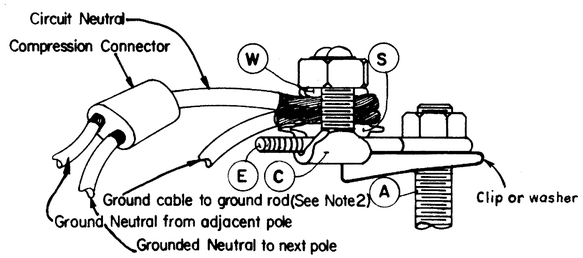


DETAIL "B"
3-WIRE, GROUNDED NEUTRAL
**Transformer Base Pole**

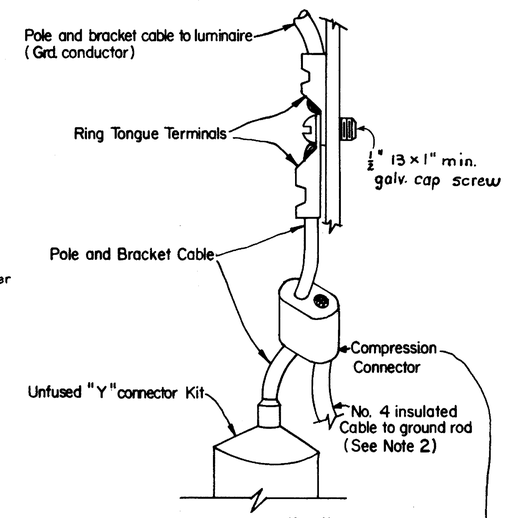


DETAIL "C"
2-Wire, Grounded Neutral
Anchor Base Pole

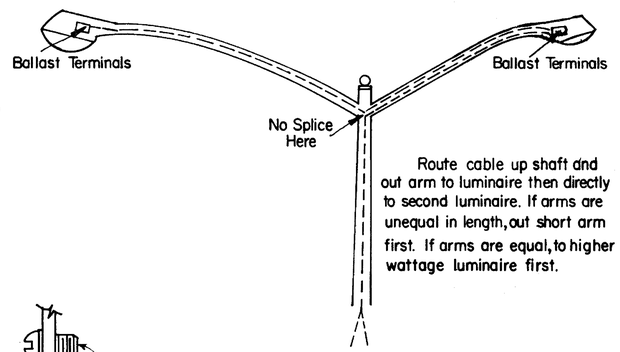


WIRING FOR TWIN-LUMINAIRE POLES

## LEGEND of ITEMS COMMON TO DETAILS "A", "B", & "D"

- (A) Anchor Bolt
- (C) Tin Plated Copper Split Bolt Connector with the following components:
  - (S) Spacer (Tin plated)
  - (W) Washer
  - (E) 3/8"X4" Galv. Steel eyebolt

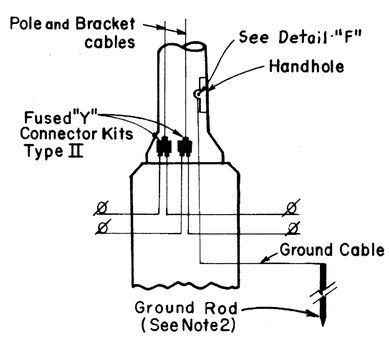


Anchor Base Pole

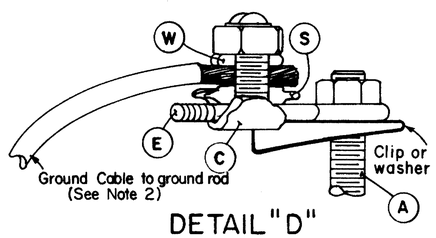


DETAIL "D"
2-Wire, Ungrounded Circuit
**Transformer Base Pole**

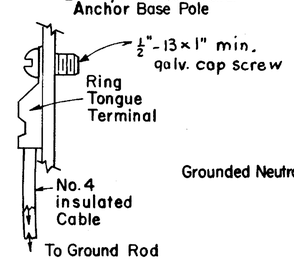


DETAIL "F"
2-WIRE UNGROUNDED

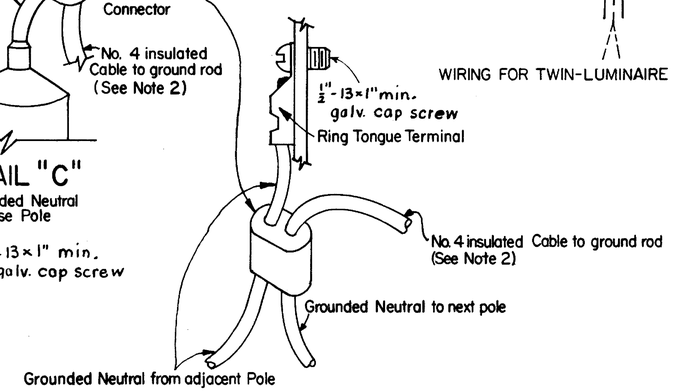


DETAIL "E"
3-Wire, Grounded Neutral
Anchor Base Pole

*240 or 480 VOLTS, TWO-WIRE, UNGROUNDED*

AB-D-GB

| FED. RD. DIVISION | STATE | PROJECT | |
|---|---|---|---|
| 2 | OHIO | | |

633H

BEL-7-8.68

# PULL BOX DETAILS

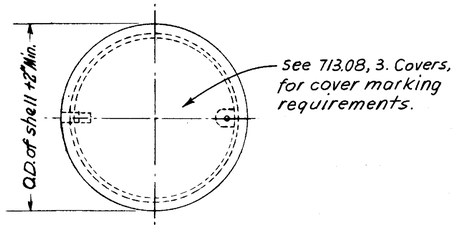


PLAN

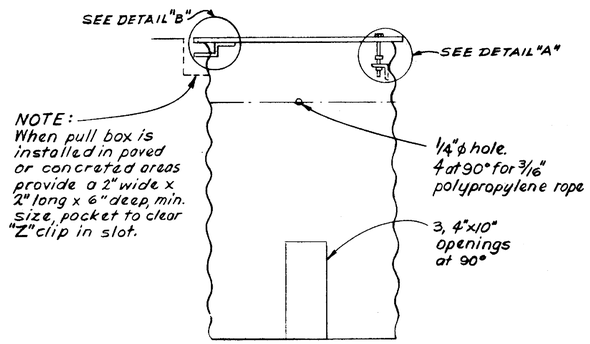


ELEVATION

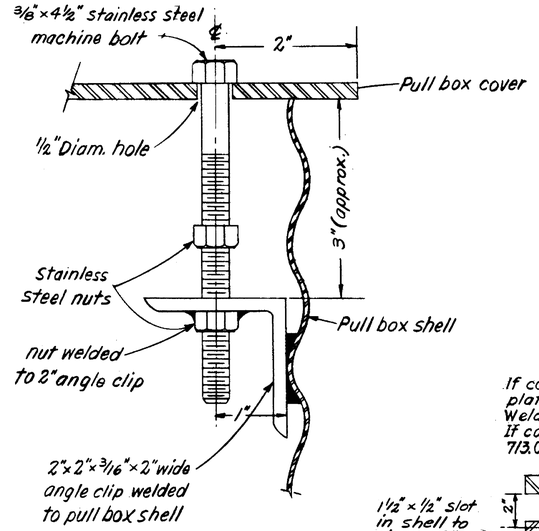


DETAIL "A"

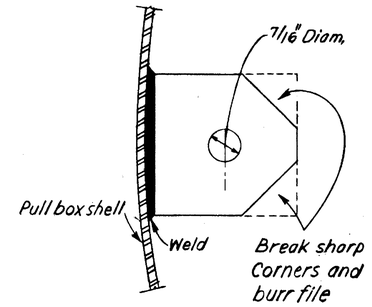


PLAN OF ANGLE CLIP

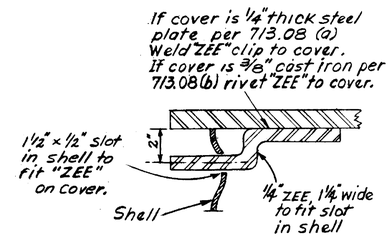


DETAIL "B"

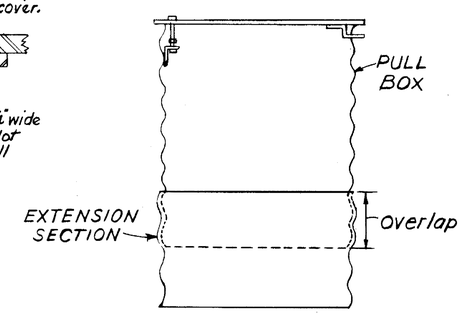


GRADE ADJUSTMENT
EXTENSION SECTION

## NOTES

1. Approximate Air Bell sizes:

| Pullbox Diameter | Air Bell Diameter | Air Bell Height |
|---|---|---|
| 18" | 16 3/4" | 20 1/2" |
| 24" | 20 1/2 | 28 1/2" |

2. When required to provide a clear opening for the duct cable the air bell for the 24" diameter pullbox shall be notched as shown

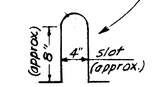


3. Underdrain tile shall be installed only when specified or directed by the Engineer.

## CORRUGATED STEEL PULL BOX

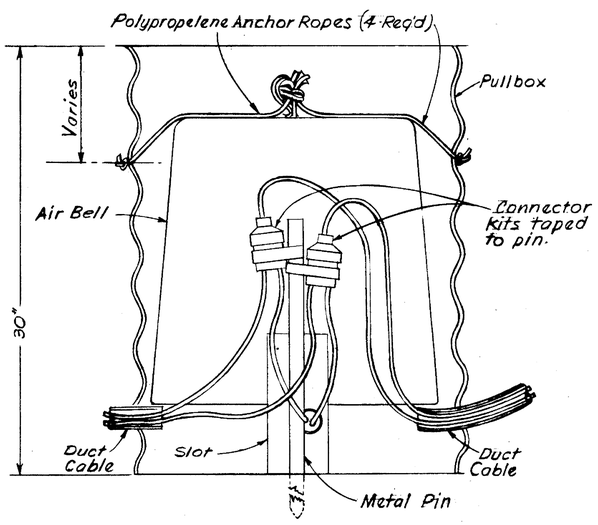


INTERIOR VIEW OF PULLBOX SHOWING ANCHORED AIR BELL AND SUPPORT FOR CONNECTOR KITS.

(See Notes 1 and 2)

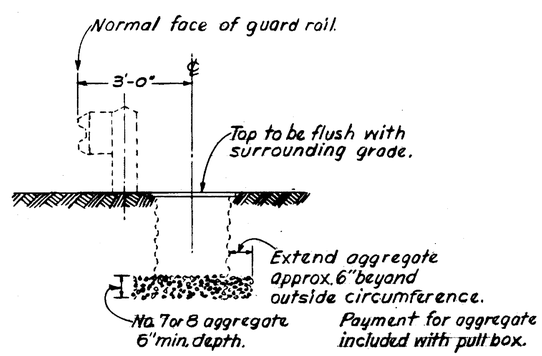


NORMAL INSTALLATION

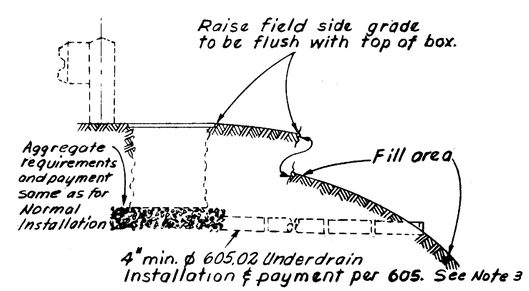


ADJACENT TO FILL AREA

AB-D-GB

| FED. RD. DIVISION | STATE | PROJECT | |
|---|---|---|---|
| 2 | OHIO | | |

633 I

BEL-7-8.68

# MISCELLANEOUS DETAILS I

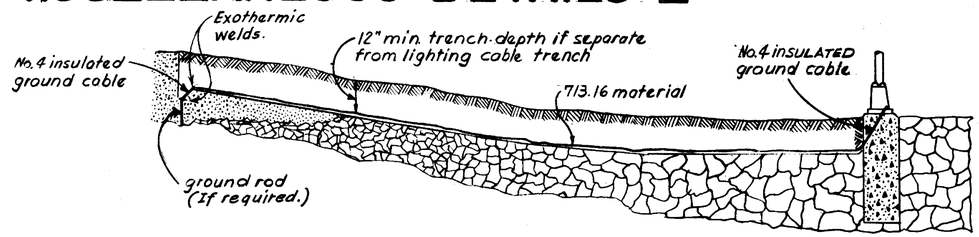


## MODIFIED GROUND GRID FOR INDIVIDUAL POLE GROUND

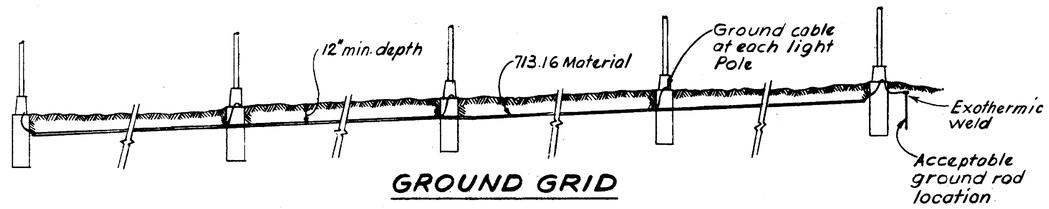


## GROUND GRID

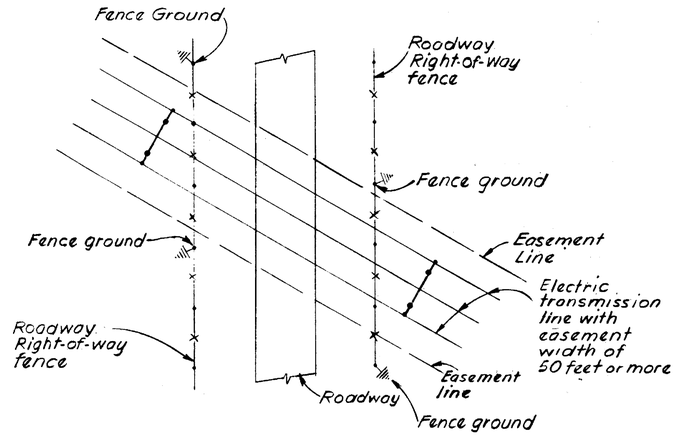


## CROSSING OF ROADWAY R/W & TRANSMISSION LINE EASEMENT

(See Note 1)

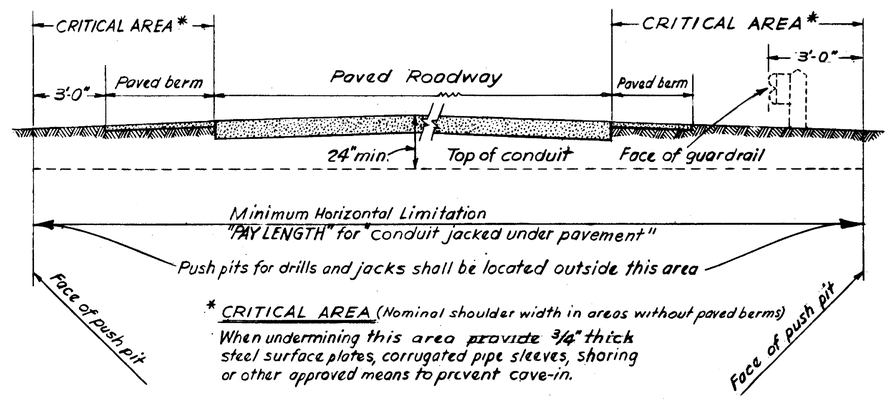


## DETAIL FOR CONDUIT JACKED UNDER PAVEMENT

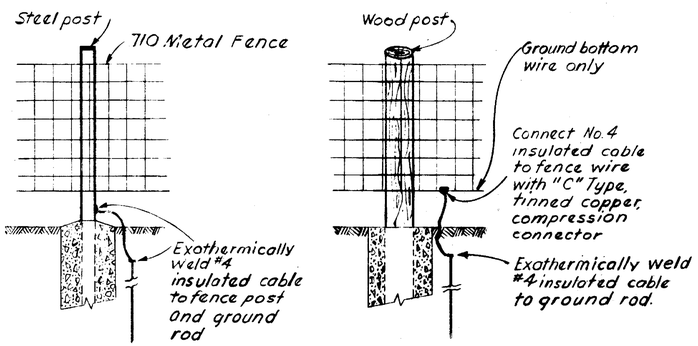


## FENCE GROUND DETAILS

When specified, roadway right-of-way fences shall be grounded as shown hereon. (See also Notes 1, 2, 3, & 4)

## NOTES FOR FENCE GROUNDING

1. Where overhead transmission line easements 50 feet or more in width cross a fenced roadway right-of-way, each fence shall be grounded as shown hereon.
2. Where overhead electric power line easements less than 50 feet in width cross a fenced roadway right-of-way, each fence shall be grounded directly below the centerline of the power line crossing.
3. Where overhead transmission lines rated 110 KV or higher are parallel to roadway fences and the transmission line easement is contiguous to the roadway right-of-way the roadway fences shall be grounded at least every 300 ft.
4. Fence grounds will be paid for at unit price bid for Ground Rods, item 625.
5. Apply two coats of insulating varnish over all exothermic welds and exposed cable.

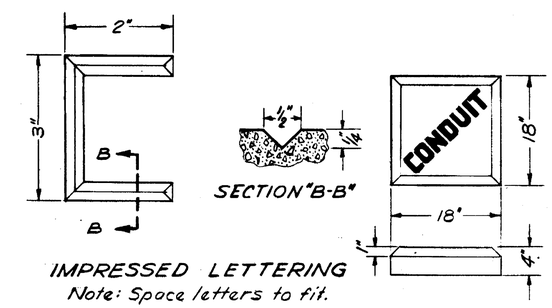


IMPRESSED LETTERING
Note: Space letters to fit.

"CONDUIT" - to indicate conduit for future cable or wire.

"CABLE" - to indicate abrupt change in direction of cable

## CONCRETE MARKER

(625.16)

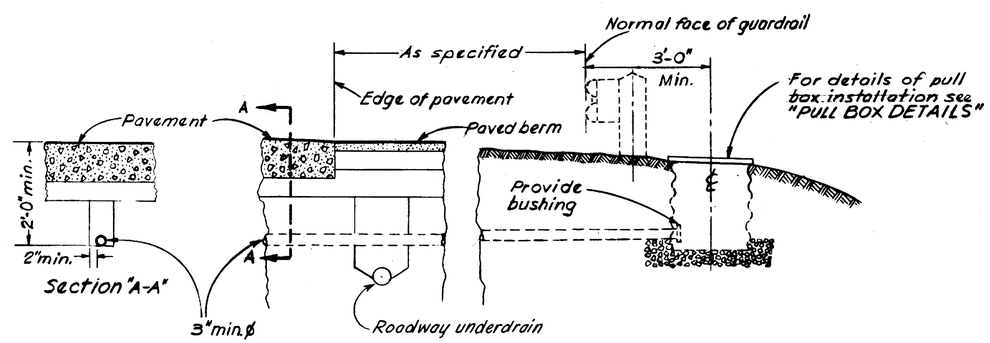


## TYPICAL CONDUIT CROSSOVER DETAIL

AB-U-GB

# MISCELLANEOUS DETAILS II

| FED. RD. DIVISION | STATE | PROJECT | |
|---|---|---|---|
| 2 | OHIO | | |

633J

BEL-7-8.68

## STANDARD GUARDRAIL FLARE
FOR CUT TO FILL AND FILL TO FILL AREAS
1" = 10'

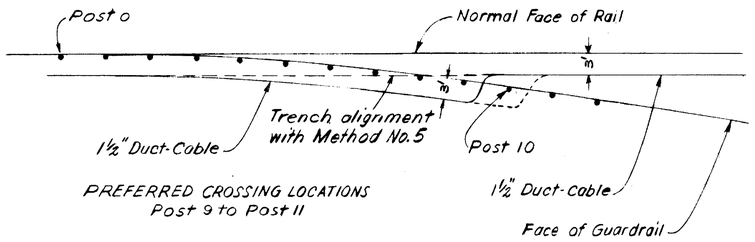


## INTRODUCED GUARDRAIL FLARE
BECAUSE OF OBSTRUCTION
1" = 10'

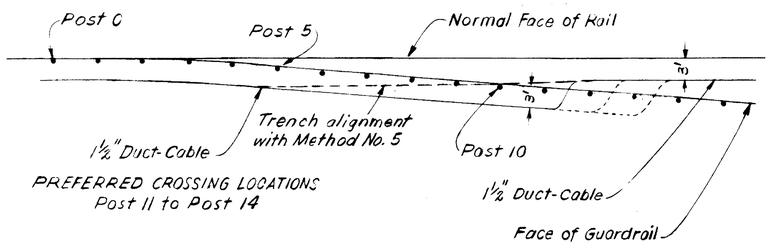


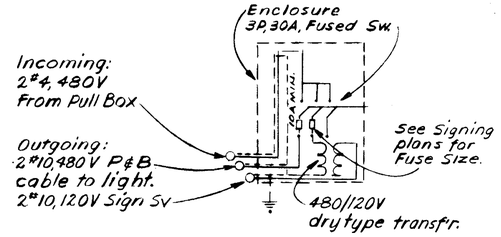


WIRING DIAGRAM

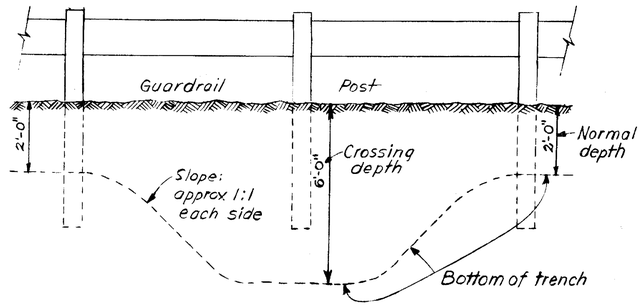


METHOD NO.5 for PROTECTING DUCT-CABLE UNDER GUARD RAIL
Increased depth of cable trench at point of crossing.
To be used whenever trench alignment is within 1'-6" of posts.
(See NOTE No.1)

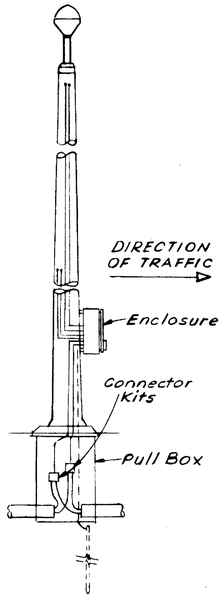


ELEVATION PARALLEL TO ROADWAY

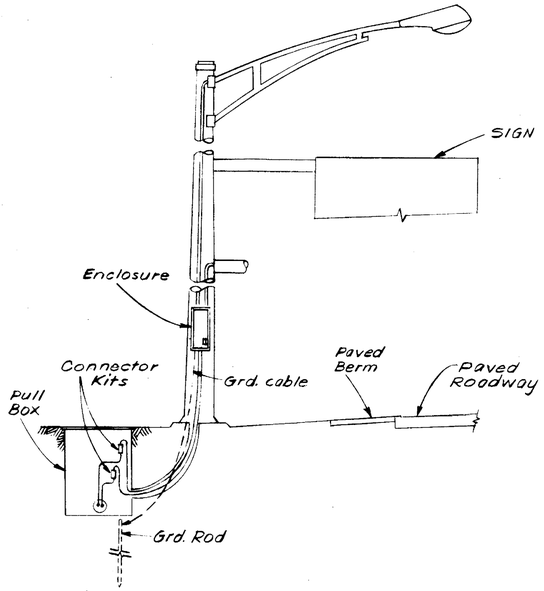


ELEVATION PERPENDICULAR TO ROADWAY

WIRING FOR COMBINATION LIGHT AND SIGN POLE

## METHODS OF PROTECTING DUCT-CABLE UNDER GUARD RAIL
(See NOTE No.1)

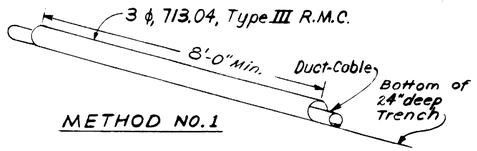


METHOD NO.1

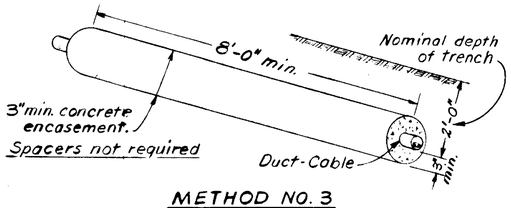


METHOD NO. 3

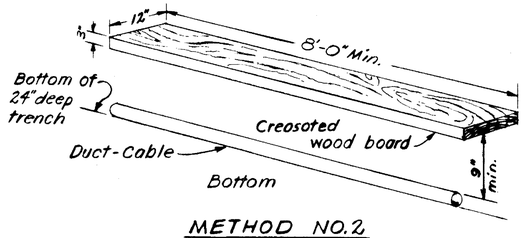


METHOD NO.2

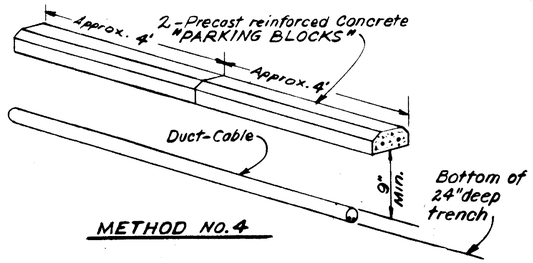


METHOD NO.4

## CONCRETE ENCASED CONDUIT

| "D" | "H" | "W" |
|---|---|---|
| 2" | 3⅝" | 5½" |
| 3" | 3⅞" | 6½" |
| 4" | 4⅛" | 7⅝" |
| 5" | 4½" | 8⅞" |

Nominal spacer dimensions

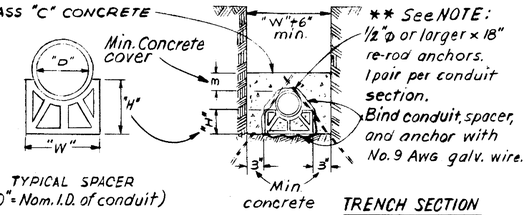


TYPICAL SPACER
("D" = Nom. I.D. of conduit)

TRENCH SECTION

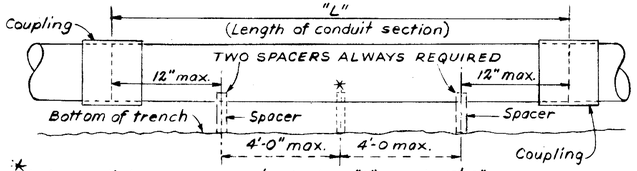


* Intermediate spacer required when "L" equals 10'-0"
Additional spacers shall be required when "L" exceeds 10'-0"

SIDE ELEVATION

** NOTE: DELETE ANCHORS AND BINDING WIRE WHEN USING STEEL CONDUIT.

## NOTES

1. Payment for protection of duct-cable and distribution cable under guard rail, as detailed in Methods 1 thru 5, shall be included in the unit prices bid for the affected cable and trench items.

AB-0-GB

# CABLE CONNECTOR KITS TYPE I THRU TYPE VI.

| FED. RD. DIVISION | STATE | PROJECT | |
|---|---|---|---|
| 2 | OHIO | | |

633K

BEL-7-8.68

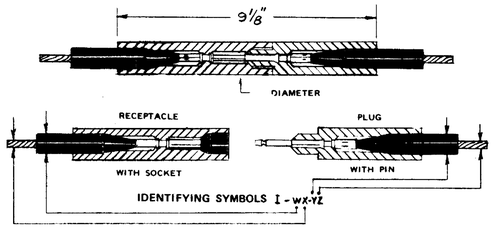


To specify the proper kit for an installation, select from the tables below the symbols which coincide with the requirements and substitute for (W, X) and (Y, Z) respectively.

| CABLE DIAMETER | | Symbol for W and Y |
|---|---|---|
| Min. | Max. | |
| .195" | .260" | B* |
| .250" | .330" | C* |
| .320" | .430" | D* |
| .420" | .585" | E |
| .575" | .785" | F |
| .775" | .985" | G |
| .975" | 1.125" | H |

| CONDUCTOR SIZE AWG | | Symbol for X and Z |
|---|---|---|
| Concentric Stranded | Solid | |
| #10, #12 | #8, #10 | 6 |
| #8 | #6 | 4 |
| #6 | #4 | 3 |
| #4 | — | 2 |
| #2 | — | 1 |

* Molded rubber adapters are a part of these kits for small diameter cables

EXAMPLE

If the installation requires a receptacle for no. 6 stranded conductor and a cable diameter of .660" and a plug for no. 8 solid conductor and a cable diameter of .460", the kit required will be I - F3 - E6.

## TYPE I
## INLINE SELF LOCKING CONNECTOR KIT FOR PULL BOX INSTALLATION.

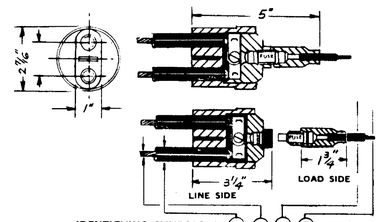


| CABLE DIAMETER | | Symbol for W |
|---|---|---|
| Min. | Max. | |
| .195" | .260" | B |
| .250 | .330 | C |
| .320 | .380 | DA |
| .370 | .430 | DB |
| .420 | .505 | EA |
| .495 | .585 | EB |
| .575 | .685 | FA |
| .675 | .785 | FB |

| COPPER CONDUCTOR (AWG) | | Symbol for Z |
|---|---|---|
| Concentric Stranded | Solid | |
| — | #8 | 6 |
| #8 | #6 | 4 |
| #6 | #4 | 3 |
| #4 | — | 2 |
| #2 | — | 1 |
| #1 | — | 0 |
| #1/0 | — | 10 |
| #2/0 | — | 20 |

| CABLE DIAMETER | | Symbol for Y |
|---|---|---|
| Min. | Max. | |
| .120" | .160" | S |
| .155 | .205 | A |
| .195 | .260 | B |
| .250 | .330 | C |
| .320 | .430 | D |

| COPPER CONDUCTOR (AWG) | | Symbol for Z |
|---|---|---|
| Concentric Stranded | Solid | |
| #14, #16 | #12, #14 | 8 |
| #10, #12 | #8, #10 | 6 |
| #8 | #6 | 4 |
| #6 | #4 | 3 |

EXAMPLE

If the line outside diameter (W) is .42" and the conductor (X) is no. 6 stranded, and the load side outside diameter (Y) is .29" and the conductor (Z) is no. 12 stranded, the kit required will be II - DB3 - C6.

## TYPE II
## FUSED "Y" CONNECTOR KIT FOR POLE BASE INSTALLATION.

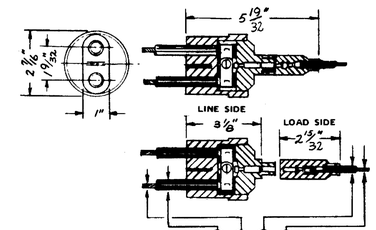


| CABLE DIAMETER | | Symbol for W |
|---|---|---|
| Min. | Max. | |
| .195" | .260" | B |
| .250 | .330 | C |
| .320 | .380 | DA |
| .370 | .430 | DB |
| .420 | .505 | EA |
| .495 | .585 | EB |
| .575 | .685 | FA |
| .675 | .785 | FB |

| COPPER CONDUCTOR (AWG) | | Symbol for Z |
|---|---|---|
| Concentric Stranded | Solid | |
| — | #8 | 6 |
| #8 | #6 | 4 |
| #6 | #4 | 3 |
| #4 | — | 2 |
| #2 | — | 1 |
| #1 | — | 0 |
| #1/0 | — | 10 |
| #2/0 | — | 20 |

| CABLE DIAMETER | | Symbol for Y |
|---|---|---|
| Min. | Max. | |
| .120" | .160" | S |
| .155 | .205 | A |
| .195 | .260 | B |
| .250 | .330 | C |
| .320 | .430 | D |

| COPPER CONDUCTOR (AWG) | | Symbol for Z |
|---|---|---|
| Concentric Stranded | Solid | |
| #14, #16 | #12, #14 | 8 |
| #10, #12 | #8, #10 | 6 |
| #8 | #6 | 4 |
| #6 | #4 | 3 |

EXAMPLE

If the line side cable outside diameter (W) is .54" and the conductor (X) is no.2 stranded, and the load side cable outside diameter (Y) is .29" and the conductor (Z) is no. 12 stranded, the kit required will be III - EBI - C6.

## TYPE III
## UNFUSED "Y" CONNECTOR KIT FOR POLE BASE INSTALLATION.

## NOTES

1. Diameters usually vary along cable lengths. Take several measurements and select the symbols for "W" and "Y" which will insure a tight fit rather than a loose fit between the cables and the openings in the housings of the connector kits.
2. Where a light is located at the end of the lighting circuit one opening of the "Y" connector kit shall be plugged. The plug shall be of insulating material and have the same overall diameter of the lighting circuit cable occupying the other opening of the "Y" connector kit.
3. If the cable has a nylon jacket the jacket shall be peeled back to a point where no part of the jacket is encased in the boot with the insulated cable.

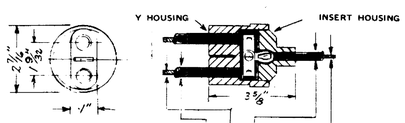


TABLE (X)

| CABLE DIAMETER | | Symbol for W |
|---|---|---|
| Min | Max | |
| .195" | .260" | B |
| .250" | .330" | C |
| .320" | .380" | DA |
| .370" | .430" | DB |
| .420" | .505" | EA |
| .495" | .585" | EB |
| .575" | .685" | FA |
| .675" | .785" | FB |

TABLE (Y)

| CABLE DIAMETER | | Symbol for Y |
|---|---|---|
| Min | Max | |
| .120" | .160" | S |
| .155" | .205" | A |
| .195" | .260" | B |
| .250" | .330" | C |
| .320" | .430" | D |
| .420" | .585" | E |
| .575" | .785" | F |

TABLE (Z)

| COPPER CONDUCTOR (AWG) | | Symbol for Z |
|---|---|---|
| Concentric Stranded | Solid | |
| — | #8 | 6 |
| #8 | #6 | 4 |
| #6 | #4 | 3 |
| #4 | — | 2 |
| #2 | — | 1 |
| #1 | — | 0 |
| #1/0 | — | 10 |
| #2/0 | — | 20 |

| COPPER CONDUCTOR (AWG) | | Symbol for Z |
|---|---|---|
| Concentric Stranded | Solid | |
| #14, #16 | #12, #14 | 8 |
| #10, #12 | #8, #10 | 6 |
| #8 | #6 | 4 |
| #6 | #4 | 3 |

EXAMPLE

If the twin cable outside diameter (W) is .54" and their conductor (X) is no. 2 stranded, and the single cable outside diameter (Y) is .29" and the conductor (Z) is no. 12 stranded, the kit required will be IV - EBI - C6.

## TYPE IV
## UNFUSED "Y" CONNECTOR KIT FOR PULL BOX INSTALLATION

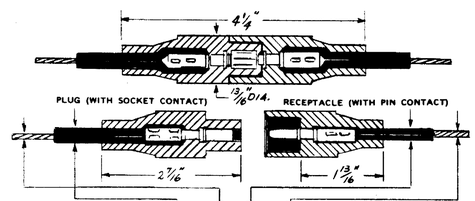


| CABLE DIAMETER | | Symbol for W and Y |
|---|---|---|
| Min | Max | |
| .120" | .160" | S |
| .155" | .205" | A |
| .195" | .260" | B |
| .250" | .330" | C |
| .320" | .430" | D |

| CONDUCTOR SIZE AWG | | Symbol for X and Z |
|---|---|---|
| Concentric Stranded | Solid | |
| #14, #16 | #12, #14 | 8 |
| #10, #12 | #8, #10 | 6 |
| #8 | #6 | 4 |
| #6 | #4 | 3 |

EXAMPLE

If the installation requires a plug for a cable diameter of .38", and a no. 8 stranded conductor, and a receptacle for a cable diameter of .27", and a no. 14 stranded conductor, the kit required will be V - D4 - C8.

## TYPE V
## UNFUSED INLINE CONNECTOR KIT FOR JUNCTION BOX INSTALLATION.

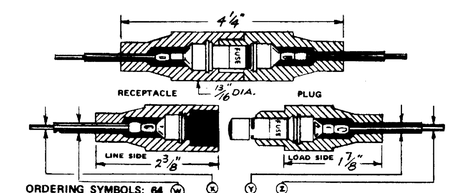


TABLE A

| CABLE DIAMETER | | Symbol for W and Y |
|---|---|---|
| Min. | Max. | |
| .110" | .110" | T |
| .120 | .160 | S |
| .155 | .205 | A |
| .195 | .260 | B |
| .250 | .330 | C |
| .320 | .430 | D |

TABLE B

| CONDUCTOR SIZE AWG | | Symbol for X and Z |
|---|---|---|
| Concentric Stranded | Solid | |
| #14, #16 | #12, #14 | 8 |
| #10, #12 | #8, #10 | 6 |
| #8 | #6 | 4 |
| #6 | #4 | 3 |

EXAMPLE

If the line outside diameter (W) is .42" and the conductor (X) is no. 6 stranded, and the load side outside diameter (Y) is .29" and the conductor (Z) is no. 12 stranded, the kit required will be VI - D3 - C6.

## TYPE VI
## FUSED INLINE CONNECTOR KIT FOR JUNCTION BOX INSTALLATION.

MIDGET TYPE FUSE

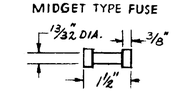


Any standard Midget Ferrule type fuse, (except glass tube) may be used in this connector.

Fuses rated 600 volts and 10 amperes, minimum shall be used unless otherwise specified.

AB-D-GB

# CABLE CONNECTOR KITS TYPES VII, VIII & IX

| FED. RD. DIVISION | STATE | PROJECT | |
|---|---|---|---|
| 2 | OHIO | | |

633L

BEL-7-8.68

## TYPES VII CABLE CONNECTOR KITS

### SPLICE INSULATING KITS

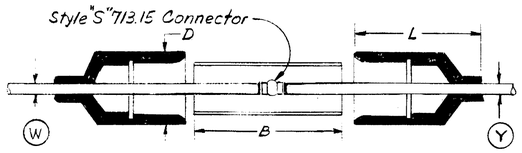


TYPE VII A
Straight line Splice

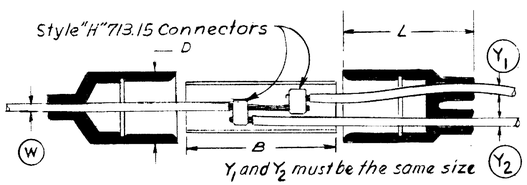


TYPE VII B
Two-way Splice

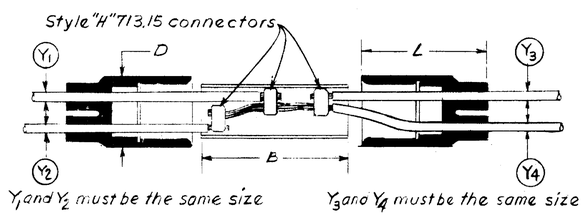


TYPE VII C
Three-way Splice

TABLE OF NOMINAL TYPE VII KIT STYLE VARIATIONS REQUIRED

| B | D | L | Cable Diameter min. | Cable Diameter max. | AWG. 600V cable per 713.02 |
|---|---|---|---|---|---|
| "L" and "S" | 1 29/32" | 4 1/16" | .320" | .430" | No. 6 and No. 4 |
| | " | " | .420" | .585" | No. 2 and No. 2/0 |
| | " | " | .575" | .785" | No. 3/0 - 250 MCM* |
| | " | " | .775" | .985" | 300 MCM - 400 MCM |
| | " | 4 3/16" | .975" | 1.185" | 500 MCM |
| | " | 4 5/16" | 1.175" | 1.385" | 600 MCM - 750 MCM |
| | | | | | |

*Maximum "Y" cable size. See catalogs or design drawings for specific kit symbolization required in each application.

## TYPES VIII & IX CABLE CONNECTOR KITS

### BREAKAWAY FUSEHOLDER KITS

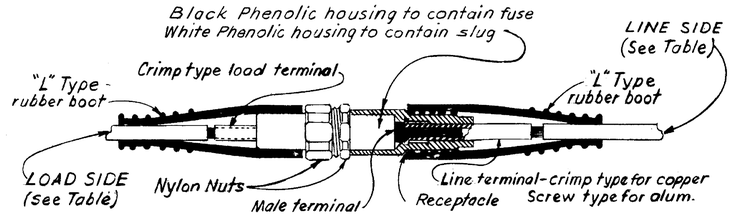


TYPE VIII "AL" for IN-LINE ALUMINUM
TYPE VIII "CU" for IN-LINE COPPER

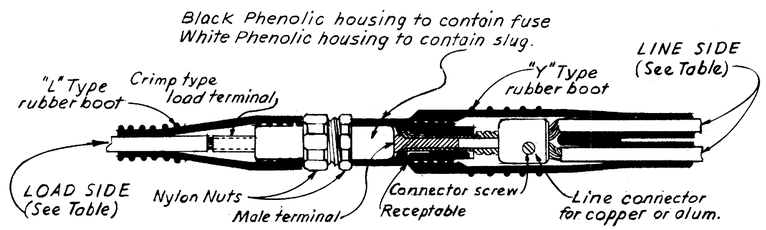


TYPE IX "AL" for TEE TAP ALUMINUM
TYPE IX "CU" for TEE TAP COPPER

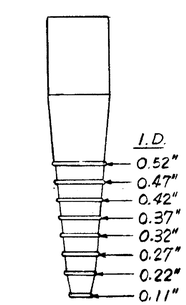


"L" TYPE RUBBER BOOT

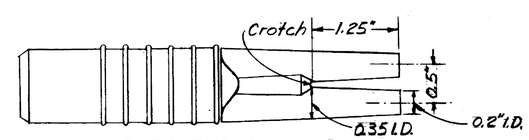


"Y" TYPE RUBBER BOOT

## NOTES...

### FOR BREAKAWAY FUSEHOLDER KITS

1. Acceptable cable size ranges are as follows:

| CABLE MAT'L. | LOAD SIDE | LINE SIDE |
|---|---|---|
| Copper | No. 14 thru No. 2 | No. 12 thru No. 2 |
| Aluminum | No. 12 thru No. 2 | No. 12 thru No. 2 |

2. See catalogs or design drawings for kit symbolization in specific combinations of load and line cable sizes.
3. The fuseholder shall be capable of retaining a 13/32" diameteter by 1 1/2" long fuse rated up to 600 volts and a minimum of 10 amperes.
4. To secure a satisfactory interference fit between a rubber boot and the cable, the outside diameter of the cable should be approximately 0.0625" (1/16") larger than the inside diameter of the boot.
5. When a lubricant is used on the outside of the cable insulation the outside diameter of the cable may be 0.125" (1/8") larger than the inside diameter of the boot in lieu of 1/16" larger without lubrication.
6. Where the "L" type boot is used the maximum inside diameter of the boot shall not be more than 0.42". The upper two rings, namely 0.47" and 0.52" shall not be used.
7. The "Y" type boot shall not be cut beyond the crotch where the inside diameter of each leg is 0.35". Use of a cable of 0.48" O.D. in the "Y" type boot may require the application of a lubricating compound on the cable insulation for it to slide into the boot.
8. If the cable has a nylon jacket the jacket shall be peeled back to a point where no part of the jacket is encased in the boot with the insulated cable.

AB-D-GB

# SERVICE POLES AND CONTROL CENTERS

| FED. RD. DIVISION | STATE | PROJECT | |
|---|---|---|---|
| 2 | OHIO | | |

633M

BEL-7-8.68

## TYPICAL SERVICE POLE HEADS

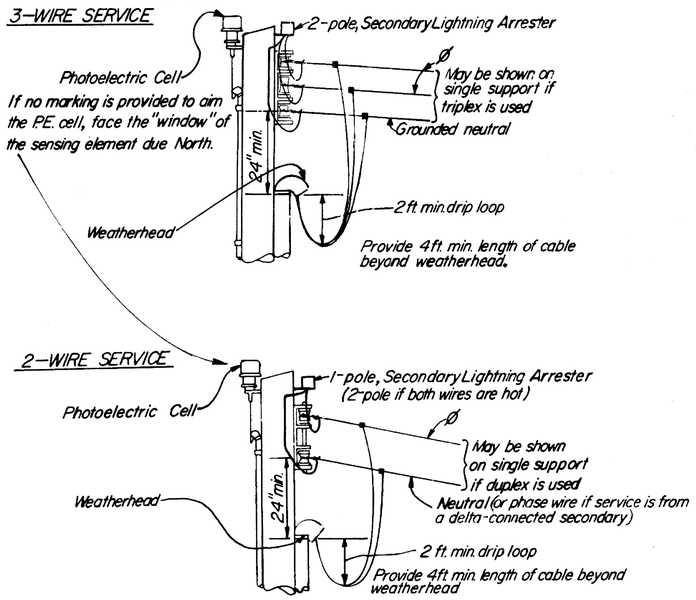


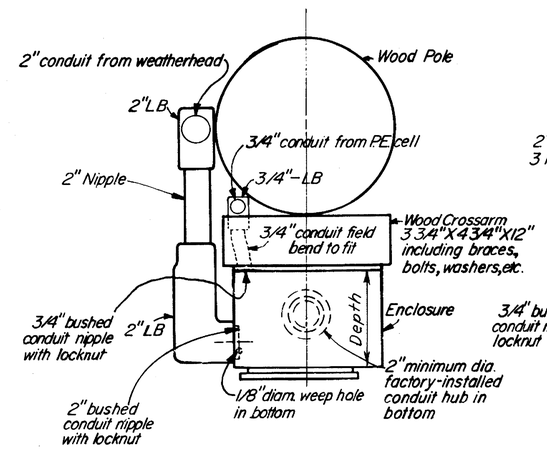


PLAN
SINGLE ENCLOSURE

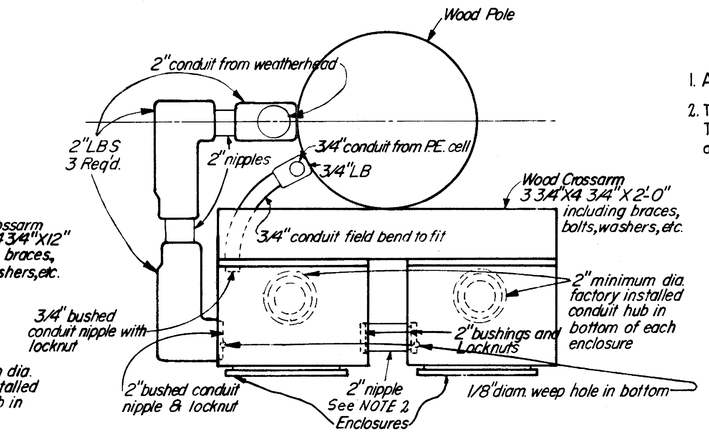


PLAN
DOUBLE ENCLOSURES

## NOTES

1. All openings in enclosures shall be made by fabricator.
2. Two or more enclosures may be mounted with sides abutting. The 2" nipple shown shall then be replaced by the installation of 2" insulated bushings in the openings for cables.

## ENCLOSURE TYPES

| MINIMUM INTERIOR DIMENSIONS | | | | |
|---|---|---|---|---|
| TYPE NO. | PRINCIPLE CONTENTS | WIDTH | HEIGHT | DEPTH * |
| S-30/60 | 30 or 60 ampere fused switch. | 10 1/2" | 18" | 6 9/16" |
| S-100 | 100 ampere fused switch. | 14" | 20" | 8" |
| SC-30/60 | 30 or 60 ampere combination fused switch & contactor. | 10 7/16" | 32 7/16" | 7 5/8" |
| SC-100 | 100 ampere combination fused switch & contactor. | 14" | 41" | 8 1/8" |

*See "PLAN" view of Single Enclosure.

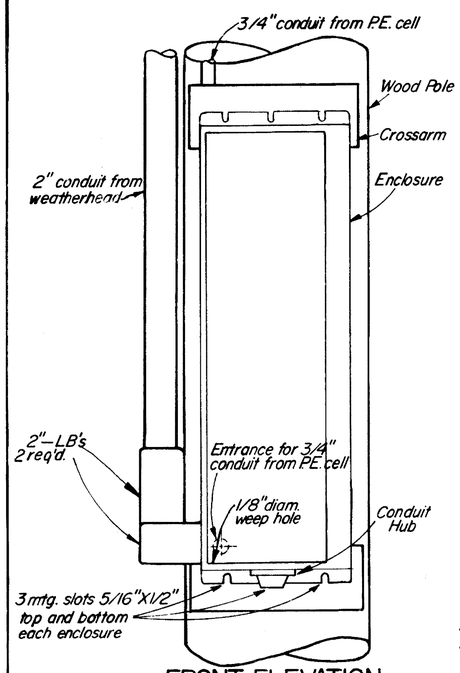


FRONT ELEVATION
SINGLE ENCLOSURE

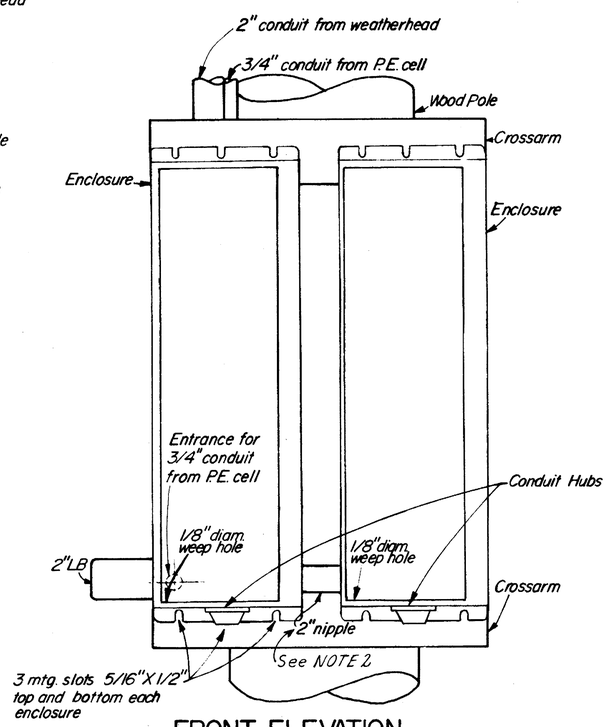


FRONT ELEVATION
DOUBLE ENCLOSURES

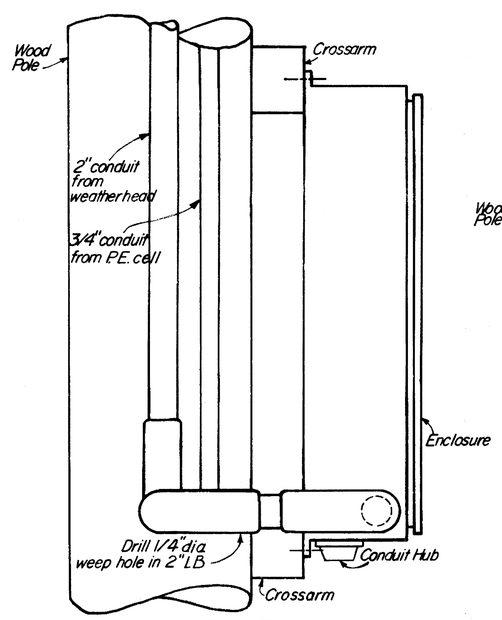


LEFT SIDE VIEW
DOUBLE ENCLOSURES

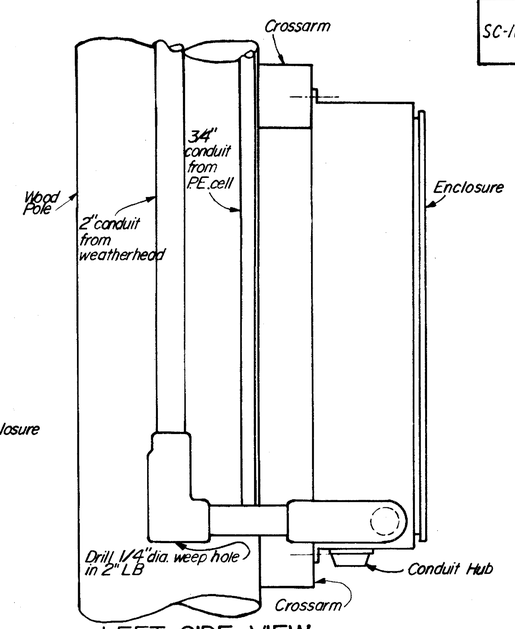


LEFT SIDE VIEW
SINGLE ENCLOSURE

# WIRING DIAGRAMS

| FED. RD. DIVISION | STATE | PROJECT | |
|---|---|---|---|
| 2 | OHIO | | |

633N

BEL-7-8.68

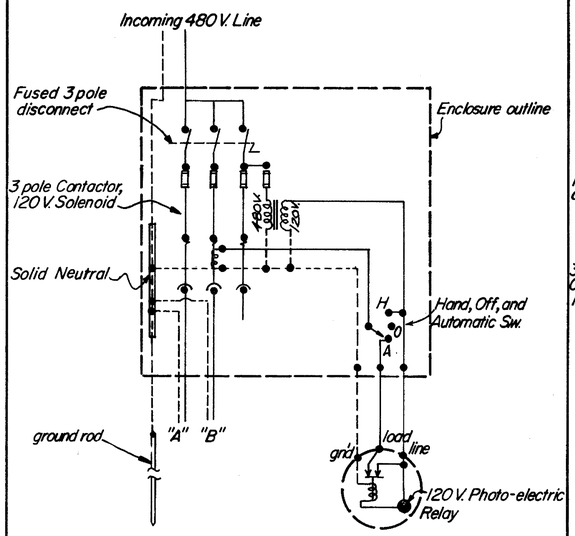


SINGLE UNIT 480 VOLT, 2-WIRE GROUNDED NEUTRAL

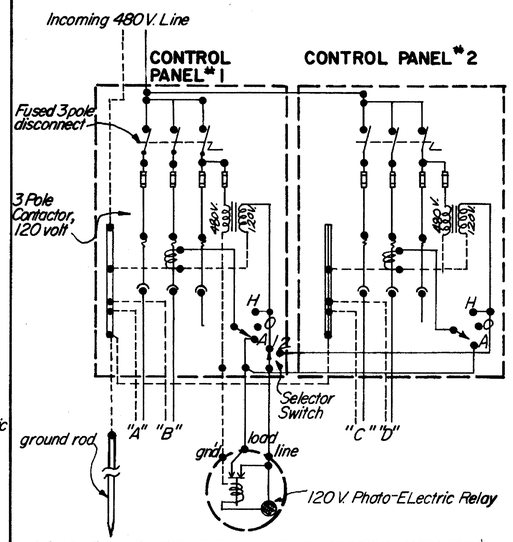


DOUBLE UNIT 480 VOLT, 2-WIRE GROUNDED NEUTRAL

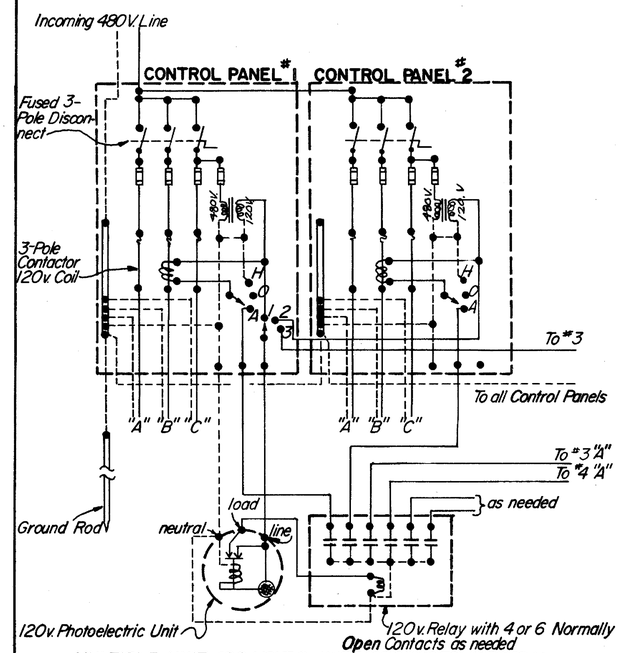


MULTIPLE UNIT 480 VOLT, 2-WIRE GROUNDED NEUTRAL

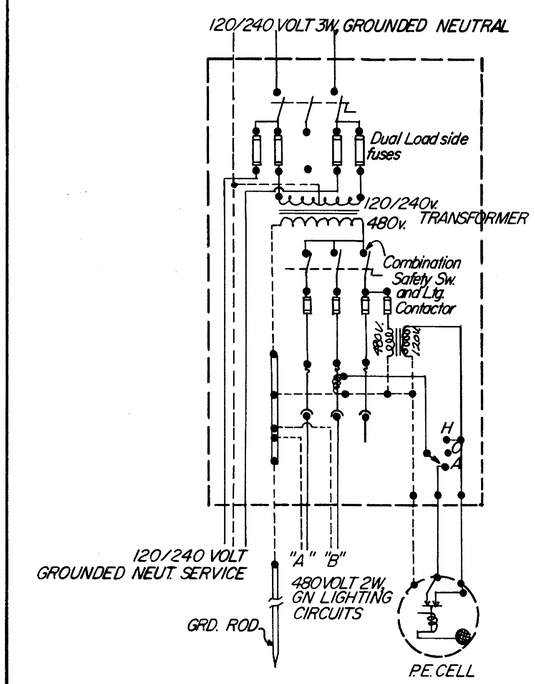


480 VOLT, 2-WIRE, GROUNDED NEUTRAL CONTROL CENTER WITH 120/240 VOLT, 3-WIRE GROUNDED NEUTRAL SUPPLY FOR ASSOCIATED LOAD.

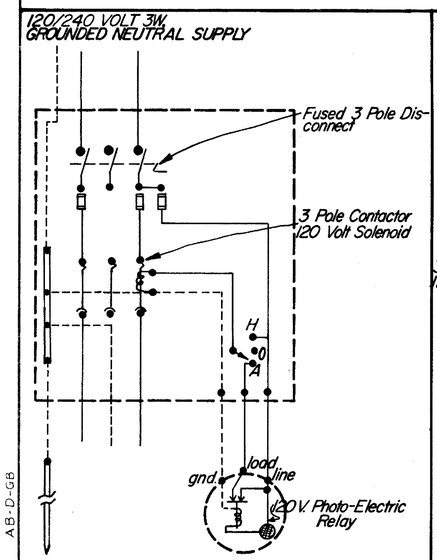


120/240 VOLT, 3-WIRE, GROUNDED NEUTRAL SINGLE CIRCUIT

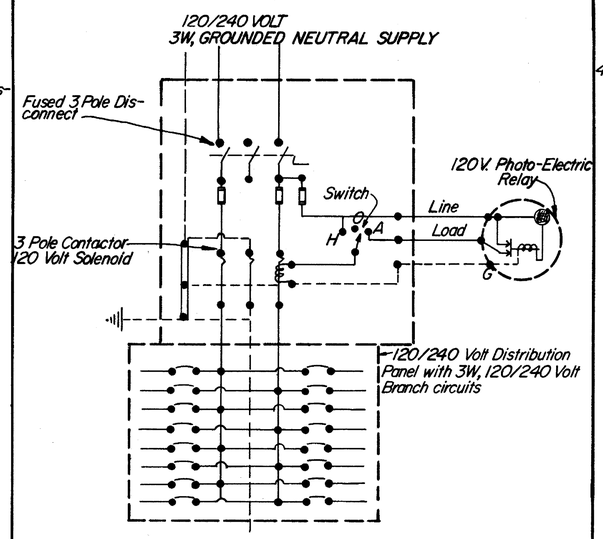


120/240 VOLT, 3-WIRE, GROUNDED NEUTRAL MULTIPLE CIRCUIT

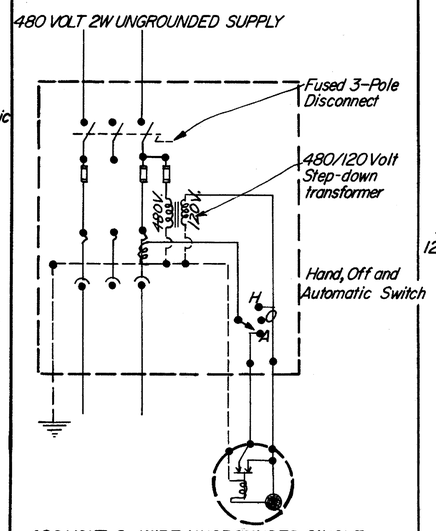


480 VOLT, 2-WIRE UNGROUNDED SINGLE CIRCUIT

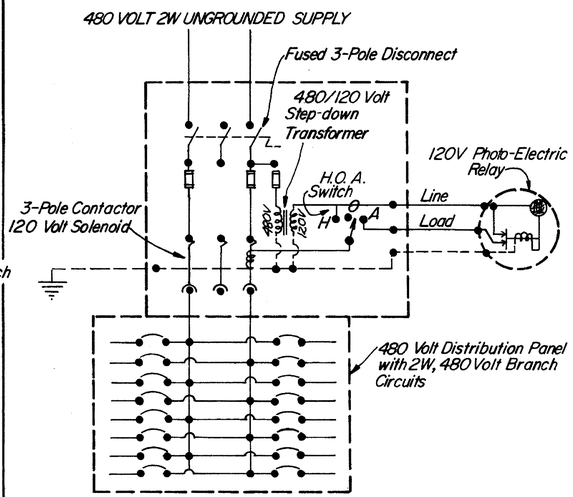


480 VOLT, 2-WIRE UNGROUNDED MULTIPLE CIRCUIT

A.B.-D.-G.B.