F.H.W.A. REGION	STATE	PROJECT	
5	OHIO	RS 1251 (6), C2	

BEL-872-0.00

FED. HWY. ADM.	STATE DIST NO	FEDERAL PROJECT NO. STATE	FISCAL YEAR	COUNTY	SHEET NO	TOTAL SHEETS
W.VA.	6	X326-SP2-0.00 C-4		MARSHALL, W. VA.-BELMONT, OHIO	1	255

WEST VIRGINIA
DEPARTMENT OF HIGHWAYS

PLANS FOR CONSTRUCTION
OF
STATE HIGHWAY

STATE PROJECT NO. X326-SP2-0.00, C-4
OHIO PROJECT NO. BEL-872-0.00
FEDERAL PROJECT NO. RS 1251 (6), C-2
BELMONT COUNTY, OHIO

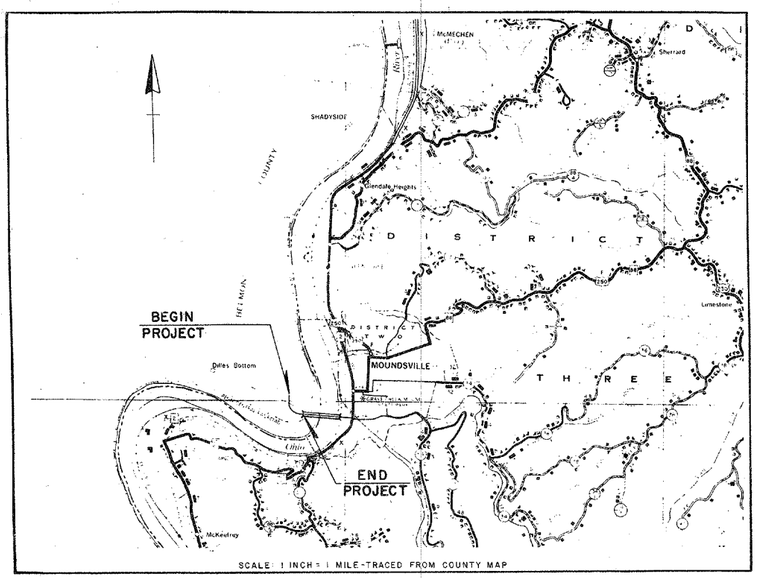

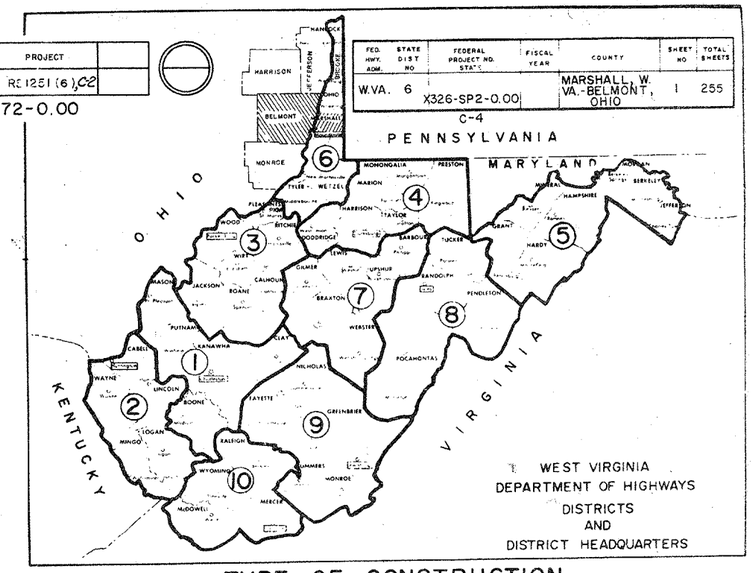

THIS PROJECT IS A FULLY CONTROLLED ACCESS FACILITY WITH NO ACCESS EXCEPT AT DESIGNATED POINTS OF PUBLIC ACCESS AS SET FORTH IN THESE PLANS.

PROJECT NO.	STA. TO STA.	LENGTH	LENGTH
ROADWAY	5+85.23 - 9+41.93	356.70 FT.	.067 MI. RDY.
BRIDGE BEL-872-0008	9+41.93 - 11+08.52	166.59 FT.	.032 MI. BR.
ROADWAY	11+08.52 - 22+00.00	1091.48 FT.	.207 MI. RDY.
TOTAL ROADWAY		1448.18 FT.	.274 MI.
TOTAL BRIDGE		166.59 FT.	.032 MI.
TOTAL PROJECT		1614.77 FT.	.306 MI.

TYPE OF CONSTRUCTION
GRADING, DRAINAGE, PAVING, SIGNING, LIGHTING, PAVEMENT MARKINGS AND BRIDGE

NOTE: IN THESE PLANS WHERE THE PROJECT NUMBER APPEARS AS M-5251(002), IT SHALL BE READ AS RS-1251(6), C-2.

PROJECT # X326-SP2-0.00, C-4 IS FOR ADMINISTRATION PURPOSES BY W.V. DOH ONLY.

UTILITIES
OHIO POWER CO.
OHIO EDISON CO.
OHIO BELL TELEPHONE CO.

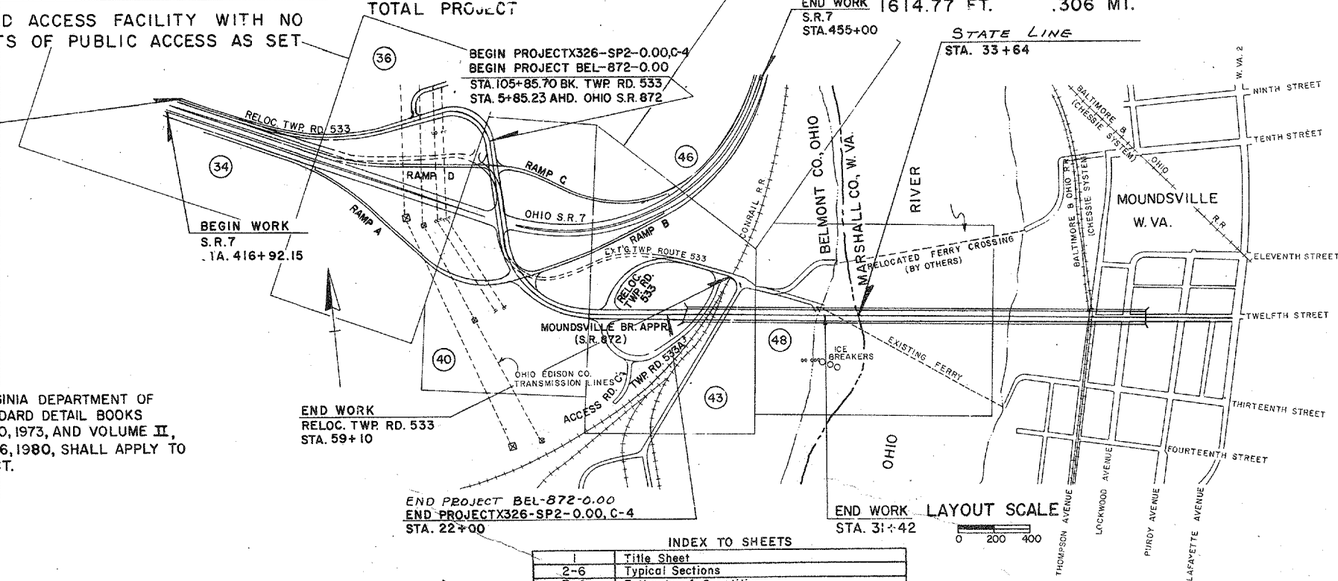

THE WEST VIRGINIA DEPARTMENT OF HIGHWAYS STANDARD DETAIL BOOKS DATED JUNE 20, 1973, AND VOLUME II, DATED JUNE 16, 1980, SHALL APPLY TO THIS PROJECT.

SCALES
PLAN HOR. 0 25 50
PROFILE VERT. 10 5 0
HOR. 0 25 50

DESIGN DESIGNATION
A.D.T. (1981) = 3700
A.D.T. (2001) = 9100
K. = 10%
D. = 65/35
T. = 5%
V. = 40 M.P.H.

CONVENTIONAL SIGNS
State Line
County Line
Corporation Line
Proposed R/W Line
Property Line
Existing Fence
Proposed Fence
Edge of Stream
Proposed Guard Rail
Existing Guard Rail
Railroad
Gas Line
Water Line
Telephone Line
Electric Line
Telephone Pole
Power Pole
Combined Power and Telephone Pole
Tree
Shrub
Right of Way Marker

PLANS PREPARED BY
MICHAEL BAKER, JR., INC.
Consulting Engineers
SIGNED
DATE - JULY 30, 1979
BEAVER, PENNA.

SEAL

INDEX TO SHEETS

1	Title Sheet
2-6	Typical Sections
7-8	Estimate of Quantities
9-15	Summary of Quantities - Roadway
16-18	Summary of Quantities - Signing
19-20B	Summary of Quantities - Maintenance of Traffic
21-22	General Notes
23	Traffic Data
24-31A	Maintenance of Traffic
32	Geometric Layout
33	References
34-49	Plans and Profiles
50-59	Drainage Structure Notes and Details
60-75	Special Details
76-82	Intersection Details
83-85	Superelevation Tables and Diagrams
86	Site Grading Plan
87	Pavement Marking Plan
88-89	Mass Diagrams
90-96	Signing Plan and Details
96A-96-O	Lighting Plan and Details
97-108	Bridge No. BEL-872-0008
115-132	Bridge No. 2971
133-144	Soil Plans
145-255	Cross Sections
109-114	STANDARD DRAWINGS

REVISION NUMBER	SHEET NUMBER	REVISIONS	DATE	BY
1	109-114	ADDED SHEETS	5/5/82	C. RUNG

~~SHEETS 109-114 DELETED~~

I HEREBY CERTIFY THAT THIS IS A CORRECT COPY OF THE PLANS OF PROJECT X326-SP2-0.00, C-4.
September 6, 1979
EXECUTIVE SECRETARY

OHIO APPROVALS
The right of way for the Ohio portion of this improvement will be provided by the State of Ohio.

I hereby approve these plans and declare that the making of this improvement will not require the closing to traffic of the highway and that provisions for maintenance and safety of traffic will be as set forth on the plans and estimates.

APPROVED George A. Nielsen
DATE 8-16-79 DISTRICT DEPUTY DIRECTOR OF TRANSPORTATION

APPROVED Robert B. Pfeifer
DATE 8-20-79 ENGINEER, BUREAU OF BRIDGES, AND STRUCTURAL DESIGN

APPROVED R. E. Gatke
DATE 8-22-79 CHIEF ENGINEER, PLANNING AND DESIGN

APPROVED David L. Wier
DATE 8-22-79 DIRECTOR, DEPARTMENT OF TRANSPORTATION

WEST VIRGINIA APPROVALS
RECOMMENDED William L. Pomeroy
DIRECTOR STRUCTURES DIVISION

RECOMMENDED John Chaney
DIRECTOR ROADWAY DESIGN DIVISION

REVIEWED Donovan H. Boyd
CHIEF ENGINEER - DEVELOPMENT

RECOMMENDED FOR APPROVAL William A. Hartig
STATE HIGHWAY ENGINEER

APPROVED Charles Wise
COMMISSIONER OF HIGHWAYS

APPROVED
DIVISION ADMINISTRATOR DATE

U. S. DEPARTMENT OF TRANSPORTATION
FEDERAL HIGHWAY ADMINISTRATION

PROJECT NO. X326-SP2-0.00, C-4

(158)

FED. HWY. ADM.	STATE DIST. NO.	STATE PROJECT NO.	FED. PROJECT NO.	FISCAL YEAR	COUNTY	SHEET NO.	TOTAL SHEETS
W.VA.	6	326-SP2-0.00 C-4	M-5251-(002)		MARSHALL, W.VA. BELMONT, OHIO	96A	255

F.H.W.A. REGION	STATE	PROJECT	
5	OHIO		

E1

BEL-872-0.00

GENERAL LIGHTING NOTES

SPECIFICATIONS

THESE NOTES ARE SUPPLEMENTAL TO SPECIAL PROVISIONS, SECTIONS 625, 713 AND 839. REFERENCE SHALL BE MADE TO OHIO DEPARTMENT OF TRANSPORTATION STANDARD CONSTRUCTION DRAWING HL-1, HL-2, HL-3, HL-5, HL-7, HL-8, HL-9, HL-10, HL-11, HL-12, HL-15 AND HL-16. (SHEETS E4 TO E15)

625.03 - GENERAL

THE POWER SUPPLYING AGENCY FOR THIS PROJECT IS: OHIO POWER COMPANY
BOX 40
BELLAIRE, OHIO 43906

THIS PROJECT HAS BEEN DESIGNED ON THE BASIS OF 5% VOLTAGE DROP PERMISSIBLE ON BRANCH CIRCUITS. THE PROJECT WILL RECEIVE 480 VOLT TWO-WIRE SECONDARY SERVICE, ONE SIDE GROUNDED FROM THE OHIO POWER COMPANY.

THE PROJECT HAS BEEN DESIGNED ON THE BASIS OF 1.2 AVERAGE FOOTCANDLE INITIAL, WITH A MAXIMUM UNIFORMITY RATIO OF 4.0 TO 1.

HIGH VOLTAGE DIRECT CURRENT TEST

A HIGH VOLTAGE DIRECT CURRENT TEST, AS DESCRIBED IN SPECIAL PROVISIONS, SECTION 839, SHALL BE PERFORMED ON ALL DISTRIBUTION CABLE AND DUCT CABLE SYSTEMS TO BE INSTALLED ON THIS PROJECT. THE TEST SHALL NOT BE PERFORMED UNTIL AFTER ALL NEW CONSTRUCTION, SUCH AS GUARD RAIL FENCE, DELINEATOR POSTS, SIGN SUPPORTS, ETC. IN THE IMMEDIATE VICINITY OF THE DISTRIBUTION CABLE RUN BEING TESTED, HAS BEEN COMPLETED.

625.07 - 713.11 HIGH PRESSURE SODIUM LUMINAIRES

STYLE "C" LUMINAIRES SHALL HAVE A SINGLE RATED 480 VOLT, 310 WATT INTEGRAL REGULATOR BALLAST, AND SHALL BE GENERAL ELECTRIC M-1000, WESTINGHOUSE OV-50-TUDOR, ITT AMERICAN 1000, OR EQUAL APPROVED BY THE ENGINEER.

713.14 - LAMPS

HIGH PRESSURE SODIUM LAMPS SHALL BE GENERAL ELECTRIC "LUCALOX", WESTINGHOUSE "CERMALUX", SYLVANIA "LUMALUX, OR EQUAL APPROVED BY THE ENGINEER.

ITEM SPECIAL - CABLE SPLICING KIT

THIS ITEM SHALL CONSIST OF PROVIDING AND INSTALLING AN APPROVED CABLE SPLICING KIT AS DESCRIBED IN PARAGRAPH 5 OF SECTION 713.15 OF THE ODOT CONSTRUCTION AND MATERIAL SPECIFICATIONS. THE COST OF ALL MATERIALS, LABOR, AND EQUIPMENT NECESSARY FOR THIS ITEM SHALL BE INCLUDED IN THE UNIT PRICE BID FOR EACH "ITEM SPECIAL - CABLE SPLICING KIT."

ITEM SPECIAL - LIGHT POLE ANCHOR BOLTS FOR BRIDGES

ANCHOR BOLTS FOR MOUNTING LIGHT POLES ON BRIDGES SHALL CONFORM TO THE REQUIREMENTS OF 713.01 AND DETAILS SHOWN ON THE PLANS AND STANDARD DRAWINGS, OR THE APPROVED SHOP DRAWINGS, FOR THE RESPECTIVE POLES TO BE PLACED THEREON. PAYMENT SHALL BE MADE AT THE UNIT PRICE BID FOR EACH SET OF THE SIZE REQUIRED AND NECESSARY TO INSTALL ONE POLE, AND THIS PAYMENT SHALL CONSTITUTE FULL COMPENSATION FOR FURNISHING AND PLACING THE BOLTS.

UNDERGROUND UTILITIES

EXTREME CAUTION SHOULD BE EXERCISED IN AREAS WITH UNDERGROUND ELECTRICAL CONDUIT AND/OR LIGHTING CABLE, SEWERS, DRAINS, WATERLINES, OR OTHER UNDERGROUND UTILITIES.

THE CONTRACTOR IS FULLY RESPONSIBLE FOR ALL DAMAGE INFLICTED ON UNDERGROUND UTILITIES IN THE EXCAVATION AND PLACEMENT OF SIGN SUPPORT FOUNDATIONS, LIGHT POLE FOUNDATIONS, GUARD RAIL FLARES, PROTECTIVE GUARD RAIL, DELINEATORS AND THE LIKE.

ESTIMATED QUANTITIES

(A) AN ESTIMATED QUANTITY OF 100 LIN. FT. OF 606-25(4), 4-INCH UNDERDRAIN PIPE AND 12.6 CUBIC YARDS OF 606-22 CRUSHED STONE, CRUSHED GRAVEL OR SILICA SAND SHALL BE PROVIDED IN THE LIGHTING GENERAL SUMMARY FOR USE AS DIRECTED BY THE ENGINEER IN PROVIDING POSITIVE DRAINAGE FOR PULL BOXES IN FILL AREAS. IT IS INTENDED THAT ALL PULL BOXES IN THESE AREAS BE PROVIDED THE LENGTH OF UNDERDRAIN NECESSARY TO OBTAIN A SATISFACTORY OUTFALL DOES NOT EXCEED 20 FEET APPROXIMATELY. A PERFORATED PVC PIPE OR CONDUIT MATERIAL APPROVED BY THE ENGINEER MAY BE USED IN THE CONSTRUCTION OF THIS ITEM.

LIGHTING POLES

ALL LIGHTING POLES SHALL BE STYLE II POLES WITH ARM LENGTHS AS INDICATED WITH A 3'-0" UPSWEEP AND 41.7' MOUNTING HEIGHT.

CONDUIT ON STRUCTURES

EXPANSION FITTINGS FOR CONDUIT ON STRUCTURE SHALL BE OZ-GEDNEY TYPE AX, CROUSE-HINDS TYPE XJ-4, APPLETON TYPE XJ-4 OR APPROVED EQUAL.
EACH EXPANSION FITTING SHALL HAVE A COPPER BONDING JUMPER.

TYPICAL
UTILIZATION CURVE

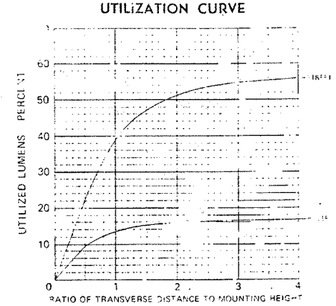

TYPICAL
ISOFOOTCANDLE CURVES

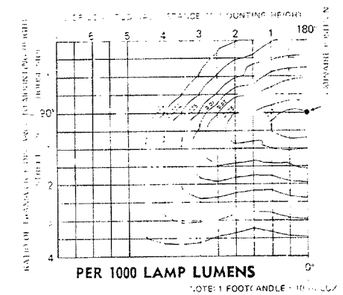

CONTROL CENTER	CONN. LOAD KVA	ENCLOSURE RATING AMPS	SERVICE ENT. COND. SIZE AWG	CIRCUIT NO.	CIRCUIT COND. SIZE AWG	CIRCUIT LOAD AMPS	CIRCUIT FUSE AMPS	C. T. RATING VA.
RELOC. TWP. RD. 533 STA. 98+50	17.1	60	#4	A, B	#4	38.4	A-20A B-30A	300

LIGHT POLE DATA

REFERENCE NUMBER	DESIGN NUMBER	FOUNDATION ANCHOR BOLTS: SIZE, DIAMETER AND LENGTH	FOUNDATION ANCHOR BOLTS: BOLT CIRCLE DIAMETER (MOST LIKELY)	BASE STYLE
1	AT-15B-41.7	1" x 40"	15"	AT-A
~~2~~	~~AT-10B-41.7~~	~~1" x 40"~~	~~15"~~	~~AT-A~~
3	A-6B-41.7	*	11 1/2"	ANCHOR BASE

* SEE SHEET 105 OF 255.

LIGHTING NOTES
CONTROL CENTER DATA
LIGHT POLE DATA

REVISION NUMBER	SHEET NUMBER	REVISIONS	DATE	BY

MICHAEL BAKER, JR., INC. CONSULTING ENGINEERS

PLAN NOTE BOOK NO.
SURVEYED
PLOTTED
ALIGNMENT CHECKED
PT. OF INT. CHECKED
BY
DATE

FED. HWY. ADM.	STATE DIST. NO.	STATE PROJECT NO.	FED. PROJECT NO.	FISCAL YEAR	COUNTY	TOTAL SHEETS	SHEET NO.
W. VA.	6	326-SP2-0.00	M-5251-(002)		MARSHALL, W. VA. BELMONT, OHIO	96B	255

C-4

FHWA REGION	STATE	PROJECT
5	OHIO	

BEL-872-0.00

E-2

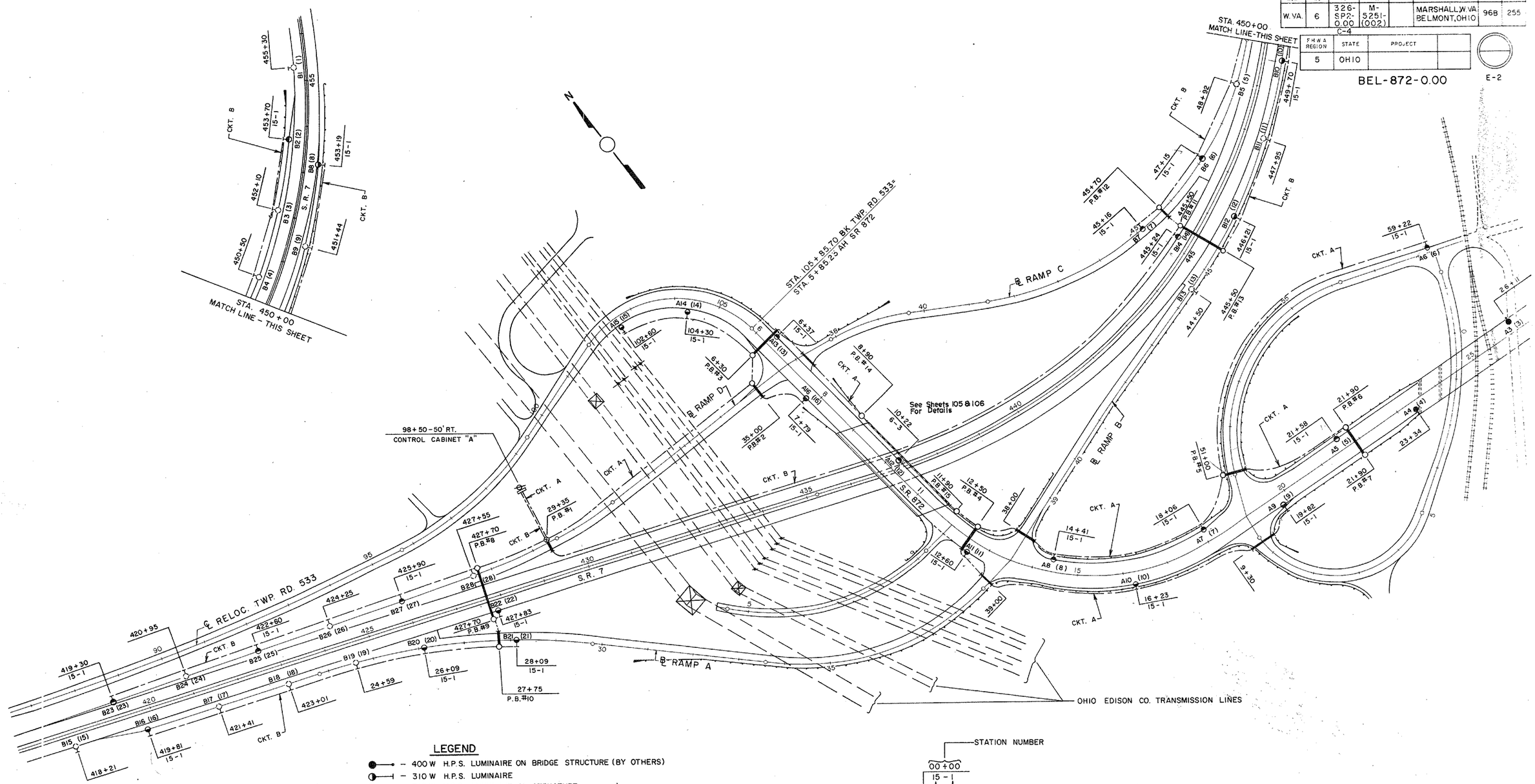

LEGEND

- 400 W H.P.S. LUMINAIRE ON BRIDGE STRUCTURE (BY OTHERS)
- 310 W H.P.S. LUMINAIRE
- 310 W H.P.S. LUMINAIRE ON STRUCTURE
- 310 W H.P.S. LUMINAIRE (FUTURE)
- 1 1/2" CABLEDUCT WITH 2-1/C #4 AWG 600V. CABLE
- 3" GALV. RIGID STEEL CONDUIT-UNDERPAVEMENT CROSSING
- 18" DIA. PULLBOX
- 24" DIA. PULLBOX
- SERVICE POLE AND CONTROL CABINET
- GUARDRAIL

LIGHT POLE IDENTIFICATION

STATION NUMBER — 00+00

15-1 — LIGHT POLE DESIGN (SEE LIGHT POLE DATA)

OFFSET DISTANCE BETWEEN ℄ OF POLE AND EDGE OF PAVEMENT

A2 (2) — POLE NUMBER

CIRCUIT LETTER & POSITION NUMBER

100 50 0 100

LIGHTING PLAN

REVISION NUMBER	SHEET NUMBER	REVISIONS	DATE	BY

MICHAEL BAKER, JR., INC. CONSULTING ENGINEER

PLAN — SURVEYED, PLOTTED, ALIGNMENT CHECKED, RT. OF WAY CHECKED, NOTE BOOK NO., DATE, BY

FED. HWY. ADM.	STATE DIST. NO.	STATE PROJECT NO.	FED. PROJECT NO.	FISCAL YEAR	COUNTY	SHEET NO.	TOTAL SHEETS
W.VA.	6	326-SP2-0.00 C-4	M-5251-(002)		MARSHALL, W.VA. BELMONT, OHIO	96C	255

F.H.W.A. REGION	STATE	PROJECT	
5	OHIO		

BEL-872-0.00

E-3

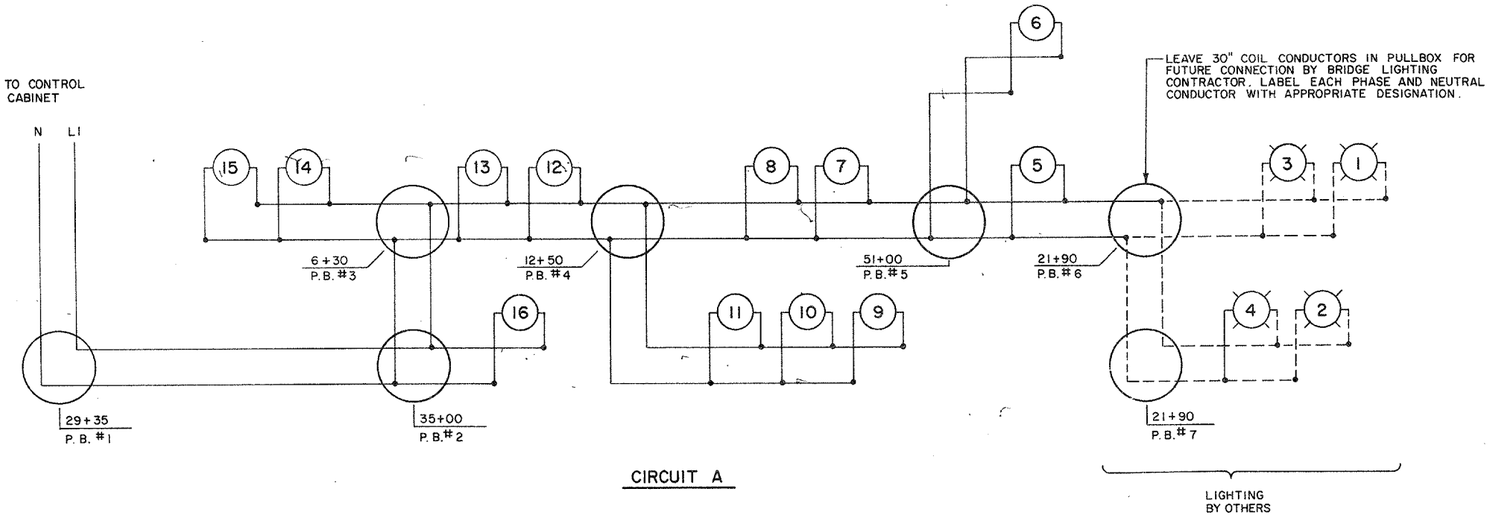

CIRCUIT A

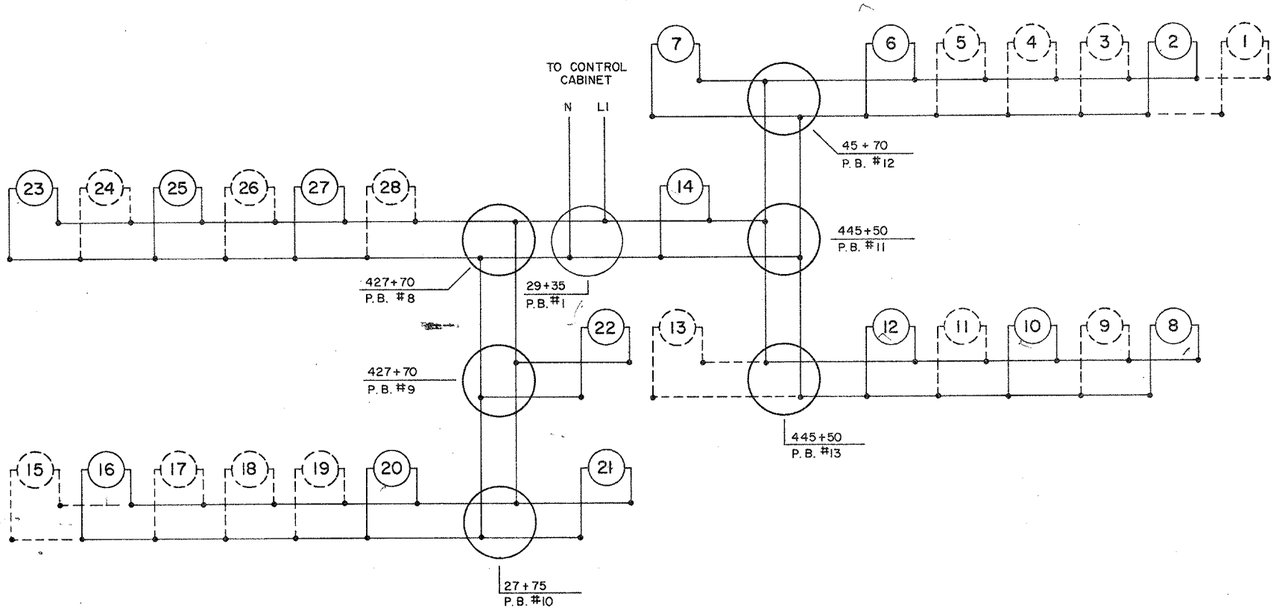

CIRCUIT B

LEGEND

- ○ - 310 WATT H.P.S.
- ⌘ - 400 WATT H.P.S. (BY OTHERS)
- ◌ - 310 WATT H.P.S. (FUTURE)

WIRING DIAGRAMS

REVISION NUMBER	SHEET NUMBER	REVISIONS	DATE	

MICHAEL BAKER, JR., INC. CONSULTING ENGINEERS

PLAN

SURVEYED
PLOTTED
ALIGNMENT CHECKED
RT OF WAY CHECKED
NOTE BOOK
NO.

DATE
BY

FOUNDATION AND TRENCH DETAILS

FED. RD. DIVISION	STATE	PROJECT	
5	OHIO		

BEL-872-0.00

FED. HWY. ADM.	STATE DIST. NO.	STATE PROJECT NO.	FED. PROJECT NO.	FISCAL YEAR	COUNTY	SHEET NO.	TOTAL SHEETS
W.VA.	6	326-SP2-0.00 C-4	M-5251-(002)		MARSHALL, W.VA. BELMONT, OHIO	96D	255

E4

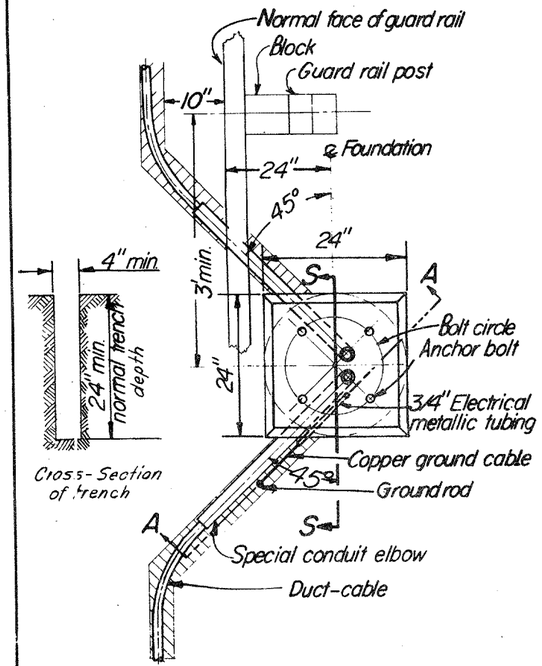

ALTERNATE **TRENCH ALIGNMENT**
(Use when specified or directed by the Engineer)

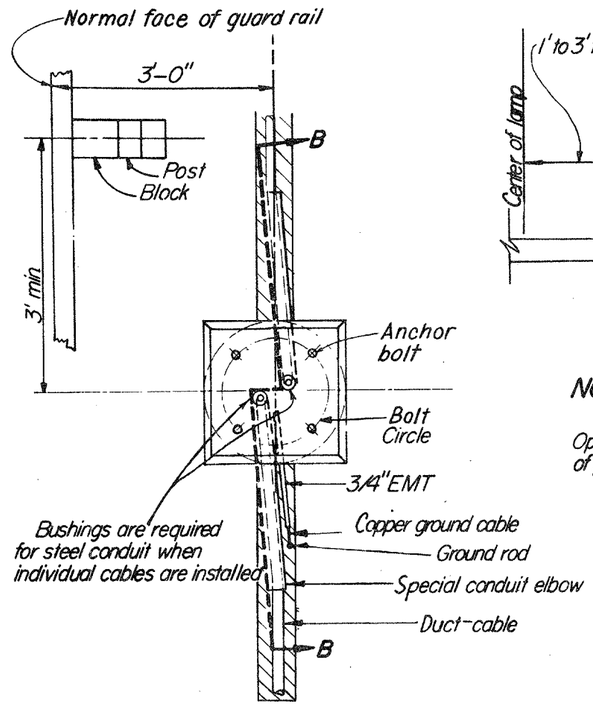

NORMAL **TRENCH ALIGNMENT**

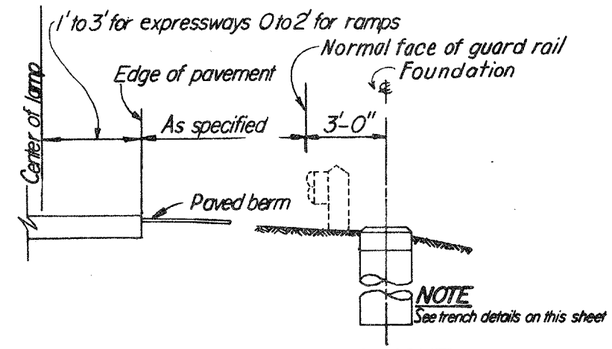

NORMAL LOCATION OF LIGHT POLE FOUNDATION
Opposite hand for poles mounted on left side of pavement.

NOTES

1. FOUNDATION
   Minimum depths to be as follows:
   6 feet for poles having a mounting height less than 40 ft.
   8 feet for poles having a mounting height 40 ft. thru 44 ft.
   9 feet for poles having a mounting height 45 ft. thru 49 ft.
   10 feet for poles having a mounting height of 50 ft. thru 55 ft.
   No. 4 Tie bars required as follows:
   4 No. 4 tie bars for 6 ft. depth
   5 No. 4 tie bars for 8 and 9 ft. depth
   6 No. 4 tie bars for 10 ft. depth
   Rotate bars to clear conduits.
2. COPPER GROUND CABLE:
   No. 4 AWG, stranded insulated copper ground cable shall be used. Exothermically weld cable to ground rod, run free end through 3/4" EMT and connect as shown on HL-9, POLE WIRING.
   Use two coats of insulating varnish over exothermic weld and exposed conductor.
3. ANCHOR BOLT DATA:
   For anchor bolt data see HL-3, POLE BASE DETAILS
4. CONDUIT:
   Where 2" or 3" diameter conduit terminates in a foundation the conduit elbows in the foundation shall be the same size as the conduit. The ends of conduit elbows containing distribution cable shall be closed as described in 625.13
   When the terminating conduit is steel the conduit elbows in the pole foundation shall also be steel.
   At the last light pole on a circuit the vacant conduit elbow in the light pole foundation shall be stubbed out and capped.
5. GROUND RODS:
   When a second ground rod is required it shall be installed in the cable trench as shown in SECTION B-B.
6. REINFORCING STEEL:
   Reinforcing steel may be assembled in cages by approved welding of bars.
   Subject to approval of the Engineer cages may be assembled in a spiral conformation.

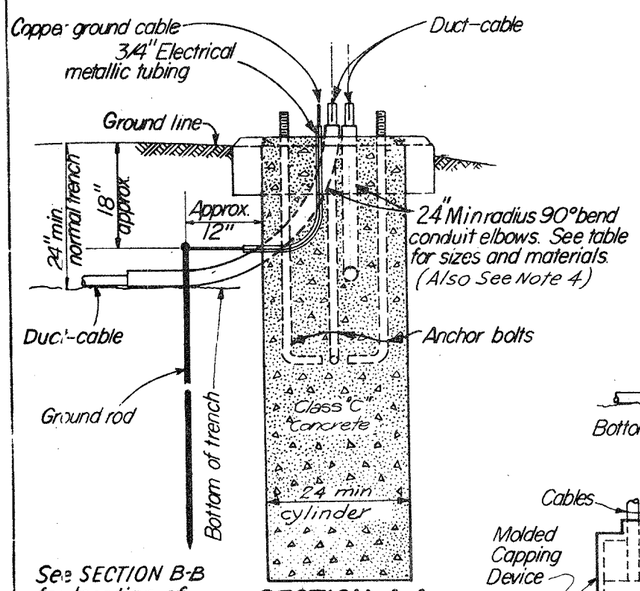

See SECTION B-B for location of Second ground rod when required

SECTION A-A

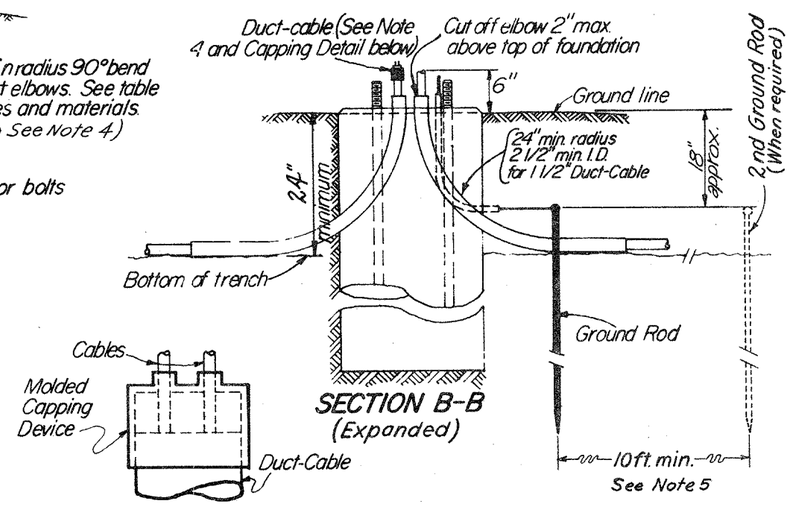

SECTION B-B
(Expanded)

CAPPING DETAIL

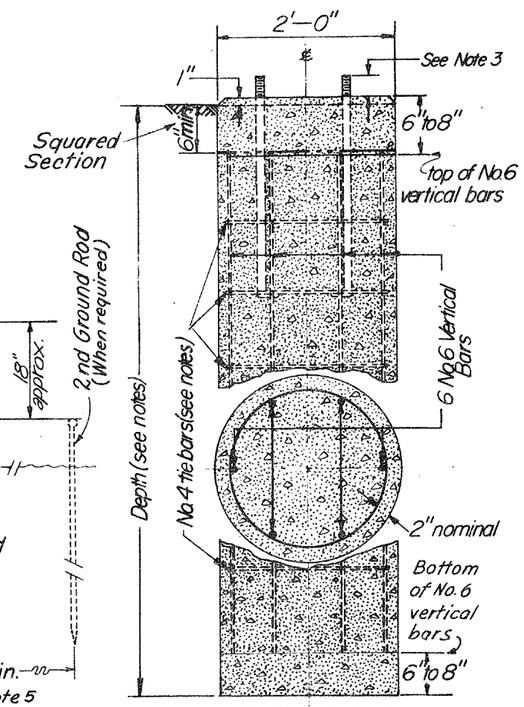

SECTION S-S
REINFORCING STEEL

R = bending radius
S = straight section
Y = R + S

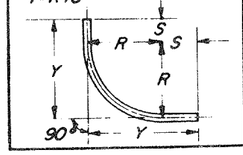

SPECIAL CONDUIT ELBOWS
90° BENDS

2", 2 1/2" & 3" 713.04			3"-713.05 or 713.06		
R	S	Y	R	S	Y
24"	11"	35"	24"	8"	32"
30"	11"	41"			
36"	11"	47"	36"	2"	38"
42"	12"	54"			
48"	12"	60"			

BUREAU OF DESIGN SERVICES
DIVISION OF HIGHWAYS
OHIO DEPARTMENT OF TRANSPORTATION

HIGHWAY LIGHTING

FOUNDATION AND TRENCH DETAILS

DATE 11-1-65 7-6-73 9-6-73

STANDARD CONSTRUCTION DRAWING **HL-1**

APPROVED: W. J. Cunningham Engineer of Design Services

DRAWING 44 NO. 10943

LIGHT POLE DETAILS

FED. RD. DIVISION	STATE	PROJECT	
5	OHIO		

BEL-872-0.00

FED. HWY. ADM.	STATE DIST. NO.	STATE PROJECT NO.	FED. PROJECT NO.	FISCAL YEAR	COUNTY	SHEET NO.	TOTAL SHEETS
W. VA.	6	326-SP2-0.00	M-5251-(002)		MARSHALL, W.VA. BELMONT, OHIO	96E	255

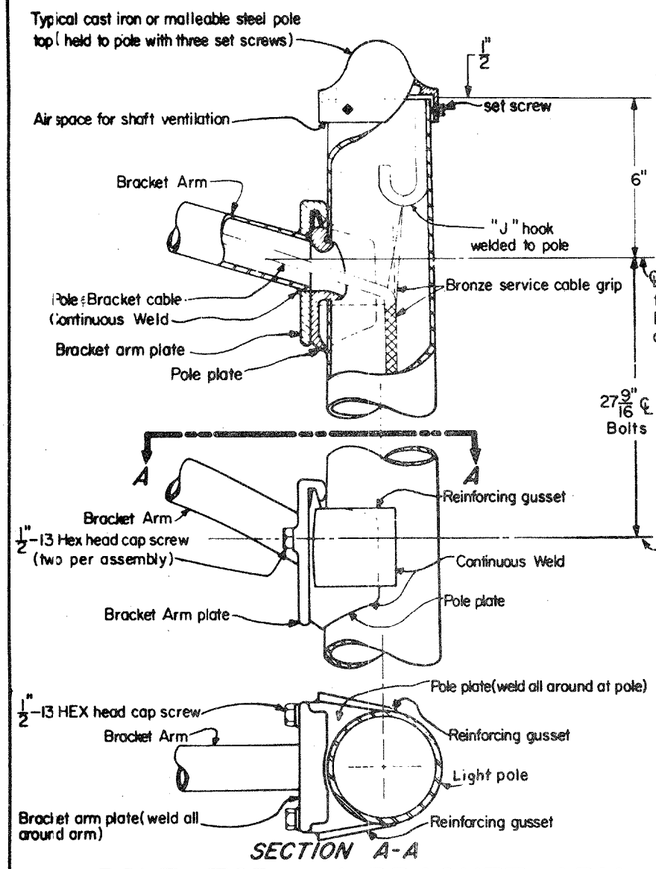

SECTION A-A

POLE TOP and BRACKET ARM ASSEMBLIES

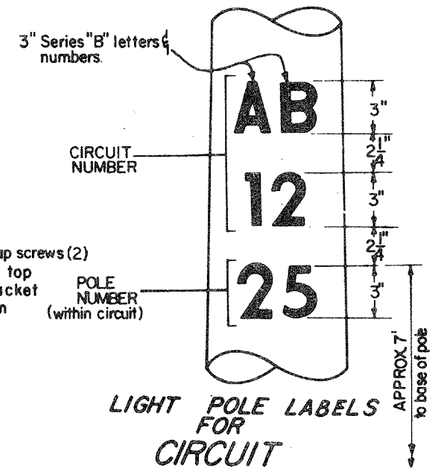

LIGHT POLE LABELS FOR CIRCUIT IDENTIFICATION

(See note 4)

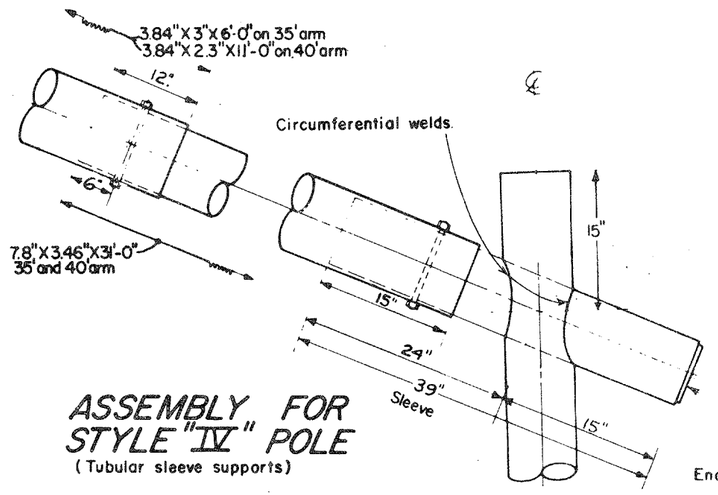

ASSEMBLY FOR STYLE "IV" POLE

(Tubular sleeve supports)

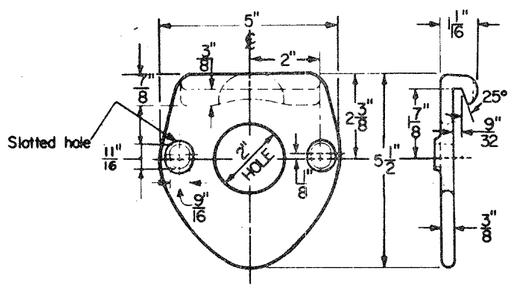

BRACKET ARM PLATE

(CAST STEEL)

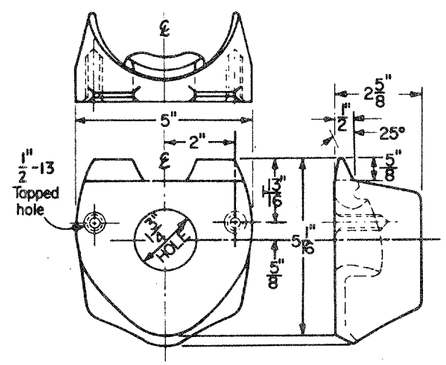

POLE PLATE

(CAST STEEL)

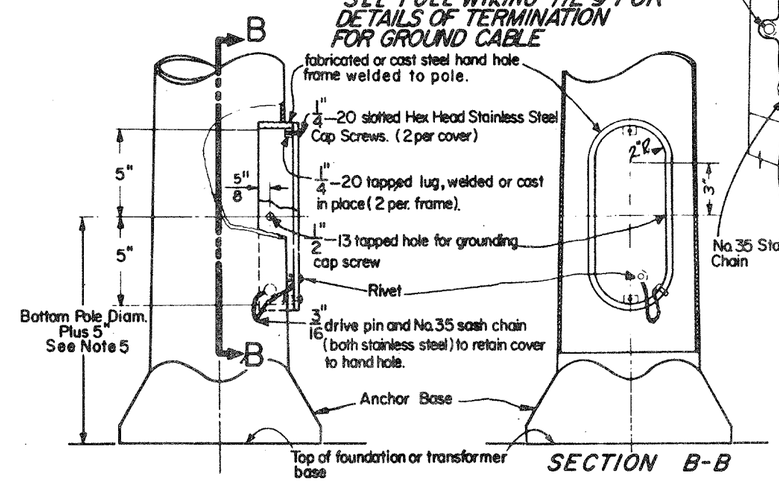

HAND HOLE WITH COVER

See Notes 1 & 2

SECTION B-B

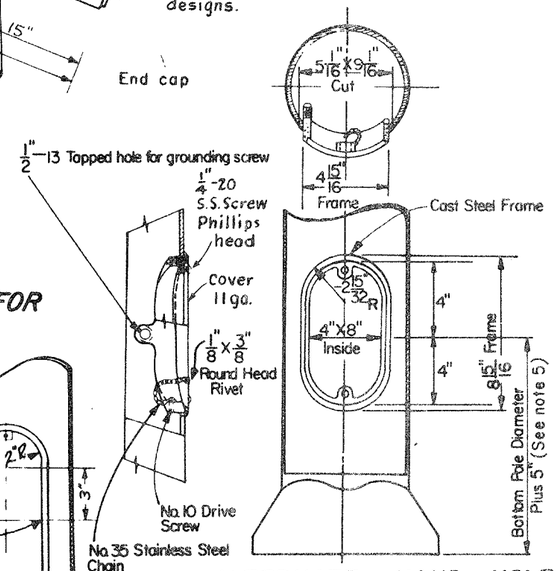

ALTERNATE HAND HOLE

NOTES

E5

1. Hand holes are not required on poles with transformer bases.
2. Hand holes shall be opposite the roadway unless such location renders them inaccessible. (See NOTE 6)
3. Use of Reinforcing gussets is optional.
4. Circuit and light pole numbers shall be as scheduled on light plan sheets. Labels shall meet the requirements of 713.18 and shall contain 3" series "B" letters and numbers as per the "Standard Alphabets for Highway Signs" published by the Federal Highway Adminstration.
5. Hand holes for bridge poles shall be on roadway side and 17" from center of hand hole to bottom of base.
6. All light poles mounted on raised concrete median barriers shall be equipped with handholes. Handholes shall be located beneath the bracket arm extending over the Northbound or Westbound traffic lanes.
7. Details shown hereon are essentially for galvanized steel pole designs meeting 713.01 requirements. For aluminum designs, or other permitted steel material designs, variations from these details will be acceptable, as approved by the Engineer.
8. Circuit identification details are applicable to all pole designs.

BUREAU OF DESIGN SERVICES
DIVISION OF HIGHWAYS
OHIO DEPARTMENT OF TRANSPORTATION

HIGHWAY LIGHTING

LIGHT POLE DETAILS

DATE

STANDARD CONSTRUCTION DRAWING

HL-2

APPROVED: [signature] Engineer of Design Services

FED. RD. DIVISION	STATE	PROJECT	
5	OHIO		

BEL-872-0.00

FED. HWY. ADM.	STATE DIST. NO.	STATE PROJECT NO.	FED. PROJECT NO.	FISCAL YEAR	COUNTY	SHEET NO.	TOTAL SHEETS
W.VA.	6	325-SP2-0.00	M-525-(002)		MARSHALL, W.VA. BELMONT, OHIO	96F	255

E6

POLE BASE DETAILS

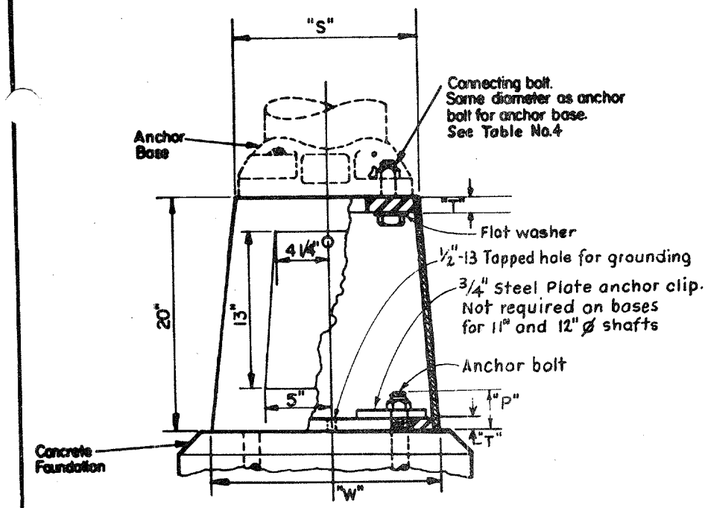

TABLE NO.1 STEEL TRANSFORMER BASES					
SHAFT SIZE	"T"	"S"	"W"	BOLT CIRCLE	"P"
6.0" thru 9.2"	3 1/4" min.	13" sq.	16" sq.	15"	4 1/2"
8.5" thru 10"	1 1/4" min.	15" sq.	18" sq.	17 1/4"	4 1/2"
11" and 12"	1 1/4"	17" sq.	25" sq.	22"	4 1/2"

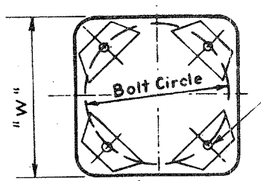

BASE FRAME

STEEL TRANSFORMER BASES

TABLE NO.2 TRANSFORMER BASE ANCHOR BOLTS			
SHAFT SIZE	STEEL POLE GUAGE NO. 11	7	3
6.5"	1"ø X 40"	1"ø X 40"	1"ø X 40"
7"			
7.5"			
8"			
8.5"			
9"			1 1/4"ø X 48"
9.5			
10"		1 1/4"ø X 48"	
11"			1 1/2" ø x 60"
12"			

40" bolts include 4" bend
48" and 60" bolts include 6" bend

TABLE NO. 3 ALUMINUM TRANSFORMER BASES					
TYPE	"P"	"S"	"W"	BOLT CIRCLE	SHAFT SIZE
AT-A	4 1/2"	13"	16 3/8"	15"	SEE NOTE 2
AT-C	4 1/2"	14 5/8"	17 1/4"	17 1/4"	SEE NOTE 3

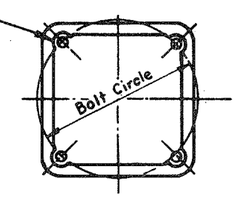

BASE FRAME

CAST ALUMINUM TRANSFORMER BASES

SHALL NOT BE USED WHERE OVERHEAD WIRING IS REQUIRED

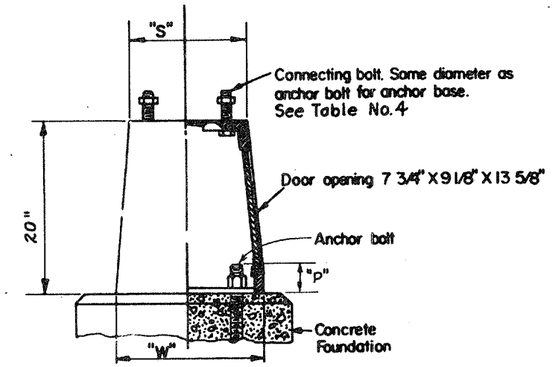

TABLE NO. 5			
SHAFT SIZE	"F"	U-BOLT LENGTH ‡ SIDEWALK	STD. RDWY
6.5"	6 3/4"	75"	82"
7.0"	7 7/16"	75"	82"
7.5"	7 7/16"	76 1/2"	83 1/2"
8.0"	7 3/4"	76 1/2"	83 1/2"
8.5"	8 1/8"	76 1/2"	83 1/2"
9.0"	8 7/8"	78"	85"
9.5"	9 3/16"	78"	85"
10.0"	9 9/16"	79 1/2"	86 1/2"
11.0"	10 5/8"	79 1/2"	86 1/2"
12.0"	11 5/16"	81"	88"

‡ See NOTE 4

NOTES

1. For pole grounding details see "POLE WIRING," HL-9
2. Type AT-A base shall normally be used with anchor base poles having diameters of 6 inches through 9.2, inches inclusive, and mounting heights through 41.7 feet.
3. Type AT-C base must be used for anchor base poles having diameters of 9.5 inches and 10 inches and mounting heights through 51.7 except for exclusions listed below:
   a. All double-arm poles with mounting heights of 50 feet.
   b. All single-arm poles with mounting heights of 50 feet and arm lengths of 25 feet and 30 feet.
   c. All double-arm poles with mounting heights of 45 feet and arm lengths of 25 feet and 30 feet.
   d. All single-arm poles with mounting heights of 45 feet and arm length of 30 feet.

   On excepted poles above, transformer bases of material other than cast aluminum shall be used.
4. U-bolt lengths shown in TABLE NO.5 are developed lengths and may vary ±1/2". Lengths are for 1", 1 1/4", 1 1/2" and 1 3/4" diam. bolts. Lengths shown are for bridges with sidewalk railing and for bridges having a standard roadway railing.
5. For anchor bolt data when transformer bases are to be mounted on bridge pilasters see TABLE NO.1 and TABLE NO.2.
6. For median-mounted pole base details See HL-17A or HL-17B

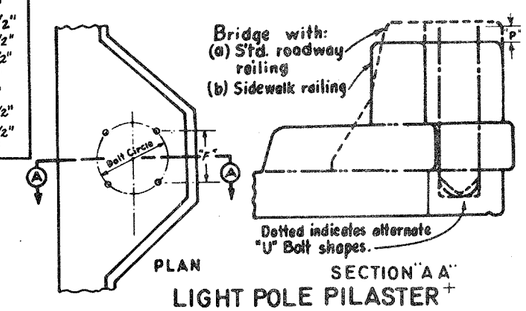

LIGHT POLE PILASTER+

BRIDGE MOUNTED POLES

+ For pilaster dimensional details, See HL-4

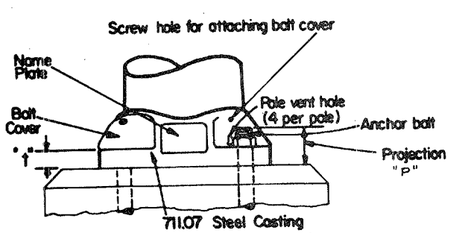

OPTIONAL **CAST STEEL** BASE
(See TABLE NO.4)

TABLE NO. 4 ANCHOR BOLTS FOR STEEL ANCHOR BASES						
SHAFT SIZE	BOLT CIRCLE	BOLT* PROJ. "P"	"t"	POLE GUAGE NO.11	NO. 7	NO.3
6.5"	9 1/2"	2 1/8"	7/8"	1"x 40"	1 1/4"x 48"	1 1/4"x48"
7"	10"	2 1/4"	1"			
7.5"	10 1/2"	2 5/8"	1 1/8"			
8"	11"	2 5/8"	1 3/16"			
8.5"	11 1/2"	2 3/4"	1 1/4"			
9"	12 1/2"	3"	1 5/16"			1 1/2"x60"
9.5	13"	3 1/8"	1 3/8"	1 1/4"x48"		
10"	13 1/2"	3 3/8"	1 7/16"		1 1/2"x 60"	
11"	15"	3 5/8"	1 5/8"			1 3/4"x 90"
12"	16"	4	1 11/16"			

* Based on cast steel anchor bases only. For plate bases the projection shall be increased by the amount the plate thickness exceeds the "t" dimension shown.

STEEL ANCHOR BASES

(See optional base plate details on either side)

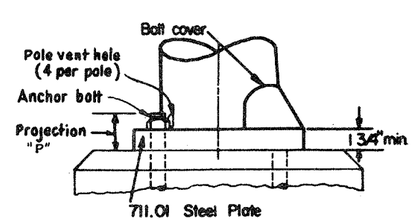

OPTIONAL **STEEL PLATE** BASE
(See TABLE NO 4)

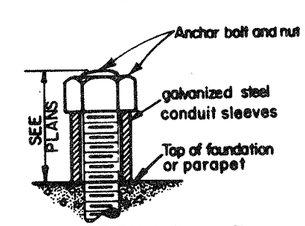

ANCHOR BOLT COVER

Note: To be placed on all light pole anchor bolts provided for future lighting installations.

BUREAU OF DESIGN SERVICES
DIVISION OF HIGHWAYS
OHIO DEPARTMENT OF TRANSPORTATION

HIGHWAY LIGHTING

POLE BASE DETAILS

DATE 11-1-65 REV. 7-27-73

STANDARD CONSTRUCTION DRAWING **HL-3**

APPROVED: [signature] Engineer of Design Services

FED. RD. DIVISION	STATE	PROJECT	
5	OHIO		

BEL-872-0.00

FED. HWY. ADM.	STATE DIST. NO.	STATE PROJECT NO.	FED. PROJECT NO.	FISCAL YEAR	COUNTY	SHEET NO.	TOTAL SHEETS
W.VA.	6	326-SP2-0.00	M-5251-(002)		MARSHALL, W.VA BELMONT, OHIO	96G	255

C-4

STRUCTURE LIGHTING II

E7

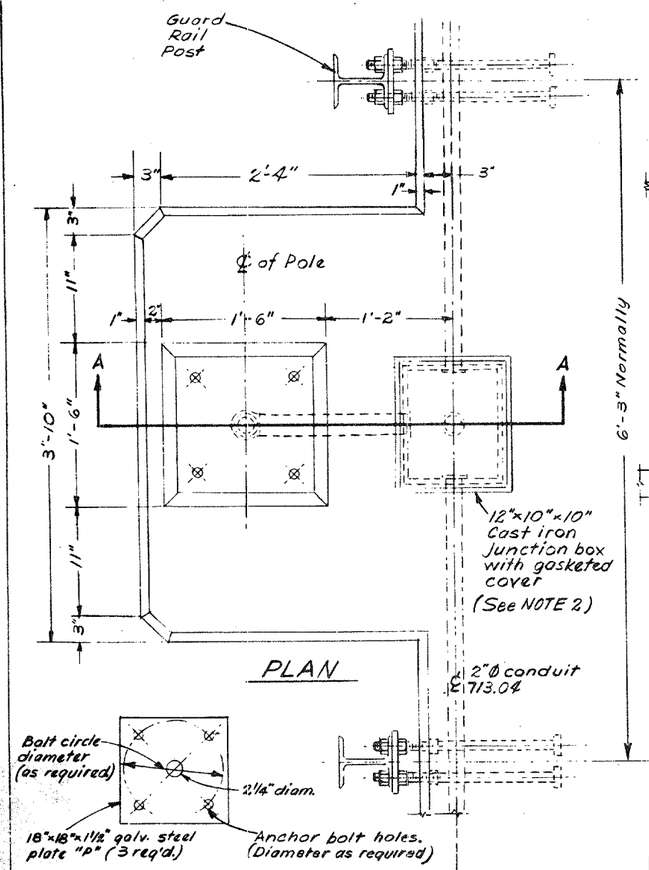

PLAN

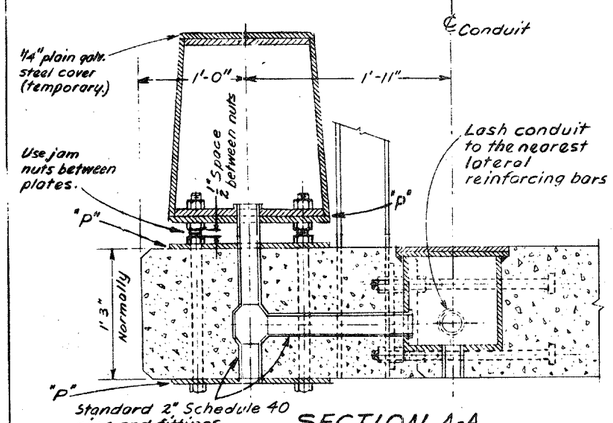

SECTION A-A

LIGHT POLE PILASTER FOR BRIDGE WITHOUT CURBS AND WITH HIGHWAY GUARD RAIL

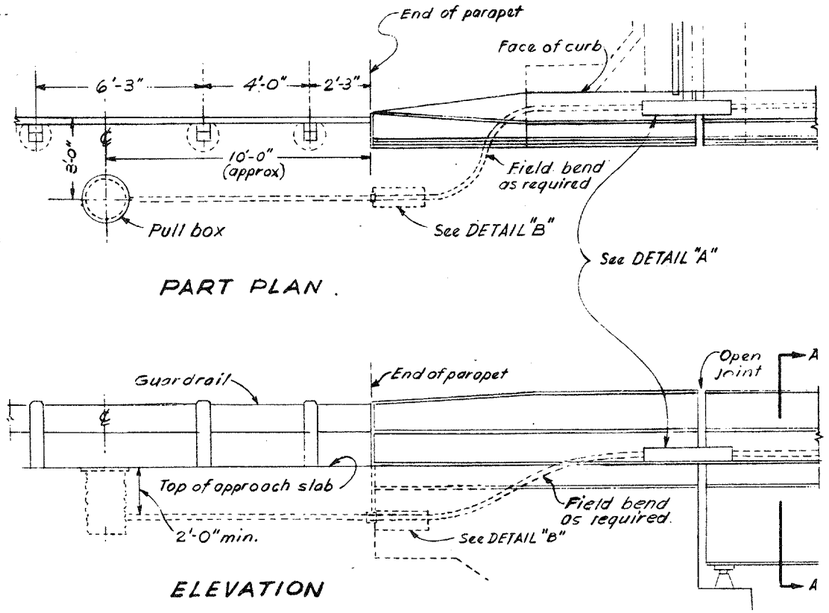

PART PLAN

ELEVATION

CONDUIT DETAILS FOR BRIDGE WITH STANDARD ROADWAY RAILING

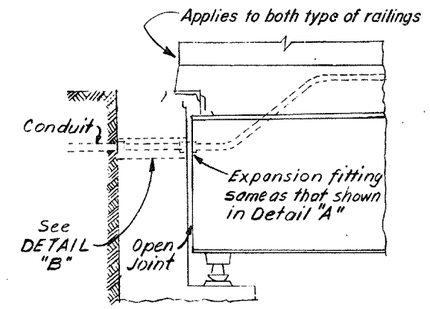

STRAIGHT WING WALL

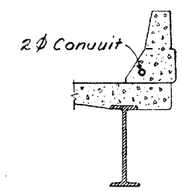

SECTION A-A

NOTES

1. Fill space around the conduit and/or fittings within the cavity with a polyurethane foam or other approved cold applied joint sealer.
2. All conduit openings in junction boxes shall be bossed drilled and tapped. Covers shall be 1/4" min. thick cast iron.

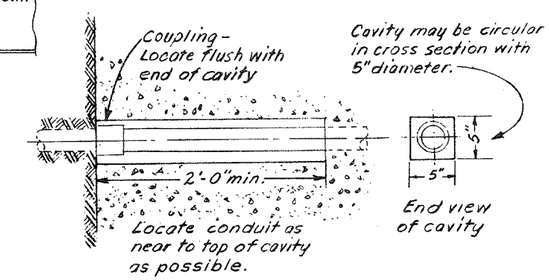

DETAIL "B"

CAVITY FOR CONDUIT CONNECTION AT BRIDGE ABUTMENTS

Dimensions may be altered to fit abutment design

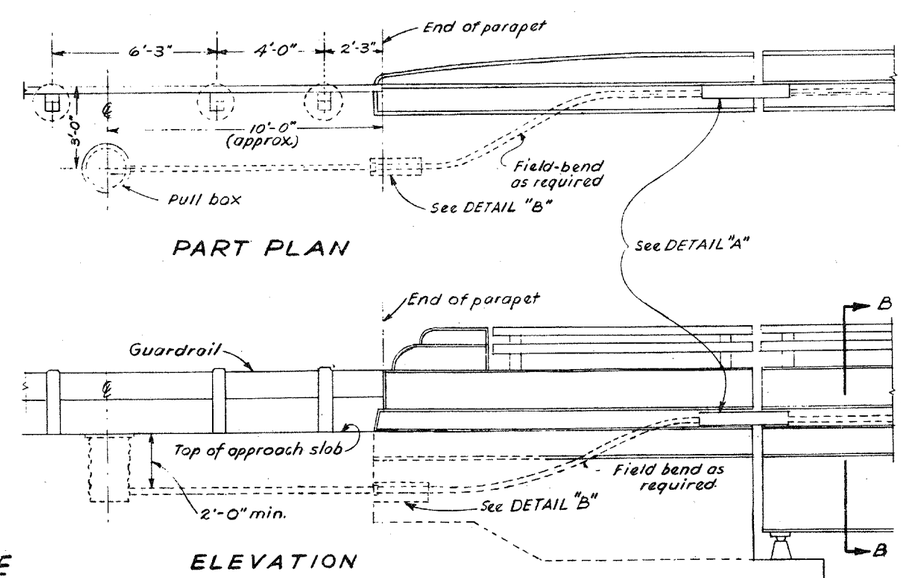

PART PLAN

ELEVATION

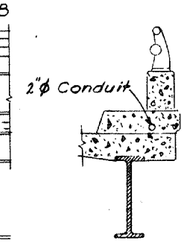

SECTION B-B

CONDUIT DETAILS FOR BRIDGE WITH SIDEWALK RAILING

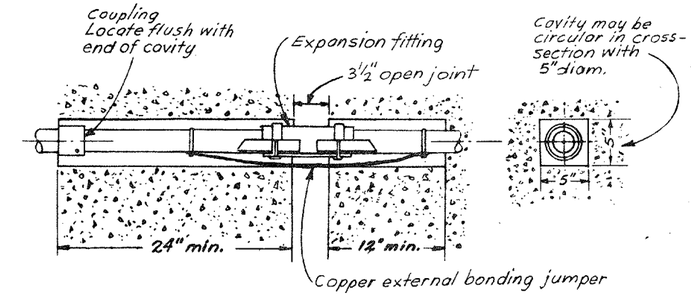

Locate conduit and fittings as near to top of cavity as possible.

DETAIL "A"

CAVITY FOR CONDUIT EXPANSION FITTING

Dimensions may be altered to fit abutment design.

BUREAU OF DESIGN SERVICES
DIVISION OF HIGHWAYS
OHIO DEPARTMENT OF TRANSPORTATION

HIGHWAY LIGHTING

STRUCTURE LIGHTING II

STANDARD CONSTRUCTION DRAWING

HL-5

DATE 4-6-73 9-6-73

APPROVED: W. J. Cunningham Engineer of Design Services

STRUCTURE GROUNDING

FED. RD. DIVISION	STATE	PROJECT	
5	OHIO		

BEL - 872 - 0.00

FED. HWY. ADM.	STATE DIST. NO.	STATE PROJECT NO.	FED. PROJECT NO.	FISCAL YEAR	COUNTY	SHEET NO.	TOTAL SHEETS
W. VA.	6	326-SP2-0.00	M-5251-(002)		MARSHALL, W.VA. BELMONT, OHIO	96H	255

C-4

E8

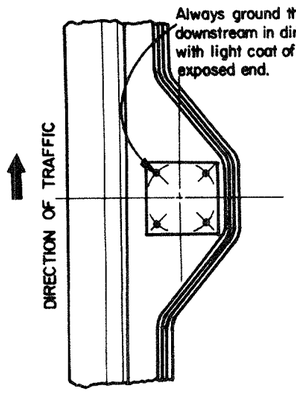

LIGHT POLE PARAPET PLAN

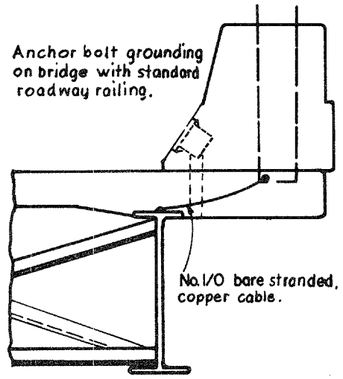

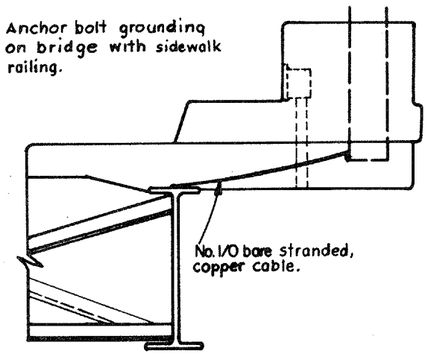

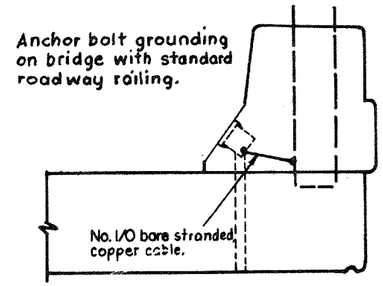

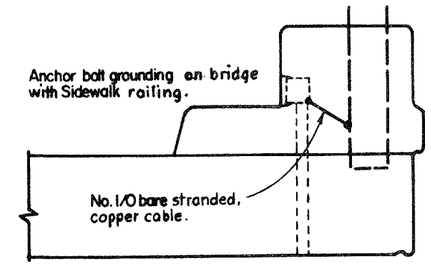

NOTES

Copper grounding cable shall be connected to structural steel, pile encasement, piling, ground rods and/or light pole anchor bolts by means of exothermic welding. Two coats of insulating varnish shall be applied over the exothermic weld and exposed cable.

STEEL BEAM BRIDGES

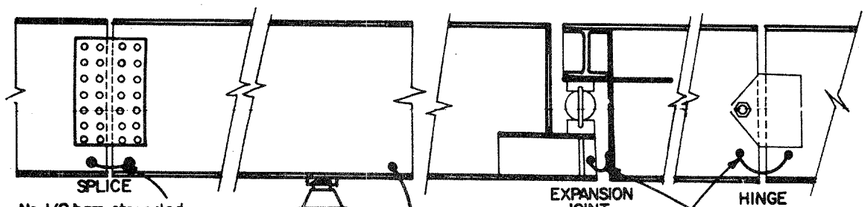

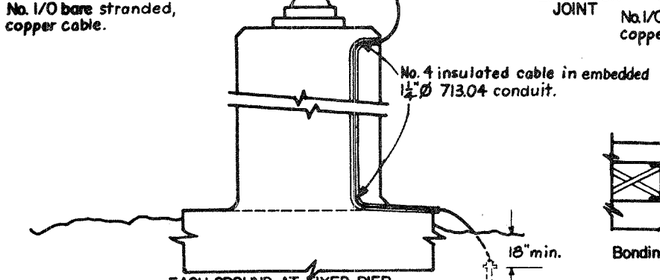

EACH GROUND AT FIXED PIER

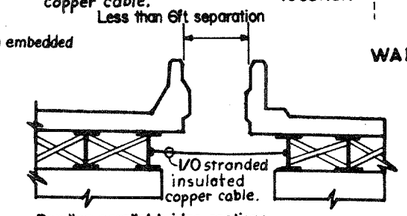

Bonding parallel bridge sections

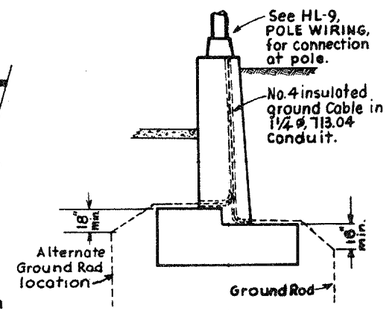

GROUNDING OF WALL-MOUNTED POLES

CONCRETE SLAB BRIDGES

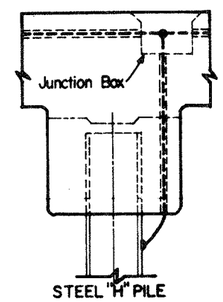

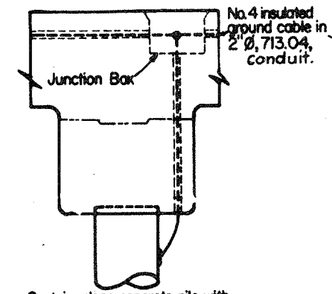

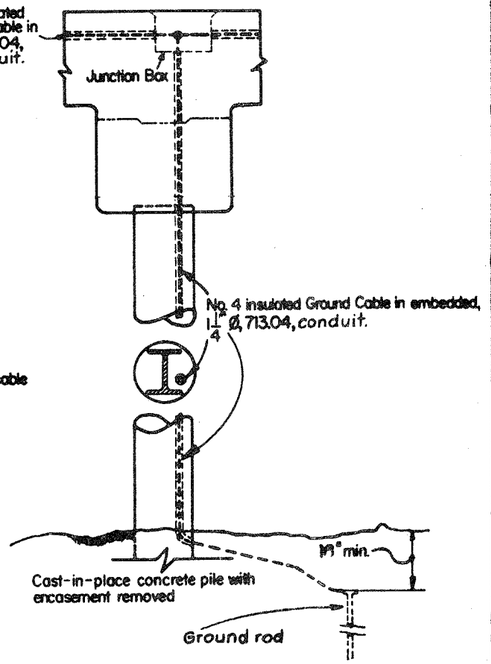

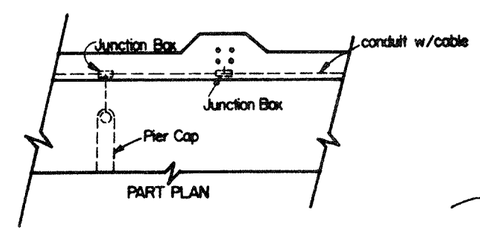

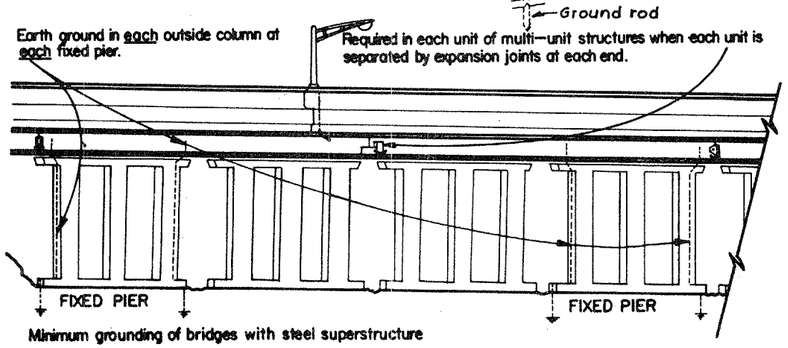

Minimum grounding of bridges with steel superstructure

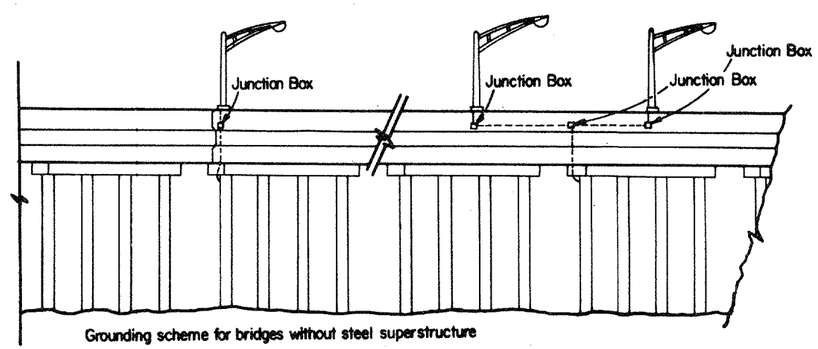

Grounding scheme for bridges without steel superstructure

BUREAU OF DESIGN SERVICES
DIVISION OF HIGHWAYS
OHIO DEPARTMENT OF TRANSPORTATION

HIGHWAY LIGHTING

DATE 4-6-73 9-6-73

STRUCTURE GROUNDING

STANDARD CONSTRUCTION DRAWING

HL-7

APPROVED: H. J. Cunningham Engineer of Design Services

BRUNING AA-560 10M43

LIGHT POLE STYLES

FED. RD. DIVISION	STATE	PROJECT	
5	OHIO		

BEL - 872 - 0.00

FED. HWY. ADM.	STATE DIST. NO.	STATE PROJECT NO.	FED. PROJECT NO.	FISCAL YEAR	COUNTY	SHEET NO.	TOTAL SHEETS
W. VA.	6	326-5P2-0.00	M-5251-(002)		MARSHALL, W.VA. BELMONT, OHIO	96I	255

C-4

E9

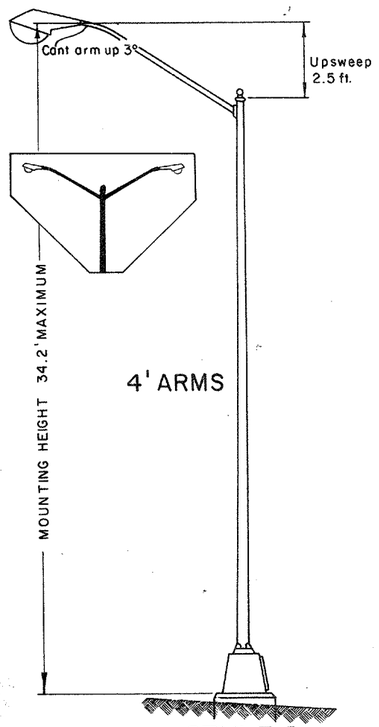

STYLE I

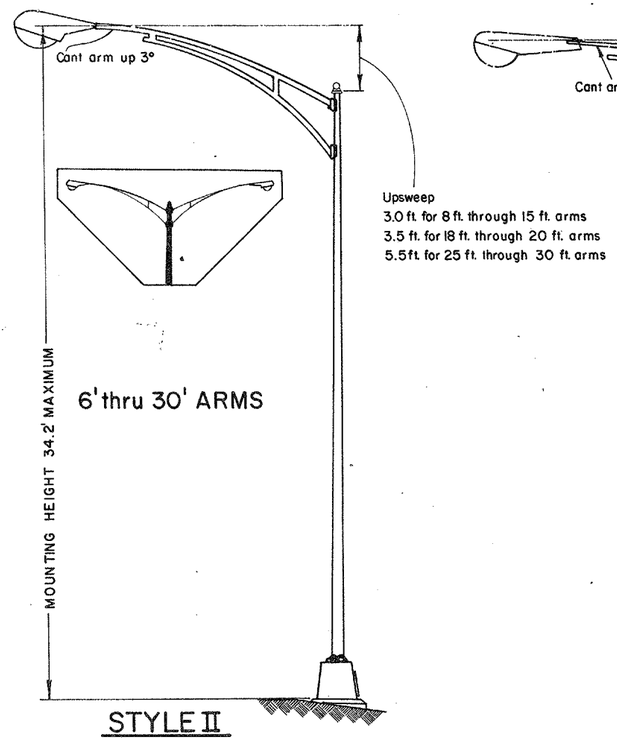

STYLE II

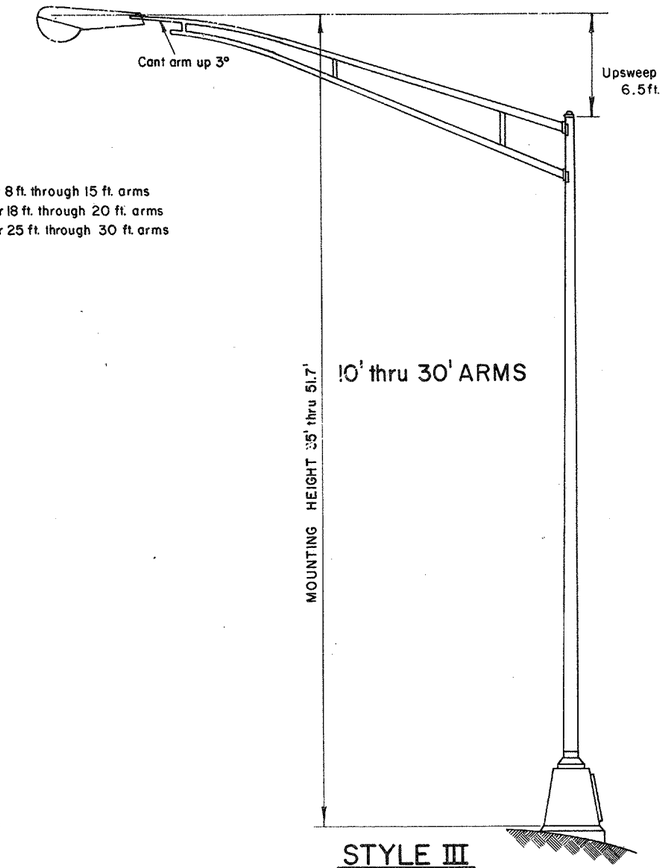

STYLE III

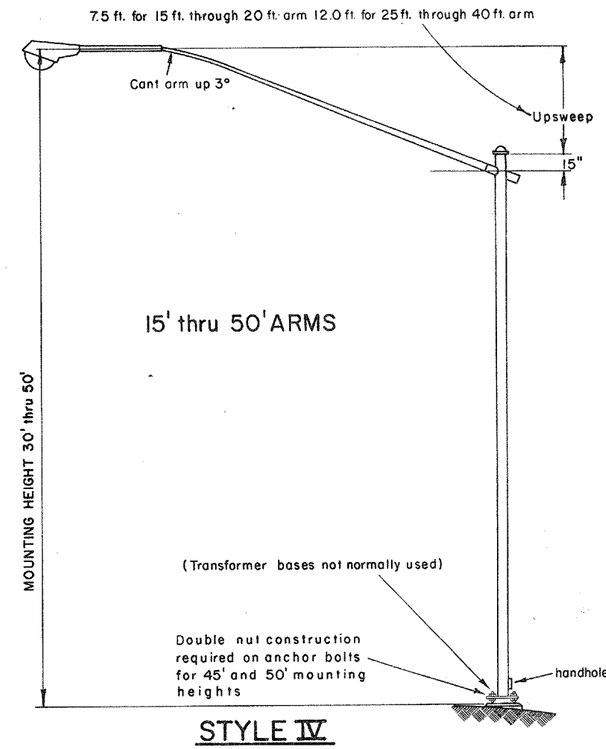

STYLE IV

NOTE: Subject to the approval of the Engineer, modification of the ratio of bracket upsweep to arm length is permissible provided the basic pole proportions are maintained as shown

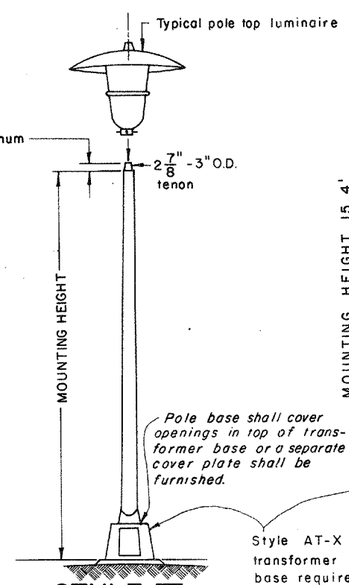

STYLE V

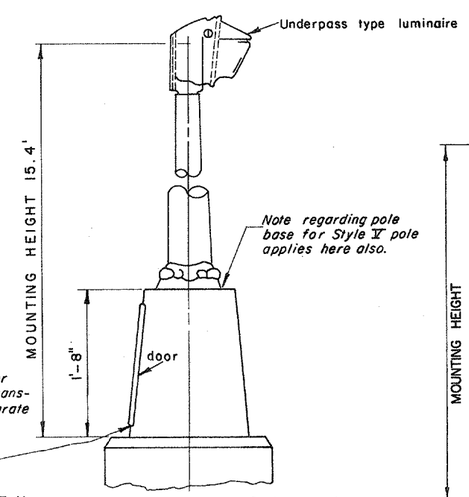

STYLE VI

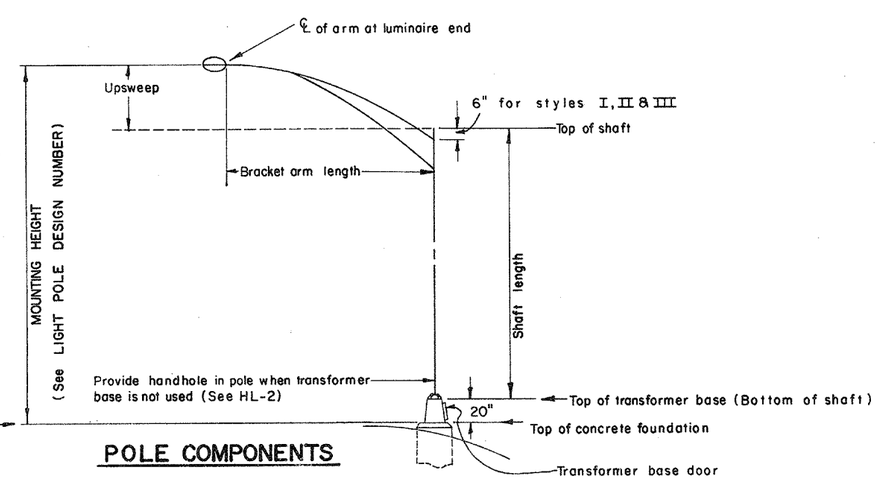

POLE COMPONENTS

Base type A = Anchor
AT = Aluminum Transformer
ST = Steel Transformer
T = Steel or Aluminum Transformer

A 4 B 25 D

Bracket arm(s) — *"B" = Single arm; "BB" = Double arm (If unequal arms Ex. 10B15B); "ON" = Post top*

Special features (See details)

Mounting height (The distance from top of foundation retaining wall or bridge parapet to the center of the bracket arm at the luminaire end)

Arm Length

LIGHT POLE DESIGN NUMBER

BUREAU OF DESIGN SERVICES
DIVISION OF HIGHWAYS
OHIO DEPARTMENT OF TRANSPORTATION

HIGHWAY LIGHTING

LIGHT POLE STYLES

DATE 9-6-73 12-10-73 2-1-7

STANDARD CONSTRUCTION DRAWING

HL-8

APPROVED M. J. Cunningham Engineer of Design Services

PLAN | SURVEYED | PLOTTED | ALIGNMENT CHECKED | PT. OF INT. CHECKED | NOTE BOOK | NO.

POLE WIRING

FED. RD. DIVISION	STATE	PROJECT	
5	OHIO		

BEL-872-0.00

FED. HWY. ADM.	STATE DIST. NO.	STATE PROJECT NO.	FED. PROJECT NO.	FISCAL YEAR	COUNTY	SHEET NO.	TOTAL SHEETS
W.VA.	6	326-SP2-0.00	M-525I-(002)		MARSHALL, W.VA. BELMONT, OHIO	96J	255

C-4 E10

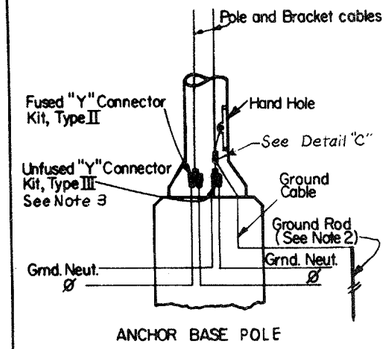

ANCHOR BASE POLE

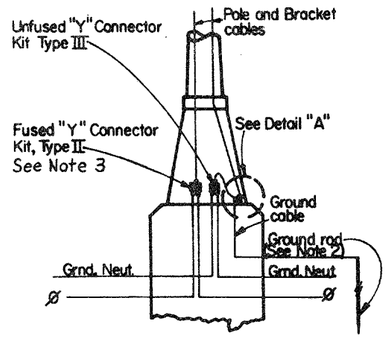

TRANSFORMER BASE POLE

480 VOLT, TWO-WIRE, GROUNDED NEUTRAL

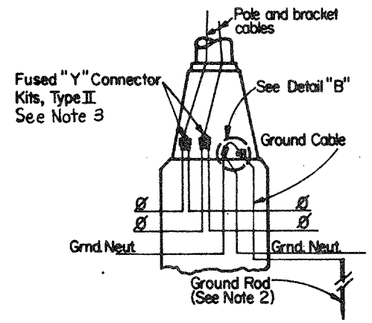

TRANSFORMER BASE POLE

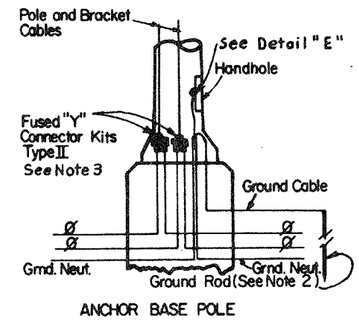

ANCHOR BASE POLE

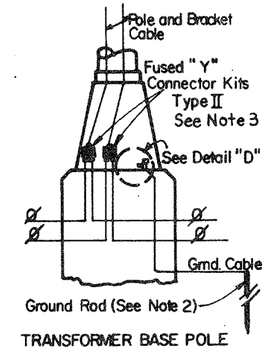

TRANSFORMER BASE POLE

120/240 VOLTS, THREE WIRE, GROUNDED NEUTRAL

240 or 480 VOLTS, TWO-WIRE, UNGROUNDED

NOTES

1. Provide sufficient slack in all cables to permit bringing Kits outside of pole base through handhole of anchor base poles or door in transformer base poles.
2. For structure-mounted poles substitute "Structure grounding system" for "ground rod."
3. Fuses for connector Kits shall be as follows:

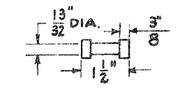

Any standard Midget Ferrule type fuse, (except glass tube) may be used in this connection.

Fuses rated 600 volts and 10 amperes, minimum shall be used unless other wise specified.

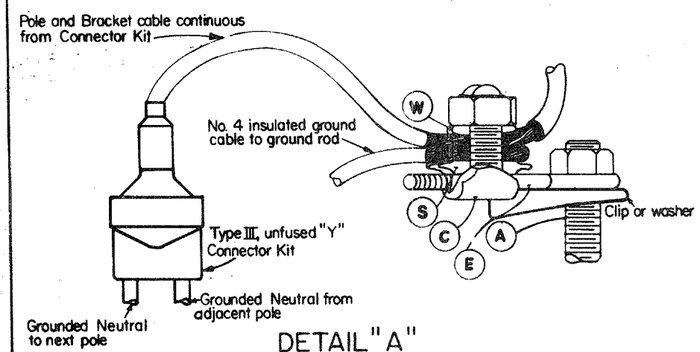

DETAIL "A"
2-Wire Grounded Neutral
Transformer Base Pole

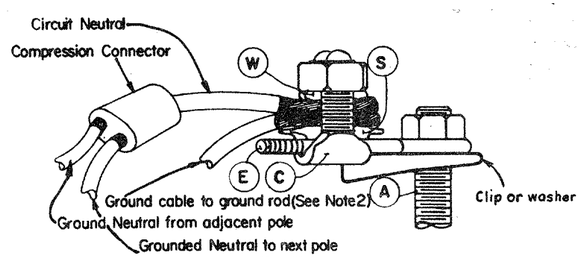

DETAIL "B"
3-WIRE, GROUNDED NEUTRAL
Transformer Base Pole

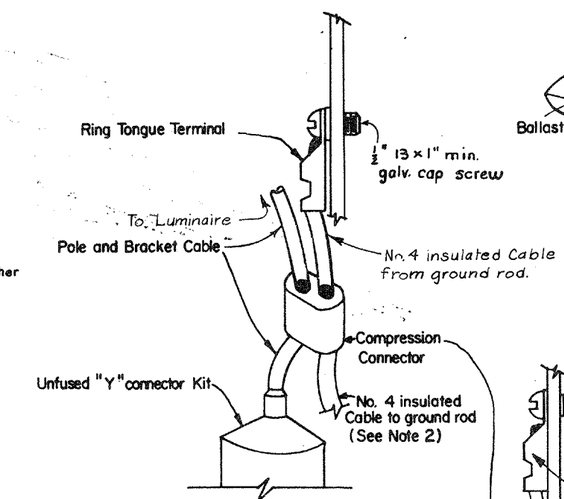

DETAIL "C"
2-Wire, Grounded Neutral
Anchor Base Pole

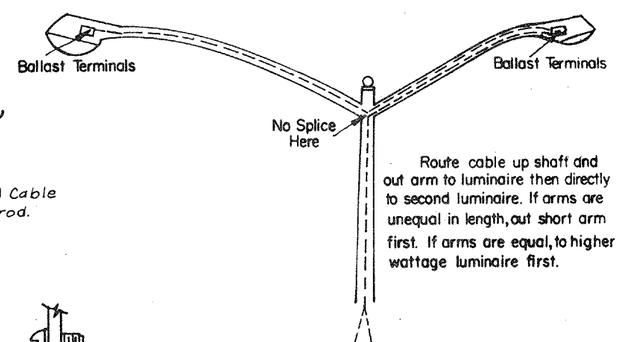

WIRING FOR TWIN-LUMINAIRE POLES

LEGEND of ITEMS COMMON TO DETAILS "A", "B", & "D"

- (A) Anchor Bolt
- (C) Tin Plated Copper Split Bolt Connector with the following components:
  - (S) Spacer (Tin plated)
  - (W) Washer
  - (E) 3/8" X 4" Galv. Steel eyebolt

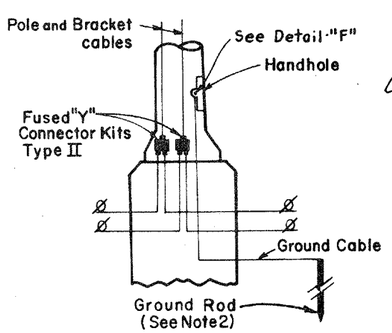

Anchor Base Pole

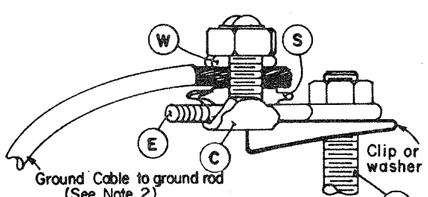

DETAIL "D"
2-Wire, Ungrounded Circuit
Transformer Base Pole

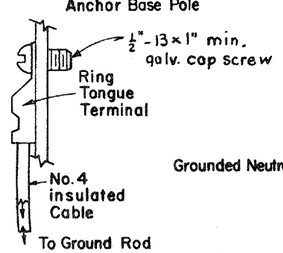

DETAIL "F"
2-WIRE UNGROUNDED

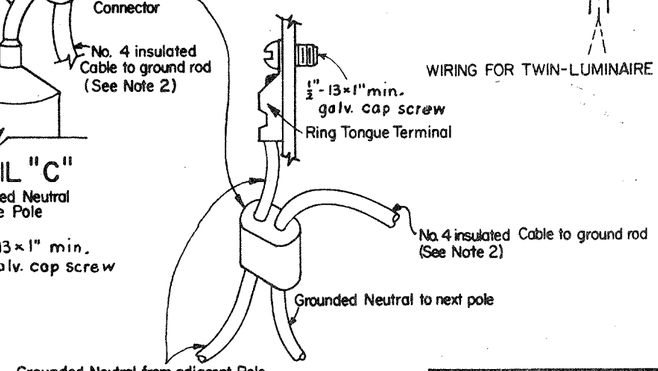

DETAIL "E"
3-Wire, Grounded Neutral
Anchor Base Pole

240 or 480 VOLTS, TWO-WIRE, UNGROUNDED

BUREAU OF DESIGN SERVICES
DIVISION OF HIGHWAYS
OHIO DEPARTMENT OF TRANSPORTATION

HIGHWAY LIGHTING

POLE WIRING

STANDARD CONSTRUCTION DRAWING **HL-9**

APPROVED: H. J. Cunningham Engineer of Design Services

DATE

FED. RD. DIVISION	STATE	PROJECT
5	OHIO	BEL-872-0.00

FED. HWY. ADM.	STATE DIST. NO.	STATE PROJECT NO.	F.A.S. PROJECT NO.	SCAL. YEAR	COUNTY	SHEET NO.	TOTAL SHEETS
W.VA.	G	326-SP2-0.00	M-5251-(002)		MARSHALL, W.VA. BELMONT, OHIO	96K	255

PULL BOX DETAILS

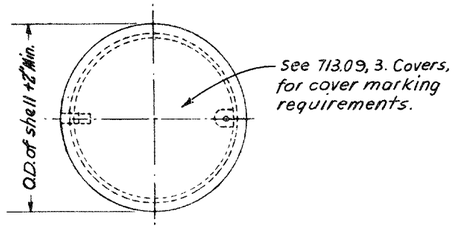

PLAN

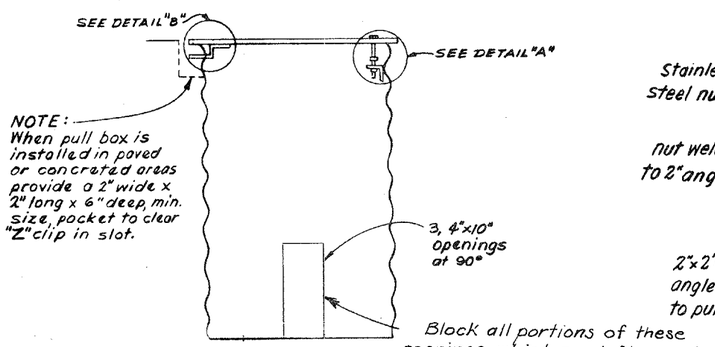

ELEVATION

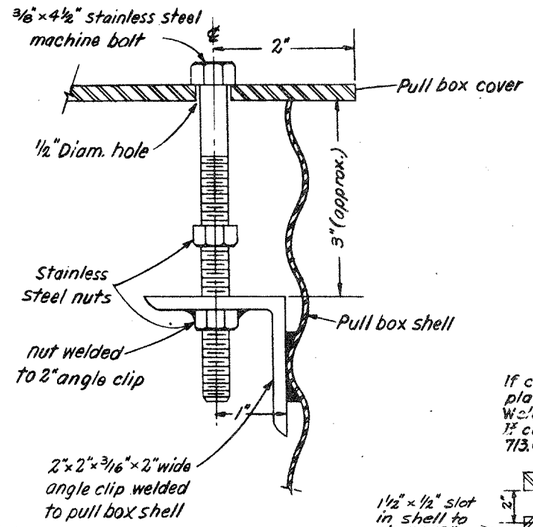

DETAIL "A"

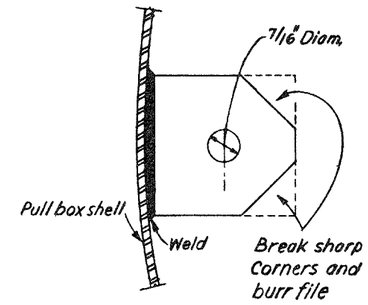

PLAN OF ANGLE CLIP

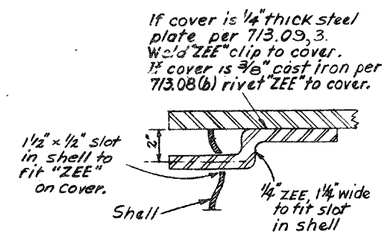

DETAIL "B"

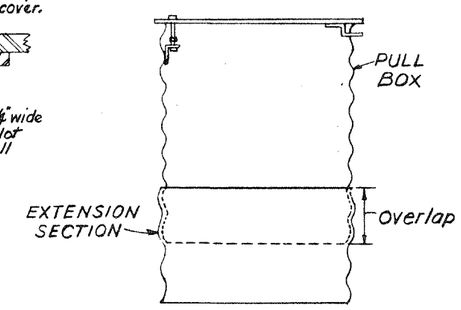

GRADE ADJUSTMENT EXTENSION SECTION

NOTES

1. An air bell shall be provided only when specifically required by the plans.
2. Approximate Air Bell sizes:

Pullbox Diameter	Air Bell Diameter	Air Bell Height
18"	16 3/4"	20 1/2"
24"	20 1/2"	28 1/2"

3. When required to provide a clear opening for the duct cable the air bell for the 24" diameter pullbox shall be notched as shown

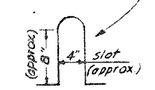

4. Pull Box Drain shall be installed only when specified or directed by the Engineer. The installation and payment shall be in accordance with 605.

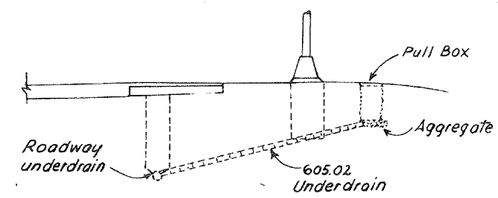

PULL BOX DRAIN TO UNDERDRAIN IN CUT AREA

See Note 4.

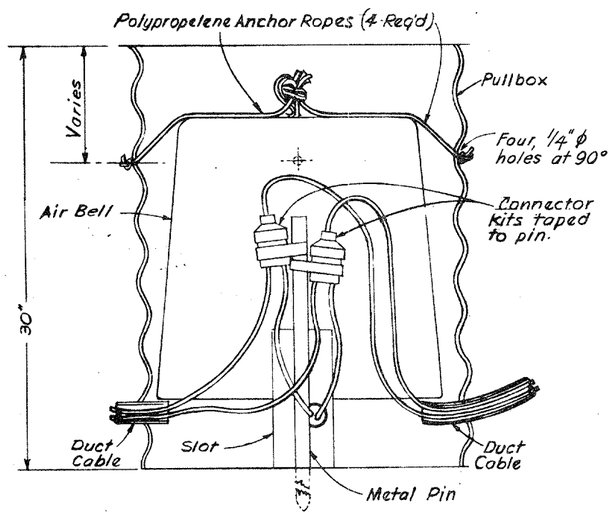

INTERIOR VIEW OF PULLBOX SHOWING ANCHORED AIR BELL AND SUPPORT FOR CONNECTOR KITS.

(See Notes 1 through 3)

CORRUGATED STEEL PULL BOX

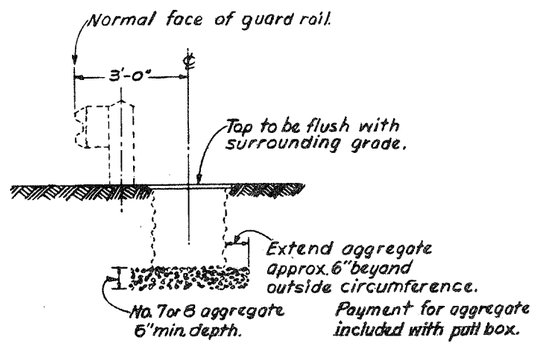

NORMAL INSTALLATION

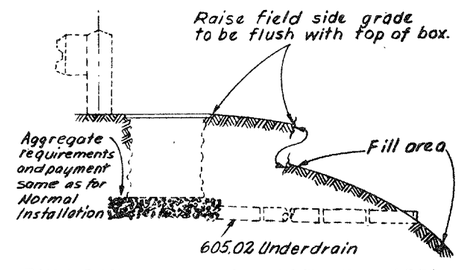

PULL BOX DRAIN ADJACENT TO FILL AREA

BUREAU OF DESIGN SERVICES
DIVISION OF HIGHWAYS
OHIO DEPARTMENT OF TRANSPORTATION

HIGHWAY LIGHTING

PULL BOX DETAILS

DATE 4-6-73 9-6-74 1-21-76

STANDARD CONSTRUCTION DRAWING **HL-10**

APPROVED: W. J. Cunningham Engineer of Design Services

MISCELLANEOUS DETAILS I

FED. RD. DIVISION	STATE	PROJECT	
5	OHIO		

BEL-872-0.00

FED HWY ADM.	STATE DIST. NO.	STATE PROJECT NO.	FED. PROJECT NO.	FISCAL YEAR	COUNTY	SHEET NO.	TOTAL SHEETS
W.VA.	6	326-SP2-0.00	M-5251-(002)		MARSHALL, W.VA. BELMONT, OHIO	96L	255

C-4

E12

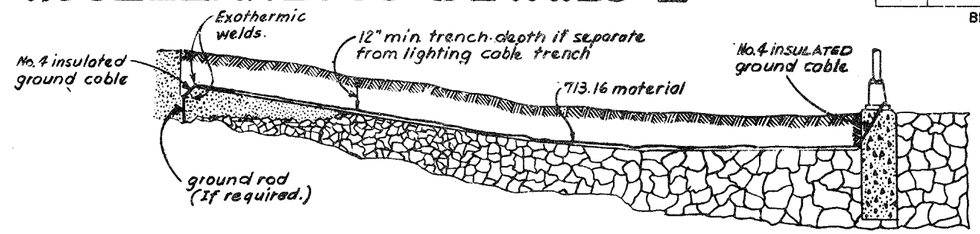

MODIFIED GROUND GRID FOR INDIVIDUAL POLE GROUND

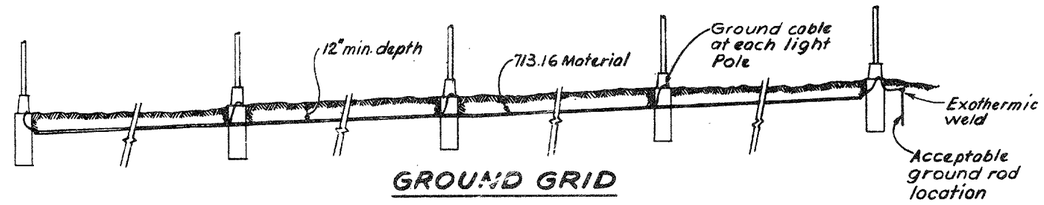

GROUND GRID

NOTES

1. Where overhead transmission line easements 50 feet or more in width cross a fenced roadway right-of-way, each fence shall be grounded as shown hereon.
2. Where overhead electric power line easements less than 50 feet in width cross a fenced roadway right-of-way, each fence shall be grounded directly below the centerline of the power line crossing.
3. Where overhead transmission lines rated 110 KV or higher are parallel to roadway fences and the transmission line easement is contiguous to the roadway right-of-way the roadway fences shall be grounded at least every 300 ft.
4. Fence grounds will be paid for at unit price bid for Ground Rods, Item 625.
5. Apply two coats of insulating varnish over all exothermic welds and exposed cable.

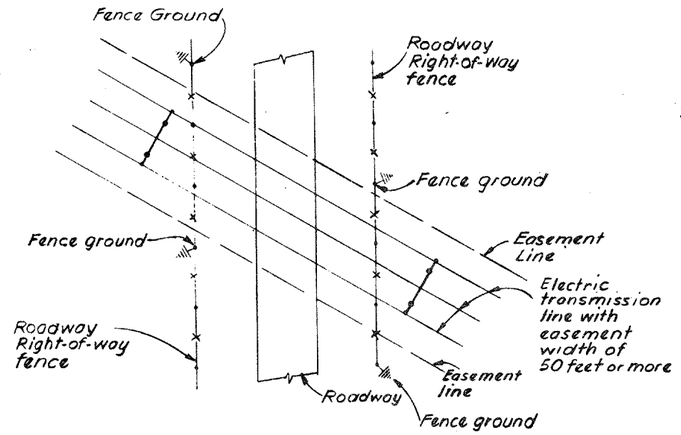

CROSSING OF ROADWAY R/W & TRANSMISSION LINE EASEMENT

(See Note 1)

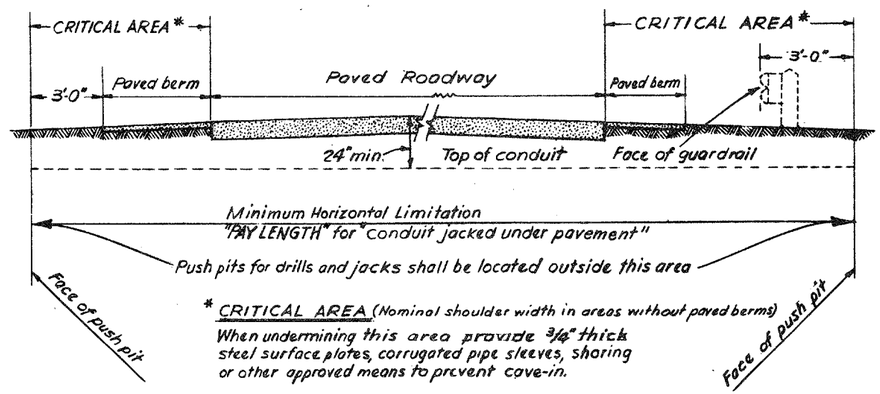

DETAIL FOR CONDUIT JACKED UNDER PAVEMENT

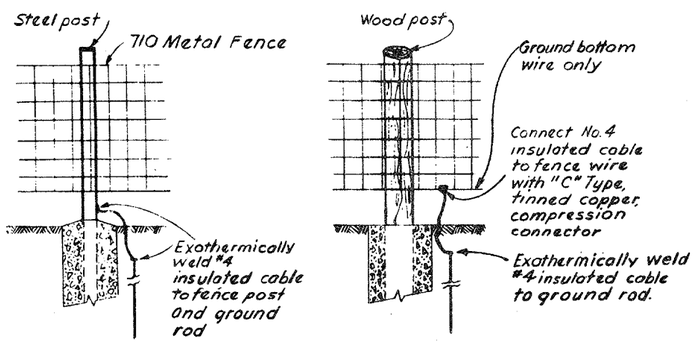

FENCE GROUND DETAILS

When specified, roadway right-of-way fences shall be grounded as shown hereon. (See also, Notes 1, 2, 3, & 4)

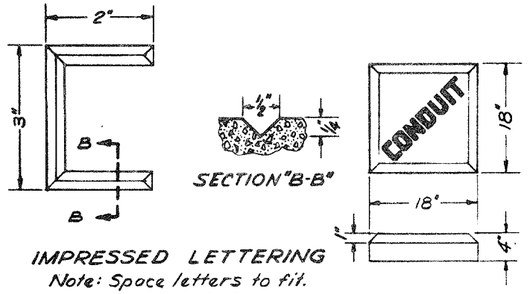

IMPRESSED LETTERING
Note: Space letters to fit.

"CONDUIT" - to indicate conduit for future cable or wire.

"CABLE" - to indicate abrupt change in direction of cable

CONCRETE MARKER

(625.16)

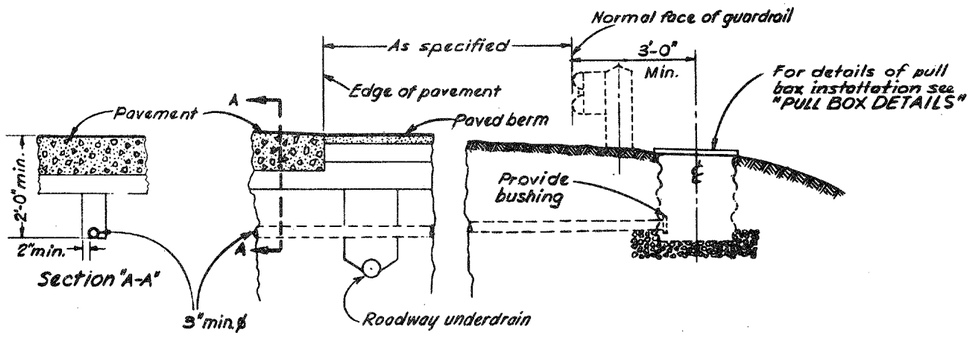

TYPICAL CONDUIT CROSSOVER DETAIL

BUREAU OF DESIGN SERVICES
DIVISION OF HIGHWAYS
OHIO DEPARTMENT OF TRANSPORTATION

HIGHWAY LIGHTING

DATE 4-6-73

MISCELLANEOUS DETAILS I

STANDARD CONSTRUCTION DRAWING **HL-11**

APPROVED: H. J. Cunningham Engineer of Design Services

MISCELLANEOUS DETAILS II

FED. RD. DIVISION	STATE	PROJECT	
5	OHIO		

BEL-872-0.00

FED. HWY. ADM.	STATE DIST. NO.	STATE PROJECT NO.	FED. PROJECT NO.	FISCAL YEAR	COUNTY	SHEET NO.	TOTAL SHEETS
W. VA.	6	326-SP2-0.00	M-525T-(002)		MARSHALL, W. VA. BELMONT, OHIO	96M	255

C-4 E13

STANDARD GUARDRAIL FLARE
FOR CUT TO FILL AND FILL TO FILL AREAS
1" = 10'

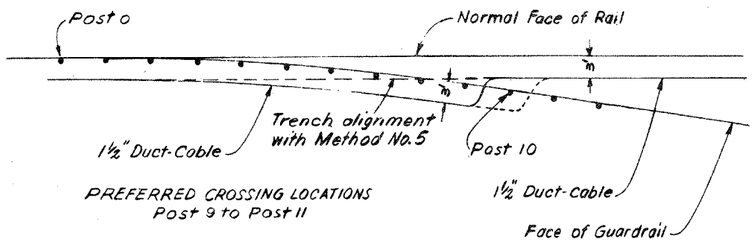

PREFERRED CROSSING LOCATIONS
Post 9 to Post 11

INTRODUCED GUARDRAIL FLARE
BECAUSE OF OBSTRUCTION
1" = 10'

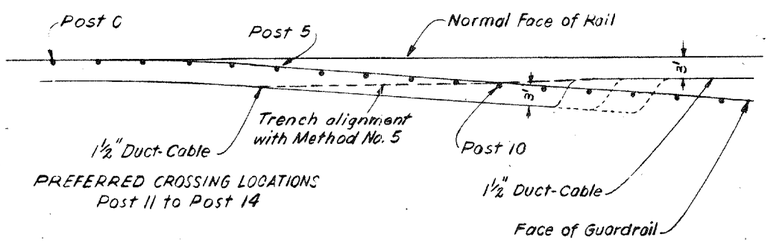

PREFERRED CROSSING LOCATIONS
Post 11 to Post 14

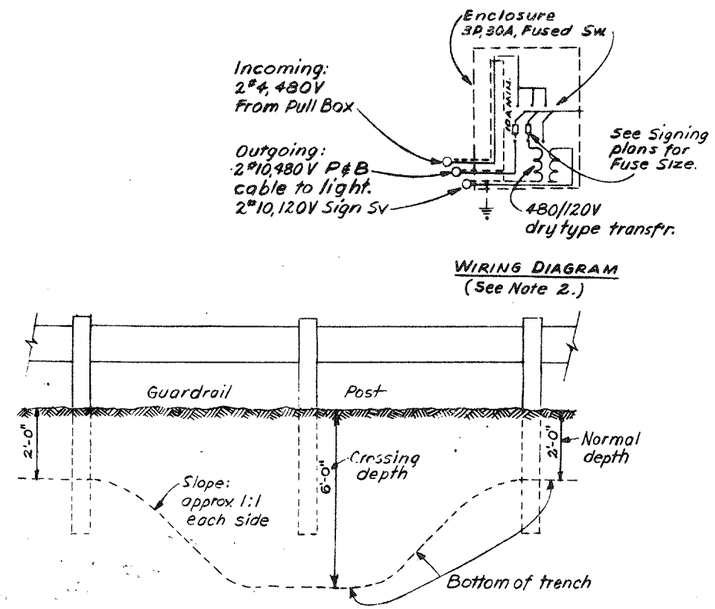

METHOD NO.5 for PROTECTING DUCT-CABLE UNDER GUARD RAIL
Increased depth of cable trench at point of crossing.
To be used whenever trench alignment is within 1'-6" of posts.
(See NOTE No.1)

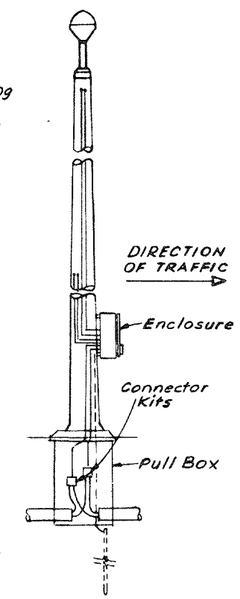

ELEVATION PARALLEL TO ROADWAY

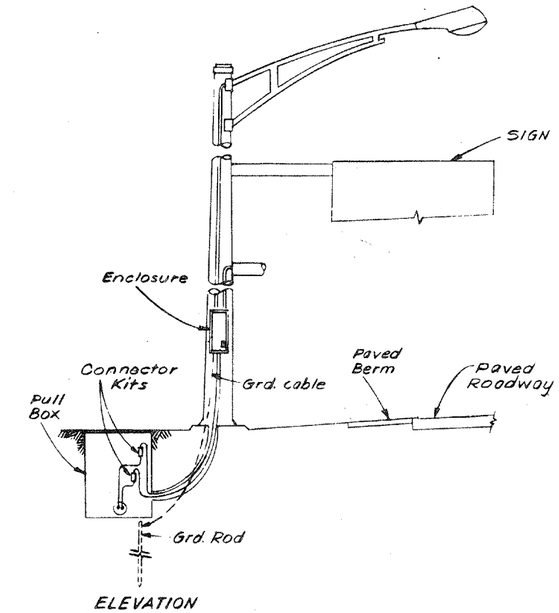

ELEVATION PERPENDICULAR TO ROADWAY

WIRING FOR COMBINATION LIGHT AND SIGN POLE

METHODS OF PROTECTING DUCT-CABLE UNDER GUARD RAIL
(See NOTE No.1)

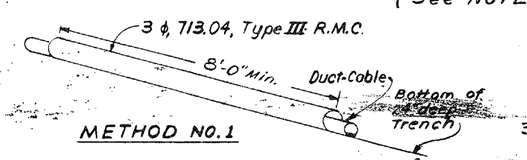

METHOD NO.1

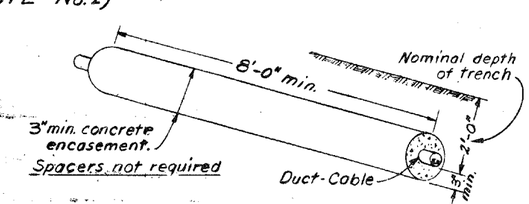

METHOD NO. 3

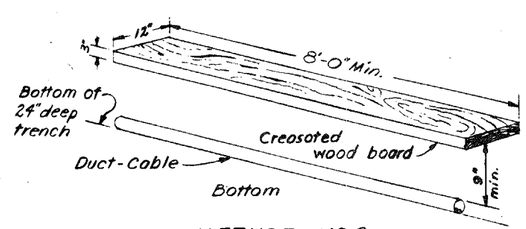

METHOD NO.2

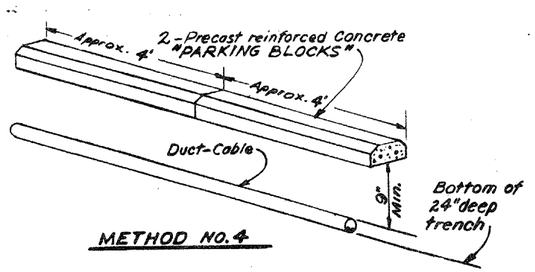

METHOD NO.4

CONCRETE ENCASED CONDUIT

"D"	"H"	"W"
2"	3⅝"	5½"
3"	3⅞"	6½"
4"	4⅛"	7⅝"
5"	4½"	8⅞"

Nominal spacer dimensions

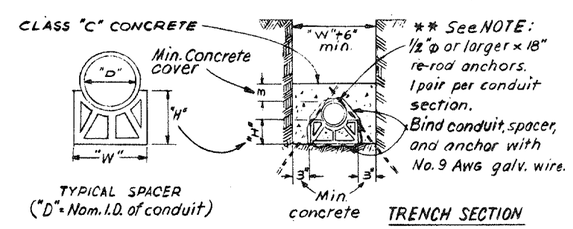

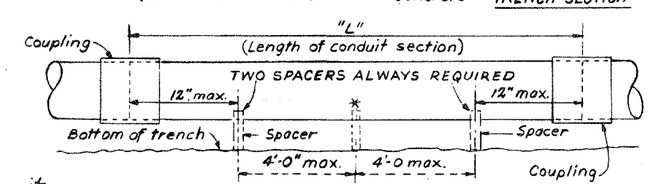

*Intermediate spacer required when "L" equals 10'-0"
Additional spacers shall be required when "L" exceeds 10'-0"

SIDE ELEVATION

** NOTE: DELETE ANCHORS AND BINDING WIRE WHEN USING STEEL CONDUIT.

NOTES

1. Payment for protection of duct-cable and distribution cable under guard rail, as detailed in Methods 1 thru 5, shall be included in the unit prices bid for the affected cable and trench items.
2. Wiring diagram shown is required when illuminated signs are flourescent type. For mercury vapor type delete the 480/120 volt dry type transformer and change Sign Service to read "2 #10, 480V"

BUREAU OF DESIGN SERVICES
DIVISION OF HIGHWAYS
OHIO DEPARTMENT OF TRANSPORTATION

HIGHWAY LIGHTING

DATE 4-6-73

MISCELLANEOUS DETAILS II

STANDARD CONSTRUCTION DRAWING **HL-12**

APPROVED: M. J. Cunningham Engineer of Design Services

SERVICE POLES AND CONTROL CENTERS

FED. RD. DIVISION	STATE	PROJECT	
5	OHIO		

BEL-872-0.00

FED. HWY. ADM.	STATE DIST. NO.	STATE PROJECT NO.	FED. PROJECT NO.	FISCAL YEAR	COUNTY	SHEET NO.	TOTAL SHEETS
W. VA.	6	326-SP2-0.00	HI-5251-(002)		MARSHALL, W.VA. BELMONT, OHIO	96N	255

C-4

E14

TYPICAL SERVICE POLE HEADS

3-WIRE SERVICE

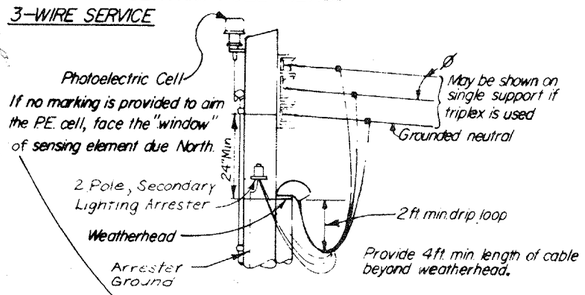

2-WIRE SERVICE

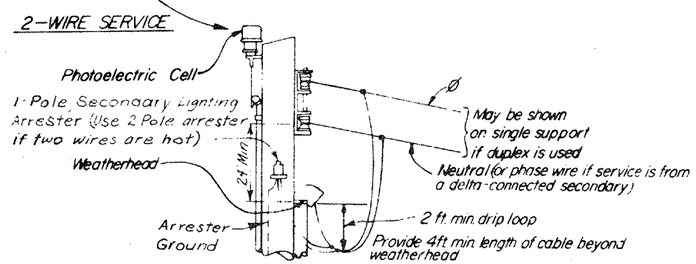

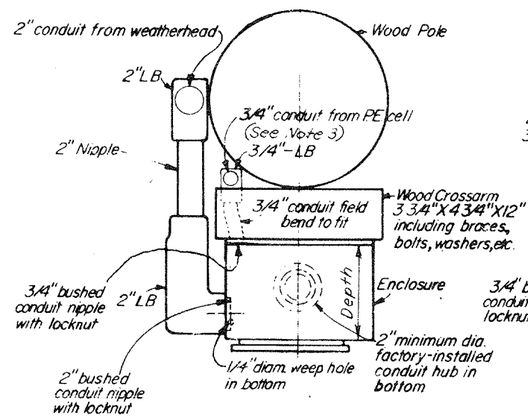

PLAN
SINGLE ENCLOSURE

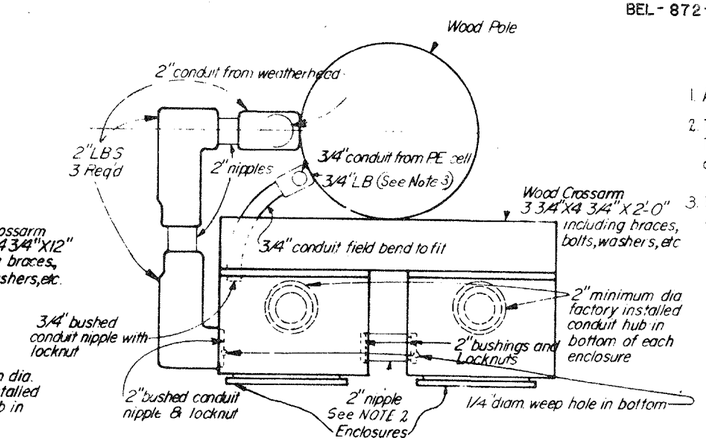

PLAN
DOUBLE ENCLOSURES

NOTES

1. All openings in enclosures shall be made by fabricator.
2. Two or more enclosures may be mounted with sides touching. The 2" nipple shown shall then be replaced by the installation of 2" insulated bushings in the openings for cables.
3. The 3/4" conduit for control wiring between P.E. Cell and contactor enters the back of the enclosure at the bottom.

ENCLOSURE TYPES

MINIMUM INTERIOR DIMENSIONS

TYPE NO.	PRINCIPLE CONTENTS	WIDTH	HEIGHT	DEPTH*
S-30/60	30 or 60 ampere fused switch.	10 1/2"	18"	6 9/16"
S-100	100 ampere fused switch.	14"	20"	8"
SC-30/60	30 or 60 ampere combination fused switch & contactor.	10 7/16"	32 7/16"	7 5/8"
SC-100	100 ampere combination fused switch & contactor.	14"	41"	8 1/8"

*See "PLAN" view of Single Enclosure. The interior depth dimension shall not include any part of the enclosure door which may protrude into the interior of the enclosure.

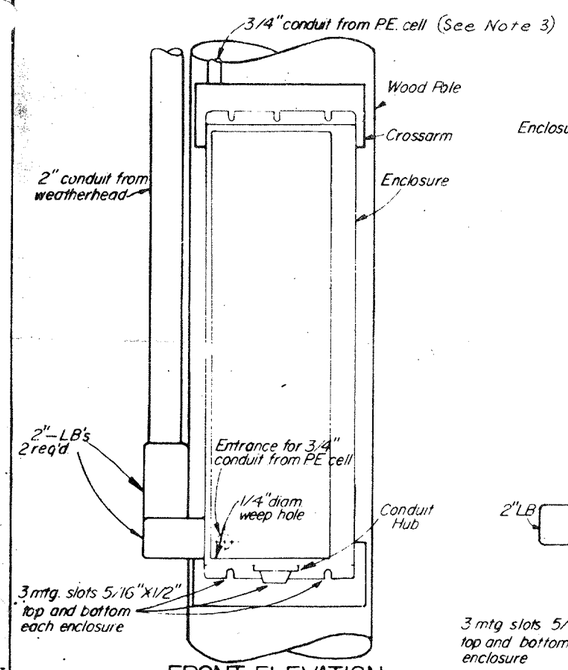

FRONT ELEVATION
SINGLE ENCLOSURE

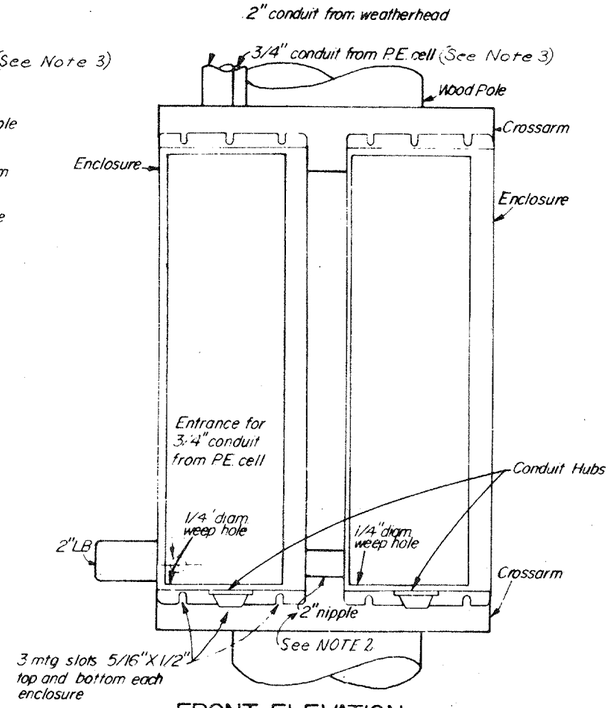

FRONT ELEVATION
DOUBLE ENCLOSURES

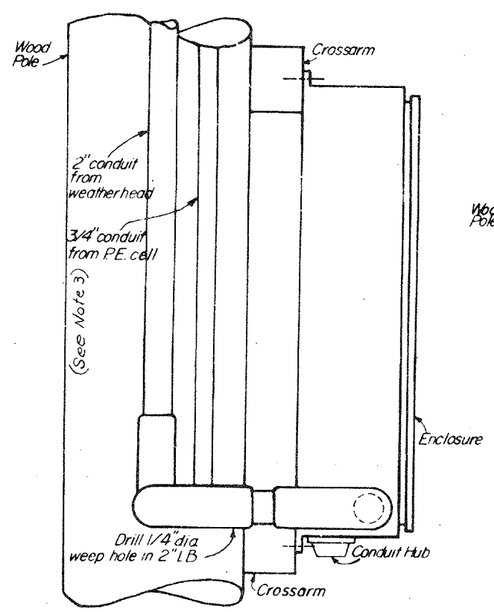

LEFT SIDE VIEW
DOUBLE ENCLOSURES

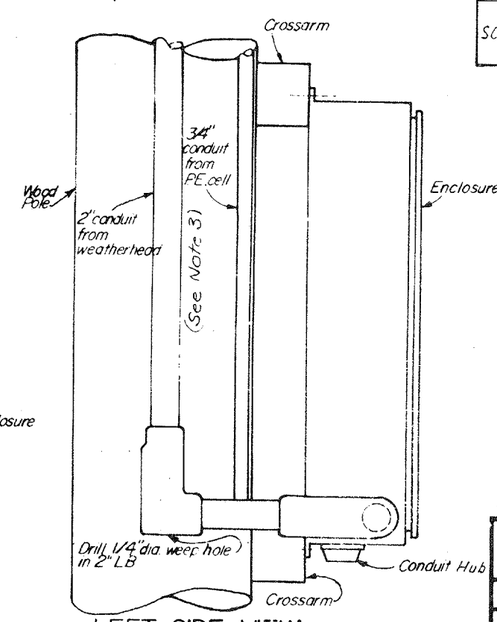

LEFT SIDE VIEW
SINGLE ENCLOSURE

BUREAU OF DESIGN SERVICES
DIVISION OF HIGHWAYS
OHIO DEPARTMENT OF TRANSPORTATION

HIGHWAY LIGHTING

CONTROL CENTERS

STANDARD CONSTRUCTION DRAWING HL-15

APPROVED ..... Engineer of Design Services

DATE 4-6-73 12-10-75 1-2-76

WIRING DIAGRAMS

FED. HWY. ADM.	STATE DIST. NO.	STATE PROJECT NO.	FED. PROJECT NO.	FISCAL YEAR	COUNTY	SHEET NO.	TOTAL SHEETS
W.VA.	6	326-SP2-0.00	M-5251-(002)		MARSHALL, W.VA BELMONT, OHIO	960	255

C-4

FED. RD. DIVISION	STATE	PROJECT	
5	OHIO	BEL-872-0.00	

E15

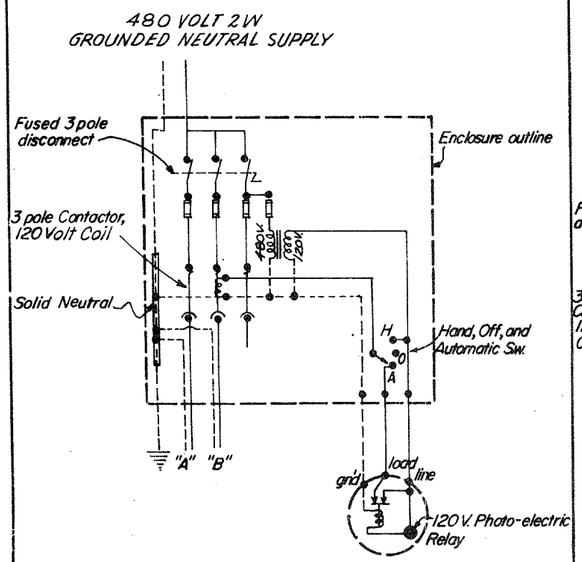

SINGLE UNIT 480 VOLT, 2-WIRE GROUNDED NEUTRAL

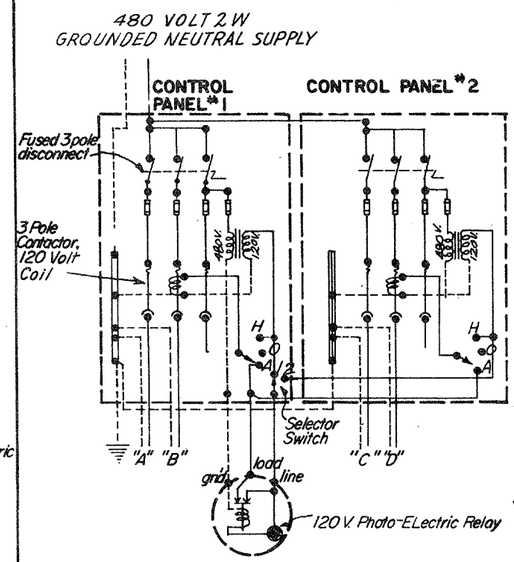

DOUBLE UNIT 480 VOLT, 2-WIRE GROUNDED NEUTRAL

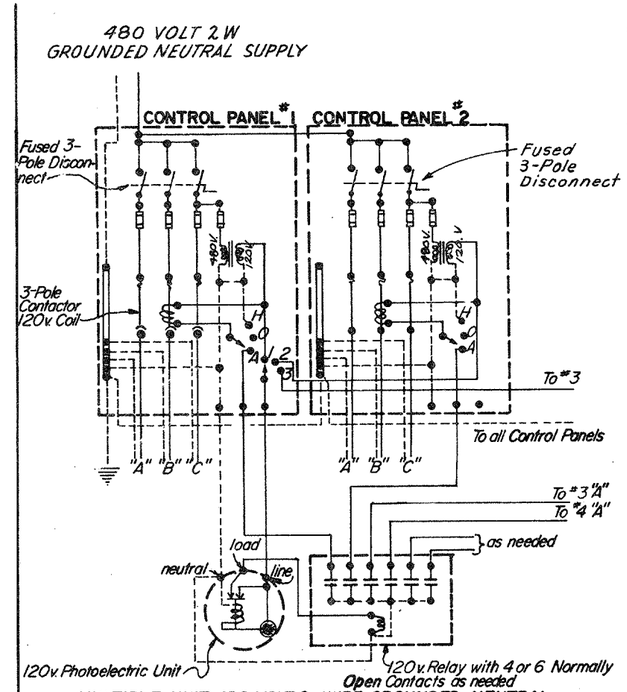

MULTIPLE UNIT 480 VOLT, 2-WIRE GROUNDED NEUTRAL

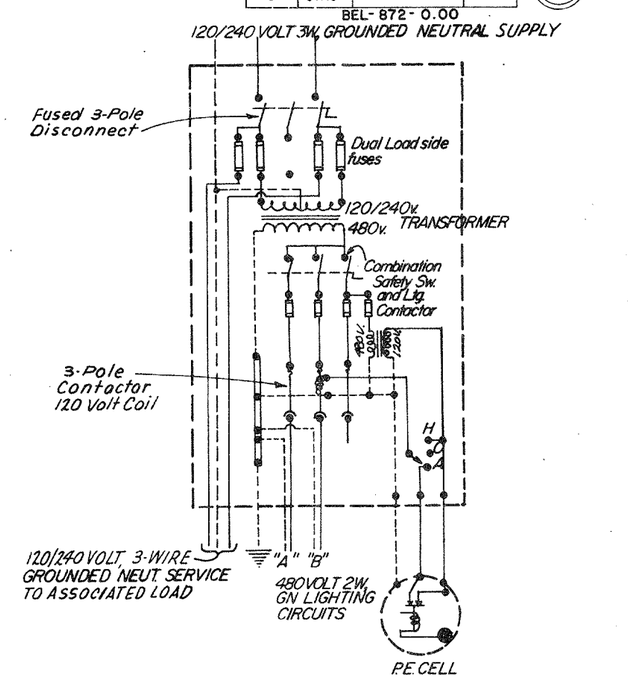

480 VOLT, 2-WIRE, GROUNDED NEUTRAL CONTROL CENTER WITH 120/240 VOLT, 3-WIRE GROUNDED NEUTRAL SUPPLY FOR ASSOCIATED LOAD.

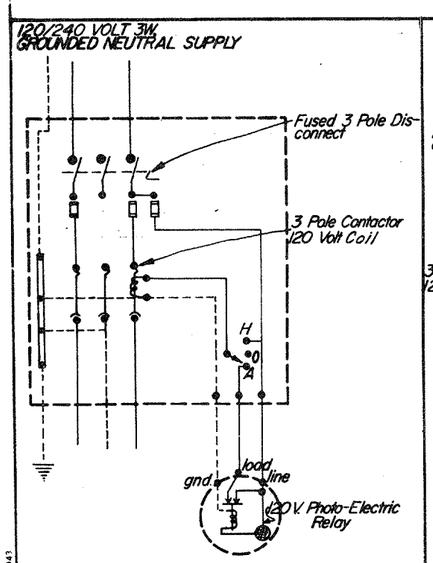

120/240 VOLT, 3-WIRE, GROUNDED NEUTRAL SINGLE CIRCUIT

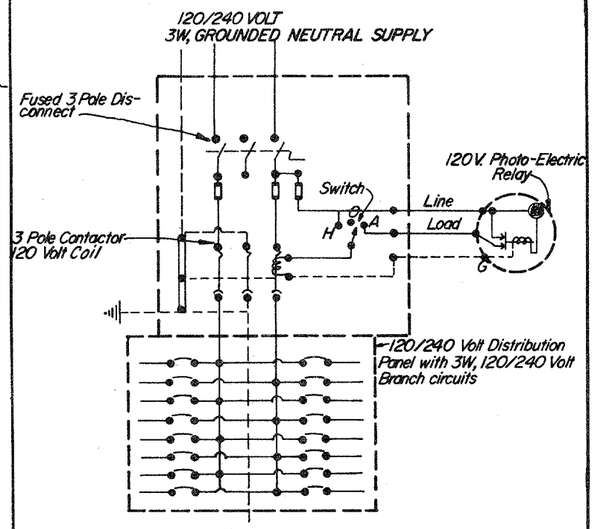

120/240 VOLT, 3-WIRE, GROUNDED NEUTRAL MULTIPLE CIRCUIT

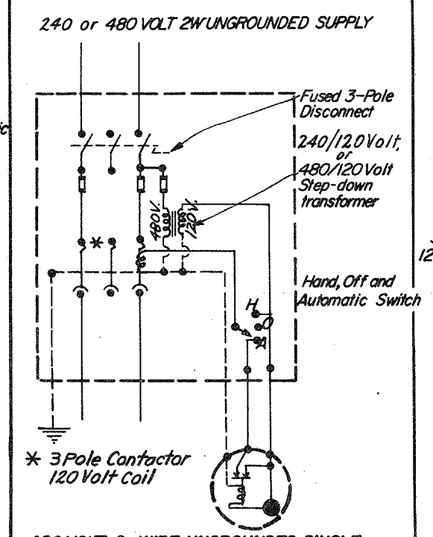

480 VOLT, 2-WIRE UNGROUNDED SINGLE CIRCUIT

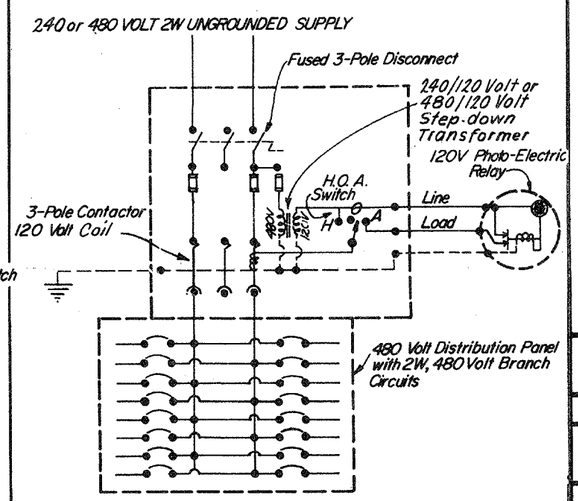

480 VOLT, 2-WIRE UNGROUNDED MULTIPLE CIRCUIT

BUREAU OF DESIGN SERVICES
DIVISION OF HIGHWAYS
OHIO DEPARTMENT OF TRANSPORTATION

HIGHWAY LIGHTING

WIRING DIAGRAMS

DATE 1-6-73

STANDARD CONSTRUCTION DRAWING

HL-16

APPROVED: M. J. Cunningham Engineer of Design Services

BRUNING 44 SEC. 10943