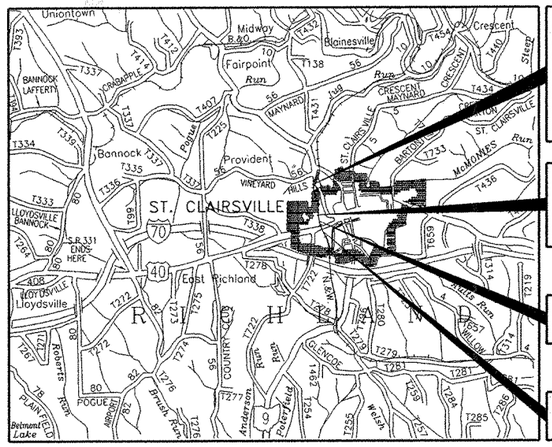

ADDITIVE ALTERNATE NO. 5 OVERLOOK PLATFORM AT BIKEWAY BRIDGE OVER STATE ROUTE 9

ADDITIVE ALTERNATE NO. 4 BIKEWAY PAVING NORTH OF TUNNEL

END PROJECT STATION 8+33.18

BEGIN PROJECT STATION 2+47.80

U.S. ROUTE 40, NATIONAL ROAD BIKEWAY TUNNEL REHABILITATION

CITY OF ST. CLAIRSVILLE
BELMONT COUNTY

LOCATION MAP

SCALE IN MILES

0 1 2 3 4

N

PORTION TO BE IMPROVED
INTERSTATE & DIVIDED HIGHWAY
UNDIVIDED STATE & FEDERAL ROUTES
OTHER ROADS

DESIGN DESIGNATION

CURRENT ADT (2008)	N/A
DESIGN YEAR ADT (2028)	N/A
DESIGN HOURLY VOLUME (2028)	N/A
DIRECTIONAL DISTRIBUTION	N/A
TRUCKS (24 HOUR B&C)	N/A
DESIGN SPEED	N/A
LEGAL SPEED	N/A
DESIGN FUNCTIONAL CLASSIFICATION:	N/A

DESIGN EXCEPTIONS

NONE REQUIRED

UNDERGROUND UTILITIES
TWO WORKING DAYS
BEFORE YOU DIG
CALL 1-800-362-2764 (TOLL FREE)
OHIO UTILITIES PROTECTION SERVICE
NON-MEMBERS
MUST BE CALLED DIRECTLY

PLAN PREPARED BY:

BURGESS & NIPLE, INC.
5085 REED ROAD
COLUMBUS, OH 43220

INDEX OF SHEETS:

SHEET NO.	DESCRIPTION
1	TITLE
2	SITE PLAN
3	GENERAL NOTES 1
4	GENERAL NOTES 2
5	GENERAL NOTES 3
6	ESTIMATED QUANTITIES
7	TUNNEL REPAIR - LEFT WALL PROFILE
8	TUNNEL REPAIR - RIGHT WALL PROFILE
9	TUNNEL REPAIR - PLAN
10	PROPOSED PAVEMENT - PROFILES
11	TUNNEL REPAIR - SECTIONS 1
12	TUNNEL REPAIR - SECTIONS 2
13	TUNNEL REPAIR - DETAILS 1
14	TUNNEL REPAIR - DETAILS 2
15	BIKEWAY BRIDGE - OVERLOOK PLATFORM DETAILS 1
16	BIKEWAY BRIDGE - OVERLOOK PLATFORM DETAILS 2

2008 SPECIFICATIONS

THE STANDARD SPECIFICATIONS OF THE STATE OF OHIO, DEPARTMENT OF TRANSPORTATION, INCLUDING CHANGES AND SUPPLEMENTAL SPECIFICATIONS LISTED IN THE PROPOSAL SHALL GOVERN THIS IMPROVEMENT.

PROJECT DESCRIPTION

BIKEWAY TUNNEL REHABILITATION:

1. STABILIZE THE WEST WALL OF THE TUNNEL NEAR THE NORTH END BY REMOVING THE SEPARATED LINER, INSTALLING NEW ROCK BOLTS AND APPLYING NEW PNEUMATICALLY PLACED MORTAR (P.P.M.).

2. FILL THE EXISTING VOID ABOVE THE NORTH PORTAL CONCRETE LINER WITH ENGINEERED FILL. CONSTRUCT THE ENGINEERED FILL ON TOP OF POROUS BACKFILL SEPARATED BY FILTER FABRIC. CORE HOLES IN THE EXISTING WALL AND PLACE PVC PIPES TO ALLOW THE AREA TO DRAIN.

3. CONSTRUCT NEW PIPES AND INLETS THROUGH THE EXTENT OF THE TUNNEL BETWEEN ENDS OF CAST-IN-PLACE CONCRETE LINERS PER THE PLAN, PROFILES AND SECTIONS.

4. APPLY P.P.M TO THE UPPER PORTIONS OF THE TUNNEL FROM CONCRETE LINER TO CONCRETE LINER AS INDICATED IN THE RIGHT AND LEFT PROFILES. PLACE A DRAINAGE MAT AND WATERPROOFING MEMBRANE UNDER THE P.P.M. TO ROUTE SEEPING WATER TO THE FLOOR DRAINAGE SYSTEM.

5. AT EXISTING ROCK BOLTS BELOW THE PROPOSED TUNNEL CROWN GROUTING LIMITS WITH MISSING OR DETERIORATED NUTS AND PLATES, WELD NEW PLATES TO EXISTING ROCK BOLT RODS. IF EXISTING ROCK BOLTS CAN NOT BE REPAIRED, INSTALL NEW ROCK BOLTS ADJACENT TO THE EXISTING.

BIKEWAY BRIDGE OVERLOOK: (ADDITIVE ALTERNATE #5)

1. CONSTRUCT AN OVERLOOK PLATFORM WEST OF THE SOUTH ABUTMENT AT THE BIKEWAY BRIDGE OVER STATE ROUTE 9.

STANDARD CONSTRUCTION DRAWINGS

DWG. NO.	DATE	DWG. NO.	DATE	DWG. NO.	DATE	DWG. NO.	DATE	DWG. NO.	DATE
VPF-1-90	07/19/02								

SUPPLEMENTAL SPECIFICATIONS

800	7/18/08
832	4/25/06
1072	4/15/05

SPECIAL PROVISIONS

ENGINEERS SEAL:

STATE OF OHIO DONALD L. MARES E-47181 REGISTERED PROFESSIONAL ENGINEER

SIGNED: Donald L. Mares
DATE: 12/17/08

CITY OF ST. CLAIRSVILLE
APPROVED Dave Taylor
DATE 12/17/08 DIRECTOR OF PUBLIC WORKS

Final Plans 12/18/08

BURGESS & NIPLE
5085 Reed Road
Columbus, Ohio 43220

REVIEWED	DATE	DESIGNED	DRAWN	REVISED
DKM	12-17-08	GCG	JDA	
STRUCTURE FILE NUMBER		CHECKED		
0701572		HBO		

STA. 1+00.00
STA. 10+00.00

TITLE
U.S. ROUTE 40, NATIONAL ROAD BIKEWAY
TUNNEL REHABILITATION, ST. CLAIRSVILLE, OHIO

BEL-40
Federal Aid No. 060415
PID No. 80906

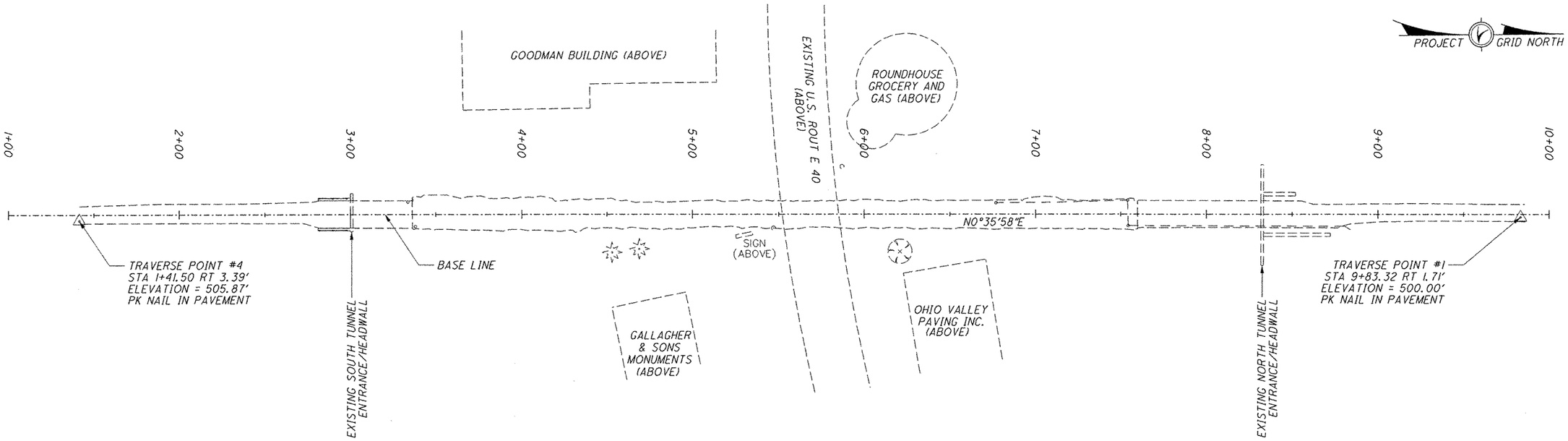

PLAN

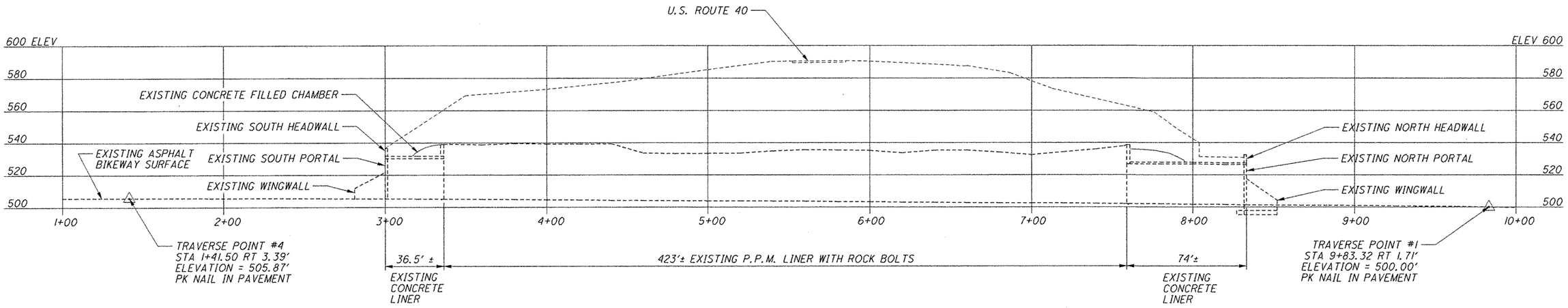

ELEVATION

LEGEND

P.P.M. = PNEUMATICALLY PLACED MORTAR

16" PINE TREE

20" TREE

TELEPHONE POLE

POWER POLE

LIGHT POLE

MANHOLE

NOTES:

1. EARTHWORK LIMITS SHOWN ARE APPROXIMATE. ACTUAL SLOPES SHALL BE FIELD VERIFIED.
2. SEE SHEETS 11 / 16 AND 12 / 16 FOR SECTIONS.
3. ALL LOCATION DATA SHOWN ON THESE PLANS ARE BASED ON AN ASSUMED COORDINATE SYSTEM AND GRID NORTH.

PROPOSED WORK

TYPE: EXISTING BIKEWAY TUNNEL WITH DRAINAGE IMPROVEMENTS AND P.P.M. CEILING. NEW OVERLOOK AT EXISTING BRIDGE APPROXIMATELY ONE HALF MILE NORTH OF TUNNEL INCLUDED WITH THIS CONTRACT.

TUNNEL WIDTH: VARIES TOE/TOE WALL

SKEW: NONE

ALIGNMENT: TANGENT

BURGESS & NIPLE
5085 Reed Road
Columbus, Ohio 43220

DESIGNED	DRAWN	REVIEWED	DATE
CCG	JDA	DKM	12-17-08
CHECKED	REVISED	STRUCTURE FILE NUMBER	
HBO		0701572	

STA. 1+00.00
STA. 10+00.00

SITE PLAN

U.S. ROUTE 40, NATIONAL ROAD BIKEWAY
TUNNEL REHABILITATION, ST. CLAIRSVILLE, OHIO

BEL-40
Federal Aid No. 060415
PID No. 80906

GENERAL NOTES

PRIOR TO ANY DEMOLITION/RENOVATION OF THE EXISTING TUNNEL, THE CONTRACTOR SHALL CAREFULLY EXAMINE THE STRUCTURE FOR THE PRESENCE OF BATS. IF ANY BATS ARE FOUND, THE ODOT DISTRICT 11 ENVIRONMENTAL COORDINATOR SHALL BE CONTACTED AT 330-339-6633 BEFORE COMMENCING WITH THE STRUCTURE'S RENOVATION.

DESIGN SPECIFICATIONS: UNLESS NOTED OTHERWISE, THIS STRUCTURE CONFORMS TO "STANDARD SPECIFICATIONS FOR HIGHWAY BRIDGES" ADOPTED BY THE AMERICAN ASSOCIATION OF STATE HIGHWAY AND TRANSPORTATION OFFICIALS, 17th EDITION, AND THE OHIO DEPARTMENT OF TRANSPORTATION BRIDGE DESIGN MANUAL.

CONSTRUCTION AND MATERIAL SPECIFICATIONS: THE STATE OF OHIO DEPARTMENT OF TRANSPORTATION CONSTRUCTION AND MATERIAL SPECIFICATIONS, DATED JANUARY 1, 2008, SHALL GOVERN ALL WORK, EXCEPT AS MODIFIED HEREIN.

REFERENCE SHALL BE MADE TO THE FOLLOWING OHIO DEPARTMENT OF TRANSPORTATION DOCUMENTS:

BRIDGE STANDARD DRAWINGS:

VPF-1-90 REVISED 7/19/02

AND SUPPLEMENTAL SPECIFICATIONS:

800 DATED 7/18/08
1072 DATED 4/15/05

DESIGN LOADING:
THE PEDESTRIAN OVERLOOK STRUCTURE HAS BEEN DESIGNED FOR 85 PSF OF PEDESTRIAN LIVE LOAD.

DESIGN DATA:
CONCRETE:
CLASS C - (OVERLOOK AND PROTECTION BARRIER REINFORCED CONCRETE SHAFTS)
COMPRESSIVE STRENGTH 4000 PSI

PNEUMATICALLY PLACED MORTAR: AS PER ODOT CMS 520
COMPRESSIVE STRENGTH 4200 PSI

REINFORCING STEEL: ASTM A615, OR A996 GRADE 60
MINIMUM YIELD STRENGTH 60,000 PSI

EXISTING STRUCTURE PLANS: PREVIOUS REHABILITATION PLANS OF THE TUNNEL MAY BE EXAMINED BY PROSPECTIVE BIDDERS/CONTRACTORS AT THE CITY OF ST. CLAIRSVILLE PUBLIC SERVICES OFFICE: 100 NORTH MARKET STREET, PO BOX 537, ST. CLAIRSVILLE, OHIO 43950 (PHONE (740) 695-0156). EXISTING BRIDGE PLANS ARE NOT AVAILABLE.

EXISTING STRUCTURE VERIFICATION: DETAILS AND DIMENSIONS SHOWN ON THESE PLANS PERTAINING TO THE EXISTING STRUCTURES HAVE BEEN OBTAINED FROM AVAILABLE PLANS OF THE EXISTING STRUCTURES AND FROM FIELD OBSERVATIONS AND MEASUREMENTS. CONSEQUENTLY, THEY ARE INDICATIVE OF THE EXISTING STRUCTURES AND THE PROPOSED WORK. HOWEVER, THEY SHALL BE CONSIDERED TENTATIVE AND APPROXIMATE. THE CONTRACTOR IS REFERRED TO ODOT CMS SECTIONS 102.05 AND 105.02. BASE CONTRACT BID PRICES UPON RECOGNITION OF THE UNCERTAINTIES DESCRIBED ABOVE AND UPON A PREBID EXAMINATION OF THE EXISTING STRUCTURES. HOWEVER, THE CITY WILL PAY FOR ALL PROJECT WORK BASED UPON ACTUAL DETAILS AND DIMENSIONS, WHICH HAVE BEEN VERIFIED IN THE FIELD.

ITEM 202 - PORTIONS OF STRUCTURE REMOVED, AS PER PLAN: THIS ITEM SHALL INCLUDE ALL LABOR, EQUIPMENT AND MATERIALS NECESSARY TO REMOVE THE EXISTING SEPARATED PNEUMATICALLY PLACED MORTAR ON THE WEST WALL NEAR THE NORTH ENTRANCE OF THE TUNNEL. THE UNSOUND AREA IS APPROXIMATELY 44' LONG BY 22' HIGH AND PROJECTS FROM THE SURROUNDING SURFACE APPROXIMATELY 3'. THE UNSOUND PNEUMATICALLY PLACED MORTAR AND ROCK SHALL BE REMOVED TO PROVIDE A SURFACE FLUSH WITH THE ADJACENT SURFACES.

ITEM 202 - REMOVAL MISC: TIMBER RETAINING WALL, VEGETATION, AND CHAIN LINK FENCE: THIS ITEM SHALL INCLUDE ALL THE MATERIALS, LABOR, AND EQUIPMENT NECESSARY FOR THE REMOVAL OF THE ELEMENTS INDICATED IN THE PLANS AND GENERAL NOTES TO BE REMOVED. ITEMS TO BE REMOVED INCLUDE ALL EXISTING MATERIALS BEING REPLACED BY NEW CONSTRUCTION AND MISCELLANEOUS ITEMS THAT ARE NOT SHOWN TO BE INCORPORATED INTO THE FINAL CONSTRUCTION AND ARE DIRECTED TO BE REMOVED BY THE ENGINEER. THIS INCLUDES, BUT IS NOT LIMITED TO: THE EXISTING TIMBER RETAINING WALL, THE VEGETATION, AND THE PORTIONS OF EXISTING CHAIN LINK FENCE INDICATED TO BE REMOVED IN THE PLANS THAT ARE LOCATED AT THE REAR LEFT CORNER OF THE NATIONAL ROAD BIKEWAY OVER SR 9 BRIDGE.

THE USE OF EXPLOSIVES, HEADACHE BALLS AND/OR HOE-RAMS WILL NOT BE PERMITTED. THE METHOD OF REMOVAL AND THE WEIGHT OF HAMMER SHALL BE APPROVED BY THE ENGINEER. PERFORM ALL WORK IN A MANNER THAT WILL NOT DAMAGE THE EXISTING ELEMENTS TO BE PRESERVED. CHIPPING HAMMERS SHALL NOT BE HEAVIER THAN THE NOMINAL 90-POUND CLASS. PNEUMATIC HAMMERS SHALL NOT BE PLACED IN DIRECT CONTACT WITH REINFORCING STEEL THAT IS TO BE RETAINED IN THE REBUILT STRUCTURE.

ITEM 202 - REMOVAL MISC.: CORE DRILL HOLES: THIS ITEM SHALL INCLUDE ALL LABOR, EQUIPMENT AND MATERIALS NECESSARY TO CORE DRILL 3" DIAMETER HOLES FOR 2" DIAMETER PVC PIPES THROUGH AN EXISTING CONCRETE WALL AT THE SOUTH END OF THE NORTH PORTAL CONCRETE LINER. THE SPACE BETWEEN THE HOLE AND PIPE SHALL BE FILLED WITH NONSHRINK, NONMETALLIC GROUT. NONSHRINK, NONMETALLIC GROUT SHALL CONFORM TO ODOT CMS 705.20. THE COSTS ASSOCIATED WITH PROVIDING AND PLACING THE NONSHRINK, NONMETALLIC GROUT SHALL BE INCLUDED WITH THIS ITEM.

ITEM 203 - ENGINEERED FILL: AN ENGINEERED FILL SHALL BE USED TO FILL THE EXISTING VOID BETWEEN THE TOP OF THE NORTH PORTAL LINER AND THE EXISTING ROCK SURFACE. FORMWORK SHALL BE CONSTRUCTED AT THE EXISTING OPENING TO THE CHAMBER TO PROVIDE A FINISHED SURFACE FLUSH WITH THE EXISTING END WALL. THE FILL SHALL BE PLACED ON TOP OF POROUS BACKFILL WITH A FILTER FABRIC. PAYMENT FOR THE POROUS BACKFILL WITH FILTER FABRIC WILL BE INCLUDED IN THE PAY ITEM "POROUS BACKFILL WITH FILTER FABRIC, AS PER PLAN".

THE ENGINEERED FILL APPLICATOR SHALL BE CERTIFIED BY THE MANUFACTURER OF THE ENGINEERED FILL AND BE APPROVED BY THE ENGINEER PRIOR TO THE APPLICATION OF THE FILL. SKILLED WORKMEN WHO ARE EXPERIENCED AND FAMILIAR WITH THE REQUIREMENTS AND METHODS FOR PLACEMENT OF ENGINEERED FILL SHALL BE USED.

TO ACHIEVE CERTIFICATION BY THE MANUFACTURER AND APPROVAL BY THE ENGINEER, THE APPLICATOR SHALL HAVE BEEN REGULARLY ENGAGED IN PLACING ENGINEERED FILL INCLUDING COMPLETION OF MASS FILLS FOR FEDERAL AND STATE HIGHWAYS.

THE SPECIALIZED BATCHING, MIXING AND PLACING EQUIPMENT SHALL BE AUTOMATED WITH BULK HANDLING EQUIPMENT APPROVED BY THE MANUFACTURER. BULK CEMENT SHALL BE WEIGHED ON A SCALE THAT OPERATES WITHIN A TOLERANCE OF 1-1½% PER BATCH. TRANSIT MIXERS ARE NOT ACCEPTABLE FOR THIS APPLICATION.

THE ENGINEERED FILL MATERIAL SHALL MEET THE PROPERTY REQUIREMENTS BELOW:

PORTLAND CEMENT SHALL COMPLY WITH ASTM C150. POZZOLANS AND FLY ASH MATERIALS MAY BE USED. THE MANUFACTURER OF THE ENGINEERED FILL SHALL DESIGN THE MIX.

WATER SHALL BE POTABLE WATER.

ADMIXURES MAY BE USED WHEN SPECIFICALLY APPROVED BY THE MANUFACTURER OF THE ENGINEERED FILL.

PROPERTY REQUIREMENTS: THE CLASS II ENGINEERED FILL SHALL MEET THE FOLLOWING:

MAXIMUM CAST DENSITY - 30 PCF
MINIMUM COMPRESSIVE STRENGTH AT 28 DAYS - 40 PSI
COEFFICIENT OF PERMEABILITY (CM/SEC) AT 2.5 PSI - 1.3×10^{-3}
FROST HEAVE PER BRRL LR90 (250 HOUR EXPOSURE)
4.5" HIGH X 4" DIAMETER - < ½"

THE AREA IN WHICH THE ENGINEERED FILL WORK WILL BE PERFORMED SHALL BE EXAMINED BY THE CONTRACTOR PRIOR TO SUBMISSION OF BID. THE CONTRACTOR SHALL MEASURE THE VOID AND DETERMINE THE ACTUAL VOLUME OF THE SPACE TO BE FILLED. THE QUANTITY NOTED IN THE ESTIMATED QUANTITIES TABLE HAS BEEN APPROXIMATED BASED ON DRAWINGS FROM A 1997 REHABILITATION.

THE INSTALLATION OF THE ENGINEERED FILL SHALL BE IN ACCORDANCE WITH PROCEDURES PROVIDED BY THE MANUFACTURER. THE AREA TO BE FILLED SHALL NOT HAVE STANDING WATER AND ITEMS ENCASED IN THE FILL SHALL BE STABLE PRIOR TO CASTING.

AUTOMATED JOB SITE BATCHING, MIXING AND PLACING EQUIPMENT APPROVED BY THE MANUFACTURER SHALL BE USED. MATERIALS SHALL BE PROMPTLY CONVEYED TO POINT OF PLACEMENT AFTER MIXING. THE ENGINEERED FILL SHALL BE CAST IN LIFTS IN SUCH A MANNER AS TO PREVENT SEGREGATION. THE FINAL SURFACE SHALL BE WITHIN +/- 2" OF PLAN ELEVATION.

DURING PLACEMENT OF INITIAL BATCHES, THE MIX SHALL BE ADJUSTED AS REQUIRED TO OBTAIN THE SPECIFIED CAST DENSITY AT THE POINT OF PLACEMENT. TWO TEST SPECIMENS SHALL BE TAKEN FOR THE AMOUNT ESTIMATED IN THE PLANS OR FOUR TEST SPECIMENS SHALL BE TAKEN FOR EACH 300 CUBIC YARDS OF ENGINEERED FILL PLACED OR FOR EACH FOUR HOURS OF PLACING.

TESTING SHALL BE IN ACCORDANCE WITH ASTM C796 EXCEPT THE TEST SPECIMENS SHALL NOT BE OVEN DRIED. THE SPECIMENS SHALL BE 3" X 6" CYLINDERS COVERED AFTER CASTING TO PREVENT DAMAGE AND LOSS OF MOISTURE. THE SPECIMENS SHALL BE MOIST CURED AT LEAST UP TO 7 DAYS PRIOR TO A 28 DAY COMPRESSIVE STRENGTH TEST. SPECIMENS MAY BE TESTED AT ANY AGE TO MONITOR THE COMPRESSIVE STRENGTH. THE MANUFACTURER SHALL REPORT TEST RESULTS TO THE APPLICATOR FOR DISTRIBUTION.

PAYMENT FOR THIS WORK WILL BE MADE AT CONTRACT PRICES FOR ITEM SPECIAL, CUBIC YARDS, ENGINEERED FILL. SUCH PAYMENT SHALL BE FULL COMPENSATION FOR FURNISHING AND PLACING SPECIFIED FILL TO THE LIMITS SPECIFIED AND SHALL BE FULL COMPENSATION FOR FURNISHING THE MATERIAL, EQUIPMENT AND LABOR NECESSARY TO COMPLETE THE WORK ACCEPTABLE TO THE ENGINEER.

ITEM 253 - PAVEMENT REPAIR: THIS ITEM SHALL INCLUDE ALL LABOR, EQUIPMENT, AND MATERIALS NECESSARY TO RESTORE ANY EXISTING ASPHALT BIKEWAY PAVEMENT THAT IS DAMAGED BY THE CONSTRUCTION OPERATIONS TO "AS NEW" CONDITION. THIS ITEM SHALL ALSO SERVE AS A UNIT PRICE ITEM FOR ADDITIONL PAVEMENT REPAIR AND REPLACEMENT ALONG THE BIKEWAY BETWEEN THE TUNNEL AND THE BRIDGE.

ITEM 503 - UNCLASSIFIED EXCAVATION, AS PER PLAN: THIS ITEM SHALL CONSIST OF ALL LABOR, EQUIPMENT, AND MATERIALS NECESSARY TO EXCAVATE THE EXISTING MATERIALS AND CONSTRUCT THE EMBANKMENT BELOW THE BRIDGE OVERLOOK AS REQUIRED IN THE PLANS.

ITEM 504 - STEEL SHEET PILING LEFT IN PLACE, AS PER PLAN: THIS ITEM SHALL INCLUDE ALL LABOR, EQUIPMENT, AND MATERIALS NECESSARY TO INSTALL THE SHEET PILE RETAINING SYSTEM AS SHOWN IN THESE PLANS.

THIS ITEM SHALL ALSO INCLUDE ALL COSTS ASSOCIATED WITH AN INITIAL CONTRACTOR SUBSURFACE PROBE FOR ROCK. IN THE EVENT THAT SHALLOW ROCK IS ENCOUNTERED DURING THIS PROBE THAT WOULD PROHIBIT THE DRIVING OPERATION OF THE SHEET PILING, THE CONTRACTOR IS RESPONSIBLE FOR DESIGNING AND BUILDING AN ALTERNATE REINFORCED CONCRETE OR CONCRETE BLOCK GRAVITY WALL SYSTEM THAT IS APPROVED BY THE CITY OF ST. CLAIRSVILLE AT NO ADDITIONAL COST. PLANS FOR AN ALTERNATE RETAINING WALL SHALL BE DESIGNED BY A REGISTERED PROFESSIONAL ENGINEER AND CONFORM TO ODOT CMS 501.05. FOR APPROVAL, SIX COPIES OF THE DRAWINGS SHALL BE SUBMITTED TO THE CITY OF ST. CLAIRSVILLE ENGINEERING DEPARTMENT. CONSTRUCTION OF THE ALTERNATE RETAINING WALL SYSTEM SHALL NOT BEGIN UNTIL AFTER WRITTEN APPROVAL HAS BEEN RECEIVED FROM THE CITY ENGINEER.

IT IS EXPECTED THAT PORTIONS OF THE STEEL SHEET PILING WILL NEED TO BE DRIVEN AROUND THE EXISTING BRIDGE ABUTMENT FOOTING. HOWEVER, IT IS NOT ANTICIPATED THAT THIS WILL PROHIBIT THE SHEET PILING FROM FUNCTIONING AS INTENDED.

THE CONTRACTOR IS RESPONSIBLE FOR SHEET PILE DRIVING AND INSTALLATION METHODS WHICH RESULT IN SHEET PILE PENETRATIONS THAT ALLOW THE TOP OF THE 15'-0" SHEET TO BE LEVEL WITH THE BOTTOM OF THE EXISTING TIMBER DECKING. APPROPRIATELY SIZED IMPACT DRIVING HAMMERS MAY BE REQUIRED TO ACHIEVE THE REQUIRED SHEET PILE PENETRATIONS IN LIEU OF VIBRATORY HAMMERS.

SHEET PILING SHALL REMAIN IN PLACE FOLLOWING COMPLETION OF THE PROJECT.

ITEM 508 - POROUS BACKFILL WITH FILTER FABRIC, AS PER PLAN: THIS ITEM SHALL INCLUDE ALL LABOR, EQUIPMENT AND MATERIALS NECESSARY TO FURNISH AND INSTALL POROUS BACKFILL WITH A FILTER FABRIC ON TOP OF THE NORTH PORTAL CONCRETE LINER PRIOR TO THE PLACEMENT OF ENGINEERED FILL. REQUIRED POROUS BACKFILL THICKNESS IS 1'-0" MINIMUM. PLACE THE FILTER FABRIC ON TOP OF THE POROUS BACKFILL, BETWEEN THE POROUS BACKFILL AND THE ENGINEERED FILL.

ITEM 512 - WATERPROOFING, MISC.: DRAINAGE MAT WITH GEOCOMPOSITE FABRIC BONDED TO ONE SIDE: THIS ITEM SHALL INCLUDE ALL LABOR, EQUIPMENT AND MATERIALS NECESSARY TO FURNISH AND INSTALL A DRAINAGE COMPOSITE COMPOSED OF A DRAINAGE MAT WITH A GEOCOMPOSITE FABRIC BONDED TO ONE SIDE AT THE LOCATIONS INDICATED ON THE PLANS AND AS DIRECTED BY THE ENGINEER. THE COMPOSITE SHALL BE FLEXIBLE AND CONFORM TO IRREGULAR SURFACES.

THE DRAINAGE CORE OF THE COMPOSITE SHALL BE AN ENTANGLED POLYPROPLENE MESH MEETING THE FOLLOWING REQUIREMENTS:

THICKNESS - 0.45 INCHES MINIMUM, 0.60 INCHES MAXIMUM

FLOW RATES - GAL/MIN/FT (ASTM D4716, VERTICAL APPLICATION)

PRESSURE (PSF)	1.0 GRADIENT	0.5 GRADIENT
250	22.5	15.5
500	22.0	15.2
1000	20.7	14.3

THE FABRIC SHALL BE POLYPROPOLENE WITH MEETING THE FOLLOWING PROPERTIES:

PROPERTY	TEST METHOD	VALUE
FABRIC COLOR		BLACK
WEIGHT	ASTM D 5261	4.5 oz/yd^2
GRAB STRENGTH MD/CD	ASTM D 4632	120.0 lbs
GRAB ELONGATION	ASTM D 4632	50%
TRAPEZOIDAL TEAR	ASTM D 4533	50.0 lbs
PUNCTURE STRENGTH	ASTM D 4833	70.0 lbs
AOS (MAXIMUM AVERAGE)	ASTM D 4751	70 US Sieve
FLOW RATE	ASTM D 4491	120.0 $gal/min/ft^2$
PERMITTIVITY	ASTM D 4491	1.8 sec^{1}

VALUES ARE MARV MINIMUM AVERAGE ROLL VALUE

THE DRAINAGE MAT SHALL BE INSTALLED WITH THE DRAINAGE CORE AGAINST THE EXISTING PNEUMATICALLY PLACED MORTAR. THE WATERPROOFING MEMBRANE WILL BE FACING THE BIKEWAY.

THE EXISTING SURFACES SHALL BE CLEANED AND PREPARED AND THE COMPOSITE SHALL BE INSTALLED PER THE MANUFACTURERS REQUIREMENTS.

BURGESS & NIPLE
5085 Reed Road
Columbus, Ohio 43220

DESIGNED	DRAWN	REVIEWED	DATE
CCG	JDA	DKM	12-17-08
CHECKED	REVISED	STRUCTURE FILE NUMBER	
HBO		0701572	

STA. 1+00.00
STA. 10+00.00

GENERAL NOTES 1
U.S. ROUTE 40, NATIONAL ROAD BIKEWAY
TUNNEL REHABILITATION, ST. CLAIRSVILLE, OHIO

BEL-40
Federal Aid No. 060415
PID No. 80906

ITEM 512 - WATERPROOFING , MISC.: WATERPROOFING MEMBRANE: THIS ITEM SHALL INCLUDE ALL LABOR, EQUIPMENT AND MATERIALS NECESSARY TO FURNISH AND INSTALL A SPRAY APPLIED WATERPROOFING MEMBRANE OVER THE DRAINAGE MAT AND AROUND THE PNEUMATICALLY PLACED MORTAR HOOK BOLTS AT THE LOCATIONS INDICATED ON THE PLANS AND AS DIRECTED BY THE ENGINEER. THE MEMBRANE SHALL BE APPLIED OVER THE GEOCOMPOSITE FABRIC OF THE DRAINAGE MAT AND SHALL BE FLEXIBLE AND CONFORM TO IRREGULAR SURFACES.

COMPOSITION: HYDROCARBON POLYMERS IN HYDROCARBON SOLVENTS, APPLIED MEMBRANE
DENSITY: 6.8-7.8 LBS. / GALLON
MINIMUM TEMP FOR APPLICATION: 15°F
APPLICATION: AIRLESS SPRAY
APPLICATION RATE: 60 MIL MEMBRANE

PROPERTY	TEST METHODS	VALUE
ELONGATION	ASTM D412 (DIE C)	1200+%
LOW-TEMP FLEXIBILITY	BEND AROUND 0.5" MANDREL	FLEXIBLE TO -20°F
ABRASION RESISTANCE	700 PSI ON .06" X.06" POINT MOVING 1" PER SECOND	LESS THAN .10% MEMBRANE LOSS
PEEL ADHESION	ASTM D-903 BLOCK	7.65 LBS/INCH
CRACK BRIDGING	ASTM C836	EXCEEDS 10 CYCLES TO 1/8" AT - 15°F
WATER VAPOR PERMENANCE	ASTM E96 (WATER METHOD)	.21 PERMS PER DRY 40-MIL COATING GRAMS/FT2/HR HG
LIQUID WATER ABSORPTION	ASTM D95	LESS THAN 0.5% WEIGHT
RESISTANCE TO BACTERIA	ASTM D4299-83 (MODIFIED)	NO ATTACK
RESISTANCE TO DEGRADATION IN SOIL	ASTM E154 (SOIL PREPARATION)	EXCELLENT
RESISTANCE TO ALGAE	ASTM G29-75 (MODIFIED)	NO ATTACK
RESISTANCE TO FUNGUS	ASTM D2020 (MODIFIED)	NO ATTACK

ITEM 513 - STRUCTURAL STEEL, MISC.: JOIST SUPPORT BRACKET: THIS ITEM SHALL INCLUDE ALL LABOR, EQUIPMENT, AND MATERIALS NECESSARY TO FABRICATE AND INSTALL THE JOIST SUPPORT BRACKETS AS DETAILED IN THE PLANS. THIS SHALL INCLUDE BUT NOT BE LIMITED TO ALL ANGLE AND PLATE STEEL, BOLTS, NUTS, WASHERS, SCREWS, WELDING, AND DRILLING AND GROUTING USING NON-METALLIC, NON-SHRINK GROUT AS PER ODOT CMS 705.20. ALL STRUCTURAL STEEL MEMBERS, BOLTS, NUTS, AND WASHERS, AND SCREWS SHALL BE MINIMUM GRADE 36 STEEL AND GALVANIZED AS PER ODOT CMS 711.02.

ITEM 513 - STRUCTURAL STEEL, MISC.: MISCELLANEOUS CONNECTOR PLATES: THIS ITEM SHALL INCLUDE ALL LABOR, EQUIPMENT, AND MATERIALS REQUIRED FOR THE INSTALLATION OF THE MISCELLANEOUS CONNECTORS FOUND ON THE SOUTH PORTAL PROTECTION BARRIER. THIS INCLUDES BUT IS NOT LIMITED TO: THE MC9x25.4, THE 3/8" CONNECTION PLATES, THE 3/4" HIGH STRENGTH BOLTS, AND DRILLING AND GROUTING WITH NON-SHRINK, NON-METALLIC GROUT (AS PER ODOT CMS 705.20).

ITEM 513 - STRUCTURAL STEEL, MISC.: ROCK BOLT REPAIR: THIS ITEM SHALL INCLUDE ALL LABOR, EQUIPMENT AND MATERIALS NECESSARY TO EVALUATE THE CONDITION OF THE EXISTING ROCK BOLTS BELOW THE PROPOSED PNEUMATICALLY PLACED MORTAR LINE AND PROVIDE NEW PLATES IF NECESSARY. REPAIR ALL EXISTING ROCK BOLTS AND PLATES THAT ARE MISSING NUTS, PLATES OR BOTH THAT ARE LOCATED ON THE SIDES OF THE TUNNEL BELOW THE PROPOSED PNEUMATICALLY PLACED MORTAR. REPAIR SHALL CONSIST OF PROVIDING NEW PLATES TO ENSURE THE ROCK BOLTS ARE IN CONTACT WITH THE EXISTING PNEUMATICALLY PLACED MORTAR SURFACE. AFTER ABRASIVELY CLEANING THE ROCK BOLT RODS, NUTS AND PLATES (PAYMENT FOR ABRASIVELY CLEANING INCLUDED IN THE PAY ITEM "FIELD PAINTING, MISC.: CLEAN AND PAINT ROCK BOLT NUTS AND PLATES"), INSPECT THE EXISTING ASSEMBLY. IF THE ASSEMBLY IS MISSING NUTS, PLATES OR BOTH AND IF EXISTING ROD IS IN GOOD CONDITION, WELD A NEW A36 STEEL 4"x4"x1/4" PLATE TO ROD. PROVIDE SLOT IN PLATE TO FIT OVER ROD. WELD SHALL BE 1/4" FILLET. PLACE NONSHRINK, NONMETALLIC GROUT BETWEEN EXISTING PNEUMATICALLY PLACED MORTAR SURFACE AND NEW PLATE IF NECESSARY TO ENSURE FULL CONTACT BETWEEN THE TWO SURFACES. NONSHRINK, NONMETALLIC GROUT SHALL CONFORM TO ODOT CMS 705.20. PAINT ROCK BOLT COMPONENTS AFTER REPAIR HAS BEEN COMPLETED (PAYMENT FOR PAINTING INCLUDED IN THE PAY ITEM "FIELD PAINTING, MISC.: CLEAN AND PAINT ROCK BOLT NUTS AND PLATES). IF EXISTING ROCK BOLT ROD IS LOOSE, EXISTING ROD DIAMETER IS COMPROMISED DUE TO EXCESSIVE SECTION LOSS OR DEFICIENT IN ANY MANNER (AS DETERMINED BY THE ENGINEER), PROVIDE A NEW ROCK BOLT ADJACENT TO THE EXISTING ROCK BOLT. PAYMENT FOR NEW ROCK BOLT WILL BE INCLUDED IN THE PAY ITEM "STRUCTURAL STEEL, MISC.: PRESTRESSABLE HOLLOW GROUTABLE REBAR ROCK BOLTS (5'-0" EMBEDMENT"). CUT OFF EXPOSED PORTION OF EXISTING DEFICIENT ROCK BOLT AND FILL HOLE WITH GROUT.

ITEM 513 - STRUCTURAL STEEL, MISC.: PRESTRESSABLE HOLLOW-CORE GROUTABLE SPIN-LOCK ROCK BOLTS (5'-0" EMBEDMENT): THIS ITEM SHALL INCLUDE ALL LABOR, EQUIPMENT AND MATERIALS NECESSARY TO FURNISH AND INSTALL ROCK BOLTS ON THE INTERIOR OF THE TUNNEL AT LOCATIONS DETERMINED BY THE ENGINEER.

MATERIAL AND CONSTRUCTION:

THIS ITEM SHALL INCLUDE THE FOLLOWING COMPONENTS, WHICH SHALL MEET THE FOLLOWING REQUIREMENTS:

BOLT ROD -

THE 1" DIAMETER BAR SHALL BE A HIGH STRENGTH GRADE 70 (MINIMUM) HOLLOW CORE PRESTRESSABLE ROD MEETING THE REQUIREMENTS OF ASTM A 615. THE OUTER END OF THE BAR SHALL BE THREADED APPROXIMATELY 6" IN LENGTH.

ANCHOR ASSEMBLY -

THE ANCHOR ASSEMBLY SHALL CONSIST OF A 4 1/4" LONG CONE IN THREADED ENGAGEMENT WITH THE INNER END OF THE BOLT ROD. THE CONE SHALL HAVE AN EXTERIOR CONICAL SURFACE CONTINUOUS IN CROSS SECTION THROUGHOUT A SECTOR OF 360 DEGREES TO DELIVER BEARING PRESSURE RADIALLY WITH RESPECT TO THE AXIS OF THE BOLT ROD, AND SHALL HAVE A RAISED AXIAL KEY TO STOP ROTATION OF THE CONE IN THE SHELL.

A 3 3/4" LONG EXPANSION SHELL WITH A CONICAL INNER SURFACE BEARING ON THE CONE AND THE OUTER SURFACE OF THE SHELL BEING INITIALLY OF CYLINDRICAL CURVATURE AND CONTINOUS IN CROSS SECTION OVER A SECTOR OF AT LEAST 300 DEGREES THROUGHOUT THE LENGTH OF THE SHELL.

A THRUST RING IN THREADED ENGAGEMENT WITH THE BOLT ROD.

TWO SLIP RINGS BETWEEN THE THRUST RING AND THE SHELL.

BEARING PLATE -

A SURFACE BEARING PLATE HAVING A KEYHOLE SHAPED OPENING WITH THE LARGER PORTION SIZED TO RECEIVE THE BOLT ROD AND THE SMALLER SIZED TO RECEIVE THE SELECTED VENT TUBE. THE PLATE SHALL BE OF SUFFICIENT STRENGTH TO WITHSTAND THE APPLICATION OF THE WORKING LOAD ON THE BOLT. TYPE 2 QUICK SETTING CONCRETE MORTAR PER ODOT CMS 705.21 SHALL BE USED AS A SEALER. THE BEARING PLATE SHALL BE PLACED FLAT AGAINST THE EXISTING PNEUMATICALLY PLACED MORTAR FACE WHERE POSSIBLE. WHERE THIS IS NOT POSSIBLE, LEVELING PADS SHALL BE BUILT UP WITH TYPE 2 QUICK SETTING CONCRETE MORTAR PER ODOT CMS 705.21.

WASHERS -

PROVIDE ONE OR MORE BEVELED WASHERS AND HARDENED FLAT WASHERS FOR THE BOLT ROD. THE DIAMETER SHALL BE SELECTED TO LEAVE THE SMALLER PORTION OF THE KEYHOLE SHAPED OPENING EXPOSED TO A SUFFICIENT DEGREE TO PASS THE VENT TUBE WITHOUT PINCHING.

NUTS -

PROVIDE HEAVY 2H HEX NUTS FOR THREADED ENGAGEMENT WITH THE OUTER END OF THE BOLT ROD.

MISCELLANEOUS -

ALL NONSHRINK GROUT, LEVELING PADS (GROUT), VENT TUBES AND OTHER MISCELLANOUS ITEMS REQUIRED FOR COMPLETE INSTALLATION SHALL BE INCLUDED.

INSTALLATION:

DRILLED HOLES SHALL BE CLEANED OF ALL DRILL CUTTINGS, SLUDGE AND DEBRIS BEFORE THE ROCK BOLT IS INSERTED INTO THE HOLE. DEWATERING OR PREGROUTING MAY BE REQUIRED FOR PROPER GROUTING OF BOLT IN GROUNDWATER CONDITIONS. THE CONTRACTOR SHALL MAKE CERTAIN THAT THE HOLLOW CORE OF A ROCK BOLT IS CLEAR OF ALL OBSTRUCTIONS. ROCK BOLTS ARE TO BE INSERTED IN THE HOLE WITH THE ANCHOR ASSEMBLY POSITIONED APPROXIMATELY 12 INCHES FROM THE BOTTOM OF THE HOLE IN THE ROCK AND THE THREADED OUTER END PROJECTING BEYOND THE ROCK FACE AT LEAST 2 INCHES IN ADDITION TO THE NUT AND PLATE. THE ANCHOR IS TO BE EXPANDED BY ROTATION OF THE BOLT CLOCKWISE WITH A ROCK BOLT SETTING TOOL. THE USE OF PIPE WRENCHES FOR APPLYING TORQUE TO THE BOLT ROD IS EXPRESSLY PROHIBITED. TORQUE FOR SETTING THE ANCHOR ASSEMBLY (EXPANDING THE SHELL) SHALL BE 250 FOOT POUNDS.

TENSIONING:

EACH ROCK BOLT SHALL BE TENSIONED AFTER INSTALLATION PRIOR TO GROUTING TO THE DESIGN LOAD OF 33,000 POUNDS. TENSIONING SHALL BE DONE WITH APPROVED CALIBRATED TORQUE OR IMPACT WRENCHES OR WITH CENTER HOLE HYDRAULIC JACKS. COMPLETE TESTING, BOTH AS TO SETTING TORQUE OR BY APPLICATION OF SPECIFIED WORKING LOAD WITH HYDRAULIC JACKS SHALL BE PERFORMED UNLESS A WRITTEN WAIVER IS PROVIDED BY THE ENGINEER. BOLTS THAT DO NOT TEST AT THE DESIRED TENSION SHALL BE RE-TOROUED AND RE-TENSIONED AS REQUIRED OR REPLACED.

GROUTING:

GROUTING OF THE ANNULAR SPACE AROUND THE ROCK BOLT SHALL BE ACCOMPLISHED BY PRESSURE GROUTING (USING SUFFICIENT PRESSURE TO OVERCOME HYDROSTATIC HEAD) WITH A PORTABLE GROUT PUMP, PROVIDING 90 TO 120 POUNDS PER SQUARE INCH CAPACITY. GROUT SHALL BE A NON-SHRINK NON-METALLIC GROUT MIXED WITH 2 1/2 GALLONS OF WATER PER 55 POUND PAIL. CEMENTS SHALL HAVE FINENESS AS IN HIGH EARLY STRENGTH CEMENTS, SUCH AS PORTLAND TYPE 3 (4500 CENTIMETERS SQUARED PER GRAM), AS MEASURED BY THE BLAINE METHOD. IF PORTLAND CEMENT IS USED, USE AN EXPANSIVE ADDITIVE POWDER IN THE PROPORTION 0.005% OF WEIGHT OF CEMENT (2 GRAMS OR 1 LEVEL TEASPOON, FOR EACH 94 POUND SACK OF CEMENT). HOPPER WORKING CAPACITY SHALL BE AT LEAST 10 GALLONS. THE GROUT SHALL MEET THE REQUIREMENTS OF THE ROCK BOLT MANUFACTURER.

BOLTS IN UPWARD INCLINATION FROM THE SURFACE SHALL USE TYPE 2 QUICK SETTING CONCRETE MORTAR TO SEAL THE OPENING, AND SUPPLY GROUT THROUGH A SHORT TUBE EXTENDING THROUGH THE CONCRETE MORTAR SEAL. SUCH BOLTS SHALL BE CONSIDERED GROUTED WHEN THERE IS A FULL RETURN OF GROUT THROUGH THE HOLLOW CENTRAL OPENING OF THE ROCK BOLT. ANY ROCK BOLTS HORIZONTAL OR INCLINED DOWNWARD FROM THE HORIZONTAL SHALL BE GROUTED IN THE REVERSE MANNER, USING THE HOLLOW CORE OF THE ROCK BOLT AS THE GROUT INJECTION TUBE, AND THE PLASTIC TUBE EMBEDDED IN THE COLLAR OF THE HOLE AS A VENT. ALL GROUT PIPES, TUBES AND FITTINGS SHALL BE CLEAN AND FREE FROM DIRT PARTICLES, GREASE, HARDENED GROUT OR OTHER CONTAMINATION BEFORE GROUTING IS COMMENCED FOR ANY BOLT. ALL SURPLUS WATER AND DILUTED GROUT SHALL BE FLUSHED OR BLOWN FROM ALL LINES BEFORE COMMENCING INJECTIONS. THE GROUT LINE SHALL BE ATTACHED TO THE GROUT INJECTION TUBE OR TO THE HOLLOW BOLT (DEPENDING UPON WHETHER THE INSTALLATION IS UPWARDLY OR DOWNWARDLY INCLINED) WITH SUITABLE FITTINGS SUCH THAT LEAKAGE IS ENTIRELY PREVENTED. PROVIDE AND USE APPROPRIATE GROUT ADAPTER FITTINGS AS RECOMMENDED BY THE MANUFACTURER FOR THIS PURPOSE. THE GROUT SHALL BE INJECTED AT A PRESSURE TO OVERCOME HYDROSTATIC HEAD OR AS APPROVED BY THE ENGINEER.

PAYMENT:

PAYMENT SHALL BE MADE AT THE CONTRACT UNIT PRICE PER EACH ROCK BOLT PLACED FOR ITEM 513 - STRUCTURAL STEEL, MISC.: PRESTRESSABLE HOLLOW-CORE GROUTABLE SPIN-LOCK ROCK BOLTS (5'-0" EMBENDMENT).

ITEM 513 - STRUCTURAL STEEL, MISC.: PRESTRESSABLE HOLLOW-CORE GROUTABLE SPIN-LOCK ROCK BOLTS (10'-0" EMBENDMENT): THIS ITEM SHALL INCLUDE ALL LABOR, EQUIPMENT AND MATERIALS NECESSARY TO FURNISH AND INSTALL ROCK BOLTS ON THE INTERIOR OF THE TUNNEL AT LOCATIONS INDICATED ON THE PLANS.

SEE ITEM 513 - STRUCTURAL STEEL, MISC.: PRESTRESSABLE HOLLOW-CORE GROUTABLE SPIN-LOCK ROCK BOLTS (5'-0" EMBENDMENT) FOR MATERIAL AND CONSTRUCTION, INSTALLATION, TENSIONING AND GROUTING REQUIREMENTS.

PAYMENT SHALL BE MADE AT THE CONTRACT UNIT PRICE PER EACH ROCK BOLT PLACED FOR ITEM 513 - STRUCTURAL STEEL, MISC.: PRESTRESSABLE HOLLOW-CORE GROUTABLE SPIN-LOCK ROCK BOLTS (10'-0" EMBENDMENT).

ITEM 514 - FIELD PAINTING, MISC.: CLEAN AND PAINT ROCK BOLT NUTS AND PLATES: THIS ITEM SHALL INCLUDE ALL LABOR, EQUIPMENT AND MATERIALS NECESSARY TO CLEAN AND PAINT THE EXISTING EXPOSED PORTIONS OF THE ROCK BOLTS (END OF ROCK BOLT ROD, NUT, PLATE, ETC.) LOCATED ON THE INSIDE WALLS OF THE TUNNEL BELOW THE PROPOSED GUTTERS. THE EXISTING STEEL SHALL BE CLEANED AND PAINTED PER ODOT CMS 514. APPLY A THREE-COAT PAINT SYSTEM CONSISTING OF AN ORGANIC ZINC PRIME COAT, AN EPOXY INTERMEDIATE COAT AND A URETHANE FINISH COAT. THE COATING SYSTEM SHALL CONFORM TO ODOT CMS 708.02. THE COLOR OF THE PAINT SHALL MEET THE APPROVAL OF THE CITY ENGINEER.

ITEM 520 - PNEUMATICALLY PLACED MORTAR: CONTRARY TO ODOT CMS 520.04, SPACE OVERHEAD ANCHORS AT 18 INCHES ON CENTER AND ANCHORS IN THE WALLS AND INCLINED SURFACES AT 24 INCHES ON CENTER AS RECOMENDED BY AMERICAN CONCRETE INSTITUTE (ACI) REPORT 506R, SECTION 5.5.

THE CONTRACTOR SHALL TINT THE MORTAR. APPLY A MINIMUM 4 SQUARE FOOT PATCH IN A LOW VISIBILITY LOCATION FOR APPROVAL OF THE OWNER. THE OBJECT OF MORTAR TINT WILL BE TO MATCH THE COLOR OF THE EXISTING WORK THAT WILL REMAIN VISIBLE.

ITEM 524 - DRILLED SHAFTS: EPOXY COATED REINFORCING STEEL DETAILED WITH DRILLED SHAFTS SHALL BE CONSIDERED INCIDENTAL TO THE COST OF THE SHAFT.

ITEM 530 - SPECIAL - STRUCTURAL MISC.: COMPOSITE DECK, JOISTS, AND FLOORBEAMS: THIS ITEM SHALL INCLUDE ALL LABOR, EQUIPMENT, AND MATERIALS NECESSARY FOR THE CONSTRUCTION OF THE SR9 BRIDGE OVERLOOK. THIS SHALL INCLUDE, BUT NOT BE LIMITED TO ALL COMPOSITE DECKING, JOISTS, FLOORBEAM, AND TIMBER CONNECTORS AND SHIMS. ALL TIMBER SHALL BE PRESSURE TREATED SOUTHERN YELLOW PINE, NO. 1, NON-DENSE OR BETTER AND SHALL CONFORM TO ODOT CMS 711.26. IF NECESSARY TO ENSURE ADEQUATE BEARING AND PROPER DECK DRAINAGE, THE CONTRACTOR SHALL INSTALL TIMBER SHIMS BETWEEN THE ELASTOMERIC PADS AND THE TIMBER JOISTS.

BURGESS & NIPLE
5085 Reed Road
Columbus, Ohio 43220

DESIGNED	DRAWN	REVIEWED	DATE
CCG	JDA	DKM	12-17-08
CHECKED	REVISED	STRUCTURE FILE NUMBER	
HBO		0701572	

STA. 1+00.00
STA. 10+00.00

GENERAL NOTES 2
U.S. ROUTE 40, NATIONAL ROAD BIKEWAY
TUNNEL REHABILITATION, ST. CLAIRSVILLE, OHIO

BEL-40
Federal Aid No. 060415
PID No. 80906

COMPOSITE DECKING:

PRIOR TO ORDERING THE COMPOSITE DECKING, THE CONTRACTOR SHALL PROVIDE PRODUCT LITERATURE AND SAMPLES TO THE OWNER FOR SELECTION OF COLOR AND TEXTURE.

THE COMPOSITE DECKING SHALL BE NOMINAL 2X6 PLANKS X MAXIMUM PRACTICAL LENGTH CONSISTING OF WOOD AND PLASTIC WITH INTEGRAL COLORING; FREE FROM TOXIC CHEMICALS AND PRESERVATIVES SATISFYING THE FOLLOWING PROPERTIES:

PROPERTY	Test Method	VALUE
ABRASION RESISTANCE	ASTM D2394	0.01 INCH WEAR PER 1000 REVOLUTIONS
HARDNESS	ASTM D143	1124 POUNDS
SELF IGNITION TEMPERATURE	ASTM D1929	743 DEGREES F
FLASH IGNITION TEMPERATURE	ASTM D1929	698 DEGREES F
FLAME SPREAD RATING	ASTM E84	80
WATER ABSORPTION	ASTM D1037	24 HOUR IMMERSION
FASTENER WITHDRAWAL	ASTM D1761	NAIL: 163 POUNDS PER INCH SCREW: 558 POUNDS PER INCH
STATIC COEFFICIENT OF FRICTION	ASTM F1679	DRY: 0.59 TO 0.70 WET: 0.70 TO 0.75
	ASTM D1413	NO DECAY
FUNGUS RESISTANCE	AWPA E-1	9.6 RATING
TERMITE RESISTANCE	ASTM D2395	0.91 TO 0.95
SPECIFIC GRAVITY	ASTM D198	
COMPRESSION	ASTM D143	PARALLEL: 1806 PSI ULTIMATE PERPENDICULAR: 1944 PSI ULTIMATE
TENSILE STRENGTH	ASTM D198	854 PSI ULTIMATE
SHEAR STRENGTH	ASTM D143	561 PSI ULTIMATE
MODULUS OF RUPTURE	ASTM D4761	1423 PSI ULTIMATE
MODULUS OF ELASTICITY	ASTM D4761	175,000 PSI ULTIMATE

ITEM 530 - SPECIAL - STRUCTURAL MISC.: STEEL RAILING WITH 3"x3" MESH INFILL: THIS ITEM SHALL CONSIST OF ALL LABOR, EQUIPMENT, AND MATERIALS NECESSARY TO FABRICATE AND INSTALL THE 3'-6" TALL STEEL RAILING WITH 3"x3" STEEL MESH INFILL. STEEL RAILING AND CONNECTIONS SHALL BE MINIMUM GRADE 36 STEEL AND GALVANIZED AS PER ODOT CMS 711.02. RAIL SYSTEM SHALL BE FABRICATED WITH 2"x2" MINIMUM SQUARE TUBE POSTS. ALL DECK NOTCH-OUTS AND FLOOR SYSTEM CONNECTIONS REQUIRED FOR THE POST INSTALLATION SHALL BE INCLUDED WITH THIS QUANITITY. RAILING POSTS SHALL BE CONNECTED TO FLOORBEAMS AND JOISTS AND NOT TO THE DECKING BOARDS. THESE RAILING CONNECTIONS SHALL BE AS PER THESE PLANS AND MANUFACTURER SPECIFICATIONS AND SHALL BE DESIGNED TO RESIST LOADING AS DEFINED IN THE AASHTO STANDARD SPECIFICATION 2.7.3.2. 3"x3" STEEL MESH INFILL SHALL MATCH EXISTING MESH ON THE BRIDGE.

THE RAILING AND FENCE SYSTEM SHALL BE WIRE MESH PANELS WITH THE MESH INFILL ARRANGED IN A DIAMOND PATTERN AND FINISHED WITH A POLYESTER POWDER COATING OVER HOT DIP GALVANIZING MEETING THE FOLLOWING REQUIREMENTS:

PROPERTY	TEST METHOD	VALUE
SALT SPRAY RESISTANCE	ASTM B117 95 DEGREES F AND 95 PERCENT RELATIVE HUMIDITY	NO UNDERCUTTING AFTER 500 HOURS IN 5 PERCENT SALT SPRAY TESTING. AFTER 1000 HOURS, THE PANELS SHOWED LESS THAN 3/16 INCH UNDERCUTTING.
WEATHERABILITY	ASTM D822	ONE YEAR EXPOSURE IN SOUTH FLORIDA, WITH PANELS FACING SOUTH AND TILTED AT A 45 DEGREE ANGLE, A HIGH GLOSS WHITE POLYESTER COATING RETAINS 88 PERCENT OF ITS GLOSS (GLOSS READING OBTAINED ON WASHED PANELS). NO FILM FAILURE.
HARDNESS	ASTM D3363	2 H (MIN)
DIRECT IMPACT	ASTM D2794	160 IN./LBS.

SUBMIT COLOR SAMPLES TO THE OWNER FOR SELECTION.

THE POLYESTER-COATED GALVANIZED METAL SHALL BE WARRANTED NOT TO CRACK, PEEL OR BLISTER FOR A PERIOD OF 10 YEARS.

ITEM 603 - CONDUIT, MISC.: PVC WALL DRAIN: THIS ITEM SHALL INCLUDE ALL LABOR, EQUIPMENT AND MATERIALS NECESSARY TO FURNISH AND INSTALL 2" DIAMETER POLYVINYL CHLORIDE (PVC) PIPE, FITTINGS AND HANGERS FROM EXISTING (OR PROPOSED) WALL DRAINS TO THE PROPOSED PERVIOUS PAVEMENT ON EACH SIDE OF THE TUNNEL. AT THE NEW PIPES DRAINING THE ENGINEERED FILL ABOVE THE NORTH END CONCRETE LINER, THIS ITEM INCLUDES THE PIPE PASSING THROUGH THE EXISTING CONCRETE WALL. PVC PIPE SHALL CONFORM TO ASTM F 758. PROVIDE PIPE FITTINGS AS NECESSARY TO TRANSITION PIPE FROM EXISTING (OR PROPOSED) WALL DRAINS TO THE TUNNEL FLOOR. HANGERS SHALL BE TYPE 304 STAINLESS STEEL SPLIT RING HANGERS. HANGER RODS SHALL BE 3/8" DIAMETER GALVANIZED THREADED RODS. DRILL HOLE IN EXISTING PNEUMATICALLY PLACED MORTAR AND SECURE ROD WITH NONSHRINK, NONMETALLIC GROUT. NONSHRINK, NONMETALLIC GROUT SHALL CONFORM TO ODOT CMS 705.20. PLACE HANGERS AND RODS AT APPROXIMATE LOCATIONS SHOWN ON THE PLANS. CLEAN OUT INTERIOR AND EXTERIOR OF EXISTING PVC PIPES PRIOR TO ATTACHING NEW PIPES. EXISTING 2" DIAMETER PVC WALL DRAINS AND LOCATIONS FOR NECESSARY PROPOSED WALL DRAINS SHALL BE DETERMINED IN THE FIELD BY BOTH THE CONTRACTOR AND THE ENGINEER. COVER AND PROTECT PIPES DURING APPLICATION OF PNEUMATICALLY PLACED MORTAR.

ITEM 603 - CONDUIT, MISC.: WALL DRAIN BOX AND FITTINGS: THIS ITEM SHALL INCLUDE ALL LABOR, EQUIPMENT AND MATERIALS NECESSARY TO FURNISH AND INSTALL AN OPERABLE WALL ENCLOSURE BOX THAT WILL HOUSE THE FITTINGS AND ADAPTERS NECESSARY TO CONNECT THE EXISTING WALL DRAIN PIPES TO A GARDEN HOSE AND TO ROUTE THAT HOSE THROUGH A NEW 2" DIAMETER PVC CONDUIT TO BE EMBEDDED IN THE PROPOSED P.P.M. AT LOCATIONS INDICATED BY THE PLANS. ITEM SHALL INCLUDE DRILLING NECESSARY HOLES, SUPPLYING AND PLACING 2" DIAMETER PVC PIPES, FITTINGS, GARDEN HOSE, POLYSTYRENE BACKER BARS AND NONSHRINK, NONMETALLIC GROUT. PVC PIPE SHALL CONFORM TO ASTM F 758. NONSHRINK, NONMETALLIC GROUT SHALL CONFORM TO ODOT CMS 705.20. THE POLYSTYRENE BACKER BAR SHALL BE APPLIED AROUND THE END OF THE PIPE TO ENSURE THAT GROUT DOES NOT SEAL OR BLOCK ANY OF THE OPENING. WALL DRAINS BOXES AND FITTINGS SHALL BE INSTALLED PRIOR TO PLACEMENT OF PNEUMATICALLY PLACED MORTAR AND SHALL BE COVERED AND PROTECTED DURING THE APPLICATION OF PNEUMATICALLY PLACED MORTAR.

ITEM 603 - CONDUIT, MISC.: WALL DRAIN CONDUIT: THIS ITEM SHALL INCLUDE ALL LABOR, EQUIPMENT AND MATERIALS NECESSARY TO FURNISH AND INSTALL NEW PVC PIPES TO ACT AS CONDUIT FOR REMOVABLE GARDEN HOSE LINERS. LOCATIONS SHALL BE AS SHOWN ON THE PLANS AND CONFIRMED IN THE FIELD BY THE CONTRACTOR AND ENGINEER. PVC FLANGES SHALL BE BONDED TO THE PVC PIPES AND SECURED TO THE PNEUMATICALLY PLACED MORTAR WALL WITH 5/8" DIAMETER EXPANSION ANCHOR BOLTS. SHIMS SHALL BE PROVIDED IF NECESSARY TO ENSURE THAT THE FLANGE IS TIGHT TO THE EXISTING WALL. WALL DRAIN ATTACHMENTS SHALL BE INSTALLED PRIOR TO PLACEMENT OF PNEUMATICALLY PLACED MORTAR.

ITEM 603 - CONDUIT MISC.: WALL DRAIN LINER HOSE. THIS ITEM SHALL INCLUDE ALL LABOR, EQUIPMENT AND MATERIALS NECESSARY TO FURNISH AND INSTALL A NEW WALL DRAIN LINER HOSE CONSISTING OF 5/8" NON-KINKING RUBBER GARDEN HOSE AND NECESSARY FITTINGS IN PVC CONDUITS AS INDICATED ON THE PLANS. THE GARDEN HOSE SHALL BE APPROVED BY THE CITY OF ST. CLAIRSVILLE.

ITEM 604 - DRAINAGE STRUCTURE, MISC.: 12"X12" CATCH BASIN: THIS ITEM SHALL INCLUDE ALL LABOR, EQUIPMENT AND MATERIALS NECESSARY TO FURNISH AND INSTALL 12"X12" CATCH BASINS AND GRATES AT THE LOCATIONS AND ELEVATIONS INDICATED ON THE PLANS.

THE CATCH BASINS SHALL BE 12-INCH SQUARE, TAPERED CATCH BASINS MADE OF OF HIGH-IMPACT POLYSTYRENE MEETING THE FOLLOWING REQUIREMENTS:

PROPERTY	TEST METHOD	VALUE
TYPE, CLASS, CATEGORY	ASTM D1248	III, A, 3
DENSITY	ASTM D1505	0.950 - 0.965 G/CM3
TENSILE STRENGTH, AT BREAK	ASTM D638	3,000 PSI TO 4,400 PSI
ELONGATION, AT BREAK	ASTM D638	400%
TENSILE IMPACT	ASTM D1822	27 FT-LB/IN2
FLEXURAL MODULUS	ASTM D790	120,000 PSI - 240,000 PSI
LOW TEMPERATURE BRITTLENESS	ASTM D746	<-76 F50, AT OC
HARDNESS	ASTM D2240	66 SHORE D
DEFLECTION TEMPERATURE	ASTM D648	1500 - 2000 AT 66 PSI
ELECTRICAL DIELECTRIC STRENGTH	ASTM D149	400 13/32 600 V/MIL

SUBMIT AVAILABLE COLORS TO THE OWNER FOR SELECTION. SUBMIT TECHNICAL INFORMATION ON THE SELECTED PRODUCT FOR APPROVAL. THE OUTLETS OF THE BASINS SHALL BE ADJUSTABLE TO ACHIEVE THE SPECIFIED GRADES.

PROVIDE RISERS AS REQUIRED TO SET THE BOX ELEVATIONS TO MEET THE SPECIFIED PIPE GRADES. THE RISERS SHALL BE OF THE SAME MATERIAL AS THE BASINS.

PROVIDE 12-INCH BY 12-INCH SQUARE GRATES WITH MAXIMUM OPENINGS OF 3/8", AN OPEN SURFACE AREA EXCEEDING 50 SQUARE INCHES, AN INLET CAPACITY EXCEEDING 60 GALLONS PER MINUTE AND CAPABLE OF SUPPORTING A MINIMUM OF 400 POUNDS. THE GRATES SHALL BE MADE OF STRUCTURAL-FOAM POLYOLEFIN, GRATE WITH UV INHIBITOR MEETING THE FOLLOWING REQUIREMENTS:

PROPERTY	TEST METHOD	VALUE
SPECIFIC GRAVITY	ASTM D792	1.04 G/CM3
TENSILE STRENGTH	ASTM D638	>4,000 AT YIELD, PSI
ELONGATION	ASTM D638	>35% AT BREAK
NOTCHED LZOD	ASTM D256	2-4 FT-LB/IN @ 0.125"
FLEXURAL MODULUS	ASTM D790	285,000 PSI
DEFLECTION TEMPERATURE	ASTM D648	189O F AT 264 PSI

ITEM 625 - LIGHTING, MISC.: REMOVE, SALVAGE AND REINSTALL LIGHTING SYSTEM: THIS ITEM SHALL INCLUDE ALL LABOR, EQUIPMENT AND MATERIALS NECESSARY TO REMOVE, SALVAGE AND REINSTALL EXISTING LIGHT FIXTURES AND CONDUIT LOCATED ON THE WALLS INSIDE THE TUNNEL. REMOVAL SHALL TAKE PLACE PRIOR TO APPLICATION OF PROPOSED PNEUMATICALLY PLACED MORTAR. EXISTING LOCATIONS OF LIGHT FIXTURES AND CONDUIT SHALL BE NOTED. AFTER PROPOSED PNEUMATICALLY PLACED MORTAR IS CONSTRUCTED, FIXTURES AND CONDUIT SHALL BE REINSTALLED AT APPROXIMATELY THE SAME LOCATIONS OR AT LOCATIONS DIRECTED BY THE ENGINEER.

BURGESS & NIPLE
5085 Reed Road
Columbus, Ohio 43220

DESIGNED	DRAWN	REVIEWED	DATE
GCG	JDA	DKM	12-17-08
CHECKED	REVISED	STRUCTURE FILE NUMBER	
HBO		0701572	

STA. 1+00.00
STA. 10+00.00

GENERAL NOTES 3
U.S. ROUTE 40, NATIONAL ROAD BIKEWAY
TUNNEL REHABILITATION, ST. CLAIRSVILLE, OHIO

BEL-40
Federal Aid No. 060415
PID No. 80906

BASE BID - ESTIMATED QUANTITIES

ITEM	ITEM EXT.	TOTAL	UNIT	DESCRIPTION	SHT. REF.
202	23000	218	SQ YD	PAVEMENT REMOVED	9,10,13
202	98100	2	EACH	REMOVAL MISC.: CORE DRILL HOLES	7,8
202	98500	56	CU YD	REMOVAL MISC.: TUNNEL WALL REMOVAL	7,12,14
203	02000	116	CU YD	SPECIAL - ENGINEERED FILL	7/8
254	01000	128	SQ YD	PAVEMENT PLANING, ASPHALT CONCRETE	9,10,13
407	14000	110	GALLON	TACK COAT FOR INTERMEDIATE COURSE	9,10,13
421	10020	680	SQ YD	MICROSURFACING, LEVELING COURSE	9,10,13
448	47020	28	CU YD	ASPHALT CONCRETE SURFACE COURSE, TYPE 1, PG 64-22	9,10,13
452	17200	218	SQ YD	NON-REINFORCED CONCRETE PAVEMENT, MISC: 4 1/2" PERVIOUS CONCRETE PAVEMENT	9,10,13
512	67400	10750	SQ FT	SPECIAL - WATERPROOFING, MISC.: DRAINAGE MAT	7,8,11,12
512	67400	10750	SQ FT	SPECIAL - WATERPROOFING, MISC.: WATERPROOFING MEMBRANE	7,8,11,12
513	95030	30	EACH	STRUCTURAL STEEL, MISC.: PRESTRESSABLE HOLLOW-CORE GROUTABLE SPIN-LOCK ROCK BOLTS (10'-0" EMBEDMENT)	14
513	95030	5	EACH	STRUCTURAL STEEL, MISC.: PRESTRESSABLE HOLLOW-CORE GROUTABLE SPIN-LOCK ROCK BOLTS (5'-0" EMBEDMENT)	7,8,9
513	95030	10	EACH	STRUCTURAL STEEL, MISC.: ROCK BOLT REPAIR	7,8
518	21200	84	CU YD	POROUS BACKFILL WITH FILTER FABRIC	9,11,12
518	21201	24	CU YD	POROUS BACKFILL WITH FILTER FABRIC, AS PER PLAN	7,8
520	11100	12600	SQ FT	PNEUMATICALLY PLACED MORTAR	8-12
603	98100	4	EACH	CONDUIT, MISC.: WALL DRAIN BOX & FITTINGS	7,14
603	98300	88	FT	CONDUIT, MISC.: WALL DRAIN CONDUIT	7,14
603	98300	90	FT	CONDUIT, MISC.: WALL DRAIN LINER HOSE	7,14
603	98300	104	FT	CONDUIT, MISC.: PVC WALL DRAIN	7,8,14
604	09800	8	EACH	DRAINAGE STRUCTURE, MISC.: 12"X12" CATCH BASIN	9,10,13
607	39900	35	FT	VANDAL PROTECTION FENCE, 6' STRAIGHT, COATED FABRIC	7,8,9,13
625	98200	1	LUMP	LIGHTING, MISC.: REMOVE, SALVAGE AND REINSTALL LIGHTING FIXTURES	7,8
840	25010	840	FT	6" DRAINAGE PIPE, PERFORATED	9,10,13
840	25020	13	FT	6" DRAINAGE PIPE, NON-PERFORATED	9,10,13

ADDITIVE ALTERNATES NO. 1 THRU 3 QUANTITIES

ITEM	ITEM EXT.	TOTAL	UNIT	DESCRIPTION	SHT. REF.
520	11100	750	SQ FT	ADDITIVE ALTERNATE NO. 1 - PNEUMATICALLY PLACED MORTAR	7,8
520	11100	1920	SQ FT	ADDITIVE ALTERNATE NO. 2 - PNEUMATICALLY PLACED MORTAR	7,8
520	11100	1420	SQ FT	ADDITIVE ALTERNATE NO. 3 - PNEUMATICALLY PLACED MORTAR	7,8

ADDITIVE ALTERNATE #4 QUANTITIES

ITEM	ITEM EXT.	TOTAL	UNIT	DESCRIPTION	SHT. REF.
254	01000	982	SQ YD	PAVEMENT PLANING, ASPHALT CONCRETE	9
407	14000	74	GALLON	TACK COAT FOR INTERMEDIATE COURSE	9
448	47020	34	CU YD	ASPHALT CONCRETE SURFACE COURSE, TYPE 1, PG 64-22	9

ADDITIVE ALTERNATE #5 QUANTITIES (BIKEWAY BRIDGE OVERLOOK)

ITEM	ITEM EXT.	TOTAL	UNIT	DESCRIPTION	SHT. REF.
202	98000	1	LUMP	REMOVAL MISC.: TIMBER RETAINING WALL, VEGETATION, AND CHAIN LINK FENCE	15,16
253	01000	19	SQ YD	PAVEMENT REPAIR	15,16
503	21301	1	LUMP	UNCLASSIFIED EXCAVATION, AS PER PLAN	15,16
504	11101	255	SQ FT	STEEL SHEET PILING LEFT IN PLACE, AS PER PLAN	15,16
513	95020	1	LUMP	STRUCTURAL STEEL, MISC.: JOIST SUPPORT BRACKET	15,16
516	42000	4	EACH	ELASTOMERIC BEARING PAD, MISC.: 3 1/2 "x8"x5/8" JOIST SUPPORT PAD	15,16
524	94500	38	FT	DRILLED SHAFTS, 24" DIAMETER	15,16
530	00200	1	LUMP	SPECIAL - STRUCTURE, MISC.: STEEL RAILING WITH 3"x3" MESH INFILL	15,16
530	00200	1	LUMP	SPECIAL - STRUCTURE, MISC.: TIMBER DECK, JOISTS, AND FLOORBEAMS	15,16

BURGESS & NIPLE
5085 Reed Road
Columbus, Ohio 43220

DESIGNED CCC | CHECKED HBO | DRAWN JDA | REVISED | REVIEWED DKM | DATE 12-17-08 | STRUCTURE FILE NUMBER 0701572

STA. 1+00.00
STA. 10+00.00

ESTIMATED QUANTITIES
U.S. ROUTE 40, NATIONAL ROAD BIKEWAY
TUNNEL REHABILITATION, ST. CLAIRSVILLE, OHIO

BEL-40
Federal Aid No. 060415
PID No. 80906

NOTES:

1. SEE SHEETS 11 / 16 AND 12 / 16 FOR SECTIONS.
2. SEE SHEET 14 / 16 FOR SECTIONS A, D & E.
3. INSTALLATION OF NEW DRAIN PIPE SHALL INCLUDE PVC PIPE OF SIZE TO MATCH OR NOMINALLY EXCEED SIZE OF EXISTING DRAIN WITH ADAPTERS & FITTINGS TO CARRY DRAIN PIPE TO 6" BELOW FINAL GRADE. PIPE SHALL BE FASTENED TO EXISTING WALL AS DIRECTED (8'-0" O.C. MAXIMUM) AND COVERED BY P.P.M.
4. REMOVE AND CAREFULLY STORE LIGHT FIXTURE DURRING WALL RENOVATION. EXTEND CONDUIT AND WIRING THROUGH PROPOSED P.P.M. AND RE-INSTALL LIGHT FIXTURE.
5. INSTALLATION OF NEW DRAIN PIPE SHALL INCLUDE 2" DIA. PVC PIPE WITH ADAPTERS FROM DRAINS OVER EXISTING CONCRETE LINER AND THROUGH LINER. INSTALLATION SHALL INCLUDE FITTINGS TO CARRY DRAIN PIPE TO 6" BELOW FINAL GRADE. PIPE SHALL BE FASTENED TO EXISTING WALL AS DIRECTED (8"-0" O.C. MAXIMUM) AND COVERED BY P.P.M.
6. REMOVE OR ABANDON EXISTING 6" PIPE.
7. ALIGN REPAIR STRIP WITH EXISTING CRACK.
8. REMOVE CRACKED AND UN SOUND MATERIAL AND INSTALL NEW ROCK BOLT PRIOR TO INSTALLATION OF PROPOSED P.P.M.
9. CROWN P.P.M. FROM 4+85 TO 5+05 AND ABOVE ELEVATION 531 IS NOT PART OF ADDITIVE ALTERNATE NO. 3.
10. CUT & GRIND TUNNEL LINER JOINTS PER LINER JOINT DETAIL ON 14 / 16 . DRILL 3" DIAMETER HOLE THROUGH ASPHALT TO SUBGRADE TO PASS DRAINAGE FROM JOINT.

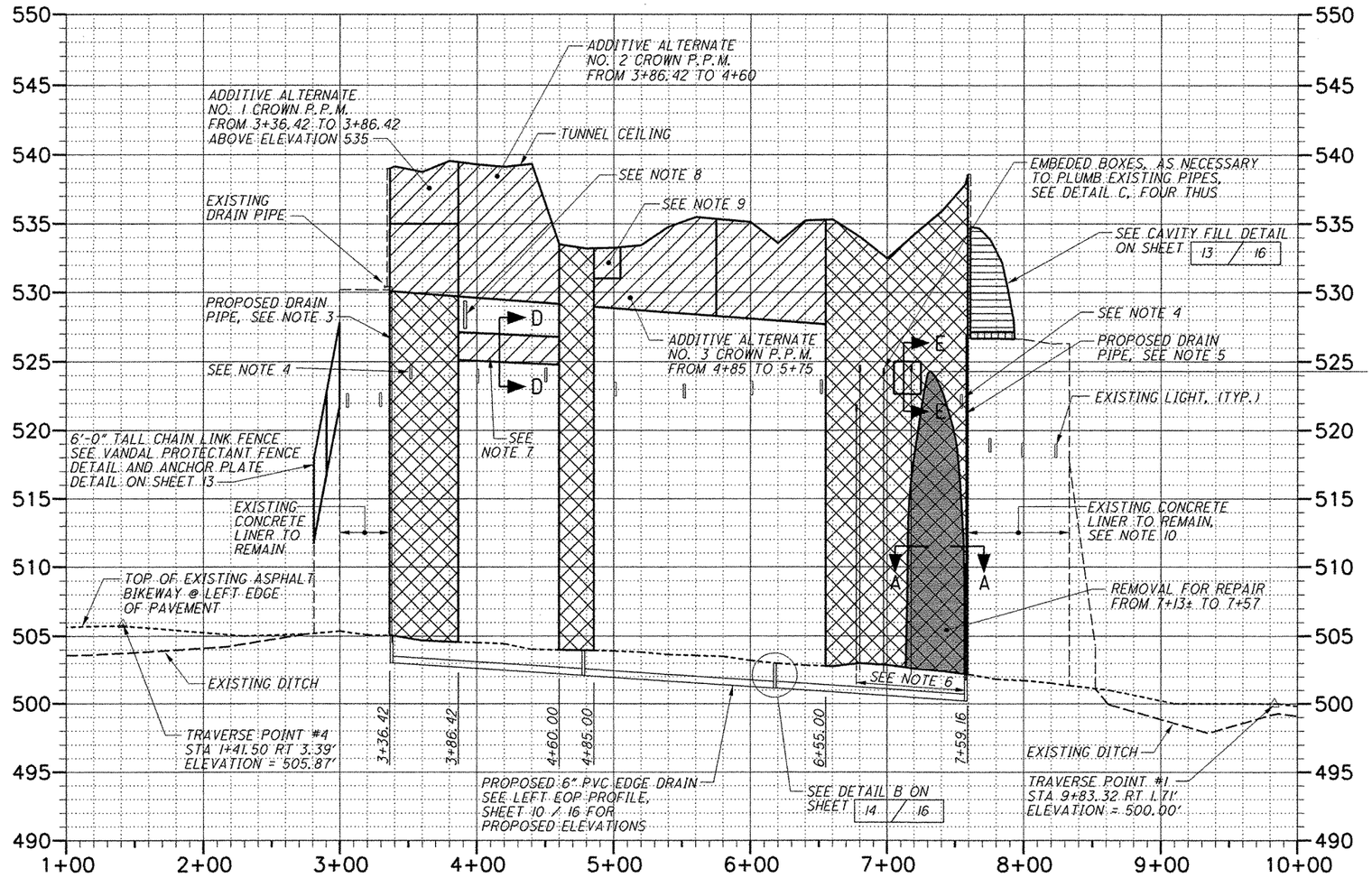

LEFT PROFILE

SCALE:
1" = 50' HORIZONTAL
1" = 5' VERTICAL

LEGEND:

- = EXISTING & PROPOSED 2" PVC/GARDEN HOSE WALL DRAIN
- = LIMITS OF PNEUMATICALLY PLACED MORTER (P.P.M.)
- = LIMITS OF DRAINAGE MAT WITH WATERPROOFING MEMBRANE UNDER P.P.M.
- = LIMITS OF ENGINEERED FILL
- = LIMITS OF POROUS BACK-FILL WITH FILTER FABRIC
- = LIMITS OF ROCK AREA TO BE REMOVED

BURGESS & NIPLE
5085 Reed Road
Columbus, Ohio 43220

DESIGNED	DRAWN	REVIEWED	DATE
CCC	JDA	DKM	12-17-08
CHECKED	REVISED	STRUCTURE FILE NUMBER	
HBO		0701572	

STA. 1+00.00
STA. 10+00.00

TUNNEL REPAIR - LEFT WALL PROFILE

U.S. ROUTE 40, NATIONAL ROAD BIKEWAY
TUNNEL REHABILITATION, ST. CLAIRSVILLE, OHIO

BEL-40
Federal Aid No. 060415
PID No. 80906

NOTES:

1. SEE SHEETS 11 / 16 AND 12 / 16 FOR SECTIONS.
2. NOT USED.
3. INSTALLATION OF NEW DRAIN PIPE SHALL INCLUDE PVC PIPE OF SIZE TO MATCH OR NOMINALLY EXCEED SIZE OF EXISTING DRAIN WITH ADAPTERS & FITTINGS TO CARRY DRAIN PIPE TO 6" BELOW FINAL GRADE. PIPE SHALL BE FASTENED TO EXISTING WALL AS DIRECTED (8'-0" O.C. MAXIMUM) AND COVERED BY P.P.M.
4. REMOVE AND CAREFULLY STORE LIGHT FIXTURE DURRING WALL RENOVATION. EXTEND CONDUIT AND WIRING THROUGH PROPOSED P.P.M. AND RE-INSTALL LIGHT FIXTURE.
5. INSTALLATION OF NEW DRAIN PIPE SHALL INCLUDE 2" DIA. PVC PIPE WITH ADAPTERS FROM DRAINS OVER EXISTING CONCRETE LINER AND THROUGH LINER. INSTALLATION SHALL INCLUDE FITTINGS TO CARRY DRAIN PIPE TO 6" BELOW FINAL GRADE. PIPE SHALL BE FASTENED TO EXISTING WALL AS DIRECTED (8'-0" O.C. MAXIMUM) AND COVERED BY P.P.M.
6. NOT USED.
7. NOT USED.
8. NOT USED.
9. NOT USED.
10. CUT & GRIND TUNNEL LINER JOINTS PER LINER JOINT DETAIL ON 14 / 16 . DRILL 3" DIAMETER HOLE THROUGH ASPHALT TO SUBGRADE TO PASS DRAINAGE FROM JOINT.

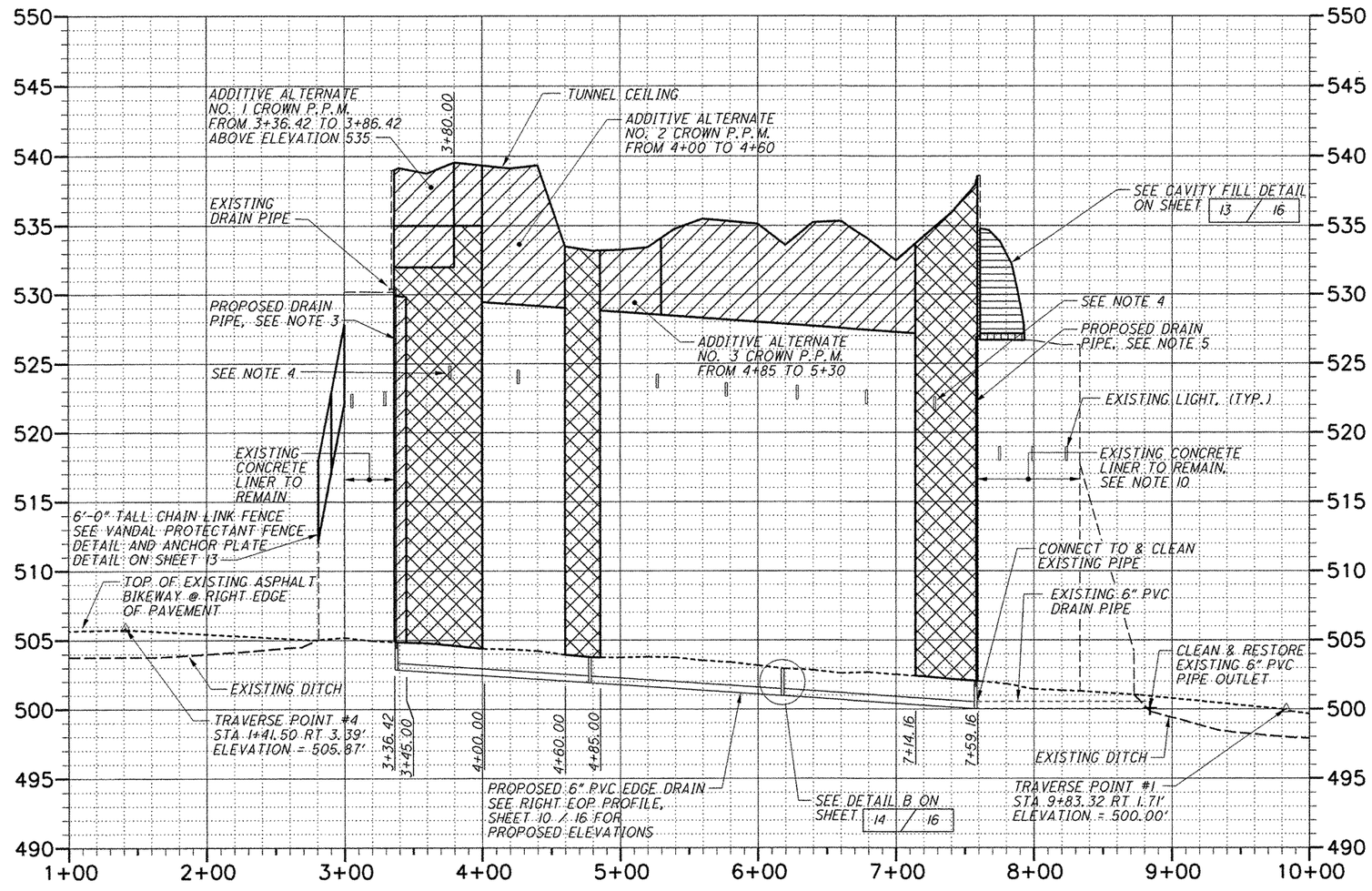

RIGHT PROFILE

SCALE:
1" = 50' HORIZONTAL
1" = 5' VERTICAL

LEGEND:

- = LIMITS OF PNEUMATICALLY PLACED MORTER (P.P.M.)
- = LIMITS OF DRAINAGE MAT WITH WATERPROOFING MEMBRANE UNDER P.P.M.
- = LIMITS OF ENGINEERED FILL
- = LIMITS OF POROUS BACK-FILL WITH FILTER FABRIC

DATE 12-17-08
REVIEWED DKM
DRAWN JDA
DESIGNED GCG
TUNNEL REPAIR - RIGHT WALL PROFILE
STA. 1+00.00
BEL-40
Federal Aid No. 060415
U.S. ROUTE 40 NATIONAL ROAD BIKEWAY

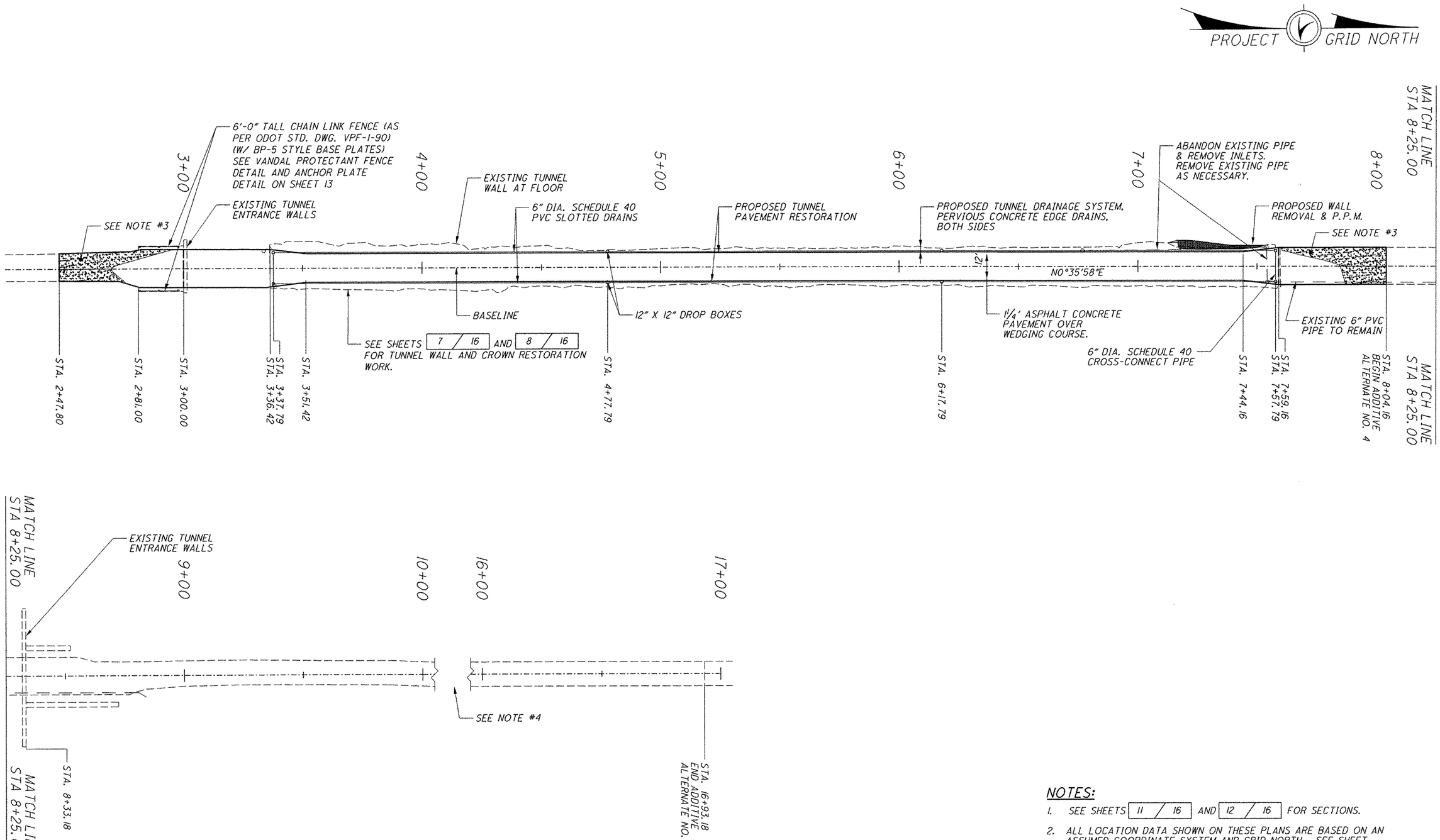

PLAN

SCALE = 1" = 20'-0"

NOTES:

1. SEE SHEETS 11 / 16 AND 12 / 16 FOR SECTIONS.
2. ALL LOCATION DATA SHOWN ON THESE PLANS ARE BASED ON AN ASSUMED COORDINATE SYSTEM AND GRID NORTH. SEE SHEET 2 / 16 FOR SURVEY CONTROL DATA.
3. AREA OF EXISTING PAVEMENT TO RECEIVE PAVEMENT PLANING FOR BUTT JOINT.
4. ADDITIVE ALTERNATE NO. 4 - PAVEMENT PLANING AND SURFACE COURSE FULL WIDTH FROM STA. 8+04.16 TO STA. 16+93.16. PLANING SHALL BE TO A DEPTH NECESSARY TO PROVIDE A UNIFORM CENTERLINE PROFILE GRADE. THE CROWN CROSS-SLOPE SHALL CONFORM TO THE TYPICAL PAVEMENT SECTION ON SHEET 13 / 16. PAVEMENT EDGE ELEVATIONS SHALL BE SET TO MATCH THE EXISTING PAVEMENT AND RESTORED SHOULDER SURFACES SO AS TO PREVENT EDGE DROPS FOR PEDESTRIANS AND CYCLISTS.

DESIGNED	DRAWN	REVIEWED	DATE
CCO	JDA	DKM	12-11-08

TUNNEL REPAIR - PLAN

US ROUTE 40 NATIONAL ROAD BIKEWAY

BEL-40

Federal Aid No. 060415

STA. 8+33.30 TO STA. 16+93.16

10

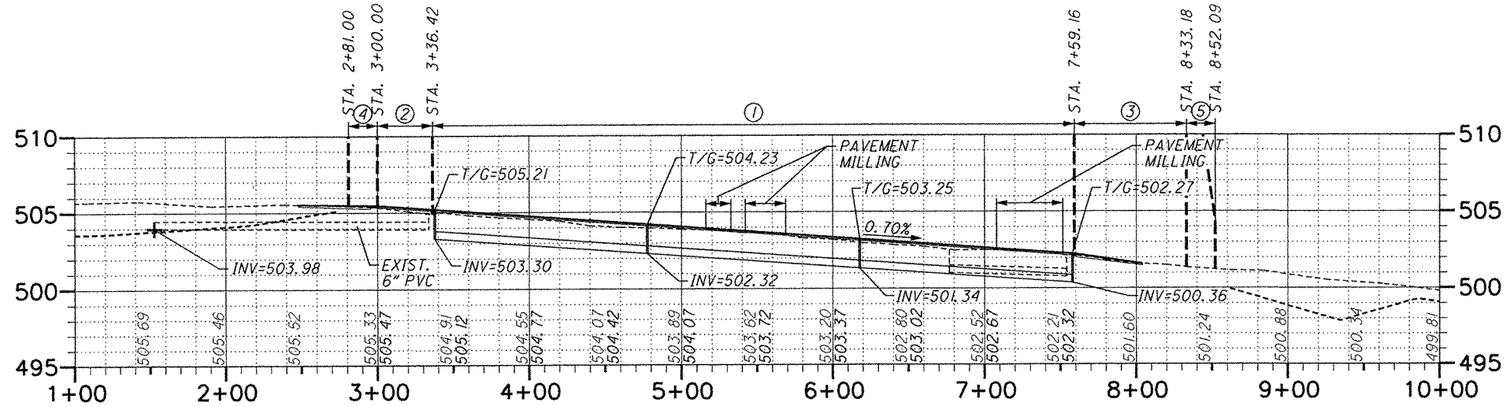

LEFT EOP PROFILE

SCALE:
1" = 50' HORIZONTAL
1" = 5' VERTICAL

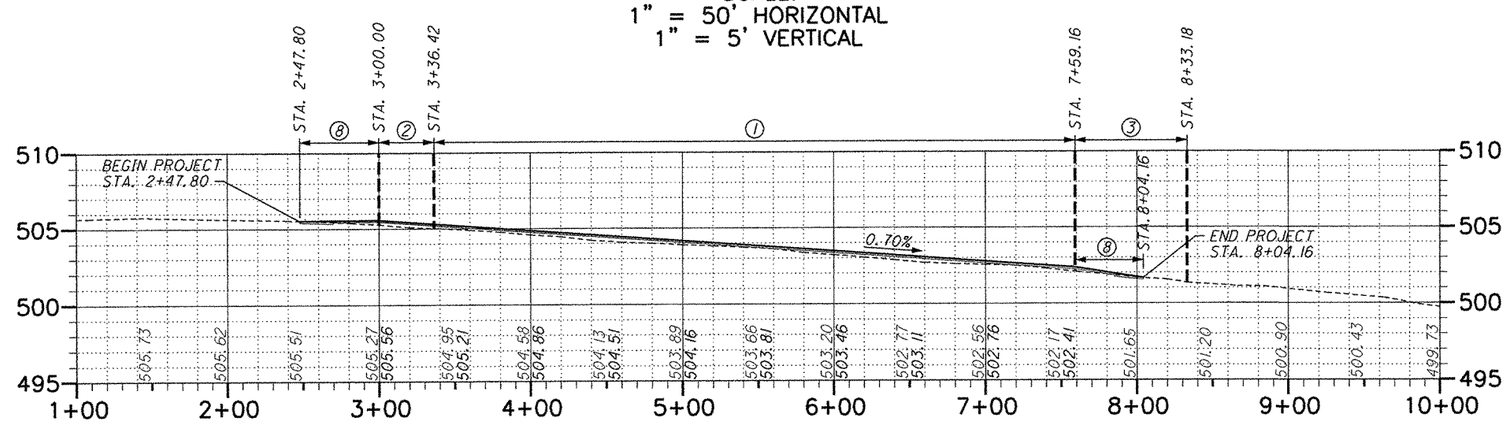

CENTERLINE PROFILE

SCALE:
1" = 50' HORIZONTAL
1" = 5' VERTICAL

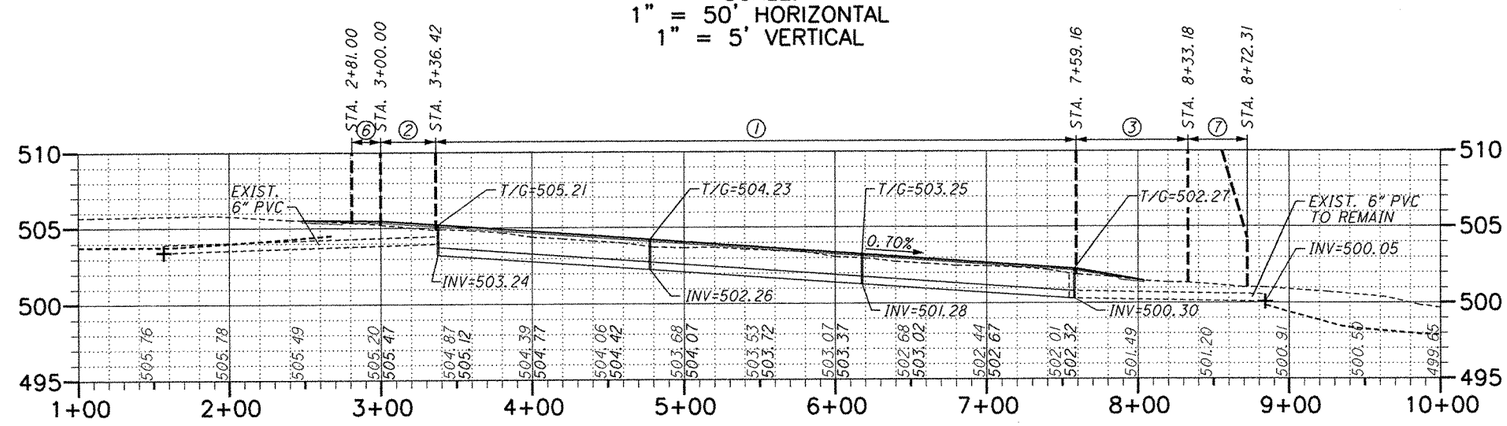

RIGHT EOP PROFILE

SCALE:
1" = 50' HORIZONTAL
1" = 5' VERTICAL

NOTES:

1. AS MINED/UNLINED TUNNEL.
2. CAST IN PLACE TUNNEL LINER, SOUTH END.
3. CAST IN PLACE TUNNEL LINER, NORTH END.
4. EXISTING SOUTH WEST WING WALL.
5. EXISTING NORTH WEST WING WALL.
6. EXISTING SOUTH EAST WING WALL.
7. EXISTING NORTH EAST WING WALL.
8. PAVEMENT BUTT JOINT & CROWN TRANSITION, SEE BUTT JOINT DETAIL ON SHEET 13.

NOTES:

1. ALL LOCATION DATA SHOWN ON THESE PLANS ARE BASED ON AN ASSUMED COORDINATE SYSTEM AND GRID NORTH. SEE SHEET 2 / 16 FOR SURVEY CONTROL DATA.

BURGESS & NIPLE
5085 Reed Road
Columbus, Ohio 43220

DESIGNED	DRAWN	REVIEWED	DATE
GCG	JDA	DKM	12-17-08
CHECKED	REVISED	STRUCTURE FILE NUMBER	
HBO		0701572	

STA. 1+00.00
STA. 10+00.00

PROPOSED PAVEMENT - PROFILES

U.S. ROUTE 40, NATIONAL ROAD BIKEWAY
TUNNEL REHABILITATION, ST. CLAIRSVILLE, OHIO

BEL-40
Federal Aid No. 060415
PID No. 80906

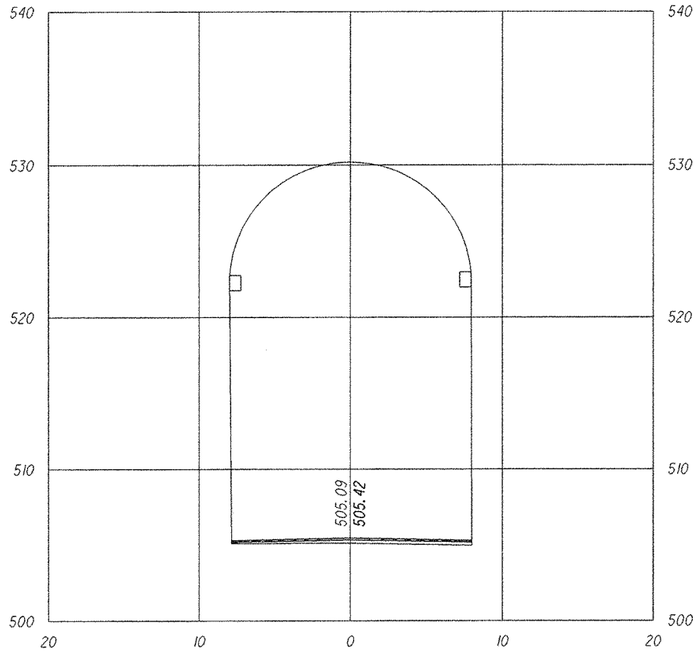

SECTION @ STA. 3+20

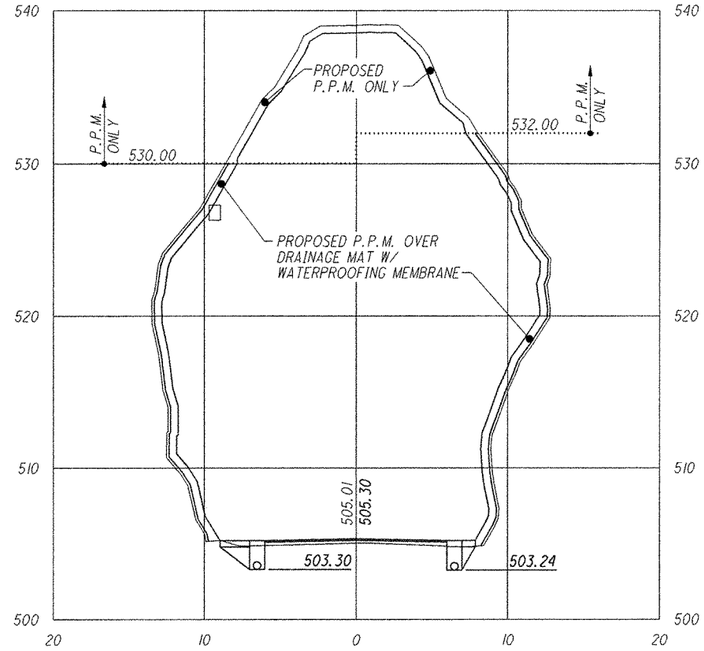

SECTION @ STA. 3+37

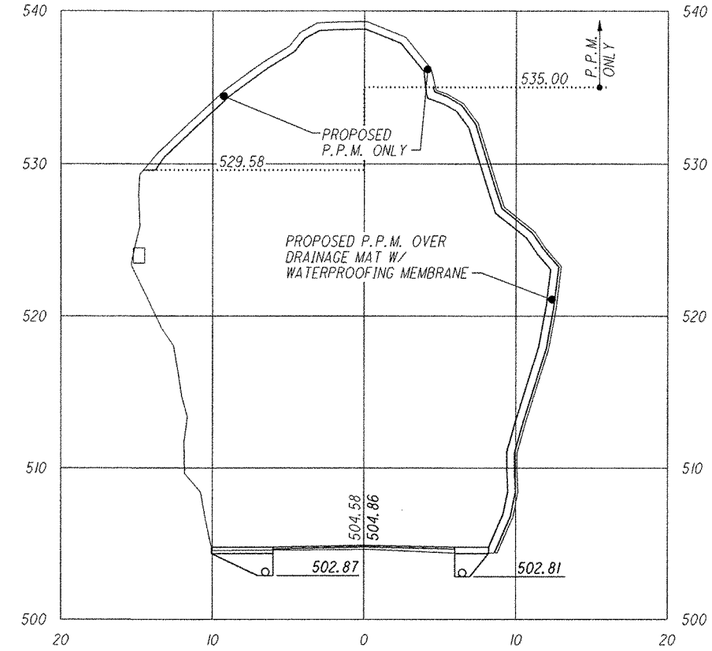

SECTION @ STA. 4+00

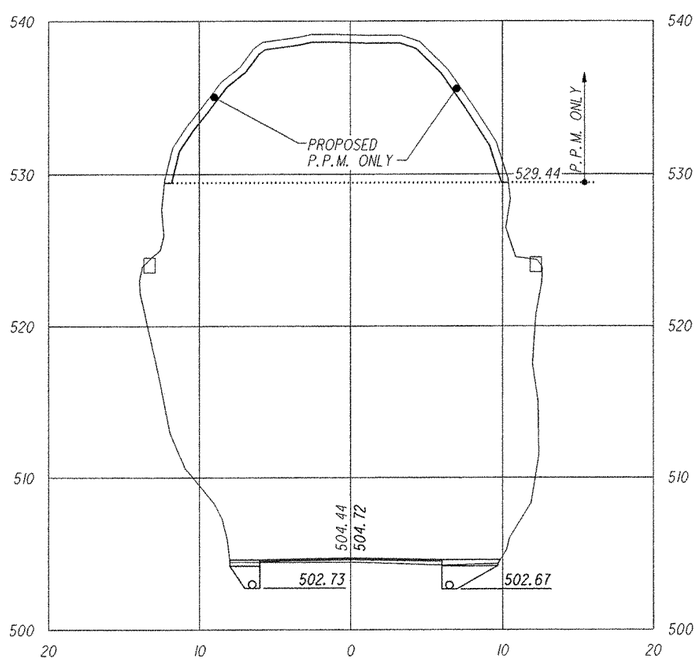

SECTION @ STA. 4+20

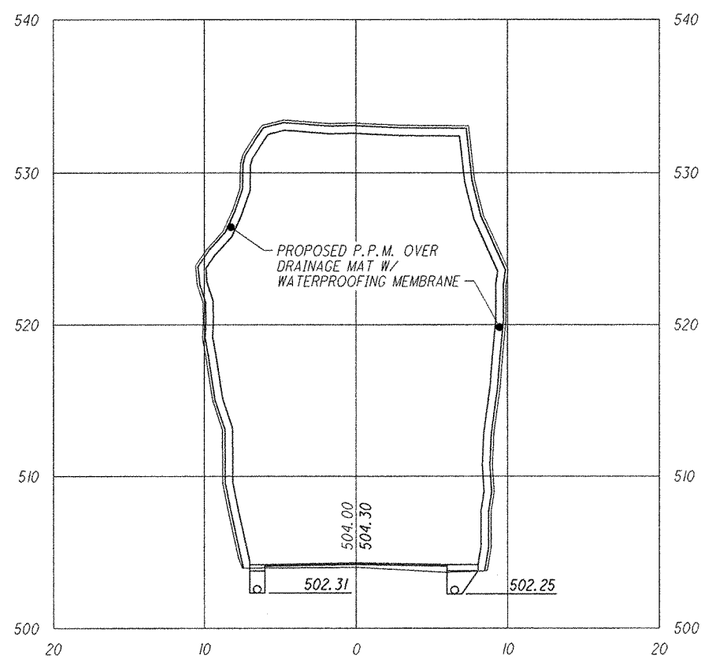

SECTION @ STA. 4+80

NOTES:

1. P.P.M = PNEUMATICALLY PLACED MORTAR.
2. SEE LEFT WALL PROFILE SHEET 7 / 16 AND RIGHT WALL PROFILE SHEET 8 / 16 FOR BID ALTERNATE EXTENTS.

BURGESS & NIPLE
5085 Reed Road
Columbus, Ohio 43220

DESIGNED	DRAWN	REVIEWED	DATE
GCG	JDA	DKM	12-17-08
CHECKED	REVISED	STRUCTURE FILE NUMBER	
HBO		0701572	

STA. 1+00.00
STA. 10+00.00

TUNNEL REPAIR - SECTIONS 1
U.S. ROUTE 40, NATIONAL ROAD BIKEWAY
TUNNEL REHABILITATION, ST. CLAIRSVILLE, OHIO

BEL-40
Federal Aid No. 060415
PID No. 80906

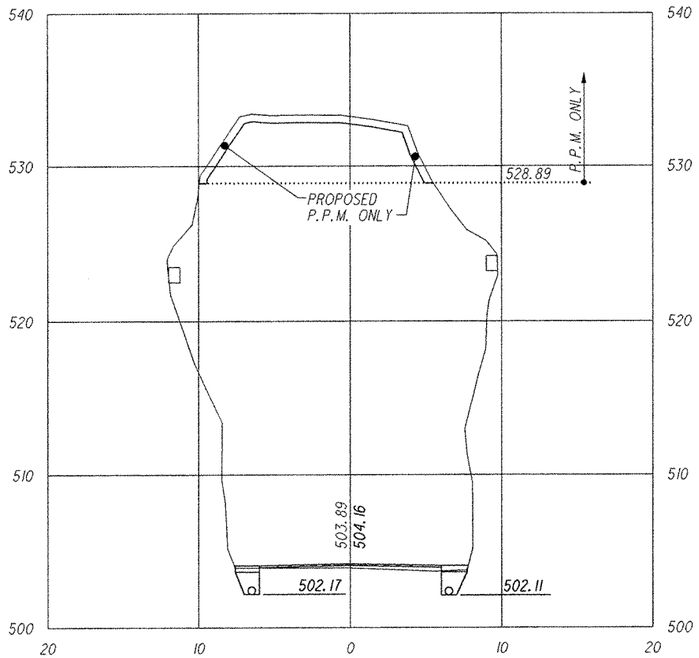

SECTION @ STA. 5+00

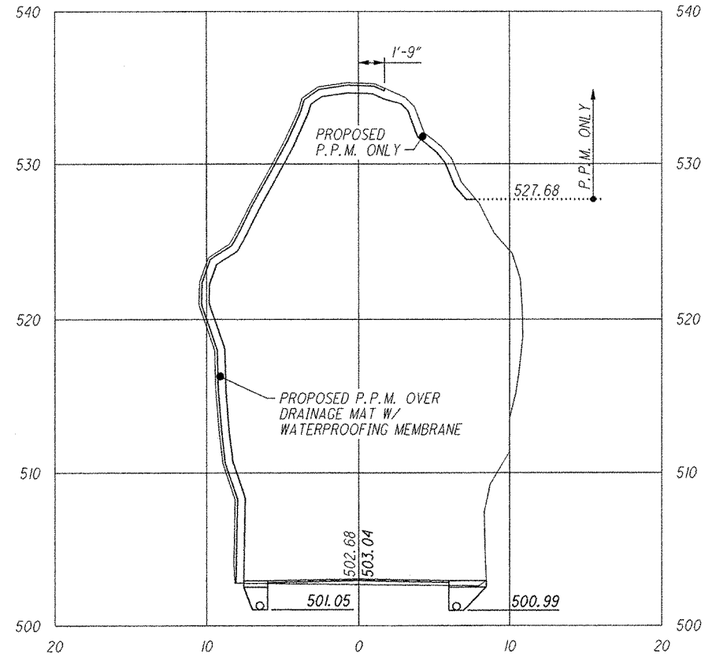

SECTION @ STA. 6+60

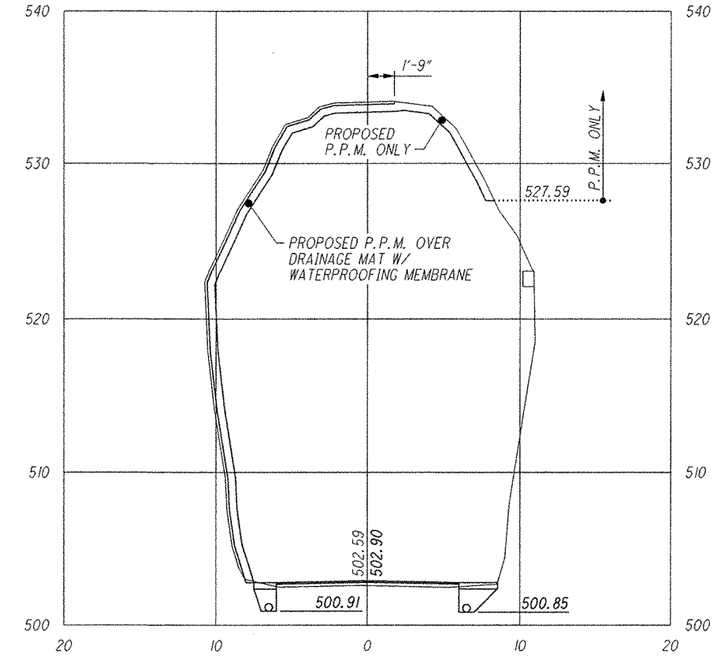

SECTION @ STA. 6+80

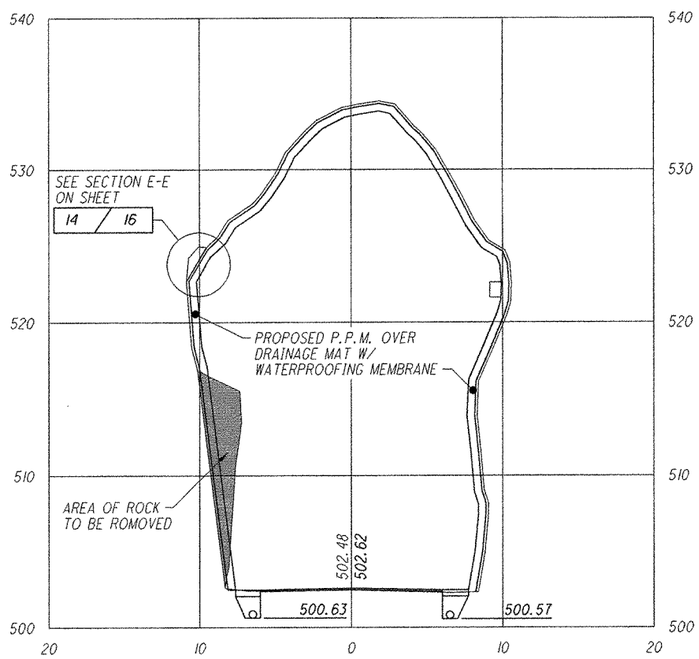

SECTION @ STA. 7+20

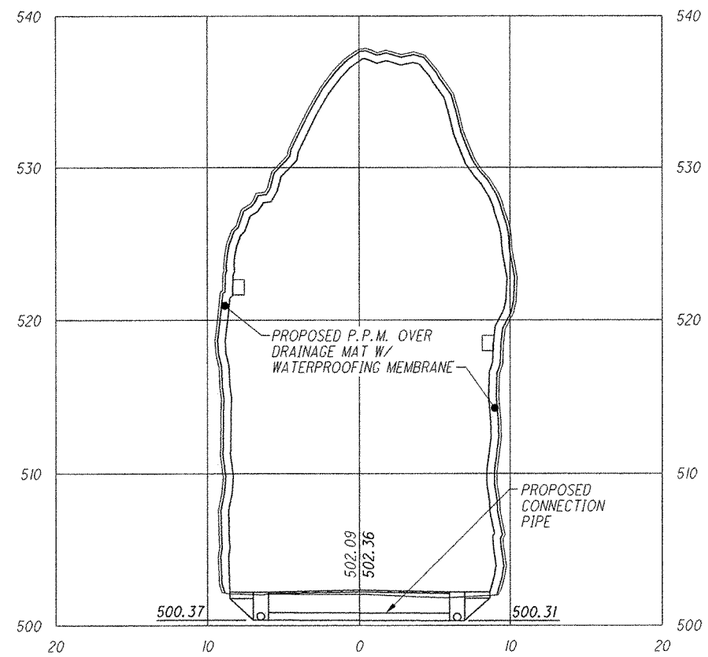

SECTION @ STA. 7+57

NOTES:

1. P.P.M = PNEUMATICALLY PLACED MORTAR.
2. SEE LEFT WALL PROFILE SHEET 7 / 16 AND RIGHT WALL PROFILE SHEET 8 / 16 FOR BID ALTERNATE EXTENTS.

BURGESS & NIPLE
5085 Reed Road
Columbus, Ohio 43220

DESIGNED	DRAWN	REVIEWED	DATE
CCC	JDA	DKM	12-17-08
CHECKED	REVISED	STRUCTURE FILE NUMBER	
HBO		0701572	

STA. 1+00.00
STA. 10+00.00

TUNNEL REPAIR - SECTIONS 2
U.S. ROUTE 40, NATIONAL ROAD BIKEWAY
TUNNEL REHABILITATION, ST. CLAIRSVILLE, OHIO

BEL-40
Federal Aid No. 060415
PID No. 80906

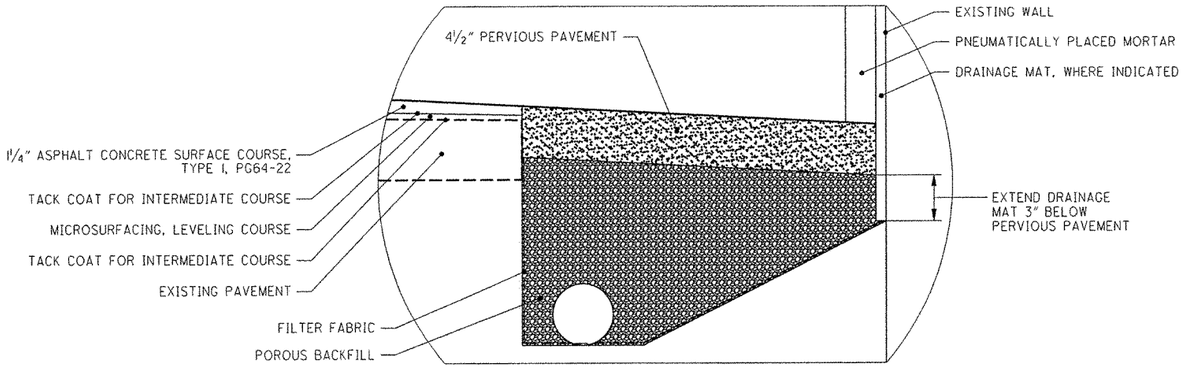

DETAIL A

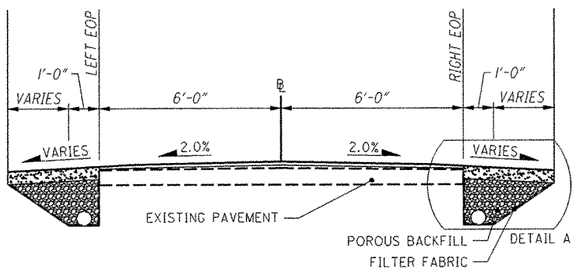

TYPICAL PAVEMENT SECTION

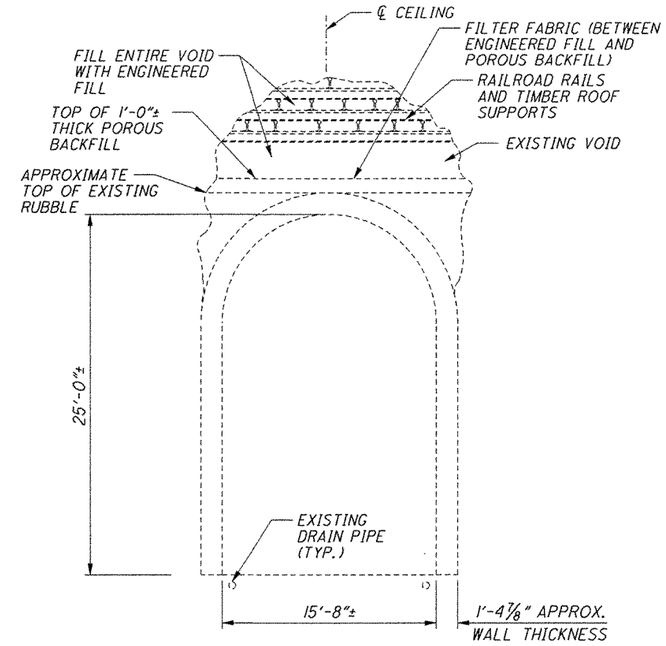

CAVITY FILL DETAIL

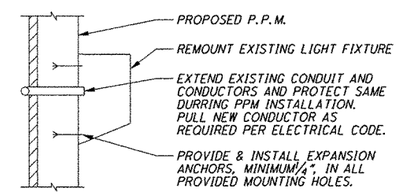

RE-INSTALL DISPLACED LIGHT FIXTURES

SEE ITEM 625 NOTE, SHEET 5 / 16

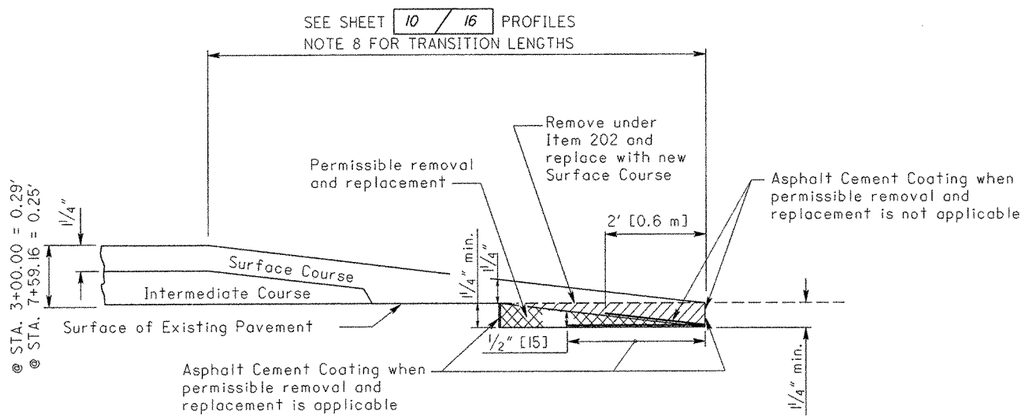

BUTT JOINT DETAIL

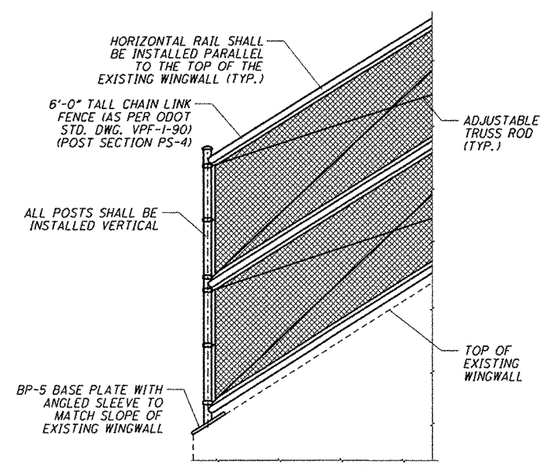

VANDAL PROTECTANT FENCE DETAIL

LEFT WINGWALL SHOWN, RIGHT WINGWALL SIMILAR

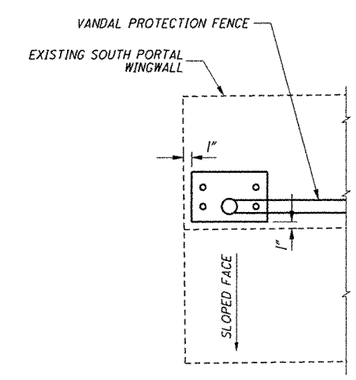

ANCHOR PLATE DETAIL

BURGESS & NIPPLE
5085 Reed Road
Columbus, Ohio 43220

DESIGNED	DRAWN	REVIEWED	DATE
GCG	JDA	DKM	12-17-08
CHECKED	REVISED	STRUCTURE FILE NUMBER	
HBO		0701572	

STA. 1+00.00
STA. 10+00.00

TUNNEL REPAIR - DETAILS 1
U.S. ROUTE 40, NATIONAL ROAD BIKEWAY
TUNNEL REHABILITATION, ST. CLAIRSVILLE, OHIO

BEL-40
Federal Aid No. 060415
PID No. 80906

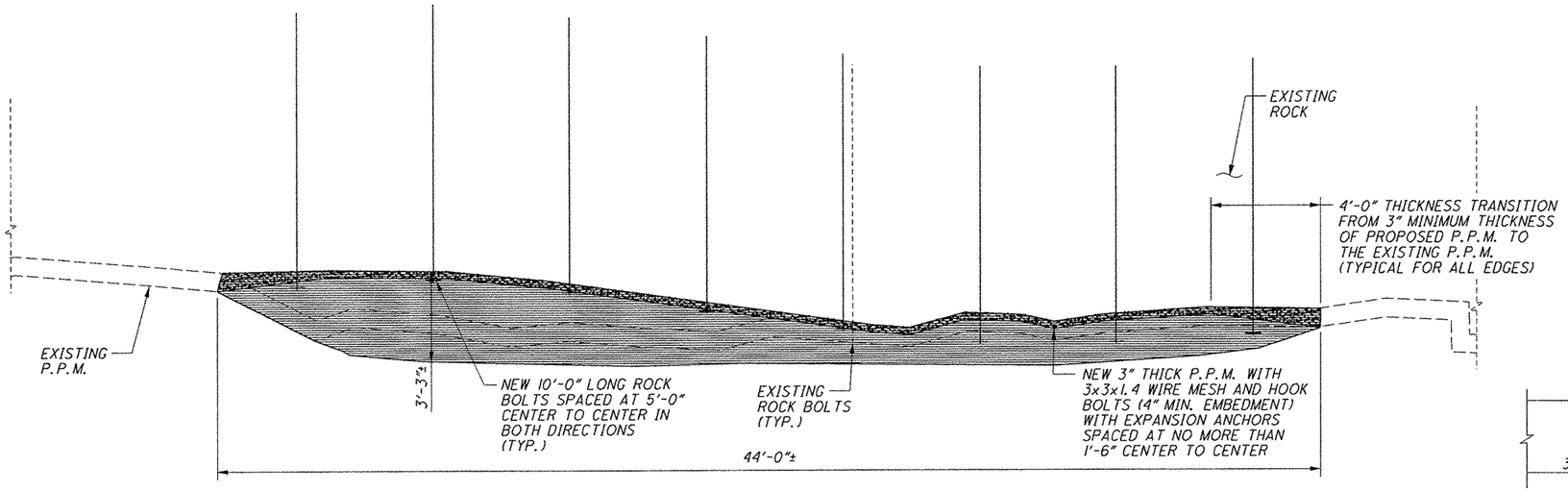

SECTION A-A

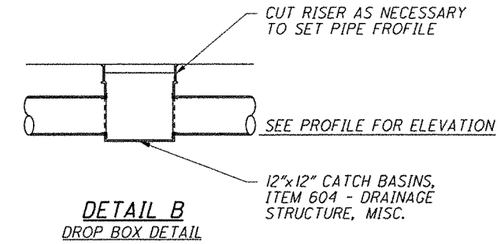

DETAIL B

DROP BOX DETAIL

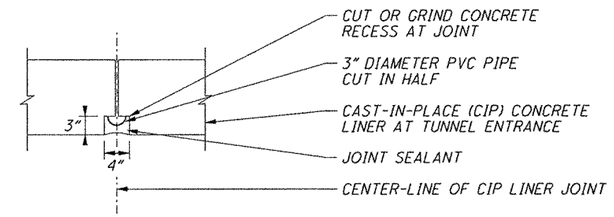

LINER JOINT DETAIL

NOTE: SET PIPE SO IT WILL NOT SHIFT OR BE DISPLAYED BY INSTALLATION OF SEALANT. SEALANT SHALL CONFORM TO ASTM C920, SILICONE, NEUTRAL CURE, TYPE S, GRADE NS, SHORE A HARDNESS OF 15-20, JOINT MOVEMENT +100% TO -50%, MINIMUM ELONGATION OF 1200%.

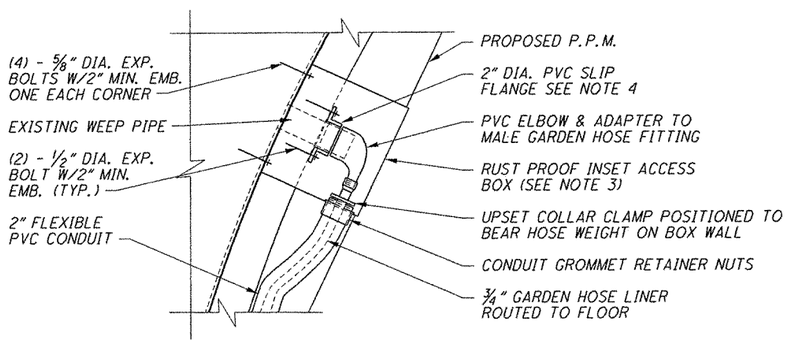

DETAIL C

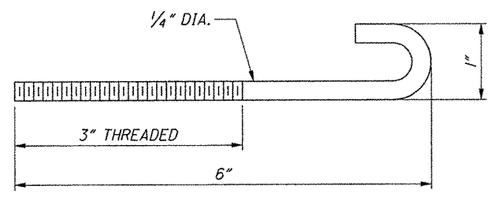

HOOK BOLT

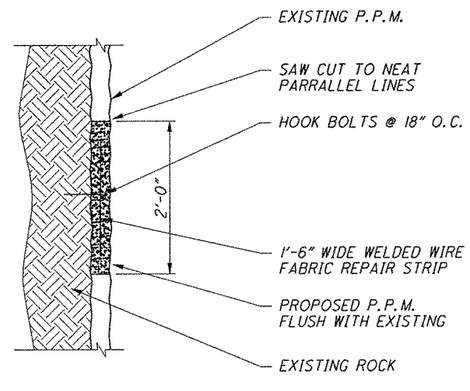

SECTION D-D

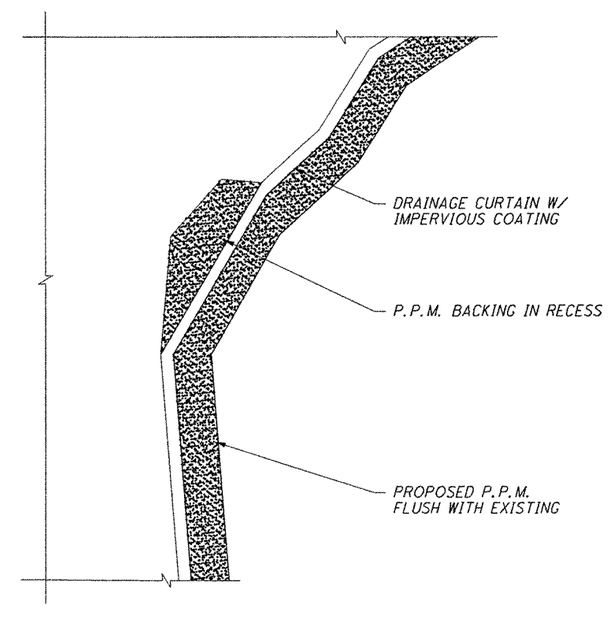

SECTION E-E

NOTES:

1. P.P.M. = PNEUMATICALLY PLACED MORTAR
2. CONTRACTOR AND ENGINEER TO LOCATE EXISTING AND PROPOSED DRAINAGE PIPE LOCATIONS IN THE FIELD (SEE GENERAL NOTES).
3. 12X12X6 RECESS BOX NEMA TYPE 4, 12 OR APPROVED EQUAL.
4. SEAL PVC FLANGE TO WALL WITH SILICONE CAULK.

BURGESS & NIPLE
5995 Reed Road
Columbus, Ohio 43220

DESIGNED	DRAWN	REVIEWED	DATE
GCG	JDA	DKM	12-17-08
CHECKED	REVISED	STRUCTURE FILE NUMBER	
HBO		0701572	

STA. 1+00.00
STA. 10+00.00

TUNNEL REPAIR - DETAILS 2
U.S. ROUTE 40, NATIONAL ROAD BIKEWAY
TUNNEL REHABILITATION, ST. CLAIRSVILLE, OHIO

BEL-40
Federal Aid No. 060415
PID No. 80906

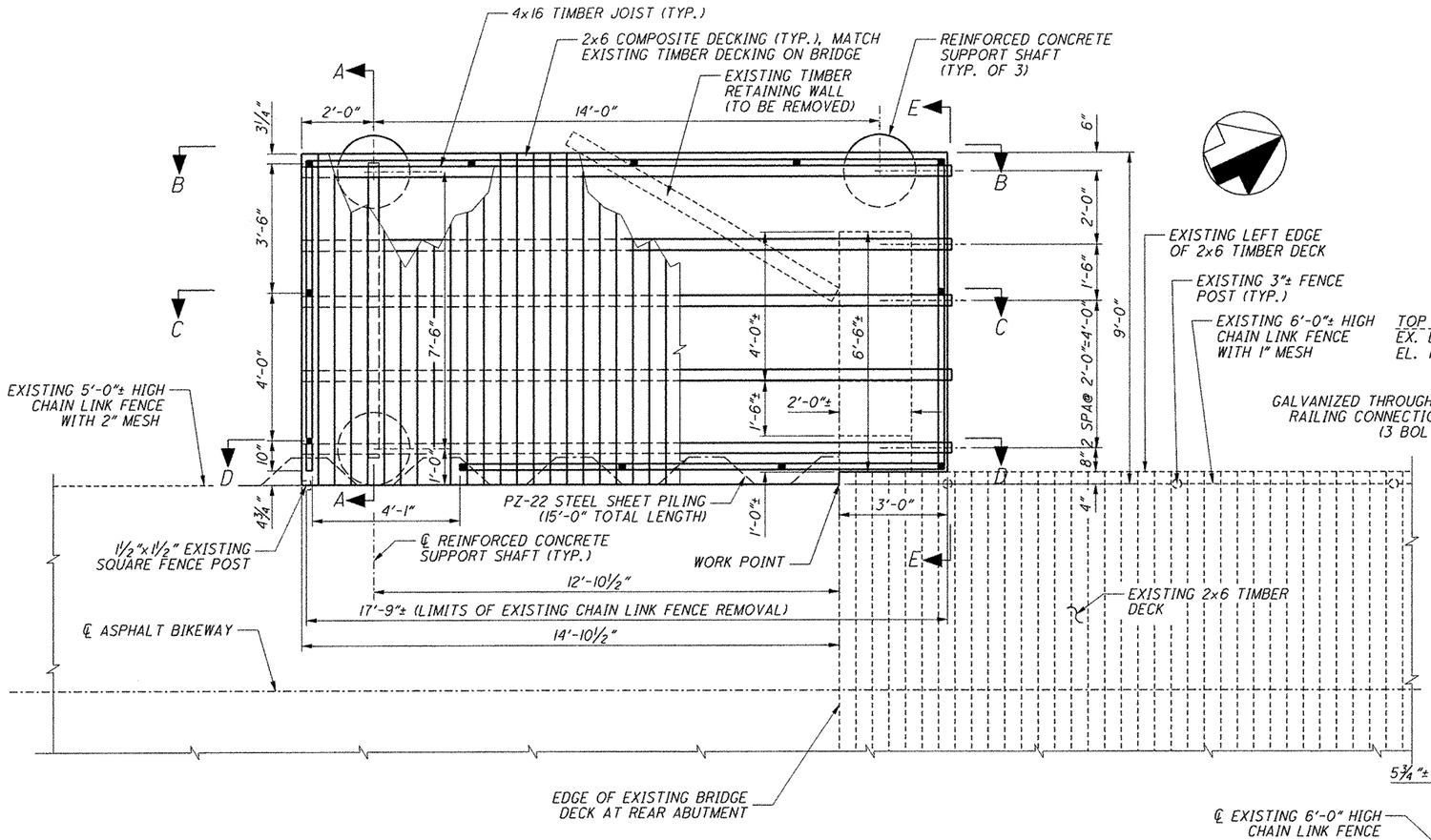

PLAN

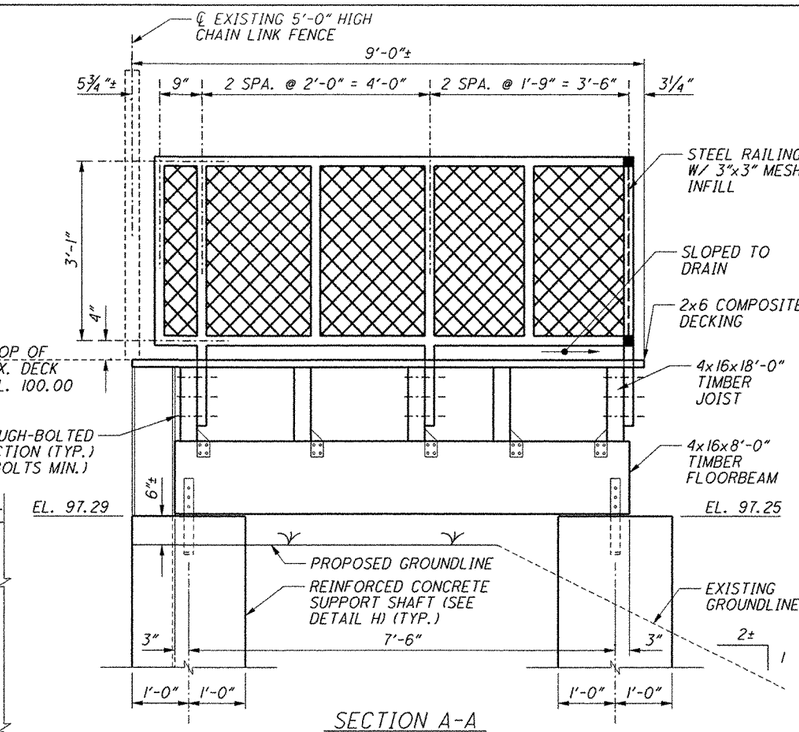

SECTION A-A

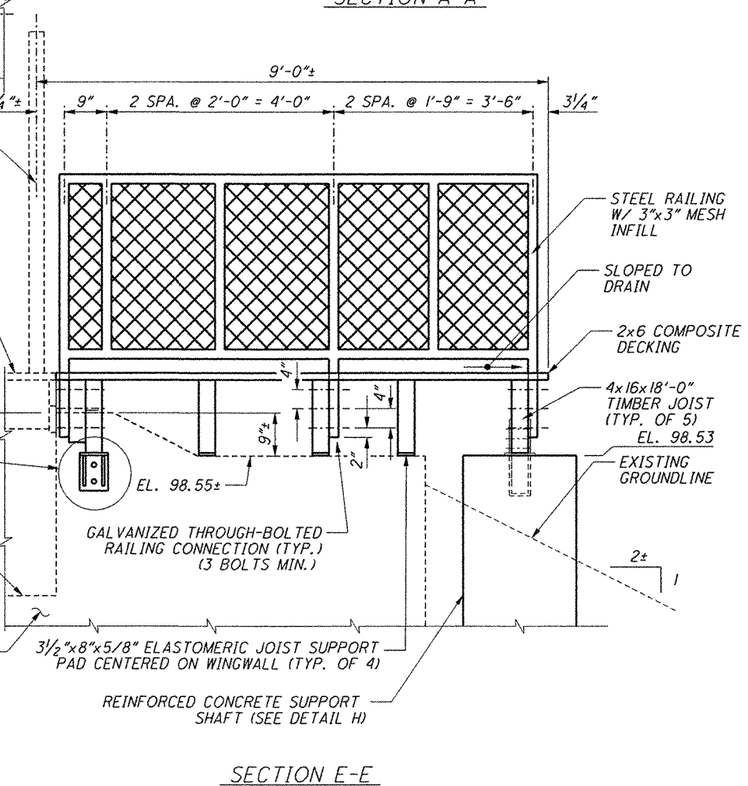

SECTION E-E

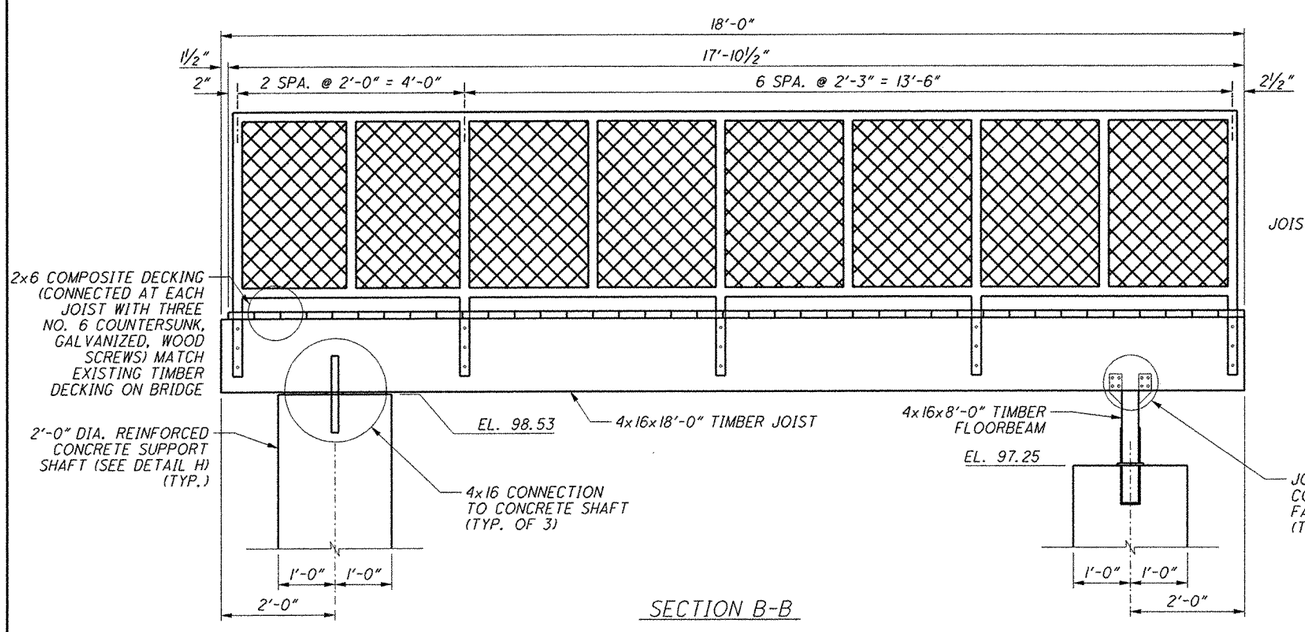

SECTION B-B

NOTE

1. SEE SHEET 14 / 14 FOR SECTIONS C-C, D-D, AND DETAILS F, AND H

BURGESS & NIPPLE
5035 Reed Road
Columbus, Ohio 43220

DESIGNED	DRAWN	REVIEWED	DATE
MAK	MAK/JDA	ECV/GCG	12-17-08
CHECKED	REVISED	STRUCTURE FILE NUMBER	
TTK	JDA	0701572	

STA. 1+00.00
STA. 10+00.00

OVERLOOK PLATFORM DETAILS 1

U.S. ROUTE 40, NATIONAL ROAD BIKEWAY
TUNNEL REHABILITATION, ST. CLAIRSVILLE, OHIO

BEL-40
Federal Aid No. 060415
PID No. 80906

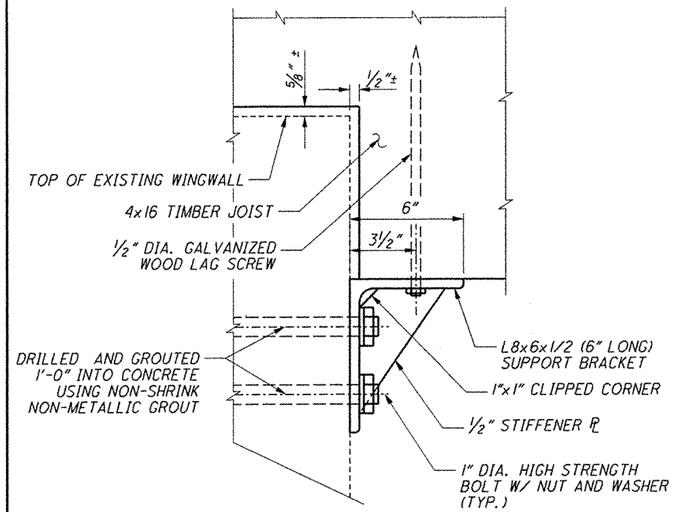

SECTION J-J

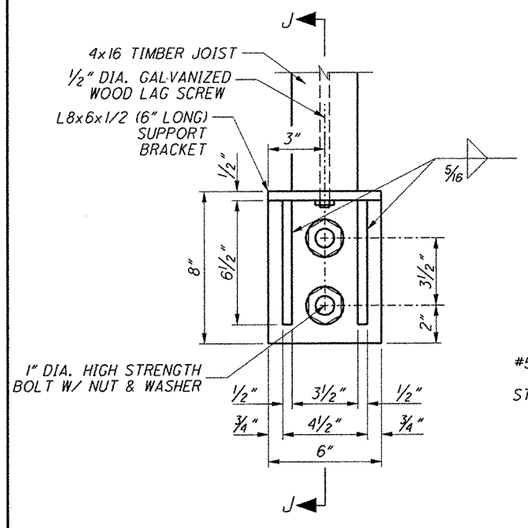

DETAIL F

JOIST SUPPORT BRACKET

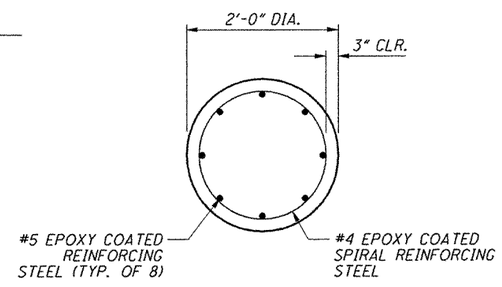

SECTION K-K

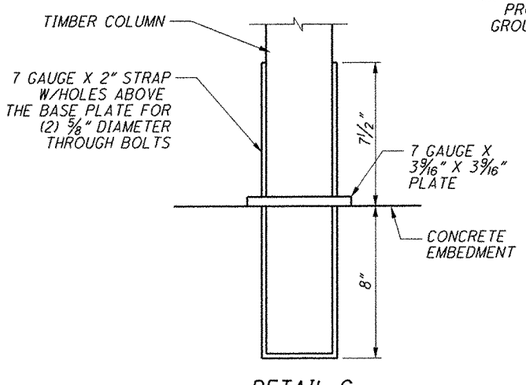

DETAIL G

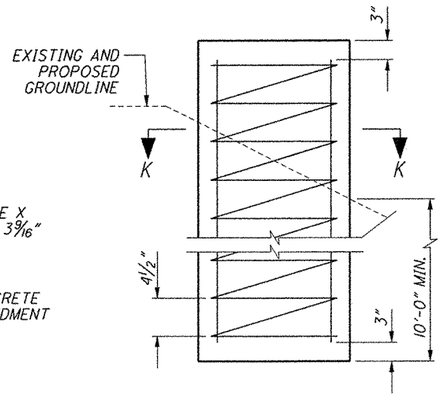

DETAIL H

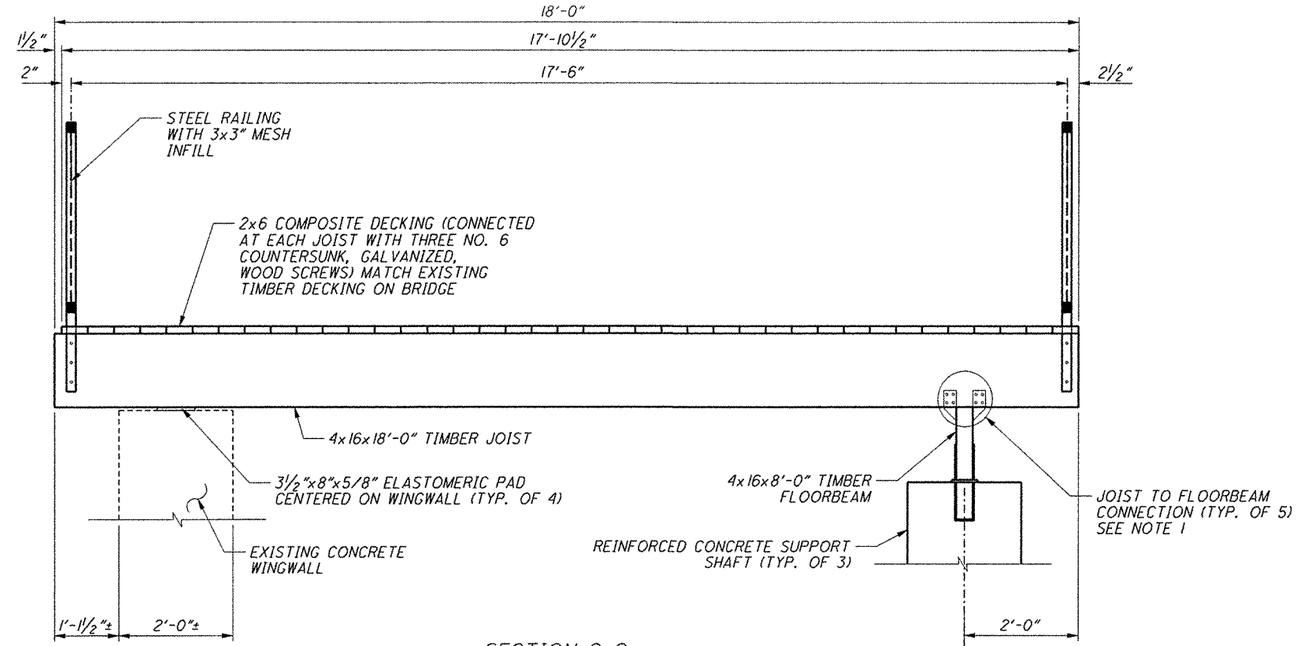

SECTION C-C

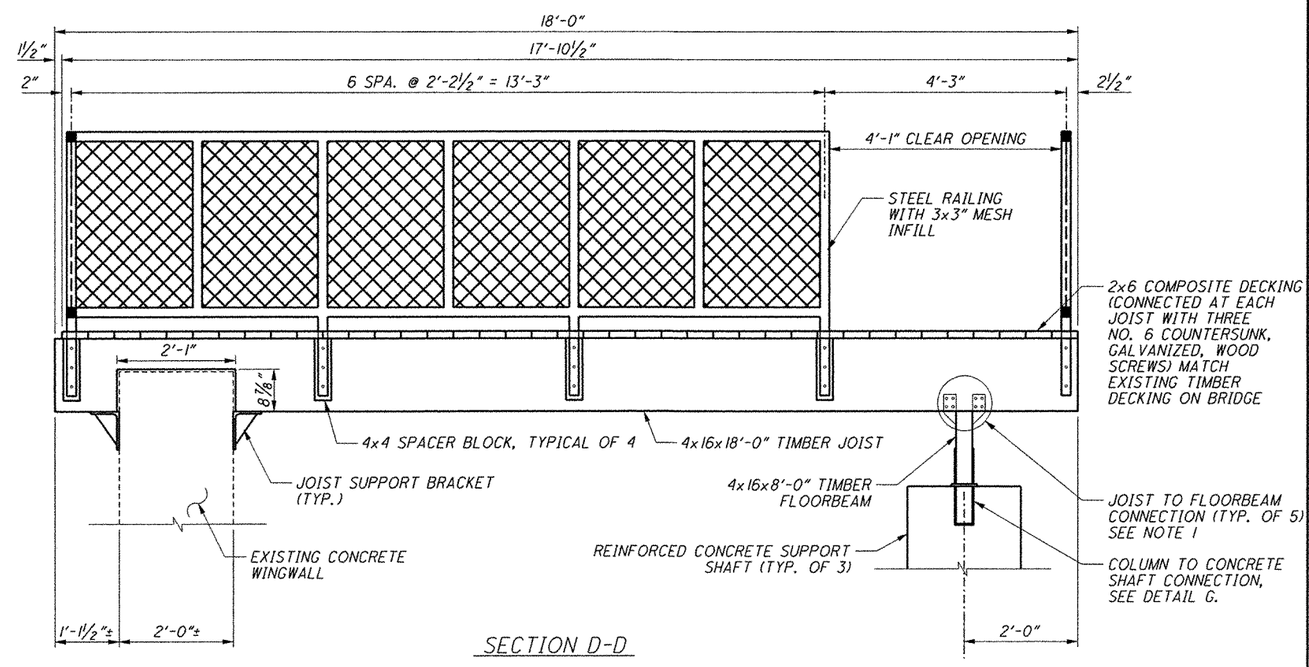

SECTION D-D

NOTES:
1. BENT STRAP 18 GAUGE X 1 9/16" X 5 7/16" WOOD CONNECTOR WITH HOLES FOR 10-8d NAILS, 5 EACH TO UPPER AND LOWER TIMBER MEMBERS. 2 EACH PER JOIST. FULLY NAIL.

BURGESS & NIPPLE
5085 Reed Road
Columbus, Ohio 43220

DESIGNED	DRAWN	REVIEWED	DATE
MAK	MAK/JDA	ECV/GCG	12-17-08
CHECKED	REVISED	STRUCTURE FILE NUMBER	
TTK	JDA	0701572	

STA. 1+00.00
STA. 10+00.00

OVERLOOK PLATFORM DETAILS 2

U.S. ROUTE 40, NATIONAL ROAD BIKEWAY
TUNNEL REHABILITATION, ST. CLAIRSVILLE, OHIO

BEL-40
Federal Aid No. 060415
PID No. 80906