MICROFILMED
MAY 14 1986

ROUTED
APR 1 1980

DESIGN DESIGNATION	
(1968) Current A.D.T.	10,750
(1982) Design Year A.D.T.	15,500
D.H.V.	12%
D (directional distribution)	60%
T (percent B&C Truck)	10%
V (design Speed)	60 MPH

STATE OF OHIO
DEPARTMENT OF HIGHWAYS
BEL-7-20.64
GRADE SEPARATION WITH PENNSYLVANIA RAILROAD COMPANY
VILLAGE OF BRIDGEPORT, CITY OF MARTINS FERRY
PEASE TOWNSHIP, BELMONT COUNTY

PROJECT DESIGNATION BEL-7-20.74 APPEARING THROUGHOUT THIS PLAN SHALL BE CONSIDERED TO READ BEL-7-20.64

Federal Nos. U-UG-534 (10) and UG-534 (10) appearing throughout this plan shall be considered to read U-534 (10)

FED. RD. DIVISION	STATE	PROJECT	
2	OHIO	U-534(10)	

1 / 418

BELMONT COUNTY
BEL-7-20.64
U-534(10)

LIMITED ACCESS

This improvement is especially designed for through traffic and has been declared a limited access highway or freeway by action of the Director of Highways in accordance with the provisions of Section 5511.02 of the Revised Code of the State of Ohio.

CONVENTIONAL SIGNS

County Line
Existing Right of Way
Limited Access Only
Right of Way Only
Limited Access and Right of Way
Corporation Line
Center Line
Township Line
Section Line
Fence Line
Guard Rail (existing)
Guard Rail (proposed)
Railroad
Power Poles
Telephone Poles
Trees or stumps (existing)
Trees or stumps (to be removed)

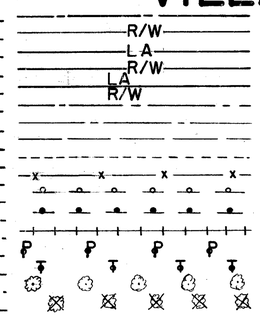

INDEX SHEETS

Revised Sheet 355 5-17-67 EBL
Revised Sheets 339 & 226 10-21-66 CEH

TITLE SHEET	1	PAVEMENT DETAILS	195 - 197
SCHEMATIC PLANS	2 - 3	RAILROAD RELOCATION PLAN & PROFILE	198 - 202
CENTERLINE LAYOUT PLAN	4 - 5	RAILROAD YARD RELOCATION PLANS	203-208, 208A, 209-212, 212A
TYPICAL SECTIONS	6 - 10	OUTFALL SEWERS	213
GENERAL NOTES	11 - 13	CULVERTS	214-220, 220A, 220B
GENERAL SUMMARY	14, 14A, 15, 15A, 16, 16A, 17, 17A	MISCELLANEOUS DETAILS	221 - 225
UTILITY GENERAL SUMMARY	18, 18A, 19, 19A, 20, 20A, 20B	SIGNING PLANS	226-237, 237A, 238, 238A, 239 - 248
SUBSUMMARY & CALCULATION SHEETS	21 - 25	LIGHTING PLANS	249 - 260
SUPERELEVATION TABLES	26 - 27	RETAINING WALLS	261-297, 297A, 298, 299, 299A, 300 - 304
PLAN & PROFILE AND UTILITY PLAN	28-34, 34A, 35-40, 40A, 41-66, 66A	STRUCTURES OVER 20' SPAN	305 - 357
CROSS - SECTIONS	67-175	RIGHT OF WAY	364-387, 387A, 388, 388A, 389, 389A, 390, 390A, 391-418, 418A, 418B
SIDE STREETS & INTERSECTION DETAILS	176-184, 184A, 185-194		

LINE DATA

Omitted from Plans
358, 359, 360, 361, 362, 363

Bridgeport - U-534(10)
Begin Project & Work — Sta. 1089+75.00
North Corp. Line — Sta. 1425+07.70
Net Project Length — 3532.70 Lin. Ft. or 0.669 Mi.
Net Work — 3,532.70 Lin. Ft. or 0.669 Mi.

Martins Ferry - U-534(10)
South Corp. Line — Sta. 1125+07.70
End U-534(10) — Sta. 1252+63.44
Net Project Length * 12,754.95 Lin. Ft. or 2.415 Mi.
Add For Sideroads (see sh. 13) 1,449.91
Net Work Length 14,204.86 Lin. Ft. or 2.690 Mi.

U-534(10) Portion
Net Project Length 16,287.65 Lin. Ft. or 3.084 Mi.
Net Work Length 17,737.56 Lin. Ft. or 3.359 Mi.

Rural Portion (Martins Ferry)
End U-534(10) & Begin Rural) Sta. 1252+63.44
End Project Sta. 1258+00.00
Net Project Length 536.56 Lin. Ft. or 0.101 Mi.
Add For Work (Rural)
Sta. 1258+00 to Sta. 1261+35.82 = 395.82 Lin. Ft. or 0.074 Mi.
Net Length of Work - Rural = 932.38 Lin. Ft. or 0.176 Mi.

Rural Portion (State)
Sta. 1261+95.82 to Sta. 1265+86 = 390.18 Lin. Ft.
Net Length of Work = 390.18 Lin. Ft. or 0.073 Mi.

*Station Equations.
Sta. 1173+94.45 Back = 1173+92.34 Ahead, add 2.11
Sta. 1243+78.91 Back = 1243+81.81 Ahead, deduct 2.90'

Total Length of Project = 16,824.21 Lin. Ft. or 3.186 Mi.
Total Length of Work = 19,060.12 Lin. Ft. or 3.609 Mi.

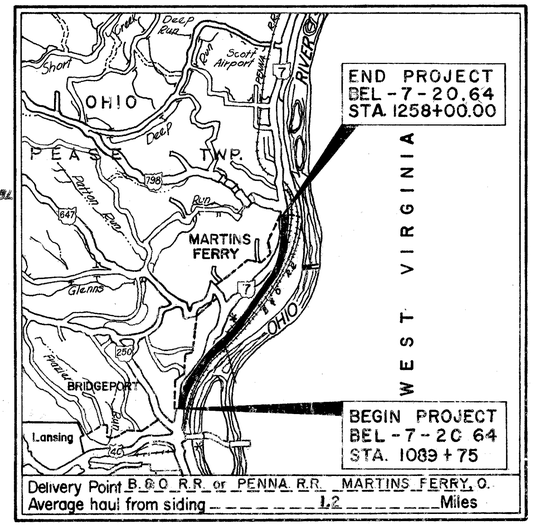

LOCATION MAP

SCALE OF MILES
0 1 2 3

Portion to be improved
Other streets & roads

SCALES
Plan 0 50
Profile (horizontal) 0 50
(vertical) 0 5'
Cross Sections 0 10
Right of Way 0 20'

1965 SPECIFICATIONS

The standand specifications of the State of Ohio Department of Highways, including changes and supplemental specifications listed in the proposal shall govern this improvement.

The right of way for this improvement will be provided by the State of Ohio.

I hereby approve these plans and declare that the making of this improvement will not require the closing of the highway to traffic and that provisions for the maintenance and safety of traffic will be as set forth on these plans and estimates.

Approved Earl W. Nelson
Date 7-12-66 Division Deputy Director

Approved C. H. Altwater
Date 8-2-66 Engineer of Bridges

Approved R. N. Pickett
Date 8-2-66 Engineer of Location and Design

Approved R. E. Shultz
Date 8-2-66 Deputy Director of Design and Construction

Approved T. H. Boswell
Date 8-15-66 Deputy Director of Right of Way

Approved [illegible]
Date 8-15-66 Deputy Director of Planning and Programming

Approved
Date First Assistant Director

Approved J. E. Marsh
Date 8/15/66 Director of Highways

Approved Ralph A. Pickett
Date 6-17-64 Director of Public Service
City of Martins Ferry, O.

Approved John Laslo
Date 6-17-64 Mayor, City of Martins Ferry, O.

PLANS PREPARED BY
RACKOFF ASSOCIATES
ENGINEERS
COLUMBUS, OHIO
Melvin Rackoff
MELVIN RACKOFF

DEPARTMENT OF COMMERCE
BUREAU OF PUBLIC ROADS
APPROVED:
DIVISION ENGINEER — DATE

Supplemental Prints of Standard Construction Drawings									
SD-1-63 (Sh. 2, 3, 4)	11-12-63	FSB-1-62	1-15-63	BR-1-65 (Sh. 1&2)	11-24-65	SD-2-64	11-25-64	RB-1-55	2-2-59
HL-4	1-1-66	F-4	6-1-65	CB 2-2A & B	6-1-65	M.H.-1	6-1-65	GR-6	6-1-65
		F-3	6-1-65	CB 2-3 & 2-4	6-1-65	M.H.-1-A	8-1-66	MC-6	6-1-65
MC-1	6-1-65	MC-3	5-1-66	CB 2-5 & 2-6	6-1-65	M.H.-2	6-1-65	AS-1-54	8-10-65
BP-5	6-1-65	FACI-1	6-1-65	CB No. 3	6-1-65	MC-4	6-1-65	MC-5	6-1-65
L-1	6-1-65	FACI-2	6-1-65	CB No. 3-A	6-1-65	BP-7	1-1-66	HL-1	11-1-65
BP-6	6-1-65	HW-1	6-1-65	I-2	6-1-65	GR.-1	6-1-65	HL-2	11-1-65
F-1	6-1-65	HW-E	6-1-65	I-2A	6-1-65	GR 2-A	9-1-65	HL-3	11-1-65

Supplemental Specifications			
814	3-16-66	825	4-22-65
815	8-6-65	828	3-21-66
816	8-6-65	1001	3-21-66
801	9-2-65		
811	3-29-65		
808	2-7-66		

File No.	BELMONT COUNTY BEL-7-20.64
	Date of Letting 19
	Contract No.

Revised 8-10-66

MICROFILMED
MAY 14 1986

SCHEMATIC PLAN

FED. RD. DIVISION	STATE	PROJECT	
2	OHIO		

2/418

BELMONT COUNTY
BEL-7-20.74

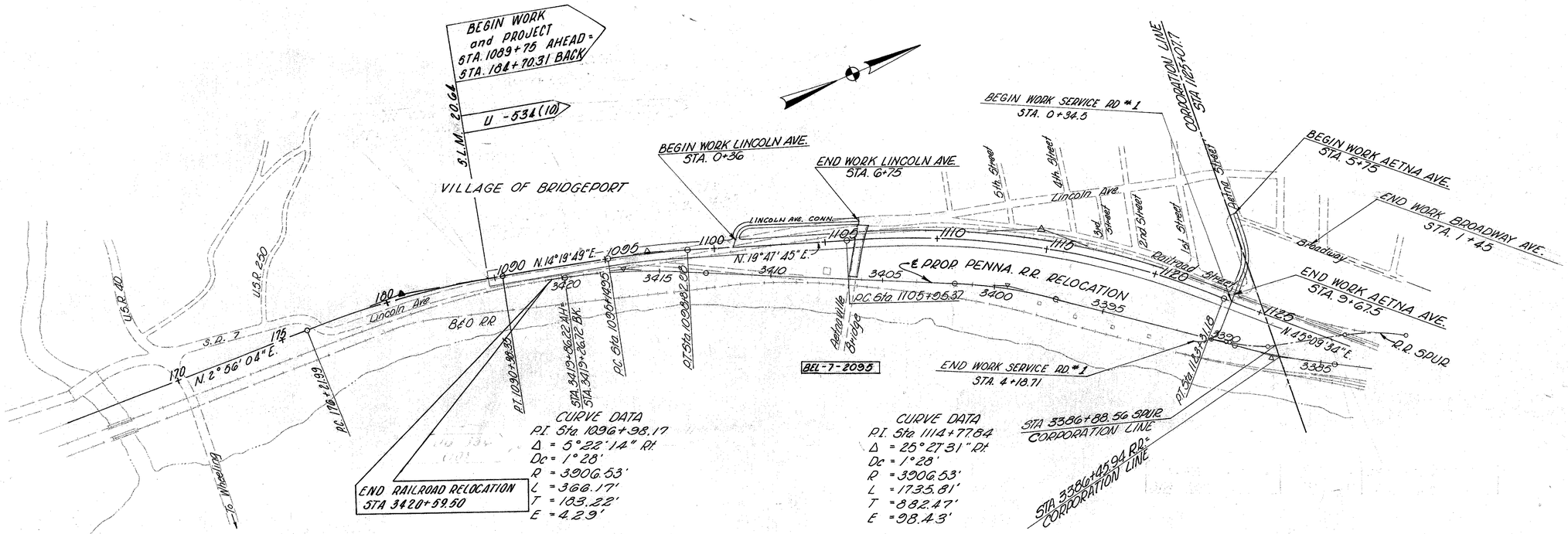

CURVE DATA
P.I. STA. 180+79.33
Δ = 11° 23' 45" Rt.
Dc = 1° 15'
R = 4583.66'
L = 911.67'
T = 457.34'
E = 22.76'

R.R. CURVE DATA
P.I. STA. 3416+10.24
Δ = 12° 42' 43" LT.
Dc = 2° 00' 00"
L = 635.60'
T = 319.12'
E = 17.72'

R.R. CURVE DATA
P.I. STA. 3393+50.32
Δ = 13° 50' 02" LT.
Dc = 3° 00' 00"
L = 461.13'
T = 231.72'
E = 13.87'

R.R. CURVE DATA
P.I. STA. 3386+67.13
Δ = 9° 09' 23" RT.
Dc = 2° 00' 00"
L = 457.82'
T = 229.41'
E = 9.17'

SCHEMATIC PLAN

MICROFILMED
MAY 14 1986

FED. RD. DIVISION	STATE	PROJECT	
2	OHIO		

3 / 418

BELMONT COUNTY
BEL-7-20.74

SCHEMATIC PLAN

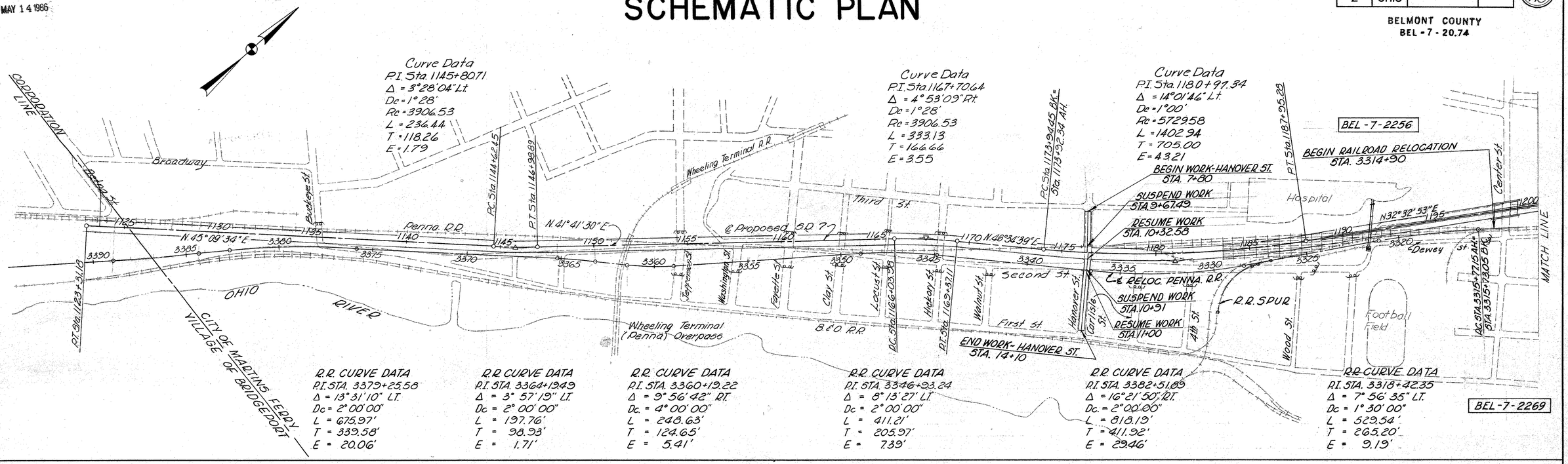

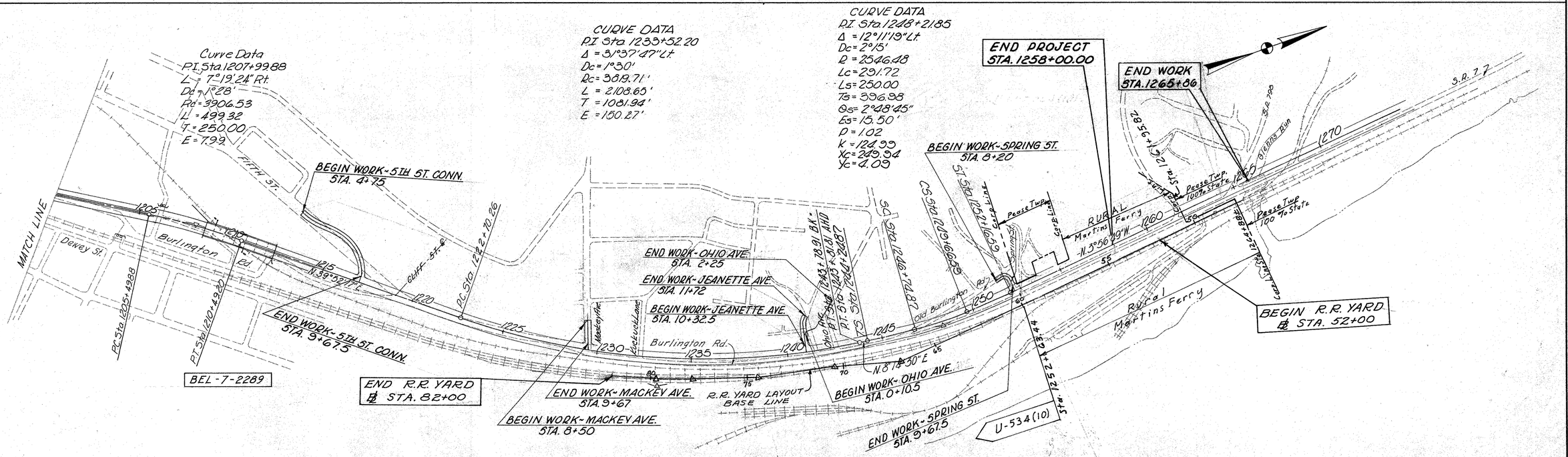

SCHEMATIC PLAN

CENTERLINE LAYOUT PLAN

0 250 500 1000
SCALE

FED. RD. DIVISION	STATE	PROJECT	
2	OHIO		

4 / 418

BELMONT COUNTY
BEL - 7 - 20.74

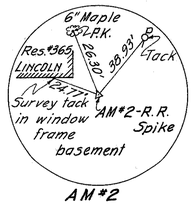

AM #2

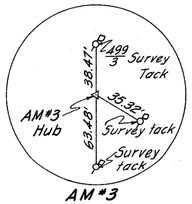

AM #3

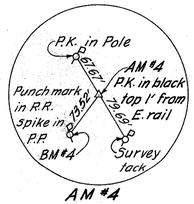

AM #4

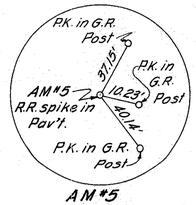

AM #5

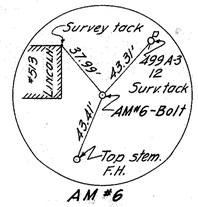

AM #6

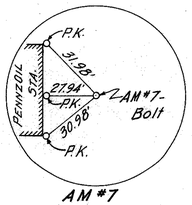

AM #7

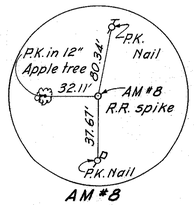

AM #8

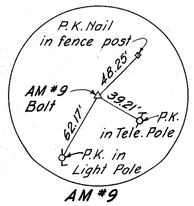

AM #9

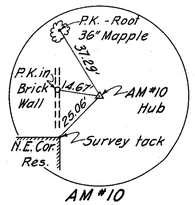

AM #10

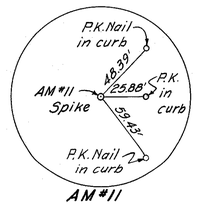

AM #11

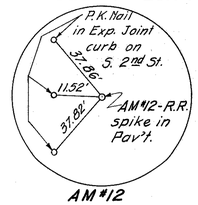

AM #12

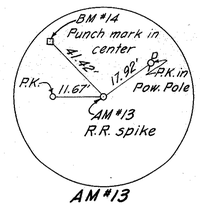

AM #13

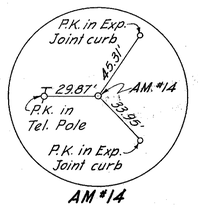

AM #14

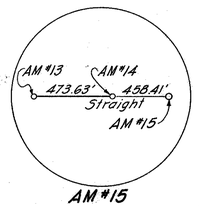

AM #15

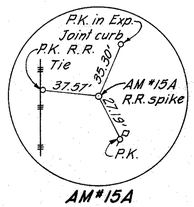

AM #15A

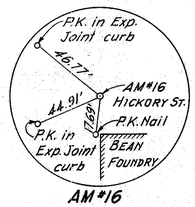

AM #16

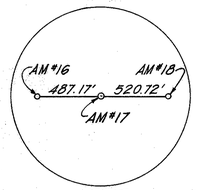

AM #17

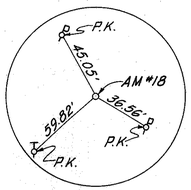

AM #18

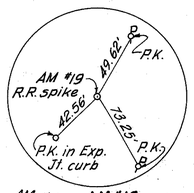

AM #19

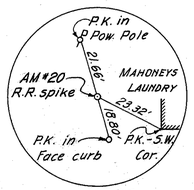

AM #20

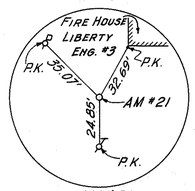

AM #21

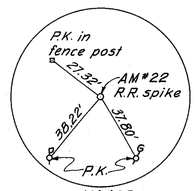

AM #22

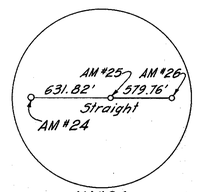

AM #24

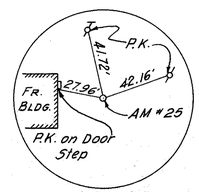

AM #25

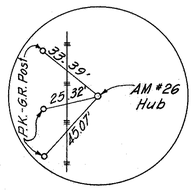

AM #26

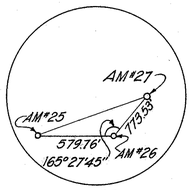

AM #27

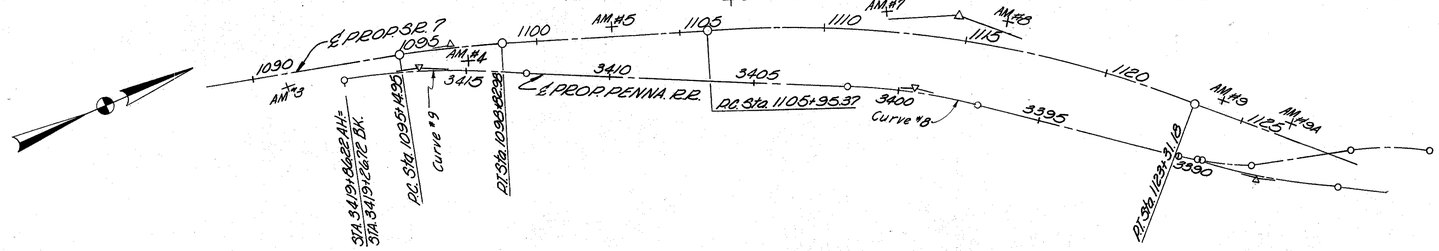

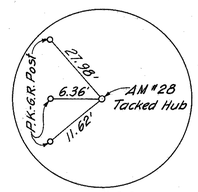

AM #28

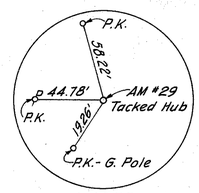

AM #29

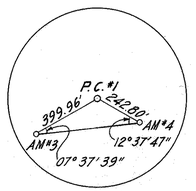

P.C. #1 - 1095+14.95

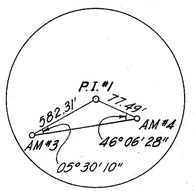

P.I. #1 - 1096+98.17

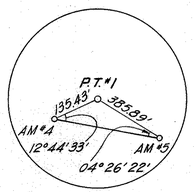

P.T. #1 - 1098+81.12

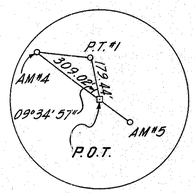

P.O.T. - 1100+60.56

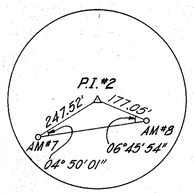

P.I. #2 - 1114+77.84

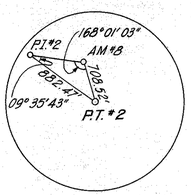

P.T. #2 - 1123+31.18

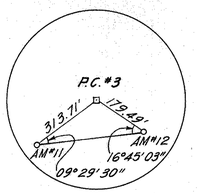

P.C. #3 - 1144+62.45

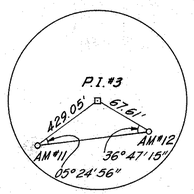

P.I. #3 - 1145+80.71

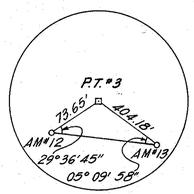

P.T. #3 - 1146+98.89

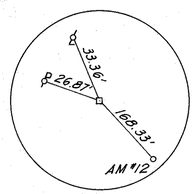

REF. PT. - 1148+00

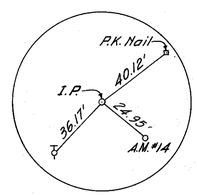

REF. PT. - 1156+00

REF. PT. - 1166+00

P.I. #4 - 1167+70.64

P.T. #4 - 1169+37.11

REF. PT. - 1173+00

P.I. #5 - 1180+97.34

P.T. #5 - 1187+95.28

P.O.T. - 1199+27.53

P.I. #6 - 1207+99.88

P.T. #6 - 1210+49.20

REF. PT. - 1218+00

P.C. #7 - 1222+70.26

P.I. #7 - 1233+52.20

P.T. #7 - 1243+79.91

T.S. #8 - 1244+24.87

P.I. #8 - 1248+21.85

AM = AERIAL MARKER

CENTERLINE LAYOUT PLAN

DESCRIPTION	PLOTTED BY	DATE	CHECKED BY	DATE
ORIGINAL				
PAVEMENT				
BRIDGE				
QUANTITIES				

CENTERLINE LAYOUT PLAN

SCALE 0 250 500 1000

BELMONT COUNTY
BEL - 7 - 20.74

FED. RD. DIVISION	STATE	PROJECT	
2	OHIO		

5
418

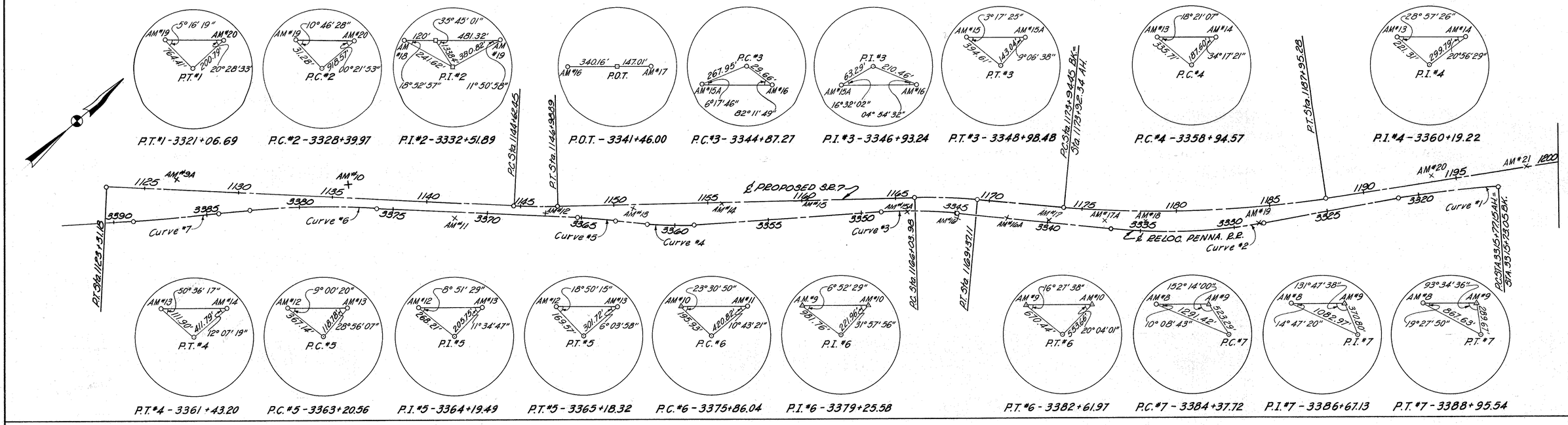

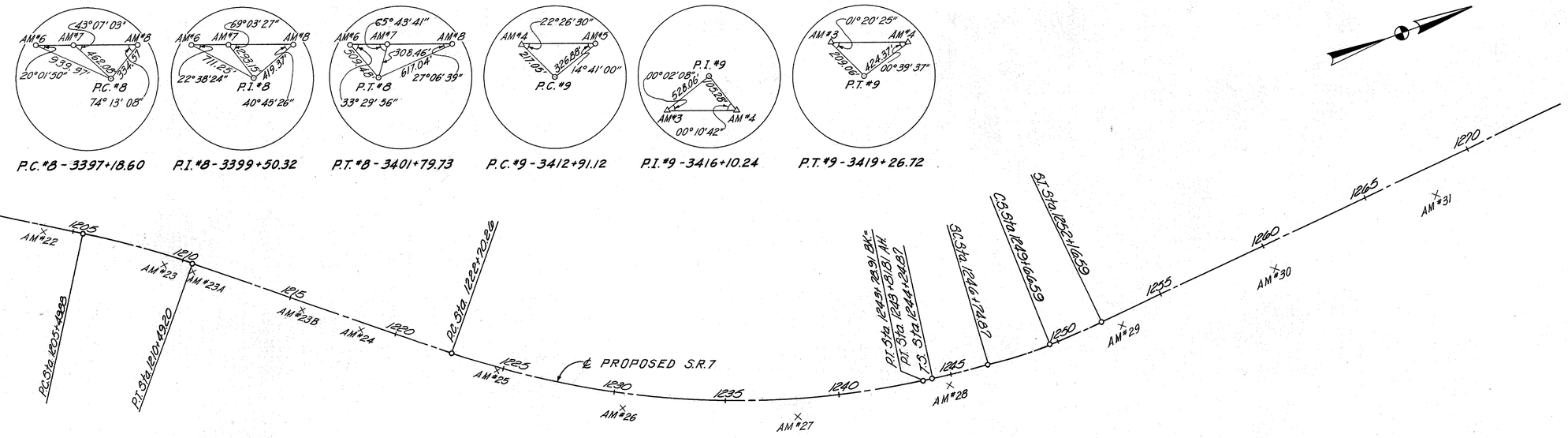

CENTERLINE LAYOUT PLAN

DESCRIPTION
TOPOGRAPHY
RIGHT-OF-WAY
PROPERTIES
R. R. W.
MONUMENTS

PLOTTED BY DATE
INKED BY DATE
CHECKED BY DATE

TYPICAL SECTIONS
TYPE T-35 ON B-20

TYPE CODE 6201

FED. RD. DIVISION	STATE	PROJECT	
2	OHIO		

6 / 418

BELMONT COUNTY
BEL-7-20.74

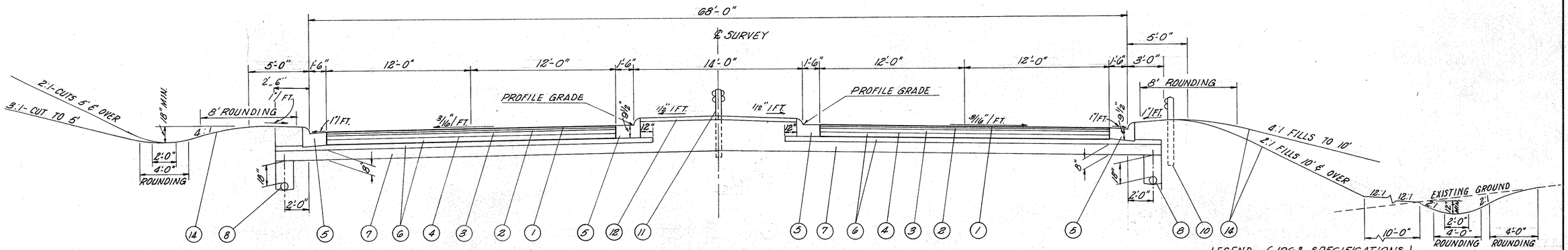

NORMAL SECTION

STA. 1101+50	TO	STA. 1103+25	= 175	LIN. FT.
STA. 1126+00	TO	STA. 1141+75	= 1575	LIN. FT.
STA. 1149+75	TO	STA. 1163+25	= 1350	LIN. FT.
STA. 1190+50	TO	STA. 1202+75	= 1225	LIN. FT.
STA. 1213+25	TO	STA. 1220+00	= 675	LIN. FT.
STA. 1254+00	TO	STA. 1258+00	= 400	LIN. FT.
DEDUCT FOR STRUCT. STA. 1197+92.80	TO	STA. 1199+87.40	= -174.60	LIN. FT.
		TOTAL	= 5225.40 LIN. FT. - *16.08	= 5209.32 LIN. FT.

*DEDUCT FOR R.R. SPUR STA. 1128+26.24 TO STA 1128+42.32 16.08 LIN. FT.

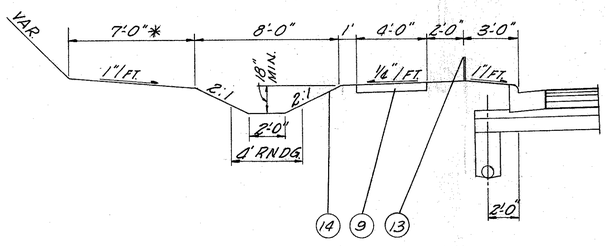

SIDEWALK DETAIL

STA. 1217+60 ± TO STA. 12252+31 LT. SIDE

* OR AS SHOWN ON THE PLANS

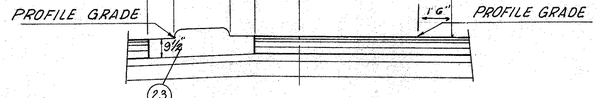

STORAGE LANE DETAIL

STA. 1098+20	TO STA. 1100+20	STA. 1215+97.5	TO STA. 1216+47.5
STA. 1121+16.5	TO STA. 1123+16.5	STA. 1228+39.39	TO STA. 1228+89.39
STA. 1173+78.7	TO STA. 1175+74.5	STA. 1240+03	TO STA. 1240+53
STA. 1176+77.9	TO STA. 1179+77.9	STA. 1251+48.2	TO STA. 1251+98.2

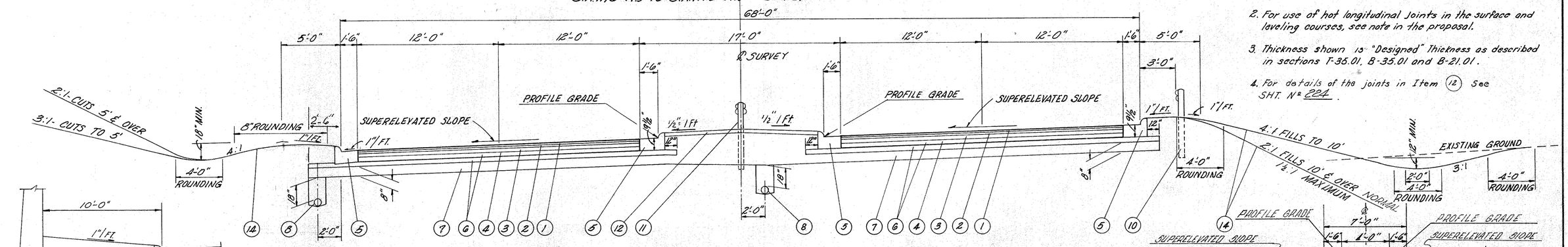

SUPERELEVATED SECTION

STA. 1095+14.95	TO	STA. 1101+50	= 635.05	LIN. FT.	** DEDUCT 2.90 LIN. FT. FOR STA. EQUATION.
STA. 1103+25	TO	STA. 1126+00	= 2275	LIN. FT.	STA. 1243+78.91 BACK = STA. 1243+81.81 AHEAD.
STA. 1141+75	TO	STA. 1149+75	= 800	LIN. FT.	† ADD 2.11 LIN. FT. FOR STA. EQUATION
STA. 1163+25	TO	STA. 1190+50	= †2727.11	LIN. FT.	STA. 1173+94.45 BACK = STA. 1173+92.34 AHEAD.
STA. 1202+75	TO	STA. 1213+25	= 1050	LIN. FT.	
STA. 1220+00	TO	STA. 1254+00	= **3397.1	LIN. FT.	For Pavement Details Between Sta 1089+75
DEDUCT FOR STRUCTURE STA. 1208+25.75	TO	STA. 1212+56.25	= -430.50	LIN. FT.	and Sta 1095+14.95 See Sheet No. 195
		TOTAL	= 10,453.76	LIN. FT.	

RETAINING WALL DETAIL

STA. 1105+17 TO STA. 1106+35 LT.
STA. 1160+00 TO STA. 1168+88 LT.

STA. 1089+75 ~ STA. 1090+38.35

LEGEND - (1963 SPECIFICATIONS)

(1)	T-35	1 1/4" ASPHALTIC CONCRETE SURFACE COURSE TYPE "C" (70-85)
(2)	B-35	1 1/4" ASPHALTIC CONCRETE LEVELING COURSE (70-85)
(3)	B-35	3" ASPHALTIC CONCRETE BASE COURSE (70-85)
(4)	T-30	BITUMINOUS PRIME COAT, SEC. M-5.1, RT-2 OR RT-3 APPLIED AT THE RATE OF 0.40 GAL. PER SQ. YD.
(5)	I-12	COMBINED CURB & GUTTER, STANDARD TYPE 2 MODIFIED AS PER PLAN
(6)	B-20	4" WATERBOUND MACADAM BASE COURSE USING NO. 2 COURSE AGGREGATE
(7)	I-22	SUBBASE
(8)	I-1	6" PIPE CLASS I-3
(9)	I-13	4" CONCRETE SIDEWALK
(10)	I-15	GUARD RAIL, STEEL BEAM, STANDARD TYPE (DEEP)
(11)	I-15	GUARD RAIL, STEEL BEAM, BARRIER TYPE (DEEP)
(12)	I-21	4" CONCRETE MEDIAN PAVEMENT, AS PER PLAN
(13)	I-26	CHAIN LINK FENCE
(14)	L-9	SEEDING AND PROTECTING
(23)	I-21	CONCRETE MEDIAN PAVEMENT, AS PER PLAN

NOTE: FOR CONVERSION TO 1965 SPECIFICATIONS, SEE SHEET NO. 7

NOTES

1. Item I-22 Subbase shall be increased from 8" to 12" from Sta. 1123+00 to Sta. 1136+00.
2. For use of hot longitudinal joints in the surface and leveling courses, see note in the proposal.
3. Thickness shown is "Designed" Thickness as described in sections T-35.01, B-35.01 and B-21.01.
4. For details of the joints in Item (12) See SHT. Nº 224.

DESCRIPTION	PLOTTED BY	DATE	INKED BY	DATE	CHECKED BY	DATE
TOPOGRAPHY						
GRADING						
DRAINAGE						
R. & W.						
SUBMITTED						

FED. RD. DIVISION	STATE	PROJECT	
2	OHIO		

7
418

BELMONT COUNTY
BEL - 7 - 20.74

TYPICAL SECTIONS

TYPE T-35

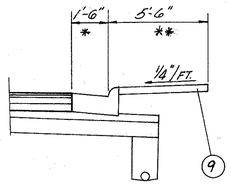

HANOVER ST. SIDEWALK DETAIL LT. & RT.

** STA. 7+80 TO STA. 8+40, SIDEWALK VARIES FROM 5'-6" TO 7'-0", RT. SIDE ONLY

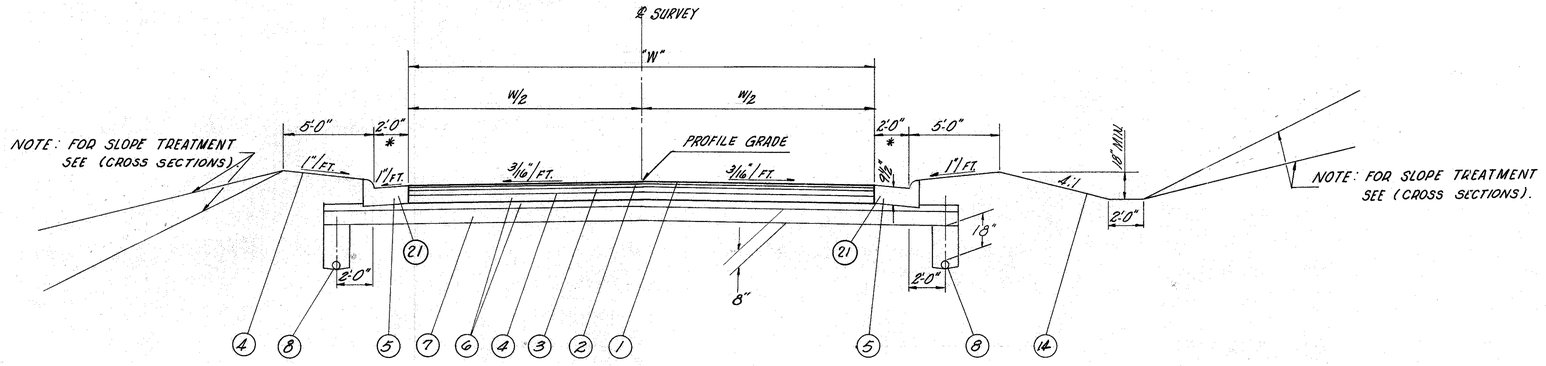

LINCOLN AVENUE - W = 24' TO 30'
STA. 0+62.4 TO STA. 6+17.48 = 555.08 LIN. FT
AETNA STREET - W IS VARIABLE
STA. 6+00 TO 8+54.4 = 254.4 LIN.FT.
HANOVER STREET - W = 40'
STA. 7+80 TO 8+77.3 = 97.3
STA. 11+17.1 TO 14+10 = 292.9
390.2 = 390.2 LIN.FT.
FIFTH STREET - W = 28'
STA. 5+00 TO STA. 8+70.2 = 370.2 LIN.FT.
TOTAL = 1569.88 L.F.

NOTES:
1. FOR WIDTH OF AETNA ST. SEE DETAIL SHEET NO. 18Z
* 2 ITEM 5 IS 1'-6" FOR AETNA & HANOVER STREETS.

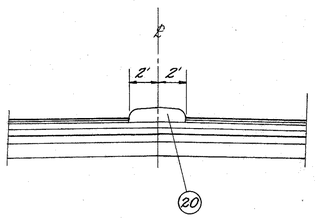

AETNA ST. MEDIAN DETAIL

STA. 8+89 TO STA. 9+47.5

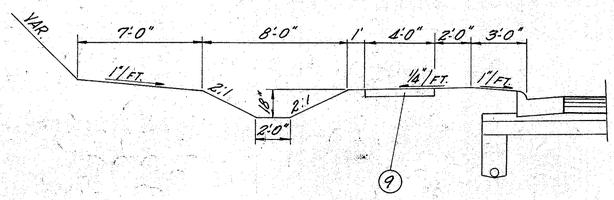

SIDEWALK DETAIL

FIFTH ST. : STA. 5+00 TO STA. 9+39.9 LT. SIDE

ITEM	DESCRIPTION (1963 SPECIFICATIONS)
①	T-35 1¼" ASPHALTIC CONCRETE SURFACE COURSE, TYPE "L" (70-85)
②	B-35 1¼" ASPHALTIC CONCRETE LEVELING COURSE (70-85)
③	B-35 3" ASPHALTIC CONCRETE BASE COURSE (70-85)
④	T-30 BITUMINOUS PRIME COAT, SEC. M-5.1, RT-2 OR RT-3 APPLIED AT THE RATE OF 0.40 GAL. PER SQ.YD.
⑤	I-12 COMBINED CURB & GUTTER, TYPE 2 MODIFIED AS PER PLAN (AETNA & HANOVER STREETS)
⑥	B-20 4" WATERBOUND MACADAM BASE COURSE
⑦	I-22 SUBBASE
⑧	I-1 6" PIPE, CLASS I-3
⑨	I-13 4" CONCRETE SIDEWALK
⑭	L-9 SEEDING AND PROTECTING
⑳	I-21 CONCRETE MEDIAN PAVEMENT.
㉑	I-12 COMBINED CURB AND GUTTER, STANDARD TYPE 2 (LINCOLN AVE. & FIFTH STREET.)

ITEM	DESCRIPTION (1965 SPECIFICATIONS)
① 404	1 ¼" ASPHALT CONCRETE (70 - 85)
② 403	1 ¼" ASPHALT CONCRETE (70 - 85)
③ 302	3" ASPHALT CONCRETE (70 - 85)
④ 408	BITUMINOUS PRIME COAT, 702.09 RT-2 OR RT-3 APPLIED AT THE RATE OF 0.40 GAL. PER SQ. YD.
⑤ 609	COMBINATION CURB AND GUTTER, STANDARD TYPE "2" MODIFIED AS PER PLAN (AETNA & HANOVER STREETS)
⑥ 303	4" WATERBOUND MACADAM BASE COURSE (SHEET NO. 7) 4" WATERBOUND MACADAM BASE COURSE, USING NO. 2 COARSE AGGREGATE
⑦ 310	SUBBASE
⑧ 605	6" PIPE UNDERDRAINS
⑨ 608	4" CONCRETE WALK
⑩ 606	GUARD RAIL TYPE 4
⑪ 606	GUARD RAIL TYPE 4, BARRIER DESIGN
⑫ 612	4" CONCRETE MEDIAN, AS PER PLAN
⑬ 607	FENCE, TYPE , CL.
⑭ 659	SEEDING AND MULCHING
⑳ 612	CONCRETE MEDIAN
㉑ 609	COMBINATION CURB AND GUTTER, STANDARD TYPE "2" (LINCOLN AND FIFTH STREETS)
㉓ 612	CONCRETE MEDIAN, AS PER PLAN

DESCRIPTION	PLOTTED BY	DATE	INKED BY	DATE	CHECKED BY	DATE
TOPOGRAPHY						
PAVEMENT						
STRUCTURE						
R. O. W.						
QUANTITIES						

FED. RD. DIVISION	STATE	PROJECT	
2	OHIO		

8/48

BELMONT COUNTY
BEL - 7 - 20.74

TYPICAL SECTION

TYPE T-35

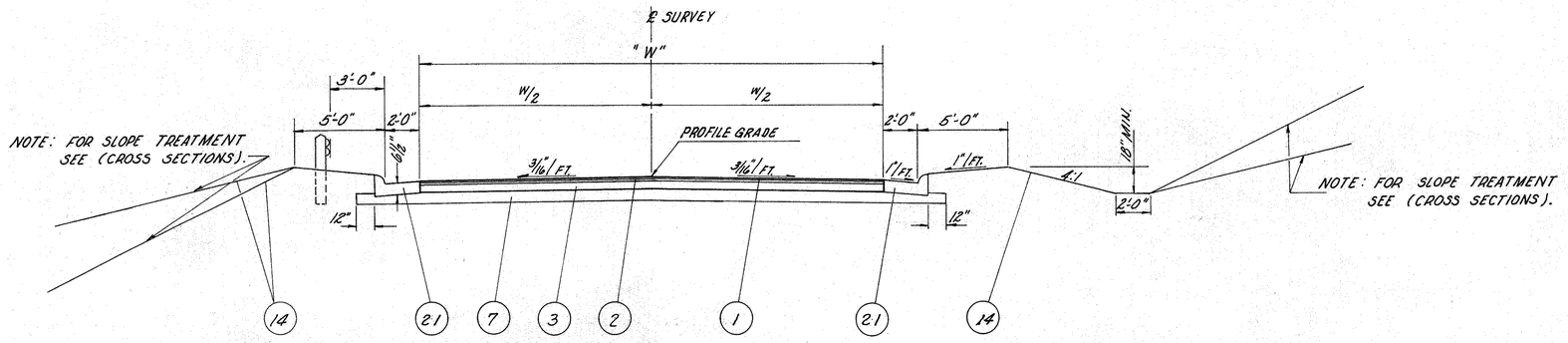

MACKEY AVENUE – W = 26'
STA. 8+50 TO STA. 9+01 = 51 LIN. FT.

JEANETTE AVENUE – W = 20'
STA. 10+84.7 TO STA. 11+52 = 67.3 LIN. FT.

OHIO AVENUE – W = 20'
STA. 0+468 TO STA. 2405 = 1582 LIN. FT.

SPRING STREET – W = VARIABLE
STA. 8+45 TO STA. 9+34 = 89 LIN. FT.

TOTAL = 365.5 LIN. FT.

NOTES.

1. For location of sidewalks on the side road, see their respective detail sheets.
2. For the width of Spring Street, see the detail sheet.

ITEM	DESCRIPTION (1963 SPECIFICATIONS)
A	T-30 BITUMINOUS PRIME COAT, SEC. M-5.7, RT-2 OR RT-3 APPLIED AT THE RATE OF 0.40 GAL. PER SQ. YD.
21	I-12 COMBINED CURB AND GUTTER STANDARD TYPE 2.
14	L-9 SEEDING AND PROTECTING
1	T-35 1½" ASPHALTIC CONCRETE SURFACE COURSE, TYPE "C" (70-85)
2	B-35 1½" ASPHALTIC CONCRETE LEVELING COURSE (70-85).
3	B-35 3" ASPHALTIC CONCRETE BASE COURSE. (70-85).
7	I-22 6" SUBBASE

ITEM	DESCRIPTION (1965 SPECIFICATIONS)
1	404 1½" ASPHALT CONCRETE (70-85)
2	403 1½" ASPHALT CONCRETE (70-85)
3	302 3" ASPHALT CONCRETE (70-85)
A	408 BITUMINOUS PRIME COAT, 702.09 RT-2 OR RT-3, APPLIED AT THE RATE OF 0.40 GAL. PER SQ. YD.
7	310 6" SUBBASE
14	659 SEEDING AND MULCHING
21	609 COMBINATION CURB AND GUTTER STANDARD TYPE "2"

DESCRIPTION	PLOTTED BY	DATE	INKED BY	DATE	CHECKED BY	DATE
TOPOGRAPHY						
ALIGNMENT						
GRADES						
R. O. W.						
QUANTITIES						

TYPICAL SECTIONS – SIDE ROADS

FED. RD. DIVISION	STATE	PROJECT	
2	OHIO		

9
418

BELMONT COUNTY
BEL - 7 - 20.74

TYPICAL SECTIONS

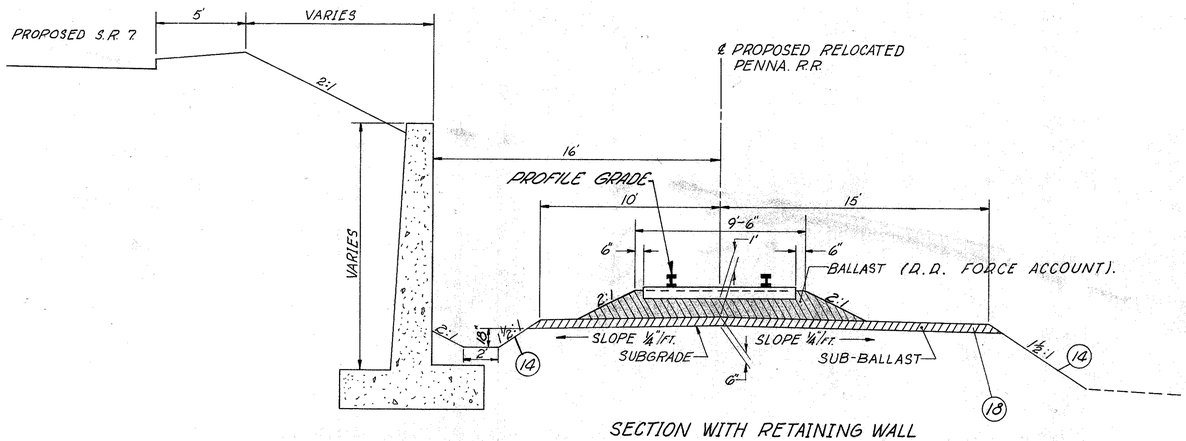

SECTION WITH RETAINING WALL
STA. 3314+90 TO STA. 3327+58 = 1263.90 LIN. FT.

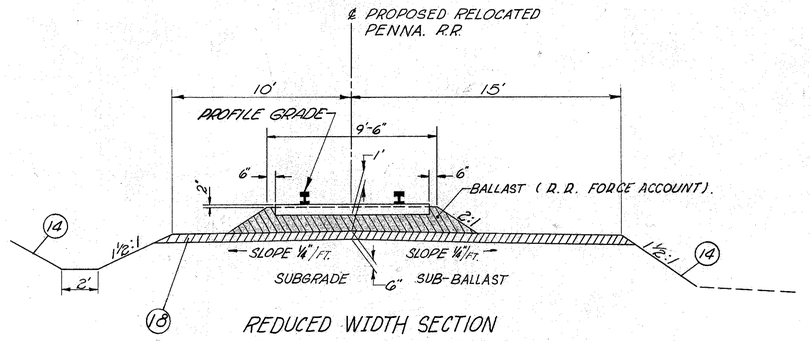

REDUCED WIDTH SECTION
STA. 3345+00 TO STA. 3350+00 = 500 LIN. FT.

ITEM	DESCRIPTION - (1963 SPECIFICATIONS)
14	L-9 SEEDING & PROTECTING
18	I-22 6" SUBBASE

ITEM	DESCRIPTION - (1963 SPECIFICATIONS)
14	659 SEEDING AND MULCHING
18	310 6" SUBBASE

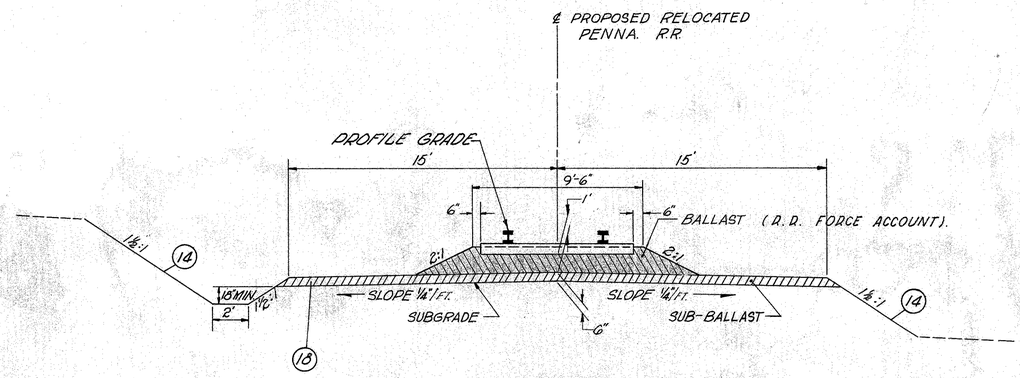

SPUR SECTION
STA. 3326+96.27 TO STA. 3331+50 = 453.73 L.F.
STA. 3390+00.00 TO STA. 3379+75 = 1,025.00 L.F.
TOTAL = 1,478.73 LIN. FT.

NOTE: These typical sections are to be viewed by looking down stationing according to railroad stationing.

TYPICAL SECTIONS - RELOCATED PENNA. R.R.

FED. RD. DIVISION	STATE	PROJECT	
2	OHIO		

10
418

BELMONT COUNTY
BEL - 7 - 20.74

TYPICAL SECTIONS

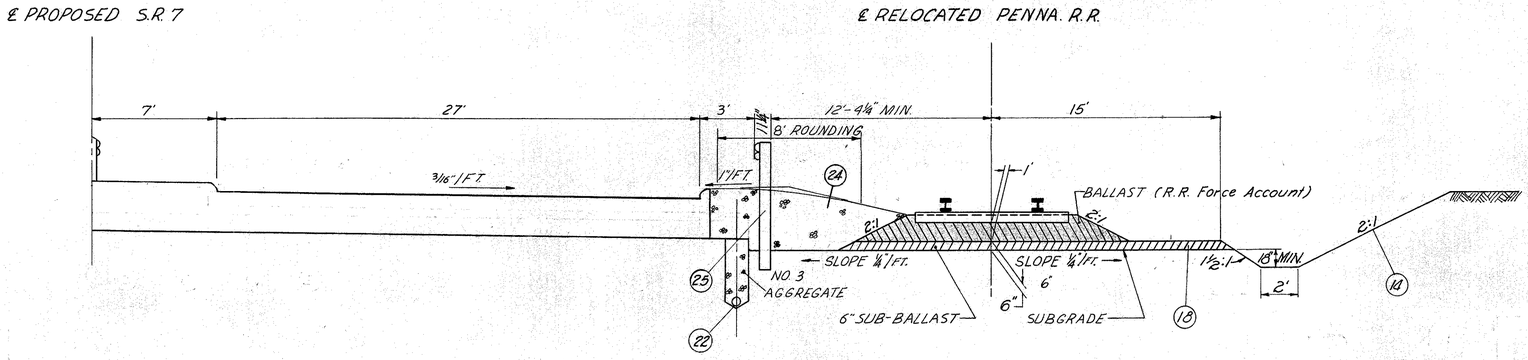

REDUCED WIDTH SECTION

STA. 3364+50 TO STA. 3379+50 = 1500.00 L.F.
STA. 3416+25 TO STA. 3420+59.50 = 375.00 L.F.
TOTAL = 1875.00 LIN.FT.

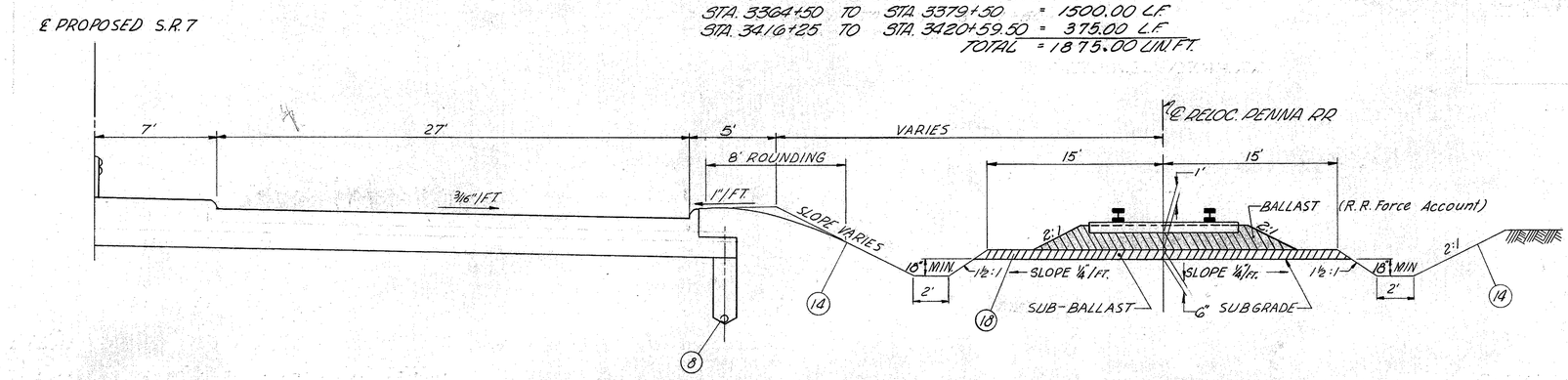

Note: Typicals are not to scale.

NORMAL SECTION

STA. 3327+58 TO STA. 3345+00 = 1742 L.F.
STA. 3350+00 TO STA. 3364+50 = 1450 L.F.
STA. 3379+50 TO STA. 3416+25 = 3775 L.F.
TOTAL = 6967 LIN.FT.

ITEM	DESCRIPTION - (1963 SPECIFICATIONS)
(8)	I-1 6" CLASS I-3
(25)	I-15 GUARD RAIL, STEEL BEAM STANDARD TYPE DEEP, USING 10' POSTS AS PER PLAN.
(14)	L-9 SEEDING AND PROTECTING
(16)	I-22 6" SUBBASE
(22)	I-1 6" PIPE AS PER PLAN
(24)	E-4 BORROW USING Nº 3 AGGREGATE

ITEM	DESCRIPTION - (1965 SPECIFICATIONS)
(8)	605 6" PIPE UNDERDRAINS
(14)	659 SEEDING AND MULCHING
(16)	310 6" SUBBASE
(22)	605 6" PIPE UNDERDRAINS, AS PER PLAN
(24)	203 BORROW, USING NO. 4 AGGREGATE
(25)	606 GUARD RAIL, TYPE 4, USING 10' POSTS, AS PER PLAN

NOTE: These typical sections are to be viewed by looking down stationing according to railroad stationing.

TYPICAL SECTIONS S.R. 7 & RELOCATED P.R.R.

FED. RD. DIVISION	STATE	PROJECT		
2	OHIO			

11
418

BELMONT COUNTY
BEL-7-20.74

GENERAL NOTES

ELEVATION DATUM

ALL ELEVATIONS ARE BASED ON U.S.G.S. DATUM.

CONSTRUCTION LAYOUT STAKES

SEE NOTE IN PROPOSAL DESCRIBING THE WORK INCLUDED IN THIS LUMP SUM PAY ITEM.

NON-RIGID PAVEMENT REMOVAL

REMOVAL AND DISPOSAL OF EXISTING NON-RIGID PAVEMENT, UNLESS OTHERWISE INDICATED ON THESE PLANS, SHALL BE MEASURED AND PAID FOR AS ITEM 203 EXCAVATION

ROUNDING OF CORNERS SHOWN ON CROSS-SECTIONS

THE ROUNDED CORNERS SHOWN ON STANDARD DRAWING MC-1, AS MODIFIED BY THE TYPICAL SECTIONS, APPLY TO ALL CROSS SECTIONS, EVEN THOUGH OTHERWISE SHOWN ON THESE PLANS.

SUPERELEVATION

SUPERELEVATED CURVES SHALL BE BUILT WITHOUT CROWN. THE CROWN SHALL BE WORKED OUT OF THE PAVEMENT IN THE PORTION BETWEEN THE BEGINNING OF THE TRANSITION AND THE POINT WHERE THE SUPERELEVATION EQUALS TWICE THE CROWN.

FIELD OFFICE

THE CONTRACTOR SHALL, IN addition to the requirements of 105.152, provide a suitable field office having a minimum of 500 sq. ft. of floor space. The Contractor shall have a telephone installed and maintained in this field office during the construction of this project. The Contractor shall also provide and maintain sanitory provisions as per 107.06. All of the above is included in the lump sum price bid for Field Office.

SPECIAL DITCH ELEVATIONS

FOR ELEVATIONS OF SPECIAL DITCHES SEE THE CROSS-SECTIONS.

LOCATION AND SIZE OF PIPES

THE LOCATION, TYPE, DEPTH AND SIZE OF ALL EXISTING PIPES ARE SHOWN AS NEAR EXACT AS THE AVAILABLE INFORMATION WILL PERMIT. THE STATE WILL NOT BE RESPONSIBLE FOR ANY VARIATIONS FOUND DURING CONSTRUCTION.

PAVEMENT REMOVAL OUTSIDE NORMAL CONSTRUCTION LIMITS

AFTER THE EXISTING PAVEMENT AS INDICATED ON THE PLANS HAS BEEN REMOVED, THE [illegible] SHALL BE PLOWED, HARROWED AND DRAGGED TO A SMOOTH GRADE, THE SIDE DITCHES FILLED, AND THE ENTIRE AREA SHAPED TO DRAIN AND LEFT IN A NEAT CONDITION READY FOR SEEDING. PAYMENT FOR THIS WORK SHALL BE INCLUDED IN THE UNIT PRICE BID FOR ITEM 202 PAVEMENT REMOVAL, AS PER PLAN. SEEDING SHALL BE MEASURED AND PAID FOR IN ACCORDANCE WITH ITEM 659

DRIVEWAYS

DRIVEWAY LOCATIONS OUTSIDE THE LIMITED ACCESS AREAS MAY BE CHANGED PROVIDED THAT THE NEW LOCATION CAN BE AGREED UPON BY THE PROPERTY OWNER AND THE ENGINEER, AND THAT NO ADDED COST IS INCURRED BY THE STATE.

SEEDING

QUANTITIES FOR SEEDING ARE CALCULATED FOR THE SOIL AREAS BETWEEN THE RIGHT-OF-WAY FENCE LINES, BETWEEN THE RIGHT-OF-WAY LINES IN UNFENCED AREAS, AND WITHIN THE WORK LIMITS FOR AREAS OUTSIDE THE RIGHT-OF-WAY LINES COVERED BY WORK AGREEMENT OR SLOPE EASEMENT.

ITEM 604 MANHOLE RECONSTRUCTED TO GRADE, AS PER PLAN

THIS ITEM SHALL CONSIST OF THE CAREFUL REMOVAL OF THE EXISTING MANHOLE DOWN TO THE SPRING LINE AND RECONSTRUCTION OF THE MANHOLE TO THE NEW GRADE, CONFORMING AS NEARLY AS PRACTICABLE TO THE EXISTING DIMENSIONS AND TYPE OF CONSTRUCTION AND USING THE SALVAGED MANHOLE FRAME AND COVER.

SPECIAL SEEDING PREPARATION AREAS

THE REFERENCES IN THE FIRST PARAGRAPH OF SEC. 659.09 TO PREPARATION OF THE SEED BED IN FRONT OF RESIDENCES, ETC., SHALL, ON THIS PROJECT, BE CONSIDERED TO BE PARTICULARLY APPLICABLE IN THE FOLLOWING AREAS:

MAINLINE

STATION 1142+00 TO 1139+75 LT.
STATION 1143+29 TO 1145+44 RT.
STATION 1157+44 TO 1157+80 LT.
STATION 1158+50 TO 1162+60 RT.
STATION 1199+15 TO 1203+00 LT.
STATION 1204+00 TO 1205+58 LT.
STATION 1230+62 TO 1231+66 LT.
STATION 1249+50 TO 1250+55 LT.

LINCOLN AVENUE

STA. 5+90 TO 5+75 LT.

BROADWAY STREET
STA. 0+40 TO 1+45 LT.

ALTNA STREET
STA. 8+75 TO 9+15 RT.

5th STREET
STA. 4+75 TO 5+25 LT.
STA. 4+75 TO 6+47 RT.
STA. 7+22 TO 8+72 LT.

HANOVER STREET

STA. 7+80 TO 8+80 LT.
STA. 14+08 TO 14+10 LT.
STA. 13+41 TO 14+10 RT.

JEANETTE AVENUE
STA. 11+15 TO 11+72 LT.

OHIO AVENUE
STA. 0+26 TO 1+70 LT.

SEED MIX SHALL BE AS SPECIFIED FOR AN AREA IMMEDIATELY IN FRONT OF A RESIDENCE

SPECIFICATIONS
All Items appearing throughout the plans referring to the 1963 Construction and Material Specifications are to be used for reference purposes only. This project shall be constructed in accordance with the requirements of the 1965 Construction and Material Specifications. The cross references to the 1965 Specifications are shown on the general summary sheets Nos. 14A, 15A, 16A, 17A, 18A, 19A, 20A, and 20B.

MAINTENANCE OF SEWER FLOWS

THE CONTRACTOR SHALL CONDUCT HIS OPERATIONS SO AS TO MAINTAIN AT ALL TIMES SEWER FLOWS THROUGH EXISTING FACILITIES TO REMAIN IN PLACE AND THROUGH EXISTING FACILITIES TO BE REPLACED UNTIL NEW FACILITIES ARE COMPLETED AND PLACED INTO USE.

PAYMENT FOR ANY ADDITIONAL COSTS INVOLVED IN MAINTAINING THESE FLOWS BY PUMPING OR BY ANY OTHER MEANS APPROVED BY THE ENGINEER SHALL BE INCLUDED IN THE UNIT PRICES BID FOR THE RESPECTIVE PIPE ITEMS.

TREATED SANITARY FLOW INTO HIGHWAY DRAINAGE SYSTEMS

TREATED SANITARY FLOW MAY BE DISCHARGED INTO THE HIGHWAY DRAINAGE SYSTEM PROVIDED THE OWNER HAS SECURED THE APPROVAL OF THE LOCAL HEALTH AUTHORITIES AND HAS ACQUIRED FROM THE STATE HIGHWAY DEPARTMENT, THE OFFICIAL PERMIT TO HAVE THE CONNECTION MADE.

IN EACH CASE WHERE A PERMIT HAS BEEN ISSUED FOR A SANITARY CONNECTION TO BE MADE, IT SHALL BE PROVIDED WITH AN INSPECTION WELL, IN ACCORDANCE WITH THE DETAIL SHOWN ON SHEET NO. _____, LOCATED APPROXIMATELY ONE FOOT INSIDE THE RIGHT-OF-WAY LINE.

THE FOLLOWING ESTIMATED QUANTITIES HAVE BEEN INCLUDED IN THE GENERAL SUMMARY, FOR USE AS DIRECTED BY THE ENGINEER, IN MAKING THE ABOVE DESCRIBED CONNECTIONS:

ITEM 603, 6" CONDUIT, TYPE "C"	=	600 LIN. FT.
ITEM 604 INSPECTION WELLS, AS PER PLAN	=	6 EACH

CONNECTIONS TO EXISTING PIPE

AT PLACES WHERE THE PLANS PROVIDE FOR PROPOSED DRAINAGE PIPE TO BE CONNECTED TO EXISTING PIPES, IT SHALL BE THE RESPONSIBILITY OF THE CONTRACTOR TO LOCATE THE EXISTING PIPE BOTH AS TO LINE AND GRADE BEFORE HE STARTS TO LAY THE PROPOSED PIPE. THE COST OF THIS OPERATION SHALL BE INCLUDED IN THE UNIT PRICE BID FOR THE PERTINENT PIPE ITEM.

EROSION CONTROL

ITEMS 601, 660, & 667 ARE PROVIDED IN THESE PLANS FOR EROSION CONTROL. ROCK OF A STABLE NATURE WILL NOT BE REMOVED IN ORDER TO PLACE ANY OF THESE ITEMS. THE ENGINEER SHALL CHECK AND NON-PERFORM QUANTITIES OR ADJUST LOCATIONS AND QUANTITIES FOR THESE ITEMS WHERE INDICATED BY FIELD CONDITIONS DURING CONSTRUCTION.

659 COMMERCIAL FERTILIZER

ALL AREAS TO BE SEEDED SHALL HAVE COMMERCIAL FERTILIZER (12-12-12 MIX) APPLIED AT THE RATE OF 20 POUNDS PER 1000 SQ. FT.

SODDING

AN 18 INCH WIDTH OF SOD SHALL BE PLACED AROUND THE BACK AND BOTH SIDES OF ALL HEADWALLS AND ALONG THE EDGES OF ALL PAVED GUTTERS AND RIPRAP WHERE SHOWN ON THE PLANS. THE COST OF THE SODDING SHALL BE PAID FOR AT THE UNIT PRICE BID PER SQUARE YARD FOR 660 SODDING.

CONDUIT UNDER RAILROAD

For construction of all conduit under railroads see note in proposal.

REMOVAL OF TREES AND STUMPS

ALL TREES AND STUMPS LYING WITHIN THE CONSTRUCTION LIMITS OF THIS PROJECT SHALL BE REMOVED UNDER THE LUMP SUM PRICE BID FOR ITEM 201 CLEARING AND GRUBBING, EXCEPT THAT THOSE TREES [illegible] FOR WHICH PROTECTION AND PRESERVATION WORK IS INDICATED ELSEWHERE IN THESE PLANS SHALL NOT BE REMOVED.

THE FOLLOWING IS AN APPROXIMATE ESTIMATE OF THE NUMBER OF TREES AND STUMPS TO BE REMOVED:

SIZES	TREES			STUMPS		
	BRIDGEPORT	MARTINS FERRY	RURAL	BRIDGEPORT	MARTINS FERRY	RURAL
18"	4	77	5	1		
30"		35	1			
48"		3				
OVER 48"		1				

THE ABOVE ESTIMATE IS APPROXIMATE AND THE STATE OF OHIO RESERVES THE RIGHT TO ORDER THE REMOVAL OF ADDITIONAL TREES OR STUMPS OUTSIDE THE LIMITS OF CONSTRUCTION BUT WITHIN THE RIGHT-OF-WAY AND/OR EASEMENT LINES. PAYMENT FOR THE REMOVAL OF THESE ADDITIONAL TREES OR STUMPS SHALL BE INCLUDED IN THE LUMP SUM PRICE BID FOR ITEM 201, CLEARING AND GRUBBING

REMOVAL OF EXISTING PIPE

THE REMOVAL OF ALL EXISTING PIPES, HEADWALLS AND/OR APPURTENANCES WITHIN THE LIMITS OF PROPOSED EXCAVATION ITEMS SHALL BE INCLUDED FOR PAYMENT IN THE UNIT PRICES BID FOR THE RESPECTIVE EXCAVATION ITEMS, UNLESS OTHERWISE ITEMIZED IN THE PLANS.

COOPERATION WITH OTHER CONTRACTORS

IN ADDITION TO THE PROVISIONS AS SET FORTH IN THE SPECIFICATIONS, THE CONTRACTOR SHALL COOPERATE WITH THE CONTRACTOR OR CONTRACTORS, AS THE CASE MAY BE, ENGAGED IN CONSTRUCTION OF AN ADJOINING SECTION OF THIS PROJECT.

GENERAL NOTES

GUARD RAIL POST ANCHORS

AT LOCATIONS WHERE PIER FOOTINGS INTERFERE WITH INSTALLATION OF FULL LENGTH GUARD RAIL POSTS, SHORT POSTS SHALL BE PROVIDED AND SHALL BE ANCHORED IN ACCORDANCE WITH THE DETAILS SHOWN IN STD. CONSTR. DWG. GR -6. COST OF PROVIDING AND INSTALLING NECESSARY ANCHORS SHALL BE INCLUDED IN THE UNIT PRICE BID PER LINEAL FOOT OF GUARD RAIL.

UNDERGROUND UTILITIES

THE LOCATION OF THE UNDERGROUND UTILITIES SHOWN ON THE PLANS HAVE BEEN OBTAINED BY DILIGENT FIELD CHECKS AND SEARCHES OF AVAILABLE RECORDS. IT IS BELIEVED THAT THEY ARE ESSENTIALLY CORRECT, BUT THE BUT THE STATE OF OHIO MAKES NO GUARRANTEES AS TO THEIR ACCURACY OR COMPLETENESS.

ESTIMATED QUANTITIES

SPECIFIC LOCATIONS AND USAGE OF ESTIMATED QUANTITIES SET UP ON THIS PLAN TO BE USED "AS DIRECTED BY THE ENGINEER" SHALL BE MADE A MATTER OF RECORD BY INCORPORATION INTO THE FINAL CHANGE ORDER GOVERNING COMPLETION OF THIS PROJECT. NO SUCH QUANTITIES SHALL BE ORDERED UNTIL DIRECTED BY THE ENGINEER.

REVIEW OF PROJECT

BEFORE ANY WORK IS STARTED ON THE PROJECT, REPRESENTATIVES OF THE STATE, THE CITY AND THE CONTRACTOR SHALL MAKE A VISUAL INSPECTION OF THE EXISTING STORM, SANITARY AND COMBINED SEWERS WHICH ARE TO REMAIN IN SERVICE AND WHICH ARE WITHIN THE LIMITS OF THE WORK. A RECORD OF THE INSPECTION SHALL BE KEPT IN WRITING BY THE STATE! ALL NEW SEWERS, INLETS AND MANHOLE CONSTRUCTED AS A PART OF THE PROJECT SHALL BE FREE OF ALL FOREIGN MATTER AND IN A CLEAN CONDITION BEFORE THE PROJECT WILL BE ACCEPTED BY THE STATE. ALL EXISTING SEWERS INSPECTED INITIALLY BY THE ABOVE MENTIONED PARTIES SHALL BE MAINTAINED AND LEFT IN THE SAME CONDITION AS DETERMINED BY THE ORIGINAL INSPECTION. ANY CHANGE IN THE CONDITION RESULTING FROM THE CONTRACTOR'S OPERATION SHALL BE CORRECTED BY THE CONTRACTOR TO THE SATISFACTION OF THE ENGINEER. THE COST OF MAKING INSPECTIONS AND ANY REPAIRING OR CORRECTING OF SEWERS, AS A RESULT OF CONSTRUCTION OPERATION SHALL BE INCLUDED IN THE UNIT PRICES BID FOR THE VARIOUS PLAN ITEMS OF THE CONTRACT

SEQUENCE OF OPERATIONS: (FOR UTILITY CONSTRUCTION)

The Contractors first operation on this project shall be the construction of the embonkment and excavation to plan lines on the left from MainLine Sta. 1089+75 to Lincoln Ave. Relocated & Sta. 6+00 to provide an area for relocated utilities. Upon completion of this work, the Contractor shall notify the Utility companies involed and then vacate the area for a period of 2½ months, to allow the utilities to be relocated uninterruptedly. The Contractor shall excercise extreme caution while working in the vicinity of existing or relocated utilities.

FORWARD APPROACH EMBANKMENT - WHEELING TERMINAL RAILROAD STRUCTURE

BETWEEN STATIONS 1212+00 AND STATION 1218+00 THE EXISTING GROUND TO THE RIGHT OF THE CENTERLINE SHALL BE EXCAVATED TO BEDROCK ALONG THE NEAT LINES AS SHOWN ON THE CROSS SECTIONS. THIS OPERATION SHALL BE ACCOMPLISHED IN RUNS OF 200 FOOT SEGMENTS TO FACILITATE BACK-FILLING EACH SEGMENT PRIOR TO THE BEGINNING OF EXCAVATION ON THE NEXT 200 FOOT SEGMENT. SHORTER SEGMENTS SHALL BE REQUIRED IF, IN THE OPINION OF THE ENGINEER, THERE IS ANY LATERAL MOVEMENT IN THE ADJACENT SLOPES.

AN 8" UNDERDRAIN PIPE LINE SHALL BE INSTALLED AT THE BASE OF THE INSIDE SLOPE TO REMOVE FREE WATER FROM THE EXCAVATED AREA PRIOR TO BACKFILLING, AS SHOWN ON THE PLANS AND CROSS-SECTIONS.

PAYMENT FOR THE UNDERDRAIN LINE SHALL BE AT THE UNIT PRICE BID FOR "ITEM 605 8" SHALLOW PIPE UNDERDRAINS

PAYMENT FOR EXCAVATING AND BACKFILLING SHALL BE AT THE UNIT PRICE BID FOR "ITEM 203 EXCAVATION

THE COST OF THE NO. 6 OR NO. 6-A AGGREGATE AS SHOWN ON THE CROSS-SECTIONS SHALL BE INCLUDED IN THE UNIT PRICE BID FOR ITEM 605 8" SHALLOW PIPE UNDERDRAINS

ITEM 203 PROOF ROLLING

AN ESTIMATED QUANTITY FOR THIS ITEM HAS BEEN PROVIDED IN THE GENERAL SUMMARY FOR USE IN PROOF ROLLING OF SUBGRADE ON THE MAINLINE AND RAMP PAVEMENTS, and for pared shoulders, in accordance with Supplemental Specification 801.

CROWN AT RAILROAD CROSSING

THE CROWN SHALL BE WORKED OUT OF THE PAVEMENT BEGINNING 50 FEET EACH SIDE OF THE RAILROAD CROSSING BY RAISING THE EDGE OF THE PAVEMENT TO MEET THE RAIL ELEVATION.

RAILROAD STATIONING

ON THIS PROJECT, THE CENTERLINE STATIONING OF THE RAILROAD RELOCATIONS FOR THAT PORTION WHICH ARE ON CURVES, HAS BEEN CALCULATED ON THE BASIS OF THE ARC DEFINITION OF THE DEGREE OF CURVE.

UTILITY OWNERSHIP

THE OHIO VALLEY GAS COMPANY
317 SOUTH GUERNSEY
BELLAIRE, OHIO

THE MANUFACTURES LIGHT AND HEAT COMPANY
1226 CHAPLINE
WHEELING, WEST VIRGINIA

THE OHIO BELL TELEPHONE COMPANY
14 FIFTH STREET
MARTINS FERRY, OHIO

CITY OF MARTINS FERRY (WATER LINES, SANITARY LINES, POWER LINES)
MUNICIPAL BUILDING
MARTINS FERRY, OHIO

OHIO POWER COMPANY
FIFTH AND WASHINGTON STREET
STEUBENVILLE, OHIO

BELMONT COUNTY SEWER AUTHORITY NO. ONE
BRIDGEPORT, OHIO

VILLAGE OF BRIDGEPORT
BRIDGEPORT, OHIO

BACKFILLING BASEMENTS

AN ESTIMATED QUANTITY OF 2600 C.Y. OF ITEM 203 EMBANKMENT HAS BEEN PROVIDED IN THE GENERAL SUMMARY TO BACKFILL BASEMENTS OF BUILDINGS OUTSIDE THE WORK LIMITS BUT INSIDE THE RIGHT OF WAY.

WAITING PERIOD FOR EMBANKMENT

BETWEEN STATIONS 1195+00 AND 1198+50 AND BETWEEN STATIONS 1199+00 AND 1209+00 A WAITING PERIOD OF NINETY (90) DAYS SHALL ELAPSE AFTER THE EMBANKMENT IS COMPLETED BEFORE STARTING THE CONSTRUCTION ON THE ABUTMENTS FOR THE BRIDGES AND THE PAVEMENT.

SUITABLE SETTLEMENT HUBS SHALL BE PLACED IN THE EMBANKMENT IN THE ABUTMENT AREAS AND SETTLEMENT READINGS MADE AT LEAST ONCE EACH WEEK DURING THE WAITING PERIOD.

THE COST OF THIS ITEM SHALL BE INCLUDED IN THE UNIT PRICE BID FOR "ITEM 203 EXCAVATION".

BENCHING OF FOUNDATION SLOPES

ALTHOUGH CROSS SECTIONS ON THIS PLAN INDICATE SPECIFIC WIDTHS AND DEPTHS OF PROPOSED BENCHING OF THE EMBANKMENT FOUNDATION IN CERTAIN AREAS" NO WAIVER OF THE SPECIFICATIONS IS INTENDED AND ALL OTHER SLOPED FOUNDATION AREAS SHALL BE BENCHED AS SET FORTH IN SEC. 203.09 NO ADDITIONAL PAYMENT WILL BE MADE FOR BENCHING REQUIRED BY THE PROVISIONS OF SEC. 203.09

GUARD RAIL ADJUSTMENT

Guard rail in the median area shall be built in accordance with the adjustment table shown on sheet 224. Quantities for this adjustment are included in the General Summary.

DUST CONTROL

THE FOLLOWING ESTIMATED QUANTITIES HAVE BEEN PROVIDED FOR DUST CONTROL TO BE USED AS DIRECTED BY THE ENGINEER.

ITEM 616 WATER FOR DUST CONTROL 100 M. GALS.
ITEM 616 CALCIUM CHLORIDE FOR DUST CONTROL 10 TONS

CONTRACTOR'S MAINTENANCE RESPONSIBILITY

ON THIS PROJECT, THE CONTRACTOR'S RESPONSIBILITY FOR MAINTENACE OF THE EXISTING PAVEMENT PER ITEM 614 SHALL BE LIMITED TO THOSE PORTIONS OF THE EXISTING PAVEMENT LYING WITHIN THE PROPOSED WORK LIMITS.

FEDERAL AID CONSTRUCTION IDENTIFICATION SIGNS

THE CONTRACTOR SHALL FURNISH, ERECT, MAINTAIN AND SUBSEQUENTLY REMOVE FEDERAL AID CONSTRUCTION IDENTIFICATION SIGNS AT EACH OF THE FOLLOWING LOCATIONS:

1. STATION 1095+15, 40' RT.
2. STATION 1258+00, 40' LT.
3. HANOVER STREET STATION 8+50, 29' RT.
4. HANOVER STREET STATION 13+50, 32' LT.

SIGN DETAILS SHALL BE AS SPECIFIED ON STANDARD DRAWING FACI-1, "CODE N-54(1)-96(3)

THE SIGNS SHALL BE ERECTED IN ACCORDANCE WITH STANDARD DRAWING FACI-2. ADDITIONAL REQUIREMENTS SHALL BE IN ACCORDANCE WITH NOTES IN THE PROPOSAL.

ITEM 605 6" Shallow Pipe Underdrains, As Per Plan

ON THE RIGHT SIDE BETWEEN RAILROAD STATIONS 3364+50 AND 3379+50 AND BETWEEN RAILROAD STATION 3416+25 AND 3420+59.50, BACKFILL FOR UNDERDRAINS SHALL BE NO. 3 AGGREGATE MEETING THE SPECIFICATION OF 703 SHALL BE PROVIDED.

PAYMENT FOR THE ABOVE AGGREGATE SHALL BE INCLUDED IN THE UNIT PRICE BID FOR ITEM 605, 6" Shallow Pipe Underdrains, As Per Plan.

ITEM 203 NO. 4 AGGREGATE EMBANKMENT

ON THE RIGHT SIDE, BETWEEN STATIONS 1092+48 AND 1096+25 AND BETWEEN STATIONS 1133+50 AND 1148+50, S.R. 7, THE EMBANKMENT BETWEEN S.R. 7 AND THE PROPOSED RAILROAD SHALL BE MADE OF NO. 4 AGGREGATE MEETING THE SPECIFICATION OF 703

THE AGGREGATE EMBANKMENT PROVIDED ABOVE SHALL BE PLACED IN ACCORDANCE WITH THE REQUIREMENTS AS SET FORTH IN ITEM 411.03 EXCEPT THAT THE FINES MENTIONED IN THIS SPECIFICATION SHALL NOT EXCEED THAT REQUIRED FOR 703, NO. 4 AGGREGATE.

PAYMENT FOR THE ABOVE AGGREGATE EMBANKMENT SHALL BE THE UNIT PRICE BID PER CUBIC YARD OF ITEM 203, Borrow using No. 4 Aggregate.

FED. RD. DIVISION	STATE	PROJECT	
2	OHIO		

13
418

BELMONT COUNTY
BEL. 7 - 20.74

GENERAL NOTES (CONT'D)

FIRE HYDRANT SPECIFICATIONS

FIRE HYDRANTS SHALL BE FIVE (5) INCH "DARLING" AND SHALL OPEN TO THE RIGHT AND HAVE PITTSBURGH THREAD. THEY ALSO WILL HAVE A 54" TRENCH. THE FOLLOWING FITTINGS SHALL BE PROVIDED:

1 - 8" PIPE CONNECTING HUB AND BASE
1 - SQUARE OPERATING NUT
1 - 4 1/2" STEAMER NOZZLES
2 - 2 1/2" HOSE NOZZLES

COST OF THESE FITTINGS SHALL BE INCLUDED IN THE UNIT PRICE BID FOR ITEM I-124 FIRE HYDRANTS, AS PER PLAN.

CONVERSION TABLE

STANDARD DRAWINGS			
1963	1965	1963	1965
T-35	BP-5	—	HL-4
DR-1	BP-6	HW No. 1	HW-1
I-8 CB, 2-2A & B	CB 2-2-A & B	HW-E	HW-E
I-8 CB, 2-3 & 2-A	CB 2-3 & 2-A	I-8, I No. 2	I-2
I-8 CB, 2-5 & 2-C	CB 2-5 & 2-C	I-8, I No. 2-A	I-2A
I-8 CB. No. 3	CB No. 3	L-1	L-1
I-8 CB. No. 3-A	CB No. 3-A	RI-1	MC-1
F-1	F-1	G-7.07	MC-3
F-3	F-3	I-1	MC-4
F-4	F-4	I-1AG	MC-5
FACI-1	FACI-1	I-21-23	MC-6
FACI-2	FACI-2	I-8 M.H. No. 1	MH-1
I-15 No. 1	GR-1	I-8 M.H. No. 1-A	MH-1A
I-15 No. 2-A	GR-2A	I-8 M.H. No. 2	MH-2
—	HL-1	I-15 No. 6	GR-6
—	HL-2	I-12	BP-12
—	HL-3		

SUPPLEMENTAL SPECIFICATIONS			
1963	1965	1963	1965
CE-101.04	801	I-129	816
S-101	808	—	825
S-307	811	—	828
I-124	814	—	1001
I-128	815		

FINE GRADING AT HANOVER STREET INTERSECTION

PRIOR TO FINE GRADING IN VICINITY OF STATION 1175+14 TO STATION 1177+36, THE CONTRACTOR WILL NOTIFY THE MARTINS FERRY MUNICIPAL ELECTRIC DEPARTMENT SO THAT THEY CAN INSTALL THEIR DUCT LINES THROUGH THE FILL. THE CITY WILL THEN BACK FILL ACCORDING TO SPECIFICATIONS.

ITEM 604 CATCH BASIN RECONSTRUCTED TO GRADE

THE ENGINEER SHALL INSPECT THE EXISTING CASTING ON EACH CATCH BASIN WHICH IS TO BE RECONSTRUCTED TO GRADE. IF AFTER INSPECTION, THE CASTING AND COVER IS FOUND TO BE UNACCEPTABLE, THE CONTRACTOR SHALL FURNISH A STANDARD NO. ONE MANHOLE FRAME AND COVER. THESE CATCH BASINS ARE LOCATED AS FOLLOWS:

STATION 1108+00 - 179' RT.
STATION 1220+08 - 6' RT.
STATION 1222+25 - 37.5' RT.

THE COST OF THE NEW FRAME AND COVER ARE TO BE INCLUDED IN THE UNIT PRICE BID FOR ITEM 604 CATCH BASINS RECONSTRUCTED TO GRADE, AS PER PLAN".

MAINTAINING WATER SERVICE DURING CONSTRUCTION

THE CONTRACTOR SHALL INSTALL COMPLETE EACH LINE OF THE NEW WATER MAINS AS SHOWN ON THE PLANS BEFORE TAKING THE EXISTING WATER MAINS OUT OF SERVICE. IN THE AREA SOUTH OF CLIFF STREET CONNECTING THE NEW MAINS TO THE EXISTING MAINS SHALL BE PERFORMED WITHOUT DISRUPTING SERVICE IN THE INDUSTRIAL AREA. THE CONTRACTOR SHALL SCHEDULE HIS OPERATIONS SUCH THAT THE CONNECTING OF THE NEW WATER MAIN TO EXISTING WATER MAINS NORTH OF CLIFF STREET AND SOUTH OF LINCOLN AVENUE IS PERFORMED BETWEEN 12:00 O'CLOCK P.M. AND 6:00 O'CLOCK A.M. SERVICE FROM THE WATER PLANT IN BRIDGEPORT SHALL AT NO TIME BE DISCONNECTED MORE THAN SIX HOURS. THE CONTRACTOR SHALL NOT CONNECT A NEW WATER MAIN TO AN EXISTING WATER MAIN WITHOUT THE APPROVAL OF THE WATER SUPERINTENDENT OF THE CITY OF MARTINS FERRY, OHIO OR VILLAGE OF BRIDGEPORT, OHIO, WHICHEVER IS AFFECTED.

GENERAL NOTES - TRAFFIC

TRAFFIC MAINTENANCE ~ STATE ROUTE 7

TWO-WAY TRAFFIC SHALL BE MAINTAINED AT ALL TIMES BY USE OF EITHER THE EXISTING PAVEMENT, THE PROPOSED PAVEMENT, OR TEMPORARY ROADWAYS SURFACED WITH 410 AGGREGATE AND STABILIZED WITH ITEM 616 CALCIUM CHLORIDE.

ATTENTION IS CALLED TO SECTION 104.04 OF THE SPECIFICATIONS REGARDING MAINTAINING INGRESS AND EGRESS OF LOCAL STREETS AND DRIVEWAYS.

TWO-WAY TRAFFIC SHALL BE MAINTAINED AT ALL TIMES EXCEPT THAT ONE-WAY TRAFFIC WILL BE PERMITTED FOR MINIMUM PERIODS OF TIME CONSISTENT WITH THE REQUIREMENTS OF THE SPECIFICATIONS FOR PROTECTION OF COMPLETED ASPHALTIC CONCRETE COURSES.

SIDE STREETS

JEFFERSON AND FAYETTE STREETS SHALL HAVE TWO-WAY LOCAL TRAFFIC MAINTAINED AT ALL TIMES UNTIL PROPOSED HANOVER STREET IS OPEN TO TRAFFIC.

TWO-WAY LOCAL TRAFFIC SHALL BE MAINTAINED AT ALL TIMES ON CENTER STREET AND FIFTH STREET.

TWO-WAY LOCAL TRAFFIC SHALL BE MAINTAINED AT ALL TIMES FROM AETNA STREET TO THE KROGER COMPANY PARKING LOT.

TWO-WAY LOCAL TRAFFIC SHALL BE MAINTAINED ON KUCKUCK LANE UNTIL PROPOSED MACKEY AVENUE AND PROPOSED JEANETTE AVENUE ARE OPEN TO TRAFFIC.

OLD BURLINGTON ROAD SHALL HAVE TWO-WAY LOCAL TRAFFIC MAINTAINED UNTIL PROPOSED SPRING STREET IS OPEN TO TRAFFIC.

AETNAVILLE BRIDGE

BEFORE CONSTRUCTION IS STARTED ON THE AETNAVILLE BRIDGE, BEL-7-2095, APPROVAL OF THE SCHEDULE OF CONSTRUCTION OPERATIONS FOR THE BRIDGE MUST BE SUBMITTED TO AND APPROVED BY THE STATE ROAD COMMISSION OF WEST VIRGINIA AND THE DIRECTOR OF THE OHIO DEPARTMENT OF HIGHWAYS.
The Contractor shall not close the Aetnaville Bridge to traffic until after September 7, (Labor Day), 1967. The period during which the bridge is closed shall be limited to four (4) consecutive calendar months, with said period of closure ending prior to May 30 (Memorial Day), 1968.

BRIDGEPORT WATER TREATMENT PLANT

INGRESS AND EGRESS TO THE BRIDGEPORT WATER TREATMENT PLANT AND WATER WELLS WILL BE MAINTAINED AT ALL TIMES

TEMPORARY ROADWAYS

TEMPORARY ROADWAYS SHALL BE SURFACED WITH ITEM 410 TRAFFIC COMPACTED SURFACE, TYPE "C", STABILIZED WITH ITEM 616 CALCIUM CHLORIDE. ITEMS 616 AND 410 SHALL BE APPLIED WHERE DIRECTED AND IN AMOUNTS REQUESTED BY THE ENGINEER.

THE LIMITS AND DURATION OF USE OF TEMPORARY ROADWAYS SHALL BE HELD TO THE ABSOLUTE MINIMUM AND SHALL BE IN ALL CASES SUBJECT TO THE APPROVAL OF THE ENGINEER.

BECAUSE OF THE NECESSITY OF BUILDING PORTIONS OF THIS PROJECT UNDER TRAFFIC AND CONSTRUCTING THE PAVEMENT PART AT A TIME, EXTREME CARE SHALL BE TAKEN TO PREVENT THE CONSTRUCTION OF A BUTT JOINT IN THE 303 AND 310 COURSES. THIS SHALL BE ACCOMPLISHED BY BUILDING THE 303 AND 310 COURSES, PLACED WITH THE FIRST PORTION OF THE PAVEMENT BUILT, AT LEAST EIGHTEEN (18) INCHES BEYOND THE PROPOSED JOINT AND BY SURFACING NO CLOSER THAN EIGHTEEN (18) INCHES TO THIS EDGE OF THE ABOVE COURSES. WHEN THE SECOND PORTION OF THE PAVEMENT IS BUILT, AT LEAST TWELVE (12) INCHES OF THESE PROJECTING COURSES SHALL BE BROKEN DOWN AND THOROUGHLY KEYED IN WITH THE NEWLY PLACED CORRESPONDING COURSES IN THE SECOND PORTION OF THE PAVEMENT BUILT. PAYMENT FOR THIS OPERATION SHALL BE INCLUDED IN THE UNIT PRICE BID FOR THE PERTINENT PAVEMENT ITEMS.

QUANTITIES FOR TEMPORARY PAVEMENT

THE FOLLOWING QUANTITIES ARE PROVIDED FOR MAINTAINING TRAFFIC ON THE PROJECT TO BE USED WHERE DIRECTED BY THE PROJECT ENGINEER:

		BRIDGEPORT	MARTINS FERRY	RURAL
616	CALCIUM CHLORIDE	13.3 T	48.7T	4.7T
403	ASPHALT CONCRETE or an approved equal bituminous material	10 C.Y.	36 C.Y.	4 C.Y.
410	TRAFFIC COMPACTED SURFACE, TYPE "C"	250 C.Y.	900 C.Y.	100 C.Y.
410	TRAFFIC COMPACTED SURFACE TYPE "C", MODIFIED AS PER PLAN	750 C.Y.	2700 C.Y.	300 C.Y.

LIGHTS AND SIGNS AT ADJACENT STREET INTERSECTIONS

THE CONTRACTOR SHALL, IN ADDITION TO THE GENERAL REQUIREMENTS OF ITEM 614 ON THIS PROJECT PERFORM THE FOLLOWING:

PROVIDE, ERECT AND MAINTAIN STANDARD 40" X 30" SIZE "ROAD CLOSED" SIGNS, SIGN SUPPORTS, AND LIGHTS AT THE FOLLOWING LOCATIONS DURING PERIODS IN WHICH THE AFFECTED STREETS ARE CLOSED TO TRAFFIC:

1. ON AETNA STREET AT THE LINCOLN AVENUE INTERSECTION
2. ON HANOVER STREET AT THE FIRST STREET INTERSECTION
3. ON HANOVER STREET AT THE THIRD STREET INTERSECTION
4. *ON EACH END OF THE AETNAVILLE BRIDGE*

SIGN SUPPORTS AND LIGHTS FOR "ROAD CLOSED" SIGNS SHALL BE AS DETAILED IN THE "OHIO MANUAL OF UNIFORM TRAFFIC CONTROL DEVICES".

PAYMENT FOR PROVIDING, ERECTING, MAINTAINING AND REMOVING LIGHTS, SIGNS, AND SIGN SUPPORTS SHALL BE INCLUDED IN THE LUMP SUM PRICE BID FOR ITEM 614 MAINTAINING TRAFFIC".

PENNSYLVANIA RAILROAD RELOCATION

THE PROPOSED RELOCATION OF THE PENNSYLVANIA RAILROAD TRACKS SHOULD BE COMPLETED AND OPERATING BEFORE ANY HIGHWAY CONSTRUCTION IS UNDERTAKEN THAT WOULD INTERFERE WITH OPERATIONS ON THE EXISTING PENNSYLVANIA R.R. TRACKS.

CO-OPERATION:
The Contractor's attention is directed to the fact that proposed water lines and appurtenances will be built by the City of Martins Ferry on overlapping portions of this project concurrently with this contract.
The Contractor for this contract shall be responsible for informing himself of all available facets of overlapping work and the co-ordination and scheduling of his operations in order to co-operate fully with and permit necessary access to the City of Martins Ferry for such overlapping work.
The Contractors for the two projects shall mutually co-operate to the fullest extent one with the other and shall schedule and co-ordinate their operations under the directions of the Engineer, so that unnecessary delays, interference, and inconvenience shall be held to an absolute minimum.
Any costs incurred in complying with the above requirements shall be included in the various bid items for this project and no additional compensation will be allowed.

ALTERNATE METHODS

IF THE CONTRACTOR SO ELECTS, HE MAY SUBMIT ALTERNATE METHODS FOR THE MAINTENANCE OF TRAFFIC PROVIDED THE INTENT OF THE ABOVE PROVISIONS IS FOLLOWED AND NO ADDITIONAL INCONVENIENCE TO THE TRAVELING PUBLIC RESULTS THEREFROM. NO ALTERNATE PLAN SHALL BE PLACED INTO EFFECT UNTIL APPROVAL HAS BEEN GRANTED, IN WRITING, BY THE DIRECTOR.

LENGTH OF WORK ON RAILROAD

BEGIN R.R. RELOCATION STATION 3314+90		
END R.R. RELOCATION STATION 3420+59.5 =	= 10,569.5	LIN FT
ADJUST FOR STATION EQUATIONS:		
STATION 3315+77.15 AH. = 3315+73.05 BK.		
STATION 3419+66.22 AH. = 3419+26.72 BK. =	39.40	LIN. FT.
	10,514.10	LIN. FT.
ADD FOR SPURS & NEW FREIGHT YARD	4,478.73	LIN. FT.
NET LENGTH OF WORK	14,992.83	LIN. FT.

LENGTH OF WORK - SIDE ROADS

AETNA AVENUE	STATION 5+75 TO STATION 9+67.5	392.50 LIN. FT.
HANOVER ST.	STATION 7+80 TO STATION 9+67.49	187.49 LIN. FT.
	STATION 10+32.58 TO STATION 14+10	377.42 LIN. FT.
FIFTH STREET	STATION 4+75 TO STATION 9+67.5	492.50 LIN. FT.
Total Length of Work Carried to Line Data		1,449.91 Lin. Ft.

FED. RD. DIVISION	STATE	PROJECT	
2	OHIO		

14 / 418

BELMONT COUNTY
BEL - 7 - 20.74

GENERAL SUMMARY 1963 SPECIFICATIONS

⊗ Indicates U.G. (RR) Quantity

* Quantities carried from Sheet Nº 418

ITEM	SHEET NUMBER — BRIDGEPORT: 11	12	13	21	22	23	28	29	30	32	33	66	221
E-1					⊗ 38692 / C.R. 155								
E-1					29220								
E-3													
E-4													
E-4					598								
55 CE 101.02					14								
E-8				1891			70	4327			91	1330 / 117	
E-8													
E-8				4234			125	6020			144	1543	
E-8				653			50	2000					
E-9	Lump												
E-11					⊗ 1300								
I-4		100											
I-4		10											
I-4			66.7										
I-8													
I-13				138								364	
I-15				400			22.5	600		225	281.75	252.5	
I-15								525		781.75		623.75	
I-15				638								250	
I-15								400					
I-26													
I-26													
L-9					⊗ 16133 / 31795								
L-9					⊗ 146 / 2.93								
L-9					⊗ 728 / 14.64								
L-10				28 ⊗ 2				8 ⊗ 1/4		229	30 3/12	9 ⊗	
L-120													
T-10			1250										
T-10			3750										
T-35			50										
S-22													
S-24				Lump				Lump		Lump	Lump	Lump	
SPECIAL													

ITEM	SHEET NUMBER — MARTINS FERRY: 21	22	23	33	36	38	40	42	44	47	49	51	53	55	57	59	61	66	204	224	223
E-1		⊗ 253080 / 22,377																			
E-1		100093																			
E-3																			137 ⊗		
E-4		61,884																			
E-4		2001																			
55 CE 101.02		44																			
E-8	3593						20 ⊗ 408			12 ⊗		2787	1022					1308			
E-8	583					561 ⊗	2 ⊗ 30		35 ⊗	33 ⊗	1½ ⊗ 1588	451	442					450			
E-8	5332										732	365	507					3360 ⊗ 21352			
E-8	1042										123		560					1863 ⊗ 5911			
E-9	Lump																				
E-11	⊗ 3933 / 1877																				
I-4																					
I-4																					
I-4																					
I-8																					
I-13	2792										933		960		4000	5098		5561			
I-15				1375	200	3.75 ⊗ 600	50 ⊗ 512.5	100 ⊗ 1362.5		3.75 ⊗ 1225	1037.5	1238	943	1000	1462.5	1075	282	62.5 ⊗ 1052	2150		
I-15				351.75	1000	1000	850	887.5		691.15	825.4	848.85	276	586.5	437.5	650		137.75	-1075		
I-15													293	32.5	1000	1000		155			
I-15					625	875															
I-26																					
I-26																					
L-9		⊗ 1 / 32.776 / 130.795																			
L-9		⊗ 2.96 / 11.94																			
L-9		⊗ 14.75 / 59.71																			
L-10	49	41		31	14 ⊗		22	63	26	1119	203	93	72	84	82	41	2				
L-120								359	650	788	229	-									
T-10																					
T-10																					
T-35																					
S-22																		Lump			
S-24	Lump			Lump		Lump					Lump							Lump			
SPECIAL							Lump														

ITEM	SHEET NUMBER — RURAL: 21	22	23	61	63	66	REF. NO.	ITEM
E-1		65,961					1	E-1
E-1		6842					2	E-1
E-3							2A	E-3
E-4							3	E-4
E-4							4	E-4
55 CE 101.02		3					5	55 CE 101.02
E-8					98		6	E-8
E-8							7	E-8
E-8					159	680	8	E-8
E-8							9	E-8
E-9							1	E-9
E-11		14					1	E-11
I-4							24	I-4
I-4							25	I-4
I-4							25	I-4
I-8							21	I-8
I-13							23	I-13
I-15				325			18	I-15
I-15				400			19	I-15
I-15							12	I-15
I-15							20	I-15
I-26							22	I-26
I-26							22A	I-26
L-9		11267					26	L-9
L-9		101					27	L-9
L-9		5.07					28	L-9
L-10				2			29	L-10
L-120							30	L-120
T-10							31A	T-10
T-10							31B	T-10
T-35							31C	T-35
S-22							14	S-22
S-24					Lump	Lump	13	S-24
SPECIAL							31	SPEC

ITEM	QUANTITIES — BRIDGEPORT	MARTINS FERRY	TOTAL	RURAL	GRAND TOTAL	UNIT	DESCRIPTION
							ROADWAY
E-1	38692	22,377	61,069	65,961	450,464	Cu.Yds.	Roadway Excavation, Method "B" as per plan
E-1	—	—	—	6842	144,155	Sq.Yds.	Compacted Subgrade
E-3	—	137	137	—	137	Cu.Yds.	Channel Excavation.
E-4	—	—	—	—	61,884	Cu.Yds.	Borrow
E-4	—	—	—	598	2,599	Cu.Yds.	Borrow, Using Nº 3 Aggregate
55 CE 101.02	—	—	—	14	61	Hours	Compaction Using Heavy Pneumatic Tired Roller
E-8	533	38	571	6496	16,643	Sq.Yds.	Removal and Disposal of Existing Pavement
E-8	—	814	814	—	2,842	Sq.Yds.	Removal and Disposal of Existing Pavement, as per plan
E-8	—	3360	3360	12066	50,559	Sq.Ft.	Removal and Disposal of Existing Sidewalk
E-8		1863	1863	2703	12,202	Lin.Ft.	Removal and Disposal of Existing Curb
E-9	Lump	Lump	Lump	Lump	Lump	Lump	Removal of Trees and Stumps
E-11	14	393	407	100	2398	M.Gals	Water
I-4	—	—	—	—	100	—	100 M.Gals Water for Dust Control
I-4	—	—	—	10	—	10	Tons Calcium Chloride for Dust Control
I-4	—	—	—	13.3	48.7	4.7	66.7 Tons Calcium Chloride
I-8	8	17	25	12	32	1	70 Each Centerline Reference Monuments *
I-13	—	—	—	302	19,338	—	19,640 Sq.Ft. 4" Concrete Sidewalk
I-15	—	287.5	287.5	1,187.5	14,787.5	325	17,187.50 Lin.Ft. Guard Rail, Steel Beam, Standard Type (Deep)
I-15	—	—	—	1900.0	342.512	400	3725.4 Lin.Ft. Guard Rail, Steel Beam, Barrier Type (Deep)
I-15	—	—	—	688	2480.5	—	3368.3 Lin.Ft. Guard Rail, Removed & Disposed of
I-15	—	—	—	400	1500	—	1900 Lin.Ft. Guard Rail, Steel Beam Standard Type (Deep) Using 10' Posts, as per plan
I-26				5051	12,790	1163	18,994 Lin.Ft. Fence, Chain Link *
I-26	—	1	1	—	—	1	Each Chain Link Fence Gate
L-9	16133	32.776	48.959	31795	130.795	11267	222,816 Sq.Yds. Seeding and Protecting
L-9	1.46	2.96	4.42	2.93	11.94	1.01	20.30 Tons Commercial Fertilizer (12-12-12)
L-9	7.28	14.75	22.03	14.64	59.71	5.07	101.45 Tons Agricultural Liming Material
L-10	49	18	67	700	1879	2	2648 Sq.Yds. Sodding
L-120	—	—	—	—	2026	—	2026 Sq.Yds. Jute Matting
T-10	—	—	—	250	900	100	1250 Cu.Yds. Traffic Compacted Surface Course for Maintaining Traffic
T-10	—	—	—	750	2700	300	3750 Cu.Yds. Traffic Compacted Surface Course for Maintaining Traffic, as per plan
T-35	—	—	—	10	36	4	50 C.Y. Asphaltic Concrete Surface Course or an Approved Bituminous, Premixed Surface Course for Maintaining Traffic
S-22	—	—	—		Lump	—	Lump Lump Removal of Portions of Existing Structures
S-24		Lump	Lump	Lump	Lump	Lump	Lump Lump Removal of Existing Structures
SPECIAL					Lump		Lump Lump Concrete Encasement for Structural Steel

32,776
130.795
163,571

GENERAL SUMMARY

1965 SPECIFICATIONS

BELMONT COUNTY
BEL-7-20.74

FED. RD. DIVISION	STATE	PROJECT	
2	OHIO		

14A
418

* Except as shown

REFERENCE	ITEM	QUANTITIES: BRIDGEPORT STATE, FED. PARTIC.	QUANTITIES: MARTINS FERRY STATE, FED. & CITY PARTIC.	QUANTITIES: TOTAL U-534(10)	Rural: MARTINS FERRY & STATE	GRAND TOTAL	UNIT	DESCRIPTION
	*7405 CODE 6201							ROADWAY
1	201	Lump	Lump	Lump	Lump	LUMP	Lump	Clearing & Grubbing
1,2A&12	203	102,846	281,794	384,640	65961	450,601	C.Y.	Excavation Including Embankment Construction, as per Plan
1	203	114	2270	2,384	14	2398	M.Gals.	Water
2	203	29,220	108,093	137,313	6,842	144,155	S.Y.	Subgrade Preparation
3	203		61,884	61,884	—	61,884	C.Y.	Borrow
4	203	598	2,001	2599	—	2,599	C.Y.	Borrow, Using No. 4 Aggregate
5	203	14	44	58	3	61	Hours	Proof Rolling
6	202	7029	9516	16545	98	16,643	S.Y.	Existing Pavement Removed and Disposed of.
7	202		2842	2842	—	2,842	S.Y.	Existing Pavement Removed and Disposed of, as Per Plan.
8	202	12,066	37648	49714	845	50,559	S.F.	Existing Sidewalk Removed and Disposed of
9	202	2,703	9499	12202	—	12,202	L.F.	Existing Curb Removed and Disposed of
10	202	2,013	220	2233	32	2,265	L.F.	Pipe Removed, 15" and Under.
11	202	137	769	906	—	906	L.F.	Pipe Removed, over 15".
13	202	Lump	Lump	Lump	Lump	LUMP	Lump	Existing Structure Removed.
14	202		Lump	Lump	—	LUMP	Lump	Portions of Existing Structures Removed.
15	202		10	10	—	10	Each	Manholes Removed
16	202	5	38	43	4	47	Each	Catch Basins Removed
17	202		1	1	—	1	Each	Inlet Removed
18	606	1787.5	15,075	16,8625	325	17,187.5	L.F.	Guard Rail, Type 4.
19	606	1900.0	7425.4	9325.4	400	9725.4	L.F.	Guard Rail, Type 4, Barrier Design
20	606	400	1500	1900	—	1,900	L.F.	Guard Rail, Type 4, Using 10' Posts
21	604	20	49	69	1	70	Each	Standard Monument Assembly
22	607	5,051	12,780	17831	1163	18,994	L.F.	Fence, Type CL
22-A	607		1	1	—	1	Each	Gate, Type CL.
23	608	502	19,338	19840	—	19,840	S.F.	4" Concrete Walk
24	616		100	100	—	100	M.Gals.	Water
25	616	13.3	58.7	72.0	4.7	76.7	Tons	Calcium Chloride
26	659	47978	163571	211549	11,267	222816	S.Y.	Seeding & Mulching, as per Plan
27	659	4.39	14.90	19.29	1.01	20.30	Tons	Commercial Fertilizer (12-12-12)
28	659	21.92	74.46	96.38	5.07	101.45	Tons	Agricultural Liming
29	660	749	1897	2646	2	2,648	S.Y.	Sodding
30	667		2026	2026	—	2,026	S.Y.	Jute Matting
31	SPECIAL		Lump	Lump	—	LUMP	Lump	Concrete Encasement for Structural Steel
31-A	410	250	900	1150	100	1,250	C.Y.	Traffic Compacted Surface, Type C
31-B	410	750	2700	3450	300	3,750	C.Y.	Traffic Compacted Surface, Type A or B
31-C	404	10	36	46	4	50	C.Y.	Asphalt Concrete or an approved Bituminous Prefixed Surface Course for Maintaining Traffic.

CODE TYPE Y005

8-12-66

GENERAL SUMMARY

1963 SPECIFICATIONS

FED. RD. DIVISION	STATE	PROJECT	
2	OHIO		

15/418

BELMONT COUNTY
BEL - 7 - 20.74

⊗ Indicates U.G. Quantity (R.R.)

| ITEM | SHEET NUMBER | | |

1965 SPECIFICATIONS

BELMONT CO. 7,
BEL - 7 - 20.74

FED. RD. DIVISION	STATE	PROJECT	
2	OHIO		

15A
418

REFERENCE	ITEM	QUANTITIES: BRIDGEPORT STATE & FED. PARTIC.	QUANTITIES: MARTINS FERRY STATE, FED. & CITY PARTIC.	QUANTITIES: TOTAL U-534-(10)	RURAL: 100% STATE	RURAL: MARTINS FERRY & STATE	GRAND TOTAL	UNIT.	DESCRIPTION
		TYPE CODE 6201							DRAINAGE
33-A	603		36	36		–	36	L.F.	12" Conduit, Type "A" 706.02, Cl. V, w/Class "B" Bedding, under Railroad.
33	603		85	85		–	85	L.F.	72" Conduit, Type "A" 706.03, Cl. V, w/Class "B" Bedding, under Railroad
34	603	150	118	268		–	268	L.F.	36" Conduit, Type "A", 706.02, with Class "B" Bedding Under Railroad
32-A	603		160	160		–	160	L.F.	24" Conduit, Type "A" 706.02, Cl. V, with Cl. "B" Bedding, under Railroad
35	603	100		100		–	100	L.F.	42" Conduit, Type "A" 706.02, with Class "B" Bedding Under Railroad 1/3 Vitrified Lined as per plan
36	603		206	206		–	206	L.F.	54" Conduit, Type "A", 707.05, (8 Gage), Shop Elongated, with Class "B" Bedding
37 & G3	603	304	515	819		225	1044	L.F.	15" Conduit, Type "B", with Class "B" Bedding
38 & G5	603	340	157	497			497	L.F.	21" Conduit, Type "B", with Class "B" Bedding
39 & G4	603	45	512	557		138	695	L.F.	18" Conduit, Type "B", with Class "B" Bedding
40	603		138	138		–	138	L.F.	60" Conduit, Type "B", with Class "B" Bedding, 706.02 Cl III
40A	603		24	24		–	24	L.F.	60" Conduit, Type "B", with Class "B" Bedding, Radius Pipe, 706.02 Cl III
41 & 40B	603	179	1789	1968		20	1988	L.F.	12" Conduit, Type "C", with Class "B" Bedding
42	603		341	341		–	341	L.F.	15" Conduit, Type "C", with Class "B" Bedding
43	603		353	353		–	353	L.F.	18" Conduit, Type "C", with Class "B" Bedding
44	603		52	52		–	52	L.F.	21" Conduit, Type "C", with Class "B" Bedding
45	603	136	363	499		–	499	L.F.	24" Conduit, Type "C", with Class "B" Bedding
46	603	64	40	104	40		144	L.F.	27" Conduit, Type "C", with Class "B" Bedding
47	603	42	126	168		–	168	L.F.	36" Conduit, Type "C", with Class "B" Bedding
48	603	32		32		–	32	L.F.	42" Conduit, Type "C", with Class "B" Bedding
49	603		340	340		–	340	L.F.	48" Conduit, Type "C", 706.02, Cl III, w/Class "B" Bedding
50	603	29		29		–	29	L.F.	42" Conduit, Type "C", 706.02, w/Class "B" Bedding, 1/3 Vitrified Lined as per plan
51	603		600	600		–	600	L.F.	6" Conduit, Type "C".
52	603	340	1020	1360	30	80	1470	L.F.	6" Conduit, Type "F".
53 & 5G	603		18	18		–	18	L.F.	8" Conduit, Type "F"
54	603	122	31	153		28	181	L.F.	12" Conduit, Type "F".
55	603		58	58		–	58	L.F.	24" Conduit, Type "F".
57	605	7351	18,427	25,778	384	1187	27,349	L.F.	6" Shallow Pipe Underdrains.
57	605	126	2,164	2290		–	2.290	L.F.	6" Deep Pipe Underdrains.
58	605		30	30		–	30	L.F.	6" Pipe Underdrains 707.06 or 707.12, as per Plan.
59	605		2313	2313		550	2863	L.F.	6" Pipe Underdrains 707.06 or 707.12
60	605		450	450		–	450	L.F.	8" Pipe Underdrains 707.06 or 707.12
61	605	353	1248	1601		–	1601	L.F.	6" Shallow Pipe Underdrains, as per Plan.
62	603	776	3000	3776	54	238	4068	L.F.	12" Conduit, Type "B", with Class "B" Bedding
66	603	357	186	543	46		589	L.F.	24" Conduit, Type "B", with Class "B" Bedding
67	603				300		300	L.F.	27" Conduit, Type "B", with Class "B" Bedding
68	603	166	107	273		–	273	L.F.	36" Conduit, Type "B", with Class "B" Bedding
69	603		265	265		–	265	L.F.	48" Conduit, Type "B", with Class "B" Bedding
71	603		280	280		–	280	L.F.	12" Conduit, Type "B", 706.02 Cl III = 706.08, with Class "B" Bedding.
72	603		38	38		–	38	L.F.	18" Conduit, Type "B", 706.02 Cl III = 706.08, with Class "B" Bedding.
73	603		326	326		–	526	L.F.	24" Conduit, Type "B", 706.02 Cl III = 706.08, with Class "B" Bedding.
74	603		126	126			126	L.F.	36" Conduit, Type "B", 706.02 Cl III = 706.08, with Class "B" Bedding.
75	603		110	110		–	110	L.F.	8" Conduit, Type "B", 706.02, Cl. V, w/Class "B" Bedding. Under Railroad
76	603		56	56		–	56	L.F.	12" Conduit, Type "B", 706.02, Cl. V, w/Class "B" Bedding.
79	603	51		51		–	51	L.F.	30" Conduit, Type "B", 706.02, Cl. V, w/Class "B" Bedding. Under Railroad
82	603		195	195		–	195	L.F.	18" Conduit, Type "B", 706.02, Cl. V, w/Class "B" Bedding. Under Railroad.
83	603	77	75	152		–	152	L.F.	21" Conduit, Type "B", 706.02, Cl. V, w/Class "B" Bedding. Under Railroad.

GENERAL SUMMARY CONVERSION TO 1965 SPECIFICATIONS

GENERAL SUMMARY

1963 SPECIFICATIONS

FED. RD. DIVISION	STATE	PROJECT	
2	OHIO		

16
418

BELMONT COUNTY
BEL-7-20.74

ITEM	SHEET NUMBER: BRIDGEPORT 11	12	13	21	22	23	28	29	30	32	33	66	221
I-1													
I-1													
I-1								51®					
I-1													
I-1													
I-1											43 37		
I-1								31®					
I-1													
I-1													
S-4				10827®									
S-1				48®									
I-2				5.13® 2.25				0.92®	1.05	0.76	0.36®		
I-2													
I-5										1			
I-5													
I-5	24												
I-5													
I-5													
I-5				1						2			
I-8				1				3	2		2®		
I-8				2				3	1	4			
I-8								2	2		3		
I-8				2®					1	1			
I-8													
I-8													
I-8													
I-8									7				
I-8								1		1			
I-8										1			
I-8													
I-8													
I-8													
I-8	6												
I-8				1									
I-8				1									
I-8									1®				
I-8									1	2			
I-9													
I-10				24				4®	11®78	5.6	2®		
I-10				40®28					22				
I-14									469				
I-14									126				
I-14				10				30	20	20	30®		
I-16													
I-16								4	1				
I-16													
E-12								548	1297	168			
E-12									137				
I-8													

ITEM	SHEET NUMBER: MARTINS FERRY 21	22	23	33	36	38	40	42	44	47	49	51	53	55	57	59	61	66	204	222	223
I-1													68 56								
I-1													56								
I-1																					
I-1	80®																				
I-1					30® 28						57®										
I-1					75®																
I-1													34®								
I-1	100®																				
I-1	120®																				
S-4																					
S-1	392®																				
I-2	27.21			0.41	0.166®	0.26	0.99	0.75	0.96	0.72	0.23	0.96	0.04®						3.66®		
I-2																4.7	6.7				
I-5																		1			
I-5																		1			
I-5													2								
I-5						1			3			1							2		
I-8																					
I-8																					
I-8																					
I-8						2	3	1	5							1		3			
I-8						1	3	2		1						3		2	2		
I-8					4		2	1		2		2	2			1	2				
I-8										2	2					2	1				
I-8												1									
I-8																					
I-8												1									
I-8										1®	1®					1		1			
I-8						1												1			
I-8																					
I-8																					
I-8																					
I-8	1®																				
I-8	1																				
I-8																					
I-8																					
I-9																				10	
I-10	42®72 24®			20	40® 9		80	23.5	20	80	15.0	13.0	160				60		16® 5®		127
I-14																					
I-14																					
I-14	20®30			20	20®30	20®30	200®30		50		10			20	20	10					
I-16						2	1	1	1			2			1	2					
I-16	1			5	2	1	1	2	6			1	1	4	6	7	1				
I-16	1																				
E-12					14			80								126					
E-12	25			429												275			40®		
I-8	1®12																				

ITEM	SHEET NUMBER: DURAL 21	22	23	61	63	66
I-1						
I-1						
I-1						
I-1						
I-1						
I-1						
I-1						
I-1						
I-1						
S-4						
S-1						
I-2						
I-2				0.3		
I-5						
I-5						
I-5						
I-5						
I-5						
I-5					2	
I-8						
I-8						
I-8				

1965 SPECIFICATIONS

BELMONT COUNTY
BEL - 7 - 20.74

FED. RD. DIVISION	STATE	PROJECT	
2	OHIO		

16A
418

* Except as shown

REFERENCE	ITEM	QUANTITIES: BRIDGEPORT STATE & FED. PARTIC.	QUANTITIES: MARTINS FERRY STATE, FED. & CITY PARTIC.	QUANTITIES: TOTAL U-534(10)	RURAL: 100% STATE	RURAL: MARTINS FERRY & STATE	GRAND TOTAL	UNIT	DESCRIPTION
		*TYPE CODE 6201							DRAINAGE (Continued)
84	603	31	34	65		—	65	L.F.	24" Conduit, Type "B" 706.02, C.I.Y., W/Class "B" Bedding – Under Railroad
85	603	—	60	60		—	60	L.F.	36" Conduit, Type "B" 706.02, C.I.Y., W/Class "B" Bedding – Under Railroad
81&86	603	—	200	200		—	200	L.F.	48" Conduit, Type "B" 706.02, C.I.Y., W/Class "B" Bedding – Under Railroad
87	602	10.47	40.13	50.60		—	50.6	C.Y.	Concrete Masonry
88	602		11.4	11.4		0.3	11.7	C.Y.	Concrete Masonry, as per Plan.
89									
90									
91									
92									Discontinued. Included in Items 603 & 605.
93									
94									
95									
96	604	8	23	31	1	1	33	Each	Standard No. 2-2-A Catch Basin
97	604	10	16	26		1	27	Each	Standard No. 3 Catch Basin
98	604	7	25	32		—	32	Each	Standard No. 3A Catch Basin
99	604	4	4	8		—	8	Each	Standard No. 2-4 Catch Basin, Modified as per Plan
100	604		1	1		—	1	Each	Standard No. 2-5 Catch Basin, Modified as per Plan
101	604		3	3		—	3	Each	Standard No. 2-6 Median Inlet.
102	604		1	1		—	1	Each	Standard No. 2-10 Median Inlet.
103	604	7	16	23		1	24	Each	Standard No. 2A-6 Inlet Modified as per Plan, Paved Shoulder
104	604	2	14	16		4	20	Each	Standard No. 2A-8 Inlet Modified as per Plan, Paved Shoulder
105	604	1	17	18		—	18	Each	Standard No. 2A-10 Inlet Modified as per Plan, Paved Shoulder
106	604	1	7	8		—	8	Each	Standard No. 2A-12 Inlet Modified as per Plan, Paved Shoulder
107	604	1	1	2		—	2	Each	Standard No. 2A-14 Inlet Modified as per Plan, Paved Shoulder
108	604		1	1		—	1	Each	Standard No. 2A-18 Inlet Modified as per Plan, Paved Shoulder
109	604		4	4		—	4	Each	Standard No. 2A-20 Inlet Modified as per Plan. Paved Shoulder
110	604		4	4	1	1	6	Each	Standard No. 1 Manhole.
111	604		4	4		—	4	Each	Standard No. 2 Manhole without Drop Pipe.
112	604		6	6		—	6	Each	Inspection Wells as per Plan
113	604	1	1	2		—	2	Each	Manhole Adjusted to Grade
114	604	1		1		—	1	Each	Manhole Reconstructed to Grade, as per Plan
115	604	1	2	3		—	3	Each	Catch Basin Reconstructed to Grade, as per Plan
116	604	3	1	4		—	4	Each	Manhole Reconstructed to Grade, Using Precast Sections, as per plan
117	605		10	10		—	10	L.F.	Aggregate Drains, as per Plan.
118	601	54.5	221.5	276.0		10	286	C.Y.	Dumped Rock Channel Protection.
119	601	90	225	315			315	S.Y.	Riprap Using 6" Reinforced Concrete Slab, As Per Plan
120	601	469		469		—	469	L.F.	Paved Gutter Type "A" as per Plan.
121	601	126		126		—	126	L.F.	Paved Gutter Type "B" as per Plan.
122	601	110	1380	1490		10	1500	L.F.	Paved Gutter Standard Type 1-2, Modified as per Plan.
122A	604		3	3		—	3	Each	Junction Chamber, as per plan
123	509	10827		10,827		—	10827	Lbs.	Reinforcing Steel
124	511	48		48		—	48	C.Y.	Class "C" Concrete for Structures

Code Type 4005

GENERAL SUMMARY CONVERSION TO 1965 SPECIFICATIONS

GENERAL SUMMARY

1963 SPECIFICATIONS

FED. RD. DIVISION	STATE	PROJECT	
2	OHIO		

17/418

BELMONT COUNTY
BEL-7-20.74

⊗ Indicates U.S. Quantity (P.R.)

ITEM	SHEET NUMBER: BRIDGEPORT 11	12	13	21	22	23	28	29	30	32	33	66	221
B-19													129
B-20						5790							
B-35						817							
B-35						1934							
T-30						9285							
T-35						817							366
T-70													
T-70													
I-7						6222							
I-7						272							
I-12													
I-12						1110							
I-12						12329							
I-12				8									
I-12													
I-21						3292							
I-21						319							
I-21													
I-22						1985⊗ 8936							
I-23													
I-3													

ITEM	SHEET NUMBER: MARTINS FERRY 11	12	13	21	22	23	33	36	38	40	42	44	47	49	51	53	55	57	59	61	66	221	204	223
B-19						8⊗								4.0							21	22	418⊗	
B-20						18469																		
B-35						2⊗ 2594																		
B-35				5		6256																		
T-30				6		28⊗ 23611																18		
T-35				5		2⊗ 2603								1.0						3		2		
T-70																						67		
T-70																						306		
I-7						6222																		
I-7																								
I-12						102																		
I-12						1807																		
I-12						47401																		
I-12																								
I-12														110										
I-21						14923																	170	
I-21						408																		
I-21						26																		
I-22						3914⊗ 31581																		
I-23																								
I-3																								

ITEM	SHEET NUMBER: RURAL 21	22	23	61	204	221	REF. NO.
B-19					167⊗	1	125
B-20			1487				126
B-35			210				127
B-35			491				128
T-30			2367				129
T-35			209				130
T-70						71	131
T-70							132
I-7							133
I-7							133-A
I-12							134
I-12							135
I-12			3470				136
I-12							137
I-12							138
I-21			1227				139
I-21							140
I-21							141
I-22			2392				142
I-23			12				143
							144
I-3							145

ITEM	QUANTITIES: BRIDGEPORT	MARTINS FERRY	TOTAL	BRIDGEPORT	MARTINS FERRY	RURAL	GRAND TOTAL	UNIT	DESCRIPTION
									PAVEMENT
B-19	-	426	426	129	47	168	770	Cu.Yds.	Aggregate Base Course
B-20	-	-	-	5790	18469	1487	25,746	Cu.Yds.	Waterbound Macadam Base Course, Using No.2, Course Agg.
B-35		2	2	817	2594	210	3,623	Cu.Yds.	Asphaltic Concrete Leveling Course (70-85).
B-35				1,934	6,261	491	8,686	Cu.Yds.	Asphaltic Concrete Base Course (70-85).
T-30		28	28	9,285	29,635	2,367	41,315	Gals.	Bituminous Prime Coat, Sec. M-3.7, Rt.-2 or Rt.-3.
T-35		2	2	818	2,614	209	3,643	Cu.Yds.	Asphaltic Concrete Surface Course Type "C" (70-85).
T-70				366	67	71	504	Sq.Yds.	Portland Cement Concrete Pavement (T-8")
T-70					306		306	Sq.Yds.	Portland Cement Concrete Pavement (T-7")
I-7					6222		6222	Sq.Yds.	Reinforced Concrete Approach Slabs (T=13").
I-7				27.2			27.2	Sq.Yds.	Reinforced Concrete Approach Slabs (T=10")
I-12					102		102	Lin.Ft.	Combination Curb & Gutter, as per plan.
I-12				1,110	1,407		2,517	Lin.Ft.	Combination Curb & Gutter, Standard Type 2.
I-12				12,329	47,401	3,470	63,200	Lin.Ft.	Combination Curb & Gutter, Standard Type 2, Modified, as per plan.
I-12				8			8	Lin.Ft.	Concrete Curb, Type 6, as per plan
I-12					110		110	Lin.Ft.	Concrete Curb, Standard Type 6
I-21				3,292	15,093	1,227	19,612	Sq.Yds.	4" Portland Cement Concrete Median Pavement.
I-21				319	408		727	Sq.Yds.	Portland Cement Concrete Median Pavement, as per plan.
I-21					26		26	Sq.Yds.	Portland Cement Concrete Median Pavement.
I-22	1,985	3,914	5,899	8,936	31,614	2,392	48,841	Cu.Yds.	Subbase
I-23						12	12	Each	Precast White Portland Cement Concrete Traffic Dividers.
									STRUCTURES OVER 20' SPAN
									BRIDGE NUMBER LOCATION FOR QUANTITIES SEE SHEET NUMBER
									BEL.-7-2095 Aetnaville Bridge over S.R.-7 308
									BEL.-7-2256 Bridge over Pedestrian Overpass. 319
									BEL.-7-2269 Bridge over Center Street. 332
									BEL.-7-2289 Bridge over Wheeling Terminal R.R. 340
									RETAINING WALL SUMMARY - FOR QUANTITIES SEE SHEET No. 261 267 279 289 297 301
									SIGN SUMMARY - FOR QUANTITIES SEE SHEET No. 227
									LIGHTING SUMMARY - FOR QUANTITIES SEE SHEET No. 249
									SIGNAL SUMMARY - FOR QUANTITIES SEE SHEET No. 227
								LUMP	Construction Layout Stakes. LUMP
								LUMP	Maintaining Traffic. LUMP

1965 SPECIFICATIONS

BELMONT COUNTY
BEL - 7 - 20.74

FED. RD. DIVISION	STATE	PROJECT	
2	OHIO		

17A
418

REFERENCE	ITEM	QUANTITIES: BRIDGEPORT STATE & FED PART'C.	QUANTITIES: MARTINS FERRY STATE, FED & CITY PART'C.	QUANTITIES: TOTAL U-534(10)	RURAL: MARTINS FERRY STATE	RURAL: 100% STATE	GRAND TOTAL	UNIT	DESCRIPTION
		TYPE CODE 6201							PAVEMENT
125	304	129	473	602	168		770	C.Y.	Aggregate Base
125	304	0.6	3.3	3.9			3.9	M.Gals.	Water
126	303	5790	18,469	24,259	1345	142	25,746	C.Y.	Waterbound Macadam base Course, Using No.2 Coarse Aggregate
127	403	817	2596	3413	183	27	3623	C.Y.	Asphalt Concrete (70-85)
128	302	1934	6261	8195	438	53	8686	C.Y.	Asphalt Concrete (70-85)
129	408	9285	29,663	38,948	2112	255	41,315	Gals.	Bituminous Prime Coat, 702.09 RT-2 or RT-3
130	404	818	2616	3434	120	89	3643	C.Y.	Asphalt Concrete (70-85)
131	452	366	67	433	71		504	S.Y.	8" Plain Portland Cement Concrete Pavement
132	452		306	306			306	S.Y.	7" Plain Portland Cement Concrete Pavement
133	611		622.2	622.2			622.2	S.Y.	Reinforced Concrete Approach Slabs (T=13")
133-A	611	27.2		27.2			27.2	S.Y.	Reinforced Concrete Approach Slabs (T= 10")
134	609		102	102			102	L.F.	Combination Curb & Gutter, as per Plan
135	609	1110	1407	2517			2517	L.F.	Combination Curb & Gutter, Standard Type 2
136	609	12,329	47,401	59,730	3470		63,200	L.F.	Combination Curb & Gutter, Standard Type 2, Modified as per Plan
137	609	8		8			8	L.F.	Concrete Curb, Standard Type 6, as per Plan
138	609		110	110			110	L.F.	Concrete Curb, Standard Type 6
139	612	3292	15,093	18,385	1227		19,612	S.Y.	4" Concrete Median
140	612	319	408	727			727	S.Y.	Concrete Median, as per Plan
141	612		26	26			26	S.Y.	Concrete Median
142	310	10921	35528	46449	2250	142	48,841	C.Y.	Subbase
143	613				12		12	Each	Traffic Dividers
144		Lump	Lump	Lump	Lump	Lump	Lump	Lump	Construction Layout Stakes.
145	614	Lump	Lump	Lump	Lump	Lump	Lump	Lump	Maintaining Traffic

STRUCTURES OVER 20' SPAN

BEL-7-2085 Aetnaville Bridge over S.R.7
For Quantities see sheet 308

BEL-7-2256 Bridge over Pedestrian Overpass
For Quantities see sheet 319

BEL-7-2263 Bridge over Center Street
For Quantities see sheet 332

BEL-7-2289 Bridge over Wheeling Terminal Railroad
For Quantities see sheet 340

RETAINING WALL SUMMARY
For Quantities see sheets 261, 267, 279, 289, 297 and 301

SIGN SUMMARY
For Quantities see sheet 227

LIGHTING SUMMARY
For Quantities see sheet 249

SIGNAL SUMMARY
For Quantities see sheet 227

UTILITIES
GENERAL SUMMARY

1963 SPECIFICATIONS

FED. RD. DIVISION	STATE	PROJECT	
2	OHIO		

BELMONT COUNTY
BEL - 7 - 20.74

18
418

ITEM	SHEET NUMBER BRIDGEPORT 31	34-A	MARTINS FERRY 37	39	41	43	45	46	48	50	52	54	56	58	60	62	RURAL 62	64	REF. NO.	ITEM	QUANTITIES BRIDGEPORT	MARTINS FERRY	RURAL	TOTAL	UNIT	DESCRIPTION
																										WATER MAINS CODE YOGO
					220														244	I-124		220		220	LIN.FT.	NEW WATER MAIN - 4"
I-124	1330	655																	245	I-124	1985			1985	LIN.FT.	NEW WATER MAIN - 12"
I-124		69										535							246	I-124	69	535		604	LIN.FT.	NEW WATER MAIN - 10"
I-124												280	1000	1000	1000	275	725	412	247	I-124		3535	1137	4692	LIN.FT.	NEW WATER MAIN - 8"
I-124	15											25	10	10	116				248	I-124	15	161		176	LIN.FT.	NEW WATER MAIN - 6"
I-124		670																	249	I-124	670			670	LIN.FT.	NEW WATED MAIN, ASBESTOS CEMENT 10"
I-124																60			250	I-124		60		60	LIN.FT.	WATER MAIN RAISED - 8"
I-124														24					251	I-124		24		24	LIN.FT.	WATER MAIN RAISED - 6"
I-124												62							252	I-124		62		62	LIN.FT.	WATER MAIN LOWERED - 6"
I-124	3	2																	253	I-124	5			5	EACH	VALVES & BOXES - 12"
I-124		2										1							254	I-124	2	1		3	EACH	VALVES & BOXES - 10"
I-124													2	2	2	2	2	1	255	I-124		8	3	11	EACH	VALVES & BOXES - 8"
I-124	2											1	2	2	2				256	I-124	2	7		9	EACH	VALVES & BOXES - 6"
					3														257	I-124		3		3	EACH	VALVES & BOXES - 4"
I-124	2	1			1							1	1	1	1				258	I-124	3	5		8	EACH	FIRE HYDRANTS, AS PER PLAN
I-124	2	1										2	2		2				259	I-124	3	6		9	EACH	FIRE HYDRANTS, REMOVED
I-124		1																	260	I-124	1			1	EACH	FIRE HYDRANTS, ADJUSTED TO GRADE
I-124		1																	261	I-124	1			1	EACH	TEES - 12"x12"
I-124												1							262	I-124		1		1	EACH	TEES - 12"x10"
I-124	2																		263	I-124	2			2	EACH	TEES - 12"x6"
I-124												2							264	I-124		2		2	EACH	TEES - 10"x6"
I-124															1		1		265	I-124		1	1	2	EACH	TEES - 8"x8"
I-124													1	1	1				266	I-124		3		3	EACH	TEES - 8"x6"
I-124													1	1					267	I-124		2		2	EACH	TEES - 6"x6"
I-124															1				268	I-124		1		1	EACH	TEES - 6"x4"
					1														269	I-124		1		1	EACH	TEE - 4"x4"
I-124		1																	270	I-124	1			1	EACH	ELBOWS - 12"x90°
I-124		1																	271	I-124	1			1	EACH	BENDS - 12"x45°
I-124		1																	272	I-124	1			1	EACH	BENDS - 12"x22½°
I-124		1																	273	I-124	1			1	EACH	BENDS - 12"x11¼°
I-124		1																	274	I-124	1			1	EACH	BENDS - 12"x5⅝°
I-124		2										1							275	I-124	2	1		3	EACH	ELBOWS - 10"x90°
I-124		1										5							276	I-124	1	5		6	EACH	BENDS - 10"x22½°
I-124		3										1							277	I-124	3	1		4	EACH	BENDS - 10"x11¼°
I-124																	1		278	I-124			1	1	EACH	BENDS - 8"x45°
I-124												1							279	I-124		1		1	EACH	BENDS - 8"x22½°
I-124													1						280	I-124		1		1	EACH	BENDS - 8"x5⅝°
I-124															1				281	I-124		1		1	EACH	BENDS - 6"x11¼°
					2														282	I-124		2		2	EACH	BENDS - 4"x22½°
I-124		1																	283	I-124	1			1	EACH	WATER VALVES, ADJUSTED TO GRADE
I-124												1							284	I-124		1		1	EACH	REDUCERS - 10"x8"
I-124																	1		285	I-124			1	1	EACH	SLEEVES - 8"
I-124													1	1					286	I-124		2		2	EACH	SLEEVES - 6"
I-124					1										1				287	I-124		2		2	EACH	BLOW-OFF VALVES - 4"
I-124												1							288	I-124		1		1	EACH	PLUGS - 12"
I-124																	1		289	I-124			1	1	EACH	PLUGS - 8"
I-124												1							290	I-124		1		1	EACH	PLUGS - 6"
I-124												1			1				291	I-124		2		2	EACH	PLUGS - 4"
E-12														400					146	E-12		400		400	LIN FT	PIPE REMOVED 15" & UNDER

1965 SPECIFICATIONS

FED. RD. DIVISION	STATE	PROJECT	
2	OHIO		

18-A
418

BELMONT COUNTY
BEL-7-20.74

REFERENCE	ITEM	RURAL: MARTINS FERRY & STATE	RURAL: 100% MARTINS FERRY	QUANTITIES: BRIDGEPORT STATE & FED PARTIC.	QUANTITIES: MARTINS FERRY STATE, FED & CITY PARTIC.	QUANTITIES: TOTAL U-534(10)	GRAND TOTAL	UNIT	DESCRIPTION
				TYPE CODE 4060					WATER MAINS
244	814				220	220	220	LIN.FT.	NEW WATER MAIN-4"
245	814			1985		1985	1985	LIN.FT.	NEW WATER MAIN-12"
246	814			69	535	604	604	LIN.FT.	NEW WATER MAIN-10"
247	814	753	384		3555	3555	4692	LIN.FT.	NEW WATER MAIN-8"
248	814			15	161	176	176	LIN.FT.	NEW WATER MAIN-6"
249	814			670		670	670	LIN.FT.	NEW WATER MAIN, ASBESTOS CEMENT 10"
250	814				60	60	60	LIN.FT.	WATER MAIN RAISED 8"
251	814				24	24	24	LIN.FT.	WATER MAIN RAISED-6"
252	814				62	62	62	LIN.FT.	WATER MAIN LOWERED-6"
253	814			5		5	5	EACH	VALVES & BOXES-12"
254	814			2	1	3	3	EACH	VALVES & BOXES-10"
255	814	2	1		8	8	11	EACH	VALVES & BOXES-8"
256	814			2	7	9	9	EACH	VALVES & BOXES-6"
257	814				3	3	3	EACH	VALVES & BOXES-4"
258	814			3	5	8	8	EACH	FIRE HYDRANTS, AS PER PLAN
259	814			3	6	9	9	EACH	FIRE HYDRANTS, REMOVED
260	814			1		1	1	EACH	FIRE HYDRANTS, ADJUSTED TO GRADE
261	814			1		1	1	EACH	TEES-12"x12"
262	814				1	1	1	EACH	TEES-12"x10"
263	814			2		2	2	EACH	TEES-12"x6"
264	814				2	2	2	EACH	TEES-10"x6"
265	814		1		1	1	2	EACH	TEES-8"x8"
266	814				3	3	3	EACH	TEES-8"x6"
267	814				2	2	2	EACH	TEES-6"x6"
268	814				1	1	1	EACH	TEES-6"x4"
269	814				1	1	1	EACH	TEE-4"x4"
270	814			1		1	1	EACH	ELBOWS-12"x90°
271	814			1		1	1	EACH	BENDS-12"x45°
272	814			1		1	1	EACH	BENDS-12"x22½°
273	814			1		1	1	EACH	BENDS-12"x11¼°
274	814			1		1	1	EACH	BENDS-12"x5 5/8°
275	814			2	1	3	3	EACH	ELBOWS-10"x90°
276	814			1	5	6	6	EACH	BENDS-10"x22½°
277	814			3	1	4	4	EACH	BENDS-10"x11¼°
278	814		1				1	EACH	BENDS-8"x45°
279	814				1	1	1	EACH	BENDS-8"x22½°
280	814				1	1	1	EACH	BENDS-8"x5 5/8°
281	814				1	1	1	EACH	BENDS-6"x11¼°
282	814				2	2	2	EACH	BENDS-4"x22.1/2°
283	814			1		1	1	EACH	WATER VALVES, ADJUSTED TO GRADE
284	814				1	1	1	EACH	REDUCERS-10"x8"
285	814		1				1	EACH	SLEEVES-8"
286	814				2	2	2	EACH	SLEEVES-6"
287	814				2	2	2	EACH	BLOW-OFF VALVES-4"
288	814				1	1	1	EACH	PLUGS-12"
289	814		1				1	EACH	PLUGS-8"
290	814				1	1	1	EACH	PLUGS-6"
291	814				2	2	2	EACH	PLUGS-4"
146	202				400	400	400	LIN.FT.	PIPE REMOVED 15" & UNDER

UTILITIES

GENERAL SUMMARY

1963 SPECIFICATIONS

FED. RD. DIVISION	STATE	PROJECT	
2	OHIO		

19
418

BELMONT COUNTY
BEL - 7 - 20.74

ITEM	SHEET NUMBER — BRIDGEPORT 31	34A	MARTINS FERRY 37	39	41	43	45	46	48	50	52	54	56	58	60	62	RURAL 62	64	REF. NO.	ITEM	QUANTITIES BRIDGEPORT	MARTINS FERRY	RURAL	TOTAL	UNIT	DESCRIPTION
																										SANITARY SEWER CODE YOGO
I-1							70												147	I-1		70		70	Lin. Ft.	8" Pipe, Class A-1 Sec. M-6.6(d) Under Railroad
I-1		30																	148	I-1	30			30	Lin. Ft.	24" Pipe, Class A-1 Sec. M-6.6(d) Under Railroad
I-1					370														149	I-1		370		370	Lin. Ft.	6" Pipe, Class B-1
I-1						132				92	381	60		20	733	94			150	I-1		1515		1515	Lin. Ft.	8" Pipe, Class B-1
I-1												450							151	I-1		450		450	Lin. Ft.	10" Pipe, Class B-1
I-1														446	109				152	I-1		555		555	Lin. Ft.	12" Pipe, Class B-1
I-1					110					195									153	I-1		305		305	Lin. Ft.	18" Pipe, Class B-1
I-1													98		26				154	I-1		124		124	Lin. Ft.	8" Pipe, Class B-1 Sec. M-6.6(c)
I-1															150				155	I-1		150		150	Lin. Ft.	10" Pipe, Class B-1 Sec. M-6.6(c)
I-1														330					156	I-1		330		330	Lin. Ft.	12" Pipe, Class B-1 Sec. M-6.6(c)
I-1														81					157	I-1		81		81	Lin. Ft.	15" Pipe, Class B-1 Sec. M-6.6(c)
I-1													40						158	I-1		40		40	Lin. Ft.	8" Pipe, Class B-1 Sec. M-6.6(d) Pipe Under Railroad
I-1														47					159	I-1		47		47	Lin. Ft.	15" Pipe, Class B-1 Sec. M-6.6(d) Pipe Under Railroad
I-8		1			5	2	2			2	3	1	1	2	4	2			160	I-8	1	24		25	Each	Standard No. 1 Manhole
I-8						1			1			4		1	1				161	I-8		8		8	Each	Standard No. 2 Manhole
										1									161-A	I-8		1		1	Each	Standard No. 1 Manhole, with drop pipe.
I-8	1										1								162	I-8	1	1		2	Each	Manhole, Reconstructed to grade
I-8	1																		163	I-8	1			1	Each	Manhole Reconstructed to grade using precast sections
I-13										40									164	I-13		40		40	Sq. Ft.	4" Concrete Sidewalk
I-16	6				3	2	1		1	2	1	1	4	3	4				165	I-16	6	22		28	Each	Manhole, Abandoned
I-16													4						166	I-16		4		4	Each	Inlet, Abandoned
E-8										109		70							167	E-8		179		179	Cu. Yds.	Removal & Disposal of Existing Pavement
E-12															719				168	E-12		719		719	Lin. Ft.	Pipe Removed, Under 15"
S-1	5.2	0.6		3.7		13.4	6.7			33		1.3	0.4	0.3	0.5	0.1		0.2	169	S-1	5.8	59.4	.2	65.4	Cu. Yds.	Concrete for Structures, Class "E"
S-24										Lump									170	S-24		Lump		Lump	Lump	Removal of Existing Structures
B-35					8					41.5									171	B-35		49.5		49.5	Cu. Yds.	Asphaltic Concrete Base Course (70-85)
B-70										109		70							172	B-70		179		179	Sq. Yds.	Portland Cement Concrete Base Course (T-6")
T-30					87					478									173	T-30		565		565	Gals.	Bituminous Tack Coat
T-35					8					41.5		10		3					174	T-35		62.5		62.5	Cu. Yds.	Asphaltic Concrete Surface Course (70-85)
I-22					48					266		24		15					175	I-22		353		353	Cu. Yds.	Subbase

1965 SPECIFICATIONS

BELMONT COUNTY
BEL - 7 - 20.74

FED. RD. DIVISION	STATE	PROJECT	
2	OHIO		

19-A
418

REFERENCE	ITEM	QUANTITIES					TOTAL U-534(10)	GRAND TOTAL	UNIT	DESCRIPTION
				100% MARTINS FERRY RURAL	U-534(10) BRIDGEPORT	U-534(10) MARTINS FERRY				
										SANITARY SEWER CODE Y060
147	603				—	70	70	70	L.F.	8" Conduit Type "A", 706.02, Cl. V, W/Class "B" Bedding, Under Railroad
148	603				30	—	30	30	L.F.	24" Conduit Type "A", 706.02 Cl. V, W/Class "B" Bedding, Under Railroad
149	603				—	370	370	370	L.F.	6" Conduit Type "B", with Class "B" Bedding
150	603				—	1515	1515	1515	L.F.	8" Conduit Type "B", With Class "B" Bedding
151	603					450	450	450	L.F.	10" Conduit Type "B", with Class "B" Bedding
152	603				—	555	555	555	L.F.	12" Conduit Type "B", with Class "B" Bedding
153	603				—	305	305	305	L.F.	18" Conduit Type "B", with Class "B" Bedding
154	603				—	124	124	124	L.F.	8" Conduit Type "B", 706.02, Cl. V, W/Class "B" Bedding
155	603				—	150	150	150	L.F.	10" Conduit Type "B", 706.02, Cl. V, W/Class "B" Bedding
156	603				—	330	330	330	L.F.	12" Conduit Type "B", 706.02, Cl. V, W/Class "B" Bedding
157	603				—	81	81	81	L.F.	15" Conduit Type "B", 706.02, Cl. V, W/Class "B" Bedding
158	603				—	40	40	40	L.F.	8" Conduit Type "B", 706.02, Cl. V, W/Class "B" Bedding - Conduit Under Railroad.
159	603				—	47	47	47	L.F.	15" Conduit Type "B", 706.02, Cl. V, W/Class "B" Bedding - Conduit Under Railroad.
160	604				1	24	25	25	Each	Standard No. 1 Manholes.
161	604				—	8	8	8	Each	Standard No. 2 Manholes.
161-A	604				—	1	1	1	Each	Standard No. 1 Manhole, with dropipe.
162	604				1	1	2	2	Each	Manhole, Reconstructed to Grade.
163	604				1	—	1	1	Each	Manhole, Reconstructed to Grade, Using Precast Sections, as per plan
164	608				—	40	40	40	S.F.	4" Concrete Walk.
165	202				6	22	28	28	Each	Manholes Removed.
166	202				—	4	4	4	Each	Inlets Removed.
167	202				—	179	179	179	S.Y.	Existing Pavement Removed and Disposed of.
168	202				—	719	719	719	L.F.	Pipe Removed 15" & Under.
169	511			0.2	5.8	59.4	65.2	65.4	C.Y.	Class "E" Concrete, for Structures.
170	202				—	Lump	Lump	Lump	Lump	Existing Structures Removed.
171	302				—	49.5	49.5	49.5	C.Y.	Asphalt Concrete (70-85)
172	305				—	179	179	179	S.Y.	6" Portland Cement Concrete Base.
173	407				—	565	565	565	Gals.	Tack Coat, 702.04 MS-2 or RS-1; or 702.02 RC-70 or RC-250
174	404				—	625	62.5	625	C.Y.	Asphalt Concrete (70-85)
175	310				—	353	353	353	C.Y.	Subbase

GENERAL SUMMARY CONVERSION TO 1965 SPECIFICATIONS

UTILITIES
GENERAL SUMMARY

WORK TO BE DONE BY CITY OF MARTINS FERRY FORCES

FED. RD. DIVISION	STATE	PROJECT	
2	OHIO		

BELMONT COUNTY
BEL. - 7- 20.74

20
4.18

ITEM	SHEET NUMBER 37	39	41	43	45	46	48	50	52	REF. NO.	ITEM	BY OTHERS TOTAL		UNIT	DESCRIPTION
															WATER MAINS CODE YO60
I-124						10				292	I-124	10		LIN. FT.	NEW WATER MAIN - 12"
I-124					375	155				293	I-124	530		LIN. FT.	NEW WATER MAIN - 10"
I-124						2005		301		294	I-124	2306		LIN. FT.	NEW WATER MAIN - 8"
I-124		325			10	55				295	I-124	390		LIN. FT.	NEW WATER MAIN - 6"
I-124		140						100	487	296	I-124	727		LIN. FT.	NEW WATER MAIN - 4"
I-124		320								297	I-124	320		LIN. FT.	NEW WATER MAIN - 1¼"
I-124						1				298	I-124	1		EACH	VALVES & BOXES - 12"
I-124					2					299	I-124	2		EACH	VALVES & BOXES - 10"
I-124						3				300	I-124	3		EACH	VALVES & BOXES - 8"
I-124		2			1	3				301	I-124	6		EACH	VALVES & BOXES - 6"
I-124		2							3	302	I-124	5		EACH	VALVES & BOXES - 4"
I-124		1			1	3			1	303	I-124	6		EACH	FIRE HYDRANTS, AS PER PLAN
I-124	1	1	1	1	3	2			2	304	I-124	11		EACH	FIRE HYDRANTS REMOVED
I-124						1				305	I-124	1		EACH	TEES - 12" x 12"
I-124						1				306	I-124	1		EACH	TEES - 12" x 10"
I-124					1					307	I-124	1		EACH	TEES - 10" x 10"
I-124					1					308	I-124	1		EACH	TEES - 10" x 6"
I-124						7				309	I-124	7		EACH	TEES - 8" x 6"
I-124						3				310	I-124	3		EACH	TEES - 8" x 4"
I-124		1								311	I-124	1		EACH	TEES - 6" x 6"
I-124		1								312	I-124	1		EACH	TEES - 6" x 4"
									2	313	I-124	2		EACH	BENDS ~ 4". 45°
I-124		2								314	I-124	2		EACH	ELBOWS - 1½" - 90°
I-124								2		315	I-124	2		EACH	BENDS - 4" - 22½°
I-124					1	1				316	I-124	2		EACH	ELBOWS - 10" - 90°
I-124						1		1		317	I-124	2		EACH	ELBOWS - 8" - 90°
I-124						1		2		318	I-124	3		EACH	BENDS - 8" - 22½°
I-124						2				319	I-124	2		EACH	BENDS - 8" - 11¼°
I-124						1				320	I-124	1		EACH	REDUCERS - 12" x 8"
I-124						1				321	I-124	1		EACH	REDUCERS - 10" x 8"
I-124		1								322	I-124	1		EACH	REDUCERS - 6" x 4"
I-124					1					323	I-124	1		EACH	SLEEVES - 10"
I-124								1		324	I-124	1		EACH	6" x 4" TAPPING VALVE AND SLEEVE
I-124							2			325	I-124	2		EACH	BLOW-OFF VALVES - 8"
I-124	1	1	3	3	1				1	326	I-124	10		EACH	BLOW-OFF VALVES - 4"
I-124						1				327	I-124	1		EACH	PLUGS - 12"
I-124							2			328	I-124	2		EACH	PLUGS - 8"
I-124	1	2	3	3	1	1		2	2	329	I-124	15		EACH	PLUGS - 4"
I-124		1								330	I-124	1		EACH	SERVICE TAPS - 1¼"
I-124		1				1				331	I-124	2		EACH	SERVICE TAPS - 2"
I-124						1				332	I-124	1		EACH	SERVICE TAPS - 1"
I-124		6				12				333	I-124	18		EACH	SERVICE TAPS - 3/4"
S-1		427			0.3	0.5		0.4	0.2	176	S-1	5.7		CU YDS	CONCRETE FOR STRUCTURES, CLASS "E"
I-1						30				177	I-1	30		LIN FT	18" PIPE, CLASS "A-1 SEC M-6.6(d)
I-1					30					178	I-1	30		LIN FT	24" PIPE, CLASS A-1 SEC M-6.6(d), Under Railroad

FED. RD. DIVISION	STATE	PROJECT	
2	OHIO		

20A 418

BELMONT COUNTY
BEL-7-20.74

WORK TO BE DONE BY CITY OF MARTINS FERRY FORCES

REFERENCE	ITEM	QUANTITIES	GRAND TOTAL BY OTHERS	UNIT	DESCRIPTION
					WATER MAINS CODE 7060
292	814		10	LIN.FT.	NEW WATER MAIN ~ 12"
293	814		530	LIN.FT.	NEW WATER MAIN ~ 10"
294	814		2306	LIN.FT.	NEW WATER MAIN ~ 8"
295	814		390	LIN.FT.	NEW WATER MAIN ~ 6"
296	814		727	LIN.FT.	NEW WATER MAIN ~ 4"
297	814		320	LIN.FT.	NEW WATER MAIN ~ 1¼"
298	814		1	EACH	VALVES & BOXES ~ 12"
299	814		2	EACH	VALVES & BOXES ~ 10"
300	814		3	EACH	VALVES & BOXES ~ 8"
301	814		6	EACH	VALVES & BOXES ~ 6"
302	814		5	EACH	VALVES & BOXES ~ 4"
303	814		6	EACH	FIRE HYDRANTS, AS PER PLAN
304	814		11	EACH	FIRE HYDRANTS REMOVED
305	814		1	EACH	TEES ~ 12"x12"
306	814		1	EACH	TEES ~ 12"x10"
307	814		1	EACH	TEES ~ 10"x10"
308	814		1	EACH	TEES ~ 10"x6"
309	814		7	EACH	TEES ~ 8"x6"
310	814		3	EACH	TEES ~ 8"x4"
311	814		1	EACH	TEES ~ 6"x6"
312	814		1	EACH	TEES ~ 6"x4"
313	814		2	EACH	BENDS ~ 4" ~ 45°
314	814		2	EACH	ELBOWS ~ 1¼" ~ 90°
315	814		2	EACH	BENDS ~ 4" ~ 22½°
316	814		2	EACH	ELBOWS ~ 10" ~ 90°
317	814		2	EACH	ELBOWS ~ 8" ~ 90°
318	814		3	EACH	BENDS ~ 8" ~ 22½°
319	814		2	EACH	BENDS ~ 8" ~ 11¼°
320	814		1	EACH	REDUCERS ~ 12"x8"
321	814		1	EACH	REDUCERS ~ 10"x8"
322	814		1	EACH	REDUCERS ~ 6"x4"
323	814		1	EACH	SLEEVES ~ 10"
324	814		1	EACH	6"x4" TAPPING VALVE AND SLEEVE
325	814		2	EACH	BLOW-OFF VALVES ~ 8"
326	814		10	EACH	BLOW-OFF VALVES ~ 4"
327	814		1	EACH	PLUGS ~ 12"
328	814		2	EACH	PLUGS ~ 8"
329	814		15	EACH	PLUGS ~ 4"
330	814		1	EACH	SERVICE TAPS ~ 1¼"
331	814		2	EACH	SERVICE TAPS ~ 2"
332	814		1	EACH	SERVICE TAPS ~ 1"
333	814		18	EACH	SERVICE TAPS ~ ¾"
176	511		57	CU.YDS.	CLASS "E" CONCRETE FOR STRUCTURES
177	603		30	LIN.FT.	18" CONDUIT, TYPE "A" 706.02, WITH CLASS "B" BEDDING
178	603		30	LIN.FT.	24" CONDUIT, TYPE "A" 706.02, WITH CLASS "B" BEDDING, UNDER RAILROAD

GENERAL SUMMARY CONVERSION TO 1965 SPECIFICATIONS

GENERAL SUMMARY

FED. RD. DIVISION	STATE	PROJECT	
2	OHIO		

208
418

BEL-7-20.64

ITEM	SHEET NUMBER																		BRIDGEPORT	MARTINS FERRY	ITEM	TOTAL U-534(10) QUANT.	UNIT	DESCRIPTION
																								CODE TYPE 6201
																								BUILDING REMOVALS
																				Lump	202	Lump	Lump	Parcel No. 25-WD, Removal of one 2-car frame garage and shed.
																				Lump	202	Lump	Lump	Parcel No. 38-WL, Removal of two 1-story concrete block buildings.
																				Lump	202	Lump	Lump	Parcel No. 48-WL, Removal of one 1-story frame residence, frame shed.
																				Lump	202	Lump	Lump	Parcel No. 59-WD, Removal of two 2-story frame residences, two frame buildings, two frame sheds.
																				Lump	202	Lump	Lump	Parcel No. 67-WL, Removal of one 1-story brick & frame residence, one 2-story brick & frame residence.
																				Lump	202	Lump	Lump	Parcel No. 68-WL, Removal of one 2-story brick residence, one 1-story frame residence.
																				Lump	202	Lump	Lump	Parcel No. 71-WL, Removal of one 2-story brick & frame residence.
																				Lump	202	Lump	Lump	Parcel No. 75-WL, Removal of one 1-story concrete block building.
																				Lump	202	Lump	Lump	Parcel No. 39-E-WL, Removal of one 1-story corrugated tin building. (39-E-WL)
																				Lump	202	Lump	Lump	Parcel No. 110-WL, Removal of one 2-story frame & brick building.
																				Lump	202	Lump	Lump	Parcel No. 117-WL-WH, Removal of one 2-story brick warehouse building, concrete block garage.
																				Lump	202	Lump	Lump	Parcel No. 117-RW, Removal of one 2-story brick building.
																				Lump	202	Lump	Lump	Parcel No. 141-WL, Removal of one 2-story brick residence.
																				Lump	202	Lump	Lump	Parcel No. 142-WL, Removal of one 2-story frame residence, one 2-room frame shed.
																				Lump	202	Lump	Lump	Parcel No. 144-WL, Removal of one 2-story brick residence, brick garage.
																				Lump	202	Lump	Lump	Parcel No. 136-FWD, Removal of one 1-story commercial brick building.
																				Lump	202	Lump	Lump	Parcel No 167-WL, Removal of one 2-story frame residence, frame shed.
																				Lump	202	Lump	Lump	Parcel No. 199-WL, Removal of one 1-car frame garage.
																				Lump	202	Lump	Lump	Parcel No. 200-WL, Removal of one 1-car brick garage.
																				Lump	202	Lump	Lump	Parcel No. 216-WD, Removal of one 2-story frame residence
																				Lump	202	Lump	Lump	Parcel No. 237-WD, Removal of one 2-story frame residence with attached garage, frame shed.
																				Lump	202	Lump	Lump	Parcel No. 242-WD, Removal of one 2-story frame residence.
																				Lump	202	Lump	Lump	Parcel No. 266-WD, Removal of one 1-story frame residence, one 2-story frame garage.
																				Lump	202	Lump	Lump	Parcel No. 269-WD, Removal of one 1-story frame residence.
																				Lump	202	Lump	Lump	Parcel NO. 279-WL, Removal of one 1-story frame residence.
																				Lump	202	Lump	Lump	Parcel No. 282-WL, Removal of one 1-story service station, one 1½-story frame residence, frame garage & shed.
																			Lump		202	Lump	Lump	Parcel No. 318-WL, Removal of one concrete block & tile building.
																			Lump		202	Lump	Lump	Parcel No. 320-WL, Removal of one 3-car frame garage.
																			Lump		202	Lump	Lump	Parcel No. 360-WL, Removal of three baseball backstops, four dugouts, one grandstand.
																				Lump	202	Lump	Lump	Parcel No. 39-FWL, Removal of one 1-story frame residence.

Revised 8-10-66
Revised 8-26-66

SIDE STREETS AND CULVERTS SUB-SUMMARY

⊗ UG R.R. QUANTITIES

FED. RD. DIVISION	STATE	PROJECT	
2	OHIO		

21/418

BELMONT COUNTY
BEL-7-20.74

ITEM	BRIDGEPORT SIDE STREETS			BRIDGEPORT CULVERTS SHEET NUMBERS			MARTINS FERRY SIDE STREETS			MARTINS FERRY CULVERTS					REF. NO.	ITEM	TOTALS BRIDGEPORT	TOTALS BRIDGEPORT UG	TOTALS MARTINS FERRY	TOTALS MARTINS FERRY UG	UNIT	DESCRIPTION
	176	180		218	219	220	180	183	186	213	214	215	216	217								
E-8	1891						1835	1057	701						179	E-8	1891		3593		Sq.Yds.	Removal and Disposal of Existing Pavement
E-8									583						180	E-8			583		Sq.Yds.	Removal and Disposal of Existing Pavement, as per plan
E-8	4234						790	168	4374						181	E-8	4234		5332		Sq.Ft.	Removal and Disposal of Existing Sidewalk
E-8	653						302		740						182	E-8	653		1042		Lin.Ft.	Removal and Disposal of Existing Curb
I-13															183	I-13					Sq.Ft.	6" Concrete Sidewalk
I-13	138						668		2124						184	I-13	138		2792		Sq.Ft.	4" Concrete Sidewalk
I-15	400														185	I-15	400				Lin.Ft.	Guard Rails, Steel Beam, Standard Type (Deep)
I-15	638														186	I-15	638				Lin.Ft.	Guard Rails, Removed and Disposed of
L-10				2⊗		2			39				2	4⊗	187	L-10	2	2	41	4	Sq.Yds.	Sodding
S-24	LUMP						LUMP		LUMP		LUMP⊗		LUMP		188	S-24	LUMP		LUMP	LUMP	Lump	Removal of Existing Structures
I-1											55	30⊗			190	I-1			55	30	Lin.Ft.	72" Pipe, Class A-1, Sec. M-6.6(d), Under Railroad
I-1													206		192	I-1			206		Lin.Ft.	54" Pipe, Class A-1, Sec. M-6.4(d), 8 Gage Shop Elongated
I-1				88⊗		62									193	I-1	62	88			Lin.Ft.	36" Pipe, Class A-1, Sec. M-6.6(d), Pipe under Railroad
I-1				100⊗											194	I-1		100			Lin.Ft.	42" Pipe, Class A-1, Sec. M-6.6(d), Pipe under Railroad, ½ Vitrified Lined
I-1												138			195	I-1			138		Lin.Ft.	60" Pipe, Class B-1, Sec. M-6.6(b)
I-1												24			196	I-1			24		Lin.Ft.	60" Pipe, Class B-1, Sec. M-6.6(b), Radial
I-1								11	80						197	I-1			91		Lin.Ft.	12" Pipe, Class E-1
I-1									56						198	I-1			56		Lin.Ft.	18" Pipe, Class E-1
I-1									66						199	I-1			66		Lin.Ft.	24" Pipe, Class E-1
I-1														126⊗	200	I-1				126	Lin.Ft.	36" Pipe, Class E-1
I-1										340⊗					201	I-1				340	Lin.Ft.	48" Pipe, Class E-1, Sec. M-6.6(b)
I-1				29⊗											202	I-1		29			Lin.Ft.	42" Pipe, Class E-1, ½ Vitrified Lined
I-1	40	10					10	40	60						203	I-1	50		110		Lin.Ft.	6" Pipe, Class F-4
I-1	1018	304					224	844	891						204	I-1	1322		1959		Lin.Ft.	6" Pipe, Class I-3
I-1		308						71							205	I-1	308		71		Lin.Ft.	12" Pipe, Class J-1
I-1								26							206	I-1			26		Lin.Ft.	15" Pipe, Class J-1
I-1								23							207	I-1			23		Lin.Ft.	18" Pipe, Class J-1
I-1								265							208	I-1			265		Lin.Ft.	48" Pipe, Class J-1
I-1									280						209	I-1			280		Lin.Ft.	12" Pipe, Class J-1, Sec. M-6.6(b) or Sec. M-6.8(b)
I-1									38						210	I-1			38		Lin.Ft.	18" Pipe, Class J-1, Sec. M-6.6(b) or Sec. M-6.8(b)
I-1								80⊗							212	I-1				80	Lin.Ft.	48" Pipe, Class J-1, Sec. M-6.6(d), under Railroad
I-1														106⊗	213	I-1				106	Lin.Ft.	36" Pipe, Class J-1, Sec. M-6.6(d), Pipe under Railroad
I-1										120⊗					214	I-1				120	Lin.Ft.	48" Pipe, Class J-1, Sec. M-6.6(d), Pipe under Railroad
I-2				5.13⊗		2.25				2.46⊗	2.53	4.22	20.46	1.46⊗	215	I-2	2.25	5.13	27.21	3.92	Cu.Yds.	Masonry
I-5	1														216	I-5	1				Each	6" Pipe Special, Class I-3
I-8		1							2						217	I-8	1		2		Each	Standard No 2-2A Catch Basin
I-8		2						2							218	I-8	2		2		Each	Standard No 3 Catch Basin
I-8									1						219	I-8			1		Each	Standard No 3-A Catch Basin
I-8				2⊗										1⊗	220	I-8		2		1	Each	Standard No 2-A Catch Basin, Modified as per plan
I-8									1						221	I-8			1		Each	Standard No 2-A-6 Inlet, Modified as per plan
I-8									1						222	I-8			1		Each	Standard No 2-A-10 Inlet, Modified as per plan
I-8									1						223	I-8			1		Each	Standard No 2-A-13 Inlet, Modified as per plan
I-8								2							224	I-8			2		Each	Standard No 2-A-20 Inlet, Modified as per plan
I-8								1		1					225	I-8			2		Each	Standard No 2 Manhole, without Drop Pipe
I-8		1					1								226	I-8	1		1		Each	Manhole, Adjusted to Grade
I-8		1													227	I-8	1				Each	Manhole, Reconstructed to Grade, as per plan
I-8							1								228	I-8			1		Each	Manhole, Reconstructed to Grade, using Precast Sections
I-10						24				12⊗			72	30⊗	229	I-10	24		72	42	Cu.Yds.	Dumped Rock Channel Protection
I-10				40⊗		28				9⊗				15⊗	230	I-10	28	40		24	Sq.Yds.	Riprap, using 6" Reinforced Concrete Slab
I-14		10							30					20⊗	231	I-14	10		30	20	Lin.Ft.	Paved Gutter, Type I, Modified as per plan
I-16							1								232	I-16			1		Each	Catch Basin, Abandoned
I-16							1								233	I-16			1		Each	Inlet, Abandoned
E-12											25				234	E-12			25		Lin.Ft.	Pipe Removed, Over 15"
S-1					48⊗										235	S-1		48			Cu.Yds.	Concrete for Structures, Class "C" (Box Culvert)
S-4					10,827⊗										236	S-4		10,827			Lbs.	Reinforcing Steel, (Box Culvert)
I-8											1⊗	1	1		237	I-8			2	1	Each	Junction Chamber, as per plan
B-35								5.10							238	B-35			5.10		Cu.Yds.	Asphaltic Concrete Base Course (70-85)
T-30								6							239	T-30			6		Gals.	Bituminous Prime Coat, Sec. M-5.7, RT-2 or RT-3
T-35	1.28							5.10							240	T-35	1.28		5.10		Cu.Yds.	Asphaltic Concrete Surface Course, Type "C" (70-85)
I-12	8														241	I-12	8				Lin.Ft.	Concrete Curb, Type 6, as per plan
I-22								32.5							242	I-22			32.5		Cu.Yds.	Subbase

FED. RD. DIVISION	STATE	PROJECT	
2	OHIO		

22/418

BELMONT COUNTY
BEL - 7 - 20.74

* BRIDGEPORT
‡ MARTINS FERRY
** EMBANKMENT CARRIED FROM GENERAL NOTES

QUANTITIES AND SUB-SUMMARIES

ITEM E-1 EARTHWORK

STATION TO STATION	MAINLINE EXCAVATION CU. YDS.	MAINLINE EMBANKMENT CU. YDS.	RAILROAD EXCAVATION CU. YDS.	RAILROAD EMBANKMENT CU. YDS.	ITEM SPECIAL Nº 3 STONE EMBANKMENT CU. YDS.
1089+75.00 ~ 1100+00 *	9,759	1,033	4,542	2	598
1100+00 ~ 1110+00 *	17,379	5,601	2,843	685	-
1110+00 ~ 1120+00 *	7,064	2,192	15,648	210	-
1120+00 ~ 1130+00 *	2,186	2,169	15,659	-	-
1120+00 ~ 1130+00 ‡	3,842	306	2,449	-	-
1130+00 ~ 1140+00 ‡	14,248	213	12,659	17	974
1140+00 ~ 1150+00 ‡	5,682	3,612	547	1,934	1,027
1150+00 ~ 1160+00 ‡	5,499	6,661	1,114	3,693	-
1160+00 ~ 1170+00 ‡	3,599	10,354	80	4,918	-
1170+00 ~ 1180+00 ‡	1,587	28,471	-	14,027	-
1180+00 ~ 1190+00 ‡	205	42,071	410	4,505	-
1190+00 ~ 1200+00 ‡	657	49,622	2,048		-
1200+00 ~ 1210+00 ‡	1,081	119,990	-	-	-
1210+00 ~ 1220+00 ‡	28,462	60,188			
1220+00 ~ 1230+00 ‡	33,412	6,679			
1230+00 ~ 1240+00 ‡	56,103	5,535			
1240+00 ~ 1250+00 ‡	70,568	1,582			
1250+00 ~ 1260+00 ‡	17,720	562			
1250+00 ~ 1260+00 RURAL	61,641	159			
1260+00 ~ 1264+00	2,221	194			
SUBTOTAL BRIDGEPORT	36,588	10,995	38,692	897	598
SIDE STREET SUBTOT. BRIDGEPORT	27,566	-	-	-	-
TOTAL BRIDGEPORT	64,154	10,995	38,692	897	598
R.R. YARD			3,270	30,730	
SUBTOTAL MARTINS FERRY	288,665	335,846	19,307	29,094	2,001
SIDE STREET SUBTOT. MARTINS FERRY	16,415	5,218	-	-	-
** BACKFILLING BASEMENTS ‡	-	2,600	-	-	-
TOTAL MARTINS FERRY	259,080	343,664	22,577	59,884	
TOTAL BRIDGEPORT	64,154	10,995	38,692	897	598
TOTAL MARTINS FERRY	259,080	343,664	22,577	59,884	2,001
TOTAL RURAL	63,862	353	2,099	750	-
TOTAL	387,096	355,012	63,368	61,531	2,599

SIDE STREETS

LOCATION	EXCAVATION CU. YDS.	EMBANKMENT CU. YDS.
LINCOLN AVE.	27566	-
SUBTOTAL BRIDGEPORT	27566	-
AETNA ST.	639	785
BROADWAY ST.	242	-
HANOVER ST.	316	4412
5TH. ST.	12,132	-
MACKEY AVE.	351	3
OHIO AVE. & JEANETTE AVE.	1,742	10
SPRING ST.	993	8
SUBTOTAL MARTINS FERRY	16,415 ‡	5,218

ITEM E-1 COMPACTED SUBGRADE

	MARTINS FERRY SQ. YDS.	BRIDGEPORT SQ. YDS.	RURAL SQ. YDS.
MAINLINE	98,074	27,235	6,842
SIDE ROADS	10,019	1,985	-
TOTAL	108,093	29,220	6,842
CE-101.04 Compaction w/Heavy Roller			
	Less 107% Rock		Less 21.7% Rock
Mainline Area S.Y.	87,580	27,235	5,357
Rolling Hours	44	14	3

ITEM E-4 BORROW

	EXCAVATION CU. YDS.	EMBANKMENT+23% CU. YDS.	BORROW CU. YDS
MAINLINE			
BRIDGEPORT	64,154	(10,995 × 1.23) = 13,524	
MARTINS FERRY	259,080	(343,664 × 1.23) = 422,707	
RURAL	63,862	(353 × 1.23) = 434	
SUBTOTAL	387,096	436,665	
RAILROAD			
BRIDGEPORT	38,692	(897 × 1.23) = 1,103	
MARTINS FERRY	22,577	(59,884 × 1.23) = 73,657	
RURAL	2,099	(750 × 1.23) = 923	
SUBTOTAL	63,368	75,683	
GRAND TOTAL	450,464	512,348	61,884

ITEM E-11 WATER @ 5 GAL./CU.YD.

	MAINLINE M. GALS.	RAILROAD M. GALS.
EMBANKMENT BRIDGEPORT	55	4
" MARTINS FERRY	1,719	373
" RURAL	2	
I-22 BRIDGEPORT	45	10
" " MARTINS FERRY	158	20
" " RURAL	12	
TOTAL BRIDGEPORT	100	14
TOTAL MARTINS FERRY	1,877	393
TOTAL RURAL	14	
GRAND TOTAL	1,991	407

ITEM L-9 SEEDING

	BRIDGEPORT SQ. YDS	MARTINS FERRY SQ. YDS.	RURAL SQ. YDS
S.R. 7 SIDE STREETS	27,562	123,139	
	+ 4,973	+ 9,555	
TOTAL	32,535	132,694	10024
DEDUCTS SQ. YDS.			
	BRIDGEPORT	MARTINS F.	RURAL
SODDING	740	1,899	2
			-
TOTAL DEDUCT	740	1899	2
		DEDUCT	- 740 - 1899 - 2
		TOTAL	31,795 130,795 10,022
GROSS AREA R.R.			16,183 25,745 -
R.R. YARD			7031 1245
GRAND TOTAL			47,978 163,571 11,267

ITEM L-9 COMMERCIAL FERTILIZER

20# / 1000 ⁰	SQ. YDS. × 9 × 20 / 2000 × 1000 = TONS
R.R. YARD	0.64 TONS
BRIDGEPORT	2.93 TONS
MARTINS FERRY	11.94 TONS
RURAL	1.01 TONS
RAILROAD (BRIDGEPORT)	1.46 TONS
RAILROAD (MARTINS FERRY)	2.32 TONS
TOTAL	20.30 TONS

ITEM L-9 AGRICULTURAL LIMING MAT'L

100# / 1000 ⁰	SQ. YDS. × 9 × 100 / 2000 × 1000 = TONS
R.R. YARD	3.16 TONS
BRIDGEPORT	14.64 TONS
MARTINS FERRY	59.71 TONS
RURAL	5.07 TONS
RAILROAD (BRIDGEPORT)	7.28 TONS
RAILROAD (MARTINS FERRY)	11.59 TONS
TOTAL	101.45 TONS

ITEM I-26 CHAIN LINK FENCE GATE
See Sheet Nº 392 (R/W Sheet Nº 29) for Station Location, Gate, 20' wide Type I-26 1 EACH

PAVEMENT SUB-SUMMARIES

FED. RD. DIVISION	STATE	PROJECT	
2	OHIO		

23/418

BELMONT COUNTY
BEL - 7 - 20.74

DESCRIPTION	LOCATION	LENGTH	See Sheet No.	T-35 Asph. Concrete Surface Course	B-35 Asph. Concrete Leveling Course	B-35 Asph. Concrete Base Course	T-30 Bit. Prime Coat	B-20 Water-bound Macadam Base Course	I-22 Subbase	I-21 Concrete Median Pavement 4"	I-21 Concrete Median Pavement As per Plan	I-21 Concrete Median Pavement Standard	I-23 Precast Concrete Traffic Dividers	I-7 Reinf. Concrete Approach Slab T=13"	I-12 Combination Curb and Gutter As per Plan	I-12 Combination Curb and Gutter Standard Type 2	I-12 Combination Curb and Gutter Type 2 Mod. As per Plan	B-19 Aggregate Base Course	I-7 Reinf. Conc. Appr. Slabs T=10"
		LIN. FT.		CU. YDS.	CU. YDS.	CU. YDS.	GAL.	CU. YDS.	CU. YDS.	SQ. YDS.	SQ. YDS.	SQ. YDS.	EACH	SQ. YDS.	LIN. FT.	LIN. FT.	LIN. FT.	CU. YDS.	S. Y.
	BRIDGEPORT MAINLINE																		
TRANSITION DETAIL	1089+75.00 ~ 1095+14.95		195	116.27	116.27	279.05	1339	831.56	1170.86	250.00	49.27						2034		
SUPER ①	1095+14.95 ~ 1095+70.00	55.05		10.19	10.19	24.47	117	74.08	136.41	79.52							220		
LINCOLN AVE X-ING	1095+70.00 ~ 1102+48.00		179	152.84	152.84	366.78	1761	1086.78	1385.84	322.00	135.00						2076		
NORMAL	1102+48.00 ~ 1105+25.00	277.00		51.29	51.29	123.11	591	376.18	676.07	400.11							1108		
SUPER ①	1105+25.00 ~ 1118+66.50	1341.50		248.42	248.42	596.22	2862	1805.24	3324.10	1937.72							5366		
AETNAVILLE STRUCTURE	1106+40 (SHT. No 310)		310																27.2
AETNA ST. X-ING	1118+65.50 ~ 1125+07.70		24	172.98	172.98	415.14	1993	1208.96	1773.63	303.11	135.00						1525		
	BRIDGEPORT SIDESTREETS																		
LINCOLN AVE.			25	64.75	54.00	129.61	622	407.30	468.97							1110			
	BRIDGEPORT TOTAL			816.74	816.74	1934.38	9285	5790.10	8935.88	3292.46	319.27					1110	12329		27.2
	MARTINS FERRY MAINLINE																		
AETNA ST. X-ING	1125+07.70 ~ 1125+21.00		24	1.27	1.27	3.06	147	10.47	25.20	18.44							53		
NORMAL	1125+21.00 ~ 1128+26.34	305.34		56.54	56.54	135.71	651	414.66	745.23	415.38							1203		
NORMAL	1128+42.32 ~ 1143+50.00	1507.68		279.19	279.19	670.07	3216	2047.49	3679.75	2152.09							6013		
SUPER ①	1143+50.00 ~ 1171+28.70	2778.70		514.56	514.56	1234.97	5928	3739.27	6885.34	4013.68							11,115		
HANOVER ST. X-ING	1171+28.70 ~ 1181+27.90		24	278.94	278.94	669.46	3210	1944.54	2355.29	417.00	268.00						3098		
SUPER ②	1181+27.90 ~ 1188+50.00	722.10		133.72	133.72	320.93	1541	971.72	1780.92	1043.03							2888		
NORMAL	1188+50.00 ~ 1197+92.80	942.80		174.59	174.59	419.02	2011	1280.36	2301.06	1361.82							3771		
CENTER ST. STRUCTURE	1197+92.80 ~ 1199+67.40	174.60							69.13	72.22				311.1					
NORMAL	1199+67.40 ~ 1208+25.75	858.30		158.94	158.94	381.46	1831	1165.61	2094.83	1239.77							3433		
RAILROAD STRUCTURE	1208+25.75 ~ 1212+56.25	430.50							69.13	72.22				311.1			364		
NORMAL	1212+56.25 ~ 1213+47.50	91.00		16.85	16.85	40.44	194	123.58	222.10	131.44							1820		
FIFTH ST. X-ING	1213+47.50 ~ 1218+49.00		183	126.48	126.48	303.56	1457	894.46	1169.80	322.00	35.00						1404		
NORMAL	1218+49.00 ~ 1222+00.00	351.00		65.00	65.00	156.00	749	476.67	856.68	507.00							1558		
SUPER ③	1222+00.00 ~ 1225+89.39	389.39		72.11	72.11	173.06	831	524.00	965.41	562.45							1716		
MACKEY ST. X-ING	1225+89.39 ~ 1230+92.99		24	120.37	120.37	288.90	1387	846.50	1223.95	322.00	35.00						2640		
SUPER ③	1230+92.99 ~ 1237+53.00	660.01		122.22	122.22	293.33	1408	888.17	1636.36	953.35							1604		
OHIO & JEANETTE X-ING	1237+53.00 ~ 1242+49.50		24	116.87	116.87	280.48	1346	822.62	911.65	322.00	35.00						118		
NORMAL	1242+49.50 ~ 1243+78.91 BK.	29.41		5.45	5.45	13.07	63	39.94	71.78	42.48							873		
NORMAL	1243+81.81 AH. ~ 1246+00.00	218.19		40.40	40.40	96.97	465	296.31	532.53	315.16							1193		
SUPER ④	1246+00.00 ~ 1248+98.20	298.20		55.22	55.22	132.53	636	401.28	744.90	430.73							1137		
SPRING ST. X-ING	1248+98.20 ~ 1252+16.59		24	67.54	67.54	162.10	778	486.07	672.27	208.30	35.00								
SEE NOTE ON Mk. Typical Section	1123+00.00 ~ 1136+00.00		6						1141.97										
TYPICAL SECTION	**MARTINS FERRY SIDESTREETS**																		
AETNA ST.			25	54.81	52.87	129.06	609	371.31	398.97			26.00					620		
HANOVER ST.			25	60.07	60.07	144.17	692	422.96	463.48								780		
FIFTH ST.			25	41.16	39.99	95.98	461	300.79	345.63							740			
MACKEY ST.			24	5.12	5.12	16.37			31.17						102				
OHIO & JEANETTE AVE.			24	23.71	21.63	69.21			135.44							488			
SPRING ST.			24	12.06	8.16	26.12			50.79							179			
	MARTINS FERRY TOTAL			2603.19	2594.10	6256.03	29,611	18468.78	31,580.76	14,922.56	408.00	26.00		622.22	102	1407	47,401		
	RURAL																		
SPRING ST. X-ING	1252+16.59 ~ 1253+94.60		24	44.52	44.52	106.68	512	308.37	400.06	113.20							590		
NORMAL	1253+94.60 ~ 1258+00.00	405.40		75.07	75.07	180.18	865	550.55	989.45	585.58							1622		
TRANSITION	1258+00.00 ~ 1264+00.00		196	89.37	90.56	204.44	990	627.68	1002.00	528.00			12				1258		
	RURAL TOTAL			208.96	210.15	491.30	2367	1486.60	2391.51	1226.78			12				3470		
	RAILROAD																		
	UG BRIDGEPORT																		
	NORMAL SECTION								1696.41										
	REDUCED WIDTH SECTION (23.5' WIDE)								162.90										
	SPUR SECTIONS								125.24										
	UG BRIDGEPORT TOTAL								1984.55										
	UG MARTINS FERRY																		
	NORMAL SECTION								2213.96										
	REDUCED WIDTH SECTION (25' WIDE)								841.12										
	REDUCED WIDTH SECTION (23.5 WIDE)								651.61										
	SPUR SECTIONS								207.49										
R.R. X-ING	1128+26.34 ~ 1128+42.32		224	0.76	0.76		8.8											2.44	
R.R. X-ING	HANOVER ST. ~ 10+95		224	1.04	1.04		18.9											5.06	
	UG MARTINS FERRY TOTAL			1.80	1.80		27.7		3914.18									7.50	
	UG RAILROAD TOTAL			1.80	1.80		27.7		5898.73									7.50	

CONSTANTS

QUANTITY = CONSTANT × LENGTH

ALL SECTIONS

T-35 1½" Asphaltic Concrete Surface Course, Type 'C' (70-85)
B-35 1¼" Asphaltic Concrete Leveling Course, (70-85)

$$\text{Constant} = \frac{1.25}{12} \times 48 \times \frac{100}{27} = 18.518 \text{ Cu Yds./Sta.}$$

B-35 3" Asphaltic Concrete Base Course (70-85)

$$\text{Constant} = \frac{3}{12} \times 48 \times \frac{100}{27} = 44.444 \text{ Cu Yds./Sta.}$$

T-30 Bituminous Prime Coat, as per plan

$$\text{Constant} = \frac{48 \times 100}{9} \times 0.40 = 213.34 \text{ Gal./Sta.}$$

NORMAL SECTIONS

NOTE: Sta. on Normal Sections extend 200' into curves.

B-20 4" Waterbound Macadam Base Course

$$\frac{4}{12} \times 48 \times \frac{100}{27} = 59.260$$

$$\frac{4}{12} \times 62 \times \frac{100}{27} = 76.544$$

$$\text{Constant} = 135.804 \text{ Cu Yds./Sta.}$$

I-22 Subbase

$$\frac{8}{12} \times 30 \times \frac{100}{27} \times 2 = 148.148$$

$$\frac{25.53 + 23.50}{2} \times 13 \times \frac{100}{27} = 98.363$$

$$246.511$$

Ⓐ Deduct $\frac{12 \times 4}{144} \times \frac{100}{27} \times 2 = 2.444$

$$\text{Constant} = 244.067 \text{ Cu Yds./Sta.}$$

SUPERELEVATED SECTIONS

B-20 4" Waterbound Macadam Base Course

$$\frac{4}{12} \times 48 \times \frac{100}{27} = 59.260$$

$$\frac{4}{12} \times 30 \times \frac{100}{27} = 37.037$$

$$\frac{4}{12} \times 31 \times \frac{100}{27} = 38.272$$

$$\text{Constant} = 134.659 \text{ Cu Yds./Sta.}$$

I-22 Subbase

Pavement $\frac{8}{12} \times 59 \times \frac{100}{27} = 145.679$

Median $\frac{3.25}{12} \times 6.5 \times \frac{100}{27} = 6.520$

Constant Ⓑ $\frac{94.274}{246.473}$

Deduct Ⓐ (See Normal Sec.) $\frac{2.444}{244.029}$ Cu Yds/Sta.

S = Superelevation Slope

$$\text{Constant} = \frac{4.5(S) + 1.958 + 1.958}{2} \times 130 \times \frac{100}{27}$$

$$\text{Constant} = 108.33(S) + 94.274\text{Ⓑ}$$

① 108.33 (0.347) + 244.03 = 247.79 Cu Yds./Sta.
② 108.33 (0.24) + 244.03 = 246.63 Cu Yds./Sta.
③ 108.33 (0.36) + 244.03 = 247.93 Cu Yds./Sta.
④ 108.33 (0.533) + 244.03 = 249.80 Cu Yds./Sta.

PLOTTED BY DATE | CHECKED BY DATE | INKED BY DATE
DESCRIPTION: TYPICAL SECTIONS, PAVEMENT, DRAINAGE, R.R. X-ING, QUANTITIES

FED. RD. DIVISION	STATE	PROJECT	
2	OHIO		

24
418

BELMONT COUNTY
BEL - 7 - 20.74

CALCULATIONS

ESTIMATED QUANTITIES FOR SHT. Nº 182

* STA. 1118+66.5 TO STA. 1125+07.7 — MARTINS FERRY
STA. 1125+07.7 TO STA. 1125+21 — * BRIDGE PORT

①&② 44,835 SY × 0.104167' ÷ 27 = 172.98 CY *	⑤ LT. 197.7 LF 13.3 LF
3.31 SY × 0.104167' ÷ 27 = 1.27 CY	RT. 641.7 LF 13.3 LF
	MEDIAN 6854 LF 266 LF
③ 44,835 SY × 0.2500' ÷ 27 = 415.14 CY *	TOTAL 1524.8 * LF 53.2 LF
3.31 SY × 0.2500' ÷ 27 = 3.06 CY	
	⑫ (1875 SY − 853) ÷ 9 = 303.11 * SY
④ 44,835 SY × 0.400 ÷ 9 = 1993 GAL *	166 SY ÷ 9 = 18.44 SY
331 SY × 0.400 ÷ 9 = 14.7 GAL	
	㉓ 1214 SY ÷ 9 = 135 * SY
*⑥ 44,835 SY × 0.667' ÷ 27 = 1107.04 CY	
MEDIAN (b) 1214 SY × 0.3333' ÷ 27 = 14.99 CY	* ⑦ 44,835 SY × 0.667' ÷ 27 = 1107.04 CY
STEP OUT: LT. 421 × 3 × 0.3333' ÷ 27 = 15.59	STEP OUT = 86.93 CY × 2 = 173.86 CY
LT. 289 × 4 × 0.3333' ÷ 27 = 14.26	MEDIAN (b) 1224 SY × 0.667' ÷ 27 = 302.22 CY
RT. 641 ¾ × 4 × 0.3333' ÷ 27 = 31.69	MEDIAN (a) 14.08 SY × 250' ÷ 27 = 130.37 CY
MEDIAN (342.7 × 3 × 0.3333 ÷ 27) × 2 = 25.39	18.73 SY × 86.7' ÷ 27 = 60.14 CY
SUBTOTAL = 86.93 → 86.93 CY	TOTAL = 1773.63 * CY
TOTAL = 1208.96 CY *	
	⑦ 331 SY × 0.667' ÷ 27 = 8.17 CY
⑥ 331 SY × 0.667' ÷ 27 = 8.17 CY	STEP OUT = 2.30 CY × 2 = 4.60 CY
STEP OUT: LT & RT. (26.6 × 4 × 0.3333 ÷ 27) = 1.32	MEDIAN (a) 25.23 SY × 13.3' ÷ 27 = 12.43 CY
MEDIAN (26.6 × 3 × 0.3333 ÷ 27) 0.98	TOTAL = 25.20 CY
SUBTOTAL = 2.30 → 2.30 CY	
TOTAL = 10.47 CY	

ESTIMATED QUANTITIES FOR SHT. Nº 185

STA. 1171+28.7 TO STA. 1181+27.9

①&② 72,302 SY × 0.104167' ÷ 27 = 278.94 CY	⑤ LT. 1072 LF
	RT. 1026 LF
③ 72,302 SY × 0.2500' ÷ 27 = 669.46 CY	MEDIAN 1000 LF
	TOTAL = 3098 LF
④ 72,302 SY × 0.400 ÷ 9 = 3210 GAL	
	⑫ (1875 + 1875) ÷ 9 = 417 SY
⑥ 72,302 SY × 0.6667' ÷ 27 = 1785.23 CY	
MEDIAN (b) 2416 SY × 0.3333' ÷ 27 = 29.83 CY	㉓ (1202 + 1214) ÷ 9 = 268 SY
STEP OUT: LT. 1072 × 4 × 0.3333 ÷ 27 = 52.94	
RT. 121 × 4 × 0.3333 ÷ 27 = 5.98	⑦ 72,302 SY × 0.6667' ÷ 27 = 1785.23 CY
RT. 905 × 3 × 0.3333 ÷ 27 = 33.52	STEP OUT 129.48 CY × 2 = 258.94 CY
MEDIAN (250 × 3 × 0.3333 ÷ 27) × 4 = 37.04	MEDIAN (b) 24.16 SY × 0.6667 ÷ 27 = 59.65 CY
SUBTOTAL = 129.48 → 129.48 CY	MEDIAN (a) 13.24 SY × 250' ÷ 27 = 122.59 CY
TOTAL = 1344.54 CY	13.92 SY × 250' ÷ 27 = 128.88 CY
	TOTAL = 2355.29 CY

ESTIMATED QUANTITIES FOR SHT Nº 193

STA. 1248+98.2 TO STA. 1252+16.59 — * RURAL
STA. 1252+16.59 TO STA. 1253+94.60 *

①&② 17,507 SY × 0.104167 ÷ 27 = 67.54 CY	⑤ LT. 318.4 LF * 200 LF
11,522 SY × 0.104167 ÷ 27 = * 44.52 CY	RT. 318.4 LF * 178 LF
	MEDIAN 500 LF * 212 LF
③ 17,507 SY × 0.2500' ÷ 27 = 162.10 CY	TOTAL = 1136.8 LF * 590 LF
11,522 SY × 0.2500 ÷ 27 = * 106.68 CY	
	⑫ 1875 SY ÷ 9 = 208.3 SY
④ 17,507 SY × 0.400 ÷ 9 = 778 GAL	1019 SY ÷ 9 = * 113.2 SY
11,522 SY × 0.400 ÷ 9 = * 512 GAL	
	㉓ 314 SY × 9 = 35 SY
⑥ 17,507 SY × 0.667' ÷ 27 = 432.27 CY	
MEDIAN (b) 314 SY × 0.333' ÷ 27 = 3.88 CY	⑦ 17,507 SY × 0.667' ÷ 27 = 432.27 CY
STEP OUT: LT. (318.4 × 4 × 0.333) ÷ 27 = 15.70	STEP OUT 49.92 CY × 2 = 99.84 CY
RT. (318.4 × 4 × 0.333) ÷ 27 = 15.70	MEDIAN (b) 314 SY × 0.667' ÷ 27 = 7.75 CY
MEDIAN (250 × 3 × 0.333 ÷ 27) × 2 = 18.52	MEDIAN (a) 14.30 SY × 250' ÷ 27 = 132.41 CY
SUBTOTAL = 49.92 → 49.92 CY	TOTAL = 672.27 CY
TOTAL = 486.07 CY	
	⑦ * 11,522 SY × 0.667' ÷ 27 = 284.49 CY
⑥ * 11,522 SY × 0.667' ÷ 27 = 284.49 CY	STEP OUT 23.88 CY × 2 = 47.76 CY
STEP OUT: LT. (191 × 4 × 0.333') ÷ 27 = 9.43	MEDIAN (a) 18.31 SY × 100' ÷ 27 = 67.81 CY
RT. (178 × 3 × 0.333') ÷ 27 = 6.59	TOTAL = * 400.06 CY
MEDIAN (106 × 3 × 0.333 ÷ 27) × 2 = 7.86	
SUBTOTAL = 23.88 → 23.88 CY	
TOTAL = * 308.37 CY	

ESTIMATED QUANTITIES FOR SPRING ST.

STA. 8+45 TO STA. 9+34

① 2116 SY × 1041667' ÷ 27 = 8.16 CY	③ 2116 SY × 0.3333 ÷ 27 = 26.12 CY
FEATHERING ((0+0.39)/2) × 18 × 30' ÷ 27 = 3.90 CY	
TOTAL = 12.06 CY	㉑ LT. 108 LF
	RT. 71 LF
② 2116 SY × 0.104167' ÷ 27 = 8.16 CY	TOTAL = 179 LF
	⑦ 2116 SY × 0.500 ÷ 27 = 39.19 CY
	STEP OUT (179 × 3.5 × 0.500) ÷ 27 = 11.60 CY
	TOTAL = 50.79 CY

ESTIMATED QUANTITIES FOR SHT. Nº 190

STA. 1225+89.39 TO STA. 1230+92.99

①&② 31,201 SY × 0.104167' ÷ 27 = 120.37 CY	⑤ LT. 551 LF
	RT. 504 LF
③ 31,201 SY × 0.2500' ÷ 27 = 288.90 CY	MEDIAN 712 LF
	TOTAL = 1716 LF
④ 31,201 SY × 0.400 ÷ 9 = 1387 GAL	
	⑫ (1875' + 1019') ÷ 9 = 322 SY
⑥ 31,201 SY × 0.6667 ÷ 27 = 770.40 CY	
MEDIAN (b) 3/4 SY × 0.3333 ÷ 27 = 3.88 CY	㉓ 314' ÷ 9 = 35 SY
STEP OUT: LT. 550.50 × 4 × 0.3333 ÷ 27 = 27.19	
RT. 503.60 × 3 × 0.3333 ÷ 27 = 18.65	⑦ 31,201 SY × 0.6667' ÷ 27 = 770.40 CY
MEDIAN (356 × 3 × 0.3333 ÷ 27) × 2 = 26.38	STEP OUT 72.22 CY × 2 = 144.44 CY
SUBTOTAL 72.22 → 72.22 CY	MEDIAN (b) 3/4 SY × 0.6667' ÷ 27 = 7.75 CY
TOTAL = 846.50 CY	MEDIAN (a) 14.09 SY × 250 ÷ 27 = 130.40 CY
	19.16 SY × 100 ÷ 27 = 70.96 CY
	TOTAL = 1223.95 CY

ESTIMATED QUANTITIES FOR MACKEY AVE.

STA. 8+50 TO STA. 9+01

① 1326 SY × 0.104167' ÷ 27 = 5.12 CY	㉒ LT. 51' LF
	RT. 51' LF
② 1326 SY × 0.104167' ÷ 27 = 5.12 CY	TOTAL = 102' LF
	⑦ 1326 SY × 0.5000' ÷ 27 = 24.56 CY
③ 1326 SY × 0.3333' ÷ 27 = 16.37 CY	STEP OUT 102' × 3.5 × 0.500' ÷ 27 = 6.61 CY
	TOTAL = 31.17 CY

ESTIMATED QUANTITIES FOR SHT. Nº 191

STA. 1237+53 TO STA. 1242+49.5

①&② 30,292 SY × 0.104167 ÷ 27 = 116.87 CY	⑤ LT. 527 LF
	RT. 497 LF
③ 30,292 SY × 0.2500 ÷ 27 = 280.48 CY	MEDIAN 712 LF
	TOTAL = 1604 LF
④ 30,292 SY × 0.400 ÷ 9 = 1346 GAL	
	⑫ (1875 SY / 1019') ÷ 9 = 322 SY
⑥ 30,292 SY × 0.6667 ÷ 27 = 747.95 CY	
MEDIAN (b) 3/4 SY × 0.3333 ÷ 27 = 3.88 CY	㉓ (3/4') ÷ 9 = 35 SY
STEP OUT: LT. 527 × 4 × 0.3333 ÷ 27 = 26.02	
RT. 496.5 × 3 × 0.3333 ÷ 27 = 18.39	⑦ 30.292 SY × 0.500 ÷ 27 = 560.96 CY
MEDIAN (356 × 3 × 0.3333 ÷ 27) × 2 = 26.38	STEP OUT 70.79 CY × 2 = 141.58 CY
SUBTOTAL = 70.79 → 70.79 CY	MEDIAN (b) 3/4 SY × 0.6667 ÷ 27 = 7.75 CY
TOTAL = 822.62 CY	MEDIAN (a) 14.09 SY × 250' ÷ 27 = 130.40 CY
	19.16 SY × 100 ' ÷ 27 = 70.96 CY
	TOTAL = 911.65 CY

ESTIMATED QUANTITIES FOR OHIO AVE. & JEANETTE AVE.

① 5606 SY × 0.104167 ÷ 27 = 21.63 CY	③ 5606 SY × 0.3333' ÷ 27 = 69.21 CY
OHIO FEATHERING ((0.15 + 18' + 0)/2) × 20' ÷ 27 = 1.55 CY	㉑ OHIO AVE. LT 203 LF
JEANETTE FEATHERING ((0.11 + 15' + 0)/2) × 17.5 ÷ 27 = 0.53 CY	OHIO AVE. RT. 209 LF
TOTAL = 23.71 CY	JEANETTE AVE. 76 LF
	TOTAL = 488 LF
② 5606 SY × 0.104167 ÷ 27 21.63 CY	⑦ 5606 SY × 0.500' ÷ 27 = 103.81 CY
	STEP OUT 488 × 3.5 × 0.500' ÷ 27 = 31.63 CY
	TOTAL = 135.44 CY

LEGEND

Nº	ITEM DESCRIPTION
①	T-35 1¼" ASPHALTIC CONCRETE SURFACE COURSE
②	B-35 1¼" ASPHALTIC CONCRETE LEVELING COURSE
③	B-35 3" ASPHALTIC CONCRETE BASE COURSE
④	T-30 BITUMINOUS PRIME COAT
⑥	B-20 4" WATERBOUND MACADAM BASE COURSE
㉑	I-12 COMBINATION CURB & GUTTER, STANDARD TYPE 2
⑤	I-12 COMBINATION CURB & GUTTER, TYPE 2 MODIFIED AS PER PLAN
㉒	I-12 COMBINATION CURB & GUTTER, AS PER PLAN
⑳	I-21 CONCRETE MEDIAN PAVEMENT, TYPE 2 MODIFIED, AS PER PLAN
⑫	I-21 4" CONCRETE MEDIAN PAVEMENT, AS PER PLAN
㉓	I-21 CONCRETE MEDIAN PAVEMENT, AS PER PLAN
⑦	I-22 SUBBASE
⑭	I-23 PRECAST WHITE PORTLAND CEMENT CONCRETE TRAFFIC DIVIDERS.

DESCRIPTION	PLOTTED BY	PLOTTED DATE	INKED BY	INKED DATE	CHECKED BY	CHECKED DATE
ESTIMATES						
DRAWING						
QUANTITIES						

FED. RD. DIVISION	STATE	PROJECT	
2	OHIO		

25
418

BELMONT COUNTY
BEL - 7 - 20.74

CALCULATIONS

ESTIMATED QUANTITIES FOR LINCOLN AVE.
STA. 0+62.4 TO STA. 6+17.4

①&② 13,998 ᵒ/ₓ × 0.104167' ÷ 27 = 54.00 C.Y. FEATHERING $\left(\frac{0.36'+0'}{2}\right)$ × 28' × 576' ÷ 27 = 10.75 C.Y. ① TOTAL = 64.75 C.Y.	㉑ LT. 574 L.F. RT. 536 L.F. TOTAL = 1110 L.F.
③ 13,998 ᵒ/ₓ × 0.2500' ÷ 27 = 129.61 C.Y.	
④ 13,998 ᵒ/ₓ × 0.400 ÷ 9 = 622.0 GAL.	
⑥ 13,998 ᵒ/ₓ × 0.0667' ÷ 27 = 345.63 C.Y. STEP OUT LT. 574' × 4.5' × 0.3333' ÷ 27 = 31.89 RT. 536' × 4.5' × 0.3333' ÷ 27 = 29.78 SUBTOTAL = 61.67 → 61.67 C.Y. TOTAL = 407.30 C.Y.	⑦ 13,998 ᵒ/ₓ × 0.0667' ÷ 27 = 345.63 C.Y. STEP OUT 61.67 C.Y. × 2 = 123.34 C.Y. TOTAL = 468.97 C.Y.

FOR LEGEND - SEE SHEET № 24

ESTIMATED QUANTITIES FOR AETNA ST.
STA. 6+00 TO STA. 8+54.4

①&② 13,704 ᵒ/ₓ × 0.104167' ÷ 27 = 52.87 C.Y. FEATHERING $\left(\frac{0'+0.11'}{2}\right)$ × 38' × 25' ÷ 27 = 1.94 C.Y. ① TOTAL = 54.81 C.Y.	⑤ LT. 380 L.F. RT. 240 L.F. TOTAL = 620 L.F.
③ 13,704 ᵒ/ₓ × 0.2500' ÷ 27 = 126.89 C.Y. MEDIAN 234 ᵒ/ₓ × 0.2500' ÷ 27 = 2.17 C.Y. TOTAL = 129.06 C.Y.	⑳ (58.5' × 4') ÷ 9 = 26 S.Y.
④ 13,704 ᵒ/ₓ × 0.4000 ÷ 9 = 6.09 GAL.	⑦ 13,704 ᵒ/ₓ × 0.0667' ÷ 27 = 338.87 C.Y. MEDIAN 234 ᵒ/ₓ × 0.0667' ÷ 27 = 5.78 C.Y. STEP OUT 27.16 C.Y. × 2 = 54.32 C.Y. TOTAL = 398.97 C.Y.
⑥ 13,704 ᵒ/ₓ × 0.0667' ÷ 27 = 338.37 C.Y. MEDIAN 234 ᵒ/ₓ × 0.0667' ÷ 27 = 5.78 C.Y. STEP OUT LT. 280' × 3' × 0.3333' ÷ 27 = 10.37 LT. 100' × 4' × 0.3333' ÷ 27 = 4.94 RT. 240' × 4' × 0.3333' ÷ 27 = 11.85 SUBTOTAL = 27.16 → 27.16 C.Y. TOTAL = 371.31 C.Y.	

ESTIMATED QUANTITIES FOR HANOVER ST.
STA. 7+80 TO STA. 14+10

①&② 15,570 ᵒ/ₓ × 0.104167' ÷ 27 = 60.07 C.Y.	⑤ LT. 390' L.F. RT. 390' L.F. TOTAL 780' L.F.
③ 15,570 ᵒ/ₓ × 0.2500' ÷ 27 = 144.17 C.Y.	
④ 15,570 ᵒ/ₓ × 0.400 ÷ 9 = 692.0 GAL.	
⑥ 15,570 ᵒ/ₓ × 0.0667' ÷ 27 = 384.44 C.Y. STEP OUT 780' × 4' × 0.3333' ÷ 27 = 38.52 C.Y. TOTAL = 422.96 C.Y.	⑦ 15,570 ᵒ/ₓ × 0.0667' ÷ 27 = 384.44 C.Y. STEP OUT 38.52 C.Y. × 2 = 79.04 C.Y. TOTAL = 463.48 C.Y.

ESTIMATED QUANTITIES FOR 5TH ST.
STA. 4+75 TO STA. 8+70.2

①&② 10,366 ᵒ/ₓ × 0.104167' ÷ 27 = 39.99 C.Y. FEATHERING $\left(\frac{0'+0.09'}{2}\right)$ × 28' × 25' ÷ 27 = 1.17 C.Y. ① 41.16 C.Y.	㉑ LT. 361 L.F. RT. 379 L.F. TOTAL = 740 L.F.
③ 10,366 ᵒ/ₓ × 0.2500' ÷ 27 = 95.98 C.Y.	⑦ 10,366 ᵒ/ₓ × 0.0667' ÷ 27 = 255.95 C.Y. STEP OUT 44.84 C.Y. × 2 = 89.68 C.Y. TOTAL = 345.63 C.Y.
④ 10,366 ᵒ/ₓ × 0.400 ÷ 9 = 461.0 GAL.	
⑥ 10,366 ᵒ/ₓ × 0.0667' ÷ 27 = 255.95 C.Y. STEP OUT LT. 415' × 4.5' × 0.3333' ÷ 27 = 23.06 RT. 392' × 4.5' × 0.3333' ÷ 27 = 21.78 SUBTOTAL = 44.84 → 44.84 C.Y. TOTAL = 300.79 C.Y.	

SUPERELEVATION TABLES

FED. RD. DIVISION	STATE	PROJECT	
2	OHIO		

BELMONT COUNTY
BEL -7-20.74

(26 of 48)

CURVE NO. 1

P.I. STATION 1096+98.17
Dc. = 1°-28' MAX. S. = .0347 ft/ft

25'-6" LT. OF P.G.	STATION	PROFILE GRADE	25'-6" RT. OF P.G.
FROM STATION 1089+75.00 TO STATION 1096+25 SEE SHEET No. 195.			
666.81	1096+25	664.62	663.53
665.45	1096+50	664.66	663.67
665.59	1096+75	664.70	663.81
665.73	1097+00	664.74	663.95
665.87	1097+25	664.78	664.09
666.01	1097+50	664.82	664.23
666.13	1097+75	664.86	664.39
666.19	1098+00	665.40	664.61
666.22	1098+25	665.54	664.86
666.24	1098+50	665.68	665.12
666.26	1098+75	665.82	665.38
666.28	1099+00	665.96	665.56
666.31	1099+25	666.10	665.70
666.33	1099+50	666.24	665.84
666.37	1099+75	666.38	665.98
666.44	1100+00	666.52	666.12
666.53	1100+25	666.66	666.26
666.61	1100+50	666.80	666.40
666.68	1100+75	666.94	666.54
666.75	1101+00	667.08	666.68
666.85	1101+25	667.22	666.82
666.96	1101+50	667.36	666.96

CURVE NO. 2.

P.I. STATION 1114+77.84
Dc. = 1°-28' MAX. S. = .0347%

25'-6" LT. OF P.G.	STATION	PROFILE GRADE	25'-6" RT. OF P.G.
666.84	1103+25	667.34	666.84
666.67	1103+50	667.34	666.84
666.51	1103+75	666.82	666.42
666.34	1104+00	666.60	666.20
666.19	1104+25	666.38	665.98
666.03	1104+50	666.16	665.76
665.86	1104+75	665.94	665.54
665.71	1105+00	665.72	665.32
665.59	1105+25	665.50	665.10

CONTINUED CURVE NO. 2.

P.I. STATION 1114+77.84
Dc. = 1°-28' MAX. S. = .0347 ft/ft

25'-6" LT. OF P.G.	STATION	PROFILE GRADE	25'-6" RT. OF P.G.
665.49	1105+50	665.28	664.88
665.32	1105+75	665.06	664.66
665.25	1106+00	664.84	664.40
665.18	1106+25	664.62	664.06
665.06	1106+50	664.40	663.72
664.97	1106+75	664.18	663.39
664.83	1107+00	663.96	663.09
664.63	1107+25	663.74	662.85
664.41	1107+50	663.52	662.63
664.19	1107+75	663.30	662.41
663.98	1108+00	663.08	662.19
663.75	1108+25	662.86	661.97
663.53	1108+50	662.64	661.75
663.31	1108+75	662.42	661.53
663.09	1109+00	662.20	661.31
662.87	1109+25	661.98	661.09
662.65	1109+50	661.76	660.87
662.43	1109+75	661.54	660.65
662.21	1110+00	661.32	660.43
662.02	1110+25	661.13	660.24
661.88	1110+50	660.99	660.10
661.80	1110+75	660.91	660.02
661.77	1111+00	660.88	659.99
661.80	1111+25	660.91	660.02
661.86	1111+50	660.99	660.10
662.02	1111+75	661.13	660.24
662.21	1112+00	661.32	660.43
662.43	1112+25	661+54	660.65
662.65	1112+50	661.76	660.87
662.86	1112+75	661.97	661.08
663.08	1113+00	662.19	661.30
663.30	1113+25	662.41	661.52
663.52	1113+50	662.63	661.74
663.47	1113+75q	662.85	661.96
663.96	1114+00	663.07	662.18
664.18	1114+25	663.29	662.40
664.40	1114+50	663.51	662.62
664.61	1114+75	663.72	662.83
664.83	1115+00	663.94	663.05
665.05	1115+25	664.16	663.27
665.27	1115+50	664.38	663.49
665.49	1115+75	664.60	663.71

CONTINUED CURVE NO. 2.

P.I. STATION 1114+77.84
Dc. = 1°-28' MAX. S. = .0347 ft/ft

25'-6" LT. OF P.G.	STATION	PROFILE GRADE	25'-6" RT. OF P.G.
665.71	1116+00	664.82	663.93
665.90	1116+25	665.04	664.15
666.18	1116+50	665.26	664.37
666.36	1116+75	665.47	664.58
666.58	1117+00	665.69	664.80
666.80	1117+25	665.91	665.02
667.02	1117+50	666.13	665.24
667.24	1117+75	666.35	665.46
667.46	1118+00	666.57	665.68
667.68	1118+25	666.79	665.90
667.90	1118+50	667.01	666.12
668.09	1118+75	667.20	666.31
668.26	1119+00	667.37	666.48
668.39	1119+25	667.50	666.61
668.49	1119+50	667.60	666.71
668.55	1119+75	667.66	666.77
668.58	1120+00	667.69	666.80
668.57	1120+25	667.68	666.79
668.53	1120+50	667.64	666.75
668.47	1120+75	667.58	666.69
668.41	1121+00	667.52	666.63
668.35	1121+25	667.46	666.57
668.29	1121+50	667.40	666.51
668.23	1121+75	667.34	666.45
668.17	1122+00	667.28	666.39
668.09	1122+25	667.22	666.35
667.95	1122+50	667.16	666.37
667.78	1122+75	667.10	666.42
667.60	1123+00	667.04	666.45
667.42	1123+25	666.98	666.54
667.24	1123+50	666.92	666.52
667.07	1123+75	666.86	666.46
666.89	1124+00	666.80	666.40
666.73	1124+25	666.74	666.34
666.60	1124+50	666.68	666.26
666.49	1124+75	666.62	666.22
666.37	1125+00	666.56	666.16
666.24	1125+25	666.50	666.10
666.13	1125+50	666.44	666.04
666.01	1125+75	666.38	665.98
665.92	1126+00	666.32	665.92

CURVE NO. 3.

P.I. STATION 1145+80.71
Dc = 1°-28' MAX. S. = .0347 ft/ft

25'-6" LT. OF P.G.	STATION	PROFILE GRADE	25'-6" RT. OF P.G.
659.78	1141+75	660.18	659.78
659.35	1142+00	660.28	659.91
659.96	1142+25	660.38	660.07
660.06	1142+50	660.48	660.22
660.16	1142+75	660.58	660.39
660.25	1143+00	660.68	660.55
660.38	1143+25	660.78	660.70
660.48	1143+50	660.88	660.87
660.58	1143+75	660.98	661.07
660.68	1144+00	661.08	661.29
660.78	1144+25	661.18	661.50
660.84	1144+50	661.28	661.72
660.82	1144+75	661.36	661.94
660.80	1145+00	661.46	662.16
660.79	1145+25	661.58	662.37
660.81	1145+50	661.68	662.55
660.89	1145+75	661.78	662.67
661.01	1146+00	661.88	662.75
661.19	1146+25	661.98	662.77
661.40	1146+50	662.08	662.76
661.62	1146+75	662.18	662.74
661.84	1147+00	662.26	662.72
661.98	1147+25	662.36	662.70
662.08	1147+50	662.46	662.69
662.16	1147+75	662.56	662.67
662.28	1148+00	662.66	662.67
662.38	1148+25	662.76	662.70
662.48	1148+50	662.86	662.75
662.58	1148+75	662.96	662.79
662.68	1149+00	663.06	662.82
662.78	1149+25	663.16	662.87
662.88	1149+50	663.26	662.91
662.96	1149+75	663.38	662.98

CURVE NO. 4.

P.I. STATION 1167+70.64
Dc. = 1°-28' MAX. S. = .0347 ft/ft

25'-6" LT. OF P.G.	STATION	PROFILE GRADE	25'-6" RT. OF P.G.
668.38	1163+25	668.78	668.38
668.51	1163+50	668.88	668.48
668.67	1163+75	668.98	668.58
668.82	1164+00	669.08	668.68
668.99	1164+25	669.18	668.78
669.15	1164+50	669.28	668.88
669.30	1164+75	669.38	668.98
669.47	1165+00	669.48	669.08
669.66	1165+25	669.57	669.17
669.86	1165+50	669.65	669.25
670.04	1165+75	669.72	669.32
670.21	1166+00	669.77	669.38
670.37	1166+25	669.81	669.35
670.51	1166+50	669.83	669.15
670.63	1166+75	669.84	669.05
670.71	1167+00	669.84	668.97
670.71	1167+25	669.82	668.93
670.66	1167+50	669.79	668.90
670.64	1167+75	669.75	668.86
670.58	1168+00	669.69	668.80
670.49	1168+25	669.62	668.75
670.32	1168+50	669.53	668.74
670.11	1168+75	669.43	668.75
669.86	1169+00	669.32	668.78
669.64	1169+25	669.20	668.76
669.40	1169+50	669.08	668.66
669.17	1169+75	668.96	668.56
668.93	1170+00	668.84	668.44
668.71	1170+25	668.72	668.32
668.52	1170+50	668.60	668.20
668.35	1170+75	668.48	668.08
668.17	1171+00	668.36	667.96
667.96	1171+25	668.24	667.84
667.81	1171+50	668.12	667.72
667.83	1171+75	668.00	667.62

CURVE NO. 5.

P.I. STATION 1180+97.34
Dc = 1°-00' MAX S. = 0240 ft/ft

25'-6" LT. OF P.G.	STATION	PROFILE GRADE	25'-6" RT. OF P.G.
667.48	1172+00	667.88	667.36
667.36	1172+25	667.76	667.28
667.24	1172+50	667.64	667.40
667.12	1172+75	667.52	667.38
667.00	1173+00	667.40	667.31
666.88	1173+25	667.28	667.26
666.76	1173+50	667.16	667.24
666.64	1173+75	667.04	667.22
666.52	1174+00	666.92	667.22
666.40	1174+25	666.80	667.18
666.28	1174+50	666.68	667.08
666.15	1174+75	666.56	666.97
666.03	1175+00	666.44	666.85
665.92	1175+25	666.32	666.75
665.80	1175+50	666.20	666.60
665.68	1175+75	666.08	666.48
665.56	1176+00	665.96	666.36
665.44	1176+25	665.84	666.24
665.32	1176+50	665.72	666.12
665.20	1176+75	665.60	666.00
665.06	1177+00	665.48	665.87
664.89	1177+25	665.28	665.67
664.73	1177+50	665.32	665.88
664.68	1177+75	665.29	665.80
664.70	1178+00	665.31	665.83
664.75	1178+25	665.36	665.97
664.85	1178+50	665.46	666.07
664.98	1178+75	665.59	666.20
665.15	1179+00	665.75	666.37
665.34	1179+25	665.95	666.56
665.53	1179+50	666.14	666.75
665.72	1179+75	666.33	666.94
665.91	1180+00	666.52	667.13
666.14	1180+25	666.71	667.32
666.29	1180+50	666.90	667.51
666.48	1180+75	667.09	667.70
666.67	1181+00	667.29	667.89
666.87	1181+25	667.47	668.09
667.05	1181+50	667.65	668.27
667.24	1181+75	667.83	668.46
667.43	1182+00	668.04	668.68
667.62	1182+25	668.23	668.84

FED. RD. DIVISION	STATE	PROJECT	
2	OHIO		

BELMONT COUNTY
BEL - 7 - 20.74

SUPERELEVATION TABLES

CONTINUED CURVE NO. 5

P.I. STATION 1180+97.34
Dc.= 1°- 00' MAX. S. = .0240 ft/ft

25'-6" LT. OF P.G.	STATION	PROFILE GRADE	25'-6" RT. OF P.G.
667.81	1182+50	668.42	669.03
668.00	1182+75	668.61	669.22
668.19	1183+00	668.80	669.41
668.38	1183+25	668.99	669.60
668.57	1183+50	669.18	669.79
668.76	1183+75	669.37	669.98
668.95	1184+00	669.56	670.17
669.14	1184+25	669.75	670.36
669.33	1184+50	669.94	670.55
669.52	1184+75	670.13	670.74
669.71	1185+00	670.32	670.93
669.90	1185+25	670.51	671.12
670.09	1185+50	670.70	671.31
670.28	1185+75	670.89	671.50
670.47	1186+00	671.08	671.69
670.66	1186+25	671.27	671.88
670.85	1186+50	671.46	672.07
671.04	1186+75	671.65	672.26
671.23	1187+00	671.84	672.45
671.42	1187+25	672.03	672.64
671.68	1187+50	672.22	672.76
671.98	1187+75	672.41	672.83
672.20	1188+00	672.60	672.90
672.39	1188+25	672.79	672.98
672.58	1188+50	672.98	673.06
672.77	1188+75	673.17	673.15
672.96	1189+00	673.36	673.27
673.15	1189+25	673.55	673.41
673.34	1189+50	673.74	673.53
673.53	1189+75	673.93	673.67
673.72	1190+00	674.12	673.80
673.91	1190+25	674.31	673.93
674.10	1190+50	674.50	674.10

CURVE NO. 6

P.I. STATION 1207+99.88
Dc.= 1°- 28' MAX. S. = .0347 ft/ft

25'-6" LT OF P.G.	STATION	PROFILE GRADE	25'-6" RT. OF P.G
698.53	1202+75	698.93	698.53
699.31	1203+00	699.68	699.28
700.12	1203+25	700.43	700.03
700.93	1203+50	701.18	700.78
701.74	1203+75	701.93	701.53
702.55	1204+00	702.68	702.28
703.35	1204+25	703.43	703.03
704.17	1204+50	704.18	703.78
705.02	1204+75	704.93	704.53
705.89	1205+00	705.68	705.28
706.75	1205+25	706.43	706.03
707.62	1205+50	707.18	706.74
708.49	1205+75	707.93	707.37
709.36	1206+00	708.68	708.00
710.22	1206+25	709.43	708.64
711.05	1206+50	710.18	709.31
711.82	1206+75	710.93	710.04
712.57	1207+00	711.68	710.79
713.36	1207+25	712.41	711.52
713.99	1207+50	713.10	712.21
714.65	1207+75	713.76	712.87
715.27	1208+00	714.38	713.49
715.85	1208+25	714.96	714.07
716.39	1208+50	715.50	714.61
716.90	1208+75	716.01	715.12
717.37	1209+00	716.48	715.59
717.80	1209+25	716.91	716.02
718.17	1209+50	717.30	716.43
718.45	1209+75	717.66	716.87
718.66	1210+00	717.98	717.30
718.82	1210+25	718.26	717.70
718.94	1210+50	718.50	718.06
719.03	1210+75	718.71	718.31
719.09	1211+00	718.88	718.48
719.10	1211+25	719.01	718.61
719.09	1211+50	719.10	718.70
719.08	1211+75	719.16	718.76
719.05	1212+00	719.18	718.78
718.97	1212+25	719.16	718.76
718.85	1212+50	719.10	718.70
718.70	1212+75	719.01	718.61
718.51	1213+00	718.88	718.48
718.31	1213+25	718.71	718.31

CURVE NO. 7

P.I. STATION 1233+52.20
Dc.= 1°-30' MAX. S. = .0360 ft/ft

25'-6" LT. OF P.G.	STATION	PROFILE GRADE	25'-6" RT. OF P.G
702.28	1220+00	702.68	702.28
701.53	1220+25	701.93	701.58
700.78	1220+50	701.18	700.89
700.05	1220+75	700.45	700.22
699.36	1221+00	699.76	699.59
698.70	1221+25	699.10	698.99
698.08	1221+50	698.48	698.42
697.50	1221+75	697.90	697.92
696.96	1222+00	697.36	697.49
696.45	1222+25	696.85	697.10
695.97	1222+50	696.38	696.75
695.45	1222+75	695.93	696.41
694.88	1223+00	695.48	696.06
694.31	1223+25	695.03	695.75
693.74	1223+50	694.58	695.42
693.21	1223+75	694.13	695.05
692.76	1224+00	693.68	694.60
692.31	1224+25	693.23	694.15
691.86	1224+50	692.78	693.70
691.41	1224+75	692.33	693.25
690.96	1225+00	691.88	692.80
690.51	1225+25	691.43	692.35
690.06	1225+50	690.98	691.90
689.61	1225+75	690.53	691.45
689.16	1226+00	690.06	691.00
688.71	1226+25	689.63	690.55
688.26	1226+50	689.18	690.10
687.81	1226+75	688.73	689.65
687.36	1227+00	688.28	689.20
686.91	1227+25	687.83	688.75
686.46	1127+50	687.38	688.30
686.01	1227+75	686.93	687.85
685.56	1228+00	686.48	687.40
685.11	1228+25	686.03	686.95
684.66	1228+50	685.58	686.50
684.21	1228+75	685.13	686.05
683.76	1229+00	684.68	685.60
683.31	1229+25	684.23	685.15
682.86	1229+50	683.78	684.70
682.41	1229+75	683.33	684.25
681.96	1230+00	682.88	683.80
681.51	1230+25	682.43	683.35

CONTINUED CURVE NO. 7

P.I. STATION 1233+52.20
Dc.= 1°-30' MAX. S. = .0360 ft/ft

25'-6" LT. OF P.G.	STATION	PROFILE GRADE	25'-6" RT. OF P.G.
681.06	1230+50	681.98	682.90
680.61	1230+75	681.53	682.45
680.16	1231+00	681.08	682.00
679.71	1231+25	680.63	681.55
679.26	1231+50	680.18	681.10
678.81	1231+75	679.73	680.65
678.36	1232+00	679.28	680.20
677.91	1232+25	678.83	679.75
677.46	1232+50	678.38	679.30
677.01	1232+75	677.93	678.85
676.56	1233+00	677.48	678.40
676.11	1233+25	677.03	677.95
675.66	1233+50	676.58	677.50
675.21	1233+75	676.13	677.05
674.76	1234+00	675.68	676.60
674.31	1234+25	675.23	676.15
673.86	1234+50	674.78	675.70
673.41	1234+75	674.33	675.25
672.96	1235+00	673.88	674.80
672.51	1235+25	673.43	674.35
672.06	1235+50	672.98	673.90
671.61	1235+75	672.53	673.45
671.16	1236+00	672.08	673.00
670.71	1236+25	671.63	672.55
670.26	1236+50	671.18	672.10
669.81	1236+75	670.73	671.65
669.36	1237+00	670.28	671.20
668.91	1237+25	669.83	670.75
668.46	1237+50	669.40	670.32
668.09	1237+75	669.01	669.93
667.75	1238+00	668.67	669.59
667.45	1238+25	668.37	669.29
667.18	1238+50	668.10	669.02
666.96	1238+75	667.88	668.80
666.79	1239+00	667.71	668.63
666.65	1239+25	667.57	668.49
666.56	1239+50	667.48	668.40
666.50	1239+75	667.42	668.34
666.49	1240+00	667.41	668.33
666.53	1240+25	667.45	668.37
666.61	1240+50	667.53	668.45
666.73	1240+75	667.64	668.56

CONTINUED CURVE NO. 7

P.I. STATION 1233+52.20
Dc.= 1°-30' MAX. S. = .0360 ft/ft

25'-6" LT. OF P.G.	STATION	PROFILE GRADE	25'-6" RT. OF P.G.
666.88	1241+00	667.80	668.72
667.08	1241+25	668.00	668.92
667.30	1241+50	668.22	669.14
667.52	1241+75	668.44	669.36
667.74	1242+00	668.66	669.58
667.96	1242+25	668.86	669.80
668.18	1242+50	669.10	670.02
668.40	1242+75	669.32	670.24
668.69	1243+00	669.52	670.35
669.02	1243+25	669.74	670.46
669.37	1243+50	669.96	670.55
669.70	1243+75	670.18	670.66

CURVE NO.8

P.I. STATION 1248+21.85
Dc.= 2°-15' MAX. S. = .0533 ft/ft

25'-6" LT. OF P.G	STATION	PROFILE GRADE	25'-6" RT. OF P.G.
669.99	1244+00	670.40	670.81
670.21	1244+25	670.61	671.01
670.31	1244+50	670.80	671.29
670.38	1244+75	670.97	671.56
670.41	1245+00	671.10	671.79
670.44	1245+25	671.22	672.00
670.43	1245+50	671.31	672.19
670.41	1245+75	671.38	672.35
670.36	1246+00	671.43	672.50
670.28	1246+25	671.45	672.62
670.18	1246+50	671.45	672.72
670.07	1246+75	671.43	672.79
670.02	1247+00	671.38	672.74
669.96	1247+25	671.32	672.68
669.86	1247+50	671.22	672.58
669.75	1247+75	671.11	672.47
669.61	1248+00	670.97	672.33
669.46	1248+25	670.82	672.18
669.31	1248+50	670.67	672.03
669.16	1248+75	670.52	671.88
669.01	1249+00	670.37	671.73
668.86	1249+25	670.22	671.58
668.81	1249+50	670.07	671.38
668.78	1249+75	669.92	671.06
668.75	1250+00	669.77	670.79
668.71	1250+25	669.62	670.53
668.68	1250+50	669.47	670.36
668.65	1250+75	669.32	669.99
668.62	1251+00	669.17	669.72
668.59	1251+25	669.02	669.45
668.47	1251+50	668.87	669.19
668.32	1251+75	668.72	668.92
668.17	1252+00	668.57	668.65
668.02	1252+25	668.42	668.40
667.87	1252+50	668.27	668.19
667.72	1252+75	668.12	667.96
667.57	1253+00	667.97	667.77
667.42	1253+25	667.82	667.58
667.27	1253+50	667.67	667.38
667.12	1253+75	667.52	667.14
666.97	1254+00	667.37	666.97

BELMONT COUNTY
BEL - 7 - 20.74

FED. NO.	STATE	PROJECT	
2	OHIO		

28
418

CURVE DATA

P.I. STA. 1080+79.33
Δ = 11°23'45" RT.
D_c = 1°15'
L = 911.67'
R = 4583.66'
T = 457.34'
E = 22.76'

BEGIN PROJECT STA. 1089+75.00 AHEAD = STA. 1084+70.31 BACK — U-534 (10)

Wooded Area

Fr. 3 bed

Grass

1 Car Conc. Gar.

18" Concr. Wall

Porch

1 Sty Fr. Res.

2 Sty Fr. Res. W/Bsmt.

Res.

3" Concr.

Trailer

Wire Fence

1 Car Fr. Gar.

74" L.P.

18" Stone Wall

177 178 179 180 181 182 183 184 1090

3 BELL UNDER GROUND CABLE

8" HPC.

12" T

EXISTING - S.R. 7 (LINCOLN AVENUE)

10" San. T

10" H.P.T

Exist. Penna. R.R.

RAILROAD POLES

Exist. B. & O. R.R.

10' FEATHERING

STA. 1090+00

+77.5

24" Conc. San. T To Remain in Service

Wooded Area

Wooded Area

1/10 1/R 2/10 1/6 2/12

LA

TYPICAL SECTION EXISTING S.R. 7

3' 2'6' Asphalt

16' Brick Sidewalk — 10' Concrete Base

BENCH MARK

OPCO Pole № 499A2-15, east side of Rt 7. Spike in west side of pole opposite house 365. Elev. 660.72

FOR PAVEMENT TRANSITION SEE SHEET № 195

DESCRIPTION	PLOTTED BY	PLOTTED DATE	INKED BY	INKED DATE	CHECKED BY	CHECKED DATE
TOPOGRAPHIC	AF	10-24-73	AF	10-25-73		
PAVEMENT						
DRAINAGE						
STRUCTURES						
R/W & UTILITIES						
BENCH MARKS						

DESCRIPTION	PLOTTED BY	PLOTTED DATE	INKED BY	INKED DATE	CHECKED BY	CHECKED DATE
EXISTING GROUND	AF	10-24-73	AF	10-25-73		
PROFILE GRADE						
ALIGNMENT						
BENCH MARKS						

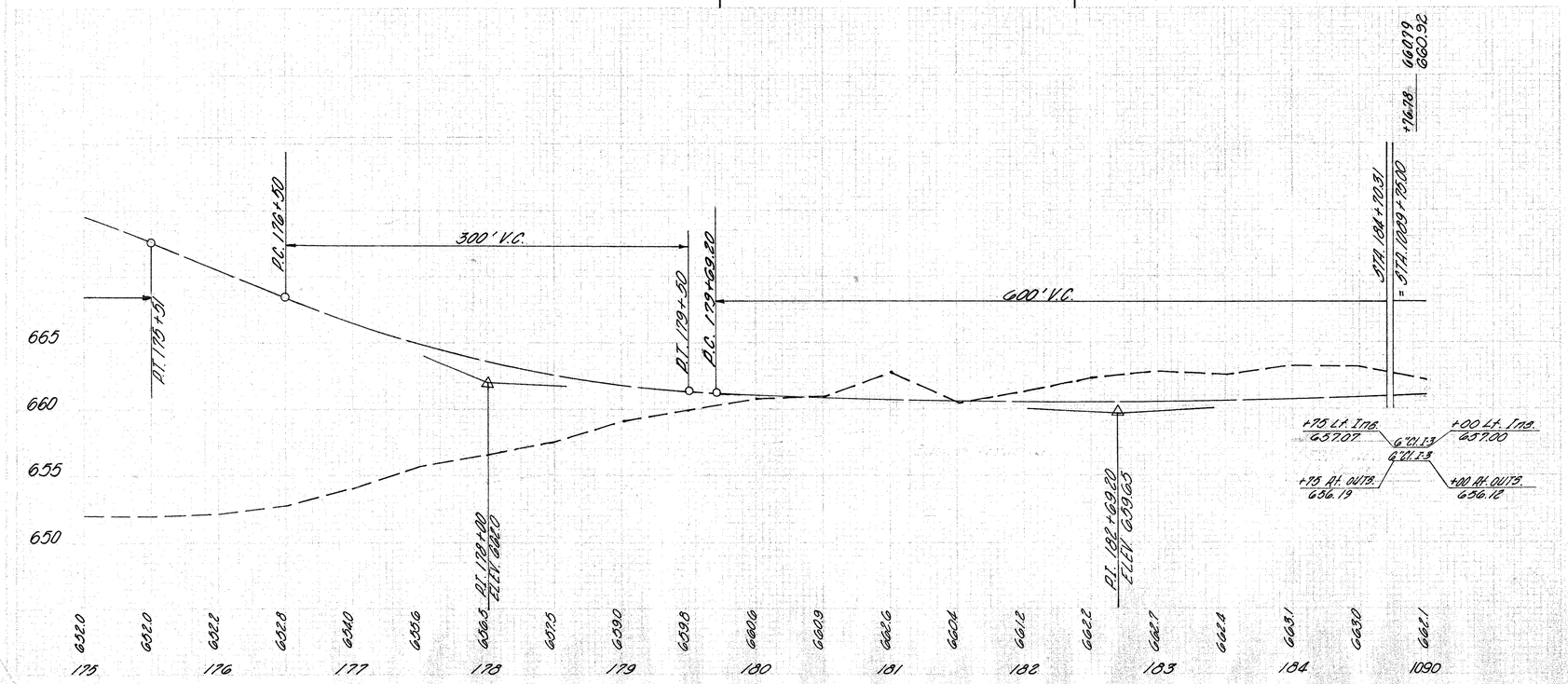

			T-1	CLASS		
			T-3			
			G			
			L.F.			
	T-15					
	G. R. STD. TYPE					
	DEEP					
	L. F.					
E-8						
REMOVAL & DISPOSAL OF EXISTING-						
CURB						
PAVT. SIDEWALK						
LIN. FT.						
SQ. YDS.						
SQ. FT.						
1-A 1089+75 - 1090+00	Lt.	50	70	125		
2-A 1089+75 - 1090+00	Rt.					
1-G 1089+77.5 - 1090+00	Rt.			22.5		
1-H 1089+75 - 1090+00	Lt.				25	
2-H 1089+75 - 1090+00	Rt.				25	
					50	70

			80
			22.5
			125

STA. 1089+66.78 TO STA. 1090+00

CURVE DATA

P.I. STA. 1096+98.17
Δ = 5° 22' 14" RT.
D_a = 1° 28'
R_c = 3906.53'
L = 366.17'
T = 183.22'
E = 4.29'

LA

7' Conc. Sidewalk
1-Car Blk. Gar.
2 Car 300 lb. Wire Conc. Gar.
Conc. Apt. Wall
8" Blk. Wall
Brk. Dr.
Conc.
18" Brk. Dr.
1-Sty. Fr. Res. w/Bsmt.
1½-Sty. Fr. Res. w/Bsmt.
2-Sty. Fr. Res. w/Bsmt.
1-Sty. Blk. Res. w/Bsmt.
2-Sty. Blk. Res. w/Bsmt.
Conc. Walk
Shed
Car Gar.
2-Sty. Fr. Res. w/Bsmt.
Conc. 1095
N 14° 18' 19" E.
Brk. Res. w/Bsmt.
2-Sty. Fr. Res. w/Bsmt.
Conc. 1099
2' Conc. Sidewalk
Brk. Sidewalk
1-Sty. Conc. Blk. Storage Shed
1-Sty. Conc. Blk. Service Station
Billboards
Billboard
Conc. Pav't. 4" W. Conc. Walk
Sign Post
Gas Pumps
25,000 Gal.
15,000 Gal.
Conc. Curb
Exist. Ret. Wall
3' Brk. Walk
4"x 5" Brk. Steps
Brk. Walk
1090
Conc. Dr.
12"
10"
Brk. Ret. Wall
Abandoned
Exist. Penna. R.R.
3420
12" Stump
PT. STA. 34+19+36.30 BK. = STA. 34+19+36.22 AHEAD
PT. STA. 1095+16.30
D.R.C.P. 4'x10'x18"
D.R.C.P. 4'x10'x18"
PROPOSED PENNA. R.R. RELOCATION
3415
Gas Regulator
Old River Rd.
Vent Pipe
12"ø
ENCASE EXIST. PIPE UNDER R.R.
3-Car Fr. Gar.
Used Car Lot Bldg.
1-Sty. Met. Shed
Exist. 24" Conc. San.
EXIST. PENNA. TRACKS TO BE REMOVED BY OTHERS
To Remain in Service
FOR CULVERT DETAILS SEE SH. 220
36" CL. A-1 M-G.G(d)
60" CL I Pipe
END PENNA. R.R. RELOCATION STA. 3420+39.50
Exist. B. & O. R.R.

⊗ U.G. QUANTITIES
✱ PIPE UNDER EXISTING R.R.
↑ 1'-15 USING 10' POSTS, AS PER PLAN.

BENCH MARK

Spike in East Side of O.P.C.O. Pole
No 499-3. 43' Rt. Sta. 1091+54
Elev. 662.16

FOR PAVEMENT TRANSITION SEE SHEET No. _____.
FOR PENNA. R.R. RELOC. SEE SHEET No. 193
FOR QUANTITIES NOT SHOWN SEE SHEET No. 65.

660.97 661.21 661.48 661.76 662.04 662.32 662.60 662.88 663.16 663.44 663.72 664.00 664.28 664.56 664.84 665.12 665.40 665.68 665.96 666.24 666.52

NOTE: UNDERDRAINS OUTSIDE, 3.90' BELOW EDGE OF PAV'T.
UNDERDRAINS INSIDE, 3.80' BELOW PROFILE GRADE

43' Lt. Sta. 1090+50
Std. No. 2-2-A C.B.
E. Grate 661.36
E. 21" Cl. U-1 656.00

2.14' Lt. Sta. 1090+50
Std. No. 3-A C.B.
E. Window 661.03
E. 12" Cl. U-1 656.00
E. 21" Cl. U-1 652.13
E. 21" Cl. U-1 652.13
E. 6" Cl. F-A 656.85 (S)
E. 6" Cl. F-A 657.41 (N)

53' Lt. Sta. 1092+80
Std. No. 3-A C.B.
E. Grate ~ 662.32
E. 21" Cl. U-1 ~ 656.21
E. 6" Cl. F-A ~ 658.66

51' Lt. Sta. 1094+00
Std. No. 2-2-A C.B.
E. Window ~ 661.74
E. 18" Cl. U-1 ~ 659.24

50' Lt. Sta. 1095+50
Std. No. 2-2-A C.B.
E. Window ~ 663.26
E. 21" Cl. U-1 ~ 659.15

+00 Lt. OUTS. 662.39
+46 Lt. INS. 660.20
+76 Lt. INS. 658.66
+00 Lt. INS. 662.72
6" Cl. I-3
+00 Rt. OUTS. 662.22
+75 Lt. OUTS. 662.17
+00 Lt. INS. 657.00
6" Cl. I-3
6" Cl. I-3
+00 Rt. OUTS. 656.12
+44 Begin 6" Cl. I-3 As per plan.
+76 Rt. OUTS. 657.73
+25 Rt. End 6" Cl. I-3, As per plan.
+46 Rt. OUTS. 659.21
+0.56 %
6" Cl. I-3
6" Cl. I-3
6" Cl. I-3
6" Cl. I-3, As per plan.
180'-21" Cl. U-1 @ 1.70%
270'-24" Cl. U-1 @ 1.43 %
EXIST. 24" CONC. SAN. SEWER

39' Rt. Sta. 1090+50
Std. No. 3-C.B.
E. Window 660.13
E. 21" Cl. U-1 651.13
E. 24" Cl. U-1 650.88
E. 6" Cl. F-A 655.97 (S)
E. 6" Cl. F-A 656.32 (N)

103' Rt. Sta. 1090+50
Std. HW-E ENDWALL
E. 24" Cl. E-1 ~ 649.49

37' Rt. Sta. 1092+80
Std. HW-E ENDWALL
E. 30" Cl. U-1 ~ 650.57

56' Rt. Sta. 1092+80
Std. No. 3 C.B.
E. Window ~ 661.37
E. 21" Cl. U-1 ~ 655.23
E. 24" Cl. U-1 ~ 653.77
E. 30" Cl. U-1 ~ 651.37
E. 6" Cl. F-A ~ 657.72

6.46' Lt. Sta. 1094+00
Std. No. 2-A-B. Inlet (Mod)
E. Window ~ 662.99
E. 18" Cl. U-1 ~ 658.50
E. 21" Cl. U-1 ~ 658.25

34' Rt. Sta. 1095+50
Std. No. 3 C.B.
E. Window ~ 662.82
E. 24" Cl. U-1 ~ 657.64
E. 24" Cl. U-1 ~ 657.64
E. 6" Cl. F-A ~ 659.21

7' Lt. Sta. 1095+50
Std. No. 2-A-14 Inlet (Mod)
E. Window ~ 663.83
E. 21" Cl. U-1 ~ 658.34
E. 24" Cl. U-1 ~ 658.09
E. 6" Cl. F-A ~ 660.20

662.1 661.5 661.6 661.0 662.3 662.2 661.9 662.0 661.8 662.4 662.6 663.0 663.0 663.6 664.5 664.7 667.9 668.8 670.1

1090 1091 1092 1093 1094 1095 1096 1097 1098 1099 1100

STA. 1090+00 TO STA. 1100+00

ESTIMATED QUANTITIES

| | | |

MICROFILMED
MAY 14 1986

BELMONT COUNTY
BEL • 7 • 20.74

30
418

FOR RELOC. LINCOLN AVE. & MEDIAN TREATMENT
SEE SHEET Nº 179

FOR DETAIL OF DRIVE STA. 1105+01 RT., SEE SHEET Nº 197

I-14 TYPE "A"

I-14 TYPE "B"

8' WIDE I-10 RIPRAP OVER DIKE
SEE SHT. NO. 223

MOD TYPE 1 PAVED GUTTER TYPE 'B' WITH 1' WIDE SOD STRIPS

PAVED GUTTER-TYPE 'A'

SOD STRIPS 1.5' WIDE

Billboard

Water Meter

2 & RELOC. 3 LINCOLN 4 Conc. AVE. 5
N. 21° 01' 42" E.

4 Conc. SW

4 Brk. SW

6" Conc. SW with Curb

Retaining Wall

RDOA RETAINING WALL

Inlet

STORM SEWER

Gravel 1 Sty. Fr. Res. W/Bsmt

1 Sty. Fr. Res

2 Sty. Fr. Res

Conc. Blk. Garage

Shed

Shed

1 Sty. Blk.

O.B.T. MH.

T.T.P.

1-10 RIPRAP 8' WIDE SEE SHT. NO. 223

1100 1101 1102 Exist. G.R. 1103 Exist. Ret. Wall 1104 1105 1106 1107 1108 1109 1110

Exist. Penna. R.R.

No Exist. Curb

N. 19° 42' 03" E.

Billboard

M.H.

D.R.C.P. 4'x7'x18'

Exist. 24" Conc.

CURVE DATA
P.I. STA. 1113+77.84
Δ = 25° 27' 31" Rt.
Dc = 1° 28'
Rc = 3906.33'
L = 1735.81'
T = 882.47'
E = 98.43'

Plug 56' Rt.

Plug 60' Rt.

Abandon.

24" Pipe Abandoned

Exist. Swale 20'x10'x18" D.R.C.P.

24" Conc. San. Sewer TO REMAIN IN SERVICE

STA. 1100+80 ℄ S.R. 7

STA. 0+00 LINCOLN AVE.

D.R.C.P. 7'x15'x18" Deep.

D.R.C.P. 4'x10'x18" Deep

Abdnt. Blk. Res.

1 3/4 Conc. Blk.

Gravel

Undisturbed Ground

WATER PLANT

16' Pk.

3412

3410

℄ PROPOSED PENNA. RR. RELOC.

Gravel Road

Exist. P.R.R.

3405

REMOVE

3403

3/4"

For Quant. not tabulated See Sht. #65

Exist. P.R.R. tracks to be removed by others

BEL-7-20.87

BENCH MARK
Spike in O.P.C.O. pole Nº 499A3-7
21' Lt. Sta. 1102+50
Elev. 677.40

BENCH MARK
Spike in O.P.C.O. pole Nº 499A3-11,
10' south of Aetnaville Bridge.
62' Lt. Sta. 1106+30. Elev. 685.75

BEL-7-20.95

FOR CULVERT, SEE SHEET Nº 218

FOR PENNA. R.R. RELOC. SEE SHEET Nº 198

Note: See Sheet No 176 for Removal of the Existing Guard Rail Between Sta. 1100+00 Lt. and Sta. 1108+25 Lt.

USING PRECAST SECTIONS

A3 PED PLAN

US QUANTITIES

666.52 666.80 667.03 667.36 667.48 667.55 667.58 667.56 667.50 667.39 667.24 667.04 666.60 666.16 665.72 665.28 664.84 664.40 663.96 663.52 663.08 662.64 662.20 661.76 661.32

50.5' Lt. Sta. 1100+50
Std. No. 2-4 C.B.
Elev. Grate ~ 664.60
℄ 27" Cl. E-1 ~ 658.81
℄ 36" Cl. J-1 ~ 658.06
℄ 6" Cl. F-4 ~ 662.22(S)
℄ 6" Cl. F-4 ~ 662.22(N)

34' Lt. Sta. 1104+00
Std. No. 2-A-6 Inlet (Mod.)
℄ Window ~ 666.17
℄ 12" Cl. J-1 ~ 661.51
℄ 12" Cl. E-1 ~ 661.51
℄ 6" Cl. F-4 ~ 662.44

34' Rt. Sta. 1104+00
Std. No. 2-A-6 Inlet (Mod.)
℄ Window ~ 666.03
℄ 12" Cl. E-1 ~ 661.36
℄ 12" Cl. J-1 ~ 661.36
℄ 6" Cl. F-4 ~ 662.30

34' Lt. Sta. 1104+75
Std. No. 2-A-6 Inlet (Mod.)
℄ Window ~ 665.69
℄ 12" Cl. E-1 ~ 661.96

7' Lt. Sta. 1107+00
Std. No. 2-A-6 Inlet (Mod.)
℄ Window ~ 663.79
℄ 12" Cl. J-1 ~ 660.06
℄ 6" Cl. F-4 ~ 660.16

34' Rt. Sta. 1107+00
Std. No. 2-A-6 Inlet (Mod.)
℄ Window ~ 662.92
℄ 12" Cl. J-1 ~ 659.19
℄ 12" Cl. E-1 ~ 659.19
℄ 6" Cl. F-4 ~ 659.19

NOTE: UNDERDRAINS OUTSIDE, 3.90' BELOW EDGE PAV'T.
UNDERDRAINS INSIDE, 3.80' BELOW PROFILE GRADE

PROPOSED STRUCTURE
BRIDGE No. BEL-7-20.95
Type: Cont. Steel Beam with reinf. Conc. Deck & Superstructure
Spans: 66-2⅞", 89'-0" & 77'-6" ℄ brgs.
Roadway: Varies
Load Frequency: CF 400 (57)
Skew: Varies
Wearing Surface: 1" Monolithic Conc.
Approach Slab: Special 7' Long
Alignment: Tangent
Superelevation: None

670
665
660
655
650

+0.56%

-0.88%

PVI STA. 1102+50
Elev. 667.92

+20-2' Lt. ℄ E=662.83
+15 Lt. Out E=662.83
Rt. Out
+42' Lt. Out E=662.36
+46 Rt. Out E=662.47
+00 Rt. Out E=662.22
+00 Lt. Out E=662.39
+17 Rt. Sta. 0+93 Lincoln Ave. E=662.71
27"
SEE SHT. 148
For Storm Sewer System See Sheet No. 43

PVC. STA. 1101+50

200' V.C.

PRT. STA. 1103+50

+26' Lt. & Rt. Out E=663.16
+30 Lt. & Rt. Out E=663.13
Lt. & Rt. Out
6' Cl. I-3
75' 12" CIE 1+00 Cl.
+04-2' Lt. ℄ E=662.76
+04 Rt. Out E=662.26
67.5' Rt. Sta. 1104+00 Std. Type HW-E Endwall ℄ 12" Cl. E-1 ~ 659.18 10'x4'x18" D.R.C.P.

6' Cl. I-3
2' Lt. ℄
Rt. Out

+04-2' Lt. ℄ E=660.12
+04-Rt. Out E=659.15
6' Cl. I-3
2' Lt. ℄
Rt. Out
+00-2' Lt. ℄ E=657.52
+00 Lt. Out E=656.63
57.5' Rt. Sta. 1107+00 Std. Type HW-E Endwall ℄ 12" Cl. E-1 ~ 658.53 4'x7'x18" D.R.C.P.

Exist. 24" Conc. San. Sewer

34' Rt. Sta. 1100+50
Std. No. 2-B C.B.
℄ Window 666.23
℄ 36" Cl. J-1 657.12
℄ 36" Cl. E-1 ~ 657.12
℄ 6" Cl. F-4 ~ 662.50

76' Rt. Sta. 1100+50
Std. Type HW-E Endwall
℄ 36" Cl. E-1 656.07
7'x15'x18" D.R.C.P.

45' RT. STA. 1103+86
EX. SAN. M.H. RECONSTRUCTED TO GRADE
EX. COVER 666.00
PROP. COVER 665.48

670.1 670.7 671.7 670.4 663.4 663.7 663.4 664.3 664.8 664.7 663.0 665.1 664.6 661.9 663.2 664.0 663.6 663.0 661.6 662.2 661.6

1100 1101 1102 1103 1104 1105 1106 1107 1108 1109 1110

DESCRIPTION	PLOTTED BY	PLOTTED DATE	INKED BY	INKED DATE	CHECKED BY	CHECKED DATE
TOPOGRAPHY						
PAVEMENT						
PROFILE GRADE						
R.O.W.						
BENCH MARKS						
QUANTITIES						

DESCRIPTION	PLOTTED BY	PLOTTED DATE	INKED BY	INKED DATE	CHECKED BY	CHECKED DATE
EXISTING GROUND						
PROFILE GRADE						
R.O.W.						
BENCH MARKS						

| I-1 | | | | | |

MICROFILMED
MAY 14 1966

BELMONT COUNTY
BEL - 7 - 20.74

BEGIN PROJECT
BEL-7-20.74
STA. 1089+79.00

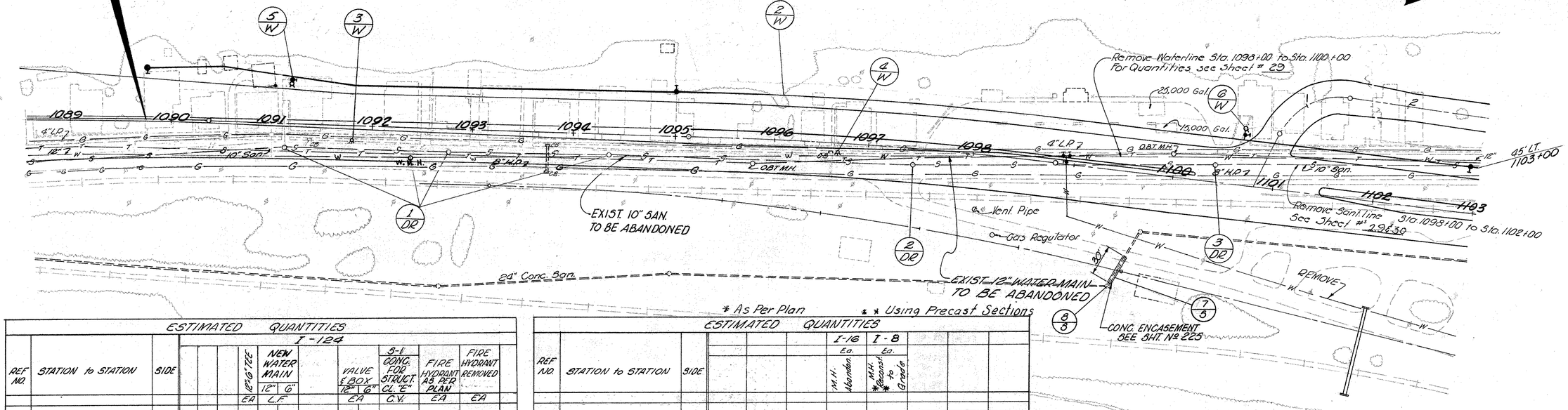

* As Per Plan ** Using Precast Sections

ESTIMATED QUANTITIES — I-124

REF NO.	STATION to STATION	SIDE	12"TEE	NEW WATER MAIN 12" "G"	VALVE & BOX 12" "G"	S-4 CONC. FOR STRUCT. CL. "E"	FIRE HYDRANT AS PER PLAN	FIRE HYDRANT REMOVED
			EA	L.F.	EA	C.Y.	EA	EA
		Rt.						
2-W	1089+79 - 1103+00	Lt. & Rt.	2	1330	3			
3-W	1091+80	Rt.						1
4-W	1096+03	Rt.						1
5-W	1091+25	Lt.		5	1	0.2	1	
6-W	1100+65	Lt.		10	1	0.2	1	
7-5	1099+00	Rt.				4.8		
			2	1330 15	3	2 5.2	2	2

ESTIMATED QUANTITIES

REF NO.	STATION to STATION	SIDE	I-16 Ea. M.H. Abandon	I-8 Ea. *M.H. Reconst. to Grade	**M.H. Reconst. to Grade
1-DR	1091+14 - 1094+36	Rt.	4		
2-DR	1097+45	Rt.	1		
3-DR	1100+43	Lt.	1		
8-5	1099+46	Rt.		1	
	TOTALS		6	1	

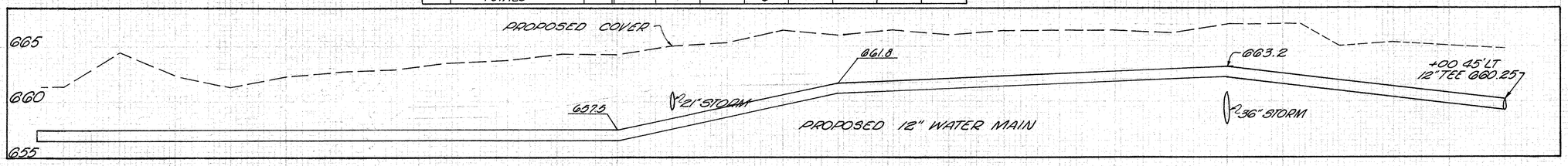

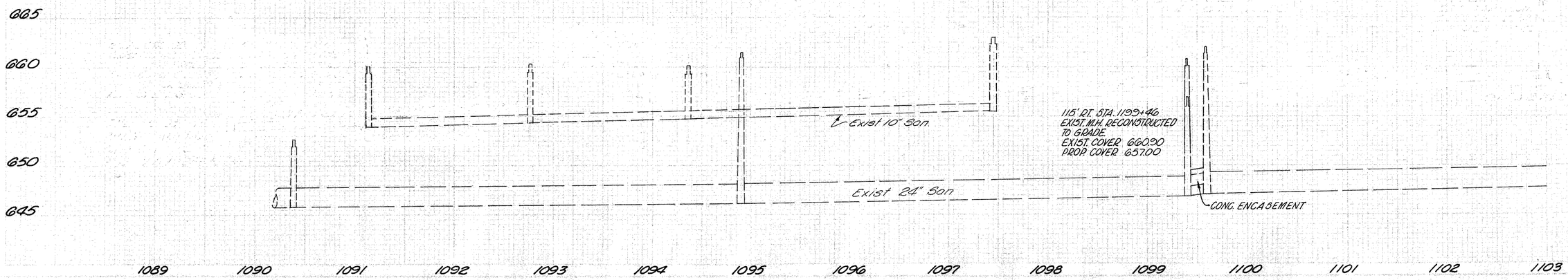

UTILITY PLAN STA 1089+00 TO STA 1103+00

DESCRIPTION	PLOTTED BY	PLOTTED DATE	INKED BY	INKED DATE	CHECKED BY	CHECKED DATE
TOPOGRAPHY						
PLANIMETRIC						
DRAINAGE						
R. / W.						
PROPERTIES						

MICROFILMED
MAY 14 1986

BELMONT, COUNTY
BEL-7-20.74

32
418

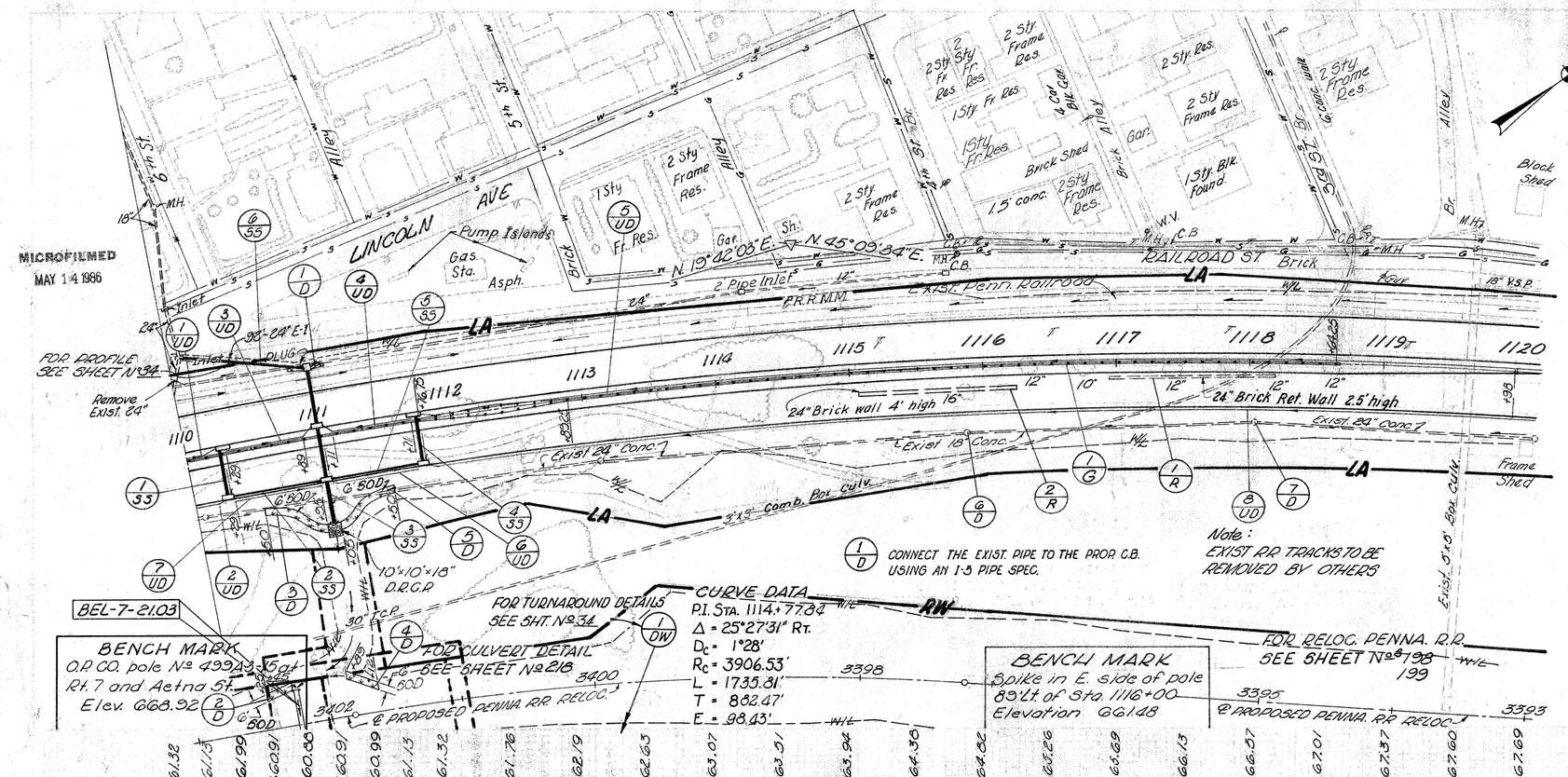

USING PRECAST SECTIONS

I-3	Standard 2-A Inlets Modified Nº 240 Each					
I-3 Pipe Std.	C.I. E-1 30" Bend	C.I. E-1 MOD. 6" & 24"	I-5 Std. C.B. MOD. Nº 324 Nº 3	E-12 CURB REMOVAL REMOVAL OF EXIST. 15" & UNDER CORRUG. STRUCT.	S-24 MANHOLE REMOVAL RECONST. OF EXIST. TO GRADE STRUCT.	
				4	4	EACH
						LUMP
						LIN. FT.

UB QUANTITIES.

| | | | | | |

MICROFILMED
MAY 14 1986

SEE AETNA ST. LINE SHT. No. 180

CORRUGATED CULVERT AETNA STREET

RAILROAD STREET

Kroger Co.

(Blacktop Parking Area)

Drug Store

Frame 1½ Sty. Box factory

2 Sty. Frame Res.

Dr. Leon F. Favede Optometrist

1 Sty. Fr. Res.

2 Car Blk. Gar.

Garage Apt.

2 Car Fr. Gar.

2 Sty. Fr. Res.

Block Shed

Swimming Pool

Brick

Concrete Pad

8" Conc. Blk. Wall

Conc. Pav't.

CONNECT EXIST. 12" INTO PROP. C.B. WITH CONC. COLLAR.

PREVIOUSLY ABANDONED

2'-3" BRICK BOX CULVERT UNDER R.R.

PLUG 6" AT R/W

Pennsylvania R.R. Exist.

REMOVE

TO REMAIN IN SERVICE

12" brick wall

18" Brk. Wall

Remove between W/L

Existing 18" Concrete San. Sew.

Exist. 16" C.I.P. Force Main

ABANDON

EXIST. PENNA. TRACKS TO BE REMOVED BY OTHERS

CURVE DATA
P.I. STA. 1114+77.84
Δ = 25°27'31" RT.
Dc = 1° 28'
Rc = 3906.53'
L = 1735.81'
T = 882.47'
E = 98.43

FOR DRIVE DETAILS SEE SHT. No. 221

SERVICE RD. No. 1

FOR PROFILE SEE SHT. No. 34A

FOR STORM SEWER SYSTEM SEE SHEETS 34 & 35

FOR DETAILS OF INTERSECTION SEE SHEET No. 186

OLD RIVER ROAD

FOR RELOC. PENNA. R.R. SEE SHEET No. 199

REMOVE BETWEEN R/W LIMITS

Exist. B&O R.R.

℄ PROPOSED PENNA. R.R. RELOCATION

℄ STA. 1128+34.28 5°47' = ℄ STA. 3384+41.36 R.R. SPUR

BENCH MARK
475B4 OPCO Spike in E. Side of pole NW Corner of 121 ℄ Railroad & Streets.
78 Lt. Sta. 1121+85
Elevation 664.52

7' Lt. Sta. 1123+00
Std. No. 2-A-12 Inlet (Mod)
IE-Window ~ 666.87
IE-12" Cl. J-1 ~ 661.30
IE-6" Cl. F-4 ~ 663.24

34' Rt. Sta. 1122+25
Std. 3-A C.B.
IE-Grate ~ 666.18
IE-12" Cl. J-1 ~ 661.50
IE-6" Cl. F-4 ~ 662.09

34' Rt. Sta. 1123+00
Std. No. 3-A C.B.
IE-Window ~ 666.31
IE-12" Cl. J-1 ~ 661.05
IE-12" Cl. J-1 ~ 661.05
IE-6" F-4 ~ 662.64

34' Rt. Sta. 1125+50
Std. No. 3-A C.B.
IE-Window ~ 665.87
IE-12" Cl. J-1 ~ 659.55
IE-15" Cl. J-1 ~ 659.30
IE-6" Cl. F-4 ~ 662.14

56' Lt. Sta. 1126+50
Std. No. 2-2-A C.B.
IE-Grate ~ 662.40
IE-18" Cl. E-1 ~ 659.40 ↑ IE 12" Cl. E-1 659.00

34' Lt. Sta. 1126+50
Std. No. 3-A C.B.
IE-12" Cl. J-1 ~ 659.65
IE-18" Cl. E-1 ~ 659.14
IE-21" Cl. J-1 ~ 658.84
IE-6" Cl. F-4 ~ 659.80 (S)
IE-Window ~ 665.63
IE-6" Cl. F-4 ~ 658.84 (N)

34' Rt. Sta. 1127+31
Std. No. 3-A C.B.
IE-Window ~ 665.44
IE-12" Cl. J-1 ~ 659.96

34' Lt. Sta. 1128+28
Std. No. 3-A C.B.
IE-Window ~ 665.20
IE-12" Cl. J-1 ~ 660.72

1129+25 ~ 74' Lt. Std. No. 2-2-A C.B.
1129+51 ~ 48' Lt. Std. No. 2-2-A C.B.

NOTE: UNDERDRAINS OUTSIDE, 3.90' FOR SHALLOW & 6.00' FOR DEEP BELOW EDGE PAVEMENT.
UNDERDRAINS INSIDE, 3.80 FOR SHALLOW & 6.00' FOR DEEP BELOW PROFILE GRADE.

34' Rt. Sta. 1124+00
Std. No. 3-A C.B.
IE. Grate ~ 666.23
IE. 12" Cl. J-1 ~ 660.05 (SW)
IE. 12" Cl. J-1 ~ 658.09
IE. 15" Cl. B-1 ~ 657.84

68.5' Rt. Sta. 1126+50
Std. HW-E Endwall
IE-24" Cl. E-1 ~ 658.79
10'-4" x 18" D.R.C.P.

34' Rt. Sta. 1126+50
Std. No. 3-A C.B.
IE-Window ~ 665.63
IE-12" Cl. J-1 ~ 659.15
IE-15" Cl. J-1 ~ 658.90
IE-21" Cl. J-1 ~ 658.25
IE-24" Cl. E-1 ~ 658.00
IE-6" Cl. F-4 ~ 659.36

74' Lt. ~ Sta 1129+25
Std. No. 2-2-A C.B.
IE Grate 661.5
IE Window 661.0
IE 12" Pipe 658.74

48' Lt. Sta 1129+51
Std. No. 2-2-A C.B.
IE Grate 661.9
IE Window 661.4
IE 12" Pipe 658.6

Sta. 1120+00 to Sta. 1130+00

NOTE: FOR DETAILS AND QUANTITIES OF PAVEMENT AT R.R. CROSSING SEE SHT. No. 199

* Pipe under Railroad

⊙ UG QUANTITIES

* City of Bridgeport

BELMONT COUNTY
BEL-7-20.74

33
418

| | | |

FED. RD. DIVISION	STATE	PROJECT	
2	OHIO		

34
418

BELMONT COUNTY
BEL - 7 - 20.74

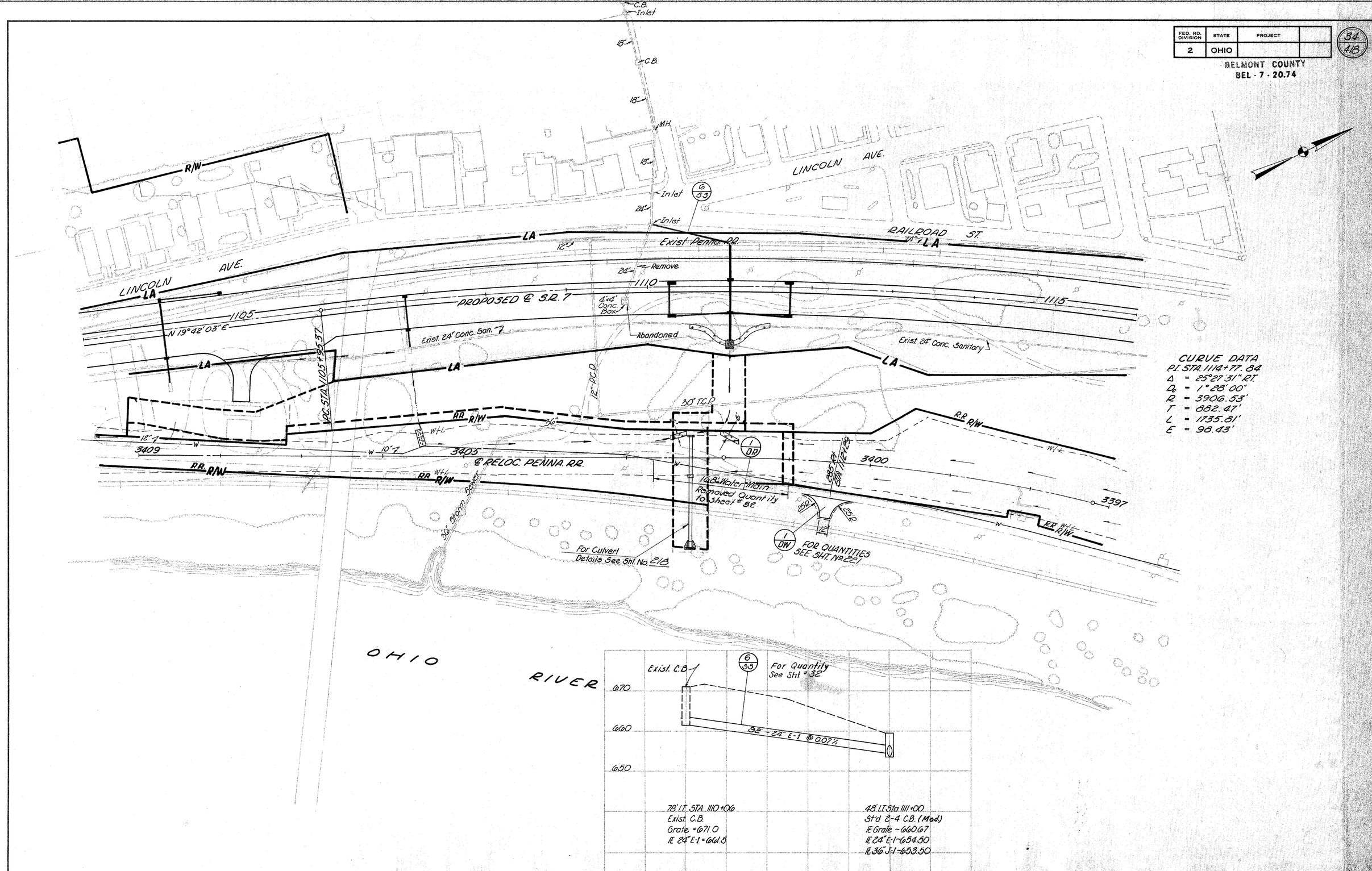

CURVE DATA
P.I. STA. 1114+77.84
Δ = 25°27'31" RT.
D_c = 1°28'00"
R = 3906.53'
T = 882.47'
L = 1735.81'
E = 98.43'

DESCRIPTION	PLOTTED BY	PLOTTED DATE	INKED BY	INKED DATE	CHECKED BY	CHECKED DATE
TOPOGRAPHY						
PAVEMENT						
DRAINAGE						
R.O.W.						
QUANTITIES						

Plan Sta. 1103+00 to Sta. 1116+00

FED. RD. DIVISION	STATE	PROJECT	
2	OHIO		

34-A
413

BELMONT COUNTY
BEL - 7 - 20.74

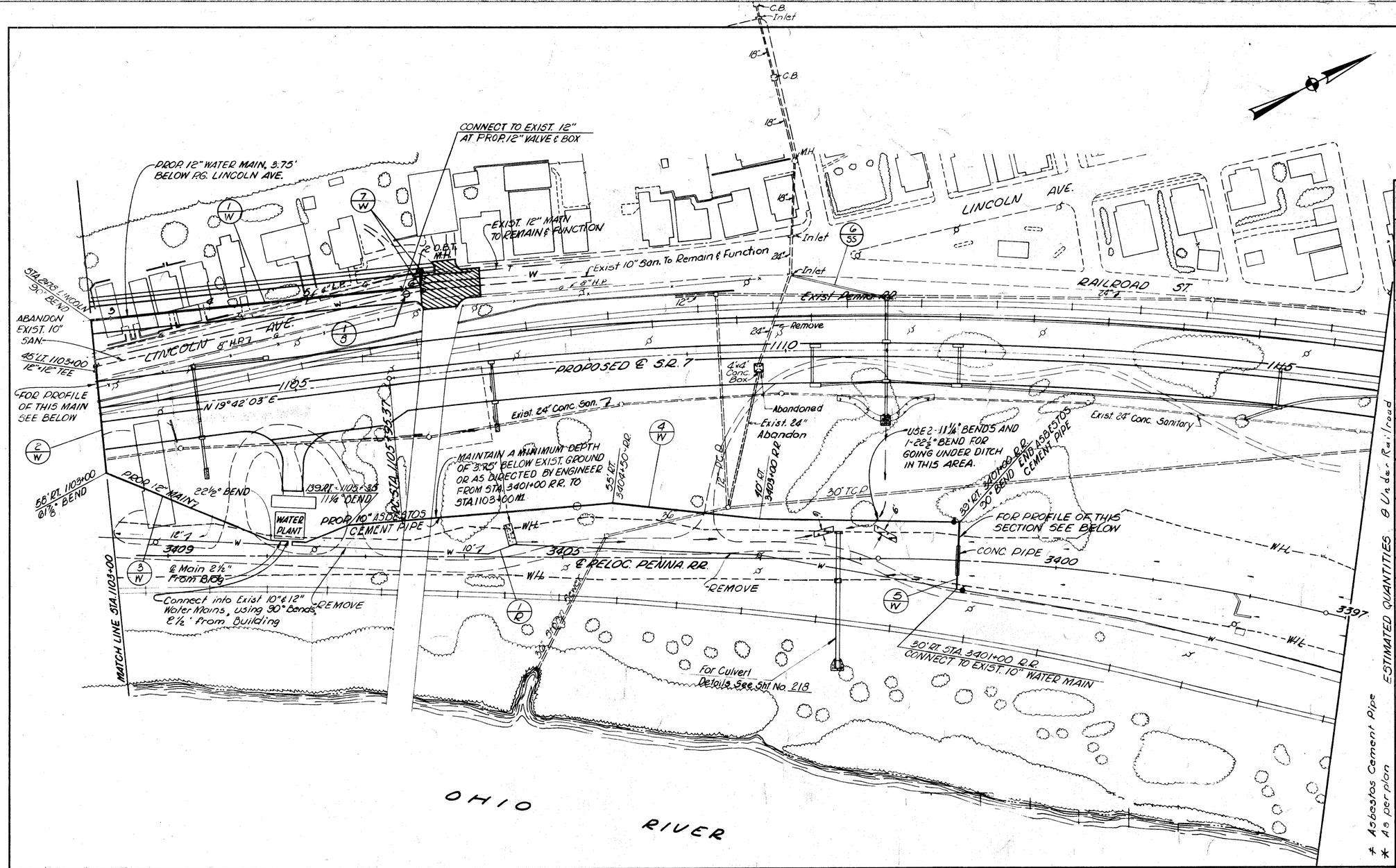

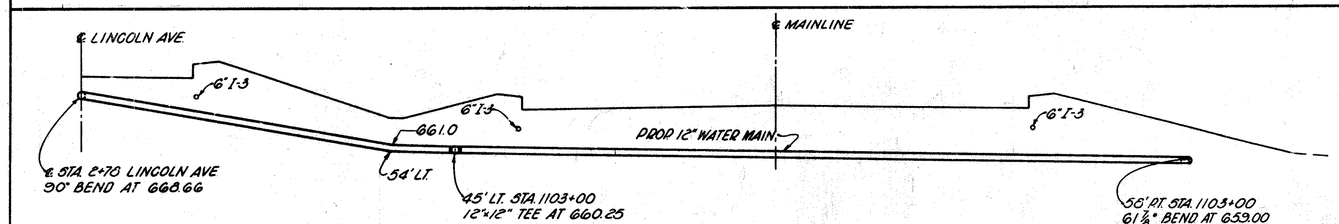

PROFILE OF PROP. 12" WATER MAIN AT ℄ STA. 1103+00

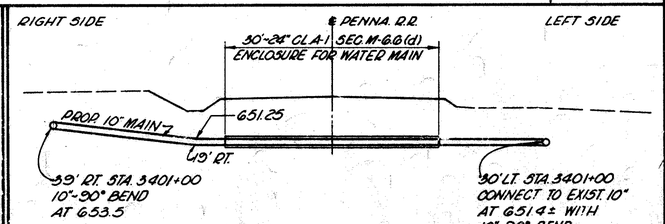

PROFILE OF PROP. 10" WATER MAIN AT R.R. STA. 3401+00

ESTIMATED QUANTITIES

REF. NO.	STATION TO STATION	SIDE	F-124 BENDS-12" 22½°	90°	11¼°	22½°	F-124 BENDS-10" 90°	F-124 TEE 12"	F-124 VALVE & BOX 10"	F-124 VALVE & BOX 12"	F-124 NEW MAIN 10"	F-124 NEW MAIN 12"	F-8 M.H. STD. No. 1	F-124 CONC. FOR STRUCT. CL "E"	F-1 CL A-1 6.6(d) 24" ℄	F-124 FIRE HYDRANTS REMOVED	F-124 FIRE + HYDRANTS W/ DRAINS	F-124 ADJUSTING VALVES TO GRADE	F-124 WATER SERVICE
			EACH	EACH	EACH	EACH	EACH	EACH	EACH	EACH	LIN. FT.	LIN. FT.	EACH	CU YDS	LIN FT.	EACH	EACH	EACH	EACH
										#									
S-W	LINCOLN AVE. STA. 2+36 - 5+36	℄									318			0.1					
S-W	1103+00	LT & RT.								1	155			0.1					
S-W	1103+00 - 3407+92.00 R.R.	RT.						1			182			0.1					
S-W	R.R. 3401+00 - 3407+62	RT.								1				0.2					
S-W	R.R. 3401+00	RT & LT.								1				0.1					
S-W	1122+95.5 1125+16	LT.										69			30				
S-W	NO R/W See Sheet 1 of 36																		
S-W	1106+20	LT.																	
I-S	LINCOLN AVE. 6+00	RT.																	
											655	69	2	0.6	30				
										2									
								1											
									1										
								1											

FED. RD. DIVISION	STATE	PROJECT	
2	OHIO		

35
4B

BELMONT COUNTY
BEL - 7 - 20.74

CITY OF MARTINS FERRY
VILLAGE OF BRIDGEPORT

(Brick) ALLEY
3rd ST.
(Brick) ALLEY
1st ST.
Basketball Court
2 Story Fr. Res
2 Sty Fr. Dr. Office
1 Story Fr. Res.
2 Story Fr. Res
2 Sty. Brick Gar. & Apt.
Fr. Gar.
Bk. Shed
Swimming Pool
2 Sty. Frame Res.
2 Sty. Frame Res
AETNA ST.
RAILROAD ST.
LA
RIW
TEMP. R/W
Blacktop Parking Area
STA. 1123+66.0 PROP. S.R.7
STA. 10+00 PROP. AETNA ST. &
STA. 0+00 SERVICE RD. #1
BROADWAY
Cleaner
Kroger Co.
1 Story Brick
Drug Store
1½ Sty. Frame Box Factory
EXIST. PENNA. R.R.
1116
1120
1125
1130
Exist. 24" Conc. Sanitary
Exist. 18" Conc. Sanitary
P.I. STA. 1123+31.18
& PROPOSED S.R.7
Exist. 16" Force Main San.
N 45°09'30"E
3986
Spur Track
Penna. R.R.
LA
R.R. R/W
R.R. R/W
STA. 3386+88.68
Proposed Penna. R.R.
3383
3385
3390
3395
3397
& RELOC. PENNA. R.R.
Exist. 5'x5' Box Culvert
EXIST. 5'x5' STONE BOX CULVERT REPLACED BY 5'x5' REINF. CONC. BOX CULVERT. FOR DETAILS, SEE SHT. No. 219
FOR QUANTITIES, SEE SHT. 221
FOR ITEM 4R SEE SHT. No. 33
P.T. STA. 44+18.71
OLD RIVER ROAD
2' Conc. Wall
City Water Well
10'
R.R. R/W
City Water Well
City Water Well
Dirt & Gravel
EXIST. B. & O. R.R.
FOR QUANTITIES, SEE 6-55, SHT. No. 33
FOR PROFILE, SEE SHT. No. 95

CURVE DATA
P.I. STA. 1114+77.84
Δ = 25°27'31" RT.
D_c = 1°28'00"
R = 3906.53'
T = 882.47'
L = 1735.81'
E = 98.43'

200'
Δ=85°
R.C. STA. 1+22

0+35.75 AHEAD
0+93.75 BACK
668.0
1+01.75
667.9
1+07.75 BACK
1+09.75 AHEAD
667.28
0+55
668.0
661.02
3+90
661.2
664.76
1+85
663.1
FOR EARTHWORK QUANTITIES SEE SHT. No. 35
Scale: 1"=10'

PROFILE OF SERVICE RD. #1 STA. 1123+66.0 PROP. S.R.7

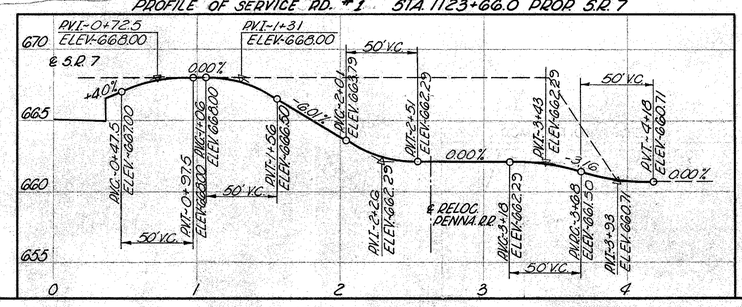

Plan Sta. 1116+00 to Sta. 1130+00

BELMONT COUNTY
BEL - 7 - 20.74

SHEET	PLAN	PROFILE	
2	OHIO		

36
418

Frame Box Factory
Note Existing R.R. Track to be removed by others.
PROP. PENNA. R.R. SPUR TRACK
Frame Box Factory
Frame Box Factory
Frame Box Factory
Wooded Area.
M.H. 48" conc. Storm Manhole
Gravel Alley
Gravel
Trailer
Wooded Area
Wooded Area
Frame Box Factory
Wooded Area
Wooded Area
Wooded Area

BELMONT COUNTY
BEL - 7 - 20.74

FED. RD. DIVISION	STATE	PROJECT	
2	OHIO		

37
418

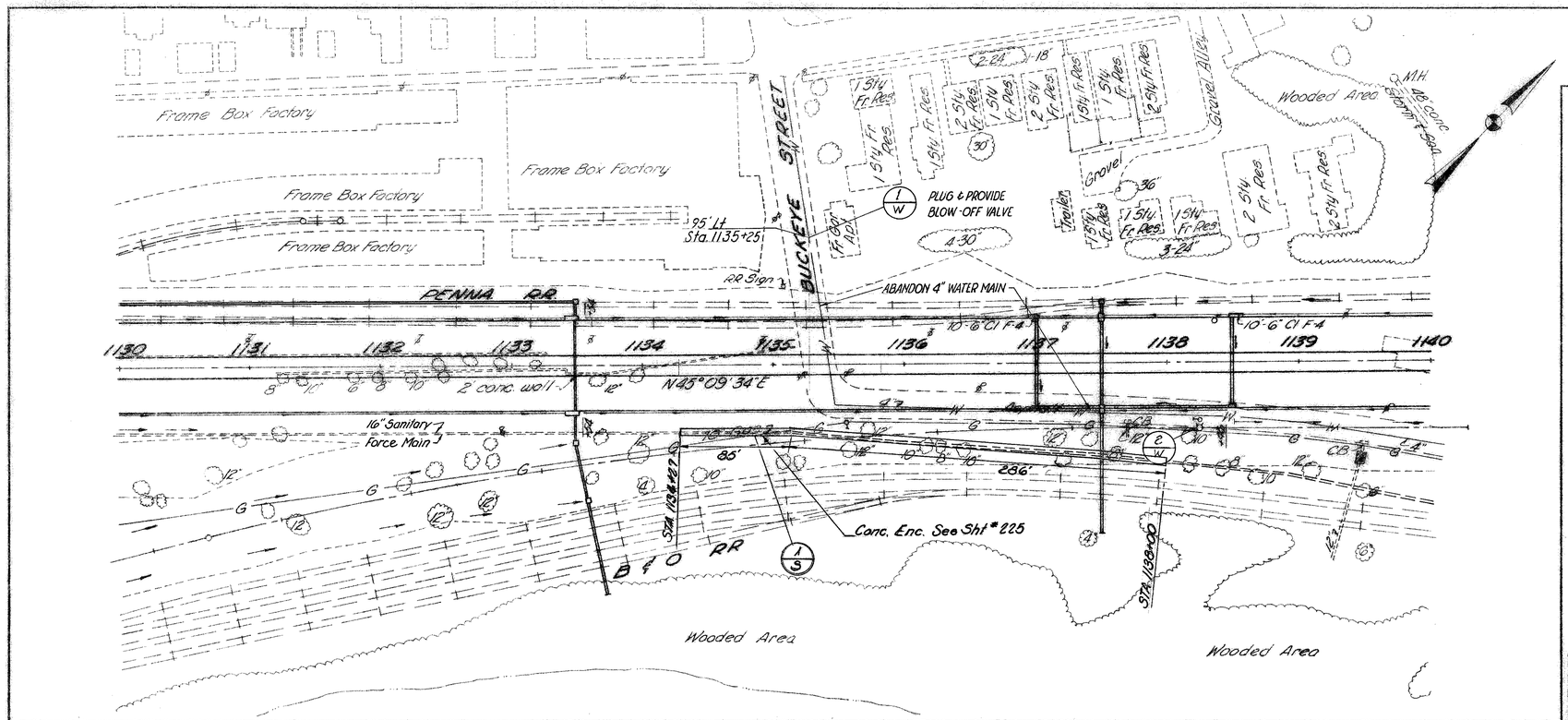

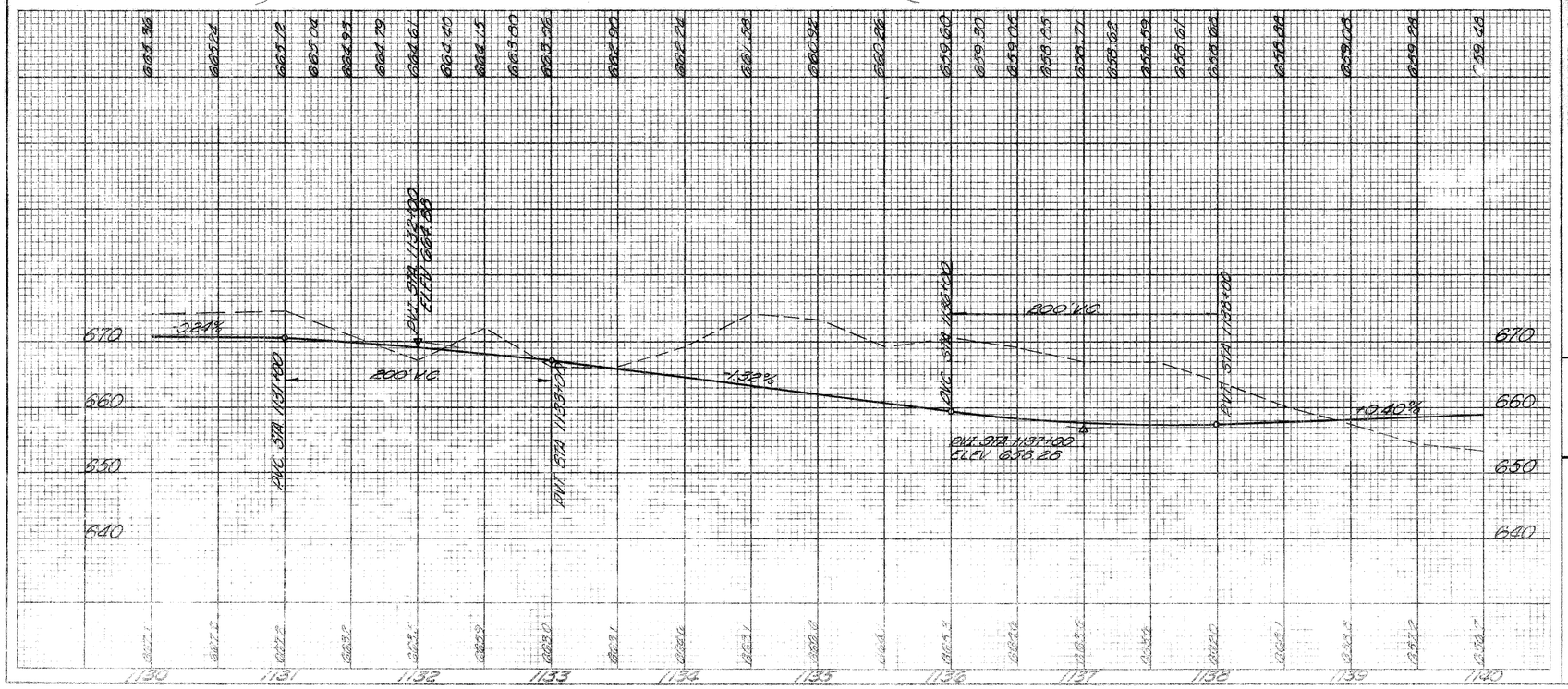

SEE SHEET NO.

ESTIMATED QUANTITIES

REF NO	STATION TO STATION	SIDE	By Others I-124 PLUG AND FR. PROVIDE BLOW-OFF VALVE & REMOVED EACH	By Others I-124 EACH	S.I Conc. for Sh. cl. 2" C.Y.
			EACH	EACH	C.Y.
	BY OTHERS				
1-W	1130+25	Lt.	1		
2-W	1138+25	Rt.		1	
	STATE CONTRACTOR				
1S	1134+27 to 1135+87	Rt.			3.7
TOTALS			1	1	3.7

UTILITY PLAN STA. 1130+00 to STA. 1140+00

P.I. STA. 1145+80.71
Δ = 3°28'04"
D_c = 1°28'
R_c = 3906.53
L = 236.44
T = 118.26
E = 1.79

P.C. STA. 1144+62.45
P.T. STA. 1146+98.89

Exist. R.R. track to be removed by others.

℄ FUTURE RAILROAD SPUR

For Pipe Replacement, Details See Sheet No. 214

Ex. 48" STORM (Conc.)

Ex. 84" STORM

Exist. Pennsylvania R.R.

Frame Sheds

A&P Super Market

A&P Parking Lot (Asphalt)

Metal Frame Bldg.

Conc.

1140 Brick Blk. Bldg. 1141 1142 1143 1144 1145 1146 1147 1148 1149 1150

ADAMS

N45°09'34"E

℄ PROPOSED PENNA. R.R. RELOC.

N41°41'30"E.

12" Stonewall

Curb

Conc. S.W.

Brick S.W.

4,000 Gals. underground gasoline storage tank

Gas pump Island

SECOND STREET

Dumping Station

Gravel

Asphalt

Curb

Exist. 15"

Exist. 16" Force Main

(Asphalt) 1ST STREET

Exist. B&O R.R.

6' x Stone Box Culvert 25'x9.6' Comb. Sewer

Wooded Area

Conc.

Gar.

Mat. Bldg.

Gravel

Gas

Water

NOTE: 9-55, CONNECT PROP F-4 THRU EXIST. C.B. (ABAND).

FOR RELOC. PENNA. R.R. SEE SHEET Nº 200

BENCH MARK
1673 OBTC Contract 30' N. of AM #11
86' Rt. Sta. 1142+54
Elevation 655.73

Bench Mark
R.R. Spike in 26" Tree stump on west side of street near House #515 28' Right of Sta. 1146+15 Elev. 662.24

NOTE: UNDERDRAINS OUTSIDE, 3.90' BELOW EDGE PAV'T.
UNDERDRAINS INSIDE, 3.80' BELOW PROFILE GRADE

34'-Lt. Sta. 1142+00
Std. No. 2-6 Inlet
℄ Window ~ 659.71
℄ 12" Cl. J-1 ~ 655.92
℄ 6" Cl. F-4 ~ 655.92

34' Rt. Sta. 1142+00
Std. No. 2-6 Inlet
℄ Window ~ 659.71
℄ 12" Cl. J-1 ~ 655.49
℄ 12" Cl. E-1 ~ 655.49

8' Rt. Sta. 1144+00
Std. No. 3-A C.B.
℄ 12" Cl. E-1 ~ 655.21
℄ 15" Cl. J-1 ~ 654.96
Elev. Grate ~ 660.91
℄ 6" Cl. F-4 ~ 657.88

7' Rt. Sta. 1145+00
Std. No. 2-A-8 Inlet (Mod.)
℄ 12" Cl. J-1 ~ 656.41
℄ 12" Cl. E-1 ~ 656.41
℄ Window ~ 661.31
℄ 6" Cl. F-4 ~ 657.68

34' Lt. Sta. 1145+25
Std. No. 3-A C.B.
℄ 12" Cl. J-1 ~ 656.66
℄ 12" Cl. J-1 ~ 656.66
Elev. Grate ~ 660.62

+0.40%

+30 Rt. Out. ℄ ~ 656.20

+96 Lt. Out. ℄ ~ 655.96
+96 Rt. Out. ℄ ~ 655.99

+00 Lt. & Rt. Out. ℄ ~ 655.18

12"-56' Cl. E-1 @ 1.39%

15"-144' @ 0.70%

+00-2' Rt. ℄ ~ 657.66

12"-100' @ 1.2%

12"-75' J-1 @ 0.6%

12"-42' J-1 @ 0.6%

+21 Lt. Out. ℄ ~ 656.89

+30 Rt. Out. ℄ ~ 656.00

6" I-3 2' Rt.

6" I-3 Lt. Out.

+00 Rt. Out. ℄ ~ 658.00

Lt. & Rt. Out.

12"-75' @ 0.60%

18"-100' @ 0.60%

+96-2' Rt. ℄ ~ 659.65

+96' Lt. & Rt. Outs. ~ 659.15

40' Rt. Sta. 1142+56
Std. No. 1 M.H.
Elev. Cover ~ 660.80
℄ 12" Cl. E-1 ~ 654.71
℄ 15" Cl. E-1 ~ 650.59
℄ 6" Cl. F-4 ~ 656.82

40' Rt. Sta. 1144+00
Std. No. 1 M.H.
℄ 12" Cl. E-1 ~ 651.85
℄ 15" Cl. J-1 ~ 654.80
℄ 15" Cl. E-1 ~ 651.60
Elev. Cover ~ 661.83
℄ 6" F-4 ~ 656.90

79' Rt. Sta. 1142+52
Std. HW-E Endwall
℄ 12" Cl. F-4 ~ 651.70

34' Lt. Sta. 1146+00
Std. No. 3-A C.B.
℄ 12" Cl. J-1 ~ 657.11
℄ Window ~ 660.84
℄ 6" Cl. F-4 ~ 657.11

34' Rt. Sta. 1148+25
Std. No. 3-A C.B.
Elev. Grate ~ 662.53
℄ 12" Cl. J-1 ~ 658.80

34' Rt. Sta. 1149+00
Std. No. 3-A C.B.
℄ Window ~ 662.65
℄ 12" Cl. J-1 ~ 658.35
℄ 6" Cl. F-4 ~ 658.92

659.48 659.68 659.98 660.08 660.28 660.48 660.68 660.68 661.08 661.28 661.48 661.68 662.08 662.28 662.48 662.68 662.88 663.08 663.28 663.48

654.7 655.7 655.3 655.3 654.8 +24 654.8 655.8 +59 655.0 +72 654.7 654.9 655.7 662.2 662.3 660.6 661.2 664.7 665.6 665.0 663.5 663.6 662.7 662.9 662.4 662.0

1140 1141 1142 1143 1144 1145 1146 1147 1148 1149 1150

665 660 655

Sta. 1140+00 to Sta. 1150+00

| | S-22 | T-8 | | |

BELMONT COUNTY
BEL - 7 - 20.74

FED. RD. DIVISION	STATE	PROJECT	
2	OHIO		

39
418

P.I. STA. 1145+80.17
Δ = 3°28'04"
D_c = 1°28'
R_c = 3906.53
L = 236.44
T = 118.26
E = 1.79

P.C. STA. 1144+62.45
P.T. STA. 1146+98.89

A&P Super Market
A&P Parking Lot (Asphalt)
To Remain & Function Encase in Concrete 6" steel casing pipe
To Remain & Function See Sht # 214
48" Comb (Conc.)
84" Comb.
Exist. Pennsylvania R.R.
Frame Shed
15½ Fr. Res. W/Bsmt
15½ B/K Bldg.
12" Stonewall
ADAMS
N 45°09'34" E
PROPOSED RELOCATION PENNSYLVANIA R.R.
N 41°41'30" E
Abandon 6" Water Main
SECOND STREET
Abandon 4" Water Main
Pump Station
Gravel
Asphalt
Concrete
Exist. B&O R.R.
Stone Box Culvert 25'x9.6' Comb. Sewer
Wooded Area
Exist. 6" Water
10" Gas
3/4" TAPS
2" TAP
¾" TAP
1" TAP
1½" TAP
Mtr. Bldg.
Garage
Carport
Bench Mark
RR Spike in 26" tree stump on west side of street near house #315 28' right of Sta. 1146+15 Elev. 662.26

BENCH MARK
1673 OBTC Contract 90' N. of AM #11
86' Rt. Sta. 1142+54
Elevation 655.73

1140 1141 1142 1143 1144 1145 1146 1147 1148 1149 1150

655 660 665

EXISTING GROUND
PROP. 6" WATER MAIN
Ex. 15" Storm
Ex. 6" Water Main
PROP. 6" WATER MAIN
Plug End
6"x4" Reducer
CONNECT TO EX. 6" WATER MAIN
Ex. 24" Sanit.

BY STATE CONTRACTOR

REF. NO.	STATION TO STATION	SIDE	NEW 6" MAIN	6"x4" TEE	6"x6" TEE	VALVE & BOX 6"	FIRE HYDRANT AS PER PLAN	PLUG AND REMOVE ABANDONED 4" GATE VALVE & 4" WIDE	FIRE HYDRANT REMOVED	VERIFY MAIN	1½" TAPS	3/4"	2"	SEE SHEET NO.
			LIN. FT.	EA.	EA.	EA.	EA.	EA.	EA.	LIN. FT.	EA.	EA.	EA.	
1-W	1145+20 - 1148+25	LT.	325	1	1	2	1	1	1			4		
2-W	1148+33 - 1148+51	LT.						1			1			
3-W	1148+10 - 1146+10	RT.				1		1	1	140			2	1
4-W	1143+86 - 1145+20	RT.						1						
5-W	1147+00 - 1148+51	LT.												
	TOTALS		325	1	1	2	1	2	1	140	1	6	1	6

ESTIMATED QUANTITIES

| REF. NO. | STATION TO STATION | SIDE | I-124 6" Std. Steel Casing Pipe | I-124 CLEARING & GRUBBING | I-124 CONC. FOR STRUCT. CL. 2 | I-124 6"x6" REDUCER | I-124 TAPS | I-124 TAPS | I-124 TAPS

FOR PAY ITEMS NOT SHOWN SEE SHEET Nº 65

EXIST. R.R. TRACKS TO BE REMOVED BY OTHERS

Wooded Area

1 Sty Met'c Blk Bldg

Exist. Wheeling Terminal R.R.

NOTE: 19'Lt. STA. 1157+13 & 18'Lt. STA. 1157+69 2 MANHOLES, TO BE ABANDONED FOR PAY ITEMS SEE SHT. Nº 41

NOTE: Ref. No. 2-R, remove wall within work limits only.

JEFFERSON STREET

Existing Wall

2 Sty Brk Res. W/B

2 Sty Brk Res W/Stone Base

2 Car Bldg

2 Car Fr. Gar.

1 Sty Brk W/B

1 Sty Fr. W/B

1 Sty Fr. Res

1 Sty Fr. & Tin Gar.

1 Sty Fr. Bldg Store

2 Sty Brk Res. W/B

2 Sty Fr. & Brk. Res

1 Sty Brk Res. Top Grocery Bottom

1 Sty Blk. Gar.

Exist Pennsylvania R.R.

LA

R.R. Control Cab

R.R. Signals

18" block ret. wall

11" Conc. retaining wall

Brick Sidewalk

10" Water

CB

2ND STREET

NARROW

Asph. on Conc.

8" Brick S.W.

8" Br. S.W.

Br. S.W.

12" Conc.

1 Sty Fr. Bldg Gar.

2 Sty Blk & Brk. Res.

1 Sty Blk & Tin Jno E. Burson, Contr.

D.R.C.P. 9'x 4'x 18" DEEP

D.R.C.P. 11'x4'x18" DEEP

D.R.C.P. 8'x4'x18" DEEP

D.R.C.P. G's 4'x18" DEEP

2 Sty Fr. Res w/ Brk Base.

STA. 3362+30 0° SKEW

Gar.

FOR DETAILS SEE SHT. Nº 213

2 Sty Fr. Res. w/ Blk. Base

20' Gravel Alley Under R.R.

3 Sty Brick Bldg Pipe Coupling Mfg & Co

1 Sty Blk 2 Car Gar

1 Sty Brk Bldg

2 Sty Brk Bldg W/B

℄ PROPOSED PENN R.R. RELOC. 7 3356

R/W

Roof shelter for lumber

1 Sty Fr. Res w/ Brk Base.

1 Sty Fr. Wood Res. Shed

WASHINGTON STREET

FAYETTE STREET

FOR DETAIL OF MEDIAN BARRIER RAIL AT EXIST. BRIDGE PIERS, SEE SHEET Nº 224

For Profile Along Exist. Wheeling Terminal R.R. See Sht. No. 200. For details of the existing R.R. structure see Sht. No. 40-A.

FOR RELOC. PENNA. R.R. SEE SHEET Nº 200

BENCH MARK
Top of bolt S.E. Corner of S.W. Pier @ Railroad Bridge
4' Lt. Sta. 1151+43
Elevation 664.05

BENCH MARK
Top of bolt in Conc. wall on W Side of 2nd St
26' Rt. Sta. 1154+76
Elevation 667.90

Note: 6" Cl. E-3 U.D. 3.90' Below Pavt Edge

34' Lt. Sta. 1150+00
Std. No. 2A-6 Inlet. (Mod)
℄ Window ~ 662.91
℄ 12" Cl. J-1 ~ 659.18
℄ 6" Cl. F-4 ~ 659.18

34' Rt. Sta. 1150+00
Std. No. 2A-8 Inlet. (Mod)
℄ Window ~ 662.91
℄ 12" Cl. J-1 ~ 659.75
℄ 12" Cl. J-1 ~ 657.75
℄ 15" Cl. E-1 ~ 657.50
℄ 6" Cl. F-4 ~ 659.18

59.5' Rt. Sta. 1150+00
Std. Type HW-E Endwall
℄ 15" Cl. E-1 ~ 657.20

46' Lt. Sta. 1152+50
Std. No. 2-2-A C.B.
℄ 12" Cl. E-1 ~ 660.47
Elev. Grate ~ 663.47

34' Lt. Sta. 1152+50
Std. No. 2A-6 Inlet. (Mod)
℄ 12" Cl. E-1 ~ 660.16
℄ 15" Cl. J-1 ~ 659.88
℄ Window ~ 663.91
℄ 6" Cl. F-4 ~ 660.16

34' Rt. Sta. 1152+50
Std. No. 2A-6 Inlet. (Mod)
℄ 15" Cl. J-1 ~ 657.75
℄ 15" Cl. E-1 ~ 657.75
℄ Window ~ 663.91
℄ 6" Cl. F-4 ~ 660.16

63.5' Rt. Sta. 1152+50
Std. Type HW-E Endwall
℄ 15" Cl. E-1 ~ 656.62
9'x 4'x 18" D.R.C.P.

51' Lt. Sta. 1155+50
Std. 2-2-A C.B.
℄ Window ~ 663.4
℄ 15" Cl. E-1 ~ 661.08

34' Lt. Sta. 1155+50
Std. No. 2A-8 Inlet. (Mod)
℄ Window ~ 664.71
℄ 15" Cl. E-1 ~ 660.94
℄ 15" Cl. J-1 ~ 660.94
℄ 6" Cl. F-4 ~ 660.98

34' Rt. Sta. 1155+50
Std. No. 2A-8 Inlet. (Mod)
℄ Window ~ 664.71
℄ 15" Cl. J-1 ~ 660.02
℄ 15" Cl. E-1 ~ 660.02
℄ 6" Cl. F-4 ~ 660.98

+0.40%

6" Cl. I-3 Lt. & Rt. Outs.

+46 - Lt. & Rt. Outs ℄ ~ 660.16

6" Cl. I-3

Lt. & Rt. Out

+46 - Lt. & Rt. Outs ℄ ~ 660.96

Lt. & Rt. Out

C2.5' Rt. Sta. 1153+50
Std. Type HW-E Endwall
℄ 15" Cl. E-1 ~ 659.53
11'x 4'x 18" D.R.C.P.

49' Lt. Sta. 1159+00
Std. 2-2-A C.B.
℄ Window ~ 665.2
℄ 15" Cl. E-1 ~ 661.08

34' Lt. Sta. 1159+00
Std. No. 2A-10 Inlet. (Mod)
℄ Window ~ 666.51
℄ 15" Cl. E-1 ~ 660.71
℄ 18" Cl. J-1 ~ 660.71
℄ 6" Cl. F-4 ~ 662.78

34' Rt. Sta. 1159+00
Std. No. 2A-10 Inlet. (Mod)
℄ Window ~ 666.51
℄ 18" Cl. J-1 ~ 660.00
℄ 18" Cl. E-1 ~ 660.00
℄ 6" Cl. F-4 ~ 662.78

+96 - Lt. & Rt. Outs ℄ ~ 662.76

+00 - Lt. & Rt. Outs ℄ ~ 663.18

68.5' Rt. Sta. 1159+00
Std. Type HW-E Endwall
℄ 18" Cl. E-1 ~ 659.57
8'x 4'x 18" D.R.C.P.

670
665
660

1150 1151 1152 1153 1154 1155 1156 1157 1158 1159 1160

663.48 663.68 663.88 664.08 664.28 664.48 664.68 664.88 665.08 665.28 665.48 665.68 665.88 666.08 666.28 666.48 666.68 666.88 667.08 667.28 667.48

662.0 661.7 662.2 662.1 662.6 662.3 662.1 661.4 661.0 663.4 663.2 +63 662.8 +75 662.7 662.4 662.3 +08 662.2 663.9 663.4 663.6 663.3 663.2 663.8 664.5 664.2

STA. 1150+00 TO STA. 1160+00

ESTIMATED QUANTITIES

* As Per Plan

⊗ U.G. QUANTITIES

| | | |

FED. RD. DIVISION	STATE	PROJECT	
2	OHIO		

40A
41B

BELMONT COUNTY
BEL - 7 - 20.74

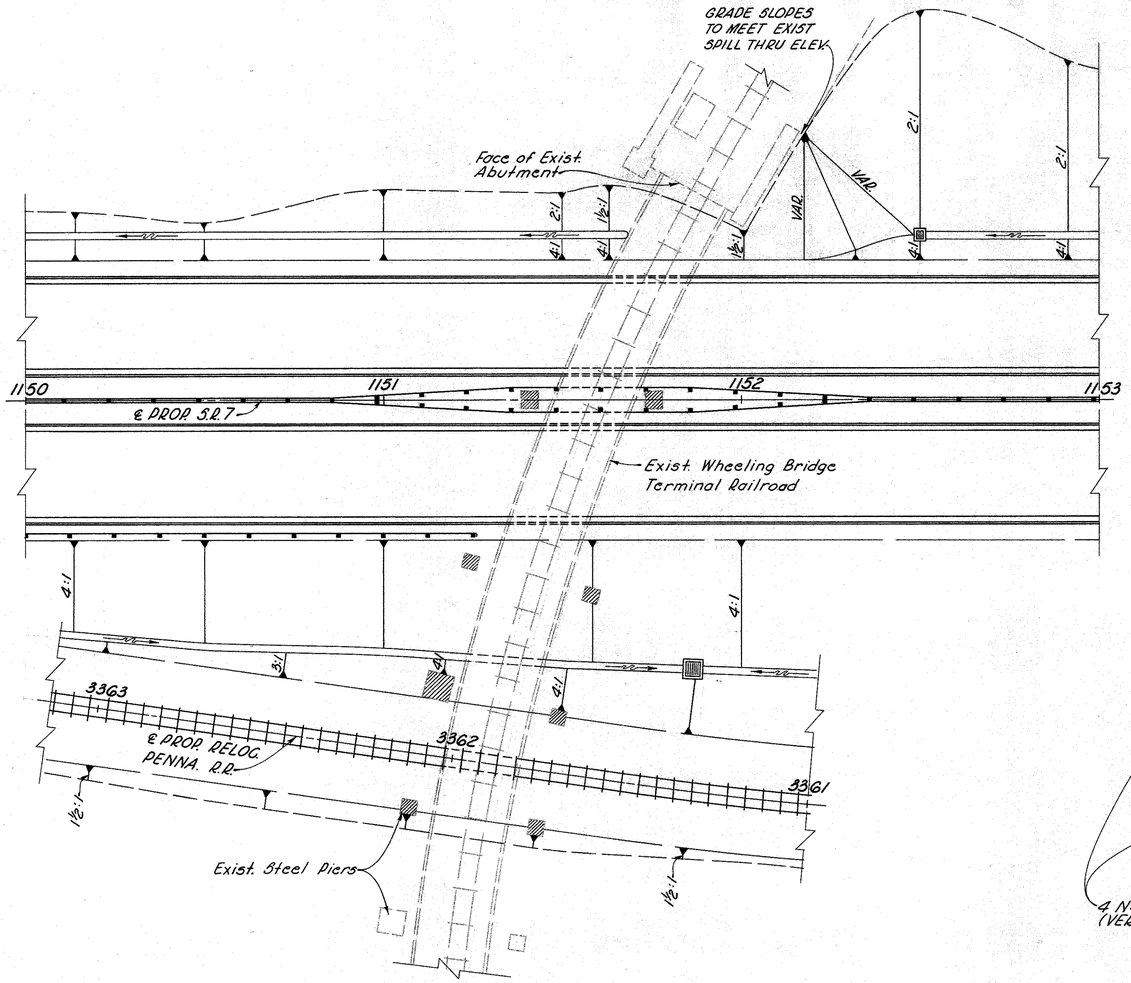

PLAN VIEW

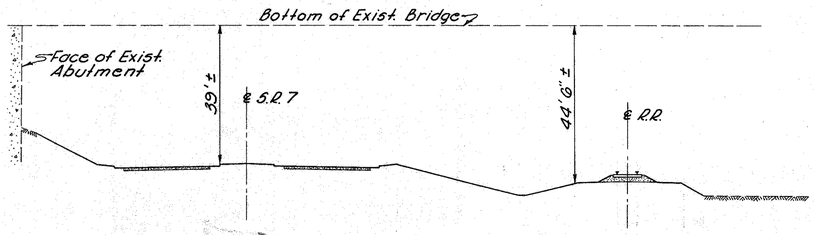

PROFILE VIEW AT ℄ BRIDGE

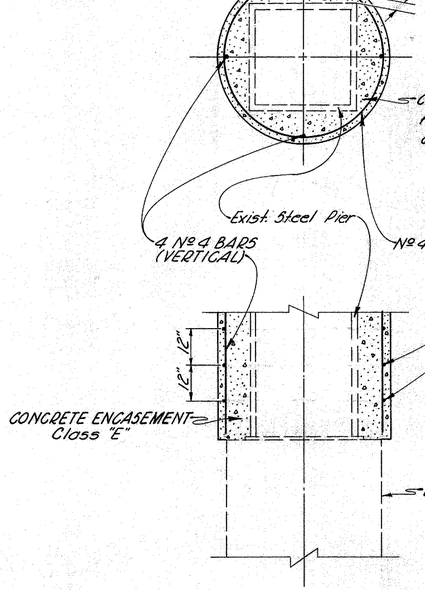

DETAIL OF ENCASEMENT

NOTE: Reinforcing Steel shall meet the requirements of Item 509.

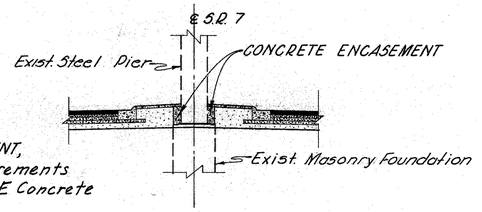

DETAIL OF ENCASEMENT IN MEDIAN

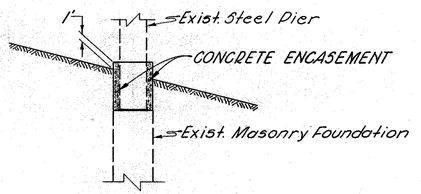

DETAIL OF ENCASEMENT IN EMBANKMENT

NOTE:
The structural steel in the steel piers, shown cross-hatched in the Plan View, of the existing Wheeling Bridge Terminal Railroad, shall be encased in concrete as shown in Details. The cost of this encasement shall be paid for as Item Special, Lump Sum, Concrete Encasement of Structural Steel, which price and payment shall include all materials, labor, equipment and incidentals necessary to complete this item. Quantity is carried on Sh. 40.

SUPPLEMENTAL SITE PLAN OF EXIST. WHEELING BRIDGE TERMINAL R.R. OVER PROP. S.R. 7

BELMONT COUNTY
BEL-7-20.74

FED. RD. DIVISION	STATE	PROJECT	
2	OHIO		

41
418

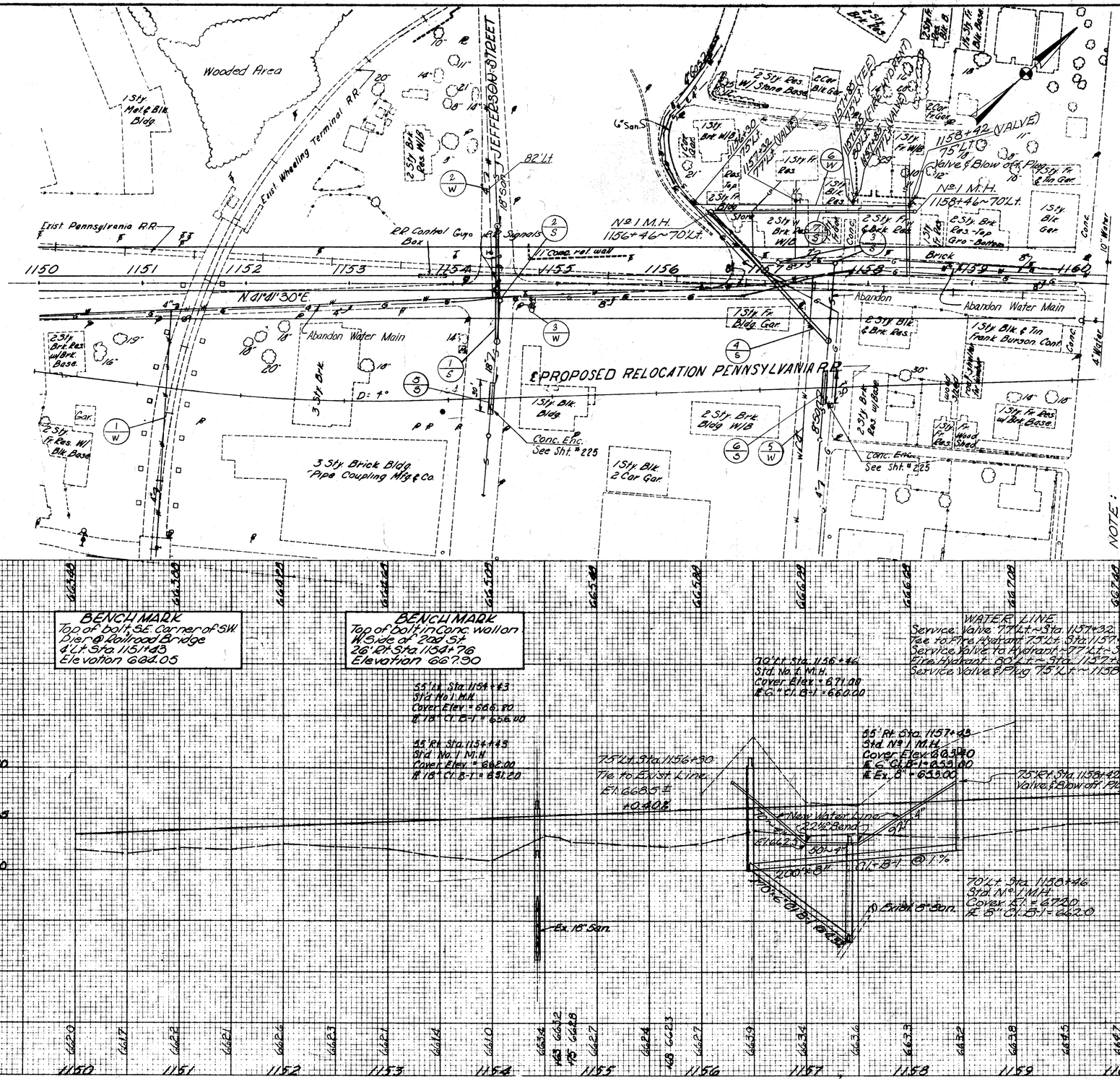

NOTE:
Exact location, as to line and grade, should be determined, of the existing Water Lines and Sanitary Sewers, on the Lt. from Sta. 1156+50 to 1158+50, Before Constructing of the new facilities.

ESTIMATED QUANTITIES

REF. NO.	STATION TO STATION	SIDE	F-124 RELOCATE REMOVE WATER LINE VALVE & BOX EACH	F-124 FIRE HYDRANT ASSEMBLY EACH	F-124 4" NEW WATER MAIN LIN. FT.	F-124 4" VALVE & BOX EACH	F-124 FIRE HYDRANT AS PER STD. EACH	F-124 4" NEW WATER MAIN LIN. FT.	F-124 BEND 4" 22½° EACH	F-124 TEES 4"x4"x4" EACH	F-124 4" VALVE & BOX EACH	F-8 STD NO 1 M.H. EACH	F-16 MH TO BE ABANDONED EACH	S-1 CONC. FOR SPECIAL DESIGN CU YDS
	BY OTHERS													
1-W	1151+25	℄	* 1											
2-W	1151+40	Lt.	* 1											
3-W	1154+75	℄		* 1										
5-W	1157+40	Rt	* 1											
6-W	STATE CONTRACTOR 1156+30 - 1158+42	Lt.	1											
1-S	1154+38	Lt&℄						110	2		1			
2-S	1154+45	℄									2			
3-S	1157+10 ~ 1157+20	Lt.										2		
4-S	1156+46 ~ 1157+43	Lt&℄						170						6.7
5-S	1154+38	℄												6.7
6-S	1157+43	℄										1		
7-S	1156+46 ~ 1158+46	Lt.						200						
	*WORK DONE BY CITY OF MARTINS FERRY													
	TOTALS BY OTHERS		* 3	* 1										
TOTALS			1		370	110	5	3	134					

UTILITY PLAN STA. 1150+00 TO STA. 1160+00

SEE SHEET NO.														

FOR PAY ITEMS NOT TABULATED SEE SHEET Nº 65

BELMONT COUNTY
BEL - 7 - 20.74

42
418

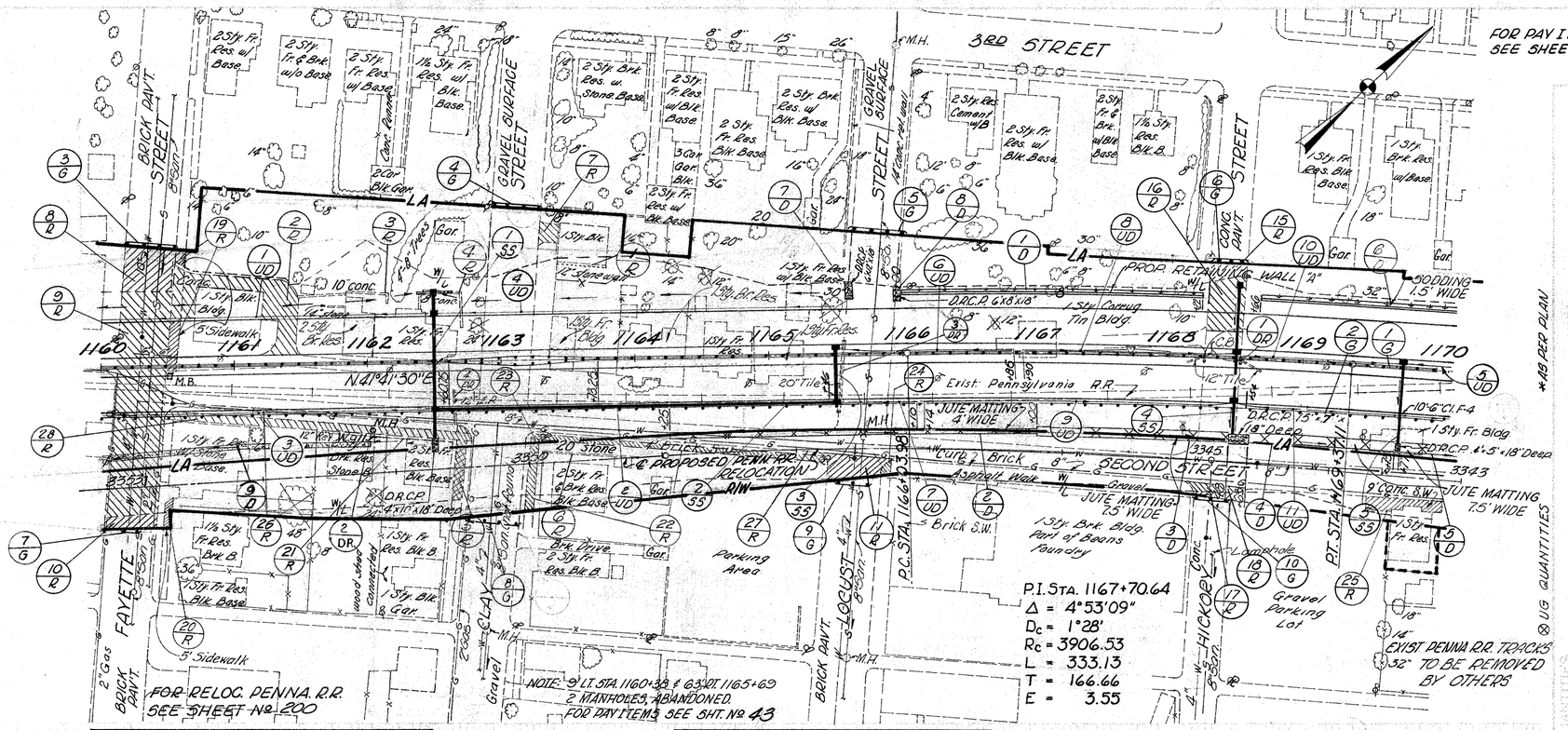

Bench Mark
Spike in telephone pole on W. side of 2nd St. next to George Schweszer Auto Body Shop
5' Lt. of Sta. 1160+89 Elev. 666.62

Bench Mark
Spike in service pole near intersection of 2nd & Locust St. No. 435
20' Rt. of Sta. 1165+38 Elev. 660.47

NOTE: UNDERDRAINS OUTSIDE, 3.90 BELOW EDGE PAVT
UNDERDRAINS INSIDE, 3.80 BELOW PROFILE GRADE

51' Lt. Sta. 1162+50
Std. NO. 2-2-A C.B.
℄ 15" Cl. E-1 - 662.00
Elev. Grate - 666.00

34' Lt. Sta. 1162+50
Std. No. 2-A-10 Inlet (Mod.)
℄ 15" Cl. E-1 - 662.32
℄ 18" Cl. J-1 - 662.07
℄ Window - 667.91
℄ 6" Cl. F-4 - 664.18

7' Lt. Sta. 1165+50
Std. NO. 2A8 Inlet (Mod)
℄ 12" Cl. J-1 - 665.75
℄ Window - 669.48
℄ 6" Cl. F-4 - 665.85

54.5' Lt. Sta. 1168+50
Std. No. 2-2-A C.B.
Elev. Grate - 670.00
℄ 15" Cl. J-1 - 665.95

7' Lt. Sta. 1169+50
Std. No. 2-A-6 Inlet (Mod)
℄ Window - 669.36
℄ 15" Cl. J-1 - 663.50
℄ 6" Cl. F-4 - 665.73

P.V.I. STA. 1167+00
Elev. 670.28

+0.40%
-0.48%
400' V.C.
S.S. D = 475'
12"x300' Cl. J-1 @ 0.42%
6" Cl. I-3
Lt. & Rt. Out
+46 Lt. & Rt. Out ℄ = 664.18
+00 Lt. & Rt. Out ℄ = 663.18
+50 Lt. Out ℄ = 665.96
+10 Rt. Out ℄ = 665.40
+14 Rt. Out ℄ = 665.39
+46 Rt. Out ℄ = 665.34
+86 & +90 - 2' Lt. ℄ = 666.04
+54 - 2' Lt. ℄ = 665.71
+54 Rt. Out ℄ = 664.86
+04 Rt. Out ℄ = 664.76
+00 Rt. Out ℄ = 664.77
+00 - 2' Lt. ℄ = 663.11
+00 Rt. Out ℄ = 664.33

34' Rt. Sta. 1162+50
Std. No. 3 C.B.
℄ 12" Cl. J-1 - 664.10
℄ 18" Cl. J-1 - 660.85
℄ 18" Cl. E-1 - 660.85
℄ Window - 667.91

58' Rt. Sta. 1162+50
Std. Type HW-E Endwall
℄ 18" Cl. E-1 - 659.00
4'x10'x18" D.R.C.P.

34' Rt. Sta. 1165+50
Std. No. 3-A C.B.
℄ 12" Cl. J-1 - 668.85
℄ 12" Cl. J-1 - 665.35
℄ Window - 669.08
℄ 6" Cl. F-4 - 665.35

34' Rt. Sta. 1168+50
Std. No. 3-A C.B.
℄ Window - 668.53
℄ 15" Cl. J-1 - 661.55
℄ 15" Cl. E-1 - 661.55
℄ 6" Cl. F-4 - 664.62

57.5' Rt. Sta. 1168+50
Std. Type HW-E Endwall
℄ 15" Cl. E-1 - 660.35
15'x7'x18" D.R.C.P.

7' Lt. Sta. 1169+75
Std. No. 2-A-8 Inlet (Mod)
℄ Window - 668.79
℄ 12" Cl. J-1 - 665.06
℄ 6" Cl. F-4 - 665.16(S)
℄ 6" Cl. F-4 - 665.06(N)

57.5' Rt. Sta. 1169+75
Std. Type HW-E Endwall
℄ 12" Cl. J-1 - 660.36
4'x5'x18" D.R.C.P.

Sta. 1160+00 to Sta. 1170+00

| | | |

BELMONT COUNTY
BEL - 7 - 20.74

FED. RD. DIVISION	STATE	PROJECT	
2	OHIO		

43/418

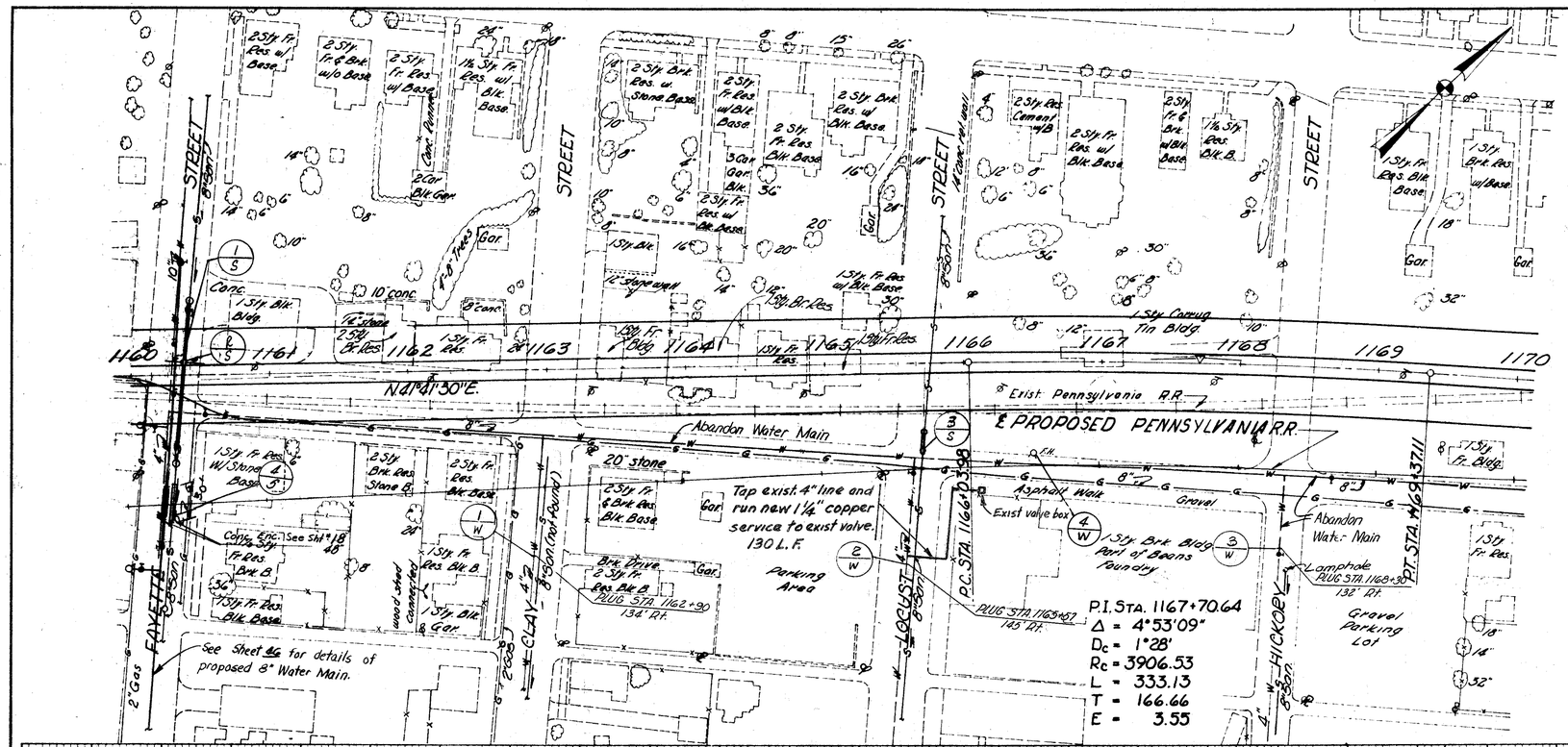

Bench Mark
Spike in telephone pole on W side of 2nd St. next to George Schwaszer Auto Body Shop
5' Lt. of Sta. 1160+83 Elev. 666.62

Bench Mark
Spike in service pole near intersection of 2nd & Locust St. No. 435
80' Rt. of Sta. 1165+38 Elev. 660.47

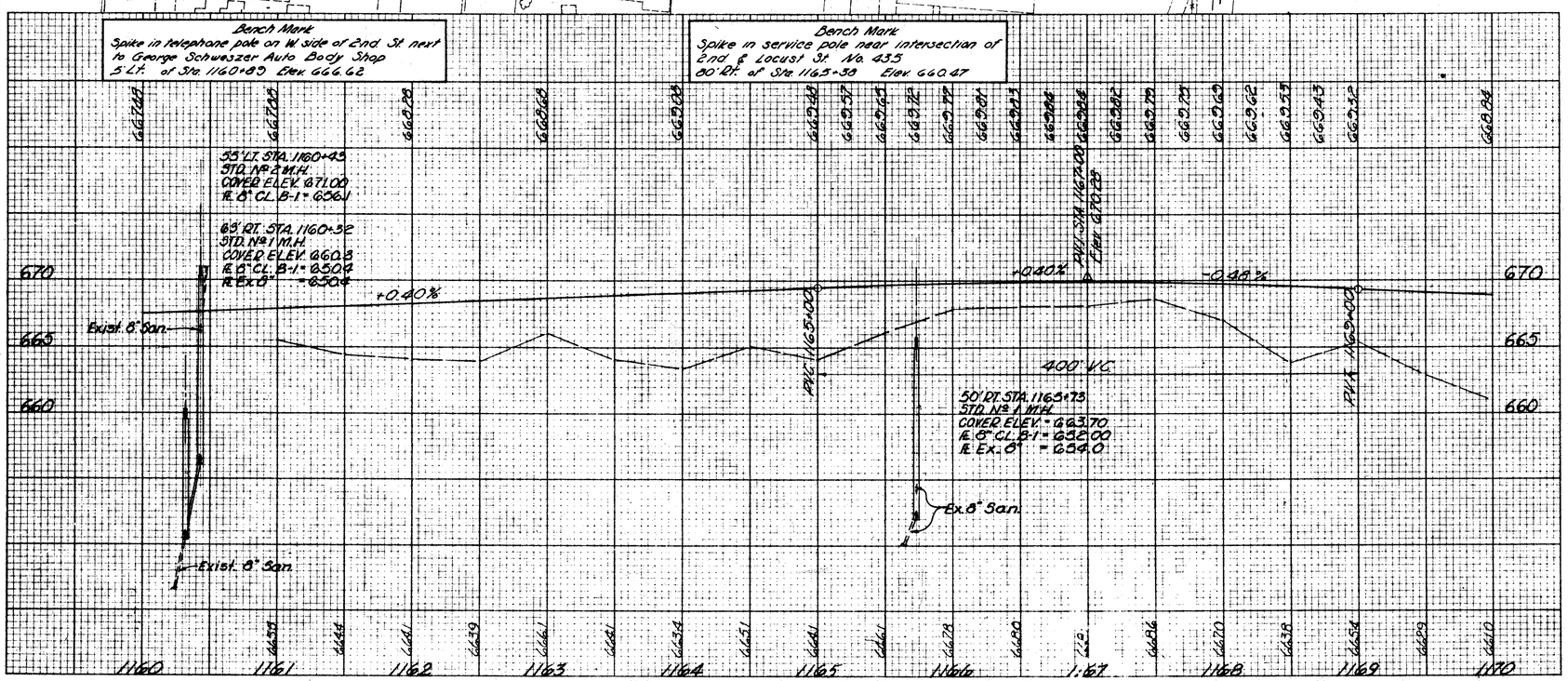

ESTIMATED QUANTITIES

REF. NO.	STATION TO STATION	SIDE	T-124 Excavation for new 1 1/4" copper line 130 Lin Ft	S-1 Conc. Cradle for 8" Sewer Cl. 2	T-1 Cl. B-1 8"	T-118 Manhole Adjusted	T-9 Std. No. 1 M.H.	T-8 Std. No. 2 M.H.	T-124 1 1/4" Ells	SEE SHEET NO.
			EACH	CU YDS	LIN FT	EACH	EACH	EACH	EACH	
	BY CITY									
1-W	1162+90	E.F.	1							
2-W	1165+57	E.F.	1							
3-W	1166+80	E.F.	1							
4-W	1167+51	E.F.							1	
	BY CONTRACTOR									
1-3	1160+20 - 1160+50	LINE			118		1	1		
2-3	1160+40	C.F.				1				
3-3	1165+75	E.F.			14	1	1			
4-3	1160+32	E.F.		6.7						
	TOTALS		3	6.7	132	2	2	1	1	

UTILITY PLAN STA. 1160+00 TO STA. 1170+00 Rev 10-21-66 C.E.H.

FOR PAY QUANTITIES NOT SHOWN SEE SHEET Nº 65

NOTE: 88' Rt. Sta. 1171+10 1 MANHOLE, ABANDONED FOR PAY ITEM, SEE SHT. Nº 45

3RD STREET

HANOVER STREET

SECOND STREET

CARLISLE STREET

Gravel Parking Lot

1 Car Fr. Gar.

Small Locusts 2'-4"

Gravel Alley

4' Stone Paved Gutter 12"

Curb

PROPOSED RETAINING WALL

SODDING 1.5' WIDE

JUTE MATTING 75' WIDE

JUTE MATTING 4' WIDE

D.R.C.P. 4'-5'-18"

Brick S.W.

Conc. Brick S.W.

CONC. WALK

Wooded

Gor.

Playground

GRAVEL

ASPHALT

Tin Shed

Ex. Penna. R.R.

EXIST PENNA. RR. TRACKS TO BE REMOVED BY OTHERS

FOR DETAILS OF INTERSECTION SEE SHEET Nº 185

FOR RELOC. PENNA. R.R. SEE SHEET Nº 201

FOR Storm Sewer See Sht. Nº 183

ADD 2.11 FOR STATION EQUATION: PC. STA. 1173+34.45 Bk = PC. STA. 1173+32.34 Ahd.

STATION EQUATION STA. 1173+94.45 Bk = STA. 1173+92.34 Ahd.

CURVE DATA
PI. STA. 1180+97.34
Δ = 14°01'46"
Dc = 1°00'
Rc = 5729.58'
L = 1402.94'
T = 705.00'
E = 43.21'

1170 1171 1172 1173 1174 1175 1176 1177 1178 1179 1180

N. 46°34'30" E.

3343

3390

3335

BENCH MARK
Spike in bottom of 24" Elm near intersection of 2nd & Walnut Sts. 125' Rt. Sta. 1171+46 Elevation 653.42

BENCH MARK
Spike in service pole S.E. cor. of 2nd & Hanover Streets. 73' Rt. Sta. 1178+10 Elevation 656.04

NOTE: UNDERDRAINS OUTSIDE, 390' BELOW EDGE PAVEMENT.
UNDERDRAINS INSIDE, 3.80' BELOW PROFILE GRADE.

BENCH MARK
N.E. corner Spike in pole 90' N. of AM #18, near Katinas Cafe 74' Rt. Sta. 1179+22 Elevation 655.15

Note:
For additional Storm Sewer Data, See Appropriate Cross Sections.

-0.48%

+0.76%

200' V.C.

PVC. 1177+00

PVT. 1178+00

PVT. 1179+00

Elev. 665.00

35' Rt. Sta. 1171+50 Std. No. 2-A-G Inlet (Mod) IE-6" Cl. F-4 = 663.82 IE Window 667.55 IE 12" Cl. E-1 663.82

575' Rt. Sta. 1171+50 Std. Type HW-E Endwall IE 12" Cl. E-1 ~ 659.83 4'x5'x18" D.R.C.P.

34' Lt. Sta. 1172+50 Std. No. 2-A-G Inlet (Mod) IE-6" Cl. F-4 = 663.34 IE-Window = 667.07 IE-12" Cl. J-1 = 663.34 50' Rt. Sta. 1172+50 Std. No. 2-A-G Inlet (Mod) IE-12" Cl. J-1 = 662.88 IE Window = 667.21 IE-6" Cl. F-4 = 663.48 IE-12" Cl. E-1 = 662.88

64' Rt. Sta. 1172+50 Std. No. 2-2-A C.B. IE-24" Cl. J-1 = 655.35 IE-12" Cl. E-1 = 656.35

454'-24" Cl. J-1 @ 0.82%

43' Rt. Sta. 1173+25 Std. No. 3-A C.B. IE = 12" Cl. J-1 = 663.36

38' Lt. Sta. 1175+50 Std. No. 2-A-G Inlet (Mod) IE-6" Cl. F-4 = 661.90

2' Lt. Sta. 1175+50 Std. No. 2-10 Inlet IE = 6" Cl. F-4 = 662.80 (N) & 662.40 (S)

58' Lt. Sta. 1175+50 Std. No. 2-2-A C.B.

82' Lt. 1175+97 IE-Lt Out = 661.69

79' Lt. 1176+56 IE-Lt. Out. = 661.18

For Continuation See Sht. Nº 184

62' Lt. Sta. 1177+00 Std. No. 2-4 C.B. (Mod.)

64' Rt. Sta. 1177+00 Std. No. 2-5 C.B. (Mod) IE-24" Cl. J-1 = 651.63

7' Rt. Sta. 1177+75 Std. No. 3 C.B. IE-6" Cl. F-4 = 661.45

34' Lt. Sta. 1177+50 Std. No. 3 C.B IE-6" Cl. F-4 = 660.64 (N)

2' Rt. 1177+64 IE-6" Cl. J-3 = 661.48

2' Lt. 1177+86 IE-6" Cl. J-3 = 661.48

41'-12" Cl. J-1 @ 2.22%
59'-12" Cl. E-1 @ 11.1%

7' Rt. Sta. 1178+50 Std. No. 2-4 Inlet (Mod.) IE-6" Cl. F-4 = 661.68

34' Lt. Sta. 1178+50 Std. No. 2-A-G Inlet (Mod.) IE = 6" Cl. F-4 = 660.95

59.5' Lt. Sta. 1178+50 Std. Type HW-E Endwall IE 12" Cl. E-1 ~ 658.00

+00-2' Lt. & E = 665.11
+25 Lt Out E = 664.81
+54 Rt Out E = 663.78
+54-2' Rt. & E = 663.82
+00 Rt Out E = 664.33
+25-2' Lt. & E = 665.16
+54 Lt Out E = 663.32
+54 Lt Out E = 661.88
+75-2' Rt. & E = 662.28
+46-2' Rt. & E = 662.45
+77-2' Rt. & E = 661.79
+46 Lt Out E = 660.93
+46-2' Rt. & E = 661.66
+00-2' Rt. & E = 662.72
+00 Lt Out E = 662.01

6" Cl. I-3

75'-12" Cl. J-1 @ 0.64%

Lt. Outside 18"

6668.84 6668.60 6668.36 6668.12 6667.88 6667.64 6667.40 6667.16 6666.92 6666.68 6666.44 6666.20 6665.96 6665.72 6665.48 6665.38 6665.32 6665.29 6665.31 6665.36 6665.46 6665.59 6665.76 6666.14 6666.52

6670 6665 6660 6655 6650

6670 6665 6660 6655 6650

6670.10 6670.10 6671.11 6671.11 6670.09 6670.15 6670.18 6670.30 6670.38 6670.37 6670.39 6670.56 6670.62 6670.57 6670.71 6671.39

1170 1171 1172 1173 1174 1175 1176 1177 1178 1179 1180

Sta. 1170+00 to Sta. 1180+00

| | | |

BELMONT COUNTY
BEL - 7 - 20.74

FED. RD. DIVISION	STATE	PROJECT	
2	OHIO		

45
418

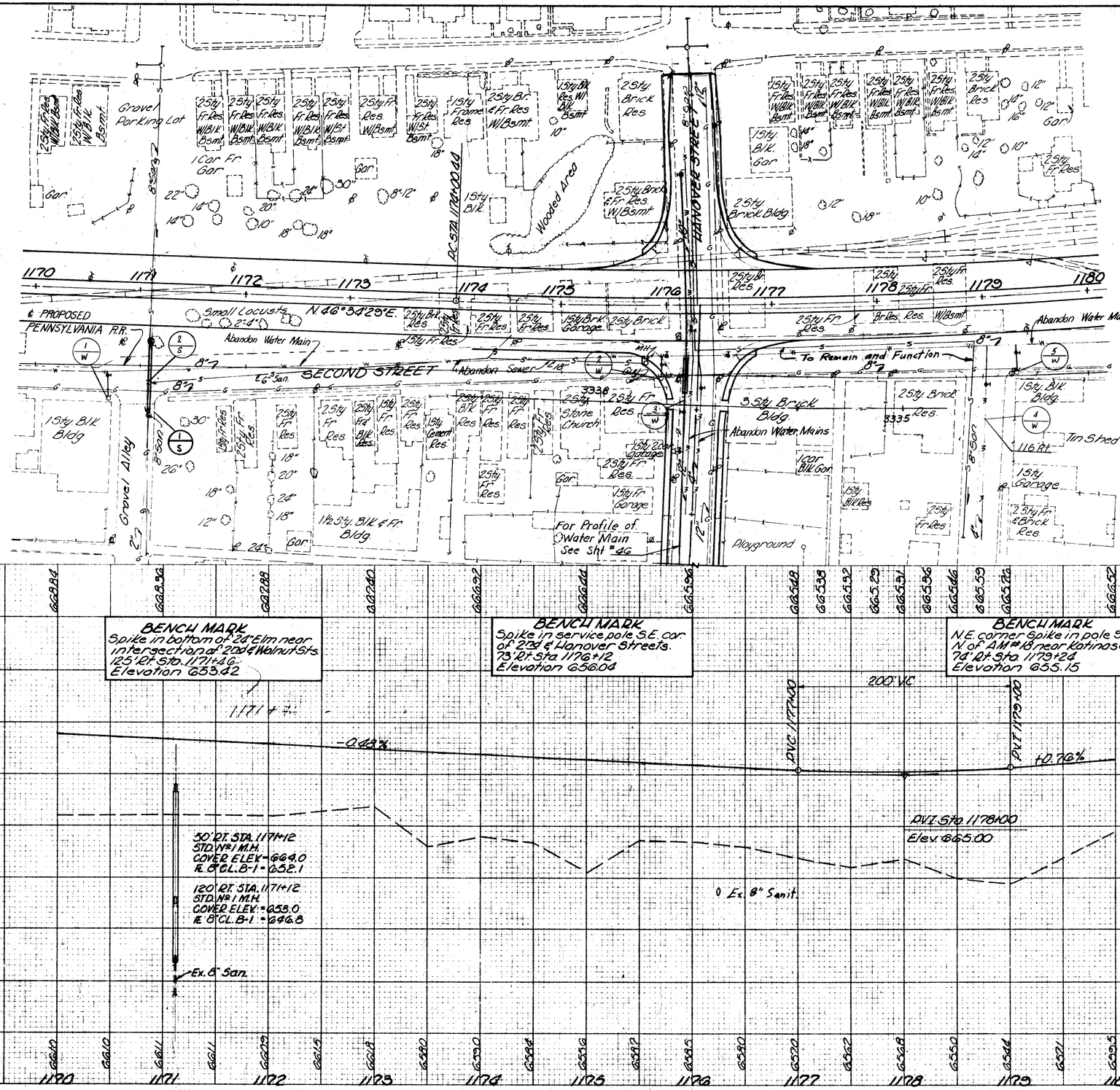

ESTIMATED QUANTITIES

| REF. NO. | STATION TO STATION | SIDE | SEE SHEET NO. | I-8 STD. NO. 1 M.H. EACH | I-16 MH TO BE REMOVED EACH | 3-1 CONC. STREET CURB 12" EA. LIN. FT. | | |

BELMONT COUNTY
BEL - 7 - 20.74

FED. RD. DIVISION	STATE	PROJECT	
2	OHIO		

46
418

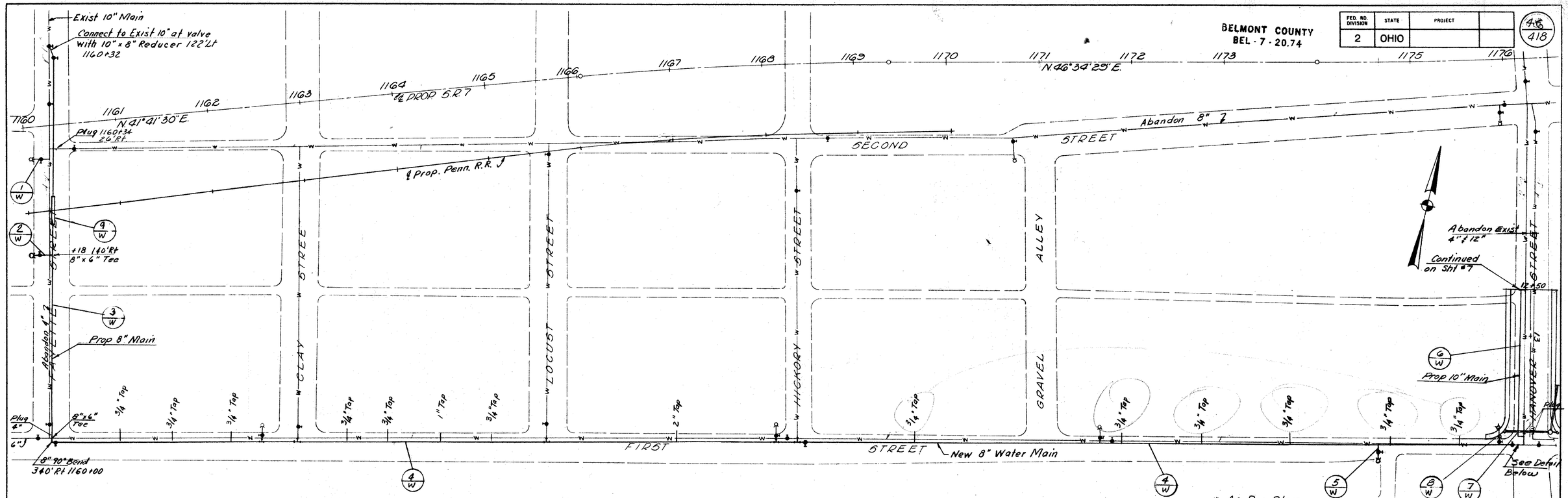

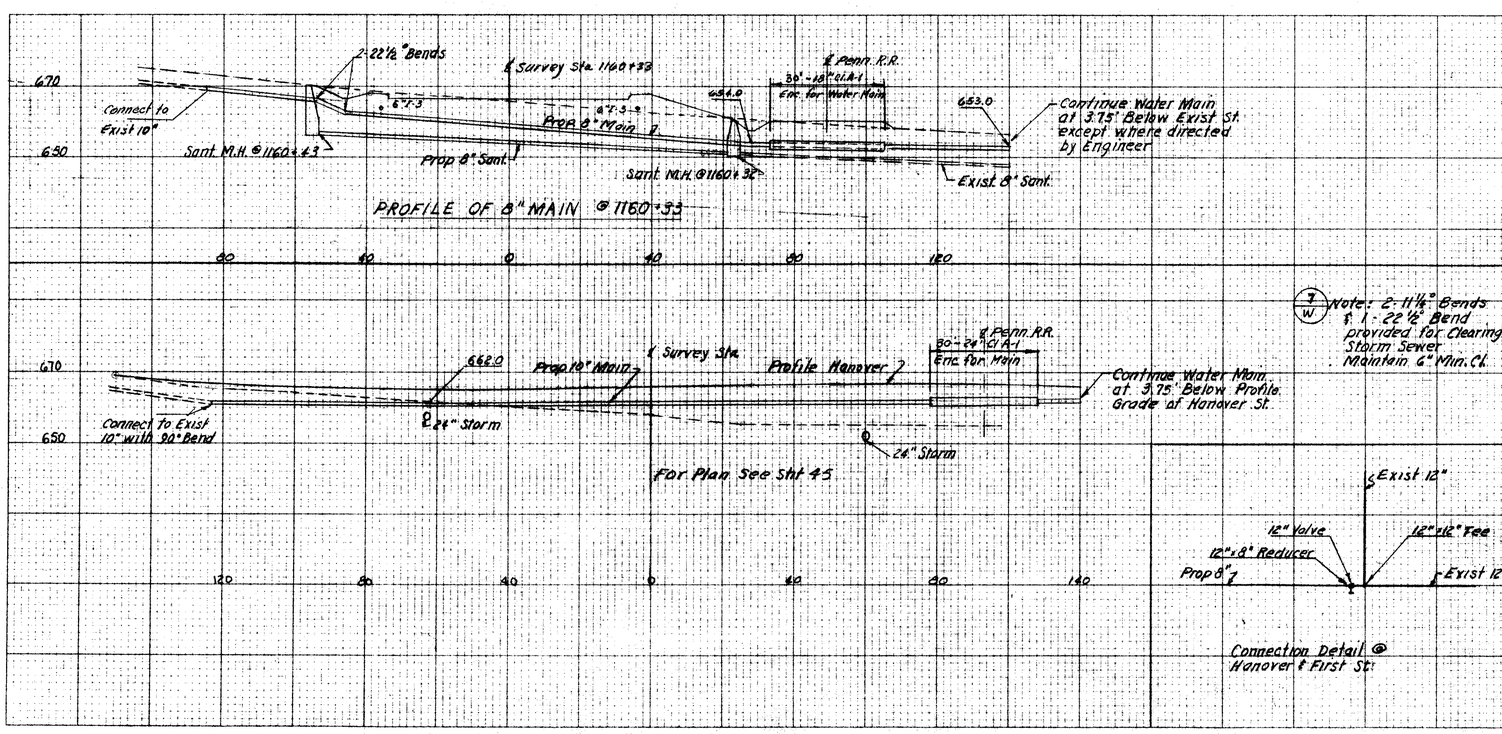

7/W Note: 2-11¼° Bends & 1-22½° Bend provided for Clearing Storm Sewer Maintain 6" Min. Cl.

ESTIMATED QUANTITIES BY OTHERS

I-124

			New Mains 6"	New Mains 8"	New Mains 10"	New Mains 12"	Valve & Box 6"	Valve & Box 8"	Valve & Box 12"	Tees 12" x 12"	Tees 12" x 10"	Tees 8" x 4"	Tees 8" x 6"	90° Elbows 8"	90° Elbows 10"	8" Bends 11¼"	8" Bends 22½"	Reducer 8" x 10"	Reducer 8" x 12"	4" Plug	12" Plug	Fire Hyd. *	FH Removed
1W	1160+00	R																					1
2W	1160+00	R	20'				1'						1'									1'	
3W	1160+32	℄		425				1'					1'	1'				1					
4W	1160+32 - 1176+15	R		1580		10'		2'	1'	1'		3'	3'						1				
5W	1174+75	R	15				1						1									1	
6W	1176+15	R			155						1				1					1	1		
7W	1176+15	R														2	1						
8W	1176+00	R	20				1						1									1	1
	Totals		55	2005	155	10	3	3	1	1	1	3	7	1	1	2	1	1	1	1	1	3	2

BY OTHERS

		I-124 Service Taps 3/4" Ea.	I-124 Service Taps 1" Ea.	I-124 Service Taps 2" Ea.	S-1 Conc. for Backing	L-1 18" Cl. A-1 Sec. M.G. Lt. L.F.	STATE CONTRACTOR T-35 1¼" Asph. Conc. Surf. Course C.Y.	B-35 1¼" Asph. Conc. Lev. Course C.Y.	T-30 Bituminous Prime Coat Gal	I-22 Subbase C.Y.
9W-1160+32	Rt				0.5	30'				
4W-1160+32-1176+15	Rt	12	1	1			41.55	41.55	478	265.93
Total		12	1	1	0.5	30	41.55	41.55	478	265.93

UTILITY RELOCATION 1160+00 to 1176+30

BELMONT COUNTY
BEL-7-20.78

			41
2	OHIO		418

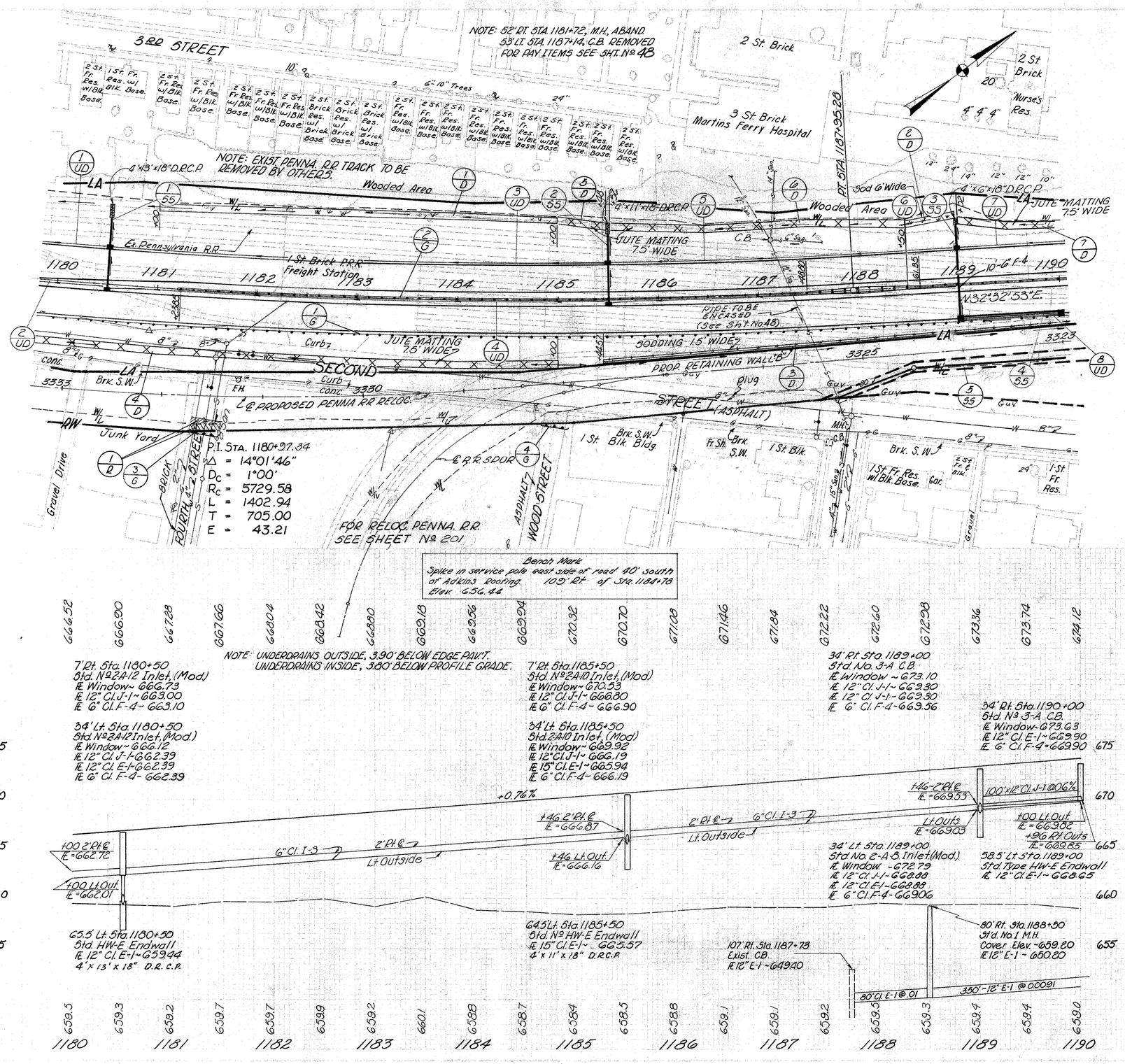

| | | |

BELMONT COUNTY
BEL - 7 - 20.74

FED. RD. DIVISION	STATE	PROJECT	
2	OHIO		

48
418

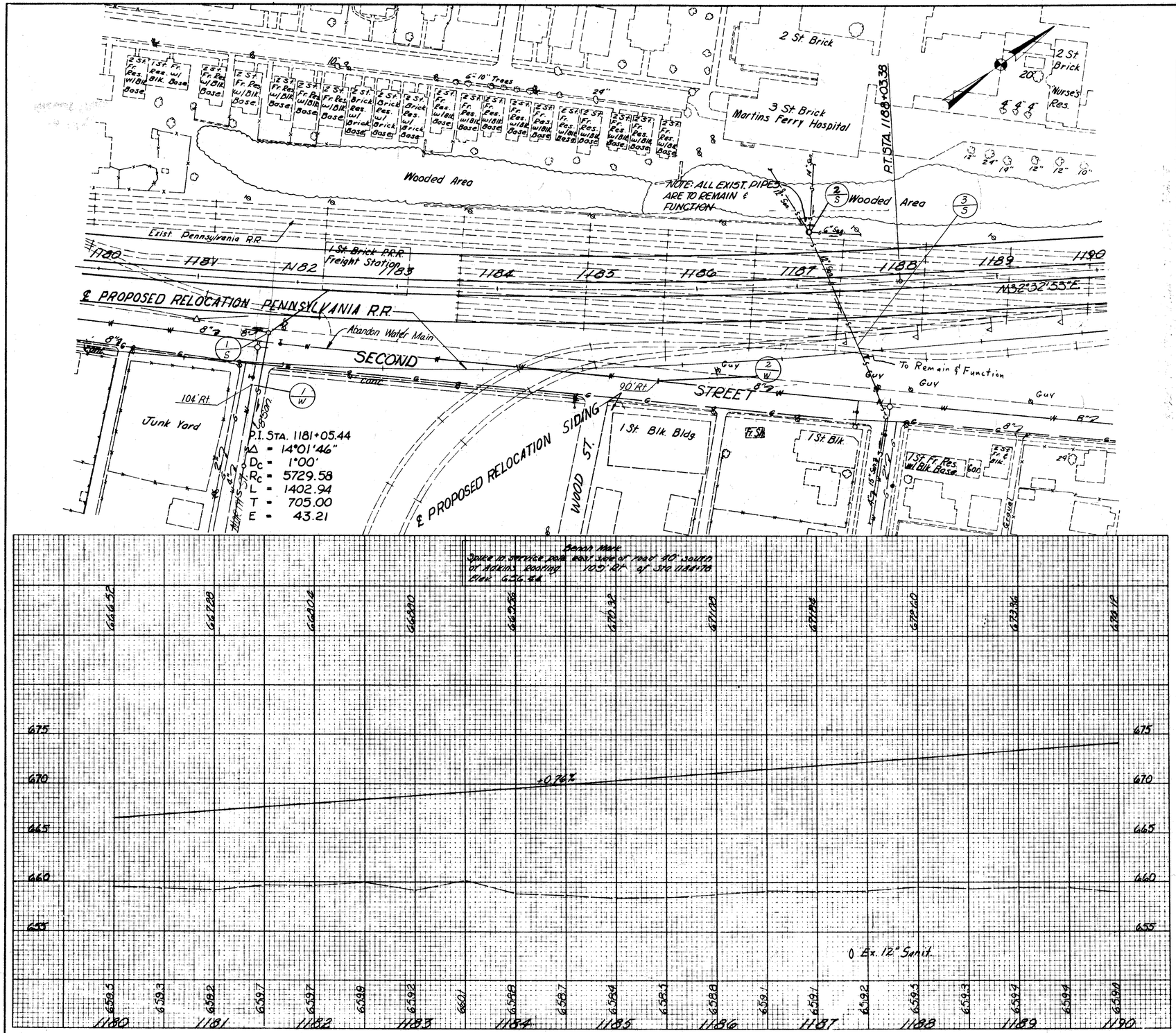

ESTIMATED QUANTITIES

REF. NO.	STATION TO STATION	SIDE	I-124 PLUG AND PROVIDE BLOW-OFF VALVE 8" EACH	S-1 CONCRETE FOR STRUCT. CLASS "E" C.Y.	S-24 REMOVAL OF EXIST. STRUCTURES LUMP	I-16 MH TO BE ABANDONED EACH	I-8 STD. NO. 2 M.H. EACH
	BY OTHERS						
1-W	1181+60	RT.	1				
2-W	1185+50	RT.	1				
	TOTAL BY OTHERS		2				
	STATE CONTRACTOR						
1-S	1181+75	RT.				1	
2-S	1187+15	LT.			LUMP		1
3-S	1187+44 ~ 1187+73	LT. & RT.		33			
TOTALS	STATE CONTRACTOR			33	LUMP	1	1

SEE SHEET NO.

UTILITY PLAN STA. 1180+00 TO STA. 1190+00

MICROFILMED
MAY 14 1986

TYPICAL SECTION
WEST APPROACH TO STR. BEL-7-2256

BEL-7-2256

EXIST PENNA. R.R. TRACKS TO BE REMOVED BY OTHERS

NOTE: 55' LT. STA. 1198+04
1 MANHOLE, ABANDONED
FOR PAY ITEM SEE SHT. No. 50

PROPOSED PEDESTRIAN OVERPASS

Exist. Wooden Steps with Steel Frame

Asphalt Parking Lot

STA. 1191+47.73 ℄ S.R. 7
STA. 4+99.07 OVERPASS

JUTE MATTING 7.5' WIDE

Wooded Area

Ex 15" C.M.P.

8" Gas Line

D.R.C.P. - 10'-8" x 18"

CONC. BLOCK BLDG

1st. Brick Bldg.

Curb

Brick

BURLINGTON ROAD

Lamp Hole

House Trailer

15th. Blk.

25th. Fr. Apt. Bldg.

N 32°32'55" W

1st Fr. Res.

2 St. Brick Liberty Fire House

PROP. RETAINING WALL-B

SODDING 15' WIDE

℄ PROPOSED PENNA. R.R. RELOC.

Penna. R.R.

Conc. Walk

Brick

1st Brick Indust. Bldg.

Guy

End of Curb

Asphalt

1st Conc. Blk.

1st Fr. Res. W/Brick Base.

San. M.H.

25th Blk. Bldg.

Davies Glass & Mfg. Co.

1st Brick & Blk.

For Details of Drain Conn. to SB See Sht. No. 311
Quant. on Sht. No. 322

FOR RELOC. PENNA. R.R.
SEE SHEET No. 201

1st Fr. Res. w/ Blk. Base.

Cemetery

2 St. Brick Res.

Gar.

Wood Shelter

2 St. Fr. Res. w/ Blk. Base

1st Fr. Res.

Brick Cone Box Base

2 St. Brick w/ Base

Conc. S.W.

Stone Box Culvert

2 St. Brick Res. w/Base

M.H.

C.B.

W. DEWEY STREET

W. CENTER STREET

TO REMAIN IN PLACE

BEGIN PENN. R.R. RELOC. STA. 33+90

FOR BASE REPLACEMENT SEE SHT. NO. 50

FOR CULVERT DETAILS SEE SHT. NO. 215

FOR S.S. PROFILE SEE SHT. 215

* SEE M 606 (01)

** As Per Plan.

| | | |

BELMONT COUNTY
BEL - 7 - 20.74

FED. RD. DIVISION	STATE	PROJECT	
2	OHIO		

50
418

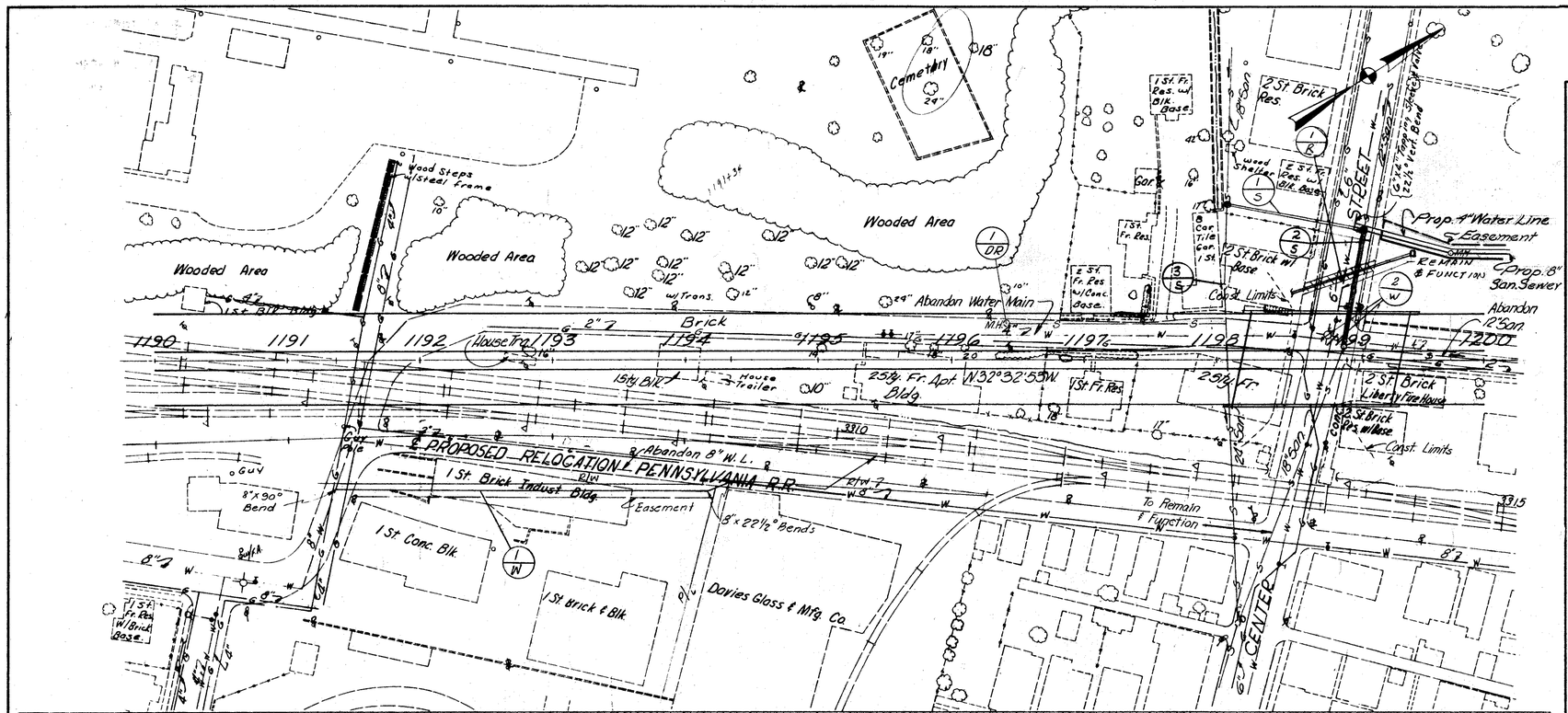

ESTIMATED QUANTITIES

REF. NO.	STATION TO STATION	SIDE		SEE SHEET NO.	S-70 8" PVC C-900 DR 18 CL 235 COUPLE	T-35 2" Galv. Steel Pipe Sch. 40 COARSE	3-1 CONC. BASE CL. 2"	T-22 8" SUB-BASE	T-19 4" CONC. SIDEWALK	E-3 REMOVE & RELAY 4" CONC. SIDEWALK	T-1 8" CL. 52 DI	T-1 18" CL. 52 DI	F-3 STD. STONE MIX	F-8 STD. STONE INTAKE DIVISION	
					380 VOS	201 VOS	201 VOS	CU. YDS.	SQ. FT.	SQ. YDS.	LIN. FT.	LIN. FT.		EACH	
	BY OTHERS						0.3								
1-W	1191+37 - 1194+94	RT.					0.1								
2-W	1194+80 - 1198+30	LT.					0.4								
3-W	1199+26 - 1200+00	LT.													
	TOTALS BY OTHERS		2	3	1	2		5	20	20		92	1		
	STATE CONTRACT OE							1	20	19	105	90			
1-2	1199+60 - 1199+00	LT.						1	20	19	1	1			
1-3	1198+00 - 1199+15	LT.						1	20	19	1	1			
2-3	1199+00	LT.						1	20	19	1	1			
3-3	1198+25	LT.						1	20	19	1	1			
4-3	1199+15 - 1200+00	LT.						1	20	19	1	1			
	TOTALS STATE CONTRACTOR							5	100	95	109	92	1		
1-DR	1196 + 42	LT.						1	20	19	1	1			
	TOTALS							6	120	114	110	93	1		

REF. NO.	STATION TO STATION	SIDE		F-124 4" PLUG	F-124 6"x4" PLUG	F-124 8"x90° BEND	F-124 8"x22½° BEND	F-124 4" NEW MAIN	F-124 6"x4" TAPPING SLEEVE & VALVE	F-16 MUTCD R1-1 STOP SIGN	F-124 8"x6" REDUCER	
				EACH	LIN. FT.	EACH	EACH	LIN. FT.	EACH	EACH	EACH	
	BY OTHERS											
1-W	1191+37 - 1194+94	RT.			301	1	2					
2-W	1194+80 - 1198+30	LT.		2				100	1			
3-W	1199+26 - 1200+00	LT.								1		
	TOTALS BY OTHERS			2	301	1	2	100	1	1	2	
	STATE CONTRACT OE											
1-2	1199+60 - 1199+00	LT.										
1-3	1198+00 - 1199+15	LT.										
2-3	1199+00	LT.										
3-3	1198+25	LT.										
4-3	1199+15 - 1200+00	LT.										
	TOTALS STATE CONTRACTOR											
1-DR	1196 + 42	LT.								1		
	TOTALS									2		

UTILITY PLAN STA. 1190+00 TO STA. 1200+00

109
10
24
40
109
92
95
1
2

MICROFILMED
MAY 14 1986

BELMONT COUNTY
BEL-7-20.74

51
418

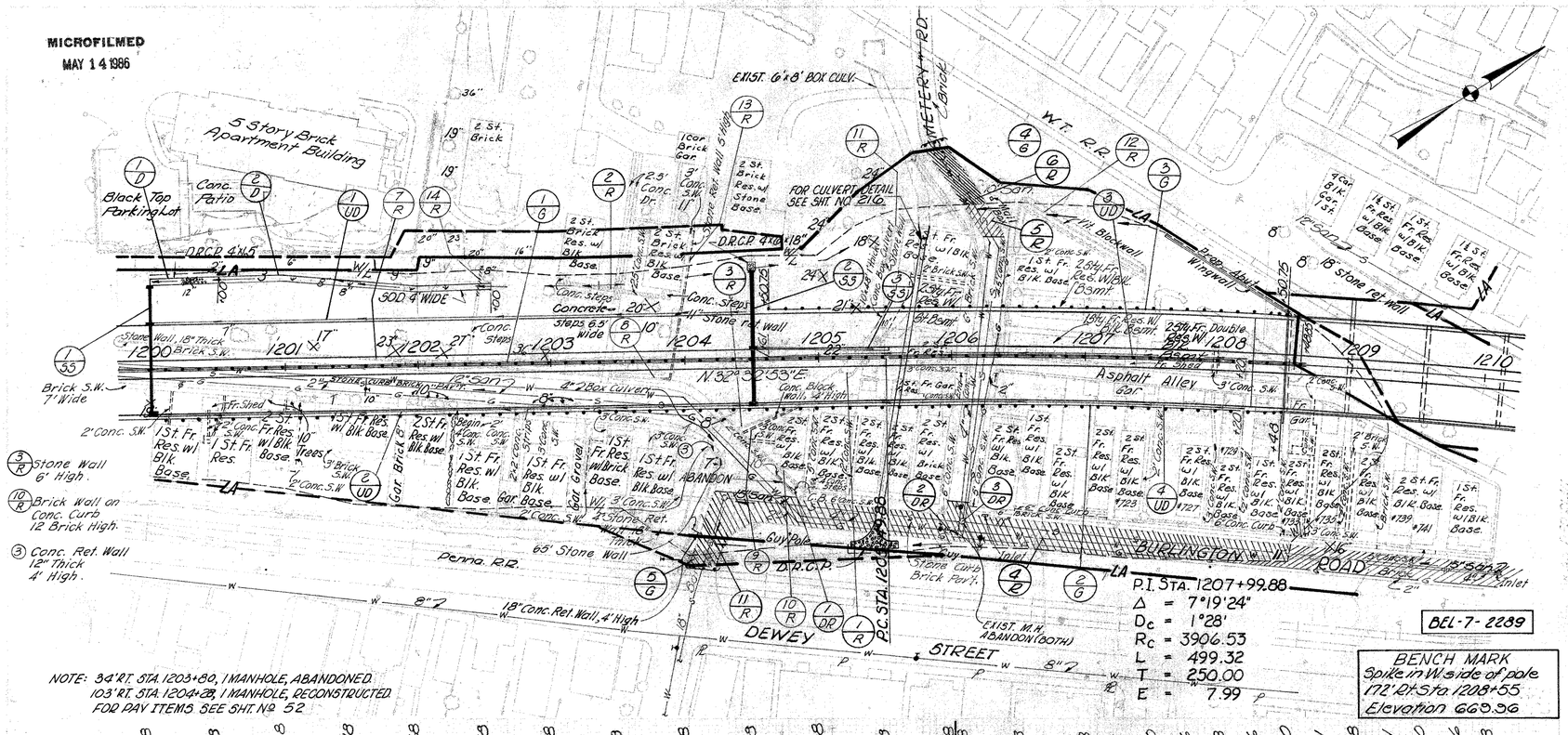

| | | |

BELMONT COUNTY
BEL - 7 - 20.74

FED. RD. DIVISION	STATE	PROJECT	
2	OHIO		

52/418

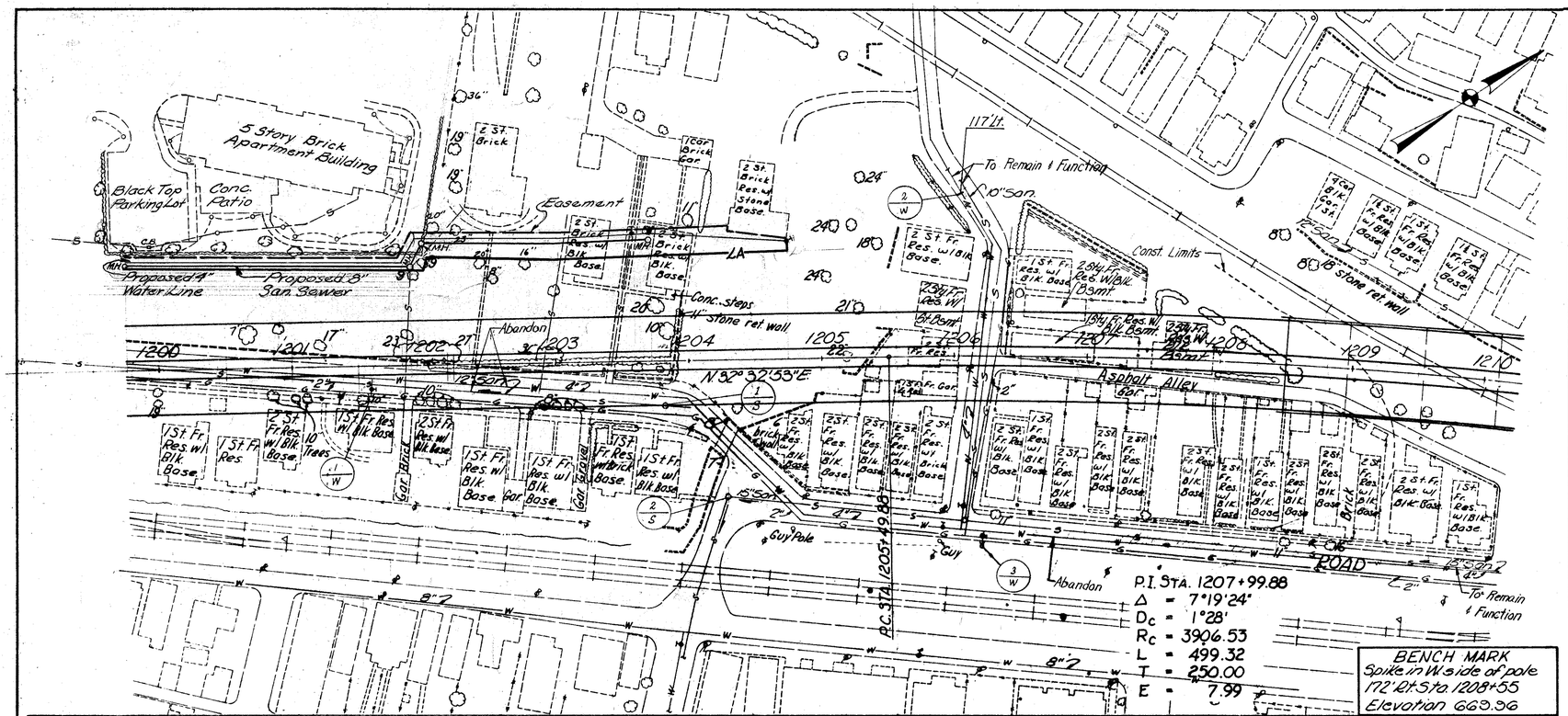

ESTIMATED QUANTITIES

| REF. NO. | STATION TO STATION | SIDE | 1-12A Reset Fire Hydrant (Breakaway Assembly) EACH | 1-12A Fire Hydrant EACH | 1-12A 4" New Water Main LIN. FT. | 1-12A 4" Valve & Box EACH | 1-12A 4" Valve & Box w/ Fire Hydrant EACH | 1-12A 4" Valve & Box w/ Flow-Off Valve EACH | 1-12A Water Service Line LIN. FT. | 1-12A Water Service Line Connection EACH | 1-12A Water Service Line Connection to Existing Main EACH | 1-12A Water Service Line Connection to Existing Water Service Line EACH | 1-12A Water Service Line Connection to Existing Water Service Line EACH | 1-12A Water Service Line Connection to Existing Water Service Line

MICROFILMED
MAY 14 1986

NOTE: 63' LT. STA. 1217+28
1 MANHOLE, ABANDONED.
FOR PAY ITEM, SEE SHT. № 54

NOTE: THE LOCATION OF REF. № 3-D AS INSTALLED SHALL BE REFERENCED ON TOP OF THE GROUND IN THE VICINITY OF THE PROPOSED RETAINING WALL, TO PREVENT DRIVING A PILE THROUGH THE 8" PIPE.

Bench Mark
Bolt in concrete pier west side of Burlington 3' Lt. of Sta. 1212+35 Elev. 683.94

Bench Mark
Spike in west side of service pole East side of Rt. #7 35' Rt. of Sta. 1219+34 Elev. 701.15

FOR DETAILS OF INTERSECTION SEE SHEET № 189

SEE SHEET № 142 FOR STORM SEWER PROFILE

34' LT. STA. 1216+15
STD. NO. 2-A-10 INLET
R. WINDOW = 713.34
COVER ELEV = 713.64
R. 24" CL. E-1 = 703.59
R. 24" CL. J-1 = 703.50
5TH ST. R. 6" CL. F-4 = 705.50
ML. R. 6" CL. F-4 = 709.69

34' RT. STA. 1215+93
STD. NO. 2-A-10 INLET
R. WINDOW = 713.83
COVER ELEV = 714.15
R. 24" CL. J-1 = 703.17
R. 24" CL. F-4 = 703.00
R. 6" CL. J-1 = 710.43

83' RT. STA. 1215+93
STD. NO. 2-2-A C.B.
R. GRATE = 682.00
R. WINDOW = 681.50
R. 24" CL. F-4 = 677.25
R. 24" CL. J-1 = 677.00
118' RT. STA. 1215+93
STD. HW-E HEADWALL
R. 24" CL. J-1 = 676.66
45°x6'x18" D.R.C.P.

+00 = 36' RT.
R. ELEV. = 698.44
+00 LT.
R. = 696.68
R. 677.1

BRIDGE LIMITS = 380.50'
BEGIN APPR. SLAB STA. 1212+31.25
END APPR. SLAB STA. 1212+56.25
P.V.I. Sta. 1212+00
Elev. 726.68
+3.00%
-3.00%
+35 = 36' LT. & RT.
R. ELEV. = 714.90
+00 = 36' LT. & RT.
R. ELEV. = 710.14
1000' V.C.
PVT. STA. 1211+00
PVT. STA. 1213+00
+40 = 36' LT.
R. ELEV. = 703.75
RT. 6" I-37
LT. 6" I-37
-3.00%

* As Per Plan ⊕ U.G. Quantities

| | | |

BELMONT COUNTY
BEL - 7 - 20.74

FED. RD. DIVISION	STATE	PROJECT	
2	OHIO		

54
418

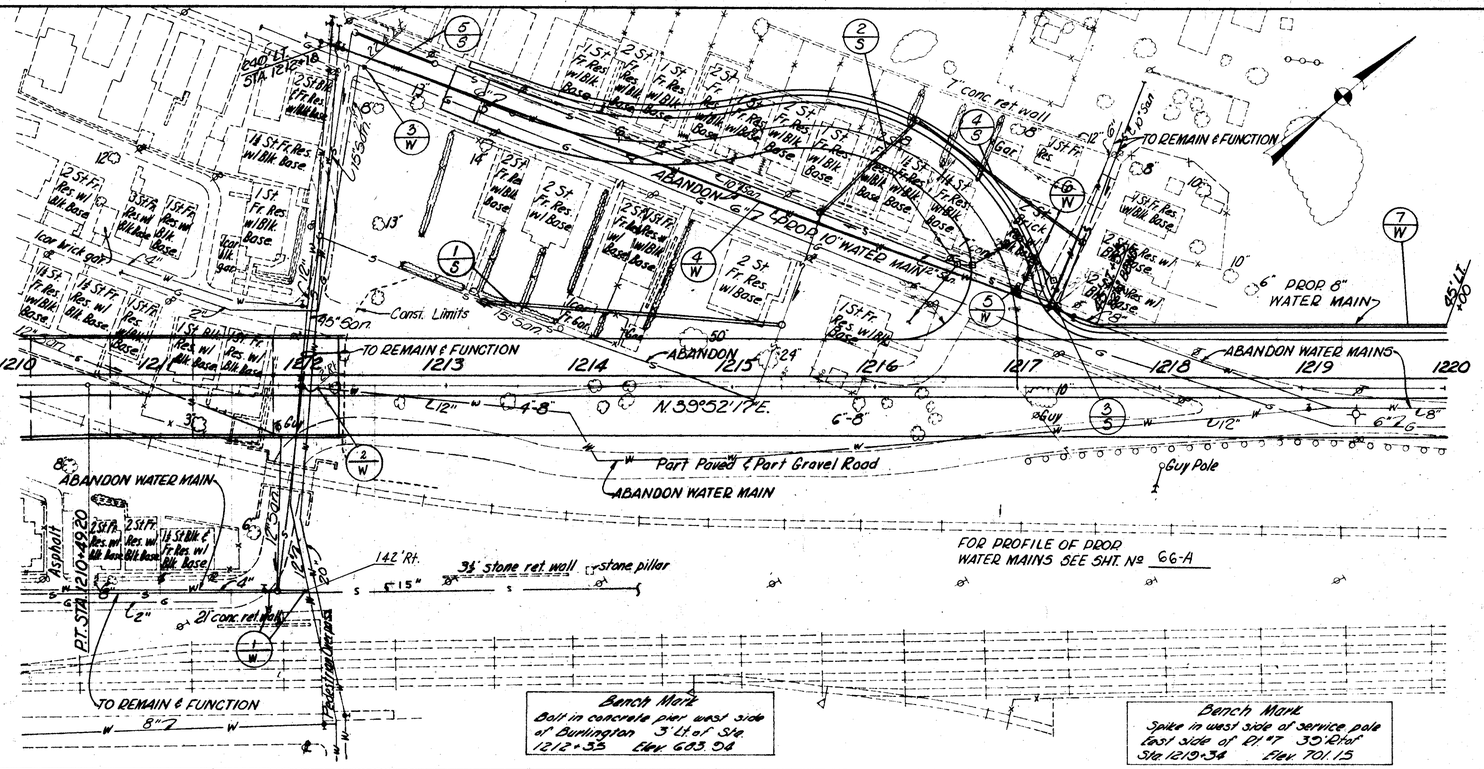

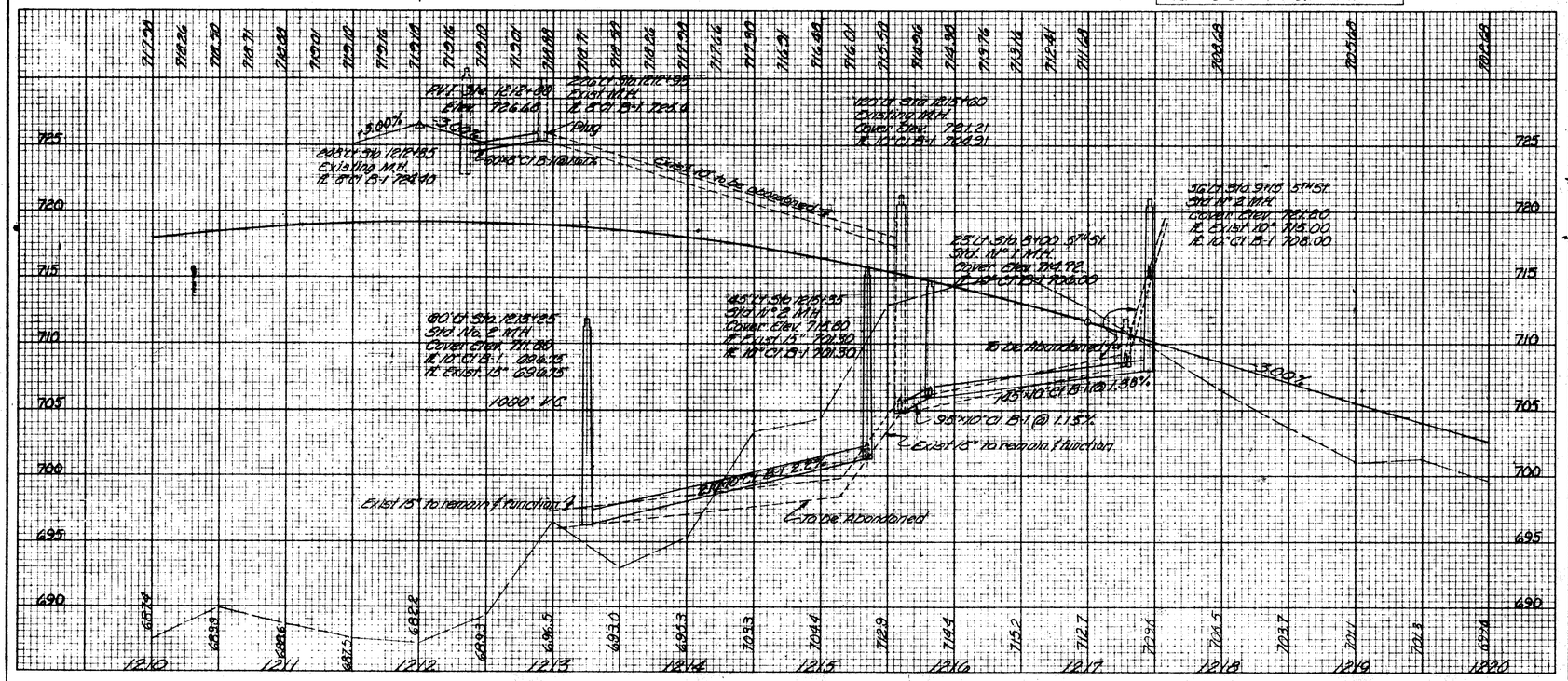

* AS PER PLAN

ESTIMATED QUANTITIES

REF. NO.	STATION TO STATION	SIDE	SEE SHEET NO.	F-22 8" SUB-BASE COURSE SQ.YDS.	F-35 8-20 6"-12" CONCRETE PAVEMENT W/WIRE MESH REINF. SQ.YDS.	E-8 REMOVAL & SALVAGE OF EXIST. COURSE SQ.YDS.	S-1 Coverage Sheet CU.YDS.	F-22 8" SUB-BASE CU.YDS.	F-23 No.1 No.2 No.4 Mix Mix Mix CU. Yd.	F-26 Asphalt Road CU. Yd.	F-124 FIRE HYDRANT ASSEMBLY EACH	F-124 NEW FIRE HYDRANT PERMANENT EACH	F-124 CAP & PLUG EXIST. 4" & 6" EACH	F-124 TEES 10"x6" 8"x6" EACH	F-124 BENDS .06 .222 .411 EACH	F-124 VALVES & BOXES 6" EACH	F-124 REDUCER 10"x8" EACH	F-124 NEW MAIN 6" 8" 10" LIN. FT.	F-124 CONNECT TO EXIST. MAIN EACH
	BY CONTRACTOR																		
1-W	1211+80 - 1212+05	Rt.					0.90					1							
2-W	1212+15	℄										1							
2-W	1212+35	Lt.					0.30					1							
4-W	1212+48 - 1217+00	Lt.					0.10					1							
5-W	1217+00	Lt.										1							
6-W	1217+05	Lt.										1							
7-W	1217+22 - 1220+00	Lt.										1							
L-S	1211+35 - 12+15+35	Lt.						210	2										
2-S	2+80 - 8+00 S.A. ℄	Lt.						95	1	1									
3-S	12+11.25	Lt.						185	1	1									
4-S	8+00 - 9+45 S.M.H.	Lt.																	
5-S	1220+35 - 12+21.95	Lt.						80											
TOTALS			1	1	2	1	1.30	570	4	1	1	6	1	1	1	1	1	25	1

Utility Plan Sta 1210+00 to Sta 1220+00

NOTE: FOR PAY ITEMS OF M.H.s ABANDONED SEE SHT. Nº 5-6

FOR PAY ITEMS NOT SHOWN SEE SHEET Nº 66

NOTE:
- CONC. PIERS ARE 2'-2' ON TOP, 4' HIGH
SEE B-R FOR REMOVAL OF 10 PIERS

SIXTH STREET

MACKEY

SIXTH ST.

MACKEY SCHOOL

DIRT ALLEY

CURVE DATA
P.I. STA. 1233+52.20
Δ = 31° 37' 47" LT.
D = 1° 30'
R = 3819.71'
L = 2108.65'
T = 1081.94'
E = 150.27'

CONSTR. LIMITS

Note: C.B. Reconstructed on Exist. Pipe

3 Stone Walls 2'x4'x25'

2' Stone Wall

Conc. 2'x4'-10" Piers

30" Tile

24" Tile

18" Tile

8" Conc.

EXISTING S.R. 7

To Remain in place

W.T.-R.R.

18" Note: Rep. No. 19-R. Includes all pipe Piling in vicinity of Sta. 1227+00± to 1228+00± Ft. These piling are to be cut off Flush With the Existing Ground

P.R.R.

WHEELING STEEL CORP.

DROP RETAINING WALL

SODDING 15' WIDE

STA. 1229+52.20 ℄ PROP. S.R. 7
STA. 10+00.00 ℄ MACKEY ST.

FOR DETAILS OF INTERSECTION SEE SHEET Nº 190

12" Conc. Wall 2' High

8" Brk. Wall 4' High

2'-6" Conc. Piers 4' High

SEE 14-R FOR THE REMOVAL OF 3 PIERS

Exist. Guard Rail

M.H.

6" Conc. S.W.

4" Conc. S.W.

2" Conc. S.W.

8" St. Wall 5' High

12" St. Wall 4' High

4' Conc. Wall 10' High

5' Conc. Wall 2' High

Brk. S.W.

Conc. Blk. Wall

Bldg. Face

Basement

Conc. Curb

Gravel

Asph.

Sta. 1220+00 to Sta. 1230+00

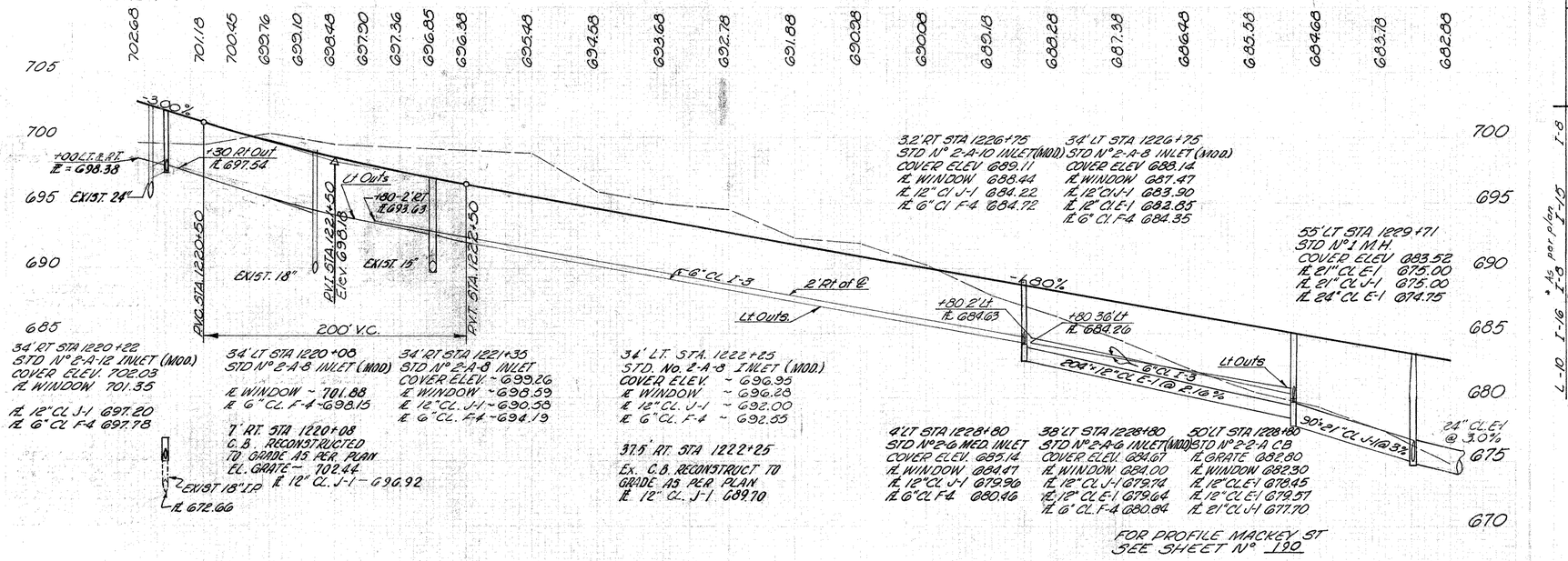

34' RT STA 1220+22
STD N° 2-A-12 INLET (MOD.)
COVER ELEV. 702.03
℄ WINDOW 701.35
℄ 12" CL J-1 697.20
℄ 6" CL F-4 697.78

34' LT STA 1220+08
STD N° 2-A-8 INLET (MOD)
℄ WINDOW ~ 701.88
℄ 6" CL. F-4 ~ 698.15

34' RT STA 1221+35
STD N° 2-A-8 INLET
COVER ELEV. ~ 699.26
℄ WINDOW ~ 698.59
℄ 12" CL. J-1 ~ 690.58
℄ 6" CL. F-4 ~ 694.19

7' RT. STA 1220+08
C.B. RECONSTRUCTED TO GRADE AS PER PLAN
EL. GRATE ~ 702.44
℄ 12" CL. J-1 ~ 696.92
EXIST 18" I.P.
℄ 672.66

34' LT. STA. 1222+25
STD. NO. 2-A-8 INLET (MOD.)
COVER ELEV. ~ 696.95
℄ WINDOW ~ 696.28
℄ 12" CL. J-1 ~ 692.00
℄ 6" CL. F-4 ~ 692.55

37.5' RT. STA 1222+25
Ex. C.B. RECONSTRUCT TO GRADE AS PER PLAN
℄ 12" CL. J-1. 689.70

32' RT STA 1226+75
STD Nº 2-A-10 INLET (MOD.)
COVER ELEV 689.11
℄ WINDOW 688.44
℄ 12" CL J-1 684.22
℄ 6" CL F-4 684.72

34' LT STA 1226+75
STD Nº 2-A-8 INLET (MOD.)
COVER ELEV 688.14
℄ WINDOW 687.47
℄ 12" CL J-1 683.90
℄ 12" CL E-1 683.35
℄ 6" CL F-4 684.35

55' LT STA 1229+71
STD Nº 1 M.H.
COVER ELEV 683.52
℄ 21" CL E-1 675.00
℄ 21" CL J-1 675.00
℄ 24" CL E-1 674.75

4' LT STA 1228+80
STD Nº 2-G MED. INLET
COVER ELEV. 685.14
℄ WINDOW 684.47
℄ 12" CL J-1 679.96
℄ 6" CL F4 680.46

38' LT STA 1228+80
STD Nº 2-A-8 INLET (MOD.)
COVER ELEV. 684.67
℄ WINDOW 684.00
℄ 12" CL J-1 679.70
℄ 12" CL E-1 679.64
℄ 6" CL. F-4 680.84

50' LT STA 1228+80
STD Nº 2-2-A CB
℄ GRATE 682.80
℄ WINDOW 682.30
℄ 18" CL E-1 678.45
℄ 12" CL E-1 679.57
℄ 21" CL J-1 677.70

FOR PROFILE MACKEY ST SEE SHEET Nº 190

| | | |

BELMONT COUNTY
BEL-7-20.74

FED. RD. DIVISION	STATE	PROJECT	
2	OHIO		

56/48

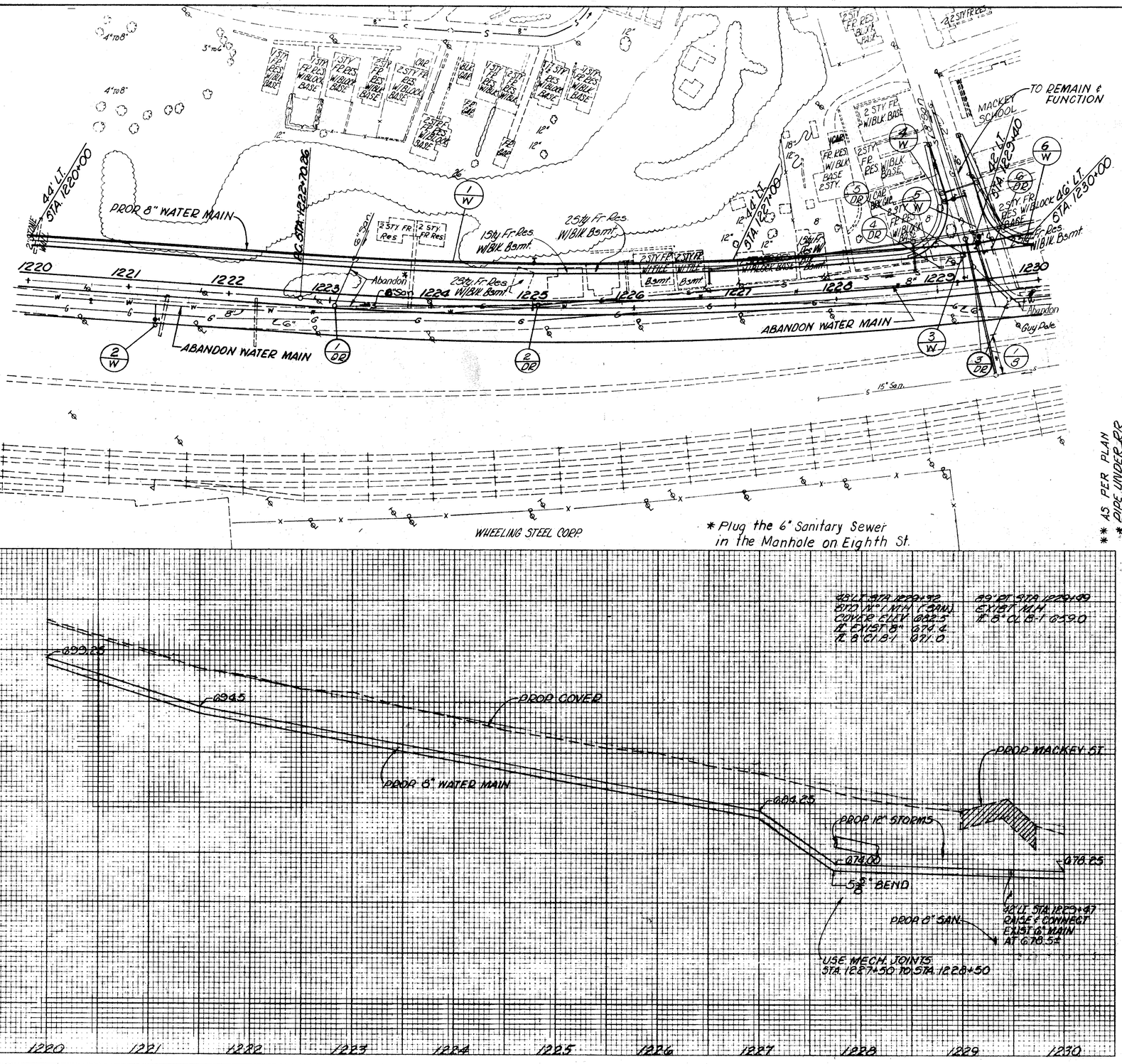

ESTIMATED QUANTITIES

| REF NO. | STATION TO STATION | SIDE | F-124 NEW MAINS 8" G. L.F. | F-124 VALVES BOXES 8" G. EA. | F-124 TEES 8"x6"G EA. | F-124 SLEEVE 6" G. EACH | F-124 NEW FIRE HYDRANT ** EACH | F-124 F.H. W/ BEND & VALVE & BOX EACH | F-124 TIE TO M.H. 8" EA. | F-124 CUT & PLUG EXIST. MAIN EACH | F-124 CUT & PLUG EXIST. MAIN 8" EA. | F-124 CUT & PLUG EXIST. MAIN 6" EA.

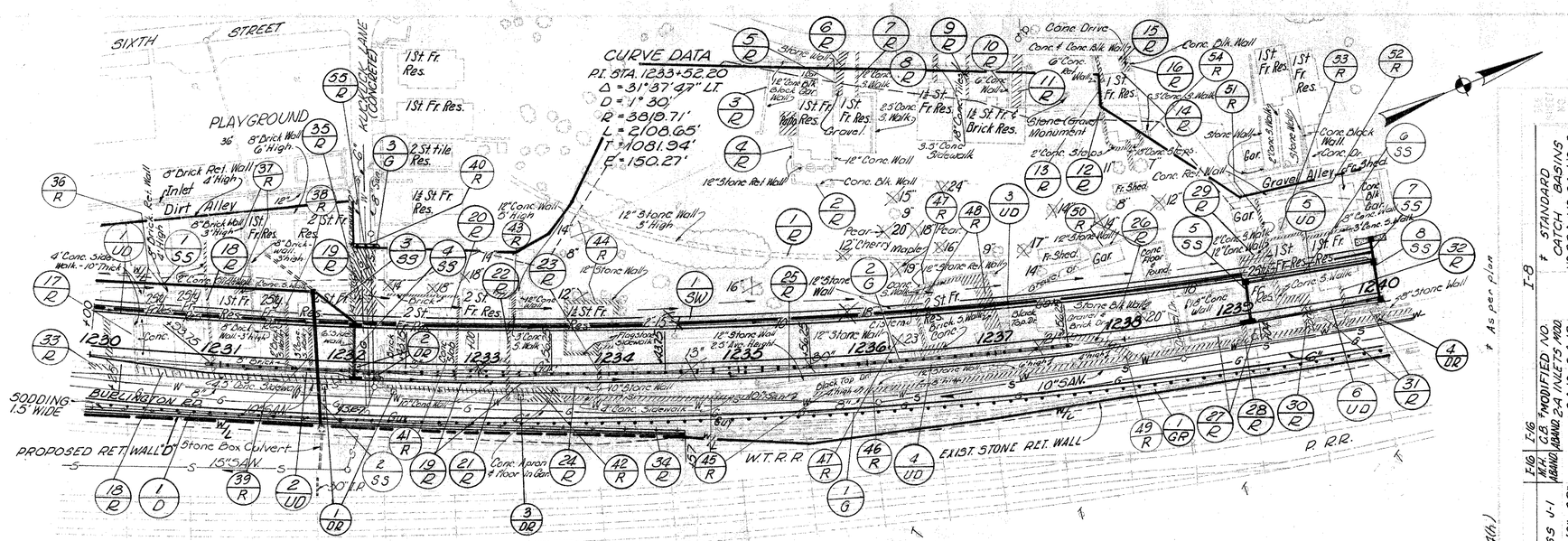

NOTE: FOR PAY ITEMS OF SAN. MANHOLES, ABANDONED SEE SHT. N° 58

FOR ROADWAY REMOVAL QUANTITIES SEE SHEET N° 66

CURVE DATA
P.I. STA. 1233+52.20
Δ = 31° 37' 47" LT.
D = 1° 30'
R = 3819.71'
L = 2108.65'
T = 1081.94'
E = 150.27

* SEC. M.G.A.(H.)

* As per plan

I-8 * STANDARD CATCH BASINS NO. 22A NO. 24 NO. 3 EACH (MOD.)

| | | |

BELMONT COUNTY
BEL - 7 - 20.74

FED. RD. DIVISION	STATE	PROJECT	
2	OHIO		

58
418

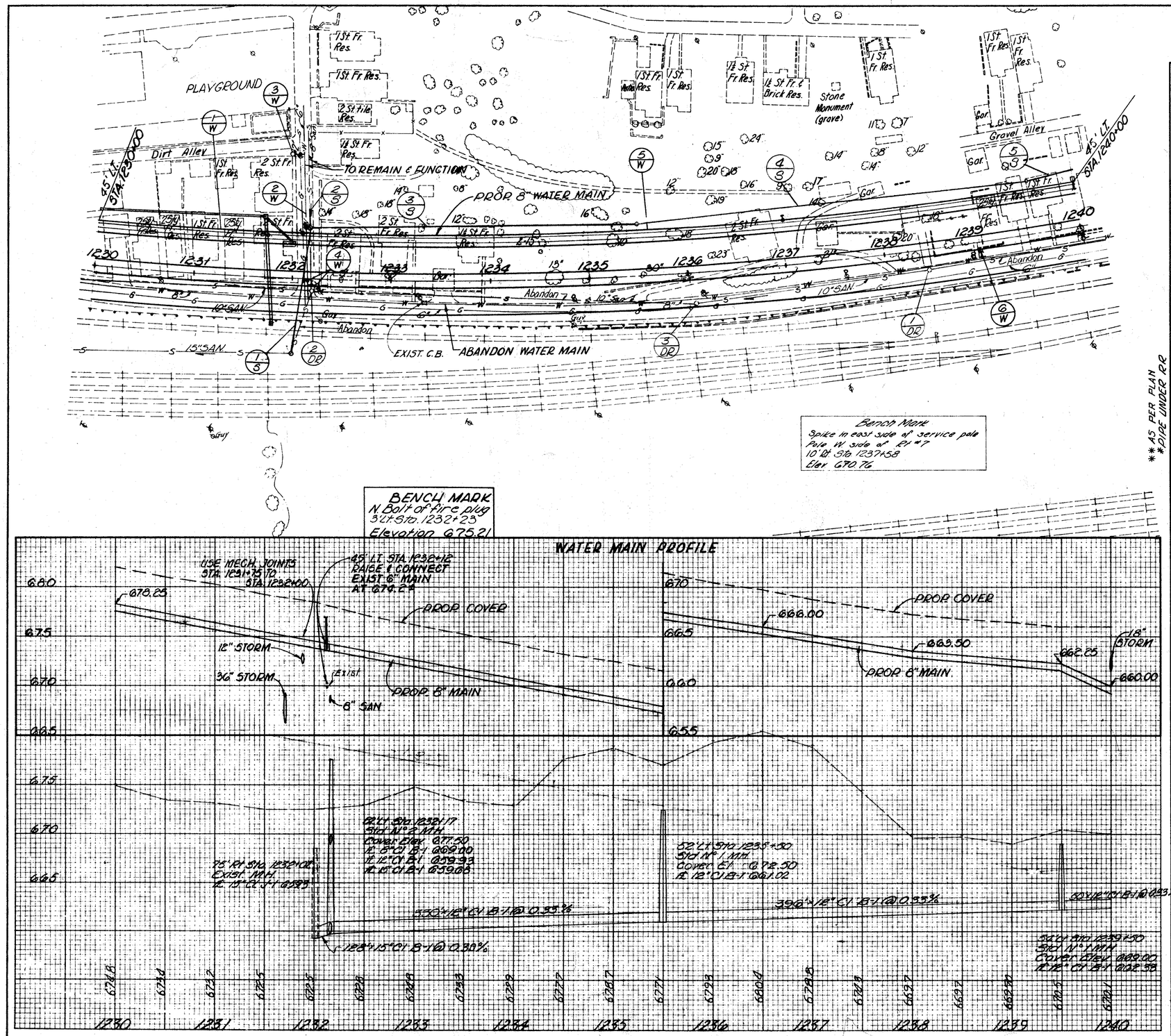

** AS PER PLAN
** PIPE UNDER RR

ESTIMATED QUANTITIES

REF. NO.	STATION TO STATION	SIDE	I-124 NEW MAINS 8" L.F.	I-124 VALVES & BOXES 6" L.F.	I-124 VALVES & BOXES 8" EA.	I-124 TEES 6" EA.	I-124 TEES 8"-6" EA.	I-124 NEW FIRE HYDRANT 6"-6" EA.	I-124 MAIN TO BE RAISED 6" LIN. FT.	I-124 SLEEVE 6" EACH	I-1 CLASS B-1 8" LF	I-1 CLASS B-1 12" LF	I-1 CLASS B-1 Middle LF	I-1 CLASS B-1 Middle LF	I-1 CLASS B-1 Middle LF	I-8 STD MH No. 2 EA	I-8 STD MH No. 1 EA	I-8 CONC. FOR STRUCT. CU. YD.	I-16 MH ABANDON EA	SEE SHEET NO.
	BY CONTRACTOR																			
1-W	1230+00 - 1232+12	LT.	212	2																
2-W	1232+12	LT.			1	1														
3-W	1231+96 - 1232+08	LT.	10		1		1	1												
4-W	1232+25	RT.																		
5-W	1232+12 - 1240+00	LT.	788																	
6-W	1238+97	RT.																		
1 S	1232+02 - 1232+17	L&R																		
2 S	1232+17 - 1232+24	LT.																		
3 S	1232+17 - 1235+50	LT.																		
4 S	1235+50 - 1239+50	LT.																		
5 S	1239+50 - 1240+00	LT.																		
1 DR	1238+44	RT.																		
2 DR	1232+20	RT.																		
3 DR	1236+05	RT.																		
TOTALS			1000	10	2	2	1	1	1	1	24	1	20	446	330	47	81	1	2	0.30	3

UTILITY PLANS Sta. 1230+00 to Sta. 1240+00

CURVE DATA
P.I. STA. 1233+52.20
Δ = 31° 37' 47" Lt.
D = 1° 30'
R = 3819.71'
L = 2108.65'
T = 1081.94'
E = 150.27'

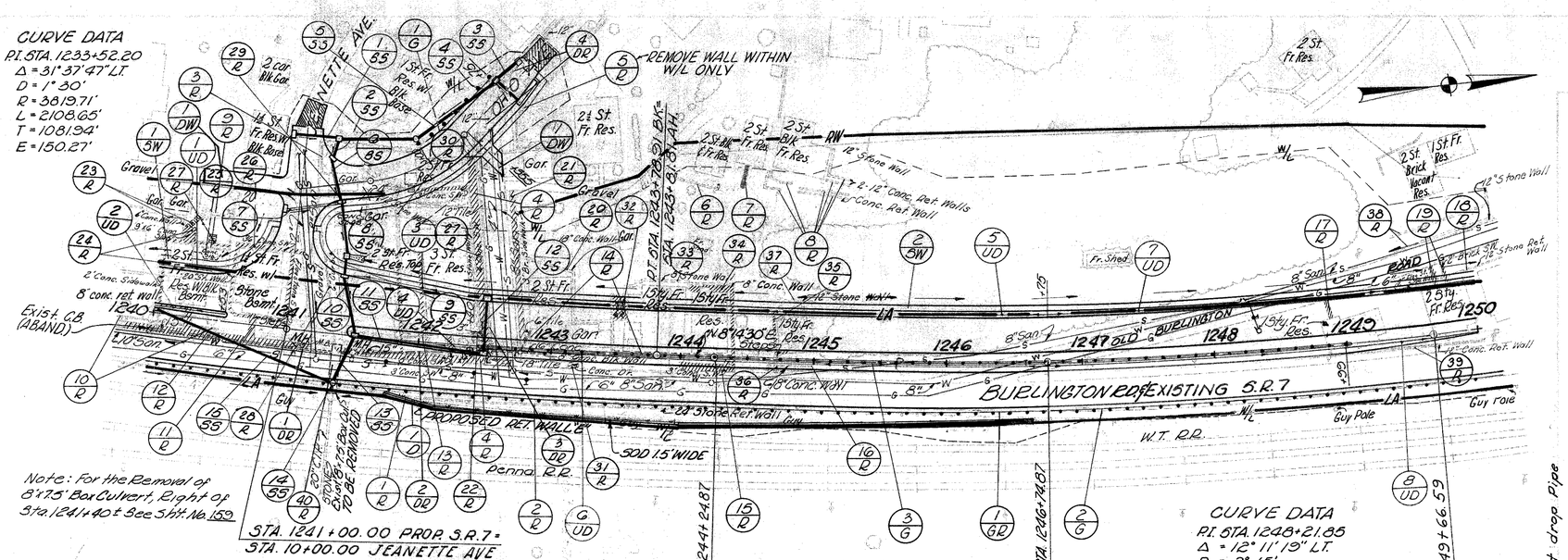

Note: For the Removal of 8'-7.5" Box Culvert, Right of Sta. 1241+40 ± See Sht. No. 159

Note: The Existing Stone Retaining Wall is to be left in place between Sta. 1234+56.5 & Sta. 1241+76.5 Rt. Several Existing Cap-Stones are missing in the vicinity of Sta. 1240+00. These Stones should be replaced by salvaging them from 1-R. The cost of this work shall be included in the Lump Sum-bid for Item S-24.

Note: Item 2-R, Retaining Wall is to be removed 2' below finished grade.

FOR INTERSECTION & OHIO AVE. DETAIL SEE SHEET Nº 191

For Sanitary Removal Quantities See Sheet Nº 60

For Roadway Removal Quantities See Sheet No. 66

CURVE DATA
P.I. STA. 1248+21.85
Δ = 12° 11' 19" Lt.
D_c = 2° 15'
R_c = 2546.48'
L_c = 291.72'
L_s = 250.00'
T_a = 396.98'
E_s = 15.50'
θ_s = 2° 48' 45"
p = 1.02'
k = 124.99'
X_c = 249.94'
Y_c = 4.09'

Bench Mark
E. Bolt of fire plug on S.W. corner of Ohio Street & Rt. #7
3' Lt. Sta. 1242+57 Elev. 673.30

Bench Mark
Chiseled □ on concrete wall in front of House 1502 on Rt. #7
7' Rt. Sta. 1248+91 Elev. 672.21

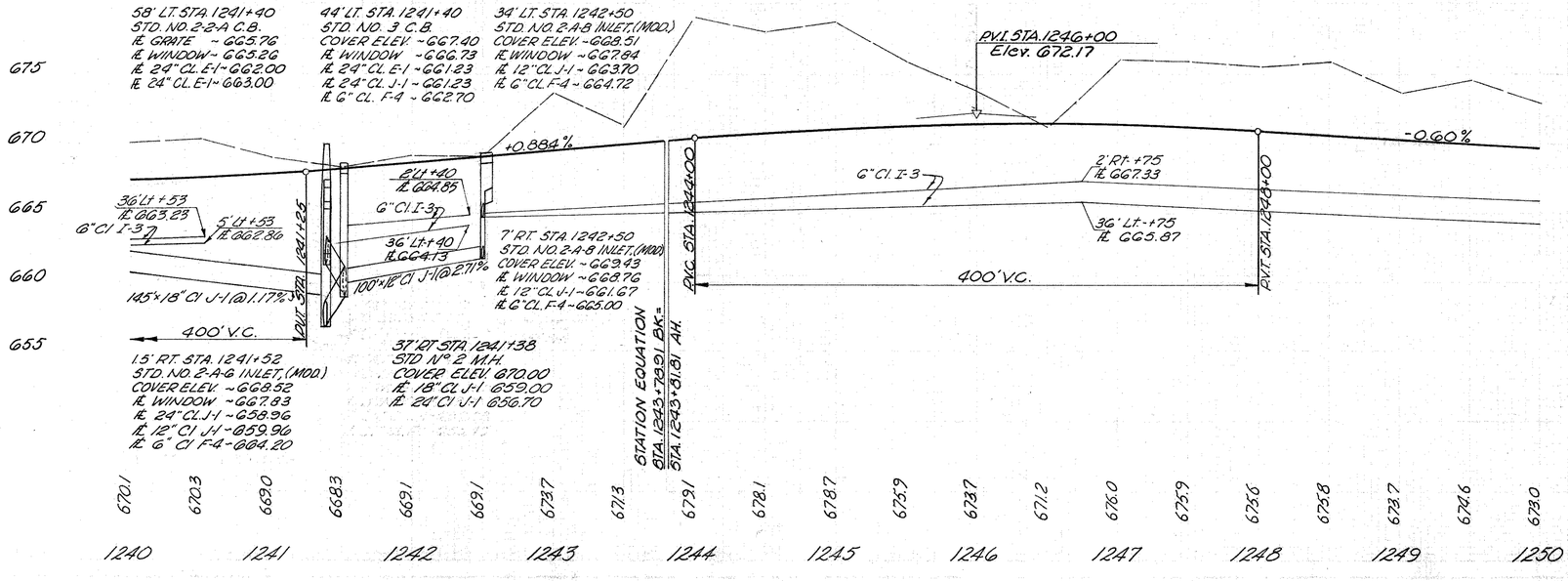

| | | |

BELMONT COUNTY
BEL - 7 - 20.74

FED. DIV.	STATE	PROJECT		SHEET NO.	TOTAL SHEETS
5	OHIO			60	418

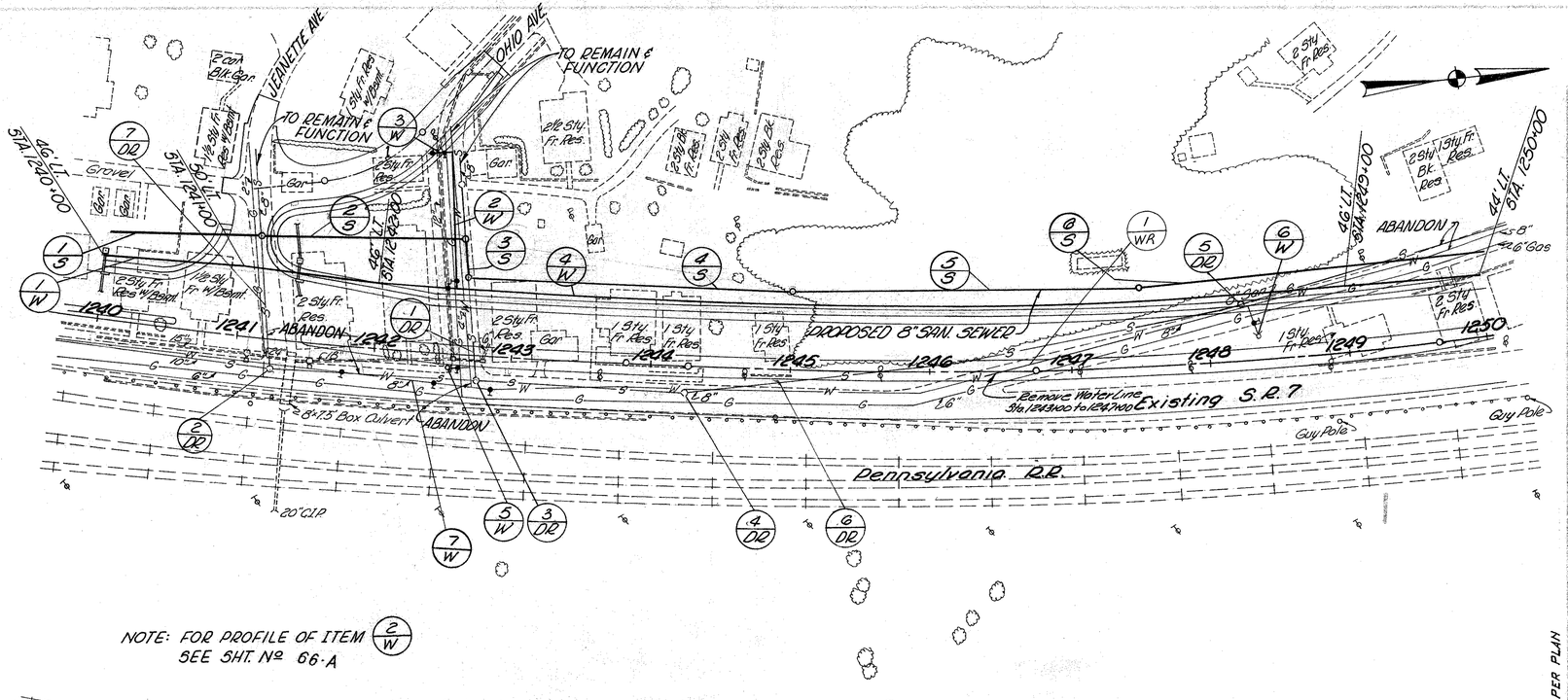
JEANNETTE AVE.
OHIO AVE.
TO REMAIN & FUNCTION
TO REMAIN & FUNCTION
46' Lt. STA. 1240+00
46' Lt. STA. 1242+00
46' Lt. STA. 1245+00
ABANDON
ABANDON
ABANDON
PROPOSED 8" SAN. SEWER
Remove Water Line Sta. 1243+00 to 1244+00
Existing S.R. 7
8'-7.5" Box Culvert
Pennsylvania R.R.
20° Clip
Guy Pole
Guy Pole
Gravel
Gas
2 Sty. Fr. Res.
1 Sty. Fr. Res.
1 Sty. Fr. Beau.
2 Sty. Fr. Res. w/ Beau.
1 Sty. Fr. Res. w/ Beau.
2 Sty. Fr. Res. w/ Beau.
2 Sty. Fr. Res.
2 Sty. Fr. Res.
2 Sty. Fr. Res

P.I. STA. 1248+21.85
Δ = 12° 11' 19" Lt.
Dc = 2° 15'
Rc = 2546.48'
Lc = 291.72'
Ls = 250.00'
Ts = 396.98'
Es = 15.50'
θs = 2° 48' 45"
P = 1.02'
K = 124.99'
Xc = 249.94'
Yc = 4.09'

NOTE: Ref. Nº 8-R & 14-R REMOVE WALL TO 2' BELOW FINISH GRADE

NOTE: Ref. No. 15-R is the Removal of the Foundations Only of the High Voltage Tower -

END PROJECT BEL.-7-20. STA. 1258+00

"Wooded Area"

FOR PAVEMENT TRANSITION SEE SHEET Nº 196

DON ST.

OLD BUCHANAN ROAD

Asphalt

12" stone wall

EXISTING S.R. 7

Conc. S.W.

Conc. Pier

Gravel

Shed

Ft. Wood shed

Conc. Steps

To Be Abandoned

1250 1251 1253 1254 1255 1256 1257 1258 1259 1260

N 3° 56' 45" W.

W.T. R.R. 7

Penna R.R.

4'x5'x18" D.R.C.P.

9'-6"x18" D.R.C.P.

18'-6"x18" D.R.C.P.

NOTE: THE CONTRACTOR SHALL REMOVE THE TOP OF THIS C.B. AND INSTALL NEW REINF. CONC. SLAB COVER AT ELEV. 663.5 AFTER INSTALLING NEW 12" PIPE FROM MEDIAN INLET. PAYMENT SHALL BE INCLUDED IN THE UNIT PRICE BID FOR I-16 CATCH BASIN, AS PROPOSED.

Note DO NOT REMOVE RETAINING WALL ON THE LEFT BETWEEN STA. 1250+50 & 1252+05

S.T. Sta. 1252+16.59

STA. 1252+46 S.R. 7
STA. 10+00 SPRING ST.

U-534(10) RURAL

FOR DETAILS OF INTERSECTION SEE SHEET Nº 193

FOR MEDIAN SIGN PROTECTION DESIGN SEE SHEET Nº 223

FOR DAY ITEMS NOT SHOWN SEE SHEET Nº 66

"Wooded Area"

* As per plan

Bench Mark
Chiseled □ on concrete base of Martins Ferry Corporation sign
Elev. 666.746

663.77 663.47 663.17 663.87 663.57 663.27 663.67 663.37 663.07 663.77 663.47 663.17 663.87 664.57 664.67 664.37 664.07 663.77

675
670
665
660

34' Lt. STA. 1250+50
STD. Nº 2-A-8 INLET (Mod.)
COVER ELEV. 669.05
℄ WINDOW 668.38
℄ 12" CL J-1 663.41
℄ 6" CL F-4 663.91

15' Rt. STA. 1250+50
STD. Nº 2-A-8 INLET (Mod.)
COVER ELEV. 668.81
℄ WINDOW 669.14
℄ 12" CL J-1 660.74
℄ 6" CL F-4 665.70

35' Lt. STA 1252+10
STD. Nº 3 C.B.
℄ WINDOW 667.90
℄ 12" CL E-1 663.86
℄ 6" CL F-4 664.36

34' Lt. STA 1255+50
STD. Nº 2-A-8 INLET (Mod.)
COVER ELEV. 666.44
℄ WINDOW 665.77
℄ 12" CL J-1 662.19
℄ 6" CL F4 662.73

34' Rt. STA 1255+50
STD. Nº 2-A-8 INLET (Mod.)
COVER ELEV. 666.44
℄ WINDOW 665.77
℄ 12" CL J-1 661.75
℄ 12" CL E-1 661.65
℄ 6" CL F4 662.23

+00.2' Rt. ℄ 667.97
+00.36' Lt. ℄ 664.17
6" CL I-3
+55.2' Lt. ℄ 665.65
+55.36' Lt. ℄ 665.29
E-663.0
+00.36' Rt. ℄ 664.81
+00.36' LT. ℄ 664.23
-0.60%
50' LT. STA 1252+98
STD. Nº 2-B-A C.B.
℄ GRATE 666.00
℄ WINDOW 665.50
℄ 18" CL J-1 663.00
℄ 659.00
+55.36' LT. ℄ 662.70
+55.2' Rt. ℄ 662.64
+55.36' RT. ℄ 662.20
+79.2' RT. ℄ 660.78
+80.36' RT. ℄ 660.65
6" CL I-3
125'-15' CL I-1 @ 0.90%
+00.9' Rt. ℄ 660.06
℄ 658.55

61' Rt. Sta. 1250+50
Std. HW-E Endwall
℄ 12" CL J-1 658.55

4' Lt. STA 1251+85
STD Nº 2-6 MED. INLET
COVER ELEV. 668.98
℄ WINDOW 668.31
℄ 12" CL J-1 664.40
℄ 6" CL F-4 664.90, 5 Lt.

52.5' Lt. Sta. 1251+94
STD. HW-1 HEADWALL
℄ 12" CL E-1 663.3
℄ EX. 36" PIPE 663.3

66' RT. STA 1252+98
STD. HW-E ENDWALL
℄ 18" CL J-1 659.00

55' Rt. STA 1255+50
STD. HW-E ENDWALL
℄ 12" CL E-1 661.43
18'-6"x18" D.R.C.P.

34' Lt. STA 1253+75
STD Nº 2-A-8 Inlet (Mod.)
COVER ELEV. 664.89
℄ WINDOW 664.22
℄ 12" CL J-1 660.68
℄ 6" CL F-4 661.18

34' Rt. STA 1258+75
STD Nº 3 C.B.
COVER ELEV 664.52
℄ WINDOW 663.85
℄ 12" CL J-1 659.81
℄ 15" CL J-1 659.71
℄ 8" CL F4 660.31

673.0 668.9 668.0 667.2 666.7 666.2 669.5 670.5 672.8 670.9 671.5 671.1 672.2 672.4 670.8 670.9 671.9 670.4 669.7 669.8 668.4

1250 1251 1252 1253 1254 1255 1256 1257 1258 1259 1260

| | | |

BELMONT COUNTY
BEL - 7 - 20.74

SHEET NO.	STATE	PROJECT		62
2	OHIO			418

SEE SHEET NO

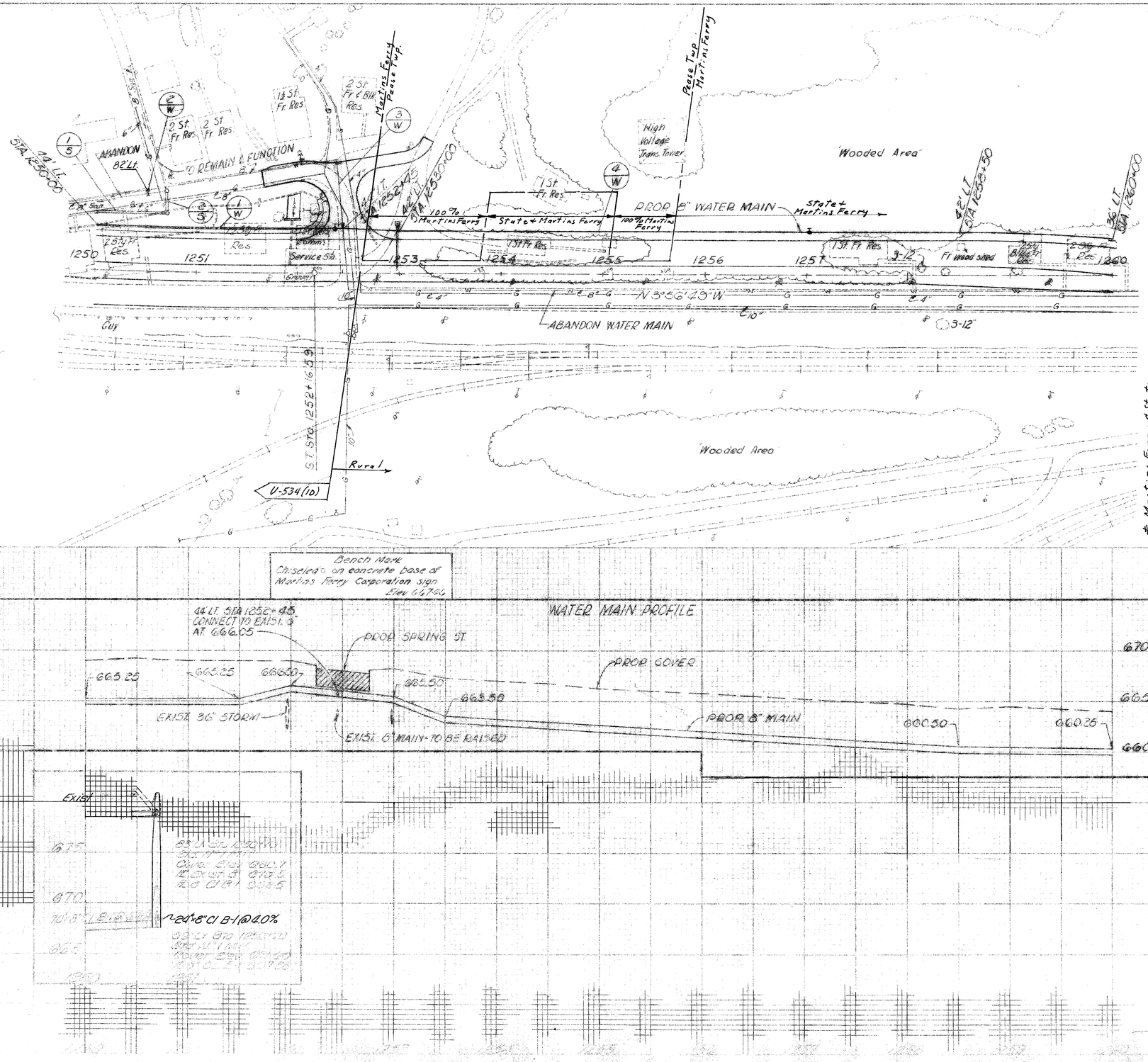

ESTIMATED QUANTITIES

STATION TO STATION	SIDE	5'-1 CONC. FOR STRUCT. CLASS 'E' 8" cu. yds.	I-8 CLASS B MH EACH
U-534(10) Except as Shown			
1250+70			
		168	2
Total *		557	2
Total #		60 275	1
U-534(10)		0.10**	0.10**

BELMONT COUNTY
BEL - 7 - 20.74

SHEET	DATE	PAGES		
2	0940			63 418

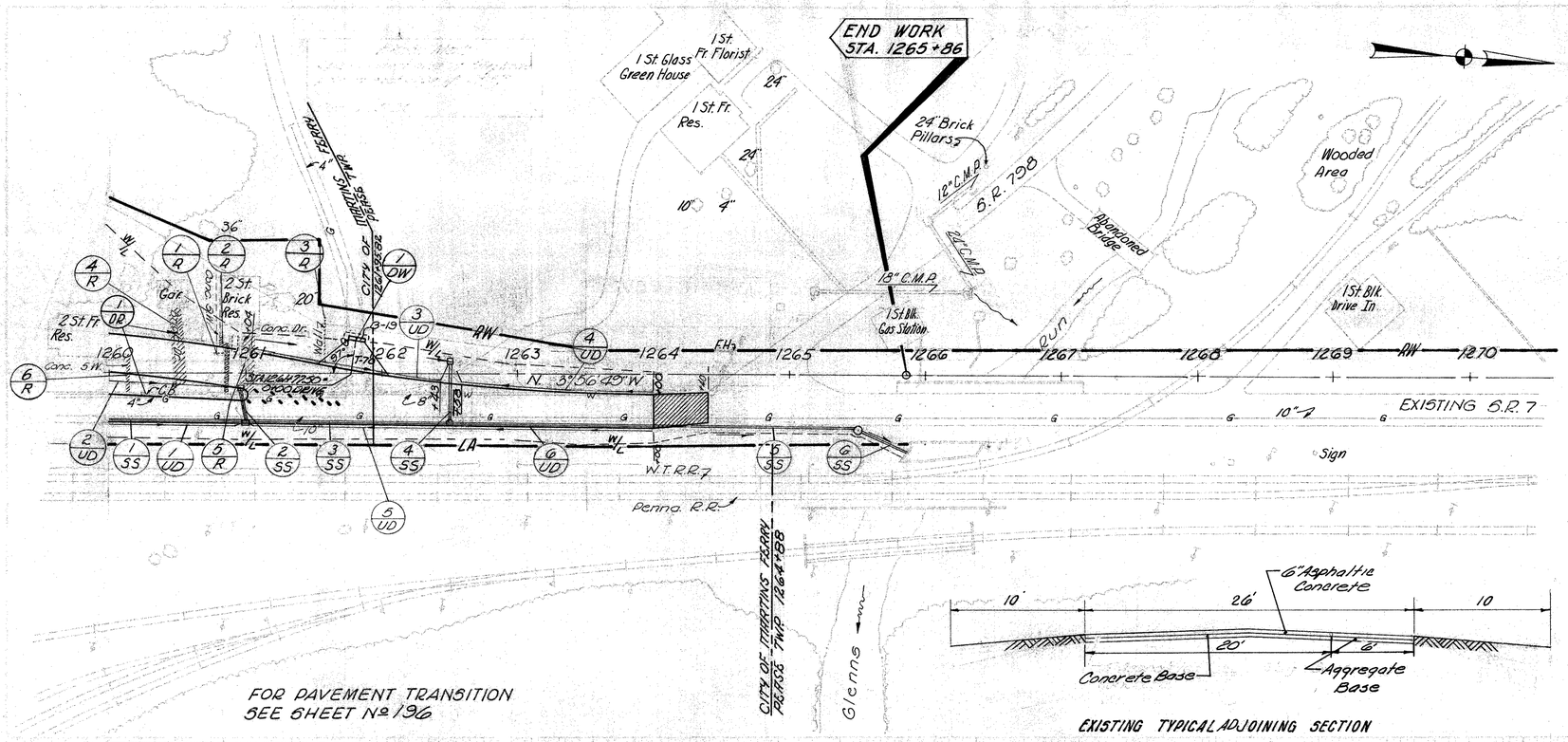

FOR PAVEMENT TRANSITION
SEE SHEET No. 196

EXISTING TYPICAL ADJOINING SECTION

Bench Mark
Spike in west side of telephone pole on east side of Rt. #7
54' Rt. Sta. 1260+65 Elev. 663.50

BENCH MARK
Chiseled □
54' Rt. Sta. 1266+86
Elevation 661.10

10' RT. STA. 1260+97
STD. NO. 2-A-6 INLET (MOD)
℄ WINDOW ~ 662.98
℄ 12" CL. J-1 ~ 658.43
℄ 6" CL. F-4 ~ 659.43
Cover El. ~ 663.65

36' RT. STA. 1261+00
STD. NO. 3 C.B.
℄ WINDOW ~ 662.63
℄ 18" CL. J-1 ~ 657.34
℄ 15" CL. J-1 ~ 657.59
℄ 12" CL. J-1 ~ 658.12
℄ 6" CL. F-4 ~ 659.05

8' LT. STA. 1262+50
STD. NO. 2-2-A C.B.
ELEV. GRATE ~ 660.00
℄ 24" CL. J-1 ~ 656.26
℄ 6" CL. F-4 ~ 657.69 (N)
℄ 6" CL. F-4 ~ 658.50 (S)
℄ Window ~ 659.50

200' V.C.

36' RT. STA. 1262+50
STD. NO. 1 M.H.
ELEV. COVER ~ 662.10
℄ 15" CL. J-1 ~ 655.71
℄ 24" CL. J-1 ~ 655.74
℄ 27" CL. J-1 ~ 655.49
℄ 6" F-4 ~ 657.69 (N)
℄ 6" F-4 ~ 658.21 (S)

40' RT. STA. 1265+50
STD. NO. 1 M.H.
ELEV. COVER ~ 661.50
℄ 27" CL. E-1 ~ 652.94
℄ 27" CL. J-1 ~ 652.94

57' RT. STA. 1265+86
℄ 27" CL. E-1 ~ 652.54

3' CONC. WALL

Cost of Conn. thru the Existing Wall to be included in Unit Price Bid of I-1 PIPE.

-0.60%
+0.20%
6" CL. I-3
9.75' RT. +86 ℄ 659.54
+04-18' LT. ℄ 659.43
+43-9' RT. ℄ 658.60
+58-6' RT. ℄ 657.79
+00 13' RT. ℄ 39' RT. ℄ 658.17
226' - 12" CL. J-1 @ 0.97%
250'-15" CL. J-1 @ 0.65%
+04-36' RT. ℄ 659.02
300'-27" CL. J-1 @ 0.85%
40'-27" CL. E-1 @ 1.0%
PVC. STA. 1262+00
PVT. STA. 1264+00
PVI. STA. 1263+00
Elev. 661.57
℄ Exist. S.R. 7

675
670
665
660

1260 1261 1262 1263 1264 1265 1266 1267 1268 1269 1270

663.77	663.47	663.17	662.87	662.57	662.43	662.32	662.23	662.17	662.13	662.12	662.13	662.17
663.6	662.9	662.8	662.5	661.9	661.8	662.0	661.6	661.7	661.8	662.3	662.5	663.3	664.3

I-5	PIPE SPEC. (CLT3 BEND 6"x60"	STD. NO. 1 M.H. EA.	I-8 STD NO. 2-A-6 C.B. EA.	I-8 STD NO. 3 C.B. EA.
I-1 CLASS J-1	CL. J-1	CL. E-1		
12" 24" 27" L.F.	L.F.	L.F.		
CL. F-3 6" L.F.	CL. F-4 6" L.F.			

I-16	CATCH BASIN			
S-24	REMOVAL EXISTING STRUCT.	SIDEWALK OF	EXIST. PAVT.	ADJAC. EA.
	LUMP	sq. ft.	sq. yds.	
	LUMP	33		
	LUMP		54	
			44	
			126	

1-R	1260+76 ~ 1261+15	LT.	
2-R	1260+81 ~ 1260+87	LT.	
3-R	1261+50 ~ 1261+58	LT.	
4-R	1260+48 ~ 1260+58	LT.	
5-R	1260+98 ~ 1261+08	LT.	
6-R	1260+15	℄	
1-55	1260+00 ~ 1261+00	RT.	
2-55	1261+00	L&R	
3-55	1261+00 ~ 1262+50	RT.	
4-55	1262+50 ~ 1263+50	L&R	
5-55	1262+50 ~ 1263+50	RT.	
6-55	1263+50 ~ 1265+86±	RT.	
1-UD	1260+00 ~ 1261+00	RT.	
2-UD	1260+00 ~ 1260+97	L&R	
3-UD	1261+04 ~ 1262+50	L&R	
4-UD	1262+50 ~ 1264+00	LT.	
5-UD	1261+00 ~ 1262+50	RT.	
6-UD	1262+50 ~ 1264+00	RT.	
1-DW	1261+77.50	LT.	
1-DD	1260+25	LT.	

| | | | | | | | | | | |

BELMONT, COUNTY
BEL.-7.-20.74

DIST. NO. DIVISION	STATE	PROJECT		64 418
2	OHIO			

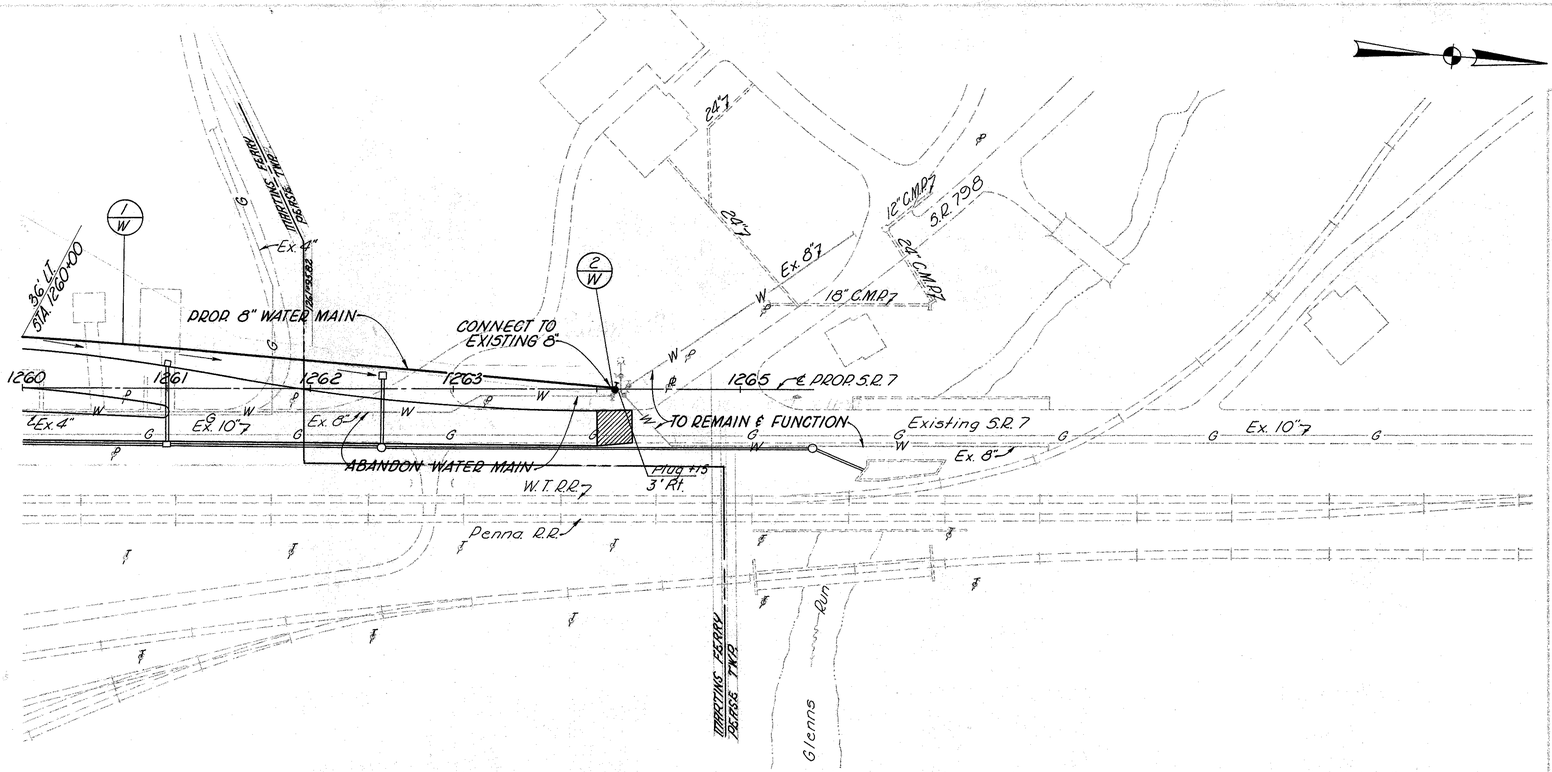

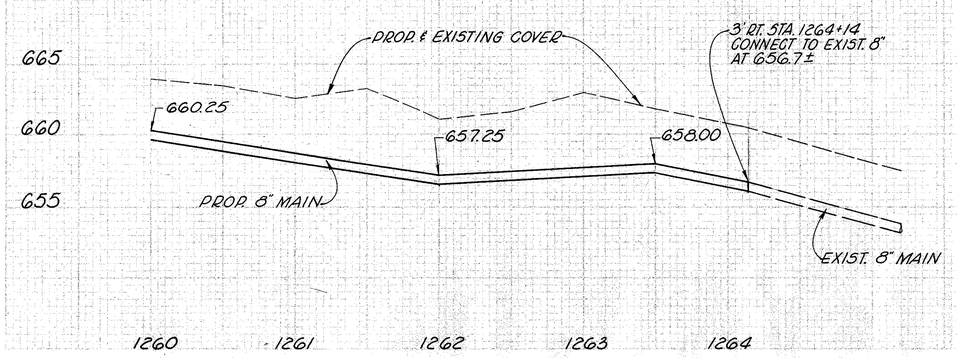

ESTIMATED QUANTITIES

SEE SHEET NO.	ITEM	DIST. NO.	STATION TO STATION	SIDE	NEW MAIN 8"	TEE 8"	SLEEVE 8"	VALVE & BOX 8"	BEND 8"-45°	PLUG 8"
					LIN. FT.	EACH	EACH	EACH	EACH	EACH
		1-W	1260+00 ~ 1264+12	LT.	216	1	1	1	1	1
		2-W	1264+12	℄		1	1	1	1	1
							100%	CITY	OF	MARTINS FERRY
		1-W	1260+00 to 1261+96		196					

ADDITIONAL ESTIMATED QUANTITIES

BELMONT COUNTY
BEL - 7 - 20.74

FED. RD. DIVISION	STATE	PROJECT	
2	OHIO		

05
418

⊗ UG QUANTITIES

ESTIMATED QUANTITIES

REF. NO.	STATION TO STATION	SIDE	E-8 REMOVAL & DISPOSAL OF EXISTING – PAVEMENT AS PER PLAN SQ YDS	PAVEMENT SQ YDS	SIDEWALK SQ FT	CURB LIN FT	I-13 4" CONCRETE SIDEWALK SQ FT	I-15 GUARD RAILS STEEL BEAM STD TYPE (DEEP) LIN FT	BARRIER TYPE (DEEP) LIN FT	S-24 REMOVAL OF EXISTING STRUCTURES LUMP	I-15 GUARD RAIL REMOVED & DISPOSED OF LIN FT
	SHEET Nº 29										
1-GR	1097+50 ~ 1100+00	RT.									250
1-SP	1099+73 ~ 1099+86	LT.									
11-R	1030+00 ~ 1030+12	LT & RT.			325						
12-R	1031+51 ~ 1031+57	LT. & RT.		10							
13-R	1031+51 ~ 1031+53	LT.			40						
14-R	1031+57 ~ 1032+09	RT.								LUMP	
15-R	1031+46 ~ 1032+13	LT.								LUMP	
16-R	1032+05 ~ 1032+11	LT & RT.			106						
17-R	1032+47 ~ 1032+53	LT & RT.		24							
18-R	1034+71 ~ 1034+75	LT.			16						
19-R	1034+67 ~ 1034+71	RT.			16						
20-R	1035+02 ~ 1036+29	LT & RT.								LUMP	
21-R	1036+97 ~ 1037+02	LT.			238						
22-R	1036+58 ~ 1036+61	LT & RT.			133						
23-R	1035+62 ~ 1035+82	LT & RT.			570						
24-R	1037+42 ~ 1037+44	LT.			90						
25-R	1032+58 ~ 1032+92	LT.								LUMP	
	SHEET Nº 30										
1-G	1100+00 ~ 1100+02.5	RT.						2.5			
2-G	1102+51.75 ~ 1110+00	℄						250	623.25		
1-SW	1100+00 ~ 0+62.4 "LINCOLN"	LT.					369				
4-R	1104+76	RT.								LUMP	
1-E	1100+00 ~ 1106+80	LT.								LUMP	
2-R	1100+00 ~ 1104+00	LT.		535⊗							
3-E	1100+00 ~ 1100+30	LT.		83							
8-D	1103+56	RT.									
	UG SUB TOTALS			535⊗							
	BRIDGEPORT TOTALS			117	1543		369	2525	623.25	LUMP	250
	SHEET Nº 36										
3-R	1135+10 ~ 1135+39	LT.	98								
4-R	1135+26 ~ 1135+42	LT.		29							
5-R	1135+10 ~ 1140+00	LT & RT.				1200					
6-R	1133+79 ~ 1135+26	RT.								LUMP	
	SHEET Nº 38										
6-R	1140+00 ~ 1147+20	RT.				1270⊗					
7-R	1148+99 ~ 1149+07	LT.								LUMP	
8-R	1148+94 ~ 1149+32	RT.		43							
9-R	1145+15 ~ 1150+00	RT.				750					
10-R	1148+55 ~ 1150+00	RT.			870						
	SHEET Nº 40										
12-R	1150+00 ~ 1160+00	LT & RT.				2000					
13-R	1150+00 ~ 1154+13	RT.			3320						
14-R	1157+80 ~ 1160+00	LT & RT.			3560						
15-R	1152+58 ~ 1154+20	LT.								LUMP	
	SHEET Nº 42										
1-E	1163+80 ~ 1163+78	LT.								LUMP	
2-R	1160+53 ~ 1161+50	LT.		28							
3-R	1161+93 ~ 1162+17	LT.								LUMP	
4-R	1162+33 ~ 1162+72	LT.								LUMP	
5-R	1160+62 ~ 1162+60	RT.			304						
6-R	1163+69 ~ 1164+01	RT.								LUMP	
7-R	1163+23 ~ 1163+32	LT.	85								
8-R	1160+17 ~ 1160+55	LT.	107								
9-R	1160+12 ~ 1160+90	LT & RT.		116							
10-R	1160+02 ~ 1160+30	RT.	48								
11-R	1165+42 ~ 1165+92	RT.		74							
15-R	1168+26 ~ 1168+59	LT.	30								
16-R	1168+26 ~ 1168+52	LT.		120							
17-R	1168+28 ~ 1168+57	RT.	38								
18-R	1168+13 ~ 1168+65	RT.		24							
19-R	1160+45 ~ 1160+56	LT & RT.			450						
20-R	1160+45 ~ 1160+51	RT.			110⊗						
21-R	1162+61 ~ 1162+80	RT.								LUMP	
22-R	1163+15 ~ 1165+92	RT.			868⊗						
23-R	1162+21 ~ 1163+00	RT.			840						
24-R	1165+51 ~ 1162+86	RT.			72⊗						
25-R	1160+34 ~ 1162+04	RT.			383⊗						
26-R	1160+00 ~ 1162+07	RT.				907					
27-R	1162+07 ~ 1170+00	RT.				503⊗					
28-R	1160+17 ~ 1162+77	RT.			1561⊗						

⊗ UG QUANTITIES

ESTIMATED QUANTITIES

REF. NO.	STATION TO STATION	SIDE	E-8 REMOVAL & DISPOSAL OF EXISTING – PAVEMENT AS PER PLAN SQ YDS	PAVEMENT SQ YDS	SIDEWALK SQ FT	CURB LIN FT	I-13 4" CONCRETE SIDEWALK SQ FT	I-15 GUARD RAILS STEEL BEAM 3'-0" TYPE (DEEP) LIN FT	BARRIER TYPE (DEEP) LIN FT	S-24 REMOVAL OF EXISTING STRUCTURES LUMP	I-15 GUARD RAIL REMOVED & DISPOSED OF LIN FT	I-1 CLASS F-4 8" LIN FT	I-5 PIPE SPEC. CL F-1 9" ELBOW	I-5 PIPE SPEC. CL F-1 12"ø TEE
	SHEET Nº 44													
1-G	1170+00 ~ 1171+35.75	℄									135.75			
2-G	1170+00 ~ 1175+50	LT.						550						
3-G	1176+98 ~ 1180+00	RT.						302						
4-G	1177+00 ~ 1179+00	LT.						200						
5-G	1171+00	LT.						25⊗						
6-G	1179+00	RT.						57.5⊗						
4-R	1171+17 ~ 1171+19	RT.				9								
	Sht. No. 49													
633	1131+35	P.T.										8	1	1
	SHEET Nº 55													
1-SW	1220+00 ~ 8+50 "MACKEY"	LT.					3981							
2-SW	8+50 "MACKEY" ~ 1230+00	LT.					532							
1-R	1223+78 ~ 1223+61	LT & RT.			210									
2-R	1225+56 ~ 1226+95	LT.			225						LUMP			
3-R	1225+96 ~ 1229+25	LT.			1555									
4-R	1227+05 ~ 1229+18	LT.									LUMP			
5-R	1228+07 ~ 1228+54	LT.			435									
6-R	1228+31 ~ 1228+98	LT.			100									
7-R	1229+50 ~ 1230+00	LT & RT.			1217									
8-R	1220+00 ~ 1220+50	LT & RT.									LUMP			
9-R	1220+30 ~ 1220+65	LT.									LUMP			
10-R	1229+60 ~ 1229+88	LT.									LUMP			
11-R	1225+36 ~ 1226+08	LT.									LUMP			
12-R	1227+05 ~ 1227+62	LT.			190						LUMP			
13-R	1227+71 ~ 1227+97	LT.			225									
14-R	1220+57	LT.									LUMP			
15-R	1225+70 ~ 1230+10	LT.									LUMP			
16-R	1221+00 ~ 1227+50	LT & RT.				1300								
17-R	8+50 ~ 0+65 "MACKEY"	LT.				115								
18-R	8+50 ~ 0+80 "MACKEY"	LT.				130								

TOTALS FOR THIS SHEET ONLY

UG BRIDGEPORT		535⊗												
UG MARTINS FERRY	–		3360⊗	1863⊗	–	625⊗	–	–	–	–				
BRIDGEPORT		117	1543	–	369	2525	623.25	LUMP	250	–				
MARTINS FERRY	296	1034	16,831	5911	4513	1052	135.75	LUMP	–		8	1	1	

ESTIMATED QUANTITIES CARRIED TO SHEET Nº 66

ADDITIONAL ESTIMATED QUANTITIES

BELMONT COUNTY
BEL - 7 - 20.74

FED. RD. DIVISION	STATE	PROJECT	
2	OHIO		

66 / 418

⊗ UG QUANTITIES

ESTIMATED QUANTITIES

REF. NO.	STATION TO STATION	SIDE	E-8 REMOVAL & DISPOSAL OF EXISTING: PAVEMENT AS PER PLAN	PAVEMENT	SIDEWALK	CURB	I-13 4" CONCRETE SIDEWALK	I-15 GUARD RAILS STEEL BEAM: STD. TYPE (DEEP)	BARRIER TYPE (DEEP)	S-24 REMOVAL OF EXISTING STRUCTURES	I-15 GUARD RAIL REMOVED & DISPOSED OF	S-22 REMOVAL OF PORTIONS OF EXIST. STRUCTURES
			SQ.YDS	SQ.YDS.	SQ.FT.	LIN.FT	SQ.FT.	LIN.FT.	LIN.FT.	LUMP	LIN.FT	LUMP
	SHEET NO 57											
1-R	1233+26 ~ 1237+12	LT								LUMP		
2-R	1235+50 ~ 1235+83	LT								LUMP		
3-R	1235+82 ~ 1235+59	LT								LUMP		
4-R	1235+31 ~ 1235+05	LT			351							
5-R	1235+77 ~ 1235+93	LT								LUMP		
6-R	1235+98 ~ 1236+02	LT	24									
7-R	1236+05 ~ 1236+00	LT			240							
8-R	1236+71 ~ 1236+77	LT			79							
9-R	1236+93 ~ 1236+98	LT								LUMP		
10-R	1237+27 ~ 1237+33	LT								LUMP		
11-R	1237+32 ~ 1237+45	LT	33									
12-R	1238+02 ~ 1238+04	LT								LUMP		
13-R	1238+04 ~ 1238+34	LT			253							
14-R	1238+09 ~ 1238+24	LT								LUMP		
15-R	1238+27 ~ 1238+33	LT	8									
16-R	1238+33 ~ 1238+36	LT								LUMP		
17-R	1230+29 ~ 1230+98	LER								LUMP		
18-R	1230+36 ~ 1232+06	LER			1229							
19-R	1232+24 ~ 1233+43	L&R								LUMP		
20-R	1232+25 ~ 1232+82	LT			230							
21-R	1232+28 ~ 1233+43	RT			383							
22-R	1233+82 ~ 1233+85	LT			287							
23-R	1233+60 ~ 1234+09	L&R			485							
24-R	1233+64 ~ 1233+92	RT								LUMP		
25-R	1235+13 ~ 1236+06	RT								LUMP		
26-R	1237+45 ~ 1238+22	LT								LUMP		
27-R	1238+30 ~ 1238+21	L&R								LUMP		
28-R	1238+90 ~ 1239+01	L&R			228							
29-R	1238+36 ~ 1239+13	LT								LUMP		
30-R	1239+38 ~ 1239+47	L&R			31							
31-R	1239+48 ~ 1240+00	RT								LUMP		
32-R	1239+70 ~ 1239+73	L&R			109							
33-R	1230+00 ~ 1230+20	L&R			285							
34-R	1233+75 ~ 1234+56.5	RT								LUMP		
35-R	1232+02 ~ 1232+20	LT		46								
36-R	1230+30 ~ 1230+62	LT								LUMP		
37-R	1230+92 ~ 1231+17	LT			183					Lump		
38-R	1231+55 ~ 1231+52	LT			93							
39-R	1231+69 ~ 1231+72	LT			93							
40-R	1232+00 ~ 1232+06	L&R			480							
41-R	1232+67 ~ 1232+32	LT								LUMP		
42-R	1233+40 ~ 1233+79	RT		27								
43-R	1232+87 ~ 1234+33	LT								LUMP		
44-R	1233+10 ~ 1234+41	LT								LUMP		
45-R	1233+79 ~ 1240+00	RT			2080							
46-R	1235+37 ~ 1237+95	RT								LUMP		
47-R	1235+95 ~ 1237+05	LT								LUMP		
48-R	1236+92 ~ 1237+05	LT			640							
49-R	1237+90 ~ 1239+95	LT&RT		42								
50-R	1237+75 ~ 1238+42	LT								LUMP		
51-R	1239+99 ~ 1239+89	LT			199							
52-R	1239+18 ~ 1239+54	LT								LUMP		
53-R	1239+34 ~ 1239+37	LT								LUMP		
54-R	1238+34 ~ 1238+39	LT								LUMP		
55-R	1232+02 ~ 1232+20	LT	92									
	SHEET NO 59											
1-R	1241+76 ~ 1242+00	RT								LUMP		
2-R	1242+00 ~ 1244+00	RT										LUMP
3-R	1241+12 ~ 1241+19	LT								LUMP		
4-R	1241+38 ~ 1242+56	L&R			1303							
5-R	1242+68 ~ 1243+02	LT								LUMP		
6-R	1243+30 ~ 1244+28	LT								LUMP		
7-R	1244+12 ~ 1244+18	LT			54							
8-R	1244+05 ~ 1245+24	LT								LUMP		
9-R	1240+25 ~ 1240+52	LT								LUMP		
10-R	1240+00 ~ 1240+48	RT								LUMP		
11-R	1240+71 ~ 1240+76	L&R								LUMP		
12-R	1240+00 ~ 1241+20	RT			751							
13-R	1241+83 ~ 1242+06	LT								LUMP		
14-R	1242+85 ~ 1243+34	L&R								LUMP		
15-R	1242+00 ~ 1243+37	RT			258							
16-R	1244+70 ~ 1245+00	L&R								LUMP		
17-R	1245+46 ~ 1245+91	LT			51							
18-R	1240+32 ~ 1250+00	LT								LUMP		
19-R	1247+00 ~ 1249+32	LT			90							
20-R	1248+27 ~ 1248+30	LT								LUMP		
21-R	1248+00 ~ 1248+51	LT			480							
22-R	1248+32 ~ 1248+06	LT								LUMP		
23-R	1250+03 ~ 1249+17	LT								LUMP		
24-R	1240+08 ~ 1250+53	LT			470							
25-R	1240+25 ~ 1240+49	LT								LUMP		
26-R	1240+50 ~ 1241+08	LT			321							
27-R	1240+30 ~ 1240+41	LT								LUMP		
28-R	1241+25 ~ 1241+41	LT				75						

* STATE & MARTINS FERRY ⊗ UG QUANTITIES

ESTIMATED QUANTITIES

REF. NO.	STATION TO STATION	SIDE	E-8 REMOVAL & DISPOSAL OF EXISTING: PAVEMENT AS PER PLAN	PAVEMENT	SIDEWALK	CURB	I-13 4" CONCRETE SIDEWALK	I-15 GUARD RAILS STEEL BEAM: STD. TYPE (DEEP)	BARRIER TYPE (DEEP)	S-24 REMOVAL OF EXISTING STRUCTURES	I-15 GUARD RAIL REMOVED DISPOSED OF	I-1 CLASS F-4 8"	S-22 REMOVAL OF PORTIONS OF EXIST. STRUCTURES	I-5 DICE SPEC: CL F4 8"	CL E-1 12"	B-19 AGGREGATE BASE COURSE 5|8"
	SHEET Nº 59 (CONT)		30 YDS	30. YDS.	30. FT.	LIN FT.	30. FT.	LIN. FT.	LIN. FT.	LUMP	LIN. FT.	L. F.	LUMP	EA	EA	CU. YDS
29-R	1241+19 ~ 1241+80	LT		22												
30-R	1241+50 ~ 1241+87	LT								LUMP						
31-R	1243+17 ~ 1243+24	L&R		7												
32-R	1243+46 ~ 1243+58	LT								LUMP						
33-R	1243+55 ~ 1244+41	L&R								LUMP						
34-R	1243+07 ~ 1243+22	L&R			290											
35-R	1243+91 ~ 1244+75	L&R			188											
36-R	1244+91 ~ 1244+75	L&R								LUMP						
37-R	1244+05 ~ 1243+75	LT								LUMP						
38-R	1249+43 ~ 1250+00	LT								LUMP						
39-R	1248+74 ~ 1250+00	RT								LUMP						
40-R	1241+36	RT								LUMP						
1-WD	11+05.6 LT JEANETTE AVE															
	SHEET Nº 61															14
1-GR	1250+00 ~ 1251+55	RT.									155					
1-R	1250+00 ~ 1251+26	LT.								LUMP						
2-R	1250+25 ~ 1250+32	LT.			33											
3-R	1250+50 ~ 1251+02	LT.								LUMP						
4-R	1252+69 ~ 1252+78	LT.								LUMP*						
5-R	1253+86 ~ 1254+05	LT.			50*											
6-R	1254+02 ~ 1254+74	LT.								LUMP*						
7-R	1254+98 ~ 1255+02	LT.			189*											
8-R	1251+50 ~ 1252+30	LT.											LUMP			
9-R	1252+57 ~ 1253+30	LT	95*	130*												
10-R	1257+77 ~ 1258+09	LT&RT			114*											
11-R	1259+30 ~ 1259+65	LT.			206*											
12-R	1259+92 ~ 1260+16	LT.			137*											
13-R	1251+80 ~ 1251+89	LT.								LUMP						
14-R	1252+80 ~ 1252+35	LT.											LUMP			
15-R	1253+30	LT.								LUMP*						
1SN	1250+00 SR7 - 9+15 SPRING	LT					1048									
1-SD	1252+06 ~ 1252+90	LT.													7	
	SHEET Nº 186															
15-R	7+95 ~ 8+98	LT&RT			558											
16-R	8+30 ~ 8+83	LT&RT			365											
	TOTALS FOR THIS SHEET ONLY															
	MARTINS FERRY TOTALS		154	274	14,961	—	1048	—	—	LUMP	155	—	LUMP			
	RURAL TOTALS		—	—	886*	—	—	—	—	LUMP*	—	—	—			
	ADD TOTALS FROM SHEET Nº 65.															
	UG TOTALS BRIDGEPORT			533⊗												
	UG TOTALS MARTINS FERRY		—	—	3360⊗	1603⊗	—	625⊗	—	—	—	—	—			
	BRIDGEPORT TOTALS			117	1543	—	362	252.5	623.25	LUMP	250		—			
	MARTINS FERRY TOTALS		296	1034	12,891	5911	2513	1052	135.75	LUMP	—	8	—	1	1	7 14
	GRAND TOTAL FOR SHEET Nº 65 & 66															
	UG TOTALS BRIDGEPORT			533⊗												
	UG TOTALS MARTINS FERRY		—	—	3360⊗	1603⊗	—	625⊗	—	—	—	—	—			
	BRIDGEPORT TOTALS		—	117	1543	—	362	252.5	623.25	LUMP	250					
	MARTINS FERRY TOTALS		450	1308	27,352	5911	5561	1052	135.75	LUMP	155	8	LUMP	1	1	7 14
	RURAL TOTALS		—	—	886*	—	—	—	—	LUMP*	—	—	—			

ESTIMATED QUANTITES CARRIED TO GENERAL SUMMARY

FED. RD. DIVISION	STATE	PROJECT	
2	OHIO		

66-A
418

BELMONT COUNTY
BEL - 7 - 20.74

PROFILE OF PROP. WATER MAIN, LEFT OF STA. 1212+18 TO STA. 1220+00

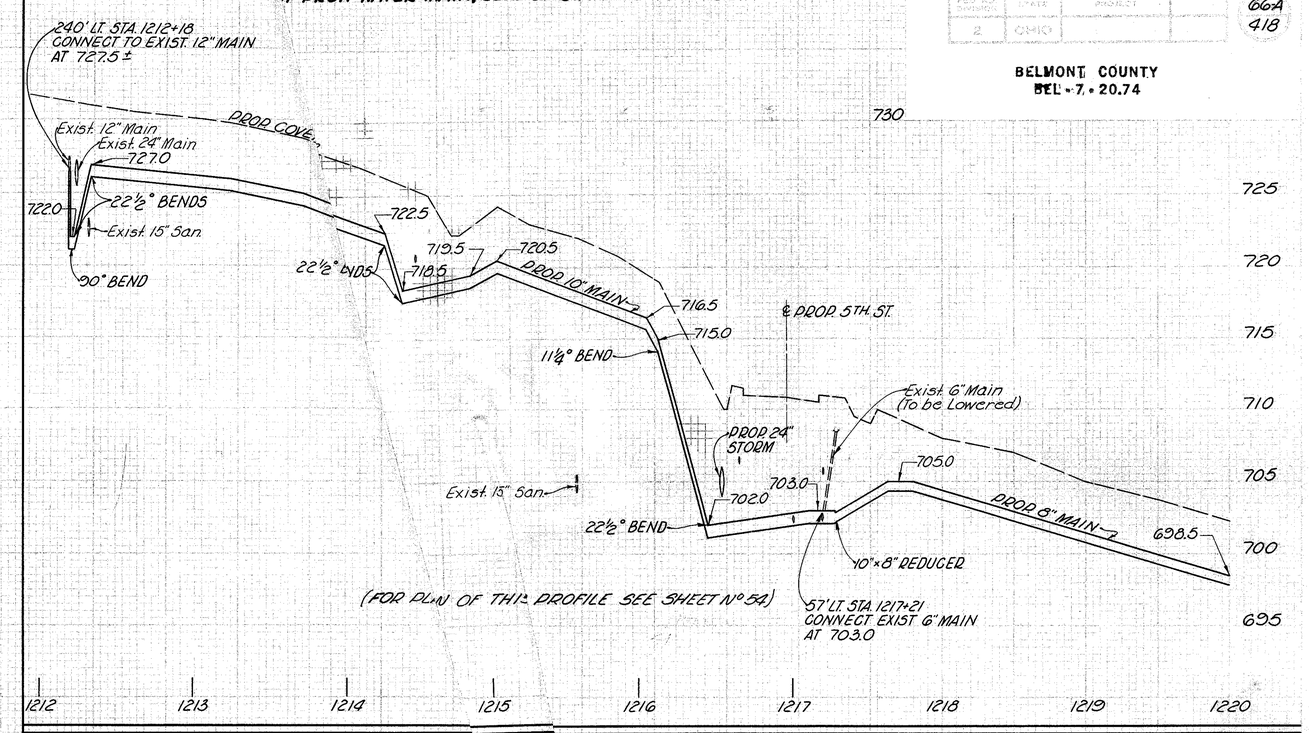

(FOR PLAN OF THIS PROFILE SEE SHEET No 54)

PROFILE OF PROP. 6" WATERMAIN, LEFT OF STA. 1242+57 ℄ PROP. S.R. 7

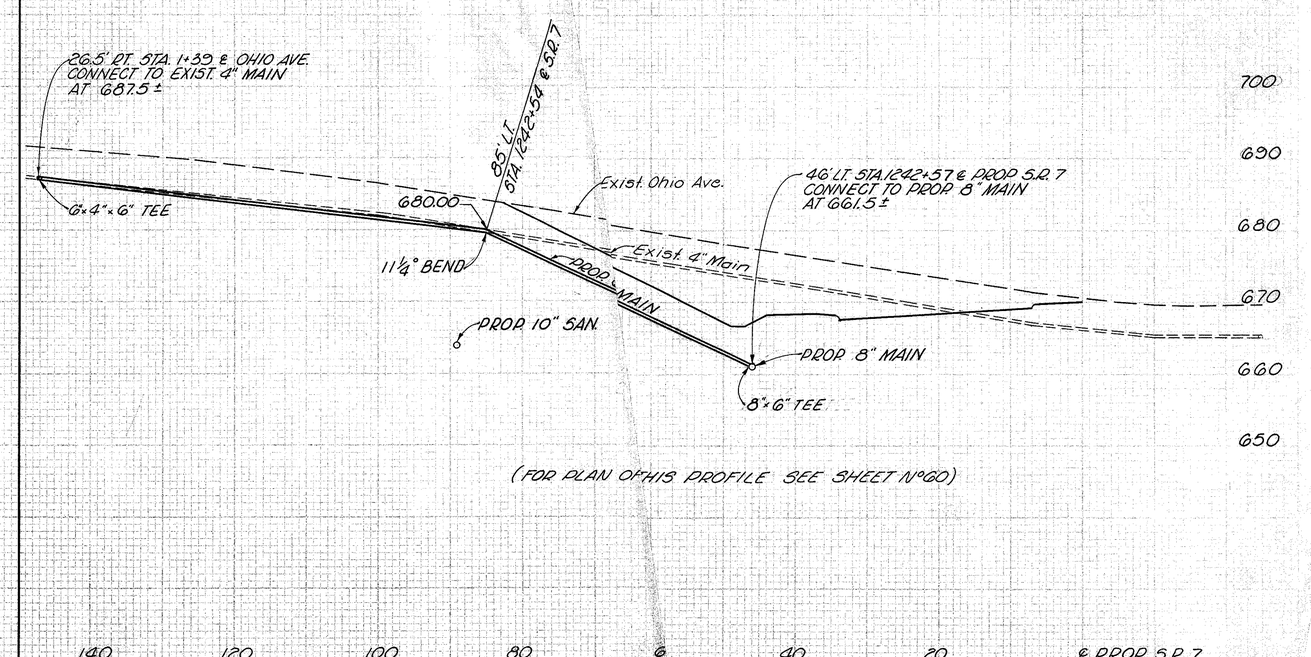

(FOR PLAN OF THIS PROFILE SEE SHEET No 60)

CILITY PLANS ~ MISC. PROFILES

DESCRIPTION	PLOTTED BY	PLOTTED DATE	INKED BY	INKED DATE	CHECKED BY	CHECKED DATE
EXISTING GROUND						
PROFILE GRADE						
VARIABLE						
ENCH. MARKS						

BELMONT COUNTY
BEL - 7 - 20.74

140 120 100 80 60 40 20 ℄ 20 40 60 80 100

700
690
720
710

1:1

PROP. 12" WATER

660.97
1090+00
662.1

Exist. 12" Water (Abandoned)

Exist. 10" San. (Abandoned)

℄ PENNA. R.R.

670
660
650

570 0

BEGIN NEW PAVEMENT
STATION 1089+75.00 AHEAD
= STATION 184+70.31 BACK

720
710

℄ PENNA. R.R.

670
660
650

184+45.31
663.1

0 0

720
710
700
690
680

℄ PENNA. R.R.

670
660
650

184+20.31
663.0

720
710
700
690
680

℄ PENNA. R.R.

670
660
650

183+95.31
662.5

140 120 100 80 60 40 20 ℄ 20 40 60 80 100 120 140

STA. 1088+50 TO STA. 1090+00

865 0

DESCRIPTION	PLOTTED/MINED		CALCULATED		CHECKED	
	BY	DATE	BY	DATE	BY	DATE
ORIGINAL GROUND						
TEMPLATES						
DRAINAGE						
PAVEMENT						
EARTHWORK						
BEYOND AREAS						

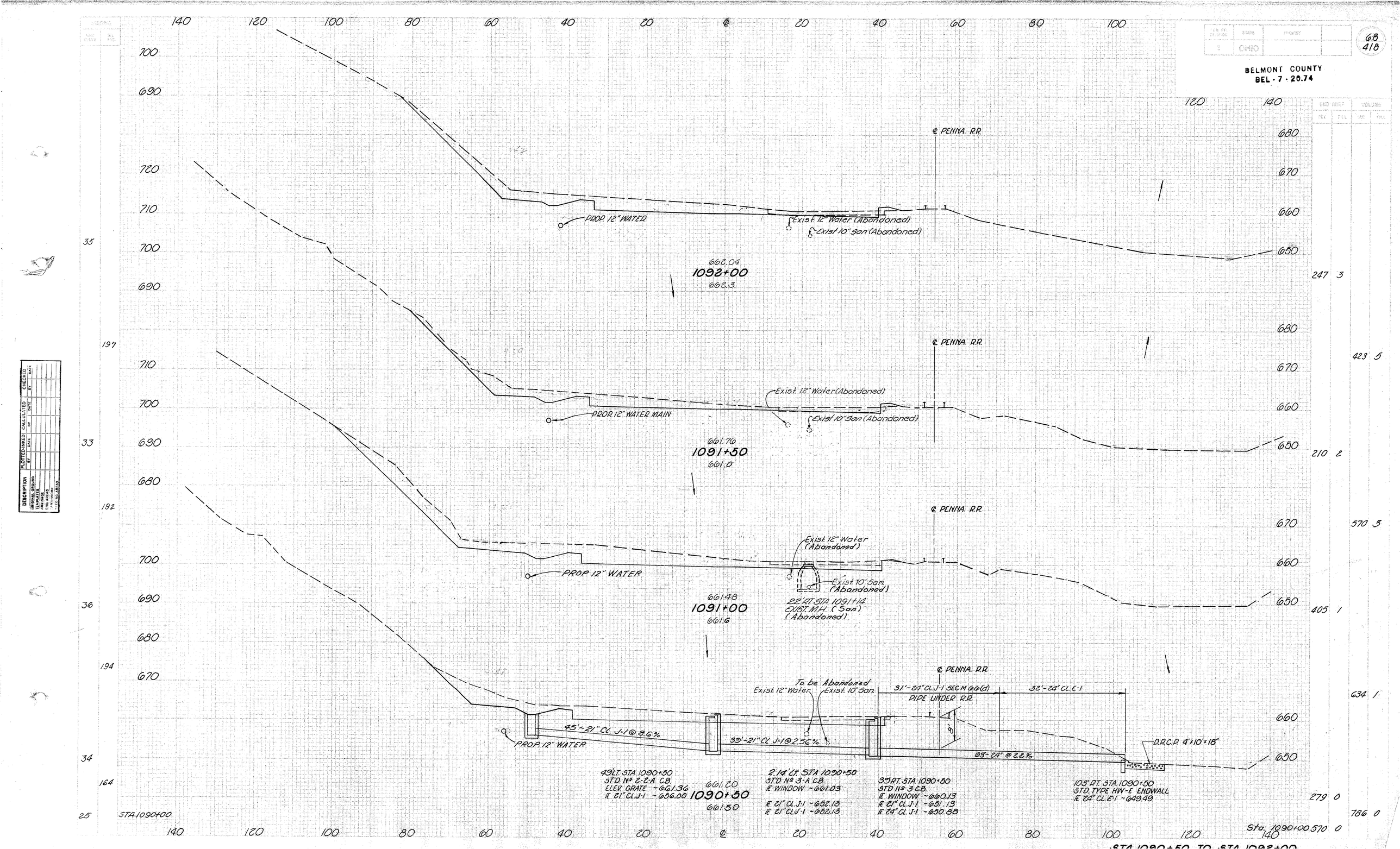

68
418
BELMONT COUNTY
BEL - 7 - 20.74
OHIO
℄ PENNA. R.R.
PROP. 12" WATER
Exist. 12" Water (Abandoned)
Exist. 10" San (Abandoned)
662.04
1092+00
662.3
PROP. 12" WATER MAIN
661.76
1091+50
661.0
PROP. 12" WATER
661.48
1091+00
661.6
22' RT. STA. 1091+14
EXIST. M.H. (San.)
(Abandoned)
To be Abandoned
Exist. 12" Water
Exist. 10" San.
31'-24" CL. J-1 SEC. M 66(d)
32'-24" CL. E-1
PIPE UNDER R.R.
45'-21" CL. J-1 @ 8.6%
39'-21" CL. J-1 @ 2.56%
63'-24" @ 2.2%
D.R.C.P. 4'x10'x18"
49' LT. STA. 1090+50
STD. Nº 2-2-A C.B.
ELEV. GRATE ~661.36
℄ 21" CL. J-1 ~656.00
661.20
1090+50
661.50
2.14' Lt. STA. 1090+50
STD. Nº 3-A C.B.
℄ WINDOW ~661.03
℄ 21" CL. J-1 ~652.13
℄ 21" CL. J-1 ~652.13
39' RT. STA. 1090+50
STD. Nº 3 C.B.
℄ WINDOW ~660.13
℄ 21" CL. J-1 ~651.13
℄ 24" CL. J-1 ~650.88
103' RT. STA. 1090+50
STD. TYPE HW-E ENDWALL
℄ 24" CL. E-1 ~649.49
STA. 1090+00
Sta. 1090+00
247 3
423 5
210 2
570 3
405 1
634 1
279 0
786 0
570 0

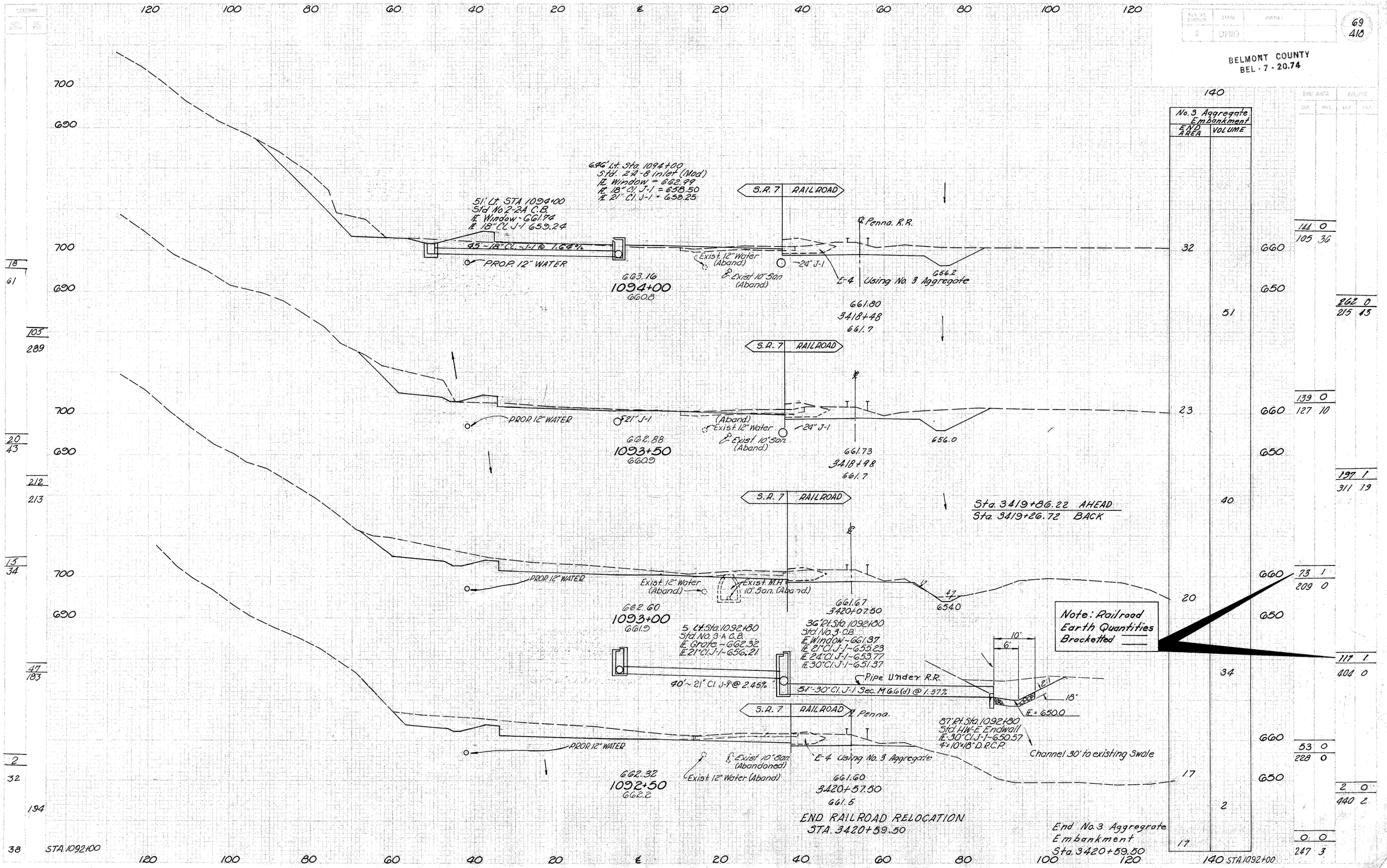

BELMONT COUNTY
BEL - 7 - 20.74
69
418
No. 3 Aggregate Embankment
END AREA
VOLUME
6.46' Lt. Sta. 1094+00
Std. 2A-8 inlet (Mod)
℄ Window = 662.99
℄ 18" Cl. J-1 = 658.50
℄ 21" Cl. J-1 = 658.25
51' Lt. STA 1094+00
Std No 2-2A C.B.
℄ Window - 661.74
℄ 18" Cl. J-1 659.24
45'-18" Cl. J-1 @ 1.64%
PROP. 12" WATER
S.R. 7 RAILROAD
℄ Penna. R.R.
Exist. 12" Water (Aband.)
Exist 10" San (Aband.)
24" J-1
E-4 Using No. 3 Aggregate
663.16
1094+00
660.8
661.80
3418+48
661.7
656.2
21" J-1
(Aband.)
Exist. 12" Water
Exist 10" San. (Aband.)
662.88
1093+50
660.9
661.73
3418+98
661.7
656.0
Sta. 3419+86.22 AHEAD
Sta. 3419+26.72 BACK
Exist. 12" Water (Aband.)
Exist. M.H. 10" San. (Aband.)
662.60
1093+00
661.9
661.67
3420+07.50
654.0
5' Lt. Sta. 1092+80
Std. No. 3-A C.B.
℄ Grate - 662.32
℄ 21" Cl. J-1 - 656.21
36' Rt. Sta. 1092+80
Std. No. 3-C.B.
℄ Window - 661.37
℄ 21" Cl. J-1 - 655.23
℄ 24" Cl. J-1 - 653.77
℄ 30" Cl. J-1 - 651.37
40'-21" Cl. J-1 @ 2.45%
51'-30" Cl. J-1 Sec. M 6.6(d) @ 1.57%
Pipe Under R.R.
℄ = 650.0
87' Rt. Sta. 1092+80
Std. HW-E Endwall
℄ 30" Cl. J-1 - 650.57
4'x10'x18" D.R.C.P.
Channel 30' to existing Swale
Note: Railroad Earth Quantities Bracketted
Penna.
Exist 10" San. (Abandoned)
Exist. 12" Water (Aband.)
E-4 Using No. 3 Aggregate
662.32
1092+50
662.2
661.60
3420+57.50
661.5
END RAILROAD RELOCATION
STA. 3420+59.50
End No. 3 Aggregate Embankment
Sta. 3420+59.50
STA. 1092+00
STA. 1092+50 TO STA. 1094+00

BELMONT COUNTY
BEL • 7 • 20.74

120 100 80 60 40 20 ℄ 20 40 60 80 100 120 140 STA. 1094+00

690 680 700 690 680 700 690 680 700 690

30/63 178/361 34/63 185/333 34/63 180/347 31/62 138/342 18/61

S.R. 7 RAILROAD

PROP. 12" WATER

Exist. 12" Water (Aband.)

Exist. 10" San

℄ Penna.

E-4 Using #3 Aggregate

1:1

45°-21" Cl. J-1 @ 1.80

39°-24" Cl. J-1 @ 1.15%

50' Lt. Sta. 1095+50
Std. No. 2-2-A C.B.
IE Window = 663.26
IE 21" Cl. J-1 = 659.15

7' Lt. Sta. 1095+50
Std. No. 2-A-14 Inlet (Mod)
IE Window = 663.83
IE 21" Cl. J-1 = 658.34
IE 24" Cl. J-1 = 658.09

39°-24" Cl. J-1 @ 1.15%
Std. No. 3 C.B.
IE Window = 662.82
IE 24" Cl. J-1 = 657.64
IE 24" Cl. J-1 = 657.64

Exist. 10" San ℄ (Abandon)

24" J-1

Exist. 10" San

Exist. 12" Water (Abandon)

21" 21° Sta. 1094+36
Exist. M.H. (San)
Abandon

24" Conc. San. To Remain & Function

San. M.H. To Remain & Function

24" Conc. San. To Remain & Function

	663.4.28	663.0	662.6	663.72	662.4	663.44	662.8
	1096+00		**1095+50**	**1095+00**		**1094+50**	
	656.0		656.8	656.6		656.4	
	661.86	662.3	661.88	661.88	661.7	661.85	661.5
	3416+49		3416+99	3417+48		3417+88	

Sta. 3418+48

End No. 3 Aggregate Embankment Sta. 3416+26.00

No. 3 Aggregate Embankment

END AREA	VOLUME
83	
	74
83	
	136
66	
	108
51	
	88
41	
	68
32	

END AREA CUT	END AREA FILL	VOLUME CUT	VOLUME FILL
		251 0	
660		92	48
650			
		413 0	
		335	53
		224 0	
660		270	9
650			
		386 0	
		835	10
660		193 0	
650		631	1
		337 0	
		1038	2
660		171 0	
		490	2
650		292 0	
		551	35
		181 0	
		105	36

STA. 1094+50 TO STA. 1096+00

SHEETS	
END AREA	VOL.

CO. RD. REVISION	STATE	PROJECT	
2	OHIO		

71
418

BELMONT COUNTY
BEL - 7 - 20.74

END AREA		VOLUME	
CUT	FILL	CUT	FILL

120 100 80 60 40 20 ℄ 20 40 60 80 100 120 140

700
690
700
690
700
690
700
690
700
690

52/36
275/256
51/56
261/300
45/52
158/342
12/71
112/378
30/65

PROP. 12" WATER

665.40
1098+00
664.5

S.R. 7 RAILROAD

℄ Penna. R.R.

661.54
3414+53
661.8

24" Conc. San. To Remain & Function

PROP. 12" WATER

665.12
1097+50
663.6

17 Rt. Sta 1097+45 Exist. M.H. (San) (Abandon)

661.65
3415+02
661.8

Ditch Block
Sta. 1096+75
Elev. 657.4

PROP. 12" WATER

664.84
1097+00
663.0

Exist 10" San

661.74
3415+51
660.9

PROP. 12" WATER

664.56
1096+50
663.0

Exist 10" San

661.81
3416+01
661.2

24" Conc. San. To Remain & Function

Sta. 3416+49

STA 1096+00

STA. 1096+00

670	195	0	
660	82	31	
670	202	0	
660	275	22	
670	309	0	
660	351	54	
670	138	0	
660	104	36	
670	275	0	
660	258	93	
670	159	0	
660	172	64	
670	360	0	
660	331	49	
670	383	0	
660	247	104	
	251	0	
	92	48	

STA. 1096+50 TO STA. 1098+00

END AREA		VOLUME	
CUT	FILL	CUT	FILL
63	0		
301	158		
179	0		
516	238		
134	0		
256	99		
302	0		
456	155		
192	0		
236	68		
351	0		
368	104		
187	0		
162	44		
347	0		
226	70		
195	0		
82	31		

690 680 690 680 690 680 690 680 690 680 690 680

36/76 230/294 47/30 233/264 48/54 264/278 47/46 270/228 52/36

Ditch Block
Sta. 1100+25
Elev. = 666.3

PPOP. 12" WATER
℄ Exist. 10"
666.52
1100+00
670.1
301
150
63
S.R. 7 RAILROAD
℄ Penna. R.R.
24" Conc. San. To Remain & Function.
660.87
34+12+54
659.1

PROP. 12" WATER
Exist 10"
666.24
1099+50
668.8
3:1
256
99
3.9:1
S.R. 7 RAILROAD
Exist San M.H. To Remain & Function
CONC. ENCASEMENT 30"×4"×1.5"
661.05
3413+04
660.0
24" Conc. San.
To Remain & Function
134
115' PT. STA 1099+76
RECONSTRUCT M.H. (San) TO GRADE.
COVER ELEV. 657.00

PROP. 12" WATER
℄ EXIST 10"
665.96
1099+00
667.9
436
68
3.6:1
S.R. 7 RAILROAD
℄
192
661.23
3413+54
662.2

PROP. 12" WATER
EXIST 10"
665.68
1098+50
666.7
798
44
2.8:1
S.R. 7 RAILROAD
℄ Penna. R.R.
187
661.40
3414+04
661.7
24" Conc. San. To Remain & Function.
Sta. 3414+53

STA. 1098+00
120 100 80 60 40 20 ℄ 20 40 60 80 100 120 140 STA. 1098+00

STA. 1098+50 TO STA. 1100+00

BELMONT COUNTY
BEL - 7 - 20.74

LINCOLN AVE. Rt

388

4:1

167

GG7.55
1102+00
663.4

End 4' Bottom Ditch 1102+00

℄ Penna. R.R.

2:1

C=101

4:1

653.0

40.7

For Culvert - See Sht. No. 218

660.24
3410+53
656.0

660
650
640
150 170 190

Exist 24" Conc. San. To Remain & Function

648.5

LINCOLN AVE. AHD
MAIN LINE AHD
MAIN LINE BK

For continuation of X Sec. & Additional Earthwork back See Lincoln Ave. Sheet No

200

180

365

4:1

175

GG7.36
1101+50
670.4

2:1

51

653.0

2:1

42

660.33
3411+03
656.2

660
650
640
150 170 190

698.1

Ditch from Lincoln Ave. & Sec.

3,350

Exist 10"

GG4.8

224

4:1

GG7.08
1101+00
671.7

S.R. 7 RAIL ROAD

℄

21

3

3:1

217

655.0

60

651.3

660.51
3411+53
656.8

660
650
640
150 170 190

566

GG4.6

Exist 10"

84'-36" Cl. J-1 @ 1.11 %

GG6.80
1100+50
670.7

50.5' Lt Sta. 1100+50
Std. No. 2-4 C.B.
Elev. Grate ~ GG4.60
Rt. 27" Cl. E-1 ~ G58.81
Rt. 36" Cl. J-1 ~ G58.06

168

4:1

42'-36" Cl. E-1 @ 2.50%

34' Rt Sta. 1100+50
Std. No. 3 C.B.
Rt. Window ~ GG6.23
Rt. 36" Cl. J-1 ~ G57.12
Rt. 36" Cl. E-1 ~ G57.12

Exist 24" conc. San., To Remain & Function

76' Rt Sta. 1100+50
Std. Type HW-E Endwall
Rt. 36" Cl. E-1 ~ G56.07

℄ Penna. R.R.

G55.5

32

42

97

27

653.9

D.R.C.P. 7'-15" x 18" Deep

Begin 4' Bottom Ditch 1100+50

660.69
3412+04
658.2

660
650

Sta. 3412+54
140 STA. 1100+00

STA 1100+00

120 100 80 60 40 20 ℄ 20 40 60 80 100 120

STA 1100+50 TO STA 1102+00

	CUT AREA	FILL AREA	CUT VOLUME	FILL VOLUME
16 / 96	120	40	338	167
103 / 505	166	76	651	317
21 / 86	59	42	365	175
164 / 769	118	58	3002	369
38 / 181	68	21	2879	224
159 / 822	94	26	3324	363
18 / 103	32	6	710	168
150 / 503	88	6	936	302
36 / 76	63	0	301	158

SHEET NO.	STATE	PROJECT
2	OHIO	

74
418

BELMONT COUNTY
BEL - 7 - 20.74

STATION	OFFSET	END AREA CUT	END AREA FILL	VOLUME CUT	VOLUME FILL
120					
100					
80					
60					
40					
20					
℄					
20					
40					
60					
80					
100					
120					
140					
120					
100					
80					
60					
40					
20					
℄					
20					
40					
60					
80					
100					
120					
140					
STA. 1102+00					

LINCOLN AVE. MAINLINE

328
4:1
27
37
166
4:1
D
D
34' Lt Sta. 1104+00
Std. No. 2-A-6 Mod. Inlet
Rf. Window ~ GGG.17
Rf. 12" Cl. J-1 ~ GG1.51
Rf. 12" Cl. E-1 ~ GG1.51
GGG.60
1104+00
GG48
71'-12" Cl. J-1 @ 0.60%
32'-12" Cl. E-1 @ 0.8%
TO REMAIN & FUNCTION-24" Conc.
D.R.C.P. 4'x10'-18" Deep.
39' Rt Sta. 1104+00
Std. No. 2-A-6 Mod. Inlet
Rf. Window ~ GG6.03
Rf. 12" Cl. J-1 ~ GG1.36
Rf. 12" Cl. E-1 ~ GG1.36
67.5' Rt Sta. 1104+00
Std. Type HW-E Endwall
Rf. 12" Cl. E-1 ~ GG9.18

402
4:1
125
C
C
GG7.04
1103+50
GG4.3
45' Rt. Sta. 1103+86
RECONSTRUCT EX. SAN. M.H.
TO GRADE.
COVER ELEV. 665.48

398
4:1
290
B
B
GG7.39
1103+00
GG3.4

LINCOLN AVE. MAINLINE

394
4:1
158
A
A
GG7.56
1102+50
GG3.7
24" Conc. San.
To Remain & Function

STA. 1102+50 TO STA. 1104+00

G80					
G70					
65					
350					
G80					
G70					
61					
G90					
375					
G80					
74					
G90					
422					
G80					
78					
482					
96					
G60	331	168			
G50			679	272	
G60	402	125			
G50			741	385	
G60	398	290			
G50			734	415	
G60	394	158			
G50			678	301	
G60					
G50					

FED. RD. DIVISION	STATE	PROJECT
2	OHIO	

BELMONT COUNTY
BEL - 7 - 20.74

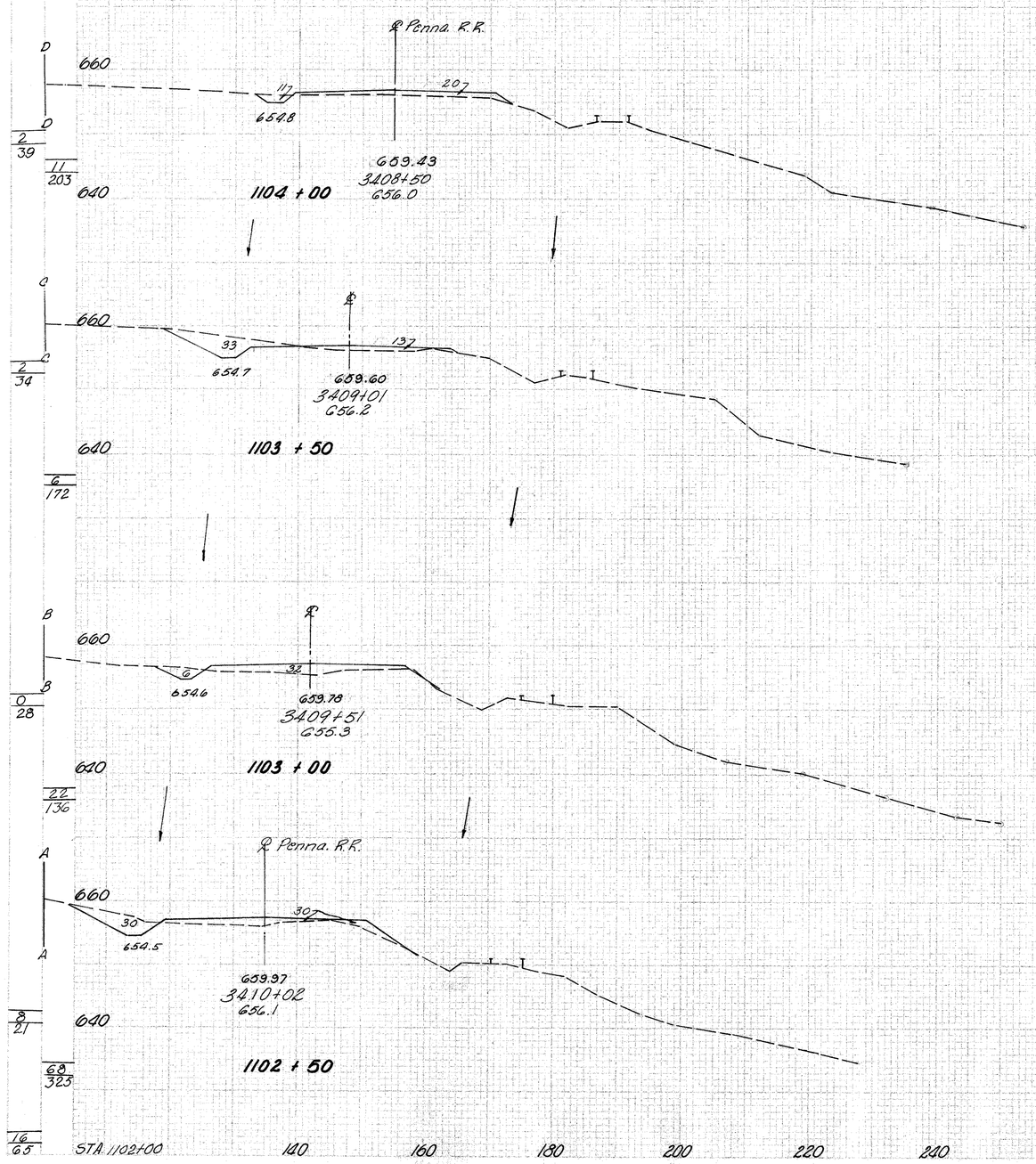

END AREA CUT	END AREA FILL	VOLUME CUT	VOLUME FILL
11	20		
		41	31
33	13		
		36	42
6	32		
		34	58
30	30		
		142	66
120	40		

STA. 1102+50 TO STA. 1104+00 RIGHT SIDE

DESCRIPTION	PLOTTED-INKED BY	DATE	CALCULATED BY	DATE	CHECKED BY	DATE
ORIGINAL GROUND						
TEMPLATES						
DRAINAGE						
END AREAS						
EARTHWORK						
SECOND AREAS						

BELMONT COUNTY
BEL - 7 - 20.74

120 100 80 60 40 20 ℄ 20 40 60 80 100 120 140

LINCOLN AVE. | MAINLINE

G664.84
1100+00
G664.6

G665.19
1105+50
G665.1

G665.72
1105+00
G663.0

BEGIN RETAINING WALL
STA. 1104+73

G664.16
1104+50
G664.7

34' Lt. Sta. 1104+75
Std. No. 8A-G MOD. Inlet
℄ Window ~ G665.69
℄ 12" C.I. E-1 ~ G661.96

END DRIVE 108' Rt.

DRIVE RT.
-3.09%

PROFILE OF DRIVE RT.
STA. 1105+01

ADD FOR DRIVE
Rt. Sta. 1105+01

24" Conc.

STA. 1104+00

STA. 1104+50 TO STA. 1106+00

END AREA		VOLUME	
CUT	FILL	CY	FILL
163	140	345	438
210	333	340	715
157	439	446	679
325	294	579	428
331	168		

2
39

FED. RD. DIVISION	STATE	PROJECT	
2	OHIO		

77
418

BELMONT COUNTY
BEL • 7 - 20.74

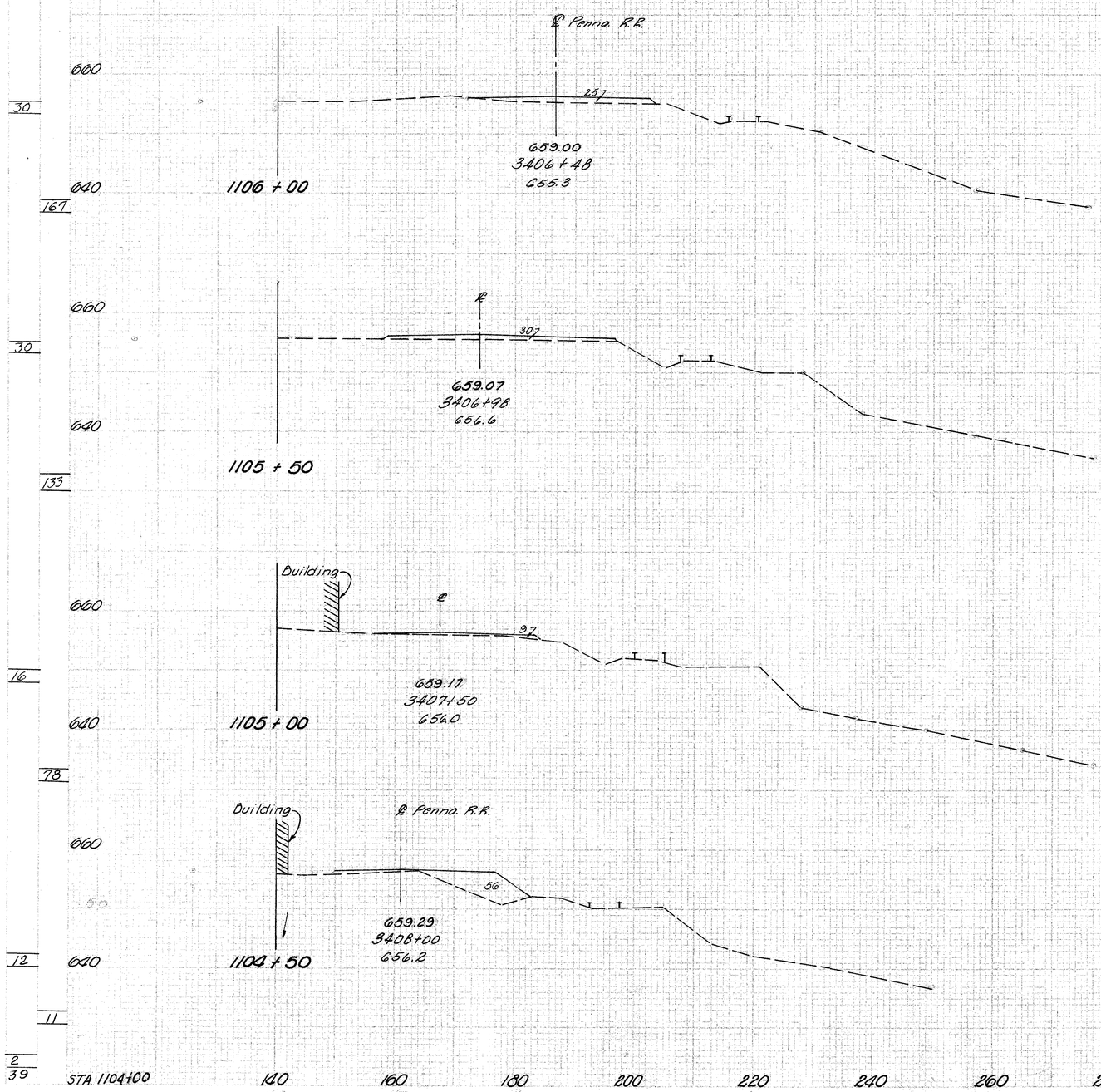

END AREA CUT	END AREA FILL	VOLUME CUT	VOLUME FILL
0	25		
		0	51
0	30		
		0	38
0	9		
		0	60
0	56		
		10	71
11	20		

STA. 3408+50

STA. 1104+50 TO STA. 1106+00 RIGHT SIDE.

DESCRIPTION	PLOTTED-INKED BY	DATE	CALCULATED BY	DATE	CHECKED BY	DATE
ORIGINAL GROUND						
TEMPLATES						
DRAINAGE						
END AREAS						
EARTHWORK						
SECOND AREAS						

BELMONT COUNTY
BEL - 7 - 20.74

END RETAINING WALL STA. 1106+80.05

7' Lt. Sta. 1107+00
Std. No. 2-A-6 Mod. Inlet
℄ Window ~ GG3.79
℄ 12" Cl J-1 ~ GG0.06

GG3.9
GG3.96
1107+00
GG3.2

141' 12" Cl J-1 @ 2.12%

22' 12" Cl E-1 @ 3.0%

To Exist Swale

34' Rt. Sta. 1107+00
Std. No. 2-A-6 Mod. Inl.
℄ Window ~ GG2.92
℄ 12" Cl J-1 ~ GG5.19
℄ 12" Cl E-1 ~ GG5.19

57.5' Rt. Sta. 1107+00
Std. Type HW-E Endwall
℄ 12" Cl. E-1 ~ G58.53

G58.0
24" Conc.
D.R.C.P. 4'x7'x18" Deep.

GG4.18
1106+75
GG2.2

G58.4

MAINLINE AHD
LINCOLN AVE BK | MAINLINE BK

GG4.40
1106+50
GG1.5

G58.6

GG4.51
1106+37
GG0.9

Pier

G58.8

Exist. San. M.H. To Remain & Function.

Begin Ditch
Sta. 1106+85

STA. 1106+00 120 100 80 60 40 20 ℄ 20 40 60 80 100 120 140 STA. 1106+00

FED. RD. DIVISION	STATE	PROJECT	
2	OHIO		

BELMONT COUNTY
BEL - 7 - 20.74

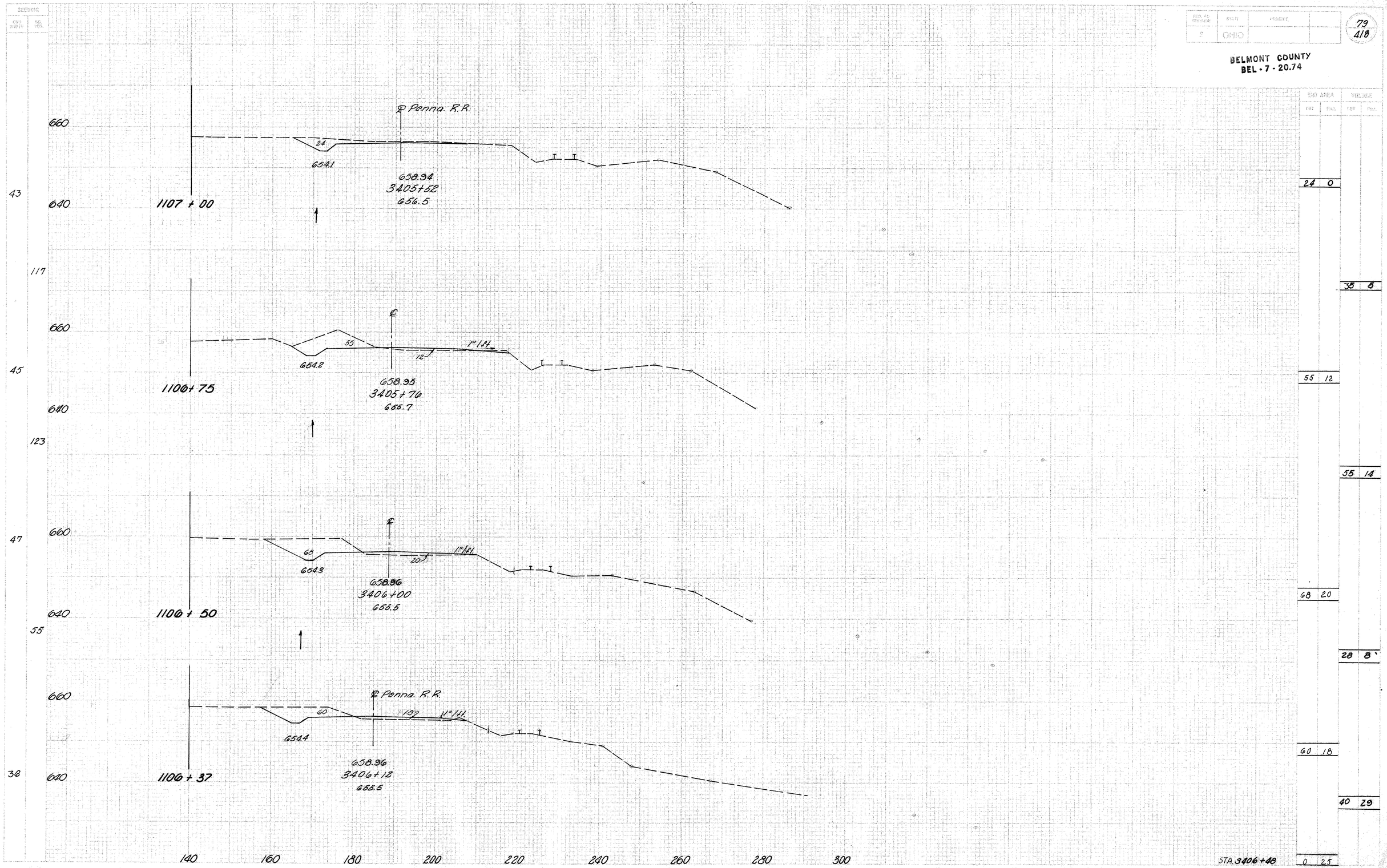

STA. 1106+37 TO STA. 1107+00 RIGHT SIDE

DESCRIPTION	PLOTTED-INKED BY	DATE	CALCULATED BY	DATE	CHECKED BY	DATE
ORIGINAL GROUND						
TEMPLATES						
DRAINAGE						
END AREAS						
EARTHWORK						
SEEDING AREAS						

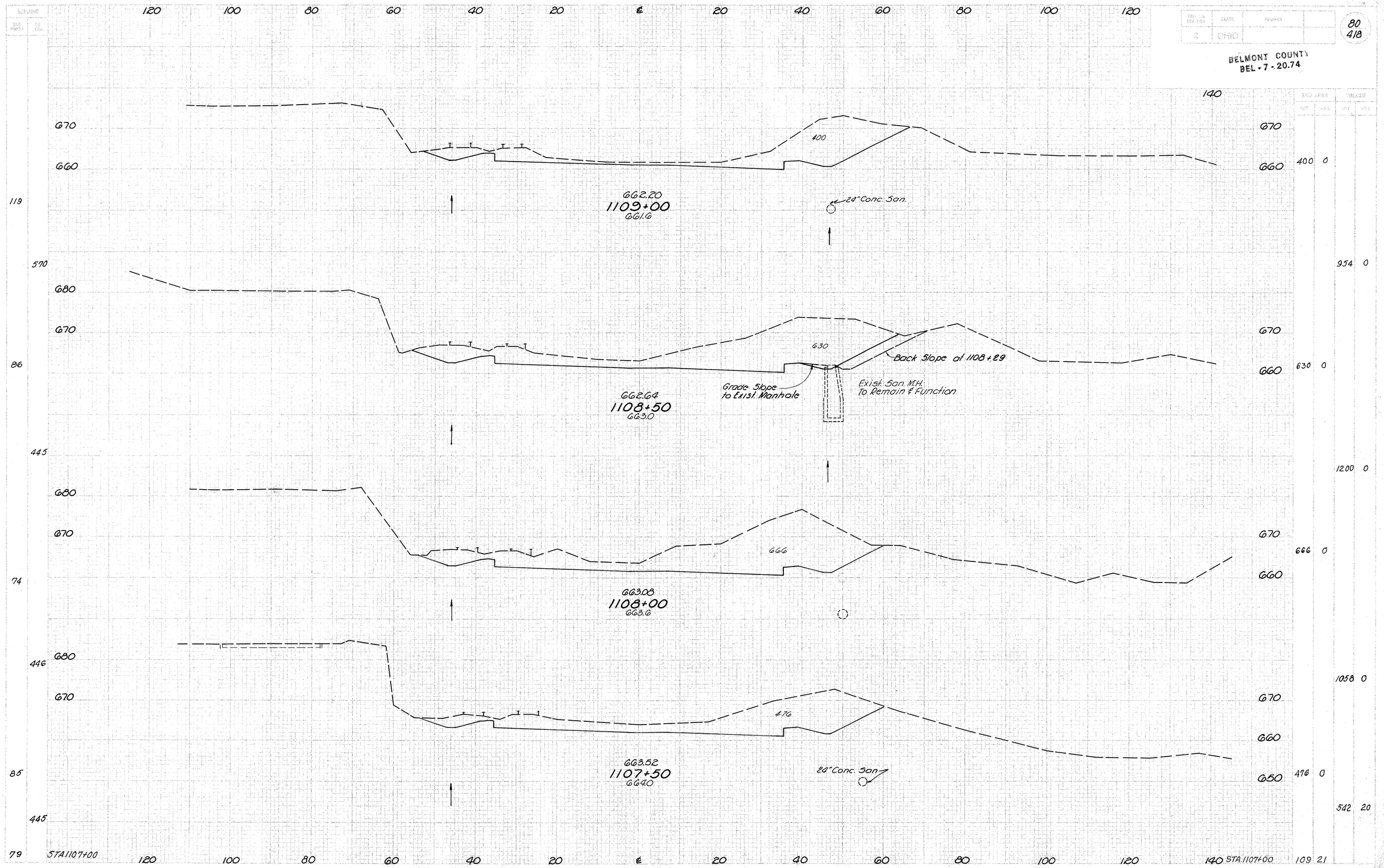

BELMONT COUNTY
BEL - 7 - 20.74

80
418

STA 1107+50 TO STA 1109+00

FED. RD. DIVISION	STATE	PROJECT
2	OHIO	

BELMONT COUNTY
BEL - 7 - 20.74

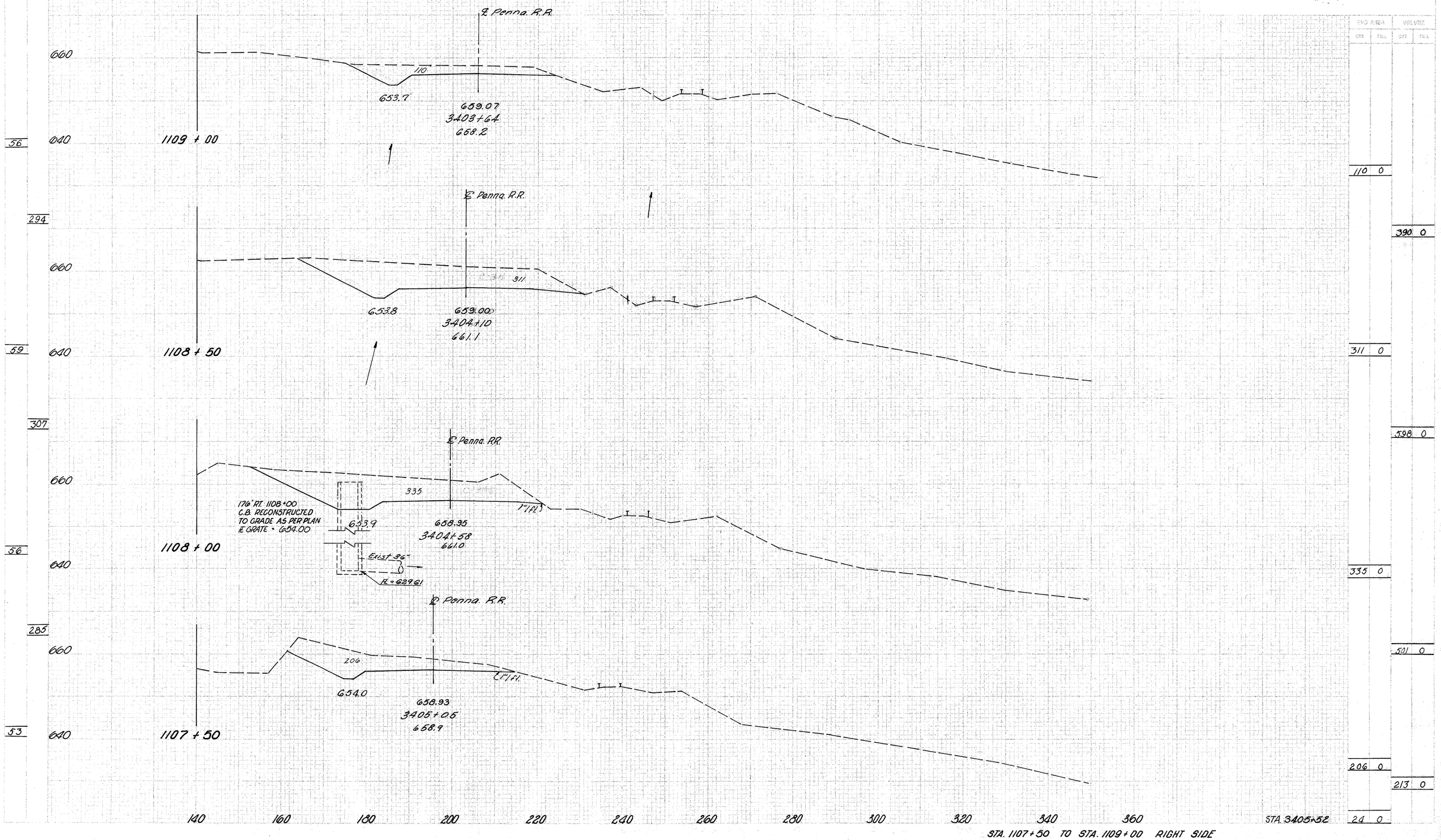

END AREA CUT	END AREA FILL	VOLUME CUT	VOLUME FILL
110	0		
		390	0
311	0		
		598	0
335	0		
		501	0
206	0		
		213	0
24	0		

STA. 1107+50 TO STA. 1109+00 RIGHT SIDE

DESCRIPTION	PLOTTED-INKED BY	DATE	CALCULATED BY	DATE	CHECKED BY	DATE
ORIGINAL GROUND						
TEMPLATES						
DRAINAGE						
END AREAS						
EARTHWORK						
SECOND AREAS						

BELMONT COUNTY
BEL - 7 - 20.74

ENG. AREA		VOLUME	
CUT	FILL	CUT	FILL
375	0	619	54
283	58	518	62
276	9	524	9
290	0	556	0
310	0	658	0
400	0		

69 403 76 358 53 244 35 300 73 533 119

120 100 80 60 40 20 ℄ 20 40 60 80 100 120 140

660 650 660 650 660 650 660 650 660 650 660 650 660 650

Exist. 24" Tile

3:1 4:1 375 2:1 3:1

39"x15" Cl. J-1 @ 2.67%

660.99

07' Lt. Sta. 1111+75
Std. No. 2-A-10 Inlet (Mod.)
IE-Window = 660.96
IE-15" Cl. J-1 = 657.23

1111+50
661.7

34' Rt. Sta. 1111+75
Std. No. 3 C.B.
IE-Window = 660.07
IE-15" Cl. J-1 = 656.19

Exist 24"

℄ Railroad St.

Normal Ditch Elev. 660.00

Exist. 24"
IE-657.0

2:1 4:1 283 4:1 58

20'-24" Pipe Cl. E-1
@ 0.165

41"x36" Cl. J-1 @ 1.29%

660.88

41"x36" Cl. J-1 @ 1.29%

32"x42" Cl. E-1 @ 0.69%

Exist 24"

1111+00
662.1

48' Lt. Sta. 1111+00
Std. No. 2-A C.B. Mod.
IE Grate = 660.67
IE Window = 659.50
IE 24" Cl. E-1 = 654.50
IE 36" Cl. J-1 = 653.50

7' Lt. Sta. 1111+00
Std. No. 3 C.B.
IE Grate = 660.71
IE 36" Cl. J-1 = 652.97

34' Rt. Sta. 1111+00
Std. No. 3 C.B.
IE-Grate = 659.82
IE-12" Cl. J-1 = 655.29
IE-15" Cl. J-1 = 655.14
IE-36" Cl. J-1 = 652.44
IE-42" Cl. E-1 = 651.94

65.5' Rt. Sta. 1111+00
Std. No. HW-E Endwall
IE-42" Cl. E-1 = 651.72
10'x10'x18" D.R.C.P.

65.5' Rt.
Sta. 1111+00
0° Skew

1111+05

1110+95

2:1 2:1 2:1 2:1 2:1 2:1

10'

Matchline Sheet 83

PLAN OF CHANNEL

660.6

07' Lt. Sta. 1110+25
Std. No. 2-A-8 Inlet (Mod.)
IE-Window = 660.96
IE-12" Cl. J-1 = 657.23

264 3:1 127 3:1

39"x12" Cl. J-1 @ 2.28%

660.99

1110+50
661.9

34' Rt. Sta. 1110+25
Std. No. 3 C.B.
IE-Window = 660.07
IE-12" Cl. J-1 = 656.34

658.0

Exist 24"

Exist. Inlet
To Remain & Function

290

Existing 24" Pipe Removed

661.32

1110+00
661.6

4'x4' Existing
Conc. C.B. to be removed
Price to be included
in E-12. Pipe Removal.

Exist. San. MH.
To Remain & Function

Exist 24" Conc.

Plug Hole in C.B. Cost to be
Included in Pipe Removal

97' Pipe Removal

3:1 4:1 310 4:1 3:1

661.0

661.76

1109+50
662.2

This pipe will continue to Function
Draining into Nat Ditch

Plug
47' Rt.

STA. 1109+00 120 100 80 60 40 20 ℄ 20 40 60 80 100 120 140 STA. 1109+00

STA. 1109+50 TO STA. 1111+50

BELMONT COUNTY
BEL - 7 - 20.74

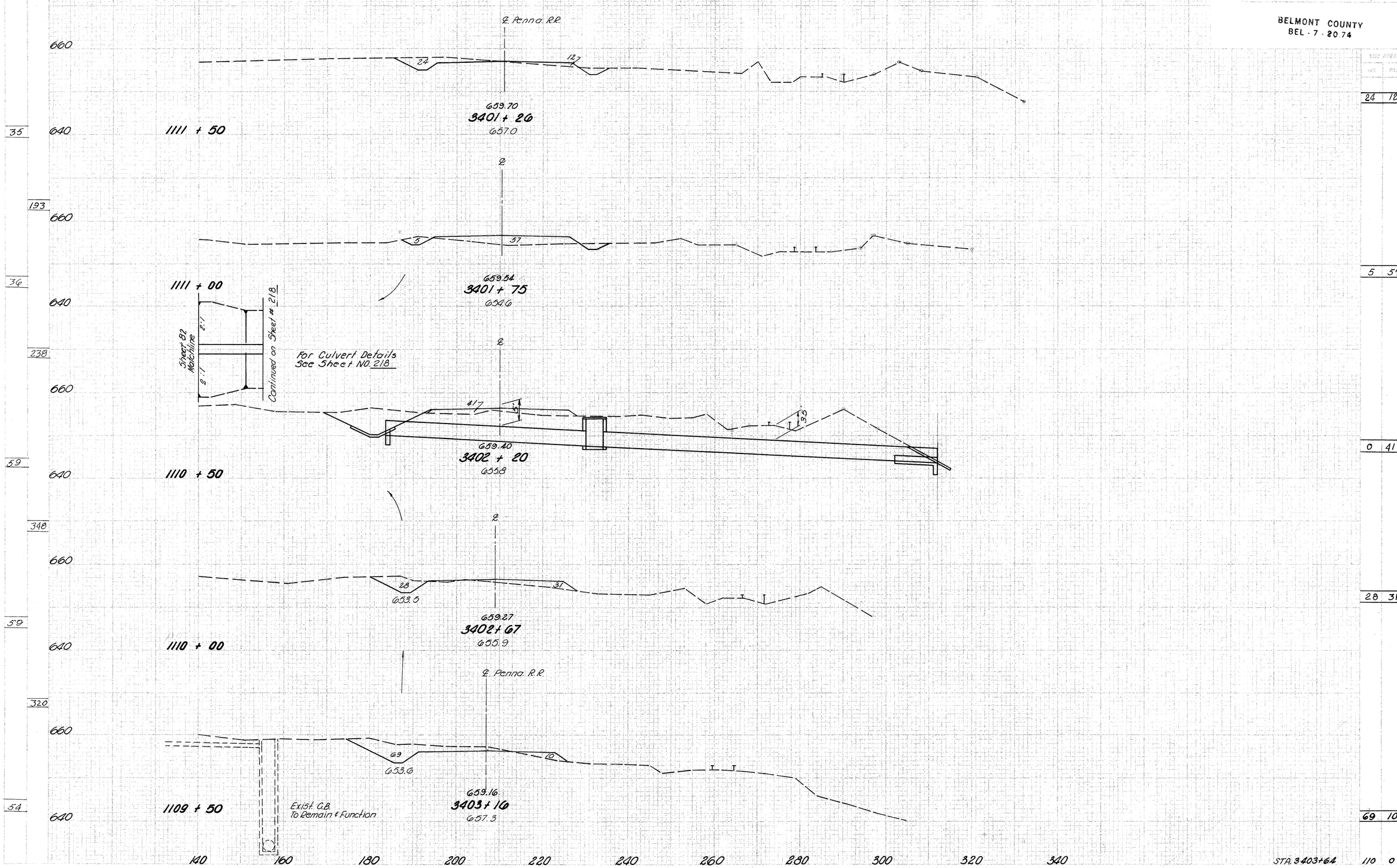

END AREA CUT	END AREA FILL	VOLUME CUT	VOLUME FILL
24	12		
		26	63
5	57		
		4	82
0	41		
		24	63
28	31		
		88	37
69	10		
		166	9
110	0		

STA. 1109 + 50 TO STA. 1111 + 50 RIGHT SIDE.

FED. AID PROJECT	STATE	PROJECT	
2	OHIO		

84
418

BELMONT COUNTY
BEL - 7 - 20.74

EARTHWORK			EXIST AREA		VOLUME	
CUT	FILL		CUT	FILL	CUT	FILL
94		120 100 80 60 40 20 ℄ 20 40 60 80 100 120 140	670			
		660	660		247	0
		650				
433						401 0
			670			
62		660	660		186	0
319						395 0
		660	660		240	0
53			650			
322						530 0
		660	660		332	0
63			650			685 0
367					375	0
69		STA. 1111+50 120 100 80 60 40 20 ℄ 20 40 60 80 100 120 140 STA. 1111+50				

662.2
177
217
107
37
2:1
662.63
1113+50
661.2
Exist 24"

662.0
186
662.19
1113+00
661.8
Exist. San MH.
To Remain & Function

661.76
240
1112+50
662.4
Exist 24"

661.32
332
1112+00
661.2
Exist 24"

STA. 1112+00 TO STA. 1113+50

FED. RD. DIVISION	STATE	PROJECT	
2	OHIO		

85
418

BELMONT COUNTY
BEL - 7 - 20.74

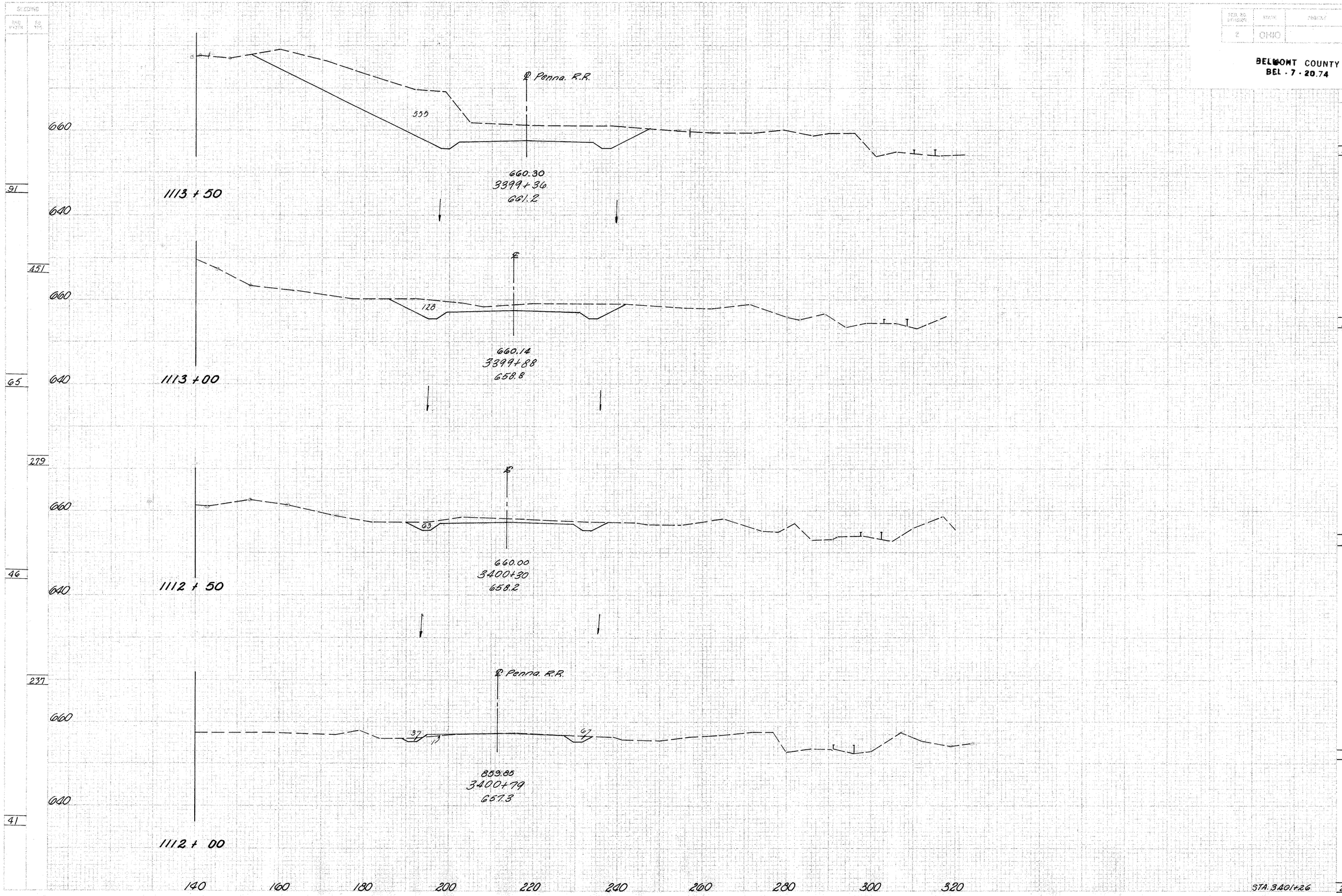

STA. 1112+00 TO STA. 1113+50 RIGHT SIDE.

SECTIONS

SUB AREA | N CS

120 100 80 60 40 20 ℄ 20 40 60 80 100 120 140

SHEET NO.	STATE	PROJECT
2	OHIO	

86
418

BELMONT COUNTY
BEL - 7 - 20.74

CUT AREA | VOLUMES
CUT | FILL | CUT | FILL

76 | 428 | 660 | 663.0 | 4:1 | 4:1 | 8 | 4:1 | 187 | 219 | 4:1 | 3:1 | 670 | 660 | 228 48

664.38
1115+50
661.8

○ Exist 24"

397 98

78 | 442 | 660 | 662.8 | 4:1 | 4:1 | 12 | 4:1 | 387 | 189 | 4:1 | 3:1 | 670 | 660 | 201 58

663.94
1115+00
661.9

○ Exist 24"

222 84

81 | 442 | 660 | 662.6 | 4:1 | 4:1 | 10 | 13 | 137 | 13 | 4:1 | 14 | 670 | 660 | 39 32

663.51
1114+50
662.3

○ Exist 24"

128 35

90 | 475 | 660 | 662.4 | 4:1 | 4:1 | 11 | 27 | 36 | 3 | 4:1 | 27 | 670 | 660 | 99 5

663.07
1114+00
663.2

℄ Exist 24"

321 5

94 | 511 | STA. 1113+50 | 120 100 80 60 40 20 ℄ 20 40 60 80 100 120 140 | STA. 1113+50 | 247 0

STA. 1114+00 TO STA. 1115+50

FED. RD. DIVISION	STATE	PROJECT
2	OHIO	

BELMONT COUNTY
BEL - 7 - 20.74

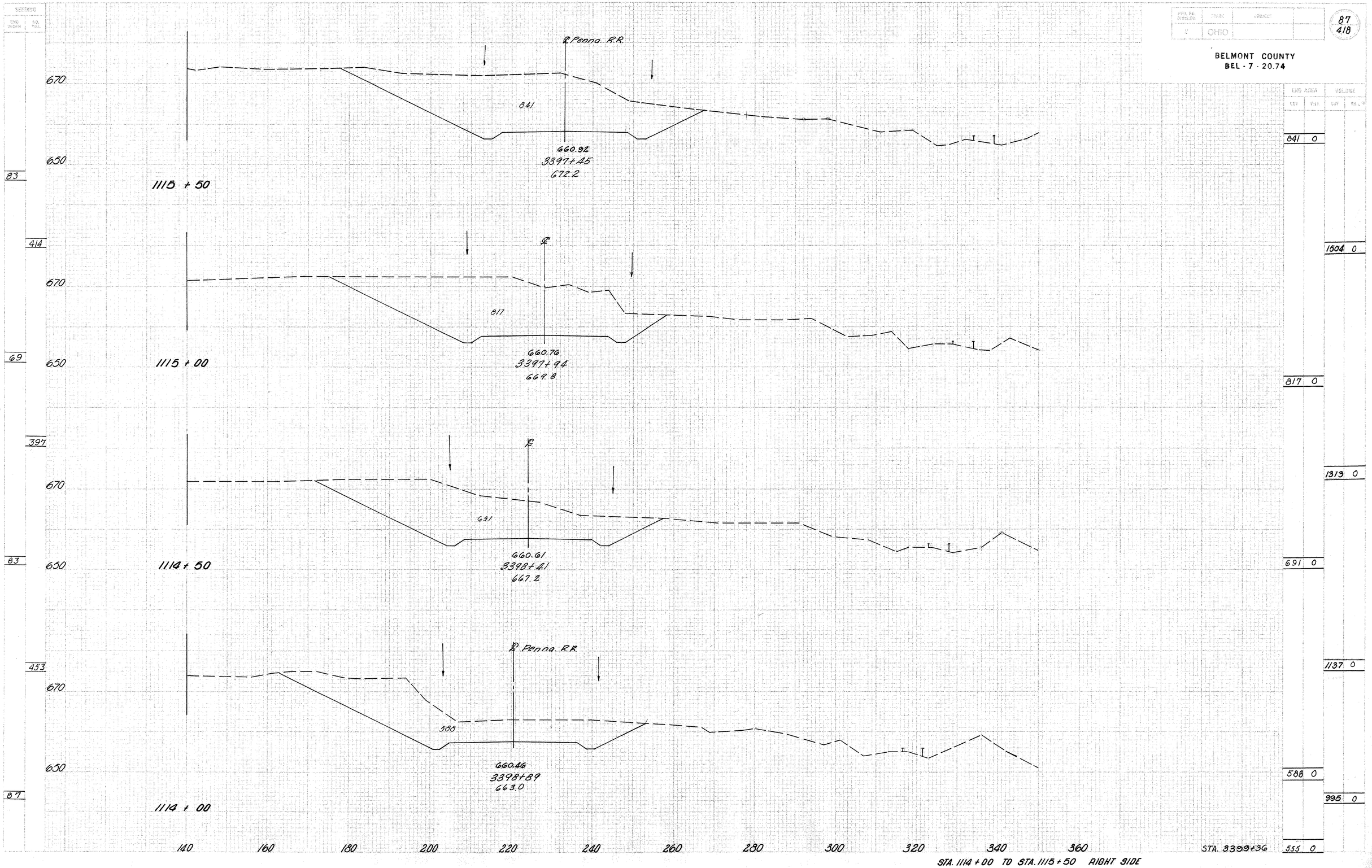

STA. 1114 + 00 TO STA. 1115 + 50 RIGHT SIDE

DESCRIPTION	PLOTTED-INKED BY	DATE	CALCULATED BY	DATE	CHECKED BY	DATE
ORIGINAL GROUND						
TEMPLATES						
DRAINAGE						
END AREAS						
EARTHWORK						
SECOND AREAS						

FED. ROAD PROJECT NO.	STATE	PROJECT	SHEET NO.	TOTAL SHEETS
	OHIO			88 418

BELMONT COUNTY
BEL - 7 - 20.74

SHEETING

LEFT WIDTH	LEFT TIER	STATION	RIGHT TIER	RIGHT WIDTH
		140 120 100 80 60 40 20	℄	20 40 60 80 100 120
	61	666.57 1118+00 663.6	10' 1½"H.T. 4:1 109 128 4:1 Exist. San. M.H. Reconstruct to Grade. Exist. 24"	670
	344			
	63	666.13 1117+50 663.8	103 128 Exist. 24"	660
	353			
	64	665.09 1117+00 663.2	98 200 Exist. 24"	660
	63	665.26 1116+50 662.7	119 190 Exist. 24"	660
	353			
	64	664.82 1116+00 661.0	4:1 111 198 4:1 5:1 Exist. San. M.H. Reconstruct to Grade Exist. 24"	660
	389			
76		STA. 1115+50 140 120 100 80 60 40 20	℄	20 40 60 80 100 120 STA. 1115+50 140

STATION	END AREA CUT	END AREA FILL	VOLUME CUT	VOLUME FILL
140				
660	128	109		
			237	201
670	128	108		
660				
			304	190
670	200	98		
660				
			361	201
670	190	119		
660				
			360	213
670	198	111		
660				
			394	147
140			228	48

Sta. 1116+00 to Sta. 1118+00

FED. RD. DIVISION	STATE	PROJECT	
2	OHIO		

89
418

BELMONT COUNTY
BEL - 7 - 20.74

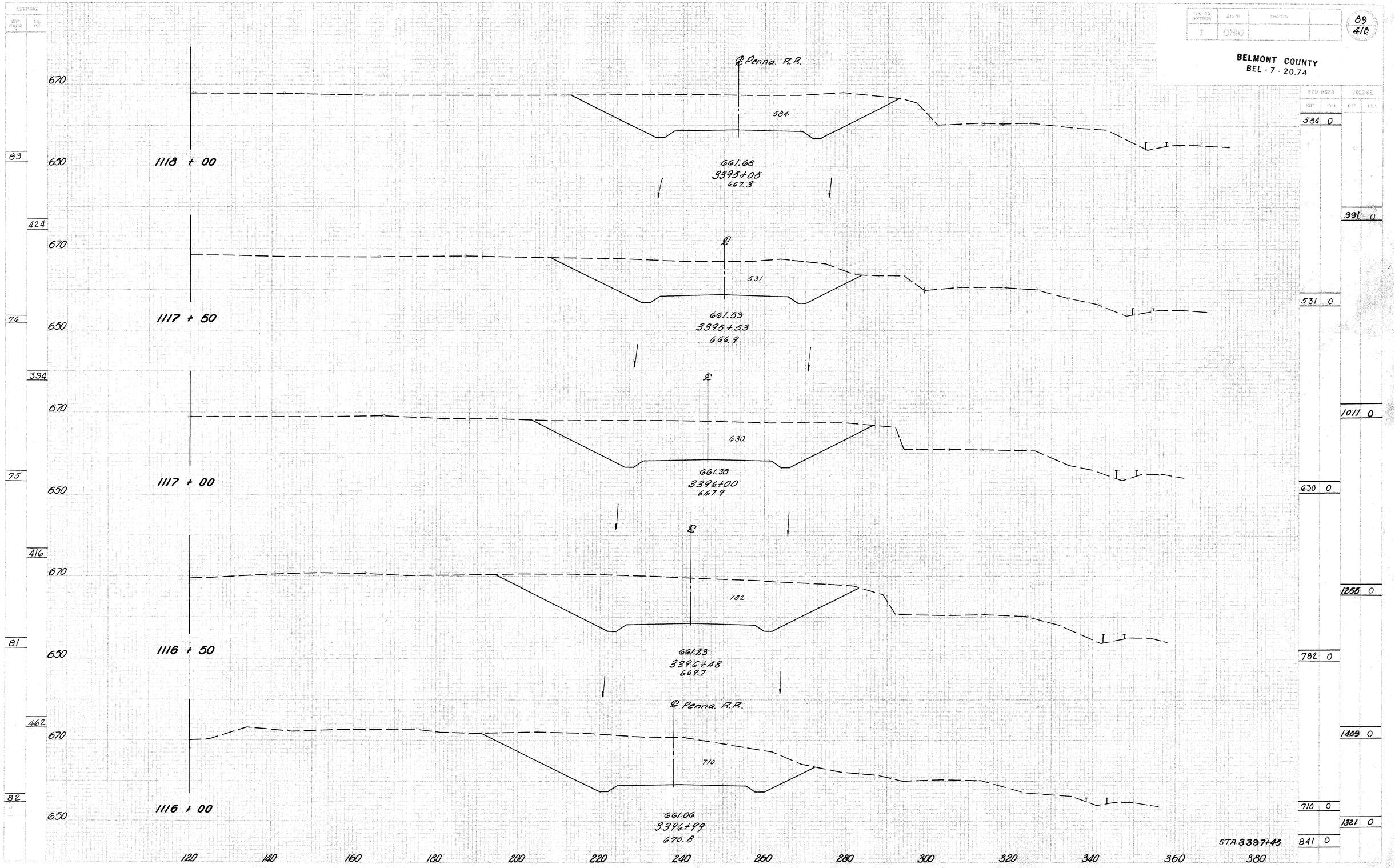

END AREA CUT	END AREA FILL	VOLUME CUT	VOLUME FILL
584	0		
		991	0
531	0		
		1011	0
630	0		
		1255	0
782	0		
		1409	0
710	0		
		1321	0
841	0		

STA. 1116+00 TO STA. 1118+00 RIGHT SIDE.

DESCRIPTION	PLOTTED-INKED BY	DATE	CALCULATED BY	DATE	CHECKED BY	DATE
ORIGINAL GROUND						
TEMPLATES						
DRAINAGE						
END AREAS						
EARTHWORK						
SEEDING AREAS						

FED. ROAD PROJECT	STATE	PROJECT	
2	OHIO		

90
418

BELMONT COUNTY
BEL - 7 - 20.74

SECTIONS		END AREA		VOLUME	
CUT	FILL	CUT	FILL	CUT	FILL
62	353	55	171	120	290
65	367	74	143	147	245
67	358	85	122	158	217
62	344	86	112	172	217
62	342	100	122	211	214
G1		128	109		

140 120 100 80 60 40 20 ℄ 20 40 60 80 100 120 140

670 660 670 660 670 660 670 660 670 660

4:1 171 40 4:1 3:1

667.64
1120+50
663.9

Exist 18"

143 74

667.69
1120+00
664.2

Exist. San. M.H. To Remain & Function

Exist. 18"
Exist. 24"

122 85

667.60
1119+50
664.3

Exist. 5'-5' Box Culvert To Remain & Function.

Exist 24"

112 86

667.37
1119+00
664.7

Exist 24"

4:1 122 100 4:1 3:1

667.01
1118+50
664.3

Exist 24"

STA. 1118+00

140 120 100 80 60 40 20 ℄ 20 40 60 80 100 120 140

Sta 1118+50 to Sta 1120+50

FED. RD. DIVISION	STATE	PROJECT	
2	OHIO		

91
418

BELMONT COUNTY
BEL - 7 - 20.74

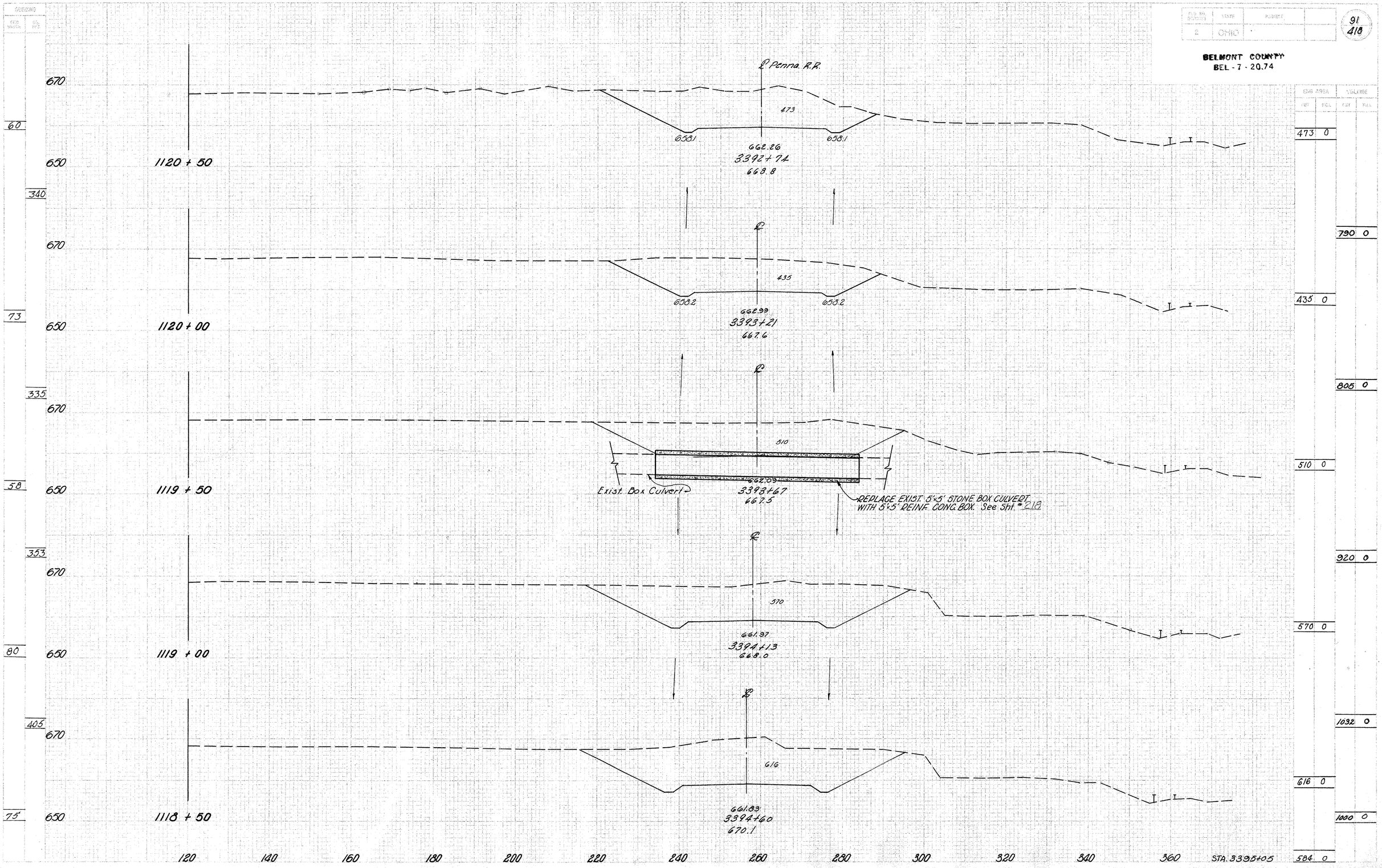

STA. 1118+50 TO STA. 1120+50 RIGHT SIDE.

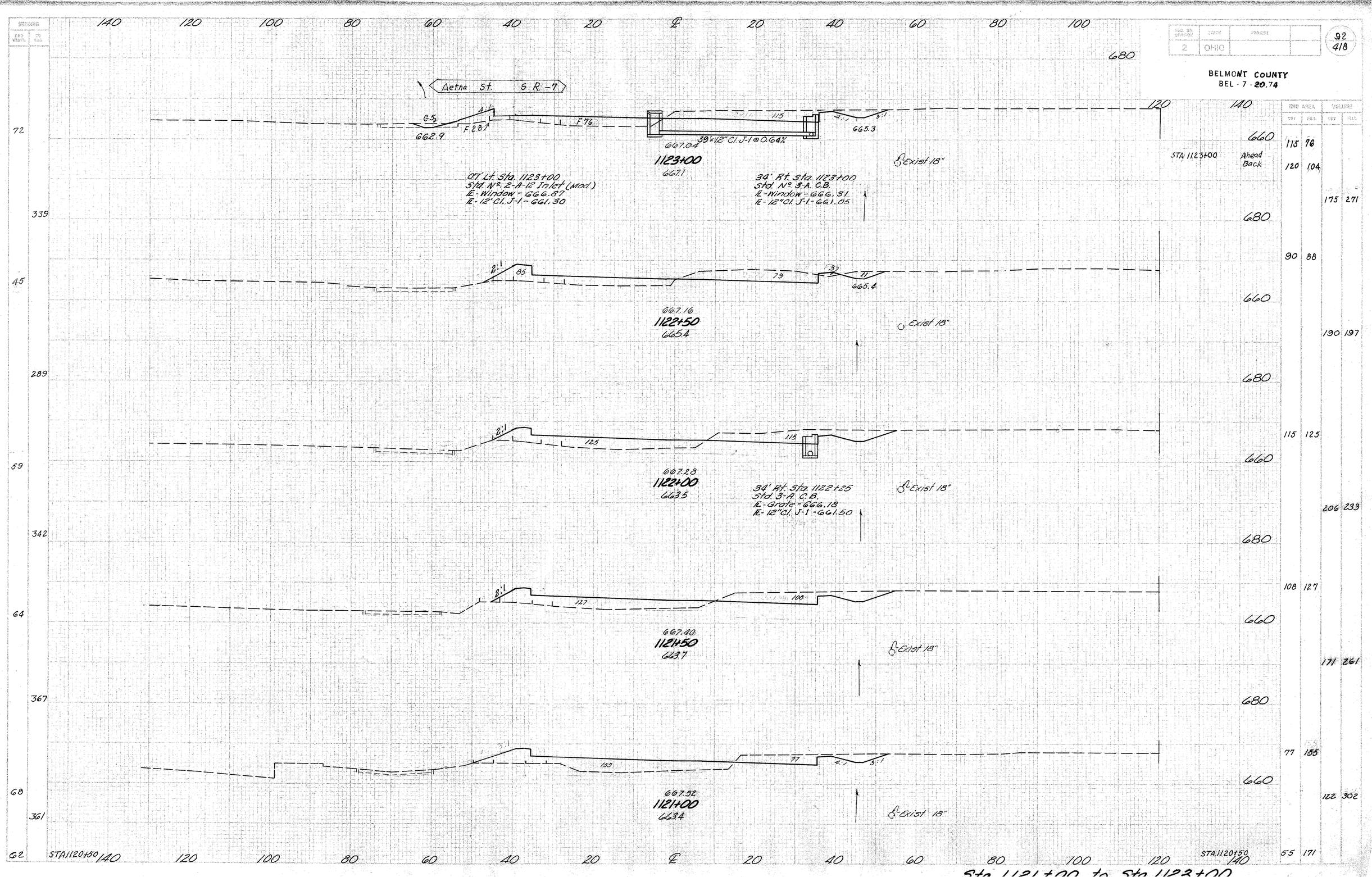

Sta.	End Area Cut	End Area Fill	Volume Cut	Volume Fill
1123+00	115	76		
	120	104		
			175	271
1122+50	90	88		
			190	197
1122+00	115	125		
			206	233
1121+50	108	127		
			171	261
1121+00	77	155		
			122	302
STA 1120+50	55	171		

Sta. 1121+00 to Sta. 1123+00

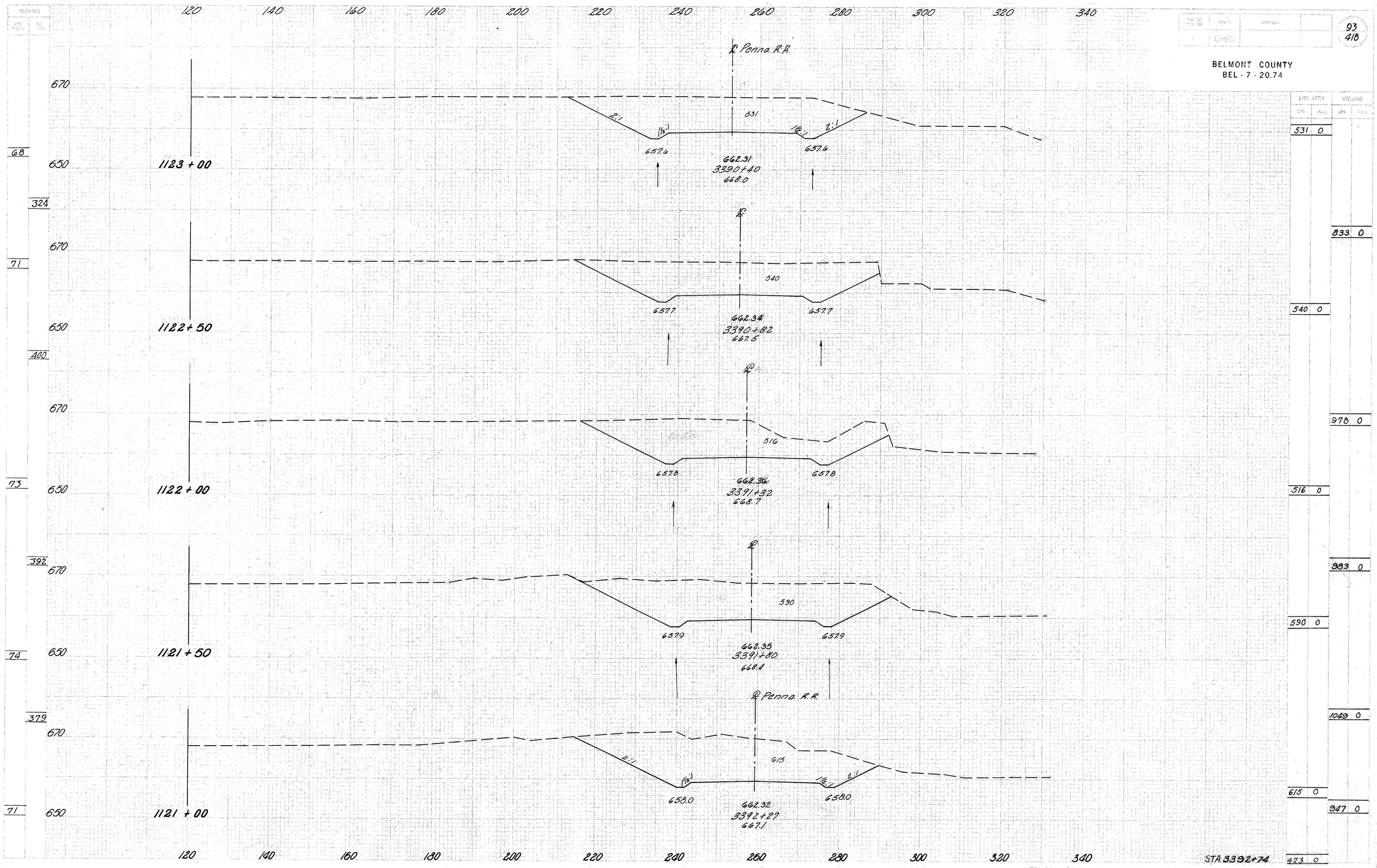

END AREA CUT	END AREA FILL	VOLUME CUT	VOLUME FILL
531	0		
		833	0
540	0		
		978	0
516	0		
		983	0
590	0		
		1049	0
615	0		
		947	0
473	0		

STA. 1121+00 TO STA. 1123+00 RIGHT SIDE

DESCRIPTION	PLOTTED INKED BY	DATE	CALCULATED BY	DATE	CHECKED BY	DATE
ORIGINAL GROUND						
TEMPLATES						
DRAINAGE						
END AREAS						
EARTHWORK						
SEEDING AREAS						

93
418

BELMONT COUNTY
BEL - 7 - 20.74

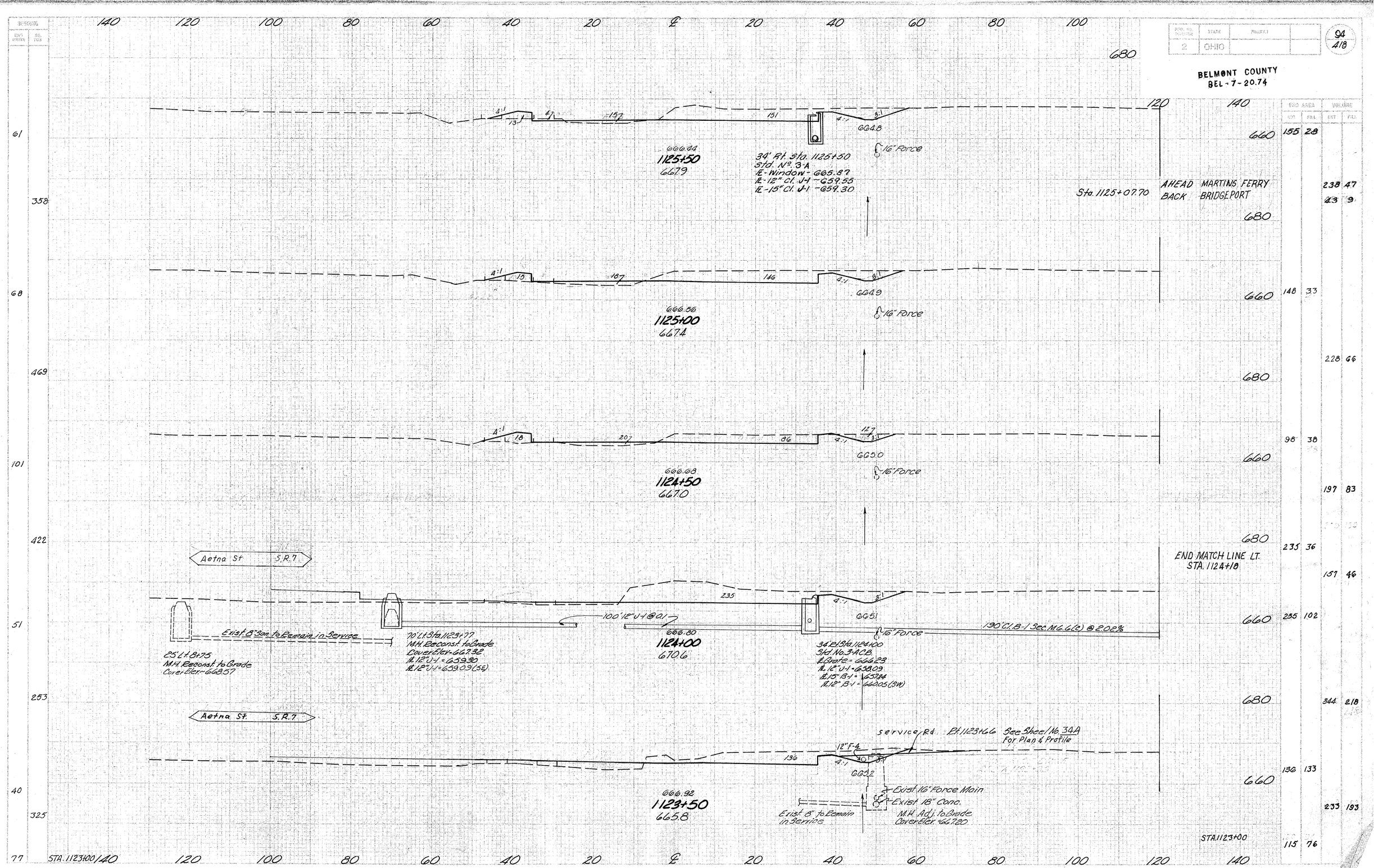

END AREA CUT	END AREA FILL	VOLUME EXT	VOLUME FILL
155	28		
		238	47
		43	9
148	33		
		228	66
98	38		
		197	83
235	36		
		157	46
235	102		
		344	218
136	133		
		233	193
115	76		

Sta. 1123+50 to Sta. 1125+50

FED. RD. DIVISION	STATE	PROJECT	
2	OHIO		

95
418

BELMONT COUNTY
BEL. - 7 - 20.74

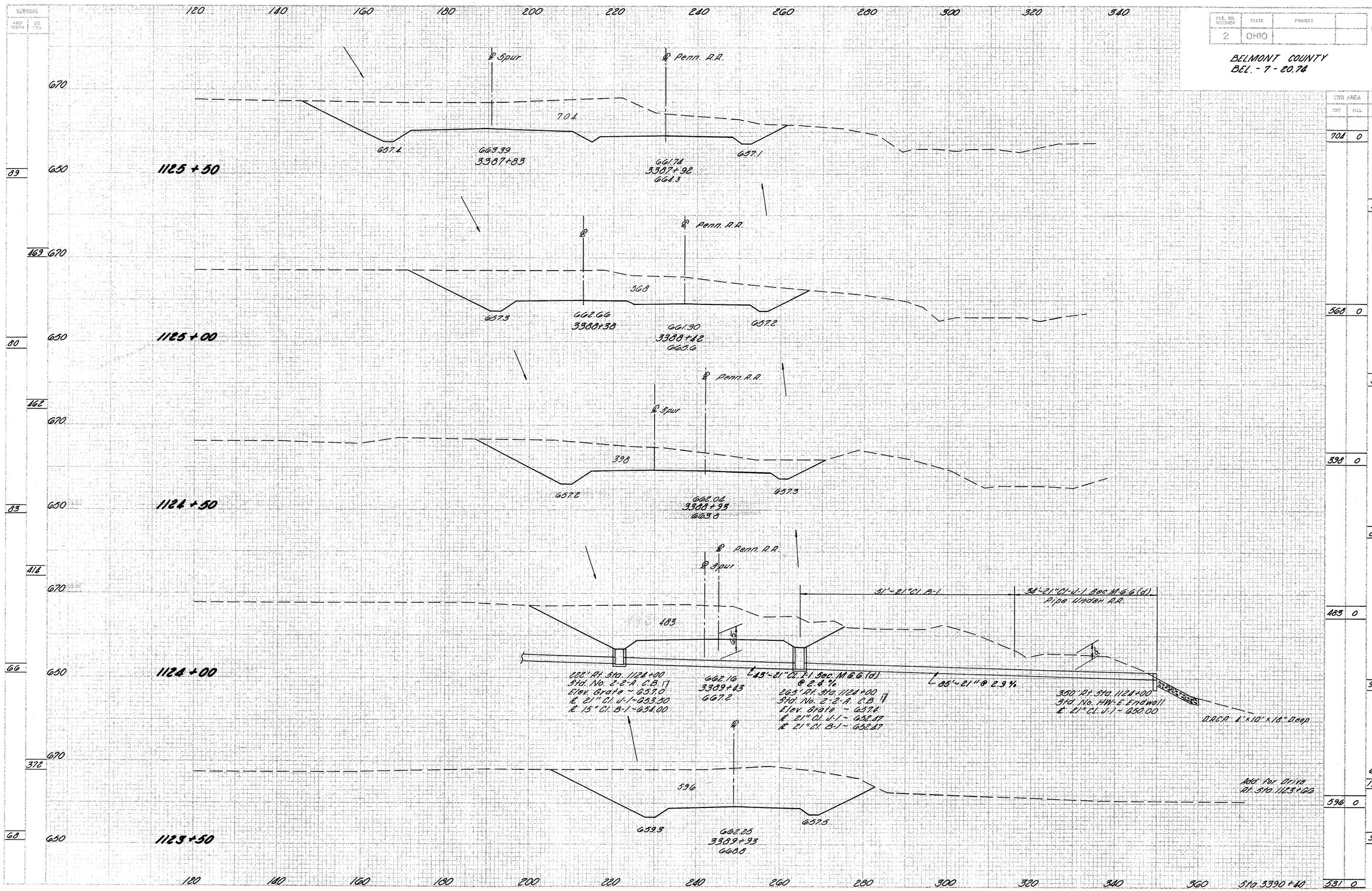

END AREA CUT	END AREA FILL	VOLUME CUT	VOLUME FILL
704	0		
		1178	0
568	0		
		912	0
398	0		
		816	0
483	0		
		999	0
		63	
		178	0
596	0		
		981	0
531	0		

STA. 1123+50 TO STA. 1125+50 RIGHT SIDE

FED. RD. DIVISION	STATE	PROJECT	
2	OHIO		

96
118

BELMONT COUNTY
BEL.-7-20.78

SECTIONS

END AREA CUT	END AREA FILL	VOLUME CUT	VOLUME FILL
17	59		
245	208		
49	29		
253	212		
31	38		
138	330		
46	68		
367			
64			
317			
61			

	END AREA CUT	END AREA FILL	VOLUME CUT	VOLUME FILL
660				
BACK	184	19		
AHEAD	11	0		
	170	0		
			290	0
			282	37
680				
	170	0		
	121	21		
660				
			136	0
			259	42
680				
	301	0		
	159	24		
660				
			661	0
			881	43
680				
660				
	391	0		
	492	22		
680				
			508	23
			183	15
660				
			276	41
			155	20

120 120 100 80 60 40 20 0 20 40 60 80 100 120 140 160 180

STA. 1126+00 TO STA. 1128+00

680

℄ R.R. Spur

160

140

57 4 20 1:1 3:1 2 663.0

666.84
1128+00
667.4

34' Lt. Sta. 1128+28
Std. No. 3-A C.B.
E-Window 665.20
E-12" Cl. U-1 660.72

5-16" Force

Sta. 3385+01

S.R. 7 - RAILROAD

℄ R.R. Spur

57 67 13 1:1 2:1 662.8 97 16 170

665.96
1127+50
667.3

665.95
3385+17

5-16" Force

34' Rt. Sta. 1127+51
Std. No. 3-A C.B.
E-Window = 665.44
E-12" Cl. U-1 = 659.96

℄ R.R. Spur

301

666.03
3386+04

Var. 2:1 1:1 16" Force

666.00
1127+00
666.9

R.R. Shoulder P.I.

39' Rt. 1:1

PLAN VIEW
Sta. 1126+50

S.R. 7 RAILROAD

Cut Slope @ Sta. 1126+72

662.4 10 37 137 2:1 1:1 13

22'-18" Cl. E-18 @ .012%

61'-21" Cl. U-1 @ .0096%

35'-24" Cl. E-18 .006%

492 137 1:1

666.20
1126+50
666.7

5-16" Force

657.6

36' Lt. Sta. 1126+30
Std. No. 2-E-A C.B.
E-Grate = 662.80
E-18" Cl. E-1 = 659.40

34' Lt. Sta. 1126+30
Std. No. 3-A C.B.
E-12" Cl. U-1 = 659.65
E-18" Cl. E-1 = 659.12
E-21" Cl. U-1 = 658.89
E-Window = 665.63

34' Rt. Sta. 1126+50
Std. No. 3-A C.B.
E-Window = 665.63
E-12" Cl. U-1 659.13
E-15" Cl. U-1 658.90
E-21" Cl. E-1 658.25
E-24" Cl. E-1 658.00

60.3' Rt. Sta. 1126+50
Std. HW-A Endwall
E-24" Cl. E-1 = 658.79
10'-4" x 16" D.R.C.P.

STA. 3386+61 R.R. SPUR

6 12 137

666.32
1126+00
667.4

5-16" Force

STA. 3386+61 R.R. SPUR
Sta. 1125+50

Sta. 1125+50

STA. 1125+50

DESCRIPTION | PLOTTED-INKED BY / DATE | CALCULATED BY / DATE | CHECKED BY / DATE

ORIGINAL GROUND
UPDATES
PROFILES
(1) AREAS
(2) DIVIDER
SECTIONS AREAS

DESCRIPTION	PLOTTED-INKED	CALCULATED	CHECKED
	BY DATE	BY DATE	BY DATE
ORIGINAL GROUND			
FINISHED			
E.O. AREAS			
E.O. VOLUMES			
REMARKS			

FED. ROAD DIV. NO.	STATE	PROJECT	
5	OHIO		

97
418

BELMONT COUNTY
BEL - 7 - 20.74

END AREA CUT	END AREA FILL	VOLUMES CUT	VOLUMES FILL
345 0			
		668 0	
362 0			
		722 0	
418 0			
		88 0	
		652 0	
394 0			
		324 0	
		724 0	
550 0			
381 0			
		722 0	
BACK 384 0			
AHEAD 334 0			
		1547 0	
704 0			

120 140 160 180 200 220 240 260 280 300 320

670
650

79 — 1128+00

2 Penna. R.R.
2:1 1½:1 345 1½:1 1½:1
660.74
3385+39
661.2

476

670
650

89 — 1127+50

362
660.94
3385+90
661.5

528

670
650

101 — 1127+00

0.27 418
661.14
3386+40
663.0

408

670
650

46 RR. SPUR R.R.
28 — 1126+50

2 R.R. Spur.
237 381
665.51
3386+64
661.34
3386+90
663.9

380
285

670
650

66 RR. SPUR-BACK
56 RR. BACK
112 RR. SPUR & RR. AHEAD — 1126+00

2 R.R. Spur
EARTHWORK SECTION AHEAD
A.R. SPUR RAILROAD
2 Penna R.R.
550 384 2:1 1½:1 1½:1 1½:1
667.6
664.56
3387+25
661.54
3387+41
663.3

BACK-MARTINS FERRY
Sta. 3386+45.94
AHEAD-BRIDGEPORT
A.R. SPUR STA. 3386+64
A.R. SPUR Sta. 3386+88.52 BACK MARTINS FERRY
AHEAD-BRIDGEPORT
A.R. SPUR
Sta. 3387+25

STA. 3387+82

STA. 1126+00 TO STA. 1128+00 RIGHT SIDE.

BELMONT COUNTY
BEL - 7 - 20.74

140 120 100 80 60 40 20 ℄ 20 40 60 80 100 120 140

℄ Proposed R. R. Spur.

71 — 46 — 181 — 89

667.74
3382+02

665.24
1130+50
667.2

℄ 16' Force

361

℄ Proposed R. R. Spur.

59 — 82 — 27 — 187 — 60

666.61
3382+53

3:1
662.7

665.36
1130+00
667.1

℄ 16' Force

375

℄ Proposed R.R. Spur

1129+25 ~ 74' Lt
Sta 11+82.2 A-C.B.

1129+51 ~ 48' Lt
Sta 11+82.2 P.C.B.

Grate El. 661.9

76 — 207 — 130

Window El. 661.4

Window El. 661.0
℄ 658.74

665.86
3383+09 0.4%
36"-12' pipe, Cl. A-1
M-6.6(d)

℄ 658.6

665.48
1129+50
667.0

℄ 16' Force

386

℄ R.R. Spur

63 — 94 — 127 — 179

665.63
3383+53
664.9

665.60
1129+00
667.5

℄ 16' Force

R. R. BACK
Sta. 3383+73
R. R. AHEAD

408

℄ R.R. Spur

84 — ℄ 137 — 72 — ℄ 186

5:1 — 6:1 — 663.2

3384+23 665.72
1128+50
667.0

℄ 16' Force

Sta. 3384+23

397

Sta. 3385+01
STA. 1128+00

59 STA. 1128+00 140 120 100 80 60 40 20 ℄ 20 40 60 80 100 120 140

Sta. 1128+50 to Sta. 1130+50

660	46	0	
	181	0	
680	121	0	
	341	2	
660	82	0	
	187	2	
680	300	0	
	296	10	
660	207	0	
	133	9	
680	245	0	
	293	19	
660	94	0	
	183	12	
680	70	0	
660	94	0	
	5	0	
	364	19	
680	9	0	
660	5	0	
	210	9	
	23	0	
	365	26	
	11	0	
	184	19	

FED. RD. DIVISION	STATE	PROJECT
2	OHIO	

BELMONT COUNTY
BEL - 7 - 20.74

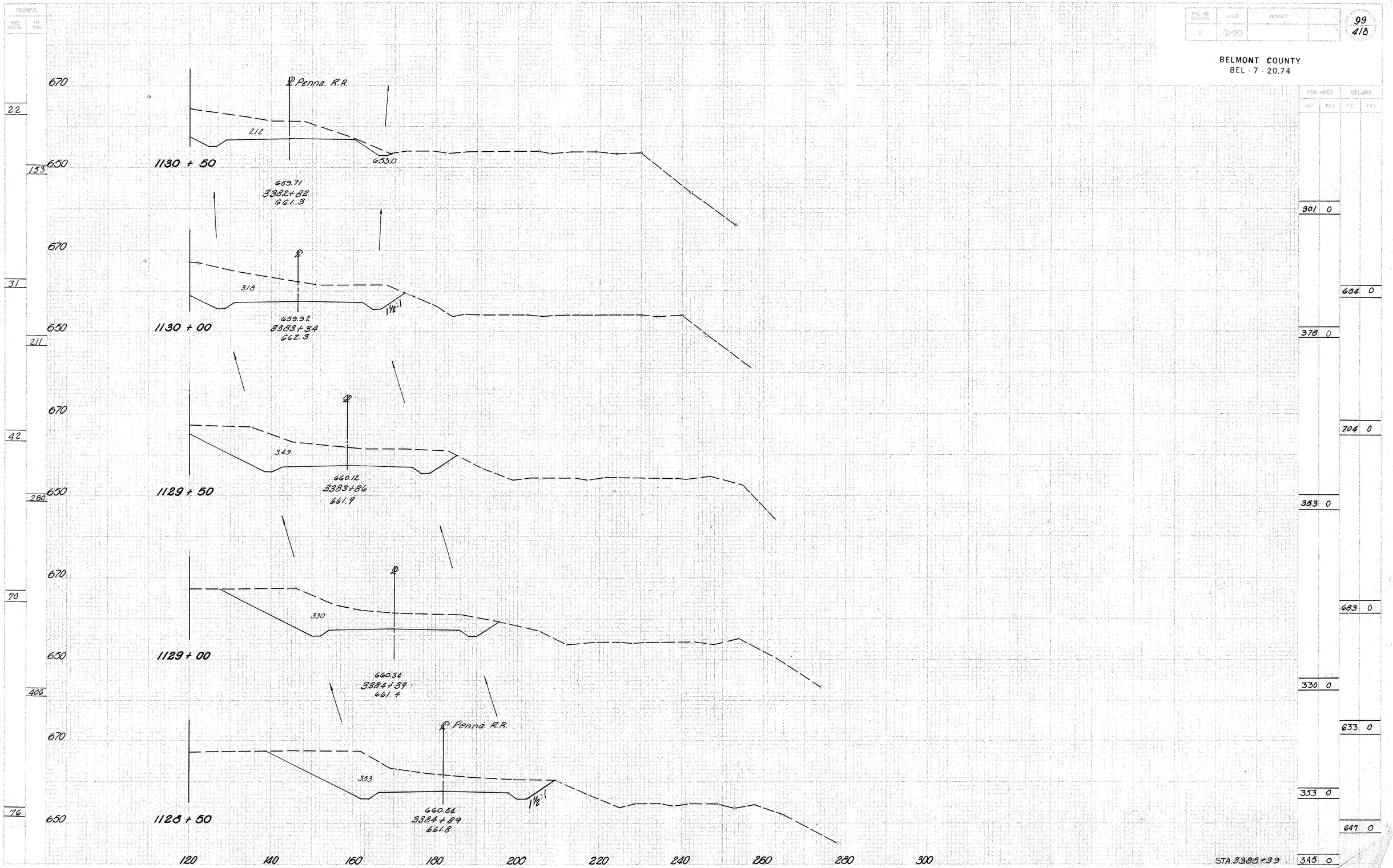

STA.1128+50 TO STA.1130+50 RIGHT SIDE.

DESCRIPTION	PLOTTED-INKED BY	DATE	CALCULATED BY	DATE	CHECKED BY	DATE
ORIGINAL GROUND						
TEMPLATES						
DRAINAGE						
END AREAS						
EARTHWORK						
SEEDING AREAS						

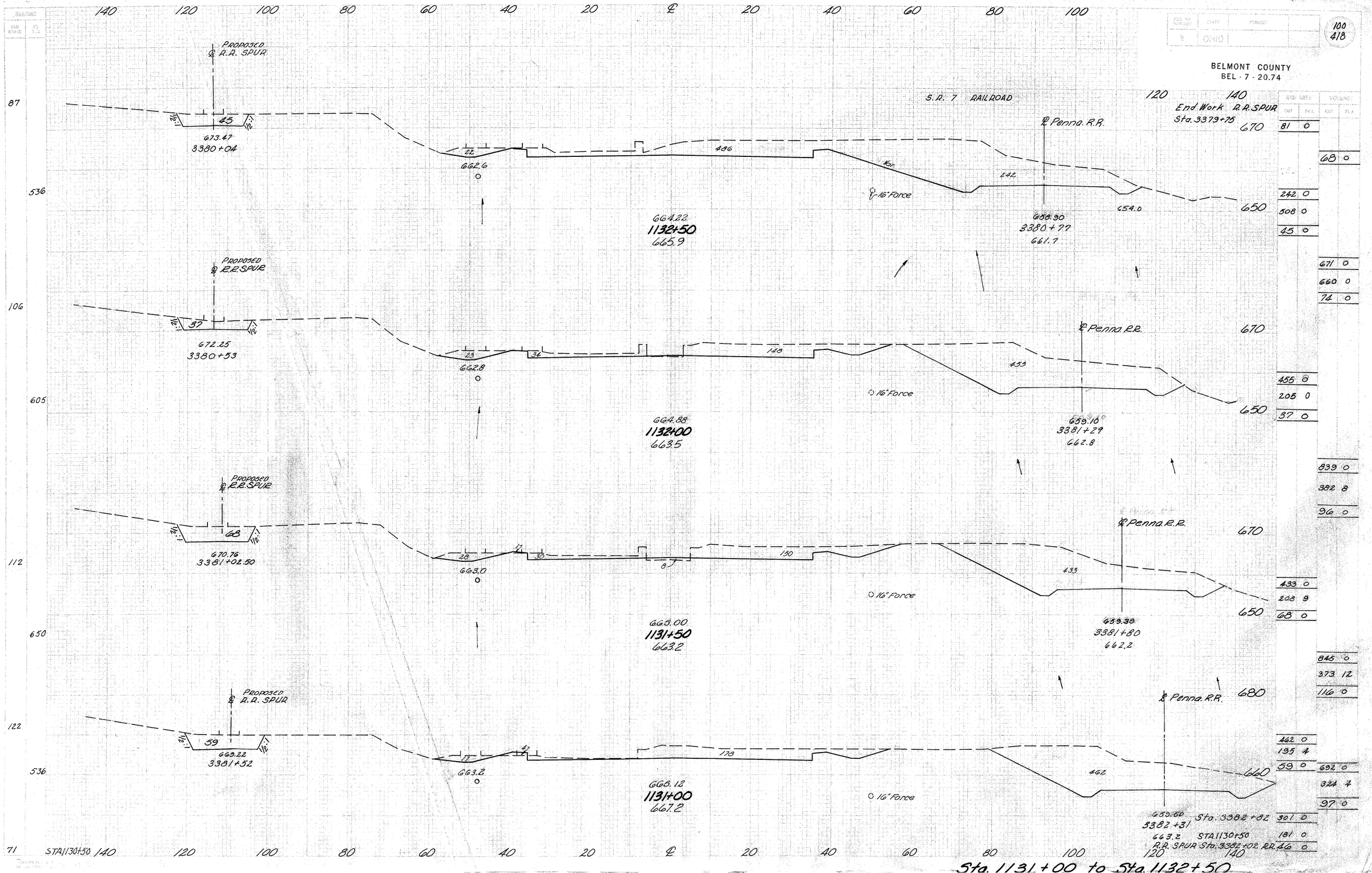

BELMONT COUNTY
BEL - 7 - 20.74
100
418
OHIO
S.R. 7 RAILROAD
End Work R.R. SPUR
Sta. 3379+75
PROPOSED ℄ R.R. SPUR
673.47
3380+04
662.6
664.22
1132+50
665.9
℄ Penna. R.R.
16" Force
658.90
3380+77
661.7
654.0
672.25
3380+53
662.8
664.88
1132+00
663.5
659.10
3381+29
662.8
670.76
3381+02.50
663.0
663.00
1131+50
663.2
659.38
3381+80
662.2
669.22
3381+52
663.2
665.12
1131+00
667.2
659.60
3382+31
Sta. 3382+82
663.2
STA. 1130+50
R.R. SPUR Sta. 3382+02 R.R.
STA. 1130+50
Sta. 1131+00 to Sta. 1132+50

BELMONT COUNTY
BEL-7-20.74

140 120 100 80 60 40 20 ℄ 20 40 60 80 100 120 140

S.R. 7 RAILROAD

℄ Penna. R.R.

502

660.5

90

340

℄ 16" Force

E-4 Borrow Using #3 Aggregate

661.58
1134+50
667.1

658.45
3378+76
661.3

383

661.4

28:1

477

118

℄ 16" Force

E-4 Borrow Using #3 Aggregate

662.24
1134+00
664.6

658.52
3379+26
661.6

Ditch Block Sta. 1133+75
Elev. 662.1

Sta. 3379+50

No. 3 Aggregate Embankment

End Area	Volume
90	
	193
118	
	105
118	

END AREA: CUT / FILL — VOLUME: CUT / FILL

348 0
502 0
764 0
342 0
477 0
383 0
749 0
857 0

S.R. 7 RAILROAD

℄

543

48' Lt. Sta. 1133+50
Std. No. 2-2-A C.B.
Elev. Grate - 661.10
℄ 15" Cl. E-1 - 657.00
℄ 12" Cl. D-1 - 657.00

13'-15" Cl. E-1 @ 3.85%

71'-15" Cl. J-1 @ 4.8%

34' Lt. Sta. 1133+50
Std. No. 2A-10 Inlet (Mod.)
℄ Window - 662.33
℄ 15" Cl. E-1 - 656.50
℄ 15" Cl. J-1 - 656.50

662.90
1133+50
663.1

23'-18" Cl. B-1 @ 7.6%

34' Rt. Sta. 1133+50
Std. No. 2A-10 Inlet (Mod.)
℄ Window - 662.33
℄ 15" Cl. J-1 - 653.10
℄ 18" Cl. B-1 - 652.85

58.5' Rt. Sta. 1133+50
Std. No. 2-2-A C.B.
Elev. Grate - 653.80
℄ 18" Cl. B-1 - 651.10
℄ 18" Cl. J-1 - 650.85

16" Force

658.62
3379+77
661.7

44'-18" Cl. J-1 Sec. M-6.6(d) @ 5.9%

101' Rt. Sta. 1133+60
Std. No. 2-2-A C.B.
Elev. Grate - 651.00
℄ 18" Cl. J-1 - 648.25
℄ 21" Cl. E-1 - 648.00

78'-21" Cl. J-1, 3 Sec. M-6.6(d) @ 1.84%
Pipe Under Railroad

178' Rt. Sta. 1133+75
Std. Type HW-E Endwall
℄ 21" Cl. J-1 - 646.66

D.R.C.P. 4'-10"-18"

A A A A

316 0
543 0
568 0
1010 0

S.R. 7 RAILROAD

℄ Penna. R.R.

348

Var.

℄ 16" Force

297

661.25

661.2

658.75
3380+27
661.7

297 0
548 0
499 0
978 0

Sta. 3380+77

242 0
508 0

STA. 1132+50 140 120 100 80 60 40 20 ℄ 20 40 60 80 100 120 140

Sta. 1133+00 to Sta. 1134+50

BELMONT COUNTY
BEL - 7 - 20.74

140 120 100 80 60 40 20 ℄ 20 40 60 80 100 120 140

S.R. 7 RAILROAD — ℄ Penna. R.R.

13/56 — 644 — 658.2 — E-4 Borrow Using #3 Agg. — 36 — 196 — 16' Force
659.05 / 1136+50 / 664.6
658.45 / 3376+75 / 662.6

13/55 — 592 — 658.7 — 42 — 309 — 16' Force
659.60 / 1136+00 / 665.3
658.41 / 3377+25 / 661.2

11/47 — 495 — 659.2 — 55 — 265 — 16' Force
660.26 / 1135+50 / 664.7
658.39 / 3377+76 / 661.8

11/39 — 351 — 659.8 — E-4 Borrow Using #3 Aggregate — 71 — 205 — 16' Force
660.92 / 1135+00 / 666.6
658.40 / 3378+26 / 661.7

61/239 — 217

39 STA 1134+50

N°3 Aggregate Embankment			END AREA CUT	END AREA FILL	VOLUME CUT	VOLUME FILL
END AREA	VOLUME					
			644 0			
			206 0			
36		640				
	72				1145 0	
					477 0	
42		660				
			592 0			
		640	309 0			
92					1017 0	
					537 0	
		660				
55			495 0			
			265 0			
		640				
	114				949 0	
					426 0	
71		660	551 0			
			205 0			
149		640			975 0	
					512 0	
90			502 0			
			348 0			

STA 1134+50
STA 3378+76

140 120 100 80 60 40 20 ℄ 20 40 60 80 100 120 140

Sta. 1135+00 to Sta. 1136+50

BELMONT COUNTY
BEL - 7 - 20.74

140 120 100 80 60 40 20 ℄ 20 40 60 80 100 120 140

℄ Penna. R.R.

SR 7 RR

E-4 Borrow Using #3 Aggregate

1:P:1

657.9

284

L 69'-12" Cl. J-1 @ 0.6%

34' Lt. Sta 1138+50
Std. No. 2-A-10 Inlet (Mod)
℄ Window ~ 658.31
℄ 12" Cl. J-1 ~ 654.58

658.88
1138+50
660.1

34' Rt. Sta. 1138+50
Std. No. 3-A C.B.
℄ Window ~ 658.31
℄ 12" Cl. J-1 ~ 654.17
℄ 12" Cl. J-1 ~ 652.48

656.20
33+74.75
654.0

652.8

16° Force

14 63 17

No.3 Aggregate Embankment

End Area	Volume
14	660
	640
31	
20	660
	640
45	
29	

END AREA CUT	END AREA FILL	VOLUME CUT	VOLUME FILL
284	0		
80	0		
674	0		
152	0		
444	0		
84	0		
933	0		
176	0		
564	0		
106	0		
1048	0		
270	0		
568	0		
186	0		
1122	0		
303	0		
644	0		
206	0		

SR 7 RR

444

657.7

658.68
1138+00
662.0

20 84

656.04
33+75.25
658.8

658.0

16° Force

Begin Ditch 1138+75
Elev. = 654.0

No Ditch

℄ Penna. R.R.

46'x18" Cl. J-1 Sec. M-6.6(d) @ 4.0%

48'x18" Cl. J-1 Sec. M-6.6(d) @ 4.0%
Pipe Under R.R.

SR 7 RR

564

657.5

658.59
1137+50
663.6

29 106

655.91
33+75.25
654.6

12:1

16° Force

D.R.C.P. 10'-4"-18" Deep

128' Rt. Sta. 1137+50
Std. Type HW-E Endwall
℄ 18" Cl. J-1 ~ 643.50

34' Lt. Sta. 1137+50
Std. No. 2-A-2 C.B.
Elev. Grate ~ 657.50
℄ 18" Cl. E-1 ~ 654.50

11'-18" Cl. E-1 @ 20.2%

L 69'-18" Cl. J-1 @ 2.2%

34' Lt. Sta. 1137+50
Std. No. 3-A C.B.
℄ Window ~ 658.02
℄ 18" Cl. E-1 ~ 654.39
℄ 18" Cl. J-1 ~ 652.08

34' Rt. Sta. 1137+50
Std. No. 3- C.B.
℄ Window ~ 658.02
℄ 12" Cl. J-1 ~ 651.91 (South)
℄ 12" Cl. J-1 ~ 651.68 (North)
℄ 18" Cl. J-1 ~ 630.52 (West)
℄ 18" Cl. J-1 ~ 647.22 (East)

℄ Penna. R.R.

SR 7 RR

368

657.9

E-4 Borrow Using #3 Aggregate

25 136

12:1

6"F.A UNDER C.B.

L 69'-12" Cl. J-1 @ 0.6%

655.81
33+76.25
663.1

16° Force

34' Lt. Sta. 1137+00
Std. No. 2-A-10 Inlet (Mod)
℄ Window ~ 658.14
℄ 12" Cl. J-1 ~ 654.41

658.71
1137+00
663.6

34' Rt. Sta. 1137+00
Std. No. 3-A C.B.
℄ Window ~ 658.14
℄ 12" Cl. J-1 ~ 654.00
℄ 12" Cl. J-1 ~ 652.31

29 50 25 28 36

STA 1136+50
33+76.75

STA. 1136+50

31/39 | 164/233 | 28/45 | 131/250 | 19/45 | 100/286 | 17/58 | 317 | 56

140 120 100 80 60 40 20 ℄ 20 40 60 80 100 120 140

Sta. 1137+00 to Sta. 1138+50

BELMONT COUNTY
BEL-7-20.74

140 120 100 80 60 40 20 ℄ 20 40 60 80 100 120 140

SR 7 RR

℄ Penna. R.R.

E-4 Borrow Using #3 Aggregate

N°3 Aggregate Embankment

End Area	Volume
20	
39	
22	
38	
19	
31	
18	
26	
14	

END AREA VOLUME

END	FILL	CUT	FILL
83	166		
12	56		
169	260		
44	80		
100	115		
35	35		
194	160		
58	17		
110	58		
28	0		
281	27		
60	0		
194	0		
37	0		
443	0		
108	0		
284	0		
80	0		

80 — 658.7 — 166 — 56 — 12 — 651.8
659.68 — 1140+50 — 655.7
659.70 — 3372+76 — 654.7
16" Force

100 — 658.5 — N5% — 26 — 35 — 651.6
659.48 — 1140+00 — 656.7
659.50 — 3373+25 — 655.4
16" Force

3:1 — 110 — 658.3 — 58 — 19 — 12 — 28
659.28 — 1139+50 — 657.2
659.30 — 3373+75 — 655.5
Exist C.B. (Abandon)
℄ Grate = 655.17
℄ 12" = 652.67
Remove 14' of Pipe
10'
1:10 Riprap using 6" Reinf conc. slab.
Exist 12" Conc. Pipe To remain & Function
16" Force

194 — 658.1 — 44 — 37 — 652.6
659.08 — 1139+00 — 658.8
659.10 — 3374+25 — 657.1
16" Force

STA. 1138+50

STA. 1138+50
STA. 3374+75

Sta. 1139+00 to Sta. 1140+50

FED. NO.	STATE	PROJECT
2	OHIO	

BELMONT COUNTY
BEL - 7 - 20.74

SEEDING
LIME | SEED

140 120 100 80 60 40 20 ℄ 20 40 60 80 100 120 140

81/44
206/118
74/43
394/239
68/43
364/239
63/43
236
42 STA. 1140+50

660.38
1142+24
654.8

660.39
3371+02
653.5

660.28
1142+00
654.8

660.08
1141+50
655.3

659.88
1141+00
655.3

660.10
3371+76
654.0

659.90
3372+26
654.7

660.30
3371+26
653.5

SR 7 RR — ℄ Penna. R.R.
E-4 Borrow Using #Agg. / To Exist C.B.
116 659.12 281 22 138 652.4

S.R. 7 R.R. — ℄
62 659.0 278 17 126 37 652.4
71'-12" Cl. J-1 @ 0.6%
34' Lt. Sta. 1142+00
Std. No. 2-G Inlet
℄ Window ~ 659.71
℄ 12" Cl. J-1 ~ 655.92
34' Rt. Sta. 1142+00
Std. No. 2-G Inlet
℄ Window ~ 659.71
℄ 12" Cl. J-1 ~ 655.49
℄ 12" Cl. E-1 ~ 655.49

S.R. 7 R.R. — ℄
86 658.9 225 21 113 47 652.2

S.R. 7 R.R. — ℄ Penna. R.R.
E-4 Borrow using #3 Agg.
84 658.8 186 18.7 82 77 652.0
16' Force ℄

660
640

N°3 Aggregate Embankment	
END AREA	VOLUME
22	
17	
17	
35	
21	
36	
18	
35	
20	

END AREA		VOLUME	
CUT	FILL	CUT	FILL
	116		281
	0		138
	79		248
	1		173
	62		278
	3		126
	146		466
	6		221
	86		225
	4		113
	157		381
	10		181
	84		186
	7		82
	247		301
	18		128
	183		166
	12		50

STA 1140+50
STA 3372+76

Sta. 1141+00 to Sta 1142+24

BELMONT COUNTY
BEL · 7 · 20.74

140 120 100 80 60 40 20 ℄ 20 40 60 80 100 120 140

S.R. 7 R.R.
℄ Penna. R.R.
E-4 Borrow Using #3 Agg.
Edge of House
32'-15" @ 0.5%

659.65 — 42 — 17 — 156 — 47

661.08
1144+00
662.2

661.10
3369+25
656.9

8' Rt. Sta. 1144+00
Std. No. 3-A C.B.
℄ 12" Cl. E-1 - 655.21
℄ 15" Cl. J-1 - 654.96
Elev. Grate - 660.91

40' Rt. Sta. 1144+00
Std. No. 1 M.H.
℄ 15" Cl. J-1 - 654.80
Elev. Cover - 661.83
℄ 15" Cl. E-1 - 651.60

S.R. 7 R.R.
℄ Penna. R.R.

659.5 — 51 — 271 — 123 — 7 — 653.7

660.88
1143+50
655.7

660.90
3369+75
654.1

S.R. 7 R.R.
℄ Penna. R.R.

659.35 — 75 — 17 — 290 — 25 — 107 — 37 — 653.6

660.68
1143+00
654.9

660.70
3370+26
654.3

S.R. 7 R.R.
℄ Penna. R.R.

659.27 — 62 — 318 — 20 — 101 — 17 — 653.5

660.57
1142+72
654.7

660.58
3370+54
654.0

Exist. M.H. To Remain & Function.

Exist Stone Box Culvert
See Culv. Detail Sht. # 177

S.R. 7 R.R.
℄ Penna. R.R.
E-4 Borrow Using # 3 Aggregate

659.2 — 51 — 17 — 12 — 294 — 21 — 120 — 177 — 651.7

Exist. C.B. (Abandon)
5'+12" Cl. F-4
79' Rt. Sta. 1142+52
Std. HW-E Endwall
℄ 12" Cl. F-4 - 651.70
Exist. 12" ℄ C.B. To Remain & Function

660.48
1142+50
655.8

660.50
3370+76
653.7

40' Rt. Sta. 1142+56
Std. No. 2 M.H.
℄ 15" Cl. E-1 - 650.59
Cover Elev. - 660.80
℄ 12" Cl. E-1 - 654.71
See Sht. # 214

STA. 1142+24
STA. 3371+02

Sta. 1142+50 to Sta. 1144+00

N° 3 Aggregate Embankment	
END AREA	VOLUME
26	
	48
26	
	47
25	
	26
26	
	25
25	
	19
19	
	22
22	

END AREA		VOLUME	
CUT	FILL	CY	FILL
198	1		
0	47		
		231	252
		3	157
51	271		
7	123		
		117	519
		9	213
75	290		
3	107		
		71	315
		2	108
62	318		
1	101		
		46	250
		7	90
52	295		
17	120		
		81	277
		4	124
116	281		
0	138		

16/38	
103/236	
21/47	
130/261	
25/47	
122/143	
56/45	
181/109	
92/44	
128	
44	

BELMONT COUNTY
BEL 7 - 20.74

SEEDING
KIND OF MIXTURE | LB. PER ACRE

140 120 100 80 60 40 20 ℄ 20 40 60 80 100 120 140

680

S.R. 7 R.R. — ℄ Penna. R.R.

21/36 | 121/208 — 330 ft @ 2:1 — 660.9 — 15 ft — 41 ft — E-4 Borrow Using #3 Aggregate — 117 ft

66208
1146+50
665.6

662.11
3366+72.5
660.0

21/39 | 117/219 — 316 ft @ 2:1 — 660.5 — 17 ft — 38 ft

34' Lt. Sta. 1146+00
Std. No. 3-A C.B.
Ft. 12" Cl. J-1 - 657.11
Ft. Window - 660.84

66188
1146+00
664.7

661.90
3367+24
659.8

21/40 | 116/217 — 165 ft @ 2:1 — 660.1 — 44 ft — 32 ft — 16 ft

66168
1145+50
661.2

661.70
3367+74
658.5

20/38 | 116/211 — 165 ft @ 2:1 — 659.95 — 53 ft — 31 ft — 277 ft

42'-12" Cl. E-1 @ 0.6%

34' Lt. Sta. 1145+25
Std. No. 3-A C.B.
Ft. 12" Cl. J-1 - 656.66
Ft. 12" Cl. J-1 - 656.66
Grate Elev. - 660.62

66148
1145+00
660.6

7' Rt. Sta. 1145+00
Std. No. 2A-8 Inlet Mod.
Ft. 12" Cl. E-1 - 656.41
Ft. 12" Cl. J-1 - 656.41
Ft. Window - 661.31

661.50
3368+25
657.8

21/38 | 211 — 221 ft @ 2:1 — 659.8 — 26 ft — 56 ft — E-4 Borrow Using #3 Aggregate

66128
1144+50
662.3

661.30
3368+76
656.5

38 STA. 1144+00

140 120 100 80 60 40 20 ℄ 20 40 60 80 100 120 140

STA. 1144+00
STA. 3369+25

Nº3 Aggregate Embankment			END AREA	VOLUME
END AREA	VOLUME	660		
41				330 0 / 0 15
	77	670		598 7 / 4 15
38				316 17 / 8 0
		650		445 56 / 4 8
	66			
32		670		165 44 / 0 16
		650		301 89 / 0 40
58				
		670		
31				160 53 / 0 27
		650		353 25 / 0 77
53		670		
26				221 0 / 0 56
		650		388 1 / 0 95
48				
26				198 1 / 0 47

Sta. 1144+50 to Sta. 1146+50

FED. REG. SYMBOL	STATE	PROJECT	
2	OHIO		

108
418

BELMONT COUNTY
BEL - 7 - 20.74

140 120 100 80 60 40 20 ℄ 20 40 60 80 100 120 140

S.R. 7 R.R. — ℄ Penna. R.R.

2:1 G62.1 — 112 — 10 — 2:1 — 41 — 8 — G56.9

34' Rt. Sta 1149+00
Std. No. 3-A C.B.
Rt. Window ~ G62.65
Rt. 12" Cl. J-1 ~ G58.35

662.88
3364 + 21
659.9

663.08
1149+00
662.9

S.R. 7 R.R. — ℄

E-4 Borrow Using #3 Aggregate

2:1 — G61.0 — 152 — 2:1 — 66 — 22

34' Rt. Sta 1148+25
Std. No. 3-A C.B.
Elev. Grate ~ G62.33
Rt. 12" Cl. J-1 ~ G58.80

662.77
3364 + 71
660.4

662.88
1148+50
662.7

24" San.

S.R. 7 R.R. — ℄

2:1 — G61.7 — 168 — 60 — 68

662.64
3365+21
660.9

662.68
1148+00
663.6

S.R. 7 R.R. — ℄

2:1 — G61.5 — 189 — F7 — 45 — 53

662.49
3365+71
660.8

662.48
1147+50
663.3

S.R. 7 R.R. — ℄ Penna. R.R.

E-4 Borrow Using #3 Aggregate

2:1 — 661.2 — 278 — 41 — 49

662.31
3366+21
660.6

662.28
1147+00
665.0

STA. 1146+50 140 120 100 80 60 40 20 ℄ 20 40 60 80 100 120 140 STA. 1146+50 R.R. STA. 3366+72.5

Nº 3 Aggregate Embankment			END AREA	VOLUME
650	112 0	14 / 30	0	
	41 18	92 / 167		31
670	244 0			
	58 18		66	
650	152 0	19 / 30		
	22 2	108 / 167		117
670	296 0			
	83 2		60	
650	168 0	20 / 30		
	68 0	111		97
670	331 6			
	117 0		45	
650	189 7	20 / 31		
	58 0	119 / 178		80
670	432 11			
	99 0		41	
650	278 5	21 / 33		
	49 0	117 / 192		77
	563 5			
	24 8		41	
	330 0	21 / 36		
	0 15			

Sta. 1147+00 to Sta. 1149+00

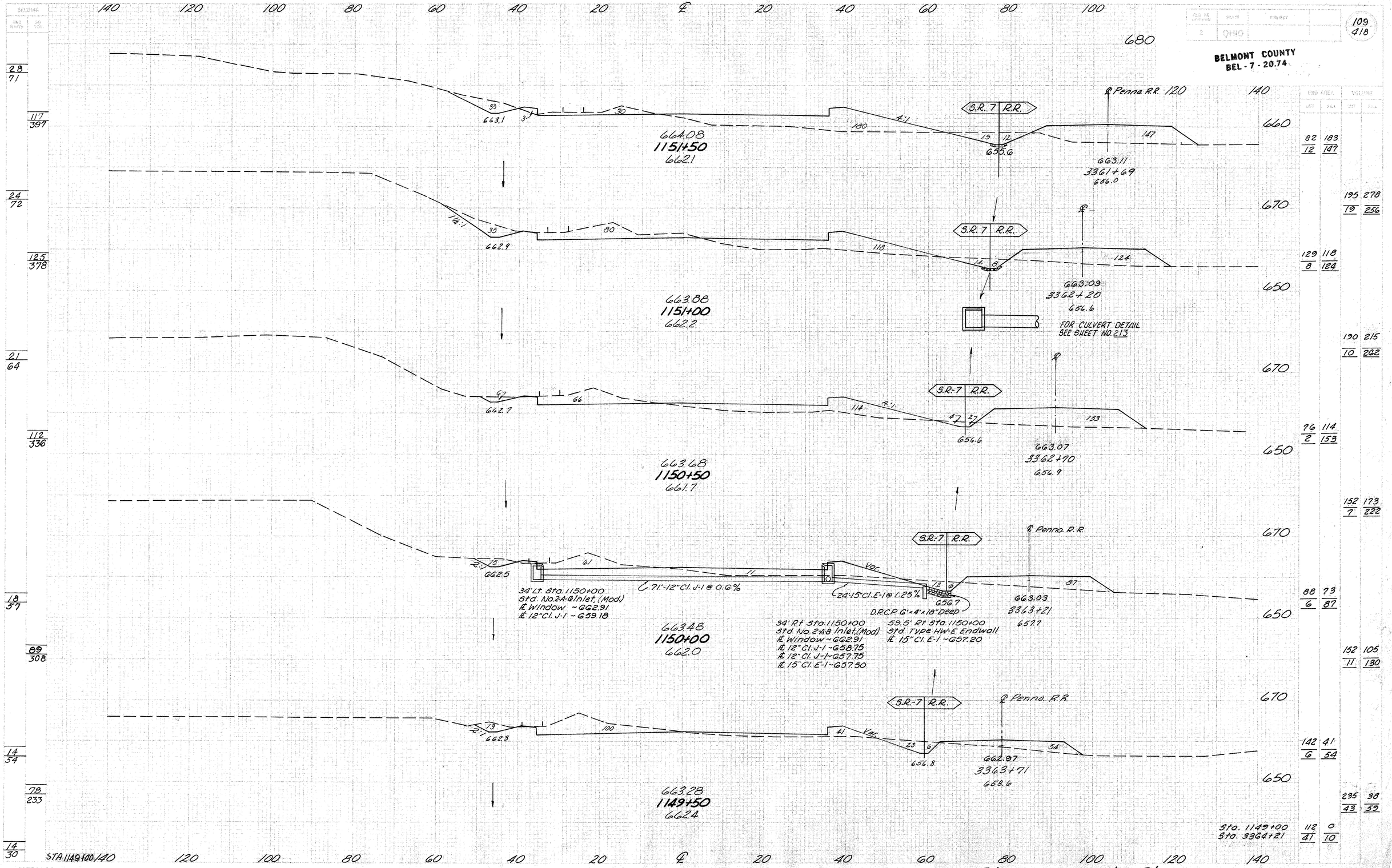

109
418
BELMONT COUNTY
BEL - 7 - 20.74
OHIO
680
660
670
650
℄ Penna R.R.
S.R. 7 R.R.
664.08
1151+50
662.1
663.11
3361+69
656.0
663.88
1151+00
662.2
663.09
3362+20
656.6
FOR CULVERT DETAIL
SEE SHEET NO. 213
663.68
1150+50
661.7
663.07
3362+70
656.9
℄ Penna. R.R.
34' Lt. Sta. 1150+00
Std. No. 2-A-6 Inlet, (Mod.)
℄ Window ~ 662.91
℄ 12" Cl. J-1 ~ 659.18
71'-12" Cl. J-1 @ 0.6%
24'-15" Cl. E-1 @ 1.25%
D.R.C.P. 6'×4'×18" Deep
663.03
3363+21
657.7
663.48
1150+00
662.0
34' Rt Sta. 1150+00
Std. No. 2-A-8 Inlet, (Mod)
℄ Window ~ 662.91
℄ 12" Cl. J-1 ~ 658.75
℄ 12" Cl. J-1 ~ 657.75
℄ 15" Cl. E-1 ~ 657.50
59.5' Rt Sta. 1150+00
Std. Type HW-E Endwall
℄ 15" Cl. E-1 ~ 657.20
663.28
1149+50
662.4
662.97
3363+71
658.6
Sta. 1149+00
Sta. 3364+21
STA. 1149+00
Sta. 1149+50 to Sta. 1151+50

DIST. NO.	STATE	ROUTE		SHEET NO.
11	OHIO			110 / 418

BELMONT COUNTY
BEL-7-20.74

SLOPE/RUN | %

42 / 104
197 / 639
29 / 126
178 / 694
35 / 124
186 / 492
32 / 53
167 / 344 STA. 1151+50
71 / 28

140 120 100 80 60 40 20 ℄ 20 40 60 80 100 120 140

366
200
664.88
1153+50
661.4
3.R.-7 R.R.
33 17
656.0
℄ Penna. R.R.
150
663.19
3359+69
656.7

680
660
680
660
680
660
690
670
650

END AREA CUT | END AREA FILL | VOLUME CUT | VOLUME FILL

399 200
17 150
810 346
24 274
477 174
9 146
954 296
36 175
554 146
28 43
611 253
56 58
106 128
32 20
174 288
41 157
82 183
12 147

457
174
664.68
1153+00
662.1
3.R.-7 R.R.
20 9
655.9
℄
146
663.17
3360+19
656.9

516
4G' Lt. Sta. 1152+50
Std. No. 2-2-A C.B.
Elev. Grate-663.47
℄ 12" Cl. E-1-660.47
12"-18" Cl. E-1 @ 2.8%
34' Lt. Sta 1152+50
Std. No. 2-A-6 Inlet Mod.
℄ Window ~ 663.91
℄ 12" Cl. E-1 ~ 660.16
℄ 15" Cl. J-1 ~ 659.88
Face of Abutment
664.48
1152+50
662.3
71'-15" Cl. J-1 @ 3.0%
34'-15" Cl. E-1 @ 3.3%
146
4:1
3.R.-7 R.R.
33 28
655.8
D.R.C.P. 9'x4'x18" Deep
℄ Penna. R.R.
43
663.15
3360+69
659.0
34' Rt. Sta. 1152+50
Std. No. 2-A-6 Inlet Mod.
℄ Window ~ 663.91
℄ 15" Cl. J-1 ~ 657.75
℄ 15" Cl. E-1 ~ 657.75
695' Rt. Sta. 1152+50
Std. Type HW-E Endwall
℄ 15" Cl. E-1 ~ 656.62

14:1
10
128
4:1
3.R.-7 R.R.
2.7 32
655.7
4:1
℄ Penna. R.R.
27
663.13
3361+19
659.8
664.28
1152+00
662.6
Sta. 1151+50
Sta. 3361+69

Sta. 1152+00 to Sta. 1153+50

PID NO. DIVISION	STATE	PROJECT	
2	OHIO		

111
418

BELMONT COUNTY
BEL - 7 - 20.74

140 120 100 80 60 40 20 ℄ 20 40 60 80 100 120 140

680 660 680 660 680 660 680 660 680

C-109 F 111 4:1 S.R.-7 R.R. C-96 4:1 C-162 ℛ Penna. R.R.

16"-15" Cl. E-1 @ 0.9%
5' Lt. Sta. 1155+50
Std. No. E-2-A C.B.
℄ Window ~ 663.4
℄ 15" Cl. E-1 ~ 661.08

34' Lt. Sta. 1155+50
Std. No. 2-A-8 Inlet Mod.
℄ Window ~ 664.71
℄ 15" Cl. E-1 ~ 660.94
℄ 15" Cl. J-1 ~ 660.94

665.68
1155+50
662.4

71"-15" Cl. J-1 @ 1.3%

34' Rt. Sta. 1155+50
Std. No. 2-A-8 Inlet Mod.
℄ Window ~ 664.71
℄ 15" Cl. J-1 ~ 660.02
℄ 15" Cl. E-1 ~ 660.02

27"-15" Cl. E-1 @ 1.0%

656.5

D.R.C.P. 11' × 4' × 18" Deep
62.5' Rt Sta. 1155+50
Std. Type HW-E Endwall
℄ 15" Cl. E-1 ~ 759.53

663.27
3357 + 69
663.1

C-72 F 106 4:1 C-107 S.R.-7 R.R. C-199 ℄ F 17 1½:1

66548
1155+00
662.7

656.4

663.25
3358 + 19
661.7

C-78 F 110 4:1 C-50 S.R.-7 R.R. C-15 1'/ft. ℄ F 133

665.38
1154+75
662.8

656.3

663.24
3358 + 44
656.9

55' Lt. Sta. 1154+43
Std. No. 1 M.H. (San.)
Cover Elev. - 666.80
℄ 18" Cl. B-1 ~ 656.00
℄ Exist. 18" ~ 656.00

55' Rt. Sta. 1154+43
Std. No. 1 M.H. (San.)
Cover Elev. - 662.00
℄ 18" Cl. B-1 ~ 651.20
℄ Exist. 18" ~ 651.20

C-12 C-12 F 205 4:1 S.R.-7 R.R. C-4 C-3 1'/ft. ℄ F 206

Exist. 18" San.
110'-18" Cl. B-1 Sec. M.G.8(b) @ 45%
Exist. M.H. (Aband)

665.28
1154+50
663.4

656.2

663.23
3358 + 69
656.7

C-292 F 269 4:1 S.R.-7 R.R. C-6 C-3 1'/ft. ℛ Penna. R.R. F 218

665.08
1154+00
661.0

656.1

663.21
3359 + 19
655.6

STA. 1153+50

STA. 1153+50
STA. 3359+69

Sta. 1154+00 to Sta. 1155+50

44/88	200/500		
46/92	128		
45/95	128/189		
46/70	261/464		
88/97	558/104		

LAND AREAS		VOLUMES	
CUT	FILL	CUT	FILL
205	111		
162	0		
355	201		
334	16		
179	106		
199	17		
142	100		
99	69		
128	110		
15	133		
72	146		
8	157		
28	205		
3	206		
302	415		
6	392		
298	269		
3	218		
695	411		
19	340		
399	200		
17	150		

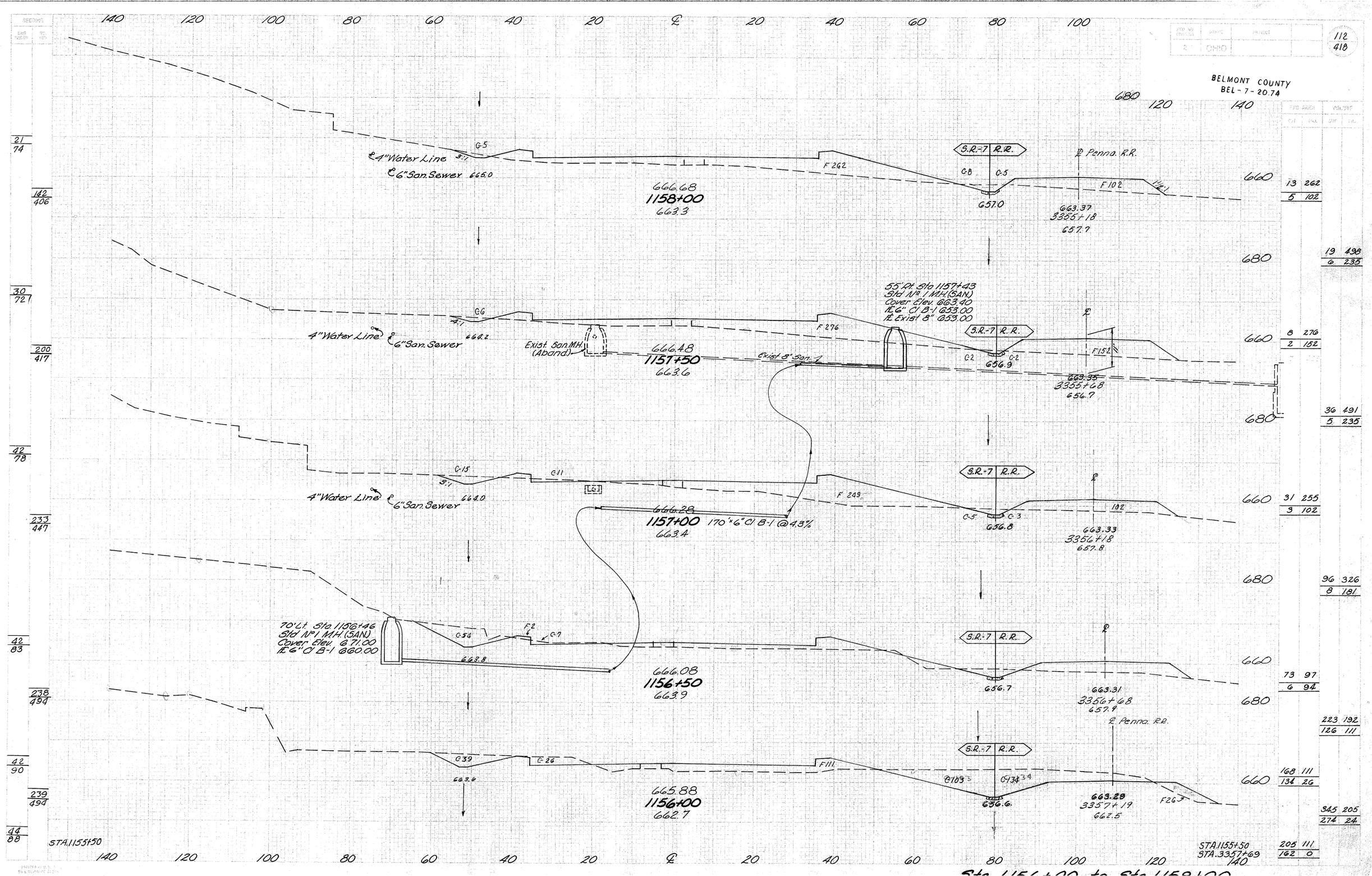

112
418
BELMONT COUNTY
BEL-7-20.74
4" Water Line
6" San. Sewer
666.68
1158+00
663.3
S.R.-7 R.R.
℄ Penna. R.R.
657.0
663.37
3355+18
657.7
55' Rt. Sta 1157+43
Std No 1 M.H. (SAN.)
Cover Elev. 663.40
℄ 6" Cl B-1 653.00
℄ Exist 8" 653.00
Exist. San. M.H. (Aband.)
666.48
1157+50
663.6
Exist 8" San.
656.9
663.35
3355+68
656.7
666.28
1157+00
663.4
170'×6" Cl B-1 @ 4.3%
656.8
663.33
3356+18
657.8
70' Lt. Sta 1156+46
Std No 1 M.H. (SAN.)
Cover Elev. 671.00
℄ 6" Cl B-1 660.00
666.08
1156+50
663.9
656.7
663.31
3356+68
657.9
665.88
1156+00
662.7
656.6
663.29
3357+19
662.5
STA. 1155+50
STA. 3357+69

FED. AID DIVISION 2 | STATE OHIO | PROJECT | BELMONT COUNTY BEL-7-20.74

EXIST. SURFACE		VOLUMES	
CUT	FILL	CUT	FILL
72	157		
12	31		
111	325		
18	117		
43	194		
7	95		
58	369		
12	117		
15	205		
6	32		
59	384		
11	75		
49	210		
6	49		
47	513		
7	144		
2	345		
2	107		
14	561		
6	193		
13	262		
5	102		

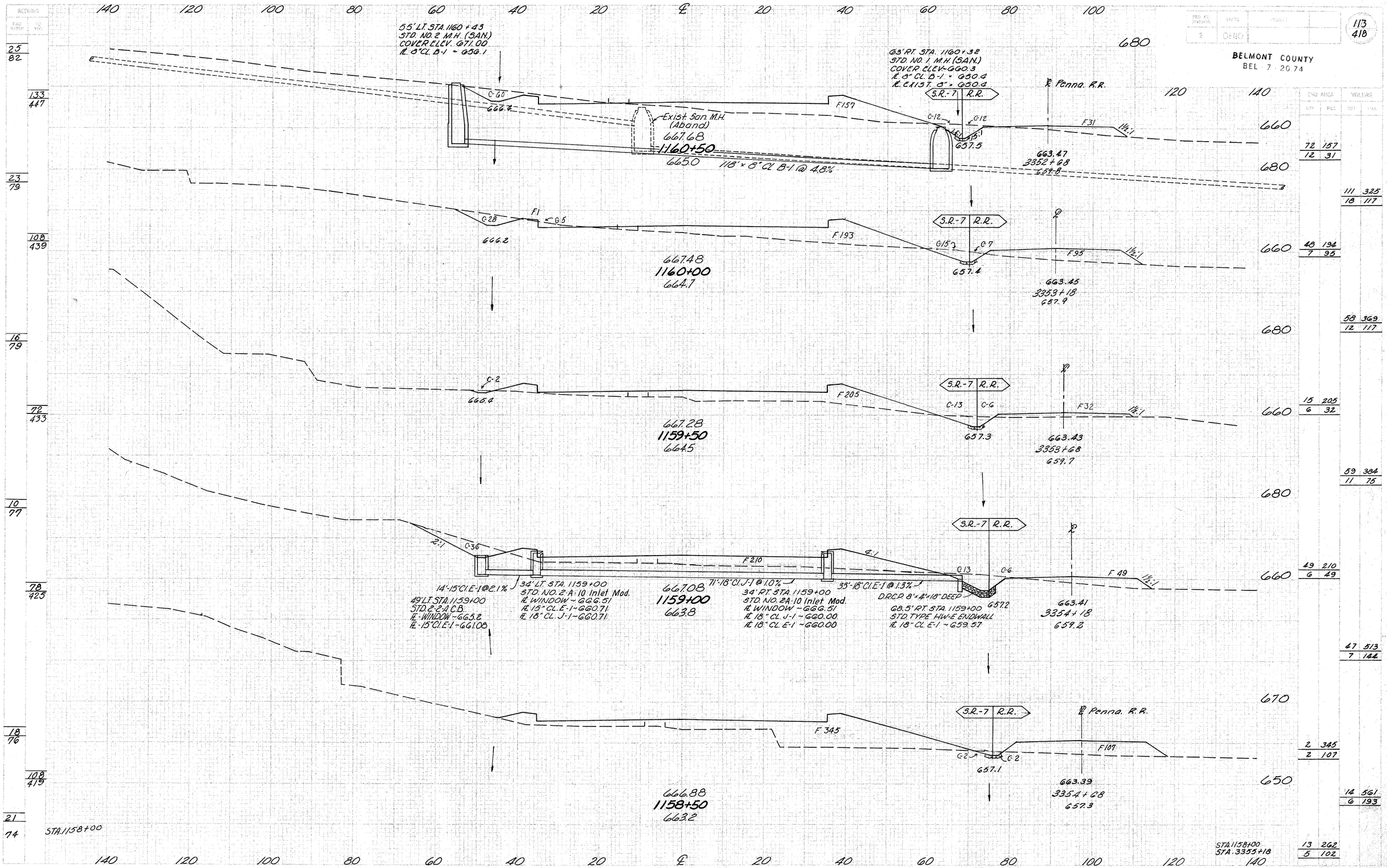

Sta. 1158+50 to Sta. 1160+50

BELMONT COUNTY
BEL - 7 - 20.74

140 120 100 80 60 40 20 ℄ 20 40 60 80 100 120 140

51' Lt. Sta. 1162+50
Std. No. 2-2-A C.B.
R. 15" Cl. E-1 - 663.00
Grate Elev. - 666.00

16'-15" Cl. E-1 @ 4.25%

30' Lt. Sta. 1162+50
R. 15" Cl. E-1 - 662.32
R. 18" Cl. J-1 - 662.07
R. Window - 667.91
Std. 2A-10 inlet (Mod)

F 325

71'-18" Cl. J-1 @ 1.72%

30' Rt. Sta. 1162+50
Std. No. 3-A C.B.
R. 12" Cl. J-1 - 664.10
R. 18" Cl. J-1 - 660.85
R. 18" Cl. E1 - 660.85
R. Window - 667.91

23'-18" Cl. E-1 @ 13.7%
D.R.C.P. 4' x 8' x 18" Dsgp
58' Rt. Sta. 1162+50
Std. Type HW-E Endwall
R. 18" Cl. E-1 - 659.00

S.R.-7 R.R.

℄ Penna. R.R.

C-15 C-4

657.9

663.55
3350+68
657.6

F 119

1½:1

66848
1162+50
663.9

C-77

667.4

RR

F 218

2:1

657.8

663.53
3351+18
655.7

F 172

66828
1162+00
664.1

3:1

C-74

667.2

F 202

657.7

663.51
3351+68
656.2

F 174

66808
1161+50
664.4

C-70

667.0

F 138

657.6

663.49
3352+18
656.6

F 130

66788
1161+00
665.5

STA. 1160+50

STA. 1160+50
STA. 3352+68

Sta 1161+00 to Sta 1162+50

Obl. 0.11 4/4/68 Eastbound

| | | |

FED. AID DIVISION	STATE	PROJECT	
2	OHIO		

115
418

BELMONT COUNTY
BEL-7-20.74

SHEDDING

CUT WIDTH	CUT SLOPE
16	58
89	367
16	74
103	414
21	75
130	417
26	75
433	222
81	54

140 120 100 80 60 40 20 ℄ 20 40 60 80 100 120 140

℄ Penna. R.R.

S.R.7 R.R.

668.6 — C-1.8 — F-3.15 — 1½:1

66928
1164+50
665.1

663.78
3348+68
659.8

668.4 — C-6.8 — F-3.96 — R.R. — 2:1 — C-1.7 — F-3.56

66908
1164+00
663.4

663.69
3347+18
659.8

668.0 — C-1.97 — F-3.35 — R.R. — C-2.3 — C-4.7 — F-1.26 — 1½:1

668.88
1163+50
664.1

663.62
3349+68
656.6

667.4 — C-1.15 — F-1.89 — 2:1 — C-5.7 — C-2.7 — F-.71 — 1½:1

659.1

668.68
1163+00
666.1

663.57
3350+18
658.9

STA. 1162+50

END AREA CUT	END AREA FILL	VOLUME CUT	VOLUME FILL
680			
660		28	315
		0	39
680		90	661
		0	88
660		69	309
		0	56
680		248	680
		2	169
660		199	335
		4	126
670		296	485
		5	183
650		120	189
		2	71
		141	476
		6	176
		32	325
		4	119

Sta. 1163+00 to Sta. 1164+50

DRAWN BY DJJ 4/3/64 — CHK. VOL. 4-13-64

BELMONT COUNTY
BEL - 7 - 20.74

END AREA SQ FT	END AREA CU YD	VOLUME SQ FT	VOLUME CU YD
9 / 74			
46 / 414		140 / 0	268 / 99
8 / 75		207 / 0	419 / 181
42 / 414		83 / 0	184 / 93
53 / 397		143 / 0	411 / 148
12 / 69		71 / 0	260 / 67
78 / 353		2 / 0	395 / 30
58 / 16		28 / 0	657 / 83
		28 / 0	315 / 30

140 120 100 80 60 40 20 ℄ 20 40 60 80 100 120 140

680 660 680 660 680 690 670 650

C-140
F 248
669.83
1166+50
668.0
℄ Penna. R.R.
S.R.7 R.R.
F 99
1½:1
664.31
3346+69
658.0

C-70
F 3
F 1
F 198 R.R.
BEGIN RETAINING WALL
STA. 1166+00
669.77
1166+00
667.8
S.R.7 R.R.
F 93
664.17
3347+18
658.7

2:1
669.2
Exist 8" San
C-69
7' Lt. Sta. 1165+50
Std. No. 2A-B inlet (Mod.)
Rt. 12" Cl. J-1 - 665.75
Rt. Window - 669.48
C-4
12" Cl. J-1 @ 1.0%
669.65
1165+50
666.1
R.R.
F 260
S.R.7 R.R.
F 67
(San.)
To be abandoned
664.02
3347+68
658.9
30" Rt. Sta. 1165+73
Std. No. 1 MH (San.)
Cover Elev. 669.70
Rt. Exist 8" San. 654.0
Rt. 8" Cl. B-1 - 652.00
14" 8" Cl. B-1 @ 1.0%

C-2
668.8
F 423
℄ Penna. R.R.
S.R.7 R.R.
F 50
1½:1
660.3
663.89
3348+18
659.0
669.48
1165+00
664.1
STA. 1164+50
STA. 1164+50
R.R. STA. 3348+68

Sta. 1165+00 to Sta. 1166+50

FED. ROAD DIVISION	STATE	PROJECT	
2	OHIO		

117
418

BELMONT COUNTY
BEL - 7 - 20.74

SECTIONS

CUT AREA	FILL AREA

CUT VOLUME	FILL VOLUME

140 120 100 80 60 40 20 ℄ 20 40 60 80 100 120 140

SUSPEND RETAINING WALL
STA. 1168+22.27

C-94

F 212

2:1

S.R.7 R.R.

Var.

660.0

℄ Penna. R.R.

F 180

Face of Exist. Building

66969
1168+00
667.0

664.72
3345+22
656.6

680
660

12/67 | 94/0 | 212/180

C-149

C-2

F 220

R.R.

660.1

F 182

66979
1167+50
668.6

664.61
3345+70
657.2

680
660

227/0 | 400/300

151/0 | 220/132

C-143

F 217

660.2

F 135

66984
1167+00
668.1

664.46
3346+20
657.6

690
670
650

272/0 | 405/247

143/0 | 217/135

262/0 | 449/221

140/0 | 268/99

75/381 | 69/392 | 14/70 | 11/71 | 403/56 | 74/9

STA 1166+50

STA 1166+50
R.R. STA. 3346+69

Sta. 1167+00 to Sta. 1168+00

REG. NO. OF DIVISION	STATE	PROJECT	
2	OHIO		

118
418

BELMONT COUNTY
BEL - 7 - 20.74

SPEEDING

EST. WIDTH	SQ. YDS.
28	61
178	353
36	66
144	361
14	64
82	347
16	61
356	83
67	14

140 120 100 80 60 40 20 ℄ 20 40 60 80 100 120 140

EXC. AREA		VOLUME	
CUT	FILL	CUT	FILL
		5	474
		0	314
		35	849
		0	563
		33	443
		0	294
		131	757
		0	500
		108	374
		0	256
		114	722
		0	438
		15	406
		0	227
		101	572
		0	377
		94	212
		0	180

680
660
680
660
680
660
670
650

C-57 F-17 2

S.R.7 R.R.

F.G 3'-12" Cl. J-1 @ 7.46%

2:1

F 472

Vat.

℄ Penna. R.R.

D.R.C.P. 4'-5'-18" Deep

F 314

66884
1170+00
666.1

7' Lt. Sta. 1169+75
Std. No. 2A-8 Inlet (Mod)
℄ Window ~ 668.79
℄ 12" Cl. J-1 ~ 663.06

659.6

57.5' Rt. Sta. 1169+75
Std. Type HW-E Endwall
℄ 12" Cl. J-1 ~ 660.36

665.35
3343+25
654.2

C-33 C-3

F 443

D.D.

S.R.7 R.R.

2:1

Vat.

℄

F 294

66908
1169+50
662.9

659.7

665.20
3343+75
654.9

108 C-108

F 374

R.R.

S.R.7 R.R.

2:1

Vat.

℄

F 256

RESUME RETAINING WALL
STA. 1168+66

66932
1169+00
665.4

659.8

665.05
3344+23.5
655.2

C-137

C 49'-15" Cl. J-1 @ 5.0%

33'-15" Cl. J-1 @ 5.0%

F 406

2:1

S.R.7 R.R.

℄ Penna. R.R.

D.R.C.P. 15"x15"x18" Deep

F 227

54.5' Lt. Sta. 1168+50
Std. No. 2-2-A C.B.
Elev. Grate ~ 670.00
℄ 15" Cl. J-1 ~ 663.95

7' Lt. Sta. 1168+50
Std. No. 2A-6 Inlet (Mod)
℄ Window ~ 669.36
℄ 15" Cl. J-1 ~ 663.50

34' Rt. Sta. 1168+50
Std. No. 3-A C.B.
℄ Window ~ 668.53
℄ 15" Cl. J-1 ~ 661.55
℄ 15" Cl. E-1 ~ 661.55

24'-15" Cl. E-1 @ 5.0%

57.5' Rt. Sta. 1168+50
Std. Type HW-E Endwall
℄ 15" Cl. E-1 ~ 660.35

659.9

664.90
3344+72
656.2

66953
1168+50
663.8

STA. 1168+00

STA. 1168+00
R.R. STA. 3345+22

Sta. 1168+50 to Sta. 1170+00

Valdez D.J.J. 4/14/69

FED. ROAD DESIGNATION	STATE	PROJECT	
2	OHIO		

119
418

BELMONT COUNTY
BEL - 7 - 20.74

SCREENING

END AREA CUT	END AREA FILL
41	55
217	314
37	58
203	320
36	57
192	336
33	64
347	149
61	28

VOLUME CUT	VOLUME FILL
1	613
0	449
14	1071
0	832
14	544
0	449
30	825
0	898
18	347
0	521
20	729
0	861
3	441
0	409
8	845
0	670
5	472
0	314

140 120 100 80 60 40 20 ℄ 20 40 60 80 100 120 140

680 660 680 660 680 660

S.R.7 R.R.

℄ Penna. R.R.

2:1

Val.

659.2

666.88
1172+00
660.9

665.84
3341+25
653.3

667.4

R.R.

2:1

21"-12" Cl. E-1 @ 19.0%

Val.

D.R.C.P. 8'-5"-18 Deep

659.3

35' Rt. Sta. 1171+50
Std. No. 2-A-G Inlet. (Mod.)
℄ Window ~ 667.55
℄ 12" Cl. E-1 ~ 663.82

575' Rt. Sta. 1171+50
Std. Type HW-E Endwall
℄ 12" Cl. E-1 ~ 659.83

668.12
1171+50
661.1

665.75
3341+75
653.2

667.8

R.R.

668.36
1171+00
661.1

℄ Penna. R.R.

2:1

Val.

13.5'

659.4

Exist. San. M.H. (Aband)

665.33
3342+25
653.8

50' Rt. Sta. 1171+12
Std. No. 1 M.H. (San.)
Cover Elev. ~ 664.0
℄ 8" Cl. B-1 ~ 652.1

180' Rt. Sta. 1171+12
Std. No. 1 M.H. (San.)
Cover Elev. ~ 653.0
℄ 8" Cl. B-1 ~ 646.8

END RETAINING WALL
STA. 1170+75

C-1 F3 C-1

S.R.7 R.R.

2:1

F438

Val.

659.6

F409

668.60
1170+50
661.0

665.49
3342+75
653.6

STA. 1170+00

STA. 1170+00
R.R. Sta. 3342+75

140 120 100 80 60 40 20 ℄ 20 40 60 80 100 120 140

Sta. 1170+50 to Sta. 1172+00

JBB 4-13-64

Ck'd. DJJ 4/14/64

FED. ROAD DIVISION	STATE	PROJECT	
2	OHIO		

120
418

BELMONT COUNTY
BEL - 7 - 20.74

SEEDING
EXC. WATER | W. WAY

140 120 100 80 60 40 20 ℄ 20 40 60 80 100 120 140

AREA | VOLUME
CUT | FILL | CUT | FILL

36/61 | 208/347

S.R.-7 | R.R. — ℄ Penna. R.R.

37 — 665.4 — Var. — 1½:1 — 931 — 660.7 — 1½:1 — 350

666.96
1174+00
659.0

STATION EQUATION
1173+94.45 BK. =
1173+92.34 AHD.
Add 2.11' For Station Equation

665.38
3339+25
654.2

680

2 931
0 350

39/54 | 228/306

S.R.-7 | R.R. — ℄

37 — 665.4 — R.R. — 967 — 2:1 — 1½:1 — 660.2 — 391 — 1½:1

667.16
1173+50
658.0

665.38
3339+75
653.8

660

680

5 1758
0 686

3 967
0 391

VOL. CHG. 4-13-64 | 43/56

S.R.-7 | R.R. — ℄

47 — 665.8 — R.R. — 754 — 43' Rt. Sta. 1173+25 Std. No. 3-A C.B. Elev. Grate-GG709 669.8 — 478 — 1½:1

667.40
1173+00
661.8

665.96
3340+25
653.1

680

660

7 1503
0 828

4 754
0 478

Upd. Chd. Dft. 4/19/64 | 42/56

S.R.-7 | R.R. — ℄ Penna. R.R.

17 — 666.4 — 77'-12"Cl. J-1 @ 0.6% — 2:1 — 1½:1 — 763 — 22.5'-12"Cl. E-1 @ 29.0% — 422 — 1½:1

34' Lt. Sta. 1172+50 Std. No. 2-A-G. Inlet (Mod) ℄ Window - GG7.07 ℄ 12" Cl. J-1 - GG9.34

667.64
1172+50
661.5

40' Rt. Sta. 1172+50 Std. No. 2-A-G Inlet (Mod) ℄ Window - GG7.21 ℄ 12" Cl. J-1 - GG2.88 ℄ 12" Cl. E-1 - GG2.88

64' Rt. Sta. 1172+50 Std. No. 2-2-A C.B. Elev. Grate-GG9.10 ℄ 12" Cl. E-1 - GG6.35 ℄ 24" Cl. J-1 - GG5.35

665.31
3340+75
653.1

680

660

5 1405
0 834

1 763
0 422

308/230

55/41 | STA 1172+00

STA 1172+00
R.R. STA. 334+25

680

660

2 1274
0 807

1 613
0 440

140 120 100 80 60 40 20 ℄ 20 40 60 80 100 120 140

Sta 1172+50 to Sta 1174+00

SEEDING

140 120 100 80 60 40 20 ℄ 20 40 60 80 100

121
4.18

BELMONT COUNTY
BEL - 7 - 20.76

HANOVER ST. MAINLINE

℄ Penna. R.R.

665.72
1176+50
6580

1413

665.61
3336+71
654.8

MAINLINE HANOVER ST.

HANOVER ST. MAINLINE

1276

[1.1 3' San]

665.73
3337+82
655.4

BEGIN R.R. EARTHWORK
STA. 3337+30

665.96
1176+00

MAINLINE BK.
HANOVER ST. AH. MAINLINE AH.

MAINLINE HANOVER ST.

S.R.-7 R.R.

19'-12" Cl. E-1 @ 9.63 %

136'-12" Cl. J-1 @ 0.67 %

2'-Lt Sta. 1175+50
Std. No. 2←10 Inlet.
℄ Window ~ GG5.87
℄E 12" Cl. J-1 ~ GG2.14

Var.

933

GG1.3

301

665.83
3337+72
655.4

58' Lt Sta. 1175+50
Std. No. 2-2-A C.B.
Elev. Grate ~ GG3.22
℄E 12" Cl. E-1 ~ GG0.07
℄E 18" Cl. E-1 ~ G59.47 - (For Continuation, See Sht ____)

38' Lt Sta. 1175+50
Std. No. 2-A-G Inlet, (Mod)
℄E Window ~ GG5.63
℄E 12" Cl. J-1 ~ GG1.90
℄E 12" Cl. E-1 ~ GG1.90

666.20
1175+50
658.7

S.R.-7 R.R.

Var.

663.6

℄R

1004

661.1

305

665.90
3338+24
655.2

666.44
1175+00
655.6

S.R.-7 R.R.

℄ Penna. R.R.

Var.

665.0

899

661.0

348

1½:1

665.57
3338+74
654.3

666.68
1174+50
658.4

STA. 1174+00

STA. 1174+00
R.R. STA. 3339+25

140 120 100 80 60 40 20 ℄ 20 40 60 80 100 120 140

Sta 1174+50 to Sta 1176+50

			0	1413
				2490
			0	1276
				301
			5	2045
			0	468
			11	933
			0	301
			5	1794
			0	584
			0	1004
			0	305
			2	1762
			0	605
			4	899
			0	348
			6	1695
			0	659
			2	931
			0	358

0 0 — 44 40 — 0 0 — 16 43 — 92 300 — 16 65 — 130 120 — 31 64 — 186 116 — 61 34

FED. AID PROJECT	STATE	PROJECT		SHEET NO.	TOTAL SHEETS
2	OHIO			122	418

BELMONT COUNTY
BEL - 7 - 20.74

SECTION	END AREA CUT	END AREA FILL	VOLUME CUT	VOLUME FILL
61	74			
332	414			
56	75			
315	403			
55	70			
253	372			
38	64			
178				
0	0			

140 120 100 80 60 40 20 ℄ 20 40 60 80 100 120 140

D.R.C.P. 4'x6'x18" Deep

5:1

35

L 24"-12" Cl. E-1 @ 1.22%

657.4

59.5' Lt. Sta. 1178+50
Std. Type HW-E Endwall
℄ 12" Cl. E-1 ~ G58.00

34'-Lt. Sta. 1178+50
Std. No. 2-A-G Inlet (Mod.)
℄ Window ~ GG4.28
℄ 12" Cl. J-1 ~ GG0.94
℄ 12" Cl. E-1 ~ GG0.94

C 41'-12" Cl. J-1 @ 1.51%

7' Rt. Sta. 1178+50
Std. No. 2-G Inlet (Mod.)
℄ Window ~ GG3.29
℄ 12" Cl. J-1 ~ GG1.56

878

S.R. - 7 | RAIL ROAD

2:1

Var.

℄ Penna. R.R.

500

1:1

656.8

665.46
1178+50
655.0

GG4.86
3334 + 67.5
653.9

670
650

35 878
0 500

GB 1505
0 856

D.R.C.P.

2:1

33

747

657.3

656.7

665.31
1178+00
656.8

GG5.08
3335 + 18
654.9

415

33 747
0 415

GO 1461
0 793

D.R.C.P.

32

657.2

C 41'-12" Cl. J-1 @ 2.22%

831

34' Lt. Sta 1177+50
Std. No. 3 C.B.
℄ Window ~ GG4.56
℄ 12" Cl. E-1 ~ GG0.31
℄ 12" Cl. J-1 ~ GG0.31

7' Rt. Sta. 1177+75
Std. No. 3 C.B.
℄ Window ~ GG5.12
℄ 12" Cl. J-1 ~ GG1.22

656.6

665.28
3335+69
654.7

425

32 831
0 425

665.32
1177+50
656.2

MAINLINE AH.
HANOVER ST. BK. | MAINLINE BK.

AHEAD → 75 1466
0 756

Normal Ditch
Elev. 657.1

40

752

656.5

376

AHEAD 49 752
BACK 0 152
0 376

126'-36" Cl. J-1 @ 1.03%

62' Lt. Sta. 1177+00
Std. No. 2-4 C.B. Mod.
℄ Window ~ G56.1
℄ 12" Cl. E-1 ~ G53.94
℄ 27" Cl. E-1 ~ G52.69 - (Continued From Sht. 157)
℄ 36" Cl. J-1 ~ G51.94

665.48
1177+00
657.0

64' Rt. Sta. 1177+00
Std. No. 2-5 C.B. Mod.
℄ Window ~ G56.00
℄ 24" Cl. J-1 ~ G51.63
℄ 36" Cl. J-1 ~ G50.64
℄ 48" Cl. J-1 ~ G49.64

347'-48" Cl. J-1
@ 0.4% See
Sheet No. 156

665.45
3336+20
655.0

MAINLINE | HANOVER ST.

BACK → 0 1103
0 627

END RAILROAD EARTHWORK
STA. 3336+65
STA. 1176+50

0 376
0 439

STA. 1176+50

140 120 100 80 60 40 20 ℄ 20 40 60 80 100 120 140

Sta. 1177+00 to Sta. 1178+50

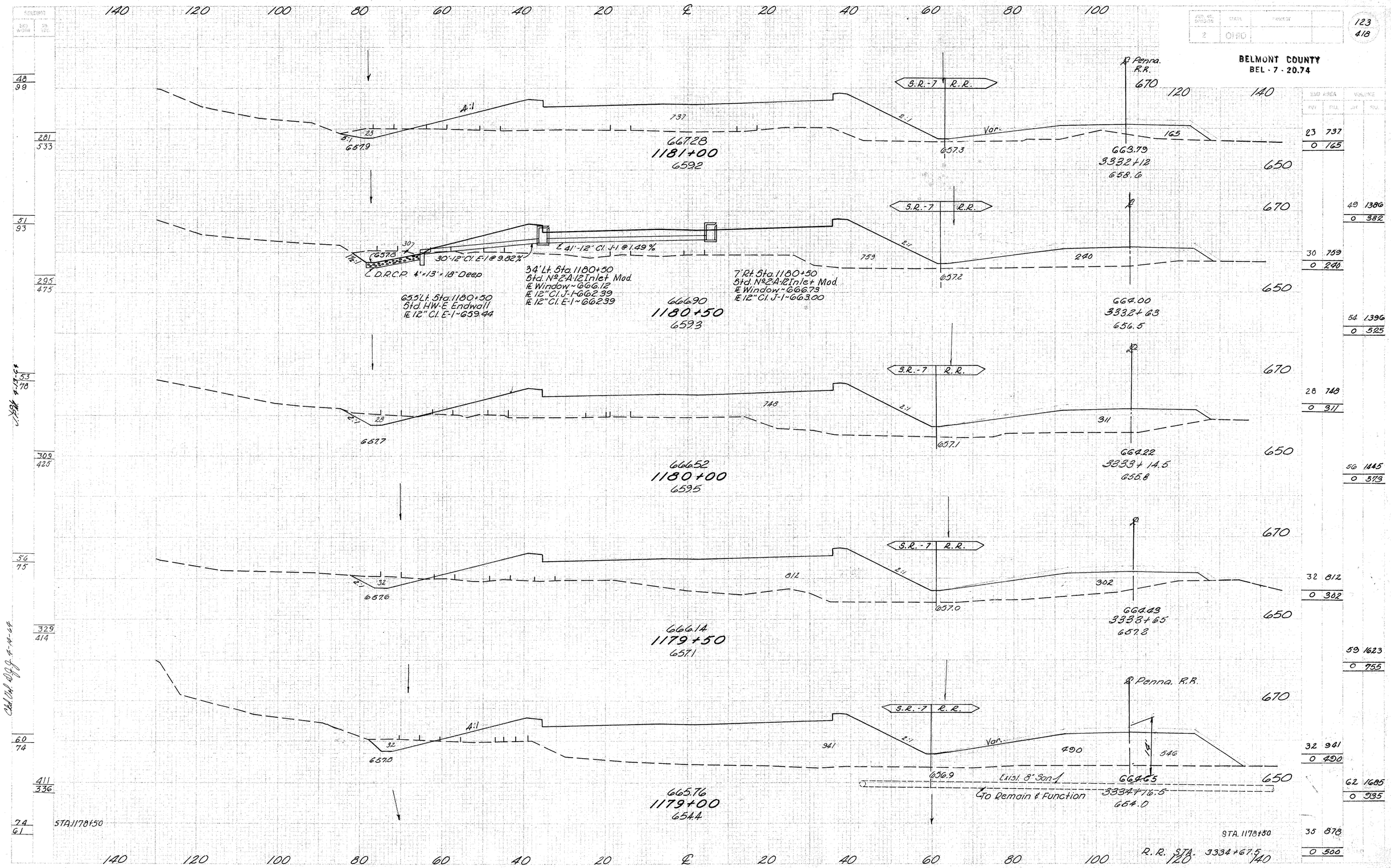

123
418
BELMONT COUNTY
BEL - 7 - 20.74
2
OHIO
140 120 100 80 60 40 20 ℄ 20 40 60 80 100
S.R.-7 R.R.
℄ Penna. R.R.
670
650
4:1
737
2:1
Var.
23
5:1
657.9
667.28
1181+00
659.2
657.3
663.79
3332+12
658.6
165
30
657.8
30'-12" Cl. E-1 @ 9.82%
41'-12" Cl. J-1 @ 1.49%
759
240
D.R.C.P. 4'×13'×18" Deep
34' Lt. Sta. 1180+50
Std. No 2-A-12 Inlet Mod.
℄ Window ~ 666.12
℄ 12" Cl. J-1 ~ 662.39
℄ 12" Cl. E-1 ~ 662.39
7' Rt. Sta. 1180+50
Std. No 2-A-12 Inlet Mod.
℄ Window ~ 666.73
℄ 12" Cl. J-1 ~ 663.00
655' Lt. Sta. 1180+50
Std. HW-E Endwall
℄ 12" Cl. E-1 ~ 659.44
666.90
1180+50
659.3
657.2
664.00
3332+63
656.5
748
311
657.7
657.1
664.22
3333+14.5
655.8
666.52
1180+00
659.5
812
302
657.6
657.0
664.43
3333+65
657.2
666.14
1179+50
657.1
℄ Penna. R.R.
941
490
546
657.0
656.9
Exist. 8" San.
To Remain & Function
664.65
3334+16.5
654.0
665.76
1179+00
654.4
STA. 1178+50
R.R. STA. 3334+67.5
Sta. 1179+00 to Sta. 1181+00

BELMONT COUNTY
BEL - 7 - 20.74

SEEDING — AREA (ACRES) | NO. CWT.

33 / 103
195 / 578
36 / 105
208 / 583
39 / 105
230 / 581
42 / 104
255 / 569
48 / 101
269 / 556
99 / 48

140 120 100 80 60 40 20 ℄ 20 40 60 80 100 120 140

6:1 — 662.2 — 964 — 2:1 — S.R.-7 R.R. — 657.8 — Var: — 116 — 16:1

66918
1183+50
666.1

6:1 — 661.5 — 1068 — 2:1 — S.R.-7 R.R. — 657.7 — 102

66880
1183+00
659.2

5:1 — 659.2 — 852 — 2:1 — S.R.-7 R.R. — 657.6 — 114

668.42
1182+50
659.9

4:1 — 97 — 658.5 — 842 — 2:1 — S.R.-7 R.R. — 657.6 — 120

668.04
1182+00
659.7

4:1 — 117 — 658.0 — 770 — 2:1 — S.R.-7 R.R. — 657.4 — Var: — 172

667.66
1181+50
659.7

To Be Abandoned ℄ — To be Abandoned

STA. 1181+00

℄ Penna. R.R.

R.R. SPUR 3329+00 670 — 0 75
R.R. SPUR — 2 163
660 — 0 964
0 116
R.R. SPUR 680 — 2 101
0 1882
0 206
R.R. SPUR — 8 127
660 — 0 1068
0 102
680 — 1 1778
0 200
R.R. SPUR — 7 36
R.R. SPUR — 37 33
660 — 1 852
0 114
680 — 10 1569
0 221
R.R. SPUR — 33 0
R.R. SPUR — 31 0
660 — 9 842
0 120
END R.R. SPUR STA. 3331+50 — 0 0
680 — 20 1493
0 276
660 — 12 770
0 172
33 1396
0 318
23 737
0 165

662.72 3329+58 657.2 — 116 — 16:1 — 101
660.62 3329+50
662.94 3330+09 658.1 — 102
659.68 3330+00
663.15 3330+39 657.9 — 114
℄ R.R SPUR
DRAIN TO EXISTING DITCH
659.00 3330+50
663.36 3331+10 658.0 — 120
663.58 3331+61 657.2 — 172

NOTE:
FOR R.R. SPUR PLAN & PROFILE SEE SHEET NO. 202

STA. 1181+00
R.R. STA. 3332+12

Sta. 1181+50 to Sta. 1183+50

J.S.H. 4-24-13
W.M. Stat. Dill 4-14-14

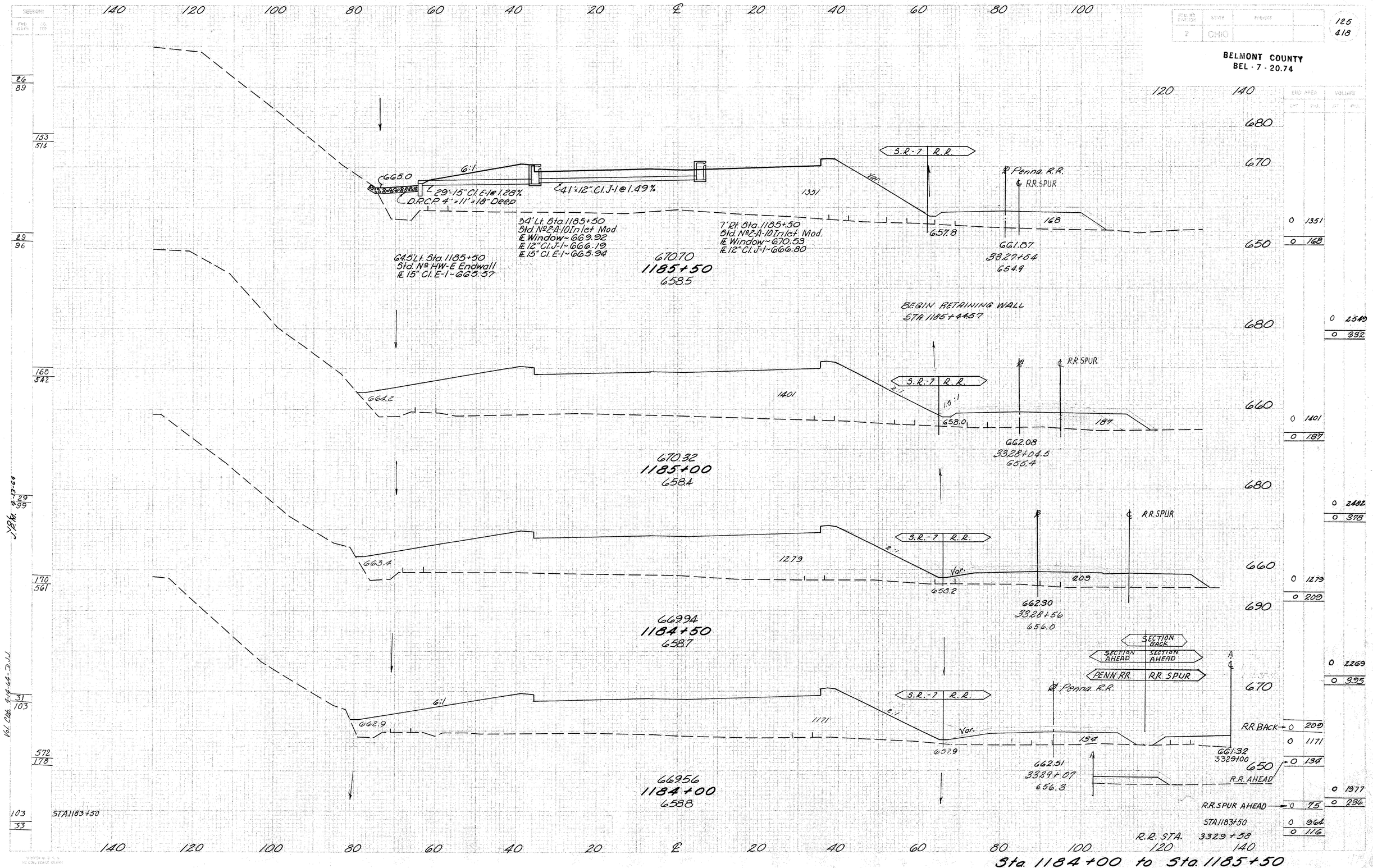

125
418
BELMONT COUNTY
BEL - 7 - 20.74
140 120 100 80 60 40 20 ℄ 20 40 60 80 100
120 140
680
670
650
660
690
670
650
665.0
6:1
29'-15" Cl. E-1 @ 1.28%
D.R.C.P. 4'×11'×18" Deep
41'×12" Cl. J-1 @ 1.49%
1351
Var.
S.R.-7 R.R.
℄ Penna. R.R.
℄ R.R. SPUR
168
657.8
661.87
3327+54
654.9
34' Lt. Sta. 1185+50
Std. No 2-A-10 Inlet Mod.
℄ Window ~ 669.92
℄ 12" Cl. J-1 ~ 666.19
℄ 15" Cl. E-1 ~ 665.94
7' Rt. Sta. 1185+50
Std. No 2-A-10 Inlet Mod.
℄ Window ~ 670.53
℄ 12" Cl. J-1 ~ 666.80
64.5' Lt. Sta. 1185+50
Std. No HW-E Endwall
℄ 15" Cl. E-1 ~ 665.57
670.70
1185+50
658.5
BEGIN RETAINING WALL
STA. 1185+44.57
664.2
1401
2:1
1.5:1
℄ R.R. SPUR
658.0
187
662.08
3328+04.5
655.4
670.32
1185+00
658.4
663.4
1279
2:1
Var.
℄ R.R. SPUR
658.2
209
662.30
3328+56
656.0
669.94
1184+50
658.7
SECTION BACK
SECTION AHEAD
SECTION AHEAD
PENN RR.
R.R. SPUR
℄ Penna. R.R.
662.9
6:1
1171
2:1
Var.
657.9
134
662.51
3329+07
656.3
661.32
3329+00
669.56
1184+00
658.8
STA. 1183+50
R.R. BACK
R.R. AHEAD
R.R. SPUR AHEAD
STA. 1183+50
R.R. STA. 3329+58
0 1351
0 168
0 2549
0 332
0 1401
0 187
0 2482
0 378
0 1279
0 209
0 2269
0 395
0 209
0 1171
0 134
0 1977
0 286
0 75
0 964
0 116
Sta. 1184+00 to Sta. 1185+50

FED. RD. DIVISION	STATE	PROJECT	
2	OHIO		

126
418

BELMONT COUNTY
BEL - 7 - 20.74

END AREA		VOLUME	
CUT	FILL	CUT	FILL

S.R. - 7 R.R.

℄ Penna. R.R.

5:1

666.7

1315

656.97

661.18
3325+51
651.8

33

℄ to Remain & Function

672.22
1187+50
6592

660 0 1315
3 83

5A' Lt. Sta 1187+15
Std. N° 2 MH.
Rt. Exist. 6" @ 655.82
Rt. Exist. 14" @ 655.05
Rt. Exist. 12" @ 654.35
Cover Elev. 669.00

5:1

666.5

1317

Remove Exist. C.B.

657.11

661.32
3326+02
657.3

56

652.75

671.84
1187+00
6591

680 0 2437
5 84

660 0 1317
2 56

680 0 2451
2 135

5:1

666.0

1330

657.21

661.48
3326+52
656.5

90

671.46
1186+50
6591

660 0 1330
0 90

6:1

665.5

1386

7' Rt Sta.

657.45

661.66
3327+03
655.8

111

671.08
1186+00
6588

680 0 2515
0 100

660 0 1386
0 111

0 2535
0 263

STA. 1185+50

0 1351
0 168

R.R. STA. 3327+54

STA. 1185+50

Sta. 1186+00 to Sta. 1187+50

SECTIONS	
CUT	FILL
25 / 77	
142 / 433	
25 / 79	
142 / 447	
26 / 82	
136 / 458	
22 / 83	
478 / 33	
89 / 26	

Vert. 1"=5'

Hor. 1"=50'

FED. DIVISION 2 | STATE OHIO | SHEET | 127 418

BELMONT COUNTY
BEL - 7 - 20.74

140 120 100 80 60 40 20 ℄ 20 40 60 80 100 120 140

43/64 | 211/378 | 33/71 | 158/403 | 24/74 | 139/420 | 26/77 | 428/142 | 77/25

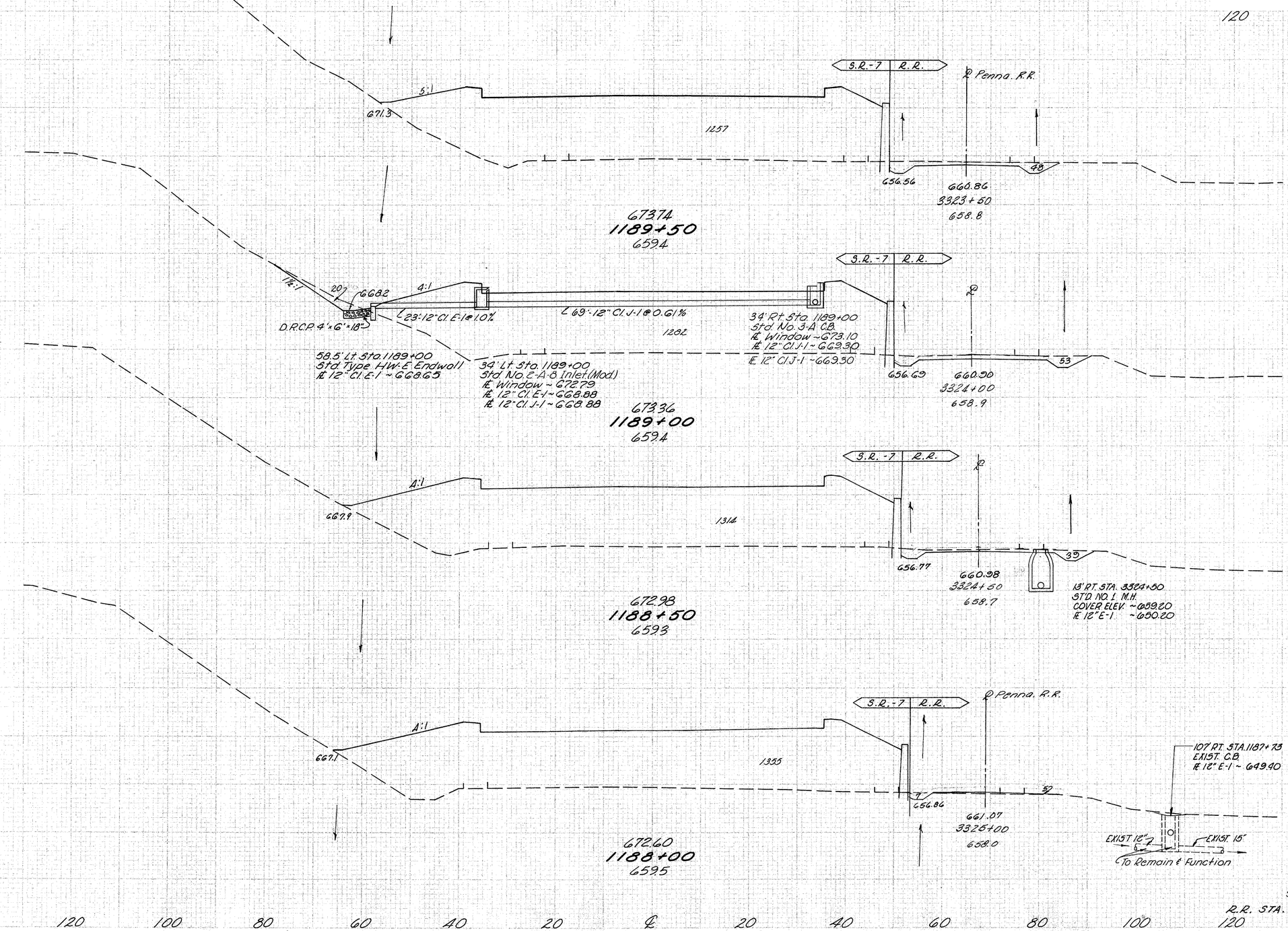

680 | 660 | 680 | 680 | 660 | 690 | 670 | 650

END AREA CUT | END AREA FILL | VOLUME CUT | VOLUME FILL

0	1257		
48	0		
		19	2351
		94	0
20	1282		
53	0		
		19	2401
		85	0
0	1314		
39	0		
0	2472		
43	5		
0	1355		
7	5		
0	2473		
9	36		
0	1315		
3	33		

Sta. 1188+00 to Sta. 1189+50

V.S.H.M. 4-13-64

C.D. Vol. D.J.J. 4-19-68

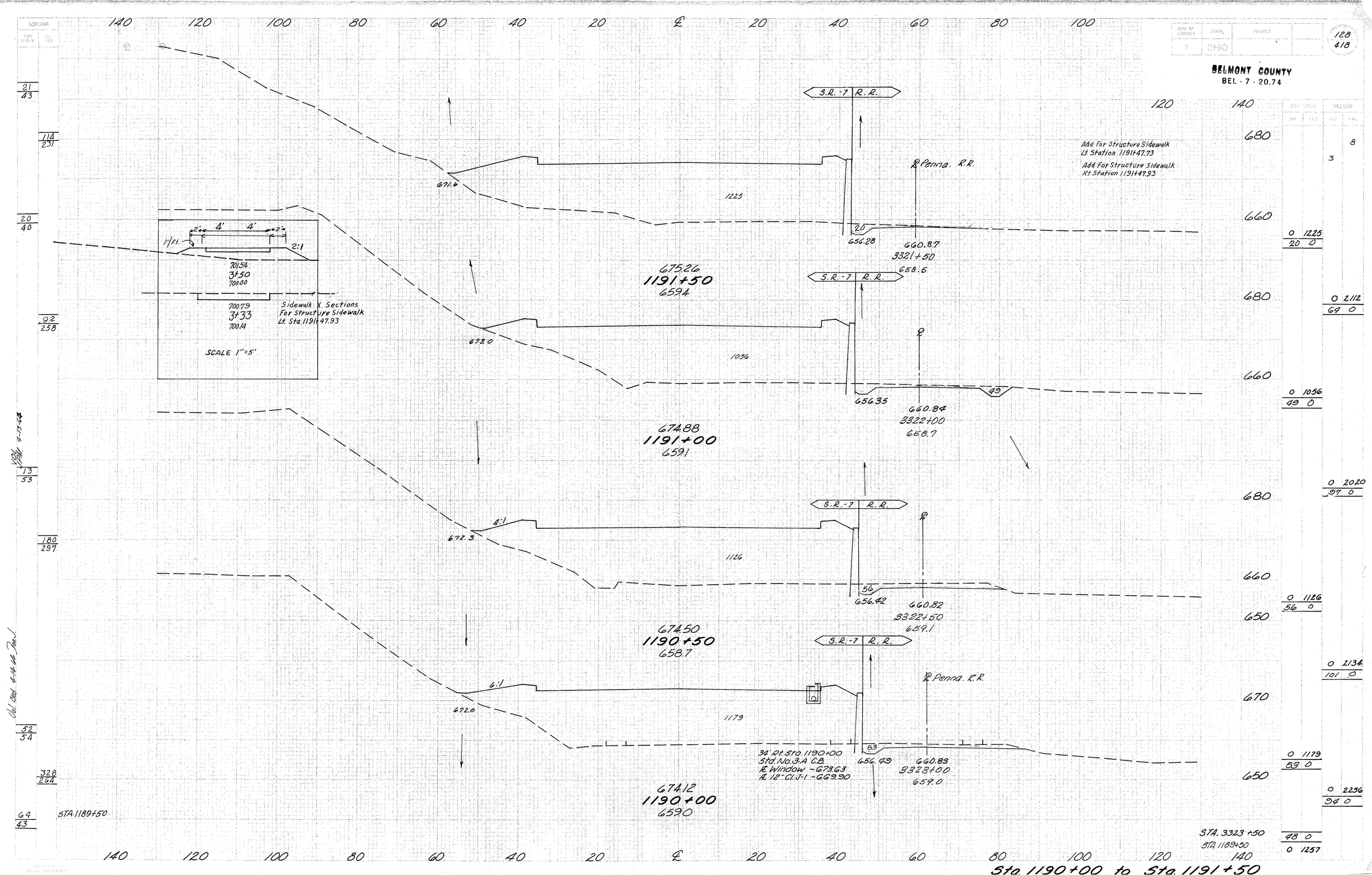

BELMONT COUNTY
BEL - 7 - 20.74
128
418
Add For Structure Sidewalk
Lt. Station 1191+47.73
Add For Structure Sidewalk
Rt. Station 1191+47.93
S.R.-7 R.R.
℄ Penna. R.R.
671.6
1225
20
656.28
660.87
3321+50
658.5
675.26
1191+50
659.4
673.0
1056
49
656.35
660.84
3322+00
658.7
674.88
1191+00
659.1
4:1
672.3
1126
56
656.42
660.82
3322+50
659.1
674.50
1190+50
658.7
6:1
672.0
1179
53
656.49
660.83
3323+00
659.0
34' Rt. Sta. 1190+00
Std. No. 3-A C.B.
℄ Window - 673.63
℄ 12" Cl. J-1 - 669.90
674.12
1190+00
659.0
2:1
701.54
3+50
700.00
700.79
3+33
700.14
Sidewalk X. Sections
For Structure Sidewalk
Lt. Sta. 1191+47.93
SCALE 1"=5'
STA. 1189+50
STA. 3323+50
STA. 1189+50
0 1225
20 0
0 2112
64 0
0 1056
49 0
0 2020
97 0
0 1126
56 0
0 2134
101 0
0 1179
53 0
0 2256
94 0
48 0
0 1257
Sta. 1190+00 to Sta. 1191+50

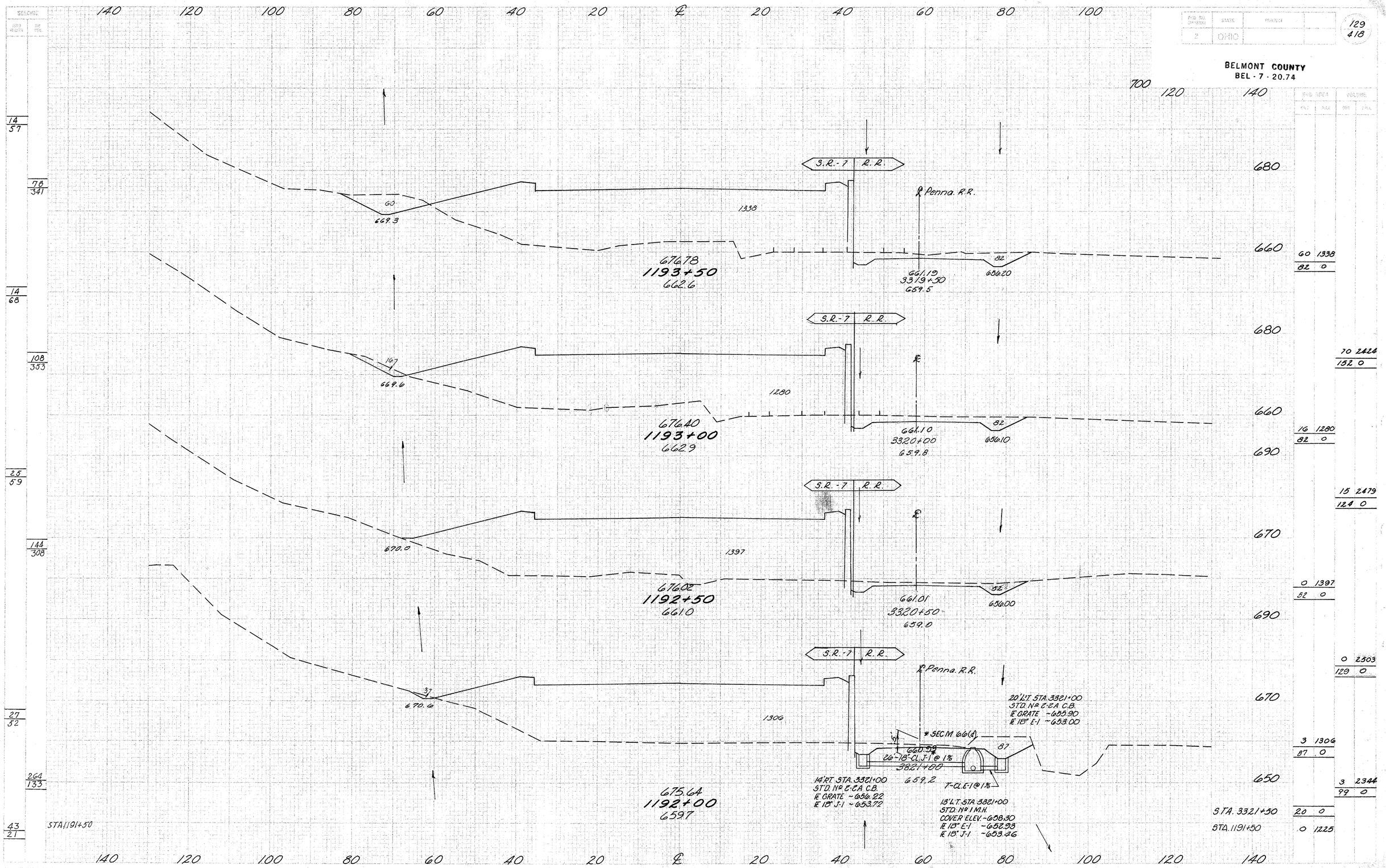

BELMONT COUNTY
BEL - 7 - 20.74
129
418
S.R.-7 R.R.
℄ Penna. R.R.
676.78
1193+50
662.6
661.19
3319+50
659.5
656.20
1338
669.3
676.40
1193+00
662.9
661.10
3320+00
659.8
656.10
1280
669.6
676.02
1192+50
661.0
661.01
3320+50
659.0
656.00
1397
670.0
675.64
1192+00
659.7
670.6
1306
20' L.T. STA. 3321+00
STD. No 2-2A C.B.
℄ GRATE ~655.90
℄ 18" E-1 ~653.00
* SEC M 6.6(d)
26'-18"-CL.J-1 @ 1%
3321+00
659.2
7'-CL.E-1 @ 1%
14' RT. STA. 3321+00
STD. No 2-2A C.B.
℄ GRATE ~656.22
℄ 18" J-1 ~653.72
13' L.T. STA. 3321+00
STD. No 1 M.H.
COVER ELEV. ~658.30
℄ 18" E-1 ~652.93
℄ 18" J-1 ~653.46
STA. 1191+50
STA. 3321+50
STA. 1191+50
Sta. 1192+00 to Sta. 1193+50

140 120 100 80 60 40 20 ℄ 20 40 60 80 100 120 140

700
680
660
690
670
660
680
660
680
660
660

BELMONT COUNTY
BEL - 7 - 20.74

130
418

S.R. - 7 R. R.

℄ Penna. R.R.

1412

678.93
1195+50
662.2

1½:1 2:1 4:1 3:1 2:1 4:1 2:1 4:1 2:1

4B 668.1
2B 668.4
3G 668.7
5G 669.0

661.52
3317+49
660.6

661.45
3317+99
660.7

661.37
3318+49
660.2

661.28
3319+00
659.3

1380

678.20
1195+00
662.6

1315

677.61
1194+50
661.9

1336

677.16
1194+00
662.3

98

104

85

75

650.30

℄ D.R.C.P. 4'×8'×18' Deep

℄ 32"-12" Cl. E-1 @ 8.29%

℄ 71'-12" Cl. J-1 @ 0.6%

31'-18" Cl. J-1 @ .000 SEC. M 6.6(d)

G7.5' Lt. Sta. 1194+00
Std. Type HW-E Endwall
℄ 12" Cl. E-1 ~ GG9.79

34' Lt. Sta. 1194+00
Std. No. 2-A-12 Inlet (Mod)
℄ Window ~ G76.59
℄ 12" Cl. J-1 ~ G72.44
℄ 12" Cl. E-1 ~ G72.44

34' Rt. Sta. 1194+00
Std. No. 2-A-12 Inlet (Mod)
℄ Window ~ G76.59
℄ 12" Cl. J-1 ~ G72.86

STA. 1193+50

STA. 1193+50

STA. 3319+50

Sta. 1194+00 to Sta. 1195+50

32/80 211/442 44/79 197/458 27/86 144/450 24/76 369/105 57/14

4B 1412 98 0

GG 2585 187 0

23 1380 104 0

55 2495 175 0

36 1315 85 0

87 2455 151 0

109 2476 145 0

82 0

60 1338

Plan 4-13-44

3M CM Dual 4-14-44

FED. AID DIVISION	STATE	PROJECT
2	OHIO	

131
418

BELMONT COUNTY
BEL - 7 - 20.74

SECTION

END AREA CUT	END AREA FILL	VOLUME CUT	VOLUME FILL
0	2000		
42	0		
7	3457		
80	0		
16	1734		
45	0		
18	3212		
80	0		
3	1735		
49	0		
0	3107		
122	0		
7	1621		
83	0		
16	2870		
164	0		
10	1587		
94	0		
54	2777		
178	0		
48	1412		
98	0		

140 120 100 80 60 40 20 ℄ 20 40 60 80 100 120 140

16/118 — To Remain & Function
92/639 — Bulkhead
Exist 5'x8' Box Culvert
Exist 18" San. To be Abandoned
To be Abandoned Exist 5'x8' Stone Arch Culvert
New 60" Culvert See Sh. No. 218
M.H. To be Abandoned
Exist 21" San. To be Abandoned
684.68
1198+00
666.7
2000
END RETAINING WALL
STA. 1198+28
℄ Penna. R.R
42
658.93
3314+99
661.1
660

118 'Lt Sta. 1198+08
Std. No 1 M.H. (San)
Cover Elev. 664.00
℄ 18" CL B: 1659.70
℄ Exist 18" 659.70

17/112 — 16 — 666.6
1734
683.25
1197+50
666.7
670
660
45
658.93
3315+49
661.1

RAILROAD
STA. EQUATION
STA. 3315+73.05 BACK =
STA. 3315+77.15 AHEAD

16/98 — 37 — 667.0
1735
681.96
1197+00
665.2
680
660
49
658.92
3315+99
661.3

92/511 — 77 — 667.5
1621
680.81
1196+50
664.1
690
670
660
33
658.90
3316+49
661.0

34/78 — 107 — 667.8
1587
679.80
1196+00
663.6
680
660
178
658.86
3316+99
660.8
℄ Penna. R.R.

439/183

80/32 — STA 1195+50

STA 1195+50
R. R. STA. 3317+49

Sta. 1196+00 to Sta. 1198+00

Y&M 4-13-64
Y&M 4-14-64 J.J.L.

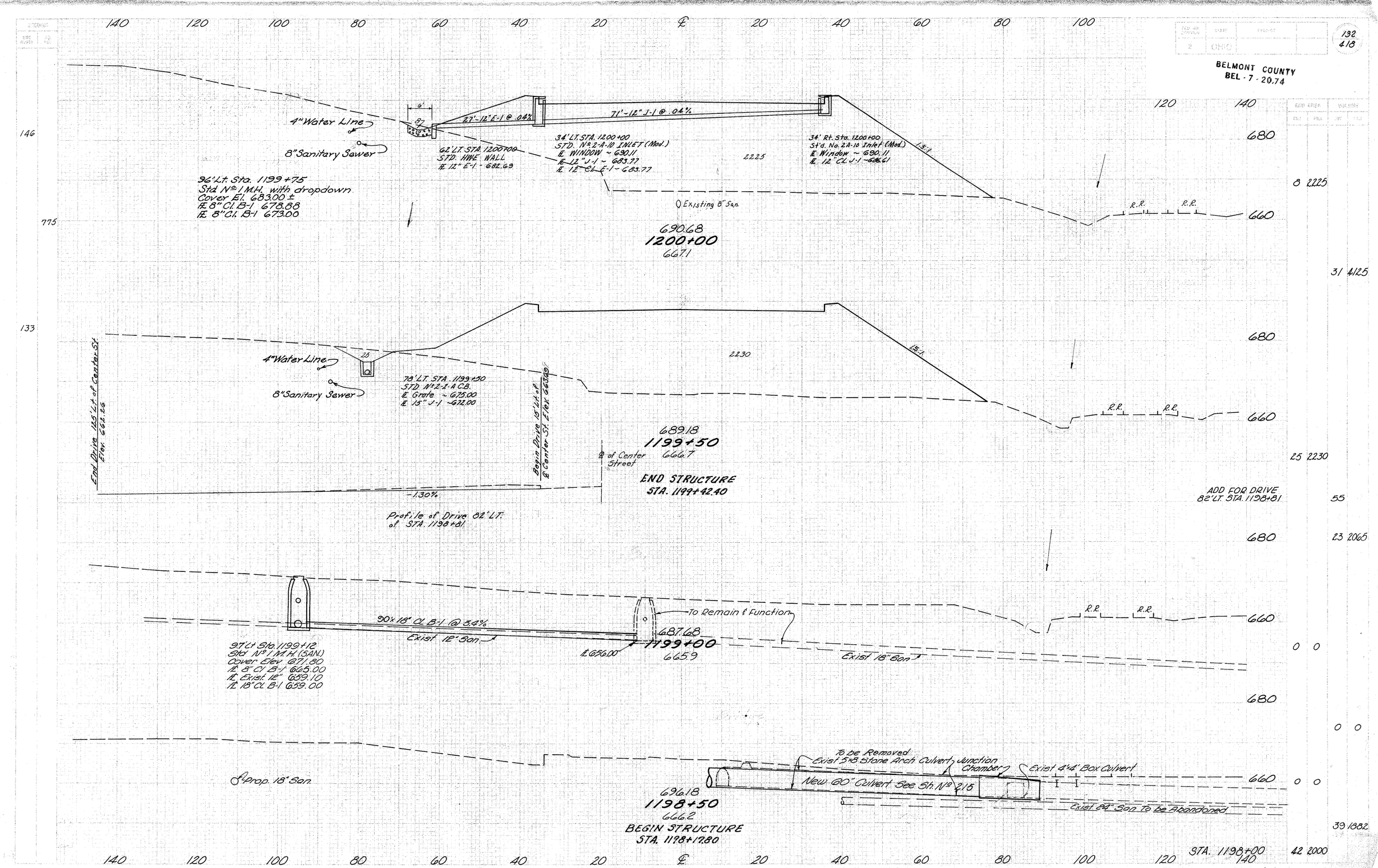

132
418
BELMONT COUNTY
BEL - 7 - 20.74
4" Water Line
8" Sanitary Sewer
27'-12" E-1 @ .04%
71'-12" J-1 @ .04%
62' LT. STA. 1200+00
STD. HWE WALL
℄ 12" E-1 - 682.69
34' LT. STA. 1200+00
STD. No. 2-A-10 INLET (Mod.)
℄ WINDOW ~ 690.11
℄ 12" J-1 ~ 683.77
℄ 12" CL E-1 ~ 683.77
34' Rt. Sta. 1200+00
St'd. No. 2A-10 Inlet (Mod.)
℄ Window ~ 690.11
℄ 12" CL J-1 ~ 686.61
96' Lt. Sta. 1199+75
Std No. 1 M.H. with dropdown
Cover El. 683.00 ±
℄ 8" Cl. B-1 678.88
℄ 8" Cl. B-1 673.00
Existing 8" San.
690.68
1200+00
667.1
R.R.
4" Water Line
8" Sanitary Sewer
78' LT. STA. 1199+50
STD. No. 2-2-A C.B.
℄ Grate ~ 675.00
℄ 15" J-1 ~ 672.00
End Drive 125' Lt. of Center St. Elev. 662.26
Begin Drive 15' Lt. of ℄ Center St. Elev. 663.69
℄ of Center Street
-1.30%
Profile of Drive 82' LT. of STA. 1198+81
689.18
1199+50
666.7
END STRUCTURE
STA. 1199+42.40
ADD FOR DRIVE 82' LT. STA. 1198+81
90' x 18" CL B-1 @ 3.4%
Exist 12" San.
To Remain & Function
687.68
1199+00
665.9
℄ 656.00
Exist 18" San.
97' Lt. Sta. 1199+12
Std No. 1 M.H. (SAN.)
Cover Elev. 671.80
℄ 8" Cl. B-1 665.00
℄ Exist. 12" 659.10
℄ 18" CL B-1 659.00
Prop. 18" San.
To be Removed
Exist 5x8 Stone Arch Culvert
Junction Chamber
Exist 4'x4' Box Culvert
New 60" Culvert See Sh. No. 215
Exist 24" San. To be Abandoned
696.18
1198+50
666.2
BEGIN STRUCTURE
STA. 1198+17.80
STA. 1198+00
Sta. 1198+50 to Sta 1200+00

SHEETING

140 120 100 80 60 40 20 ℄ 20 40 60 80 100 120 140

STATE | PROJECT
CHO

133
418

BELMONT COUNTY
BEL -7- 20.74

END AREA | VOLUMES
CUT | FILL | CUT | FILL

156

4"Water Line
8"Sanitary Sewer
10%
690.5
2670
2:1
700
680
R.R. R.R.
660
695.18
1201+50
668.3
Exist. 8" San.
10 2670

867

156

4"Water Line
8"Sanitary Sewer
11%
689.0
2367
1.25:1
700
680
R.R. R.R.
660
693.68
1201+00
667.7
Exist. 8" San.
20 1668
11 2367

864

155

4"Water Line
8"Sanitary Sewer
11%
686.5
2342
1.5:1
680
R.R. R.R.
660
692.18
1200+50
667.5
Exist. 8" San.
17 4360
7 2342
18 1229

836

146 STA 1200+00

STA. 1200+00
8 2225

140 120 100 80 60 40 20 ℄ 20 40 60 80 100 120 140

Sta. 1200+50 to Sta. 1201+50

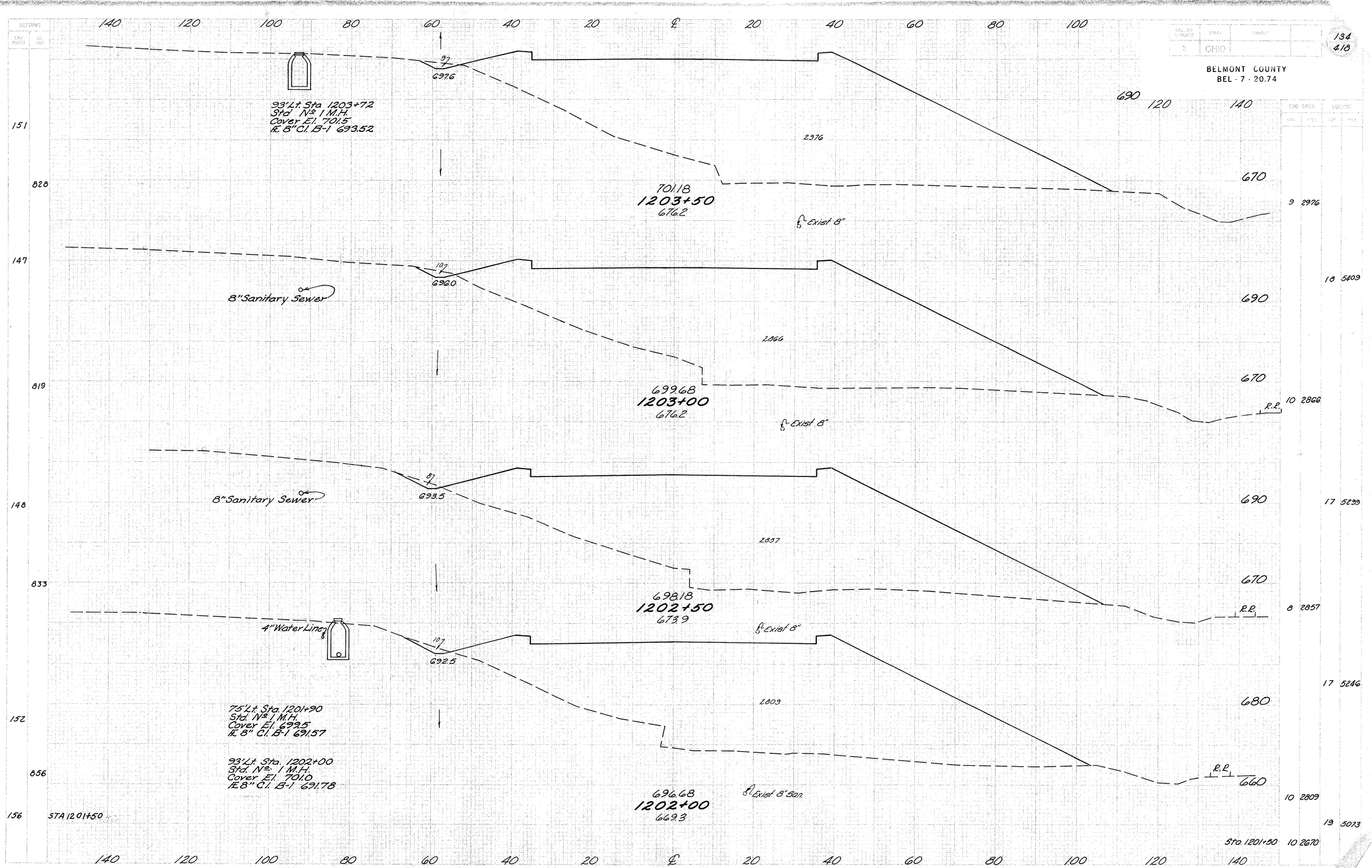

134
418
BELMONT COUNTY
BEL - 7 - 20.74
93' Lt. Sta 1203+72
Std Nº 1 M.H.
Cover El. 701.5
℄ 8" Cl. B-1 693.52
697.6
2976
701.18
1203+50
676.2
Exist 8"
8" Sanitary Sewer
696.0
2866
699.68
1203+00
676.2
Exist 8"
8" Sanitary Sewer
693.5
2857
698.18
1202+50
673.9
Exist 8"
4" Water Line
692.5
2809
75' Lt. Sta. 1201+90
Std. Nº 1 M.H.
Cover El. 699.5
℄ 8" Cl. B-1 691.57
93' Lt. Sta. 1202+00
Std. Nº 1 M.H.
Cover El. 701.0
℄ 8" Cl. B-1 691.78
696.68
1202+00
669.3
Exist 8" San.
STA 1201+50
Sta. 1201+50
Sta. 1202+00 to Sta. 1203+50

SHEETING	
ZONE WIDTH	SQ. YDS.

FED. ROAD DIVISION	STATE	PROJECT	
2	OHIO		

135
418

BELMONT COUNTY
BEL - 7 - 20.74

EXCAVATION AREA		EMBANKMENT AREA	
CUT	FILL	EST.	REM.

EXCAVATION VOLUME		EMBANKMENT VOLUME	
CUT	FILL	EST.	REM.

140 120 100 80 60 40 20 ℄ 20 40 60 80 100 120 140

178
963
169
914
160
864
151

696.0

705.68
1205+00
678.3

G'
11'
D.R.C.P. 6'x4'x18" DEEP

GG' LT. STA. 1204+50
STD. TYPE E ENDWALL
IE 12" CL. J-1 - 698.20

58'-12" CL. J-1 @ 5.90%

44'-12" CL. J-1 @ 0.6%

7' LT. STA 1204+50
STD. NO. 3-A C.B.
IE GRATE - 704.01
IE 12" CL E-1 - 700.38
IE 12" CL. J-1 - 699.63

39' RT. STA 1204+50
STD. NO. 2-A-1A INLET (Mod)
IE WINDOW - 703.61
IE 12" CL J-1 - 699.88

EXIST 15"

704.18
1204+50
697.5

102' Rt. Sta 1204+28
SAN. M.H. Reconst. to grade
Exist. Cover 667.4
Prop. Cover 672.4

Exist 18"

697.2

Exist. San. M.H. (Abond.)

702.68
1204+00
675.7

3344
104 3344
82
663.2
660

194 6277

3435
105 3435
34
661.0
660

122 6364

3438
26 3438
20
660.5
660

33 5939

9 2976

700
680
700
680
700
680
660

STA 1203+50
STA 1203+50

Sta. 1204+00 to Sta. 1205+00

BELMONT COUNTY
BEL - 7 - 20.74

140 120 100 80 60 40 20 ℄ 20 40 60 80 100 120 140

214 861 194 261 197 428 188 610 178

4395

Exist. 10" San.

77
GB1.0

708.68
1206+00
677.2

114' LT. STA. 1206+14
STD. NO. 1 M.H. (SAN.)
COVER ELEV. - 680.5
IE EXIST. 10" - 675.6

Exist. No. 2 M.H. (San.)
31
GG7.1

Exist. 10" San. - to remain and function:

Exist. 15" San.

4334

21
EXIST. 8'x6' CONC. BOX CULVERT

54" CL. A-1

2'x1' WINDOW
IE ~ 680.80

FOR CULVERT DETAILS - SEE SHEET NO. 216

32
GG7.0

707.54
1205+62
676.5

Exist 15" San

7' LT. STA. 1205+50
STD. NO. 2-A-20 INLET (MOD.)
IE WINDOW ~ 707.01
IE 12" CL. E-1 ~ 703.38

4209

27
GB4.0

707.18
1205+50
676.1

115' RT. STA. 1205+50
STD. HW-E ENDWALL
FOR DETAILS SEE
SHEET NO. 222

54" CL. A-1

33

Exist. 15" San

45
GB4.4

4085

31
GG4.5

Exist 15" San

STA. 1205+00

706.58
1205+30
669.1

140 120 100 80 60 40 20 ℄ 20 40 60 80 100 120 140

	AREA CUT	AREA FILL	VOLUME CUT	VOLUME FILL
38	4595			
64	6883			
53	4334			
39	1899			
122	4209			
138	4608			
126	4085			
128	4127			
104	3344			

Sta. 1205 +30 to Sta. 1206 +00

SURFACE	
EXIST. WIDTH	PROP. WIDTH
225	1275
234	1278
226	1264
229	1425
214	

END AREA		VOLUME	
CUT	FILL	CUT	FILL
17	5149		
19	5331		
42	9514		
26	4944		
65	8964		
44	4737		
76	8681		
38	4535		

DIVISION	STATE	PROJECT	
12	OHIO		

137
418

BELMONT COUNTY
BEL - 7 - 20.74

140 120 100 80 60 40 20 ℄ 20 40 60 80 100 120 140

R.R. 686.8 — 5149 — 700 — 680 — 667.9

714.38
1208+00
677.1

Exist 15" San

R.R. 686.3 — 5331 — 700 — 680 — 667.7

713.10
1207+50
677.0

Exist 15" San

R.R. 684.0 — 4944 — 700 — 680 — 667.5

711.68
1207+00
678.3

Exist 15" San

47 682.5 — 4737 — 700 — 680 — 667.3

710.18
1206+50
678.2

STA. 1206+00

140 120 100 80 60 40 20 ℄ 20 40 60 80 100 120 140

Sta. 1206+50 to Sta. 1208+00

140 120 100 80 60 40 20 ℄ 20 40 60 80 100

138
418

BELMONT COUNTY
BEL - 7 - 20.74

120 140

700

680

R.R.

717.98
1210+00
687.4

700

680

R.R.

717.30
1209+50
687.0

700

680

R.R.

716.48
1209+00
682.5
BEGIN STRUCTURE
STATION 1208+50.75

700

680

R.R.

27
687.0

1654

715.50
1208+50
676.5

27
668.1

201
1183
225
STA. 1208+00

STA. 1208+00

140 120 100 80 60 40 20 ℄ 20 40 60 80 100 120 140

Sta. 1208+50 to Sta. 1210+00

FED. ROAD DIVISION	STATE	PROJECT	
2	OHIO		

139
418

BELMONT COUNTY
BEL - 7 - 20.74

140 120 100 80 60 40 20 ℄ 20 40 60 80 100 120 140

720
700
680
700
680
660

719.10
1211+50
687.5

718.88
1211+00
688.6
STRUCTURE

718.50
1210+50
689.9

R.R.

STA. 1210+00

Sta. 1210+50 to Sta. 1211+50

SHEET NO.	STATE	PROJECT	
2	OHIO		

140
418

BELMONT COUNTY
BEL - 7 - 20.74

140 120 100 80 60 40 20 ℄ 20 40 60 80 100 120 140

113

121
706.5

Exist 15" San.

647

3636

Retaining Wall

℄ R.R.

683.53

718.88
1213+00
696.5

No. 6 Aggregate
Or 6A

5'

30'

978

1:1

Estimated Rock Line

Section M-6.4(h)
8" Pipe Underdrain
E-663.0

Retaining Wall

77
702.0

Exist 15" San.

120

℄ R.R.

3059

683.88

719.10
1212+50

689.3

5'

30'

778

1:1

Estimated Rock Line

83' Lt. Sta. 1212+30
Outlet Ditch into Catch Basin.

No. 6 Or 6A Aggregate

12" MIN.

END STRUCTURE
STA. 1212+31.25

Begin Special Benching to Rock
@ Sta. 1212+31.25

Begin 8" Cl. I-3 Sec M 6.4(h)
15' Rt. Sta. 1212+50
E - 664.0

NOTE:
THE BENCH ELEVATION SHOWN ON THE CROSS-SECTIONS MAY BE VARIED DURING CONSTRUCTION, AS DIRECTED BY THE ENGINEER TO PROVIDE A BENCH IN SOUND BEDROCK, OF AT LEAST 30' IN WIDTH.

Exist. 15" San.

Exist. No. 1 M.H.
To Remain & Function

Exist 15" San.
To Remain & Function

719.18
1212+00
682.2
STRUCTURE

STA. 1211+98

Exist. No. 2 M.H.
To Remain & Function

STA. 1211+30

140 120 100 80 60 40 20 ℄ 20 40 60 80 100 120 140

Sta. 1212+00 to Sta. 1213+00

720
700
680
710
690
670
710
690
670

1099 3763
1745 G317
785 3059
756 2946

SHEET NO.	STATE	PROJECT	
2	OHIO		

141
418

BELMONT COUNTY
BEL-7-20.74

SECTIONS		END AREA		VOLUME	
EXC. WASTE	EMB. FILL	CUT	FILL	CUT	FILL

140 120 100 80 60 40 20 ℄ 20 40 60 80 100 120 140

68

714.3

Prop. 10"

Exist. 15" San.

717.30
1214+50
703.3

Retaining Wall

℄ R.R.

3084

1:1

NO.6 Or 6A (Aggregate)

935

30'

632.32

Estimated Rock Line

433

663.2

712.6

13

Prop. 10"

Exist 15" San.

3594

717.98
1214+00
695.3

NO.6 Or 6A Aggregate 993

682.79

522

Estimated Rock Line

3:1

62

709.1

110'-8" Cl. J-1 Sec M 6.6(d) @ 1.45%

662.6

Under R.R.

14.5' RT. Sta. 1214+20
IE 8" J-1 = 661.00

60' Lt. Sta. 1213+25
Std. No. 2 MH. (San.)
Cover Elev. 711.80
IE 10" Cl. B-1 656.75
IE Exist 15" 696.75

Exist 15" San.

3679

Retaining Wall

℄ R.R.

100

592

718.50
1213+50
693.0

NO. 6 Or 6A Aggregate 860

30'

683.19

Estimated Rock Line

662.8

113

STA. 1213+00

STA. 1213+00

Sta. 1213+50 to Sta. 1214+50

710
690
670
710
690
670

935 3084

1798 G184

100G 3594

178G G735

922 3679

1872 G841

1099 3763

FED. ROAD DESIGNATION	STATE	PROJECT	
2	OHIO		

142
418

BELMONT COUNTY
BEL - 7 - 20,74

34' LT. STA. 1216+15
STD. Nº 2-A-10 INLET Mod.
lt. WINDOW = 713.34
lt. 24" CL. E-1 = 703.59
lt. 24" CL. J-1 = 703.50
lt. 6" CL. F-4 = 705.50 - 5th ST.
lt. 6" Cl. F-4 = 709.69 NE

34' RT. STA. 1215+98
STD. Nº 2-A-10 INLET Mod.
lt. WINDOW = 713.85
lt. 24" Cl. J-1 = 703.17
lt. 24" Cl. F-4 = 703.00
lt. 6" Cl. J-1.

FROM FIFTH STREET
SEE SHEET Nº 188

66'x24" Cl E-1 @ 0.4%

72'x24" Cl. J-1 @ 0.45%

24" Cl. F-1 @ 10 %

8'x24"x45° BEND Cl. F-1

RET. WALL

℄ R.R.

714.38
1216+00
714.1

Estimated Rock Line

1173
NO.6 Or 6A
Aggregate

665.0

24" Cl. F-4 @ 50 %

83' Rt. STA. 1215+98
STD. NO. 2-A-C.B.
lt. GRATE = 682.00
lt. WINDOW = 681.50
lt. 24" Cl. F-4 = 677.25
lt. 24" Cl. J-1 = 677.00

118' Rt. STA 1215+93
STD. HW-E END WALL
lt. 24" Cl. J-1 = 676.66

34'x24" Cl J-1 @ 1.0%

5'x4'-1/4" 5th ST.

45°x6'x1.5' D.R.C.P.

EXIST. 24" CULVERT

120' Lt. Sta. 1215+60
Exist M.H. (San.)
Cover Elev. 721.30
lt. 10" Cl B-1 704.19
lt. Exist 15" 704.19

SEE FIFTH ST.

To Remain & Function

To Remain & Function

Exist 15" San.

To be Abandoned

Plug

43' Lt. Sta. 1215+35
Std. Nº 2 M.H. (San.)
Cover Elev. 715.80
lt. 10" Cl B-1 701.30
lt. Exist 15" 701.30

715.50
1215+50
712.9

2332

RET. WALL

℄ R.R.

1155
NO.6 Or 6A
Aggregate

681.7

Estimated Rock Line

660.4

713.0

Exist 15" San.

3103

Exist 15" ℄

RET. WALL

℄ R.R.

NO.6 Or 6A
Aggregate 1345

681.9

716.48
1215+00
704.4

Estimated Rock Line

663.8

STA. 1214+50

STA. 1214+50

Sta. 1215+00 to Sta. 1216+00

BELMONT COUNTY
BEL - 7 - 20.74

SHEETING		END AREA		VOLUME	
END POINTS	DIST.	CUT	FILL	CUT	FILL

730 710 690 670

140 120 100 80 60 40 20 ℄ 20 40 60 80 100 120 140

190 700 62 322 54 366 78

G7 37 447 637

710.18
1217+50
709.6

1:1

℄ R.R.

53 G37

1504 2217

FIFTH ST MAINLINE

610

1722

711.68
1217+00
712.7

Conc. Collar
Cost to be included in unit Price Bid Per Lin. Ft. of 12" J-1

Exist. 12" V.C.P.

36"-12" J-1 @ 600 %

NO. 6 or 6A Aggregate

1026

30'

1:1

85' Rt. Sta. 1217+30
E 12" J-1 - 668.50

D.R.C.P. 18"x12"x5'

Estimated Rock Line

47.5' Rt. Sta 1217+00
Begin 8" CL I-3 Sec M 6.4 (h)
E = 668.00

1636 1722

FIFTH ST MAINLINE

344

2302

713.10
1216+50
715.2

1:1

1550

NO. 6 or 6A Aggregate

30'

Estimated Rock Line

655.6

℄ R.R.

3269 3722

18942302

3026 2035

1854 2056

STA 12/6+00

STA 12/7+00

Sta 1216+50 to Sta. 1217+50

SEEDING	
LBS/1000 SQ.YDS.	SQ. YDS.
134	
	797
153	
	939
175	
	1014
190	

SHD. RD. DIVISION	STATE	PROJECT	
2	OHIO		

144
418

BELMONT COUNTY
BEL - 7 - 20.74

END AREA		VOLUME	
CUT	FILL	CUT	FILL
	710		
728	606	1382	1176
	700		
764	664	1788	1974
	710		
1167	1468	1130	1949
	670		
53	637		

140 120 100 80 60 40 20 ℄ 20 40 60 80 100 120 140

705.68
1219+00
701.1

410
606
1.75:1
1:1
318
30'
℄ R.R.

707.18
1218+50
703.7

519
705.8
1.75:1
664
1:1
243
20'
℄ R.R.

End Benching to Rock
@
Sta. 1218+50

708.68
1218+00
706.5

71
1467
1.5:1
1095
1:1
24:1
30'
℄ R.R.
Estimated Rock Line

STA. 1217+50

STA. 1218+00 TO STA. 1219+00

BELMONT COUNTY
BEL - 7 - 20.74

GRID AREA		VOLUME	
CUT	FILL	CUT	FILL
654	186		
693	330		
94	180		
491	401		
436	253		
1078	796		
728	606		

140 120 100 80 60 40 20 ℄ 20 40 60 80 100 120 140

131 739 135 744 742 134

710 690 670 690 670 690 670

1½:1 654 186 1½:1 701.18 1220+50 699.4 ℄ R.R.

34' LT. STA. 1220+08
STD. N° 2-A-8 INLET (Mod)
℄ WINDOW ~ 701.88

7' RT. STA. 1220+08
C.B. RECONST. TO GRADE AS PER PLAN
GRATE ELEV. ~ 702.41
℄ 12" CL. J-1 ~ 696.92

34' RT. STA. 1220+22
STD. N° 2-A-12 INLET
COVER ELEV ~ 702.08
℄ WINDOW ~ 701.35
℄ 12" CL. I-1 ~ 697.20

1½:1 86 27 37 178 1½:1
C.B. ABANDONED
PLUG
28"x18" CL. J-1 @ .01%
EXIST. 24" 702.68 1220+00 699.6 To Remain Function EXIST. 24"
℄ EXIST RR
EXIST 18" I.P. ℄ 672.66

1½:1 436 253 1½:1 704.18 1219+50 701.3 ℄ R.R.

STA. 1219+00

140 120 100 80 60 40 20 ℄ 20 40 60 80 100 120 140

STA. 1219+50 TO STA. 1220+50

| SIDEWALK | | |

SEC. NO. DIVISION	STATE	PROJECT	
2	OHIO		

147
418

BELMONT COUNTY
BEL - 7 - 20.74

SIDEWALK
EXP. WIDTH | SQ. YDS.

140 120 100 80 60 40 20 ℄ 20 40 60 80 100 120 140

B B B B

780 770 760

138

2:1

190 170 140

730

1/4:1

1320

781

710

6"CL. F-4

72'x12"CL. J-1 @ .032%

694.9

17

690

696.38
1222+50
702.6

TO BE ABANDONED

34' LT. STA. 1222+25
STD. N° 2-A-8 INLET (MOD.)
COVER ELEV. ~696.93
℄ WINDOW ~696.28
℄ 12"CL. J-1 ~692.00

℄ Exist. R.R.

1320 1

37.5' RT. STA. 1222+25
EXIST. C.B. RECONST.
TO GRADE AS PER PLAN
℄ 12"CL. J-1 ~689.70

670

143

1/4:1

1324

710

157

786

696.0

EXIST. 30" SAN.
TO BE REMOVED

690

1324 15

℄ Exist. R.R.

697.36
1222+00
702.9

670

3025 107

140 STA. 1221+50

STA. 1221+50 1442 100

140 120 100 80 60 40 20 ℄ 20 40 60 80 100 120 140

STA. 1222+00 TO STA. 1222 + 50

FED. RD. DIVISION	STATE	PROJECT
2	OHIO	

148
418

BELMONT COUNTY
BEL-7-20.74

SCREENING

GRID AREA		GRID VOLUME	
CUT	FILL	CUT	FILL

140 120 100 80 60 40 20 ℄ 20 40 60 80 100 120 140

135

783

200 180 160

1¼:1

1935

Exist 6"San

℄ Exist. R.R.

694.58
1223+50
695.8

138

1390

1¼:1

Exist 6"San

207

767

TO BE ABANDONED

℄ Exist. R.R.

695.48
1223+00
698.8

138 STA. 1222+50

STA. 1222+50

140 120 100 80 60 40 20 ℄ 20 40 60 80 100 120 140

GRID AREA CUT	GRID AREA FILL	GRID VOLUME CUT	GRID VOLUME FILL
	710		
	690	1935	3
	670	3079	22
	710		
	690	1390	20
	670	2510	20
STA. 1222+50		1320	1

STA. 1223+00 TO STA. 1223+50

FED. RD. DIVISION	STATE	PROJECT	
2	OHIO		

149
418

BELMONT COUNTY
BEL - 7 - 20.74

SEEDING	
SEED MIXTURE	LB/AC

END AREA		VOLUME	
CUT	FILL	CUT	FILL

140 120 100 80 60 40 20 ℄ 20 40 60 80 100 120 140

119

683

1:1

1/4:1

1370

690.8

Exist. 6" San.

117 1:1

℄ Exist. R.R.

692.78
1224+50
694.50

730

710

690

670

1570 11

127

728

1/4:1

1883

692.0

Exist. 6" San.

℄ Exist. R.R.

693.68
1224+00
699.49

710

690

670

3198 10

1883 0

3536 3

135 STA. 1223+50

STA. 1223+50 1935 3

140 120 100 80 60 40 20 ℄ 20 40 60 80 100 120 140

STA. 1224+00 TO STA. 1224+50

BELMONT COUNTY
BEL - 7 - 20.74

140 120 100 80 60 40 20 ℄ 20 40 60 80 100 120 140

115 750 740 663 770 760 750 113 780 770 633 760 115 650 119 STA. 1224+50

1:1 1½:1 700 688.3 5" EXIST. 8" SAN. 689.18 1226+00 690.1 160 ℄ Exist. R.R.

1:1 1½:1 932 689.0 EXIST. 8" SAN. 690.08 1225+50 691.7 130 ℄ Exist. R.R.

1:1 1½:1 1167 688.9 Exist. San M.H. (Aband) 690.98 1225+00 693.1 29 ℄ Exist. R.R.

690 680 700 160 670 700 1511 269 690 680 932 130 670 700 1944 187 690 680 1167 29 670 2535 37 STA. 1226+50 1570 11

140 120 100 80 60 40 20 ℄ 20 40 60 80 100 120 140

STA. 1225+00 TO STA. 1226+00

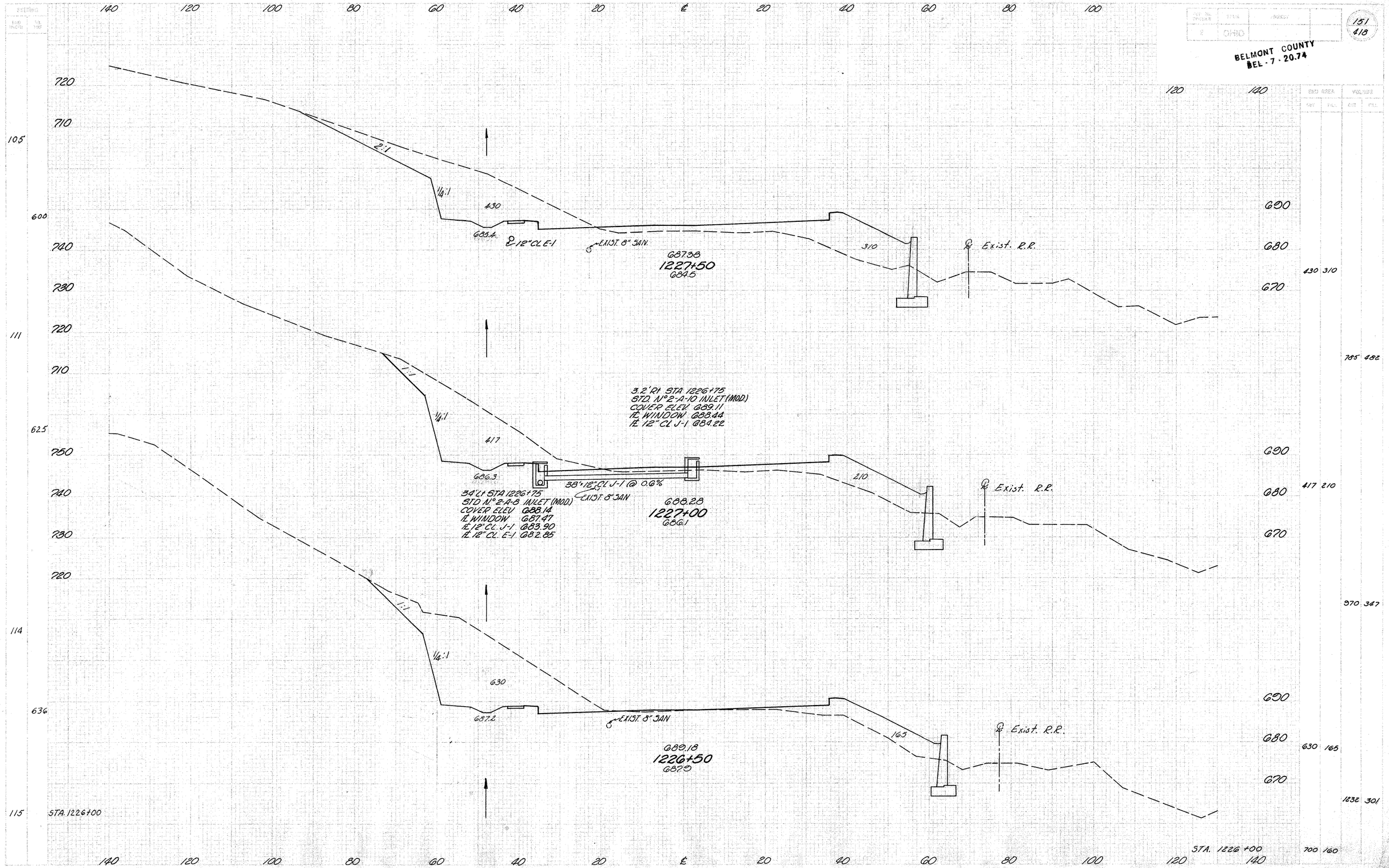

151
418
BELMONT COUNTY
BEL - 7 - 20.74
2:1
1/4:1
430
685.4
12" CL E-1
EXIST. 8" SAN.
687.38
1227+50
684.5
310
Exist. R.R.
3.2' Rt STA 1226+75
STD. N° 2-A-10 INLET (MOD.)
COVER ELEV. 689.11
℄ WINDOW 688.44
℄ 12" CL J-1 684.22
1:1
1/4:1
417
686.3
38'×12" CL J-1 @ 0.6%
EXIST. 8" SAN
34' Lt STA 1226+75
STD N° 2-A-8 INLET (MOD.)
COVER ELEV 688.14
℄ WINDOW 687.47
℄ 12" CL. J-1 683.90
℄ 12" CL. E-1 682.85
688.28
1227+00
686.1
210
Exist. R.R.
1:1
1/4:1
630
687.2
EXIST. 8" SAN
689.18
1226+50
687.9
165
Exist. R.R.
STA. 1226+00
STA. 1226+00
STA. 1226+50 TO STA. 1227+50

BELMONT COUNTY
BEL - 7 - 20.74

140 120 100 80 60 40 20 ℄ 20 40 60 80 100

118' LT STA 1229+45
METAL C.B. EUREKA

MACKEY ST MAINLINE

To be Abandoned
EXIST 18" SAN

EXIST 18" SAN

EXIST 8" SAN

42' LT STA 1229+60
DOUBLE Inlet
(Abond.)

38' LT STA 1229+37
EXIST. INLET

32

21" CL J-1

FOR STORM SEWER
DETAILS SEE SHEET 190

48' Lt Sta 1229+32
Std N° 1 MH (San.)
Cover Elev 682.5
℄ Exist 8" 674.4
℄ 8" Cl B-1 671.0

20' LT STA 1229+41
EXIST. M.H

683.78
1229+50
677.5

To be Abandoned
EXIST 10" SAN.

8.5' RT STA 1229+71
EXIST. M.H

℄ Exist. R.R.

138'×8" Cl. B-1 7.25%

89' RT STA 1229+49
EXIST. M.H.

659.0

40' PIPE UNDER R.R

G90 G80 G70

10 100

520 120 140

3 520

MACKEY ST. MAINLINE

G90 G80

26 300

200 430

EXIST. 15" SAN
EXIST. 8" SAN

21" CL J-1

22' LT. STA 1229+06
EXIST. METAL INLET
(Aband)

684.68
1229+00
679.3

℄ Exist. R.R.

G90 G80 G70

188 880

200 430

EARTHWORK
SECTION AHEAD

EARTHWORK
SECTION BACK

4' LT STA 1228+80
STD N° 2-G INLET
COVER ELEV 685.14
℄ WINDOW 684.47
℄ 12" Cl J-1 679.96

AHEAD → 317 787

82 539

690 680

142

32'×12" CL J-1 @ 0.69%

10'×12" CL E-1 @ 1.1%

50' LT STA 1228+80
STD N° 2-2-A C.B.
GRATE ELEV 682.80
℄ WINDOW 682.30
℄ 12" CL E-1 678.45
℄ 12" CL E-1 679.57
℄ 21" Cl J-1 677.70

38' LT STA 1228+80
STD N° 2-A-G INLET (MOD.)
COVER ELEV 684.67
℄ WINDOW 684.00
℄ 12" CL J-1 679.74
℄ 12" CL E-1 679.04

685.58
1228+50
680.5

420

℄ Exist. R.R.

AHEAD → 142 420

BACK → 164 420

G80 G70

700 112

690 680

340

684.6
℄ 12" CL E-1

EXIST 8" SAN.

686.48
1228+00
682.3

423

℄ Exist. R.R.

BACK → 467 781

G80 G70

340 423

603 105

STA. 1227+50

713 679

STA. 1227+50 430 310

140 120 100 80 60 40 20 ℄ 20 40 60 80 100 120 140

STA. 1228+00 TO STA. 1229+50

BELMONT COUNTY
BEL - 7 - 20.74

GRID WIDTH	FT.
93	492
84	442
75	397
68	217
10	STA 1229+50

GRID AREA SQ.	GRID AREA SQ. FT.	VOLUME CU. YD.	VOLUME CU. YD.
7	450		
16	933		
10	557		
56	866		
50	400		
65	845		
20	512		
22	956		
3	520		

140 120 100 80 60 40 20 ℄ 20 40 60 80 100 120 140

680 / 670 / 660

G75.6
G80.18
1231+50
G72.6
℄ R.R.
℄ EXIST. 10" SAN.
℄ EXIST. 15" SAN.

680 / 670

G76.1
G81.08
1231+00
G74.6
℄ R.R.
℄ EXIST. 10" SAN.
℄ EXIST. 15" SAN.

690 / 680 / 670

G80.0
G81.98
1230+50
G77.1
℄ R.R.
℄ EXIST. 10" SAN.
℄ EXIST. 15" SAN.

690 / 680 / 670

52"+21" CL. E-I @ 14.75%
FOR CONTINUATION OF STORM SEWER SYSTEM SEE MACKEY ST. SHEET NO. 190
55' LT. STA 1229+71
STO. N°1 MH
COVER ELEV. 683.52
AL 21" CL. E-I 675.00
AL 21" CL. E-I 675.00
AL 24" CL. E-I 674.75
G82.88
1230+00
G75.4
℄ R.R.
℄ EXIST. 10" SAN.
℄ EXIST. 15" SAN.

STA. 1229+50

140 120 100 80 60 40 20 ℄ 20 40 60 80 100 120 140

STA. 1230+00 TO STA. 1231+50

FED. AID PROJECT	STATE	PROJECT	
2	OHIO		

BELMONT COUNTY
BEL - 7 - 20.74

BID AREA		V. HORIZ	
CUT	FILL	CUT	FILL
755	315		
812	332		
193	665		
17	960		
7	450		

140 120 100 80 60 40 20 ℄ 20 40 60 80 100 120 140

75 67 394 372 367 438 93

G90 G80 G70 G60

Prop. 12" San

10' RT. STA. 1233+30
EXIST. C.B. (Abond)

EXIST. 12" SAN

G76.50
1233 + 50
G73.0

℄ R.R.

Prop. 12" San.

EXIST. 12" SAN

G77.88
1233+00
G73.2

Prop. 12" San.

EXIST. 12" SAN

G78.38
1232+50
G76.6

2:1

S.B. LANES

1231

N.B. LANES

EXISTING 36" ST. SAN. SEWER

No. 2-A (Mod.) C.B.

No. 2 M.H.

12" B-1

(8) No. 2-A-12 Inlet (Mod.)

36" L-1

12" H-1

18" B-1

(Abond.)

1232

(3) No. 2-A-10 Inlet (Mod.) (ABAND)

(2)

(10) No. 2-A (Mod.) C.B.

EXISTING 18" San. Z

(11) EXISTING M.H. (San.)

52' LT. STA. 1232+17 (6)
STD. N° 2 MH (SAN)
COVER ELEV. 677.50
FL. 8" CL B-1 672.20
FL. 12" CL B-1 659.93
FL. 15" CL B-1 659.68

117' LT. STA. 1232+84
EXIST. M.H. (San.)

EXIST. 10" SAN

EXIST. 8" SAN

To Remain & Function

COUNNECT TO EXIST

40'×12" CL E-1 @ 18.63%

20'×12" CL B-1 @ 7.3%

EXIST. 36" ST. SEWER

41'×12" CL J-1 @ 22.5%

Abond.

2' LT. STA. 1232+23 (1)
EXIST. C.B.

10' RT. STA. 1232+30 (2)
EXIST. C.B.

3' LT. STA. 1232+77 (5)
EXIST. C.B.

EXIST. M.H. (5)

EXIST. C.B. (5)

18' RT. STA. 1231+82 (9)

EXIST. 24" SAN

107'×36" CL J-1 @ 7.75%

679.28

1232+00

672.1

128'×15" CL B-1 @ .30%

EXIST. BOX CULVERT 2.1'×2.1'

75' RT. STA. 1232+02 (11)
EXIST. M.H. (San.)
To Remain & Function

46' RT. STA. 1231+80 (4)
EXIST. C.B. (Abond)

PIPE UNDER RR.

EXIST. 30" IRON PIPE

61' LT. STA. 1231+70 (7)
STD. N° 2-A C.B. (MOD.)
FL. GRATE - 675.36
FL. WINDOW - 674.90
FL. 12" CL E-1 - 669.00
FL. 24" CL E-1 - 668.00
FL. 36" CL J-1 - 667.00
FL. EXIST. 36" 667.00

34' LT. STA. 1232+00 (8)
STD. N° 2-A-12 INLET (MOD.)
COVER ELEV. 678.86
FL. WINDOW 678.19
FL. 12" CL J-1 674.46
FL. 12" CL E-1 674.46
FL. 6" CL F-4 674.46

7' RT. STA. 1232+00 (9)
STD. N° 2-A-10 INLET (MOD.)
COVER ELEV. 679.78
FL. WINDOW 679.11
FL. 12" CL J-1 675.38
FL. 6" CL F-4 675.38

46' RT. STA. 1231+80 (4)
STD. N° 2-A C.B. MOD.
FL. GRATE 667.50
FL. WINDOW 668.58
FL. 36" CL J-1 667.70
FL. EXIST. 36" 667.70

STA. 1231+50

STA. 1232+00 TO STA. 1233+50

FED. ROAD DIVISION	STATE	PROJECT	
2	OHIO		

135
418

BELMONT COUNTY
BEL. 7. 20.74

END AREA | VOLUME
CUT | FILL | CUT | FILL

140 120 100 80 60 40 20 ℄ 20 40 60 80 100 120 140

A

730 720 710 700 690 680 670 660 650 640 630 620 610

240 220 200 180 160 140

2575

1265

1264

B

730 720 710 700 690 680 670 660 650 640 630 620 610

230 210 190 170 150

2130

1622

238 217 869 103 494 75

℄ R.R.

G73.88
1235+00
G81.3

Drop 12" San

EXIST. 12" SAN

Existing Retaining Wall

3843 9

G74.78
1234+50
G80.7

Prop 12" San

EXIST. 12" SAN

50

2438 50

G73.4

G75.68
1234+00
G81.6

Prop 12" San

EXIST. 12" SAN

100

1622 100

3759 139

1627 269

5816 55

135 190

STA. 1233+50

STA 1234+00 TO STA 1235+00

SECTIONS	
CUT WIDTH	FILL WIDTH

END AREA		VOLUME	
CUT	FILL	CUT	FILL

FED. SEC. DIVISION	STATE	COUNTY	
2	OHIO		

156
418

BELMONT COUNTY
BEL. - 7 - 20.74

C 140 120 100 80 60 40 20 ℄ 20 40 60 80 100 120 140

C 750 740 730 720

720 710 700

210 190 350 170 150

255.9

213

B 730 720 710 700

1372

8" Prop 12" San

G71.18
1236+50
G82.0

8" Exist 10" San

℄ R.R.

G70 G60

3909 8

750 740 730 720 710

B

930

140

7110 12

209

A 720 710 700

2820

220 200 180 160 140

℄ R.R.

Exist. San. M.H. (Aband.)

1233

8" Prop 12" San

G72.08
1236+00
G81.9

3770 5

G70 G60

2633

7054 11

235

1215

A 740 730 720 140

℄ R.R.

52' Lt STA 1235+50
STD. N° 1 MH (SAN.)
COVER ELEV G72+50
℄ 12" CL B-1 G61.02

G72.98
1235+50
G80.9

Existing Retaining Wall

8" Exist 10" San

G70 G60

1314

3848 7

7122 15

238

220 200 180 160 140 120 100 80 60 40 20 ℄ 20 40 60 80 100 120 140

STA. 1235+00

STA. 1235+00

3843 9

STA. 1235+50 TO STA. 1236+50

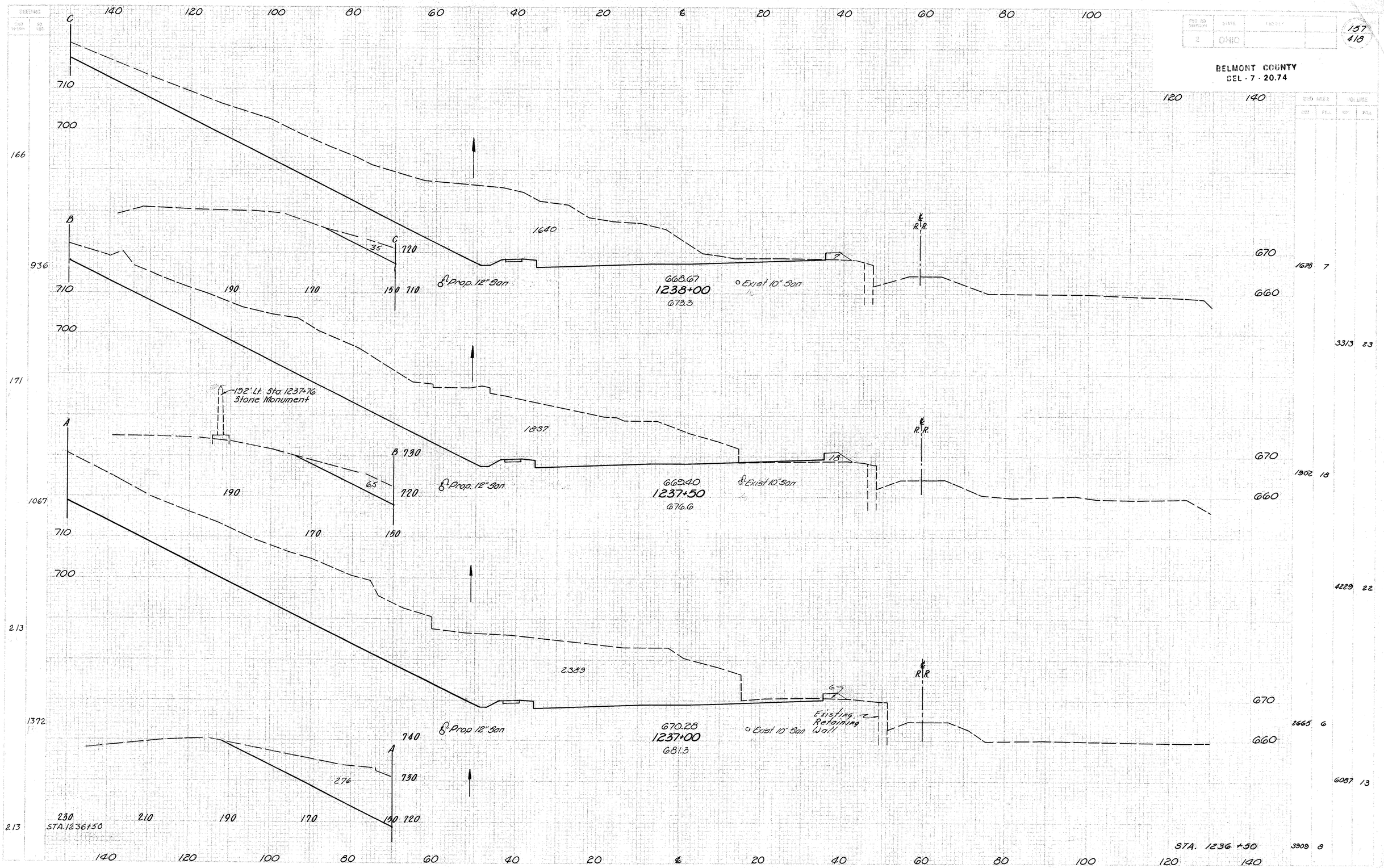

157
418
2
OHIO
BELMONT COUNTY
SEL - 7 - 20.74
140 120 100 80 60 40 20 ℄ 20 40 60 80 100
120 140
C
B
A
710
700
166
936
171
1067
213
1372
1640
35
720
190
170
150
710
Prop. 12" San
668.67
1238+00
673.3
Exist 10" San
℄ R.R.
670
660
1675 7
3313 23
192' Lt. Sta. 1237+76
Stone Monument
1837
730
65
720
190
170
150
669.40
1237+50
676.6
Exist 10" San
18
1902 18
4229 22
2389
6
Existing Retaining Wall
670.28
1237+00
681.3
Exist 10" San
Prop 12" San
740
730
276
230
210
190
170
150
720
STA. 1236+50
2665 6
6087 13
3909 8
STA. 1236+50

BELMONT COUNTY
BEL-7-20.74

140 120 100 80 60 40 20 ℄ 20 40 60 80 100 120 140

690
680
650
700
710
730
720

1½:1
2:1

705
7' RT. STA. 1239+97
EXIST. M.H.
Abond.
7' RT. STA. 1239+97
EXIST. C.B.
EXIST. 10" SAN
℄ R.R.
Prop. 10" San
49' LT. STA. 1240+00
STD. N° 2-2-A C.B.
℄ GRATE GG5.00
℄ WINDOW GG4.50
℄ 18" CL E-1 GG1.70
16"+18" CL E-1 @ 1.25%
30"+18" CL J-1 @ 103%
34' LT. STA 1240+00
STD N° 3 C.B.
℄ WINDOW GG6.20
℄ 18" CL E-1 GG1.50
℄ 18" CL J-1 GG1.00
℄ 12" CL J-1 GG1.50
GG7.41
1240+00
G71.4
4' LT STA 1240+00
STD N° 3 C.B.
℄ WINDOW GG0.85
℄ 18" CL J-1 GG0.69
54' LT. Sta 1239+30
Std. N° 1 M.H. (SAN.)
Cover Elev. GG9.00
℄ 10" CI B-1 GG.
GG5.5
635
8"-12" CI J-1
EXIST. 10" SAN
GG7.48
1239+50
G71.2
731
8" Prop. 12" San
32'+12" CL J-1 @ 1.81%
EXIST. 10" SAN
GG7.71
1239+00
G71.6
25' RT STA 1239+00
STD N° 2-A-10 INLET
COVER ELEV. GG7.98
℄ WINDOW GG7.31
℄ 12" CL J-1 GG2.38
34' LT. STA. 1239+00
STD N° 3 C.B.
℄ WINDOW GG6.50
℄ 12" CL J-1 GG1.80
1792
Exist. San. M.H. (Abond.)
Existing Retaining Wall
GG8.10
1238+50
G72.7
107
2:1
STA. 1238+00

190 170 150

END AREA
CUT FILL

		CUT	FILL
82	433		
74	417		
76	644		
156	894		
166			

		CUT	FILL
G60	705	15	
G50			
			1241 20
G60	635	6	
G50			
			1265 13
G60	731	8	
G50			
			2346 12
G60			1602 7
G50			3220 13
			1675 7

STA. 1238+50 TO STA. 1240+00

BELMONT COUNTY
BEL - 7 - 20.74

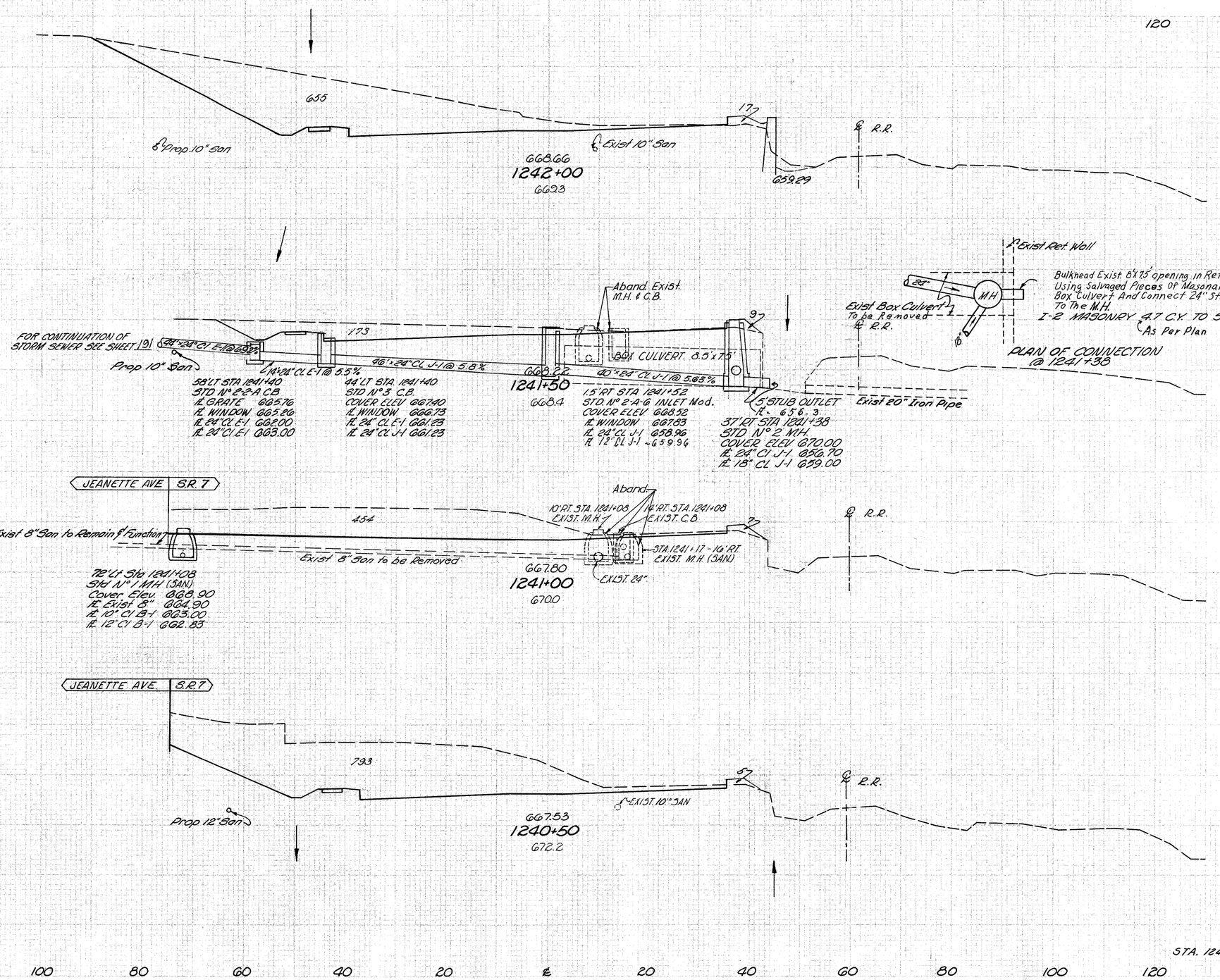

STA. 1240+50 TO STA. 1242+00

SEEDING

RATE PER 1000 SY	LB PER SY

END AREA		VOLUME	
CUT	FILL	CUT	FILL

FED. ROAD DIVISION	STATE	PROJECT	SHEET NO.	TOTAL SHEETS
2	OHIO		160	418

BELMONT COUNTY
BEL - 7 - 20.74

140 120 100 80 60 40 20 ℄ 20 40 60 80 100 120 140

100 90 80 70 60 50 40 30 20 10 0 10 20 30 40 50 60 70 80 90 100

1½:1

1620

℄ Prop. 8" San

℄ EXIST. 8" SAN.

669.07
1243+50
671.3

℄ R.R.

1620 69

117' LT. STA. 1242+55
EXIST. M.H. (San.)

EXIST. 8" SAN.

ABANDON & PLUG

624

81' Lt Sta. 1242+60
Std N° 2 M.H. (San)
Cover Elev. 682.90
℄ Exist 8" 676.50
℄ 8" Cl B-1 673.70
℄ 10" Cl B-1 663.53

26'+8" CL B-1 @ 0.18%

55' Lt Sta. 1242+67
Std N° 1 M.H. (San)
Cover Elev. 671.00
℄ 8" Cl B-1 663.82

2' Rt. STA. 1242+78
EXIST. C.B.

Aband.

12' Rt. STA. 1242+75
EXIST. M.H. San.

EXIST. 6"

Remove 6" ℄ 8" Pipe

EXIST. 8" JAN.

Exist 10" San

669.53
1243+00
671.37

57

℄ R.R.

624 57

EXIST. 12"

ABANDON & PLUG

465

Prop 10" San.

Remove 12" Pipe 2' RT. STA. 1242+50

EXIST. C.B. Abandoned

41'+12" CL J-1 @ 5.2%

Exist 10" San

47

℄ R.R.

465 47

34' LT. STA. 1242+50
STD N° 2-A-8 INLET Mod.
COVER ELEV 668.51
℄ WINDOW 667.84
℄ 12" CL J-1 663.70

7Rt STA. 1242+50
STD N° 2-A-8 INLET Mod.
COVER ELEV - 669.43
℄ WINDOW - 668.76
℄ 12" CL J-1 - 661.67

669.09
1242+50
670.7

STA 1242+00

STA. 1242+00

2263 117

1194 97

1037 60

655 17

STA 1242+50 TO STA. 1243+50

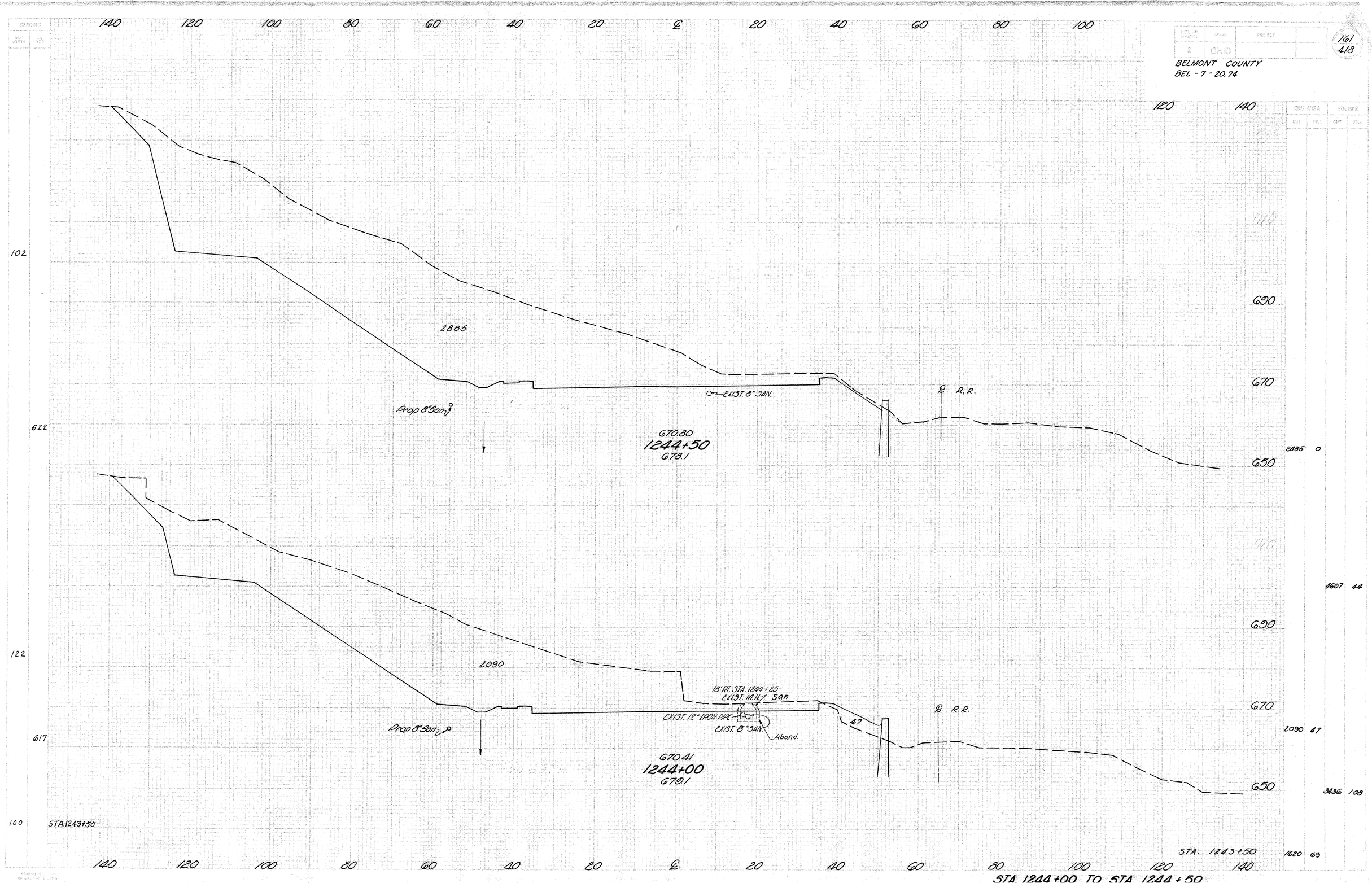

161
418
BELMONT COUNTY
BEL - 7 - 20.74
140 120 100 80 60 40 20 ℄ 20 40 60 80 100
120 140
102
622
122
617
100
690
670
650
2885
Prop 8" San
EXIST. 8" SAN.
℄ R.R.
670.80
1244+50
678.1
2090
18" RT. STA. 1244+25
EXIST. M.H. San
EXIST. 12" IRON PIPE
EXIST. 8" SAN.
Aband.
47
670.41
1244+00
679.1
STA. 1243+50
STA. 1243+50
2885 0
4607 44
2090 47
3436 108
1620 69
STA. 1244+00 TO STA. 1244+50

BELMONT COUNTY
BEL - 7 - 20.74

140 120 100 80 60 40 20 ℄ 20 40 60 80 100 120 140

134
667
106
656
134
644
102

1:1
1¼:1
1½:1

4252
3592
2950

EXIST. 8" SAN.
Prop 8" San
℄ R.R.
32
24

G71.43
1246+00
G73.7

℄ Prop. 8" San.
EXIST. 8" SAN.
G71.31
1245+50
G75.9

55'Lt Sta 1245+00
Std. N° 1 MH. (San.)
Cover Elev. 671.00
H. 8"CI B-1 662.96

G71.10
1245+00
G78.7

STA. 1244+50

700 680 660 670 650 670 650

4252 32
7263 47
3592 19
6058 40
2950 24
5403 22
2885 0

STA. 1244+50 TO STA. 1246+00

SETTINGS

GRID WIDTH	GRID TICS

P.O. NO. SYMBOL	STATE	PROJECT	
2	OHIO		

163
418

BELMONT COUNTY
BEL - 7 - 20.74

GRID AREA		VOLUME	
CUT	FILL	CUT	FILL

140 120 100 80 60 40 20 ℄ 20 40 60 80 100 120 140

115 664 124 772 154 800 134 STA. 1246+00

1:1 1¼:1 1½:1 1¼:1 1:1 1½:1 1¼:1 1½:1

2650

55' Lt. Sta 1247+50
Std. No 1 M.H. San
Cover Elev 670.30
15-8"Cl B-1 660.13

Exist. 8" San.

671.22
1247+50
675.9

℄ R.R.

2650 55

2032

Exist. 8" San.

℄ Prop. 8" San.

671.38
1247+00
676.0

39

2932 39

3322

Exist. 8" San.

Prop. 8" San ℄

671.45
1246+50
671.2

60

3322 60

STA. 1246+00

700 680 670 660 690 670 680 660

5169 87 5791 92 7013 4252 32

140 120 100 80 60 40 20 ℄ 20 40 60 80 100 120 140

STA. 1246+50 TO STA. 1247+50

140 120 100 80 60 40 20 ℄ 20 40 60 80 100

SECTION
END AREA CUT FILL

GRID

164
418

BELMONT COUNTY
BEL - 7 - 20.74

120 140

END AREA VOLUME
CUT FILL CUT FILL

124

669

117

653

118

647

115

STA. 1247+50

8" EXIST. 8" SAN.

1430

℄ Prop 8" San

80

℄ R.R.

700

680

1430 80

660

G70.37
1249+00
G73.7

3274 144

690

8" EXIST. 8" SAN.

2105

Prop 8" San

19

℄ R.R.

2105 73

670

G70.67
1248+50
G75.8

700

2477

40' L.T. STA. 1248+24.
EXIST. M.H. (San.)
Aband.

℄ EXIST. 8" SAN.

Prop 8" San

88

℄ R.R.

2243 151

680

G70.97
1248+00
G75.6

660

2477 88

5673 133

STA. 1247+50

2650 55

140 120 100 80 60 40 20 ℄ 20 40 60 80 100 120 140

STA. 1248+00 TO STA. 1249+00

BELMONT COUNTY
BEL - 7 - 20.74

140 120 100 80 60 40 20 ℄ 20 40 60 80 100 120 140

R.R.

669.17
1251+00
668.0

669.47
1250+50
668.9

669.77
1250+00
673.0

670.07
1249+50
674.6

STA. 1249+00

EXIST. 8" SAN

EXIST. M.H.
83' LT STA. 1250+70

83' LT Sta 1250+70
Std N° 1 MH (San.)
Cover Elev 680.7
℄ Exist 670.5
℄ 8" CI B-1 668.50

24"x8" CI B-1 @ 4.0%

59' LT Sta 12.50+70
Std N° 1 MH (San.)
Cover Elev 672.50
℄ 8" CI B-1 667.58

1.5:1

34' LT STA. 1250+50
STD. N° 2-A-B-INLET (MOD.)
COVER ELEV-669.05
℄ WINDOW - 668.38
℄ 12" CL J-1 - 663.41

34"x12" CL J-1 @ 7.85%

1.5 RT STA 1250+50
STD N° 2-A-B (INLET (MOD.)
COVER ELEV 669.81
℄ WINDOW 669.14
℄ 12" CL J-1 660.74

60"x24" CI. J-1 @ 3.65 %

61' Rt. Sta. 1250+30
℄ 24" CI. J-1 - 650.55
STR. HWE HEADWALL

10'x5'x4' D.R.C.P.

2:1

EXIST. 8" SAN

Prop. 8" San

14:1

| | | |

BELMONT COUNTY
BEL-7-20.74

140 120 100 80 60 40 20 ℄ 20 40 60 80 100 120 140

37 Rural
55 Martinsferry
168 Rural
22 Rural-Ahead
Sta. 1252+64
22 Martinsferry-Back

EARTHWORK SECTION - AHEAD
EARTHWORK SECTION - BACK
MARTINS FERRY | RURAL

2:1 405 269 134 17 107 57 3.7 68

℄ R.R.

115'x18" CL.J-1 @ 3.48%

50'Lt. STA 1252+98
STD. N° 2-2-A C.B.
FL GRATE 666.00
FL WINDOW 665.50
FL 18" CL.J-1 663.00

GG7.47
1253+00
669.5

18"x 9'x6' ORCP
GG'RT. STA. 1252+98
STD. HW-E ENDWALL
FL 18" CL.-J-1-659.00

MARTINS FERRY - AHEAD → 674 0
AHEAD RURAL → 212 6
BACK → 481 6

680
660

29 15 133 33 233 51 325 GG

SPRING ST. | S.R. 7

197 55 4:1

Exist. C.B. & 15" Tile To be Abandoned

℄ R.R.

660

19 55

6'-4'-6' 2:1 2:1
I-10 Riprap (Reinforced)
SEC. A-A
1252+64

EARTHWORK SECTION - AHEAD
EARTHWORK SECTION - BACK

GG827
1252+50
666.2

℄ SPRING ST.

35'LT. STA 1252+10
STD. N° 3 C.B.
FL WINDOW 667.90
FL 12" CL.E-1 663.80

4'LT. STA 1251+85
STD. N°2-6 MEDIAN INLET
COVER ELEV 668.98
FL WINDOW 668.31
FL 12" CL J-1 664.40

Existing C.B. Abandoned
FL GRATE - 666.38
FL 36" - 657.96
FL 12" - 661.88
FL 6" - 664.38

FL 12"J-1 = 663.00

A FL 12"E-1 ~ 663.30 A

257 27 52 31

Exist. 7.5'x6.5' Stone Box Culvert (Skewed) To Remain & Function.

FL 668.28

20'x12" CL E-1 @ 2.8% Exist 36" Pipe J

HW N°1
52.5' LT. STA. 1251+94
STD. HW-N°1 HEADWALL
FL 12" CL. E-1 ~ 663.30
FL EXIST. 36" ~ 663.30

I-10 Riprap Using 6" Reinf. Conc. Slab

GG8.57
1252+00
666.7

15'~12" CL J-1 @ 10%

Exist. 36" and prop. 12" will Continue to Function

Exist 36" Pipe J

℄ R.R.

Exist 36" I.P. @ 3.64%

FL 655.05

660

680

AHEAD → 2 52
BACK → 2 77

680

157 7 35

GG887
1251+50
667.2

℄ R.R.

680

22 39

STA. 1251+00

MARTINS FERRY - WEST of 14' LT. of ℄ - 186 0
RURAL - EAST of 14' LT. of ℄ - 147 40
STA. 1252+64
MARTINS FERRY - BACK - 130 16

22 108
309 78
312 45

140 120 100 80 60 40 20 ℄ 20 40 60 80 100 120 140

STA. 1251+50 TO STA. 1253+00

GRADING

140 120 100 80 60 40 20 ℄ 20 40 60 80 100

STATE: OHIO

167
418

BELMONT COUNTY
BEL - 7 - 20.74

120 140

END AREA: CUT FILL | VOLUME: CUT FILL

MARTINS FERRY RURAL

GGR
79

1½:1

414

2333

378 Rural
392 Martins Ferry

MARTINS FERRY RURAL

1½:1

12 47 117

℄ R.R.

Martins Ferry
RURAL
GGO

414 0
414 2357 12

700

680

GG707
1254+50
G70.9

70R
62

385

1½:1

2000

231 Rural
408 Martins Ferry

Martins Ferry
RURAL
GGO

740 0
4034 18

680

Martins Ferry
385 0
RURAL
2000 7

77

℄ R.R.

MARTINS FERRY RURAL

GG737
1254+00
G72.8

GGO

AHEAD - WEST of 85' L.T. of ℄ -
EAST of 85' L.T. of ℄ - RURAL

RURAL 1873 15
1710 0

STA. 1253+72 Martins Ferry

680

BACK - WEST of 14' L.T. of ℄ - URBAN
EAST of 14' L.T. of ℄ - RURAL

1305

180

97

℄ R.R.

13R
85

139 Rural
389 Martins Ferry

GG767
1253+50
G70.5

Martins Ferry
1305 0
RURAL
180 9
GGO

Martins Ferry
1833 6
RURAL
363 9

37R
55

STA. 1253+00
Martins Ferry

STA. 1253+00
Martins Ferry
RURAL 212 6
674 0

140 120 100 80 60 40 20 ℄ 20 40 60 80 100 120 140

STA. 1253+50 TO STA. 1254+50

SIZE CONT.

FED. AID SYSTEM NO.	STATE	PROJECT	
2	OHIO		

168
418

BELMONT COUNTY
BEL-7-20.74

140 120 100 80 60 40 20 ℄ 20 40 60 80 100 120 140

	END AREA		VOLUME	
	CUT	FILL	CUT	FILL
AHEAD - RURAL	4310	4		
STA. 1255+59				
MARTINS FERRY - BACK - WEST of 14'LT. of ℄	3861	0	1299	0
EAST of 14'LT. of ℄ - RURAL	349	4	118	1
710				
600				
Martins Ferry	3933	0		
RURAL	360	4		
670				
Martins Ferry	7740	0		
RURAL	552	8		
700				
RURAL AHEAD	236	4		
Martins Ferry AHEAD	4126	0		
680				
RURAL BACK	2060	4		
Martins Ferry BACK	1402	0		
660				
RURAL	4030	15		
Martins Ferry	1601	0		
STA. 1254+50 RURAL	2357	12		
Martins Ferry	414	0		

138 Rural-Ahead
Sta 1255+59
34R Rural-Back
104 Martins Ferry-Back

35 Rural
105 Martins Ferry

35R
106

1/4:1

3933

MARTINS FERRY | RURAL

267 Rural
433 Martins Ferry

1 1/2:1

BACK
MARTINS FERRY | RURAL

1/4:1

1400
14.02

280

665.5

71'×12" CL J-1 @ 0.68%

34'LT STA 1255+50
STD. N° 2-A-8 INLET (MOD.)
COVER ELEV. 666.44
℄ WINDOW 665.77
℄ 12" CL J-1 662.19

666.47
1255+50
671.1

34'RT STA 1255+50
STD. N° 2-A-8 INLET (MOD.)
COVER ELEV. 666.44
℄ WINDOW 665.77
℄ 12" CL J-1 661.73
℄ 12" CL E-1 661.63

20'×12" CL E-1 @ 1.2%
A. 661.00

55'RT STA. 1255+50
HW-E ENDWALL
18"×18"×6' DRCP
℄ 12" CL E-1 = 661.43

659.0

℄ R.R.

61R
50

AHEAD
MARTINS FERRY | RURAL

1824

1 1/2:1

236

665.8

℄ R.R.

353 Rural
358 Martins Ferry

666.77
1255+00
671.5

66R
79

STA 1254+50

140 120 100 80 60 40 20 ℄ 20 40 60 80 100 120 140

STA. 1255+00 TO STA. 1255+50

BELMONT COUNTY
BEL - 7 - 20.74

END AREA		VOLUME	
CUT	FILL	CUT	FILL

140 120 100 80 60 40 20 ℄ 20 40 60 80 100 120 140

123

683

95

1/1

4385

595

138 STA. 1255+59

4075

61

47

GG5.87
1256+50
G72.4

℄ R.R.

GG6.17
1256+00
G72.2

37

700

680

660

4075 4

7834 7

700

4385 3

680

660

6602 5

STA. 1255+59 4310 4

140 120 100 80 60 40 20 ℄ 20 40 60 80 100 120 140

STA. 1256+00 TO STA. 1256+50

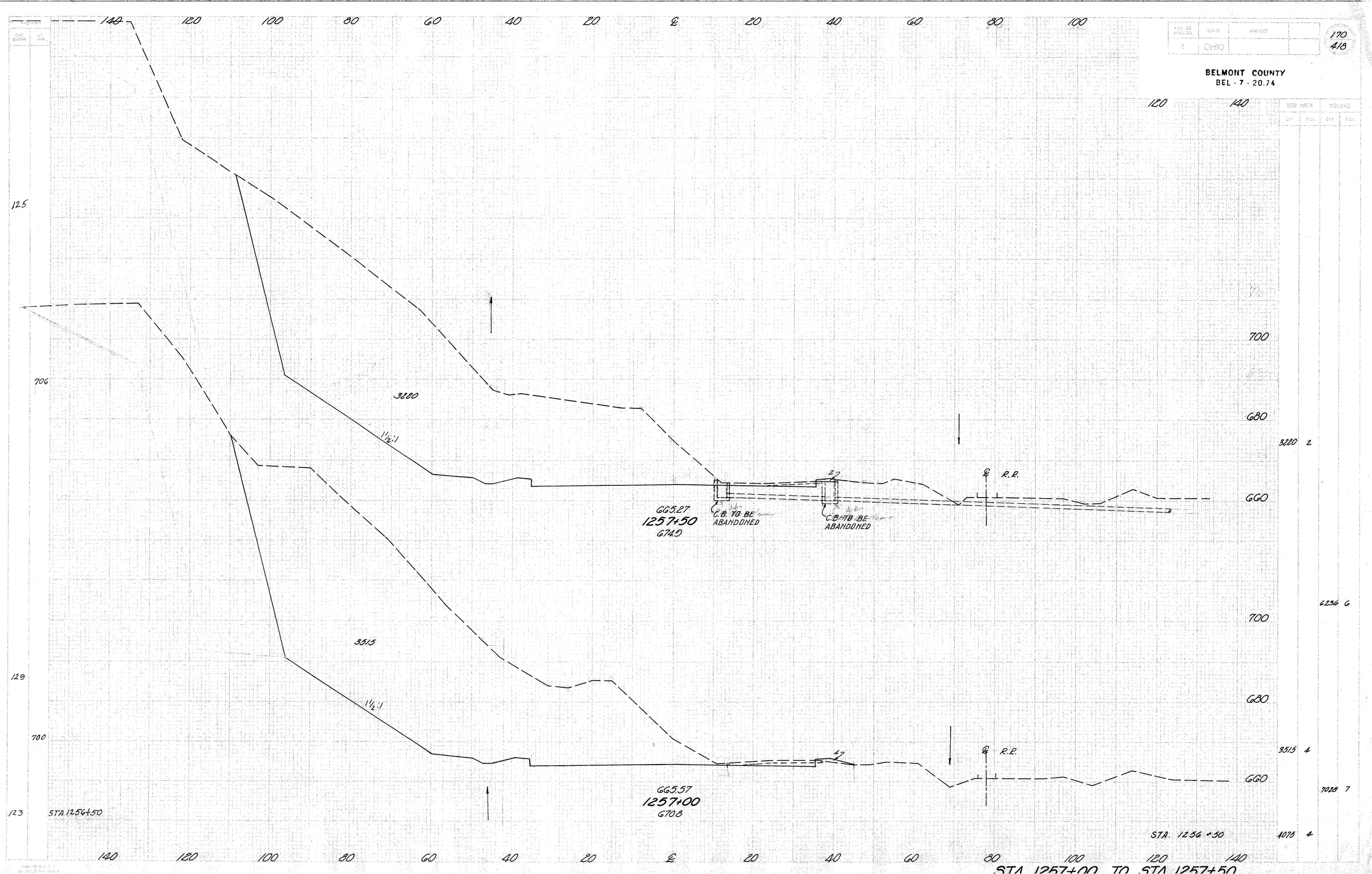

170
418
BELMONT COUNTY
BEL - 7 - 20.74
2
OHIO
140
120
100
80
60
40
20
℄
20
40
60
80
100
125
706
129
700
123
STA 1256+50
3220
1½:1
665.27
1257+50
674.9
C.B. TO BE ABANDONED
C.B. TO BE ABANDONED
℄ R.R.
3515
1½:1
665.57
1257+00
670.8
℄ R.R.
700
680
660
700
680
660
3220 2
6236 6
3515 4
7028 7
4075 4
STA. 1256+50
STA 1257+00 TO STA 1257+50

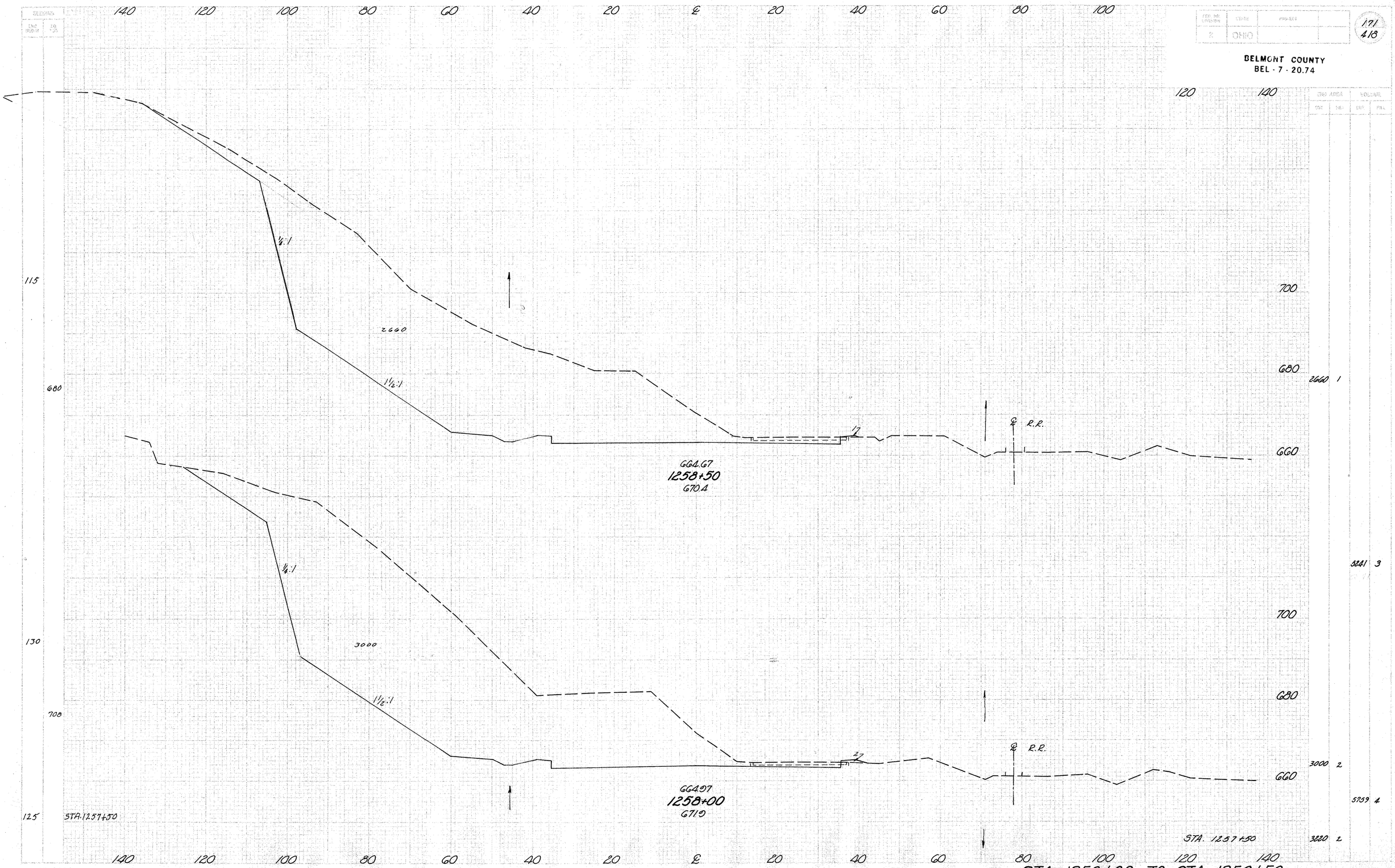

STA. 1258+00 TO STA. 1258+50

BELMONT COUNTY
BEL - 7 - 20.74

FED. RD. DIVISION	STATE	PROJECT	
2	OHIO		

BELMONT COUNTY
BEL - 7 - 20.74

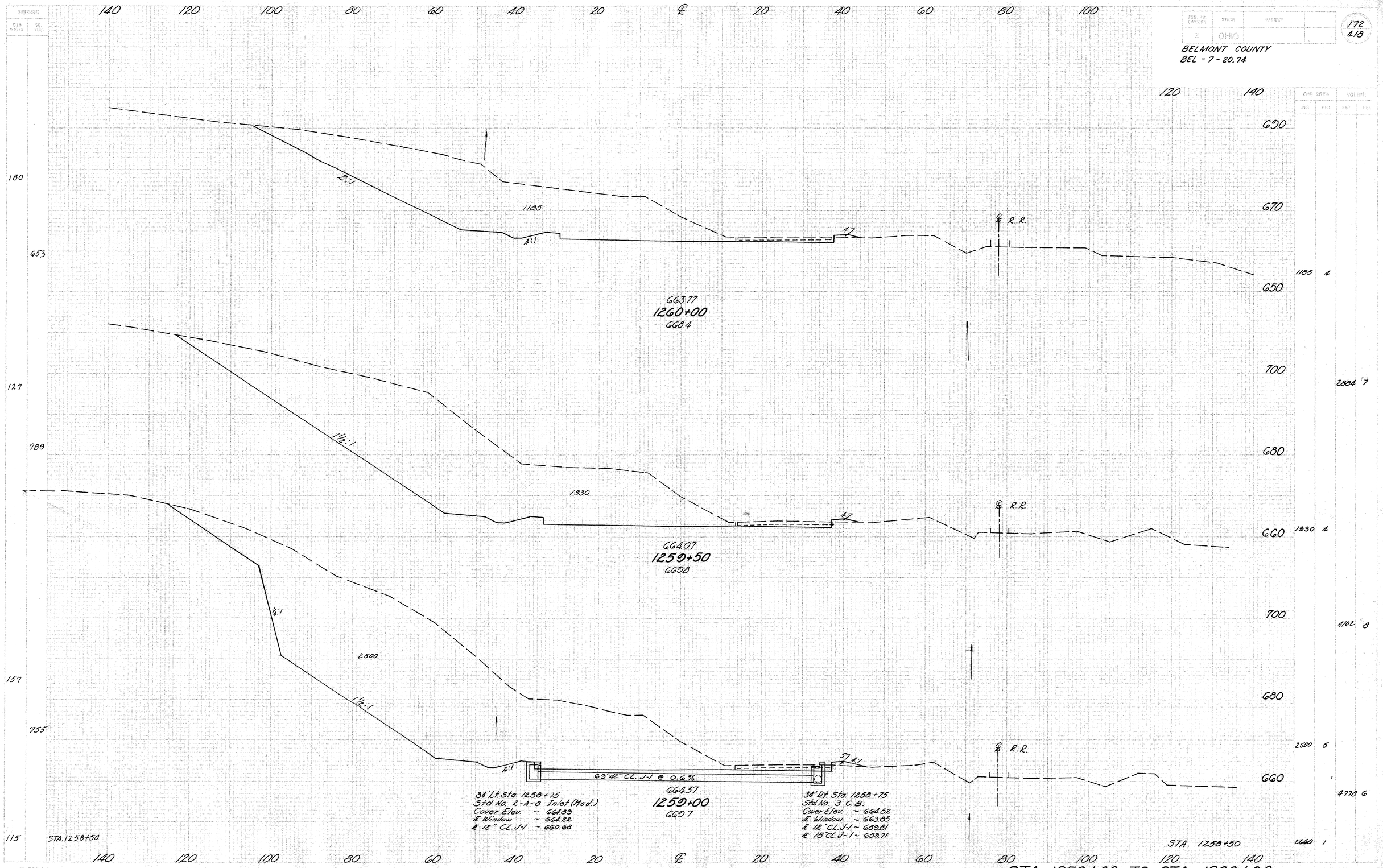

STA. 1259+00 TO STA. 1260+00

| DESIGN | | |

SHEET NO.	20
SEQUENCE NO.	22

FED. ROAD DIVISION NO.	STATE	PROJECT	
2	OHIO		

172
418

BELMONT - COUNTY
BEL - 7 - 20.74

140 120 100 80 60 40 20 ℄ 20 40 60 80 100 120 140

END AREA CUT	END AREA FILL	VOLUME CUT	VOLUME FILL
0	0		
		19	24
20	26		
		54	34
38	11		
		72	18
40	8		
		90	18
37	11		
		90	31
40	22		

650

1264+50
660.9

STA. 1264+40 END FEATHERING

20 — 14? 20? 12? — R.R. — 660

662.17
1264+00
661.0

STA. 1264+00 END FULL DEPTH CONST.
BEGIN FEATHERING

103

17 — 5? 38? 6? — R.R. — 660

662.12
1263+50
661.6

153

38 — 3? 40? 3? — R.R. — 660

662.19
1263+00
662.0

228

44 — 12? 6? 45? 5? — R.R. — 660
44"x28" CL. J-1 PIPE @ 0.114 %

8' Lt. Sta 1262+50
Std No. 2-2-A C.B.
Rt. Grate ~ 660.00
Rt. Window ~ 659.50
24" Cl. J-1 ~ 656.26

662.32
1262+50
661.8

236

41 STA 1262+00

36' Rt. Sta 1262+50
Std. No. 1 M.H.
Elev. Cover ~ 662.10
Rt. 24" Cl. J-1 ~ 665.74
Rt. 27" J-1 ~ 655.49
Rt. 15" Cl. J-1 ~ 655.71

STA. 1262 +00

140 120 100 80 60 40 20 ℄ 20 40 60 80 100 120 140

STA. 1262+50 TO STA. 1264+50

SHEETING

SHT	NO.

STATE	PROJECT	
OHIO		

175
418

BELMONT COUNTY
BEL - 7 - 20.72

END AREA		VOLUME	
CUT	FILL	CUT	FILL
0	0		
0	0		
0	0		
0	0		
0	0		

140 120 100 80 60 40 20 ℄ 20 40 60 80 100 120 140

670
660
670
650
630
650
630
660
STA. 1264+50

1266+50
661.3

1266+00
659.5

END WORK
STA. 1265+86

℄ R.R. ℄ R.R.

27"CL. E-1 @ 5 1.0%

40' Dt. Sta. 1265+50
Std No. 1 M.H.
Cover Elev. ~ 661.50
℄ 27"CL. E-1 ~ 652.94

57' Dt. Sta. 1265+81
℄ 27"CL. E-1 ~ 652.54
Outlet Through Conc. Wall into
Glenns Run ~

1265+50
661.8

1265+00
660.7

STA. 1265+00 TO STA. 1266+50

(1/P) TRANSITION HEIGHT OF TYPE 6 CURB FROM 6" AT STA 6+11 to 10" AT END OF BRIDGE

Denotes Variable Depth Resurfacing

CURVE DATA
LINCOLN AVE.
P.I. STA. 1+07.50
Δ = 71°19'39"
D = 85°30'58"
R = 67.00'
L = 83.41'
T = 48.08'
E = 15.47

FOR PAVEMENT DETAILS & MEDIAN TREATMENT SEE SHEET No 179

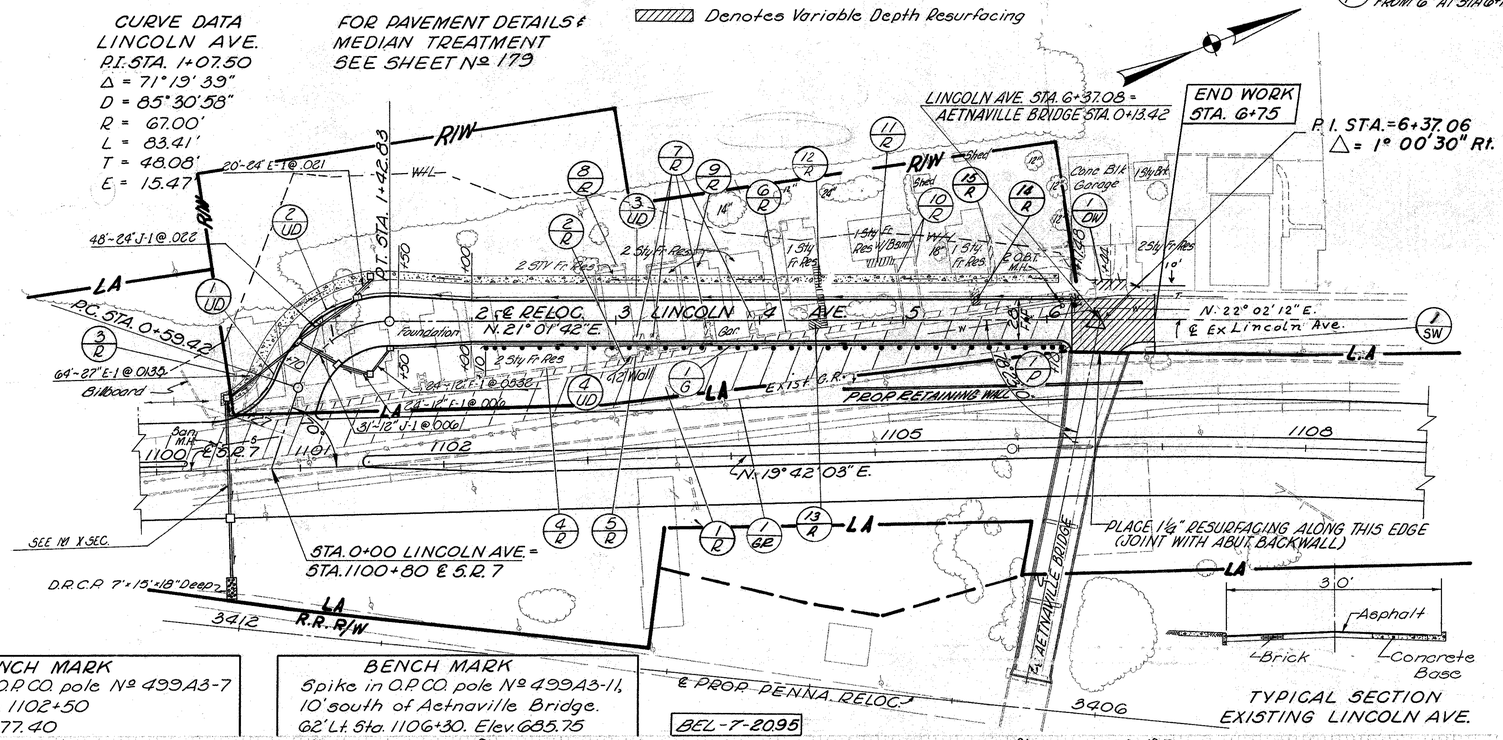

TYPICAL SECTION EXISTING LINCOLN AVE.

BENCH MARK
Spike in O.P.CO. pole No 499A3-7
21' Lt. Sta. 1102+50
Elev. 677.40

BENCH MARK
Spike in O.P.CO. pole No 499A3-11,
10' south of Aetnaville Bridge.
62' Lt. Sta. 1106+30. Elev. 685.75

BEL-7-2095

| | | |

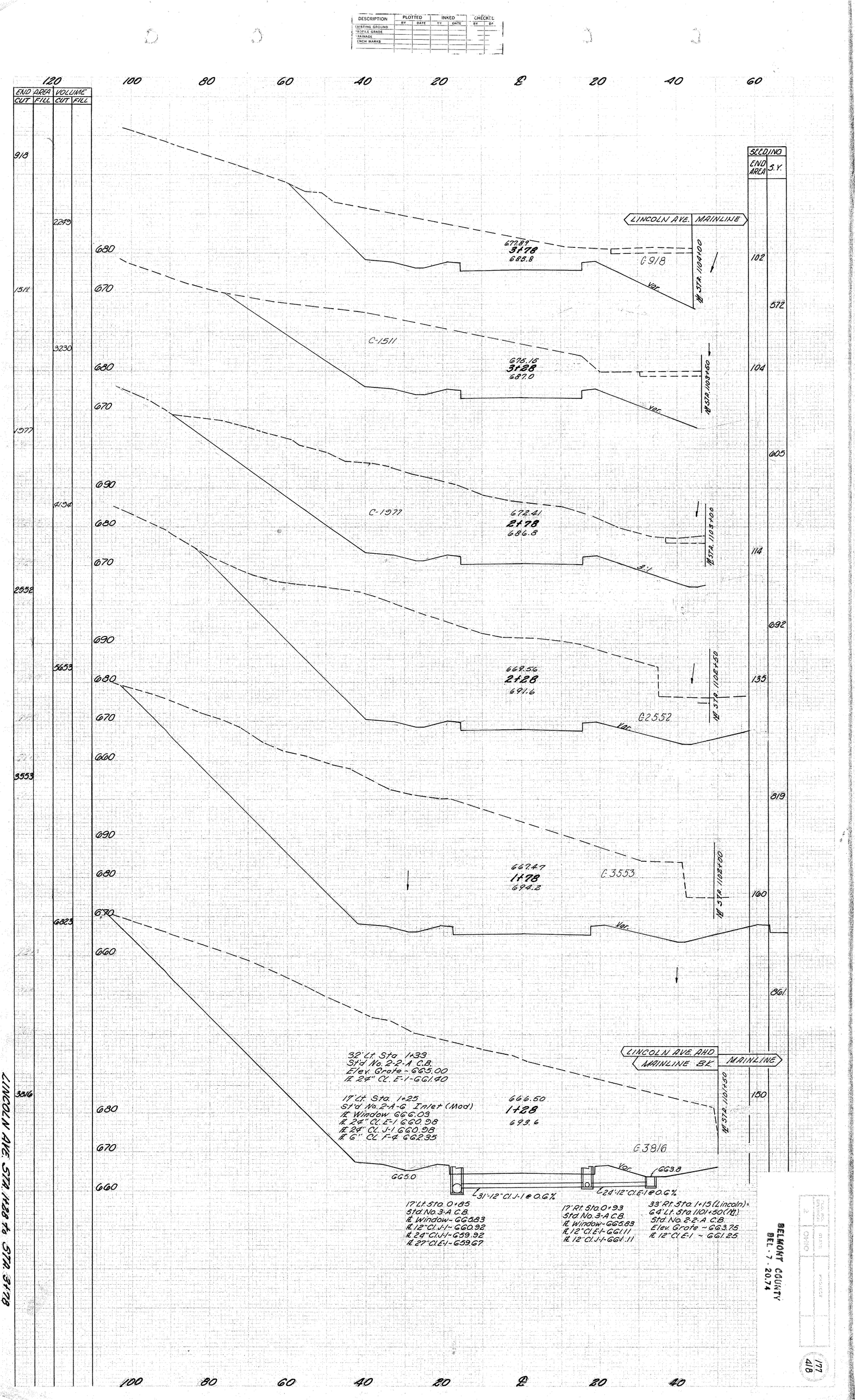

DESCRIPTION
PLOTTED
INKED
CHECKED
BY
DATE
EXISTING GROUND
PROFILE GRADE
DRAINAGE
BENCH MARKS
END AREA
VOLUME
CUT
FILL
SEEDING
END AREA
S.Y.
LINCOLN AVE. MAINLINE
677.89
3+78
683.8
C-918
Var.
STA. 1104+00
C-1511
675.15
3+28
687.0
STA. 1103+50
C-1977
672.41
2+78
686.8
STA. 1103+00
3:1
669.56
2+28
691.6
STA. 1102+50
C-2552
667.47
1+78
694.2
C-3553
STA. 1102+00
LINCOLN AVE. AHD
MAINLINE BK.
MAINLINE
32' Lt. Sta. 1+33
Std No. 2-2-A C.B.
Elev. Grate - 665.00
℄ 24" CL. E-1-661.40
17' Lt. Sta. 1+25
Std No. 2-A-6 Inlet (Mod)
℄ Window 666.03
℄ 24" CL. E-1 660.98
℄ 24" CL. J-1 660.98
℄ 6" CL. F-4 662.35
666.50
1+28
693.6
STA. 1101+50
C-3816
665.0
663.8
31'-12" Cl. J-1 @ 0.6%
24'-12" Cl. E-1 @ 0.6%
17' Lt. Sta. 0+85
Std. No. 3-A C.B.
℄ Window - 665.83
℄ 12" Cl. J-1 - 660.92
℄ 24" Cl. J-1 - 659.92
℄ 27" Cl. E-1 - 659.67
17' Rt. Sta. 0+93
Std. No. 3-A C.B.
℄ Window - 665.83
℄ 12" Cl. E-1 - 661.11
℄ 12" Cl. J-1 - 661.11
33' Rt. Sta. 1+15 (Lincoln) =
64' Lt. Sta. 1101+50 (℄)
Std. No. 2-2-A C.B.
Elev. Grate - 663.75
℄ 12" Cl. E-1 - 661.25
LINCOLN AVE. STA. 1+28 to STA. 3+78
BELMONT COUNTY
BEL - 7 - 20.74
177
418

DESCRIPTION	PLOTTED BY	PLOTTED DATE	INKED BY	INKED DATE	CHECKED BY	CHECKED DATE
EXISTING GROUND						
PROFILE GRADE						
DRAINAGE						
BENCH MARKS						

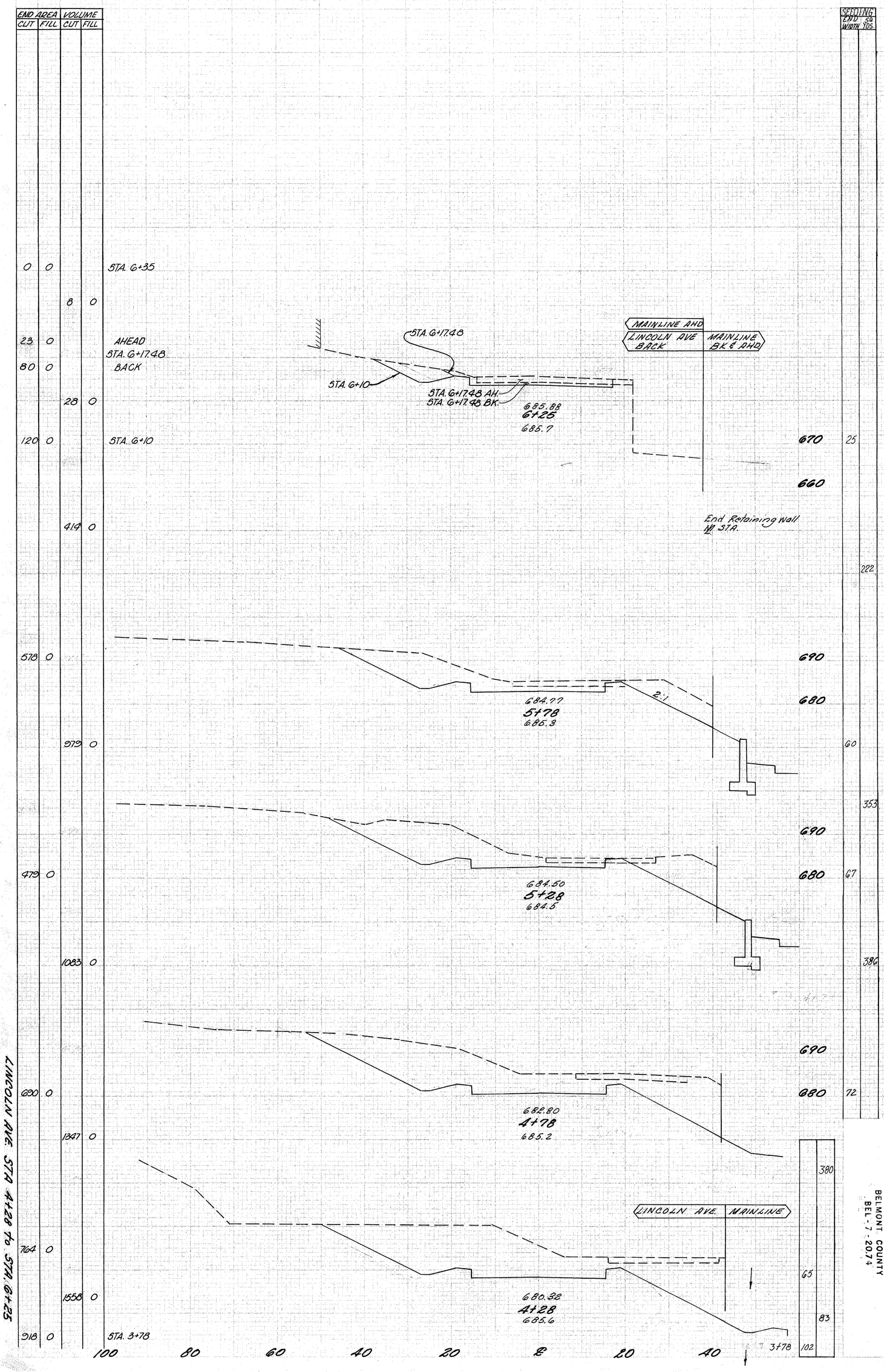

BELMONT COUNTY
BEL-7-20.74

2 OHIO

178
418

FED. RD. DIVISION	STATE	PROJECT	
2	OHIO		

179
418

BELMONT COUNTY
BEL - 7 - 20.74

ESTIMATED QUANTITIES
Sta. 1095+70 to Sta. 1102+48

BRIDGEPORT

M Pavement Area = 38,513 sq.
Lincoln Intersection = 1,099 sq.
Total 39,612 sq.

T-35 1¼" Asphaltic Conc. Surface Course B-35 1¼" Asphaltic Conc. Leveling Course 39,612 × 0.104167 ÷ 27	= 152.84 C.Y.
B-35 3" Asphaltic Conc. Base Course 39,612 × 0.25000 ÷ 27	= 366.78 C.Y.
T-30 Bituminous Prime Coat 39,612 × 0.4 ÷ 9	= 1761 Gals.
B-20 4" Waterbound Macadam Base Course 39,612 × 0.0667 ÷ 27	= 978.12 C.Y.
Median (b) 1214 × 0.3333 ÷ 27	= 14.99
Step Outs: Lt. 686 × 4 × 0.333 ÷ 27	= 33.84
Step Outs: Rt. 678 × 4 × 0.333 ÷ 27	= 33.45
Step Outs: Median 250 × 3 × 0.333 ÷ 27 (L)	= 18.52
Step Outs: 106 × 3 × 0.333 ÷ 27 (R)	= 7.86
Sub Total	93.67 ~ 93.67
Total	1086.78 C.Y.

I-12 Combined Curb & Gutter, Type 2 Mod. as Per Plan	
Left Side	= 686
Right Side	= 678
Median	= 712
Total	2076 Lin. Ft.
I-21 4" Median Pav't. as per plan. (1875+1019) ÷ 9	= 322 Sq. Yds.
I-21 Median Pav't. as per plan. 1214 ÷ 9	= 135 Sq. Yds.
I-22 Subbase 39,612 × 0.0667 ÷ 27	= 978.12
Step Outs 98.67 × 2	= 197.34
Median (b) 1214 × 0.667 ÷ 27	= 29.98
Median (a) 13.24 × 250 ÷ 27	= 122.59
18.31 × 100 ÷ 27	= 67.81
Total	1385.84 C.Y.

MEDIAN I-22

Station	End Area	Ave.
1095+70	24.36	13.24
1098+20	1.92	
1101+48	12.06	18.31
1102+48	24.56	

Quantities Carried to Sheet No 23.

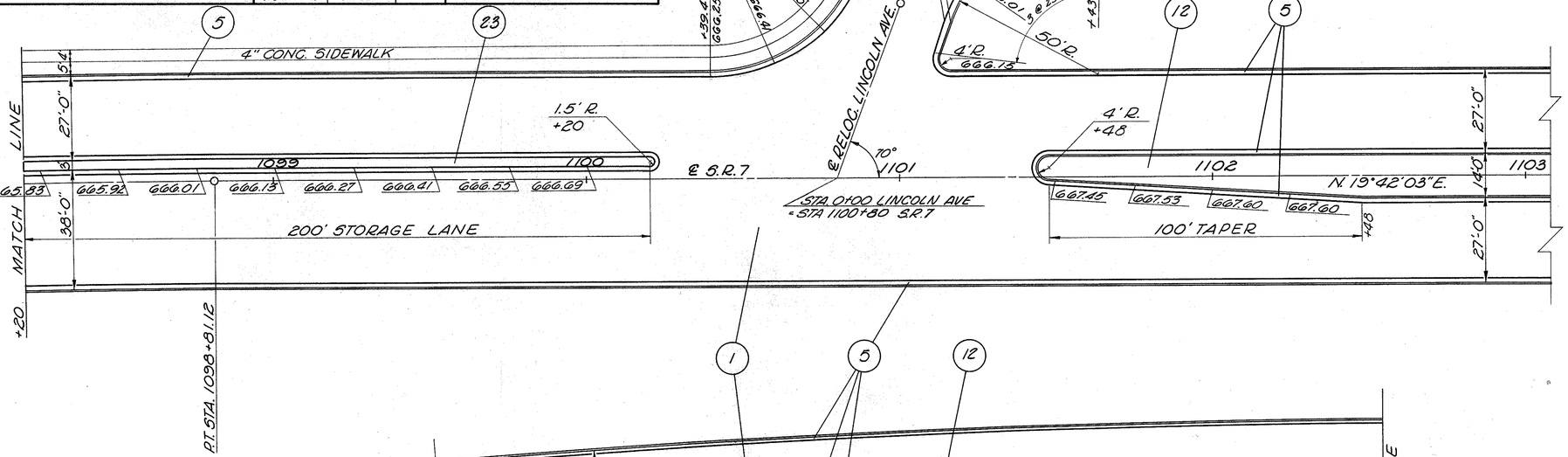

NOTES:
1. All dimensions are to the face of curb.
2. Elevations on returns are to the face of gutter.
3. Transition 2'-0" gutter to 1'-6" on returns.
4. Intersection pavement design is the same as 1.
5. For legend and items description see sht No's. 24
6. Median elevations are to the face of curb at the gutter.

INTERSECTION DETAILS RELOCATED LINCOLN AVE. & S.R. 7

NOTE: The typical section for Broadway St. is the same as the pavement design for Aetna St.

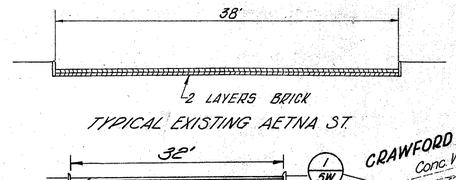

NOTE: 1-SW, SIDEWALK: 4" THICK × 4' WIDE.

FOR DETAILS OF INTERSECTION SEE SHEET No. 182

** USING PRECAST SECTION,
* CITY OF BRIDGEPORT
* AS PER PLAN

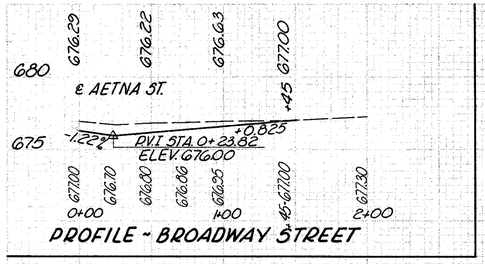

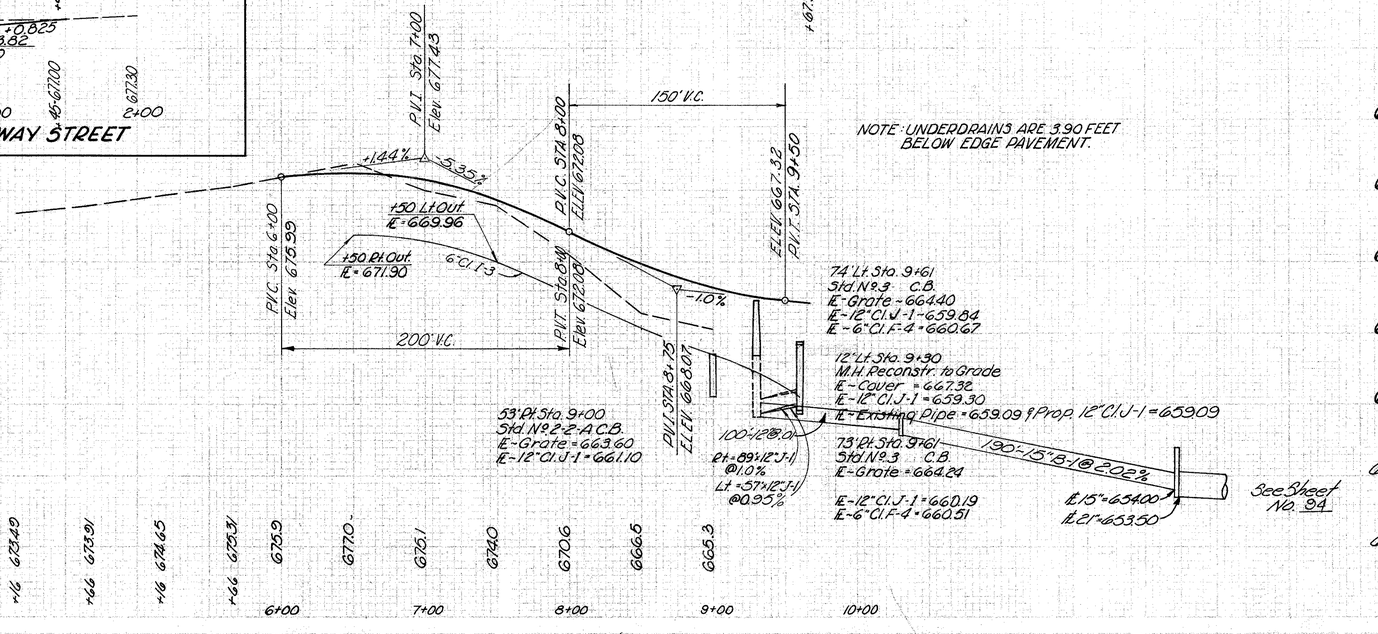

| ITEM | DESCRIPTION | | |

END AREA CUT	END AREA FILL	VOLUME CUT	VOLUME FILL	
38				680
		97		670
78				680
				670
		185		
86				680
				670
		242		TOTAL BROADWAY ST.

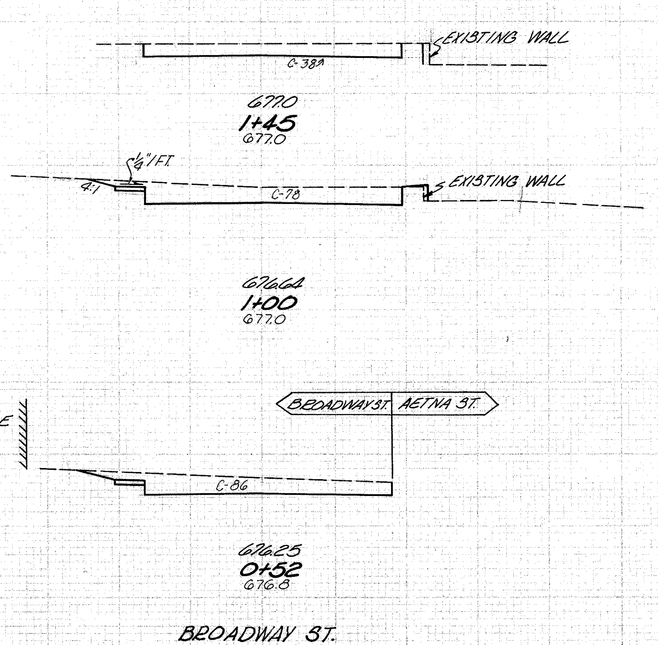

BROADWAY ST.

END AREA CUT	END AREA FILL	VOLUME CUT	VOLUME FILL	
				670
6	144			
				660
		10	296	
5	170			670
			24	
				660
		38	256	
			35	
36	106			
				670
		84	126	660
				680
54	30			
				670
		113	38	
				680
70	11			
				670
		195	10	
140	0			680
				670
		197	0	
73	0			680
				670
		639	785	TOTAL AETNA ST.

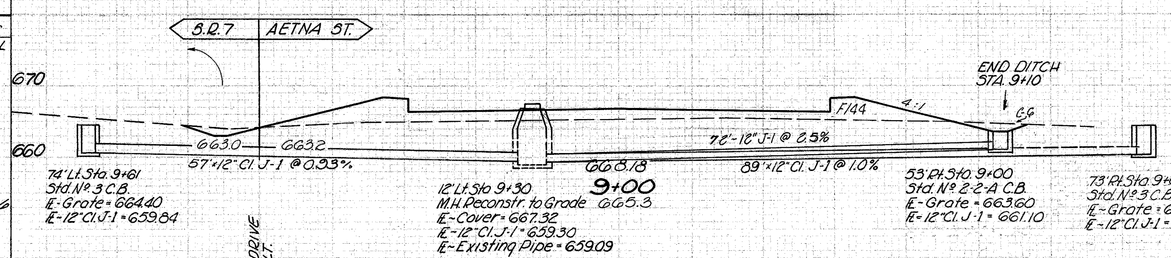

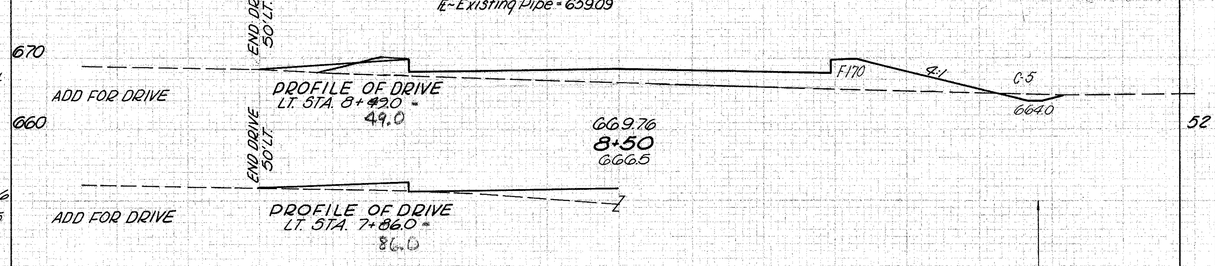



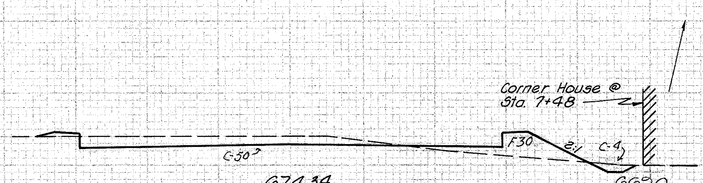

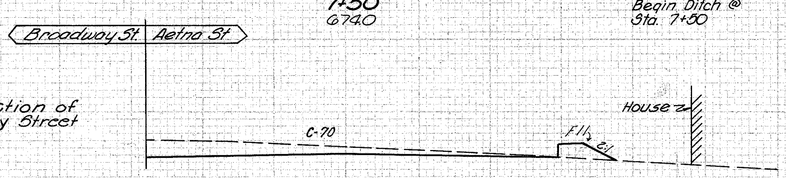

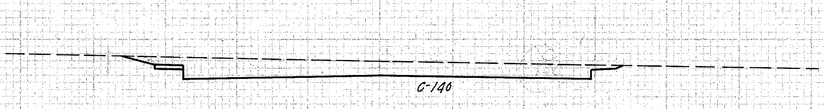

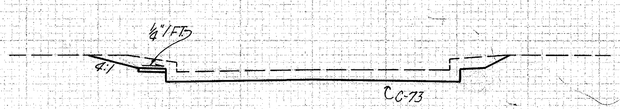

AETNA STREET

Seeding End Area	S.Y.	
24		
	122	
25		
	67	
0		
	62	
	317	
52		
	300	
56		
	269	
41		
	119	
16		
	27	
43	194	

BELMONT COUNTY
BEL-7-20.74

CROSS SECTIONS STA 0+52 TO STA 1+45 BROADWAY ST.
STA 6+00 TO STA 9+00 AETNA ST.

60 40 20 ℄ 20 40 60

181
418

FED. RD. DIVISION	STATE	PROJECT	
2	OHIO		

182
418

BELMONT COUNTY
BEL · 7 · 20.74

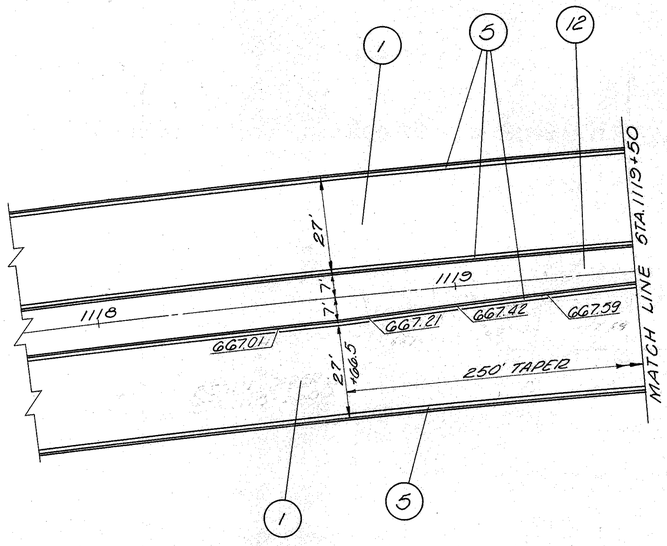

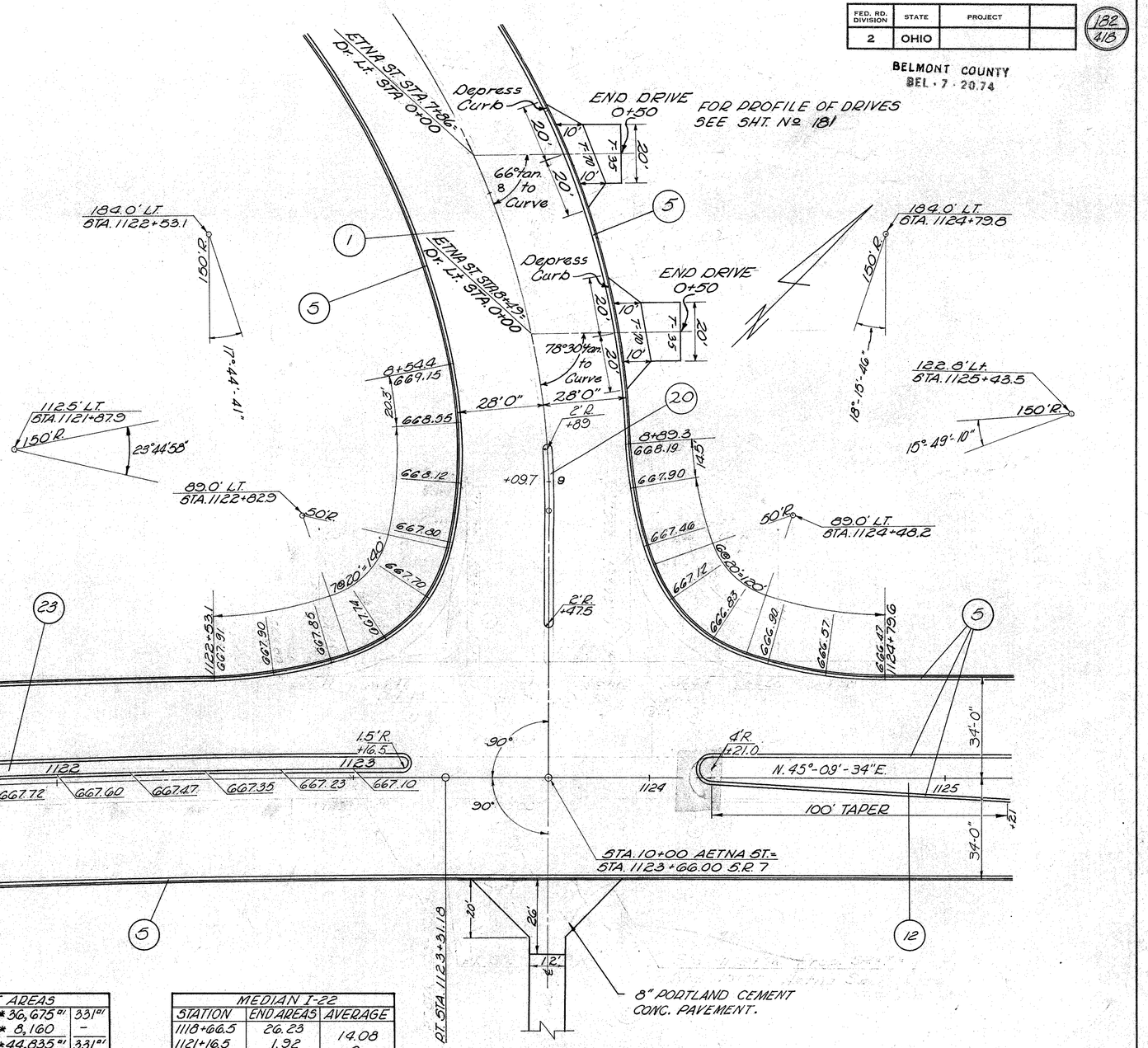

PAVEMENT AREAS		
MAINLINE	*36,675 SY	331 CY
INTER. AETNA	*8,160	—
TOTALS	*44,835 SY	331 CY
* CITY NON PARTICIPATION		

MEDIAN I-22		
STATION	END AREAS	AVERAGE
1118+66.5	26.23	14.08
1121+16.5	1.92	0
1124+21	12.23	18.73
1125+07.7	25.23	

NOTES:
1. All dimensions are to the face of curb.
2. Median elevations are to the face of curb at the gutter.
3. Return elevations are to the face of gutter.
4. Intersection pavement design is the same ALL.
5. For legend and items description see sht. Nº 24

Scale: 1"=20'

Intersection Detail S.R. 7 & Aetna St.

BELMONT COUNTY
BEL - 7 - 20.74

SHEET	OF	SHEETS
2	OHIO	

183
418

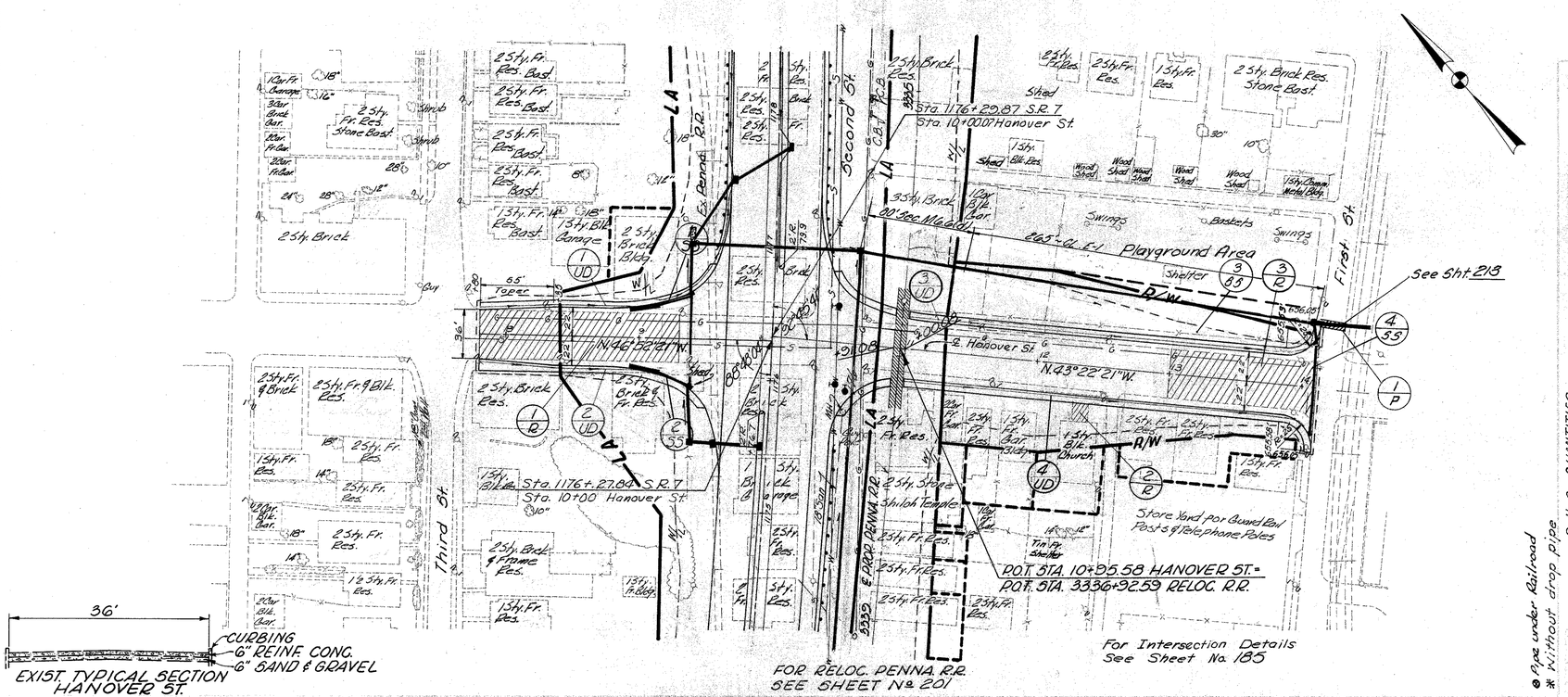

● Pipe under Railroad
* Without drop pipe

⊗ U. G. QUANTITIES

| | | |

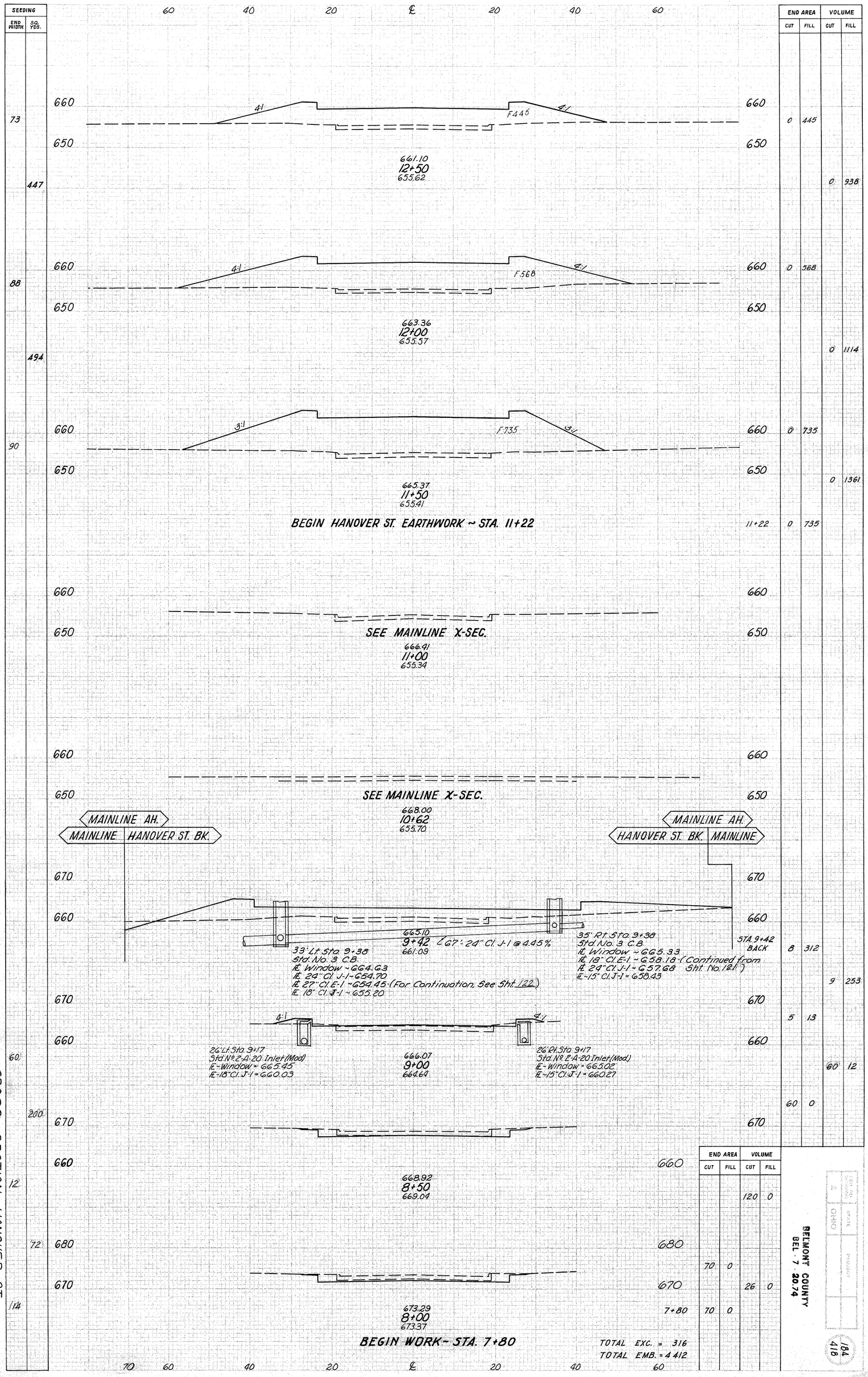
SEEDING
END WIDTH
SQ. YDS.
60 40 20 ℄ 20 40 60
END AREA CUT FILL
VOLUME CUT FILL
660
650
4:1
F 445
4:1
73
447
661.10
12+50
655.62
0 445
0 938
660
650
4:1
F 568
4:1
88
494
663.36
12+00
655.57
0 568
0 1114
660
650
3:1
F 735
3:1
90
665.37
11+50
655.41
0 735
0 1361
BEGIN HANOVER ST. EARTHWORK ~ STA. 11+22
11+22 0 735
SEE MAINLINE X-SEC.
666.91
11+00
655.34
SEE MAINLINE X-SEC.
668.00
10+62
655.70
MAINLINE AH.
MAINLINE HANOVER ST. BK.
MAINLINE AH.
HANOVER ST. BK. MAINLINE
665.10
9+42 ℄ G7 - 24" Cl. J-1 @ 4.45%
661.09
33' Lt. Sta. 9+38
Std. No. 3 C.B.
IE Window = 664.63
IE 24" Cl. J-1 = 654.70
IE 27" Cl. E-1 = 654.45 (For Continuation, See Sht. 122)
IE 18" Cl. J-1 = 655.20
35' Rt. Sta. 9+38
Std. No. 3 C.B.
IE Window = 665.33
IE 18" Cl. E-1 = 658.18 (Continued from Sht. No. 121)
IE 24" Cl. J-1 = 657.68
IE 15" Cl. J-1 = 658.43
STA. 9+42 BACK 8 312
9 253
5 13
4:1
4:1
26' Lt. Sta. 9+17
Std. No. 2-A-20 Inlet (Mod)
IE - Window = 665.45
IE - 18" Cl. J-1 = 660.03
666.07
9+00
664.69
26' Rt. Sta. 9+17
Std. No. 2-A-20 Inlet (Mod)
IE - Window = 665.02
IE - 15" Cl. J-1 = 660.27
60 12
60 0
60
200
670
660
668.92
8+50
669.04
120 0
12
72
680
670
70 0
26 0
114
673.29
8+00
673.37
7+80 70 0
BEGIN WORK ~ STA. 7+80
TOTAL EXC. = 316
TOTAL EMB. = 4412
70 60 40 20 ℄ 20 40 60
CROSS SECTION HANOVER ST.
END AREA CUT FILL
VOLUME CUT FILL
BELMONT COUNTY
BEL-7 20.74
184
418

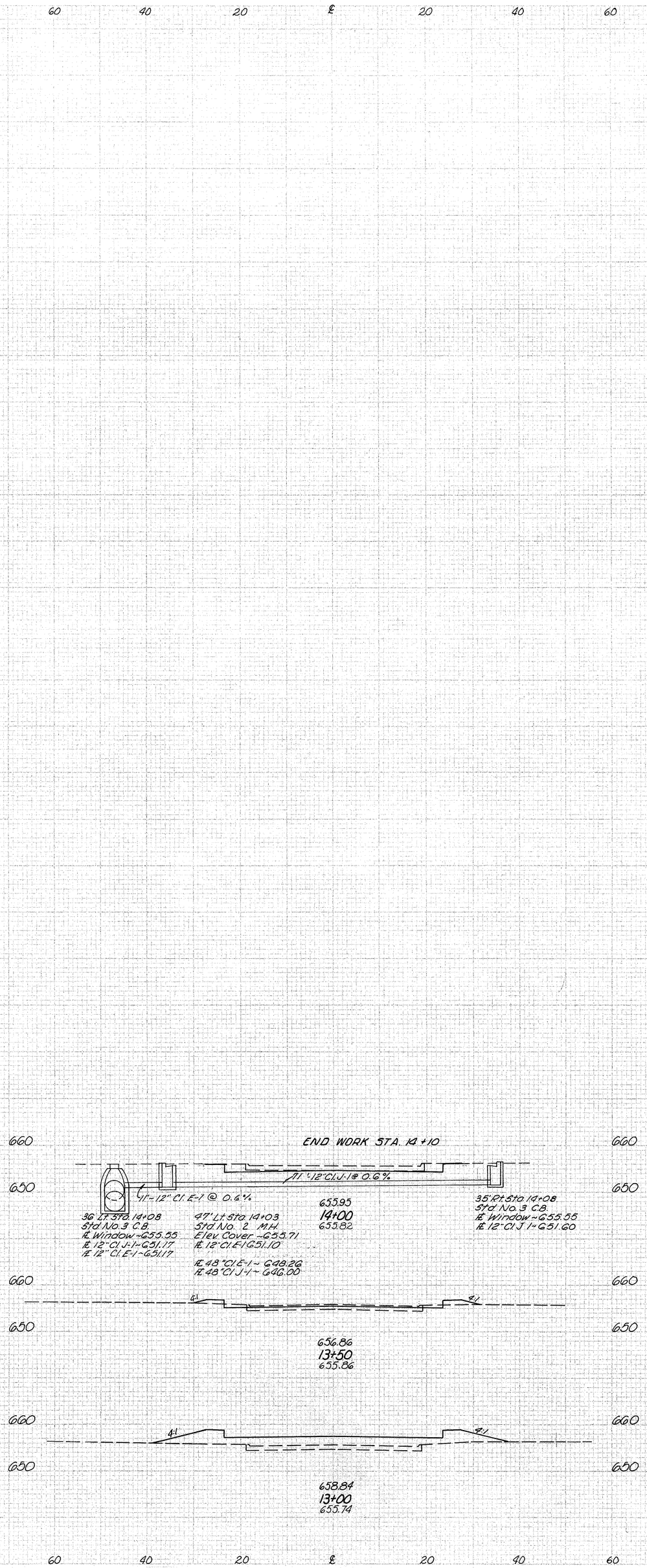

SEEDING		
END WIDTH	SQ. YDS.	
4		14+10
	100	
32		14+10
	200	
40		13+50
	261	
54		13+00

	END AREA		VOLUME	
	CUT	FILL	CUT	FILL
14+10	52	0		
			81	11
13+50	21	10		
			20	185
13+00	0	136		
			0	538
12+50	0	445		

CROSS SECTION HANOVER ST.

BELMONT COUNTY
BFL-7-20.74

FED. RD. DIVISION	STATE	PROJECT
2	OHIO	

184A
418

FED. RD. DIVISION	STATE	PROJECT	
2	OHIO		

185/418

BELMONT COUNTY
BEL - 7 - 20.74

PAVEMENT AREAS	
MAINLINE	60,564 sq
INTER. HANOVER	11,738
TOTAL	72,302 sq

MEDIAN I-22		
STATION	END AREAS	AVERAGE
1171+28.7	24.56	13.24
1173+78.7	1.92	0
1178+77.9	1.92	13.92
1181+27.9	25.91	

SCALE: 1" = 20'

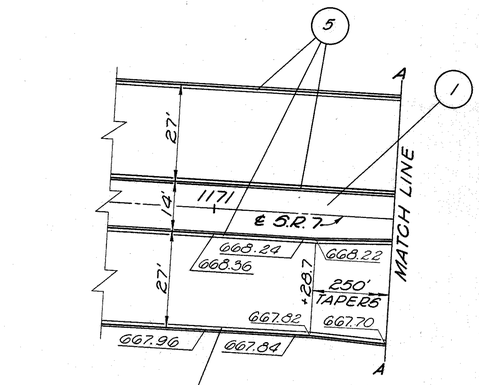

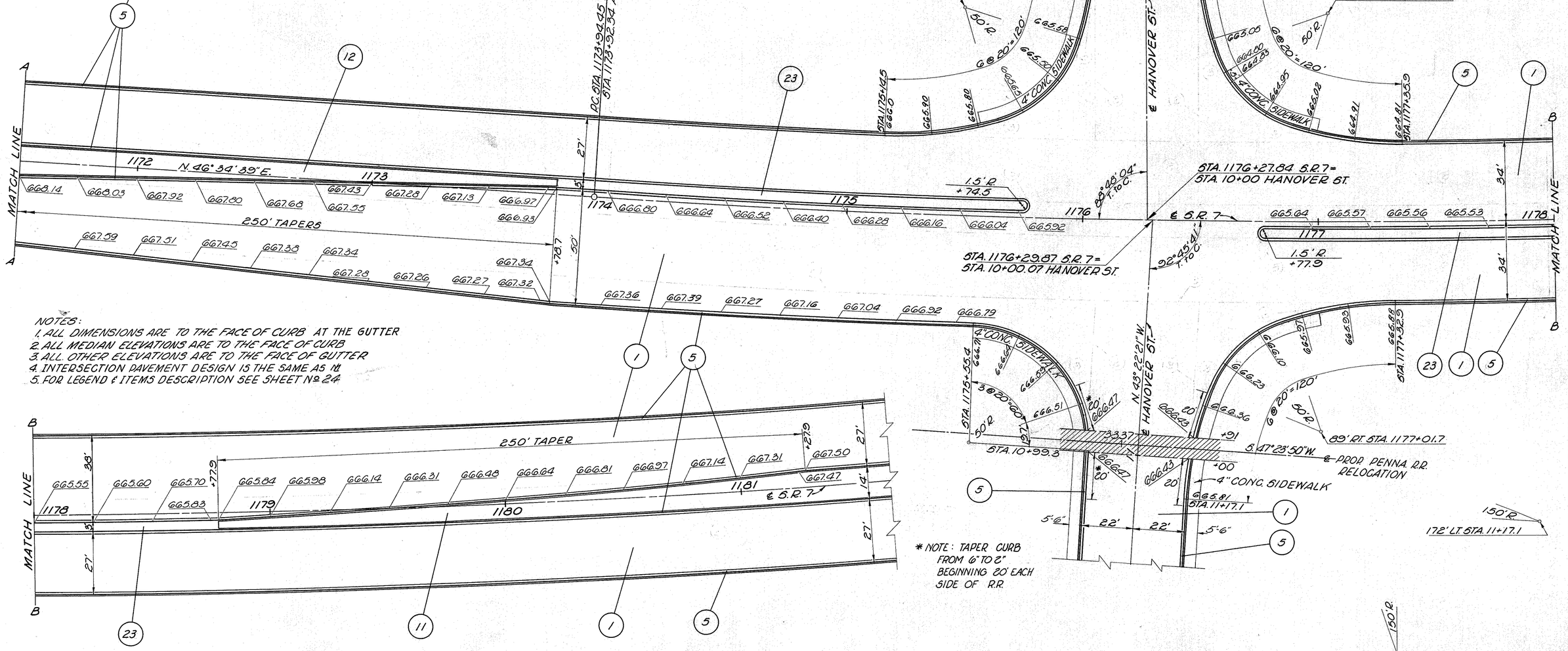
5
12
23
A
MATCH LINE
1172
N. 46° 34' 39" E.
1173
1174
1175
668.14
668.03
667.92
667.80
667.68
667.55
667.43
667.28
667.13
666.97
666.93
250' TAPERS
667.59
667.51
667.45
667.38
667.34
667.34
667.28
667.26
667.27
667.32
+78.7
50'
27'
PC. STA. 1173+94.45 BK=
STA. 1173+32.34 AH.
666.80
666.64
666.52
666.40
666.28
666.16
666.04
665.92
667.36
667.39
667.27
667.16
667.04
666.92
666.79
1.5' R
+74.5
1176
88° 48' 04"
T. to C.
℄ S.R. 7
1177
1.5' R
+77.9
1178
MATCH LINE
34'
92° 45' 41"
T. to C.
STA. 1176+27.84 S.R. 7=
STA. 10+00 HANOVER ST.
STA. 1176+29.87 S.R. 7=
STA. 10+00.07 HANOVER ST.
B
B
MATCH LINE
1178
1179
1180
1181
℄ S.R. 7
250' TAPER
665.55
665.60
665.70
665.84
665.98
666.14
666.31
666.48
666.64
666.81
666.97
667.14
667.31
667.50
667.47
+77.9
+27.9
38'
27'
14'
27'
5
B
23
11
1
5
1
5
184' LT. STA. 1175+14.5
150' R
172' RT. STA. 8+77.3
150' R
89' LT. STA. 1175+47.1
50' R
5'-6"
22'
22'
5'-6"
STA. 8+77.3
666.75
665.88
665.58
665.50
665.42
665.34
665.26
665.18
665.10
665.02
664.95
664.87
664.79
664.71
664.63
664.55
664.47
664.39
664.31
664.23
664.15
664.07
663.99
663.91
663.83
663.75
663.67
663.59
663.51
663.43
663.35
663.27
663.19
663.11
663.03
662.95
662.87
662.79
662.71
662.63
662.55
662.47
662.39
662.31
662.23
662.15
662.07
661.99
661.91
661.83

BELMONT COUNTY
BEL - 7. - 20.74

SHEET NO.	STATE	PROJECT	
2	OHIO		

186
418

CURVE DATA.
P.I. STA. 6+12.20
Δ = 34°34'54" Lt.
D_c = 20°00'
R = 286.48'
T = 89.18'
L = 172.91'
E = 13.56'

CURVE DATA
P.I. STA. 8+85.05
Δ = 103°09'36"
R = 150.00'
T = 189.12'
L = 270.07'
E = 91.38

P.C. STA. 5+23.02
P.R.C. STA. 6+93.93

FEATHERING
BEGIN WORK STA. 4+75
FIFTH ST.
BURLINGTON ROAD
℄ PROP. S.R. 7
R/W
W/L
Brk. Wall
Conc. Wall
Conc. Sw.
Inlet
MH.
C.B.

Note: The existing sidewalk on the right, between STA. 4+75 & STA. 6+52 is to remain undisturbed.

DRIVEWAY DETAIL
2 DW
55' R.
Δ = 22°23'50"
55.12
T-70
10'
12'
20.39

FOR PAVEMENT DETAILS SEE SHEET № 189

P.I. STA. 9+66.00
STA. 12.17+00 S.R. 7 =
STA. 10+00 FIFTH ST.

* SEC M-6.6(6) or M-6.6(7)

729.74 728.69 726.93 724.47 72.30 717.78 714.52 712.29 711.14 711.06

16'LT. STA. 9+00
STD. NO. 2-A-6 INLET
℄ WINDOW - 710.59
℄ 18" Cl. E-1 - 704.80
℄ 18" Cl. J-1 - 704.70
℄ 6" Cl. F-4 - 706.47

16'LT STA 5+00
STD N° 2-A-18 INLET (MOD)
℄ WINDOW - 729.19
℄ 12" Cl. J-1 - 724.60

16'RT STA 8+00
STD N° 2-A-10 INLET (MOD)
℄ WINDOW - 713.97
℄ 12" Cl J-1 - 709.38
℄ 12" Cl E-1 - 709.38
℄ 6" Cl. F-4 - 711.00

30'RT STA. 8+98
STD N° 2-2-A C.B.
℄ GRATE - 709.77
℄ 12" Cl E-1 - 704.90
℄ 24" Cl E-1 - 705.85
℄ 18" Cl E-1 - 704.35

21.5' Rt. STA. 9+03
STD. NO. 3-A C.B.
℄ WINDOW - 709.94
℄ 18" Cl. J-1 - 704.43
℄ 18" Cl. E-1 - 704.40

SEE X-SECTION STA. 9+00 FOR ADDITIONAL STORM SEWER PROFILE SHEET NO. 188

735
725
715

-1.40 %
P.V.I. STA. 6+00
ELEV. 728.34
+00 - 18' RT.
℄ = 725.07
+25 - 18' LT.
℄ =
200' V.C.
-7.04 %
200' V.C.
280' x 12" Cl. E-1 @ 3.2%
+65 - 18' LT.
℄ = 712.05
P.V.I. STA. 8+65
ELEV. 709.68
+00 - 18' LT & RT.
℄ = 716.63
+35 - 18' RT.
℄ = 714.17
+50 - 18' RT.
℄ = 707.62
+05 - 18' RT.
℄ = 709.46
80' x 12" Cl. E-1 @ 5.6%
30' LT STA 9+31
STD. NO. 2-2-A C.B.
℄ GRATE - 709.21
℄ 18" Cl. E-1 - 705.00
+00 - RT.
℄ = 706.30
+1.56%
STA. 12.16+15 - 35' LT
℄ = 705.50
+05 - 18' LT
℄ = 706.25
STA. 12.17+46 - 36' LT.
℄ = 703.75
66' x 24" Cl. E-1 @ 0.4 %
FOR CONTINUATION OF 24" SEE SHEET 142
℄ PROP. S.R. 7 STA. 12.17+00 = ℄ PROP. FIFTH ST. STA. 10+00

731.19 730.63 729.94 729.65 728.71 727.28 729.9 730.0 730.2 731.5 729.9 724.0 714.2 712.7
+.82 +.32 +.82
4 5 6 7 8 9 10

TYPICAL SECTION
EXISTING FIFTH STREET
17' 17'
2" Asphaltic Conc.
6" Reinf. Conc.
6" Subbase

INTERSECTION FIFTH ST & PROPOSED S.R.7

ESTIMATED QUANTITIES

SEE SHEET NO.	ITEM	DESCRIPTION	UNIT	FIFTH ST.	PROP. S.R. 7	TOTAL
	I-14	STAND. CBASIN STANDARD 2-A INLET MOD. TYPE 1	EA.			1
		2-2-A	EA.			1
		3-A	EA.			1
		2-A-6	EA.			1
		2-A-10	EA.			1
		2-A-18	EA.			1
	I-14	PAVED GUTTER MOD. TYPE 1	L.F.	10		10
				20		20
221 / 222	I-3	STAND. CBASIN STANDARD 2-A INLET MOD.				
		2-2-A	EA.	1		1
		3-A	EA.			1
		2-A-6	EA.	1		1
		2-A-10	EA.			1
		2-A-18	EA.	1		1
	I-3	REMOVAL OF CONC. SIDEWALK & STRUCT.	S.F.	240		LUMP
	4	REMOVAL OF EXIST. CL. F-4	L.F.	100		LUMP
		CL. F-4	L.F.	240		LUMP
		CL. J-1	L.F.	170		LUMP
		CL. E-1	L.F.	330		LUMP
		CL. E-1	L.F.	124		LUMP
	E-8	REMOVAL/DISPOSAL OF EXISTING - PAVEMENT, PAVEMENT, SIDEWALK, CURB & BERM	S.Y.	330		LUMP
			S.Y.			
			S.F.			
			L.F.	740		740
	I-8			683	701	1384
	I-10	SODDING		100		100
				2050		2050

| SEE SHEET NO. | STATION TO STATION | SIDE | | | |

100 80 60 40 20 ℄ 20 40 60 80 100

DESIGN ENGINEER	STATE	PROJECT	
	OHIO		

187
418

BELMONT COUNTY
BEL - 7 - 20.74

END AREA		VOLUME	
CUT	FILL	CUT	FILL

113 740 730

658

C-791

2:1

1½:1

3:1

721.30
7+00
730.0

124 740 730

C-589

END DRIVE 48' RT.
ELEV. 725.07

+2.60

4:1

PROFILE OF DRIVE RT.
STA. 6+50

724.47
6+50
729.9

344 740 730

68

C-220

END DRIVE 32' RT.
ELEV. -726.72

+1.0%

PROFILE OF DRIVE RT.
STA. 6+10

726.98
6+00
727.28

314 740 730

45

C-36

C-66

728.69
5+50
728.71

205 740 730

29

C-35

C-65

16' LT STA 5+00
STD N° E-A-16 INLET (MOD)
RE WINDOW - 729.19
RE 12" CLJ-1 - 724.60

729.74
5+00
729.65

BEGIN WORK STA 4+75

100 80 60 40 20 ℄ 20 40 60 80 100

END AREA		VOLUME	
CUT	FILL	CUT	FILL

730 720

791

1273

730

584

ADD FOR DRIVE 720

10

745

ADD FOR DRIVE 730 720

9

220

298

730 720

102

187

730 720

100

FIFTH STREET STA. 5+00 TO STA. 7+00

DESIGNED	DRAWN	CHECKED
WEM	KG	

DESCRIPTION	PLOTTED-INKED BY	DATE	CALLED-CLD BY	DATE	CHECKED BY	DATE
ORIGINAL GROUND						
TEMPLATES						
ENG. AREAS						
EARTHWORK						
SECOND AREAS						

FED. HIG. DIVISION	STATE	PROJECT	
5	OHIO		

188
418

BELMONT COUNTY
BEL - 7 - 20.74

END WORK STA. 9+67.5

30' LT. STA. 9+31
STD. NO. 2-2-A C.B.
℄ GRATE = 709.21
℄ 18" CL. E-1 = 705.00

5G' LT. STA. 9+15
STD. NO. 2 M.H.
COVER ELEV. = 721.8
℄ EXIST. 10" = 715.00
℄ 10" CL. B-1 = 708.00

10" SAN.

16' LT. STA. 9+00
STD. NO. 2-4-G INLET
℄ WINDOW = 710.59
℄ 18" CL. E-1 = 704.60
℄ 18" CL. J-1 = 704.70
℄ G" CL. F-4 = 706.47

42'-18" CL. E-1 @ 0.48%

38'-18" CL. J-1 @ 0.55%

14'-18" CL. E-1 @ 0.36%

C-1051

21.5' RT. STA. 9+03
STD. NO. 3-A C.B.
℄ WINDOW = 709.94
℄ 18" CL. J-1 = 704.49
℄ 18" CL. E-1 = 704.40

30' RT. STA. 8+98
STD. NO. 2-2-A C.B.
℄ GRATE = 709.77
℄ 12" CL. E-1 = 704.90
℄ 18" CL. E-1 = 704.35
℄ 24" CL. E-1 = 703.85

66'-24" CL. E-1 @ 0.47% to M - SEE SHEET NO. 142

711.14
9+00
724.0

2:1

2:1

1¼:1

C-1528

10" SAN.

712.29
8+50
729.9

1¼:1

23' LT. STA. 8+00
STD. NO. 1 M.H.
COVER ELEV. = 714.72
℄ 10" CL. B-1 = 706.00

C-1747

95'-10" CL. B-1 @ 1.15%

714.52
8+00
731.5

16' RT. STA. 8+00
STD. NO. 2-4-10 INLET (Mod.)
℄ WINDOW = 713.97
℄ 12" CL. J-1 = 709.38
℄ 12" CL. E-1 = 709.38
℄ 6" CL. F-4 = 711.00

1¼:1

1¼:1

C-1401

2:1

120' LT. ℄ STA. 1215+60
EXIST. M.H.
COVER ELEV. = 721.21
℄ 10" CL. B-1 = 704.91

95'-10" CL. B-1 @ 1.15%

EXIST. 15" TO REMAIN IN SERVICE

717.78
7+50
730.2

SHD AREA		VOLUME	
CUT	FILL	CUT	FILL
1051		2388	
1528		3033	
1747		2915	
1401		1274	
791			

STA. 7+00

STA. 7+00

FIFTH STREET STA. 7+50 TO STA. 9+00

FED. RD. DIVISION	STATE	PROJECT	
2	OHIO		

189
48

BELMONT COUNTY
BEL - 7 - 20.74

ESTIMATED QUANTITIES

Sta. 1213+47.5 to Sta. 1218+49.0

Nt Pavement Area = 27,961 Sq.Ft.
Fifth St. Intersection = 4,824 Sq.Ft.
Total Pav't. Area - 32,785 Sq.Ft.

T-35 1 1/4" Asphaltic Conc. Surface Course
B-35 1 1/4" Asphaltic Conc. Leveling Course
32,785 × 0.104167 ÷ 27 = 126.48 Cu.Yds.

B-35 3" Asphaltic Conc. Base Course
32,785 × 0.25000 ÷ 27 = 303.56 Cu.Yds.

T-30 Bituminous Prime Coat
32,785 × 0.4 ÷ 9 = 1457 Gals.

B-20 4" Waterbound Macadam Base Course
32,785 × 0.0667 ÷ 27 = 809.51 Cu.Yds.
Median (6) 314 × 0.3333 ÷ 27 = 3.88 Cu.Yds.
Step Outs — Lt. 606 × 4 × 0.333 ÷ 27 = 29.92
Rt. 501.5 × 4 × 0.333 ÷ 27 = 24.77
Median 250 × 3 × 0.333 ÷ 27 (2) = 18.52
100 × 3 × 0.333 ÷ 27 (2) = 7.86
Sub Total 81.07 81.07 Cu.Yds.
Total ~ 894.46 Cu.Yds.

I-12 Combined Curb & Gutter, Type C Mod. as Per Plan
Left Side = 606 Lin. Ft.
Right Side = 502
Median = 712
Total 1820 Lin. Ft.

I-21 4" Median Pavement as Per Plan
(1875 + 1019) ÷ 9 = 322 Sq.Yds.

I-21 Median Pav't. As Per Plan.
314 ÷ 9 = 35 Sq.Yds.

I-22 Subbase
32,785 × 0.0667 ÷ 27 = 809.51 Cu.Yds.
Step Outs 81.07 × 2 = 162.14
Median (2) 314 × 0.0667 ÷ 27 = 7.75
Median (1) 13.24 × 2.50 ÷ 27 = 122.59
18.31 × 1.00 ÷ 27 = 67.81
Total ~ 1169.80 Cu.Yds.

MEDIAN I-22

Station	End Area	Ave.
1213+47.5	24.56	13.24
1215+97.5	1.92	
1217+49.0	18.06	18.31
1218+49.0	24.56	

Quantities Carried to Sheet No. 23.

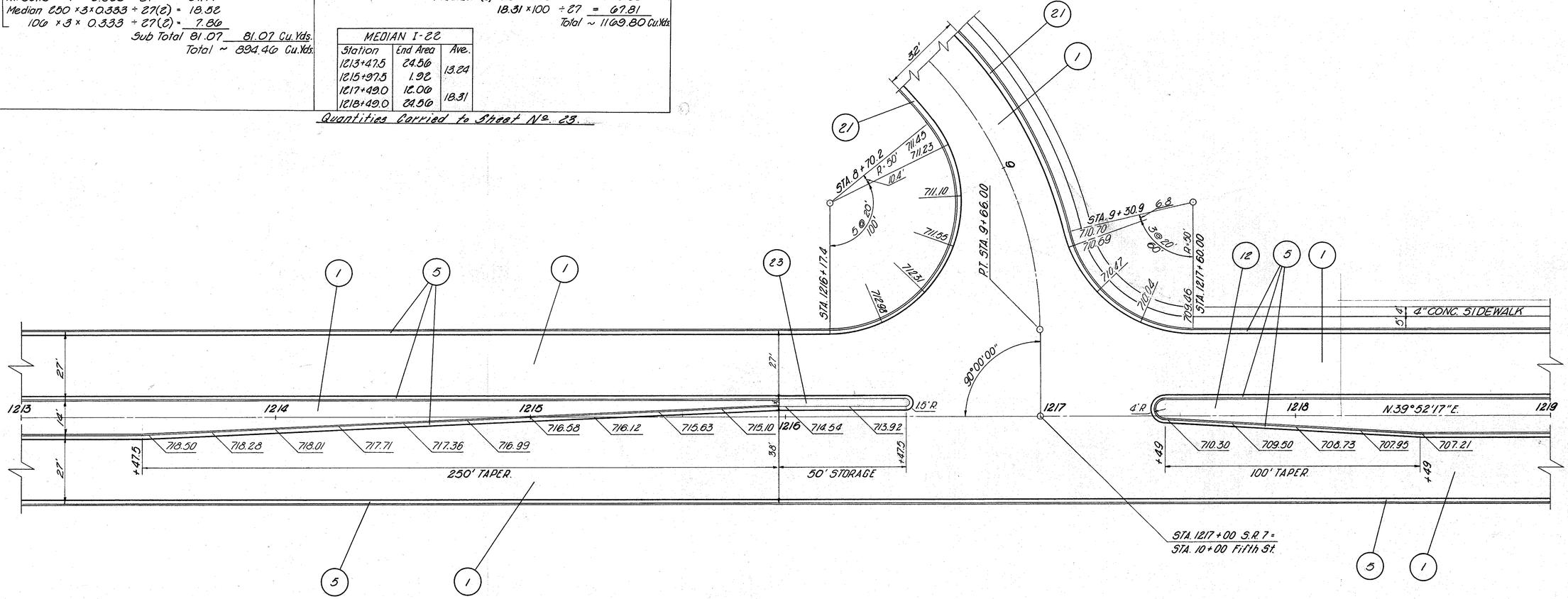

SIDE ROADS - NOTES

NOTE:
1. ALL DIMENSIONS ARE TO THE FACE OF CURB.
2. ELEVATIONS ON S.R. 7 ARE TO THE FACE OF CURB AT THE GUTTER
3. ELEVATIONS ON RETURNS ARE TO THE FACE OF CURB.
4. TRANSITION 2'-0" GUTTER TO 1'-6" ON RETURNS
5. INTERSECTION PAVEMENT DESIGN IS THE SAME AS IN
6. FOR LEGEND & ITEMS DESCRIPTION SEE SHT. No. 24

INTERSECTION DETAIL 5th STREET & PROPOSED S.R. 7

PLOTTED BY	DATE	INKED BY	DATE	CHECKED BY	DATE
DESCRIPTION	PLOTTED BY	DATE			
TOPOGRAPHY					
PAVEMENT					
DRAINAGE					
R.R.					
QUANTITIES					

FED. RD. DIVISION	STATE	PROJECT	
2	OHIO		

190
418

BELMONT COUNTY
BEL - 7 - 20.74

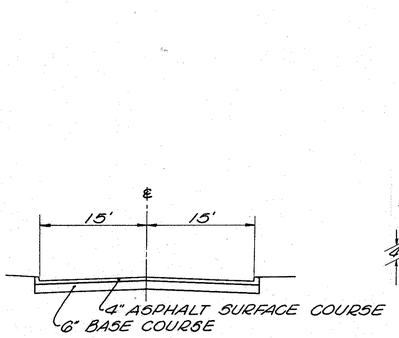

TYPICAL SECTION
EXISTING MACKEY ST.

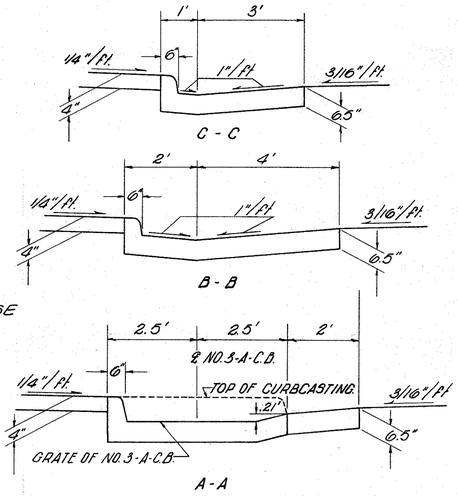

NOTE: FOR TREATMENT ON THE LEFT, REVERSE SECTIONS.

NOTES:
1. ALL DIMENSIONS ARE TO THE FACE OF CURB.
2. MEDIAN ELEVATIONS ARE TO THE FACE OF CURB AT THE GUTTER.
3. ELEVATIONS ON RETURNS ARE TO THE EDGE OF PAVED GUTTER.
4. TRANSITION 2'-0" GUTTER TO 1'-6" ON RETURNS.
5. INTERSECTION PAVEMENT DESIGN IS THE SAME AS MACKEY AVE.
6. FOR LEGEND AND ITEMS DESCRIPTION SEE SHT. Nº 24

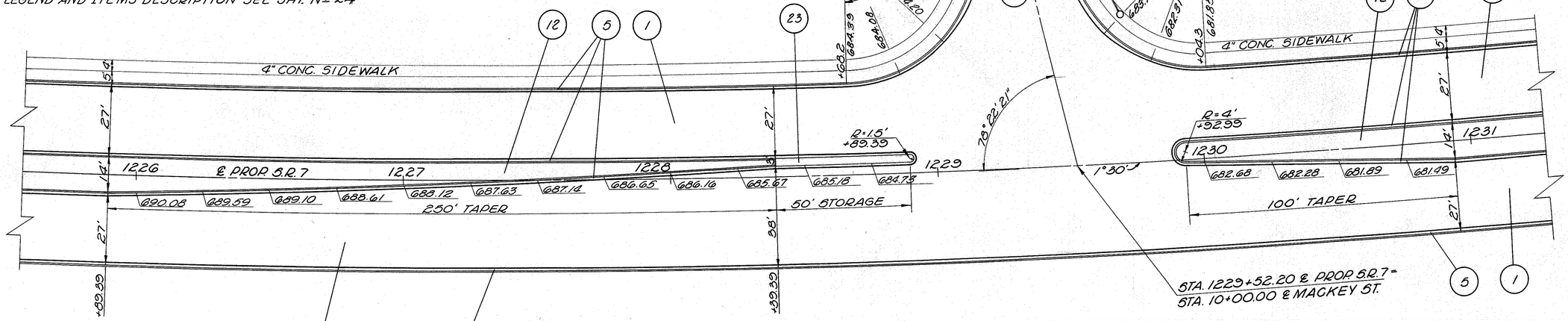

PAVEMENT AREAS	
MAINLINE	28,097 ft²
INTER. MACKEY ℄ Nt.	3,104
TOTAL	31,201 ft²
MACKEY AVE.	1,326 ft²

MEDIAN I-22		
STATION	END AREAS	AVERAGE
1225+89.39	26.25	14.09
1228+39.39	1.92	0
1229+92.99	12.06	19.16
1230+92.99	26.25	

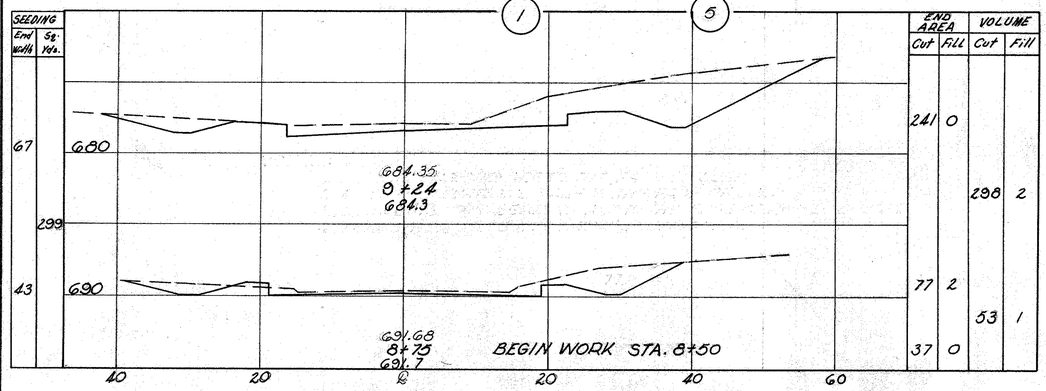

	END AREA		VOLUME	
	Cut	Fill	Cut	Fill
	241	0		
			298	2
	77	2		
			53	1
	37	0		

15' LT. STA. 8+50
STD. NO. 3-A C.B.
ELEV. GRATE = 695.11 ±
ft. 18" CL. J-1 = 689.50 ±
ft. 18" CL. J-1 = 689.20 ±

18' RT. STA. 9+00
STD. NO. 3-A-C.B.
ft. GRATE = 687.64
ft. 12" CL. J-1 = 683.64

15' RT. STA. 8+50
STD. NO. 3-A C.B.
ELEV. GRATE = 695.11 ± 695
ft. 18" CL. J-1 = 689.50 ±

18' LT. STA. 9+00
STD. NO. 3-A-C.B.
ft. GRATE = 687.64
ft. 12" CL. J-1 = 683.42
ft. 21" CL. E-1 = 682.67
ft. 18" CL. J-1 = 682.67

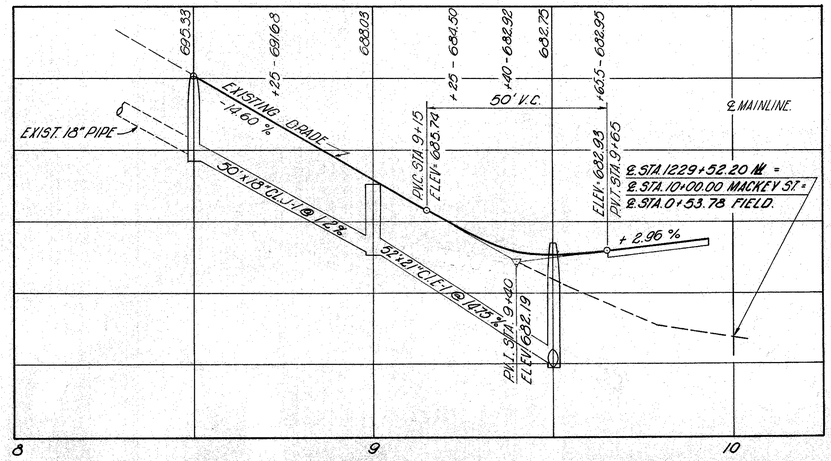

INTERSECTION DETAIL MACKEY AVENUE & PROPOSED S.R. 7

DESCRIPTION	PLOTTED BY	PLOTTED DATE	INKED BY	INKED DATE	CHECKED BY	CHECKED DATE
TOPOGRAPHY						
PAVEMENT						
DRAINAGE						
R.R. & W.						
QUANTITIES						

FED. RD. DIVISION	STATE	PROJECT	
2	OHIO		

191
418

BELMONT COUNTY
BEL - 7 - 20.74

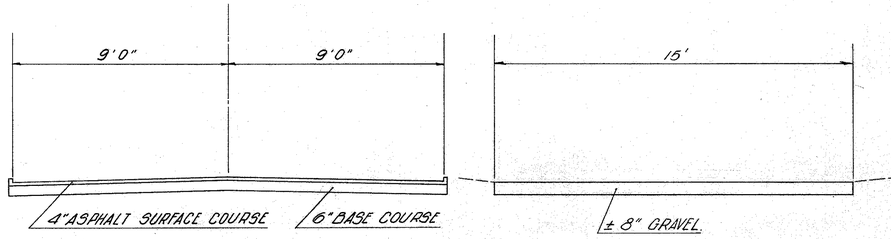

TYPICAL SECTION
EXISTING OHIO AVENUE

TYPICAL SECTION
EXISTING JEANETTE AVENUE

NOTE:
1. ALL DIMENSIONS ARE TO THE FACE OF CURB
2. MEDIAN ELEVATIONS ARE TO THE FACE OF CURB AT THE GUTTER.
3. ELEVATIONS ON RETURNS ARE TO THE FACE OF GUTTER
4. TRANSITION 2'0" GUTTER TO 1'6" ON RETURNS
5. INTERSECTION PAVEMENT DESIGN IS THE SAME AS №
6. FOR LEGEND AND ITEMS DESCRIPTION SEE SHT. № 24

PAVEMENT AREAS		
MAINLINE		27,636 sq ft
INTER. J & M		2,652
OHIO AVE.	3064 sq ft	
INTER. O & J	1064	
JEANETTE	1346	
ALLEY	132	
TOTALS	5606 sq ft	30,292 sq ft

MEDIAN I-22		
STATION	END AREAS	AVERAGE
1237+53	26.25	14.09
1239+03	1.92	0
1241+49.5	12.06	19.16
1242+49.5	26.25	

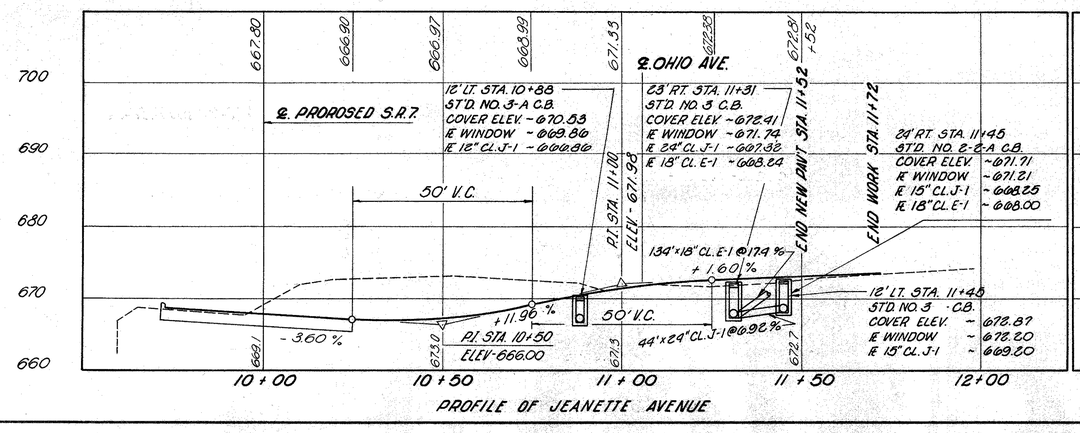

INTERSECTION DETAILS OHIO AVE, JEANETTE AVE, & S.R.7 – PROFILE OF OHIO AVE & JEANETTE AVE

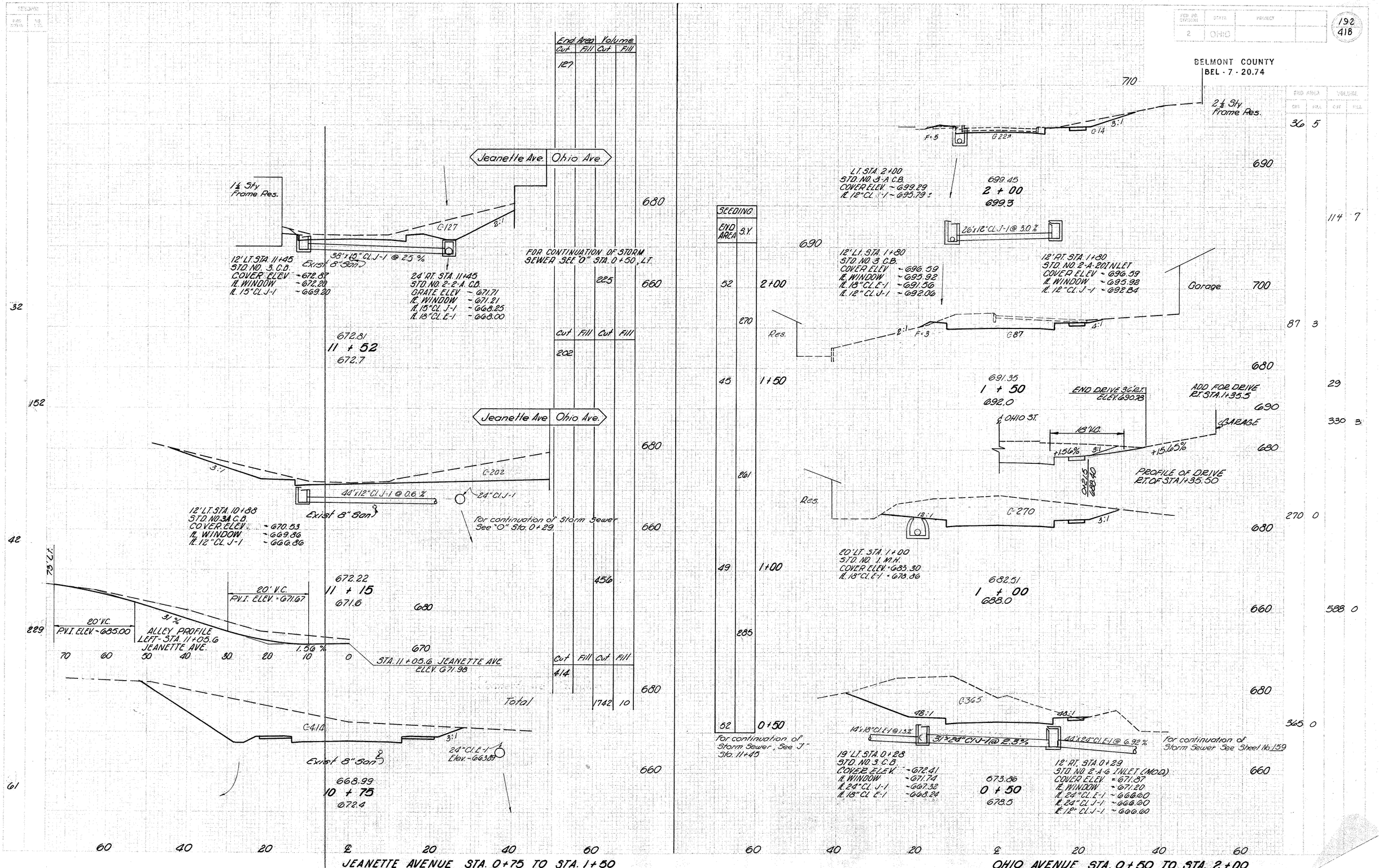

JEANETTE AVENUE STA. 0+75 TO STA. 1+50

OHIO AVENUE STA. 0+50 TO STA. 2+00

FED. RD. DIVISION	STATE	PROJECT	
2	OHIO		

193
418

BELMONT COUNTY
BEL - 7 - 20.74

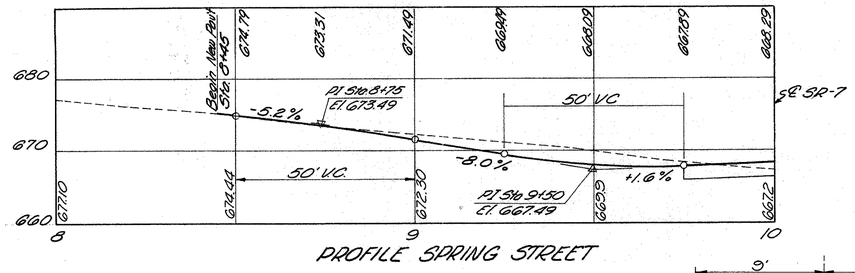

PROFILE SPRING STREET

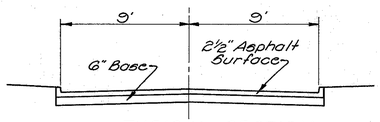

TYPICAL SECTION
EXISTING SPRING STREET

NOTES:

1. ALL DIMENSIONS ARE TO THE FACE OF CURB.
2. ALL MEDIAN ELEVATIONS ARE TO THE FACE OF CURB AT THE GUTTER
3. ELEVATIONS ON RETURNS ARE TO THE EDGE OF PAVED GUTTER.
4. INTERSECTION PAVEMENT DESIGN IS THE SAME AS SPRING ST.
5. FOR LEGEND & ITEMS DESCRIPTION SEE SHT. No 24
6. TRANSITION 2'-0" GUTTER TO 1'-6" ON RETURNS.

PAVEMENT AREAS		
MAINLINE	A = 17,507 SY	* 10,122 SY
SPRING ST.	A =	* 1,416 SY
TOTALS =	17,507 SY	* 11,522 SY

* - DURAL

MEDIAN I-22		
STATION	END AREAS	AVERAGE
1248+98.2	28.77	14.30
1251+48.2	1.92	0
1252+94.6	12.06	18.31
1253+94.6	24.56	

Scale: 1" = 20'

INTERSECTION DETAIL - SPRING ST. & S.R. 7

BELMONT COUNTY
BEL - 7. - 20.74

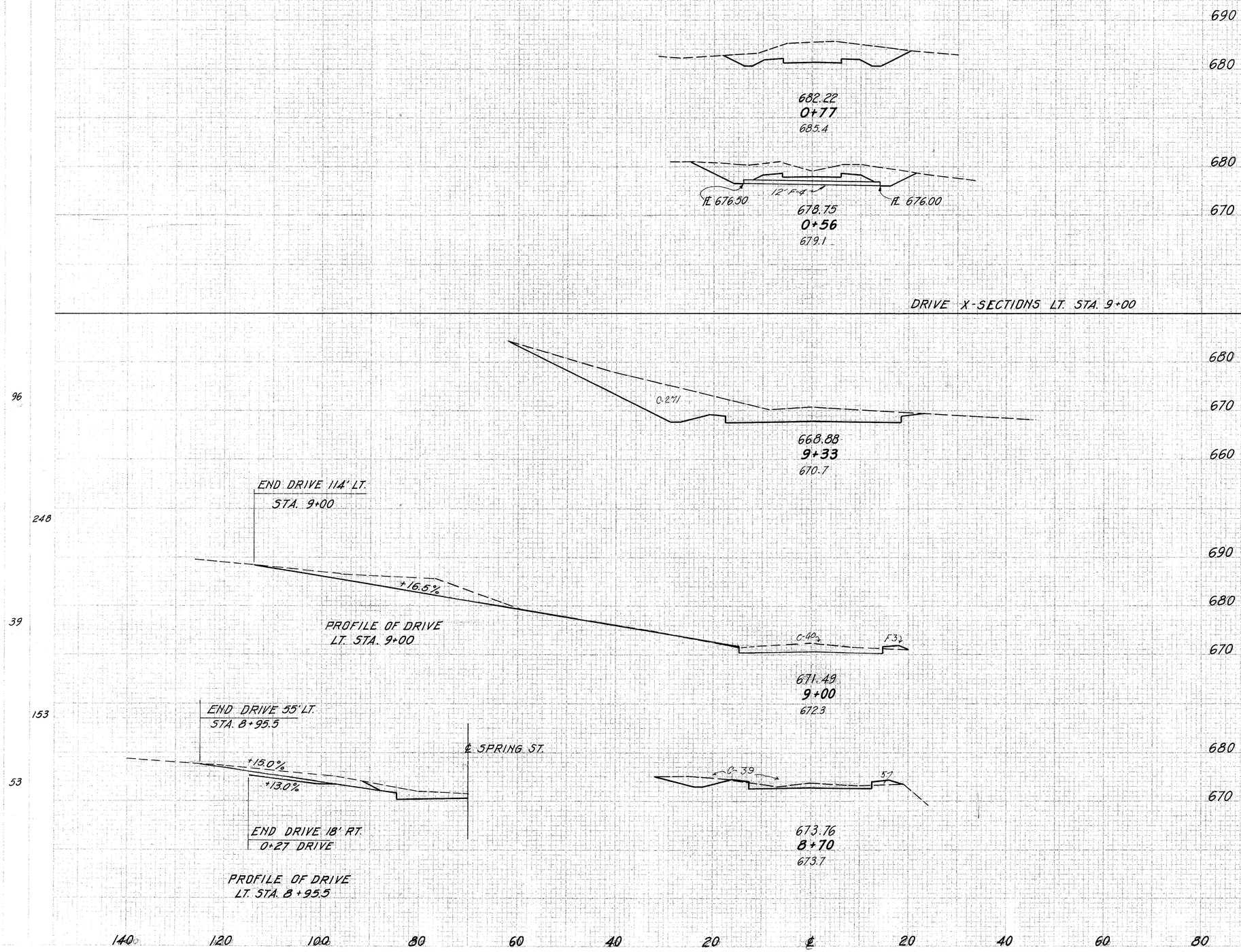

	END AREA CUT	END AREA FILL	VOLUME CUT	VOLUME FILL
STA. 1+14	20	0		
			90	0
	112	0		
			75	0
	81	0		
			83	0
STA. 0+13	23	0		
STA. 9+63.50 EARTHWORK	485	0		
			427	0
	271	0		
			190	2
	40	3		
			44	4
ADD FOR DRIVE LT. STA. 8+95.50			66	
	39	5		
			18	2
STA. 8+45 EARTHWORK	0	0		
TOTAL CARRIED TO SHEET NO. 22			993	8

96
248
39
153
53

SPRING STREET X-SECTIONS

FED. RD. DIVISION	STATE	PROJECT	
2	OHIO		

195
418

BELMONT COUNTY
BEL-7-20.74

NOTES: 1. All dimensions are to the face of curb.
2. Median elevations are to the face of curb of the gutter and all other elevations are to the face of gutter.
3. Pavement Composition is the same as that shown on the Typical Sections for S.R. 7.
4. For legend and items description see sht. Nº 24.

BEGIN PROJECT
STA. 1089 + 75 AHEAD =
STA. 184 + 7031 BACK =
STA. 2 + 0122 RAMP "C"

Begin Decel. Lane Ramp "C"
Sta. 0+00 = Sta. 1091 + 15.50

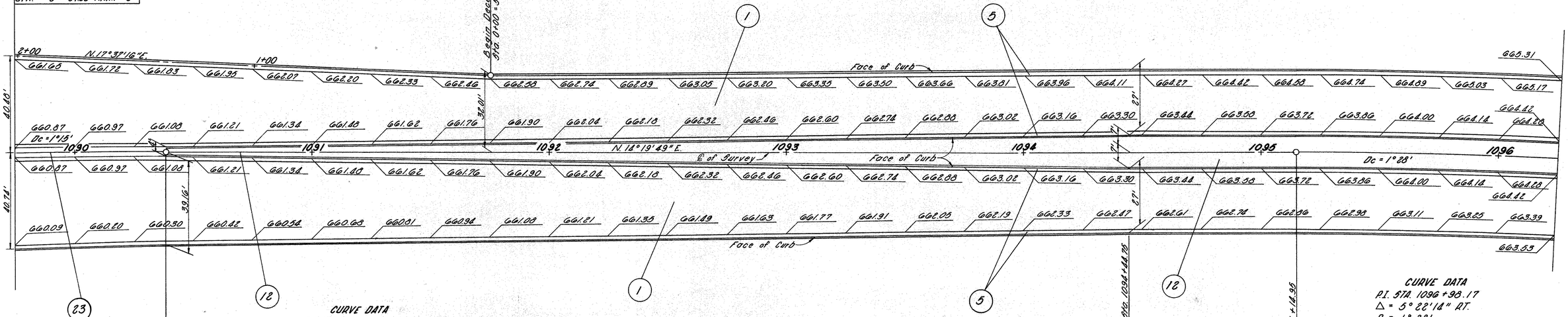

CURVE DATA
P.I. STA. 180 + 79.33
△ = 11° 23' 45" RT.
Dc = 1° 15'
R = 4583.66'
L = 911.67'
T = 457.34'
E = 22.76'

P.T. 1090 + 30.35

CURVE DATA
P.I. STA. 1096 + 98.17
△ = 5° 22' 14" RT.
Dc = 1° 28'
R = 3906.53'
L = 366.17'
T = 183.22'
E = 4.29'

Quantities Carried to Sheet Nº 23

ESTIMATED QUANTITIES — BRIDGEPORT

Total Pav't. Area. = 30,137 Sq. Ft. Sta. 1089 + 75 to Sta. 1095 + 14.95

T-35 1¼" Asphaltic Conc. Surface Course		
30,137 × .1017 ÷ 27 =	116.27	C.Y.
B-35 1¼" Asphaltic Conc. Leveling Course		
30,137 × .1017 ÷ 27 =	116.27	C.Y.
B-35 3" Asphaltic Conc. Base Course		
30,137 × .25 ÷ 27 =	279.05	C.Y.
T-30 Bituminous Prime Coat		
30,137 × 0.80 ÷ 9 =	1339.42	Gal.
B-20 4" Waterbound Macadam Base Course		
30,137 × .667 ÷ 27 =	744.12	
476.60 × 13 × .333 ÷ 27 =	76.89	
63.35 × 14 × .333 ÷ 27 =	10.95	
	831.96	C.Y.
I-12 Combined Curb & Gutter, Type 2 Mod., As per plan		
Left Side	540.67	
Right Side	539.92	
Median	953.20	
	2033.82	Lin.Ft.
I-21 4" Median Pavement, As per plan		
70.20 × 6 ÷ 9 =	46.80	
406.40 × 4.5 ÷ 9 =	203.20	
=	250.00	Sq. Yds.

I-22 Subbase		
30,137 × .667 ÷ 27 =	744.12	
939.95 × 7 × .667 ÷ 27 =	93.32	
25.67 × 70.20 ÷ 27 =	66.74	
16.99 × 406.40 ÷ 27 =	255.73	
7 × 63.35 × .667 ÷ 27 =	10.91	
	1170.86	C.Y.
I-21 Concrete Median Pavement, As per plan		
63.35 × 7 ÷ 9 =	49.27	S.Y.

MEDIAN I-22		
STATION	END AREA	AVERAGE
1094 + 44.75	25.67	
		16.99
1090 + 30.35	8.31	

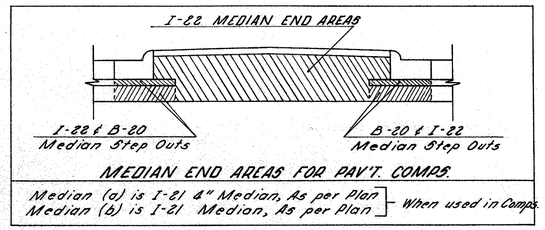

MEDIAN END AREAS FOR PAV'T. COMPS.
Median (a) is I-21 4" Median, As per Plan
Median (b) is I-21 Median, As per Plan
— When used in Comps.

PAVEMENT TRANSITION STA. 1089 + 75 TO STA. 1096 + 25

DESCRIPTION	PLOTTED BY	PLOTTED DATE	INKED BY	INKED DATE	CHECKED BY	CHECKED DATE
TOPOGRAPHY						
PAVEMENT						
BRIDGE						
R.R.						
QUANTITIES						

FED. RD. DIVISION	STATE	PROJECT	
2	OHIO		

196
418

BELMONT COUNTY
BEL - 7 - 20.74

CURVE DATA FOR
PAVEMENT TRANSITION
P.I. STA. 1260+02.41
P.I. STA. 1262+61.68
Δ = 10° 22' 15"
D = 4° 00' 00"
R = 1432.39'
L = 259.27'
T = 129.99'
E = 5.89'

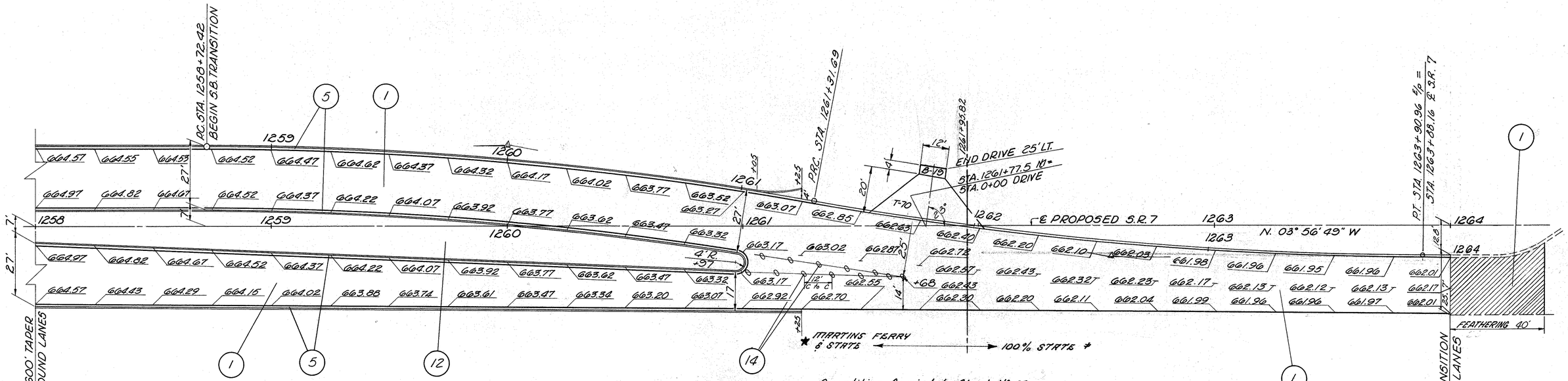

Quantities Carried to Sheet No. 23.

ESTIMATED QUANTITIES FOR PAVEMENT TRANSITION

TOTAL PAV'T. AREA = 22,274 Sq. Ft. STA. 1258+00 TO 1264+00

(1) FEATHERING $\left[\left(\frac{0.17+0}{2}\right)+\frac{1.25}{12}\right]\times 24'\times 25'\div 27$ = 85.93 C.Y.
$22{,}274^{\square'}\times 0.104106'\div 27$ = 3.44 C.Y.
TOTAL = ≠ 89.37 C.Y.

(3) $22{,}274^{\square'}\times 0.2500'\div 27$ = 204.44 C.Y.
≠ 53.15 ★ 151.29

(4) $22{,}274^{\square'}\times 0.400\div 9$ = 990.0 GAL.
≠ 255.0 ★ 735.0

(6) $22{,}274^{\square'}\times 0.06667'\div 27$ = 545.98 C.Y.
STEP OUT LT. $603'\times 4'\times .3333'\div 27$ = 29.77
RT. $600'\times 4'\times .3333'\div 27$ = 29.63
MEDIAN $(30'\times 3'\times .3333'\div 27)(2)$ = 22.30
SUBTOTAL = 81.70 → 81.70 C.Y.
TOTAL = 627.68 C.Y.
≠ 141.73 ★ 485.95

MEDIAN I-22

STA.	END AREA	AVERAGE
1258+00	24.56	28.59
1259+15	32.61	29.13
1260+30	25.64	18.85
1260+97	12.06	

(5) LT. 325 L.F.
RT. 325 L.F.
MEDIAN 608 L.F.
TOTAL = 1258 L.F. ★

(12) $4754^{\square'}\div 9$ = 528 S.Y. ★

(7) $22{,}274^{\square'}\times 0.0667'\div 27$ = 545.98 C.Y.
STEP OUT 81.70 C.Y. × 2 = 163.40 C.Y.
MEDIAN (a) $28.59^{\square'}\times 115'\div 27$ = 121.77 C.Y.
$29.13^{\square'}\times 115'\div 27$ = 124.07 C.Y.
$18.85^{\square'}\times 67'\div 27$ = 46.78 C.Y.
≠ 142 ★ 860 TOTAL = 1002.00 C.Y.

(2) FEATHERING $\left(\frac{4.25+0.75'}{2}\right)\times\frac{1}{12}\times 24'\times 25'\div 27$ = 85.93 C.Y.
$22{,}272^{\square'}\times 0.104106'\div 27$ = 4.63 C.Y.
≠ 26.76 ★ 63.80 TOTAL = 90.56 C.Y.

(14) 12 EACH ★

NOTES: 1. All dimensions are to the face of curb.
2. Median elevations are to the face of curb at the gutter and all other elevations are to the face of gutter.
3. Profile grade from sta 1261+25 to sta 1264+00 is midway between the edges of pavement.
4. Transition pavement design is the same as No.
5. For legend and items description see sht. No. 24

PAVEMENT TRANSITION STA. 1258+00 TO STA. 1264+00

FED. RD. DIVISION	STATE	PROJECT	
2	OHIO		

197
418

BELMONT COUNTY
BEL - 7 - 20.74

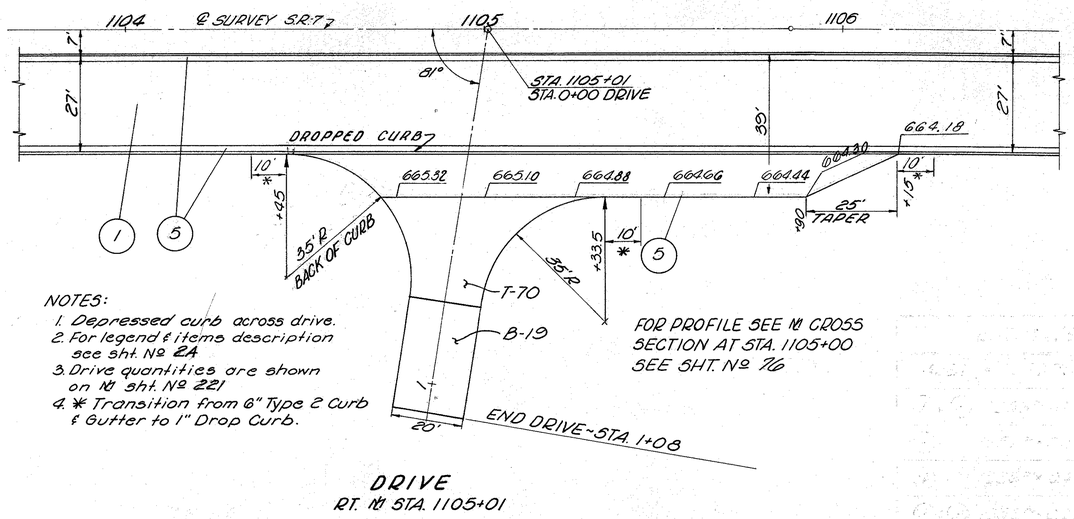

NOTES:
1. Depressed curb across drive.
2. For legend & items description see sht. № 24
3. Drive quantities are shown on № sht. № 221
4. * Transition from 6" Type 2 Curb & Gutter to 1" Drop Curb.

FOR PROFILE SEE № CROSS SECTION AT STA. 1105+00 SEE SHT. № 76

DRIVE
RT. № STA. 1105+01

FED. HWY. DIVISION	STATE	PROJECT	
2	OHIO		

198
418

BELMONT COUNTY
BEL - 7 - 20.74

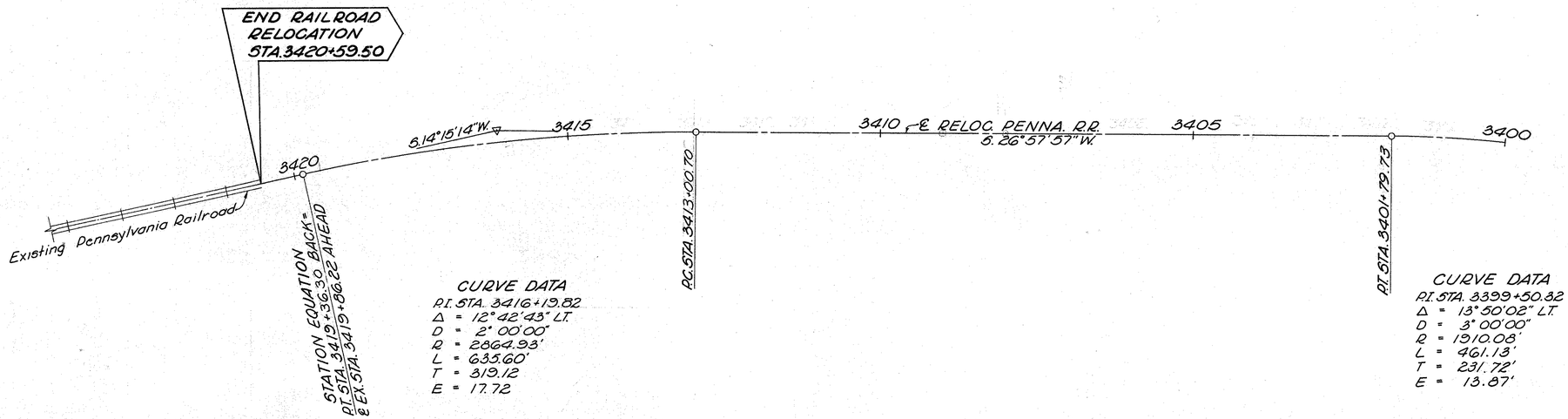

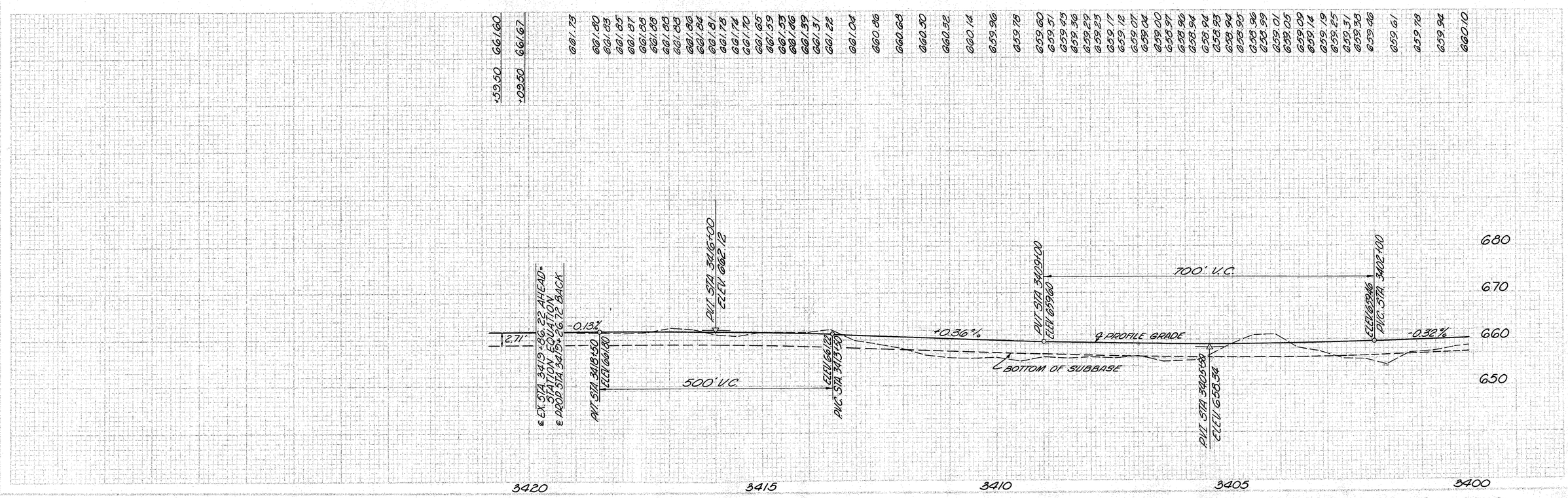

STA. 3400+00 TO STA. 3420+00 PENNSYLVANIA RAILROAD

DESCRIPTION	PLOTTED BY	DATE	INKED BY	DATE	CHECKED BY	DATE
TOPOGRAPHY						
PAVEMENT						
DETAILS						
R. O. W.						
QUANTITIES						

FED. RD. DIVISION	STATE	PROJECT		
2	OHIO			

199
418

BELMONT COUNTY
BEL - 7 - 20.74

CURVE DATA
P.I. STA. 3386+67.13
Δ = 9° 09' 23" RT.
D = 2° 00' 00"
R = 2864.93'
L = 457.82'
T = 229.41'
E = 9.17'

CURVE DATA
P.I. STA. 3399+50.32
Δ = 13° 50' 02" LT.
D = 3° 00' 00"
R = 1910.08'
L = 461.13'
T = 231.72'
E = 13.87'

CURVE DATA
P.I. STA. 3379+25.58
Δ = 13° 31' 10" LT.
D = 2° 00' 00"
R = 2864.93'
L = 675.97'
T = 339.58'
E = 20.06'

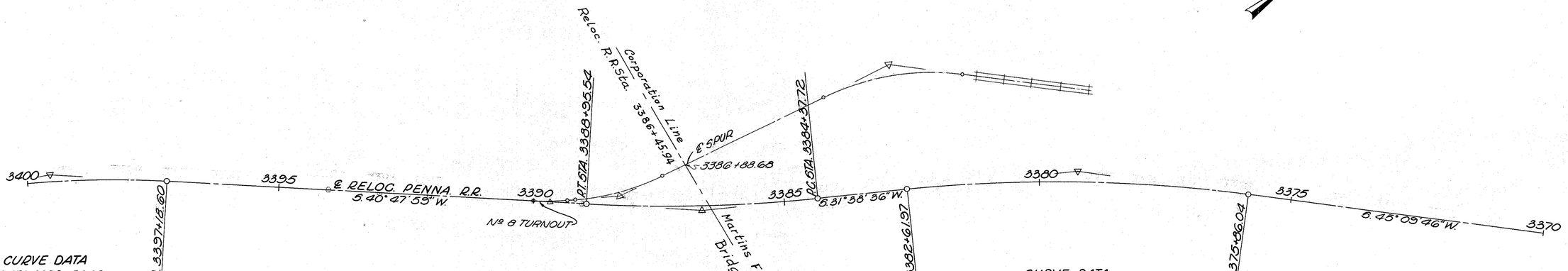

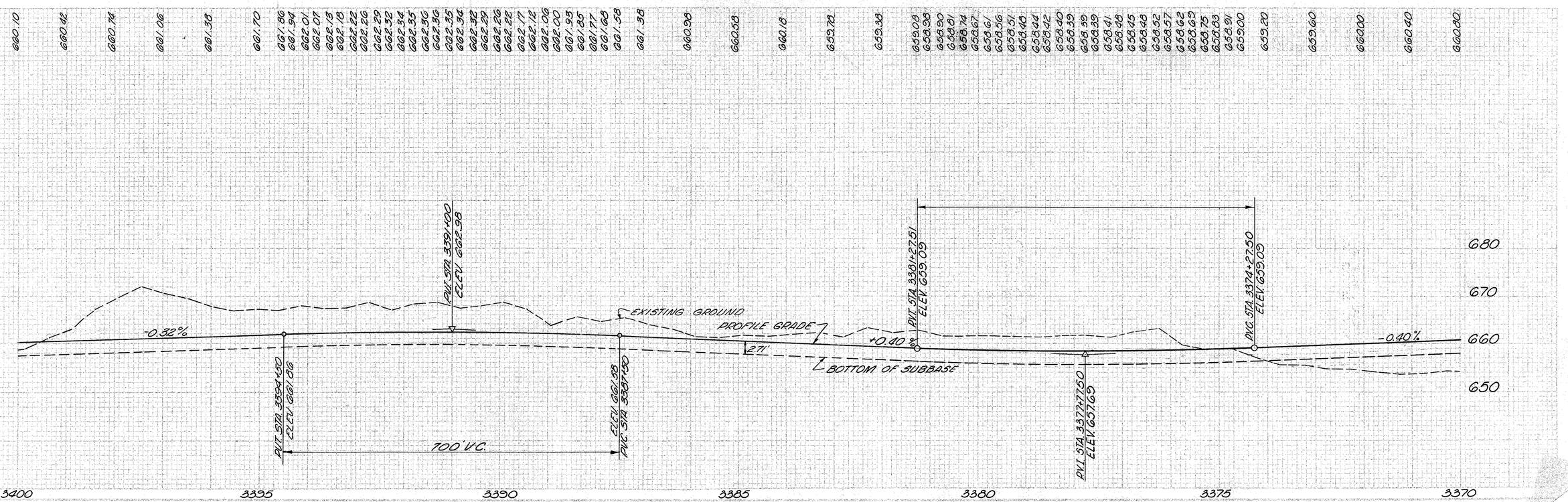

STA. 3370+00 TO STA. 3400+00 PENNSYLVANIA RAILROAD

DESCRIPTION	PLOTTED BY	PLOTTED DATE	INKED BY	INKED DATE	CHECKED BY	CHECKED DATE
TOPOGRAPHY						
ENGINEERING						
PROFILE						
R. O. W.						
QUANTITIES						

FED. ROAD DIVISION	STATE	PROJECT	
2	OHIO		

200
4.18

BELMONT COUNTY
BEL-7-20.74

CURVE DATA
P.I. STA. 3360+19.22
Δ = 9°56'42" RT.
D = 4°00'00"
R = 1432.69'
L = 248.63'
T = 124.65'
E = 5.41'

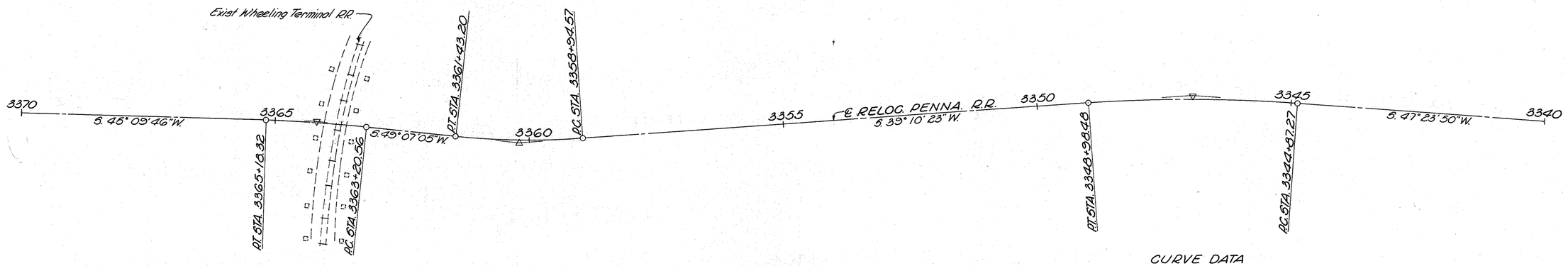

CURVE DATA
P.I. STA. 3364+19.49
Δ = 3°57'15" LT.
D = 2°00'00"
R = 2864.93'
L = 197.76'
T = 98.93'
E = 1.71'

CURVE DATA
P.I. STA. 3346+93.24
Δ = 8°13'27" LT.
D = 2°00'00"
R = 2864.93'
L = 411.21'
T = 205.97'
E = 7.39'

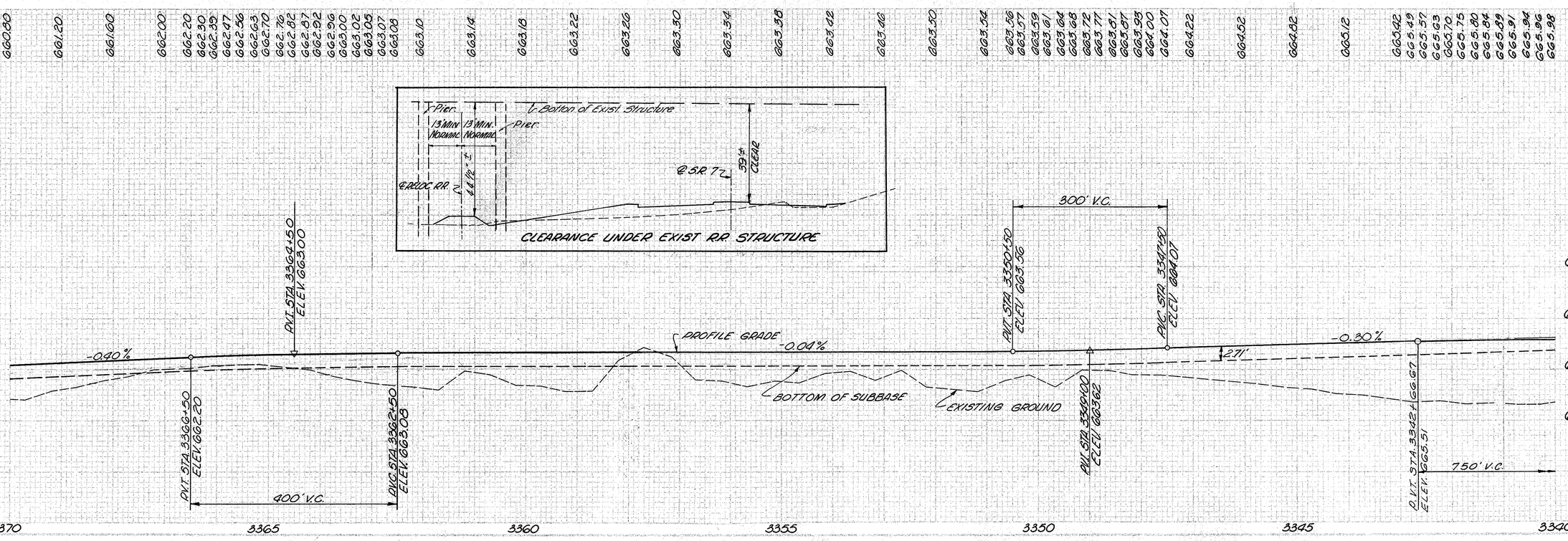

STA. 3340+00 TO STA. 3370+00 PENNSYLVANIA RAILROAD

DESCRIPTION	PLOTTED BY	PLOTTED DATE	INKED BY	INKED DATE	CHECKED BY	CHECKED DATE
TYPE SHEET						
PLAN & PROF.						
DRAINAGE						
R. / R.						
QUANTITIES						

FED. RD. DIVISION	STATE	PROJECT	
2	OHIO		

201
418

BELMONT COUNTY
BEL - 7 - 20.74

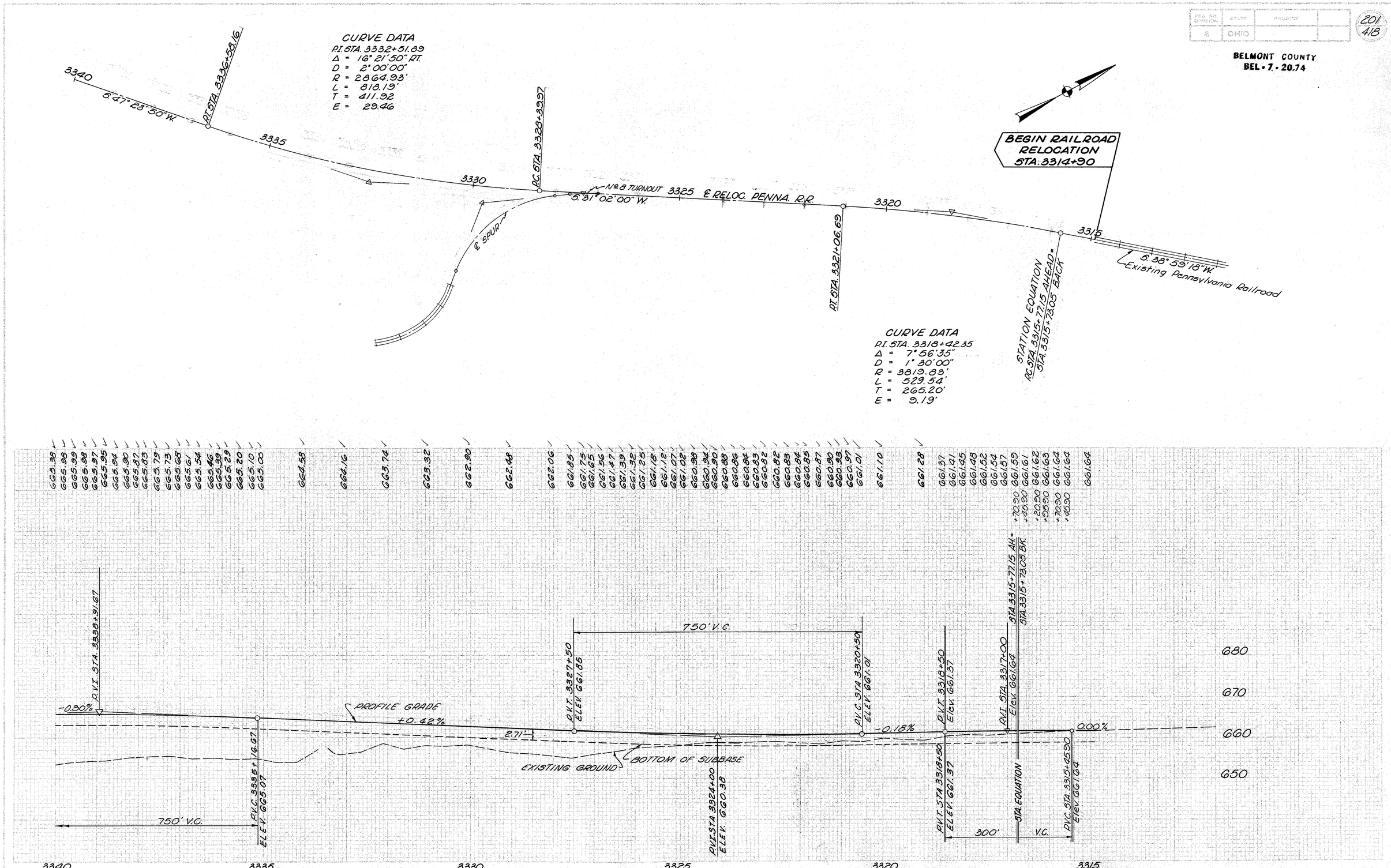

STA. 3314+90 TO STA. 3340+00 PENNSYLVANIA RAILROAD

FED. ROAD DIVISION	STATE	PROJECT	
2	OHIO		

202
418

BELMONT COUNTY
BEL - 7 - 20.74

DATA-CURVE 1
P.I. STA. 3327+30.00
Δ = 8°16'16"
D = 12°18'20"
R = 466.50'
L = 67.34'
T = 33.73'
E = 1.22'

DATA-CURVE 2
P.I. STA. 3329+76.86
Δ = 63°10'56"
D = 20°00'00"
R = 287.94'
L = 317.52'
T = 177.08'
E = 50.09'

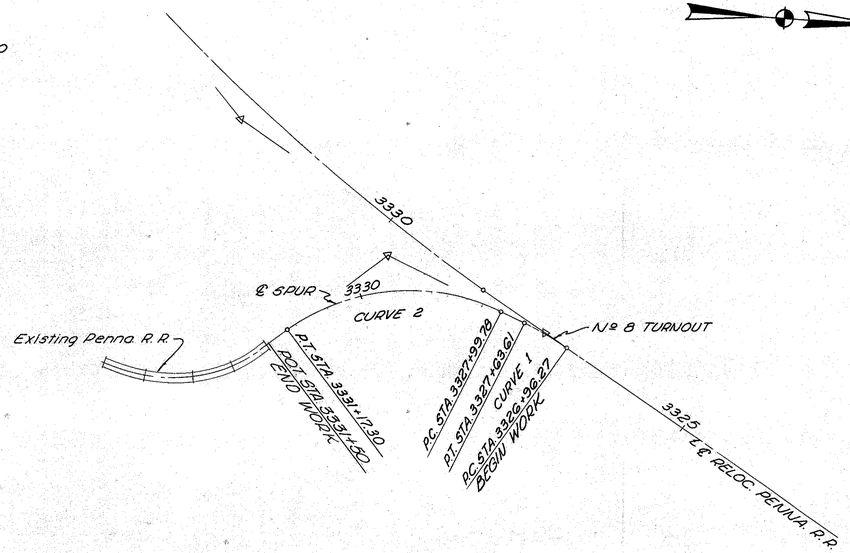

DATA CURVE 1
P.I. STA. 3382+53.79
Δ = 33°20'10"
D = 12°00'00"
R = 478.34'
L = 277.80'
T = 143.22'
E = 20.98'

DATA CURVE 2
P.I. STA. 3388+29.79
Δ = 21°24'42"
D = 12°00'00"
R = 478.34'
L = 178.43'
T = 90.43'
E = 8.47'

DATA CURVE 3
P.I. STA. 3389+66.52
Δ = 8°16'16"
D = 12°18'20"
R = 466.50'
L = 67.21'
T = 33.73'
E = 1.22

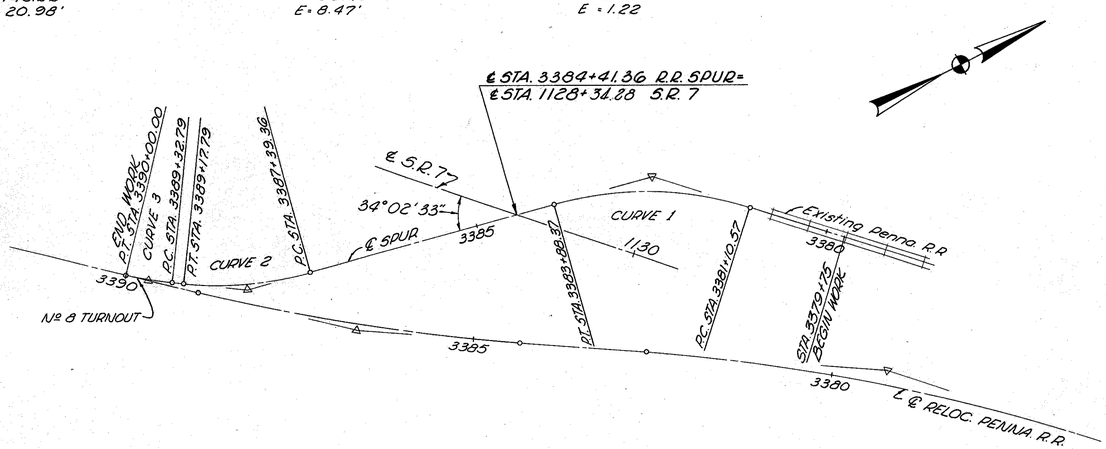

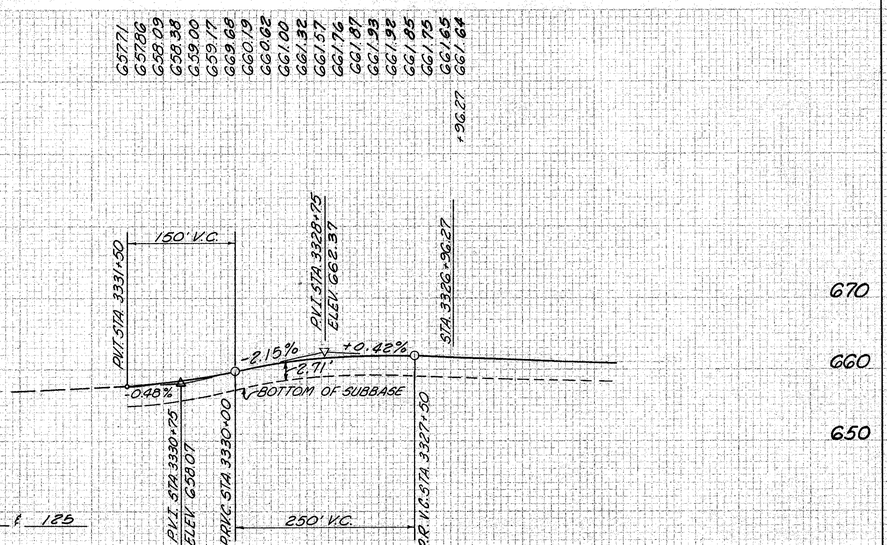

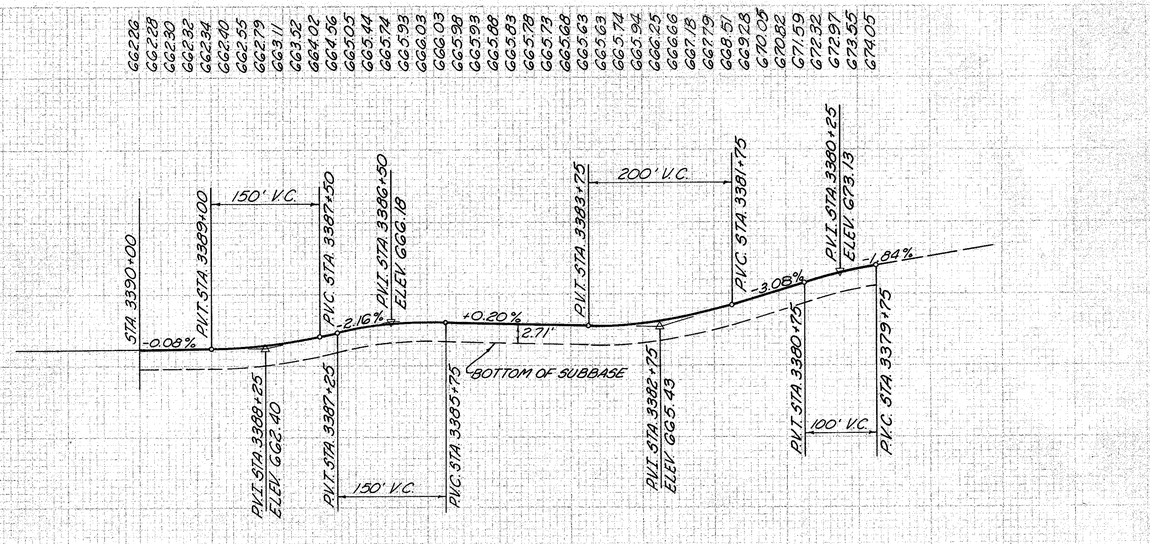

PENNSYLVANIA RAILROAD SPURS

FED. RD. DIVISION	STATE	PROJECT	
2	OHIO		

203/418

BELMONT COUNTY
BEL-7-20.64

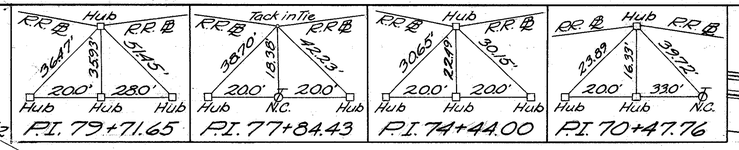

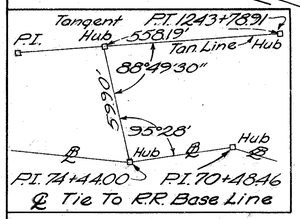

CURVE DATA					
CV. No.	Δ	D	R	T	L
1.	17°47'08.6"	8°15'00"	695.095'	108.760'	215.576'
2	5°18'13"	1°21'32.6"	4,215.947'	195.276'	390.235'
3.	5°18'13"	1°21'12.94"	4,232.947'	196.052'	391.728'
4	5°18'13"	1°20'56.9"	4,246.947'	196.701'	393.180'
5.	5°18'13"	1°20'40.94"	4,260.947'	197.349'	394.349'
6.	5°18'13"	1°20'25.18"	4,274.947'	197.998'	395.732'
7.	5°18'13"	1°20'09.32"	4,288.947'	198.646'	397.303'
8	3°21'40.4"	1°00'00"	5,729.65'	168.111'	336.110'
9.	3°21'40.4"	0°59'49.3"	5,746.65'	168.610'	337.111'
10	3°21'40.4"	0°59'40.6"	5,760.65'	169.021'	337.925'
11.	3°21'40.4"	0°59'31.94"	5,774.65'	169.432'	338.742'
12.	3°21'40.4"	0°59'23.30"	5,788.65'	169.842'	339.564'
13.	3°21'40.4"	0°59'14.70"	5,802.65'	170.253'	340.389'
14.	12°15'30.4"	1°30'00"	3,819.83'	410.192'	817.20'
15.	12°15'30.4"	1°29'36.07"	3,836.85'	412.018'	821.031'
16.	12°15'30.4"	1°29'14.5"	3,850.83'	413.521'	823.790'
17.	15°15'30.4"	1°28'57.1"	3,864.85'	517.685'	1029.234'
18.	15°15'30.4"	1°28'27.82"	3,878.83'	519.560'	1034.889'
19.	15°15'30.4"	1°28'18.72"	3892.83'	521.435'	1036.717'
20.	6°20'08.3"	1°00'00"	5,729.65'	317.11'	633.89'
21.	3°00'00"	2°15'26.34"	2,538.39'	66.47'	132.90'
22.	3°00'00"	3°44'37.5"	1,530.71'	40.083'	80.132'
23.	1°59'15.4"	0°52'56"	6,494.53'	112.660'	225.280'
24.	1°59'15.4"	0°52'49"	6,508.53'	112.903'	225.795'

CV. No.	Δ	D	R	T	L
25	1°59'15.4"	1°45'13.2"	3,267.06'	56.710'	113.331'
26	9°08'25.1"	7°22'18.9"	777.765'	62.198'	123.992'

THE PENNSYLVANIA RAILROAD CO.
CENTRAL REGION PITTSBURGH DIV.

MARTINS FERRY, OHIO
NEW YARD FACILITIES
SCALE: 1"=50' MAY 3, 1965
OFFICE OF AREA ENGINEER
PITTSBURGH, PA.
26781

FED. RD. DIVISION	STATE	PROJECT	
2	OHIO		

204
418

BELMONT COUNTY
BEL-7-20.64

8"Hickory 9" Locust
15.00'
RR
19.22' Hub
12"Locust
P.I 67+00

1253+52.10
Hub
99°41'
80.00'
99°15"
Hub
PRR P.O.T. 53+00
℄ Tie To R.R. Base Line

MARK
564.00
N° 6
N° 22
+0.3% GR.
N. 5885.939
E. 9469.246
N. 5976.46
E. 9521.95
N. 6010.69
E. 9563.29
MATCH
M.P. 37
3291+36

ESTIMATED QUANTITIES FOR RELOCATED RAILROAD YARD

Base Line From	Base Line To	Side ℄	Sec Sheet	B-19 6" Aggr. Cu.Yds.	I-1 Pipe, Class A-1, Sec. M-G.G (d) Lin. Ft. 24"	36"			I-10 Dumped Rock Channel Protection Cu.Yds.	I-10 Riprap, using 6" Reinf. Conc. Slab Sq. Yds.	I-2 Masonry Cu.Yds.	E-3 Channel Excavation Cu.Yds.	E-12 Pipe Removed, 15" and over Lin. Ft.	
51+00	82+00	Lt.	203 To 205	585										
60+45.53		Lt.	208-A			118			8		1.77	137	40	
71+82.6		Lt.	211		82				3		0.41			
74+91		Lt.	212		62				3		0.41			
81+13		Lt.	212A		16				2	5	1.07			
Totals				+585	160	118			16	5	3.66	137	40	

Quantities carried to General Summary Sheets No. 15, 16, & 17.
+167 C.Y. 100% State -418 C.Y. U-534(10)

P.T. 1243+78.91 Bk.
1243+81.81 Ah.
T.S. 1244+34.81
1244
N8°14'30"E
1245
1246
1247
1248 Dc.2°15' 1249
1250
1251
℄ SR 7
1252
1253
1254
1255
1256
1257
1258
1259
1260
1261
S.C. 1246+74.81
C.S. 1249+66.53
S.T. 1252+16.59
E 9900
N 9700
662.04
232.50'
EXIST'G POLE LINE
CAR 58 CARS
52
50
48
38
Acc.=1515.60'
HUB
45.28
125.78'± 1245.00 HWY.
R.R. Co. R/W LINE
138.00'
N 19° 18' E
PERTY TO BE CONVEYED BY
HIO TO THE P.R.R. CO.
3.01 Ac.±
(SEE INSERT)
RRET = 3.2 Ac.±
YARD AT
790.90'
N13°45'17"E
1245+73.10 (TL)
265.13' Ah.
NEW YARD OFF.
ROAD
R.R. Yard Layout Base Line
+0.04% GRADE
10' PROPOSED DRIVE
ENGINE TRK. N°1 CAP. 2 CARS
ENGINE TRK. N°2 " 2 "
LEVEL
-1.62% GR.
N. 7698.429 E. 10,012.210
N. 7507.135 E. 10,012.618
N. 7695.842 E. 10,040.158
N. 7694.647 E. 10,068.058
N. 7693.253 E. 10,068.058
N. 7891.049 E. 10,086.400
N. 7908.105 E. 10,137.869
N. 7983.398 E. 10,125.695
N. 7800.910 E. 10,151.411
N. 7701.572 E. 10,197.269
654.92
36" C.I.P.
U-534(10) 100% State
O.H. WIRE SING
C of F Line
662.41
N. 8089.694 E. 10,050.400
N. 8089.994 E. 10,013.400
N. 8085.694 E. 10,088.400
N. 8089.694 E. 10,088.400
N. 8089.694 E. 10,012.400
N. 8089.694 E. 10,086.400
N. 8318.284 E. 10,086.395
N. 8429.846 E. 10,072.396
N. 8541.408 E. 10,058.397
N. 8,652.970 E. 10,044.398
N. 8,764.532 E. 10,030.399
17'
14'
EXIST'G POLE LINE
-0.09% GRADE
#8 LADDER
10' DRIVEWAY (PROPOSED)
NICKEL PLATE R.R.
OHIO

THE PENNSYLVANIA RAILROAD CO.
CENTRAL REGION PITTSBURGH DIV.

MARTINS FERRY, OHIO
NEW YARD FACILITIES
SCALE: 1"=50' MAY 3, 1965
OFFICE OF AREA ENGINEER
PITTSBURGH, PA.
26781

FED. RD. DIVISION	STATE	PROJECT	
2	OHIO		

205
418

BELMONT COUNTY
BEL-7-20.64

LEGEND

- R.R. CO. OWNERSHIP
- PROPERTY TO BE CONVEYED BY STATE OF OHIO TO R.R.
- EXISTING TRACK
- PROPOSED NEW YARD

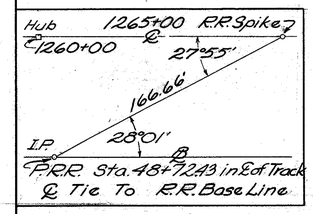

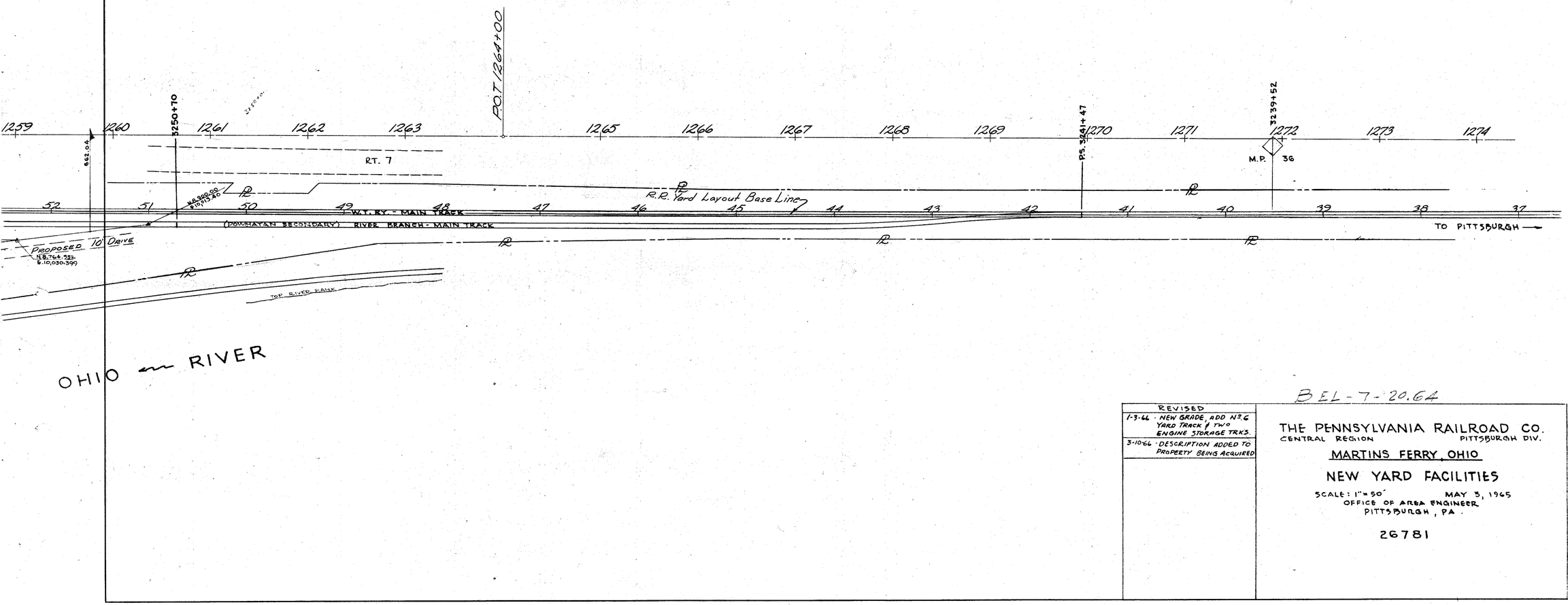

BEL-7-20.64

REVISED
1-3-66 · NEW GRADE, ADD No. 6 YARD TRACK & TWO ENGINE STORAGE TRKS.
3-10-66 · DESCRIPTION ADDED TO PROPERTY BEING ACQUIRED

THE PENNSYLVANIA RAILROAD CO.
CENTRAL REGION PITTSBURGH DIV.

MARTINS FERRY, OHIO

NEW YARD FACILITIES

SCALE: 1" = 50' MAY 3, 1965
OFFICE OF AREA ENGINEER
PITTSBURGH, PA.

26781

FED. RD. DIVISION	STATE	PROJECT	
2	OHIO		

206
418

BELMONT COUNTY
BEL-7-20.64

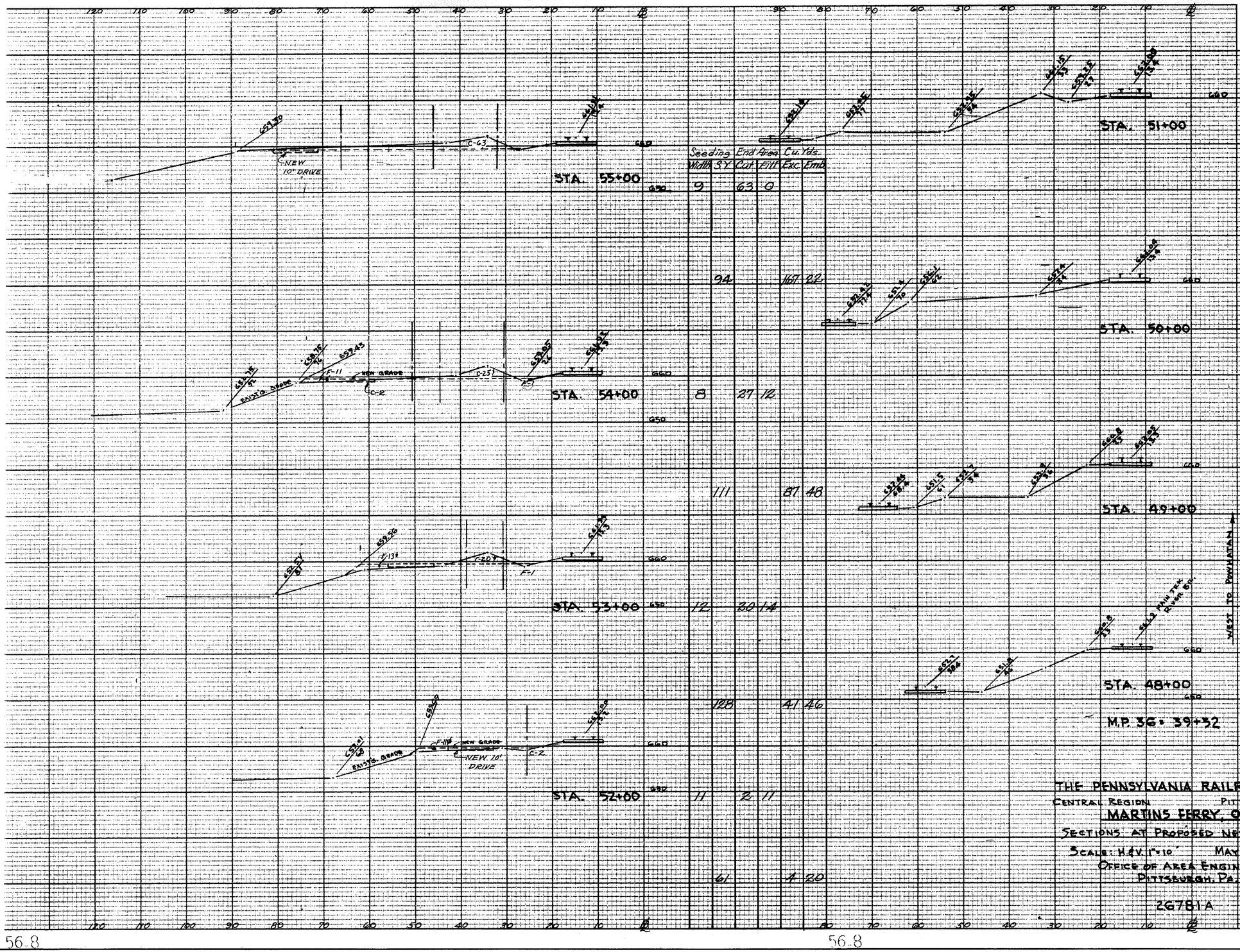

	Seeding		End Area		Cu. Yds.	
	Width	S.Y.	Cut	Fill	Exc.	Emb.
STA. 55+00	9	63	0			
		94	166	22		
STA. 54+00	8	27	12			
		111	87	48		
STA. 53+00	12	20	14			
		128	41	46		
STA. 52+00	11	2	11			
		61	4	20		
STA. 51+00	0		0	0		

THE PENNSYLVANIA RAILROAD CO.
CENTRAL REGION PITTSBURGH DIV.
MARTINS FERRY, OHIO
SECTIONS AT PROPOSED NEW YARD
SCALE: H. & V. 1"=10' MAY 3, 1965
OFFICE OF AREA ENGINEER
PITTSBURGH, PA.
2G781A REV. 11-5-66

56-8 56-8

FED. RD. DIVISION	STATE	PROJECT	
2	OHIO		

207
418

BELMONT COUNTY
BEL-7-20.64

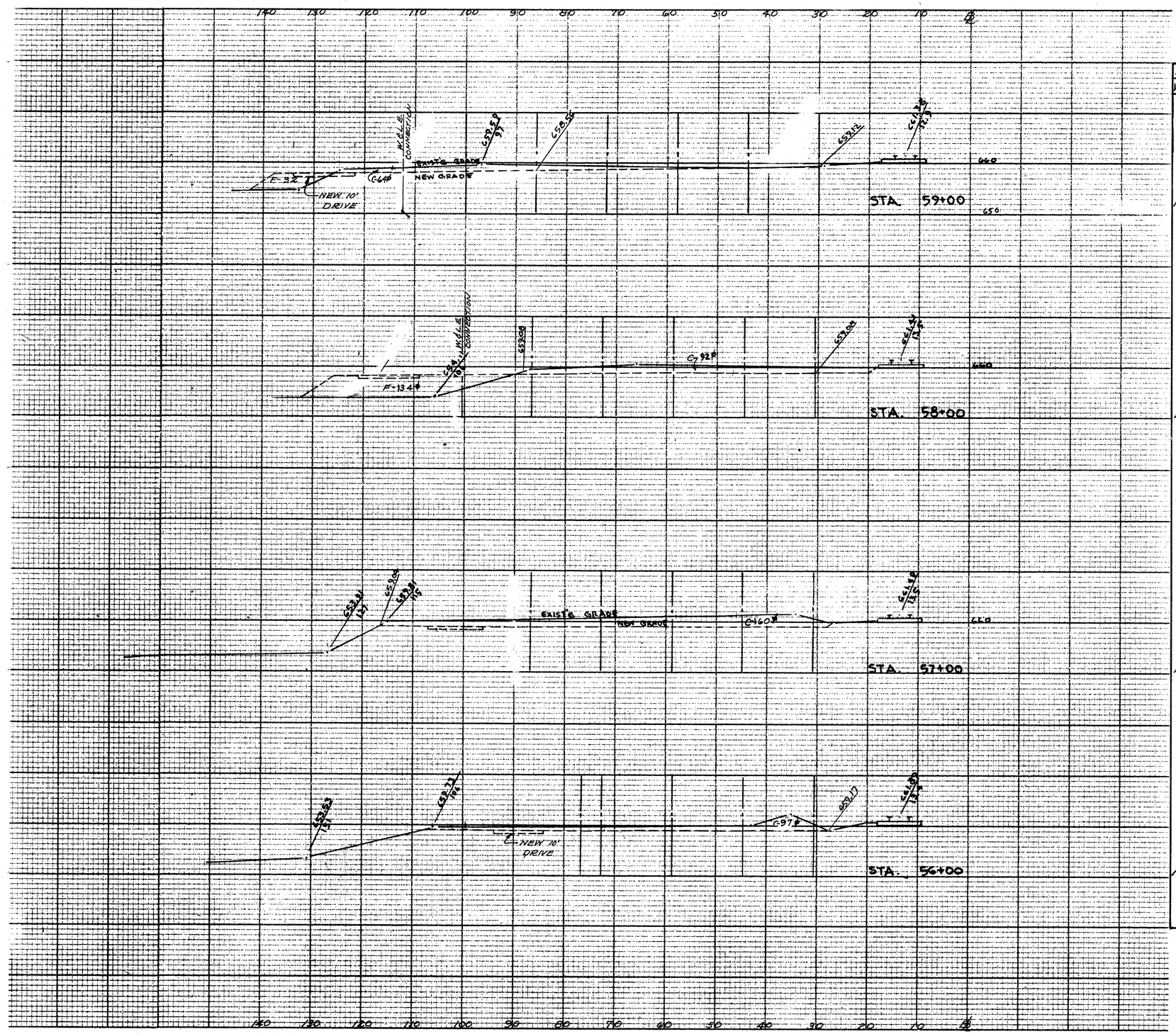

Seeding Width	Seeding S.Y.	End Area Cut	End Area Fill	Cu Yds. Exc.	Cu Yds. Emb.
	256			272	59
12		64	32		
	150			289	307
15		92	134		
	150			467	248
12		160	0		
	156			476	0
16		97	0		
	139			296	0

THE PENNSYLVANIA RAILROAD CO.
CENTRAL REGION PITTSBURGH DIV.

MARTINS FERRY, OHIO
NEW YARD FACILITIES
SCALE: 1"=50' MAY 3, 1965
OFFICE OF ARER ENGINEER
PITTSBURGH, PA.
26781

FED. RD. DIVISION	STATE	PROJECT	
2	OHIO		

208
418

BELMONT COUNTY
B&L ~ 7~20.64

Seeding	End Area		Cu Yds.	
Width	S.Y.	Cut	Fill	Exc.	Emb.
	250			689	48
24		180	16		
	333			589	94
36		138	35		
	389			409	65
34		83	0		

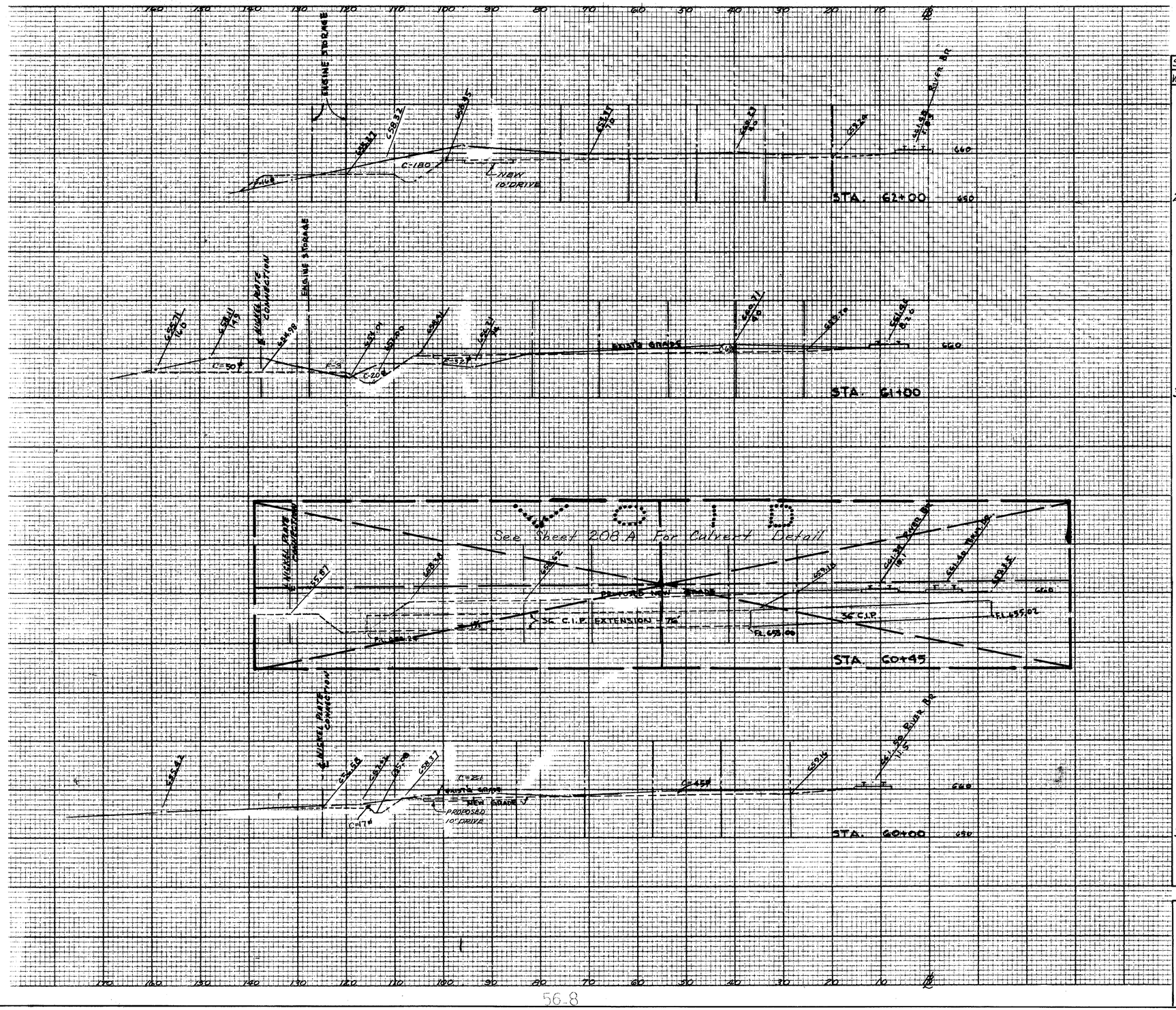

THE PENNSYLVANIA RAILROAD CO.
CENTRAL REGION PITTSBURGH DIV.

MARTINS FERRY, OHIO
NEW YARD FACILITIES
SCALE: 1"=50' MAY 3, 1965
OFFICE OF AREA ENGINEER
PITTSBURGH, PA.
26781

FED. RD. DIVISION	STATE	PROJECT	
2	OHIO		

208A
418

BELMONT COUNTY
BEL-7-20.64

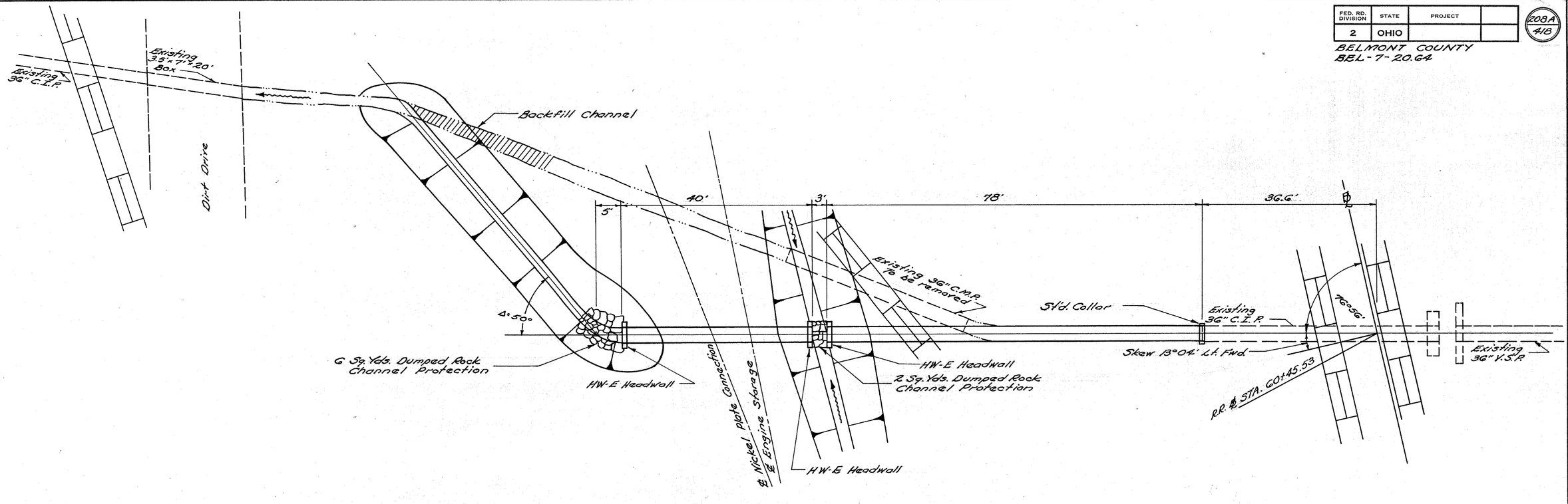

PLAN

Scale
0' 10' 20'

ESTIMATED QUANTITIES

36" Pipe, Class A-1, Sec. M-6.6(d), Pipe under Railroad	118 Lin. Ft.
Dumped Rock Channel Protection	8 Sq. Yds.
Masonry	1.8 Cu. Yds.
Pipe Removed, (15" and over)	40 Lin. Ft.
Channel Excavation	137 Cu. Yds.

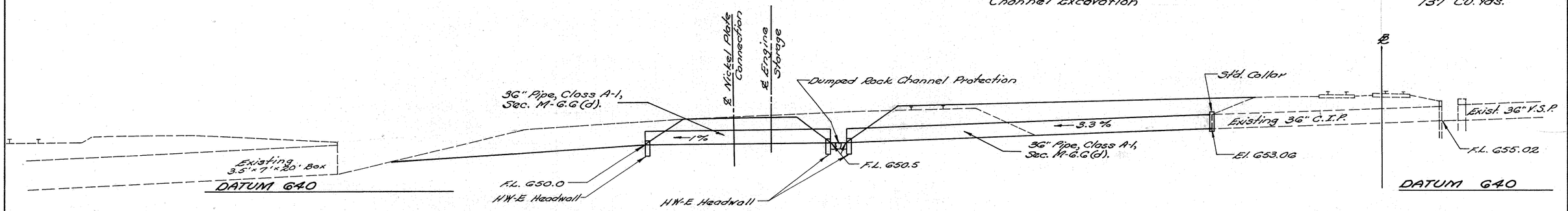

PROFILE

Scale
0' 10' 20'

FED. RD. DIVISION	STATE	PROJECT	
2	OHIO		

209
418

BELMONT COUNTY
BEL-7-20.64

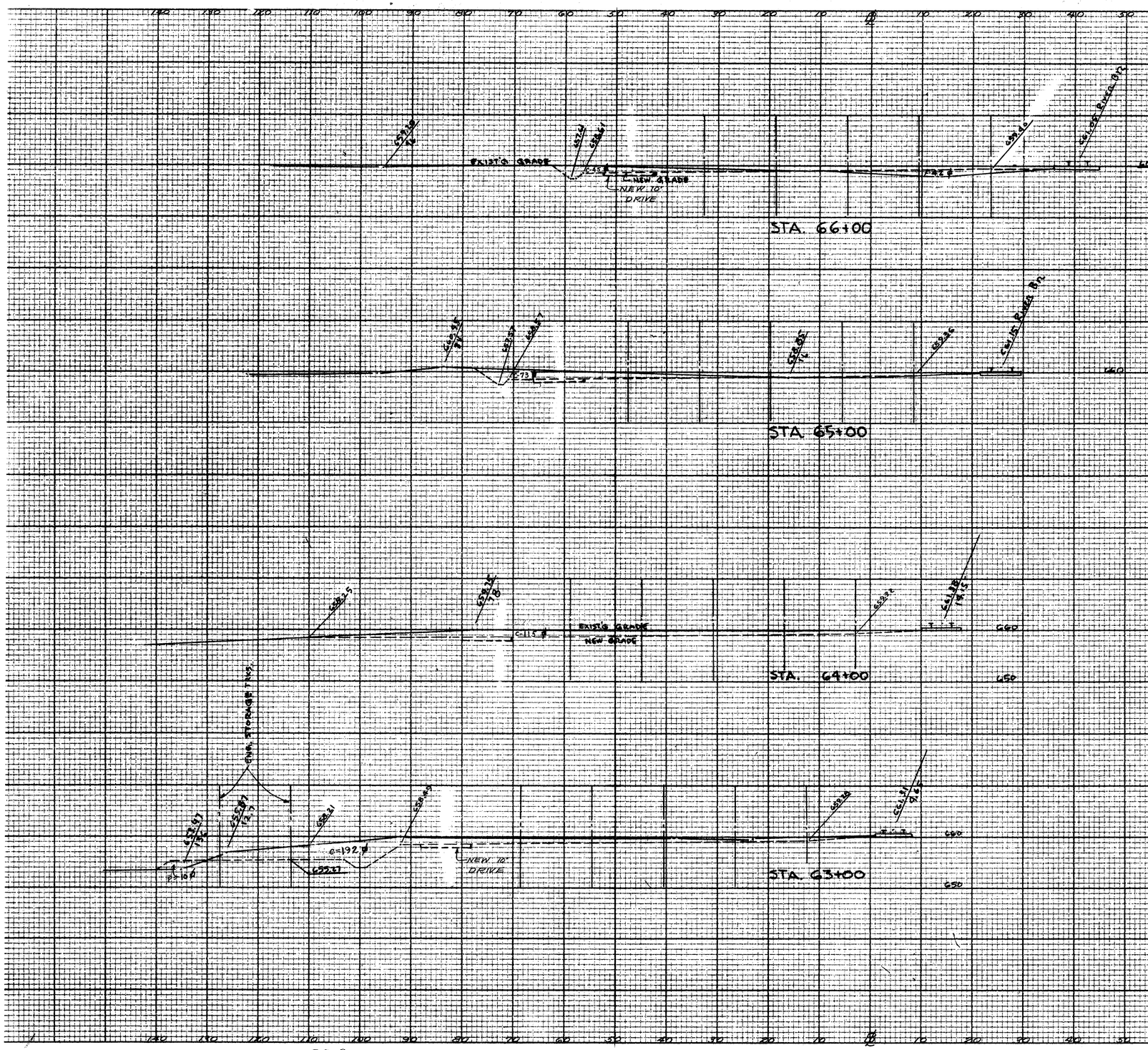

Seeding Width	Seeding S.Y.	End Area Cut	End Area Fill	Cu. Yds. Exc.	Cu. Yds. Emb.
	261			83	504
14		45	42		
	161			219	78
15		73	0		
	261			348	0
32		115	0		
	294			569	19
21		192	10		

Excavation 5369 Cu.Yds.
Embankment 31,540 Cu.Yds.
Seeding 8276 Sq.Yds.

THE PENNSYLVANIA RAILROAD CO.
CENTRAL REGION PITTSBURGH DIV.

MARTINS FERRY, OHIO
NEW YARD FACILITIES
SCALE: 1"=50' MAY 3, 1965
OFFICE OF AREA ENGINEER
PITTSBURGH, PA.
26781

56-8

56-8

FED. RD. DIVISION	STATE	PROJECT	
2	OHIO		

210
418

BELMONT COUNTY
BEL-7-20.64

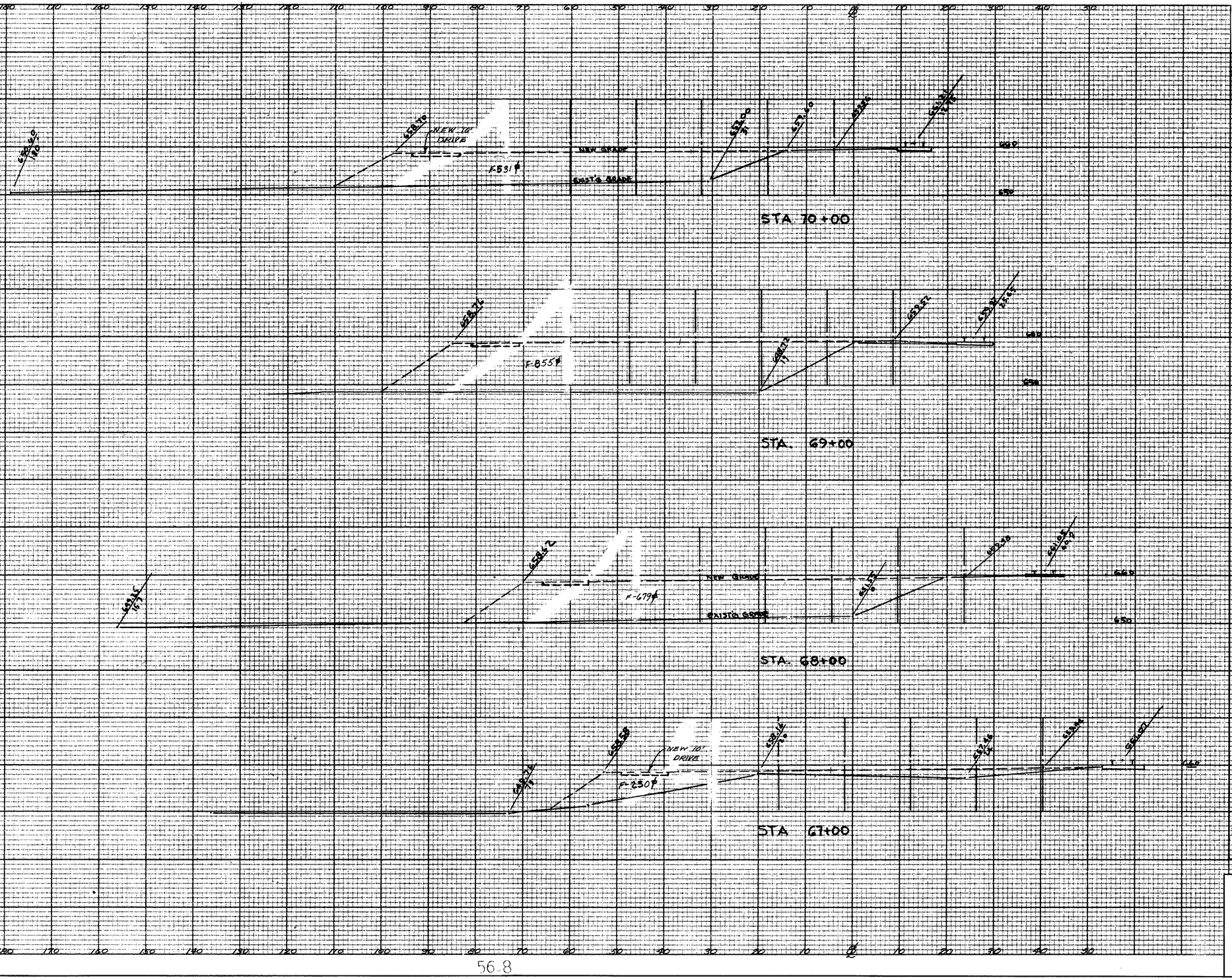

Seeding Width S.Y.	End Area Cut	End Area Fill	Cu. Yds. Exc.	Cu. Yds. Emb.
361			0	1826
34			0	531
394			0	2567
37			0	855
400			0	2841
35			0	679
378			0	1683
33			0	230

THE PENNSYLVANIA RAILROAD CO.
CENTRAL REGION PITTSBURGH DIV.

MARTINS FERRY, OHIO
NEW YARD FACILITIES

SCALE: 1"=50' MAR 3, 1966
OFFICE OF AREA ENGINEER
PITTSBURGH, PA.
26781

FED. RD. DIVISION	STATE	PROJECT	
2	OHIO		

211
418

BELMONT COUNTY
BEL-7-20.64

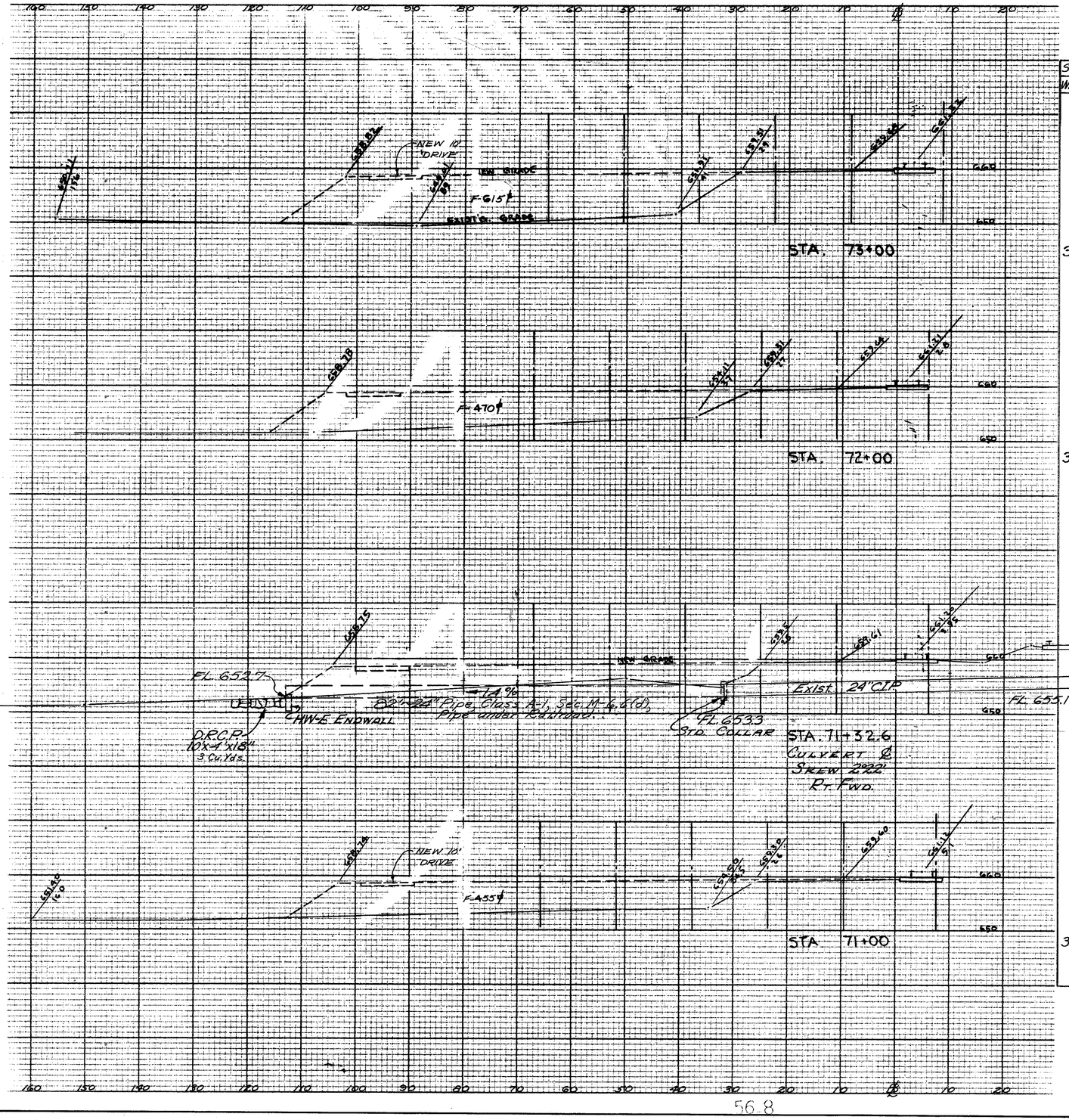

Seeding Width	Seeding S.Y.	End Area Cut	End Area Fill	Cu. Yds. Exc.	Cu. Yds. Emb.
	394			15	2398
34		0	615		
	372			0	2009
33		0	470		
	356			0	1713
31		0	455		

THE PENNSYLVANIA RAILROAD CO.
CENTRAL REGION PITTSBURGH DIV.

MARTINS FERRY, OHIO
NEW YARD FACILITIES
SCALE: 1"=50' MAY 3, 1965
OFFICE OF AREA ENGINEER
PITTSBURGH, PA.
26781

FED. RD. DIVISION	STATE	PROJECT	
2	OHIO		

2.12
418

BELMONT COUNTY
BEL-7-20.64

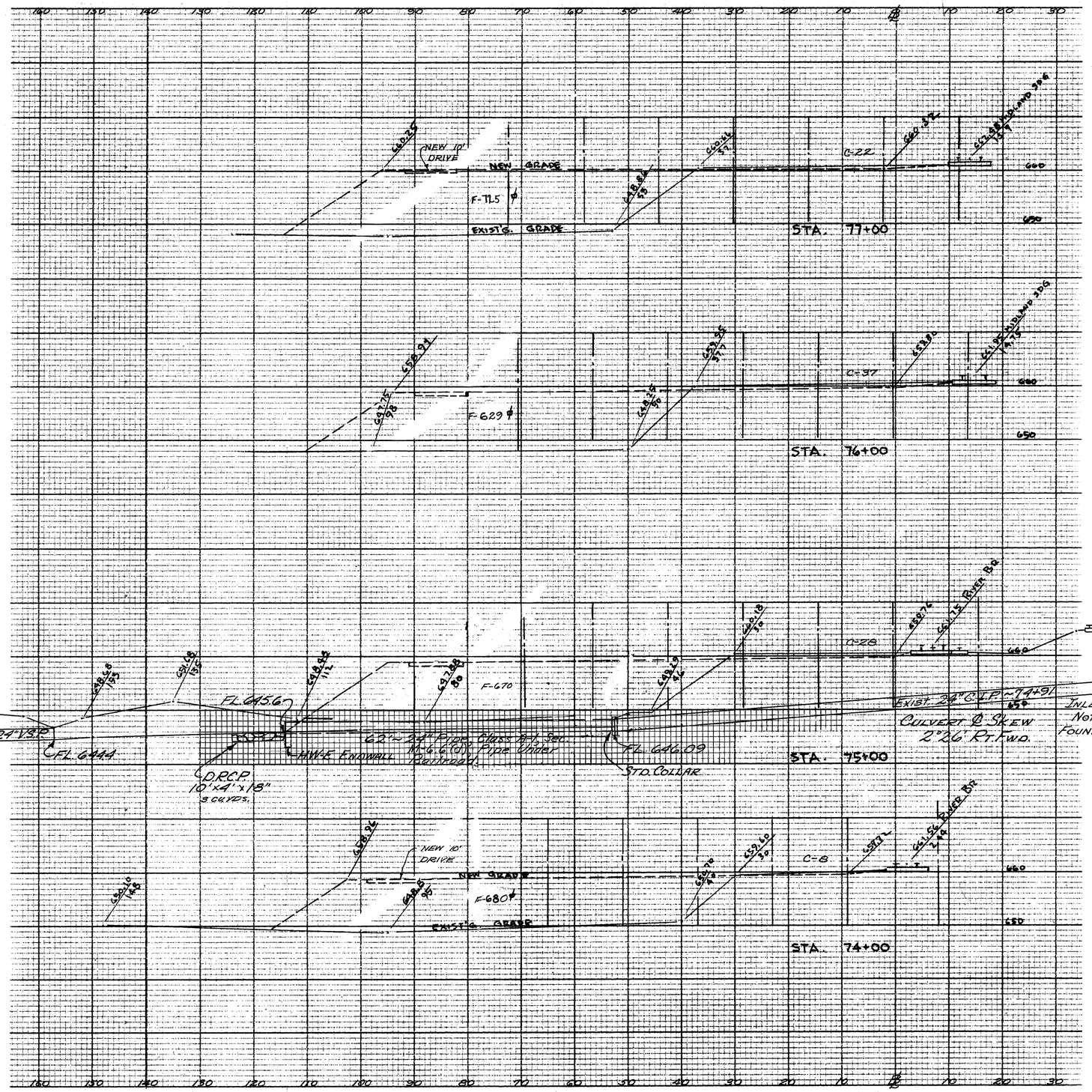

Seeding Width	Seeding S.Y.	End Area Cut	End Area Fill	Cu. Yds. Exc.	Cu. Yds. Emb.
	317			41	2582
28		22	725		
	300			109	2507
26		37	629		
	311			120	2406
30		28	670		
	372			67	2500
37		8	680		

THE PENNSYLVANIA RAILROAD CO.
CENTRAL REGION PITTSBURGH DIV.

MARTINS FERRY, OHIO
NEW YARD FACILITIES
SCALE: 1"=50' MAY 3, 1965
OFFICE OF AREA ENGINEER
PITTSBURGH, PA.
26781

56.8

FED. RD. DIVISION	STATE	PROJECT	
2	OHIO		

212A
418

BELMONT COUNTY
BEL~7~20.64

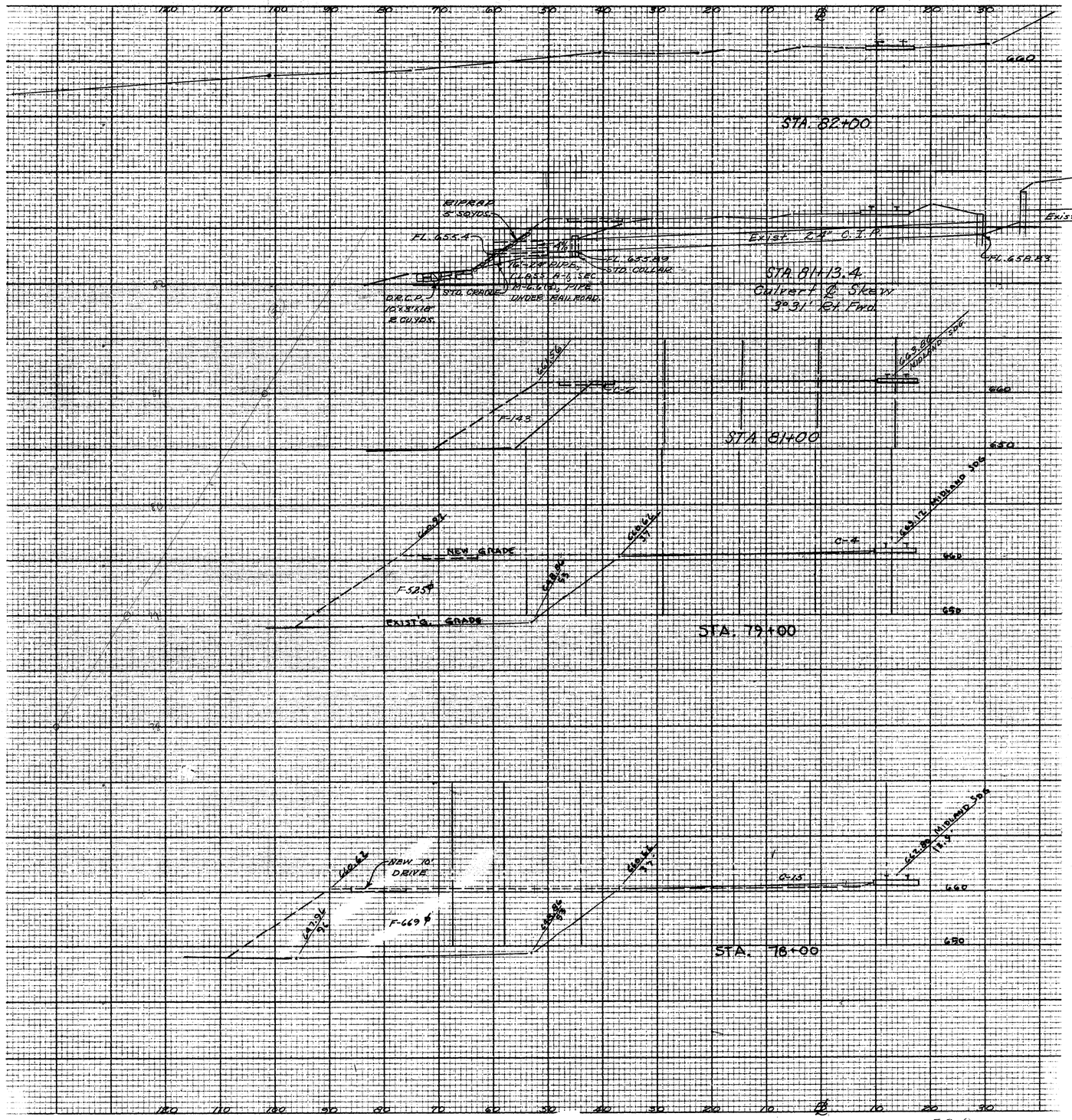
STA. 82+00
STA 81+13.4
Culvert & Skew
36°31' Rt. Fwd.
STA. 81+00
STA. 79+00
STA. 78+00
EIPRAP
& SQYDS.
FL. 655.4
4%
FL. 655.89
STD. COLLAR
14"-24" PIPES,
CL. 65S, B-2, 1 SEC.
W-2-6.66, TYPE
STD. CRADLE UNDER RAILROAD.
D.R.C.P.
10'6.3"X10'
8 CU.YDS.
EXIST. 2.4" C.T.P.
EL. 658.89
Exist. 2.8'×2.8' Conc. Box
6.5% MINIMUM SLOPE
NEW GRADE
F-585'
EXIST'G. GRADE
NEW 10' DRIVE
F-669'
C-4
C-13
GRADE 3%
GRADE 5%
GRADE 10%
GRADE 4%
GRADE 2%

BELMONT COUNTY
BEL - 7 - 20.74

FED. RD. DIVISION	STATE	PROJECT
2	OHIO	

213
418

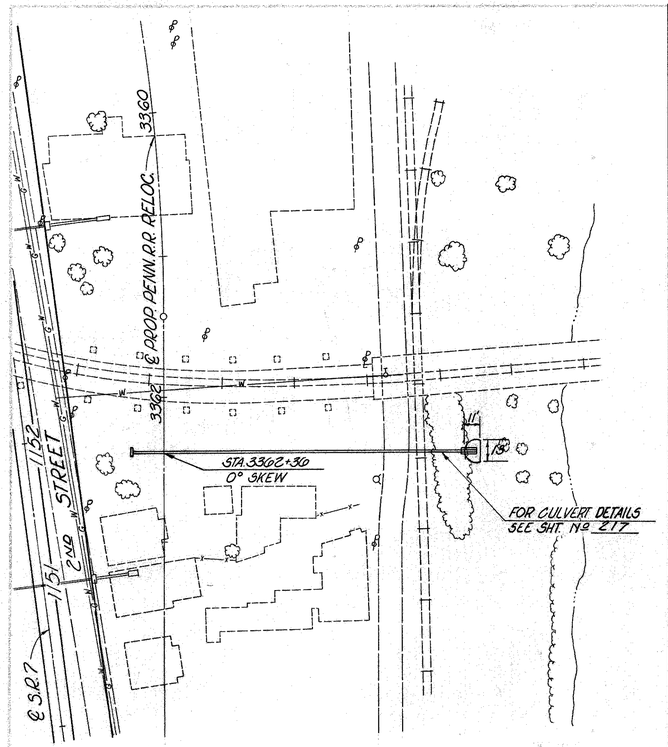

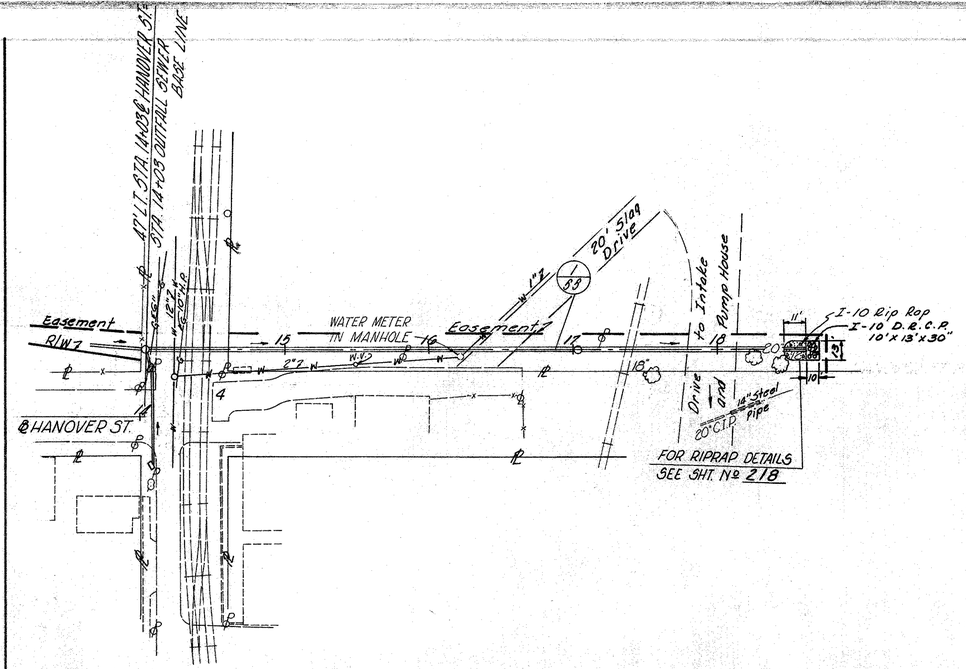

Note: During Construction of this outfall Sewer, All precautions shall be taken to prevent damage to adjacent Utilities and the pavement shall be open to traffic at all times.

⊗ U.G. QUANTITIES
SEC. M6.6(b)
* PIPE UNDER RR. SEC. M6.6(d)

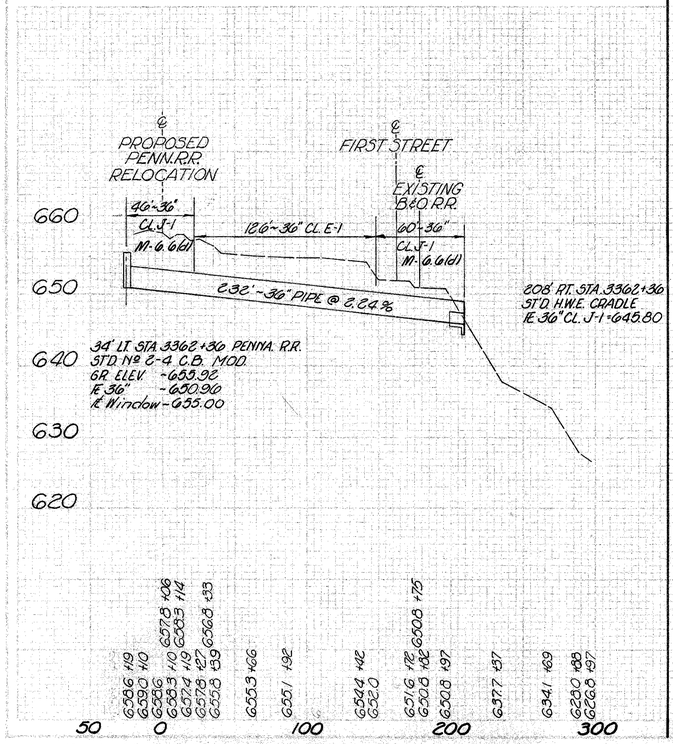

MADISON STREET OUTFALL SEWER

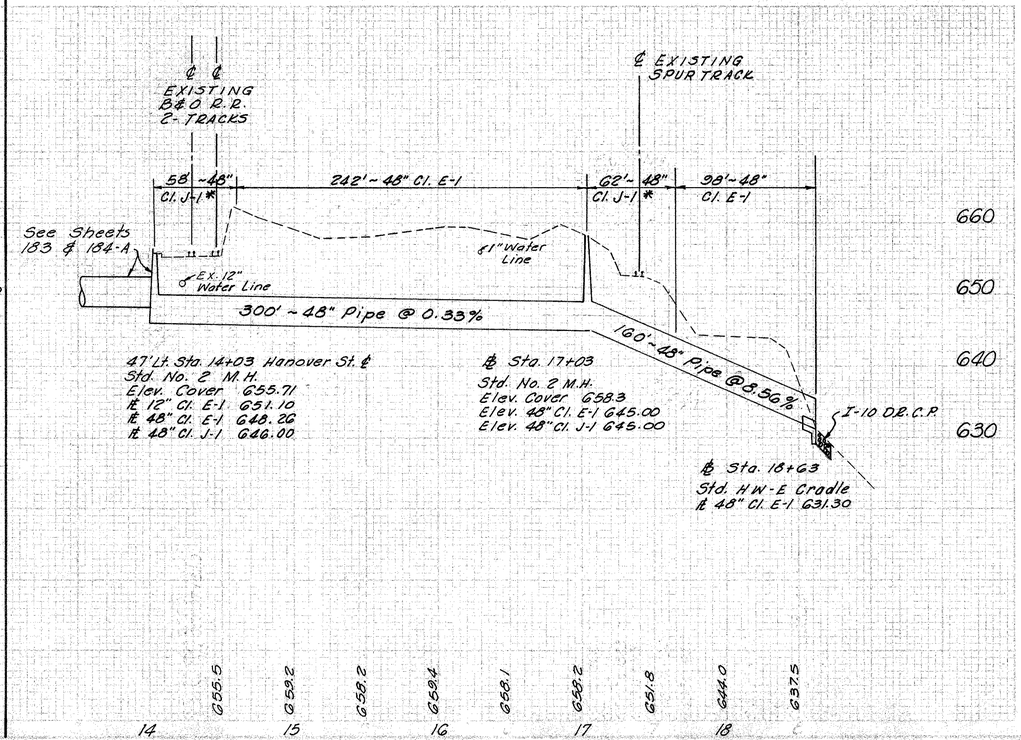

HANOVER STREET OUTFALL SEWER

ESTIMATED QUANTITIES

RAD. NO.	STATION TO STATION	SIDE	I-8 Std. No. 2 M.H. Ea. ⊗	I-2 MASONRY ⊗ C.Y.	I-10 RIPRAP USING 6" CONC. SLAB ⊗ S.Y.	I-10 Dumped Rock Channel Prot. ⊗ C.Y.	I-1 CLASS J-1 # 48" ⊗ L.F.	CLASS E-1 # 48" ⊗ L.F.
1-55	14+03 HANOVER ~ 18+63 ℄	℄	1 ⊗	2.46 ⊗	9 ⊗	12 ⊗	120 ⊗	340 ⊗

OUTFALL SEWERS

BELMONT COUNTY
BEL-7-20.74

FED. RD. DIVISION	STATE	PROJECT	TYPE FUNDS
2	OHIO		

214
418

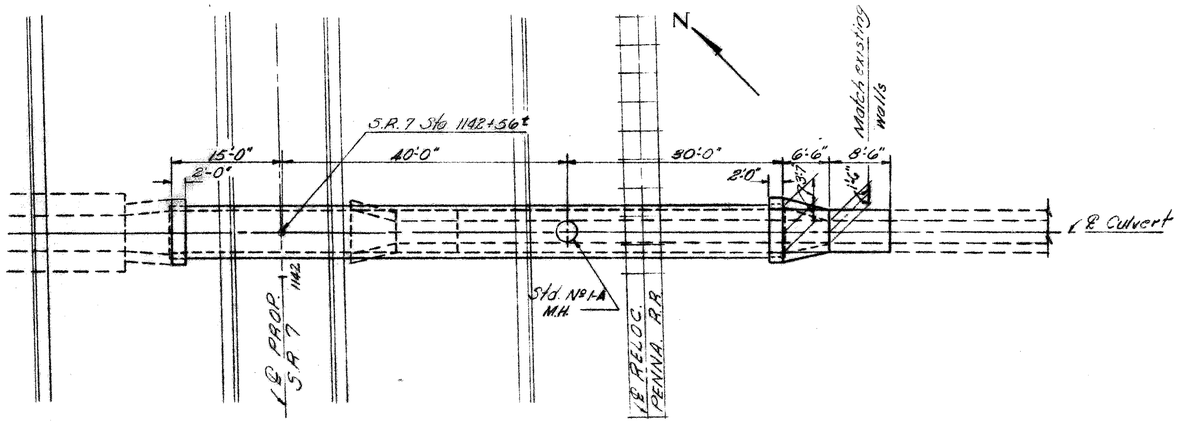

PLAN

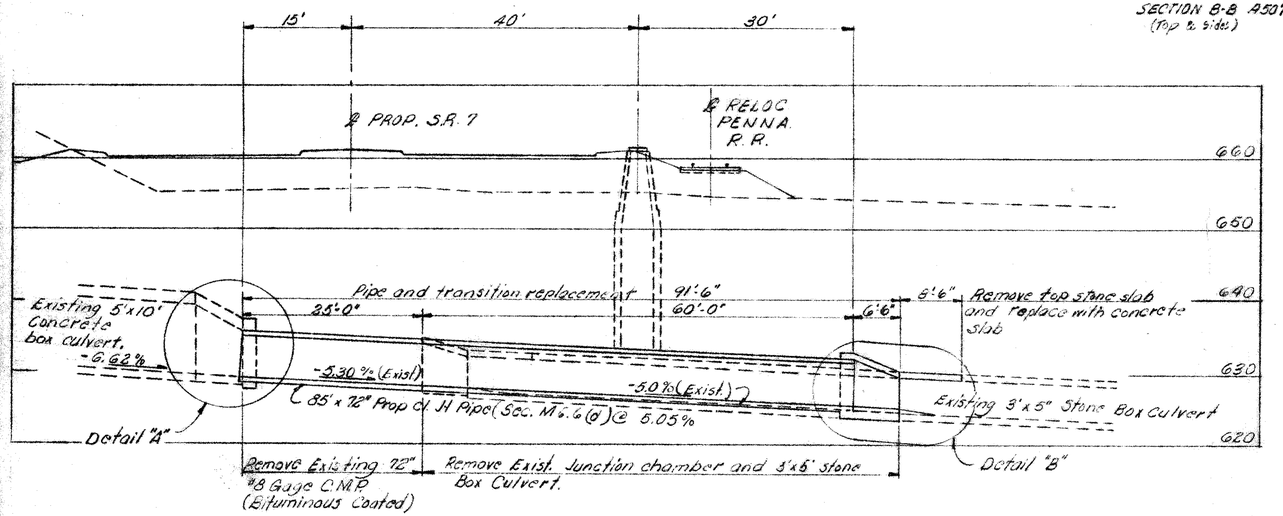

SECTION ALONG ℄ CULVERT

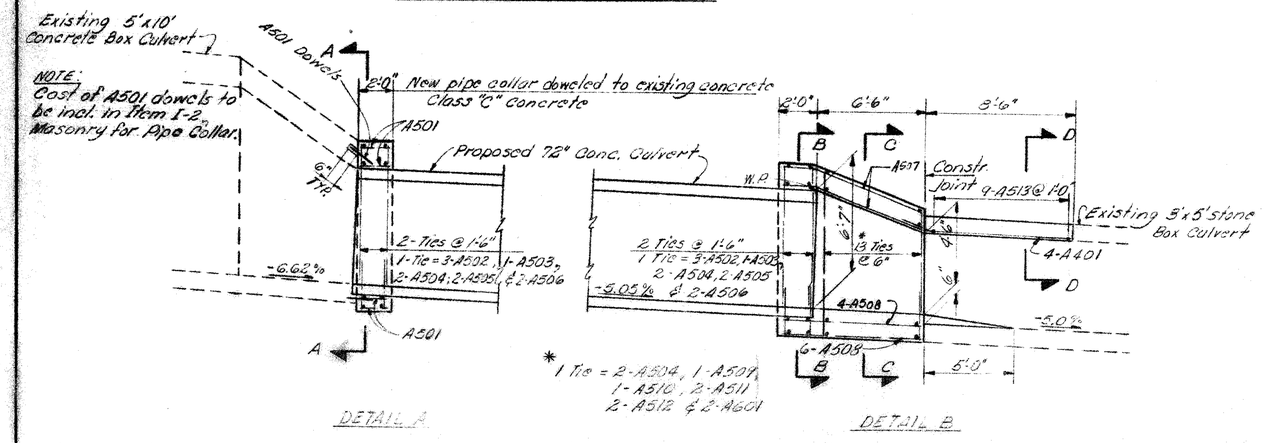

DETAIL A

DETAIL B

BENDING DIAGRAMS

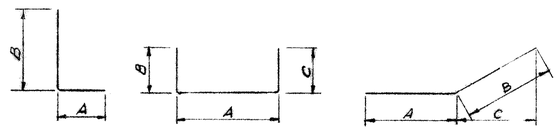

REINFORCING STEEL LIST								
MARK	NO	LENGTH	WEIGHT	TYPE	A	B	C	D
A401	4	9-10	26	3	5-9	1-7	1-6	
A501	58	1-3	101	5				
A502	12	4-7	122	5				
A503	4	15-0	63	2	9-9	2-9	2-9	
A504	34	2-11	103	1	0-9	2-9		
A505	8	4-3	77	1	1-7	2-10		
A506	8	7-10	65	5				
A507	26	8-3	224	3	1-10	6-6	6-3	
A508	10	8-2	85	5				
A509	13	9-8 to 5-8	104	5	1 each, Vary by 4" increments			
A510	13	14-11 to 10-11	175	2	9-8 to 5-8	2-9 Vary by 4" increments	2-9	1 each
A511	26	7-9 to 5-9	133	5	2 each, Vary by 2" increments			
A512	26	7-3 to 7-3	224	1	1-7	7-10 to 5-10	2 each Vary by 2" increments	
A513	7	5-10	55	5				
A601	26	7-8 to 5-8	247	5	2 each, Vary by 4" increments			
		Total	1906					

Bar size is indicated in bar mark. The first digit where three digits are used indicates the bar size no. "5" in the column for "Type" indicates straight bars.

~~5-1 Class "C" concrete 14 Cu. yds.~~
~~5-4 Reinforcing steel 1906 Lbs.~~

ESTIMATED QUANTITIES

E-12	Pipe Removal - over 15"	86 Lin. Ft.
I-2	Masonry For Pipe Collar	2.83 Cu. Yds.
I-1	Pipe - 72" CL. A-1 See M6.6(d)	~~55~~ Lin. Ft. ⊗ 30 Lin. Ft.
S-24	Removal of Existing Structures	@ Lump
Item I-8	Junction chamber	@ 1 Each

⊗ U.G. QUANTITIES

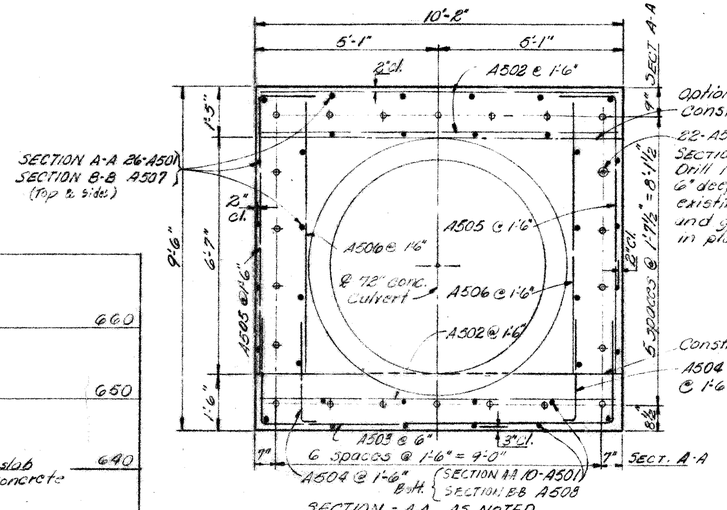

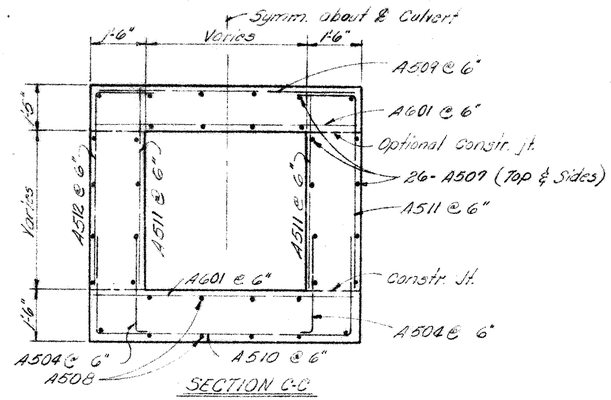

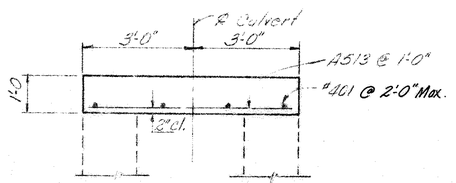

BEL-7-21.64

RACKOFF ASSOCIATES
ENGINEERS COLUMBUS, OHIO

CULVERT
AT STA 1142+56 ±

Designed	Drawn	Traced	Checked	Reviewed	Date	Revised

FED. RD. DIVISION	STATE	PROJECT	
2	OHIO		

215/418

BELMONT COUNTY
BEL - 7 - 20.74

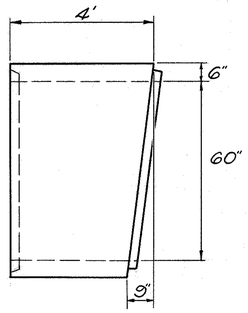

RADIAL PIPE DETAIL
SCALE: 1/2" = 1'

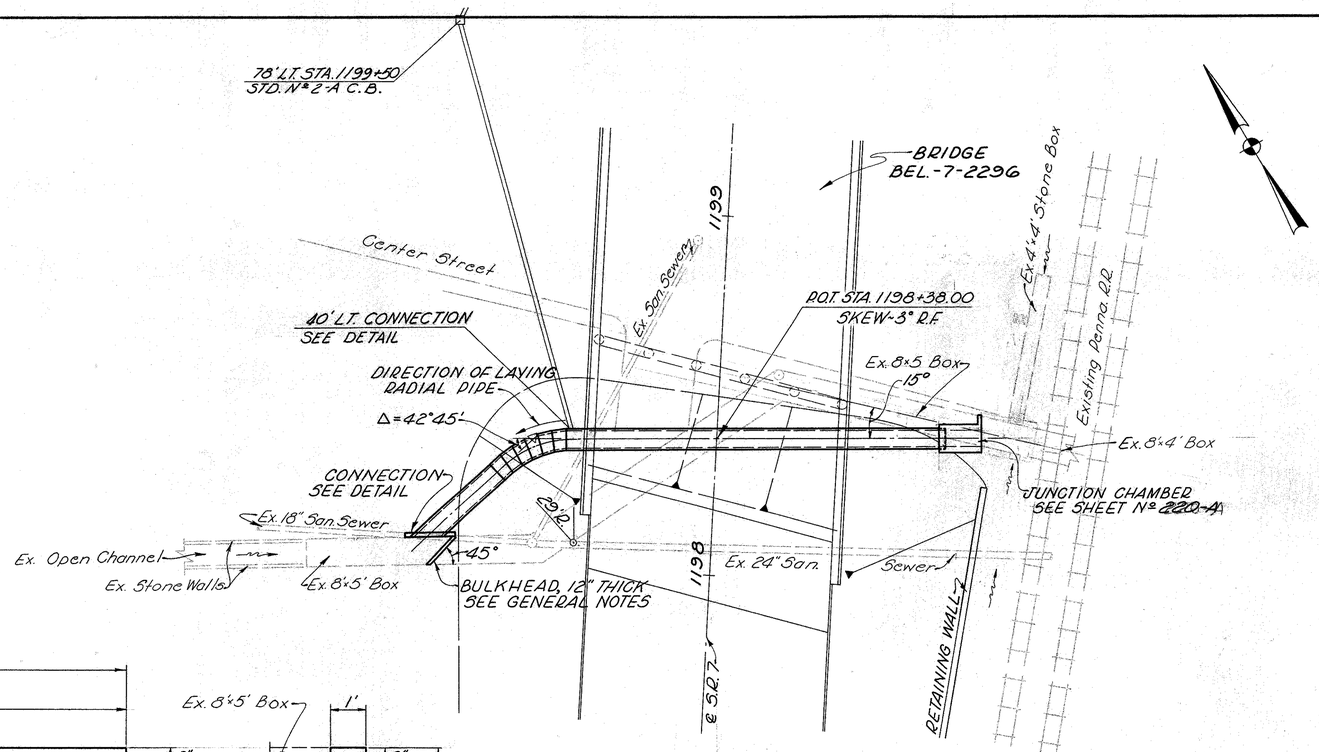

CONNECTION DETAIL
NOT TO SCALE

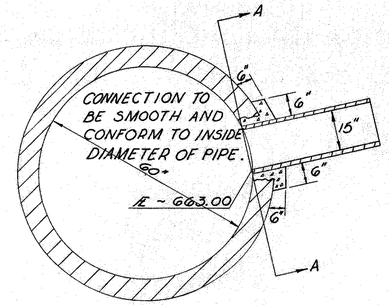

COST OF CONNECTION TO BE INCLUDED IN UNIT PRICE BID PER LIN. FT. OF STORM SEWER.

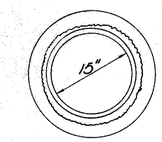

SECTION A-A

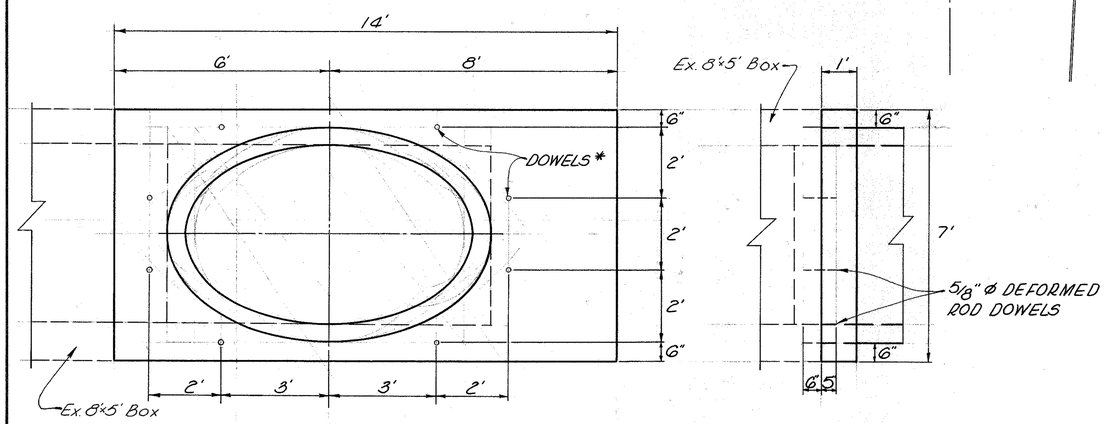

CONNECTION DETAIL
SCALE: 1/2" = 1'

* 5/8" ϕ DEFORMED ROD DOWELS (COST TO BE INCLUDED IN UNIT PRICE BID FOR I-2 MASONRY PIPE COLLAR.

A = 248 ACRES
Q_{25} = 280 c.f.s.
SCALE: 1" = 20'

ESTIMATED QUANTITIES

I-1	PIPE, 60" CL. B-1, SEC. M 6.6(b)	138 LIN. FT.
I-1	RADIAL PIPE, 60" CL. B-1, SEC. M 6.6(b)	24 LIN. FT.
I-2	MASONRY FOR PIPE COLLAR	2.00 CU. YDS.
I-2	MASONRY FOR BULKHEAD	2.22 CU. YDS.
I-8	JUNCTION CHAMBER, AS PER PLAN	1 EACH

BEL.-7-20.80

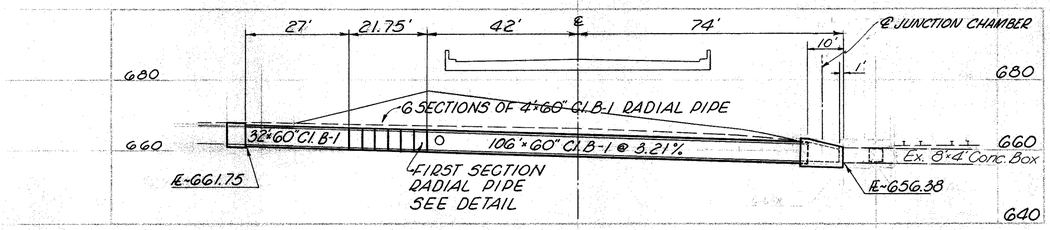

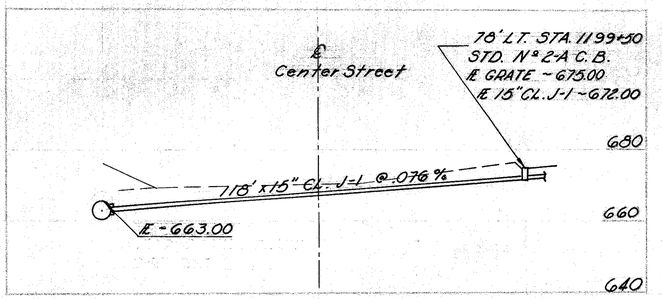

DESCRIPTION	PLOTTED BY	DATE	IN BY	DATE	CHECKED BY	DATE
TOPOGRAPHY						
PAVEMENT						
DRAINAGE						
R.O.W.						
QUANTITIES						

CULVERT ~ STA. 1198+38 S.R. 7

FED. RD. DIVISION	STATE	PROJECT	
2	OHIO		

216
418

BELMONT COUNTY
BR. - 7. - 20.74

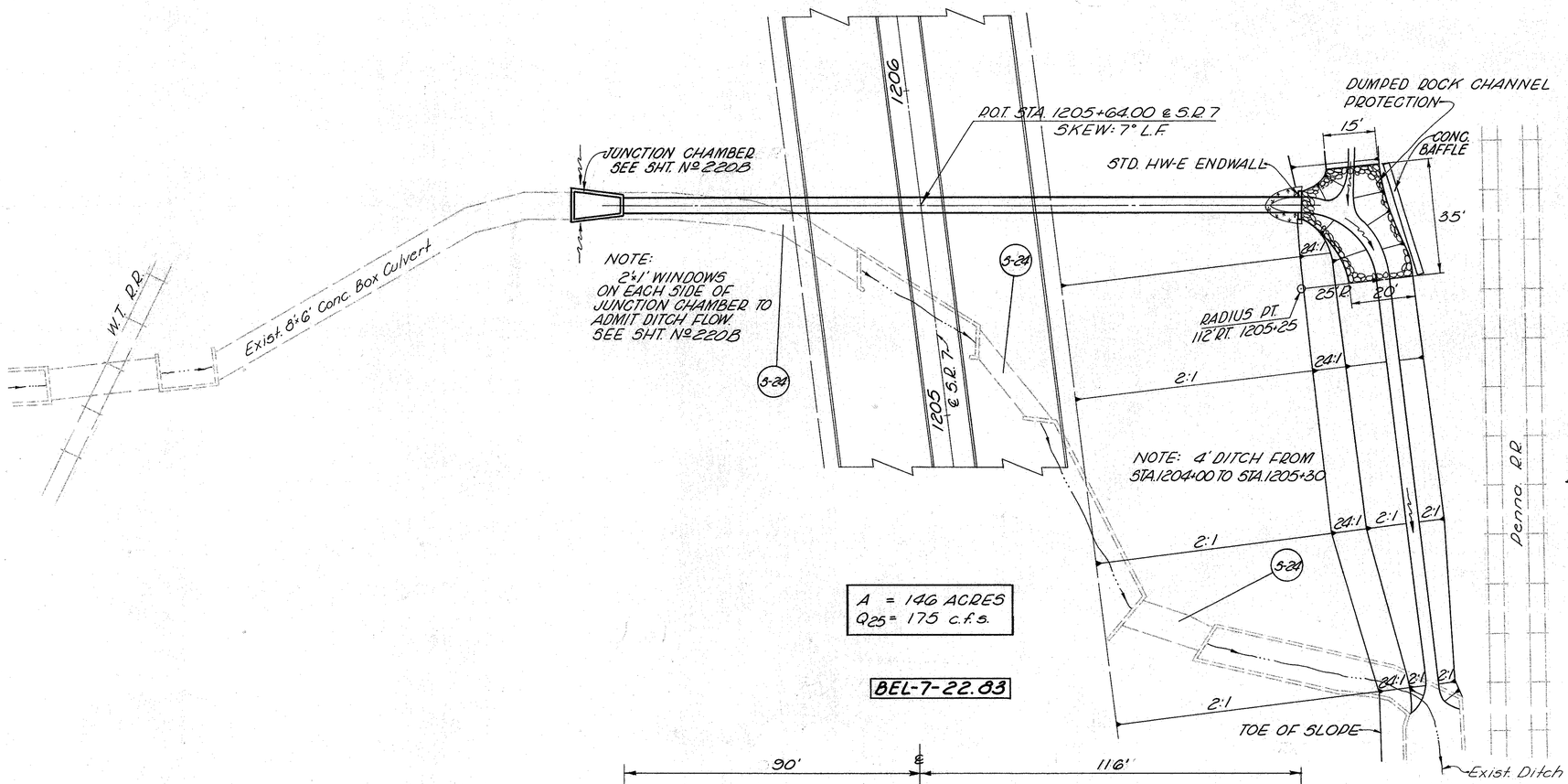

ESTIMATED QUANTITIES

I-1	PIPE, 54" CL.A-1 SEC.M-6.4(d) 8 GAGE, SHOD ELONGATED	206 L.F.
I-2	MASONRY FOR HEADWALL	0.96 C.Y.
L-10	SODDING	2 S.Y.
I-10	DUMPED ROCK CHANNEL PROT.	72.0 C.Y.
I-8	JUNCTION CHAMBER	1 EA.
I-2	MASONRY FOR BAFFLE	19.50 C.Y.
S-24	REMOVAL OF EXIST. STRUCTURES	LUMP

CULVERT ~ STA. 1205+64 S.R. 7

FED. RD. DIVISION	STATE	PROJECT	
2	OHIO		

217
418

BELMONT COUNTY
BEL-7-20.74

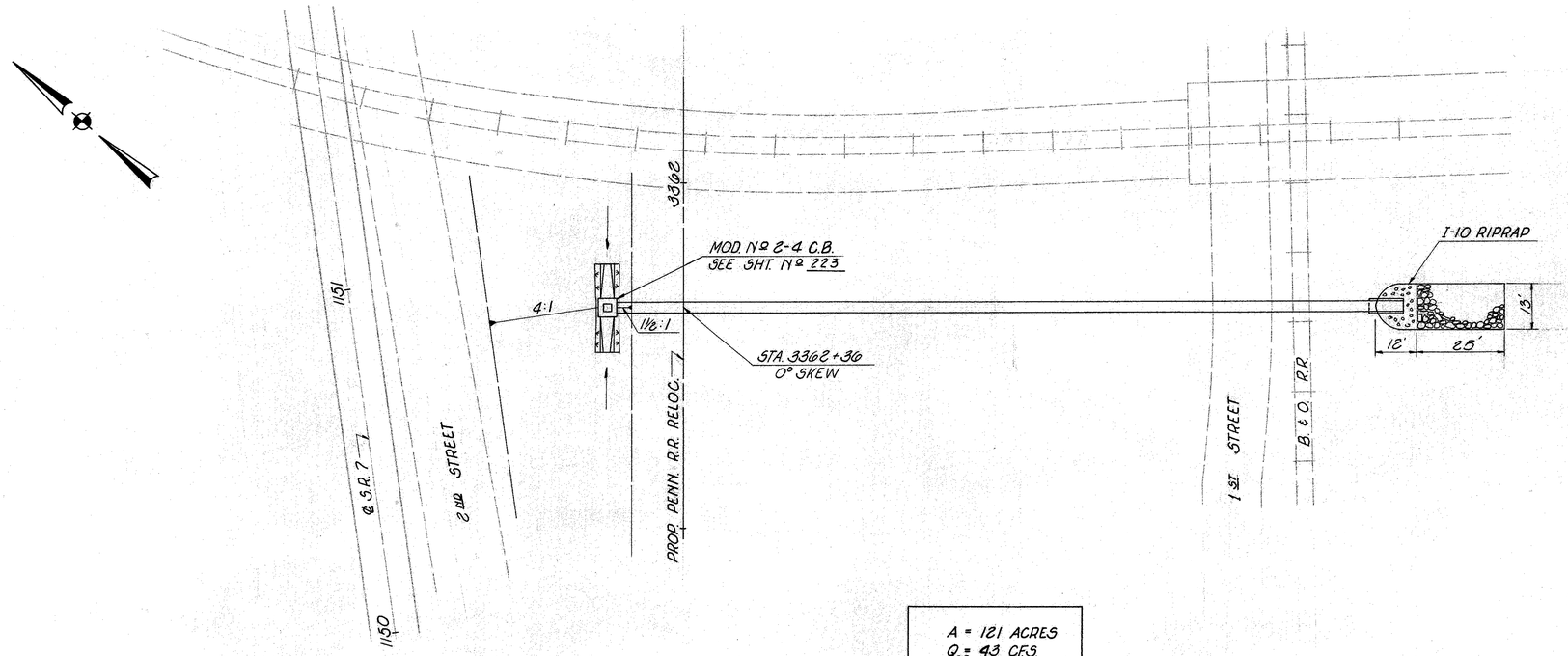

A = 12.1 ACRES
Q_{25} = 43 C.F.S.

SCALE 1" = 20'

BEL-7-21.79

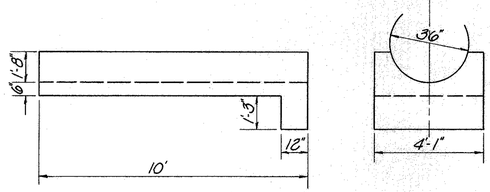

CONCRETE CRADLE DETAIL
SCALE: 3/8" = 1'

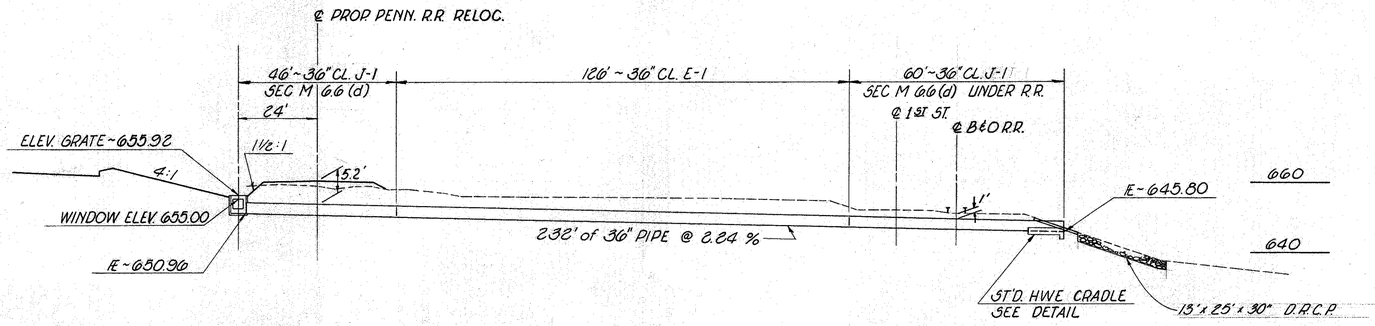

ESTIMATED QUANTITIES

I-1 PIPE, 36" CL. J-1 SEC M 6.6(d) UNDER R.R.	⊗ 106	L.F.
I-1 PIPE, 36" CL. E-1	⊗ 126	L.F.
I-2 MASONRY FOR CONC. CRADLE	⊗ 1.46	C.Y.
I-8 ST'D. Nº 2-4 C.B., MODIFIED	⊗ 1	EACH
I-10 RIPRAP USING 6" REINF. CONC. SLAB.	⊗ 15	S.Y.
I-14 PAVED GUTTER TYPE 1 MOD.	⊗ 20	L.F.
L-10 SODDING	⊗ 4	S.Y.
I-10 DUMPED ROCK CHANNEL PROTECTION	⊗ 30	C.Y.

⊗ U.C. QUANTITIES

CULVERT STA. 3362+36 RELOC. PENN. R.R.

FED. RD. DIVISION	STATE	PROJECT	
2	OHIO		

218
418

BELMONT COUNTY
BEL-7-20.74

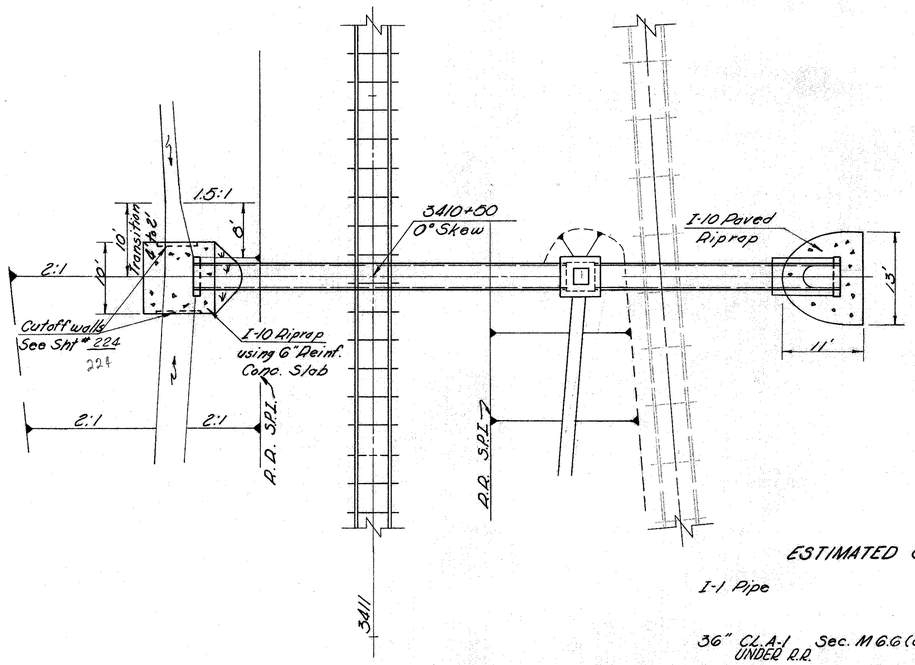

Area = 19 Ac.
Qes = 44 cfs

Scale: 1"=10'

BEL-7-20.87

ESTIMATED QUANTITIES

I-1 Pipe

36" Cl. A-1 Sec. M6.6(d) UNDER R.R.	88 Lin. Ft.	⊗
I-2 Masonry for Endwall	0.89 Cu. Yds.	⊗
I-2 Masonry for Cradle & Cutoffwall	1.66 Cu. Yds.	⊗
I-8 Std. No. 2-4 Catch Basin Mod/ Each As per plan.		⊗
I-10 Riprap Using 6" Conc. Slab	20 Sq. Yds.	⊗
L-10 Sodding	1 Sq. Yd.	⊗

⊗ U.C. Quantities

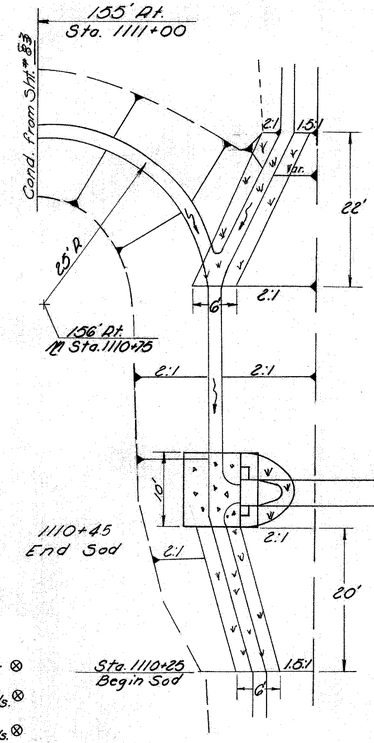

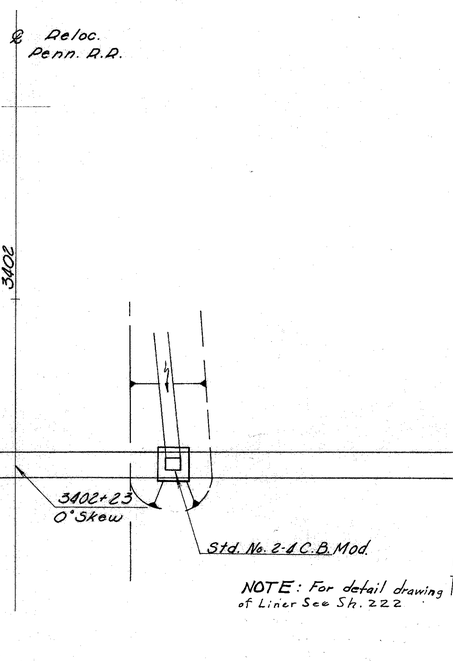

NOTE: For detail drawing of Liner See Sh. 222

Area = 28 Ac.
Qes = 69 cfs

BEL-7-21.03

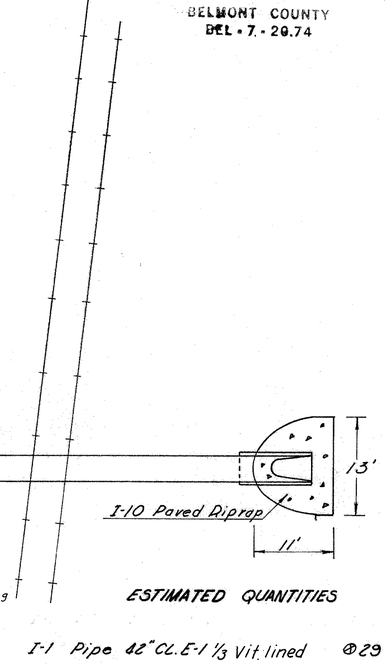

ESTIMATED QUANTITIES

I-1 Pipe 42" Cl. E-1 1/3 Vit. lined	29 Lin. Ft.	⊗
I-1 Pipe 42" Cl. A-1 Sec. M6.6(d) UNDER R.R. 1/3 Vit lined	100 Lin. Ft.	⊗
I-2 Masonry for Endwall	0.76 Cu. Yds.	⊗
I-2 Masonry for Conc. Cradle & Cutoffwall	2.12 Cu. Yds.	⊗
I-8 Std. No. 2-4 C.B. Mod. As per plan.	1 Each	⊗
I-10 Riprap Using 6" Conc. Slab	20 Sq. Yds.	⊗
L-10 Sodding	1 Sq. Yd.	⊗

⊗ U.C. Quantities

BEL-7-21.03

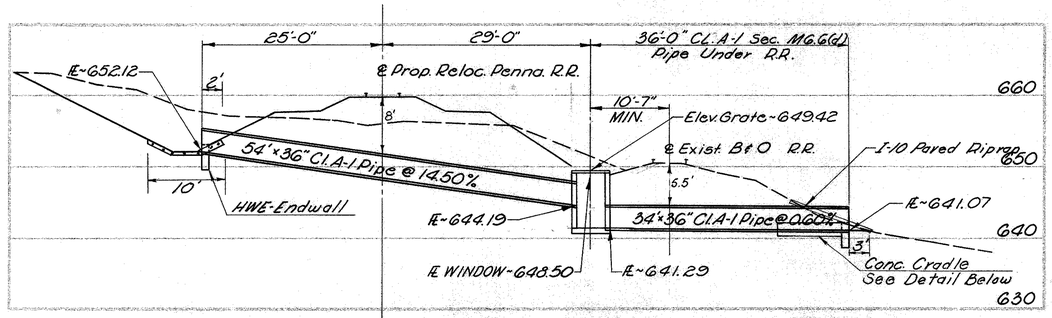

Conc. Cradle Detail

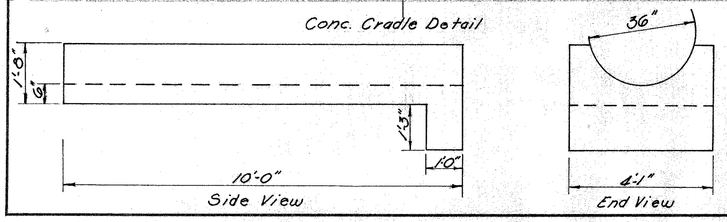

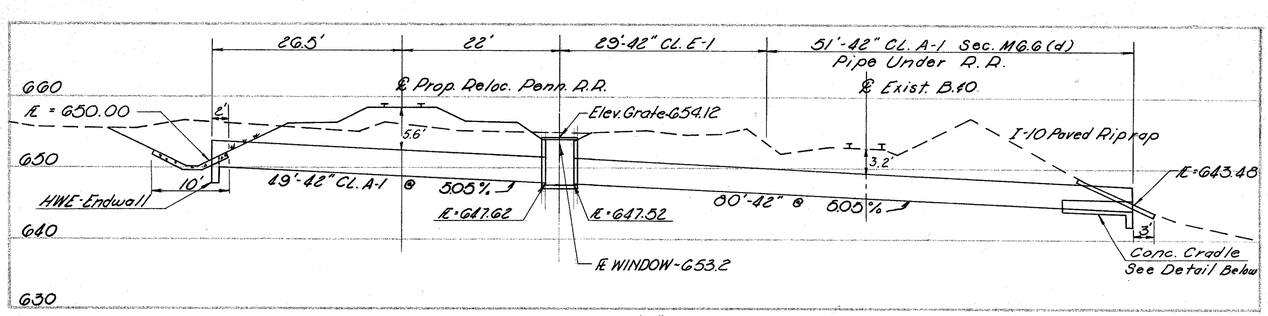

Conc. Cradle Detail

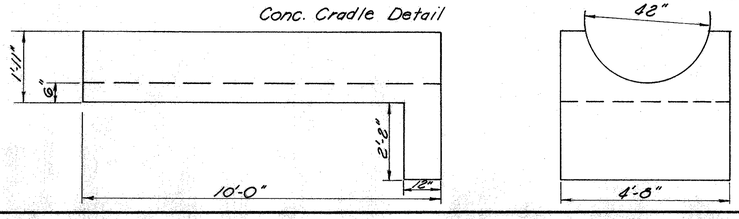

CULVERTS ~ STA. 3410+50 & STA. 3402+23 RELOC. PENNA. R.R.

FED. RD. DIVISION	STATE	PROJECT	TYPE FUNDS
2	OHIO		

BELMONT COUNTY
BEL-7-20.74

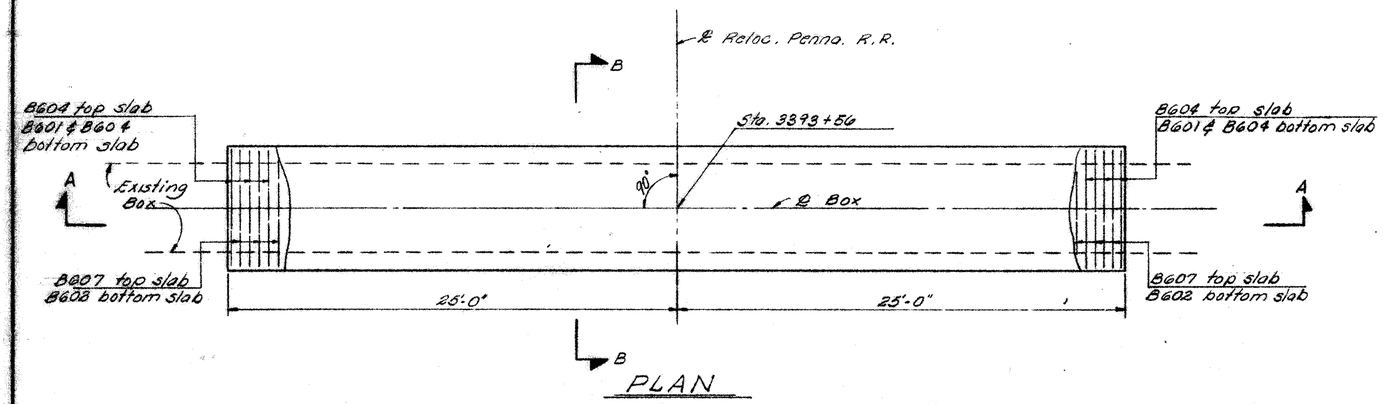

PLAN

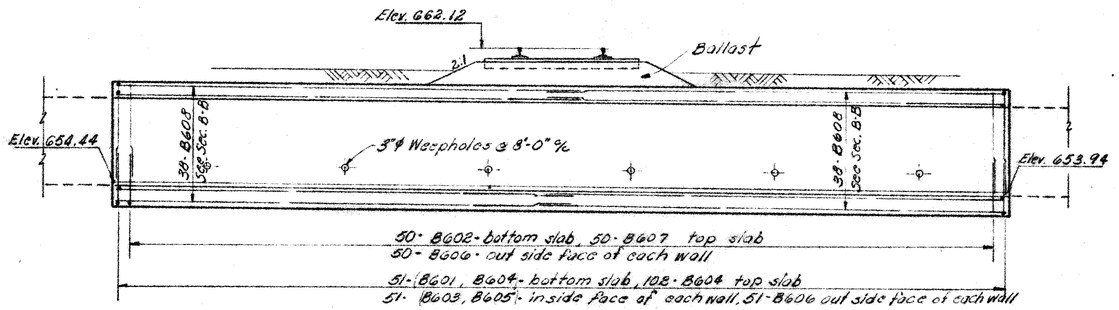

SECTION "A-A"

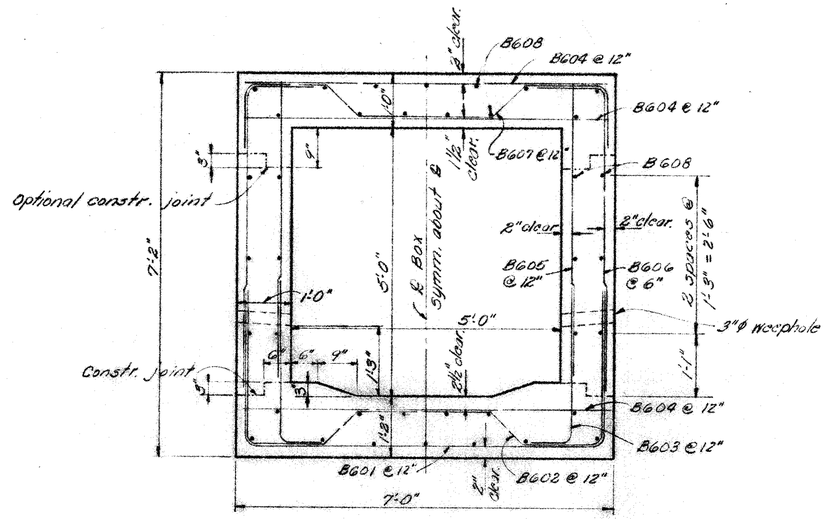

SECTION "B-B"

REINFORCING STEEL LIST

MARK	NO.	LENGTH	WEIGHT	TYPE	A	B	C	D	E
B601	51	12-2	932	1	6-8	2-11			
B602	50	12-10	964	2	2-11	1-3½	0-9½	2-6	1-1½
B603	102	3-10	587	3	0-10	3-2			
B604	153	6-8	1532	3					
B605	102	5-7	865	3					
B606	202	7-7	2301	3	1-11	5-10			
B607	50	9-5	707	2	1-3	1-4½	0-8½	2-6	1-0
B608	76	25-10	2949	3					
		TOTAL	10,827						

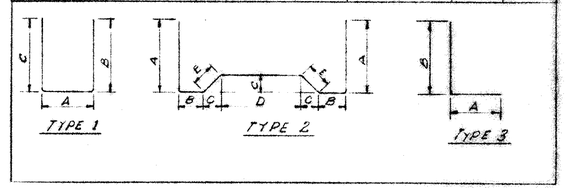

Bar size is indicated in bar mark. The first digit where three digits are used indicates the bar size no. "3" in the column for "Type" indicates straight bars.

ESTIMATED QUANTITIES

S-1 Class "C" concrete ⊗48 cu. yds.
S-4 Reinforcing Steel ⊗10,827 lbs.

⊗ U.G. QUANTITIES

RACKOFF ASSOCIATES
ENGINEERS COLUMBUS, OHIO

CULVERT
STA. 3393+56
RELOC. PENNA R.R.

Designed	Drawn	Traced	Checked	Reviewed	Date	Revised

TYPICAL DETAILS OF UNDERDRAIN OUTLETS

FED. RD. DIVISION	STATE	PROJECT	
2	OHIO		

220
418

BELMONT COUNTY
BEL - 7 - 20.74

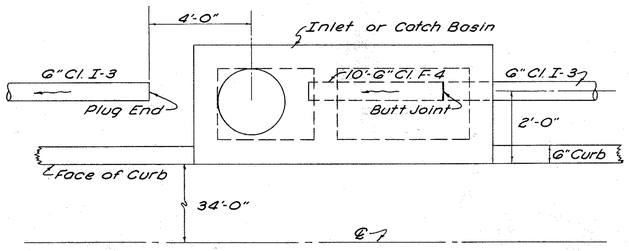

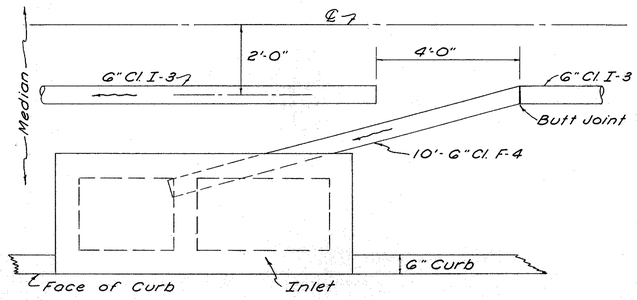

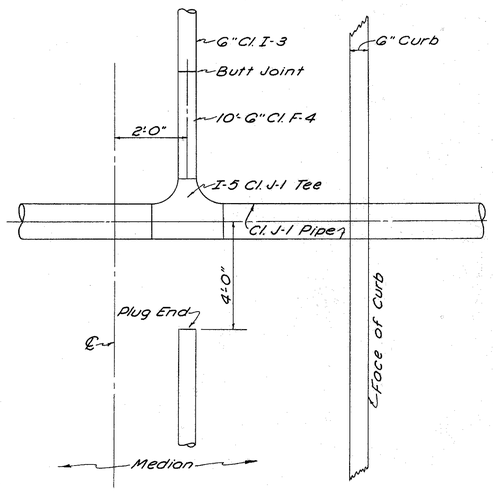

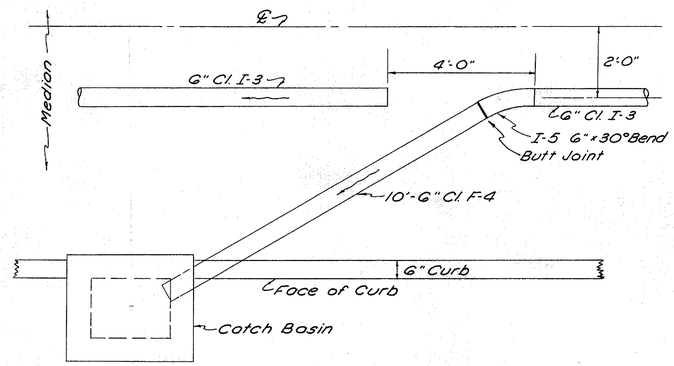

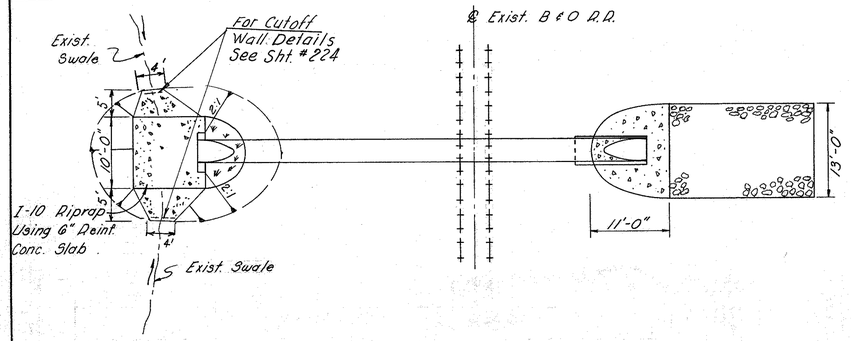

A = 24 Ac.
Q_{25} = 53 cfs

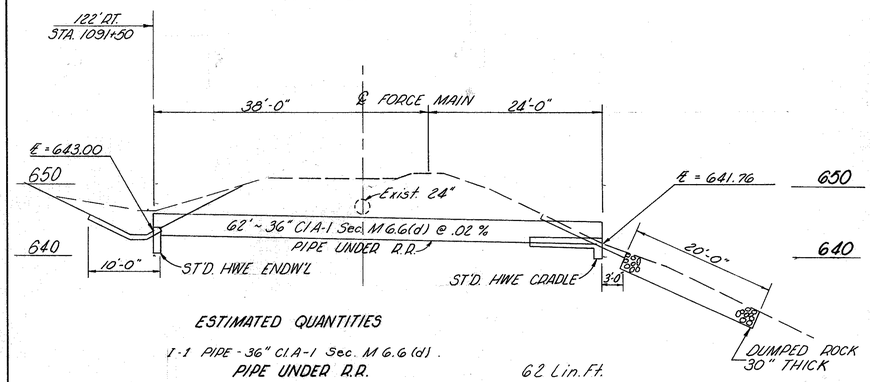

ESTIMATED QUANTITIES

I-1 PIPE - 36" Cl. A-1 Sec. M 6.6 (d). PIPE UNDER R.R.	62 Lin. Ft.
I-2 MASONRY FOR CONC. CRADLE & CUTOFF WALL.	1.66 Cu. Yds.
I-2 MASONRY FOR ENDWALL.	0.59 Cu. Yds.
I-10 RIPRAP USING 6" REINF. CONC. SLAB.	28 Sq. Yds.
I-10 SODDING.	2 Sq. Yds.
I-10 DUMPED ROCK CHANNEL PROTECTION.	24 Cu. Yds.

ESTIMATED QUANTITIES CARRIED TO SHEET Nº 21.

CULVERT STA. 1091+50

DESCRIPTION	PLOTTED BY	DATE	INKED BY	DATE	CHECKED BY	DATE
TOPOGRAPHY						
PAVEMENT						
DRAINAGE						
R. & W.						
QUANTITIES	E.L.Y.	1-2-63				

CULVERT STA. 1091+50 — MISCELLANEOUS DETAILS - UNDERDRAINS

FED. RD. DIVISION	STATE	PROJECT	TYPE FUNDS
2	OHIO		

BELMONT COUNTY
BEL - 7 - 20.74

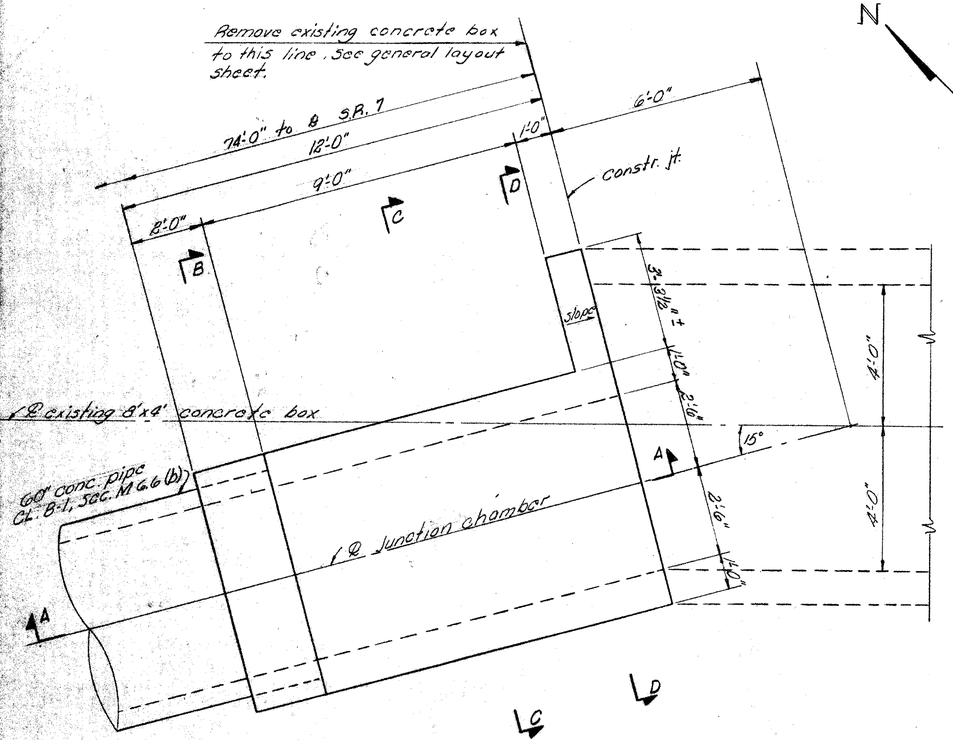

TOP PLAN

BENDING DIAGRAMS

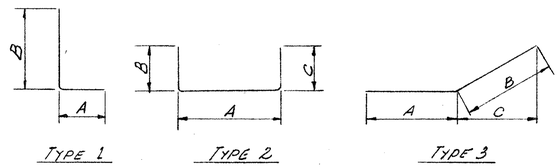

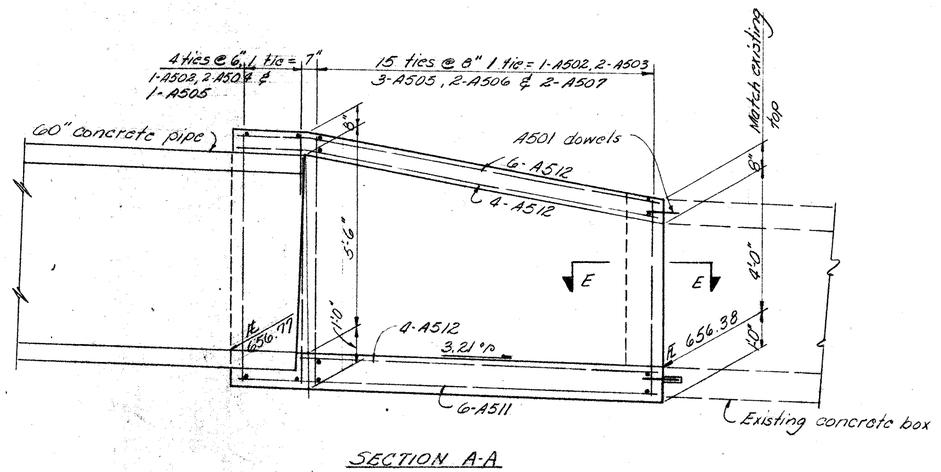

SECTION A-A

REINFORCING STEEL LIST

MARK	NO.	LENGTH	WEIGHT	TYPE	A	B	C	D
A501	24	1-0	25	3				
A502	19	11-7	230	2	6-8	2-7	2-7	
A503	30	3-6	110	1	1-1	2-7		
A504	8	7-5	62	1	1-7	6-0		
A505	49	6-8	341	5				
A506	30	7-1 to	203	1	1-7	5-8 to	2 each, vary by	
		5-11				4-6	1" increments	
A507	30	5-8 to	159	5			2 each, vary by	
		4-6					1" increments	
A508	7	5-7	39	5				
A509	4	4-1	17	5				
A510	4	5-0	21	1	1-1	4-1		
A511	14	11-8	170	5				
A512	12	9-8	121	5				
A513	10	11-10	123	3	9-10	2-1	2'-0½"	
		Total	1681					

Bar size is indicated in bar mark. The first digit where three digits are used indicates the bar size no. "5" in the column for "Type" indicates straight bars.

~~541 Class "C" concrete 10 cu.yds.~~
~~542 Reinforcing steel 1681 lbs.~~

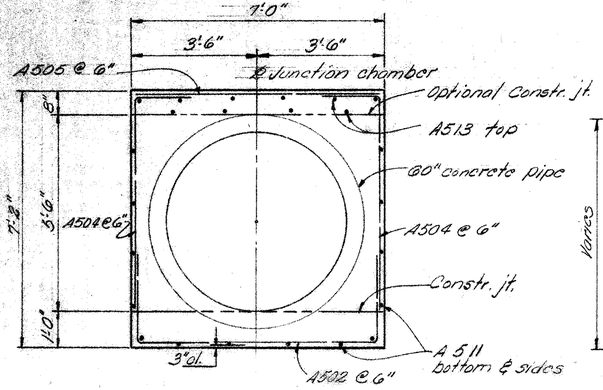

SECTION B-B

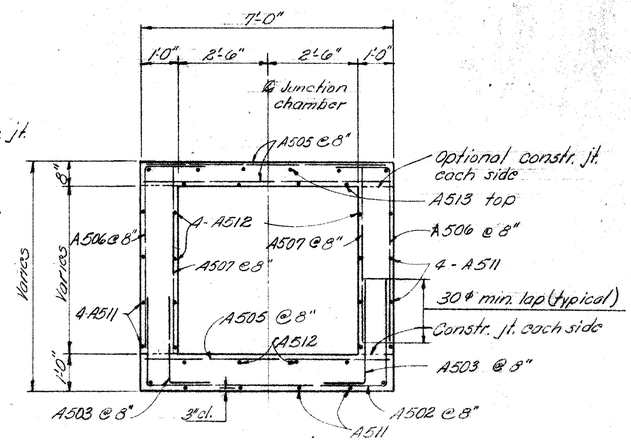

SECTION C-C

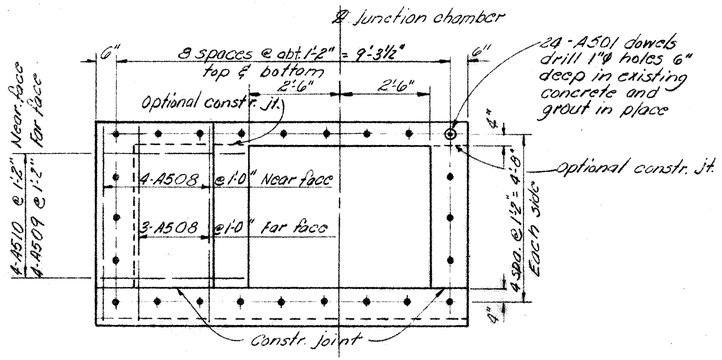

SECTION D-D

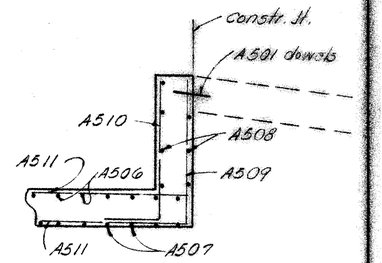

SECTION E-E

RACKOFF ASSOCIATES
ENGINEERS COLUMBUS, OHIO

JUNCTION CHAMBER
AT
STA. 1198+35

Designed	Drawn	Traced	Checked	Reviewed	Date	Revised

FED. RD. DIVISION	STATE	PROJECT	TYPE FUNDS
2	OHIO		

(20)(B)(418)

BELMONT COUNTY
BEL - 7 - 20.74

Remove existing concrete box to line
See general layout sheet

109' to ℄ S.R. 7

16'-0"

4'-0" | 10'-0" | 2'-0"

Existing 8'x6' concrete box culvert

Constr. joint

1'-0" 2'-0" 6"

54" corrugated metal pipe Cl. "A-1 Sec. M-6.01(d)

℄ Junction chamber

10'-0" 4'-0" 4'-0" 1'-0" 1'-0" 6'-10" 2'-3" 2'-3" 1'-0"

1'-0" 2'-0" 6"

N

A B C D E F

TOP PLAN

2-A515 @ 1'-0" outside face
2-A516 @ 1'-0" inside face
2-A509 @ 8" outside face
2-A510 @ 8" inside face
2-A511 @ 8" outside face
2-A511 @ 8" inside face
8" 8" 8"
15-A517 @ 8" outside face
15-A518 @ 8" inside face
3-A519 @ 8" outside face
21-A505 top & bottom spaced to match vertical bars
3-A508 @ 8"
A501 dowels
℄ window
1-A523 each face
1-A520 each face
Finished ground line
6-A523 fanned
6 A525
54" corrugated metal pipe
2-A518 @ 1'-0" outside face
2-A514 @ 1'-0" inside face
4-A520 equally spaced each face
4-A521 @ 2'-10" max. equally spa. each face
4-A523 fanned
4-A522 equally spa. outside face
4-A506 fanned
6-A506 fanned
21-A505 top spaced to match vert. dowels
2.55 %
18-A504 @ 8" inside face
18-A503 @ 8 bottom
3-A508 @ 8"
3-A507 @ 8" bottom
3-A504 @ 8" inside face
3-A502 @ 8" bottom

ELEVATION A-A AS SHOWN
ELEVATION B-B OPPOSITE HAND

BENDING DIAGRAMS

TYPE 1 TYPE 2 TYPE 3

10'-0"
5'-0" 5'-0"
6 spaces @ 1'-6" = 9'-0"
top and bottom
6" 6"
6 spaces @ 1'-8" = 6'-8"
each side
7'-6"
℄ Junction chamber
Finished ground line
20-A501 dowels. Drill 1" ϕ holes 6" deep in existing concrete and grout in place.

SECTION C-C

Symmetrical about ℄ Junction chamber
1'-0" Varies Varies 1'-0"
A515 @ 1'-0"
A505 @ 1'-0"
A524
Optional constr. Joint each side
A523
Varies
A520
A505 @ 1'-0"
A516 @ 1'-0"
A523
A515 @ 1'-0"
A520
Finished ground line
A520
A520
A514 @ 1'-0"
A514 @ 1'-0"
A513 @ 1'-0"
Varies
A513 @ 1'-0"
A505 @ 1'-0"
Constr. jt each side
A504 @ 1'-0"
A502 @ 1'-0"
A506
A504 @ 1'-0"

SECTION D-D

Symmetrical about ℄ junction chamber
1'-0" Varies Varies 1'-0"
A505 @ 8"
Optional constr. joint each side
A524
A517 @ 8"
A518 @ 8"
A518 @ 8"
A517 @ 8"
A521
A521
A504 @ 8"
Varies
A504 @ 8"
A505 @ 8"
Constr. Joint each side
A503 @ 8"
A506

SECTION E-E

℄ Junction chamber
6'-6"
3'-3" 3'-3"
A508 @ 8"
Optional constr. joint
A525
54" CM Pipe
A522
A522
A519 @ 8"
A519 @ 8"
6'-2"
4'-6"
1'-0"
constr. joint
A508 @ 8"
A506
A507 @ 8"

SECTION F-F

REINFORCING STEEL LIST

MARK	NO.	LENGTH	WEIGHT	TYPE	A	B	C	D
A501	20	1-0	21	S				
A502	3	13-10 to 13-6	43	2	9-7 to 9-3	2-3 vary	2-3	1 each, vary by 2" increments
A503	18	13-3 to 10-5	128	2	9-0 to 6-2	2-3	2-3	1 each, vary by 2" increments
A504	42	9-3	142	1	1-1	2-3		
A505	63	9-6 to 6-2	515	S	3 each, vary by 2" increments			
A506	10	15-11	166	3	14-2	1-10	1-9¾	
A507	3	10-5	33	2	6-2	2-3	2-3	
A508	6	6-2	39	S				
A509	4	8-0	33	1	6-6	1-7		
A510	4	6-6	27	S				
A511	4	8-4	35	1	6-10	1-7		
A512	4	6-10	29	S				
A513	4	4-7	19	1	4-0	0-8		
A514	4	4-0	17	S				
A515	4	2-10	12	1	1-4	1-7		
A516	4	1-4	6	S				
A517	30	8-3 to 6-6	231	1	6-9 to 5-0	1-7	2 each, vary by 1½" increments	
A518	30	6-9 to 5-0	184	S	2 each, vary by 1½" increments			
A519	6	6-6	41	1	5-0	1-7		
A520	20	5-0	104	S				
A521	16	10-6	175	S				
A522	8	6-0	50	S				
A523	4	5-9	24	1	2-0	3-10	3-8	
A524	10	14-6	151	1	10-9	3-10	3-8	
A525	6	3-4	21	1	1-10	1-7	1-6	
		TOTAL	2246					

Bar size is indicated in bar mark. The first digit where three digits are used indicates the bar size no. "S" in the column for "Type" indicates straight bars.

~~S-1 Class "C" Concrete 16 cu. yds.~~
~~S-2 Reinforcing steel 2246 lbs.~~

RACKOFF ASSOCIATES
ENGINEERS COLUMBUS, OHIO

JUNCTION CHAMBER AT STA. 1205+64

Designed	Drawn	Traced	Checked	Reviewed	Date	Revised
WF	WF	E A				

3025

FED. RD. DIVISION	STATE	PROJECT	
2	OHIO		

221
418

BELMONT COUNTY
BEL - 7 - 20.74

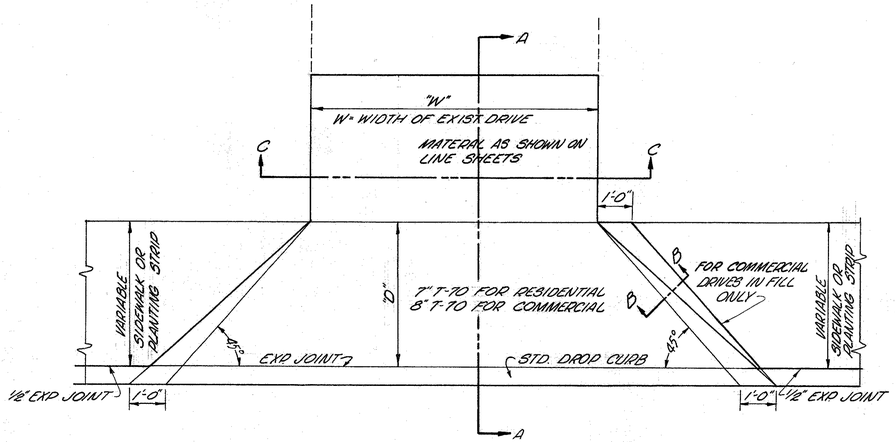

TYPICAL DRIVE

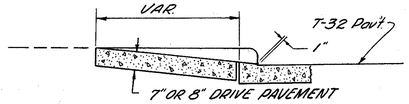

SECTION A-A

PRIVATE DRIVES
COMMERCIAL DRIVES (IN CUT)

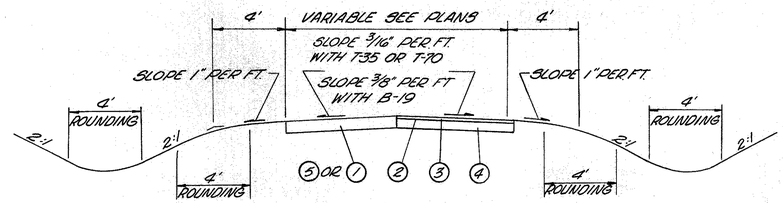

NOTE : FOR DIMENSIONS & DETAILS NOT SHOWN
SEE STD. DWG. DR-1

STANDARD DRIVES

1105+01 SR 7 W=12
1261+77.5 SR 7 W=12 D=20

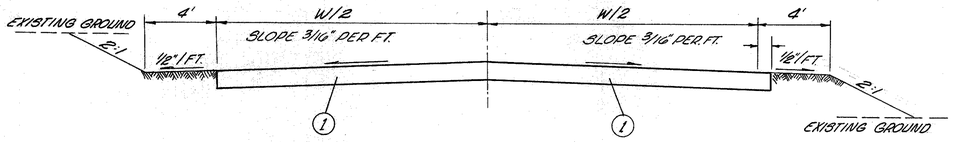

SECTION C-C

DRIVEWAY LOCATIONS

6+10	FIFTH ST.	W=12	D=10
6+50	FIFTH ST.	W=12	D=10
1+35.5	OHIO AVE	W=12	D=11
7+86	AETNA ST	W=20	D=10
8+49	AETNA ST	W=20	D=10
*SERVICE RD. #1		W=12	D=20
82'LT 1198+79		W=12	D=10

DRIVEWAY LOCATION	T-70 Sq. Yds. 7"	T-70 Sq. Yds. 8"	T-35 Cu. Yds. 2"	T-30 Gals.	B-19 Cu. Yds. 5"	B-19 Cu. Yds. 7"	B-19 Cu. Yds. 8"
6+10 FIFTH ST.	25						
6+50 FIFTH ST.	53						
1+35.5 OHIO AVE.	51						
7+86 AETNA ST.		33.3	1	8		4	
8+49 AETNA ST.		33.6	1	10		5	
8+95.5 SPRING ST.	62				2		
9+00 SPRING ST.	91				11		
82' LT. 1198+79 S.R.7	24						
*1105+01 S.R.7		*29.5					*15
†1261+77.5 S.R.7		†7.1				†1	
*SERVICE RD. #1		*7.1					*14
TOTAL BRIDGEPORT *		*36.6					*29
TOTAL RURAL †		†7.1				†1	
TOTAL MARTINS FERRY	306	67.0	2	18	13	9	

* BRIDGEPORT
† RURAL
MARTINS FERRY

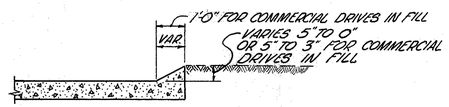

SECTION B-B

① ITEM B-19 8" CRUSHED AGGREGATE BASE COURSE FOR RESIDENCE DRIVES.
② ITEM T-35 2" ASPHALTIC CONCRETE SURFACE COURSE TYPE "C"
③ ITEM T-30 BITUMINOUS PRIME COAT, SEC. M-5.7, RT-2 OR RT-3 OR SEC M-5.2, RC-1 OR RC-2 APPLIED AT THE RATE OF 0.40 GAL. PER SQ. YD.
④ ITEM B-19 5" CRUSHED AGGREGATE BASE COURSE FOR RESIDENTIAL
7" CRUSHED AGGREGATE BASE COURSE FOR COMMERCIAL
⑤ ITEM T-70 7" PORTLAND CEMENT CONCRETE PAVEMENT FOR PRIVATE DRIVES
8" PORTLAND CEMENT CONCRETE PAVEMENT FOR COMMERCIAL

① ITEM T-70 DESCRIPTION
7" OR 8" PORTLAND CEMENT CONCRETE PAVEMENT

DESCRIPTION	PLOTTED BY	PLOTTED DATE	INKED BY	INKED DATE	CHECKED BY	CHECKED DATE
TOPOGRAPHY & PROPERTY						
DRAINAGE						
R.O.W. UTILITIES						

MISCELLANEOUS DETAILS

FED. RD. DIVISION	STATE	PROJECT	
2	OHIO		

222
476

BELMONT COUNTY
BEL. 7-20.74

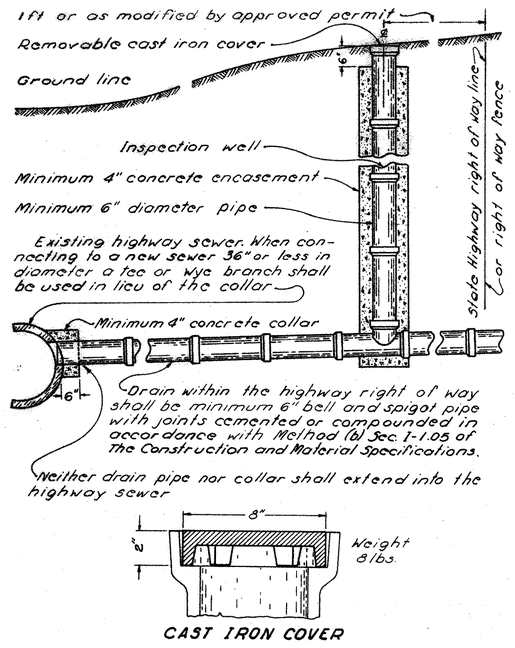

CAST IRON COVER

INSPECTION WELL

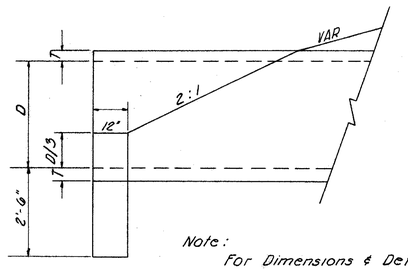

Note:
For Dimensions & Details not shown, See Standard Drawing HW-E.

DETAIL OF SLOPE TREATMENT AT HW-E ENDWALLS

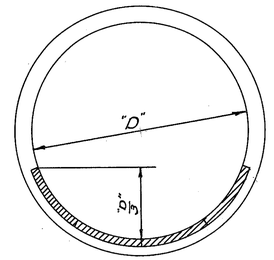

CROSS-SECTION OF CONDUIT

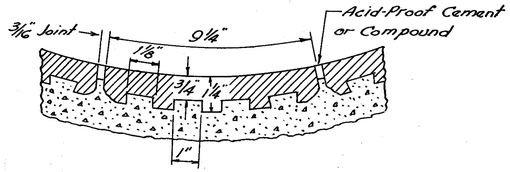

DETAIL OF LINERS ANCHORED IN CONCRETE CONDUIT

PLACEMENT OF VITRIFIED LINER PLATES IN CIRCULAR CULVERT

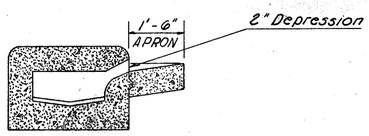

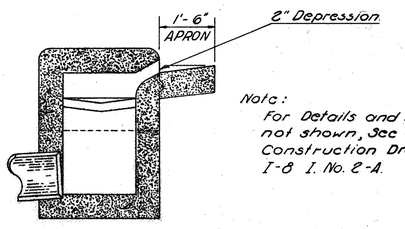

Note:
For Details and Dimensions not shown, See Standard Construction Drawing I-8 I. No. 2-A.

STANDARD I-8 PAVED SHOULDER INLETS NO. 2-A MODIFIED

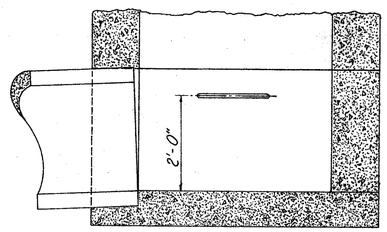

SIDE VIEW

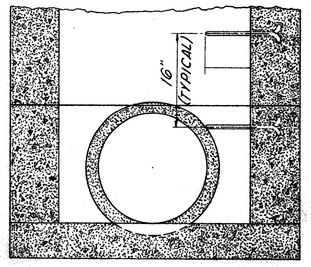

END VIEW

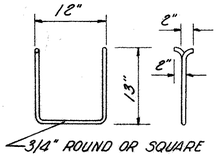

STEP DETAIL

STEP DETAILS FOR I-8 NO. 3 & 3-A C.B. & 2-A I. WITH A DEPTH MORE THAN 6'

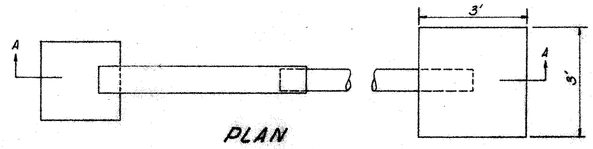

PLAN

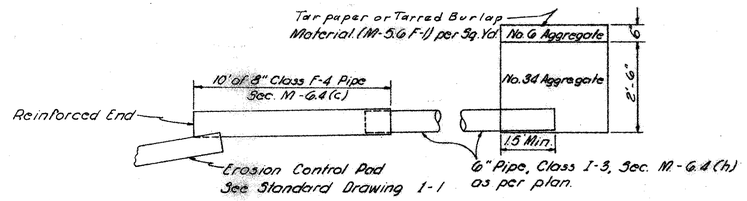

SECTION A-A

Note:

Aggregate, Bituminous Material and necessary Excavation for Spring Drains shall be paid for at the Unit Price Bid per Linear Foot of "Item 1-9, Stone Underdrains, No. 1, as per plan." The Length and Location of Spring drains shall be determined by the Engineer. The 6" Pipe, Sec. M-6.4(h); as per plan, shall be covered with Class 3 Porous backfill material to a height of one (1) foot above the top of the pipe. The remainder of the backfill for this item shall meet the specification requirements for Class 2 Backfill.

The following estimated quantities are provided for spring drains to be used as directed by the Engineer.

Item 1-1 Pipe, 6" Class 1-3, Sec. M-6.4(h), as per plan	30 Lin. Ft.
Item 1-1 Pipe, 8" Class F-4, Sec. M-6.4(c),	10 Lin. Ft.
Item 1-9 Stone Underdrain No. 1, as per plan	10 Lin. Ft.

DETAIL SECTION SPRING DRAIN

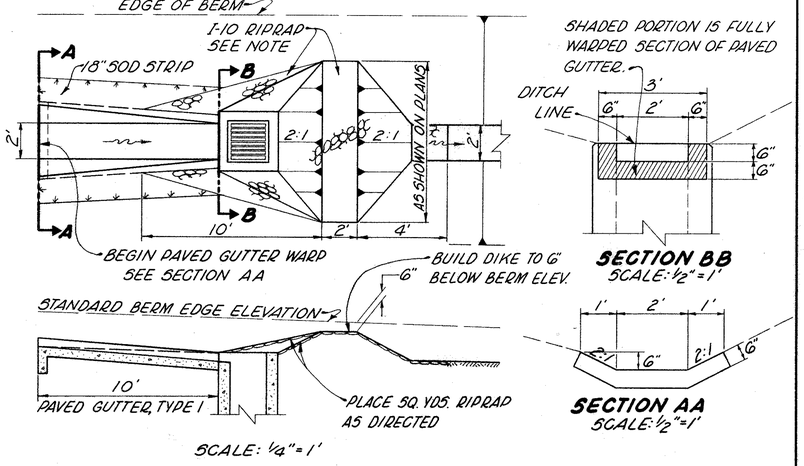

NOTES:

1. COST OF WARPING THE PAVED GUTTER AT THE CATCH BASINS SHALL BE INCLUDED IN THE UNIT PRICE BID PER LINEAL FOOT OF PAVED GUTTER, TYPE I, MODIFIED.
2. STANDARD CONCRETE CUTOFF WALL SHALL BE CONSTRUCTED AT THE BEGINNING OF EACH RUN OF PAVED GUTTER.
3. PLACE I-10 RIPRAP WHEN SHOWN ON PLANS.

2-2-A CATCH BASIN ON CONTINUOUS GRADE

NOTE: THREE ELEVATIONS WILL BE SHOWN ON ALL CATCH BASINS
1. PIPE INLET IE.
2. WINDOW IE's.
3. TOP OF GRATE INLET: THIS WILL ALWAYS BE ABOVE WINDOW IE.

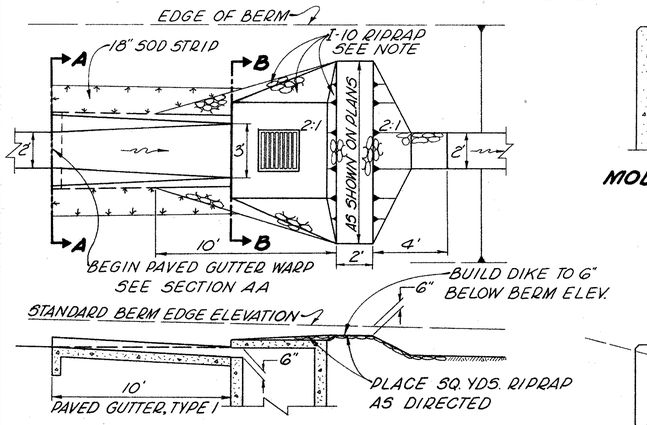

CONTINUOUS GRADE CONDITION

SCALE: 1/4" = 1'

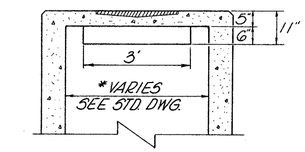

MOD. Nº 2-(M) CATCH BASIN

SCALE: 1/2" = 1'

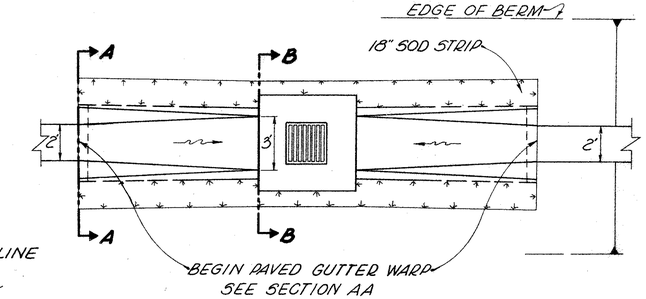

SAG CONDITION

SCALE: 1/4" = 1'

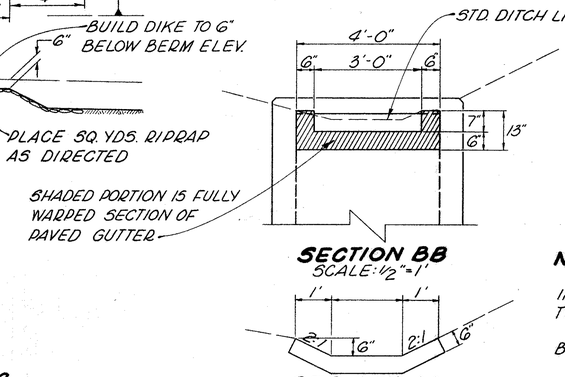

NOTES:

1. COST OF WARPING THE PAVED GUTTER AT THE CATCH BASINS SHALL BE INCLUDED IN THE UNIT PRICE BID PER LINEAL FOOT OF PAVED GUTTER TYPE I, MODIFIED.
2. STANDARD CONCRETE CUTOFF WALL SHALL BE CONSTRUCTED AT THE BEGINNING OF EACH RUN OF PAVED GUTTER.
3. PLACE I-10 RIPRAP WHEN SHOWN ON PLANS.

MODIFICATION OF I-8 NO. 2-4 & 2-5 CATCH BASINS

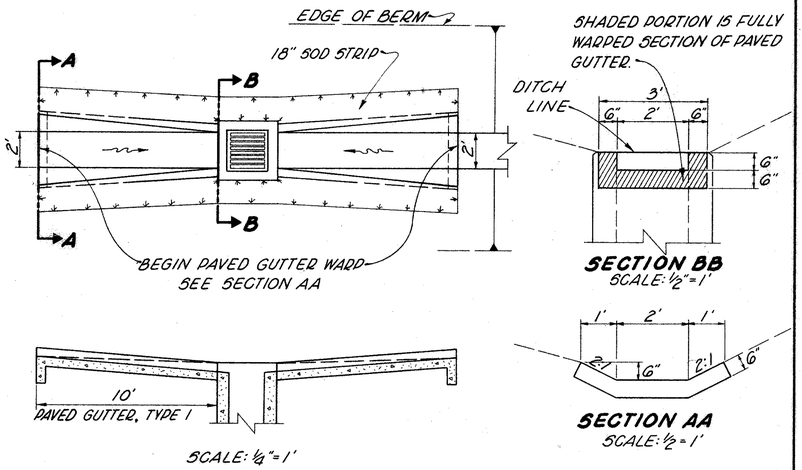

NOTES:

1. COST OF WARPING THE PAVED GUTTER AT THE CATCH BASINS SHALL BE INCLUDED IN THE UNIT PRICE BID PER LINEAL FOOT OF PAVED GUTTER TYPE I, MODIFIED.
2. STANDARD CONCRETE CUTOFF WALL SHALL BE CONSTRUCTED AT THE BEGINNING OF EACH RUN OF PAVED GUTTER.

2-2-A CATCH BASIN IN SAG

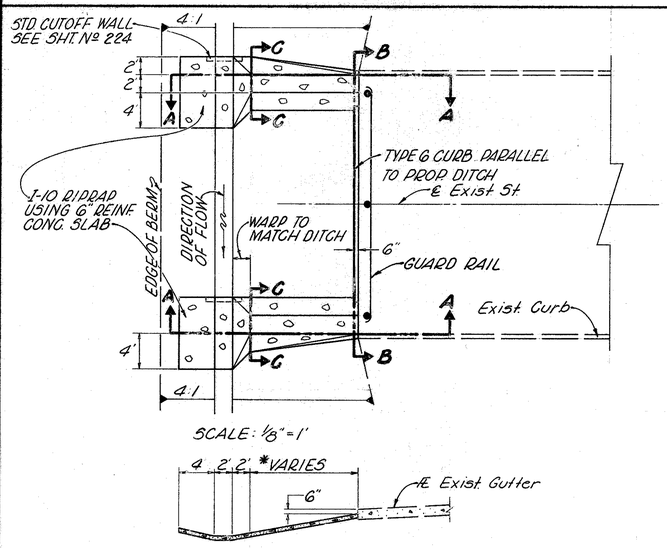

DETAIL FOR SLOPE PROTECTION

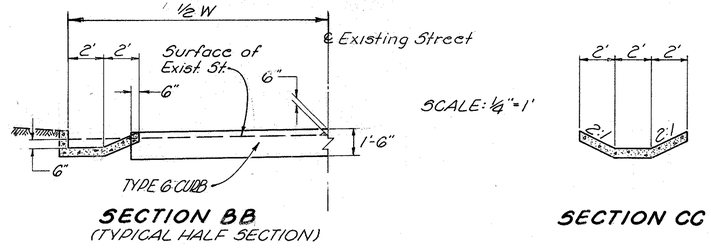

ESTIMATED QUANTITIES

* DIST.	STREET	LOCATION	I-10 RIPRAP W/6" REINF. CONC. SLAB	I-12 CONC. CURB TYPE 6
			SQ YDS.	LIN. FT.
6'	BUCKEYE ST.	LT. 1135+35	21	20
4'	JEFFERSON ST.	LT. 1154+43	19	30
6'	FAYETTE ST.	LT. 1160+30	21	38
10'	CLAY ST.	LT. 1163+04	26	36
4"	HICKORY ST.	LT. 1168+39	19	28
6'	KUCKUCK LANE	LT. 1232+15	21	18
		TOTALS	127	170

FED. RD. DIVISION	STATE	PROJECT	
2	OHIO		

224
418

BELMONT COUNTY
BEL - 7 - 20.74

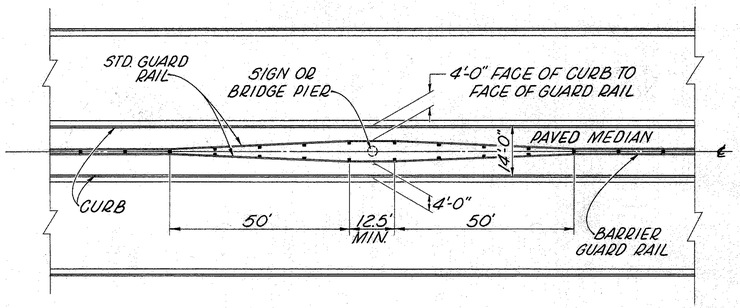

MEDIAN BARRIER RAIL DETAIL AT LIGHTS, SIGNS, OR BRIDGE PIERS
SCALE: 1" = 20'

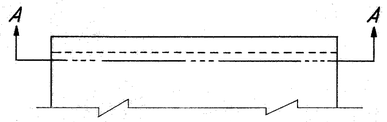

PLAN

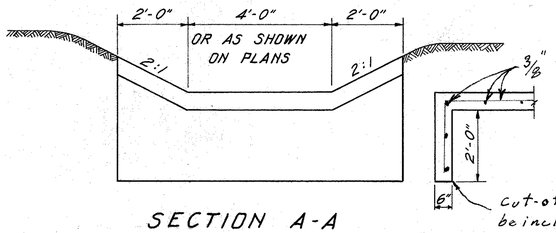

SECTION A-A
CUTOFF WALL DETAIL
FOR I-10 PAVED RIP-RAP

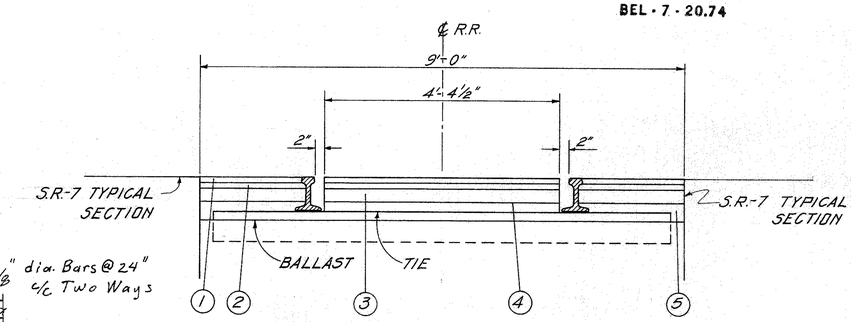

PAVEMENT DESIGN IS AS FOLLOWS:

1. 1¼" T-35, TYPE "C" (70-85)
2. 1¼" B-35 LEVELING (70-85)
3. 3" B-35 BASE (70-85)
4. T-30 PRIME COAT (4 GALS./SQ. YD.)
5. 4" B-19

ESTIMATED PAY QUANTITIES FOR R.R. CROSSINGS AT:

	STATION 1128+34.28	HANOVER ST., STA. 10+95.58	TOTAL
T-35 TYPE "C" (70-85)	.76 cu. yds.	1.04 cu. yds.	1.8 cu. yds.
B-35 (70-85)	.76 cu. yds.	1.04 cu. yds.	1.8 cu. yds.
T-30 PRIME	8.8 gals.	18.90 gals.	27.7 gals.
B-19	2.44 cu. yds.	5.06 cu. yds.	7.5 cu. yds.

Estimated Quantities carried to the R.R. Quantities on the Pavement Sub-Summary

PAVEMENT DETAIL AT R.R. CROSSINGS

MEDIAN GUARD RAIL ADJUSTMENT

Guard rail shall be built as shown in the the detail above left to accommodate Lighting poles in the median area at the following stations:

STATION	DEDUCT BARRIER GUARD RAIL	ADD STANDARD GUARD RAIL
1125+75	50	100
1128+25	62.5	125
1130+75	112.5	225
1133+25	112.5	225
1135+75	112.5	225
1138+25	112.5	225
1140+75	112.5	225
1143+25	112.5	225
1145+75	112.5	225
1148+25	112.5	225
1150+75	62.5	125
TOTALS	-1075.0	+2150

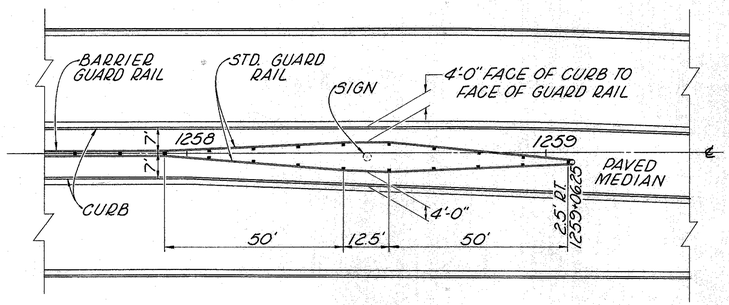

MEDIAN BARRIER RAIL DETAIL
SCALE: 1" = 20'
STA. 1257+93.75 TO STA. 1259+06.25

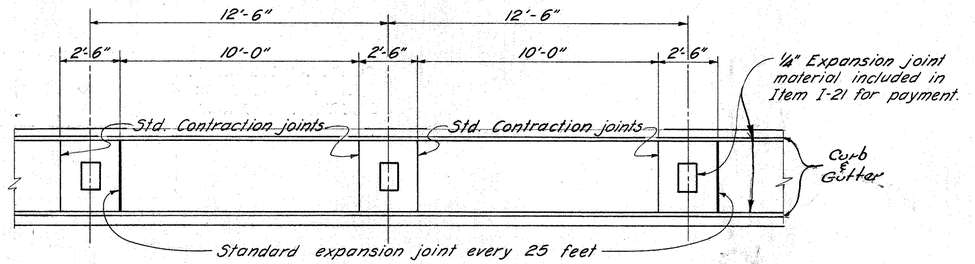

Expansion and contraction joints shall be provided in Item I-21 4" Concrete Median Pavement as per plan, as detailed hereon, whenever guard rail is called for.

JOINT DETAIL FOR 4" CONCRETE MEDIAN PAVEMENT AS PER PLAN AT GUARD RAIL POSTS

DESCRIPTION	PLOTTED BY	PLOTTED DATE	INKED BY	INKED DATE	CHECKED BY	CHECKED DATE
TOPOGRAPHY						
PAVEMENT						
DRAINAGE						
R. O. W.						
QUANTITIES						

MISCELLANEOUS DETAILS.

FED. RD. DIVISION	STATE	PROJECT	
2	OHIO		

225
418

BELMONT COUNTY
BEL.-7-20.74

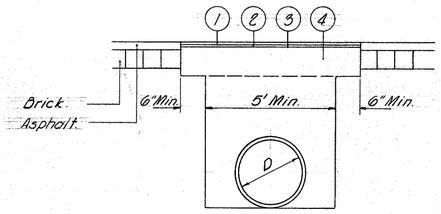

1. T-35 1¼" Asph. Conc. Surface Course
2. B-35 1¼" Asph. Conc. Leveling Course
3. T-30 Bituminous Prime Coat 0.4 Gal. Per S.Y.
4. I-22 8" I-22 Subbase

REPLACEMENT & TEMPORARY PAVEMENT.
TYPICAL SECTION

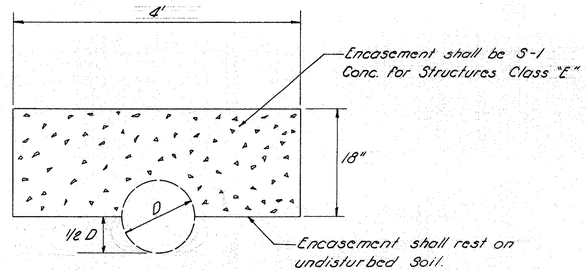

DETAIL FOR ENCASING EXISTING PIPES

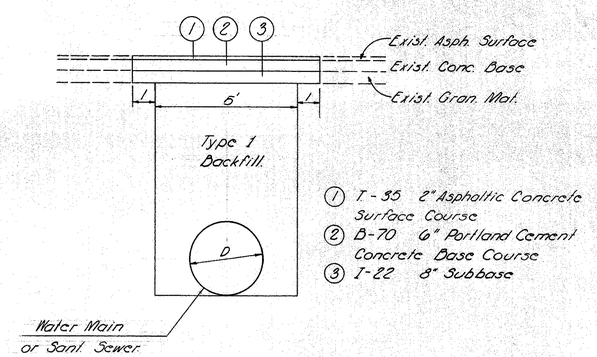

REPLACEMENT TYPICAL FOR
CENTER ST. & FIFTH ST.

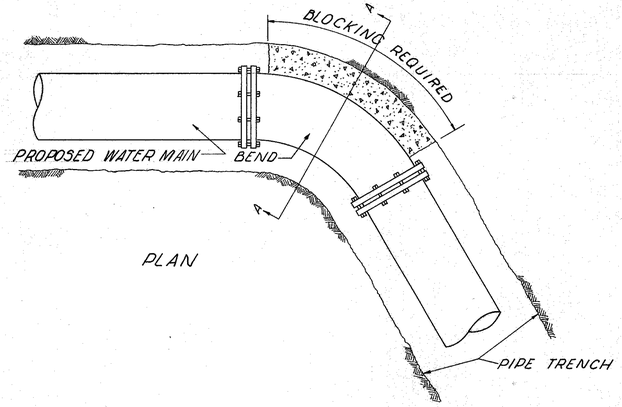

PLAN

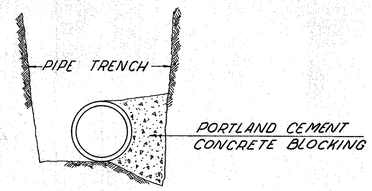

SECTION "A-A"

CONCRETE BLOCKING

Note:
Concrete for Backing use
S-1 Concrete for Structures Class "E"

I-8 MANHOLE RECONSTRUCTED TO GRADE USING PRECAST SECTIONS

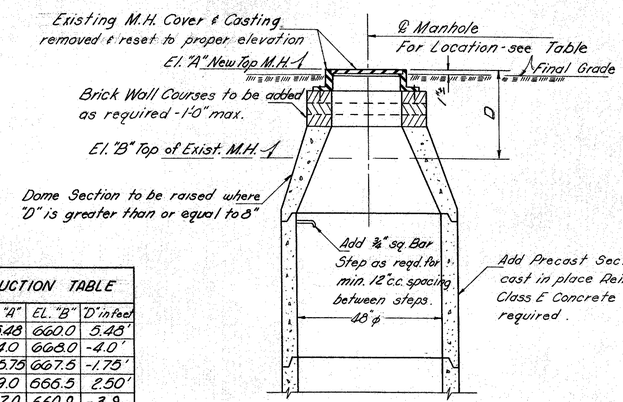

MANHOLE RECONSTRUCTION TABLE			
LOCATION	EL. "A"	EL. "B"	"D" in feet
1103+86	665.48	660.0	5.48'
1115+86	664.0	668.0	-4.0'
1118+04	665.75	667.5	-1.75'
8+75 AETNA	669.0	666.5	2.50'
1099+46	657.0	660.9	-3.9

Note: For Details not shown see Std. Dwg. M.H. No1-A.
Existing manholes are constructed of precast concrete as manufactured by the Martin-Marietta Corp.

DETAIL OF MANHOLE
RECONSTRUCTION TO GRADE
No Scale

ESTIMATED QUANTITIES
I-8 Manhole Reconstruction
to Grade, As Per Plan.

DESCRIPTION	PLOTTED BY	DATE	MKED BY	DATE	CHECKED BY	DATE
PAVEMENT						
DRAINAGE						
QUANTITIES						

GENERAL NOTES

SIGNS

WIRE AND CABLE - 625

WIRE AND CABLE INSTALLED IN CONDUIT ABOVE GROUND SHALL BE RHW, (3/64' INSULATION AND 3/64 JACKET), 600 VOLT, STANDARD COPPER WIRE.

PAYMENT FOR WIRE AND CABLE SHALL BE MADE AT THE CONTRACT UNIT PRICE WHICH SHALL INCLUDE ALL TESTING, SPLICING, MATERIAL, LABOR, EQUIPMENT, TOOLS AND INCIDENTALS NECESSARY TO COMPLETE THIS ITEM.

STRUCTURAL SIGN SUPPORT QUANTITIES

QUANTITIES FOR ITEM 816 STRUCTURAL BEAM SUPPORTS APPEARING IN THE SUMMARY TABLES ARE APPROXIMATE. THE CONTRACTOR SHALL BE RESPONSIBLE FOR DETERMINING EXACT SUPPORT LENGTHS PRIOR TO FABRICATION AND GALVANIZING OF SUPPORTS.

606 GUARDRAIL, STEEL BEAM, STD. TYPE (DEEP) AS PER PLAN

GUARDRAIL SHOWN AT SIGN SUPPORTS SHALL BE TYPE DEEP, WITH POST SPACING OF 6'-3", DETAILS ARE SHOWN ON SHEET NO. 224.

CERTIFICATION AND APPROVAL OF TRAFFIC CONTROL SUPPORTS AND SIGN ITEMS

THE CONTRACTOR SHALL SUBMIT THROUGH PROPER CHANNELS THE DRAWINGS, INFORMATION OR SAMPLES AS REQUIRED BELOW:

(A) SIX (6) COPIES OF THE FOLLOWING:

SHOP DRAWINGS AND MATERIAL LISTS FOR APPROVAL:

1. OVERHEAD SIGN AND SIGNAL SUPPORTS
2. SIGN FACE LAYOUTS
3. SIGN PANELS AND ACCESSORIES
4. SIGN LIGHTING DETAILS
5. CATALOG CUTS, DESCRIPTIONS OR SAMPLES OF FABRICATOR'S STANDARD ITEMS AS SHOWN IN THE PLANS OR THEIR EQUAL FOR APPROVAL.

(B) CERTIFICATIONS OR SAMPLES FOR ALL MATERIALS WHICH HAVE BEEN APPROVED ABOVE UNDER ITEM (A) 5 SHALL BE IN POSSESSION OF THE CONTRACTOR PRIOR TO ANY PURCHASE OR INSTALLATION.

IDENTIFICATION OF TRAFFIC SIGNS

IDENTIFICATION OF ALL TRAFFIC SIGNS IS BY CODE NUMBER. NUMBERS REFER TO THE SIGN DESIGN BEARING THE SAME NUMBER.

ORIENTATION OF SIGN FACES

SIGNS SHALL BE ERECTED SO THAT THE FACE OF THE SIGN IS VERTICAL AND AT A RIGHT ANGLE TO THE CENTER OF THE LANE WHICH THE SIGN SERVES EXCEPT WHERE OTHERWISE NOTED. WHERE LANES DIVIDE AND ON SHARP HORIZONTAL CURVES, SIGN FACES SHALL BE PLACED PERPENDICULAR TO THE TANGENT POINT OF THE CURVE AT THE STATION LOCATION, SO AS TO BE MOST EFFECTIVE BOTH DAY AND NIGHT.

ALPHABETS AND LETTER SPACING

SIGN LETTERING, WHEN INDICATED ON THE PLANS AS "INTERSTATE" SHALL BE DESIGNED IN ACCORDANCE WITH "THE AMERICAN ASSOCIATION OF STATE HIGHWAY OFFICIALS MANUAL" FOR SIGNING OF INTERSTATE HIGHWAYS, 1961 EDITION.

SIGN LETTERING, WHEN INDICATED ON THE PLANS AS A SERIES TYPE SUCH AS SERIES D, SERIES E, ETC., SHALL BE DESIGNATED IN ACCORDANCE WITH THE "STANDARD ALPHABETS FOR HIGHWAY SIGNS OF THE BUREAU OF PUBLIC ROADS". THE SPACING BETWEEN LETTERS IS INDICATED IN THE "OHIO MANUAL OF UNIFORM TRAFFIC CONTROL DEVICES" AND IS TO BE INCREASED OR DECREASED PROPORTIONALLY SO THAT THE LEGEND OCCUPIES THE DIMENSION INDICATED ON THE PLANS.

SIGN DESIGN SHOWING CROSS-HATCHED AREAS INDICATE THAT THE LEGEND THEREIN WILL VARY IN ACCORDANCE WITH THAT SHOWN ON THE ROADWAY ALIGNMENT SHEETS.

COPIES OF THE ABOVE REFERENCE ARE ON FILE IN THE OFFICE OF THE DEPARTMENT OF HIGHWAYS, BUREAU OF TRAFFIC, 450 EAST TOWN STREET, COLUMBUS, OHIO.

CORNERS

ALUMINUM SECTIONAL SHEET SIGNS, SHALL BE FABRICATED WITH ROUND CORNERS, AND THE OUTLINE OR BORDER ROUNDED ON ALL SIGNS AS SHOWN ON THE SIGN DESIGN DRAWINGS.

DIMENSIONS

DIMENSIONS OF SIGNS ARE INDICATED ON THE PLANS WITH THE HORIZONTAL WIDTH DIMENSION SHOWN FIRST, THEN THE VERTICAL DIMENSION.

ALL TYPE G SIGNS SHALL HAVE A 1' 0" GLARE SHIELD ON THE BOTTOM AS SHOWN ON SHEET 242.

PAYMENT FOR THIS ADDITIONAL AREA SHALL BE INCLUDED IN THE UNIT PRICE BID FOR ITEM 815 EXTERNALLY ILLUMINATED SIGNS.

ALL BRACKETS SHALL BE CENTERED VERTICALLY ON HORIZONTAL MEMBERS OF OVERHEAD SUPPORTS.

SIGN MATERIALS, COLOR AND REFLECTORIZATION

TYPE D ALUMINUM EXTRUSHEET WITH GREEN TYPE F REFLECTIVE SHEETING AND WHITE DEMOUNTABLE COPY, REFLECTIVE UNIT TYPE.

TYPE G ALUMINUM SPECTIONAL SHEET OR ALUMINUM EXTRUSHEET WITH GREEN TYPE F REFLECTIVE UNIT TYPE WITH EXTERNAL ILLUMINATION. LIGHT FIXTURES SHALL BE AT BOTTOM OF SIGN. WHERE ADDITIONAL SIGN AREA (GLARE SHIELD) IS INDICATED BELOW BOTTOM OF DEMOUNTABLE BORDER, IT SHALL BE COVERED WITH GREEN NONREFLECTORIZED SHEETING. THE CONTRACTOR MAY USE GREEN SCOTCH-CAL 607 OR WHITE SCOTCH CAL 3650 (OR 650) WITH A GREEN COLOR SCREEN OF CP-1310 OR EQUAL. THE CONTRACTOR MUST NOTIFY THE FABRICATOR OF THE COMBINED USE OF ABOVE MATERIALS AND SHALL FURNISH 3 SAMPLES SHOWING THE COLOR MATCH (SEE NOTE B UNDER APPROVALS).

DEMOUNTABLE COPY

SHALL INCLUDE LETTERS, DIGITS, ROUTE MARKERS, SYMBOLS, BORDERS AND OUTLINES. OHIO AND U.S. MARKERS SHOWN SHALL BE SILVER WHITE GRADE B REFLECTIVE SHEETING TYPE F WITH BLACK NUMERALS. THEY SHALL BE MOUNTED AS A SEPARATE AND COMPLETE UNIT.

MATERIALS - GENERAL

MATERIALS TO BE FURNISHED MAY BE SPECIFIED IN THE PLANS BY A GIVEN MANUFACTURER'S CATALOG NUMBER OR TYPE. THIS IS FOR DESCRIPTIVE PURPOSES ONLY AND THE CONTRACTOR MAY ASSUME THAT APPROVED EQUAL MATERIALS MAY BE FURNISHED.

SIGN MATERIALS

SIGN SPECIFIED AS "SECTIONAL SHEET" ON THE SHEET QUANTITIES SHALL CONSIST OF ALUMINUM SECTIONAL SHEET AND DEMOUNTABLE COPY SHEET NO. 243 AND 244. SIGNS SPECIFIED AS "SHEET" ON THE SHEET QUANTITIES SHALL CONSIST OF ALUMINUM SHEET .064" THICK IN ACCORDANCE WITH SEC. 815 .02(2).

OVERHEAD SIGN SUPPORTS

ALL COMPONENTS OF THE OVERHEAD SIGN SUPPORTS, 816, SHALL BE STEEL.

FOR SPECIFIC DETAILS AND MATERIALS SEE SHEET NO. 238 THROUGH 241.

625 GROUND ROD AND WIRE CONNECTION

THIS ITEM OF WORK SHALL CONSIST OF FURNISHING AND INSTALLING GROUND ROD AND WIRE AS DETAILED AND SPECIFIED ON SHEET 245. ALSO INCLUDED WILL BE THE COST FURNISHING THE 1/2 EMT GROUND WIRE CONDUIT FOR INSTALLATION UNDER ITEM 816 CONCRETE FOR SIGN SUPPORT FOUNDATIONS.

BASIS OF PAYMENT FOR THIS ITEM SHALL BE AT CONTRACT UNIT PRICE PER EACH, WHICH SHALL INCLUDE ALL LABOR, TOOLS, MATERIALS AND EQUIPMENT REQUIRED FOR THE COMPLETE ITEM OF WORK.

625 SIGNS WIRED, COMPLETE AS PER PLAN

THIS ITEM SHALL CONSIST OF THE FURNISHING AND/OR INSTALLATION OF THE ELECTRICAL SIGN LIGHTING SYSTEM COMPONENTS FOR EACH ILLUMINATED SIGN.

WORK SHALL INCLUDE INSTALLATION OF LIGHT FIXTURES AND BALLASTS, AND FURNISHING AND INSTALLATION OF ALL RIGID AND FLEXIBLE CONDUIT, CONDULETS, JUNCTION BOXES, WIRE, FASTENERS, HARDWARE, AND ALL OTHER ITEMS REQUIRED TO ENERGIZE THE SIGN LIGHTING SYSTEM. SEE DETAILS ON SHEETS (EI-1 & 2, ES-3A).

BASIS OF PAYMENT SHALL BE ON THE LUMP SUM BASIS WHICH PRICE SHALL INCLUDE ALL LABOR, MATERIALS, TOOLS, EQUIPMENT, AND OTHER INCIDENTALS TO PROVIDE A COMPLETE AND ACCEPTED ITEM OF WORK.

THE COST OF FURNISHING AND INSTALLING WIRE AND NECESSARY FASTENERS FROM THE DISCONNECT SWITCH TO THE SIGNS (OR BETWEEN SIGNS) WITHIN SIGN SUPPORT MEMBERS SHALL BE INCIDENTAL TO THE COST OF VARIOUS ITEMS INCLUDED IN THIS ITEM OF WORK.

INSPECTION AND TESTING OF SIGN LIGHTING

THE CONTRACTOR SHALL FURNISH ALL EQUIPMENT NECESSARY TO DEMONSTRATE TO THE ENGINEER THAT ALL CIRCUITS ARE FREE FROM SHORT CIRCUITS AND UNSPECIFIED GROUNDS, AND ARE PROPERLY CONNECTED AND OPERABLE BEFORE ACCEPTANCE. THIS DEMONSTRATION SHALL INCLUDE A MEGGARING TEST TO SHOW THAT ALL CONDUCTORS ARE CLEAR OF GROUNDS AND THAT THE RESISTANCE AT THE GROUND IS NOT MORE THAN 25 OHMS. VOLTAGE AND AMPERAGE TESTS SHALL BE MADE AT THE SIGN SUPPORT SWITCH.

PAYMENT FOR THESE TESTS SHALL BE CONSIDERED A SUBSIDIARY WORK ITEM, INCLUDED IN THE UNIT PRICE BID FOR THE RESPECTIVE ITEMS TESTED.

AFTER THE SIGN LIGHTING SYSTEM IS COMPLETED, THE ENTIRE SYSTEM SHALL BE OPERATED CONTINUOUSLY EACH NIGHT UNTIL SEVEN (7) CONSECUTIVE DAYS ELAPSE WITHOUT FAILURE OR DEFECT. THE CONTRACTOR SHALL CORRECT ANY DEFECTS WHICH MAY DEVELOP AT NO EXTRA COST TO THE STATE.

DURING THE TEST PERIOD, ADJUSTMENTS TO FIXTURE AIMING ANGLES SHALL BE MADE AS DIRECTED BY THE ENGINEER TO OBTAIN MAXIMUM UNIFORMITY IN SIGN ILLUMINATION.

GALVANIZED SUPPORTS

THE STRUCTURAL STEEL BEAM SUPPORTS SHALL BE GALVANIZED IN ACCORDANCE WITH ASTM A-123. ALL BOLTS, NUTS, PLAIN AND LOCKWASHERS SHALL BE GALVANIZED IN ACCORDANCE WITH ASTM A-153, EXCEPT WHERE ALUMINUM OR STAINLESS STEEL IS REQUIRED.

816 ALTERNATE DESIGNS FOR OVERHEAD SIGN SUPPORTS

If the contractor desires to furnish an alternate design for overhead sign supports, the alternate designs must be submitted to the State at least 21 days prior to opening of bids. The Bidder will be notified as to acceptance or rejection of alternate design at least 7 days before bids are to be opened. Alternate designs must utilize tubular structural members. Submissions shall be made to Ohio Department of Highways, Bureau of Traffic, 450 East Town Street, Columbus, Ohio 43216.

ELECTRICAL - GENERAL

THIS ITEM SHALL CONSIST OF FURNISHING ALL NECESSARY MATERIAL, LABOR AND FACILITIES REQUIRED TO COMPLETE THE ELECTRICAL INSTALLATION IN ACCORDANCE WITH THE DESIGNS, DIMENSIONS AND DETAILS SHOWN IN THE PLANS AND DESCRIBED IN THE SPECIFICATIONS.

ALL MATERIAL, WORKMANSHIP AND CONSTRUCTION METHODS, EXCEPT AS MODIFIED HEREIN, SHALL CONFORM TO THE GENERAL REQUIREMENTS OF THE STATE OF OHIO, DEPARTMENT OF HIGHWAYS, CONSTRUCTION AND MATERIALS SPECIFICATIONS, JANUARY 1, 1965.

625 DISCONNECT SWITCH WITH THE TYPE "Y" OR "Z" ENCLOSURE, AS PER PLAN

THE BASIS FOR PAYMENT FOR THIS ITEM SHALL BE ON A UNIT BID PER EACH BASIS, FURNISHED, INSTALLED, COMPLETE, AND ACCEPTED.

THE ITEM SHALL INCLUDE FURNISHING OF A 30 AMP. 600 VOLT FUSED DISCONNECT SWITCH OF TYPE AND MAKE AS INDICATED ON SHEET 245 AND SHALL BE MOUNTED IN A NEMA (4) STAINLESS STEEL ENCLOSURE TYPE "Y" OR "Z" AND ATTACHED TO EACH SIGN SUPPORT BY MEANS OF A MOUNTING BRACKET AS DESCRIBED IN DETAIL ON THE ABOVE SHEET.

625 TRANSFORMER, BY TYPE, AS PER PLAN

THIS ITEM OF WORK SHALL CONSIST OF FURNISHING AND INSTALLING TRANSFORMERS AS DETAILED AND SPECIFIED ON SHEET 245.

BASIS OF PAYMENT FOR THIS ITEM SHALL BE AT CONTRACT UNIT PRICE PER EACH, WHICH SHALL INCLUDE ALL LABOR, TOOLS, MATERIAL AND EQUIPMENT REQUIRED FOR THIS COMPLETE ITEM OF WORK.

625 BALLAST, BY TYPE, AS PER PLAN

THIS ITEM OF WORK SHALL CONSIST OF FURNISHING ALL BALLAST TYPES A THROUGH D AS DETAILED AND SPECIFIED ON SHEET 242.

BASIS OF PAYMENT FOR THIS ITEM SHALL BE AT THE CONTRACT UNIT PRICE PER EACH WHICH SHALL INCLUDE ALL LABOR, TOOLS, MATERIAL AND EQUIPMENT REQUIRED FOR THIS COMPLETE ITEM OF WORK.

S-25 LIGHT FIXTURE WITH LAMP, BY TYPE AND SIZE, AS PER PLAN

THIS ITEM OF WORK SHALL CONSIST OF FURNISHING ALL LIGHT FIXTURES AND LAMPS, TYPES AND SIZES AS SPECIFIED ON SHEET 241.

BASIS OF PAYMENT FOR THIS ITEM SHALL BE AT THE CONTRACT UNIT PRICE PER EACH.

BASIS OF PAYMENT FOR OVERHEAD SIGNS AND SIGN SUPPORTS

~~MODIFYING SUPPLEMENTAL SPECIFICATION 815 .12, PAYMENT FOR FURNISHING AND ERECTING SIGNS, LAMPS, FIXTURES, FIXTURE SUPPORT ARMS "G" BALLASTS, CONDUIT, WIRING INCLUDING CONNECTIONS FROM SIGNS TO DISCONNECT SWITCHES, REQUIRED ACCESSORIES, AND ALL LABOR RELATED THERETO, SHALL BE INCLUDED IN THE UNIT PRICE BID PER SQUARE FOOT FOR ITEM 815 EXTERNALLY ILLUMINATED SIGNS. TYPE G~~

Fixture support arms 'G' shall be included for payment in the unit price bid for the pertinent overhead sign support.

ALL ITEMS FURNISHED FOR SIGN LIGHTING, EXCLUSIVE OF FIXTURE SUPPORT ARMS "G" SHALL BE PROVIDED IN CONFORMANCE WITH STANDARD SPECIFICATION 625.

MODIFYING SUPPLEMENTAL SPECIFICATION 816.13 , PAYMENT FOR OVERHEAD SIGN SUPPORTS SHALL BE PER EACH FOR 816 OVERHEAD SIGN SUPPORTS, WHICH PRICE AND PAYMENT SHALL INCLUDE FURNISHING AND ERECTING SUPPORTS ON FOUNDATIONS, EXCLUDING THE MOUNTING OF SIGNS.

MODIFYING SUPPLEMENTAL SPECIFICATION 815 TYPE D SIGNS. BASIS OF PAYMENT TO BE BID PRICE PER SQUARE FOOT COMPLETE.

CONCRETE FOR SIGN SUPPORT FOUNDATIONS

THE QUANTITY FOR CONCRETE TO BE PAID FOR SHALL BE PER CUBIC YARD BASED ON THE PLAN DIMENSIONS RATHER THAN THE PLAN QUANTITY.

TRAFFIC SIGNAL POLES

TRAFFIC SIGNAL SHALL BE OF THE MONOTUBE ANCHOR BASE TYPE AND SHALL BE CAPABLE OF WITHSTANDING LOADING (APPLIED 18" FROM THE TOP) AS INDICATED BELOW WITHOUT EXCEEDING THE PERMANENT SET AND DEFLECTION (MEASURED IN INCHES 18" FROM THE TOP OF THE POLE) AS INDICATED.

LENGTH	DIAM. AT GROUND LINE	DIAM. AT TOP	BOLT CIRCLE	WALL THICKNESS	NET WEIGHT LBS.	LOAD FOR PERMANENT SET LBS.	DEFLECTION PER 100 LBS.	ANCHOR RODS 2 NUTS TO EACH ROD	POLE TOP	ALLOWABLE BEND MOMENT FT. LBS.
30'	13"	8.8"	18"	0 GUAGE	1269	5410	0.25"	2"x 96"	ORNAMENTAL	154,300

RODS AND NUTS TO BE GALVANIZED

LOAD YIELD 5410#

POLES TO HAVE ONE COAT OF RED LEAD (SHOP COAT)

SPECIAL MODIFICATIONS: POLES TO HAVE A 4-INCH X 6/1/2 INCH HANDHOLD WITH REINFORCING FRAME AND COVER, THE CENTER OF HANDHOLE TO BE LOCATED APPROXIMATELY 12 INCHES FROM THE BASE OF POLE.

Revised 10-21-66 C.E.H.
Revised 8-10-66

FED. RD. DIVISION	STATE	PROJECT	
2	OHIO		

227
418

BELMONT COUNTY
BEL-7-20.74

GENERAL SUMMARY

SHEET NUMBER 237-A

TYPE CODE G201

Item	U-534(10) State and Federal	U-534(10) State, Fed. and City	RURAL Martins Ferry & State	U-534(10) Total Federal	Item	Grand Total	Unit	Description
								SIGNING & SIGNALS
815	60.5	836.0	54.0	896.5	815	950.5	Sq.Ft.	Signs, Aluminum Extru. Sht, Type G
815	42.0	289.0		331	815	331.0	Sq.Ft.	Signs, Aluminum Extru. Sht, Type D
816		3		3	816	3	Each	Overhead Sign Support No. 9.24 Design 2; Arm 14'
816		1		1	816	1	Each	Overhead Sign Support No. 9.24 Design 3; Arm 18'
816		1		1	816	1	Each	Overhead Sign Support No. 12.24 Design 4; Arm 16'
816		1		1	816	1	Each	Overhead Sign Support No. 9.12 Design 1; Arm 9'
816	1	1	1	2	816	3	Each	Overhead Sign Support No. 9.24 Design 2; Arm 11'
816		1		1	816	1	Each	Special Structural Sign Support, as per plan
816	104	322.0		426.0	816	426.0	Lin.Ft.	Structural Support, Steel Beam 6B 8.5
816	18.0	64.9	3.6	82.9	816	86.5	Cu.Yds.	Concrete Foundations For Overhead Sign Supports
816	0.8	2.4		3.2	816	3.2	Cu.Yds.	Concrete Foundations For Ground Mounted Sign Supports
816	6	18		24	816	24	Each	Traffic Signal Pole as per plan
625		4		4	625	4	Each	72" Lighting Fixture With SHO Lamps
625		2		2	625	2	Each	96" Lighting Fixture With SHO Lamps
625		5	1	5	625	6	Each	72" Lighting Fixture With HO Lamps
625	1	4		5	625	5	Each	96" Lighting Fixture With HO Lamps
625	1	5	1	6	625	7	Each	Sign Ballast, Type A
625		2		2	625	2	Each	Sign Ballast, Type B
625		3		3	625	3	Each	Sign Ballast, Type D
625								
625	1	4	1	5	625	6	Each	30 Amp Fusible Disconnect Switch With Enclosure, Type Y
625		2		2	625	2	Each	30 Amp Fusible Disconnect Switch With Enclosure, Type Z
625	1	6	1	7	625	8	Each	Ground Rod and Wire Connection
625	1	5	1	6	625	7	Each	Connector Kit Type I
625	1	5	1	6	625	7	Each	Connector Kit Type I, as per plan
625		1		1	625	1	Each	Connector Kit Type II
625		1		1	625	1	Each	Connector Kit Type VI
625	8	48	8	56	625	64	Lin.Ft.	Direct Burial Cable, No.10 RHW, 600V., Single Conductor
625	Lump	Lump	Lump	Lump	625	Lump	Lump	Sign Wiring Complete, as per plan
625	1	1		2	625	2	Each	Transformer Type I
625	2			2	625	2	Each	Transformer Type II
625	2			2	625	2	Each	Transformer Type III
625	2			2	625	2	Each	Transformer Type IV

FED. RD. DIVISION	STATE	PROJECT	TYPE FUNDS
2	OHIO		

285
4.18

3
5

BELMONT COUNTY
BEL - 7 - 20.74

TRAFFIC CONTROL SYMBOLS

- Overhead Butterfly (2 - signs, back to back)
- Overhead Cantilever
- Ground Mounted
- Overhead Butterfly
- With Center Post only
- Ground Mounted with center post only
- Traffic Signal

* NOTE: Add 1'-0" to vertical dimension for Glare shield.

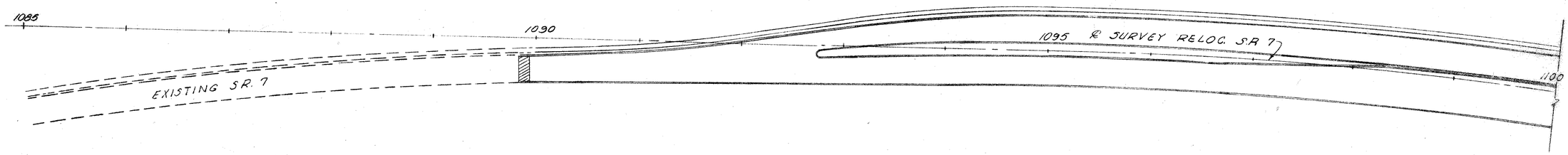

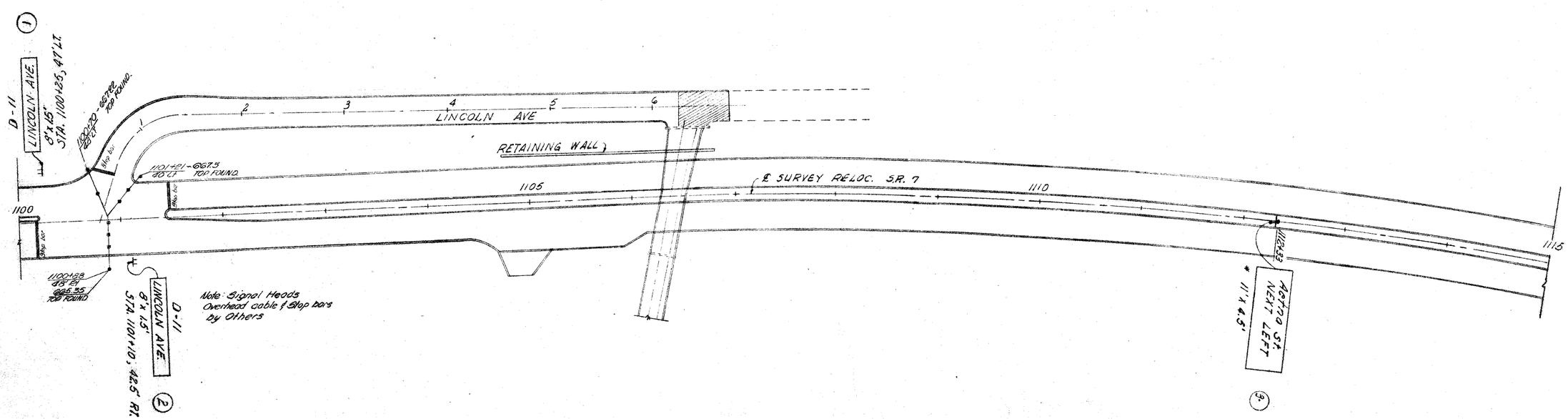

SIGN PLAN 1089+00 TO 1116+00

FED. RD. DIVISION	STATE	PROJECT	TYPE FUNDS
2	OHIO		

229
418

4
5

BELMONT COUNTY
BEL - 7 - 20.74

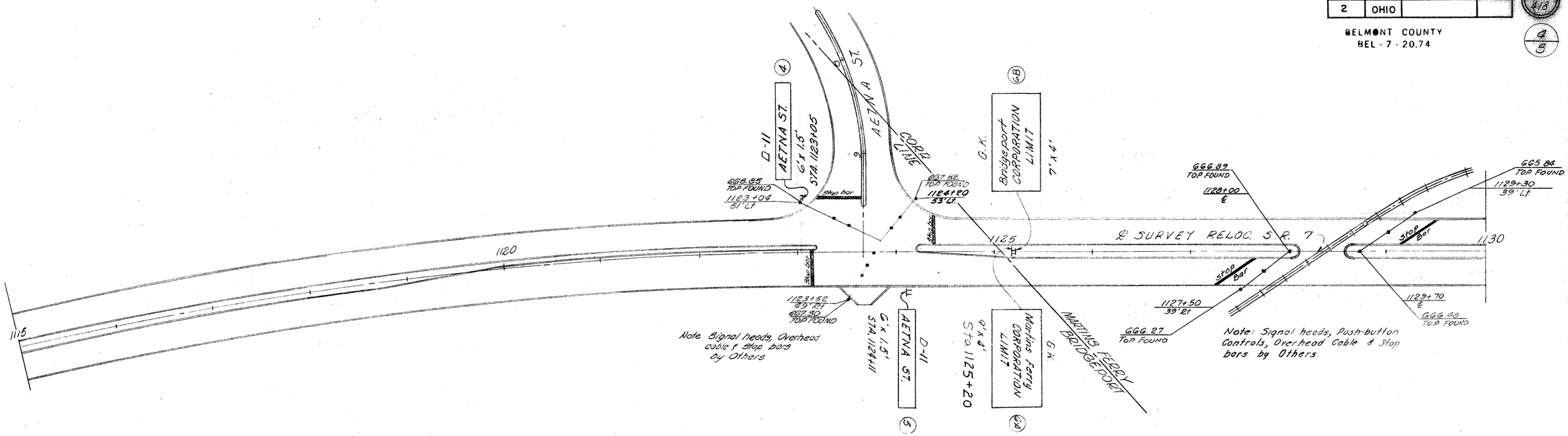

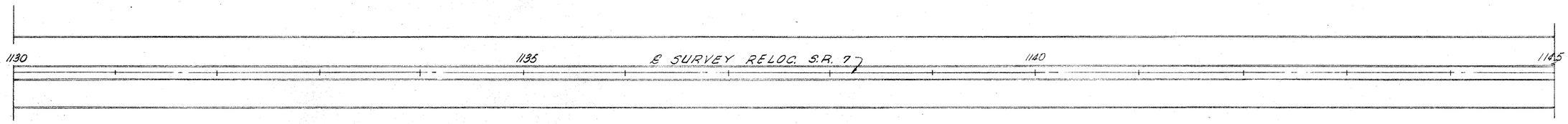

SIGN PLAN 1115+00 TO 1145+00

FED. RD. DIVISION	STATE	PROJECT	TYPE FUNDS
2	OHIO		

230
418

5
8

BELMONT COUNTY
BEL - 7 - 20.74

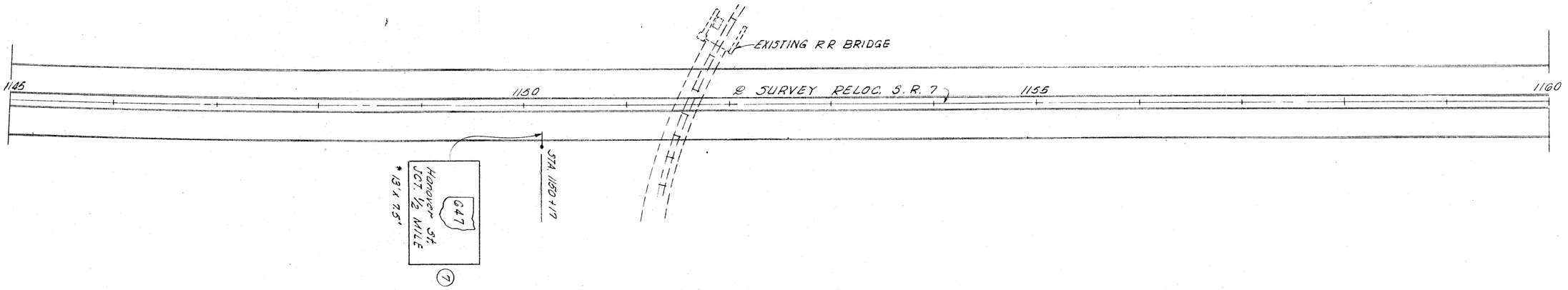

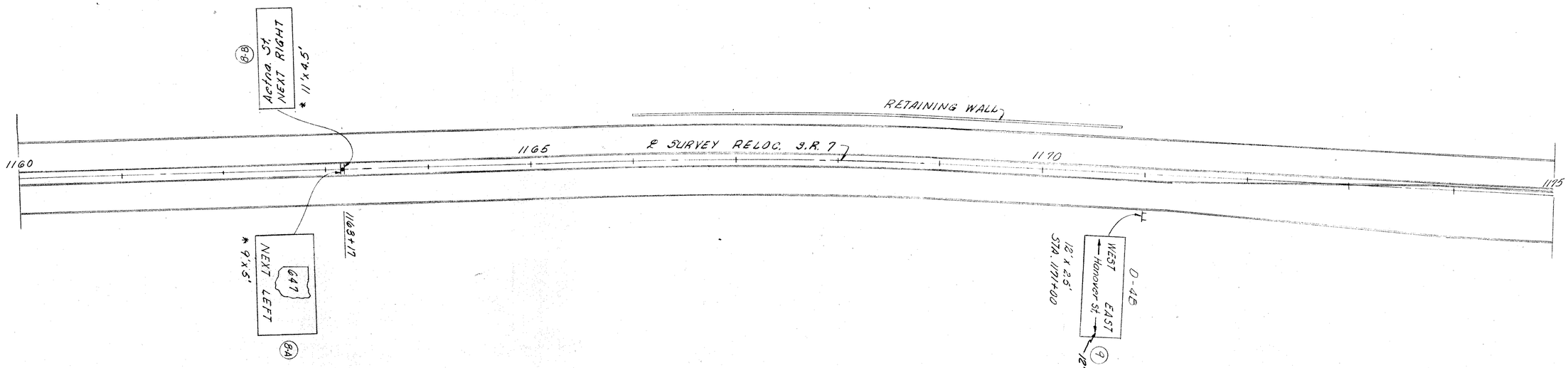

SIGN PLAN 1145+00 TO 1175+00

FED. RD. DIVISION	STATE	PROJECT	TYPE FUNDS
2	OHIO		

231
418
6
8

BELMONT COUNTY
BEL - 7 - 20.74

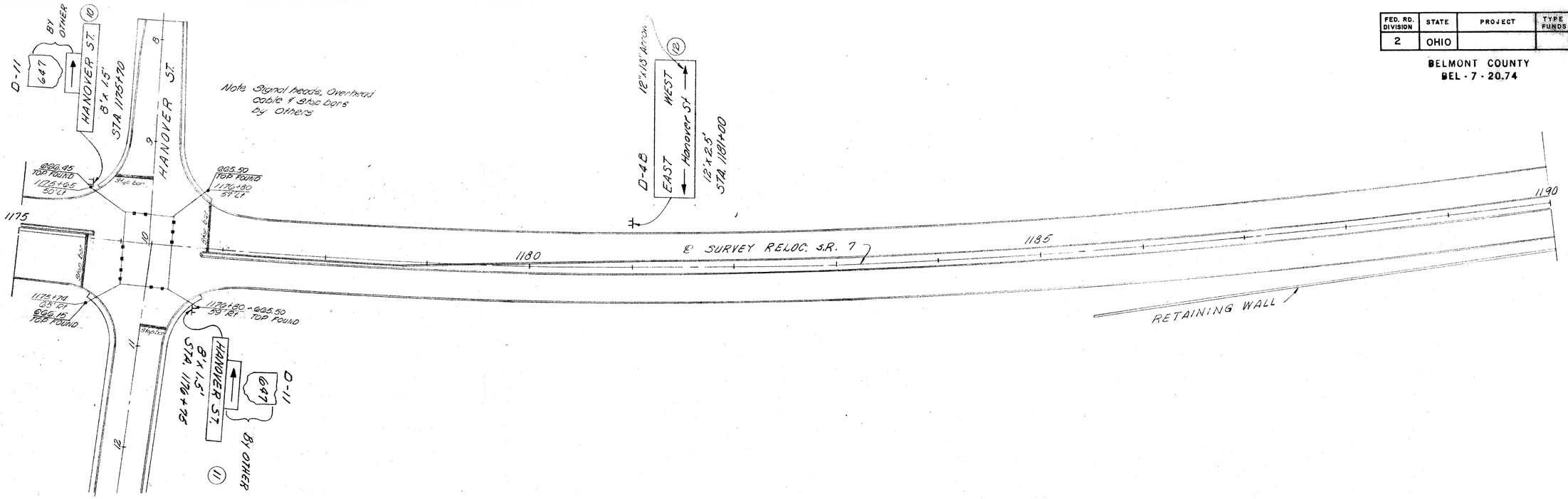

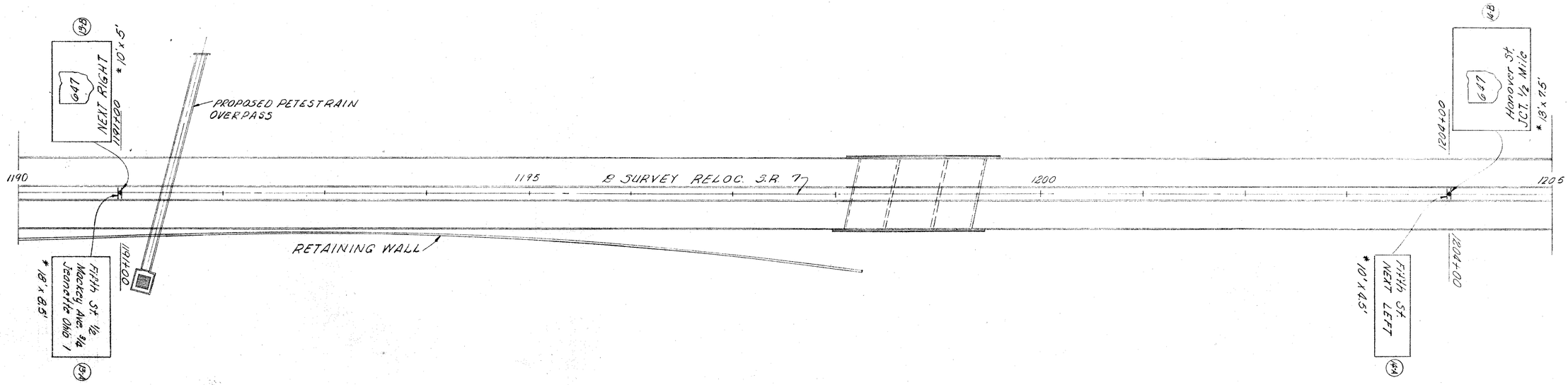

SIGN PLAN 1175+00 TO 1205+00

FED. RD. DIVISION	STATE	PROJECT	TYPE FUNDS
2	OHIO		

BELMONT COUNTY
BEL - 7 - 20.74

232
418

7
5

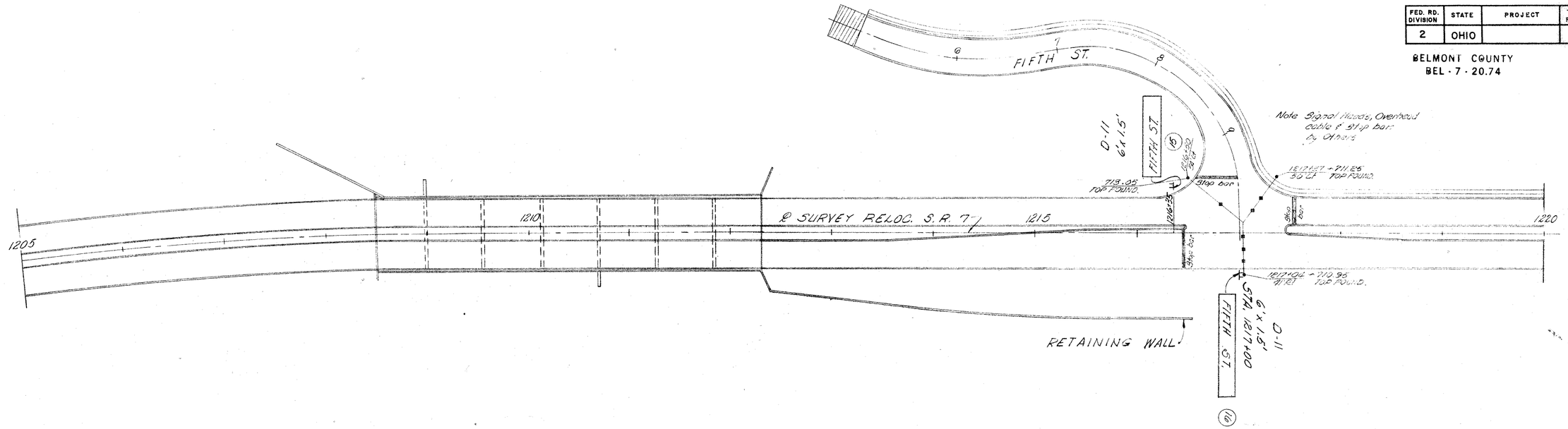

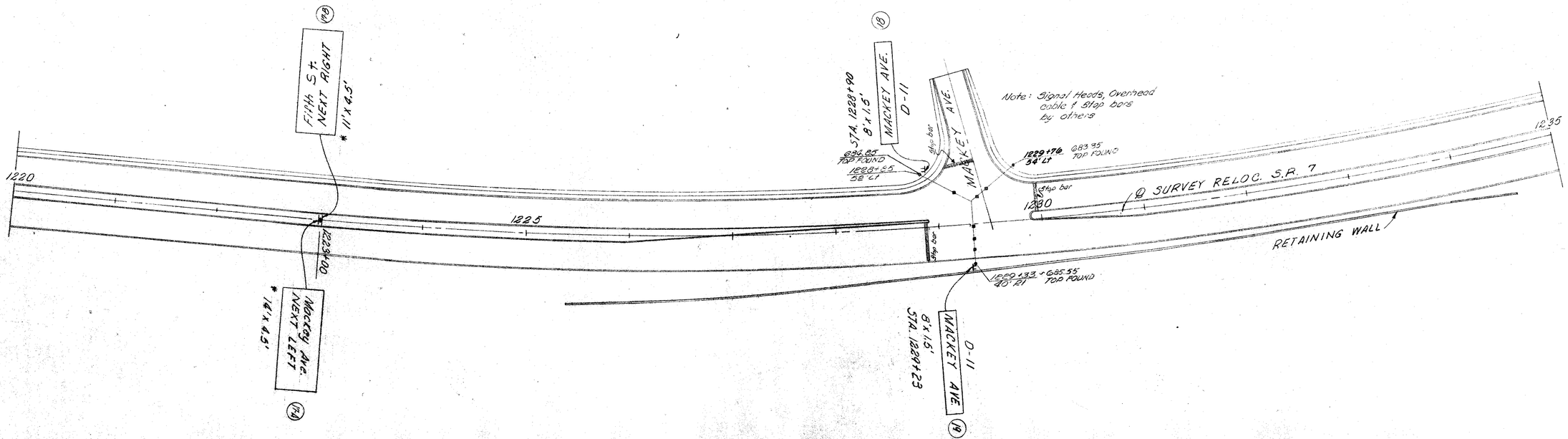

SIGN PLAN 1205+00 TO 1235+00

FED. RD. DIVISION	STATE	PROJECT	TYPE FUNDS
2	OHIO		

233
418

8
5

BELMONT COUNTY
BEL - 7 - 20.74

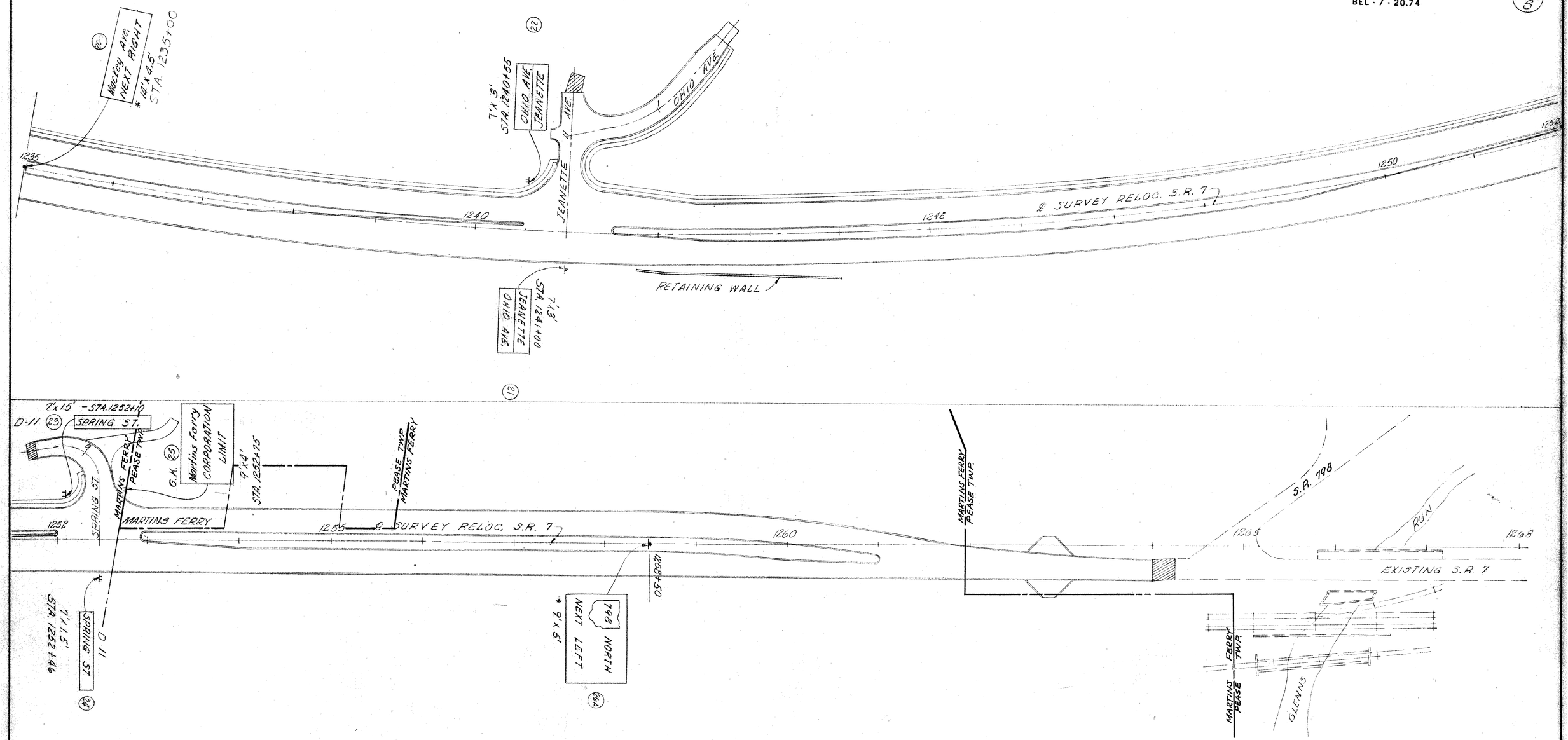

SIGN PLAN 1235+00 TO 1265+00

BELMONT COUNTY
BEL. 7-20.74

FED. RD. DIVISION	STATE	PROJECT	
2	OHIO		

234
418

9
8

SIGN NO. 3

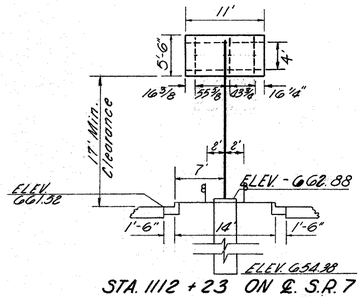

STA. 1112 + 23 ON ℄ S.R. 7
816 NO. 9.24 DES. 1
ARM. 11'-0"
3 Y$_3$ - BRACKET ASSEMBLIES 5'-6" HEIGHT.

(3)

SIGN NO. 7

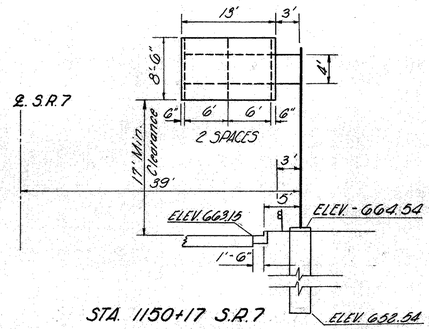

STA. 1150+17 S.R. 7
816 NO. 1224 DES. 5
ARM. 16'-0"
3 Y$_3$ - BRACKET ASSEMBLIES 8'-6" HEIGHT

(7)

SIGN NO. 8-A SIGN NO. 8-B

No. of Brackets - 2 Y$_3$, 6'-0" HEIGHT

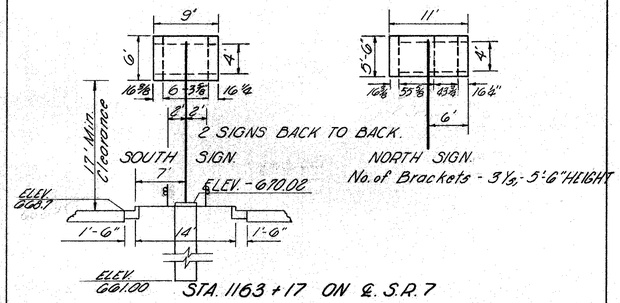

STA. 1163 + 17 ON ℄ S.R. 7
816 NO. 9.24 DES. 2 AS PER PLAN
ARM. 9'-0"
5 Y$_3$ - BRACKET ASSEMBLIES

(8)

SIGN NO. 13-A SIGN NO. 13-B

No. of Brackets - 3 Y$_3$, 9'-6" Height.

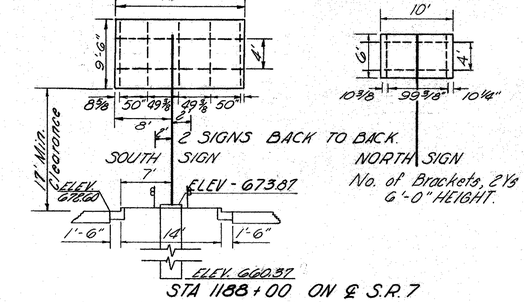

STA 1188 + 00 ON ℄ S.R. 7
816 NO. 9.24 DES. 4 AS PER PLAN
ARM. 18'-0"
7 Y$_3$ - BRACKET ASSEMBLIES.

(13)

SIGN NO. 14-A SIGN NO. 14-B

No. of Brackets - 2 Y$_3$, 5'-6" Height.

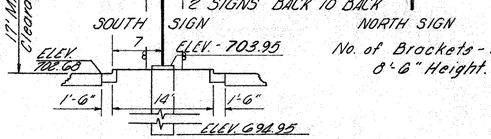

STA. 1204+00 ON ℄ S.R. 7
816 NO. 9.24 DES. 2 AS PER PLAN
ARM. 13'-0"
5 Y$_3$ & 2 Y$_3$ - BRACKET ASSEMBLIES.

(14)

SIGN NO. 17-A SIGN NO. 17-B

No. of Brackets - 3 Y$_3$, 5'-6" Height.

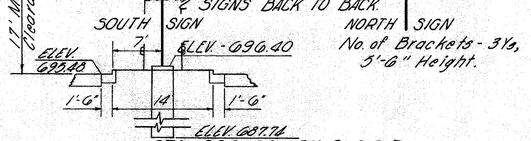

STA. 1223+00 ON ℄ S.R. 7
816 NO. 9.24 DES. 2 AS PER PLAN
ARM. 14'-0"
6 Y$_3$ - BRACKET ASSEMBLIES

(17)

SIGN NO. 20

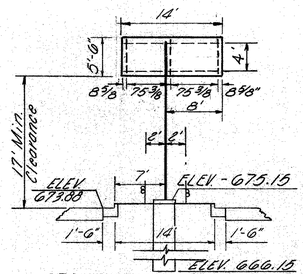

STA. 1235+00 ON ℄ S.R. 7
816 NO. 9.24 DES. 2
ARM. 13'-0"
3 Y$_3$ - BRACKET ASSEMBLIES 5'-6" Height.

(20)

SIGN NO. 26

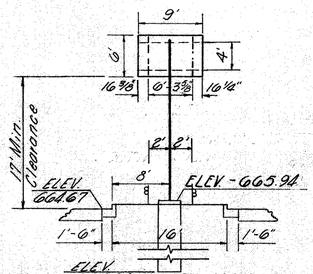

STA. 1258+50 ON ℄ S.R. 7
816 NO. 9.24 DES. 1
ARM. 9'-0"
2 Y$_3$ - BRACKET ASSEMBLIES 6'-0" HEIGHT.

(26)

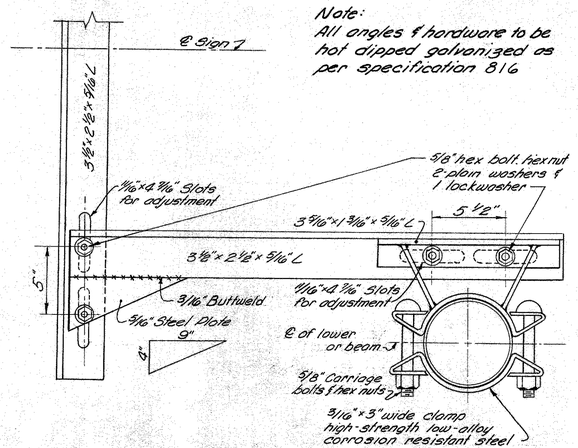

Note:
All angles & hardware to be hot dipped galvanized as per specification 816

SPECIAL SIGN BRACKET ASSEMBLY USE WHEN SIGN HEIGHT IS LESS THAN THE DISTANCE BETWEEN ARMS (DRG. ST-1)

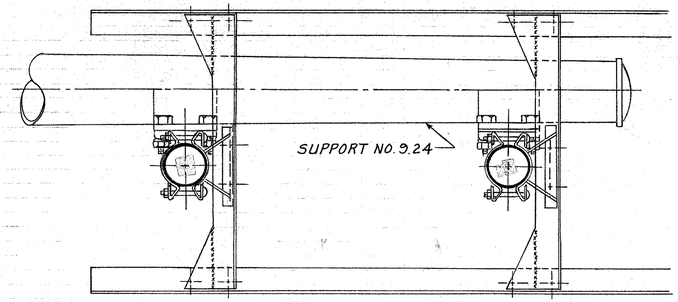

ST-1A
SIGNS MOUNTED BACK-TO-BACK ON 9.24
OVERHEAD SIGN SUPPORT

TRAFFIC SIGN SUB-SUMMARY, I-129 OVERHEAD SIGN SUPPORTS

BELMONT COUNTY
BEL. 7 - 20.74

FED. RD. DIVISION	STATE	PROJECT	
2	OHIO		

235
418

10
5

SIGN NO 6-A
SOUTH SIGN

SIGN NO 6-B
NORTH SIGN

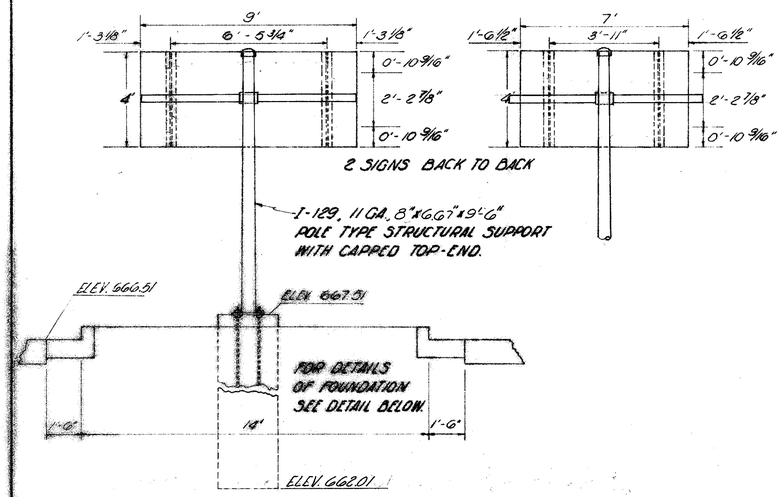

STA. 1125+20 ON ℄ S.R.7
816 STRUCTURAL SUPPORT, GROUND MOUNTED SIGN, 9:2 DES. 1 ARM 9' AS PER PLAN
4 VERTICAL BRACKETS - 4' LONG - 4" x 3 1/16" x 1/4" STEEL Z BAR @ 8.2 LB.

6

SIGN NO. 21

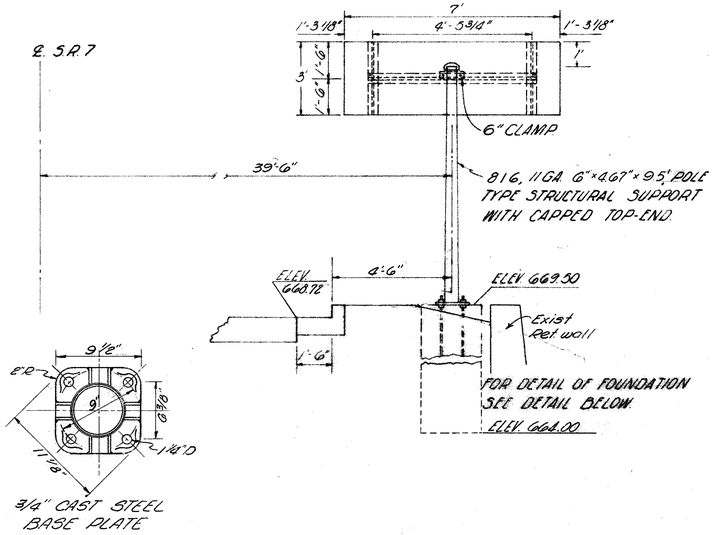

STA. 1241+00 -39.5' RT. ℄ S.R.-7
816 STRUCTURAL SUPPORT GROUND MOUNTED SIGN (SINGLE SUPPORT)
2 VERTICAL BRACKETS - 3' LONG - 3" x 2 1/16" x 1/4" @ 2.33 LBS. ALUMINUM Z-BAR
1 HORIZONTAL BRACKET - 4'-11 3/8" LONG - 4" x 3 1/16" x 1/4" @ 8.2 LBS. STEEL Z BAR
Not to Scale

21

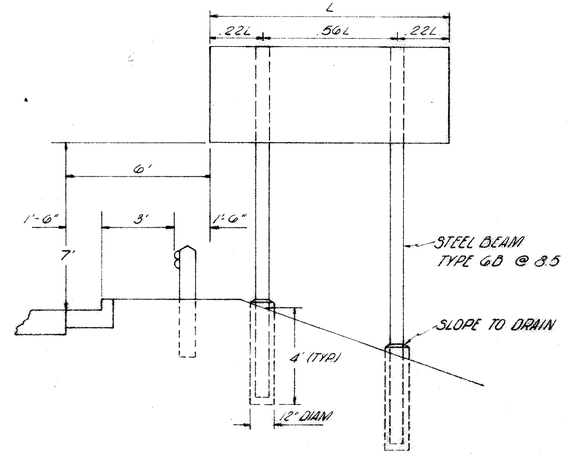

NOTE: THE GROUND MOUNTED SIGN AT STA. 1241+00, 39.5' RT. HAS ONLY 3' HORIZONTAL CLEARANCE TO THE EDGE OF PAVEMENT.

DETAIL OF 816
STRUCTURAL SUPPORT FOR GROUND MOUNTED SIGNS, AS PER PLAN

FOUNDATION DETAILS FOR 816
GROUND MOUNTED SIGN (SINGLE SUPPORT)
STA. 1125+20 ON ℄ S.R.7 & STA. 1241+00, 39.5' RT.
SIGN SUPPORT No. 6 & No. 21

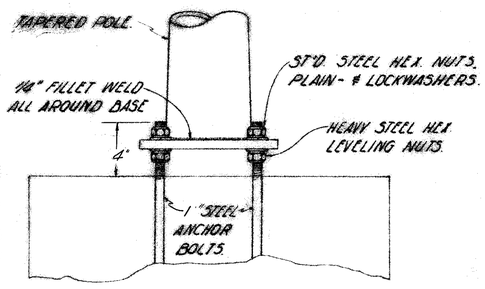

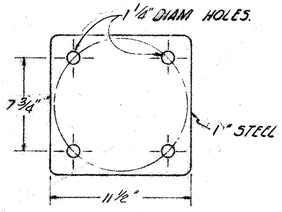

BASE PLATE DETAIL.
STA. 1125+20 ON ℄ S.R.7

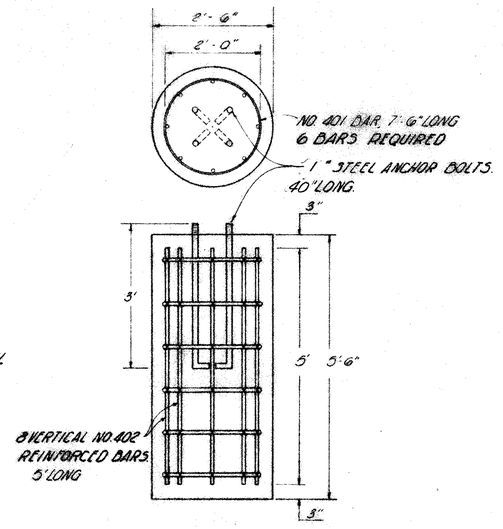

REINFORCING FOR ANCHOR BASE

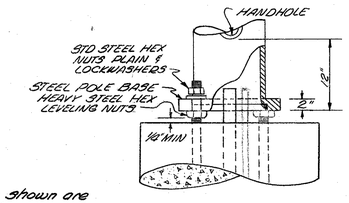

NOTES

301.13: The foundation details shown are for average soil conditions (medium clay, cemented sand & gravel, sandy clay, or silty clay). For poor soil conditions increase depth to 18' in dry or wet sand 19.2' in silty clay, 24' in soft clay and from 21' to 30' in wet silt, depending on quicksand action.

REINFORCING STEEL: Reinforcing steel shown shall be installed as shown. The cost and placement shall be included in the unit price bid for I-129 Concrete For Sign Support Foundation.

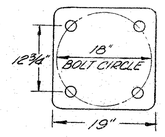

POLE DETAIL

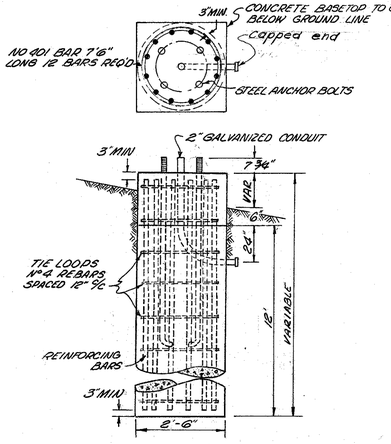

FOUNDATION DETAIL

TRAFFIC SIGNAL POLE FOUNDATION DETAILS

BELMONT COUNTY
BEL. 7 - 20.74

FED. RD. DIVISION	STATE	PROJECT	
2	OHIO		

236
418
11
5

℄ OF SIGN
11'-0"
48 11/16
48 5/8
10.5
13.33"U.C.
9.17"
10"E
11
Aetna St
NEXT LEFT
10" L.C.
4'-6"
2"
6"R
42.65
43.84
∇-0-1-NL
11' x 4 1/2'
3

℄ OF SIGN AND
M-2C-24-3 MKR.
13'-0"
21
℄ OF MKR.
18.5"
7'-6"
13.33"U.C.
13.17
10"E
14
647
60 7/16
61 7/8
Hanover St
JCT 1/2 MILE
2"
10" L.C.
10"E
15"
12"R
56 1/8
55 1/2
∇-1-1-J 1/2
13' x 7 1/2'
7 14 -B

℄ OF SIGN AND
M-2C-24-3 MKR.
9'-0"
21
℄ OF MKR.
18"
10"E
11
647
NEXT LEFT
2"
9"R
5'-0"
42.65
43.84
∇-1-0-NL
9' x 5'
8 -A

℄ OF SIGN
11"-0"
48 11/16
48 5/8
10.5
13.33"U.C.
9.17"
10"E
11
Aetna St
NEXT RIGHT
10" L.C.
4'-6"
2"
6"R
47.25
48.5
∇-0-1-NR
11" x 4 1/2'
8 -B

SPECIAL 3
18"-0"
15
85 7/8
℄ OF SIGN
29 1/2
15
14
13.33" U.C.
10" L.C.
17
Fifth St
1/2
Mackey Ave
3/4
Jeanette Ohio
1
10 11/16
10
10
20
10 5/16
8'-6"
13 11/16
32
2"
12" R
15
132 1/16
155 15/16
18' x 8 1/2'
13 -A

℄ OF SIGN AND
M-2C-24-3 MKR.
10'-0"
21
℄ OF MKR.
18"
10"E
11
647
NEXT RIGHT
2"
9"R
5'-0"
47.25
48.5
∇-1-0-NR
10' x 5'
13 -B

10'-0"
℄ OF SIGN
42 1/4
43 9/16
10.5
13.33"U.C.
9.17"
10"E
11
Fifth St
NEXT LEFT
10" L.C.
4'-6"
2"
6"R
42.65
43.84
∇-0-1-NL
10' x 4 1/2'
14 -A

14'-0"
℄ OF SIGN
65 3/8
66 11/16
10.5
13.33"U.C.
9.17"
10"E
11
Mackey Ave
NEXT LEFT
10" L.C.
4'-6"
2"
6"R
42.65
43.84
∇-0-1-NL
14' x 4 1/2'
17 -A

11'-0"
℄ OF SIGN
42 1/4
43 9/16
10.5
13.33"U.C.
9.17
10"E
11
Fifth St
NEXT RIGHT
10" L.C.
4'-6"
2"
6"R
47.25
48.5
∇-0-1-NR
11' x 4 1/2'
17 B

NOTE : ALL DIMENSIONS ARE IN INCHES, UNLESS OTHERWISE INDICATED.

TRAFFIC SIGN LAYOUTS.

DESCRIPTION	PLOTTED BY	DATE	INKED BY	DATE	CHECKED BY	DATE
TOPOGRAPHIC						
RIGHT OF WAY						
DRAINAGE						
R. C. & M.						
REMARKS						

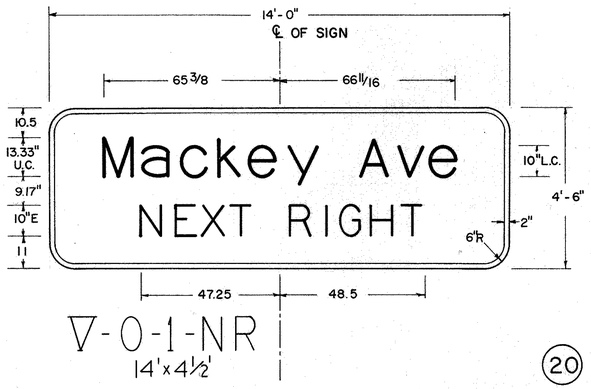

V-0-1-NR
14'x4½'

20

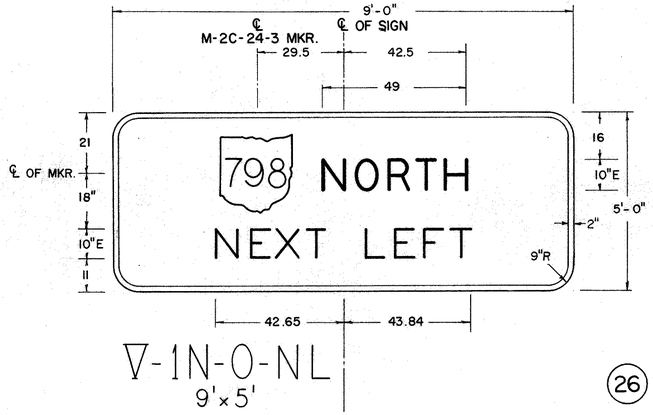

V-1N-0-NL
9'x5'

26 - A

BELMONT COUNTY
BEL. 7 - 20.74

FED. RD. DIVISION	STATE	PROJECT	
2	OHIO		

237
418
12
5

SPECIAL 1

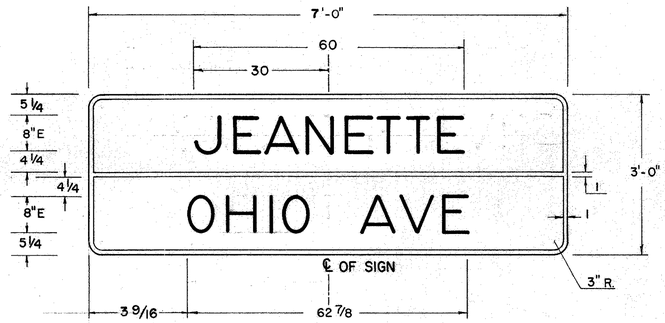

9'x3'

21

SPECIAL 2

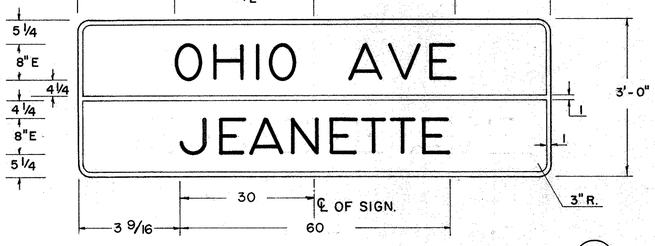

9'x3'

22

NOTE

FOR SIGN LAYOUTS 1,2,4,5,10,11,15,16,18,19,23, AND 24 REFER TO SIGN DESIGN SHEET "D-11" (Sheet 237A)

FOR SIGN LAYOUTS 6A, 6B, AND 25 REFER TO SIGN SHEET "GK" (Sheet 248)

FOR SIGN LAYOUTS 9 AND 12 REFER TO SIGN DESIGN SHEET "D-4B" (Sheet 246)

DETAILS FOR MARKER M-2C-24-3 ARE FOUND ON SIGN DESIGN SHEET "M-2C-24-3" (Sheet 247)

D-11

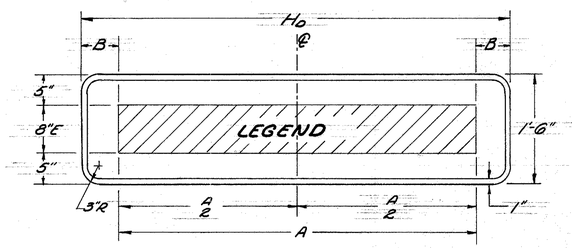

A	Ho
8	6'0"
9	7'0"
10	8'0"
11	8'0"

Note:
"A" = Number of letters, numerals, & spaces
"B" Is variable, never less than 5"

NOTE: ALL DIMENSIONS ARE IN INCHES, UNLESS OTHERWISE INDICATED.

TRAFFIC SIGN LAYOUTS.

SIGN & SIGNAL

FED. RD. DIVISION	STATE	PROJECT	
2	OHIO		

BELMONT COUNTY
BEL - 7 - 20.74

237A
418

2
3

REF. Nº	STATION LOCATION	SIGN SIZE	815 SIGN AS PER PLAN TYPE B	815 SIGN AS PER PLAN TYPE D	816 SUPPORTS 9.24 Des 2 Arm 11'	816 SUPPORTS 9.24 Des 2 Arm 14'	816 SUPPORTS 9.24 Des 3 Arm 18'	816 SUPPORTS 12.24 Des 4 Arm 16'	816 SUPPORTS 9.12 Des 1 Arm 9' Rib 4-28in	816 SUPPORTS SPECIAL AS PER PLAN	816 STRUCTURAL SUPPORT STEEL BEAM GB-8.5 AS PER PLAN	816 CONCRETE FOR SIGN SUPPORT FOUNDATIONS OVERHEAD	816 CONCRETE FOR SIGN SUPPORT FOUNDATIONS GROUND MOUNTED	816 SIGNAL POLES AS PER PLAN	625 FIXTURE & LAMP 72" SHO	625 FIXTURE & LAMP 96" SHO	625 FIXTURE & LAMP 72" HO	625 FIXTURE & LAMP 96" HO	625 BALLAST RATING	625 BALLAST TYPE A	625 BALLAST TYPE B	625 BALLAST TYPE C	625 BALLAST TYPE D	625 TRANSFORMER K.V.A.	625 TRANSFORMER I	625 TRANSFORMER II	625 TRANSFORMER III	625 TRANSFORMER IV	625 TRANSFORMER V	625 TRANSFORMER VI	625 TRANSFORMER VII	625 30A DISCONNECT SWITCH IN ENCLOSURE TYPE X	625 30A DISCONNECT SWITCH IN ENCLOSURE TYPE Y	625 30A DISCONNECT SWITCH IN ENCLOSURE TYPE Z	625 GROUND ROD & WIRE CONNECTION	625 CONNECTOR KITS TYPE I	625 CONNECTOR KITS TYPE I½	625 CONNECTOR KITS TYPE II	625 CONNECTOR KITS TYPE VI	625 #10 WIRE TO DISC SWITCH	SIGN WIRING COMPLETE AS PER PLAN	
		'x'	SF	SF	EA	EA	EA	EA		EA	L.F.	CU. YD.	CU. YD.		EA	EA	EA	EA		EA	EA	EA	EA		EA	EA	EA	EA	EA	EA	EA	EA	EA	EA	EA	EA	EA	EA	L.F.	LUMP	
	SIGN																																								
1	1100+25 47'Lt	8 x 1.5		12							26		0.2																												
2	1101+10 42.5'Rt	8 x 1.5		12							26		0.2																												
3	1112+33 ℄	11 x 4.5	60.5		1							3.6					1		1			0.25	1								1		1		1	1		8	Lump	
4	1123+05 55'Lt	6 x 1.5		9							26		0.2																												
5	1124+11 41.5'Rt	6 x 1.5		9							26		0.2																												
6A	1125+20 ℄	9 x 4		36					1			1.8																												
6B	1125+20 ℄	7 x 4		28																																				
7	1150+17 39'Rt	13 x 7.5	110.5					1				2.5			2							0.75		1							1		1			1	1	8	Lump	
8A	1163+17 ℄	11 x 4.5	60.5		1 †							2.0					1		1			0.50	1							1		1		1	1		8	Lump	
8B	1163+17 ℄	9 x 5	54.0													1			1																					
9	1171+00 44.5'Rt	12 x 2.5		30							28		0.2																												
10	1175+70 55.5'Lt	8 x 1.5		12							26		0.2																												
11	1176+75 60'Rt	8 x 1.5		12							26		0.2																												
12	1181+00 44.5'Lt	12 x 2.5		30							28		0.2																												
13A	1188+00 ℄	18 x 8.5	171.0				1 *					3.6				2						1.00			1						1	1		1	1		8	Lump	
13B	1188+00 ℄	10 x 5	60.0														1		1																					
14A	1204+00 ℄	10 x 4.5	55.0			1 *						3.6					1		1			1.00			1						1	1		1	1		8	Lump	
14B	1204+00 ℄	13 x 7.5	110.5												2					1																				
15	1216+35 46.5'Lt	6 x 1.5		9							26		0.2																												
16	1217+00 41.5'Lt	6 x 1.5		9							26		0.2																												
17A	1223+00 ℄	14 x 4.5	77.0			1 *						3.6					2			1		0.75		1							1		1		1	1		8	Lump	
17B	1223+00 ℄	11 x 4.5	60.5															1	1																					
18	1228+90 54'Lt	8 x 1.5		12							26		0.2																												
19	1229+23 42.5'Rt	8 x 1.5		12							26		0.2																												
20	1235+00 ℄	14 x 4.5	77.0			1						3.6					2			1		0.50	1								1		1		1	1		8	Lump	
21	1241+00 395'Rt	7 x 3		21						1		1.0																												
22	1240+55 54'Lt	7 x 3		21							29		0.2																												
23	1252+10 47'Lt	7 x 1.5		10.5							26		0.2																												
24	1252+46 42'Rt	7 x 1.5		10.5							26		0.2																												
25	1252+75 55'Lt	9 x 4		36							31		0.2																												
26	1258+50 ℄	9 x 5	54		1							3.6					1		1			0.25	1								1		1		1	1		8	Lump	
	SIGNAL																																								
	LINCOLN AVE											7.2		3																											
	AETNA ST.											7.2		3																											
	HANOVER ST.											9.6		4																											
	FIFTH ST.											7.2		3																											
	MACKEY AVE.											7.2		3																											
	RAILROAD CROSSING											3.6		4																											
	TO BOX FACTORY											3.6		4																											
	SUB TOTAL BRIDGEPORT		60.5	42	1						104	18.0	0.8	6				1	1				1								1		1		1	1		8	Lump	
	SUB TOTAL MARTINS FERRY		83.60	28.9	1 †	2 †	1 †	1	1	1	32.2	6.4.9	2.4	18	4	2	5	4	5	2	3		1	2	2	2					4	2	6	5	5	1	1	48	Lump	
	SUB TOTAL RURAL		54		1							3.6					1		1				1								1		1		1	1		8	Lump	
	GRAND TOTAL		950.5	331	1 † 2	2 † 1	1 †	1	1	1	426	86.5	3.2	24	4	2	6	5	7	2	3		2	2	2	2					6	2	8	7	7	1	1	64	Lump	

BRIDGEPORT State & Federal Participation Only

RURAL Martins Ferry & State Participation Only

BRIDGEPORT State & Federal Participation Only

* Also foundation concrete for Signal Poles & Spec. Ground Mounted supports as per plan

† As per plan

DESCRIPTION	PLOTTED BY	PLOTTED DATE	INKED BY	INKED DATE	CHECKED BY	CHECKED DATE
TOPOGRAPHY						
PAVEMENT						
DRAINAGE						
R/W						
QUANTITIES						

SIGN & SIGNAL SUMMARY

FED. AID DIVISION	STATE	PROJECT	
2	OHIO		

238
418

14
3

BELMONT COUNTY
BEL-7-20.74

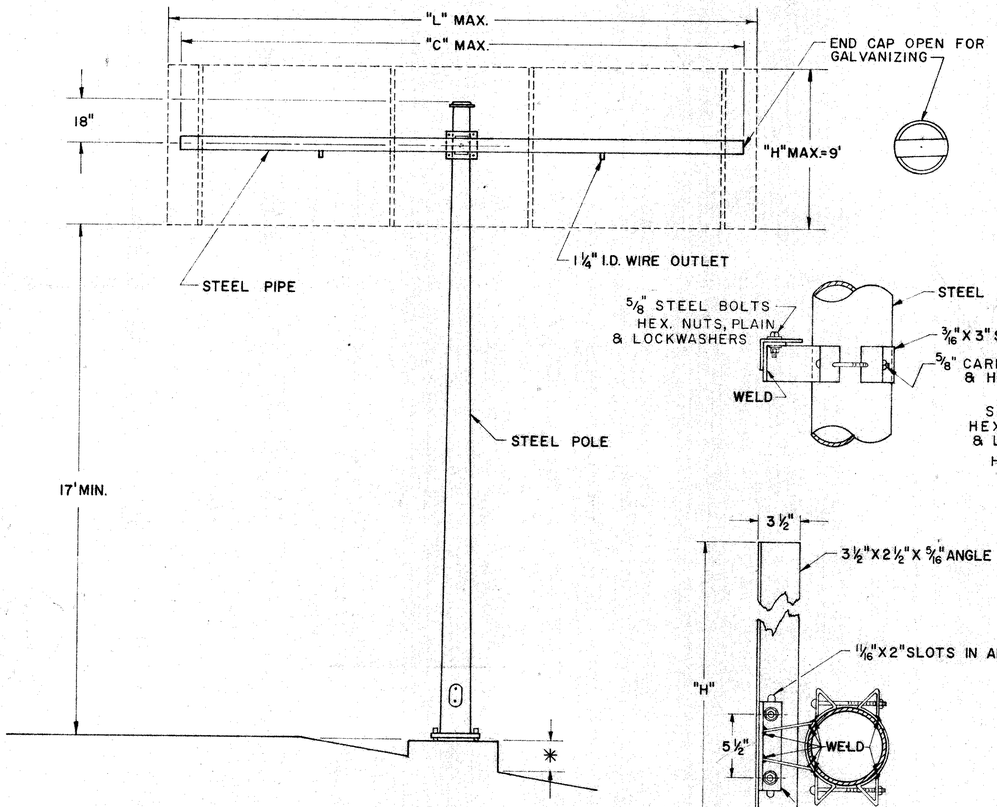

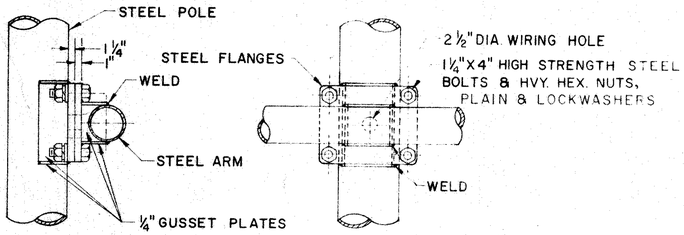

ARM ATTACHMENT

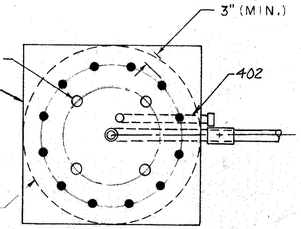

SIGN ATTACHMENT DETAIL

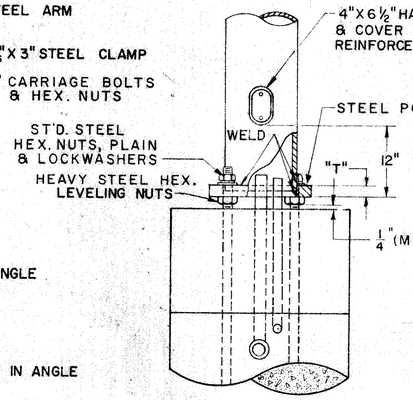

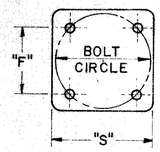

POLE DETAIL

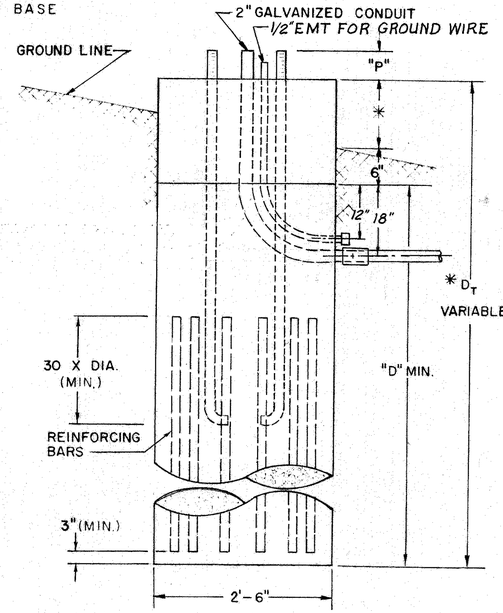

FOUNDATION DETAIL

DESIGN NO.	POLE SIZE	PIPE SIZE	DIM C	DIM F	DIM P	DIM S	DIM T	BOLT CIRCLE	ANCHOR BOLT SIZE	MAX SIGN AREA	MAX. "L" WITH MAX. SIGN AREA	"D" MIN.	REINF. BARS	
													TYPE	NO.
1	7ga, 11"X 7.99 X 21'-6"	4"SCH.40 GRADE A	18'	10 5/8"	6½"	15 5/8"	1½"	15"	1½"X60"	60	24'-9"	7'-0"	#6	8
2	3ga, 13"X 9.99 X 21'-6"	4"SCH.80 GRADE A	14'	12¾"	7 3/4"	18½"	2"	18"	1¾"X90"	120	16'-9"	8'-6"	#7	12
3	3ga, 13"X 9.99 X 21'-6"	6"SCH.40 GRADE A	20'	12¾"	7 3/4"	18½"	2"	18"	1¾"X90"	120	24'-0"	9'-0"	#7	12

NOTES

FABRICATION – ALL PORTIONS OF THE SIGN SUPPORT, INCLUDING SIGN ATTACHMENTS, SHALL BE HOT DIP GALVANIZED IN ACCORDANCE WITH THE REQUIREMENTS OF A.S.T.M. DESIGNATIONS A-123 AND A-153. THE CONDUIT SHALL BE GALVANIZED IN ACCORDANCE WITH SEC. 625.13 AND SHALL BE INCLUDED IN THE UNIT PRICE BID FOR OVERHEAD SIGN SUPPORTS FOR PAYMENT.

* FOUNDATION – THE TOP ELEVATION OF FOUNDATIONS SHALL BE VARIED SO AS TO MAINTAIN A MINIMUM CLEARANCE OF 17' BETWEEN THE BOTTOM OF THE SIGN AND THE HIGHWAY CROWN.

MATERIAL – STEEL POLE BASES, FLANGES, AND END CAPS SHALL CONFORM TO THE REQUIREMENTS OF ASTM SPECIFICATION A 30 GRADE B. HIGH STRENGTH STEEL BOLTS SHALL CONFORM TO ASTM SPECIFICATION A 193 GRADE B 7. AFTER FABRICATION TAPERED POLES SHALL HAVE A MINIMUM YIELD STRENGTH OF 48,000 PSI.

SOILS – THE FOUNDATION DETAILS SHOWN ARE FOR AVERAGE SOIL CONDITIONS (MEDIUM CLAY, CEMENTED SAND AND GRAVEL, SANDY CLAY, OR STIFF CLAY). FOR POOR SOIL CONDITIONS, INCREASE "D" MIN. BY: 50% IN DRY OR WET SAND, 60% IN SILTY CLAY, 100% IN SOFT CLAY, AND FROM 75% TO 150% IN WET SILT, DEPENDING ON QUICKSAND ACTION.

REINFORCING STEEL – REINFORCING STEEL AS SHOWN IN TABLE SHALL BE INSTALLED WHEN "D_T" EXCEEDS THE ANCHOR BOLT LENGTH BY MORE THAN 3 FT. THE COST AND PLACEMENT OF REINFORCING STEEL SHALL BE INCLUDED IN THE UNIT PRICE FOR *816* CONCRETE FOR SIGN SUPPORT FOUNDATION.

DESIGN
THE DESIGN OF OVERHEAD SUPPORTS IS IN ACCORDANCE WITH A.A.S.H.O. SPECIFICATION FOR THE DESIGN AND CONSTRUCTION OF STRUCTURAL SUPPORTS FOR HIGHWAY SIGNS, ADOPTED JUNE 12, 1961.

BUREAU OF TRAFFIC
OHIO DEPARTMENT OF HIGHWAYS

OVERHEAD SIGN SUPPORT	816 No. 9.12	DATE 1-19-62 3-30-62

APPROVED Robert S. Comer
ENGINEER OF TRAFFIC

FED. RD. DIVISION	STATE	PROJECT	
2	OHIO		

238-A
418

BELMONT COUNTY
BEL - 7 - 20.74

14-A
S

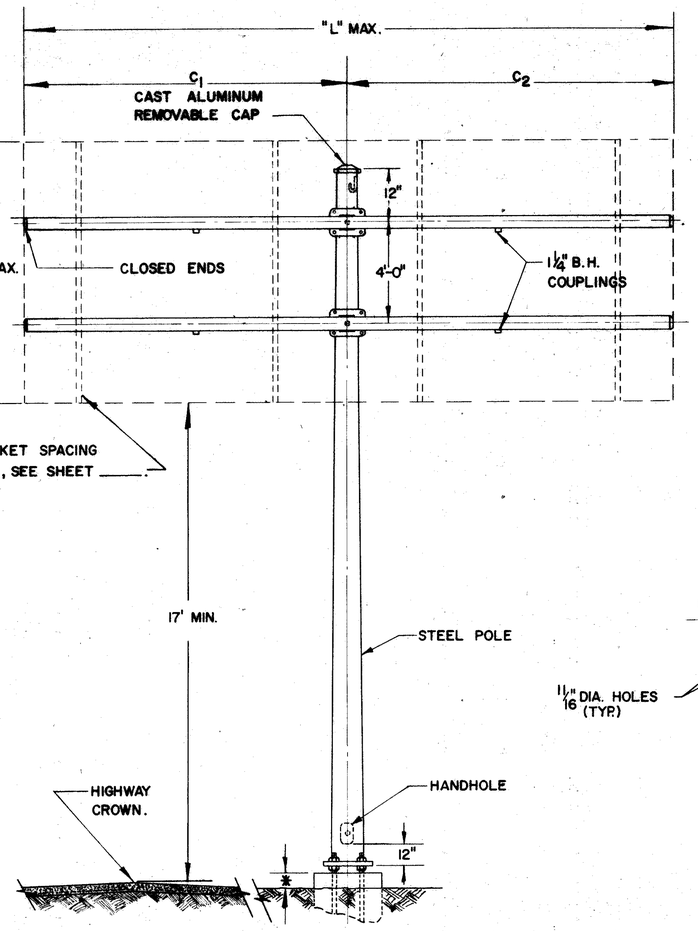

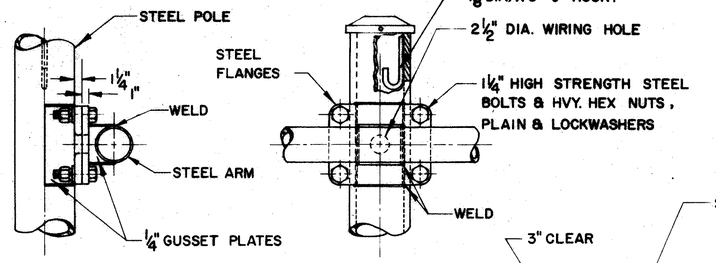

ARM ATTACHMENT DETAIL

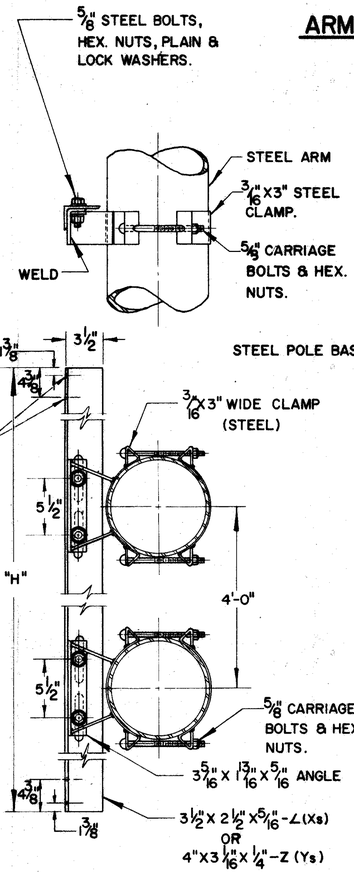

SIGN ATTACHMENT DETAIL

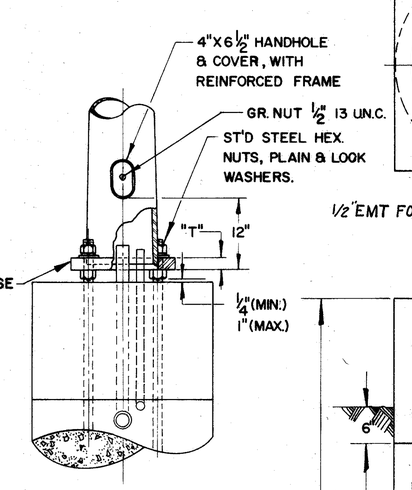

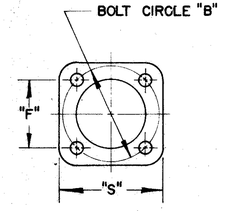

POLE DETAIL

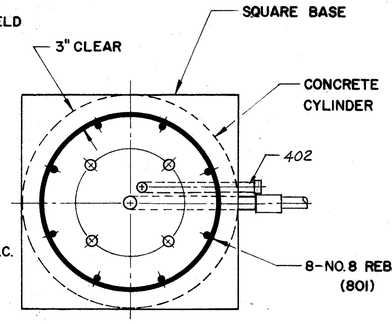

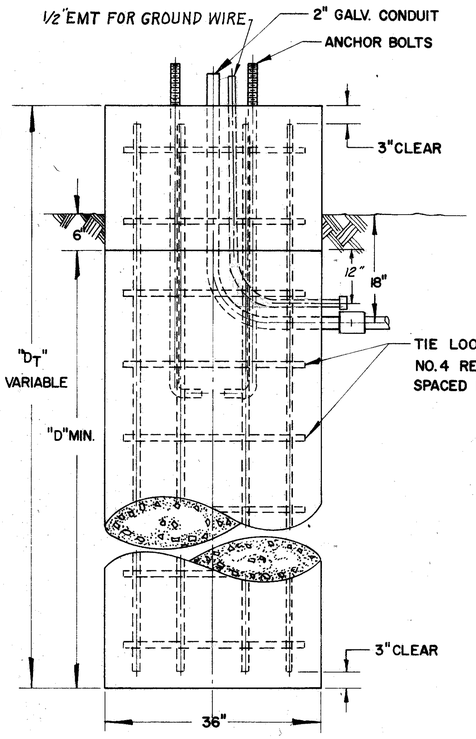

FOUNDATION DETAIL

DESIGN	POLE SIZE (STD.)	MAX. ARM SIZE	MAX. SIGN LENGTH "L"	MAX. SIGN AREA	B	F	P	S	T	ANCHOR BOLTS	"D" MIN.
1.	3GA. 14"X10.76"X23'	4" SCH. 40 12'-0"	24'-0"	120 SQ FT	20"	14 1/16"	7"	20½"	2"	1¾" X 90"	9'
2.	3GA. 16.5"X13" X 25'	4"SCH. 40 9"-0"	18'-0"	180 SQ FT	23½"	16 5/16"	8"	24½"	2"	2" X 96"	11'
3.	3GA. 16.5" X13.28"X25'	6" SCH. 40 12'-0"	24'-0"	180 SQ FT	23½"	16 5/16"	8"	24½"	2"	2" X 96"	11'
4.	0GA. 18" X 14.5"X25'	6"SCH. 40 12'-0"	24'-0"	240 SQ FT	25½"	18"	9"	26½"	2½"	2¼"X96"	13'

REINFORCEMENT SCHEDULE				
MARK	NO.	LEN.	TYPE	
402	12" c/c	8'-6"	103	2'-6" 103
801	8	D_T-6"	STR.	

NOTES

GENERAL

MAXIMUM SIGN AREAS AND ARM LENGTHS SHOWN IN TABLE, ARE FOR BALANCED DESIGN ($C_1 = C_2$).

FOR UNBALANCED DESIGN ($C_1 \geqslant C_2$), THE PRODUCT OF THE ACTUAL SIGN AREA (C_1 H or C_2 H) TIMES 1/2 OF ACTUAL ARM (1/2 C_1 or 1/2 C_2) SHALL BE LESS THAN THE PRODUCT OF 45% OF MAXIMUM SIGN AREA TIMES 1/2 MAX ARM FOR BALANCED DESIGN. (0.45 H $2C_1$ $1/2C_1$ or 0.45 H $2C_2$ $1/2C_2$)

DESIGN

THE DESIGN OF OVERHEAD SUPPORTS SHALL BE IN ACCORDANCE WITH A.A.S.H.O. SPECIFICATION FOR THE DESIGN AND CONSTRUCTION OF STRUCTURAL SUPPORTS FOR HIGHWAY SIGNS, ADOPTED JUNE 13, 1961.

*** FOUNDATION**

THE TOP ELEVATION OF FOUNDATIONS SHALL BE VARIED SO AS TO MAINTAIN A MINIMUM CLEARANCE OF 17' BETWEEN THE BOTTOM OF THE SIGN AND THE HIGHWAY CROWN.

SOILS

THE FOUNDATION DETAILS SHOWN ARE FOR AVERAGE SOIL CONDITIONS (MEDIUM CLAY, CEMENTED SAND AND GRAVEL, SANDY CLAY, OR STIFF CLAY). FOR POOR SOIL CONDITIONS, INCREASE "D" MIN. BY: 50% IN DRY OR WET SAND, 60% IN SILTY CLAY, 100% IN SOFT CLAY, AND FROM 75% TO 150% IN WET SILT, DEPENDING ON QUICKSAND ACTION.

FINISH

ALL STRUCTURAL PORTIONS OF THE SIGN SUPPORTS, SIGN BRACKETS, HARDWARE AND CONDUIT SHALL BE HOT DIPPED GALVANIZED IN ACCORDANCE WITH SEC. 711.02 (EXCEPT AS OTHER WISE SHOWN).

MATERIALS

ALL MATERIALS TO BE FURNISHED SHALL BE IN ACCORDANCE WITH SEC. 711.02 WITH THE FOLLOWING ADDITIONS:

TAPERED TUBES SHALL BE STEEL, SAE 1015 AND COLD ROLLED TO OBTAIN A MINIMUM YIELD STRENGTH OF 48,000PSI.
STEEL PIPE: 4" DIAMETER AND UNDER SHALL BE STEEL-ASTM-A120
OVER 4" DIAMETER SHALL BE ASTM-A53, GRADE B
ANCHOR BOLTS SHALL BE HIGH STRENGTH STEEL ASTM-A107, GRADE C-1035
HIGH STRENGTH CLAMPS SHALL BE STEEL-ASTM-A242

PAYMENT FOR CONDUIT

PAYMENT FOR THE GALVANIZED CONDUIT SHALL BE INCLUDED IN THE UNIT PRICE BID FOR OVERHEAD SIGN SUPPORTS.

REINFORCING STEEL

COST OF REINFORCING STEEL SHALL BE INCLUDED IN THE UNIT PRICE FOR ITEM I-129 CONCRETE FOR SIGN SUPPORT FOUNDATIONS.

BAR SIZE IS INDICATED IN THE BAR MARK. THE FIRST DIGIT WHERE THREE DIGITS ARE USED AND THE FIRST TWO DIGITS WHERE FOUR ARE USED, INCIDATE THE BAR SIZE NUMBER.

BUREAU OF TRAFFIC
OHIO DEPARTMENT OF HIGHWAYS

OVERHEAD SIGN SUPPORT	816 No.9.24	DATE 6-17-64

APPROVED _____
ENGINEER OF TRAFFIC

FED. RD. DIVISION	STATE	PROJECT	
2	OHIO		

239, 418

15, 5

BELMONT COUNTY
BEL-7-20.74

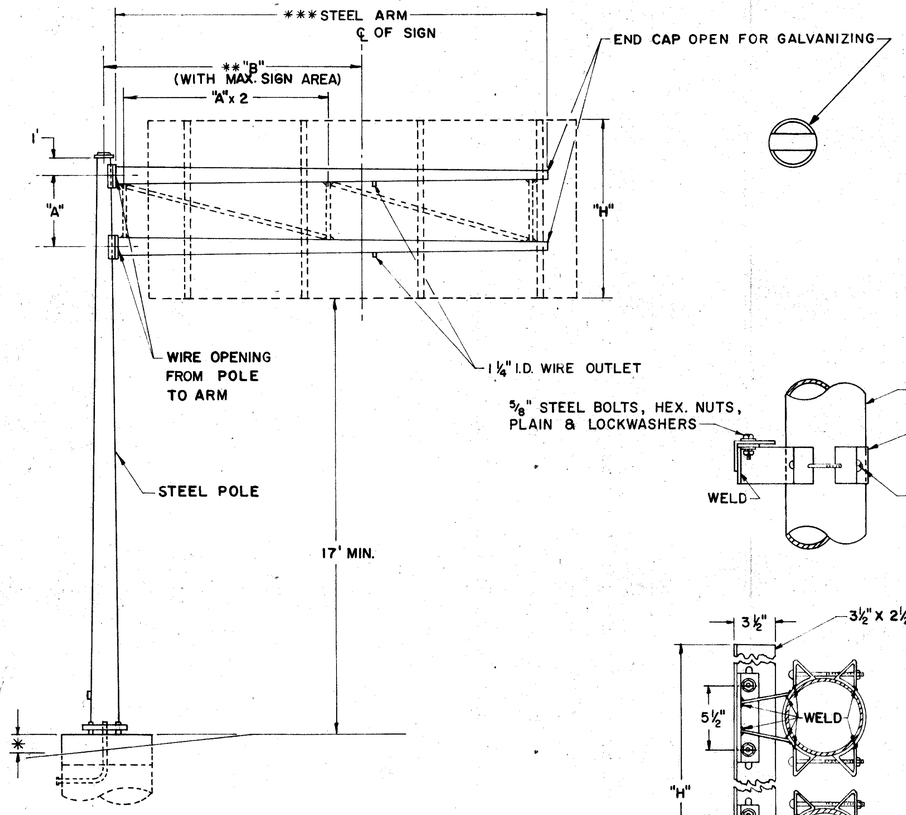

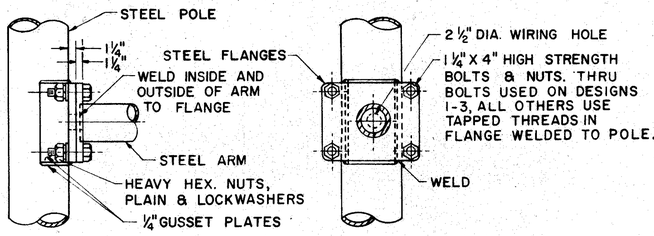

ARM ATTACHMENT

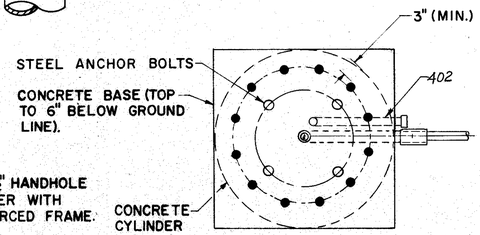

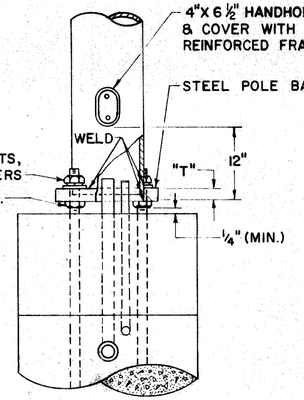

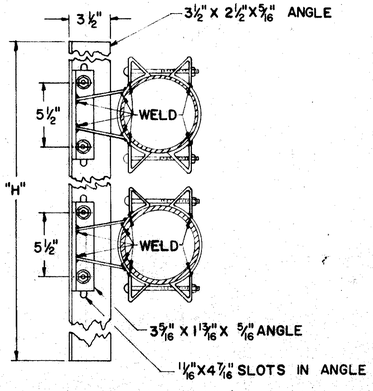

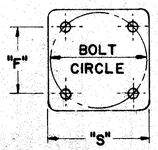

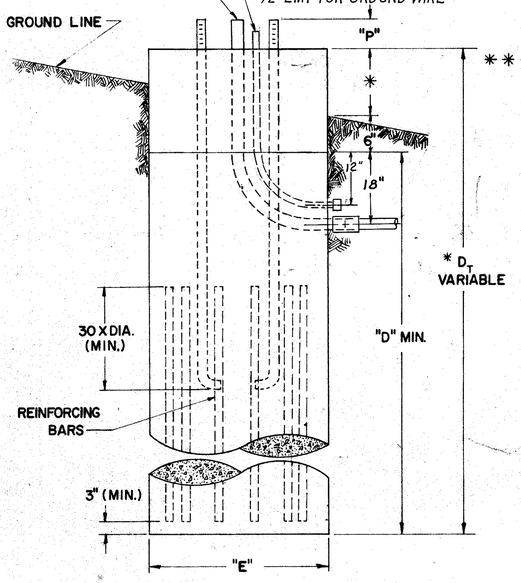

SIGN ATTACHMENT DETAIL

POLE DETAIL

FOUNDATION DETAIL

DESIGN NO.	POLE SIZE	*** ARM SIZE	DIM A	DIM ** B	DIM "D" MIN.	DIM E	DIM F	DIM P	DIM "S"	DIM T	BOLT CIRCLE	ANCHOR BOLT SIZE	MAX SIGN AREA	REINF. BARS SIZE	REINF. BARS NO.
1	3 Ga, 12" X 8.78" X 23'-0"	7Ga, 6.9"X 4.66"X16'-0"	4'	12'	9'	3'-0"	11 5/16"	7¾"	17"	2"	16"	1¾" X 90"	80	¾"	12
2	3 Ga, 12" X 8.78" X 23'-0"	7 Ga, 8" X 5.2" X 20'-0"	4'	16'	9'	3'-0"	11 5/16"	7¾"	17"	2"	16"	1¾"X 90"	80	¾"	12
3	3 Ga, 15" X 11.5" X 25'-0"	7 Ga, 8.3"X 6.06"X16'-0"	4'	12'	11'	3'-0"	15½"	8⅜"	23"	2"	22"	2"X 96"	120	1"	12
4	3 Ga, 16" X 12.5" X 25'-0"	3 Ga, 9.2"X 6.40"X20'-0"	4'	16'	11'	3'-0"	16 5/16"	8⅜"	24½"	2"	23½"	2"X 96"	120	1"	12
5	0 Ga, 18" X 14.36" X 26'-0"	7 Ga, 11" X 7.92" X 22'-0"	6'	14'	13'	3'-0"	18"	9⅜"	26½"	2½"	25½"	2¼"X120"	180	1⅛"	12
6	0 Ga, 18" X 14.36" X 26'-0"	7 Ga, 12.5"X 8.86"X26'-0"	6'	18'	13'	3'-0"	18"	9⅜"	26½"	2½"	25½"	2¼"X120"	180	1⅛"	12
7	2 PLY 7 Ga, 18"X14.36"X26'-0"	7 Ga, 12.5"X9.14"X24'-0"	6'	14'	15'	3'-0"	18"	9¾"	26½"	2½"	25½"	2½"X144"	240	1¼"	12
8	2 PLY ¼", 18"X14.36"X26'-0"	3 Ga, 12.5"X8.58"X28'-0"	6'	18'	15'	3'-0"	18"	11¼"	26½"	3"	25½"	3"X 144"	240	1¼"	12

NOTES

FABRICATION - ALL PORTIONS OF THE SIGN SUPPORT, INCLUDING SIGN ATTACHMENTS, SHALL BE HOT DIP GALVANIZED IN ACCORDANCE WITH THE REQUIREMENTS OF A.S.T.M. DESIGNATIONS A-123 AND A-153. THE CONDUIT SHALL BE GALVANIZED IN ACCORDANCE WITH SEC. S-25.08 AND SHALL BE INCLUDED IN THE UNIT PRICE BID FOR OVERHEAD SIGN SUPPORTS FOR PAYMENT.

* FOUNDATION- THE TOP ELEVATION OF FOUNDATIONS SHALL BE VARIED SO AS TO MAINTAIN A MINIMUM CLEARANCE OF 17' BETWEEN THE BOTTOM OF THE SIGN AND THE HIGHWAY CROWN.

** ERECTION- VALUES OF "B" MAY BE EXCEEDED PROVIDED THE PRODUCT OF ACTUAL SIGN AREA TIMES THE DISTANCE FROM ℄ OF POLE TO ℄ OF SIGN DOES NOT EXCEED THE MAX SIGN AREA TIMES "B".

*** ARMS 20' LONG OR LONGER ARE TO BE TRUSS TYPE WITH 3"X 3"X ⅜" ANGLES WELDED TO GUSSET PLATES.

MATERIAL- STEEL POLE BASES, FLANGES, AND END CAPS SHALL CONFORM TO THE REQUIREMENTS OF ASTM SPECIFICATION A 30 GRADE B. HIGH STRENGTH STEEL BOLTS SHALL CONFORM TO ASTM SPECIFICATION A 193 GRADE B7. AFTER FABRICATION TAPERED POLES AND ARMS SHALL HAVE A MINIMUM YIELD STRENGTH OF 48,000 PSI.

SOILS- THE FOUNDATION DETAILS SHOWN ARE FOR AVERAGE SOIL CONDITIONS (MEDIUM CLAY, CEMENTED SAND AND GRAVEL, SANDY CLAY, OR STIFF CLAY). FOR POOR SOIL CONDITIONS, INCREASE "D" MIN. BY 50% IN DRY OR WET SAND, 60% IN SILTY CLAY, 100% IN SOFT CLAY, AND FROM 75% TO 150% IN WET SILT, DEPENDING ON QUICKSAND ACTION.

REINFORCING STEEL- REINFORCING STEEL AS SHOWN IN TABLE SHALL BE INSTALLED WHEN "D," EXCEEDS THE ANCHOR BOLT LENGTH BY MORE THAN 3 FT. THE COST AND PLACEMENT OF REINFORCING STEEL SHALL BE INCLUDED IN THE UNIT PRICE FOR ITEM 816 CONCRETE FOR SIGN SUPPORT FOUNDATIONS.

DESIGN

THE DESIGN OF OVERHEAD SUPPORTS IS IN ACCORDANCE WITH A.A.S.H.O. SPECIFICATIONS FOR THE DESIGN AND CONSTRUCTION OF STRUCTURAL SUPPORTS FOR HIGHWAY SIGNS, ADOPTED JUNE 12, 1961.

BUREAU OF TRAFFIC
OHIO DEPARTMENT OF HIGHWAYS

OVERHEAD SIGN SUPPORT | 816 No. 12.24 | DATE 6-16-61 4-11-62

APPROVED Robert E. Conder
ENGINEER OF TRAFFIC

FED. RD. DIVISION	STATE	PROJECT	
2	OHIO		

240
418

BELMONT COUNTY
BEL - 7 - 20.74

16
5

12" EXTRUSHEET PANEL

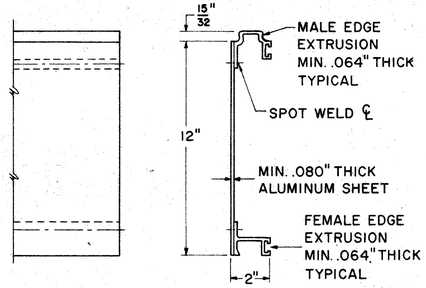

FRONT VIEW SIDE VIEW

18" EXTRUSHEET PANEL

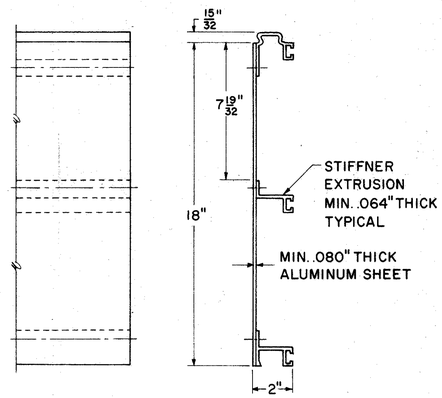

FRONT VIEW SIDE VIEW

24" EXTRUSHEET PANEL

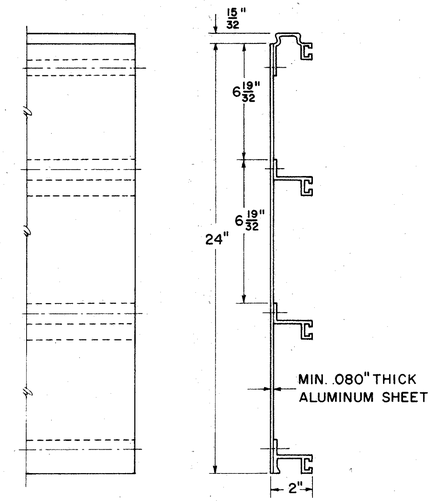

FRONT VIEW SIDE VIEW

NOTES:

EXTRUSHEET PANELS SHALL BE ALUMINUM; SPOT WELDING AND ALL MATERIALS SHALL CONFORM WITH SUPPLEMENTAL SPECIFICATION I-128.

COMBINATIONS OF 12", 18", AND 24" PANELS ARE USED TO ATTAIN REQUIRED SIGN HEIGHT.

INDIVIDUAL PANELS SHALL BE THE SAME LENGTH AS THE HORIZONTAL LENGTH OF SIGN WITH NO SPLICES.

PANELS SHALL BE INTERLOCKED AND ERECTED WITH THE MALE EXTRUSION LOCATED AT THE TOP EDGE OF THE SIGN.

EXTRUSHEET PANELS SHALL BE FASTENED TO EACH VERTICAL SUPPORT MEMBER WITH MOUNTING CLIPS; ALTERNATELY AT EACH HORIZONTAL EXTRUSION; BOTH SIDES AT EACH JOINT, AND ON BOTH SIDES AT TOP AND BOTTOM EDGE OF SIGN.

THE PANELS SHALL BE DESIGNED TO WITHSTAND A WIND LOAD OF 35 POUNDS PER SQUARE FOOT.

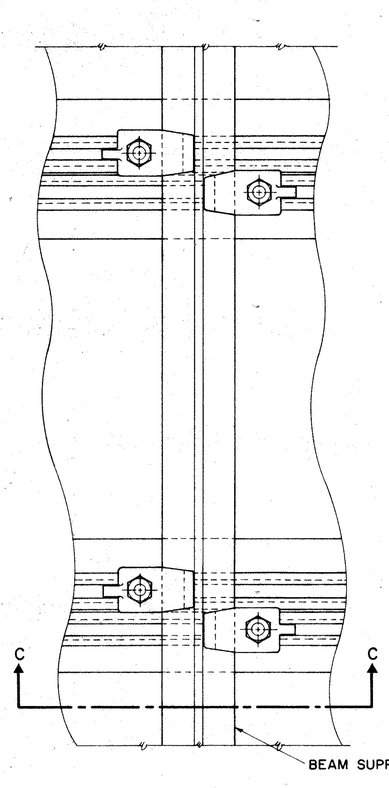

SECTION A-A

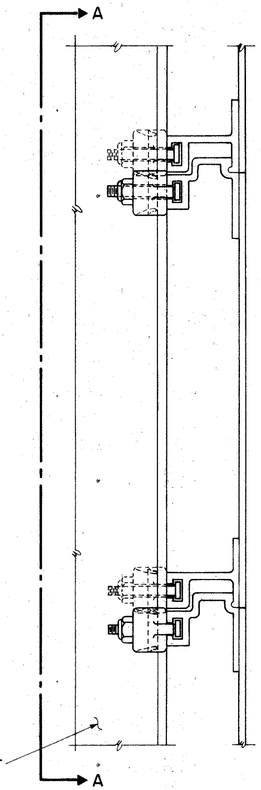

SECTION B-B

GENERAL ARRANGEMENT

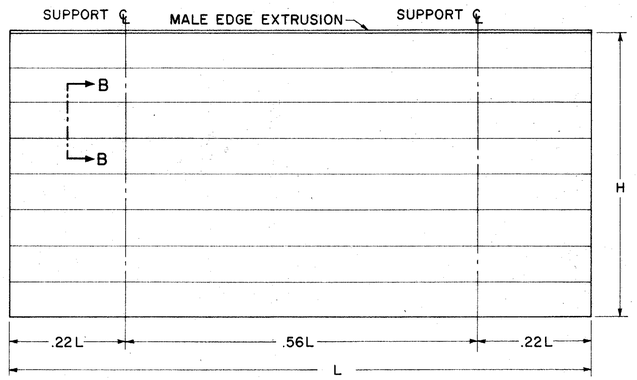

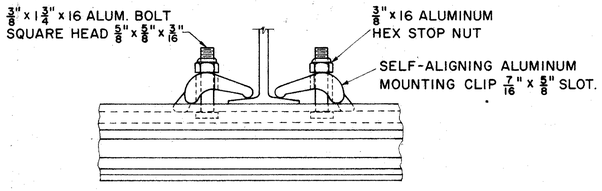

SECTION C-C

CLIP DETAIL

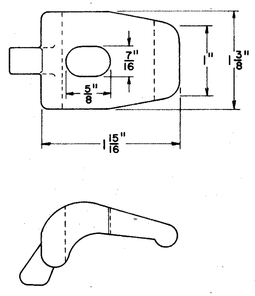

SPOT WELDS

PANEL SIZE	MAXIMUM SPOT WELD SPACING	
	CENTER TO CENTER	BETWN ROWS
12 INCH	4 INCH	10 INCH
18 & 24 INCH	4 INCH	8 INCH

BUREAU OF TRAFFIC
OHIO DEPARTMENT OF HIGHWAYS

ALUMINUM EXTRUSHEET PANEL SIGN

ECD

DATE
9-25-63
5-19-64

APPROVED Fred C Barber
ENGINEER OF TRAFFIC

ALUMINUM EXTRUSHEET PANEL SIGN

FED. RD. DIVISION	STATE	PROJECT	
2	OHIO		

241
418

BELMONT COUNTY
BEL - 7 - 20.74

17
5

ALTERNATE FIXTURE LOCATION (ABOVE)

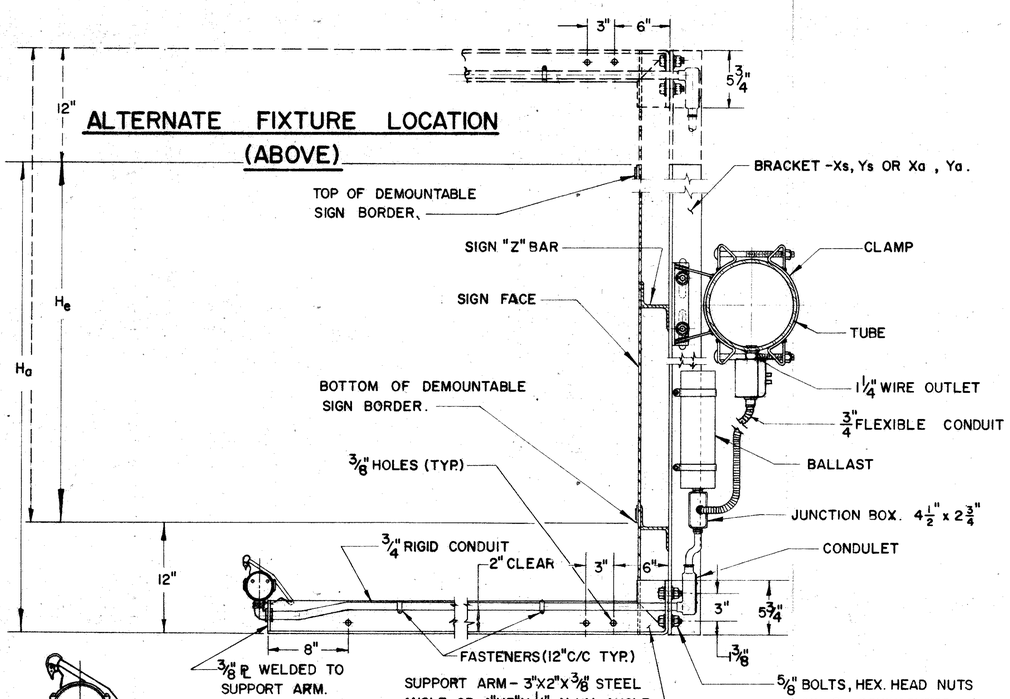

STANDARD FIXTURE LOCATION (BELOW)

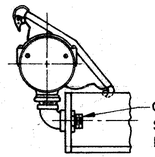

FIXTURE CONNECTION WHERE WIRING CONDUIT IS NOT NEEDED.

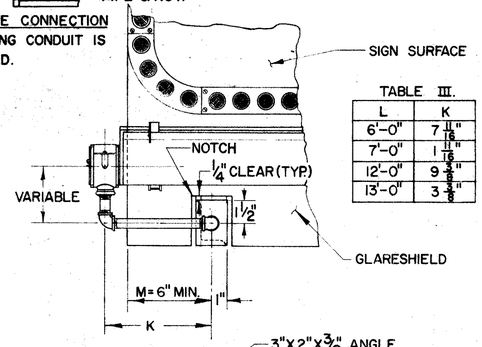

TABLE III.

L	K
6'-0"	7 11/16"
7'-0"	1 11/16"
12'-0"	9 3/8"
13'-0"	3 3/8"

ALTERNATE FIXTURE CONNECTIONS FOR SIGN 6', 7', 12' & 13' IN LENGTH.

DETAIL A.

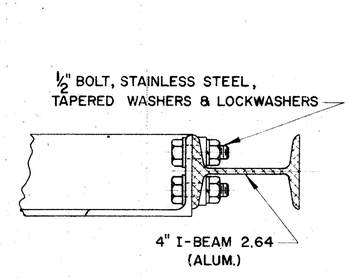

FOR SUPPORTS 7.2-7.6

DETAIL B.

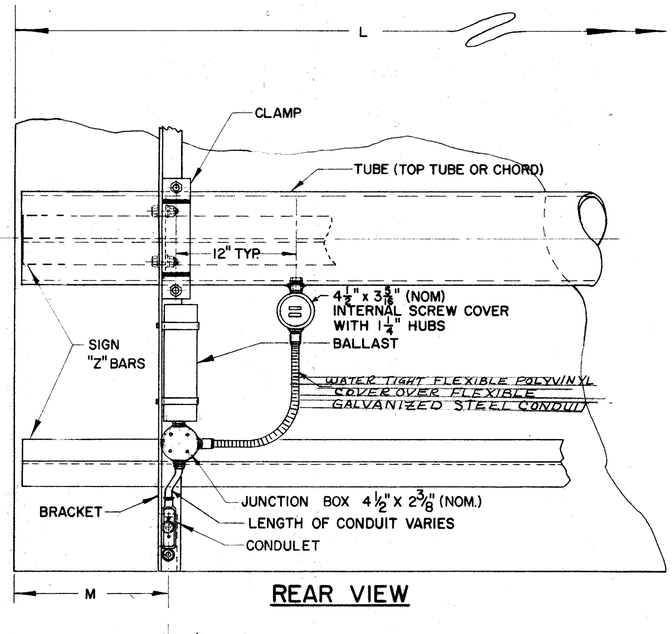

REAR VIEW

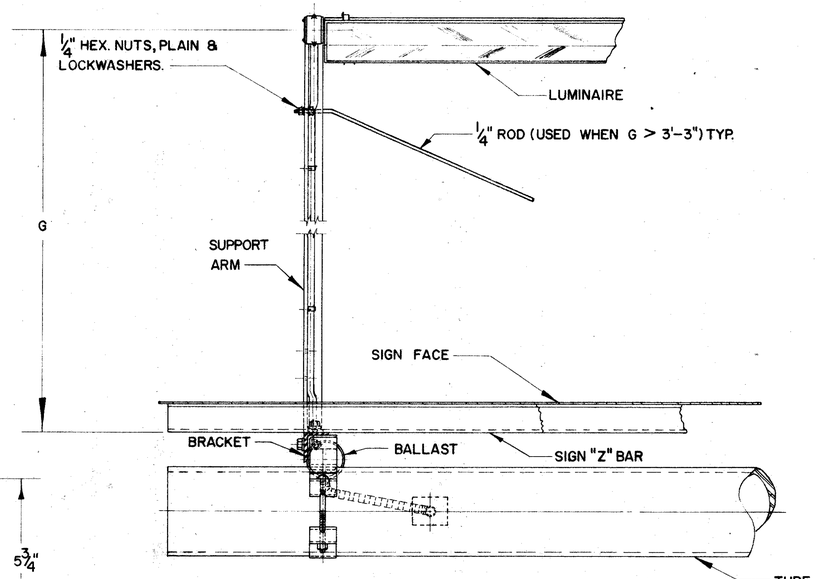

TOP VIEW

FABRICATION — ALL STRUCTURAL COMPONENTS SHOWN ON THIS SHEET SHALL CONFORM TO SUPPLEMENT SPECIFICATIONS I-129.

MATERIALS — THE MATERIALS USED IN THE COMPONENTS SHOWN ON THIS SHEET SHALL BE IN CONFORMANCE WITH THE MATERIALS USED IN THE SIGN SUPPORT.

TABLE I.

"L" SIGN LENGTH A	"L" SIGN LENGTH B	NUMBER OF FIXTURES 75 PSF	NUMBER OF FIXTURES 99 PSF	"M" EDGE DISTANCE A LT.	A RT.	B LT.	B RT.	NO. BALLAST
6'-0"	7'-0"	1		6"	6"	6"	6"	1
8'-0"	9'-0"	1		10 5/16"	10 1/4"	16 3/16"	16 1/4"	1
10'-0"	11'-0"		1	10 3/16"	10 1/4"	16 3/16"	16 1/4"	1
12'-0"	13'-0"	2		6"	6	6	6	1
14'-0"	15'-0"	2		8 5/16"	8 5/16"	14 5/16"	14 5/16"	1
16'-0"	17'-0"	1	1	8 5/16"	8 5/16"	14 5/16"	14 5/16"	1
18'-0"	19'-0"		2	8 5/16"	8 5/16"	14 5/16"	14 5/16"	1
20'-0"	21'-0"	3		7"	6 7/8"	13	12 7/8"	2
22'-0"	23'-0"	2	1	7"	6 7/8"	13	12 7/8"	2
24'-0"	25'-0"	1	2	7"	6 7/8"	13	12 7/8"	2
26'-0"	27'-0"		3	7"	6 7/8"	13	12 7/8"	2

Sn= Nominal Fixture Length, 72" & 96" respectively.
Sa= Actual Fixture Length, for mounting purposes, 75 5/8" and 99 5/8" respectively. (Slight variation for different manufacturers.)
M= Distance from edge of sign to ℄ of notch, min. 6". When the length of the sign minus 1'-0" is less than the sum of the actual fixture lengths, an offset "K" is used. For additional details see detail A and table III.

TABLE II

MAX. BRACKET SPACING FOR EXTERNALLY ILLUMINATED SIGNS

ACTUAL SIGN HEIGHT "Ha"	SUPPORT TYPES 9.12, 11.08, 13.2, 7.2 SINGLE TUBE DOUBLE TUBE LESS 36" C/C	9.24, 10.48, 12.24, 14.5, 15.8, 7.2 to 7.6 DOUBLE TUBE C/C 36"-42"	C/C 48"-54"	C/C 60"-72"
	MAXIMUM BRACKET SPACING			
to 5'-0"	6'-4" with X 8'-4" with Y	8'-4" with X	8'-4" with X	8'-4" with X
5'-6" to 8'-0"	6'-4" with Y	4'-2" with X 6'-4" with Y	6'-4" with X 8'-4" with Y	8'-4" with X
8'-6" to 10'-0"	3'-2" with X 4'-2" with Y	6'-4" with Y	6'-4" with Y	8'-4" with Y
10'-6" to 12'-0"	———	4'-2" with Y	6'-4" with Y	6'-4" with Y
12'-6" to 14'-0"	———	3'-2" with Y	3'-2" with Y	4'-2" with Y

Ha= ACTUAL SIGN HEIGHT
He= EFFECTIVE SIGN HEIGHT
BRACKET SIZE: Xs = 3½" X 2½" X 5/16" — L @ 6.1 LB. STEEL } 9.12, 10.48, 11.08, 12.24, 14.5 & 15.8
Ys = 4" X 3 3/16" X ¼" — Z @ 8.2 LB. STEEL
Xa = 3" X 2 11/16" X ¼" — Z @ 2.33 LB. ALUM. } 7.2 Thru 7.6
Ya = 4" X 2 21/32" X 3/16" — I @ 2.64 LB. ALUM.

WHEN MAX. ALLOWABLE SPACING IS LESS THAN ACTUAL FIXTURE LENGTHS, Sa, ADDITIONAL STANDARD BRACKETS MUST BE FURNISHED, EQUAL IN HEIGHT TO "Ha".

SUPPORTS 7.2 THROUGH 7.6 SHALL HAVE AN ALUMINUM FIXTURE ARM, 4"X3"X¼" ANGLE. SEE DETAIL B. BOLTS AND ACCESSORIES SHALL BE STAINLESS STEEL.

BUREAU OF TRAFFIC
OHIO DEPARTMENT OF HIGHWAYS

STRUCTURAL DETAILS FOR EXTERNALLY ILLUMINATED SIGNS

EI-1

DATE 10-16-63, 5-6-64, 10-26-64

APPROVED Frank C Tarbox
ENGINEER OF TRAFFIC

STRUCTURAL DETAILS FOR EXTERNALLY ILLUMINATED SIGNS

BELMONT COUNTY
BEL - 7 - 20.74

FED. RD. DIVISION	STATE	PROJECT	
2	OHIO		

242
418

18
5

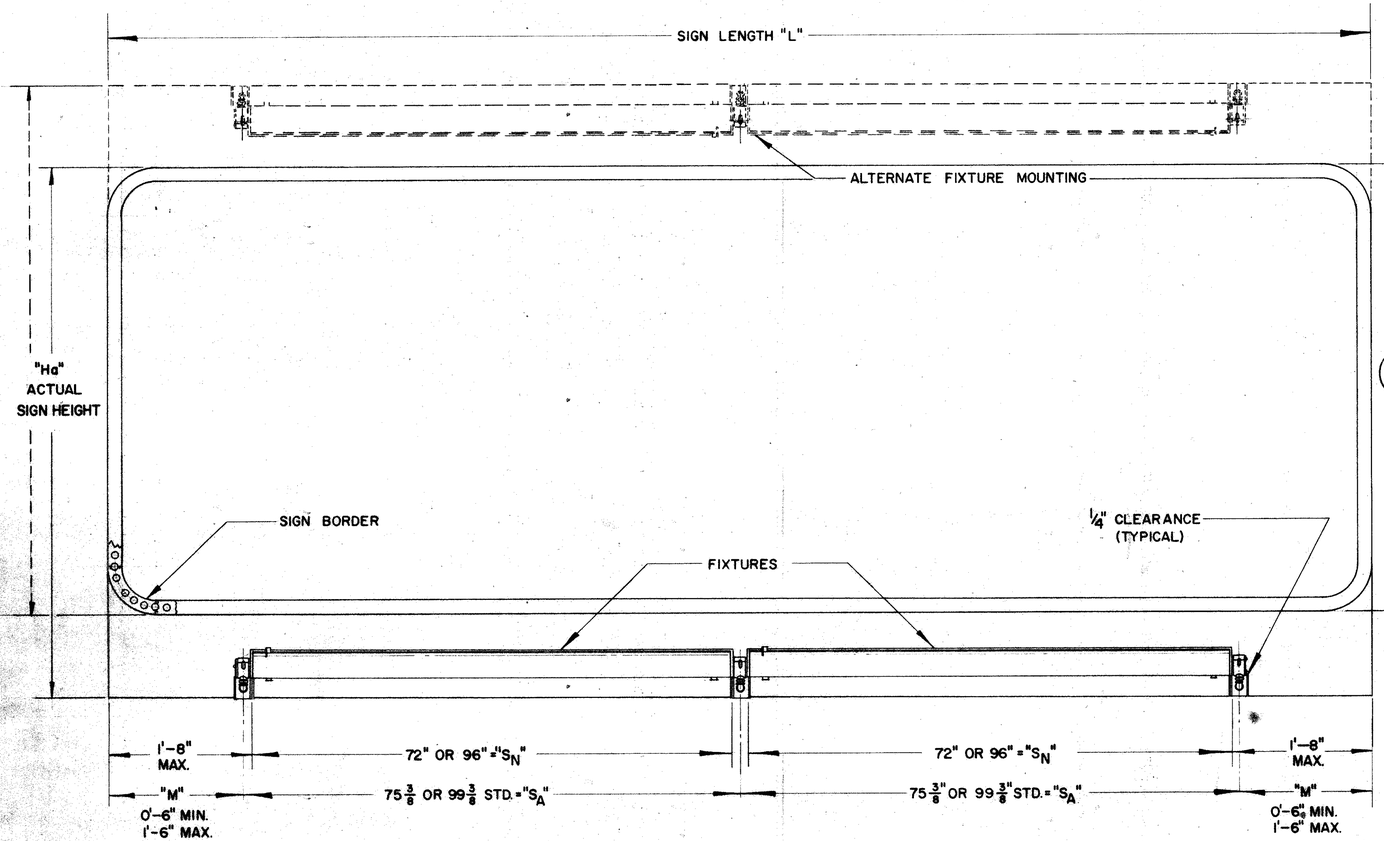

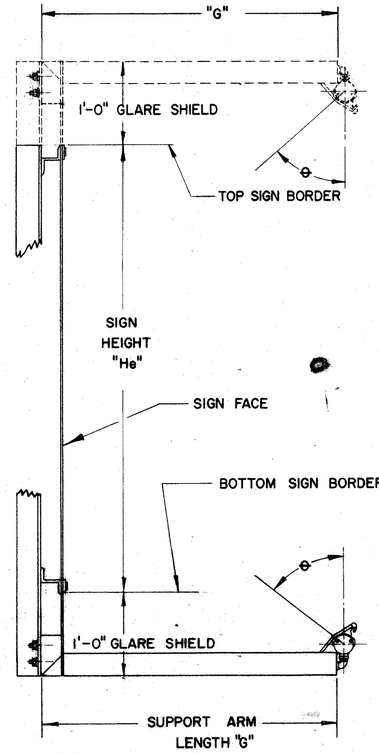

SIGN LIGHTING NOTES

SIGN ILLUMINATION

SIGN ILLUMINATION SHALL BE BY ATTACHED FLUORESCENT FIXTURES AS SHOWN ON ILLUMINATED SIGN DETAIL SHEETS.

LAMPS

LAMPS SHALL BE TYPE F72 OR F96-T12/CW/HO AS MANUFACTURED BY WESTINGHOUSE, GENERAL ELECTRIC OR APPROVED EQUAL FOR SIGNS TO A MAXIMUM HEIGHT OF 6'-6". LAMP TYPE SHALL BE F72 OR F96-T12/CW/SHO AS MANUFACTURED BY WESTINGHOUSE, F72 OR F96-PG17/CW AS MANUFACTURED BY GENERAL ELECTRIC, OR APPROVED EQUAL FOR SIGNS THAT ARE 7'-0" OR GREATER IN HEIGHT.

LAMP FIXTURES

LIGHTING FIXTURES SHALL BE CONSTRUCTED OF CORROSION RESISTANT MATERIALS OR WITH HIGH QUALITY CORROSION RESISTANT FINISH. ALL FIXTURES SHALL BE SPECIFICALLY DESIGNED FOR OUTDOOR SIGN LIGHTING SERVICE. MAJOR COMPONENTS SHALL INCLUDE WEATHERPROOF CAST ALUMINUM MOUNTING HUBS DESIGNED TO SECURELY LOCK THE FIXTURES AT ANY ANGLE THROUGH 360 DEGREES. INDICATORS IN 10 DEGREE INCREMENTS SHALL BE STAMPED OR CAST INTO THE HUB TO FACILITATE PROPER AIMING OF THE FIXTURE. FINAL ADJUSTMENT OF FIXTURE SHALL BE DONE AT NIGHT UNDER THE PROJECT ENGINEER'S DIRECTION.

THE BODY DESIGN OF THE FIXTURE SHALL PROVIDE AN ASYMMETRIC SPECULAR ALZAK REFLECTOR TO GIVE A HIGH LEVEL OF UNIFORM ILLUMINATION AND SHALL PROVIDE A WIREWAY FROM END TO END; WHEN ADJACENT FIXTURES ARE WIRED TOGETHER THROUGH THE WIREWAY, WIRE BETWEEN FIXTURES SHALL BE ENTIRELY ENCLOSED.

EXTERIOR FINISH OF THE FIXTURE BODY SHALL BE INTERSTATE GREEN COLOR, HEAT RESISTANT BAKED ENAMEL AS #8950 UNIVERSAL PAINT AND VARNISH INC., OR EQUIVALENT BY MIDWESTERN COLOR WORKS OR APPROVED EQUAL. REFLECTOR, LAMP AND SOCKETS SHALL BE PROTECTED BY A HINGED DOOR OF CLEAR ACRYLIC PLASTIC WITH ALUMINUM OR STAINLESS STEEL FRAMES AND GASKETING.

BALLASTS

BALLASTS FOR FIXTURES SHALL BE WEATHER-PROOF OUTDOOR TYPE FOR A 120 VOLT 60 CYCLE SYSTEM AND SHALL PROVIDE LAMP STARTING AT AN AMBIENT TEMPERATURE OF -20°F. BALLASTS SHALL BE MOUNTED ON SIGN BRACKET ONLY. WIRING SHALL BE ACCOMPLISHED IN SUCH A MANNER THAT THE SIGN MAY BE REMOVED WITHOUT DISTURBING THE ELECTRICAL WIRING.

EFFECTIVE SIGN HEIGHT "H"	SUPPORT ARM LENGTH "G"	APPROX. AIMING ANGLE ⊖
3'-0" to 5'-0"	2'-9"	25°
5'-0" to 6'-6"	3'-3"	25°
7'-0" to 10'-0"	4'-3"	17°
10'-6" to 13'-0"	5'-9"	23°

"L" SIGN LENGTH	NO. OF FIXTURES		He=3'-0" to 6'-6" LAMP=T12/cw/ho			He=7'-0" to 13'-0" LAMP=T12/cw/sho		
	72	96	BALLAST NO.	BALLAST TYPE	WATTAGE PER SIGN	BALLAST NO.	BALLAST TYPE	WATTAGE PER SIGN
6'-0" to 7'-0"	1		1	A	190	1	C	250
8'-0" to 9'-0"	1		1	A	190	1	C	250
10'-0" to 11'-0"		1	1	A	190	1	C	250
12'-0" to 13'-0"	2		1	B	250	1	D	425
14'-0" to 15'-0"	2		1	B	250	1	D	425
16'-0" to 17'-0"	1	1	1	B	250	1	D	425
18'-0" to 19'-0"		2	1	B	250	1	D	425
20'-0" to 21'-0"	3		2	A&B	440	2	C&D	675
22'-0" to 23'-0"	2	1	2	A&B	440	2	C&D	675
24'-0" to 25'-0"	1	2	2	A&B	440	2	C&D	675
26'-0" to 27'-0"		3	2	A&B	440	2	C&D	675

BALLASTS

TYPE	MANUFACTURERS		WATTAGE
	G.E.	JEFFERSON	
A	GG 3583	257-321	190
B	GG 3535	257-331	250
C	GG 3585	257-361	250
D	GG 3588	257-371	425

BALLASTS SHALL BE GENERAL ELECTRIC, JEFFERSON AS SPECIFIED ABOVE OR EQUAL.

BUREAU OF TRAFFIC
OHIO DEPARTMENT OF HIGHWAYS

ELECTRICAL DETAILS FOR EXTERNALLY ILLUMINATED SIGNS

EI-2

DATE
10-31-63
5-6-64
10-29-64

APPROVED Fred C Talbot
ENGINEER OF TRAFFIC

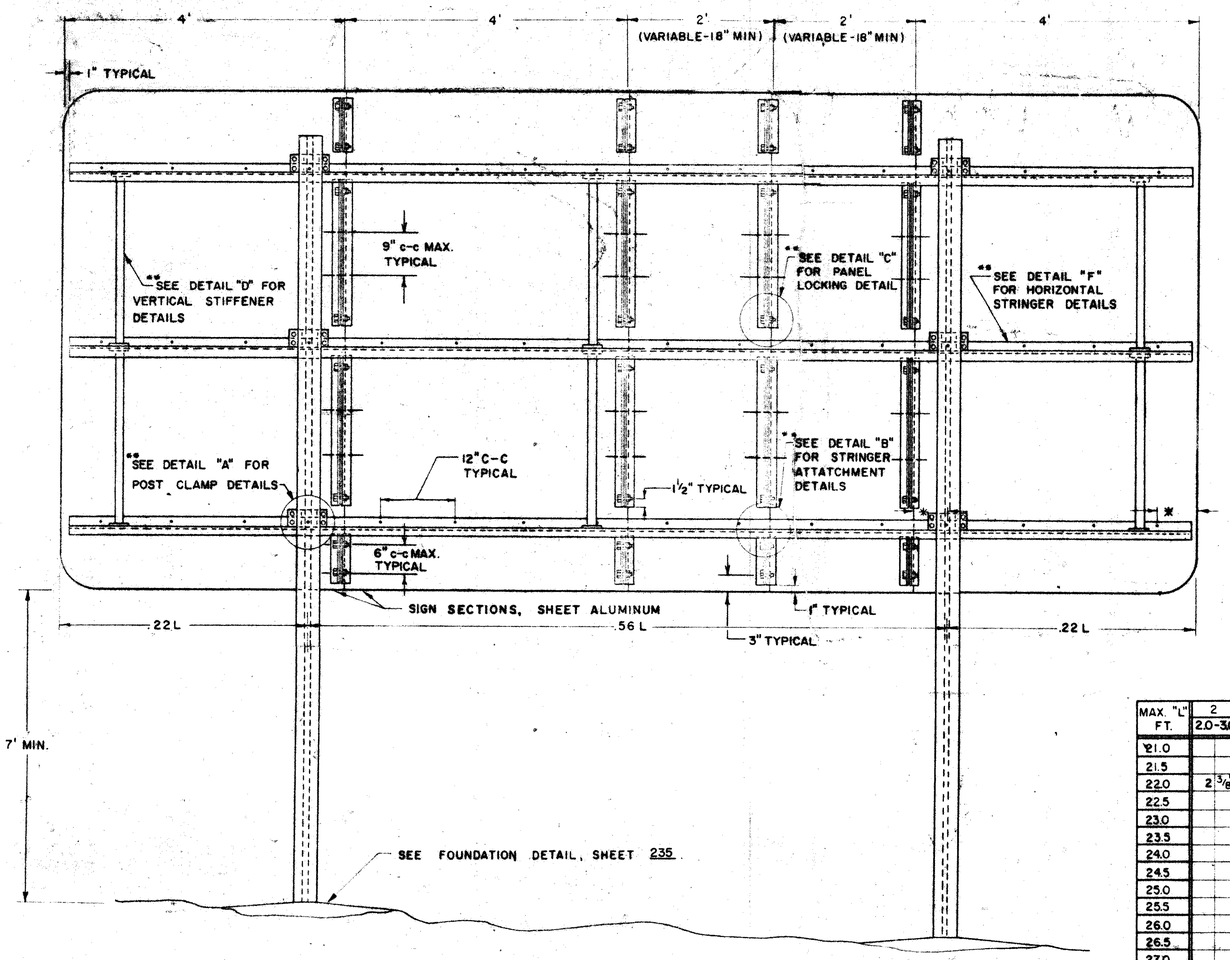

SIGN SUPPORT SPACING

L OR H FT.	2 SUPPORTS .22	2 SUPPORTS .56	3 SUPPORTS .14	3 SUPPORTS .36
2.0	0.4	1.1	0.30	0.70
2.5	0.6	1.4	0.35	0.90
3.0	0.7	1.6	0.40	1.10
3.5	0.8	1.9	0.50	1.25
4.0	0.9	2.2	0.60	1.40
4.5	1.0	2.5	0.65	1.60
5.0	1.1	2.8	0.70	1.80
5.5	1.2	3.1	0.80	1.95
6.0	1.3	3.4	0.90	2.10
6.5	1.4	3.7	0.95	2.30
7.0	1.5	4.0	1.00	2.50
7.5	1.6	4.3	1.05	2.70
8.0	1.8	4.4	1.10	2.90
8.5	1.9	4.7	1.20	3.05
9.0	2.0	5.0	1.30	3.20
9.5	2.1	5.3	1.35	3.40
10.0	2.2	5.6	1.40	3.60
10.5	2.3	5.9	1.50	3.75
11.0	2.4	6.2	1.60	3.90
11.5	2.5	6.5	1.65	4.10
12.0	2.6	6.8	1.70	4.30
12.5	2.7	7.1	1.80	4.45
13.0	2.8	7.4	1.90	4.60
13.5	2.9	7.7	1.95	4.80
14.0	3.1	7.8	2.00	5.00
14.5	3.2	8.1	2.10	5.15

L OR H FT.	2 SUPPORTS .22	2 SUPPORTS .56	3 SUPPORTS .14	3 SUPPORTS .36
15.0	3.3	8.4	2.20	5.30
15.5	3.4	8.7	2.25	5.50
16.0	3.5	9.0	2.30	5.70
16.5	3.6	9.3	2.40	5.85
17.0	3.7	9.6	2.50	6.00
17.5	3.8	9.9	2.55	6.20
18.0	3.9	10.2	2.60	6.40
18.5	4.0	10.5	2.70	6.55
19.0	4.1	10.8	2.80	6.70
19.5	4.3	10.9	2.85	6.90
20.0	4.4	11.2	2.90	7.10
20.5	4.5	11.5	3.00	7.25
21.0	4.6	11.8	3.10	7.40
21.5	4.7	12.1	3.15	7.60
22.0	4.8	12.4	3.20	7.80
22.5	4.9	12.7	3.25	8.00
23.0	5.0	13.0	3.30	8.20
23.5	5.1	13.3	3.40	8.35
24.0	5.2	13.6	3.50	8.50
24.5	5.4	13.7	3.55	8.70
25.0	5.5	14.0	3.60	8.90
25.5	5.6	14.3	3.70	9.05
26.0	5.7	14.6	3.80	9.20
26.5	5.8	14.9	3.85	9.40
27.0	5.9	15.2	3.90	9.60

STRINGER TYPE

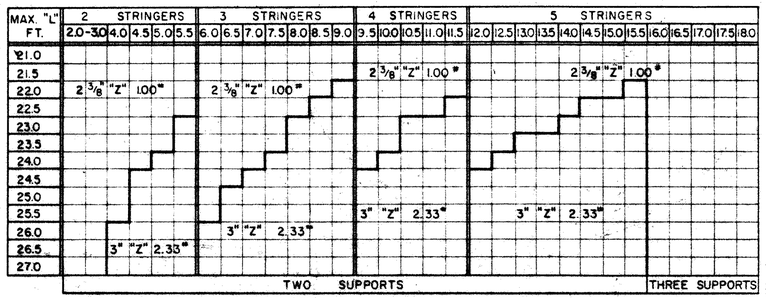

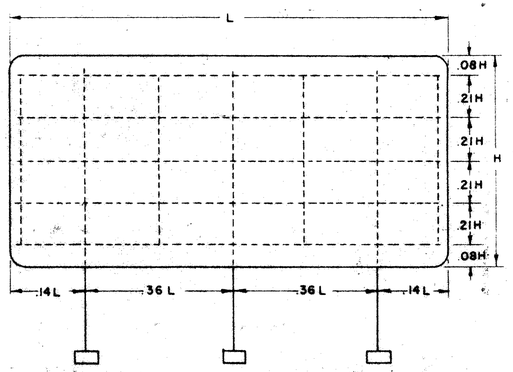

5 STRINGERS (REQUIRED FOR VALUES OF "H" OVER 11'-6")

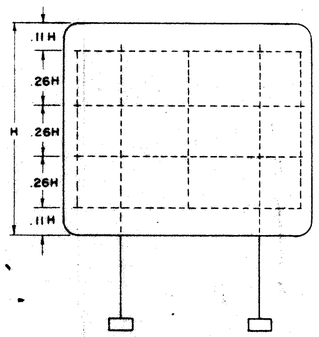

4 STRINGERS (REQUIRED FOR VALUES OF "H" FROM 9'-6" TO 11'-6")

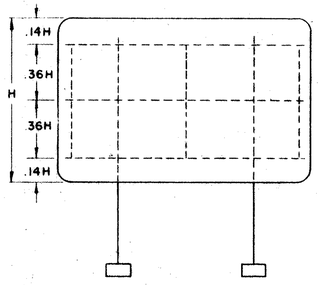

3 STRINGERS (REQUIRED FOR VALUES OF "H" FROM 6' TO 9')

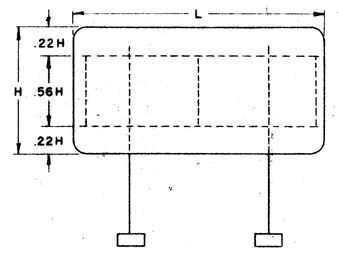

2 STRINGERS (REQUIRED FOR VALUES OF "H" FROM 2' TO 5'-6")

FED. RD. DIVISION	STATE	PROJECT	
2	OHIO		

243
418

BELMONT COUNTY
BEL - 7 - 20.74

19
5

NOTES

GENERAL

SECTIONAL SHEET SIGNS CAN BE ERECTED ON GALVANIZED STEEL BEAMS OR ON STEEL OR ALUMINUM OVERHEAD SIGN SUPPORTS AS SPECIFIED IN THE PLANS.

MODIFIED SECTIONAL SHEET SIGNS CAN BE ERECTED ON GALVANIZED STEEL BEAMS AS "MAJOR" OR "SECONDARY" SIGNS. ("SECONDARY" SIGNS ARE MOUNTED BELOW "MAJOR" SIGNS.

FABRICATION

ALUMINUM SHEET MATERIAL SHALL BE 0.080" THICK FOR SIGN UP TO 15'-6" IN HEIGHT. SIGNS GREATER THAN 15'-6" IN HEIGHT SHALL BE PLACED ON THREE SUPPORTS AND THE SIGN SHEET MATERIAL SHALL BE 0.100" THICK.

"STANDARD SECTIONAL SHEET"

VERTICAL ALUMINUM SHEET SECTIONS SHALL BE FOUR FEET WIDE. EXCEPT THAT NO MORE THAN TWO VERTICAL SECTIONS FOR ANY SIGN SHALL BE CUT TO LESS THAN FOUR FEET TO OBTAIN THE REQUIRED SIGN LENGTH.

ONE HORIZONTAL JOINT IS PERMISSIBLE WHERE SIGN HEIGHT EXCEED STANDARD COMMERCIAL SHEET HEIGHT. THE HORIZONTAL JOINT IN THE SIGN SHALL BE EQUAL IN CONSTRUCTION TO THE VERTICAL JOINTS (AS SHOWN). THE PLACEMENT OF A HORIZONTAL JOINT SHALL BE ARRANGED NOT TO INTERFERE WITH A HORIZONTAL LINE OF LEGEND AND IN ADDITION THE JOINT SHALL BE PLACED BETWEEN HORIZONTAL STRINGERS.

"MODIFIED SECTIONAL SHEET"

THE HORIZONTAL STRINGER ON THIS SIGN MAY BE ATTACHED PERMANENTLY. NO JOINTS ARE NECESSARY FOR SIGNS IN SIZE LESS THAN STANDARD COMMERCIAL SHEET. FOR SIGNS LONGER THAN STANDARD COMMERCIAL SHEET ONE VERTICAL JOINT IS ACCEPTABLE.

ERECTION

NO FIELD WELDING SHALL BE PERMITTED. BOLT HOLES MAY BE DRILLED IN THE FIELD, WHERE NECESSARY.

DETAILS

FOR ADDITIONAL NOTES AND DETAILS SEE SHEET 244 (SS-2).

BUREAU OF TRAFFIC
OHIO DEPARTMENT OF HIGHWAYS

SECTIONAL SHEET SIGN	SSI	DATE 1-15-62 4-16-62 11-18-63

APPROVED _____ ENGINEER OF TRAFFIC

SECTIONAL SHEET SIGN

FED. RD. DIVISION	STATE	PROJECT	
2	OHIO		

244
418

BELMONT COUNTY
BEL - 7 - 20.74

20
5

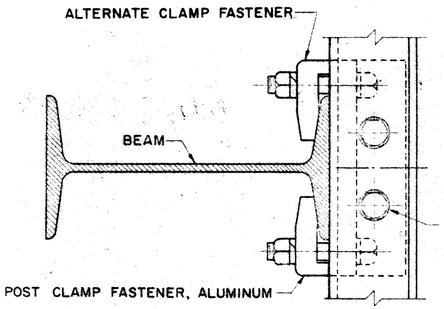

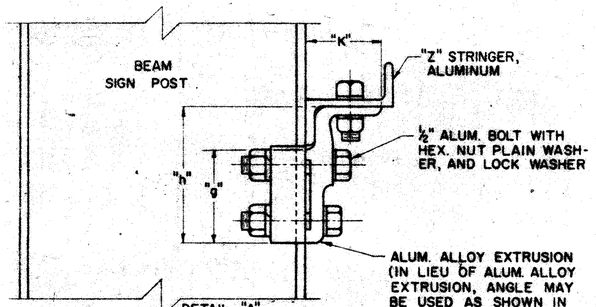

POST CLAMP DETAIL

(FOR STRUCTURAL SHAPES)

POST TYPE	STRINGER TYPE	g	h	k
BEAM	A	2 ¾"	3 13/16"	2 ⅛"
BEAM	B	3"	5 ¼"	2 ⅜"

EXTRUSION SIZES

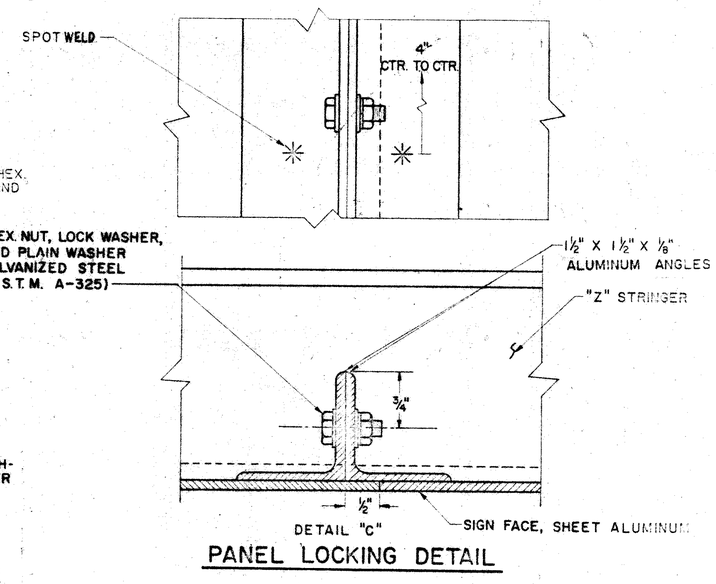

PANEL LOCKING DETAIL

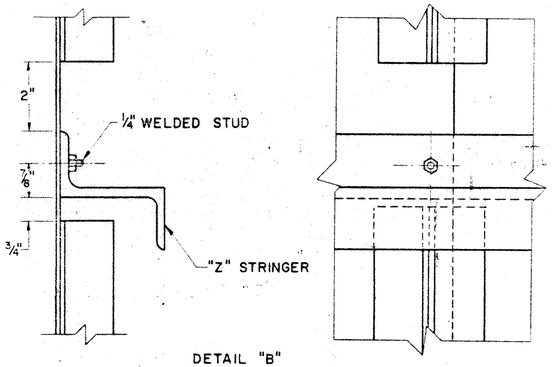

STRINGER ATTACHMENT DETAIL

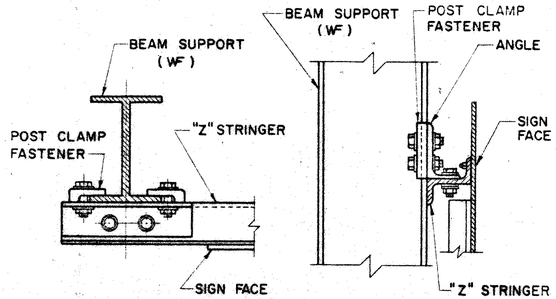

SECONDARY SIGN

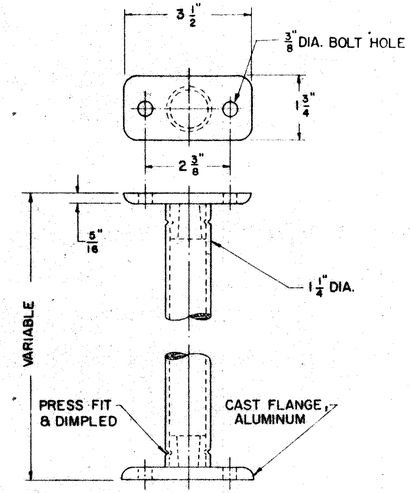

STIFFENERS ARE NOT REQUIRED ON 2 POST SIGNS. LESS THAN 9' IN LENGTH AND ON 3 POST SIGNS. LESS THAN 14' IN LENGTH.

DETAIL "D"

VERTICAL STIFFENER

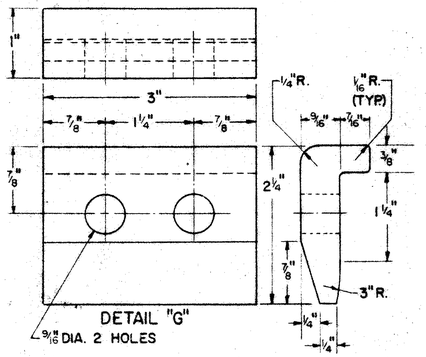

POST CLAMP FASTENER

ALTERNATE TYPE

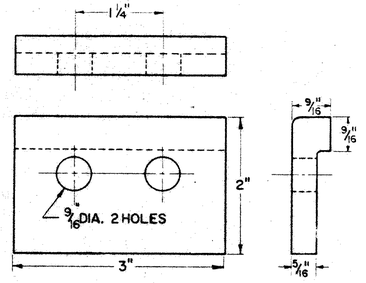

POST CLAMP FASTENER

(FOR USE ON WF & ANGLES ONLY)

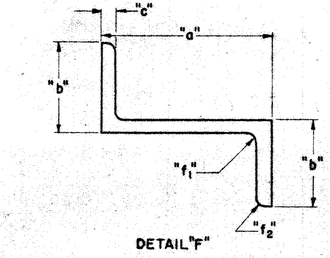

HORIZONTAL STRINGER

	a	b	c	f_1	f_2	wt.	SECTION MODULUS
A	2⅜"	1¼"	3/16"	5/16"	⅛"	1.0 lb.	.584 in³
B	3"	2 1/16"	¼"	5/16"	¼"	2.33 lb.	1.92 in³

NOTES

GENERAL

THE ALUMINUM SECTIONAL SHEET COMPONENTS SHALL BE ASSEMBLED INTO ONE UNIT PRIOR TO ERECTION ON THE VERTICAL SUPPORT MEMBERS.

SIGNS ON OVERHEAD SUPPORTS SHALL BE MOUNTED ON VERTICAL SIGN BRACKETS USING METHOD AND ACCESSORIES AS SHOWN ON THIS SHEET.

MATERIALS AND FABRICATION

THE STRUCTURAL ELEMENTS OF THE ALUMINUM SECTIONAL SHEET SIGNS SHALL CONFORM TO SUPPLEMENTAL SPECIFICATION I-129.

ALL OTHER ELEMENTS SHALL CONFORM WITH SUPPLEMENTAL SPECIFICATION I-128.

ALTERNATE FABRICATION

ELEMENTS AND METHODS SHOWN ON THIS SHEET MAY BE SUBSTITUTED WITH AN ALTERNATE, HOWEVER, PRIOR TO SUCH APPROVAL THE FABRICATOR SHALL SUBMIT STRESS ANALYSIS, MATERIAL SPECIFICATIONS AND SAMPLES SHOWING HIS ALTERNATE MATERIALS AND THEIR APPLICATION.

BUREAU OF TRAFFIC
OHIO DEPARTMENT OF HIGHWAYS

SECTIONAL SHEET SIGN

SS2

DATE 4-17-62 10-23-63

APPROVED _____
ENGINEER OF TRAFFIC

SECTIONAL SHEET SIGN DETAILS

FED. RD. DIVISION	STATE	PROJECT	
2	OHIO		

245/418

BELMONT COUNTY
BEL - 7 - 20.74

21/S

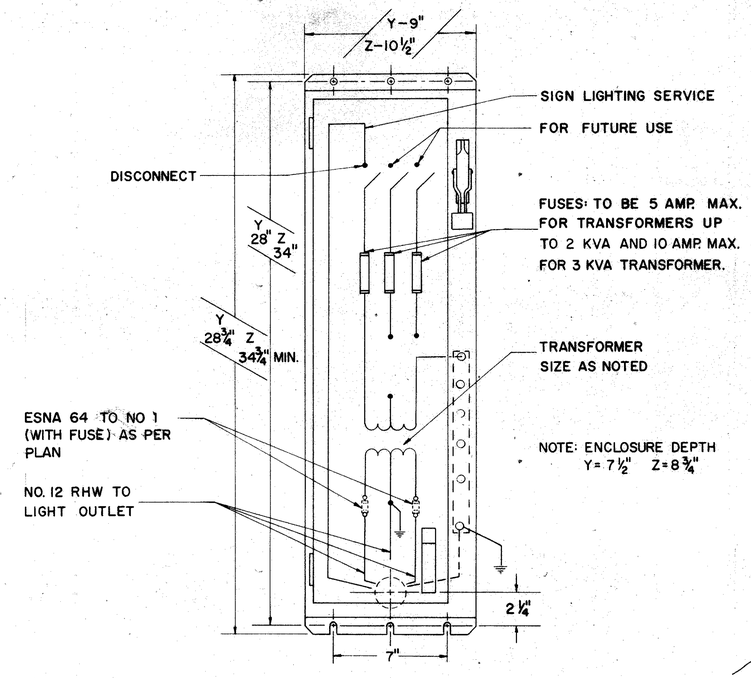

TYPICAL ENCLOSURE DETAIL

480 VOLT SIGN LIGHTING SERVICE

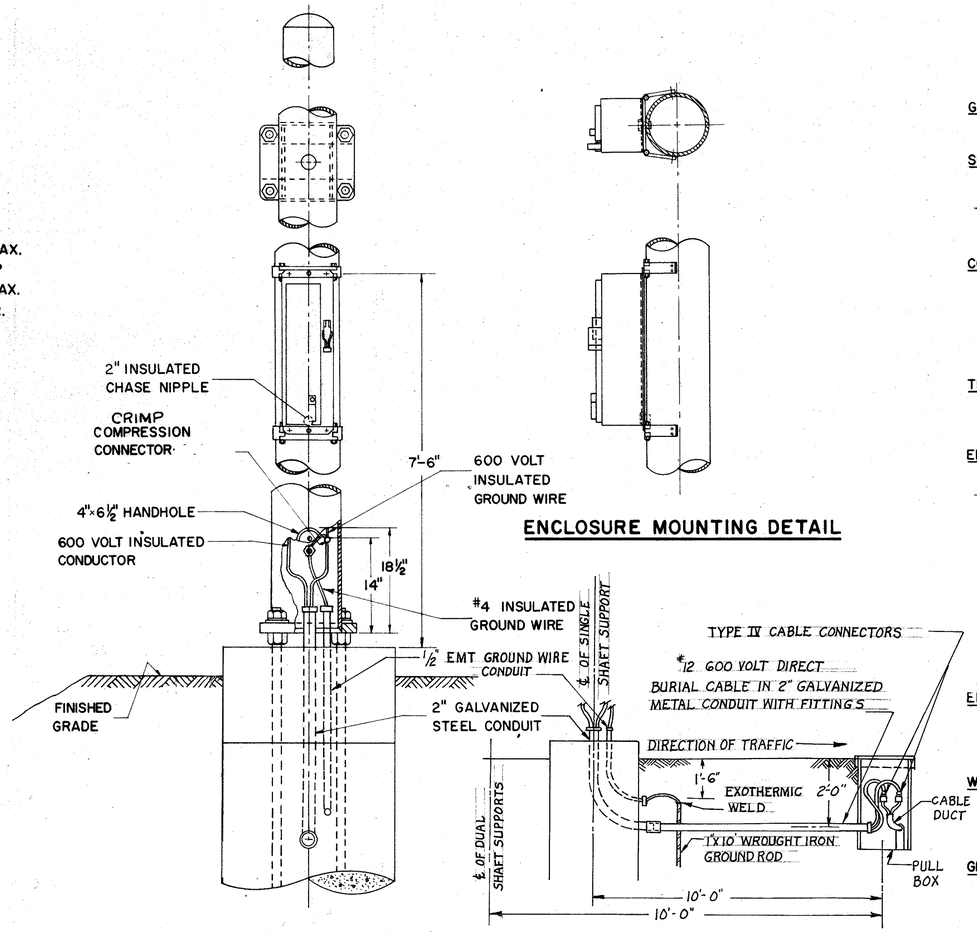

ENCLOSURE MOUNTING DETAIL

SIGN SUPPORT DETAIL FOR ILLUMINATED SIGNS

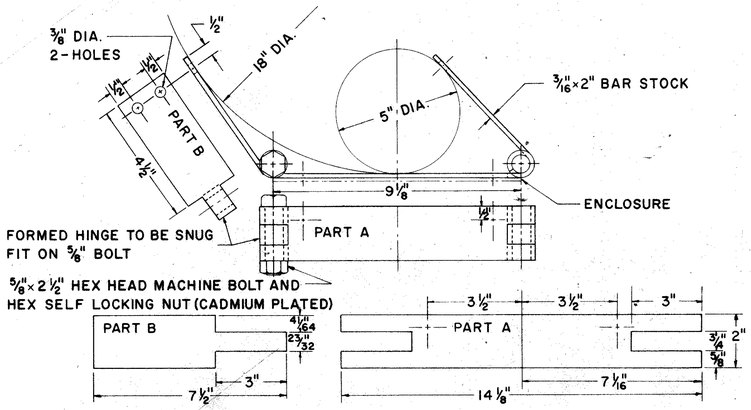

ENCLOSURE MOUNTING BRACKET

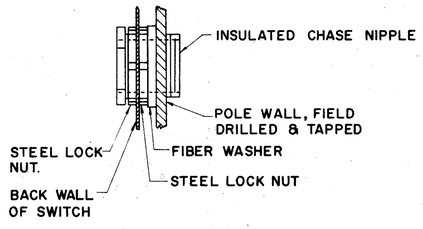

CHASE NIPPLE ASSEMBLY DETAIL

AS MANUFACTURED BY THOMAS BETTS, APPLETON OR STEEL CITY OR EQUAL

NOTES

GENERAL

DETAILS OF THIS SHEET SHALL APPLY TO EACH OVERHEAD SIGN STRUCTURE TO SUPPORT EXTERNALLY ILLUMINATED SIGNS.

SERVICE

ELECTRIC SERVICE SHALL ENTER THROUGH A 2" GALVANIZED RIGID STEEL CONDUIT INSTALLED IN STRUCTURE FOUNDATION AS PER DETAIL. SIGN SERVICE OR CIRCUITRY SHALL BE CONTROLLED AS REQUIRED BY THE SYSTEM DESIGN AT THE PRIMARY SOURCE.

SERVICE CONDUCTORS SHALL BE THE SIZE AND TYPE AS SPECIFIED.

COMBINATION SWITCH AND TRANSFORMER

(TYPE Y OR Z ENCLOSURE REQUIRED AS PER SCHEDULE ON THIS SHEET)

THIS COMBINATION SHALL BE A 30 OR 60 AMPERE. 600 VOLT SWITCH WITH A .25 TO 3.0 KVA TRANSFORMER. THE COMBINATION AND ENCLOSURE SHALL BE AS SQUARE D CLASS 9421, COLUMBUS ELECTRIC WORKS CLASS 101, PANALS INCORPORATED–CLASS 9400, OR APPROVED EQUAL.

TRANSFORMER

THE TRANSFORMER SHALL BE DRY TYPE SINGLE FACE 240/480 VOLT PRIMARY 120/240 VOLT SECONDARY, THE TYPE AND CAPACITY AS SPECIFIED IN DETAILED SCHEDULE ON THIS SHEET.

ENCLOSURE

THE ENCLOSURE SHALL BE NEMA #4 WATER TIGHT .063 GAGE STAINLESS STEEL ASTA 302–303. A DISCONNECT HANDLE SHALL BE FLANGE MOUNTED AND CAPABLE OF BEING LOCKED IN EITHER POSITION, THE ENCLOSURE SHALL BE EQUIPPED WITH A DOOR LOCKING MECHANISM WITH A DEFEATER THAT NECESSITATES TWO HANDS TO OPERATE MECHANISM WITH THE SWITCH IN OFF POSITION. SPACE FOR A 2" INSULATED CHASE NIPPLE SHALL BE PROVIDED APPROXIMATELY 2¼" ABOVE THE CENTER LINE OF THE LOWER MOUNTING SLOT. THIS ENCLOSURE AND STRUCTURE SHALL BE FIELD DRILLED AND TAPPED FOR THE REQUIRED NIPPLE AS SHOWN ON THE DETAIL ON THIS SHEET.

THIS ENCLOSURE SHALL BE FLANGE MOUNTED ON BRACKETS WITH 5/16–18×¾" HEX HEAD CADMIUM PLATED MACHINE BOLTS. ENCLOSURES SHALL BE TYPE Y OR Z AS SPECIFIED AND DIMENSIONED ON THIS SHEET.

ENCLOSURE MOUNTING BRACKET

THE ENCLOSURE MOUNTING BRACKET SHALL BE FABRICATED THEN GALVANIZED BEFORE ASSEMBLY. THE BRACKET SHALL BE FIELD MOUNTED WITH 5/16" HEX HEAD SELF TAPPING CADMIUM PLATED SCREWS. THE SIGN SUPPORT SHALL BE FIELD DRILLED, AS PER DETAIL.

WIRE AND CABLE

ALL WIRE AND CABLE UP TO AND INCLUDING #4 SHALL COMPLY WITH FAA TYPE A SPECIFICATIONS. #2 OR LARGER WIRE OR CABLE SHALL BE G.E. 58006 OR ANACONDA AP–10711, OR EQUAL. ALL WIRE AND CABLE SHALL BE 600 VOLT.

GROUNDING

EACH SIGN SUPPORT OR STRUCTURE SHALL BE GROUNDED WITH A #4 RUBBER INSULATION AND NEOPRENE JACKETED CONDUCTOR. THE GROUNDING CONDUCTOR SHALL BE CONNECTED TO THE SWITCH THEN TO THE COMPRESSION CONNECTOR IN THE SIGN SUPPORT THEN TO A 1"×10' GALVANIZED WROUGHT IRON GROUND ROD. GROUND CONDUCTOR SHALL BE EXOTHERMICALLY WELDED TO GROUND ROD AND THEN TAPED WITH PLASTIC ELECTRICAL TAPE AT EACH EXPOSED PORTION OF CONDUCTOR. THE WELDED CONNECTION AND TAPED PORTION SHALL BE PAINTED 2 COATS OF INSULATING ENAMEL.

TRANSFORMERS

TYPE	MANUFACTURERS G.E.	MANUFACTURERS JEFFERSON	OUTPUT K.V.A.	SWITCH TRANSFORMER ENCLOSURE
I	9T51Y7	220 – 041	.25	Y
II	9T51Y8	220 – 051	.50	Y
III	9T51Y9	220 – 061	.75	Y
IV	9T51Y10	220 – 071	1.00	Z
V	9T51Y11	220 – 081	1.50	Z
VI	9T51Y12	220 – 091	2.00	Z
VII	9T51Y13	221 – 102	3.00	Z

BUREAU OF TRAFFIC
OHIO DEPARTMENT OF HIGHWAYS

ELECTRICAL SIGN SERVICE DETAILS 480 VOLT SYSTEM

ES-3A

DATE 6-18-64

APPROVED _____
ENGINEER OF TRAFFIC

FED. RD. DIVISION	STATE	PROJECT	
2	OHIO		

24G
418

22
3

BELMONT COUNTY
BEL - 7 - 20.74

D-4A

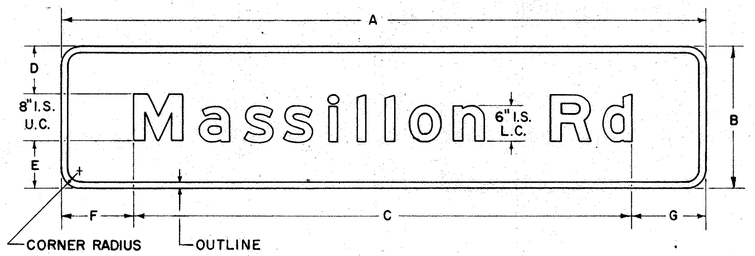

TYPICAL SIGN

NOTE:
"A" SHALL BE DETERMINED BY THE LENGTH OF LEGEND, PLUS SPACES "F" & "G".
SPACES "F" & "G" SHALL BE HELD TO A MINIMUM OF 6 INCHES.
"A" SHALL BE HELD TO THE EVEN FOOT.

D-4B

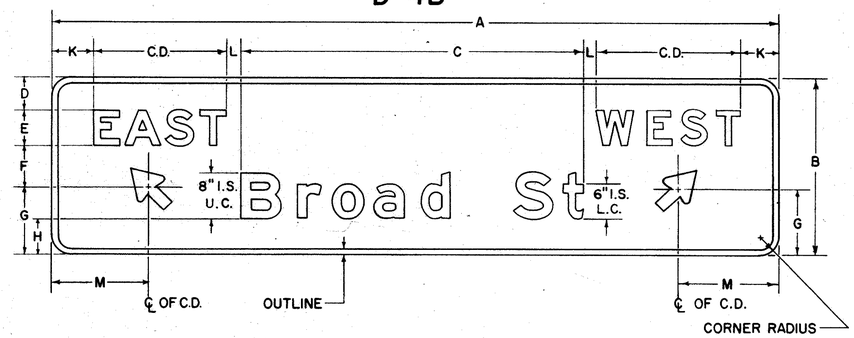

TYPICAL SIGN

SIGN	D-4A	D-4B
A	VARIABLE	VARIABLE
B	2'-0"	2'-6"
C	VARIABLE	VARIABLE
D	8	$5\frac{1}{2}$
E	8	6E
F	VARIABLE	$8\frac{1}{2}$
G	VARIABLE	10
H	—	6
K	—	VARIABLE 6" MIN.
L	—	$\frac{K}{2}$
M	—	℄ OF C.D.
C.D. EAST	—	22.75
C.D. WEST	—	24.25
C.D. NORTH	—	27.00
C.D. SOUTH	—	26.87
ARROW	—	8"x12"
OUTLINE	1	1
COR. RAD.	3	3

NOTE:
"L" IS = TO $\frac{K}{2}$.
"K" SHALL BE HELD TO A MINIMUM OF 6 INCHES.
"A" SHALL BE DETERMINED BY THE SUM OF BOTH CARDINAL DIRECTIONS, PLUS THE LENGTH OF LEGEND, AND THREE TIMES SPACE "K".
"A" SHALL BE HELD TO THE EVEN FOOT.

NOTE:
ALL DIMENSIONS ARE IN INCHES UNLESS OTHERWISE SHOWN.

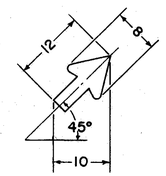

DIMENSIONS FOR 8"x12" ARROW IN HORIZONTAL, VERTICAL, OR 45° DIAGONAL POSITION.

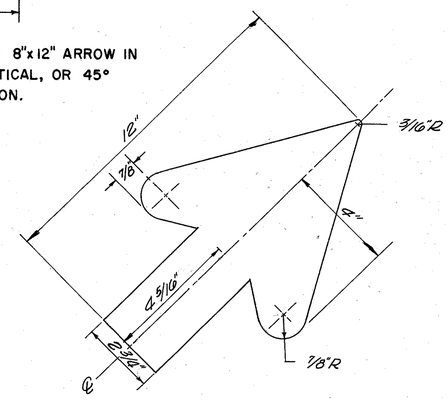

BUREAU OF TRAFFIC
OHIO DEPARTMENT OF HIGHWAYS

TRAFFIC SIGNS

DATE
10-8-63
12-16-63

APPROVED Fred C. Parker
ENGINEER OF TRAFFIC

D-4A & 4B

FED. RD. DIVISION	STATE	PROJECT	
2	OHIO		

247
418

23
3

BELMONT COUNTY
BEL - 7 - 20.74

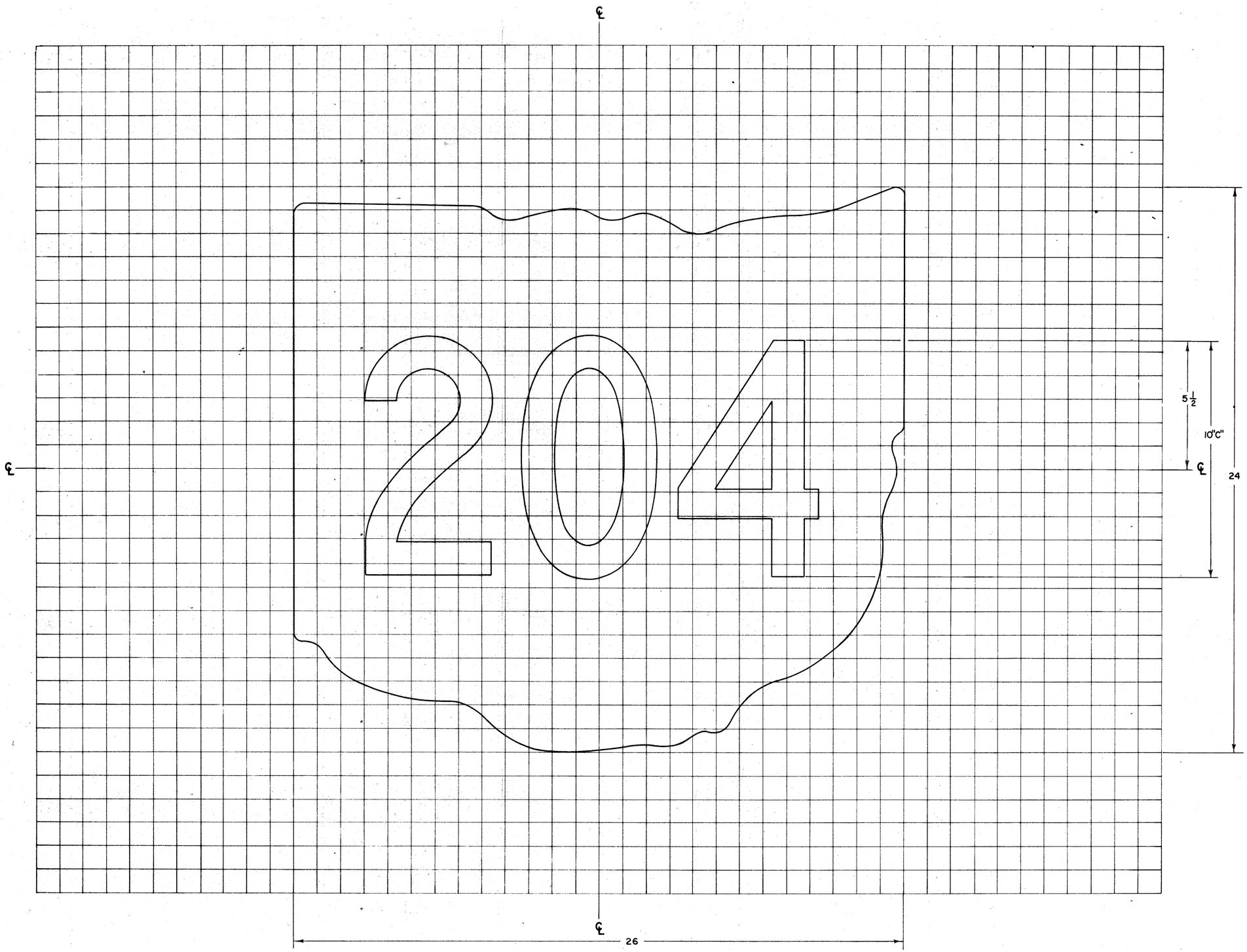

NOTE:
ALL DIMENSIONS ARE IN INCHES
UNLESS OTHERWISE SHOWN.

BUREAU OF TRAFFIC
OHIO DEPARTMENT OF HIGHWAYS

TRAFFIC SIGNS	M-2C	DATE 9-24-63

APPROVED Fred C. Dailey
ENGINEER OF TRAFFIC

Mega-Flex Tracing

FED. RD. DIVISION	STATE	PROJECT	
2	OHIO		

BELMONT COUNTY
BEL - 7 - 20.74

248
418

24
5

GK

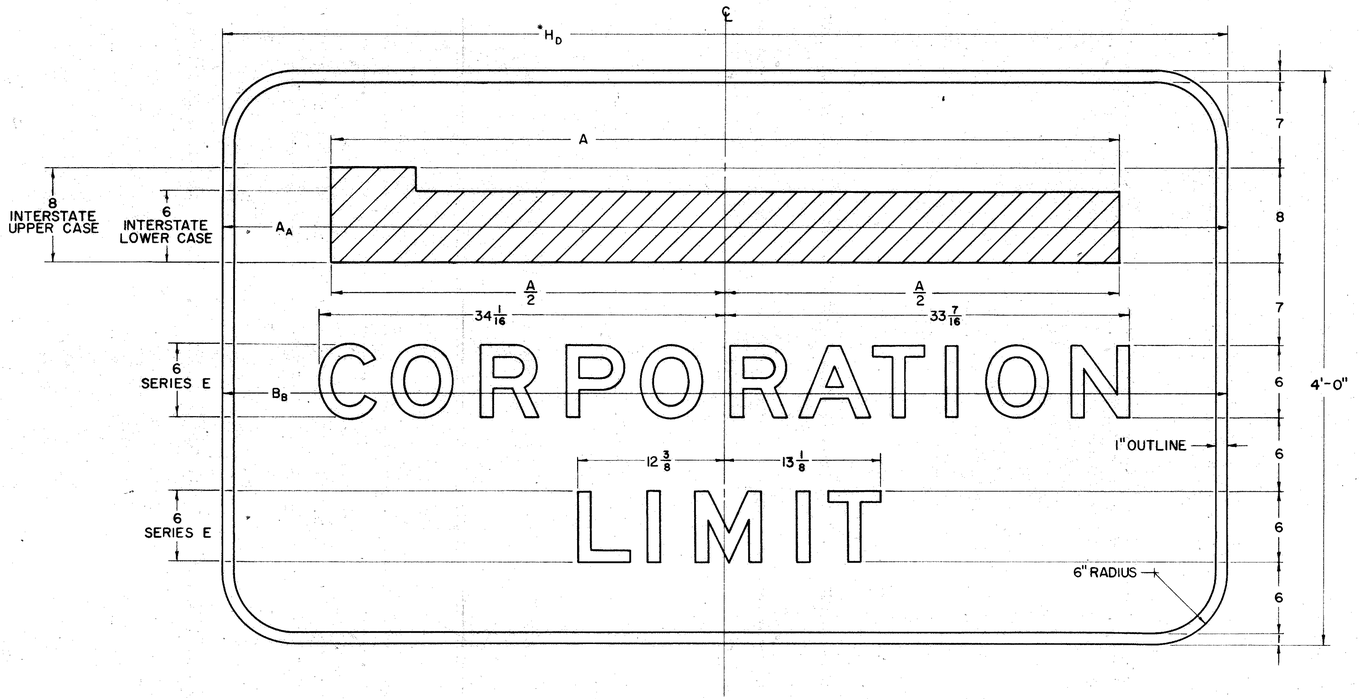

NOTES:

* TO FIND H_D

H_D IS DETERMINED BY A_A OR B_B WHICHEVER IS GREATER.

TO FIND A_A

$A_A = A + 18" \pm$ (**)

TO FIND B_B

$B_B = 7'-0"$

** ADD OR SUBTRACT UP TO 6" TO KEEP H_D TO EVEN FOOT.

ALL DIMENSIONS ARE IN INCHES UNLESS OTHERWISE SHOWN.

TYPICAL SIGNS





BUREAU OF TRAFFIC
OHIO DEPARTMENT OF HIGHWAYS

TRAFFIC SIGNS	GK	DATE 10-18-61 12-17-63

APPROVED Robert E. Comer
ENGINEER OF TRAFFIC

LIGHTING SUMMARY

FED. RD. DIVISION	STATE	PROJECT	
2	OHIO		

249 / 418

BELMONT COUNTY
BEL. 7-20.74

L1 / 12

DESCRIPTION

TYPE CODE G201 LIGHTING & SIGNALS

BRIDGEPORT (State & Federal)							MARTINS FERRY (CITY-STATE & FEDERAL)											RURAL L 12					
SHEET NUMBER OR STRUCTURE LOC.			ITEM	TOTAL NOT INCLUDING STRUCTURE	UNIT		SHEET NUMBER OR STRUCTURE LOCATION											MARTINS FERRY & STATE	100% STATE	ITEM	TOTAL - Without Structures Including Martins Ferry Bridgeport & Rural	UNIT	
L7	L8	BRIDGE OVER STATE ROUTE NO. 7					L8	L9	L10	L11	L12	Bridge Over Center Street	Pedestrian Overpass	Bridge Over Railroad	TOTAL Martins Ferry W/O Struct.	Total U-534(10) Martinsferry & Bridgeport Met. Incl. Struct.							
5		2	625	5	Each					4	3				7	12				625	12	Each	Luminaires, Type II with integral 250 Watt Mercury ballast
20	9		625	29	Each		17	26	24	22	15	2		3	104	133		7	2	625	142	Each	Luminaires, Type III with integral 250/400 Watt Mercury ballast
												4								625		Each	Luminaires - Mercury underpass with integral 250 Watt ballast
													4							625		Each	Luminaires - Mercury underpass pedestrian stair tower with integral 250 Watt ballast
													5							625		Each	Luminaires - Mercury post-top with integral 175 Watt ballast
													5							625		Each	Lamps, Mercury - 175 Watt
5		2	625	5	Each					4	3	4	4		7	12				625	12	Each	Lamps, Mercury - 250 Watt
20	9		625	29	Each		17	26	24	22	15	2		3	104	133		7	2	625	142	Each	Lamps, Mercury - 400 Watt
20	9		625	29	Each		1	20	24	21	14	2		3	80	109		7	2	625	118	Each	Lighting standard, with 8'-0" bracket for main roadway & bridges - Circular Cross Section
5			625	5	Each											5				625	5	Each	Lighting standard, with 6'-0" bracket for Lincoln Ave. - Circular Cross Section
										5	4				9	9				625	9	Each	Lighting standard, with 4'-0" bracket for entering side streets - Circular Cross Section
		2	625																	625		Each	Lighting standard, with 4'-0" bracket for bridge - Circular Cross Section
													5							625		Each	Lighting standard, for post-top light - Circular Cross Section
							8	3							11	11					11		Lighting Standard, with Twin 10'-0" Brackets (Roadway, Main) - Circular Cross Section
25	9		625	34	Each		9	23	24	26	18				100	134		7	2	625	143	Each	Lighting standard, foundation
25	9		625	34	Each		9	23	24	26	18				100	134		7	2	625	143	Each	Ground rod units
5	4		625	9	Each		1	3	9	10	7				30	39		1	2	625	42	Each	Pull boxes, circular, 18" I.D. & cover (Round Fiber)
2 *			625	2 *	Each		2 *	3 *	3 *	1 *					9 *	11 *				625	11 *	Each	Pull boxes, circular, 18" I.D. & cover for traffic signal system
200	200		625	400			100	100	100	100	100				500	900	100			625	1000	L.F	Alternate Trench - 4'-6" Deep
1600			625	1600	L.F.		1920	620	500	2300	2000				7340	8940	100			625	9040	L.F.	Trench (in area with guard rail or sidewalk) 2'-0" Deep
4200	1300		625	6000	L.F.		160	5080	6150	4000	2250				17,640	23,640	1705	345		625	25,690	L.F.	Trench (in area without guard rail or sidewalk) 2'-0" Deep
									130 *						130 *	130 *				625	130 *	L.F.	Trench for traffic signal system
190	360/100		625	550/100 *	L.F.			160	260/65 *	500/65 *	120				1040/180 *	1540/230 *		30		625	1620/230 *	L.F.	Conduit 3" rigid ferrous Metal - Type II or III
40			625	40	L.F.			50	80	40	85				255	295	35			625	330	L.F.	Conduit 2" rigid galvanized between pullbox & sign base
120			625	120	L.F.			120	200	100	220				640	760	80			625	840	L.F.	No. 4 Circuit cable - 1/C - 600 volt between pullbox & sign
		400			L.F.							940		1850						625		L.F.	No. 4 Circuit cable - 1/C - 600 volt on bridge structure
220	400		625	620	L.F.			180	300	900	330				1710	2330		70		625	2400	L.F.	No. 4 Circuit cable - 1/C - 600 volt cross-over
												430 *	800 *	1200						625		L.F.	No. 10 Circuit cable - 1/C - 600 volt on structures
2500	900	200	625	3400	L.F.		1240	2410	2400	2600	1970	200		300	10,620	14,820	570	160		625	14,750	L.F.	No. 10 Lighting standard & bracket cable - 1/C - 600 volt
1400 *	980 *		625	2380 *	L.F.					1300 *					1300 *	3680 *				625	3680 *	L.F.	Duct cable - 2/C, No. 10, 600 volt, as per plan for traffic signal system
6050	1910		625	7960	L.F.		1780	6830	7200	6000	4750				26,560	34520	1805	345		625	36,670	L.F.	Duct cable - 2-1/c #4-600 Volt.
	60 *		625	60 *	L.F.		2100 *	3000 *	3200 *	790 *					9090 *	9150 *				625	9150 *	L.F.	Duct cable - 3/C No. 10, 600 volt, as per plan for traffic signal system
25	9	2	625	34	Each		9	23	24	26	18	2	5	3	100	134	7	2		625	143	Each	Connector kit Type II
25	9	2	625	34	Each		9	23	24	26	18	2	5	3	100	134	7	2		625	143	Each	Connector kit Type III
10	8		625	18	Each			6	16	22	18				62	80	2			625	82	Each	Connector kit Type IV
	1		625	1	Each			1		1					2	3				625	3	Each	Service Pole
								1		1					2	2				625	2	Each	Control center
	1		625	1	Each											1				625	1	Each	Control center
								1		1					2	2				625	2	Each	37½ KVA Distribution Transformer at Station 1163+35 & Station 1228+70
	80		625	80	L.F.			40		30					70	150				625	150	L.F.	Conduit 2" rigid galvanized between pullbox & controls
	200		625	200	L.F.			160		120					240	440				625	440	L.F.	No. 2 feeder cable, 600 volt
		1	625									2	1	2						625		Each	Structure grounding system
		180			L.F.							300		820						625		L.F.	Conduit, 2" rigid galvanized in bridge
												120								625		L.F.	Conduit, 1¼" rigid galvanized in bridge
												160	340							625		L.F.	Conduit, 3/4" rigid galvanized in bridge
												160	*	400 *						625		L.F.	Conduit, 1" rigid galvanized in bridge for traffic signal system
												2								625		Each	Structure junction box
		2	625		Set, 4							2	5	3						625		Set, 4	Structure, lighting standard anchor rods
																							ALTERNATE BIDS
20	9		625	29	Each		1	20	24	21	14	2		3	80	109	7	2		626	118	Each	Lighting Standard, w/8'-0" Bracket for Main Roadway & Bridges - Other than Circular Cross Section
5			625	5	Each											5				625	5	Each	Lighting Standard, w/6'-0" Bracket for Lincoln Ave. - Other than Circular Cross Section
										5	4				9	9				625	9	Each	Lighting Standard, w/4'-0" Bracket for entering side Streets - Other than Circular Cross Section
		2	625		Each															625		Each	Lighting Standard, w/4'-0" Bracket for Bridge - Other than Circular Cross Section
													5							625		Each	Lighting Standard, for Post-Top Light - Other than Circular Cross Section
							8	3							11	11				625	11	Each	Lighting Standard, For Main Roadway w/Twin 10'-0" Bracket's - Other than Circular Cross Section
5	4		625	9	Each		1	3	9	10	7				30	39	1	2		625	42	Each	Pull Box, Circular, 18" I.D. & Cover - Concrete

* Quantities for Traffic Signal System

DESCRIPTION	PLOTTED BY	PLOTTED DATE	INKED BY	INKED DATE	CHECKED BY	CHECKED DATE
TYPICAL LIGHTING						
TYPICAL SIGNALS						
DRAWINGS						
R.O.W.						
QUANTITIES						

8-12-66

FED. RD. DIVISION	STATE	PROJECT	
2	OHIO		

250 / 418

LL 2 / 12

BELMONT COUNTY
BEL - 7 - 20.74

GENERAL NOTES
LIGHTING

GENERAL

THIS ITEM SHALL CONSIST OF A COMPLETE ROADWAY LIGHTING SYSTEM OF LUMINAIRES SUPPORTED ON METAL POLES INSTALLED ON CONCRETE FOUNDATIONS, INCLUDING ALL LABOR AND MATERIALS TO PROVIDE THE LIGHTING SYSTEM COMPLETE, TESTED, AND READY FOR OPERATION. LIGHTING SYSTEM SHALL BE OF THE MULTIPLE TYPE, UTILIZING MERCURY VAPOR LUMINAIRES SUPPORTED ON STEEL LIGHT POLE STANDARDS. ALL WORK SHALL CONFORM TO THE REQUIREMENTS OF ITEM 625. FURTHER, THE RIGHT IS RESERVED BY THE CITY OF MARTINS FERRY TO INSTALL (AT THE APPROPRIATE TIME) IN STRUCTURES AND AT OTHER POINTS, NECESSARY CONDUITS, PULL BOXES AND APPURTENANCES REQUIRED FOR FUTURE ELECTRICAL CIRCUITS.

ALL MATERIAL, WORKMANSHIP AND CONSTRUCTION METHODS OF THIS PROJECT, EXCEPT AS MODIFIED HEREIN, OR ON THE DRAWINGS, SHALL CONFORM TO THE GENERAL REQUIREMENTS OF STATE OF OHIO, DEPARTMENT OF HIGHWAYS, CONSTRUCTION AND MATERIAL SPECIFICATIONS, JANUARY 1, 1965. OTHER ITEMS WHICH APPLY ARE INCLUDED BELOW WITH MODIFICATIONS OF THE SPECIFICATIONS WHICH SHALL BE COMPLIED WITH BY THE CONTRACTOR.

IN GENERAL, THE ELECTRIC WORK IS SHOWN ON THE DRAWINGS BY SYMBOLS AND NUMERICAL DESIGNATION, A KEY TO WHICH IS INDICATED ON THE DRAWINGS.

THROUGHOUT THESE PLANS THE USE OF TRADE NAMES FOR ELECTRICAL LIGHTING EQUIPMENT IS MEANT TO BE DESCRIPTIVE ONLY. COMPARABLE PRODUCTS OF OTHER ELECTRICAL FIRMS ARE ACCEPTABLE IF ACCESSORIES AND MAIN MEMBERS ARE COMPATIBLE WITH ONE ANOTHER AND SERVE THE INTENDED PURPOSE.

THE CONTRACTOR SHALL ALSO COMPLY WITH THE NATIONAL SAFETY CODE AND ELECTRICAL SERVICE RULES AND REGULATIONS OF THE CITY MUNICIPAL LIGHT PLANT OF MARTINS FERRY, OHIO. AND THE OHIO POWER COMPANY.

THE LIGHTING SYSTEM HAS BEEN DESIGNED FOR A INITIAL INTENSITY OF 1.0 FOOT CANDLES.

LAMPS

LAMPS SHALL BE HEAVY DUTY TYPE, SIMILAR TO G.E. "SONUS LINE", WESTINGHOUSE "LIFEGUARD", SYLVANIA "BANNER", OR OTHER APPROVED EQUAL.

SEPARATE PULL BOX

FURNISH AND INSTALL THE SEPARATE TUBE PULL BOXES COMPLETE WITH CAST IRON COVER AS SHOWN ON PLANS. PULL BOX SHALL CONSIST OF A 18" DIAMTER TUBE, 0.37" MINIMUM WALL THICKNESS, OF BITUMINIZED FIBER. BOTTOM OF THE TUBE TO BE LEFT OPEN AND THE TOP TO BE COVERED.

LIGHTING STANDARD FOUNDATIONS

FOUNDATIONS SHALL CONFORM TO THE DESIGN AND DETAILS SHOWN ON THE PLANS AND AS SPECIFIED HEREIN.

LOCATION OF LIGHTING UNIT FOUNDATION IS REFERENCED BY A STATION ON THE ROADWAY CENTERLINE AND OFFSET DISTANCE FROM THE ROADWAY PAVEMENT. CONTRACTOR SHALL CHECK THE OFFSET DISTANCES IN THE FIELD TO PREVENT IMPROPER PLACEMENTS, STAKE OUT LOCATIONS AND OBTAIN ENGINEER APPROVAL PRIOR TO EXCAVATION. FINAL POSITION SHALL BE ADJUSTED TO MEET FIELD CONDITIONS. A TEMPLATE SHALL BE PROVIDED TO ACCURATELY AND FIRMLY HOLD THE ANCHOR BOLTS DURING THE POURING OF THE CONCRETE.

FOUNDATION MUST BE TO A MINIMUM DEPTH OF SIX (6) FEET BELOW LOWEST POINT OF FINISHED GRADE, ADDITIONAL DEPTH REQUIRED DEPENDING UPON SOIL CONDITIONS.

THE TOP ELEVATION OF POLE FOUNDATION SHALL BE SET TO PROVIDE THE SPECIFIED MOUNTING HEIGHT OF LUMINAIRES ABOVE TOP OF PAVEMENT.

UNIT PRICE BID FOR STANDARD FOUNDATIONS SHALL INCLUDE FURNISHING AND PLACING OF CONCRETE, ANCHOR BOLTS, CONDUIT ELLS, REINFORCING, AND THE COST OF EXCAVATION BACKFILL AND DISPOSAL OF SURPLUS MATERIAL.

CONDUIT IN BRIDGE STRUCTURES

RIGID CONDUIT IN BRIDGE STRUCTURES FOR TRAFFIC SIGNAL SYSTEM AND LIGHTING SYSTEM, SHALL BE 2" TYPE II OR III.

TRENCH

SEPARATE MEASUREMENT SHALL BE MADE FOR TRENCH INSTALLED IN AREAS WHERE NO GUARDRAIL IS PRESENT AND FOR TRENCH INSTALLED IN AREAS WHERE GUARDRAIL IS EXISTING.

PAYMENT FOR TRENCH SHALL BE MADE AT THE CONTRACT UNIT PRICE BID, FOR EACH TYPE OF TRENCH. PRICE SHALL INCLUDE EXCAVATION, BACKFILL, RESTORATION, GUARDRAIL REMOVAL AND REPLACEMENT, DISPOSAL OF SURPLUS MATERIAL, REMOVAL OF ROCK, SAND AND GRADED BACKFILL AND FOR ALL PREPARATION, LABOR, EQUIPMENT, TOOLS AND INCIDENTALS NECESSARY TO COMPLETE THIS WORK. NO SEPARATE PAYMENT SHALL BE MADE FOR TRENCHES OF DIFFERENT WIDTHS.

CIRCUIT CABLES

CIRCUIT CABLES (HOT AND GROUND WIRE) FOR CONDUIT OR DUCT CABLE SHALL BE 600 VOLT NO. 4 AWG, AND SHALL BE G. E. #SI-58073, CROSS LINKED POLYETHYLENE, OR EQUIVALENT AS MADE BY PHELPS DODGE, ROME, REYNOLDS, OR OTHER APPROVED EQUAL.

DUCT CABLE

MINIMUM SIZED DUCT SHALL HAVE A NOMINAL INSIDE DIAMETER OF 1.50".

POLE AND BRACKET CABLE SHALL BE SINGLE CONDUCTOR #10-AWG COPPER, THHN OR THHN/THWN.

DUCT CABLE FOR TRAFFIC SIGNAL SYSTEM

MINIMUM SIZED DUCT SHALL HAVE A NOMINAL INSIDE DIAMETER OF 1.50".
DUCT-CABLE SHALL BE 600 Volt NO. 10 AWG 1/c, AND SHALL BE G.E. # SI-58073, CROSS LINKED POLYETHYLENE OR EQUIVALENT AS MANUFACTURED BY PHELPS DODGE, ROME, REYNOLDS OR OTHER APPROVED EQUAL.

PEDESTRIAN OVERPASS

FURNISH AND INSTALL A TOTAL OF 5 - 175 W MERCURY POST-TOP LIGHTS COMPLETE WITH LAMPS, BALLASTS AND PEDESTAL POLES, SIMILAR TO GENERAL ELECTRIC PMA-115 CAT NO. C708G020 EXCEPT 480 VOLT, HOLOPLANE OR WESTINGHOUSE EQUIPPED WITH LIGHTWEIGHT ACRYLIC REFRACTOR. PEDESTAL POLES SHALL BE ANCHOR BASE TYPE TAPERED STEEL 11 GUAGE SINGLE-PIECE CONSTRUCTION WITH 48,000 P.S.I. YIELD STRENGTH, WITH HANDHOLE FOR WIRING. POLE TOPS ARE DESIGNED TO RECEIVE A LUMINAIRE WITH MINIMUM INSIDE DIAMETER OF 3-1/8" AND A HEIGHT OF 15' FROM BASE TO POLE TOP. POLE AND LUMINAIRE INSTALLATION IS AS SHOWN IN DETAILS.

PAYMENT SHALL BE MADE ON A UNIT BID PRICE BASIS FOR EACH POLE LIGHT COMPLETED.

LIGHT POLES, ARMS AND ACCESSORIES

LIGHT POLES SHALL BE MINIMUM SIZE 11 GUAGE (US S'TD) AND CAPABLE OF WITHSTANDING LOADING (APPLIED 18" FROM THE TOP) AS INDICATED BELOW WITHOUT EXCEEDING THE PERMANENT SET AND DEFLECTION (MEASURED IN INCHES 18" FROM TOP OF POLE) AS INDICATED.

POLE	MAX. ARM LENGTH	PROJECTION ABOVE GROUND	BELT CIRCLE DIA.	MTG HEIGHT	ELASTIC DEF'L RATE IN PER 100 LB.	AT 2/3 OF YIELD STRESS LOAD IN LB.	AT 2/3 OF YIELD STRESS TOTAL DEF'L IN IN.	AT 2/3 OF YIELD STRESS PERM SET IN IN.	AT YIELD STRESS LOAD IN LBS.	AT YIELD STRESS TOTAL DEF'L IN IN.	AT YIELD STRESS PERM. SET IN IN.
65' x 44" x 15'-0" x .8.0" x 3.87" x 29 6"	POST TOP	2 1/8"	9 1/2"	15'-0"	0.56	699	4.41	.50	1049	6.96	109
	8'	2 5/8"	11"	32'-6"	3.32	517	17.66	.50	776	28.84	3.08
.8.0" x 4.22" x 27'-0"	4' & 6'	2 5/8"	11"	30'-6"	2.37	568	13.96	.50	852	22.71	2.52

FREEWAY LIGHT POLES ARE IDENTIFIED BY FREEWAY CENTERLINE STATIONS WITH BRACKET ARMS NORMAL WHEN 90° TO FREEWAY CENTERLINE, EXCEPT AS SHOWN. LIGHT POLES ON INTERSECTING STREETS ARE IDENTIFIED BY INTERSECTING STREET CENTERLINE STATIONS OR BY DIMENSION FROM CENTERLINE OF FREEWAY WITH BRACKET ARMS NORMAL WHEN 90° TO INTERSECTION STREET CENTERLINE. ORIENT FOUNDATION ANCHOR BOLTS ACCORDING TO ABOVE ARRANGEMENTS.

Wire - Cable - Duct-Cable Identification

All Circuit and ground cables (except structure grounding system wires) and duct-cable shall be Identified in each pull box, manhole, parapet or curb junction box (Type "A" or "B" Bridge Raceway Boxes), etc. Tags shall be circular in shape, 1-3/8" to 1-1/2" nominal diameter and not less than .031" thick copper or brass. Use steel lettering dies, 1/4" minimum size, or the equivalent engraving process to mark the tag. It shall be securely attached with an AWG # 16 or larger bare copper wire. Marking of tags shall consist of an abbreviation for the ground wires "Gr'd" and circuit with number or letter "Ckt. A", etc.
Identification by an approved banding method will be considered as an alternate; also approved plastic tags in lieu of above metal tags.
Cables in circuit breaker and safety switch enclosures shall be tagged with plastic tags or banded in an appropriate manner so as not to reduce electrical clearances from live conductors and live parts to ground.
Cost shall be included with bid item for wire, cable or duct-cable.

EACH POLE SHALL BE FITTED WITH A "J" HOOK AND LOCATED AT POLE TOP AS SHOWN IN POLE DETAIL. THE SHAFTS OF ANCHOR BASE STANDARDS SHALL BE FITTED WITH A 4" x 10" MINIMUM SIZED REINFORCED HANDHOLE WITH LOCKING STEEL COVER WITH CAPTIVE CHAIN AND GROUNDING NUT WELDED TO INSIDE OF SHAFT OPPOSITE HANDHOLE. HANDHOLES ON GROUND MOUNTED STANDARDS SHALL BE ON THE SIDE OPPOSITE THE LUMINAIRE SUPPORT ARM. FOR BRIDGE MOUNTED STANDARDS, HANDHOLE SHALL BE 17" ABOVE BASE ON SAME SIDE OF SHAFT AS LUMINAIRE SUPPORT ARM. THE POLES SHALL ALSO BE FITTED WITH POLE TOPS AND ORNAMENTAL ANCHOR BOLT COVERS.

THE BASE SHALL BE PROVIDED WITH FOUR (4) HOLES TO RECEIVE THE ANCHOR BOLTS, POUR (4) HOLES FOR VENTILATION LOCATED IN THE BODY OF THE BASE DIRECTLY BEHIND EACH ANCHOR BOLT HOLD, AND FOUR (4) TAPPED HOLES FOR ATTACHING THE ORNAMENTAL COVERS.

FOUR (4) HIGH GRADE STEEL ANCHOR RODS, EACH FITTED WITH A HEX NUT, SHALL BE FURNISHED. EACH ANCHOR BOLT SHALL HAVE AN "L" BEND AT THE BOTTOM END AND BE THREADED AT THE TOP END. THREADED ENDS AND ALL NUTS SHALL BE GALVANIZED IN ACCORDANCE WITH ASTM A-153 WITH GALVANIZING EXTENDING NO MORE THAN 1" TO 4" BEYOND THREAD.

Light Poles, Bracket Arms and Accessories, shall be hot dipped galvanized after fabrication in accordance with 713.01.

CABLE MARKERS

THE CONTRACTOR SHALL FURNISH AND INSTALL CONCRETE MARKERS (SEE DETAIL) AS SHOWN ON THE PLANS AND AT EACH DEVIATION FROM THE NORMAL TRENCH PARALLEL TO THE ROADWAY AND AS MAY BE REQUIRED TO INDICATE DEVIATION FROM NORMAL STRAIGHT RUNS TO AVOID OBSTACLES. COST OF THE MARKERS SHALL BE INCLUDED IN THE UNIT PRICE BID FOR CABLE.

STRUCTURES ELECTRICAL GROUND SYSTEM

SUPER STRUCTURE GROUNDING SHALL BE NO. 1/0 AWG 7 STRAND, SOFT ANNEALED BARE COPPER CABLE ENCASED IN OUTSIDE COLUMN ON EITHER SIDE OF STRUCTURE AT FIXED PIER OR PIERS, CONNECT BY EXOTHERMIC WELD PROCESS THE LOWER END OF CABLE TO A STEEL PILE OR STEEL SHELL OF A CAST IN PLACE CONCRETE PILE. IF STEEL PILING OR CAST IN PLACE CONCRETE PILING IS NOT USED THEN INSTALL 25 FOOT OF CABLE LOOPED UNDER THE PIER FOOTING AND SEPARATE FROM THE CONCRETE WITH 2 LAYERS OF TAR PAPER. EXTEND CABLE IN ONE CONTINUOUS LENGTH THROUGH TOP OF PIER CAP WITH LEAD IN OF SUFFICIENT LENGTH TO EXOTHERMIC WELD AT UPPER END OF CABLE TO OUTSIDE GIRDER OR BEAM OF SUPER STRUCTURE.

PAYMENT SHALL BE MADE ON THE UNIT PRICE BID FOR EACH STRUCTURE, GROUNDING SYSTEM.

LUMINAIRE SUPPORT ARMS

THE LUMINAIRE SUPPORT ARM ASSEMBLY SHALL CONSIST OF AN UPPER AND LOWER MEMBER SECURELY JOINED BY MEANS OF VERTICAL STRUT OR STRUTS. THE UPPER AND LOWER MEMBERS SHALL BE STANDARD STEEL PIPE OF 2" N.P.S. (OR LARGER AS REQUIRED), ASTM-A-53 SCHEDULE 40. THE SHAFT END OF MEMBER SHALL HAVE A WELDED STEEL FITTING, WHICH WILL PERMIT POSITIONING THE ARM ON THE SHAFT PLATE AND WILL SUPPORT THE ARM WHILE SECURING TO THE SHAFT. TWO CAP SCREWS SHALL BE PROVIDED PER FITTING. ALL ARMS SHALL ACCOMMODATE A 2" SLIP FITTER LUMINAIRE. FITTING AND SHAFT PLATE SHALL BE SIMILAR TO THOSE NOW IN USE BY THE AGENCY MAINTAINING THE SYSTEM TO PROVIDE INTERCHANGEABILITY OF ARMS.

INSPECTIONS, CODES, RULES AND REGULATIONS

OBTAIN ALL INSPECTIONS REQUIRED BY LAWS, ORDINANCES, RULES, REGULATIONS, AND THE CITY OF MARTINS FERRY. OBTAIN CERTIFICATES OF SUCH INSPECTIONS AND SUBMIT SAME TO ENGINEER. CONTRACTOR SHALL PAY ALL FEES, CHARGES AND OTHER EXPENSE IN CONNECTION THEREWITH.

Special Note

The Following Quantity has been included in the General Summary for use as directed by the Engineer:

1000 L.F - Alternate Trench, 4'-6" Deep

Luminaires

Roadway Luminaires 400 Watt Mercury I E S Type II or III, General Electric M400, Westinghouse OV-25, Line Materials Unistyle or Approved Equal. with integral dual voltage Ballasts rated for 240/480 volt operation.

FED. RD. DIVISION	STATE	PROJECT	
2	OHIO		

25/418

L3/12

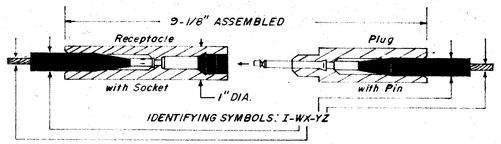

TO IDENTIFY THE PROPER KIT FOR AN INSTALLATION, SELECT FROM THE TABLES BELOW THE SYMBOLS WHICH COINCIDE WITH THE REQUIREMENTS and SUBSTITUTE FOR (W,X) and (Y,Z) RESPECTIVELY.

EXAMPLE

IF THE INSTALLATION REQUIRES A RECEPTACLE FOR NO.6 STRANDED CONDUCTOR and A CABLE DIA. OF .660" and A PLUG FOR NO.8 SOLID CONDUCTOR and A CABLE DIA. OF .460", THE KIT NO. IS I-F3-E6.

CONDUCTOR SIZE AWG NO.		SYMBOL FOR X and Z
Concentric Stranded	Solid	
10, 12	8, 10	6
8	6	4
6	4	3
4	–	2

CABLE DIA.		SYMBOL FOR W and Y
MIN.	MAX.	
.195"	.260"	B*
.250"	.330"	C*
.320"	.430"	D*
.420"	.585"	E
.575"	.785"	F
.775"	.985"	G
.975"	1.125"	H

DIAMETERS VARY ALONG CABLE LENGTHS. TAKE SEVERAL MEASUREMENTS. SELECT A TIGHT FIT RATHER THAN A LOOSE ONE.

* MOLDED RUBBER ADAPTERS ARE A PART OF THESE KITS FOR SMALL DIA. CABLE.

TYPE I
INLINE SELF LOCKING CONNECTOR KIT FOR PULL BOX INSTALLATION.

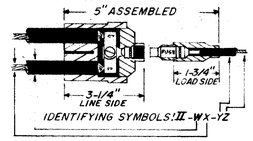

FOR LIGHT AT END OF A CIRCUIT, PLUG ONE OPENING WITH INSULATED PLUG HAVING SAME DIAMETER AS CABLE.
ANY STANDARD MIDGET, FERRULE TYPE, FUSE MAY BE USED IN THIS CONNECTOR. A FUSE CAPABLE OF INTERUPTING THE SHORT CIRCUIT CAPACITY OF THE SUPPLY CIRCUIT MUST BE USED.

(X) CONDUCTOR SIZE(X) AWG NO.		SYMBOL FOR X	(Z) CONDUCTOR SIZE(Z) AWG NO.		SYMBOL FOR X
Concentric Stranded	Solid		Concentric Stranded	Solid	
–	8	6	14,16	12,14	8
8	6	4	10,12	8,10	6
6	4	3	8	6	4
4	–	2	6	4	3
2	–	1			
1	–	0			
1/0	–	10			
2/0	–	20			

(W) CABLE DIA. (W)		SYMBOL FOR X	(Y) CABLE DIA. (Y)		SYMBOL FOR Y
MIN.	MAX.		MIN.	MAX.	
.250"	.330"	C	.120"	.160"	S
.320"	.380"	DA	.155"	.205"	A
.370"	.430"	DB	.195"	.260"	B
.420"	.505"	EA	.250"	.330"	C
.495"	.585"	EB	.320"	.430"	D
.575"	.685"	FA			
.675"	.785"	FB			

DIAMETERS VARY ALONG CABLE LENGTHS. TAKE SEVERAL MEASUREMENTS. SELECT A TIGHT FIT RATHER THAN A LOOSE ONE.

TYPE II
FUSED "Y" CONNECTOR KIT FOR POLE BASE INSTALLATION.

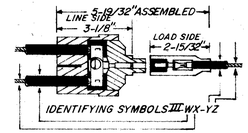

FOR LIGHT AT END OF A CIRCUIT, PLUG ONE OPENING WITH INSULATED PLUG HAVING SAME DIAMETER. TO IDENTIFY THE PROPER KIT FOR AN INSTALLATION, SELECT FROM THE TABLES BELOW THE SYMBOLS WHICH COINCIDE WITH THE REQUIREMENTS and SUBSTITUTE FOR (W,X) and (Y,Z) RESPECTIVELY.

EXAMPLE

IF THE LINE SIDE CABLES ARE NO. 2 STRANDED CONDUCTOR WITH AN OUTSIDE DIAMETER OF .54", and THE LOAD SIDE CABLE IS NO.12 STRANDED CONDUCTOR WITH AN OUTSIDE DIAMETER OF .29", THE KIT NO. IS 3-EB1-C6.

(X) CONDUCTOR SIZE(X) AWG NO.		SYMBOL FOR X	(Z) CONDUCTOR SIZE (Z) AWG NO.		SYMBOL FOR X
Concentric Stranded	Solid		Concentric Stranded	Solid	
–	8	6	14,16	12,14	8
8	6	4	10,12	8,10	6
6	4	3	8	6	4
4	–	2	6	4	3
2	–	1			
1	–	0			
1/0	–	10			
	–				

(W) CABLE DIA. (W)		SYMBOL FOR W	(Y) CABLE DIA. (Y)		SYMBOL FOR Y
MIN.	MAX.		MIN.	MAX.	
.250"	.330"	C	.120"	.160"	S
.320"	.380"	DA	.155"	.205"	A
.370"	.430"	DB	.195"	.260"	B
.420"	.505"	EA	.250"	.330"	C
.495"	.585"	EB	.320"	.430"	D
.575"	.685"	FA			
.675"	.785"	FB			

DIAMETERS VARY ALONG CABLE LENGTHS. TAKE SEVERAL MEASUREMENTS. SELECT A TIGHT FIT RATHER THAN A LOOSE ONE.

TYPE III
UNFUSED "Y" CONNECTOR KIT FOR POLE BASE INSTALLATION.

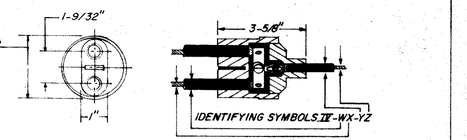

TO IDENTIFY THE PROPER KIT FOR AN INSTALLATION, SELECT FROM THE TABLES BELOW THE SYMBOLS WHICH COINCIDE WITH THE REQUIREMENTS and SUBSTITUTE FOR (W,X) and (Y,Z) RESPECTIVELY.

EXAMPLE

IF THE TWIN CABLES ARE NO.2 STRANDED CONDUCTOR WITH AN OUTSIDE DIA. OF .54" and THE SINGLE CABLE IS NO. STRANDED CONDUCTOR WITH AN OUTSIDE DIA. OF .29", THE KIT NO. IS 4-EB1-C6.

(X) CONDUCTOR SIZE(X) AWG NO.		SYMBOL FOR X	(Z) CONDUCTOR SIZE (Z) AWG NO.		SYMBOL FOR Z
Concentric Stranded	Solid		Concentric Stranded	Solid	
–	8	6	14,16	12,16	8
8	6	4	10,12	8,10	6
6	4	3	8	6	4
4	–	2	6	4	3
2	–	1	4	–	2
1	–	0	2	–	1
1/0	–	10	1	–	0
2/0	–	20			

(W) CABLE DIA. (W)		SYMBOL FOR W	(Y) CABLE DIA. (Y)		SYMBOL FOR Y
MIN.	MAX.		MIN.	MAX.	
.250"	.330"	C	.155"	.205"	A
.320"	.380"	DA	.195"	.260"	B
.370"	.430"	DB	.250"	.330"	C
.420"	.505"	EA	.320"	.430"	D
.495"	.585"	EB	.420"	.585"	E
.575"	.685"	FA	.575"	.785"	F
.675"	.785"	FB			

DIAMETERS VARY ALONG CABLE LENGTHS. TAKE SEVERAL MEASUREMENTS. SELECT A TIGHT FIT RATHER THAN A LOOSE ONE.

TYPE IV
UNFUSED "Y" CONNECTOR KIT FOR PULL BOX INSTALLATION

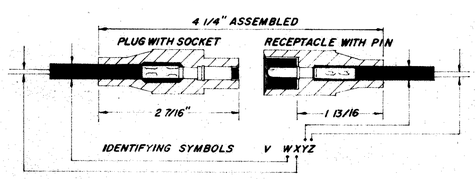

TO IDENTIFY THE PROPER KIT FOR AN INSTALLATION, SELECT FROM THE TABLES BELOW THE SYMBOLS WHICH COINCIDE WITH THE REQUIREMENTS AND SUBSTITUTE FOR (W,X) AND (Y,Z) RESPECTIVELY.

EXAMPLE: IF THE INSTALLATION REQUIRES A PLUG FOR NO. 8 STRANDED CONDUCTOR AND A CABLE DIAMETER OF .38" AND A RECEPTACLE FOR NO. 14 STRAND CONDUCTOR AND A CABLE DIAMETER OF .27", THE KIT NO. IS V-D4-C8.

Conductor Size AWG		Symbol for X and Z
Concentric Strd.	Solid	
14, 16	12, 14	8
10, 12	8, 10	6
8	6	4
6	4	3

Cable Diameter		Symbol for W and Y
MIN.	MAX.	
.155"	.205	A
.195	.260	B
.250	.330	C
.320	.430	D

DIAMETERS VARY ALONG CABLE LENGTHS. TAKE SEVERAL MEASUREMENTS. SELECT A TIGHT FIT RATHER THAN A LOOSE ONE.

TYPE V
UNFUSED INLINE CONNECTOR KIT FOR JUNCTION BOX INSTALLATION.

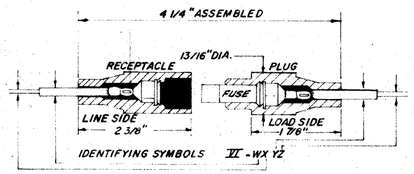

TO IDENTIFY THE PROPER KIT FOR THE INSTALLATION, SELECT FROM THE THE SYMBOLS WHICH COINCIDE WITH THE REQUIREMENTS AND SUBSTITUTE FOR (W,X) and (Y,Z) RESPECTIVELY.

EXAMPLE: IF THE INSTALLATION REQUIRES A RECEPTACLE FOR THE LINE SIDE FOR NO.6 STRANDED CONDUCTOR AND A CABLE DIAMETER OF .42" AND A PLUG FOR THE FUSE FOR THE LOAD SIDE FOR NO.12 STRANDED CONDUCTOR AND A CABLE DIAMETER OF .29", THE KIT NO. IS VI-D3-C6.

Conductor Size AWG		Symbol for X and Z
Concentric Strd.	Solid	
14, 16	12, 14	8
10, 12	8, 10	6
8	6	4
6	4	3

Cable Diameter		Symbol for Y and W
MIN.	MAX.	
.120"	.160"	S
.155	.205	A
.195	.260	B
.250	.330	C
.320	.430	D

DIAMETERS VARY ALONG CABLE LENGTHS. TAKE SEVERAL MEASUREMENTS. SELECT A TIGHT FIT RATHER THAN A LOOSE ONE.

TYPE VI
FUSED INLINE CONNECTOR KIT FOR JUNCTION BOX INSTALLATION.

MIDGET SIZE FUSE

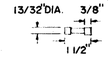

MIDGET FUSES ARE AVAILABLE IN THE FOLLOWING CAPACITIES:
600 VOLTS OR LESS, 1/10 TO 30 AMPS.
ANY STANDARD MIDGET, FERRULE TYPE FUSE, (EXCEPT GLASS TUBE) MAY BE USED IN THIS CONNECTOR.
A FUSE CAPABLE OF INTERRUPTING THE SHORT CIRCUIT CAPACITY OF THE SUPPLY CIRCUIT MUST BE USED.

FED. RD. DIVISION	STATE	PROJECT	TYPE FUNDS
2	OHIO		

BELMONT COUNTY
BEL. 7-20.74

22 / 40

44 / 17

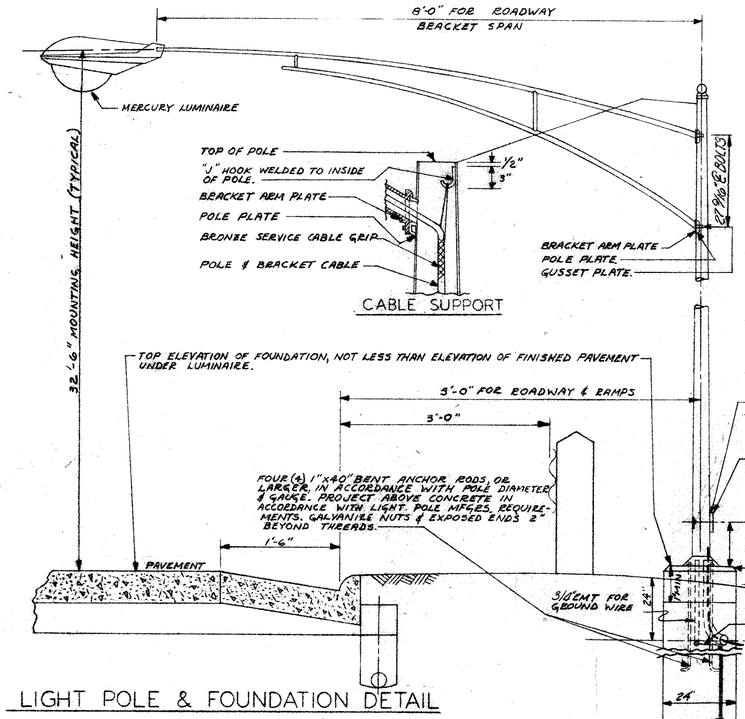

LIGHT POLE & FOUNDATION DETAIL

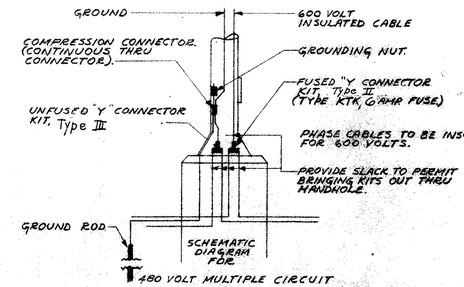

ELECTRICAL WIRING AT LIGHT POLE

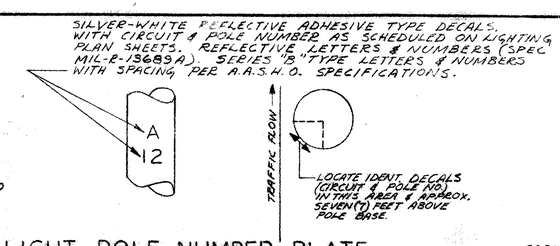

LIGHT POLE NUMBER PLATE

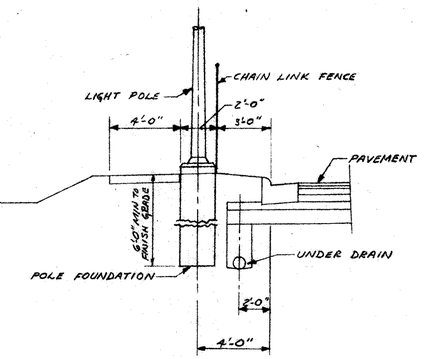

SIDEWALK DETAIL
STA. 1095 TO STA. 1101 & LINCOLN AVE
STA. 1217+60 TO STA. 1252+03 LT. SIDE

ALTERNATE "A"
CABLE-DUCT MAY BE PLACED DIRECTLY IN FOUNDATION BEFORE POUR & CUT-OFF AS SPECIFIED IN GENERAL NOTES.

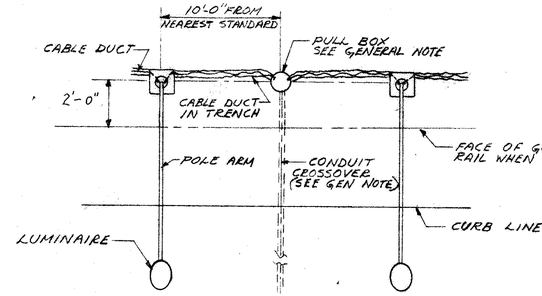

DUCT CABLE & PULL BOX LOCATIONS

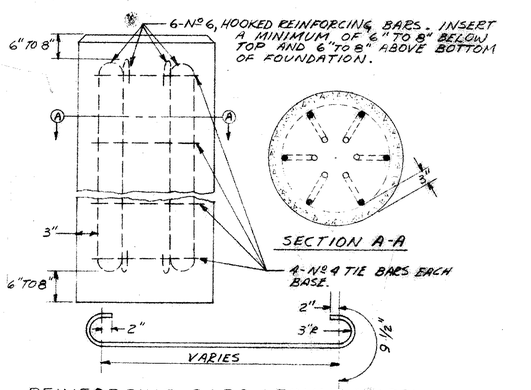

REINFORCING BARS - FOUNDATION

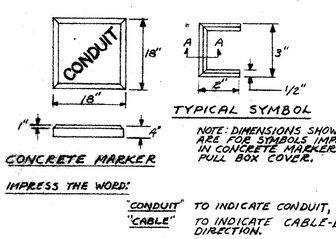

MARKER DETAILS

NOTE: Use Alternate Trench Alignment Except for 2'-0" Deep Trench.

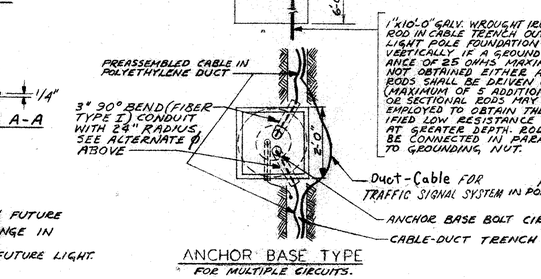

TYPICAL DUCT CABLE TRENCH

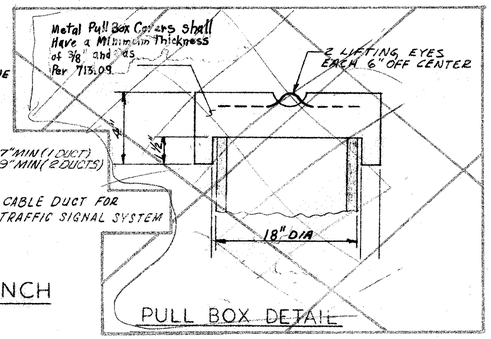

PULL BOX DETAIL

NOTE: Refer to Standard Drawing HL-1, HL-2 & HL-3 for Roadway Lighting Details. Except for Details not shown thereon, use this Sheet.

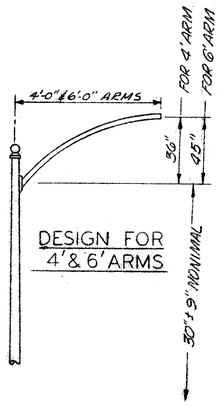

DESIGN FOR 4' & 6' ARMS

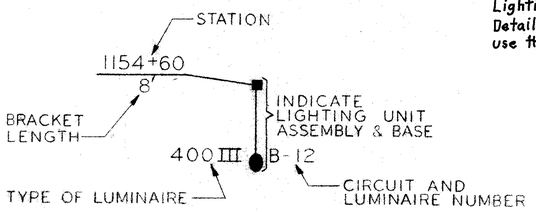

LIGHTING UNIT KEY TO DESCRIPTION

- ○ 18" Diameter Pull Box
- ——— Lighting Duct-Cable 2 #4 ½
- ——— Steel Conduit
- — — Traffic Signal Duct-Cable

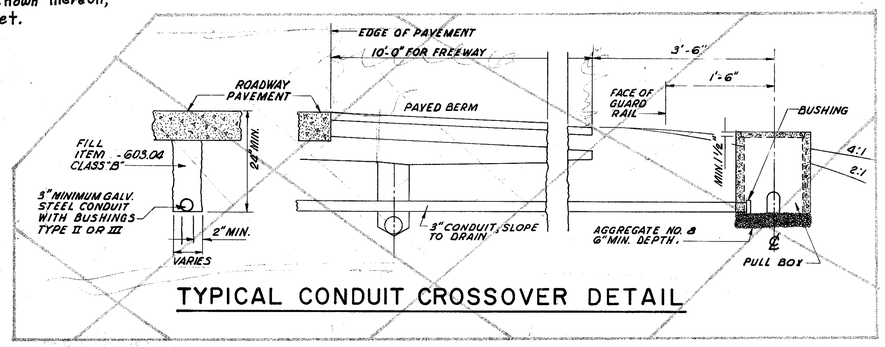

TYPICAL CONDUIT CROSSOVER DETAIL

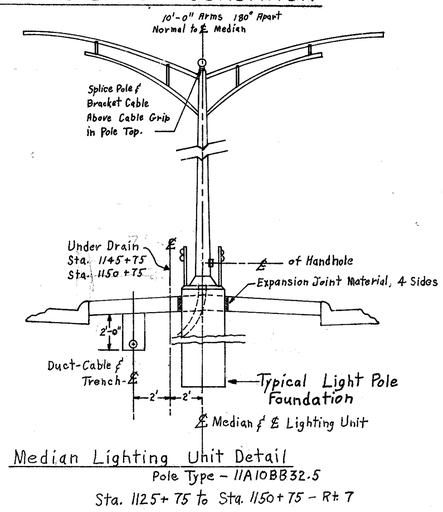

Median Lighting Unit Detail
Pole Type - 11A10BB32.5
Sta. 1125+75 to Sta. 1150+75 - Rt 7

FED. RD. DIVISION	STATE	PROJECT	TYPE FUNDS
2	OHIO		

263 418

BELMONT COUNTY
BEL. 7-20.74

L5 12

12' SQUARE FENCED ENCLOSURE & 8' WIDE DOUBLE GATE. CHAIN LINK FENCE & GATE SHALL BE 8' HIGH PLUS ONE FT. (3 STRANDS) OF BARBED WIRE AT TOP. MATERIAL & INSTALLATION SHALL CONFORM TO SUPPLEMENTAL SPEC. Nº 18, TYPE 'C' LOCK TO BE PROVIDED BY CITY OF MARTINS FERRY, DIV OF ELECTRICITY

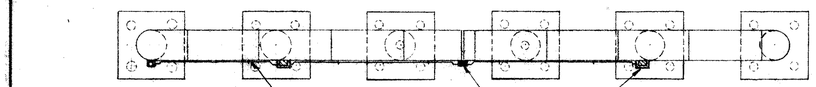

3/4" CONDUIT STRAPS MAX 10'-0" SPACING - TO BE HELD BY 1/4"-20 LEAD ANCHORS & 1/4"-20 x 1" SCREWS OR APPROVED EQUAL.

EXPANSION FITTING (SIMILAR TO OZ CO., SPRING CITY ELECT. MFG. CO TYPE AF OR APPROVED EQUAL)

MERCURY LUMINAIRE HOLOPHANE U588-480-CG-60° SURFACE MTD. HELD BY 3-1/4-20x1" SCREWS & 3-1/4-20 LEAD ANCHORS OR (APPROVED EQUAL)

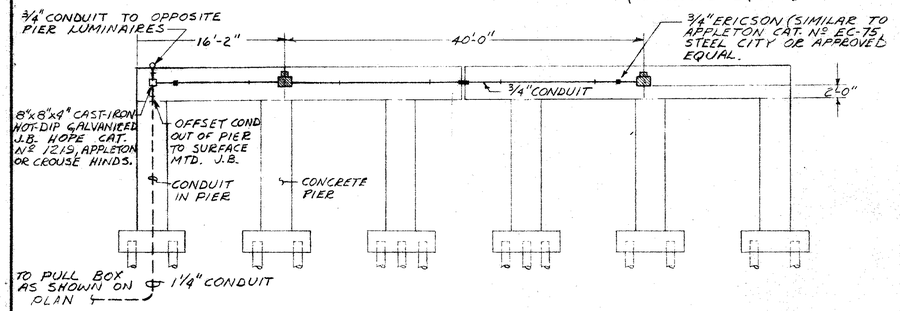

DETAIL UNDER STRUCTURE LIGHTING - BRIDGE SR 7 OVER CENTER ST

NO SCALE

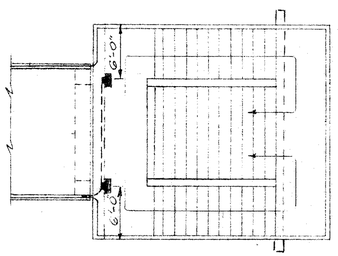

PLAN VIEW

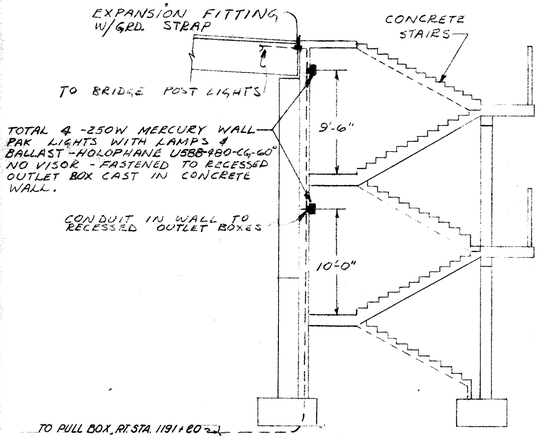

PEDESTRIAN OVER-PASS STAIR TOWER LIGHTING

480V SECONDARY FROM TRANSFORMER IN 2" COND.

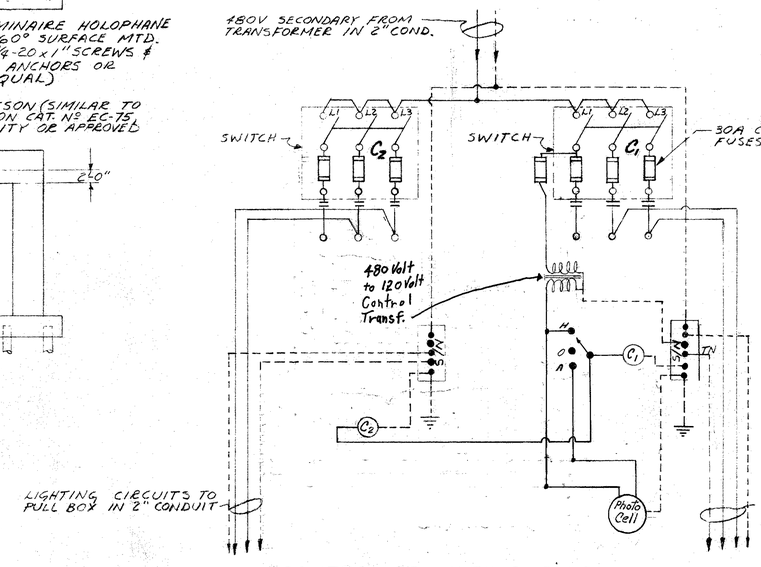

CONTROLLER WIRING DIAGRAM

MARTINS FERRY ONLY

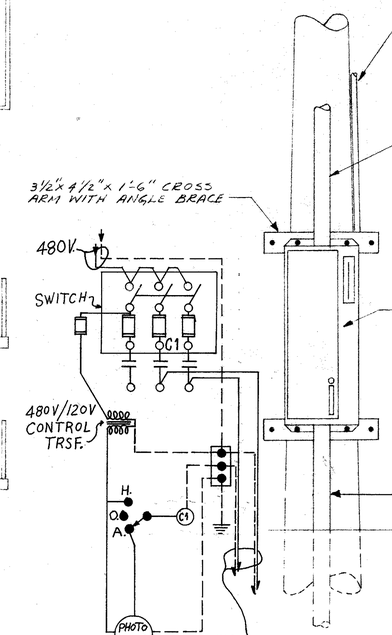

FRONT ELEVATION

BRIDGEPORT SECTION

CONTROL WIRING DIAGRAM

BRIDGEPORT ONLY

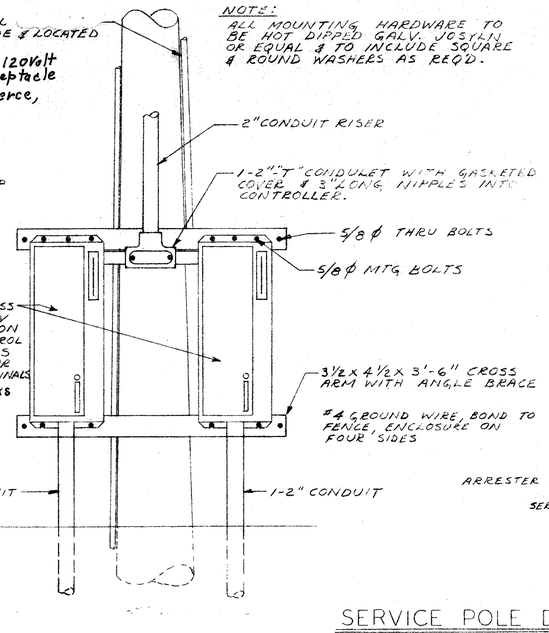

FRONT ELEVATION

MARTINS FERRY SECTION

SERVICE POLE DETAILS

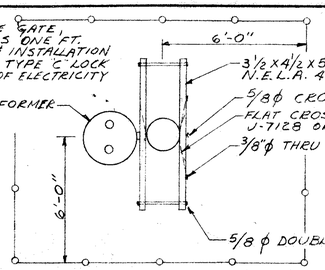

PLAN

NOTE:
SITE LOCATION MAY VARY TO SUIT SUPPLY LINES LOCATION & MUST BE VERIFIED PRIOR TO CONSTRUCTION. POLE CONSTRUCTION TO BE IN ACCORDANCE WITH NATIONAL ELECTRICAL SAFETY CODE CLASS 'B' CONSTRUCTION

INCOMING POWER SERVICE & CONNECTIONS TO TRANSFORMER BY POWER UTILITY. ALL OTHER LABOR & MATERIAL TO PROVIDE INSTALLATION COMPLETE SHALL BE FURNISHED UNDER THIS CONTRACT.

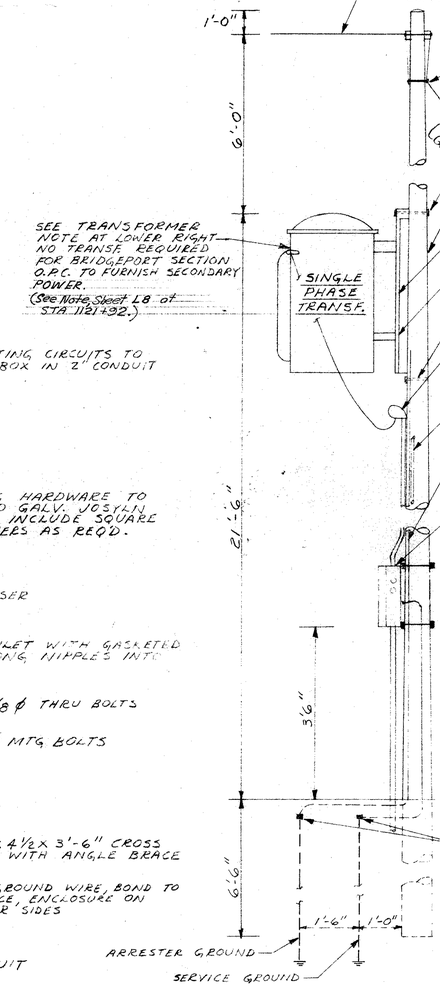

SIDE ELEVATION

NOTE:
POLE TO BE GUYED AS REQUIRED BY INCOMING SERVICE USING APPROVED TYPE GUY CLAMPS, ATTACHMENTS, STRAIN INSULATOR & GUY ANCHOR.

TRANSFORMER NOTE

TRANSFORMER SHALL BE OIL IMMERSED SELF COOLED, 55°C RISE RATED 37 1/2 KVA SINGLE PHASE, 4000/2400 VOLT PRIMARY, 480 VOLT SECONDARY, ONE PHASE GROUNDED, WITH TWO TAPS 2 1/2 % ABOVE & TWO TAPS BELOW RATED HIGH VOLTAGE AND SHALL BE EQUIPPED WITH MANUAL TAP CHANGER. TRANSFORMER SHALL CONFORM TO APPLICABLE EEI-NEMA STANDARDS FOR DISTRIBUTION TYPE TRANSFORMERS. TRANSFORMER SHALL BE COMPLETELY SELF-PROTECTED WITH FUSED CUTOUT, LIGHTNING ARRESTERS & ETC. GENERAL ELECTRIC, WESTINGHOUSE, ALLIS CHALMER OR EQUAL.

1" x 10'-0" GALVANIZED WROUGHT IRON GROUND ROD WITH WIRE BRAZED ON TOP. IF A GROUND RESISTANCE OF 25 OHMS MAXIMUM IS NOT OBTAINED, EITHER ADDITIONAL RODS SHALL BE DRIVEN 6'-0" APART (MAXIMUM 5 ADDITIONAL RODS) OR SECTIONAL RODS MAY BE EMPLOYED TO OBTAIN THE SPECIFIED LOW RESISTANCE GROUND AT GREATER DEPTH.

Rev. 8-30-66

MISCELLANEOUS DETAILS - LIGHTING

FED. RD. DIVISION	STATE	PROJECT	TYPE FUNDS
2	OHIO		

254
415

46
12

BELMONT COUNTY
BEL. 7-20.74

NOTE: Use Standard Drawing HL-4 for Bridge Lighting Details Except for Details Not Shown Thereon use This Sheet.

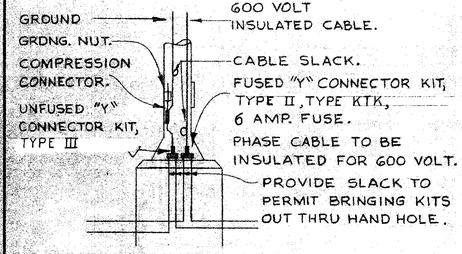

SCHEMATIC DIAGRAM FOR 480 VOLT MULTIPLE CIRCUIT

ELECTRICAL WIRING AT LIGHT POLE

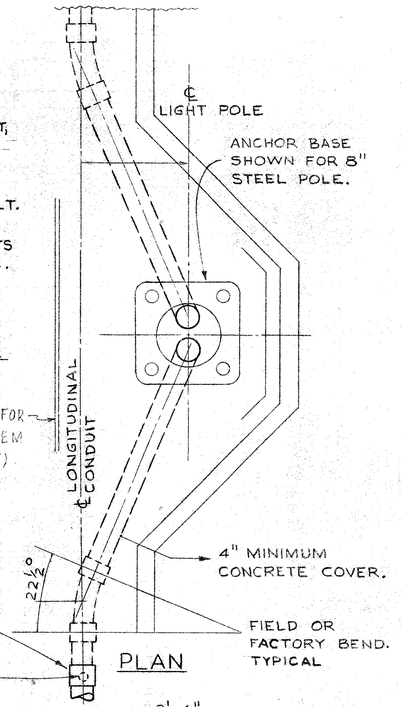

PLAN

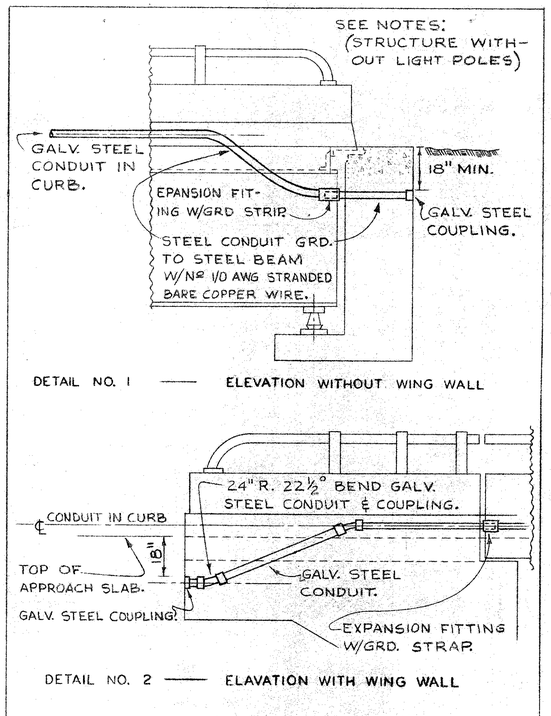

DETAIL NO. 1 —— ELEVATION WITHOUT WING WALL

DETAIL NO. 2 —— ELAVATION WITH WING WALL

SUPER-STRUCTURE ABUTMENT CONDUIT

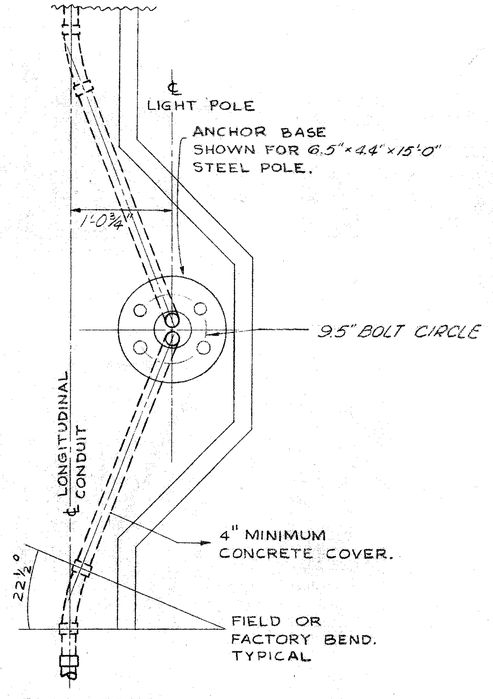

PLAN-FOOT BRIDGE

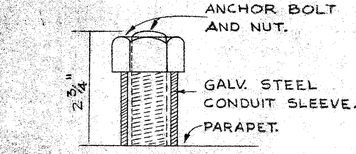

COVER FOR ANCHOR RODS

WHERE LIGHTING INSTALLATION WILL BE MADE AT FUTURE DATE.

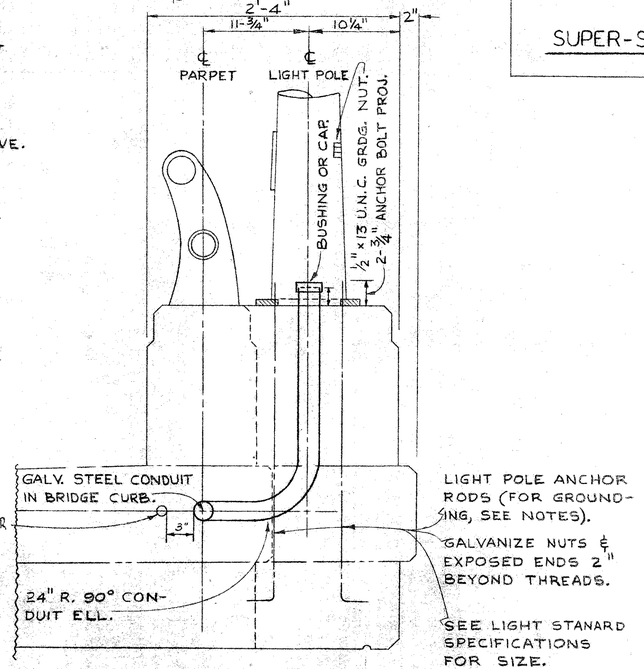

SECTION MULTIPLE CIRCUIT

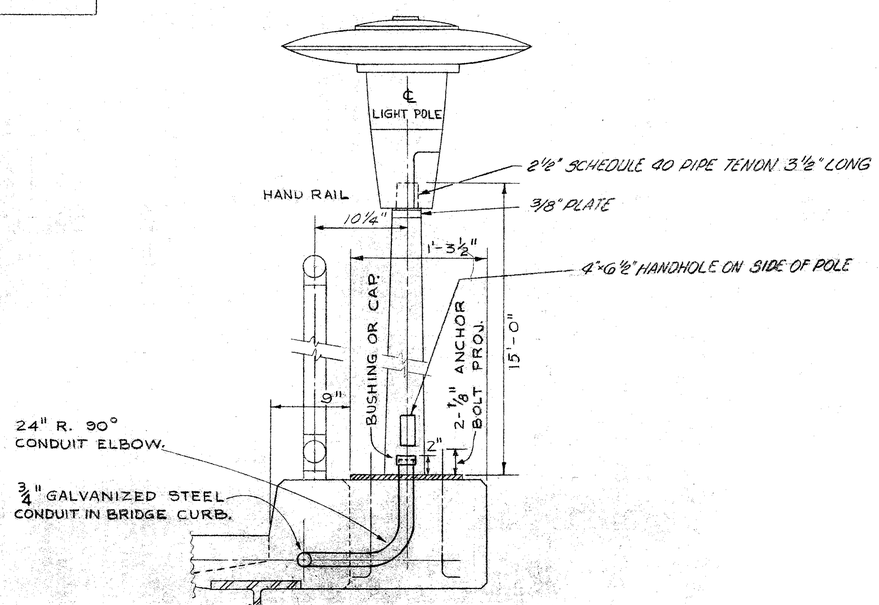

SECTION MULTIPLE CIRCUIT

FED. RD. DIVISION	STATE	PROJECT	TYPE FUNDS
2	OHIO		

255
4.18

BELMONT COUNTY
BEL. 7-20.74

47
12

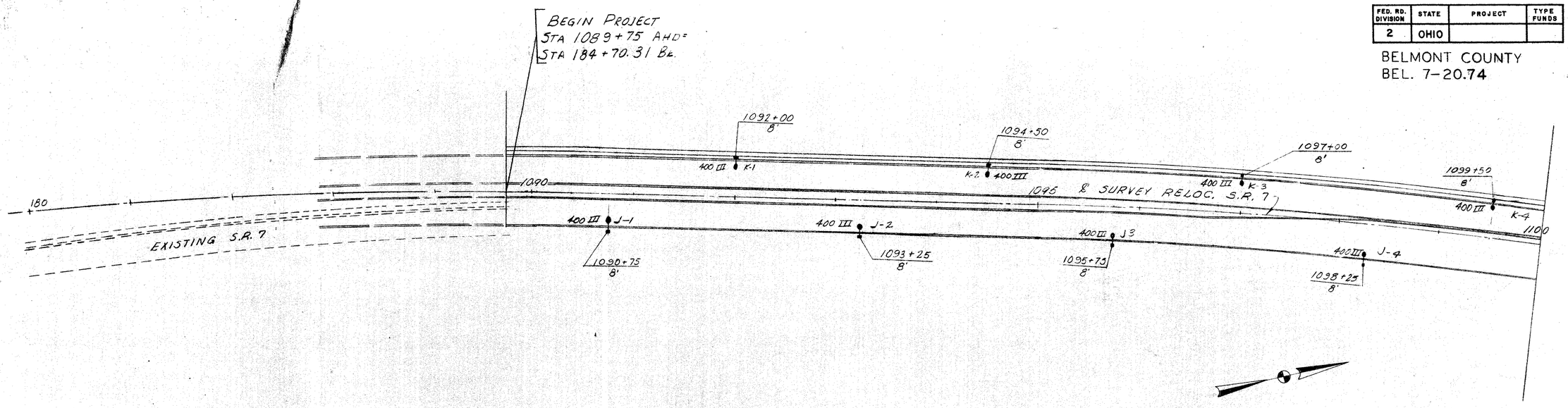

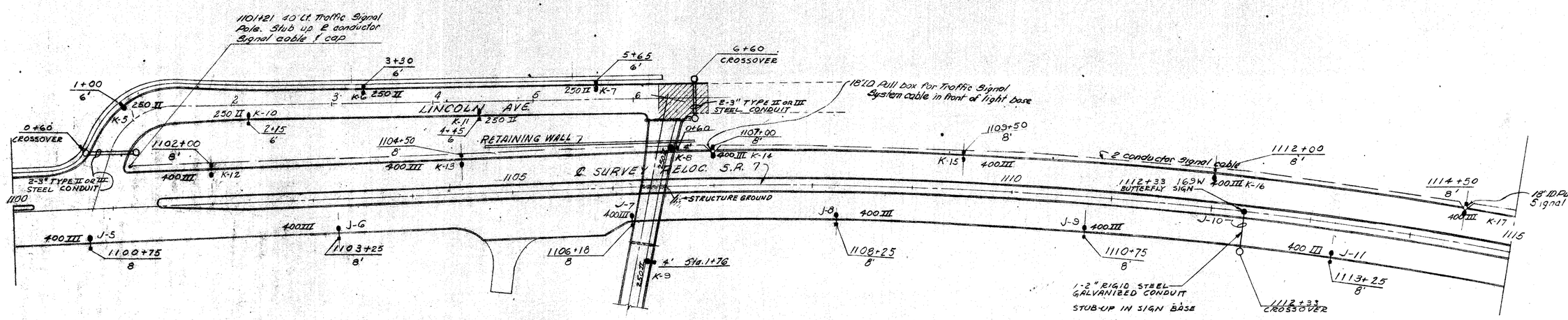

RACKOFF ASSOCIATES
ENGINEERS COLUMBUS, OHIO

Designed	Drawn	Traced	Checked	Reviewed	Date	Revised

FED. RD. DIVISION	STATE	PROJECT	TYPE FUNDS
2	OHIO		

256
418

BELMONT COUNTY
BEL. 7-20.74

L8
12

NOTE: Transformer for this Service Pole will be Supplied by the Ohio Power Co. See Lighting Summary Sheet L1 : "Control Center less Transformer"

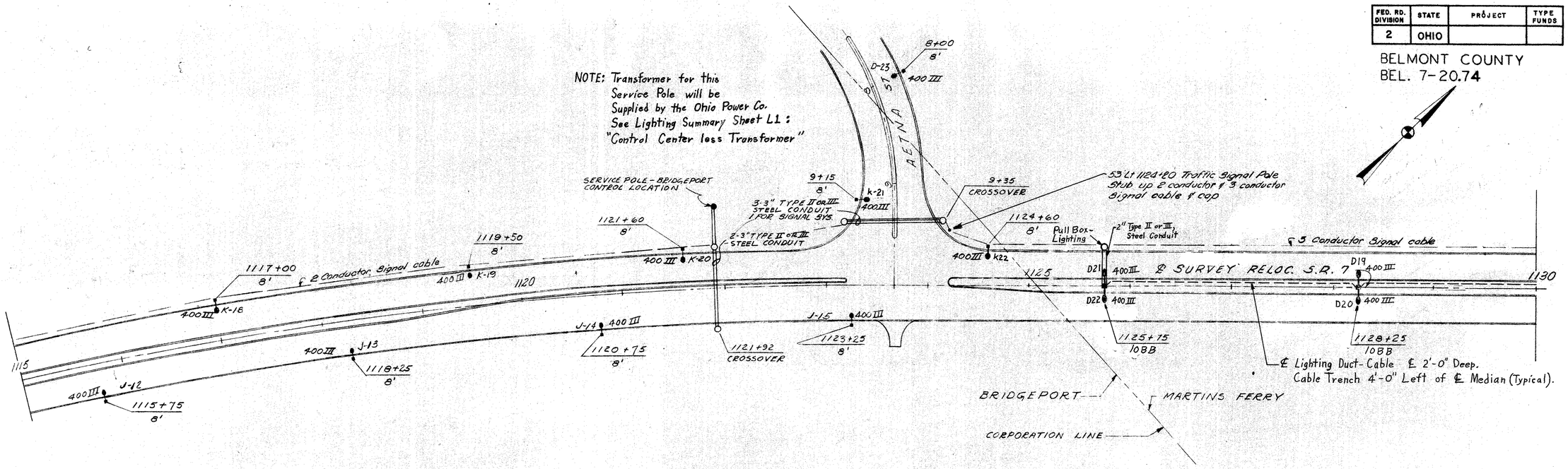

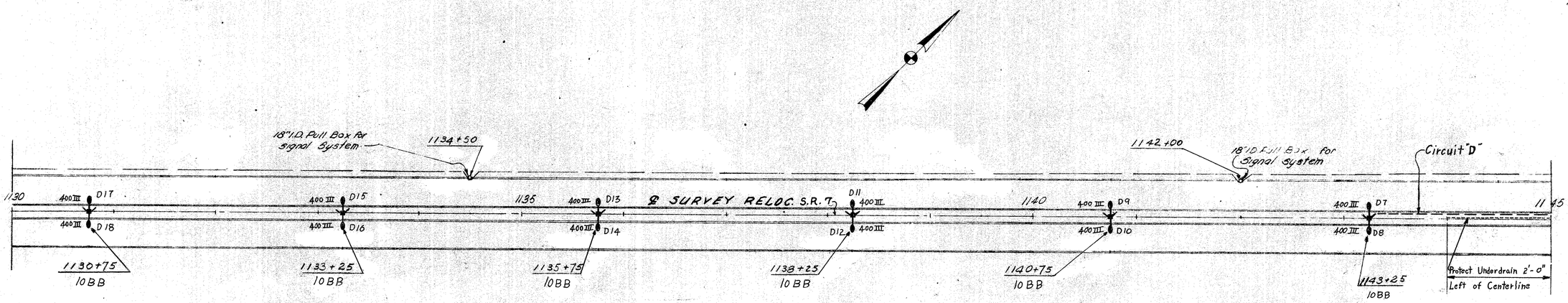

RACKOFF ASSOCIATES
ENGINEERS COLUMBUS, OHIO

Designed	Drawn	Traced	Checked	Reviewed	Date	Revised

FED. RD. DIVISION	STATE	PROJECT	TYPE FUNDS
2	OHIO		

257
418

. BELMONT COUNTY
BEL. 7-20.74

L-9
12

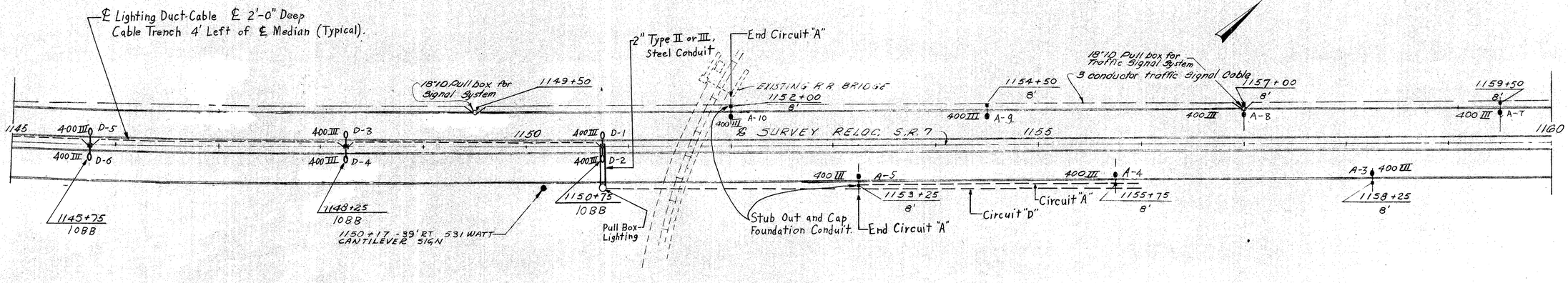

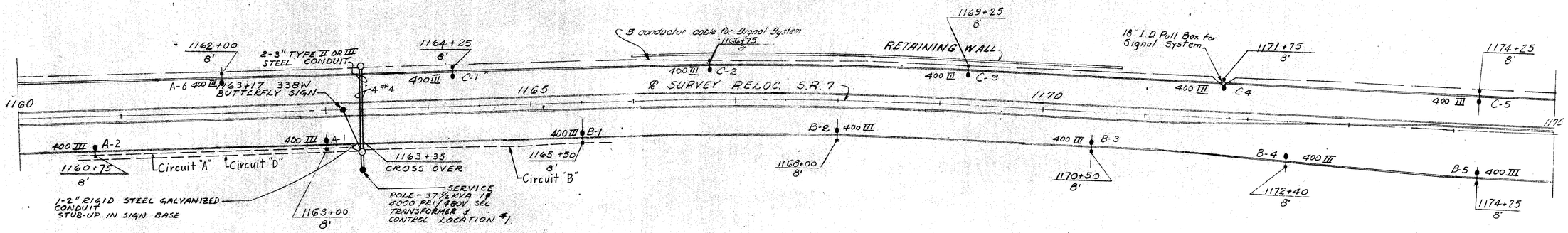

RACKOFF ASSOCIATES
ENGINEERS COLUMBUS, OHIO

Designed	Drawn	Traced	Checked	Reviewed	Date	Revised

FED. RD. DIVISION	STATE	PROJECT	TYPE FUNDS
2	OHIO		

258/418

L10/12

BELMONT COUNTY
BEL. 7-20.74

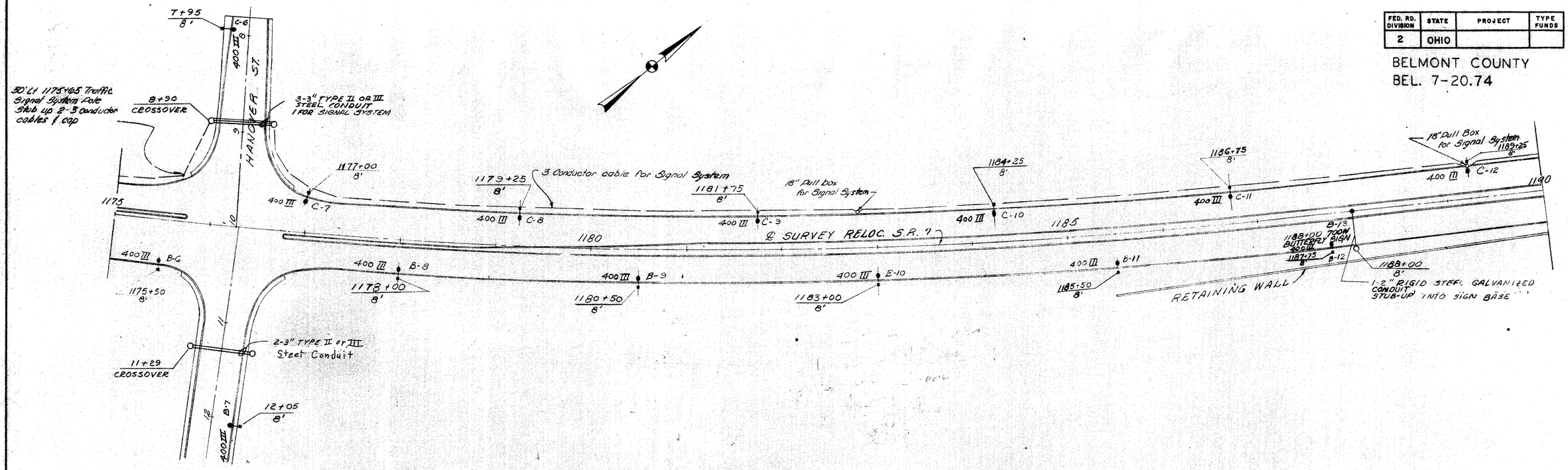

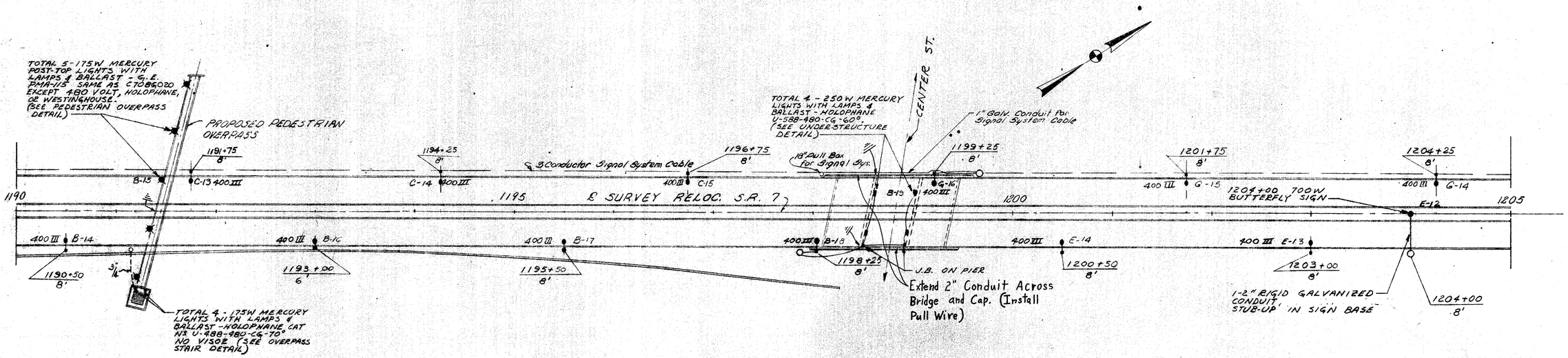

RACKOFF ASSOCIATES
ENGINEERS COLUMBUS, OHIO

Designed	Drawn	Traced	Checked	Reviewed	Date	Revised

FED. RD. DIVISION	STATE	PROJECT	TYPE FUNDS
2	OHIO		

BELMONT COUNTY
BEL. 7-20.74

203
418

LII
12

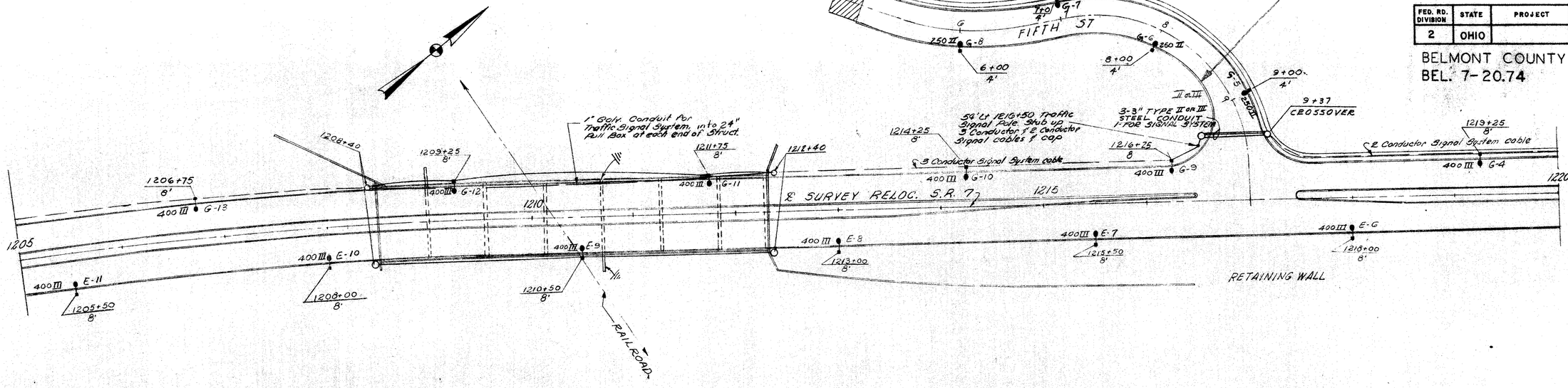

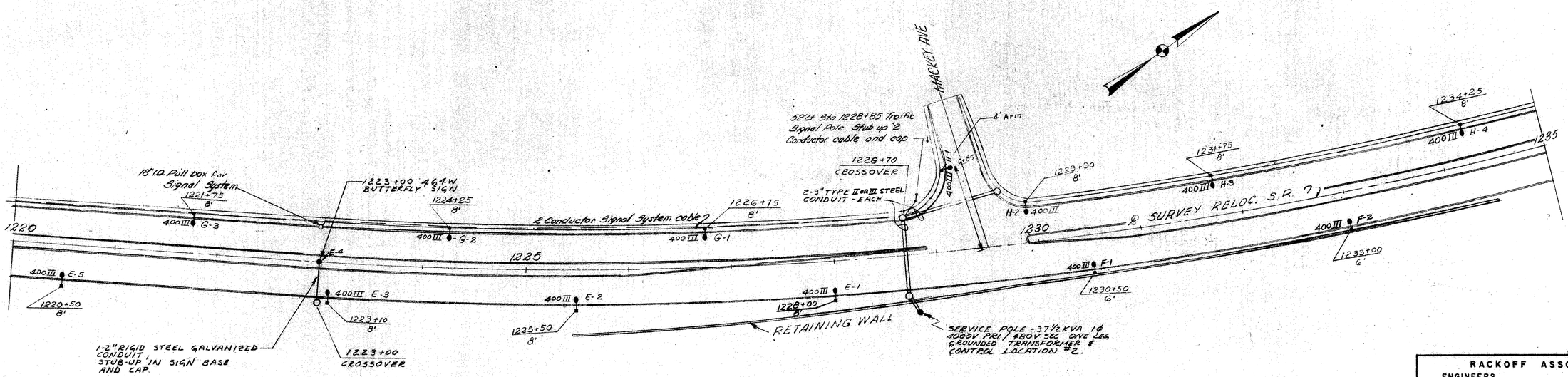

RACKOFF ASSOCIATES
ENGINEERS COLUMBUS, OHIO

Designed	Drawn	Traced	Checked	Reviewed	Date	Revised

FED. RD. DIVISION	STATE	PROJECT	TYPE FUNDS
2	OHIO		

260
413

BELMONT COUNTY
BEL. 7-20.74

L12
12

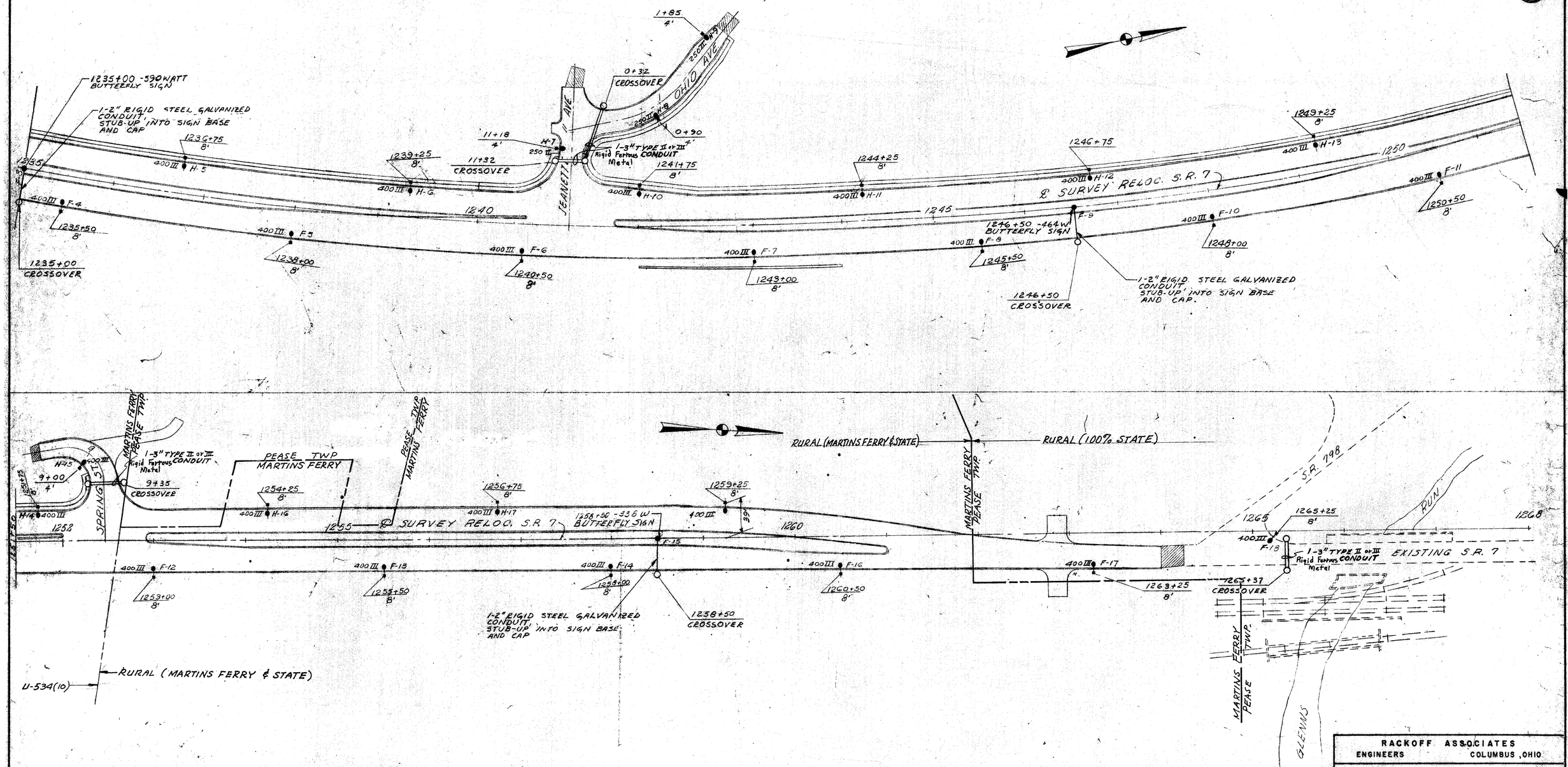

RACKOFF ASSOCIATES
ENGINEERS COLUMBUS, OHIO

Designed	Drawn	Traced	Checked	Reviewed	Date	Revised

FED. RD. DIVISION	STATE	PROJECT	TYPE FUNDS
2	OHIO		

261
418

BELMONT COUNTY
BEL-7-20.74

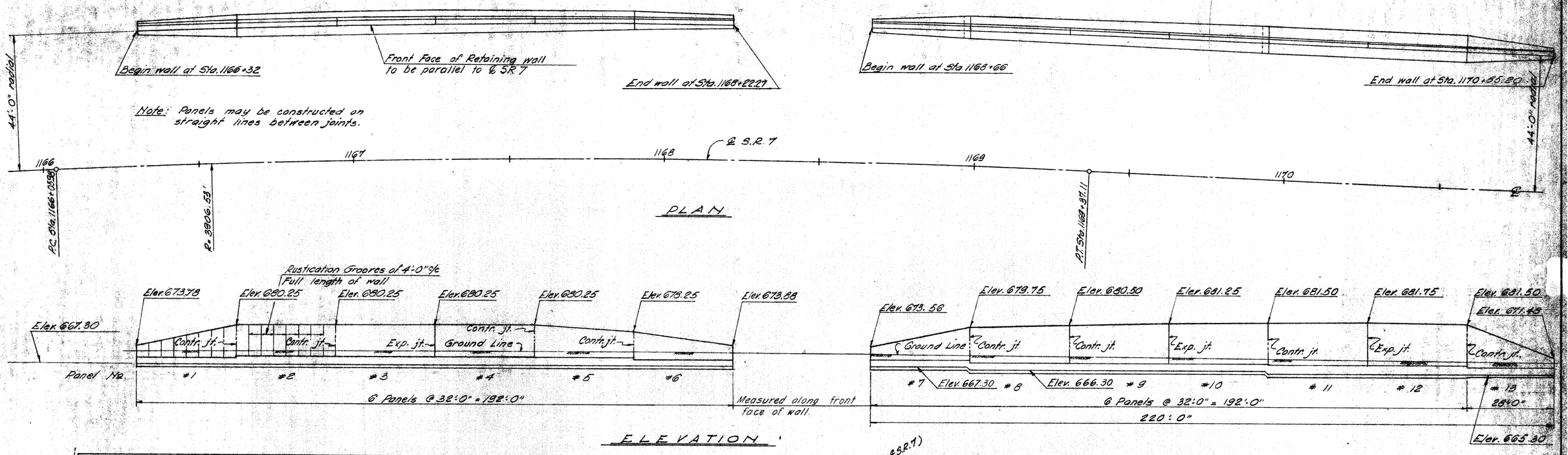

TYPE CODE G201	ESTIMATED QUANTITIES			
ITEM	TOTAL	UNIT	DESCRIPTION	AS BUILT
503	lump	sum	Cofferdams, cribs and sheeting	
503	1170	cu. yds.	Unclassified excavation	
511	296	cu. yds.	Class "E" concrete, walls above footings	
511	271	cu. yds.	Class "E" concrete, footings	
512	130	lin. ft.	Premolded sealing strip.	
509	20,632	lbs.	Reinforcing steel	
516	65	sq. ft.	1" preformed expansion joint filler (AASHO M-153)	
518	183	cu. yds.	Porous backfill	

GENERAL NOTES

DESIGN SPECIFICATIONS: This structure conforms to the requirements of "Design specifications for Highway Structures" of the State of Ohio Department of Highways, dated 9-1-57, together with current revisions thereof.

FOUNDATION BEARING PRESSURE: Maximum designed bearing pressure is 1.4 tons per sq. ft.

THE KEY on the bottom of footings shall be placed in a carefully made trench against undisturbed earth.

CONCRETE CLASS "E" - basic unit stress 1,139 p.s.i.
REINFORCING STEEL - ASTM A15, A16, A160, Deformed, Intermediate or Hard Grade. Basic unit stress 20,000 p.s.i.

POROUS BACKFILL, 2 ft. thick, full length of retaining wall shall extend up to within 2 feet of finished ground line.

FOOTING REINFORCING STEEL shall be 3" clear from bottom of footing.

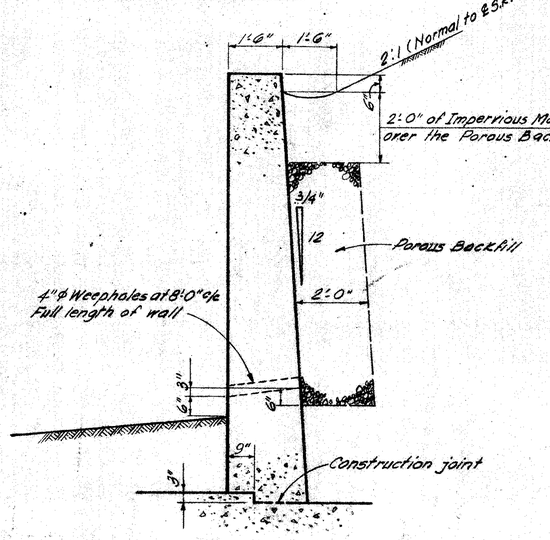

SECTION THRU RETAINING WALL STEM
Details shown are typical for all panels

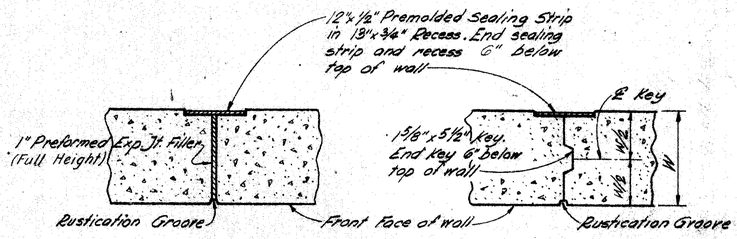

EXPANSION JOINT DETAIL
CONTRACTION JOINT DETAIL

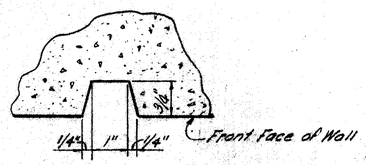

RUSTICATION GROOVE DETAIL

RACKOFF ASSOCIATES
ENGINEERS COLUMBUS, OHIO

RETAINING WALL A
GENERAL PLAN & ELEVATION
GENERAL NOTES AND ESTIMATED QUANTITIES
BELMONT COUNTY STA. 1166+32 STA. 1170+85.20

Designed	Drawn	Traced	Checked	Reviewed	Date	Revised
W.F.	G.M.		V.K.	[illegible]	3-16-64	

FED. RD. DIVISION	STATE	PROJECT	TYPE FUNDS
2	OHIO		

262
418

BELMONT COUNTY
BEL-7-20.74

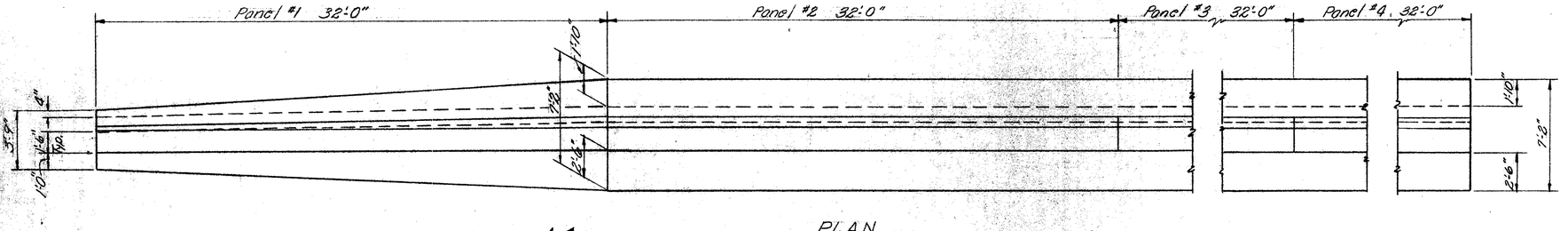

Note: Dimensions, Reinforcing Steel and Details for Panels #3 and #4 are same as for Panel #2.

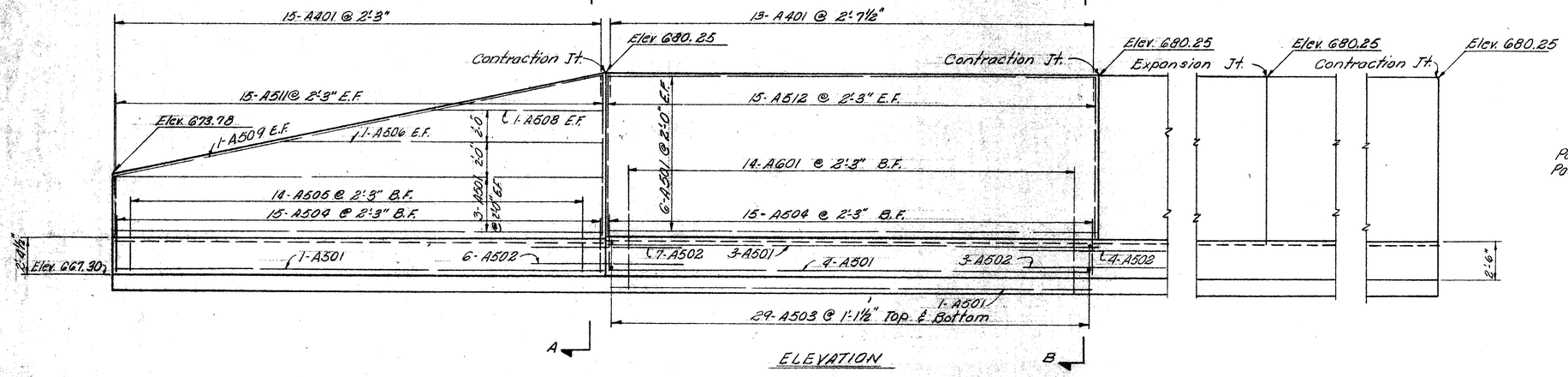

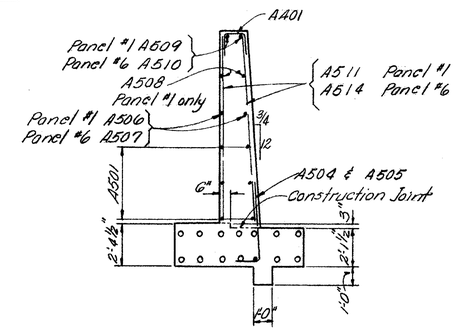

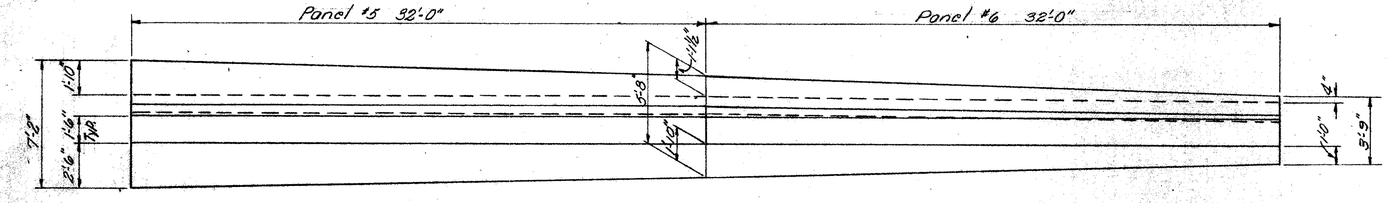

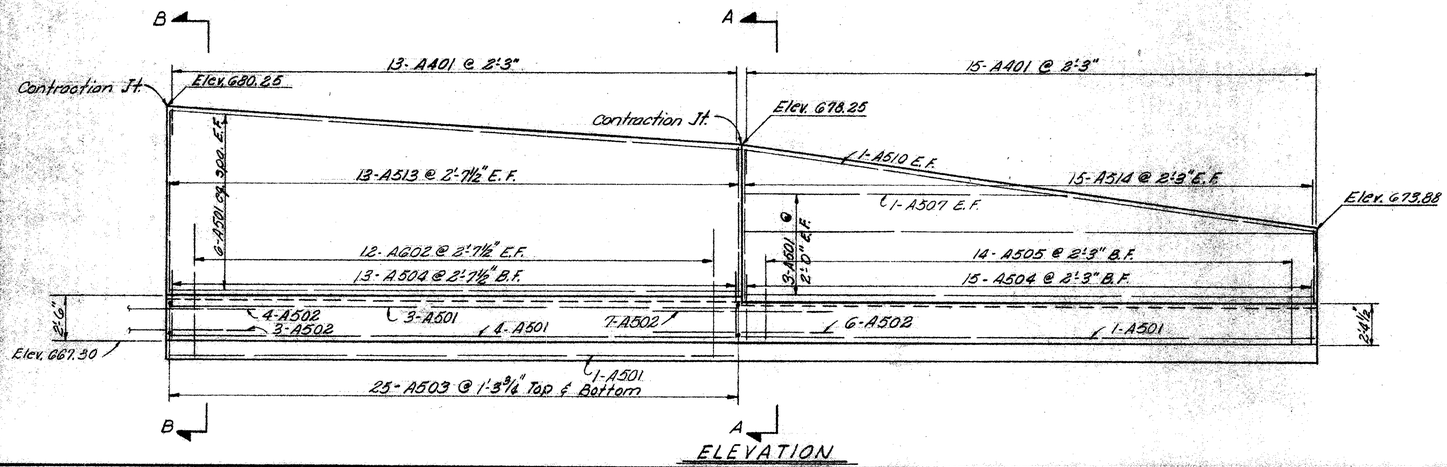

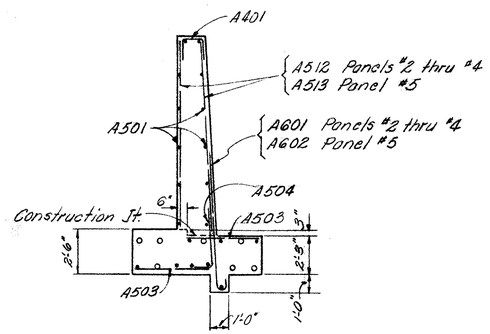

LEGEND

E.F. Denotes Each Face
F.F. Denotes Front Face
B.F. Denotes Back Face

All footing longitudinal bars

- • A501
- ○ A503 centered under expansion or contraction jt.

RACKOFF ASSOCIATES
ENGINEERS COLUMBUS, OHIO

RETAINING WALL A
PANELS 1 - 6

BELMONT COUNTY STA. 1166+32
STA. 1170+85.20

Designed	Drawn	Traced	Checked	Reviewed	Date	Revised
W.F.	E.D.A		N.K.	GEE	3-18-64	

FED. RD. DIVISION	STATE	PROJECT	TYPE FUNDS
2	OHIO		

(268 418)

BELMONT COUNTY
BEL - 7 - 20.74

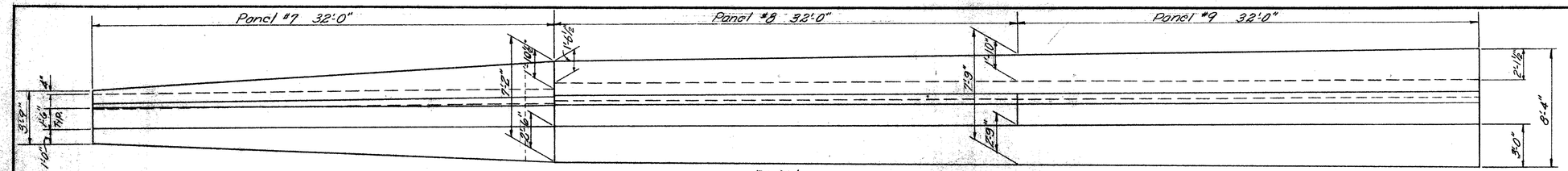

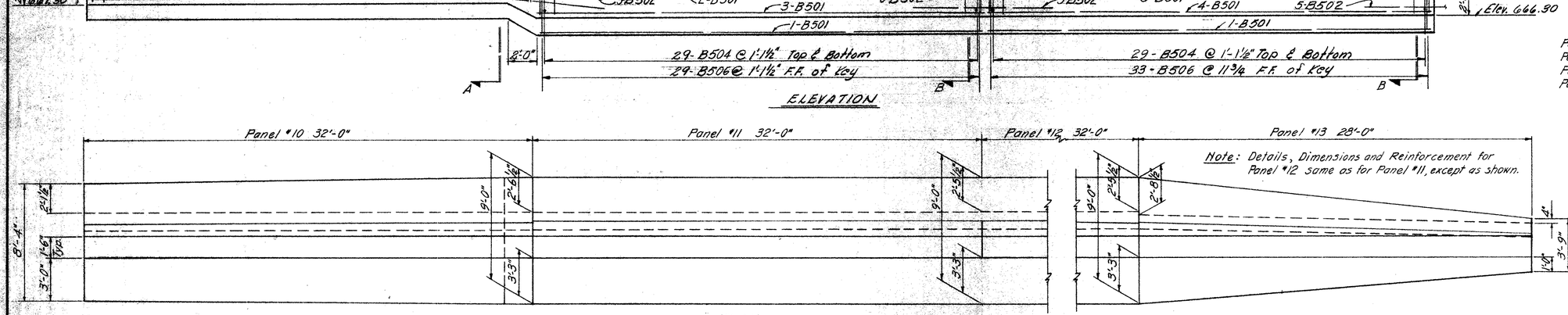

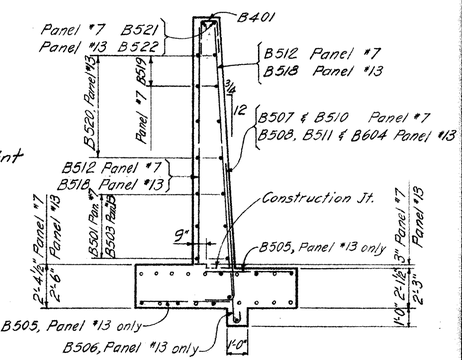

LEGEND

E.F. Denotes Each Face
F.F. Denotes Front Face
B.F. Denotes Back Face

Footing Longitudinal Bars.

- • B501 or B523 Top
  B501, B523 or B503 Bottom
- ○ B502 centered under expansion or contraction joint.

RACKOFF ASSOCIATES
ENGINEERS COLUMBUS, OHIO

RETAINING WALL A
PANELS 7 - 13

BELMONT COUNTY STA. 1166 + 32
STA. 1170 + 85.20

Designed	Drawn	Traced	Checked	Reviewed	Date	Revised
W.F.	E.D.A. M.R.		N.K.	[illegible]	3-18-64	

REINFORCING STEEL LIST

FED. RD. DIVISION	STATE	PROJECT	
2	OHIO		

264
418

BELMONT COUNTY
BEL-7-20.74

BENDING DIAGRAM

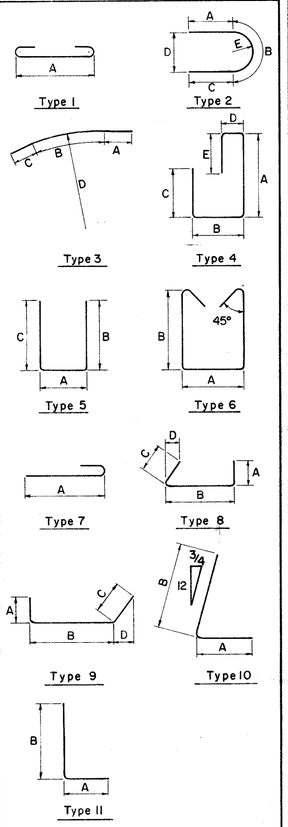

S IN THE COLUMN FOR "TYPE" INDICATES STRAIGHT BARS.

PANELS 1 THRU 6

MARK	NO.	LENGTH	WEIGHT	TYPE	A	B	C	D	E
A401	82	3 - 10	210	5	1 - 1	1 - 6	1 - 6		
A501	94	31 - 8	3,105	S					
A502	47	10 - 0	490	S					
A503	224	4 - 0	935	S					
A504	88	4 - 6	413	10	1 - 1	3 - 7			
A505	28	5 - 8	165	10	1 - 1	4 - 9			
A506	2	21 - 0	44	S					
A507	2	18 - 6	39	S					
A508	2	11 - 0	23	S					
A509	2	32 - 4	67	S					
A510	2	32 - 0	67	S					
A511	30	3 - 11 to 10 - 11	232	S	2 each, vary by 6" increments				
A512	90	10 - 3	962	S					
A513	26	8 - 3 to 10 - 3	251	S	2 each, vary by 2" increments				
A514	30	3 - 9 to 8 - 5	190	S	2 each, vary by 4" increments				
A601	42	8 - 8	547	7	8 - 0				
A602	12	7 - 10	141	7	7 - 2				
		TOTAL	7,881						

PANELS 7 THRU 13

MARK	NO.	LENGTH	WEIGHT	TYPE	A	B	C	D	E
B401	101	4 - 4	292	5	1 - 1	1 - 9	1 - 9		
B501	115	31 - 8	3,798	S					
B502	71	10 - 0	741	S					
B503	7	27 - 8	202	S					
B504	116	4 - 3	514	S					
B505	190	4 - 9	941	S					
B506	236	3 - 4	820	7	2 - 9				
B507	15	4 - 5	69	10	1 - 1	3 - 6			
B508	67	4 - 7	320	10	1 - 1	3 - 8			
B509	30	4 - 10	151	10	1 - 1	3 - 11			
B510	14	5 - 8	83	10	1 - 1	4 - 9			
B511	8	8 - 11	74	10	1 - 1	8 - 0			
B512	30	3 - 6 to 9 - 11	210	S	2 each, vary by 5½" increments				
B513	28	9 - 11	290	S					
B514	34	10 - 8	378	S					
B515	11	6 - 6	75	S					
B516	24	12 - 3	307	S					
B517	60	13 - 6	845	S					
B518	24	3 - 5 to 13 - 6	212	S	2 each, vary by 11" increments				
B519	4	12 - 0 to 22 - 0	71	S	2 each, vary by 10'-0" increments				
B520	8	6 - 8 to 23 - 2	124	S	2 each, vary by 5'-6" increments				
B521	2	32 - 3	67	S					
B522	2	29 - 6	62	S					
B523	6	11 - 0	69	S					
B601	36	7 - 4	397	10	1 - 3	6 - 3			
B602	28	5 - 1	214	10	1 - 3	4 - 0			
B603	56	8 - 11	750	10	1 - 3	7 - 10			
B604	11	6 - 10	113	10	1 - 3	5 - 9			
B605	28	6 - 6	273	S					
B701	16	8 - 10	289	10	1 - 6	7 - 6			
		TOTAL	12,751						

REPLACEMENT BARS

RE401	1	5 - 3	-	S
RE501	1	5 - 7	-	S
RE601	1	5 - 11	-	S
RE701	1	6 - 3	-	S

MARK	NO.	LENGTH	WEIGHT	TYPE	A	B	C	D	E

NOTES

BAR SIZE is indicated in bar mark. The first digit where three digits are used, and the first two where four are used indicate the bar size number.

RACKOFF ASSOCIATES
ENGINEERS COLUMBUS, OHIO

RETAINING WALL A
REINFORCING STEEL LIST

BELMONT COUNTY
STA 1166 + 32
STA 1170 + 85.20

Designed	Drawn	Traced	Checked	Reviewed	Date	Revised
W.F.	M.R.		N.K.	WF	3-18-64	

FED. RD. DIVISION	STATE	PROJECT	TYPE FUNDS
2	OHIO		

265
418

BELMONT COUNTY
BEL. 7-20.74

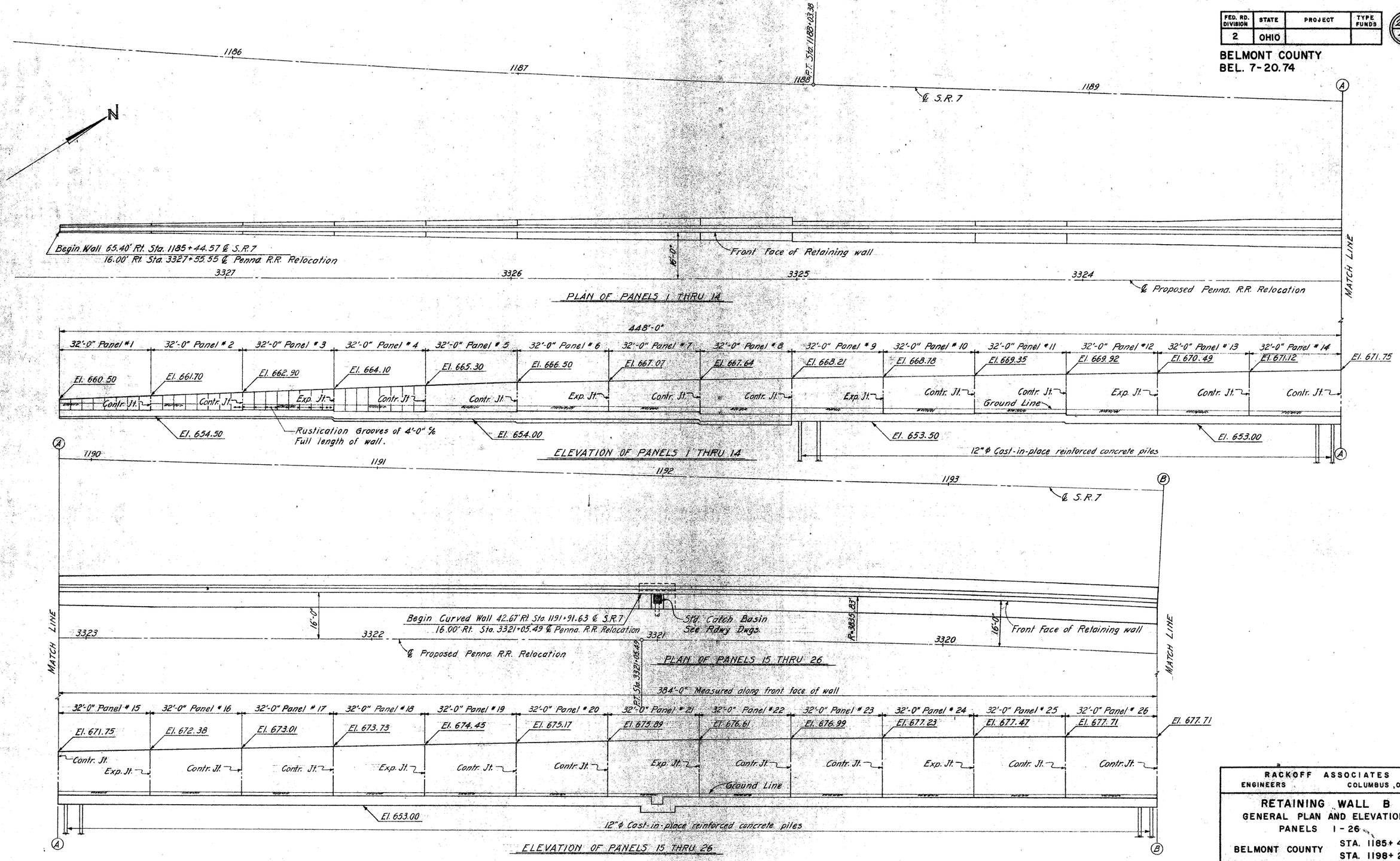

RACKOFF ASSOCIATES
ENGINEERS COLUMBUS, OHIO

RETAINING WALL B
GENERAL PLAN AND ELEVATION
PANELS 1 - 26
BELMONT COUNTY
STA. 1185+44.57
STA. 1198+28.00

Designed	Drawn	Traced	Checked	Reviewed	Date	Revised
P. M.	P.M.	M. R.	W. F.	[illegible]	11-21-63	

FED. RD. DIVISION	STATE	PROJECT	TYPE FUNDS
2	OHIO		

266
418

BELMONT COUNTY
BEL. 7-20.74

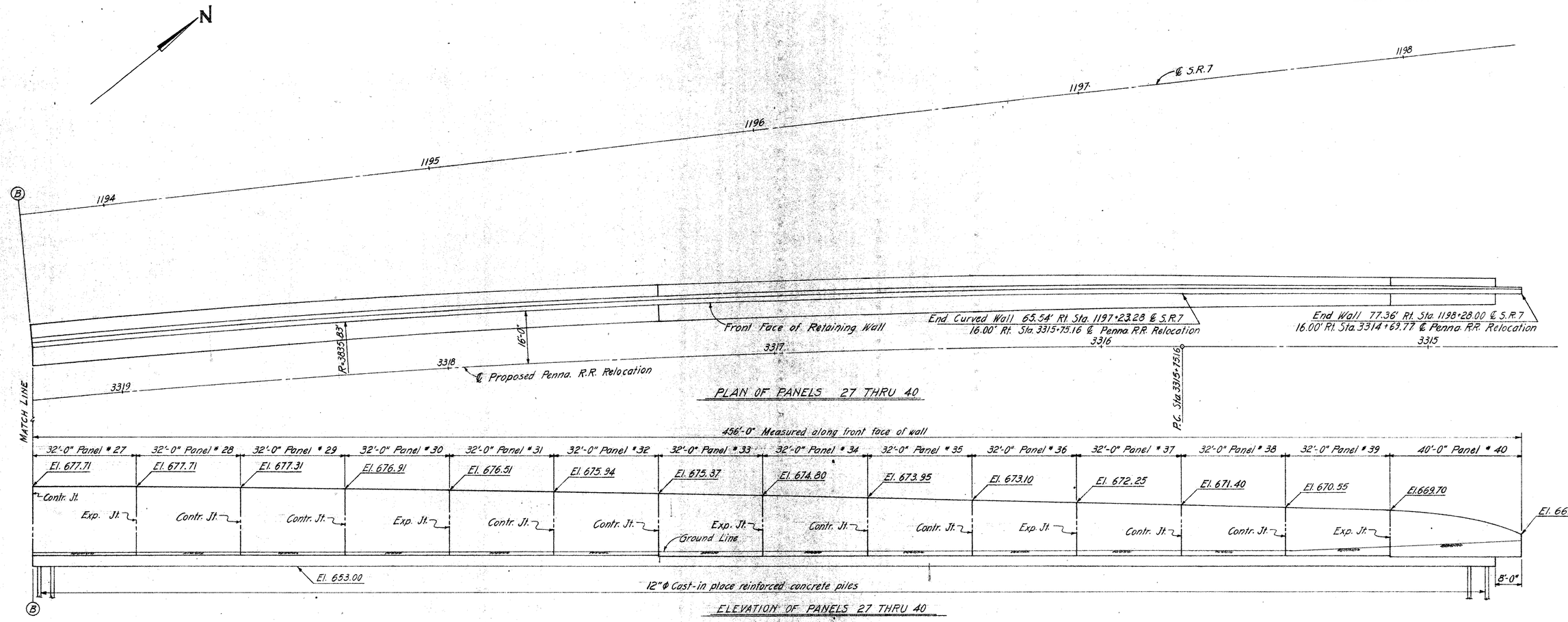

RACKOFF ASSOCIATES
ENGINEERS COLUMBUS, OHIO

RETAINING WALL B
GENERAL PLAN AND ELEVATION
PANELS 27 - 40

BELMONT COUNTY
STA. 1185+44.57
STA. 1198+28.00

Designed	Drawn	Traced	Checked	Reviewed	Date	Revised
P.M.	P.M.	M.R.	W.F.	666	11-21-63	

FED. RD. DIVISION	STATE	PROJECT	TYPE FUNDS
2	OHIO		

267
418

BELMONT COUNTY
BEL. 7-20.74

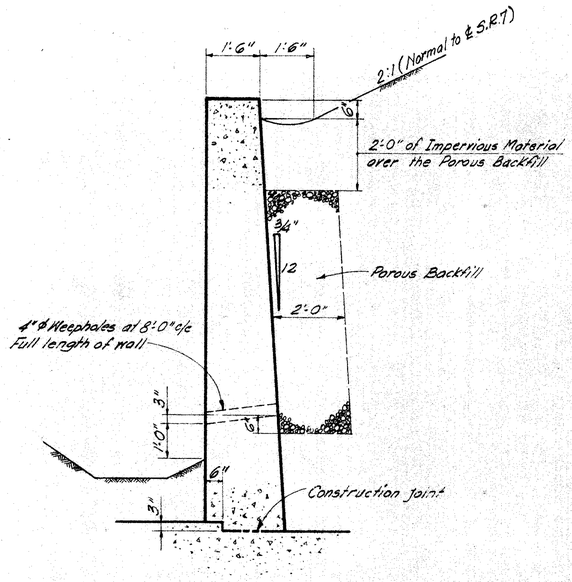

SECTION THRU RETAINING WALL B TEM
Details shown are typical for all panels

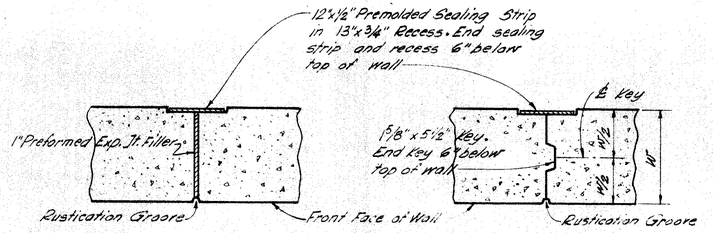

EXPANSION JOINT DETAIL

CONTRACTION JOINT DETAIL

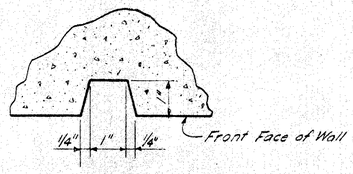

RUSTICATION GROOVE DETAIL

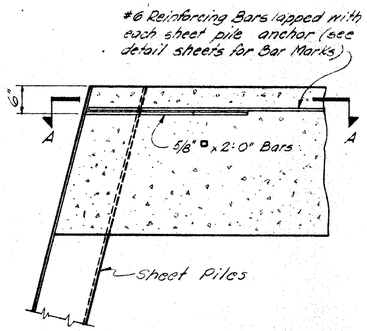

SECTION THRU FOOTING

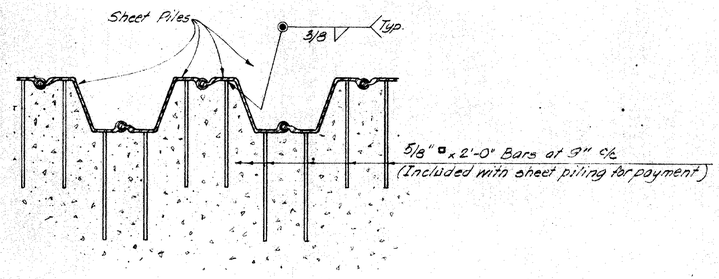

SECTION A-A

SHEET PILE ANCHOR DETAILS
Details shown are typical for all panels with sheet piling in front of the footing.

ESTIMATED QUANTITIES
TYPE CODE G201

ITEM	TOTAL	UNIT	DESCRIPTION	AS BUILT
503		Lump sum	Cofferdams, cribs and sheeting.	
504	7636	sq. ft.	Steel sheet piling left in place (Min. section modulus of 9.0 in.³ per foot of wall).	
503	3232	cu. yds.	Unclassified excavation.	
511	1559	cu. yds.	Class "E" concrete, walls above footings.	
511	1357	cu. yds.	Class "E" concrete, footings.	
512	618	lin. ft.	Premolded sealing strip.	
509	180,757	lbs.	Reinforcing steel.	
516	423	sq. ft.	1" preformed expansion joint filler (AASHO M-153)	
505		Lump sum	First test pile.	
507	12,675	lin. ft.	12" cast-in-place reinforced concrete piles.	
518	1079	cu. yds.	Porous backfill	
506		Lump sum	First pile test load.	
506	1	each	Subsequent pile test load.	

GENERAL NOTES

DESIGN SPECIFICATIONS: This structure conforms to the requirements of "Design Specifications for Highway Structures" of the State of Ohio, Department of Highways, dated 9-1-57, together with current revisions thereof.

PILES shall be driven to a minimum bearing capacity as shown below:

Panel No.	Min. Bearing Capacity	Estimate Average Pay Length
9, 10, 16 & 36	35 T	30'
11, 14, 15, 17, 18, 19, 22, 23, 24, 32, 33, 35, 37 & 38	40 T	35'
12, 13, 20, 21, 25 thru 31, 34, 39 & 40	45 T	40'

FOUNDATION BEARING PRESSURE: Footings for Panels #1 thru #8 are designed for a maximum bearing pressure of 1.5 tons per sq. ft.

THE KEY on the bottom of footings for Panels #1 thru #8 shall be placed in a carefully made trench against undisturbed earth.

CONCRETE CLASS E - basic unit stress 1,133 psi.

REINFORCING STEEL - ASTM A15, A16, A160, Deformed, Intermediate or Hard Grade. Basic Unit stress 20,000 psi.

SHEETING AND BRACING: Before construction is started, eight sets of prints showing details of the sheeting and bracing to be used for excavation adjacent to the railroad tracks shall be submitted to the Director for approval by the Department of Highways and by the Railroad Company.

ALIGNING RAILROAD TRACKS: After the Contractor has completed all excavation and backfill adjacent to the railroad tracks in compliance with Secs. 503.04 and 503.09 of the Construction and Material Specifications, subject to the Supervision of the Railroad Company, nothing in Secs. 503.04, 503.09 or 108.04 of the Specifications shall be construed to hold the Contractor liable for aligning and resurfacing the railroad tracks.

POROUS BACKFILL, 2 ft. thick, full length of retaining wall shall extend up to within 2 feet of the finished ground line.

FOOTING REINFORCING STEEL shall be 3" clear from bottom of footing.

RACKOFF ASSOCIATES
ENGINEERS COLUMBUS, OHIO

RETAINING WALL B
COMMON DETAILS, GENERAL NOTES AND ESTIMATED QUANTITIES
BELMONT COUNTY
STA. 1185+44.57
STA. 1198+28.00

Designed	Drawn	Traced	Checked	Reviewed	Date	Revised
P. M.	G.M.		W. F.	[illegible]	11-21-63	

FED. RD. DIVISION	STATE	PROJECT	TYPE FUNDS
2	OHIO		

268
418

BELMONT COUNTY
BEL. 7-20.74

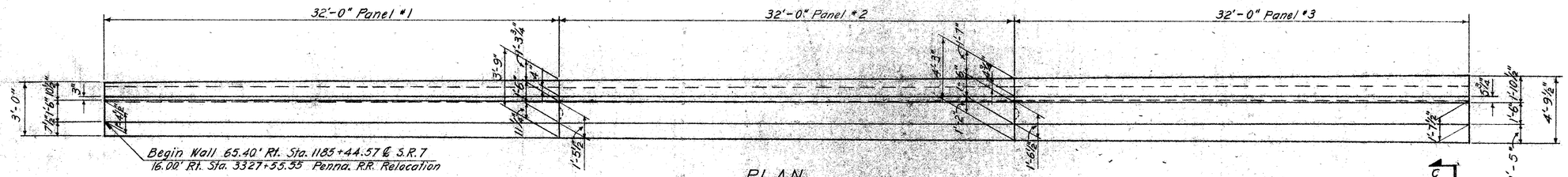

PLAN

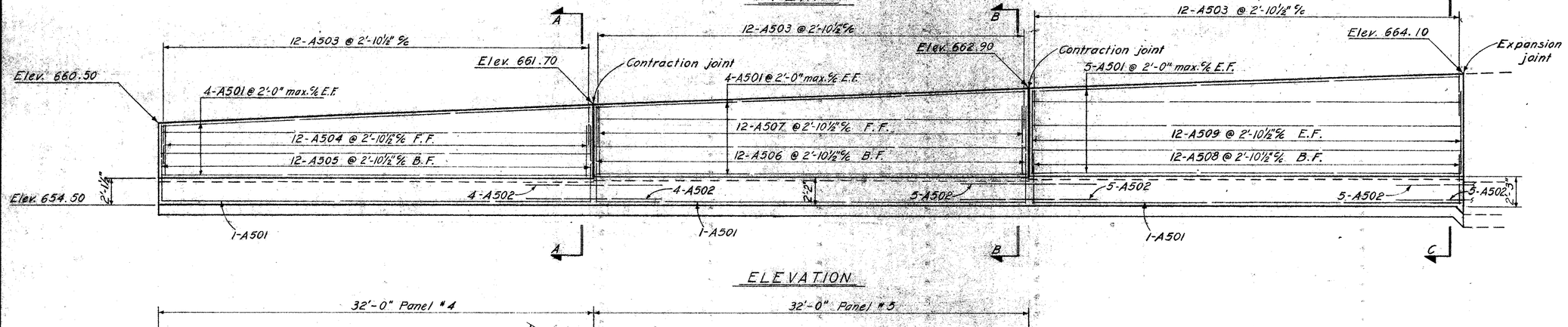

ELEVATION

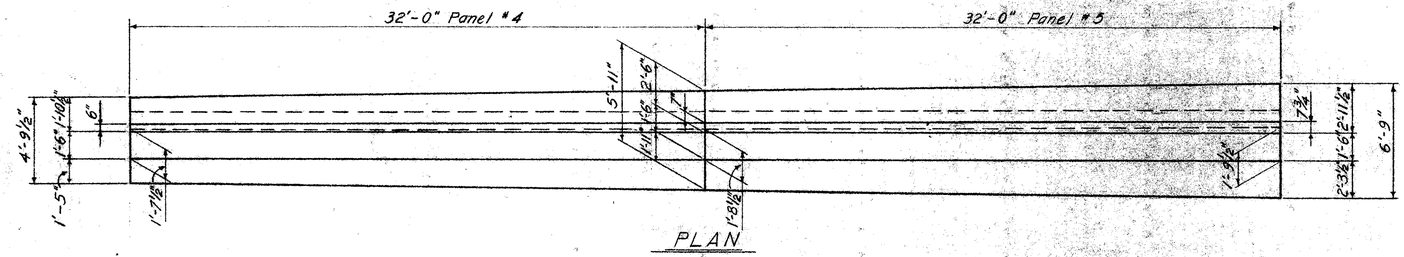

PLAN

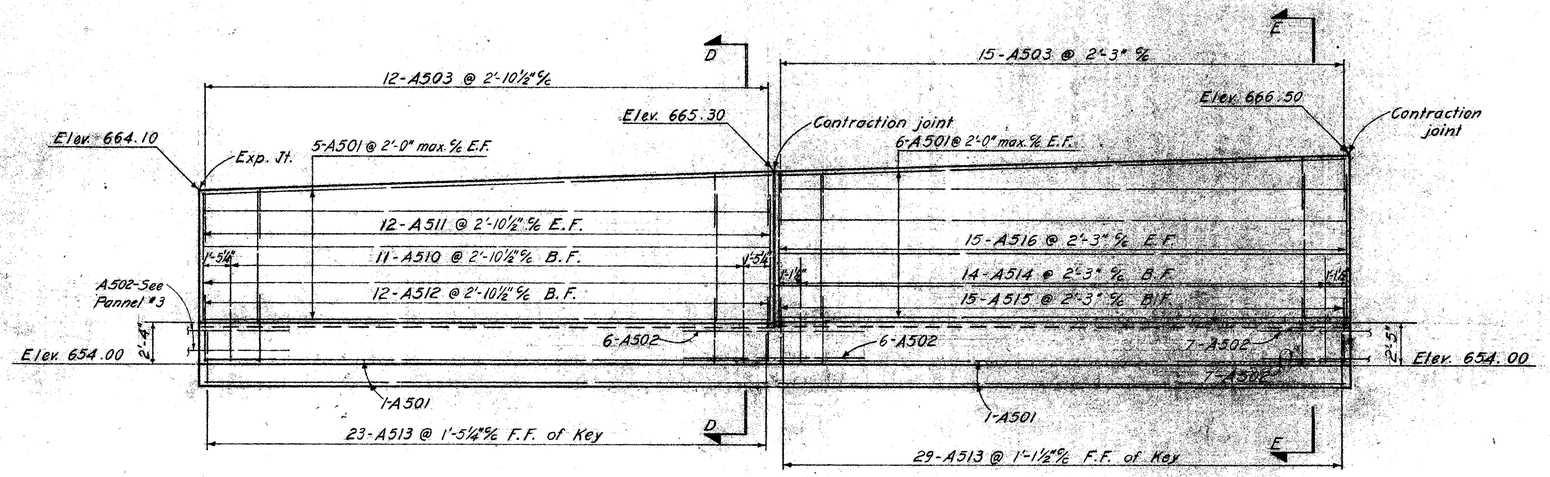

ELEVATION

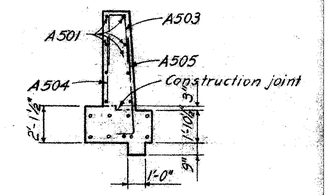

SECTION A-A

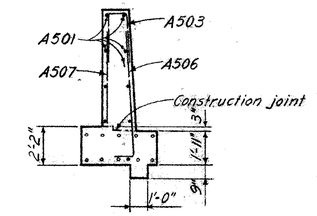

SECTION B-B

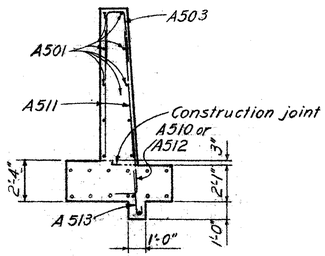

SECTION D-D

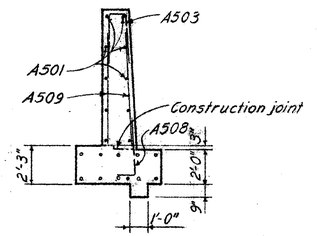

SECTION C-C

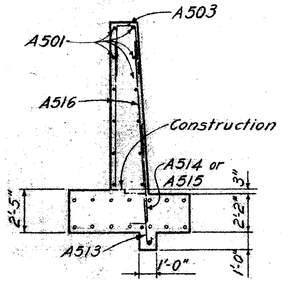

SECTION E-E

All Footing Longitudinal Bars
- • A501
- ◦ A502 centered under contraction or expansion joint.

E.F. Denotes Each Face
F.F. Denotes Front Face
B.F. Denotes Back Face

RACKOFF ASSOCIATES
ENGINEERS COLUMBUS, OHIO

RETAINING WALL B
PANELS 1-5

BELMONT COUNTY STA. 1185+44.57
STA. 1198+28.00

Designed	Drawn	Traced	Checked	Reviewed	Date	Revised
S.S.	M.R.		P.M.	[illegible]	11-21-63	

FED. RD. DIVISION	STATE	PROJECT	TYPE FUNDS
2	OHIO		

269
418

BELMONT COUNTY
BEL. 7 - 20.74

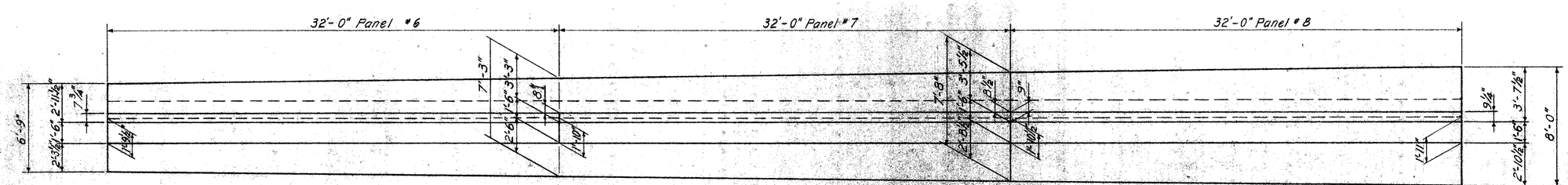

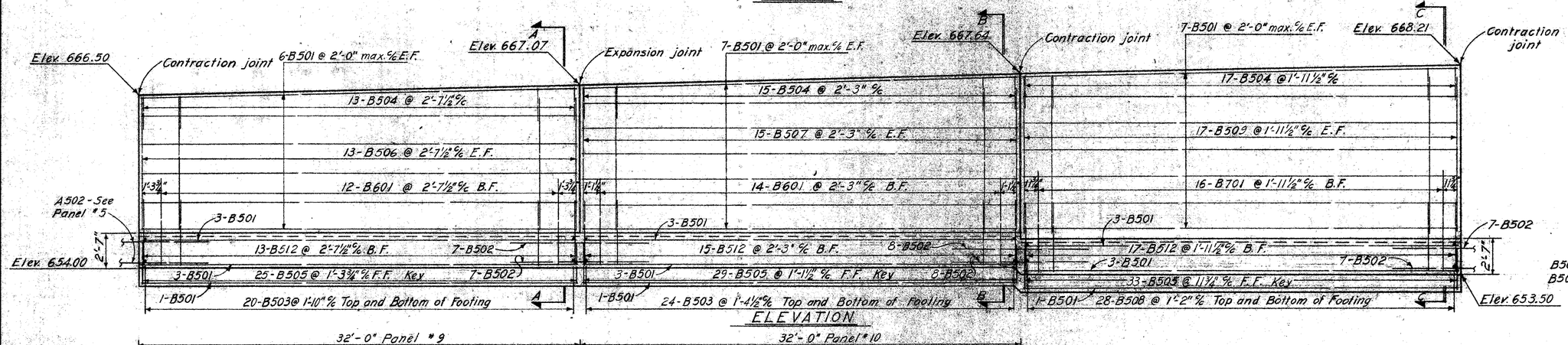

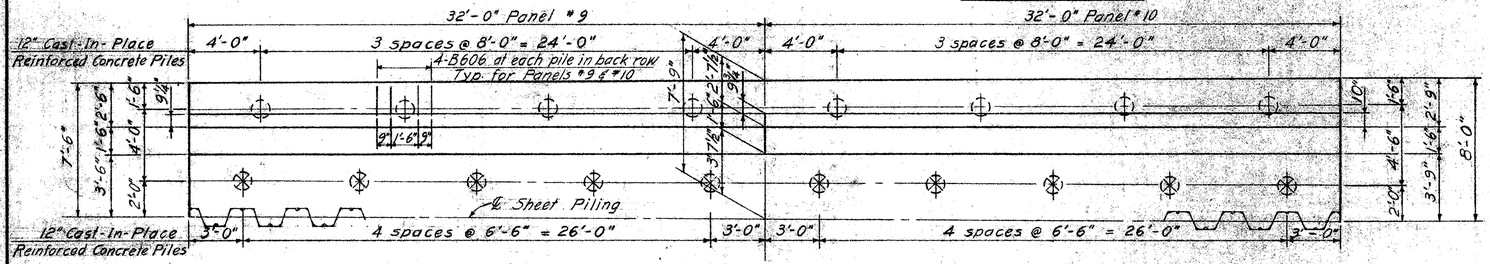

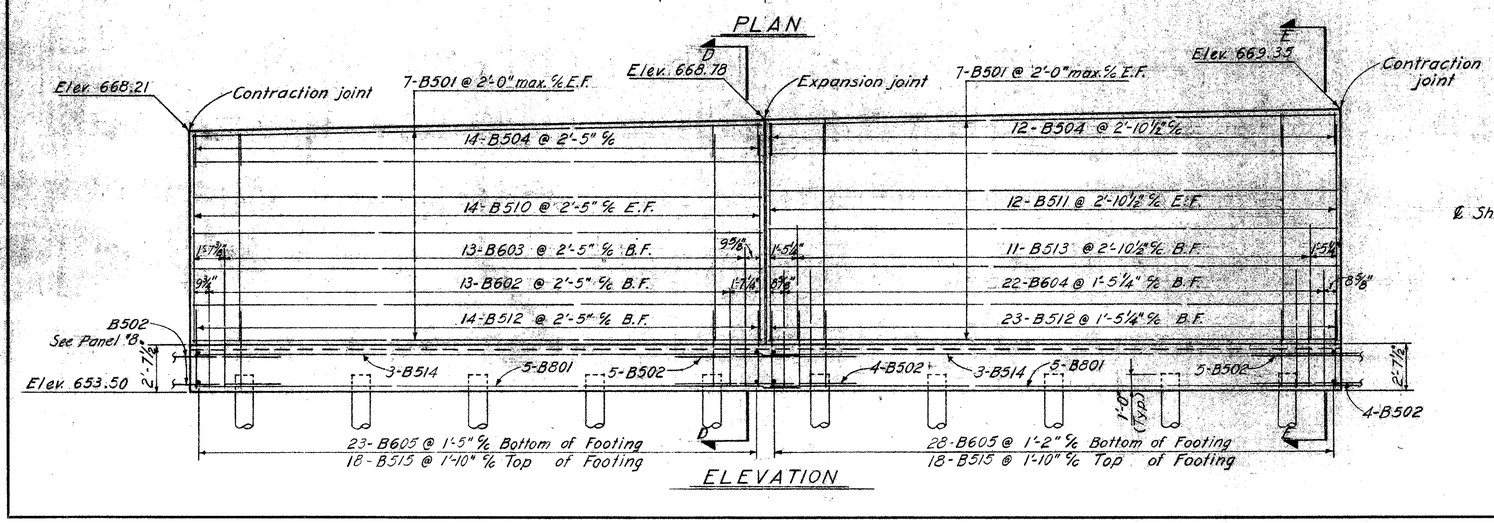

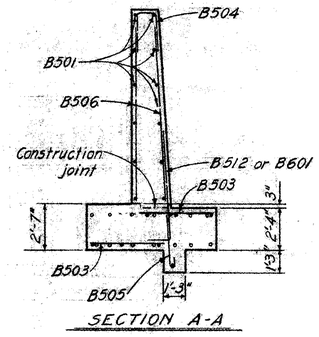

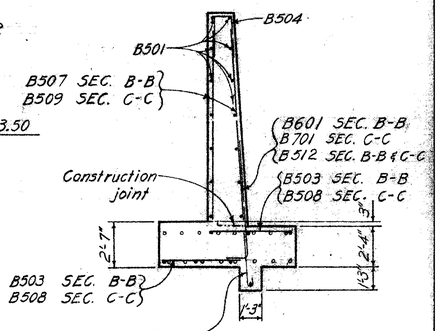

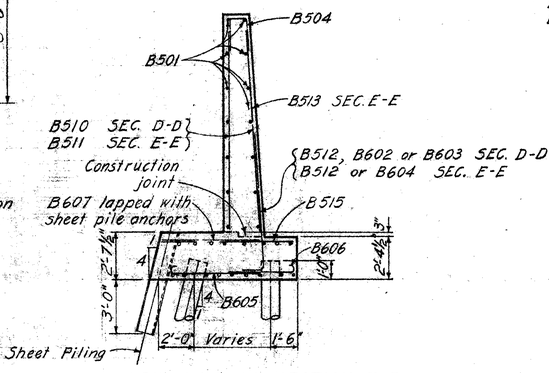

Footing Longitudinal Bars for Sections D-D & E-E.
- B514 Top & B801 Bottom
- ○ B502 Top & Bottom centered under contraction or expansion joint.

Footing Longitudinal Bars for Sections A-A, B-B & C-C
- B501
- ○ B502 Centered under contraction or expansion joint.

E.F. Denotes Each Face
F.F. Denotes Front Face
B.F. Denotes Back Face

⊕ Vertical Piles
⊗ Battered Piles 1:4

RACKOFF ASSOCIATES
ENGINEERS COLUMBUS, OHIO

RETAINING WALL B
PANELS 6 - 10

BELMONT COUNTY
STA. 1185+44.57
STA. 1198+28.00

Designed	Drawn	Traced	Checked	Reviewed	Date	Revised
S.S.	M.R.		P.M.	[illegible]	11-21-63	

FED. RD. DIVISION	STATE	PROJECT	TYPE FUNDS
2	OHIO		

270
418

BELMONT COUNTY
BEL. 7-20.74

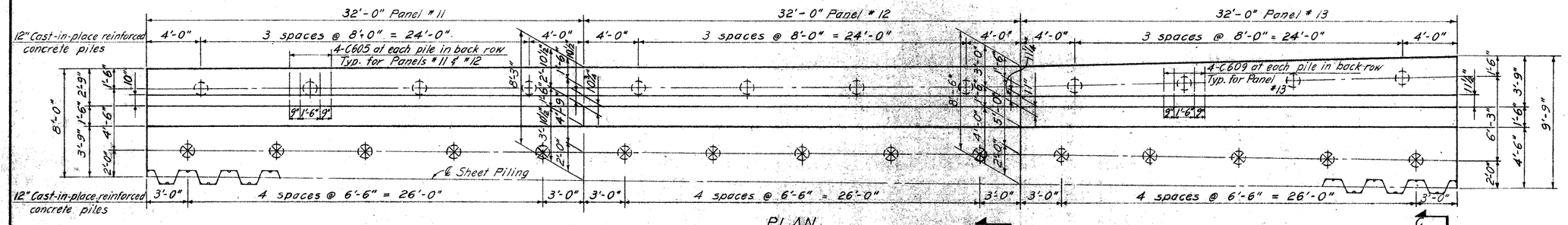

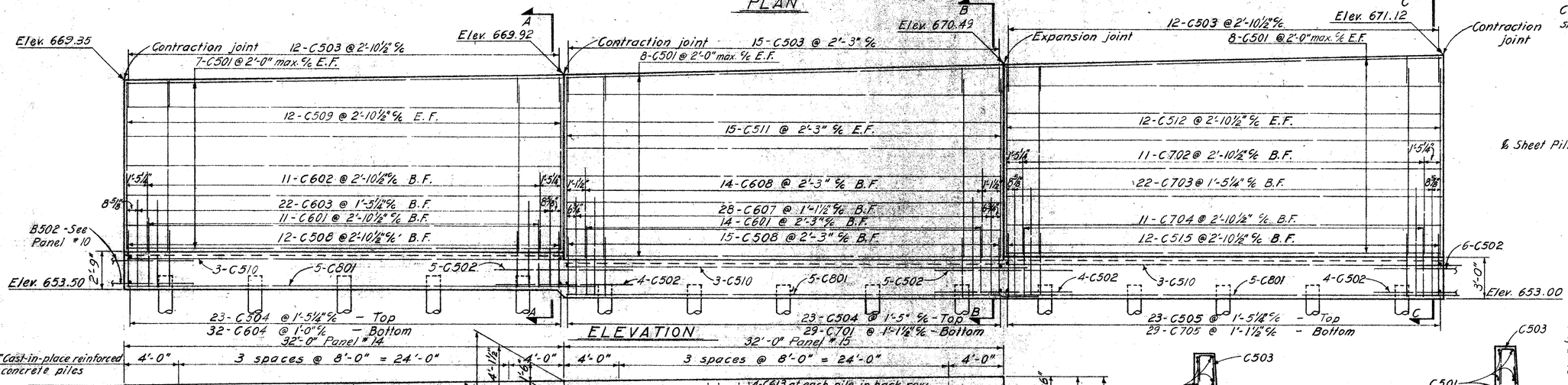

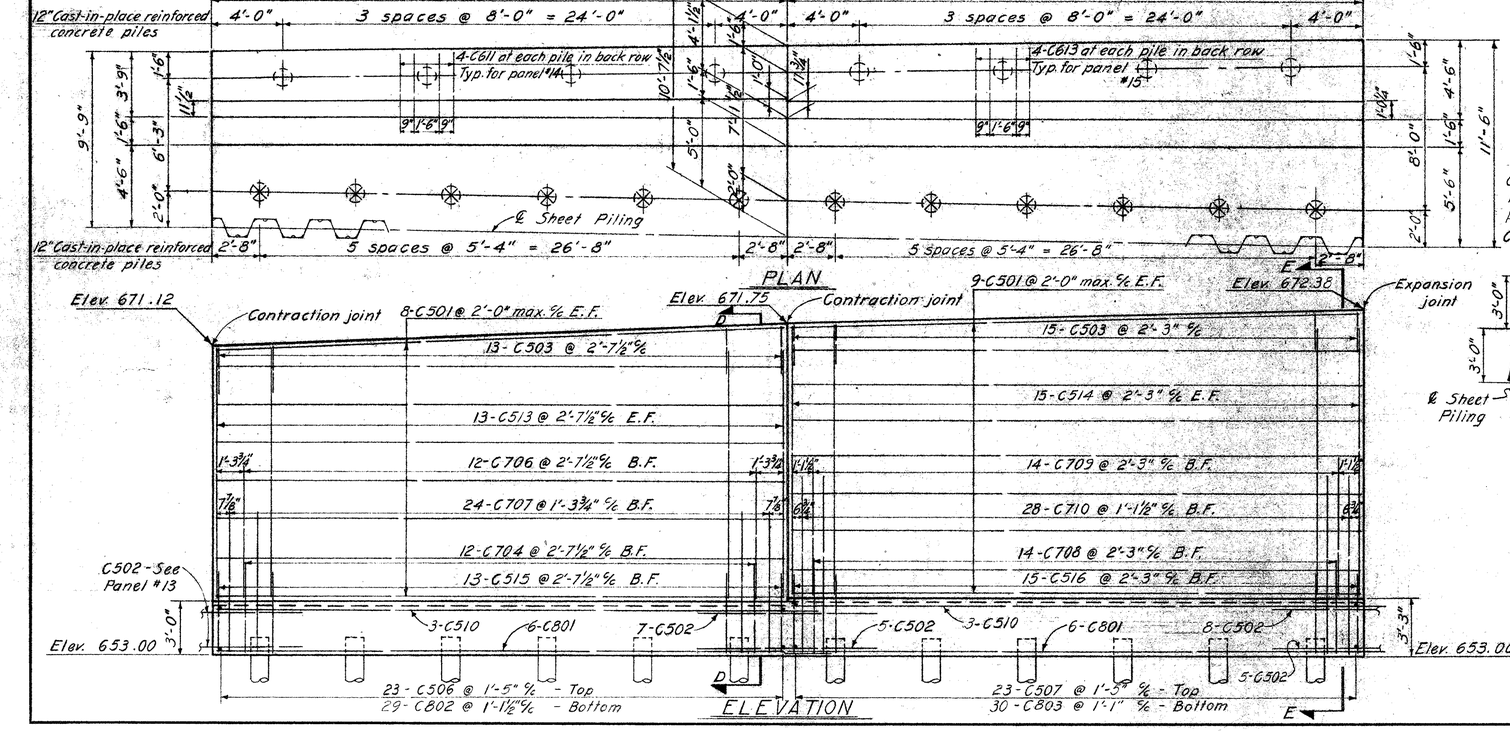

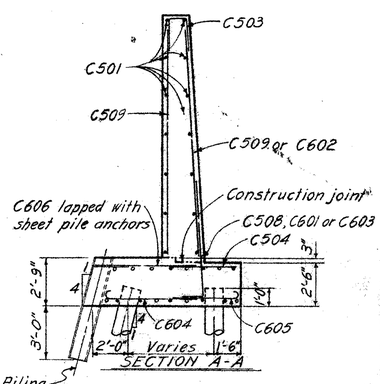

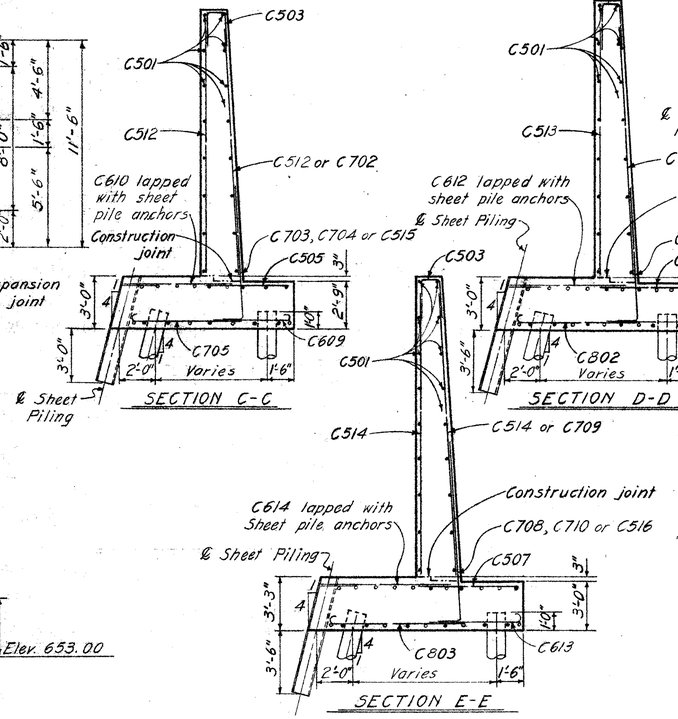

All Footing Longitudinal Bars
- C510 Top & C801 Bottom
- C502 Top & Bottom Centered under Contract. or Exp. Joints.

E.F. Denotes Each Face
F.F. Denotes Front Face
B.F. Denotes Back Face

⊕ - Vertical Piles
⊗ - Battered Piles 1:4

RACKOFF ASSOCIATES
ENGINEERS COLUMBUS, OHIO

RETAINING WALL B
PANELS 11-15

BELMONT COUNTY
STA. 1185+44.57
STA. 1198+28.00

Designed	Drawn	Traced	Checked	Reviewed	Date	Revised
S.S.	M.R.		P.M.	[illegible]	11-21-63	

FED. RD. DIVISION	STATE	PROJECT	TYPE FUNDS
2	OHIO		

271
418

BELMONT COUNTY
BEL. 7- 20.74

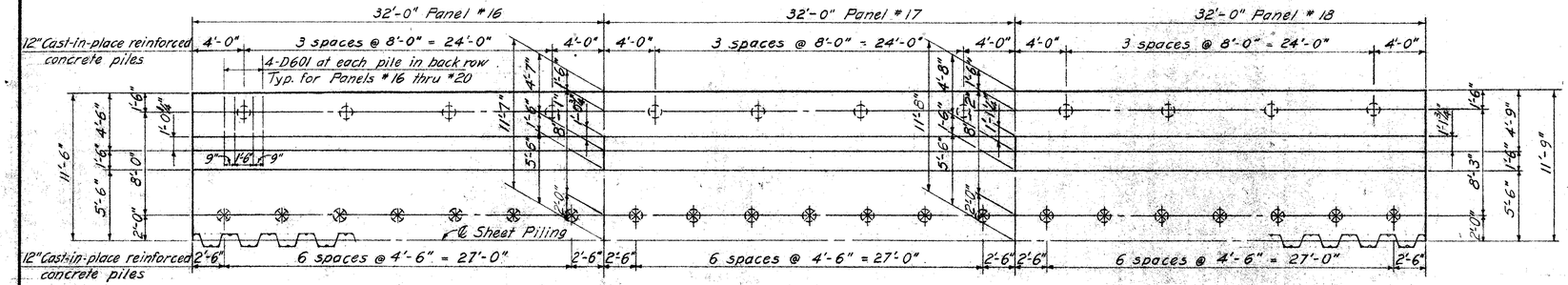

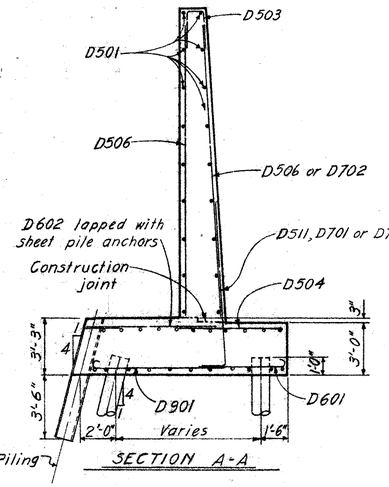

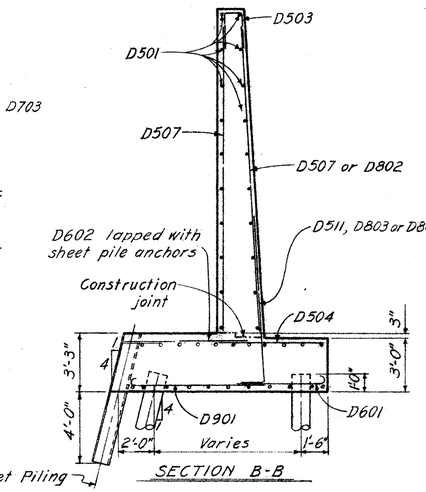

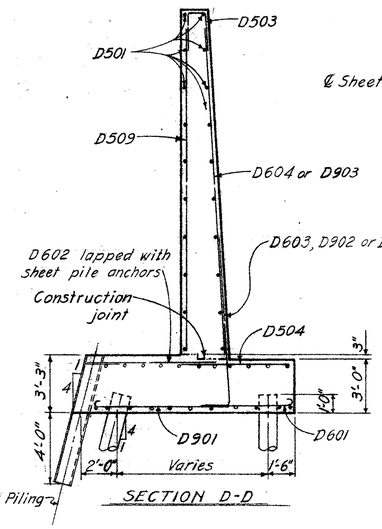

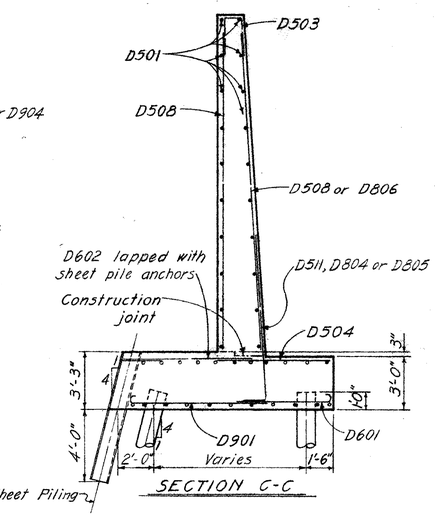

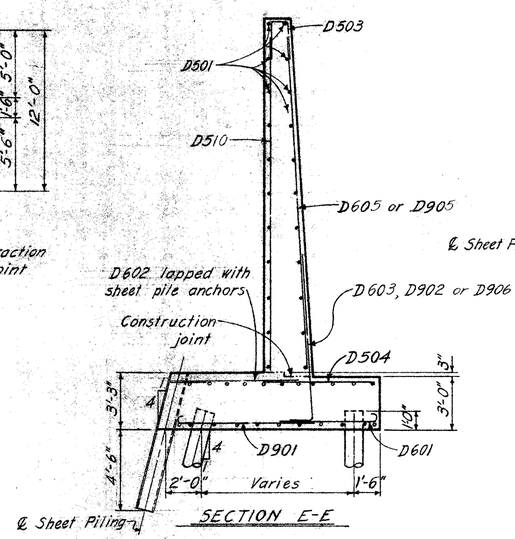

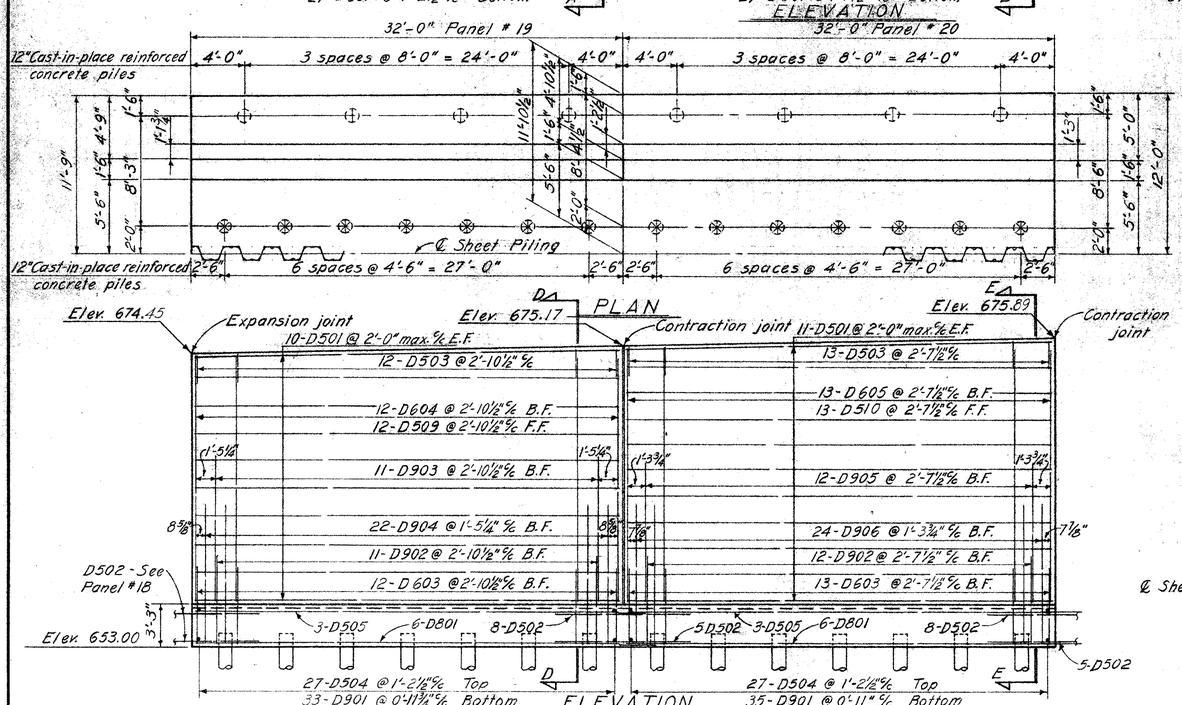

All Footing Longitudinal Bars
- D505 Top & D801 Bottom
- D502 Top & Bottom centered under exp. or contraction joints.

E.F. Denotes Each Face
F.F. Denotes Front Face
B.F. Denotes Back Face

⊕ - Vertical Piles
⊗ - Battered Piles, 1:4

RACKOFF ASSOCIATES
ENGINEERS COLUMBUS, OHIO

RETAINING WALL B
PANELS 16 - 20

BELMONT COUNTY
STA. 1185+44.57
STA. 1198+28.00

Designed	Drawn	Traced	Checked	Reviewed	Date	Revised
S. S.	M. R.		P. M.	[illegible]	11-21-63	

FED. RD. DIVISION	STATE	PROJECT	TYPE FUNDS
2	OHIO		

272
418

BELMONT COUNTY
BEL. 7 - 20.74

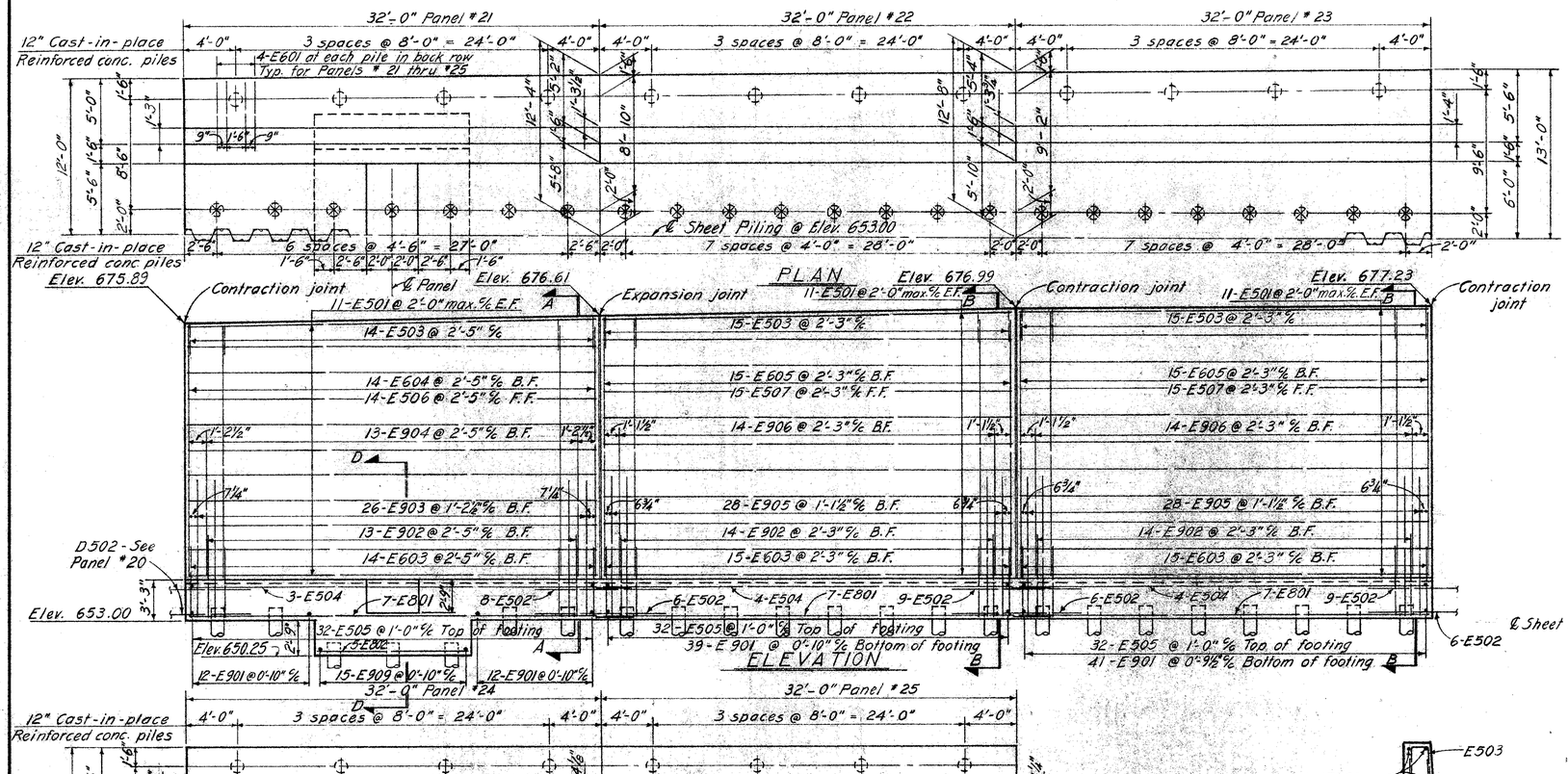

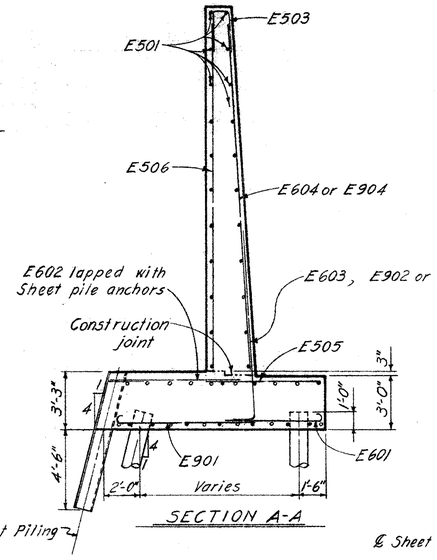

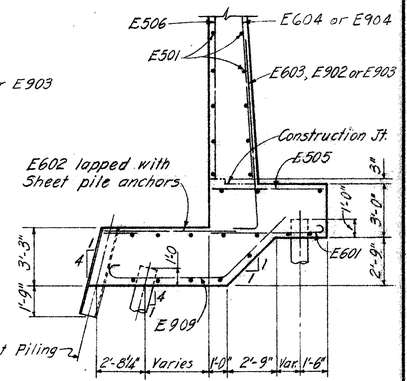

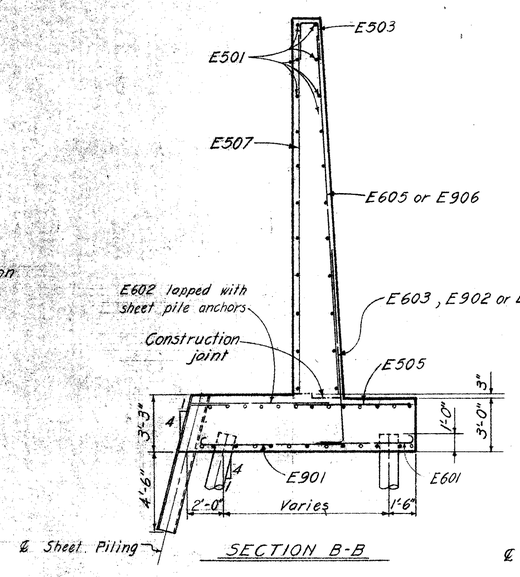

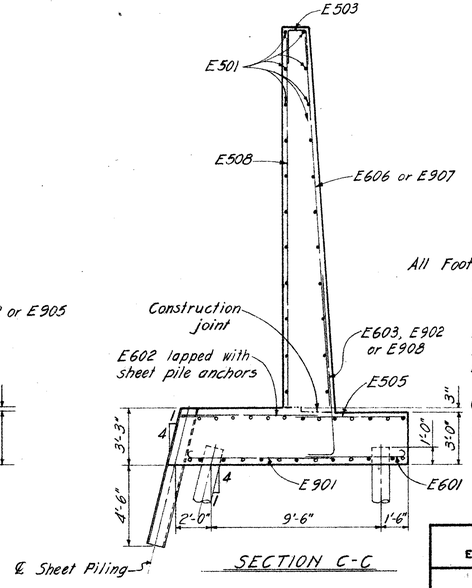

All Footing Longitudinal Bars
- E504 Top & E801 and E602 Bottom
- E502 Top & Bottom, centered under exp. or contraction joints.

E.F. Denotes Each Face
F.F. Denotes Front Face
B.F. Denotes Back Face

⊕ Vertical Piles
⊗ Battered Piles 1:4

RACKOFF ASSOCIATES
ENGINEERS COLUMBUS, OHIO

RETAINING WALL B
PANELS 21-25

BELMONT COUNTY
STA. 1185+44.57
STA. 1198+28.00

Designed	Drawn	Traced	Checked	Reviewed	Date	Revised
S.S.	M.R.		P.M.	[illegible]	11-21-63	

FED. RD. DIVISION	STATE	PROJECT	TYPE FUNDS
2	OHIO		

273
418

BELMONT COUNTY
BEL. 7- 20.74

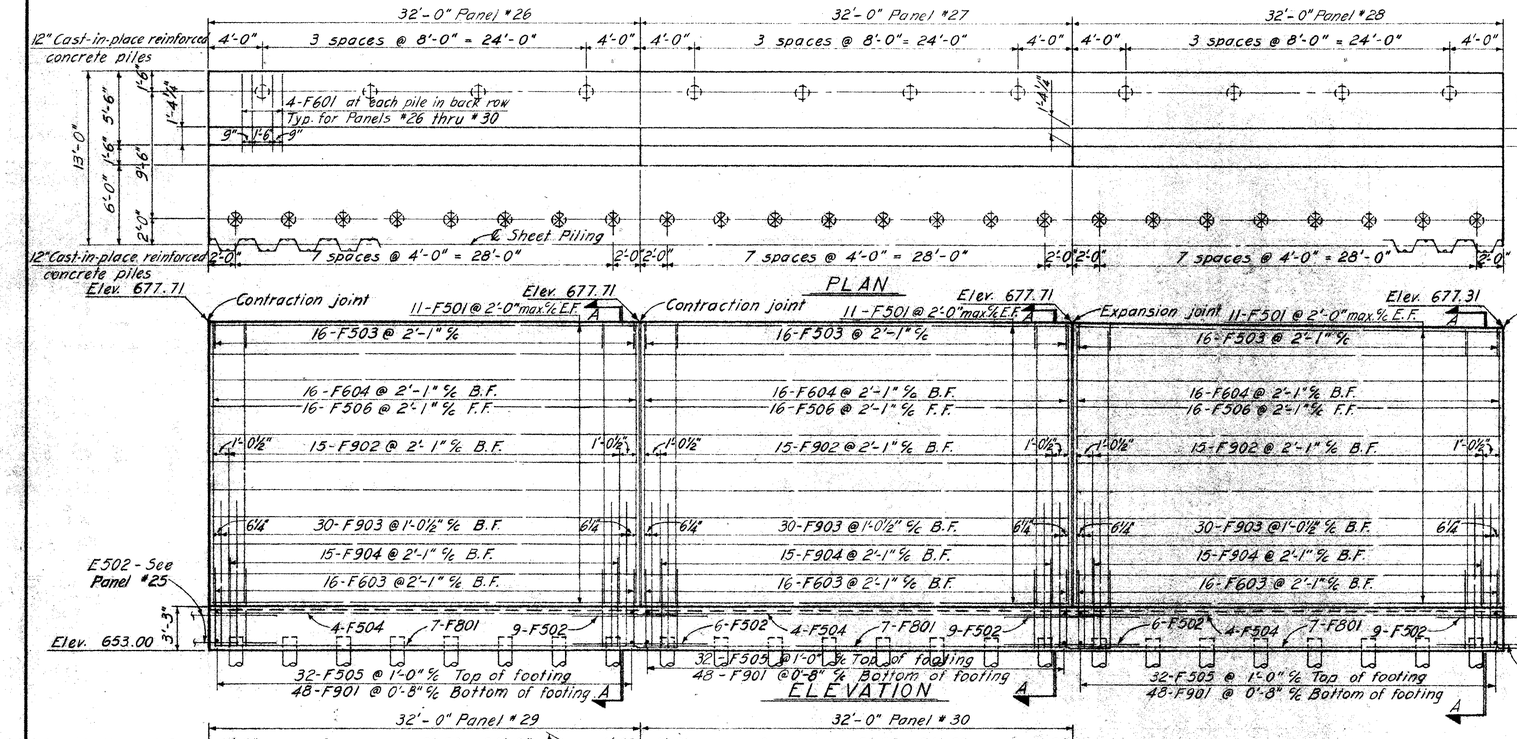

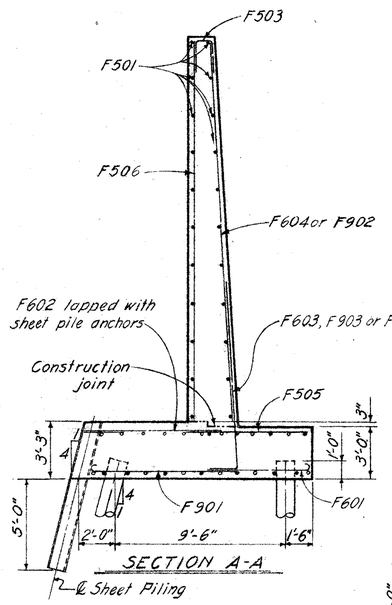

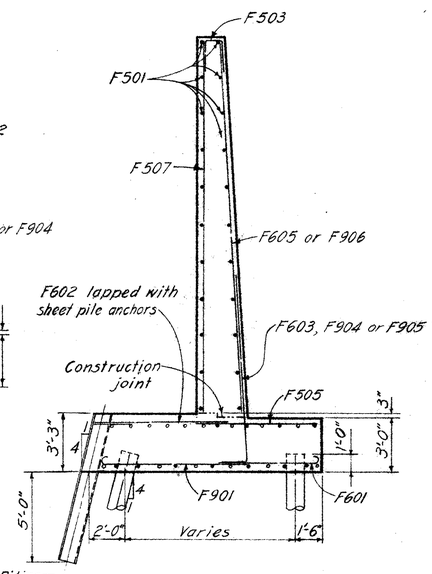

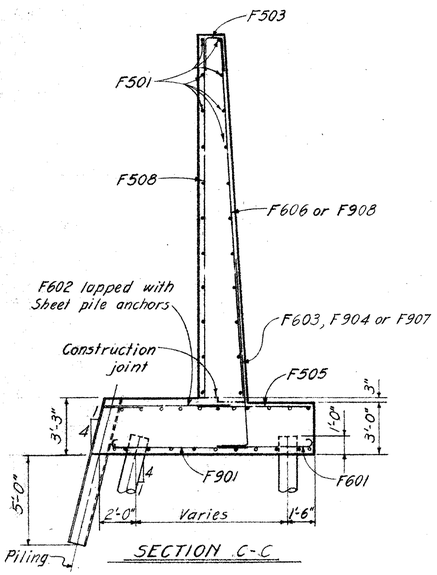

All Footing Longitudinal Bars
- F504 Top & F801 Bottom
- F502 Top & Bottom centered under expansion or contraction joints.

E.F. Denotes Each Face
F.F. Denotes Front Face
B.F. Denotes Back Face

Vertical Piles
Battered Piles 1:4

RACKOFF ASSOCIATES
ENGINEERS COLUMBUS, OHIO

RETAINING WALL B
PANELS 26-30

BELMONT COUNTY
STA. 1185+44.57
STA. 1198+28.00

Designed	Drawn	Traced	Checked	Reviewed	Date	Revised
S.S.	M.R.		P.M.	[illegible]	11-21-63	

FED. RD. DIVISION	STATE	PROJECT	TYPE FUNDS
2	OHIO		

274
418

BELMONT COUNTY
BEL. 7 - 20.74

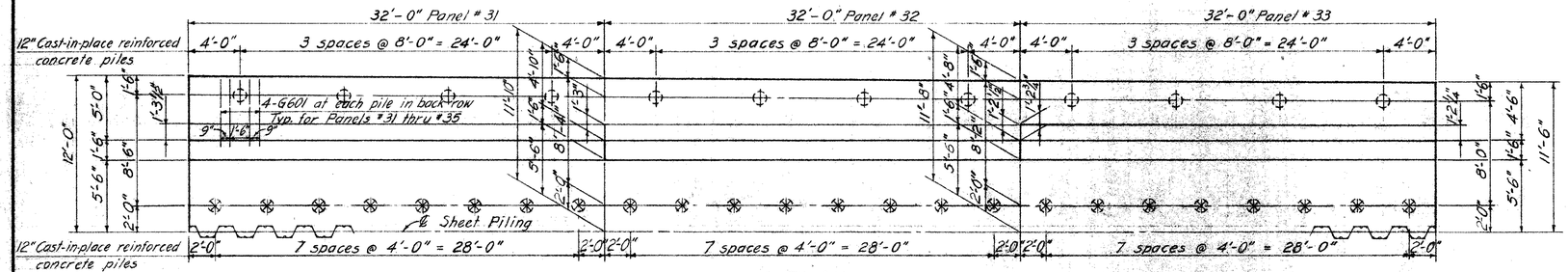

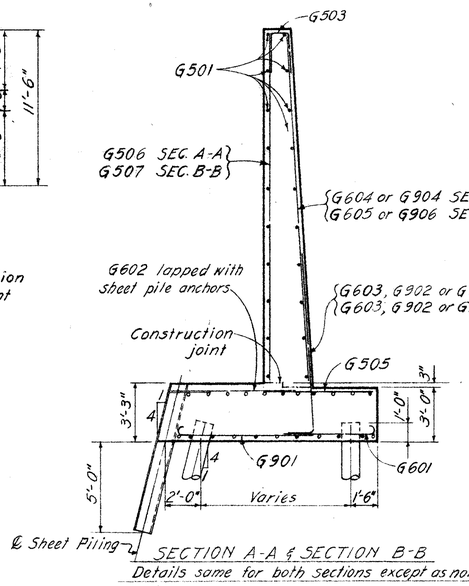

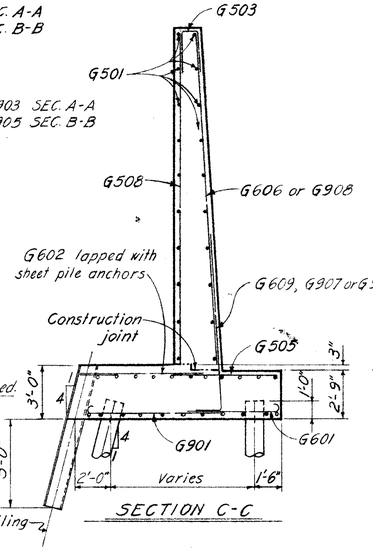

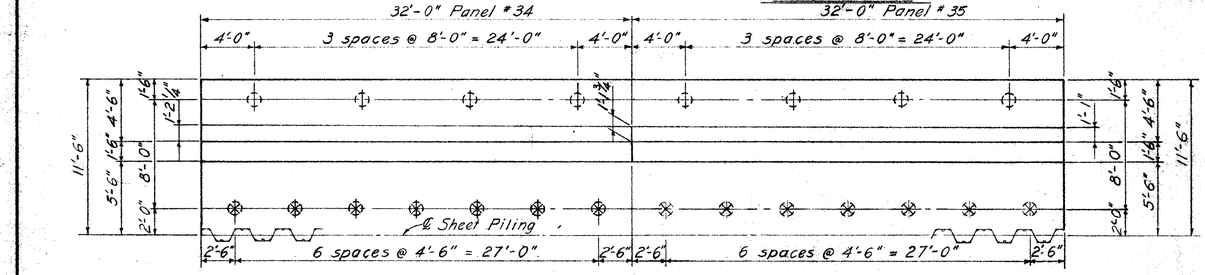

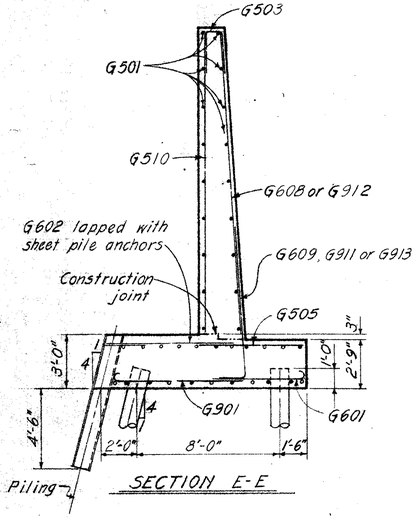

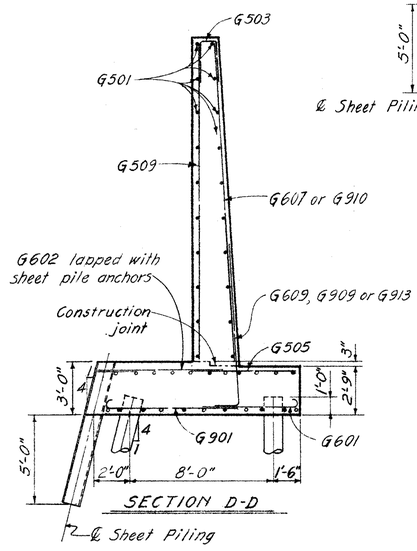

All Footing Longitudinal Bars
- • G 504 Top & G801 Bottom
- ◦ G 502 Top and Bottom centered under expansion or contraction joints.

E.F. Denotes Each Face
F.F. Denotes Front Face
B.F. Denotes Back Face

⊕ Vertical Piles
⊗ Battered Piles 1:4

RACKOFF ASSOCIATES
ENGINEERS COLUMBUS, OHIO

RETAINING WALL B
PANELS 31 - 35

BELMONT COUNTY
STA. 1185+44.57
STA. 1198+28.00

Designed	Drawn	Traced	Checked	Reviewed	Date	Revised.
S.S.	M.R.		P.M.	[illegible]	11-21-63	

FED. RD. DIVISION	STATE	PROJECT	TYPE FUNDS
2	OHIO		

275
418

BELMONT COUNTY
BEL. 7- 20.74

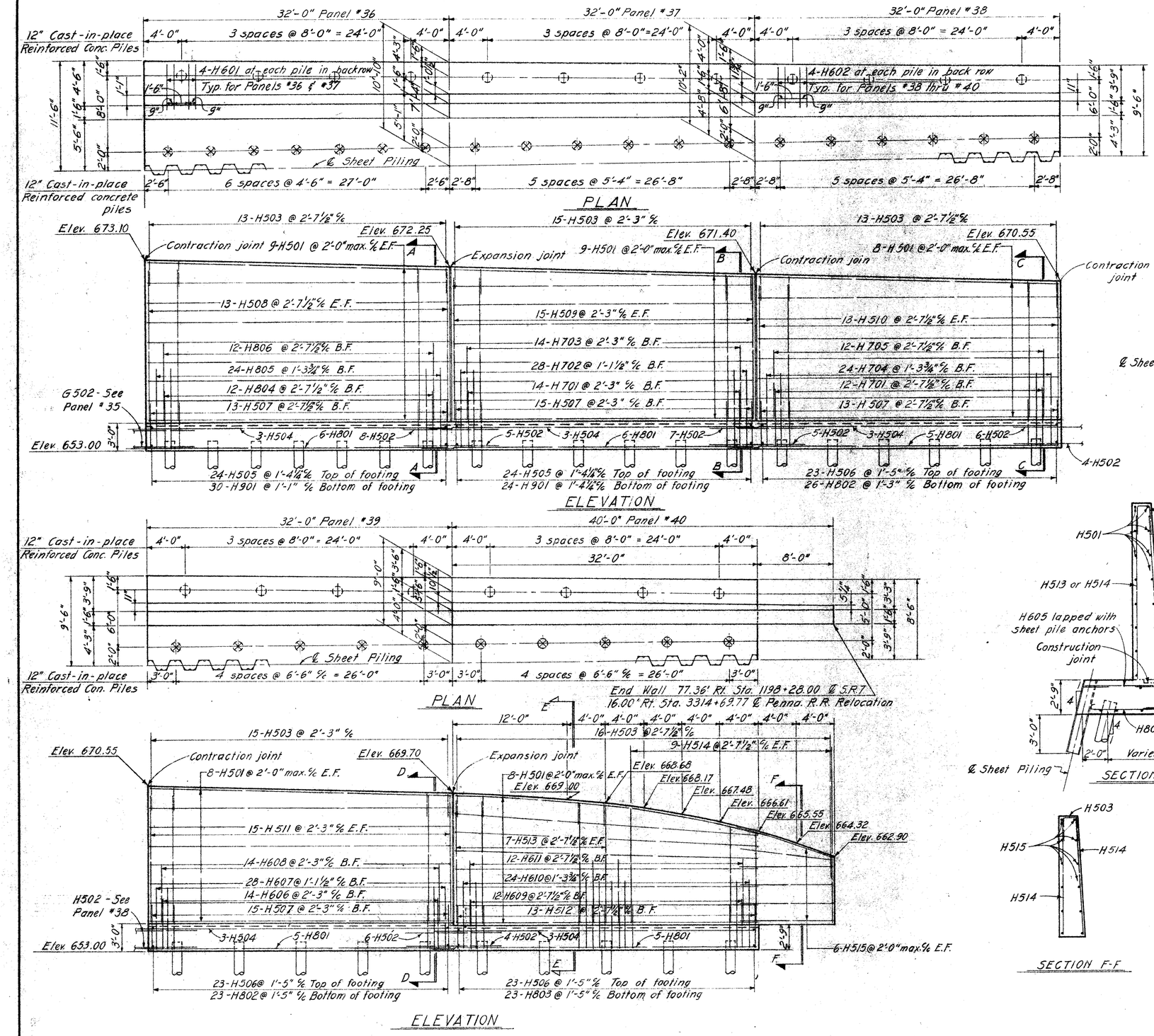

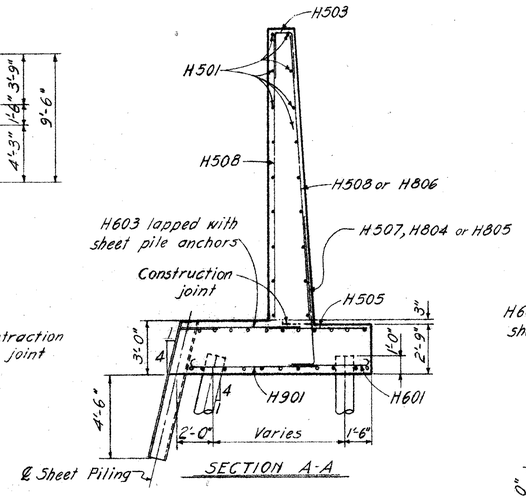

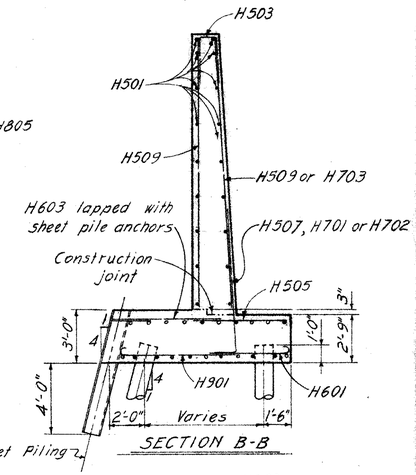

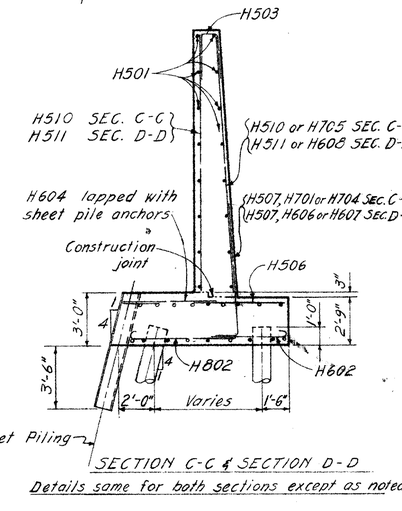

Details same for both sections except as noted

All Footing Longitudinal Bars
- H504 Top & H801 Bottom
- H502 Top & Bottom centered under expansion or contraction Jt.

E.F. Denotes Each Face
F.F. Denotes Front Face
B.F. Denotes Back Face

⊕ Vertical Piles
⊗ Battered Piles 1:4

RACKOFF ASSOCIATES
ENGINEERS COLUMBUS, OHIO

RETAINING WALL B
PANELS 36-40

BELMONT COUNTY
STA. 1185+44.57
STA. 1198+28.00

Designed	Drawn	Traced	Checked	Reviewed	Date	Revised
S.S.	M.R.		P.M.	[illegible]	11-21-63	

REINFORCING STEEL LIST

FED. RD. DIVISION	STATE	PROJECT	
2	OHIO		

276
418

BELMONT COUNTY
BEL. 7-20.74

BENDING DIAGRAM

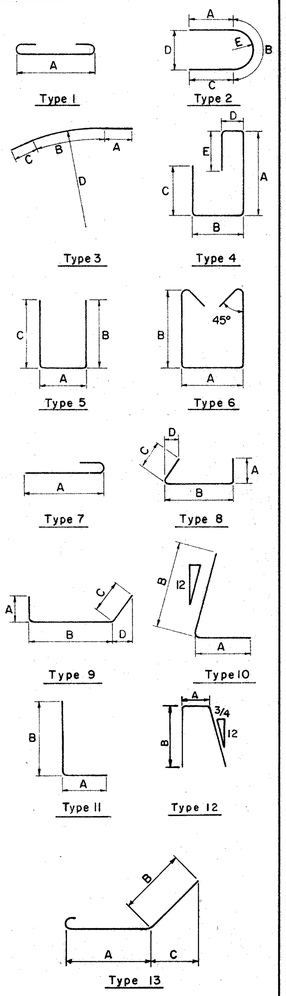

$ IN THE COLUMN FOR "TYPE" INDICATES STRAIGHT BARS.

MARK	NO.	LENGTH	WEIGHT	TYPE	A	B	C	D	E
			PANELS 1 THRU 5						
A501	55	31-8	1,817	S					
A502	54	10-0	563	S					
A503	63	5-10	383	12	1-1	2-6			
A504	12	3-8	46	S					
A505	12	6-5	80	10	1-1	5-6			
A506	12	7-8	96	10	1-1	6-9			
A507	12	4-10	60	S					
A508	12	4-6	56	10	1-1	3-7			
A509	24	6-0	150	S					
A510	11	5-7	64	10	1-1	4-8			
A511	24	7-7	190	S					
A512	12	4-7	57	10	1-1	3-8			
A513	52	3-1	167	7	2-6				
A514	14	6-6	95	10	1-1	5-7			
A515	15	4-8	73	10	1-1	3-9			
A516	30	8-8	271	S					
		TOTAL	4,168						
			PANELS 6 THRU 10						
B501	89	31-8	2,940	S					
B502	62	10-0	647	S					
B503	88	4-4	398	S					
B504	71	4-6	333	12	1-1	1-10			
B505	87	3-4	302	7	2-9				
B506	26	9-9	264	S					
B507	30	10-4	323	S					
B508	56	4-6	263	S					
B509	34	11-4	402	S					
B510	28	11-11	348	S					
B511	24	12-6	313	S					
B512	82	4-10	413	10	1-1	3-11			
B513	11	6-0	69	S					
B514	6	33-7	210	S					
B515	36	3-6	131	S					
B601	26	6-10	267	10	1-3	5-9			
B602	13	5-11	116	10	1-3	4-10			
B603	13	8-9	171	10	1-3	7-8			
B604	22	7-9	256	10	1-3	6-8			
B605	51	5-11	453	7	5-3				
B606	32	4-8	224	7	4-0				
B607	88	5-3	694	S					
B701	16	7-9	253	10	1-5	6-6			
B801	10	34-6	921	S					
		TOTAL	10,711						
			PANELS 11 THRU 15						
C501	80	31-8	2,642	S					
C502	53	10-0	553	S					
C503	67	4-6	314	12	1-1	1-10			
C504	46	3-8	176	S					
C505	23	4-5	106	S					
C506	23	4-9	114	S					
C507	23	5-1	122	S					
C508	27	4-11	138	10	1-1	4-0			
C509	24	12-11	323	S					
C510	15	33-7	525	S					
C511	30	14-0	438	S					
C512	24	14-4	359	S					
C513	26	14-11	405	S					
C514	30	15-4	480	S					
C515	25	5-2	135	10	1-1	4-3			
C516	15	5-5	85	10	1-1	4-6			

MARK	NO.	LENGTH	WEIGHT	TYPE	A	B	C	D	E
C601	25	5-3	197	10	1-3	4-2			
C602	11	6-7	109	S					
C603	22	7-7	251	10	1-3	6-6			
C604	32	6-1	292	7	5-5				
C605	32	4-11	236	7	4-3				
C606	88	5-6	727	S					
C607	28	7-9	326	10	1-3	6-8			
C608	14	7-0	147	S					
C609	16	5-8	136	7	5-0				
C610	44	6-0	397	S					
C611	16	5-10	140	7	5-2				
C612	44	6-6	430	S					
C613	16	6-2	148	7	5-6				
C614	44	7-0	463	S					
C701	29	6-7	390	7	5-9				
C702	11	8-5	189	S					
C703	22	9-0	405	10	1-5	7-9			
C704	23	6-2	290	10	1-5	4-11			
C705	29	7-1	420	7	6-3				
C706	12	8-9	215	S					
C707	24	9-3	454	10	1-5	8-0			
C708	14	6-5	184	10	1-5	5-2			
C709	14	8-11	255	S					
C710	28	9-4	534	10	1-5	8-1			
C801	27	34-6	2,487	S					
C802	29	8-1	626	7	7-0				
C803	30	8-7	688	7	7-6				
		TOTAL	18,051						
			PANELS 16 THRU 20						
D501	100	31-8	3,303	S					
D502	65	10-0	678	S					
D503	67	4-10	338	12	1-1	2-0			
D504	126	5-6	723	S					
D505	15	33-7	525	S					
D506	30	16-0	501	S					
D507	26	16-7	450	S					
D508	28	17-4	506	S					
D509	12	18-0	225	S					
D510	13	18-9	254	S					
D511	42	5-5	237	10	1-1	4-6			
D601	80	6-4	761	7	5-8				
D602	220	7-0	2,313	S					
D603	25	5-11	222	10	1-3	4-10			
D604	12	18-3	329	S					
D605	13	19-0	371	S					
D701	14	6-5	184	10	1-5	5-2			
D702	14	9-2	262	S					
D703	28	9-9	558	10	1-5	8-6			
D801	30	34-6	2,763	S					
D802	12	10-6	336	S					
D803	24	10-6	673	10	1-6	9-3			
D804	25	6-9	451	10	1-6	5-6			
D805	26	10-9	746	10	1-6	9-6			
D806	13	11-0	382	S					
D901	155	9-1	4,787	7	7-10				
D902	23	7-1	554	10	1-7	5-9			
D903	11	11-6	430	S					
D904	22	11-4	848	10	1-7	10-0			
D905	12	11-10	483	S					
D906	24	11-7	945	10	1-7	10-3			
		TOTAL	26,138						

MARK	NO.	LENGTH	WEIGHT	TYPE	A	B	C	D	E
			PANELS 21 THRU 25						
E501	110	31-8	3,633	S					
E502	74	10-0	772	S					
E503	76	4-10	383	12	1-1	2-0			
E504	19	33-7	666	S					
E505	160	6-0	1,001	S					
E506	14	19-6	285	S					
E507	30	20-2	631	S					
E508	32	20-10	695	S					
E601	80	6-10	821	7	6-2				
E602	220	7-6	2,478	S					
E603	76	5-11	675	10	1-3	4-10			
E604	14	19-9	415	S					
E605	30	20-5	920	S					
E606	32	21-1	1,013	S					
E801	35	34-6	3,224	S					
E802	5	11-8	156	S					
E901	190	9-7	6,191	7	8-4				
E902	71	7-1	1,710	10	1-7	5-9			
E903	26	12-0	1,061	10	1-7	10-8			
E904	13	12-4	545	S					
E905	56	12-2	2,317	10	1-7	10-10			
E906	28	12-9	1,214	S					
E907	30	13-0	1,326	S					
E908	60	12-3	2,499	10	1-7	10-11			
E909	15	12-5	633	13	6-0	5-5	3-10		
		TOTAL	35,264						
			PANELS 26 THRU 30						
F501	110	31-8	3,633	S					
F502	73	10-0	761	S					
F503	79	4-2	343	12	1-1	1-8			
F504	19	33-7	666	S					
F505	160	6-0	1,001	S					
F506	48	20-11	1,047	S					
F507	16	20-6	342	S					
F508	15	20-1	314	S					
F601	80	6-10	821	7	6-2				
F602	220	7-6	2,478	S					
F603	79	5-11	702	10	1-3	4-10			
F604	48	21-2	1,526	S					
F605	16	20-9	499	S					
F606	15	20-4	458	S					
F801	34	34-6	3,132	S					
F901	230	9-7	7,494	7	8-4				
F902	45	13-0	1,989	S					
F903	90	12-3	3,749	10	1-7	10-11			
F904	74	7-1	1,782	10	1-7	5-9			
F905	30	11-10	1,207	10	1-7	10-6			
F906	15	12-7	642	S					
F907	28	11-8	1,111	10	1-7	10-4			
F908	14	12-5	591	S					
		TOTAL	36,288						

NOTES

BAR SIZE is indicated in bar mark. The first digit where three digits are used, and the first two where four are used indicate the bar size number.

RACKOFF ASSOCIATES
ENGINEERS COLUMBUS, OHIO

RETAINING WALL B
REINFORCING STEEL LIST

BELMONT COUNTY
STA. 1185+44.57
STA. 1198+28.00

Designed	Drawn	Traced	Checked	Reviewed	Date	Revised
P. M.	E.D.A.		W. F.	WF	11-21-63	

REINFORCING STEEL LIST

FED. RD. DIVISION	STATE	PROJECT
2	OHIO	

277
418

BELMONT COUNTY
BEL. 7-20.74

BENDING DIAGRAM

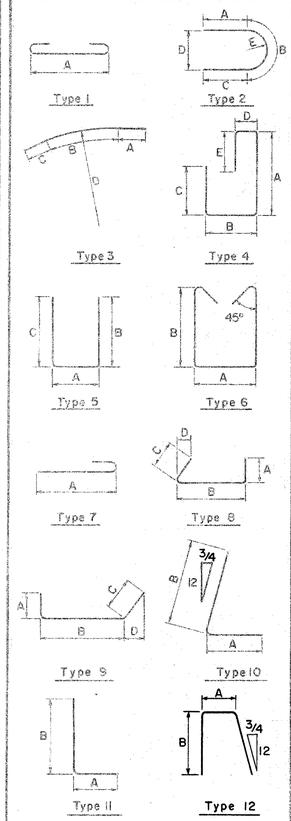

S IN THE COLUMN FOR "TYPE" INDICATES STRAIGHT BARS.

MARK	NO.	LENGTH	WEIGHT	TYPE	A	B	C	D	E
			PANELS	31	THRU	35			
G501	98	31-8	3,237	S					
G502	65	10-0	678	S					
G503	69	5-0	360	12	1-1	2-1			
G504	15	33-7	525	S					
G505	129	5-6	740	S					
G506	15	19-6	305	S					
G507	15	18-11	296	S					
G508	14	18-8	273	S					
G509	13	17-9	241	S					
G510	12	16-11	212	S					
G601	80	6-4	761	7	5-8				
G602	220	7-6	2,478	S					
G603	30	5-11	267	10	1-3	4-10			
G604	15	19-9	445	S					
G605	15	19-2	432	S					
G606	14	18-11	398	S					
G607	13	18-0	351	S					
G608	12	17-2	309	S					
G609	39	5-8	332	10	1-3	4-7			
G801	30	34-6	2,763	S					
G901	207	9-1	6,393	7	7-10				
G902	28	7-1	674	10	1-7	5-9			
G903	28	11-5	1,087	10	1-7	10-1			
G904	14	12-1	575	S					
G905	28	10-10	1,031	10	1-7	9-6			
G906	14	11-6	547	S					
G907	26	10-8	943	10	1-7	9-4			
G908	13	11-4	501	S					
G909	24	10-6	857	10	1-7	9-2			
G910	12	10-11	445	S					
G911	22	10-1	754	10	1-7	8-9			
G912	11	10-5	390	S					
G913	36	6-10	836	10	1-7	5-6			
		TOTAL	30,436						
			PANELS	36	THRU	40			
H501	84	31-8	2,774	S					
H502	45	10-0	469	S					
H503	72	5-0	375	12	1-1	2-1			
H504	15	33-7	525	S					
H505	48	5-3	263	S					
H506	69	4-9	342	S					
H507	56	5-2	302	10	1-1	4-3			
H508	26	16-1	436	S					
H509	30	15-3	477	S					
H510	26	14-4	389	S					
H511	30	13-6	422	S					
H512	13	4-11	67	10	1-1	4-0			
H513	14	12-9	186	S					
H514	18	6-9 to 12-5	180	S	2 each, vary by 8½" increments				
H515	12	9-7	120	S					
H601	32	5-10	280	7	5-2				
H602	48	5-8	409	7	5-0				
H603	88	7-0	925	S					
H604	88	6-2	815	S					
H605	44	5-6	363	S					
H606	14	5-8	119	10	1-3	4-7			
H607	28	7-10	329	10	1-3	6-9			
H608	14	7-3	152	S					
H609	12	5-5	98	10	1-3	4-4			
H610	24	7-6	270	10	1-3	6-5			
H611	12	6-7	119	S					

MARK	NO.	LENGTH	WEIGHT	TYPE	A	B	C	D	E
H701	26	6-2	328	10	1-5	4-11			
H702	28	9-0	515	10	1-5	7-9			
H703	14	8-11	255	S					
H704	24	8-5	413	10	1-5	7-2			
H705	12	8-3	202	S					
H801	27	34-6	2,487	S					
H802	49	7-9	1,014	7	6-8				
H803	23	7-1	435	7	6-0				
H804	12	6-5	206	10	1-6	5-2			
H805	24	10-0	641	10	1-6	8-9			
H806	12	10-4	331	S					
H901	54	9-1	1,668	7	7-10				
		TOTAL	19,701						

TOTAL FOR ALL PANELS 180,457

REPLACEMENT BARS

RE 501	3	5-7	—	S
RE 601	2	5-11	—	S
RE 701	1	6-3	—	S
RE 801	1	6-6	—	S
RE 901	3	6-10	—	S

MARK	NO.	LENGTH	WEIGHT	TYPE	A	B	C	D	E

NOTES

BAR SIZE is indicated in bar mark. The first digit where three digits are used, and the first two where four are used indicate the bar size number.

RACKOFF ASSOCIATES
ENGINEERS COLUMBUS, OHIO

RETAINING WALL B
REINFORCING STEEL LIST

BELMONT COUNTY STA. 1185+44.57
STA. 1198+28.00

Designed	Drawn	Traced	Checked	Reviewed	Date	Revised
P. M.	M.R.		W. F.	[illegible]	11-21-63	

FED. RD. DIVISION	STATE	PROJECT	TYPE FUNDS
2	OHIO		

BELMONT COUNTY
BEL-7-20.74

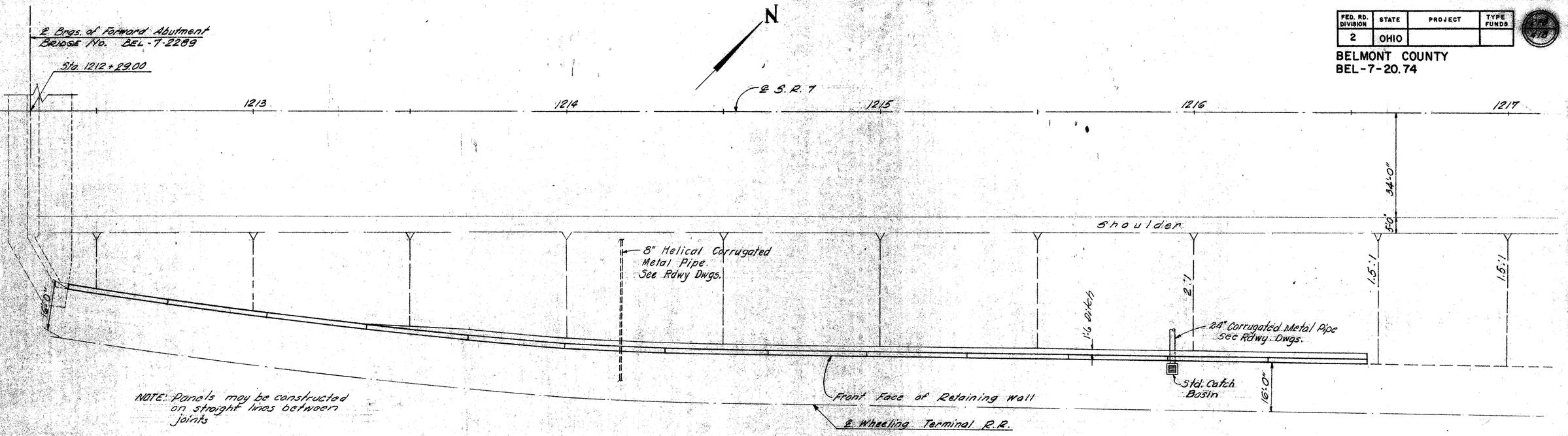

PLAN OF PANELS 1 THRU 13

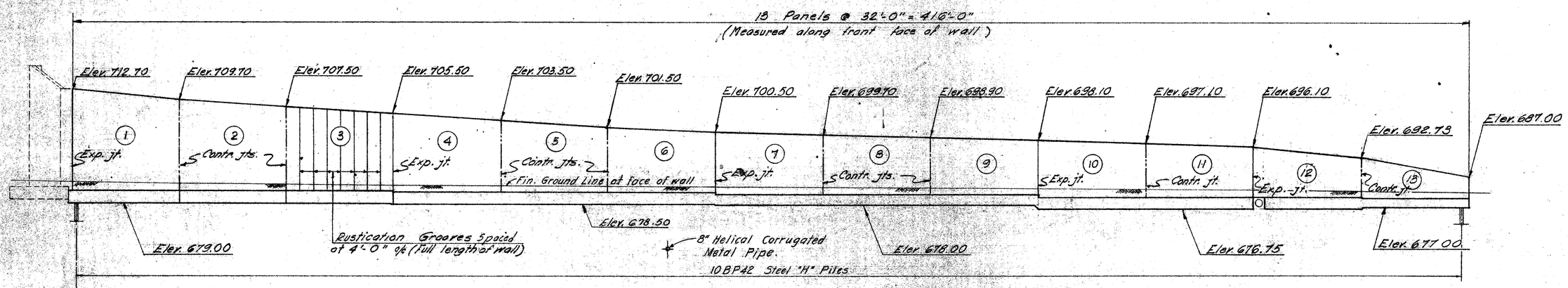

ELEVATION OF PANELS 1 THRU 13

All piles shall be 10 BP 42 Steel "H" Piles
Estimated average Pay Lengths are as follows:

Panels	1-6	17'
Panels	7-9	16'
Panels	10-13	12'

RACKOFF ASSOCIATES
ENGINEERS COLUMBUS, OHIO

RETAINING WALL C
GENERAL PLAN

BELMONT COUNTY
STA. 1212+40.62
STA. 1216+55 (±)

Designed	Drawn	Traced	Checked	Reviewed	Date	Revised
V.K.	V.K.	G.M.	W.F.	666	5-7-64	

FED. RD. DIVISION	STATE	PROJECT	TYPE FUNDS
2	OHIO		

279
418

BELMONT COUNTY
BEL-7-20.74

GENERAL NOTES

DESIGN SPECIFICATIONS: This structure conforms to the requirements of "Design Specifications for Highway Structures" of the State of Ohio, Department of Highways, dated 9-1-57, together with current revisions thereof.

PILES SHALL BE driven to firm contact with rock. If the length of penetration is approximately equal to the depth to rock according to the bridge foundation investigation report, the firm contact shall be considered as attained when the capacity according to the formula in Sec. 507.05 is not less than the following value for a pile hammer of the indicated energy rating:

55 tons for a 7,000 ft. lb. hammer
50 tons for a 11,000 ft. lb. hammer
45 tons for a 15,000 ft. lb. hammer

If the energy rating of the hammer is between the ratings as shown, the required formula capacity shall be determined by interpolation. The design load is 35 tons per pile for all the piles.

POROUS BACKFILL, 2 ft. thick full length of retaining wall shall extend up to within 2 feet of the finished ground line.

CONCRETE CLASS "E" - basic unit stress 1,133 p.s.i.

REINFORCING STEEL - ASTM A15, A16, A160, Deformed, Intermediate or Hard Grade.
Basic unit stress 20,000 p.s.i.

SHEETING AND BRACING: Before construction is started, eight sets of prints showing details of the sheeting and bracing to be used for excavation adjacent to the railroad tracks shall be submitted to the Director for approval by the Department of Highways and by the Railroad Company.

ALIGNING RAILROAD TRACKS: After the Contractor has completed all excavation and backfill adjacent to the railroad tracks in compliance with Secs. 503.04 and 503.09 of the Construction and Material Specifications, subject to the supervision of the Railroad Company, nothing in Secs. 503.04, 503.09 or 108.04 of the Specifications shall be construed to hold the Contractor liable for aligning and resurfacing the railroad tracks.

ESTIMATED QUANTITIES

TYPE CODE G201

ITEM	TOTAL	UNIT	DESCRIPTION	AS BUILT
503	lump	sum	Cofferdams, cribs and sheeting	
504	2,287	sq. ft.	Steel sheet piling (Panels 1 thru 8) left in place (min.	
			section modulus of 21.8 in.³ per foot of wall).	
504	877	sq. ft.	Steel sheet piling (Panels 9 thru 12) left in place (min.	
			section modulus of 7.0 in.³ per foot of wall).	
503	1427	cu. yds.	Unclassified excavation.	
511	621	cu. yds.	Class "E" concrete, walls above footings	
511	537	cu. yds.	Class "E" concrete, footings	
512	241	lin. ft.	Premolded sealing strip.	
509	95,621	lbs.	Reinforcing steel	
516	226	sq. ft.	1" preformed expansion joint filler (AASHO M-153)	
512	8	sq. yds.	Type "B" waterproofing	
505	lump	sum	First test pile	
507	3,295	lin. ft.	Steel Piles, 10.BP42	
518	447	cu. yds.	Porous backfill	

RACKOFF ASSOCIATES
ENGINEERS COLUMBUS, OHIO

RETAINING WALL C
GENERAL NOTES AND ESTIMATED QUANTITIES
BELMONT COUNTY STA. 1212 + 40.62
STA. 1216 + 55 (±)

Designed	Drawn	Traced	Checked	Reviewed	Date	Revised
W.F.	M.R.		V.K.	GEE	5-7 64	

FED. RD. DIVISION	STATE	PROJECT	TYPE FUNDS
2	OHIO		

280
418

BELMONT COUNTY
BEL. 7 - 20.74

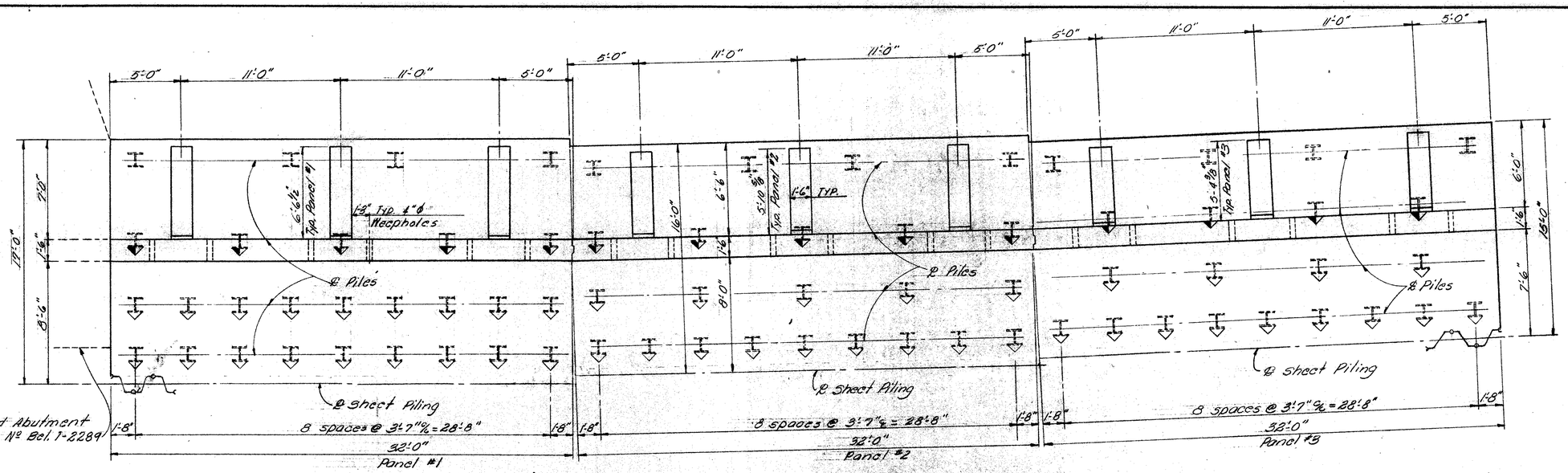

PLAN

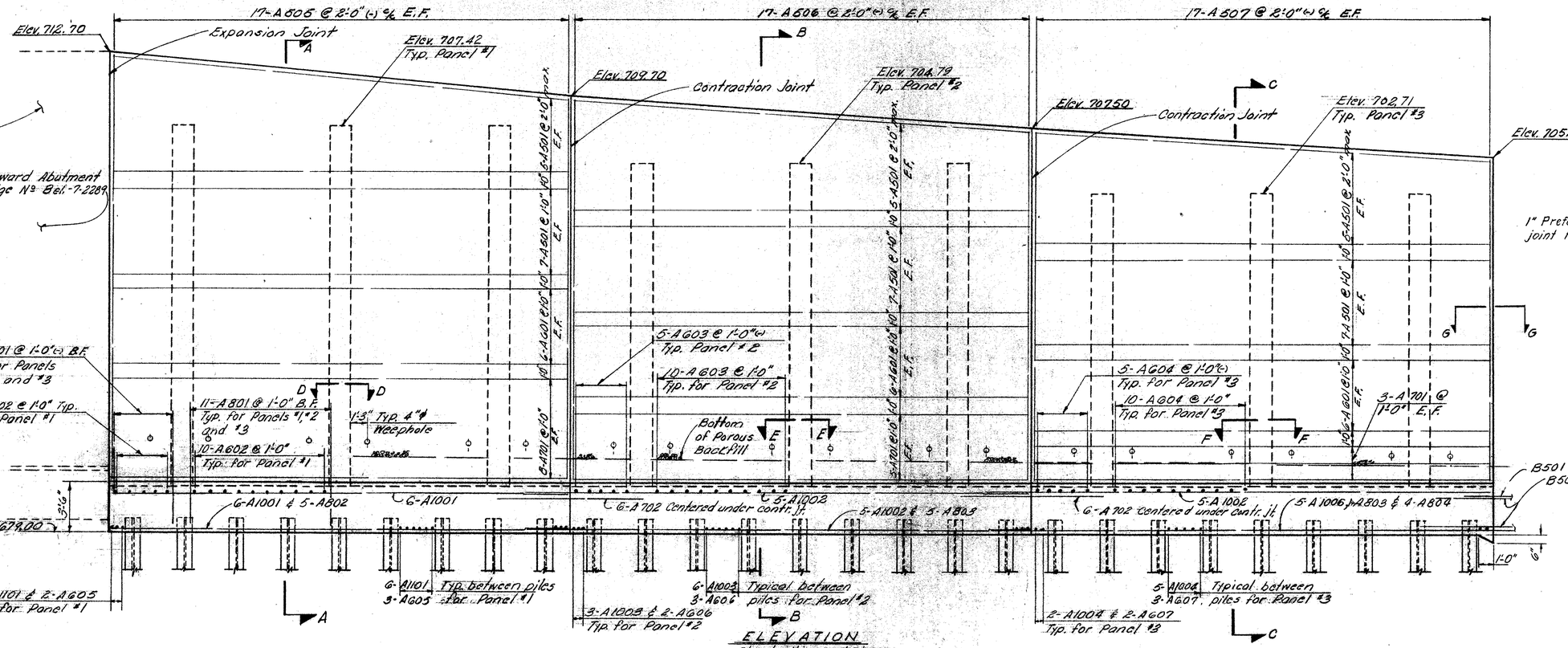

ELEVATION
Sheet piling not shown

LEGEND

E.F. Denotes Each Face
F.F. Denotes Front Face
B.F. Denotes Back Face

Indicates vertical Piles

Indicates Piles Battered 1:4

Indicates Piles Battered 1:3

RACKOFF ASSOCIATES
ENGINEERS COLUMBUS, OHIO

RETAINING WALL C
PANELS 1 - 3

BELMONT COUNTY
STA. 1212 + 40.62
STA. 1216 + 55 (±)

Designed	Drawn	Traced	Checked	Reviewed	Date	Revised
W.F.	W.F.	E.A.	V.K.	666	5-7 64	

FED. RD. DIVISION	STATE	PROJECT	TYPE FUNDS
2	OHIO		

281
418

BELMONT COUNTY
BEL. 7- 20.74

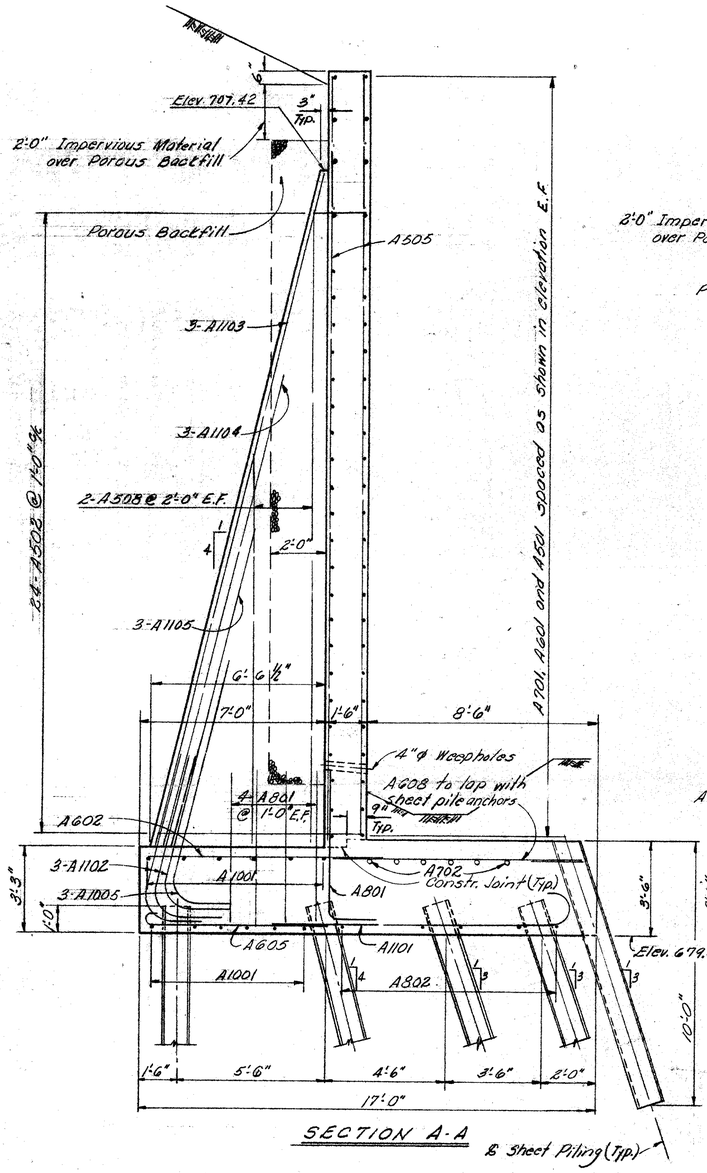

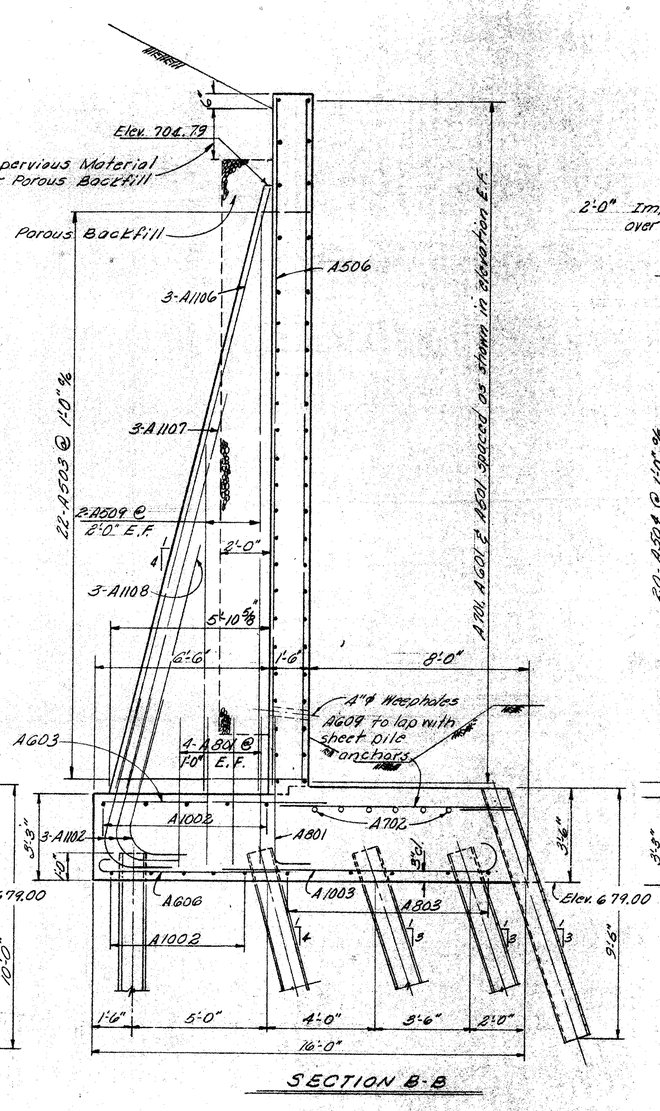

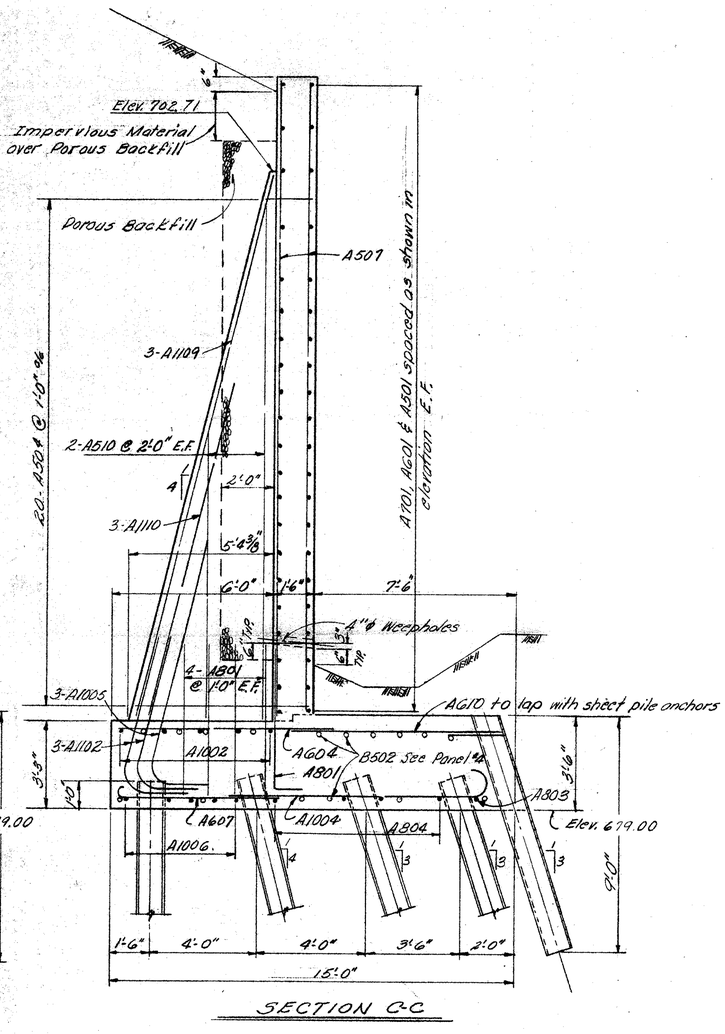

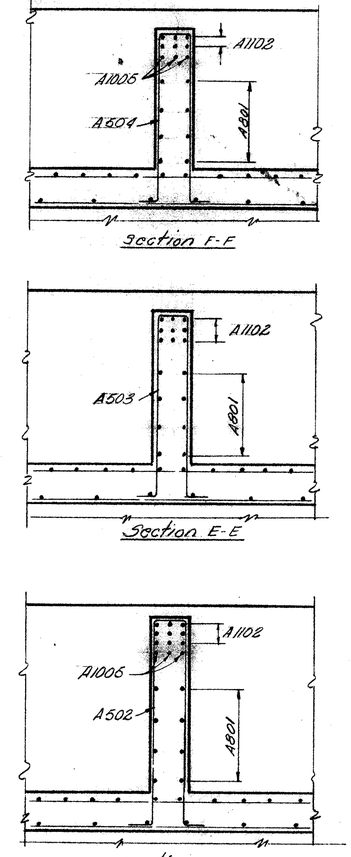

LEGEND:
E.F. Denotes Each Face

RACKOFF ASSOCIATES
ENGINEERS COLUMBUS, OHIO

RETAINING WALL C
PANELS 1 - 3

BELMONT COUNTY
STA. 1212 + 40.62
STA. 1216 + 55 (±)

Designed	Drawn	Traced	Checked	Reviewed	Date	Revised
W.F.	W.F.	E.A.	V.K.	668	5-7 64	

FED. RD. DIVISION	STATE	PROJECT	TYPE FUNDS
2	OHIO		

282
418

BELMONT COUNTY
BEL. 7- 20.74

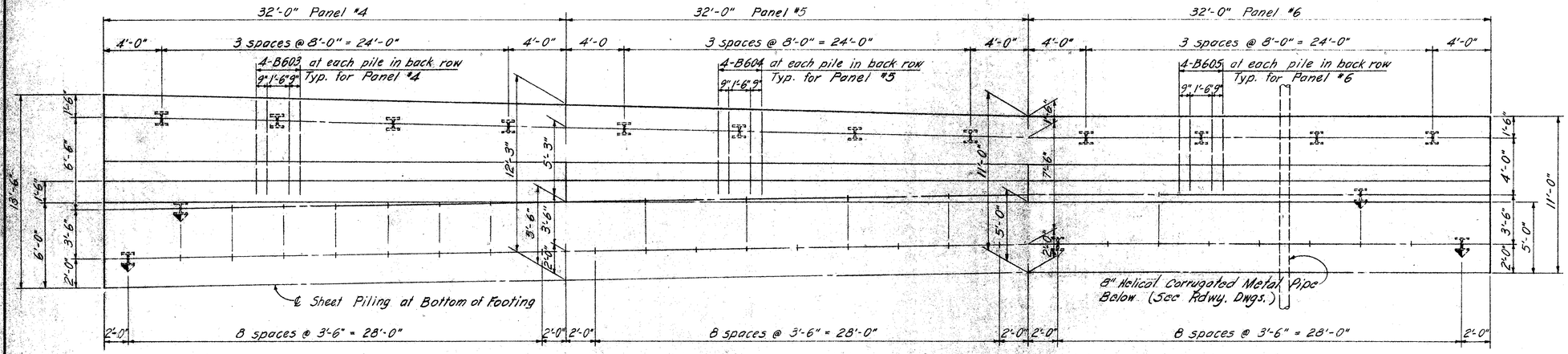

Note: Shift Piles as required to clear 8" pipe; Omit sheet piling at pipe (See field location)

PLAN

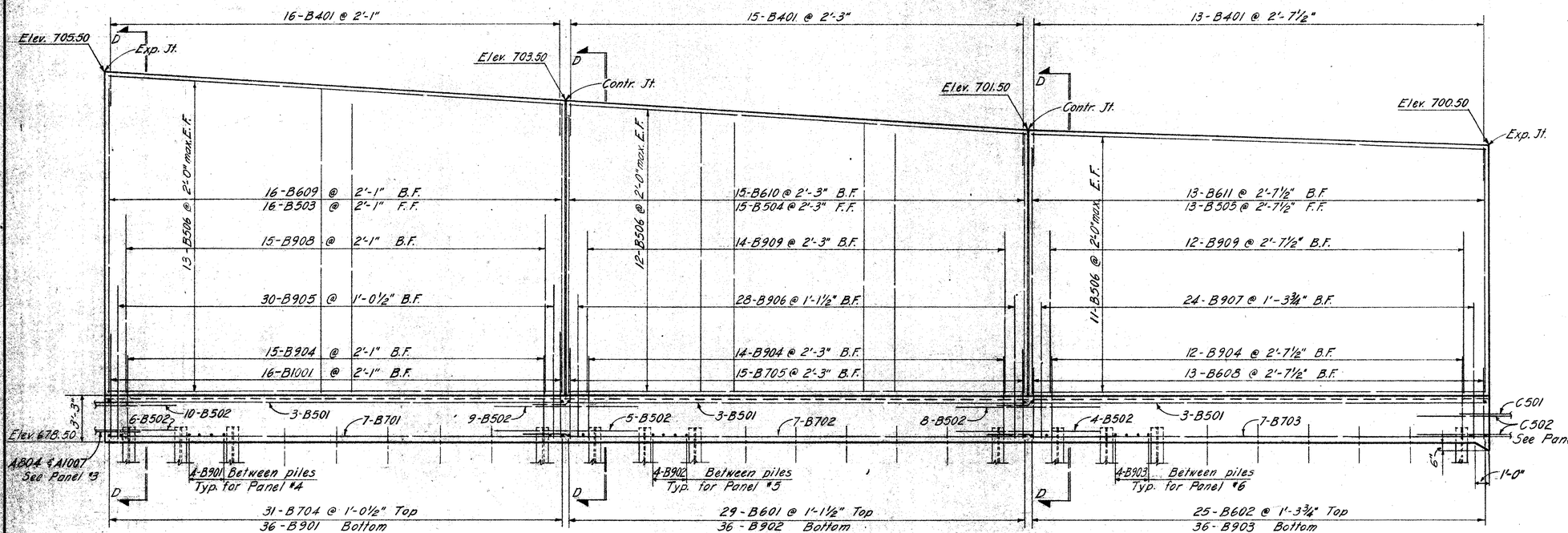

ELEVATION

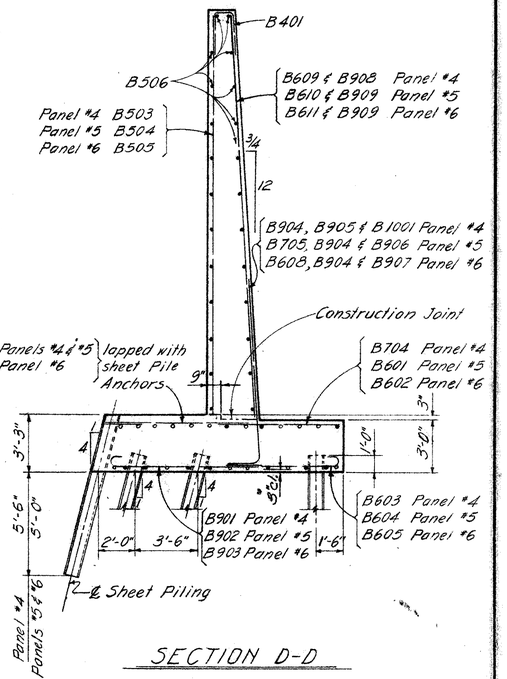

SECTION D-D

LEGEND

E.F. Denotes Each Face
F.F. Denotes Front Face
B.F. Denotes Back Face

Indicates Vertical Piles

Indicates Piles Battered 1:4

All Footing Longitudinal Bars
- • B501 Top
  B701, B702 or B703 Bottom
- ○ B502 Top & Bottom
  Centered under Expansion or Contraction Joint.

RACKOFF ASSOCIATES
ENGINEERS COLUMBUS, OHIO

RETAINING WALL C
PANELS 4 - 6

BELMONT COUNTY
STA. 1212+40.62
STA. 1216+55 (±)

Designed	Drawn	Traced	Checked	Reviewed	Date	Revised
W.F.	W.F.	M.R.	V.K.	666	5-7-64	

FED. RD. DIVISION	STATE	PROJECT	TYPE FUNDS
2	OHIO		

283
418

BELMONT COUNTY
BEL. 7- 20.74

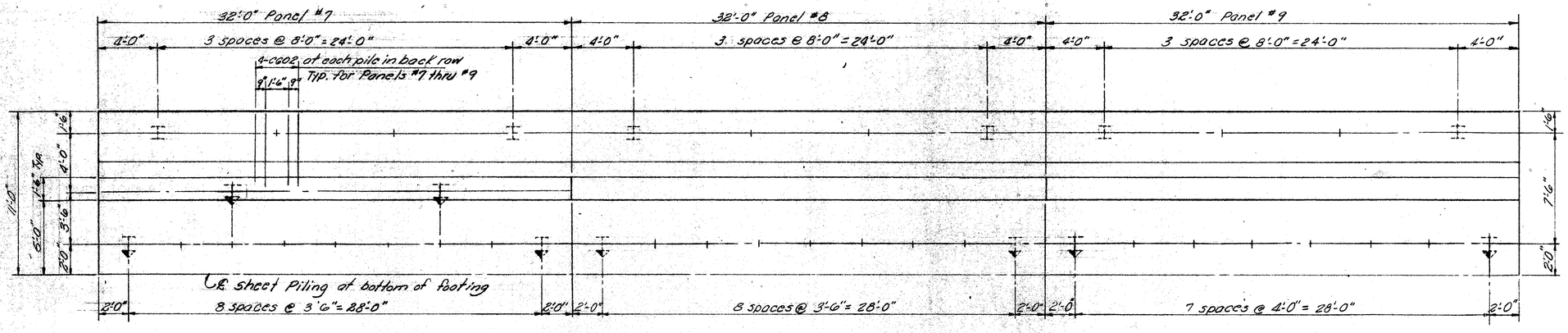

PLAN

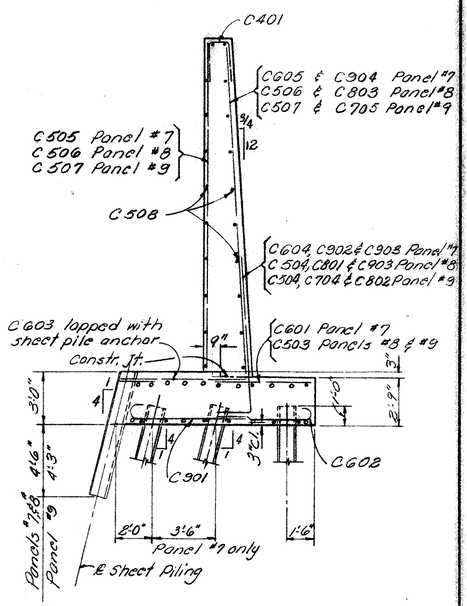

SECTION E-E

LEGEND

E.F. Denotes Each Face
F.F. Denotes Front Face
B.F. Denotes Back Face

Indicates Vertical Piles
Indicates Piles Battered 1:4

Footing Longitudinal Bars
- C501 Top
  C701, C702 or C703 Bottom
- C502 Top & Bottom centered under Expansion or Contraction Joint

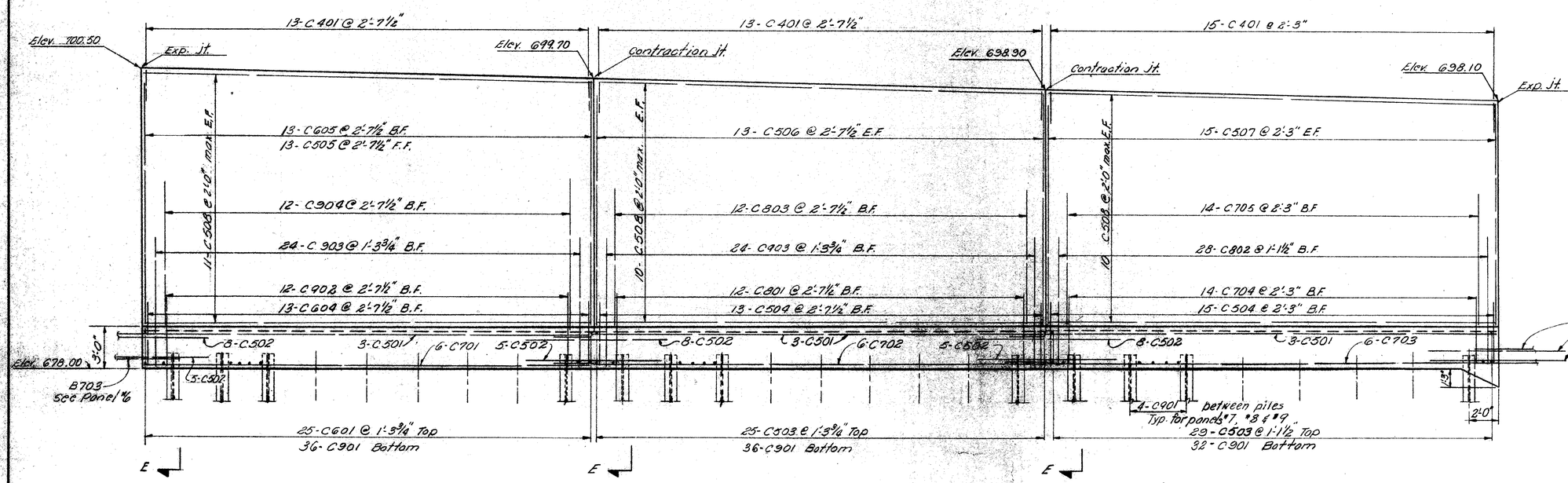

ELEVATION

RACKOFF ASSOCIATES
ENGINEERS COLUMBUS, OHIO

RETAINING WALL C
PANELS 7 - 9

BELMONT COUNTY
STA. 1212 + 40.62
STA. 1216 + 55 (±)

Designed	Drawn	Traced	Checked	Reviewed	Date	Revised
W.F.	W.F.	E.A.	V.K.	666	5-7 64	

FED. RD. DIVISION	STATE	PROJECT	TYPE FUNDS
2	OHIO		

284
418

BELMONT COUNTY
BEL. 7-20.74

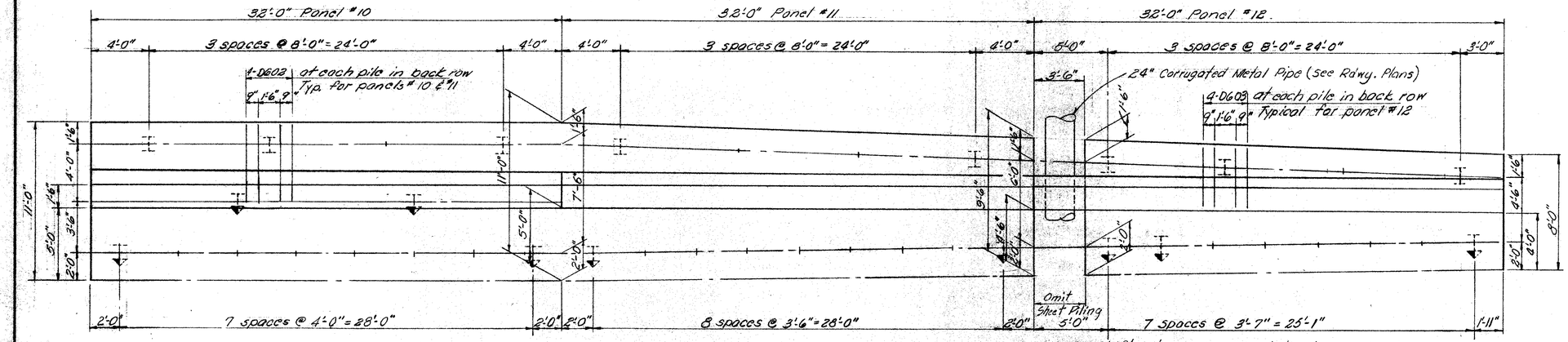

PLAN

NOTE: Shift piles as required to clear 24" pipe. See field location.

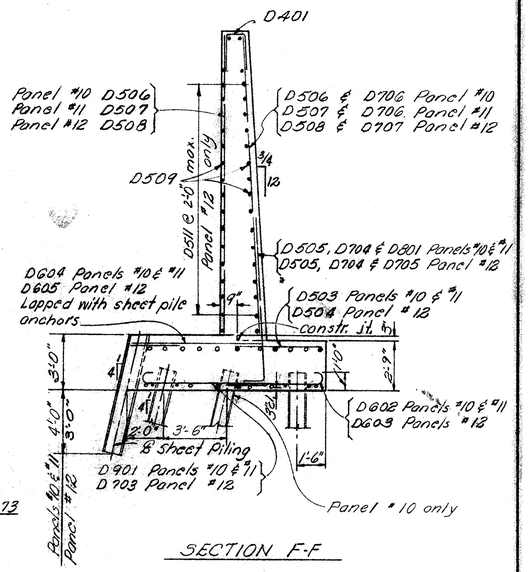

SECTION F-F

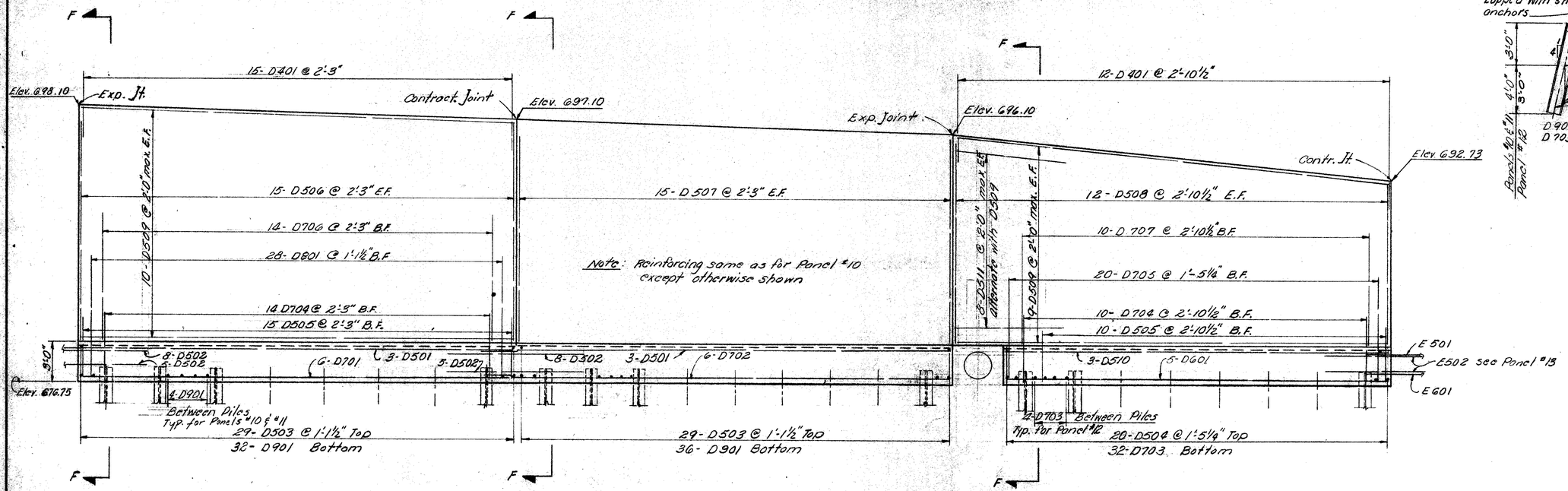

ELEVATION

LEGEND

E.F. Denotes Each Face
F.F. Denotes Front Face
B.F. Denotes Back Face

Indicates vertical Piles

Indicates Piles Battered 1:4

Footing Longitudinal Bars
- D601 & D510 Top
  D601, D701 & D702 Bottom
- ○ D502 Top & Bottom centered under Expansion or Contraction Jt.

RACKOFF ASSOCIATES
ENGINEERS COLUMBUS, OHIO

RETAINING WALL C

PANELS 10-12

BELMONT COUNTY

STA. 1212+40.62
STA. 1216+55 (±)

Designed	Drawn	Traced	Checked	Reviewed	Date	Revised
W.F.	W.F.	E.A.	V.K.	[illegible]	5-7-64	

FED. RD. DIVISION	STATE	PROJECT	TYPE FUNDS
2	OHIO		

(285 418)

BELMONT COUNTY
BEL. 7- 20.74

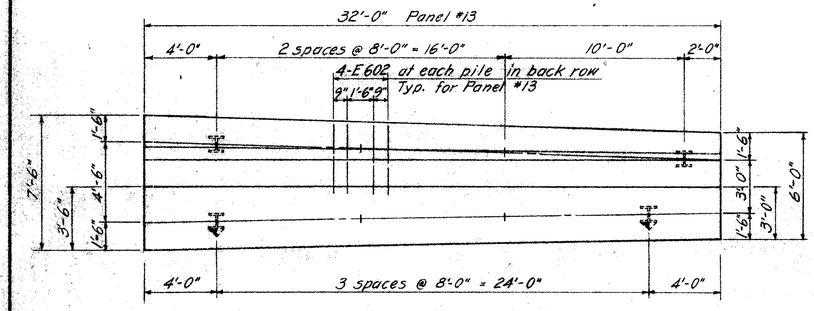

PLAN

All piles shall be 10 BP 42 steel "H" piles

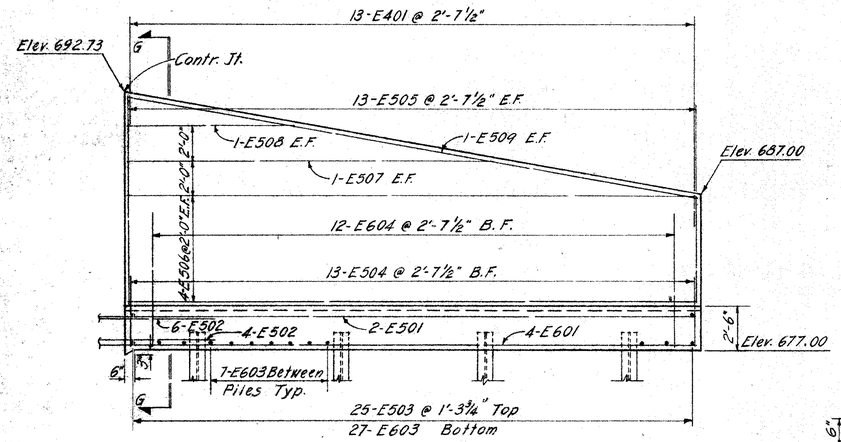

ELEVATION

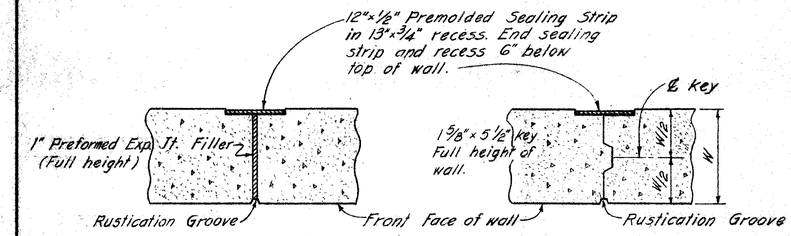

EXPANSION JOINT DETAIL

CONTRACTION JOINT DETAIL

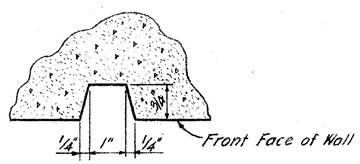

RUSTICATION GROOVE DETAIL

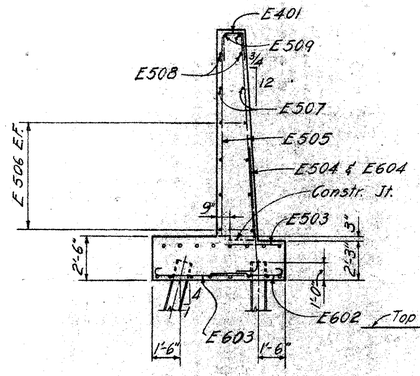

SECTION G-G

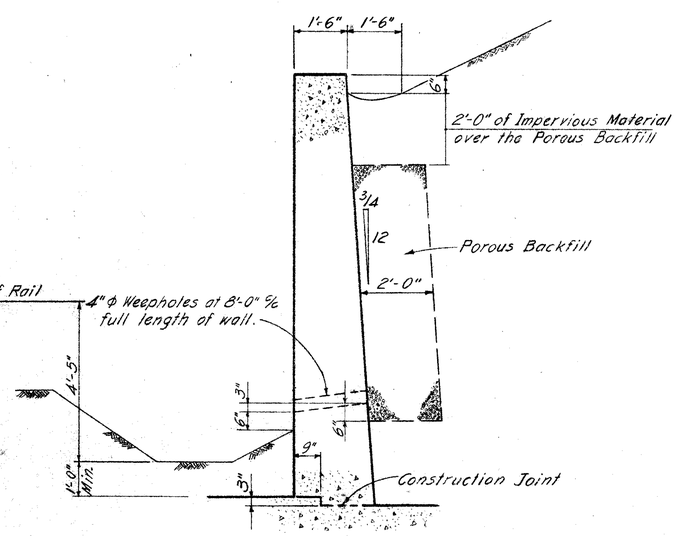

SECTION THRU RETAINING WALL STEM

Details shown are typical for panels 4 thru 13

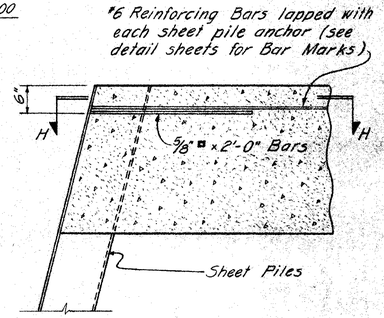

SECTION THRU FOOTING

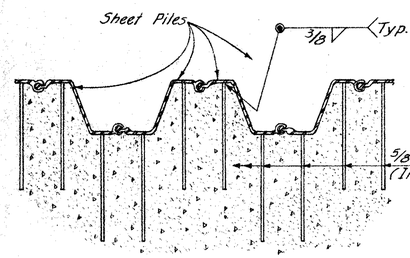

Note: Used piles in good condition may be used.

SECTION H-H

SHEET PILE ANCHOR DETAILS

LEGEND

E. F. Denotes Each Face
F. F. Denotes Front Face
B. F. Denotes Back Face

Indicates Vertical Piles

Indicates Piles Battered 1:4

All Footing Longitudinal Bars

- E501 Top
  E601 Bottom
- ○ E502 Top & Bottom Centered under Expansion or Contraction Joint.

RACKOFF ASSOCIATES
ENGINEERS COLUMBUS, OHIO

RETAINING WALL C
PANEL 13
AND COMMON DETAILS

BELMONT COUNTY
STA. 1212 + 40.62
STA. 1216 + 5.5 (±)

Designed	Drawn	Traced	Checked	Reviewed	Date	Revised
W. F.	W.F.	M.R.	V.K.	[illegible]	5-7 64	

REINFORCING STEEL LIST

FED. RD. DIVISION	STATE	PROJECT	
2	OHIO		

286
418

BELMONT COUNTY
BEL-7-20.74

BENDING DIAGRAM

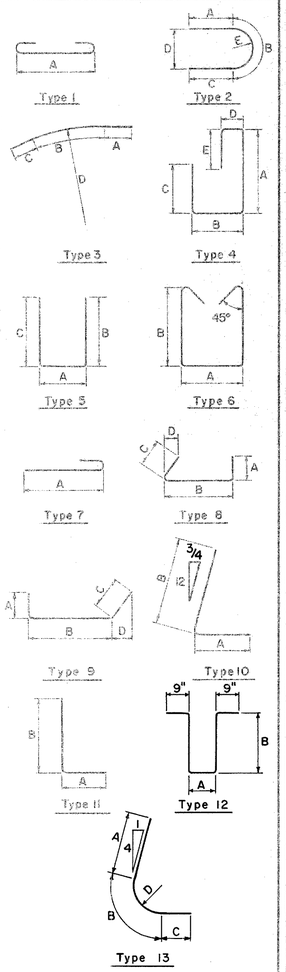

S IN THE COLUMN FOR "TYPE" INDICATES STRAIGHT BARS.

MARK	NO.	LENGTH	WEIGHT	TYPE	A	B	C	D	E
PANELS 1 THRU 3									
A501	72	31 - 8	2,378	S					
A502	72	17-2 to 5-8	857	12	1 - 2	7-6 to 1-9	3 each, vary "B" by 3" increments		
A503	66	15-10 to 5-4	729	12	1 - 2	6-10 to 1-7	3 each, vary "B" by 3" increments		
A504	60	14-10 to 5-4	631	12	1 - 2	6-4 to 1-7	3 each, vary "B" by 3" increments		
A505	34	30-0 to 27-0	1,011	S	2 each, vary by 2¼" increments				
A506	34	27-0 to 24-10	919	S	2 each, vary by 1⅞" increments				
A507	34	24-10 to 22-10	845	S	2 each, vary by 1½" increments				
A508	12	23-0 to 15-0	238	S	6 each, vary by 8'-0" increments				
A509	12	21-0 to 13-0	213	S	6 each, vary by 8'-0" increments				
A510	12	19-0 to 11-0	188	S	6 each, vary by 8'-0" increments				
A601	36	31 - 8	1,712	S					
A602	30	8 - 9	394	S					
A603	30	8 - 3	372	S					
A604	30	7 - 9	349	S					
A605	28	7 - 5	312	7	6 - 9				
A606	28	7 - 2	301	7	6 - 6				
A607	28	6 - 8	280	7	6 - 0				
A608	43	10 - 0	646	S					
A609	43	9 - 6	614	S					
A610	43	9 - 0	581	S					
A701	32	31 - 8	2,071	S					
A702	12	10 - 0	245	S					
A801	168	6 - 11	3,103	11	1 - 2	6 - 0			
A802	5	31 - 8	423	S					
A803	6	34 - 6	553	S					
A804	4	37 - 4	399	S					
A1001	12	31 - 8	1,635	S					
A1002	15	35 - 3	2,275	S					
A1003	54	11 - 8	2,711	7	10-3				
A1004	44	11 - 2	2,114	7	9 - 9				
A1005	18	10 - 7	820	13	8-0	1-7	1-0	0-10	
A1006	5	38 - 10	835	S					
A1101	54	12 - 8	3,634	7	11-1				
A1102	72	8 - 1	3,092	13	5-6	1-7	1-0	0-10	
A1103	9	25 - 8	1,227	S					
A1104	9	18 - 0	861	S					
A1105	9	12 - 0	574	S					
A1106	9	23 - 0	1,100	S					
A1107	9	15 - 3	729	S					
A1108	9	9 - 3	442	S					
A1109	9	20 - 10	996	S					
A1110	9	13 - 0	622	S					
		TOTAL	44,031						

MARK	NO.	LENGTH	WEIGHT	TYPE	A	B	C	D	E
PANELS 4 THRU 6									
B401	44	5 - 4	157	5	1 - 1	2 - 3	2 - 3		
B501	9	33 - 7	315	S					
B502	42	10 - 0	438	S					
B503	16	21 - 7 to 22 - 7	369	S	2 sets of 8 each, vary each set by 1'-0"				
B504	15	19-7 to 20-11	317	S	3 sets of 5 each, vary each set by 8"				
B505	13	18 - 7	252	S					
B506	72	31 - 8	2,378	S					
B601	29	6 - 0	261	S					
B602	25	5 - 3	197	S					
B603	16	7 - 1	170	7	6 - 5				
B604	16	6 - 4	152	7	5 - 8				
B605	16	5 - 7	134	7	4 - 11				
B606	86	8 - 6	1,098	S					
B607	43	7 - 8	495	S					
B608	13	5 - 11	116	10	1 - 3	4 - 10			
B609	16	21-10 to 22-10	537	S	2 sets of 8 each, vary each set by 1'-0"				
B610	15	19-10 to 21 - 2	462	S	3 sets of 5 each, vary each set by 8"				
B611	13	18 - 10	368	S					
B701	7	31 - 8	453	S					
B702	7	34 - 3	490	S					
B703	7	36 - 10	527	S					
B704	31	6 - 10	433	S					
B705	15	7 - 4	225	10	1 - 6	6 - 0			
B901	36	9 - 11	1,214	7	8 - 8				
B902	36	9 - 5	1,153	7	8 - 2				
B903	36	8 - 11	1,091	7	7 - 8				
B904	41	7 - 5	1,034	10	1 - 11	5 - 9			
B905	30	12 - 7	1,283	10	1 - 11	10 - 11			
B906	28	11 - 2	1,063	10	1 - 11	9 - 6			
B907	24	10 - 10	884	10	1 - 11	9 - 2			
B908	15	13 - 0	663	S					
B909	26	11 - 6	1,017	S					
B1001	16	8 - 10	608	10	2 - 2	7 - 0			
		TOTAL	20,354						
PANELS 7 THRU 9									
C401	41	5 - 4	146	5	1 - 1	2 - 3	2 - 3		
C501	9	33 - 7	315	S					
C502	39	10 - 0	407	S					
C503	54	5 - 0	282	S					
C504	28	5 - 2	151	10	1 - 1	4 - 3			
C505	13	18 - 7	252	S					
C506	26	17 - 9	481	S					
C507	30	16 - 11	529	S					
C508	62	31 - 8	2,048	S					
C601	25	5 - 3	197	S					
C602	48	5 - 8	409	7	5 - 0				
C603	129	7 - 4	1,421	S					
C604	13	5 - 8	111	10	1 - 3	4 - 7			
C605	13	18 - 10	368	S					
C701	6	31 - 8	388	S					
C702	6	34 - 3	420	S					
C703	6	36 - 10	452	S					
C704	14	6 - 4	181	10	1 - 6	5 - 0			
C705	14	9 - 9	279	S					
C801	12	6 - 8	214	10	1 - 8	5 - 3			
C802	28	10 - 5	779	10	1 - 8	9 - 0			
C803	12	10 - 6	336	S					
C901	104	8 - 11	3,153	7	7 - 8				
C902	12	7 - 2	292	10	1 - 11	5 - 6			
C903	48	10 - 8	1,741	10	1 - 11	9 - 0			
C904	12	10 - 11	445	S					
		TOTAL	15,797						

MARK	NO.	LENGTH	WEIGHT	TYPE	A	B	C	D	E
PANELS 10 THRU 12									
D401	42	5 - 4	150	5	1 - 1	2 - 3	2 - 3		
D501	6	33 - 7	210	S					
D502	26	10 - 0	271	S					
D503	58	5 - 0	302	S					
D504	20	4 - 0	83	S					
D505	40	5 - 2	216	10	1 - 1	4 - 3			
D506	30	17 - 2	537	S					
D507	30	16 - 2	506	S					
D508	24	12-9 to 16-2	362	S	2 each, vary by ±3¾" increments				
D509	58	31 - 8	1,916	S					
D510	3	28 - 2	88	S					
D511	16	8 - 0	134	S					
D601	5	28 - 2	212	S					
D602	32	5 - 8	272	7	5 - 0				
D603	16	5 - 0	120	7	4 - 4				
D604	86	7 - 4	947	S					
D605	43	6 - 4	409	S					
D701	6	31 - 8	388	S					
D702	6	34 - 3	420	S					
D703	32	7 - 5	485	7	6 - 7				
D704	38	6 - 4	492	10	1 - 6	5 - 0			
D705	20	9 - 1	371	10	1 - 6	7 - 9			
D706	28	9 - 9	558	S					
D707	10	8 - 5	172	S					
D801	56	9 - 8	1,445	10	1 - 8	8 - 3			
D901	68	8 - 11	2,062	7	7 - 8				
		TOTAL	13,128						
PANEL 13									
E401	13	3 - 10	33	5	1 - 1	1 - 6	1 - 6		
E501	2	33 - 7	70	S					
E502	10	10 - 0	104	S					
E503	25	3 - 4	87	S					
E504	13	5 - 2	70	10	1 - 1	4 - 3			
E505	26	7-4 to 13-1	277	S	2 each, vary by 5¾" increments				
E506	8	31 - 8	264	S					
E507	2	22 - 9	47	S					
E508	2	12 - 6	26	S					
E509	2	32 - 8	68	S					
E601	4	33 - 11	204	S					
E602	16	4 - 8	112	7	4 - 0				
E603	27	6 - 5	260	7	5 - 9				
E604	12	4 - 11	89	10	1 - 3	3 - 10			
		TOTAL	1,711						
REPLACEMENT BARS									
RE401	1	5 - 3	—	S					
RE501	2	5 - 7	—	S					
RE601	1	5 - 11	—	S					
RE701	1	6 - 3	—	S					
RE801	1	6 - 6	—	S					
RE901	1	6 - 10	—	S					
RE1001	1	7 - 3	—	S					
RE1101	1	7 - 7	—	S					

NOTES

BAR SIZE is indicated in bar mark. The first digit where three digits are used, and the first two where four are used indicate the bar size number.

RACKOFF ASSOCIATES
ENGINEERS COLUMBUS, OHIO

RETAINING WALL C
REINFORCING STEEL LIST

BELMONT COUNTY
STA. 1212 + 40.62
STA. 1216 + 55(±)

Designed	Drawn	Traced	Checked	Reviewed	Date	Revised
W. F.	M. R.		V. K.	[illegible]	5-7 64	

FED. RD. DIVISION	STATE	PROJECT	TYPE FUNDS
2	OHIO		

287
418

BELMONT COUNTY
BEL. 7 - 20.74

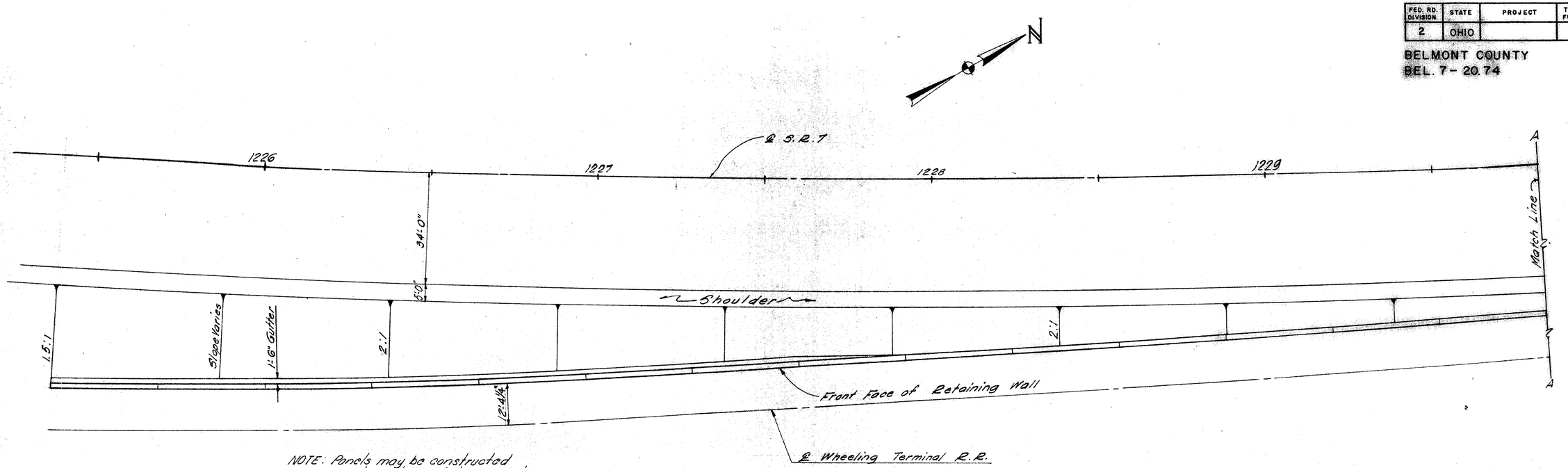

NOTE: Panels may be constructed on straight lines between joints

PLAN

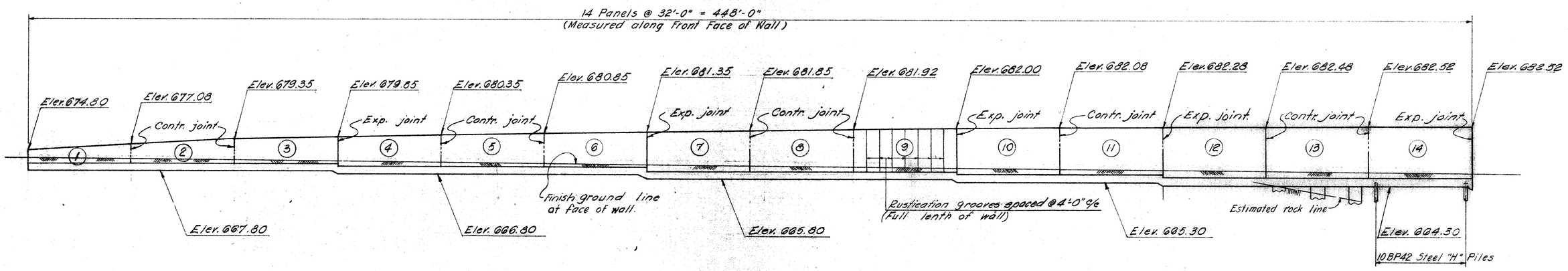

ELEVATION

RACKOFF ASSOCIATES
ENGINEERS COLUMBUS, OHIO

RETAINING WALL D

GENERAL PLAN

BELMONT COUNTY STA. 1225 + 40
STA. 1234 + 57½

Designed	Drawn	Traced	Checked	Reviewed	Date	Revised
W.F.	W.F.	G.M.	N.K.	666	5-7 64	

FED. RD. DIVISION	STATE	PROJECT	TYPE FUNDS
2	OHIO		

288
418

BELMONT COUNTY
BEL. 7 - 20.74

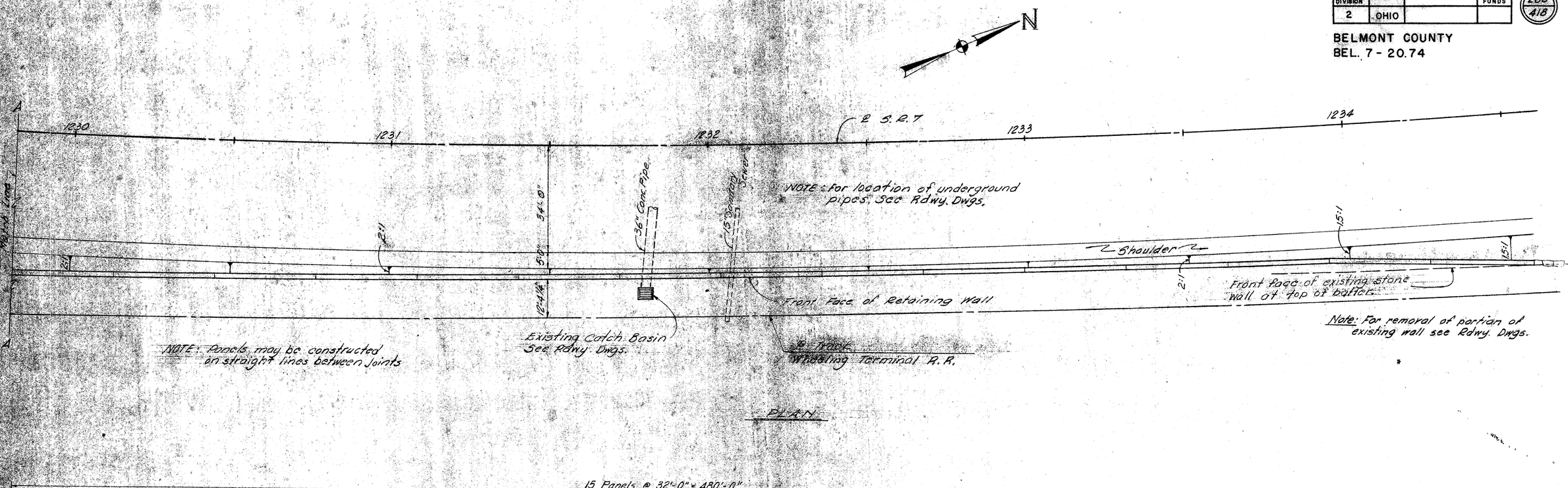

PLAN

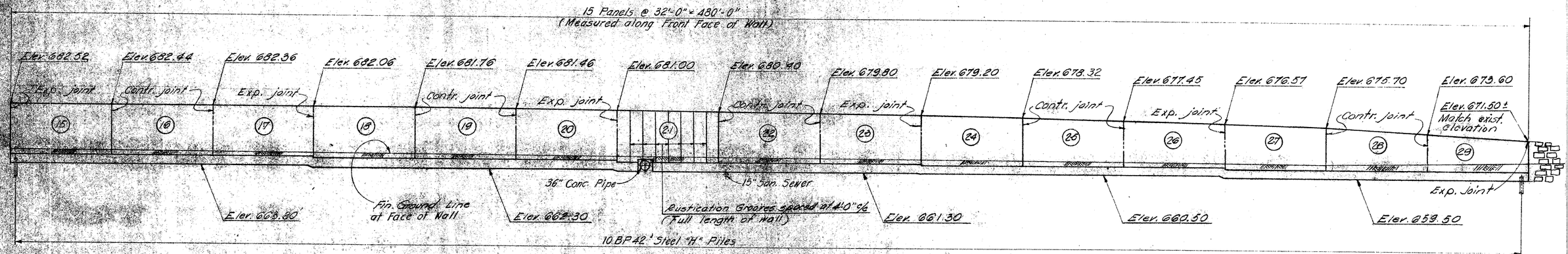

ELEVATION

All piles shall be 10 BP 42 steel "H" Piles.
Estimated average pay lengths are as follows:

Panels 14;	24-26	10'
Panels	15-17	14'
Panels	18-23	12'
Panels	27-29	8'

RACKOFF ASSOCIATES
ENGINEERS COLUMBUS, OHIO

RETAINING WALL D
GENERAL PLAN

BELMONT COUNTY
STA. 1225 + 40
STA. 1234 + 57±

Designed	Drawn	Traced	Checked	Reviewed	Date	Revised
W.F.	W. F.	G.M.	N.K.	686	5-7 64	

FED. RD. DIVISION	STATE	PROJECT	TYPE FUNDS
2	OHIO		

289
418

BELMONT COUNTY
BEL.7 - 20.74

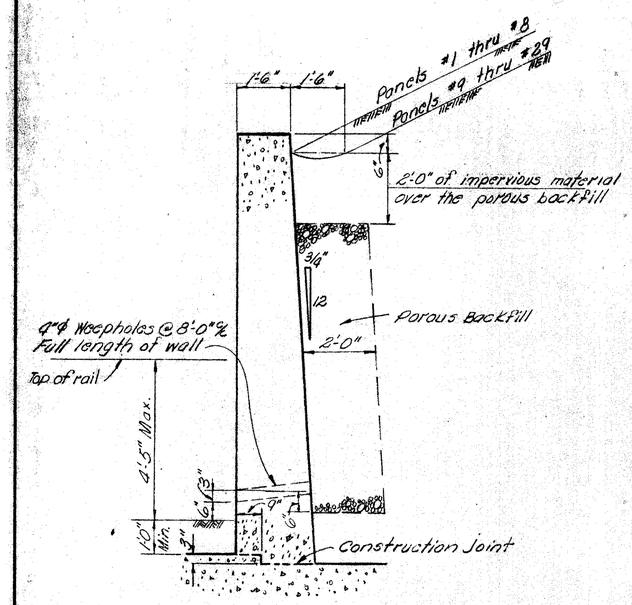

TYPICAL SECTION THRU RETAINING WALL STEM

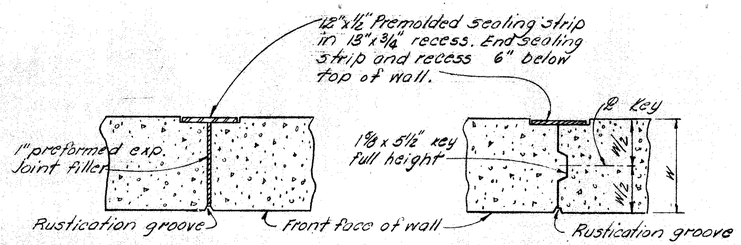

EXPANSION JOINT DETAIL

CONTRACTION JOINT DETAIL

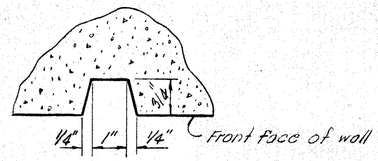

RUSTICATION GROOVE DETAIL

ESTIMATED QUANTITIES

TYPE CODE G201

ITEM	TOTAL	UNIT	DESCRIPTION	AS BUILT
503	Lump	Sum	Cofferdams, cribs and sheeting	
504	3,110	Sq. ft.	Steel sheet piling left in place (min. section modulus of 7.0 in.³ per foot of wall)	
503	3,053	Cu. Yds.	Unclassified excavation, including rock	
511	936	Cu. Yds	Class "E" concrete, walls above footings	
511	780	Cu. Yds.	Class "E" concrete, footings	
512	368	Lin. Ft.	Premolded sealing strip.	
512	3	Sq. Yds.	Type "B" waterproofing	
509	90,414	Lbs.	Reinforcing Steel	
516	283	Sq. Ft.	1" preformed expansion joint filler (AASHO M-153)	
505	Lump	Sum	First test pile	
507	2,104	Lin. Ft.	Steel piles, 10 BP 42	
518	707	Cu. Yds.	Porous backfill	

GENERAL NOTES

DESIGN SPECIFICATIONS: The structure conforms to the requirements of "Design Specifications for Highway Structures" of the State of Ohio, Department of Highways, dated 9-1-57, together with current revisions thereof.

Footings for panels #1 thru #12 shall extend a minimum of 3" into undisturbed rock or to the elevation shown, whichever is lower.

The maximum Design Foundation Bearing Pressure for Panels #1 thru #12 is 1.75 tons per sq. ft.

The maximum Design Foundation Bearing Pressure for the pedestals under panel #13 is 4.7 tons per sq. ft.

PILES shall be driven to firm contact with rock. If the lenght of penetration is approximately equal to the depth to rock according to the bridge foundation investigation report, the firm contact shall be considered as attained when the capacity according to the formula in Sec. 507.05 is not less then the following value for a pile hammer of the indicated energy rating.

45 tons for a 7,000 ft. lb. hammer
35 tons for a 11,000 ft. lb. hammer
30 tons for a 15,000 ft. lb. hammer

If the energy rating of the hammer is between the ratings shown, the required formula capacity shall be determined by interpolation.
The design load is 25 tons per pile for all piles.

POROUS BACKFILL, 2 ft. thick full length of retaining wall, shall extend up to within 2 feet of the finished ground line.

CONCRETE CLASS "E" - basic unit stress 1,133 psi

REINFORCING STEEL - ASTM A15, A16, A160, Deformed, Intermediate or Hard Grade. Basic unit stress 20,000 psi.

Pedestals shall be extended 9" into undisturbed rock or to the elevation shown, whichever is lower.

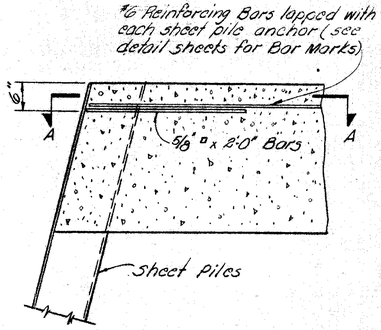

SECTION THRU FOOTING

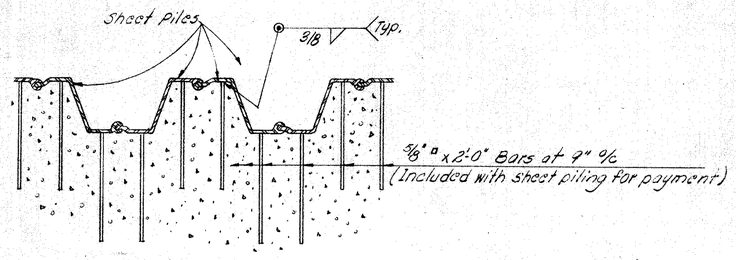

Note: Used sheet piles in good condition may be used.

SECTION A-A

SHEET PILE ANCHOR DETAILS

SHEETING AND BRACING: Before construction is started, eight sets of prints showing details of the sheeting and bracing to be used for excavation adjacent to the railroad tracks shall be submitted to the Director for approval by the Department of Highways and by the Railroad Company.

ALIGNING RAILROAD TRACKS: After the Contractor has completed all excavation and backfill adjacent to the railroad tracks in compliance with Secs. 503.04 and 503.09 of the Construction and Material Specifications, subject to the Supervision of the Railroad Company, nothing in Secs. 503.04, 503.09 or 108.04 of the Specifications shall be construed to hold the Contractor liable for aligning and resurfacing the railroad tracks.

RACKOFF ASSOCIATES
ENGINEERS COLUMBUS, OHIO

RETAINING WALL D
GENERAL NOTES, ESTIMATED QUANTITIES AND DETAILS
STA. 1225+40
BELMONT COUNTY STA. 1234+57±

Designed	Drawn	Traced	Checked	Reviewed	Date	Revised
W.F.	E.A.		N.K.	666	5-7 64	

FED. RD. DIVISION	STATE	PROJECT	TYPE FUNDS
2	OHIO		

290
418

BELMONT COUNTY
BEL. 7 - 20.74

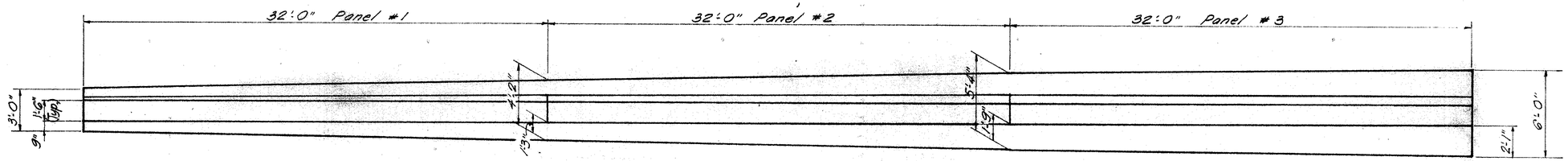

PLAN

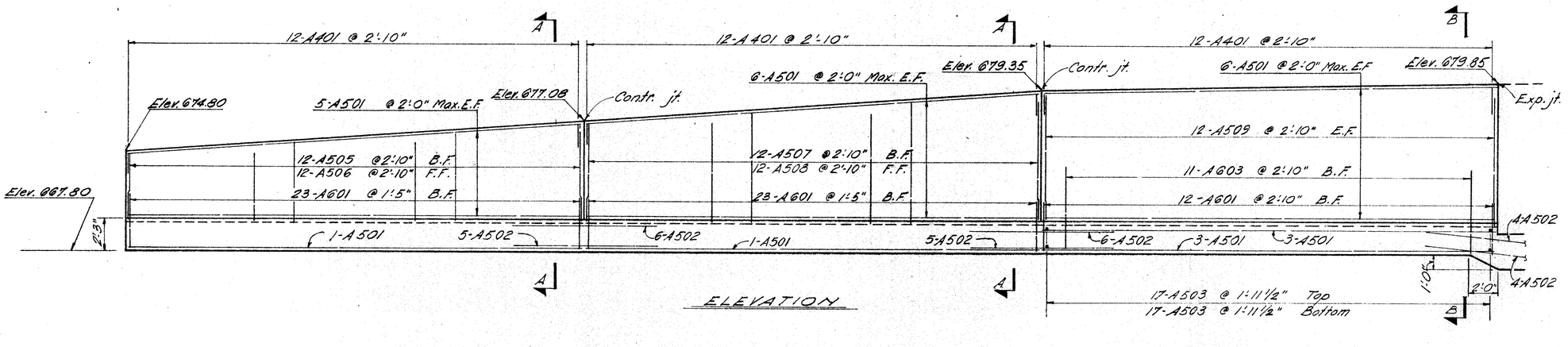

ELEVATION

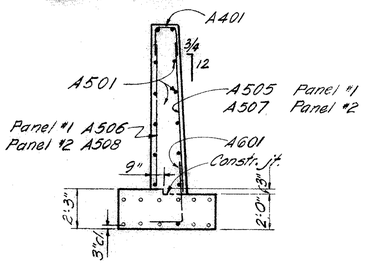

SECTION A-A

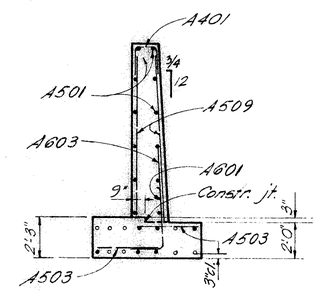

SECTION B-B

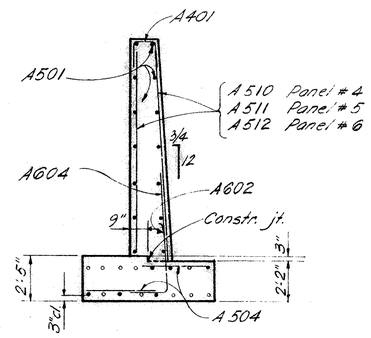

SECTION C-C

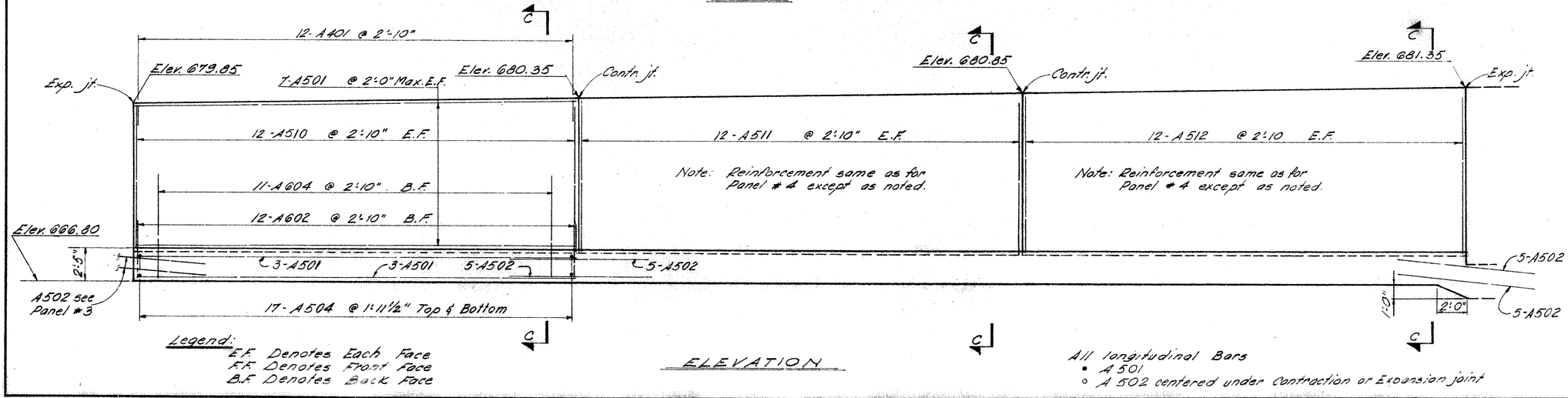

PLAN

ELEVATION

Legend:
E.F. Denotes Each Face
F.F. Denotes Front Face
B.F. Denotes Back Face

All longitudinal Bars
• A 501
◦ A 502 centered under Contraction or Expansion joint

RACKOFF ASSOCIATES
ENGINEERS COLUMBUS, OHIO

RETAINING WALL D
PANELS 1 - 6

BELMONT COUNTY
STA. 1225+40
STA. 1234+57 ±

Designed	Drawn	Traced	Checked	Reviewed	Date	Revised
W.F.	W.F.	G.M.	N.K.	[illegible]	5-7-64	

FED. RD. DIVISION	STATE	PROJECT	TYPE FUNDS
2	OHIO		

291
418

BELMONT COUNTY
BEL. 7 - 20.74

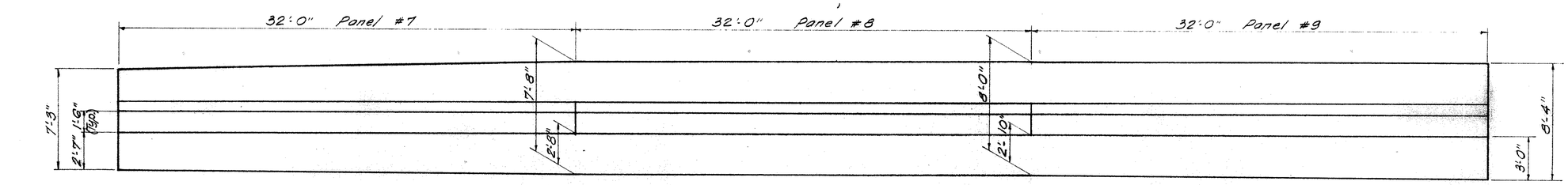

PLAN

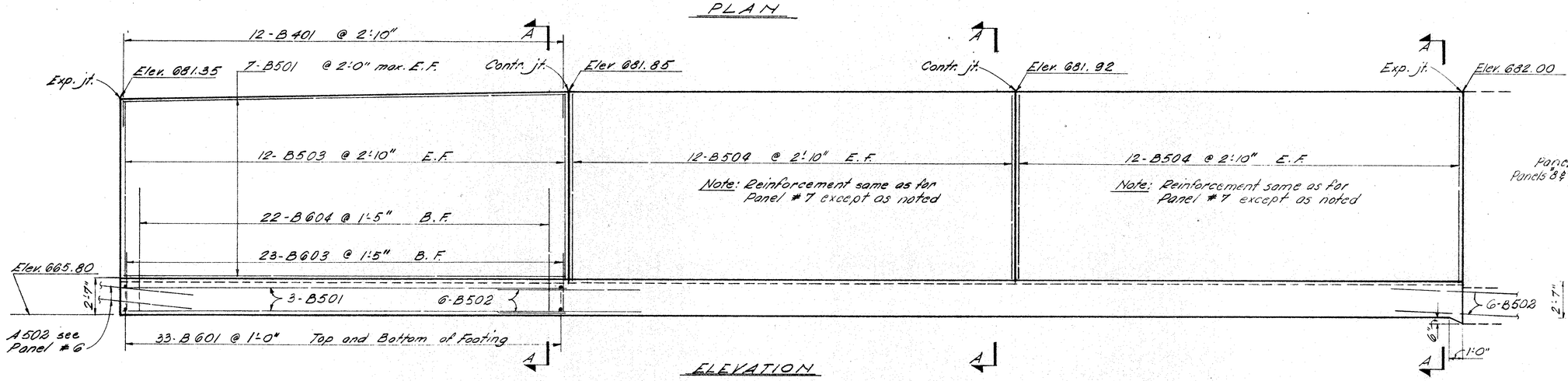

ELEVATION

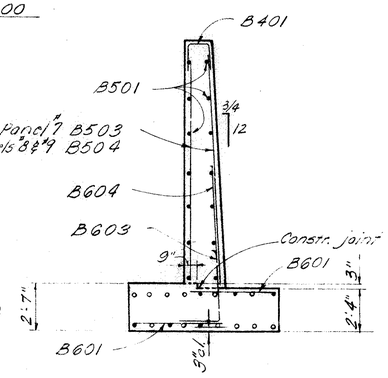

SECTION A-A

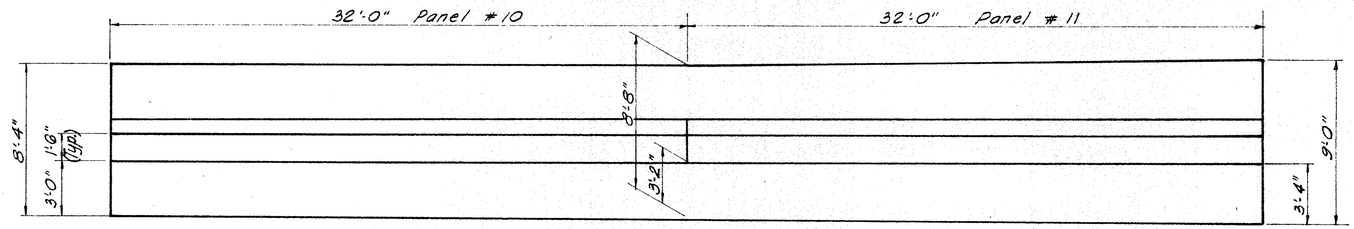

PLAN

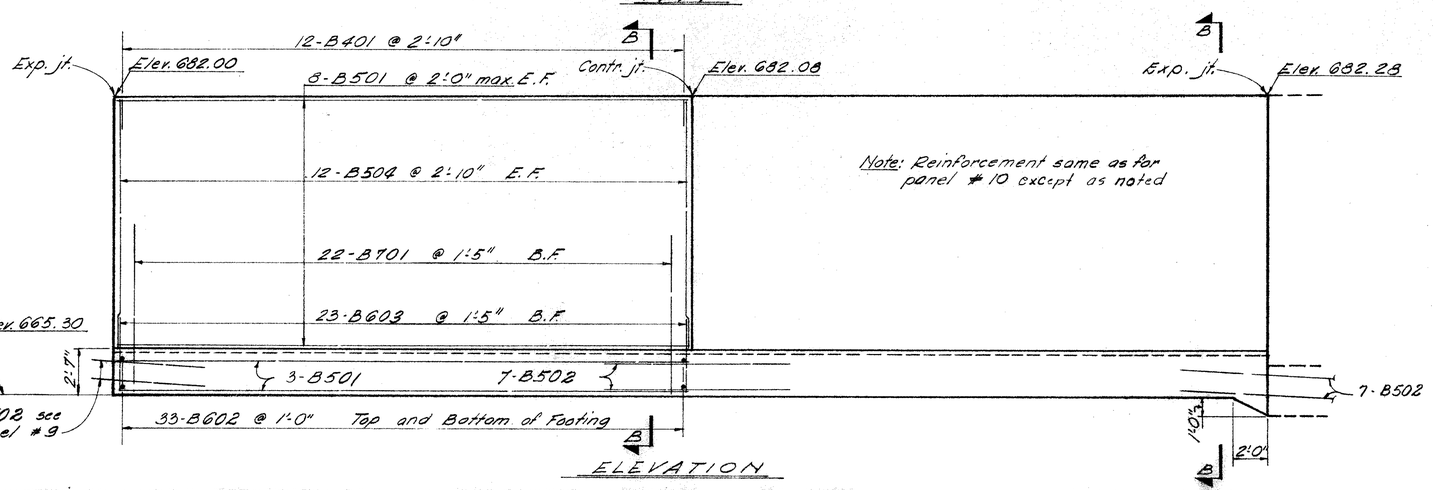

ELEVATION

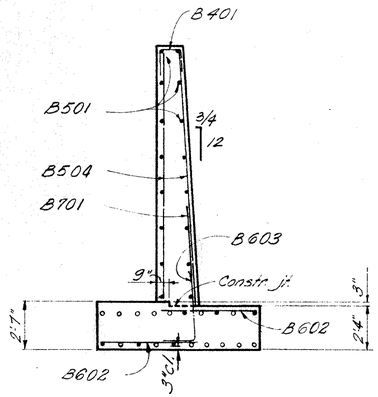

SECTION B-B

All footing longitudinal bars

- B501
- B502 centered under contraction or expansion joint

E.F. Denotes Each Face
F.F. Denotes Front Face
B.F. Denotes Back Face

RACKOFF ASSOCIATES
ENGINEERS COLUMBUS, OHIO

RETAINING WALL D
PANELS 7 - 11

STA. 1225+40
BELMONT COUNTY STA. 1234+57 ±

Designed	Drawn	Traced	Checked	Reviewed	Date	Revised
W.F.	W.F.	G.M.	N.K.	666	5-7 64	

FED. RD. DIVISION	STATE	PROJECT	TYPE FUNDS
2	OHIO		

292 418

BELMONT COUNTY
BEL. 7 – 20.74

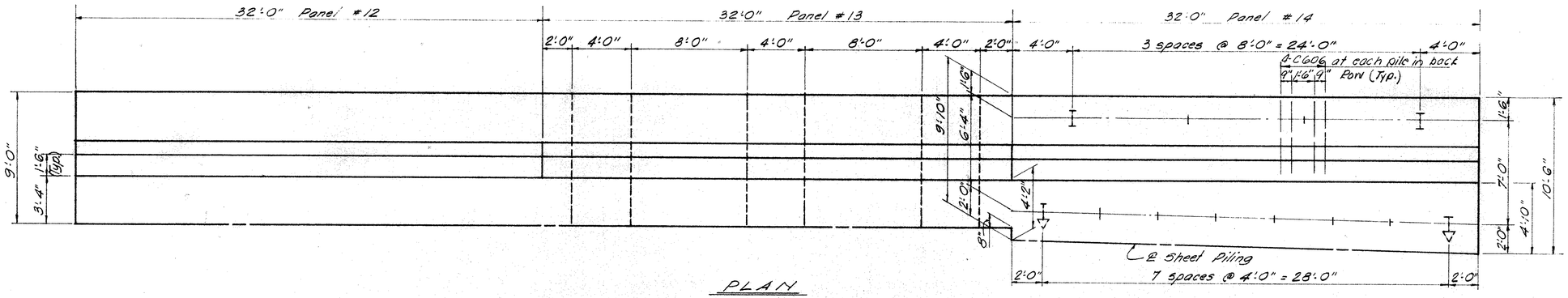

PLAN

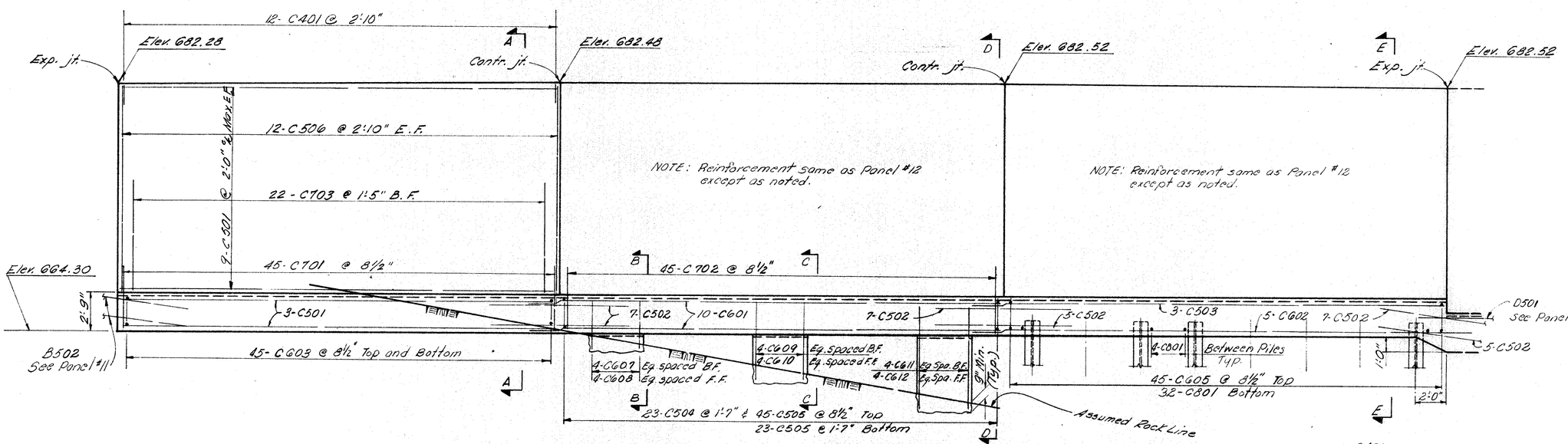

ELEVATION

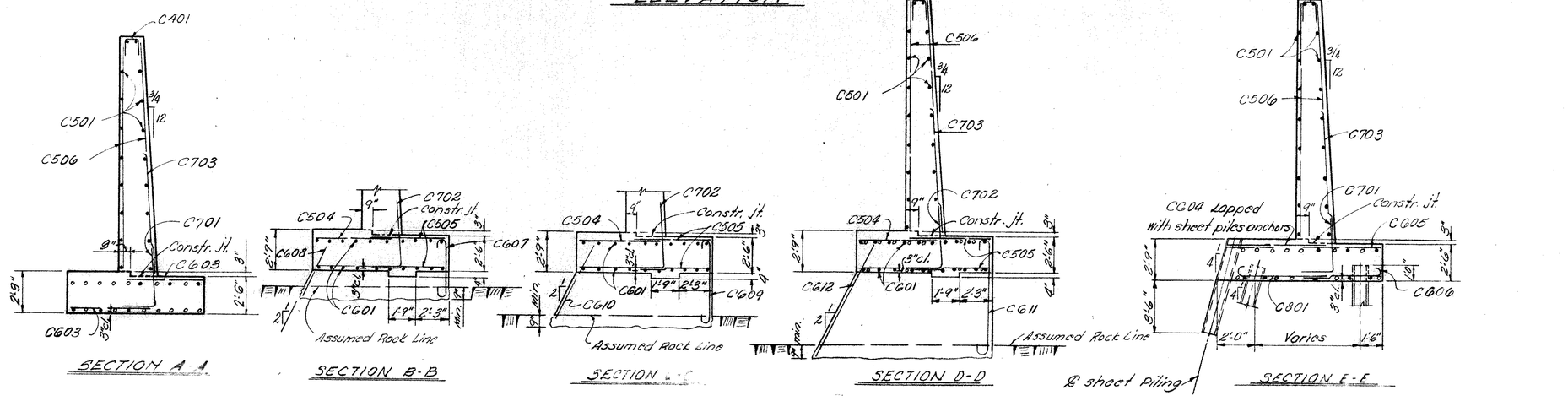

SECTION A-A
SECTION B-B
SECTION C-C
SECTION D-D
SECTION E-E

LEGEND

E.F. Denotes Each Face
F.F. Denotes Front Face
B.F. Denotes Back Face
Indicates Vertical Piles
Indicates Piles Battered 1:4

FOOTING LONGITUDINAL BARS

- C501, C503, or C601 Top
  C501, C601, or C602 Bottom
- C502 Top and Bottom

Centered under expansion or contraction joint.

RACKOFF ASSOCIATES
ENGINEERS COLUMBUS, OHIO

RETAINING WALL D
PANELS 12–14

BELMONT COUNTY
STA. 1225+40
STA. 1234+57 ±

Designed	Drawn	Traced	Checked	Reviewed	Date	Revised
W.F.	W.F.	G.M.	N.K.	[illegible]	5-7-64	

FED. RD. DIVISION	STATE	PROJECT	TYPE FUNDS
2	OHIO		

293
4/18

BELMONT COUNTY
BEL. 7 - 20.74

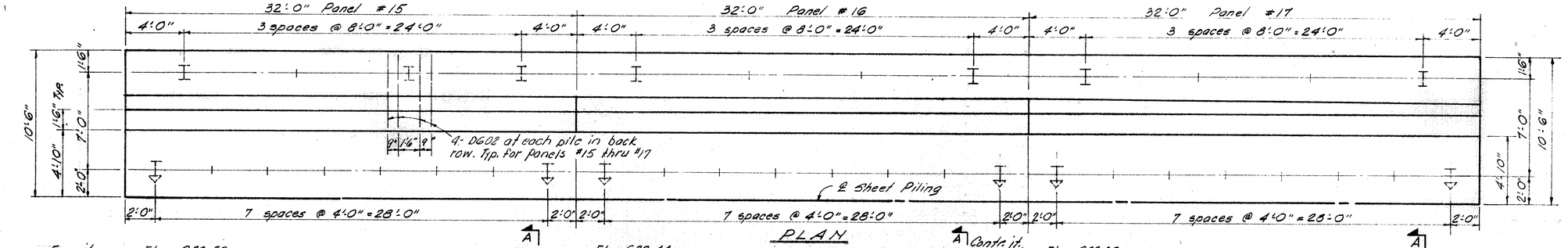

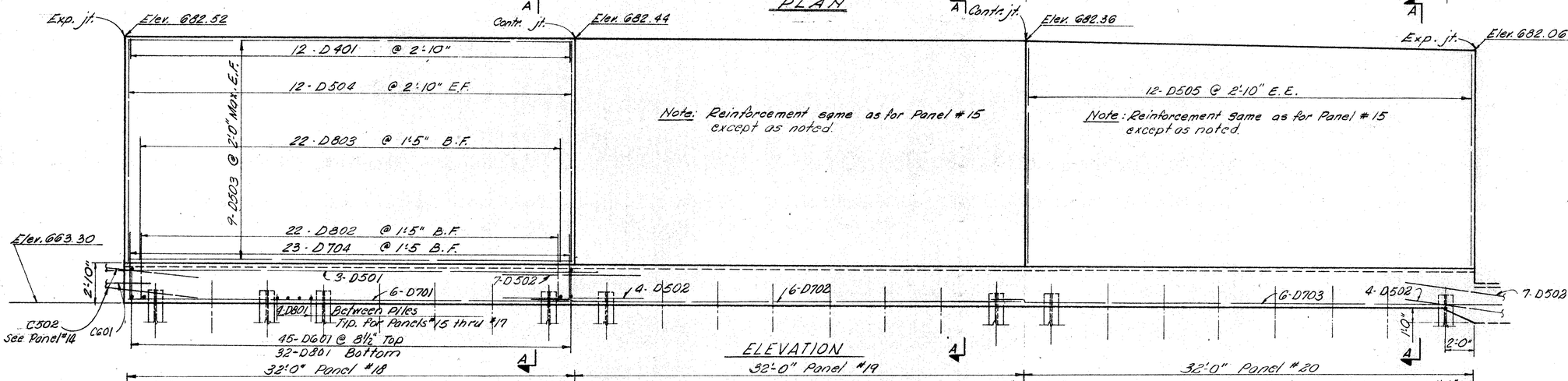

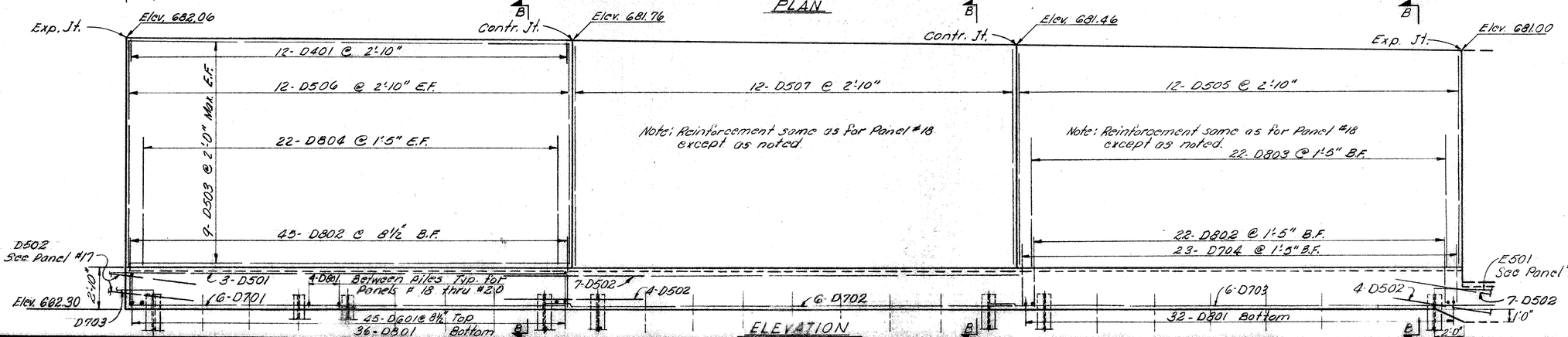

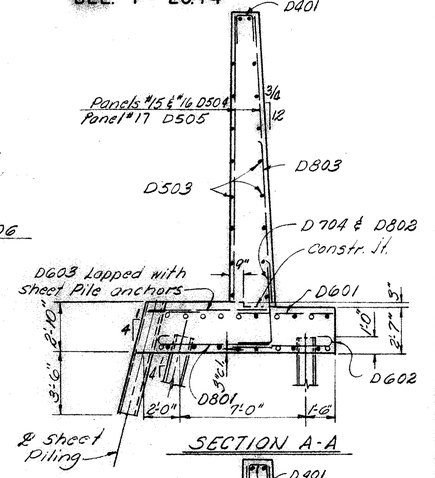

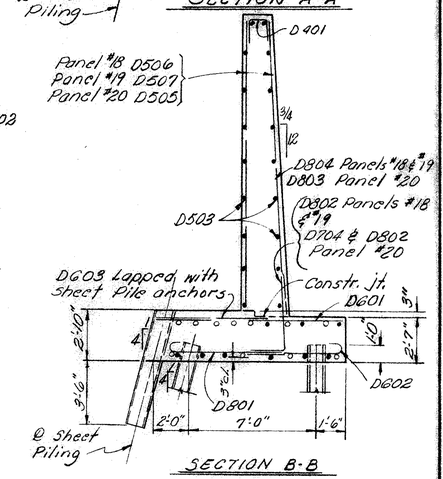

LEGEND

E.F. Denotes Each Face
F.F. Denotes Front Face
B.F. Denotes Back Face

Indicates Vertical Piles
Indicates Piles Battered 1:4

FOOTING LONGITUDINAL BARS

- D501 Top
  D701, D702, or D703 Bottom
- D502 Centered under expansion or contraction joint

RACKOFF ASSOCIATES
ENGINEERS COLUMBUS, OHIO

RETAINING WALL D
PANELS 15 - 20

STA. 1225+40
BELMONT COUNTY STA. 1234+57 ±

Designed	Drawn	Traced	Checked	Reviewed	Date	Revised
W.F.	E.A.	E.A.	N.K.	666	5-7-64	

FED. RD. DIVISION	STATE	PROJECT	TYPE FUNDS
2	OHIO		

294
418

BELMONT COUNTY
BEL. 7 - 20.74

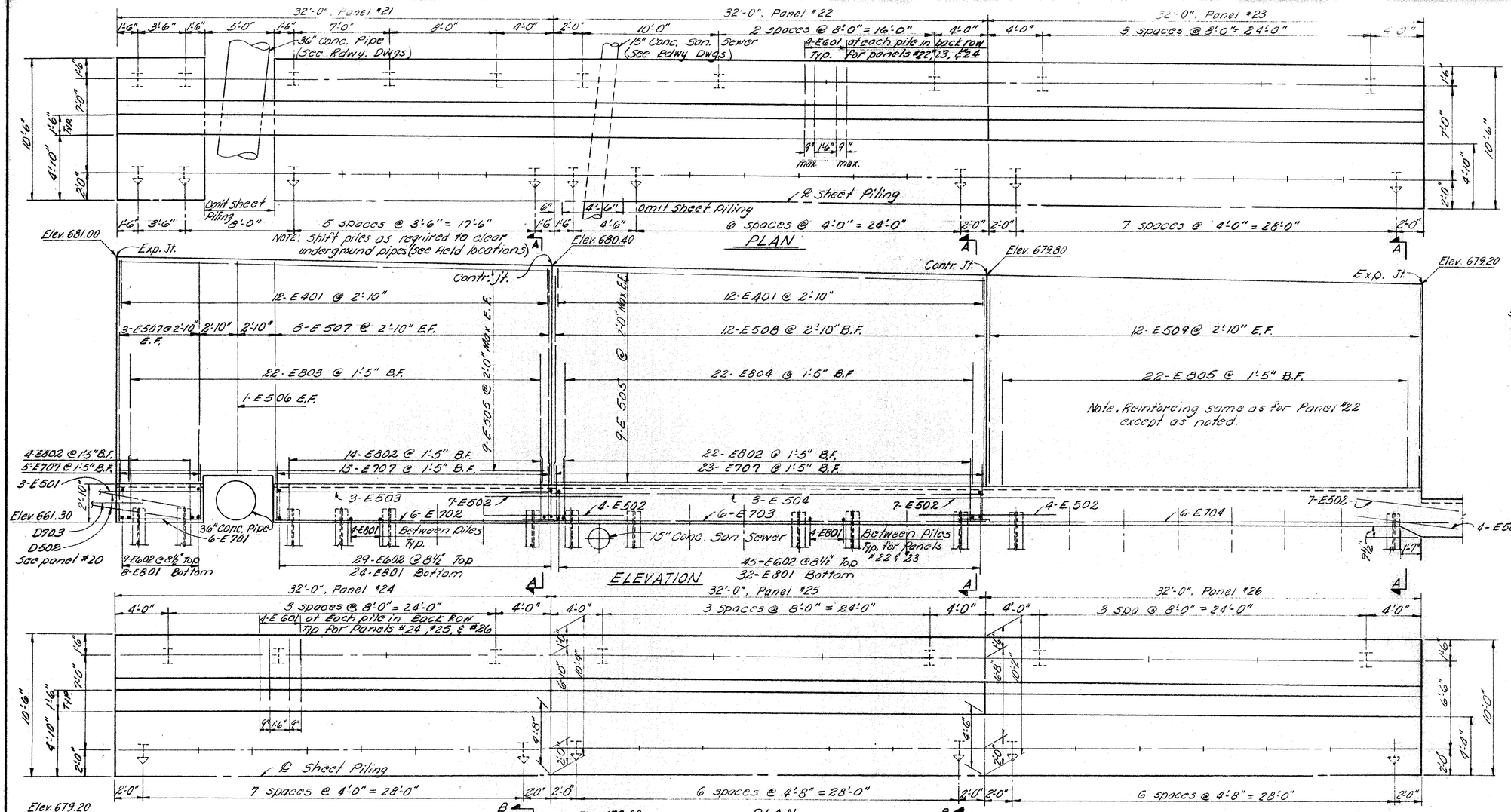

LEGEND

E.F. Denotes - Each Face
F.F. Denotes - Front Face
B.F. Denotes - Back Face

Indicates Vertical Piles

Indicates Piles Battered 1:4

- E501, E503 & E504 Top
  E701, E702, E703, E704 & E705 Bottom
- ○ E502 centered under expansion or contraction Joint.

RACKOFF ASSOCIATES
ENGINEERS COLUMBUS, OHIO

RETAINING WALL D

PANELS 21 - 26

BELMONT COUNTY STA. 1225+40
STA. 1234+57

Designed	Drawn	Traced	Checked	Reviewed	Date	Revised
W.F.	W.F.	E.A.	N.K.	[illegible]	5-7 64	

FED. RD. DIVISION	STATE	PROJECT	TYPE FUNDS
2	OHIO		

295
418

BELMONT COUNTY
BEL. 7 – 20.74

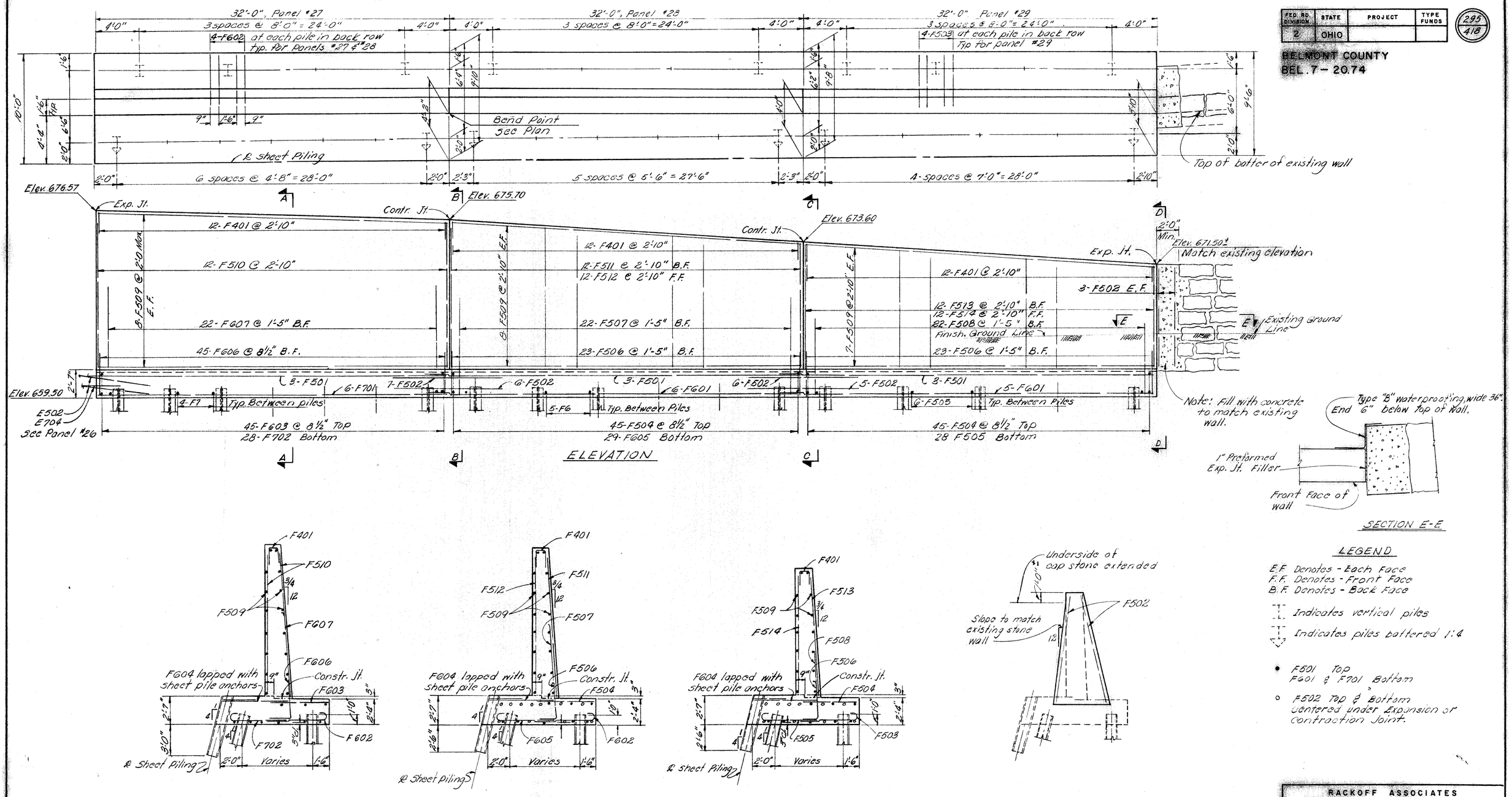

SECTION A-A

SECTION B-B

SECTION C-C

SECTION D-D

LEGEND

E.F. Denotes - Each Face
F.F. Denotes - Front Face
B.F. Denotes - Back Face

Indicates vertical piles

Indicates piles battered 1:4

• F501 Top
F601 & F701 Bottom

° F502 Top & Bottom centered under Expansion or contraction Joint.

RACKOFF ASSOCIATES
ENGINEERS COLUMBUS, OHIO

RETAINING WALL D

PANELS 27 – 29

BELMONT COUNTY
STA. 1225+40
STA. 1234+57½

Designed	Drawn	Traced	Checked	Reviewed	Date	Revised
W.F.	W.F.	E.A.	N.K.	666	5-7 64	

REINFORCING STEEL LIST

FED. RD. DIVISION	STATE	PROJECT	
2	OHIO		

296
418

BELMONT COUNTY
BEL. 7 - 20.74

BENDING DIAGRAM

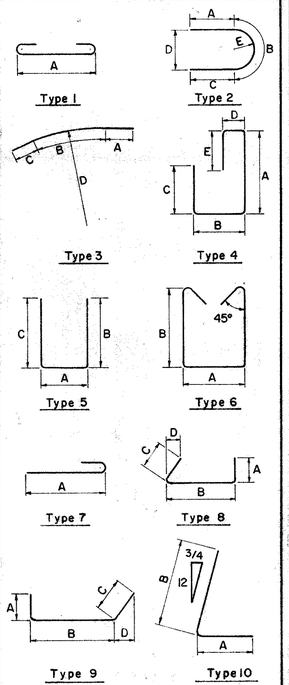

S IN THE COLUMN FOR "TYPE" INDICATES STRAIGHT BARS.

MARK	NO.	LENGTH	WEIGHT	TYPE	A	B	C	D	E
		PANELS 1 THRU 6							
A401	72	3-11	188	5	1-2	1-6	1-6		
A501	102	31-8	3,369	S					
A502	60	10-0	626	S					
A503	34	3-6	124	S					
A504	102	4-0	426	S					
A505	12	4-8 to 7-0	73	S	3 sets of 4 each, vary each set by 1'-2"				
A506	12	4-5 to 6-9	70	S	3 sets of 4 each, vary each set by 1'-2"				
A507	12	7-0 to 9-4	102	S	3 sets of 4 each, vary each set by 1'-2"				
A508	12	6-9 to 9-1	99	S	3 sets of 4 each, vary each set by 1'-2"				
A509	24	9-4	234	S					
A510	24	10-8	267	S					
A511	24	11-2	280	S					
A512	24	11-8	292	S					
A601	58	5-5	472	10	1-11	3-8			
A602	36	5-7	302	10	1-11	3-10			
A603	11	7-9	128	10	1-11	6-0			
A604	33	9-3	458	10	1-11	7-6			
		TOTAL	7,510						
		PANELS 7 THRU 11							
B401	60	3-11	157	5	1-2	1-6	1-6		
B501	104	31-8	3435	S					
B502	64	10-0	668	S					
B503	24	13-0	325	S					
B504	96	13-6	1352	S					
B601	198	4-9	1413	S					
B602	132	5-0	991	S					
B603	115	5-8	979	10	1-11	3-11			
B604	66	10-3	1016	10	1-11	8-6			
B701	44	11-0	989	10	2-3	8-11			
		TOTAL	11,325						
		PANELS 12 THRU 14							
C401	36	3-5	82	5	1-2	1-3	1-3		
C501	60	31-8	1982	S					
C502	38	10-0	396	S					
C503	3	33-7	105	S					
C504	23	5-9	138	S					
C505	68	4-9	337	S					
C506	72	15-1	1133	S					
C601	20	33-11	1019	S					
C602	5	36-2	272	S					
C603	90	5-0	676	S					
C604	43	7-0	452	S					
C605	45	5-0	338	S					
C606	16	6-0	144	7	5-4				
C607	4	5-3	32	1	3-11				
C608	4	4-0	24	S					
C609	4	6-8	40	1	5-4				
C610	4	5-6	33	S					
C611	4	9-0	54	1	7-8				
C612	4	8-0	48	S					
C701	90	6-7	1211	10	2-3	4-6			
C702	45	9-10	904	10	5-6	4-6			
C703	66	8-0	1079	S					
C801	32	6-5	548	7	5-4				
		TOTAL	11,047						

MARK	NO.	LENGTH	WEIGHT	TYPE	A	B	C	D	E
		PANELS 15 THRU 20							
D401	72	3-11	188	5	1-2	1-6	1-6		
D501	18	33-7	630	S					
D502	66	10-0	688	S					
D503	108	31-8	3567	S					
D504	48	16-0	801	S					
D505	48	15-9	789	S					
D506	24	16-6	413	S					
D507	24	16-3	407	S					
D601	270	5-0	2028	S					
D602	96	5-8	817	7	5-0				
D603	258	6-8	2583	S					
D701	12	31-8	777	S					
D702	12	34-3	840	S					
D703	12	36-10	903	S					
D704	92	6-7	1238	10	2-3	4-6			
D801	200	7-9	4139	7	6-8				
D802	178	7-0	3327	10	2-6	4-9			
D803	88	9-0	2115	S					
D804	44	10-0	1175	S					
		TOTAL	27,425						
		PANELS 21 THRU 26							
E401	36	3-11	94	5	1-2	1-6	1-6		
E402	36	4-5	106	5	1-2	1-9	1-9		
E501	3	8-1	25	S					
E502	66	10-0	688	S					
E503	3	20-2	63	S					
E504	15	33-7	525	S					
E505	106	31-8	3501	S					
E506	2	15-6	32	S					
E507	22	16-1	369	S					
E508	24	15-3	382	S					
E509	48	14-11	747	S					
E510	24	14-0	350	S					
E511	24	13-2	330	S					
E601	100	5-9	864	7	5-1				
E602	263	5-0	1975	S					
E603	245	6-6	2392	S					
E604	68	5-11	604	10	1-11	4-2			
E605	22	7-6	248	S					
E701	6	6-2	76	S					
E702	6	20-2	247	S					
E703	12	34-3	840	S					
E704	12	36-10	903	S					
E705	6	31-8	388	S					
E706	56	7-0	801	7	6-2				
E707	111	6-7	1494	10	2-3	4-6			
E708	22	8-9	393	S					
E801	128	7-6	2563	7	6-5				
E802	84	7-0	1570	10	2-6	4-9			
E803	22	9-9	573	S					
E804	22	9-3	543	S					
E805	44	8-9	1028	S					
		TOTAL	24,714						

MARK	NO.	LENGTH	WEIGHT	TYPE	A	B	C	D	E
		PANELS 27 THRU 29							
F401	36	4-5	106	5	1-2	1-9	1-9		
F501	9	33-7	315	S					
F502	30	10-0	313	S					
F503	16	5-7	93	7	5-0				
F504	90	5-0	469	S					
F505	28	5-3	153	7	4-8				
F506	46	5-0	240	10	1-7	3-7			
F507	22	10-6	241	10	1-7	9-1			
F508	22	8-6	195	10	1-7	7-1			
F509	46	31-8	519	S					
F510	24	13-5	336	S					
F511	12	11-7 to 12-11	153	S	3 sets of 4 each, vary each set by 8"				
F512	12	11-4 to 12-8	150	S	3 sets of 4 each, vary each set by 8"				
F513	12	9-6 to 10-10	127	S	3 sets of 4 each, vary each set by 8"				
F514	12	9-3 to 10-7	124	S	3 sets of 4 each, vary each set by 8"				
F601	11	33-11	560	S					
F602	32	5-8	272	7	5-0				
F603	45	4-6	304	S					
F604	129	5-9	1114	S					
F605	29	5-6	240	7	4-10				
F606	45	5-8	383	10	1-11	3-11			
F607	22	8-0	264	S					
F701	6	31-8	388	S					
F702	28	5-10	334	7	5-0				
		TOTAL	8,393						
		REPLACEMENT BARS							
R401	1	5-3	—	S					
R501	2	5-7	—	S					
R601	2	5-11	—	S					
R701	1	6-3	—	S					
R801	1	6-6	—	S					

NOTES

BAR SIZE is indicated in bar mark. The first digit where three digits are used, and the first two where four are used indicate the bar size number.

RACKOFF ASSOCIATES
ENGINEERS COLUMBUS, OHIO

RETAINING WALL D

REINFORCING STEEL LIST

BELMONT COUNTY STA. 1225+40
STA. 1234+57±

Designed	Drawn	Traced	Checked	Reviewed	Date	Revised
W.F.	E.A.		N.K. S.S.	[illegible]	5-7 64	

FED. RD. DIVISION	STATE	PROJECT	TYPE FUNDS
2	OHIO		

297
418

BELMONT COUNTY
BEL. 7 - 20.74

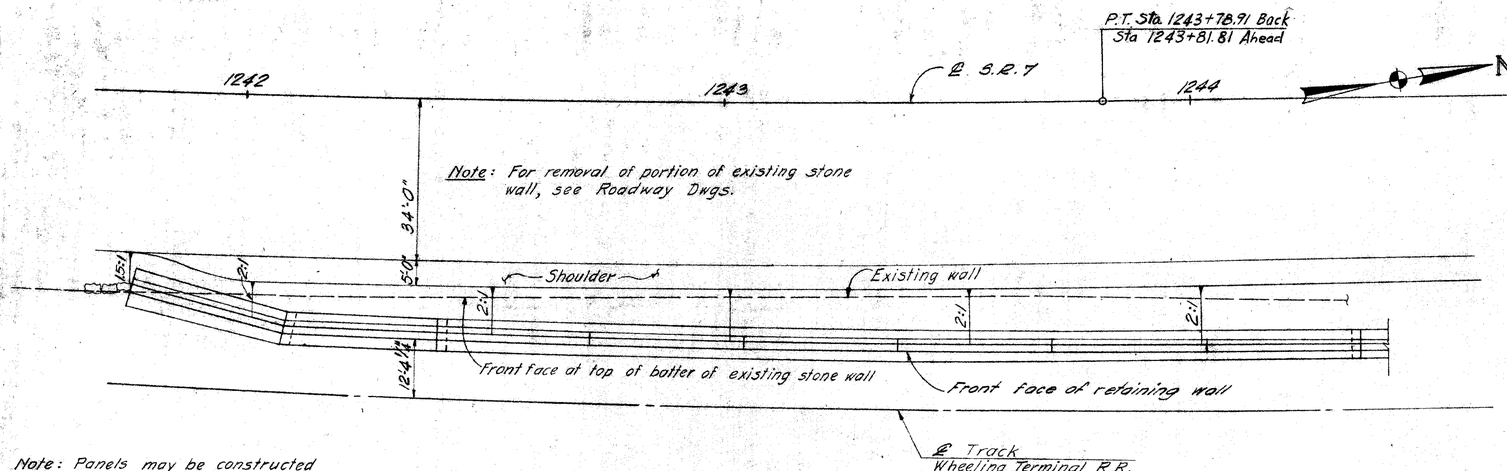

Note: Panels may be constructed on straight lines between Joints.

PLAN OF PANELS 1 THRU 8

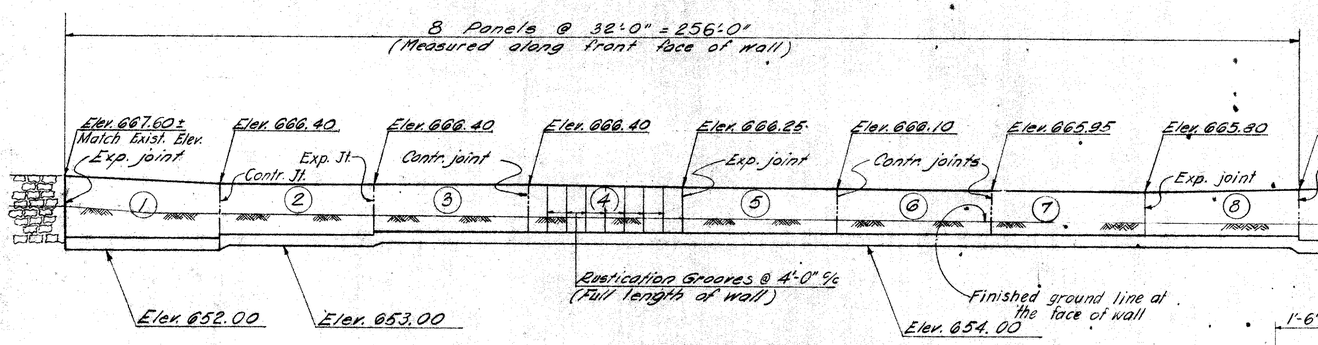

ELEVATION OF PANELS 1 THRU 8

TYPE CODE G201 ESTIMATED QUANTITIES				As Built
ITEM	TOTAL	UNIT	DESCRIPTION	
503	lump	sum	Cofferdams, cribs and sheeting.	
503	1,465	cu. yds.	Unclassified excavation, including rock	
511	369	cu. yds.	Class "E" concrete, walls above footings.	
511	283	cu. yds.	Class "E" concrete, footings.	
512	150	lin. ft.	Premolded sealing strip.	
512	5	sq. yds.	Type "B" Waterproofing.	
509	24,944	lbs.	Reinforcing steel	
516	118	sq. ft.	1" preformed expansion joint filler (AASHO M-153)	
518	190	cu. yds	Porous backfill	

GENERAL NOTES

DESIGN SPECIFICATIONS: The structure conforms to the requirements of "Design Specifications for Highway Structures" of the State of Ohio, Department of Highways, dated 9-1-57, together with current revisions thereof.

FOOTINGS shall extend a minimum of 3" into undisturbed rock or to the elevation shown, whichever is lower.

The maximum Design Foundation Bearing Pressure is 1.50 tons per sq. ft.

POROUS BACKFILL, 2 ft thick full length of retaining wall, shall extend up to within 2 feet of the finished ground line.

CONCRETE CLASS "E" - Basic unit stress 1,133 p.s.i.

REINFORCING STEEL - ASTM A15, A16, A160, Deformed, Intermediate or Hard Grade. Basic unit stress 20,000 p.s.i.

SHEETING AND BRACING: Before construction is started, eight sets of prints showing details of the sheeting and bracing to be used for excavation adjacent to the railroad tracks shall be submitted to the Director for approval by the Department of Highways and by the Railroad Company.

ALIGNING RAILROAD TRACKS: After the Contractor has completed all excavation and backfill adjacent to the railroad tracks in compliance with Secs. 503.04 and 503.09 of the Construction and Material Specifications, subject to the supervision of the Railroad Company, nothing in Secs. 503.04, 503.09 or 108.04 of the Specifications shall be construed to hold the Contractor liable for aligning and resurfacing the railroad tracks.

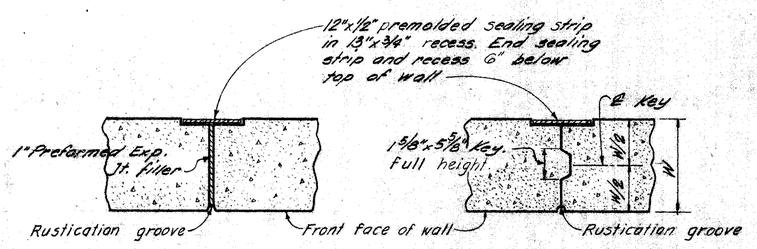

EXPANSION JOINT DETAIL

CONTRACTION JOINT DETAIL

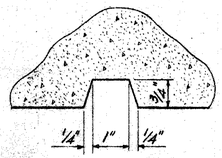

RUSTICATION GROOVE DETAIL
SPACED 4'-0" ℄

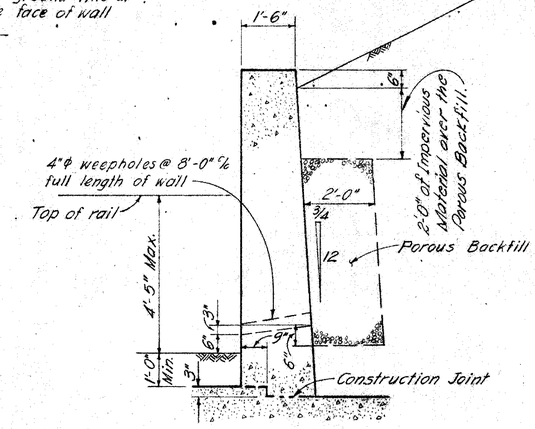

TYPICAL SECTION THRU RETAINING WALL STEM

RACKOFF ASSOCIATES
ENGINEERS COLUMBUS, OHIO

RETAINING WALL E
GENERAL PLAN, ESTIMATED QUANTITIES, GENERAL NOTES AND DETAILS
BELMONT COUNTY STA. 1241 + 76
STA. 1246 + 59 ±

Designed	Drawn	Traced	Checked	Reviewed	Date	Revised
R. J.	G.M. M.P.		L.F.L.	666	5-7 64	

FED. RD. DIVISION	STATE	PROJECT	TYPE FUNDS
2	OHIO		

297 a 418

BELMONT COUNTY
BEL. 7 – 20.74

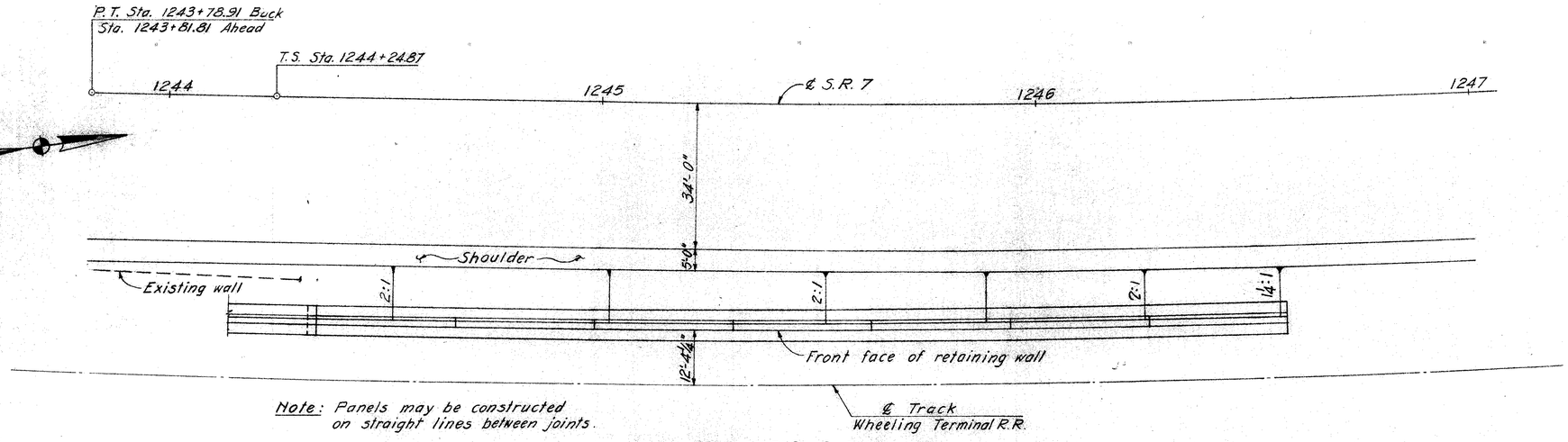

Note: Panels may be constructed on straight lines between joints.

PLAN OF PANELS 9 THRU 15

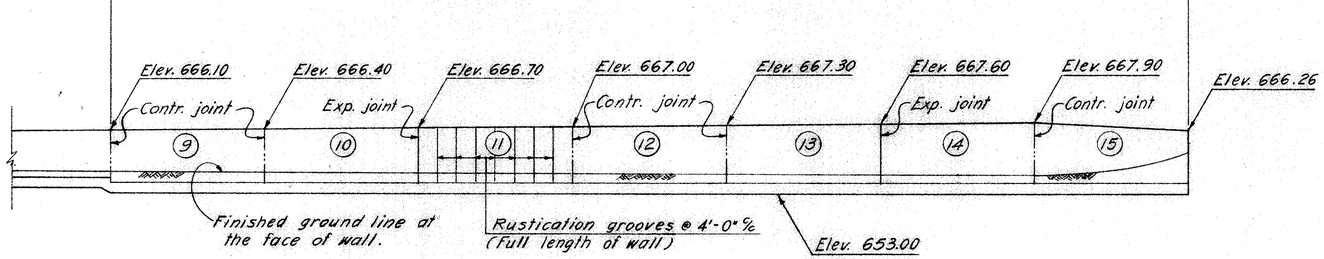

ELEVATION OF PANELS 9 THRU 15

RACKOFF ASSOCIATES
ENGINEERS COLUMBUS, OHIO

RETAINING WALL E
GENERAL PLAN

BELMONT COUNTY STA. 1241 + 76
STA. 1246 + 59 ±

Designed	Drawn	Traced	Checked	Reviewed	Date	Revised
R. J.	M. R.		L.F.L.		2-15 65	

FED. RD. DIVISION	STATE	PROJECT	TYPE FUNDS
2	OHIO		

298
418

BELMONT COUNTY
BEL. 7 - 20.74

NOTE: The contractor shall set Panel #1 in field. See General Plan for limits

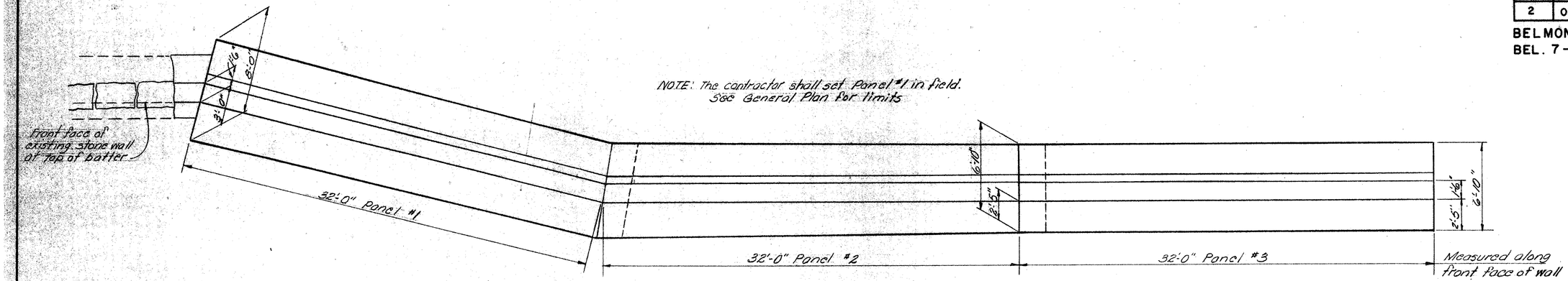

PLAN

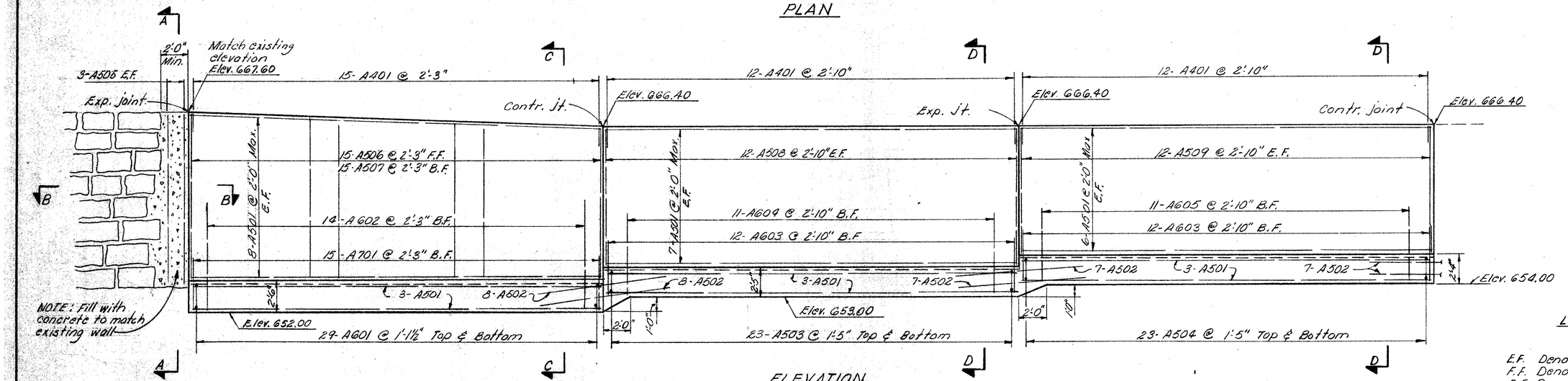

ELEVATION

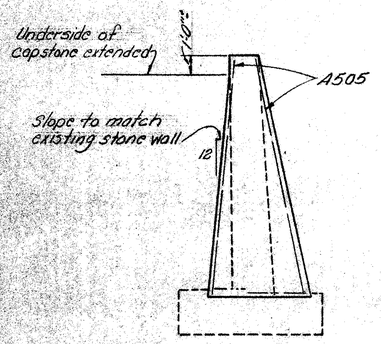

SECTION A-A

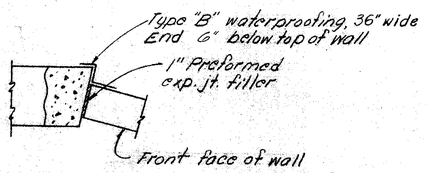

SECTION B-B

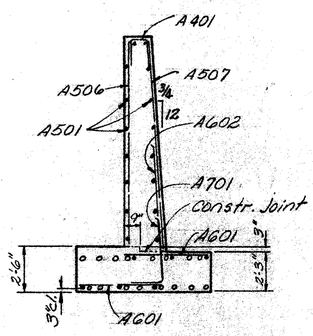

SECTION C-C

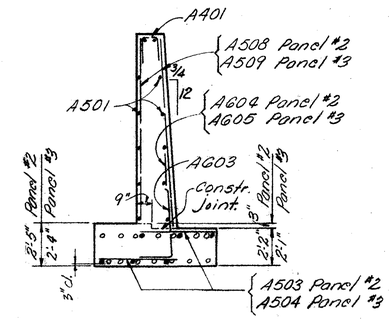

SECTION D-D

LEGEND

E.F. Denotes Each Face
F.F. Denotes Front Face
B.F. Denotes Back Face

All footing longitudinal bars:

- A501 Top & Bottom
- ○ A502 Top & Bottom centered under expansion or contraction joint.

RACKOFF ASSOCIATES
ENGINEERS COLUMBUS, OHIO

RETAINING WALL E
PANELS 1 - 3

BELMONT COUNTY
STA. 1241+76
STA. 1246+59±

Designed	Drawn	Traced	Checked	Reviewed	Date	Revised
R. J.	R. J.	E.A.	L.F.L.	666	5-7 64	

FED. RD. DIVISION	STATE	PROJECT	TYPE FUNDS
2	OHIO		

299
418

BELMONT COUNTY
BEL. 7- 20.74

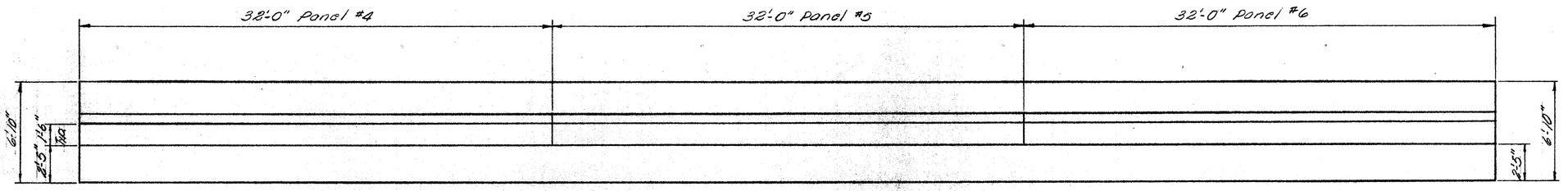

PLAN

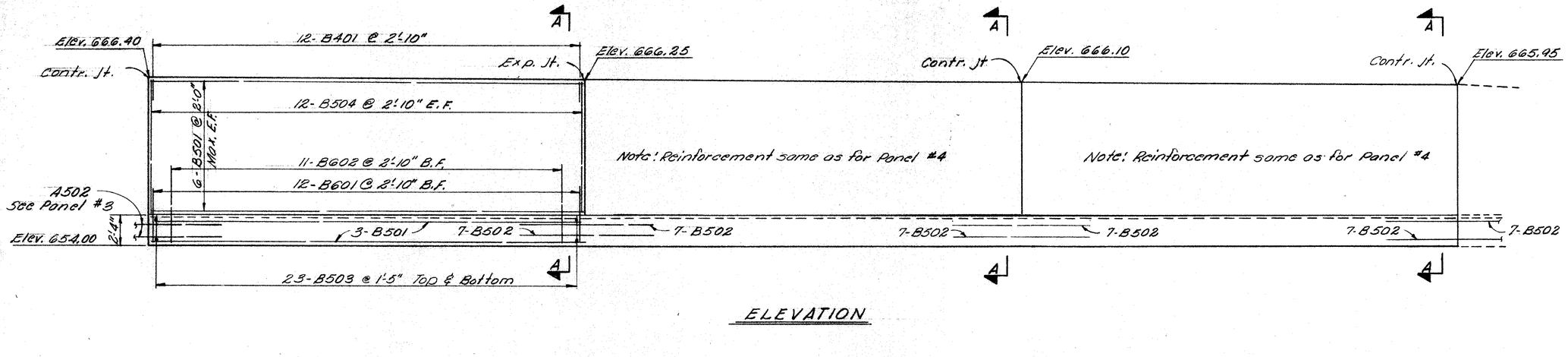

ELEVATION

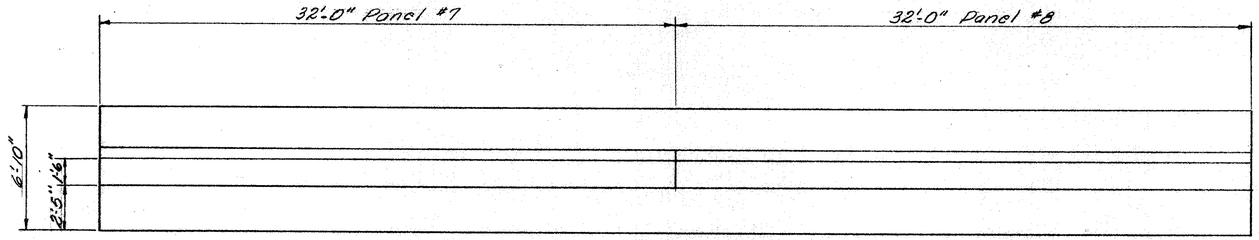

PLAN

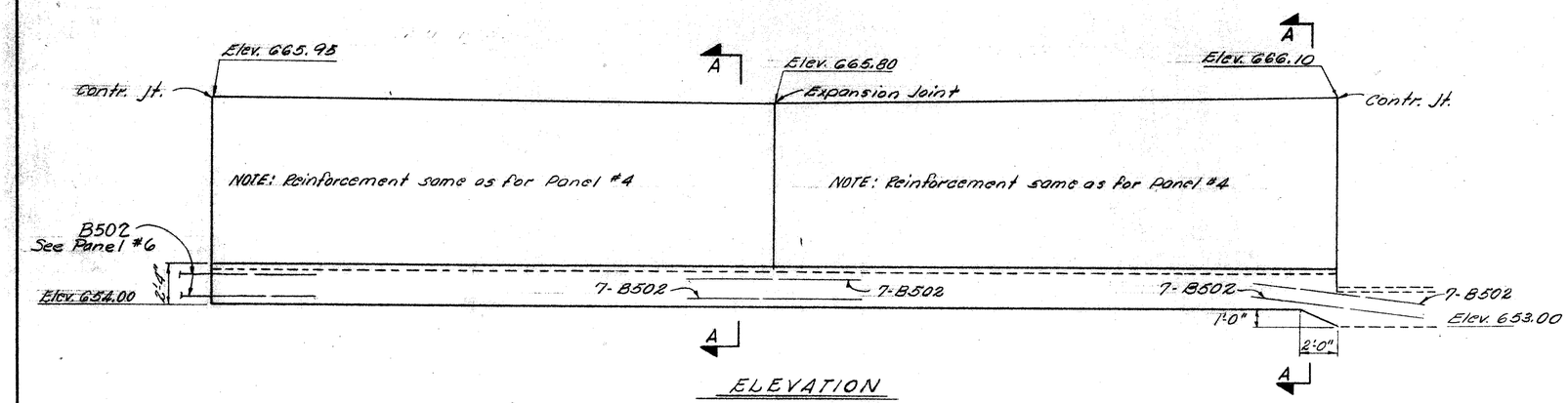

ELEVATION

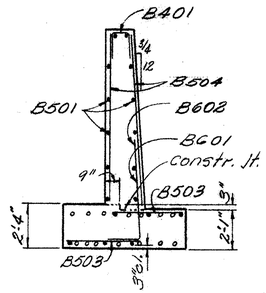

SECTION A-A

LEGEND

E.F. Denotes Each Face
F.F. Denotes Front Face
B.F. Denotes Back Face

All footing longitudinal bars:
- B501 Top & Bottom
- ○ B502 Top & Bottom Centered under expansion or contraction Joint.

RACKOFF ASSOCIATES
ENGINEERS COLUMBUS, OHIO

RETAINING WALL E
PANELS 4- 8

BELMONT COUNTY
STA. 1241+76
STA. 1246+59±

Designed	Drawn	Traced	Checked	Reviewed	Date	Revised
R. J.	R. J.	E.D.A.	L.F.L.	666	2-12-65	

FED. RD. DIVISION	STATE	PROJECT	TYPE FUNDS
2	OHIO		

299a
418

BELMONT COUNTY
BEL. 7-20.74

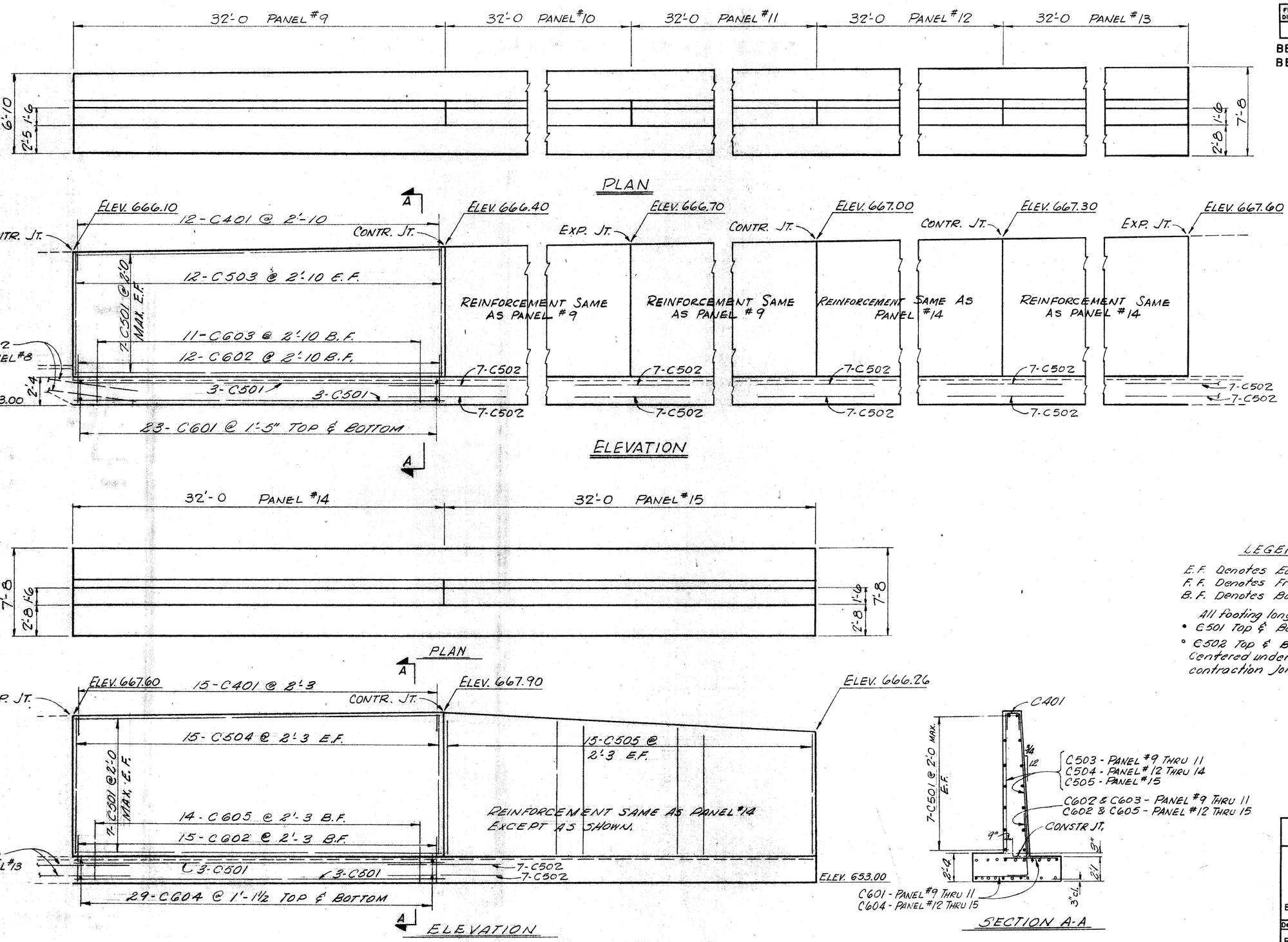

LEGEND

E.F. Denotes Each Face
F.F. Denotes Front Face
B.F. Denotes Back Face

All footing longitudinal bars:
- C501 Top & Bottom
- ° C502 Top & Bottom Centered under expansion or contraction joint.

RACKOFF ASSOCIATES
ENGINEERS COLUMBUS, OHIO

RETAINING WALL E

PANELS 9 – 15

BELMONT COUNTY

STA. 1241+76
STA. 1246+59±

Designed	Drawn	Traced	Checked	Reviewed	Date	Revised
R.J.	E.D.A. R.J.		L.F.L.		2-12-65	

REINFORCING STEEL LIST

FED. RD. DIVISION	STATE	PROJECT	
2	OHIO		

300
418

BELMONT COUNTY
BEL. 7 - 20.74

BENDING DIAGRAM

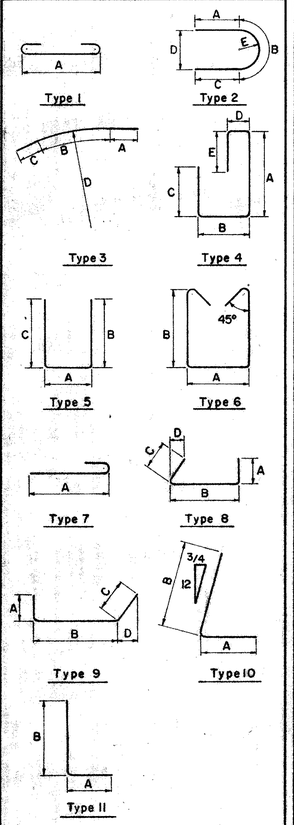

S IN THE COLUMN FOR "TYPE" INDICATES STRAIGHT BARS.

MARK	NO.	LENGTH	WEIGHT	TYPE	A	B	C	D	E
		PANELS 1 THRU 3							
A401	39	3-11	102	5	1-2	1-6	1-6		
A501	60	31-8	1982	S					
A502	44	10-0	459	S					
A503	46	4-4	208	S					
A504	46	4-0	192	S					
A505	6	13-6	84	S					
A506	15	11-9 to 12-7	190	S	3 sets of 5 each, vary each set by 5"				
A507	15	12-0 to 12-10	194	S	3 sets of 5 each, vary each set by 5"				
A508	24	10-10	271	S					
A509	24	9-11	248	S					
A601	58	4-9	414	S					
A602	14	10-0	210	10	1-11	8-3			
A603	24	5-10	210	10	1-11	4-1			
A604	11	8-0	132	10	1-11	6-3			
A605	11	7-3	120	10	1-11	5-6			
A701	15	6-3	192	10	2-3	4-2			
		TOTAL	5,208						
		PANELS 4 THRU 8							
B401	60	4-5	177	5	1-2	1-9	1-9		
B501	90	31-8	2973	S					
B502	70	10-0	730	S					
B503	230	4-0	960	S					
B504	120	9-4	1,168	S					
B601	60	5-5	488	10	1-11	3-8			
B602	55	7-9	640	10	1-11	6-0			
		TOTAL	7,136						
		REPLACEMENT BARS							
RE401	1	4-5	—	5	1-2	1-9	1-9		
RE501	1	5-7	—	S					
RE601	1	4-4	—	S					
RE701	1	6-3	—	10	2-3	4-2			

MARK	NO.	LENGTH	WEIGHT	TYPE	A	B	C	D	E
		PANELS 9 THRU 15							
C401	96	4-5	283	5	1-2	1-9	1-9		
C501	140	31-8	4,624	S					
C502	84	10-0	876	S					
C503	72	10-7	795	S					
C504	90	11-6	1,080	S					
C505	30	10-9 to 11-9	352	S	3 sets of 10	each,	vary	by 6"	
C601	138	4-4	898	S					
C602	96	5-8	817	10	1-11	3-11			
C603	33	8-6	421	10	1-11	6-9			
C604	232	4-9	1,655	S					
C605	56	9-6	799	10	1-11	7-9			
		TOTAL	12,600						

MARK	NO.	LENGTH	WEIGHT	TYPE	A	B	C	D	E

NOTES

BAR SIZE is indicated in bar mark. The first digit where three digits are used, and the first two where four are used indicate the bar size number.

RACKOFF ASSOCIATES
ENGINEERS COLUMBUS, OHIO

RETAINING WALL E
REINFORCING BAR LIST

BELMONT COUNTY
STA. 1241+76
STA. 1246+59±

Designed	Drawn	Traced	Checked	Reviewed	Date	Revised
R. J.	E.A.		L.F.L.	[illegible]	5-7 64	

FED. RD. DIVISION	STATE	PROJECT	TYPE FUNDS
2	OHIO		

301
418

BELMONT COUNTY
BEL-7-20.74

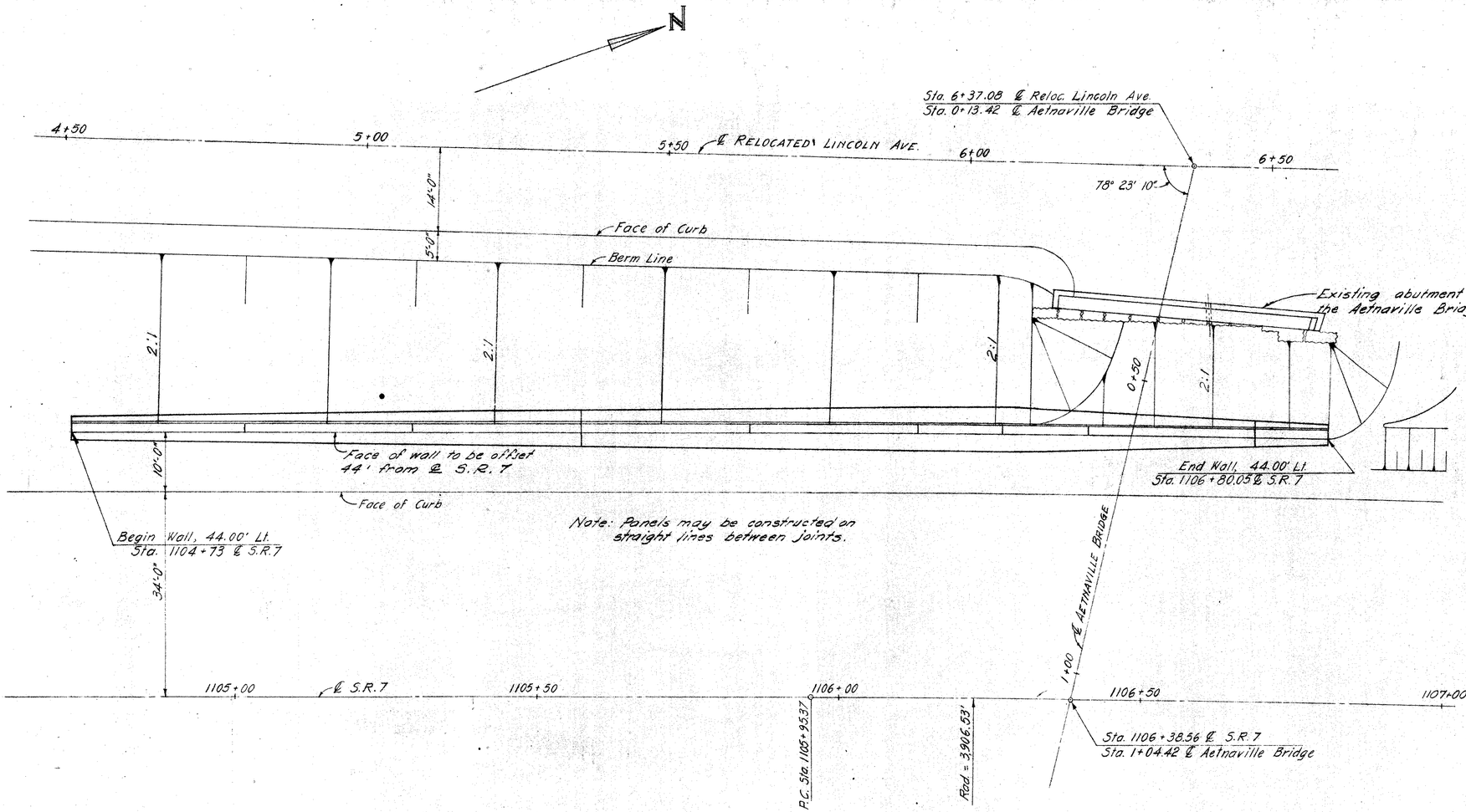

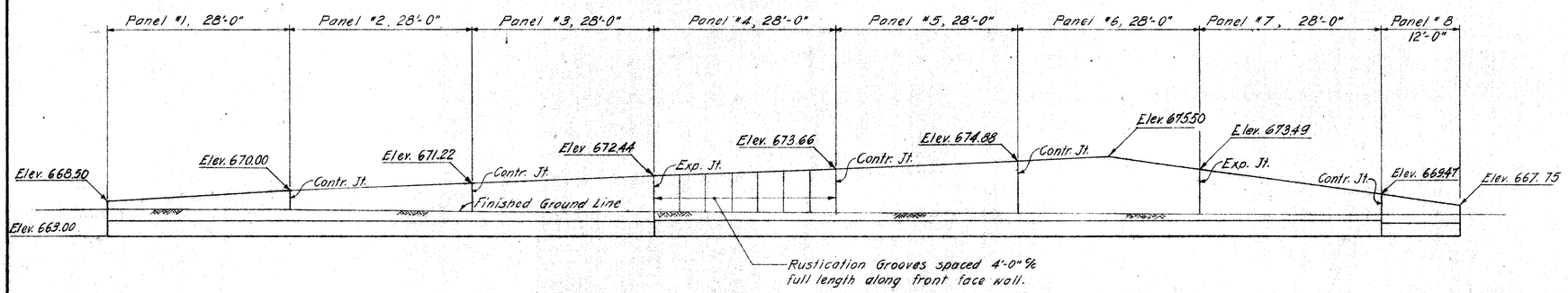

ELEVATION

TYPE CODE 6201 ESTIMATED QUANTITIES				As Built
Item	Total	Unit	Description	
503	214	cu. yds.	Unclassified excavation	
503	lump	sum	Cofferdams, cribs and sheeting	
511	93	cu. yds.	Class "E" concrete, walls above footings	
511	100	cu. yds.	Class "E" concrete, footings	
512	47	lin. ft.	Premolded sealing strip.	
509	7472	lbs.	Reinforcing steel	
516	26	sq. ft.	1" Preformed expansion joint filler (AASHO M-153)	
518	44	cu. yds.	Porous backfill	

GENERAL NOTES

DESIGN SPECIFICATIONS: This structure conforms to the requirements of "Design Specifications for Highway Structures" of the State of Ohio, Department of Highways, dated 9-1-57, together with current revisions thereof.

FOUNDATION BEARING PRESSURE: All footings are designed for a maximum bearing pressure of 1.0 ton per sq. ft. THE KEY on the bottom of the footings shall be placed in a carefully made trench against undisturbed earth.

POROUS BACKFILL, 2 ft thick full length of retaining wall shall extend up to within 2 feet of the finished ground line.

CONCRETE CLASS 'E' - basic unit stress 1,133 p.s.i.

REINFORCING STEEL - ASTM A15, A16, A160, Deformed, Intermediate or Hard Grade. Basic unit stress 20,000 p.s.i.

EXCAVATION PROCEDURE: Temporary steel sheet piling shall be used between panels #6, #7 and #8 and the existing abutment for the Aetnaville Bridge, to prevent the existing abutment and slope from being disturbed during excavation.

RACKOFF ASSOCIATES
ENGINEERS COLUMBUS, OHIO

RETAINING WALL F

GENERAL PLAN, ESTIMATED QUANTITIES AND GENERAL NOTES

BELMONT COUNTY STA. 1104+73 STA. 1106+80.05

Designed	Drawn	Traced	Checked	Reviewed	Date	Revised
W.F.	W.F.	M.R.	R.A.K.	[illegible]	3-18-64	

FED. RD. DIVISION	STATE	PROJECT	TYPE FUNDS
2	OHIO		

302
418

BELMONT COUNTY
BEL-7-20.74

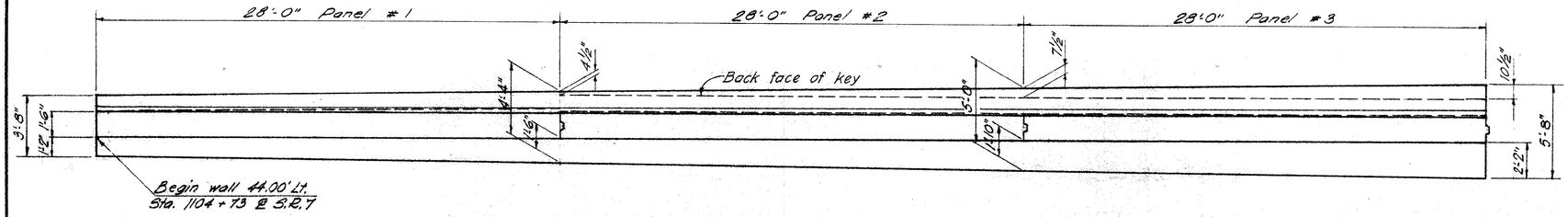

PLAN

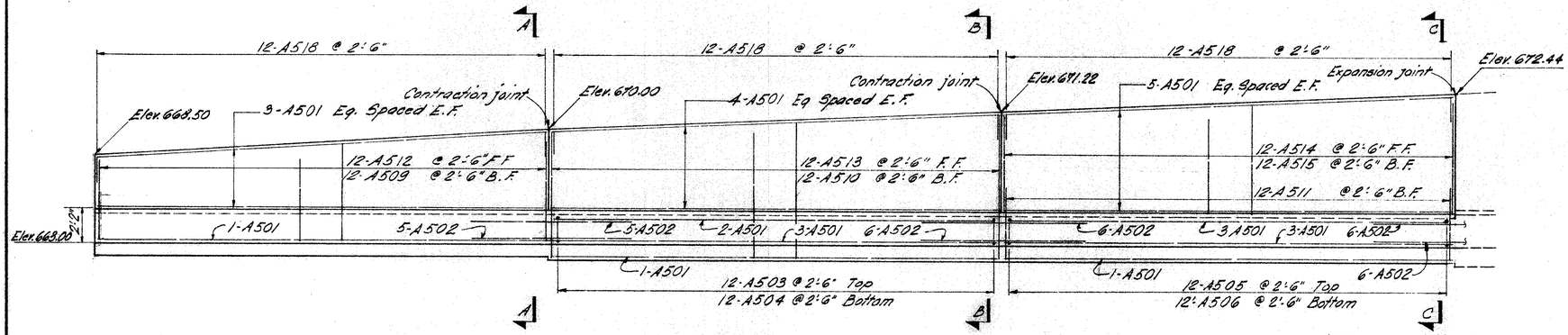

ELEVATION

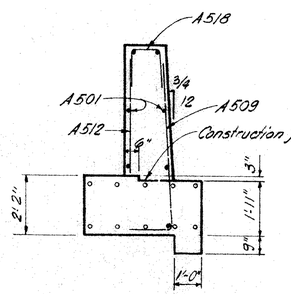

SECTION A-A

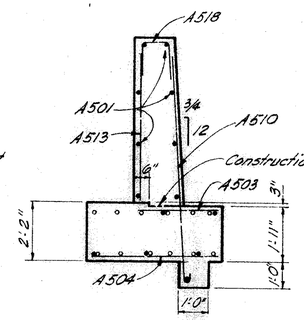

SECTION B-B

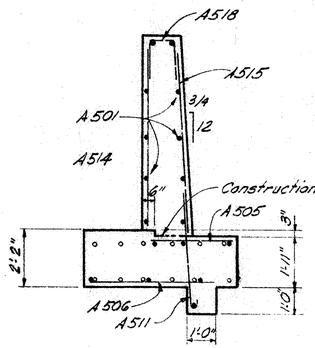

SECTION C-C

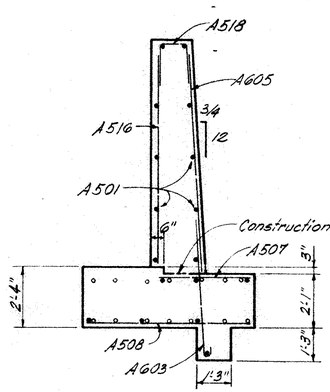

SECTION D-D

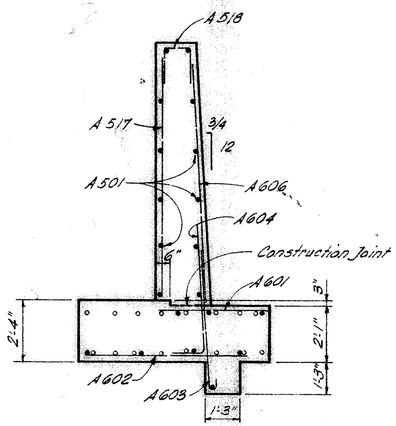

SECTION E-E

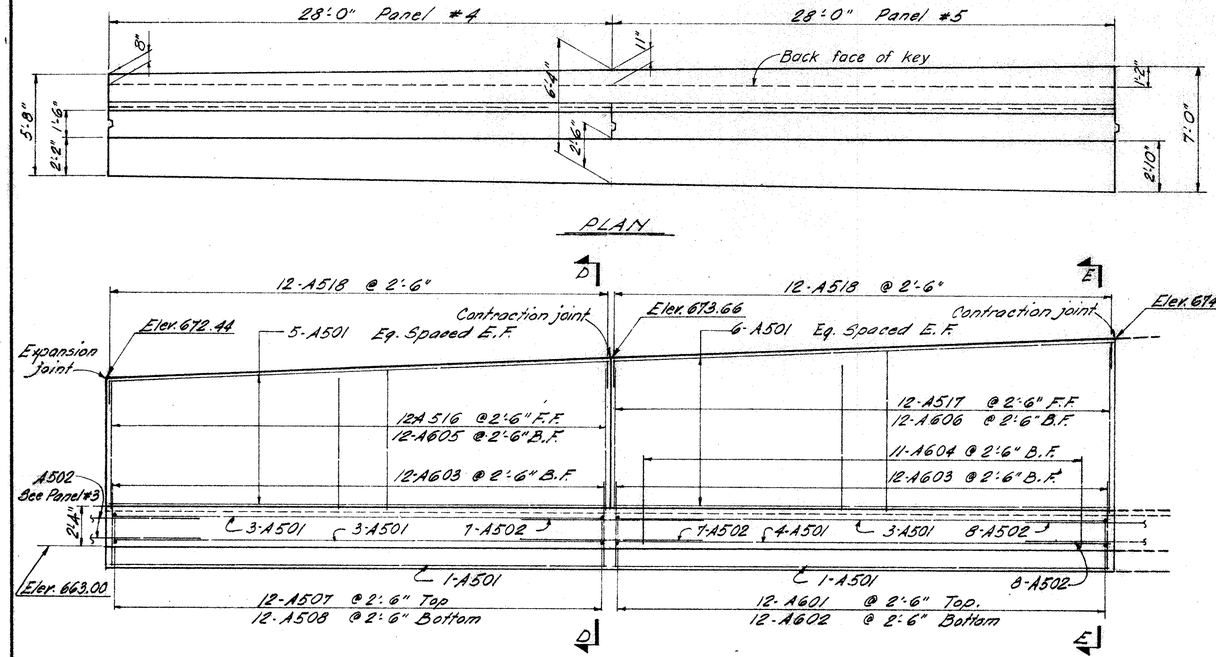

ELEVATION

All Footing Longitudinal Bars
- A501
- ◦ A502 centered under contraction or expansion joint

E.F. Denotes Each Face
F.F. Denotes Front Face
B.F. Denotes Back Face

RACKOFF ASSOCIATES
ENGINEERS COLUMBUS, OHIO

RETAINING WALL F
PANELS 1-5

BELMONT COUNTY
STA. 1104+73
STA. 1106+80.05

Designed	Drawn	Traced	Checked	Reviewed	Date	Revised
W.F.	W.F.	G.M.	R.A.K.	[illegible]	3-18-64	

FED. RD. DIVISION	STATE	PROJECT	TYPE FUNDS
2	OHIO		

303
418

BELMONT COUNTY
BEL-7-20.74

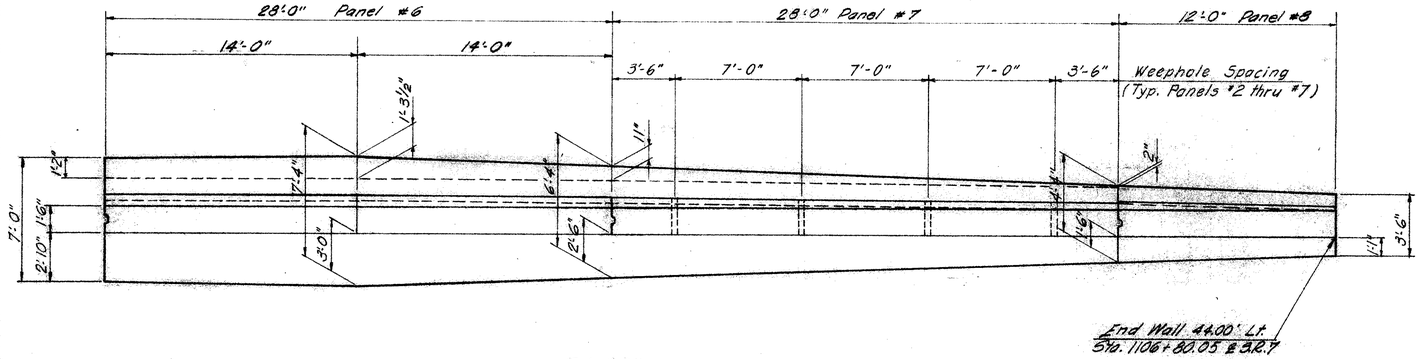

PLAN

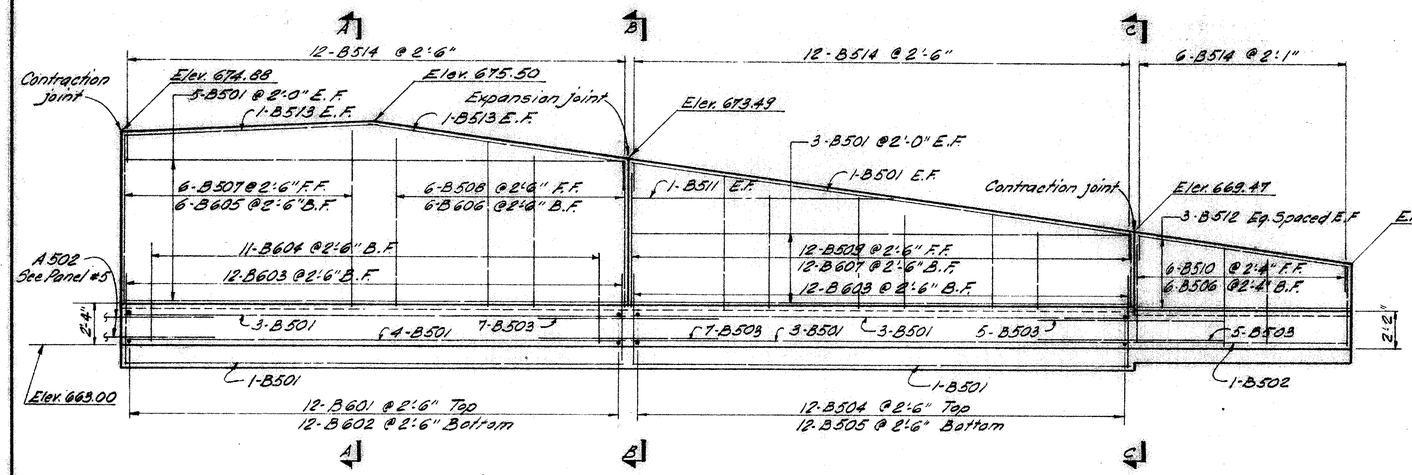

ELEVATION

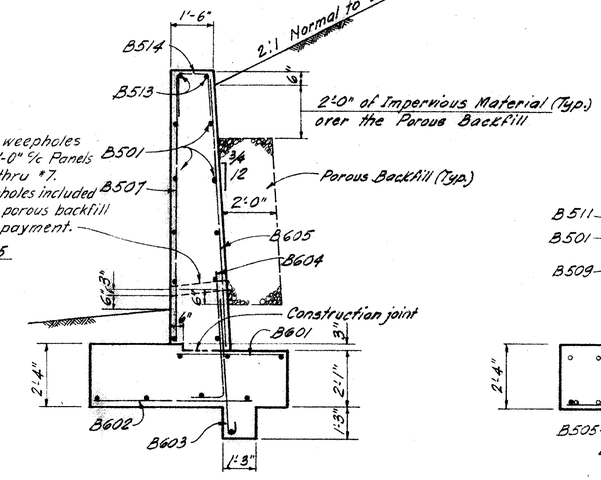

SECTION A-A

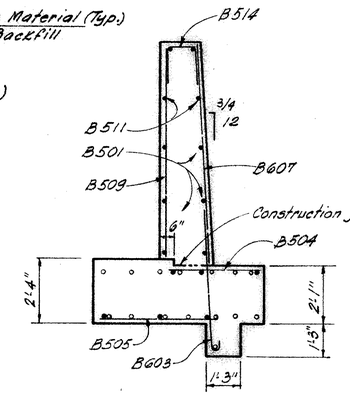

SECTION B-B

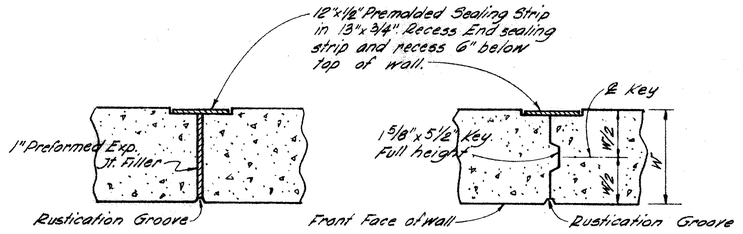

EXPANSION JOINT DETAIL

CONTRACTION JOINT DETAIL

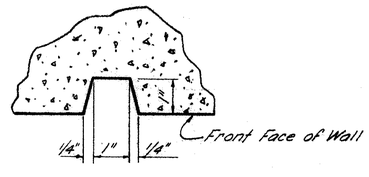

RUSTICATION GROOVE DETAIL

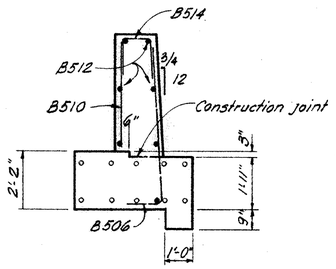

SECTION C-C

All Footing longitudinal bar.
- B501 and B502
- B503 centered under contraction or expansion joint.

E.F. Denotes Each Face
F.F. Denotes Front Face
B.F. Denote Back Face

RACKOFF ASSOCIATES
ENGINEERS COLUMBUS, OHIO

RETAINING WALL F
PANELS 6-8
AND COMMON DETAILS

BELMONT COUNTY
STA. 1104+73
STA. 1106+80.05

Designed	Drawn	Traced	Checked	Reviewed	Date	Revised
W.F.	W.F.	G.M.	R.A.K.	[illegible]	3-18-64	

REINFORCING STEEL LIST

FED. RD. DIVISION	STATE	PROJECT	
2	OHIO		

304
418

BELMONT COUNTY
BEL-7-20.74

BENDING DIAGRAM

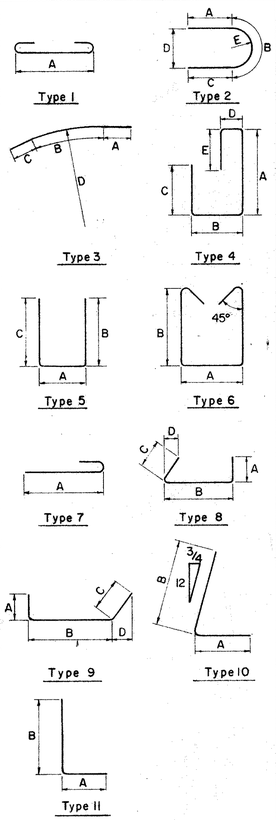

S IN THE COLUMN FOR "TYPE" INDICATES STRAIGHT BARS.

MARK	NO.	LENGTH	WEIGHT	TYPE	A	B	C	D	E
			PANELS 1-5						
A501	75	27 - 8	2,164	S					
A502	64	10 - 0	668	S					
A503	12	3 - 0	38	S					
A504	12	4 - 0	50	S					
A505	12	3 - 3	41	S					
A506	12	4 - 8	58	S					
A507	12	3 - 5	43	S					
A508	12	5 - 4	68	S					
A509	12	6-0 to 6-9	80	10	1 - 1	5-1 to 5-10	2 Sets of 6 each, vary each set by 9".		
A510	12	8-2 to 8-9	106	7	7-7 to 8-2		2 Sets of 6 each, vary each set by 7".		
A511	12	4 - 10	60	7	4 - 3				
A512	12	3-2 to 3-11	45	S	2 Sets of 6 each, vary each set by 9".				
A513	12	4-8 to 5-3	63	S	2 Sets of 6 each, vary each set by 7".				
A514	12	5-10 to 6-5	77	S	2 Sets of 6 each, vary each set by 7"				
A515	12	6-1 to 6-8	80	S	2 Sets of 6 each, vary each set by 7"				
A516	12	6-11 to 7-6	90	S	2 Sets of 6 each, vary each set by 7"				
A517	12	8-2 to 8-9	106	S	2 Sets of 6 each, vary each set by 7"				
A518	60	4 - 4	272	5	1 - 1	1 - 9	1 - 9		
A601	12	4 - 0	72	S					
A602	12	6 - 0	108	S					
A603	24	5 - 8	204	7	5 - 0				
A604	11	5 - 11	98	10	1 - 3	4 - 10			
A605	12	7-2 to 7-9	134	S	2 Sets of 6 each, vary each set by 7"				
A606	12	8-5 to 9-0	157	S	2 Sets of 6 each, vary each set by 7"				
		TOTAL	4,882						

MARK	NO.	LENGTH	WEIGHT	TYPE	A	B	C	D	E
			PANELS 6-8						
B501	33	27 - 8	952	S					
B502	1	11 - 8	12	S					
B503	24	10 - 0	250	S					
B504	12	3 - 6	44	S					
B505	12	4 - 0	50	S					
B506	6	5-3 to 6-2	36	10	1 - 1	4 - 4 to 5 - 3	2 Sets of 3 each, vary each set by 11"		
B507	6	9 - 4	58	S					
B508	6	8-0 to 9-0	53	S	2 Sets of 3 each, vary each set by 1-0				
B509	12	4-0 to 7-0	69	S	4 Sets of 3 each, vary each set by 1-0				
B510	6	2-4 to 3-3	17	S	2 Sets of 3 each, vary each set by 11"				
B511	2	14 - 3	30	S					
B512	6	11 - 8	73	S					
B513	4	13 - 10	58	S					
B514	30	4 - 4	137	5	1 - 1	1 - 9	1 - 9		
B601	12	4 - 0	72	S					
B602	12	6 - 0	108	S					
B603	24	5 - 8	204	7	5 - 0				
B604	11	5 - 11	98	10	1 - 3	4 - 10			
B605	6	9 - 7	86	S					
B606	6	8-3 to 9-3	79	S	2 Sets of 3 each, vary each set by 1-0				
B607	12	4-3 to 7-3	104	S	4 Sets of 3 each, vary each set by 1-0				
		TOTAL	2,590						

REPLACEMENT BARS

RE501	1	5 - 7	-	S
RE601	1	5 - 11	-	S

MARK	NO.	LENGTH	WEIGHT	TYPE	A	B	C	D	E

NOTES

BAR SIZE is indicated in bar mark. The first digit where three digits are used, and the first two where four are used indicate the bar size number.

RACKOFF ASSOCIATES
ENGINEERS COLUMBUS, OHIO

REINFORCING STEEL LIST
RETAINING WALL F

BELMONT COUNTY
STA. 1104+73
STA. 1106+80.05

Designed	Drawn	Traced	Checked	Reviewed	Date	Revised
W.F.	M.R.		R.A.K.		3-18-64	

MICROFILMED
MAY 14 1986

FED. RD. DIVISION	STATE	PROJECT	TYPE FUNDS
2	OHIO		

305
418

BELMONT COUNTY
BEL. 7 - 20.74

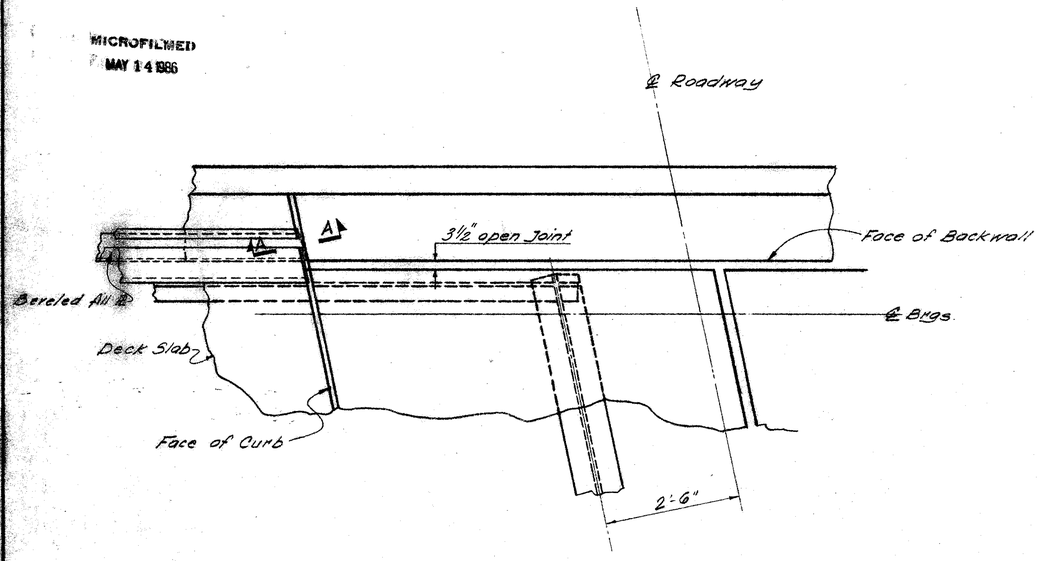

PLAN VIEW
MEDIAN CURB PLATE DETAILS
(For Details not shown see Standard Drawing SD-1-63, Sheet 4)

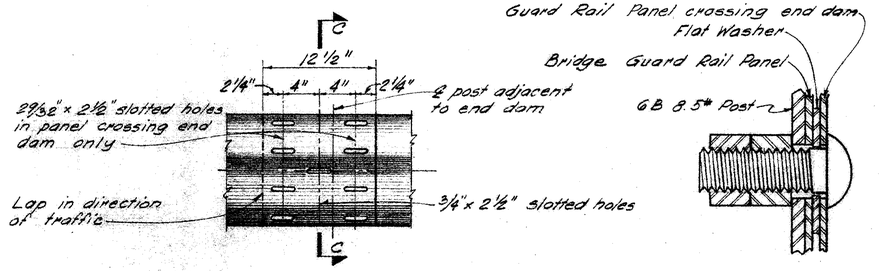

SECTION C-C

DETAIL OF SPLICE IN GUARD RAIL AT MEDIAN ADJACENT TO END DAM

NOTES FOR GUARD RAIL SPLICE

1. When panel crossing end dam is adjacent to post an additional washer shall be inserted between post and panel.
2. All bolts shall be ⅝" ϕ with button head, oval shoulder, flat washer (or two washers) and two hex. nuts. Bolts, washers and nuts shall be galvanized (nine required per splice). The flat washer shall be placed between the panels of guard rail (or between panels and post). The first nut on each bolt shall be tightened until all parts are in contact, then released one half turn. The second nut on each bolt shall then be tightened to lock the first nut in place. The guard rail shall be erected so that at 68°F the bolts are centered in the slotted holes.

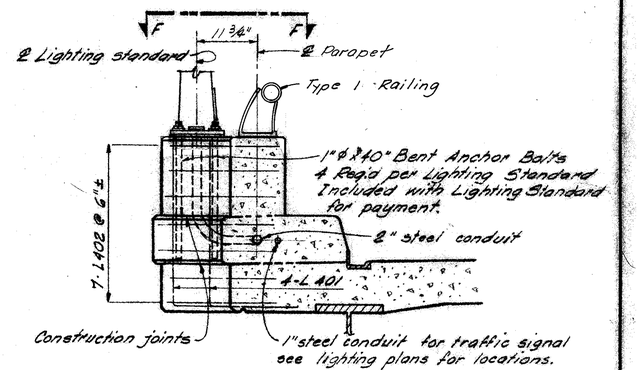

SECTION THRU CURB AT LIGHTING STANDARD
See "Lighting Details Sheets for additional notes and details"

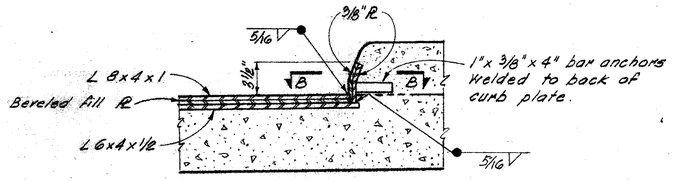

SECTION A-A

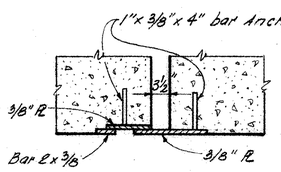

SECTION B-B

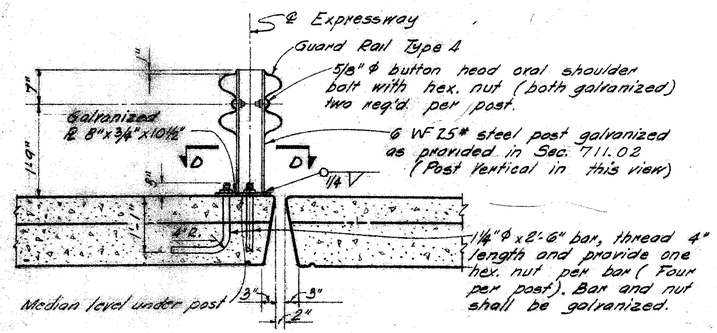

GUARD RAIL POST SUPPORT AT MEDIAN

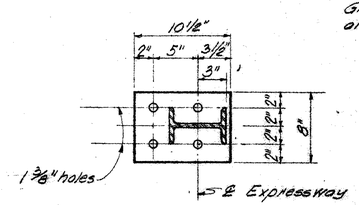

SECTION D-D

NOTE: 6 WF 25# post shall be erected normal to grade.

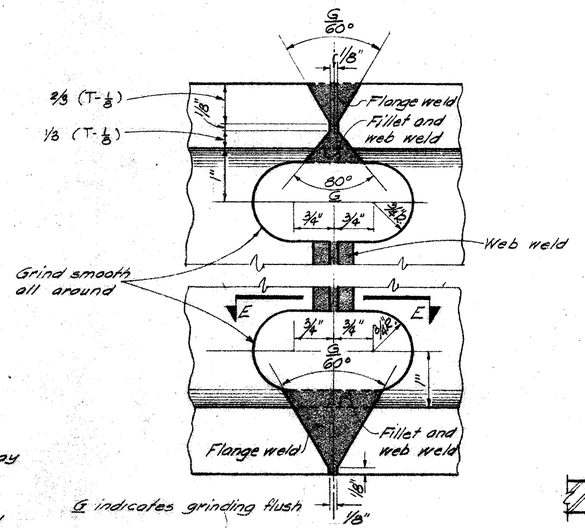

END PREPARATION OF ROLLED BEAMS FOR FIELD WELDING

BRIDGE No. BEL-7-2289 ONLY
SR. 7 OVER WHEELING TERMINAL R.R.

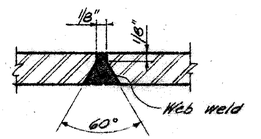

SECTION E-E

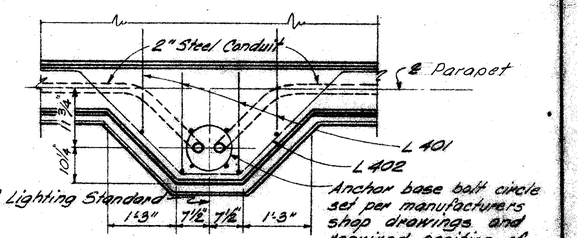

VIEW F-E

RACKOFF ASSOCIATES
ENGINEERS COLUMBUS, OHIO

COMMON DETAILS
BRIDGE NO. BEL. 7-2269
BRIDGE NO. BEL. 7-2289
BRIDGE NO. BEL. 7-2095
BELMONT COUNTY

Designed	Detailed	Traced	Checked	Approved	Date	Revised
S.H.S.		G.M.	N.W.U.	[illegible]	6-17 63	

FED. RD. DIVISION	STATE	PROJECT	
2	OHIO		

306
418

BELMONT COUNTY
BEL.7 - 20.74

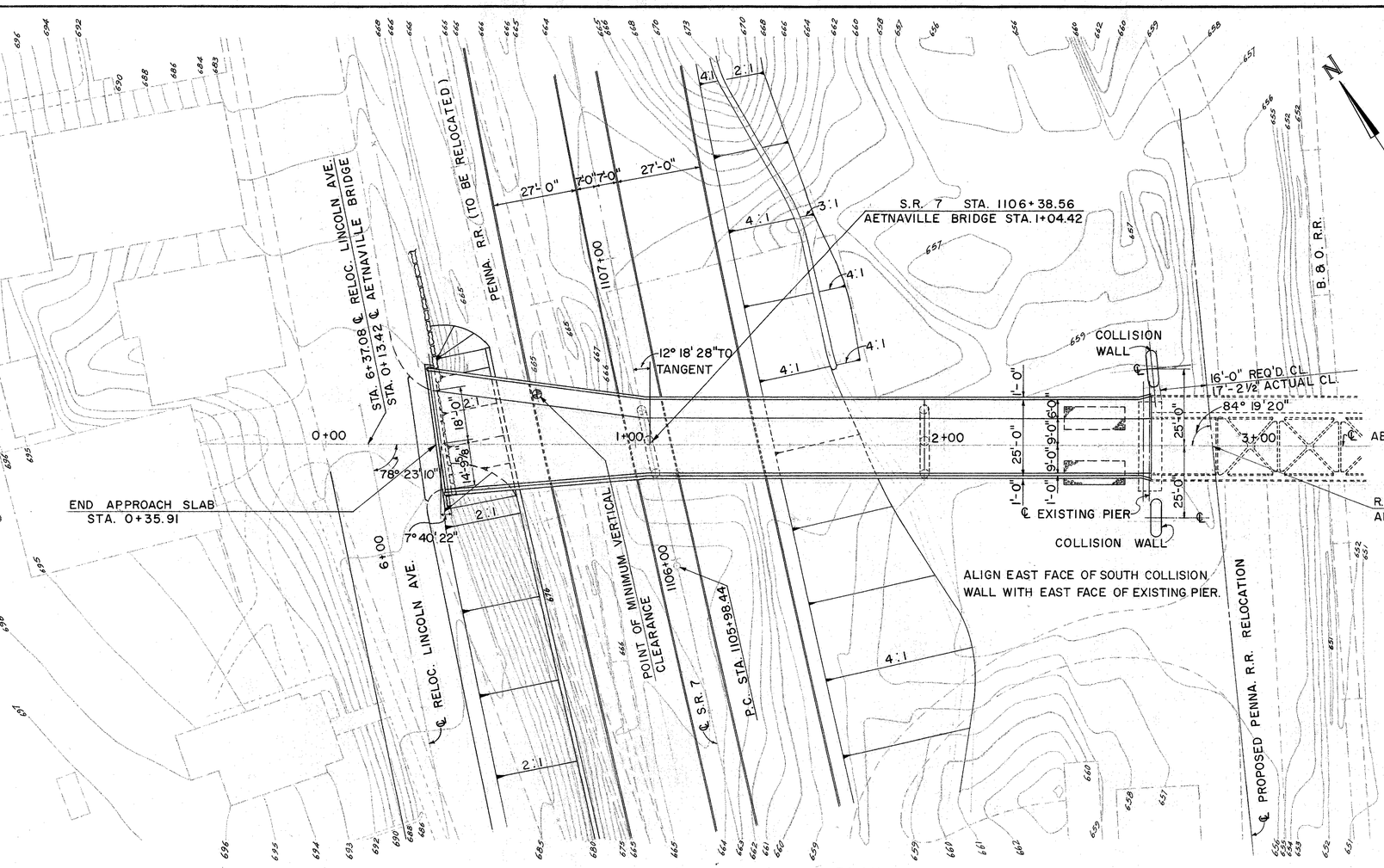

PLAN

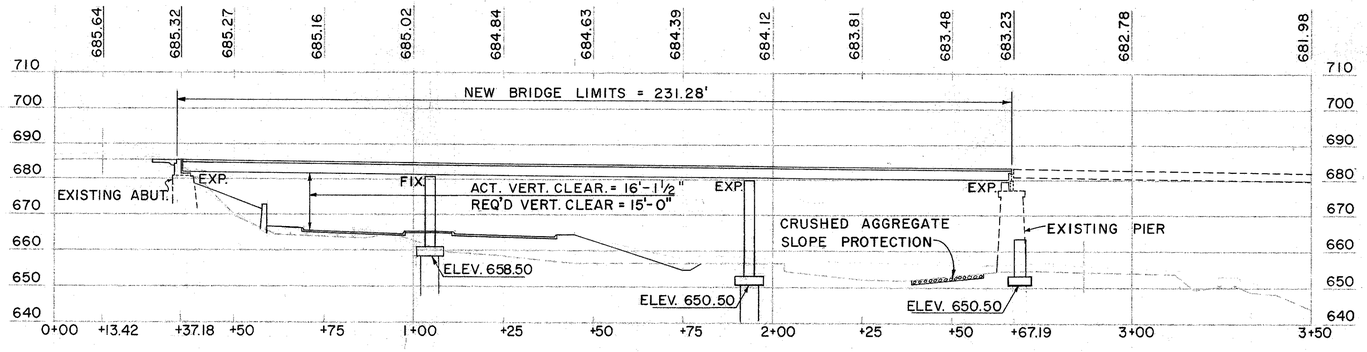

PROFILE ALONG ℄ OF AETNAVILLE BRIDGE

All piles shall be 12 BP 53 steel "H" piles.
Estimated average pay lengths are:
Pier #1 - 50'
Pier #2 - 53'

HORIZONTAL CURVE DATA - S.R. 7

P.I. STA. 1114+77.51
Δ = 25° 21' 49" Rt.
Dc = 1° 28'
Rc = 3906.53'
L = 1729.34'
T = 879.07'
E = 97.69'
P.C. STA. 1105+98.44
P.T. STA. 1123+27.78

VERTICAL CURVE DATA - AETNAVILLE BRIDGE

P.V.I. STA. 1+52.18, ELEV. 684.95
$G_1 = -0.32\%$, $G_2 = -1.50\%$
V.C. = 230'

TRAFFIC COUNT S.R. 7
1982 A.D.T. = 17,750

NOTE : For existing structure see next sheet.

PROPOSED STRUCTURE

TYPE : Continuous steel beam with reinforced concrete deck and substructures.

SPANS : 66'-2⅞", 89'-0" and 71'-6" ℄ brgs.

ROADWAY : Varies

LOAD FREQUENCY : C F 400 (57)

SKEW : Varies

WEARING SURFACE : 1" monolithic concrete.

APPROACH SLABS : Special, 7' Long

ALIGNMENT : Tangent

SUPERELEVATION : None

RACKOFF ASSOCIATES
ENGINEERS COLUMBUS, OHIO

SITE PLAN

BRIDGE NO. BEL - 7 - 2095
S.R. 7 UNDER AETNAVILLE BRIDGE
BELMONT COUNTY
STA. 0 + 35.91
STA. 2 + 67.19

Designed	Drawn	Traced	Checked	Reviewed	Date	Revised
P. M.	M.R.		R.A.K.	[illegible]	5-12 64	

MICROFILMED
MAY 14 1986

RECEIVED
MAY 1 4 1985

FED. RD. DIVISION	STATE	PROJECT	TYPE FUNDS
2	OHIO		

BELMONT COUNTY
BEL. 7-20.74

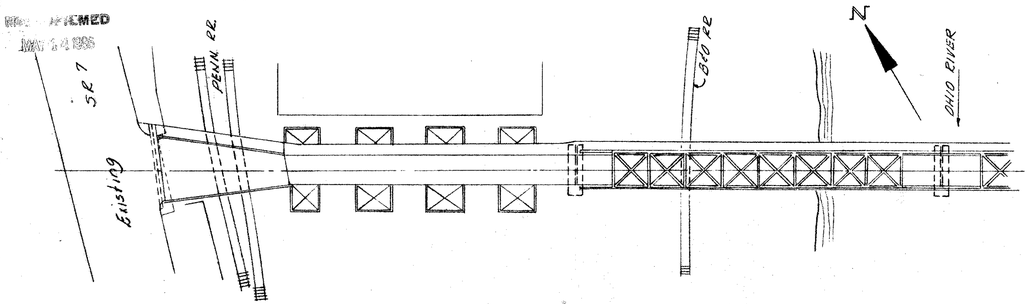

GENERAL PLAN

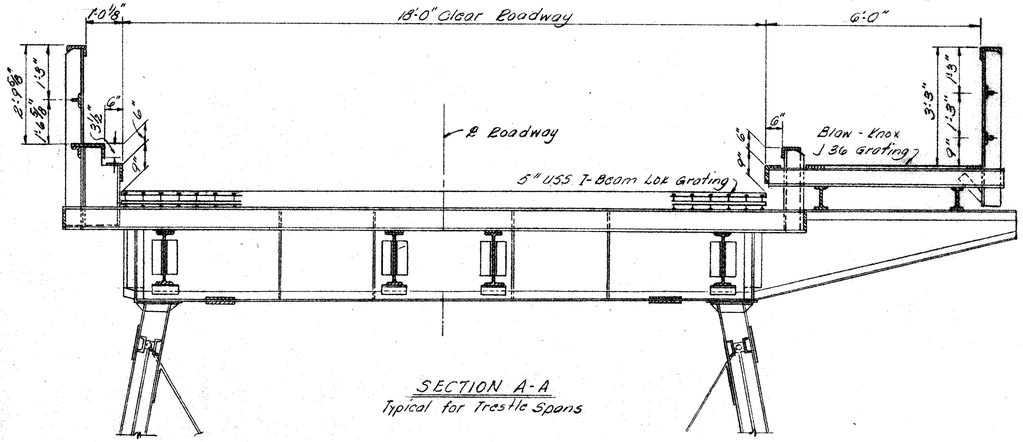

SECTION A-A
Typical for Trestle Spans

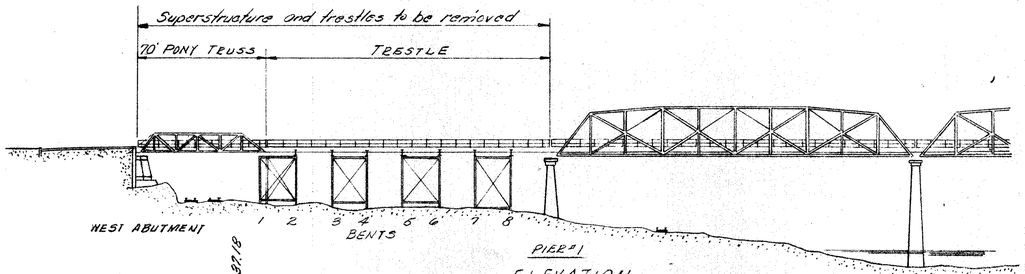

ELEVATION

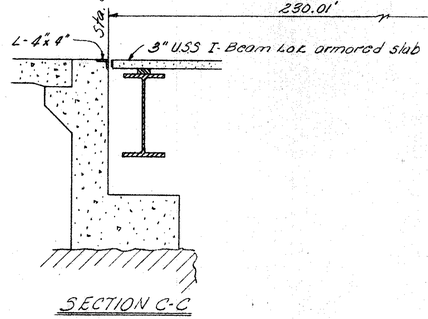

SECTION C-C

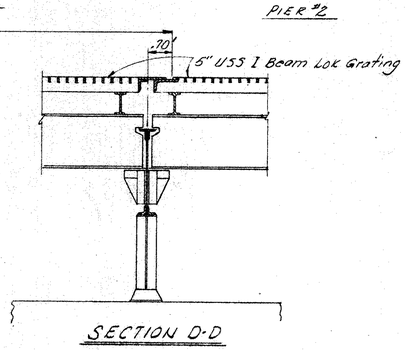

SECTION D-D

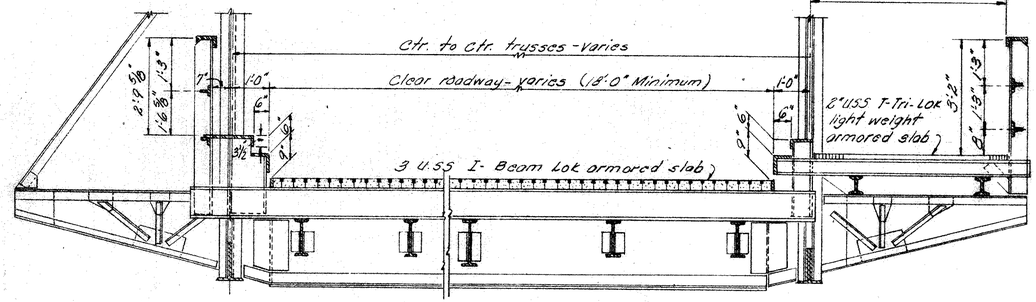

SECTION B-B
Typical for pony truss span

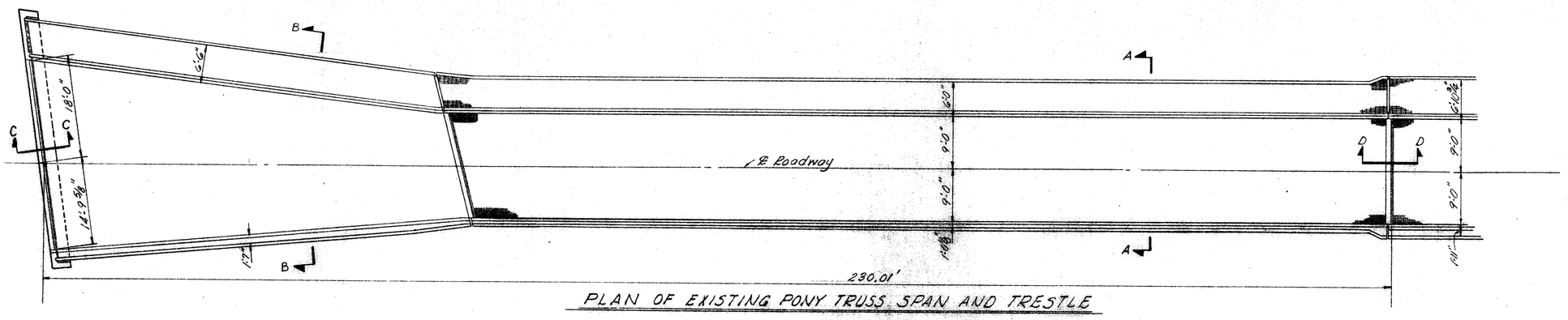

PLAN OF EXISTING PONY TRUSS SPAN AND TRESTLE

RACKOFF ASSOCIATES
ENGINEERS COLUMBUS, OHIO

EXISTING STRUCTURE
BRIDGE NO. BEL-7-2095
S.R.7 UNDER AETNAVILLE BRIDGE
BELMONT COUNTY STA. 0+35.91
STA. 2+67.18

Designed	Drawn	Traced	Checked	Approved	Date	Revised
P.M.	P.M.	E.D.A.	F.A.		5-12-84	

MICROFILMED
MAY 14 1966

FED. RD. DIVISION	STATE	PROJECT	
2	OHIO		

308
418

BELMONT COUNTY
BEL. 7-20.74

GENERAL NOTES

REFERENCE SHALL BE MADE TO:

STANDARD DRAWING SD-1-63, SHEETS 2, 3, AND 4, DATED 11-12-63
STANDARD DRAWING SD-2-64, DATED 11-25-64
STANDARD DRAWING PSB-1-62, REVISED 1-15-63
STANDARD DRAWING BR-1-65, SHEET 2, *REVISED 11-24-65*
SUPPLEMENTAL SPECIFICATION 808, DATED *2-7-66 AND 825 DATED 4-22-65*
SUPPLEMENTAL SPECIFICATION 811, DATED 3-29-65 *AND 828 DATED 3-21-66*

DESIGN SPECIFICATIONS: THIS STRUCTURE CONFORMS TO THE REQUIREMENTS OF "DESIGN SPECIFICATIONS FOR HIGHWAY STRUCTURES" OF THE STATE OF OHIO, DEPARTMENT OF HIGHWAYS, DATED 9-1-57, TOGETHER WITH CURRENT REVISIONS THEREOF.

DESIGN LOADING - CF 400 (57) .

CONCRETE CLASS C - BASIC UNIT STRESS 1,333 PSI.
CONCRETE CLASS E - BASIC UNIT STRESS 1,133 PSI.

STRUCTURAL STEEL (EXCEPT PILING) - ASTM A 36 - BASIC UNIT STRESS 20,000 PSI.

REINFORCING STEEL - ASTM A15, A16, A160, DEFORMED, INTERMEDIATE OR HARD GRADE. BASIC UNIT STRESS 20,000 PSI. EXCEPT, SPIRAL REINFORCEMENT MAY BE PLAIN, STRUCTURAL GRADE WITH BASIC UNIT STRESS OF 18,000 PSI.

PILES SHALL BE DRIVEN WITH A HAMMER OF NOT LESS THAN 11,000 FT. LBS. PER BLOW TO FIRM CONTACT WITH ROCK. IF THE LENGTH OF PENETRATION IS APPROXIMATELY EQUAL TO THE DEPTH TO ROCK ACCORDING TO THE BRIDGE FOUNDATION INVESTIGATION REPORT, THE FIRM CONTACT SHALL BE CONSIDERED AS ATTAINED WHEN THE CAPACITY ACCORDING TO THE FORMULA IN SEC. 507.05 IS NOT LESS THAN THE FOLLOWING VALUE FOR A PILE HAMMER OF THE INDICATED ENERGY RATING:

60 TONS PER PILE USING AN 11,000 FT. LB. HAMMER
56 TONS PER PILE USING A 15,000 FT. LB. OR GREATER HAMMER

IF THE ENERGY RATING OF THE HAMMER IS BETWEEN THE RATINGS AS SHOWN ABOVE, THE REQUIRED FORMULA CAPACITY SHALL BE DETERMINED BY INTERPOLATION. THE DESIGN LOAD IS 50 TONS PER PILE FOR THE PIER PILES.

MACHINE FINISH: AT THE CONTRACTOR'S OPTION, THE CONCRETE DECK MAY BE FINISHED BY THE USE OF A FINISHING MACHINE.

REMOVAL OF EXISTING STRUCTURE: PORTIONS OF THE EXISTING STRUCTURE SHALL BE REMOVED AS PER PLAN.

FOUNDATION BEARING PRESSURE: COLLISION WALL FOOTINGS ARE DESIGNED FOR A MAXIMUM BEARING PRESSURE OF 0.55 TONS PER SQ. FT.

REFERENCE SHALL BE MADE TO THE ROADWAY PLANS FOR "TIME SCHEDULE" AND "MAINTENANCE OF TRAFFIC."

UTILITY LINES: ALL EXPENSE INVOLVED IN RELOCATING THE AFFECTED UTILITY LINES SHALL BE BORNE BY THE OWNERS. THE CONTRACTOR AND OWNERS ARE REQUESTED TO COOPERATE BY ARRANGING THEIR WORK IN SUCH A MANNER THAT INCONVENIENCE TO EITHER WILL BE HELD TO A MINIMUM.

RAILROAD AERIAL LINES WILL BE RELOCATED BY THE RAILROAD. THE CONTRACTOR SHALL USE ALL PRECAUTIONS NECESSARY TO SEE THAT THE LINES ARE NOT DISTURBED DURING THE CONSTRUCTION STAGE AND SHALL COOPERATE WITH THE RAILROAD IN THE RELOCATION OF THESE LINES. THE COST OF THE RELOCATION SHALL BE INCLUDED IN THE RAILROAD FORCE ACCOUNT WORK.

CONSTRUCTION CLEARANCE OF 23 FT. VERTICALLY ABOVE THE TOP OF THE RAILROAD RAILS AND 12 FT. HORIZONTALLY FROM THE CENTER OF TRACKS SHALL BE MAINTAINED AT ALL TIMES.

SHEETING AND BRACING: BEFORE CONSTRUCTION IS STARTED, EIGHT SETS OF PRINTS SHOWING DETAILS OF THE SHEETING AND BRACING TO BE USED FOR EXCAVATION ADJACENT TO THE RAILROAD TRACKS SHALL BE SUBMITTED TO THE DIRECTOR FOR APPROVAL BY THE DEPARTMENT OF HIGHWAYS AND BY THE RAILROAD COMPANY.

ALIGNING RAILROAD TRACKS: AFTER THE CONTRACTOR HAS COMPLETED ALL EXCAVATION AND BACKFILL ADJACENT TO THE RAILROAD TRACKS IN COMPLIANCE WITH SECS. 503.04 AND 503.09 OF THE CONSTRUCTION AND MATERIAL SPECIFICATIONS, SUBJECT TO THE SUPERVISION OF THE RAILROAD COMPANY, NOTHING IN SECS. 503.04, 503.09 OR 108.04 OF THE SPECIFICATIONS SHALL BE CONSTRUED TO HOLD THE CONTRACTOR LIABLE FOR ALIGNING AND RESURFACING THE RAILROAD TRACKS.

ESTIMATED QUANTITIES

ITEM	TOTAL	UNIT	DESCRIPTION	SUPER.	ABUT.	PIER	COLL. WALLS	AS BUILT	
503	113	cu. yds.	Unclassified excavation			72	41		
503	lump	sum	Cofferdams, cribs and sheeting						
511	242	cu. yds.	Class "C" concrete, superstructure	242					
511	50	cu. yds.	Class "C" concrete, piers above footings			50			
511	31	cu. yds.	Class "E" concrete, pier footings			31			
511	19	cu. yds.	Class "E" concrete, abutments		19				
511	48	cu. yds.	Class "E" concrete, collision walls and footings				48		
509	79,993	lbs.	Reinforcing steel	61,969	2,021	14,290	1,713		
513	239,700	lbs.	Structural steel	239,700					
514	239,700	lbs.	Field painting of structural steel	239,700					
517	463.20	lin. ft.	*Bridge railing, Type 2.*	463.20					
505	lump	sum	First test pile						
507	1,260	lin. ft.	Steel piles, 12 BP 53			1,260			
202	lump	sum	Removal of portions of existing structure						
510	58	each	Dowel holes		58				
625			Electric lighting system - see Electric Lighting Plans Sh. 249						
518	4	each	Scuppers, including supports	4					
518	13	cu. yds.	Porous backfill		13				
518	42	lin. ft.	6" helical perforated C.M.P., Sec. 707.06, including specials		42				
518	23	lin. ft	6" helical C.M.P., Sec. 707.06, non-perforated		23				
808	242	*Units*	Water-reducing, set-retarding admixture	242					
825	*830*	*sq. yds.*	*Concrete surface treatment*	*820*	*10*				
601	36	sq. yds.	Crushed aggregate slope protection	36					
828	*51*	*lin. ft.*	*Joint sealer (End Dam)*	*51*					

RACKOFF ASSOCIATES
ENGINEERS
CLEVELAND, OHIO COLUMBUS, OHIO

GENERAL NOTES AND ESTIMATED QUANTITIES
BRIDGE NO. BEL-7-2095
S. R. 7 UNDER AETNAVILLE BRIDGE
BELMONT COUNTY STA. 0+35.91
STA. 2+67.19

Designed	Drawn	Traced	Checked	Reviewed	Date	Revised
F. A.	E.D.A.		R.A.K.	I.C.	5-12-64	

MICROFILMED
MAY 14 1986

FED. RD. DIVISION	STATE	PROJECT	TYPE FUNDS
2	OHIO		

309
418

BELMONT COUNTY
BEL. 7- 20.74

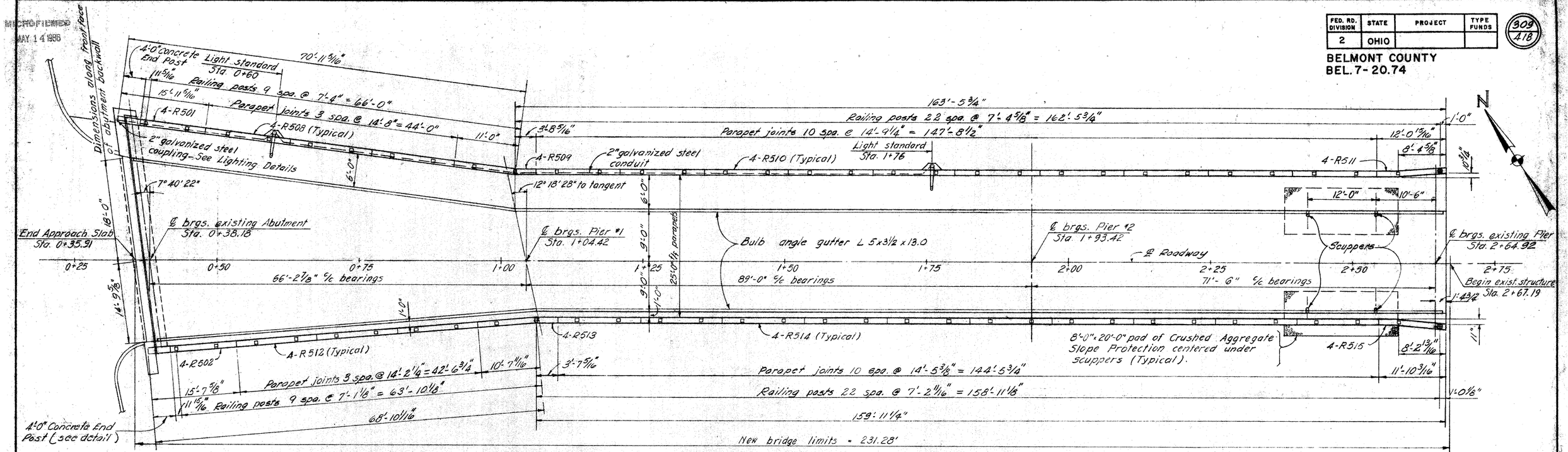

PLAN
(Dimensions measured along face of parapets)

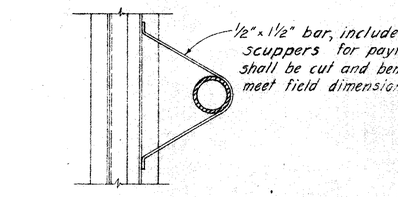

SECTION A-A

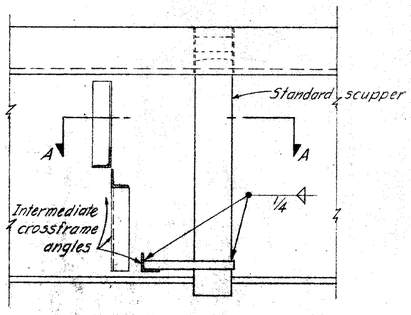

SCUPPER DETAIL
(North curb scuppers only)

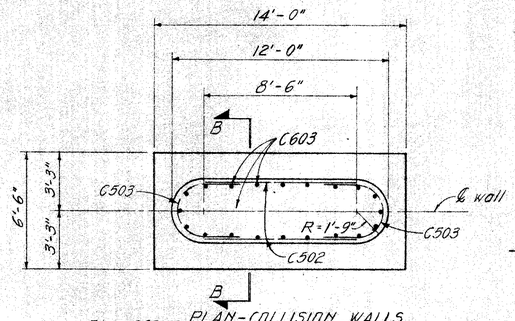

PLAN-COLLISION WALLS

Note: All concrete for the collision walls shall be Class "E" concrete.

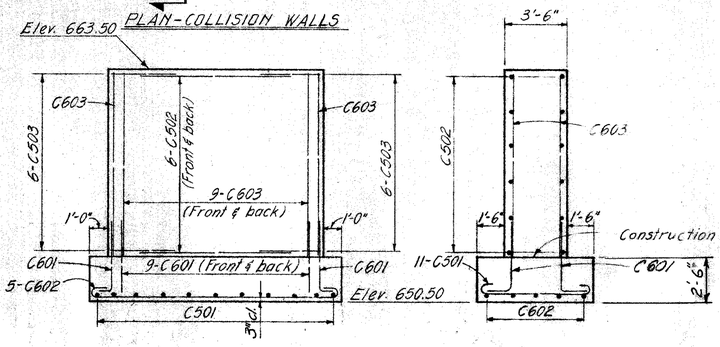

ELEVATION

SECTION B-B

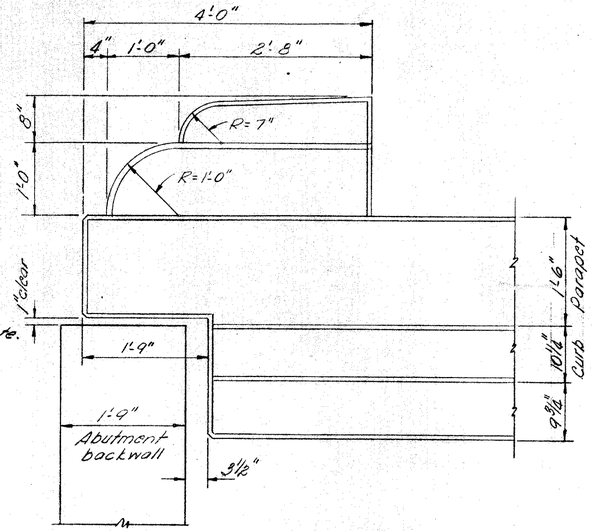

CANTILEVER END POST

For end post reinforcement and additional notes and details refer to Standard Drawing BR-1-65, Sheet 2.

PAVEMENT ELEVATIONS

STATION	N. EDGE	℄	S. EDGE
0+40	684.89	685.31	685.70
0+50	684.88	685.27	685.59
0+60	684.87	685.23	685.47
0+70	684.86	685.19	685.34
0+80	684.85	685.14	685.21
0+90	684.84	685.08	685.06
1+00	684.83	685.02	684.92
1+25	684.69	684.84	684.69
1+50	684.48	684.63	684.48
1+75	684.24	684.39	684.24
2+00	683.99	684.12	683.98
2+10	683.86	684.00	683.86
2+20	683.75	683.88	683.75
2+30	683.65	683.75	683.64
2+40	683.55	683.62	683.53
2+50	683.45	683.48	683.42
2+60	683.33	683.33	683.29
2+6492	683.28	683.26	683.24

RACKOFF ASSOCIATES
ENGINEERS COLUMBUS, OHIO

GENERAL PLAN

BRIDGE NO. BEL.-7-2095
S.R. 7 UNDER AETNAVILLE BRIDGE
BELMONT COUNTY
STA. 0 + 35.91
STA. 2 + 67.19

Designed	Drawn	Traced	Checked	Reviewed	Date	Revised
H. H.	G. M. M. R.		F. A. R. A. K.	[illegible]	5-12-64	

MICROFILMED
MAY 1 8 1965

FED. RD. DIVISION	STATE	PROJECT	TYPE FUNDS
2	OHIO		

310
418

BELMONT COUNTY
BEL. 7 – 20.74

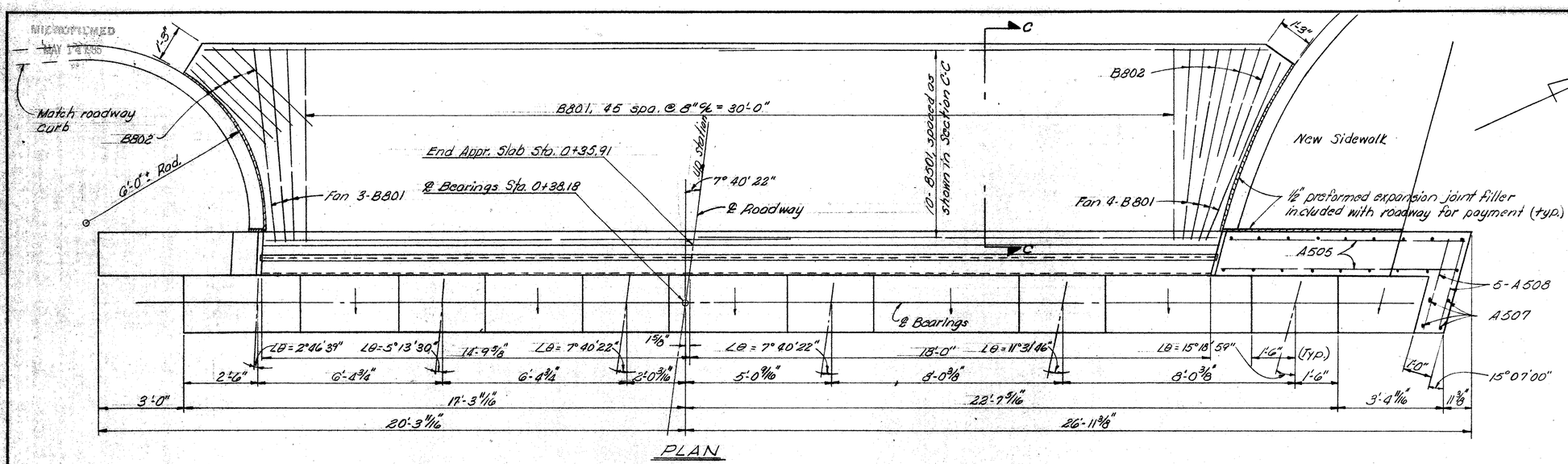

PLAN

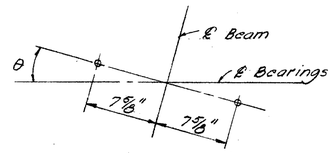

Angle θ shown in plan view for all beams

ANCHOR ROD LAYOUT

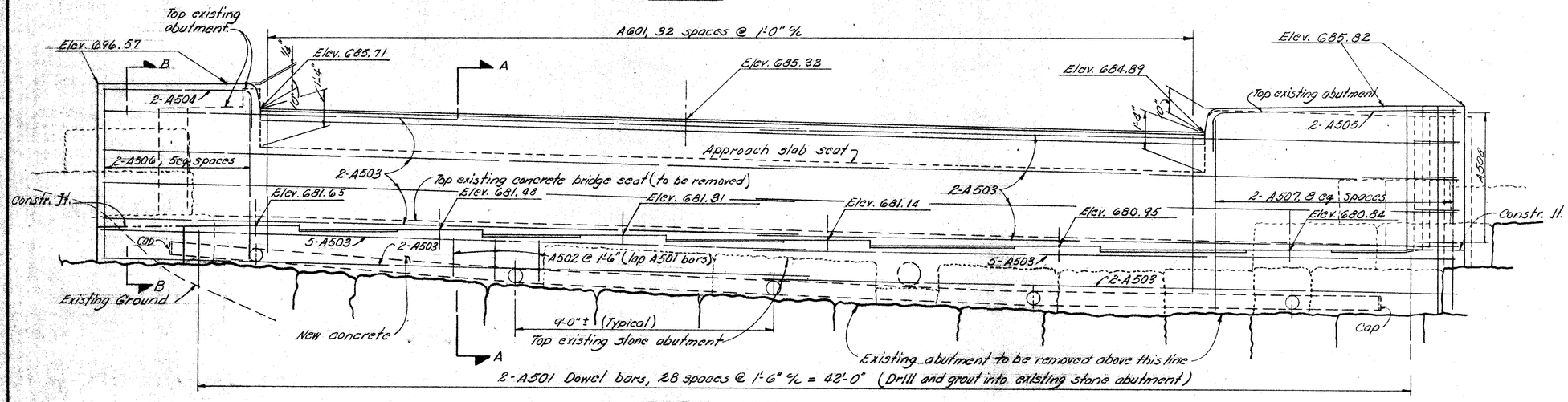

ELEVATION

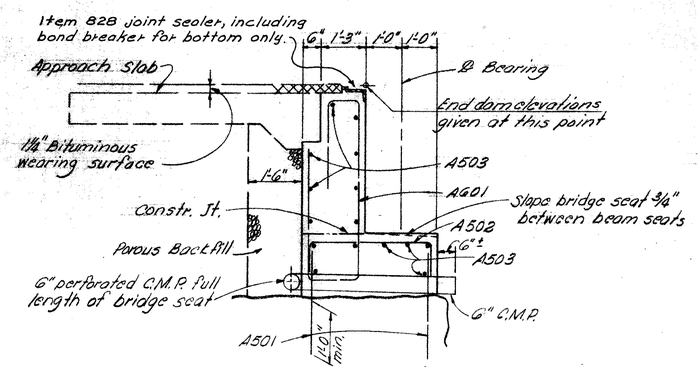

SECTION A-A

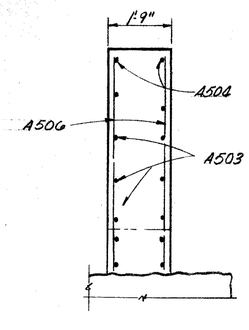

SECTION B-B

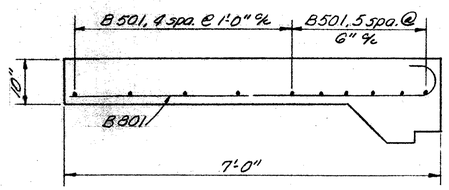

SECTION C-C

NOTES:

PROCEDURE: In order to prevent disruption of traffic on S.R. 7, the existing concrete approach slab shall be cut and sheet piling driven before removal of the existing abutment. The existing approach slab, concrete abutment and portions of the stone abutment shall be removed according to plan.

POROUS BACKFILL: 1'-6" thick, full length of abutment and wings shall extend up to the underside of the approach slab or to the finished ground surface.

BRIDGE SEAT REINFORCING: Special care shall be taken in placing reinforcing steel in the vicinity of the beam seat so as to avoid interference with the drilling of anchor rod holes.

Reference shall be made to Standard Drawing SD-1-63 for end crossframes, roadway and sidewalk end dam details, curb plate details and other notes and details not shown.

APPROACH SLAB QUANTITIES*

REINFORCING STEEL (LBS.)				CONCRETE
Mark	No.	Length	Shp.	
B801	63	7'-7"	B	27.2 SQ. YDS.
B802	9	4'0"	S	
B501	20	19'-0"	S	

* Roadway pay item

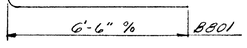

RACKOFF ASSOCIATES
ENGINEERS COLUMBUS, OHIO

ABUTMENT DETAILS
BRIDGE NO. BEL-7-2095
S.R.7 UNDER AETNAVILLE BRIDGE
BELMONT COUNTY
STA. 0+35.91
STA. 2+67.19

Designed	Drawn	Traced	Checked	Reviewed	Date	Revised
R.A.K.	R.A.K.	E.D.A.	N.K.	[illegible]	6-12-64	

MICROFILMED
MAY 14 1966

FED. RD. DIVISION	STATE	PROJECT	TYPE FUNDS
2	OHIO		

311
418

BELMONT COUNTY
BEL. 7-20.74

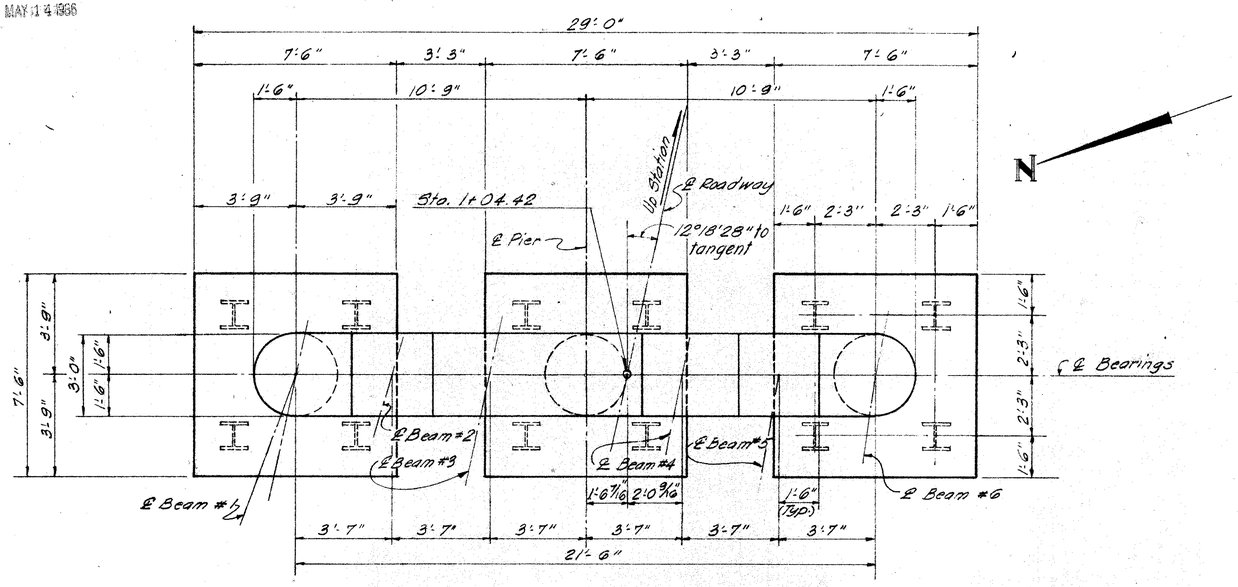

PLAN - PIER NO. 1

	Beam #1	Beam #2	Beam #3	Beam #4	Beam #5	Beam #6
Angle θ	12°18'28"	16°09'52"	12°18'28"	12°18'28"	09°51'36"	12°18'28"
Dimension "A"	18"	14"	18"	18"	14"	18"
Dimension "B"	7"	5"	7"	7"	5"	7"

NOTE:
BRIDGE SEAT REINFORCING: Special care shall be taken in placing reinforcing steel in the vicinity of the beam seat so as to avoid interference with the drilling of anchor rod holes.

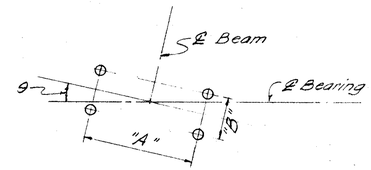

ANCHOR ROD LAY-OUT

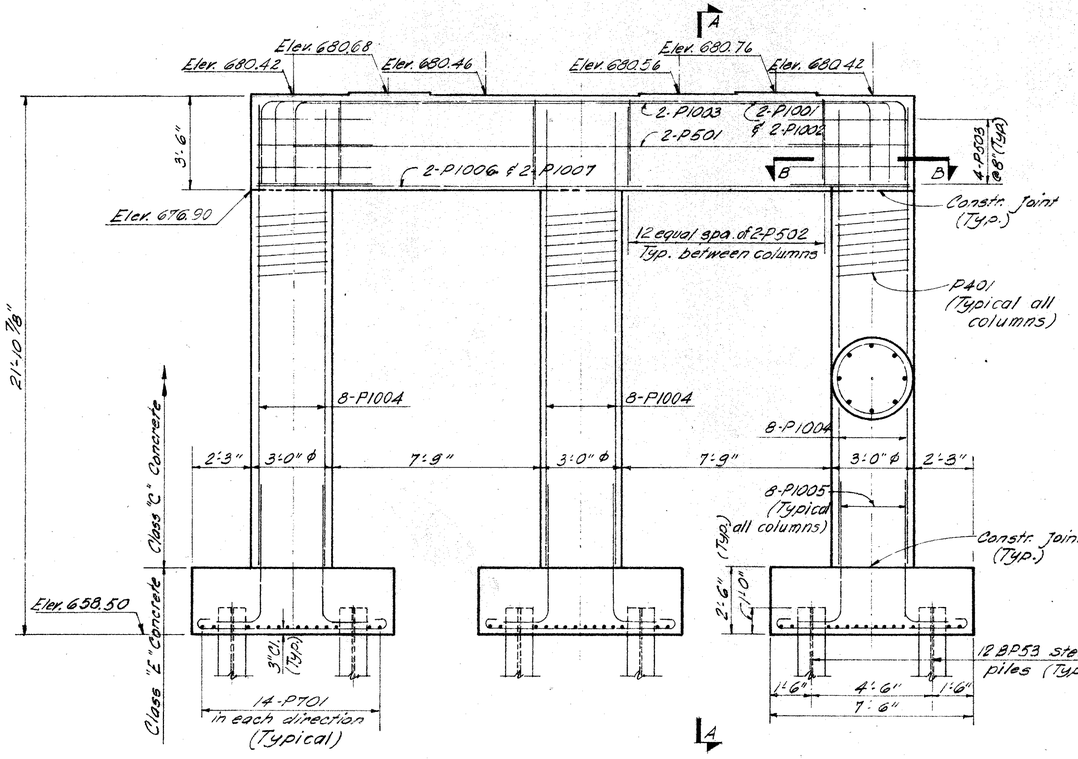

ELEVATION

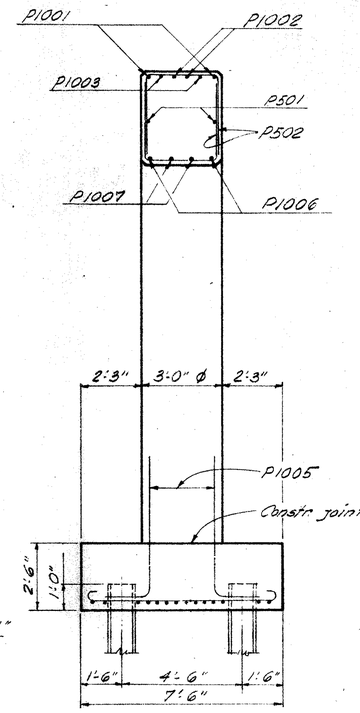

SECTION A-A

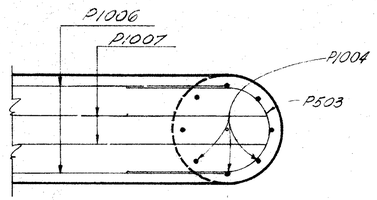

SECTION B-B

RACKOFF ASSOCIATES
ENGINEERS COLUMBUS, OHIO

PIER NO. 1 DETAILS
BRIDGE NO. BEL-7-2095
S.R. 7 UNDER AETNAVILLE BRIDGE
BELMONT COUNTY
STA. 0 + 35.91
STA. 2 + 67.19

Designed	Drawn	Traced	Checked	Reviewed	Date	Revised
H. H.	H. H.	G. M.	F. A. R. A. K.	[illegible]	5-12 64	

MICROFILMED
MAY 14 1986

FED. RD. DIVISION	STATE	PROJECT	TYPE FUNDS
2	OHIO		

312
418

BELMONT COUNTY
BEL. 7 - 20.74

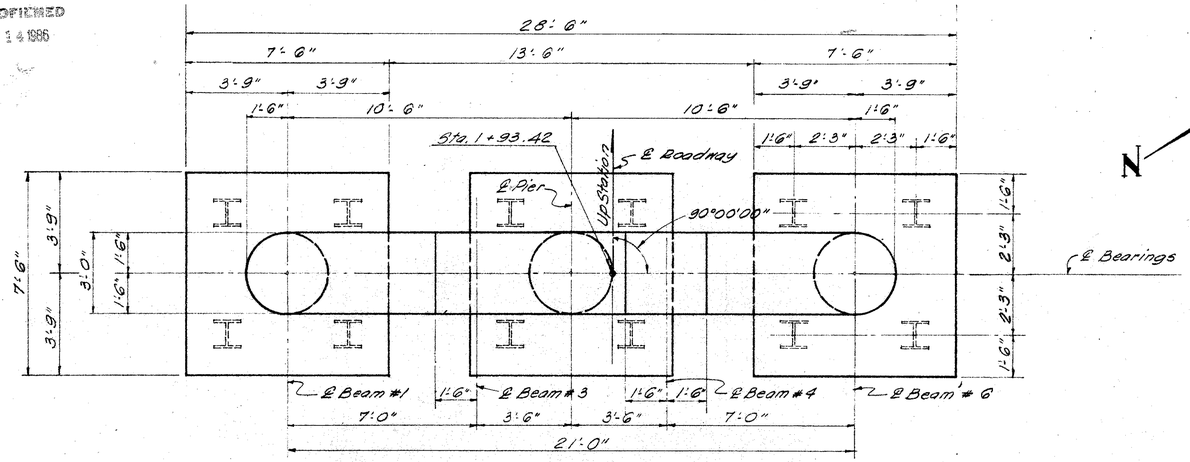

PLAN - PIER No 2

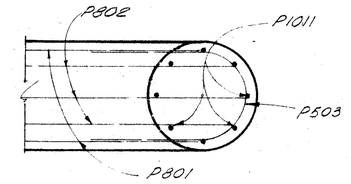

SECTION B-B

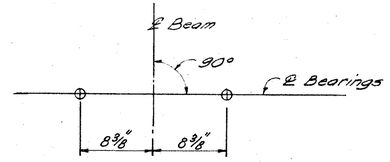

ANCHOR ROD LAY-OUT

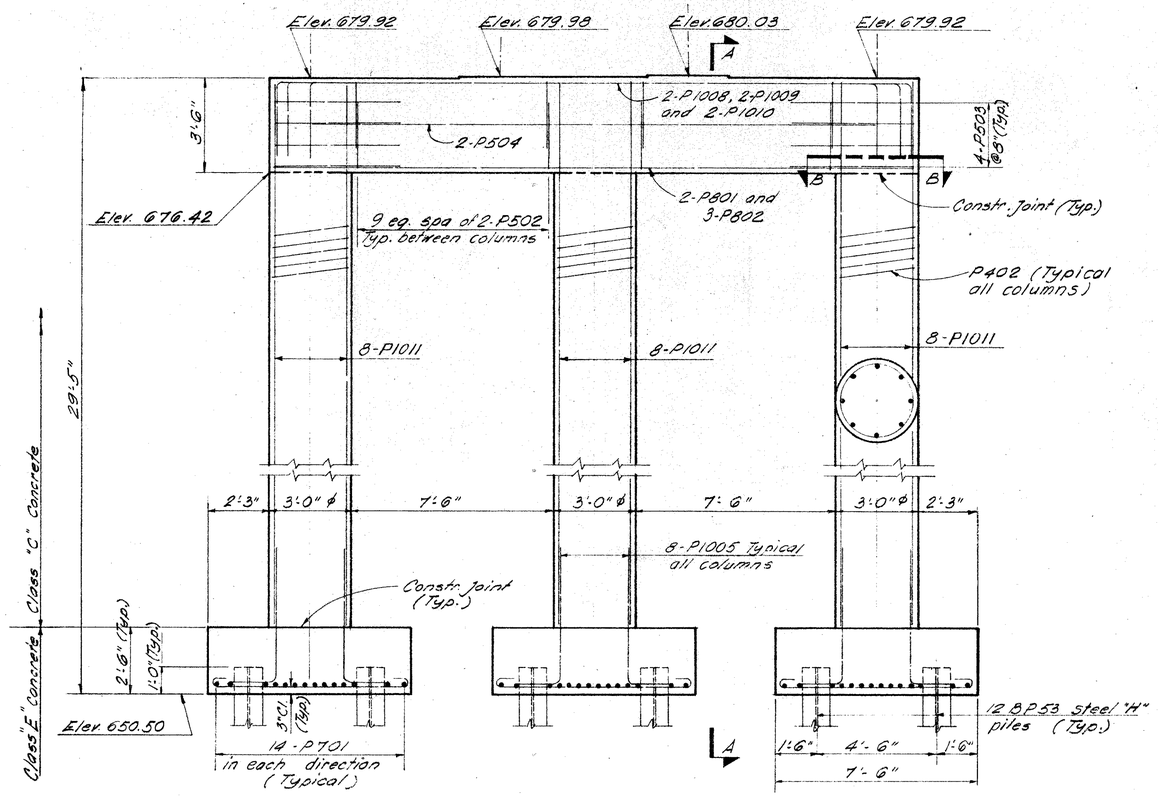

ELEVATION

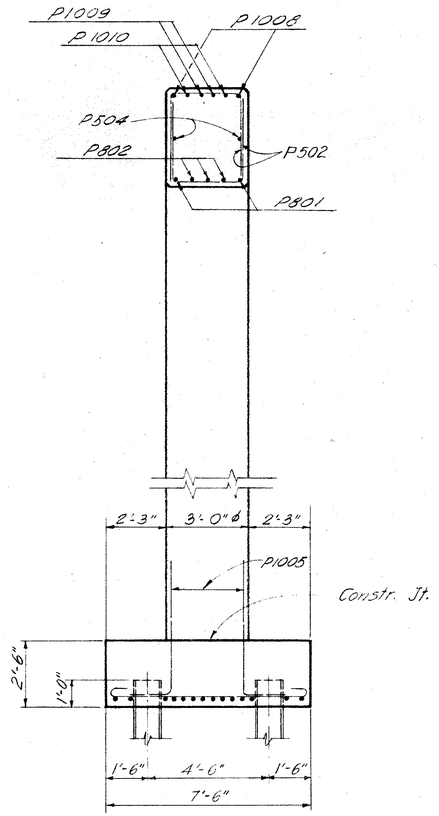

SECTION A-A

NOTE:
BRIDGE SEAT REINFORCING: Special care shall be taken in placing reinforcing steel in the vicinity of the beam seat so as to avoid interference with the drilling of anchor rod holes.

RACKOFF ASSOCIATES
ENGINEERS COLUMBUS, OHIO

PIER NO. 2 DETAILS
BRIDGE NO. BEL-7-2095
S.R. 7 UNDER AETNAVILLE BRIDGE
BELMONT COUNTY
STA. 0 + 35.91
STA. 2 + 67.19

Designed	Drawn	Traced	Checked	Reviewed	Date	Revised
H. H.	G.M.		F.A. R.A.K.	668	5-12 64	

FED. RD. DIVISION	STATE	PROJECT	TYPE FUNDS
2	OHIO		

313/418

BELMONT COUNTY
BEL. 7 - 20.74

MICROFILMED
MAY 14 1965

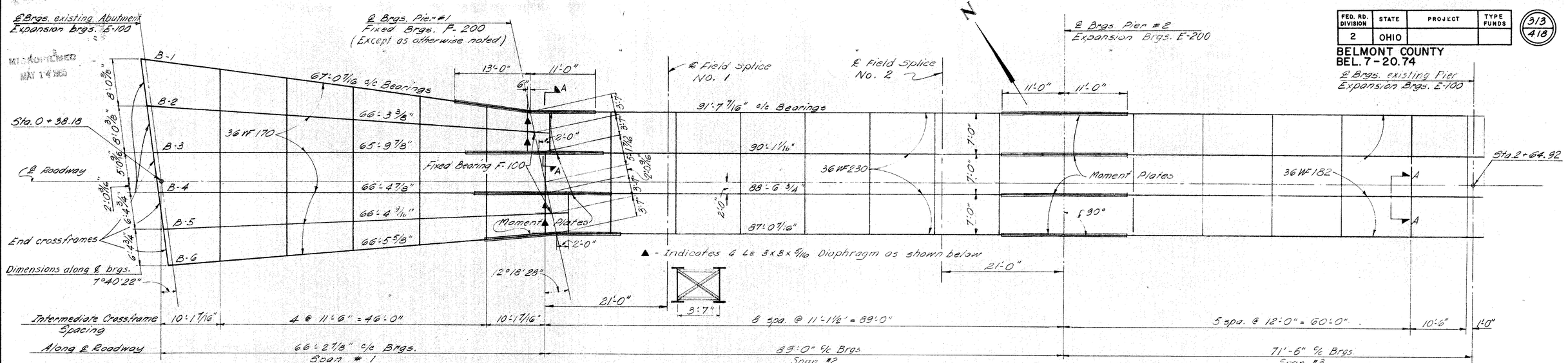

Note: All intermediate crossframes are placed perpendicular to ℄ Roadway.

FRAMING PLAN

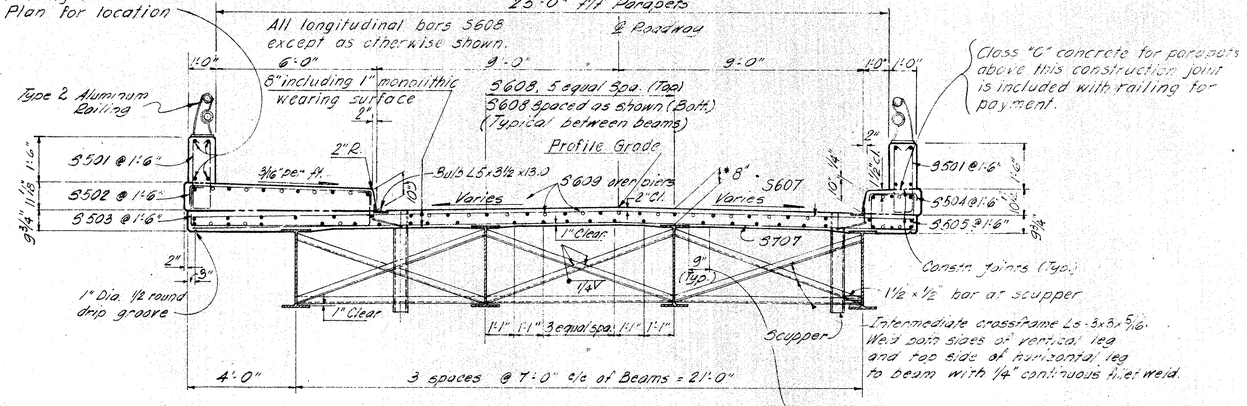

Class "C" concrete for parapets above this construction joint is included with railing for payment.

A typical haunch width of 9" shall be used for computing quantity of concrete. However, the haunch width may vary between 6" and 12" provided that the slope shall be not more than 1:4 for a haunch less than 9" in width.

TRANSVERSE SECTION
(Typical for Span #2, #3)

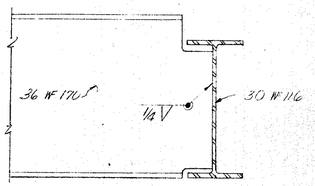

SECTION B-B

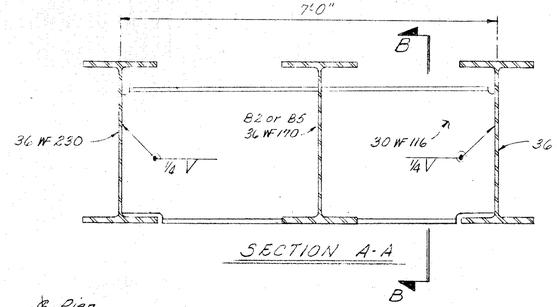

SECTION A-A

DEFLECTION AND CAMBER

LOCATION	SPAN #1						SPAN #2				SPAN #3			
BEAM	B-1	B-2	B-3	B-4	B-5	B-6	B-1	B-3	B-4	B-6	B-1	B-3	B-4	B-6
Deflection due to weight of Steel	1/16	1/4	1/16	1/16	1/4	1/16	1/4	1/4	1/4	1/4	1/16	1/16	1/8	1/8
Deflection due to remaining dead load	9/16	11/16	5/16	3/8	7/16	3/8	1	5/8	1/2	1/2	11/16	7/16	1/2	1/2
Convexity required for vertical curve	0	-5/16	1/16	5/16	1/16	1/16	5/8	5/8	5/8	9/16	3/8	3/8	3/8	3/8
Sum of deflection and convexity	5/8	5/8	7/16	3/4	3/4	7/8	1 7/8	1 1/2	1 3/8	1 1/16	1 1/8	7/8	1	1
Required Camber	0	0	0	3/4	3/4	7/8	1 7/8	1 1/2	1 3/8	1 1/16	1 1/8	7/8	1	1

If required camber equals zero, fabricate with any natural camber up.

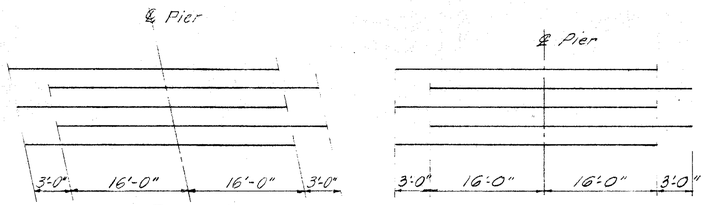

DIAGRAM SHOWING STAGGER OF S609 BARS OVER PIERS

REFERENCE SHALL BE MADE TO:

Standard Drawing BR-1-65, Sheet 2, for Type 2 Bridge Railing
Standard Drawing FSB-1-62 for Fixed and Sliding Bearings.
Standard Drawing S.D. 1-63 for Gutter support and scupper details.

* This is the nominal dimension. The quantity of deck concrete to be paid for shall be based upon this dimension, even though deviation from it may be necessary because the top flange of the beam may not have the exact camber or conformation required to place it parallel to the finished grade. Deduction shall be made for volume of encased steel plates as per Sec. 511.19 of the Construction and Material Specifications.

RACKOFF ASSOCIATES
ENGINEERS COLUMBUS, OHIO

SUPERSTRUCTURE DETAILS

BRIDGE NO. BEL-7-2095
S.R. 7 UNDER AETNAVILLE BRIDGE
BELMONT COUNTY STA. 0 + 35.91 / STA. 2 + 67.19

Designed	Drawn	Traced	Checked	Reviewed	Date	Revised
N. K.	G. M.		F. A. R. A. K.	666	5-12 64	

BELMONT COUNTY
BEL. 7- 20.74

FED. RD. DIVISION	STATE	PROJECT	TYPE FUNDS
2	OHIO		

314
418

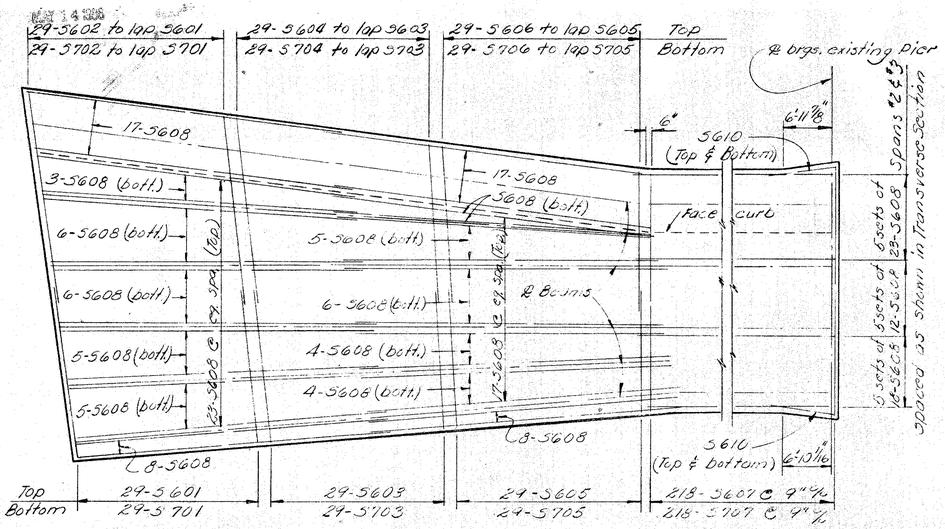

NOTE:
Place Transverse Bars at 9" along ℄ of roadway
Flare Bars in slab evenly.
All median and curb bars spaced as shown in Transverse Section

PLACEMENT OF SLAB STEEL

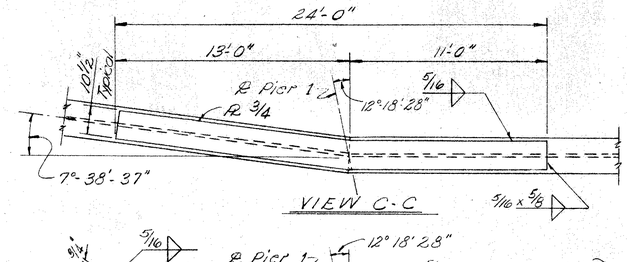

VIEW C-C

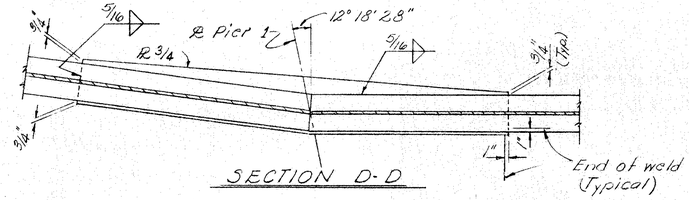

SECTION D-D

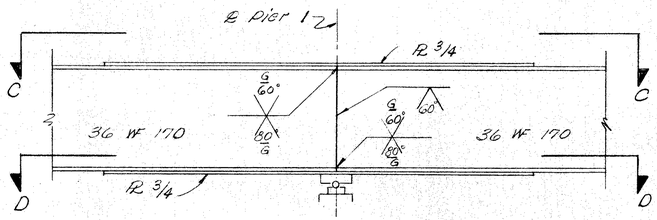

BEAM AND MOMENT PLATE WELDING DETAILS

PIER NO. 1 : BEAM B-1

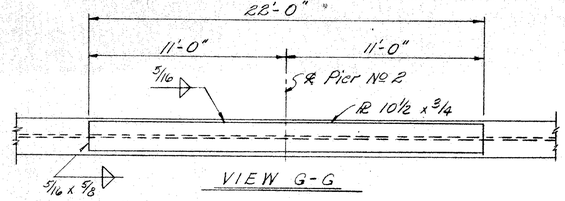

VIEW G-G

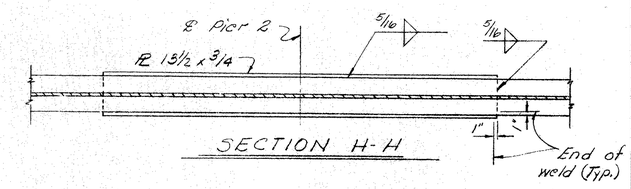

SECTION H-H

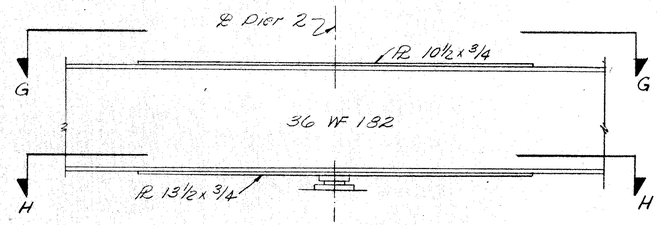

MOMENT PLATE WELDING DETAILS

PIER NO. 2 : ALL BEAMS

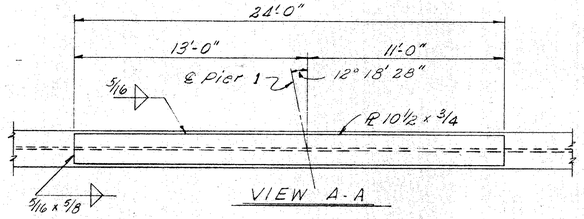

VIEW A-A

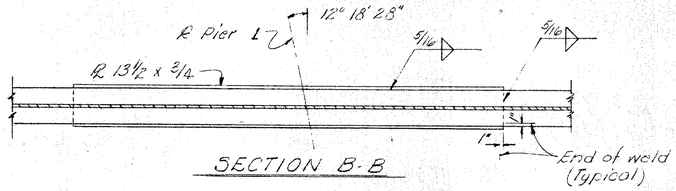

SECTION B-B

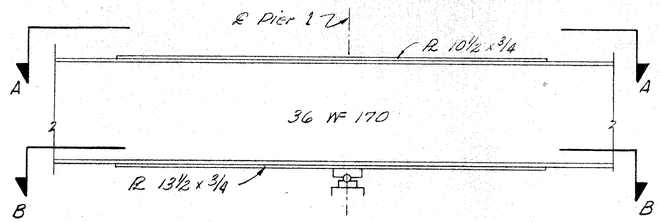

MOMENT PLATE WELDING DETAILS

PIER NO. 1 : BEAMS B-3 AND B-4

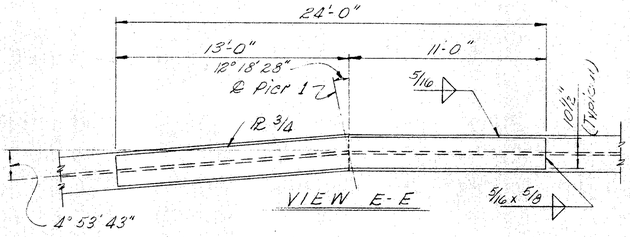

VIEW E-E

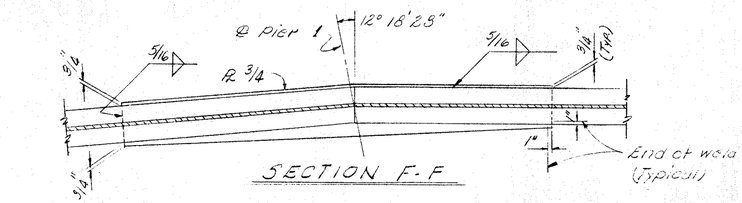

SECTION F-F

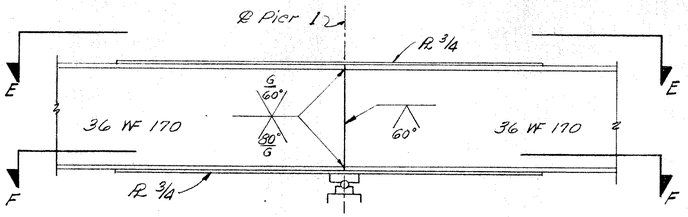

BEAM AND MOMENT PLATE WELDING DETAILS

PIER NO. 1 : BEAM B-6

RACKOFF ASSOCIATES
ENGINEERS COLUMBUS, OHIO

SLAB REINFORCMENT
AND BEAM WELDING DETAILS
BRIDGE NO. BEL-7-2095
S.R. 7 UNDER AETNAVILLE BRIDGE
BELMONT COUNTY STA. 0+35.91 STA. 2+67.19

Designed	Drawn	Traced	Checked	Reviewed	Date	Revised
L.F.L.	L.F.L.	E.D.A.	H.H.	[illegible]	5-12 64	

MICROFILMED
MAY 14 1990

FED. RD. DIVISION	STATE	PROJECT	TYPE FUNDS
2	OHIO		

(315/A18)

BELMONT COUNTY
BEL. 7-20.74

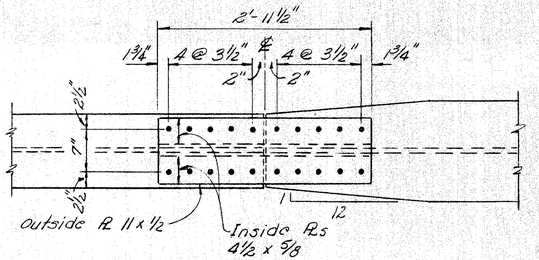

PLAN

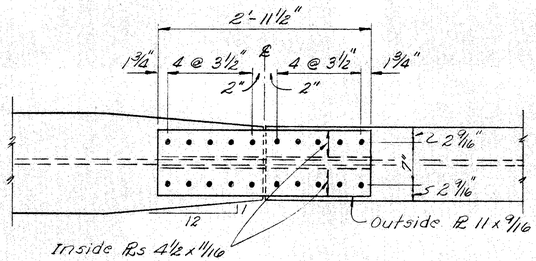

PLAN

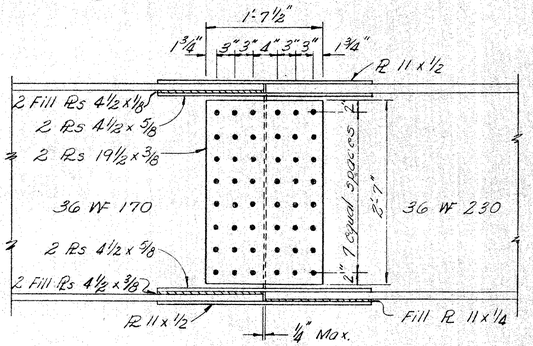

ELEVATION

FIELD SPLICE NO. 1

36 WF 170 WITH 36 WF 230

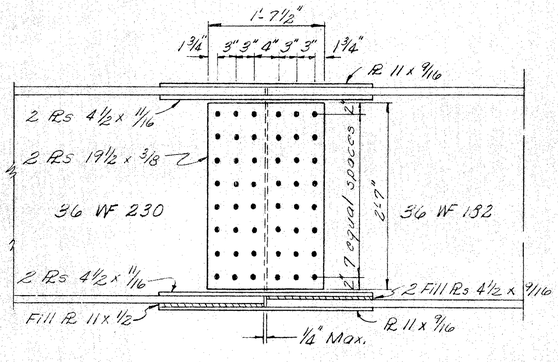

ELEVATION

FIELD SPLICE NO. 2

36 WF 230 WITH 36 WF 132

For additional notes and details not shown refer to Standard Drawing SD-2-64.

RACKOFF ASSOCIATES
ENGINEERS COLUMBUS, OHIO

FIELD SPLICE DETAILS

BRIDGE NO. BEL.-7-2095
S.R. 7 UNDER AETNAVILLE BRIDGE
BELMONT COUNTY
STA. 0+35.91
STA. 2+67.19

Designed	Drawn	Traced	Checked	Reviewed	Date	Revised
L.F.L.	L.F.L.	E.D.A.	H.H.	V.K.	5-12-64	

MICROFILMED
MAY 14 1986

FED. RD. DIVISION	STATE	PROJECT	TYPE FUNDS
2	OHIO		

316
418

BELMONT COUNTY
BEL 7-20.74

* Elevations to be verified in the field to match with the existing structure.

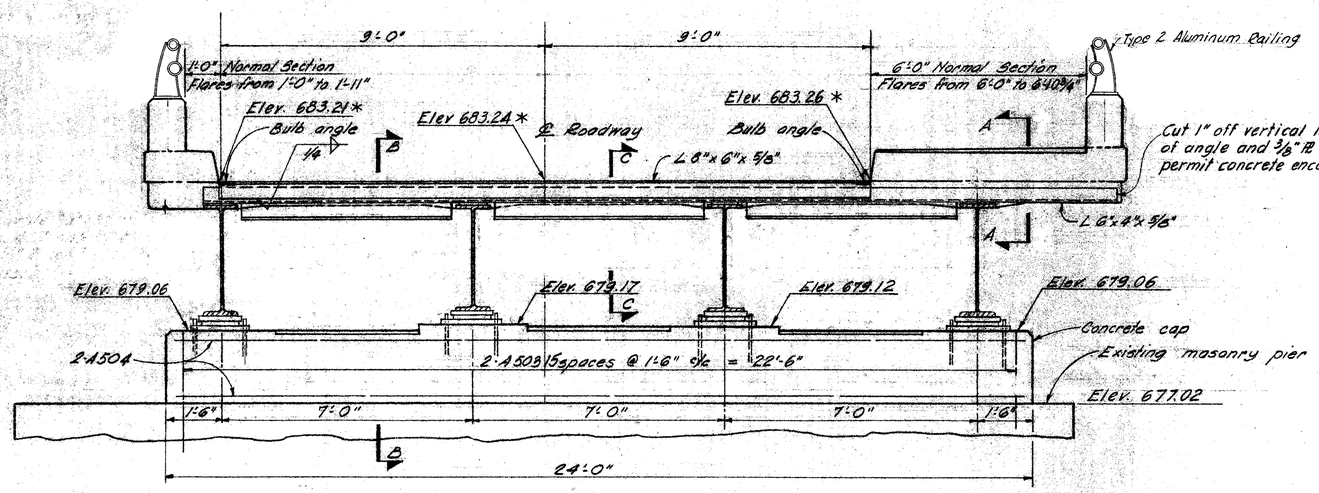

ELEVATION AT EXISTING PIER

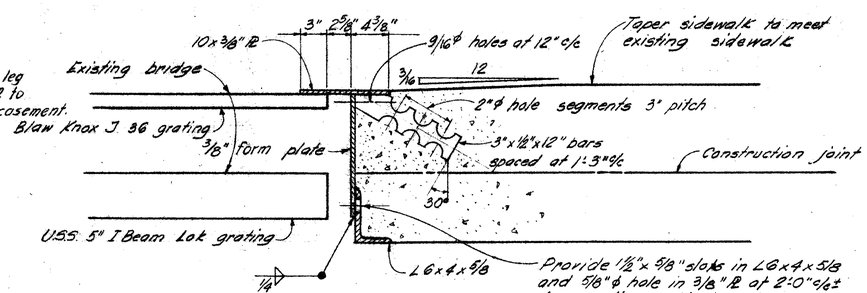

SECTION A-A

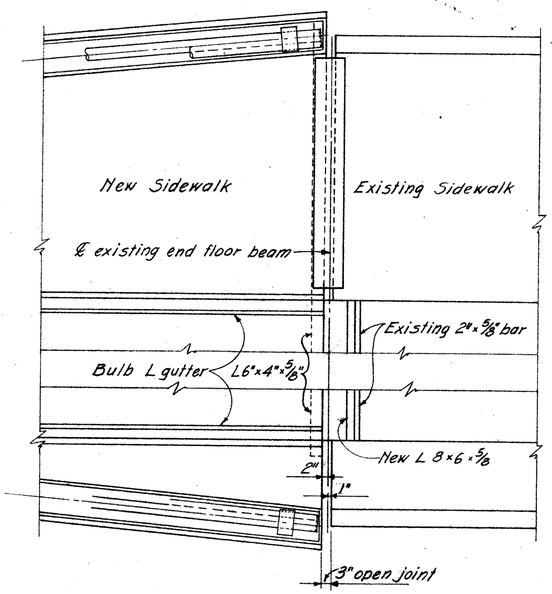

CURB DETAILS

Reference shall be made to SD-1-63 for notes and details not shown.

Sta. 2+67.19 @ ℄ Roadway

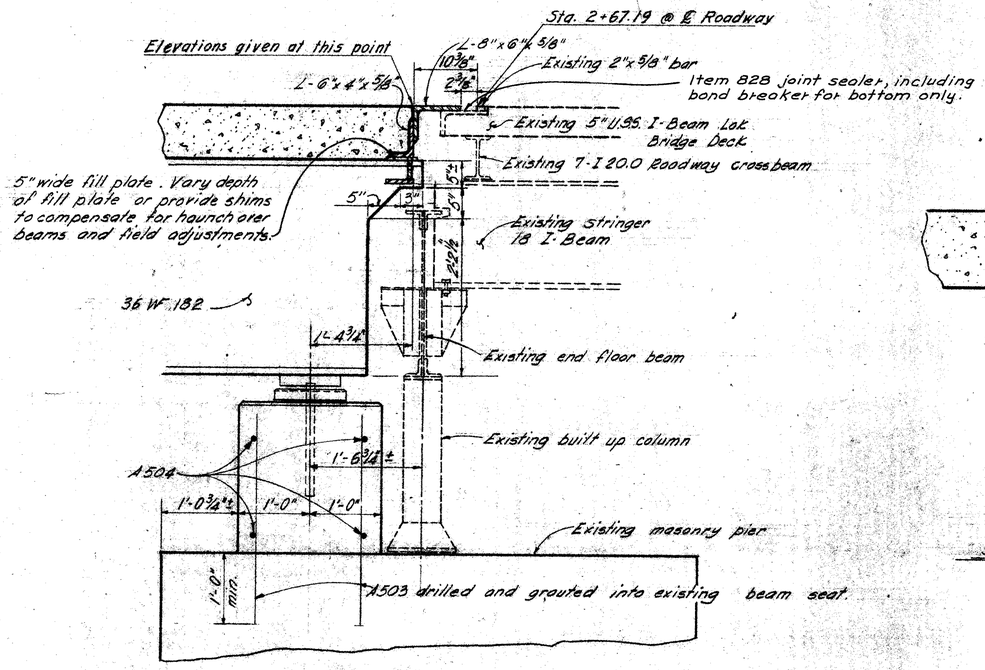

SECTION B-B

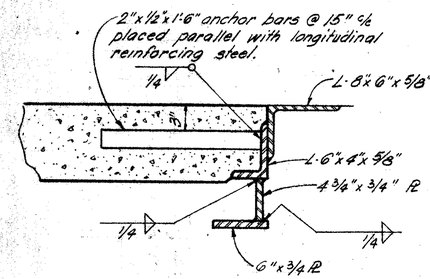

SECTION C-C

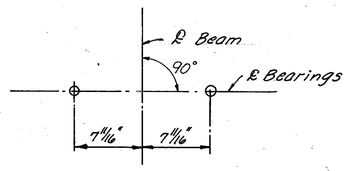

ANCHOR ROD LAYOUT AT EXISTING PIER

RACKOFF ASSOCIATES
ENGINEERS COLUMBUS, OHIO

SUPERSTRUCTURE DETAILS
BRIDGE NO. BEL-7-2095
S.R. 7 UNDER AETNAVILLE BRIDGE
BELMONT COUNTY
STA. 0+35.91
STA. 2+67.19

Designed	Drawn	Traced	Checked	Reviewed	Date	Revised
P.M. F.A.	P.M F.A.	G.M.	R.A.K.	666	5-12 64	

MICROFILMED
MAY 14 1986

REINFORCING STEEL LIST

FED. RD. DIVISION	STATE	PROJECT	
2	OHIO		

317
418

BELMONT COUNTY
BEL. 7-20.74

BENDING DIAGRAM

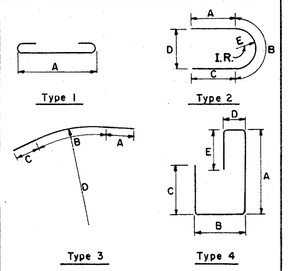

S IN THE COLUMN FOR "TYPE" INDICATES STRAIGHT BARS.

ABUTMENTS

MARK	NO.	LENGTH	WEIGHT	TYPE	A	B	C	D	E
A501	58	2-6	151	S					
A502	29	5-8	171	5	3-5	1-3	1-3		
A503	30	24-1	754	S					
A504	2	6-6	14	11	1-6	5-2			
A505	2	9-6	20	11	1-6	8-2			
A506	12	6-0	75	S					
A507	22	6-9	155	S					
A508	10	3-6	37	S					
A601	33	13-0	644	4	5-0	1-5	3-8	0-11	2-6
		TOTAL	2,021						

COLLISION WALLS

MARK	NO.	LENGTH	WEIGHT	TYPE	A	B	C	D	E
C501	22	7-2	164	1	6-0				
C502	24	8-6	213	S					
C503	24	8-1	202	2	1-7	4-11	1-7	3-2	1-6 3/8
C601	40	4-11	295	11	1-0	4-1			
C602	10	14-10	223	1	13-6				
C603	40	10-3	616	S					
		TOTAL	1,713						

PIERS

MARK	NO.	LENGTH	WEIGHT	TYPE	A	B	C	D	E
P501	2	21-6	45	S					
P502	92	8-5	808	5	2-8	3-0	3-0		
P503	16	6-10	114	2	1-7	3-8	1-7	2-4½	1-1¾
P504	2	21-0	44	S					
P 701	168	8-8	2976	1	7-0				
P801	2	21-0	112	S					
P802	3	23-0	184	S					
P1001	2	26-11	232	5	21-6	3-0	3-0		
P1002	2	29-1	250	5	23-8	3-0	3-0		
P1003	2	28-0	241		22-7	3-0	3-0		
P1004	24	19-0	1962	S					
P1005	48	6-5	1325	11	1-5	5-4			
P1006	2	21-6	185	S					
P1007	2	23-6	202	S					
P1008	2	26-5	227	5	21-0	3-0	3-0		
P1009	2	28-7	246	5	23-2	3-0	3-0		
P1010	2	27-6	237	5	22-1	3-0	3-0		
P1011	24	26-5	2728	S					
		TOTAL	12,118						
		SPIRAL	2,172						
		TOTAL	14,290						

REPLACEMENT BARS

RE401	1	5-3	—	12	5-3	1-4
RE501	1	5-7	—	S		
RE601	2	5-11	—	S		
RE701	2	6-3	—	S		
RE801	1	6-6	—	S		
RE1001	1	7-3	—	S		

SUPERSTRUCTURE

MARK	NO.	LENGTH	WEIGHT	TYPE	A	B	C	D	E
S501	308	5-7	1794	6	0-8	2-2			
S502	156	7-9	1261	5	6-8	0-8	0-8		
S503	156	9-10	1600	4	6-6	1-3	0-8	1-3	0-8
S504	152	2-9	436	5	1-8	0-8	0-8		
S505	152	4-10	766	4	1-6	1-3	0-8	1-3	0-8
S601	29	19-3	838	S					
S602	29	24-7	1071	S					
S603	29	17-5	759	S					
S604	29	21-7	940	S					
S605	29	15-7	679	S					
S606	29	18-7	809	S					
S607	218	26-8	8732	S					
S608	401	34-6	20779	S					
S609	46	35-0	2418	S					
S610	4	11-6	69	S					
S701	29	22-9	1349	S					
S702	29	21-1	1250	S					
S703	29	20-11	1240	S					
S704	29	18-1	1072	S					
S705	29	19-1	1131	S					
S706	29	15-1	894	S					
S707	218	26-8	11882	S					
L401	16	4-10	52	11	2-0	2-11			
L402	28	7-10	148	14	1-1	2-8	0-9	1-11	
		TOTAL	61,969						

RAILING

R501	4	15-7	—	S				
R502	4	15-3	—	S				
R503	6	6-1	—	*				
R504	4	4-2	—	*				
R505	4	5-5	—	*				
R506	4	3-0	—	*				
R507	4	3-5	—	*				
R508	12	14-4	—	S				
R509	4	14-4	—	13	10-10	3-6	0-5½	
R510	40	14-5	—	S				
R511	4	11-7	—	13	8-2	3-5	0-4½	
R512	12	13-10	—	S				
R513	4	13-10	—	13	10-5	3-5	0-3½	
R514	40	14-1	—	S				
R515	4	11-5	—	13	8-0	3-5	0-4½	

Included with railing for payment.

* Refer to Standard Drawing BR-1-65, sheet 2.

NOTES

BAR SIZE is indicated in bar mark. The first digit where three digits are used, and the first two where four are used indicate the bar size number.

SPIRAL REINFORCING BARS; The "Length" shown in the steel list for the spiral bars is the distance from the top of the footing to the bottom of the pier cap. The "No. of Turns" shown is the "Length" divided by the pitch, plus three turns (total number of closed coils), expressed as the nearest whole number. Spiral reinforcing bars shall not have deformations but shall in other respects conform to Item 509. 1½ closed coils shall be provided at the ends of each spiral unit. Four steel channel, tee or angle spacers, weighing approximately 0.68 lb. per lin. ft. of spacer, shall be provided for each spiral unit. They shall be equally spaced along the periphery of the coil. The number of pounds of these spacers, based on 0.68 lb. per lin. ft., will be paid for as reinforcing steel and is included in the tabulated quantity of spiral bars.

SPIRAL REINFORCEMENT

MARK	NO.	LENGTH	CORE	PITCH	TURNS	SPACERS	WEIGHT
P401	3	15-11	32	4½	46	4	890
P402	3	23-5	32	4½	66	4	1282
					TOTAL		2,172

RACKOFF ASSOCIATES
ENGINEERS COLUMBUS, OHIO

REINFORCING STEEL LIST
BRIDGE NO. BEL.-7-2095
S.R. 7 UNDER AETNAVILLE BRIDGE
BELMONT COUNTY STA. 0+35.91
STA. 2+67.19

Designed	Drawn	Traced	Checked	Reviewed	Date	Revised
H.H. N.K.		G.M.	W.F. H.H.	EEE	5-12 64	

MICROFILMED
MAY 14 1986

FED. RD. DIVISION	STATE	PROJECT	
2	OHIO		

318
418

BELMONT COUNTY
BEL. 7-20.74

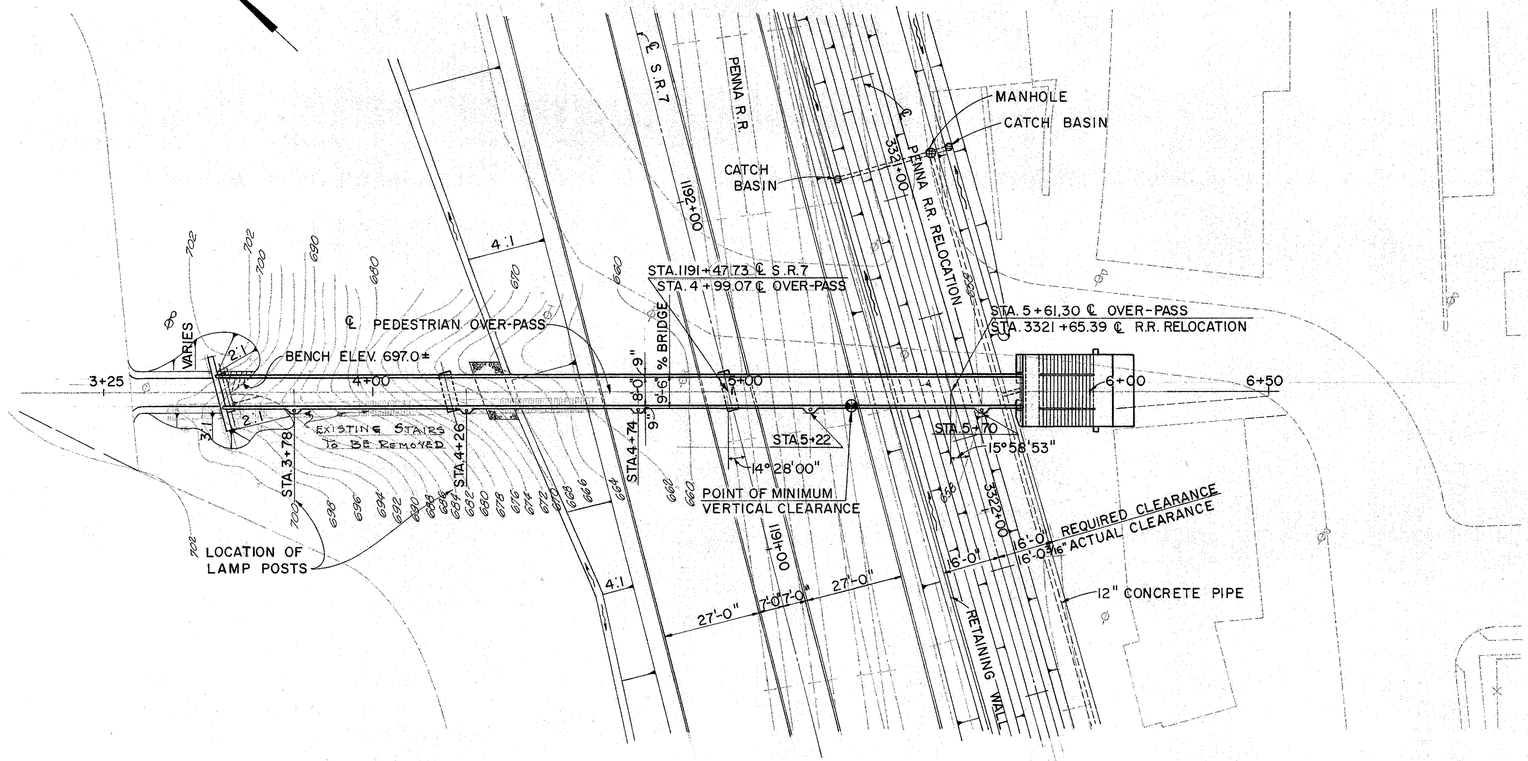

PLAN

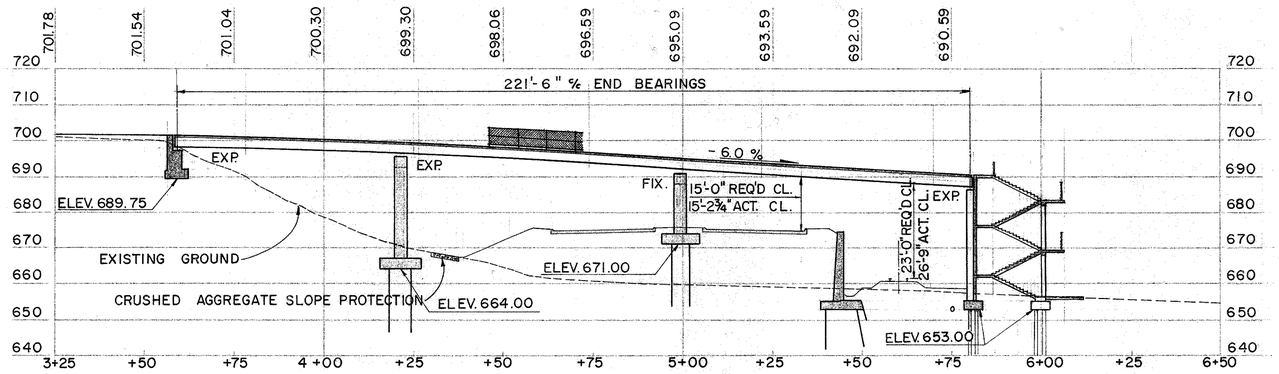

PROFILE ALONG ℄ PROPOSED
PEDESTRIAN OVER-PASS

VERTICAL CURVE DATA

P.V.I. STA. 3+88.00 ELEV. 701.81
G_1 = 0.00% G_2 = -6.00%
V.C = 150'

All piles shall be 12" cast-in-place reinforced concrete piles.

Estimated average pay lengths are:

Pier #1 - 50'
Pier #2 - 40'
Stairways - 45'

PROPOSED STRUCTURE

TYPE: Continuous steel beam with reinforced concrete deck and substructure.

SPANS: 62'-0", 78'-0" and 81'-6" % brgs.

WIDTH: 8'-0" f/f curbs.

LOADING: 85 p.s.f.

SKEW: 14° 28' 00" r.f.

WEARING SURFACE: 1/2" monolithic concrete.

ALIGNMENT: Tangent.

RACKOFF ASSOCIATES
ENGINEERS COLUMBUS, OHIO

SITE PLAN

BRIDGE NO. BEL.7-2256
S.R. 7 UNDER PEDESTRIAN OVER-PASS
BELMONT COUNTY STA. 1191+47.73

Designed	Drawn	Traced	Checked	Reviewed	Date	Revised
P.M.	P.M. E.D.A.	G.M.	R.A.K.	[illegible]	6-10-64	

MICROFILMED
MAY 14 1986

FED. RD. DIVISION	STATE	PROJECT	
2	OHIO		

(319 418)

BELMONT COUNTY
BEL. 7-20.74

GENERAL NOTES

REFERENCE SHALL BE MADE TO:

Standard Drawing SD-1-63, sheets 2, 3 and 4, dated 11-12-63
Standard Drawing SD-2-64, dated 11-25-64
Standard Drawing F.S.B.-1-62, revised 1-15-63
Supplemental Specification 808, dated 2-7-66, and 811 dated 3-29-65
825 dated 4-22-65, and 828 dated 3-21-66

DESIGN SPECIFICATIONS: This structure conforms to the requirements of "Design Specifications for Highway Structures" of the State of Ohio, Department of Highways, dated 9-1-57, together with current revisions thereof.

DESIGN LOADING - 85 p.s.f.

CONCRETE CLASS C - basic unit stress 1,333 p.s.i.
CONCRETE CLASS E - basic unit stress 1,133 p.s.i.

STRUCTURAL STEEL - ASTM A36 - basic unit stress 20,000 p.s.i.

REINFORCING STEEL - ASTM A15, A16, A160, Deformed, Intermediate or Hard Grade. Basic unit stress 20,000 p.s.i. Except, Spiral reinforcement may be plain, Structural Grade with basic unit stress of 18,000 p.s.i.

CONCRETE DECK PLACING: In order to facilitate water curing of the concrete of the deck slab, the placing of concrete shall progress upgrade. The slab may be placed in sections, between transverse construction joints which are parallel to transverse reinforcing steel and are located near the center of any span.

EXCAVATION QUANTITY for pier 2 includes the removal of fill material required for construction of the pier.

FOUNDATION BEARING PRESSURE: The west abutment footing is designed for a maximum bearing pressure of 1.5 tons per sq. ft.

PILES shall be driven to a minimum bearing capacity of 50 tons per pile for the piers and 40 tons per pile for the stairway.

CONSTRUCTION CLEARANCE of 20'-0" vertically above the top of the railroad rails and 8'-0" horizontally from the center of tracks shall be maintained at all times.

SHEETING AND BRACING: Before construction is started, eight sets of prints showing details of the sheeting and bracing to be used for excavation adjacent to the railroad tracks shall be submitted to the Director for approval by the Department of Highways and by the Railroad Company.

The contractor shall remove and dispose of the existing stairs.

ESTIMATED QUANTITIES

ITEM	TOTAL	UNIT	DESCRIPTION	SUPER.	WEST ABUT.	PIERS	GEN.	STAIRWAYS	AS BUILT	
503	172	cu.yds.	Unclassified excavation.		43	87		42		
503	lump	sum	Cofferdams, cribs and sheeting.							
511	21	cu.yds.	Class "C" concrete, piers above footings			21				
511	51	cu. yds.	Class "C" concrete, superstructure.	51						
511	73	cu. yds.	Class "C" concrete, stairway towers above footings.					73		
511	45	cu.yds.	Class "E" concrete, pier and stairway footings.			32		13		
511	17	cu.yds.	Class "E" concrete, abutments above footings.		17					
511	6	cu.yds.	Class "E" concrete, abutment footings.		6					
509	35,957	lbs.	Reinforcing steel.	8,758	1,073	9,611		16,515		
513	56,200	lbs.	Structural steel.	56,200						
514	56,200	lbs.	Field painting of structural steel.	56,200						
825	265	sq.yds.	Concrete surface treatment				265			
517	lump	sum	Railing, (galvanized steel)							
505	lump	sum	First test pile							
507	945	lin. ft.	12" cast-in-place reinforced concrete piles			450		495		
625			Electric lighting system - see lighting plans. Sh. 249							
518	12	lin. ft.	6" helical perforated C.M.P., Sec. 707.06, including specials		12					
518	11	lin. ft.	6" helical C.M.P., Sec. 707.06, non-perforated		11					
518	25	lin. ft.	6" ø conductor pipe, including specials	25						
518	28	lin. ft.	6" standard pipe downspout, wrought iron or hot-dip galvanized steel, including specials.				28			
518	6	each	Scuppers, including supports	6						
518	6	cu.yds.	Porous backfill.		6					
808	51	Units	Water-reducing, set retarding admixture.	51						
202	lump	sum	Existing structures removed							
601	15	sq.yds.	Crushed aggregate slope protection.				15			
607	lump	sum	Fence, Type "CL"							
828	18	lin. ft.	Joint sealer (end dam)	18						

RACKOFF ASSOCIATES
ENGINEERS COLUMBUS, OHIO

GENERAL NOTES AND ESTIMATED QUANTITIES
BRIDGE NO. BEL. 7-2256
S.R. 7 UNDER PEDESTRIAN OVER-PASS
BELMONT COUNTY STA. 1191+47.73

Designed	Drawn	Traced	Checked	Reviewed	Date	Revised
R.A.K.	E.A.		H.H.		6-10-64	

3235-C

PLOTTED | BY | DATE | DESCRIPTION
TOPOGRAPHY
ALIGNMENT
TRANSMIT
CHECKED | BY | DATE | DESCRIPTION

MICROFILMED
MAY 14 1996

FED. RD. DIVISION	STATE	PROJECT	TYPE FUNDS
2	OHIO		

320
478

BELMONT COUNTY
BEL. 7-20.74

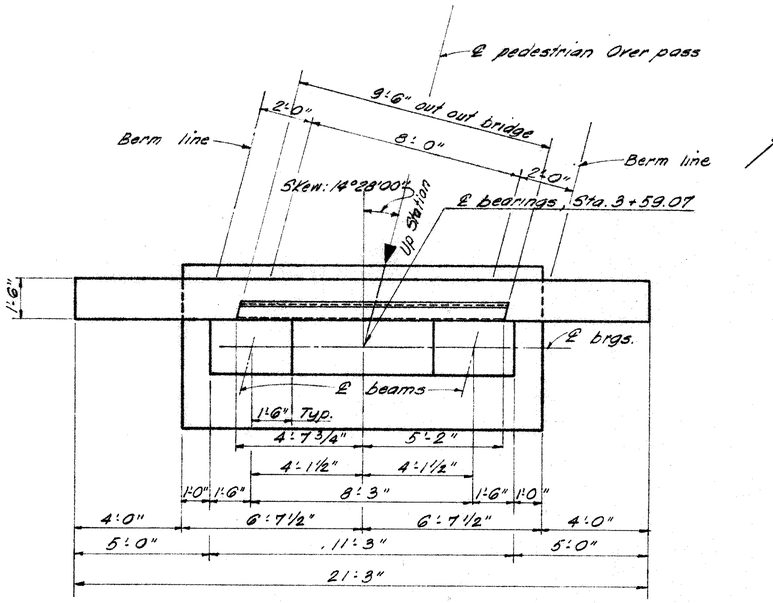

PLAN

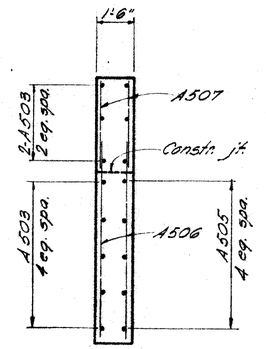

SECTION B-B

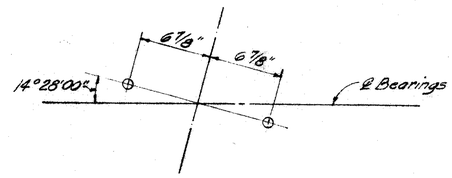

ANCHOR ROD LAYOUT

POROUS BACKFILL, 1'-6" thick, shall extend up to the underside of the approach sidewalk or to the finished ground surface.

BRIDGE SEAT REINFORCING: Special care shall be taken in placing reinforcing steel in the vicinity of the beam seat so as to avoid interference with the drilling of anchor rod holes.

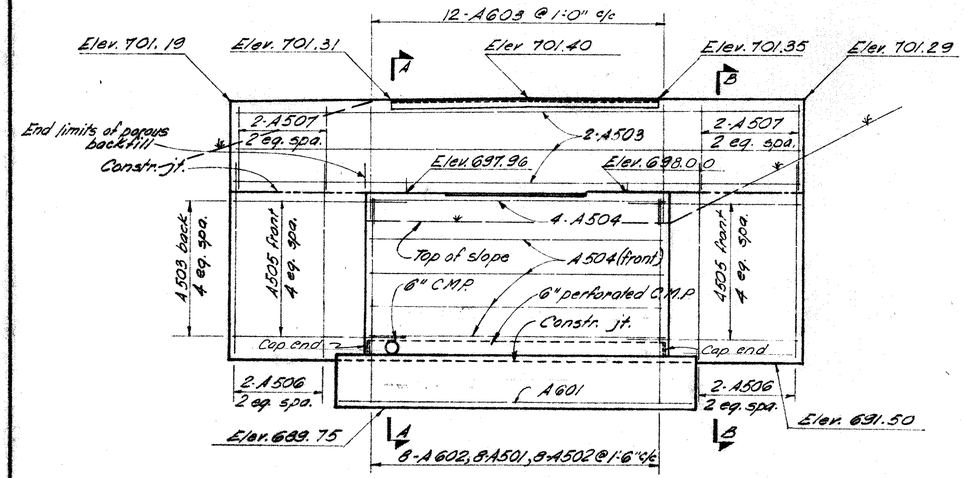

ELEVATION

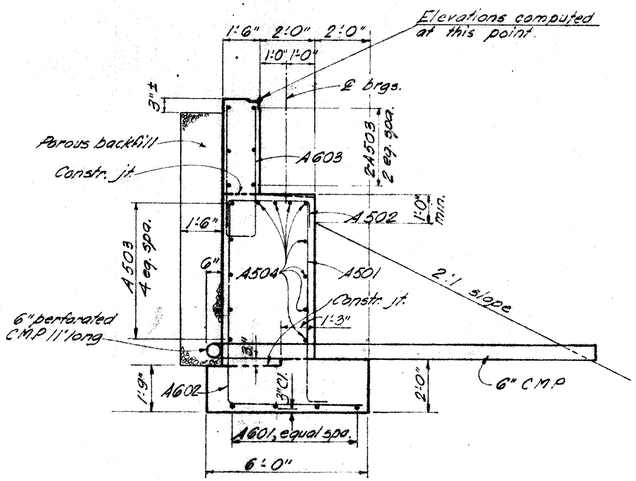

SECTION A-A

RACKOFF ASSOCIATES
ENGINEERS COLUMBUS, OHIO

WEST ABUTMENT DETAILS

BRIDGE NO. BEL. 7- 2256
S.R.7 UNDER PEDESTRIAN OVER-PASS
BELMONT COUNTY STA. 1191+42.73

Designed	Drawn	Traced	Checked	Reviewed	Date	Revised
H.H.	H.H.	G.M.	R.A.K.	[illegible]	6-10-96	

MICROFILMED
MAY 14 1986

FED. RD. DIVISION	STATE	PROJECT	TYPE FUNDS
2	OHIO		

321
418

BELMONT COUNTY
BEL. 7 - 20.74

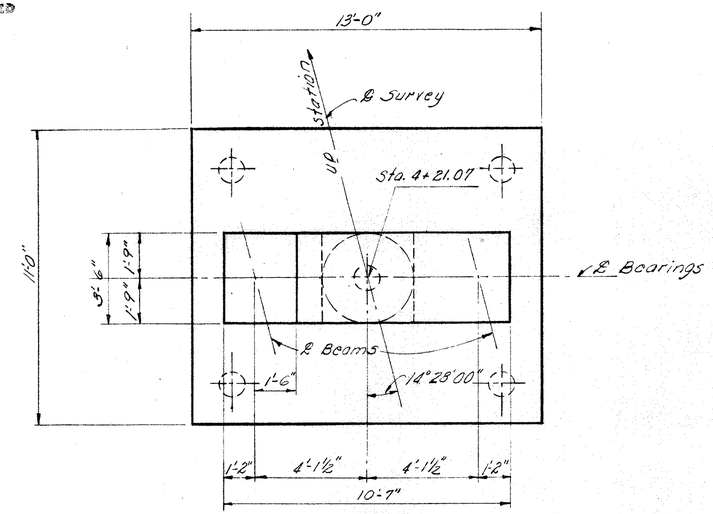

PLAN - PIER #1

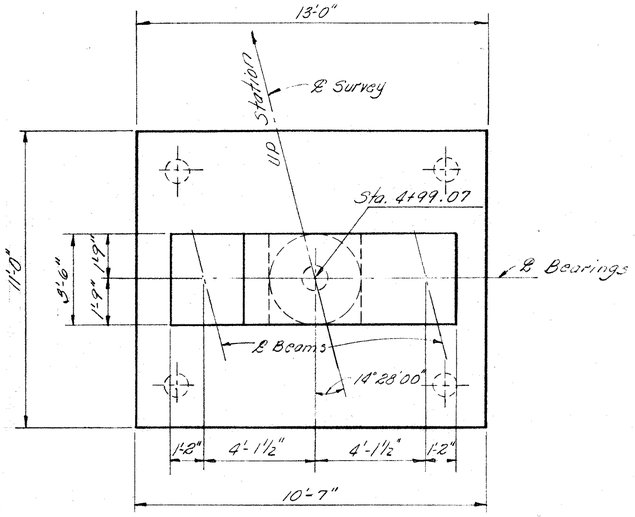

PLAN - PIER #2

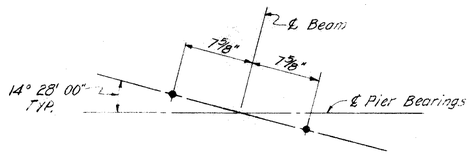

ANCHOR ROD LAYOUT - PIER #1

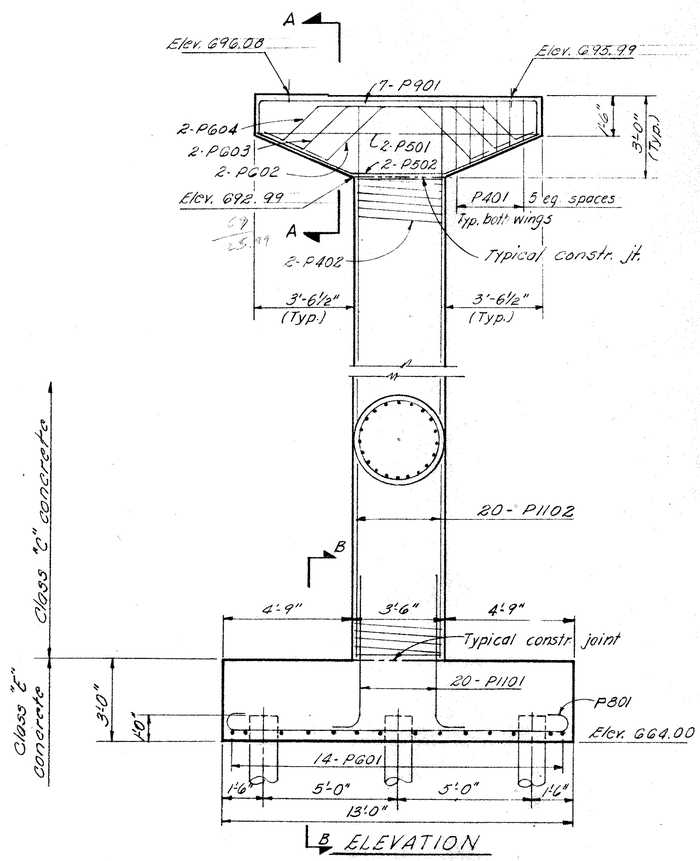

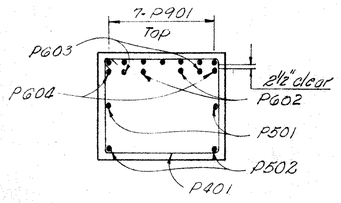

SECTION A-A

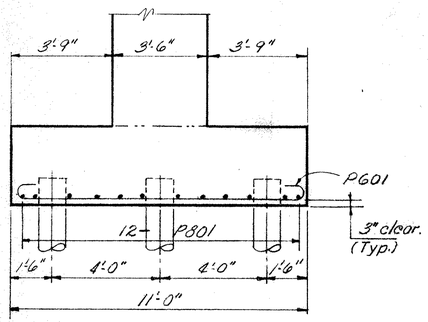

SECTION B-B
Section C-C similar

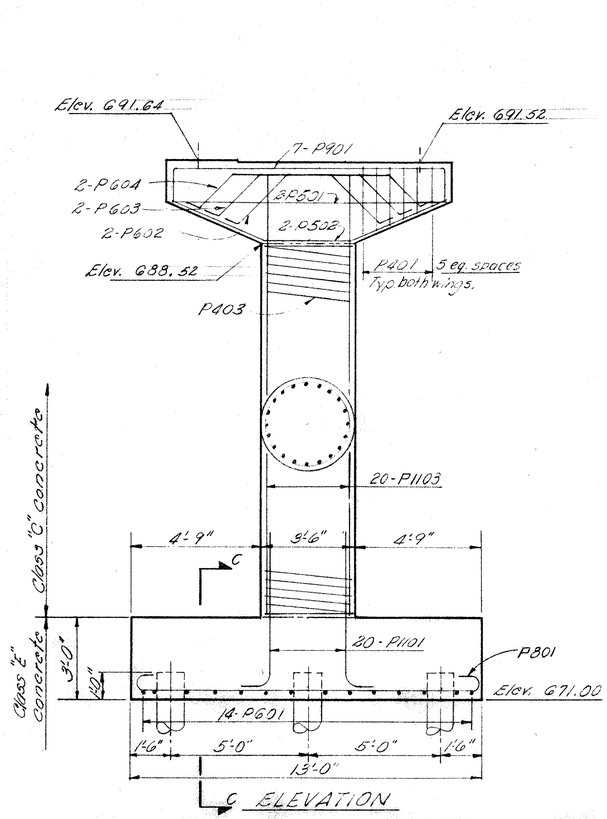

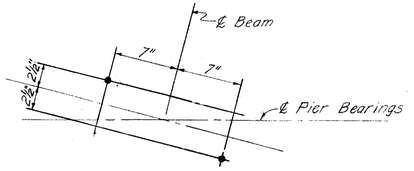

ANCHOR ROD LAYOUT - PIER #2

NOTE:

BRIDGE SEAT REINFORCING: Special care shall be taken in placing reinforcing steel in the vicinity of the beam seat so as to avoid interference with the drilling of anchor rod holes.

RACKOFF ASSOCIATES
ENGINEERS COLUMBUS, OHIO

PIER DETAILS
BRIDGE NO. BEL. 7-2256
S.R. 7 UNDER PEDESTRIAN OVER-PASS
BELMONT COUNTY STA. 1191+47.73

Designed	Drawn	Traced	Checked	Reviewed	Date	Revised
R.K	E.D.A.		V.K	[illegible]	6-10-64	

MICROFILMED
MAY 14 1965

FED. RD. DIVISION	STATE	PROJECT	TYPE FUNDS
2	OHIO		

322
418

BELMONT COUNTY
BEL. 7-20.74

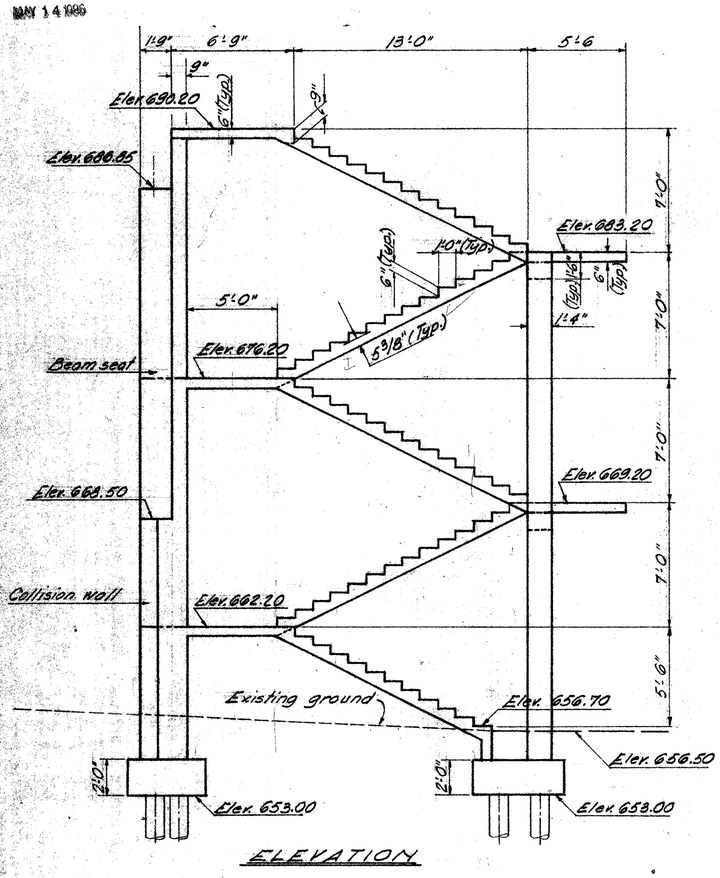

ELEVATION

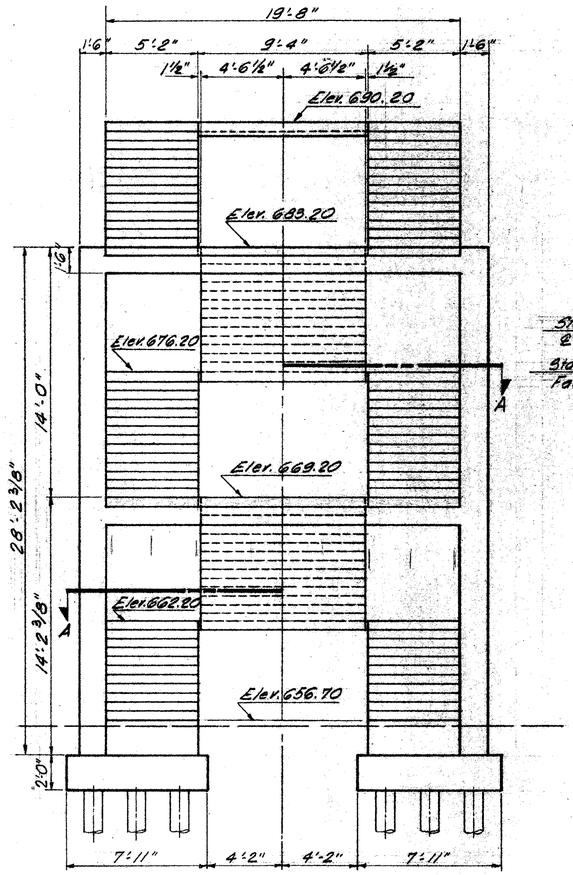

BACK VIEW

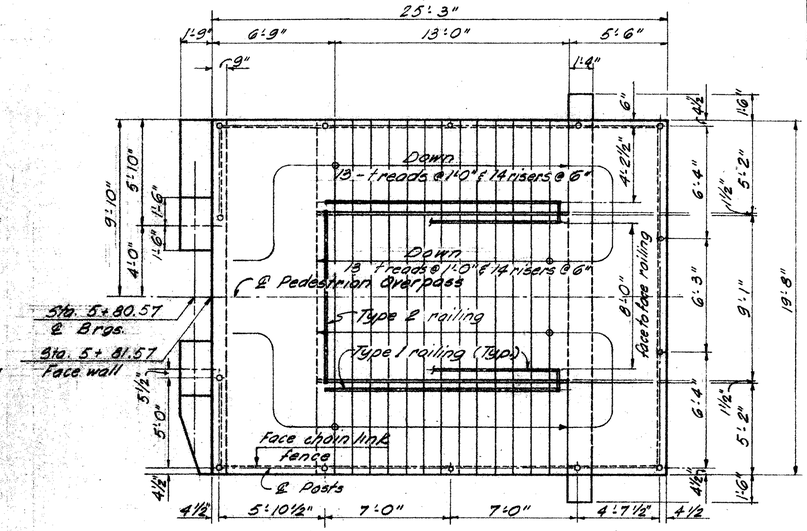

PLAN

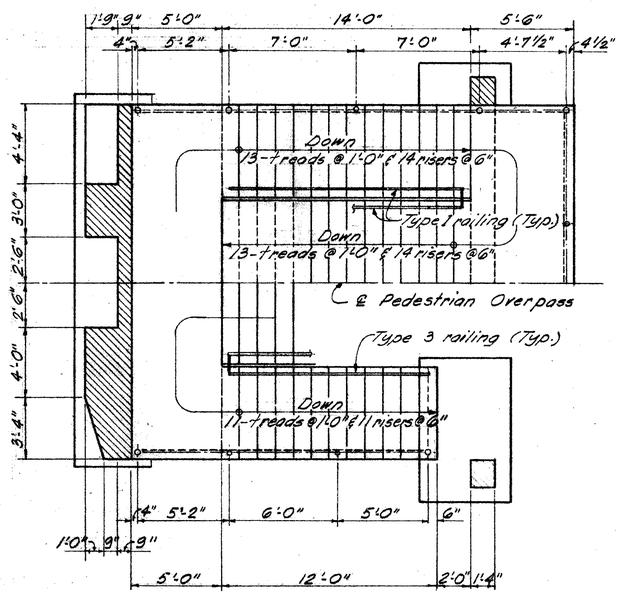

SECTION A-A

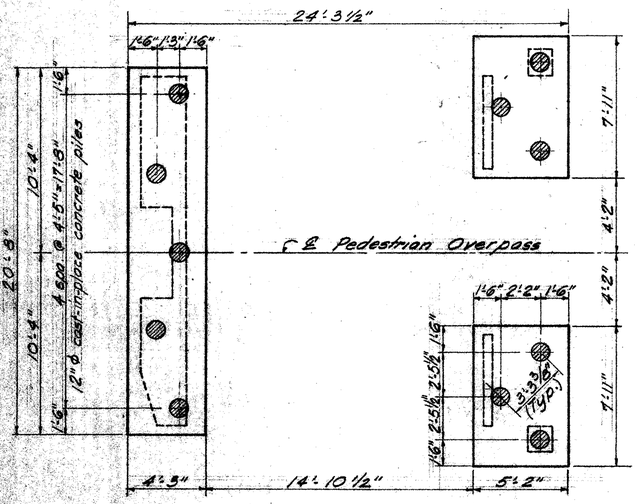

PILE AND FOOTING PLAN

RACKOFF ASSOCIATES
ENGINEERS COLUMBUS, OHIO

STAIRWAY DETAILS

BRIDGE NO. BEL. 7-2256
S.R.7 UNDER PEDESTRIAN OVER-PASS
BELMONT COUNTY STA. 1191+47.73

Designed	Drawn	Traced	Checked	Reviewed	Date	Revised
H.H.	H.H.	G. M.	V.K.	[illegible]	6-10-64	

MICROFILMED
MAY 14 1986

FED. RD. DIVISION	STATE	PROJECT	TYPE FUNDS
2	OHIO		

323
46

BELMONT COUNTY
BEL.7- 20.74

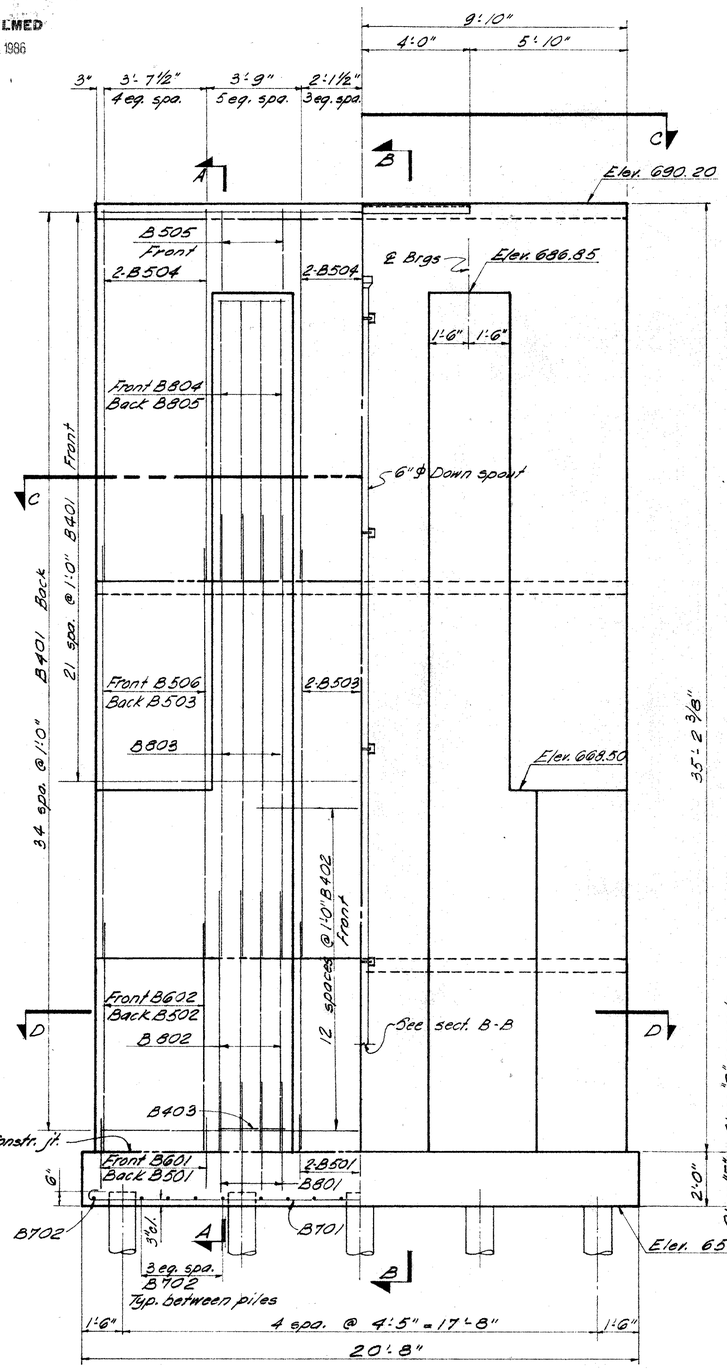

ELEVATION

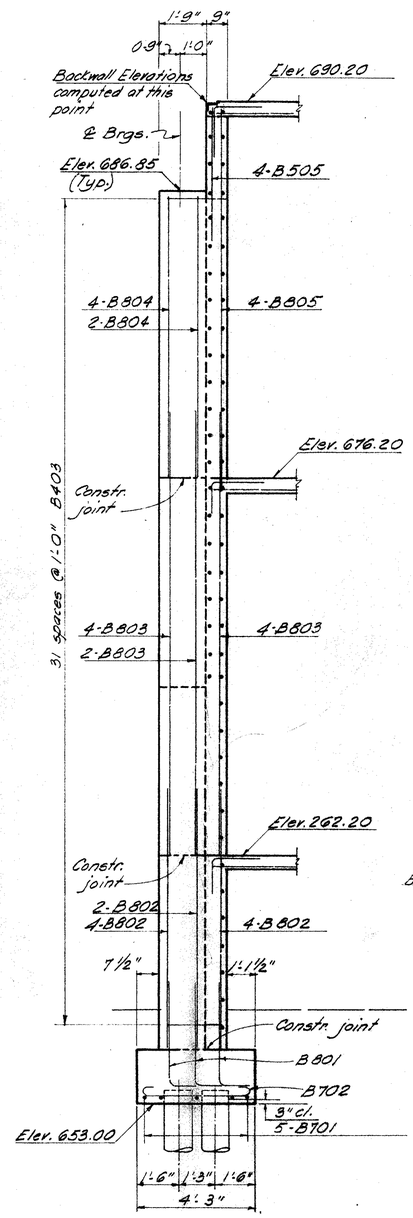

SECTION A-A

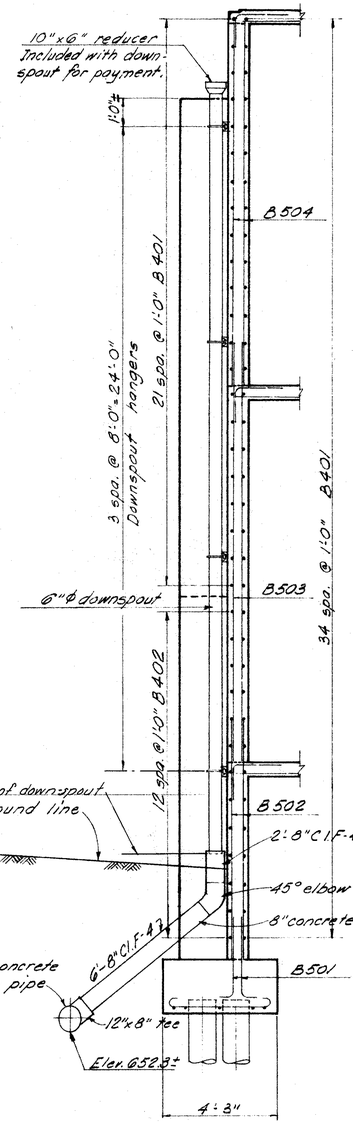

SECTION B-B

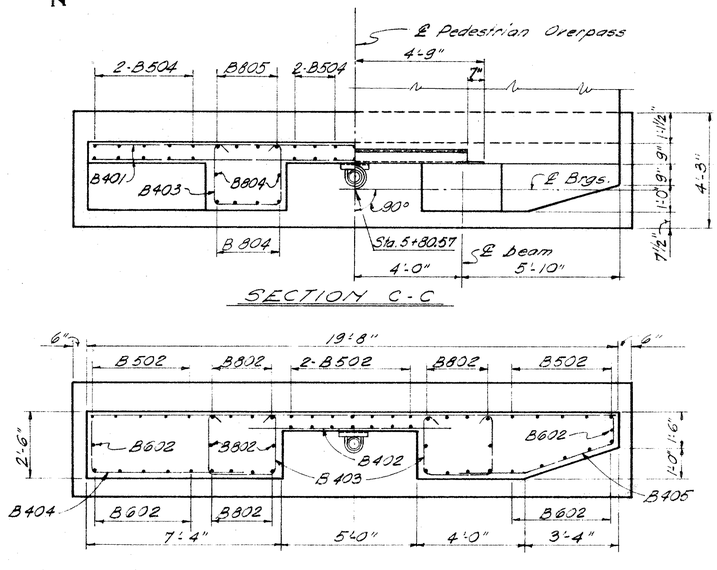

SECTION THROUGH COLLISION WALL

RACKOFF ASSOCIATES
ENGINEERS COLUMBUS, OHIO

STAIRWAY DETAILS

BRIDGE NO. BEL. 7-2256
S.R.7 UNDER PEDESTRIAN OVER-PASS
BELMONT COUNTY STA. 1191+47.73

Designed	Drawn	Traced	Checked	Reviewed	Date	Revised
H.H.	H.H.	G.M.	V.K.	[illegible]	6-10-64	

MICROFILMED
MAY 16 1966

FED. RD. DIVISION	STATE	PROJECT	TYPE FUNDS
2	OHIO		

324/418

BELMONT COUNTY
BEL. 7-20.74

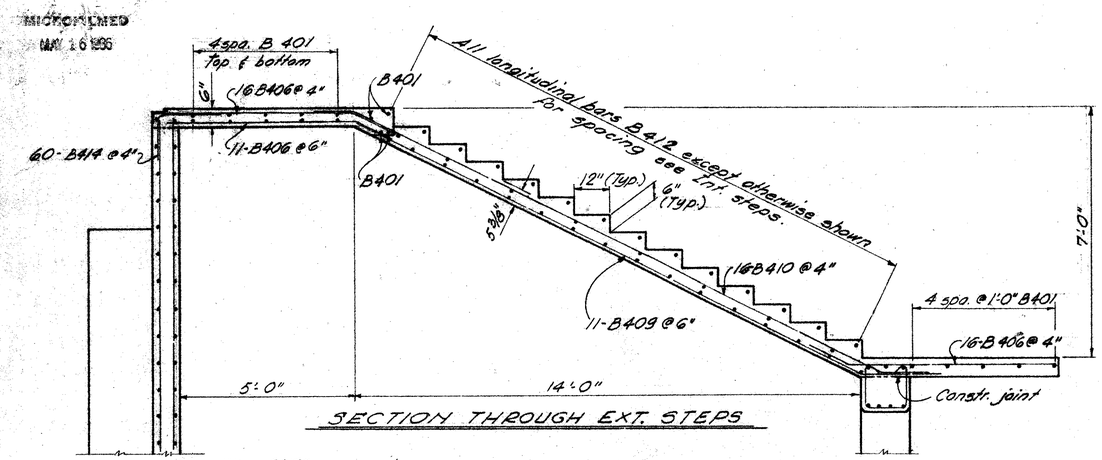

SECTION THROUGH EXT. STEPS

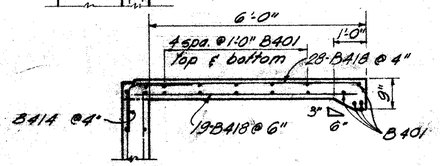

SECTION THROUGH TOP LANDING

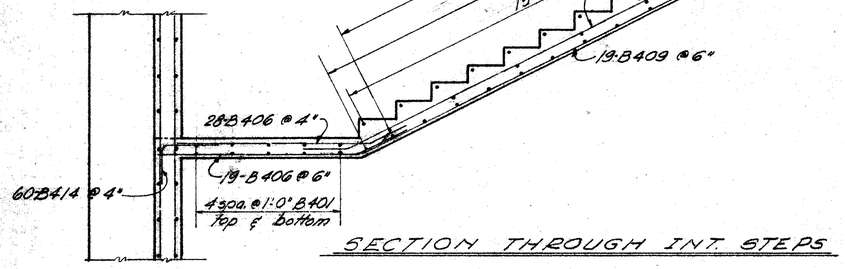

SECTION THROUGH INT. STEPS

SECTION THROUGH BOTTOM STEPS

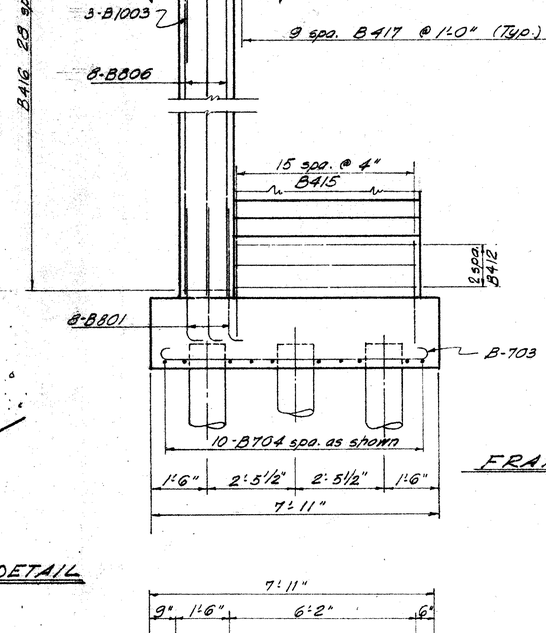

TYPICAL STEP DETAIL

FOOTING PLAN

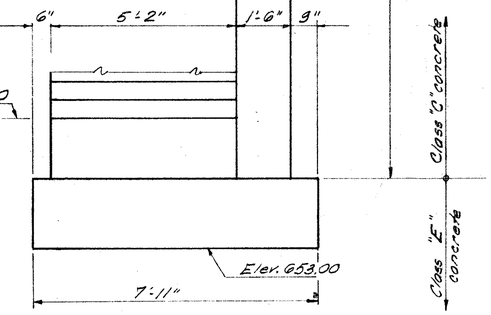

FRAME ELEVATION

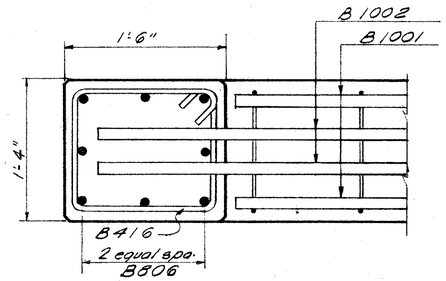

SECTION A-A

RACKOFF ASSOCIATES
ENGINEERS COLUMBUS, OHIO

STAIRWAY DETAILS

BRIDGE NO. BEL. 7-2256
S.R. 7 UNDER PEDESTRIAN OVER-PASS
BELMONT COUNTY STA. 1191+47.73

Designed	Drawn	Traced	Checked	Reviewed	Date	Revised
H.H.	H.H.	G.M.	V.K.	[illegible]	6-10-64	

FED. RD. DIVISION	STATE	PROJECT	TYPE FUNDS
2	OHIO		

325
418

BELMONT COUNTY
BEL. 7-20.74

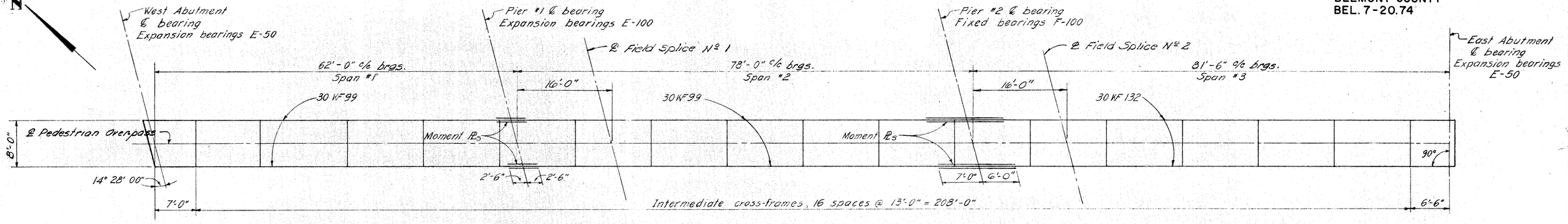

FRAMING PLAN

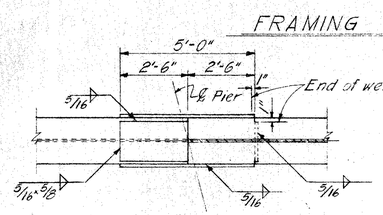

SECTION A-A

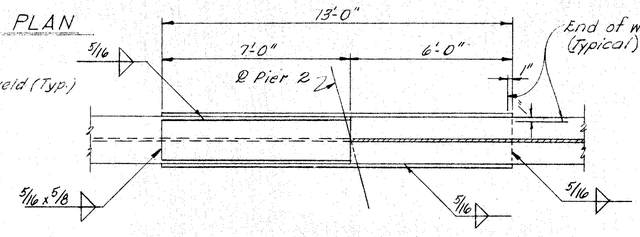

SECTION B-B

NOTES

REFERENCE SHALL BE MADE TO:

Standard Drawing SD-1-63, sheets 2, 3, and 4, for notes and details not shown.

Standard Drawing F.S.B.-1-62 for fixed and sliding bearings.

Standard Drawing SD-2-64 for bolted beam splice details.

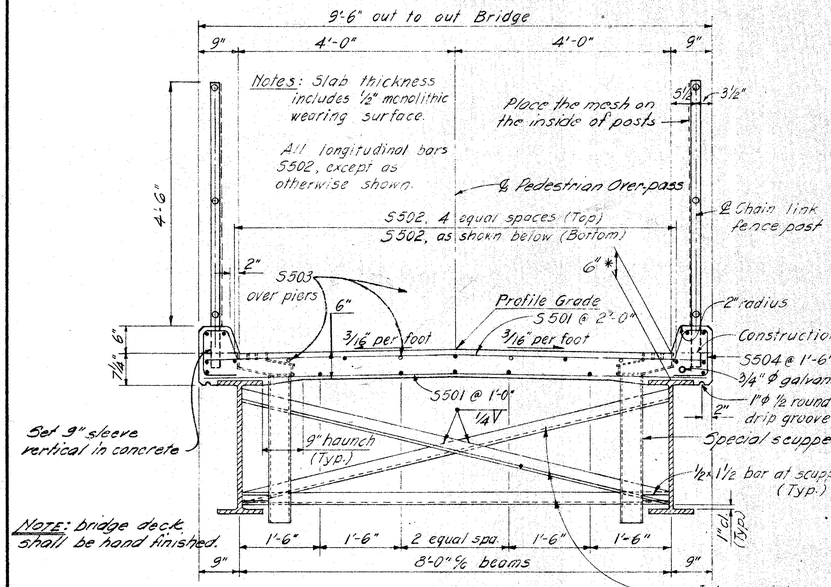

SUPERSTRUCTURE TRANSVERSE SECTION
(Typical section except for scuppers)

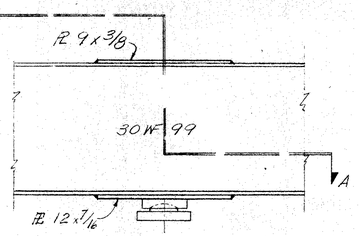

PIER #1

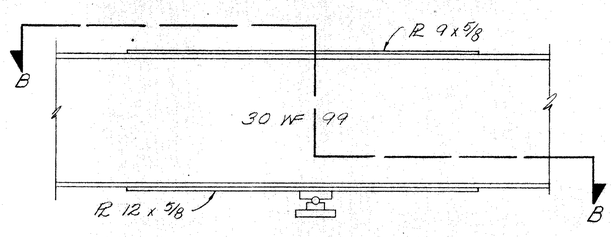

PIER #2

DECK SLAB HAUNCH: A typical haunch width of 9" shall be used for computing quantity of concrete. However, the haunch width may vary between 6" and 12" provided that the slope be not more than 1:4 for a haunch less than 9" in width.

FIELD SPLICE Nº 1: Refer to Standard Drawing SD-2-64

FIELD SPLICE Nº 2: See detail next sheet

DEFLECTION AND CAMBER			
	SPAN #1	SPAN #2	SPAN #3
Deflection due to weight of steel	1/8	1/16	1/2
Deflection due to remaining dead load	1/2	3/8	1 3/16
Convexity required for vertical curve	2 5/16	2 1/8	0
Sum of deflections and convexity	2 13/16	2 9/16	1 11/16
Required Camber	2 13/16	2 9/16	1 11/16

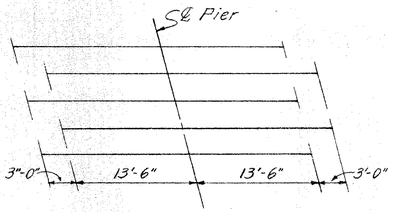

DIAGRAM SHOWING STAGGER OF S503 BARS OVER PIERS

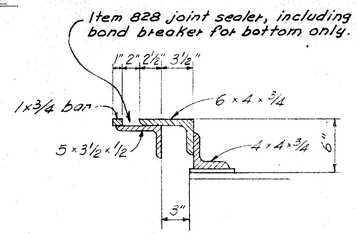

SECTION C-C

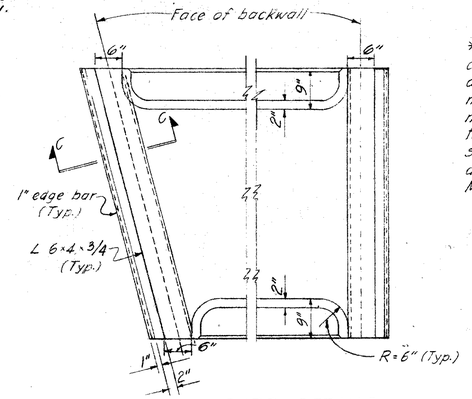

CURB DETAILS

* This is the nominal dimension. The quantity of deck concrete to be paid for shall be based on this dimension, even though deviation from it may be necessary because the top flange of the beam may not have the exact camber or conformation required to place it parallel to the finished grade. Deduction shall be made for volume of encased steel plates as per Sec. 511.19 of the Construction and Materials Specifications.

RACKOFF ASSOCIATES
ENGINEERS COLUMBUS, OHIO

SUPERSTRUCTURE DETAILS
BRIDGE NO. BEL 7-2256
S.R. 7 UNDER PEDESTRIAN OVER-PASS
BELMONT COUNTY STA. 1191+47.73

Designed	Drawn	Traced	Checked	Reviewed	Date	Revised
R.A.K.	M.R.		H.H.	℄℄	6-10-64	

MICROFILMED
MAY 16 1995

FED. RD. DIVISION	STATE	PROJECT	TYPE FUNDS
2	OHIO		

326
418

BELMONT COUNTY
BEL. 7-20.74

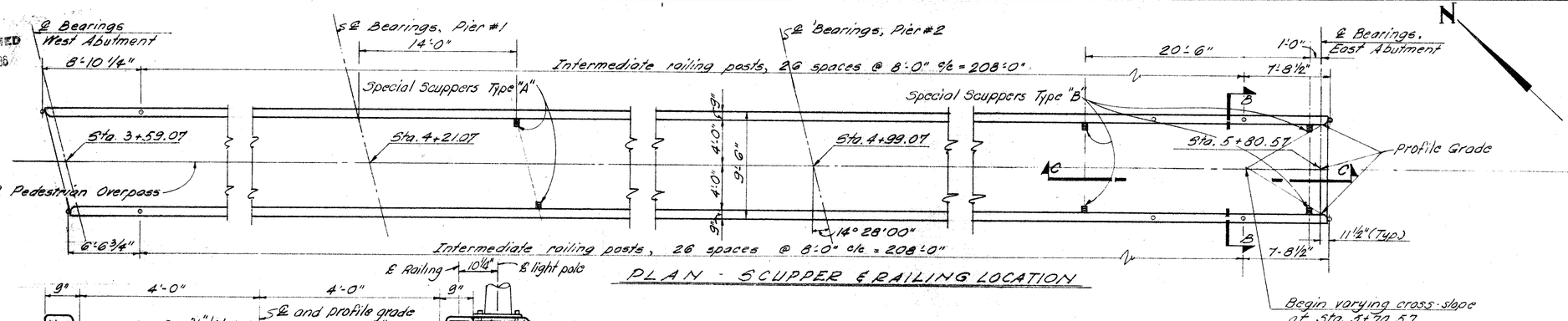

PLAN - SCUPPER & RAILING LOCATION

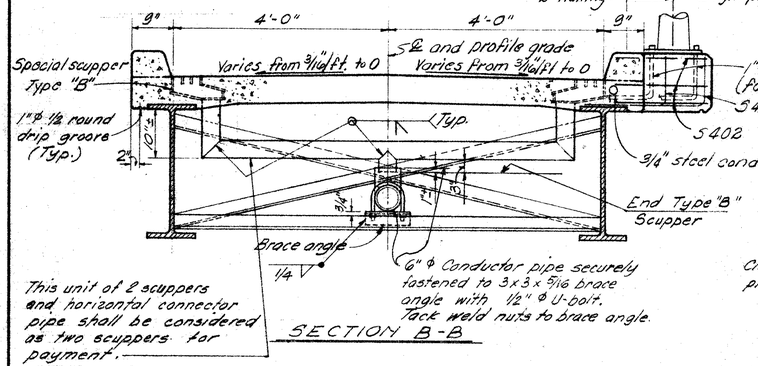

SECTION B-B

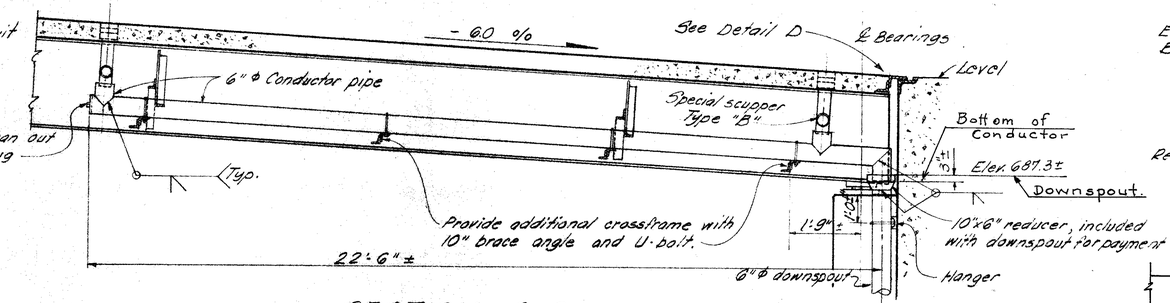

SECTION C-C

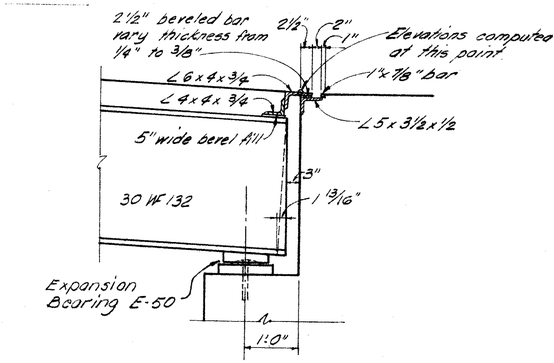

DETAIL D

Refer to Std. Drawing SD-1-63 for details not shown.

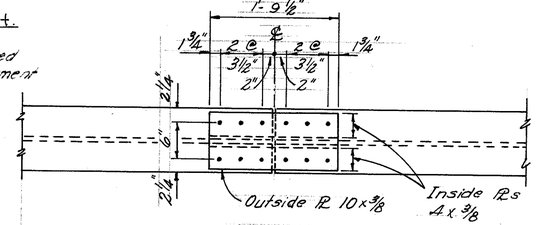

PLAN

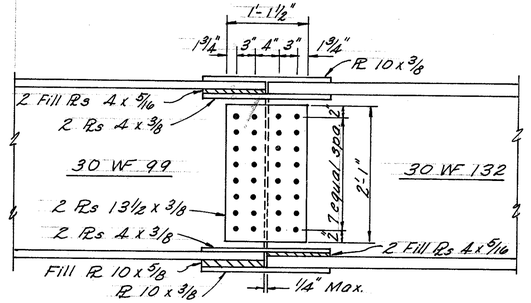

ELEVATION

FIELD SPLICE NO.2

30 WF 99 WITH 30 WF 132

For additional notes and details not shown, refer to Standard Drawing S.D.-2-64

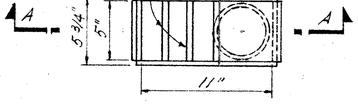

Note: All scupper plates 3/8"

SPECIAL SCUPPER PLAN

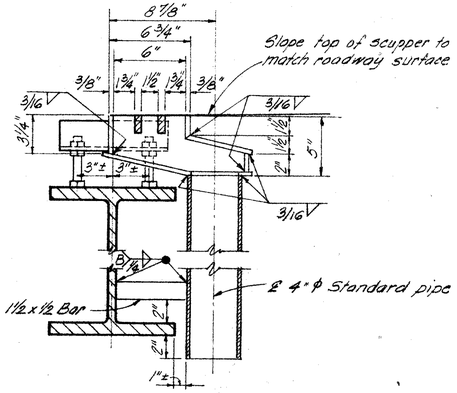

Refer to Standard Drawing SD-1-63 for details not shown

SECTION A-A

(Special scupper Type "A")

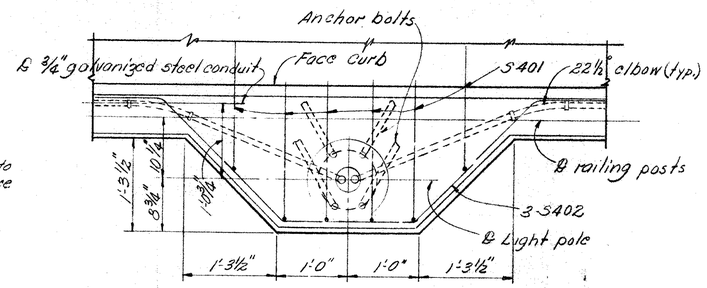

TYPICAL CURB PLAN AT LIGHT POLE

(For additional notes and details not shown refer to Electric Lighting Plans)

NOTE: Provide five light pole supports as shown above on South side of Pedestrian Over-Pass at the following stations:

3+78.0
4+26.0
4+74.0
5+22.0
5+70.0

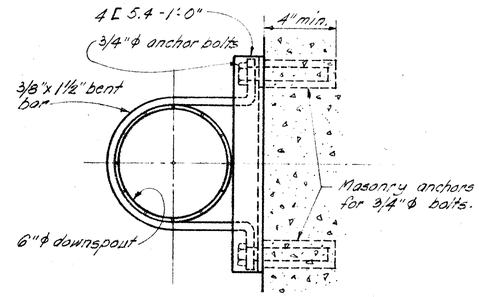

DOWNSPOUT HANGER DETAIL

(Included with downspout for payment)

DOWNSPOUT and 4" ϕ and 6" ϕ conductor pipes shall be 4" or 6" standard wrought iron pipe or hot-dip galvanized steel pipe. Joints shall be made by welding or by the use of a clamp-type coupling with a ring gasket. All welding shall be done before galvanizing. Straps or clamps for attaching downspouts shall be wrought iron or hot-dip galvanized steel. On bolts galvanizing as called for in Sec. 710.10 will be considered sufficient.

RACKOFF ASSOCIATES
ENGINEERS COLUMBUS, OHIO

SUPERSTRUCTURE DETAILS
BRIDGE NO. BEL. 7- 2256
S.R. 7 UNDER PEDESTRIAN OVER-PASS
BELMONT COUNTY STA. 1191 + 47.73

Designed	Drawn	Traced	Checked	Reviewed	Date	Revised
R.A.K.	G.M.		H.H.	[illegible]	6-10-64	

MICROFILMED
MAY 16 1986

FED. RD. DIVISION	STATE	PROJECT	TYPE FUNDS
2	OHIO		

327
418

BELMONT COUNTY
BEL. 7-20.74

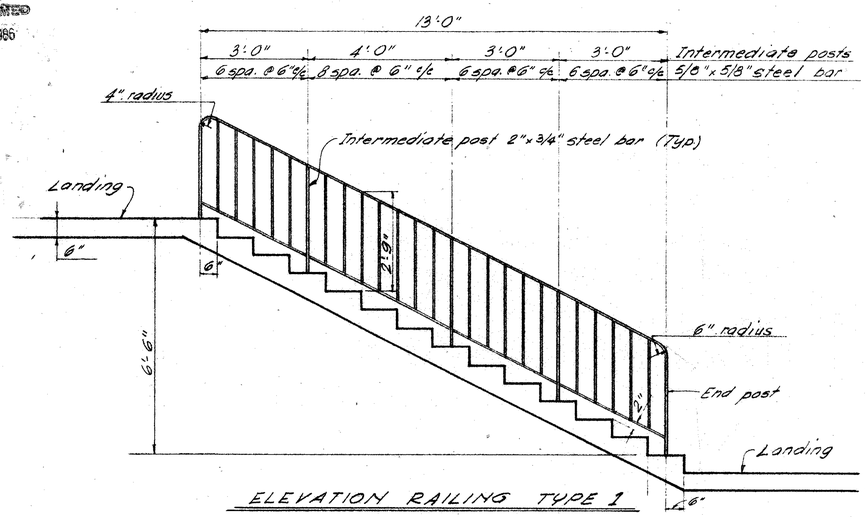

ELEVATION RAILING TYPE 1

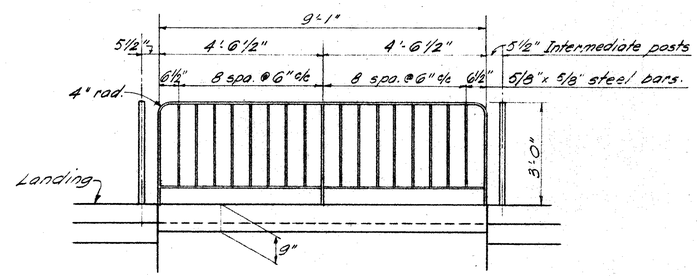

ELEVATION RAILING TYPE 2

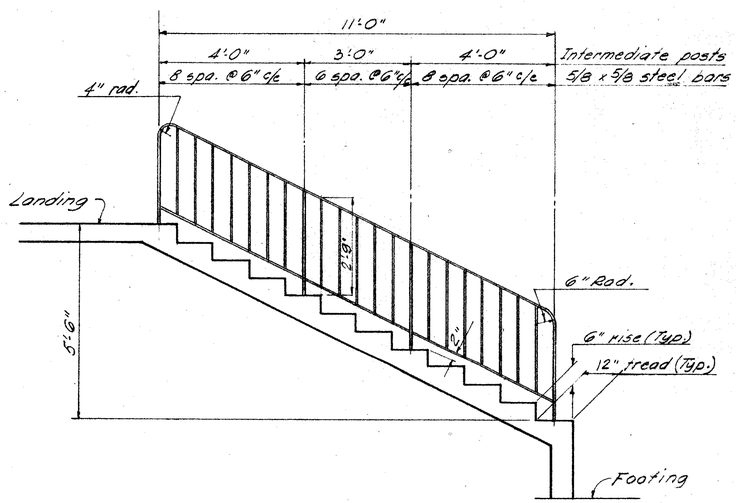

ELEVATION RAILING TYPE 3

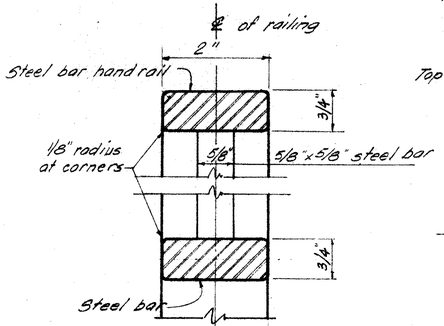

SECTION THRU RAILING

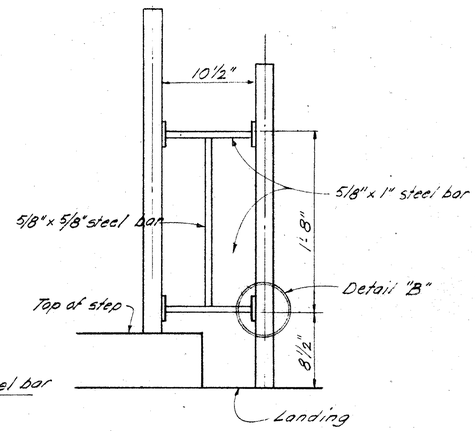

CORNER RAILING DETAIL

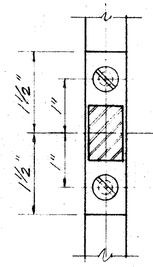

SECTION C-C

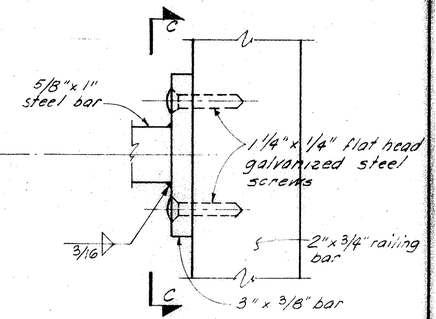

DETAIL "B"

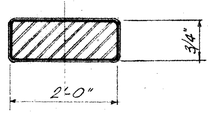

PLAN OF RAILING AT BASE

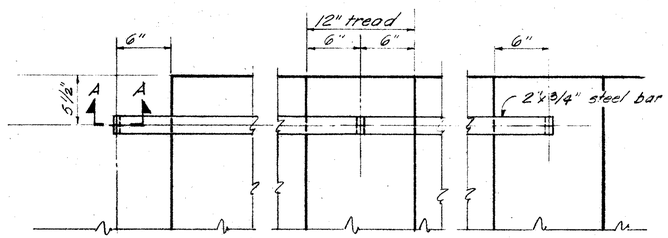

PLAN OF RAILING AT BASE

NOTES:

The railings shall be of galvanized steel and conform to the requirements of Sec. 711.02.

The posts shall be set in steel sleeves, inside dimensions of 1 1/4" x 2 1/2", and securely leaded.

All component parts, ie. screws, lead calking etc., necessary to complete the railing shall be included in the lump sum bid for galvanized steel railing.

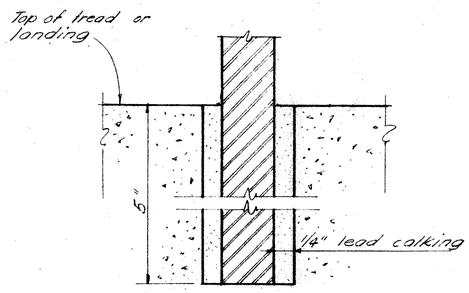

SECTION A-A

RACKOFF ASSOCIATES
ENGINEERS COLUMBUS, OHIO

RAILING DETAILS

BRIDGE NO. BEL. 7-2256
S.R.7 UNDER PEDESTRIAN OVER-PASS
BELMONT COUNTY STA. 1191+47.73

Designed	Drawn	Traced	Checked	Reviewed	Date	Revised
H.H.	G.M.		R.A.K.	[illegible]	6-10-64	

MICROFILMED
MAY 16 1996

FED. RD. DIVISION	STATE	PROJECT	TYPE FUNDS
2	OHIO		

328
418

BELMONT COUNTY
BEL. 7 - 20.74

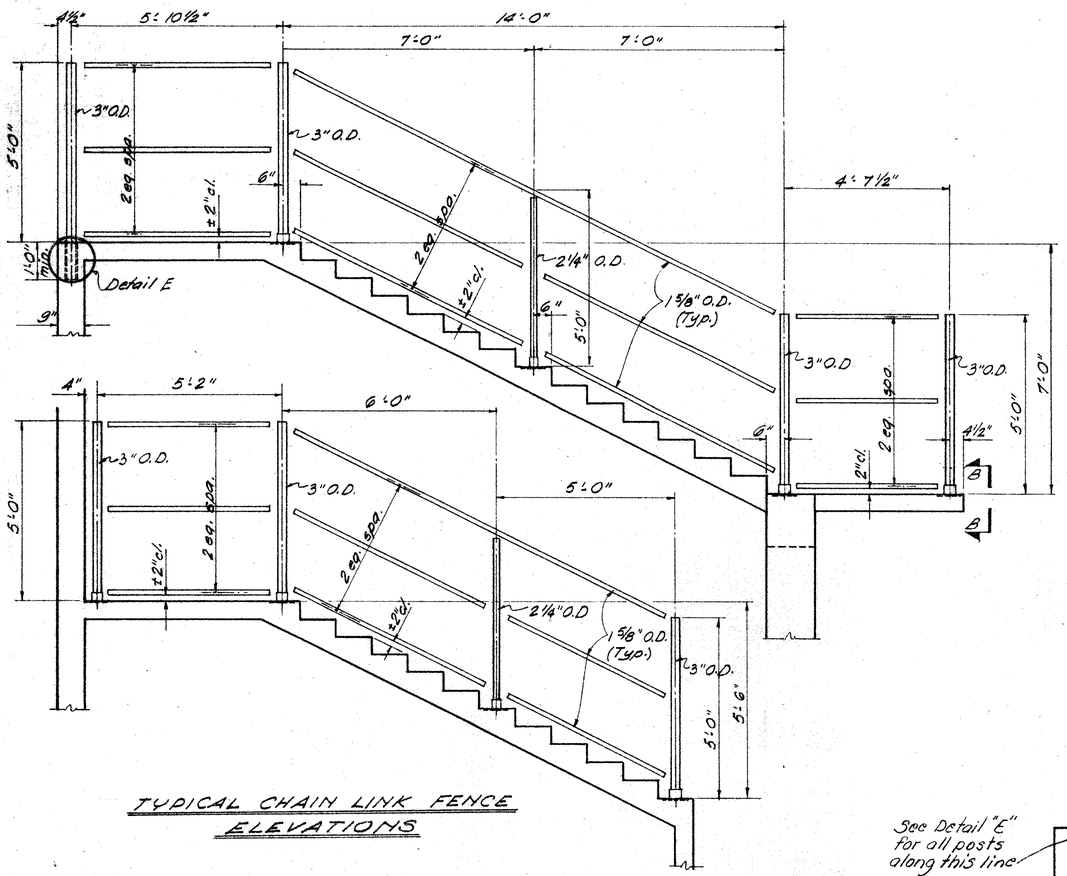

TYPICAL CHAIN LINK FENCE ELEVATIONS

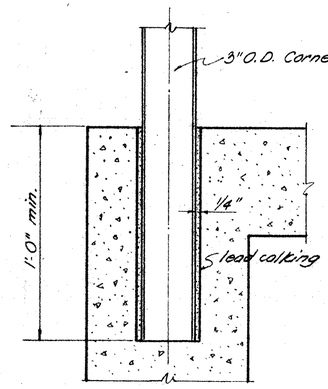

DETAIL E

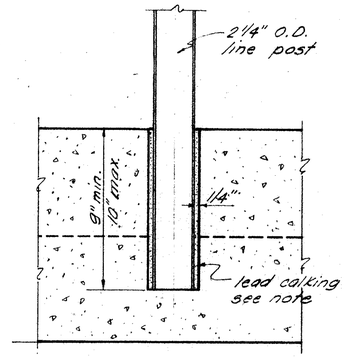

DETAIL F
(Typical all superstructure line posts)

NOTES:

The chain link fence shall be of galvanized steel.

After welding the post to the sleeve, the anchor plate, sleeve and non galvanized part of the post shall be painted according to Item 514. Payment for this painting shall be included with payment for the chain link fence.

At the contractors option the chain link fence posts may be set in drilled holes. If steel sleeves are used, they shall have an I.D. ½" larger than the O.D. of the posts and shall be aligned vertical in the concrete curb. All posts shall be securely leaded.

Chain link fence shall have 3 rails as indicated on the plans.

All component part, ie. sleeves, anchor plates etc. necessary to complete the chain link fence shall be included in the lump sum bid for chain link fence.

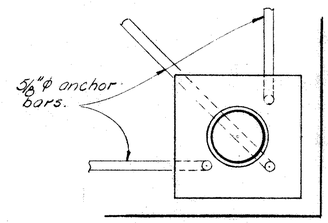

SECTION C-C

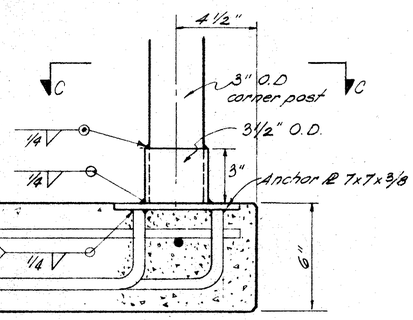

SECTION B-B-CORNER POST

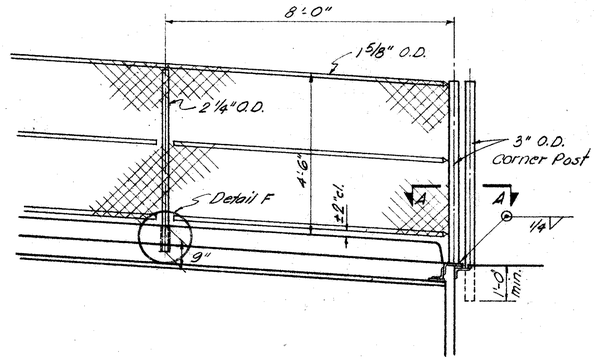

SUPERSTRUCTURE END POST DETAIL

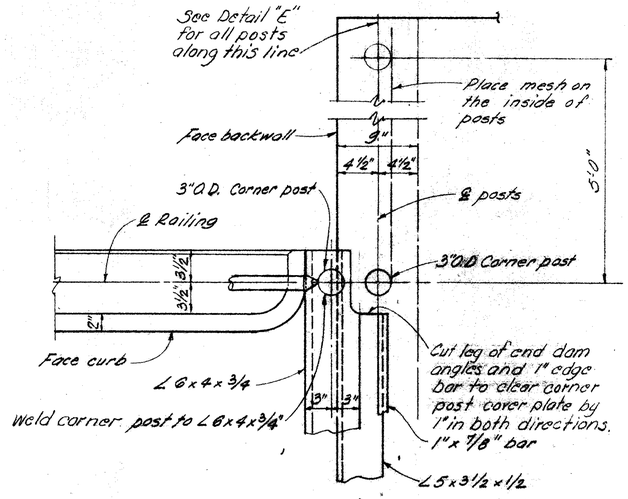

SECTION A-A

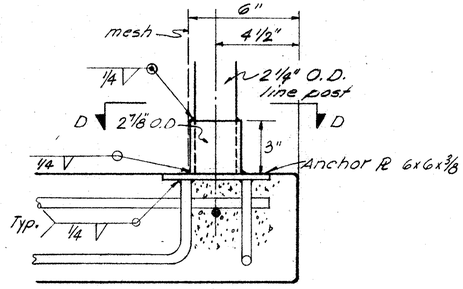

SECTION B-B—LINE POST

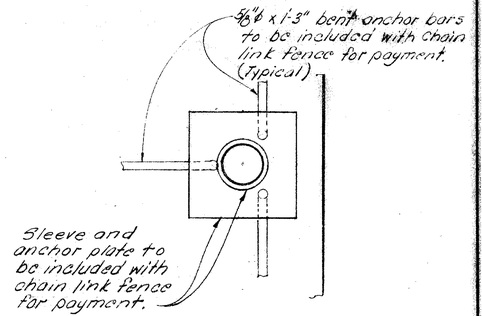

SECTION D-D

RACKOFF ASSOCIATES
ENGINEERS COLUMBUS, OHIO

CHAIN LINK FENCE DETAILS
BRIDGE NO. BEL. 7 - 2256
S.R. 7 UNDER PEDESTRIAN OVER-PASS
BELMONT COUNTY STA. 1191+47.73

Designed	Drawn	Traced	Checked	Reviewed	Date	Revised
H.H		G.M.	R.A.K.	[illegible]	6-10-64	

MICROFILMED
MAY 16 1986

REINFORCING STEEL LIST

FED. RD. DIVISION	STATE	PROJECT	
2	OHIO		

329
418

BELMONT COUNTY
BEL. 7-20.74

BENDING DIAGRAM

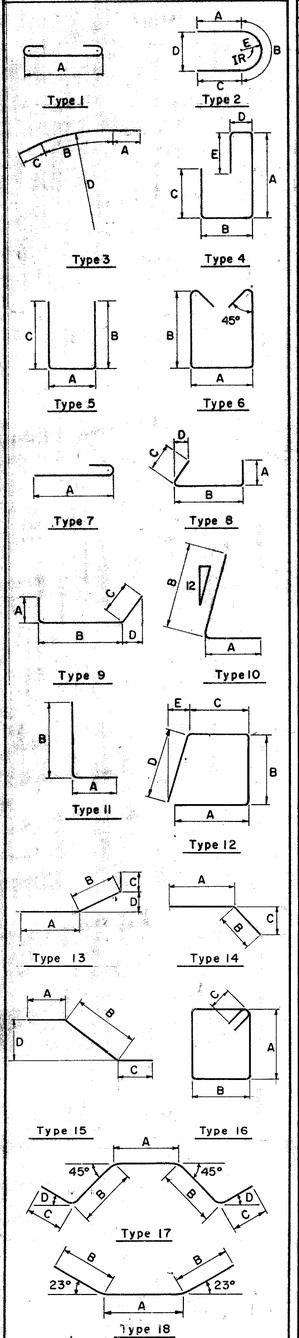

S IN THE COLUMN FOR "TYPE" INDICATES STRAIGHT BARS.

MARK	NO.	LENGTH	WEIGHT	TYPE	A	B	C	D	E
		SUPERSTRUCTURE							
S501	335	9-2	3203	S					
S502	144	29-3	4393	S					
S503	8	30-0	250	S					
S504	300	2-6	782	12	1-0	0-9	0-4	0-9	0-3
S401	30	2-7	52	11	0-9	2-0			
S402	15	7-9	78	17	1-9	2-5	0-8	0°	
		TOTAL	8,758						
		PIERS							
P401	24	11-9 to 9-8	172	16	2-6 to 1-5½	3-2 each. Vary Dim. A by 2½" increments.	0-4½ 4 sets of 6		
P501	4	10-3	43	S					
P502	4	10-10	45	18	3-6	3-8			
P601	28	11-10	498	1	10-6				
P602	4	9-6	57	17	1-6	2-9	1-4	23°	
P603	4	10-10	65	17	4-0	2-2	1-4	23°	
P604	4	11-4	68	17	6-6	1-9	0-9	23°	
P801	24	14-8	940	1	12-6				
P901	14	12-2	579	5	10-3	1-3	1-3		
P1101	40	7-4	1,558	11	1-6	6-2			
P1102	20	28-0	2,975	S					
P1103	20	16-6	1,753	S					
		TOTAL	8,753						
		SPIRAL	858						
		TOTAL	9,611						
		WEST ABUTMENT							
A501	8	8-2	68	11	0-9	7-7			
A502	8	4-11	41	5	3-2	1-0	1-0		
A503	11	20-11	240	S					
A504	8	10-11	91	S					
A505	10	6-8	70	S					
A506	12	7-11	99	S					
A507	12	3-2	40	S					
A601	4	12-11	78	S					
A602	8	12-7	151	11	5-2	7-7			
A603	12	10-10	195	5	1-2	5-0	5-0		
		TOTAL	1073						

MARK	NO.	LENGTH	WEIGHT	TYPE	A	B	C	D	E
		STAIRWAY							
B401	101	19-4	1304	S					
B402	13	8-0	69	S					
B403	64	7-7	324	6	2-8	2-2			
B404	13	7-6	65	11	5-5	2-2			
B405	13	7-10	68	13	2-3	3-5	1-3	1-0	
B406	320	6-10	1461	14	5-6	1-4	0-8		
B407	22	13-0	191	S					
B408	32	15-11	340	13	1-4	13-3	1-4	5-6	
B409	82	17-8	968	14	15-8	2-0	0-10		
B410	120	18-10	1510	15	1-4	16-2	1-4	7-2	
B411	56	6-8	249	14	5-4	1-4	0-8		
B412	216	5-0	721	S					
B413	76	8-10	448	S					
B414	180	3-3	391	11	1-8	1-8			
B415	44	3-3	96	11	2-9	0-7			
B416	58	4-9	184	16	1-2	1-0	0-4½		
B417	40	3-10	102	6	1-0	1-2			
B418	47	6-6	204	S					
B501	24	3-7	90	11	0-8	3-1			
B502	24	8-10	221	S					
B503	24	15-7	390	S					
B504	26	13-10	375	S					
B505	8	4-10	40	S					
B506	10	10-6	110	S					
B601	12	4-1	74	11	0-10	3-5			
B602	12	13-4	240	S					
B701	5	21-10	223	1	20-2				
B702	18	5-5	199	1	3-9				
B703	12	9-1	223	1	7-5				
B704	20	6-4	259	1	4-8				
B801	34	4-11	446	11	1-2	4-0			
B802	20	9-9	521	S					
B803	20	16-6	881	S					
B804	12	10-6	336	S					
B805	8	13-10	295	S					
B806	16	16-6	705	S					
B807	16	13-8	584	S					
B1001	4	19-6	336	S					
B1002	10	22-2	954	S					
B1003	12	6-2	318	11	3-3	3-3			
		TOTAL	16,515						

MARK	NO.	LENGTH	WEIGHT	TYPE	A	B	C	D	E
		REPLACEMENT BARS							
RE401	1	5-3	—	S					
RE501	1	5-7	—	S					
RE601	1	5-11	—	S					
RE701	1	6-3	—	S					
RE801	1	6-6	—	S					
RE901	1	6-10	—	S					
RE1001	1	7-3	—	S					
RE1101	1	7-7	—	S					

NOTES

BAR SIZE is indicated in bar mark. The first digit where three digits are used, and the first two where four are used indicate the bar size number.

SPIRAL REINFORCING BARS: The "Length" shown in the steel list for the spiral bars is the distance from the top of the footing to the bottom of the pier cap. The "No. of Turns" shown is the "Length" divided by the pitch, plus three turns (total number of closed coils), expressed as the nearest whole number.

Spiral reinforcing bars shall not have deformations but shall in other respects conform to Item 509. 1½ closed coils shall be provided at the ends of each spiral unit. Four steel channel, tee or angle spacers, weighing approximately 0.68 lb. per lin. ft. of spacer, shall be provided for each spiral unit. They shall be equally spaced along the periphery of the coil. The number of pounds of these spacers, based on 0.68 lb. per lin. ft., will be paid for as reinforcing steel and is included in the tabulated quantity of spiral bars.

SPIRAL REINFORCEMENT							
MARK	NO.	LENGTH	CORE	PITCH	TURNS	SPACERS	WEIGHT
P402	1	25-11	38"	4½"	72	4	543
P403	1	14-6	38"	4½"	42	4	315
						TOTAL	858

RACKOFF ASSOCIATES
ENGINEERS COLUMBUS, OHIO

REINFORCING STEEL LIST
BRIDGE NO BEL. 7-2256
S.R. 7 UNDER PEDESTRIAN OVER-PASS
BELMONT COUNTY STA. 1191+47.73

Designed	Drawn	Traced	Checked	Reviewed	Date	Revised
H.H.	G.M.		R.A.K.	LEE	6-10-64	

MICROFILMED
MAY 16 1985

FED. RD. DIVISION	STATE	PROJECT	
2	OHIO		

330
418

BELMONT COUNTY
BEL. 7 - 20.74

FOUNDATION SOUNDINGS: Foundation design and foundation quantities are based on a study of rod soundings and soil sampling soundings made of the site. This sounding information may be inspected in the office of the Bureau of Bridges in Columbus, or in the Division office, but the State assumes no responsibility for the accuracy thereof.

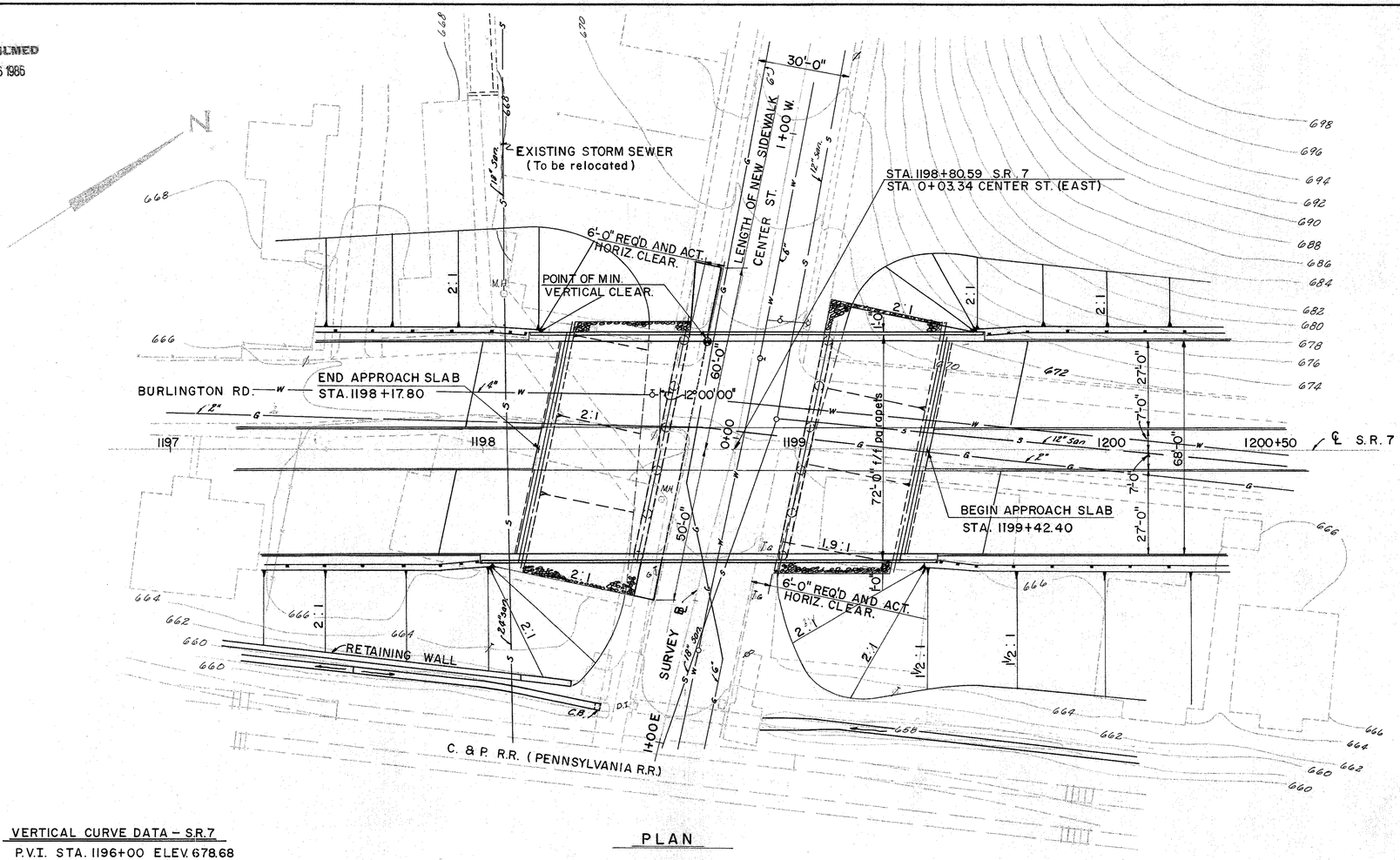

PLAN

VERTICAL CURVE DATA – S.R.7
P.V.I. STA. 1196+00 ELEV. 678.68
G_1 = +0.76% G_2 = +3.00%
V.C. = 400' CORR. = 1.12'

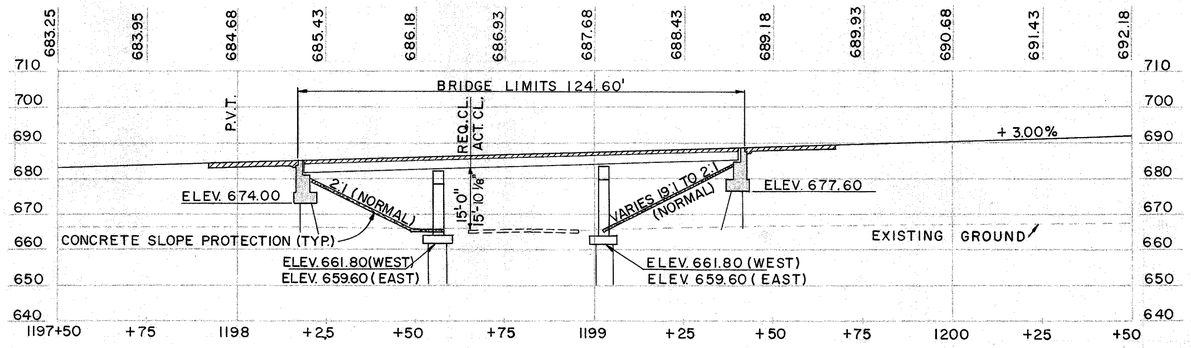

PROFILE ALONG ℄ S.R. 7

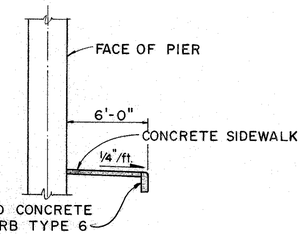

TYPICAL SECTION OF ITEM 608, CONCRETE WALK
SEE PAY ITEM ON SHEET NO. 49

All piles are 12"ϕ cast-in-place reinforced concrete
Estimated average pay length for piles:
Abutments = 35'
Rear Piers #1 and #2 = 45'
Forward Piers #3 and #4 = 35'

1982 A.D.T. = 15,200

PROPOSED STRUCTURE

TYPE: Continuous steel beam with reinforced concrete deck and substructure.

SPANS: 37'-0", 46'-0" and 37'-0" ℄ bearings.

ROADWAY: 68'-0" f/f of 2'-0" safety curbs

LOAD FREQUENCY: C.F. 2000 (57)

SKEW: 12° L.F.

WEARING SURFACE: 1" monolithic concrete

APPROACH SLABS: AS-1-54, 25' long.

ALIGNMENT: Tangent

SUPERELEVATION: None

RACKOFF ASSOCIATES
ENGINEERS COLUMBUS, OHIO

SITE PLAN

BRIDGE NO. BEL. – 7 – 2269
S.R. 7 OVER CENTER ST.
BELMONT COUNTY
STA. 1198+17.80
STA. 1199+42.40

Designed	Drawn	Traced	Checked	Reviewed	Date	Revised
P.M.	G.M.	E.D.A.	R.A.K.	EEE	6-17-63	

MICROFILMED
MAY 16 1975

FED. RD. DIVISION	STATE	PROJECT	TYPE FUNDS
2	OHIO		

BELMONT COUNTY
BEL. 7-20.74

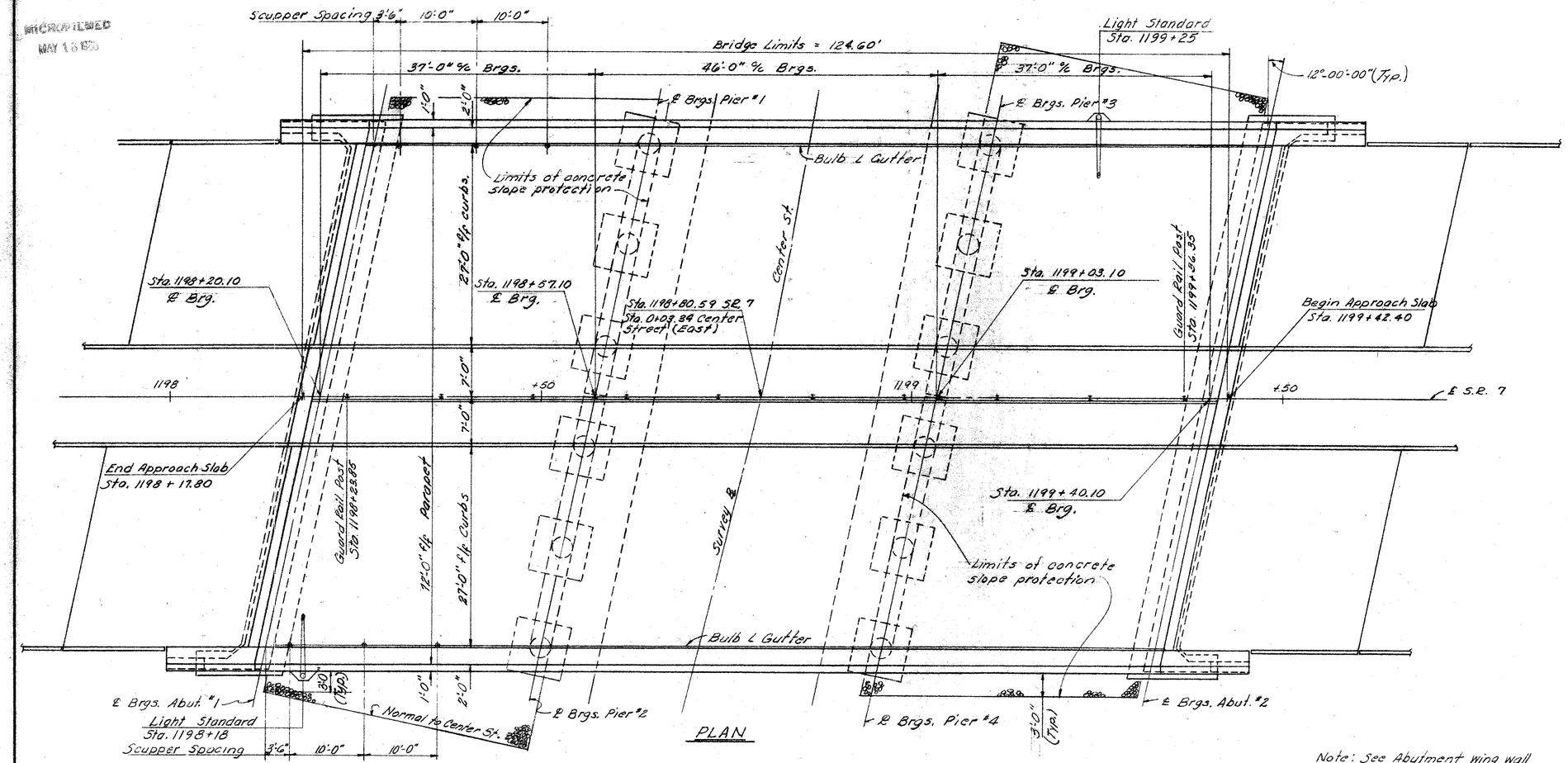

PLAN

Note: Median guard rail posts shall be placed at 12'-6" % c

Note: See Abutment wing wall details for railing post spacing on wing walls.

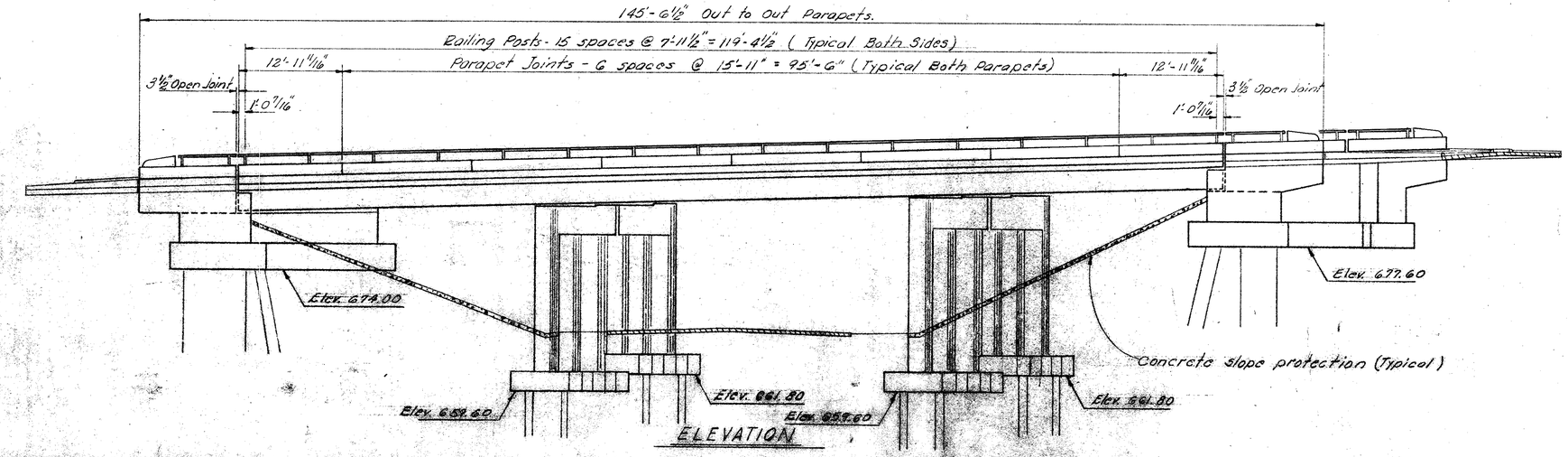

ELEVATION

RACKOFF ASSOCIATES
ENGINEERS COLUMBUS, OHIO

GENERAL PLAN AND ELEVATION
BRIDGE NO. BEL. 7-2269
SR 7 OVER CENTER ST.
BELMONT COUNTY
STA. 1198+17.80
STA. 1199+42.40

Designed	Drawn	Traced	Checked	Approved	Date	Revised
S.H.S.	S.S.	E.G.A.	N.W.U.	666	6-17 63	

MICROFILMED
MAY 16 1986

FED. RD. DIVISION	STATE	PROJECT	
2	OHIO		

332
418

BELMONT COUNTY
BEL. 7-20.74

GENERAL NOTES

REFERENCE SHALL BE MADE TO:
Standard Drawing SD-1-63, dated 11-12-63
Standard Drawing FSB-1-62, revised 1-15-63
Standard Drawing BR-1-65, revised 11-24-65
Standard Drawing SD-2-64, dated 11-25-64
Supplemental Specification 808, dated 2-7-66 and 811 dated 3-29-65; 825 dated 4-22-65, and 828 dated 3-21-66

DESIGN SPECIFICATIONS: This structure conforms to the requirements of "Design Specifications for Highway Structures" of the State of Ohio, Department of Highways, dated 9-1-57 together with current revisions thereof.

CONCRETE DECK PLACING: In order to facilitate water curing of the concrete of the deck slab, the placing of concrete shall progress upgrade. The slab may be placed in sections, between transverse construction joints which are parallel to transverse reinforcing steel and are located near the center of any span.

MACHINE FINISH: The concrete bridge deck shall be finished by the use of a finishing machine.

EXCAVATION QUANTITY includes the removal of fill material required for construction of the abutments and piers.

DESIGN LOADING - CF 2000 (57).

CONCRETE CLASS C - basic unit stress 1,333 p.s.i.
CONCRETE CLASS E - basic unit stress 1,133 p.s.i.

STRUCTURAL STEEL - ASTM A36 - basic unit stress 20,000 p.s.i.

REINFORCING STEEL - ASTM A15, A16, A160, Deformed, Intermediate or Hard Grade. Basic unit stress 20,000 p.s.i. Except spiral reinforcement may be plain, Structural Grade with basic unit stress of 18,000 p.s.i.

UTILITY LINES. All expense involved in relocating the affected utility lines shall be borne by the owner. The Contractor and Owner are requested to cooperate by arranging their work in such a manner that inconvenience to to either will be held to a minimum.

PILES shall be driven to a minimum bearing capacity of 30 tons per pile for the abutments and 38 tons per pile for the piers.

CONCRETE SLOPE PROTECTION shall be placed within the limits shown on General Plan.

ESTIMATED QUANTITIES								AS BUILT	
ITEM	TOTAL	UNIT	DESCRIPTION	SUPER.	ABUTS.	PIERS	GEN.		
503	472	Cu.Yds.	Unclassified excavation		371	101			
511	299	Cu.Yds.	Class "C" concrete, superstructure	299					
511	114	Cu.Yds.	Class "C" concrete, pier caps and columns			114			
511	63	Cu.Yds.	Class "E" concrete, pier footings			63			
511	146	Cu.Yds.	Class "E" concrete, abutments above footings		146				
511	121	Cu.Yds.	Class "E" concrete, abutment footings		121				
512	14	Lin.Ft.	Premolded sealing strip		14				
509	121,516	Lbs.	Reinforcing steel	83,133	16,510	21,873			
513	175,700	Lbs.	Structural steel	175,700					
514	175,700	Lbs.	Field painting of structural steel	175,700					
517	289.90	Lin.Ft.	Bridge railing, Type 1	242.90	47.00				
825	1104	Sq.Yds.	Concrete surface treatment				1104		
517	124.60	Lin. Ft.	Railing (deep beam type, double-faced, with galvanized steel posts and bolts.)	124.60					
507	3410	Lin.Ft.	12" cast-in-place reinforced concrete piles		1330	2080			
625			Electric lighting system. See lighting plans Sh. 249						
518	45	Cu.Yds.	Porous backfill		45				
518	6	Each	Scuppers including supports	6					
601	784	Sq.Yds.	Concrete slope protection		784				
505	Lump	Sum	First test pile						
808	298	~~Units~~	Water-reducing, set-retarding admixture.	298					
828	111	Lin.Ft.	Joint sealer (end dam)	111					

RACKOFF ASSOCIATES
ENGINEERS COLUMBUS, OHIO

GENERAL NOTES & ESTIMATED QUANTITIES
BRIDGE NO. BEL. 7-2269
SR 7 OVER CENTER ST.
BELMONT COUNTY STA. 1198+17.80
STA. 1199+4240

Designed	Drawn	Traced	Checked	Reviewed	Date	Revised
S.H.S.	E.D.A.		N.W.U.	[illegible]	6-17-63	

FED. RD. DIVISION	STATE	PROJECT	TYPE FUNDS
2	OHIO		

BELMONT COUNTY
BEL. 7-20.74

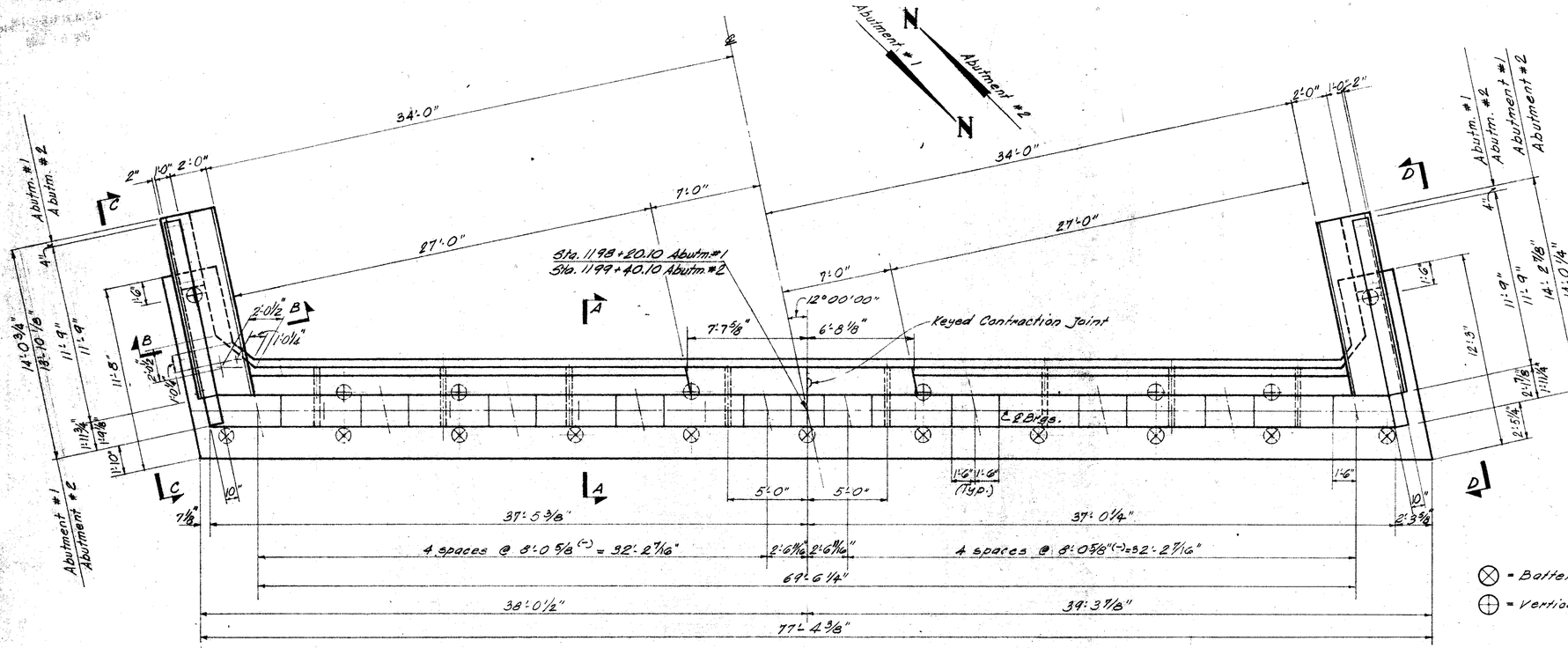

PLAN

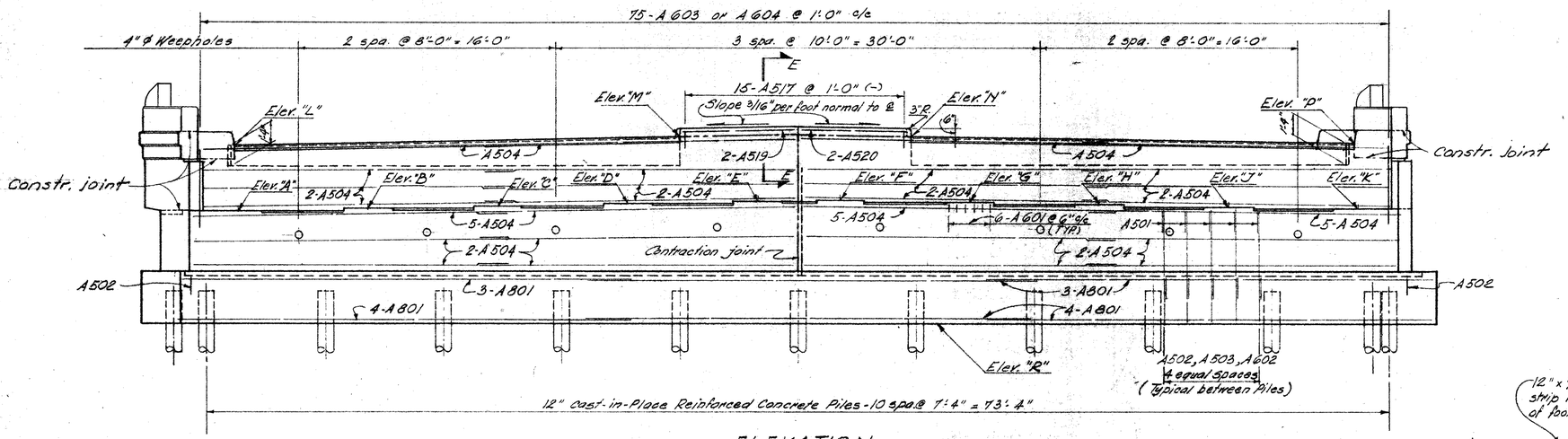

ELEVATION

ELEVATIONS																
LOCATION	"A"	"B"	"C"	"D"	"E"	"F"	"G"	"H"	"J"	"K"	"L"	"M"	"N"	"P"	"R"
Abutment #1	681.06	681.23	681.40	681.58	681.75	681.78	681.71	681.63	681.56	681.49	684.61	685.21	685.30	685.05	674.00
Abutment #2	685.09	685.16	685.23	685.31	685.38	685.35	685.18	685.00	684.83	684.66	688.71	688.96	688.87	688.28	677.60

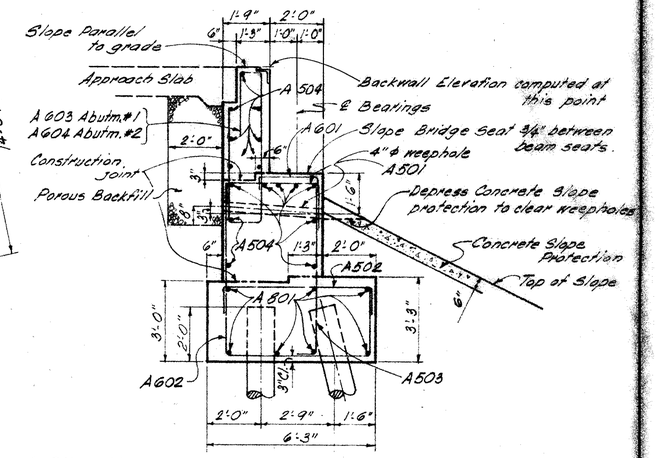

⊗ = Battered Piles 4:1
⊕ = Vertical Piles

SECTION A-A

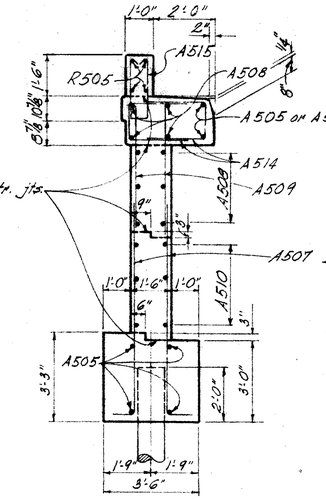

SECTION B-B

SECTION E-E

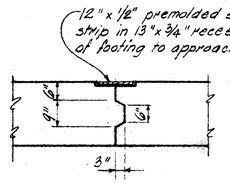

CONTRACTION JOINT DETAIL

RACKOFF ASSOCIATES
ENGINEERS COLUMBUS, OHIO

ABUTMENT DETAILS
BRIDGE NO. BEL. 7-2269
SR 7 OVER CENTER ST.
BELMONT COUNTY
STA. 1198+17.80
STA. 1199+42.40

Designed	Drawn	Traced	Checked	Reviewed	Date	Revisions
S.H.S.	G.M.		N.W.U.	666	6-17 63	

RECEIVED
MAY 16 1966

FED. RD. DIVISION	STATE	PROJECT	TYPE FUNDS
2	OHIO		

334
418

BELMONT COUNTY
BEL.- 7- 20.74

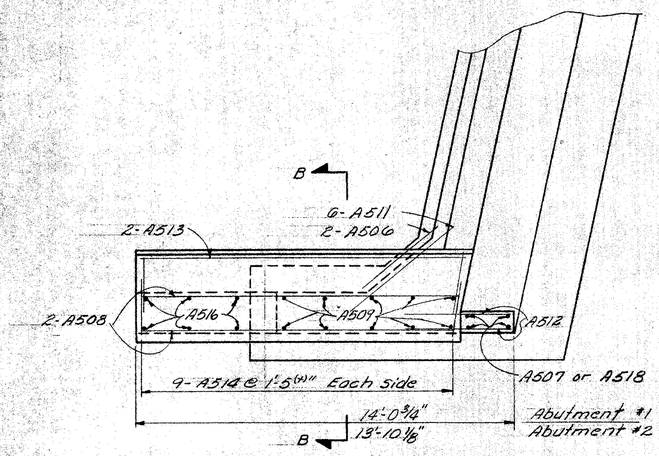

PLAN OF VIEW C-C
Parapet not shown

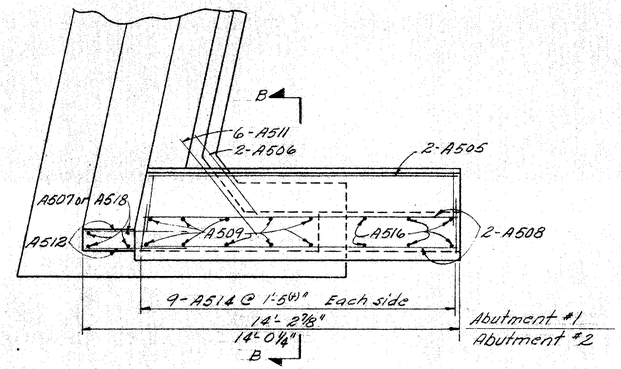

PLAN OF VIEW D-D
Parapet not shown

NOTES

CONCRETE END POST AND RAILING: For reinforcement in the concrete end post, and other notes and details not shown, refer to Standard Drawing BR-1-65, sheet 1.

Porous Backfill shall extend upward to the approach slab.
Excavation therefor, in excess of that required for construction of the abutment, shall be considered as paid for in the bid price per cu.yd. paid for porous backfill.

EMBANKMENT: The embankment shall be placed and and compacted up to the finished spill-thru slope and to the level of the subgrade for a distance of 200 feet back of the abutments, after which excavation shall be made for the abutment and for piers that are set in the filled area.

BRIDGE SEAT REINFORCING: Special care shall be taken in placing reinforcing steel in the vicinity of the bridge seat so as to avoid interference with the drilling of anchor rod holes.

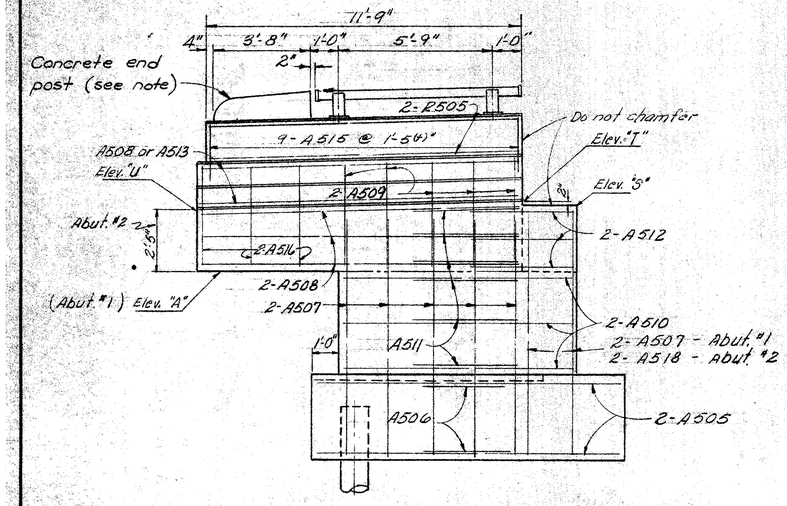

VIEW C-C

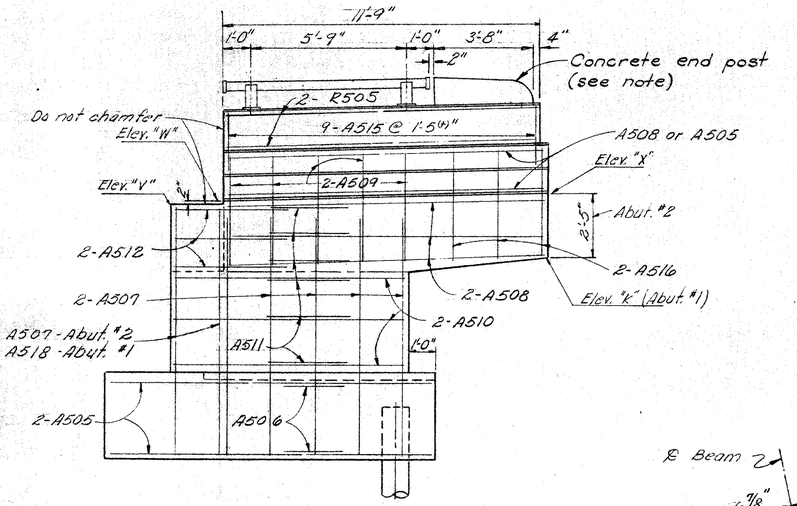

VIEW D-D

ELEVATIONS						
LOCATION	S	T	U	V	W	X
Abutment #1	683.70	683.81	683.45	684.17	684.27	683.91
Abutment #2	687.71	687.93	688.29	687.25	687.47	687.93

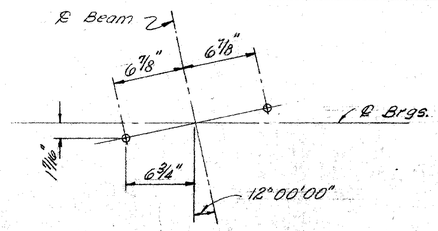

ANCHOR ROD LAYOUT AT ABUTMENTS
TYPICAL BOTH ABUTMENTS

RACKOFF ASSOCIATES
ENGINEERS COLUMBUS, OHIO

ABUTMENTS DETAILS
BRIDGE NO. BEL. 7-2269
SR 7 OVER CENTER ST.
STA. 1198+17.80
BELMONT COUNTY STA. 1199+42.40

Designed	Drawn	Traced	Checked	Reviewed	Date	Revised
S.H.S.	E.D.A.		N.W.U.	[illegible]	6-17 63	

APPROVED
MAY 16 1963

FED. RD. DIVISION	STATE	PROJECT	TYPE FUNDS
2	OHIO		

335
418

BELMONT COUNTY
BEL. 7 - 20.74

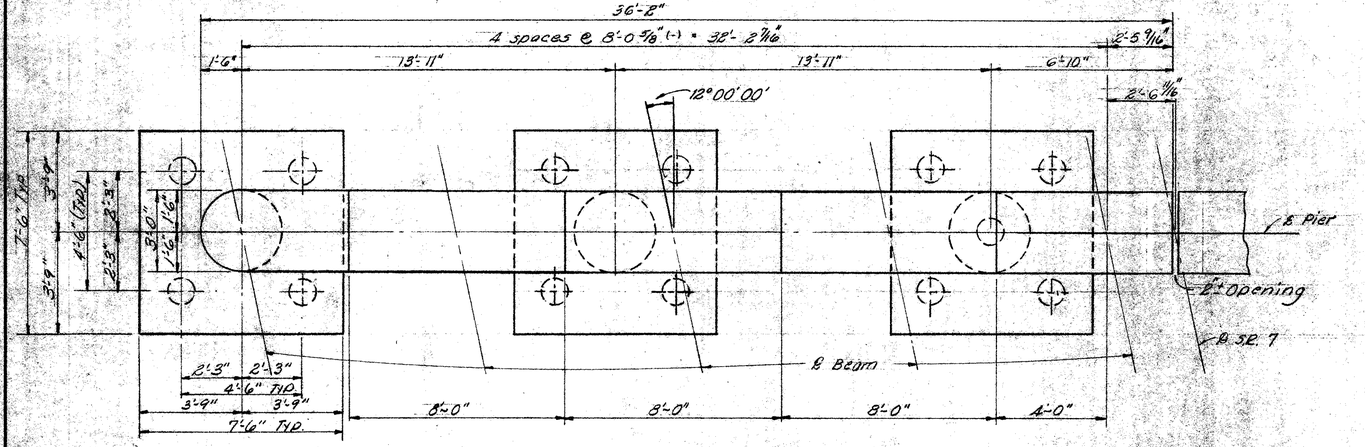

PLAN

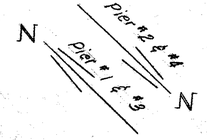

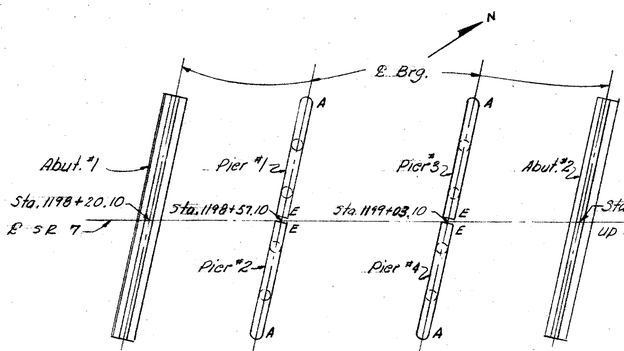

SUBSTRUCTURE LOCATION PLAN

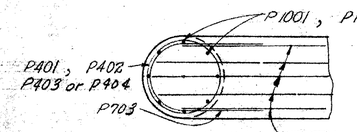

SECTION B-B

ELEVATIONS							
Location	A	B	C	D	E	F	G
Pier #1	682.35	682.43	682.50	682.57	682.65	678.46	661.80
Pier #2	681.92	682.09	682.27	682.44	682.61	678.46	659.60
Pier #3	683.94	684.02	684.09	684.16	684.23	680.04	661.80
Pier #4	683.51	683.68	683.86	684.03	684.20	680.04	659.60

NOTES:
Bridge Seat Reinforcing: Special care shall be taken in placing reinforcing steel in the vicinity of the bridge seat so as to avoid interference with the drilling of anchor rod holes.

All piles are 12" Cast-in-place reinforced concrete.

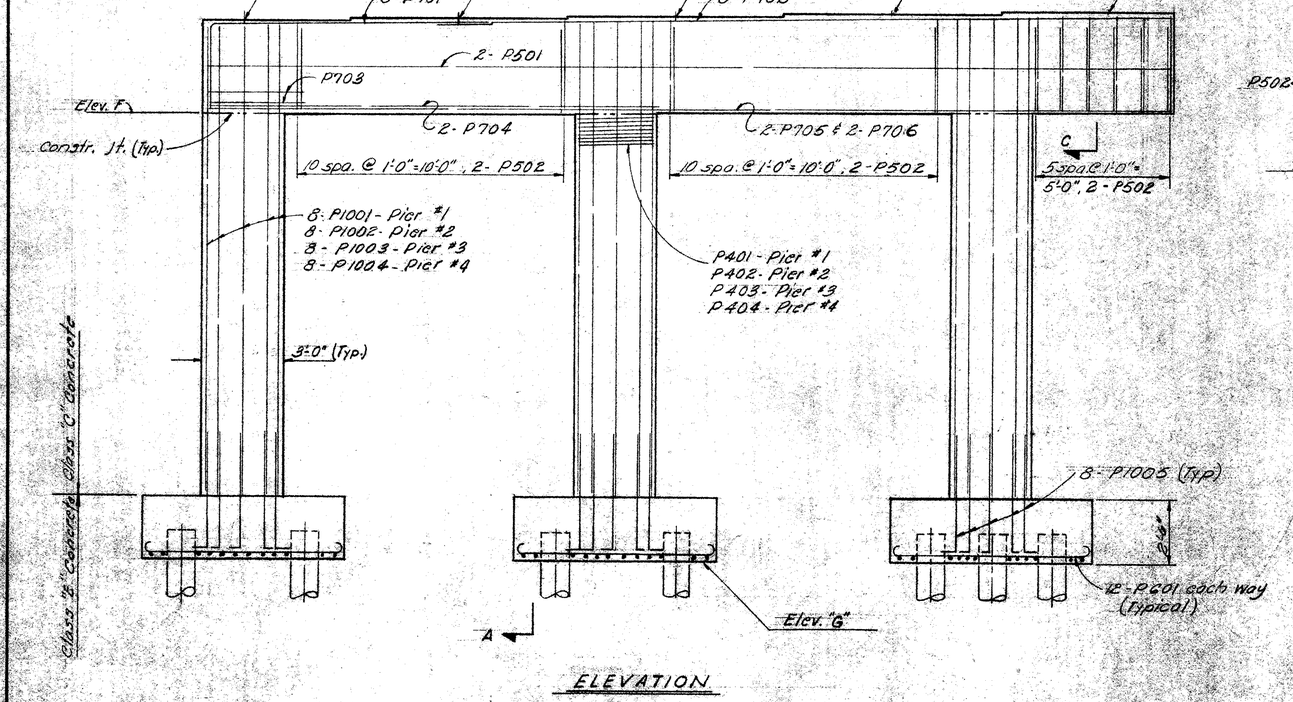

ELEVATION

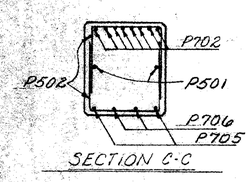

SECTION C-C

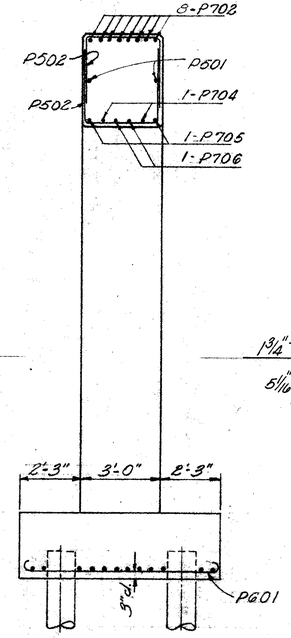

SECTION A-A

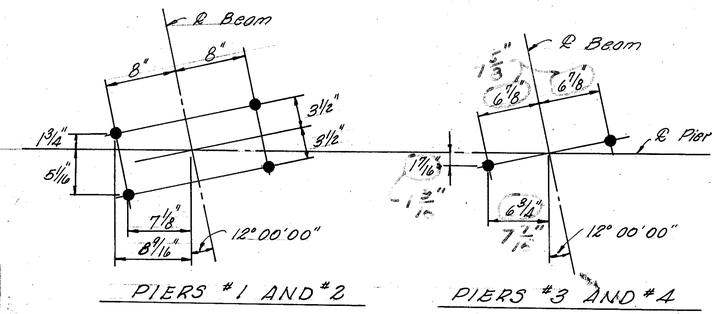

ANCHOR ROD LAYOUT AT PIERS

RACKOFF ASSOCIATES
ENGINEERS COLUMBUS, OHIO

PIERS DETAILS
BRIDGE NO. BEL. 7-2269
SR 7 OVER CENTER ST.
BELMONT COUNTY
STA. 1198+17.80
STA. 1199+42.40

Designed	Drawn	Traced	Checked	Revised	Date	Revised
N.W.U.	E.D.A.		S.H.S.	6-17-63	6-17-63	5-17-57

MICROFILMED
MAY 16 1966

FED. RD. DIVISION	STATE	PROJECT	TYPE FUNDS
2	OHIO		

336
418

BELMONT COUNTY
BEL. 7 – 20.74

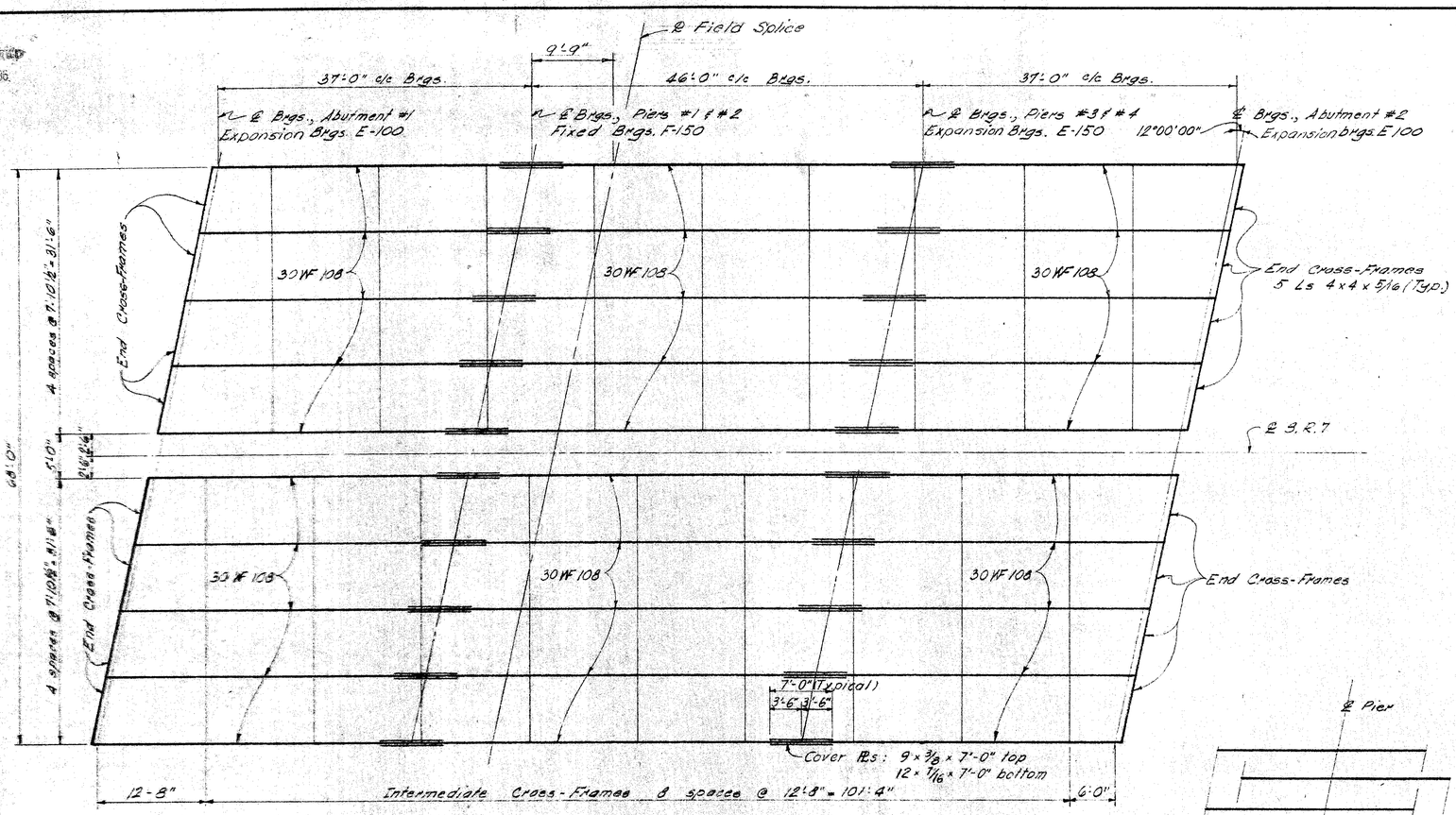

FRAMING PLAN

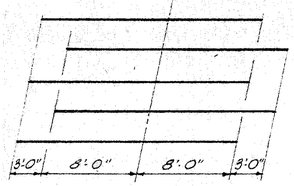

DIAGRAM SHOWING THE STAGGER OF S603 BARS OVER THE PIERS

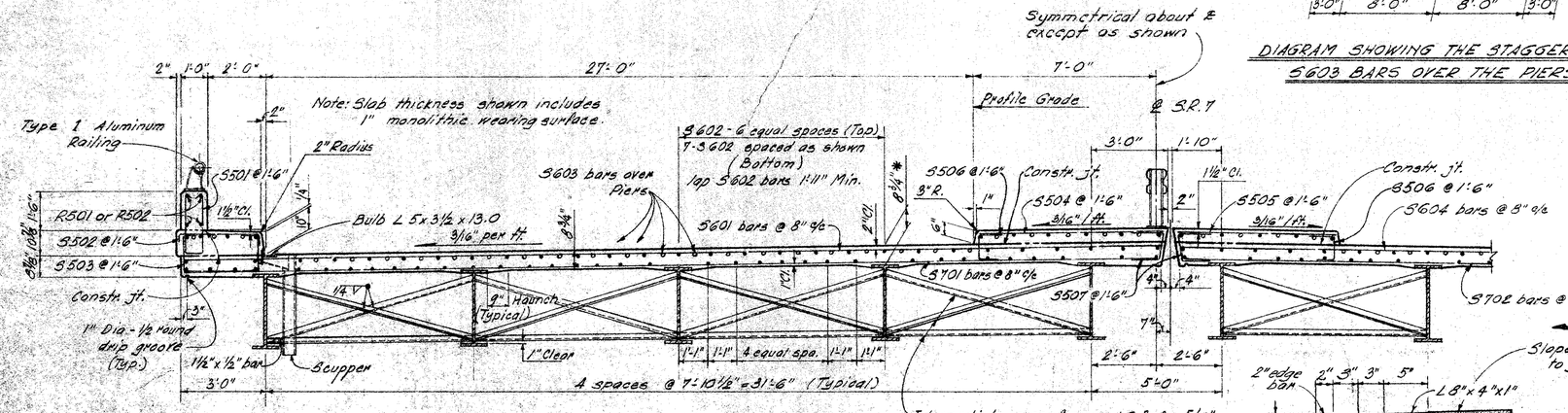

PARTIAL TRANSVERSE SECTION

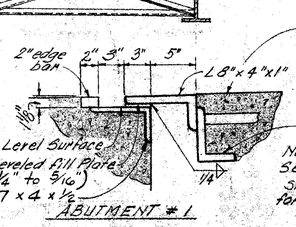

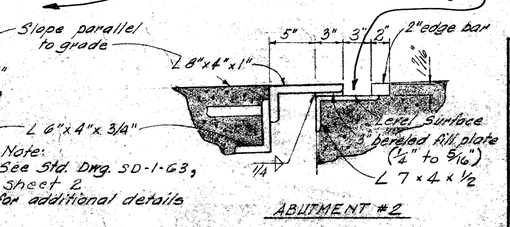

BEVELED END DAM DETAIL

DEFLECTION AND CAMBER			
LOCATION	INTERIOR, FASCIA AND MEDIAN BEAMS		
	SPAN 1	SPAN 2	SPAN 3
Deflection due to Weight of Steel	0	0	0
Deflection due to Remaining Dead Load	1/8	3/16	1/8
Convexity Required for Vertical Curve	0	0	0
Total	1/8	3/16	1/8
Required Camber	0	0	0

NOTE: Fabricate beams with any natural camber up.

REFERENCE SHALL BE MADE TO:

Standard Drawing SD-1-63 for end crossframes, end dams, scuppers, curb plates, bulb angle gutters, and moment plate welding details. Moment plates shall be shop welded instead of field welded as shown on the Standard Drawing.

Standard Drawing SD-2-64 for bolted beam field splice details.

Standard Drawing BR-1-65 Sheet 1, for Type 1 bridge railing.

Standard Drawing FSB-1-62 for Fixed and sliding bearings.

DECK SLAB HAUNCH: The haunch in the deck slab adjacent to the top of steel beams, which is shown as 9" wide, may vary from this dimension with a minimum of 6" and a maximum of 12". Maximum slope of haunch shall be one vertical to four horizontal. Payment for deck slab concrete shall be based on the 9" width.

* This is the nominal dimension. The quantity of deck concrete to be paid for shall be based on this dimension, even though deviation from it may be necessary because the top flange of the beam may not have the exact camber or conformation required to place it parallel to the finished grade.

See General Plan and Elevation for location of Scuppers and Railing Posts.

See Common Details sheet for details of median guard rail, median curb plates and lighting standard bases.

RACKOFF ASSOCIATES
ENGINEERS COLUMBUS OHIO

SUPERSTRUCTURE DETAILS
BRIDGE NO. BEL. 7-2269
SR 7 OVER CENTER ST.
BELMONT COUNTY
STA. 1198 + 17.80
STA. 1199 + 42.40

Designed	Drawn	Traced	Checked	Reviewed	Date	Revised
S.H.S.	G.M.		N.W.U.		6-17 63	

MICROFILMED
MAY 16 1986

REINFORCING STEEL LIST

DISTRICT DIVISION	STATE	PROJECT	
2	OHIO		

337
418

BELMONT COUNTY
BEL. 7 - 20.74

BENDING DIAGRAM

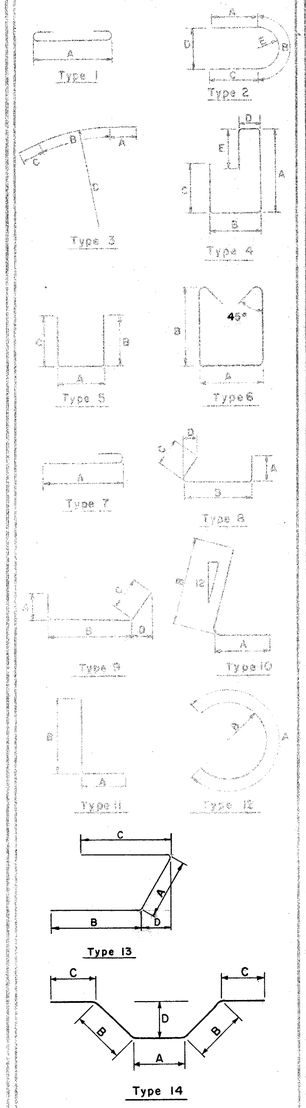

S IN THE COLUMN FOR "TYPE" INDICATES STRAIGHT BARS

ABUTMENTS

MARK	NO.	LENGTH	WEIGHT	TYPE	A	B	C	D	E	F
A501	100	7-2	748	5	3-5	2-0	2-0			
A502	104	7-8	832	5	5-5	1-3	1-3			
A503	100	7-0	730	11	0-9	6-6				
A504	128	19-6	2603	S						
A505	20	11-3	235	S						
A506	8	4-0	33	S						
A507	48	9-9	488	11	0-9	9-3				
A508	40	11-9	490	S						
A509	40	4-1	170	S						
A510	24	8-6	213	S						
A511	24	5-3	131	S						
A512	24	4-0	100	S						
A513	4	12-2	51	S						
A514	72	5-1	382	5	1-4	2-0	2-0			
A515	36	5-7	210	6	0-8	2-2	2-2			
A516	24	3-7	90	S						
A517	30	4-1	128	5	1-4	1-6	1-6			
A518	8	10-4	86	11	0-9	9-9				
A519	4	7-3	30	S						
A520	4	6-4	26	S						
A601	120	3-6	631	5	2-2	0-10	0-10			
A602	100	14-2	2128	5	5-5	2-7	6-6			
A603	75	12-10	1446	4	5-1	1-5	3-7	0-10	2-6	
A604	75	13-0	1464	4	5-1	1-5	3-7	1-0	2-6	
A801	42	27-4	3065	S						
		TOTAL	16,510							

PIERS

MARK	NO.	LENGTH	WEIGHT	TYPE	A	B	C	D	E	F
P501	8	34-6	288	S						
P502	224	9-3	2161	5	3-2	3-2	3-2			
P601	288	8-6	3677	1	7-2					
P701	20	13-6	552	11	3-2	10-6				
P702	32	27-8	1810	S						
P703	8	8-2	134	2	2-3	3-7 3/8	2-3	2-4 1/2	1-1 3/8	
P704	8	16-9	274	S						
P705	8	34-6	564	S						
P706	8	35-9	586	S						
P1001	24	17-7	1816	S						
P1002	24	19-4	1997	S						
P1003	24	19-2	1979	S						
P1004	24	20-11	2160	S						
P1005	96	6-6	2685	11	1-5	5-5				
SPIRALS			1190							
		TOTAL	21,873							

SUPERSTRUCTURE

MARK	NO.	LENGTH	WEIGHT	TYPE	A	B	C	D	E	F
S 501	164	5-7	955	6	0-8	2-2				
S 502	164	3-9	641	5	2-8	0-8	0-8			
S 503	164	6-0	1,026	4	2-6	1-4	0-8	1-4	0-8	
S 504	82	7-2	613	S						
S 505	82	6-0	513	S						
S 506	164	2-8	456	5	1-0	0-8	1-3			
S 507	164	2-9	470	13	1-1	0-8	1-3	0-2 1/2		
S 601	182	37-9	10,319	S						
S 602	572	31-7	27,134	S						
S 603	114	19-0	3,253	S						
S 604	182	36-7	10,001	S						
S 701	182	37-9	14,043	S						
S 702	182	36-7	13,609	S						
L 401	8	4-10	26	11	2-0	2-11				
L 402	14	7-10	74	14	1-1	2-8	0-9	1-11		
		TOTAL	83,133							

REPLACEMENT BARS

RE401	1	5-3	—	12	5-3	1-3 1/2
RE501	1	5-7	—	S		
RE601	4	5-11	—	S		
RE701	2	6-3	—	S		
RE801	1	6-6	—	S		
RE1001	1	7-3	—	S		

RAILING BARS (Included with railing for payment)

R501	16	12-7	—	S
R502	48	15-7	—	S
R503	12	4-2	—	*
R504	8	5-4	—	*
R505	16	11-5	—	S

* Refer to Standard Drawing BR-1-65, Sheet 1.

SPIRAL REINFORCEMENT

MARK	NO.	LENGTH	CORE	PITCH	TURNS	SPACERS	WEIGHT
P401	3	14'-2"	32"	4 1/2	41	4	264
P402	3	16'-4"	32"	4 1/2	47	4	304
P403	3	15'-9"	32"	4 1/2	45	4	292
P404	3	17'-11"	32"	4 1/2	51	4	330
						TOTAL	1190

NOTES

BAR SIZE is indicated in bar mark. The first digit where three digits are used, and the first two where four are used indicate the bar size number.

SPIRAL REINFORCING BARS; The "Length" shown in the steel list for the spiral bars is the distance from the top of the footing to the bottom of the pier cap. The "No. of Turns" shown is the "Length" divided by the pitch, plus three turns (total number of closed coils), expressed as the nearest whole number.

Spiral reinforcing bars shall not have deformations but shall in other respects conform to Item 509. 1 1/2 closed coils shall be provided at the ends of each spiral unit. Four steel channel, tee or angle spacers, weighing approximately 0.88 lb. per lin. ft. of spacer, shall be provided for each spiral unit. They shall be equally spaced along the periphery of the coil. The number of pounds of these spacers, based on 0.88 lb. per lin. ft., will be paid for as reinforcing steel and is included in the tabulated quantity of spiral bars.

BACKOFF ASSOCIATES
ENGINEERS COLUMBUS, OHIO

REINFORCING STEEL LIST

BRIDGE NO. BEL. 7-2269
SR 7 OVER CENTER ST.
BELMONT COUNTY
STA. 1198+17.80
STA. 1199+42.40

Designed	Drawn	Traced	Checked	Reviewed	Date	Revised
S.H.S.	E.D.A.		N.W.U.		6-17 63	

MICROFILMED
MAY 16 1986

FED. RD. DIVISION	STATE	PROJECT	
2	OHIO		

338
418

BELMONT COUNTY
BEL. 7 - 20.74

FOUNDATION SOUNDINGS: Foundation design and foundation quantities are based on a study of rod soundings and soil sampling soundings made at the site. This sounding information may be inspected in the office of the Bureau of Bridges in Columbus, or in the Division office, but the State assumes no responsibility for the accuracy thereof.

NOTE: Refer to Abutment and Pier detail sheets for footing elevations and estimated average pay-length of piles.

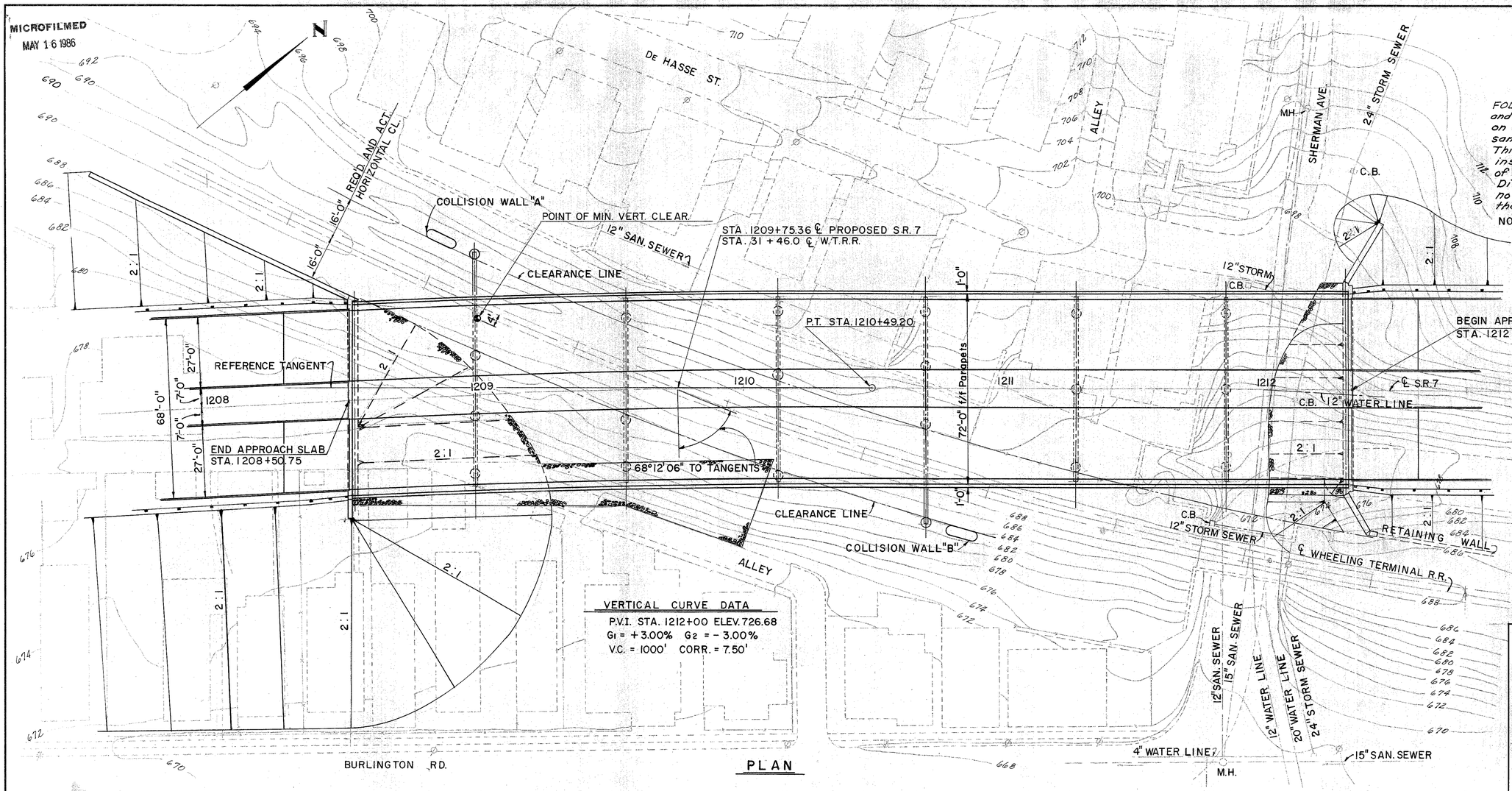

VERTICAL CURVE DATA

P.V.I. STA. 1212+00 ELEV. 726.68
G1 = +3.00% G2 = -3.00%
V.C. = 1000' CORR. = 7.50'

HORIZONTAL CURVE DATA

P.I. = STA. 1207+99.88
Δ = 7° 19' 24" RT.
Dc = 1° 28'
Rc = 3906.53'
L = 499.32'
T = 250.00'
E = 7.90'
P.C. = STA. 1205+49.88
P.T. = STA. 1210+49.20

1982 A.D.T. = 15,200

PLAN

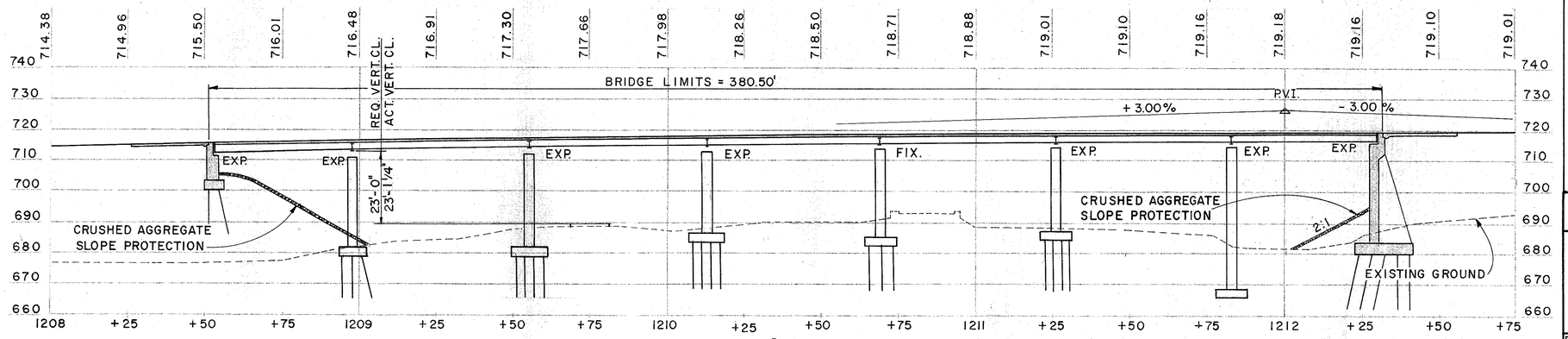

PROFILE ALONG ℄ OF SR.7

PROPOSED STRUCTURE

TYPE: Continuous steel beam with reinforced concrete deck and substructure.

SPANS: 45'-6", 5 spans @ 57'-0" and 45'-6" center to center bearing along ℄

ROADWAY: 68'-0" f/f of 2'-0" safety curbs.

LOAD FREQUENCY: C.F. 2000(57)

SKEW: None to reference tangent.

WEARING SURFACE: 1" monolithic concrete

APPROACH SLABS: AS-1-54, 25' long.

ALIGNMENT: 1° 28' Curve Rt. and tangent

SUPERELEVATION: Varies

RACKOFF ASSOCIATES
ENGINEERS COLUMBUS, OHIO

SITE PLAN

BRIDGE NO. BEL. - 7 - 2289
S.R. 7 OVER WHEELING TERMINAL R.R.
BELMONT COUNTY
STA. 1208+50.75
STA. 1212+31.25

Designed	Drawn	Traced	Checked	Reviewed	Date	Revised
P.M.	G.M.	E.D.A.	R.A.K.		6-20 63	

FED. RD. DIVISION	STATE	PROJECT	TYPE FUNDS
2	OHIO		

339
416

BELMONT COUNTY
BEL. 7 - 20.74

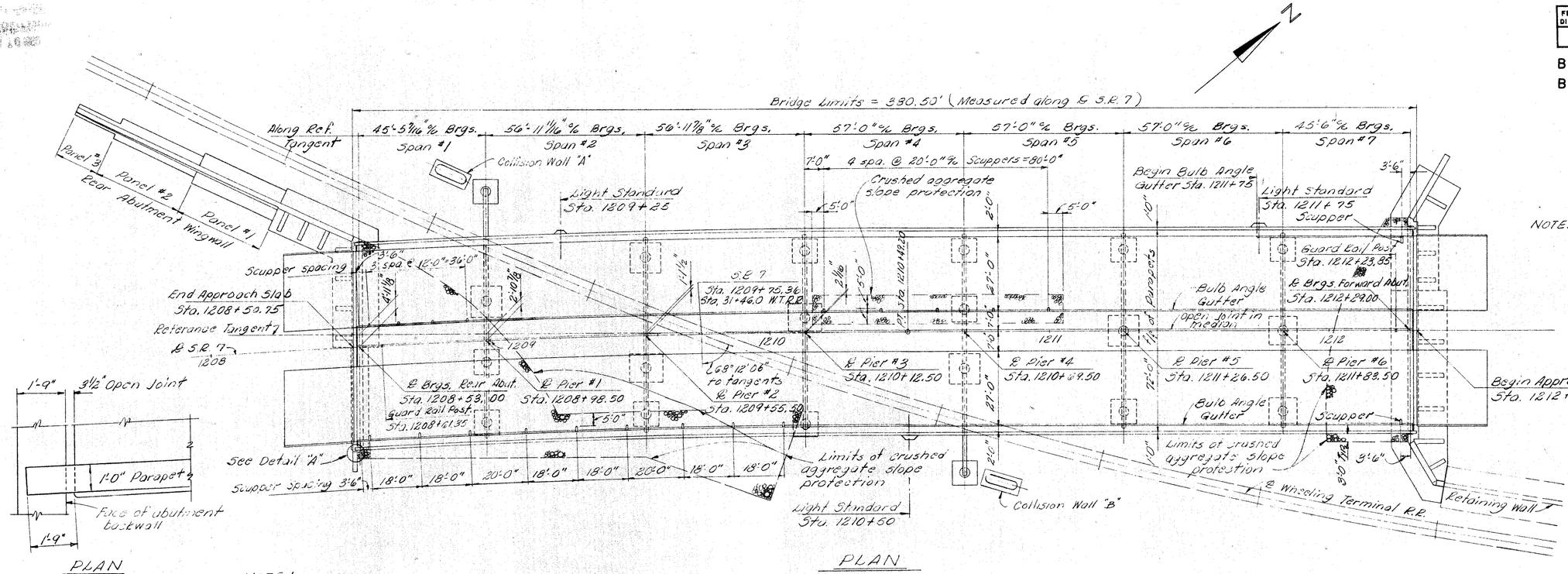

PLAN

PLAN

NOTE: Median guard rail posts shall be spaced at 12'-6" ℄ between stations shown on Plan.

NOTE:
Typical at all four corners of bridge.
For cantilever end post reinforcement and additional notes and details refer to Standard Drawing BR-1-65, Sheet 1.

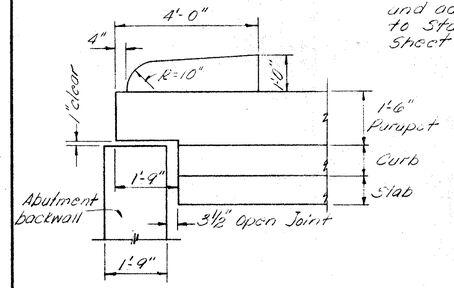

ELEVATION

DETAIL "A"

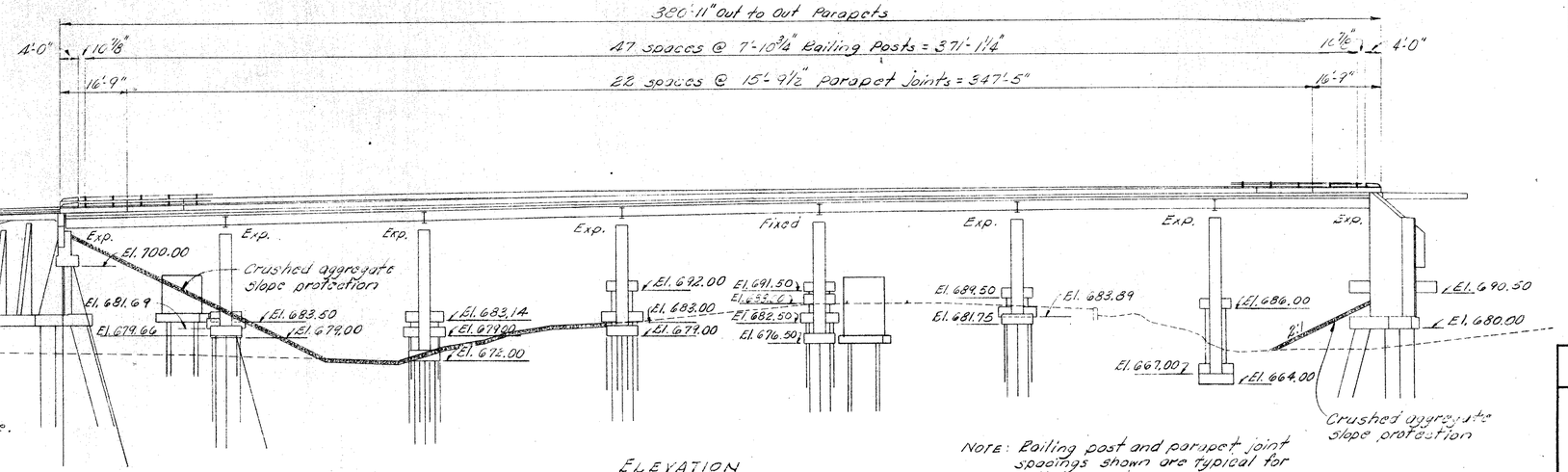

ELEVATION

NOTE: Railing post and parapet joint spacings shown are typical for both parapets.

FACE OF CURB ELEVATION

STATION	P.G.	Face of Left Curb	Face of Right Curb
1208+25	714.96	715.90	714.02
1208+50	715.50	716.44	714.56
1208+75	716.01	716.95	715.07
1209+00	716.48	717.42	715.54
1209+25	716.91	717.85	715.97
1209+50	717.30	718.22	716.38
1209+75	717.66	718.50	716.82
1210+00	717.98	718.70	717.26
1210+25	718.26	718.85	717.67
1210+50	718.50	718.97	718.03
1210+75	718.71	719.05	718.29
1211+00	718.88	719.10	718.46
1211+25	719.01	719.11	718.59
1211+50	719.10	719.09	718.68
1211+75	719.16	719.08	718.74
1212+00	719.18	719.04	718.76
1212+25	719.16	718.96	718.74
1212+50	719.10	718.84	718.58

RACKOFF ASSOCIATES
ENGINEERS COLUMBUS, OHIO

GENERAL PLAN AND ELEVATION

BRIDGE NO. BEL.-7-2289
S.R. 7 OVER WHEELING TERMINAL R.R.
BELMONT COUNTY
STA. 1208+50.75
STA. 1212+31.25

Designed	Drawn	Traced	Checked	Reviewed	Date	Revised
P.M.	E.D.A. P.M.		R.A.K.	[illegible]	6-20 63	

MICROFILMED
MAY 16 1966

FED. RD. DIVISION	STATE	PROJECT	
2	OHIO		

340
418

BELMONT COUNTY
BEL. 7- 20.74

GENERAL NOTES

REFERENCE SHALL BE MADE TO:
Standard Drawing SD-1-63 sheets 2, 3 and 4 dated 11-12-63
Standard Drawing RB-1-55 revised 2-2-59
Standard Drawing BR-1-65, *revised 11-24-65*
Supplemental Specification 808, dated *2-7-66 and 825 dated 4-22-65*
Supplemental Specification 811, dated 3-29-65 *and 828 dated 3-21-66*

DESIGN SPECIFICATIONS: This structure conforms to the requirements of "Design Specifications for Highway Structures of the State of Ohio, Department of Highways, dated 9-1-57 together with current revisions thereof.

EXCAVATION QUANTITY includes the removal of fill material required for construction of the abutments and piers.

PILES shall be driven with a hammer of not less than 11,000 ft lbs. per blow to firm contact with rock. If the length of penetration is approximately equal to the depth to rock according to the bridge foundation investigation report the firm contact shall be considered as attained when the capacity according to the formula in Sec. 507.05 is not less than the value shown on abutment and pier detail sheet for a pile hammer of the indicated energy rating. If the energy rating of hammer is between the ratings as shown, the required formula capacity shall be determined by interpolation. The design load is 35 tons per pile for all abutment piles except those in Group "C" which shall have a design load of 41 tons per pile. The design load is 35 tons per pile for the pier piles.
PIER FOOTINGS NO. 6-B AND 6-C shall extend a minimum of 3" into undisturbed rock or to the elevation shown, whichever is lower.

FOUNDATION BEARING PRESSURE: Pier footings NO. 6-B and 6-C are designed for a maximum bearing pressure of 4.9 tons per sq. ft.

MACHINE FINISH At the Contractor's option, the concrete deck may be finished by the use of a finishing machine.

UTILITY LINES All expense involved in relocating the affected utility lines shall be borne by the owner. The Contractor and Owner are requested to cooperate by arranging their work in such a manner that inconvenience to to either will be held to a minimum.

CONSTRUCTION CLEARANCE of 20'-0" vertically above the top of the railroad rails and 8'-0" horizontally from the center of tracks shall be maintained at all times.

SHEETING AND BRACING: Before construction is started, eight sets of prints showing details of the sheeting and bracing to be used for excavation adjacent to the railroad tracks shall be submitted to the Director for approval by the Department of Highways and by the Railroad Company.

ALIGNING RAILROAD TRACKS: After the Contractor has completed all excavation and backfill adjacent to the railroad tracks in compliance with Secs. 503.04 and 503.09 of the Construction and Material Specifications, subject to the Supervision of the Railroad Company, nothing in Secs. 503.04 503.09 or 108.04 of the Specifications shall be construed to hold the Contractor liable for aligning and resurfacing the railroad tracks.

DESIGN LOADING - CF 2000 (57)

CONCRETE CLASS C - basic unit stress 1,333 p.s.i.
CONCRETE CLASS E - basic unit stress 1,133 p.s.i.

STRUCTURAL STEEL - ASTM A36 - basic unit stress 20,000 p.s.i.

REINFORCING STEEL- ASTM A15, A16, A160, Deformed, Intermediate or Hard Grade. Basic unit stress 20,000 p.s.i. Except spiral reinforcement may be plain, Structural Grade with basic unit stress of 18,000 p.s.i.

ESTIMATED QUANTITIES

ITEM	TOTAL	UNIT	DESCRIPTION	SUPER.	ABUT.	WING WALL	PIERS & COL. WALLS	GEN.	AS BUILT	
503	lump	sum	Cofferdams, cribs and sheeting							
503	1700	cu. yds	Unclassified excavation including rock		716	199	785			
511	963	cu. yds.	Class "C" concrete, superstructure	963						
511	203	cu. yds	Class "C" concrete, pier columns				203			
511	628	cu. yds.	Class "E" concrete, abutment walls		628					
511	132	cu. yds.	Class "E" concrete, wingwall and collision wall			90	42			
511	512	cu. yds	Class "E" concrete, abutment and wingwall footings		434	78				
511	226	cu. yds.	Class "E" concrete, pier and collision wall footings				226			
808	963	~~units~~	Water-reducing, set-retarding admixture	963						
512	8	sq. yds.	Type "B" waterproofing			8				
512	70	lin. ft.	Premolded sealing strip		45	25				
509	421,725	lbs.	Reinforcing steel	256,479	95,057	11,256	58,933			
513	735,900	lbs.	Structural steel	735,900						
514	735,900	lbs.	Field painting of structural steel	735,900						
516	48	sq. ft.	1" preformed expansion joint filler (AASHO M-153)			48				
517	761.83	lin. ft.	*Bridge railing, Type 1.*	761.83						
517	380.50	lin. ft.	Railing (*deep beam rail*, double-faced with galvanized steel posts and bolts)	380.50						
505	lump	sum	First test pile							
507	400	lin. ft.	12 BP 53 steel piles		400					
507	8067	lin. ft.	10 BP 42 steel piles		3835	540	3692			
625			Electric lighting system - see Lighting Plans *Sh. 249*							
518	436	cu. yds.	Porous backfill		381	55				
518	20	each	Scuppers including supports	20						
825	*3390*	*sq yds.*	*Concrete surface treatment*					*3390*		
828	*108*	*lin. ft.*	*Joint sealer (end dam)*	*108*						
518	184	lin. ft.	8" bituminous coated perforated C.M.P. (Sec. 707.04)		184					
601	1050	sq yds.	Crushed aggregate slope protection					1050		
504	941	sq. ft.	Steel sheet piling left in place (min. sect. mod. of 14.2 in^3 / ft. of wall)		941					
504	488	sq. ft.	Steel sheet piling left in place (min. sect. mod. of 17.0 in^3 / ft. of wall)		488					
504	943	sq. ft	Steel sheet piling left in place (min. sect. mod. of 24.9 in^3 / ft. of wall)		943					
504	328	sq. ft.	Steel sheet piling left in place (min. sect. mod. of 21.1 in^3 / ft. of wall)			328				
504	185	sq. ft	Steel sheet piling left in place (min. sect. mod. of 7.0 in^3 / ft. of wall)			185				
Special	3	each	Elastometric bearing pads 35" ϕ 6 laminas	3						
Special	2	each	Elastometric bearing pads 35" ϕ 3 laminas	2						
Special	3	each	Elastometric bearing pads 23" ϕ 4 laminas	3						
Special	1	each	Elastometric bearing pads 23" ϕ 3 laminas	1						
Special	4	each	Elastometric bearing pads 23" ϕ 2 laminas	4						

RACKOFF ASSOCIATES
ENGINEERS COLUMBUS, OHIO

GENERAL NOTES & ESTIMATED QUANTITIES
BRIDGE NO. BEL.- 7 - 2289
S.R. 7 OVER WHEELING TERMINAL R.R.
BELMONT COUNTY
STA. 1208+ 50.75
STA. 1212+ 31.25

Designed	Drawn	Traced	Checked	Reviewed	Date	Revised
P.M. F.A.	E.D.A.		R.A.K.		6-20 63	

MICROFILMED
MAY 16 1986

FED. RD. DIVISION	STATE	PROJECT	TYPE FUNDS
2	OHIO		

341 of 413

BELMONT COUNTY
BEL. 7- 20.74

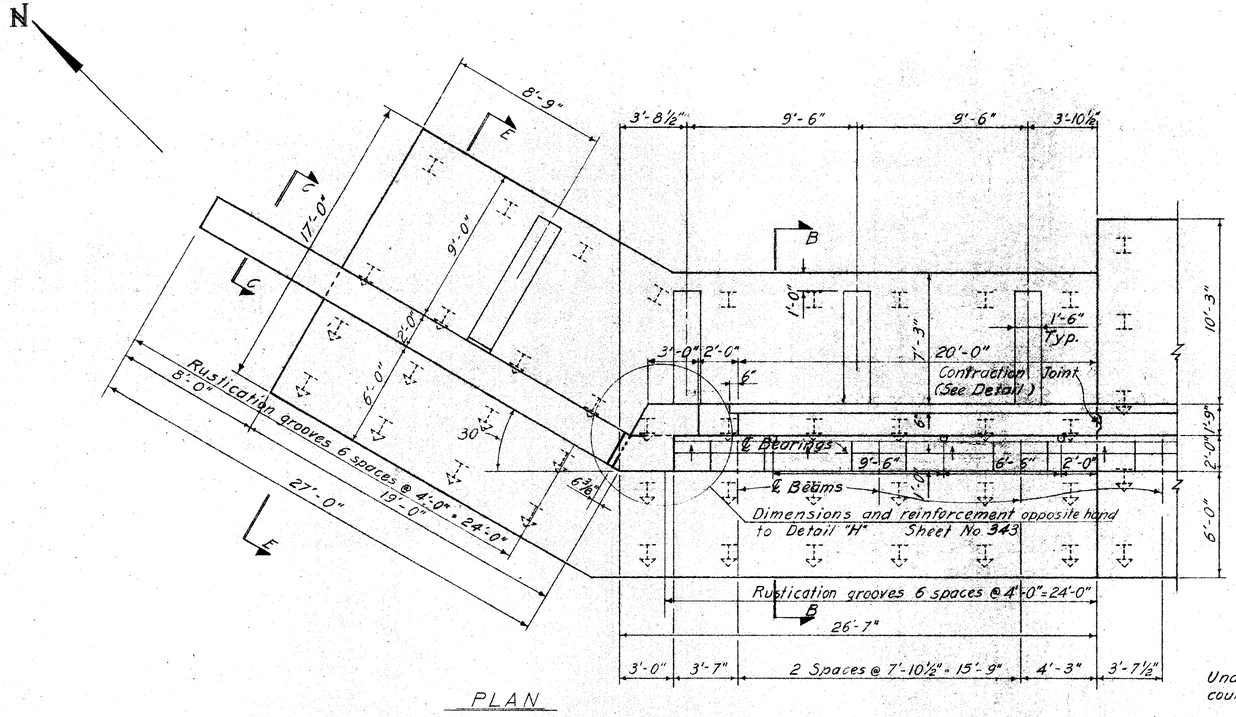

PLAN

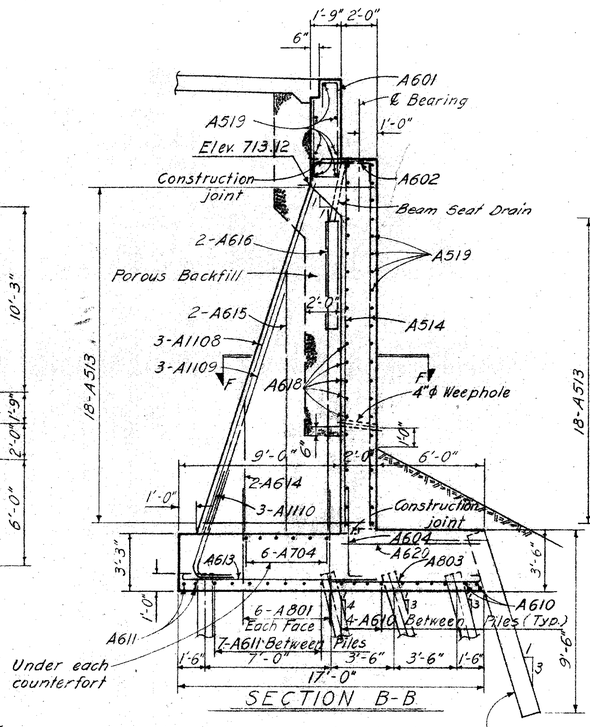

SECTION B-B

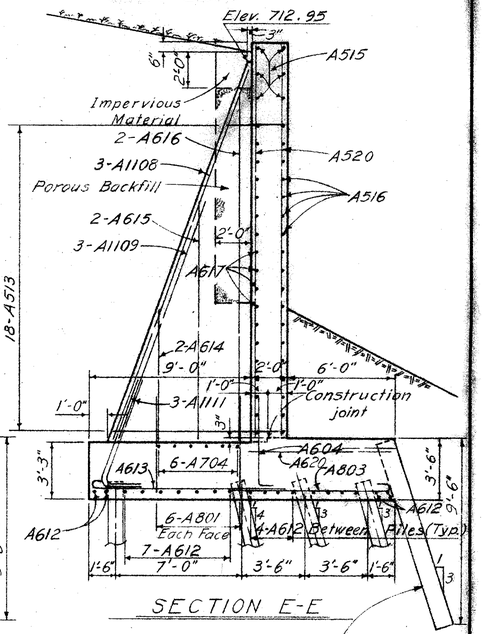

SECTION E-E

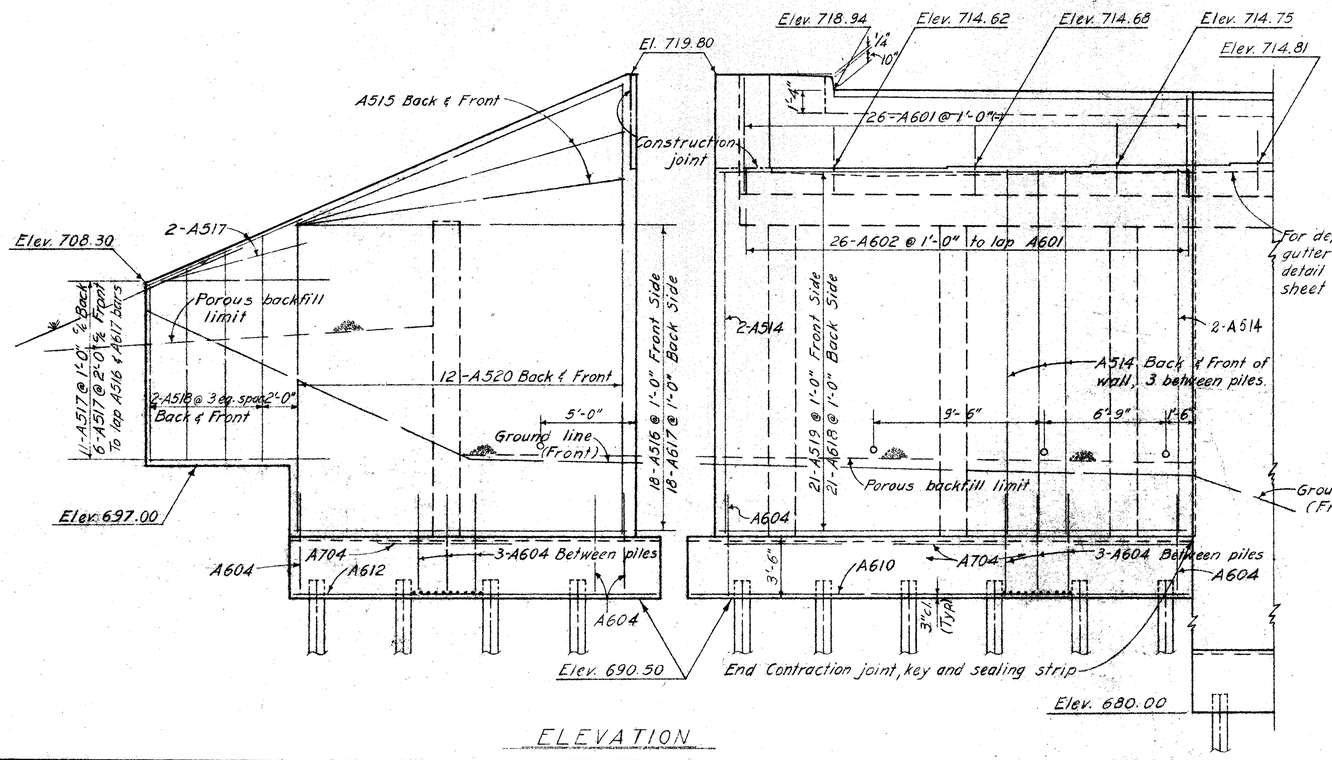

ELEVATION

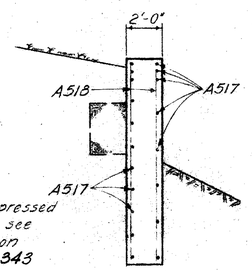

SECTION C-C

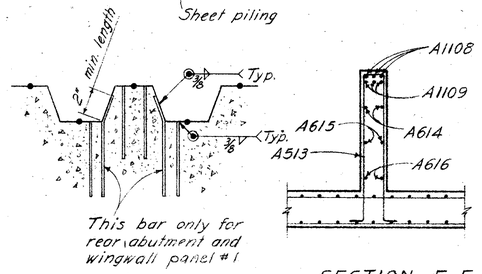

PLAN VIEW OF PILE ANCHORS

SECTION F-F

NOTE:
STEEL SHEET PILING left in place at forward abutment shall have a minimum section modulus of 17 in.³ per foot of wall.
Used piling in good condition may be used.

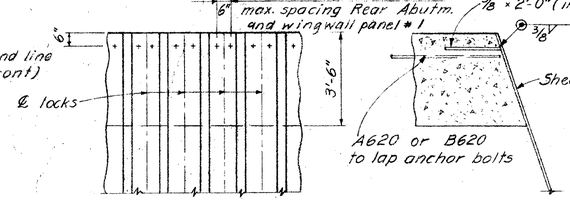

DETAILS OF SHEET PILE ANCHORS

RACKOFF ASSOCIATES
ENGINEERS COLUMBUS, OHIO

FORWARD ABUTMENT, WEST SIDE

BRIDGE NO. BEL-7-22.89
S.R.7 OVER WHEELING TERMINAL R R
BELMONT COUNTY
STA. 1208+ 50.75
STA. 1212+ 31.25

Designed	Drawn	Traced	Checked	Reviewed	Date	Revised
F. A.	M. R.		R.A.K.	[illegible]	6-20-63	

MICROFILMED
MAY 16 1966

FED. RD. DIVISION	STATE	PROJECT	TYPE FUNDS
2	OHIO		

342
418

BELMONT COUNTY
BEL. 7- 20.74

PLAN

ELEVATION

ELEVATION G-G

SECTION D-D

SECTION A-A

SECTION F-F

NOTE:
STEEL SHEET PILING left in place shall have a minimum section modulus of 14.2 in.³ per foot of wall.
Used piling in good condition may be used.
The steel sheet piling extends along the entire front face of the footing.

RACKOFF ASSOCIATES
ENGINEERS COLUMBUS, OHIO

FORWARD ABUTMENT, EAST SIDE
BRIDGE NO. BEL-7-2289
S.R.7 OVER WHEELING TERMINAL R R
BELMONT COUNTY
STA. 1208+50.75
STA. 1212+31.25

Designed	Drawn	Traced	Checked	Reviewed	Date	Revised
F.A.	M.R.		R.A.K.	[illegible]	6-20 63	

MICROFILMED
MAY 16 1996

FED. RD. DIVISION	STATE	PROJECT	TYPE FUNDS
2	OHIO		

343
418

BELMONT COUNTY
BEL. 7-20.74

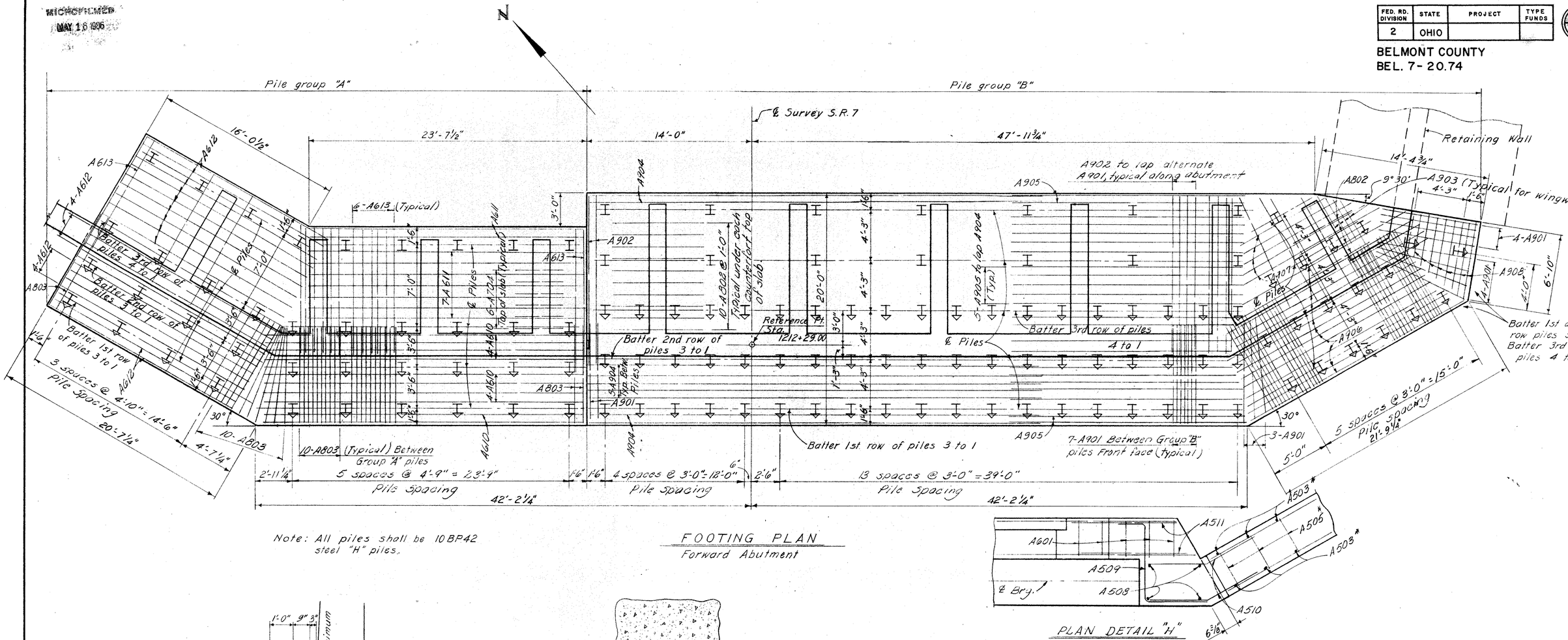

Note: All piles shall be 10BP42 steel "H" piles.

FOOTING PLAN
Forward Abutment

PLAN DETAIL "H"

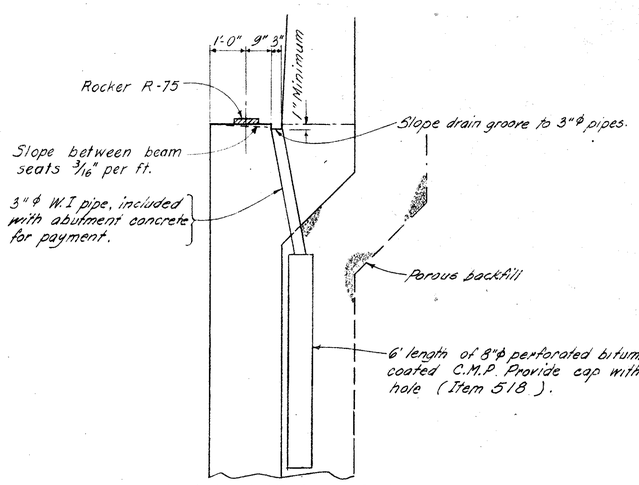

DRAINAGE OF BEAM SEATS

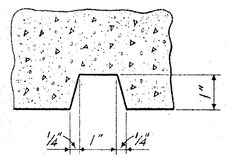

TYPICAL RUSTICATION GROOVE

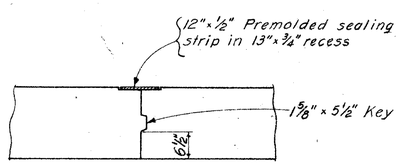

CONTRACTION JOINT

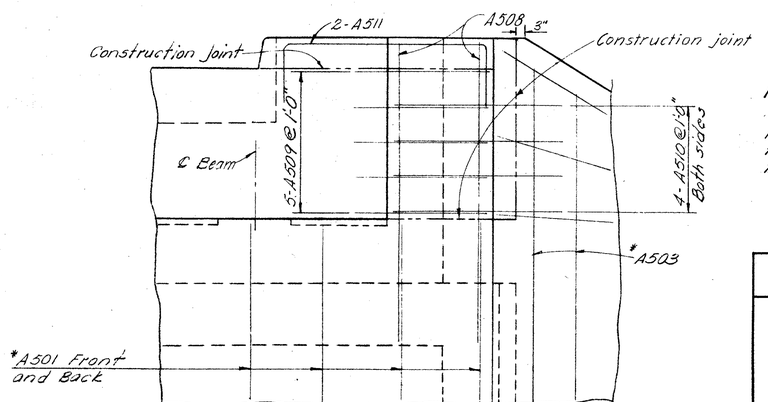

ELEVATION DETAIL "H"

Notes:
For the estimated average pay length and the required formula capacity of the piles in each group See sheet 344.

RACKOFF ASSOCIATES
ENGINEERS COLUMBUS, OHIO

FORWARD ABUTMENT: FOOTING PLAN
BRIDGE NO. BEL-7-2289
S.R.7 OVER WHEELING TERMINAL R R
BELMONT COUNTY
STA. 1208+50.75
STA. 1212+31.25

Designed	Drawn	Traced	Checked	Reviewed	Date	Revised
F. A.	F. A.	E.D.A.	R.A.K.	[illegible]	6-20-63	

MICROFILMED
MAY 16 1990

FED. RD. DIVISION	STATE	PROJECT	TYPE FUNDS
2	OHIO		

344
418

BELMONT COUNTY
BEL. 7 - 20.74

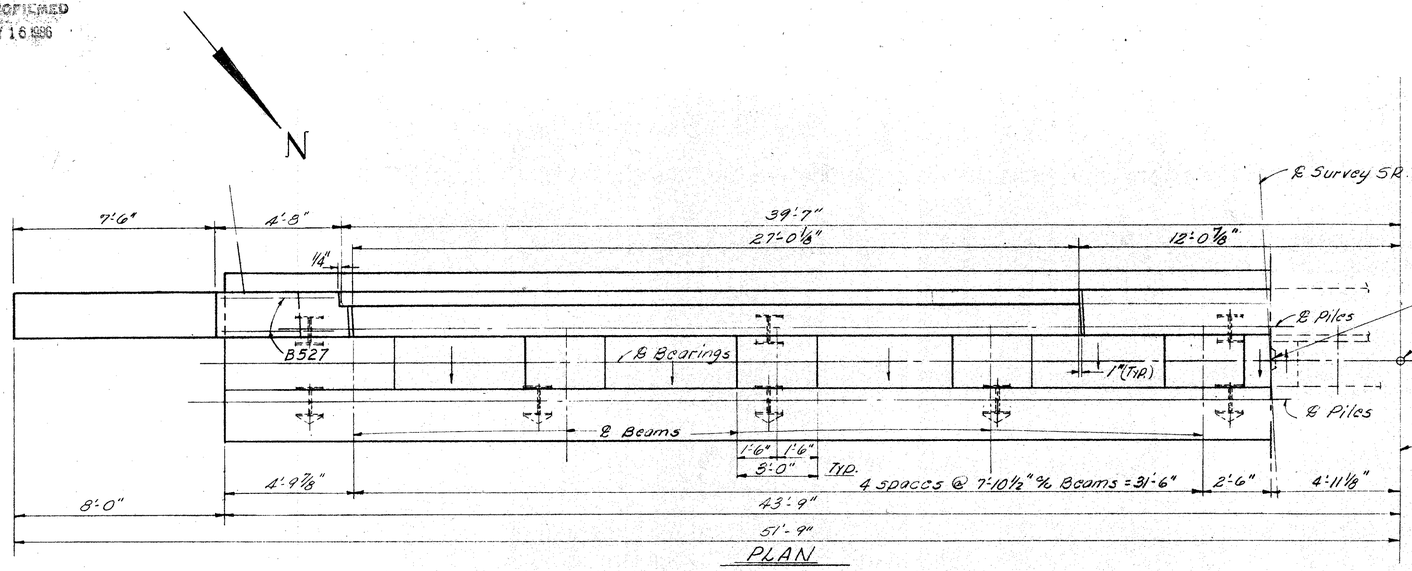

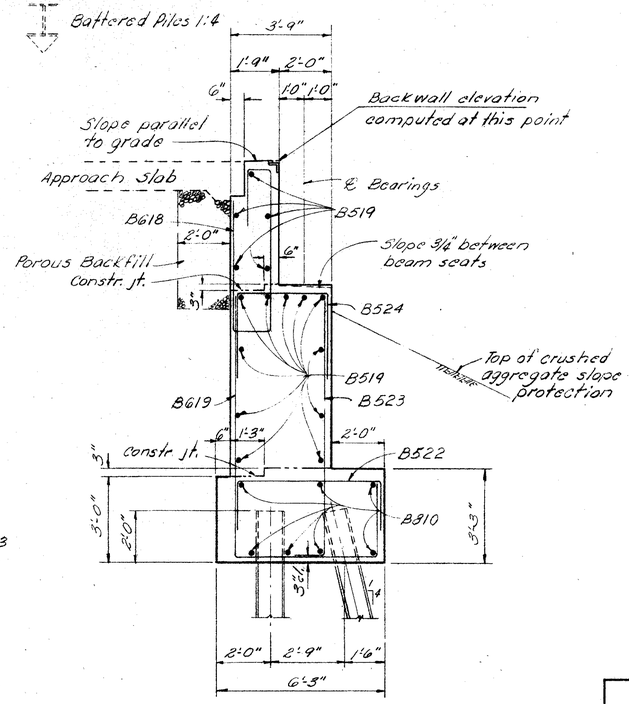

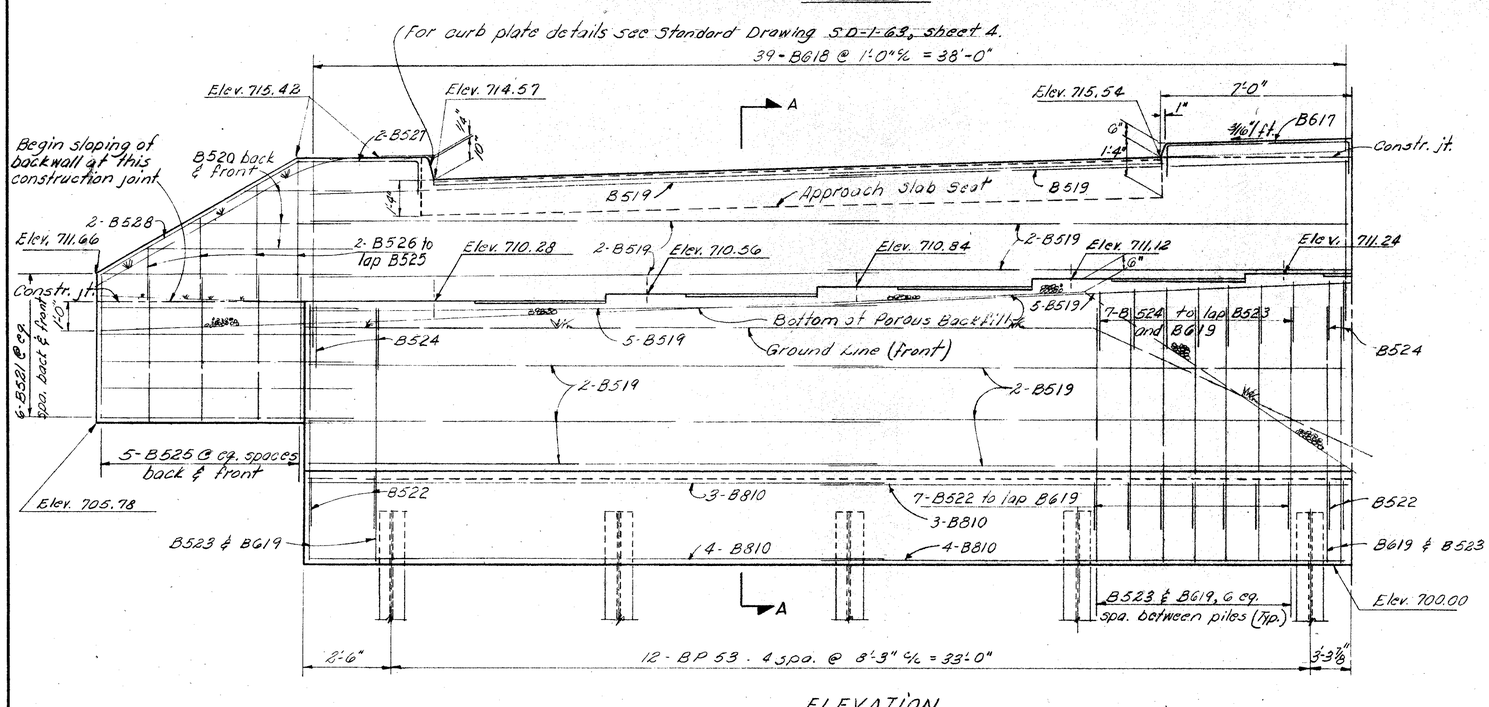

ELEVATION

All piles to be 12 BP 53. Pile group "C", see table on this sheet

ABUTMENT NOTES:

Footing	Estimated average pay length of piles	Required formula capacity in tons per pile	
		11000 # Hammer	15000 # Hammer or greater
Group "A" Forward Abut. West side	20'	52	46
Group "B" Forward Abut. East side	15'	56	52
Group "C" Rear Abut. East side	50'	38	35
Group "D" Rear Abut. West side	20'	52	46
Group "E" Rear Abut. West Side	35'	47	42
Group "F" Rear Abut. West Side	30'	43	39
Wingwall Panels 1 thru 3	18'	53	48

PROCEDURE: For the spill-thru type abutment, rear abutment east side, the embankment shall be placed and compacted up to the finished spill-thru slope and to the level of the subgrade for a distance of 200 feet back of the abutment, after which excavation shall be made for the abutment and piles driven. The procedure for the remaining abutments (all cantilever type) shall be as follows: Before the backwall is constructed the embankment shall be placed and compacted up to the level of the subgrade, with a 1:1 slope from the bridge seat to the subgrade, for a distance of 200 feet back of the abutments.

RACKOFF ASSOCIATES
ENGINEERS COLUMBUS, OHIO

REAR ABUTMENT: EAST SIDE
BRIDGE NO. BEL.-7-2289
S.R. 7 OVER WHEELING TERMINAL R.R.
BELMONT COUNTY
STA. 1208+50.75
STA. 1212+31.25

Designed	Drawn	Traced	Checked	Reviewed	Date	Revised
F.A.	E.D.A.		R.K.	GEE	6-20-63	

MICROFILMED
MAY 16 1985

FED. RD. DIVISION	STATE	PROJECT	TYPE FUNDS
2	OHIO		

345
416

BELMONT COUNTY
BEL. 7 - 20.74

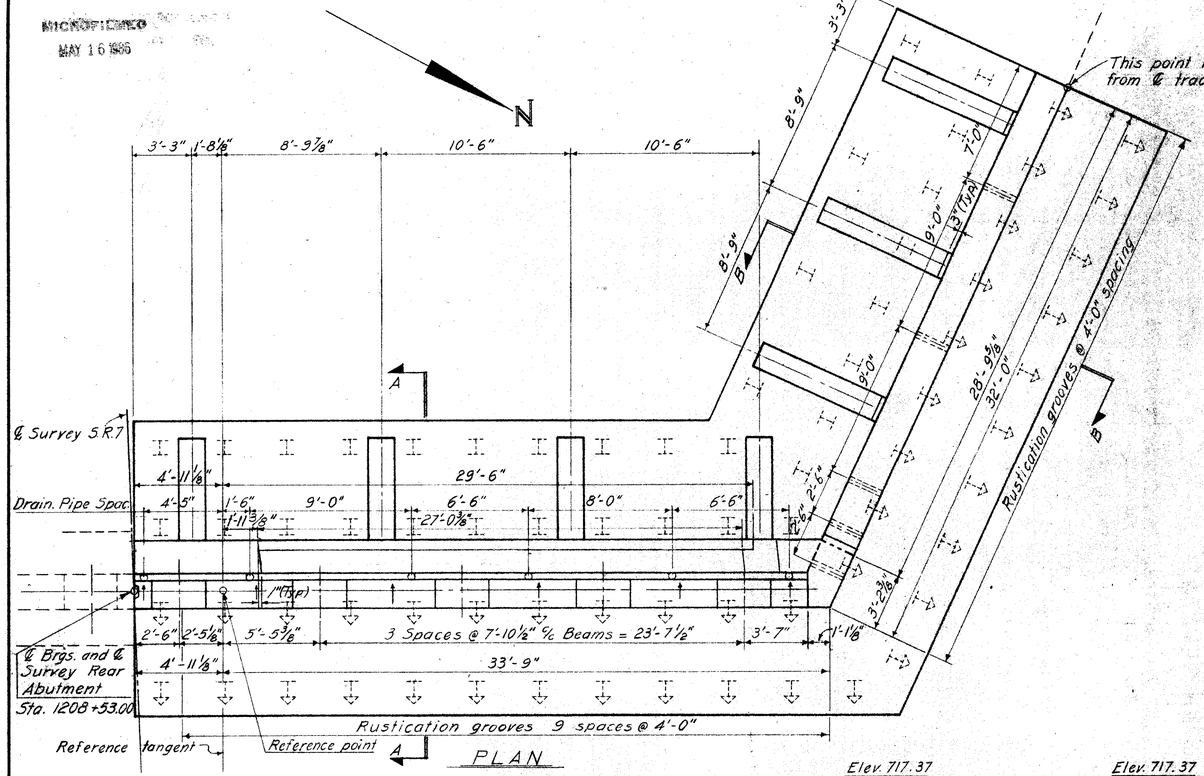

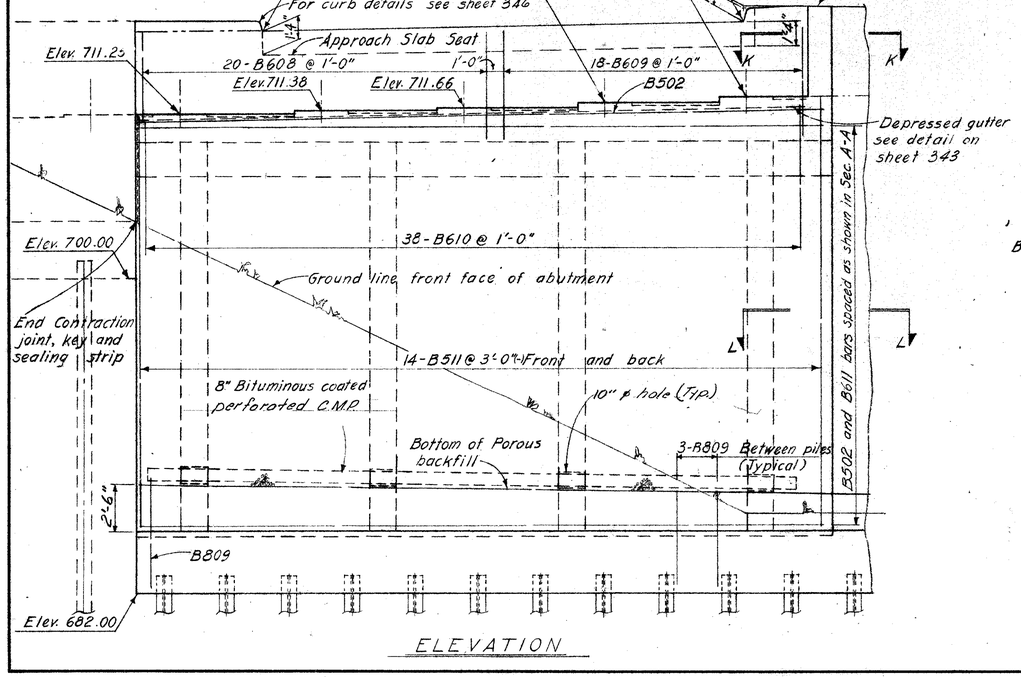

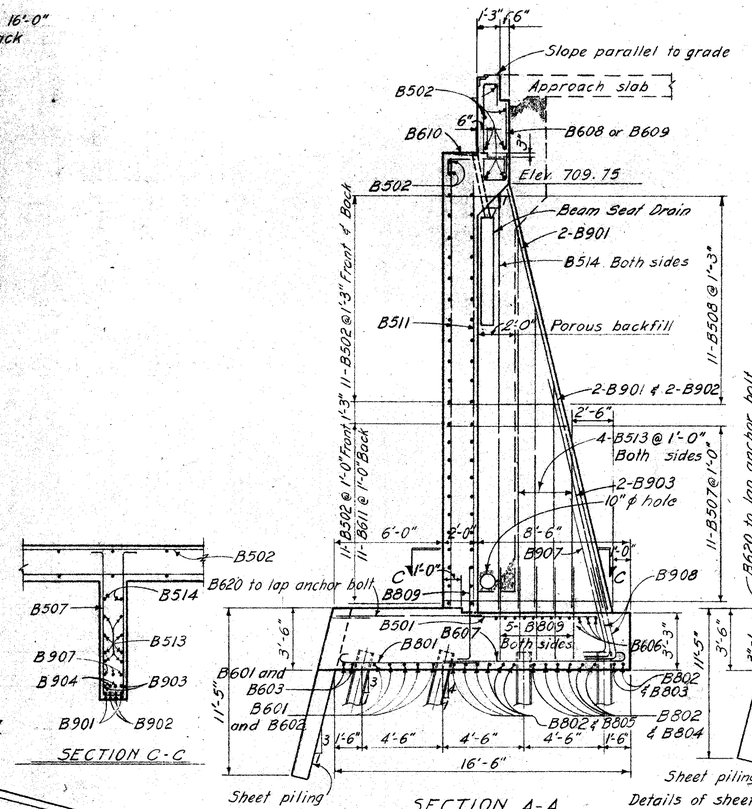

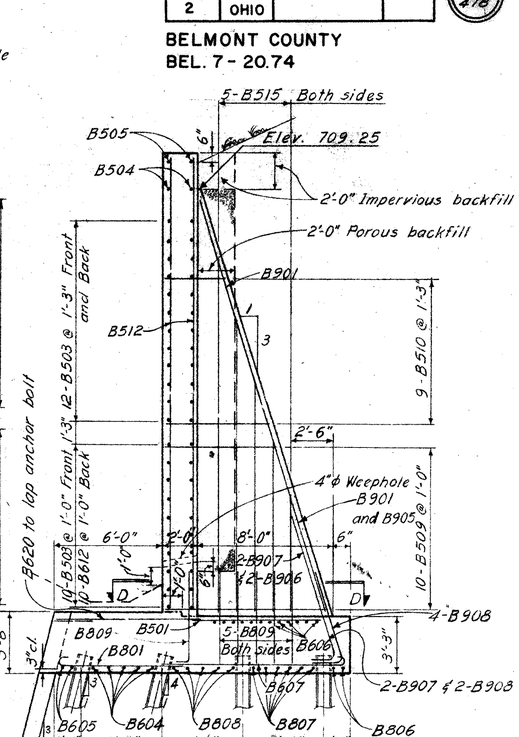

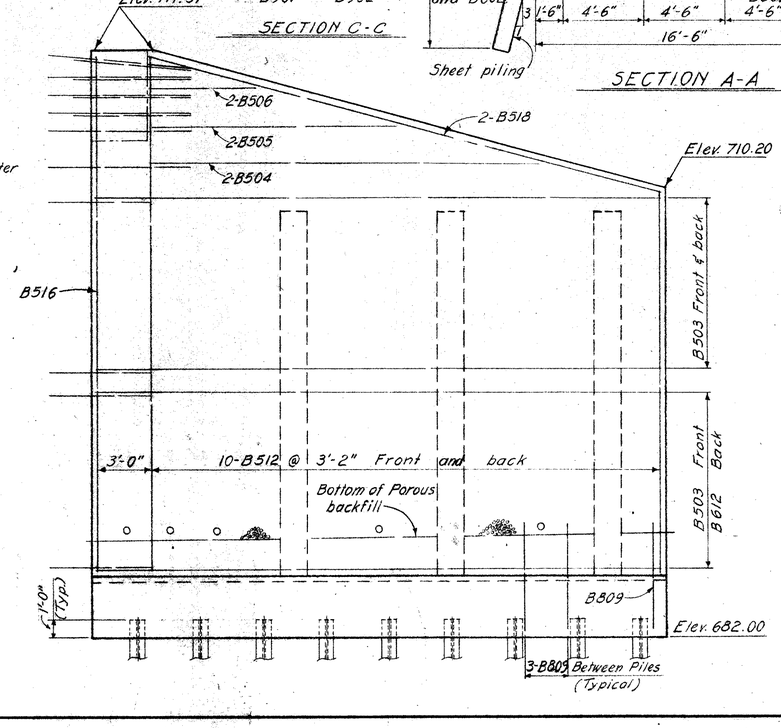

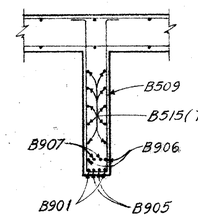

NOTE:
STEEL SHEET PILING left in place shall have a minimum section modulus of 24.9 in.³ per foot of wall. Used piling in good condition may be used.
For Sections K-K and L-L See sheet 346

RACKOFF ASSOCIATES
ENGINEERS COLUMBUS, OHIO

REAR ABUTMENT, WEST SIDE
BRIDGE NO. BEL-7-2289
S.R.7 OVER WHEELING TERMINAL RR
BELMONT COUNTY
STA. 1208+50.75
STA. 1212+31.25

Designed	Drawn	Traced	Checked	Reviewed	Date	Revised
F.A.	F.A.	M.R.	R.A.K.	[illegible]	6-20-63	

MICROFILMED
MAY 16 65

FED. RD. DIVISION	STATE	PROJECT	TYPE FUNDS
2	OHIO		

340
418

BELMONT COUNTY
BEL.7-20.74

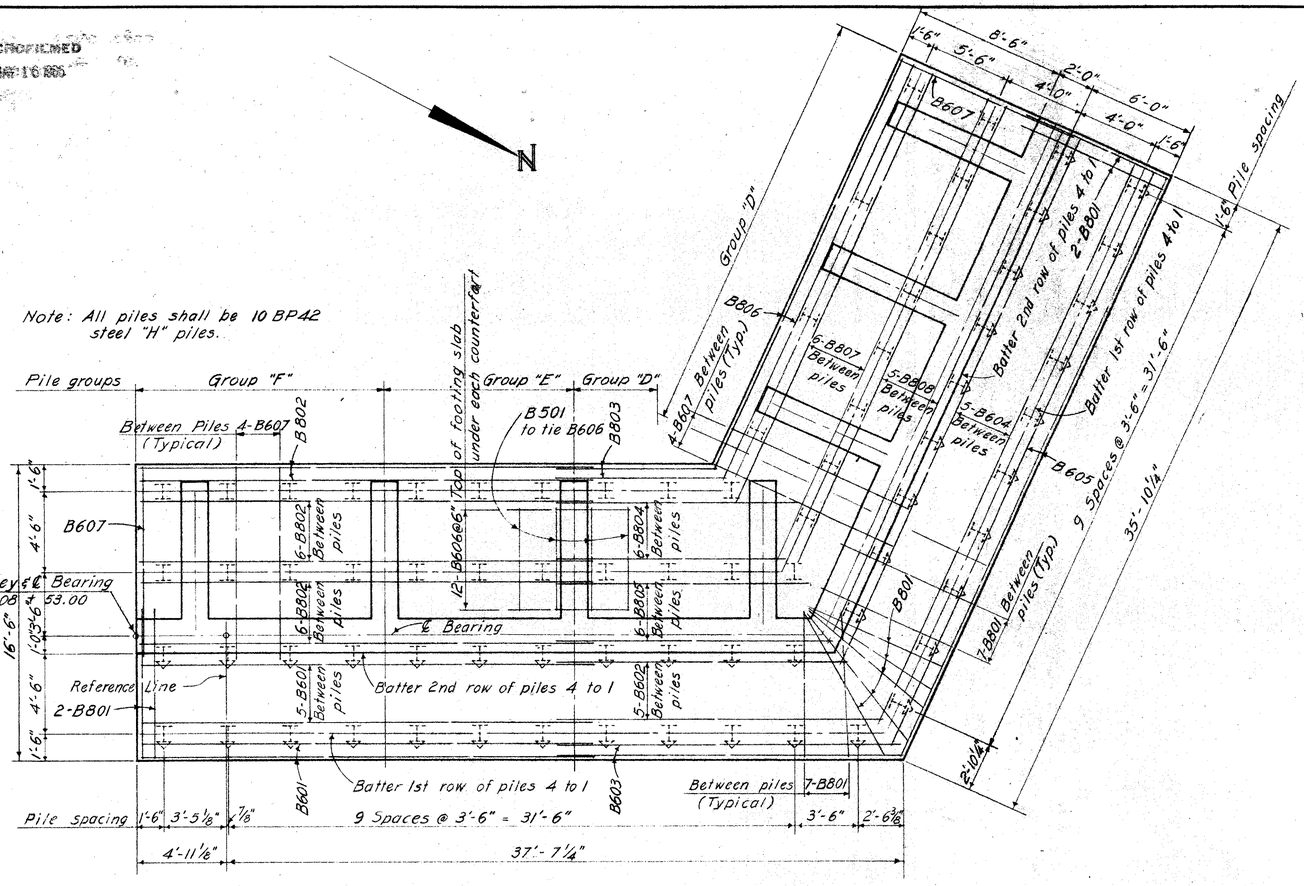

FOOTING PLAN

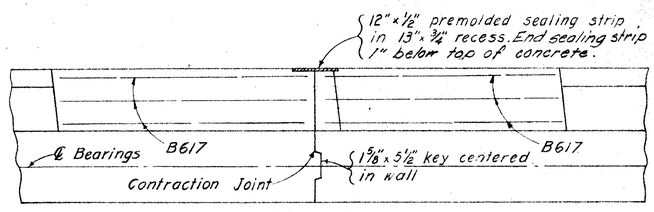

MEDIAN PLAN

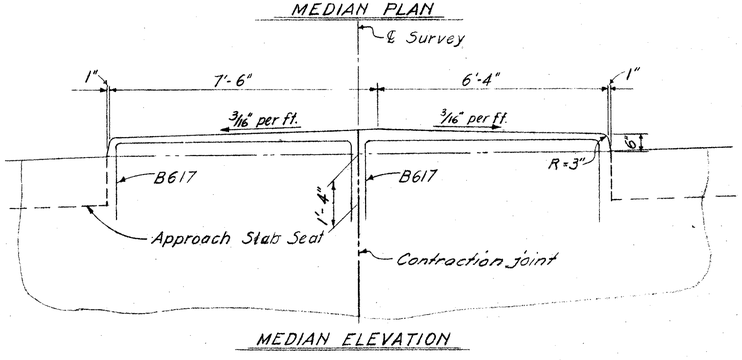

MEDIAN ELEVATION

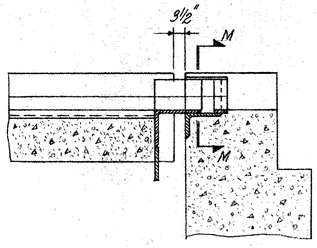

CURB PLATE AT MEDIAN

For details not shown see Std. Drwg. SD-1-63, sheet 4

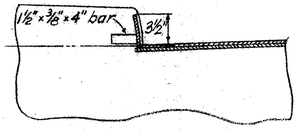

SECTION M-M

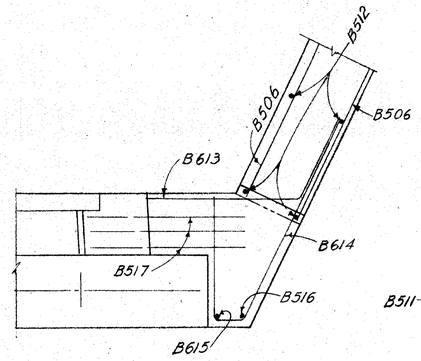

SECTION K-K

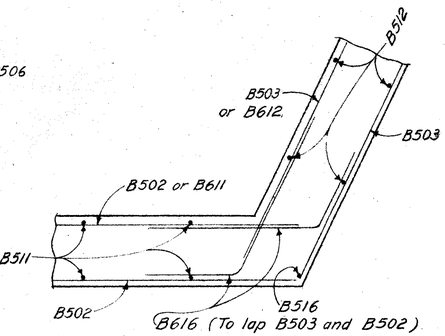

SECTION L-L

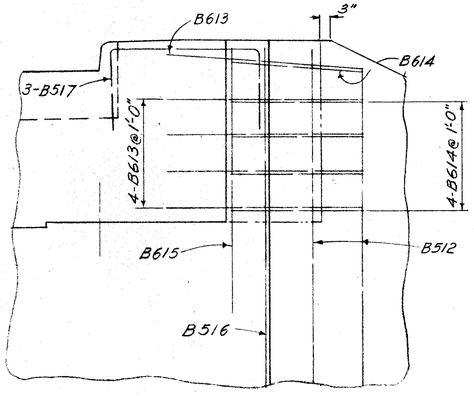

ELEVATION OF SECTION K-K

NOTES

For the estimated average pay-length and the required formula capacity of the piles in each group see sheet 344

RACKOFF ASSOCIATES
ENGINEERS COLUMBUS, OHIO

REAR ABUTMENT: WEST SIDE
BRIDGE NO. BEL-7-2289
S.R.7 OVER WHEELING TERMINAL RR
BELMONT COUNTY
STA. 1208 + 50.75
STA. 1212 + 31.25

Designed	Drawn	Traced	Checked	Reviewed	Date	Revised
F. A.	F. A.	M.R.	R.A.K.	[illegible]	6-20 63	

MICROFILMED
MAY 15 1995

FED. RD. DIVISION	STATE	PROJECT	TYPE FUNDS
2	OHIO		

347
416

BELMONT COUNTY
BEL. 7 - 20.74

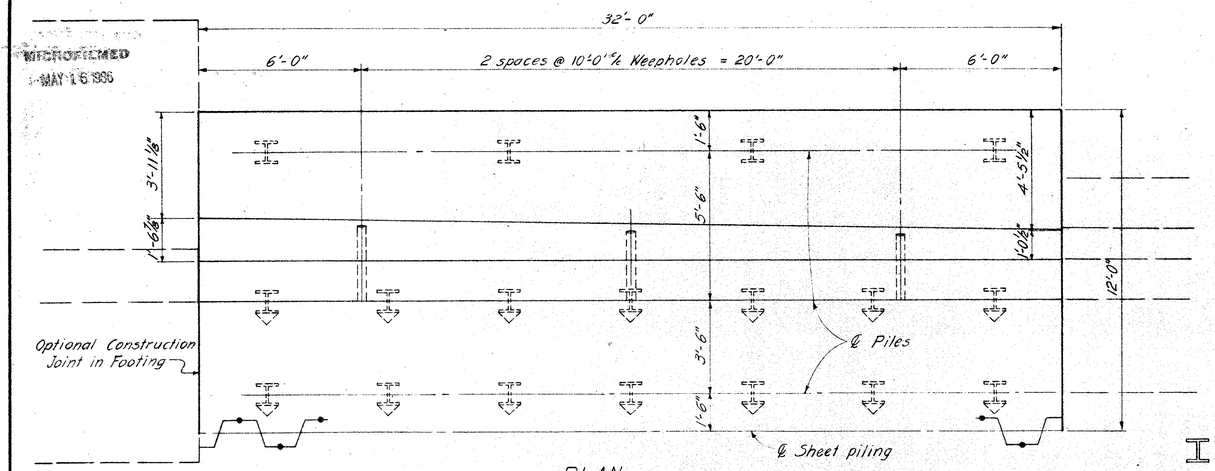

PLAN

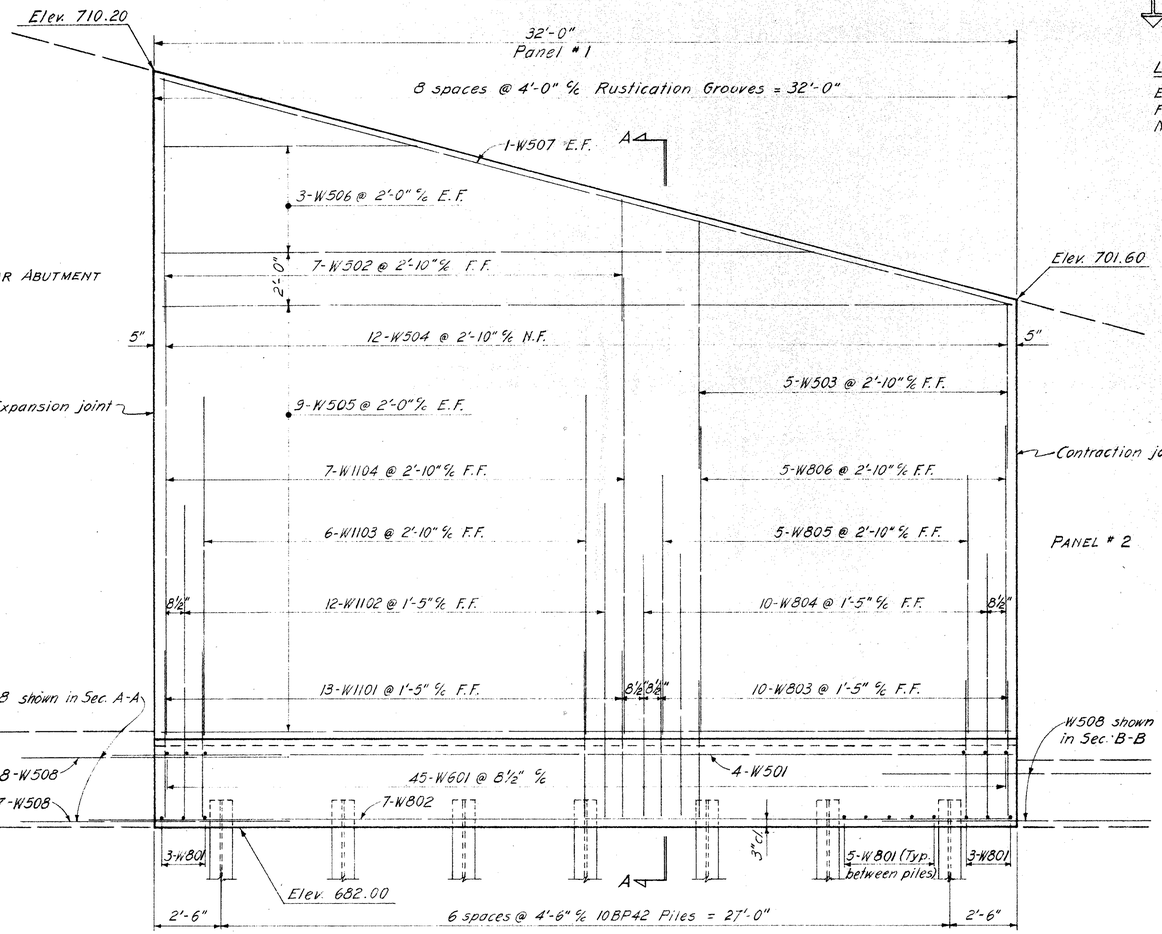

ELEVATION
Sheet piling not shown

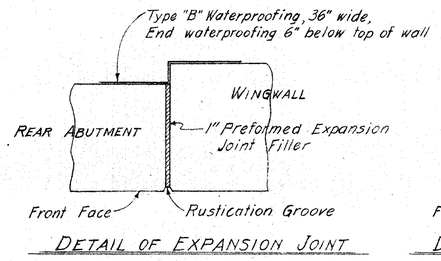

DETAIL OF EXPANSION JOINT

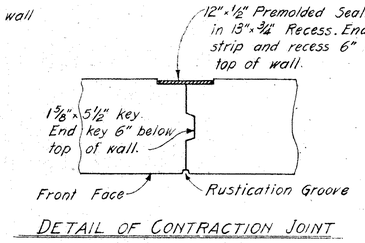

DETAIL OF CONTRACTION JOINT

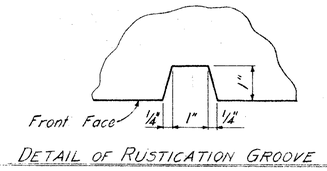

DETAIL OF RUSTICATION GROOVE

I Indicates vertical piles

I Indicates piles battered 1:4

LEGEND

E.F. Denotes Each Face
F.F. Denotes Far Face
N.F. Denotes Near Face

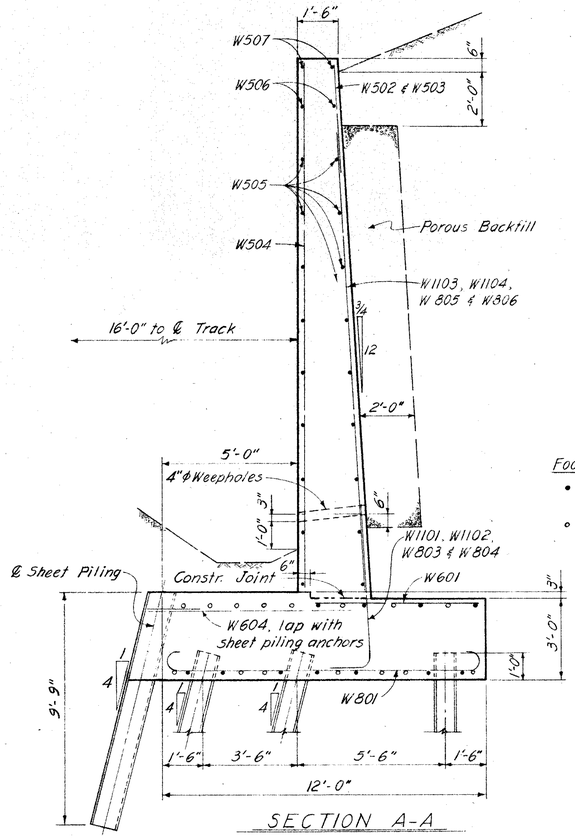

SECTION A-A

NOTES:
Steel sheet piling left in place for wingwall panel # 1 shall have a minimum section modulus of 21.1 in.³ per foot of wall.
Used piling in good condition may be used.

See sheet 341 for sheet piling anchor details.

FOOTING LONGITUDINAL BARS

- Denotes W501 top and W802 bottom
- Denotes W508

RACKOFF ASSOCIATES
ENGINEERS COLUMBUS, OHIO

REAR ABUTMENT: WINGWALL
PANEL NO. 1
BRIDGE NO. BEL-7-2289
S.R.7 OVER WHEELING TERMINAL R.R.
BELMONT COUNTY
STA. 1208 + 50.75
STA. 1212 + 31.25

Designed	Drawn	Traced	Checked	Reviewed	Date	Revised
P.M.	P.M.	M.R.	H.H.	[illegible]	6-20-63	

MICROFILMED
MAY 16 1996

FED. RD. DIVISION	STATE	PROJECT	TYPE FUNDS
2	OHIO		

348
418

BELMONT COUNTY
BEL. 7-20.74

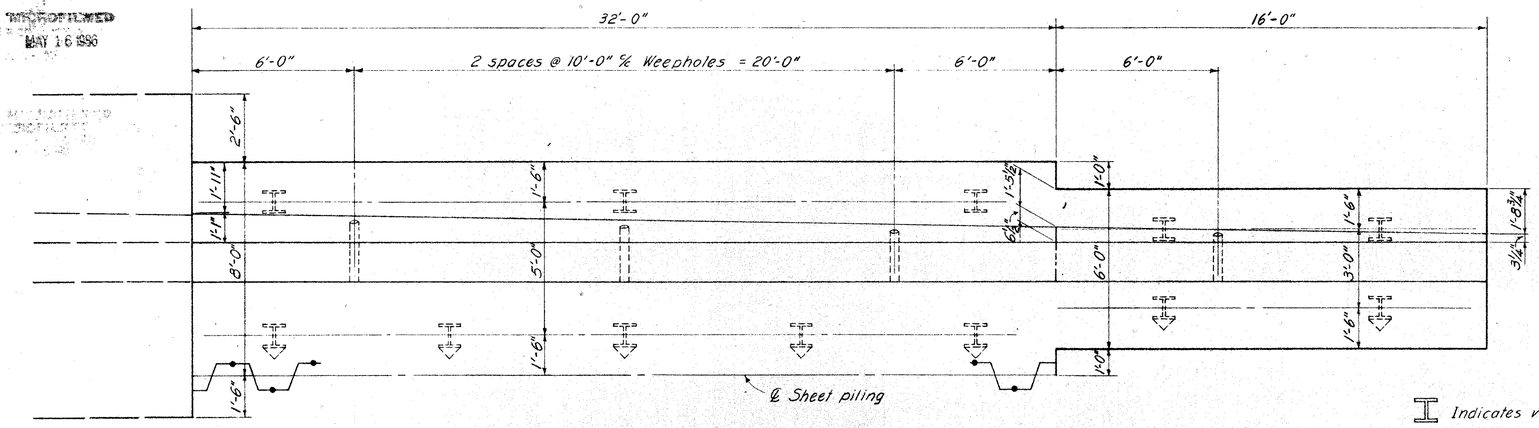

PLAN

Indicates vertical piles

Indicates piles battered 1:4

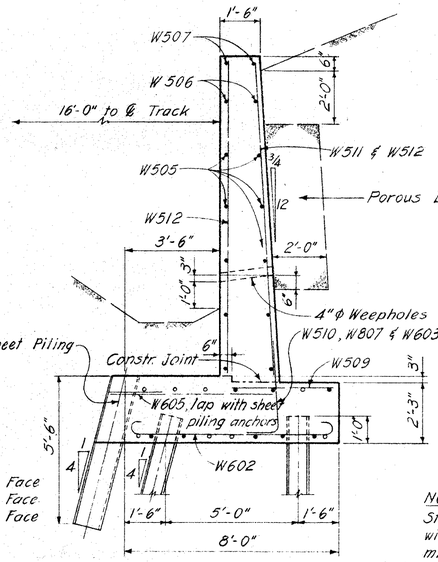

SECTION B-B

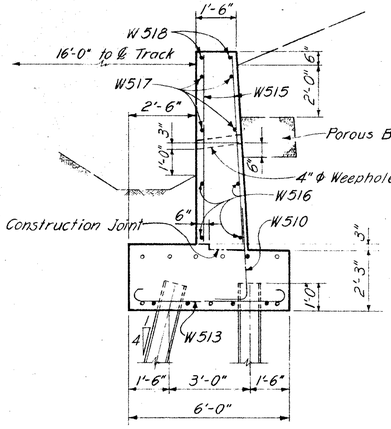

SECTION C-C

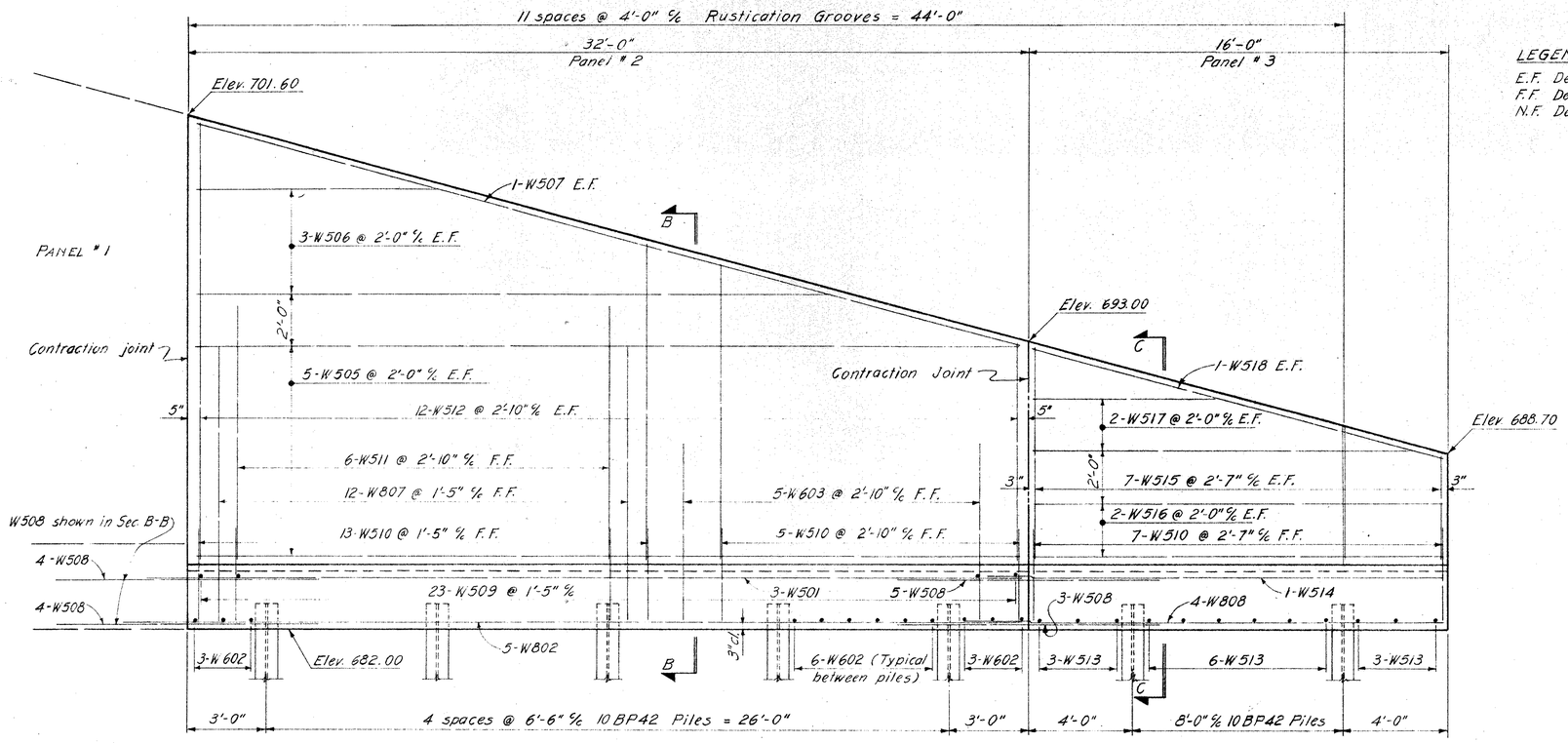

ELEVATION
Sheet piling not shown

FOOTING LONGITUDINAL BARS
- • Denotes W501 top and W802 bottom
- ○ Denotes W508

LEGEND
E.F. Denotes Each Face
F.F. Denotes Far Face
N.F. Denotes Near Face

NOTES:
Steel sheet piling left in place for wingwall panel # 2 shall have a minimum section modulus of 7.0 in.³ per foot of wall.
Used piling in good condition may be used.

See sheet 341 for sheet piling anchor details.

FOOTING LONGITUDINAL BARS
- • Denotes W514 top and W808 bottom
- ○ Denotes W508

RACKOFF ASSOCIATES
ENGINEERS COLUMBUS, OHIO

REAR ABUTMENT: WINGWALL PANELS NO. 2 AND NO. 3
BRIDGE NO. BEL-7-2289
S.R.7 OVER WHEELING TERMINAL R.R.
BELMONT COUNTY
STA. 1208 + 50.75
STA. 1212 + 31.25

Designed	Drawn	Traced	Checked	Reviewed	Date	Revised
P. M.	P. M.	M. R.	H. H.	[illegible]	6-20 63	

FED. RD. DIVISION	STATE	PROJECT	TYPE FUNDS
2	OHIO		

347
418

BELMONT COUNTY
BEL. 7- 20.74

MICROFILMED
MAY 16 1966

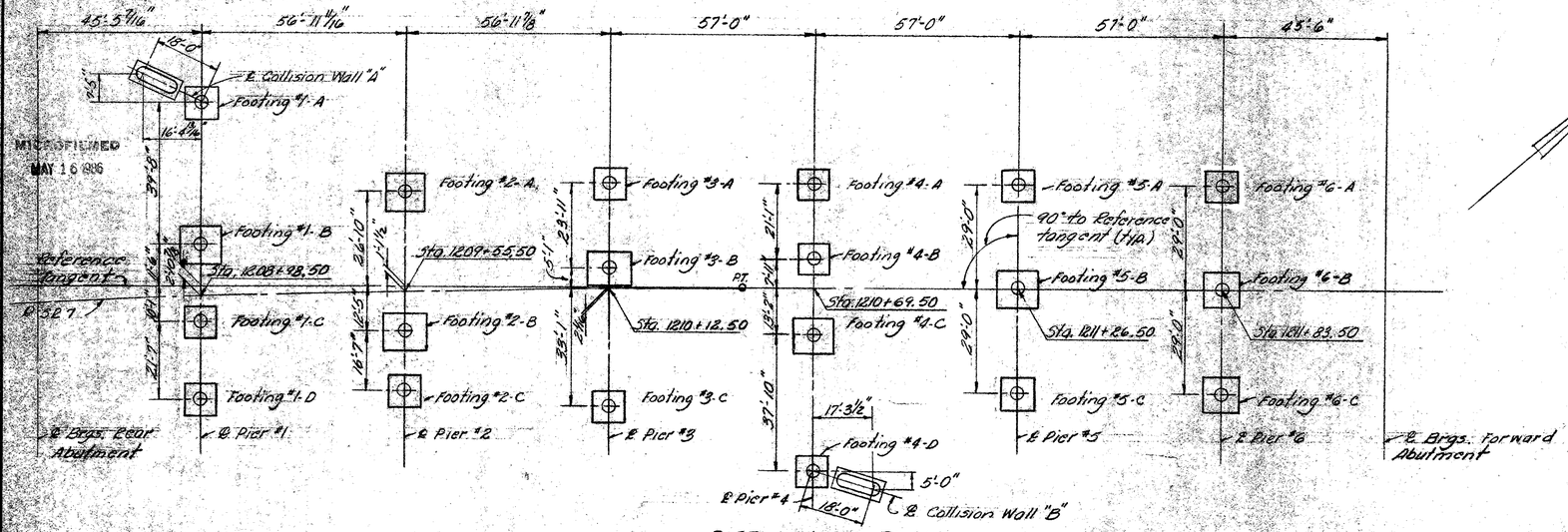

PIER LAYOUT PLAN

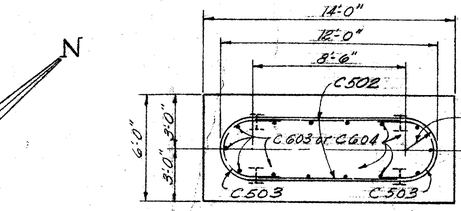

PLAN

NOTE: All concrete for collision walls shall be Class "E".

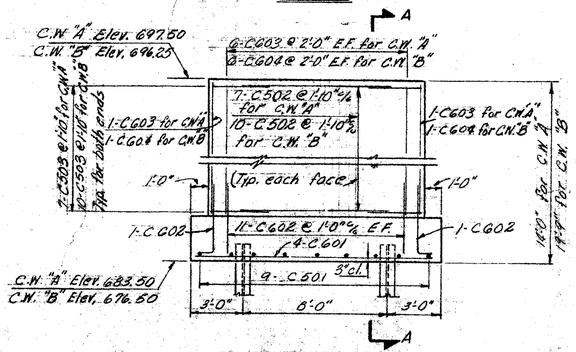

ELEVATION

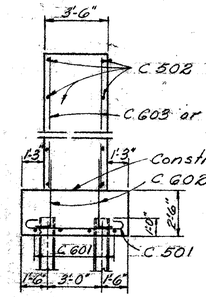

SECTION A-A

COLLISION WALLS "A" AND "B"

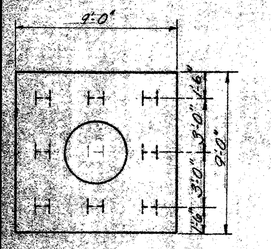

PLAN TYPE "E"

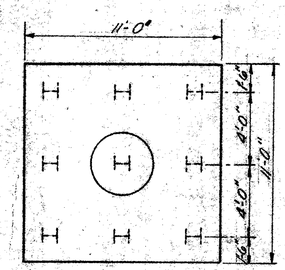

PLAN TYPE "F"

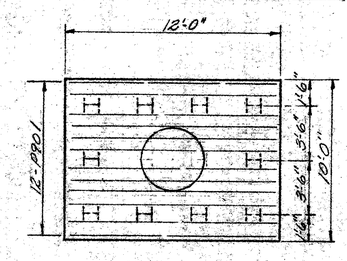

PLAN TYPE "G"

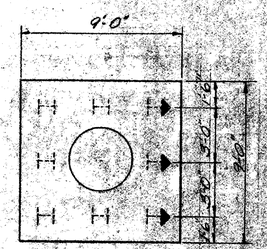

PLAN TYPE "H"

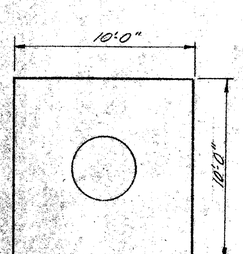

PLAN TYPE "I"

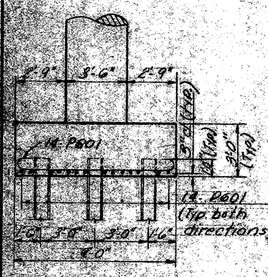

TYPE "E"

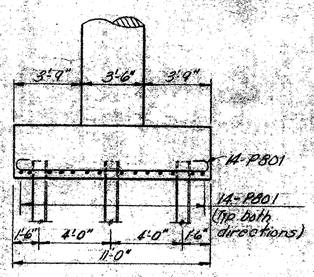

TYPE "F"

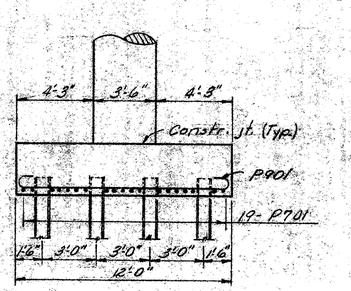

TYPE "G"

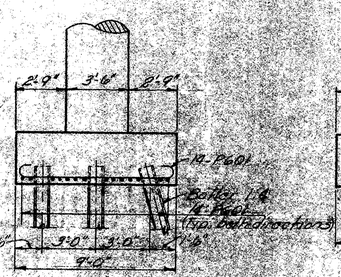

TYPE "H"

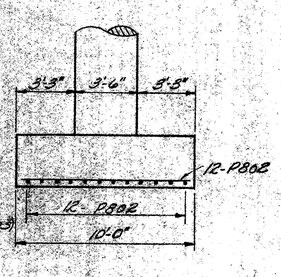

TYPE "I"

FOOTING ELEVATION VIEWS

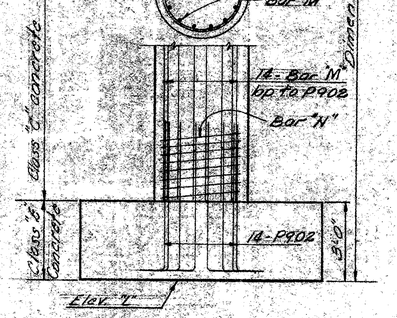

TYPICAL PIER ELEVATION

Column or Footing	"1-A	"1-B	"1-C	"1-D	"2-A	"2-B	"2-C	"3-A	"3-B	"3-C	"4-A	"4-B	"4-C	"4-D	"5-A	"5-B	"5-C	"6-A	"6-B	"6-C
Type of footing	"E"	"F"	"H"	"H"	"F"	"G"	"E"	"E"	"G"	"E"	"E"	"E"	"F"	"E"	"E"	"F"	"E"	"E"	"I"	"I"
Elev. "K"	711.89	710.48	709.77	708.96	712.60	711.22	711.81	714.38	712.78	712.87	714.78	714.50	713.19	713.59	714.72	713.35	714.29	712.88	712.74	712.61
Elev. "L"	683.50	681.69	679.00	679.66	683.14	679.00	672.00	692.00	683.00	679.00	691.50	688.00	682.50	676.60	689.80	683.80	681.15	686.00	667.00	664.00
Bar "M"	P903	P904	P905	P906	P907	P908	P909	P910	P911	P912	P913	P914	P915	P916	P917	P907	P918	P919	P920	P921
Bar "N"	SP401	SP402	SP403	SP404	SP405	SP406	SP407	SP408	SP409	SP410	SP411	SP412	SP413	SP414	SP415	SP405	SP416	SP417	SP418	SP419
Dimension "X"	28'-4 5/8"	28'-9 1/2"	30'-9 1/4"	29'-3 3/8"	29'-5 1/2"	32'-2 5/8"	34'-9 3/4"	28'-4 1/2"	29'-9 3/8"	33'-10 1/2"	23'-3 3/8"	24'-6"	30'-8 1/4"	37'-11 3/8"	25'-2 5/8"	29'-5 1/2"	32'-6 1/2"	26'-10 1/2"	45'-8 7/8"	48'-7 7/8"

Note: Piles for footings "1-B", 1-C and "1-D shall be driven after the embankment for the Rear Abutment has been completed up to the finished spill thru slope for a distance of 200 Ft. back of the abutment.

All pier and collision wall piles shall be 10 BP 42 steel piles.

PILE DRIVING DATA

Footing No.	Estimated Average Ray Length of Piles (in feet)	Required Formula Capacity in Tons per Pile (See General notes) 11,000# hammer	15,000# or greater hammer
1-A	17	54	49
1-B	28	46	41
1-C	31	44	39
1-D	34	43	38
2-A	18	53	48
2-B	26	47	42
2-C	28	47	42
3-A	26	47	42
3-B	21	51	45
3-C	26	47	42
4-A	26	47	42
4-B	32	50	44
4-C	20	51	46
4-D	21	51	45
5-A	22	50	44
5-B	20	51	46
5-C	28	50	44
6-A	17	54	49
C.W. "A"	17	54	49
C.W. "B"	21	51	45

RACKOFF ASSOCIATES
ENGINEERS COLUMBUS, OHIO

PIERS AND COLLISION WALLS
BRIDGE NO. BEL.-7-22.89
S.R. 7 OVER WHEELING TERMINAL R.R.
BELMONT COUNTY
STA. 1208+50.75
STA. 1212+31.25

Designed	Drawn	Traced	Checked	Reviewed	Date	Revised
R.A.K.	R.A.K.	E.D.A.	P.M.		6-20-63	

MICROFILMED
MAY 16 1986

FED. RD. DIVISION	STATE	PROJECT	TYPE FUNDS
2	OHIO		

350/418

BELMONT COUNTY
BEL. 7 - 20.74

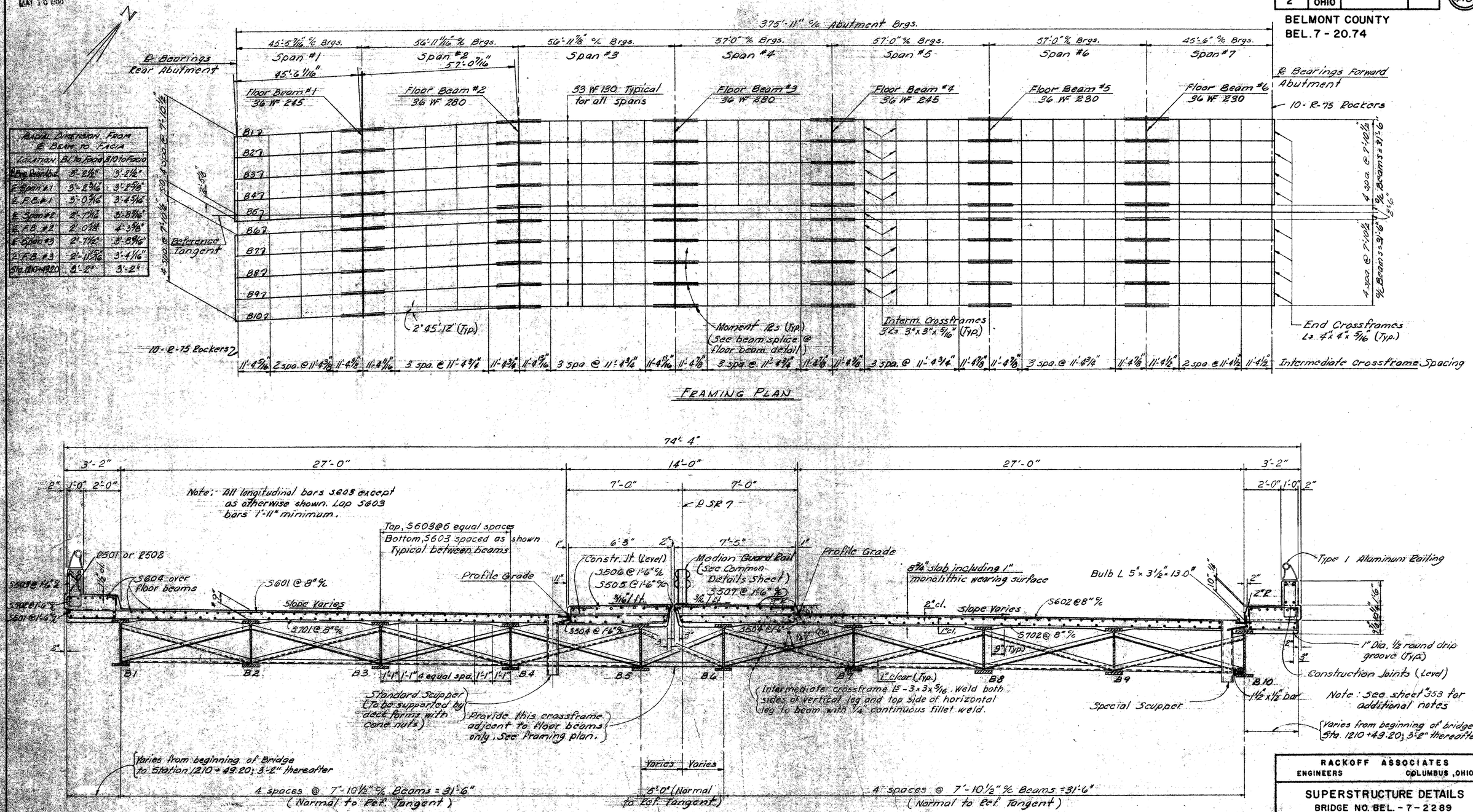

RADIAL DIMENSION FROM ℄ BEAM TO FACIA		
LOCATION	B1 to Facia	B10 to Facia
℄ Brg. Rear Abut.	3'-2 1/2"	3'-2 1/2"
℄ Span #1	3'-2 3/16"	3'-2 5/8"
℄ F.B. #1	3'-0 5/16"	3'-4 5/16"
℄ Span #2	2'-7 11/16"	3'-8 11/16"
℄ F.B. #2	2'-0 5/8"	4'-3 5/8"
℄ Span #3	2'-7 1/2"	3'-8 9/16"
℄ F.B. #3	2'-11 15/16"	3'-4 1/16"
Sta. 1210+49.20	3'-2"	3'-2"

FRAMING PLAN

*This is the nominal dimension. The quantity of deck concrete to be paid for shall be based on this dimension, even though deviation from it may be necessary because the top flange of the beam may not have the exact camber or conformation required to place it parallel to the finished grade.

Note: All horizontal dimension radial except as noted.

TRANSVERSE SECTION
Floor beams not shown

RACKOFF ASSOCIATES
ENGINEERS COLUMBUS, OHIO

SUPERSTRUCTURE DETAILS
BRIDGE NO. BEL. - 7 - 2289
SR. 7 OVER WHEELING TERMINAL R.R.
BELMONT COUNTY
STA. 1208+50.75
STA. 1212+31.25

Designed	Drawn	Traced	Checked	Reviewed	Date	Revised
P.M.	E.D.A.		R.A.K.	[illegible]	6-20 63	

MICROFILMED
MAY 16 1986

FED. RD. DIVISION	STATE	PROJECT	TYPE FUNDS
2	OHIO		

(351 / 418)

BELMONT COUNTY
BEL. 7 - 20.74

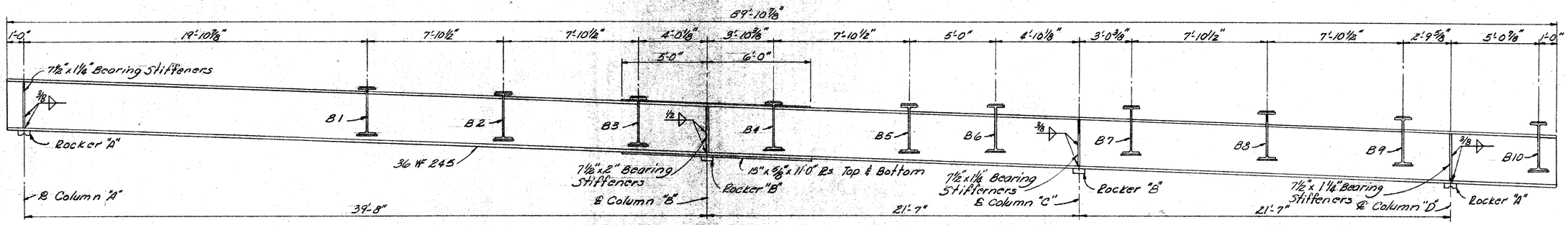

FLOOR BEAM Nº 1

NOTE:
All bearing stiffiners shall be fabricated according to Sec. 513.16

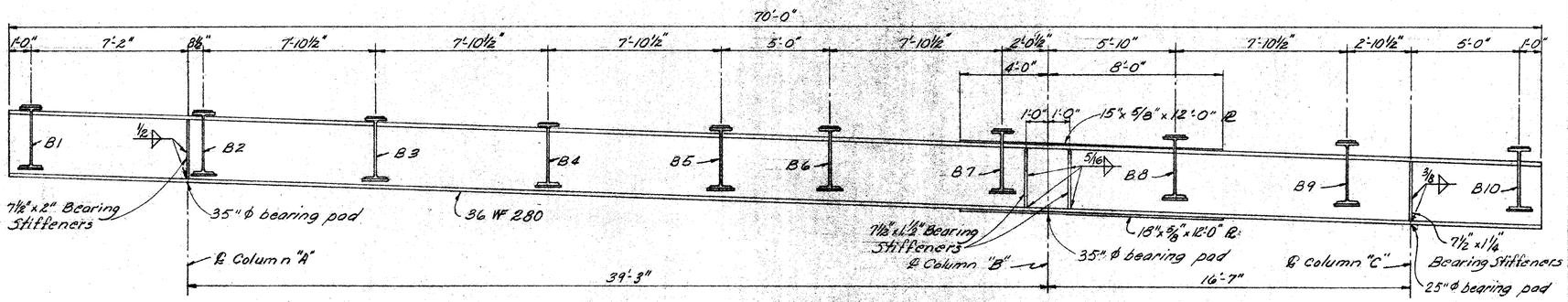

FLOOR BEAM Nº 2

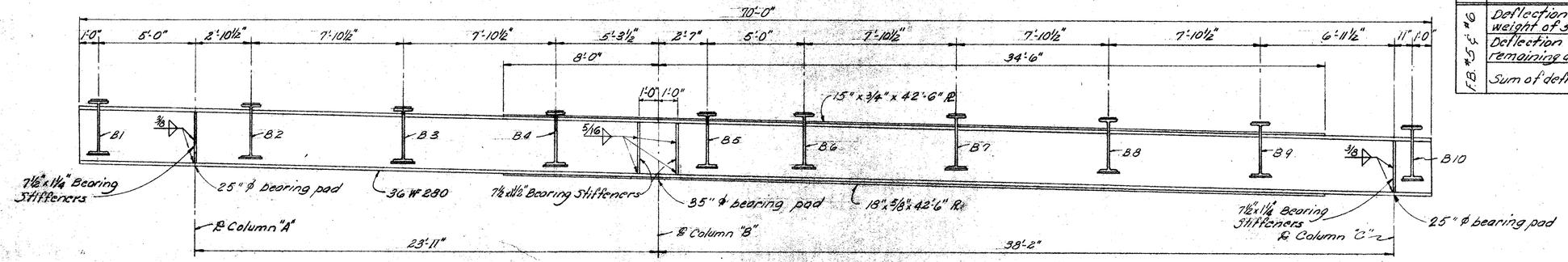

FLOOR BEAM Nº 3

FLOOR BEAM DEFLECTIONS

	LOCATION	B1	B2	B3	B4	B5	B6	B7	B8	B9	B10
F.B. #1	Deflection due to weight of steel	1/16	1/16	0	0	0	0	0	0	0	0
	Deflection due to remaining dead load	5/16	1/4	1/16	0	0	0	0	0	0	0
	Sum of deflections	3/8	5/16	1/16	0	0	0	0	0	0	0
F.B. #2	Deflection due to weight of steel	0	0	1/16	1/16	1/16	1/16	0	0	0	0
	Deflection due to remaining dead load	-1/8	0	3/16	5/16	5/16	3/16	1/16	-1/16	0	1/16
	Sum of deflections	-1/8	0	1/4	3/8	3/8	1/4	1/16	-1/16	0	1/16
F.B. #3	Deflection due to weight of steel	0	0	0	0	0	0	1/16	1/16	1/16	0
	Deflection due to remaining dead load	1/16	0	-1/16	-1/16	1/16	1/8	1/4	1/4	1/8	0
	Sum of deflections	1/16	0	-1/16	-1/16	1/16	1/8	5/16	5/16	3/16	0
F.B. #4	Deflection due to weight of steel	0	0	0	0	0	0	0	0	1/16	1/16
	Deflection due to remaining dead load	0	0	0	0	0	0	0	1/16	1/4	5/16
	Sum of deflections	0	0	0	0	0	0	0	1/16	5/16	3/8
F.B. #5 & #6	Deflection due to weight of steel	0	0	0	0	0	0	0	0	0	0
	Deflection due to remaining dead load	0	0	1/16	1/16	0	0	1/16	1/16	0	0
	Sum of deflections	0	0	1/16	1/16	0	0	1/16	1/16	0	0

Notes: Minus sign indicates upward deflection. The sum of deflections is included in dimension "D" tabulation in order to maintain the 9" slab thickness at the beams under full dead load.

RACKOFF ASSOCIATES
ENGINEERS COLUMBUS, OHIO

SUPERSTRUCTURE DETAILS
BRIDGE NO. BEL.-7-2289
S.R.7 OVER WHEELING TERMINAL R.R.
BELMONT COUNTY
STA. 1208+50.75
STA. 1212+31.25

Designed	Drawn	Traced	Checked	Reviewed	Date	Revised
P.M.	P.M.	E.D.A.	R.A.K.	[illegible]	6-20-63	

MICROFILMED
MAY 16 1995

FED. RD. DIVISION	STATE	PROJECT	TYPE FUNDS
2	OHIO		

352
418

BELMONT COUNTY
BEL. 7 - 20.74

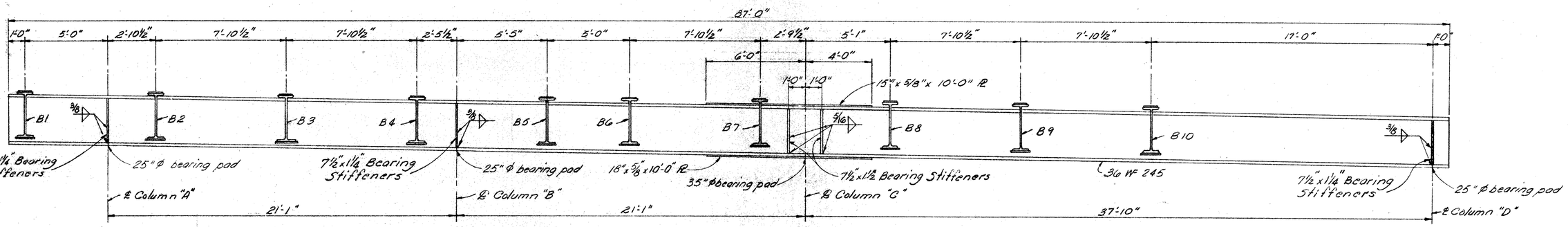

FLOOR BEAM Nº 4

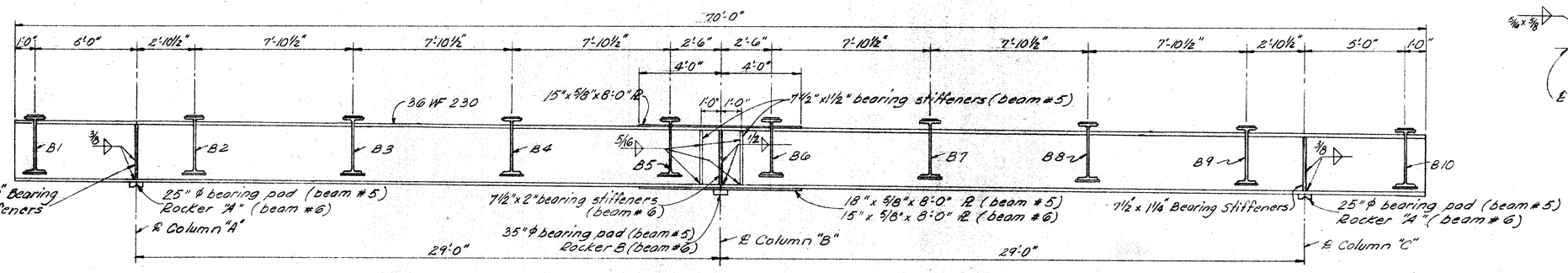

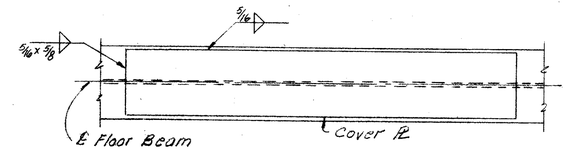

FLOOR BEAM COVER PLATE WELDING
Welds shown typical for top and bottom cover PLs

FLOOR BEAMS Nº 5 & Nº 6

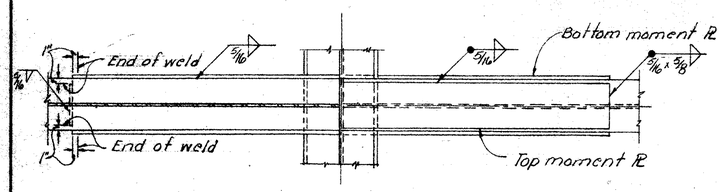

SECTION A-A

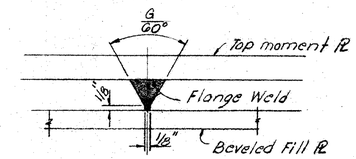

DETAIL "B"
Showing end preparation for top flange welding

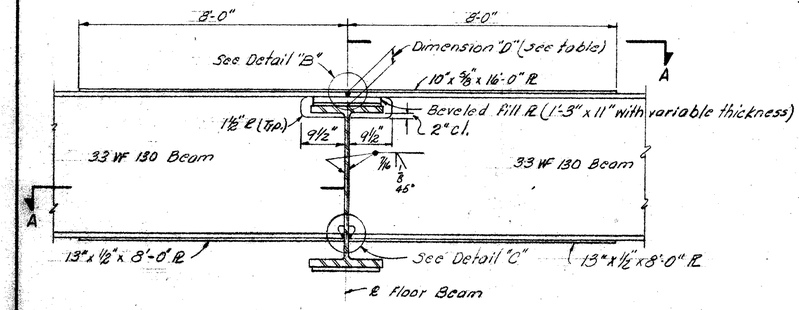

BEAM SPLICE AT FLOOR BEAM FOR DIMENSION "D" LESS THAN 6"
See sheet 353 for beam splice welding procedure

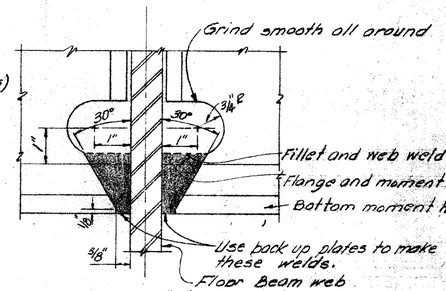

DETAIL "C"
Showing end preparation for bottom flange welding

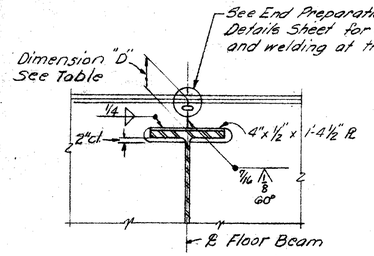

BEAM SPLICE AT FLOOR BEAM FOR DIMENSION "D" MORE THAN 6"
Bottom flange and web splice the same as shown for Beam Splice at Floor Beam for Dimension "D" less than 6"

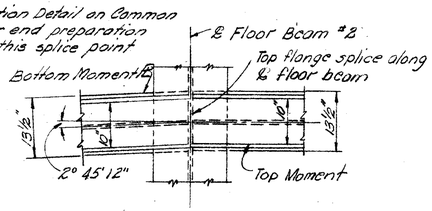

PART PLAN OF BEAM SPLICE AT FLOOR BEAM #2
Details not shown typical for all beam splices.

DIMENSION "D"										
LOCATION	B1	B2	B3	B4	B5	B6	B7	B8	B9	B10
Floor Beam #1	2 3/16"	2 5/16"	2 1/16"	2"	3 3/16"	5 1/8"	7 13/16"	7 13/16"	7 13/16	7 13/16"
Floor Beam #2	1¼"	1⅜"	1⅜"	1¾"	3 1/16"	5"	7 1/16	6 15/16"	7"	7"
Floor Beam #3	2 9/16"	2 1/8"	2 1/16"	2 1/16"	3 1/16"	4 15/16"	6 1/2"	6 1/2"	6 3/16"	6 3/16"
Floor Beam #4	1 3/8"	1 3/8"	1 3/8"	1 3/8"	2 1/8"	2 5/16"	3 9/16"	3 9/16"	3 1/2"	3 3/16"
Floor Beam #5	1 3/8"	1¾"	2¼"	2 5/8"	3 1/8"	3 5/8"	3 9/16"	2 15/16"	2 1/8"	1 3/8"
Floor Beam #6	1 3/8"	2 1/8"	3"	3 13/16"	4 3/8"	4 5/8"	4 1/2"	3 1/2"	2 3/8"	1 3/8"

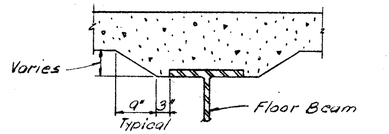

DECK SLAB HAUNCH AT FLOOR BEAMS

RACKOFF ASSOCIATES
ENGINEERS COLUMBUS, OHIO

SUPERSTRUCTURE DETAILS
BRIDGE NO. BEL.- 7 - 2289
S.R. 7 OVER WHEELING TERMINAL R.R.
BELMONT COUNTY
STA. 1208+ 50.75
STA. 1212+ 31.25

Designed	Drawn	Traced	Checked	Reviewed	Date	Revised
P.M.	P.M.	E.D.A.	R.A.K.	[illegible]	6-20 63	

HIGHWAYS
JAN 16 1965

FED. RD. DIVISION	STATE	PROJECT	TYPE FUNDS
2	OHIO		

353
418

BELMONT COUNTY
BEL. 7 - 20.74

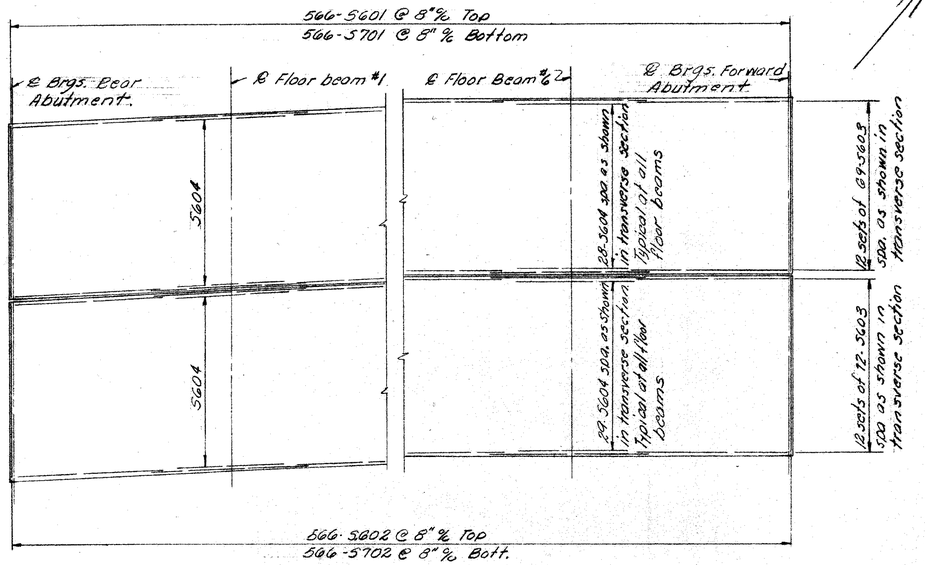

DECK REINFORCING PLAN

NOTE:
The deflections for beams are measured from straight lines connecting the points of support, some of which will deflect under dead loads. The Contractor shall adjust the screed elevations for these deflections

DEFLECTION AND CAMBER FOR BEAMS

LOCATION	B1 & B10		B2, B3, B4, B6, B7, B8, & B9		B5	
	END SPANS	CENTER SPANS	END SPANS	CENTER SPANS	END SPANS	CENTER SPANS
Deflection due to weight of steel	0	1/16	0	1/16	0	1/16
Deflection due to remaining dead load	3/16	1/4	3/16	3/16	1/8	3/16
Convexity required for vertical curve	3/16	5/16	3/16	5/16	3/16	5/16
Sum of deflection and convexity	3/8	5/8	3/8	9/16	5/16	9/16
Required camber	0	0	0	0	0	0

Note: Fabricate beams with any natural camber up

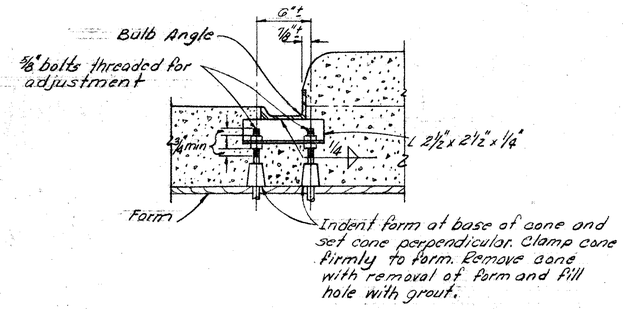

DETAIL OF GUTTER SUPPORT ADJACENT TO MEDIAN

BEAM SPLICE WELDING PROCEDURE

(1) Butt-weld beam flanges and web of floor beam #4 using the following sequence: make one pass on top flange and one pass at each side of the floor beam web on bottom flange, then two passes at each side of the floor beam web on the beam web; repeat using one pass at each location, until welds are completed.

(2) Weld top flange moment plates of floor beam #4

(3) Make splices at floor beam #5 and, #6, #3, #2 and #1 in the same manner.

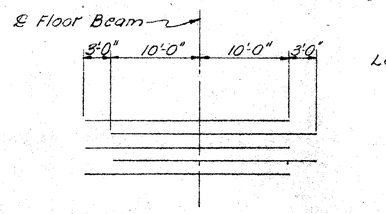

DIAGRAM SHOWING STAGGER OF S604 BARS OVER FLOOR BEAMS

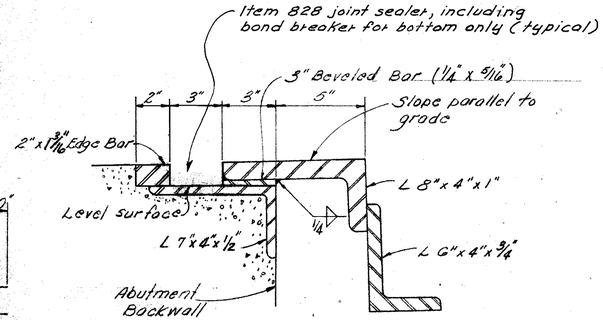

SECTION THRU ROADWAY END DAM AT REAR ABUTMENT

For details not shown see Standard Drawing S.D-1-63 Sheet 2. End dam at forward abutment as shown on Standard Drawing without 3" beveled bar.

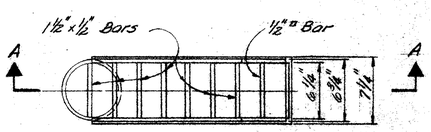

SPECIAL SCUPPER PLAN

For details not shown see Standard Drawing S.D-1-63 Sheet 3.

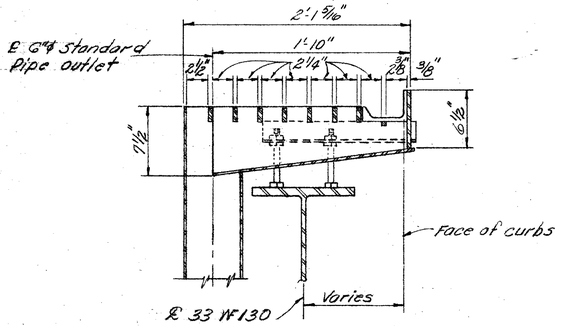

SECTION A-A

NOTES:

REFERENCE SHALL BE MADE TO:
Standard Drawing SD-1-63 for end dams, end crossframes, scuppers, gutters, and curb plates

Standard Drawing RB-1-55 for R-75 rockers.

Standard Drawing BR-1-65, sheet 1, for Type 1 bridge railing.

DECK SLAB HAUNCH: The haunch in the superelevated deck slab adjacent to the top of steel beams, which is shown as 9" wide, may vary from this dimension between the limits of 6" and 12" on the low side and between 9" and 12" on the high side. Except on the high side, the maximum slope shall not exceed 3 inches per foot. Payment for deck slab concrete shall be based on the 9" width.

See General Plan and Elevation for location of scuppers, parapet railing posts and median guard rail posts.

See Common Details sheet for details of median guard rail, median curb plates and lighting standard bases.

RACKOFF ASSOCIATES
ENGINEERS COLUMBUS, OHIO

SUPERSTRUCTURE DETAILS
BRIDGE NO. BEL.-7-2289
S.R. 7 OVER WHEELING TERMINAL R.R.
BELMONT COUNTY
STA. 1208+50.75
STA. 1212+31.25

Designed	Drawn	Traced	Checked	Reviewed	Date	Revised
P.M.	P.M.	E.D.A.	R.A.K.	[illegible]	6-20 63	

MICROFILMED
MAY 16 1986

FED. RD. DIVISION	STATE	PROJECT	TYPE FUNDS
2	OHIO		

354
418

BELMONT COUNTY
BEL. 7 - 20.74

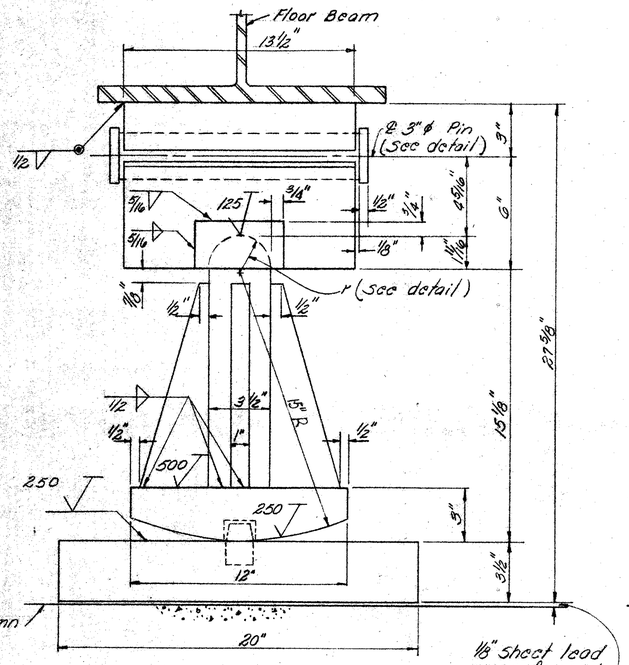

ROCKER "A"

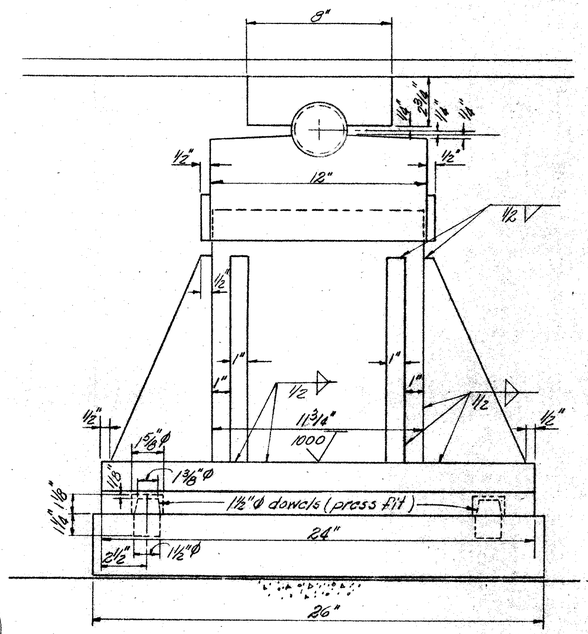

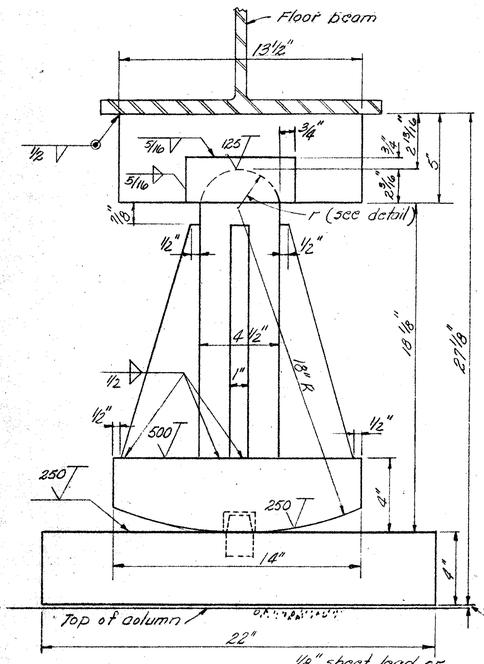

ROCKER "B"

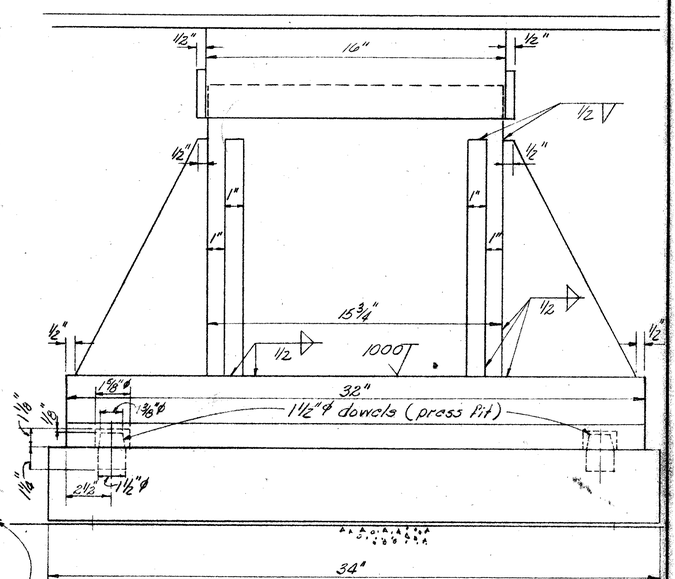

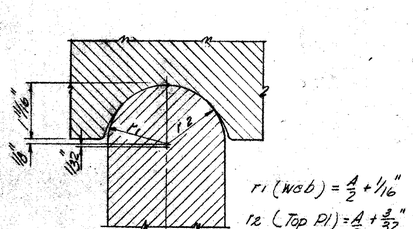

TOP BEARING DETAIL

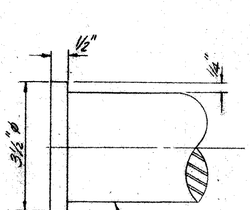

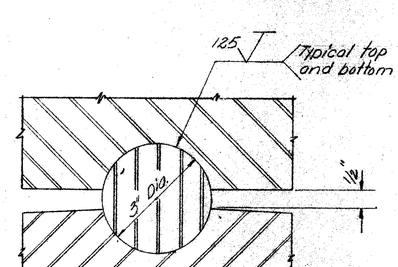

BEARING PIN DETAIL

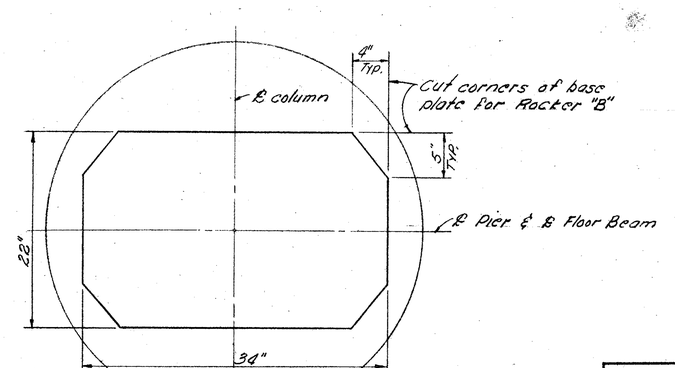

PLAN BASE PLATE
ROCKER "B"

RACKOFF ASSOCIATES
ENGINEERS COLUMBUS, OHIO

ROCKERS
BRIDGE NO. BEL. 7 - 2289
S.R. 7 OVER WHEELING TERMINAL R.R.
BELMONT COUNTY STA. 1208+50.75
STA. 1212+31.25

Designed	Drawn	Traced	Checked	Reviewed	Date	Revised
R.A.K.	E.D.A.		P.M.	[illegible]	6-12-64	

MICROFILMED
MAY 16 1986

FED. RD. DIVISION	STATE	PROJECT	TYPE FUNDS
2	OHIO		

955 4/18

BELMONT COUNTY
BEL. 7 - 20.74

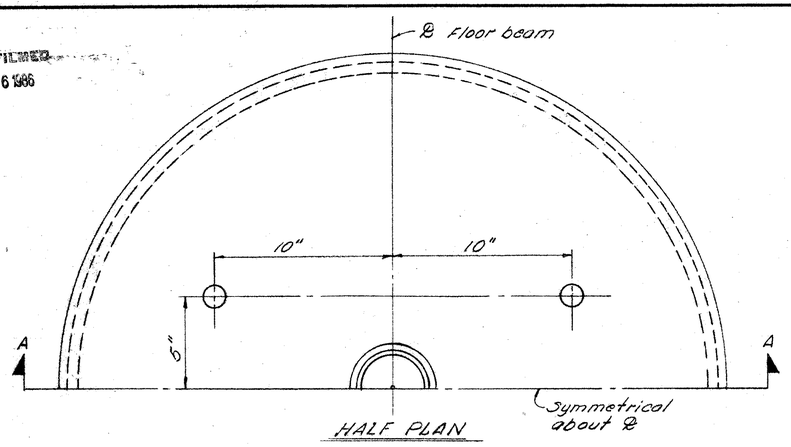

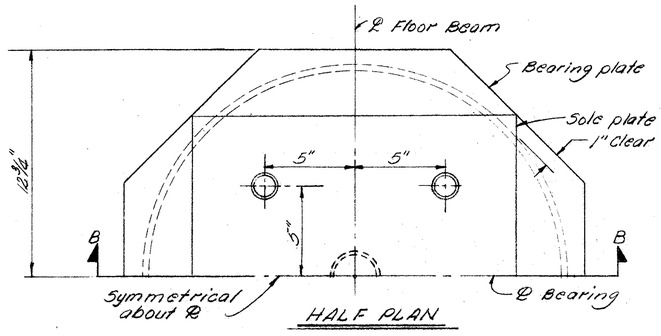

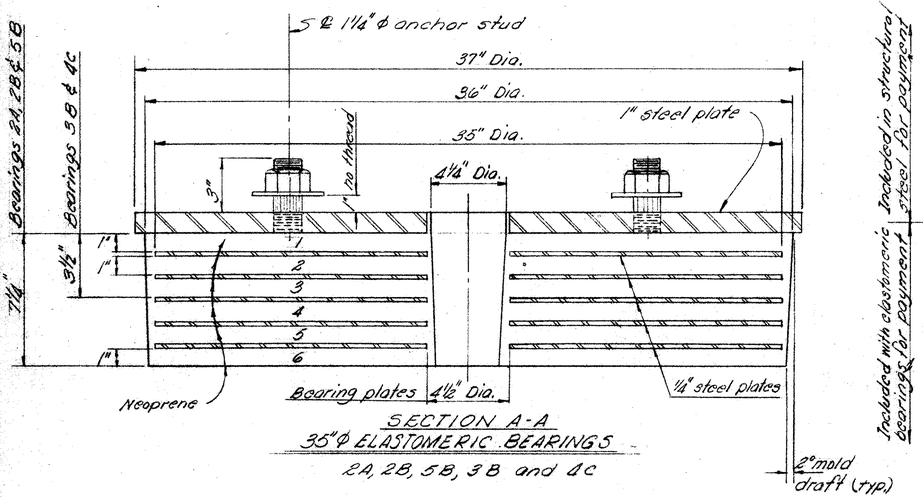

SECTION A-A
35" ϕ ELASTOMERIC BEARINGS
2A, 2B, 5B, 3B and 4C

Bearings 2A, 2B, & 5B have 6 laminae
Bearings 3B and 4C have 3 laminae
Shape factor 7.62

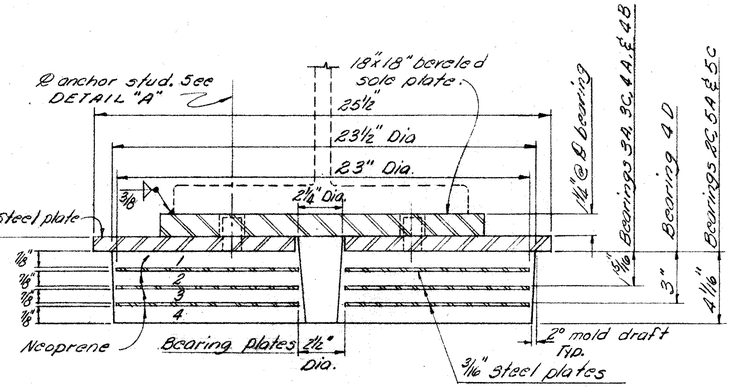

SECTION B-B
23" ϕ ELASTOMERIC BEARINGS
2C, 3A, 3C, 4A, 4B, 4D, 5A and 5C

Bearings 2C, 5A, and 5C have 4 laminae
Bearing 4D has 3 laminae
Bearings 3A, 3C, 4A and 4B have 2 laminae
Shape factor 5.86

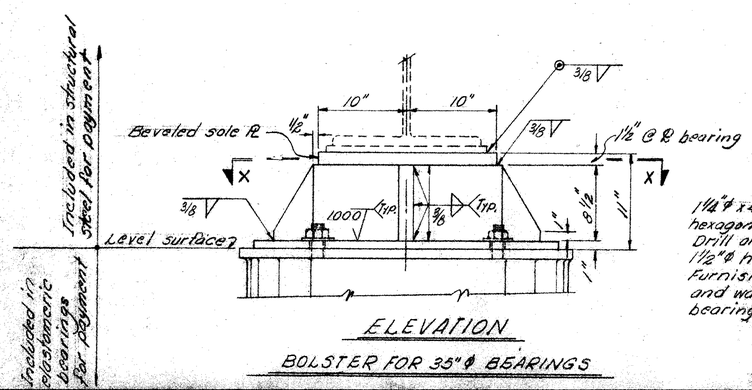

ELEVATION
BOLSTER FOR 35" ϕ BEARINGS

1¼"ϕ x 4" anchor stud with hexagonal nut and washer. Drill and tap bearing plate. 1½"ϕ hole in bolster plate. Furnish anchor studs, nuts and washers with elastomeric bearings.

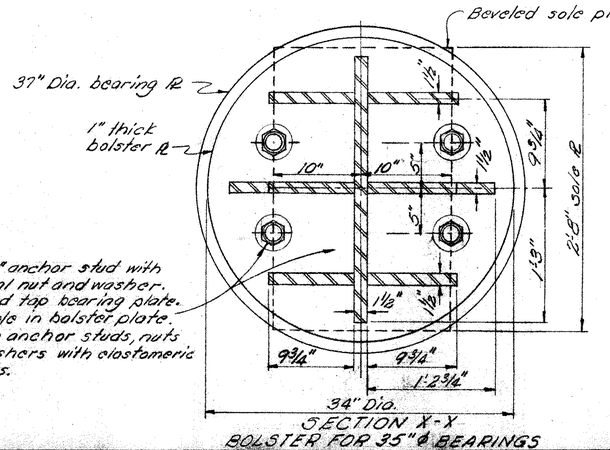

SECTION X-X
BOLSTER FOR 35" ϕ BEARINGS

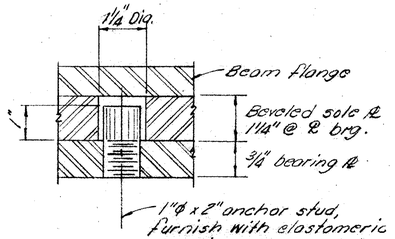

DETAIL A

NOTES

GENERAL: In addition to the requirements of Section 711.23, elastomeric bearings shall be subject to the following requirements:

SAMPLE TESTING: The bond between the elastomer and the metal shall conform to the requirements of ASTM Designation D429, Method B. Adhesion as determined in the test shall not be less than 40 lbs/inch.

MATERIALS: All material shall be new, with no reclaimed material incorporated in the finished bearings.

CONSTRUCTION: Elastomeric bearings shall conform to the requirements of the class designated as RMA:A3-F3T.063, in the Rubber Handbook, Second Edition 1963, by the Rubber Manufacturers Association, Inc. In brief, the above classifications specify commercial tolerances, average surface finish, and normal trim tolerance. The lamina dimensions shall not vary to the extent that the shape factor changes more than ± 0.5. There shall be a minimum ⅛ inch edge seal, integral with the bearing, over all internal plates.

CERTIFICATION: The Contractor shall furnish to the Director certified copies of the bearing manufacturer's test reports and a certification by the bearing manufacturer that the bearings furnished conform to all the requirements shown on the plans and as stipulated herein.

PACKAGING: The bearings shall be packaged or crated in such manner that they will not become damaged while being handled, transported or stored. Any bearing damaged before incorporation into the work shall be replaced by the Contractor, at his expense.

VERIFICATION: The State reserves the right to perform such tests as are deemed necessary to insure that furnished material conforms to prescribed requirements.

BEARING TEMPLATE: The anchor studs shall be located by the use of metal templates. The bearing manufacturer and structural fabricator shall coordinate their work to insure accurate location of anchor studs and holes.

NEOPRENE: 50 durometer neoprene shall be used in all pads. The top steel plate shall be bonded to the neoprene during the molding process.

RACKOFF ASSOCIATES
ENGINEERS
CLEVELAND, OHIO — COLUMBUS, OHIO

ELASTOMERIC BEARINGS
BRIDGE NO. BEL. 7 - 2289
S.R. 7 OVER WHEELING TERMINAL R.R.
BELMONT COUNTY
STA. 1208+50.75
STA. 1212+31.25

Designed	Drawn	Traced	Checked	Reviewed	Date	Revised
V.K.	E.D.A.		M.P.B.	666	1-4-65	

MICROFILMED
MAY 16 1986

REINFORCING STEEL LIST

FED. RD. DIVISION	STATE	PROJECT		
2	OHIO			

356
418

BELMONT COUNTY
BEL. 7 - 20.74

BENDING DIAGRAM

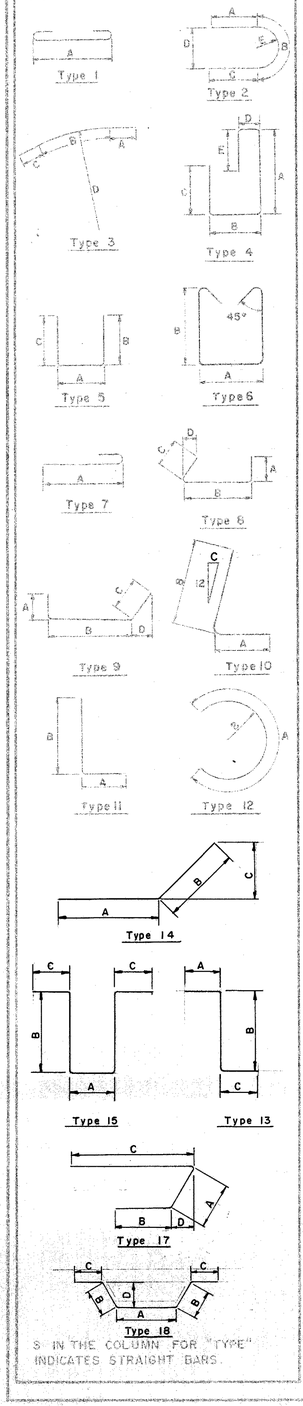

S IN THE COLUMN FOR "TYPE" INDICATES STRAIGHT BARS.

PIERS

MARK	NO.	LENGTH	WEIGHT	TYPE	A	B	C	D	E	F
P601	336	10-0	5,047	1	8-8					
P701	38	11-4	880	1	9-8					
P801	112	12-10	3,838	1	10-8					
P802	48	9-8	1,239	S						
P901	24	14-2	1,156	1	11-8					
P902	280	6-6	6,188	11	5-6	1-3				
P903	14	25-3	1,202	S						
P904	14	25-7	1,218	S						
P905	14	27-7	1,313	S						
P906	14	26-2	1,246	S						
P907	28	26-3	2,499	S						
P908	14	29-1	1,384	S						
P909	14	36-8	1,745	S						
P910	14	19-2	912	S						
P911	14	26-7	1,265	S						
P912	14	30-8	1,460	S						
P913	14	20-1	956	S						
P914	14	21-4	1,015	S						
P915	14	27-6	1,309	S						
P916	14	33-11	1,614	S						
P917	14	22-1	1,051	S						
P918	14	29-4	1,396	S						
P919	14	23-8	1,127	S						
P920	14	42-7	2027	S						
P921	14	45-5	2162	S						
		TOTAL	45,249							
SPIRAL BARS			11,852							
		TOTAL	57,101							

SUPERSTRUCTURE

MARK	NO.	LENGTH	WEIGHT	TYPE	A	B	C	D	E	F
S501	506	6-0	3,167	4	2-6	1-4	0-8	1-4	0-8	
S502	506	3-9	1,979	5	2-8	0-8	0-8			
S503	506	5-7	2,947	6	0-8	2-2				
S504	506	2-8	1,407	5	1-0	0-8	1-3			
S505	506	2-9	1,451	17	1-1	0-8	1-3	0-2½		
S506	253	5-11	1,561	S						
S507	253	7-1	1,869	S						
S601	566	35-9	30,392	S						
S602	566	36-11	31,384	S						
S603	1692	33-2	84,289	S						
S604	342	23-0	11,815	S						
S701	566	35-9	41,359	S						
S702	566	36-11	42,709	S						
L401	12	4-10	39	11	2-0	2-11				
L402	21	7-10	111	18	1-1	2-8	0-9	1-11		
		TOTAL	256,479							

COLLISION WALLS

MARK	NO.	LENGTH	WEIGHT	TYPE	A	B	C	D	E	F
C501	18	6-8	125	1	5-6					
C502	34	8-6	301	S						
C503	34	8-1	287	2	1-7	4-11	1-7	3-2	1-6⅜	
C601	8	13-6	162	S						
C602	48	5-0	360	11	1-0	4-2				
C603	14	11-4	238	S						
C604	14	17-1	359	S						
		TOTAL	1,832							

FORWARD ABUTMENT EAST SIDE

MARK	NO.	LENGTH	WEIGHT	TYPE	A	B	C	D	E	F
A501	74	30-9	2,373	S						
A502	145	27-0 to 9-6	2,760	15	1-2 Vary 5 Sets of 29.	0-8 "B" vary by 3¾		increments from	12'-6" to 3'-9"	
A503	12	32-6	408	S						
A504	15	29-0	454	S						
A505	9	11-1	104	5	1-8	4-10	4-10			
A506	19	17-0	337	S						
A507	29	6-6 to 17-0	355	15	1-2 1 Set of 29.	0-8 "B" vary by 2¼		increments from	2'-3" to 7'-6"	
A508	8	6-7	55	S						
A509	10	6-7	69	13	0-9	3-5	2-8			
A510	16	5-4	89	14	2-8	2-8	1-4			
A511	4	8-7	36	5	4-4	2-3	2-3			
A512	44	27-11	1,281	S						
A521	3	17-1	53	5	13-6	1-11	1-11			
A620	125	7-9	1,455	S						
A601	54	14-0	1,136	4	5-8	1-5	4-2	0-11	2-6	
A602	54	5-1	412	5	3-5	1-0	1-0			
A603	62	28-1	2,615	S						
A604	50	5-9	432	11	0-10	5-1				
A605	40	8-5 to 27-5	1,076	S	10 Sets of 4 - vary			by 6'-4" increments from	8-5 to 27-5	
A606	10	27-9	417	S						
A607	16	17-0	409	S						
A608	29	3-8	160	S						
A609	13	22-2	433	14	20-3	1-11	1-5			
A619	4	12-1 to 26-6	116	S	2 sets of 2 - vary by 14'-5"			from	12'-1" to 26'-6"	
A701	32	28-3	1,848	S						
A702	16	22-2	725	14	20-3	1-11	1-5			
A703	29	6-8	395	14	4-5	2-3	1-5			
A801	108	6-7	1,898	11	1-2	5-8				
A802	54	6-0	865	S						
A901	181	9-11	6,103	7	8-8					
A902	74	15-1	3,795	7	13-10					
A903	12	9-11	405	S						
A904	24	38-9	3,162	S						
A905	24	19-6	1,591	S						
A906	12	18-0	734	S						
A907	5	8-0 to 13-0	178	S	1 Set of 5 bars - vary			by 1'-3" increments from	8-0 to 13-0	
A908	7	6-0	143	S						
A1101	15	30-9	2,451	S						
A1102	18	20-0	1,913	S						
A1103	15	14-8	1,169	10	1-6	13-6	0-3¾			
A1104	30	7-9	1,235	10	1-6	6-7	0-3¾			
A1105	3	29-0	462	S						
A1106	3	14-8	234	10	1-6	13-6	0-2⅜			
A1107	6	7-9	247	10	1-6	6-7	0-2⅜			
		TOTAL	46,588							

FORWARD ABUTMENT WEST SIDE

MARK	NO.	LENGTH	WEIGHT	TYPE	A	B	C	D	E	F
A513	72	8-7½ to 20-8	1100	15	1-2 Vary	0-8 4 sets of 18. "B" vary by 4¼		increments from	3'-3¾ to 9'-4"	
A514	34	20-3	718	S						
A515	6	20-0	125	S						
A516	18	18-9	352	S						
A517	21	9-7	210	S						
A518	8	11-0 to 13-3	101	S	2 sets of 4 bars, 9" increments from			11'-0" to 13'-3"		
A519	28	25-0	730	S						
A520	24	17-3 to 25-6	535	S	2 sets of 12 bars - vary by 9" increments from			17'-3" to 25'-6"		
A601	26	14-0	546	4	5-8	1-5	4-2	0-11	2-6	
A602	26	5-1	199	5	3-5	1-0	1-0			
A604	29	5-9	250	11	0-10	5-1				
A610	10	27-0	406	S						
A611	9	23-6	318	S						
A612	19	18-0	514	S						
A613	52	11-5	892	7	10-9					
A614	8	7-0	84	S						
A615	8	14-0	168	S						
A616	8	17-8	212	S						
A617	18	19-6	527	S						
A618	21	26-3	828	S						
A620	73	7-9	850	S						
A704	24	4-3	208	S						
A801	48	6-7	844	11	1-2	5-8				
A803	94	9-5	2363	7	8-4					
A1108	12	20-2	1,286	S						
A1109	12	9-0	574	S						
A1110	18	7-9	741	10	1-6	6-7	0-3¾			
A1111	6	7-9	247	10	1-6	6-7	0-4¼			
		TOTAL	15,928							
			46,588		FORWARD ABUTMENT EAST SIDE					
			62,516		TOTAL FORWARD ABUTMENT					

Detail "H" bars shown with East Side

REPLACEMENT BARS

RE401	1	5-3	—	12	5-3	1-4
RE501	3	5-7	—	S		
RE601	10	5-11	—	S		
RE701	5	6-3	—	S		
RE801	2	6-6	—	S		
RE901	3	6-10	—	S		
RE1101	1	7-7	—	S		

SPIRAL REINFORCEMENT

MARK	NO.	LENGTH	CORE	PITCH	TURNS	SPACERS	WEIGHT
SP401	1	25-3	38"	4½	70	4	528
SP402	1	25-7	38"	4½	71	4	535
SP403	1	27-7	38"	4½	77	4	581
SP404	1	26-2	38"	4½	73	4	551
SP405	2	26-3	38"	4½	73	4	1101
SP406	1	29-1	38"	4½	81	4	611
SP407	1	36-8	38"	4½	101	4	763
SP408	1	19-2	38"	4½	54	4	406
SP409	1	26-7	38"	4½	74	4	558
SP410	1	30-8	38"	4½	85	4	642
SP411	1	20-1	38"	4½	57	4	429
SP412	1	21-4	38"	4½	60	4	452
SP413	1	27-6	38"	4½	77	4	581
SP414	1	33-11	38"	4½	94	4	710
SP415	1	22-1	38"	4½	62	4	467
SP416	1	29-4	38"	4½	82	4	619
SP417	1	23-8	38"	4½	66	4	497
SP418	1	42-7	38"	4½	117	4	884
SP419	1	45-5	38"	4½	124	4	937
					TOTAL		11,852

BAR SIZE is indicated in bar mark. The first digit where three digits are used, and first two where four are used indicate the bar size number.

SPIRAL REINFORCING BARS; The "Length" shown in the steel list for the spiral bars is the distance from the top of the footing to the **top of column less 2".** The "No. of Turns" shown is the "Length" divided by the pitch, plus three turns (total number of closed coils), expressed as the nearest whole number.

Spiral reinforcing bars shall not have deformations but shall in other respects conform to Item 509. 1½ closed coils shall be provided at the ends of each spiral unit. Four steel channel, tee or angle spacers, weighing approximately 0.68 lb. per lin. ft. of spacer, shall be provided for each spiral unit. They shall be equally spaced along the periphery of the coil. The number of pounds of these spacers, based on 0.68 lb. per lin. ft., will be paid for as reinforcing steel and is included in the tabulated quantity of spiral bars.

RACKOFF ASSOCIATES
ENGINEERS COLUMBUS, OHIO

REINFORCING STEEL LIST
PIERS, SUPERSTRUCTURE & FORWARD ABUTMENT
BRIDGE NO. BEL-7-2289
S.R.7 OVER WHEELING TERMINAL RR
BELMONT COUNTY STA. 1208+50.75 STA. 1212+31.25

Designed	Drawn	Traced	Checked	Reviewed	Date	Revised
P.M. F.A.	M.R.		H.H. R.A.K.	666	6-20 63	

MICROFILMED
MAY 16 1986

REINFORCING STEEL LIST

FED. RD. DIVISION	STATE	PROJECT	
2	OHIO		

357
418

BELMONT COUNTY
BEL. 7-20.74

BENDING DIAGRAM

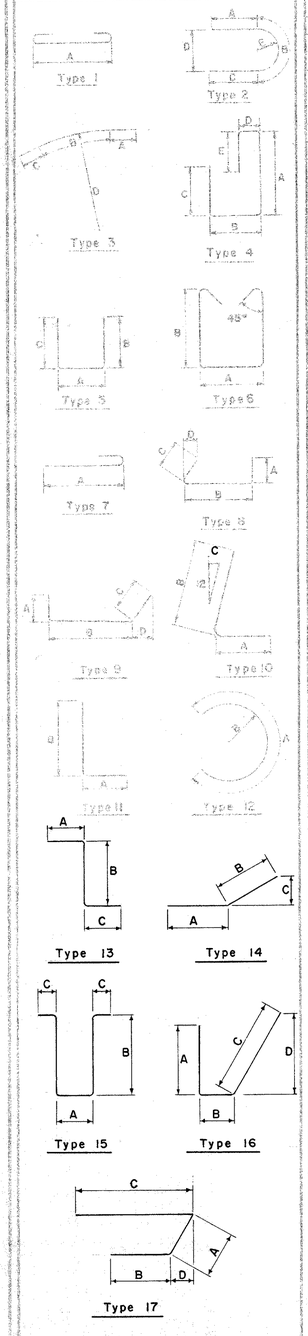

S IN THE COLUMN FOR "TYPE" INDICATES STRAIGHT BARS.

REAR ABUTMENT WEST SIDE

MARK	NO.	LENGTH	WEIGHT	TYPE	A	B	C	D	E	F
B501	28	6-6	190	S						
B502	42	38-4	1,679	S						
B503	34	31-8	1,123	S						
B504	2	23-6	49	S						
B505	2	16-0	33	S						
B506	2	7-0	15	S						
B507	44	14-10	792	15	1-2	Vary 0-5				
		to 19-8	4 Sets of 11, "B" vary by 2⅞" increments from 9'-1" to 6'-8¼							
B508	44	14-4	524	15	1-2	Vary 0-5				
		to 8-6	4 Sets of 11, "B" vary by 3½" increments from 6'-5" to 3'-6"							
B509	30	14-6	548	15	1-2	Vary 0-5				
		to 20-6	3 Sets of 10, "B" vary by 4" increments from 9'-6" to 6'-6"							
B510	27	7-2	296	15	1-2	Vary 0-5				
		to 13-10	3 Sets of 9, "B" vary by 5" increments from 6'-2" to 2'-10"							
B511	28	25-7	747	S						
B512	20	24-7½	588	S	2 Sets of 10 vary by 9½" from 31'-9" to 24'-7½"					
		to 31-9								
B513	32	10-6	567	S	8 Sets of 4 vary by 4'-4" from 10'-6" to 23'-6"					
		to 23-6								
B514	8	23-6	196	S						
B515	30	7-4	417	S	6 Sets of 5 vary by 3'-0" from 7'-4" to 19'-4"					
		to 19-4								
B516	1	31-9	33	S						
B517	3	6-5	20	5	4-0	1-4	1-4			
B518	2	30-4	63	S						
B601	7	25-0	263	S						
B602	5	16-5	127	S	1 Set of 5 vary by 3" from 16'-5" to 17'-5"					
		to 17-5								
B603	2	19-3	58	S						
B604	5	32-6	252	S	1 Set of 5 vary by 6" from 32'-6" to 34'-6"					
		to 34-6								
B605	2	35-6	107	S						
B606	84	7-0	883	S						
B607	66	10-11	1,082	7	10-3					
B608	20	13-9	413	4	5-6	1-5	4-2	0-10	2-6	
B609	18	14-3	385	4	6-0	1-5	4-2	0-10	2-6	
B610	38	5-7	319	5	3-5	1-3	1-3			
B611	11	38-4	633	S						
B612	10	31-8	476	S						
B613	5	5-10	44	14	3-11	1-11	1-10			
B614	5	9-10	74	16	3-5	0-10	5-9	5-3		
B615	1	7-1	11	S						
B616	44	6-9	446	14	2-3	4-6	4-0			
B617	3	10-9	48	5	6-7	2-3	2-3			
B620	156	7-9	1,816	S						
B801	142	9-5	3,570	7	8-4					
B802	14	25-3	944	S						
B803	2	9-0	48	S						
B804	6	10-0	180	S	1 Set of 6 vary by 6" from 10'-0" to 12'-6"					
		to 12-6								
B805	6	13-0	228	S	1 Set of 6 vary by 6" from 13'-0" to 15'-6"					
		to 15-6								
B806	2	25-0	134	S						
B807	6	26-0	437	S	1 Set of 6 vary by 6" from 26'-0" to 28'-6"					
		to 28-6								
B808	5	30-0	414	S	1 Set of 5 vary by 6" from 30'-0" to 32'-0"					
		to 32-0								
B809	129	6-7	2,268	11	1-1	5-8				
B901	14	25-0	1,190	S						
B902	8	18-3	496	S						
B903	8	13-9	374	S						
B904	8	9-9	265	S						
B905	6	18-0	367	S						
B906	6	12-0	245	S						
B907	18	10-2	622	10	1-3	9-3				
B908	50	6-11	1,176	10	1-3	6-0	0-3¼			
			28,275							

REAR ABUTMENT EAST SIDE

MARK	NO.	LENGTH	WEIGHT	TYPE	A	B	C	D	E	F
B519	32	20-0	668	S						
B520	6	4-6	41	S	2 Sets of 3 vary by 2'-0" from 4'-6" to 8'-6"					
		to 8'-6"								
B521	12	9-7	120	S						
B522	32	7-8	256	5	5-5	1-3	1-3			
B523	32	10-3	342	11	0-9	9-8				
B524	32	7-6	250	5	3-5	2-2	2-2			
B525	10	5-6	57	S						
B526	8	2-2	30	S	2 Sets of 4 vary by 11" from 2'-2" to 4'-11"					
		to 4-11								
B527	2	6-4	13	11	2-3	4-3				
B528	2	8-1	17	S						
B617	3	10-9	48	5	6-7	2-3	2-3			
B618	39	14-1	825	4	5-9	1-5	4-3	0-10	2-6	
B619	32	17-4	833	5	9-8	5-5	2-7			
B810	14	20-6	766	S						
			4,266							
			28,275							
			32,541	TOTAL REAR ABUTMENT						

REAR ABUTMENT WINGWALL PANELS 1 THRU 3

MARK	NO.	LENGTH	WEIGHT	TYPE	A	B	C	D	E	F
W501	7	33-7	245	S						
W502	7	4-6	49	S	1 each, vary by 9"					
		to 9-0								
W503	5	6-3	40	S	1 each, vary by 9"					
		to 9-3								
W504	12	16-4	256	S	1 each, vary by 9"					
		to 24-7								
W505	28	31-8	925	S						
W506	12	9-3	206	S	4 each, vary by 7'-3"					
		to 23-9								
W507	4	32-9	137	S						
W508	31	10-0	323	S						
W509	23	4-1	98	S						
W510	25	4-3	111	10	0-8	3-9	¾"			
W511	6	10-1	63	S						
W512	24	8-7	318	S	2 each, vary by 9"					
		to 16-10								
W513	12	6-10	86	1	5-8					
W514	1	17-7	18	S						
W515	14	4-0	89	S	2 each, vary by 8½"					
		to 8-3								
W516	4	15-8	65	S						
W517	4	7-0	44	S	2 each, vary by 7'-3"					
		to 14-3								
W518	2	16-3	34	S						
W601	45	6-6	439	S						
W602	30	9-0	406	1	7-8					
W603	5	7-5	56	10	0-10	6-9	¾"			
W604	63	7-6	710	S						
W605	42	6-0	379	S						
W801	36	13-10	1,330	1	11-8					
W802	12	34-6	1,105	S						
W803	10	6-3	167	10	1-4	5-2	¾"			
W804	10	10-11	291	10	1-4	9-10	¾"			
W805	5	10-2	136	S						
W806	5	12-0	160	S						
W807	12	11-7	371	10	1-4	10-6	¾"			
W808	4	18-6	198	S						
W1101	13	7-5	512	10	1-6	6-3	¾"			
W1102	12	12-11	824	10	1-6	11-9	¾"			
W1103	6	13-1	417	S						
W1104	7	17-5	648	S						
		TOTAL	11,256							

RAILING BARS (Included with railing for payment)

R501	16	16-5	—	S						
R502	176	15-5	—	S						
R503	12	4-2	—	*						
R504	8	5-4	—	*						
R505	8	3-5	—	*						
R506	8	3-0	—	*						

* Refer to Standard Drawing BR-1-65, sheet 1.

SPIRAL REINFORCEMENT

MARK	NO.	LENGTH	CORE	PITCH	TURNS	SPACERS	WEIGHT

NOTES

BAR SIZE is indicated in bar mark. The first digit where three digits are used, and the first two where four are used indicate the bar size number.

SPIRAL REINFORCING BARS: The "Length" shown in the steel list for the spiral bars is the distance from the top of the footing to the bottom of the pier cap. The "No. of Turns" shown is the "Length" divided by the pitch, plus three turns (total number of closed coils), expressed as the nearest whole number. Spiral reinforcing bars shall not have deformations but shall in other respects conform to Item 509. 1½ closed coils shall be provided at the ends of each spiral unit. Four steel channel, tee or angle spacers, weighing approximately 0.68 lb. per lin. ft. of spacer, shall be provided for each spiral unit. They shall be equally spaced along the periphery of the coil. The number of pounds of these spacers, based on 0.68 lb. per lin. ft., will be paid for as reinforcing steel and is included in the tabulated quantity of spiral bars.

RACKOFF ASSOCIATES
ENGINEERS COLUMBUS, OHIO

REINFORCING STEEL LIST
REAR ABUTMENT AND WINGWALL
BRIDGE NO. BEL-7-2289
S.R.7 OVER WHEELING TERMINAL RR
BELMONT COUNTY STA. 1208+50.75
STA. 1212+31.25

Designed	Drawn	Traced	Checked	Reviewed	Date	Revised
P.M. F.A.	M.R.		R.A.K. H.H.		6-20 63	

TE 95
400-1-63

DEC PROFILED
MAY 10 1965

GENERAL INFORMATION

INTRODUCTION

The project consists of the construction of a portion of SR 7, approximately 3400 feet in length, located in Bridgeport. Also included in this report is the profile for Relocated Lincoln Avenue.

The proposed grades indicate the following:

SR 7 - cuts, generally between 10 and 15 feet in depth, but as deep as 25 feet at ditchline; fill embankments, 5 feet high.

Relocated Lincoln Avenue - cuts, ranging between 0 and 28 feet deep and as deep as 40 feet at ditchline.

GEOLOGY AND OBSERVATIONS OF THE PROJECT

The project begins on the terraced flood plain of the Ohio River, adjacent to the steep west valley wall, ascends the lower portion of the valley wall, descends and terminates on the terraced flood plain. Moderately thick residual soil cover and glacial outwash overlies indurated clay, shale, sandstone, and limestone bedrock, of Pennsylvanian age. The project is almost entirely located on at-surface random fill. A stratigraphic rock section was observed and measured in the vininity of stations 1098+00 and 1099+00. An area of major sloughing was observed in the upper-most portion of the left backslope between approximately stations 1096+00 and 1106+00.

INVESTIGATIONAL FINDINGS

Borings disclose that materials occurring immediately below the proposed grade and in the embankment foundation are predominantly comprised of at-surface random fill, (comprised of cinders, ashes, brickbats, clayey silts, sands, gravels and stone fragments), sandy silts, silts, silt clays and clays, in the A-4, A-6, and A-7-6 classifications, having low moisture contents or moisture contents in the lower portion of the plastic range, as well as bedrock.

Bedrock is anticipated to occur at the following approximate stations:

SR 7

Stations 1094+50 to 1095+50 - shale in the left ditchline and lower-most portion of the left backslope.

Stations 1096+50 to 1097+50 - shale in the left ditchline and lower-most portion of the left backslope.

Stations 1100+00 to 1100+50 - shale at grade, in the left ditchline, and lower portion of the left backslope.

Stations 1100+50 to 1104+50 - shale at left side of grade, in the left ditchline, and lower portion of the left backslope.

Stations 1104+50 to 1105+00 - shale in the left ditchline and lower-most portion of the left backslope.

Relocated Lincoln Avenue

Stations 0+50 to 4+25 - shale and indurated clay at grade, in the ditches and lower-most portion of the left backslope; indurated clay, limestone, shale, and sandstone in mid and upper portion of the left backslope.

Stations 4+25 to 5+25 - shale and indurated clay at the left side of grade, in the left ditchline and lower-most portion of the left backslope.

Stations 5+25 to 5+50 - shale and indurated clay in the left ditchline.

EXPLORATION

Exploratory borings were made by means of truck-mounted mechanical soil auger, hand auger (in areas of difficult access), and rotary type drill rig on February 20, and between April 15 and 22, 1964. Included in the report is a log of boring made for the original investigation.

LEGEND FOR PROJECT AVERAGE RESULTS OF TESTS — 25 SAMPLES TESTED

DESCRIPTION	H.R.B. CLASS	OHIO CLASS	% AGG	% SAND	% F. SAND	% SILT	% CLAY	LIQUID LIMIT	PLASTICITY INDEX	WATER CONTENT	SAMPLES TESTED
Gravel with sand and silt	A-2-4(0)	A-2-4	37	9	21	23	10	NP	NP	14	1
Sandy silt	A-4(0)	A-4a	0	5	40	43	12	NP	NP	19	3
Silt	A-4(0)	A-4b	2	1	13	66	19	NP	NP	20	7
Silt and clay	A-6(8)	A-6a	13	7	9	38	33	35	13	24	5
Silty clay	A-6(10)	A-6b	13	3	8	33	43	37	16	16	1
Clay	A-7-6(19)	A-7-6	5	3	7	37	62	59	29	33	7
Random fill			VISUAL CLASSIFICATION								
Weathered indurated clay			VISUAL CLASSIFICATION							10	1
Indurated clay			VISUAL CLASSIFICATION								
Shale			VISUAL CLASSIFICATION								
Sandstone			VISUAL CLASSIFICATION								
Limestone			VISUAL CLASSIFICATION								
Various other materials			VISUAL CLASSIFICATION								

Auger boring - plan view.

Core boring - plan view.

Auger boring plotted to vertical scale only.

Core boring plotted to vertical scale only.

W Free water.

NOTE: Figures beside borings indicate water content in percent. e.g. 15.

SOIL PROFILE
BELMONT COUNTY
BEL-7-20.74 PART I
SUPPLEMENT

OHIO STATE HIGHWAY TESTING LABORATORY
1620 W. BROAD ST. COLUMBUS 23, OHIO

1 / 33

NOTE: INFORMATION SHOWN BY THIS SUBGRADE PROFILE WAS OBTAINED SOLELY FOR USE IN ESTABLISHING DESIGN CONTROLS FOR THE PROJECT. THE STATE OF OHIO DOES NOT GUARANTEE THE ACCURACY OF THIS DATA AND IT IS NOT TO BE CONSTRUED AS A PART OF THE PLANS GOVERNING CONSTRUCTION OF THE PROJECT.

Fed. No. U-534 (10)

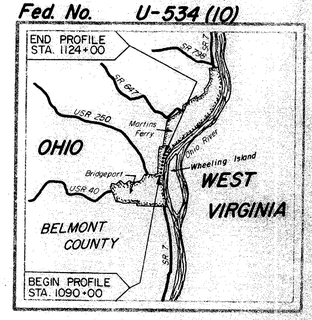

LOCATION MAP

Recon. - J.S.M. - 5/24/63, 2/13/64

Drilling - Auger - B.D.L., L.M.D. - 2/20/64, 4/15 to 4/16/64
Core - C.J.C. - 4/16 to 4/17/64, 4/20 to 4/22/64

Drafting - R.P.W. - 5/1/64

SUMMARY OF SOIL TEST DATA

NOTE: NP shown in Liquid Limit and Plasticity Index columns indicates that the material is non-plastic.
*Denotes sample taken at or near grade.

STATION & OFFSET		DEPTH FROM-TO	% AGG.	% C.S.	% F.S.	% SILT	% CLAY	L.L.	P.I.	% W.C.	SHTL CLASS.
1090+15	CL	0.0-5.0	0	2	4	32	62	58	29	34	A-7-6 *
1091+50	CL	0.0-5.0	Black Cinders and Ashes with Clayey Silt								Visual *
		5.0-10.0	0	3	13	20	64	56	28	38	A-7-6
1095+00	70'Rt	0.0-9.0	Dark Brown Clayey Silt with Cinders, Stone Fragments and Brickbats								Visual
		9.0-14.0	19	11	6	27	37	36	11	13	A-6a
1098+00	50'Lt	0.0-3.0	0	3	3	33	61	54	31	25	A-7-6
		3.0-8.0	13	3	8	33	43	37	16	16	A-6b
		8.0-10.0	Gray Weathered Indurated Clay							10	Visual
1099+00	50'Rt	0.0-4.0	Black Cinders and Ashes								Visual
		4.0-10.0	17	4	4	29	46	41	14	22	A-7-6
1102+00	25'Rt	0.4-4.0	0	0	13	65	22	26	6	21	A-4b
		4.0-8.0	0	0	20	64	16	NP	NP	22	A-4b
		8.0-16.0	0	0	10	70	20	NP	NP	25	A-4b
		16.0-20.0	19	6	7	42	26	38	15	29	A-6a
1105+00	15'Rt	0.0-2.0	Brown Clayey Silt with Ashes								Visual
		2.0-6.0	9	4	5	32	50	54	27	27	A-7-6
		6.0-10.0	0	1	8	53	38	34	12	26	A-6a

STATION & OFFSET		DEPTH FROM-TO	% AGG.	% C.S.	% F.S.	% SILT	% CLAY	L.L.	P.I.	% W.C.	SHTL CLASS.
1107+00	CL	0.0-3.0	Dark Gray Cinders with Brickbats								Visual *
		3.0-7.0	0	4	12	51	33	32	12	29	A-6a
		7.0-13.0	0	0	10	73	17	NP	NP	13	A-4b
		13.0-15.0	7	0	23	58	12	NP	NP	19	A-4b
		15.0-18.0	37	9	21	23	10	NP	NP	14	A-2-4
1110+00	10'Rt	0.0-3.0	Black Cinders, Ashes and Gravel								Visual *
		3.0-8.0	29	11	14	17	29	37	15	21	A-6a *
		8.0-12.0	12	3	4	29	52	50	25	28	A-7-6
1113+00	4'Rt	0.0-3.0	Brown Silty Sand with Cinders								Visual *
		3.0-10.0	Dark Gray Cinders								Visual
		10.0-17.0	Dark Gray Cinders								Visual
		17.0-20.0	0	1	7	39	53	53	30	24	A-7-6
1115+00	CL	0.0-4.0	Black Cinders, Ashes and Stone Fragments								Visual *
		4.0-10.0	6	4	11	52	27	NP	NP	24	Visual
1118+00	CL	0.3-3.0	0	2	39	49	10	NP	NP	24	A-4a
		3.0-10.0	0	7	49	35	9	NP	NP	17	A-4a
1120+00	CL	0.0-2.0	Black Cinders and Ashes								Visual
		2.0-6.0	0	6	3	81	16	NP	NP	18	A-4b
		6.0-10.0	0	6	33	45	16	NP	NP	17	A-4a
1123+00	25'Rt	0.0-3.0	Gray Cinders								Visual *
		3.0-8.0	6	2	15	50	27	26	2	19	A-4b
		8.0-14.0	9	1	18	50	22	NP	NP	19	A-4b
1124+00	CL	0.0-8.0	Black Cinders, Ashes and Brickbats								Visual *

RECEIVED
MAY 1-6 1956

SOIL PROFILE
BELMONT COUNTY
BEL - 7 - 20.74 PART I
SUPPLEMENT

OHIO STATE HIGHWAY TESTING LABORATORY
1620 W. BROAD ST. COLUMBUS 23, OHIO

2/33

NOTE: For cross section of sta. 1+78- Relocated Lincoln Ave., see sheet 4.

Slough Area

Wooded

℄, Relocated Lincoln Ave.

Existing SR 7 (Lincoln Ave.)

Penna. RR

NOTE: For cross section of sta. 1099+00, see sheet 3.

*NOTE: For profile of Relocated Lincoln Ave., see sheet 3.

B & O RR

℄, Relocated Penna. RR

℄, Proposed SR 7

Residential

Railroad Street

Fourth Street

Third Street

First Street

MATCH LINE - STA 1122+00

MATCH LINE - STA 1124+00

1090 1095 1100 1105 1110 1115 1120 1124

Rock Section 115' Lt.
Shale, yellow, siliceous, weak, with scattered shaly sandstone lenses
Mottled yellow and red clay shale
Shale, yellow, siliceous, soft

Rock Section 75' Lt.
Shaly sandstone
Soft clay shale
Shale, yellow, siliceous, soft

Refusal (Hand Auger)

Cinders and ashes with clayey silt

Dark-brown clayey silt with cinders, stone fragments and brickbats

Cinders and ashes

Trace of Organic

℄, Relocated Lincoln Ave.

Brown clayey silt with ashes

Dark-gray cinders with brickbats

Organic

Cinders, ashes and gravel

Brown silty sand with cinders

Dark-gray cinders

Dark-gray cinders

Cinders, ashes and stone fragments

Cinders and ashes

70' Rt. 50' Lt. 50' Rt. 25' Rt. Cinders=0.4' 15' Rt. 10' Rt. 4' Rt.

℄, Proposed SR 7

℄, Relocated Penna. RR

25' Rt.
Gray cinders
Cinders, ashes and brickbats
Refusal (Concrete)

1122 1123 1124

700 690 680 670 660 650 640

1090 1091 1092 1093 1094 1095 1096 1097 1098 1099 1100 1101 1102 1103 1104 1105 1106 1107 1108 1109 1110 1111 1112 1113 1114 1115 1116 1117 1118 1119 1120 1121 1122

SOIL PROFILE
BELMONT COUNTY
BEL-7-20.74 PART I
SUPPLEMENT

OHIO STATE HIGHWAY TESTING LABORATORY
1620 W. BROAD ST. COLUMBUS 23, OHIO

3/33

A. Indurated Clay, mottled brown and gray and gray, soft and crumbly in upper 1.2', calcareous, badly broken, with limestone nodules. No core loss.

B. Sandstone, gray and brownish-gray, fine and medium-grained, generally firm, with soft clay seams, broken, jointed. No core loss.

C. Indurated Clay, gray, brownish-gray, and reddish-brown, generally firm with few soft crumbly intervals (max. 0.2' thick), calcareous, with few slickensides and limestone nodules.

D. Shale, gray, firm, slightly arenaceous, generally fissile, broken and jointed. No core loss.

E. Indurated Clay, gray, brownish-gray, and reddish-gray, generally firm, soft and crumbly between elevations 680.2' and 671.0', calcareous, slickensided, with numerous clay intervals, with limestone stringer between elevations 680.2' and 679.2', badly broken throughout. Core Loss 20%.

F. Shale, gray, slightly argillaceous, firm, generally arenaceous, grading intermittently into argillaceous, sandstone, jointed and broken. No core loss.

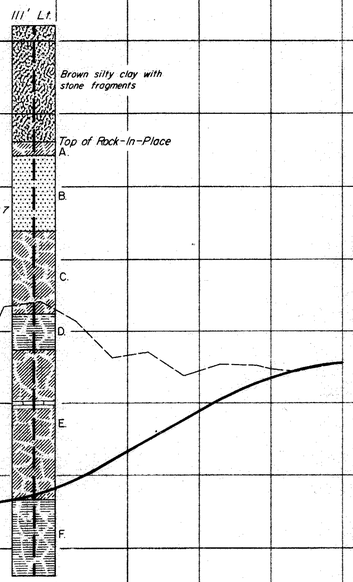

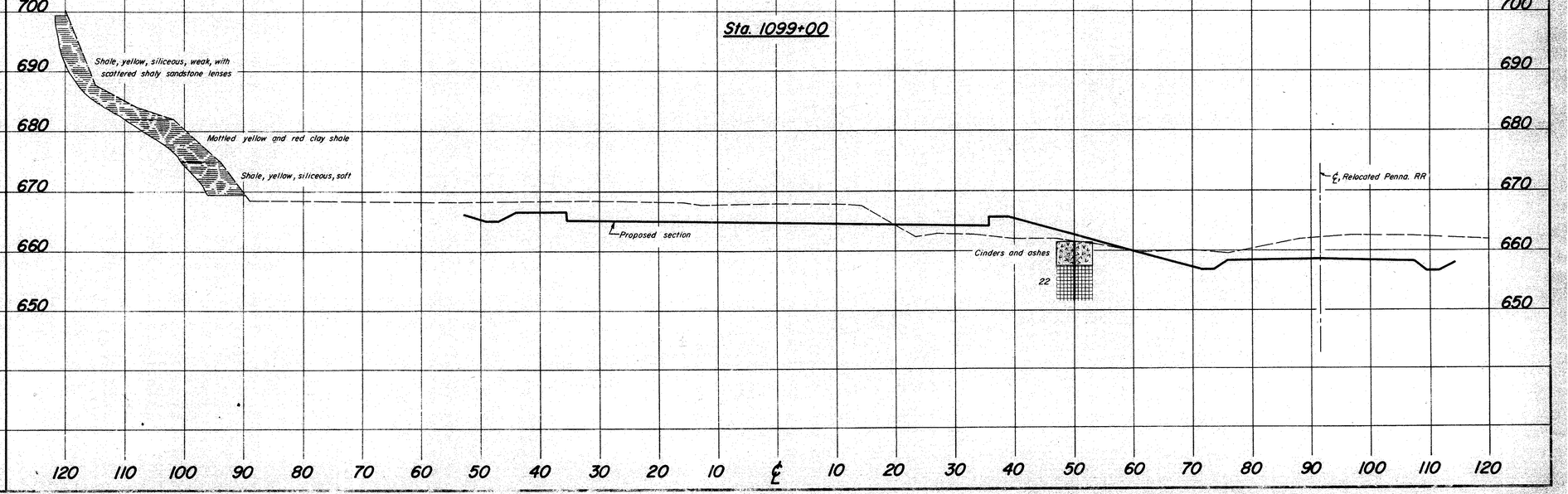

SOIL PROFILE
BELMONT COUNTY
BEL-7-20.74 PART I
SUPPLEMENT

OHIO STATE HIGHWAY TESTING LABORATORY
1620 W. BROAD ST. COLUMBUS 23, OHIO

4
33

740
730
720
710
700
690
680
670
660
650
640

(Sta. 1+69)

Brown silty clay with stone fragments

Top of Rock-In-Place

Indurated Clay, mottled brown and gray and gray, soft and crumbly in upper 1.2', calcareous, badly broken, with limestone nodules. No core loss.

Sandstone, gray and brownish-gray, fine- and medium-grained, generally firm, with soft clay seams, broken, jointed. No core loss.

Indurated Clay; gray, brownish-gray, and reddish-brown, generally firm with few soft crumbly intervals (max. 0.2' thick), calcareous, with few slickensides and limestone nodules. No core loss.

Shale, gray, firm, slightly arenaceous, generally fissile, broken and jointed. No core loss.

Indurated Clay; gray, brownish-gray, and reddish-gray, generally firm, soft and crumbly between elevations 680.2' and 671.0', calcareous, slickensided, with numerous clay intervals, with limestone stringer between elevations 680.2' and 679.2', badly broken throughout. Core loss 20%.

Shale, gray, slightly argillaceous, firm, generally arenaceous, grading intermittently into argillaceous sandstone, jointed and broken. No core loss.

Sta. 1+78
Relocated Lincoln Ave.

℄, Proposed SR 7

Proposed section

(Sta. 1102+00, Proposed SR 7)

Cinders=0.4'

21

22 Trace of Organic

25

29

120 110 100 90 80 70 60 50 40 30 20 10 ℄ 10 20 30 40 50 60 70 80 90 100 110 120 130 140 150 160 170 180 190

TE-95 (FORMERLY TE-54-A)
200-10-61

MICROFILMED
MAY 1 6 1985

GENERAL INFORMATION

INTRODUCTION

The project consists of the relocation of SR 7, located in Martins Ferry, beginning approximately 1000 feet south of Buckeye Street, extending northward for 1.7 miles, and terminating approximately 200 feet south of Fifth Avenue, existing SR 7.

The proposed grade indicates cuts, maximum 5 feet in depth, and fill embankments, maximum 40 feet in height.

GEOLOGY OF THE PROJECT

The alignment incepts on the terraced flood plain of the deeply entrenched Ohio River, ascends the lower portion of the steep valley wall and terminates. Moderately thick residual soil cover and deep glacial outwash, overlies bedrock of the Conemaugh formation, Pennsylvanian age.

EXPLORATION*

Exploratory borings were made by means of truck-mounted mechanical earth auger, on October 1, 2 and 3, 1962.

INVESTIGATIONAL DISCLOSURES

Materials occurring immediately below proposed grade and in the embankment foundation area are comprised of unstratified gravels, sands, silts and silt clays, in the A-1-a, A-1-b, A-3a, A-4 and A-6 classifications, generally having moisture contents in the lower portion of the plastic range.

Frost susceptible silts were encountered within three feet of proposed grade at stations 1123+00, 1131+00, 1135+00, 1136+00 and 1136+50.

It is noted that random fill and cinders, occurring at surface and as deep as 17 feet below ground surface were encountered along the entire project; occurring at grade at stations 1123+00, 1127+00, 1131+00, 1139+00, 1139+75 and 1152+00.

EXPLORATION*

Supplemental information was obtained employing electrical resistivity methods, rotary type-drill rigs, and drive rod penetration tests, between July 26 and August 13, 1963.

LEGEND FOR PROJECT-AVERAGE RESULTS OF TESTS- 154 SAMPLES TESTED

DESCRIPTION	H. R. B. CLASS	OHIO CLASS	% AGG.	% C. SAND	% F. SAND	% SILT	% CLAY	LIQUID LIMIT	PLASTICITY INDEX	WATER CONTENT	SAMPLES TESTED
Gravel and/or stone fragments	A-1-a(0)	A-1-a	64	17	11	3	5	NP	NP	9	25
Gravel and/or stone fragments with sand	A-1-b(0)	A-1-b	40	21	15	6	9	27	0	11	17
Fine sand	A-3(0)	A-3	9	32	53	- 6 -		NP	NP	6	6
Coarse and fine sand	-----	A-3a	17	20	50	5	10	NP	NP	9	3
Gravel with sand and silt	A-2-4(0)	A-2-4	30	13	12	15	15	20	3	15	14
Sandy silt	A-4(4)	A-4a	11	4	30	34	21	27	1	17	31
Silt	A-4(8)	A-4b	2	1	15	50	23	20	1	19	16
Silt and clay	A-6(7)	A-6a	20	5	10	33	32	34	12	21	29
Silty clay	A-6(3)	A-6b	45	7	6	20	22	40	17	14	1
Elastic clay	A-7-5(7)	A-7-5	34	6	7	17	36	40	16	22	2
Clay	A-7-6(13)	A-7-6	5	4	8	37	46	45	19	24	10

Random fill consisting of brick bats, cinders, ashes, slag, gravel, decayed wood and soil

VISUAL CLASSIFICATION

Cinders   Shale   Limestone   Sandstone   VISUAL CLASSIFICATION

Weathered sandstone   Indurated clay   Various other materials

Sod and/or Topsoil = X' = Approximate depth.

Berm material.

Auger boring — plan view.

Drive sample and/or core boring — plan view.

Auger boring plotted to vertical scale only.

Drive sample and/or core boring plotted to vertical scale only.

VISUAL CLASSIFICATION

Number of blows for "Standard Penetration" test.
X = number of blows for first 6 inches.
Y = number of blows for second 6 inches.

● Water content nearly equal to or greater than liquid limit.

Indicates a non-plastic material with high water content.

W Free water.

Drive rod — plan view.

Drive rod plotted to vertical scale only.

NOTE: Figures beside borings indicate water in percent. e.g. *15*

REVISED 9/13/63

SOIL PROFILE
BELMONT COUNTY
BEL-7-20.74

5/33

OHIO STATE HIGHWAY TESTING LABORATORY
1620 W. BROAD ST., COLUMBUS 23, OHIO

NOTE: ● INFORMATION SHOWN BY THIS SUBGRADE PROFILE WAS OBTAINED SOLELY FOR USE IN ESTABLISHING DESIGN CONTROLS FOR THE PROJECT. THE STATE OF OHIO DOES NOT GUARANTEE THE ACCURACY OF THIS DATA AND IT IS NOT TO BE CONSTRUED AS A PART OF THE PLANS GOVERNING CONSTRUCTION OF THE PROJECT.

FED. NO. U-

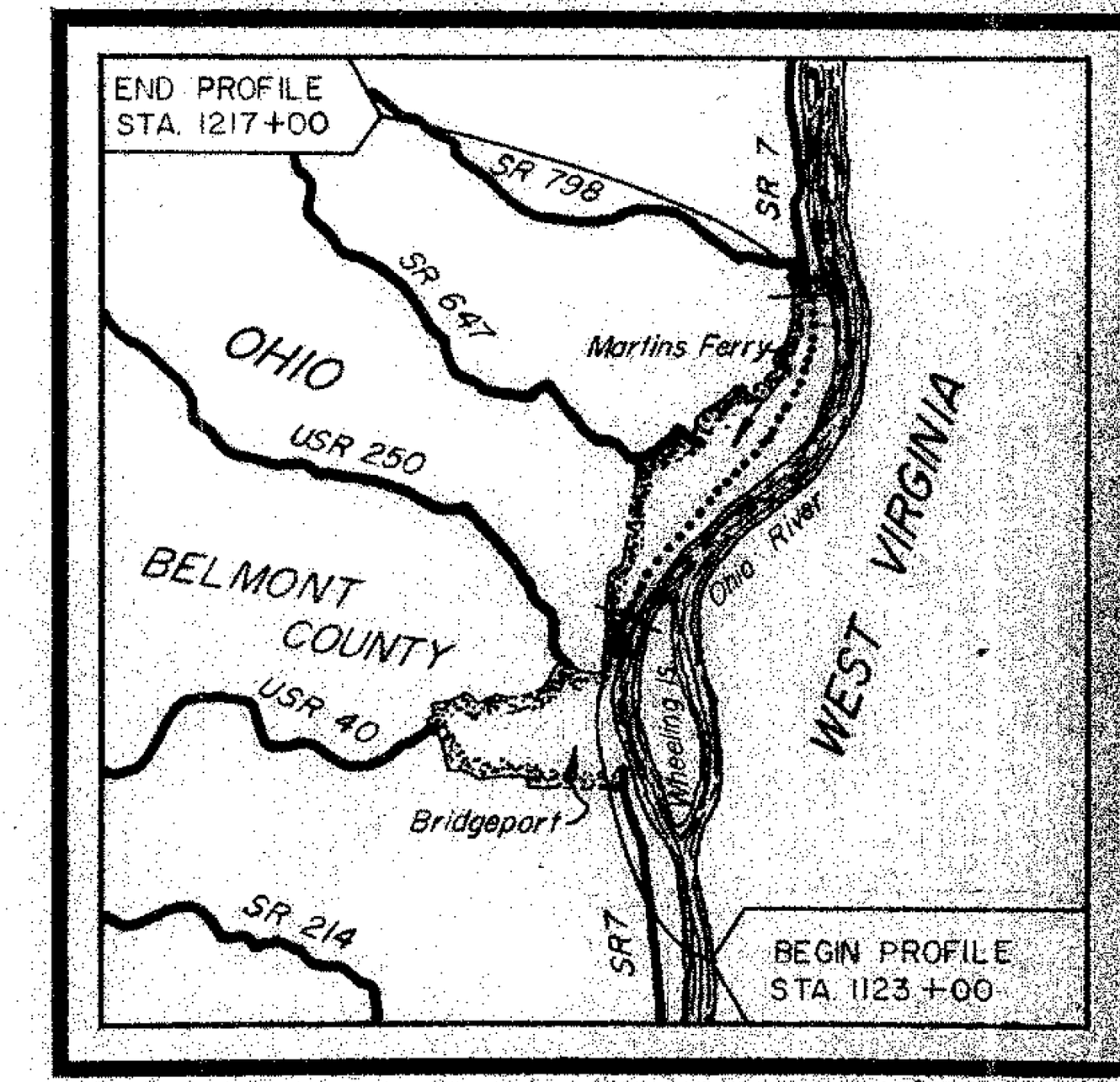

LOCATION MAP

Recon — C.J.K. — 9/21/62 to 9/28/62

Auger — L.M.D., B.D.L. — 10/1/62 to 10/3/62

Drafting — F.S.F. — 11/9/62

REVISION

Core — R.L.S. — 8/6/63 to 8/13/63

Drafting — C.L.I. — 9/13/63

SUMMARY OF SOIL TEST DATA

NOTE: NP shown in Liquid Limit and Plasticity Index columns indicates that the material is non-plastic.
*Denotes sample taken at or near grade.

STATION & OFFSET	DEPTH FROM-TO	% AGG.	% C.S.	% F.S.	% SILT	% CLAY	L.L.	P.I.	% W.C.	SOIL CLASS.
1123+00 25'Rt	0.0-3.0	Gray Cinders								Visual *
	3.0-8.0	6	2	15	50	27	26	2	19	A-4b *
	8.0-14.0	9	1	18	50	22	NP	NP	19	A-4b
1127+00 CL	0.0-1.5	Black Cinders and Ashes								Visual *
	1.5-6.0	0	1	8	60	31	NP	NP	29	A-4b
	6.0-12.0	0	0	18	59	23	NP	NP	22	A-4b
1131+00 4'Rt	0.0-3.0	Black Cinders and Ashes								Visual *
	3.0-8.0	0	1	19	58	22	NP	NP	20	A-4b *
	8.0-12.0	0	0	30	51	19	NP	NP	21	A-4b
1135+00 CL	0.0-1.5	Black Cinders and Decayed Wood								Visual
	1.5-6.0	0	0	9	70	21	NP	NP	21	A-4b *
	6.0-11.0	0	1	43	42	14	NP	NP	13	A-4a *
	11.0-16.0	0	0	31	46	23	NP	NP	18	A-4a
1136+50 75'Lt	0.0-1.5	Gray Cinders and Ashes								Visual
	1.5-5.0	0	1	13	64	22	NP	NP	14	A-4b
	5.0-10.0	0	0	13	69	18	NP	NP	14	A-4b
	10.0-16.0	0	1	13	65	21	NP	NP	18	A-4b *
	16.0-20.0	35	41	16	- 8 -		NP	NP	7	A-1-b *
1136+50 35'Lt	0.0-1.0	Gray Cinders								Visual
	1.0-5.0	6	2	30	46	16	NP	NP	21	A-4a
	5.0-10.0	0	1	34	46	19	NP	NP	12	A-4a *
	10.0-14.0	0	0	49	36	15	NP	NP	16	A-4a
	14.0-17.0	32	35	24	- 9 -		NP	NP	8	A-1-b
1139+00 CL	0.0-1.0	Gray Gravel, Brick Bats and Cinders								Visual *
	1.0-5.0	23	2	37	26	12	NP	NP	11	A-4a *
	5.0-10.0	19	3	26	36	16	NP	NP	14	A-4a
	10.0-12.0	54	28	10	1	7	NP	NP	5	A-1-a
1139+75 CL	0.0-1.0	Gray Slag and Cinders								Visual *
	1.0-5.0	13	5	30	28	24	NP	NP	18	A-4a
	5.0-10.0	11	2	33	29	25	NP	NP	18	A-4a
	10.0-12.0	10	28	53	- 9 -		NP	NP	8	A-3
1141+45 20'Rt	0.0-21.0	Gray Cinders, Slag W/Gravel								Visual
	21.0-23.0	31	15	24	15	15	NP	NP	21	A-2-4
	23.0-30.0	0	2	4	44	50	50	22	30	A-7-6
1142+10 25'Rt	0.0-17.0	Gray Cinders, Slag W/Gravel								Visual
	17.0-20.0	15	4	9	42	30	30	12	25	A-6a
1142+30 30'Rt	0.0-19.0	Dark Gray Cinders								Visual
	19.0-21.0	27	13	18	22	20	28	11	22	A-6a
	21.0-24.0	0	1	5	28	66	30	11	34	A-6a
	24.0-30.0	30	13	44	5	8	NP	NP	14	A-3a

STATION & OFFSET	DEPTH FROM-TO	% AGG.	% C.S.	% F.S.	% SILT	% CLAY	L.L.	P.I.	% W.C.	SOIL CLASS.
1142+60 30'Rt	0.0-6.0	43	22	12	11	12	NP	NP	10	A-1-b
	6.0-12.0	31	18	16	18	17	34	2	12	A-2-4
	12.0-18.0	12	36	37	3	12	NP	NP	5	A-3a
1143+00 CL	0.0-18.0	Dark-Gray Cinders & Ashes								Visual
	18.0-20.0	51	14	18	7	10	NP	NP	27	A-1-b
1143+00 87'Rt	0.0-7.0	Dark-Gray Cinders, Ashes and Brick Bats								Visual
	7.0-10.0	6	4	12	56	22	NP	NP	16	A-4b
	10.0-15.0	8	23	62	- 7 -		NP	NP	6	A-3
1148+00 CL	0.0-5.0	55	26	16	- 3 -		NP	NP	5	A-1-a *
	5.0-11.0	9	30	52	- 9 -		NP	NP	6	A-3
1152+00 CL	0.0-2.0	Black Cinders								Visual *
	2.0-5.0	80	10	6	1	3	NP	NP	5	A-1-a
	5.0-12.0	9	40	48	- 3 -		NP	NP	6	A-3
1153+12 9'Lt	0.3-4.0	47	19	9	9	16	27	5	9	A-1-b
	4.0-11.0	59	25	11	2	3	NP	NP	9	A-1-a
	11.0-18.0	70	14	10	2	4	NP	NP	8	A-1-a
1156+00 25'Rt	0.0-4.0	Dark-Gray Cinders and Ashes								Visual
	4.0-8.0	25	4	13	34	24	26	11	19	A-6a
	8.0-12.0	0	1	29	49	21	NP	NP	19	A-4a
1160+00 25'Rt	0.0-1.0	Black Cinders								Visual
	1.0-6.0	70	11	10	6	3	NP	NP	30	A-1-a
	6.0-8.0	62	23	8	0	7	NP	NP	12	A-1-a
	8.0-12.0	38	4	17	24	17	NP	NP	18	A-4a
1163+00 CL	0.0-4.0	62	19	8	7	4	NP	NP	10	A-1-a
	4.0-9.0	42	6	10	30	12	NP	NP	11	A-4a
	9.0-12.0	0	8	24	38	30	NP	NP	22	A-4a
1163+10 110'Lt	0.0-7.0	64	22	10	0	4	NP	NP	3	A-1-a *
1165+05 CL	0.0-4.0	54	24	10	4	8	NP	NP	10	A-1-a
	4.0-8.0	10	6	20	38	26	NP	NP	10	A-4a
	8.0-12.0	4	3	32	39	22	NP	NP	15	A-4a
1166+40 20' Lt.	1.0-5.0	31	4	6	18	44	46	16	17	A-7-5
	5.0-10.0	44	8	15	19	14	25	5	8	A-2-4
	10.0-15.0	61	20	7	4	8	NP	NP	9	A-1-a
	15.0-20.0	50	19	17	4	10	NP	NP	9	A-1-b
1168+00 30'Lt	0.0-5.0	73	11	6	4	6	NP	NP	6	A-1-a
	5.0-10.0	75	13	5	2	5	NP	NP	4	A-1-a
	10.0-13.0	65	10	10	7	8	NP	NP	5	A-1-a

STATION & OFFSET	DEPTH FROM-TO	% AGG.	% C.S.	% F.S.	% SILT	% CLAY	L.L.	P.I.	% W.C.	SOIL CLASS.
1168+00 70'Rt	1.0-4.0	74	15	5	1	5	NP	NP	7	A-1-a
	4.0-9.0	6	2	30	37	25	NP	NP	17	A-4a
	9.0-14.0	13	3	32	29	23	NP	NP	19	A-4a
	14.0-18.0	8	18	31	21	21	NP	NP	20	A-4a
	18.0-20.0	59	18	12	3	8	NP	NP	9	A-1-b
1170+60 35'Lt	0.0-3.0	39	17	16	16	12	NP	NP	5	A-2-4
	3.0-6.0	50	8	11	18	13	NP	NP	17	A-2-4
	6.0-12.0	42	33	15	0	10	NP	NP	9	A-1-b
	12.0-16.0	8	40	48	- 4 -		NP	NP	5	A-3
1173+00 CL	0.0-5.0	62	14	10	5	9	NP	NP	6	A-1-b
	5.0-10.0	50	18	14	7	11	NP	NP	7	A-1-b
	10.0-14.0	56	18	11	7	8	NP	NP	6	A-1-a
1177+30 15'Lt	0.0-4.0	21	4	9	34	32	30	11	18	A-6a
	4.0-9.0	25	18	27	16	14	NP	NP	17	A-2-4
	9.0-15.0	35	8	22	18	17	26	7	19	A-2-4
1180+00 CL	0.0-9.0	Gray Cinders, Ashes and Slag								Visual
	9.0-15.0	0	8	8	34	50	40	11	25	A-6a
1186+00 80'Rt	0.0-6.0	Gray Slag								Visual
	6.0-8.0	34	17	14	15	20	36	4	22	A-2-4
	8.0-13.0	5	2	12	37	44	33	11	20	A-6a
	13.0-16.0	11	1	26	36	26	NP	NP	21	A-4a
1191+10 50'Rt	0.0-6.0	Black Cinders								Visual
	6.0-11.0	0	3	6	48	43	35	11	32	A-6a
	11.0-16.0	0	1	21	46	32	28	7	23	A-4a
	16.0-21.0	0	2	32	37	29	25	3	24	A-4a
	21.0-25.0	61	12	16	4	7	NP	NP	11	A-1-a
	25.0-30.0	59	17	15	3	6	NP	NP	11	A-1-a
1194+00 10'Lt	0.4-5.0	67	10	3	11	9	NP	NP	9	A-1-b
	5.0-9.0	11	5	8	44	32	32	12	16	A-6a
	9.0-15.0	67	13	7	5	8	26	10	10	A-2-4
	15.0-20.0	60	21	6	1	12	-	-	13	A-1-a
	20.0-24.0	54	13	23	2	8	NP	NP	12	A-1-b
	24.0-28.0	65	18	12	0	5	NP	NP	9	A-1-a
1197+45 CL	0.4-5.0	0	5	9	34	52	42	15	21	A-7-6
	5.0-11.0	45	7	6	20	22	40	17	14	A-6b
	11.0-15.0	0	1	5	40	45	43	22	22	A-7-6
	15.0-20.0	19	8	12	29	32	35	15	25	A-6a
	20.0-25.0	48	23	16	4	9	NP	NP	15	A-1-b
	25.0-30.0	63	11	16	3	7	NP	NP	9	A-1-a
1199+00 15'Rt	0.3-6.0	12	9	15	30	34	35	11	22	A-6a
	6.0-11.0	31	11	14	5	39	39	11	17	A-6a
	11.0-16.0	35	4	11	25	25	30	11	18	A-6a
	16.0-24.0	36	10	13	20	21	30	10	15	A-4a
	24.0-30.0	62	15	18	- 5 -		NP	NP	8	A-1-a

STATION & OFFSET	DEPTH FROM-TO	% AGG.	% C.S.	% F.S.	% SILT	% CLAY	L.L.	P.I.	% W.C.	SOIL CLASS.
1204+00 21'Rt	0.3-7.0	35	7	6	27	25	30	11	19	A-6a
	7.0-13.0	44	8	5	23	20	30	11	14	A-6a
	13.0-19.0	47	12	11	13	17	27	9	18	A-2-4
	19.0-25.0	36	31	18	6	8	NP	NP	10	A-1-b
	25.0-30.0	57	11	16	8	8	NP	NP	13	A-1-b
1205+00 80'Lt	0.2-8.0	54	21	7	5	13	-	-	12	A-1-a
	8.0-15.0	69	20	6	2	3	NP	NP	11	A-1-a
1205+00 135'Rt	0.3-6.0	6	4	10	36	44	37	13	25	A-6a
	6.0-12.0	13	5	9	30	34	33	11	22	A-6a
	12.0-16.0	46	5	7	25	17	36	14	23	A-6a
	16.0-22.0	35	6	10	27	22	35	12	21	A-6a
	22.0-30.0	21	7	11	43	18	36	14	21	A-6a
1208+50 160'Rt	0.3-7.0	27	3	8	28	34	33	12	19	A-6a
	7.0-12.0	16	6	15	33	30	32	11	21	A-6a
	12.0-18.0	32	2	4	30	23	30	14	27	A-6a
	18.0-24.0	0	1	4	75	20	33	9	28	A-4b
	24.0-30.0	0	2	7	45	46	35	12	26	A-6a
1208+84 16'Rt	0.0-6.0	36	8	8	17	31	52	16	26	A-7-5
	6.0-10.0	0	14	18	27	41	41	14	25	A-7-6
	10.0-15.0	8	11	69	- 12 -		NP	NP	8	A-3a
	15.0-21.0	29	10	32	15	14	NP	NP	15	A-2-4
	21.0-25.0	0	3	14	53	30	27	3	11	A-4b
1212+30 36'Lt	0.3-5.0	10	3	7	27	53	53	25	19	A-7-6
	5.0-10.0	38	5	11	21	25	38	15	15	A-6a
	10.0-15.0	11	4	9	40	36	27	11	19	A-6a
	15.0-20.0	0	2	49	26	23	NP	NP	16	A-4a
	20.0-25.0	21	6	35	27	11	NP	NP	14	A-4a
1213+00 30'Rt	0.3-4.0	51	10	26	- 4 -		NP	NP	10	A-1-a
	4.0-9.0	15	3	19	48	15	NP	NP	26	A-4a
	9.0-13.0	0	6	16	40	38	31	13	14	A-6a
1215+00 48'Rt	0.3-4.0	16	4	44	16	23	NP	NP	17	A-4a
	4.0-10.0	0	1	9	28	62	42	19	27	A-7-6
1217+00 CL	0.3-10.0	Dark Brown Cinders and Ashes								Visual *
	10.0-15.0	13	2	8	37	40	43	18	24	A-7-6
1215+00 45'Rt	0.3-6.0	0	2	6	50	42	43	23	17	A-7-6
	6.0-13.0	7	3	22	41	27	26	17	16	A-4a
	13.0-20.0	0	3	37	36	24	NP	NP	18	A-4a
	20.0-25.0	49	7	14	39	21	34	12	23	A-6a

TE-96 (FORMERLY TE-54-B)
2000-10-01

SOIL PROFILE

BELMONT COUNTY

BEL-7-20.74

OHIO STATE HIGHWAY TESTING LABORATORY

1620 W. BROAD ST., COLUMBUS 23, OHIO

6/33

REVISED 9/13/63

Wooded Area

Bridge St.

Residential

Railroad St.

Weeds

Commercial

Buckeye Street

Residential

Wooded Area

Commercial

Parking Area

NOTE: Depression caused by sewer cave-in, in 1961.

Max. 10' emb.

Max. 10' cut

Top of bank

Max. 15' cut

Equipment storage

Weeds

Top of bank

Max. 12' cut

Max. 3' cut

Max. 5' cut

Parking Area

Lawn

Parking Area

1125 1130 1135 1140 1145 1150 1155

Weeds

Weeds

2' wall and emb.

℄, Proposed SR 7

Second St.

Hole 50' deep under construction

Pump Station

First Street

Adams St.

Residential

Monroe St.

Residential

Parking Area

Commercial

Steel overhead R.R. bridge.

Jefferson St.

Vacant Lot

Weeds

Parking Area

Weeds and scrub brush

Top of bank

Parking

Weeds

Wooded Area

Wooded Area

Wooded Area

Wooded Area

Ohio River

LOGS OF OFFSET BORINGS

Sta. 1142+10, 25' Rt.

Gray cinders and slag

19 19

Sta. 1142+10, 75' Lt.

Cinders and ashes

14 14 18 7

Sta. 1142+10, 35' Lt.

21 12 16 8

Sta. 1142+10, 4' Rt.

Cinders and ashes

20 21

Sta. 1142+10, 25' Rt.

Cinders and ashes

29 22

Sta. 1142+10, ℄

Cinders with decayed wood.

21 13 18

Sta. 1142+10, ℄

11 14 5

Gravel, brick and cinders

Sta. 1142+10, ℄

18 18 8

Slag and cinders

Sta. 1142+10, 20' Rt.

21 39

Cinders and slag with gravel

Sta. 1142+10, 30' Rt.

22 34 14

Trace of organic

Sta. 1142+10, 30' Rt.

10 12 5

Sta. 1142+10, ℄

Dark-gray cinders and ashes

27

Sta. 1142+10, 25' Rt.

25

Sta. 1143+00, 25' Rt.

Cinders, slag and gravel with soil.

Sta. 1143+00, 87' Rt.

Dark gray cinders and ashes with trace of brick bats

16 6

Sta. 1143+00, ℄

5 6

Sta. 1143+00, 92' Lt.

Sod BTS=0.3'

9 9 8

Sta. 1143+00, ℄

Hole squeezed in at elev. 673.5'

5 6

660 650 640 630

690 680 670 660 650 640 630 620

1123 1124 1125 1126 1127 1128 1129 1130 1131 1132 1133 1134 1135 1136 1137 1138 1139 1140 1141 1142 1143 1144 1145 1146 1147 1148 1149 1150 1151 1152 1153 1154 1155

TE-96 (FORMERLY TE-54-B)
2000-10-01

SOIL PROFILE

BELMONT COUNTY

BEL-7-20.74

OHIO STATE HIGHWAY TESTING LABORATORY

1620 W. BROAD ST., COLUMBUS 23, OHIO

7/33

REVISED 9/13/63

NOTE: For Cross Section of station 1163+00, see this sheet.

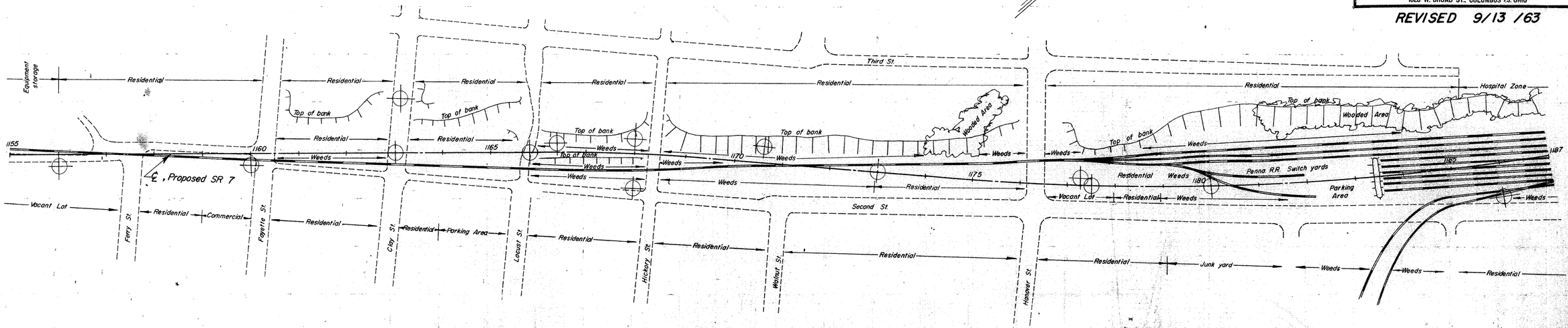

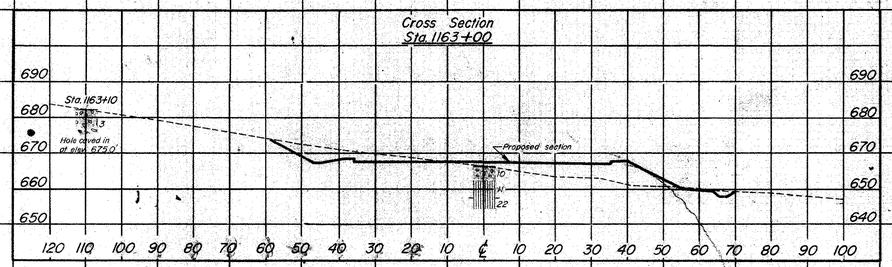

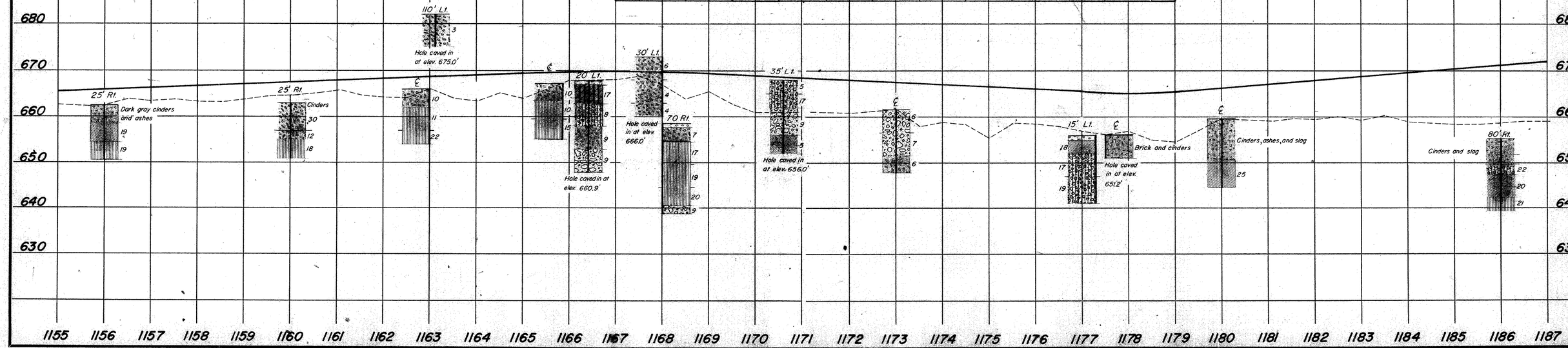

TE-96 (FORMERLY TE-54-B)
2000-10-01

MICROFILMED
MAY 15 1965

SOIL PROFILE

BELMONT COUNTY
BEL-7-20.74

OHIO STATE HIGHWAY
TESTING LABORATORY
1620 W. BROAD ST., COLUMBUS 23, OHIO

8
33

REVISED 9/13/63

CROSS SECTION INDEX	
STATION	SHEET
1208+00	5
1213+00	5
1214+00	6
1214+50	6
1215+00	7
1216+00	7
1216+50	8
1217+00	8

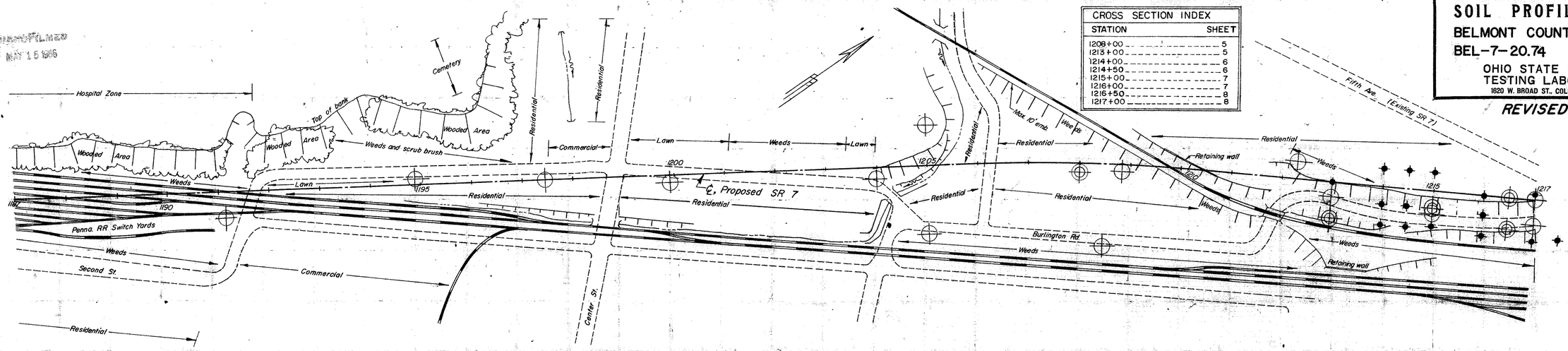

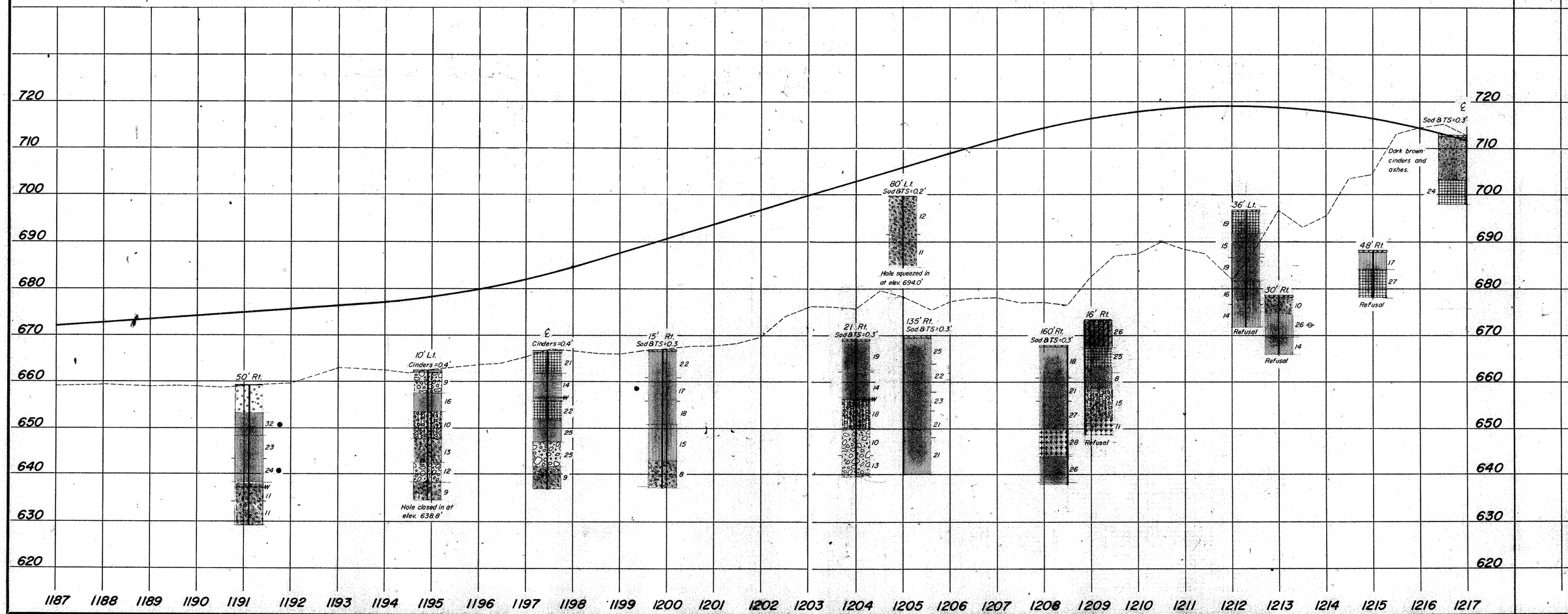

SOIL PROFILE

BELMONT COUNTY
BEL – 7 – 20.74

OHIO STATE HIGHWAY TESTING LABORATORY
1620 W. BROAD ST. COLUMBUS 23, OHIO

9/33

SUPPLEMENT 9/13/63

Sta. 1213+00

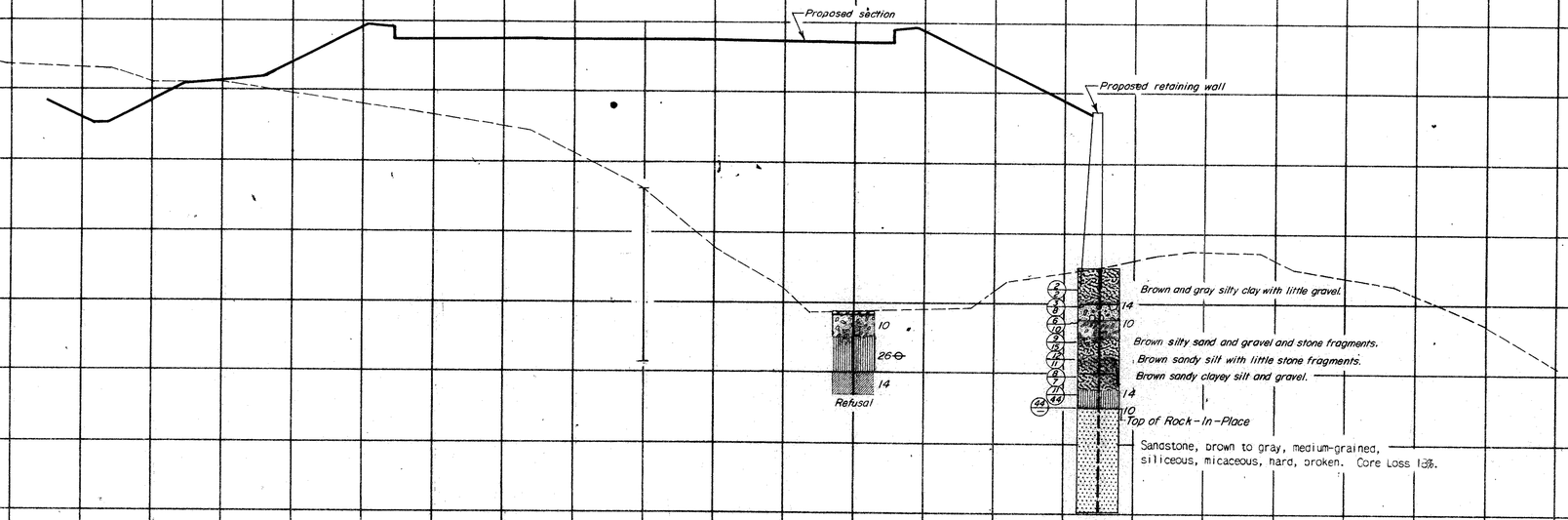

Sta. 1208+00

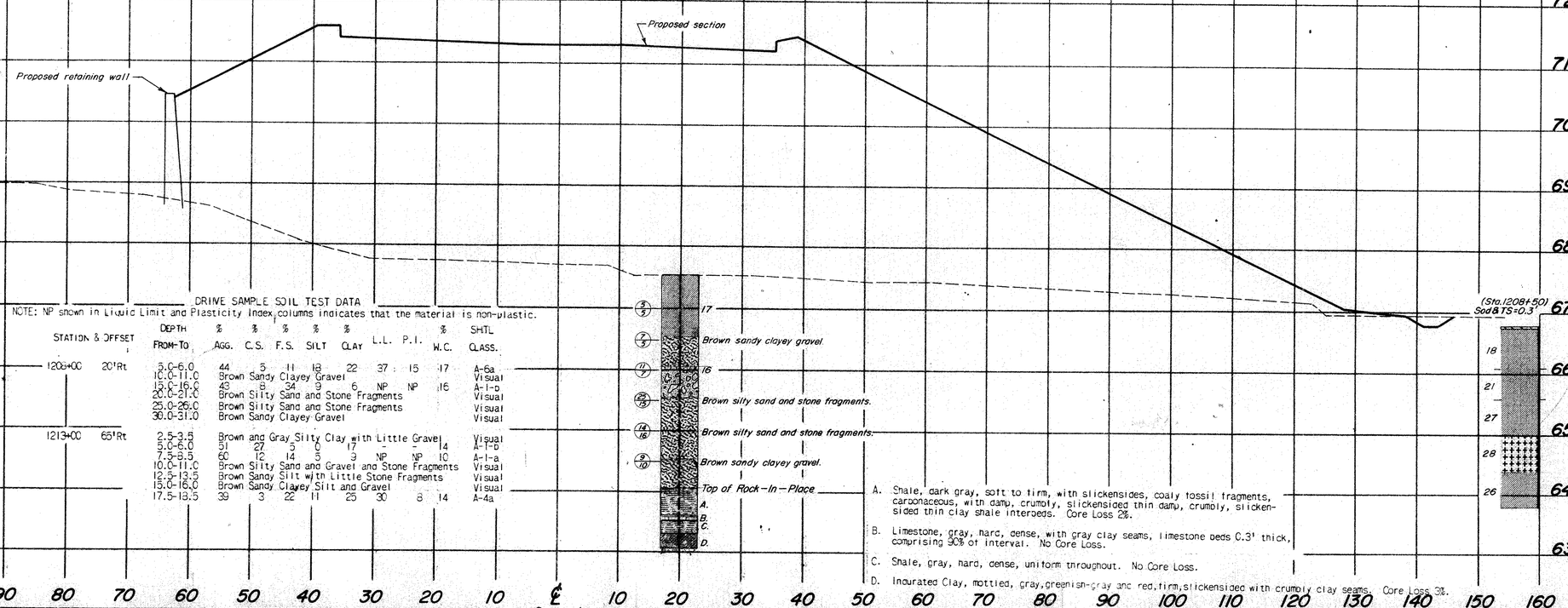

DRIVE SAMPLE SOIL TEST DATA

NOTE: NP shown in Liquid Limit and Plasticity Index columns indicates that the material is non-plastic.

STATION & OFFSET	DEPTH FROM-TO	% AGG.	% C.S.	% F.S.	% SILT	% CLAY	L.L.	P.I.	% W.C.	SHTL CLASS.
1208+00 20'Rt	5.0-6.0	44	5	11	18	22	37	15	17	A-6a
	10.0-11.0	Brown Sandy Clayey Gravel								Visual
	15.0-16.0	43	8	34	9	6	NP	NP	16	A-1-b
	20.0-21.0	Brown Silty Sand and Stone Fragments								Visual
	25.0-26.0	Brown Silty Sand and Stone Fragments								Visual
	30.0-31.0	Brown Sandy Clayey Gravel								Visual
1213+00 65'Rt	2.5-3.5	Brown and Gray Silty Clay with Little Gravel								Visual
	5.0-6.0	51	27	5	0	17	-	-	14	A-1-b
	7.5-8.5	60	12	14	5	9	NP	NP	10	A-1-a
	10.0-11.0	Brown Silty Sand and Gravel and Stone Fragments								Visual
	12.5-13.5	Brown Sandy Silt with Little Stone Fragments								Visual
	15.0-16.0	Brown Sandy Clayey Silt and Gravel								Visual
	17.5-18.5	39	3	22	11	25	30	8	14	A-4a

A. Shale, dark gray, soft to firm, with slickensides, coaly fossil fragments, carbonaceous, with damp, crumoly, slickensided thin damp, crumoly, slickensided thin clay shale interbeds. Core Loss 2%.

B. Limestone, gray, hard, dense, with gray clay seams, limestone beds 0.3' thick, comprising 90% of interval. No Core Loss.

C. Shale, gray, hard, dense, uniform throughout. No Core Loss.

D. Incurated Clay, mottled, gray, greenish-gray and red, firm, slickensided with crumoly clay seams. Core Loss 3%.

SOIL PROFILE

BELMONT COUNTY
BEL-7-20.74

OHIO STATE HIGHWAY TESTING LABORATORY
1620 W. BROAD ST. COLUMBUS 23, OHIO

10/33

SUPPLEMENT 9/13/63

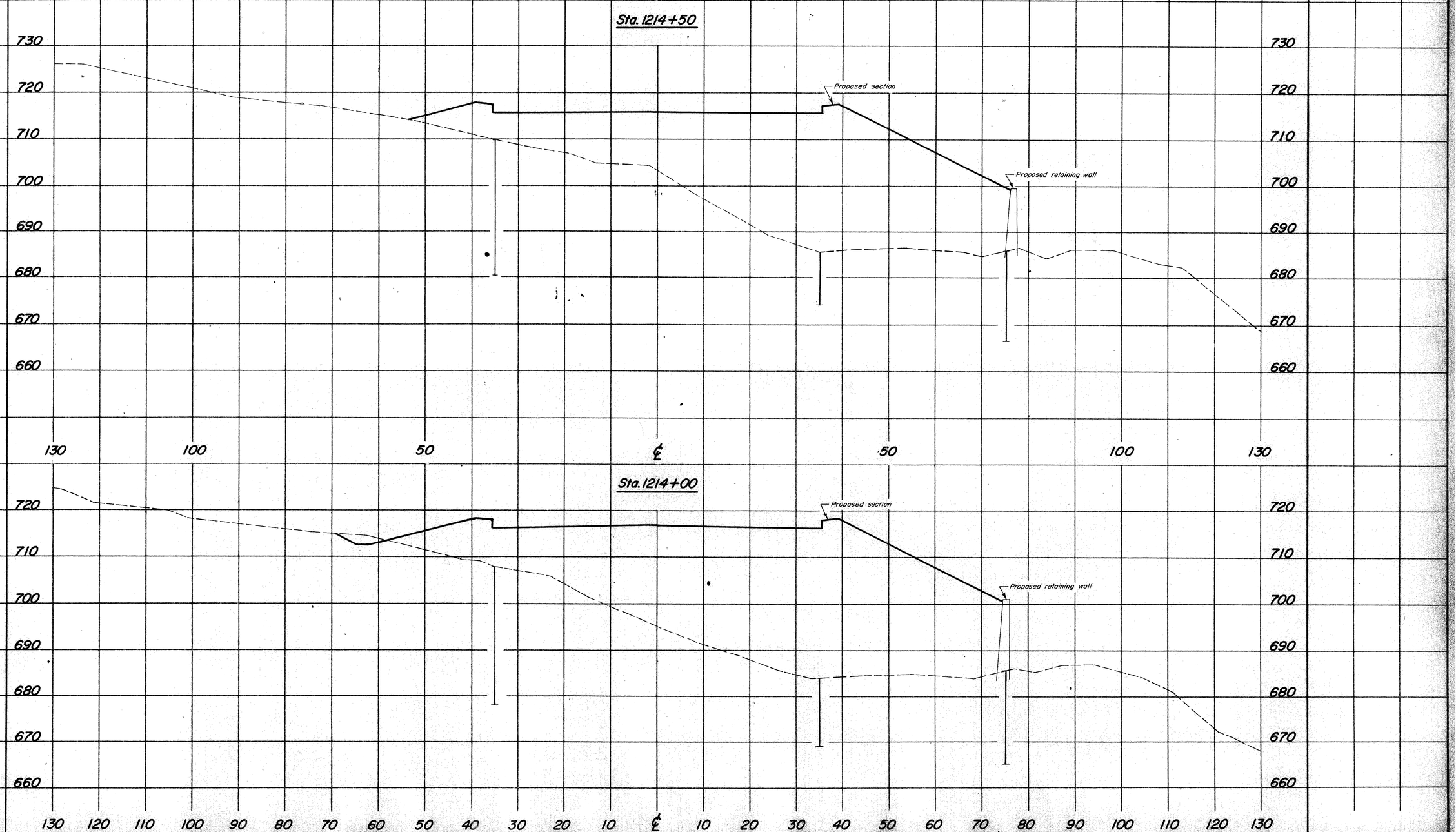

SOIL PROFILE

BELMONT COUNTY
BEL – 7 – 20.74

OHIO STATE HIGHWAY TESTING LABORATORY
1620 W. BROAD ST. COLUMBUS 23, OHIO

SUPPLEMENT 9/13/63

11/33

Sta. 1216+00

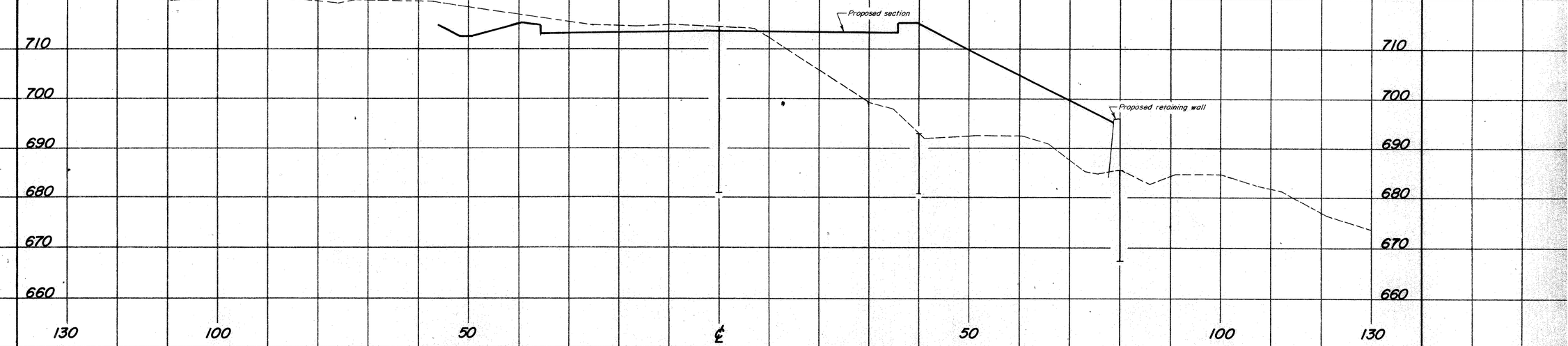

Sta. 1215+00

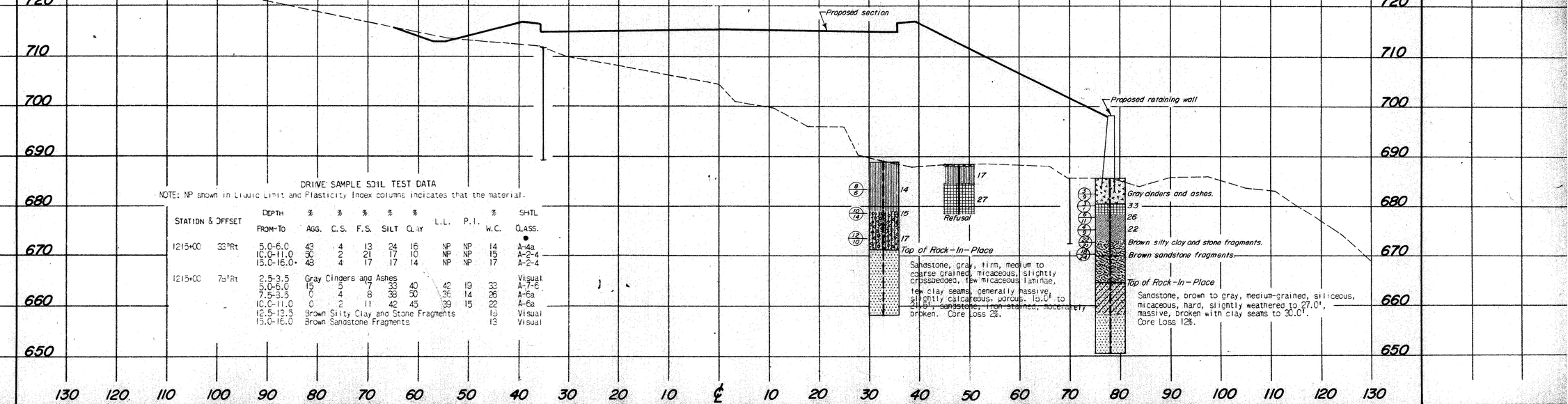

DRIVE SAMPLE SOIL TEST DATA

NOTE: NP shown in Liquid Limit and Plasticity Index columns indicates that the material.

STATION & OFFSET	DEPTH FROM-TO	% AGG.	% C.S.	% F.S.	% SILT	% CLAY	L.L.	P.I.	% W.C.	SHTL CLASS.
1215+00 33'Rt	5.0-6.0	43	4	13	24	16	NP	NP	14	A-4a
	10.0-11.0	50	2	21	17	10	NP	NP	15	A-2-4
	15.0-16.0	48	4	17	17	14	NP	NP	17	A-2-4
1215+00 73'Rt	2.5-3.5	Gray Cinders and Ashes								Visual
	5.0-6.0	15	5	7	33	40	42	19	33	A-7-6
	7.5-8.5	0	4	8	38	50	36	14	26	A-6a
	10.0-11.0	0	2	11	42	45	39	15	22	A-6a
	12.5-13.5	Brown Silty Clay and Stone Fragments							15	Visual
	15.0-16.0	Brown Sandstone Fragments							13	Visual

SOIL PROFILE

BELMONT COUNTY
BEL-7-20.74

OHIO STATE HIGHWAY TESTING LABORATORY
1620 W. BROAD ST. COLUMBUS 23, OHIO

12/33

SUPPLEMENT 9/13/63

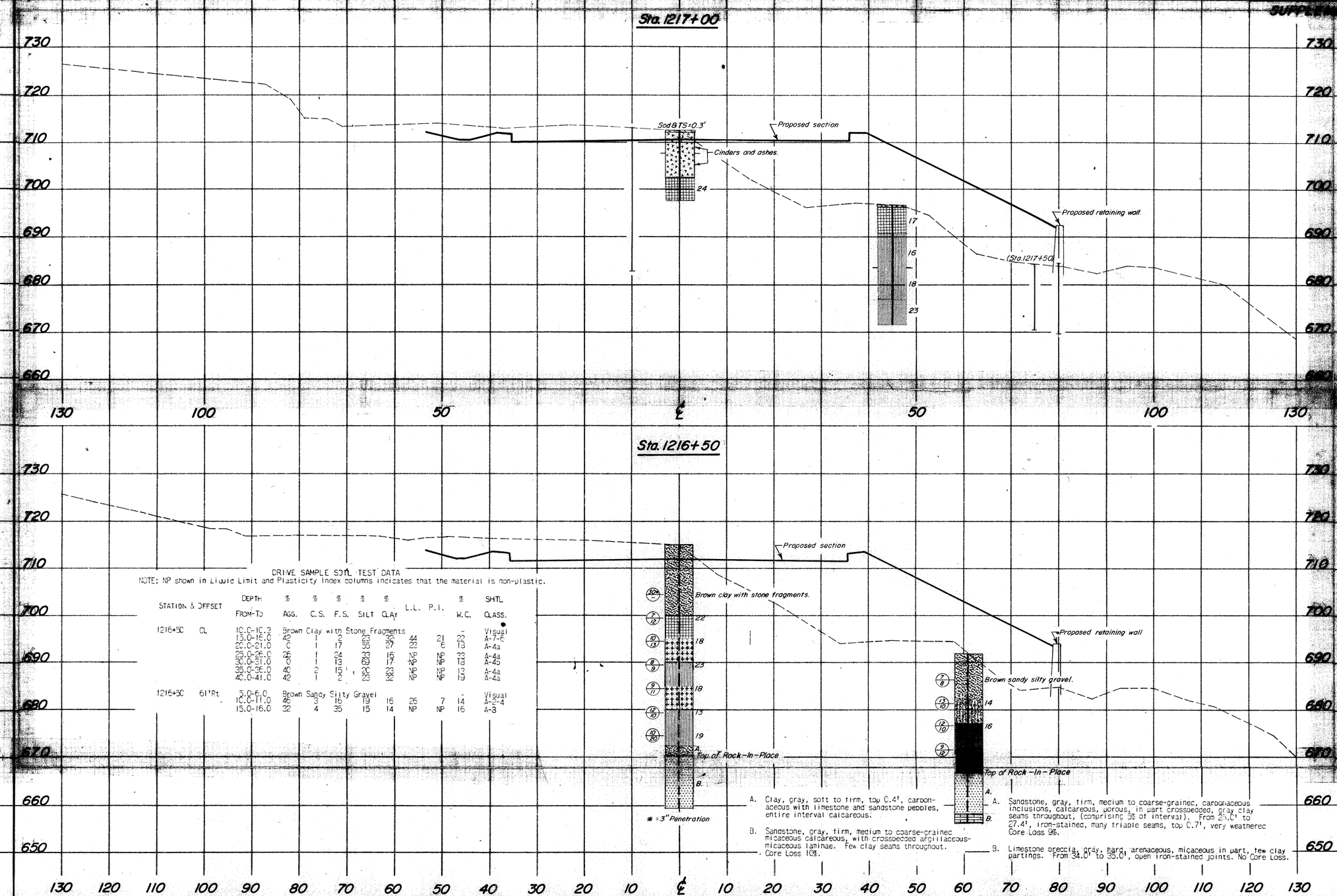

DRIVE SAMPLE SOIL TEST DATA

NOTE: NP shown in Liquid Limit and Plasticity Index columns indicates that the material is non-plastic.

STATION & OFFSET		DEPTH FROM-TO	% AGG.	% C.S.	% F.S.	% SILT	% CLAY	L.L.	P.I.	% W.C.	SHTL CLASS.
1216+50	CL	10.0-10.3	Brown Clay with Stone Fragments							-	Visual
		15.0-16.0	42	1	2	23	32	44	21	22	A-7-6
		20.0-21.0	0	1	17	55	27	23	6	18	A-4a
		25.0-26.0	26	1	24	33	16	NP	NP	33	A-4a
		30.0-31.0	0	1	13	69	17	NP	NP	18	A-4b
		35.0-36.0	40	2	15	20	23	NP	NP	13	A-4a
		40.0-41.0	42	1	2	23	32	NP	NP	19	A-4a
1216+50	61'Rt	5.0-6.0	Brown Sandy Silty Gravel							-	Visual
		10.0-11.0	46	3	16	19	16	26	7	14	A-2-4
		15.0-16.0	32	4	35	15	14	NP	NP	16	A-3

A. Clay, gray, soft to firm, top 0.4', carbonaceous with limestone and sandstone pebbles, entire interval calcareous.

B. Sandstone, gray, firm, medium to coarse-grained micaceous calcareous, with crossbedded argillaceous-micaceous laminae. Few clay seams throughout. Core Loss 10%.

A. Sandstone, gray, firm, medium to coarse-grained, carbonaceous inclusions, calcareous, porous, in part crossbedded, gray clay seams throughout, (comprising 5% of interval). From 25.0' to 27.4', iron-stained, many friable seams, top 0.7', very weathered Core Loss 9%.

B. Limestone breccia, gray, hard, arenaceous, micaceous in part, few clay partings. From 34.0' to 35.0', open iron-stained joints. No Core Loss.

TE-95 (FORMERLY TE-54-A)
200-10-61

GENERAL INFORMATION

INTRODUCTION

The project consists of the construction of a 0.9 mile section of SR 7, located in Martins Ferry, beginning on SR 7, approximately 200 feet south of 5th Avenue, extending northeastward, adjacent to SR 7, and terminating at the junction of SR 7 and SR 796.

Proposed grade indicates maximum 10-foot cuts and 9-foot embankments along centerline; maximum 72-foot cuts in left ditchlines; and maximum 12-foot side-hill embankments on the right.

GEOLOGY AND OBSERVATIONS OF THE PROJECT

The alignment traverses the terraced flood plain adjacent to the base of the west valley wall of the Ohio River. Thin to moderately deep outwash and alluvium, on the flood plain, and shallow residual soils, on the valley wall, overlie sandstone, shales, indurated clays, and coals, of Pennsylvanian age. Rock outcrops were observed on the valley wall and measured.

EXPLORATION *

Exploratory borings were made by means of truck-mounted mechanical earth auger and hand auger (in areas of difficult access), on January 22 and 23, 1963, and rotary type drill rig (for the preliminary investigation), between July 10 and 24, 1962. Included in this report is the log of a boring made for the proposed retaining wall in the vicinity of station 1216+00.

INVESTIGATIONAL DISCLOSURES

Materials immediately below grade consist predominantly of sandy gravels, sandy silts, silts, and silt clays, in the A-2-4, A-2-6, A-4, and A-6a classifications, having moisture contents generally in the lower portions of the plastic range, as well as shale and sandstone bedrock.

Bedrock is anticipated in the excavations at the following locations:

Stations 1220+25 to 1220+50 - sandstone in the left ditch.
Stations 1220+50 to 1221+00 - sandstone and shale in the left ditch; sandstone in the left backslope.
Stations 1221+00 to 1225+50 - shale at left grade, and in the left ditch and lower-most portion of the left backslope; sandstone and shale in the upper portion of the left backslope.
Stations 1227+00 to 1228+00 - shale in the left ditch and backslope.
Stations 1228+00 to 1228+75 - indurated clay in the left ditch and lower-most portion of left backslope; shale and sandstone in the upper portion of left backslope.
Stations 1228+75 to 1236+75 - indurated clay at left grade, and in the left ditch and lower-most portion of the left backslope; sandstone and shale in the upper portion of the left backslope.
Stations 1236+75 to 1241+25 - indurated clay in the left ditch.
Stations 1242+00 to 1242+50 - indurated clay in the left ditch.
Stations 1243+50 to 1252+50 - indurated clay at left grade, and in the left ditch and lower-most portion of the left backslope; shale and sandstone in the upper portion of the left backslope.
Stations 1252+50 to 1252+75 - sandstone in left ditch.
Stations 1252+75 to 1259+75 - sandstone and indurated clay and some shale at left grade, in the left ditch and lower portion of the backslope; predominantly sandstone with some thin beds of limestone and shale in the upper portion of the backslope.
Stations 1259+75 to 1260+25 - shale and indurated clay in the left ditch and lower-most portions of the left backslope.

A 10-foot interval of random fill, comprised of cinders and ashes, was encountered at grade, at station 1217+00.

Frost susceptible silts were encountered within three feet below proposed grade at stations 1238+50 and 1244+70. Wet materials were encountered at stations 1238+50 and 1249+50.

In the embankment foundation areas, materials are comprised of gravels, sandy gravels, sandy silts, silt clays, and clays, in the A-1-a, A-1-b, A-2-4, A-2-6, A-4a, A-6a, and A-7-6 classifications. Wet materials were encountered at stations 1225+25 and 1261+50. One to 2 feet of cinders and rubbish were encountered at surface, between stations 1226+00 and 1228+00, right of centerline.

*EXPLORATION (Cont'd)

Supplemental information was obtained employing electrical resistivity methods and drive rod penetration tests, between July 26 and 31, 1963 and by rotary-type drill rigs, between March 23 and 25, 1964

LEGEND FOR PROJECT-AVERAGE RESULTS OF TESTS- 93 SAMPLES TESTED

DESCRIPTION	H. R. B. CLASS	OHIO CLASS	% AGG.	% C. SAND	% F. SAND	% SILT	% CLAY	LIQUID LIMIT	PLASTICITY INDEX	WATER CONTENT	SAMPLES TESTED
Gravel and/or stone fragments	A-1-a(0)	A-1-a	77	7	6	2	8	NP	NP	12	5
Gravel and/or stone fragments with sand	A-1-b(0)	A-1-b	62	8	12	5	13	NP	NP	16	6
Gravel and/or stone fragments with sand and silt	A-2-4(0)	A-2-4	59	7	10	8	16	30	9	17	9
Gravel and/or stone fragments with sand, silt, and clay	A-2-6(1)	A-2-6	60	4	8	6	22	38	19	22	12
Sandy silt	A-4(4)	A-4a	13	3	26	32	26	25	1	20	9
Silt	A-4(8)	A-4b	-	-	19	50	31	28	2	24	3
Silt and clay	A-6(5)	A-6a	28	4	10	23	35	33	12	22	21
Silty clay	A-6(8)	A-6b	29	4	7	24	36	37	18	21	8
Clay	A-7-6(9)	A-7-6	33	3	5	18	41	44	20	24	14
Random fill											
Coal blossom											
Cinders											
Weathered shale											4
Weathered sandstone											
Indurated Clay											
Shale											2

Sandstone
Limestone
Various other materials

VISUAL CLASSIFICATION

(R) Resistivity - plan view.
(R) Resistivity plotted in profile only.
Sod and/or Topsoil=X'=Approximate depth.
Berm material.
Auger boring - plan view.
Drive sample and/or core boring - plan view.
Auger boring plotted to vertical scale only.
Drive sample and/or core boring plotted to vertical scale only.
Number of blows for "Standard Penetration" test. X=number of blows for the first 6 inches. Y=number of blows for the second 6 inches.
Water content nearly equal to or greater than liquid limit.
TR Resistivity plotted in profile only. Indicates top of rock.
Indicates moist zone plotted in profile only.
Indicates a non-plastic material with high water content.
Free water.
Drive rod - plan view.
Drive rod plotted to vertical scale only.
B Indicates broken rock interval.

NOTE: Figures beside borings indicate water content in percent. e.g. 15

REVISED 9/9/63

REVISED 4/15/64

SOIL PROFILE
BELMONT COUNTY
BEL-7-20.74 PART II
OHIO STATE HIGHWAY TESTING LABORATORY
1620 W. BROAD ST., COLUMBUS 23, OHIO

13/33

NOTE: •INFORMATION SHOWN BY THIS SUBGRADE PROFILE WAS OBTAINED SOLELY FOR USE IN ESTABLISHING DESIGN CONTROLS FOR THE PROJECT. THE STATE OF OHIO DOES NOT GUARANTEE THE ACCURACY OF THIS DATA AND IT IS NOT TO BE CONSTRUED AS A PART OF THE PLANS GOVERNING CONSTRUCTION OF THE PROJECT.

FED. NO. U-534(10)

Recon - J.S.M. - 12/17/62 to 12/20/62.

Drilling:
Auger - J.A.G. ; C.M.C. - 1/22/63 to 1-23/63.
Core - F.E.S. ; W.L.T. ; W.R.B. - 7/12/62 to 7/24/62.

Drafting - S.J.H. ; R.D.S. - 2/26/63.

REVISION

Drafting - C.L.I. - 9/9/63

REVISION

Drafting - A.F. 4/15/64
Core - J.H.S. 3/23/64, to 3/25/64

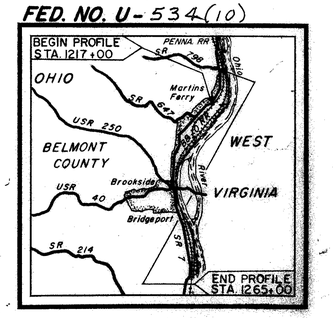

LOCATION MAP

STATION & OFFSET		DEPTH FROM-TO	% AGG.	% C.S.	% F.S.	% SILT	% CLAY	L.L.	P.I.	% W.C.	SHTL CLASS.
1249+00	110'Rt	0.4-4.0	52	7	12	10	19	30	9	17	A-2-4 *
		4.0-9.0	52	6	11	6	25	37	15	20	A-2-6 *
		9.0-15.0	36	7	13	8	36	37	19	21	A-6b
1249+50	CL	0.0-3.0	Cinders, Glass, and Brick Bats								Visual
		3.0-7.0	0	1	8	40	51	36	14	33	A-6a *
		7.0-8.0	60	4	9	8	19	36	11	31	A-2-6 *
		8.0-15.0	42	4	7	9	38	41	19	28	A-7-6
1252+75	CL	0.2-1.5	Brown Broken Sandstone								Visual *
1255+00	CL	0.2-1.0	37	6	7	11	39	-	-	19	A-6a
1255+00	50'Rt	0.4-6.0	78	2	9	3	8	NP	NP	11	A-1-a
		6.0-9.0	47	3	2	10	38	43	26	22	A-7-6
		9.0-10.0	-	-	-	-	39	17	14		A-6b
1252+00	50'Lt	0.0-1.0	Gray Clayey Silt and Stone Fragments								Visual
1261+50	CL	1.0-6.0	48	4	8	10	30	37	13	22	A-6a *
		6.0-8.0	82	3	2	1	10	-	-	12	A-1-a
		8.0-11.0	73	3	4	6	14	36	12	21	A-2-6
		11.0-14.0	0	1	6	51	42	28	7	26	A-4b
		14.0-20.0	0	0	24	33	43	28	11	21	A-6a
		20.0-25.0	0	1	27	30	42	27	11	25	A-6a
		25.0-30.0	0	1	24	33	42	28	11	24	A-6a
1263+00	CL	0.4-5.0	57	6	8	7	22	34	11	12	A-2-6 *
		5.0-10.0	53	4	7	11	25	36	13	27	A-6a
		10.0-15.0	0	1	9	39	51	44	15	29	A-7-6
1264+70	30'Lt	0.4-4.0	0	0	27	50	23	NP	NP	23	A-4b *
		4.0-9.0	61	12	10	6	11	NP	NP	14	A-1-b
		9.0-15.0	0	0	8	46	46	39	17	22	A-6b

DRIVE SAMPLE SOIL TEST DATA

STATION & OFFSET		DEPTH FROM-TO	% AGG.	% C.S.	% F.S.	% SILT	% CLAY	L.L.	P.I.	% W.C.	SHTL CLASS.
1218+00	80'Rt	5.0-6.0	10	6	32	18	34	25	8	13	A-4a
		7.5-8.5	36	11	27	6	20	NP	NP	14	A-2-4
		10.0-11.0	37	2	10	12	39	40	17	14	A-6b
1221+80	182'Lt	5.0-6.0	21	5	4	26	44	43	16	22	A-7-6
		10.0-11.0	0	2	2	37	59	37	12	19	A-6a
		15.0-16.0	15	4	3	46	32	35	11	18	A-6a
		20.0-21.0	35	13	22	12	17	27	7	17	A-2-4
1247+00	210'Lt	5.0-6.0	38	2	1	14	45	-	-	16	A-6a
		10.0-11.0	70	3	2	10	15	-	-	14	A-1-b
		15.0-16.0	Black Coal Blossom								Visual
		20.0-21.0	42	1	1	17	39	-	-	16	A-6a

SUMMARY OF SOIL TEST DATA

NOTE: NP shown in Liquid Limit and Plasticity Index columns indicates that the material is non-plastic.
*Denotes sample taken at or near grade.

STATION & OFFSET		DEPTH FROM-TO	% AGG.	% C.S.	% F.S.	% SILT	% CLAY	L.L.	P.I.	% W.C.	SHTL CLASS.
1217+00	CL	0.3-10.0	Dark-Brown Cinders and Ashes								Visual *
		10.0-15.0	13	2	8	37	40	43	18	24	A-7-6
1217+00	45'Rt	0.3-6.0	0	2	6	50	42	43	23	17	A-7-6
		6.0-13.0	7	2	22	41	27	28	7	16	A-4a
		13.0-20.0	0	3	37	36	24	NP	NP	18	A-4a
		20.0-25.0	19	7	14	39	21	34	12	23	A-6a
1219+00	50'Lt	0.0-5.0	58	3	1	14	24	32	11	13	A-6a
		5.0-10.0	31	6	5	22	36	38	12	21	A-6a
		10.0-13.0	23	5	4	26	42	39	12	16	A-6a
		13.0-17.0	53	10	5	9	23	38	16	16	A-2-6
		17.0-20.0	32	2	5	17	44	38	17	19	A-6b
1219+00	CL	0.8-2.0	74	6	6	6	8	NP	NP	18	A-1-a
		2.0-5.0	36	4	4	17	39	42	14	21	A-7-6
		5.0-10.0	14	4	8	31	43	33	11	22	A-6a
		10.0-13.0	37	3	8	22	30	39	19	23	A-6b
		13.0-15.0	51	1	3	5	40	51	30	25	A-7-6
1219+00	35'Rt	0.5-1.5	77	7	6	3	7	-	-	11	A-1-b
		1.5-6.0	62	2	3	12	21	36	16	25	A-2-6
		6.0-12.0	0	2	3	43	52	35	15	26	A-6a
		12.0-20.0	30	3	6	26	35	37	17	23	A-6b
1219+00	75'Rt	2.5-8.0	57	13	10	4	16	-	-	12	A-1-b
		8.0-10.5	56	2	8	7	27	45	24	24	A-2-7
1221+00	CL	0.6-3.0	28	8	11	28	25	34	11	22	A-6a *
		3.0-5.0	33	4	13	26	24	NP	NP	19	A-4a
1222+00	CL	0.2-4.0	76	3	6	5	10	28	9	14	A-2-4
1225+00	68'Lt	0.0-2.0	33	4	4	16	43	49	22	21	A-7-6
1225+00	8'Lt	0.2-2.0	48	2	3	14	33	43	20	23	A-7-6 *
		2.0-6.5	Brown Broken Shale							10	Visual *
1226+00	56'Rt	0.2-1.0	Cinders								Visual
		1.0-2.0	64	2	6	11	17	32	12	20	A-2-6
		3.0-6.0	9	7	6	19	59	39	24	16	A-6b
		6.0-7.0	10	4	5	23	58	41	18	18	A-7-6
		7.0-10.0	13	0	2	35	50	36	15	15	A-6a
		10.0-13.0	43	5	13	15	24	30	11	10	A-6a
1227+00	53'Rt	0.2-2.0	Cinders								Visual
		2.0-4.0	48	5	7	10	30	44	21	28	A-7-6
		4.0-8.0	53	3	3	23	18	41	18	16	A-7-6
1228+00	48'Rt	0.2-2.0	Rubbish								Visual
1229+00	40'Rt	0.3-3.5	24	10	12	18	36	38	13	32	A-6a
		3.5-7.0	55	6	10	10	19	34	9	18	A-2-4
1230+25	CL	0.4-5.0	38	9	16	17	20	26	5	14	A-4a
		5.0-10.0	45	9	15	9	21	30	9	14	A-2-4
1231+50	38'Rt	2.0-7.0	12	1	3	27	57	48	20	29	A-7-6
		7.0-12.0	29	5	6	18	42	44	21	26	A-7-6
		12.0-15.0	35	5	6	16	38	49	24	30	A-7-6
1234+25	11'Rt	0.3-1.0	Brown Broken Sandstone								Visual *
1235+25	18'Rt	0.2-1.0	Silt and Sandstone Fragments								Visual *
1235+25	43'Rt	0.3-3.0	68	15	8	1	8	NP	NP	18	A-1-a
		3.0-7.0	54	6	20	6	14	NP	NP	17	A-1-b
		7.0-11.0	10	1	20	46	23	NP	NP	22	A-4a
		11.0-13.0	0	1	33	36	30	NP	NP	21	A-4a
		13.0-18.0	56	3	10	12	19	27	9	16	A-2-4
		18.0-18.5	10	0	1	37	52	34	12	20	A-6a
		18.5-20.0	Brown Broken Siliceous Shale							8	Visual
1236+50	44'Lt	0.1-1.5	20	7	12	23	38	34	11	22	A-6a
1236+50	6'Rt.	0.4-3.0	61	5	15	8	11	NP	NP	18	A-1-b *
		3.0-7.0	0	0	24	50	26	NP	NP	22	A-4b *
		7.0-10.0	Brown Weathered Shale							12	Visual
1238+50	44'Rt	0.6-5.0	60	14	8	5	13	28	9	21	A-2-4
		5.0-9.0	55	8	12	7	18	29	11	15	A-2-6
		9.0-14.0	0	1	28	36	35	NP	NP	21	A-4a
		14.0-18.0	0	0	33	44	23	NP	NP	20	A-4a
1241+00	36'Rt	0.4-3.0	60	6	12	5	17	-	-	18	A-2-4
		3.0-7.0	40	7	12	10	31	34	13	23	A-4a
		7.0-15.0	0	0	26	37	37	NP	NP	22	A-4a
1241+05	52'Lt	0.0-2.0	Cinders and Mine Refuse								Visual
		2.0-3.0	Brown Broken Sandstone								Visual
1241+20	3'Rt.	0.4-2.5	32	10	16	18	24	26	2	18	A-4a *
		2.5-8.0	0	2	9	56	33	33	16	20	A-6b
		8.0-9.0	Brown Weathered Shale							15	Visual
1243+50	35'Rt	0.0-5.0	80	11	4	0	5	-	-	11	A-1-a *
		5.0-10.0	68	14	7	7	19	-	-	23	A-1-b
		10.0-13.0	48	5	12	12	22	32	13	21	A-2-6
		13.0-15.0	Brown Weathered Shale							6	Visual
1245+00	100'Lt	0.0-0.5	Brown Broken Sandstone								Visual
1245+00	CL	0.2-1.0	38	10	11	14	27	35	11	17	A-6a
1247+50	CL	0.0-1.0	Cinders								Visual
		1.0-7.0	47	4	12	6	31	34	14	23	A-6a *
		7.0-12.0	71	5	9	4	11	24	8	15	A-2-4 *
		12.0-15.0	0	0	1	31	68	45	20	27	A-7-6
1249+00	25'Lt	0.4-5.0	67	3	5	5	20	44	18	22	A-2-7 *
		5.0-10.0	69	4	6	2	19	-	-	25	A-2-7 *
		10.0-13.0	0	4	47	32	17	NP	NP	22	A-4a
		13.0-15.0	56	8	12	8	16	27	7	22	A-2-4
		15.0-17.0	Brown Weathered Shale							8	Visual

TE-96 (FORMERLY TE-54-B)
2000-10-61

REVISED 9/9/63

REVISED 4/15/64

SOIL PROFILE

BELMONT COUNTY

BEL-7-20.74 **PART II**

OHIO STATE HIGHWAY TESTING LABORATORY

1620 W. BROAD ST., COLUMBUS 23, OHIO

14/33

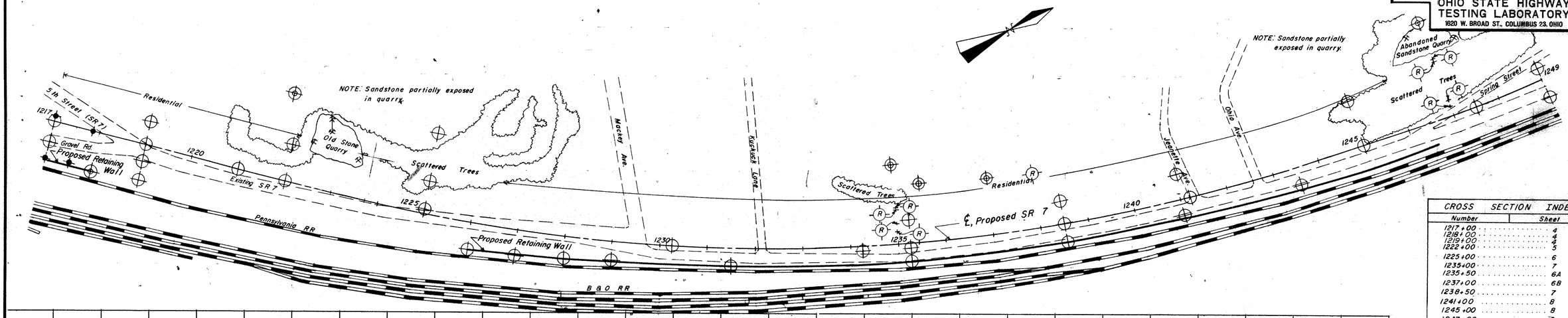

CROSS SECTION INDEX	
Number	Sheet
1217+00	4
1218+00	4
1219+00	4
1222+00	5
1225+00	6
1235+00	7
1235+50	6A
1237+00	6B
1238+50	7
1241+00	8
1245+00	8
1247+00	9

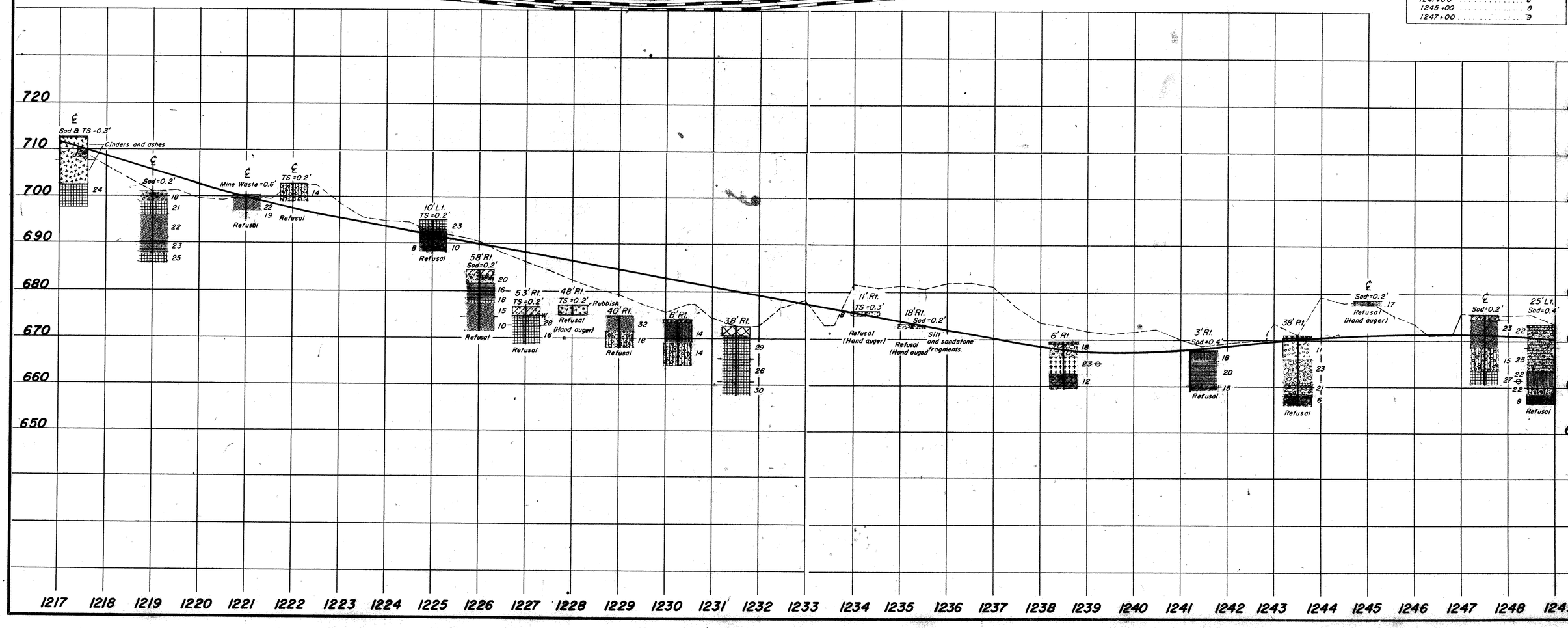

TE-86 (FORMERLY TE-54-B)
2000-10-01

SOIL PROFILE

BELMONT COUNTY

BEL-7-20.74 PART II

OHIO STATE HIGHWAY
TESTING LABORATORY
1620 W. BROAD ST., COLUMBUS 23, OHIO

15/33

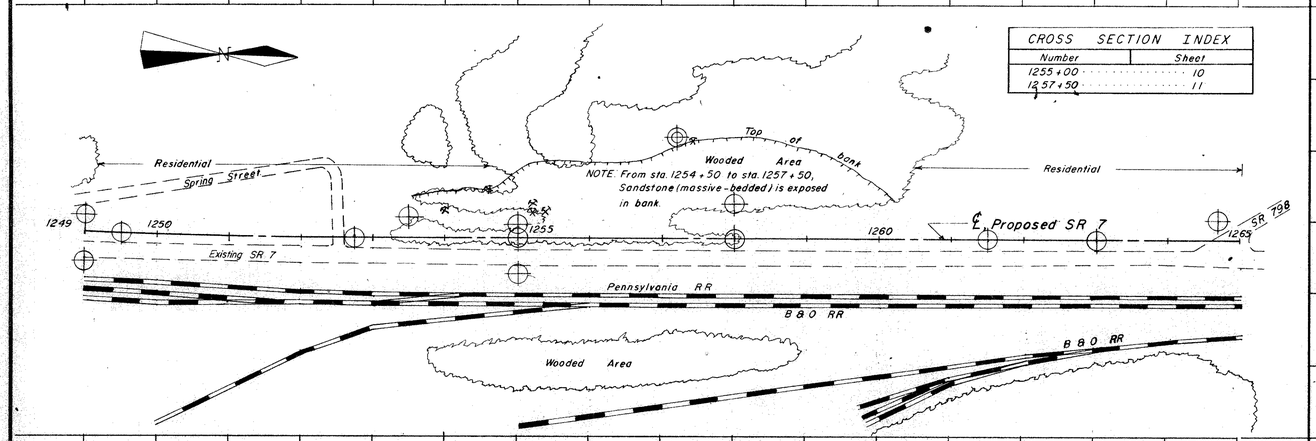

CROSS SECTION INDEX	
Number	Sheet
1255+00	10
1257+50	11

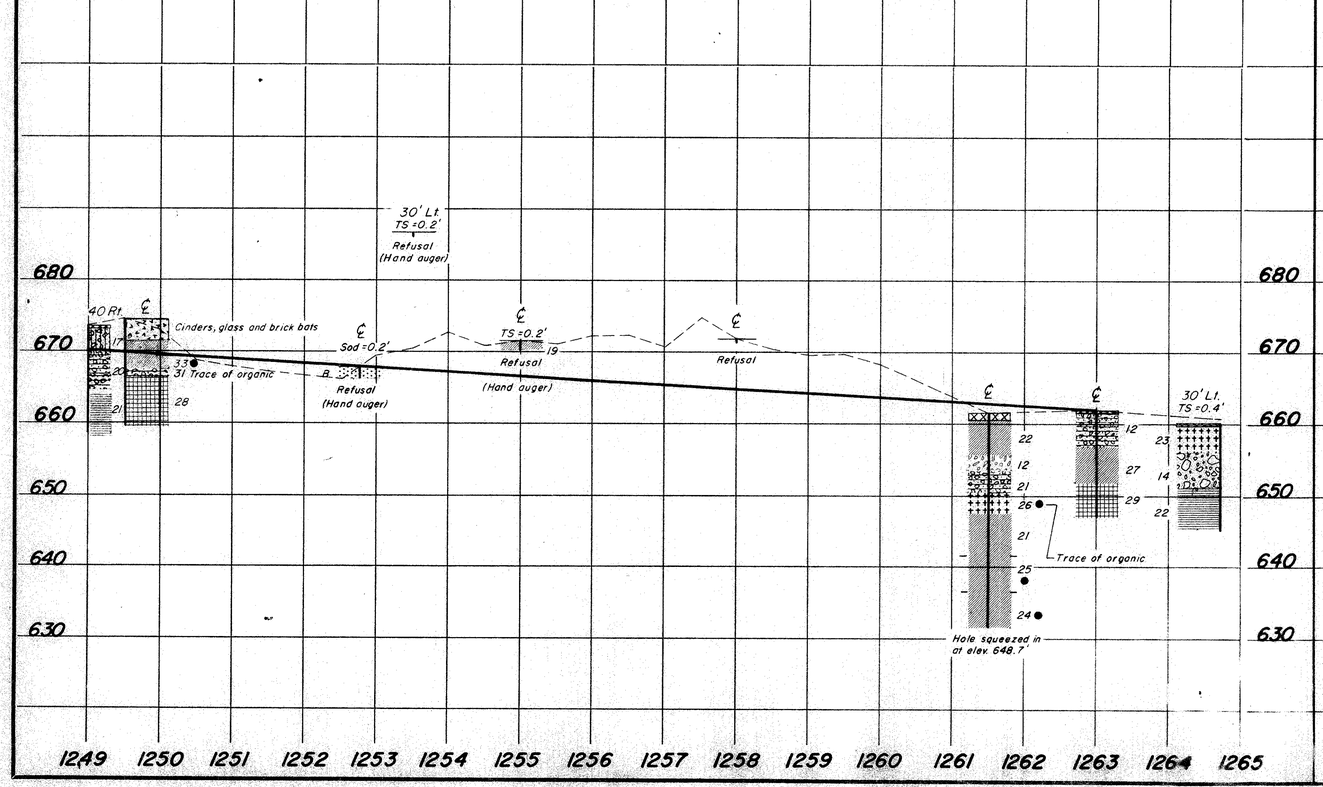

TE-90 (FORMERLY TE-54-B)
2000-10-01

SOIL PROFILE

BELMONT COUNTY

BEL-7-20.74 PART II

OHIO STATE HIGHWAY
TESTING LABORATORY
1620 W. BROAD ST., COLUMBUS 23, OHIO

16/33

REVISED
9/9/63

750 740 730 720 710 700 690 680 670 660 650

130 100 50 0 50 100 130

Sta. 1219+00

13 21 16 16 19

Proposed section

Sod=0.2'

18 21 22 23 25

℄

11 25 26 23

TS=2.5'

12 24

Refusal

Proposed section (Sta. 1217+85)

Proposed Retaining Wall

13 14 14

Top of Rock-In-Place

Sandstone, brown to gray, medium-grained, siliceous, micaceous, hard, slightly weathered to elev. 665.9, massive, broken. No core loss.

Sta. 1218+00

℄

Sod & TS=0.3'

Proposed section

Cinders and ashes

24

17 16 18 23

Proposed Retaining Wall

(Sta. 1217+50)

Sta. 1217+00

130 120 110 100 90 80 70 60 50 40 30 20 10 0 ℄ 10 20 30 40 50 60 70 80 90 100 110 120 130

TE-96 (FORMERLY TE-54-B)
2000-10-61

SOIL PROFILE

BELMONT COUNTY

BEL-7-20.74 PART II

OHIO STATE HIGHWAY
TESTING LABORATORY
1620 W. BROAD ST., COLUMBUS 23, OHIO

17/33

REVISED 9/9/63

800
790
780
770
760
750
740
730
720
710
700
690
680
670
660

(Sta. 1221+80)

5/6 22
14/32 19
21/27 19
17

Top of Rock-In-Place

Shale, brown and gray, argillaceous, arenaceous, micaceous fissile, hard, broken. No Core Loss.

Sandstone, brown to gray, medium-grained, micaceous, slightly argillaceous in parts, hard, massive, broken with very small shale stringers throughout. No Core Loss.

Shale, gray, argillaceous, calcareous, slickensided, firm to hard, broken, with a limestone (gray, argillaceous, nodular, hard, dense) interbed from elev. 705.0' to elev. 704.6'. Core Loss 11%.

Refusal

TS=20'
Refusal
(Hand auger)

Sta. 1222+00

TS=0.2'
14
Refusal

Proposed section

190 180 170 160 150 140 130 120 110 100 90 80 70 60 50 40 30 20 10 ℄ 10 20 30 40 50 60 70 80 90 100 110 120 130

SOIL PROFILE

18
33

BELMONT COUNTY
BEL-7-20.74 PART II

OHIO STATE HIGHWAY TESTING LABORATORY
1620 W. BROAD ST. COLUMBUS 23, OHIO

REVISED 9/9/63

780
770
760
750
740
730
720
710
700
690
680
670

200 150 100 50 ℄ 50 100 120

(Sta. 1225+73)
R
TR

Sta. 1225+50

Refusal
(Hand auger)

Sta. 1225+00

21
Refusal
(Hand auger)

TS=0.2'
23
10
8
Refusal

200 190 180 170 160 150 140 130 120 110 100 90 80 70 60 50 40 30 20 10 ℄ 10 20 30 40 50 60 70 80 90 100 110 120

SOIL PROFILE

BELMONT COUNTY

BEL-7-20.74 PART II

19/33

OHIO STATE HIGHWAY TESTING LABORATORY
1620 W. BROAD ST. COLUMBUS 23, OHIO

SUPPLEMENT 4/15/64

760
750
740
730
720
710
700
690
680
670
660
650

Sta. 1235+50

(Sta.1235+53)

A.
B.
C.

STATION 1235+52, 12½'Lt

A. Sandstone boulders and brown silty clay.

B. Material consists of brownish-gray and gray, badly broken argillaceous, occasionally arenaceous clay shale with intervals of clay and indurated clay.

C. Material consists of brownish-gray and gray limestone intervals 0.2' to 0.4' thick and brown and gray clay.

Proposed section

240 230 220 210 200 190 180 170 160 150 140 130 120 110 100 90 80 70 60 50 40 30 20 10 ℄ 10 20 30 40 50 60 70 80

SOIL PROFILE

BELMONT COUNTY

BEL-7-20.74 PART II

20/33

OHIO STATE HIGHWAY TESTING LABORATORY
1620 W. BROAD ST. COLUMBUS 23, OHIO

SUPPLEMENT 4/15/64

Sta. 1237+00

750
740
730
720
710
700
690
680
670
660
650

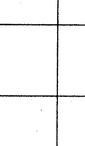

STATION 1237+00

A. Brown sandy clay with limestone and sandstone boulders.

B. Material consists of badly broken shale, gray argillaceous, with clay and indurated clay intervals and limestone nodulars.

C. Material consists of limestone intervals 0.2' and 0.3' thick and brown clay.

Proposed section

230 220 210 200 190 180 170 160 150 140 130 120 110 100 90 80 70 60 50 40 30 20 10 ℄ 10 20 30 40 50 60 70 80 90

SOIL PROFILE

21
33

BELMONT COUNTY
BEL-7-20.74 PART II

OHIO STATE HIGHWAY TESTING LABORATORY
1620 W. BROAD ST. COLUMBUS 23, OHIO

REVISED 9/9/63

Sta. 1238+50

(Sta. 1238+00)
R
TR
22
Refusal
(Hand auger)
Proposed section
18
23
1
12
21
15
21
20

Sta. 1235+00

Brown sandy clay and sandstone boulders

Top of Rock-In-Place

Sandstone, brown, medium-grained, micaceous, hard, medium-bedded, broken to badly broken, with clay seams at irregular intervals throughout. Core Loss 21%.

Shale, brown and gray, argillaceous, micaceous, hard, broken. Core Loss 15%.

Indurated Clay, gray, brown, and reddish-brown, slightly arenaceous, calcareous, slickensided, firm to hard, broken, badly broken from elevation 690.0' to elevation 681.0' and from elevation 657.5' to elevation 675.0'. Core Loss 7%.

R
TR
(Sta. 1235+25)
Sod=0.2'
Refusal
(Hand auger)
Proposed section
(Sta. 1235+25)
Sod=0.2'
Silt and sandstone fragments
Refusal
(Hand auger)
(Sta. 1235+25)
18
10
17
22
21
16
20
8

720 710 700 690 680 670 660 650 640

740 730 720 710 700 690 680 670 660 650

170 150 100 50 ℄ 50 100 130

170 160 150 140 130 120 110 100 90 80 70 60 50 40 30 20 10 ℄ 0 20 30 40 50 60 70 80 90 100 110 120 130

SOIL PROFILE

BELMONT COUNTY
BEL-7-20.74 PART II

OHIO STATE HIGHWAY TESTING LABORATORY
1620 W. BROAD ST. COLUMBUS 23, OHIO

22
33

REVISED 9/9/63

Sta. 1245+00

B
Refusal
(Hand auger)

Sod=0.2'
17
Refusal
(Hand auger)

Proposed section

℄

Sta. 1241+00

(Sta. 1241+05)
B
Cinders and mine refuse
Refusal

Proposed section

(Sta. 1241+20)
Sod=0.4'
18
20
15
Refusal

19
23
27

750 740 730 720 710 700 690 680 670 660 650 640

140 130 120 110 100 90 80 70 60 50 40 30 20 10 ℄ 10 20 30 40 50 60 70 80 90 100 110 120 130 140

TE-96 (FORMERLY TE-54-B)
2000-10-61

SOIL PROFILE

BELMONT COUNTY

BEL-7-20.74 PART II

OHIO STATE HIGHWAY
TESTING LABORATORY
1620 W. BROAD ST., COLUMBUS 23, OHIO

23/33

REVISED 9/9/63

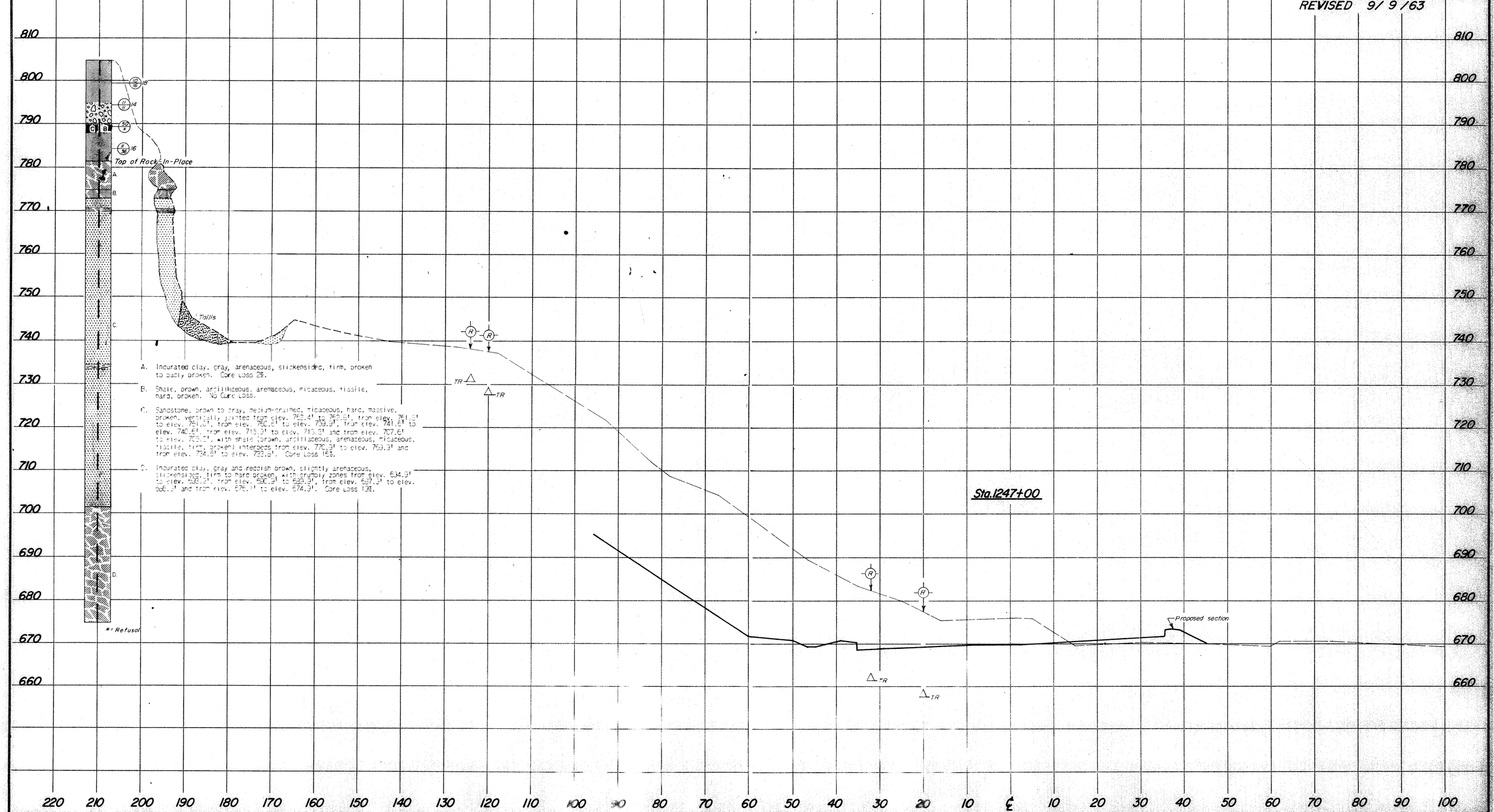

E. 06 (FORMERLY TE-54-B)
000-10-61

SOIL PROFILE

BELMONT COUNTY

BEL-7-20.74 PART II

OHIO STATE HIGHWAY
TESTING LABORATORY
1620 W. BROAD ST., COLUMBUS 23, OHIO

24
33

REVISED 9/9/63

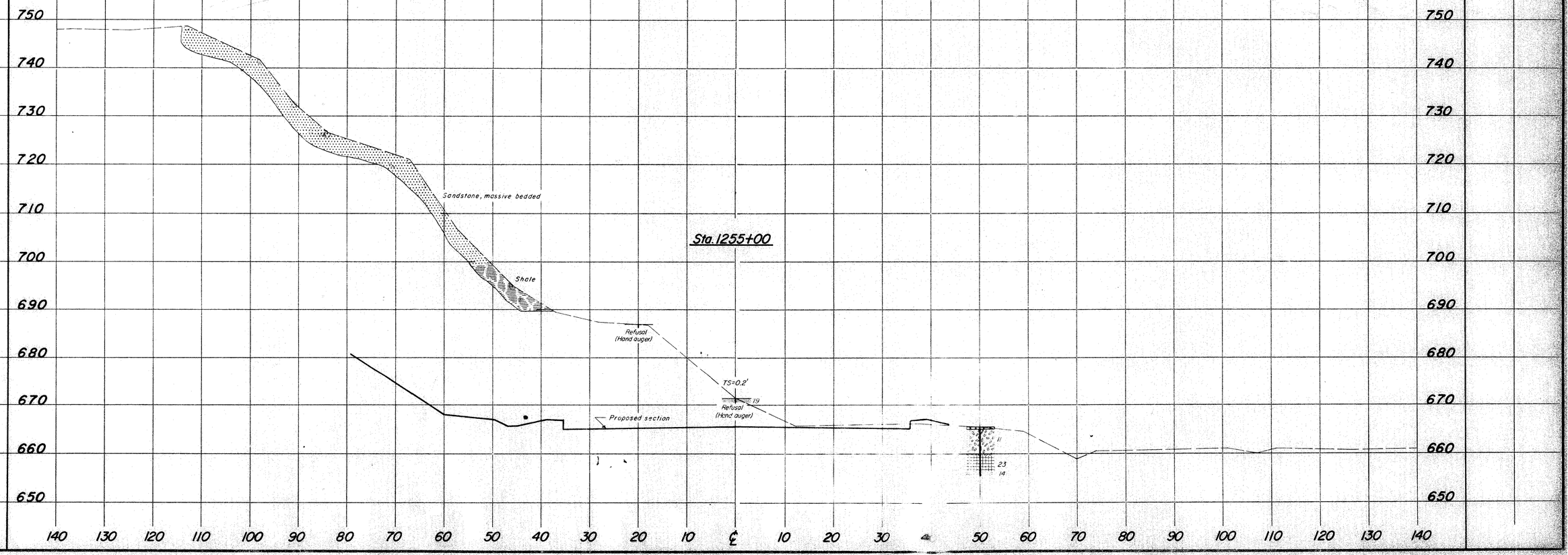

TE-96 (FORMERLY TE-54-B)
2300-10-61

SOIL PROFILE

BELMONT COUNTY

BEL-7-20.74 PART II

OHIO STATE HIGHWAY
TESTING LABORATORY
1620 W. BROAD ST., COLUMBUS 23, OHIO

25/33

REVISED 9/9/63

780 (Sta. 1257 + 21)

Brown sandy clay with stone fragments

770

Brown silty clay with stone fragments and limestone cobbles

760

Top of Rock-In-Place

750

740

730

Sandstone, brown and gray, fine to medium-grained, micaceous, siliceous in parts, hard, massive, broken, with a clay seam from elevation 718.5' to elevation 718.1'. Core Loss 1%.

720

710

Sta. 1257+50

700

Limestone, gray, hard, dense, broken. No Core Loss.

690

(Sta. 1258+00)
Bedrock: Gray clayey silt and stone fragments
Refusal
(Hand auger)

680

Indurated clay, gray and reddish-brown, calcareous, slickensided, firm to hard, broken to badly broken with a limestone (gray, hard, dense) lens from elevation 672.7' to elevation 672.5'. Core Loss 28%.

670

(Sta. 1258+00)
Refusal

Proposed section

660

650

150 140 130 120 110 100 90 80 70 60 50 40 30 20 10 ℄ 10 20 30 40 50 60 70 80 90 100 110 120 130

BELMONT COUNTY
BEL-7-2074

GEOLOGY OF THE SITE

The structure site is located upon the flood plain of the Ohio River at the base of the west valley wall. Moderately deep alluvial deposits overlie sandstone, shale and indurated clay bedrock, of Pennsylvanian age.

EXPLORATION

The exploration consisted of two drive sample-core borings and seven drive rod penetration tests, made between August 1 and 27, 1963.

INVESTIGATIONAL FINDINGS

The borings disclosed dump material overlying moist and wet, loose to very dense gravelly and sandy silts, gravels, boulders, and stiff to hard gravelly and silty clays. Bedrock surface was encountered at 57 and 65-foot depths, elevations 618 and 596 feet. The borings were terminated at 70 and 71-foot depths, elevations 612 and 583 feet, after penetrating 6 and 13 feet below bedrock surface.

The rod soundings met increasing and occasionally erratic resistance to penetration with increase in depth and were terminated upon encounter with refusal to penetration at 29 to 55-foot depths, elevations 636 to 598 feet, above bedrock surface, in hard clays and very dense boulders and gravel.

On the basis of the tests, bedrock surface is considered to slope downward from the rear to the forward portion of the structure site, between elevations 618 and 596 feet.

No free water was observed in the rod sounding holes.

LEGEND

- Auger Boring - Plan View.
- Press and/or Drive Sample and/or Core Boring - Plan View.
- Drive Rod Penetration Resistance - Soundings - Plan View
- (R) Electrical Resistivity Probe - Plan View.
- A Indicates Auger Boring.
- B Indicates Press and/or Drive Sample and/or Core Boring.
- (R) Electrical Resistivity Probe plotted to vertical scale only.
- TR Top of Rock
- Water saturated zone.
- TD Total Depth.
- Horizontal bar on log indicates the depth the sample was taken.
- X-Y Figures to the right of boring log in profile view indicate the number of blows for "Standard Penetration" test. X = First 6 inches, Y = Second 6 inches
- Casing
- Resistance "R" < 10,000 lbs.
- Resistance "R" > 10,000 lbs.
- 1/16 Indicates final measurement of penetration in-inches
- W Indicates Free Water elevation.
- Indicates Static Water elevation
- Footing
- Capped pile
- Footing on pile

SYMBOLS OF ROCK TYPES

- Coal
- Weathered Indurated Clay
- Indurated Clay
- Weathered Shale
- Shale
- Weathered Sandstone
- Sandstone
- Leached Dolomite
- Dolomite
- Leached Limestone
- Limestone

GENERAL INFORMATION

Drive Rod Penetration Tests

Drive rod penetration resistance tests constitute driving a 1.315-inch diameter steel rod, with a 45° cone point, into the ground, using a 122-pound drop-hammer with a free fall of five feet. At one or two-foot depth intervals, a measurement is taken to determine the amount of penetration achieved in three hammer drops. This reading is converted to an empirical value for capacity "R", in thousands of pounds (which is a measure of both the point resistance and frictional resistance on the rod), by using charts prepared by the Ohio Department of Highways, Bureau of Bridges, on the basis of correlation study of rod penetration with past performance of pile driving. For interpretation, a graph is prepared by plotting the value "R" against the depth at which the reading was taken, and connecting the plotted points. The curve so obtained reflects the density of subsurface materials in a manner that can be readily compared with data from similar tests at other locations on the structure site. From this comparison, the overall uniformity of subsurface conditions may be evaluated.

Drive Sample Borings - Drive-Press Sample Borings

Drive sample borings are by means of a rotary type drill rig, employing a 2" O.D., 1-3/8" I.D. sampler, at 2-1/2 and/or 5-foot depth intervals, driven by means of a 140 pound drop-hammer, with a free fall of 30 inches. The number of blows required to drive the sampler 12 inches is considered the standard penetration test.

Drive-press sample borings are made by means of a rotary-type drill rig, employing a 2" O.D., 1-3/8" I.D. drive sampler, and 3" O.D. thin-wall press sampler. The press sampler is advanced by continuous uniform pressure, applied by the drill rig.

The Boring Log sheets show a graphic plot of the information obtained, including depth and elevation of the sample, number of blows for the standard penetration tests in two 6-inch increments, depths of press samples, field sample number, sample description based on laboratory test results and the Casagrande A.C. classification system and gradation, plasticity and moisture content determinations. Results of strength and consolidation testing appear on separate enclosures.

At depths where materials are bouldery or gravelly to the extent that the sampler can not be driven, a wash sample is procured for visual classification, in order to determine the general character of the material. These samples are not considered sufficiently representative to warrant laboratory testing.

Particle Size Definitions

Boulders	8" Cobbles	3" Gravel	2.0mm Coarse Sand	0.42mm Fine Sand	0.074mm Silt	0.005mm Clay
		No 10 sieve		No 40 sieve	No 200 sieve	

NOTE: Information shown by this subsurface investigation was obtained solely for the use in establishing design controls for the project. The State of Ohio does not guarantee the accuracy of this data and it is not to be construed as a part of the plans governing construction of the project.

OHIO STATE HIGHWAY
TESTING LABORATORY
1620 WEST BROAD STREET, COLUMBUS 23, OHIO

STRUCTURE FOUNDATION INVESTIGATION
BRIDGE NO. BEL-7-2095
SR 7 UNDER AETNAVILLE BRIDGE
SEC. BEL-7-2074

CHECKED BY	REVIEWED BY	DATE
F.L.R.	R.D.R.	9-13-63

BEL-7-20.74

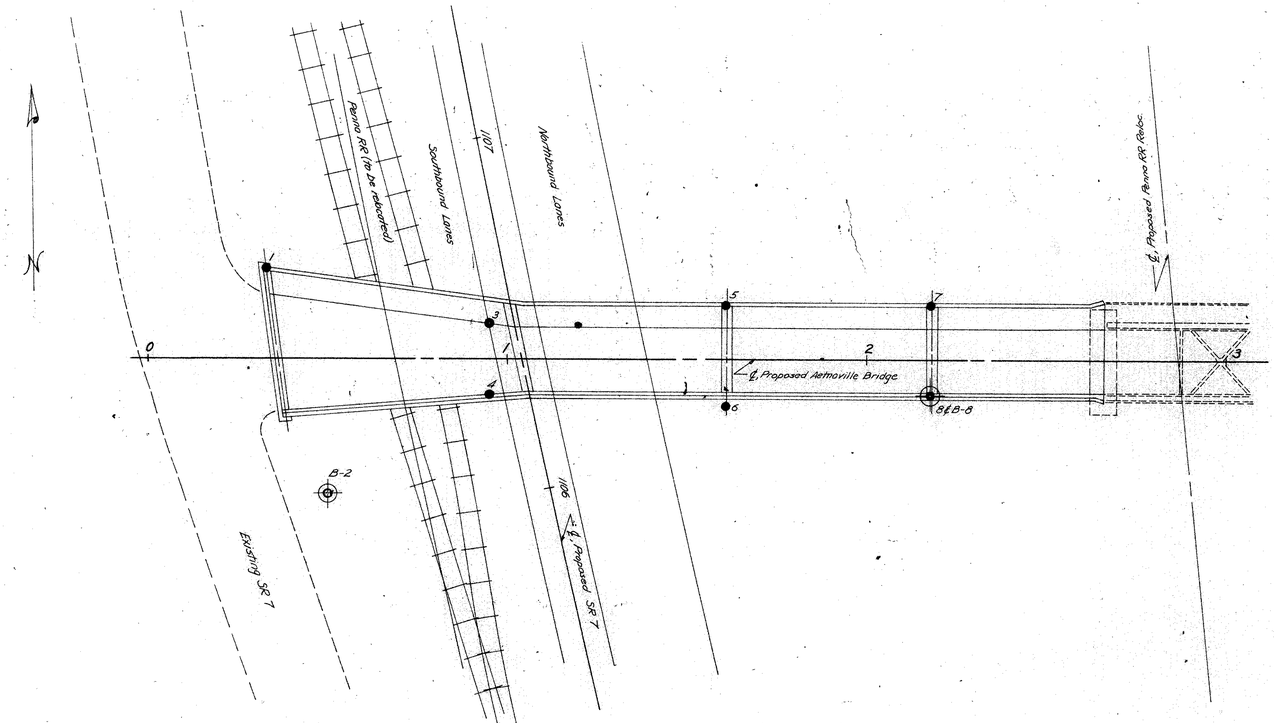

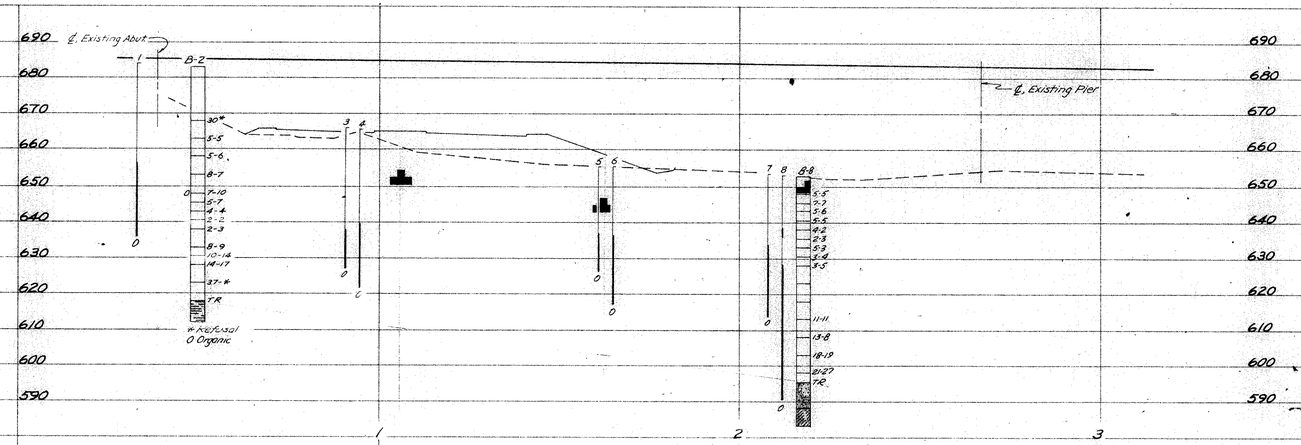

SCALE 1" = 20'

OHIO STATE HIGHWAY
TESTING LABORATORY
1620 WEST BROAD ST., COLUMBUS 23, OHIO

STRUCTURE FOUNDATION INVESTIGATION
BRIDGE NO. BEL-7-2095
SR 7 UNDER AETNAVILLE BRIDGE
SEC. BEL-7-20.74

PLAN AND PROFILE

DRAWN BY	CHECKED BY	REVIEWED BY	DATE
RPS	K.L.R.	R.D.R.	9-13-63

BR-7-20.74

LOG OF BORING

Date Started 8-11-63 | Sampler Type SS Dia. 1 3/8" | Water Elev. —
Date Completed 8-14-63 | Casing Length 52' Dia. 3 1/2" | Surface Elev. 663.0'
Boring No. B-2 | Station & Offset 2+40, 32' Rt. (REAR ABUTMENT)

Elev.	Depth	Sta. Pen. (N)	Rec. ft.	Loss ft.	Description	Sample No.	% Agg.	% C.S.	% F.S.	% Silt	% Clay	L.L.	Pl.	W.C.	SHTU Class.
663.0	0				Bricks, cement, ashes, cinders, bituminous concrete, and other refuse — Dump Material										
	2														
	4														
	6	1													
	8														
	10														
	12														
	14														
668.0	16	30* (0.3')			Brown and Gray Gravelly Clay	1	32	2	3	29	34	46	13	23	
	18														
663.0	20	5/5			Brown and Gray Silty Clay	2	0	6	4	34	56	48	20	26	
	22														
	24														
658.0	26	5/6			Brown Silty Clay	3	0	4	4	43	49	47	20	33	
	28														
653.0	30	8/7			Gray Sandy Silt	4	0	1	25	54	20	NP	NP	23	
	32														
	34														
648.0	36	7/10			Gray Gravelly Silt Slightly Organic, Trace of Decayed Wood	5	21	1	14	41	23	NP	NP	36	
645.5	38	5/7			Gray Organic Silt, Trace of Decayed Wood	6	0	3	6	49	42	NP	NP	31	
643.0	40	4/4			Gray Gravelly Silt	7	16	7	6	31	40	30	9	28	
	42														
640.5	44	2/2			Gray Gravelly Silt	8	21	3	6	34	36	32	10	24	
638.0	46	2/3			Gray Gravelly Clay	9		V	I	S	U	A	L	6	
635.5	48				Boulder (Driller's Description)										
633.0	50														
	52	8/9			Gray Gravelly Clay	10	37	4	4	22	33	30	10	8	
630.5	54	10/14			Gray Gravelly Clay	11		V	I	S	U	A	L	13	
628.0	56	14/17			Red and Gray Clay	12		V	I	S	U	A	L	14	
	58														
623.0	60	37/*			Red and Gray Clay	13		V	I	S	U	A	L	18	
	62														
618.0	64														
	66														
	68		5.6	0.4	TOP OF ROCK Shale, greenish-gray, hard, dense, sreenscens, finely micaceous, with gray clay seams. (top 0.5' calcareous; with slightly calcareous seams throughout interval. From 66.6' to 68.0', badly broken and jointed. Core loss 7%.										
613.0	70				BOTTOM OF BORING										

PERSONAL

LOG OF BORING

Date Started 8-13-63 | Sampler Type SS Dia. 1 3/8" | Water Elev. —
Date Completed 8-27-63 | Casing Length 52 1/2' Dia. 3 1/2" | Surface Elev. 651.1'
Boring No. B-6 | Station & Offset 2+18, 10 Rt. (FORWARD PIER)

Elev.	Depth	Sta. Pen. (N)	Rec. ft.	Loss ft.	Description	Sample No.	% Agg.	% C.S.	% F.S.	% Silt	% Clay	L.L.	Pl.	W.C.	SHTU Class.
653.1	0														
	2														
	4														
648.1	6	5/5			Brown Gravelly Clay	1		V	I	S	U	A	L	29	
645.6	8	7/7			Brown and Gray Silt and Clay	2	0	0	3	54	43	37	14	24	
643.1	10	5/6			Brown Silt	3	0	1	5	61	33	27	6	21	
	12														
640.6	14	5/5			Brown Silt	4	0	1	10	61	28	25	3	28	
638.1	16	4/2			Brown Sandy Gravel	5	23	2	14	42	19	NP	NP	29	
635.6	18	2/3			Brown Gravelly Sandy Silt	6	24	7	23	31	15	NP	NP	24	
633.1	20	5/3			Brown Silt	7	0	4	13	55	28	NP	NP	29	
	22														
630.6	24	3/4			No Sample Recovered										
628.1	26	3/5			No Sample Recovered										
	28														
623.1	30				No Sample Recovered - Boulder (Driller's description)										
	32														
	34														
618.1	36				No Sample Recovered - Boulder (Driller's description)										
	38														
613.1	40	11/11			Brown Silty Gravelly Sand	8	41	26	18	2	13	NP	NP	13	
	42														
	44														
608.1	46	13/8			Brown Sandy Gravel	9	48	21	22	9	—	NP	NP	14	
	48														
603.1	50	18/19			Brown Sandy Gravel	10		V	I	S	U	A	L	11	
	52														
	54														
598.1	56	21/27			Brown Silty Sandy Gravel	11	60	5	15	9	11	NP	NP	9	
595.6	58				TOP OF ROCK										
	60		1.8	0.7											
	62				Sandstone, gray, firm, medium-grained, calcareous, with soft argillaceous seams. Firm sandstone comprises 93% of interval in 0.1' to 0.4' thick beds. Core loss 10%.										
	64														
588.1	66		8.0	2.0											
	68				Indurated clay, mottled gray and dark red, soft to firm, calcareous, slickensided, crumbly throughout. Core loss 40%.										
583.1	70				BOTTOM OF BORING										

OHIO STATE HIGHWAY
TESTING LABORATORY
1620 WEST BROAD ST., COLUMBUS 23, OHIO

STRUCTURE FOUNDATION INVESTIGATION
BRIDGE NO. BEL-7-20.85
SR 7 OVER METAMORA BRIDGE
SEC. BEL-7-20.74

BORING DATA

TYPED BY	CHECKED BY	REVIEWED BY	DATE
JAC	ALE	RDE	2-27-64

BEL-7-20.74

Test Location No. 1
Station & Offset 0+33.25' LT
REAR ABUTMENT
Surface Elev 684.0 Water Elev. DRY
Piling
Hammer
Formula
Reference
Rod Condition ROD BENT-20'

Test Location No. 3
Station & Offset 0+95.10' LT
REAR PIER
Surface Elev. 666.3 Water Elev. DRY
Piling
Hammer
Formula
Reference
Rod Condition GOOD

Test Location No. 4
Station & Offset 0+95.10' RT
REAR PIER
Surface Elev. 665.7 Water Elev. DRY
Piling
Hammer
Formula
Reference
Rod Condition ROD BENT-20'

Test Locatio No. 5
Station & Offset 1+61.15' LT
CENTER PIER
Surface Elev 655.4 Water Elev. DRY
Piling
Hammer
Formula
Reference
Rod Condition GOOD

Test Location No. 6
Station & Offset 1+61.13' RT
CENTER PIER
Surface Elev. 655.5 Water Elev. DRY
Piling
Hammer
Formula
Reference
Rod Condition GOOD

Test Location No. 7
Station & Offset 2+18.5' LT
FORWARD ABUTMENT
Surface Elev. 653.6 Water Elev. DRY
Piling
Hammer
Formula
Reference
Rod Condition POINT BENT-8'

Test Location No. 8
Station & Offset 2+18.10' RT
FORWARD ABUTMENT
Surface Elev. 653.1 Water Elev. DRY
Piling
Hammer
Formula
Reference
Rod Condition GOOD

Test Location No.
Station & Offset
Surface Elev. Water Elev.
Piling
Harmmer
Formula
Reference
Rod Condition

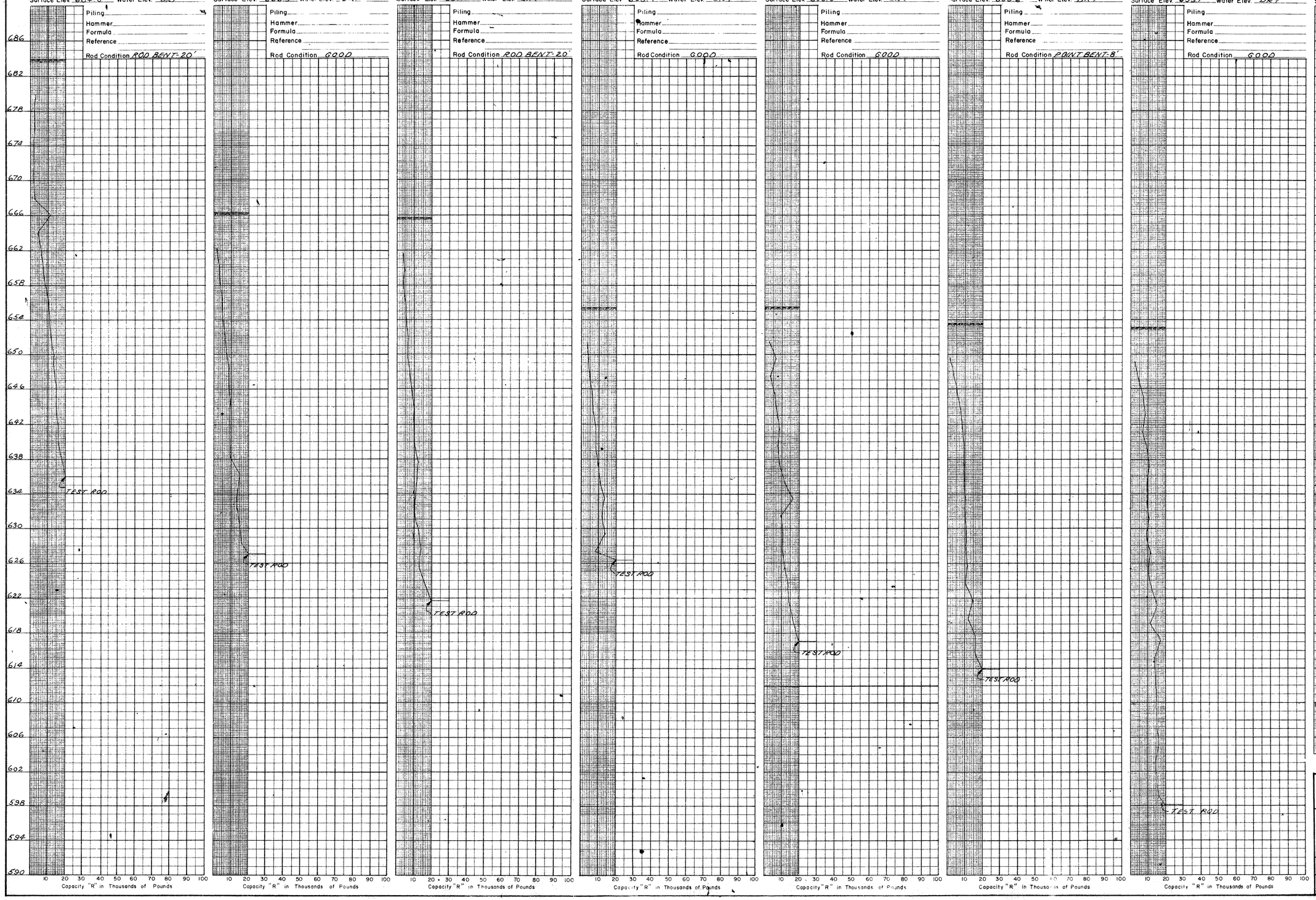

OHIO STATE HIGHWAY
TESTING LABORATORY
1620 WEST BROAD ST., COLUMBUS 23, OHIO

STRUCTURE FOUNDATION INVESTIGATION
BRIDGE NO. BEL-7-2095
SR 7 UNDER AETNAVILLE BRIDGE
SEC. BEL-7-20.74

DRIVE ROD PENETRATION RESISTANCE DATA

PLOTTED BY	CHECKED BY	REVIEWED BY	DATE
RC	F.L.P.	ROR	9-13-63

BELMONT COUNTY
BEL-7-20.74

GEOLOGY OF THE SITE

The structure site is located upon the broad, flat, flood plain of the Ohio River. Deep glacial outwash and alluvial deposits overlie bedrock, of Pennsylvanian age.

EXPLORATION

The exploration consisted of two drive sample borings and five drive rod penetration tests, made between May 9 and 16 and May 23 and June 7, 1963.

INVESTIGATIONAL FINDINGS

The borings disclosed moist to wet, medium-dense to very dense fill material, sandy gravels, gravelly sands, and sandy silts. The borings were terminated at 56 and 60 foot depths, elevations 646 and 598 feet, after penetrating in excess of 30 feet of soils composed predominantly of materials requiring more than 30 blows per foot in the standard penetration test.

The rod soundings, penetrating to greater depths, generally met increasing and erratic resistance to penetration with increase in depth and were terminated upon encounter with medium-high to high resistance, near refusal or refusal to penetration at 58 to 115-foot depths, elevations 632 to 542 feet, considered to be in alluvial materials similar to those revealed by the borings at higher elevations.

No free water was noted in the rod sounding holes.

No test penetrated to bedrock surface.

LEGEND

- Auger Boring - Plan View.
- Press and/or Drive Sample and/or Core Boring - Plan View.
- Drive Rod Penetration Resistance - Soundings - Plan View
- (R) Electrical Resistivity Probe - Plan View.
- A Indicates Auger Boring.
- B Indicates Press and/or Drive Sample and/or Core Boring.
- (R) Electrical Resistivity Probe plotted to vertical scale only.
- TR Top of Rock
- Water saturated zone.
- TD Total Depth.
- Horizontal bar on log indicates the depth the sample was taken.
- X-Y Figures to the right of boring log in profile view indicate the number of blows for "Standard Penetration" test. X = First 6 inches, Y = Second 6 inches
- Casing
- Resistance "R" = 10,000 lbs
- Resistance "R" = 10,000 lbs
- 7/16 Indicates final measurement of penetration in inches.
- W Indicates Free Water elevation.
- Indicates Static Water elevation
- Footing, Capped pile
- Footing on pile

SYMBOLS OF ROCK TYPES

- Coal
- Weathered Indurated Clay
- Indurated Clay
- Weathered Shale
- Shale
- Weathered Sandstone
- Sandstone
- Leached Dolomite
- Dolomite
- Leached Limestone
- Limestone

GENERAL INFORMATION

Drive Rod Penetration Tests

Drive rod penetration resistance tests constitute driving a 0.315-inch diameter steel rod, with a 45° cone point, into the ground, using a 122-pound drop hammer with a free fall of five feet. At one or two-foot depth intervals, a measurement is taken to determine the amount of penetration achieved in three hammer drops. This reading is converted to an empirical value for capacity "R", in thousands of pounds (which is a measure of both the point resistance and frictional resistance on the rod), by using charts prepared by the Ohio Department of Highways, Bureau of Bridges, on the basis of correlation study of rod penetration with past performance of pile driving. For interpretation, a graph is prepared by plotting the value "R" against the depth at which the reading was taken, and connecting the plotted points. The curve so obtained reflects the density of subsurface materials in a manner that can be readily compared with data from similar tests at other locations on the structure site. From this comparison, the overall uniformity of subsurface conditions may be evaluated.

Drive Sample Borings - Drive-Press Sample Borings

Drive sample borings are by means of a rotary type drill rig, employing a 2" O.D., 1-3/8" I.D. sampler, at 2-1/2 and/or 5-foot depth intervals, driven by means of a 140 pound drop hammer, with a free fall of 30 inches. The number of blows required to drive the sampler 12 inches is considered the standard penetration test.

Drive-press sample borings are made by means of a rotary type drill rig, employing a 2" O.D., 1-3/8" I.D. drive sampler, and 3" O.D. thin-wall press sampler. The press sampler is advanced by continuous uniform pressure, applied by the drill rig.

The Boring Log sheets show a graphic plot of the information obtained, including depth and elevation of the sample, number of blows for the standard penetration tests in two 6-inch increments, depths of press samples, field sample number, sample description based on laboratory test results and the Casagrande A.C. classification system and gradation, plasticity and moisture content determinations. Results of strength and consolidation testing appear on separate enclosures.

At depths where materials are bouldery or gravelly to the extent that the sampler can not be driven, a wash sample is procured for visual classification, in order to determine the general character of the material. These samples are not considered sufficiently representative to warrant laboratory testing.

Particle Size Definitions

Boulders	Cobbles	Gravel	Coarse Sand	Fine Sand	Silt	Clay
8"	3"	2.0mm (No. 10 sieve)	0.42mm (No. 40 sieve)	0.074mm (No. 200 sieve)	0.005mm	

NOTE: Information shown by this subsurface investigation was obtained solely for the use in establishing design controls for this project. The State of Ohio does not guarantee the accuracy of this data and this not to be construed as a part of the plans governing construction of the project.

OHIO STATE HIGHWAY
TESTING LABORATORY
1620 WEST BROAD STREET, COLUMBUS 23, OHIO

STRUCTURE FOUNDATION INVESTIGATION
BRIDGE NO. BEL-7-2256
UNDER PEDESTRIAN OVERPASS
SEC. BEL-7-20.74

CHECKED BY	REVIEWED BY	DATE
F.L.P.	P.D.P.	6-17-63

BEL-7-20.74

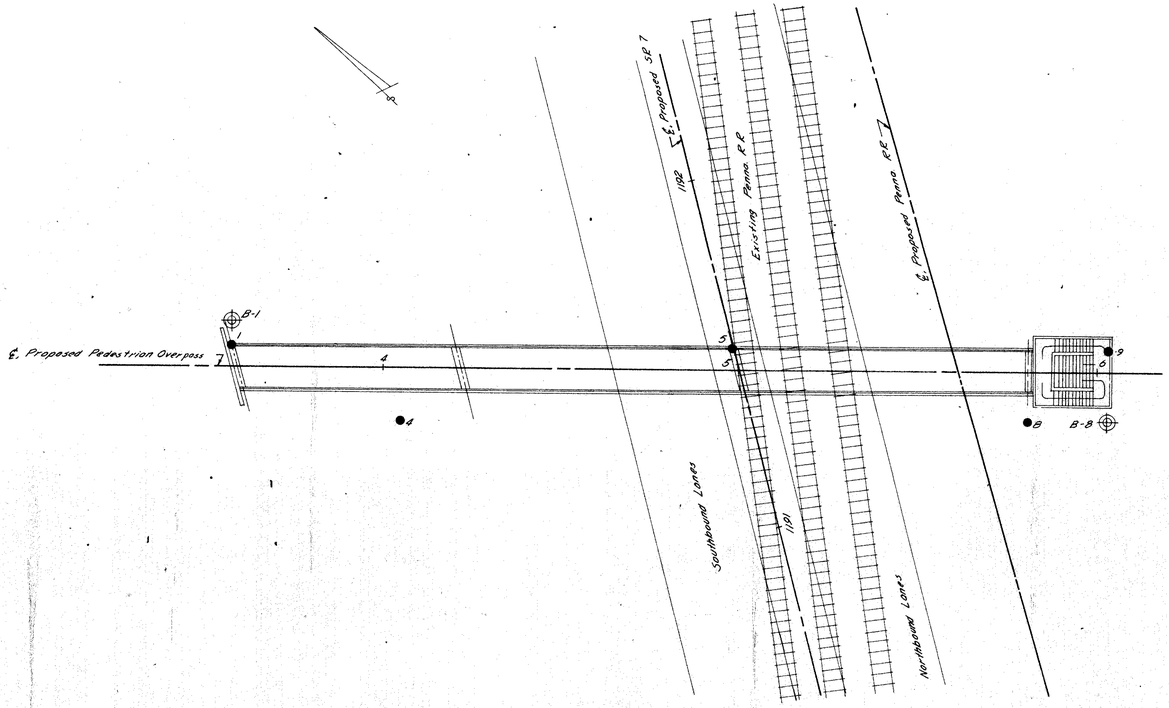

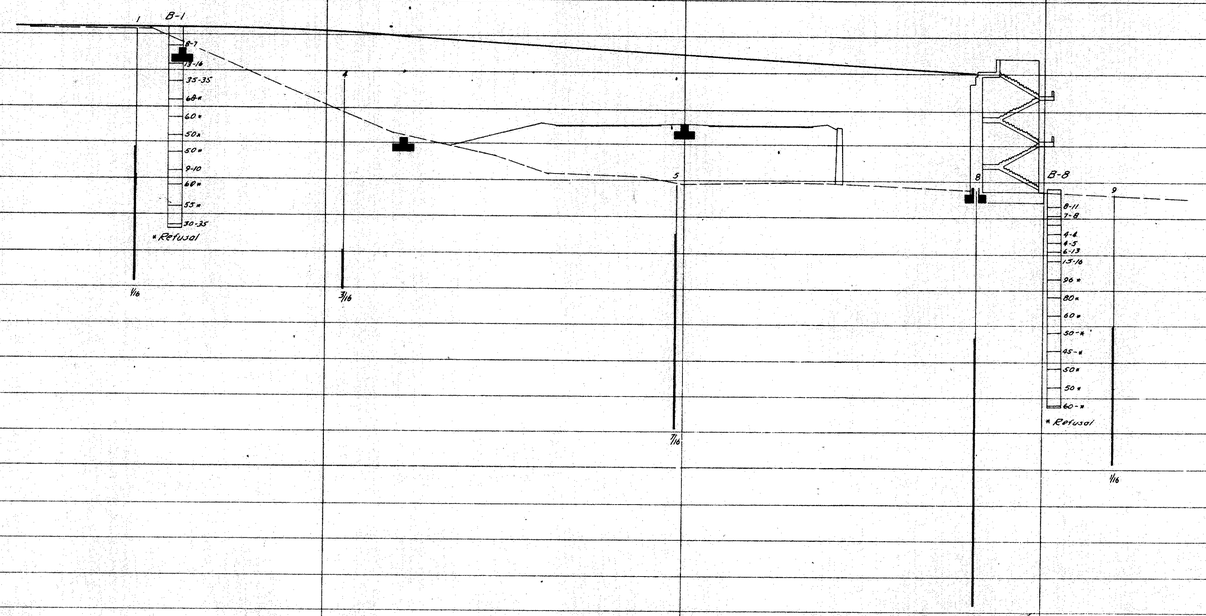

710 700 690 680 670 660 650 640 630 620 610 600 590 580 570 560 550 540

4 5 6

SCALE: 1" = 20'

OHIO STATE HIGHWAY
TESTING LABORATORY
620 WEST BROAD ST. COLUMBUS 23, OHIO

STRUCTURE FOUNDATION INVESTIGATION
BRIDGE NO. BEL-7-2256
UNDER PEDESTRIAN OVERPASS
BEL-7-20.74

PLAN AND PROFILE

DRAWN BY	CHECKED BY	REVISED BY	DATE
EAK	F.L.B.	F.O.F.	6-17-63

BEL-7-20.74

LOG OF BORING

Date Started 5-14-63 | Sampler Type SS | Dia. 1 3/8" | Water Elev.
Date Completed 5-15-63 | Casing: Length 55' | Dia. 3 1/2" | Surface Elev. 702.0'
Boring No. B-1 | Station & Offset 3+69, 12' Lt. (REAR ABUTMENT)

Elev.	Depth	Std. Pen. (N)	Rec. ft.	Loss ft.	Description	Sample No.	Physical Characteristics: % Agg	% C.S.	% F.S.	% Silt	% Clay	L.L.	Pl.	W.C.	SHTL Class.
702.0	0														
	2														
	4														
697.0	6	9/7			Gray Cinders and Ashes	1		V	I	S	U	A	L		
	8														
692.0	10														
	12	13/16			Brown Gravelly Sand with Stone Fragments	2		V	I	S	U	A	L	12	
	14														
687.0	16	35/35			Brown Gravelly Sand with Stone Fragments	3		V	I	S	U	A	L	4	
	18														
682.0	20														
	22	60/*			Brown Sandy Gravel	4	59	13	10	8	1	NP	NP	9	
	24														
677.0	26	60* (0.8')			Brown Sandy Gravel	5	66	13	14	7	1	NP	NP	10	
	28														
672.0	30	50* (0.5')			Gray Large Gravel	6		V	I	S	U	A	L		
	32														
	34														
667.0	36	50* (0.5')			Brownish-Gray Gravel (Wash Sample)	7		V	I	S	U	A	L		
	38														
662.0	40	7/0			Brown Sandy Silt	8	5	5	24	48	16	NP	NP	26	
	42														
	44														
657.0	46	60* (0.7')			Brown Sandy Gravel	9	24	15	9	4	1	NP	NP	9	
	48														
652.0	50														
	52	66* (0.8')			Brown Sandy Gravel	10	73	9	13	4	1	NP	NP	9	
	54														
647.0	56	30/35			Brown Sandy Gravel	11	66	13	12	8	1	NP	NP	7	
646.5					BOTTOM OF BORING										

*REFUSAL

LOG OF BORING

Date Started 5-16-63 | Sampler Type SS | Dia. 1 3/8" | Water Elev.
Date Completed 5-16-63 | Casing: Length 31' | Dia. 3 1/2" | Surface Elev. 650.0'
Boring No. B-2 | Station & Offset 6+03, 34' Rt. (FORWARD ABUTMENT)

Elev.	Depth	Std. Pen. (N)	Rec. ft.	Loss ft.	Description	Sample No.	Physical Characteristics: % Agg	% C.S.	% F.S.	% Silt	% Clay	L.L.	Pl.	W.C.	SHTL Class.
650.0	0														
	2														
	4														
645.0	6	3/12			Dark Brown Silt with Cinders, Ashes, and Stone Fragments	1		V	I	S	U	A	L		
640.0	8	5/8			Brown Silt	2	0	1	12	59	28	27	4	20	
	10														
635.5	12	- -			Brown Sandy Silt (Driller's Description)										
	14	4/4			Brown Sandy Silt	3	0	0	45	31	24	NP	NP	23	
630.0	16	4/5			Brown Sandy Silt	4	0	0	35	37	28	NP	NP	24	
625.5	18	6/12			Brown Silty Sandy Gravel	5	40	9	24	15	13	NP	NP	23	
620.0	20														
	22	15/16			Brown Sandy Gravel	6		V	I	S	U	A	L	11	
	24														
615.0	26	96* (6.8')			Brown Sand	7		V	I	S	U	A	I		
	28														
610.0	30														
	32	70* (5.0')			Brown Gravelly Sand	8	25	49	13	9	4		NP	NP	10
	34														
605.0	36	60*			Brown Sand (Wash Sample)	9		V	I	S	U	A	I		
	38														
	40	60*			Brown Sand (Wash Sample)	10		V	I	S	U	A	I		
600.0	42														
	44														
595.0	46	60*			Brown Sandy Gravel with Stone Fragments	11			I	S	U	A	L	11	
	48														
590.0	50	60* (0.3')			Brown and Gray Gravel	12		V	I	S	U	A	L		
	52														
585.0	54	50*			Brown Gravel, Sand	13	74	17	5	3	1		NP	NP	11
	56														
580.0	58	60/*			Brown Sandy Gravel	14	59	21	11	9	-		NP	NP	9
575.5	60														

*REFUSAL

OHIO STATE HIGHWAY
TESTING LABORATORY
1620 WEST BROAD ST. COLUMBUS 23, OHIO

STRUCTURE FOUNDATION INVESTIGATION
BRIDGE NO. BEL-7-2256
UNDER PEDESTRIAN OVERPASS
SEC. BEL-7-20.74

BORING DATA

TYPED BY	CHECKED BY	REVIEWED BY	DATE
C.N.	F.L.P.	E.O.F.	6-17-63

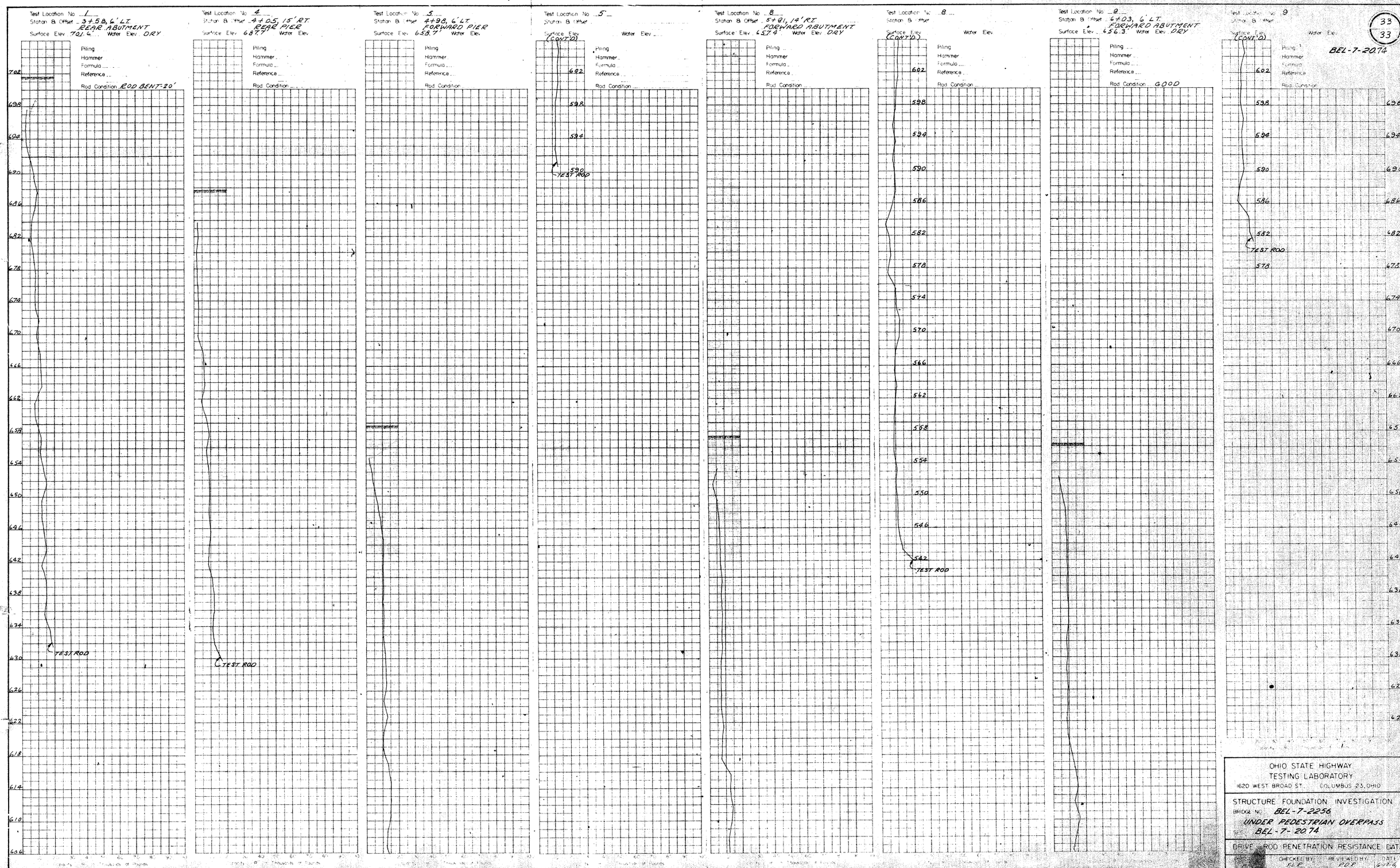

OHIO STATE HIGHWAY
TESTING LABORATORY
1620 WEST BROAD ST. COLUMBUS 23, OHIO

STRUCTURE FOUNDATION INVESTIGATION
BRIDGE NO. BEL-7-2256
UNDER PEDESTRIAN OVERPASS
SEC. BEL-7-20.74

DRIVE ROD PENETRATION RESISTANCE DATA

CHECKED BY	REVIEWED BY	DATE
F.L.P.	P.D.P.	6-17-6