FED. RD. DIVISION	STATE	PROJECT	TYPE FUNDS
2	OHIO	STATE	

1/12

JUL 9 1964
ROUND PHOTOLAB

CHAMPAIGN COUNTY
CHP-29-31.45

STATE OF OHIO
DEPARTMENT OF HIGHWAYS

CHP-29-31.45
CHAMPAIGN COUNTY

VILLAGE OF MECHANICSBURG

CONVENTIONAL SIGNS

Township Line
Center Line of Road
Street Line
Property Line — PL
Existing Right of Way
Right of Way Only — RW
Corporation Line
Limits of Cut or Fill
Slope Easement — SL
Building
Tree — to be removed
Stream
Guard Rail
Power Pole
Telephone Pole
Fire Hydrant
Fence Line

INDEX OF SHEETS

Title Sheet	1
Typical Section, General Notes, Calculations and Summary	2
Plan and Profile	3
Cross Sections	4
Channel Cross Sections	5
Structures over 20'	6-11
Right-of-Way	12

LINE DATA

Begin Project	Sta. 6 + 39.50
End Project	Sta. 7 + 59.50
Gross Length of Project	120 Lin. Ft. or .022 Miles
Begin Work	Sta. 5 + 00
End Work	Sta. 9 + 00
Gross Length of Work	400 Lin. Ft. or .075 Miles

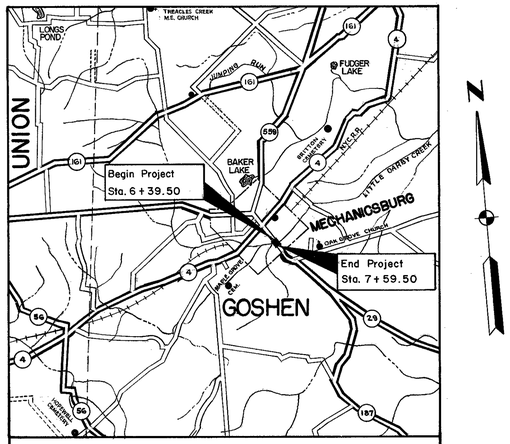

Delivery Point Mechanicsburg, Ohio
Average Haul From Siding 0.5 Miles

LOCATION MAP

SCALE OF MILES
0 1 2 3

Portion to be improved
Other Roads

SCALE

Plan	1" = 20'
Profile: Horizontal	1" = 20'
Profile: Vertical	1" = 5'

The Standard Specifications of The State of Ohio, Department of Highways, including changes and Supplemental Specifications listed in the proposal shall govern this improvement.

I hearby approve these plans and declare the making of this improvement will *not require the closing of the highway to traffic* and that provisions for the maintenance and safety of traffic will be as set forth on the plans and estimates.

The right of way for this improvement will be provided by the State of Ohio.

Approved [signature]
Date 8-4-60 Division Deputy Director

Approved [signature]
Date Deputy Director of Planning and Programming

Approved [signature]
Date 8-24-60 Engineer of Bridges

Approved [signature]
Date 8-26-60 Engineer of Location and Design

Approved C.W. McCaughey
Date 8-29-60 Deputy Director of Design and Construction

Approved G.A. Berry
Date 8-31-60 First Assistant Director

Approved E.S. Preston
Date 8-31-60 Director of Highways

Approved Noble H. Newton
Date 8/11/60 County Engineer, Champaign County

Board of Commissioners, Champaign Co.
George B. Girvan
Approved W.C. Powell
Date 8/4/60 A. C. Faulkner

Plans Prepared by
MICHAEL BAKER JR.
Consulting Engineers
Rochester, Pennsylvania

STATE OF OHIO
Michael Baker, Jr.
No. 9065
REGISTERED PROFESSIONAL ENGINEER

JUL 9 1964
ROUND PHOTOLAB

Supplemental Prints of Standard Construction Drawings					
G-7.07	6-1-56	L-3-A	4-1-50	AS-1-54	12-1-54
I-15 No.1	5-21-59	RI-1	7-15-58	L-1	4-1-50
I-15 No.2A	5-21-59	T-35	1-2-56		
L-3	4-1-50	I-12	7-1-54		

Supplemental Specifications

FILE NO.		
	CHAMPAIGN COUNTY	CHP-29-31.45
	DATE OF LETTING	
	CONTRACT NO.	

FED. RD DIVISION	STATE	PROJECT	TYPE FUNDS
2	OHIO		

2/12

CHAMPAIGN COUNTY
CHP-29-31.45

TYPICAL SECTION

TYPE T-35

Scale: 1/4" = 1'-0"

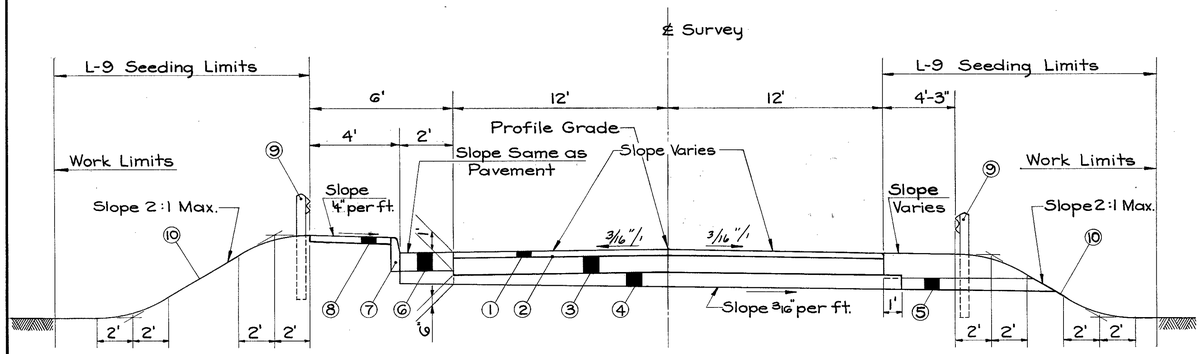

LIMITING STATIONS

Sta. 6+39.5 to Sta. 7+59.5	120	Lin. Ft.
Deduct for Bridge	70	Lin. Ft.
TOTAL	50	Lin. Ft.

① Item T-35, 3" Depth Asphaltic Concrete Surface Course, Type A (70-85), laid in two 1½" courses
② Item T-30, Bituminous Tack Coat, Sec. M-5.5, MS-2 or RS-1; or Sec. M-5.2, RC-1, RC-2 or RC-3, as per Sec. T-30.02. Applied at the rate of 0.10 Gal. per Sq. Yd.
③ Item I-7, Reinforced Concrete Approach Slab (T=13")
④ Item I-22, Subbase
⑤ Item I-9, Stone Underdrains (Nº 2)
⑥ Item I-18, Stabilized Crushed Aggregate Shoulder
⑦ Item I-12, Concrete Curb, Type G as per plan
⑧ Item I-13, 4" Concrete Sidewalk
⑨ Item I-15, Guard Rail, Steel Beam Standard Type (Deep)
⑩ Item L-9, Seeding and Protecting

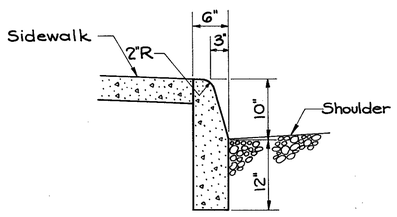

TYPE G CURB AT STRUCTURE

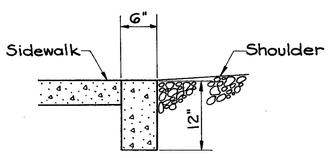

TYPE G CURB AT EXISTING ROADWAY

NOTE: At the beginning and end of typical section the type G curb shall be as shown on Standard Construction Drawing I-12.

GENERAL NOTES

FIELD OFFICE
The Contractor shall provide a suitable field office in accordance with Sec. S-0.01(b) having a minimum floor area of 150 square feet. The Contractor shall have a telephone installed and maintained during the construction of this project.

DESIGN SPEED
The design speed of this improvement is 60 M.P.H.

ELEVATION DATUM
All elevations are based on U.S.G.S. datum.

MAINTENANCE OF TRAFFIC
Two-way traffic shall be maintained at all times over the existing pavement, the temporary runaround, bridge and approaches provided in the plans or over the proposed pavement and bridge.

The provisions of Sec. 6-4.05, Maintenance of Local Traffic, and Sec. 6-7.07 Barricades, Danger and Warning Signs, shall be in force during the entire life of the contract.

SUBGRADE COMPACTION
The subgrade under the approach slabs shall be compacted for a depth of six (6) inches to the density requirements shown in table III, Item E-1. Payment for subgrade compaction, as specified above, shall be included in the unit price bid for Item E-1 Roadway Excavation.

PROTECTION OF PAVEMENTS
Self-propelled, crawler-driven machinery, equipped with cleats, shall not be operated on the existing pavement unless pads are fastened to tracks between cleats such that cleats will be prevented from making contact with the pavement. Crawler equipment shall be operated in a manner that damage to existing pavement or new surface will not occur.

QUANTITIES

Item I-7, Reinforced Concrete Approach Slabs
(25 × 24 ÷ 9) × 2 = 133.3 sq. yds.

Item T-30, Bituminous Tack Coat, .10 Gal. per sq. yd.
(25 × 24 ÷ 9) × .10 × 2 = 13.3 Gal.

Item T-35, Asphaltic Concrete Surface Course, T=3"
(25 × 24 × .25 ÷ 27) × 2 = 11.10 cu. yds.
Feathering over existing pavement to adjust crown (est.) = .90
Total 12.00 Cu. Yds.

Item I-22, Subbase, Var., Avg. T=8¼"
(25 × 27 × .69 ÷ 27) × 2 = 34.5 cu. yds.

Item I-18, Stabilized Crushed Agg. Shoulders, T=12"
(25 × 2 × 1 ÷ 27) × 2 = 3.7 cu. yds.

Item I-13, 4" Concrete Sidewalk
Sta. 6+25 to Sta. 6+64
3.50 × 39 = 136 sq. ft.
Sta. 7+35 to Sta. 7+73
3.50 × 38 = 133 sq. ft.
Total = *269 Sq. Ft.*

Item E-11, Water
Embankment = 115
I-22 = 34.5
I-18 = 3.7
153.2 × 5 ÷ 1000 = .8 M gal.

Item L-9, Commercial Fertilizer (12-12-12)
Area Seeded under L-9 297 sq. yds. or 2673 sq. ft.
2673 × 20 ÷ 1000 = 53.4 lbs. or .03 tons

Earthwork Calculations
Roadway Excavation = *100 Cu. Yds.*
Roadway Embankment + 20% = 138 Cu. Yd.
Suitable Channel Exc. Estimated = 1500 Cu. Yds
Material Available for Embankment = 1600 Cu. Yds
Suitable material resulting from Item E-3 Channel Excavation shall be placed in Roadway Embankment to the extent required.

REMOVAL OF TREES AND STUMPS
All trees and stumps lying within the construction limits of this project shall be removed under the lump sum bid for removal of trees and stumps Item E-9 unless work is indicated in these plans to preserve same. The following is an approximate estimate of the number of trees and stumps to be removed.

SIZES	Nº Trees	Nº Stumps
12"-18"	5	0
18"-24"	0	0
24"-30"	0	0
30"-36"	1	0
36"-42"	0	0
42"-48"	0	0
Over 48"	1	0

The above estimate is only approximate and the State of Ohio reserves the right to order the removal of additional trees or stumps outside the limits of construction but within Right-of-way lines. Payment for the removal of these additional trees or stumps is included for Payment in the lump sum bid Under Item E-9, Removal of trees and stumps.

GENERAL SUMMARY

Sheet Nº 2	Sheet Nº 3	Sheet Nº 4	Grand Total Item	Grand Total Quan.	Grand Total Unit	Description
						ROADWAY *and Drainage*
		100	E-1	100	Cu. Yds.	Roadway Excavation, Method B, *as per plan*
	4		I-18	4	Cu. Yds.	Stabilized Crushed Aggregate Shoulders and Approaches
1			E-11	1	M. Gal.	Water
	100		I-15	100	Lin. Ft.	Guard Rail, Steel Beam *Standard Type (Deep)*
		297	L-9	297	Sq. Yds.	Seeding and Protecting
0.03			L-9	0.03	Tons	Commercial Fertilizer (12-12-12)
			E-9	Lump	Sum	Removal of Trees and Stumps
	269		I-13	269	Sq. Ft.	4" Concrete Sidewalk
		10	I-9	10	Lin. Ft.	Stone Underdrains, Nº 2
						PAVEMENT
	134		I-7	134	Sq. Yds.	Reinforced Concrete Approach Slabs (T=13")
	77		I-12	77	Lin. Ft.	Concrete Curb, Std. Type G *Modified, as per plan*
	35		I-22	35	Cu. Yds.	Subbase
	14		T-30	14	Gals.	Bituminous Tack Coat: Sec. M-5.5, MS-2 or RS-1; or Sec. M-5.2,
						RC-1, RC-2 or RC-3, as per Sec. T-30.02
	12		T-35	12	Cu. Yds.	Asphaltic Concrete Surface Course, Type "A" (70-85)
						STRUCTURES OVER 20' SPAN
						Bridge Nº CHP-29-3145 See Sheet Nº 11 *for Quantities*

MICHAEL BAKER, JR., CONSULTING ENGINEERS
ROCHESTER PENNSYLVANIA

TYPICAL SECTION, GENERAL NOTES, QUANTITIES & GENERAL SUMMARY

CHAMPAIGN COUNTY

S. R. 29 OVER LITTLE DARBY CREEK

DESIGNED	DRAWN	TRACED	CHECKED	REVIEWED	DATE	REVISED
P.M.	P.M.	J.H.	E.F.R.	E. Roberts	7-26-60	

FED. RD. DIVISION	STATE	PROJECT	TYPE FUNDS
2	OHIO		

3/12

CHAMPAIGN COUNTY
CHP-29-31.45

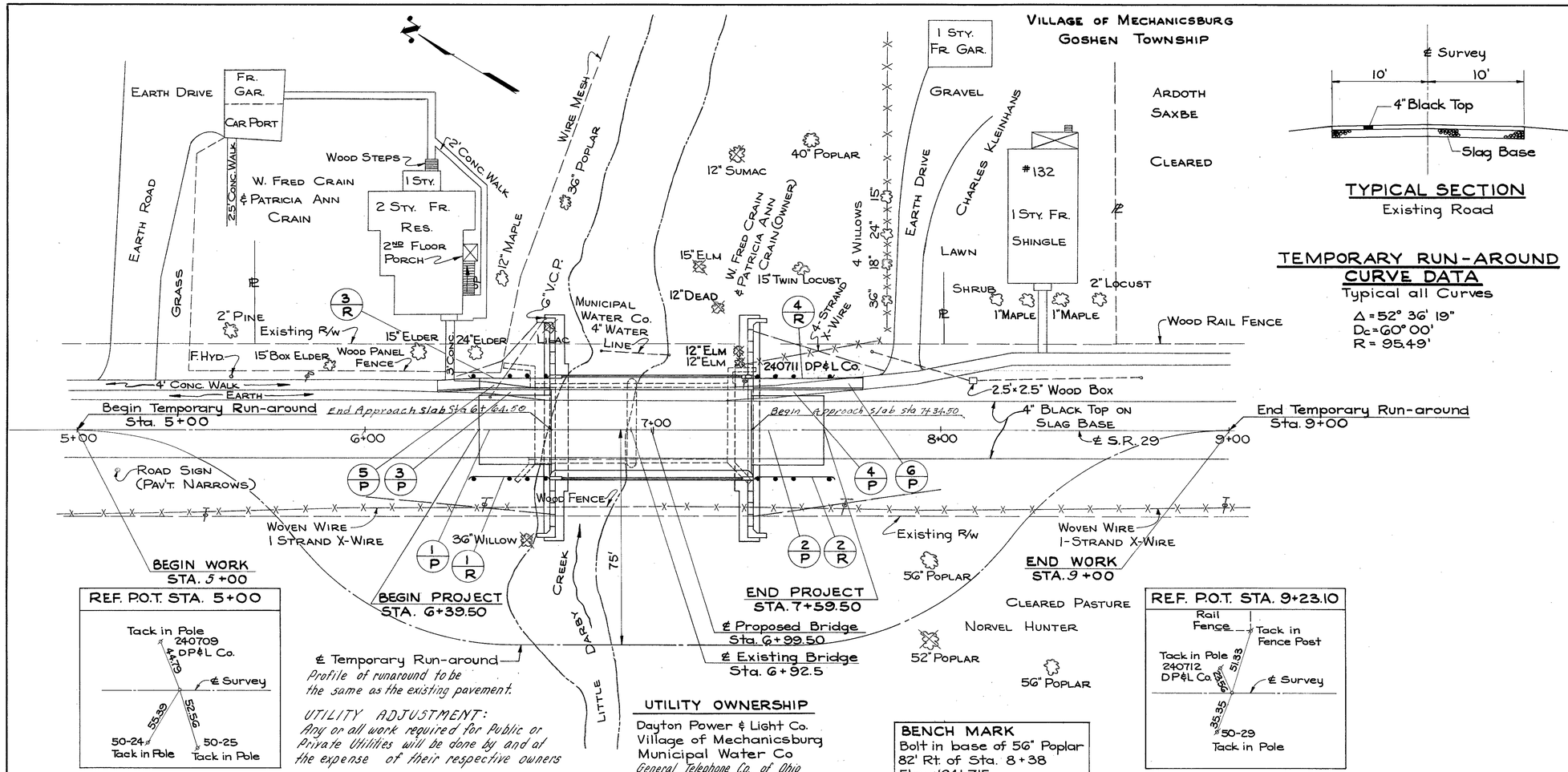

TYPICAL SECTION
Existing Road

TEMPORARY RUN-AROUND CURVE DATA
Typical all Curves

Δ = 52° 36' 19"
Dc = 60° 00'
R = 95.49'

| PAVEMENT AND ROADWAY | | |

CHAMPAIGN COUNTY
CHP-29-31.45

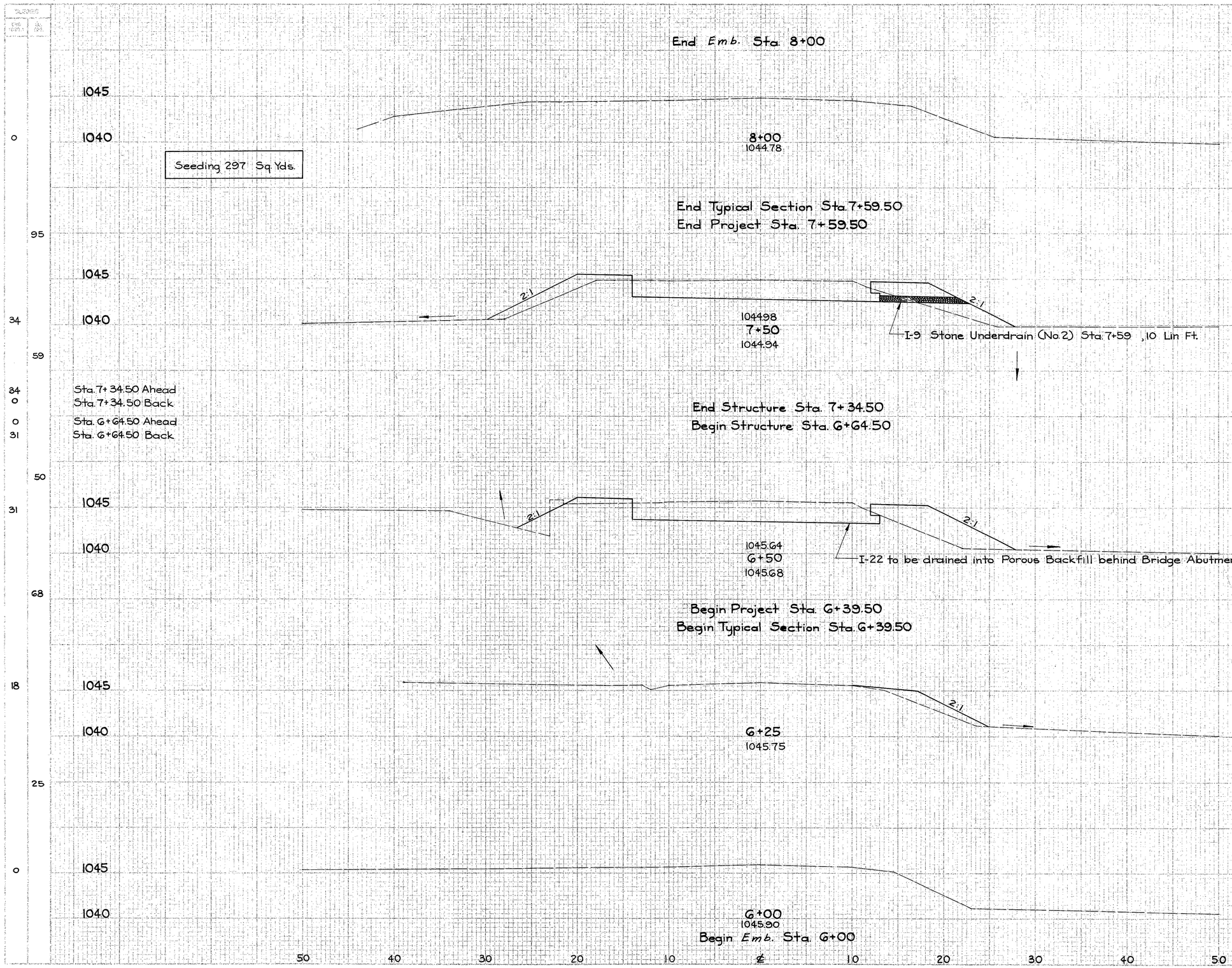

Excavation	100 Cu. Yds.		
Embankment	115 Cu. Yds.		
+20%	138 Cu. Yds.		

Sta. 7+59.50 Ahead	0	40
Sta. 7+59.50 Back	51	40
Sta. 7+34.50 Ahead	51	40
Sta. 7+34.50 Back	0	0
Sta. 6+64.50 Ahead	0	0
Sta. 6+64.50 Back	57	36
Sta. 6+39.50 Ahead	57	31
Sta. 6+39.50 Back	0	31

S.R. 29 over Little Darby Creek Sta. 6+00 to Sta. 8+00

Channel Excavation from End Areas	3209 Cu. Yds.
Masonry from Existing Structure Removal	-39 Cu. Yds.
Total Channel Excavation	3170 Cu. Yds.

FED. ROAD DIST.	STATE	PROJECT	
2	OHIO		

5
12

CHAMPAIGN COUNTY
CHP.-29-31.45

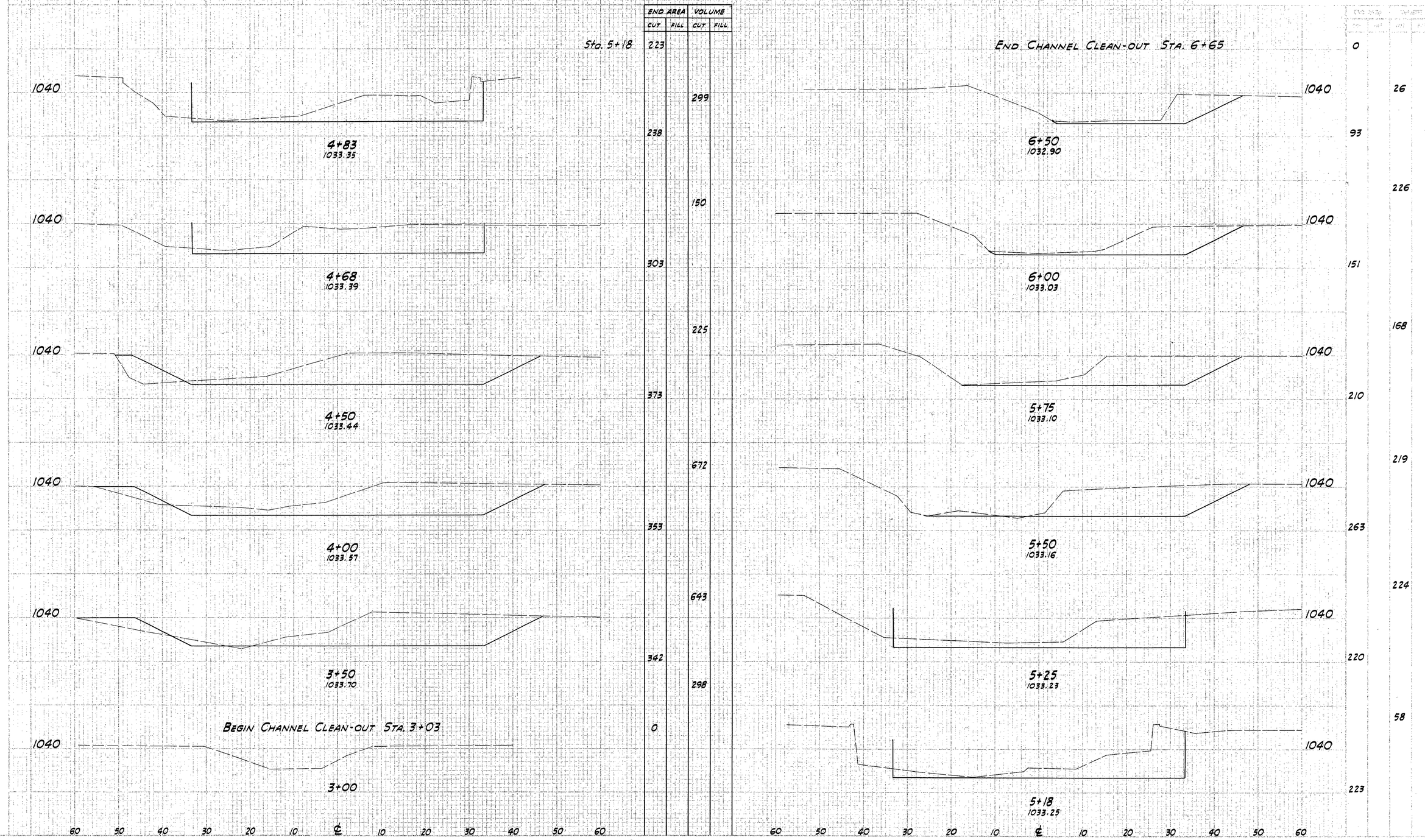

	End Area Cut	End Area Fill	Volume Cut	Volume Fill	Prismoidal Vol. Cut	Prismoidal Vol. Fill
Sta. 5+18	223				0	
			299		26	
	238				93	
			150		226	
	303				151	
			225		168	
	373				210	
			672		219	
	353				263	
			643		224	
	342				220	
			298		58	
	0				223	

Little Darby Creek Channel Sta. 3+03 To Sta. 6+65

FED RD DIVISION	STATE	PROJECT	TYPE FUNDS
2	OHIO		

6/12

CHAMPAIGN COUNTY
CHP-29-31.45

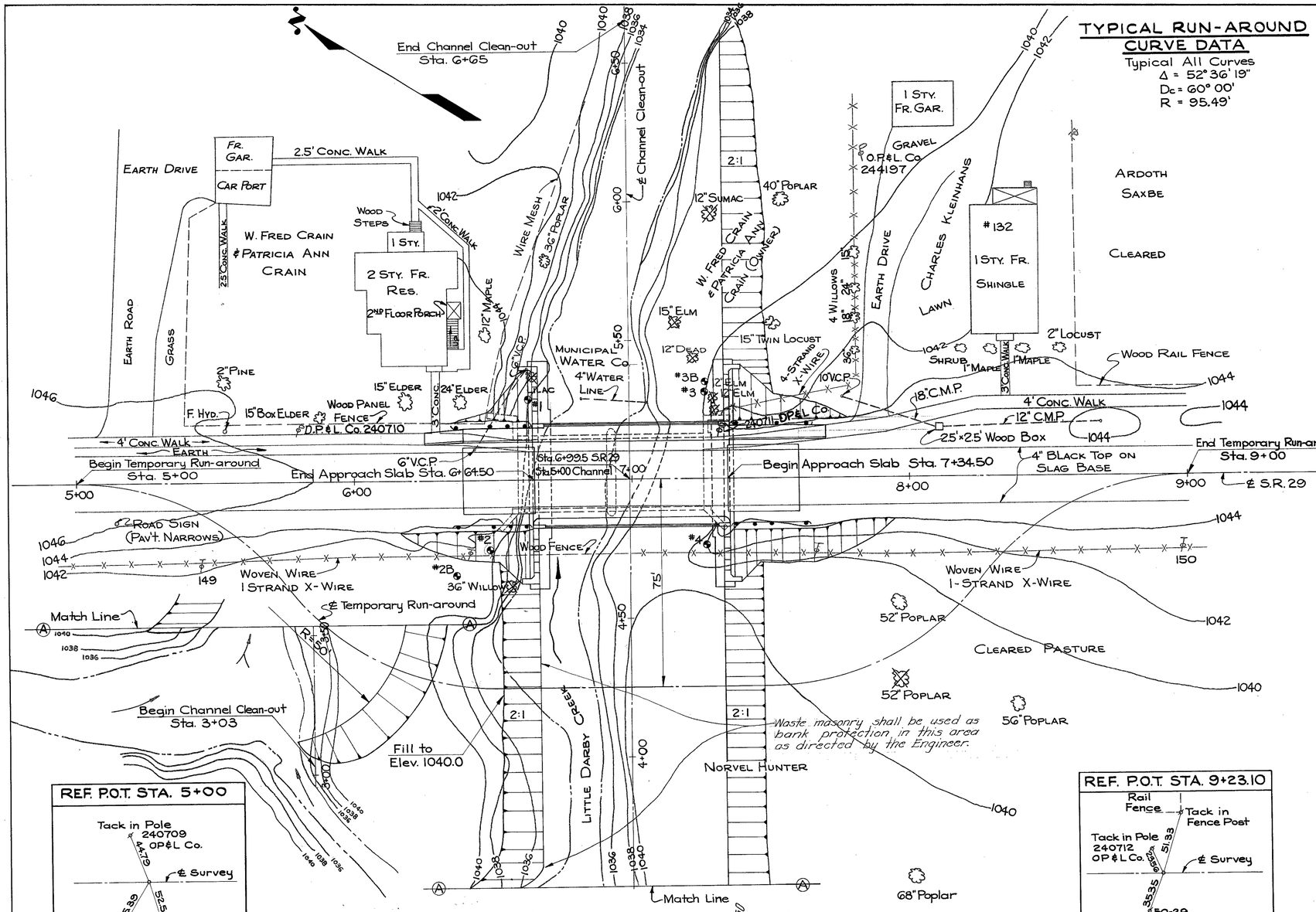

TYPICAL RUN-AROUND CURVE DATA

Typical All Curves
Δ = 52° 36' 19"
Dc = 60° 00'
R = 95.49'

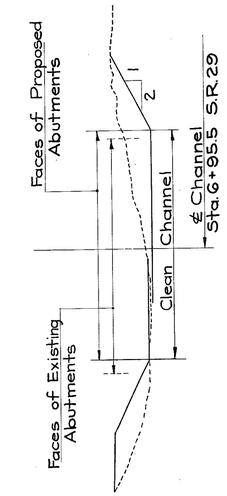

TYPICAL SECTION OF CHANNEL

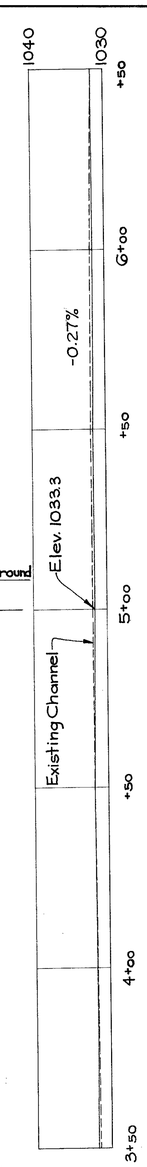

STREAM PROFILE

REF. P.O.T. STA. 5+00

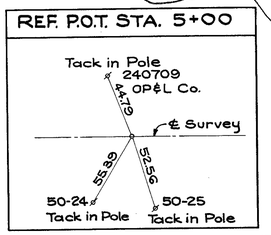

REF. P.O.T. STA. 9+23.10

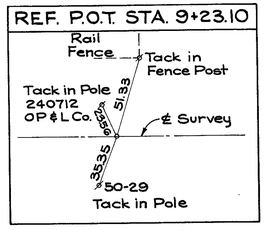

EXISTING BRIDGE DATA

TYPE: Reinforced concrete Tee beam
SPANS: 2 @ 32' clear
ROADWAY: 21'-0"
CONDITION: Poor
(to be removed)

PROPOSED STRUCTURE

TYPE: Prestressed non-composite box beams reinforced concrete substructure.
SPAN: 67.50' Clear
ROADWAY: 28'-0" ~~w~~ of 2'-3" curb and 4'-0" sidewalk
SKEW: None
LOAD FREQUENCY: CF 400 (57)
WEARING SURFACE: Asphaltic concrete
ALIGNMENT: Tangent
SUPERELEVATION: None
APPROACH SLAB: AS1-54 (25' long)

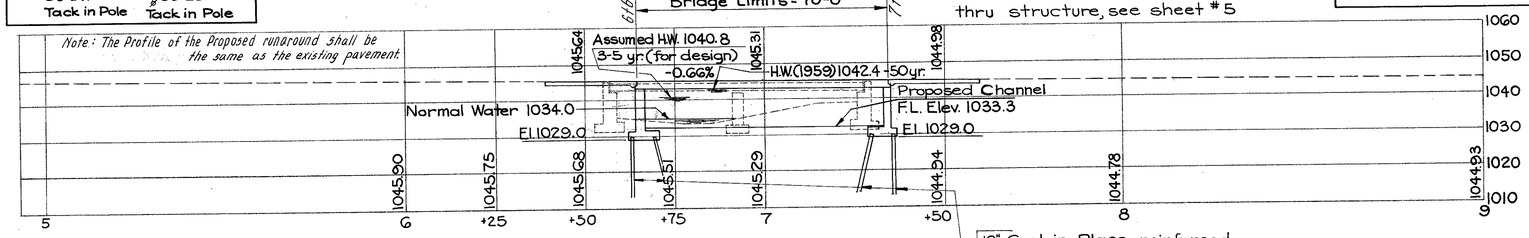

PROFILE ALONG ℄ S.R. 29

12" Cast-in-Place reinforced concrete piles
Estimated Average Pay Length = 35'

BENCH MARK
Bolt in base of 56" Poplar
82' Rt. of Sta. 8+38
Elev. 1041.715

FOUNDATION SOUNDINGS: Foundation design and foundation quantities are based on a study of rod soundings and soil-sampling soundings made at the site. This sounding information may be inspected in the office of the Bureau of Bridges in Columbus or in the Division Office, but the State does not guarantee the accuracy thereof.

● Indicates boring location

MICHAEL BAKER, JR., CONSULTING ENGINEERS
ROCHESTER PENNSYLVANIA

SITE PLAN
BRIDGE NO. CHP-29-3145
OVER LITTLE DARBY CREEK

CHAMPAIGN COUNTY
STA. 6+64.50
STA. 7+34.50

PRESENT TOPOGRAPHY		PROPOSED WORK			
SURVEYED	DRAWN	DESIGNED	DRAWN	CHECKED	REVIEWED
H.H.	J.H.	E.F.R.	P.T.R.	P.M.	E.F.R. 7-28-66

FED. RD. DIVISION	STATE	PROJECT	TYPE FUNDS
2	OHIO		

CHAMPAIGN COUNTY
CHP-29-31.45

7/12

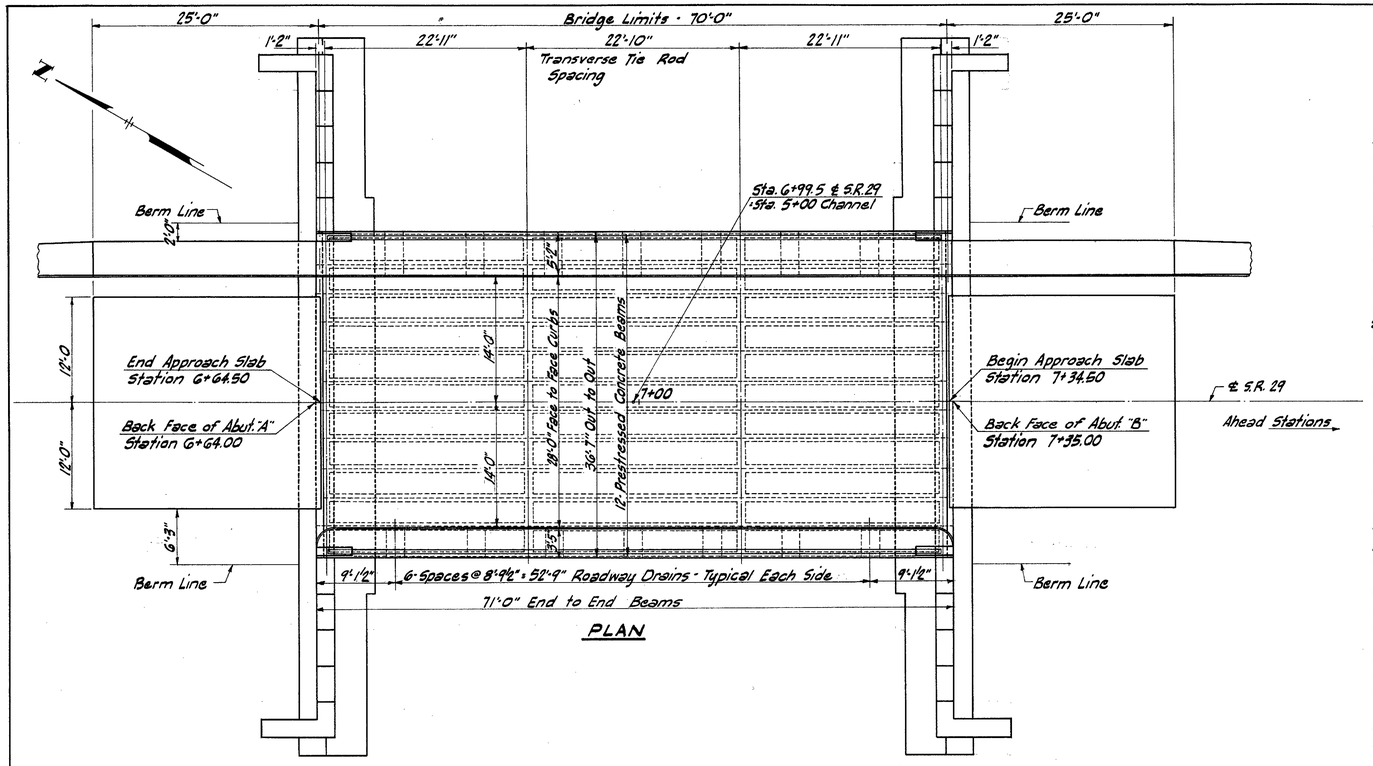

PLAN

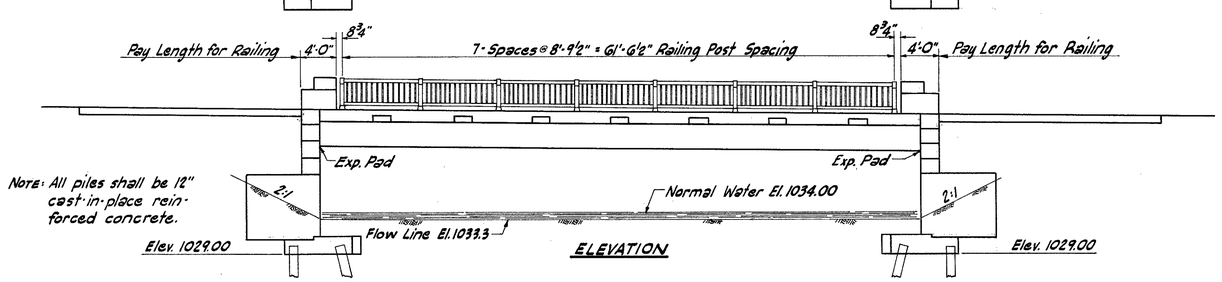

ELEVATION

GENERAL NOTES
STRUCTURAL

- DESIGN SPECIFICATIONS: This structure conforms to the requirements of "Design Specifications for Highway Structures" of the State of Ohio, Department of Highways, revised 2-21-58 and to to the specifications listed in the General Notes for Prestressed Concrete Beams.
- REFERENCE shall be made to Standard Drawing AS-1-54 revised 12-1-54.
  REMOVAL OF EXISTING STRUCTURE: When no longer needed to maintain traffic the existing structure shall be removed. All temporary shoring of structural steel at the pier shall be salvaged and stored within the right-of-way for disposal by the State Forces.
- PILES shall be driven to a minimum bearing capacity of 35 tons per pile.
- UTILITY LINES: All labor and expense involved in relocating the affected utility lines shall be borne by the owners. The contractor and owners are requested to cooperate by arranging their work in such a manner that inconvenience to either will be held to a minimum.
- TEMPORARY RUN-AROUND BRIDGE AND APPROACHES: Load frequency for bridge, C.F.=130, with unit stresses increased 25 per cent as per the provisions for temporary bridges in the "Design Specifications for Highway Structures." Approach pavement shall be Class "B."

GENERAL NOTES
PRESTRESSED CONCRETE BEAMS

The prestressed concrete beams and appurtenances shall be manufactured and installed as shown on the Plans and as required by the Construction and Material Specifications of the Ohio Department of Highways except as stated below.

Satisfactory proof shall be given to the Engineer that the fabricator of the prestressed concrete beams is capable of and has the organization and plant for performing the work involved. Before the beams are installed, the Contractor shall furnish an affidavit from the fabricator certifying that the beams are manufactured in accordance with the Plans and Specifications. Such affidavit shall be accompanied by certified copies of test results establishing that the materials used are in accordance with the Plans and Specifications.

The use of high-early strength cement will be permitted. A uniform entrained air content of from 4 to 7 per cent shall be provided.

The pretensioning reinforcement shall be 7-wire, uncoated, stress relieved strand. The center straight wire shall be slightly larger diameter than the outside wires so that the latter will firmly grip the former. Minimum ultimate tensile strength of the strand shall be 250,000 p.s.i. Minimum yield strength, at 0.2 per cent permanent set, shall be 0.85 of ultimate. Minimum total elongation at rupture shall be 4 per cent in 24 inches. The strand on this structure shall be ⅜ inch nominal diameter, 0.0799 square inch approximate area. Initial tension shall be 115,000 p.s.i. (14,000 pounds per strand.) and design strength 140,000 p.s.i.

The prestressing force shall be checked with calibrated gages on the jack. A further check shall be made by measuring the elongation of the strands.

The tensioning steel shall be entirely free of oil or other foreign matter which might reduce the bond.

Mild steel reinforcing shall be deformed bars of intermediate grade conforming to Sec. M-7.1 or deformed rail steel bars conforming to Sec. M-7.2. Unless otherwise noted, dimensions relative to placement of reinforcing steel are given to bar centers.

Up to the time of transfer of prestress to the concrete, beams shall be cured at a minimum temperature of 70° Fahr. and a minimum relative humidity of 95 per cent. Steam curing will be permitted with a maximum curing tempature of 150° Fahr. Care shall be exercised to prevent rapid change of temperature of the concrete.

Minimum cylinder strength of the concrete shall be
at 28 days 5,500 p.s.i.
at transfer of prestress 4,000 p.s.i.

Three representative test cylinders for the 28-day test shall be made of the concrete placed each day and cured under standard job conditions. Failure of any test cylinder to meet 90 per cent of minimum strength requirements, or failure of the average of the three cylinders to meet the full minimum strength requirements, shall be cause for rejection of the work represented there-by.

The transfer of prestress to the concrete, after it has attained the required strength, shall progress gradually and symmetrically so that allowable unit stresses are not exceeded.

During handling, transporting and storing, the prestressed concrete beams shall be supported at approximately the final location of the supports and the beams shall be kept in an upright position.

Full, even bearings of the dimensions shown on the Plans shall be provided for the beams.

The beams shall be paid for at the contract unit price bid per beam, which price and payment shall constitute full compensation for manufacturing, transporting and installing, furnishing all materials, labor, equipment, tools and incidentals necessary to complete the item according to the Plans and Specifications.

Transverse post tensioning and the grouting of keys and other openings shall be accomplished as shown on the Plans, or if not shown, as directed by the Engineer.

Transverse post tensioning bars shall meet the following minimum specifications.

- Ultimate strength 145,000 p.s.i.
- Yield strength at 0.2% offset from tangent 130,000 p.s.i.
- Elongation in 20 diameters, at ultimate 4%

MICHAEL BAKER, JR., CONSULTING ENGINEERS
ROCHESTER PENNSYLVANIA

GENERAL PLAN & ELEVATION

BRIDGE NO. CHP.-29-3145
OVER LITTLE DARBY CREEK
STA. 6+64.50
STA. 7+34.50
CHAMPAIGN COUNTY

DESIGNED	DRAWN	TRACED	CHECKED	REVIEWED	DATE	REVISED
E.F.R.	M.M.	M.M.	P.M.	E. Roberts	7-28-60	

FED. RD. DIVISION	STATE	PROJECT	TYPE FUNDS
2	OHIO		

CHAMPAIGN COUNTY
CHP-29-31.45

8/12

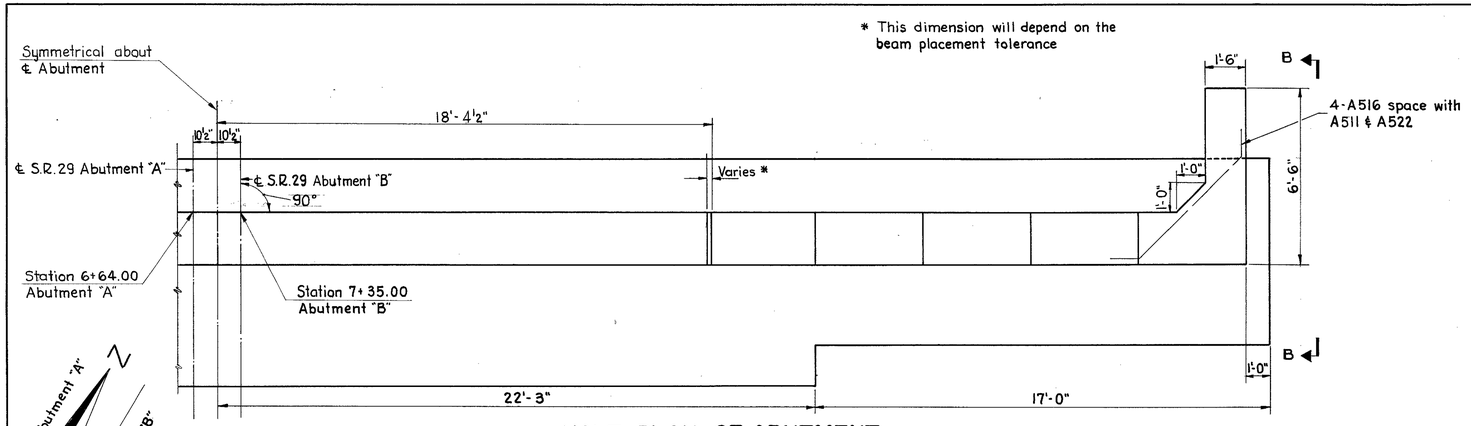

HALF PLAN OF ABUTMENT

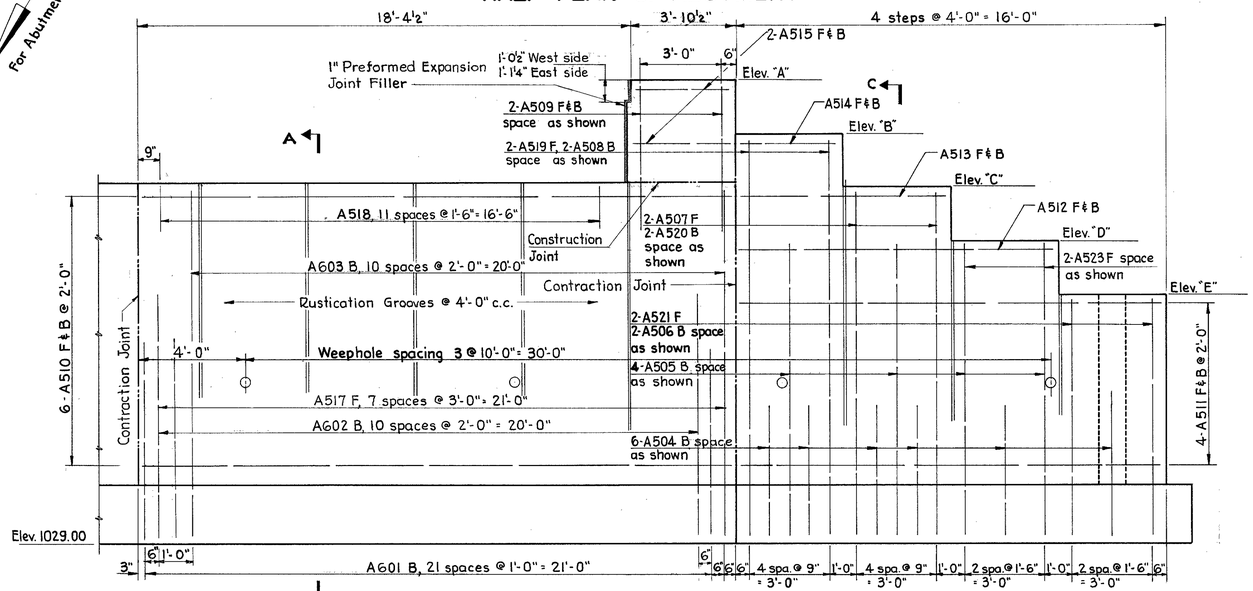

HALF ELEVATION

Piles not shown

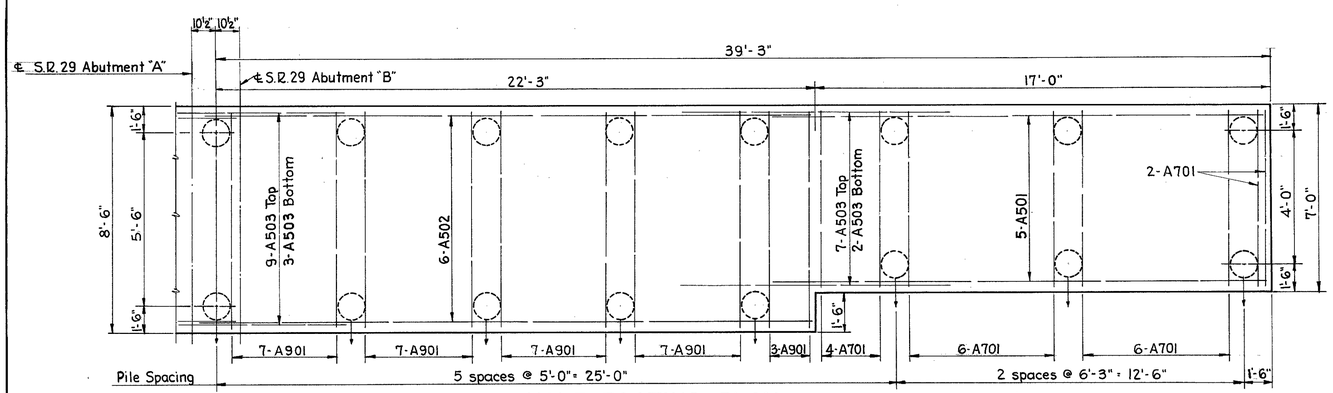

HALF FOOTING PLAN

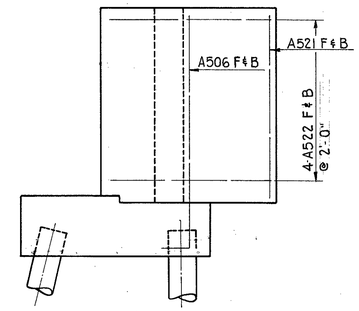

VIEW B-B

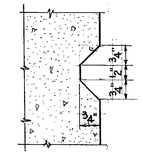

RUSTICATION GROOVE

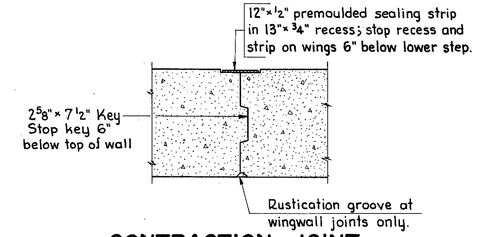

CONTRACTION JOINT

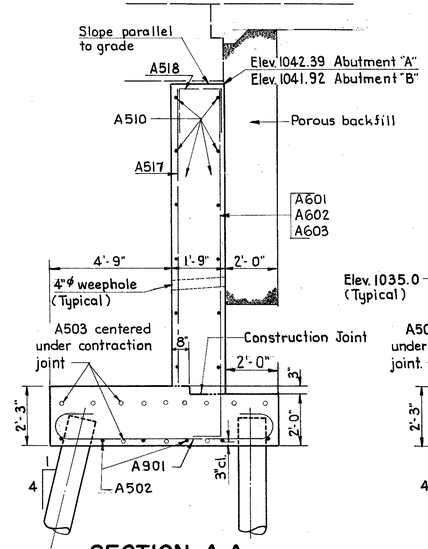

SECTION A-A

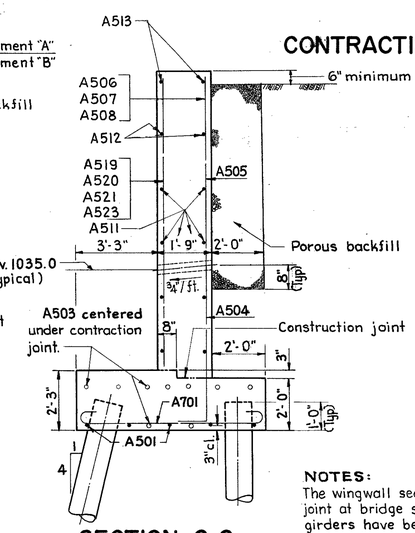

SECTION C-C

NOTES:

The wingwall section above the construction joint at bridge seat shall be placed after the girders have been erected and sidewalk and curbs placed.

CONCRETE shall be Class "E".

POROUS BACKFILL, 2 feet thick, full length of abutment and wings shall extend to the underside of the approach slab or to the finished ground surface.

REINFORCING STEEL for abutment "A" as shown. Reinforcing steel for abutment "B" is marked as shown, except with prefix B in place of A.

WINGWALL ELEVATIONS

Location		A	B	C	D	E
Abutment "A"	West	1046.19	1044.19	1042.19	1040.19	1038.19
	East	1046.25	1044.25	1042.25	1040.25	1038.25
Abutment "B"	West	1045.72	1043.72	1041.72	1039.72	1037.72
	East	1045.78	1043.78	1041.78	1039.78	1037.78

LEGEND

F = Front Face
B = Back Face

MICHAEL BAKER, JR., CONSULTING ENGINEERS
ROCHESTER PENNSYLVANIA

ABUTMENT DETAILS

BRIDGE NO. CHP-29-3145
OVER LITTLE DARBY CREEK

CHAMPAIGN COUNTY — STA. 6+64.50, STA. 7+34.50

DESIGNED	DRAWN	TRACED	CHECKED	REVIEWED	DATE	REVISED
E.F.R.	E.F.R.	P.T.R.	P.M.	E. Roberts	7-27-60	

FED. RD. DIVISION	STATE	PROJECT	TYPE FUNDS
2	OHIO		

9/12

CHAMPAIGN COUNTY
CHP-29-31.45

NOTES:

See General Plan and Elevation for location of roadway drains and railing posts. See Sheet #10 for details of aluminum railing and location of railing anchor bolts.

# Indicates items included with beams for payment.

Concrete for curbs and railing end posts shall be Class "C".

Concrete and reinforcing steel for the railing end posts shall be included with Item S-14, Railing, for payment.

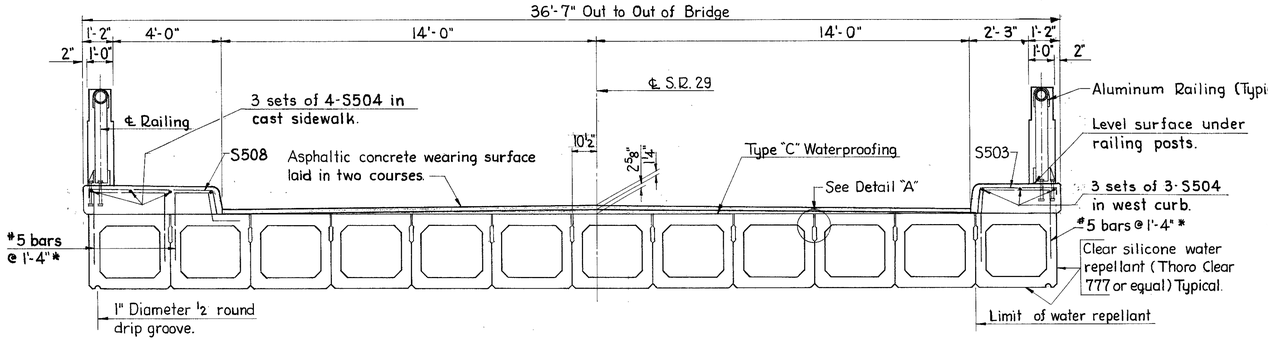

* Shift to clear roadway drains.

TYPICAL CROSS SECTION

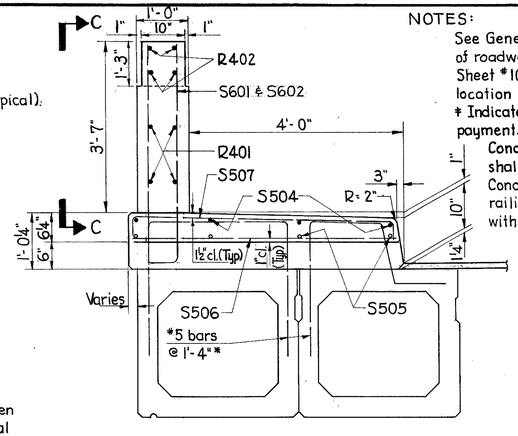

SECTION A-A

NOTES:

See General Plan and Elevation for location of roadway drains and railing posts. See Sheet #10 for details of aluminum railing and location of railing anchor bolts.

# Indicates items included with beams for payment.

Concrete for curbs and railing end posts shall be Class "C".

Concrete and reinforcing steel for the railing end posts shall be included with Item S-14, Railing, for payment.

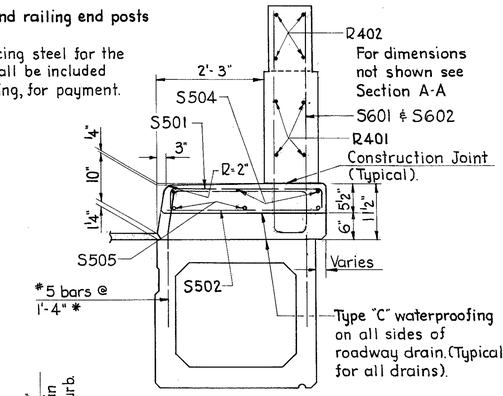

SECTION B-B

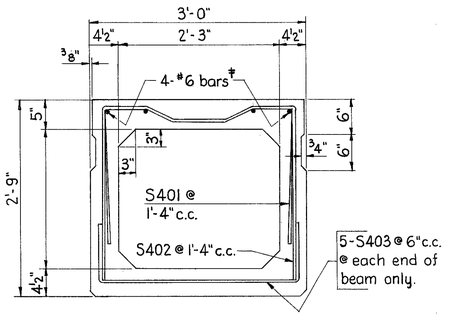

TYPICAL SECTION

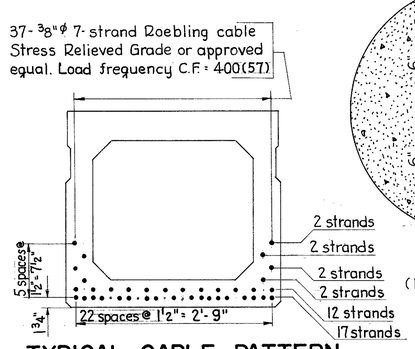

TYPICAL CABLE PATTERN

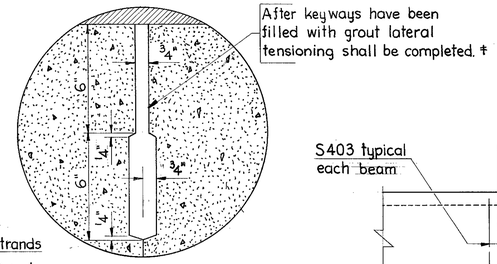

DETAIL "A"

(Longitudinal Joints)

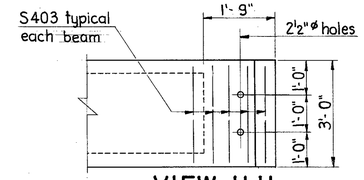

VIEW H-H

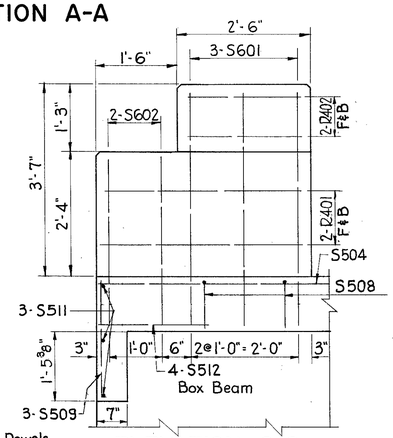

ELEVATION C-C

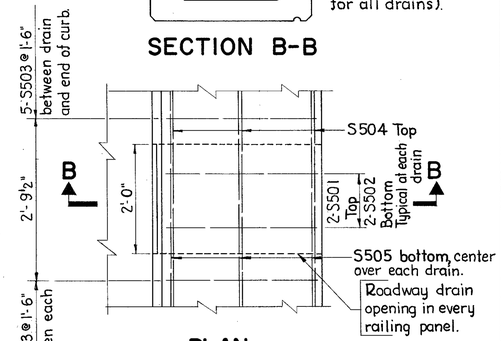

PLAN ROADWAY DRAIN DETAIL

(West curb)

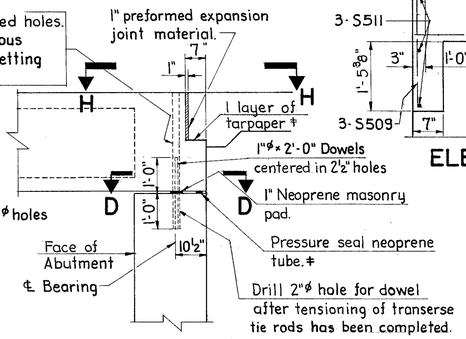

NEOPRENE MASONRY PAD DETAIL

BEAMS AT ABUTMENTS

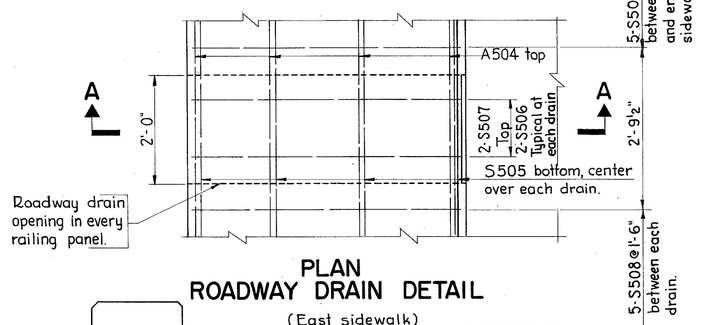

PLAN ROADWAY DRAIN DETAIL

(East sidewalk)

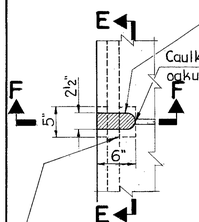

SECTION D-D

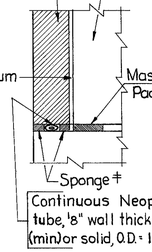

SECTION F-F

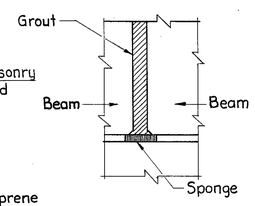

SECTION E-E

STIRRUP SCHEDULE

Mark	Bar Size	Bar Length	A
S401	#4	6'-7"	1'-11"
S402	#4	7'-7"	2'-5"
S403	#4	4'-4"	10"

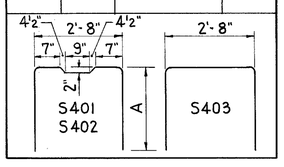

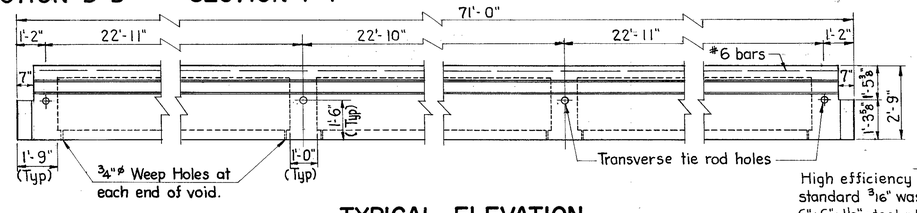

TYPICAL ELEVATION

(Interior beam shown - omit key on fascia side of fascia beam).

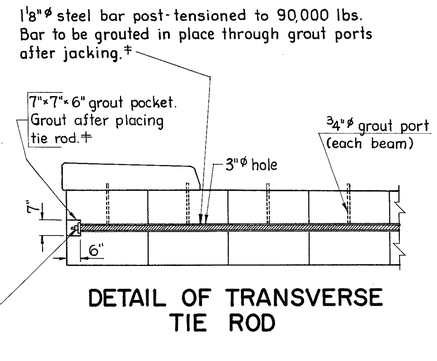

DETAIL OF TRANSVERSE TIE ROD

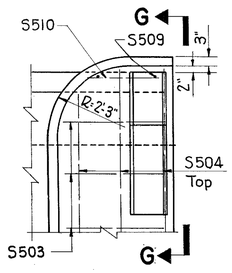

DETAIL AT ENDS OF WEST CURB

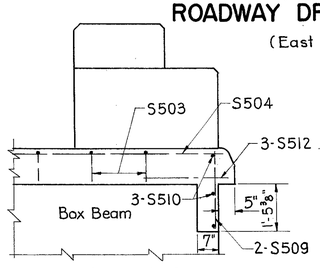

VIEW G-G

LEGEND

F = Front face
B = Back face

MICHAEL BAKER, JR., CONSULTING ENGINEERS
ROCHESTER PENNSYLVANIA

SUPERSTRUCTURE DETAILS

BRIDGE NO. CHP-29-3145
OVER LITTLE DARBY CREEK

CHAMPAIGN COUNTY — STA. 6+64.50 STA. 7+34.50

DESIGNED	DRAWN	TRACED	CHECKED	REVIEWED	DATE	REVISED
E.F.R.	E.F.R.	P.T.R.	P.M.	E. Roberts	7-28-60	

FED. RD. DIVISION	STATE	PROJECT	TYPE FUNDS
2	OHIO		

10/12

CHAMPAIGN COUNTY
CHP-29-31.45

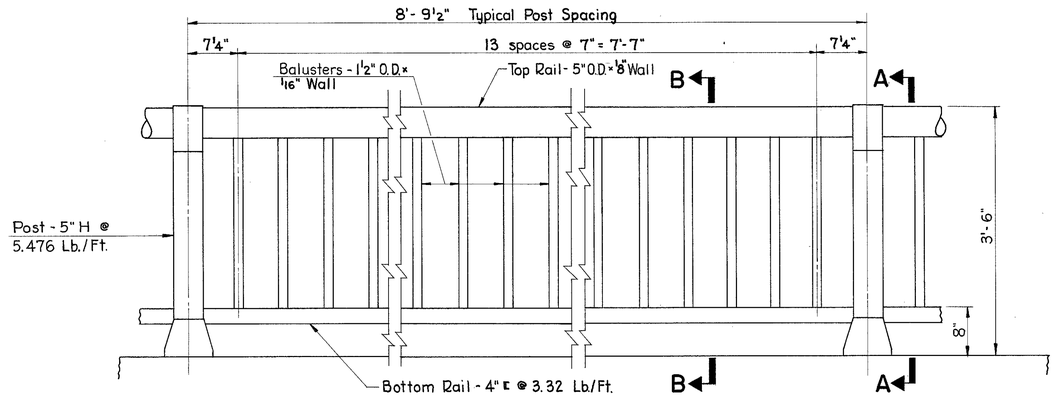

TYPICAL RAILING SECTION

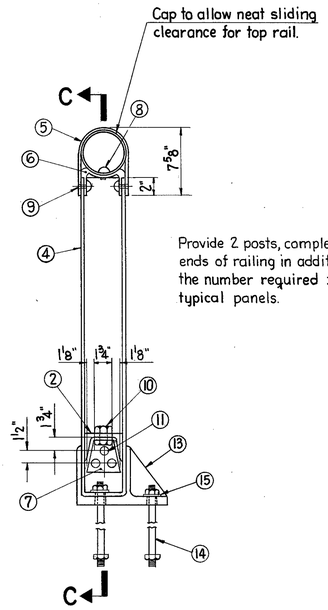

SECTION A-A

NOTE:
Anchor bolts shall be aluminum with head or nut at the lower end. They shall be 1'-0" long and shall have a minimum diameter of 0.62" at root of the thread.

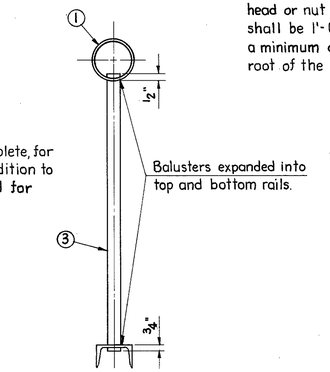

SECTION B-B

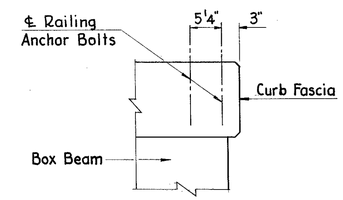

LOCATION OF RAILING ANCHOR BOLTS

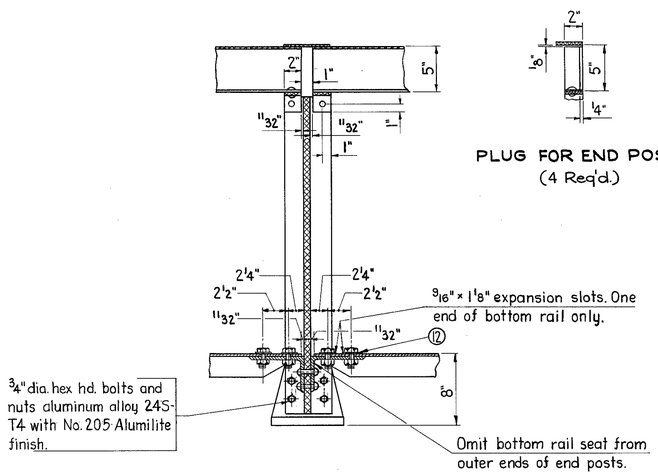

SECTION C-C

PLUG FOR END POSTS
(4 Req'd.)

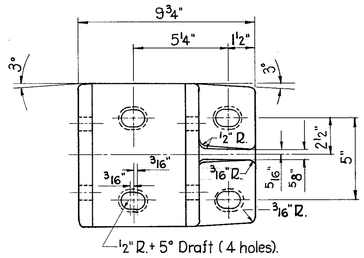

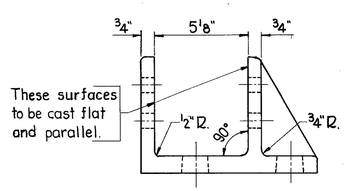

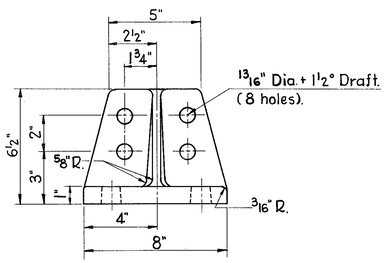

POST BASE DETAILS

BILL OF MATERIAL FOR TYPICAL PANEL

ITEM	PCS.	DESCRIPTION	SIZE	ALLOY	UNIT WT.	TOT. WT.
1	1	Top Rail	5" O.D. × ⅛" Wall × 8'-8½"	61S-T6	2.25 Lb./Ft.	19.5
2	1	Bottom Rail	4" [@ 3.32 Lb. per foot × 8'-8½"	61S-T6	3.32 Lb./Ft.	19.5
3	14	Baluster	1½" O.D. × 1/16" Wall × 2'-6¼" long	61S-T6	.332 Lb./Ft.	11.7
4	1	Post - Section No. 9430	5" H @ 5.476 Lb. per foot × 2'-11" long	61S-T6	5.476 Lb./Ft.	16.0
5	1	Post Cap	5" × ¼" Plate × 1'-6" long	61S-T6	1.468 Lb./Ft.	2.2
6	2	Top Rail Seat - Section No. 46699	2" long	61S-T6	4.950 Lb./Ft.	1.7
7	2	Bottom Rail Seat	6" × 4" × ⅜" ∠ × 4" long	61S-T6	4.23 Lb./Ft.	2.8
8	1	Top Rail to Seat Rivet	½" ϕ High Button Head × 1¼" long	61S-T6	3.6 Lb./C.	0
9	4	Cap to Post Rivet	½" ϕ High Button Head × 1 7/16" long	61S-T6	4.3 Lb./C.	0.2
10	4	Bottom Rail to Seat Bolt and Nut with				
		No. 205 Alumilite Finish	½" ϕ Hex Head × 1⅜" long	24S-T4	5.5 Lb./C.	0.2
11	3	Bottom Rail Seat to Post Rivet	½" ϕ High Button Head × 1 13/16" long	61S-T6	4.6 Lb./C.	0.1
12	2	Bottom Rail Washer	½" ϕ Bolt Size	ALCLAD 24S-T4	2.5 Lb./M	0.0
13	1	Post Base (Cast) - Section No. 5766	9¾" × 8" Base Size	61S-T6	13.8 Lb./Ea.	13.8
14	4	Post Base to Sidewalk Anchor Bolt	See Note		0.6 Lb./Ea.	2.4
15	4	Anchor Bolt Washer	¾" ϕ Bolt Size		3.0 Lb./Ea.	0.1
		TOTAL				90.2

NOTES:
1. All materials shall conform to Section M-7.19 of the Specifications, *except that alloy for base castings shall conform to ASTM SG-70B.*
2. Section numbers shown shall be Aluminum Company of America or equal.
3. For length of railing see sheet No. 7.
4. Shims shall be provided under the railing posts where necessary to assist in vertical aligning. They shall be of aluminum alloy, 4¾" × 1/16" × 8", and shall be slotted for anchor bolts to permit insertion after the posts are in place.

MICHAEL BAKER, JR., CONSULTING ENGINEERS
ROCHESTER PENNSYLVANIA

RAILING DETAILS

BRIDGE NO. CHP.-29-3145
OVER LITTLE DARBY CREEK
STA. 6+64.50
STA. 7+34.50
CHAMPAIGN COUNTY

DESIGNED	DRAWN	TRACED	CHECKED	REVIEWED	DATE	REVISED
E.F.R.	R.T.R.	R.T.R.	P.M.	E. Roberts	7-27-60	

FED. RD. DIVISION	STATE	PROJECT	TYPE FUNDS
2	OHIO		

11/12

CHAMPAIGN COUNTY
CHP-29-31.45

REINFORCING STEEL BAR SCHEDULE

Note: All bar dimensions are out to out

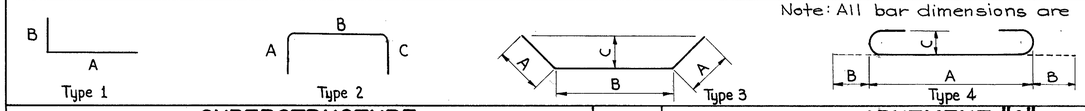

SUPERSTRUCTURE

MARK	TOTAL	LENGTH	TYPE	A	B	C	D	E	WEIGHT
S601	12	8'-8"	2	4'-3"	6"	4'-3"			156
S602	8	6'-4"	2	3'-0"	8"	3'-0"			76
S501	14	3'-1"	2	3"	2'-10"	3"			45
S502	14	2'-10"	Str.						41
S503	40	3'-11"	2	9"	2'-10"	7"			163
S504	21	24'-9"	Str.						542
S505	49	5'-0"	Str.						256
S506	14	4'-7"	Str.						67
S507	14	4'-10"	2	3"	4'-7"	3"			71
S508	40	5'-8"	2	9"	4'-7"	7"			236
S509	10	2'-1"	Str.						22
S510	6	2'-0"	Str.						13
S511	6	4'-5"	Str.						28
S512	14	2'-6"	Str.						37
R401	16	3'-8"	Str.	Included with Railing					
R402	16	2'-2"	Str.	for Payment					
Total Weight									1,753

DOWELS

1"Φ	48	2'-0"	Str.						256
Total Weight									256

ABUTMENT "A"

MARK	TOTAL	LENGTH	TYPE	A	B	C	D	E	WEIGHT
A901	62	10'-8"	4	8'-2"	1'-3"	11¼"			2249
A701	36	8'-4"	4	6'-8"	10"	6¾"			613
A601	44	8'-0"	1	7'-2"	1'-0"				529
A602	22	9'-10"	1	9'-0"	1'-0"				325
A603	22	13'-9"	1	12'-11"	1'-0"				454
A501	10	18'-7"	Str.						194
A502	12	23'-0"	Str.						288
A503	30	10'-0"	Str.						313
A504	12	6'-2"	1	5'-4"	1'-0"				77
A505	8	11'-7"	1	10'-9"	1'-0"				97
A506	8	9'-7"	1	8'-9"	1'-0"				80
A507	4	13'-7"	1	12'-9"	1'-0"				57
A508	4	15'-7"	1	14'-9"	1'-0"				65
A509	8	5'-5"	Str.						45
A510	24	21'-11"	Str.						549
A511	16	15'-8"	Str.						261
A512	4	11'-8"	Str.						49
A513	4	7'-8"	Str.						32
A514	4	3'-8"	Str.						15
A515	8	3'-7"	Str.						30
A516	8	7'-0"	3	1'-0"	5'-0"	8"			58
A517	16	10'-11"	Str.						182
A518	24	4'-4"	2"	1'-7"	1'-5"	1'-7"			108
A519	4	12'-9"	Str.						53
A520	4	10'-9"	Str.						45
A521	8	6'-9"	Str.						56
A522	8	6'-2"	Str.						51
A523	4	8'-9"	Str.						37
Total Weight									6,912

ABUTMENT "B"

MARK	TOTAL	LENGTH	TYPE	A	B	C	D	E	WEIGHT
B901	62	10'-8"	4	8'-2"	1'-3"	11¼"			2249
B701	36	8'-4"	4	6'-8"	10"	6¾"			613
B601	44	8'-0"	1	7'-2"	1'-0"				529
B602	22	9'-10"	1	9'-0"	1'-0"				325
B603	22	13'-3"	1	12'-5"	1'-0"				438
B501	10	18'-7"	Str.						194
B502	12	23'-0"	Str.						288
B503	30	10'-0"	Str.						313
B504	12	6'-2"	1	5'-4"	1'-0"				77
B505	8	11'-1"	1	10'-3"	1'-0"				92
B506	8	9'-1"	1	8'-3"	1'-0"				76
B507	4	13'-1"	1	12'-3"	1'-0"				55
B508	4	15'-1"	1	14'-3"	1'-0"				63
B509	8	5'-5"	Str.						45
B510	24	21'-11"	Str.						549
B511	16	15'-8"	Str.						261
B512	4	11'-8"	Str.						49
B513	4	7'-8"	Str.						32
B514	4	3'-8"	Str.						15
B515	8	3'-7"	Str.						30
B516	8	7'-0"	3	1'-0"	5'-0"	8"			58
B517	16	10'-6"	Str.						175
B518	24	4'-4"	2	1'-7"	1'-5"	1'-7"			108
B519	4	12'-4"	Str.						51
B520	4	10'-4"	Str.						43
B521	8	6'-4"	Str.						53
B522	8	6'-2"	Str.						51
B523	4	8'-4"	Str.						35
Total Weight									6867

ESTIMATED QUANTITIES

ITEM	TOTAL	UNIT	DESCRIPTION	SUPERSTR.	ABUTS.	PIERS	GENERAL		
E-2		lump sum	Cofferdams, cribs and sheeting		Lump sum				
E-2	410	cu. yds.	Unclassified excavation		410				
E-3	3170	cu. yds.	Channel excavation				3170		
S-1	20	cu. yds.	Class "C" concrete, superstructure	20					
S-1	117	cu. yds.	Class "E" concrete, walls		117				
S-1	98	cu. yds.	Class "E" concrete, footings		98				
S-3	275	sq. yds.	Type "C" waterproofing	275					
S-3	72	lin. ft.	Waterproofing, premoulded sealing strip		72				
S-4	15,788	lbs.	Reinforcing steel	2009	13779				
S-9	91	sq. ft.	1" preformed expansion joint filler		91				
S-14	142	lin. ft.	Railing (aluminum with concrete end posts)	142					
S-15		lump sum	Temporary run-around bridge and approaches (class "B")				Lump sum		
S-16		lump sum	First test pile				Lump sum		
S-18	2100	lin. ft.	12" cast-in-place reinforced concrete piles		2100				
S-23	48	lin. ft.	Dowel holes		48				
S-24		lump sum	Removal of existing structure				Lump sum		
S-29	90	cu. yds.	Porous backfill		90				
T-35	16	cu. yds.	Asphaltic concrete surface course Type "A" or "C" (70-85)	16					
Spec.	12	each	Prestressed concrete beams (71'-0" long) complete	12					
Spec.	91	sq. yds.	Clear silicone water repellent	91					
Spec.	30	sq. ft.	1" neoprene bearing pads (50±5 durometer hardness)	30					

REPLACEMENT BARS

MARK	NO.	SIZE	LENGTH	TYPE	WEIGHT
RE 901	1		8'-7"	4*	
RE 701	1		8'-4"	4**	
RE 601	1		5'-11"	Str.	
RE 501	1		5'-7"	Str.	

*Use one hook as detailed for A901
**Use two hooks as detailed for A701

BAR SIZE:

Bar size is indicated in the bar mark. The first digit where three digits are used and the first two digits where four digits are used, indicate the bar size number. For example, A701 is a No. 7 size bar and A1101 is a No. 11 size bar.

REPLACEMENT BARS:

If reinforcing bars are fabricated from stock which has previously been tested and approved by the Ohio Highway Testing Laboratory, test samples as provided in Sec. S-402 need not be furnished and replacement bars will not be required.

MICHAEL BAKER, JR., CONSULTING ENGINEERS
ROCHESTER PENNSYLVANIA

REINFORCING STEEL LIST
& ESTIMATED QUANTITIES

BRIDGE NO. CHP.-29-3145
OVER LITTLE DARBY CREEK

CHAMPAIGN COUNTY — STA. 6+64.50 STA. 7+34.50

DESIGNED	DRAWN	TRACED	CHECKED	REVIEWED	DATE	REVISED
E.F.R.	P.T.R.	J.H.	P.M.	E. Roberts	7-27-60	

4

FED. RD. DIST. NO.	STATE	PROJECT	FISCAL YEAR
10	OHIO		1940

1/11

CHAMPAIGN COUNTY
S.H. 188 SEC. H & O
Mechanicsburg (Pt.)

STATE OF OHIO
DEPARTMENT OF HIGHWAYS
URBANA-WEST JEFFERSON ROAD
CHAMPAIGN COUNTY
S.H. 188 ~ SEC. H, O & MECHANICSBURG (PT.)
GOSHEN TOWNSHIP & VILLAGE OF MECHANICSBURG
NET LENGTH OF PROJ 15,024.93 LIN. FT. 2.845 MILES.

LINE DATA

Begin Project Sta. 24+88
End Project Sta 175+35
Gross Length of Project 15047 Lin. Ft.
Deduction Station Equations
Sta. 47+09.55 = Sta. 47+11.21 1.66 Lin. Ft.
Sta. 84+63.67 = Sta. 84+65.38 1.71 Lin. Ft.
Deduct for R.R. Crossing 18.70 Lin. Ft.

Total Deductions 22.07 Lin. Ft.
Net length of Project 15024.93 Lin. Ft.
or 2.845 miles

CONVENTIONAL SIGNS

Township Line
Section Line
City or Village Line
Railroads
Center Line
County Line

STANDARD CONSTRUCTION DRAWINGS

Drawing No.	Date Revised
G-7.07	10-1933
I-8 C.B. 1-2 & 2-2	11-24-39

INDEX OF SHEETS

Title Sheet	Sheet No. 1
Typical Sections & General Notes	" " 2
Plan & Profile	" " 3
Alignment	" " 4
Profile	" " 5
Superelevation Tables, Steps & Culvert Details	" " 6
Cross Sections	" " 7 to 10
Summaries	" " 11

SUPPLEMENTAL SPECIFICATIONS

B-136 August 11, 1938
T-136 August 11, 1938

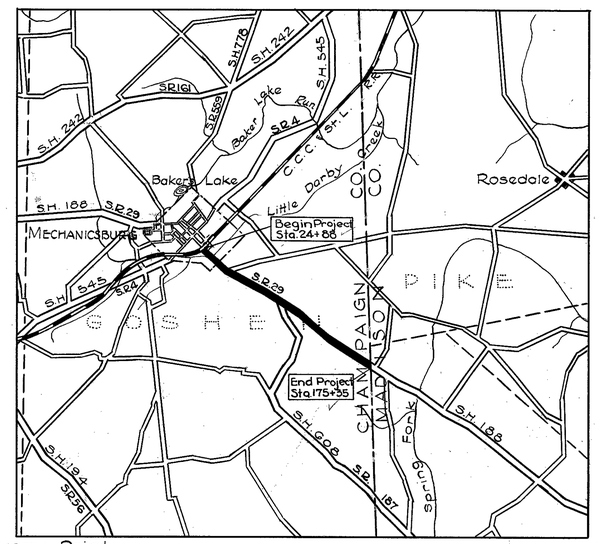

Delivery Point
Mechanicsburg
C.C.C. & St. L. R.R.

Average Haul
2 miles

LOCATION PLAN

Portion To Be Improved
State Highways
Other Roads

SCALES

Plan 1" = 300 & 1" = 100'
Profile 1" = 30' & 1" = 10'

The Standard Specifications of the State of Ohio, Department of Highways, including changes and supplemental Specifications listed in this proposal shall govern this improvement.

I hereby approve these plans and declare that the making of this improvement will not require the closing of the Highway to traffic.

The Right-of-Way necessary for this improvement will be provided by the State of Ohio.

Approved: [signature]
Date: 5-7-40 Resident Division Deputy Director

Approved: _____
Date: _____ Chief Engineer, Bureau of Maintenance

Approved: [signature] P.E. 25
Date: 5-31-40 Chief Engineer, Bureau of Location & Right-of-Way

Approved: [signature]
Date: 6-1-40 First Asst. Director & Chief Engineer.

Approved: [signature]
Date: 6-1-40 Director of Highways

Approved for the Village of Mechanicsburg
Howard Moore Mayor Date June 17, 1940

CONSTRUCTION BUREAU
MAY 28 1956
GROUND PHOTOLAB

File No.	CHAMPAIGN CO. S.H. 188 Secs H & O.
289	Date of Letting _____
	Contract No. _____

FED. RD. DIST. NO.	STATE	PROJECT	FISCAL YEAR
10	OH10		1940

2
11

CHAMPAIGN COUNTY
S.H.188 SEC'S. MECH.(PT.) H&O

TYPICAL SECTIONS

TYPE T-136

FORM AND COURSE DETAIL

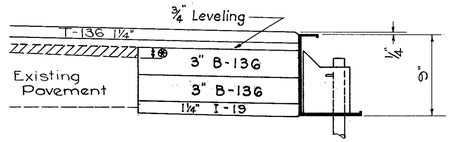

⊛ *Variable depth to be not less than ¼". Where this dimension exceeds 1", the shaded portion of the leveling course shall be spread and compacted in a separate operation.*

The forms shall be braced so as to prevent lateral movement.

DETAIL OF STONE UNDERDRAIN

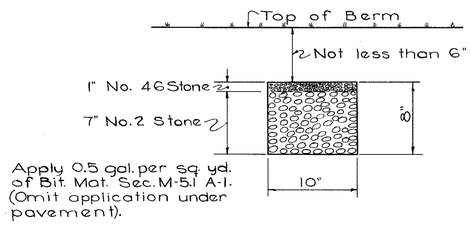

a. Hand tamp lightly the No. 2 stone to a finished depth of 7" before placing the No. 46 stone.
b. Hand tamp lightly the No. 46 stone to a finished depth of 1" before applying the bituminous material.
c. In the application of bit. mat. see that trench is covered full width forming an impervious mat.

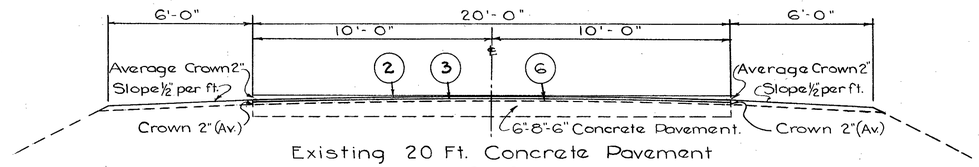

LIMITING STATIONS
From Sta 24+88 To Sta 40+00

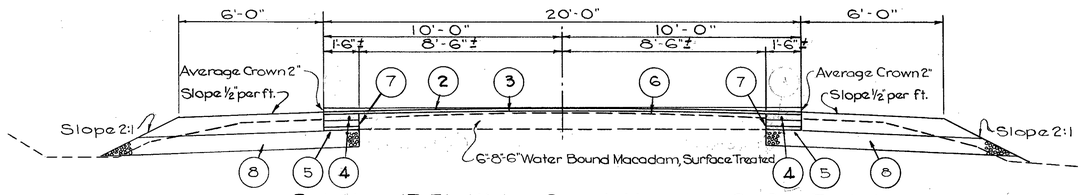

LIMITING STATIONS
From Sta. 50+00 To Sta. 77+00
From Sta. 87+00 To Sta. 175+35

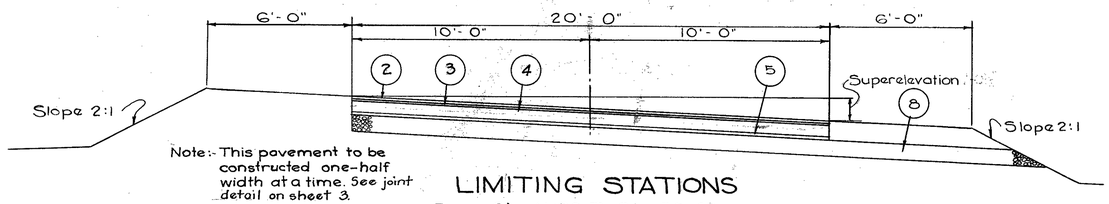

LIMITING STATIONS
From Sta. 41+30 To Sta. 50+00
From Sta. 78+50 To Sta. 85+50

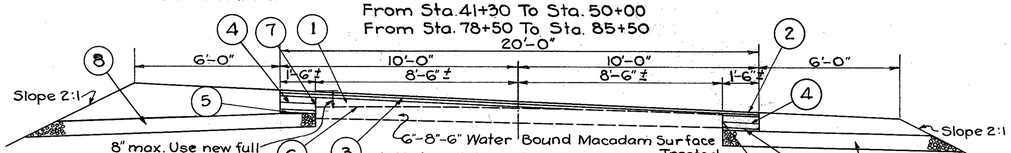

LIMITING STATIONS
From Sta. 40+00 To Sta. 41+30
From Sta. 77+00 To Sta. 78+50
From Sta 85+50 To Sta 87+00

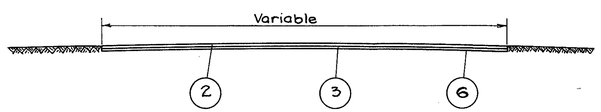

DETAIL OF SIDE ROAD APPROACHES

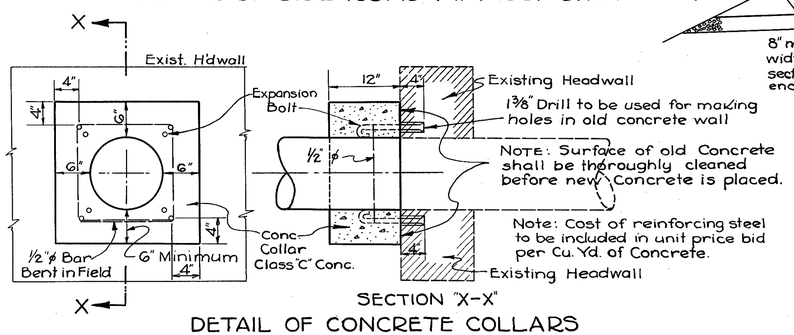

DETAIL OF CONCRETE COLLARS FOR PIPE EXTENSIONS

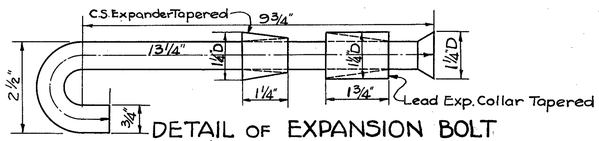

DETAIL OF EXPANSION BOLT

1. Item B-136 Variable Thickness Tar Concrete Wedge Course laid in courses not to exceed 3" in thickness.
2. Item T-136 1¼" Tar Concrete Surface Course Type "A".
3. Item B-136 ¾" Minimum thickness Tar Concrete Leveling Course.
4. Item B-136 6" tar concrete base course laid in two 3" courses.
5. Item I-19 1¼" Insulation Course.
6. Item T-30 Bituminous Prime Coat using Bituminous Material Sec. M-5.12 AE.3 applied at the rate of 0.15 gal. per sq. yd. and sand cover 4 to 7 lbs. per sq. yd. of grading & quality suitable to the Engr.
7. Item E-10 Sealing (only) edge of existing pavement using Bituminous Material Sec. M-5.12 AE.3. applied at the rate of 0.15 gal. per sq. yd.
8. Item I-9 8" × 10" Stone Underdrains (French Drain) No. 2 as per plan.

COMPACTION SUBGRADE:- Loosening and watering of subgrade in cuts, according to Sec. E-1.11 will not be required if density requirements can be met by additional rolling

PRIME COAT :- The necessity for using prime coat, item T-30 will be determined by the engineer before the contractor orders the material for this item.

TRAFFIC:- Traffic shall be maintained at all times to the satisfaction of the Division Engineer. The Item of maintaining traffic shall include furnishing lights, signs, barricades and watchmen necessary to secure the unimpeded flow of traffic twenty-four hours daily.

SANDING:- Bituminous Prime Coat Item T-30 of Bituminous Material Sec. M-5.12 AE.3 shall not be ordered by the Contractor until rate of application has been determined by the Engineer. The prime coat shall be applied by distributor or by brooms at the rate determined by the Engineer, and sand cover, 4 to 7 lb. per sq. yd of grading & quality suitable to the Engineer. After the Bituminous Material is applied all material not required to give a uniform coating to the surface shall be swept into all cracks and open joints before the sand cover is placed. Payment for sand cover is included in the price bid per gallon for Bituminous Material.

SHOULDERS AND SLOPES:- Item E-1, roadway excavation (unclassified), and Item E-4 Borrow, shall include the thorough compaction of Earthwork and the final operation of grading necessary to finish the Shoulders and Slopes to approximately the lines indicated on the Typical Sections. The use of a template and fine hand grading will not be required.

EMBANKMENT:- Watering embankment, benching, and density requirements as referred to in paragraph E-1.05 of the General Specifications, will not be required on this project except between sta. 41+30 and 50+00 & between sta. 78+50 and 85+50.

EARTHWORK:- All suitable material resulting from Roadway Excavation (Unclassified) together with the necessary Borrow, shall be used to construct the roadway shoulders as indicated on the typical sections or as directed by the Engineer.

FORMS:- Side forms set to line and grade established by the Engineer will be required for widened & new sections.

PROFILE:- The profile of the Tar Concrete Surface Course shall be approximately 2" above that of the existing pavement.

PAVEMENT:- The designed depths of the Bituminous Concrete Courses shown on the plans are subject to adjustment according to the ratio of volume to weight as indicated in the specification for the item.

PAVEMENT REMOVAL:- Pavement Removal Item shall include only removal of bituminous patches and excessive crack filler from existing concrete pavement.

ROAD APPROACHES:- County and Township road approaches not to be surfaced beyond R/W Line.

DITCH CONSTRUCTION:- The Engineer may require the Contractor to construct ditches at the toe of slopes, & grade same to drain. This excavation will be used to reduce borrow & will be paid for as part of the Borrow Quantities.

APPROVAL OF EQUIPMENT:- Equipment for placing and finishing base course, leveling course & surface course shall not be used unless approved by the Chief Engineer of Construction or his duly appointed representative.

SUPERELEVATION
Curves shall be superelevated with tar concrete leveling course laid in courses not more than 3" in depth.

FED RD DIST NO.	STATE	PROJECT	FISCAL YEAR
10	OHIO		1940

3
11

CHAMPAIGN COUNTY
SH 188 SEC MECH(PT) H&O

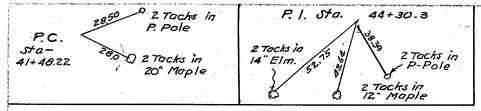

SURVEY No. 5054

GOSHEN TOWNSHIP

SURVEY No. 6809

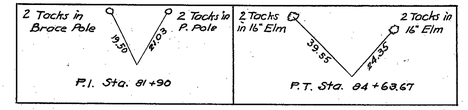

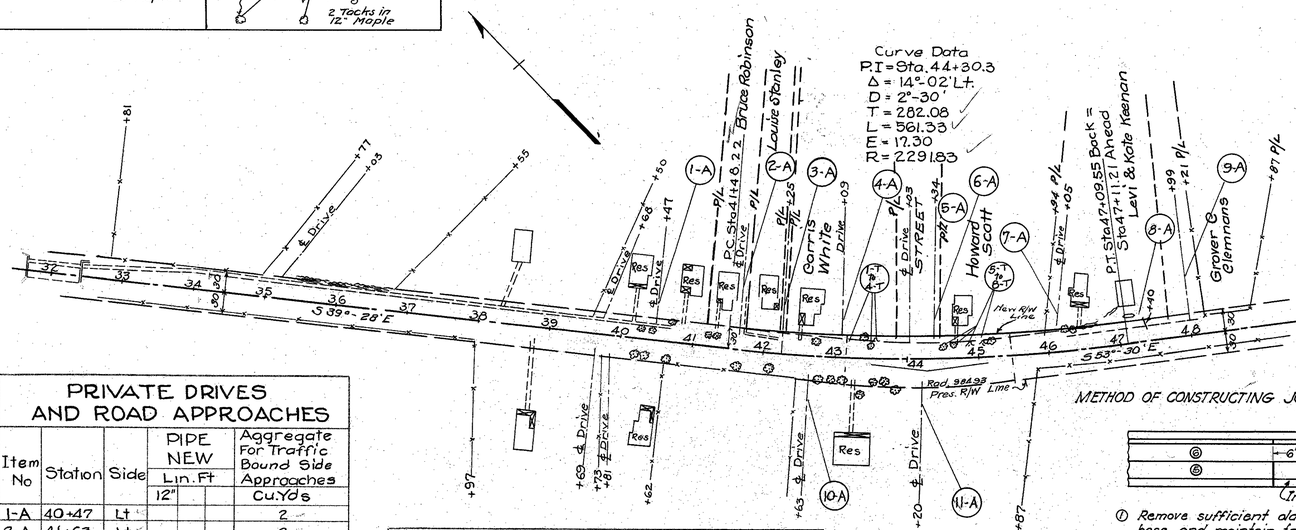

CHAS. B. WING

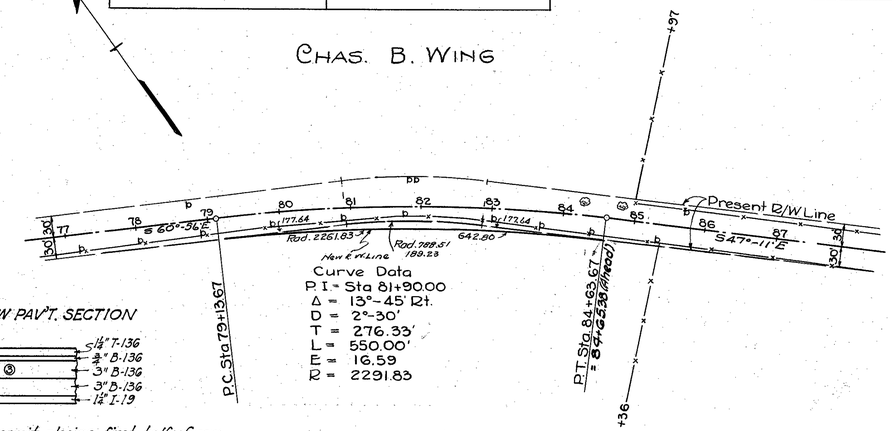

FRED OWEN

PRIVATE DRIVES AND ROAD APPROACHES

Item No	Station	Side	PIPE NEW Lin. Ft 12"			Aggregate For Traffic Bound Side Approaches Cu.Yds
1-A	40+47	Lt				2
2-A	41+63	Lt				2
3-A	42+25	Lt				3
4-A	43+09	Lt				4
5-A	44+03	Lt				2
6-A	44+34	Lt	56			4
7-A	46+05	Lt				1
8-A	47+40	Lt				4
9-A	47+99	Lt				1
10-A	42+63	Rt				3
11-A	44+20	Rt				1
Totals			56			27

TREE AND STUMP REMOVALS

Item No.	Station From	Station To	Side	Trees Units 8"-15"	Trees Units 15"-24"	Stumps Units 8"-15"
1-T to 4-T	42+73	43+23	Lt	2	1	1
5-T to 8-T	44+51	45+05	Lt	1	1	2
Totals				5		3

B.M. Elev. 1058.00
Top of Monument Left of Sta. 40+00

METHOD OF CONSTRUCTING JOINT IN ALL NEW PAV'T. SECTION

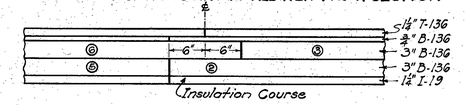

1. Remove sufficient old pavement to permit placing first half of new base and maintain traffic on remaining portion plus aggregate widening.
2. Spread and compact first half of first 3" base course to a point 6" beyond the center line.
3. Spread and compact first half of second 3" base course to a point 6" short of the ℄.
4. Maintain traffic on new half of base and remove remaining old pavement.
5. Spread and compact second half of first 3" base course.
6. Spread and compact second half of second 3" base course.
7. Spread and compact leveling and surface courses, lapping as shown AFTER both sides of both base courses are compacted.

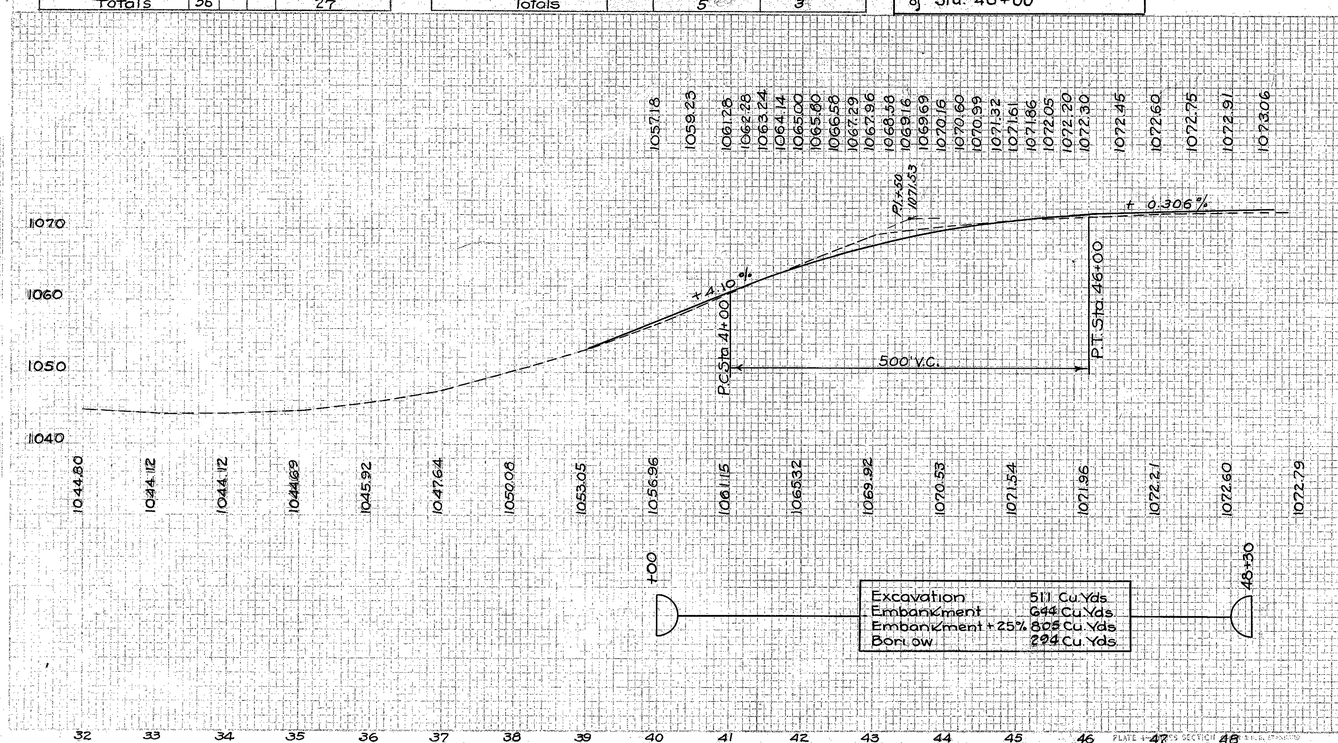

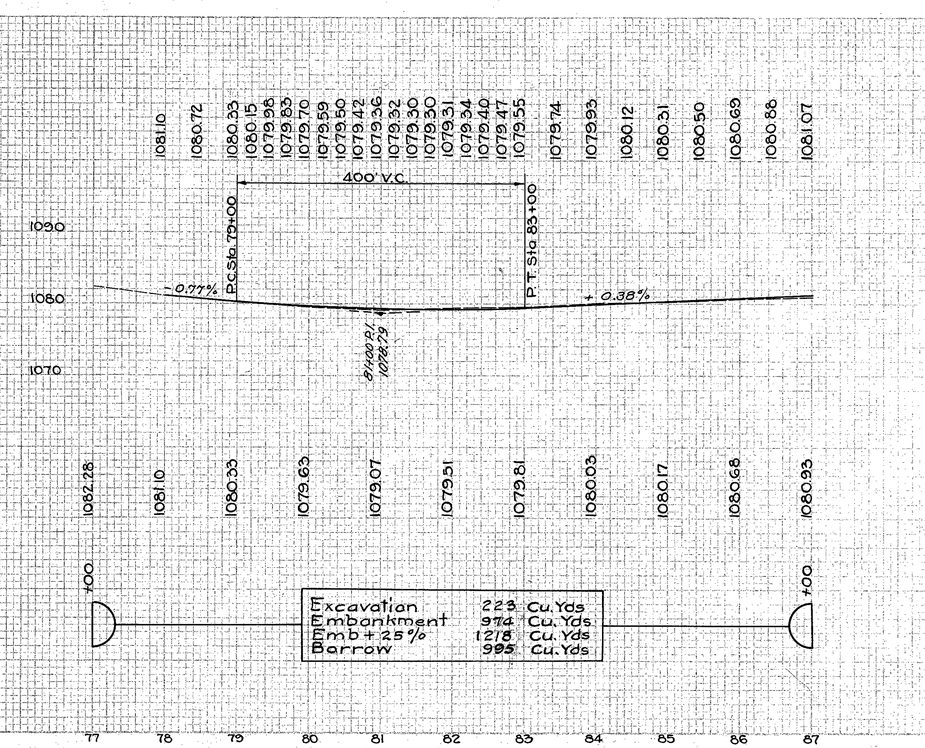

FED. RD. DIST. NO.	STATE	PROJECT	FISCAL YEAR
10	OHIO		1940

4
11

CHAMPAIGN COUNTY
SH 188 SEC'S MECH. (PT) H&O

ALIGNMENT

Scale 1" = 300'

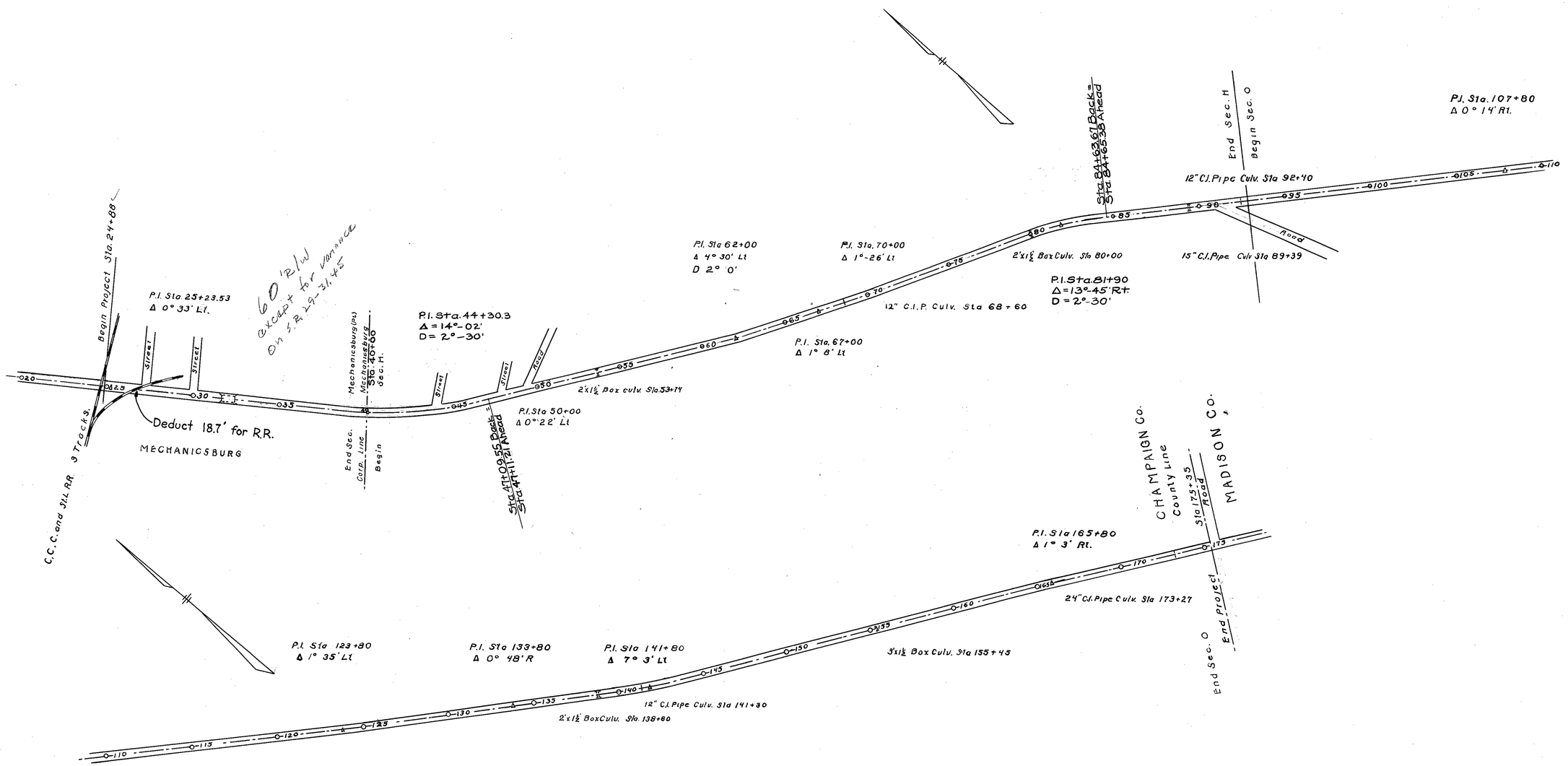

PROFILE

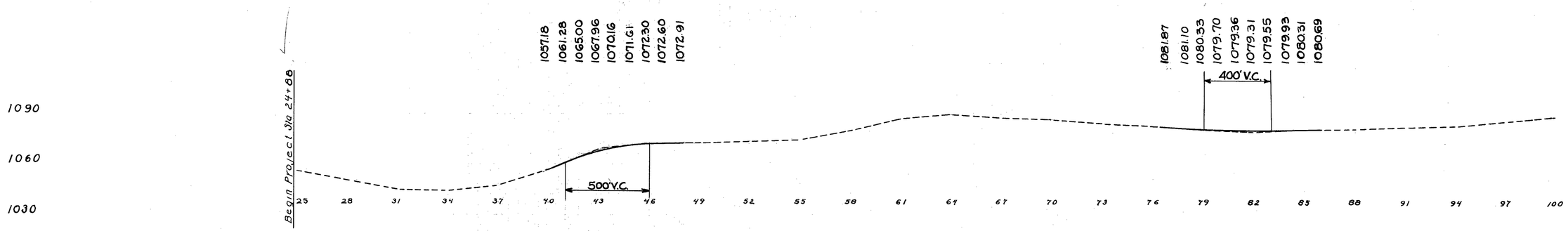

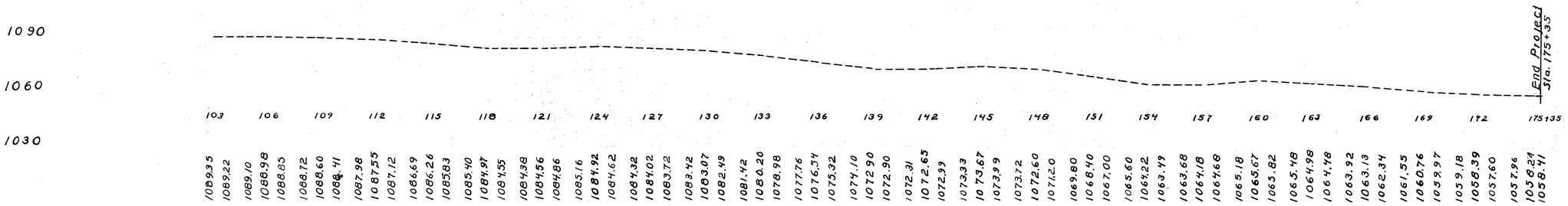

NOTE – Proposed profile grade to be approximately 2" above existing profile grade

FED. RD. DIST. NO.	STATE	PROJECT	FISCAL YEAR
10	OHIO		1940

6
11

CHAMPAIGN COUNTY
S.H. 188 SEC MECH (PT.) H & O.

SUPERELEVATION TABLE

P.C. Sta. 41+48.22 — P.T. Sta. 47+09.55 Back = 47+11.21 Ahead
D= 2°-30' Lt.

LEFT		CENTER		RIGHT	
Elev. Of Edge	Width	Station	Grade Elev.	Width	Elev. Of Edge
1056.94	10'	39+98.22	1057.11	10'	1056.94
1057.01		40+00	1057.18		1057.01
1058.04		40+25	1058.21		1058.11
1058.24		40+30	1058.41		1058.33
1058.94		40+47	1059.11		1059.16
1059.06		40+50	1059.23		1059.31
1060.09		+75	1060.26		1060.64
1061.11		41+00	1061.28		1061.94
1062.11		+25	1062.28		1063.10
1062.31		+30	1062.48		1063.32
1063.00		+48.22	1063.17		1064.04
1063.07		+50	1063.24		1064.11
1063.57		+64	1063.74		1064.61
1063.97		+75	1064.14		1065.01
1064.15		+80	1064.32		1065.19
1064.83		42+00	1065.00		1065.87
1065.63		+25	1065.80		1066.67
1065.80		+30	1065.97		1066.84
1066.41		+50	1066.58		1067.45
1066.78		+68	1066.95		1067.82
1067.12		+75	1067.29		1068.16
1067.26		+80	1067.43		1068.30
1067.79		43+00	1067.96		1068.83
1068.02		+09	1068.19		1069.06
1068.41		+25	1068.58		1069.45
1068.53		+30	1068.70		1069.57
1068.99		+50	1069.16		1070.03
1069.52		+75	1069.69		1070.56
1069.61		+80	1069.78		1070.65
1069.99		44+00	1070.16		1071.03
1070.04		+03	1070.21		1071.08
1070.35		+20	1070.52		1071.39
1070.43		+25	1070.60		1071.47
1070.50		+30	1070.67		1071.54
1070.56		+34	1070.73		1071.60
1070.82		+50	1070.99		1071.86
1071.15		+75	1071.32		1072.19
1071.21		+80	1071.38		1072.25
1071.44		45+00	1071.61		1072.48
1071.69		+25	1071.86		1072.73
1071.72		+30	1071.89		1072.76
1071.88		+50	1072.05		1072.92
1072.03		+75	1072.20		1073.07
1072.04		+80	1072.21		1073.08
1072.13		46+00	1072.30		1073.17
1072.14		+05	1072.31		1073.18
1072.20		+25	1072.37		1073.24
1072.22		+30	1072.39		1073.26
1072.28		+50	1072.45		1073.32
1072.35		+75	1072.52		1073.39
1072.37		+80	1072.54		1073.41
1072.43		47+00	1072.60		1073.47
1072.46		+09.55	1072.63		1073.50
1072.51		+25	1072.68		1073.53
1072.52		+30	1072.69		1073.52
1072.58		+50	1072.75		1073.51
1072.66		+75	1072.83		1073.32
1072.72		+95	1072.89		1073.11
1072.74		48+00	1072.91		1073.07
1072.81		+25	1072.98		1072.92
1072.83		+30	1073.00		1072.91
1072.89		+50	1073.06		1072.91
1072.92		+58.55	1073.09		1072.92

Back

SUPERELEVATION TABLE

P.C. Sta. 79+13.67 — P.T. Sta. 84+63.67 Back = 84+65.38 Ahead
D= 2°-30' Rt.

LEFT		CENTER		RIGHT	
Elev. Of Edge	Width	Station	Grade Elev.	Width	Elev. Of Edge
1081.21	10'	77+63.67	1081.38	10'	1081.21
1081.13		+75	1081.29		1081.12
1081.05		78+00	1081.10		1080.93
1081.09		+25	1080.91		1080.74
1081.22		+50	1080.72		1080.55
1081.25		+75	1080.52		1080.35
1081.18		79+00	1080.33		1080.16
1081.09		+13.67	1080.22		1080.05
1081.02		+25	1080.15		1079.98
1080.85		+50	1079.98		1079.81
1080.70		+75	1079.83		1079.66
1080.57		80+00	1079.70		1079.53
1080.46		+25	1079.59		1079.42
1080.37		+50	1079.50		1079.33
1080.29		+75	1079.42		1079.25
1080.23		81+00	1079.36		1079.19
1080.19		+25	1079.32		1079.15
1080.17		+50	1079.30		1079.13
1080.17		+75	1079.30		1079.13
1080.18		82+00	1079.31		1079.14
1080.21		+25	1079.34		1079.17
1080.27		+50	1079.40		1079.23
1080.34		+75	1079.47		1079.30
1080.42		83+00	1079.55		1079.38
1080.51		+25	1079.64		1079.47
1080.61		+50	1079.74		1079.57
1080.71		+75	1079.84		1079.67
1080.80		84+00	1079.93		1079.76
1080.89		+25	1080.02		1079.85
1080.99		+50	1080.12		1079.95
1081.04		+63.67	1080.17		1080.00
1081.08		+75	1080.22		1080.05
1081.06		85+00	1080.31		1080.14
1080.92		+25	1080.40		1080.23
1080.70		+50	1080.50		1080.33
1080.57		+75	1080.60		1080.43
1080.54		86+00	1080.69		1080.52
1080.57		+13.67	1080.74		1080.57

Back

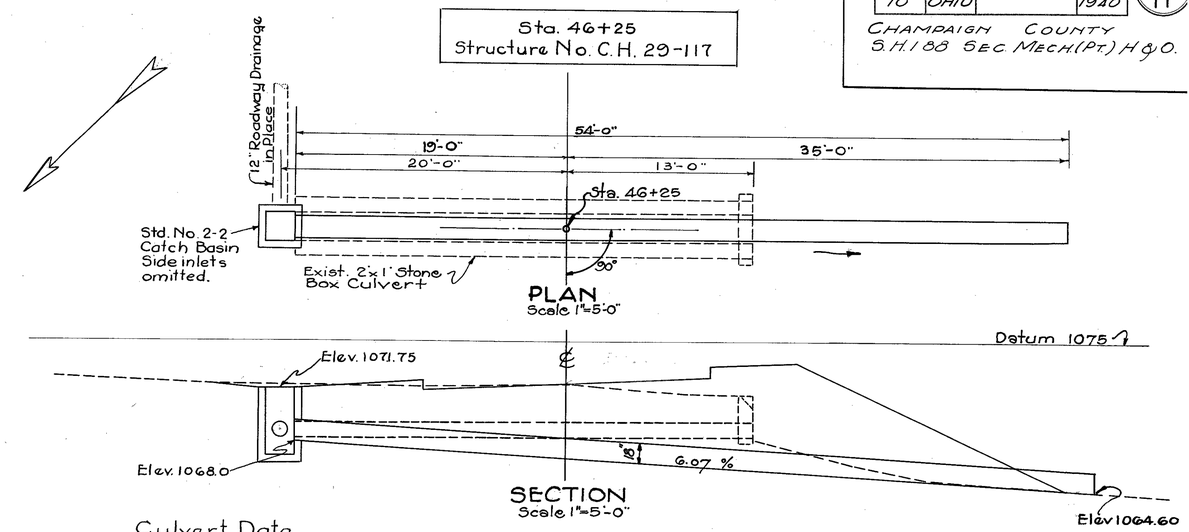

Culvert Data

Type:- Corr. Metal Pipe Culvert. (Paved Invert Fully Coated)

Size:- 18" x 54'-0"

Work Required:- Remove old 2'x1' stone Box Culvert. Replace with 54'-0" of 18" Corr. Metal Pipe with Std. #2-2 Catch Basin on left side (Side Inlets to be omitted.)

Estimated Quantities

Excavation _____ 21 Cu. Yds.
(18" Corr. M.P. Paved Invert Fully Coated) _____ 54. Lin. Ft.
Removal Of Portions of Existing Structures _____ 11 Cu. Yds.
Std. No. 2-2 Catch Basin _____ 1 Each

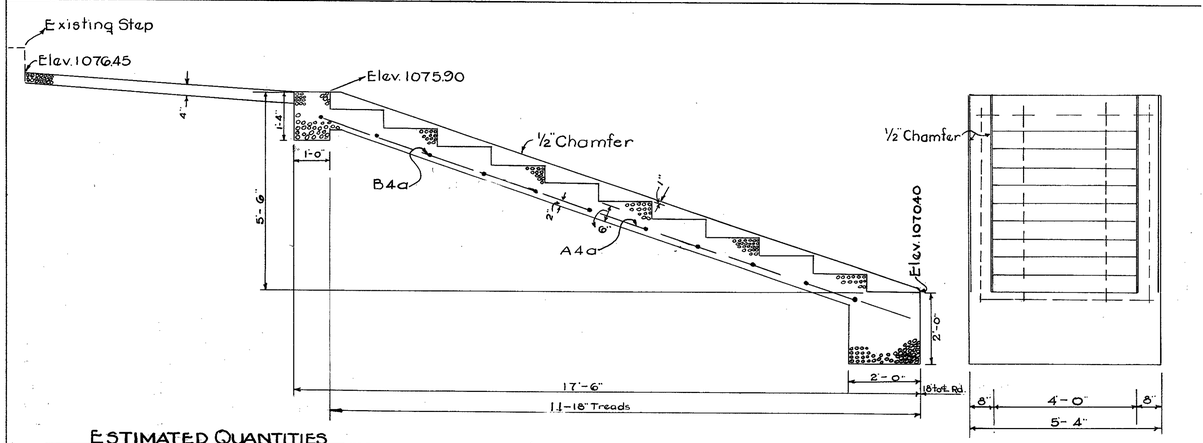

ESTIMATED QUANTITIES

Reinf. Conc. Steps (Class "C") (6" Riser / 18" Tread) _____ 64. Lin Ft.
4" Concrete Sidewalk Class "C" _____ 30. Sq. Ft.

STEEL LIST					
Mark	Size	No	Length	Spacing	Weight
A4a	5/8 φ	5	17'-6"	1'-2"	91 Lbs.
B4a	5/8 φ	11	4'-10"	As Shown	55 Lbs
				Total	146 Lbs.

* Reinforcing Steel	146. Lbs.
* Excavation	7.2 Cu. Yds.
* Concrete Class "C"	3.2 Cu. Yds.
** Removal Of Existing Steps & Sidewalk	1.6 Cu. Yds.

*Included in Concrete Steps Item for payment
**To be included for payment in Unit Price bid for Item E 1 Roadway Excavation

Note:- These quantities given for estimating purposes only.

10	OHIO		1940	7 / 11

CHAMPAIGN COUNTY
S.H. 188 SEC. MECH. (PT.) H & O.

Excavation	511 Cu.Yds.
Embankment	644 Cu.Yds.
Emb. + 25%	805 Cu.Yds.
Borrow	294 Cu.Yds.

Endfrea	Cu.Yds.																							
Cut	Fill	Cut	Fill	Cut	Fill	Cut	Fill	Cut	Fill	Cut	Fill	Cut	Fill	Cut	Fill	Cut	Fill	Cut	Fill	Cut	Fill	Cut	Fill	Cut	Fill
26	0	72	1	52	1	87	3	42	21	62	10	25	8	35	19	13	12	17	34	5	24	9	63	0	10	0	6	0	0

End Area Cut	End Area Fill	Cu. Yds Cut	Cu. Yds Fill	
				49+30 1072.90
				48+30
7	16			49+14 Side Road 1072.90
				1073.00 48+30 1072.50
		35	06	
				1072.91 47+99 1072.69 Drive Left
12	36			
		24	83	Station Equation. 47+09.55 Back = 47+11.21 Ahead = 1.66 Lin Ft. Deduction
				1072.60 47+30 1072.41
15	57			
		16	106	1072.54 46+80 1072.20
2	57			
				1072.39 46+30 1071.99
		5	90	
				1072.31 46+05 1071.95 Drive Left
3	50			
		6	72	1072.21 45+80 1072.00
4	28			
		33	36	1071.89 45+30 1071.66
31	11			
				1071.38 44+80 1071.53
		57	13	
				1070.73 44+34 1071.10 Drive Left
31	3			
				1070.67 44+30 1070.93
		53	3	Drive Right 44+20 1070.93
				1070.21 44+03 1070.60 Drive Left
26	0			Sta 43+80

10	OHIO		
			1960

CHAMPAIGN COUNTY
SH 188 SEC. MECHANICS HILL

8
11

End Area Cut	End Area Fill	Cu. Yds. Cut	Cu. Yds. Fill
9	31		
		18	48
10	21		
		27	31
19	12		
		30	20
13	10		
		16	32
4	24		
		5	56
1	36		
		7	64
6	33		
		13	107
8	82		
		14	108
7	34		
		15	55
9	25		
		26	80
5	18		
		9	33
0	0		

Excavation 223 Cu. Yds.
Embankment 674 Cu. Yds.
Emb. + 2.5% 1289 Cu. Yds.
Borrow 966 Cu. Yds.

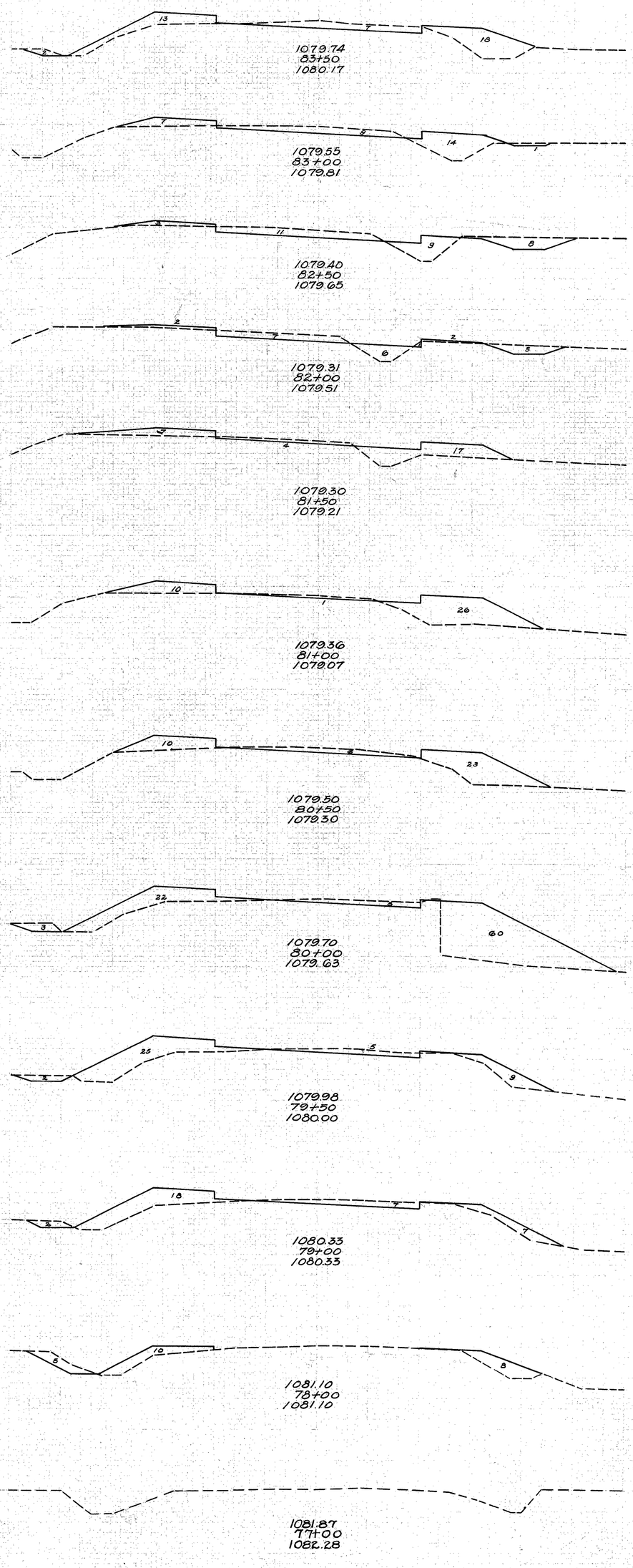

10	OHIO		1980

CHAMPAIGN COUNTY
S.H. 188 SEC. MECH(PA) 7.19.0

9
11

End Area		Cu. Yds.	
Cut	Fill	Cut	Fill
0	0		
		0	43
0	23		
		7	100
4	31		
		9	66
6	43		
		12	71
7	34		
		15	60
9	31		

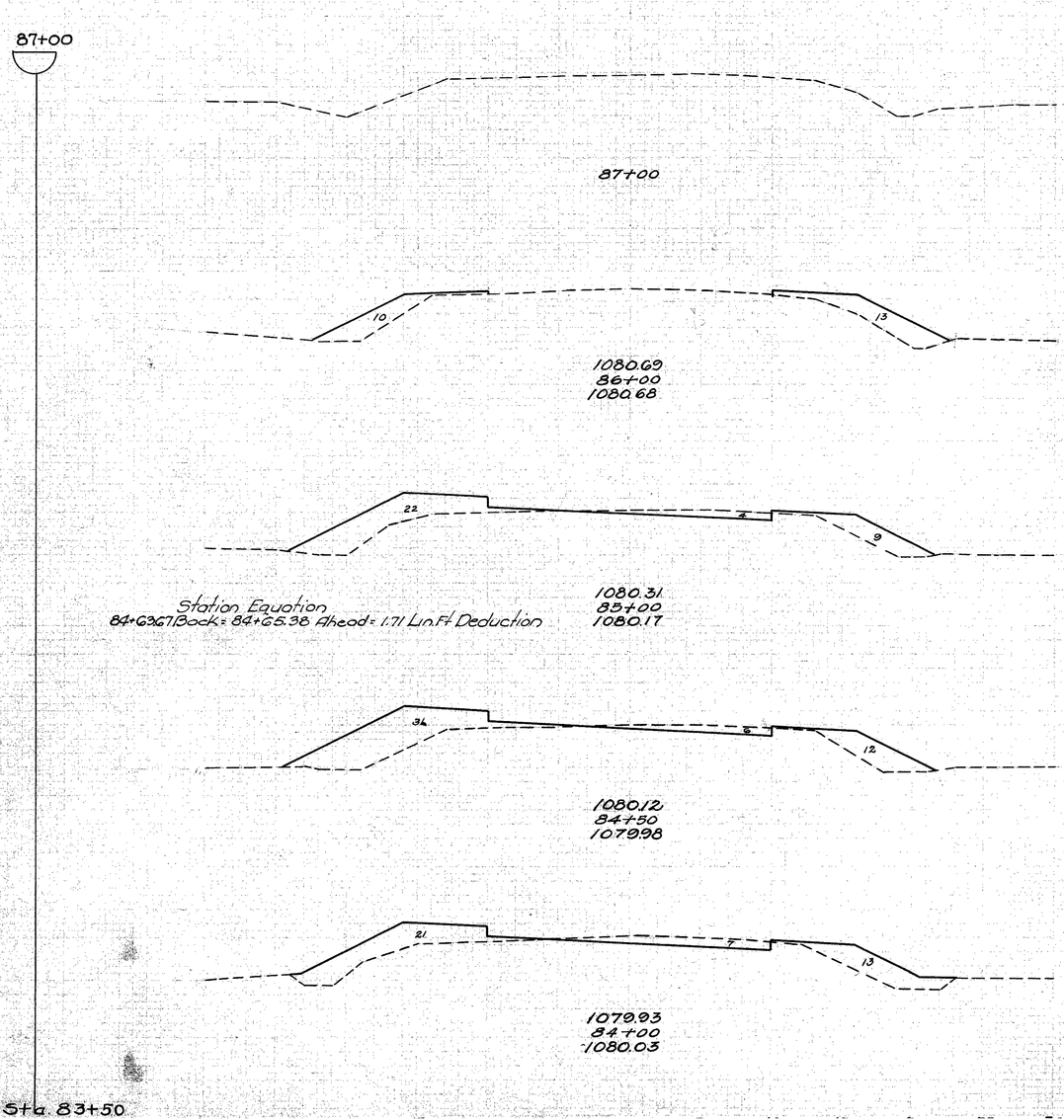

CHAMPAIGN COUNTY
S.H. 188 SEC. NEC.(FA) H.B.O.

10	
OHIO	
1940	

10
11

FED. RD. DIST. NO.	STATE	PROJECT	FISCAL YEAR
10	OHIO		1940

11
11

CHAMPAIGN COUNTY
S.H 188 SEC. MECH.(PT.) H&O.

SUMMARY OF QUANTITIES

PAVEMENT QUANTITIES

STATION FROM	STATION TO	NET LENGTH LIN. FT.	1¼" INSULA. COURSE SQ. YDS.	WEDGE COUR. 6" MAX. DEPTH CU. YDS.	BASE COURSE WIDTH 6" DEPTH	BASE COURSE CU. YDS.	PRIME COAT-.15 GAL PER SQ. YD. (ESTIMATED WIDTH	PRIME COAT GALLONS	LEVELING COURSE ¾" MIN. DEPTH WIDTH	LEVELING COURSE AV. DEPTH	LEVELING COURSE CU. YDS.	SURFACE COURSE 1¼" DEPTH WIDTH	SURFACE COURSE CU. YDS.	REMARKS
24+88	26+47.9	159.9					20	53.3	20	¾"	7.4	20	12.3	See below for widening
26+47.9	26+66.6	18.7												R.R. Crossing
26+66.6	31+67.5	500.9					20	167.0	20	¾"	23.2	20	38.6	
31+67.5	32+39	71.5					20.08	23.9				20.08	5.5	Bridge Surface Course only
32+39	40+00	761.0					20	253.7	20	¾"	35.2	20	58.7	
40+00	41+30	130.0	43.3	7.2	3	7.2	17	36.8	20	¾"	6.0	20	10.0	
41+30	50+00	868.34	1929.6		20	321.6			20	¾"	40.2	20	67.0	Short Sta. 98.34'
50+00	77+00	2700.0	900.0		3	150.0	17	765.0	20	¾"	125.0	20	208.3	
77+00	78+50	150.0	50.0	8.4	3	8.3	17	42.5	20	¾"	6.9	20	11.6	
78+50	85+50	700.0	1555.5		20	259.3			20	¾"	32.4	20	54.0	
85+50	87+00	148.29	49.4	8.3	3	8.2	17	42.0	20	¾"	6.9	20	11.4	Short Sta. 98.29'
87+00	175+35	8835.0	2945.0		3	490.8	17	2503.2	20	¾"	409.0	20	681.3	
24+89.5	26+25.5	136.0					8.5	19.3	8.5	¾"	2.7	8.5	4.5	Widening on left
24+83.6	25+81.8	98.2					19	31.1	19	¾"	4.3	19	7.2	Widening on right
49+11	To R/W Line						Varies	34.8	Varies	¾"	4.8	Varies	8.1	S. Road Appro. Lt.
91+24	108 on & of Side Rd.						Varies	44.1	Varies	¾"	6.1	Varies	10.2	S. Road Appro. Rt.
24+88	175+35								2.55 ×	200 =	510.0			Extra Leveling Course to be used as directed by Eng.
TOTALS			7472.8	* 23.9		1245.4		4016.7			1220.1		1188.7	

* To be paid for as Leveling Course

ROADWAY QUANTITIES

STATION FROM	STATION TO	NET LENGTH LIN. FT.	EXCAVATION (UNCLASSIFIED) CU. YDS	BORROW (ESTIMATED) CU. YDS.	CUT AND SEAL EDGE OF EXIST. PAVEMENT LIN. FT.	REMOVAL OF BIT. PATCHES & EXCESSIVE CRACK FILLER SQ. YDS.	8"x10" STONE UNDERDRAINS (FRENCH DRAINS) #2 LIN. FT.	REMARKS
24+88	40+00	1512		400		160		
40+00	48+30	828.34	511	294	260			Short Sta. 98.34
48+30	77+00	2870	150	1050	5400			
77+00	87+00	998.29	223	995	600			Short Sta. 98.29
87+00	175+35	8835.0	516	7561	17670			
							700	
Totals			1400	10300	23930	160	700	

STRUCTURES 20 FT SPAN & UNDER

STATION	STRUCTURE NO.	PRESENT STRUCTURE TYPE	PRESENT SIZE	PRESENT LENGTH	PROPOSED STRUCTURE TYPE	PROPOSED SIZE	PROPOSED LENGTH	EXCAVATION STRUCTURAL CU. YDS.	CONCRETE CLASS "C" CU. YDS.	CORR. M PIPE FOR RDWY CULVERTS 12"	15"	18"	24"	REMOVAL OF EXISTING MASONRY CU. YDS.		STD. NO 2-2 CATCH BASINS EACH	EXP. BOLTS EA.	1¾"x4" Dowel Holes EA.	REMARKS
46+25	CH. 29-117	Stone Box	2'x1'	33'	C.M.P.	18"	54'-0"	21				54		11		1			
53+74	CH. 29-118	Box	2'x1.5'	31'	No Work														
68+60	CH. 29-121	C.I.P.	12"	31'	C.M.P.	12"	8' on Rt. 8' on Lt.	3	.3	16							8	8	Ext.
80+00	CH. 29-122	Conc. Box	2'x1.5'	28'	No Work														
89+39	CH. 29-125	C.I.P.	15"	28'	C.M.P.	15"	10' on Rt. 10' on Lt.	3	.3		20						8	8	Ext.
92+40	CH. 29-125A	C.I.P.	12"	28.5'	C.M.P.	12"	8' on Rt. 8' on Lt.	3	.3	16							8	8	Ext.
138+60	CH. 29-134	Conc. Box	2'x1.5'	30'	No Work														
141+30	CH. 29-135	C.I.P.	12"	36.7'	C.M.P.	12"	4' on Rt. 8' on Lt.	3	.3	12							8	8	Ext.
155+45	CH. 29-137	Conc. Box	3'x1.5'	34'	No Work														
173+27	CH. 29-141	C.I.P.	24"	30.7'	C.M.P.	24"	8' on Rt. 8' on Lt.	3	.5				16				8	8	Ext.
TOTALS								36	1.7	44	20	54	16	11		1	40	40	

GENERAL SUMMARY

ITEM	QUANTITY	UNIT	DESCRIPTION
			ROADWAY
I-13	30	SQ. FT.	4" CONCRETE SIDEWALK
I-13	64	LIN. FT.	REINFORCED CONCRETE STEPS (6" Riser, 18" Tread)
I-17	27	CU. YDS	AGGREGATE FOR TRAFFIC BOUND SIDE APPROACHES
E-9	8	EACH	REMOVAL OF TREES & STUMPS
E-1	1400	CU. YDS	EXCAVATION (UNCLASSIFIED)
E-4	10300	CU. YDS.	BORROW (CONTRACTOR TO FURNISH) ESTIMATED
E-8	160	SQ. YDS	REMOVAL OF BITUMINOUS PATCHES & EXCESSIVE CRACK FILLER (ONLY) FROM EXISTING CONCRETE PAVEMENT
E-10	23930	LIN. FT.	CUTTING & SEALING EDGE OF EXISTING PAVEMENT
I-9	700	LIN. FT.	8"x10" STONE UNDERDRAINS (FRENCH DRAINS) NO. 2
I-1	56	LIN. FT.	12" PIPE FOR DRIVEWAYS
E-11	8	M GALS	WATER
			PAVEMENT
I-19	7473	SQ. YDS	1¼" INSULATION COURSE
B-136	1246	CU. YDS	TAR CONCRETE BASE COURSE -
B-136	1244	CU. YDS	TAR CONCRETE LEVELING COURSE -
T-30	4017	GALS.	BITUMINOUS PRIME COAT SEC. M-5.12 AE 3 INCLUDING SAND COVER
T-136	1189	CU. YDS	TAR CONCRETE SURFACE COURSE, TYPE A
			STRUCTURES 20' SPAN & UNDER
E-2	36	CU. YDS.	EXCAVATION STRUCTURE, (UNCLASSIFIED)
S-1	1.7	CU. YDS	CONCRETE CLASS "C" FOR PIPE COLLARS
S-22	11	CU. YDS	REMOVAL OF PORTIONS OF EXISTING STRUCTURES
S-27	44	LIN. FT.	12" CORR. METAL PIPE FOR ROADWAY CULVERTS (Paved Invert - Fully Coated)
S-27	20	LIN. FT.	15" CORR. METAL PIPE FOR ROADWAY CULVERTS (" " " ")
S-27	54	LIN. FT.	18" CORR. METAL PIPE FOR ROADWAY CULVERTS (" " " ")
S-27	16	LIN. FT.	24" CORR. METAL PIPE FOR ROADWAY CULVERTS (Paved Invert - Fully Coated)
I-8	1	EACH	STD. NO. 2-2 CATCH BASIN
SPEC.	40	EACH	EXPANSION BOLTS As per plan or equivalent
S-23	40	EACH	1¾"x4" DOWEL HOLES
	LUMP SUM		MAINTAINING TRAFFIC