CHAMPAIGN COUNTY

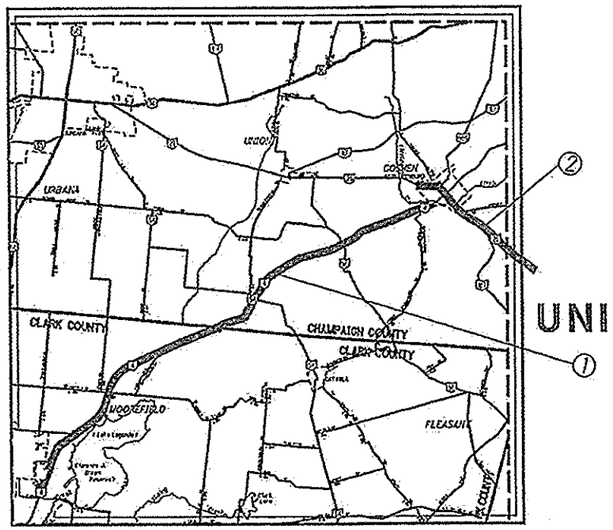

LOCATION MAP

LATITUDE: N 40° 3' 57" LONGITUDE: W 83° 34' 13"

SCALE IN MILES 0 1 2 3 4

N

PORTION TO BE IMPROVED _ _ _ _ _ _ _ _ _ _ _ _

STATE OF OHIO
DEPARTMENT OF TRANSPORTATION

CHP / CLA - 4 / 29 - VAR

UNION, GOSHEN AND MOOREFIELD TOWNSHIPS
CHAMPAIGN AND CLARK COUNTIES
VILLAGE OF MECHANICSBURG

INDEX OF SHEETS:

TITLE SHEET	1
PAVEMENT DATA	2, 3
APPROACH TYPICALS	4, 5
GENERAL NOTES	6, 7, 8, 9
GENERAL SUMMARY	10, 11
BRIDGE DATA	12, 13, 14
GUARDRAIL REPLACEMENT	15
PAVEMENT MARKINGS	16
RAISED PAVEMENT MARKERS	17
CURB RAMPS AND QUANTITIES	18 - 23

PROJECT DESCRIPTION

THE PROPOSED WORK SHALL CONSIST OF RESURFACING OF THE EXISTING ROADWAY WITH ASPHALT CONCRETE, AND OTHER ROADWAY RELATED ITEMS, AS SET FORTH IN THESE PLANS.

1 CHP-4-0.00 FROM CHP/CLA COUNTY LINE (SLM 0.00) TO WEST CORPORATION OF MECHANICSBURG (SLM 6.97), AND CLA-4-17.66 FROM HOME/CROFT RD. (SLM 17.66) TO CLA/CHP COUNTY LINE (SLM 24.85).

2 CHP-29-30.09 FROM WEST CORPORATION LIMIT OF MECHANICSBURG (SLM 30.09) TO THE CHP/MAD COUNTY LINE (SLM 33.96).

PROJECT EARTH DISTURBED AREA:	N/A*
ESTIMATED CONTRACTOR EARTH DISTURBED AREA:	N/A*
NOTICE OF INTENT EARTH DISTURBED AREA:	N/A*

*MAINTENANCE PROJECT

2013 SPECIFICATIONS

THE STANDARD SPECIFICATIONS OF THE STATE OF OHIO, DEPARTMENT OF TRANSPORTATION, INCLUDING CHANGES AND SUPPLEMENTAL SPECIFICATIONS LISTED IN THE PROPOSAL SHALL GOVERN THIS IMPROVEMENT.

I HEREBY APPROVE THESE PLANS AND DECLARE THAT THE MAKING OF THIS IMPROVEMENT WILL NOT REQUIRE THE CLOSING TO TRAFFIC OF THE HIGHWAY AND THAT PROVISIONS FOR THE MAINTENANCE AND SAFETY OF TRAFFIC WILL BE AS SET FORTH ON THE PLANS AND ESTIMATES.

APPROVED Randy Chevalley P.E. P.S. /SBCW
DATE 11/5/15 DISTRICT DEPUTY DIRECTOR

APPROVED Jerry Wray Jr.
DATE 11-25-15 DIRECTOR, DEPARTMENT OF TRANSPORTATION

UNDERGROUND UTILITIES

CONTACT BOTH SERVICES
CALL TWO WORKING DAYS
BEFORE YOU DIG

CALL
1-800-362-2764
(TOLL FREE)
OHIO UTILITIES PROTECTION SERVICE
NON-MEMBERS
MUST BE CALLED DIRECTLY

OIL & GAS PRODUCERS UNDERGROUND
PROTECTION SERVICE CALL: 1-800-925-0988

PLAN PREPARED BY:
OHIO DEPT. OF TRANSPORTATION, DISTRICT 7
1001 ST. MARYS AVE
SIDNEY, OH 45365

ENGINEERS SEAL:

STATE OF OHIO
THOMAS M. ROSSMAN
No. 54477
REGISTERED
PROFESSIONAL ENGINEER

SIGNED Thomas M. Rossman P.E.
DATE: 11-4-15

STANDARD CONSTRUCTION DRAWINGS				SUPPLEMENTAL SPECIFICATIONS		SPECIAL PROVISIONS
BP-3.1	7/18/14	TC-41.20	10/18/13	800	10/16/15	
BP-5.1	7/19/13	TC-42.20	10/18/13	832	1/17/14	
BP-7.1	7/18/14	TC-52.10	10/18/13	846	4/18/14	
DM-4.3	7/19/13	TC-52.20	7/18/14			
DM-4.4	7/20/12	TC-65.10	1/17/14			
MGS-1.1	7/19/13					
MGS-2.1	7/19/13	TC-65.11	7/18/14			
MGS-4.2	7/19/13	TC-71.10	1/17/14			
MGS-5.3	7/19/13	TC-64.10	1/16/15			
		TC-82.10	10/18/13			
MT-97.10	7/18/14					
MT-97.12	7/18/14					
MT-99.20	7/19/13					
MT-101.90	7/18/14					
MT-105.10	7/19/13					

FEDERAL PROJECT NO. E120 (720)

PID NO. 88618

STATE JOB NUMBER 479198

RAILROAD INVOLVEMENT INDIANA AND OHIO

CHP / CLA-4/ 29-VAR

CHP - /CLA SR 4/SR 29 VAR
160077 PID - 88618 Contract Proposal Available @ www.contracts.dot.state.oh.us/home
Dist 7 2/11/2016

F:\Maint\roadserv\resurfac\PROJECTS\CHP\4\VAR\88618\Design\88618 CHP-4_2

TYPICAL 1

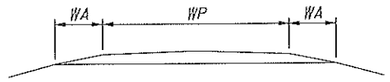

TYPICAL 2

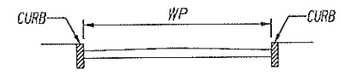

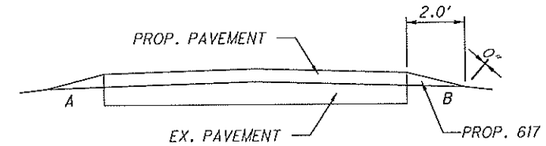

TYPICAL - COMPACTED AGGREGATE

ITEM 407, TACK COAT, CALCULATED AT 0.075 GALLON PER SQUARE YARD

**AVERAGE PAVEMENT WIDTH OVER SECTION

PAVEMENT DATA

ROUTE	SLM FROM	SLM TO	LENGTH MILE	LENGTH FT.	PVMT. WIDTH FT.	TYPICAL	PVMT AREA SQ. YD.	202 WEARING COURSE REMOVED (BT. JT.) SQ YD	254 PAVEMENT PLANING AVG. 0.75" GAL	407 TACK COAT (0.075 GAL/SY)	424 FINE GRADED POLYMER ASPHALT CONCRETE TYPE B THICK INCH (AVG)	424 CU YD	617 COMPACTED AGGREGATE THICK INCH (AVG)	617 CU YD
CHP 4	0.00	2.16	2.16	11405	27	1	34214	600		2566	1.00	950	1.0	141
	2.16	2.17	0.01	217					(SEE BRIDGE SHEET CHP-4-2.17)					
	2.17	5.49	3.32	17530	27	1	52589	1200		3944	1.00	1461	1.0	216
	5.49	6.97	1.48	7814	26.5	1	23009	147		1726	1.00	639	1.0	96
	INTERSECTIONS (15)						3700	300		278	1.00	103		
	DRIVES AND MAILBOXES						3100	198		233	1.00	86		
	TOTAL CHP SR 4		6.97	36966			116612	2445		8747		3239		453
CLA 4	17.66	17.76	0.10	500	60		3333		3333	250	1.00	93		
	17.76	17.84	0.08	450	45**		2250	333		169	1.00	63		
	17.84	19.84	2.00	10560	30		35200			2640	1.00	978	1.0	130
	19.84	20.70	0.86	4541	26		13118			984	1.00	364	1.0	56
	20.70	23.12	2.42	12778	31		44012			3301	1.00	1223	1.0	158
	23.12	23.13	0.01	67					(SEE BRIDGE SHEET CLA-4-23.12)					
	23.13	23.35	0.22	1162	31		4001			300	1.00	111	1.0	14
	23.35	23.37	0.02	106					(SEE BRIDGE SHEET CLA-4-23.35)					
	23.37	23.74	0.37	1954	28		6078			456	1.00	169	1.0	24
	23.74	24.85	1.11	5861	27		17582			1319	1.00	488	1.0	72
	INTERSECTIONS (14)						4200	280		315	1.00	117		
	DRIVES AND MAILBOXES						3950	531		296	1.00	110		
	TOTAL CLA SR 4		7.19	37979			133724	1144	3333	10030		3716		454
	TOTALS CARRIED TO THE GENERAL SUMMARY							3589	3333	18777		6955		907

CALCULATED

CHECKED

PAVEMENT DATA

CHP / CLA-4 / 29-VAR

I:\Maint\roadserv\resurfac\PROJECTS\CHP\4\VAR\88618\Design\88618 CHP-4_29-VAR.dgn 02-NOV-2015 2:00PM ssnell

TYPICAL 1

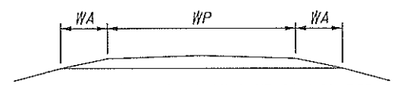

ITEM 407, TACK COAT, CALCULATED AT 0.115 GALLON PER SQUARE YARD
APPLY 0.075 GALLON PER SQUARE YARD FOR INTERMEDIATE COURSE
APPLY 0.040 GALLON PER SQUARE YARD FOR SURFACE COURSE.

TYPICAL 2

*CURB LOCATIONS VARY THROUGHOUT SECTION

**AVERAGE PAVEMENT WIDTH OVER SECTION

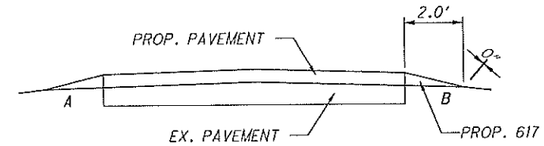

TYPICAL - COMPACTED AGGREGATE

PAVEMENT DATA

ROUTE	SLM FROM	SLM TO	LENGTH MILE	LENGTH FT.	PVMT. WIDTH FT.	TYPICAL	PVMT AREA SQ. YD.	202 WEARING COURSE REMOVED (BT. JT.) SQ YD	254 PAVEMENT PLANING AVG. 2.00 GAL	407 TACK COAT (0.115 GAL/SY)	441 ASPHALT CONCRETE INTERMEDIATE COURSE THICK INCH (AVG)	441 ASPHALT CONCRETE INTERMEDIATE COURSE CU. YD.	441 ASPHALT CONCRETE SURFACE COURSE THICK INCH	441 ASPHALT CONCRETE SURFACE COURSE CU. YD.	SPECIAL TRACKLESS TACK COAT (0.115 GAL/SY) GAL	617 COMPACTED AGGREGATE THICK INCH (AVG)	617 COMPACTED AGGREGATE CU. YD.
CHP 29	30.09	30.15	0.06	317	32	1	1126		1126		0.75	23	1.25	39	129	2.0	8
	30.15	30.23	0.08	422	28	2	1314		1314		0.75	27	1.25	46	151		
	30.23	30.43	0.20	1056	36	2	4224		4224		0.75	88	1.25	147	486		
	30.43	30.62	0.19	1003	39	2	4347		4347		0.75	91	1.25	151	500		
	30.62	30.99	0.37	1954	44**	2	9551		9551		0.75	199	1.25	332	1098		
	30.99	31.09	0.10	528	38**	2	2229		2229		0.75	46	1.25	77	256		
	31.09	31.24	0.15	792	28	2	2464		2464		0.75	51	1.25	86	283		
	31.24	31.25	0.01	70					(SEE BRIDGE SHEET CHP-29-31.45)								
	31.25	31.38	0.13	686	28	2	2135	156	2135		0.75	44	1.25	74	246	2.0	17
	31.38	33.96	2.58	13622	28	1	42381	156			0.75	883	1.25	1472	4874	2.0	336
	INTERSECTIONS (13)						2250	40	1556		0.75	47	1.25	78	259		
	DRIVES AND MAILBOXES						1200	105			0.75	25	1.25	42	138		
	TOTAL SR 29		3.87	20450			73221	457	28946			1524		2544	8420		361
	TOTALS CARRIED TO THE GENERAL SUMMARY							457	28946			1524		2544	8420		361

CALCULATED
CHECKED

PAVEMENT DATA

CHP / CLA-4 / 29-VAR

I:\Maint\roadserv\resurfac\PROJECTS\CHP\4\VAR\88618\Design\88618 CHP-4_29-VAR.dgn 02-NOV-2015 2:00PM ssnell

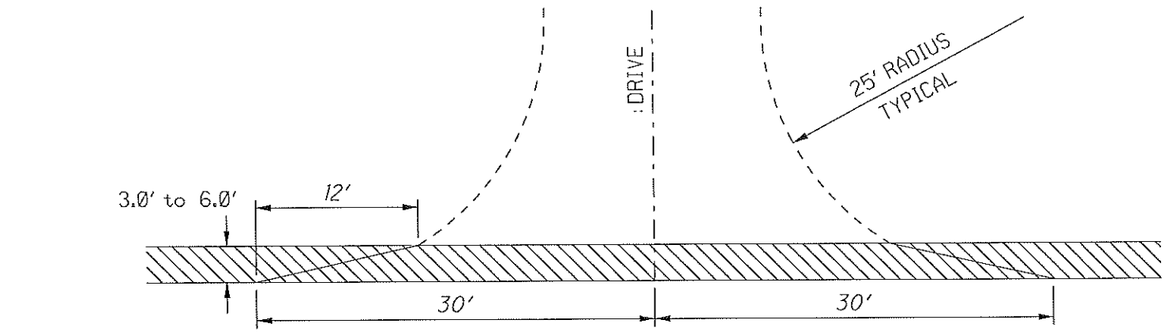

TYPICAL ASPHALT DRIVEWAY

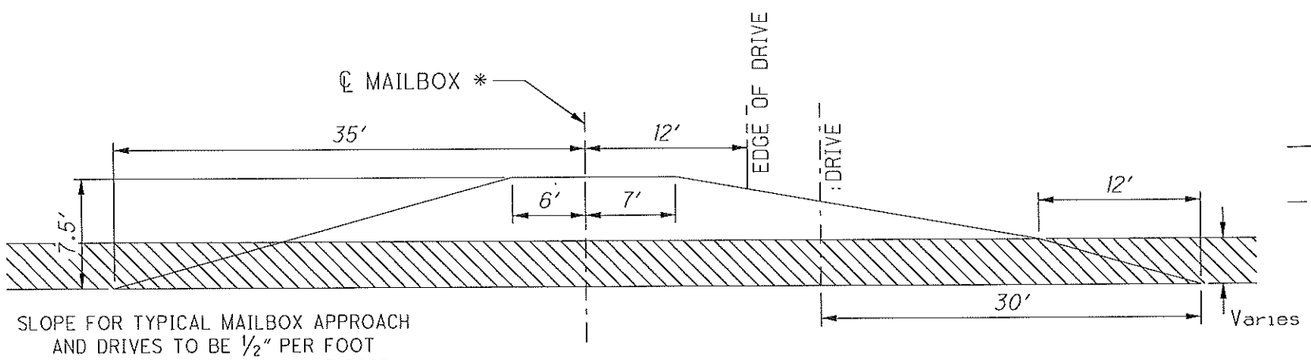

SLOPE FOR TYPICAL MAILBOX APPROACH
AND DRIVES TO BE ½" PER FOOT
DOWN FROM FINISHED PAVEMENT EDGE.

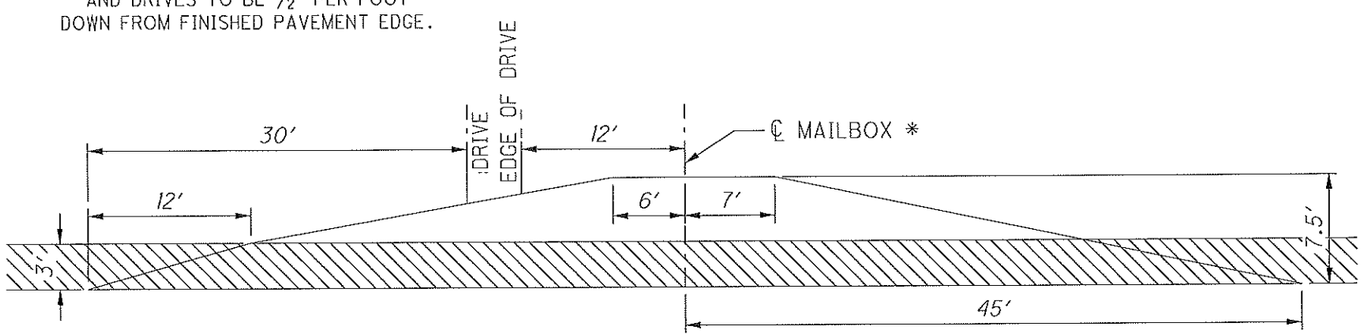

TYPICAL COMBINATION DRIVE & MAILBOX APPROACHES

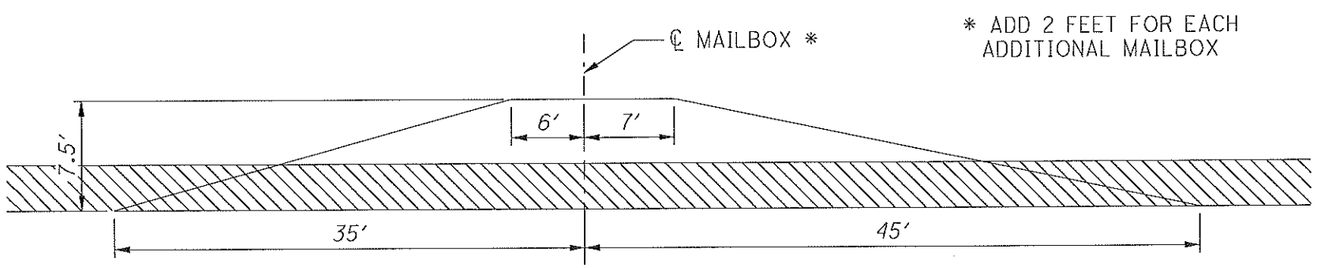

TYPICAL MAILBOX APPROACH

* ADD 2 FEET FOR EACH
ADDITIONAL MAILBOX

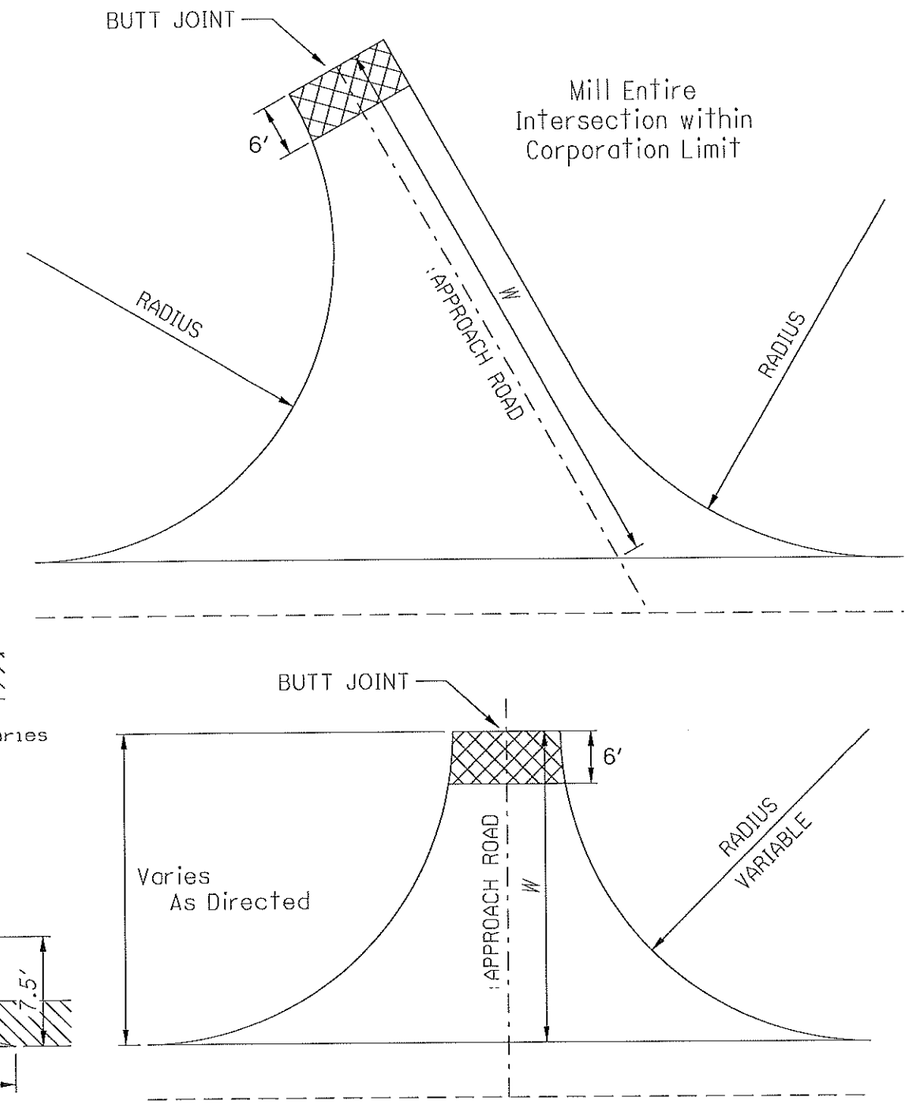

TYPICAL APPROACH ROAD PAVING

W = To Back of Radius or As Directed By the Engineer

OHIO DEPARTMENT OF TRANSPORTATION
DISTRICT SEVEN

TYPICAL APPROACHES FOR ROADS,
DRIVES, AND MAILBOXES

CALCULATED

CHECKED

APPROACH TYPICALS

CHP / CLA-4/29-VAR

4
23

i:\Maint\roadserv\resurfac\PROJECTS\CHP\4\VAR\88618\Design\88618 CHP-4_29-VAR.dgn 02-NOV-2015 2:00PM ssnell

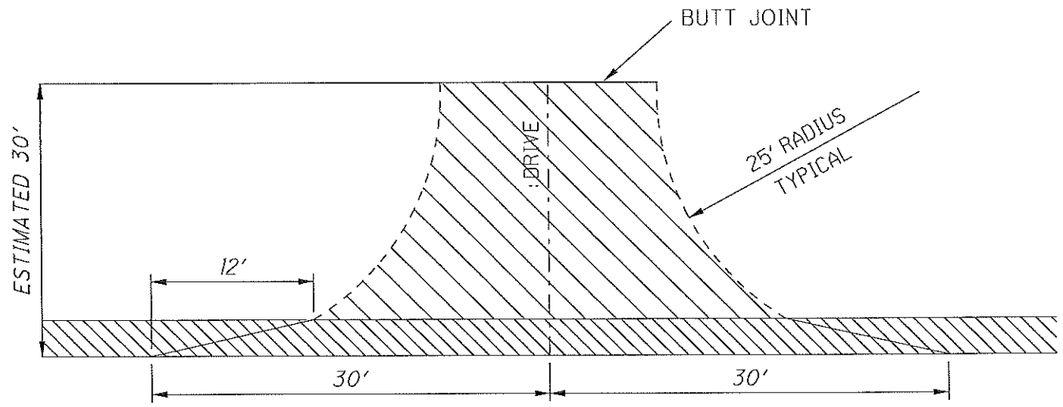

TYPICAL DRIVEWAY

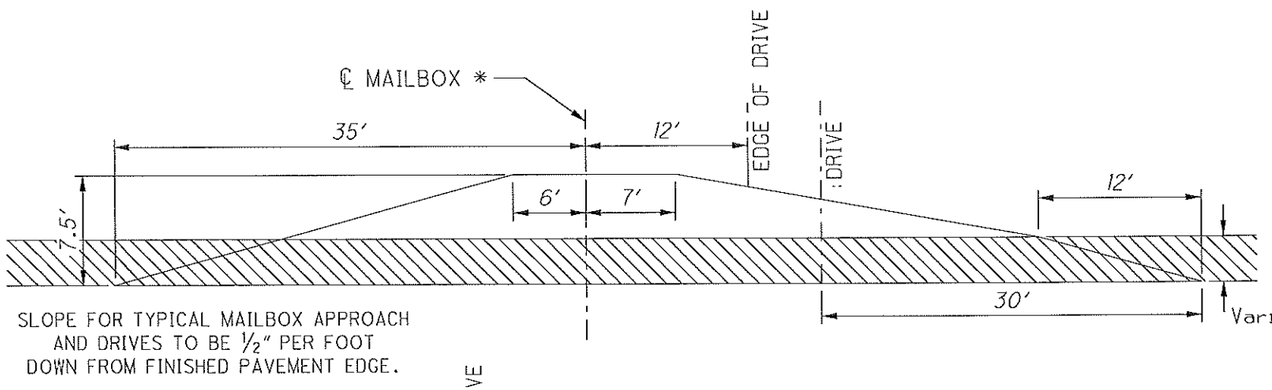

SLOPE FOR TYPICAL MAILBOX APPROACH AND DRIVES TO BE ½" PER FOOT DOWN FROM FINISHED PAVEMENT EDGE.

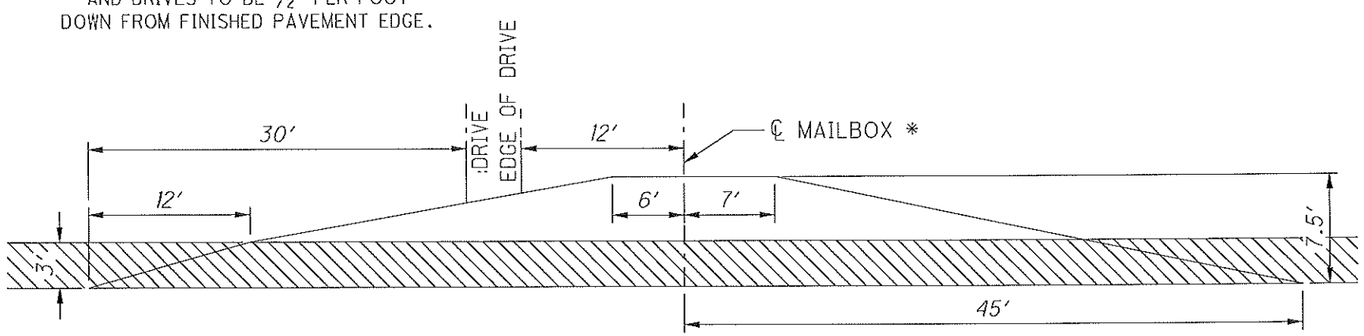

TYPICAL COMBINATION DRIVE & MAILBOX APPROACHES

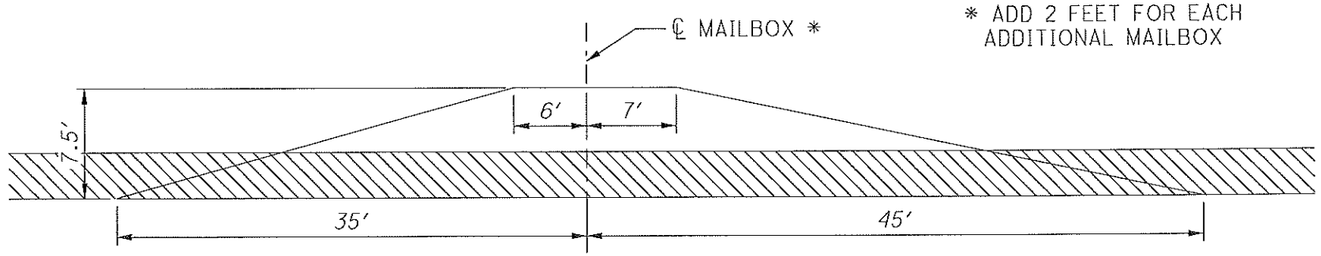

TYPICAL MAILBOX APPROACH

* ADD 2 FEET FOR EACH ADDITIONAL MAILBOX

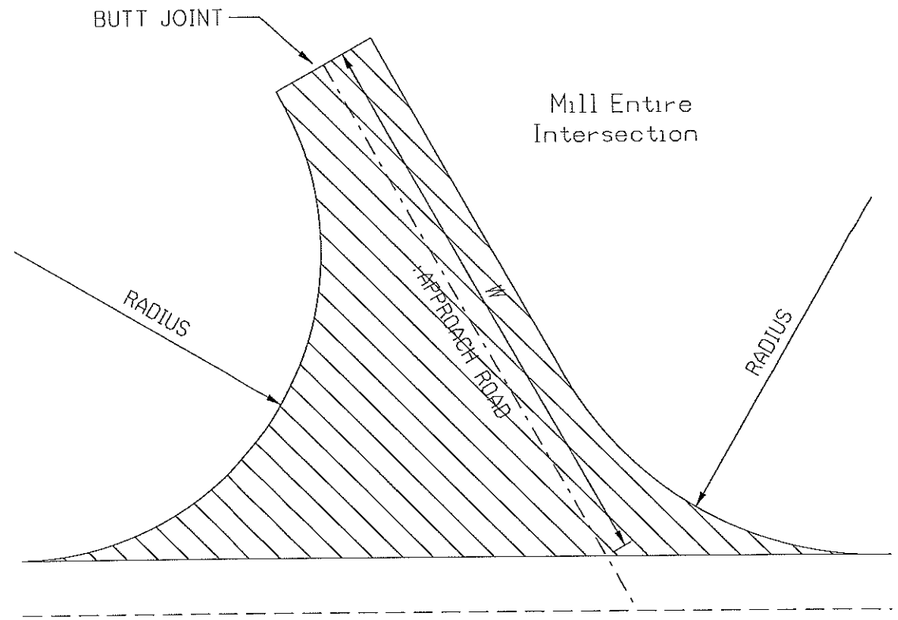

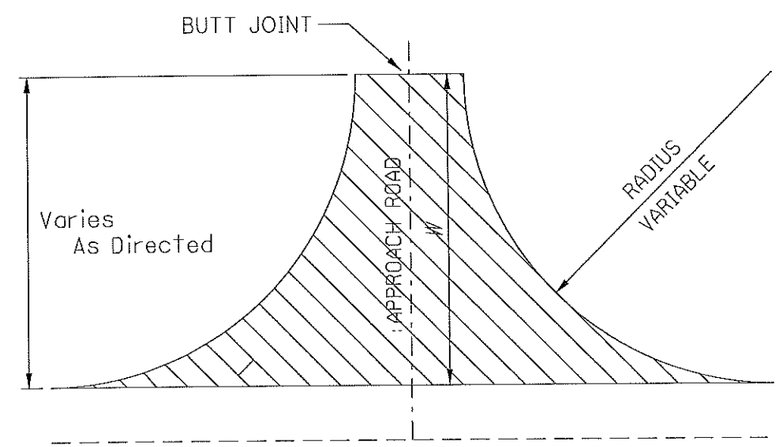

TYPICAL APPROACH ROAD PAVING

W = To Back of Radius or As Directed By the Engineer

OHIO DEPARTMENT OF TRANSPORTATION
DISTRICT SEVEN

TYPICAL APPROACHES FOR ROADS, DRIVES, AND MAILBOXES

CALCULATED | CHECKED

APPROACH TYPICALS

CHP/CLA-4/29-VAR

ITEM 254 - PAVEMENT PLANING, ASPHALT CONCRETE, AS PER PLAN (CHP-29 SLM 30.09 TO 31.38)

AN ESTIMATED QUANTITY OF ITEM 254 - PAVEMENT PLANING, ASPHALT CONCRETE HAS BEEN CARRIED TO THE GENERAL SUMMARY AND INCLUDED IN THE PLANS TO BE USED AS DIRECTED BY THE ENGINEER.

THE APPROXIMATE DEPTH OF PAVEMENT PLANING WILL BE TWO INCHES (2.00"). ALL PLANED CUTTINGS SHALL BECOME THE PROPERTY OF THE CONTRACTOR AND SHALL BE REMOVED FROM THE LIMITS OF THE PROJECT.

THE APPROXIMATE WIDTH OF PAVEMENT PLANING IS BETWEEN TWENTY-EIGHT FEET (28') TO FORTY-SIX FEET (46'). THE CONTRACTOR SHALL SCHEDULE AND BEGIN PLACEMENT OF ITEM 441 - ASPHALT CONCRETE INTERMEDIATE COURSE WITHIN FORTY-EIGHT (48) HOURS AFTER ITEM 254 - PAVEMENT PLANING, ASPHALT CONCRETE IS COMPLETED ON A DAILY OPERATION.

ITEM 254 - PAVEMENT PLANING, ASPHALT CONCRETE = 28946 SQ YD.

THERE ARE ELEVEN (11) INTERSECTIONS INCLUDED WITHIN THE LIMITS AND QUANTITY OF THE PAVEMENT PLANING.

THERE ARE APPROXIMATELY TWENTY-TWO (22) CASTINGS WITHIN THE PLANING AREA. THE CONTRACTOR SHALL BE RESPONSIBLE FOR FURNISHING ALL LABOR AND EQUIPMENT NECESSARY TO MAINTAIN TRAFFIC AROUND THE CASTINGS AND SHALL INCLUDE THE COST IN THE UNIT PRICE BID FOR ITEM 614 - MAINTAINING TRAFFIC.

MANHOLES = 12 EACH WATER VALVES = 10 EACH

ANY CASTINGS THAT REQUIRE ADJUSTING DURING CONSTRUCTION WILL BECOME THE RESPONSIBILITY OF THE CONTRACTOR. ANY NEW CASTING REQUIRED SHALL BE FURNISHED TO THE CONTRACTOR BY THE VILLAGE OF MECHANICSBURG.

AFTER COMPLETION OF ITEM 441 - ASPHALT CONCRETE SURFACE COURSE, ANY UTILITY CASTINGS THAT REQUIRE ADJUSTMENT SHALL BE COMPLETED AS PER ITEM 611 AND ITEM 638. ADJUSTING DEVICES ON MANHOLE COVERS ARE PROHIBITED.

THERE IS ALSO AN ADDITIONAL QUANTITY OF 3333 SY TO BE USED ON THE CURB SECTION OF CLA-4 BETWEEN SLM 17.66 AND 17.76.

ITEM 254 - PATCHING PLANED SURFACE, AS PER PLAN

254.04 SURFACE PATCHING. PAVEMENT AREAS DESIGNATED FOR PATCHING AFTER PAVEMENT PLANING OPERATION SHALL BE MILLED TWO INCHES (2") IN DEPTH, CLEAN AREAS OF LOOSE MATERIAL, APPLY TACK COAT AND AREA FILLED WITH ITEM 441, ASPHALT CONCRETE. LEVEL AND COMPACT NEW MATERIAL FLUSH TO THE ADJACENT PLANED SURFACE.

AN ESTIMATED QUANTITY OF 400 SQ YDS HAS BEEN CARRIED TO THE GENERAL SUMMARY TO BE USED AS DIRECTED BY THE ENGINEER.

ITEM 690 - SPECIAL, MAILBOX REMOVED AND RESET

THIS WORK SHALL CONSIST OF REMOVING AND RESETTING EXISTING MAILBOX SUPPORTS. THE CONTRACTOR SHALL TAKE GREAT CARE IN REMOVING AND RESETTING MAILBOX SUPPORTS TO THE CORRECT DISTANCE FROM THE EDGE OF PAVEMENT AS SHOWN ON THE APPROACH TYPICAL SHEET OR AS DIRECTED BY THE ENGINEER.

THE CONTRACTOR SHALL BE RESPONSIBLE FOR REPAIR OR REPLACEMENT FOR DAMAGED OR IMPROPER HANDLING ON THEIR PART AS DIRECTED BY THE ENGINEER.

THE CONTRACTOR SHALL BE RESPONSIBLE FOR COORDINATING WITH THE LOCAL POSTMASTER REGARDING THE TIMING OF THE MOVEMENT OF ANY MAILBOX TO BE REMOVED AND RESET. TEMPORARY INSTALLATIONS SHALL BE IN ACCORDANCE WITH 107.10.

MAILBOXES REMOVED AND RESET SOLELY FOR THE CONVENIENCE OF THE CONTRACTOR'S OPERATION OF CONSTRUCTING THE ASPHALT CONCRETE APPROACH IN JUDGMENT OF THE ENGINEER SHALL NOT BE PAID FOR.

PAYMENT SHALL BE FOR FINAL PERMANENT INSTALLATIONS ONLY. ALL LABOR, MATERIAL AND EQUIPMENT NEEDED TO COMPLETE THEIR WORK SHALL BE INCLUDED IN ITEM 690 - SPECIAL, MAILBOX REMOVED AND RESET.

A QUANTITY OF 19 EACH OF ITEM SPECIAL, MAILBOX REMOVED AND RESET HAS BEEN CARRIED TO THE GENERAL SUMMARY.

ITEM 301 - ASPHALT CONCRETE BASE, PG 64-22, AS PER PLAN

THE CONTRACTOR SHALL BE RESPONSIBLE FOR EXCAVATING OF MATERIAL FROM ALL EXISTING STONE DRIVEWAYS AND MAILBOX APPROACHES TO A DEPTH OF FOUR INCHES (4") BELOW THE EXISTING PAVEMENT ELEVATION. ALL DRIVEWAY AND MAILBOX APPROACHES SHALL BE CONSTRUCTED AS PER TYPICAL SHOWN IN THE PLAN. EXCAVATED MATERIAL SHALL BE USED TO BACKUP THE NEW PAVEMENT OR REMOVED FROM THE PROJECT SITE AS DIRECTED BY THE PROJECT ENGINEER.

ESTIMATED APPROACHES:
8 MAILBOX APPROACHES
2 DRIVEWAY APPROACH
12 COMBINATION DRIVE AND MAILBOX APPROACHES

A QUANTITY OF ITEM 301 - ASPHALT CONCRETE BASE, PG 64-22, AS PER PLAN HAS BEEN INCLUDED IN THE GENERAL SUMMARY TO BE USED AS DIRECTED IN THOSE AREAS EXCAVATED FOR DRIVEWAY AND MAILBOX APPROACHES.

ALL WORK, MATERIALS, LABOR AND EQUIPMENT NECESSARY TO COMPLETE THE ABOVE DESCRIBED WORK SHALL BE INCIDENTAL TO THE PLACEMENT AND INCLUDED IN THE COST OF ITEM 301 - ASPHALT CONCRETE BASE, PG 64-22, AS PER PLAN.

ITEM 301 - ASPHALT CONCRETE BASE, PG 64-22, AS PER PLAN = 105 CU YD

ITEM 614 - LAW ENFORCEMENT OFFICER (WITH PATROL CAR) FOR ASSISTANCE DURING CONSTRUCTION OPERATIONS

USE OF LAW ENFORCEMENT OFFICERS (LEOS) BY CONTRACTORS OTHER THAN THE USES SPECIFIED BELOW WILL NOT BE PERMITTED AT PROJECT COST. LEOS SHOULD NOT BE USED WHERE THE OMUTCD INTENDS THAT FLAGGERS BE USED.

IN ADDITION TO THE REQUIREMENTS OF C&MS 614 AND THE OMUTCD, A UNIFORMED LEO WITH AN OFFICIAL PATROL CAR (CAR WITH TOP-MOUNTED EMERGENCY FLASHING LIGHTS AND COMPLETE MARKINGS OF THE APPROPRIATE LAW ENFORCEMENT AGENCY) SHALL BE PROVIDED FOR THE FOLLOWING TRAFFIC CONTROL TASKS:

*DURING THE ENTIRE ADVANCE PREPARATION AND CLOSURE SEQUENCE WHERE COMPLETE BLOCKAGE OF TRAFFIC IS REQUIRED.

*DURING A TRAFFIC SIGNAL INSTALLATION WHEN IMPACTING THE NORMAL FUNCTION OF THE SIGNAL OR THE FLOW OF TRAFFIC OR WHEN TRAFFIC NEEDS TO BE DIRECTED THROUGH AN ENERGIZED TRAFFIC SIGNAL CONTRARY TO THE SIGNAL DISPLAY (E.G., DIRECTING MOTORISTS THROUGH A RED LIGHT).

IN ADDITION TO THE REQUIREMENT OF C&MS 614 AND THE OMUTCD, A UNIFORMED LEO WITH AN OFFICIAL PATROL CAR (CAR WITH TOP-MOUNTED EMERGENCY FLASHING LIGHTS AND COMPLETE MARKINGS OF THE APPROPRIATE LAW ENFORCEMENT AGENCY) SHOULD BE PROVIDED FOR THE FOLLOWING TRAFFIC CONTROL TASKS:

*FOR LANE CLOSURES: DURING INITIAL SET-UP PERIODS, TEAR DOWN PERIODS, SUBSTANTIAL SHIFTS OF A CLOSURE POINT OR WHEN NEW LANE CLOSURE ARRANGEMENTS ARE INITIATED FOR LONG-TERM LANE CLOSURES/SHIFTS (FOR THE FIRST AND LAST DAY OF MAJOR CHANGES IN TRAFFIC CONTROL SETUP). IN GENERAL, LEOS SHOULD BE POSITIONED AT THE POINT OF LANE RESTRICTION OR ROAD CLOSURE AND TO MANUALLY CONTROL TRAFFIC MOVEMENTS THROUGH INTERSECTIONS IN WORK ZONES.

*WHEN CONSTRUCTION VEHICLES ARE ENTERING/EXITING THE ZONE DIRECTLY FROM/INTO AN OPEN LANE OF TRAFFIC. IF A LANE HAS BEEN CLOSED TO PROVIDE AN ACCELERATION/DECELERATION LANE FOR THE VEHICLE, THE LEO WILL NOT BE REQUIRED.

LEOS SHOULD NOT FORGO THEIR TRAFFIC CONTROL RESPONSIBILITIES TO APPREHEND MOTORISTS FOR ROUTINE TRAFFIC VIOLATIONS. HOWEVER, IF A MOTORIST'S ACTIONS ARE CONSIDERED TO BE RECKLESS, THEN PURSUIT OF THE MOTORIST IS APPROPRIATE.

THE LEOS WORK AT THE DIRECTION OF THE CONTRACTOR. THE CONTRACTOR IS RESPONSIBLE FOR SECURING THE SERVICES OF THE LEOS WITH THE APPROPRIATE AGENCIES AND COMMUNICATING THE INTENTIONS OF THE PLANS WITH RESPECT TO DUTIES OF THE LEOS. THE ENGINEER SHALL HAVE FINAL CONTROL OVER THE LEOS' DUTIES AND PLACE- MENT, AND WILL RESOLVE ANY ISSUES THAT MAY ARISE BETWEEN THE TWO PARTIES.

THE LEO SHALL REPORT IN TO THE CONTRACTOR PRIOR TO THE START OF THE SHIFT, IN ORDER TO RECEIVE INSTRUCTIONS REGARDING SPECIFIC WORK ASSIGNMENTS DURING HIS/HER SHIFT. THE LEO IS EXPECTED TO STAY AT THE PROJECT SITE FOR THE ENTIRE DURATION OF HIS/HER SHIFT. THE LEO SHALL REPORT TO THE CONTRACTOR AT THE END OF HIS/HER SHIFT. ONCE THE LEO HAS COMPLETED THE DUTIES DESCRIBED ABOVE AND STILL HAS TIME REMAINING ON HIS/HER SHIFT, THE LEO MAY BE ASKED TO PATROL THROUGH THE WORK ZONE (WITH FLASHING LIGHTS OFF) OR BE PLACED AT A LOCATION TO DETER MOTORISTS FROM SPEEDING. SHOULD IT BE NECESSARY TO LEAVE THE PROJECT SITE, THE LEO SHALL NOTIFY THE ENGINEER. THE CONTRACTOR SHALL PROVIDE THE LEO WITH A TWO-WAY COMMUNICATION DEVICE WHICH SHALL BE RE- TURNED TO THE CONTRACTOR AT THE END OF HIS/HER SHIFT.

LEOS (WITH PATROL CAR) REQUIRED BY THE TRAFFIC MAINT-ENANCE TASKS ABOVE SHALL BE PAID FOR ON A UNIT PRICE (HOURLY) BASIS UNDER ITEM 614, LAW ENFORCEMENT OFFICER (WITH PATROL CAR) FOR ASSISTANCE. THE FOLLOWING ESTIMATED QUANTITIES HAVE BEEN CARRIED TO THE GENERAL SUMMARY.

ITEM 614, LAW ENFORCEMENT OFFICER WITH PATROL CAR FOR ASSISTANCE 50 HOURS.

THE HOURS PAID SHALL INCLUDE ANY MINIMUM SHOW-UP TIME REQUIRED BY THE LAW ENFORCEMENT AGENCY INVOLVED.

ANY ADDITIONAL COSTS (ADMINISTRATIVE OR OTHERWISE) INCURRED BY THE CONTRACTOR TO OBTAIN THE SERVICES OF AN LEO ARE INCLUDED WITH THE BID UNIT PRICE FOR ITEM 614, LAW ENFORCEMENT OFFICER WITH PATROL CAR FOR ASSISTANCE.

ITEM 253, PAVEMENT REPAIR, AS PER PLAN

PAVEMENT REPAIR SHALL BE IN ACCORDANCE WITH ITEM 253 - PAVEMENT REPAIR, WITH THE FOLLOWING ADDITIONS.

THE PAVEMENT REPAIR AREAS SHALL BE ROUGHLY RECTANGULAR IN SHAPE AND SAWED OR MILLED TO A NEAT LINE. THE DEPTH OF REMOVAL, AS DIRECTED BY THE ENGINEER, SHALL BE SUFFICIENT TO REMOVE ALL DETERIORATED PAVEMENT. THE REPLACEMENT SHALL BE ITEM 301- ASPHALT CONCRETE BASE, PG 64-22.

THE ESTIMATED PAVEMENT REPAIR AREAS SHALL BE A MINIMUM OF FOUR FEET (4') IN WIDTH AND SIX INCHES (6") IN DEPTH AND SHALL BE FINISHED TO ACCOMODATE THE PROPOSED OVERLAY.

ITEM 253 - PAVEMENT REPAIR, AS PER PLAN = 2100 SQ. YD.
PART 1 SR 4 1450 SQ YD
PART 2 SR 29 650 SQ YD

CALCULATED
CHECKED

GENERAL NOTES

CHP / CLA-4 / 29-VAR

I:\Maint\roadserv\resurfac\PROJECTS\CHP\4\VAR\88618\Design\88618 CHP-4_29-VAR.dgn 02-NOV-2015 2:01PM ssnell

ITEM SPECIAL - SAWING AND SEALING BITUMINOUS CONCRETE JOINTS

THE ENTIRE OVERLAY OVER THE STRUCTURE SHALL BE SAWED AND SEALED IN ACCORDANCE WITH 2013 CMS, ITEM 516.

THE STRUCTURES TO HAVE THIS ITEM AND THE FOLLOWING WORK PERFORMED IS CHP-4-3.94 AND CHP-4-6.08 AND CLA-4-2335.

THE STRUCTURES SHALL HAVE THE APPROACH SLAB/PAVEMENT AND THE APPROACH SLAB/BRIDGE JOINTS SAWED AND SEALED. THE CONTRACTOR SHALL MARK THE LOCATIONS PRIOR TO ANY MILLING OR PAVING.

ALIGNMENT AND PROFILE

THE WORK PROPOSED BY THIS PROJECT CONSISTS OF PAVEMENT PLANING AND RESURFACING OF THE EXISTING PAVEMENT. THE ALIGNMENT OF THE EXISTING PAVEMENT WILL NOT BE CHANGED AND THE PROFILE OF THE PROPOSED SURFACE WILL BE SIMILAR TO THAT OF THE EXISTING PAVEMENT.

INTERMEDIATE COURSE

THIS MATERIAL SHALL BE PLACED IN A SEPARATE OPERATION WHERE AND AS DIRECTED BY THE ENGINEER.

NOTIFICATION

THE CONTRACTOR SHALL NOTIFY THE OHIO DEPARTMENT OF TRANSPORTATION DISTRICT SEVEN CONSTRUCTION ADMINISTRATOR TWO (2) WEEKS PRIOR TO BEGINNING ANY WORK, PHONE: 937-497-6722.

ITEM 202, CURB REMOVED, AS PER PLAN

THE CONTRACTOR MAY NEED TO REMOVE PART OF THE EXISTING PAVEMENT AND GUARDRAIL AROUND THE PROPOSED CURB AREA. ALL COSTS ASSOCIATED WITH PAVEMENT REMOVAL SHALL BE INCLUDED IN THE CURB REMOVAL ITEM.

LOCATION: CHP-29-31.45

ITEM 609 - CURB, TYPE 6, AS PER PLAN

THE PROPOSED PAVEMENT WORK NEEDED TO MATCH EXISTING PAVEMENT/PROPOSED RESURFACING (REMOVED AS PART OF ITEM 202, CURB REMOVED, AS PER PLAN) SHALL BE INCLUDED IN THE PROPOSED CURB ITEM.

COOPERATION WITH RAILROAD

THE CONTRACTOR SHALL COORDINATE ALL WORK ON OR ADJACENT TO THE RAILROAD WITHIN THE PROJECT LIMIT. THE CONTRACTOR SHALL CONTACT THE FOLLOWING RAILROAD COMPANY, AT LEAST 30 DAYS IN ADVANCE, IN ORDER TO COORDINATE THE NECESSARY WORK. UNDER NO CIRCUMSTANCES SHALL THERE BE ANY WORK WITHIN THE RAILROAD RIGHT OF WAY WITHOUT THE PROPER AUTHORIZATION AND/OR FLAG PROTECTION FROM THE RAILROAD.

WEST CENTRAL OHIO PORT AUGHORITY
ATTN: MR. LOUIS AGRESTA
PHONE: (937) 521-2134

INDIANA AND OHIO
ATTN: DICK KREINBRINK
PHONE: (513) 860-1000 EXT. 133
CELL: (513) 505-1908

ITEM 614, MAINTAINING TRAFFIC

TRAFFIC SHALL BE MAINTAINED AT ALL TIMES. THE LENGTH OF RESTRICTED TRAFFIC ZONES SHALL BE KEPT TO A MINIMUM CONSISTENT WITH THE SPECIFICATION REQUIREMENTS FOR PROTECTION OF COMPLETED COURSES.

ALL WORK AND TRAFFIC CONTROL DEVICES SHALL BE IN ACCORDANCE WITH CMS 614 AND OTHER APPLICABLE PORTIONS OF THE SPECIFICATIONS, AS WELL AS THE OHIO MANUAL OF UNIFORM TRAFFIC CONTROL DEVICES.

THE CONTRACTOR SHALL BE REQUIRED TO FURNISH AND ERECT "GROOVED PAVEMENT" SIGNS FOR ANY PLANED SURFACE OF THE ROADWAY REMAINING OPENED AT THE CONCLUSION OF A WORK DAY.

PAYMENT FOR ALL LABOR, EQUIPMENT AND MATERIALS SHALL BE INCLUDED IN THE LUMP SUM CONTRACT PRICE FOR ITEM 614, MAINTAINING TRAFFIC, UNLESS SEPARATELY ITEMIZED IN THE PLAN.

ITEM 644 - PAVEMENT MARKINGS

THE CONTRACTOR SHALL DOCUMENT ALL EXISTING PAVEMENT MARKINGS TO BE REPLACED IN KIND.

THE MARKINGS IN FRONT OF THE FIRESTATION SHALL NOT BE REPLACED. THIS ITEM WILL BE DISCUSSED AT THE PRECONSTRUCTION MEETING.

THE CONTRACTOR SHALL COORDINATE AND COLLABORATE THE LAYOUT OF ALL PAVEMENT MARKINGS WITH THE VILLAGE OF MECHANICSBURG.

ITEM SPECIAL - TACK COAT, TRACKLESS TACK

DESCRIPTION: THIS WORK CONSISTS OF PREPARING AND TREATING A PAVED SURFACE WITH A TRACKLESS TACK ASPHALT EMULSION.

FURNISH MATERIALS ACCORDING TO THE DEPARTMENT'S APPROVED LIST.

MEET ALL REQUIREMENTS OF ITEM 407 TACK COAT IN THE CONSTRUCTION AND MATERIALS SPECIFICATIONS REQUIRED BY THE CONTRACT, EXCEPT AS NOTED BELOW.

MATERIAL: MEET ALL PROPERTIES OF THE APPROVED MANUFACTURER'S TRACKLESS TACK SPECIFICATION REQUIREMENTS ON FILE WITH THE LABORATORY AT TIME OF PLACEMENT.

ACCEPTANCE AND SAMPLING OF MATERIALS:
TEST DATA TO THE ENGINEER AND TO THE DISTRICT LABORATORY DEMONSTRATING THE TRACKLESS TACK SUPPLIED WAS TESTED FOR AND MEETS ALL MATERIAL PROPERTIES SHOWN ON THE DEPARTMENT'S APPROVED LIST.

DURING CONSTRUCTION, ODOT PERSONNEL WILL SAMPLE FROM THE DISTRIBUTOR AND SUPPLY TO THE DISTRICT TEST LAB A MINIMUM OF ONE QUART OF TRACKLESS TACK FOR EVERY 25,000 GALLONS USED ON THE PROJECT. THE CONTRACTOR IS RESPONSIBLE FOR SUPPLYING THE PROPER PLASTIC QUART SAMPLING CONTAINER. CLEARLY MARK ON THE SAMPLE WITH THE MANUFACTURER'S NAME, PROJECT NUMBER, AND THE WORDS "TRACKLESS TACK".

EQUIPMENT: FOLLOW MANUFACTURER'S RECOMMENDATIONS FOR CORRECT DISTRIBUTOR SETTINGS. THOROUGHLY CLEAN ALL EQUIPMENT IF PREVIOUSLY USED MATERIAL CHARGE IS DIFFERENT THAN THE PROPOSED MATERIAL.

APPLICATION OF ASPHALT MATERIAL:
TRACKLESS TACK WITH A DISTRIBUTOR ACCORDING TO THE MANUFACTURER'S INSTRUCTIONS. IF TRACKLESS TACK IS STORED FOR AN EXTENDED PERIOD OF TIME, PRIOR TO APPLICATION, AGITATE OR GENTLY CIRCULATE THE MATERIAL.

ENSURE ALL NOZZLES AND SPRAY PATTERNS ARE IDENTICAL TO ONE ANOTHER ALONG THE DISTRIBUTOR SPRAY BAR. PLACE THE ANGLE OF THE NOZZLE AT A 15 TO 30 DEGREE ANGLE TO THE SPRAY BAR AXIS TO MAXIMIZE OVERLAP OR AS RECOMMENDED BY THE NOZZLE MANUFACTURER. CONTACT THE MANUFACTURER'S REPRESENTATIVE FOR REQUIRED SPRAY NOZZLE SIZE AND DISTRIBUTOR AND NOZZLE SETTINGS.

APPLY AT A RATE OF 0.04 TO 0.1 GALLONS PER SQUARE YARD. DO NOT DILUTE TRACKLESS TACK. RECOMMENDED APPLICATION TEMPERATURE IS 160 °F TO 180° F. DO NOT EXCEED 180° F. THE ENGINEER WILL APPROVE THE QUANTITY, RATE OF APPLICATION, TEMPERATURE, DISTRIBUTOR SETTINGS, AND AREAS TO BE TREATED BEFORE APPLICATION OF THE TRACKLESS TACK COAT. THE ENGINEER WILL DETERMINE THE ACTUAL APPLICATION IN GALLONS PER SQUARE YARD BY A CHECK ON THE PROJECT.

PERFORMANCE OF TRACKLESS TACK: DETERMINE THE TIME TO SET FOR THE MATERIAL TO BECOME TRACKLESS. THE ENGINEER WILL REPORT ANY ISSUES WITH EXCESSIVE TIME TO SET, OR AFTER SET ISSUES WITH STICKINESS, OR PICKUP OF THE TACK TO THE DISTRICT TESTING ENGINEER AND NEW PRODUCT ENGINEER, BRAD YOUNG 614-351-2882.

IF THE CERTIFIED TEST DATA FAILS TO MEET THE LAB TESTING CRITERIA, OR FIELD SAMPLES FAIL TO MEET THE LAB TEST CRITERIA, OR THE TRACKLESS TACK FAILS TO PERFORM SATISFACTORILY IN THE FIELD, AS NOTED ABOVE, THE CONTRACTOR WILL BE REQUIRED TO REPLACE AND SUPPLY ANOTHER APPROVED TRACKLESS TACK PRODUCT FOR THE REMAINDER OF THE PROJECT AT NO ADDITIONAL COST TO THE DEPARTMENT.

ANY FAILING TRACKLESS TACK PRODUCT WILL BE REMOVED FROM THE DEPARTMENT'S APPROVED LIST.

CALCULATED | CHECKED

GENERAL NOTES

CHP / CLA-4/ 29-VAR

I:\Maint\roadserv\resurfac\PROJECTS\CHP\4\VAR\88618\Design\88618 CHP-4_29-VAR.dgn 02-NOV-2015 2:02PM ssnell

ITEM 618 - EDGE LINE, RUMBLE STRIPE (ASPHALT CONCRETE)

DESCRIPTION: THIS WORK CONSISTS OF GRINDING DEPRESSIONS (RUMBLE STRIPES) AND PLACING 4 INCH WIDE EDGE LINES SO AS TO BE VISIBLE FROM BOTH DIRECTIONS OF TRAVEL IN THE PAVEMENT AT THE LOCATION OF THE EDGE OF PAVEMENT.

CONSTRUCT EDGE LINE RUMBLE STRIPES ACCORDING TO TRAFFIC PLAN INSERT SHEET 206410.

CONSTRUCTION OF EDGE LINE RUMBLE STRIPE: FURNISH EQUIPMENT TO GRIND THE DEPRESSIONS WITH A ROTARY CUTTING HEAD THAT WILL PRODUCE THE REQUIRED DIMENSIONS AND A PATTERN OF CUTTING TIPS TO PRODUCE A SMOOTH CUT WITH APPROXIMATELY 0.06 INCHES (1.5 MM) BETWEEN PEAKS AND VALLEYS. ENSURE THAT THE CUTTING HEAD IS ON ITS OWN SUSPENSION SYSTEM, INDEPENDENT FROM THAT OF THE POWER UNIT, TO ALLOW THE HEAD TO ALIGN ITSELF WITH THE SLOPE PAVEMENT OR ANY IRREGULARITIES IN THE PAVEMENT SURFACE. EQUIP THE CUTTING TOOL WITH GUIDES OR A GUIDANCE SYSTEM, CLEARLY VISIBLE TO THE OPERATOR, TO PROVIDE FOR CONSISTENT ALIGNMENT. TAKE EFFECTIVE MEASURES TO CONTROL DUST DURING THE GRINDING OPERATION.

LOCATION AND PLACEMENT RESTRICTIONS OF EDGE LINE RUMBLE STRIPE: EDGE LINE, RUMBLE STRIPES ARE NOT TO BE USED AT LOCATIONS WHERE THE LANE WIDTH IS LESS THAN 11 FEET AND THE POSTED SPEED LIMIT IS LESS THAN 50 MPH. RUMBLE STRIPES ARE NOT TO BE USED WHERE THE SHOULDER WIDTH IS LESS THAN 2 FEET. DISCONTINUE EDGE LINE RUMBLE STRIPES AT INTERSECTIONS, RIGHT TURN LANES, DRIVEWAYS, STRUCTURES AND 650 FEET FROM URBAN AND/OR RESIDENTIAL AREAS. DISCONTINUE RUMBLE STRIPES AT THE INTERSECTION OF TWO STATE ROUTES WHERE RAISED PAVEMENT MARKERS BEGIN OR END.

LOCATE EDGE LINE RUMBLE STRIPES ON THE PAVEMENT PER THE SPECIFICATIONS OF TRAFFIC PLAN INSERT SHEET 206410. METHOD OF MEASUREMENT: THE DEPARTMENT WILL MEASURE EDGE LINE RUMBLE STRIPES IN THE UNIT OF MILES (KILOMETERS) COMPLETED IN PLACE. THE DEPARTMENT WILL MEASURE QUANTITIES AS THE LENGTH OF COMPLETED GRINDING, INCLUDING THE GAPS, INTERSECTIONS AND OTHER SECTIONS OF PAVEMENT NOT BEING GROUND BETWEEN THE BEGINNING STRAIGHT LINE MILEAGE AND THE ENDING STRAIGHT LINE MILEAGE LISTED IN THE PLANS.

BASIS OF PAYMENT: THE DEPARTMENT WILL NOT PAY FOR REPAIRING SURFACE DAMAGE AND EXTRANEOUS MARKS CAUSED BY THE CONTRACTOR'S OPERATIONS. THE DEPARTMENT WILL PAY FOR THE EDGE LINE PAVEMENT MARKINGS ITEM 642 TRAFFIC PAINT, SEPARATELY.

A QUANTITY OF 10.08 MILES OF ITEM 618 EDGE LINE, RUMBLE STRIPE (ASPHALT CONCRETE) HAS BEEN CARRIED TO THE GENERAL SUMMARY. THE LOCATIONS ARE: CLA-4 BETWEEN SLM 17.84 - 19.84 AND BETWEEN SLM 20.70-23.74.

GRINDING MATERIAL

THE GRINDING MATERIAL SHALL BECOME THE PROPERTY OF THE CONTRACTOR AND DISPOSED OUTSIDE THE LIMITS OF THE RIGHT-OF-WAY.

PAVEMENT MARKINGS

THE RUMBLE STRIPE SHALL BE DUST-FREE AND DRY WHEN THE PAVEMENT MARKINGS ARE APPLIED.

ITEM 632 - DETECTOR LOOP, AS PER PLAN

DURING THE COURSE OF THIS CONTRACT, IT MAY BE NECESSARY FOR THE CONTRACTOR TO COORDINATE LOOP DETECTOR WORK WITH THE OHIO DEPARTMENT OF TRANSPORTATION (ODOT) AND OTHER CONTRACTORS INVOLVED WITH ASPHALT PLANING AND RESURFACING PROJECTS. THE CONTRACTOR SHALL REPLACE LOOP DETECTORS REMOVED BY ASPHALT PLANING OPERATIONS PRIOR TO PLACEMENT OF THE ASPHALT CONCRETE SURFACE COURSE.

THE ODOT WILL PROVIDE TO THE CONTRACTOR, A SET OF PLANS SHOWING THE LOCATION OF THE LOOPS TO BE REPLACED. THE CONTRACTOR SHALL COORDINATE ALL NECESSARY WORK.

THE FRONT EDGE OF THE POWERHEAD LOOP DETECTORS SHALL BE LOCATED 1 (ONE) TO 3 (THREE) FEET BEHIND THE REAR EDGE OF THE STOP LINE.

THE CONTRACTOR SHALL COORDINATE AND COLLABERATE THE LAYOUT OF ALL LOOP DETECTORS AND PAVEMENT MARKINGS WITH ODOT.

THE ODOT DISTRICT 7 TRAFFIC OFFICE SHALL BE PRESENT WHEN THE CONTRACTOR MARKS THE LOCATION WHERE THE PAVEMENT IS TO BE SAWED TO BE ASSURED THAT THE PROPOSED LOOP DETECTORS ARE IN THE SAME PLACE AS THE EXISTING LOOP DETECTORS. ALL LOOP DETECTOR INSTALLATIONS SHALL BE COMPLETED BEFORE THE ASPHALT CONCRETE SURFACE COURSE IS PLACED.

ODOT SHALL BE RESPONSIBLE FOR DISCONNECTION AND RECONNECTION OF THE LOOP DETECTORS IN THE SYSTEM. THE CONTRACTOR SHALL GIVE THE ODOT TRAFFIC OFFICE (937-497-6897) FORTY-EIGHT (48) HOURS NOTICE BEFORE BEGINNING PAVEMENT PLANING IN THESE AREAS WITH LOOP DETECTORS.

STANDARD CONSTRUCTION DRAWING, TC - 82.10

LOCATION AND NUMBER OF LOOPS ARE AS FOLLOWS:

LOCATION	QUANTITY	DIMENSION/TYPE
SR 4 AND HOME-CROFT RD.	3	ADD LOOPS

ITEM 632 - LOOP DETECTOR TIE-IN, AS PER PLAN

THIS WORK SHALL CONSIST OF MAKING CONNECTIONS TO EXISTING LOOP DETECTOR LEAD-IN WIRE, WHETHER THAT WIRE IS UNDERGROUND OR AERIAL. INCLUDED IN THIS ITEM IS THE CONNECTOR KIT OR CABLE SPLICE KIT (CONFORMING TO 725.15) THAT MUST BE USED IN MAKING THESE CONNECTIONS.

ALL CONNECTIONS OF THE LOOP WIRE TO THE LOOP LEADS SHALL BE SOLDERED PRIOR TO BEING PLACED IN THE SPLICE KITS.

THIS ITEM IS NEEDED ONLY WHEN A TIE-IN SITUATION EXISTS. WHEN ALL NEW LEAD-IN WIRE IS SPECIFIED IN THE PLAN, THIS ITEM OF WORK IS NOT REQUIRED.

PAYMENT FOR THIS ITEM WILL INCLUDE ALL NECESSARY LABOR, MISCELLANEOUS HARDWARE AND EQUIPMENT REQUIRED TO PROVIDE FOR THE LOOP DETECTOR TIE-IN AND OPERATION. BASIS OF PAYMENT WILL BE AT THE CONTRACT BID PRICE PER EACH.

I:\Maint\roadserv\resurfac\PROJECTS\CHP\4\VAR\88618\Design\88618 CHP-4_29-VAR.dgn 02-NOV-2015 2:02PM ssnell

SAFETY EDGE NOTE FOR THIN OVERLAYS

IN ADDITION TO THE REQUIREMENTS OF 401.12, ATTACH A DEVICE TO THE SCREED OF THE PAVER THAT CONFINES THE MATERIAL AT THE END GATE AND EXTRUDES THE ASPHALT MATERIAL IN SUCH A WAY THAT RESULTS IN A COMPACTED WEDGE SHAPE PAVEMENT EDGE OF APPROXIMATELY 30 DEGREES (NOT STEEPER THAN 40 DEGREES). ENSURE THE DEVICE MAINTAINS CONTACT WITH THE EXISTING SURFACE, AND ALLOW FOR AUTOMATIC TRANSITION TO CROSS ROADS, DRIVEWAYS AND OBSTRUCTIONS. DO NOT USE CONVENTIONAL SINGLE PLATE STRIKE OFF.

PROJECTS WITH VARYING CONDITIONS SHOULD USE SAFETY EDGE WHERE POSSIBLE. PLAN PREPARATION HAS MADE EVERY REASONABLE ATTEMPT TO IDENTIFY POSSIBLE SAFETY EDGE LOCATIONS.

USE THE TRANSTECH SHOULDER WEDGE MAKER, THE CARLSON SAFETY EDGE END GATE, THE ADVANT-EDGER, THE TROXLER SAFETSLOPE OR A SIMILAR APPROVED-EQUAL DEVICE THAT PRODUCES THE SAME WEDGE CONSOLIDATION RESULTS. CONTACT INFORMATION FOR THESE WEDGE SHAPE COMPACTION DEVICES IS THE FOLLOWING:

TRANSTECH SYSTEMS, INC.
1594 STATE STREET
SCHENECTADY, NY 12304
1-800-724-6306
WWW.TRANSTECHSYS.COM

CARLSON SAFETY EDGE END GATE
18425 50TH AVENUE EAST
TACOMA, WA 98446
253-875-8000

ADVANT-EDGE PAVING EQUIPMENT LLC
P.O. BOX 9163
NISKAYUNA, NY 12309-0163
518-280-6090
WWW.ADVANTAEDGEPAVING.COM

TROXLER ELECTRONIC LABORATORIES, INC.
3008 E. CORNWALLIS RD.
RESEARCH TRIANGLE PARK, NC 27709
1-877-TROXLER
WWW.TROXLERLABS.COM

IF ELECTING TO USE A SIMILAR DEVICE, PROVIDE PROOF THAT THE DEVICE HAS BEEN USED ON PREVIOUS PROJECTS WITH ACCEPTABLE RESULTS OR CONSTRUCT A TEST SECTION PRIOR TO THE BEGINNING OF WORK AND DEMONSTRATE WEDGE COMPACTION TO THE SATISFACTION OF THE ENGINEER. SHORT SECTIONS OF HANDWORK WILL BE ALLOWED WHEN NECESSARY FOR TRANSITIONS AND TURNOUTS OR OTHERWISE AUTHORIZED BY THE ENGINEER.

IN ADDITION TO THE REQUIREMENTS OF 401.16, MAKE THE FIRST ROLLER PASS 8 TO 12 INCHES (200 TO 300 MM) AWAY FROM TAPERED EDGE. DO NOT ROLL THE TAPER.

ALL EQUIPMENT, LABOR, AND MATERIALS TO CONSTRUCT A SAFETY EDGE AS DETAILED SHALL BE INCIDENTAL TO THE PAVING OPERATION AND ALL COSTS ASSOCIATED SHALL BE INCLUDED IN ITEM 441 - ASPHALT CONCRETE SURFACE COURSE, TYPE 1, (448) PG 70-22M AND ITEM 424 FINE GRADED POLYMER ASPHALT CONCRETE, TYPE B.

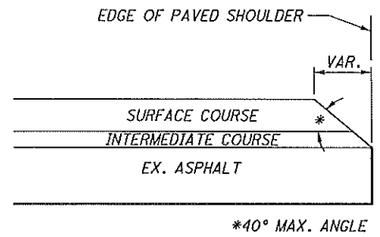

SAFETY EDGE DETAIL

BLEND TO EXISTING - CURB RAMPS

THE INTENT OF THIS PROJECT IS TO INSTALL ADA COMPLIANT CURB RAMPS AT THE INTERSECTIONS AS SHOWN IN THESE PLANS WITH MINOR UTILITY INVOLVEMENT. THE CONTRACTOR SHALL BLEND TO EXISTING CURB INLETS/MANHOLES OR UTILITY POLES WITHIN RIGHT-OF-WAY CONSTRAINTS WHERE APPLICABLE, UNLESS RELOCATION PER THE UTILITY IS NEEDED. ALL CURB RAMP STANDARDS PER BP-7.1 SHALL APPLY UNLESS OTHERWISE NOTED IN THESE PLANS.

ITEM 609 - COMBINATION CURB AND GUTTER, TYPE 2, AS PER PLAN
ITEM 609 - CURB, TYPE 6, AS PER PLAN

THE PROPOSED PAVEMENT WORK NEEDED TO MATCH EXISTING PAVEMENT/PROPOSED RESURFACING (REMOVED AS PART OF ITEM 202, CURB REMOVED, AS PER PLAN) SHALL BE INCLUDED IN THE PROPOSED CURB ITEM.

ITEM 202, CURB REMOVED, AS PER PLAN

THE CONTRACTOR MAY NEED TO REMOVE PART OF THE EXISTING PAVEMENT AROUND THE PROPOSED CURB RAMP AREA. ALL COST ASSOCIATED WITH PAVEMENT REMOVAL SHALL BE INCLUDED IN THE CURB REMOVAL ITEM.

ITEM 608, CURB RAMP, TYPE A1, AS PER PLAN
ITEM 608, CURB RAMP, TYPE A2, AS PER PLAN
ITEM 608, CURB RAMP, TYPE B2, APP

ALL CURB RAMPS SHALL BE CONSTRUCTED AS DETAILED IN THESE PLANS. FOR DETAILS NOT SHOWN IN THESE PLANS OR OTHER CURB RAMP NOTES, THE CONTRACTOR SHALL REFER TO STANDARD DRAWING BR-7.1.

ITEM 202, WALK REMOVED, AS PER PLAN

IT SHALL BE THE CONTRACTORS RESPONSIBILITY TO SAW CUT ALL EXISTING WALK AREAS TO BE REMOVED, AND CARE SHALL BE TAKEN NOT TO DAMAGE THE EXISTING AREAS TO REMAIN IN PLACE. ALL LABOR, MATERIAL, EQUIPMENT, AND INCIDENTALS NECESSARY TO COMPLETE THIS ITEM OF WORK SHALL BE PAID FOR UNDER THE UNIT BID PER SQUARE FOOT, FOR ITEM 202, WALK REMOVED, AS PER PLAN.

AIR SPEED ZONE MARKING (CLA SR4 SLM 22.00-23.00)

AIR SPEED ZONE MARKINGS SHALL BE WHITE AND 24 INCHES WIDE MEASURED IN THE DIRECTION OF TRAVEL AND 4 FEET IN LENGTH. ON TWO-LANE ROADWAYS WITH PAVED SHOULDERS LESS THAN 4 FEET IN WIDTH, THE AIR SPEED ZONE MARKINGS SHALL BE PLACED WITH 2 FEET ON EACH SIDE OF THE CENTER LINE OR EDGE LINE MARKINGS. WHEN PAVED SHOULDERS OF SUFFICIENT WIDTH ARE AVAILABLE, THE AIR SPEED ZONE MARKINGS SHALL BE PLACED ON THE SHOULDERS.

PLACE THE MARKINGS AT 0.25 MILE INTERVALS OVER A 1 MILE LENGTH OF ROADWAY.

IT IS THE CONTRACTOR'S RESPONSIBILITY TO HAVE THE MARKINGS LAID OUT BY A REGISTERED SURVEYOR. A RECORD IS TO BE KEPT AND ONE ORIGINAL SIGNED AND SEALED DOCUMENT IS TO BE SENT TO THE DISTRICT TRAFFIC ENGINEER AND ONE COPY IS TO BE SENT TO THE DISTRICT CONSTRUCTION ENGINEER.

MATERIALS, EQUIPMENT AND APPLICATION SHALL BE ACCORDING TO THE TYPE OF PAVEMENT MARKING MATERIAL USED.

PAYMENT SHALL BE ACCORDING TO THE PAVEMENT MARKING MATERIAL USED AND SHALL INCLUDE THE SURVEYING WORK. THE FIVE MARKINGS PLACED IN EACH 1 MILE OF ROADWAY SHALL EQUAL ONE ZONE. THE ZONE SHALL BE MEASURED AS 1 EACH FOR AIR SPEED ZONE MARKING.

CALCULATED
CHECKED

GENERAL NOTES

CHP / CLA-4 / 29-VAR

I:\Maint\roadserv\resurfac\PROJECTS\CHP\4\VAR\88618\Design\88618 CHP-4_29-VAR.dgn 02-NOV-2015 2:02PM ssnell

SHEET NUM.												PART.			ITEM	ITEM EXT	GRAND TOTAL	UNIT	DESCRIPTION	SEE SHEET NO.
2	3	6	8	9	12	15	16	17	23			01/NHS/PV	02/STR/BR	03/STR/PV						
																			ROADWAY	
									2					2	202	23010	2	SY	PAVEMENT REMOVED, ASPHALT	
3589	457											3589		457	202	23500	4,046	SY	WEARING COURSE REMOVED	
									1097					1097	202	30001	1,097	SF	WALK REMOVED, AS PER PLAN	9
					70				178			70		178	202	32001	248	FT	CURB REMOVED, AS PER PLAN	7, 9
						500						500			202	38001	500	FT	GUARDRAIL REMOVED, AS PER PLAN	15
						2						2			202	42010	2	EACH	ANCHOR ASSEMBLY REMOVED, TYPE E	
						2						2			202	42040	2	EACH	ANCHOR ASSEMBLY REMOVED, TYPE T	
									2					2	203	20000	2	CY	EMBANKMENT	
						237.5						237.5			606	15050	237.50	FT	GUARDRAIL, TYPE MGS	
						175						175			606	15151	175	FT	GUARDRAIL, TYPE MGS HALF POST SPACING, AS PER PLAN	14
						1						1			606	20050	1	EACH	ROUNDED END SECTION	
						2						2			606	26150	2	EACH	ANCHOR ASSEMBLY, MGS TYPE E	
						2						2			606	26550	2	EACH	ANCHOR ASSEMBLY, MGS TYPE T	
									278					278	608	10000	278	SF	4" CONCRETE WALK	
									200					200	608	52011	200	SF	CURB RAMP, TYPE A1, AS PER PLAN	9
									314					314	608	52021	314	SF	CURB RAMP, TYPE A2, AS PER PLAN	9
									295					295	608	52041	295	SF	CURB RAMP, TYPE B2, APP	9
									16					16	608	53020	16	SF	DETECTABLE WARNING	
			10.08									10.08			618	41000	10.08	MILE	EDGE LINE, RUMBLE STRIPE (ASPHALT CONCRETE)	
		19										15		4	SPECIAL	69050350	19	EACH	MAILBOX REMOVED AND RESET	6
																			DRAINAGE	
		12										12			611	99654	12	EACH	MANHOLE ADJUSTED TO GRADE	
																			PAVEMENT	
		2100										1450		650	253	01001	2,100	SY	PAVEMENT REPAIR, AS PER PLAN	6
3333	28946											3333		28946	254	01001	32,279	SY	PAVEMENT PLANING, ASPHALT CONCRETE, AS PER PLAN	6
		400												400	254	01601	400	SY	PATCHING PLANED SURFACE, AS PER PLAN	6
		105										82		23	301	46001	105	CY	ASPHALT CONCRETE BASE, PG64-22, AS PER PLAN	6
18777					73							18850			407	10000	18,850	GAL	TACK COAT	
	8420				25								25	8420	SPECIAL	40720500	8,445	GAL	TACK COAT, TRACKLESS TACK	7
6955					27							6982			424	12000	6,982	CY	FINE GRADED POLYMER ASPHALT CONCRETE, TYPE B	
	2544				8								8	2544	441	50100	2,552	CY	ASPHALT CONCRETE SURFACE COURSE, TYPE 1, (448), PG70-22M	
	1524				12								12	1524	441	50200	1,536	CY	ASPHALT CONCRETE INTERMEDIATE COURSE, TYPE 1, (448)	
									2					2	609	12001	2	FT	COMBINATION CURB AND GUTTER, TYPE 2, AS PER PLAN	9
					70				48				70	48	609	26001	118	FT	CURB, TYPE 6, AS PER PLAN	9
907	361											907		361	617	10100	1,268	CY	COMPACTED AGGREGATE	
																			WATER WORK	
		10												10	638	10800	10	EACH	VALVE BOX ADJUSTED TO GRADE	
																			TRAFFIC SIGNALS	
			3									3			632	26501	3	EACH	DETECTOR LOOP, AS PER PLAN	8
			3									3			632	27201	3	EACH	LOOP DETECTOR TIE IN, AS PER PLAN	8
																			STRUCTURE REPAIR (CHP-4-0217)	
					1052							1052			202	23500	1,052	SY	WEARING COURSE REMOVED	
																			STRUCTURE REPAIR (CHP-4-0394)	
					176							176			SPECIAL	51631200	176	FT	SAWING AND SEALING BITUMINOUS CONCRETE JOINTS	7
																			STRUCTURE REPAIR (CHP-4-0608)	
					176							176			SPECIAL	51631200	176	FT	SAWING AND SEALING BITUMINOUS CONCRETE JOINTS	7
																			STRUCTURE REPAIR (CHP-29-3145)	
					217								217		202	23500	217	SY	WEARING COURSE REMOVED	
					1.4								1.4		846	00120	1.40	CY	POLYMER MODIFIED ASPHALT EXPANSION JOINT SYSTEM	
					217								217		512	33010	217	SY	TYPE 3 WATERPROOFING	
																			STRUCTURE REPAIR (CLA-4-2312)	
					689							689			202	23500	689	SY	WEARING COURSE REMOVED	
																			STRUCTURE REPAIR (CLA-4-2335)	
					995							995			202	23500	995	SY	WEARING COURSE REMOVED	
					176							176			SPECIAL	51631200	176	FT	SAWING AND SEALING BITUMINOUS CONCRETE JOINTS	7

CALCULATED

CHECKED

GENERAL SUMMARY

CHP / CLA-4 / 29-VAR

I:\Maint\roadserv\resurfac\PROJECTS\CHP\4\VAR\88618\Design\88618 CHP-4_29-VAR.dgn 02-NOV-2015 2:03PM ssnell

SHEET NUM.										PART.				ITEM	ITEM EXT	GRAND TOTAL	UNIT	DESCRIPTION	SEE SHEET NO.
2	3	6	8	9	12	15	16	17	23	01/NHS/PV	02/STR/BR	03/STR/PV							
																		TRAFFIC CONTROL	
								1153		974		179		621	00100	1,153	EACH	RPM	
										996		179		621	54000	1,175	EACH	RAISED PAVEMENT MARKER REMOVED	
									26			26		630	03100	26	FT	GROUND MOUNTED SUPPORT, NO. 3 POST	
									8			8		630	80100	8	SF	SIGN, FLAT SHEET	
										21.2		5.84		642	00090	27.04	MILE	EDGE LINE, 4"	
							6.96			6.96				642	00094	6.96	MILE	EDGE LINE, 6"	
							0.19			0.19				642	00190	.19	MILE	LANE LINE, 4"	
										14.25		3.87		642	00290	18.12	MILE	CENTER LINE	
							715			715				644	00400	715	FT	CHANNELIZING LINE, 8"	
							473			334		139		644	00500	473	FT	STOP LINE	
							1030					1030		644	00600	1,030	FT	CROSSWALK LINE	
							203			203				644	00700	203	FT	TRANSVERSE/DIAGONAL LINE	
							8			6		2		644	01000	8	EACH	RAILROAD SYMBOL MARKING	
							363					363		644	01200	363	FT	PARKING LOT STALL MARKING	
							5			5				644	01300	5	EACH	LANE ARROW	
							4					4		644	01600	4	EACH	HANDICAP SYMBOL MARKING	
				1						1				SPECIAL	64440000	1	EACH	AIR SPEED ZONE MARKING	9
																		MAINTENANCE OF TRAFFIC	
		50								20		30		614	11110	50	HOUR	LAW ENFORCEMENT OFFICER WITH PATROL CAR FOR ASSISTANCE	
										119		21		614	12460	140	EACH	WORK ZONE MARKING SIGN	
										28.32		9.03		614	21400	37.35	MILE	WORK ZONE CENTER LINE, CLASS II	
										206		125		614	26610	331	FT	WORK ZONE STOP LINE, CLASS III, 642 PAINT	
																		INCIDENTALS	
										LS	LS	LS		614	11000	LS		MAINTAINING TRAFFIC	
										LS	LS	LS		624	10000	LS		MOBILIZATION	

CALCULATED

CHECKED

GENERAL SUMMARY

CHP / CLA-4 / 29-VAR

I:\Maint\roadserv\resurfac\PROJECTS\CHP\4\VAR\88618\Design\88618 CHP-4_29-VAR.dgn 05-NOV-2015 8:03AM SSNELL

PART	CHP-4 0217	CHP-4 0394	CHP-4 0608	CHP-29 3145	CLA-4 2312	CLA-4 2335	ITEM	ITEM EXTENSION	GRAND TOTAL	UNIT	DESCRIPTION
	1052			217	689	995	202	23500	2953	SY	WEARING COURSE REMOVED
	34					39	407	10000	73	GAL	TACK COAT
				8			441	50100	8	CY	ASPHALT CONCRETE SURFACE COURSE, TYPE 1, (448), PG70-22M
				12			441	50200	12	CY	ASPHALT CONCRETE INTERMEDIATE COURSE, TYPE 1, (448)
				1.4			846	00120	1.4	CY	POLYMER MODIFIED ASPHALT EXPANSION JOINT SYSTEM
		176	176			176	SPECIAL	51631200	528	FT	SAWING AND SEALING BITUMINOUS CONCRETE JOINTS
				70			202	32001	70	FT	CURB REMOVED, AS PER PLAN
				70			609	26001	70	FT	CURB, TYPE 6, AS PER PLAN
				217			512	33010	217	SY	TYPE 3 WATER PROOFING
	13					14	424	12000	27	CY	FINE GRADED POLYMER ASPHALT CONCRETE, TYPE B
				25			SPECIAL	40720500	25	GAL	TACK COAT, TRACKLESS TACK
	**CHP-4-3.94 AND CHP-4-6.08 SEE NOTE ON SHEET 6 FOR WORK										
	*** CLA-4-23.12 WORK SHALL CONSIST OF BUTT JOINT PAVEMENT AT APPROACH SLABS, NO WORK ON STRUCTURE										

BRIDGE No.	LENGTH (BRIDGE LIMITS) FT.	WIDTH FT.	BRIDGE DECK AREA SQ. YD.	STRUCTURE FILE NUMBER	COMMENTS (WEARING COURSE)
CHP-4-0217	92.5	44	452	1100025	4.5"+/- EXISTING ASPHALT CONCRETE
CHP-4-0394	22.4	44	110	1100068	4.5"+/- EXISTING ASPHALT CONCRETE
CHP-4-0608	34	44	166	1100122	5"+/- EXISTING ASPHALT CONCRETE
CHP-29-3145	69.8	28	217	1100661	4.5"+/- (EST) EXISTING ASPHALT CONCRETE
CLA-4-2312	67	44	328	1200550	CONCRETE SLAB DECK
CLA-4-2335	106	44	518	1200577	CONCRETE SLAB WITH 3" +/- ASPHALT CONCRETE

QUANTITIES TO BE CARRIED TO THE GENERAL SUMMARY.

CALCULATED
CHECKED

BRIDGE DATA

CHP / CLA-4/ 29-VAR

I:\Maint\roadserv\resurfac\PROJECTS\CHP\4\VAR\88618\Design\88618 CHP-4_29-VAR.dgn 02-NOV-2015 2:03PM ssnell

EXISTING STRUCTURE VERIFICATION

DETAILS AND DIMENSIONS SHOWN IN THESE PLANS PERTAINING TO THE EXISTING STRUCTURE HAVE BEEN OBTAINED FROM THE PLANS OF THE EXISTING STRUCTURE AND FROM FIELD OBSERVATION AND MEASUREMENTS. CONSEQUENTLY, THEY ARE INDICATIVE OF THE STRUCTURE AND PROPOSED WORK, BUT THEY SHALL BE CONSIDERED TENTATIVE AND APPROXIMATE. THE CONTRACTOR IS REFERRED TO THE CMS SECTIONS 102.05 AND 105.02.

CONTRACT BID PRICES SHALL BE BASED UPON A RECOGNITION OF THE UNCERTAINTIES DESCRIBED ABOVE AND UPON A PRE-BID EXAMINATION OF THE EXISTING STRUCTURES BY THE CONTRACTOR. HOWEVER, ALL PROJECT WORK SHALL BE BASED UPON ACTUAL DETAILS AND DIMENSIONS, WHICH HAVE BEEN VERIFIED BY THE CONTRACTOR IN THE FIELD. PLANS OF THE EXISTING STRUCTURES MAY BE EXAMINED AT THE DISTRICT SEVEN OFFICE IN SIDNEY, OHIO OR THE OFFICE OF STRUCTURAL ENGINEERING IN COLUMBUS, OHIO.

PROPOSED WORK - CHP-4-2.17 AND CLA-4-23.35

PERFORM WEARING COURSE REMOVED 100' BACK FROM BRIDGE JOINT FOR A SMOOTH TRANSITION ACROSS BRIDGE. REMOVE ONE INCH (1.00") FROM BRIDGE DECK. ENSURE THAT THE WEARING COURSE REMOVAL DOES NOT IMPACT THE EXISTING WATERPROOFING MATERIAL. REPLACE WITH ONE INCH (1.00") OF FINE GRADED POLYMER ASPHALT CONCRETE, TYPE B.

CLA-4-2335 WILL ALSO HAVE JOINTS SAWED AND SEALED AS DETAILED IN NOTE ON SHEET 7.

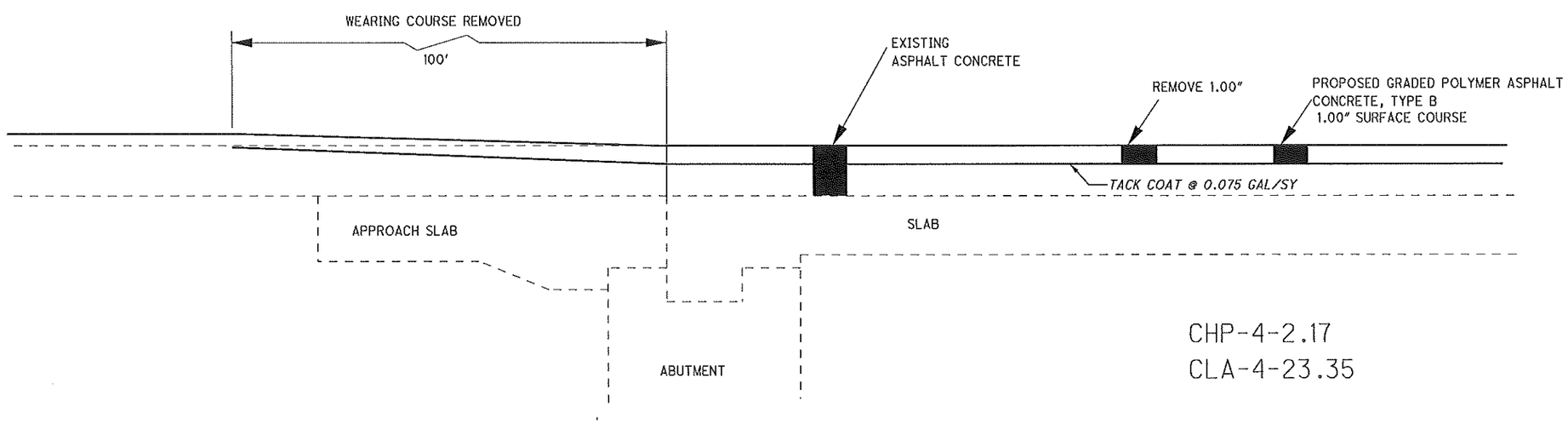

CALCULATED
CHECKED

BRIDGE DATA

CHP/CLA-4/29-VAR

I:\Maint\roadserv\resurfac\PROJECTS\CHP\4\VAR\88618\Design\88618 CHP-4_29-VAR.dgn 02-NOV-2015 2:04PM ssnell

EXISTING STRUCTURE VERIFICATION

DETAILS AND DIMENSIONS SHOWN IN THESE PLANS PERTAINING TO THE EXISTING STRUCTURE HAVE BEEN OBTAINED FROM THE PLANS OF THE EXISTING STRUCTURE AND FROM FIELD OBSERVATION AND MEASUREMENTS. CONSEQUENTLY, THEY ARE INDICATIVE OF THE STRUCTURE AND PROPOSED WORK, BUT THEY SHALL BE CONSIDERED TENTATIVE AND APPROXIMATE. THE CONTRACTOR IS REFERRED TO THE CMS SECTIONS 102.05 AND 105.02.

CONTRACT BID PRICES SHALL BE BASED UPON A RECOGNITION OF THE UNCERTAINTIES DESCRIBED ABOVE AND UPON A PREBID EXAMINATION OF THE EXISTING STRUCTURES BY THE CONTRACTOR. HOWEVER, ALL PROJECT WORK SHALL BE BASED UPON ACTUAL DETAILS AND DIMENSIONS, WHICH HAVE BEEN VERIFIED BY THE CONTRACTOR IN THE FIELD. PLANS OF THE EXISTING STRUCTURES MAY BE EXAMINED AT THE DISTRICT SEVEN OFFICE IN SIDNEY, OHIO OR THE OFFICE OF STRUCTURAL ENGINEERING IN COLUMBUS, OHIO.

PROPOSED WORK - CHP-29-31.45

MILL ALL OF THE EXISTING ASPHALT AND WATERPROOFING CURRENTLY ON THE BRIDGE. INSTALL NEW TYPE 3 WATERPROOFING OVER BRIDGE DECK. OVERLAY BRIDGE DECK WITH VARIABLE DEPTH ITEM 441 INTERMEDIATE COURSE AND 1.25" ITEM 441 SURFACE COURSE. APPLY POLYMER MODIFIED ASPHALT EXPANSION JOINT SYSTEM. REPAIR/REBUILD 70 LIN.FT. OF CURB PORTION OF THE SIDEWALK.

THE CONTRACTOR SHALL NOT ALLOW TRAFFIC TO RUN ON THE MILLED SURFACE, THIS STRUCTURE WILL REQUIRE HALF WIDTH CONSTRUCTION FOR THE PLACEMENT OF THE WATERPROOFING MATERIAL AND THE ASPHALT CONCRETE INTERMEDIATE COURSE.

THE CONTRACTOR SHALL NEED TO MAINTAIN THE EDGE SLOT DRAINAGE OF THE STRUCTURE DURING THE PAVEMENT OPERATIONS.

ITEM 846 - POLYMER MODIFIED ASPHALT EXPANSION JOINT SYSTEM

SEE SUPPLEMENTAL SPEC 846. ALL ASPHALT DIMENSIONS ARE MEASURED AT THE EDGE OF THE STRUCTURE. THE ACTUAL DEPTH OF THE JOINT WILL BE THICKER AT THE CENTER OF THE ROADWAY. REMOVAL OF THE EXISTING JOINT SEALER SHALL BE INCLUDED IN THIS ITEM.

TYPICAL PAVEMENT DETAIL TO MAINTAIN CROSS SLOPE

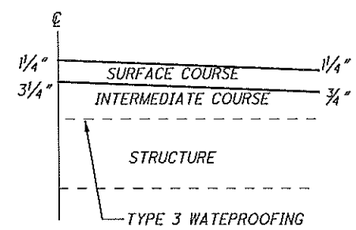

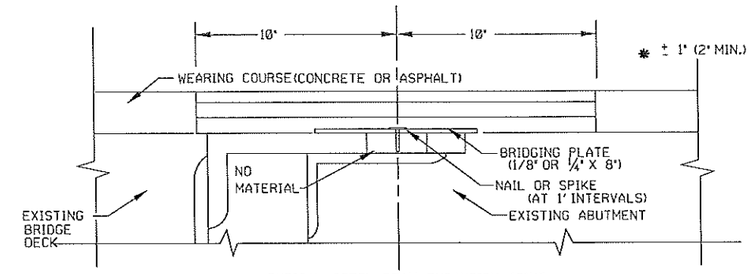

TYPICAL STEEL BEAM EXPANSION JOINT

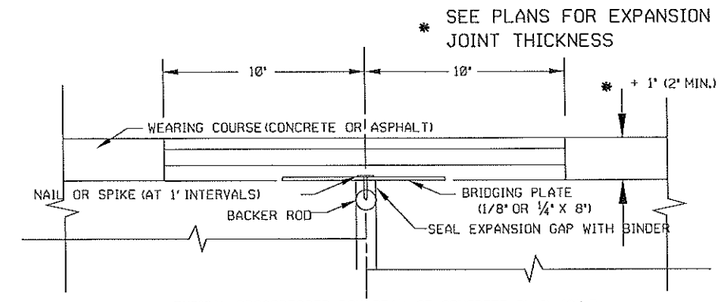

TYPICAL PRESTRESSED BOX BEAM OR CONCRETE SLAB JOINT

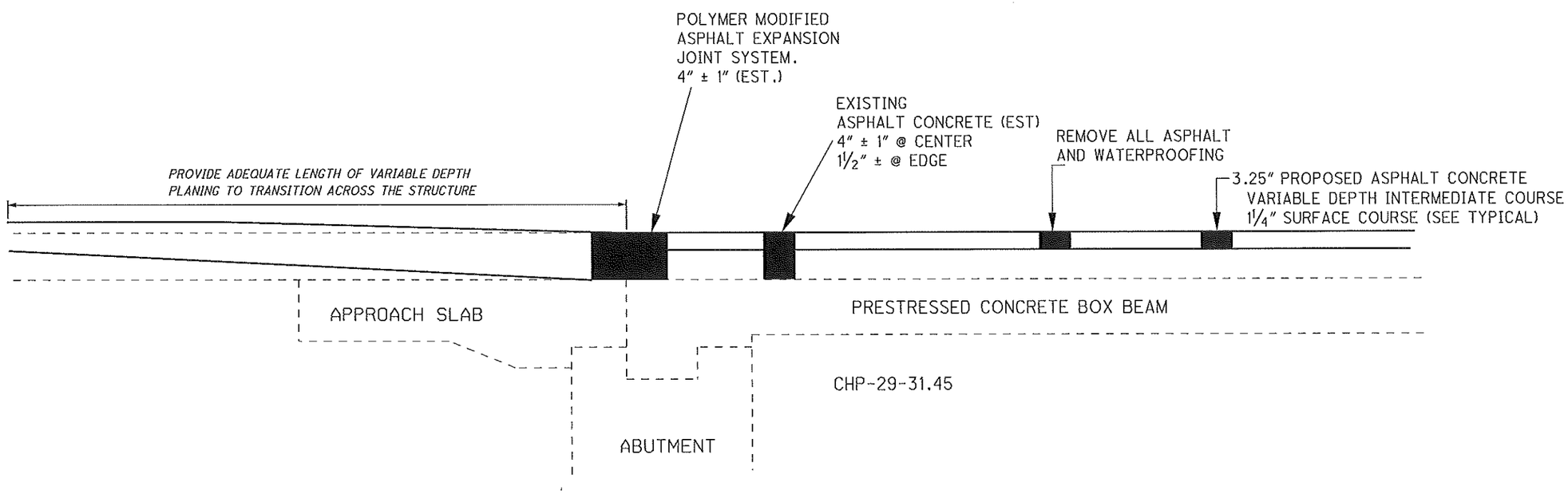

CALCULATED
CHECKED

BRIDGE DATA

CHP/CLA-4/29-VAR

I:\Maint\roadserv\resurfac\PROJECTS\CHP\4\VAR\88618\Design\88618 CHP-4_29-VAR.dgn 02-NOV-2015 2:04PM ssnell

DND = DO NOT DISTURB
C.Z. = CLEAR ZONE

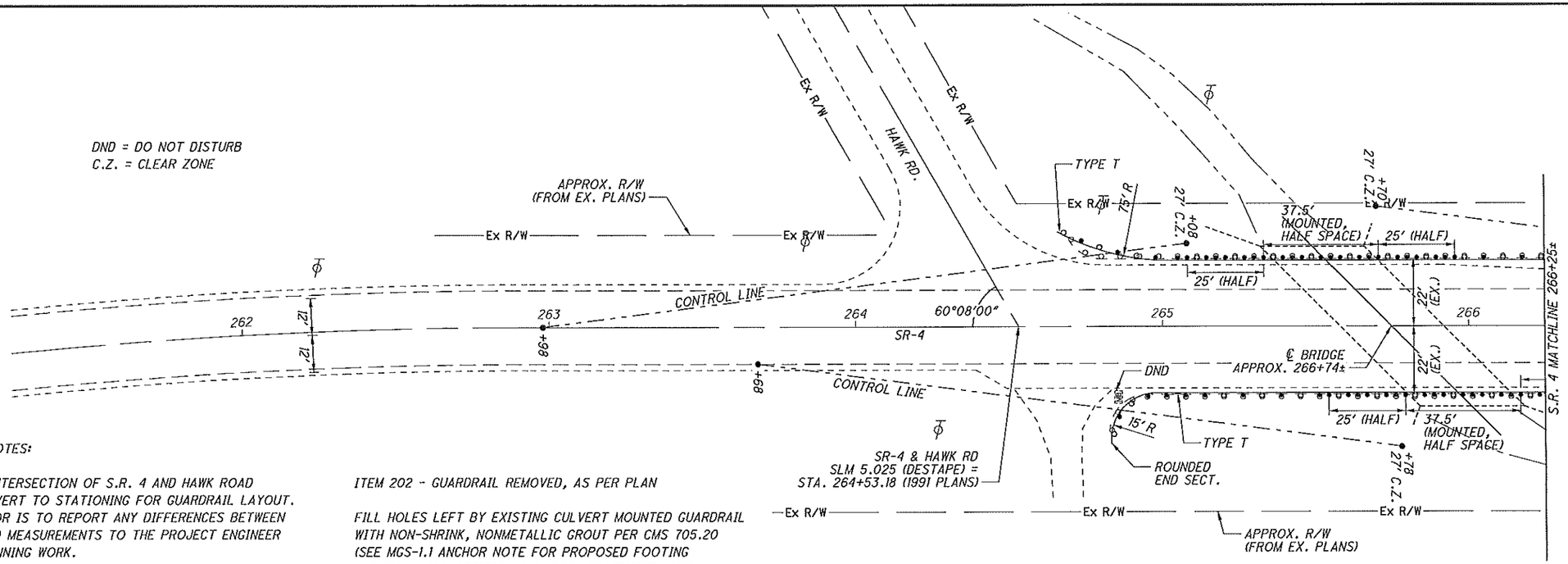

CONTRACTOR NOTES:

1. USE THE ℄ INTERSECTION OF S.R. 4 AND HAWK ROAD S.L.M. TO CONVERT TO STATIONING FOR GUARDRAIL LAYOUT. THE CONTRACTOR IS TO REPORT ANY DIFFERENCES BETWEEN PLAN AND FIELD MEASUREMENTS TO THE PROJECT ENGINEER PRIOR TO BEGINNING WORK.

2. GUARDRAIL SHALL BE CONSTRUCTED TO A MINIMUM WHERE THE CONTROL LINE CROSSES THE PROPOSED GUARDRAIL (LENGTH OF NEED - L.O.N.).

3. MOUNT PROPOSED GUARDRAIL TO THE EXISTING CULVERT PER STD. DWG. MGS-1.1 AS A STARTING POINT TO THE REST OF THE GUARDRAIL RUN. AVOID MOUNTING ON CULVERT JOINTS WHERE POSSIBLE. SHIFT THE OFFSET OF THE GUARDRAIL TO MAINTAIN 18" MINIMUM OFFSET TO THE HEADWALL (SEE FOOTING ANCHOR DETAIL).

4. USE HALF-POST GUARDRAIL SPACING FOR 25' BEFORE AND AFTER THE CULVERT DUE TO THE REDUCTION OF DEFLECTION ALLOWED AT THE HEADWALLS.

ITEM 202 - GUARDRAIL REMOVED, AS PER PLAN

FILL HOLES LEFT BY EXISTING CULVERT MOUNTED GUARDRAIL WITH NON-SHRINK, NONMETALLIC GROUT PER CMS 705.20 (SEE MGS-1.1 ANCHOR NOTE FOR PROPOSED FOOTING ANCHOR). ALL ADDITIONAL LABOR, EQUIPMENT, AND MATERIALS ASSOCIATED WITH THE REMOVAL OF EXISTING GUARDRAIL MOUNTED TO THE CULVERT SHALL BE INCLUDED IN THE UNIT PRICE PER FT OF GUARDRAIL REMOVED.

ITEM 606 - GUARDRAIL, TYPE MGS HALF POST SPACING, AS PER PLAN

IN ADDITION TO THE STANDARD INSTALLATION OF GUARDRAIL MOUNTED TO THE EXISTING CULVERT, THE CONTRACTOR SHALL CAULK AROUND THE PLATE MOUNTED TO THE BOX WITH A COMPOUND PER ASTM C920 TYPE S, CLASS 50.

ITEM	ESTIMATED QUANTITIES TO GEN. SUMMARY	UNITS	DESCRIPTION
202E38001	500	FT	GUARDRAIL REMOVED, AS PER PLAN
202E42010	2	EACH	ANCHOR ASSEMBLY REMOVED, TYPE E
202E42040	2	EACH	ANCHOR ASSEMBLY REMOVED, TYPE T
606E15050	237.5	FT	GUARDRAIL, TYPE MGS
606E15151	175	FT	GUARDRAIL, TYPE MGS HALF POST SPACING, AS PER PLAN
606E20050	1	EACH	ROUNDED END SECTION
606E26150	2	EACH	ANCHOR ASSEMBLY, MGS TYPE E
606E26550	2	EACH	ANCHOR ASSEMBLY, MGS TYPE T

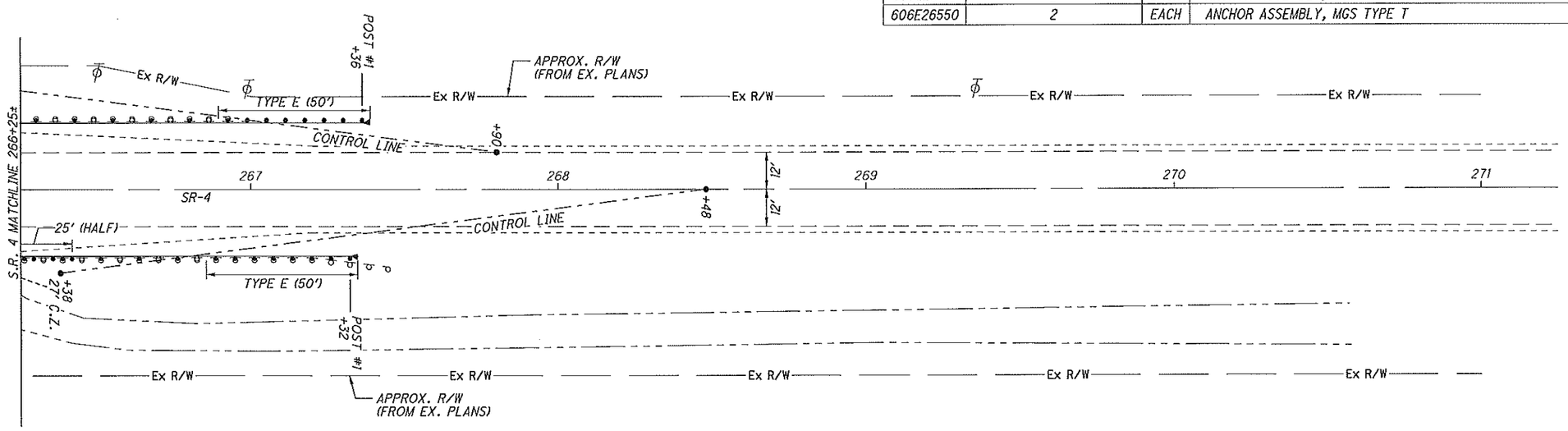

HORIZONTAL SCALE IN FEET 0 10 20 40

CALCULATED RPH
CHECKED

CHP-4-5.049 ±
GUARDRAIL REPLACEMENT

CHP/CLA-4/29-VAR

15
23

i:\Maint\roadserv\resurfac\PROJECTS\CHP\4\VAR\88618\88618_GR001.dgn 02-NOV-2015 2:39PM ssnell

CTY	RTE	SLM	INTERSECTION	644 STOP LINE FT	644 CHANNELIZING LINE, 8" FT	644 CROSSWALK LINE FT	644 TRANSVERSE/DIAGONAL LINE FT	644 RAILROAD SYMBOL MARKER EACH	644 PARKING LOT STALL MARKING FT	644 HANDICAP SYMBOL MARKING EACH	644 LANE ARROW EACH	642 LANE LINE, 4" MILE	642 EDGE LINE, 6" MILE
CLA	4	17.66	HOME-CROFT	37	475		132				5	0.19	
CLA	4	18.00	MIDDLE URBANA	34									
CLA	4	18.71	VILLA	20									
CLA	4	19.1	BOSART	29									
CLA	4	19.66	SR 334	34	240		71						
CLA	4	21.24	MOOREFIELD	45									
CLA	4	17.66 TO 21.24											6.96
CHP	4	1.36	SR 54	82									
CHP	4	2.78, 4.69, 6.06						6					
CHP	4	4.3	SR 56	53									
CHP	29	30.41	PARK			144							
CHP	29	30.55	WALNUT	14		212							
CHP	29	30.62	SR 559	17		82			363	4			
CHP	29	30.77	RACE			236							
CHP	29	30.89	SR 4/SANDUSKY	49		356							
CHP	29	31.09						2					
CHP	29	32.37	SR 187	59									
TOTALS CARRIED TO GENERAL SUMMARY				473	715	1030	203	8	363	4	5	0.19	6.96

CALCULATED

CHECKED

PAVEMENT MARKING SUBSUMMARY

CHP / CLA-4 / 29-VAR

I:\Maint\roadserv\resurfac\PROJECTS\CHP\4\VAR\88618\Design\88618 CHP-4_29-VAR.dgn 30-NOV-2015 9:12AM ssnell

RAISED PAVEMENT MARKERS

LOCATION				DETAIL	PRISMATIC RETRO-REFLECTOR TYPES					TOTAL RPM	REMARKS
PART	ROUTE	SLM			ONE-WAY		TWO-WAY				
		FROM	TO		WHITE	YELLOW	WHITE/ WHITE	YELLOW/ YELLOW	WHITE/ RED		
	CHP SR 4	0.00	1.18	GAP				79		79	
		1.18	1.48	8				20		20	SR 54
		1.48	4.13	GAP				175		175	
		4.13	4.43	8				20		20	SR 56
		4.43	6.93	GAP				165		165	
	TOTAL SR 4							459		459	
	CHP SR 29	31.38	32.11	GAP				49		49	
		32.11	32.23	15				16		16	
		32.23	32.51	8				19		19	SR 187 (ONE RPM NEEDS REMOVED/REPLACED ON SR 187 APPROACH)
		32.51	33.95	GAP				95		95	
	TOTAL SR 29							179		179	
	CLA SR4	17.65	17.82	9				17	27	44	HOME/CROFT ROAD
		17.82	19.50	GAP				111		111	
		19.50	19.80	8				20	7	27	SR 334
		19.80	24.85	GAP				333		333	
	TOTAL SR4							481	34	515	
											PAVEMENT MARKING NOTES
											LANE WIDTH = CLA SR 4 - 12 FT, CHP SR 29 - 11.5 FT, CHP SR4-11.5 FT
											SOLID LINE EQUIVALENT = CLA SR 4 - 7.95 MILES, CHP 4 -7.8 MILES, CHP SR 29 - 4.78 MILES
											THE EDGE LINE SHALL BE CONTINUED AROUND ALL RADII TO MATCH THE EDGE LINE OF THE INTERSECTING ROUTE. IF THE INTERSECTING ROUTE HAS A CENTER LINE, THE CENTER LINE SHALL BE RE-STRIPED OVER THE AREA OF THE RESURFACING.
	TOTALS CARRIED TO GEN. SUMMARY									1153	

1	Multilane Divided	5	Multilane Divided / Expressway	10	4 Lane Divided to 2 Lane Transition	15	Horizontal Curve
1	Typical Spacing	6	Stop Approach	11	4 Lane Undivided to 2 Lane Transition	16	Horizontal Curve Alt.
2	Tapered Acceleration Lane	7	1 Lane Approach w/Left Turn Lane	12	Two Lane Narrow Bridge	17	Stop Approach Alt.
3	Deceleration Lane	8	Thru Approach	13	Two Way Left Turn Lane	GAP	Centerline at 80.0 Ft. Typical
4	Parallel Acceleration Lane	9	2 Lane Approach w/Left Turn Lane	14	One Lane Bridge		

CALCULATED
CHECKED

RAISED PAVEMENT MARKERS

CHP / CLA-4/ 29-VAR

i:\Maint\roadserv\resurfac\PROJECTS\CHP\4\VAR\88618\Design\88618 CHP-4_29-VAR.dgn 02-NOV-2015 2:05PM ssnell

SR 29 (W. MAIN ST.)

ITEM	EXTENSION	REF. No. W1	REF. No. W2	TOTAL	UNIT	DESCRIPTION
202	30001	15	15	30	SQ.FT.	WALK REMOVED, AS PER PLAN
608	10000	15	15	30	SQ.FT.	4" CONCRETE WALK
608	53020	6	6	12	SQ.FT.	DETECTABLE WARNING

CENTRAL AVE.

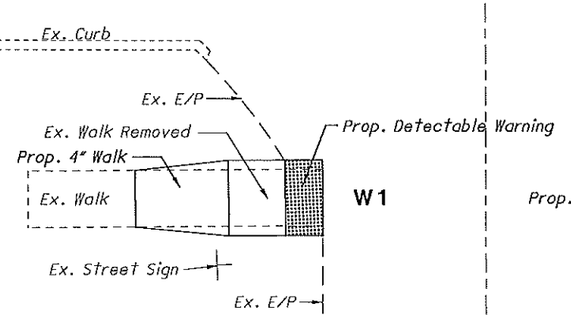

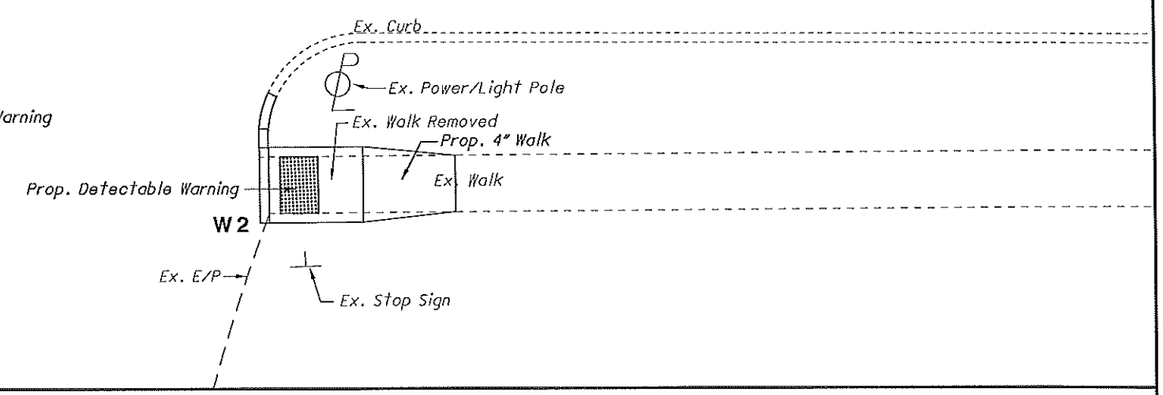

ALL QUANTITIES CARRIED TO SHEET 20.

SR 29 (W. MAIN ST.)

ITEM	EXTENSION	REF. No. CR1	REF. No. CR2	TOTAL	UNIT	DESCRIPTION
202	23000	.56	1.6		SQ.YD.	ASPHALT REMOVED
202	30001	60	88.5	148.5	SQ.FT.	WALK REMOVED, AS PER PLAN
202	32001	13	14	27	FOOT	CURB REMOVED, AS PER PLAN
608	52061	69.7	113.1	67.5	SQ.FT.	CURB RAMP, TYPE A2, AS PER PLAN
609	26000	2	2	4	FOOT	CURB, TYPE 6, AS PER PLAN

= AREA AND ITEMS INCLUDED IN COST OF CURB RAMP

UNION AVE.

TYPE A2, AS PER PLAN (COMBINED WITH RETURN CURB)

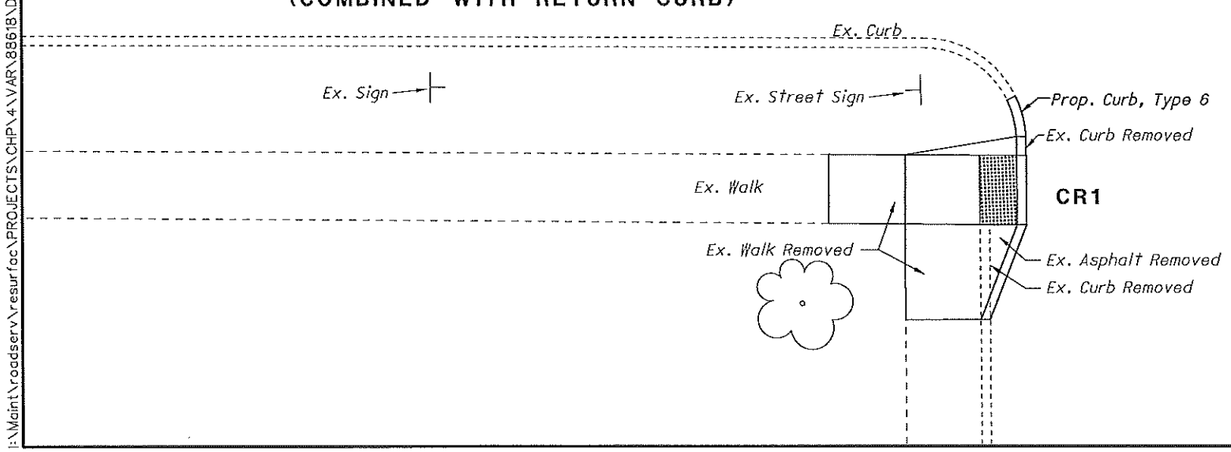

TYPE A2, AS PER PLAN (COMBINED WITH RETURN CURB)

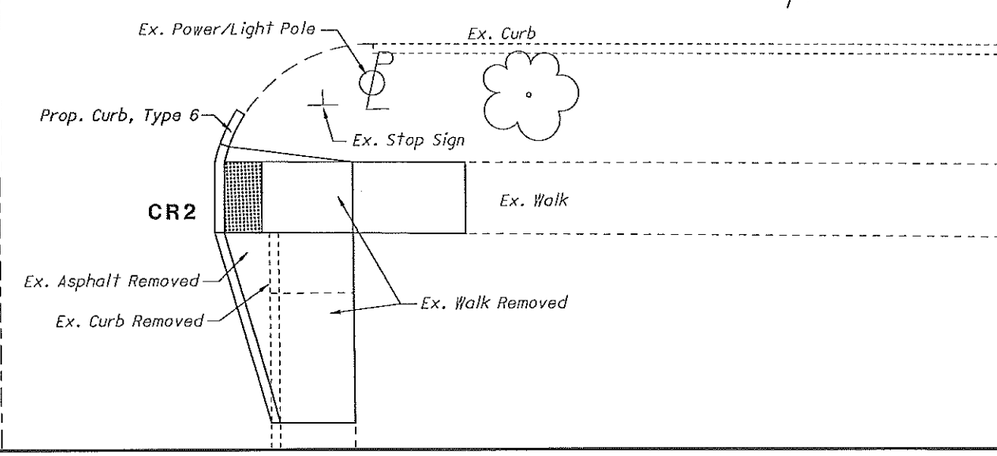

CALCULATED
CHECKED

CHP/CLA-4/29-VAR - SR 29 * CENTRAL AVE./UNION AVE.

CURB RAMPS

I:\Maint\roadserv\resurfac\PROJECTS\CHP\4\VAR\88618\Design\88618qp01.dgn 02-NOV-2015 2:43PM ssnell

ITEM	EXTENSION	REF. No. CR3	REF. No. CR4	TOTAL	UNIT	DESCRIPTION
202	30001	40.7	72.7	113.4	SQ.FT.	WALK REMOVED, AS PER PLAN
202	32001	3	13	16	FOOT	CURB REMOVED, AS PER PLAN
203	20000		.44	.44	CU.YD.	EMBANKMENT
608	52021	51.2	53	104.2	SQ.FT.	CURB RAMP, TYPE A1, AS PER PLAN
609	26000		7	7	FOOT	CURB, TYPE 6, AS PER PLAN
630	03100		13,13	26	FOOT	GRND. MOUNTED SUPPT., No3 POST
630	80100		4,4	8	SQ.FT.	SIGN, FLAT SHEET

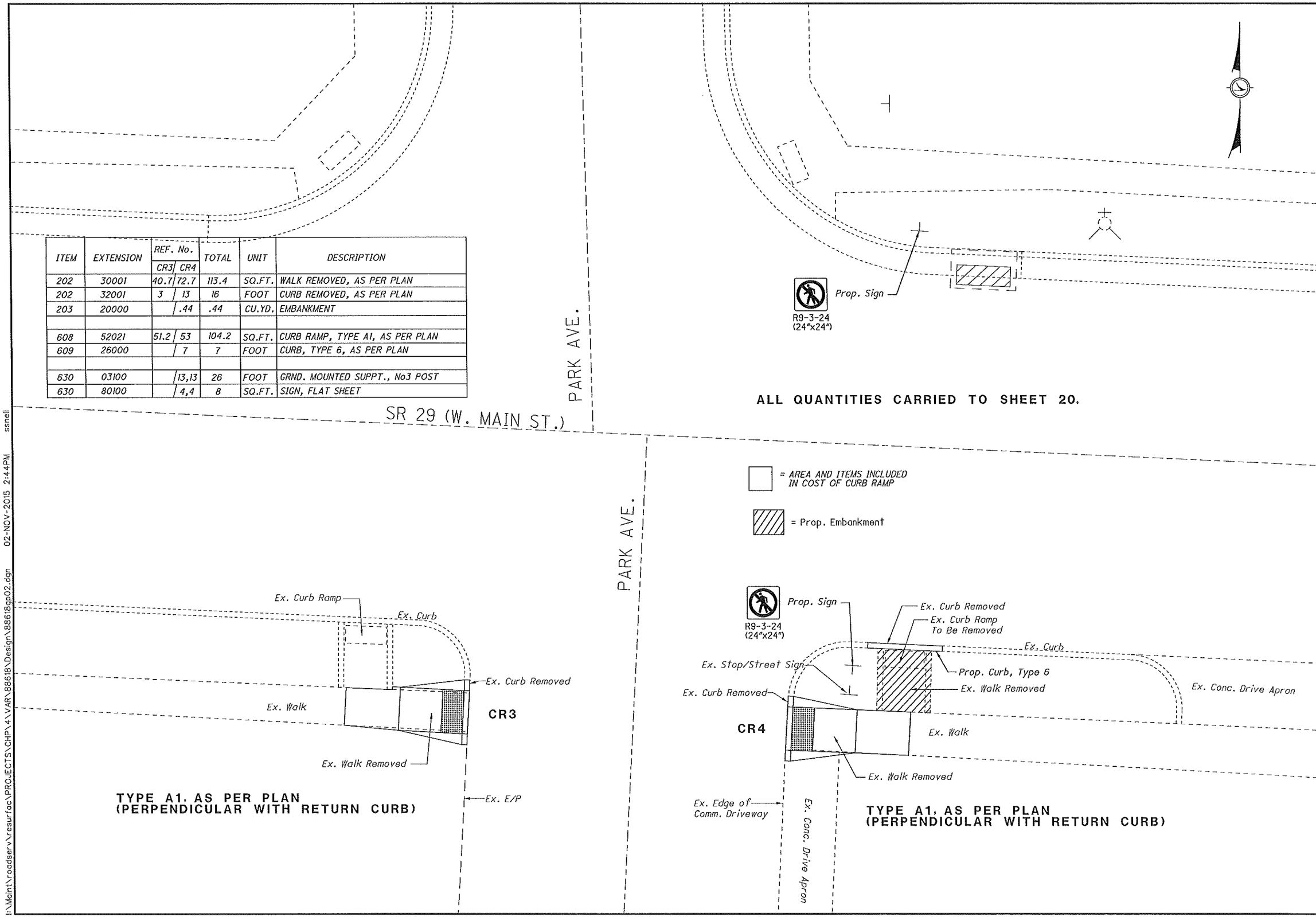

CALCULATED
CHECKED

CURB RAMPS - SR 29 * PARK AVE.

CHP / CLA-4/ 29-VAR

I:\Maint\roadserv\resurfac\PROJECTS\CHP\4\VAR\88618\Design\88618gp02.dgn 02-NOV-2015 2:44PM ssnell

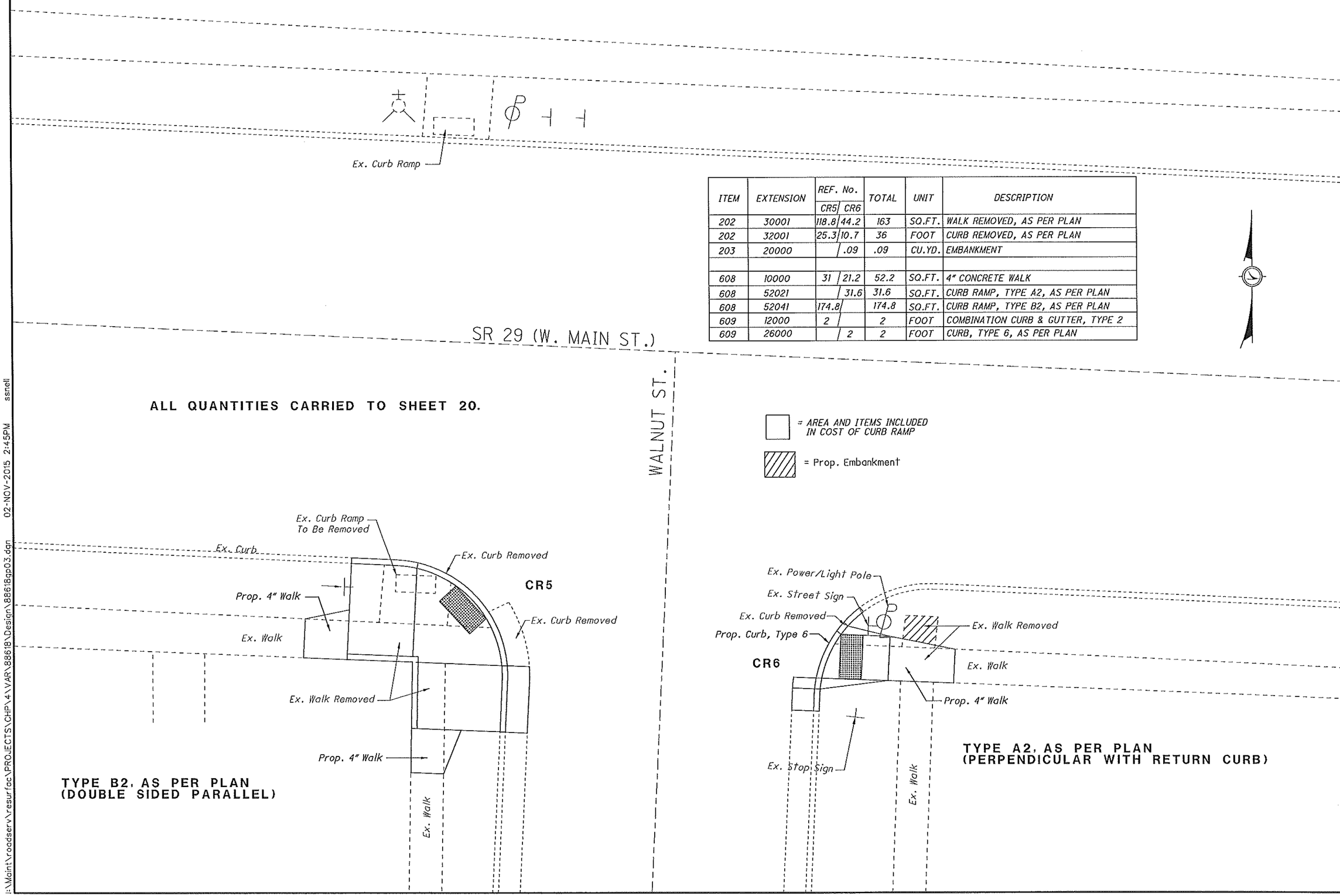

ITEM	EXTENSION	REF. No. CR5	REF. No. CR6	TOTAL	UNIT	DESCRIPTION
202	30001	118.8	44.2	163	SQ.FT.	WALK REMOVED, AS PER PLAN
202	32001	25.3	10.7	36	FOOT	CURB REMOVED, AS PER PLAN
203	20000		.09	.09	CU.YD.	EMBANKMENT
608	10000	31	21.2	52.2	SQ.FT.	4" CONCRETE WALK
608	52021		31.6	31.6	SQ.FT.	CURB RAMP, TYPE A2, AS PER PLAN
608	52041	174.8		174.8	SQ.FT.	CURB RAMP, TYPE B2, AS PER PLAN
609	12000	2		2	FOOT	COMBINATION CURB & GUTTER, TYPE 2
609	26000		2	2	FOOT	CURB, TYPE 6, AS PER PLAN

ALL QUANTITIES CARRIED TO SHEET 20.

TYPE B2, AS PER PLAN (DOUBLE SIDED PARALLEL)

TYPE A2, AS PER PLAN (PERPENDICULAR WITH RETURN CURB)

CALCULATED

CHECKED

CURB RAMPS - SR 29 * WALNUT ST.

CHP / CLA-4/ 29-VAR

20/23

i:\Maint\roadserv\resurfac\PROJECTS\CHP\4\VAR\88618\Design\88618gp03.dgn 02-NOV-2015 2:45PM ssnell

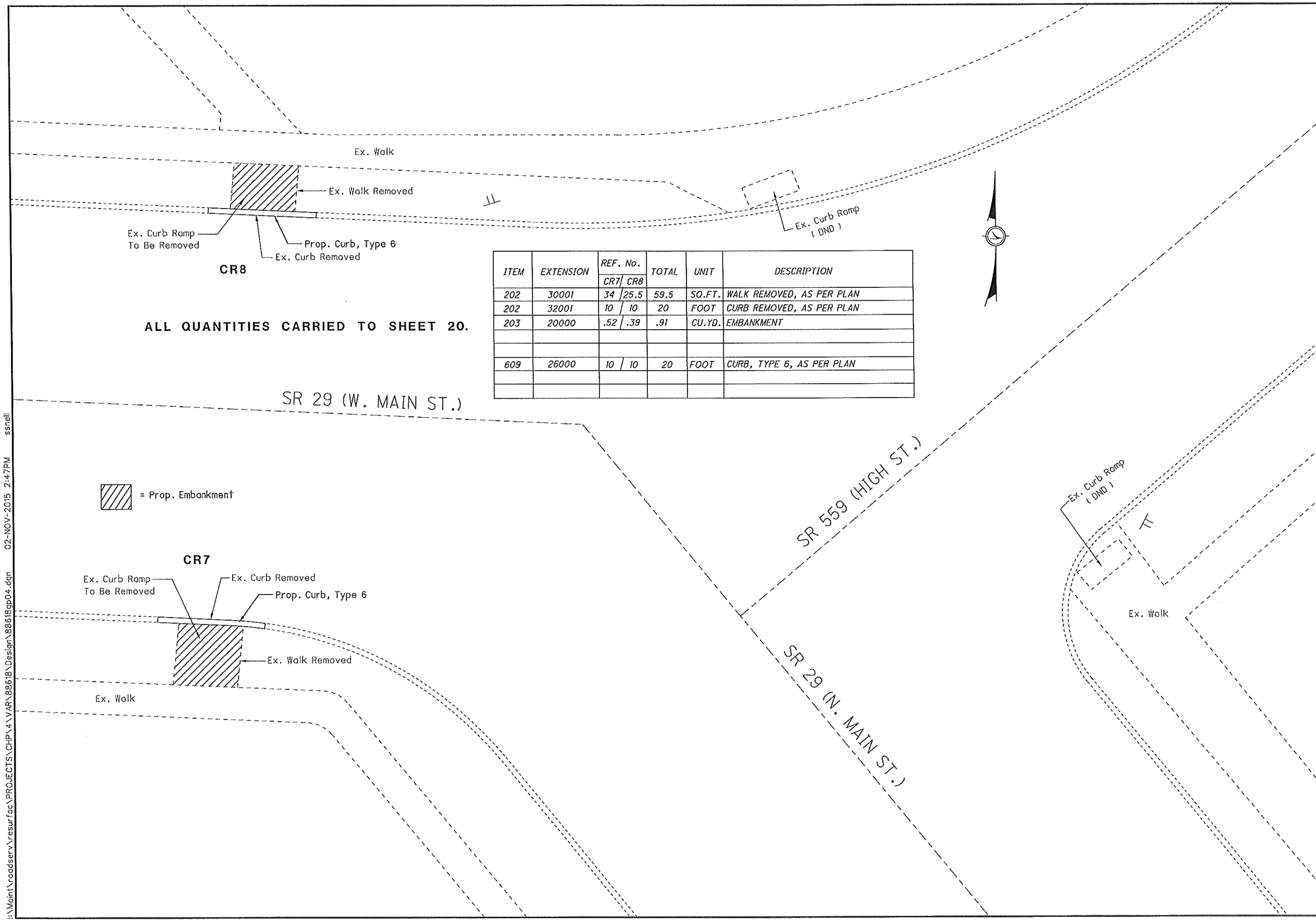

ALL QUANTITIES CARRIED TO SHEET 20.

ITEM	EXTENSION	REF. No. CR7	REF. No. CR8	TOTAL	UNIT	DESCRIPTION
202	30001	34	25.5	59.5	SQ.FT.	WALK REMOVED, AS PER PLAN
202	32001	10	10	20	FOOT	CURB REMOVED, AS PER PLAN
203	20000	.52	.39	.91	CU.YD.	EMBANKMENT
609	26000	10	10	20	FOOT	CURB, TYPE 6, AS PER PLAN

CALCULATED

CHECKED

CURB RAMPS - SR 29 * HIGH ST.

CHP / CLA-4/ 29-VAR

21
23

I:\Maint\roadserv\resurfac\PROJECTS\CHP\4\VAR\88618\Design\88618gp04.dgn 02-NOV-2015 2:47PM ssnell

TYPE B2, AS PER PLAN (DOUBLE SIDED PARALLEL)

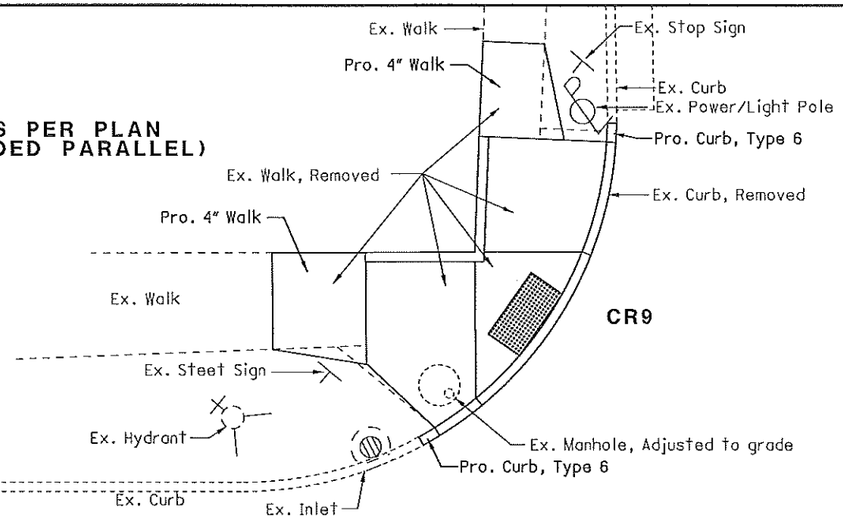

ALL QUANTITIES CARRIED TO SHEET 20.

= AREA AND ITEMS INCLUDED IN COST OF CURB RAMP

= Prop. Embankment

SR 29 (N. MAIN ST.)

E. RACE STREET

TYPE A1, AS PER PLAN (PERPENDICULAR WITH FLARED SIDES)

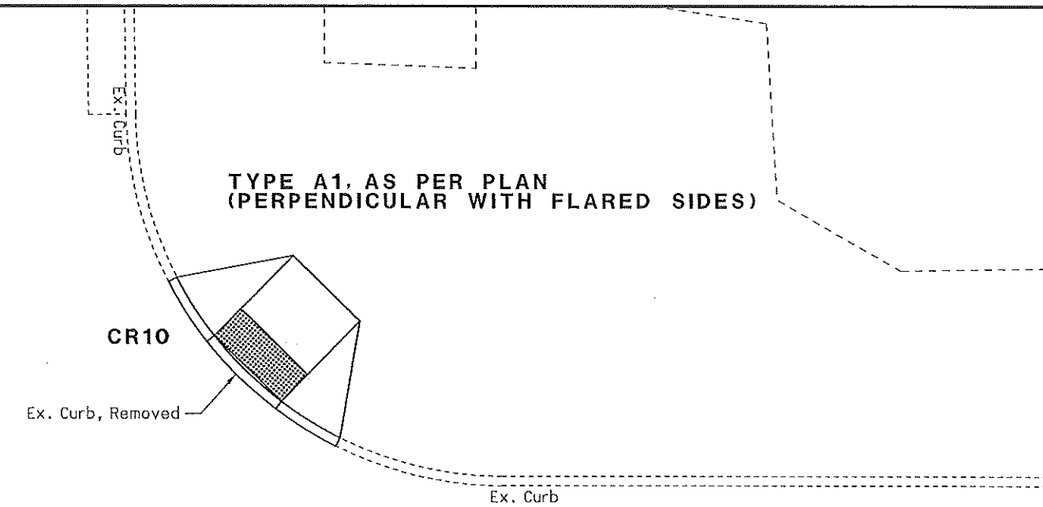

ITEM	EXTENSION	REF. No. CR9	REF. No. CR10	TOTAL	UNIT	DESCRIPTION
202	30001	156	52.4	208.4	SQ.FT.	WALK REMOVED, AS PER PLAN
202	32001	20.9	12.7	33.6	FOOT	CURB REMOVED, AS PER PLAN
608	10000	47.3		47.3	SQ.FT.	4" CONCRETE WALK
608	52011		58.7	58.7	SQ.FT.	CURB RAMP, TYPE A1, AS PER PLAN
608	52041	120.2		120.2	SQ.FT.	CURB RAMP, TYPE B2, AS PER PLAN
609	26000	2		2	FOOT	CURB, TYPE 6, AS PER PLAN

ITEM	EXTENSION	REF. No. CR11	REF. No. CR12	TOTAL	UNIT	DESCRIPTION
202	30001	86.2	44.2	130.4	SQ.FT.	WALK REMOVED, AS PER PLAN
202	32001	13.5	10.7	24.2	FOOT	CURB REMOVED, AS PER PLAN
203	20000	.41		.41	CU.YD.	EMBANKMENT
608	10000		21.2	21.2	SQ.FT.	4" CONCRETE WALK
608	52021		31.6	31.6	SQ.FT.	CURB RAMP, TYPE A2, AS PER PLAN
609	26000	6		6	FOOT	CURB, TYPE 6, AS PER PLAN

TYPE A2, AS PER PLAN (PERPENDICULAR WITH RETURNED CURB)

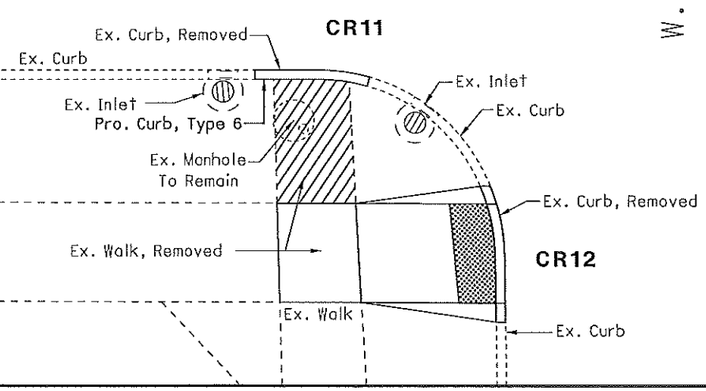

W. RACE STREET

ITEM	EXTENSION	REF. No. CR13	REF. No. CR14	TOTAL	UNIT	DESCRIPTION
202	30001	46.5	23.7	70.2	SQ.FT.	WALK REMOVED, AS PER PLAN
202	32001	7.5	6.5	14	FOOT	CURB REMOVED, AS PER PLAN
608	10000	20.7		20.7	SQ.FT.	4" CONCRETE WALK
608	52021	34.2	34.1	68.3	SQ.FT.	CURB RAMP, TYPE A2, AS PER PLAN

TYPE A2, AS PER PLAN (PERPENDICULAR WITH RETURNED CURB)

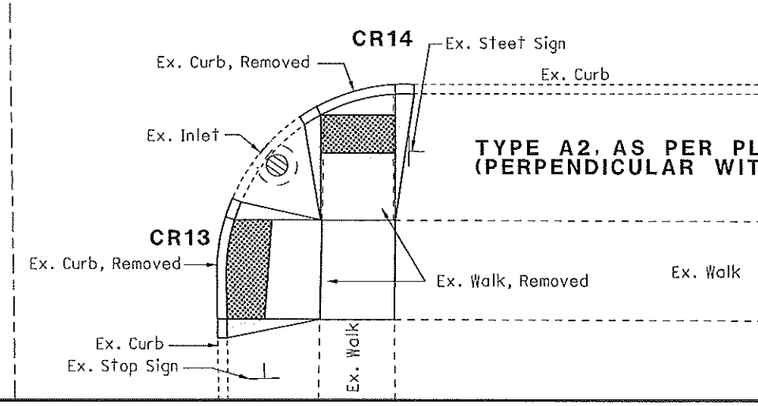

CALCULATED | CHECKED

CURB RAMPS - SR 29 * EAST AND WEST RACE ST.

CHP/CLA-4-29-VAR

I:\Maint\roadserv\resurfac\PROJECTS\CHP\4\VAR\88618\Design\B8618ap05.dgn 02-NOV-2015 2:48PM ssnell

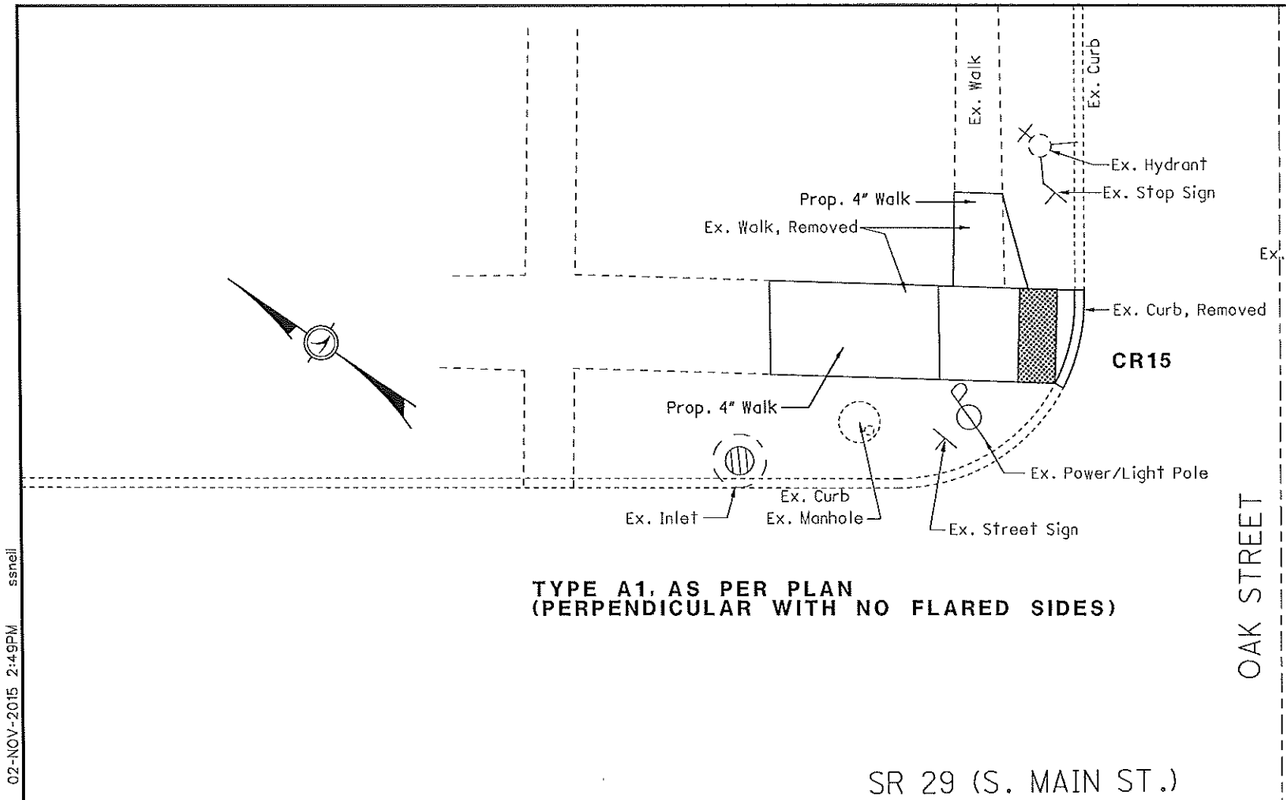

TYPE A1, AS PER PLAN
(PERPENDICULAR WITH NO FLARED SIDES)

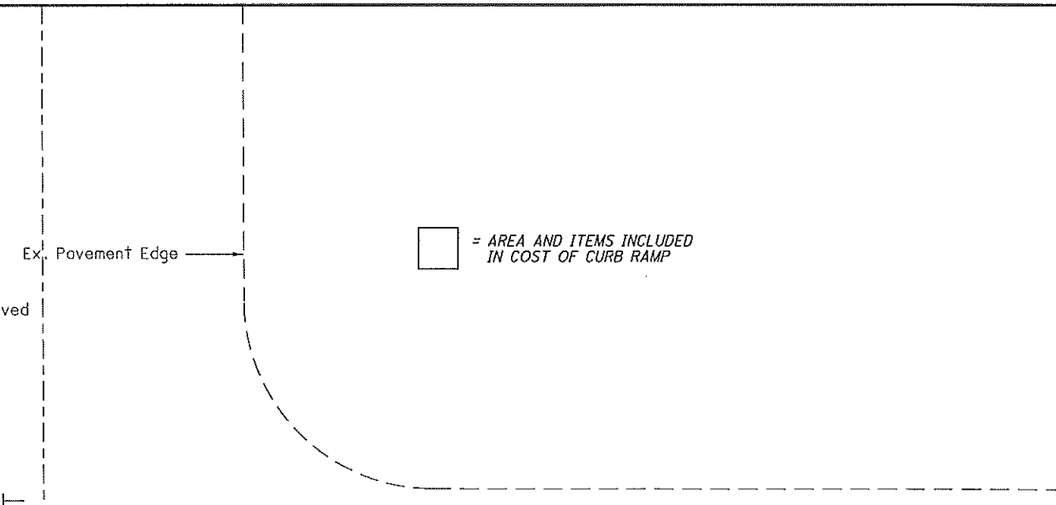

ITEM	EXTENSION	REF. No.	TOTAL	UNIT	DESCRIPTION
		CR15			
202	30001	93.2	93.2	SQ.FT.	WALK REMOVED, AS PER PLAN
202	32001	7	7	FOOT	CURB REMOVED, AS PER PLAN
608	10000	61.4	61.4	SQ.FT.	4" CONCRETE WALK
608	52011	37.5	37.5	SQ.FT.	CURB RAMP, TYPE A1, AS PER PLAN

ALL QUANTITIES CARRIED TO SHEET 20.

ESTIMATED QUANTITIES = 04/STR/PV

REF. NO.	SHEET NO.	LOCATION	CORNER	202 WALK REMOVED, AS PER PLAN (SQ.FT.)	202 CURB REMOVED, AS PER PLAN (FOOT)	202 PAVEMENT REMOVED, ASPHALT (SQ.YD.)	203 EMBANKMENT (CU.YD.)	608 4" CONCRETE WALK (SQ.FT.)	608 DETECTABLE WARNING (SQ.FT.)	608 CURB RAMP, TYPE A1, AS PER PLAN (SQ.FT.)	608 CURB RAMP, TYPE A2, AS PER PLAN (SQ.FT.)		608 CURB RAMP, TYPE B2, APP (SQ.FT.)		609 COMBINATION CURB & GUTTER, TYPE 2, AS PER PLAN (FOOT)	609 CURB, TYPE 6, AS PER PLAN (FOOT)	630 GROUND MOUNTED SUPPORT, NO 3 POST (FOOT)			SIGN CODE	SIGN SIZE	630 SIGN, FLAT SHEET (SQ. FT.)
W1	15	SR 29 @ CENTRAL AVE.	SW	30				37.5	8													
W2	15	SR 29 @ CENTRAL AVE.	SE	30				37.5	8							7						
CR1	15	SR 29 @ UNION AVE.	SW	60	13	0.56					69.7					2						
CR2	15	SR 29 @ UNION AVE.	SE	88.5	14	1.6					113.1					2						
CR3	16	SR 29 @ PARK AVE.	SW	40.7	3					51.2												
CR4	16	SR 29 @ PARK AVE.	SE	113.4	13		0.44			53						7	13			R9-3-24	24"X24"	4
			NE														13			R9-3-24	24"X24"	4
CR5	17	SR 29 @ WALNUT ST.	SW	118.8	25.3			31					174.8		2							
CR6	17	SR 29 @ WALNUT ST.	SE	44.2	10.7		0.09	21.2			31.6					2						
CR7	18	SR 29 @ SR 559 (HIGH ST.)	SW	34	10		0.52									10						
CR8	18	SR 29 @ SR 559 (HIGH ST.)	SE	25.5	10		0.39									10						
CR9	19	SR 29 @ E. RACE ST.	NW	156	20.9			47.3					120.2									
CR10	19	SR 29 @ E. RACE ST.	NE	52.4	12.7					58.7						2						
CR11	19	SR 29 @ W. RACE ST.	SW	86.2	13.5		0.41									6						
CR12	19	SR 29 @ W. RACE ST.	SW	44.2	10.7			21.2			31.6											
CR13	19	SR 29 @ W. RACE ST.	SE	46.5	7.5			20.7			34.2											
CR14	19	SR 29 @ W. RACE ST.	SE	23.7	6.5						34.1											
CR15	20	SR 29 @ OAK ST.	NW	93.2	7			61.4		37.5												
TOTALS CARRIED TO GENERAL SUMMARY				1097	178	2	2	278	16	200	314		295		2	48	26					8

CALCULATED
CHECKED

CURB RAMP - SR 29 * OAK ST.

CHP/CLA-4/29-VAR

23
23

I:\Maint\roadserv\resurfac\PROJECTS\CHP\4\VAR\88618\Design\88618gp06.dgn 02-NOV-2015 2:49PM ssnell