STATE OF OHIO
DEPARTMENT OF TRANSPORTATION

CHP-29-15.69

SALEM TOWNSHIP
CHAMPAIGN COUNTY

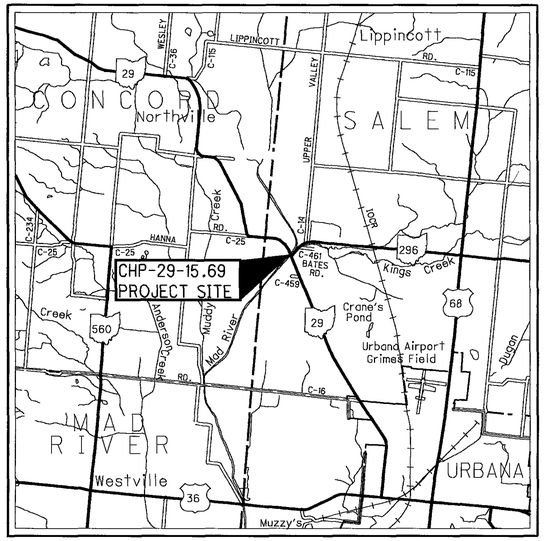

LOCATION MAP

LATITUDE: 40°09'20" LONGITUDE: 83°47'20"

SCALE IN MILES

0 1 2 3 4

N

PORTION TO BE IMPROVED
INTERSTATE & DIVIDED HIGHWAY
UNDIVIDED STATE & FEDERAL ROUTES
OTHER ROADS

DESIGN DESIGNATION

CURRENT ADT (2007)	2000
DESIGN YEAR ADT (2027)	2300
DESIGN HOURLY VOLUME (k=0.11)	253
DIRECTIONAL DISTRIBUTION	55%
TRUCKS (24 HOUR B&C)	4%
DESIGN SPEED	60 MPH
LEGAL SPEED	55 MPH

DESIGN FUNCTIONAL CLASSIFICATION:
RURAL - MAJOR COLLECTOR

DESIGN EXCEPTIONS

NONE

UNDERGROUND UTILITIES

CONTACT BOTH SERVICES
CALL TWO WORKING DAYS
BEFORE YOU DIG

CALL
1-800-362-2764
(TOLL FREE)
OHIO UTILITIES PROTECTION SERVICE
NON-MEMBERS
MUST BE CALLED DIRECTLY

OIL & GAS PRODUCERS PROTECTIVE SERVICE CALL: 1-800-929-0988

PLAN PREPARED BY:

BALKE AMERICAN
1848 Summit Road
Cincinnati, Ohio 45237

Balke Project No. 6050006

ENGINEERS SEAL:
ROADWAY
STATE OF OHIO
STEVEN N SHADIX
E-63359
REGISTERED
PROFESSIONAL ENGINEER
SIGNED:
DATE: 7-24-2006

ENGINEERS SEAL:
STRUCTURES
STATE OF OHIO
MICHAEL R. STURDEVANT
E-49864
REGISTERED
PROFESSIONAL ENGINEER
SIGNED:
DATE: 7-24-06

INDEX OF SHEETS:

TITLE SHEET	1
TYPICAL SECTION	2
GENERAL NOTES	3
MAINTENANCE OF TRAFFIC	4,5
GENERAL SUMMARY	6
SUB-SUMMARY AND PAVEMENT CALCULATIONS	7
SITE PLAN FOR SW3P	8
PLAN, PROFILE AND QUANTITIES	9
CROSS SECTIONS	10-11
TRAFFIC CONTROL	12
STRUCTURES	13-22
STRUCTURE FOUNDATION INVESTIGATION	

STANDARD CONSTRUCTION DRAWINGS

BP-3.1	7-16-04	MT-97.10	4-19-02	AS-1-81	7-19-02		
BP-4.1	7-16-04	MT-97.12	4-19-02	CPA-5-94	7-19-02		
		MT-101.60	9-20-06	CPP-2-94	7-19-02		
GR-1.1	7-16-04	MT-105.10	10-18-02	CS-1-03	4-18-03		
GR-2.1	1-16-04	MT-105.11	10-18-02	DS-1-92	7-18-03		
GR-3.6	1-16-04	TC-41.20	1-19-01	TST-1-99	10-17-03		
GR-4.1	4-18-03	TC-42.20	7-16-04				
GR-4.2	7-21-06	TC-52.10	4-20-01				
GR-5.3	1-16-04	TC-52.20	4-20-01				
		TC-65.10	1-21-05				
RM-1.1	4-21-06	TC-65.11	1-21-05				
		TC-73.10	1-19-01				
DM-4.3	7-19-02						
DM-4.4	7-19-02						

SUPPLEMENTAL SPECIFICATIONS

800	1-19-07
832	4-25-06
898	7-21-06

SPECIAL PROVISIONS

NATIONWIDE PERMIT No.3	2-15-06
NATIONWIDE PERMIT No.33	2-15-06
OEPA NOTIFICATION OF DEMOLITION	

PROJECT DESCRIPTION

REPLACE EXISTING SR 29 STRUCTURE OVER THE MAD RIVER.

PROJECT EARTH DISTURBED AREA:	0.37 ACRES
ESTIMATED CONTRACTOR EARTH DISTRUBED AREA:	0.375 ACRES
NOTICE OF INTENT EARTH DISTURBED AREA:	4.90 ACRES

2005 SPECIFICATIONS

THE STANDARD SPECIFICATIONS OF THE STATE OF OHIO, DEPARTMENT OF TRANSPORTATION, INCLUDING CHANGES AND SUPPLEMENTAL SPECIFICATIONS LISTED IN THE PROPOSAL SHALL GOVERN THIS IMPROVEMENT.

I HEREBY APPROVE THESE PLANS AND DECLARE THAT THE MAKING OF THIS IMPROVEMENT WILL REQUIRE THE CLOSING TO TRAFFIC OF THE HIGHWAY AND THAT DETOURS WILL BE PROVIDED AS INDICATED ON SHEET 5.

APPROVED William L. Harrison/PRW
DATE 10-17-06 DISTRICT DEPUTY DIRECTOR

APPROVED Gordon Proctor
DATE 12-20-06 DIRECTOR, DEPARTMENT OF TRANSPORTATION

FEDERAL PROJECT NO. E050(636)

PID NO. 19707

CONSTRUCTION PROJECT NO.

RAILROAD INVOLVEMENT NONE

CHP-29-15.69

CHP - SR 29 - 15.69
070083 PID - 19707
Dist 7 2/28/2007

NOTE:
TAPER SHOULDER FROM 2′ AT STA. 827+25
TO 4′ AT STA 827+75 LT./RT.

TAPER SHOULDER FROM 4′ AT STA 829+65.23
TO 2′ AT STA 830+03.98 LT.

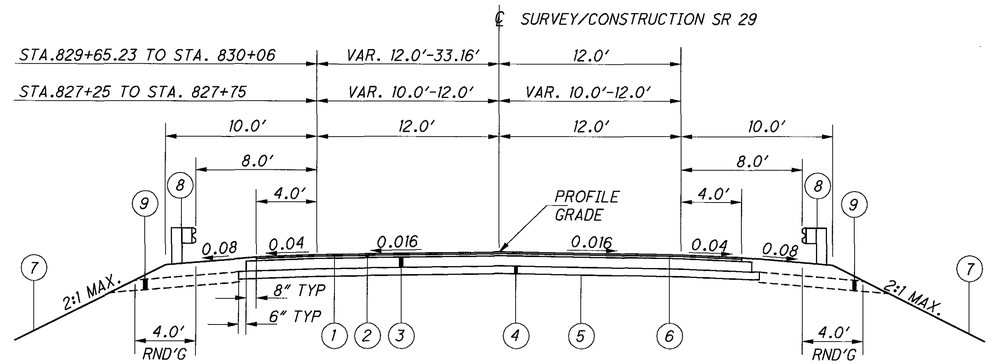

NORMAL SECTION - S.R. 29

SECTION APPLIED:
STA.827+25 TO STA.827+98.04 = 73.04 FEET
STA.829+59.91 TO STA.830+06 = 46.09 FEET
TOTAL = 119.13 FEET

LEGEND

1. ITEM 448 - 1-1/4″ ASPHALT CONCRETE SURFACE COURSE, TYPE 1 PG64-22
2. ITEM 448 - 1-3/4″ ASPHALT CONCRETE INTERMEDIATE COURSE, TYPE 2 PG64-22
3. ITEM 301 - 8″ ASPHALT CONCRETE BASE PG64-22
4. ITEM 304 - 6″ AGGREGATE BASE
5. ITEM 204 - SUBGRADE COMPACTION
6. ITEM 407- TACK COAT FOR INTERMEDIATE COURSE @ 0.040 GAL/SQ YD
7. ITEM 659 - SEEDING AND MULCHING
8. ITEM 606 - GUARDRAIL TYPE 5
9. ITEM 605 - AGGREGATE DRAIN
10. ITEM 526 - REINFORCED CONCRETE APPROACH SLAB (T= 15″)

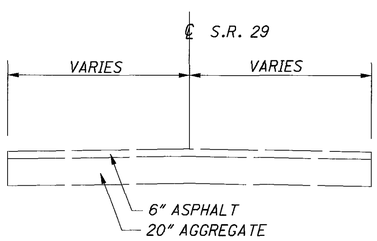

EXISTING SECTION

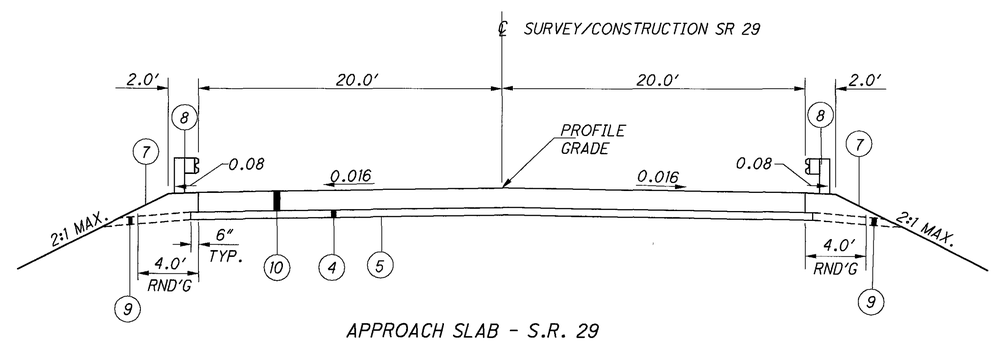

APPROACH SLAB - S.R. 29

SECTION APPLIED:
STA.827+98.04 TO STA.828+23.04 = 25.00 FEET
STA.829+34.91 TO STA.829+59.91 = 25.00 FEET
TOTAL = 50.00 FEET

CALCULATED LDS
CHECKED LEH

TYPICAL SECTION

CHP-29-15.69

UTILITIES

LISTED BELOW ARE ALL UTILITIES LOCATED WITHIN THE PROJECT CONSTRUCTION LIMITS TOGETHER WITH THEIR RESPECTIVE OWNERS

ELECTRIC:
PIONEER RURAL ELECTRIC CO-OP
344 WEST U.S. ROUTE 36
P.O. BOX 604
PIQUA, OH 45356
PHONE: 937-773-2523
(JIM RUDD)

TELEPHONE:
C.T. COMMUNICATIONS
126 SCIOTO STREET
URBANA, OH 43078
PHONE: 937-653-2266
(DAVE ROPP)

FIBER OPTIC:
QUEST COMMUNICATIONS
130 WEST SECOND STREET
DAYTON, OH 45402
PHONE: 937-228-5476
(LEON MCCOY)

THE LOCATION OF THE UNDERGROUND UTILITIES SHOWN ON THE PLANS ARE AS OBTAINED FROM THE OWNERS AS REQUIRED BY SECTION 153.64 O.R.C.

ROUNDING

THE ROUNDING AT SLOPE BREAKPOINTS SHOWN ON THE TYPICAL SECTIONS APPLY TO ALL CROSS-SECTIONS EVEN THOUGH OTHERWISE SHOWN.

ELEVATION DATUM

ALL ELEVATIONS ARE BASED ON U.S.G.S. DATUM.

WORK LIMITS

THE WORK LIMITS SHOWN ON THESE PLANS ARE FOR PHYSICAL CONSTRUCTION ONLY. PROVIDE THE INSTALLATION AND OPERATION OF ALL WORK ZONE TRAFFIC CONTROL AND WORK ZONE TRAFFIC CONTROL DEVICES REQUIRED BY THESE PLANS WHETHER INSIDE OR OUTSIDE THESE WORK LIMITS.

CLEARING AND GRUBBING

ALTHOUGH THERE ARE NO TREES OR STUMPS SPECIFICALLY MARKED FOR REMOVAL WITHIN THE LIMITS OF THE PROJECT, A LUMP SUM QUANTITY IS INCLUDED IN THE GENERAL SUMMARY FOR ITEM 201, CLEARING AND GRUBBING. ALL PROVISIONS AS SET FORTH IN THE SPECIFICATIONS UNDER THIS ITEM ARE INCLUDED IN THE LUMP SUM PRICE BID FOR ITEM 201, CLEARING AND GRUBBING.

BENCHING OF FOUNDATION SLOPES

ALTHOUGH CROSS-SECTIONS INDICATE SPECIFIC DIMENSIONS FOR PROPOSED BENCHING OF THE EMBANKMENT FOUNDATIONS IN CERTAIN AREAS, NO WAIVER OF THE SPECIFICATIONS IS INTENDED. BENCH ALL OTHER SLOPED EMBANKMENT AREAS AS SET FORTH IN 203.05. NO ADDITIONAL PAYMENT WILL BE MADE FOR BENCHING REQUIRED UNDER THE PROVISIONS OF 203.05.

ITEM 606 - ANCHOR ASSEMBLY, TYPE E-98

THIS ITEM SHALL CONSIST OF FURNISHING AND INSTALLING EITHER OF THE FOLLOWING GUARDRAIL END TERMINALS, OR AN APPROVED EQUAL AS LISTED ON ROADWAY ENGINEERING'S WEB PAGE AT WWW.DOT.STATE.OH.US/DRRC/ UNDER ROADSIDE SAFETY DEVICES FOR APPROVED GUARDRAIL END TREATMENTS:

1) THE ET-2000 (1997) MANUFACTURED BY TRINITY INDUSTRY, 1170 N. STATE STREET, GIRARD, OHIO 44420 (TELEPHONE: 330-545-4373).

THE LENGTH OF THE ET-2000 (1997) SYSTEM IS CONSIDERED TO BE 50'-0", INCLUSIVE OF TWO 25'-0" LONG RAIL ELEMENTS. INSTALLATION SHALL BE AT THE LOCATIONS SPECIFIED IN THE PLANS, IN ACCORDANCE WITH THE MANUFACTURER'S SPECIFICATIONS AS DETAILED ON THE FOLLOWING PRE-APPROVED SHOP DRAWINGS:

DWG. NO.	DRAWING NAME	DWG./ REV. DATE	ODOT APPROVAL DATE
SS265M	ET-2000 (1997) PLAN, ELEVATION AND SECTIONS	6/20/97	3/6/98
SS142	ET2000 PLUS 50'-0" PLAN, ELEVATION AND SECTION 25'-0" RAIL, SLEEVE W/PL POSTS 1-4	4/12/00	7/31/00
SS141	ET2000 PLUS PLAN, ELEVATION AND SECTION 25'-0" RAIL, HBA POSTS 1-4	2/29/00	7/31/00
SS158	ET2000 PLUS 50'-0" WITH 12'-6" PANELS AND HBA POSTS 1-4 PLAN, ELEVATION AND SECTION	5/22/00	7/31/00

2) THE SKT-350 MANUFACTURED BY ROAD SYSTEMS, INC., 2516 MALLORY LANE, STOW, OHIO, 44224, (TELEPHONE: 330-346-0721).

THE LENGTH OF THE SKT-350 SYSTEM IS CONSIDERED TO BE 50'-0", INCLUSIVE OF FOUR 12'-6" LONG RAIL ELEMENTS. INSTALLATION SHALL BE AT THE LOCATIONS SPECIFIED IN THE PLANS, IN ACCORDANCE WITH THE MANUFACTURER'S SPECIFICATIONS AS DETAILED ON THE FOLLOWING PRE-APPROVED SHOP DRAWINGS:

DWG. NO.	DRAWING NAME	DWG./ REV. DATE	ODOT APPROVAL DATE
SKT-4M	SEQUENTIAL KINKING TERMINAL (SKT-350) ASSEMBLY WITH 4 FOUNDATION TUBES	12/11/97	3/6/98

THE FACE OF THE TYPE E-98 IMPACT HEAD SHALL BE COVERED WITH A SHEET OF TYPE G REFLECTIVE SHEETING, PER CMS 730.19, APPROXIMATELY 18" X 18", OR 12" X 18" IF APPLIED TO A RECTANGULAR ET-2000 "PLUS" EXTRUDER HEAD.

REFER TO THE MANUFACTURER'S INSTRUCTION REGARDING THE INSTALLATION OF, AND THE GRADING AROUND, THE FOUNDATION TUBES AND GROUND STRUT. THE TOP OF ANY FOUNDATION TUBE SHOULD BE LESS THAN 4-INCHES ABOVE THE GROUND. THE PLACEMENT OF THE FOUNDATION TUBES SHOULD BE AN APPROPRIATE DEPTH BELOW THE LEVEL LINE IN ORDER TO MAINTAIN THE FINISHED GUARDRAIL HEIGHT OF 27-3/4-INCHES FROM THE EDGE OF THE SHOULDER.

ON-SITE GRADING IS REQUIRED IF THE TOP OF THE FOUNDATION TUBES OR TOP OF THE GROUND STRUT DOES PROJECT MORE THAN 4-INCHES ABOVE THE GROUND LINE.

PAYMENT FOR THE ABOVE WORK SHALL BE MADE AT THE UNIT PRICE BID FOR ITEM 606, ANCHOR ASSEMBLY, TYPE E-98, EACH, AND SHALL INCLUDE ALL LABOR, TOOLS, EQUIPMENT AND MATERIALS NECESSARY TO CONSTRUCT A COMPLETE AND FUNCTIONAL ANCHOR ASSEMBLY SYSTEM, INCLUDING ALL RELATED TRANSITIONS, REFLECTIVE SHEETING, HARDWARE, GRADING, EMBANKMENT AND EXCAVATION NOT SEPARATELY SPECIFIED, AS REQUIRED BY THE MANUFACTURER.

ITEM 605 - AGGREGATE DRAINS

AGGREGATE DRAINS SHALL BE PLACED AT 50 FOOT INTERVALS ON EACH SIDE OF NORMAL CROWNED SECTIONS, STAGGERED SO THAT EACH DRAIN IS 25 FEET FROM THE ADJACENT DRAIN ON THE OPPOSITE SIDE, AND AT 25 FOOT INTERVALS ON THE LOW SIDE ONLY OF SUPERELEVATED SECTIONS. AN AGGREGATE DRAIN SHALL BE PLACED AT THE LOW POINT OF EACH SAG VERTICAL CURVE.

STATION	LENGTH
827+40 LT	10.0
827+65 RT	10.5
827+90 LT	6.0
828+15 RT	6.0
828+45 LT	10.0
829+70 RT	22.5
829+95 LT	10.0
TOTAL	75.0 FOOT

SEEDING AND MULCHING

THE FOLLOWING QUANTITIES ARE PROVIDED TO PROMOTE GROWTH AND CARE OF PERMANENT SEEDED AREAS:

659, TOPSOIL 94 CU. YD.

659, SEEDING AND MULCHING 856 SQ. YD.

659, REPAIR SEEDING AND MULCHING 43 SQ. YD

659, COMMERCIAL FERTILIZER 0.12 TON

659, LIME 0.18 ACRES

659, WATER 5 M. GAL.

SEEDING AND MULCHING SHALL BE APPLIED TO ALL AREAS OF EXPOSED SOIL BETWEEN THE RIGHT-OF-WAY LINES, AND WITHIN THE CONSTRUCTION LIMITS FOR AREAS OUTSIDE THE RIGHT-OF-WAY LINES COVERED BY WORK AGREEMENT OR SLOPE EASEMENT. QUANTITY CALCULATIONS FOR SEEDING AND MULCHING ARE BASED ON THESE LIMITS.

SPECIAL REQUIREMENTS FOR PROTECTION OF ENDANGERED SPECIES HABITAT - INDIANA BAT

ANY UNAVOIDABLE CUTTING OF TREES WITH SUITABLE ROOSTING AND BROOD-REARING HABITAT FOR THE INDIANA BAT (LIVING OR STANDING DEAD TREES OR SNAGS WITH EXFOLIATING, PEELING OR LOOSE BARK, SPLIT TRUNKS AND/OR BRANCHES, OR CAVITIES) WILL BE PERFORMED ONLY BEFORE APRIL 15 OR AFTER SEPTEMBER 15, WHEN THE SPECIES WOULD NOT BE USING SUCH HABITAT.

PRIOR TO THE REMOVAL OF THE EXISTING BRIDGE, THE UNDERSIDE OF THE BRIDGE SHOULD BE CAREFULLY EXAMINED FOR THE PRESENCE OF BATS, ESPECIALLY FROM APRIL 15 TO SEPTEMBER 15. IF ANY BATS ARE FOUND ROOSTING ON THE UNDERSIDE OF THE BRIDGE, CONTACT THE U.S. FISH & WILDLIFE SERVICE AT 614-469-6923. THIS REQUIREMENT IS FOR INFORMATION GATHERING PURPOSES ONLY AND WILL NOT RESULT IN THE DELAY OF THE PROJECT.

SPILL CONTAINMENT

BEST CONSTRUCTION PRACTICES ARE TO BE IMPLEMENTED TO MINIMIZE WATER QUALITY IMPACTS. THE CONTRACTOR SHALL PERFORM ALL PROJECT RELATED REFUELING AND MAINTENANCE ACTIVITIES IN AN ENVIRONMENTALLY RESPONSIBLE MANNER. A SPILL CONTAINMENT KIT IS TO BE MAINTAINED ON-SITE THROUGHOUT CONSTRUCTION ACTIVITIES. SPILLS OR LEAKS OF FUELS, OILS, CHEMICALS OR OTHER MATERIALS WHICH COULD POSE A THREAT TO WATER QUALITY SHALL BE CLEANED UP IMMEDIATELY. IN THE EVENT OF A SIGNIFICANT SPILL THE CONTRACTOR SHALL NOTIFY THE LOCAL FIRE DEPARTMENT.

INSTREAM WORK

INSTREAM CONSTRUCTION ACTIVITIES WILL BE LIMITED TO JULY 1 THROUGH APRIL 15.

INSTREAM WORK WILL BE LIMITED WHERE PRACTICABLE AND ONLY CLEAN NON-ERODIBLE MATERIAL WILL BE USED FOR TEMPORARY CONSTRUCTION ACCESS FILLS. TEMPORARY FILLS WILL BE CONSTRUCTED SO AS TO ALLOW FOR FISH PASSAGE AND TO NOT BACK UP WATER. TEMPORARILY PLACED MATERIAL WILL BE REMOVED AND THE STREAM BOTTOM RESTORED TO NEAR PRECONSTRUCTION CONDITIONS WHEN THE WORK IS COMPLETED.

WHEN DEWATERING OPERATIONS ARE NECESSARY, BEST MANAGEMENT PRACTICES TO MINIMIZE TURBIDITY AND SILTATION IN ADJACENT AND NEARBY STREAMS, SHALL BE UTILIZED. APPROPRIATE MEASURES INCLUDE BUT ARE NOT LIMITED TO, NOT PLACING PUMP OUTLET HOSES IN STREAMS, DEWATERING ONTO VEGETATED AREAS WHEN PRACTICABLE, SUSPENDING INTAKES AND PLACING INTAKES ON NON-ERODIBLE SURFACES TO MINIMIZE SILT INTAKE.

I:\PROJECTS\Chp\029\1569\pid19707\308.2 Final Tracings\roadway\sheets\19707GN001.dgn 13-NOV-2006 2:07PM ASCHMIDT

ITEM 614, MAINTAINING TRAFFIC

ALL WORK AND TRAFFIC CONTROL DEVICES SHALL BE IN ACCORDANCE WITH CMS 614 AND OTHER APPLICABLE PORTIONS OF THE SPECIFICATIONS, AS WELL AS THE OHIO MANUAL OF UNIFORM TRAFFIC CONTROL DEVICES. PAYMENT FOR ALL LABOR, EQUIPMENT AND MATERIALS SHALL BE INCLUDED IN THE LUMP SUM CONTRACT PRICE FOR ITEM 614, MAINTAINING TRAFFIC, UNLESS SEPARATELY ITEMIZED IN THE PLAN.

NOTICE OF CLOSURE SIGN

NOTICE OF CLOSURE SIGNS, AS DETAILED IN THESE PLANS, SHALL BE ERECTED BY THE CONTRACTOR AT LEAST ONE WEEK IN ADVANCE OF THE SCHEDULED ROAD CLOSURE. THE SIGNS SHALL BE ERECTED ON THE RIGHT-HAND SIDE OF THE ROAD FACING TRAFFIC. THEY SHALL BE PLACED SO AS NOT TO INTERFERE WITH THE VISIBILITY OF ANY OTHER TRAFFIC CONTROL SIGNS. ON ROADWAYS, THEY SHOULD BE ERECTED AT THE POINT OF CLOSURE.

NOTIFICATION OF DETOUR

A NOTIFICATION OF CLOSURE SHALL BE GIVEN, TO THE ROADWAY SERVICE MANAGER (937-497-6877) TWO WEEKS PRIOR TO CLOSURE.

ROAD CLOSED SIGNS

THE CONTRACTOR SHALL PROVIDE, ERECT AND MAINTAIN STANDARD 48 X 30 INCHES ROAD CLOSED SIGNS, SIGN SUPPORTS, BARRICADES, GATES AND LIGHTS, AS PER SCD MT-101.60 AT THE FOLLOWING LOCATIONS AS SHOWN ON THE DETOUR MAP, DURING PERIODS IN WHICH THE AFFECTED ROADS ARE CLOSED TO TRAFFIC.

SIGNS AND BARRICADES

THE CONTRACTOR SHALL PROVIDE, ERECT AND MAINTAIN SIGNS AND SIGN SUPPORTS, AS DETAILED IN THE OHIO MANUAL OF UNIFORM TRAFFIC CONTROL DEVICES, AND TYPE III BARRICADES OF THE TYPE AND LOCATION AS SHOWN ON SHEET NO. 5.

DUST CONTROL

THE CONTRACTOR SHALL FURNISH AND APPLY WATER FOR DUST CONTROL AS DIRECTED BY THE ENGINEER. THE FOLLOWING ESTIMATED QUANTITIES HAVE BEEN INCLUDED FOR DUST CONTROL PURPOSES:

ITEM 616, WATER 2 M. GAL

WORK DAY CONTRACT TABLE
FOR USE WITH PROPOSAL NOTE

WORK START DATE	WORK DAYS ALLOWED
ROAD CLOSURE	55

MAINTENANCE OF CANOE TRAFFIC

CANOE TRAFFIC SHALL BE MAINTAINED THROUGHOUT CONSTRUCTION OF THE PROJECT EITHER THROUGH EXISTING RIVER CHANNEL OR THROUGH PORTAGE TRAIL APPROVED BY THE ENGINEER.

ADEQUATE SIGNING BOTH UPSTREAM AND DOWNSTREAM SHALL BE INSTALLED AND MAINTAINED BY THE CONTRACTOR. THE FOLLOWING TYPE SIGNS ARE CONSIDERED TO BE MINIMUM TREATMENT.

1. APPROXIMATELY ONE-QUARTER MILE UPSTREAM, ADVANCED WARNING TYPE SIGNS ON BOTH BANKS;
2. APPROXIMATELY 300 FEET UPSTREAM, SIGNS SPECIFYING ACTIONS REQUIRED OF CANOEIST ON BOTH BANKS;
3. APPROXIMATELY ONE-QUARTER MILE DOWNSTREAM, ADVANCE WARNING TYPE SIGNS ON BOTH BANKS;
4. APPROXIMATELY 300 FEET DOWNSTREAM, SIGNS SPECIFYING ACTIONS REQUIRED OF CANOEIST OF BOTH BANKS.

THE ABOVE SIGNING SHALL BE MOUNTED IN SUCH A WAY AS TO BE A MINIMUM OF 4 FEET ABOVE THE WATER LEVEL, UNOBSTRUCTED BY TREE BRANCHES, AND PROPERLY ANGLED FOR MAXIMUM VISIBILITY FROM THE MAIN CLEAR CHANNEL. THE METHOD OF SUPPORTING THE SIGNS SHALL BE APPROVED BY THE ENGINEER PRIOR TO INSTALLATION. UPON COMPLETION OF THE PROJECT, THE SIGNS AND SUPPORT SYSTEMS SHALL BE COMPLETELY REMOVED FROM THE RIVER CHANNEL. THE CONTRACTOR SHALL NOTIFY LOCAL CANOE LIVERIES USING THIS PORTION OF THE RIVER AT LEAST 10 DAYS PRIOR TO ANY CHANGES AFFECTING CANOE TRAFFIC.

PORTAGE TRAILS IF USED SHALL BE CONSTRUCTED AND MAINTAINED BY THE CONTRACTOR WITH THE LEAST POSSIBLE DISTURBANCE TO THE SURROUNDING AREA. THE TRAIL SHALL BE ADEQUATELY MARKED IN BOTH DIRECTIONS. THE CONTRACTOR SHALL BE RESPONSIBLE FOR OBTAINING THE RIGHT-OF-WAY FOR THE PORTAGE TRAILS IF REQUIRED.

IN THE EVENT PIPES ARE USED TO DIVERT OR CARRY RIVER WATER, BOTH THE INLET AND OUTLET ENDS SHALL BE ADEQUATELY PROTECTED BY GRATES OR FENCE SO THAT PEOPLE OR CANOES ARE NOT DRAWN THROUGH OR HELD BY THEM.

GENERAL NOTES

CHP-29-15.69

I:\PROJECTS\Chp\029\1569\pid19707\308.2 Final Tracings\roadway\sheets\19707MN001.dgn 13-NOV-2006 2:06PM ASCHMIDT

LEGEND

ROAD CLOSED	R11-2 (48x30)	ROAD CLOSED 1000 FT	W20-3 (48x48)	DETOUR	M4-8 (24x12)
BRIDGE OUT 2.5 MILES AHEAD LOCAL TRAFFIC ONLY	R11-3B (60x30)	ROAD CLOSED 500 FT	W20-3 (48x48)		M6-1L-R (21x15)
DETOUR	M4-10 (48x18)	EAST	M3-2 (24x12)		M6-3 (21x15)
DETOUR 1500 FT	W20-2 (48x48)	WEST	M3-4 (24x12)		M5-1R (21x15)
DETOUR ROUTE		29	M1-5-2 (24x24)		M5-1L (21x15)

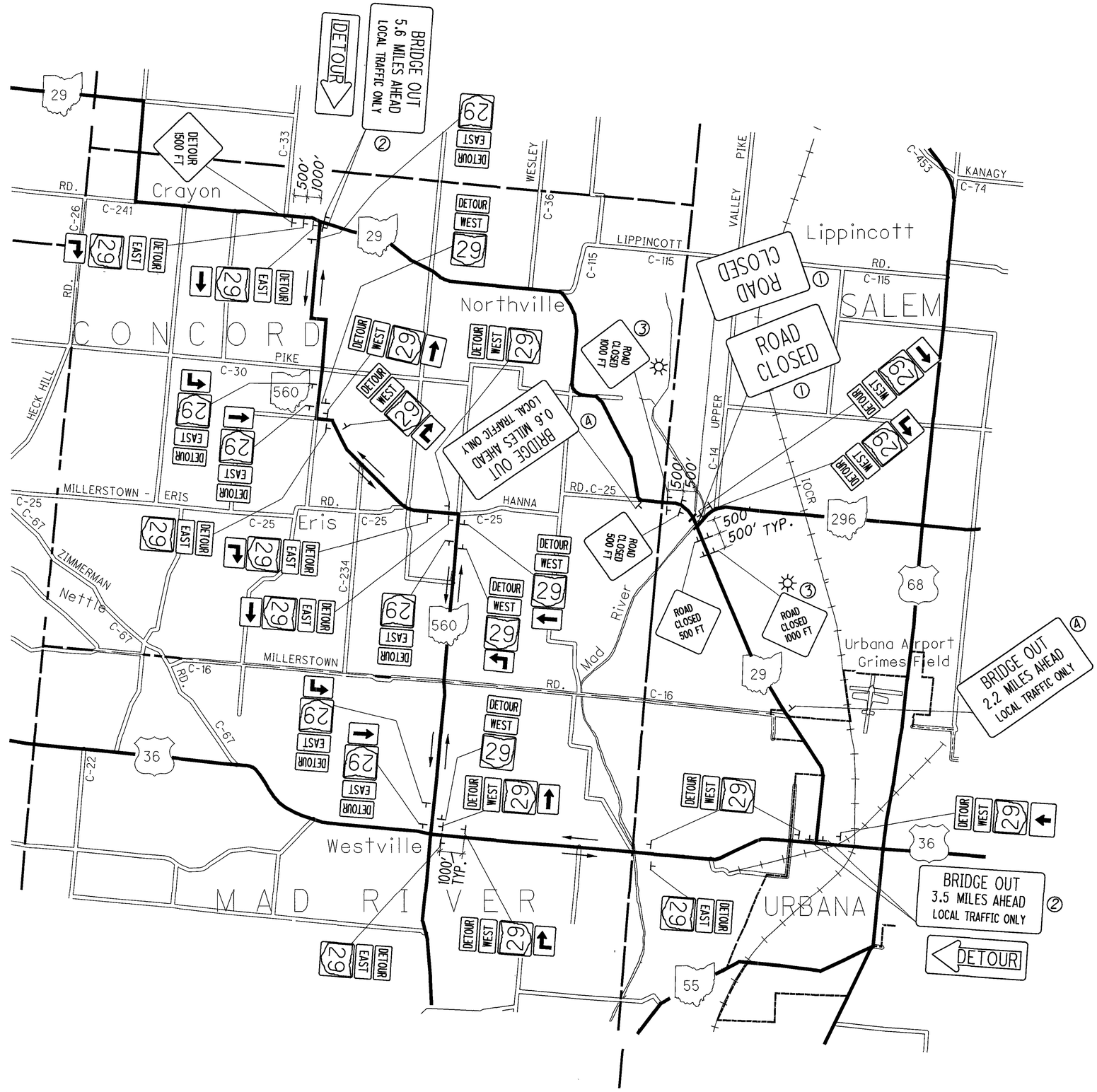

NOTICE OF CLOSURE SIGN
W20-H13 (36" X 60")

SR 29 WILL BE
CLOSED [ ]
FOR [ ] DAYS
FOR INFO 937-497-6820

NOTES:

1. R11-2 SIGNS ARE MOUNTED ON TYPE III BARRICADES WITH TYPE B FLASHING WARNING LIGHTS PER SCD MT-101.60.
2. R11-3B AND M4-10 SIGNS ARE MOUNTED ON TYPE III BARRICADES WITH TYPE A FLASHING WARNING LIGHTS
3. INDICATES TYPE A FLASHING WARNING LIGHTS
4. R11-3B SIGNS ARE MOUNTED ON TYPE III BARRICADES.

THE CONTRACTOR SHALL ERECT, MAINTAIN AND REMOVE THE DETOUR. PAYMENT FOR ALL MATERIAL, LABOR AND EQUIPMENT TO PERFORM THIS WORK SHALL BE INCLUDED IN THE LUMP SUM BID FOR ITEM 614 DETOUR SIGNING.

CALCULATED RHH
CHECKED LEH

DETOUR MAP

CHP-29-15.69

i:\PROJECTS\Chp\029\1569\pid19707\308.2 Final Tracings\roadway\sheets\19707MD001.dgn 13-NOV-2006 2:05PM ASCHMIDT

SHEET NUMBER 3	4	5	7	8	9	ITEM	ITEM EXT.	GRAND TOTAL	UNIT	DESCRIPTION	SEE SHEET NO.
										ROADWAY	
LUMP						201	11000	LUMP		CLEARING AND GRUBBING	
					433	202	38000	433	FT	GUARDRAIL REMOVED	
			4			202	54000	4	EACH	RAISED PAVEMENT MARKERS REMOVED	
			335			203	10000	335	CU YD	EXCAVATION	
			48			203	20000	48	CU YD	EMBANKMENT	
					300	606	13000	300	FOOT	GUARDRAIL, TYPE 5	
					2	606	22010	2	EACH	ANCHOR ASSEMBLY, TYPE E-98	
					1	606	25000	1	EACH	ANCHOR ASSEMBLY, TYPE A	
					1	606	26500	1	EACH	ANCHOR ASSEMBLY, TYPE T	
					4	606	32160	4	EACH	BRIDGE TERMINAL ASSEMBLY, TYPE TST	
										EROSION CONTROL	
94						659	00300	94	CU. YD	TOPSOIL	
856						659	10000	856	SQ. YD.	SEEDING AND MULCHING	
43						659	14000	43	SQ. YD.	REPAIR SEEDING AND MULCHING	
0.12						659	20000	0.12	TON	COMMERCIAL FERTILIZER	
0.18						659	31000	0.18	ACRE	LIME	
5						659	35000	5	M GAL	WATER	
				LUMP		832	15000	LUMP		STORM WATER POLLUTION PREVENTION PLAN	
				1000		832	30000	1000	EACH	EROSION CONTROL	
										DRAINAGE	
75						605	31100	75	FOOT	AGGREGATE DRAINS	
										PAVEMENT	
					539	204	10000	539	SQ YD	SUBGRADE COMPACTION	
					105	301	46000	105	CU YD	ASPHALT CONCRETE BASE, PG64-22	
					75	304	20000	75	CU YD	AGGREGATE BASE	
					17	407	14000	17	GAL	TACK COAT FOR INTERMEDIATE COURSE	
					21	448	46050	21	CU YD	ASPHALT CONCRETE INTERMEDIATE COURSE, TYPE 2 PG64-22	
					18	448	47020	18	CU YD	ASPHALT CONCRETE SURFACE COURSE, TYPE 1 PG64-22	
			4			621	00100	4	EACH	RPM **TRAFFIC CONTROL**	
			8			626	00300	8	EACH	BARRIER REFLECTOR, TYPE A2	
			27.5			630	02100	27.5	FOOT	GROUND MOUNTED SUPPORT NO. 2 POST	
			59			630	03100	59	FOOT	GROUND MOUNTED SUPPORT NO. 3 POST	
			5			630	85100	5	EACH	REMOVAL OF GROUND MOUNTED SIGN AND REERECTION	
			5			630	86002	5	EACH	REMOVAL OF GROUND MOUNTED POST SUPPORT AND DISPOSAL	
			0.11			642	00090	0.11	MILE	EDGE LINE	
			0.05			642	00290	0.05	MILE	CENTER LINE	
										MAINTENANCE OF TRAFFIC	
		LUMP				614	12420	LUMP		DETOUR SIGNING	
	2					616	10000	2	M GAL.	WATER	
										FOR STRUCTURES OVER 20 FT SPAN	14
						SPECIAL	10810000	LUMP		CPM PROGRESS SCHEDULE	
						614	11000	LUMP		MAINTAINING TRAFFIC	
						619	16010	3	MONTH	FIELD OFFICE, TYPE B	
						623	10000	LUMP		CONSTRUCTION LAYOUT STAKES	
						624	10000	LUMP		MOBILIZATION	

CALCULATED LDS
CHECKED LEH

GENERAL SUMMARY

CHP-29-15.69

i:\PROJECTS\Chp\029\1569\pid19707\308.2 Final Tracings\roadway\sheets\19707GG001.dgn 13-NOV-2006 1:31PM ASCHMIDT

ESTIMATED QUANTITIES								
				202	621	626	642	642
SHEET NO.	REFERENCE NO.	STATION TO STATION	SIDE	RAISED PAVEMENT MARKERS REMOVED	RPM *	BARRIER REFLECTOR, TYPE A2 **	EDGE LINE (WHITE)	CENTER LINE (YELLOW DOUBLE SOLID)
				EACH	EACH	EACH	FOOT	FOOT
12	EL-1	827+25.00 - 830+04.00	LT				289	
12	EL-2	827+25.00 - 830+30.00	RT				305	
12	CL-1	827+25.00 - 830+06.00	℄					281
12		827+60.00 - 830+00.00	℄	4				
12		827+35.00 - 829+75.00	℄		4			
12		826+70.00 - 829+70.00	LT			4		
12		826+77.00 - 829+77.00	RT			4		
							594	281
TOTALS CARRIED TO GENERAL SUMMARY				4	4	8	0.11 MI	0.05 MI

* RPM INSTALLED @ 80' C/C
** BARRIER REFLECTORS INSTALLED @ 100' C/C

ESTIMATED QUANTITIES										
						630				
SHEET NO.	REFERENCE NO.	STATION	SIDE	CODE	SIZE	GROUND MOUNTED SUPPORT NO. 2 POST	GROUND MOUNTED SUPPORT NO. 3 POST	REMOVAL OF GROUND MOUNTED SIGN AND REERECTION	REMOVAL OF GROUND MOUNTED POST SUPPORT AND DISPOSAL	
						FOOT	FOOT	EACH	EACH	
12	S-1	828+07	LT	M3-4 M1-5-2	24x12 24x24		31.5	2	2	
12	S-2	829+50	LT	R8H-1A	24x30	27.5		1	1	
12	S-3	829+90	LT	M1-5-3 M6-1	30x24 21x15		27.5	2	2	
TOTALS CARRIED TO GENERAL SUMMARY						27.5	59	5	5	

EARTHWORK QUANTITIES				
		203		659
SHEET NO.	STATION TO STATION	EXCAVATION	EMBANKMENT	SEEDING AND MULCHING
		CU YD	CU YD	SQ YD
10	827+25.00 - 828+00.00	122	27	533
11	828+23.01 - 830+06.00	213	21	323
	TOTALS	335	48	856
TOTALS CARRIED TO GENERAL SUMMARY		335	48	856#

\# TOTAL CARRIED TO SHEET NO. 3

ITEM 659 TOPSOIL
856 SYx111 CY/1020 SY = 93.2 USE 94 CU YD#

ITEM 659 REPAIR SEEDING AND MULCHING
856 SYx0.05 = 42.80 USE 43 SQ YD#

ITEM 659 COMMERCIAL FERTILIZER
856 SYx1 TON/7410 SY = 0.116 USE 0.12 TON#

ITEM 659 LIME
856 SYx9x1/43560 = 0.117 USE 0.18 AC#

ITEM 659 WATER
856 SYx0.0027 M GAL/SYx2 = 4.6 USE 5.0 M. GAL#

PAVEMENT CALCULATIONS

(P-1)

STA 827+25 - STA 827+98.04 LT/RT
COMPUTER GENERATED AREA = 2138 SQ. FT.

ITEM 448 ASPHALT CONCRETE SURFACE COURSE
1-1/4"/12"x2138 SFx1/27 = 8.25 CU. YD.

ITEM 448 ASPHALT CONCRETE INTERMEDIATE COURSE
1-3/4"/12"x2138 SF x1/27 = 11.55 CU.YD

ITEM 301 ASPHALT CONCRETE BASE
ADD FOR 301 147'x0.67' = 98.49 USE 99 SQ FT
8"/12"x2237 SF x1/27 = 55.24 CU YD

ITEM 304 AGGREGATE BASE
ADD FOR 304 147'x1.17' = 171.99 USE 172 SQ FT
6"/12"x2310 SF x 1/27 = 42.78 CU YD USE 43 CU YD

ITEM 407 TACK COAT FOR INTERMEDIATE COURSE
2138 SFx1/9 x0.040 GAL/SQ YD = 9.50 GAL

ITEM 204 SUBGRADE COMPACTION
ADD FOR 204 147'x1.5' = 220.5 USE 221 SQ FT
2359 SQ FTx1/9 = 262.11 SQ YD USE 263 SQ YD

(P-2)

STA 829+34.91 - STA 830+06.00 LT/RT
COMPUTER GENERATED AREA = 1643 SQ. FT.

ITEM 448 ASPHALT CONCRETE SURFACE COURSE
1-1/4"/12"x1643 SFx1/27 = 6.34 CU. YD.

ITEM 448 ASPHALT CONCRETE INTERMEDIATE COURSE
1-3/4"/12"x1643 SF x1/27 = 8.87 CU.YD

ITEM 301 ASPHALT CONCRETE BASE
ADD FOR 301 72'x0.67' = 48.24 USE 49 SQ FT
8"/12"x1692 SF x1/27 = 41.78 CU YD

ITEM 304 AGGREGATE BASE
ADD FOR 304 72'x1.17' = 84.24 USE 85 SQ FT
6"/12"x1728 SF x 1/27 = 32.0 CU YD

ITEM 407 TACK COAT FOR INTERMEDIATE COURSE
1643 SFx1/9 x0.040 GAL/SQ YD = 7.30 GAL

ITEM 204 SUBGRADE COMPACTION
ADD FOR 204 72'x1.5' = 108 SQ FT
1751 SQ FTx1/9 = 194.56 SQ YD USE 195 SQ YD

(P-3)

STA 830+04.68 - DRIVE RT.
COMPUTER GENERATED AREA = 640 SQ. FT.

ITEM 448 ASPHALT CONCRETE SURFACE COURSE
1-1/4"/12"x640 SFx1/27 = 2.47 CU. YD.

ITEM 301 ASPHALT CONCRETE BASE
ADD FOR 301 72'x0.67' = 48.24 USE 49 SQ FT
3-3/4/12""x640 SF x1/27 = 7.41 CU YD

ITEM 204 SUBGRADE COMPACTION
ADD FOR 204 56'x1.5' = 84 SQ FT
724 SQ FTx1/9 = 80.44 SQ YD USE 81 SQ YD

REFERENCE MONUMENTS

STATE SUPPLIED ℄ MONUMENTS	STATION - OFFSET	STATE SUPPLIED GRID COORDINATES		STATE SUPPLIED PROJECT COORDINATES	
		EASTING (X)	NORTHING (Y)	EASTING (X)	NORTHING (Y)
G4	826+46.28 - 16.03' RT	1608250.3477	787716.6209	1608282.6574	787732.4461
G5	826+46.22 - 16.05' LT	1608279.9301	787729.0324	1608312.2404	787744.8579
G6	834+99.66 - 16.29' RT	1608578.8308	786929.0095	1608611.1471	786944.8189
G7	834+99.59 - 16.08' LT	1608608.6748	786941.5415	1608640.9917	786957.3512

STATE SUPPLIED INVERSE COMBINED SCALE FACTOR = 1.0000200900 (GRID TO GROUND)

PAVEMENT LEGEND

ITEM 448 1¼" ASPHALT CONCRETE SURFACE COURSE
ITEM 448 1¾" ASPHALT CONCRETE INTERMEDIATE COURSE
ITEM 407 TACK COAT FOR INTERMEDIATE COURSE
ITEM 301 8" ASPHALT CONCRETE BASE
ITEM 304 6" AGGREGATE BASE
ITEM 204 SUBGRADE COMPACTION

ITEM 448 1¼" ASPHALT CONCRETE SURFACE
ITEM 301 3¾" ASPHALT CONCRETE BASE
ITEM 204 SUBGRADE COMPACTION

CALCULATED LDS
CHECKED LEH

SUB-SUMMARY & PAVEMENT CALCULATIONS

CHP-29-15.69

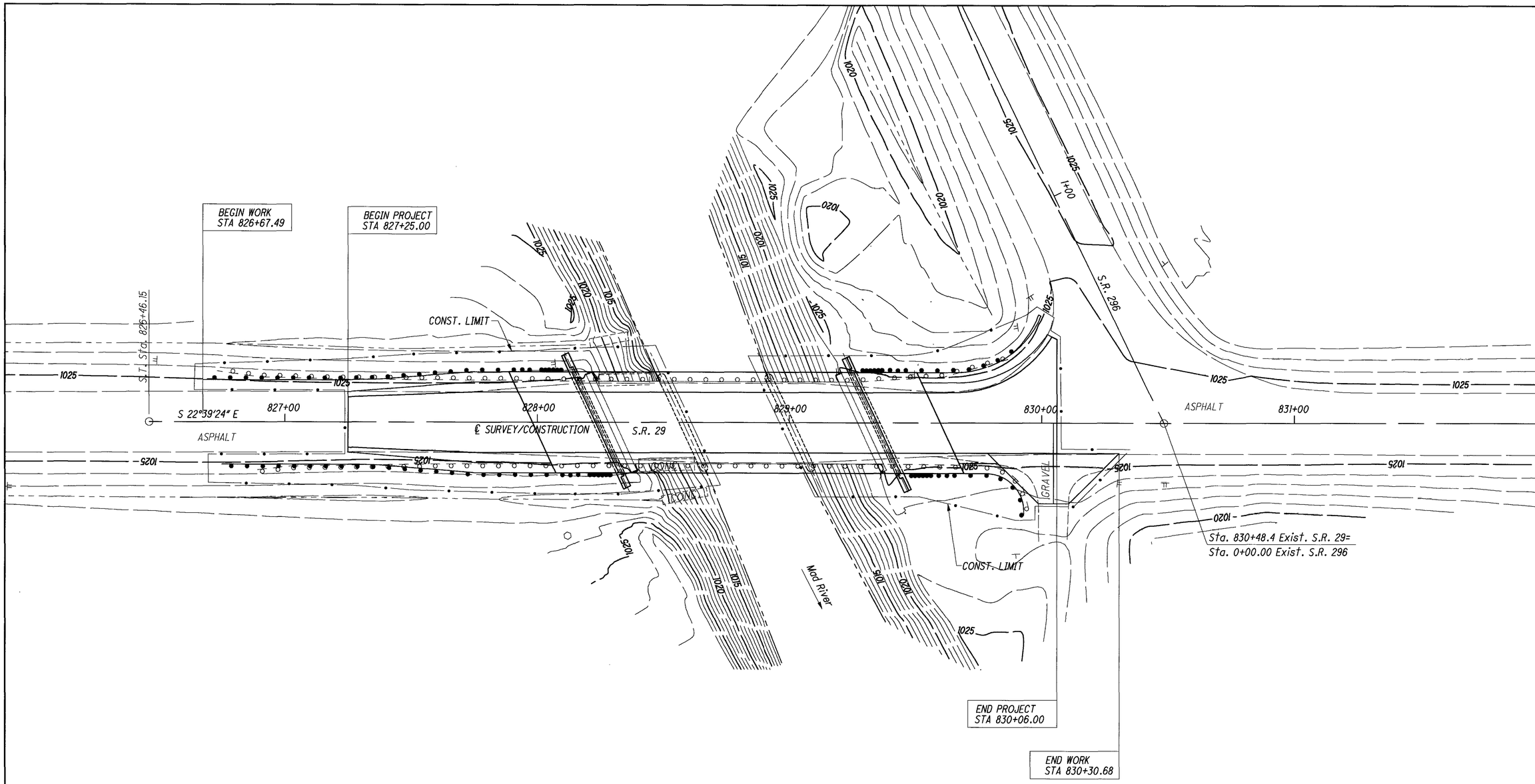

PROJECT DESCRIPTION

REPLACE EXISTING SR 29 STRUCTURE OVER THE MAD RIVER

USGS QUADRANT No. N4007.5-W8345/7.5
NORTHVILLE, OHIO

LATITUDE: 40°09'20" N*
LONGITUDE: 83°47'20" W*

* LONGITUDE AND LATITUDE TO APPROXIMATE CENTER OF PROJECT

THE FOLLOWING QUANTITIES HAVE BEEN CARRIED TO THE GENERAL SUMMARY

ITEM 832 STORM WATER POLLUTION PREVENTION PLAN
LUMP

ITEM 832 EROSION CONTROL
1000 EACH

PROJECT DATA

Total Area (Right-of Way)	0.75 AC.	Runoff Coefficient for Pre-Construction Site	0.66
Project Earth Disturbed Area	0.37 AC.	Runoff Coefficient for Post-Construction Site	0.74
Estimated Contractor Earth Disturbed Area	0.375 AC.	Soil and Water Conservation Map	CHAMPAIGN COUNTY, OH MAP 30
Notice of Intent Earth Disturbed Area	4.90 AC.	Immedidiate Receiving Waters	MAD RIVER
Impervious (Paved Area for Pre-Construction Site	0.19 AC.	Subsequent Receiving Waters	GR. MIAMI RIVER
Impervious (Paved Area for Post-Construction Site	0.25 AC		

HORIZONTAL SCALE IN FEET
0 10 20 40

CALCULATED SNS
CHECKED LEH

PROJECT SITE PLAN

CHP-29-15.69

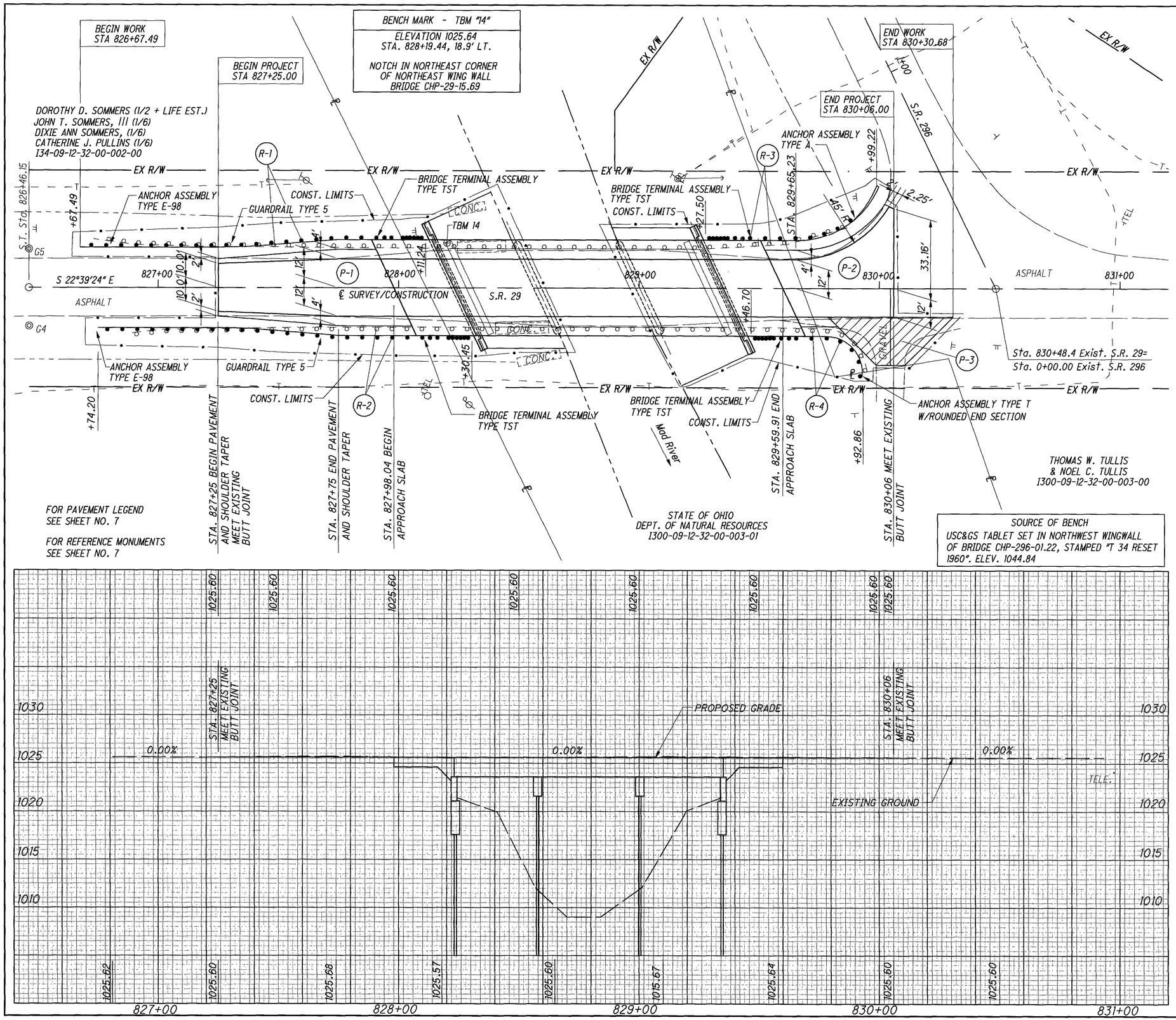

REF NO.	STATION FROM	STATION TO	SIDE	606 BRIDGE TERMINAL ASSEMBLY, TYPE TST (EACH)	606 ANCHOR ASSEMBLY, TYPE T (EACH)	606 ANCHOR ASSEMBLY, TYPE E-98 (EACH)	606 ANCHOR ASSEMBLY, TYPE A (EACH)	606 GUARDRAIL TYPE 5 (FOOT)	448 ASPHALT CONCRETE INTERMEDIATE COURSE, TYPE 2, PG64-22 (CU. YD.)	448 ASPHALT CONCRETE SURFACE COURSE, TYPE 1, PG64-22 (CU. YD.)	407 TACK COAT FOR INTERMEDIATE COURSE (GAL.)	304 AGGREGATE BASE (CU. YD.)	301 ASPHALT CONCRETE BASE PG64-22 (CU. YD.)	204 SUBGRADE COMPACTION (SQ. YD.)	202 GURARDRAIL REMOVED (FOOT)
P-1	827+25	827+98.04	LT/RT					93.75	11.55	8.25	9.5	43	55.24	263	
P-2	829+34.91	830+06	LT/RT					106.25	8.87	6.34	7.3	32	41.78	195	
P-3	830+64.68		RT					56.25		2.47			7.41	81	
R-1	826+67.49	828+20.00	LT	1		1									150
R-2	826+74.20	828+32.00	RT	1		1									144
R-3	829+21.00	829+99.22	LT		1		1								67
R-4	829+37.00	829+95	RT	1	1			43.75	20.42	17.06	16.8	75	104.43	539	72
TOTALS CARRIED TO GENERAL SUMMARY				4	1	2	1	300	21	18	17	75	105	539	433

CALCULATED LEH
CHECKED LDS

HORIZONTAL SCALE IN FEET 0 10 20 40

PLAN AND PROFILE
S.R. 29

CHP-29-15.69

SEEDING END WIDTH	SEEDING SQ. YDS.	END AREA CUT	END AREA FILL	VOLUME CUT	VOLUME FILL
37		54	13		
	225			87	21
44		40	10		
	119			35	6
42		36	2		
	189				
20					
	533			122	27

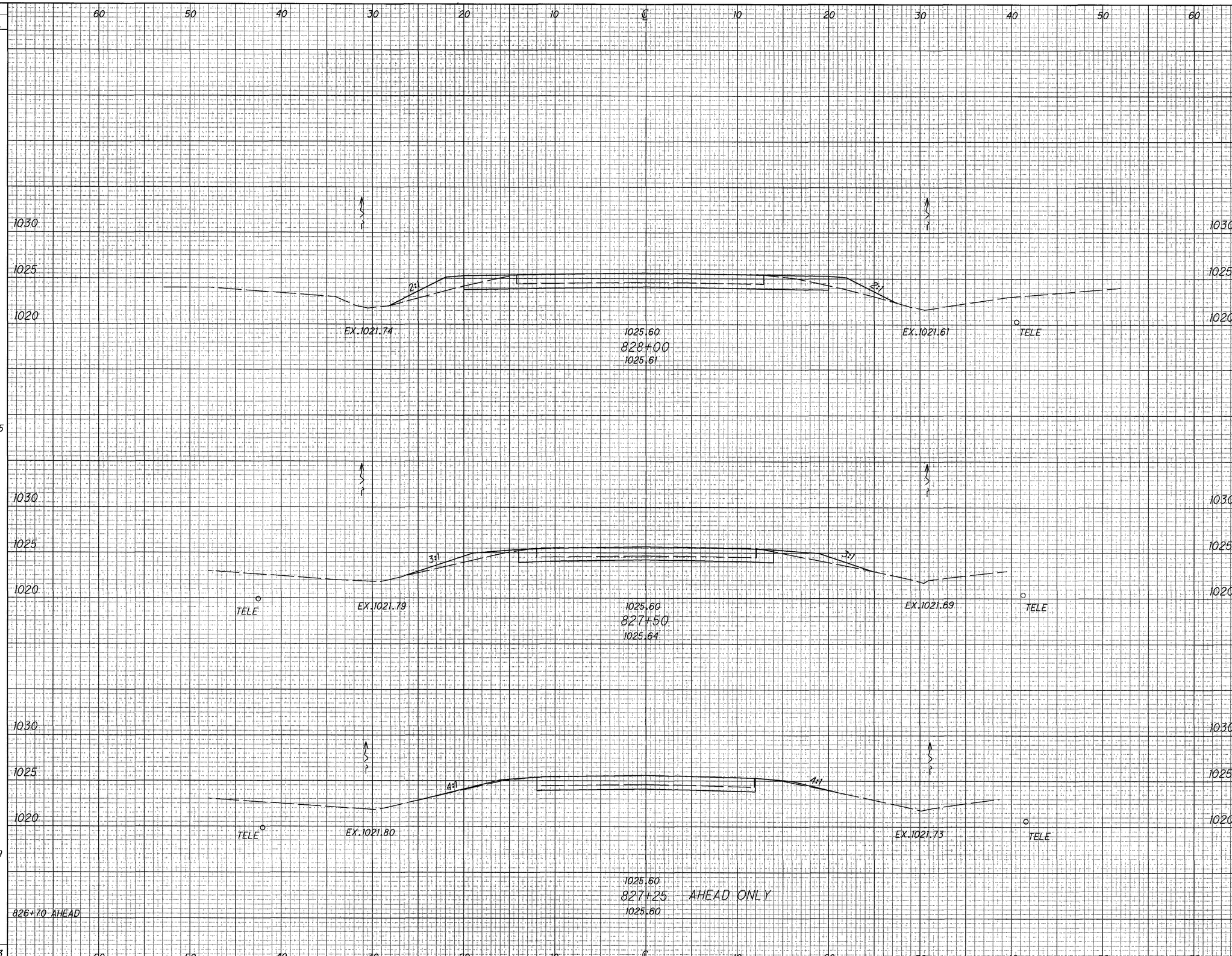

CALCULATED RHH
CHECKED LEH

CROSS SECTIONS
STA. 827+25 TO STA. 828+00

CHP-29-15.69

SEEDING END WIDTH	SEEDING SQ. YDS.	END AREA CUT	END AREA FILL	VOLUME CUT	VOLUME FILL
20	171	68	0	130	6
35	51	57	6	34	2
26	101	65	1	49	13
42		61	18		
	323			213	21

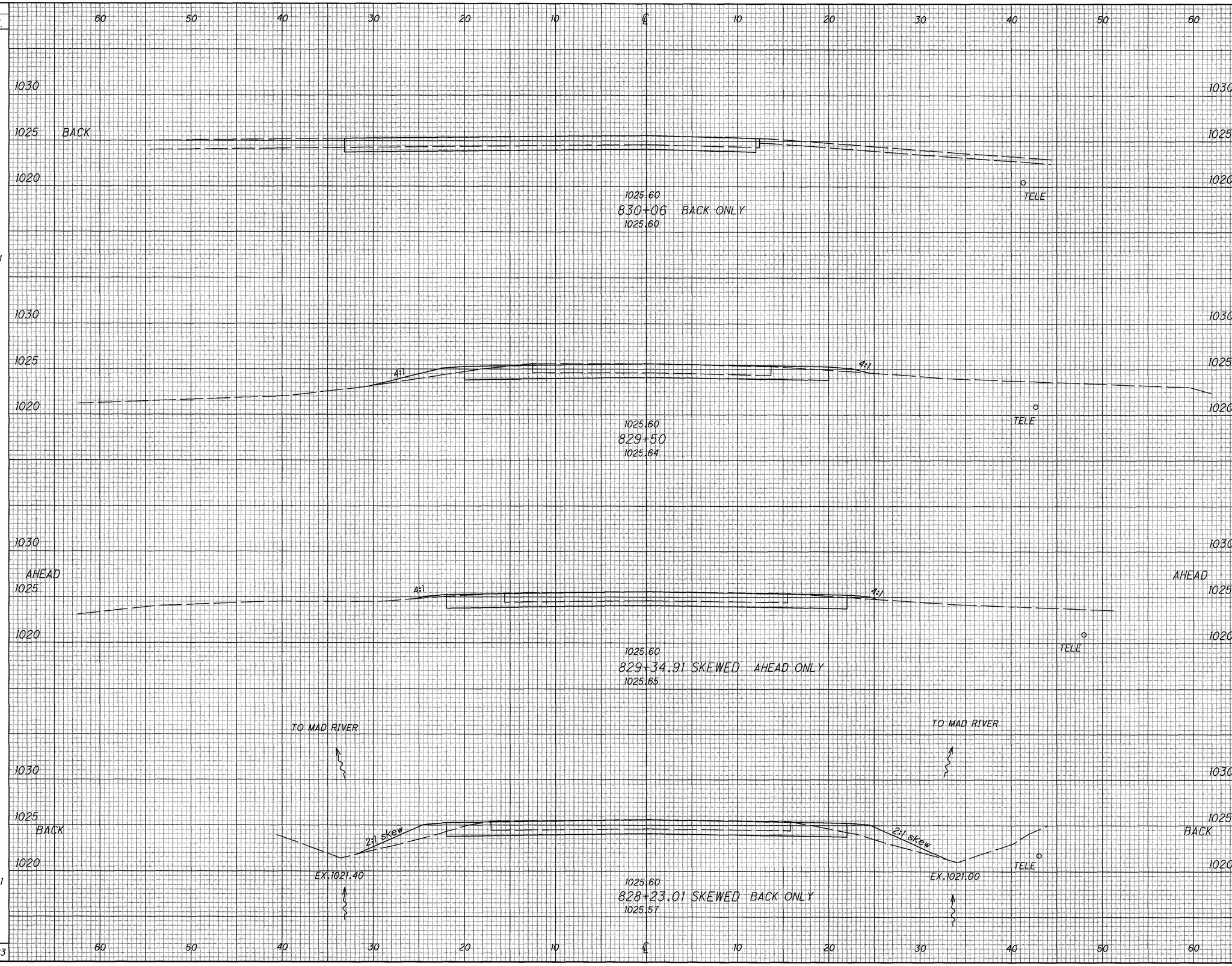

CALCULATED RHH
CHECKED LEH

CROSS SECTIONS

STA. 828+23.01 TO STA. 830+06

CHP-29-15.69

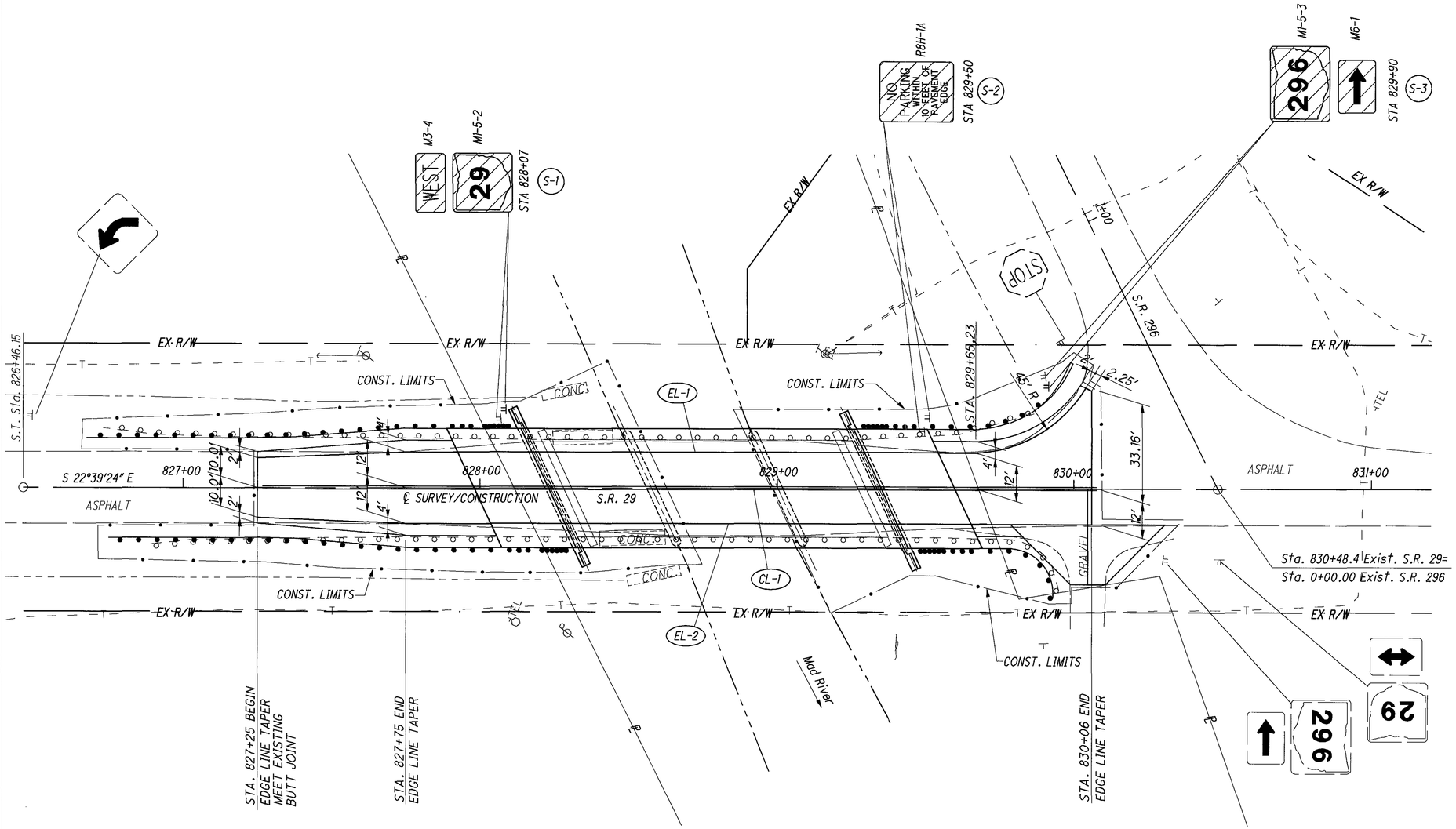

LEGEND

EXISTING SIGNS (DO NOT DISTURB)

EXISTING SIGNS TO BE REMOVED AND REERECTED

(EL) EDGE LINE ITEM 642 TRAFFIC PAINT

(CL) CENTERLINE ITEM 642 TRAFFIC PAINT

FOR QUANTITIES SEE SHEET NO. 7

HORIZONTAL SCALE IN FEET

0 10 20 40

CALCULATED

CHECKED

TRAFFIC CONTROL S.R. 29

CHP-29-15.69

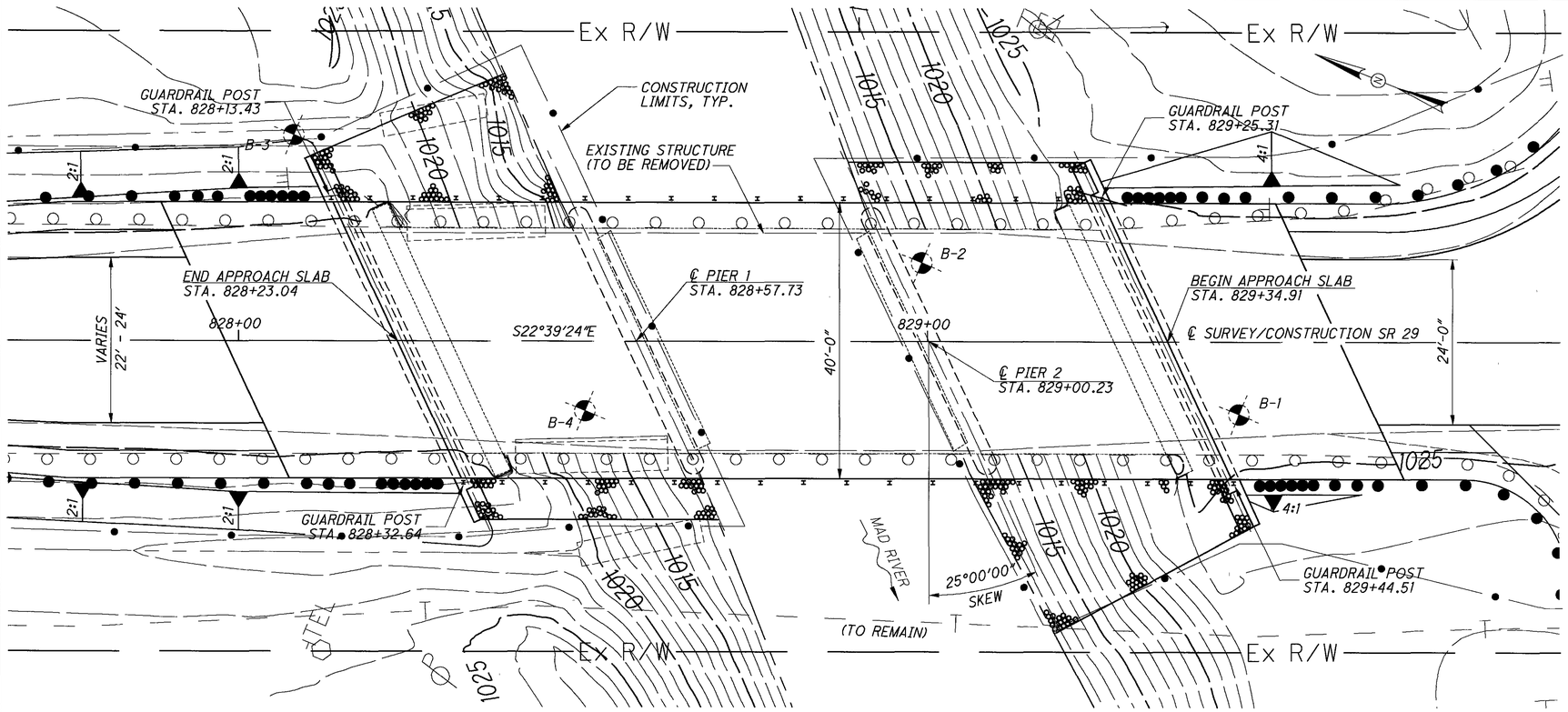

PLAN

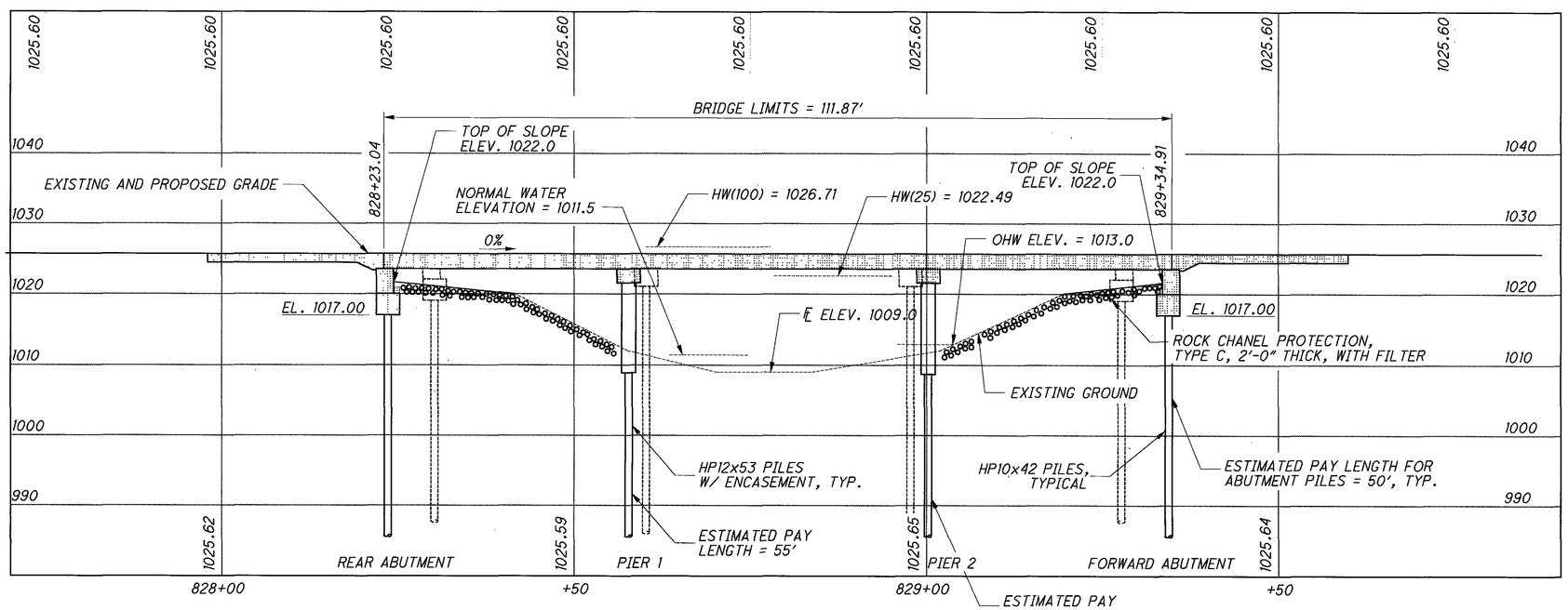

PROFILE

BENCHMARK DATA

BM #1	STA. 829+39.38,	ELEV. 1023.00,	OFFSET 166.6', LEFT
BM #2	STA. 828+19.44,	ELEV. 1025.64,	OFFSET 18.9', LEFT
BM #3	STA. ,	ELEV. ,	OFFSET ,
BM #4	STA. ,	ELEV. ,	OFFSET ,

FOR ADDITIONAL BENCHMARK INFORMATION. SEE ROADWAY PLAN SHEET 9/22

NOTES

EARTHWORK LIMITS SHOWN ARE APPROXIMATE. ACTUAL SLOPES SHALL CONFORM TO PLAN CROSS SECTIONS.

DESIGN TRAFFIC:
2007 ADT = 2000 2007 ADTT = 80
2027 ADT = 2300 2027 ADTT = 92
DIRECTIONAL DISTRIBUTION = .55

LEGEND

ORIGINAL SOIL BORING LOCATION

HYDRAULIC DATA

DRAINAGE AREA = 135 SQ. MILES
Q (25) = 6440 CFS V (25) = 10. FT/S
Q (100) = 8730 CFS V (100) = 3.7 FT/S
STRUCTURE CLEARS THE 25 YEAR
DESIGN HW BY 1.02 FEET.

EXISTING STRUCTURE

TYPE: CONTINUOUS CONCRETE SLAB ON CAPPED PILE ABUTMENTS AND PIERS
SPANS: 30'-0"±, 37'-6"±, 30'-0"± C/C BEARING
ROADWAY: 32'-6"± F/F GUARDRAIL
LOADING: H-20
SKEW: 25° R.F.
WEARING SURFACE: ASPHALT
APPROACH SLABS: 25'-0"±
ALIGNMENT: TANGENT
CROWN: 3/16"/FT.
STRUCTURAL FILE NUMBER: 1100483
DATE BUILT: 1953
DISPOSITION: TO BE REMOVED

PROPOSED STRUCTURE

TYPE: CONTINUOUS CONCRETE SLAB ON CAPPED PILE ABUTMENTS AND PIERS
SPANS: 34'-0", 42'-6", 34'-0" C/C BEARING
ROADWAY: 40'-0" F/F GUARDRAIL
LOADING: HS25 AND ALTERNATE MILITARY
SKEW: 25° RF
WEARING SURFACE: MONOLITHIC CONCRETE
APPROACH SLABS: 25'-0" LONG (AS-1-81)
ALIGNMENT: TANGENT
CROWN: .016 FT/FT
COORDINATES: LATITUDE N 40° 09' 20"
LONGITUDE W 83° 47' 20"

DESIGN AGENCY
BALKE AMERICAN
1848 Summit Road
Cincinnati, Ohio 45237

DESIGNED	DRAWN	REVIEWED	DATE
MRS	ALH	KJW	4/06
CHECKED	REVISED	STRUCTURE FILE NUMBER	
FKL		1100491	

STA. 828+23.04
STA. 829+34.91

SITE PLAN
BRIDGE NO. CHP-29-1569
OVER MAD RIVER

CHP-29-15.69
PID No. 19707

GENERAL NOTES

REFER TO THE FOLLOWING STANDARD BRIDGE DRAWINGS:

AS-1-81	REVISED	07-19-02
CPA-5-94	REVISED	07-19-02
CPP-2-94	REVISED	07-19-02
CS-1-03	DATED	04-18-03
DS-1-92	REVISED	07-18-03
TST-1-99	REVISED	10-17-03

AND TO THE FOLLOWING SUPPLEMENTAL SPECIFICATIONS:

898 DATED 7-21-06

DESIGN SPECIFICATIONS:
THIS STRUCTURE CONFORMS TO "STANDARD SPECIFICATIONS FOR HIGHWAY BRIDGES" ADOPTED BY THE AMERICAN ASSOCIATION OF STATE HIGHWAY AND TRANSPORTATION OFFICIALS, 2002, AND THE ODOT BRIDGE DESIGN MANUAL.

DESIGN LOADING:
HS25 AND THE ALTERNATE MILITARY LOADING.
FUTURE WEARING SURFACE (FWS) OF 60 LBS/FT2

DESIGN DATA:
CONCRETE CLASS S –
COMPRESSIVE STRENGTH 4500 PSI (SUPERSTRUCTURE)
CONCRETE CLASS C –
COMPRESSIVE STRENGTH 4000 PSI (SUBSTRUCTURE)
REINFORCING STEEL –
ASTM A615 OR A996 GRADE 60 MINIMUM YIELD STRENGTH 60,000 PSI

DECK PROTECTION METHOD:
EPOXY COATED REINFORCING STEEL
2½" CONCRETE COVER
STEEL DRIP STRIP

MONOLITHIC WEARING SURFACE IS ASSUMED, FOR DESIGN PURPOSES, TO BE 1 INCH THICK.

REMOVAL OF EXISTING STRUCTURE:
UPON APPROVAL BY THE ENGINEER, REMOVE THE EXISTING STRUCTURE PER THE REQUIREMENTS OF CMS 202.

PILE DESIGN LOADS (ULTIMATE BEARING VALUE):
THE ULTIMATE BEARING VALUE IS 80 TONS PER PILE FOR THE HP 10 X 42 ABUTMENT PILES. THE ULTIMATE BEARING VALUE IS 121 TONS PER PILE FOR THE HP 12 X 53 PIER PILES.

ABUTMENT PILES:
16 PILES 55 FEET LONG, ORDER LENGTH
1 DYNAMIC LOAD TESTING ITEMS

PIER PILES:
7 PILES 60 FEET LONG, ORDER LENGTH (PIER 1)
7 PILES 65 FEET LONG, ORDER LENGTH (PIER 2)
1 DYNAMIC LOAD TESTING ITEMS

UTILITY LINES:
THE UTILITY(IES) SHALL BEAR ALL EXPENSE INVOLVED IN RELOCATING (INSTALLING) THE AFFECTED UTILITY LINES. THE CONTRACTOR AND UTILITY(IES) ARE TO COOPERATE BY ARRANGING THEIR WORK IN SUCH A MANNER THAT INCONVENIENCE TO EITHER WILL BE HELD TO A MINIMUM.

ITEM SPECIAL - PILE ENCASEMENT:
ENCASE ALL STEEL H-PILES FOR THE CAPPED PILE PIERS IN CLASS C CONCRETE. PROVIDE A CONCRETE SLUMP BETWEEN 6 TO 8 INCHES WITH THE USE OF A SUPERPLASTICIZER. PLACE THE CONCRETE WITHIN A FORM THAT CONSISTS OF POLYETHYLENE PIPE (707.33), OR PVC PIPE (707.42). THE ENCASEMENT SHALL EXTEND FROM 3 FEET BELOW THE FINISHED GROUND SURFACE UP TO THE CONCRETE PIER CAP. POSITION PIPE SO THAT AT LEAST 3 INCHES OF CONCRETE COVER IS PROVIDED AROUND THE EXTERIOR OF THE PILE.

IN LIEU OF ENCASING THE PILE IN CONCRETE, GALVANIZE THE PILES ACCORDING TO 711.02. THE GALVANIZING SHALL BE CONTINUOUS FROM A MINIMUM OF 3 FEET BELOW THE FINISH GROUND SURFACE UP TO THE CONCRETE PIER CAP. THE GALVANIZED COATING THICKNESS SHALL BE A MINIMUM OF 4 MILS. REPAIR ALL GOUGES, SCRAPES, SCRATCHES OR OTHER SURFACE IMPERFECTIONS CAUSED BY THE HANDLING OR THE DRIVING OF THE PILE TO THE SATISFACTION OF THE ENGINEER.

THE DEPARTMENT WILL MEASURE PILE ENCASEMENT BY THE NUMBER OF FEET. THE DEPARTMENT WILL DETERMINE THE SUM AS THE LENGTH MEASURED ALONG THE AXIS OF EACH PILE FROM THE BOTTOM OF THE ENCASEMENT TO THE BOTTOM OF THE PIER CAP. THE DEPARTMENT WILL NOT PAY FOR GALVANIZING PROVIDED BEYOND THE PROJECT REQUIREMENTS. THE DEPARTMENT WILL PAY FOR ACCEPTED QUANTITIES AT THE CONTRACT PRICE FOR ITEM - SPECIAL, PILE ENCASEMENT.

ESTIMATED QUANTITIES

CALCULATED BY: ALH DATED: 2/06
CHECKED BY FKL DATED: 5/06

ITEM	EXTENSION	TOTAL	UNIT	DESCRIPTION	SUPERSTRUCTURE	ABUTMENT	PIER	GENERAL	SEE SHEET
202	11002	LUMP		STRUCTURE REMOVED, OVER 20 FOOT SPAN				LUMP	
202	22900	134	SQ. YD.	APPROACH SLAB REMOVED	134				
202	23500	372	SQ. YD.	WEARING COURSE REMOVED	372				
503	21100	165	CU. YD.	UNCLASSIFIED EXCAVATION		165			
505	11100	LUMP		PILE DRIVING EQUIPMENT MOBILIZATION				LUMP	
507	00100	880	FOOT	STEEL PILES HP10X42, FURNISHED		880			
507	00150	800	FOOT	STEEL PILES HP10X42, DRIVEN		800			
507	00200	875	FOOT	STEEL PILES HP12X53, FURNISHED			875		
507	00250	805	FOOT	STEEL PILES HP12X53, DRIVEN			805		
SPECIAL	50771200	190	FOOT	PILE ENCASEMENT			190		
509	10000	76,050	POUND	EPOXY COATED REINFORCING STEEL	64,222	7501	4327		
512	10100	171	SQ. YD.	SEALING OF CONCRETE SURFACES (EPOXY-URETHANE)	75	34	63		
SPECIAL	51631300	89	FOOT	POLYMER MODIFIED ASPHALT EXPANSION JOINT SYSTEM	89				
517	70000	224	FOOT	RAILING (TWIN STEEL TUBE)	224				
518	21200	61	CU. YD.	POROUS BACKFILL W/FILTER FABRIC		61			
SPECIAL	51822300	270	FOOT	STEEL DRIP STRIP	270				
518	40000	120	FOOT	6" PERFORATED CORRUGATED PLASTIC PIPE		120			
518	40010	100	FOOT	6" NON-PERFORATED CORRUGATED PLASTIC PIPE, INCLUDING SPECIALS		100			
523	20000	2	EACH	DYNAMIC LOAD TESTING		1	1		
601	32200	347	CU. YD.	ROCK CHANNEL PROTECTION, TYPE C WITH FILTER		347			
898	10200	290	CU. YD.	QC/QA CONCRETE, CLASS QSC2, SUPERSTRUCTURE (DECK)	290				
898	10704	223	SQ. YD.	QC/QA CONCRETE, CLASS QSC2, SUPERSTRUCTURE (APPROACH SLAB) 15"	223				
898	20100	19	CU. YD.	QC/QA CONCRETE, CLASS QSC1, SUBSTRUCTURE (PIER ABOVE FOOTING)			19		
898	20160	73	CU. YD.	QC/QA CONCRETE, CLASS QSC1, SUBSTRUCTURE (ABUTMENT INCLUDING FOOTING)		73			

DESIGN AGENCY
BALKE AMERICAN
1848 Summit Road
Cincinnati, Ohio 45237

DESIGNED	DRAWN	REVIEWED	DATE
FKL	ALH	KJW	4/06
CHECKED	REVISED	STRUCTURE FILE NUMBER	
MRS		1100491	

GENERAL NOTES AND ESTIMATED QUANTITIES
BRIDGE NO. CHP-29-1569
OVER MAD RIVER

CHP-29-15.69
PID No. 19707

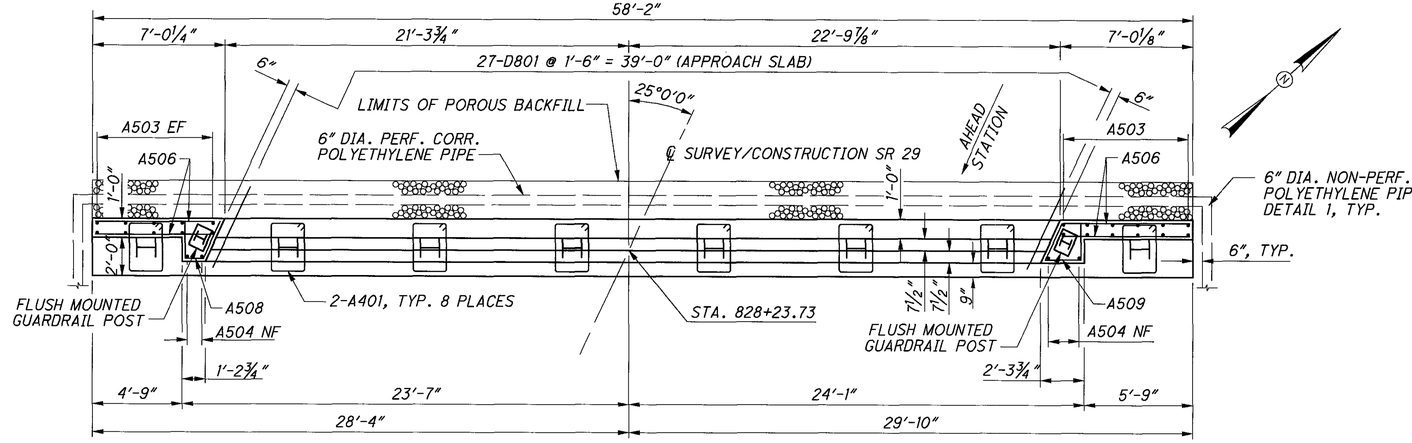

PLAN

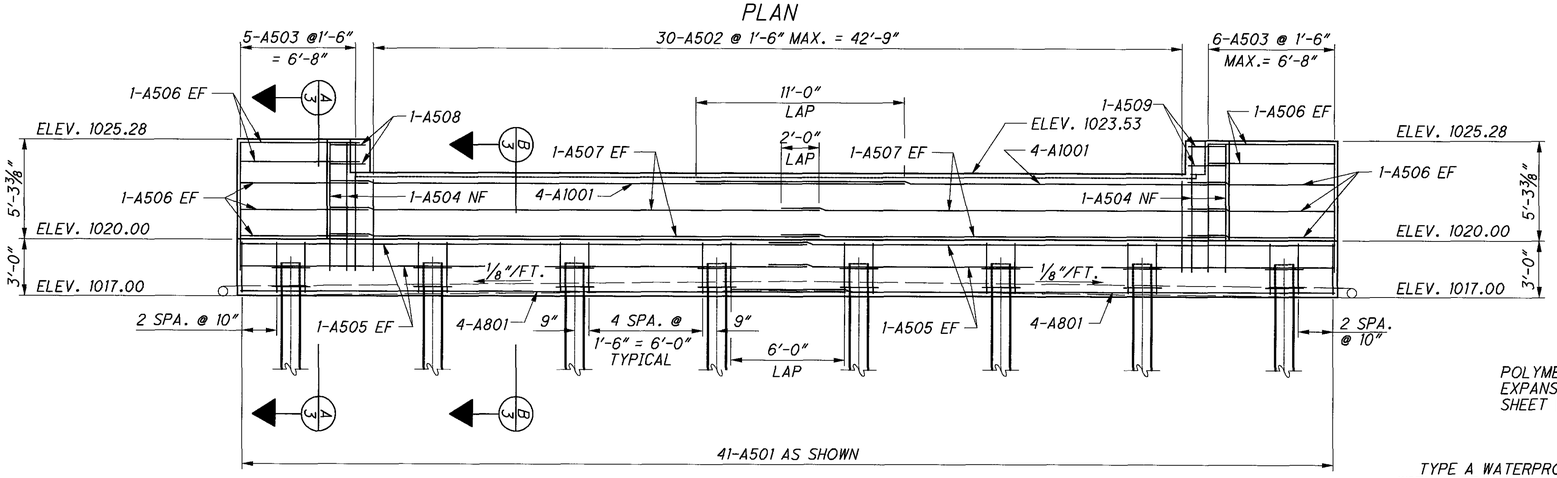

ELEVATION

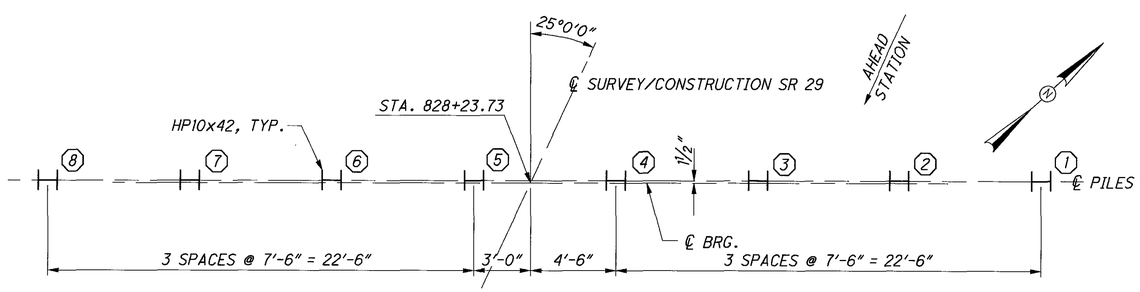

FOUNDATION PLAN

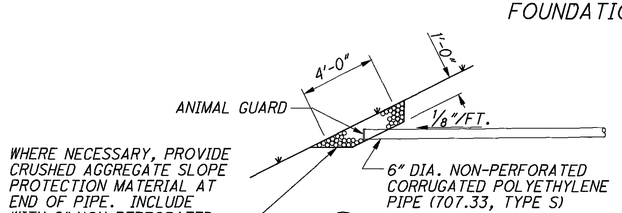

1/3,4 DETAIL

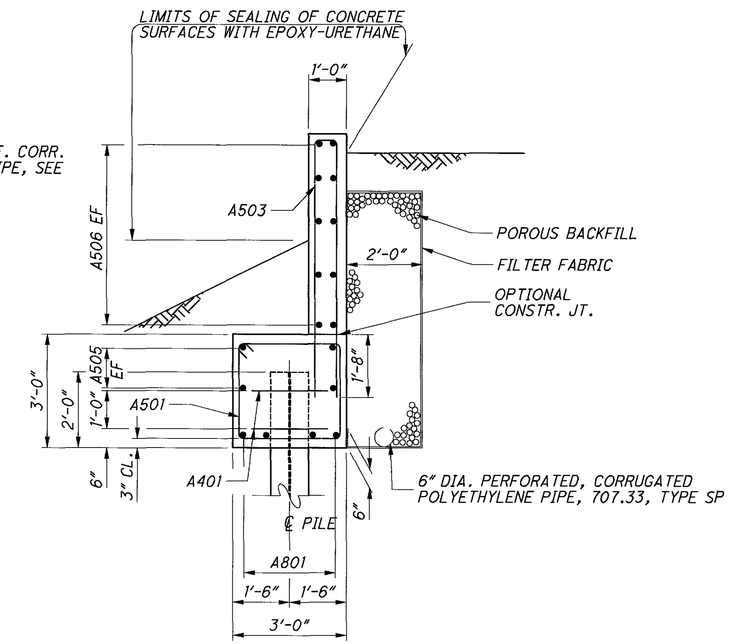

A/3 SECTION

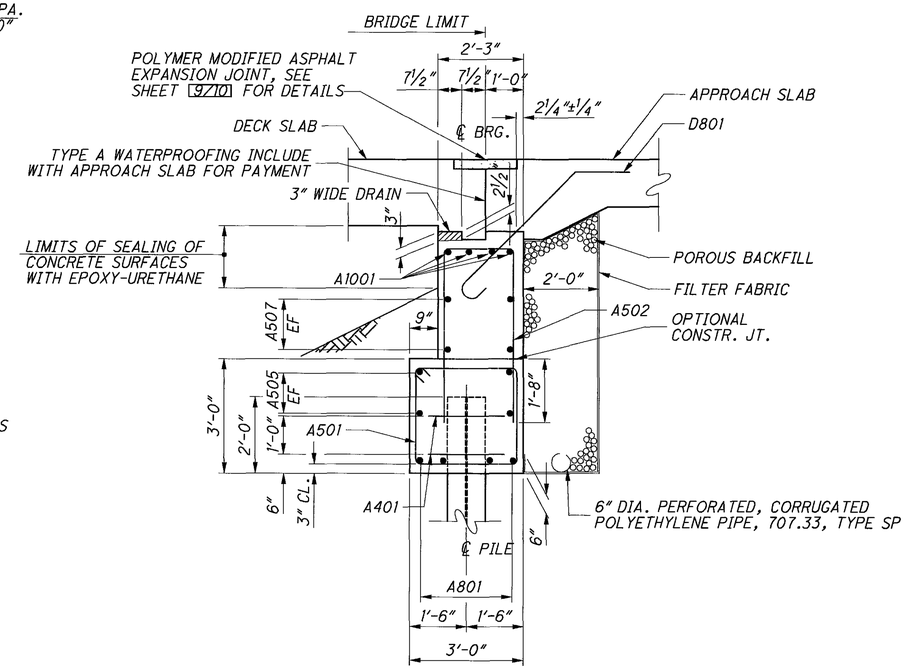

B/3 SECTION

NOTES:
1. FOR ADDITIONAL DETAILS, SEE STD. DWG. CPA-5-94.
2. POROUS BACKFILL WITH FILTER FABRIC, 2 FEET THICK, SHALL EXTEND UP TO THE PLANE OF THE SUBGRADE, TO 1 FOOT BELOW THE EMBANKMENT SURFACE, AND LATERALLY TO THE ENDS OF THE WINGWALLS.

DESIGN AGENCY
BALKE AMERICAN
1846 Summit Road
Cincinnati, Ohio 45237

DESIGNED	DRAWN	REVIEWED	DATE
MRS	ALH	KJW	4/06
CHECKED	REVISED	STRUCTURE FILE NUMBER	
FKL		1100491	

REAR ABUTMENT DETAILS
BRIDGE NO. CHP-29-1569
OVER MAD RIVER

CHP-29-15.69
PID No. 19707

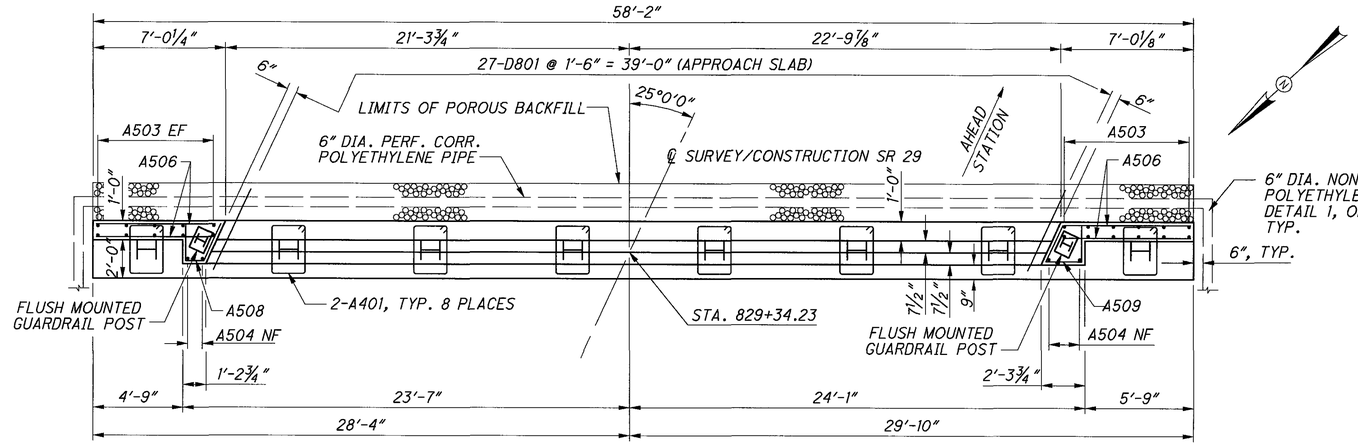

PLAN

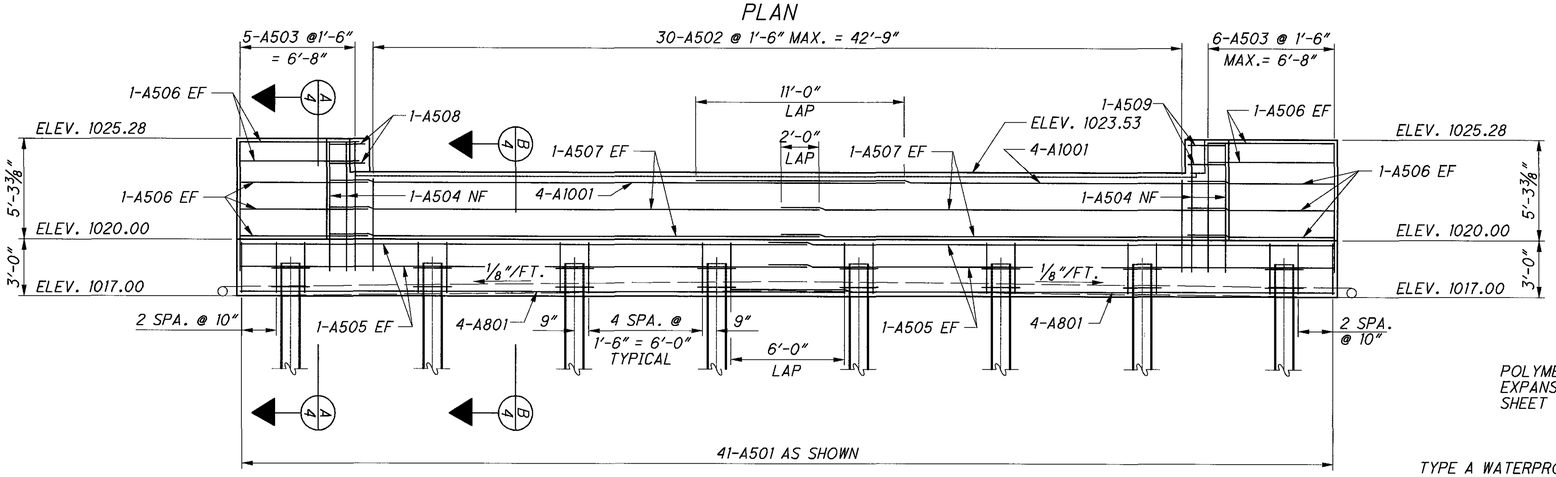

ELEVATION

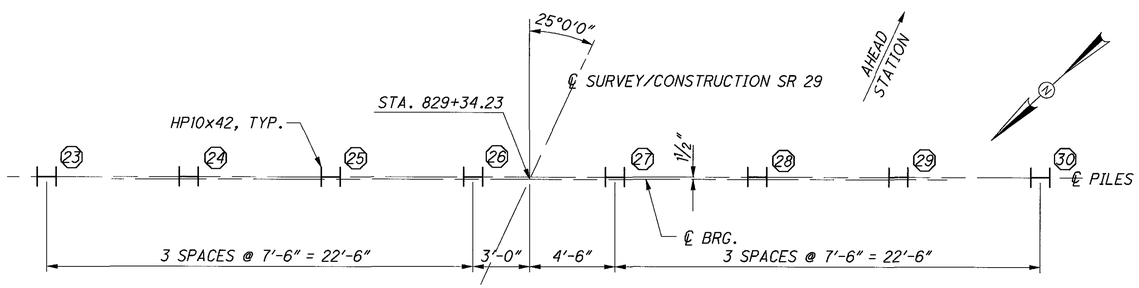

FOUNDATION PLAN

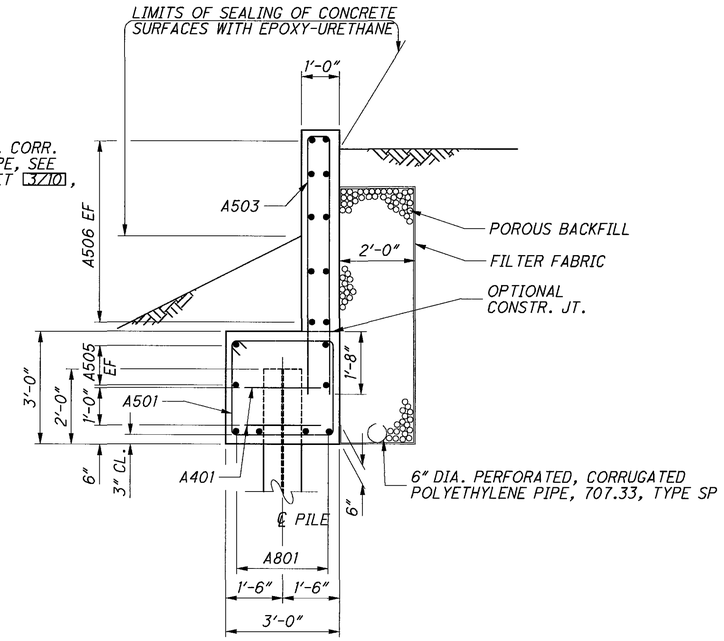

A/4 SECTION

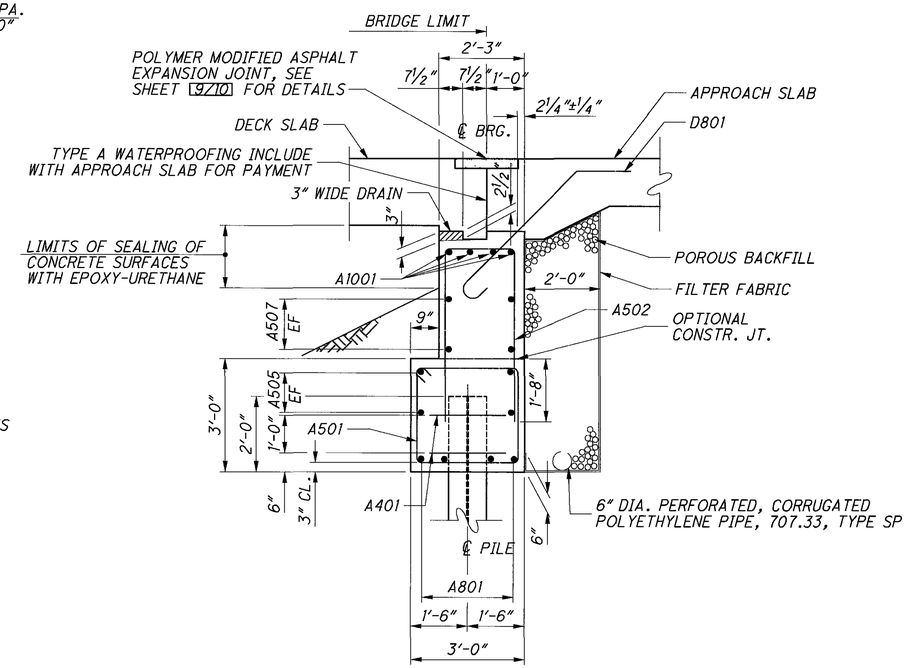

B/4 SECTION

NOTES:
1. FOR ADDITIONAL DETAILS, SEE STD. DWG. CPA-5-94.
2. POROUS BACKFILL WITH FILTER FABRIC, 2 FEET THICK, SHALL EXTEND UP TO THE PLANE OF THE SUBGRADE, TO 1 FOOT BELOW THE EMBANKMENT SURFACE, AND LATERALLY TO THE ENDS OF THE WINGWALLS.

DESIGN AGENCY
BALKE AMERICAN
1848 Summit Road
Cincinnati, Ohio 45237

DESIGNED	DRAWN	REVIEWED	DATE
MRS	ALH	KJW	4/06
CHECKED	REVISED	STRUCTURE FILE NUMBER	
FKL		1100491	

FORWARD ABUTMENT DETAILS
BRIDGE NO. CHP-29-1569
OVER MAD RIVER

CHP-29-15.69
PID No. 19707

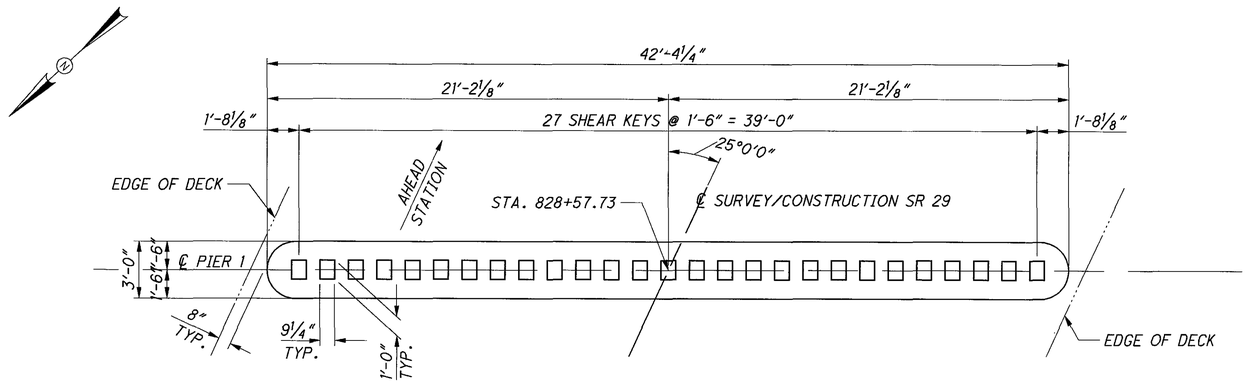

CAP PLAN

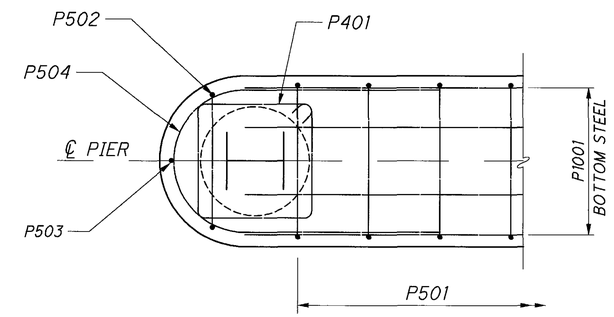

A/5 SECTION

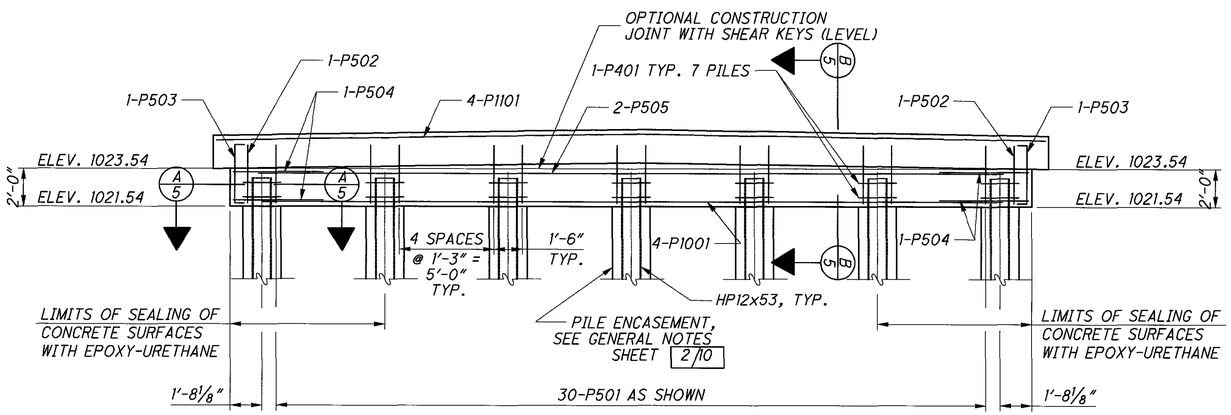

ELEVATION

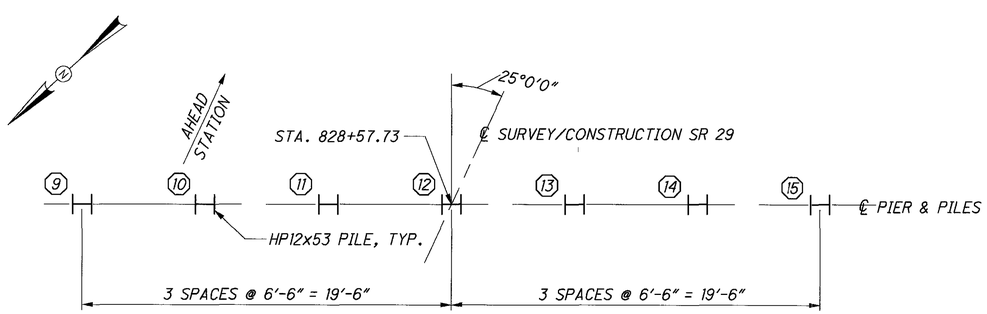

FOUNDATION LAYOUT

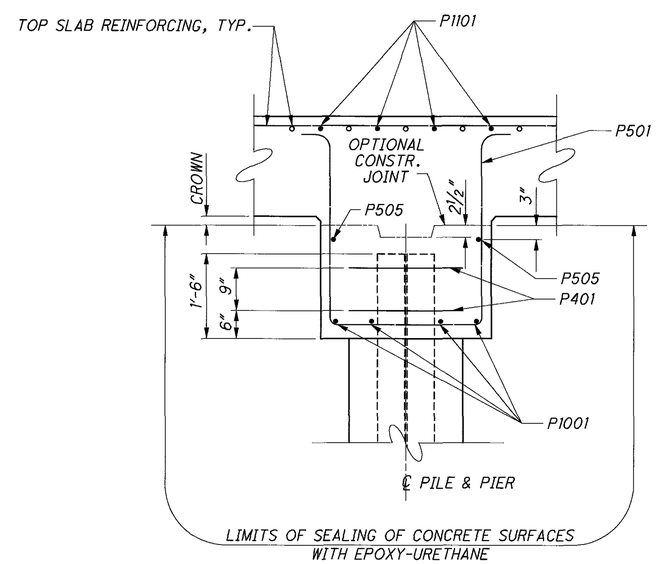

B/5 SECTION

NOTES:
1. FOR ADDITIONAL DETAILS, SEE STD. DWG. CPP-2-94.

DESIGN AGENCY
BALKE AMERICAN
1848 Summit Road
Cincinnati, Ohio 45237

DESIGNED	DRAWN	REVIEWED	DATE
MRS	ALH	KJW	4/06
CHECKED	REVISED	STRUCTURE FILE NUMBER	
FKL		1100491	

PIER 1 DETAILS
BRIDGE NO. CHP-29-1569
OVER MAD RIVER

CHP-29-15.69
PID No. 19707

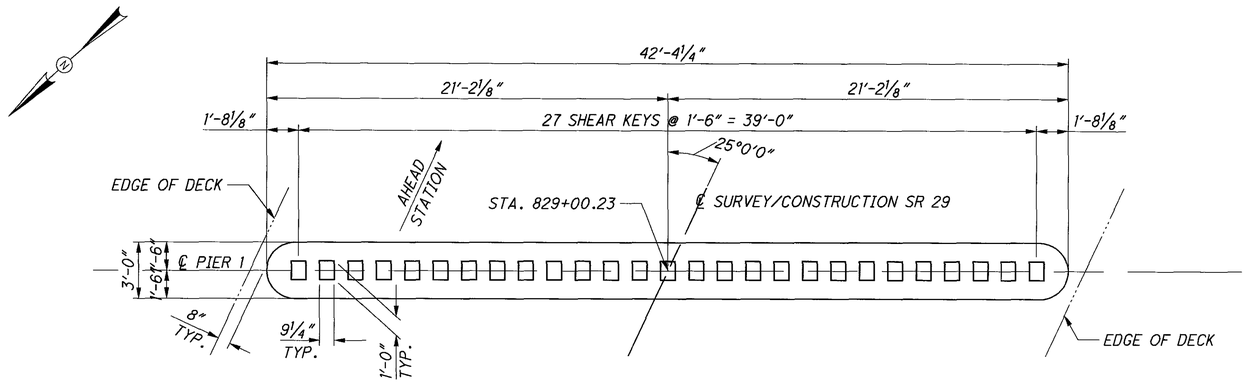

CAP PLAN

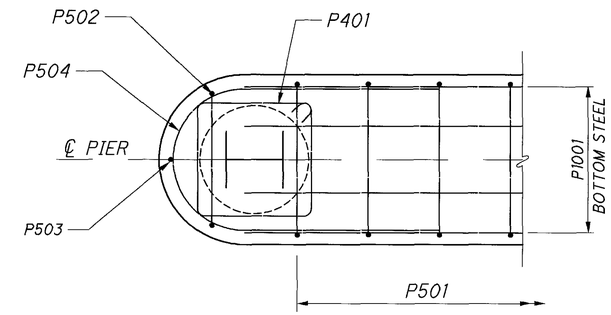

A/5 SECTION

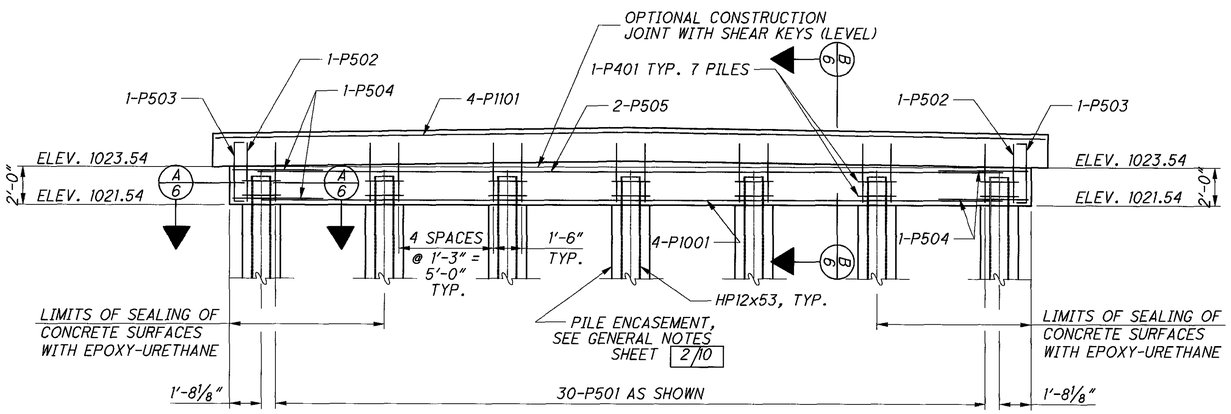

ELEVATION

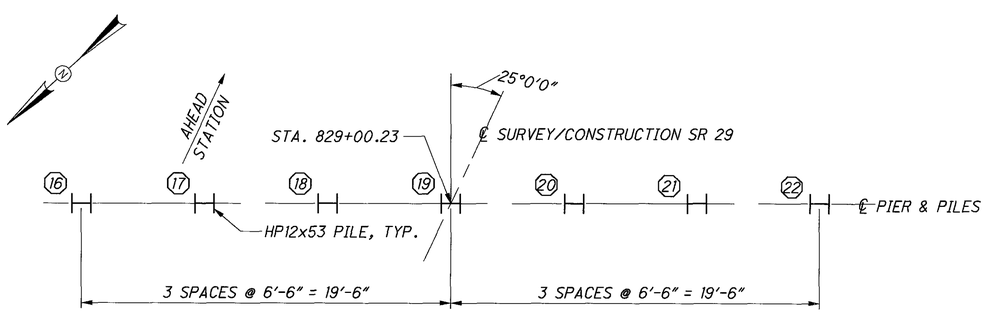

FOUNDATION LAYOUT

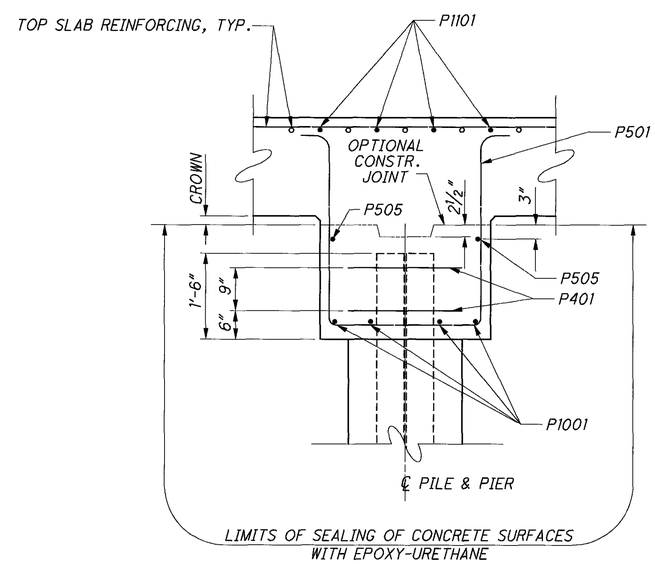

B/6 SECTION

NOTES:
1. FOR ADDITIONAL DETAILS, SEE STD. DWG. CPP-2-94.

DESIGN AGENCY
BALKE AMERICAN
1848 Summit Road
Cincinnati, Ohio 45237

DESIGNED	DRAWN	REVIEWED	DATE
MRS	ALH	KJW	4/06
CHECKED	REVISED	STRUCTURE FILE NUMBER	
FKL		1100491	

PIER 2 DETAILS
BRIDGE NO. CHP-29-1569
OVER MAD RIVER

CHP-29-15.69
PID No. 19707

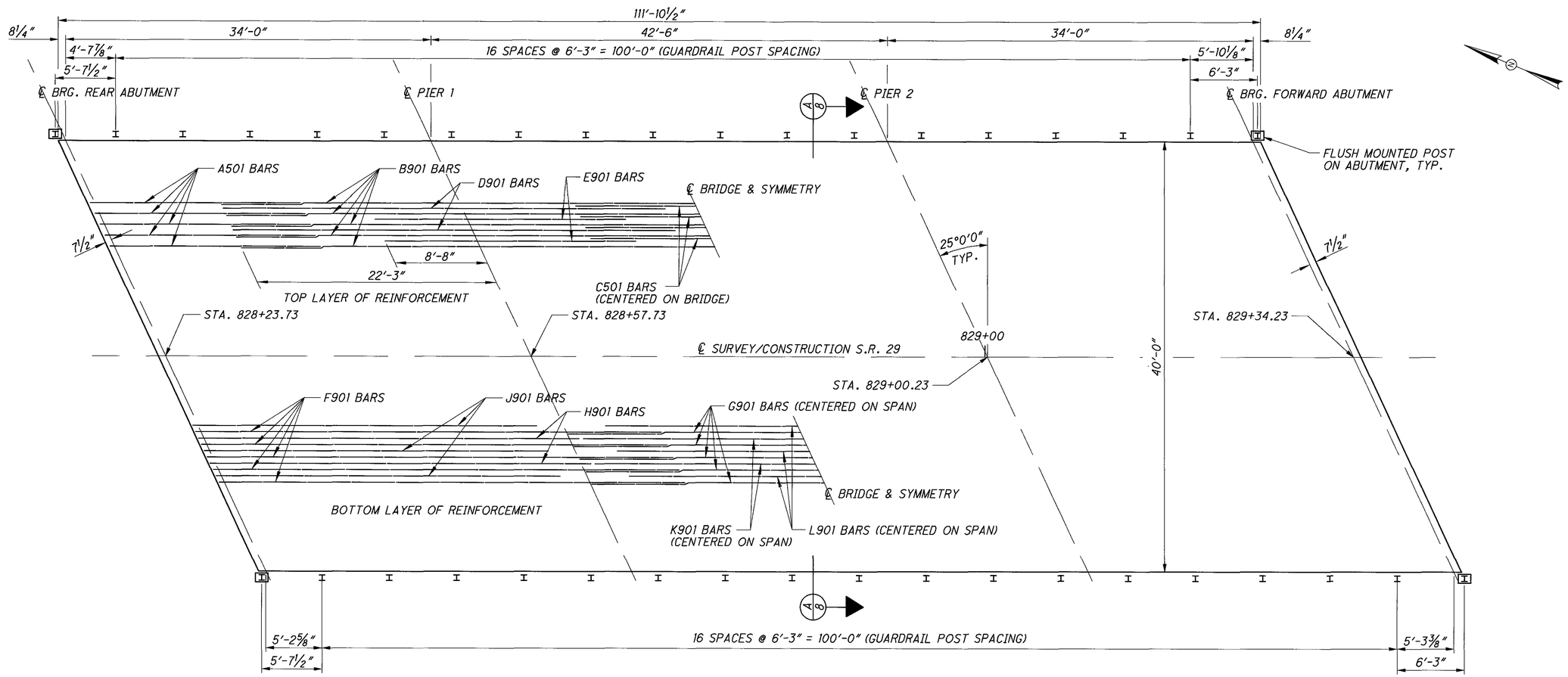

DECK PLAN

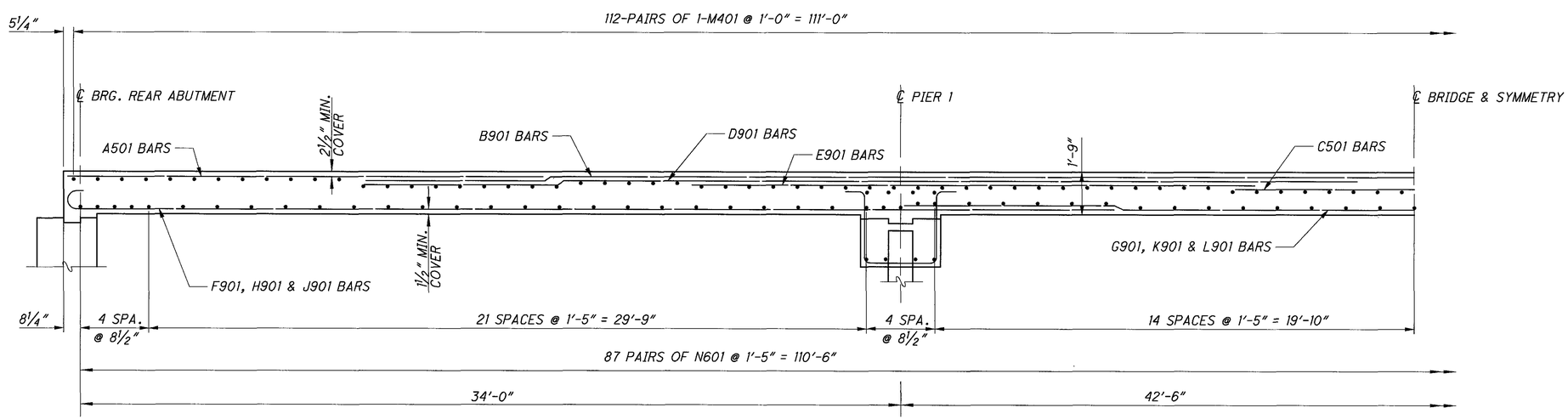

TYPICAL LONGITUDINAL SECTION

NOTES:
1. FOR ADDITIONAL INFORMATION, SEE STD. DWG. CS-1-03

DESIGN AGENCY
BALKE AMERICAN
1848 Summit Road
Cincinnati, Ohio 45237

DESIGNED	DRAWN	REVIEWED	DATE
MRS	ALH	KJW	4/06
CHECKED	REVISED	STRUCTURE FILE NUMBER	
FKL		1100491	

CONCRETE SLAB DETAILS
BRIDGE NO. CHP-29-1569
OVER MAD RIVER

CHP-29-15.69
PID No. 19707

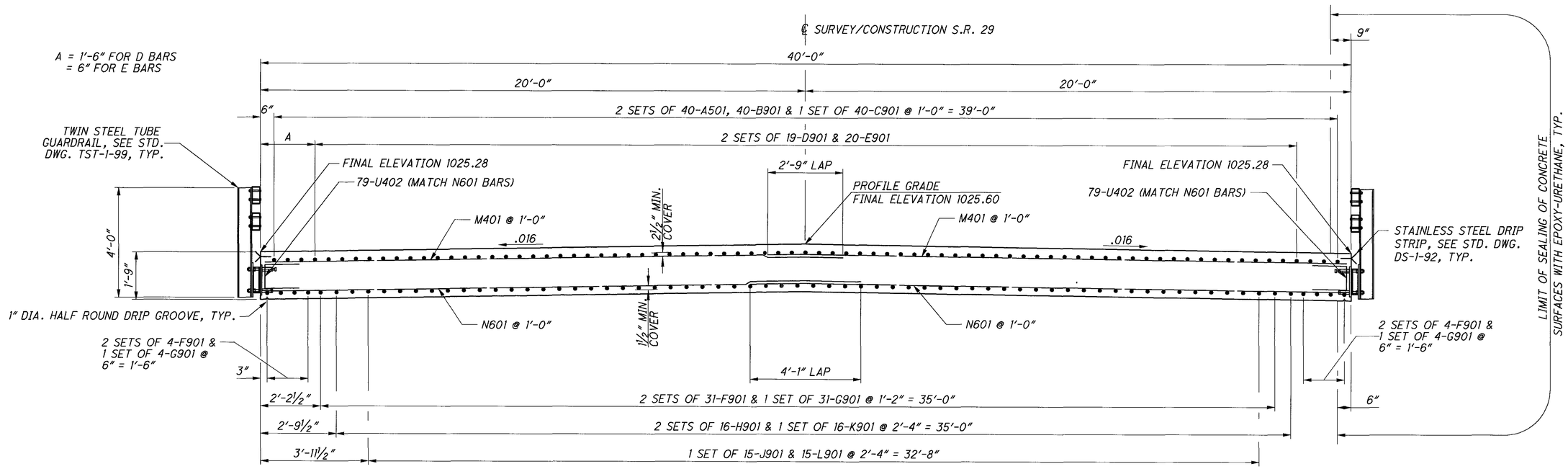

A/7 SECTION

DESIGN AGENCY
BALKE AMERICAN
1848 Summit Road
Cincinnati, Ohio 45237

DESIGNED	DRAWN	REVIEWED	DATE
MRS	ALH	KJW	4/06
CHECKED	REVISED	STRUCTURE FILE NUMBER	
FKL		1100491	

CONCRETE SLAB DETAILS
BRIDGE NO. CHP-29-1569
OVER MAD RIVER

CHP-29-15.69
PID No. 19707

GENERAL NOTES AND DETAILS FOR POLYMER MODIFIED ASPHALT EXPANSION JOINT SYSTEM

ITEM SPECIAL - POLYMER-MODIFIED ASPHALT EXPANSION JOINT SYSTEM

THIS ITEM WILL BE USED TO SEAL THE EXPANSION/CONTRACTION JOINTS AS PER THESE DETAILS AND THE MANUFACTURER'S REQUIREMENTS USING A POLYMER-MODIFIED ASPHALT SYSTEM. THE PRIME CONTRACTOR WILL OBTAIN THE SERVICES OF ONE OF THE FOLLOWING APPROVED APPLICATORS WHO WILL FURNISH AND INSTALL THE NEW BRIDGE EXPANSION JOINT SYSTEM AFTER ALL PAVING ON THE AFFECTED BRIDGE(S) HAS BEEN COMPLETED.

PRODUCT NAME	SUPPLIER	ADDRESS	PHONE NO.
THORMA-JOINT	DYNAMIC SURFACE APPLICATIONS, LTD	373 VILLAGE RD. PENNSDALE, PA 17756	(570)546-6041
MATRIX 502	CRAFCO INC.	420 N. ROOSEVELT AVE. CHANDLER, AZ 85226	(800)528-8242
EXPANDEX JOINT SYSTEM	WATSON-BOWMAN ACME	95 PINEVIEW DR. AMHERST, NY 14228	(716)691-7566
APJ ASPHALTIC PLUG EXPANSION JOINT	WYOMING EQUIPMENT SALES	281 SIXTH STREET P.O. BOX 287 WEST WYOMING, PA 18644	(570)693-2810

MATERIALS:

BRIDGING PLATE:

MILD STEEL 1/8" OR 1/4" THICK PLATE, 8" WIDE OR 18 GAUGE ALUMINUM, 8" WIDE.

BINDER:

TYPE:	POLYMER MODIFIED ASPHALT
SOFTENING POINT:	180 DEGREES F. MIN.
FLOW:	3 mm. MAX. AT 140 DEGREES F.
PENETRATION:	9 mm. MAX. AT 77 DEGREES F. 1 mm. MIN AT 0 DEGREES F. ASTM D 3407
DUCTILITY:	40 cm. MIN. ASTM D 113
RESILIENCE:	60% MIN. AT 77 DEGREES F.
TENSILE ADHESION:	700% MIN.
SPECIFIC GRAVITY:	1.10 * 0.05
POURING TEMP:	350 - 390 DEGREES F.

AGGREGATE:

TYPE:	CRUSHED, DOUBLE WASHED, AND DRIED GRANITE OR BASALT
GRADATION	THE GRADATION OF THE AGGREGATE VARIES BY MANUFACTURER AND WILL BE AS PER THE MANUFACTURER'S RECOMMENDATIONS FOR THE SYSTEM BEING USED ON THIS PROJECT.

BACKER ROD:

THE BACKER SHALL BE A CLOSED CELL FOAM EXPANSION JOINT FILLER CAPABLE OF WITHSTANDING THE PLACEMENT TEMPERATURE OF THE POLYMER MODIFIED ASPHALT.

NOTE: PRIOR TO PLACEMENT OF ANY PORTION OF THE JOINT SYSTEM, THE PROJECT ENGINEER MUST HAVE CERTIFIED TEST DATA MEETING ALL THE MINIMUM REQUIREMENTS OF ALL THE MATERIALS OF THE JOINT SYSTEM.

INSTALLATION PROCEDURES:

SURFACE PREPARATION:

BLOCK OUT THE JOINT WIDTH DURING THE PLACING OF CONCRETE FOR THE DECK SLAB AND THE APPROACH SLAB. PRIOR TO PLACING THE POLYMER MODIFIED ASPHALT EXPANSION JOINT MATERIAL, THOROUGHLY CLEAN THE HORIZONTAL AND VERTICAL SURFACES OF THE JONT BY SANDBLASTING.

SEALING OF EXPANSION JOINT:

THE EXPANSION JOINT GAP IS TO BE SEALED AND A BRIDGING PLATE CENTERED ALONG IT. A VERY NARROW GAP WILL BE SEALED BY POURING HOT BINDER INTO THE GAP. GAPS OF 1/8" OR MORE WILL FIRST BE FILLED WITH AN APPROPRIATELY SIZED BACKER ROD. THE BACKER ROD WILL BE INSTALLED SO THAT IT IS BETWEEN 1/8" AND 1-1/8" BELOW THE TOP OF THE EXISTING GAP. THE GAP WILL THEN BE FILLED WITH BINDER.

BOND BREAKER:

SPREAD BINDER OVER SURFACE AREA WHERE THE METAL BRIDGING PLATE WILL BE PLACED. CENTER THE BRIDGING PLATE OVER THE EXISTING JOINT AND BED INTO THE HOT BINDER. BUTT JOINT THE BRIDGING PLATES TO ACCOMODATE THE ENTIRE JOINT LENGTH. SPIKE HOLES WILL BE DRILLED AT 1 FOOT INTERVALS ALONG THE LONGITUDINAL CENTERLINE OF THE PLATES. SECURE BRIDGING PLATE WITH NAILS OR SPIKES. SEAL BUTT JOINTS WITH HOT BINDER AND ALLOW BINDER TO SETUP BEFORE NEXT OPERATION. WHEN ALUMINUM BRIDGING PLATES ARE USED, ONLY THE BINDER IS REQUIRED TO SECURE THE INDIVIDUAL PLATES.

BINDER COAT:

SEAL ALL PREPARED, EXPOSED SURFACES OF THE JOINT WITH BINDER. POUR THE HOT BINDER OVER THE FLOOR AREA OF THE JOINT AND SPREAD TO COAT ALL EXPOSED SURFACES. THE BINDER WILL BE A MINIMUM OF 1/32" THICK ON THE BOTTOM OF THE JOINT CAVITY, WITH POOLS OF GREATER THICKNESS WHERE SURFACE IRREGULARITIES EXIST. THE BINDER APPLICATION TEMPERATURE WILL BE BETWEEN 350 AND 390 DEGREES F. THE BINDER WILL NOT BE ALLOWED TO BE HEATED ABOVE 410 DEGREES F. NOR ALLOWED TO EXCEED 390 DEGREES F. FOR MORE THAN 1 HOUR. A DOUBLE JACKETED OIL MELTER WILL BE USED TO HEAT THE BINDER. THE MELTER WILL BE EQUIPPED WITH A CONTINUOUS AGITATION SYSTEM, TEMPERATURE CONTROLS, AND A CALIBRATED THERMOMETER. ALSO A SYSTEM FOR ACCURATELY MEASURING THE WEIGHTS OF THE BINDER AND THE AGGREGATE WILL BE REQUIRED.

BUILD-UP OF JOINT LAYERS:

AGGREGATE PREPARATION:

HEAT THE AGGREGATE TO A TEMPERATURE OF 275 TO 325 DEGREES F., WITH A SUITABLE ROTATING DRUM WITH ATTACHED HEAT SOURCE OR A HOT COMPRESSED AIR LANCE, TO REMOVE DUST AND MOISTURE.

AGGREGATE PROPORTION AND LAYER THICKNESS:

MIX THE AGGREGATE WITH THE BINDER SUCH THAT THE MINIMUM AGGREGATE CONTENT BY WEIGHT WILL BE 68%. THE HEATED AGGREGATE AND BINDER WILL BE COMBINED IN LAYERS, UNLESS PATENTED INSTALLATION REQUIRES DIFFERENTLY, NOT LESS THAN 3/4 OF AN INCH NOR EXCEEDING 2-1/2 INCHES. THE THICKNESS OF EACH LAYER CAN BE VARIED WITHIN THESE LIMITS, TO ACHIEVE THE REQUIRED JOINT THICKNESS (MIN. 2 INCHES). THE OBJECTIVE IS TO COAT EACH STONE AND FILL THE VOIDS WHILE AVOIDING AN EXCESS OF BINDER. THIS WILL ACHIEVE THE MAXIMUM CONTENT OF STONE CONSISTENT WITH ALL STONES BEING COATED WITH BINDER. RAKE THE MIXTURE TO MIX AND LEVEL.

THE TOP LAYER THICKNESS WILL VARY BETWEEN 1/2 INCH AND ONE (1) INCH. IN PREPARING THE TOP LAYER, THE RATIO OF AGGREGATE TO BINDER WILL BE APPROXIMATELY 6:1 BY WEIGHT. OVERFILL THE TOP LAYER AND COMPACT TO THE LEVEL OF THE ADJACENT SURFACES USING A ROLLER OR VIBRATORY PLATE COMPACTOR. IMMEDIATELY AFTER COMPLETION OF THE COMPACTION, POUR SUFFICIENT BINDER OVER THE JOINT TO FILL THE SURFACE VOIDS AND COAT THE SURFACE STONE. DUST THE FINISHED JOINT WITH A FINE, DRY AGGREGATE TO PREVENT TACKINESS.

TESTING:

CERTIFICATION WILL BE SUPPLIED FOR EACH PROJECT SHOWING BINDER COMPLIANCE WITH REQUIRED PROPERTIES. A ONE QUART SAMPLE OF BINDER WILL BE RETRIEVED FROM EACH BRIDGE FOR FURTHER TESTING BY THE O.D.O.T OFFICE OF MATERIALS MANAGEMENT.

METHOD OF MEASUREMENT AND BASIS OF PAYMENT:

THE DEPARTMENT WILL MEASURE THE JOINT BY THE NUMBER OF FEET AND WILL PAY FOR ACCEPTED QUANTITIES AT THE CONTRACT PRICE AS: ITEM SPECIAL, FEET, POLYMER MODIFIED ASPHALT EXPANSION JONT SYSTEM.

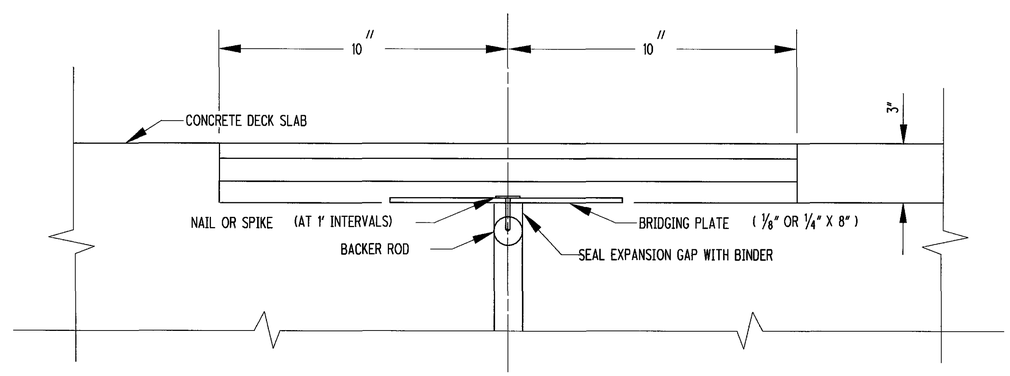

CONCRETE SLAB JOINT

DESIGNED	DATE REVISED	CALCULATED
MAM	10-28-96	
DRAWN	10-17-03	CHECKED
MAM	04-15-05	

POLYMER MODIFIED ASPHALT EXPANSION JOINT SYSTEM

CHP-29-15.69
PID No. 19707

MARK	NUMBER TOTAL	LENGTH	WEIGHT	TYPE	DIMENSIONS A	B	C	D	E	R	INC
SUPERSTRUCTURE REINFORCING STEEL LIST											
A501	80	19'- 7"	1634	STR							
B901	80	45'- 5"	12353	STR							
C501	40	15'- 10"	661	STR							
D901	38	41'- 2"	5319	STR							
E901	40	23'- 4"	3173	STR							
F901	78	43'- 6"	11536	STR							
G901	70	42'- 3"	10056	STR							
H901	32	35'- 7"	3871	STR							
J901	15	32'- 2"	1640	STR							
K901	16	40'-6"	2203	STR							
L901	15	34'- 6"	1760	STR							
M401	224	23'- 4"	3491	STR							
N601	174	24'- 0"	6272	STR							
U402	158	2'- 5"	253	2	1'-3"	1'-3"	1'-3"				
SUB-TOTAL			64,222								

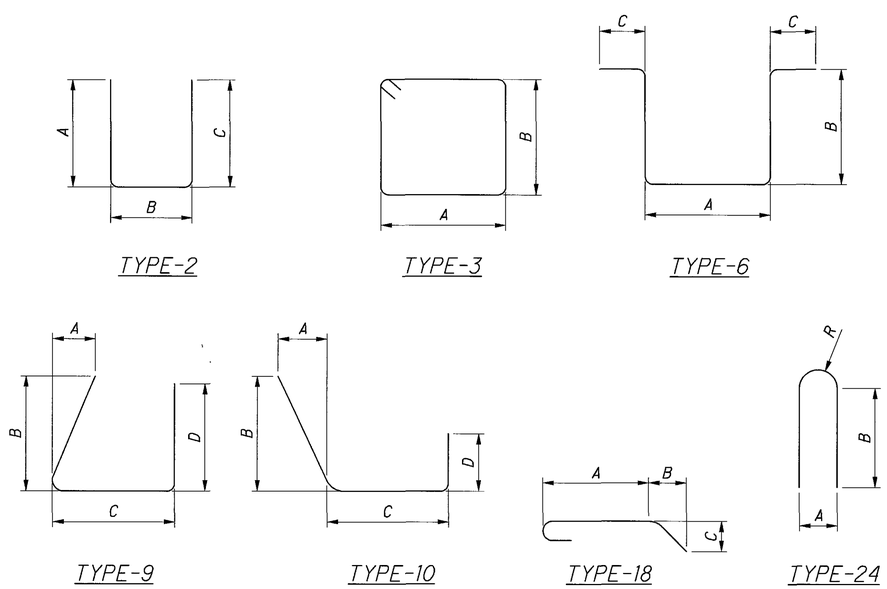

MARK	NUMBER REAR	FORWARD	TOTAL	LENGTH	WEIGHT	TYPE	DIMENSIONS A	B	C	D	E	R	INC
ABUTMENT REINFORCING STEEL LIST													
A1001	8	8	16	29'-2"	2008	STR							
D801	27	27	54	4'- 8"	673	18	2'-10"	0'-9"	0'-9"				
A801	8	8	16	31'- 11"	1363	STR							
A501	41	41	82	11'- 2"	955	3	2'-8"	2'-7"					
A502	30	30	60	11'- 2"	699	2	4'-9"	1'-11"	4'-9"				
A503	11	11	22	14'- 1"	323	2	6'-10"	0'-8"	6'-10"				
A504	4	4	8	6'-10"	57	STR							
A505	8	8	16	29'- 11"	499	STR							
A506	20	20	40	6'- 8"	278	STR							
A507	8	8	16	24'- 8"	412	STR							
A508	2	2	4	4'- 9"	20	10	0'-11"	1'-11"	0'-11"	1'-11"			
A509	2	2	4	5'- 5"	23	9	0'-10"	1'-11"	1'-10"	1'-11"			
A401	16	16	32	8'- 11"	191	3	1'-9"	2'-6"					
SUB-TOTAL					7501								

MARK	NUMBER PIER 1	PIER 2	TOTAL	LENGTH	WEIGHT	TYPE	DIMENSIONS A	B	C	D	E	R	INC
PIER REINFORCING STEEL LIST													
P1101	4	4	8	43'-9"	1860	STR							
P1001	4	4	8	39'- 4"	1354	STR							
P501	30	30	60	9'- 11"	623	6	2'-8"	3'-1"	0'-10"				
P502	2	2	4	9'- 9"	41	6	2'-6"	3'-1"	0'-10"				
P503	2	2	4	4'- 6"	19	2	0'-10"	3'-1"	0'-10"				
P504	4	4	8	10'- 9"	90	24	2'-6"	3'-5				1'-3"	
P505	2	2	4	39'- 4"	164	STR							
P401	14	14	28	9'- 5"	176	3	2'-0"	2'-6"					
SUB-TOTAL					4327								

DESIGN AGENCY
BALKE AMERICAN
1848 Summit Road
Cincinnati, Ohio 45237

DESIGNED	DRAWN	REVIEWED	DATE
MRS	ALH	KJW	4/06
CHECKED	REVISED	STRUCTURE FILE NUMBER	
FKL		1100491	

REINFORCING STEEL LIST
BRIDGE NO. CHP-29-1569
OVER MAD RIVER

CHP-29-15.69
PID No. 19707