MR 678

Office Use Only

County or Jurisdiction CLA

Rte. 41 Log Pt. 12.04

AccCat 2

State of Ohio
Department of Transportation
Permit Inspection Certificate

To be completed by District Office

[1] Permittee Name City of Springfield & Springfield Twp. Address/Contact Leo Shanayda

Phone 937-324-7310

[2] Permit No. 7-192-13 Date Issue 6-24-13

Work Authorized

construction of ridge road improvements on south side of SR 41

To be completed by Inspector

[3] Was work completed? ☑ Yes ☐ No As Authorized? ☑ Yes ☐ No If No, explain variation(s)

[4] Is work approved? ☑ Yes ☐ No If No, explain conditions

If work is not approved, advise person in charge at the work site, noting his/her name and relationship to permittee and the date and time of the inspection; note any instructions given such person, including work stoppage if warranted. If no one is present at the site, so note.

Date 1-9-2017

Signed Douglas Clark

Title Permit Tech

Notes:

MR-509

Permit No. 7-192-13

STATE OF OHIO
DEPARTMENT OF TRANSPORTATION
Permit

Office Use Only
County or Jurisdiction Clark
Rte. 41 Log Pt. 12.04 -
AccCat 2

[1] Subject to all of the terms, conditions and restrictions printed or written below, and on the reverse side hereof,or attached,

Name Springfiled & Springfield Township Attn: L.Shanayda/ J.Briner

Address 76 E.High Str Springfield OH 45502

Phone (937) 324-7310 is hereby granted a permit under Section 5515.01 and 5515.02 of Ohio Revised Code, and permission to perform work necessary in the manner described and at the location indicated in the following or as attached to this permit.

NOTE: THIS IS A JOINT PERMIT WITH THE CITY OF SPRINGFIELD AND SPRINGFIELD TOWNSHIP., TOWNSHIPS ADDRESS IS 2777 SPRINFIELD -XENIA RD, 45506 Construction of Ridge Road improvements on the south side of SR 41. Construction consist of pavement, grading, loop detectors, signal head replacement, signage and pavement markings. NOTE : CONSTRUCTION SHALL BE IN ACCORDANCE WITH THE APPROVED SUBMITTED PLANS. PLANS WHERE APPROVED BY ODOT ENGINEERS DISTRICT 7 IN SIDNEY, OHIO. THIS IS A BONDED PROJECT AND ODOT HAS ALETTER ON FILE THAT IS SUFFICIENT UNTIL PERMITTEE SELLS JOB. AT WHICH TIME ODOT WILL BE ATTACHED WITH PERMITTEES BOND FROM CONTRACTOR. RANDY ISON , CLARK COUNTY MANGER (937-497-6814) WILL BE THE PRIMARY INSPECTOR FOR THIS PROJECT.

Permittee shall have a copy of the permit and Ohio Department of Transportation approved, stamped plan on the job.

Any changes shall be approved by the Department prior to work being performed.

If permittee is excavating, he/she shall call "OUPS" at 1-800-362-2764 and Oil and Gas Producers Underground Protection Service (OGPUPS) at 1-800-925-0988, as well as, all non-OUPS utilities at least 2 days prior to start of work, for location of buried facilities.

Maintenance and/or repair of this installation shall in no way be the responsibility of the State of Ohio, Department of Transportation or the Federal Government.

Any damage done by this installation shall be restored to its original condition or better.

Permittee shall abide by current State and/or Local laws pertaining to storm water pollution and/or erosion control.

Permittee shall furnish sufficient flagmen and/or signs to protect the traveling public at all times, as per the Ohio Manual of Traffic Control Devices. Through traffic shall be maintained at all times.

All disturbed earth shall be replaced, compacted, and reshaped to its original cross-section and then re-seed it to the satisfaction of the Director of Transportation or his agent.

Finish grading and restoration back to existing condition, including seeding, is to be done as soon as work is complete.

No open bore pits or trenches permitted during dark hours without NCHRP350 crash compliant barricades or drums with flashing lights.

Permittee is responsible for all clean out work to keep this installation in operating condition.

Permittee shall be responsible for any & all utility installations/relocations as a result of this work.

Plans shall be coordinated with the ODOT Construction Engineer or his agent prior to all proposal work herein to assure no conflict with highway construction operations.

This plan was approved by District 7 Real Estate Utilities Department.

Traffic control shall be performed as per the latest Ohio Manual of Uniform Traffic Control Devices.

[2] This permit shall be in the possession of employees on site at all times who are in charge of the work and shall be shown, upon request, to any employee of the Department of Transportation.

[3] No work authorized by this permit shall begin until the permittee has contacted and received instructions from

Charles Craun 937-497-6947

(Authorized ODOT Employee)

Permit No. 7-192-13

NOTE: Any work performed by the permittee may be stopped if the above requirements are not met.

[4] To the extent applicable, this permit shall be void if the work described herein does not comply with the conditions, terms, and requirements applicable to this permit, and if the work is not completed by. 6/30/2014

[5] All work requiring persons or vehicles within ODOT right of way shall comply with all applicable requirements of the Ohio Manual of Uniform Traffic Control Devices and Item 614 (Maintaining Traffic) of the Construction and Material Specifications, latest editions. Failure to comply with these requirements will be cause for immediate revocation or suspension of the permit until the proper traffic control devices have been provided.

[6] The permittee accepts the conditions, terms, and requirements printed, written on, or attached to this permit and understands that failure to comply fully with those conditions, terms, and requirements or any change in the use of this permit inconsistent with its terms and conditions will be considered a violation and cause for suspension, revocation, or annulment of the permit thereby rendering the permit illegal and subject to appropriate Department action, up to and including removal of the installation, if applicable, at the permittee's expense.

[7] Performance Bond Required ☐

Surety Company _____

Effective Date _____ Expiration Date _____ Amount _____

Permittee: [signature] Director: Jerry Wray / W.C.

Date: 6/24/13 Date: 6-24-13

Rev. 10/15/10

Jeff Brin, Speed Twl.
6-25-13

(2) In the construction of any improvements on, over, or under the above described property and the furnishing of services thereon, no person on the grounds of race, color, national origin, sex, age, or disability shall be excluded from the participation in, be denied the benefits of, or be otherwise subjected to discrimination.

(3) The above described property shall be used in a manner that at all times is in compliance with all other requirements imposed by or pursuant to Title 49, Code of Federal Regulations, U.S. DOT, Subtitle A, Office of the Secretary, Part 21, Nondiscrimination in Federally-assisted programs of the U.S. DOT – Effectuation of Title VI of the Civil Rights Act of 1964, and as said Regulations may be amended.

(4) In the event that this instrument grants a lease, license, or permit and any of the above nondiscrimination covenants is breached, then the State of Ohio, Department of Transportation, shall have the unfettered right to terminate the lease, license or permit and to re-enter and repossess the above-described property and hold the same as if said lease, license or permit had never been made or issued.

(5) In the event that this instrument grants a fee or easement interest and any of the above nondiscrimination covenants is breached, the State of Ohio, Department of Transportation, shall have the unfettered right to re-enter the above described property, and said property will thereupon revert to and vest in and become the absolute property of the State of Ohio and its successors and assigns for the use and benefit of the Department of Transportation.

(6) In the event that this instrument grants a lease, fee or easement interest, all of the foregoing nondiscrimination covenants shall be and are covenants running with the land.

General Provisions Applicable to All Permits

(Sections 5515.01 and 5515.02 of O.R.C.)

[1] This permit is not a substitute for satisfying the rights or obligations of any other party who may have an interest in the underlying fee interest.

[2] The granting of this permit does not convey to the permittee or to the property served any rights, title, or interest in state highway rights of way or in the design or operation of the state highway; or in any way abridge the right of the Director of the Department of Transportation in his jurisdiction over state highways. If, in the process of any future work or for the benefit of the traveling public, it becomes necessary, in the opinion of the Director of Transportation to order the removal, reconstruction, relocation, or repair of any of the fixtures, or work performed under this permit, said removal, reconstruction, relocation, or repair shall be wholly at the expense of the owners thereof or the permittee and be made as directed by the Director of Transportation. Such changes in the state highway design or operation, necessary for improved safety and operation or for the benefit of the traveling public, shall not require a permit modification since the permit confers no private rights to the permittee over the control of the state highway.

[3] The District Deputy Director acts for and on behalf of the Director in issuing and carrying out the provisions of all permits. The District Deputy Director has full authority to ensure that all provisions of the permit are met and to reject any materials, design, and workmanship that do not meet applicable Department standards. The District Deputy Director, at his/her discretion, may require a performance bond or certified check as a prerequisite to the issuance of a permit.

[4] Failure on the part of the permittee to comply fully with the provisions and conditions of the permit will be cause for suspension, revocation, or annulment of the permit thereby rendering the permit illegal and subject to appropriate Departmental action. By accepting the permit, the permittee agrees to comply with all conditions, terms, and restrictions printed or written on or attached to the permit. If the permittee performs any work contrary to the conditions of the permit or to the instructions of the District Deputy Director and, after due notice, fails to correct the problem, the Department of Transportation may, with or without notice, correct such work and the permittee shall reimburse the Department for the costs.

[5] The permittee shall indemnify and hold harmless the State of Ohio, Department of Transportation, its officers, representatives and assigns, from any and all loss, liability, damages, litigation costs, and claims for injury or death to any person, property, or business caused by or resulting from any act, omission, event, consequence, or occurrence, negligent or otherwise of the permittee, his employees, or assigns as a result of the issuance of this permit.

[6] All work authorized under the permit shall be performed to the Department's satisfaction, and the entire expense shall be borne by the permittee. No work shall be performed until the permittee has contacted the Department's appointed representative named on the permit and received instructions. The Department's representative may inspect all work covered by the permit, or the Department reserves the right, during the time any or all of the work is being performed, to appoint an inspector over the work who shall represent the interest of the State on the work and any compensation arranged for shall be paid wholly by the permit holder. Work not in compliance shall be halted and the District Deputy Director shall be notified of the cause. The permittee shall be notified of the Department's action and its causes, and given an opportunity to correct the problem.

[7] Failure to complete all work within the time specified on the permit shall void the permit, thereby making the permit illegal and subject to appropriate Departmental action. The permittee may request an extension in writing from the District Office, explaining why the extension is necessary and when the work is expected to be completed.

[8] All work infringing on the pavement or shoulders shall comply with applicable standards and requirements regarding traffic control devices. Failure to comply will be cause for revocation or suspension of the permit. Any closure of lanes or shoulders shall be described in terms of location, duration, time of day, etc. Such work shall not begin until all traffic control devices are in place.

[9] If any grading, sidewalk, or other work allowed by a permit interferes with the drainage of the highway in any way, such catch basins and outlets as necessary shall be constructed to take proper care of said drainage.

[10] Upon completion of the work, the permittee shall leave the highway clean of all rubbish, excess materials, temporary structures and equipment, and all parts of the highway shall be left in a condition acceptable to the Department. Upon satisfactory completion of the work authorized by the permit, the Department's appointed representative shall complete the Permit Inspection Certificate, Form No. MR 678 certifying that the permittee has complied with the terms of the permit.

[11] Except as herein authorized, no excavation shall be made or obstacle placed within the limits of the highway so as to interfere with the travel over the road.

[12] All pole lines are to be built in accordance with Rule 4901:3-1-08 of Ohio Administrative Code promulgated and enforced by the Public Utilities Commission of Ohio.

[13] The permittee shall comply with the Air Pollution requirements of Rule 3745-17-08 of the Ohio Administrative Code promulgated and enforced by the Ohio Environmental Protection Agency.

[14] The permittee certifies that he or she is fully authorized to sign this permit. This permit shall apply to and be binding upon the permittee and his/her successors in interest. No change in ownership of the underlying property or of the facility owned by permittee shall in any way alter the permittee's obligations under this permit.

[15] The permittee(s) for herself/himself/themselves/itself, her/his/their/its personal representatives, and her/his/their/its successors in interest and assigns, as a part of the consideration hereof, do/does hereby covenant and agree that:

(1) No person on the grounds of race, color, national origin, sex, age, or disability shall be excluded from participation in, be denied the benefits of, or be otherwise subjected to discrimination in the use of the above described property.

springfield
CLARK COUNTY | OHIO

June 18, 2013

Mr. Wayne Callahan
ODOT District 7 – Real Estate Office
1001 St. Mary's Avenue
Sidney, OH 45365

Re: Letter of Commitment for
Prime Ohio II Roadway Improvement Plans – S.R. 41/Ridge Road

Mr. Callahan,

The Prime Ohio II Industrial Park project in Springfield/Clark County (CIC) encompasses work within the ODOT right-of-way – including improvements at the intersection of S.R.41 at Ridge Road and utility boring under Interstate 70.

In lieu of the typical bond required by ODOT to guarantee satisfactory completion of the right-of-way work, this letter of commitment shall serve as the CIC's intent to require the contractor selected to add ODOT as an 'additional insured' on the construction bond. The construction (performance) bond will cover the entire project (currently estimated at $4.2 million) in an amount well in excess of the ODOT right-of-way portion of the project.

Sincerely,

Horton H. Hobbs IV
Vice President of Economic Development

20 South Limestone Street, Suite 100 | Springfield, OH 45502 | T: 937.325.7621 | F: 937.325.8765 | GreaterSpringfield.com

To: 7-192-13

State of Ohio
Department of Transportation
Permit Application

See Reverse side for additional requirements

Office Use Only	
County:	CLA
Route:	41
Log Pt :	12.04
Access Category:	2

[1] This form must be completed by the property owner or agents working for a utility company (if applicable)
Application by contractor is unacceptable.

Name City of Springfield, Ohio / Springfield Township
Address 76 E. High St. 2nd Floor / 2777 Springfield-Xenia Rd. City Springfield State OH
Zip 45502/45506 Phone (937) 324-7310 Other (Fax, E-mail) lshanayda@ci.springfield.oh.us / jeffbriner@bizwoh.rr.com

[2] Type of Permit requested: ____ Commercial (See other side) ____ Residential ____ Field ____ Utility ____ Drainage
____ Beautification *(See other side)* ____ Spraying, trimming, tree removal ✓ Other

[3] Briefly describe work to be performed. *(Attach plans and see Instructions.)*
Construction of Ridge Road Improvements on the south side of S.R. 41, which includes pavement, grading, loop detectors, signal head replacement, signage and pavement markings.

Traffic Plan See attached plans for MOT plan.

[4] Location where work is to be performed. Give sufficient detail to locate the site accurately, such as the distance in miles or feet from a mile post or from some geographical feature such as an intersecting highway.
In Clark County (along, across) Interstate 41, ____ miles or 1,200 feet
North __ East __ West ✓ South __ of C/L of Interstate 70 on the North ✓ East __ West __ South ✓ side of the road.
* Work to commence on September 20, 2013 and will require 335 days to complete.

[5] Does the property owner own or have any interests in any adjacent property? ✓ Yes ____ No
If yes, please describe. Proposed PrimeOhio II Industrial Park (200 Ac.+/-)

[6] Prior to any excavation in the highway right-of-way, the Ohio Utilities Protection Service (OUPS) must be contacted in accordance with ORC Section 3781.25 to 3781.32. OUPS can be reached at 1-800-362-2764. A call must be made to Oil & Gas Producers Underground Protection Service (OGPUPS) at 1-800-925-0988.

[7] Open cutting of pavement shall not be permitted unless no reasonable alternate method is available. Written approval of the Ohio Department of Transportation District Office must be obtained.

[8] All work requiring men or vehicles within ODOT right of way shall comply with all applicable requirements of the Ohio Manual of Traffic Control Devices and Item 614 (Maintaining Traffic) of the Construction and Material Specifications, latest editions. Failure to comply with these requirements will be cause for immediate revocation or suspension of the permit until the proper traffic control devices have been provided.

[9] I have received a copy of the policies and regulations pertaining to the permit for which I have applied. If a permit is subsequently issued to me by the Ohio Department of Transportation, I understand that the permit will state the terms and conditions for its use, and I agree to comply with all conditions and regulations stipulated on or attached to the permit. I also understand and agree that failure to comply fully with all conditions and regulations of the permit or any change in the use of the permit inconsistent with its terms and conditions will be considered a violation and cause for suspension, revocation, or annulment of the permit thereby rendering the permit illegal and subject to appropriate Department action, up to an including removal of the installation at the permittee's expense.

SIGN HERE

Signature of Property Owner or Agent for Owner

Date 5/29/2013 Daytime Phone 614-775-4370

Reviewers Comments:

Office use only	
Date Received	6/13/13
By	RLM
Date Accepted	6/19/13
By	RLM
Date Permit Issued	
By	

Prime Ohio II – ODOT District 7 Permit Review Comments
Received July 3, 2012

Reviewer: Ben Wiltheiss, PE

Turn Lane Design

Comment 1: In the email dated 6/26/12, EMH&T stated they used Condition B for the design of the turn lane length. However Fig. 401-9E shows that for 35 mph Condition A is to be used. By using Condition B, the EMH&T design is only providing deceleration length and provides no storage.

Response: Comment Noted

Comment 2: Plans show a deceleration length of 115 ft. and a 50 ft. diverging taper. Using Condition A, a 90 sec. cycle length, and Certified Traffic dated March 8, 2012, Design Year 2033 DHV (260) the storage length should be 275 feet plus the 50 foot diverging taper length. The 2023 Build DHV (140) yields a storage length of 162.5 ft. and a 50 ft. diverging taper.

Response: Comment Noted

Comment: Using the current design, two WB-62/WB-67 (Interstate Semi) vehicles would utilize the entire storage length causing the possibility of the through lane being blocked if additional turning vehicles are in the queue.

Response: Comment Noted

Comment 3: Approach taper is sufficient for a 43 mph design speed. If 35 mph is the design speed, then why not shorten the taper to meet 35 mph and increase the storage length? Current design shows an approach taper of 189 ft. (Sta. 2+15 to Sta. 4+04). By utilizing the 35 mph design speed and holding Sta. 4+04, the lane shift could be accomplished by Sta. 2+81.50. This adds an additional 66.5 ft. of storage. Furthermore, this additional storage would satisfy the 10 year build traffic volume condition by providing 181.5 ft. of storage.

Response: The concept outlined will be applied to the plat set. The proposed widening is not perfectly symmetrical so the stations and lengths indicated will vary slightly. The revised plan set provides the updated Station Limits addressing the above referenced comment.

Comment 4: Pavement markings for the turn lane should only be arrows, and no "ONLY".

Response: The pavement marking will be updated.

Intersection Layout

Comment 6: Lane continuity for through movement on Titus/Ridge Road is poor. Possibly widen Titus Rd. approximately 75 feet to allow for a taper to shift traffic over so that both through lanes are continuous through the intersection. This proposed design change, to add widening to Titus Rd. for lane continuity, should be included in the MOU for future effort.

Response: Following recent discussions with the Department, the above referenced improvements will be considered at a later date and are not required as part of this project.

Comment 7: The Southwest corner berm does not show the proposed berm on Ridge Rd. aligning with the existing berm on SR 41. Plans show the berm coming off of the edge of pavement and aligning with the berm on SR 41.

Response: Comment Noted. The plan sheets have been revised to address this comment.

Comment 8: May want to increase the radius of the Southwest corner from 35 ft. to 50 ft. to allow for right turning truck traffic, or increase the berm to provide an area for the trucks to off-track onto while turning, and prevent rutting or destruction of the graded shoulder.

Response: Due to implications with the existing signal at this location, improving the radius to 50 feet will necessitate additional improvements to the intersection that exceed the available funding resources available for this project. In an effort to provide an improved pavement section within the berm area, the typical sections have been revised to include full depth pavement around the radius return up to the existing paved shoulder on State Route 41. The additional pavement will minimize rutting and/or damage to the shoulder area if trucks off-track onto the shoulder while turning.

General

Comment 9: Why are we constructing a 4 ft. shoulder on one side and a 2 ft. shoulder on the other? In addition to a narrower shoulder, the 3:1 'V' ditch right off the edge of shoulder is not traversable and creates and obstruction for vehicles leaving the roadway to impact. The optimum design should incorporate a wider paved shoulder, and a traversable foreslope to promote a safer road condition. At a minimum a 4 ft. shoulder should be provided if the more gradual foreslope requires additional right-of-way to be purchased.

Response: The shoulder design was revisited to accommodate a 4 foot shoulder within the project limits listed above, although the Foreslope and Backslope grading is constrained based on the existing R/W for the project. In order to develop a ditch on the east side of the road and limit the impact to the adjacent hillside, the 2 foot shoulder was utilized. Please see the following summary and station ranges for further details:

Station Range:
Sta. 1+00 to Sta. 2+50 (2' shoulder, foreslope 3:1 with existing slope as backslope); grading necessary to stay within R/W and minimize impact to the existing slope.

Station Range:
Sta. 2+50 to Sta. 4+00 (2' shoulder, foreslope varies 2:1 to 3:1 with existing slope as backslope, maximum ditch depth 1 foot) grading necessary to stay within R/W and minimize impact to the existing slope.

Station Range:
Sta. 4+00 to Sta. 6+50 (2' shoulder, foreslope varies 3:1 to 4:1 with existing slope as backslope) grading necessary to stay within R/W and minimize impact to the existing slope.

Station Range:
Sta. 6+50 to Sta. 15+50 (2' shoulder, foreslope of 3:1, backslope varies from 3:1 to existing slope); grading necessary to stay within R/W

Comment 10: Trim Existing R/W lines at Station ±3+15 to eliminate conflicting R/W lines.

Response: Comment Noted. The plan sheets have been revised to address this comment.

Comment 11: Is the stop bar on Ridge Road set back far enough to allow for Northbound left turning vehicles on SR 41 to make the greater than 90° turn?

Response: Moving the stop bar further back from the proposed location affects the proposed pavement widening and compromises the turn lane design as presented in response 4 listed above.

Reviewer: Craig Eley, PE Traffic Engineer

Signals

Comment: Revise coordination chart as per the marked up Coordination Timing Plan provided herein.

Response: Traffic signal coordination charts will be updated as illustrated in the attached mark ups.

Comment: Revise general notes to address marked up comments:

a. Item 633 Controller Item
b. Item 630 Signing Misc.

Response: Traffic signal general notes will be used to reflect the comments outlined on the attached mark ups.

Comment: The plans need to show the signal heads with backplates and reflective strips.

Response: Through recent discussions with the District, it is our understanding the backplates and reflective strips are existing facilities. The plan sheet has been updated to accommodate this condition.

Comment: Verify the existing location of the southwest strain pole. There appears to be a discrepancy with the surveyed/plan location versus the actual location. This confirmation needs to be made prior to addressing comment 8.

Response: Based on field survey points, the existing signal pole is shown in the correct location. Geometric changes within the project will not impact this existing signal pole. It has been called out as existing to remain in the plans and will be undisturbed by construction activities.

CITY OF SPRINGFIELD, CLARK COUNTY, OHIO
STREET, STORM, WATER, SANITARY SEWER AND FURAY-GRAY LATERAL IMPROVEMENT PLAN
FOR
PRIMEOHIO II
INDUSTRIAL PARK
2013

LOCATED IN

SECTIONS 2, 3, 8 AND 9, TOWNSHIP 5, RANGE 9, B.T.M.R.S. (BETWEEN THE MIAMI RIVERS SURVEY), SPRINGFIELD TOWNSHIP, CLARK COUNTY, OHIO

APPROVED JUN 20 2013

BENCH MARKS
(NAVD 1988)

SOURCE BM CLARK 39 AZ — Described by Geometrics GPS Incorporated 1993. The azimuth mark is located in Clark County, Ohio in Springfield Township about 4.6 miles southeast of the center of Springfield. To reach the azimuth mark from the station, proceed northeast along Laybourne Road 0.5 miles to its intersection with I-70 west bound entrance ramp and the mark on the left. The azimuth mark is a 3.25 inch aluminum Clark County disk set in concrete flush with the ground and stamped 39 AZ 1993. The azimuth mark is 14.78 feet west from a nail in the edge of the pavement of the ramp, 19.5 feet north from the northwest corner of an electric box, and 81.9 feet southeast from a chain link fence corner.

(N=693135.618, E=1624919.520) Elev. = 1056.538 (GPS)

BM#1 — Railroad spike in the west side of the third utility pole south of the intersection of State Route 41 and Ridge Road, said pole being on the west side of Ridge Road.

(N=691534.0432, E=1625622.5378) Elev. = 1053.11

BM#2 — Railroad spike in the west side of a utility pole located at the northwest corner of the driveway to residence #2028 Ridge Road.

(N=690337.2898, E=1624918.9909) Elev. = 1055.905

GPS HORIZONTAL AND VERTICAL NOTES

OPUS/NGS Vertical
The elevations shown are based on the North American Vertical Datum of 1988. Said elevations originated from positional solutions derived independently from GPS observations at traverse control points 201 and 202 and observations of selected CORS base stations in the National Spatial Reference System and processed by the National Geodetic Survey's Online Positioning User Service Software and the GEOID09 model. Elevations from said traverse control points were then transferred by conventional leveling procedures to the permanent benchmarks listed heron.

Horizontal
The coordinates shown on this map are based on the Ohio State Plan Coordinate System, South Zone, NAD 83 (2007). Said coordinates originated from a field traverse which was tied (referenced) to said coordinate system by GPS observations of National Geodetic Survey monuments CLARK 110, CLARK 111, CLARK 105, CLARK 75 and CLARK 39 AZ MK. The grid to ground scale factor (1.0000698732) was applied at the location of point #202.

STANDARD CONSTRUCTION DRAWINGS

The Standard Construction Drawings listed on these plans are to be considered a part thereof.

City of Springfield, Department of Engineering, dated 2003

A-2	FH-1	HW-1
CB-3	PB-1	SN-1
MH-1	WB-1	

ODOT

BP-3.1, dated 4-20-12	GR-1.1, dated 7-23-87	GR-2.1, dated 9-10-90
GR-4.1, dated 2-5-85	MT-101.90, dated 10-19-12	TC-42.20, dated 1-21-11
TC-52.10, dated 1-18-13	TC-52.20, dated 1-18-13	TC-71.10, dated 10-19-12

UTILITY & GOVERNING AGENCIES CONTACT LIST:

Ohio Utilities Protection Service (OUPS) (800) 362-2764
4740 Belmont Avenue

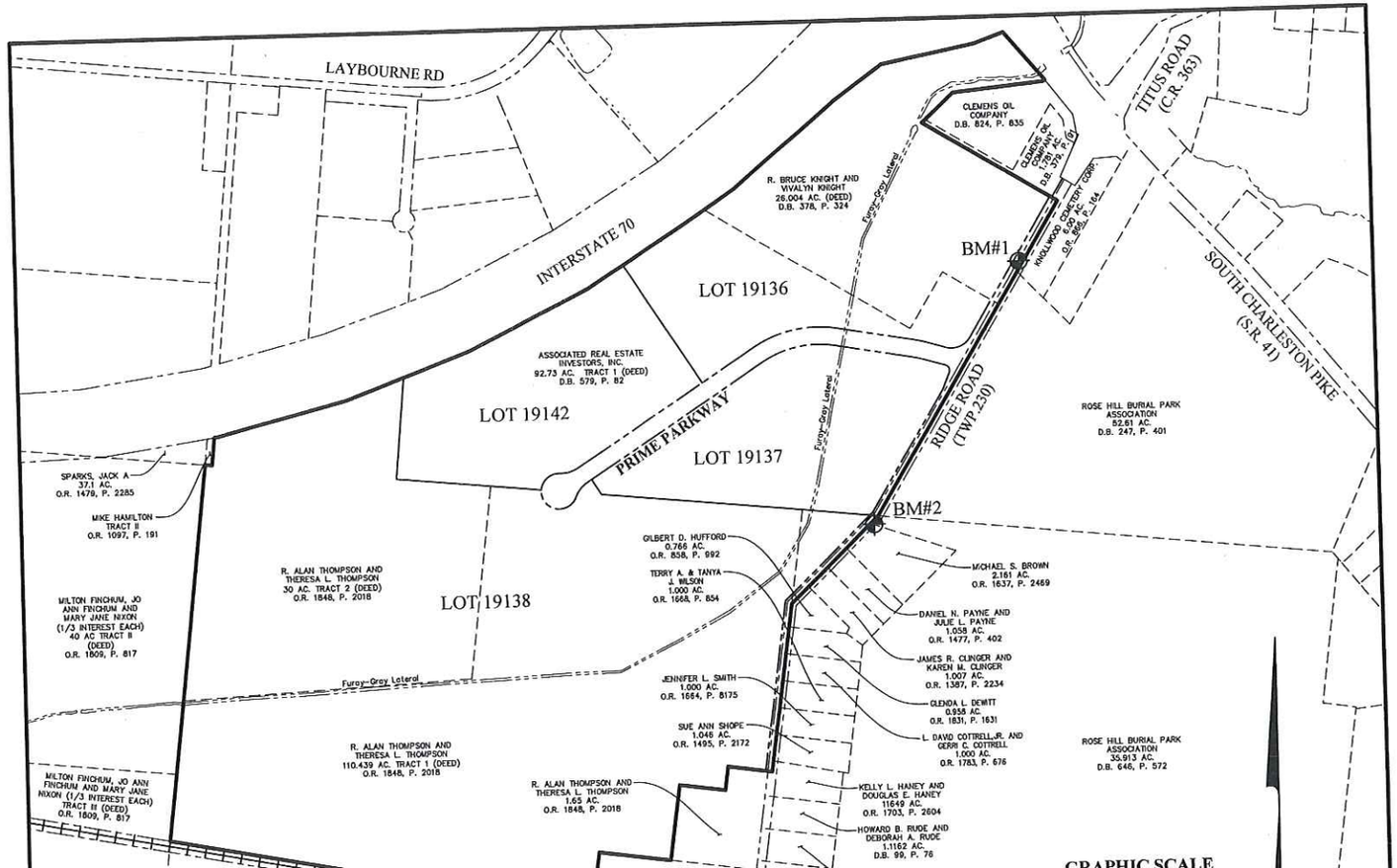

LOC

SH

Title Sheet. . . .
Utility Index Map . .
Schematic Plan. . .
Typical Sections–Ridge Road
Typical Sections–Prime Park
Typical Sections . .
Details . . . .
General Notes . . .
General Summary . .
Maintenance of Traffic
Project Site Plan . .
Plan and Profile – Ridge R
Plan and Profile – Prime
Cross Sections – Ridge Ro
Cross Sections – Prime P
Intersection and Field Drive
Temporary Outlet Ditch Pla
Furay-Gray Lateral Plan &
Furay-Gray Lateral Cross
Storm Sewer & Waterline
Sanitary Sewer Plan and
Offsite Water Main Plan a
Traffic Control Plan .
Signal Modification Plan .
Entry Feature And Landsc
Structure 20' and Over P
Materials Plan . .

MUNICIPALITY APPRO
The signatures below signify only co
project. All technical details remain

City Engineer, City of Springfield

County Engineer, Clark County, Oh

Plotted: [5/30/2013 8:32:10 AM]

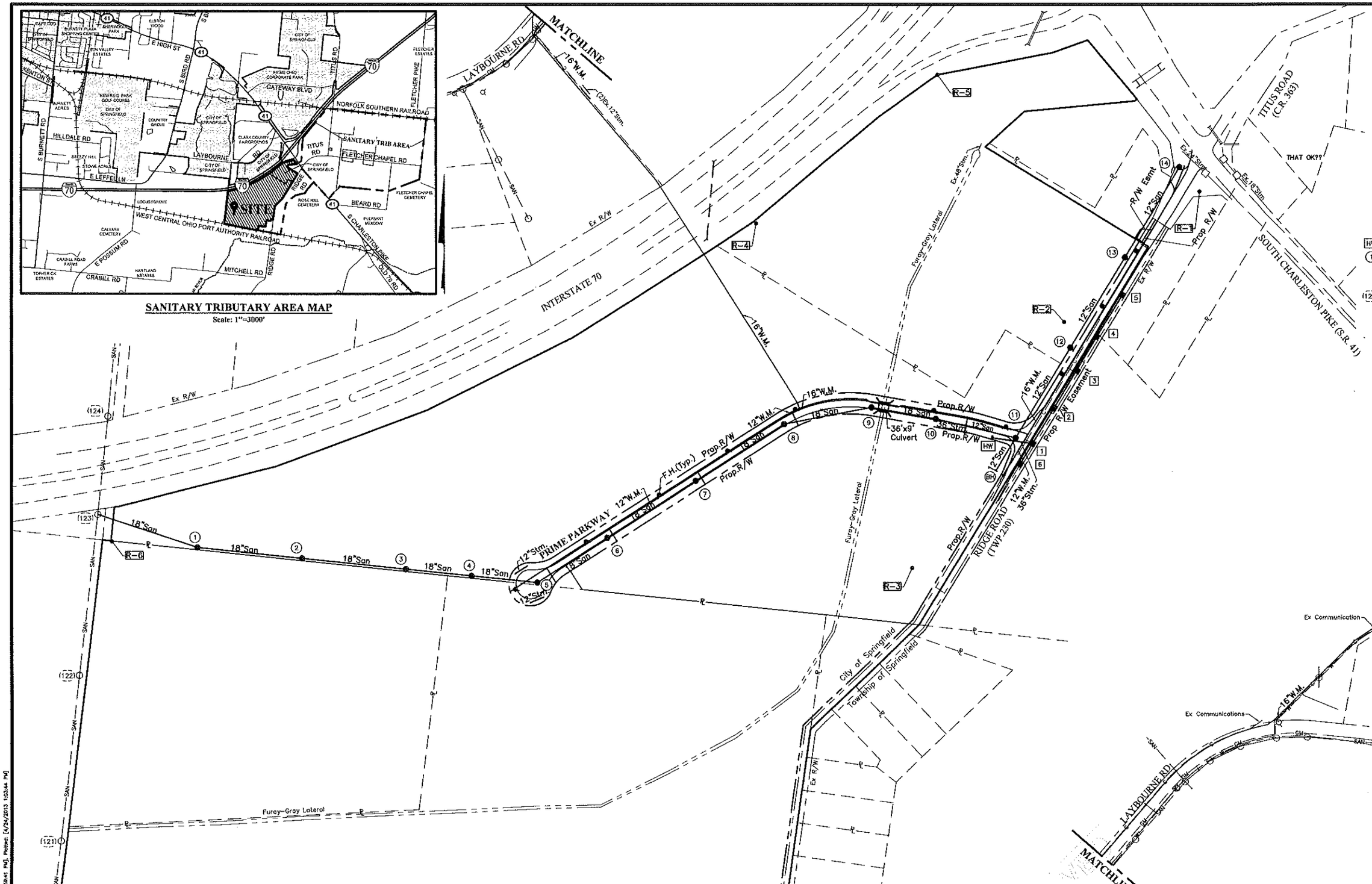
SANITARY TRIBUTARY AREA MAP
Scale: 1"=3000'
SITE
GATEWAY BLVD
NORFOLK SOUTHERN RAILROAD
SANITARY TRIB AREA
FLETCHER CHAPEL RD
BEARD RD
S CHARLESTON PIKE
WEST CENTRAL OHIO PORT AUTHORITY RAILROAD
HILLDALE RD
E HIGH ST
LAYBOURNE
E LEFFEL LN
E POSSUM RD
CRABILL RD
MITCHELL RD
RIDGE RD
TITUS RD
FLETCHER PIKE
S BIRD RD
S BURNETT RD
INTERSTATE 70
MATCHLINE
LAYBOURNE RD
TITUS ROAD (C.R. 363)
SOUTH CHARLESTON PIKE (S.R. 41)
THAT OK??
PRIME PARKWAY
RIDGE ROAD (TWP.230)
Furay-Gray Lateral
City of Springfield
Township of Springfield
Ex R/W
Prop.R/W
R/W Easmt
Prop R/W Easement
36'x9' Culvert
Ex Communications
Ex Communication

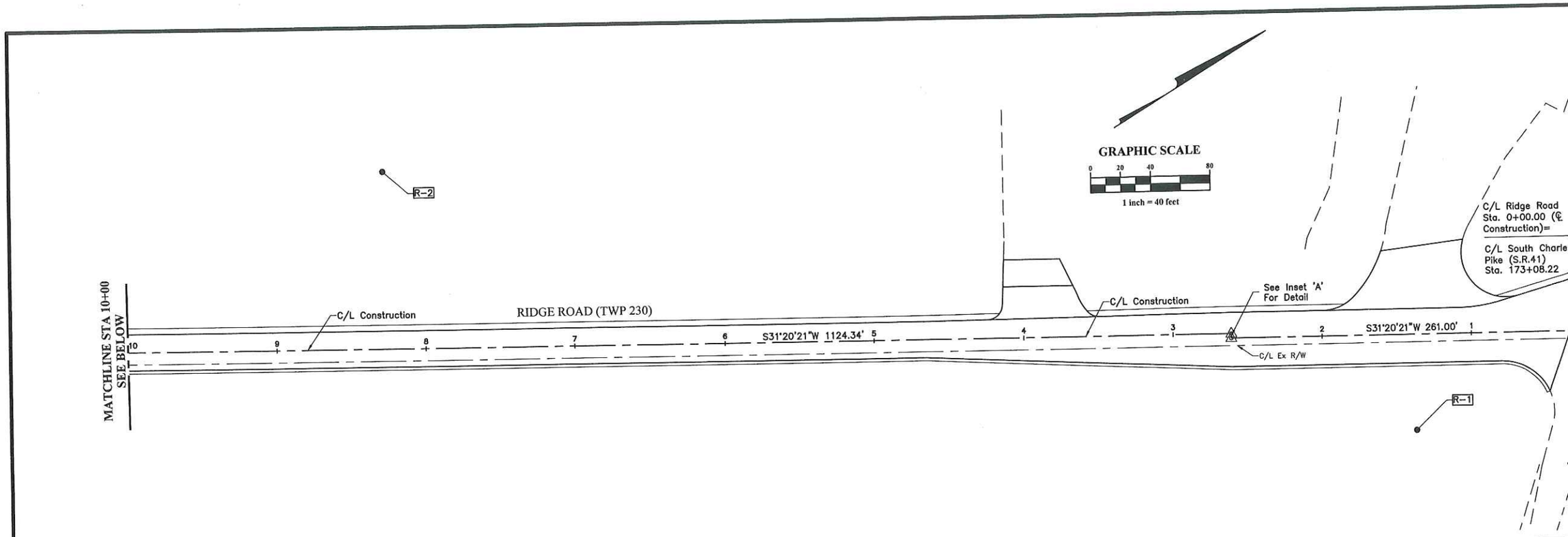

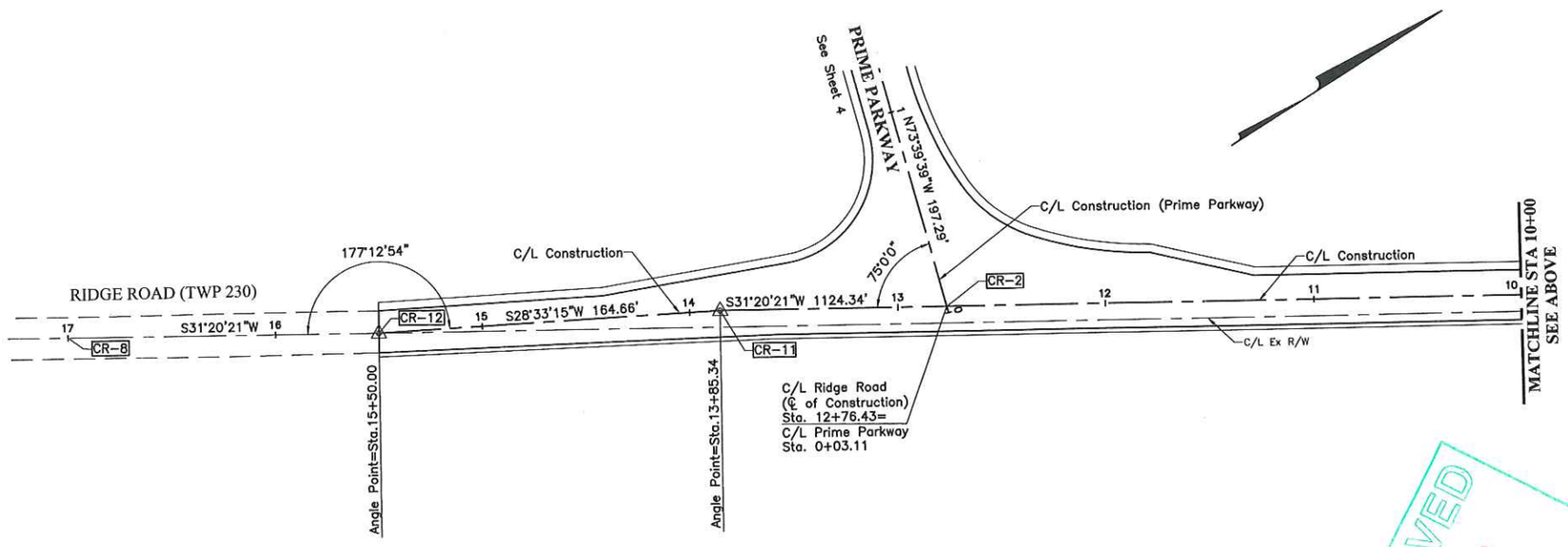

REFERENCE COORDIN

Pnt.No.	Description	Sta./Offset
		RIDGE ROAD
SR-1	C/L Ex. R/W Intersection	Sta. 0+01.82, C/L
CR-1	C/L Intersection	Sta. 0+00.00, C/L
CR-2	C/L Intersection	Sta. 12+76.43, C/L
CR-8	C/L Ex. R/W POT	Sta. 17+00.00, C/L
CR-9	Angle Point	Sta. 2+61.00, C/L
CR-10	Angle Point	Sta. 2+64.00, C/L
CR-11	Angle Point	Sta. 13+85.34, C/L
CR-12	Angle Point	Sta. 15+50.00, C/L
R-1	Iron Pipe w/Cap (Set)	Sta. 1+37.56, 63.47' R
R-2	Iron Pipe w/Cap (Set)	Sta. 8+55.80, 117.84

Angle Point=Sta.2+64.00 (Ahead)
Angle Point=Sta.2+61.00, 3.00' Rt. (Back)

APPROVED
2013

[2013 PM], Plotted: [3/24/2013 1:04:00 PM]

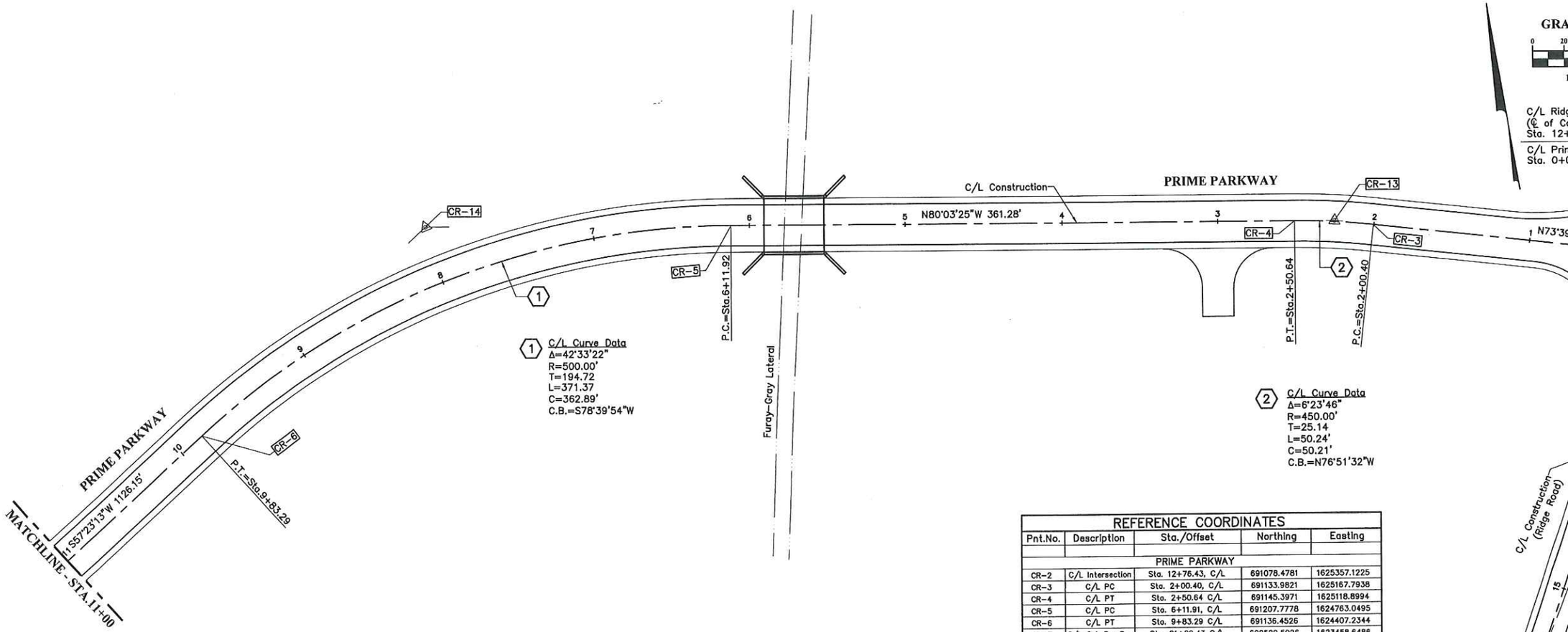

REFERENCE COORDINATES				
Pnt.No.	Description	Sta./Offset	Northing	Easting
		PRIME PARKWAY		
CR-2	C/L Intersection	Sta. 12+76.43, C/L	691078.4781	1625357.1225
CR-3	C/L PC	Sta. 2+00.40, C/L	691133.9821	1625167.7938
CR-4	C/L PT	Sta. 2+50.64 C/L	691145.3971	1625118.8994
CR-5	C/L PC	Sta. 6+11.91, C/L	691207.7778	1624763.0495
CR-6	C/L PT	Sta. 9+83.29 C/L	691136.4526	1624407.2344
CR-7	C/L Cul-De-Sac	Sta. 21+09.43 C/L	690529.5026	1623458.6486
CR-13	C/L P.I.		691141.0555	1625143.6655
CR-14	C/L P.I.		691241.3998	1624571.2534

APPROVED
JUN 20 2013

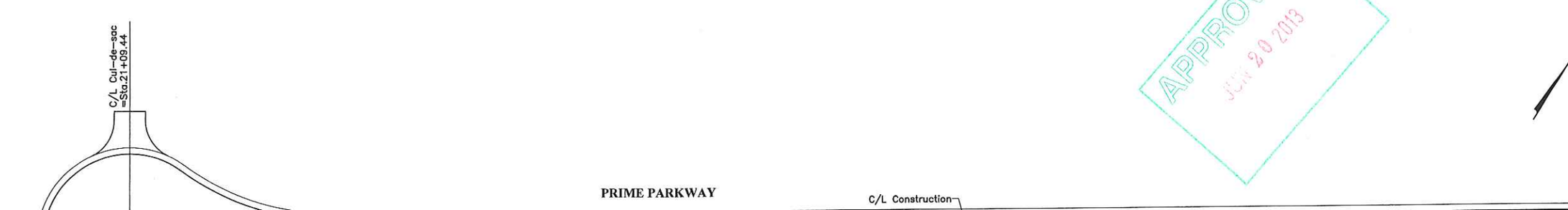

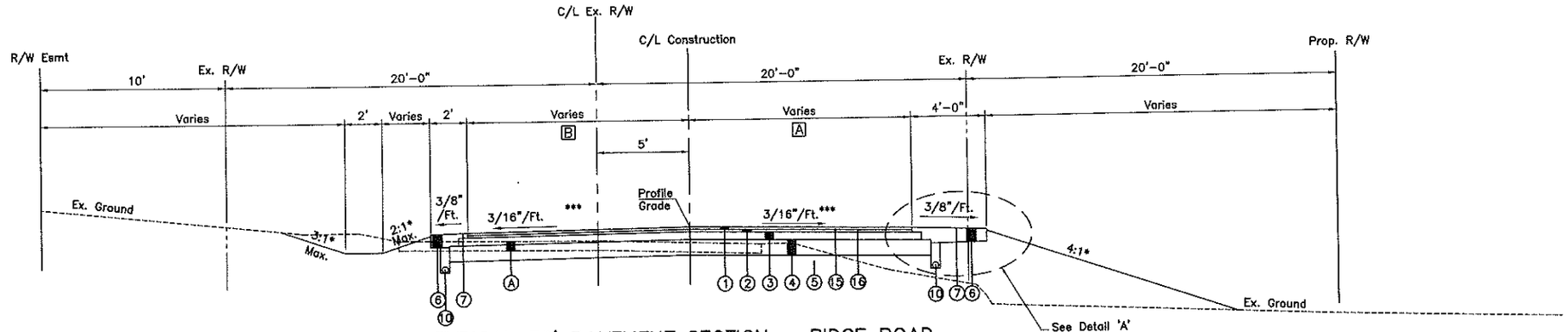

TYPICAL 36' PAVEMENT SECTION – RIDGE ROAD

Not to Scale
From Sta. 2+61.00 Sta. 15+50.00

A 14'-0"–12'-0" From Sta. 2+61 to Sta. 4+65
12'-0" From Sta. 4+65 to Sta. 11+28.26
12'-0" to 24'-0" From Sta. 11+28.26 to Sta. 11+76.26
**** Varies From Sta. 11+76.26 to Sta. 14+90.93
10'-9" From Sta. 14+90.93 to Sta. 15+50.00

B 22'-0"–12'-0" From Sta. 2+61 to Sta. 4+65
12'-0" From Sta. 4+65 to Sta. 13+60.00
**** Varies From Sta. 13+60.00 to Sta. 15+50.00

1. Item 448 – 1-1/2" Asphalt Concrete Surface
2. Item 448 – 1-3/4" Asphalt Concrete Interme
3. Item 301 – 5" Bituminous Aggregate Base, P
4. Item 304 – 10" Aggregate Base
5. •Item 204 – Subgrade Compaction
6. Item 304 – 8" Aggregate Base (Min., variable
7. Item 422 – Seal Coat, using No. 8 Cover Ag
8. Item 659 – Seeding and Mulching, As Per Pl
9. Item 652 – 6" Placing Stockpiled Topsoil, As
10. •Item 605 – 4" Base Pipe Underdrain with Fo
11. Item 301 – 8" Bituminous Aggregate Base, P
12. Item 304 – 4" Aggregate Base, (Variable deg
13. Item 304 – 6" Aggregate Base
14. Item 304 – 8" Aggregate Base
15. Item 407 – Tack Coat for Intermediate Cour
16. Item 407 – Tack Coat (0.10 Gal./Sq.Yd.)
17. Item 712 – Geotextile Fabric

A Existing Pavement to be Removed

• All Items are City of Springfield unless otherwise
Ohio Department of Transportation

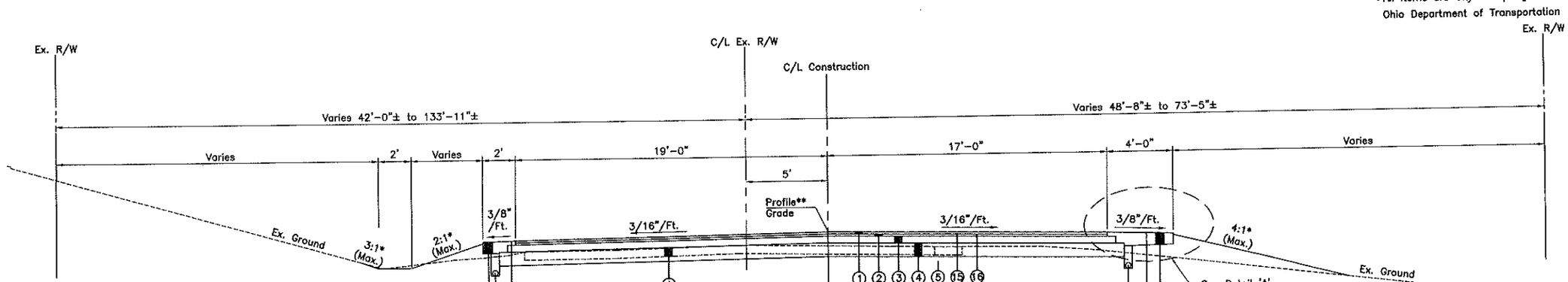

EXISTIN

2010 SPECIFICATIONS
The Standard Specifications of the State of Ohio, Department of Transportation, (ODOTCMS) including changes and supplemental specifications listed in the proposal shall govern the improvements shown on these plans except as such specifications are modified by the following specifications, or by the construction details set forth herein.

2003 SPECIFICATIONS
The Standard Specifications of the City of Springfield, Ohio, (COSCMS) shall also govern these improvements. On items where the City and the State have duplicate specifications, the City specifications shall govern, provided they meet and/or exceed ODOT standards.

REFERENCES
References to "Owner" or "Engineer" shall be considered references to the "Community Improvement Corporation of Springfield & Clark County, Ohio" and its duly authorized representative.

MODIFICATIONS
Any modifications to the specifications or work as shown on the drawings must have prior written approval by the City of Springfield and the Owner.

INSPECTIONS AND APPROVAL
Work performed within the scope of work for this project shall be subject to inspection and the approval of the Engineer and the Owner.

NOTIFICATIONS
The Contractor shall notify The City of Springfield (937) 324-7312 and Clark County (937) 521-1800, at least 48 hours prior to construction.

ODOT shall be notified 72 hours prior to beginning work on the project.

PERMITS
The Contractor shall obtain all necessary permits prior to construction.

When excavating within existing public right-of-way limits, it is necessary to obtain an excavation permit from the applicable authorities: the City of Springfield, Clark County and/or ODOT.

CONTRACTOR SITE VISIT
The Contractor is required to visit the site and fully become aware of all conditions affecting the scope of the work presented in the contract documents. Failure of the Contractor to visit the site shall not relieve the Contractor of any responsibility in the performance of this Contract.

Any performance of additional site subsurface investigations (test holes) shall be coordinated in advance with the Owner as warranted. Excavated material shall be replaced in a controlled manner to minimize impact on field earthwork operations.

CONTINGENCY QUANTITIES
The Contractor shall not order materials or perform work listed in the General Summary for items designated by plan note to be used "as directed by the Owner" unless authorized by the Owner and the Engineer. The actual work locations and quantities used at the discretion of the Owner and the Engineer shall be made a matter of record by incorporation into the final change order governing the completion of this project.

ESTIMATED QUANTITIES
The estimated quantities shown in the General Summary are not necessarily the final pay quantities. Final field measurements and calculations shall determine the final quantity to be paid.

SAFETY REQUIREMENT
The Contractor and Subcontractor shall be solely responsible for complying with all federal, state, and local safety requirements, together with exercising precautions at all times for the protection of persons (including employees) and property. It is also the sole responsibility of Contractor and Subcontractor to initiate, maintain, and supervise all safety requirements, precautions, and programs in connection with the work.

COORDINATION WITH UTILITIES
The Contractor is advised that some utility facilities may not be clear of the construction area during the time of construction. These utility facilities may remain in place or be relocated within the construction limits. The Contractor shall not wait on the relocations to be completed, but instead shall cooperate with the utilities including their contractors, and work around the existing facilities. Sections 105.07 and 107.16 of the Ohio Department of Transportation Construction and Material Specifications apply and will require that the Contractor cooperate with all utilities located within the limits of this construction project and take responsibility for the protection of the utility property and services. No separate payment shall be made for the Contractor to coordinate with Utility Companies.

The Contractor shall exercise caution when working in the proximity of existing and/or relocated utility facilities. Costs to expose conduit shall be included in the items of work affected. The Contractor is reminded to keep their OUPS ticket updated according to industry practices.

SANITARY FACILITIES
The Contractor shall furnish and maintain sanitary convenience facilities for the workmen and inspectors for the duration of the work. Cost shall be included in the price bid for the various improvement items.

UNDERGROUND UTILITIES
The locations of existing underground utilities shown on these plans are as obtained from the owners as required by Section 153.64 of the Ohio Revised Code.

EXISTING UTILITIES
Investigation, location, support, protection, and restoration of all existing utilities and

hours, not including Saturday and Sunday [six (6) weeks for signal revisions and/or pole relocations] prior to the beginning of any work within 100 feet of the signalized intersection(s) of S.R. 41, or within any posted area where ODOT has underground conduit/cable.

When unknown or incorrectly located underground utilities are encountered during construction, the Contractor shall immediately notify the utility owner, the Engineer and the Owner.

UTILITY SUPPORT
All existing utilities shall be fully supported at all times during construction. The Contractor shall be solely responsible for submitting plans and/or details showing means and methods of this support to the respective utility company and the Engineer and obtaining written approvals prior to the start of construction. No separate payment shall be made for this work.

CROSSINGS AND CONNECTIONS TO EXISTING PIPES AND UTILITIES
Where the plans provide for a proposed conduit to be connected to, or cross over or under an existing sewer or underground utility, the Contractor shall locate the existing pipes or utilities both as to line and grade prior to ordering materials and starting to lay the proposed conduit.

If it is determined that the elevation of the existing conduit, or existing appurtenance to be connected, differs from the plan elevation or results in a change in the plan conduit slope, the Engineer and Owner shall be notified before starting construction of any portion of the proposed conduit which will be affected by the variance in the existing elevations.

If it is determined that the proposed conduit will intersect an existing sewer or underground utility if constructed as shown on these plans, the Engineer and Owner shall be notified before starting construction of any portion of the proposed conduit which would be affected by the interference with an existing facility.

Payment for all the operations described above shall be included in the contract price for the pertinent conduit item. Any rework associated with the Contractor's failure to comply with the operations described above will be at the expense of the Contractor.

SOILS REPORT
Soils reports prepared by H.C. Nutting Company, DHDC, Inc. and Geotechnical Consultants, Inc. for this project are referenced as part of this plan. All recommendations in these reports unless otherwise specified herein shall be followed.

It is the contractor's obligation to make his own investigation of subsurface conditions. The soil tests shall be at the contractor's expense. A copy of the subsurface conditions report shall be given to the Engineer and Owner's Representative.

ROCK EXCAVATION
This work shall be defined in accordance with The City of Springfield Ohio Construction Specification Item 503. The bidder shall examine the soils report to determine if any rock excavation will be required and adjust the contract bid accordingly. No extra compensation shall be paid for any excavation required in rock or shale.

RIM ELEVATIONS
The rim elevation shown on the plans for proposed manholes/catch basins/inlets match the existing or proposed surface. In areas where the pavement is to be resurfaced, the top of casting shall match the surface of the resurfaced pavement.

The Contractor shall make allowance in their bid for possible adjustment to grade of proposed manhole/catch basin tops and shall receive no additional compensation because of any such adjustments that are required to be made.

MANHOLE, CATCH BASIN, HEADWALL AND TILE OUTLET LOCATIONS
Unless otherwise noted, the station/offset shown for manholes and catch basins are to the center of the structure. The station/offset of headwalls are to the centerline of pipe at the face of the headwall. The station/offset of tile outlets are to the centerline of pipe at the end of the pipe.

SECURING TRENCHES AND EXCAVATIONS DURING NON-WORKING HOURS
All excavations and trenches shall be backfilled or securely plated during non-working hours. All street plates shall be secured with asphalt placed around the perimeter. The Contractor shall maintain plates in a secure, safe condition.

DEWATERING
Any well, well point, pit, or other device installed for the purpose of lowering the ground water to facilitate construction of this project shall be properly abandoned in accordance with the provisions of Section 3745-9-10 of the Ohio Administrative Code or in accordance with the provisions of this plan and with written approval of the Owner.

Installation of well, well point, pit or other device used for the purpose of removing groundwater from any aquifer shall be in accordance with the applicable requirements of the Ohio Department of Natural Resources (ODNR) and the City of Springfield.

The Contractor shall be solely responsible to the ODNR for the registry, maintenance, and abandonment of any withdrawal device used in the construction of this project.

The contractor shall provide potable water to the nearby resident(s), if during the construction of the project, the water wells belonging to the residence(s) are de-watered. If the well is unable to be recommissioned, a tap to a waterline shall be provided if available or another well dug, at no cost to the residents, Engineer, Owner, or City.

MAINTAINING SERVICE
The Contractor shall be responsible for maintaining access for mail service, police, fire, and solid waste removal in the construction area. Cost for maintaining service shall be

Testing shall be performed by an ODOT pre-qualified agency. All copies of test results and material certifications shall be submitted to the City of Springfield at no expense to the City and/or Owner other than provided in ODOT Item 109.03.

NOTES TO DEVELOPERS OF LOTS A, B AND C
The development of any portion of Lots A, B or C shall require approval by the City of Springfield and CEDA.

Subsurface conditions within PrimeOhio II are detailed in four (4) Geotechnical Reports by H.C. Nutting Company (2), Geotechnical Consultants, Inc. (1), and DHDC, Inc. (1) and should be referenced for recommendations of footing and pavement design.

Additional site-specific Geotechnical investigation is recommended for any development within PrimeOhio II.

Stormwater detention and water quality in accordance with City of Springfield and State of Ohio regulations will be required for each development within PrimeOhio II.

The Furay-Gray lateral is designed to convey the 100-year storm after final development of Lots, A, B and C. Additional embankment within the 120-foot easement area is required for any development occurring adjacent to the Furay-Gray Lateral.

STORM SEWER GENERAL NOTES
Storm sewer materials and installations shall comply with the COSCMS.

Immediately after placement of any conduits, the Contractor shall construct the end treatments required by the plans at both the outlet and inlet ends. This shall include headwalls, rock channel protection, concrete riprap, sodding, etc.

Concrete manholes, catch basins, headwalls, and pipe in Ridge road and that drain Ridge Road into the Prime Parkway ditch must meet the specifications of ODOT Item 604. The certified precast producer shall meet the requirements of ODOT Supplemental Specifications 1074.

SANITARY SEWER GENERAL NOTES
Sanitary sewer materials and installations shall comply with the COSCMS.

All connections to existing sanitary manholes shall be made using a core drill and a flexible rubber boot. Manholes shall be rechanneled as necessary. Costs to be included under the Item 804, X" Conduit, Type A.

All sanitary manholes shall have a flexible gasketed joints and a chimney seal.

Roof drains, foundation drains and other "clean water" connections to the sanitary sewer system are prohibited.

Sanitary sewers and manhole installations shall be installed with at least ten (10) feet horizontal and eighteen (18) inches vertical separation from any waterline measured edge to edge.

Provide COSCMS type A-3 sanitary manholes outside the pavement, and provide COSCMS type A-2 sanitary manholes inside the pavement.

The ends of sanitary services shall be marked with a 4"x4" wood stake extending from 24" below grade to 36" above grade. Cost to be included in the unit price bid for Item 803 - X" x 6" Sanitary Service Connection. Sanitary Sewer manhole tops outside the pavement shall be built or subsequently adjusted to 6" above the surface grade.

WATER MAIN GENERAL NOTES
Water main materials and installations shall comply with the COSCMS.

Water mains shall be laid with a minimum of 48" of cover. Waterlines crossing any and all sewers shall have a minimum vertical separation of 18" and a minimum horizontal separation 10' between outsides of the water main and the sewer pipe.

All valves shall be a resilient seat wedge valve, clockwise open.

Valves shall be adjusted to final grade as directed by the Engineer. The Contractor shall include the cost of the valve box extensions and adjustments as required in the price bid for valves. If the top of the valve operating nut is more than 48" below finish grade an extension stem shall be furnished to bring the top of the operating nut to within 36" of the finished grade. Costs is to be included in the unit price bid for Item 638 - X" Valve and Valve Box.

The fire hydrant manufacturer shall take note of special Higbee threading requirements as outlined by the City of Springfield, Department of Engineering, Standard Drawing FH-1.

JURISDICTIONAL WATERS / WETLANDS
The existing Furay-Gray Lateral has been designated as jurisdictional waters. The Contractor shall not disturb the stream as per the Army Corps of Engineers (COE) regulations and existing permits.

Existing wetlands have been delineated within the project property. The Contractor shall not disturb these areas as per the Army Corps of Engineers (COE) regulations and existing permits.

CONSTRUCTION WITHIN LAYBOURNE ROAD RIGHT-OF-WAY LIMITS
All work and materials within the Laybourne Road right of way shall comply with Clark County regulations. The Clark County Engineer will require that the Contractor post a bond for any pavement replacement within the right of way limits. No separate payment shall be made for meeting these requirements.

FAIRGROUND / LAYBOURNE ROAD CONSTRUCTION ACTIVITY
Construction activity along Laybourne Road and within the Clark County Fairgrounds

For all work on Laybourne Road, maintain 1-la
construction. After working hours, maintain 2-

No additional pay will be allowed for any additi
suspensions for fairground events.

ITEM 614 - MAINTAINING TRAFFIC, AS PER PLA
The contractor shall submit detailed and scala
the Engineer for review and approval. For work
plans shall also be submitted to the Clark Cou

The MOT plans shall be dimensioned and the s
shall be noted. Interruptions to normal traffic
pedestrian routes shall be identified and propo
of these facilities shall be included in the MOT

The MOT plans shall be prepared by an engine
shall be submitted a minimum of seven work
approval.

The MOT plans for Ridge Road shall follow the
sheet 13.

All traffic control devices shall be furnished, e
Contractor in accordance with the "Ohio Manu
Construction and Maintenance Operations", cop
Department of Transportation, Bureau of Traff
Ohio 43223.

Steady-burning, Type "C" lights shall be requi
similar traffic control devices used at night.

Ingress and egress shall be maintained to pub

All permanent traffic controls not in conflict
maintained throughout this project by the Cor
be temporarily relocated, as approved by the
liability for missing, damaged and improperly p

The Contractor shall be responsible for the re
permanent traffic control devices damaged or
Permanent traffic control no longer in conflict
replaced immediately.

Any work done by the City of Springfield, Clar
installation, relocation, removal and/or replace
as a result of work done by the Contractor o
Contractor, shall be at the expense of the Co

All traffic lanes on SR 41 shall be fully open

Ridge Road shall remain fully open to traffic
school is not in session, Contractor may clos
Detour Plan within this plan set.

The Contractor shall notify any affected busin
to the closing as to the extent, nature, and
shall be responsible for coordinating with the
providers that service the affected businesses

Payment for all plans, labor, equipment, and
Sum price bid for Item 614 - Maintaining Tra

ITEM 838 - 16" WATER MAIN (OFFSITE)
The Contractor is responsible for field locatin
Clark county Fairgrounds prior to staking the
Locating methods shall be approved by the E
included in the unit price bid for Water Main

ITEM 623 - CONSTRUCTION LAYOUT STAKES,
All construction layout services for this proje

All existing survey monumentation and proper
during construction shall be accurately replac
of Ohio, employed by the Contractor at the
to the Owner or property owner.

The Contractor shall stake the limits of the
installation of Item 207 - Construction Fenc
limits of the existing wetlands shall be suppl

Cost for this work shall be included in the lu
Construction Layout Stakes.

ITEM 202 - SPECIAL - MAILBOX REMOVED &
This work shall consist of removing existing
erecting mailbox supports and any associate
temporary relocation during construction and
locations upon completion of construction) in
an owner-supplied mailbox at locations speci
by the local Post Master. This work shall alsc
existing mailbox and mailbox support during

8:40 PM, Printed: (6/18/2013 4:40:38 PM)

FARM DRAINS AND SPRINGS
All farm drains encountered during construction shall be provided with unobstructed outlets. Existing collectors which are located below the roadway ditch elevations, and which cross the roadway, shall be replaced within the construction limits by Item 603 – Conduit, Type B, one commercial size larger than the existing conduit.

Existing collectors and isolated farm drains encountered above the elevation of roadway ditches or the Furay–Gray Lateral shall be directed into the roadway ditch or the Furay–Gray Lateral with Item 603 – Conduit, Type F, unless otherwise shown on the plan. The optimum outlet elevation shall be one foot above the flow line elevation of the ditch/lateral.

Lateral field tiles, which cross the roadway, shall be intercepted by Item 603 – Conduit, Type E, and carried in a longitudinal direction to a drainage structure, adequate outlet or roadway crossing.

The location, type, size, and grade of replacement shall be determined by the Engineer and Owner.

Erosion control pads and animal guards shall be provided at the outlet end of all farm drains as per ODOT Standard Construction Drawing DM–1.1, except when they outlet into a drainage structure. Costs to be included under the various Item 603.

All springs encountered during excavation shall be drained to an outlet approved by the Engineer and the Owner.

The following estimated quantities have been included in the General Summary for the work noted above:

ODOT Item 603	6" Conduit, Type B	50	LF
ODOT Item 603	6" Conduit, Type E	50	LF
ODOT Item 603	6" Conduit, Type F	50	LF

ITEM 206 – LIME STABILIZED SUBGRADE, 12" DEEP, AS PER PLAN
This work shall consist of furnishing all labor, equipment, and materials to construct a chemically stabilized subgrade, using the ODOT Item 206 specification. Item 206 Lime Stabilized Subgrade, 12 Inches Deep, As Per Plan shall be an inclusive item for the work required for the stabilization. This item shall include all labor, test rolling and materials such as lime, water, and/or others materials necessary to complete the item and have acceptance in place by the Engineer, Owner and the Clark County Engineer (for Ridge Road work). The contractor shall account for possible swell either before or after application of treatment under this item. The final pavement plan grades and pavement section per the plan shall be maintained. No extra payment will be made for accounting of and/or adjustments for possible swell of material. Basis of payment will be per the 206.08 specification, using units of square yards.

The rate of application for the lime shall be 5% or as directed by the Soils Engineer.

The following estimated quantity is a contingency item that has been included in the General Summary for use as directed by the Engineer, Owner and the Clark County Engineer (for Ridge Road work) for the work noted above:

Item 206 Lime Stabilized Subgrade, 12" Deep, As Per Plan 5,300 SY

ITEM 607 – FENCE REMOVED AND REBUILT, AS PER PLAN
At locations specified on the plans, the Contractor shall carefully dismantle, salvage, and store for reuse the existing fence to be rebuilt. The contractor shall dispose of materials not considered salvageable or needed for reuse according to Item 202. Backfill the cavity created by the removal item according to Item 202, except when the cavity lies within limits of subsequent excavation or other work. The contractor is solely responsible for documenting the dimensions and assembly of the existing fence for subsequent re–erection.

The Contractor shall rebuild fence units of the same type and spacing as members of the existing fence removed for reuse or storage. For re–erecting fence, obtain the fence elements from salvage or furnish new in–kind materials: posts, rails, fence, bolts, washers, paint, and incidental hardware necessary to complete the fence. Substitute fence types or components shall be approved by the Engineer, Owner, and fence owner prior to ordering, fabrication and installation.

Contractor shall ensure that the Clark County Fairgrounds and private properties are secure during non–working hours with temporary fencing. Temporary fencing materials and locations shall be approved by the Engineer, the Fairground Administrator and/or the fence owner.

Payment for all labor, equipment, and materials, including installation and removal of temporary fencing, shall be included in the unit price bid for Item 607 – Fence Removed and Rebuilt, As Per Plan.

PLACING FEATHERED AREAS
Items, such as milling, tack coat, crack sealing, or sawcutting, that are necessary to construct butt joint or taper edge type feathered areas per ODOT Standard Construction Drawing BP–3.1 are to be considered incidental to construction and are to be included with associated pavement items for payment unless otherwise itemized on the plans.

ITEM 625 – CONDUIT, 3–4", 725.051, CONCRETE ENCASED, AS PER PLAN
ITEM 625 – CONDUIT, 2–4", 725.052, DIRECTIONAL BORED, AS PER PLAN
This item consists of the installation of conduits for utility lines installed by others.

Each conduit shall be installed per Item 625 and as detailed on the plans. All conduits shall be mandrel tested as per Item 625.12. The end of conduit locations shall be marked as detailed on the plans.

Plan quantities represent trench/ bore lengths, not conduit lengths.

Payment will be as per Item 625.

This item of work shall conform to the requirements set forth in ODOT Items 625.15 and 725.19. Power for the entry feature lighting shall be obtained from the Ohio Edison Power Company. At the time of plan preparation, the location of the power connection point was not determined. It shall be the Contractor's responsibility to coordinate with Ohio Edison for the connection point. It shall be the Contractor's responsibility to obtain any addressees necessary for power service electrical energy accounts. The Contractor shall be responsible for any charges and fees made by the power company for work by the Power Company in conjunction with establishing this power service. The contractor shall pay for all electrical energy charges for the new power service established by this project until Owner acceptance of the Entry Feature Lighting System and the Entry Feature Lighting Power Service. After acceptance of both said items, the power service electrical energy accounts shall be transferred to the Owner.

Contractor shall coordinate the size and location of all equipment, conduits, wiring, and other appurtenances required to provide power to the entry feature lighting system. Contractor shall provide shop drawings of all materials including load and sizing calculations sealed by an electrical engineer.

The Power Service shall include the conduit, trench, wiring, warning tape, grounding rods, transformer with enclosure, pull boxes, splice kits, photoelectric cell, service disconnect, grounding, control panel, meter, unistrut service mounting (as shown on sheet 67) with foundations and any incidentals necessary to complete the system.

Payment for Item 625 Entry Feature Lighting Power Service, As Per Plan, shall be a lump sum at the contract price for the installation including all materials, labor, equipment, and incidentals complete in place.

ITEM 625 – ENTRY FEATURE LIGHTING SYSTEM, AS PER PLAN
This item of work shall consist of furnishing and installing all of the electrical components and incidentals needed to render a fully functional lighting system for the luminaires at the Entry Feature. The 120 volt Luminaires shall be two Elliptipar Light Fixtures model number F152–F360–H–07–A–00–0.

The lighting system shall include all material, labor and incidentals needed to install everything from the Power Service disconnect to and including the lighting fixture. The following items shall be included: foundations, excavation, backfill, plastic caution tape, grounding rods, luminaires, conduit, trench, cable, pull boxes, splice kits and all miscellaneous parts and connections not specifically listed herein. All items housed inside the control panel including fuses, circuit breakers, step down transformer and miscellaneous connections shall be paid under Item 625 Entry Feature Lighting Power Service, As Per Plan

Payment for Item 625 – Entry Feature Lighting System, As Per Plan shall be a lump sum at the contract price for the installation including all materials, labor, equipment and incidentals complete in place.

ITEM 204 – SUBGRADE COMPACTION, AS PER PLAN
ITEM 204 – PROOF ROLLING, AS PER PLAN
All requirements of Item 204 subgrade compaction shall apply to this work unless otherwise noted.

The exposed subgrade shall be proof rolled in accordance with Item 204 to detect soft, wet or weak zones. The Engineer shall specify acceptable limits for proof rolling and maximum deflection in accordance with Item 204.

Nuclear density testing will be required to illustrate subgrade meets minimum requirements at Contractor's expense per ODOT Supplemental Specification 1015.

The following estimated quantities have been included in the General Summary for the work noted above:

Item 204	Subgrade Compaction, AS PER PLAN	13,590	SY
Item 204	Proof Rolling, AS PER PLAN	20	HR

ITEM 616 – DUST CONTROL, AS PER PLAN
The Contractor shall be responsible for providing dust control measures for the duration of the project in accordance with Item 616. Dust Control operations shall be performed on a periodic basis and/or as directed by the Owner and/or the Engineer to alleviate or prevent the dust nuisance originating within the project work limits. Water shall be included in the Lump Sum price bid for Item 616 – Dust Control, As Per Plan.

FULL DEPTH PAVEMENT SAWING
The Contractor shall sawcut existing pavement to provide a smooth vertical depth butt joint between the existing pavement and the proposed pavement. Contractor shall locate sound pavement edge and cut and trim pavement to a neat line. Existing pavement shall be sawcut full depth at all removal limits. Include the cost of sawcutting and pavement removal and disposal under Item 203 – Excavation As Per Plan.

ITEM 638 – 30" STEEL PIPE ENCASEMENT, BORED OR JACKED, AS PER PLAN
ITEM 839 – 12" WATER MAIN
ITEM 839 – 16" WATER MAIN
ITEM 803 – 18" CONDUIT, TYPE A
The work shall include installation of a casing pipe of sufficient size to accommodate the placement of the associated carrier pipe, excavation, jacking and receiving pits, bracing, sheeting, removal of water, furnishing and placing fill material, seals and low strength mortar backfill as shown on the plans.

The jack and bore installation method submission needs to specifically address the handling of obstructions should they be encountered during the jack and bore operation. Extending of the drill head out past the casing will not be allowed.

Include ODOT on shop drawing submittal distribution for contractors preferred method of jack and bore installation within right of way.

The utility facility is to be constructed, serviced and maintained without access from the through traffic roadways or ramps of the limited access highway.

Payment for the above work shall be made at the unit price bid for Item 638 , As Per Plan and shall include all labor, equipment, materials, and incidentals to complete the work including dewatering.

Costs for carrier pipe blocking and strapping shall be included in the associated unit prices bid for Item 839 – 12" Water Main, Item 839 –16" Water Main and Item 803 – 18" Conduit, Type A, and shall include all labor, equipment, materials, and incidentals to complete the work.

NON–RIGID PAVEMENT REMOVAL
Payment for the removal and disposal of existing non–rigid pavement shall be included in the unit price bid for Item 203 – Excavation, As Per Plan.

ITEM 832 – CONSTRUCTION/ACCESS DRIVE, AS PER PLAN
A Construction/Access Drive shall be constructed as detailed on the plans shall remain in place upon completion of the project. The Contractor shall repair and top dress drive as directed by the Owner prior to final acceptance of the work.

The following estimated quantity has been included in the General Summary for the work noted above:

Item 832 Construction/Access Drive, As Per Plan 715 CY

ITEM 207 – PERIMETER FILTER FABRIC FENCE, AS PER PLAN (PERMANENT)
The filter fabric fence shall not be installed until such time that the vegetation on the roadway ditch slopes has been established and accepted. Fencing shall be installed in conjunction with the construction of the adjacent infiltration trench.

The filter fabric fence shall remain in place upon completion of the project.

The Contractor shall perform any repair and/or replacement of the fence as directed by the Owner prior to final acceptance of the work.

ITEM 207 – CONSTRUCTION FENCE, AS PER PLAN (WETLANDS)
High visibility construction fence shall be installed to prevent encroachment into existing jurisdictional wetlands. Fencing shall be installed prior to the beginning of construction activities.

The construction fence shall remain in place upon completion of the project.

The Contractor shall perform any repair and/or replacement of the fence as directed by the Owner prior to final acceptance of the work.

ITEM 630 – STREET NAME SIGN SUPPORT
ITEM 630 – SIGN, FLAT SHEET
ITEM 630 – SIGNING MISC.: STREET NAME SIGN, SINGLE FACE
Sign faces for all signs shall have Type "J" sheeting according to ODOT 730.193.

Street name sign and support shall be per City of Springfield Standard Drawing SN–1.

ITEM 201 – CLEARING AND GRUBBING, AS PER PLAN
All trees, brush, stumps, abandoned cable, fence posts, fence and rocks specifically marked for removal that have not been itemized within the construction limits of this project shall be removed. No separate payment shall be made. Any root cutting necessary for any/all construction operations shall be included within the lump sum price bid for Item 201 – Clearing and Grubbing, As Per Plan.

All trees and bushes, whether shown on the plans or not, shall not be destroyed unless clearly designated for removal on the plans or if prior written approval by the Owner has been given. All branches or growth from trees that are to be saved and which are interfering with the free construction of the project may be removed by the use of pruning tools. All pruning tools used and methods employed shall meet with the approval of the Owner. The branches shall be removed with a good clean cut made flush with the parent trunk or if having a good healthy lateral branch, the cut shall be a good clean slanting cut close to and beyond the healthy branch. All branches removed shall be at the direction of the Owner's Representative. The cost of all work and expenses connected with the removal of trees and/or branches shall be included in price bid for Item 201 – Clearing and Grubbing, As Per Plan. No extra payment shall be made therefore.

ITEM 203 – EXCAVATION, AS PER PLAN
ITEM 203 – EMBANKMENT, AS PER PLAN
The excavation of asphalt pavement, asphalt curb, brick materials or unsuitable materials not otherwise itemized on this project are included within Item 203 – Excavation, As Per Plan quantities for payment.

All soil stockpiles, including trench excavation stockpiles shall be protected from erosion by perimeter control devices such as straw bale dikes or silt fences. These perimeter control devices shall be maintained throughout the life of the project. Excavated materials shall not be stored on existing public roadway pavements. This includes excess or unusable excavated soil.

Stockpile locations shall be coordinated with Owner prior to beginning work. Provide earth moving plan for approval indicating all stockpile locations and durations.

The Contractor shall construct embankments with the excavated material and material from other approved sources as necessary to complete the planned embankments. The Contractor shall use all suitable excavated material in the work prior to using borrowed material. No extra compensation will be paid for any imported material and the Contractor shall adjust the price bid accordingly. Costs for this work shall be included in the price bid for Item 203 – Embankment, As Per Plan.

No extra compensation will be paid for any excavation required in rock or shale. The Contractor shall examine the soils report prior to bidding to determine if any rock or

work noted above:

Item 203 Excavation, As Per Plan (Infiltr
Item 203 Embankment, As Per Plan (Infi
Item 203 Granular Material, As Per Plan

REMOVAL AND REPLACEMENT OF SOFT OR UNS
Areas requiring over excavation or undercut, a
the Clark County Engineer (for Ridge Road wo
Item 204, Excavation of Subgrade. Minimum c
excavated or undercut areas are to be filled
the Clark County Engineer (for Ridge Road wo
with ODOT CMS 204.07.

The following estimated quantities are conting
General Summary to be used as directed by
Engineer (for Ridge Road work)for this work.:

Item 204 Excavation of Subgrade
Item 204 Embankment
Item 204 Granular Embankment
Item 204 Geotextile Fabric

DISPOSAL OF EXCESS EXCAVATION AND TOPSO
The Contractor shall first offer all excess exc
before disposing of off the premises. The Cor
excavation and topsoil material, including uns
at a location arranged by the Contractor and
materials to be disposed of off–site must be
manner in accordance with local, state, and
to be disposed of in any wetland, floodplain,
Erosion control measures at the disposal site
disposal is complete and the disposal site pe
the limits of the project, the Contractor shal
agreement between the Contractor and the o
occurs. This written agreement shall clearly s
indicate the landowner's permission for such
Contractor's responsibility. The Contractor sho
Stockpile locations shall be coordinated with
earth moving plan for approval indicating all

Payment for this work shall be included in Ite

ITEM 651 – TOPSOIL STOCKPILED, AS PER PL
Work includes the stripping topsoil from the
and stockpiling in accordance with Item 651.
number of cubic yards of topsoil actually sto
removal areas.

All soil stockpiles, including trench excavation
by perimeter control devices such as straw b
control devices shall be maintained throughou
materials shall not be stored on existing pub
or unusable excavated soil.

Stockpile locations shall be coordinated with
earth moving plan for approval indicating all

Unsuitable and surplus material shall be dispo
OF EXCESS EXCAVATION AND TOPSOIL MATERI

An average depth of 15" was assumed for ex
quantity calculations for this project.

ITEM 652 – PLACING STOCKPILED TOPSOIL, A
Work includes the hauling and spreading of a
stockpiled under Item 651, and preparing the
Measurement for payment shall be at the nu
placed according to the specified areas and
Engineer and the Owner.

Unsuitable and surplus material shall be dispo
OF EXCESS EXCAVATION AND TOPSOIL MATERI

Any topsoil disturbance, settlement or erosion
of the contract shall be repaired and reseede
Owner at the Contractor's expense.

Contractor shall place stockpiled topsoil in al
construction. The topsoil shall be 15" thick in
locations.

Any areas disturbed that are not within the
at the contractor's expense.

The following estimated quantities have been
work noted above:

Item 652 Placing Stockpiled Topsoil, As Pe
Item 652 Placing Stockpiled Topsoil, As Pe
Item 652 Placing Stockpiled Topsoil, As Pe
Item 652 Placing Stockpiled Topsoil, As Pe

ITEM 659 – SEEDING AND MULCHING, CLASS
ITEM 659 – SEEDING AND MULCHING, CLASS
ITEM 659 – SEEDING AND MULCHING, CLASS

APPROVED JUN 2 0 2013

47:42 PM], Plotted: [6/19/2013 4:47:55 PM]

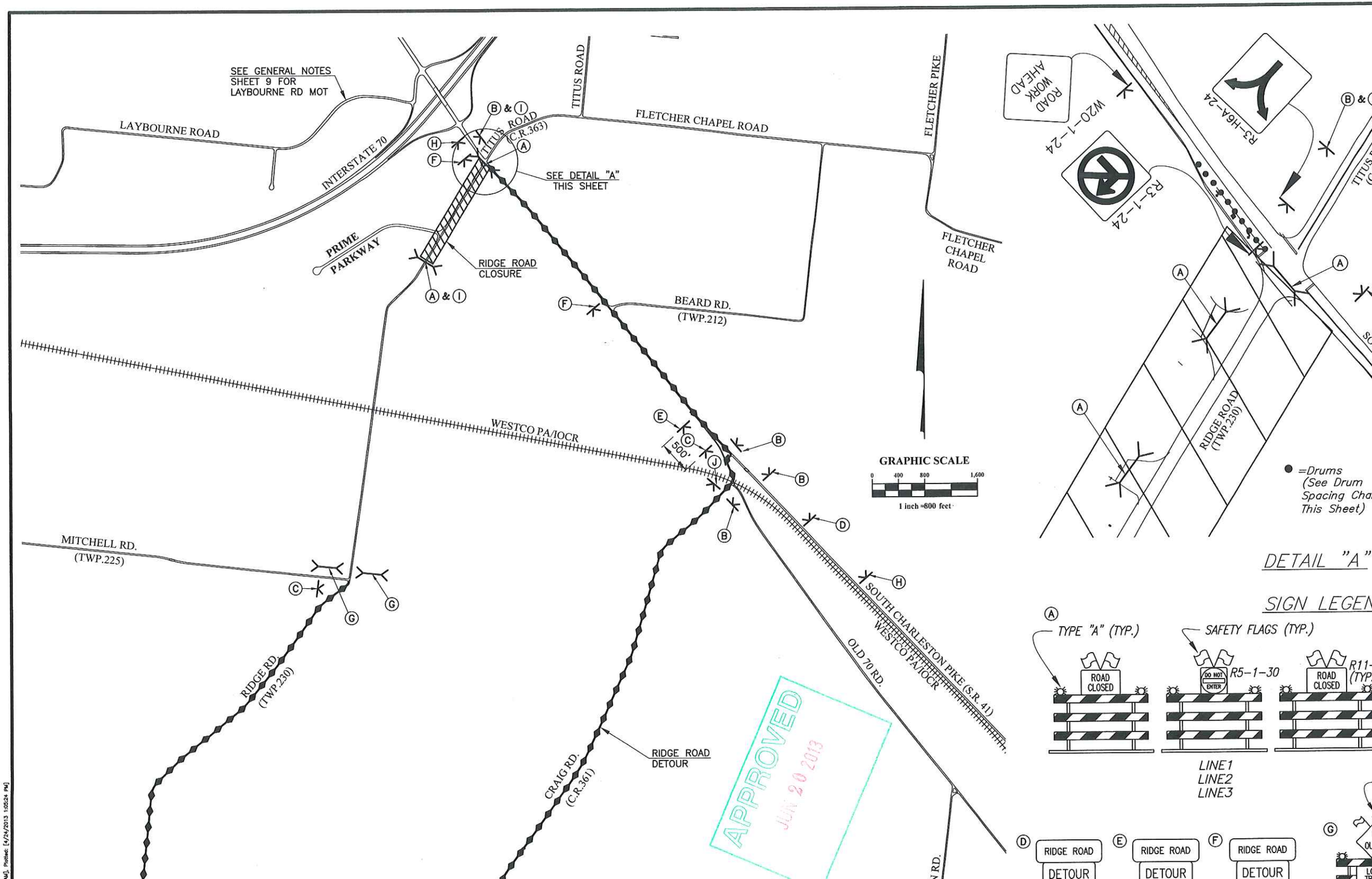
SEE GENERAL NOTES
SHEET 9 FOR
LAYBOURNE RD MOT
LAYBOURNE ROAD
INTERSTATE 70
PRIME PARKWAY
TITUS ROAD
TITUS ROAD (C.R.363)
FLETCHER CHAPEL ROAD
FLETCHER PIKE
FLETCHER CHAPEL ROAD
SEE DETAIL "A"
THIS SHEET
RIDGE ROAD
CLOSURE
BEARD RD.
(TWP.212)
WESTCO PA/IOCR
500'
MITCHELL RD.
(TWP.225)
RIDGE RD.
(TWP.230)
CRAIG RD.
(C.R.361)
RIDGE ROAD
DETOUR
SOUTH CHARLESTON PIKE (S.R. 41)
WESTCO PA/IOCR
OLD 70 RD.
GRAPHIC SCALE
0 400 800 1,600
1 inch =800 feet
APPROVED
JUN 20 2013
ROAD WORK AHEAD
W20-1-24
R3-1-24
R3-H6A-24
RIDGE ROAD
(TWP.230)
=Drums
(See Drum
Spacing Cha
This Sheet)
DETAIL "A"
SIGN LEGEN
TYPE "A" (TYP.)
SAFETY FLAGS (TYP.)
ROAD CLOSED
DO NOT ENTER
R5-1-30
ROAD CLOSED
R11-
(TYP
LINE1
LINE2
LINE3
RIDGE ROAD DETOUR
RIDGE ROAD DETOUR
RIDGE ROAD DETOUR

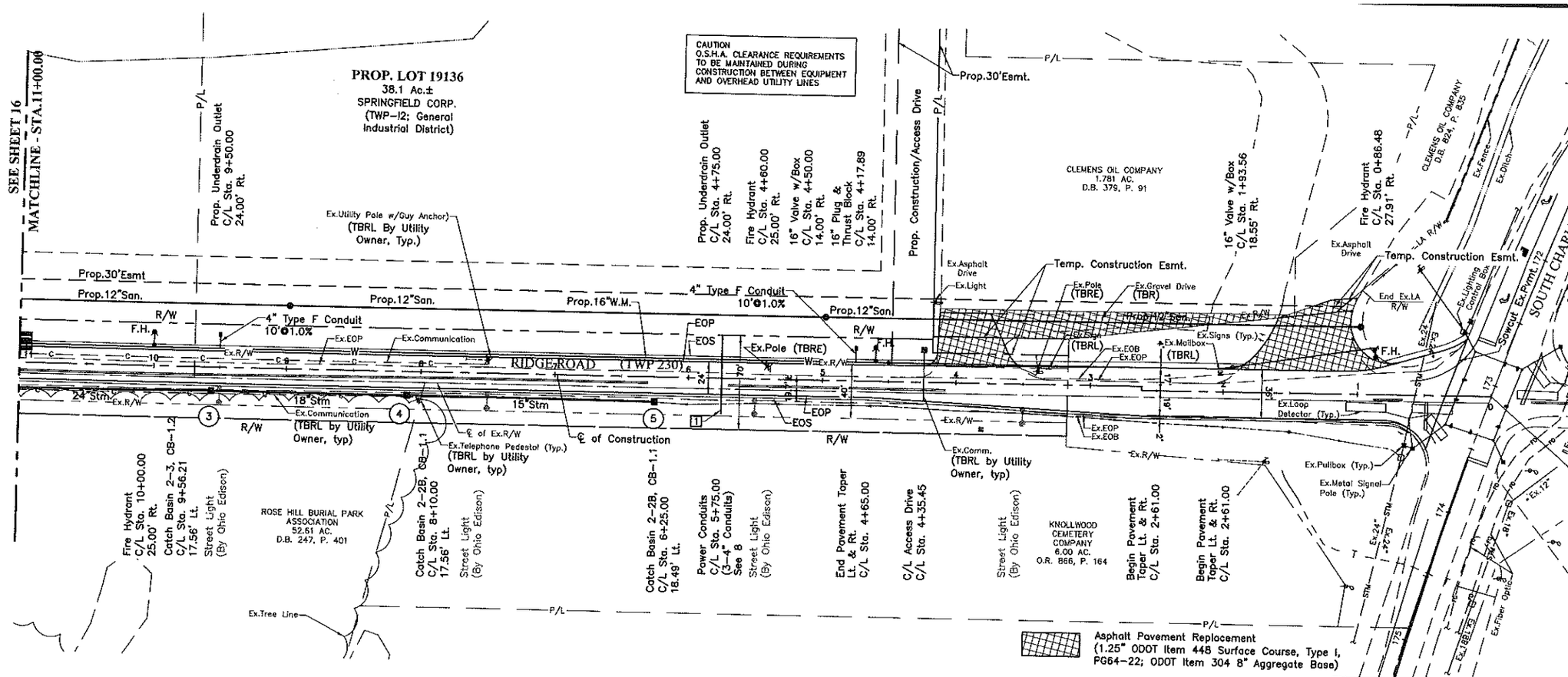

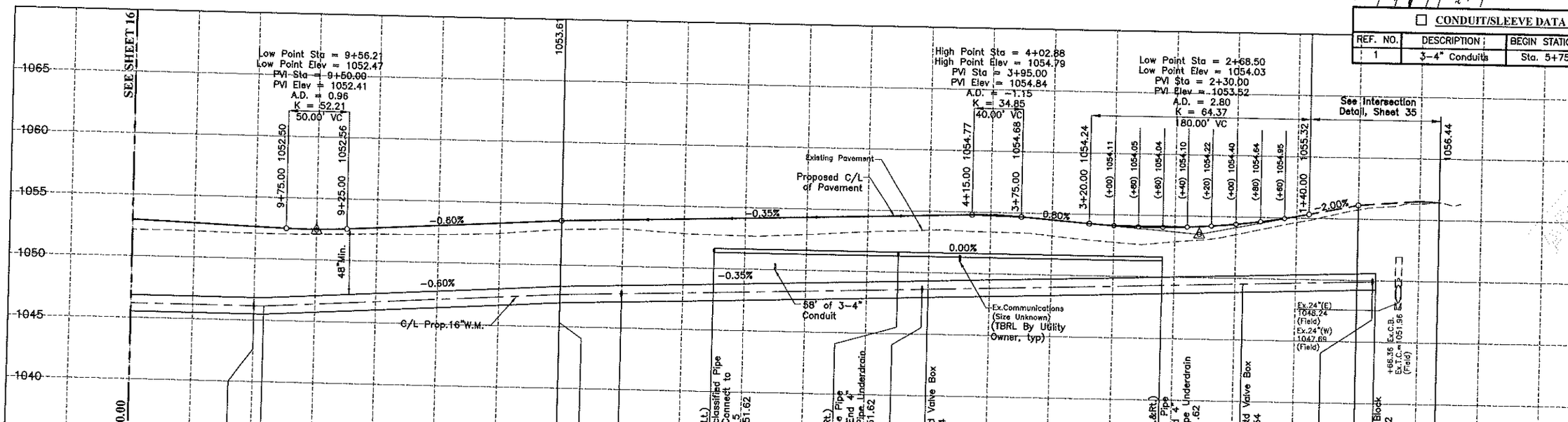

CONDUIT/SLEEVE DATA

REF. NO.	DESCRIPTION	BEGIN STATIO
1	3-4" Conduits	Sta. 5+75

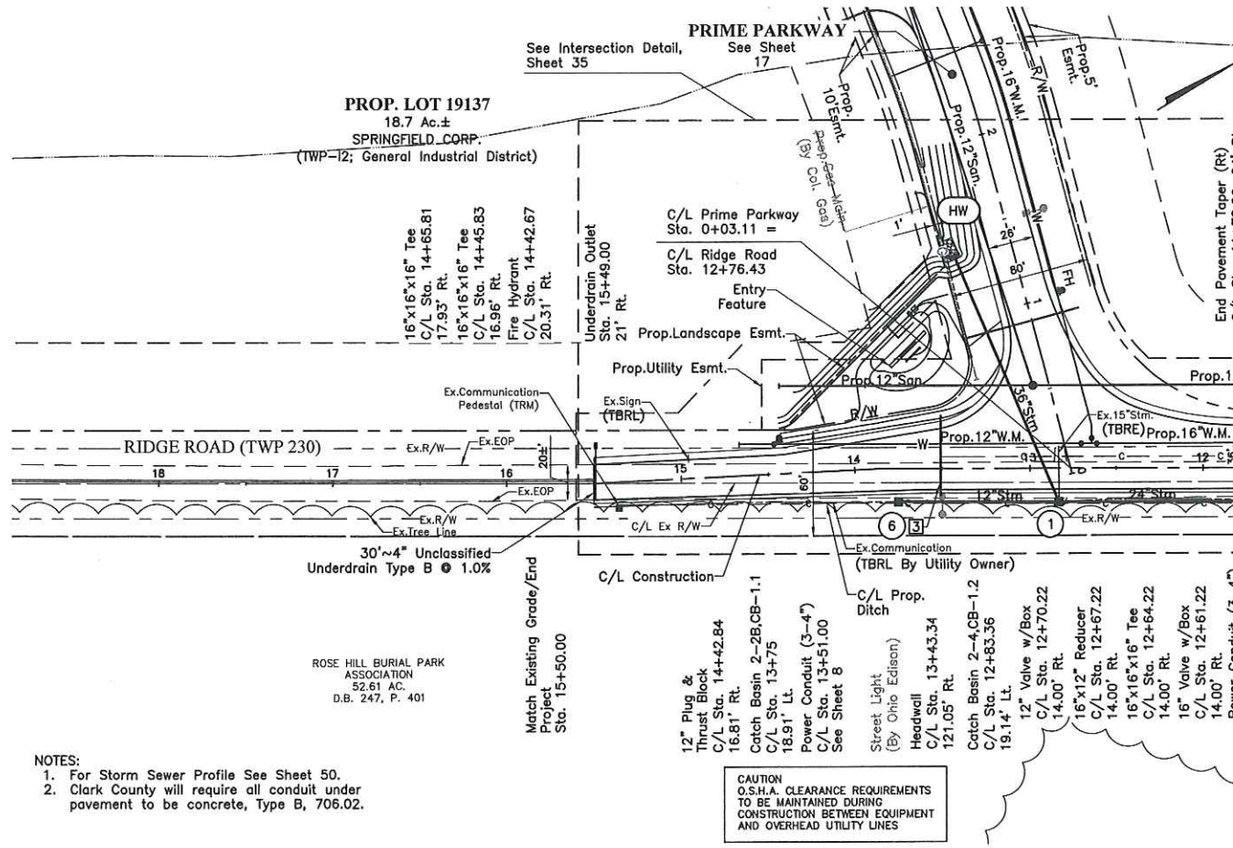

NOTES:
1. For Storm Sewer Profile See Sheet 50.
2. Clark County will require all conduit under pavement to be concrete, Type B, 706.02.

CAUTION
O.S.H.A. CLEARANCE REQUIREMENTS TO BE MAINTAINED DURING CONSTRUCTION BETWEEN EQUIPMENT AND OVERHEAD UTILITY LINES

☐ CONDUIT/SLEEVE DATA (PER ITEM 725.051, AS PER PLAN)

REF. NO.	DESCRIPTION	BEGIN STATION/OFFSET	END STATION/OFFSET	TOTAL LENGTH
2	3-4" Conduits	Sta. 11+51/32' Rt.	Sta. 11+51/26' Lt.	58'
3	3-4" Conduits	Sta. 13+51/15' Lt.	Sta. 13+51/30' Lt.	45'

APPROVED
JUN 20 2013

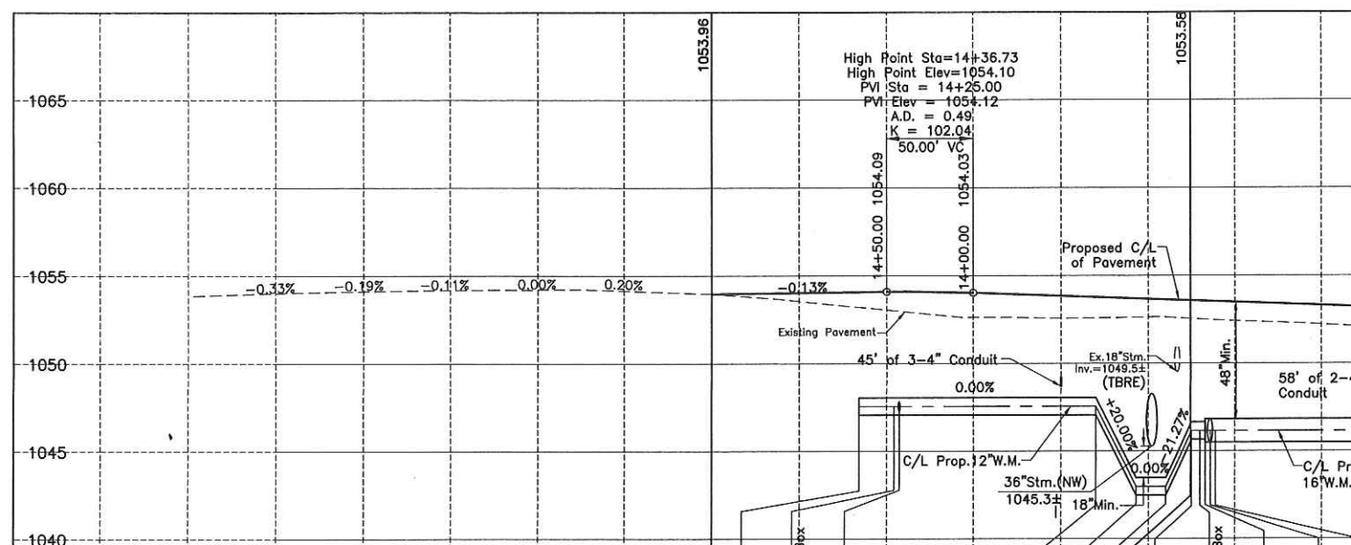

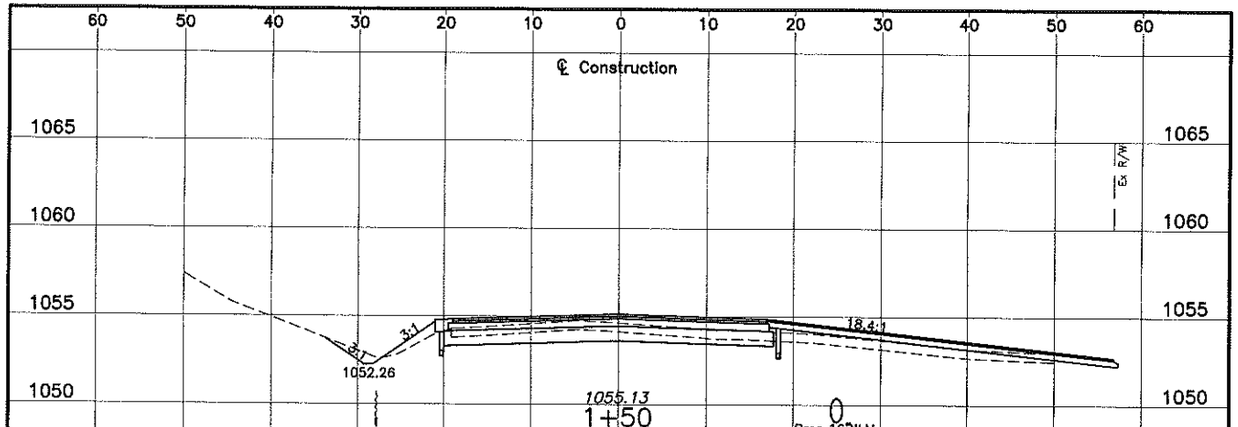
60 50 40 30 20 10 0 10 20 30 40 50 60
℄ Construction
1065
1060
1055
1050
1045
1040
1035
Ex. R/W
3:1
3:1
18.4:1
1052.26
1055.13
1+50
1054.64
Prop.16"W.M.

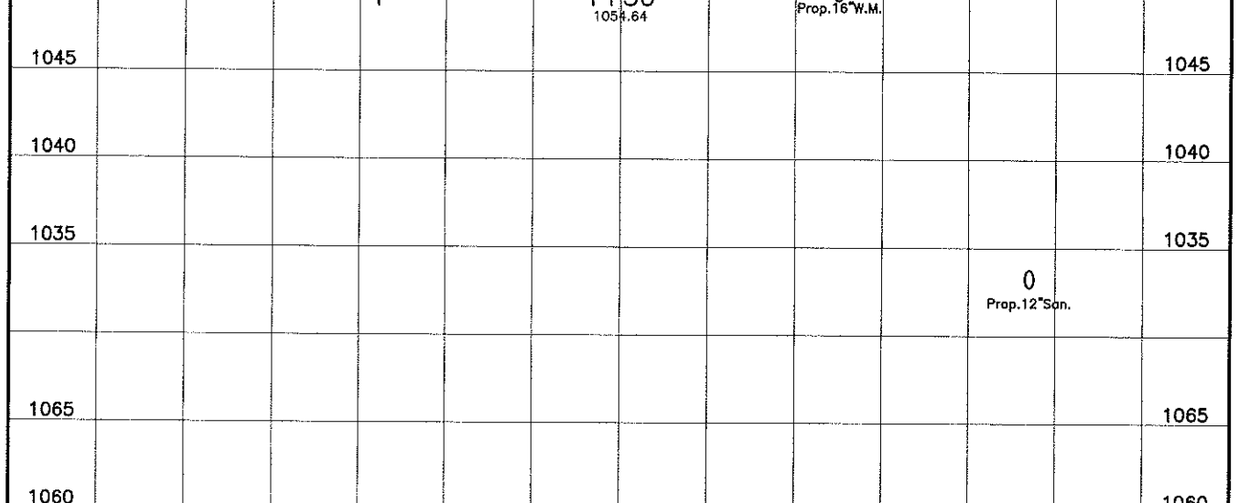
1065
1060
1055
1050
1045
1040
1035
Prop.12"San.

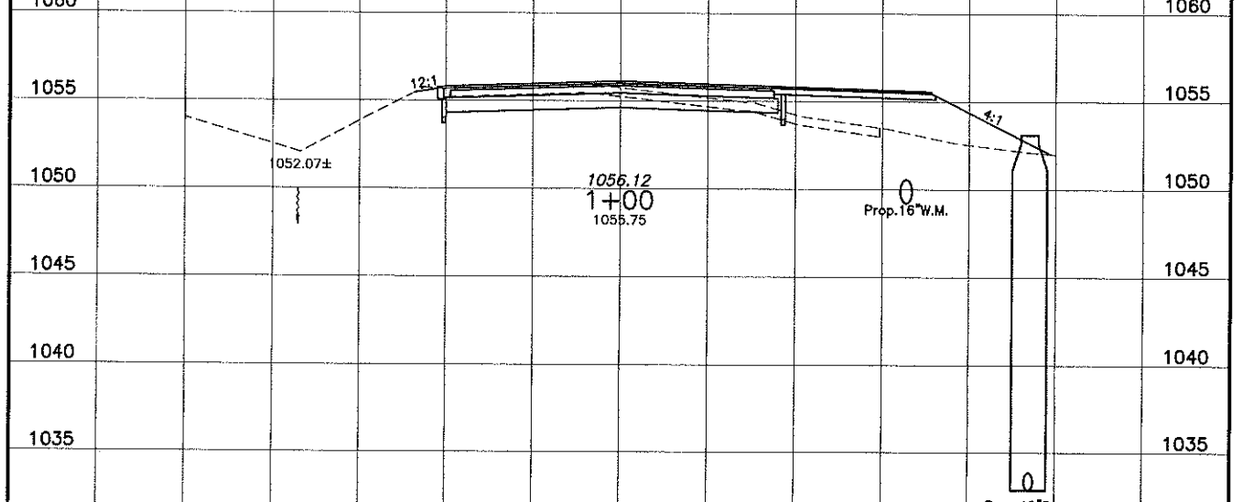
1065
1060
1055
1050
1045
1040
1035
12:1
4:1
1052.07±
1056.12
1+00
1055.75
Prop.16"W.M.

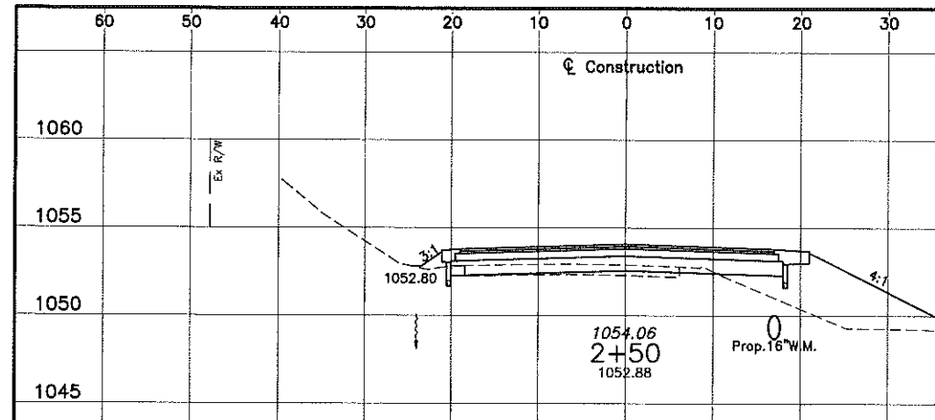
60 50 40 30 20 10 0 10 20 30
℄ Construction
1060
1055
1050
1045
1040
1035
Ex. R/W
3:1
4:1
1052.80
1054.06
2+50
1052.88
Prop.16"W.M.

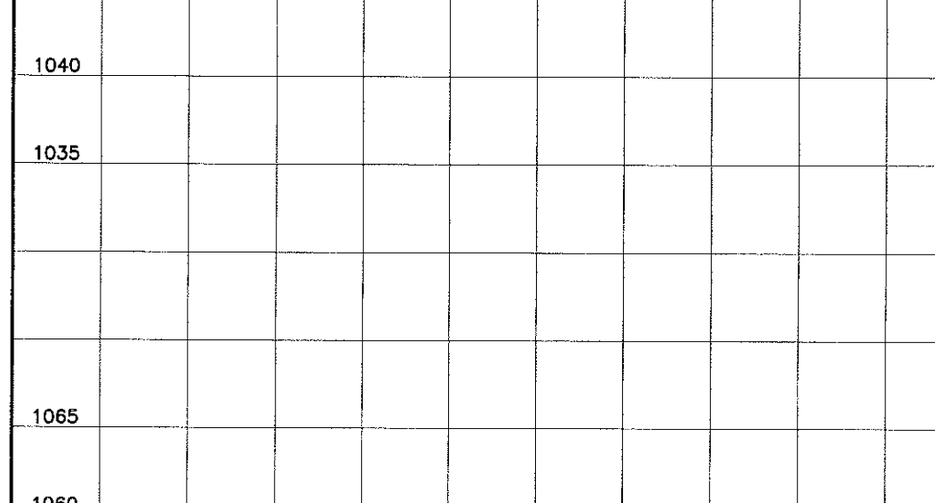
1065
1060
1055
1050
1045
1040
1035

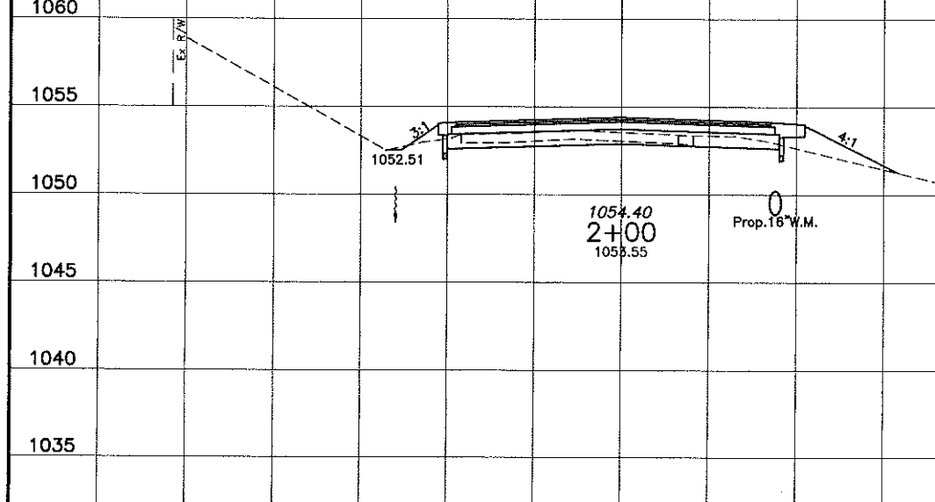
1065
1060
1055
1050
1045
1040
1035
Ex. R/W
3:1
4:1
1052.51
1054.40
2+00
1053.55
Prop.16"W.M.

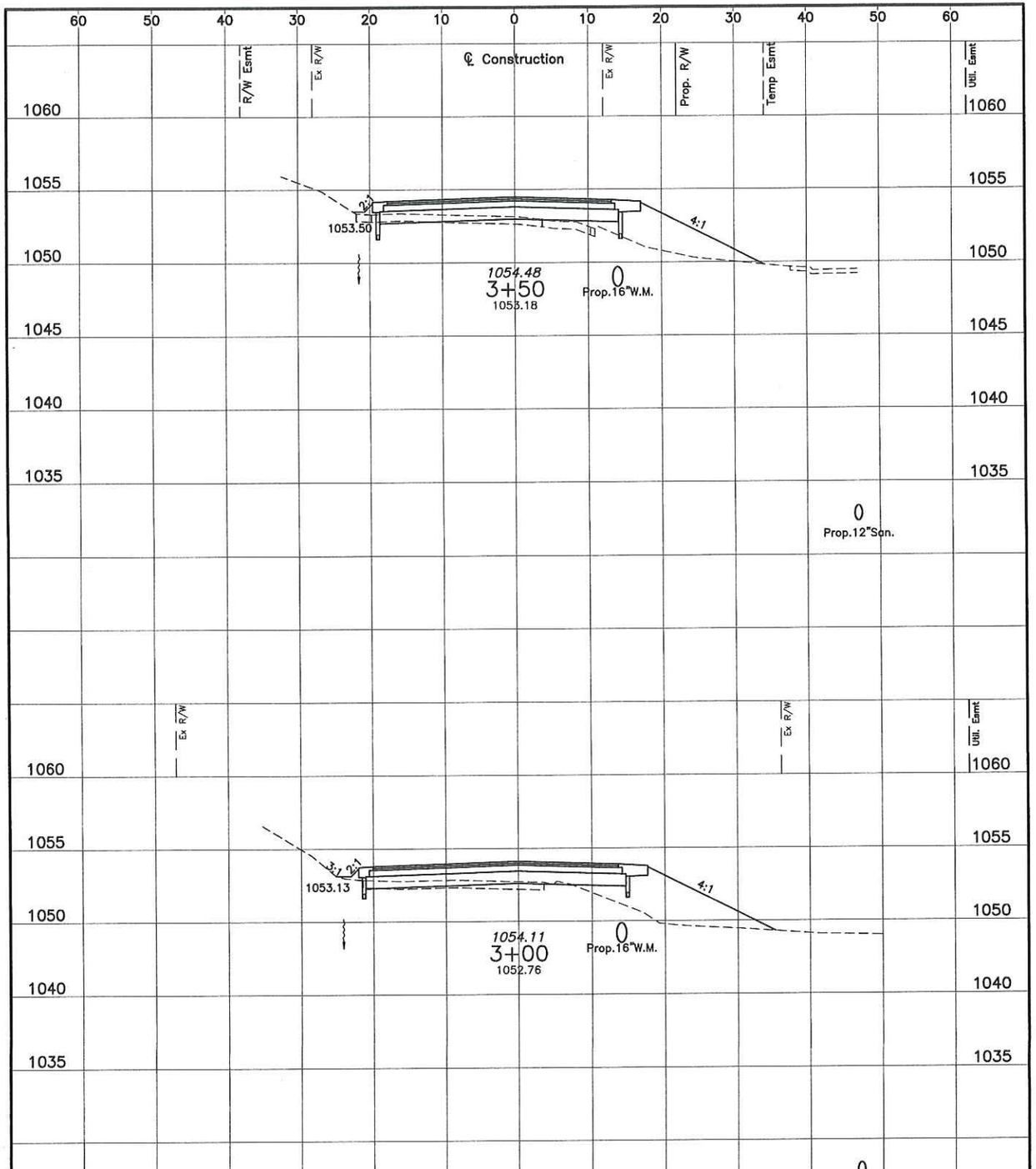
60 50 40 30 20 10 0 10 20 30 40 50 60
℄ Construction
R/W Esmt
Ex R/W
Ex R/W
Prop. R/W
Temp Esmt
Util. Esmt
1060
1055
1050
1045
1040
1035
2:1
1053.50
4:1
1054.48
3+50
1053.18
Prop.16"W.M.
Prop.12"San.
Ex R/W
Ex R/W
Util. Esmt
3:1
2:1
1053.13
4:1
1054.11
3+00
1052.76
Prop.16"W.M.

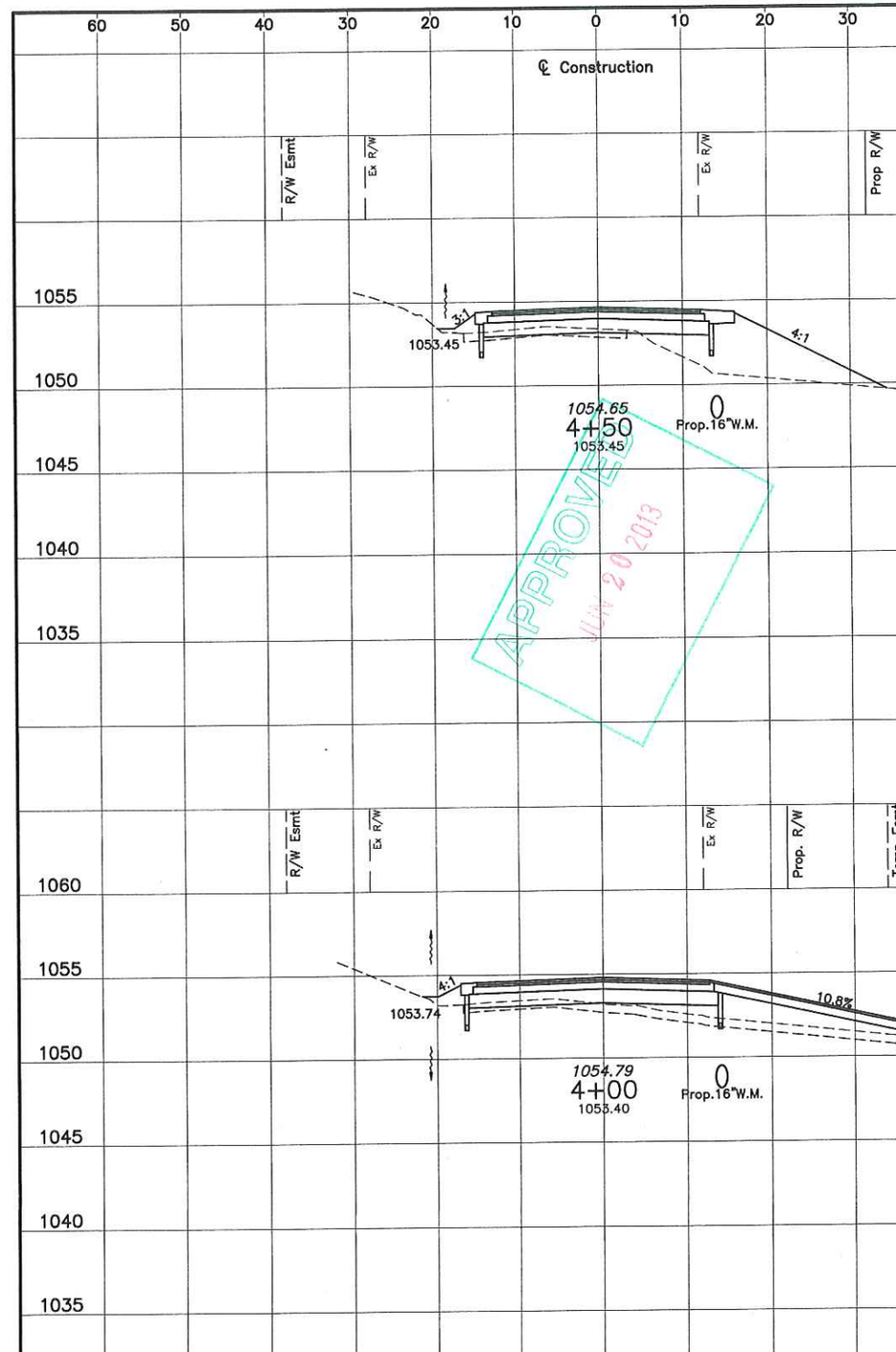
60 50 40 30 20 10 0 10 20 30
℄ Construction
R/W Esmt
Ex R/W
Ex R/W
Prop R/W
1055
1050
1045
1040
1035
3:1
1053.45
4:1
1054.65
4+50
1053.45
Prop.16"W.M.
APPROVED
JUN 20 2013
R/W Esmt
Ex R/W
Ex R/W
Prop. R/W
1060
1055
1050
1045
1040
1035
4:1
1053.74
10.8%
1054.79
4+00
1053.40
Prop.16"W.M.

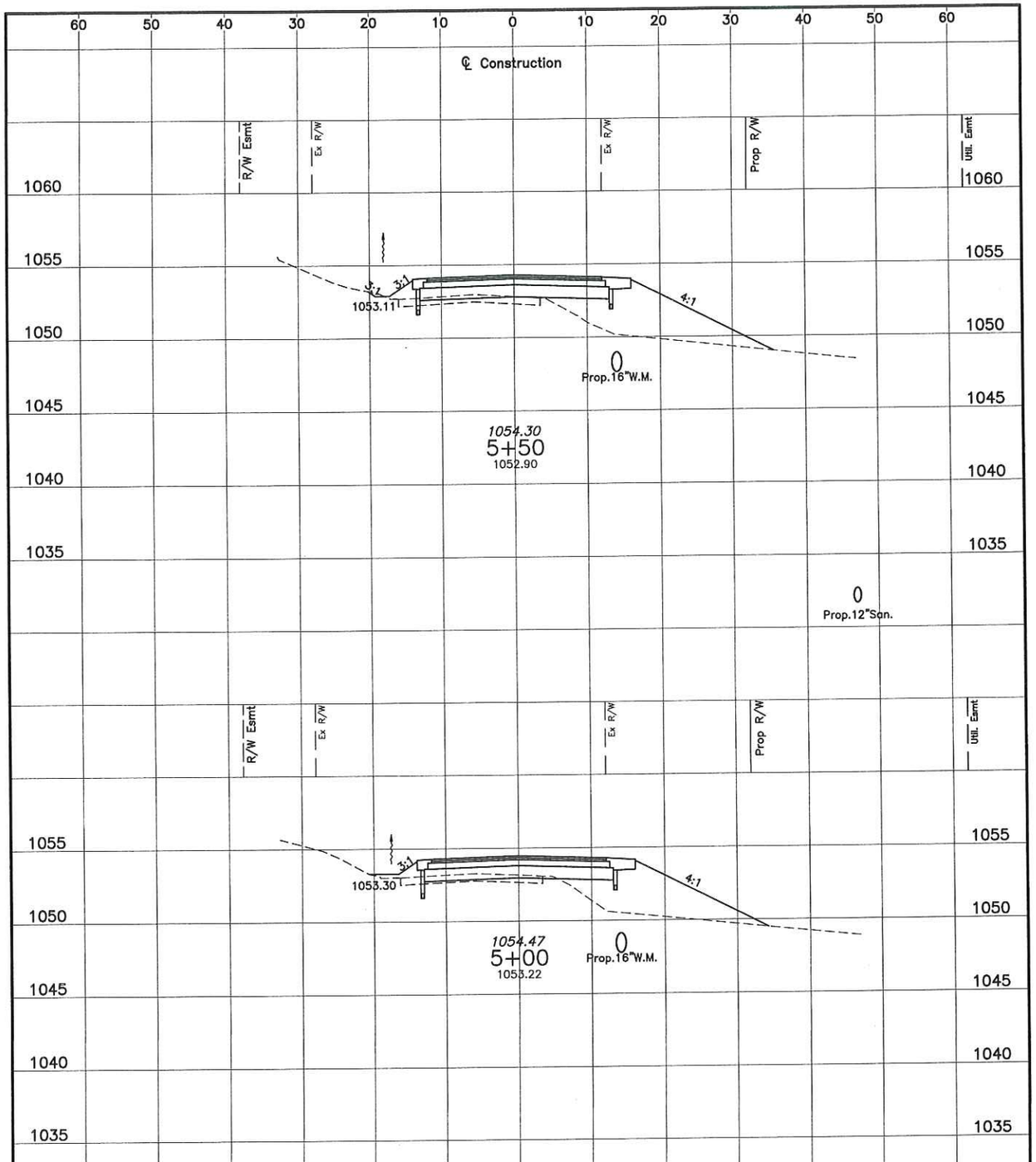
60 50 40 30 20 10 0 10 20 30 40 50 60
℄ Construction
R/W Esmt
Ex R/W
Ex R/W
Prop R/W
Util. Esmt
1060
1055
1050
1045
1040
1035
3:1
3:1
1053.11
4:1
0
Prop.16"W.M.
1054.30
5+50
1052.90
0
Prop.12"San.
R/W Esmt
Ex R/W
Ex R/W
Prop R/W
Util. Esmt
3:1
1053.30
4:1
1054.47
5+00
1053.22
0
Prop.16"W.M.

60 50 40 30 20 10 0 10 20 30
℄ Construction
1055
1050
1045
1040
1060
R/W Esmt
Ex R/W
Ex R/W
Prop R/W
4:1
1052.73
4:1
1054.13
6+00
1052.69
0
Prop.16"W.M.

APPROVED

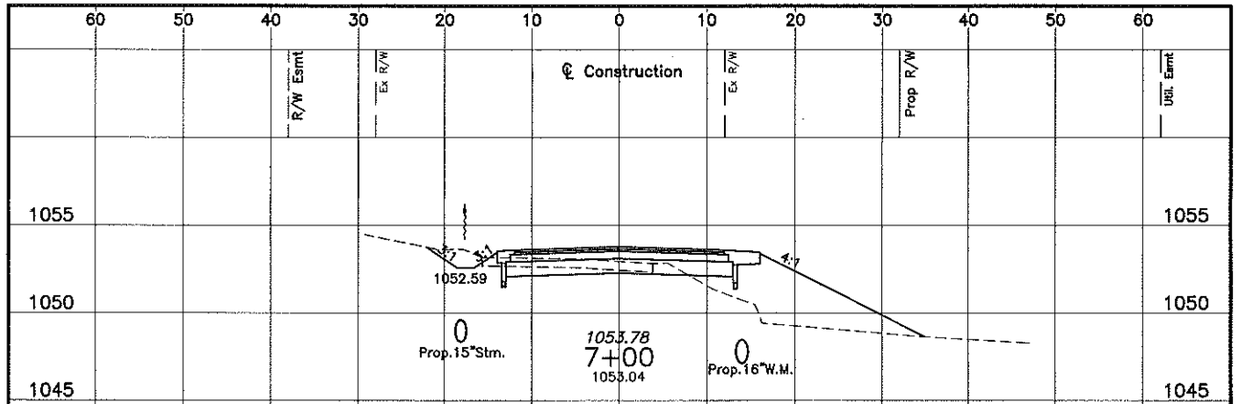
60 50 40 30 20 10 0 10 20 30 40 50 60
R/W Esmt
Ex R/W
℄ Construction
Ex R/W
Prop R/W
Util. Esmt
1055
1050
1045
1040
1035
3:1
3:1
4:1
1052.59
0
Prop.15"Stm.
1053.78
7+00
1053.04
0
Prop.16"W.M.
0
Prop.12"San.

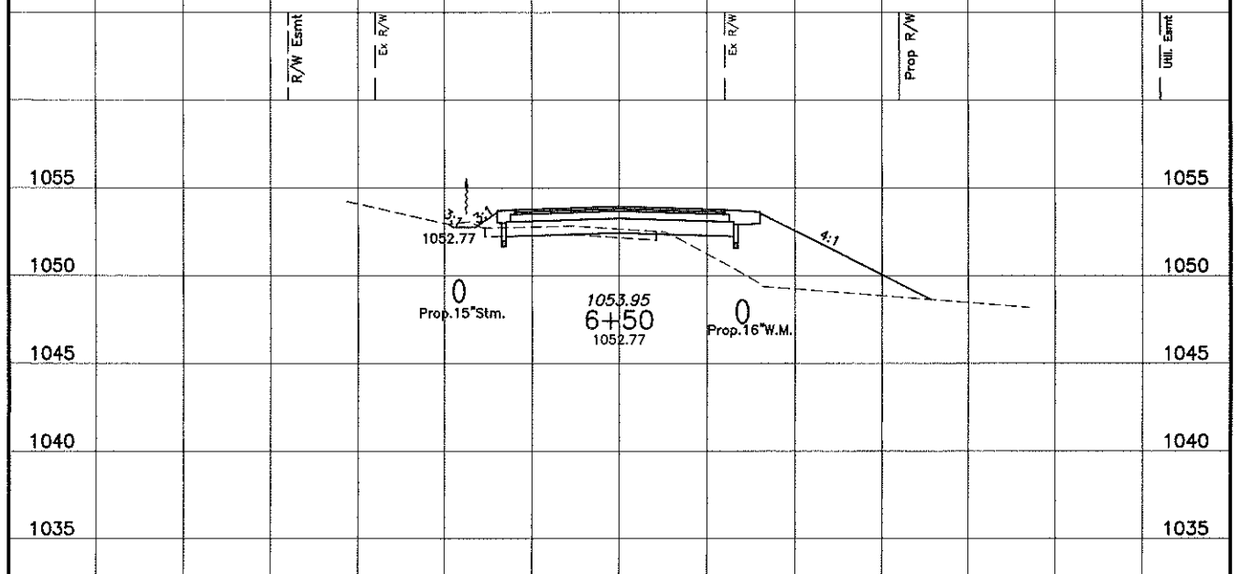
R/W Esmt
Ex R/W
Ex R/W
Prop R/W
Util. Esmt
1055
1050
1045
1040
1035
3:1
3:1
4:1
1052.77
0
Prop.15"Stm.
1053.95
6+50
1052.77
0
Prop.16"W.M.

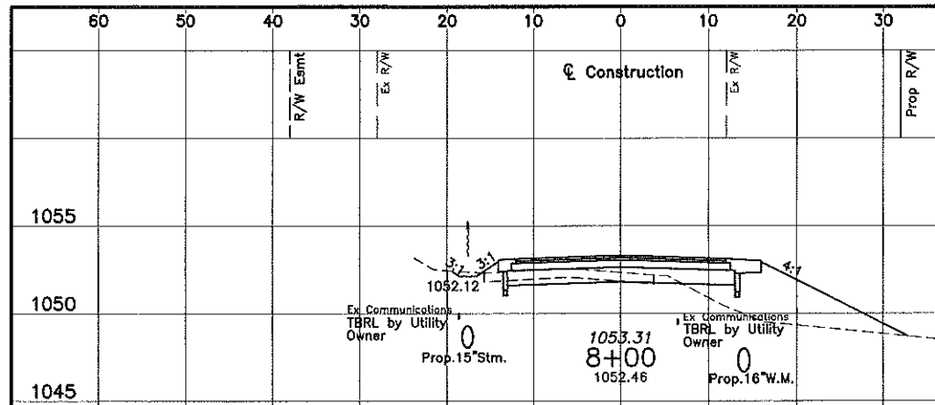
60 50 40 30 20 10 0 10 20 30
R/W Esmt
Ex R/W
℄ Construction
Ex R/W
Prop R/W
1055
1050
1045
1040
1035
3:1
3:1
4:1
1052.12
Ex Communications
TBRL by Utility
Owner
0
Prop.15"Stm.
1053.31
8+00
1052.46
Ex Communications
TBRL by Utility
Owner
0
Prop.16"W.M.

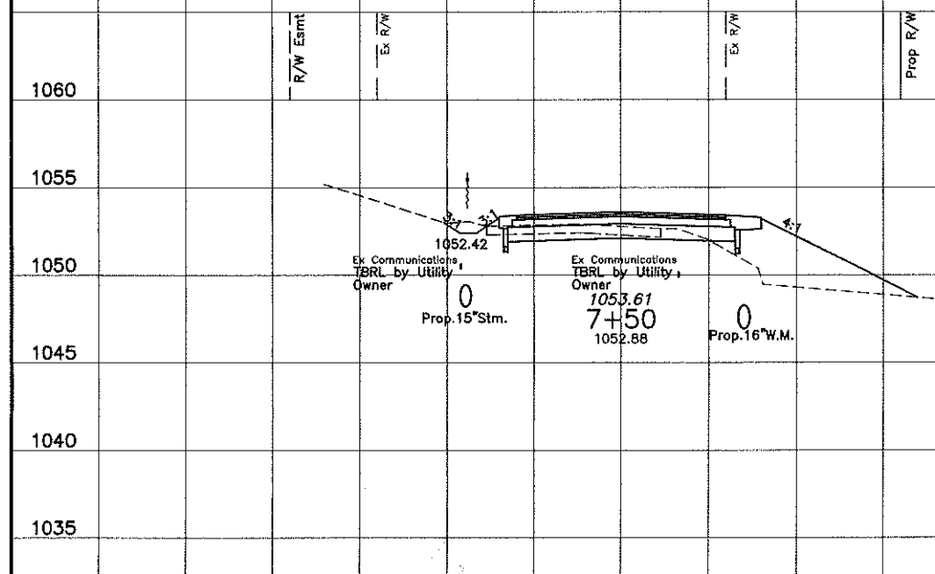
R/W Esmt
Ex R/W
Ex R/W
Prop R/W
1060
1055
1050
1045
1040
1035
3:1
3:1
4:1
1052.42
Ex Communications
TBRL by Utility
Owner
0
Prop.15"Stm.
Ex Communications
TBRL by Utility
Owner
1053.61
7+50
1052.88
0
Prop.16"W.M.

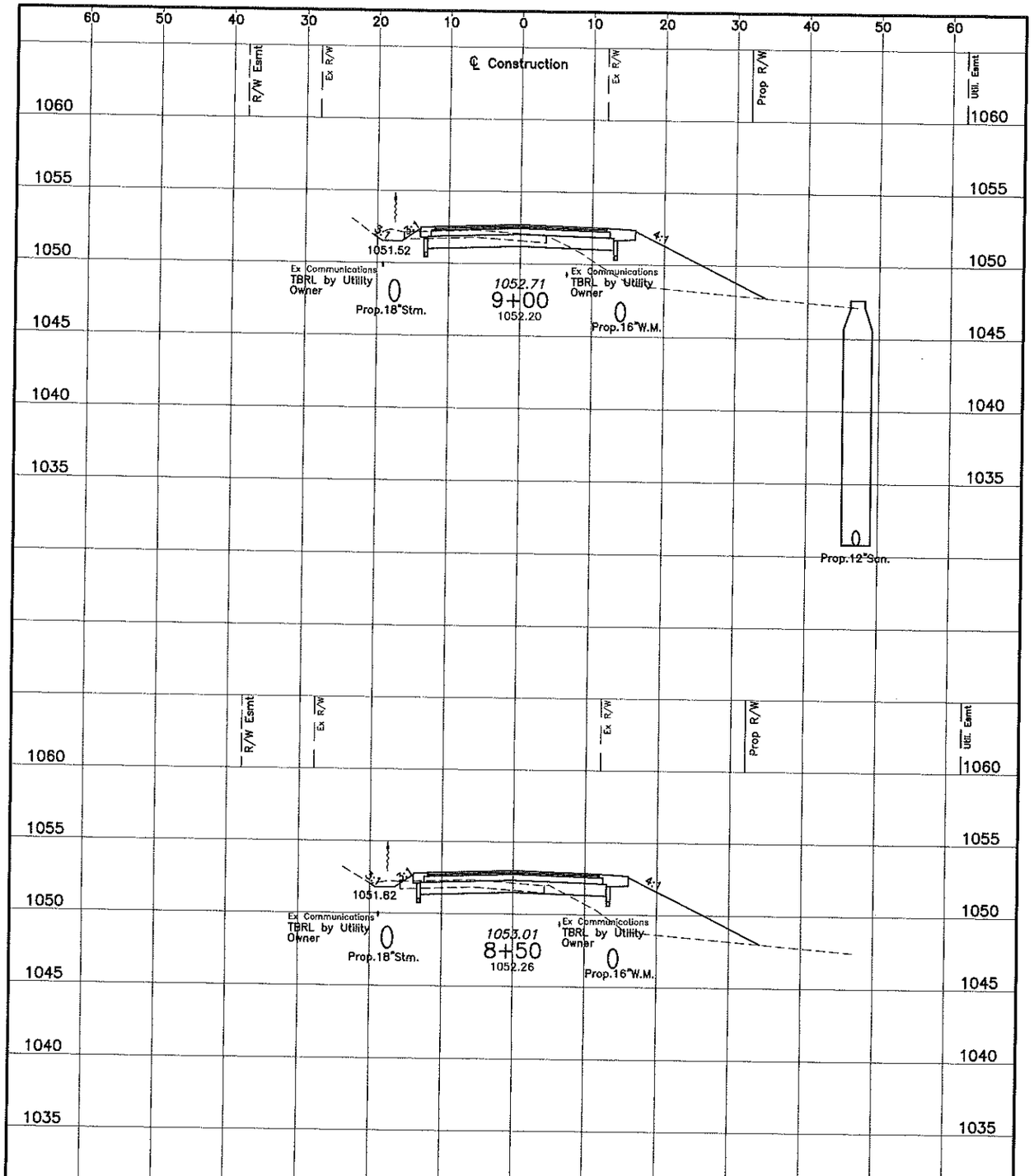

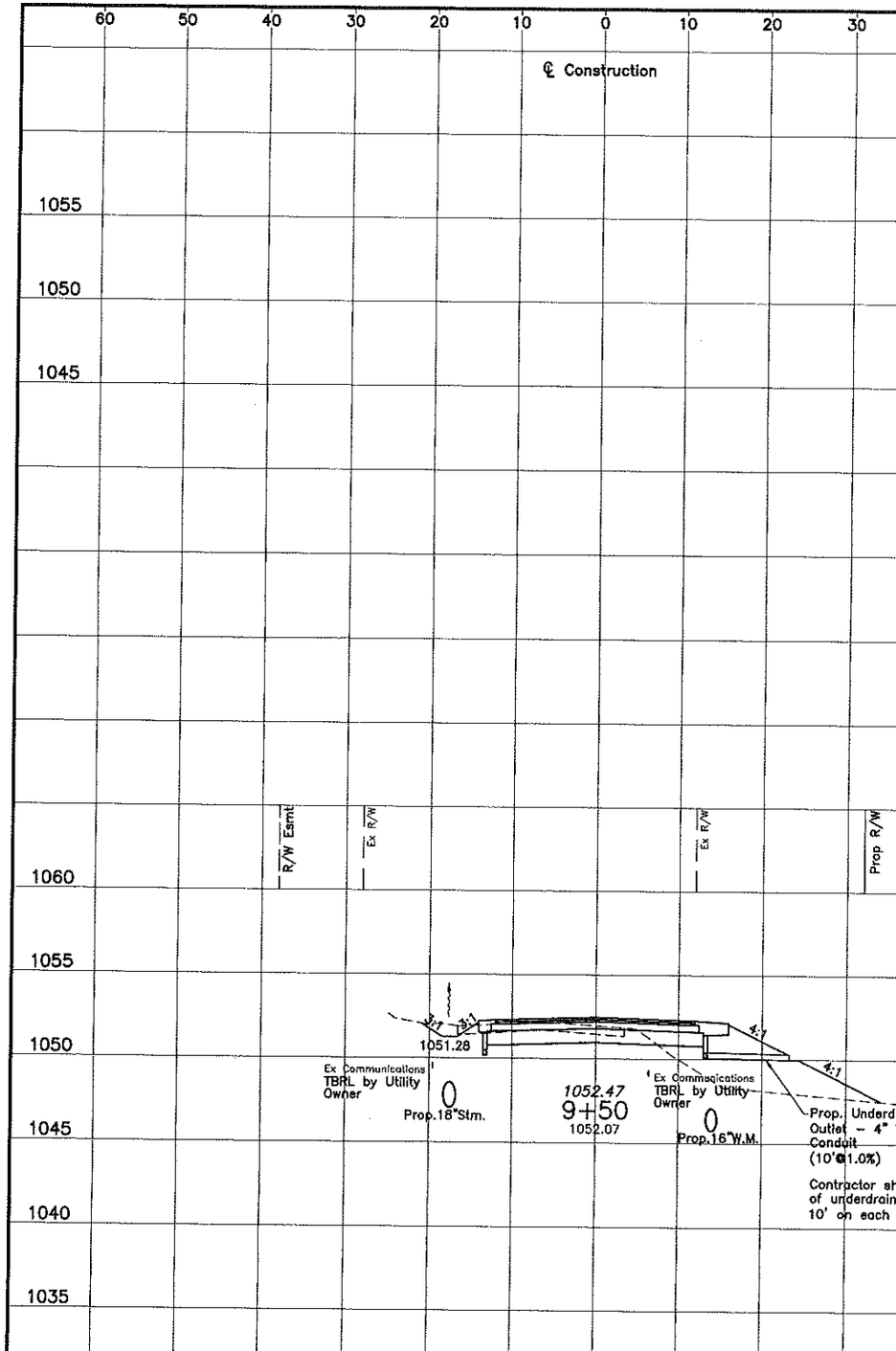

24/2013 9:31:35 AM, Plotted: (4/24/2013 10:50:20 PM)

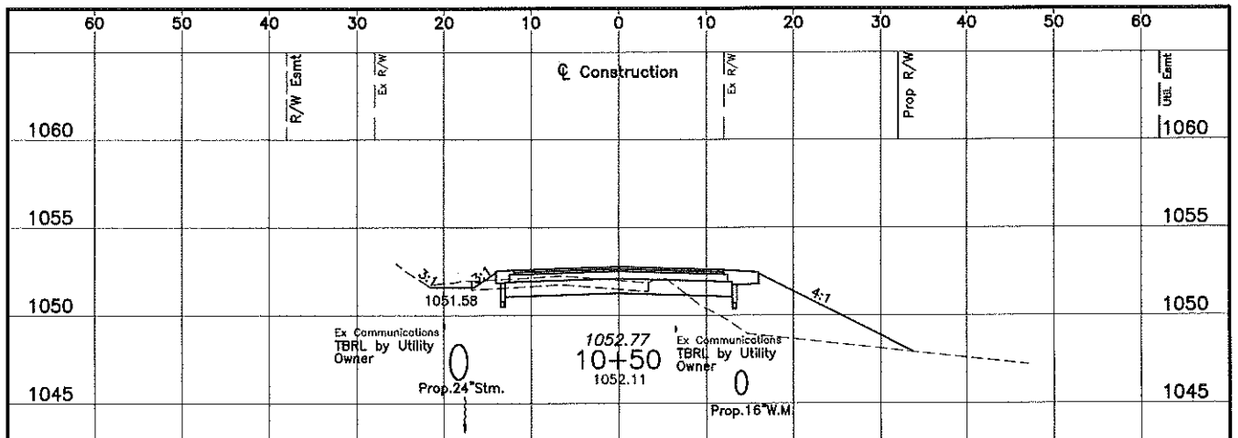
60 50 40 30 20 10 0 10 20 30 40 50 60
1060
1055
1050
1045
1040
1035
R/W Esmt
Ex R/W
℄ Construction
Ex R/W
Prop R/W
Util. Esmt
3:1
3:1
4:1
1051.58
Ex Communications
TBRL by Utility
Owner
Prop.24"Stm.
1052.77
10+50
1052.11
Ex Communications
TBRL by Utility
Owner
Prop.16"W.M.
Prop.12"San.

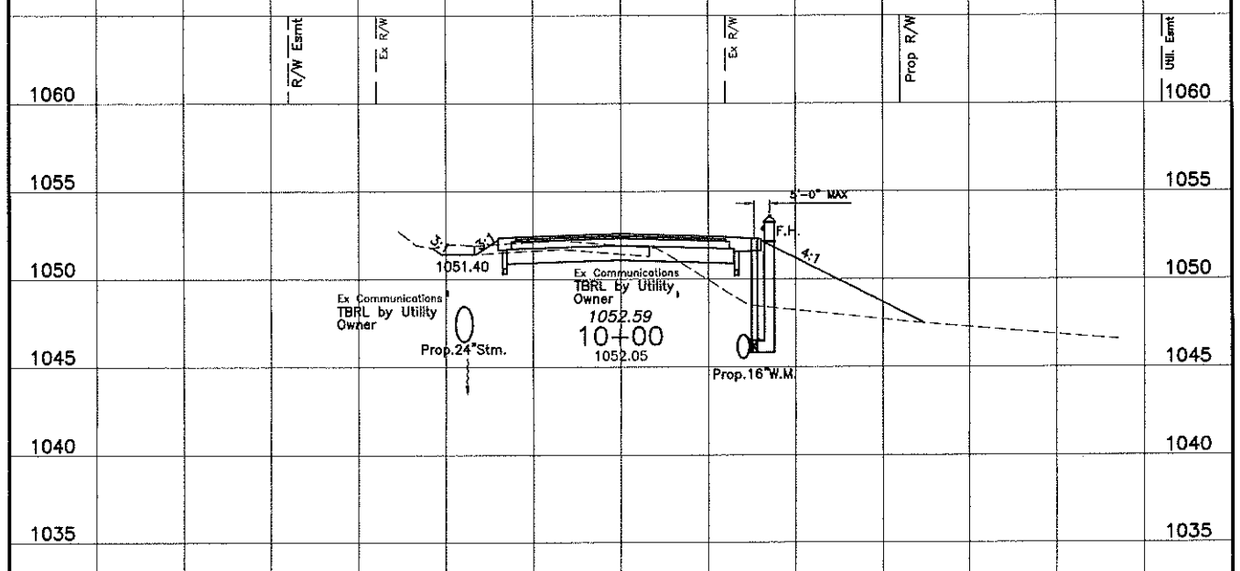
1060
1055
1050
1045
1040
1035
R/W Esmt
Ex R/W
Ex R/W
Prop R/W
Util. Esmt
5'-0" MAX
F.H.
3:1
3:1
4:1
1051.40
Ex Communications
TBRL by Utility
Owner
Prop.24"Stm.
1052.59
10+00
1052.05
Ex Communications
TBRL by Utility
Owner
Prop.16"W.M.

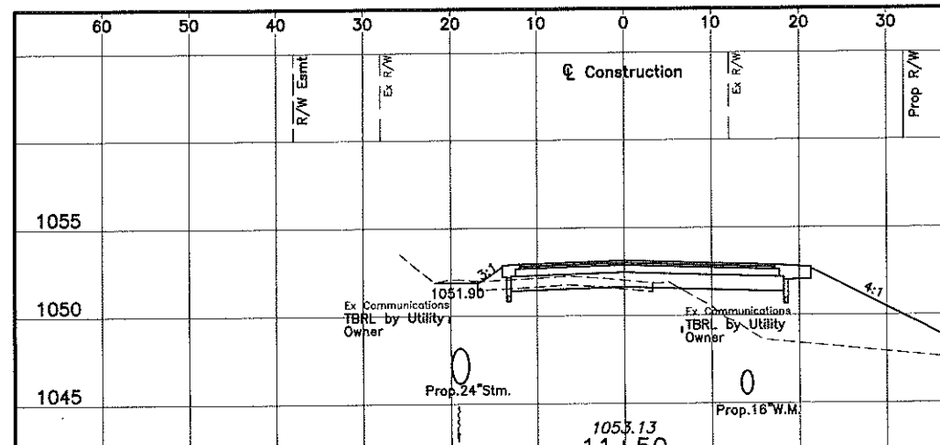
60 50 40 30 20 10 0 10 20 30
1055
1050
1045
1040
1035
R/W Esmt
Ex R/W
℄ Construction
Ex R/W
Prop R/W
3:1
3:1
4:1
1051.96
Ex Communications
TBRL by Utility
Owner
Prop.24"Stm.
Ex Communications
TBRL by Utility
Owner
Prop.16"W.M.
1053.13
11+50
1052.15

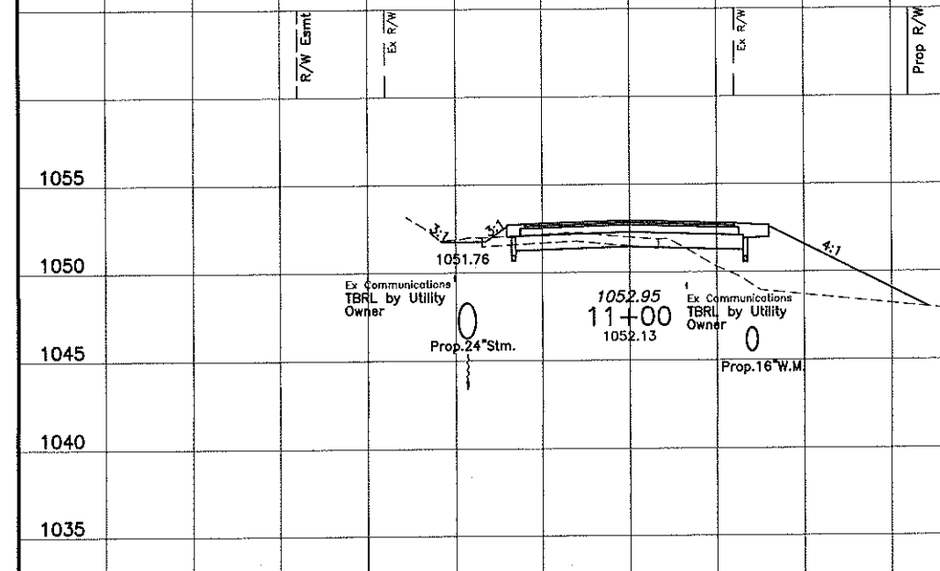
1055
1050
1045
1040
1035
R/W Esmt
Ex R/W
Ex R/W
Prop R/W
3:1
3:1
4:1
1051.76
Ex Communications
TBRL by Utility
Owner
Prop.24"Stm.
1052.95
11+00
1052.13
Ex Communications
TBRL by Utility
Owner
Prop.16"W.M.

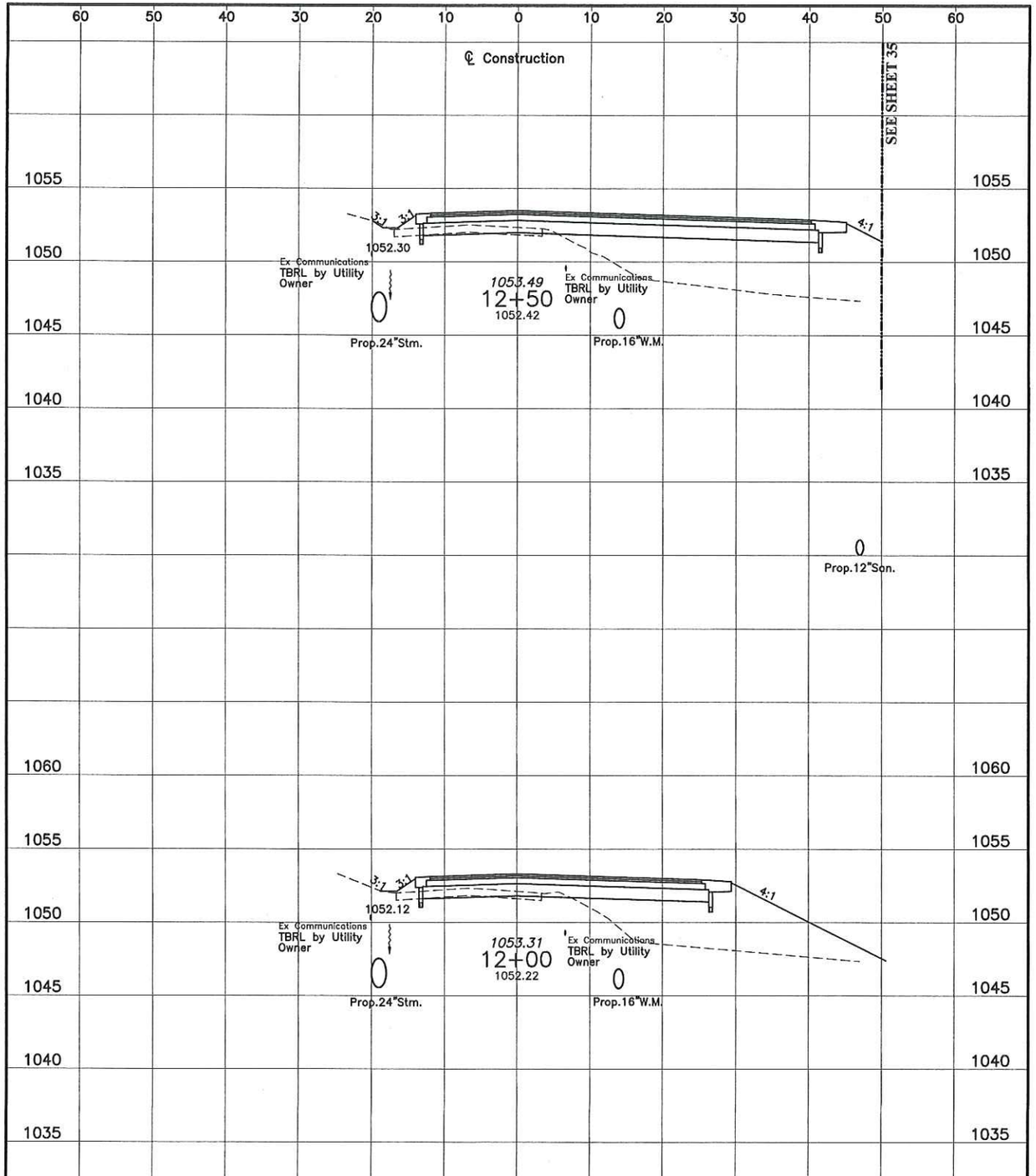

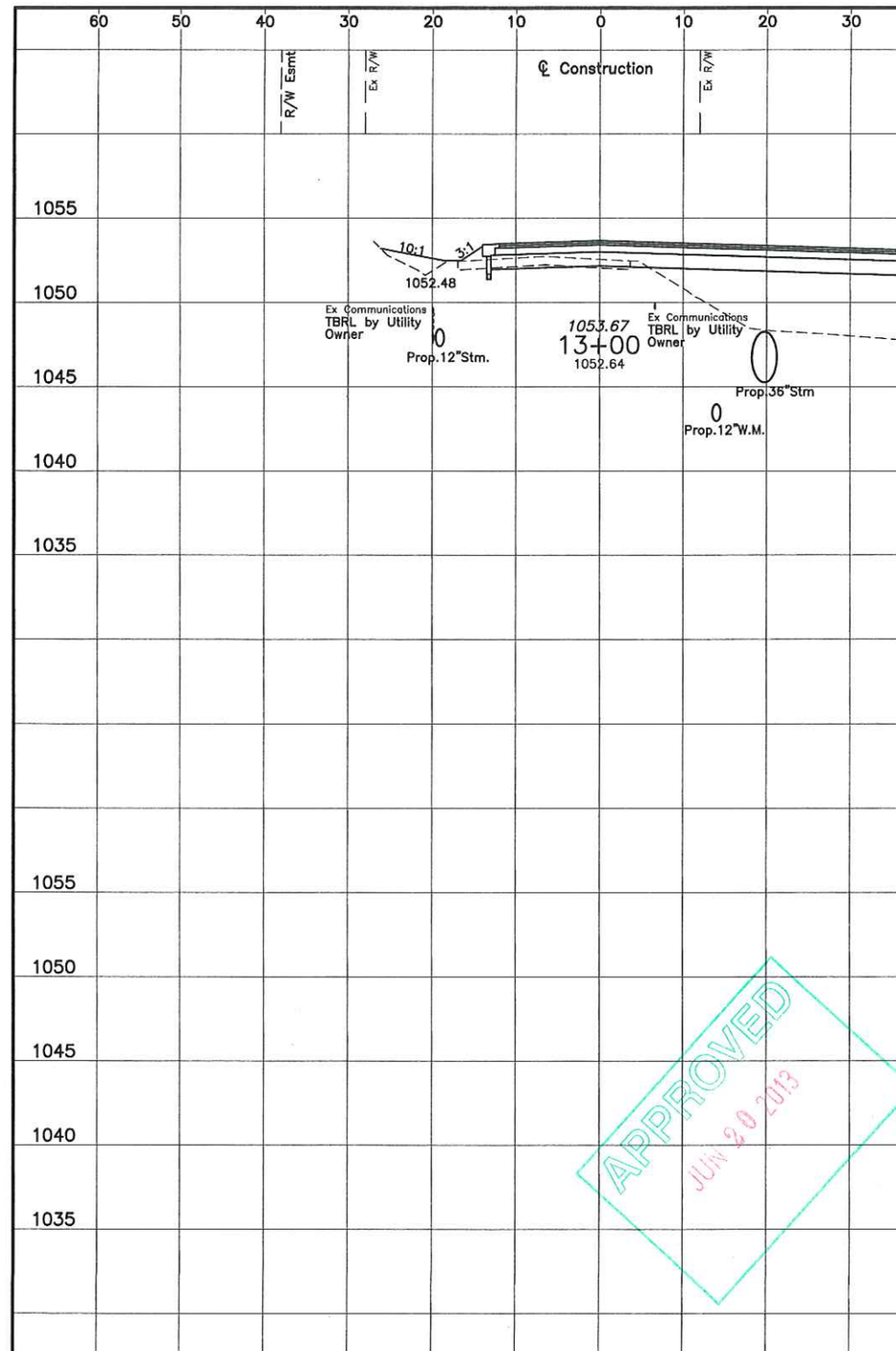

APPROVED
JUN 20 2013

[2013 9:31:35 AM], Plotted: [4/24/2013 1:08:40 PM]

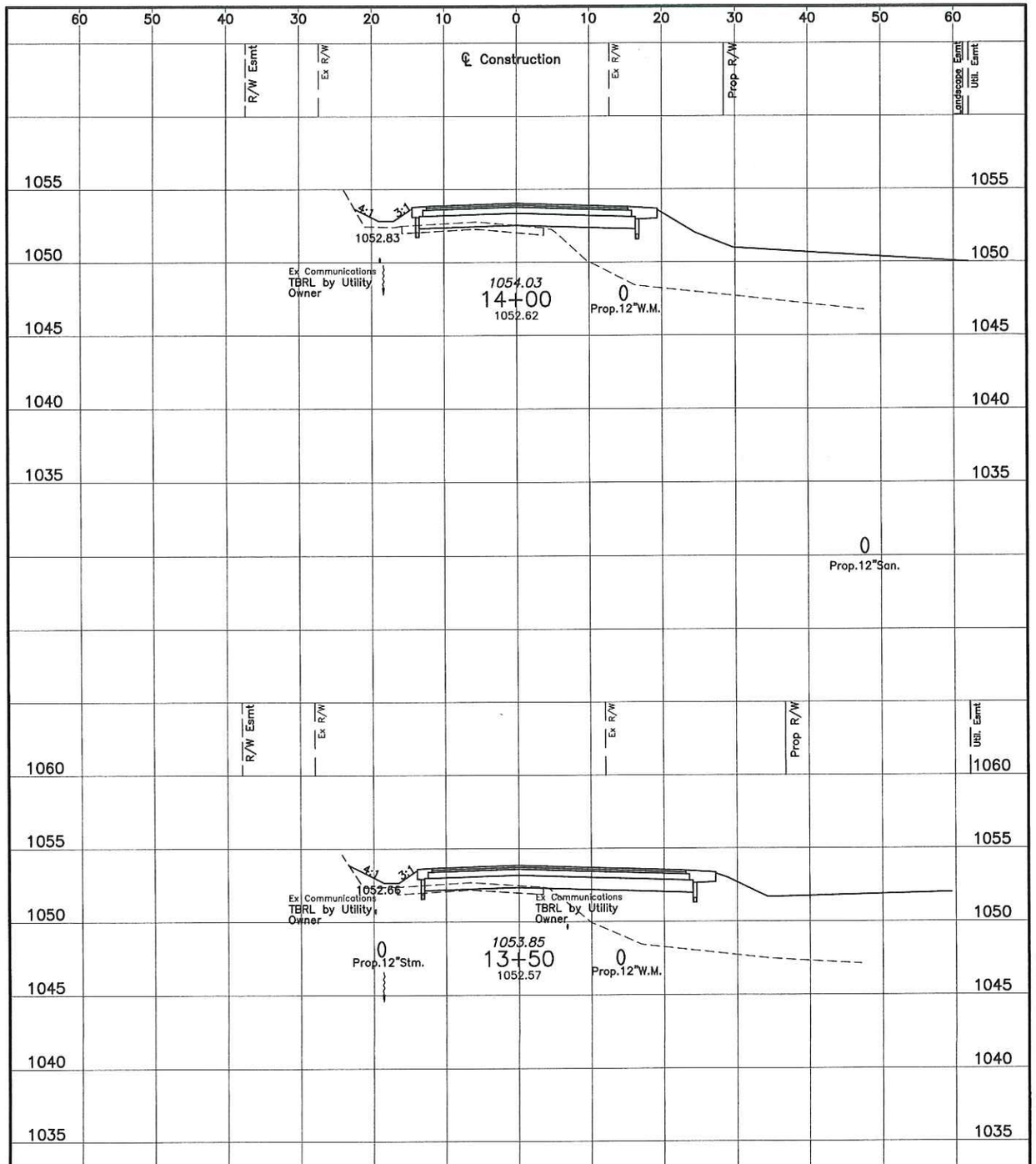

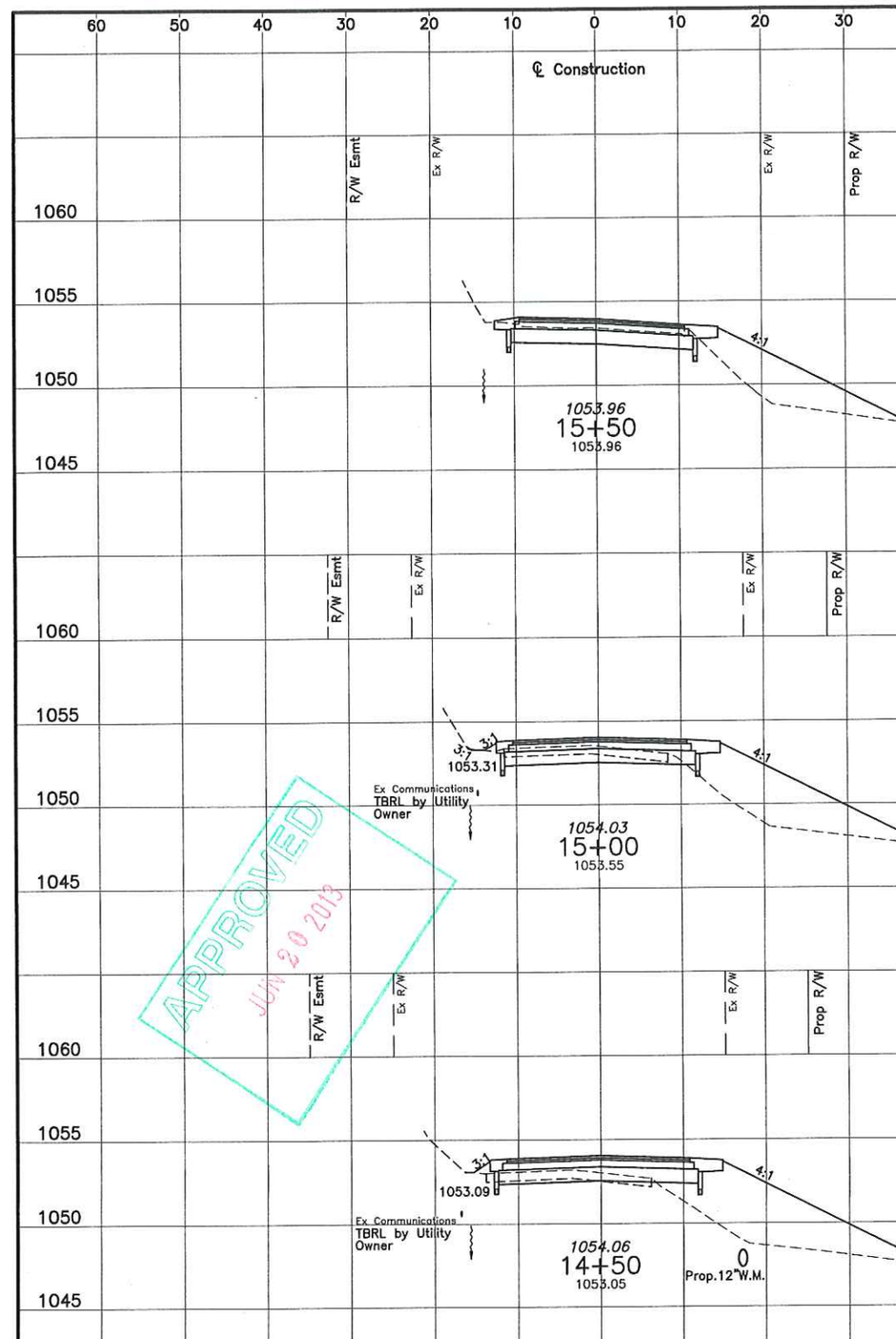

APPROVED
JUN 20 2013

MATCH LINE STA. 6+50.00, SEE BELOW

HIGH WATER
STA. 5+39 (TBRM)

Prop. Construction Access Drive (Private)

Ex.Commercial Drive

EXIT ONLY
STA. 3+31, 15' Rt. (TBRL)

Relocated Sign
Existing Sign

R7-201
TOWNSHIP ZONE
STA. 1+72 (TRM)

STOP
STA. 1+71 (TRM)

Ex.Commercial Drive

Prop. Berm
Prop. E/P

Meet Ex. Markings

RIDGE ROAD
(TWP.230)

Prop. Berm (Typ.)

Prop. R/W Easement

C/L Construction

ONLY
Sta. 2+61, 25' Lt.
Post Mt'd
R3-1BBH-30

RIDGE ROAD
STA. 0+67 (TRM)

Meet Ex. Markings

For Traffic Signal and Loop Detection Modific
Reference Sheet 62

SOUTH CHARLEST
(S.R. 41)

MATCH LINE STA. 14+50.00, SEE BELOW

PRIME PARKWAY
See Sheet 60

75'R

RIDGE ROAD
(TWP.230)

C/L Construction

Prop. R/W Easement

Sta. 12+76.43 C/L Construction Ridge Road =
Sta. 0+03.11 C/L Prime Parkway

APPROVED
JUN 20 2013

SCHOOL BUS STOP AHEAD
(TRM)

STA. 14+95, 15' Rt. (TBRL)

Relocated Sign
Existing Sign

RIDGE ROAD
(TWP.230)

C/L Construction

Prop. Berm (Typ.)

MATCH LINE STA. 14+50.00, SEE ABOVE

LEGEND

- Existing Sign
- Proposed Sign
- (DY) Existing Pavement Marking
- (DY) Proposed Pavement Marking
- (R) Remove Existing Marking

WE
YT
CH
SL
DL
DY

NOTES

1. Ur
cl
ar
pr
2. St
Ri

Plotted: [5/21/2013 5:25:30 PM]; Plotted: [5/21/2013 5:25:32 PM]

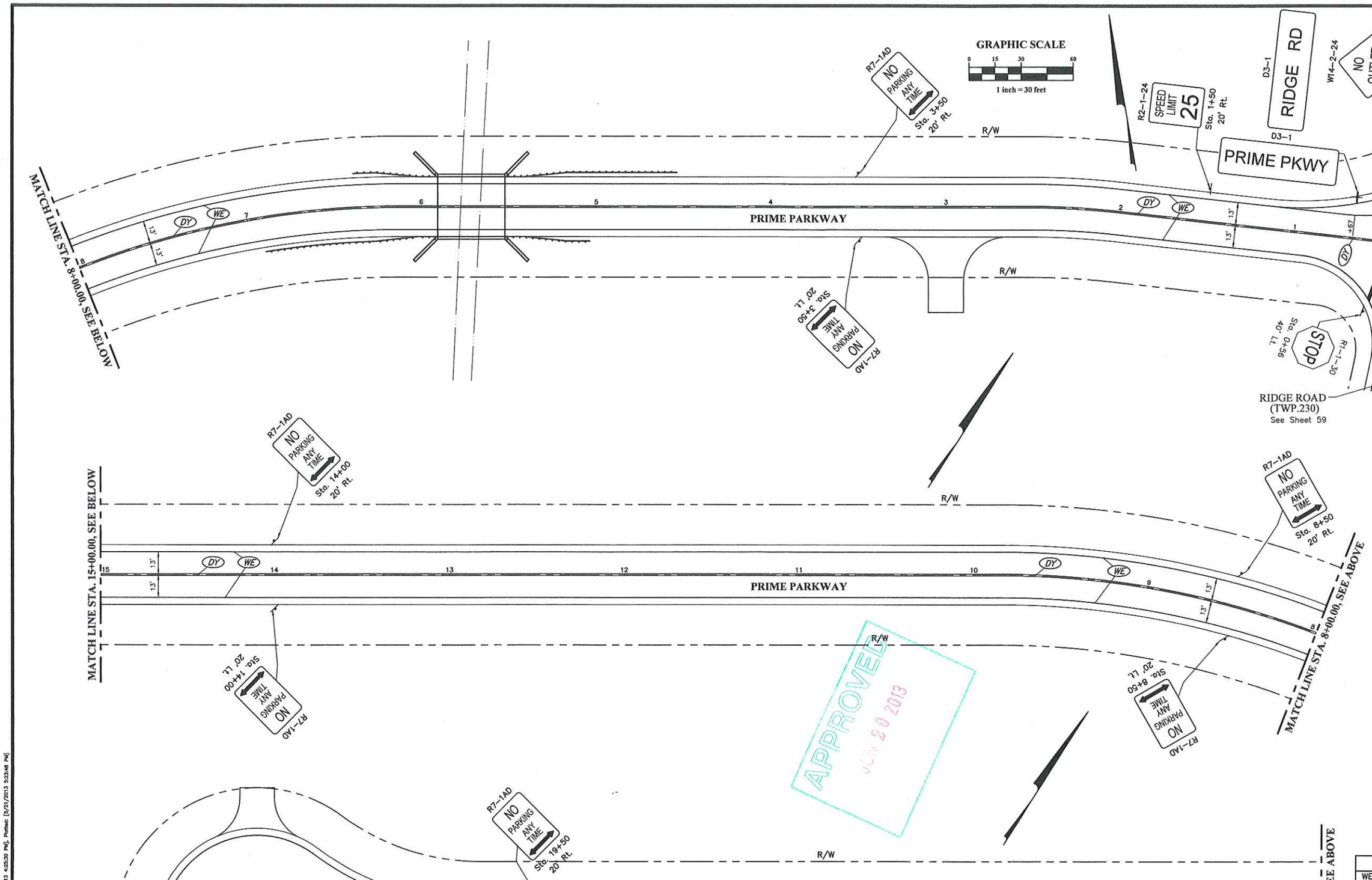

13 4:25:30 PM], Plotted: [5/21/2013 5:23:48 PM]

GENERAL

These specifications, together with the accompanying plans are intended to describe the type, size and location of the products and materials to be provided and installed under the various bid items related to traffic control. The Contractor shall furnish and install traffic control devices and related materials in compliance with these plans and specifications, as well as the 2010 Ohio Department of Transportation Construction and Material Specifications, the Ohio Manual of Uniform Traffic Control Devices and the Standard Construction Drawings issued by the Ohio Department of Transportation. These specifications set forth the minimum performance and operating requirements of the traffic control items referred to herein.

All incidental work items called for in these plans for which no specific method of payment is provided shall be performed by the Contractor and the total cost of said items shall be included in the price of its associated bid item.

MAINTENANCE OF TRAFFIC SIGNAL INSTALLATION

The Contractor shall be responsible for maintaining traffic signal/flasher installations within the
project under the following conditions:

1. *Existing signal/flasher installations which the plans require the Contractor to adjust, modify, add onto or remove, or which the Contractor actually adjusts, modifies or otherwise disturbs. The Contractor shall be responsible for the entire installation (at an intersection) from the time his operations first disturb the installation until the installation has been subsequently removed or modified and the work is accepted.*

2. *New or reused signal/flasher installations or devices, installed by the Contractor. The Contractor shall be responsible for maintenance of these from the time of installation until the work is accepted.*

The Contractor shall correct as quickly as possible all outages or malfunctions. He shall provide the maintaining agency and the Engineer such addresses and phone numbers where his maintenance forces can be contacted. The Contractor shall provide one or more persons to receive all calls and dispatch the necessary maintenance forces to correct outages. Such a person or persons may be used to perform other duties as long as prompt attention is given to these calls and a person is readily available continuously 24 hours a day, 7 days a week. All lamp outages, cable outages, electrical failures, equipment malfunctions and misaligned signal heads shall be corrected to the satisfaction of the Engineer with the signal back to service within four hours after the Contractor has been notified of the outage.

In the event new signals are damaged prior to acceptance, all damaged equipment except poles and control equipment shall be replaced by the Contractor to the satisfaction of the Engineer with the signal back in service within 8 hours after the Contractor's notification of the outage. The Contractor shall arrange for full traffic control until the signal is back in operation.

If poles and/or control equipment are damaged and must be replaced, the Contractor shall make temporary repairs as necessary to bring the signal back into full operation within the allowed 8- hour period, and shall make permanent repairs or replacement as soon thereafter as possible.

None of the above shall be construed as collective or consecutive outage time periods at any one location. That is, where more than one outage occurs at any one location then the allotted time limit shall be for the worst single outage.

Where outages are the direct result of a vehicle accident the response of the Contractor shall be as outlined above. The Contractor shall be responsible for collection of any compensation for this work from those parties responsible for the damage.

Where the Contractor has failed to, or cannot respond to, an outage or signal equipment malfunction, at these locations within his responsibility, within periods as specified above, the Engineer may invoke the provisions of Section 105.15 and any subsequent billings to the State or the City of Springfield for Police Services and maintenance services by ODOT or City forces shall be deducted from monies due or to become due the Contractor in accordance with provisions of Section 105.15.

The Contractor shall provide the maintenance service entirely with his forces or he may choose to enter into a cooperative understanding with the local maintaining agency to provide the maintenance. The Contractor shall inform the Engineer, in writing, of the maintenance method selected.

The Contractor shall be responsible for any damage to any traffic signal components required to be handled during the relocation of poles and revisions to the signal system.

When a traffic signal must be taken out of service by the Contractor, due to construction procedures, this outage shall not exceed 4 hours and shall not include the hours of 7:00 AM to 9:00 AM or 4:00 PM to 6:00PM. Where the signal is out of service due to construction procedures, or due to an outage or malfunction of equipment as described above, it is shall be protected by off-duty City of Springfield Police or the State Highway Patrol, hired by the Contractor.

1. All metallic parts containing electrical conductors shall be permanently joined to form an Effective Ground Fault Current Path back to the grounded conductor in the power service disconnect switch.

I. Provide an equipment grounding conductor in metallic conduits (725.04) in addition to the conductors specified and bond the conduit to this grounding conductor.

II. When an equipment grounding conductor is required in plastic conduit (725.05), the installation shall include a separate equipment grounding conductor in addition to the conductors specified.

III. Metallic conduit carrying the loop wires from in the pavement to the pull box splice location will only be bonded at the pull box end, and will not contain an equipment grounding conductor.

IV. Metal pull box lids shall be bonded by attachment of the equipment grounding conductor to the frame diagonal as provided on HL-30.11.

V. If multiple conduit runs begin and end at the same points, only one equipment grounding conductor is required.

VI. If an equipment grounding conductor is needed in conduit between signalized intersections for underground interconnect cable, the grounding system for each signalized intersection will be separated about midway between the intersections.

VII. The messenger wire at signalized intersections will be used as the conductive path from corner to corner if conduit is not provided under the roadway. When conduit connects the corners of an intersection, an equipment grounding conductor shall be used in the conduit.

2. Conduits.

a. The 725.04 conduit shall have grounding bushings installed at all termination points. The bushing material shall be compatible with galvanized steel conduit and the grounding lug material shall be compatible for use with copper wire. Threaded or compression type bushings may be used.

b. The 725.05 conduit shall have the inside and outside diameters of the conduit deburred at all termination points.

c. Both ends of metallic conduit shall be bonded to the equipment grounding conductor.

d. Metallic conduit may be bonded to metallic boxes through the use of conduit fittings UL approved for this type of connection, with the box bonded to the equipment grounding conductor.

3. Wire for grounding and bonding.

a. Use insulated, copper wire for the equipment grounding conductor. Bonding jumpers in boxes and enclosures may be bare or insulated copper wire. Wire size shall be as follows:

i. Use 4 AWG between the power service and supports, poles, pedestals, controller or flasher cabinets.

ii. Use a minimum 8 AWG between loop detector pull boxes and the first conduit that requires a larger size as specified in 3.a.i above.

iii. Use a minimum 8 AWG between the "Prepare to Stop When Flashing" installation (including support) and the first conduit that requires a larger size as specified in 3.a.i above.

iv. The insulation shall be green or green with yellow stripe(s). For 4 AWG or larger, insulation may also be black with green tape/labels installed at all access points.

4. Ground rod.

a. A 3/4 inch Schedule 40 PVC conduit will be used in foundations and concrete walls for the grounding conductor (ground wire) raceway to the ground rod. Should metallic conduit be used, both ends of the conduit shall be bonded to the grounding conductor.

b. The typical grounding conductor (ground wire) shall be 4 AWG insulated, copper.

5. The green conductor in signal cables (conductor #4) shall not be used to supply power to a signal indication. It will be connected to the signal body as an equipment ground in aluminum heads and it will be unused in plastic heads. Unused conductors shall be grounded in the cabinet. Typical use of conductors is as follows:

Cond. No.	Color	Vehicle Signal	Pedestrian signal
1	Black	Green Ball	#1 Walk
2	White	AC Neutral	AC Neutral
3	Red	Red Ball	#1 DW/FDW
4	Green	Equipment Ground	Equipment Ground
5	Orange	Yellow Ball	#2 DW/FDW
6	Blue	Green Arrow	#2 Walk
7	White/black stripe	Yellow Arrow	Not used

6. Power Service and Disconnect Switch.

a. At the power service location, the grounding conductor (ground wire) from the disconnect switch neutral (AC-) bar to the ground rod shall be a continuous, unspliced conductor. If spliced, it shall be an exothermic weld butt spice.

b. The service neutral (AC-) shall only be connected to ground at the primary power service disconnect switch.

i. NEMA controller cabinets: If a power service disconnect switch is located before the controller cabinet, the neutral (AC-) and the grounding bars in the controller cabinet shall not be connected together as shown in NEMA TS-2, Figure 5-4.

ii. If secondary disconnect switches are connected after the primary disconnect switch, the neutral (AC-) shall only be grounded at the primary switch. Equipment grounding

ITEM 623 VEHICULAR SIGNAL HEAD, (LED), 5-SECTION, 12" LENS, 1-WAY (W/
PLAN

In addition to the requirements of CMS Item 632 and CMS 732, the
shall apply:

1. All upper signal support hardware and piping up to and including t
shall be ferrous metal for signal displays of two or more sections.
2. The entrance fitting shall be of the tri-stud design with serrated
achieve positive locking.

Payment shall be per Item 632.

ITEM 633 CONTROLLER ITEM, MISC.: CONTROLLER/CABINET MODIFICATIO

The existing traffic signal cabinet and controller located at the State
Road/Ridge Road intersection and the master controller for the existin
corridor shall be modified to accommodate the proposed addition of
left turn phase. Any wiring or controller equipment needed to render
operational shall be considered incidental to this item of work.

Prior to deactivation or removal of the any signal equipment, alternat
control shall be in place and approved by the Engineer. The intersecti
full signalized control between the hours of 7:00 AM to 9:00 AM and
Monday through Friday. Law enforcement officers shall be hired by the
traffic during any period of time that the traffic signal is not cycling.

The Contractor and the Engineer shall inspect the cabinet and controll
for the purpose of documenting any existing damage. Any damage i
Contractor's work and not documented will be presumed to have been
Contractor. The Contractor will be required to repair or replace the d
the option of the ODOT District 7 Traffic Engineer.

This item of work shall be measured as each complete controller and
updated. All labor, equipment and materials necessary to remove, st
the equipment shall be included in this item.

TRAFFIC SIGNAL MODIFICATION SUBSUMMARY OF QUAN

Item	Quantity	Unit	Description
630	1	LUMP	SIGNING, MISC.: TEMPORARY SIGNAL OPERATION CHANG
632	1	EACH	VEHICULAR SIGNAL HEAD, (LED), 5-SECTION, 12" LENS, 1-W
632	1	EACH	COVERING OF VEHICULAR SIGNAL HEAD
632	2	EACH	DETECTOR LOOP
632	1	EACH	REMOVAL OF MISCELLANEOUS TRAFFIC SIGNAL ITEM: VE
633	1	LUMP	CONTROLLER ITEM, MISC.: CONTROLLER/CABINET MODIF

QUANTITIES HAVE BEEN CARRIED TO THE GENERAL SUMMARY.

3 11:32:27 AM), Plotted: (8/16/2013 10:45:04 AM)

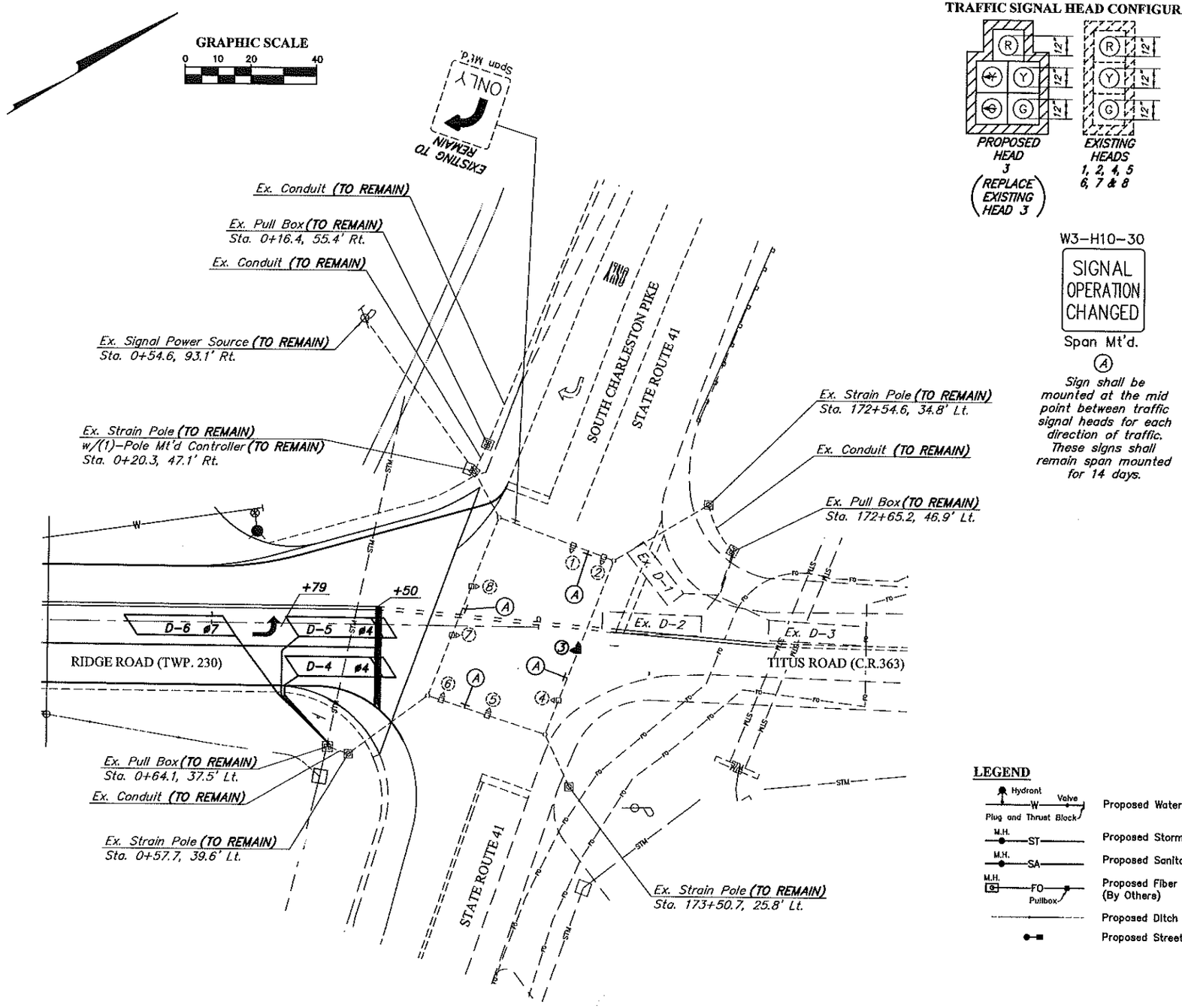

TRAFFIC SIGNAL HEAD CONFIGURATION

W3-H10-30

SIGNAL OPERATION CHANGED

Span Mt'd.

(A)

Sign shall be mounted at the mid point between traffic signal heads for each direction of traffic. These signs shall remain span mounted for 14 days.

TRAFFIC SIGNAL CONTROLL

SR 41 AND RIDGE ROAD / TITUS ROAD
MAINTAINING AGENCY: ODOT, DISTRICT 7, SIDNEY,

START IN: Y/R FLASH ● :ALL RED ○
TIME FOR FLASH OR ALL RED: 10 SEC.
FIRST PHASE: ø2+ø6
COLOR DISPLAYED: GREEN ● YELLOW ○

DUAL
REST
OVER
PHASE

INTERVAL OR FEATURE			CO	
			1	2
INTERSECTION MOVEMENT			–	NWB
MINIMUM GREEN (INITIAL)		(SEC.)	–	22
ADDED INITIAL (SEC./ACTUATION)			–	–
PASSAGE TIME (PRESET GAP)			–	3
MINIMUM GAP		(SEC.)	–	–
TIME TO REDUCE		(SEC.)	–	–
MAXIMUM GREEN I		(SEC.)	–	40
MAXIMUM GREEN II		(SEC.)	–	–
YELLOW CHANGE		(SEC.)	–	5.0
ALL RED CLEARANCE		(SEC.)	–	1.2
WALK		(SEC.)	–	–
PEDESTRIAN CLEARANCE		(SEC.)	–	–
RECALL	MAXIMUM	(ON/OFF)		OFF
	MINIMUM	(ON/OFF)		ON
	PEDESTRIAN	(ON/OFF)		OFF
MEMORY		(ON/OFF)	–	OFF
CALL TO NON-ACTUATED	NO. 1		–	YES
	NO. 2		–	–

Legend: NWB = Northwest Bound
NEB = Northeast Bound
NELT = Northeast Left Turn
SEB =
SWB =

WB Entrance / Laybourne

Plan (cycle-secs.)	Offset secs. (%) from ph.#	Split SB Ph. 6
Off Pk Plan (100)	9 (9%) from ph. 2/6	47.2(46)
AM plan (70)	15 (21%) from ph. 2/6	22.2(32)
Noon plan (80)	55 (69%) from ph. 2/6	27.6(35)
PM plan (80)	26 (33%) from ph. 2/6	30.9(39)
Alt-Off Peak (100)	6 (6%) from ph. 2/6	47.2(47)

I 70 Exit Ramp / EB Entranc

Plan (cycle-secs.)	Offset secs. (%) from ph.#	Split NB Ph. 2
Off Pk Plan (100)	0 (0%) from ph. 2/6	38.3(38)
AM plan (70)	0 (0%) from ph. 2/6	26(34)
Noon plan (80)	0 (0%) from ph. 2/6	35.8(45)
PM plan (80)	0 (0%) from ph. 2/6	36(45)
Alt-Off Peak (100)	96 (96%) from ph. 2/6	33(33)

SR 41 and Ridge / Titus &

Plan (cycle-secs.)	Offset secs. (%) from ph.#	Split NB

LEGEND

- Hydrant — W — Valve — Plug and Thrust Block: Proposed Watermain
- M.H. — ST: Proposed Storm Sewer
- M.H. — SA: Proposed Sanitary Sewer
- M.H. — FO — Pullbox: Proposed Fiber Optic (By Others)
- Proposed Ditch C/L
- Proposed Street Light

FIELD WIRING HOOK-UP CHART

SIGNAL HEAD #	INDICATION	FIELD TERMINAL	FLASH

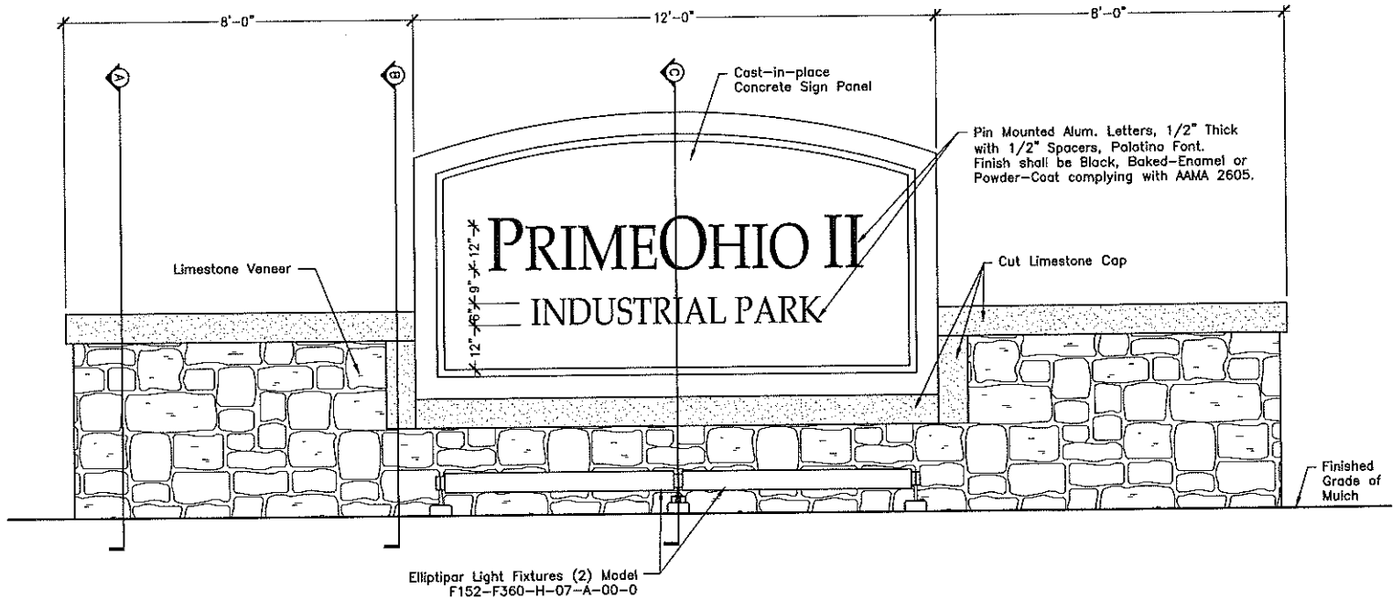

ELEVATION VIEW
1/2" = 1'-0"

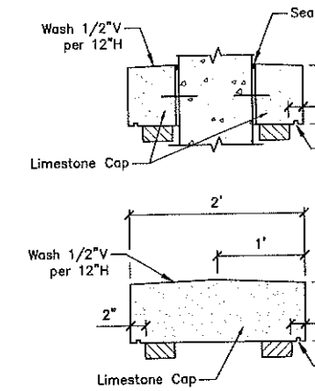

LIMESTONE WALL CA
1" = 1'-0"

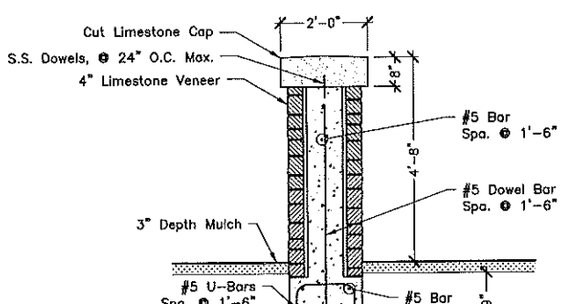

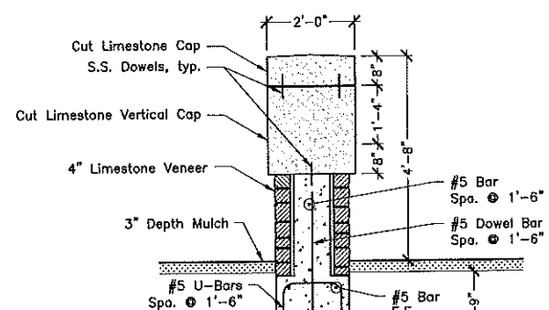

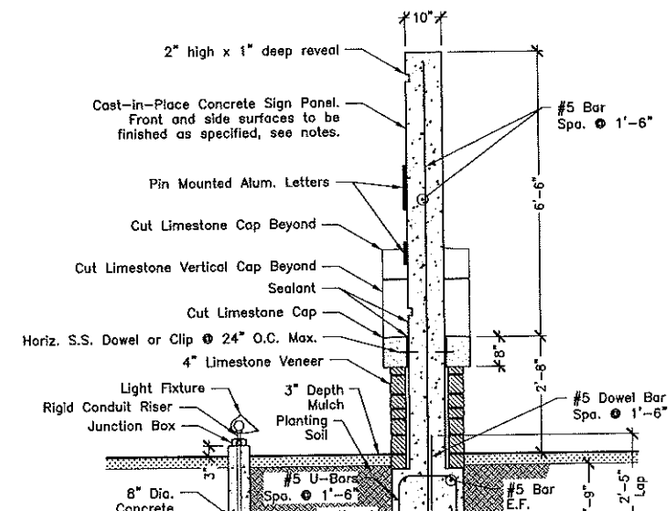

ENT

All labor, materials, an
Feature as detailed on
concrete, concrete mas
and incidentals shall be

Concrete shall conform
Specifications (CMS) Ite
concrete specimens sho
C-31 and ASTM C-39.
for each 50 cubic yard

Plain reinforcing steel
A615, A616, A617, Gra

Minimum reinforcement,

[5/24/2013 1:18:32 PM]

LANDSCAPE NOTES

1. Prior to installation, the landscape contractor shall inspect the general site conditions and verify the subgrade, elevations, utility locations and topsoil provided by the general contractor. The landscape contractor shall notify the general contractor of any unsatisfactory conditions and work shall not proceed until such conditions have been corrected and are acceptable to the landscape contractor.
2. All plants shall meet or exceed standards set in the American Standard for Nursery Stock, ANSI Z60.1, 2004. All plants shall equal or exceed the measurements and sizes specified in the schedule.
3. All planting operations shall adhere to American Nursery & Landscape Association standards unless noted otherwise.
4. Substitutions shall be permitted with notification and written approval from the Landscape Architect. Substituted material shall be equivalent or greater in size than the specified plant. Substituted plants shall have the same essential characteristics and growth habit of the specified plant.
5. Confirm location of all utilities and subsurface drain lines prior to plant installation.
6. A pre-installation conference shall be conducted prior to planting operations with Owner, Contractor, and Landscape Architect present.
7. Contractor may slightly field adjust plant locations as necessary to avoid utilities. Finished planting beds shall be graded to provide positive drainage.
8. Irrigation system, if applicable, shall be complete and operational prior to landscape planting.
9. Contractor shall repair all lawn areas disturbed during construction with seed and warrant a healthy, weed free lawn prior to project acceptance.
10. Seed all areas within contract limits that are not covered by paving, buildings or planting beds unless otherwise noted. Seeding shall not begin until area has received topsoil and finished grade.
11. Mulch planting beds with shredded hardwood mulch of uniform dark brown color. It shall be free of twigs, leaves, disease, pest or other material unsightly or injurious to plants. Average applied thickness shall be 3" depth. Mulch hedges in a continuous bed.
12. Planting beds shall be covered with pre-emergent herbicide applied at product specified rate unless otherwise noted.
13. All planting beds shall be covered with mesh weed barrier. Impervious plastic is not acceptable.
14. Bed edge shall be smooth, consistent, hand trenched 6" deep and "V" shaped unless otherwise noted. All excavated material shall be removed from the bed edge and planting bed.
15. All planting bed edges to be smooth flowing arcs or straight lines as shown on plan. Plant locations and layout of beds shall be located by Contractor and approved by Landscape Architect prior to planting.
16. Install all plants in accordance with planting details and specifications.
17. Parking lot and street trees shall have a clear canopy height of 6' min.
18. Tree shall be placed a minimum of 3' from sidewalks and curbs.
19. All planting beds to be tilled and backfilled with prepared planting mix to a minimum depth of 12 inches. All individually planted trees and shrubs to be backfilled with prepared planting mix. Prepared planting mix shall be mixed on site and consist of one part topsoil, one part soil amendment, one part soil from excavation. Topsoil: ASTM D5268, ph range of 5.5 to 7, min. 4 percent organic material, free of stones 1 inch and larger. Soil amendment: Source separated yard waste compost from an Ohio EPA rated class IV compost facility.
20. Raised beds, including mulch, shall be no higher than 6 inches above adjacent grade.
21. Lawn areas to be backfilled with topsoil to a minimum settled thickness of 6 inches.
22. All trees, shrubs, groundcover, and lawns to be fertilized with a commercial grade fertilizer consisting of fast and slow release nitrogen.
23. Composition and application rate of fertilizer shall be sufficient to amend soil according to recommendations of a qualified soil testing agency. Submit test results and amendment recommendations to Landscape Architect. Fertilizer shall be in a dry granular form for lawns and granular or tablet form for plants.
24. Contractor to determine plant list quantities from the plan. Graphic representation on plan supercedes in case of discrepancy with quantities on schedule.
25. Any item or areas damaged during construction shall be repaired or replaced to its original condition at the contractor expense.
26. Contractor shall thoroughly water all plants at time of installation and as needed until project acceptance by owner. Contractor shall guarantee all plants installed for one full year from date of acceptance by the Owner. All plants shall be alive and at a vigorous rate of growth at the end of the guarantee period.

ARCHITECTURAL CAST-IN-PLACE CONCRETE NOTES

1. Comply with ACI 301, "Specification for Structural Concrete," Sections 1 through 5 and Section 6, "Architectural Concrete" and ACI 303.1, "Specification for Cast-in-Place Architectural Concrete."
2. Form-Facing Panels for As-Cast Finishes shall be steel, glass-fiber-reinforced plastic, or other approved nonabsorptive panel materials that will provide continuous, true, and smooth architectural concrete surfaces. Furnish in largest practicable sizes to minimize number of joints.
3. Create reveals as indicated on drawings with nonstaining metal, rigid plastic, or dressed wood in longest practicable lengths.
4. Form Ties shall be Factory-fabricated, glass-fiber-reinforced plastic, internally disconnecting or removable ties designed to resist lateral pressure of fresh concrete on forms and to prevent spalling of concrete on removal. Form ties shall not be visible in the finished work.
5. Steel reinforcement shall be as indicated on the drawings.
6. Submit for approval the following: Concrete design mixtures including admixtures; Curing materials; Reinforcement Shop Drawings showing detailed fabrication, bending, and placement of reinforcement; and Formwork Shop Drawings showing detailed fabrication, assembly, and support of formwork.
7. Ready-Mixed Architectural Concrete shall be measured, batched, mixed, and delivered according to ASTM C 94/C 94M and furnish batch ticket information. Clean equipment used to mix and deliver cast-in-place architectural concrete to prevent contamination from other concrete. When air temperature is between 85 and 90 deg F (30 and 32 deg C), reduce mixing and delivery time from 1-1/2 hours to 75 minutes; when air temperature is above 90 deg F (32 deg C), reduce mixing and delivery time to 60 minutes.
8. In addition to ACI 303.1 limits on form-facing panel deflection, limit cast-in-place architectural concrete surface irregularities, designated by ACI 347 as abrupt or gradual, to Class A, 1/8 inch (3.2 mm). Fabricate forms to result in cast-in-place architectural concrete that complies with ACI 117, "Specifications for Tolerances for Concrete Construction and Materials." Do not chamfer exterior corners and edges of cast-in-place architectural concrete.
9. Clean forms and adjacent surfaces to receive concrete. Remove chips, wood, sawdust, dirt, and other debris just before placing concrete. Retighten forms

STONE MASONRY NOTES

1. Cut limestone caps shall be Indiana Oolitic Limestone Standard Grade, Buff Color, Smooth Finish on all sides. Comply with ASTM C 568. Size as indicated on plans. Submit sample for verification and approval.
2. Limestone wall veneer shall be Otten Valley Limestone, Buff Color, Natural Split Finish, 2"to 6"rise x 12"to 24"length, 4"to 5"bed depth. Submit sample for verification and approval.
3. Mortar for wall veneer shall comply with ASTM C 270, Proportion Specification. Use Type S Mortar for setting stone. Use Type N Mortar for pointing stone.
4. Stone shall be installed by a qualified installer who employs experienced stonemasons and stone fitters. Provide qualification statement and a list of at least five similar project successfully completed by installer.
5. Obtain stone of each type, from one quarry, with resources to provide materials of consistent quality in appearance and physical properties.
6. During construction, cover tops of walls, projections, and sills with waterproof sheeting at end of each day's work. Cover partially completed stone masonry when construction is not in progress.
7. Immediately remove mortar and soil to prevent them from staining the face of stone masonry.
8. Protect base of walls from rain-splashed mud and mortar splatter by coverings spread on the ground and over the wall surface.
9. Do not use frozen materials or materials mixed or coated with ice or frost. Do not build on frozen substrates. Remove and replace stone masonry damaged by frost or freezing conditions. Comply with cold-weather construction requirements contained in ACI 530.1/ASCE 6/TMS 602.
10. Use liquid cleaning methods only when air temperature is 40 deg F (4 deg C) and above and will remain so until masonry has dried, but not less than 7 days after completing cleaning.
11. Comply with hot-weather construction requirements contained in ACI 530.1/ASCE 6/TMS 602.
12. Stone Anchors shall be units fabricated with tabs or dowels designed to engage kerfs or holes in stone trim units and holes for fasteners or postinstalled anchor bolts for fastening to substrates or framing as indicated. Fabricate anchors from stainless steel, ASTM A 240/A 240M, Type 304. Fabricate dowels from stainless steel, ASTM A 276, Type 304.
13. Fasteners for Stone Trim Anchors shall be annealed stainless-steel bolts, nuts, and washers; ASTM F 593 (ASTM F 738M) for bolts and ASTM F 594 (ASTM F 836M) for nuts, Alloy Group 1 (A1).
14. Postinstalled Anchor Bolts for Fastening Stone Trim Anchors shall be torque-controlled expansion anchors or undercut anchors made from stainless-steel components complying with ASTM F 593 and ASTM F 594, Alloy Group 1 or 2 (ASTM F 738M and ASTM F 836M, Alloy Group A1 or A4) for bolts and nuts; ASTM A 666 or ASTM A 276, Type 304 or 316, for anchors.
15. Compressible Filler shall be Premolded filler strips complying with ASTM D 1056, Grade 2A1; compressible up to 35 percent; of width and thickness indicated; formulated from neoprene, urethane or PVC.
16. Cementitious Dampproofing shall be cementitious formulations that are recommended by the Indiana Limestone Institute (ILI) and that are nonstaining to stone, compatible with joint sealants, and noncorrosive to veneer anchors and attachments.
17. Fabricate stone to comply with sizes, shapes, and tolerances recommended by applicable stone association or, if none, by stone source, for faces, edges, beds, and backs. For limestone, comply with recommendations in ILI's "Indiana Limestone Handbook."
18. Cut stone to produce pieces of thickness, size, and shape indicated, including details on Drawings. Dress joints (bed and vertical) straight and at right angle to face unless otherwise indicated.
19. Cut and drill sinkages and holes in stone for anchors and supports.
20. Carefully inspect stone at quarry or fabrication plant for compliance with requirements for appearance, material, and fabrication. Replace defective units before shipment.
21. Clean sawed backs of stone to remove rust stains and iron particles.
22. Examine surfaces indicated to receive stone masonry, with installer present, for compliance with requirements for installation tolerances and other conditions affecting performance. Proceed with installation only after unsatisfactory conditions have been corrected.
23. Clean dirty or stained stone surfaces by removing soil, stains, and foreign materials before setting. Clean stone by thoroughly scrubbing with fiber brushes and then drenching with clear water. Use only mild cleaning compounds that contain no caustic or harsh materials or abrasives.
24. Perform necessary field cutting and trimming as stone is set. Use power saws to cut stone that is fabricated with saw-cut surfaces. Cut lines straight and true, with edges eased slightly to prevent snipping.
25. Set stone to comply with requirements indicated on Drawings. Install supports, fasteners, and other attachments as necessary to secure stone masonry in place. Set stone accurately in locations indicated with edges and faces aligned according to established relationships and indicated tolerances.
26. Arrange veneer stones in broken-range ashlar pattern with uniform course heights, random lengths, and uniform joint widths. Arrange stones with color and size variations uniformly dispersed for an evenly blended appearance.
27. Maintain uniform joint widths except for variations due to different stone sizes and where minor variations are required to maintain bond alignment if any. Lay caps with joints not less than 1/4 inch (6 mm) at narrowest points or more than 3/8 inch (10 mm) at widest points.
28. Coat limestone beds, joints and back surfaces with cementitious dampproofing. Allow cementitious dampproofing formulations to cure before setting dampproofed stone. Do not damage or remove dampproofing in the course of handling and setting stone.
29. Place weep holes in joints where moisture may accumulate above shelf angles. Use wicking material, round plastic tubing, rectangular plastic tubing, or open head joints to form weep holes. Space weep holes 24 inches (600 mm) o.c. Trim wicking material used in weep holes flush with outside face of wall.
30. Anchor stone caps with stone anchors as neccessary. Install anchors by fastening to substrate and inserting tabs and dowels into kerfs and holes in stone units. Provide compressible filler in ends of dowel holes and bottoms of kerfs to prevent end bearing of dowels and anchor tabs on stone. Fill remainder of anchor holes and kerfs with mortar.
31. Rake out joints for pointing with mortar to depth of not less than 3/4 inch (19 mm) before setting mortar has hardened. Rake joints to uniform depths with square bottoms and clean sides.
32. Prepare stone-joint surfaces for pointing with mortar by removing dust and mortar particles. Where setting mortar was removed to depths greater than surrounding areas, apply pointing mortar in layers not more than 3/8 inch (10 mm) deep until a uniform depth is formed.
33. Point stone joints by placing and compacting pointing mortar in layers of not more than 3/8 inch (10 mm) deep. Compact each layer thoroughly and allow to it become thumbprint hard before applying next layer. Tool joints, when pointing mortar is thumbprint hard, with a smooth jointing tool to produce a concave joint profile.
34. Remove and replace the following: Stone masonry that is broken, chipped,

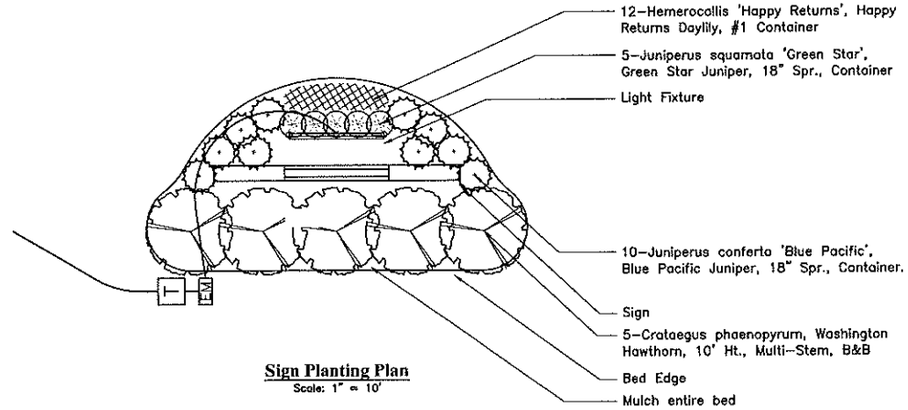

Sign Planting Plan
Scale: 1" = 10'

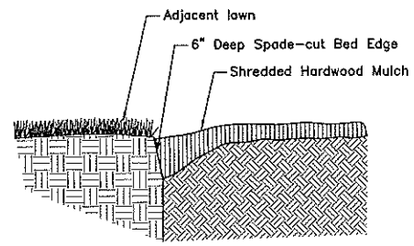

Planting Bed Edge
No Scale

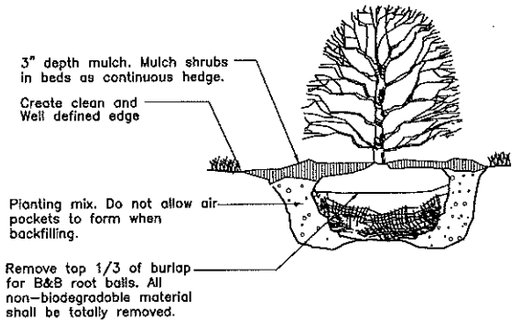

Shrub and Multi-Stem Tree Planting
No Scale

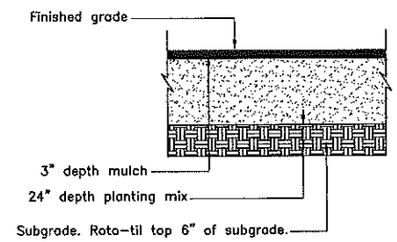

Planting Area Establishment
No Scale

GRAPHIC SCALE

0 5 10 20

1 inch = 10 feet

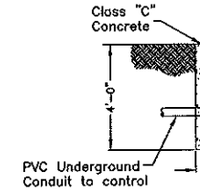

Notes:

1. Contractor to verify se requirements prior to s
2. Provide electrical contr
3. Convenience outlet sha grounding type duplex interrupter provisions.
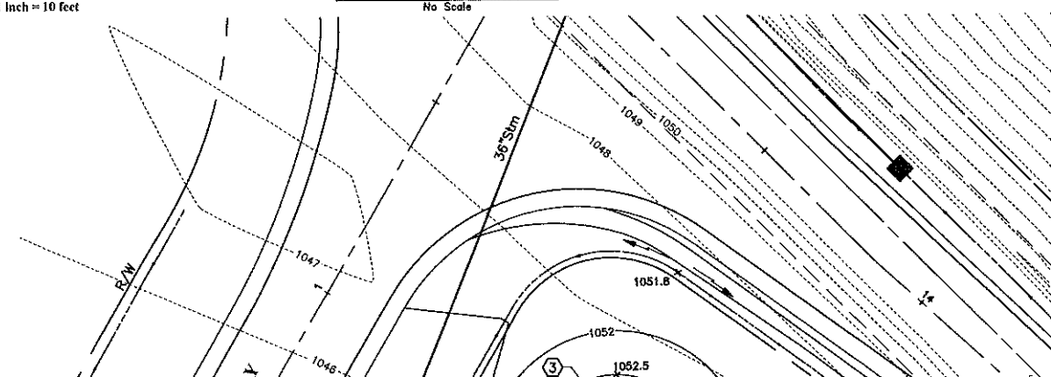
Se