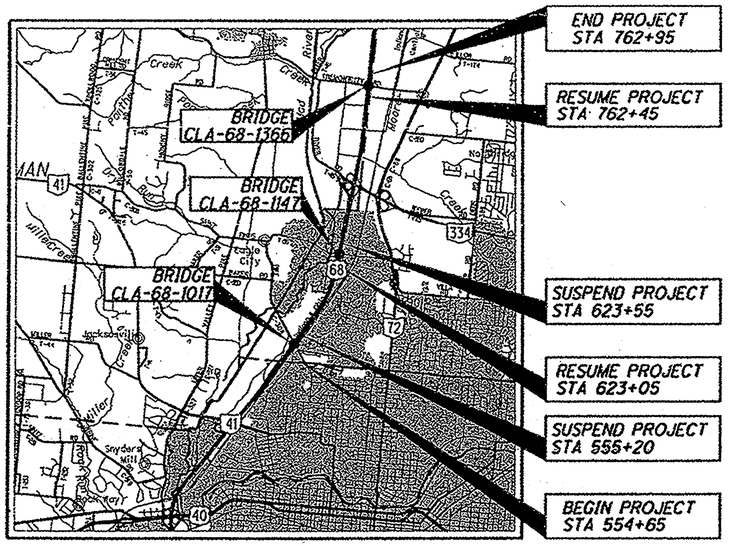


LOCATION MAP

LATITUDE: 39°58'22" LONGITUDE: 83°49'02"

SCALE IN MILES

0 1 2 3 4

PORTION TO BE IMPROVED
INTERSTATE HIGHWAY
STATE & FEDERAL ROUTES
COUNTY & TOWNSHIP ROADS
OTHER ROADS

FOR DESIGN DESIGNATIONS, SEE SHEET 2

# STATE OF OHIO

# DEPARTMENT OF TRANSPORTATION

# CLA-68-(10.17)(11.47)(13.66)

## CITY OF SPRINGFIELD
## GERMAN TOWNSHIP
## MOOREFIELD TOWNSHIP
## CLARK COUNTY

INDEX OF SHEETS:


| | |
|---|---|
| TITLE SHEET | 1 |
| SCHEMATIC PLAN | 2-3 |
| TYPICAL SECTIONS | 4-5 |
| GENERAL NOTES | 6 |
| MAINTENANCE OF TRAFFIC | 7-8 |
| GENERAL SUMMARY | 9 |
| ESTIMATED QUANTITIES | 10 |
| PLAN (ST. PARIS PIKE) | 11 |
| CROSS SECTIONS (ST. PARIS PIKE) | 12-16 |
| PLAN (EAGLE CITY) | 17 |
| CROSS SECTIONS (EAGLE CITY) | 18-23 |
| PLAN (TREMONT CITY) | 24 |
| CROSS SECTIONS (TREMONT CITY) | 25-29 |
| DRAINAGE & PAVEMENT DETAILS | 30 |
| TRAFFIC CONTROL PLANS | 31-32 |
| STRUCTURES (20' & OVER) | |
| CLA-68-1017 (ST. PARIS PIKE OVER US 68) | 33-41 |
| CLA-68-1147 (EAGLE CITY ROAD OVER US 68) | 42-50 |
| CLA-68-1366 (TREMONT CITY ROAD OVER US 68) | 51-59 |


### PROJECT DESCRIPTION

MINOR REHABILITATION OF BRIDGE NUMBERS CLA-68-1017 (ST. PARIS PIKE), CLA-68-1147 (EAGLE CITY RD) AND CLA-68-1366 (TREMONT CITY RD), INCLUDING; DECK OVERLAYS, PATCHING, DRAINAGE SYSTEM REPAIRS AND UPGRADES, OTHER REPAIRS AND GUARDRAIL REPLACEMENT.

PROJECT EARTH DISTURBED AREA:
N/A (MAINTENANCE PROJECT
ESTIMATED CONTRACTOR EARTH DISTURBED AREA:
N/A MAINTENANCE PROJECT
NOTICE OF INTENT EARTH DISTURBED AREA:
N/A (MAINTENANCE PROJECT)

### LIMITED ACCESS

THIS IMPROVEMENT IS ESPECIALLY DESIGNED FOR THROUGH TRAFFIC AND HAS BEEN DECLARED A LIMITED ACCESS HIGHWAY OR FREEWAY BY ACTION OF THE DIRECTOR IN ACCORDANCE WITH THE PROVISIONS OF SECTION 5511.02 OF THE OHIO REVISED CODE.

### 2008 SPECIFICATIONS

THE STANDARD SPECIFICATIONS OF THE STATE OF OHIO, DEPARTMENT OF TRANSPORTATION, INCLUDING CHANGES AND SUPPLEMENTAL SPECIFICATIONS LISTED IN THE PROPOSAL SHALL GOVERN THIS IMPROVEMENT.

I HEREBY APPROVE THESE PLANS AND DECLARE THAT THE MAKING OF THIS IMPROVEMENT WILL NOT REQUIRE THE CLOSING TO TRAFFIC OF THE HIGHAY EXCEPT FOR THE SIDE ROADS AS DESCRIBED ON SHEET 8 AND THAT PROVISIONS FOR THE MAINTENANCE AND SAFETY OF TRAFFIC WILL BE AS SET FORTH ON THE PLANS AND ESTIMATES.

### DESIGN EXCEPTIONS

NONE REQUIRED

UNDERGROUND UTILITIES
CONTACT BOTH SERVICES
CALL TWO WORKING DAYS
BEFORE YOU DIG
CALL
1-800-362-2764
(TOLL FREE)
OHIO UTILITIES PROTECTION SERVICE
NON-MEMBERS
MUST BE CALLED DIRECTLY
OIL & GAS PRODUCERS PROTECTIVE
SERVICE CALL: 1-800-925-0988

PLAN PREPARED BY:

Palmer ENGINEERING
PALMER ENGINEERING
11300 CORNELL PARK DR
CINCINNATI, OH 45242
• WINCHESTER • NASHVILLE • LOUISVILLE • CINCINNATI • HURRICANE •

ENGINEERS SEAL:
(SHEETS 1-32)
STATE OF OHIO
DENNIS C JENNINGS
E 59444
REGISTERED
PROFESSIONAL ENGINEER
SIGNED: Dennis C Jennings
DATE: 11/2/2009

ENGINEERS SEAL:
(SHEETS 33-69)
STATE OF OHIO
BRONSON J FUNKE
E-61830
REGISTERED
PROFESSIONAL ENGINEER
SIGNED: Bronson J Funke
DATE: 11/2/2009

STANDARD CONSTRUCTION DRAWINGS

| | | | | | | | | | |
|---|---|---|---|---|---|---|---|---|---|
| BP-3.1 | 10/19/07 | MT-35.10 | 4/20/01 | | AS-1-81 | 7/19/02 | | 800 | 1/15/10 |
| BP-5.1 | 7/28/00 | MT-95.30 | 7/17/09 | | EXJ-4-87 | 7/19/02 | | 832 | 5/5/09 |
| | | MT-95.50 | 4/17/09 | | RB-1-55 | 2/2/59 | | | |
| DM-4.1 | 7/19/02 | MT-97.10 | 4/17/09 | | SBR-1-99 | 7/19/02 | | 848 | 10/16/09 |
| DM-4.3 | 4/17/09 | MT-97.12 | 4/17/09 | | | | | 843 | 4/18/03 |
| DM-4.4 | 4/17/09 | MT-101.60 | 4/17/09 | | | | | | |
| | | MT-105.10 | 1/16/09 | | | | | | |
| F-1.1 | 7/16/04 | | | | | | | | |
| F-2.1 | 7/28/00 | TC-41.10 | 10/19/07 | | | | | | |
| | | TC-41.20 | 1/19/01 | | | | | SPECIAL PROVISIONS | |
| GR-1.1 | 7/16/04 | TC-42.10 | 1/19/07 | | | | | | |
| GR-2.1 | 1/16/04 | TC-42.20 | 7/16/04 | | | | | OEPA RENO/DEMO | |
| GR-2.3 | 4/18/03 | TC-52.10 | 1/19/07 | | | | | | |
| GR-3.1 | 10/16/09 | TC-52.20 | 1/19/07 | | | | | | |
| GR-4.1 | 4/18/03 | TC-73.10 | 1/19/01 | | | | | | |
| GR-4.2 | 1/19/07 | | | | | | | | |

APPROVED Rex Dickey, P.E., P.S. / PRN
DATE 11-24-09 DISTRICT DEPUTY DIRECTOR

APPROVED Lorne M. Molitoris
DATE 12-8-09 DIRECTOR, DEPARTMENT OF TRANSPORTATION

FEDERAL PROJECT NO. E070 (212)
PID NO. 80826
CONSTRUCTION PROJECT NO.
RAILROAD INVOLVEMENT INDIANA & OHIO
CLA-68-(10.17)(11.47)(13.66)


CLA-US-68-(10.17)(11.47)(13.66)
100085 PID - 80826
Dist 7 2/25/2010
Palmer ENGINEERING P 11300 CORNELL PARK DR ENGINEERING CINCINNATI, OH 45242
OIB\DOOT8\CLA\80826\roadway\sheets\80826GT001.dgn 11/2/2009 9:52:45 AM dan-f

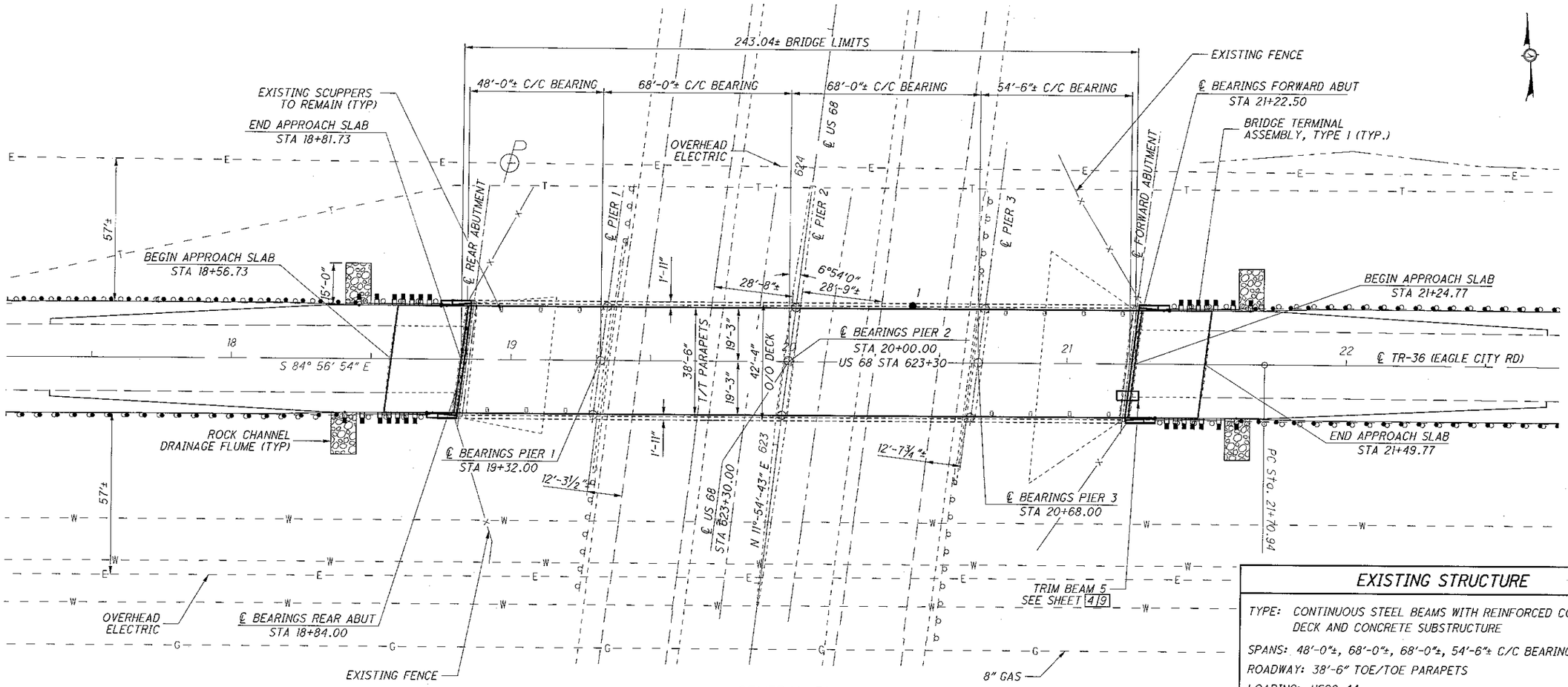


GENERAL PLAN

## SCOPE OF WORK

1. REMOVE THE APPROACH SLABS, PORTIONS OF THE ABUTMENT BACKWALLS AND PORTIONS OF THE PARAPETS.
2. REMOVE 1¼" OF THE EXISTING MONOLITHIC CONCRETE WEARING SURFACE USING HYDRODEMOLITION.
3. REFURBISH THE EXISTING STEEL ROCKER BEARINGS AT THE ABUTMENTS.
4. TRIM BEAM 5 AS INDICATED TO MAINTAIN CLEARANCE TO BACKWALL
5. PATCH THE ABUTMENT BREASTWALLS AND BEARING SEATS, AS NEEDED.
6. CONSTRUCT NEW BACKWALLS AND PARAPETS AND INSTALL NEW ELASTOMERIC STRIP SEAL EXPANSION JOINTS AT THE ABUTMENTS.
7. PERFORM PARTIAL-DEPTH AND FULL-DEPTH DECK REPAIRS, AS NEEDED.
8. EXTEND SCUPPER DRAIN PIPES.
9. APPLY A NEW 1¼" THICK MICROSILICA CONCRETE OVERLAY ON THE BRIDGE DECK.
10. CONSTRUCT NEW 25-FOOT LONG APPROACH SLABS.
11. CONSTRUCT APPROACH PAVEMENT WEDGES. (SEE ROADWAY PLANS FOR DETAILS)
12. PATCH THE BRIDGE PARAPETS, AS NEEDED.
13. SEAL THE FRONT FACE AND TOP OF THE BRIDGE PARAPETS AND EXPOSED SURFACES ON THE ABUTMENTS WITH EPOXY URETHANE.
14. REPLACE THE APPROACH GUARDRAILS AND BRIDGE TERMINAL ASSEMBLIES.
15. INSTALL ROCK DRAINAGE FLUMES ON ALL FOUR APPROACH EMBANKMENTS.
16. PERFORM CLEARING AND GRUBBING WITHIN 15 FEET OF BOTH ABUTMENTS.
17. CONSTRUCT NEW PARAPET TRANSITION WALLS.
18. TRAFFIC WILL BE DETOURED FOR BRIDGE CONSTRUCTION WORK. (SEE SHEET 7/59)

| FIRST POST STATIONS | |
|---|---|
| FORWARD LEFT | STA. 21+39.25 |
| FORWARD RIGHT | STA. 21+34.59 |
| REAR LEFT | STA. 18+71.90 |
| REAR RIGHT | STA. 18+65.40 |

| DESIGN TRAFFIC | |
|---|---|
| 2010 ADT = 1500 | 2010 ADTT = 45 |
| 2030 ADT = 1700 | 2030 ADTT = 51 |

| CLEARANCE TABLE | | |
|---|---|---|
| ● - LOCATION | MINIMUM CLEARANCE | REQUIRED CLEARANCE |
| 1 - US. 68 NORTHBOUND | 14.83'± | 14.50'± |

SEE SHEET 3/59 FOR SURVEY BENCHMARKING AND CONTROL

## EXISTING STRUCTURE

TYPE: CONTINUOUS STEEL BEAMS WITH REINFORCED CONCRETE DECK AND CONCRETE SUBSTRUCTURE
SPANS: 48'-0"±, 68'-0"±, 68'-0"±, 54'-6"± C/C BEARINGS
ROADWAY: 38'-6" TOE/TOE PARAPETS
LOADING: HS20-44
SKEW: 6°-54'-00" LF
APPROACH SLABS: 25' LONG
ALIGNMENT: TANGENT
CROWN: NORMAL CROWN
STRUCTURAL FILE NUMBER: 1203126
DATE BUILT: 1970
DISPOSITION: TO BE REHABILITATED
WEARING SURFACE: 1" MONOLITHIC CONCRETE

## PROPOSED STRUCTURE

TYPE: CONTINUOUS STEEL BEAMS WITH REINFORCED CONCRETE DECK AND 1¼" MICROSILICA OVERLAY ON EXISTING PIERS AND REHABILITATED ABUTMENTS
SPANS: 48'-0"±, 68'-0"±, 68'-0"±, 54'-6"± C/C BEARINGS
ROADWAY: 38'-6" TOE/TOE PARAPETS
LOADING: HS20-44
SKEW: 6°-54'-00" LF
APPROACH SLABS: 25' LONG (AS-1-81)
ALIGNMENT: TANGENT
CROWN: .0156 FT/FT
WEARING SURFACE: 1¼"± MICROSILICA MODIFIED CONCRETE OVERLAY
COORDINATES: LATITUDE 39°-58'-29" N
LONGITUDE 83°-48'-59" W

DESIGN AGENCY
Palmer ENGINEERING
11500 CORNELL PARK DR
CINCINNATI, OH 45242
• VIRGINIA BEACH • ROANOKE • CHARLOTTESVILLE •
• FORT MILL • MURRELLS INLET • MYRTLE BEACH •

| DESIGNED | DRAWN | REVIEWED | DATE |
|---|---|---|---|
| JPR | SDW | BJF | 7/09 |
| CHECKED | REVISED | STRUCTURE FILE NUMBER | |
| MLJ | | 1203126 | |

CLARK COUNTY
STA. 18+81.75
STA. 21+24.77

**GENERAL PLAN**
BRIDGE NO. CLA-68-1147
TR-36 (EAGLE CITY RD.) OVER SR 68

**CLA-68-(10.17)(11.47)(13.66)**
**PID No. 80826**

**REFER TO THE FOLLOWING STANDARD BRIDGE DRAWING(S):**

EXJ-4-87 DATED/REVISED 7-19-02
RB-1-55 DATED/REVISED 2-2-59
AS-1-81 DATED/REVISED 7-19-02

**AND TO THE FOLLOWING SUPPLEMENTAL SPECIFICATION(S):**

848 DATED 10-16-09
843 DATED 4-18-03

**DESIGN SPECIFICATIONS:**
THIS STRUCTURE CONFORMS TO "STANDARD SPECIFICATIONS FOR HIGHWAY BRIDGES" ADOPTED BY THE AMERICAN ASSOCIATION OF STATE HIGHWAY AND TRANSPORTATION OFFICIALS, 17TH EDITION , AND THE ODOT BRIDGE DESIGN MANUAL.

**DESIGN LOADING:**
HS20, CASE I AND THE ALTERNATE MILITARY LOADING

**DESIGN STRESSES**
CONCRETE CLASS S - COMPRESSIVE STRENGTH 4500 PSI (SUPERSTRUCTURE)

REINFORCING STEEL - ASTM A615 OR A996, GRADE 60, MINIMUM YIELD STRENGTH 60,000 PSI

STRUCTURAL STEEL - ASTM A709 , GRADE 50, MINIMUM YIELD STRENGTH 50,000 PSI

**DECK PROTECTION METHOD:**
1¼" RIGID MICRO-SILICA MODIFIED CONCRETE OVERLAY

**ITEM 202, PORTIONS OF STRUCTURE REMOVED, OVER 20' SPAN, AS PER PLAN**
THIS ITEM SHALL INCLUDE THE ELEMENTS INDICATED IN THE PLANS AND GENERAL NOTES AND THAT ARE NOT SEPARATELY LISTED FOR PAYMENT, EXCEPT FOR WEARING COURSE REMOVAL. ITEMS TO BE REMOVED INCLUDE ALL EXISTING MATERIALS BEING REPLACED BY NEW CONSTRUCTION AND MISCELLANEOUS ITEMS THAT ARE NOT SHOWN TO BE INCORPORATED INTO THE FINAL CONSTRUCTION AND ARE DIRECTED TO BE REMOVED BY THE ENGINEER. THE USE OF EXPLOSIVES, HEADACHE BALLS AND/OR HOE-RAMS WILL NOT BE PERMITTED. THE METHOD OF REMOVAL AND THE WEIGHT OF HAMMER SHALL BE APPROVED BY THE ENGINEER. PERFORM ALL WORK IN A MANNER THAT WILL NOT CUT, ELONGATE OR DAMAGE THE EXISTING REINFORCING STEEL TO BE PRESERVED. CHIPPING HAMMERS SHALL NOT BE HEAVIER THAN THE NOMINAL 90-POUND CLASS. PNEUMATIC HAMMERS SHALL NOT BE PLACED IN DIRECT CONTACT WITH REINFORCING STEEL THAT IS TO BE RETAINED IN THE REBUILT STRUCTURE. SUBMIT CONSTRUCTION PLANS ACCORDING TO CMS 501.05.

CUT LINE CONSTRUCTION JOINT PREPARATION: SAW CUT BOUNDARIES OF PROPOSED CONCRETE REMOVALS 1 INCH DEEP. REMOVE CONCRETE TO A ROUGH SURFACE. LEAVE THE EXISTING REINFORCING STEEL, IF REQUIRED IN THE PLANS, IN PLACE. INSTALL DOWEL BARS IF SPECIFIED. PRIOR TO CONCRETE PLACEMENT ABRASIVELY CLEAN JOINT SURFACES AND EXISTING EXPOSED REINFORCEMENT TO REMOVE LOOSE AND DISINTEGRATED CONCRETE AND LOOSE RUST. THOROUGHLY CLEAN THE JOINT SURFACE AND EXPOSED REINFORCEMENT OF ALL DIRT, DUST, RUST OR OTHER FOREIGN MATERIAL BY THE USE OF WATER, AIR UNDER PRESSURE, OR OTHER METHODS THAT PRODUCE SATISFACTORY RESULTS. EXISTING REINFORCING STEEL DOES NOT HAVE TO HAVE A BRIGHT STEEL FINISH, BUT REMOVE ALL PACK AND LOOSE RUST. THOROUGHLY DRENCH EXISTING CONCRETE SURFACES WITH CLEAN WATER AND ALLOW TO DRY TO A DAMP CONDITION BEFORE PLACING CONCRETE.

**EXISTING STRUCTURE VERIFICATION:**
DETAILS AND DIMENSIONS SHOWN ON THESE PLANS PERTAINING TO THE EXISTING STRUCTURE HAVE BEEN OBTAINED FROM PLANS OF THE EXISTING STRUCTURE AND FROM FIELD OBSERVATIONS AND MEASUREMENTS. CONSEQUENTLY, THEY ARE INDICATIVE OF THE EXISTING STRUCTURE AND THE PROPOSED WORK BUT THEY SHALL BE CONSIDERED TENTATIVE AND APPROXIMATE. THE CONTRACTOR IS REFERRED TO CMS SECTIONS 102.05, 105.02 AND 513.04. BASE CONTRACT BID PRICES UPON A RECOGNITION OF THE UNCERTAINTIES DESCRIBED ABOVE AND UPON A PREBID EXAMINATION OF THE EXISTING STRUCTURE. HOWEVER, THE DEPARTMENT WILL PAY FOR ALL PROJECT WORK BASED UPON ACTUAL DETAILS AND DIMENSIONS WHICH HAVE BEEN VERIFIED IN THE FIELD.

**ITEM 519 - PATCHING CONCRETE STRUCTURE, AS PER PLAN:**
PRIOR TO THE SURFACE CLEANING SPECIFIED IN 519.04 AND WITHIN 24 HOURS OF PLACING PATCHING MATERIAL, BLAST CLEAN ALL SURFACES TO BE PATCHED INCLUDING THE EXPOSED REINFORCING STEEL. ACCEPTABLE METHODS INCLUDE HIGH-PRESSURE WATER BLASTING WITH OR WITHOUT ABRASIVES IN THE WATER, ABRASIVE BLASTING WITH CONTAINMENT, OR VACUUM ABRASIVE BLASTING.

LOCATIONS OF AREAS THAT REQUIRE PATCHING ARE INCLUDED IN THE PLANS BUT ACTUAL PATCHING LOCATIONS SHALL BE VERIFIED AT THE TIME OF CONSTRUCTION. A CONTINGENCY QUANTITY OF 50 SQ FT IS INCLUDED IN THE SUMMARY TO BE USED AT THE DIRECTION OF THE ENGINEER.

**UTILITY LINES:**
THE UTILITY(IES) SHALL BORE ALL EXPENSES INVOLVED IN RELOCATING (INSTALLING) THE AFFECTED UTILITY LINES. THE CONTRACTOR AND UTILITY(IES) ARE TO COOPERATE BY ARRANGING THEIR WORK IN SUCH A MANNER THAT INCONVENIENCE TO EITHER WILL BE HELD TO A MINIMUM.

**ITEM 516 - STRUCTURAL EXPANSION JOINT INCLUDING ELASTOMERIC STRIP SEAL, AS PER PLAN:**
THIS WORK CONSISTS OF REHABILITATING THE EXISTING SLIDING PLATE JOINT TO AN ELASTOMERIC STRIP SEAL TYPE JOINT. THIS WORK ALSO INCLUDES THE HORIZONTAL EXTENSION OF THE EXPANSION JOINT INTO THE PARAPET. PAYMENT FOR THE DESCRIBED LABOR AND MATERIALS INCLUDING CONCRETE REMOVAL AND PATCHING, ANGLES, PLATES, BARS, SHEAR STUDS AND WELDING WILL BE MADE AT THE CONTRACT BID PRICE FOR ITEM 516 - STRUCTURAL EXPANSION JOINT INCLUDING ELASTOMERIC STRIP SEAL, AS PER PLAN. PAYMENT FOR FULL DEPTH REMOVAL AND REPLACEMENT OF PORTIONS OF THE BACKWALL ARE INCLUDED WITH ITEM 202, PORTIONS OF STRUCTURE REMOVED, OVER 20 FEET, AS PER PLAN.

**ITEM 513 TRIMMING OF BEAM END:**
THIS WORK CONSISTS OF TRIMMING BEAM NO. FIVE AT THE FORWARD ABUTMENT TO PROVIDE THE REQUIRED SPACING BETWEEN THE END OF THE BEAM AND THE ABUTMENT BACKWALL, AS SHOWN IN THE PLANS. PAYMENT FOR THE DESCRIBED LABOR AND MATERIALS NECESSARY WILL BE MADE AT THE CONTRACT PRICE FOR ITEM 513 - TRIMMING OF BEAM END.

**ITEM 512 - SEALING OF CONCRETE SURFACES (EPOXY-URETHANE), AS PER PLAN**
THIS ITEM SHALL INCLUDE THE REMOVAL OF ANY EXISTING SEALANT APPLICATION IN addition TO THE SURFACE PREPARATION DESCRIBED IN CMS 512.

**ITEM 516 - REFURBISHING BEARING DEVICE, AS PER PLAN:**
THIS ITEM SHALL INCLUDE ALL WORK NECESSARY TO PROPERLY ALIGN BRIDGE BEARINGS AS WELL AS THEIR CLEANING AND PAINTING. INCLUDED SHALL BE THE DISASSEMBLY OF THE BEARINGS, HAND TOOL CLEANING (GRINDING IF NECESSARY), REPLACEMENT OF ANY DAMAGED SHEET LEAD WITH PREFORMED BEARING PADS (711.21), INSTALLATION OF ANY NECESSARY STEEL SHIMS OF THE SAME SIZE AS THE BEARINGS TO PROVIDE A SNUG FIT, REALIGNMENT OF THE UPPER BEARING BEARING PLATE BY REMOVING EXISTING WELDS AND REWELDING SO THAT THE BEARINGS ARE VERTICALLY ALIGNED AT 60° F [15° C], LUBRICATING SLIDING SURFACES, AND REASSEMBLY OF THE BEARINGS. ASSURE ALL BEARINGS ARE SHIMMED ADEQUATELY AND THAT NO BEAMS AND/OR BEARING DEVICES ARE "FLOATING". THE REFURRBISHED BEARINGS SHALL ONLY HAVE A PRIME COAT APPLIED PER 513.27. AT NO ADDITIONAL COST TO THE STATE, THE CONTRACTOR MAY INSTALL NEW BEARINGS OF THE SAME TYPE AS THE EXISTING IN PLACE OF REFURBISHING THE BEARINGS. ALL WORK SHALL BE TO THE SATISFACTION OF THE ENGINEER.

JACKING AND TEMPORARY SUPPORT OF SUPERSTRUCTURE IS INCIDENTAL TO THIS ITEM AND PAYMENT FOR ALL WORK NECESSARY SHALL BE INCLUDED IN THE CONTRACT BID PRICE. THIS WORK CONSISTS OF TEMPORARILY RAISING THE EXISTING BEAMS TO ALLOW FOR REFURBISHING THE BEARING DEVICES. SUBMIT CONSTRUCTION PLANS IN ACCORDANCE WITH CMS 501.05.

IF, DURING THE JACKING OPERATIONS, CRACKING OF THE CONCRETE SUPERSTRUCTURE, SEPARATION OF THE CONCRETE DECK FROM THE STEEL STRINGERS, OR OTHER DAMAGE TO THE STRUCTURE IS VISUALLY OBSERVED, IMMEDIATELY CEASE THE JACKING OPERATION AND INSTALL SUPPORTS TO THE SATISFACTION OF THE ENGINEER. ANALYZE THE DAMAGE AND SUBMIT A METHOD OF CORRECTION TO THE ENGINEER FOR APPROVAL. EPOXY INJECT ALL BEAMS THAT SEPARATE FROM THE DECK FOR THE DISTANCE OF THE SEPARATION IN ACCORDANCE WITH CMS 512.07. THE DEPARTMENT WILL NOT PAY FOR THE COST OF THIS EPOXY INJECTION OR OTHER REQUIRED REPAIRS. THE BRIDGE BEARINGS SHALL BE FULLY SEATED AT ALL CONTACT AREAS. IF FULL SEATING IS NOT ATTAINED, SUBMIT A REPAIR PLAN TO THE ENGINEER. THE DEPARTMENT WILL NOT PAY FOR THE REPAIR COSTS TO ENSURE FULL SEATING ON BEARINGS.

PAYMENT FOR ALL OF THE ABOVE DESCRIBED LABOR AND MATERIALS WILL BE MADE AT THE CONTRACT PRICE BID FOR ITEM 516 - REFURBISH BEARING DEVICE, AS PER PLAN.

**ITEM 518 - SCUPPER LENGTHENING, AS PER PLAN**
THE SCUPPER EXTENSIONS SHALL BE FIELD PAINTED AFTER INSTALLATION USING AN OZEU PRIME COAT AS DESCRIBED IN CMS 514.

**ITEM 843 - PATCHING CONCRETE STRUCTURES WITH TROWELABLE MORTAR, AS PER PLAN:**
ALL PATCHING SHALL CONFORM TO SUPPLEMENTAL SPECIFICATION 843. LOCATIONS OF AREAS THAT REQUIRE PATCHING ARE INCLUDED IN THE PLANS BUT ACTUAL PATCHING LOCATIONS SHALL BE VERIFIED AT THE TIME OF CONSTRUCTION. A CONTINGENCY QUANTITY OF 100 SQ FT IS INCLUDED IN THE SUMMARY TO BE USED AT THE DIRECTION OF THE ENGINEER.

| ITEM | ITEM EXT. | GRAND TOTAL | UNIT | DESCRIPTION | REAR ABUT. | FWD. ABUT. | SUPER STRUCT | GENERAL | SHEET REF. |
|---|---|---|---|---|---|---|---|---|---|
| | | URBAN | | | | | | | |
| 202 | 11203 | LUMP | | PORTIONS OF STRUCTURE REMOVED, OVER 20' SPAN, AS PER PLAN | | | | | 2/9, 4/9 |
| 202 | 22900 | 134 | SQ YD | APPROACH SLAB REMOVED | | | | 134 | |
| 509 | 10000 | 2179 | POUND | EPOXY COATED REINFORCING STEEL | 485 | 485 | 1209 | | |
| 510 | 09950 | 52 | EACH | DOWEL HOLES WITH CEMENT GROUT | 26 | 26 | | | |
| 510 | 10000 | 88 | EACH | DOWEL HOLES WITH NONSHRINK, NONMETALLIC GROUT | | | 88 | | |
| 511 | 34400 | 16 | CU YD | CLASS S CONCRETE, SUPERSTRUCTURE | 4 | 4 | 8 | | |
| 512 | 10101 | 362 | SQ YD | SEALING OF CONCRETE SURFACES (EPOXY-URETHANE), AS PER PLAN | 42 | 42 | 278 | | 2/9, 5/9, 6/9, 7/9 |
| 513 | 21000 | 1 | EACH | TRIMMING OF BEAM END | | | 1 | | 2/9 |
| 516 | 11211 | 80 | FT | STRUCTURAL EXPANSION JOINT INCLUDING ELASTOMERIC STRIP SEAL, AS PER PLAN | 40 | 40 | | | 2/9, 8/9 |
| 516 | 45305 | 12 | EACH | REFURBISH BEARING DEVICE, AS PER PLAN | 6 | 6 | | | 2/9 |
| 518 | 12901 | 14 | EACH | SCUPPER, LENGTHENING, AS PER PLAN | | | 14 | | 2/9, 7/9 |
| 519 | 11101 | 58 | SQ FT | PATCHING CONCRETE STRUCTURE, AS PER PLAN | 8 | | 50 | | 2/9, 4/9 |
| 526 | 25000 | 214 | SQ YD | REINFORCED CONCRETE APPROACH SLABS (T=15") | | | | 214 | |
| 843 | 50001 | 100 | SQ FT | PATCHING CONCRETE STRUCTURES WITH TROWELABLE MORTAR, AS PER PLAN | | | 100 | | 2/9, 5/9 |
| 848 | 10000 | 1029 | SQ YD | MICRO SILICA MODIFIED CONCRETE OVERLAY USING HYDRODEMOLITION (1.25" NOMINAL THICKNESS) | | | 1029 | | |
| 848 | 20000 | 1029 | SQ YD | SURFACE PREPARATION USING HYDRODEMOLITION | | | 1029 | | |
| 848 | 30000 | 2 | CU YD | MICRO SILICA MODIFIED CONCRETE OVERLAY (VARIABLE THICKNESS), MATERIAL ONLY | | | 2 | | |
| 848 | 50000 | 2 | SQ YD | HAND CHIPPING | | | 2 | | |
| 848 | 50100 | LUMP | | TEST SLAB | | | | | |
| 848 | 50200 | 4 | CU YD | FULL DEPTH REPAIR | | | 4 | | |

DESIGN AGENCY
PALMER ENGINEERING
CINCINNATI, OHIO 45202

| DESIGNED | DRAWN | REVIEWED | DATE |
|---|---|---|---|
| JPR | SDW | BJF | 7/09 |
| CHECKED | REVISED | STRUCTURE FILE NUMBER | |
| MLJ | | 1203126 | |

ESTIMATED QUANTITIES
BRIDGE NO. CLA-68-1147
TR-36 (EAGLE CITY RD.) OVER SR 68

CLA-68-(10.17)
(11.47)(13.66)
PID No. 80826

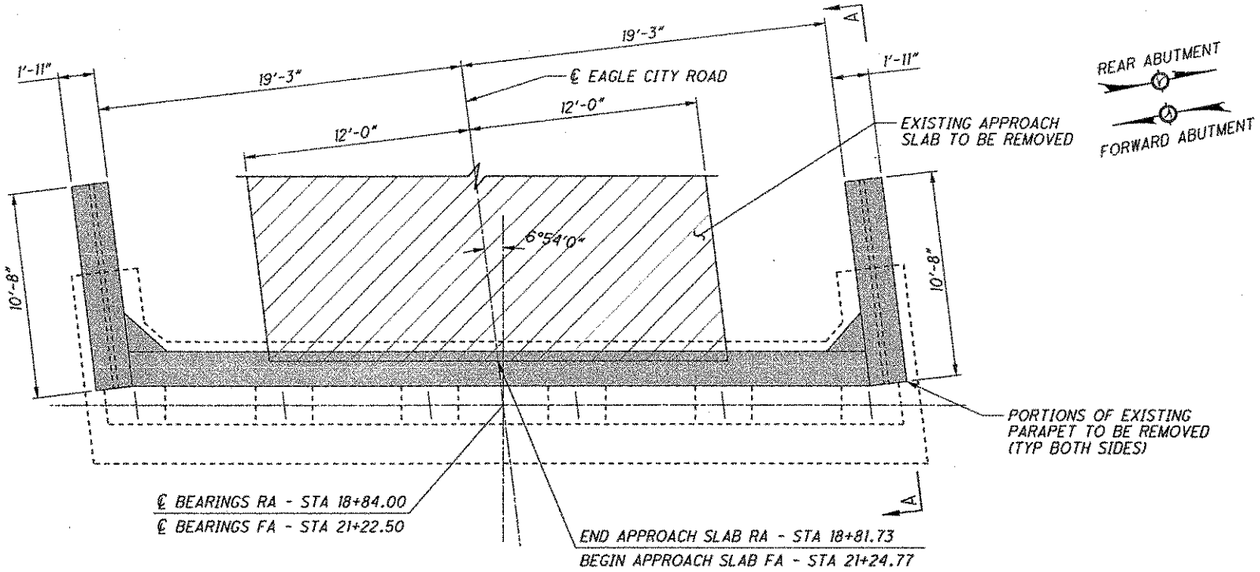


REAR ABUTMENT

FORWARD ABUTMENT

PLAN VIEW

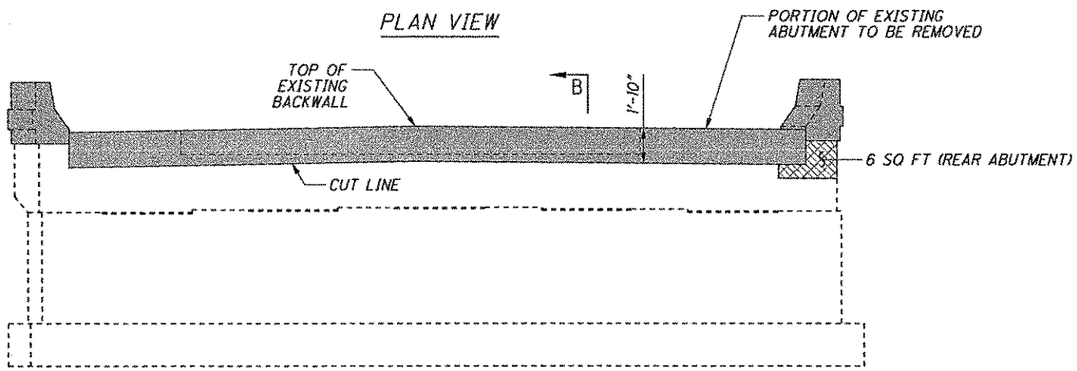


ELEVATION B

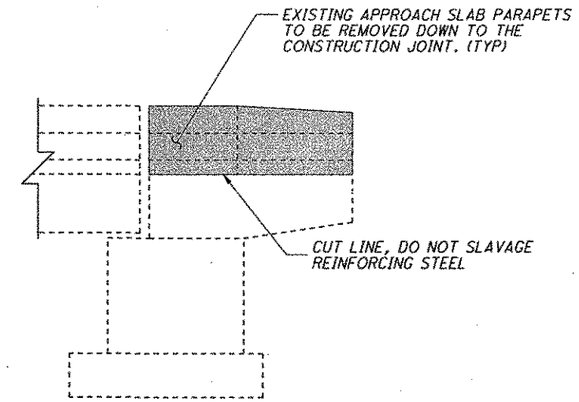


VIEW A-A

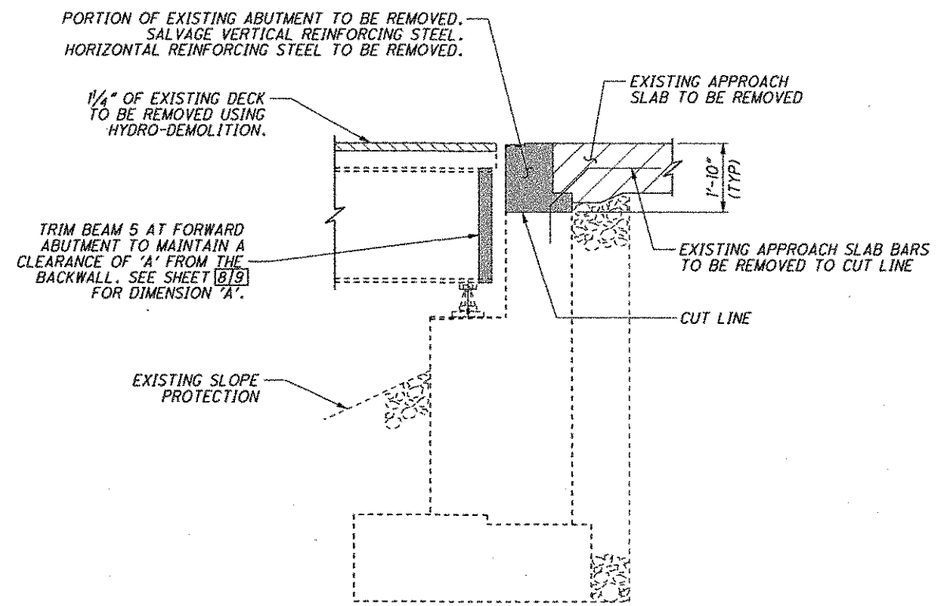


SECTION B-B

SEE NOTES THIS SHEET

NOTE

1.) ALL COSTS ASSOCIATED WITH THE REMOVAL OF THE EXISTING END DAMS SHALL BE INCLUDED FOR PAYMENT WITH ITEM 202, PORTIONS OF STRUCTURE REMOVED, OVER 20', AS PER PLAN.

2.) FOR ADDITIONAL REMOVAL DETAILS, SEE SHEET 8/9.

3.) FOR GENERAL NOTES SEE SHEET 2/9.

ITEM 202-APPROACH SLAB REMOVED

ITEM 202, PORTIONS OF STRUCTURE REMOVED, OVER 20' SPAN, AS PER PLAN

ITEM 519 - PATCHING CONCRETE STRUCTURE, AS PER PLAN

ITEM 848, SURFACE PREPARATION USING HYDRODEMOLITION

| ITEM 519, PATCHING CONCRETE STRUCTURES, AS PER PLAN - SUMMARY TABLE | | | |
|---|---|---|---|
| LOCATION | MEASURED QTY (S.F.) | CONTINGENCY FACTOR | TOTAL (S.F.) |
| REAR ABUTMENT | 6 | 1.25 | 8 |


DESIGN AGENCY
PALMER ENGINEERING
11300 CORNELL PARK DR
CINCINNATI, OH 45242
WINCHESTER, KY • NASHVILLE, TN • LOUISVILLE, KY • CLEVELAND, OH • HURRICANE, WV


| DESIGNED | DRAWN | REVIEWED | DATE |
|---|---|---|---|
| JPR | SDW | BJF | 7/09 |
| CHECKED | REVISED | STRUCTURE FILE NUMBER | |
| MLJ | | 1203126 | |

REMOVAL DETAILS

BRIDGE NO. CLA-68-1147

TR-36 (EAGLE CITY RD.) OVER SR 68

CLA-68-(10.17)(11.47)(13.66)

PID No. 80826




O:\ODOT\CLA\80826\structures\CLA068_1147C\sheets\068_1147CRE001.dgn 10/30/2009 1:24:15 PM scott-w

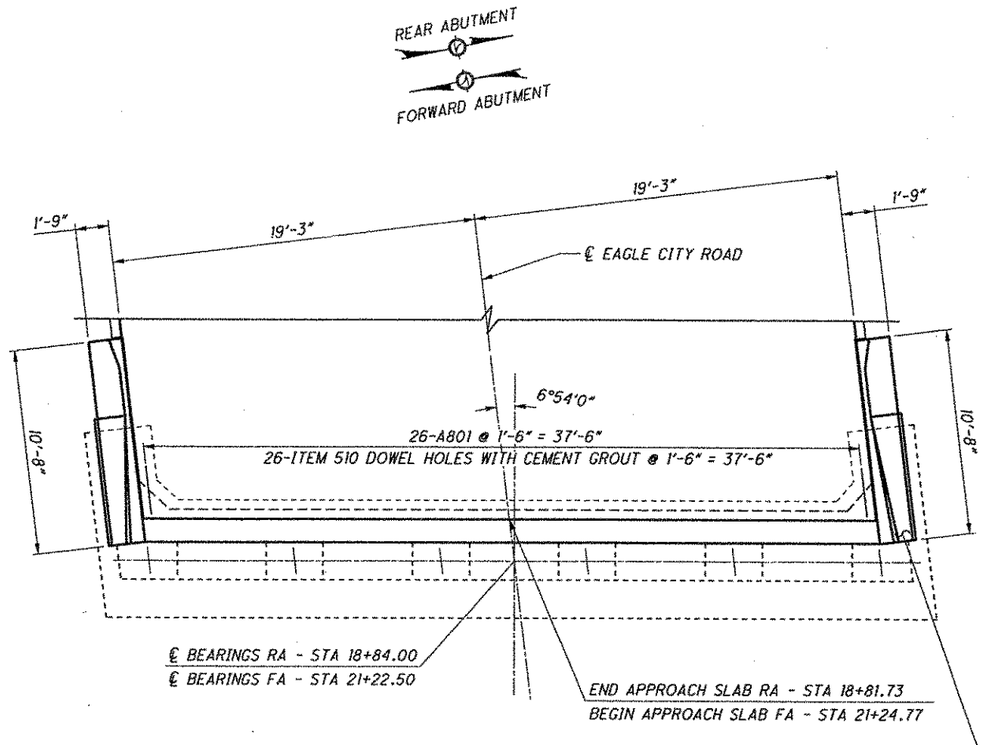


PLAN

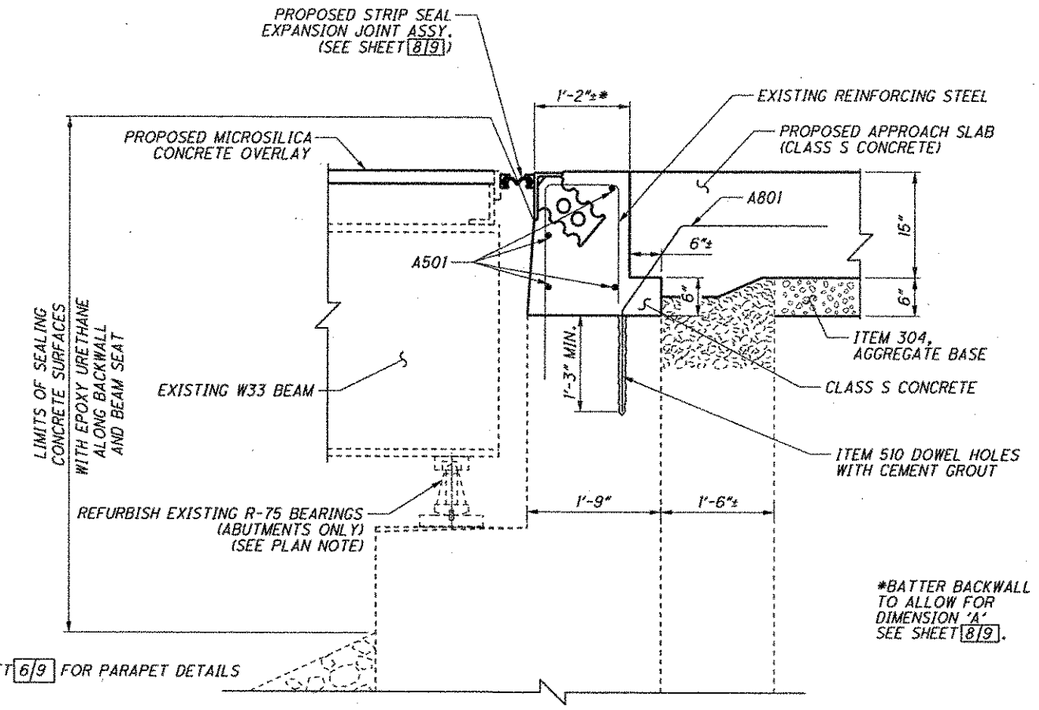


SECTION A-A

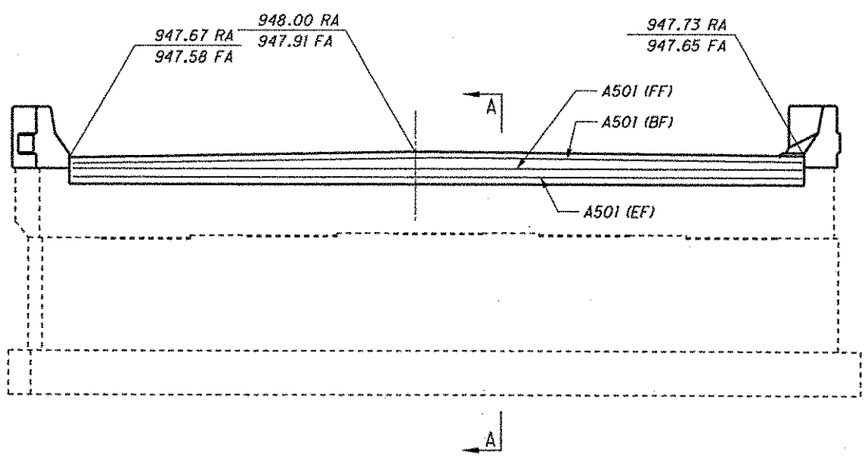


ELEVATION

LEGEND

FF - FRONT FACE

BF - BACK FACE

EF- EACH FACE

RA- REAR ABUTMENT

FA- FORWARD ABUTMENT

PEJF - PREFORMED EXPANSION JOINT FILLER

NOTES:

1.) ABUTMENT ELEVATIONS ARE GIVEN AT APPROACH SLAB/BACKWALL JOINT. SEE ROADWAY PLANS FOR ELEVATIONS AT ROADWAY END OF APPROACH SLABS.

2.) PROPOSED ELEVATION SHALL MATCH EXISTING ELEVATIONS. EXISTING ELEVATIONS ARE TO BE VERIFIED BY THE CONTRACTOR.


DESIGN AGENCY
PALMER ENGINEERING
11300 CORNELL PARK DR
CINCINNATI, OH 45242


| DESIGNED | DRAWN | REVIEWED | DATE |
|---|---|---|---|
| JPR | SDW | BJF | 7/09 |
| CHECKED | REVISED | STRUCTURE FILE NUMBER | |
| MLJ | | 1203126 | |

ABUTMENT DETAILS

BRIDGE NO. CLA-68-1147

TR-36 (EAGLE CITY RD.) OVER SR 68

CLA-68-(10.17)(11.47)(13.66)

PID No. 80826




O:\ODOT\CLA\80826\structures\CLA068_1147C\sheets\068_1147CAB001.dgn 10/30/2009 1:24:20 PM scott-w

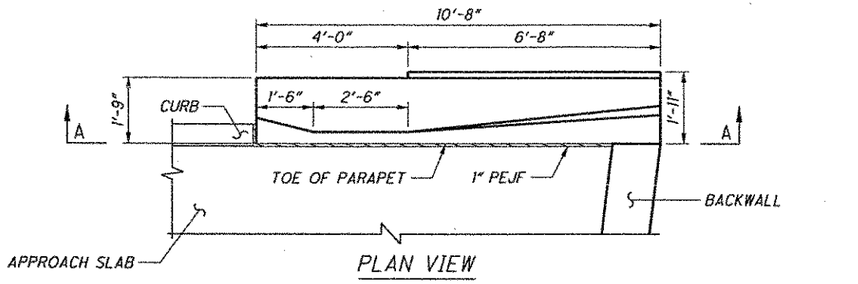


PLAN VIEW

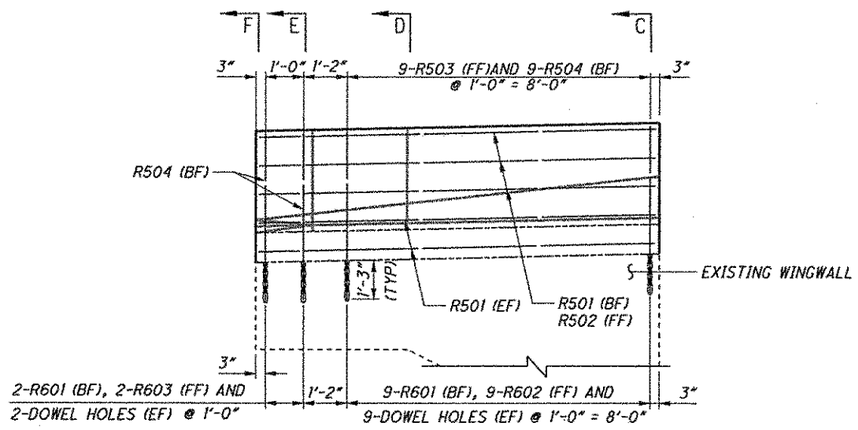


SECTION A-A

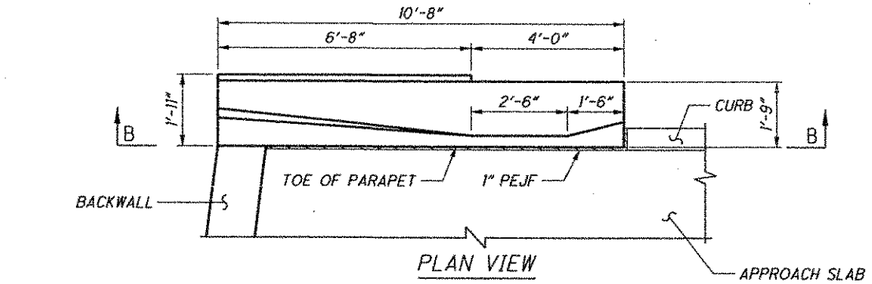


PLAN VIEW

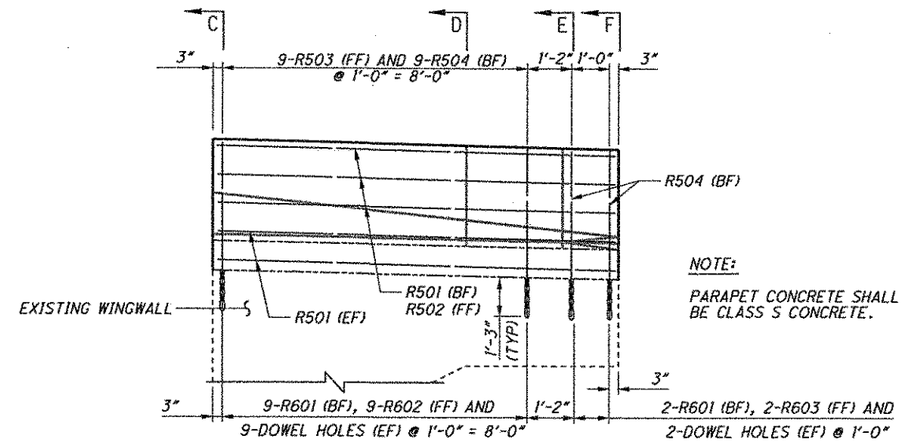


SECTION B-B

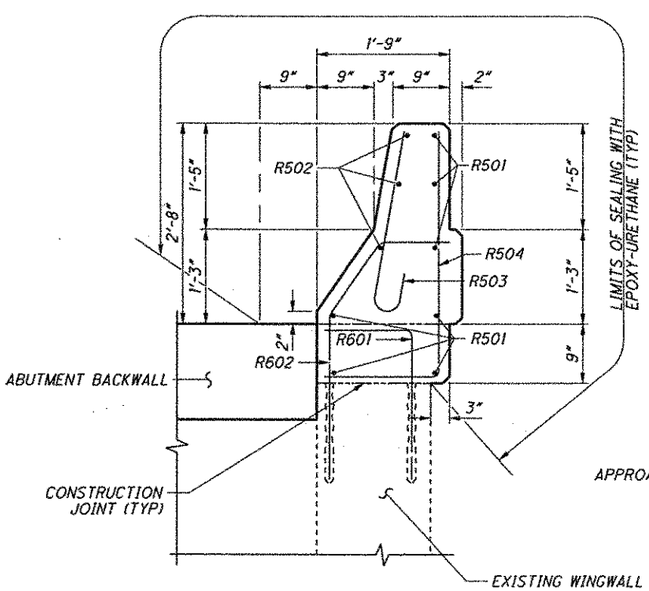


SECTION C-C

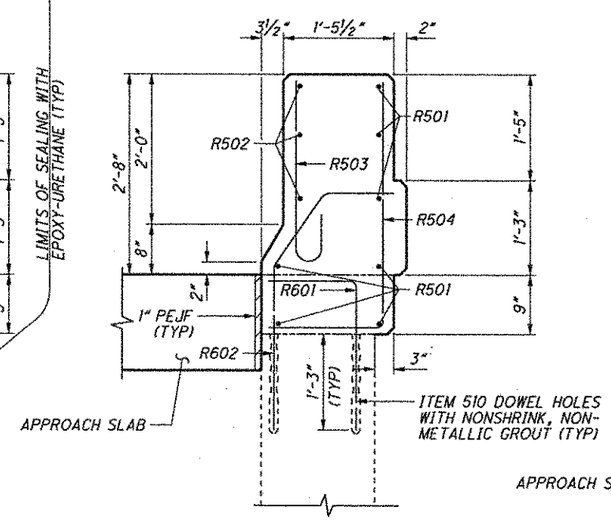


SECTION D-D

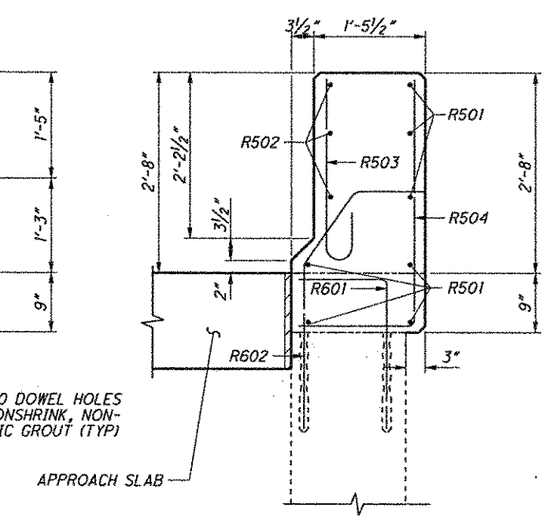


SECTION E-E

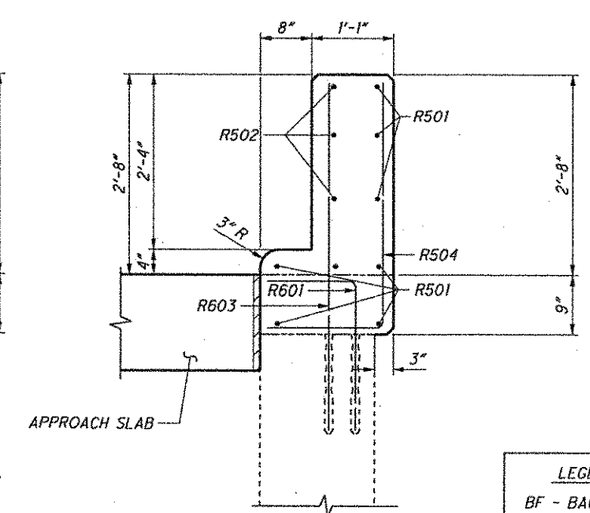


SECTION F-F

LEGEND

BF - BACK FACE

FF - FRONT FACE

EF - EACH FACE

NOTE: SECTIONS IDENTICAL FOR BOTH WINGWALLS

DESIGN AGENCY
PALMER ENGINEERING
1300 CORNELL PARK DR
CINCINNATI, OH 45242

| DESIGNED | DRAWN | REVIEWED | DATE |
|---|---|---|---|
| JPR | SDW | BJF | 7/09 |
| CHECKED | REVISED | STRUCTURE FILE NUMBER | |
| MLJ | | 1203126 | |

APPROACH SLAB PARAPET DETAILS

BRIDGE NO. CLA-68-1147

TR-36 (EAGLE CITY RD.) OVER SR 68

CLA-68-(10.17)
(11.47)(13.66)
PID No. 80826



O:\ODOT\CLA\80826\structures\CLA068_1147C\sheets\068_1147CRA001.dgn 10/30/2009 1:24:26 PM scott-w
PALMER ENGINEERING
1300 CORNELL PARK DR
CINCINNATI, OH 45242

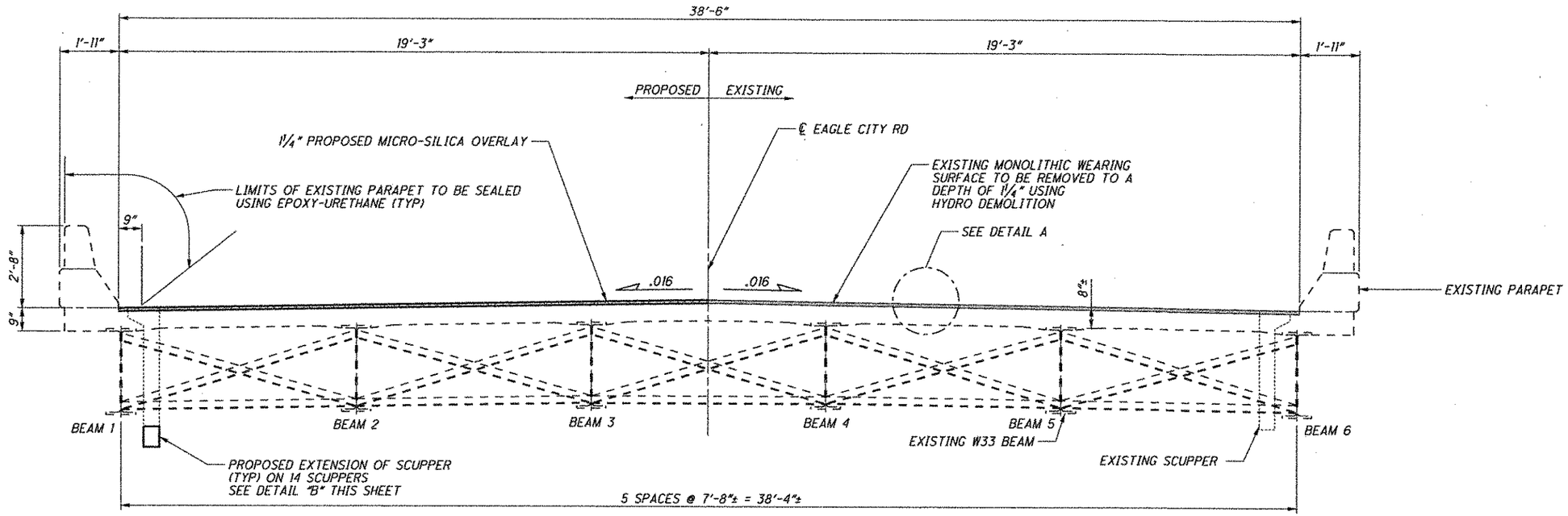


TRANSVERSE SECTION

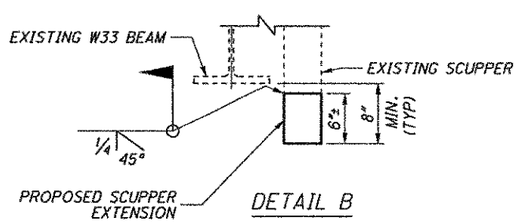


DETAIL B

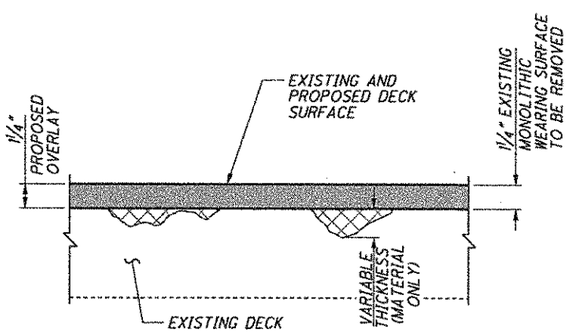


DETAIL A

EXISTING MONOLITHIC WEARING SURFACE TO BE REMOVED USING HYDRODEMOLITION

PARTIAL AND FULL-DEPTH DECK REMOVAL, AS NEEDED

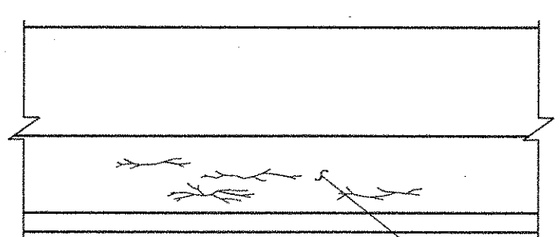

TYPICAL CRACKING IN FACE OF BRIDGE PARAPET. PATCH WITH ITEM 843, TROWELABLE MORTAR OR ITEM 519 PATCHING.

TYPICAL BRIDGE PARAPET ELEVATION

DESIGN AGENCY
Palmer ENGINEERING
6 CORNELL PARK DR
CINCINNATI, OH 45242

| DESIGNED | DRAWN | REVIEWED | DATE |
|---|---|---|---|
| JPR | SDW | BJF | 7/09 |
| CHECKED | REVISED | STRUCTURE FILE NUMBER | |
| MLJ | | 1203126 | |

TRANSVERSE SECTION
BRIDGE NO. CLA-68-1147
TR-36 (EAGLE CITY RD.) OVER SR 68

CLA-68-(10.17)
(11.47)(13.66)
PID No. 80826



O:\ODOT\CLA\80826\structures\CLA068_1147C\sheets\068_1147CTS001.dgn 10/30/2009 1:24:32 PM scott-w
Palmer ENGINEERING 6 CORNELL PARK DR CINCINNATI, OH 45242

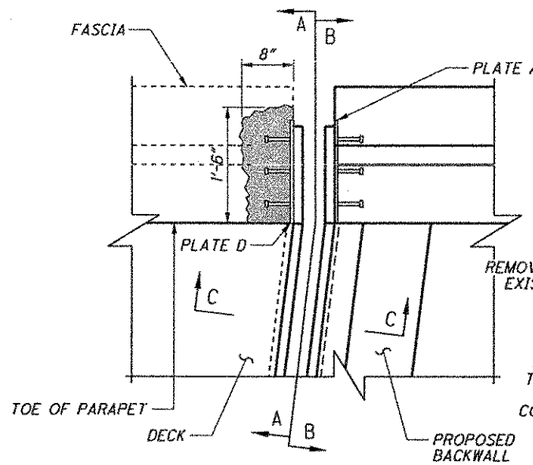


PROPOSED EXPANSION JOINT PLAN

(LEFT FORWARD ABUTMENT SHOWN RIGHT REAR ABUTMENT SIMILAR)

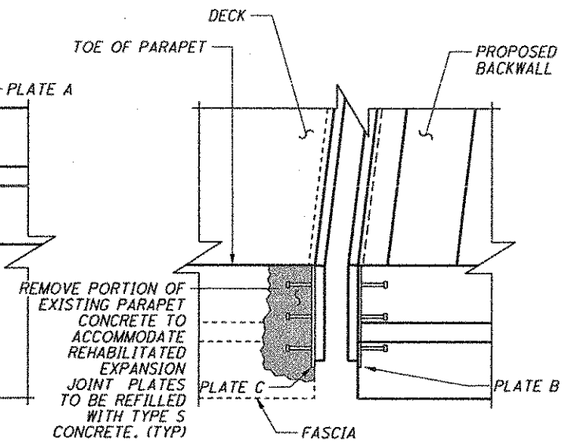


PROPOSED EXPANSION JOINT PLAN

(RIGHT FORWARD ABUTMENT SHOWN LEFT REAR ABUTMENT SIMILAR)

| DIMENSION "A" |
|---|
| 2" @ 30° |
| 1⅞" @ 40° |
| 1¾" @ 50° |
| 1⅝" @ 60° |
| 1½" @ 70° |
| 1⅜" @ 80° |
| 1¼" @ 90° |

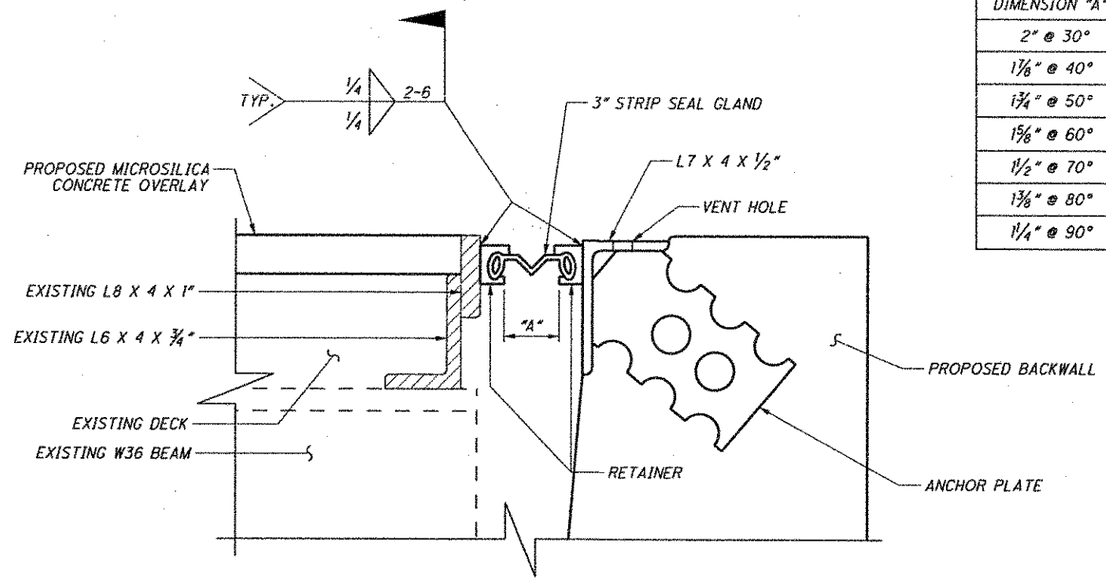


SECTION C-C

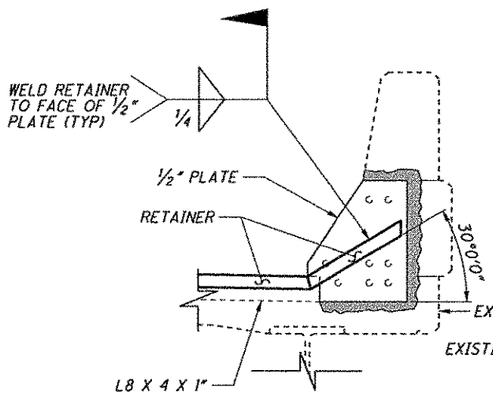


VIEW A-A

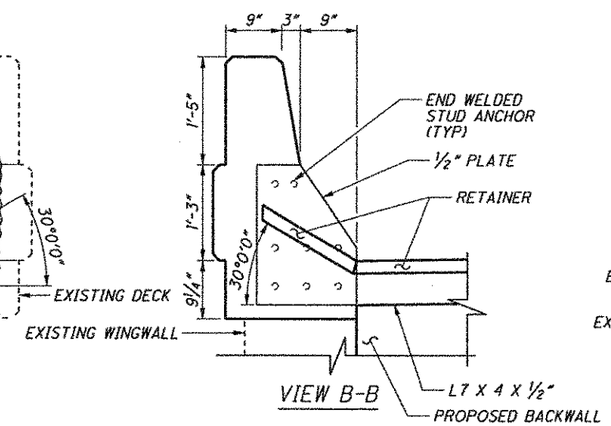


VIEW B-B

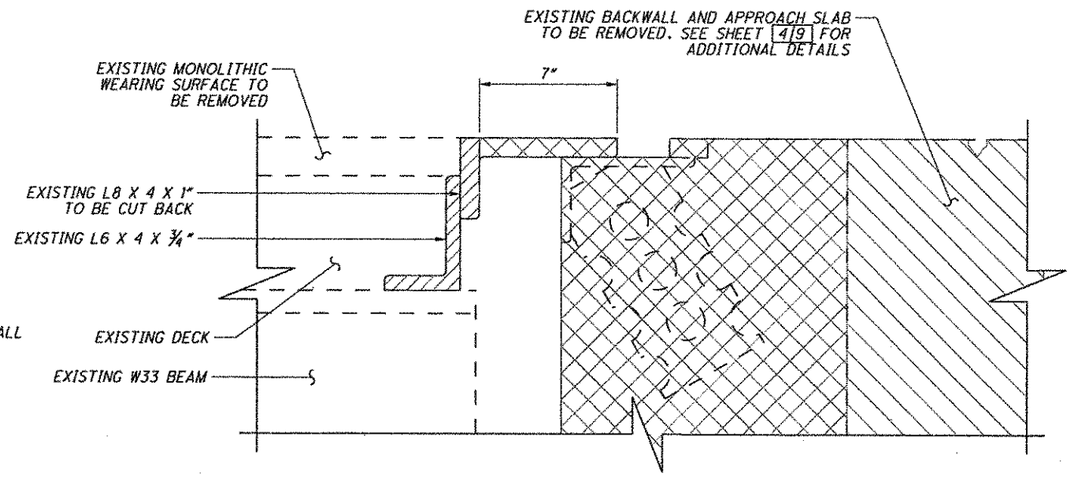


TYPICAL EXPANSION JOINT REMOVAL DETAIL

SEE NOTES THIS SHEET

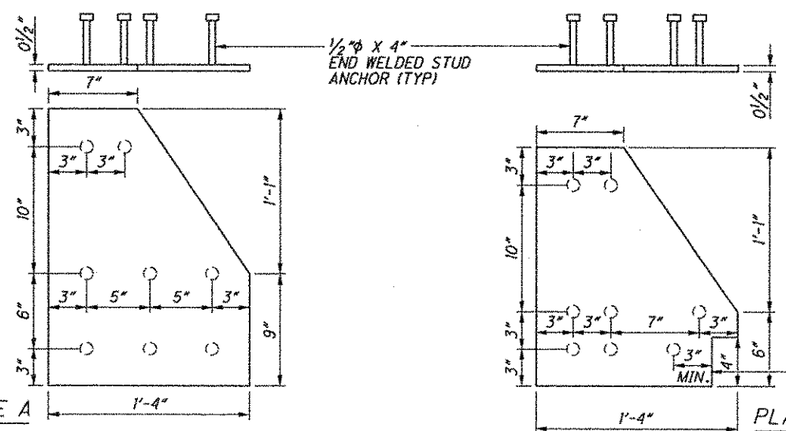


PLATE A

PLATE B (SIMILAR, OPPOSITE HAND)

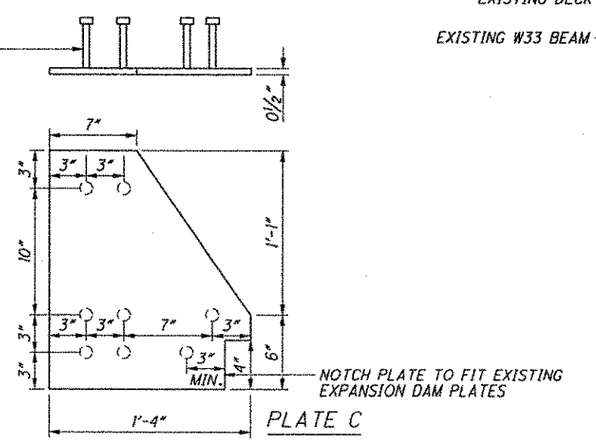


PLATE C

PLATE D (SIMILAR, OPPOSITE HAND)

REMOVAL AND PATCHING OF CONCRETE INCLUDED WITH ITEM 516 - STRUCTURAL EXPANSION JOINT INCLUDING ELASTOMERIC STRIP SEAL, AS PER PLAN.

EXISTING EXPANSION JOINT STEEL TO REMAIN

ITEM 202-PORTIONS OF STRUCTURES REMOVED, OVER 20' SPAN, AS PER PLAN

APPROACH SLAB REMOVED

NOTES

1.) CLASS S CONCRETE IS INCLUDED WITH ITEM 516, STRUCTURAL EXPANSION JOINT INCLUDING ELASTOMERIC STRIP SEAL, AS PER PLAN.

2.) SEE STD. DWG. EXJ-4-87 FOR ADDITIONAL NOTES AND DETAILS.

3.) SEE SHEET 2/9 FOR GENERAL NOTES.


DESIGN AGENCY
PALMER ENGINEERING
10400 CORNELL PARK DR.
CINCINNATI, OH 45242
WINCHESTER, IN • SAVVILLE, IN • ROBERTSDALE, AL • CLARKSVILLE


| DESIGNED | DRAWN | REVIEWED | DATE |
|---|---|---|---|
| JPR | SDW | BJF | 7/09 |
| CHECKED | REVISED | STRUCTURE FILE NUMBER | |
| MLJ | | 1203126 | |

END JOINT MODIFICATIONS

BRIDGE NO. CLA-68-1147

TR-36 (EAGLE CITY RD.) OVER SR 68

CLA-68-(10.17)
(11.47)(13.66)
PID No. 80826




O:\ODOT\CLA\80826\structures\CLA068_1147C\sheets\068_1147CEX001.dgn 10/30/2009 1:24:37 PM scott-w
PALMER ENGINEERING 10400 CORNELL PARK DR. CINCINNATI, OH 45242

| MARK | NUMBER REAR | NUMBER FWD | NUMBER TOTAL | LENGTH | WEIGHT (LBS.) | TYPE | DIMENSIONS A | B | C | D | E | R | INC. |
|---|---|---|---|---|---|---|---|---|---|---|---|---|---|
| APPROACH SLAB PARAPETS | | | | | | | | | | | | | |
| R501 | 14 | 14 | 28 | 10' - 4 " | 302 | STR | | | | | | | |
| R502 | 6 | 6 | 12 | 10' - 4 " | 129 | 25 | 6' - 6" | 2' - 5" | 1' - 5" | 1 1/2" | 5" | | |
| R503 | 18 | 18 | 36 | 3' - 0 " | 113 | 16 | 2' - 5" | | | | | | |
| R504 | 22 | 22 | 44 | 4' - 5 " | 203 | 1 | 1' - 5" | 3' - 1" | | | | | |
| | | | | | | | | | | | | | |
| R601 | 22 | 22 | 44 | 2' - 10 " | 187 | 1 | 1' - 2" | 1' - 10" | | | | | |
| R602 | 18 | 18 | 36 | 4' - 1 " | 221 | 13 | 2' - 1" | 11" | 8" | 11" | | | |
| R603 | 4 | 4 | 8 | 4' - 6 " | 54 | STR | | | | | | | |
| | | | | | | | | | | | | | |
| | | | | | | | | | | | | | |
| | | | | | | | | | | | | | |
| SUBTOTAL | | | | | 1209 | | | | | | | | |

| MARK | NUMBER REAR | NUMBER FWD | NUMBER TOTAL | LENGTH | WEIGHT (LBS.) | TYPE | DIMENSIONS A | B | C | D | E | R | INC. |
|---|---|---|---|---|---|---|---|---|---|---|---|---|---|
| ABUTMENTS | | | | | | | | | | | | | |
| A501 | 4 | 4 | 8 | 38' - 5" | 321 | STR | | | | | | | |
| | | | | | | | | | | | | | |
| A801 | 26 | 26 | 52 | 4' - 8 " | 648 | 20 | 1' - 0" | 1' - 0" | 1' - 11" | 1' - 0" | 1' - 0" | | |
| | | | | | | | | | | | | | |
| SUBTOTAL | | | | | 969 | | | | | | | | |
| TOTAL | | | | | 2178 | | | | | | | | |

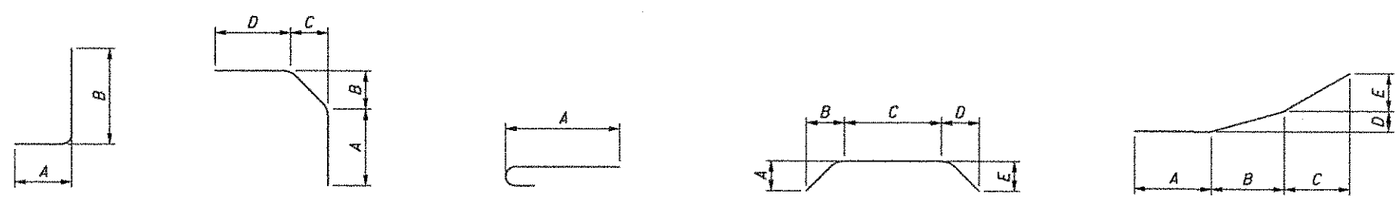


TYPE-1 TYPE-13 TYPE-16 TYPE-20 TYPE-25

DESIGN AGENCY
PALMER ENGINEERING
15000 CORNELL PARK DR
CINCINNATI, OH 45242

| DESIGNED | DRAWN | REVIEWED | DATE |
|---|---|---|---|
| JPR | SDW | BJF | 7/09 |
| CHECKED | REVISED | STRUCTURE FILE NUMBER | |
| MLJ | | 1203126 | |

# REINFORCING STEEL LIST

BRIDGE NO. CLA-68-1147
TR-36 (EAGLE CITY RD.) OVER SR 68

CLA-68-(10.17)
(11.47)(13.66)
PID No. 80826



O:\ODOT\CLA\80826\structures\CLA068_1147C\sheets\068_1147CRL001.dgn 10/30/2009 1:24:43 PM scott-w
PALMER ENGINEERING 15000 CORNELL PARK DR CINCINNATI, OH 45242