LEGEND

(1) ITEM 442 - 1½" ASPHALT CONCRETE (SC), 12.5MM, TYPE A (446)
(2) ITEM 407 - NON-TRACKING TACK COAT
(3) ITEM 442 - 1¾" ASPHALT CONCRETE (IC), 19MM, TYPE A (446)
(4) ITEM 206 - CURING COAT
(5) ITEM 302 - 10" ASPHALT CONCRETE BASE, PG64-22
(6) ITEM 206 - LIME STABILIZED SUBGRADE, 12" DEEP
(7) ITEM 304 - 8" AGGREGATE BASE
(8) ITEM 606 - GUARDRAIL, TYPE MGS
(9) ITEM 605 - 6" BASE PIPE UNDERDRAINS WITH GEOTEXTILE FABRIC
(10) ITEM 605 - 6" SHALLOW PIPE UNDERDRAINS WITH GEOTEXTILE FABRIC
(11) ITEM 659 - SEEDING AND MULCHING
(12) ITEM 609 - CURB, TYPE 6
(13) ITEM 622 - CONCRETE BARRIER, SINGLE SLOPE, TYPE D
(14) ITEM 609 - CURB, TYPE 4C
(15) ITEM 601 - PAVED GUTTER, TYPE 3, AS PER PLAN
(16) MECHANICALLY STABILIZED EARTH WALL (MSE)
(17) ABUTMENT WALL
(18) ITEM 302 - 6" ASPHALT CONCRETE BASE, PG64-22
(19) ITEM 452 - 11" NON REINFORCED CONCRETE PAVEMENT, CLASS QC1
(20) ITEM 608 - 5" CONCRETE SIDEWALK
(21) ITEM 609 - CURB, MISC.: CLERMONT COUNTY CURB AND GUTTER
(22) CONCRETE SLOPE PROTECTION
(23) ITEM 304 - 6" AGGREGATE BASE
(24) ITEM 526 - REINFORCED CONCRETE APPROACH SLABS (T=17")
(25) ITEM 452 - 4" NON-REINFORCED CONCRETE PAVEMENT, CLASS QC1
(26) ITEM 622 - CONCRETE BARRIER, SINGLE SLOPE, TYPE C1
(27) ITEM 204 - PROOF ROLLING
(28) ITEM 605 - 4" BASE PIPE UNDERDRAINS
(29) ITEM 204 - SUBGRADE COMPACTION
(30) ITEM 441 - 1¼" AC SURFACE COURSE, TYPE 1, (448), PG64-22
(31) ITEM 441 - 1¾" AC INTERMEDIATE COURSE, TYPE 2, (448), PG64-22
(32) ITEM 204 - EXCAVATION OF SUBGRADE, 12" DEEP
(33) ITEM SPECIAL, CABLE BARRIER (EXISTING)
(34) ITEM 622 - CONCRETE BARRIER, SINGLE SLOPE, TYPE D, AS PER PLAN
(35) ITEM 254 - PAVEMENT PLANING, ASPHALT CONCRETE (DEPTH VARIES 1.5" MAX)
(36) ITEM 304 - 23.1" AGGREGATE BASE
(37) ITEM 254 - PAVEMENT PLANING, ASPHALT CONCRETE (1.5" DEPTH)
(38) ITEM 601 - PAVED GUTTER, TYPE 1-2, AS PER PLAN
(39) ITEM 302 - 8¾" ASPHALT CONCRETE BASE, PG64-22
(40) ITEM 204 - GRANULAR MATERIAL, TYPE B
(41) ITEM 204 - GEOTEXTILE FABRIC

(A) 3" ASPHALT CONCRETE
(B) 9" CONCRETE
(C) AGGREGATE BASE
(D) CONCRETE BARRIER

PAVEMENT EDGE DETAILS

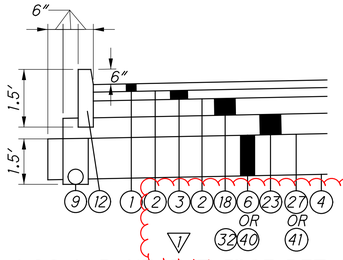

1 LOCAL PAVEMENT EDGE DETAIL WITH TYPE 6 CURB

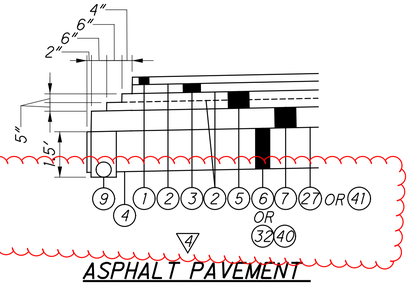

4 ASPHALT PAVEMENT EDGE STEP DETAIL

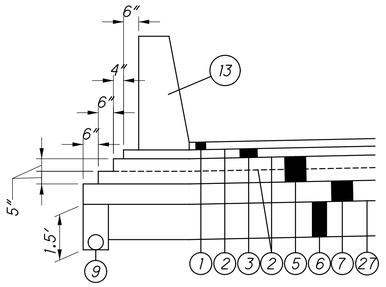

7 CONCRETE BARRIER WITH ASPHALT PAVEMENT EDGE STEP DETAIL

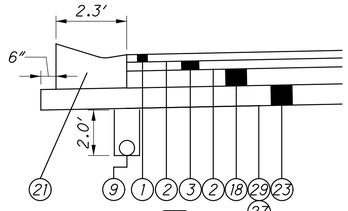

2 PAVEMENT EDGE DETAIL WITH CLERMONT COUNTY CURB AND GUTTER

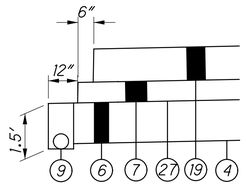

5 CONCRETE PAVEMENT EDGE STEP DETAIL

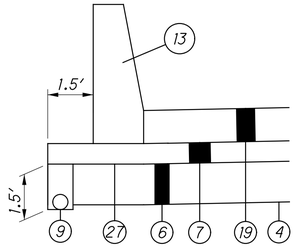

8 CONCRETE BARRIER WITH CONCRETE PAVEMENT EDGE STEP DETAIL

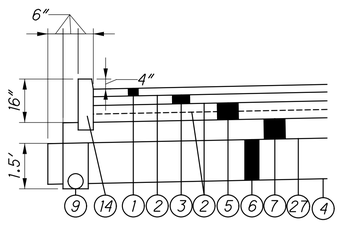

3 PAVEMENT EDGE DETAIL WITH TYPE 4C CURB

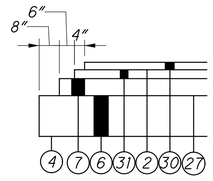

6 PAVEMENT EDGE DETAIL COMMERCIAL DRIVEWAYS NOT ABUTTING CURB

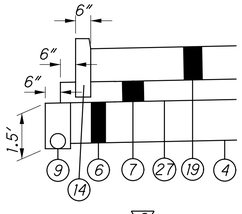

9 CONCRETE PAVEMENT WITH TYPE 4C CURB

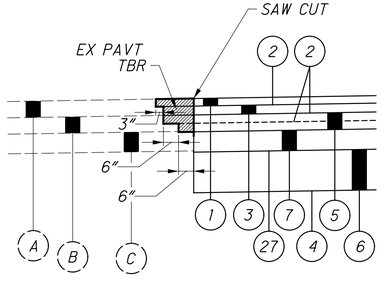

10 PHASING & SAW CUT JOINT DETAIL

TYPICAL SECTIONS

CLE-32-3.50
(PHASE 5)

...\303.205\103954_GY501.dgn 11/4/2021 1:05:29 PM mswhitt

SHEET INTENTIONALLY BLANK

[A] VARIES 0.0′ TO 14.0′±
STA 134+00.00 TO STA 134+50.00±
14.0′±
STA 134+50.00± TO STA 139+39.73

[B] VARIES 1.2′ TO 9.6′
STA 134+00.00 TO STA 135+50.00
VARIES 9.6′ TO 16.0′
STA 135+50.00 TO STA 139+39.73

[C] VARIES 10.0′ TO 4.0′
STA 134+00.00 TO STA 135+50.00
4.0′
STA 135+50.00 TO STA 139+40.00

[D] VARIES 2.0′ TO 8.7′
STA 134+00.00 TO STA 136+15.63
VARIES 8.7′ TO 0.0′
STA 136+15.63 TO STA 136+54.45
0.0′
STA 136+54.45 TO STA 139+40.00

[E] WB OUTSIDE LANE FULL DEPTH REPLACEMENT SECTION APPLIES SR-32:
STA 142+03.69 TO 143+37.48
STA 143+73.43 TO 144+10.10

[F] EB OUTSIDE LANE FULL DEPTH REPLACEMENT SECTION APPLIES SR-32:
STA 143+68.34 TO 144+65.30

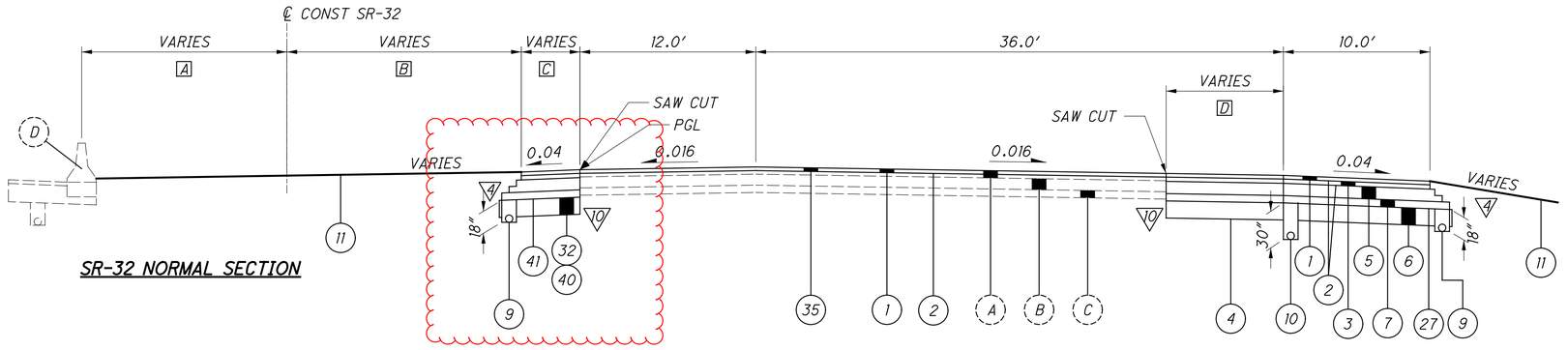

SR-32 NORMAL SECTION

STA. 134+00.00 TO STA. 139+40.00

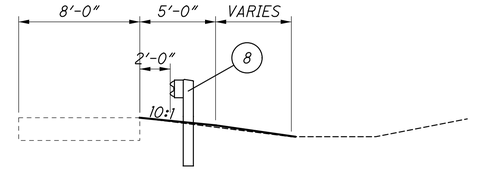

EB SR-32 OUTSIDE SHOULDER SECTION
STA 129+01.53 TO 130+64.00

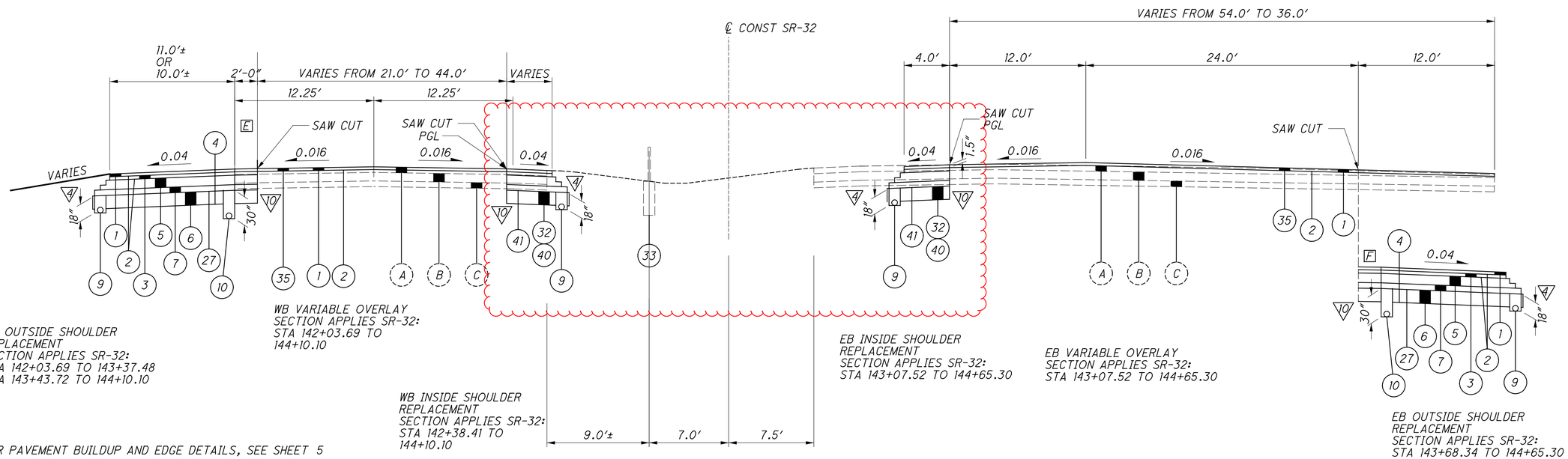

WB OUTSIDE SHOULDER REPLACEMENT
SECTION APPLIES SR-32:
STA 142+03.69 TO 143+37.48
STA 143+43.72 TO 144+10.10

WB VARIABLE OVERLAY
SECTION APPLIES SR-32:
STA 142+03.69 TO
144+10.10

WB INSIDE SHOULDER REPLACEMENT
SECTION APPLIES SR-32:
STA 142+38.41 TO
144+10.10

EB INSIDE SHOULDER REPLACEMENT
SECTION APPLIES SR-32:
STA 143+07.52 TO 144+65.30

EB VARIABLE OVERLAY
SECTION APPLIES SR-32:
STA 143+07.52 TO 144+65.30

EB OUTSIDE SHOULDER REPLACEMENT
SECTION APPLIES SR-32:
STA 143+68.34 TO 144+65.30

▽ FOR PAVEMENT BUILDUP AND EDGE DETAILS, SEE SHEET 5

FOR LEGEND, SEE SHEET 5

TYPICAL SECTIONS - SR-32

CLE-32-3.50
(PHASE 5)

...\303.205\103954_GY501.dgn 11/4/2021 1:05:29 PM mswhitt

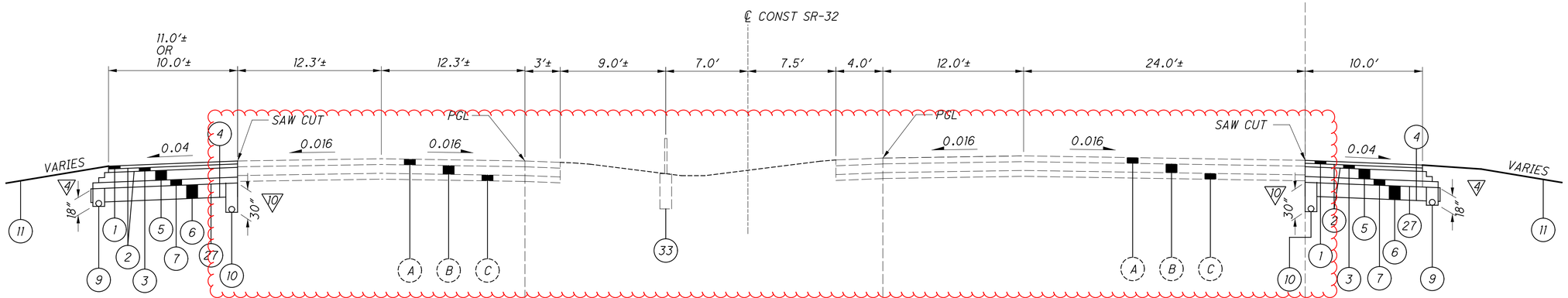

WB OUTSIDE SHOULDER REPLACEMENT
SECTION APPLIES SR-32:
STA 158+12.78 TO STA 159+32.74
STA 188+44.21 TO STA 190+00.00
STA 234+71.22 TO STA 236+35.30

SR-32 NORMAL SECTION

EB OUTSIDE SHOULDER REPLACEMENT
SECTION APPLIES SR-32:
STA 170+73.24 TO STA 175+08.78
STA 184+72.23 TO STA 189+50.00
STA 195+99.61 TO STA 197+28.82
STA 204+50.00 TO STA 205+59.52

FAYARD TURNAROUND
LOCAL PAVEMENT
SECTION APPLIES SR-32:
STA 158+91.58 TO STA
159+74.66

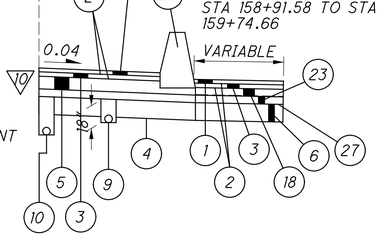

EB OUTSIDE SHOULDER REPLACEMENT
SECTION APPLIES SR-32:
STA 158+71.15 TO STA 159+90.10

NOTE: INSIDE SHOULDER BUILDUP
IDENTICAL TO OUTSIDE SHOULDER

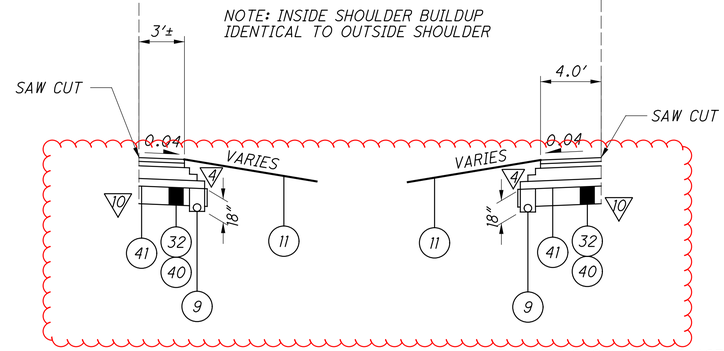

WB INSIDE SHOULDER REPLACEMENT
SECTION APPLIES SR-32:
STA 144+10.10 TO STA 153+50.00
STA 188+02.27 TO STA 192+03.94
STA 234+95.57 TO STA 239+21.68

EB INSIDE SHOULDER REPLACEMENT
SECTION APPLIES SR-32:
STA 139+39.82 TO STA 143+07.52
STA 144+65.30 TO STA 150+21.50
STA 185+35.00 TO STA 187+50.00
STA 232+35.00 TO STA 236+42.52

▽ FOR PAVEMENT BUILDUP AND EDGE DETAILS, SEE SHEET 5

FOR LEGEND, SEE SHEET 5

TYPICAL SECTIONS - SR-32

CLE-32-3.50
(PHASE 5)

...\303.205\103954_GY501.dgn 11/4/2021 1:05:30 PM mswhitt

[A] VARIES 10.0′ TO 8.0′
STA 171+90.25 TO STA 172+40.25
8.0′
STA 172+40.25 TO STA 184+40.08
VARIES 8.0′ TO 6.0′
STA 184+40.08 TO STA 184+90.08
6.0′
STA 184+90.08 TO STA 188+44.21

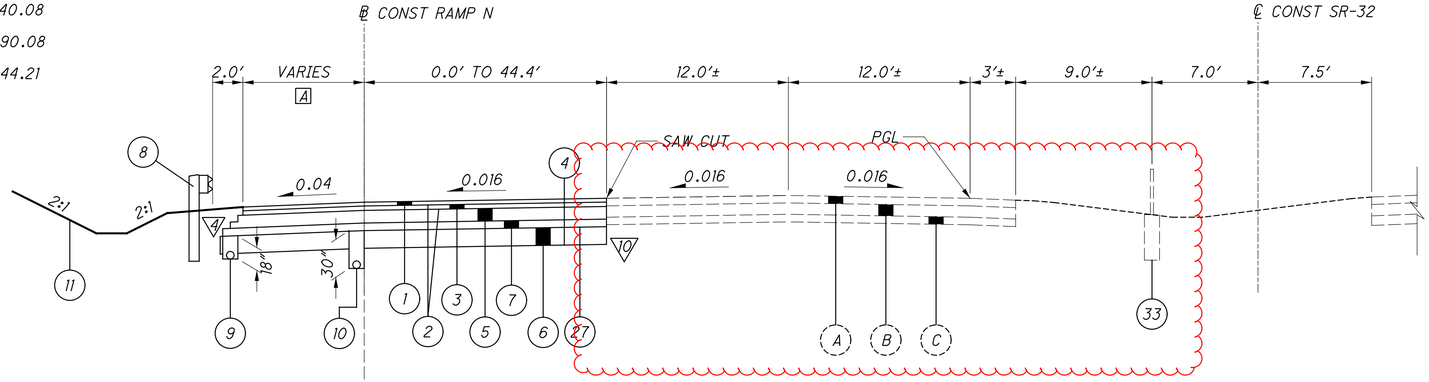

[C] VARIES 0.0′ TO 12.0′
STA 180+01.20 TO STA 181+01.20
VARIES 12.0′ TO 39.0′
STA 181+01.20 TO STA 188+87.92

[D] VARIES 10.0′ TO 8.0′
STA 180+01.20 TO STA 181+01.20
8.0′
STA 181+01.20 TO STA 188+48.94

SR-32 NORMAL SECTION

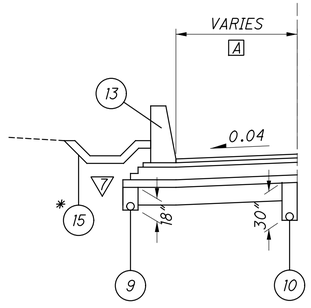

WB OUTSIDE LANE AND SHOULDER WORK
SECTION APPLIES SR-32:
STA 171+90.25 TO STA 188+44.21

* PAVED GUTTER BEGINS
AT STA. 185+50.00

SECTION APPLIES SR-32:
STA 182+25.00 TO STA 188+44.21

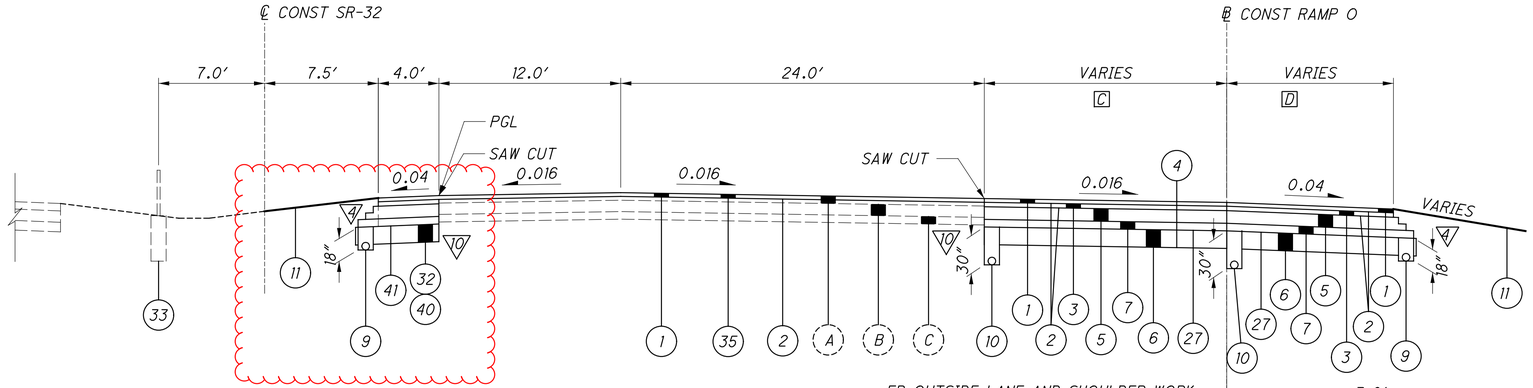

SR-32 NORMAL SECTION

EB LANES VARIABLE OVERLAY AND
OUTSIDE SHOULDER REPLACEMENT
SECTION APPLIES SR-32:
STA 187+50.00 TO STA 189+50.00

EB OUTSIDE LANE AND SHOULDER WORK
SECTION APPLIES SR-32:
STA 180+01.20 TO STA 188+87.92

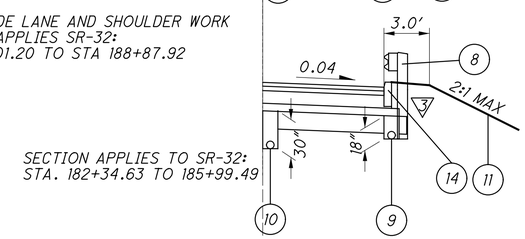

SECTION APPLIES TO SR-32:
STA. 182+34.63 TO STA 185+99.49

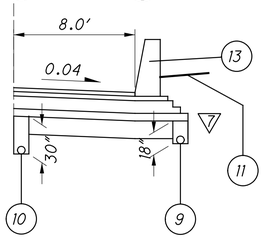

SECTION APPLIES TO SR-32:
STA. 185+99.49 TO STA 188+87.92

▽ FOR PAVEMENT BUILDUP AND EDGE DETAILS, SEE SHEET 5

FOR LEGEND, SEE SHEET 5

TYPICAL SECTIONS - SR-32

CLE-32-3.50
(PHASE 5)

...\303.205\103954_GY501.dgn 11/4/2021 1:05:30 PM mswhitt

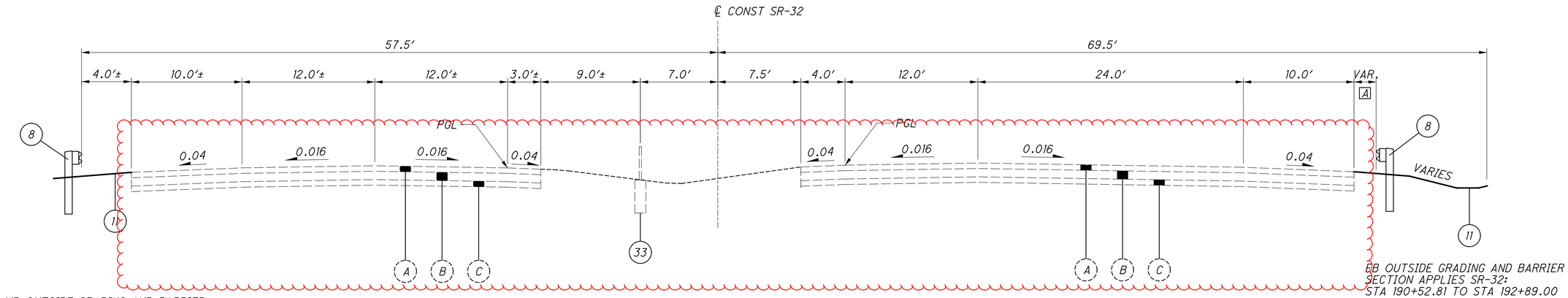

WB OUTSIDE GRADING AND BARRIER
SECTION APPLIES SR-32:
STA 190+30.10 TO STA 202+22.81

SECTION APPLIES SR-32:
STA 189+50.00 TO STA 196+25.00

EB OUTSIDE GRADING AND BARRIER
SECTION APPLIES SR-32:
STA 190+52.81 TO STA 192+89.00

SR-32 NORMAL SECTION

A 2.0′
STA 190+52.81 TO STA 191+94.60
VARIES 2.0′ TO 12.0′
STA 184+40.08 TO STA 192+89.00

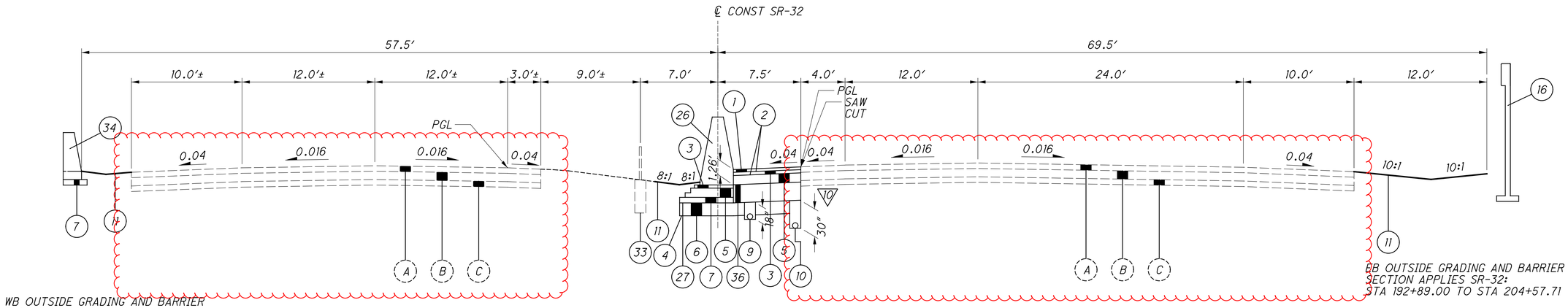

WB OUTSIDE GRADING AND BARRIER
SECTION APPLIES SR-32:
STA 196+94.70 TO STA 199+85.91

MEDIAN BARRIER WORK
SECTION APPLIES SR-32:
STA 196+90.50 TO STA 198+98.00

EB OUTSIDE GRADING AND BARRIER
SECTION APPLIES SR-32:
STA 192+89.00 TO STA 204+57.71

SR-32 NORMAL SECTION

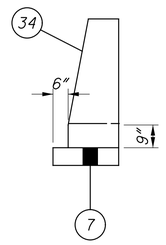

SINGLE SLOPE BARRIER, TYPE D, AS PER PLAN

▽ FOR PAVEMENT BUILDUP AND EDGE DETAILS, SEE SHEET 5

FOR LEGEND, SEE SHEET 5

TYPICAL SECTIONS - SR-32

CLE-32-3.50
(PHASE 5)

...\303.205\103954_GY501.dgn 11/4/2021 1:05:30 PM mswhitt

[A] 8.0′
STA 207+94.20 TO STA 215+48.49
VARIES 8.0′ TO 10.0′
STA 215+48.49 TO STA 216+48.49

[B] VARIES 39.0′ TO 12.0′
STA 207+94.20 TO STA 215+48.49
VARIES 12.0′ TO 0.0′
STA 215+48.49 TO STA 216+48.49

[C] VARIES 44.5′ TO 0.0′
STA 205+59.52 TO STA 236+64.00
0.0′
STA 236+64.00 TO STA 236+79.47

[D] 6.0′
STA 205+59.52 TO STA 209+15.88
VARIES 6.0′ TO 8.0′
STA 209+15.88 TO STA 209+64.58
8.0′
STA 209+64.58 TO STA 235+64.00
VARIES 8.0′ TO 10.0′
STA 235+64.00 TO STA 236+64.00
10.0′
STA 236+64.00 TO STA 236+79.47

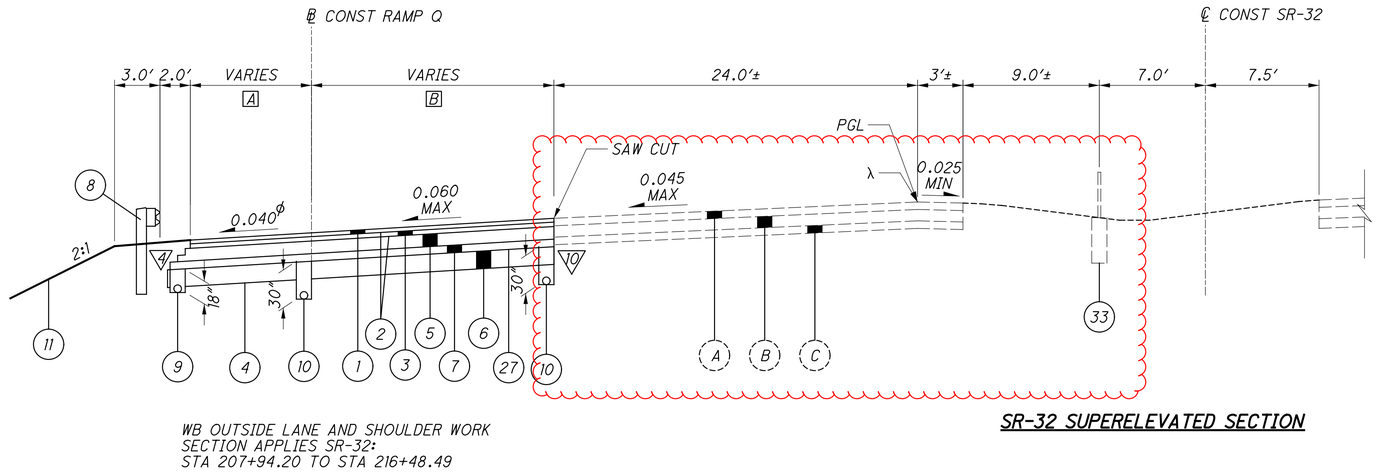

WB OUTSIDE LANE AND SHOULDER WORK
SECTION APPLIES SR-32:
STA 207+94.20 TO STA 216+48.49

SR-32 SUPERELEVATED SECTION

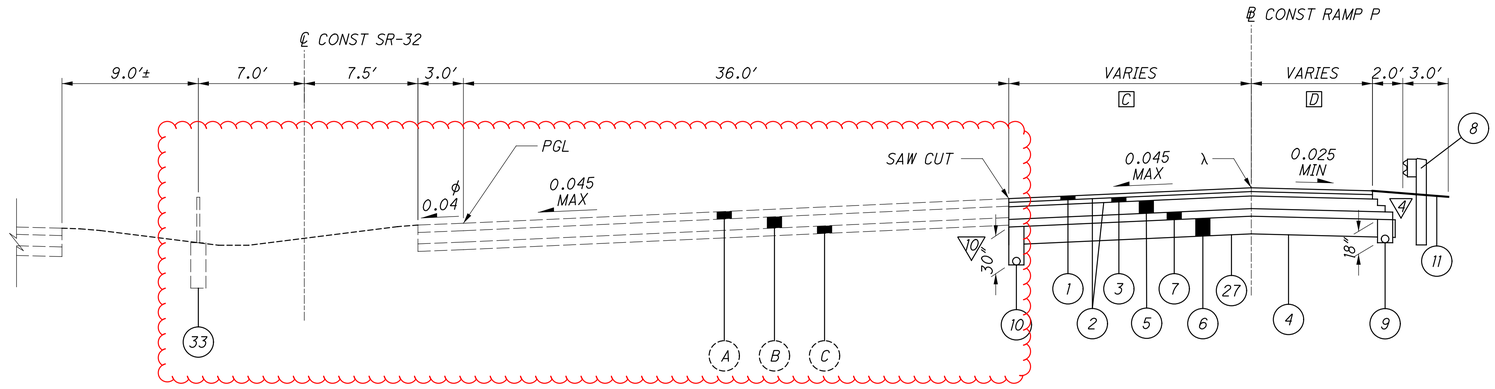

SR-32 SUPERELEVATED SECTION

EB OUTSIDE LANE AND SHOULDER WORK
SECTION APPLIES SR-32:
STA 205+59.52 TO STA 231+74.42

λ 7.00% MAX BREAK

ϕ 0.040 OR RATE OF SUPER IF GREATER

▽ FOR PAVEMENT BUILDUP AND EDGE DETAILS, SEE SHEET 5

FOR LEGEND, SEE SHEET 5

\303.205\103954_GY501.dgn 11/4/2021 1:05:30 PM mswhitt

TYPICAL SECTIONS - SR-32

CLE-32-3.50
(PHASE 5)

[A] VARIES 44.5′ TO 0.0′
STA 205+59.52 TO STA 236+64.00
0.0′
STA 236+64.00 TO STA 236+79.47

[B] 6.0′
STA 205+59.52 TO STA 209+15.88
VARIES 6.0′ TO 8.0′
STA 209+15.88 TO STA 209+64.58
8.0′
STA 209+64.58 TO STA 235+64.00
VARIES 8.0′ TO 10.0′
STA 235+64.00 TO STA 236+64.00
10.0′
STA 236+64.00 TO STA 236+79.47

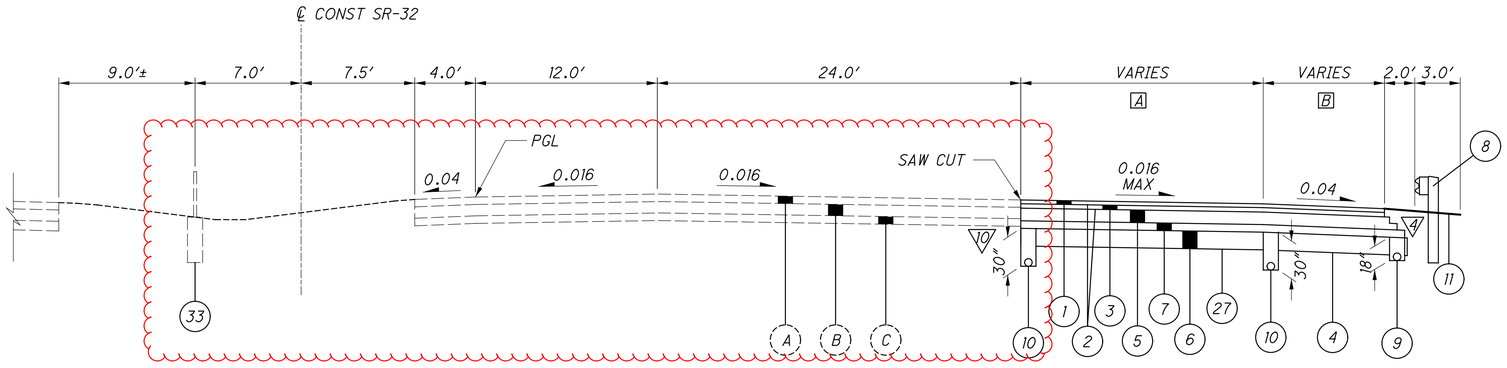

SR-32 NORMAL SECTION

EB OUTSIDE LANE AND SHOULDER WORK
SECTION APPLIES SR-32:
STA 231+74.42 TO STA 236+79.47

λ 7.00% MAX BREAK
ϕ 0.040 OR RATE OF SUPER IF GREATER
▽ FOR PAVEMENT BUILDUP AND EDGE DETAILS, SEE SHEET 5
FOR LEGEND, SEE SHEET 5

TYPICAL SECTIONS - SR-32

CLE-32-3.50
(PHASE 5)

12
736

...\303.205\103954_GY501.dgn 11/4/2021 1:05:32 PM mswhitt

[A] VARIES 0.0′ TO 8.0′
STA 184+40.25 TO STA 190+40.25
8.0′
STA 190+40.25 TO STA 191+80.63
VARIES 8.0′ TO 20.0′
STA 191+80.63 TO STA 195+85.63
20.0′
STA 195+85.63 TO STA 196+88.49
VARIES*
STA 196+88.49 TO STA 197+53.99

[B] 16.0′
STA 188+43.69 TO STA 196+98.06
VARIES*
STA 196+98.06 TO STA 197+49.47

[C] SHOULDER TAPERS FROM 6.0′ TO 0.0′*
STA 196+88.49 TO STA 197+21.66

*FOR ADDITIONAL INFORMATION,
SEE INTERSECTION DETAIL

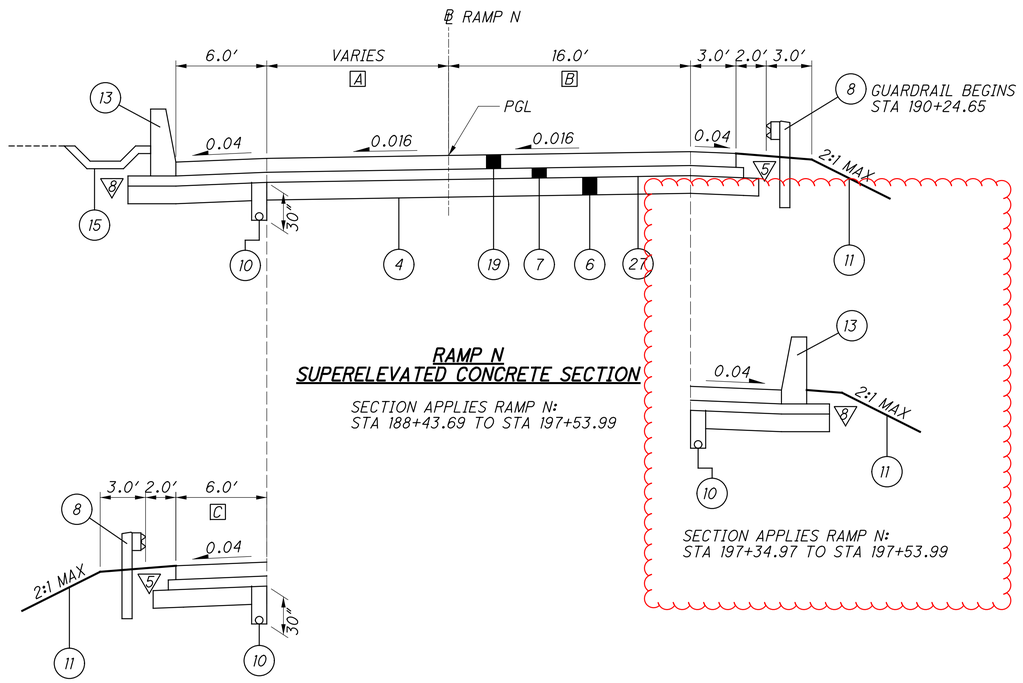

▽ FOR PAVEMENT EDGE DETAILS, SEE SHEET 5
FOR LEGEND, SEE SHEET 5

TYPICAL SECTIONS - RAMP N

CLE-32-3.50
(PHASE 5)

13
736

...\303.205\103954_GY502.dgn 11/4/2021 1:05:43 PM mswhitt

[A] 4.0′
STA 198+99.39 TO STA 199+37.78
VARIES 4.0′ TO 3.0′
STA 199+37.78 TO STA 199+62.78
3.0′
STA 199+62.78 TO STA 200+11.10

[B] 0.0′
STA 199+13.39 TO STA 199+37.78
VARIES 0.0′ TO 2.0′
STA 199+37.78 TO STA 199+62.78
2.0′
STA 199+62.78 TO STA 200+11.10

[C] 24.0′
STA 200+11.10 TO STA 201+55.00
VARIES 24.0′ TO 0.0′
STA 201+55.00 TO STA 202+55.00
0.0′
STA 202+55.00 TO STA 205+80.03

[D] 24.0′
STA 200+11.10 TO STA 201+55.00
VARIES 24.0′ TO 16.0′
STA 201+55.00 TO STA 202+05.00
16.0′
STA 202+05.00 TO STA 205+80.03

[E] 6.0′
STA 205+80.03 TO STA 207+55.50
VARIES 6.0′ TO 8.0′
STA 207+55.50 TO STA 208+05.69

*FOR ADDITIONAL INFORMATION,
SEE INTERSECTION DETAIL

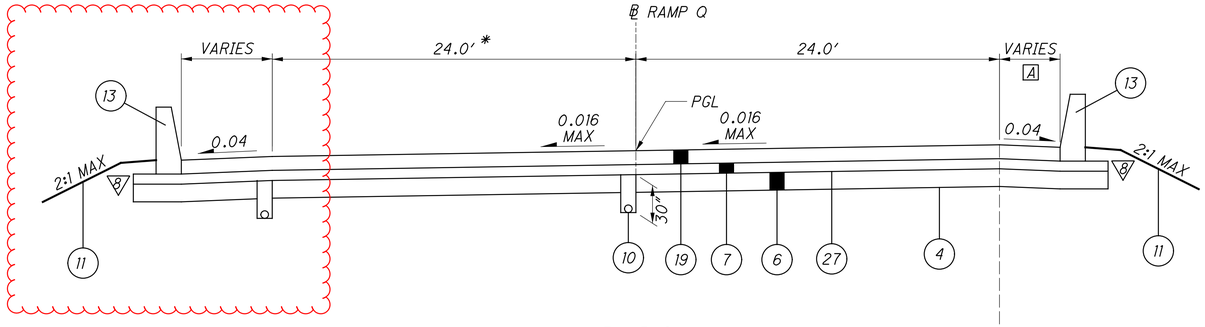

RAMP Q
SUPERELEVATED CONCRETE SECTION

SECTION APPLIES RAMP Q:
STA 198+99.39 TO STA 200+11.10

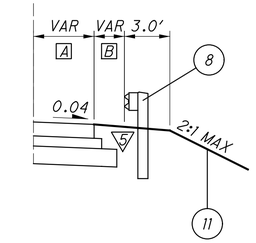

SECTION APPLIES RAMP Q:
STA 199+13.39 TO STA 200+11.10

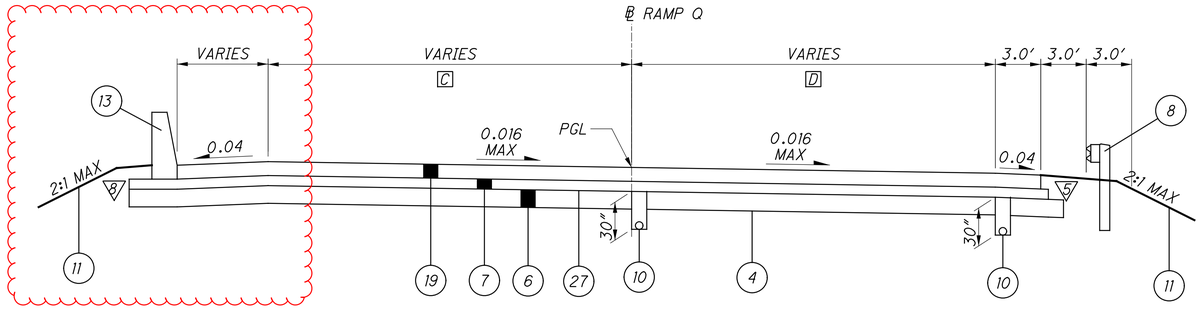

RAMP Q
SUPERELEVATED CONCRETE SECTION

SECTION APPLIES RAMP Q:
STA 200+11.10 TO STA 205+80.03

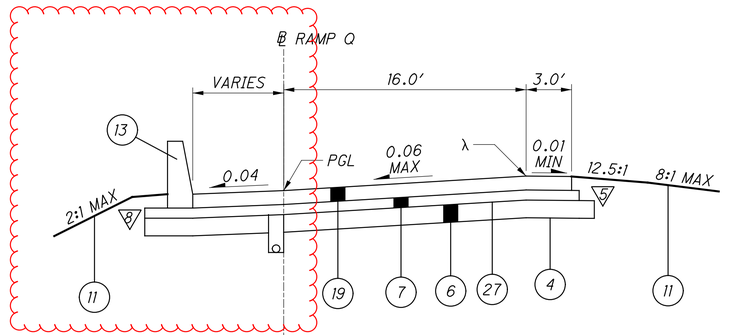

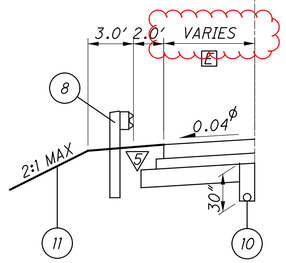

RAMP Q
SUPERELEVATED CONCRETE SECTION

SECTION APPLIES RAMP Q:
STA 205+80.03 TO STA 208+05.69

SECTION APPLIES RAMP Q:
STA 206+65.18 TO STA 208+05.69

▽ FOR PAVEMENT EDGE DETAILS, SEE SHEET 5
λ 7.00% MAX BREAK
ϕ 0.040 OR RATE OF SUPER IF GREATER
FOR LEGEND, SEE SHEET 5

TYPICAL SECTIONS - RAMP Q

CLE-32-3.50
(PHASE 5)

16
736

...\303.205\103954_GY502.dgn 11/4/2021 1:05:44 PM mswhitt

*FOR ADDITIONAL INFORMATION,
SEE INTERSECTION DETAIL

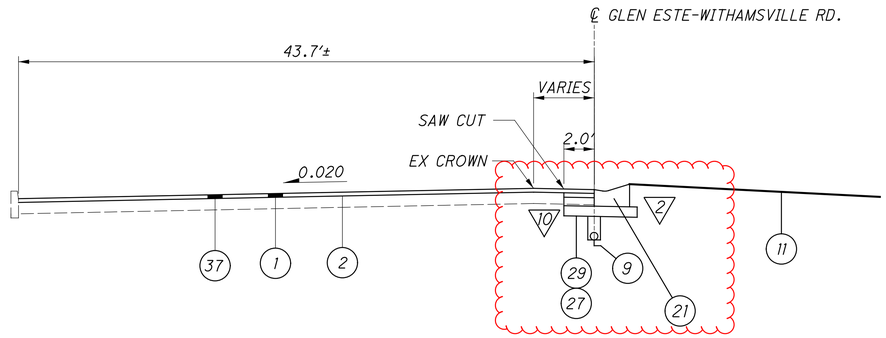

GLEN ESTE-WITHAMSVILLE RD.
NORMAL SECTION

SECTION APPLIES
GLEN ESTE-WITHAMSVILLE RD.:
STA 15+41.62 TO STA 19+38.04

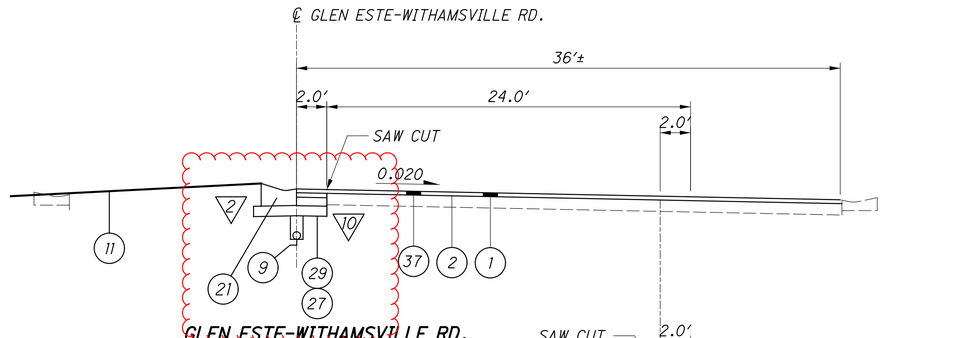

GLEN ESTE-WITHAMSVILLE RD.
NORMAL SECTION

SECTION APPLIES
GLEN ESTE-WITHAMSVILLE RD.:
STA 20+58.43 TO STA 24+14.40

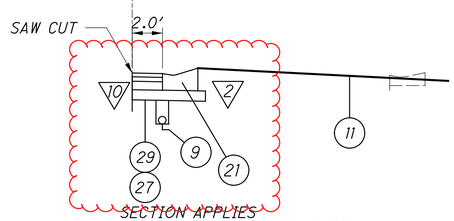

SECTION APPLIES
GLEN ESTE-WITHAMSVILLE RD.:
STA 21+05.66 TO STA 22+98.98

▽ FOR PAVEMENT EDGE DETAILS, SEE SHEET 5
FOR LEGEND, SEE SHEET 5

TYPICAL SECTIONS - GLEN ESTE-WITHAMSVILLE RD.

CLE-32-3.50
(PHASE 5)

20
736

...\303.205\103954_GY502.dgn 11/4/2021 1:05:44 PM mswhitt

*FOR ADDITIONAL INFORMATION,
SEE INTERSECTION DETAIL

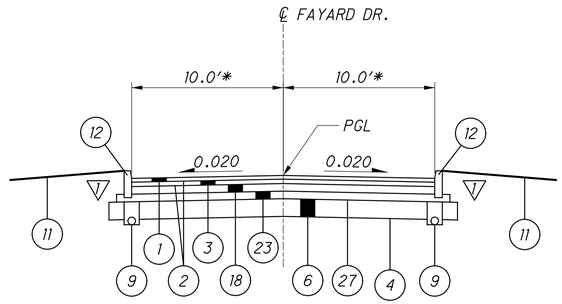

FAYARD DR. CUL DE SAC
NORMAL SECTION

SECTION APPLIES FAYARD DR.:
STA 10+00.00 TO STA 11+29.00

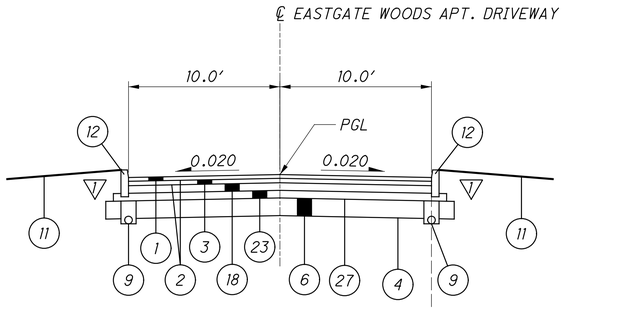

EASTGATE WOODS APT.
NORMAL SECTION

SECTION APPLIES
EASTGATE WOODS APT.:
STA 5+92.79 TO STA 9+64.32

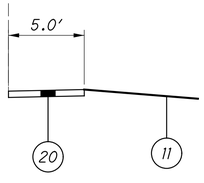

SECTION APPLIES
EASTGATE WOODS APT.:
STA 6+56.22 TO STA 7+65.80

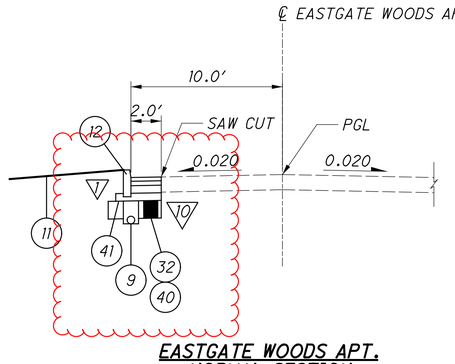

EASTGATE WOODS APT.
NORMAL SECTION

SECTION APPLIES
EASTGATE WOODS APT.:
STA 9+65.15 TO STA 11+18.62

▽ FOR PAVEMENT EDGE DETAILS, SEE SHEET 5
FOR LEGEND, SEE SHEET 5

\303.205\103954_GY502.dgn 11/4/2021 1:05:44 PM mswhitt

TYPICAL SECTIONS - FAYARD DR. / DRIVEWAY

CLE-32-3.50
(PHASE 5)

*FOR ADDITIONAL INFORMATION,
SEE INTERSECTION DETAIL

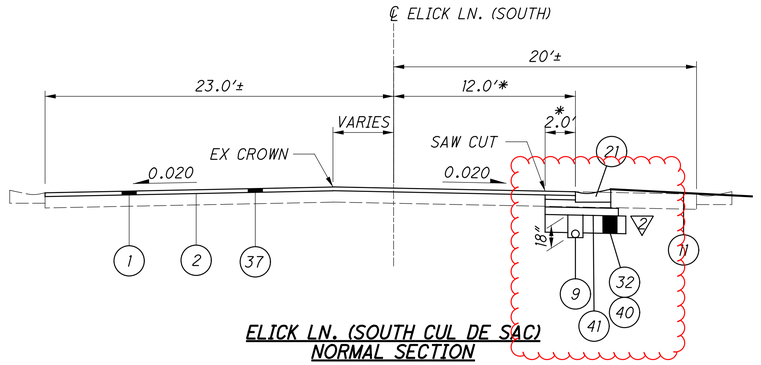

ELICK LN. (SOUTH CUL DE SAC)
NORMAL SECTION

SECTION APPLIES
ELICK LN. (SOUTH):
STA 48+38.96* TO STA 50+85.32*

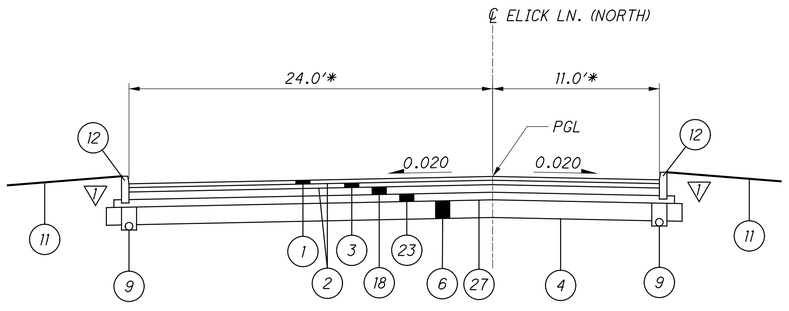

ELICK LN. (NORTH CUL DE SAC)
NORMAL SECTION

SECTION APPLIES
ELICK LN. (NORTH):
STA 60+00.61 TO STA 62+00.00

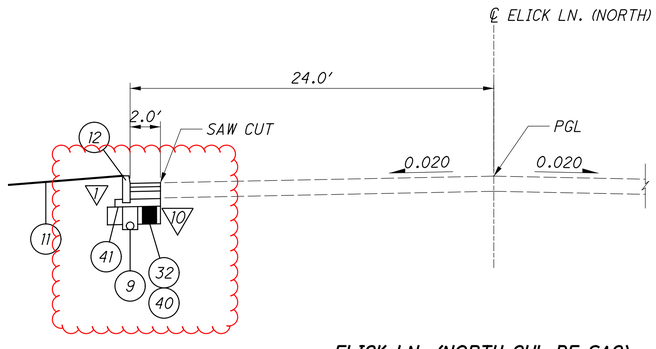

ELICK LN. (NORTH CUL DE SAC)
NORMAL SECTION

SECTION APPLIES
ELICK LN. (NORTH):
STA 62+00.00 TO STA 63+55.12

▽ FOR PAVEMENT EDGE DETAILS, SEE SHEET 5
FOR LEGEND, SEE SHEET 5

...\303.205\103954_GY502.dgn 11/4/2021 1:05:44 PM mswhitt

TYPICAL SECTIONS - ELICK LN.

CLE-32-3.50
(PHASE 5)

SEEDING AND MULCHING

THE FOLLOWING QUANTITIES ARE PROVIDED TO PROMOTE GROWTH AND CARE OF PERMANENT SEEDED AREAS:

659, SOIL ANALYSIS TEST	2 EACH
659, TOPSOIL	5,948 CU. YD.
659, SEEDING AND MULCHING	53,587 SQ. YD.
659, REPAIR SEEDING AND MULCHING	2,679 SQ. YD.
659, INTER-SEEDING	2,679 SQ. YD.
659, COMMERICAL FERTILIZER	7.48 TON
659, LIME	11.07 ACRES
659, WATER	297 M GALS
659, MOWING	121 SQ. FT.

SEEDING AND MULCHING SHALL BE APPLIED TO ALL AREAS OF EXPOSED SOIL BETWEEN THE RIGHT-OF-WAY LINES, AND WITHIN THE CONSTRUCTION LIMITS FOR AREAS OUTSIDE THE RIGHT-OF-WAY LINES COVERED BY WORK AGREEMENT OR SLOPE EASEMENT. QUANTITY CALCULATIONS FOR SEEDING AND MULCHING ARE BASED ON THESE LIMITS.

ITEM 606 - ANCHOR ASSEMBLY, MGS TYPE E (MASH 2016)

THIS ITEM SHALL CONSIST OF FURNISHING AND INSTALLING ANY OF THE GUARDRAIL END TERMINALS FOR TYPE MGS GUARDRAIL AS LISTED ON ROADWAY ENGINEERING'S WEB PAGE UNDER ROADSIDE SAFETY DEVICES FOR APPROVED GUARDRAIL END TREATMENTS. INSTALLATION SHALL BE AT THE LOCATIONS SPECIFIED IN THE PLANS, IN ACCORDANCE WITH THE MANUFACTURER'S SPECIFICATIONS.

THE FACE OF THE TYPE E IMPACT HEAD SHALL BE COVERED WITH A SHEET OF TYPE G REFLECTIVE SHEETING, PER CMS 730.19.

REFER TO THE MANUFACTURER'S INSTRUCTIONS REGARDING THE INSTALLATION OF, AND THE GRADING AROUND THE FOUNDATION TUBES AND GROUND STRUT. THE TOP OF ANY FOUNDATION TUBE SHOULD BE LESS THAN 4 INCHES ABOVE THE GROUND. THE PLACEMENT OF THE FOUNDATION TUBES SHOULD BE AN APPROPRIATE DEPTH BELOW THE LEVEL LINE IN ORDER TO MAINTAIN THE FINISHED GUARDRAIL HEIGHT OF 31 INCHES FROM THE EDGE OF THE SHOULDER.

ON-SITE GRADING IS REQUIRED IF THE TOP OF THE FOUNDATION TUBES OR TOP OF THE GROUND STRUT DOES PROJECT MORE THAN 4 INCHES ABOVE THE GROUND LINE.

PAYMENT FOR THE ABOVE WORK SHALL BE MADE AT THE UNIT PRICE BID FOR ITEM 606, ANCHOR ASSEMBLY, MGS TYPE E, EACH, AND SHALL INCLUDE ALL LABOR, TOOLS, EQUIPMENT AND MATERIALS NECESSARY TO CONSTRUCT A COMPLETE AND FUNCTIONAL ANCHOR ASSEMBLY SYSTEM, INCLUDING ALL RELATED TRANSITIONS, REFLECTIVE SHEETING, HARDWARE, GRADING, EMBANKMENT AND EXCAVATION NOT SEPARATELY SPECIFIED, AS REQUIRED BY THE MANUFACTURER.

CONNECTION BETWEEN EXISTING AND PROPOSED GUARDRAIL

WHEN IT IS NECESSARY TO SPLICE PROPOSED GUARDRAIL TO EXISTING GUARDRAIL, ONLY THE EXISTING GUARDRAIL SHALL BE CUT, DRILLED, OR PUNCHED. THE CONNECTION SHALL BE MADE USING A "W-BEAM RAIL SPLICE" AS SHOWN IN AASHTO M 180. PAYMENT SHALL BE INCLUDED IN THE CONTRACT PRICE FOR THE RESPECTIVE GUARDRAIL ITEMS.

PART WIDTH CONSTRUCTION

BECAUSE OF THE NECESSITY TO BUILD THIS PROJECT UNDER TRAFFIC AND TO CONSTRUCT THE FULL PAVEMENT WIDTH IN STAGES, EXERCISE CARE TO PREVENT THE CONSTRUCTION OF A BUTT JOINT IN THE BASE COURSES. LAP LONGITUDINAL JOINTS AS SHOWN ON STANDARD DRAWING BP-3.1.

ITEM 206 - MIXTURE DESIGN FOR CHEMICALLY STABILIZED SOILS, AS PER PLAN

OBTAIN SOIL SAMPLES AS OUTLINED IN SUPPLEMENT 1120 FOLLOWING EXCAVATION OR EMBANKMENT PLACEMENT TO THE DESIGN SUBGRADE LEVEL. THE SOIL SAMPLES FOR SUPPLEMENT 1120 TESTING ARE TO BE OBTAINED FROM THE ACTUAL SUBGRADE SOILS. SAMPLING OF THE SOILS OUTSIDE THE ACTUAL STABILIZATION LIMITS OR FROM A BORROW AREA IS PROHIBITED. THE CONSTRUCTION SCHEDULE SHALL INCLUDE SPECIFIC ACTIVITIES FOR SAMPLING AND TESTING OF THE SUBGRADE SOILS FOR ALL PHASES OR PARTIAL PHASES OF CONSTRUCTION. PERFORM THE MIXTURE DESIGN PROCEDURE FOR EACH PHASE AS OUTLINED IN SUPPLEMENT 1120. DURING CONSTRUCTION, OBTAIN FIELD VERIFICATION SAMPLES FOR EACH PHASE OF CONSTRUCTION AND SUBMIT THE TEST RESULTS FOR EACH PHASE AS THE LABORATORY TESTING IS COMPLETE.

ITEM 204 - PROOF ROLLING

THE FOLLOWING QUANTITY IS PROVIDED IN THE GENERAL SUMMARY TO ADDRESS LOCATIONS REQUIRING PROOF ROLLING. SEE PLAN SHEET 159 FOR ADDITIONAL INFORMATION.

ITEM 204 - PROOF ROLLING 30 HOURS.

PROTECTION OF RIGHT-OF-WAY LANDSCAPING

PRIOR TO BEGINNING WORK, THE CONTRACTOR, THE PROJECT ENGINEER, AND A REPRESENTATIVE OF THE MAINTAINING AGENCY WILL REVIEW AND RECORD ALL LANDSCAPING ITEMS WITHIN THE RIGHT OF WAY (BOTH WITHIN AND OUTSIDE THE CONSTRUCTION LIMITS) A RECORD OF THIS REVIEW WILL BE KEPT IN THE PROJECT ENGINEER'S FILES. PRIOR TO FINAL ACCEPTANCE, A FINAL REVIEW OF LANDSCAPING ITEMS WILL BE MADE.

CONSTRICT ALL ACTIVITIES, EQUIPMENT STORAGE, AND STAGING TO WITHIN THE CONSTRUCTION LIMITS. UNLESS OTHERWISE IDENTIFIED IN THE PLANS OR PROPOSAL, THE CONSTRUCTION LIMITS ARE IDENTIFIED AS 30 FEET FROM THE EDGE OF PAVEMENT.

SUBMIT A WRITTEN REQUEST TO THE PROJECT ENGINEER TO USE ANY AREA OUTSIDE THESE LIMITS. THE DOCUMENT SUBMITTED MUST CLEARLY IDENTIFY THE AREA AND EXPLAIN THE PROPOSED USE AND RESTORATION OF THE AREA. EXCEPT AS INDICATED ON SHEET ___ USE OF THESE AREAS FOR DISPOSAL OF WASTE MATERIAL AND CONSTRUCTION DEBRIS, EXCAVATION OF BORROW MATERIAL AND PLACEMENT OF PORTABLE PLANTS IS PROHIBITED. THE REQUEST MUST BE APPROVED, IN WRITING, BEFORE THE CONTRACTOR HAS PERMISSION TO USE THE AREA.

ANY ITEMS DAMAGED BEYOND THE CONSTRUCTION LIMITS AS DEFINED ABOVE WILL BE REPLACED IN KIND OR AS APPROVED BY THE PROJECT ENGINEER.

BENCHING OF FOUNDATION SLOPES

ALTHOUGH CROSS-SECTIONS INDICATE SPECIFIC DIMENSIONS FOR PROPOSED BENCHING OF THE EMBANKMENT FOUNDATIONS IN CERTAIN AREAS, NO WAIVER OF THE SPECIFICATIONS IS INTENDED. BENCH ALL OTHER SLOPED EMBANKMENT AREAS AS SET FORTH IN 203.05. NO ADDITIONAL PAYMENT WILL BE MADE FOR BENCHING REQUIRED UNDER THE PROVISIONS OF 203.05.

ITEM 202 - BUILDING DEMOLISHED, AS PER PLAN

REMOVAL AND DEMOLITION OF THE STRUCTURE SHALL INCLUDE REMOVAL OF ALL FOOTINGS, FLOOR SLABS, BASEMENT WALLS, UNDERGROUND TANKS AND ANY OTHER BELOW GRADE ITEMS. THE STRUCTURE SHALL BE REMOVED ENTIRELY. REMOVE AND DISPOSAL OF ALL STRUCTURE DEBRIS OFF-SITE. BACKFILL THE STRUCTURE VOID ACCORDING TO CMS 202.02.

ITEM 204 - ENBANKMENT, AS PER PLAN

ANY NEW EMBANKMENT REQUIRED TO ESTABLISH THE UPPER 12" OF THE DESIGN PAVEMENT SUBGRADE SHALL CONSIST OF NATURAL SOIL. THE NATURAL SOIL SHALL CONSIST OF COHESIVE MATERIAL CLASSIFYING AS A-7-6 OR A-6B PER THE ODOT SOIL CLASSIFICATION SYSTEM AND SHALL HAVE A PLASTICITY INDEX OF 16% OR GREATER. THE ITEM 204 EMBANKMENT, AS PER PLAN SHALL ALSO MEET THE SULFATE REQUIREMENTS OUTLINED IN SUPPLEMENT 1120. ALL OTHER ITEMS OUTLINED IN ITEM 204 SHALL APPLY TO THIS PAY ITEM. SHALE AND LIMESTONE BEDROCK EXCAVATED IN THE PROJECT AREA SHALL NOT BE UTILIZED AS EMBANKMENT WITHIN THE UPPER 12" OF THE DESIGN PAVEMENT SUBGRADE.

ITEM 619 - FIELD OFFICE, TYPE C, AS PER PLAN

IN ADDITION TO THE REQUIREMENTS PROVIDED IN CMS FOR THE TYPE OF FIELD OFFICE SPECIFIED, PROVIDE THE FOLLOWING ITEMS:

[1] FOR EACH TELEPHONE AND/OR COMPUTER STATION SPECIFIED, PROVIDE ALL ETHERNET WIRING NECESSARY TO CONNECT THE PHONE AND/OR COMPUTER AND MULTI-FUNCTION COPIER TO THE INTERNET COMPANY SYSTEM.

[5] PROVIDE A BROADBAND INTERNET CONNECTION CAPABLE OF MINIMUM DOWNLOAD SPEEDS AS FOLLOWS:

30 MBPS DOWNLOAD 5 MBPS UPLOAD - NETWORK LATENCY LESS THAN 50 MILLISECONDS. IF SPEEDS ARE NOT AVAILABLE THROUGH AN INDIVIDUAL OR SINGULAR CIRCUIT, PROVIDE THE HIGHEST SPEED AVAILABLE IN THE AREA AND INSTALL MULTIPLE CIRCUITS TO ACHIEVE THE SPECIFIED SPEEDS. WHEN MULTIPLE BROADBAND SERVICES ARE AVAILABLE, THE FOLLOWING IS THE DESCENDING ORDER OF PRECEDENCE: CABLE, DSL, CELLULAR, AND WIRELESS RADIO (SATELLITE COMMUNICATION IS NOT COMPATIBLE WITH ODOT VPN CONNECTION AND WILL NOT BE ACCEPTED). SUPPLY MODEMS CAPABLE OF BEING CONFIGURED IN BRIDGE MODE. IF A CELLULAR NETWORK IS USED, PROVIDE THE CELLULAR EQUIPMENT, INCLUDING SOFTWARE AND ROUTER EQUIPMENT TO CONNECT TO THE ODOT PROVIDED CISCO ASA 5505 FIREWALL. SUPPLY ODOT WITH ALL DOCUMENTATION FOR THE BROADBAND CIRCUIT INCLUDING ALL USERNAME/USER IDS, PASSWORDS AND ACCOUNT INFORMATION. VERIFY THAT THE BROADBAND INTERNET CONNECTION IS ACTIVE AND WORKING AS SPECIFIED. ODOT IT PERSONNEL WILL CONFIRM THAT BANDWIDTH AND NETWORK LATENCY ARE COMPLIANT WITH THE REQUIRED FIELD OFFICE SPECIFICATIONS. ALL FIELD OFFICE INTERNET CONNECTIONS ARE FOR ODOT USE ONLY.

PHASING JOINT

THE FOLLOWING QUANTITIES HAVE BEEN CALCULATED TO ACCOUNT FOR THE PHASING JOINT LOCATED AT ALL SAWCUT LINES.

SAWCUT LENGTH = 13,292' (SEE TYPICAL SECTIONS FOR LOCATIONS)

ITEM 202, PAVEMENT REMOVED = 1,846 SY

ITEM 442 ASPHALT CONCRETE SURFACE COURSE = 77 CY

ITEM 442, ASPHALT CONCRETE INTERMEDIATE COURSE = 72 CY

ITEM 302, ASPHALT CONCRETE BASE COURSE = 308 CY

CALCULATED MSW CHECKED WAA

GENERAL NOTES

CLE-32-3.50 (PHASE 5)

...\303.205\103954_GN501.dgn 11/4/2021 1:32:50 PM mswhitt

PETROLEUM CONTAMINATED SOIL & GROUNDWATER

ENVIRONMENTAL STUDIES HAVE SHOWN THAT THERE IS A POTENTIAL OF ENCOUNTERING PETROLEUM CONTAMINATED SOIL AND/OR OTHER REGULATED SUBSTANCES DURING EXCAVATIONS FOR CONSTRUCTION ACTIVITIES AT THE FOLLOWING LOCATION:

1. SHELL GAS STATION, 4382 ELICK LANE
BETWEEN STA 189+50L AND 193+00L
2. THORNTON'S GAS STATION, 4360 NEWBERRY DRIVE
BETWEEN STA 196+00R AND 199+00R
3. ACE AUTOMOTIVE COLLISION EXPERTS, 1245 OLD SR 74
BETWEEN STA 214+50L AND 234+00L

THE ENGINEER WILL INITIALLY DETERMINE IF THE EXCAVATED MATERIAL APPEARS TO BE PETROLEUM CONTAMINATED SOIL OR GROUNDWATER BASED ON THE MATERIAL'S APPEARANCE, ODOR, AND THE ENGINEER'S PAST EXPERIENCE. THE CONTRACTOR WILL BE RESPONSIBLE FOR ANY TESTING NECESSARY TO DETERMINE IF THE MATERIAL IS IN FACT PETROLEUM CONTAMINATED.

ALL POTENTIAL PETROLEUM CONTAMINATED SOIL, WITHIN THE AFOREMENTIONED LIMITS, EXCAVATED BY THE CONTRACTOR AT THIS LOCATION MAY BE STOCKPILED IN AN AREA PROVIDED BY THE CONTRACTOR AND APPROVED BY THE ENGINEER. THE ENGINEER MAY PERMIT TEMPORARY STORAGE OF THE EXCAVATED MATERIAL IN A LINED AND COVERED ROLL-OFF BOX. THE ENGINEER MAY PERMIT TEMPORARY STORAGE OF THE EXCAVATED MATERIAL ON AN IMPERMEABLE MEMBRANE. THE MEMBRANE SHALL BE SURROUNDED BY BALES OF STRAW TO PREVENT THE SUSPECTED SOIL FROM COMING IN CONTACT WITH THE ORIGINAL SOIL. AN IMPERMEABLE MEMBRANE SHALL BE PLACED OVER THE STOCKPILE TO PREVENT CONTACT WITH PRECIPITATION AND/OR SURFACE RUN-OFF. THE ENGINEER MAY PERMIT THE CONTRACTOR TO DIRECT LOAD THE EXCAVATED CONTAMINATED MATERIAL INTO TRUCKS.

ANY POTENTIAL PETROLEUM CONTAMINATED MATERIALS SHALL BE TESTED FOR BENZENE, TOLUENE, ETHYLBENZENE, XYLENE (BTEX) AND METHYL TERT-BUTYL ETHER (MTBE) USING USEPA SW-846, METHOD 8260, POLYCYCLIC AROMATIC HYDROCARBONS (PAHS) USING USEPA SW-846, METHOD 8270, AND TOTAL PETROLEUM HYDROCARBONS (TPH) USING USEPA SW-846, METHOD 8015, PER BUSTR GUIDELINES.

ONCE LAB ANALYSIS RESULTS ARE RECEIVED FOR THE MATERIAL(S), THE CONCENTRATIONS OF THE CHEMICALS OF CONCERN SHALL BE COMPARED TO BUSTR'S RE-USE ACTION LEVELS IN TABLE 1 UNDER PARAGRAPH (D)(1) OF OAC 1301:7-9-16 TO DETERMINE IF THE MATERIAL IS INDEED PETROLEUM CONTAMINATED SOIL, AND TO THE GROUNDWATER INGESTION ACTION LEVELS IN (J)(3)(A) OF OAC 1301:7-9-13 TO DETERMINE IF THE MATERIAL IS REGULATED WATER. THIS FINAL DETERMINATION SHALL BE MADE BY THE ENGINEER.

IN THE EVENT PETROLEUM-CONTAMINATED SOIL AND/OR OTHER REGULATED SUBSTANCES ARE ENCOUNTERED, THE CONTRACTOR SHALL MANAGE THIS MATERIAL ACCORDING TO THE FOLLOWING GUIDELINES. THE ESTIMATED QUANTITIES HAVE BEEN INCLUDED IN THE GENERAL SUMMARY FOR THIS WORK. ALL EXCAVATIONS AT THE AFOREMENTIONED LOCATION SHALL BE PAID FOR UNDER THE ORIGINAL PLAN BID ITEMS. ALL MATERIAL EXCAVATED BY THE CONTRACTOR AT THIS LOCATION SHALL BE SUBJECT TO TESTING BY AN INSPECTOR PROVIDED BY THE ENGINEER.

THIS MATERIAL SHALL BE PROPERLY TESTED, TRANSPORTED, AND DISPOSED OF IN A LICENSED (BY THE LOCAL HEALTH DEPARTMENT) AND PERMITTED (BY THE OHIO ENVIRONMENTAL PROTECTION AGENCY) SOLID WASTE FACILITY.

THE CONTRACTOR SHALL BE RESPONSIBLE FOR OBTAINING ALL NECESSARY PERMITS AND APPROVALS AND TO TRANSPORT THE MATERIAL TO A LICENSED AND PERMITTED SOLID WASTE DISPOSAL FACILITY. THE CONTRACTOR SHALL CONTACT THE FACILITY TO DETERMINE IF ANY ADDITIONAL TESTING IS REQUIRED FOR DISPOSAL AND WILL BE RESPONSIBLE FOR CONDUCTING ANY ADDITIONAL SAMPLING AND ANALYSIS OF THIS MATERIAL.

THE CONTRACTOR SHALL FURNISH ALL THE LABOR, EQUIPMENT, AND MATERIALS NECESSARY TO PROPERLY HANDLE, STORE (IF NECESSARY), TEST FOR DISPOSAL, TRANSPORT, AND DISPOSE OF REGULATED MATERIALS, INCLUDING ANY REQUIRED PERMITS, APPROVALS, OR FEES WITHIN THE LIMITS IDENTIFIED ABOVE. PAYMENT FOR THIS WORK SHALL BE MADE AT THE CONTRACT PRICE BID PER TON. THE BASIS FOR CONVERSION FROM TONS TO CUBIC YARDS IS 1.5 TON/CUBIC YARD. ALL EXCAVATIONS WITHIN THE AFOREMENTIONED LIMITS SHALL BE PAID FOR UNDER THE ORIGINAL PLAN BID ITEMS. THE FOLLOWING ESTIMATED QUANTITIES HAVE BEEN INCLUDED IN THE GENERAL SUMMARY FOR THE WORK NOTED ABOVE:

690E65010 ITEM SPECIAL - WORK INVOLVING SOLID WASTE	1692 TON
690E65016 ITEM SPECIAL - WORK INVOLVING PETROLEUM CONTAMINATED SOIL	846 TON
690E65020 ITEM SPECIAL - WORK INVOLVING WATER	2000 GAL
690E65024 ITEM SPECIAL - WORK INVOLVING REGULATED WATER	2000 GAL

ITEM 202 - REGULATED UNDERGROUND STORAGE TANK REMOVED

ENVIRONMENTAL STUDIES INDICATE SEVERAL ACTIVE UNDERGROUND STORAGE TANKS (USTS) IN USE AT THE FOLLOWING LOCATIONS WHICH ARE WITHIN THE CONSTRUCTION LIMITS OF THIS PROJECT:

1. SHELL GAS STATION, 4382 ELICK LANE
(3) 10,000 GAL GASOLINE TANKS

2. THORNTON'S GAS STATION, 4360 NEWBERRY DRIVE
(3) 12,000 GAL GASOLINE TANKS
(1) 6,000 GAL KEROSENE TANK

THE CONTRACTOR SHALL REMOVE ALL USTS AND ASSOCIATED PIPING IN ACCORDANCE WITH ODOT CMS 202.08 AND PROVIDE AT LEAST TWO (2) COPIES OF THE CLOSURE REPORT TO THE ENGINEER, ONE FOR SUBMITTAL TO THE BUREAU OF UNDERGROUND STORAGE TANKS REGULATIONS (BUSTR) AND THE SECOND FOR ODOT'S RECORDS.

ALL COSTS AND WORK ASSOCIATED WITH THE COMPLIANCE OF THE AFORMENTIONED RULES OR REGULATIONS SHALL BE INCLUDED IN THE UNIT PRICE FOR ITEM 202 - REGULATED UNDERGROUND STORAGE TANK REMOVED. UNDERGROUND STORAGE TANKS AND THEIR CONTENTS SHALL BE REMOVED IN THEIR ENTIRETY, INCLUDING ALL ASSOCIATED FUEL DISPENSERS AND UNDERGROUND FUEL DISTRIBUTION LINES, AND SHALL BECOME THE PROPERTY OF THE CONTRACTOR AND BE DISPOSED OF BY HIM. IF ANY CONTAMINATED WATER OR SOIL DISPOSAL OR REMEDIATION IS REQUIRED AS A RESULT OF THE UNDERGROUND STORAGE TANK REMOVED, THEN THESE ITEMS OR WORK SHALL BE HANDLED UNDER OTHER ITEMS IN THE CONTRACT.

ITEM 202 - REGULATED UNDERGROUND STORAGE TANK REMOVED (CONT.)

REMOVE THE TANK ACCORDING TO THE BUREAU OF UNDERGROUND STORAGE TANK REGULATIONS OF THE DIVISION OF FIRE MARSHAL (BUSTR), OHIO EPA, AND ALL APPLICABLE FEDERAL, STATE, AND LOCAL REGULATIONS. REMOVAL INCLUDES OBTAINING THE REQUIRED PERMIT, DISPOSING OF THE TANK AND ITS CONTENTS, TESTING THE EXCAVATED MATERIAL, AND PREPARING THE CLOSURE REPORT. PROVIDE A CERTIFIED TANK INSTALLER TO SUPERVISE THE REMOVAL. PROVIDE AN INDEPENDENT, NON-CONTRACTOR EMPLOYEE, BUSTR INSPECTOR OR A STATE CERTIFIED BUSTR INSPECTOR TO PERFORM THE BUSTR REQUIRED INSPECTIONS.

BACKFILL THE CAVITY CREATED BY THE REMOVAL ITEMS ACCORDING TO 202.02, EXCEPT WHEN THE CAVITY LIES WITHIN THE LIMITS OF SUBSEQUENT EXCAVATION OR OTHER WORK.

THE FOLLOWING ESTIMATED QUANTITIES HAVE BEEN INCLUDED IN THE GENERAL SUMMARY FOR THE WORK NOTED ABOVE:

ITEM 202 - REGULATED UNDERGROUND STORAGE TANK REMOVED	7 EACH

ITEM 202 - REMOVAL MISC.: STONE WALL

THIS ITEM IS LOCATED AT THE EXISTING CORNER OF ELICK LANE SOUTH OF SR-32 AND SOUTH OF PROPOSED RAMP O NEAR STA 187+75 AS SHOWN ON SHEET 184 . THE REMOVAL INCLUDES TWO COURSES OF LARGE STONE AT A LENGTH OF APPROXIMATELY 24 FT.

ITEM 202 - REMOVAL MISC.: COMMERCIAL LIGHTING

THIS ITEM CONSISTS OF THE REMOVAL OF LIGHT POLES ALONG OR WITHIN PRIVATE PARKING LOTS IMPACTED BY THE PROPOSED WORK. REMOVAL OF FIXTURES, CONDUIT, AND CONCRETE FOUNDATIONS SHALL BE PER CMS 625.21.

ITEM 202 - REMOVAL MISC.: BILLBOARD

THIS ITEM CONSISTS OF A DUAL STEEL I-BEAM POST BILLBOARD STRUCTURE WITH CONCRETE FOUNDATIONS. THE BILLBOARD IS LOCATED ON PARCEL 451, JUST NORTH OF SR-32 NEAR STA 193+00, AS SHOWN ON SHEET 181. THIS ITEM SHALL INCLUDE THE REMOVAL AND DISPOSAL OF ALL MATERIAL ASSOCIATED WITH THE BILLBOARD, STRUCTURE, LIGHTING SERVICE, AND CONCRETE FOUNDATIONS TO ONE FOOT BELOW THE EXISTING GRADE. APPROXIMATE DIMENSIONS OF SIGN FACES ARE 14' x 50'. ANY REMAINING HOLE FROM THE REMOVAL OF THE SIGN SHALL BE FILLED.

ITEM 606 - IMPACT ATTENUATOR, TYPE 2 (BIDIRECTIONAL)

THIS ITEM SHALL CONSIST OF FURNISHING AND INSTALLING ANY OF THE TYPE 2 IMPACT ATTENUATORS AS LISTED ON THE OFFICE OF ROADWAY ENGINEERING'S WEB PAGE (REFER TO THE POSTED SHOP DRAWINGS FOR THE MOST CURRENT APPROVED PRODUCT MODELS). WHEN BI-DIRECTIONAL DESIGNS ARE SPECIFIED, THE CONTRACTOR SHALL SUPPLY APPROPRIATE TRANSITIONS. THE FACE OF THE IMPACT HEAD SHALL BE COVERED WITH TYPE G REFLECTIVE SHEETING, PER CMS 730.19.

PAYMENT FOR THE ABOVE WORK SHALL BE MADE AT THE UNIT PRICE BID FOR ITEM 606, IMPACT ATTENUATOR, TYPE 2 [60 MPH, 34 IN, (BIDIRECTIONAL)], EACH, AND SHALL INCLUDE ALL LABOR, TOOLS, EQUIPMENT AND MATERIALS NECESSARY TO CONSTRUCT A COMPLETE AND FUNCTIONAL IMPACT ATTENUATOR SYSTEM, INCLUDING ALL RELATED BACKUPS/BACKSTOPS, TRANSITIONS, HARDWARE AND GRADING, NOT SEPARATELY SPECIFIED, AS REQUIRED BY THE MANUFACTURER. INSTALLATION SHALL BE AT THE LOCATIONS SPECIFIED IN THE PLANS, IN ACCORDANCE WITH THE MANUFACTURER'S SPECIFICATIONS.

CALCULATED MSW
CHECKED WAA

GENERAL NOTES

CLE-32-3.50
(PHASE 5)

...\303.205\103954_GN501.dgn 11/4/2021 1:07:08 PM mswhitt

SHEET NUM.												PART.		ITEM	ITEM EXT	GRAND TOTAL	UNIT	DESCRIPTION	SEE SHEET NO.
26	27	29	139	145	146	147	158	159				01/NHS/ OT	04/NHS/ BR						
																		ROADWAY	
LS												LS		201	11000	LS		CLEARING AND GRUBBING	
			1									1		202	20010	1	EACH	HEADWALL REMOVED	
	1,846		48,631									50,477		202	23000	50,477	SY	PAVEMENT REMOVED	
			997									997		202	30000	997	SF	WALK REMOVED	
			769									769		202	30700	769	FT	CONCRETE BARRIER REMOVED	
			2,508									2,508		202	32000	2,508	FT	CURB REMOVED	
			2,131									2,131		202	32500	2,131	FT	CURB AND GUTTER REMOVED	
			1,735									1,735		202	35100	1,735	FT	PIPE REMOVED, 24" AND UNDER	
			1,030									1,030		202	38000	1,030	FT	GUARDRAIL REMOVED	
			116									116		202	38300	116	FT	GUARDRAIL REMOVED, BARRIER DESIGN	
			3									3		202	53100	3	EACH	MAILBOX REMOVED	
			3									3		202	58000	3	EACH	MANHOLE REMOVED	
			20									20		202	58100	20	EACH	CATCH BASIN REMOVED	
		7										7		202	67000	7	EACH	REGULATED UNDERGROUND STORAGE TANK REMOVED	
			6,592									6,592		202	75000	6,592	FT	FENCE REMOVED	
			4									4		202	75250	4	EACH	GATE REMOVED	
			1									1		202	98100	1	EACH	REMOVAL MISC.: BILLBOARD	29
			36									36		202	98100	36	EACH	REMOVAL MISC.: COMMERCIAL LIGHTING	29
			23									23		202	98200	23	FT	REMOVAL MISC.: STONE WALL	29
						13,845	12,253					26,098		203	10000	26,098	CY	EXCAVATION	
						159,478						159,478		203	20000	159,478	CY	EMBANKMENT	
						8,605						8,605		203	20001	8,605	CY	EMBANKMENT, AS PER PLAN	27
								7,374				7,374		204	10000	7,374	SY	SUBGRADE COMPACTION	
								1,021						204	13000	1,021	CY	EXCAVATION OF SUBGRADE, 12" DEEP	
								1,021						204	30010	1,021	CY	GRANULAR MATERIAL, TYPE B	
	30											30		204	45000	30	HOUR	PROOF ROLLING	
								3,062						204	50000	3,062	SY	GEOTEXTILE FABRIC	
								52,279				52,279		206	10010	52,279	SY	LIME STABILIZED SUBGRADE, 12 INCHES DEEP	
								1,353				1,353		206	10300	1,353	TON	LIME	
								52,490				52,490		206	11000	52,490	SY	CURING COAT	
								LS				LS		206	30001	LS		MIXTURE DESIGN FOR CHEMICALLY STABILIZED SOILS, AS PER PLAN	27
				9,277								9,277		606	15050	9,277	FT	GUARDRAIL, TYPE MGS	
				11								11		606	26150	11	EACH	ANCHOR ASSEMBLY, MGS TYPE E (MASH 2016)	
				8								8		606	26550	8	EACH	ANCHOR ASSEMBLY, MGS TYPE T	
				8								8		606	35002	8	EACH	MGS BRIDGE TERMINAL ASSEMBLY, TYPE 1	
				5								5		606	35102	5	EACH	MGS BRIDGE TERMINAL ASSEMBLY, TYPE 2	
				7,907								7,907		607	23000	7,907	FT	FENCE, TYPE CLT	
				1								1		607	61200	1	EACH	GATE, TYPE CLT	
				7,907								7,907		607	70000	7,907	FT	FENCELINE SEEDING AND MULCHING	
				403								403		608	52000	403	SF	CURB RAMP	
					53							53		622	10120	53	FT	CONCRETE BARRIER, SINGLE SLOPE, TYPE C	
					208							208		622	10140	208	FT	CONCRETE BARRIER, SINGLE SLOPE, TYPE C1	
					3,314							3,314		622	10160	3,314	FT	CONCRETE BARRIER, SINGLE SLOPE, TYPE D	
					1,403							1,403		622	10161	1,403	FT	CONCRETE BARRIER, SINGLE SLOPE, TYPE D, AS PER PLAN	10
					2							2		622	24840	2	EACH	CONCRETE BARRIER END SECTION, TYPE B	
					12							12		622	25000	12	EACH	CONCRETE BARRIER END SECTION, TYPE D	
					1							1		622	25009	1	EACH	CONCRETE BARRIER, END ANCHORAGE, REINFORCED, TYPE C, AS PER PLAN	432
					19							19		622	25050	19	EACH	CONCRETE BARRIER, END ANCHORAGE, REINFORCED, TYPE D	
					1							1		622	25051	1	EACH	CONCRETE BARRIER, END ANCHORAGE, REINFORCED, TYPE D, AS PER PLAN A	433
					1							1		622	25051	1	EACH	CONCRETE BARRIER, END ANCHORAGE, REINFORCED, TYPE D, AS PER PLAN B	434
		1,692										1,692		SPECIAL	69065010	1,692	TON	WORK INVOLVING SOLID WASTE	29
		846										846		SPECIAL	69065016	846	TON	WORK INVOLVING PETROLEUM CONTAMINATED SOIL	29
		2,000										2,000		SPECIAL	69065020	2,000	GAL	WORK INVOLVING WATER	29
		2,000										2,000		SPECIAL	69065024	2,000	GAL	WORK INVOLVING REGULATED WATER	29
						18						18		840	23000	18	CY	SELECT GRANULAR BACKFILL	

ITEMS DELETED:
202E48000
606E55000
606E55150
606E60028
622E24860

CALCULATED MSW
CHECKED WAA

GENERAL SUMMARY

CLE-32-3.50
(PHASE 5)

128
736

..\303.205\103954_GG501.dgn 11/4/2021 1:08:29 PM mswhitt

SHEET NUM.												PART.		ITEM	ITEM EXT	GRAND TOTAL	UNIT	DESCRIPTION	SEE SHEET NO.
27	29	145	159	165	166	573						01/NHS/OT	04/NHS/BR						
																		PAVEMENT	
			8,369									8,369		254	01000	8,369	SY	PAVEMENT PLANING, ASPHALT CONCRETE (1.5" DEPTH)	
			4,919									4,919		254	01000	4,919	SY	PAVEMENT PLANING, ASPHALT CONCRETE (DEPTH VARIES, 1.5" MAX)	
308			8,896									9,204		302	46000	9,204	CY	ASPHALT CONCRETE BASE, PG64-22	
			12,241									12,241		304	20000	12,241	CY	AGGREGATE BASE	
			7,115									7,115		407	20000	7,115	GAL	NON-TRACKING TACK COAT	
			32									32		441	50000	32	CY	ASPHALT CONCRETE SURFACE COURSE, TYPE 1, (448), PG64-22	
			44									44		441	50300	44	CY	ASPHALT CONCRETE INTERMEDIATE COURSE, TYPE 2, (448)	
			702									702		442	00100	702	CY	ANTI-SEGREGATION EQUIPMENT	
77			2,151									2,228		442	10000	2,228	CY	ASPHALT CONCRETE SURFACE COURSE, 12.5 MM, TYPE A (446)	
72			1,879									1,951		442	10100	1,951	CY	ASPHALT CONCRETE INTERMEDIATE COURSE, 19 MM, TYPE A (446)	
			380									380		452	09010	380	SY	4" NON-REINFORCED CONCRETE PAVEMENT, CLASS QC 1P	
			14,343									14,343		452	14110	14,343	SY	11" NON-REINFORCED CONCRETE PAVEMENT, CLASS QC 1P	
		87										87		609	12000	87	FT	COMBINATION CURB AND GUTTER, TYPE 2	
		403										403		609	24510	403	FT	CURB, TYPE 4-C	
		4,068										4,068		609	26000	4,068	FT	CURB, TYPE 6	
		1,367										1,367		609	98000	1,367	FT	CURB, MISC.: CLERMONT COUNTY C&G	470
																		WATER WORK	
				3								3		202	75610	3	EACH	VALVE BOX REMOVED	
				3.2								3.2		602	98200	3.2	CY	MASONRY, MISC.:CONCRETE ENCASEMENT (CCWRD ITEM 1170)	473
				2								2		638	08706	2	EACH	8" CUTTING-IN SLEEVE	
				3								3		638	10800	3	EACH	VALVE BOX ADJUSTED TO GRADE	
				287								287		638	98600	287	FT	WATER WORK, MISC.:8" DUCTILE IRON WATER MAIN AND DUCTILE IRON FITTINGS (CCWRD ITEM 2110)	471
																		SANITARY SEWER	
					5							5		202	58700	5	EACH	MANHOLE ABANDONED	
					672							672		611	01800	672	FT	8" CONDUIT, TYPE B, SDR-26 (CCWRD 3110)	
					125							125		611	01800	125	FT	8" CONDUIT, TYPE B, SDR-35 (CCWRD 3110)	
					5							5		611	99375	5	EACH	MANHOLE, NO. 3, AS PER PLAN	472
					4							4		611	99654	4	EACH	MANHOLE ADJUSTED TO GRADE	
																		LIGHTING	
						40						40		625	00450	40	EACH	CONNECTION, FUSED PULL APART	
						42						42		625	00480	42	EACH	CONNECTION, UNFUSED PERMANENT	
						20						20		625	10481	20	EACH	LIGHT POLE, DECORATIVE, AS PER PLAN	571
						20						20		625	14001	20	EACH	LIGHT POLE FOUNDATION, 24" X 6' DEEP, AS PER PLAN	570
						1,650						1,650		625	23200	1,650	FT	NO. 4 AWG 2400 VOLT DISTRIBUTION CABLE	
						7,881						7,881		625	23304	7,881	FT	NO. 8 AWG 600 VOLT DISTRIBUTION CABLE	
						800						800		625	23400	800	FT	NO. 10 AWG POLE AND BRACKET CABLE	
						1,963						1,963		625	25304	1,963	FT	CONDUIT, 1-1/2", 725.051	
						347						347		625	25504	347	FT	CONDUIT, 3", 725.051	
						375						375		625	25902	375	FT	CONDUIT, JACKED OR DRILLED, 725.04, 3"	
						4						4		625	27503	4	EACH	LUMINAIRE, UNDERPASS, SOLID STATE (LED), AS PER PLAN, 240 VOLT	571
						20						20		625	27551	20	EACH	LUMINAIRE, DECORATIVE, AS PER PLAN, 150W HPS, 240 VOLT	571
						2,042						2,042		625	29000	2,042	FT	TRENCH	
						2						2		625	29920	2	EACH	STRUCTURE JUNCTION BOX	
						3						3		625	29930	3	EACH	MEDIAN JUNCTION BOX	
						6						6		625	30700	6	EACH	PULL BOX, 725.08, 18"	
						3						3		625	30706	3	EACH	PULL BOX, 725.08, 24"	
						20						20		625	32000	20	EACH	GROUND ROD	
						1						1		625	33000	1	EACH	STRUCTURE GROUNDING SYSTEM	
						1						1		625	34001	1	EACH	POWER SERVICE, AS PER PLAN	570
						2,042						2,042		625	36010	2,042	FT	UNDERGROUND WARNING/MARKING TAPE	
						LS						LS		625	37000	LS		SERVICE TO UNDERPASS LIGHTING	

ITEMS DELETED:
452E19200

CALCULATED MSW
CHECKED WAA

GENERAL SUMMARY

CLE-32-3.50
(PHASE 5)

130
736

...\303.205\103954_GG501.dgn 11/4/2021 1:08:29 PM mswhitt

SHEET NUM.					PART.		ITEM	ITEM EXT	GRAND TOTAL	UNIT	DESCRIPTION	SEE SHEET NO.
139	591				01/NHS/OT	04/NHS/BR						
											BUILDING DEMOLITION	
LS					LS		202	56000	LS		BUILDING DEMOLISHED, PARCEL 451, 1 STORY CANOPY COMMERCIAL	
LS					LS		202	56000	LS		BUILDING DEMOLISHED, PARCEL 451, 1 STORY BRICK COMMERCIAL	
LS					LS		202	56000	LS		BUILDING DEMOLISHED, PARCEL 455, 1 STORY FRAME GARAGE	
LS					LS		202	56000	LS		BUILDING DEMOLISHED, PARCEL 456, 1 STORY FRAME SHED	
LS					LS		202	56000	LS		BUILDING DEMOLISHED, PARCEL 456, 1 STORY FRAME RESIDENCE	
LS					LS		202	56000	LS		BUILDING DEMOLISHED, PARCEL 456, 1 STORY FRAME COMMERCIAL	
LS					LS		202	56000	LS		BUILDING DEMOLISHED, PARCEL 362, 1 STORY BLOCK COMMERCIAL	
LS					LS		202	56000	LS		BUILDING DEMOLISHED, PARCEL 103, 1 STORY BLOCK COMMERCIAL	
LS					LS		202	56001	LS		BUILDING DEMOLISHED, AS PER PLAN, PARCEL 363, 1 STORY CANOPY COMMERCIAL	27
LS					LS		202	56001	LS		BUILDING DEMOLISHED, AS PER PLAN, PARCEL 363, 1 STORY BLOCK COMMERCIAL	27
											STRUCTURE OVER 20 FOOT SPAN (CLE-32-0374)	
	1,151					1,151	204	50000	1,151	SY	GEOTEXTILE FABRIC	
	LS					LS	503	11100	LS		COFFERDAMS AND EXCAVATION BRACING	
	LS					LS	503	21300	LS		UNCLASSIFIED EXCAVATION	
	LS					LS	505	11100	LS		PILE DRIVING EQUIPMENT MOBILIZATION	
	4,000					4,000	507	00100	4,000	FT	STEEL PILES HP10X42, FURNISHED	
	3,380					3,380	507	00150	3,380	FT	STEEL PILES HP10X42, DRIVEN	
	243,028					243,028	509	10000	243,028	LB	EPOXY COATED REINFORCING STEEL	
	2					2	511	33501	2	EACH	SEMI-INTEGRAL DIAPHRAGM GUIDE, AS PER PLAN	589 & 597
	307					307	511	46512	307	CY	CLASS QC1 CONCRETE WITH QC/QA, FOOTING	
	824					824	511	53014	824	CY	CLASS QC3 CONCRETE, MISC.: CLASS QC3 CONCRETE WITH QC/QA, SUPERSTRUCTURE	589 & 590
	117					117	511	53014	117	CY	CLASS QC3 CONCRETE, MISC.: CLASS QC3 CONCRETE WITH QC/QA, PIER ABOVE FOOTINGS	589
	115					115	511	53014	115	CY	CLASS QC3 CONCRETE, MISC.: CLASS QC3 CONCRETE WITH QC/QA, ABUTMENT NOT INCLUDING FOOTING	589
	307					307	512	10050	307	SY	SEALING OF CONCRETE SURFACES (NON-EPOXY)	
	1,142					1,142	512	10100	1,142	SY	SEALING OF CONCRETE SURFACES (EPOXY-URETHANE)	
	12					12	515	15070	12	EACH	DRAPED STRAND PRESTRESSED CONCRETE BRIDGE I-BEAM MEMBERS, LEVEL 3, TYPE WF36-49 (BEAM LENGTH = 81'-11 1/4")	
	12					12	515	15070	12	EACH	DRAPED STRAND PRESTRESSED CONCRETE BRIDGE I-BEAM MEMBERS, LEVEL 3, TYPE WF36-49 (BEAM LENGTH = 68'-6 1/4")	
	44					44	515	20000	44	EACH	INTERMEDIATE DIAPHRAGMS	
	127					127	516	10010	127	FT	ARMORLESS PREFORMED JOINT SEAL	
	4,453					4,453	516	13600	4,453	SF	1" PREFORMED EXPANSION JOINT FILLER	
	109					109	516	13900	109	SF	2" PREFORMED EXPANSION JOINT FILLER	
	290					290	516	14020	290	FT	SEMI-INTEGRAL ABUTMENT EXPANSION JOINT SEAL	
	12					12	516	44101	12	EACH	ELASTOMERIC BEARING WITH INTERNAL LAMINATES AND LOAD PLATE (NEOPRENE), AS PER PLAN (13"x20"x2 9/16" WITH 14"x21"x2 1/4" BOTTOM LOAD PLATE)	611
	12					12	516	44101	12	EACH	ELASTOMERIC BEARING WITH INTERNAL LAMINATES AND LOAD PLATE (NEOPRENE), AS PER PLAN (13"x18"x2 9/16" WITH 14"x19"x2" BOTTOM LOAD PLATE	611
	24					24	516	44101	24	EACH	ELASTOMERIC BEARING WITH INTERNAL LAMINATES AND LOAD PLATE (NEOPRENE), AS PER PLAN (11"x21"x2" WITH 12"x40"x2 3/16" TOP BEVELED LOAD PLATE)	612
	376					376	517	75123	376	FT	RAILING (CONCRETE PARAPET WITH TWIN STEEL TUBE RAILING AND VANDAL PROTECTION FENCE), AS PER PLAN	590
	4					4	518	12301	4	EACH	SCUPPERS, INCLUDING SUPPORTS, AS PER PLAN	624
	36					36	518	21200	36	CY	POROUS BACKFILL WITH GEOTEXTILE FABRIC	
	293					293	518	40000	293	FT	6" PERFORATED CORRUGATED PLASTIC PIPE	
	1					1	518	40010	1	FT	6" NON-PERFORATED CORRUGATED PLASTIC PIPE, INCLUDING SPECIALS	
	804					804	526	30011	804	SY	REINFORCED CONCRETE APPROACH SLABS WITH QC/QA (T=17"), AS PER PLAN	589 & 590
	105					105	526	90021	105	SY	TYPE B INSTALLATION, AS PER PLAN	636
	127					127	526	90030	127	FT	TYPE C INSTALLATION	
	345					345	607	39930	345	FT	VANDAL PROTECTION FENCE, 12' CURVED, COATED FABRIC	
	40					40	608	53020	40	SF	DETECTABLE WARNING	
	LS					LS	SPECIAL	69098400	LS		MISC.: TEMPORARY SURCHARGE	590
	2,534					2,534	863	00100	2,534	SY	GEOGRID, TYPE P1	
	539					539	863	00801	539	CY	REINFORCED EMBANKMENT, AS PER PLAN	590

CALCULATED MSW CHECKED WAA

GENERAL SUMMARY

CLE-32-3.50 (PHASE 5)

134 736

...\303.205\103954_GG501.dgn 11/4/2021 1:08:30 PM mswhitt

ESTIMATED QUANTITIES SHEET NO.	202 PAVEMENT REMOVED (CONCRETE) SY	202 PAVEMENT REMOVED (ASPHALT) SY	202 WALK REMOVED SF	202 CONCRETE BARRIER REMOVED FT	202 CURB REMOVED FT	202 CURB AND GUTTER REMOVED FT	202 GUARDRAIL REMOVED FT	202 GUARDRAIL REMOVED, BARRIER DESIGN EACH		202 MAILBOX REMOVED EACH	202 FENCE REMOVED FT	202 GATE REMOVED EACH			202 REMOVAL MISC.: BILLBOARD EACH	202 REMOVAL MISC.: COMMERCIAL LIGHTING EACH	202 REMOVAL MISC.: STONE WALL FT
140	10,485.6	7,013.0	0.0	769.0	88.0	0.0	925.0	116.0		0	1,306.0	0			0	0	0
141	4,204.0	13,028.2	758.0	0.0	1,113.0	0.0	0.0	0.0		2	5,054.0	3			1	30	23
142	2,548.7	11,351.4	239.0	0.0	1,307.0	2,131.0	104.5	0.0		1	232.0	1			0	6	0
SUBTOTAL THIS SHEET	17,238	31,393															
TOTALS CARRIED TO GENERAL SUMMARY	48,631		997	769	2,508	2,131	1,030	116		3	6,592	4			1	36	23

ESTIMATED QUANTITIES SHEET NO.	202 HEADWALL REMOVED EACH	202 PIPE REMOVED, 24" AND UNDER FT		202 BUILDING DEMOLISHED, PARCEL 451, 1 STORY CANOPY COMMERCIAL LUMP	202 BUILDING DEMOLISHED, PARCEL 451, 1 STORY BRICK COMMERCIAL LUMP	202 BUILDING DEMOLISHED, PARCEL 455, 1 STORY FRAME GARAGE LUMP	202 BUILDING DEMOLISHED, PARCEL 456, 1 STORY FRAME SHED LUMP	202 BUILDING DEMOLISHED, PARCEL 456, 1 STORY FRAME RESIDENCE LUMP	202 BUILDING DEMOLISHED, PARCEL 456, 1 STORY FRAME COMMERCIAL LUMP	201 BUILDING DEMOLISHED, PARCEL 362, 1 STORY BLOCK COMMERCIAL LUMP	201 BUILDING DEMOLISHED, PARCEL 103, 1 STORY BLOCK COMMERCIAL LUMP	202 BUILDING DEMOLISHED, AS PER PLAN, PARCEL 363, 1 STORY CANOPY COMMERCIAL LUMP	202 BUILDING DEMOLISHED, AS PER PLAN, PARCEL 363, 1 STORY BLOCK COMMERCIAL LUMP		202 MANHOLE REMOVED EACH	202 CATCH BASIN REMOVED EACH	
143	1	1,735.0		LUMP	LUMP	LUMP	LUMP	LUMP	LUMP	LUMP	LUMP	LUMP	LUMP		3	20	
TOTALS CARRIED TO GENERAL SUMMARY	1	1,735.0		LUMP	LUMP	LUMP	LUMP	LUMP	LUMP	LUMP	LUMP	LUMP	LUMP		3	20	

CALCULATED MSW
CHECKED WAA

REMOVAL SUBSUMMARY

CLE-32-3.50
(PHASE 5)

139
736

...\303.205\103954_GS501.dgn 11/4/2021 1:10:20 PM mswhitt

REMOVAL ESTIMATED QUANTITIES

CALCULATED MSW CHECKED WAA

CLE-32-3.50 (PHASE 5)

SHEET NO.	REFERENCE NO.	ALIGNMENT	STATION FROM	STATION TO	SIDE	202 PAVEMENT REMOVED (CONCRETE) SY	202 PAVEMENT REMOVED (ASPHALT) SY	202 WALK REMOVED SF	202 CONCRETE BARRIER REMOVED FT	202 CURB REMOVED FT	202 CURB AND GUTTER REMOVED FT	202 GUARDRAIL REMOVED FT	202 GUARDRAIL REMOVED, BARRIER DESIGN EACH		202 MAILBOX REMOVED EACH	202 FENCE REMOVED FT	202 GATE REMOVED EACH			202 REMOVAL MISC.: BILLBOARD EACH	202 REMOVAL MISC.: COMMERCIAL LIGHTING EACH	202 REMOVAL MISC.: STONE WALL FT
171	R-1	SR-32	134+00.00	139+39.54	RT	288.4	444.8															
171	R-2	SR-32	134+00.00	140+00.00	LT/RT	1,853.0																
172	R-5	SR-32	140+00.00	152+00.00	LT/RT	4,513.0																
172	R-6	SR-32	144+55.10	153+23.39	RT				769.0				116									
173	R-19	SR-32	152+00.00	153+50.00	LT	213.2																
173	R-20	SR-32	158+71.15	159+90.10	RT	102.7	78.7															
173	R-24	SR-32	159+87.54	160+37.54	RT							50.0										
174	R-30	SR-32	170+73.25	175+08.78	RT		861.7															
174	R-31	SR-32	171+90.25	176+50.00	LT		479.2															
174	R-32	SR-32	170+74.88	174+12.11	RT							337.5										
175	R-39	SR-32	176+50.00	188+31.95	LT	28.4	1,249.4															
175	R-40	SR-32	180+01.20	188+50.00	RT	562.7	1,003.7															
175	R-41	SR-32	185+35.00	188+50.00	LT/RT	148.9	395.5															
175	R-44	SR-32	187+42.72	187+92.17	RT					88.0												
176	R-50	SR-32	192+50.00		RT	22.6																
176	R-51	SR-32	188+50.00	189+50.00	RT	176.2	125.5															
176	R-52	SR-32	188+50.00	192+16.00	LT/RT	669.4	41.9															
176	R-54	SR-32	194+46.19	195+48.78	LT/RT	58.8																
176	R-55	SR-32	199+99.50		LT	16.9																
177	R-63	SR-32	207+92.73	212+50.00	LT	461.9																
177	R-64	SR-32	204+50.00	212+50.00	RT		903.2															
177	R-65	SR-32	200+42.77	202+59.38	LT											365.0						
177	R-66	SR-32	202+42.25	204+23.84	LT											223.0						
177	R-67	SR-32	205+78.99	205+79.48	RT	20.8																
178	R-76	SR-32	212+50.00	236+79.47	RT	105.7	989.5															
178	R-77	SR-32	212+50.00	216+48.49	LT	430.5																
178	R-78	SR-32	232+25.00	239+75.81	LT/RT	812.6	440.0															
178	R-80	SR-32	216+16.65	235+88.37	RT							537.5										
178	R-79	SR-32	212+98.36	214+21.17	LT											121.0						
178	R-81	SR-32	212+12.04	232+50.00	RT											597.0						
SUBTOTAL CARRIED TO SHEET 139						10,486	7,013	0	769.0	88	0	925.0	116		0	1,306	0			0	0	0.0

...\303.205\103954_GS501.dgn 11/4/2021 1:10:21 PM mswhitt

SHEET NO.	REFERENCE NO.	ALIGNMENT	STATION FROM	STATION TO	SIDE	202 PAVEMENT REMOVED (CONCRETE) SY	202 PAVEMENT REMOVED (ASPHALT) SY	202 WALK REMOVED SF	202 CONCRETE BARRIER REMOVED FT	202 CURB REMOVED FT	202 CURB AND GUTTER REMOVED FT	202 GUARDRAIL REMOVED FT	202 GUARDRAIL REMOVED, BARRIER DESIGN EACH		202 MAILBOX REMOVED EACH	202 FENCE REMOVED FT	202 GATE REMOVED EACH			202 REMOVAL MISC.: BILLBOARD EACH	202 REMOVAL MISC.: COMMERCIAL LIGHTING EACH	202 REMOVAL MISC.: STONE WALL FT
180	R-90	RAMP N	185+73.73	188+85.22	LT											324.0						
180	R-91	RAMP N	185+97.68	188+42.21	LT																7	
181	R-99	RAMP N	189+77.25	192+94.62	LT	1,976.0	1,668.0															
181	R-100	RAMP N	193+28.21	193+72.58	LT		157.0															
181	R-105	RAMP N	189+92.12	192+94.41	LT					489.0												
181	R-106	RAMP N	190+55.21	191+94.06	LT																2	
181	R-107	RAMP N	189+76.40	197+50.42	LT											792.0	1					
181	R-108	RAMP N	192+93.99	193+01.37	LT															1		
182	R-113	RAMP N	195+41.59	197+94.00	LT	2,228.0																
182	R-117	RAMP N	195+00.42	195+32.17	LT			99.0														
182	R-118	RAMP N/RAMP Q	198+23.62	198+56.68	LT											16.0	1					
182	R-119	RAMP N/RAMP Q	187+89.70	208+89.23	LT/RT											1,108.0	1					
182	R-120	RAMP N	195+81.44	198+11.76	LT																4	
182	R-121	RAMP N	197+49.48		LT										1							
182	R-122	RAMP N	197+83.91		LT										1							
183	R-130	RAMP O	181+36.38	187+79.96	RT											643.0						
183	R-131	RAMP O	185+77.98	187+52.55	RT																3	
184	R-139	RAMP O	187+67.38	187+80.41	RT																	23.0
184	R-140	RAMP O/RAMP P	188+85.09	209+64.58	LT/RT											2,171.0						
185	R-145	RAMP O	190+07.77	191+45.93	RT		325.2															
185	R-146	RAMP O	193+29.24	195+26.13	RT		1,651.0															
185	R-148	RAMP O	193+48.32	195+02.41	RT																2	
186	R-159	RAMP O	195+25.30	195+26.27	RT					58.0												
187	R-168	RAMP P	198+72.80	203+93.44	RT		360.0															
187	R-171	NOT USED																				
187	R-172	NOT USED																				
187	R-173	RAMP P	198+72.80	203+93.44	RT					566.0												
187	R-174	NOT USED																				
190	R-185	RAMP Q	198+40.83	204+42.08	LT/RT		8,867.0															
190	R-187	RAMP Q	198+63.98	203+06.58	RT																12	
190	R-188	RAMP Q	201+69.49	202+31.52	LT			659.0														
SUBTOTAL CARRIED TO SHEET 139						4,204.0	13,028.2	758.0	0.0	1,113.0	0.0	0.0	0.0		2.0	5,054.0	3			1	30	23.0

CALCULATED MSW
CHECKED WAA

REMOVAL ESTIMATED QUANTITIES

CLE-32-3.50
(PHASE 5)

141
736

...\303.205\103954_GS501.dgn 11/4/2021 1:10:21 PM mswhitt

SHEET NO.	REFERENCE NO.	ALIGNMENT	STATION FROM	STATION TO	SIDE	202 PAVEMENT REMOVED (CONCRETE) SY	202 PAVEMENT REMOVED (ASPHALT) SY	202 WALK REMOVED SF	202 CONCRETE BARRIER REMOVED FT	202 CURB REMOVED FT	202 CURB AND GUTTER REMOVED FT	202 GUARDRAIL REMOVED FT	202 GUARDRAIL REMOVED, BARRIER DESIGN EACH		202 MAILBOX REMOVED EACH	202 FENCE REMOVED FT	202 GATE REMOVED EACH			202 REMOVAL MISC.: BILLBOARD EACH	202 REMOVAL MISC.: COMMERCIAL LIGHTING EACH	202 REMOVAL MISC.: STONE WALL FT
193	R-200	GLEN ESTE-WITH.	16+54.42	16+62.74	RT	15.8																
193	R-201	GLEN ESTE-WITH.	16+74.52	19+46.29	RT		1,350.0															
193	R-204	GLEN ESTE-WITH.	16+74.51	19+17.06	RT						267.0											
194	R-208	GLEN ESTE-WITH.	18+31.40	19+08.81	RT							104.5										
194	R-210	GLEN ESTE-WITH.	20+49.64	24+14.40	LT		2,141.0															
194	R-211	GLEN ESTE-WITH.	20+38.18	23+07.40	RT		375.0															
194	R-212	GLEN ESTE-WITH.	20+67.31	23+07.40	RT						241.0											
194	R-213	GLEN ESTE-WITH.	20+97.22	24+12.46	LT						336.0											
195	R-219	GLEN ESTE-WITH.	24+10.92	24+24.65	RT		16.0															
198	R-227	BACH-BUXTON	337+35.45	340+88.88	LT/RT		1,735.0															
198	R-228	BACH-BUXTON	337+35.44	339+75.54	LT/RT						418.0											
199	R-231	BACH-BUXTON	339+71.03	340+59.13	LT/RT					228.0												
199	R-232	BACH-BUXTON	338+11.75	339+71.83	LT/RT						358.0											
199	R-233	BACH-BUXTON	338+32.91	339+10.43	LT/RT					337.0												
199	R-234	BACH-BUXTON	340+17.39	340+60.86	RT			239.0														
199	R-235	BACH-BUXTON	338+30.92	320+46.49	LT/RT																6	
199	R-236	BACH-BUXTON	338+32.52	340+59.13	RT	2,433.0																
200	R-241	BACH-BUXTON	342+94.28	344+64.82	LT											232.0	1					
202	R-245	FAYARD	10+00.00	11+29.00	LT/RT		708.3															
203	R-252	ELICK (SOUTH)	47+96.92	50+85.32	LT/RT		1,280.9															
203	R-253	ELICK (SOUTH)	49+74.00	50+31.75	RT	99.9																
203	R-254	ELICK (SOUTH)	47+96.51	49+83.58	RT						270.0											
203	R-255	ELICK (SOUTH)	50+50.69	50+85.32+	LT					91.0	15.0											
203	R-256	ELICK (SOUTH)	50+31.33	50+85.32+	RT						226.0											
204	R-261	ELICK (NORTH)	60+00.61	63+55.12	LT/RT		2,032.7															
204	R-263	ELICK (NORTH)	60+00.61	62+00.00	RT					235.0												
204	R-264	ELICK (NORTH)	60+00.61	63+55.12	LT					416.0												
204	R-265	ELICK (NORTH)	61+39.09		RT										1							
205	R-272	EX OLD SR-74	201+19.73	203+04.72	LT/RT		979.1															
206	R-273	EX OLD SR-74	204+02.33	205+50.00	LT/RT		733.4															
SUBTOTAL CARRIED TO SHEET 139						2,548.7	11,351.4	239.0	0.0	1,307.0	2,131.0	104.5	0.0		1.0	232.0	1			0	6	0.0

CALCULATED MSW
CHECKED WAA

REMOVAL ESTIMATED QUANTITIES

CLE-32-3.50
(PHASE 5)

142
736

...\303.205\103954_GS501.dgn 11/4/2021 1:10:21 PM mswhitt

SHEET NO.	REFERENCE NO.	ALIGNMENT	STATION FROM	STATION TO	SIDE	202 HEADWALL REMOVED	202 PIPE REMOVED, 24" AND UNDER		202 BUILDING DEMOLISHED, PARCEL 451, 1 STORY CANOPY COMMERCIAL	202 BUILDING DEMOLISHED, PARCEL 451, 1 STORY BRICK COMMERCIAL	202 BUILDING DEMOLISHED, PARCEL 455, 1 STORY FRAME GARAGE	202 BUILDING DEMOLISHED, PARCEL 456, 1 STORY FRAME SHED	202 BUILDING DEMOLISHED, PARCEL 456, 1 STORY FRAME RESIDENCE	202 BUILDING DEMOLISHED, PARCEL 456, 1 STORY FRAME COMMERCIAL	201 BUILDING DEMOLISHED, PARCEL 362, 1 STORY BLOCK COMMERCIAL	201 BUILDING DEMOLISHED, PARCEL 103, 1 STORY BLOCK COMMERCIAL	202 BUILDING DEMOLISHED, AS PER PLAN, PARCEL 363, 1 STORY CANOPY COMMERCIAL	202 BUILDING DEMOLISHED, AS PER PLAN, PARCEL 363, 1 STORY BLOCK COMMERCIAL		202 MANHOLE REMOVED	202 CATCH BASIN REMOVED	
						EACH	FT		LUMP	LUMP	LUMP	LUMP	LUMP	LUMP	LUMP	LUMP	LUMP	LUMP		EACH	EACH	
172	R-7	SR-32	141+56.04	142+56.03	LT		99.0														1	
172	R-8	SR-32	144+34.82	144+41.54	LT		12.0														1	
172	R-9	SR-32	145+35.87	145+69.46	RT		35.0														1	
172	R-10	SR-32	146+95.59	147+03.58	RT		7.0														1	
172	R-11	SR-32	149+30.33	152+47.80	RT		323.0														2	
175	R-42	SR-32	181+98.45		LT		63.0														1	
175	R-43	SR-32	187+99.14		RT		55.0														1	
176	R-54	SR-32	194+46.19	195+48.78	LT/RT		179.0														2	
176	R-55	SR-32	199+99.50		LT		78.0															
177	R-67	SR-32	205+78.99	205+79.48	RT		87.0															
177	R-68	SR-32	205+80.72	205+81.31	LT		29.0															
178	R-83	SR-32	213+63.88	213+67.40	LT		13.0															
181	R-92	RAMP N	188+58.53	189+63.66	RT		105.0															
181	R-98	RAMP N	190+08.19		LT																1	
181	R-101	RAMP N	190+17.80	191+18.53	LT				LUMP													
181	R-102	RAMP N	191+53.91	192+77.32	LT					LUMP												
181	R-103	RAMP N	193+56.11	193+95.60	LT						LUMP											
181	R-104	RAMP N	189+67.21	189+67.41	LT		84.0															
182	R-114	RAMP N	194+68.73	194+91.18	LT							LUMP										
182	R-115	RAMP N	195+05.66	195+79.13	LT								LUMP									
182	R-116	RAMP N	196+86.19	197+29.42	LT									LUMP								
184	R-137	RAMP O	187+28.91	187+88.85	RT	1	81.0														1	
184	R-138	RAMP O	187+81.54	189+34.82	LT/RT		151.0														1	2
184	R-141	RAMP O	188+64.18	188+76.24	LT/RT		27.0															
185	R-147	RAMP O	189+94.92		LT																1	
185	R-149	RAMP O	193+71.93	194+82.53	RT										LUMP							
186	R-160	RAMP O	195+80.32	196+99.17	LT/RT		158.0														3	
186	R-161	RAMP O	196+19.15	196+96.42	LT		78.0															
190	R-186	RAMP Q	201+55.21	202+53.92	LT											LUMP						
193	R-202	GLEN ESTE-WITH.	16+69.25	16+82.73	RT		13.5															
194	R-206	GLEN ESTE-WITH.	18+75.75		℄		13.5															
194	R-207	GLEN ESTE-WITH.	18+75.35		RT		4.0														1	
194	R-214	GLEN ESTE-WITH.	22+09.45	22+14.45	RT		5.0														1	
195	R-220	GLEN ESTE-WITH.	24+02.48	24+08.79	LT		7.0														1	
198	R-229	BACH-BUXTON	337+76.45	337+78.35	RT		14.0															1
199	R-237	BACH-BUXTON	338+57.45	339+87.22	LT														LUMP			
199	R-238	BACH-BUXTON	338+90.99	339+76.26	RT												LUMP					
205	R-271	EX OLD SR-74	202+34.15	202+47.51	RT		14.0															
SUBTOTAL CARRIED TO SHEET 139						1	1,735		LUMP	LUMP	LUMP	LUMP	LUMP	LUMP	LUMP	LUMP	LUMP	LUMP		3	20	

CALCULATED MSW
CHECKED WAA

REMOVAL ESTIMATED QUANTITIES

CLE-32-3.50
(PHASE 5)

143
736

...\303.205\103954_GS501.dgn 11/4/2021 1:10:21 PM mswhitt

SHEET NO.	REFERENCE NO.	ALIGNMENT	STATION FROM	STATION TO	SIDE	606 GUARDRAIL, TYPE MGS FT	606 ANCHOR ASSEMBLY, MGS TYPE E (MASH 2016) EACH	606 ANCHOR ASSEMBLY, MGS TYPE T EACH	606 MGS BRIDGE TERMINAL ASSEMBLY, TYPE 1 EACH	606 MGS BRIDGE TERMINAL ASSEMBLY, TYPE 2 EACH				607 FENCE, TYPE CLT FT	607 GATE, TYPE CLT EACH	607 FENCELINE SEEDING AND MULCHING FT	608 CURB RAMP SF	609 COMBINATION CURB AND GUTTER, TYPE 2 FT	609 CURB, TYPE 4C FT	609 CURB, TYPE 6 FT	609 CURB, MISC.: CLERMONT COUNTY CURB AND GUTTER FT
171	G-1	SR-32	129+01.53	130+64.00	RT	100.0	1	1													
172	G-3	SR-32	144+07.97	144+57.77	RT		1														
173	G-5	SR-32	157+27.51	158+77.43	RT	25.0	1		1										18.1		
173	G-6	SR-32	159+87.62	160+37.54	RT	50.0				1											
174	G-8	SR-32	170+73.25	174+10.75	RT	325.0		1													
175	G-10	SR-32	180+27.12	182+27.04	LT	187.5		1		1											
176	G-12	SR-32	190+21.70	196+96.70	LT	662.5		1		1											
176	G-13	SR-32	199+85.31	202+22.81	LT	162.5	1		1												
176	G-14	SR-32	190+52.81	192+89.60	RT	162.5	1		1												
176	B-7	SR-32	196+90.50	199+98.00	℄																
177	G-16	SR-32	209+64.58	236+74.80	RT	1,261.6		1													
178	G-18	SR-32	212+66.69	234+83.45	LT	713.8	1														
181	G-20	RAMP N	189+03.02	197+87.07	LT	899.2			1										18.1		
181	G-21	RAMP N	190+24.65	197+36.92	RT	700.0		1		1											
182	I-1	RAMP N	197+44.21	197+85.10	RT															107.1	
182	CR-1	RAMP N	197+64.37	197+76.02	LT												120.2				
183	C-1	RAMP O	182+87.88	186+00.00	RT														311.9		
183	G-23	RAMP O	182+34.72	186+00.60	RT	287.5	1		1												
185	G-25	RAMP O	190+51.50	192+64.58	LT	137.5	1		1										18.1		
185	G-26	RAMP O	191+48.00	196+16.15	RT	600.0		1		1											
186	I-2	RAMP O	196+07.75	197+00.05	LT/RT															339.9	
186	CR-2	RAMP O	196+62.50	196+78.77	RT												101.8				
186	CR-3	RAMP O	196+89.09	197+00.05	LT/RT												81.2				
187	G-28	RAMP P	197+83.19	209+64.57	RT	1,200.4															
190	G-30	RAMP Q	199+12.78	202+89.60	RT	300.0	1		1										18.1		
190	I-3	RAMP Q	198+96.04	199+23.75	LT															65.8	
190	CR-4	RAMP Q	198+97.56	199+10.19	LT												100.2				
191	G-32	RAMP Q	206+64.67	212+66.69	LT	573.8			1										18.1		
SUBTOTAL CARRIED TO SHEET 145						8,348.7	9	7	8	5							403.4		402.6	512.8	

CALCULATED MSW
CHECKED WAA

ROADWAY ESTIMATED QUANTITIES

CLE-32-3.50
(PHASE 5)

...\303.205\103954_GS501.dgn 11/4/2021 2:11:01 PM mswhitt

SHEET NO.	REFERENCE NO.	ALIGNMENT	STATION FROM	STATION TO	SIDE	606 GUARDRAIL, TYPE MGS FT	606 ANCHOR ASSEMBLY, MGS TYPE E (MASH 2016) EACH	606 ANCHOR ASSEMBLY, MGS TYPE T EACH	606 MGS BRIDGE TERMINAL ASSEMBLY, TYPE 1 EACH	606 MGS BRIDGE TERMINAL ASSEMBLY, TYPE 2 EACH				607 FENCE, TYPE CLT FT	607 GATE, TYPE CLT EACH	607 FENCELINE SEEDING AND MULCHING FT	608 CURB RAMP SF	609 COMBINATION CURB AND GUTTER, TYPE 2 FT	609 CURB, TYPE 4C FT	609 CURB, TYPE 6 FT	609 CURB, MISC.: CLERMONT COUNTY CURB AND GUTTER FT
193	C-3	GLEN ESTE-WITH.	16+74.17	19+28.09	RT																311.3
194	C-5	GLEN ESTE-WITH.	21+05.69	23+07.40	RT																203.1
194	C-6	GLEN ESTE-WITH.	20+69.91	24+12.43	LT																406.2
197	C-8	BACH BUXTON	332+72.11	338+50.18	LT															572.1	
197	C-9	BACH BUXTON	332+72.11	340+45.25	RT															790.1	
198	G-34	BACH BUXTON	335+52.08	340+07.64	RT	413.0	1											86.5			
198	C-11	BACH BUXTON	337+35.45	338+12.85	RT																
200	G-36	BACH BUXTON	346+21.37	346+70.01	RT	37.5		1													
200	G-37	BACH BUXTON	343+88.79	349+27.72	LT	477.3	1														
200	C-13	BACH BUXTON	346+23.32	348+68.26	RT															248.9	
200	C-14	BACH BUXTON	343+86.53	348+68.26	LT															469.1	
202	C-16	FAYARD N.	10+00.00	11+29.00	LT/RT															264.4	
203	C-18	ELICK LN S.	47+96.51	49+83.77	RT																282.0
203	C-19	ELICK LN S.	50+22.59	50+85.32	LT/RT																164.1
204	C-21	ELICK LN N.	60+00.61	63+55.12	LT/RT															599.5	
205	C-23	EX OLD 74	201+48.71	202+41.60	LT/RT															175.3	
206	C-24	EX OLD 74	204+49.59	205+50.00	LT/RT															220.2	
206	C-25	EX OLD 74	205+25.81	205+50.00	RT															58.9	
206	C-26	EX OLD 74	204+94.80	205+05.80	RT															66.8	
435	C-27	ACCESS ROAD	5+33.88	5+55.00	RT															39.8	
435	C-28	ACCESS ROAD	5+14.13	5+55.00	LT															50.1	
435	F-17	ACCESS ROAD	5+54.00	6+59.48	LT									227.9	1	227.9					
435	F-18	ACCESS ROAD	5+54.00	8+15.87	RT									299.7		299.7					
436	F-19	ACCESS ROAD	6+59.48	9+62.52	LT									144.5		144.5					
641	F-1	BACH BUXTON	332+50.00	338+79.23	LT									661.2		661.2					
641	F-2	BACH BUXTON	332+50.00	340+28.56	RT									817.3		817.3					
643	F-3	BACH BUXTON	343+41.69	348+74.76	LT									530.2		530.2					
644	F-4	BACH BUXTON	346+35.37	348+74.87	RT									247.6		247.6					
645	F-6	SR-32	158+28.34	158+97.55	LT									69.6		69.6					
646	F-7	SR-32	185+50.00	195+53.45	RT									1,011.9		1,011.9					
646	F-8	SR-32	185+73.17	196+87.10	LT									1,126.5		1,126.5					
647	F-9	SR-32	201+05.90	202+59.38	LT									156.4		156.4					
647	F-10	SR-32	204+23.84	208+85.34	LT									519.2		519.2					
647	F-11	SR-32	204+07.35	210+35.98	RT									652.2		652.2					
648	F-12	SR-32	212+98.31	214+21.17	LT									119.9		119.9					
648	F-13	SR-32	212+12.04	232+50.00	RT									596.5		596.5					
649	F-14	SR-32	232+95.63	236+39.23	LT									354.2		354.2					
649	F-15	SR-32	235+05.16	238+76.91	RT									372.4		372.4					
SUBTOTAL FROM THIS SHEET						927.8	2	1						7,907.1	1	7,907.1		86.5		3,555.1	1,366.6
SUBTOTAL FROM SHEET 144						8,348.7	9	7	8	5							403.4		402.6	512.8	
TOTALS CARRIED TO GENERAL SUMMARY						9,277	11	8	8	5				7,907	1	7,907	403	87	403	4,068	1,367

CALCULATED MSW
CHECKED WAA

ROADWAY ESTIMATED QUANTITIES

CLE-32-3.50
(PHASE 5)

...\303.205\103954_GS501.dgn 11/4/2021 1:10:23 PM mswhitt

SHEET NO.	REFERENCE NO.	ALIGNMENT	STATION FROM	STATION TO	SIDE	622 CONCRETE BARRIER, SINGLE SLOPE, TYPE C (FT)	622 CONCRETE BARRIER, SINGLE SLOPE, TYPE C1 (FT)	622 CONCRETE BARRIER, SINGLE SLOPE, TYPE D (FT)	622 CONCRETE BARRIER, SINGLE SLOPE, TYPE D, AS PER PLAN (FT)		622 CONCRETE BARRIER END SECTION, TYPE B (EACH)		622 CONCRETE BARRIER END SECTION, TYPE D (EACH)		622 CONCRETE BARRIER, END ANCHORAGE, REINFORCED, TYPE C, AS PER PLAN (EACH)		622 CONCRETE BARRIER, END ANCHORAGE, REINFORCED, TYPE D (EACH)	622 CONCRETE BARRIER, END ANCHORAGE, REINFORCED, TYPE D, AS PER PLAN A (EACH)	622 CONCRETE BARRIER, END ANCHORAGE, REINFORCED, TYPE D, AS PER PLAN B (EACH)			
173	B-1	SR-32	158+76.82	159+89.62	RT	52.8					2												
175	B-3	SR-32	182+25.03	184+40.08	LT			151.1					1				2						
176	B-5	SR-32	192+89.00	204+57.71	RT				1,139.7				1		1								
176	B-6	SR-32	196+94.70	199+85.91	LT				263.2				2										
176	B-7	SR-32	196+90.50	199+98.00	℄		207.5																
180	B-8	RAMP N	184+40.25	189+03.62	LT			399.2					1				2						
182	B-10	RAMP N	197+34.86	197+53.23	RT								1					1					
184	B-12	RAMP O	186+00.00	191+50.00	RT			371.8					2				6						
185	B-14	RAMP O	192+63.98	197+06.66	LT			413.2					1				1						
187	B-16	RAMP P	198+19.77	204+32.12	RT			545.7									3						
187	B-17	RAMP P	198+72.44	204+01.00	RT			521.9									2						
190	B-18	RAMP Q	199+18.80	206+65.27	LT			788.4					1										
190	B-19	RAMP Q	198+94.16	199+13.39	RT								1						1				
200	B-21	BACH BUXTON	199+18.80	199+37.44	RT			123.1					1				3						
TOTALS CARRIED TO GENERAL SUMMARY						53	208	3,314	1,403		2		12		1		19	1	1				

CALCULATED MSW
CHECKED WAA

ESTIMATED QUANTITIES
BARRIER

CLE-32-3.50
(PHASE 5)

...\303.205\103954_GS501.dgn 11/4/2021 2:11:01 PM mswhitt

ESTIMATED QUANTITIES SHEET NO.	204 SUBGRADE COMPACTION SY	204 EXCAVATION OF SUBGRADE, 12" DEEP CY	204 GRANULAR MATERIAL, TYPE B CY	204 PROOF ROLLING HR	204 GEOTEXTILE FABRIC SY	206 LIME STABALIZED SUBGRADE, 12" DEEP SY	206 LIME TON	206 CURING COAT SY	206 MIXTURE DESIGN FOR CHEMICALLY STABILIZED SOILS, AS PER PLAN LS	254 PAVEMENT PLANING, ASPHALT CONCRETE (1.5" DEPTH) SY	254 PAVEMENT PLANING, ASPHALT CONCRETE (DEPTH VARIES 1.5" MAX) SY	302 6" ASPHALT CONCRETE BASE, PG64-22 CY	302 10" ASPHALT CONCRETE BASE, PG64-22 CY	304 6" AGGREGATE BASE CY	304 8" AGGREGATE BASE CY	407 NON-TRACKING TACK COAT (@0.06 GAL/SY) GAL	407 NON-TRACKING TACK COAT (@0.09 GAL/SY) GAL	441 1-1/4" AC SURFACE COURSE, TYPE 1, (448), PG64-22 CY	441 1-3/4" AC INTERMEDIATE COURSE, TYPE 2, (448), PG64-22 CY	
160		515.04	515.04	5.26	1,545.12	10,521.31	272.24	10,521.31			4,266.64	9.65	3,141.34	9.65	2,787.88	1,964.23	384.01			
161		391.98	391.98	4.17	1,175.95	8,348.05	216.01	8,348.05			652.75		2,505.18		2,113.78	1,555.12	58.75			
162	1,602.43			8.25		14,901.11	385.57	14,901.11							3,555.98	29.45		8.52	11.93	
163	5,541.65	113.56	113.56	12.03	340.68	18,508.73	478.91	18,508.73		8,369.49		3,178.13		3,302.41	421.23	2,331.03	753.28	23.05	32.57	
164	229.62			0.11				210.83				3.16	58.62	3.16	46.89	39.13				
SUBTOTALS THIS SHEETS	7,373.70	1,020.59	1,020.59	29.83	3,061.76	52,279.20	1,352.72	52,490.03	LS	8,369.49	4,919.39	3,190.94	5,705.14	3,315.22	8,925.76	5,918.96	1,196.04	31.57	44.50	
TOTALS CARRIED TO GENERAL NOTES				30																
TOTALS CARRIED TO GENERAL SUMMARY	7,374	1,021	1,021		3,062	52,279	1,353	52,490	LS	8,369	4,919	8,896		12,241		7,115		32	44	

ESTIMATED QUANTITIES SHEET NO.	442 ANTI-SEGREGATION EQUIPMENT CY	442 1-1/2" ASPHALT CONCRETE SURFACE COURSE, 12.5MM, TYPE A (446) CY	442 1-3/4" ASPHALT CONCRETE INTERMEDIATE COURSE, 19MM, TYPE A (446) CY	452 4" NON-REINFORCED CONCRETE PAVEMENT, CLASS QC1 SY	452 11" NON-REINFORCED CONCRETE PAVEMENT SY
160	357.12	629.97	532.28		
161	326.43	383.08	422.44		
162				379.55	14,343.06
163		1,129.30	913.48		
164	18.29	8.17	11.21		
SUBTOTALS THIS SHEETS	701.84	2,150.52	1,879.41	379.55	14,343.06
TOTALS CARRIED TO GENERAL NOTES					
TOTALS CARRIED TO GENERAL SUMMARY	702	2,151	1,879	380	14,343

CALCULATED MSW
CHECKED WAA

PAVEMENT SUBSUMMARY

CLE-32-3.50
(PHASE 5)

159
736

\303_205\103954_GS501.dgn 11/4/2021 1:10:24 PM rayhitt

PAV'T AREA	STATION FROM	STATION TO	SIDE	LENGTH (ALONG CURB OR EDGE LINE)	AREA (FROM CADD)	204 EXCAVATION OF SUBGRADE, 12" DEEP	204 GRANULAR MATERIAL, TYPE B	204 PROOF ROLLING	204 GEOTEXTILE FABRIC	206 LIME STABALIZED SUBGRADE, 12" DEEP	206 LIME	206 CURING COAT	254 PAVEMENT PLANING, ASPHALT CONCRETE (DEPTH VARIES 1.5" MAX)	302 6" ASPHALT CONCRETE BASE, PG64-22	302 10" ASPHALT CONCRETE BASE, PG64-22	304 6" AGGREGATE BASE	304 8" AGGREGATE BASE	407 NON-TRACKING TACK COAT (@0.06 GAL/SY)	407 NON-TRACKING TACK COAT (@0.09 GAL/SY)	442 ANTI-SEGREGATION EQUIPMENT	442 1-1/2" ASPHALT CONCRETE SURFACE COURSE, 12.5MM, TYPE A (446)	442 1-3/4" ASPHALT CONCRETE INTERMEDIATE COURSE, 19MM, TYPE A (446)	
				LF	SQ FT	CY	CY	HR	SY	SY	TON	SY	SY	CY	CY	CY	CY	GAL	GAL	CY	CY	CY	
	SR-32 EB																						
FREEWAY RESURFACING	134+00.00	139+40.00	RT		24,686.30								2,742.92						246.87		114.29		
FULL DEPTH ASPH. LANES	134+00.00	136+54.45	RT		1,287.18			0.07		143.02	3.70	143.02			39.73		31.79	25.75		12.92	5.96	6.96	
FULL DEPTH ASPH. SHLDR	134+00.00	139+40.00	RT		5,417.91			0.30		601.99	15.58	601.99			167.22		133.78	108.36			25.09	29.27	
+ASPH. EDGE COURSE	134+00.00	139+40.00	RT	541.91				0.05		90.32	2.34	90.32			9.76		17.85						
FULL DEPTH ASPH. SHLDR	134+00.00	150+21.50	RT		6,947.84	257.33	257.33		771.98						214.44		171.56	138.96			32.17	37.53	
+ASPH. EDGE COURSE	134+00.00	150+21.50	RT	1,622.92		90.16	90.16		270.49						29.23		53.43						
FREEWAY RESURFACING	143+07.52	144+65.30	RT	157.96	6,513.43								723.71						65.14		30.16		
FULL DEPTH ASPH. LANES	143+68.15	144+65.30	RT	111.03	225.17			0.01		25.02	0.65	25.02			6.95		5.56	4.51		2.27	1.05	1.22	
FULL DEPTH ASPH. SHLDR	143+70.14	144+65.30	RT		941.65			0.05		104.63	2.71	104.63			29.07		23.26	18.84			4.36	5.09	
+ASPH. EDGE COURSE	143+70.14	144+65.30	RT	94.33				0.01		15.73	0.41	15.73			1.71		3.11						
FULL DEPTH ASPH. SHLDR	158+71.15	159+90.10	RT		1,189.57			0.07		132.18	3.42	132.18			36.72		29.38	23.80			5.51	6.43	
+CURB TYPE 4C ASPH.	158+58.68	158+76.82	RT	18.15				0.002		3.03	0.08	3.03					0.45						
+TYPE C ASPH.	158+76.82	159+89.62	RT	29.72				0.01		13.76	0.36	13.76			3.15		3.06	0.57				0.46	
FAYARD TURNAROUND	158+91.58	159+74.66	RT		520.98			0.03		57.89	1.50	57.89		9.65		9.65		10.42			2.42	2.82	
FULL DEPTH ASPH. SHLDR	170+73.24	175+08.78	RT		4,357.28			0.24		484.15	12.53	484.15			134.49		107.59	87.15			20.18	23.54	
+ASPH. EDGE COURSE	170+73.24	175+08.78	RT	435.51				0.04		72.59	1.88	72.59			7.86		14.34						
FULL DEPTH ASPH. LANES	180+01.20	188+87.92	RT		12,446.49			0.69		1,382.95	35.78	1,382.95			384.16		307.33	248.93		124.86	57.63	67.23	
FULL DEPTH ASPH. SHLDR	180+01.20	188+87.92	RT		7,187.73			0.40		798.64	20.66	798.64			221.85		177.48	143.76			33.28	38.83	
+ASPH. EDGE COURSE	180+01.20	182+87.75	RT	287.06				0.02		47.85	1.24	47.85			5.18		9.46						
+CURB TYPE 4C ASPH.	182+87.75	186+00.00	RT	311.90				0.03		51.99	1.35	51.99					7.71						
+TYPD D ASPH.	186+00.00	188+86.82	RT	287.24				0.06		111.71	2.89	111.71			24.39		24.83	8.30				3.37	
FULL ASPH. SHLDR/GORE	184+72.23	189+50.00	RT		5,923.24			0.33		658.14	17.03	658.14			182.82		146.26	118.47			27.43	32.00	
+ASPH. EDGE COURSE	188+87.92	189+50.00	RT	62.08				0.01		10.35	0.27	10.35			1.12		2.05						
FULL DEPTH ASPH. SHLDR	185+35.00	189+50.00	RT		1,660.00	61.48	61.48		184.44						51.24		40.99	33.20			7.69	8.97	
+ASPH. EDGE COURSE	185+35.00	189+50.00	RT	415.00		23.06	23.06		69.17						7.48		13.67						
FREEWAY RESURFACING	187+50.00	189+50.00	RT	200.00	7,200.00								800.00						72.00		33.34		
FULL DEPTH ASPH. SHLDR	195+99.61	197+28.82	RT		1,292.07			0.07		143.57	3.71	143.57			39.88		31.91	25.85			5.99	6.98	
+ASPH. EDGE COURSE	195+99.61	197+28.82	RT	129.21				0.01		21.54	0.56	21.54			2.34		4.26						
+TYPD D APP WALL	192+89.00	204+57.71	RT	1,168.71													62.53						
DEEP BASE MEDIAN SHLDR	196+25.00	199+65.00	℄		1,814.82			0.10		201.65	5.22	201.65			56.02		129.40	36.30			8.41	9.81	
+TYPE C1 ASPH.	196+25.00	199+65.00	℄	340.06	1,546.02			0.12		241.05	6.24	241.05			59.10		53.57	33.20			7.16	9.28	
FULL ASPH. SHLDR/GORE	204+50.00	213+14.31	RT		8,729.75			0.48		969.98	25.10	969.98			269.44		215.55	174.60			40.42	47.16	
+ASPH. EDGE COURSE	204+50.00	205+59.52	RT	110.21				0.01		18.37	0.48	18.37			1.99		3.63						
FULL DEPTH ASPH. LANES	205+59.52	236+79.47	RT		21,639.39			1.20		2,404.38	62.21	2,404.38			667.89		534.31	432.79		217.07	100.19	116.88	
FULL DEPTH ASPH. SHLDR	205+59.52	236+79.47	RT		12,892.73			0.72		1,432.53	37.07	1,432.53			397.93		318.34	257.86			59.69	69.64	
+ASPH. EDGE COURSE	205+59.52	236+79.47	RT	1,693.80				0.14		282.30	7.30	282.30			30.51		55.77						
FULL DEPTH ASPH. SHLDR	232+35.00	236+42.52	RT		1,630.07	60.37	60.37		181.12						50.32		40.25	32.61			7.55	8.81	
+ASPH. EDGE COURSE	232+35.00	236+42.52	RT	407.52		22.64	22.64		67.92						7.35		13.42						
SUBTOTAL CARRIED TO SHEET 159						515.04	515.04	5.26	1,545.12	10,521.31	272.24	10,521.31	4,266.64	9.65	3,141.34	9.65	2,787.88	1,964.23	384.01	357.12	629.97	532.28	

CALCULATED MSW
CHECKED WAA

PAVEMENT ESTIMATED QUANTITIES

CLE-32-3.50
(PHASE 5)

...\303.205\103954_GS501.dgn 11/4/2021 1:10:24 PM mswhitt

PAV'T AREA	STATION FROM	STATION TO	SIDE	LENGTH (ALONG CURB OR EDGE LINE) LF	AREA (FROM CADD) SQ FT	204 EXCAVATION OF SUBGRADE, 12" DEEP CY	204 GRANULAR MATERIAL, TYPE B CY	204 PROOF ROLLING HR	204 GEOTEXTILE FABRIC SY	206 LIME STABALIZED SUBGRADE, 12" DEEP SY	206 LIME TON	206 CURING COAT SY	254 PAVEMENT PLANING, ASPHALT CONCRETE (DEPTH VARIES 1.5" MAX) SY	302 6" ASPHALT CONCRETE BASE, PG64-22 CY	302 10" ASPHALT CONCRETE BASE, PG64-22 CY	304 6" AGGREGATE BASE CY	304 8" AGGREGATE BASE CY	407 NON-TRACKING TACK COAT (@0.06 GAL/SY) GAL	407 NON-TRACKING TACK COAT (@0.09 GAL/SY) GAL	442 ANTI-SEGREGATION EQUIPMENT CY	442 1-1/2" ASPHALT CONCRETE SURFACE COURSE, 12.5MM, TYPE A (446) CY	442 1-3/4" ASPHALT CONCRETE INTERMEDIATE COURSE, 19MM, TYPE A (446) CY	
	SR-32 WB																						
FREEWAY RESURFACING	142+03.69	144+10.10	LT	206.18	5,874.79								652.75						58.75		27.20		
FULL DEPTH ASPH. LANES	142+03.69	143+37.48	LT		301.77			0.02		33.53	0.87	33.53			9.32		7.46	6.04		3.03	1.40	1.63	
FULL DEPTH ASPH. SHLDR	142+03.69	143+35.66	LT		1543.18			0.09		171.47	4.44	171.47			47.63		38.11	30.87			7.15	8.34	
+ASPH. EDGE COURSE	142+03.69	143+35.66	LT	129.73				0.01		21.63	0.56	21.63			2.34		4.28						
FULL DEPTH ASPH. SHLDR	142+38.41	153+50.00	LT		4445.08	164.63	164.63		493.90						137.20		109.76	88.91			20.58	24.01	
+ASPH. EDGE COURSE	142+38.41	153+50.00	LT	1,111.31		61.74	61.74		185.22						20.02		36.59						
FULL DEPTH ASPH. SHLDR	143+43.72	144+10.10	LT		507.63			0.03		56.41	1.46	56.41			15.67		12.54	10.16			2.36	2.75	
+ASPH. EDGE COURSE	142+03.69	143+35.66	LT	81.01				0.01		13.51	0.35	13.51			1.47		2.67						
FULL DEPTH ASPH. LANES	143+73.43	144+10.10	LT		71.36			0.00		7.93	0.21	7.93			2.21		1.77	1.43		0.73	0.34	0.39	
FULL DEPTH ASPH. SHLDR	158+12.78	159+32.74	LT		1,319.63			0.07		146.63	3.79	146.63			40.73		32.59	26.40			6.11	7.13	
+ASPH. EDGE COURSE	158+12.78	159+32.74	LT	119.97				0.01		20.00	0.52	20.00			2.17		3.95						
FULL DEPTH ASPH. LANES	171+90.25	188+44.21	LT		21,247.63			1.18		2,360.85	61.09	2,360.85			655.80		524.64	424.96		213.14	98.37	114.77	
FULL DEPTH ASPH. SHLDR	171+90.25	188+43.17	LT		12,521.34			0.70		1,391.27	36.00	1,391.27			386.47		309.17	250.43			57.97	67.64	
+ASPH. EDGE COURSE	158+12.78	159+32.74	LT	1,035.00				0.09		172.50	4.46	172.50			18.65		34.08						
+TYPD D ASPH.	188+48.94	188+86.82	LT	618.33				0.12		240.46	6.22	240.46			52.49		53.44	17.87				7.24	
FULL ASPH. SHLDR/GORE	180+90.41	190+00.00	LT		9,544.75			0.53		1,060.53	27.44	1,060.53			294.60		235.68	190.90			44.19	51.56	
+ASPH. EDGE COURSE	188+44.21	190+00.00	LT	155.79				0.01		25.97	0.67	25.97			2.82		5.13						
FULL DEPTH ASPH. SHLDR	188+02.27	192+03.94	LT		1,606.69	59.51	59.51		178.52						49.59		39.68	32.14			7.44	8.68	
+ASPH. EDGE COURSE	188+02.27	192+03.94	LT	401.67		22.32	22.32		66.95						7.24		13.23						
+TYPD D APP WALL	196+94.70	199+85.91	LT	291.21													15.58						
FULL DEPTH ASPH. GORE	207+94.20	210+44.28	LT		2,763.42			0.15		307.05	7.94	307.05			85.30		68.24	55.27			12.80	14.93	
FULL DEPTH ASPH. LANES	207+94.20	216+48.49	LT		10,918.35			0.61		1,213.15	31.39	1,213.15			336.99		269.59	218.37		109.53	50.55	58.98	
FULL DEPTH ASPH. SHLDR	207+96.10	216+48.49	LT		6,803.66			0.38		755.97	19.56	755.97			209.99		168.00	136.08			31.50	36.75	
+ASPH. EDGE COURSE	207+96.10	216+48.49	LT	837.08				0.07		139.52	3.61	139.52			15.08		27.56						
FULL DEPTH ASPH. SHLDR	234+71.22	236+35.30	LT		1,640.75			0.09		182.31	4.72	182.31			50.65		40.52	32.82			7.60	8.87	
+ASPH. EDGE COURSE	234+71.22	236+35.30	LT	164.13				0.01		27.36	0.71	27.36			2.97		5.41						
FULL DEPTH ASPH. SHLDR	234+95.57	239+21.68	LT		1,623.20	60.12	60.12		180.36						50.10		40.08	32.47			7.52	8.77	
+ASPH. EDGE COURSE	234+95.57	239+21.68	LT	426.10		23.67	23.67		71.02						7.68		14.03						
SUBTOTAL CARRIED TO SHEET 159						391.98	391.98	4.17	1,175.95	8,348.05	216.01	8,348.05	652.75		2,505.18		2,113.78	1,555.12	58.75	326.43	383.08	422.44	

CALCULATED MSW CHECKED WAA

PAVEMENT ESTIMATED QUANTITIES

CLE-32-3.50 (PHASE 5)

161 / 736

...\303.205\103954_GS501.dgn 11/4/2021 1:10:25 PM mswhitt

PAV'T AREA	STATION FROM	STATION TO	SIDE	LENGTH (ALONG CURB OR EDGE LINE)	AREA (FROM CADD)	204 SUBGRADE COMPACTION	204 PROOF ROLLING	206 LIME STABALIZED SUBGRADE, 12" DEEP	206 LIME	206 CURING COAT	302 6" ASPHALT CONCRETE BASE, PG64-22	302 10" ASPHALT CONCRETE BASE, PG64-22	304 6" AGGREGATE BASE	304 8" AGGREGATE BASE	407 NON-TRACKING TACK COAT (@0.06 GAL/SY)	407 NON-TRACKING TACK COAT (@0.09 GAL/SY)	441 1-1/4" AC SURFACE COURSE, TYPE I, (448), PG64-22	441 1-3/4" AC INTERMEDIATE COURSE, TYPE 2, (448), PG64-22	442 ANTI-SEGREGATION EQUIPMENT	442 1-1/2" ASPHALT CONCRETE SURFACE COURSE, 12.5MM, TYPE A (446)	442 1-3/4" ASPHALT CONCRETE INTERMEDIATE COURSE, 19MM, TYPE A (446)	452 4" NON-REINFORCED CONCRETE PAVEMENT, CLASS QC1	452 11" NON-REINFORCED CONCRETE PAVEMENT
				LF	SQ FT	SY	HR	SY	TON	SY	CY	CY	CY	CY	GAL	GAL	CY	CY	CY	CY	CY	SY	SY
	RAMP N																						
FULL DEPTH CONCRETE	188+43.69	197+53.99	LT/RT		34,639.84		1.92	3,848.88	99.59	3,848.88				855.31									3,848.87
+CONC TYPE D	188+43.69	189+03.62	LT	59.94			0.01	21.09	0.55	21.09				4.69									
+CONC CURB 4C	189+03.62	189+21.76	LT	18.15			0.002	3.03	0.08	3.03				0.45									
+CONC EDGE COURSE	189+21.76	196+88.49	LT	841.29			0.07	140.22	3.63	140.22				10.39									
+CONC EDGE COURSE	188+43.69	197+34.97	RT	891.74			0.07	148.63	3.85	148.63				11.01									
+CONC TYPE D	197+34.97	197+53.99	RT	14.00			0.002	4.93	0.13	4.93				1.10									
CONC TRAFFIC ISLAND	197+44.21	197+85.10	LT/RT		414.41		0.02	46.05	1.19	46.05				10.24								46.05	
	RAMP O																						
FULL DEPTH CONCRETE	188+87.44	197+06.0492	LT/RT		35,896.16		1.99	3,988.47	103.20	3,988.47				886.33									3,988.46
+CONC EDGE COURSE	188+87.44	192+45.77	LT	358.34			0.03	59.73	1.55	59.73				4.43									
+CONC CURB 4C	192+45.77	192+63.98	LT	18.15			0.002	3.03	0.08	3.03				0.45									
+CONC TYPE D	192+63.98	197+06.05	LT	442.20			0.08	155.59	4.03	155.59				34.58									
-MSE WALL BACKFILL	193+37.85	197+07.20	LT		5,042.48	560.28		-560.28	-14.50	-560.28													
+CONC TYPE D	188+87.44	191+50.00	RT	262.55			0.05	92.38	2.39	92.38				20.53									
+CONC EDGE COURSE	191+50.00	196+34.60	RT	563.92			0.05	93.99	2.43	93.99				6.97									
CONC TRAFFIC ISLAND	196+09.51	196+99.61	LT/RT		2,820.78		0.16	313.43	8.11	313.43				69.65								313.43	
	RAMP P																						
FULL DEPTH CONCRETE	198+12.91	205+49.91	LT/RT		24,921.56		1.38	2,769.07	71.65	2,769.07				615.35									2,769.06
+CONC TYPE D	198+19.77	204+47.15	LT	626.27			0.11	220.36	5.70	220.36				48.97									
-MSE WALL BACKFILL	198+09.87	203+13.77	LT		5,870.94	652.33		-652.33	-16.88	-652.33													
-MSE WALL BACKFILL	199+05.15	199+76.95	RT		625.76	69.53		-69.53	-1.80	-69.53													
-MSE WALL BACKFILL	201+82.89	203+06.01	RT		674.68	74.96		-74.97	-1.94	-74.97													
+CONC EDGE COURSE	204+47.15	20+49.91	LT	102.64			0.01	17.11	0.44	17.11				1.27									
+CONC EDGE COURSE	198+12.91	205+49.91	RT	744.58			0.06	124.10	3.21	124.10				9.20									
ASPHALT DRIVE/TYPE D	198+71.53	203+93.71	RT		2,208.03	245.34	0.12							54.92	29.45		8.52	11.93					
	RAMP Q																						
FULL DEPTH CONCRETE	198+99.39	208+05.69	LT/RT		33,629.94		1.87	3,736.66	96.69	3,736.66				830.37									3,736.66
+CONC TYPE D	199+18.69	206+65.27	LT	780.29			0.14	274.55	7.10	274.55				61.01									
+CONC CURB 4C	206+65.27	206+83.42	LT	18.15			0.002	3.03	0.08	3.03				0.45									
+CONC EDGE COURSE	206+83.42	208+05.69	LT	121.89			0.01	20.32	0.53	20.32				1.51									
+CONC TYPE D	198+99.39	199+13.39	RT	14.00			0.002	4.93	0.13	4.93				1.10									
+CONC CURB 4C	199+13.39	199+31.53	RT	18.15			0.002	3.03	0.08	3.03				0.45									
+CONC EDGE COURSE	199+31.53	208+06.03	RT	873.22			0.07	145.54	3.77	145.54				10.79									
CONC TRAFFIC ISLAND	198+96.04	199+23.7538	LT		180.62		0.01	20.07	0.52	20.07				4.46								20.07	
SUBTOTAL CARRIED TO SHEET 159						1,602.43	8.25	14,901.11	385.57	14,901.11				3,555.98	29.45		8.52	11.93				379.55	14,343.06

CALCULATED MSW
CHECKED WAA

ESTIMATED QUANTITIES
PAVEMENT

CLE-32-3.50
(PHASE 5)

162
736

\\303.205\103954_GS501.dgn 11/4/2021 1:10:25 PM mswhitt

ESTIMATED QUANTITIES

PAVEMENT

PAV'T AREA	STATION FROM	STATION TO	SIDE	LENGTH (ALONG CURB OR EDGE LINE)	AREA (FROM CADD)	204 SUBGRADE COMPACTION	204 EXCAVATION OF SUBGRADE, 12" DEEP	204 GRANULAR MATERIAL, TYPE B	204 PROOF ROLLING	204 GEOTEXTILE FABRIC	206 LIME STABALIZED SUBGRADE, 12" DEEP	206 LIME	206 CURING COAT	254 PAVEMENT PLANING, ASPHALT CONCRETE (1.5" DEPTH)	302 6" ASPHALT CONCRETE BASE, PG64-22	304 6" AGGREGATE BASE	304 8" AGGREGATE BASE	407 NON-TRACKING TACK COAT (@0.06 GAL/SY)	407 NON-TRACKING TACK COAT (@0.09 GAL/SY)	441 1-1/4" AC SURFACE COURSE, TYPE 1, (448), PG64-22	441 1-3/4" AC INTERMEDIATE COURSE, TYPE 2, (448), PG64-22	442 1-1/2" ASPHALT CONCRETE SURFACE COURSE, 12.5MM, TYPE A (446)	442 1-3/4" ASPHALT CONCRETE INTERMEDIATE COURSE, 19MM, TYPE A (446)
				LF	SQ FT	SY	CY	CY	HR	SY	SY	TON	SY	SY	CY	CY	CY	GAL	GAL	CY	CY	CY	CY
	GLEN ESTE-WITHAMSVILLE																						
LOCAL RESURFACING	15+41.62	19+38.04	LT/RT		20,820.28									2,313.36					208.21			96.40	
LOCAL FULL DEPTH ASPH.	16+53.24	16+63.79	RT		142.21	15.80			0.01						2.64	2.64		1.90				0.66	0.77
LOCAL FULL DEPTH ASPH.	16+72.16	19+28.72	RT		627.38	69.71			0.03						11.62	11.62		8.37				2.91	3.39
+CLERMONT C&G	16+72.16	19+28.09	RT	311.29		871.62			0.44							2.88							
LOCAL RESURFACING	20+58.43	28+81.12	LT/RT		36,192.07									4,021.34					361.93			167.56	
LOCAL FULL DEPTH ASPH.	20+69.29	24+14.40	LT		815.85	90.65			0.05						15.11	15.11		10.88				3.78	4.41
+CLERMONT C&G	20+69.91	24+12.43	LT	406.19		1,137.33			0.57							3.76							
LOCAL FULL DEPTH ASPH.	20+56.20	23+07.40	RT		406.22	45.14			0.02						7.53	7.53		5.42				1.89	2.20
+CLERMONT C&G	21+05.66	23+07.40	RT	203.13		568.75			0.28							1.88							
LOCAL FULL DEPTH ASPH.	24+10.86	24+24.65	RT		76.35	8.48			0.004						1.42	1.42		1.02				0.36	0.42
TRAFFIC ISLAND	24+12.86	24+22.65	RT		61.88	6.88			0.003							1.15							
	FAYARD DR. CUL DE SAC																						
LOCAL FULL DEPTH ASPH.	10+00.00	11+29.00	LT/RT		5,319.72				0.30		591.09	15.29	591.09		98.52	98.52		70.93				24.63	28.74
+LOCAL CURB TYPE 6	10+00.00	11+29.00	LT/RT	264.36					0.02		44.06	1.14	44.06			4.90							
	ELICK LN. S. CUL DE SAC																						
LOCAL RESURFACING	48+38.96	50+85.32	LT/RT		8,339.72									926.64					83.40			38.62	
LOCAL FULL DEPTH ASPH.	47+94.74	50+85.32	RT		1,808.84		66.99	66.99		200.98					33.50	33.50		24.12				8.38	9.77
+CLERMONT C&G	47+94.74	49+83.77	RT	291.25			16.18	16.18		48.54						2.70							
+CLERMONT C&G	50+31.33	50+80.10	LT/RT	164.87			9.16	9.16		27.48						1.53							
ASPHALT DRIVEWAY	49+36.37	50+43.37	RT		2,280.27	253.36			0.13								56.30	30.41		8.80	12.32		
	ELICK LN. N. CUL DE SAC																						
LOCAL FULL DEPTH ASPH.	60+00.61	62+00.00	LT/RT		8,375.80				0.47		930.65	24.08	930.65		155.11	155.11		111.68				38.78	45.24
+LOCAL CURB TYPE 6	60+00.61	62+00.00	LT/RT	444.42					0.04		74.07	1.92	74.07			8.23							
LOCAL FULL DEPTH ASPH.	62+00.00	63+55.12	LT/RT		340.47		12.61	12.61		37.83					6.31	6.31		4.54				1.58	1.84
+LOCAL CURB TYPE 6	62+00.00	63+55.12	LT	155.12			8.62	8.62		25.85						2.88							
ASPHALT DRIVEWAY	60+86.56	61+72.64	RT		1,731.70	192.41			0.10								42.76	23.09		6.68	9.35		
+DRIVE EDGE COURSE	60+86.56	61+72.64	RT	112.79		12.53			0.006								2.79				0.30		
	BACH BUXTON																						
LOCAL FULL DEPTH ASPH.	332+72.11	340+16.63	LT/RT		68,825.15				3.82		7,647.24	197.87	7,647.24		1,274.54	1,274.54		917.67				318.64	371.75
ASPH. W/VARIABLE 302	340+16.63	340+41.63	LT/RT		2,877.08				0.16		319.68	8.27	319.68		65.49	60.01		38.37				13.32	15.54
APPROACH SLAB TYPE B	340+41.63	340+71.63	LT/RT		3,610.36	401.15			0.20						97.51	66.86		48.14				16.72	19.51
+LOCAL CURB TYPE 6	332+72.11	338+50.18	LT	572.36					0.05		95.39	2.47	95.39			10.60							
+LOCAL CURB TYPE 6	332+72.11	340+45.25	RT	790.11					0.07		131.69	3.41	131.69			14.64							
APPROACH SLAB TYPE C	342+24.45	342+56.50	LT/RT		3,875.97	430.66			0.22							81.24							
LOCAL FULL DEPTH ASPH.	342+56.50	348+68.26	LT/RT		66,347.25				3.69		7,371.92	190.75	7,371.92		1,228.66	1,228.66		884.63				307.17	358.36
+LOCAL CURB TYPE 6	343+09.16	348+68.26	LT	550.78					0.05		91.80	2.38	91.80			10.20							
+TYPD D ASPH.	343+85.97	346+23.32	RT	245.17					0.05		95.35	2.47	95.35		12.11	14.38		3.55					2.87
+LOCAL CURB TYPE 6	346+23.32	348+68.26	RT	248.93					0.02		41.49	1.07	41.49			4.61							
	OLD 74 N. CUL DE SAC																						
LOCAL RESURFACING	199+20.00	202+08.25	LT/RT		9,973.30									1,108.14					99.74			46.18	
LOCAL FULL DEPTH ASPH.	201+19.73	202+35.47	LT/RT		4,128.44				0.23		458.72	11.87	458.72		76.46	76.46		55.05				19.12	22.30
+LOCAL ASPH. EDGE COURSE	201+19.73	201+48.71	RT	24.66					0.002		4.11	0.11	4.11		0.23	0.46							
+LOCAL CURB TYPE 6	201+49.04	202+41.01	LT/RT	175.26					0.01		29.21	0.76	29.21			3.25							
	OLD 74 S. CUL DE SAC																						
LOCAL FULL DEPTH ASPH.	204+49.59	205+50.00	LT/RT		4,880.44				0.27		542.28	14.03	542.28		90.38	90.38		65.08				22.60	26.37
+LOCAL ASPH. EDGE COURSE	205+30.32	205+50.00	LT	19.70					0.002		3.29	0.09	3.29		0.19	0.37							
+LOCAL CURB TYPE 6	204+50.17	205+50.00	LT/RT	220.20					0.02		36.70	0.95	36.70			4.08							
ASPHALT DRIVEWAY	204+98.08	205+45.04	RT		1,283.48	142.61			0.07								31.69	17.12		4.95	6.93		
	ACCESS DRIVE																						
ASPHALT DRIVE APRON	OLD 74 STA. 215+08.92		RT		678.82	75.42			0.04								16.76	9.06		2.62	3.67		
+DRIVE CURB TYPE 6			RT	85.65		9.52			0.005						0.80		2.12						
GRAVEL ACCESS DRIVE			RT		10,886.70	1,209.63			0.60								268.81						
SUBTOTAL CARRIED TO SHEET 159						5,541.65	113.56	113.56	12.03	340.68	18,508.73	478.91	18,508.73	8,369.49	3,178.13	3,302.41	421.23	2,331.03	753.28	23.05	32.57	1,129.30	913.48

DRAWN MSW
CHECKED WAA

CLE-32-3.50
(PHASE 5)

163
736

...\303.205\103954_GS501.dgn 11/4/2021 1:10:26 PM mswhitt

PAV'T AREA	STATION FROM	STATION TO	SIDE	LENGTH (ALONG CURB OR EDGE LINE)	AREA (FROM CADD)		204 SUBGRADE COMPACTION	204 PROOF ROLLING	206 CURING COAT	254 PAVEMENT PLANING, ASPHALT CONCRETE (1.5" DEPTH)	302 6" ASPHALT CONCRETE BASE, PG64-22	302 10" ASPHALT CONCRETE BASE, PG64-22	304 6" AGGREGATE BASE	304 8" AGGREGATE BASE	407 NON-TRACKING TACK COAT (@0.06 GAL/SY)	407 NON-TRACKING TACK COAT (@0.09 GAL/SY)	441 1-1/4" AC SURFACE COURSE, TYPE 1, (448), PG64-22	441 1-3/4" AC INTERMEDIATE COURSE, TYPE 2, (448), PG64-22	442 ANTI-SEGREGATION EQUIPMENT	442 1-1/2" ASPHALT CONCRETE SURFACE COURSE, 12.5MM, TYPE A (446)	442 1-3/4" ASPHALT CONCRETE INTERMEDIATE COURSE, 19MM, TYPE A (446)	452 4" NON-REINFORCED CONCRETE PAVEMENT, CLASS QC1	452 11" NON-REINFORCED CONCRETE PAVEMENT
				LF	SQ FT		SY	HR	SY	SY	CY	CY	CY	CY	GAL	GAL	CY	CY	CY	CY	CY	SY	SY
	DRAINAGE INSTALLATIONS																						
	SR-32																						
PIPE INSTALLATION	184+00.00		RT		150.23		16.69	0.01	16.69			4.64		3.71	3.01				1.52	0.70	0.82		
PIPE INSTALLATION	184+00.00		LT		126.51		14.06	0.01	14.06			3.91		3.13	2.54				1.28	0.59	0.69		
PIPE INSTALLATION	187+99.34	188+14.03	RT		173.93		19.33	0.01	19.33			5.37		4.30	2.32				0.94		0.94		
PIPE INSTALLATION	188+00.00		LT		128.71		14.30	0.01	14.30			3.98		3.18	2.58				1.30	0.60	0.70		
PIPE INSTALLATION	192+50.00		RT		203.63		22.63	0.01	22.63			6.29		5.03	4.08				2.05	0.95	1.10		
PIPE INSTALLATION	194+52.68	194+98.81	RT		323.87		35.99	0.02	35.99			10.00		8.00	6.48				3.25	1.50	1.75		
PIPE REMOVAL	195+08.26	195+37.57	RT		205.13		22.79	0.01	22.79			6.34		5.07	4.11				2.06	0.95	1.11		
PIPE INSTALLATION	196+50.00		LT		246.13		27.35	0.01	27.35			7.60		6.08	4.93				2.47	1.14	1.33		
PIPE INSTALLATION	200+00.00		LT		151.72		16.86	0.01	16.86			4.69		3.75	3.04				1.53	0.71	0.82		
PIPE INSTALLATION	205+77.10	205+81.51	RT		187.60		20.84	0.01	20.84			5.80		4.64	3.76				1.89	0.87	1.02		
	GLEN ESTE-WITHAMSVILLE																						
LOCAL PIPE INSTALLATION	16+67.14	16+72.17	RT		18.01		2.00	0.001			0.34		0.34		0.25						0.10		
LOCAL PIPE INSTALLATION	18+73.80	18+77.88	LT		19.65		2.18	0.001			0.37		0.37		0.27						0.11		
	ELICK LN. S. CUL DE SAC																						
LOCAL PIPE INSTALLATION	50+34.94	50+55.11	RT		98.46		10.94	0.01			1.83		1.83		1.32						0.54		
	BACH BUXTON																						
LOCAL PIPE INSTALLATION	337+75.00	337+82.00	RT		32.95		3.66	0.002			0.62		0.62		0.44					0.16	0.18		
SUBTOTAL CARRIED TO SHEET 159							229.62	0.11	210.83		3.16	58.62	3.16	46.89	39.13				18.29	8.17	11.21		

CALCULATED MSW
CHECKED WAA

PAVEMENT ESTIMATED QUANTITIES

CLE-32-3.50
(PHASE 5)

...\303.205\103954_GS501.dgn 11/4/2021 1:10:26 PM mswhitt

REFERENCE NO.	SHEET NO.	STATION FROM	STATION TO	SIDE	602 MANHOLE ABANDONED	611 8" CONDUIT, TYPE B, SDR-26 (CCWRD 3110)	611 8" CONDUIT, TYPE B, SDR-35 (CCWRD 3110)	611 MANHOLE, NO. 3, AS PER PLAN	611 MANHOLE ADJUSTED TO GRADE
					EACH	FT	FT	EACH	EACH
		GLEN ESTE-WITHAMSVILLE							
SA-1	194	18+17		RT					1
SA-2	194	20+90		RT					1
SA-1	195	24+32		RT					1
SA-2	195	25+04		RT					1
		RAMP O							
SA-1	185	192+25		LT			125	1	
SA-2	185	193+50		LT				1	
SA-1	186	195+03		RT	1				
SA-2	186	196+26		LT	1				
		SANITARY RELOCATION							
SA-1	475	0+50	3+46	RT / LT		296			
SA-2	475	3+46	4+00	RT / LT		55		1	
SA-1	476	4+00	4+44	RT / LT		44			
SA-2	476	4+44	7+21	RT / LT		277		1	
SA-3	476	5+13		LT	1				
SA-4	476	5+45		LT	1				
SA-5	476	6+79		LT	1				
SA-6	476	7+21		RT / LT				1	
TOTALS CARRIED TO GENERAL SUMMARY					5	672	125	5	4

UPDATED
11/3/21

CALCULATED SAT
CHECKED WAA

SANITARY SEWER ESTIMATED QUANTITIES

CLE-32-3.50
(PHASE 5)

166
736

...\312.08\Sheets\103954_US502.dgn 11/3/2021 1:59:48 PM nldonofrio

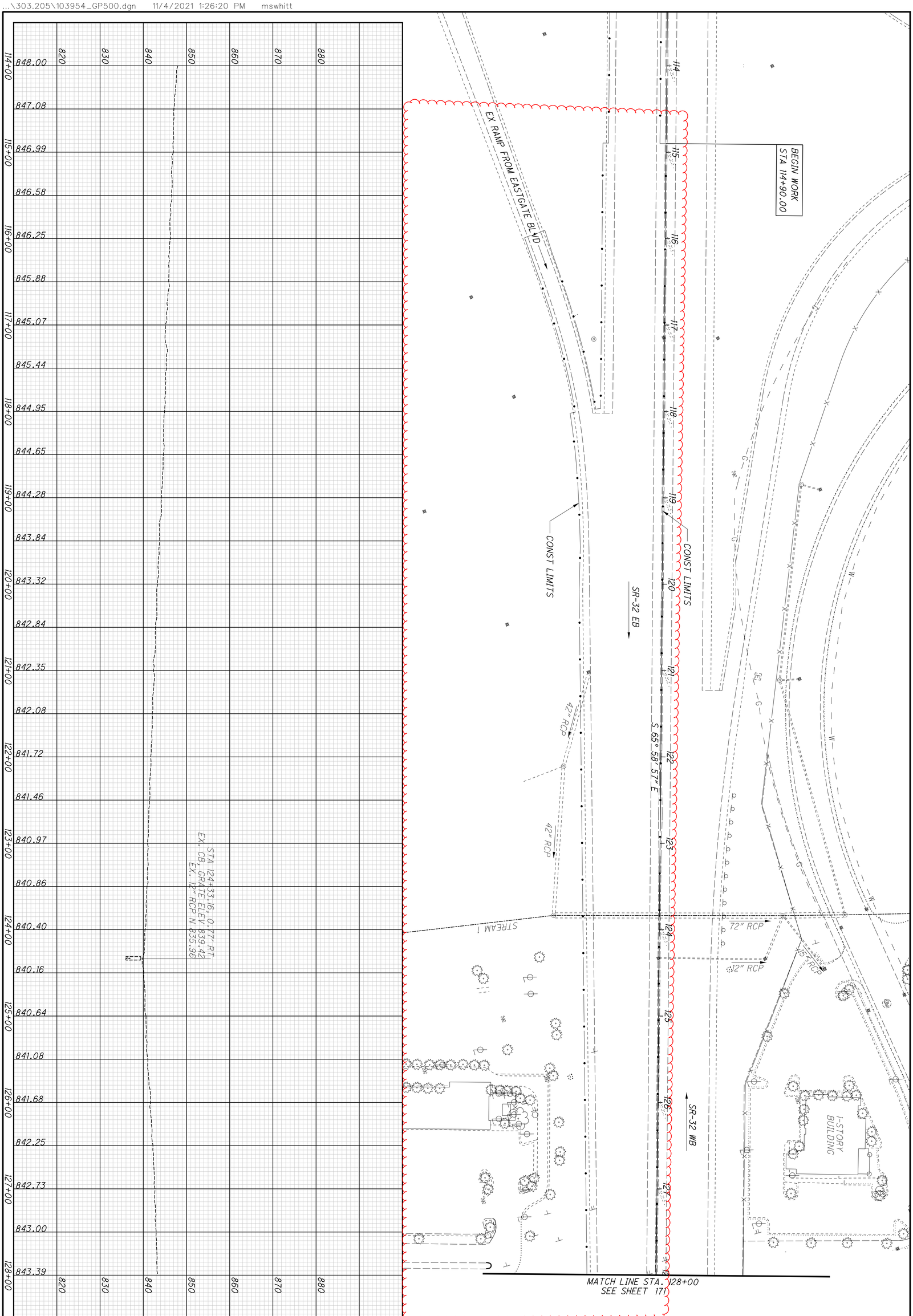

170 / 736	CLE-32-3.50 (PHASE 5)	PLAN AND PROFILE - SR-32 STA 114+00 TO STA 128+00	CALCULATED GAH / CHECKED WAA	0 50 / 25 100 HORIZONTAL SCALE IN FEET

...\303.205\103954_GP501.dgn 11/4/2021 1:26:27 PM mswhitt

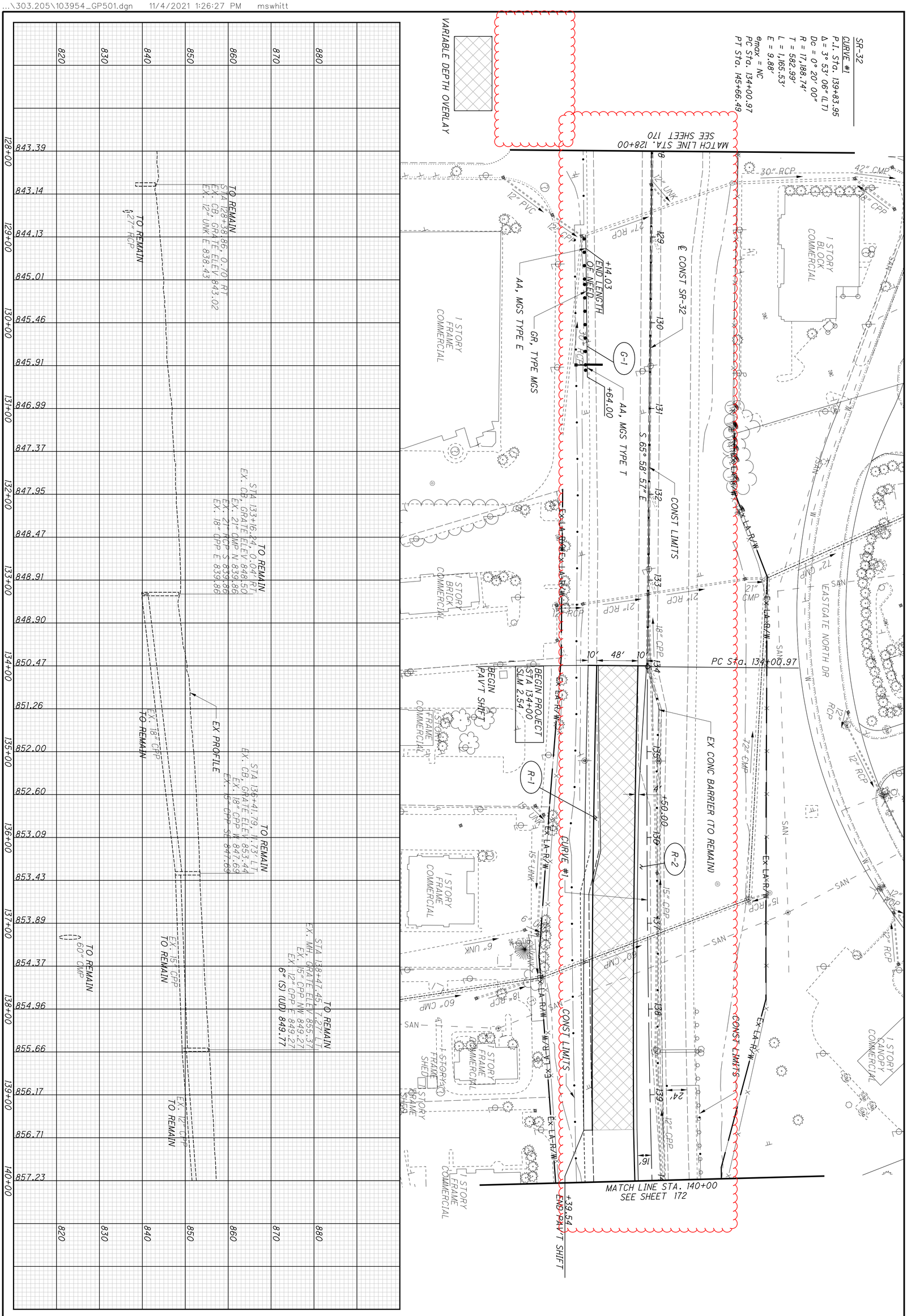

171 / 736	CLE-32-3.50 (PHASE 5)	PLAN AND PROFILE - SR-32 STA 128+00 TO STA 140+00	CALCULATED GAH CHECKED WAA	0 25 50 100 HORIZONTAL SCALE IN FEET

SR-32

CURVE #1
P.I. Sta. 139+83.95
Δ = 3° 53′ 06″ (LT)
Dc = 0° 20′ 00″
R = 17,188.74′
T = 582.99′
L = 1,165.53′
E = 9.88′
e_{max} = NC
PC Sta. 134+00.97
PT Sta. 145+66.49

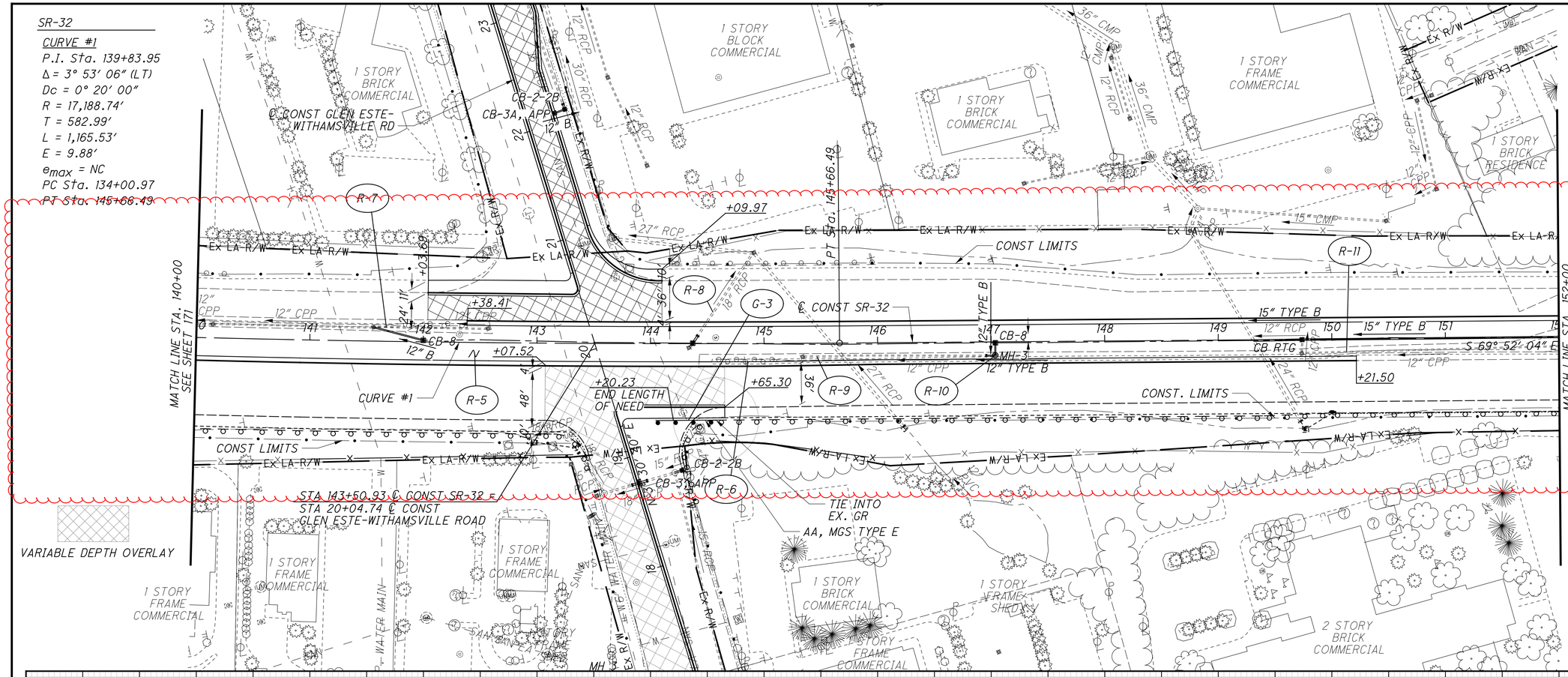

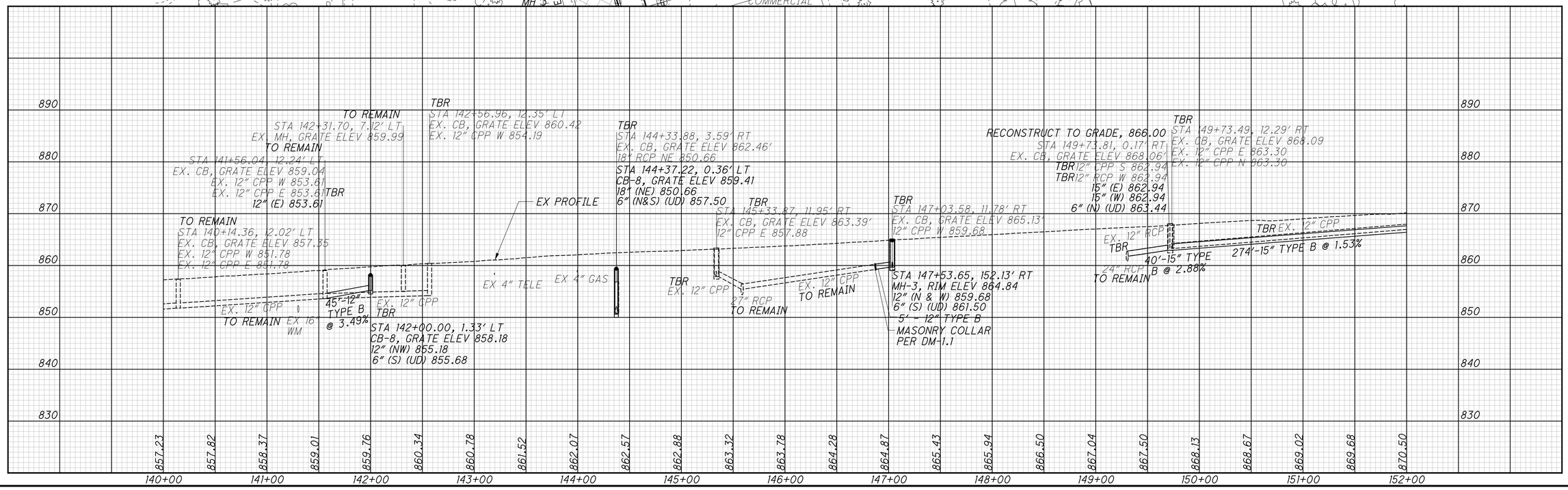

HORIZONTAL SCALE IN FEET
0 25 50 100

CALCULATED GAH CHECKED WAA

PLAN AND PROFILE - SR-32
STA. 140+00 TO STA. 152+00

CLE-32-3.50
(PHASE 5)

172
736

...\303.205\103954_GP502.dgn 11/4/2021 1:26:44 PM mswhitt

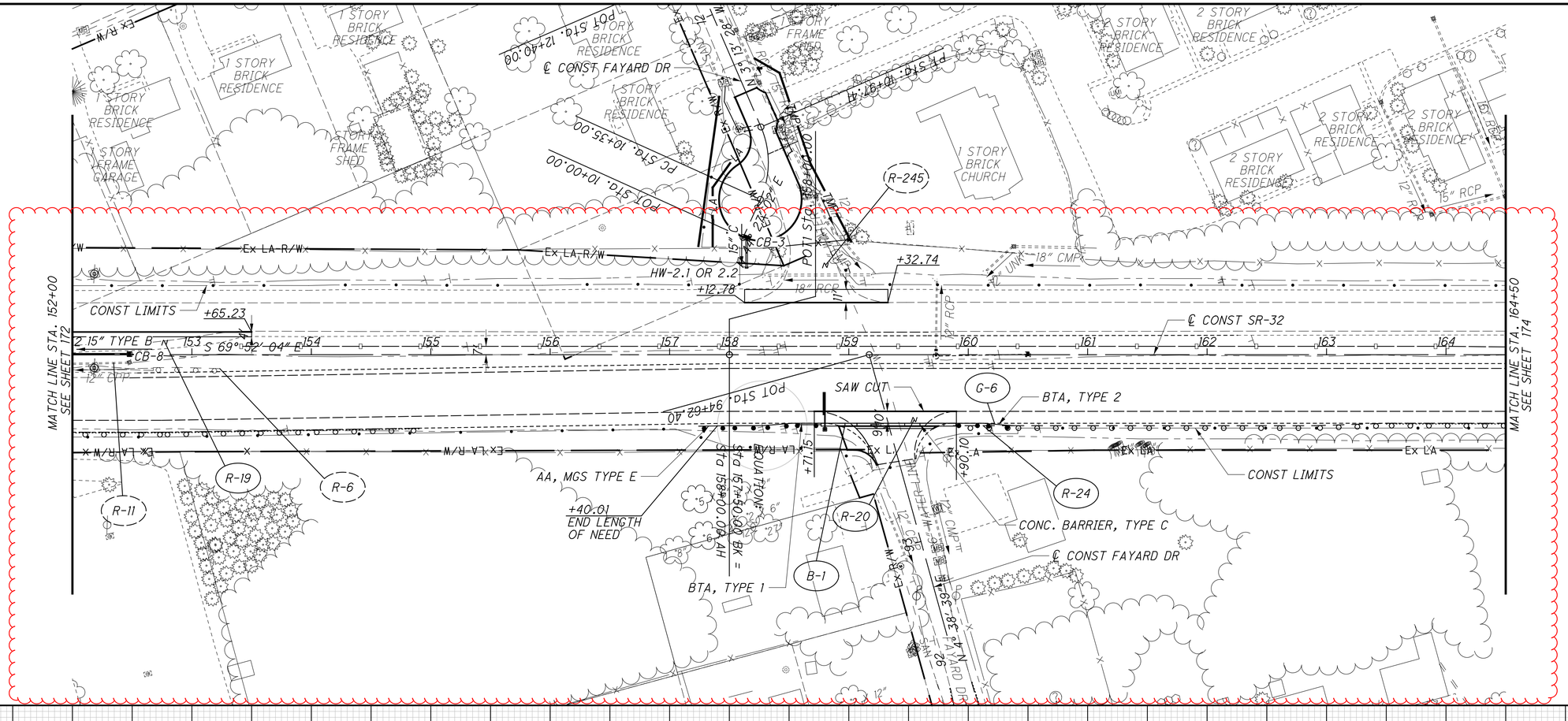

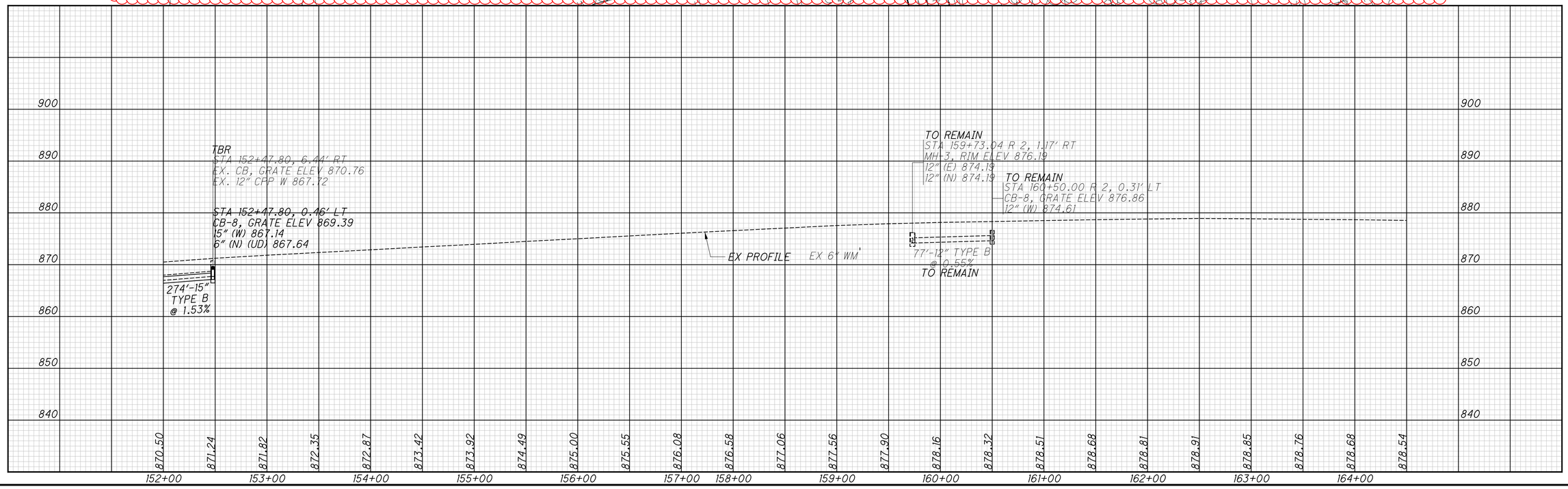

N

0 25 50 100
HORIZONTAL SCALE IN FEET

CALCULATED GAH
CHECKED WAA

PLAN AND PROFILE - SR-32
STA. 152+00 TO STA. 164+50

CLE-32-3.50
(PHASE 5)

173
736

...\303.205\103954_GP503.dgn 11/4/2021 1:27:07 PM mswhitt

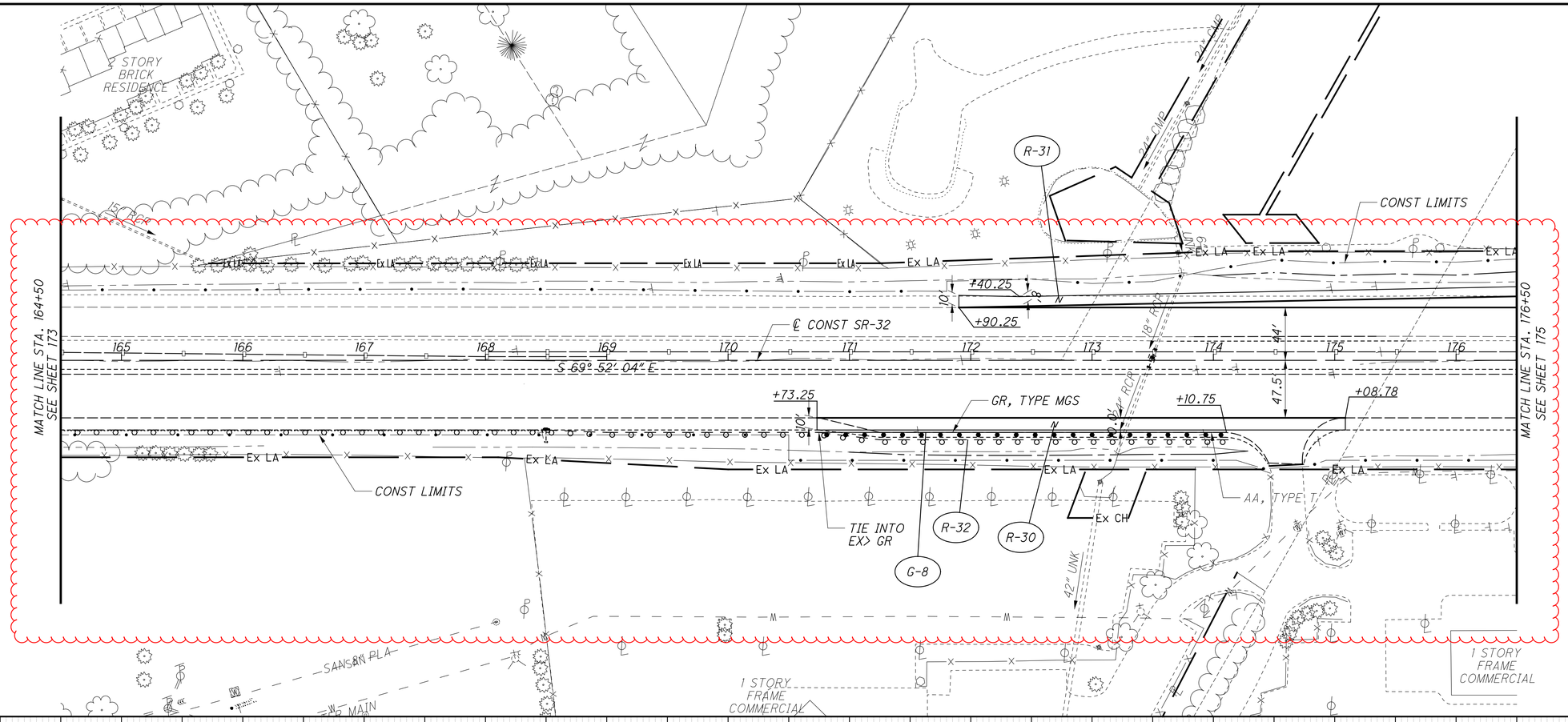

HORIZONTAL SCALE IN FEET
0 25 50 100

CALCULATED GAH
CHECKED WAA

PLAN AND PROFILE - SR-32
STA. 164+50 TO STA. 176+50

CLE-32-3.50
(PHASE 5)

\303.205\103954_GP504.dgn 11/4/2021 1:27:28 PM mswhitt

...\303.205\103954_GP505.dgn 11/4/2021 1:27:50 PM mswhitt

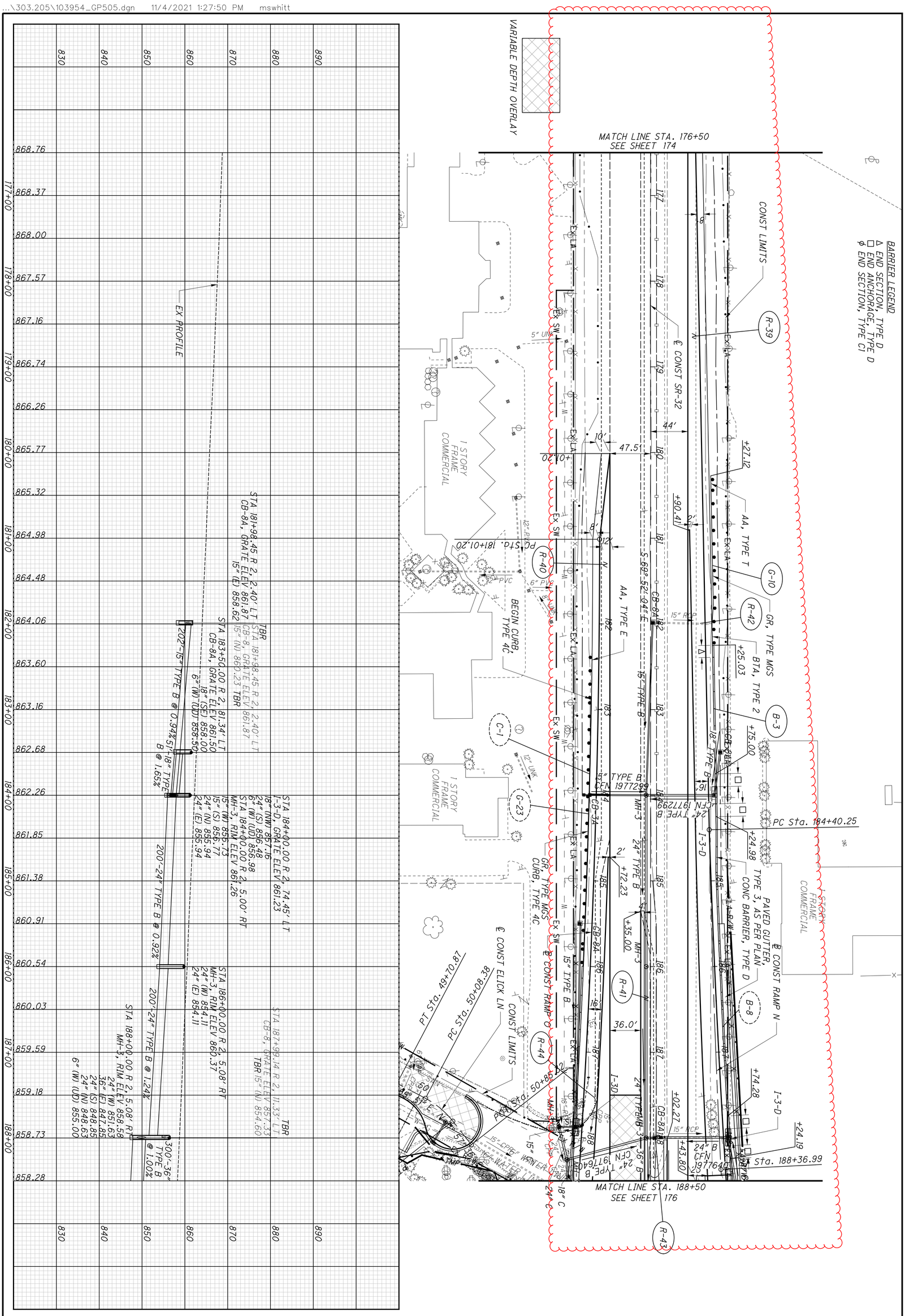

175 / 736	CLE-32-3.50 (PHASE 5)	PLAN AND PROFILE - SR-32 STA. 176+50 TO STA. 188+50	CALCULATED GAH CHECKED WAA	0 25 50 100 HORIZONTAL SCALE IN FEET

BARRIER LEGEND
Δ END SECTION, TYPE D
□ END ANCHORAGE, TYPE D
ϕ END SECTION, TYPE C1

VARIABLE DEPTH OVERLAY

BMP POND
CONC. BARRIER TYPE D
℄ CONST RAMP Q
PAVED GUTTER, TYPE I-2, AS PER PLAN
GR, TYPE MGS
CONC BARRIER TYPE D
PROP RETAINING WALL
PAVED GUTTER, TYPE I-2, AS PER PLAN
℄ CONST RAMP P
STRUCTURE NO CLE-32-0374
STA 197+94.36 ℄ CONST SR-32 = STA 341+54.81 ℄ CONST BACH-BUXTON RD
℄ CONST BACH-BUXTON RD
℄ CONST RAMP N
℄ CONST SR-32
℄ CONST RAMP O
℄ CONST ELICK LN
CONST LIMITS
AA, TYPE T
AA, TYPE E
PROP CABLE BARRIER
PROP. RETAINING WALL
BTA, TYPE 1
BTA, TYPE 2
TYPE MGS GUARDRAIL
TYPE B1 BARRIER
END APPROACH SLAB STA 342+54.62
BEGIN APPROACH SLAB STA 340+41.63
END LENGTH OF NEED
MATCH LINE STA. 188+50 SEE SHEET 175
MATCH LINE STA. 200+50 SEE SHEET 177
R-51 R-52 R-53 R-54 R-55 R-50
B-5 B-6 B-7
G-12 G-13 G-14

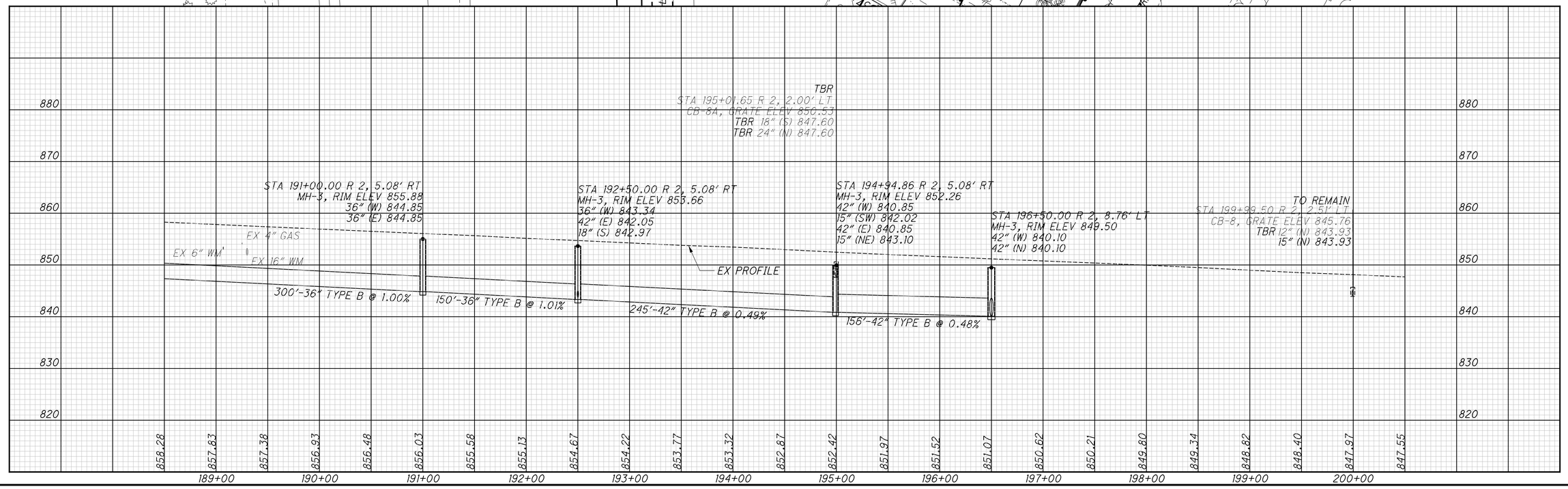

PLAN AND PROFILE - SR-32
STA. 188+50 TO STA. 200+50

CLE-32-3.50
(PHASE 5)

CALCULATED GAH CHECKED WAA

HORIZONTAL SCALE IN FEET
0 25 50 100

176
736

...\303.205\103954_GP506.dgn 11/4/2021 1:28:15 PM mswhitt

BARRIER LEGEND
△ END SECTION, TYPE D
□ END ANCHORAGE, TYPE D
⌀ END SECTION, TYPE C1

SR-32
CURVE #2
P.I. Sta. 205+82.41
Δ = 2° 03′ 49″ (LT)
Dc = 1° 30′ 00″
R = 3,819.74′
T = 68.80′
L = 137.58′
E = 0.62′
emax = 0.037
PC Sta. 205+13.61
PCC Sta. 206+51.19

SR-32
CURVE #3
P.I. Sta. 209+99.75
Δ = 13° 55′ 35″ (LT)
Dc = 2° 00′ 27″
R = 2,854.00′
T = 348.57′
L = 693.70′
E = 21.21′
emax = 0.045
PCC Sta. 206+51.19
PCC Sta. 213+44.89

* CONC BARRIER, END ANCHORAGE, TYPE C, APP

TO REMAIN
STA 205+79.48 R 2, 0.33′ RT
EX. CB, GRATE ELEV 841.55
TBR EX. 18″ RCP S 833.38
EX. 24″ RCP N 833.38
24″ (S) 833.38

EX PROFILE

HORIZONTAL SCALE IN FEET
0 25 50 100

CALCULATED GAH CHECKED WAA

PLAN AND PROFILE - SR-32
STA. 200+50 TO STA. 212+50

CLE-32-3.50
(PHASE 5)

177
736

\\303.205\103954_GP507.dgn 11/4/2021 1:28:44 PM mswhitt

SR-32

CURVE #3
P.I. Sta. 209+99.75
Δ = 13° 55′ 35″ (LT)
Dc = 2° 00′ 27″
R = 2,854.00′
T = 348.57′
L = 693.70′
E = 21.21′
e_{max} = 0.045
PCC Sta. 206+51.19
PCC Sta. 213+44.89

VARIABLE DEPTH OVERLAY

SR-32

CURVE #4
P.I. Sta. 214+11.75
Δ = 2° 00′ 21″ (LT)
Dc = 1° 30′ 00″
R = 3,819.74′
T = 66.86′
L = 133.72′
E = 0.59′
e_{max} = 0.037
PCC Sta. 213+44.89
PT Sta. 214+78.60

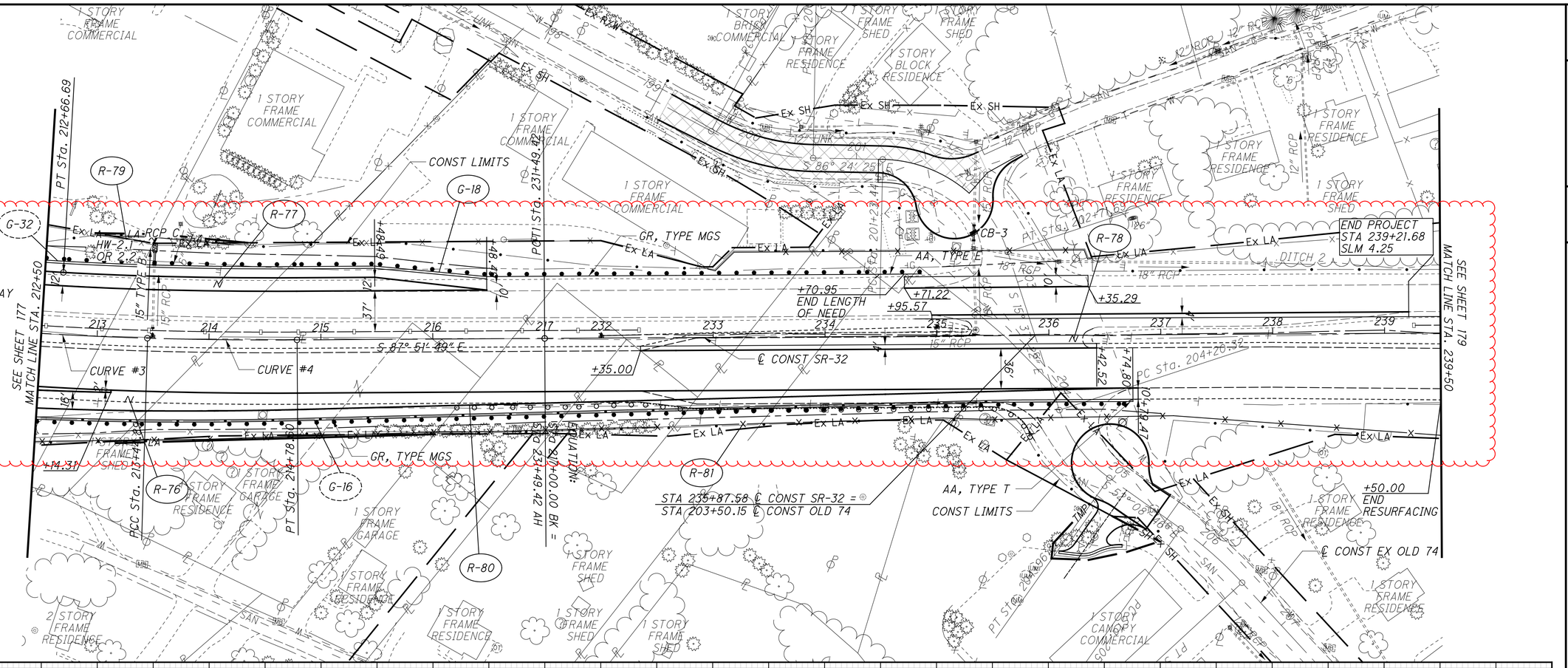

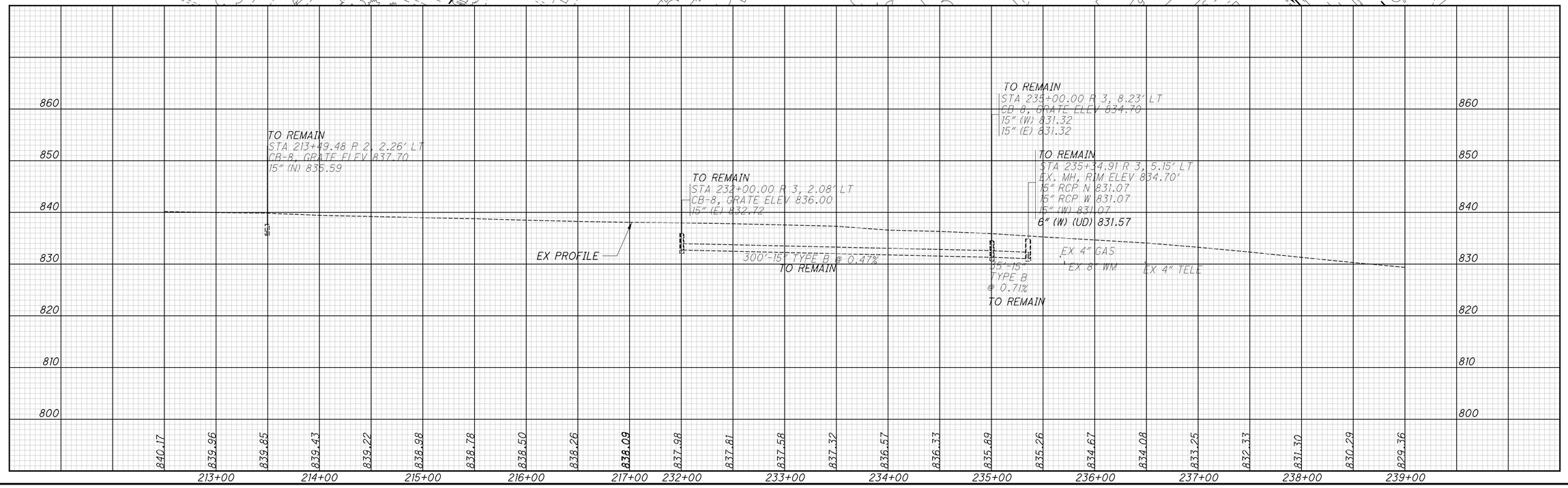

HORIZONTAL SCALE IN FEET
0 25 50 100

CALCULATED GAH
CHECKED WAA

PLAN AND PROFILE - SR-32
STA. 212+50 TO STA. 239+50

CLE-32-3.50
(PHASE 5)

178
736

\303.205\103954_GP508.dgn 11/4/2021 1:28:48 PM mswhitt

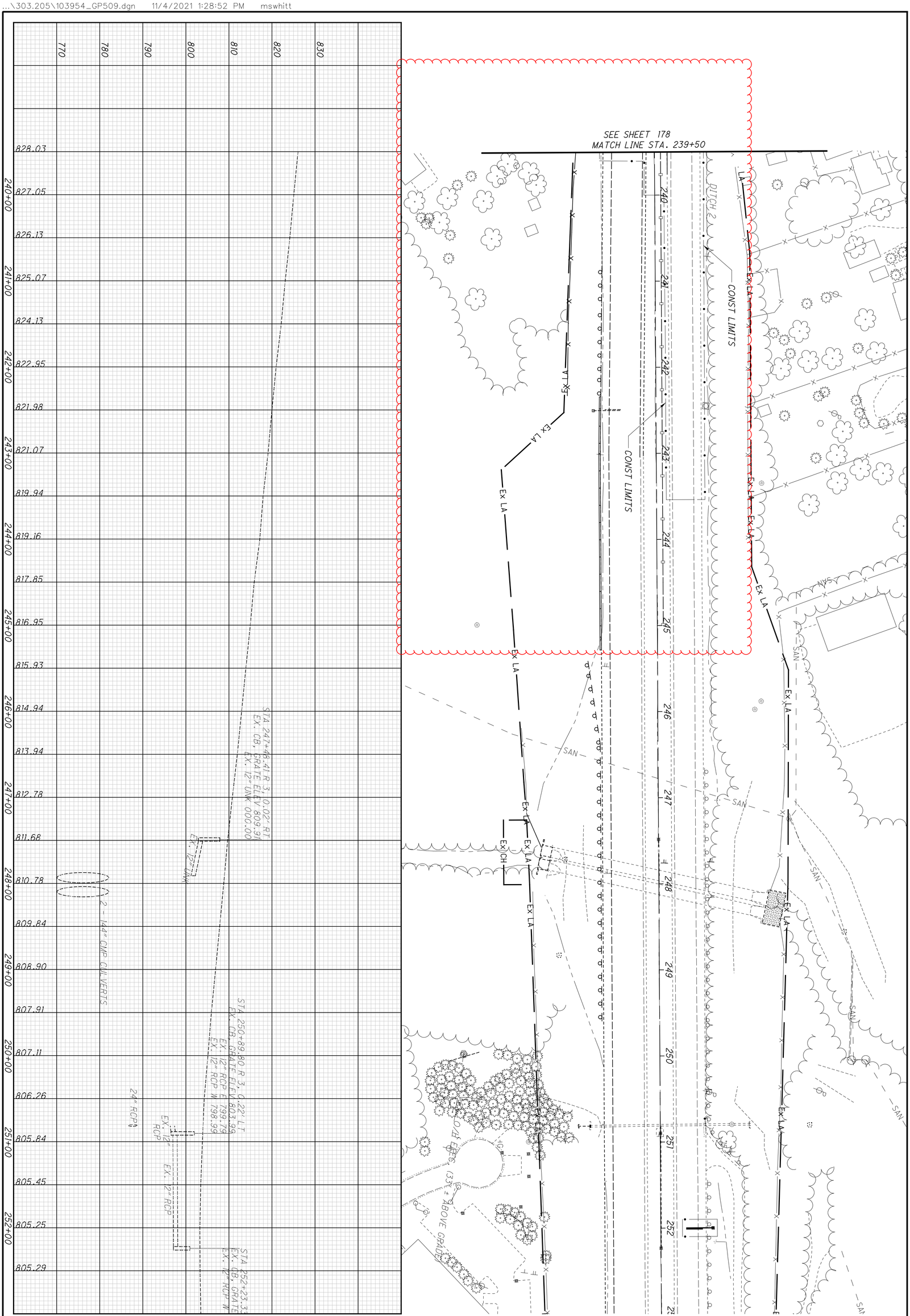

179 / 736	CLE-32-3.50 (PHASE 5)	PLAN AND PROFILE - SR-32 STA. 239+50 TO STA. 253+00	CALCULATED GAH / CHECKED WAA	HORIZONTAL SCALE IN FEET 0 25 50 100

RAMP N

CURVE #5
P.I. Sta. 186+38.63
Δ = 1° 39′ 11″ (LT)
Dc = 0° 25′ 00″
R = 13,750.99′
T = 198.38′
L = 396.74′
E = 1.43′
e_{max} = 0.016
PC Sta. 184+40.25
PT Sta. 188+36.99

BARRIER LEGEND
△ END SECTION, TYPE D
□ END ANCHORAGE, TYPE D
ϕ END SECTION, TYPE C1

VARIABLE DEPTH OVERLAY

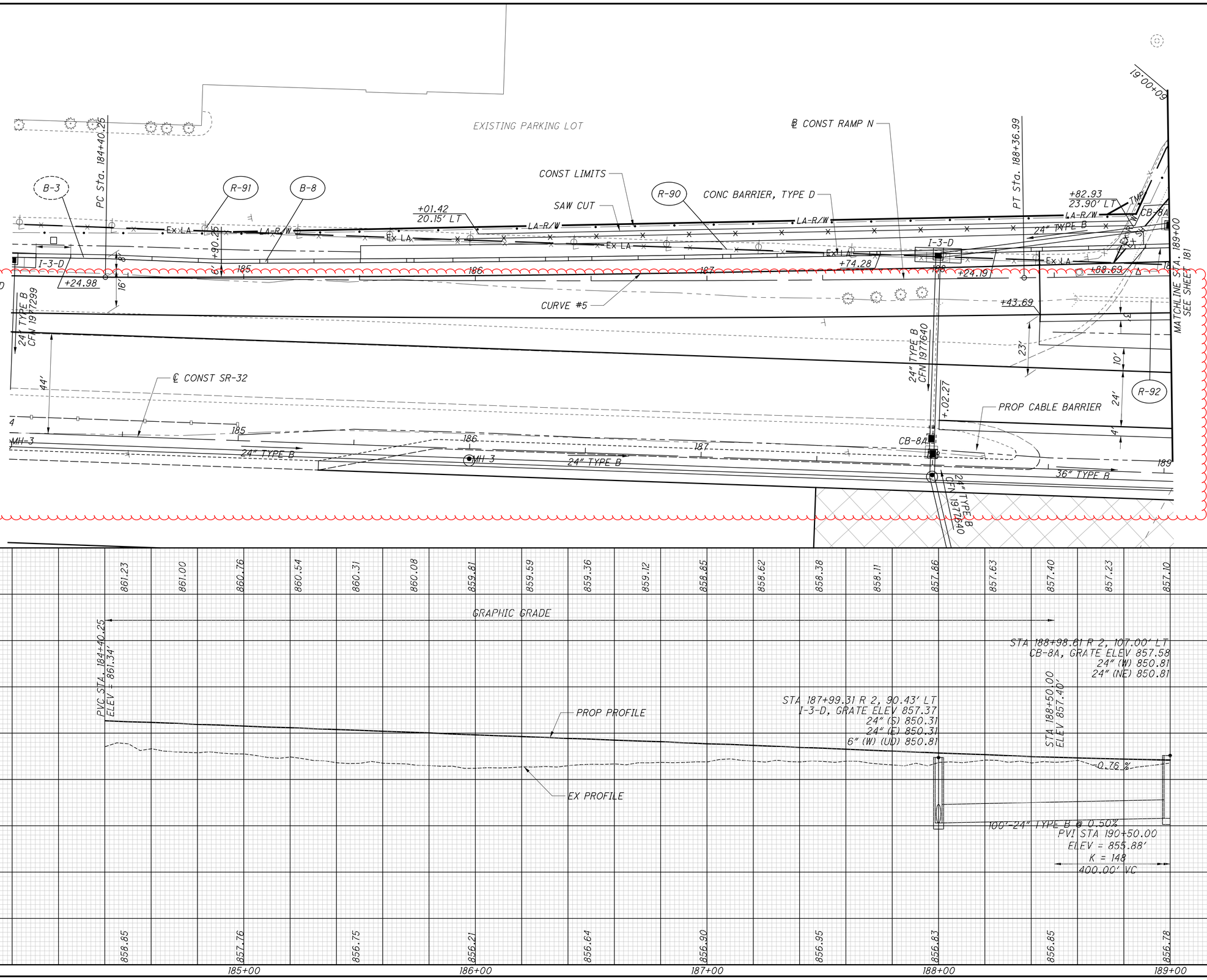

\\303.205\103954_GP531.dgn 11/4/2021 1:28:56 PM mswhitt

HORIZONTAL SCALE IN FEET
0 10 20 40
CALCULATED MSW
CHECKED WAA

PLAN AND PROFILE-RAMP N
STA 184+40.25 TO STA 189+00

CLE-32-3.50
(PHASE 5)

CONST LIMITS

R-98

℄ CONST ELICK LN

SHELL

1 STORY CANOPY COMMERCIAL

1 STORY BRICK COMMERCIAL

R-99

R-102

R-100

1 STORY FRAME GARAGE

CONST LIMITS

TMP

LA-R/W

R-101

R-105

G-20

℄ CONST RAMP N

R-103

24' TYPE B

N 58° 06' 16" E

BTA, TYPE I

+02.80

GR, TYPE MGS

+40.25

+80.51

MATCHLINE STA. 189+00
SEE SHEET 180

MATCHLINE STA. 194+00
SEE SHEET 182

Ex LA

R-104

R-106

R-108

S 72° 40' 00" E

+24.65

AA, TYPE T

+20.53

6" WATER LINE

10'

24'

R-92

R-107

G-12

G-21

VARIABLE DEPTH OVERLAY

℄ CONST SR-32

36" TYPE B

MH-3

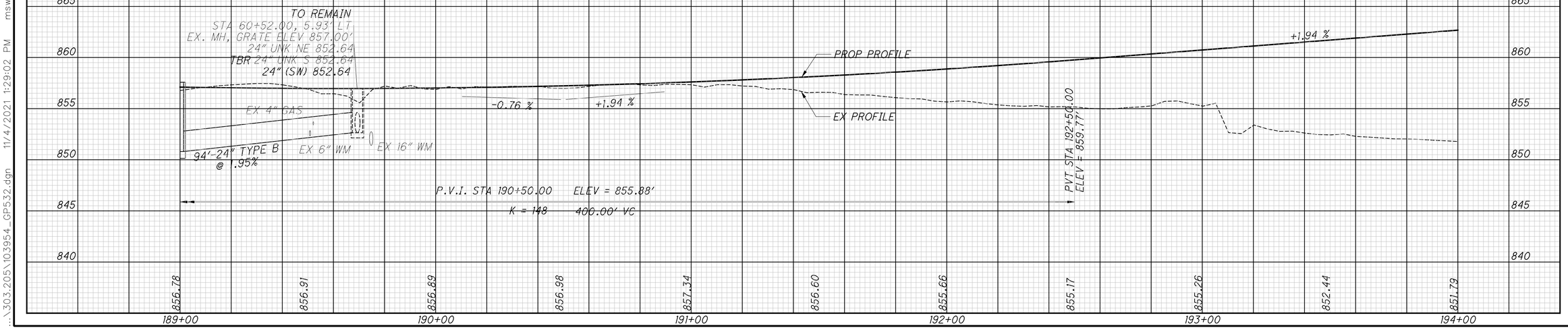

HORIZONTAL SCALE IN FEET
0 10 20 40

CALCULATED MSW
CHECKED WAA

PLAN AND PROFILE - RAMP N
STA 189+00 TO STA 194+00

CLE-32-3.50
(PHASE 5)

181
736

\303.205\103954_GP532.dgn 11/4/2021 1:29:02 PM mswhitt

...\303.205\103954_GP533.dgn 11/4/2021 1:29:06 PM mswhitt

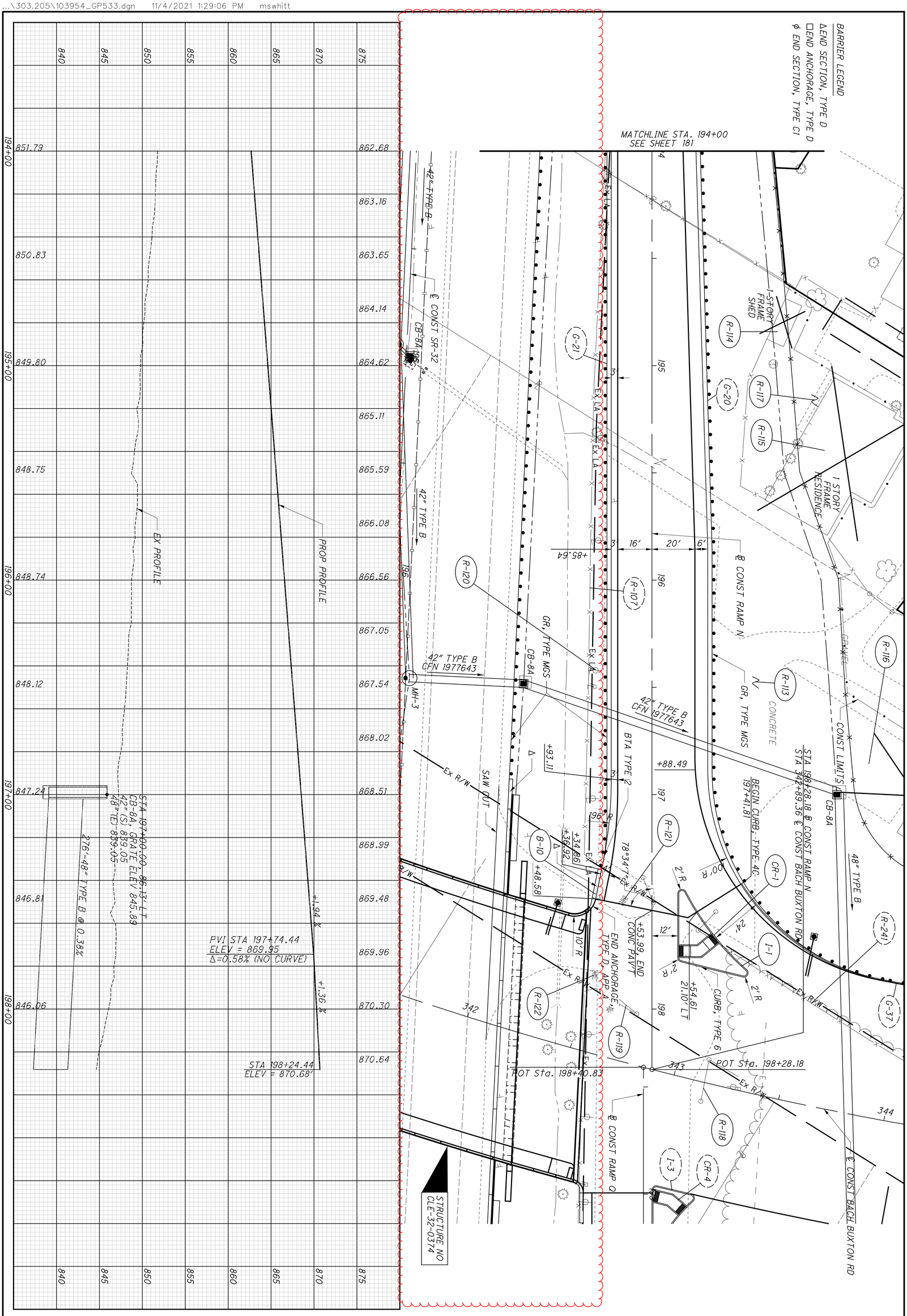

182 / 736	CLE-32-3.50 (PHASE 5)	PLAN AND PROFILE-RAMP N STA 194+00 TO STA 198+28.18	CALCULATED MSW / CHECKED WAA	HORIZONTAL SCALE IN FEET

...\303.205\103954_GP534.dgn 11/4/2021 1:29:09 PM mswhitt

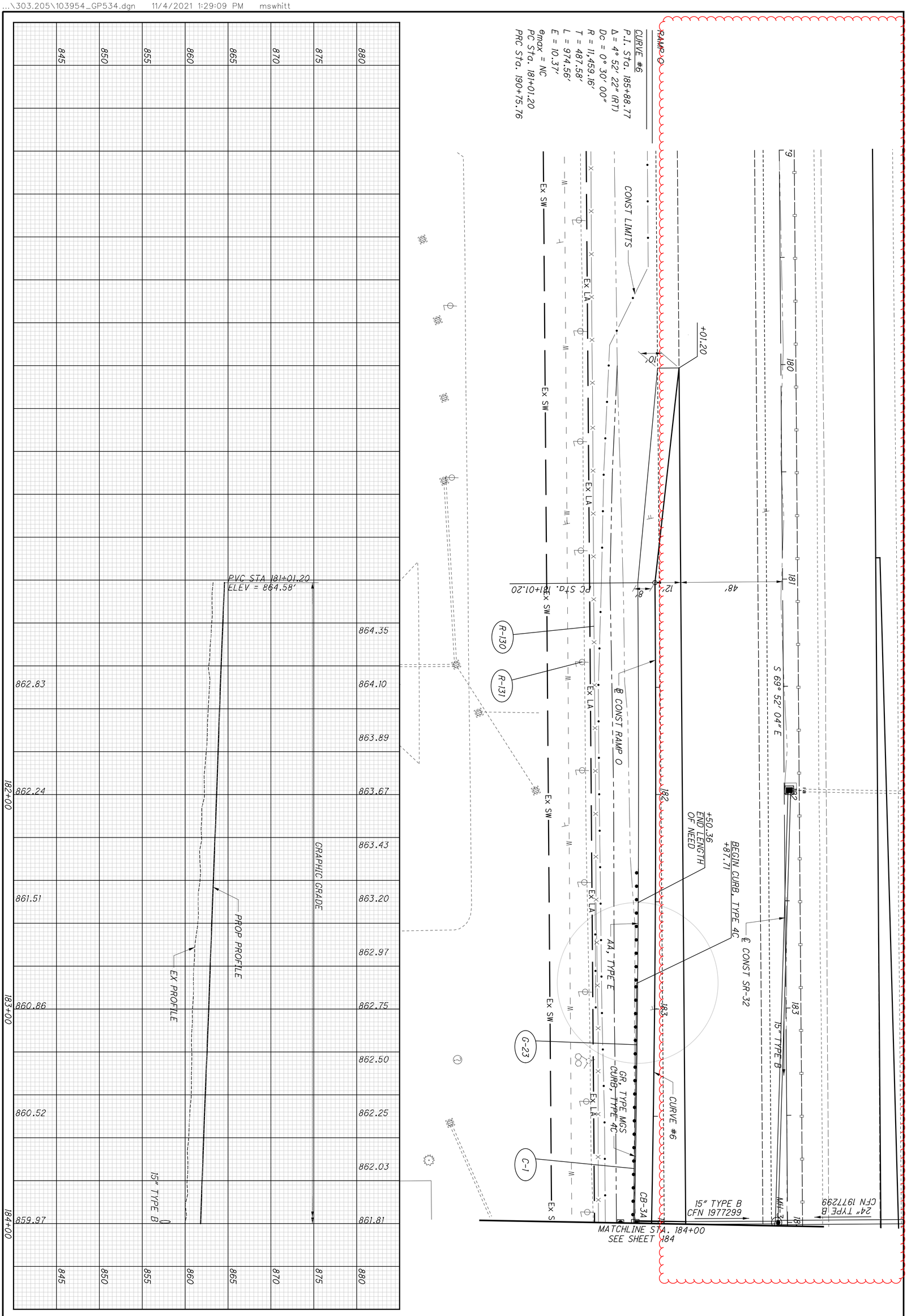

183 / 736	CLE-32-3.50 (PHASE 5)	PLAN AND PROFILE-RAMP O STA 181+01.20 TO STA 184+00	CALCULATED MSW / CHECKED WAA	0 10 20 40 HORIZONTAL SCALE IN FEET

RAMP O

CURVE #6
P.I. Sta. 185+88.77
Δ = 4° 52′ 22″ (RT)
Dc = 0° 30′ 00″
R = 11,459.16′
T = 487.58′
L = 974.56′
E = 10.37′
e_{max} = NC
PC Sta. 181+01.20
PRC Sta. 190+75.76

BARRIER LEGEND
Δ END SECTION, TYPE D
□ END ANCHORAGE, TYPE D
ϕ END SECTION, TYPE C1

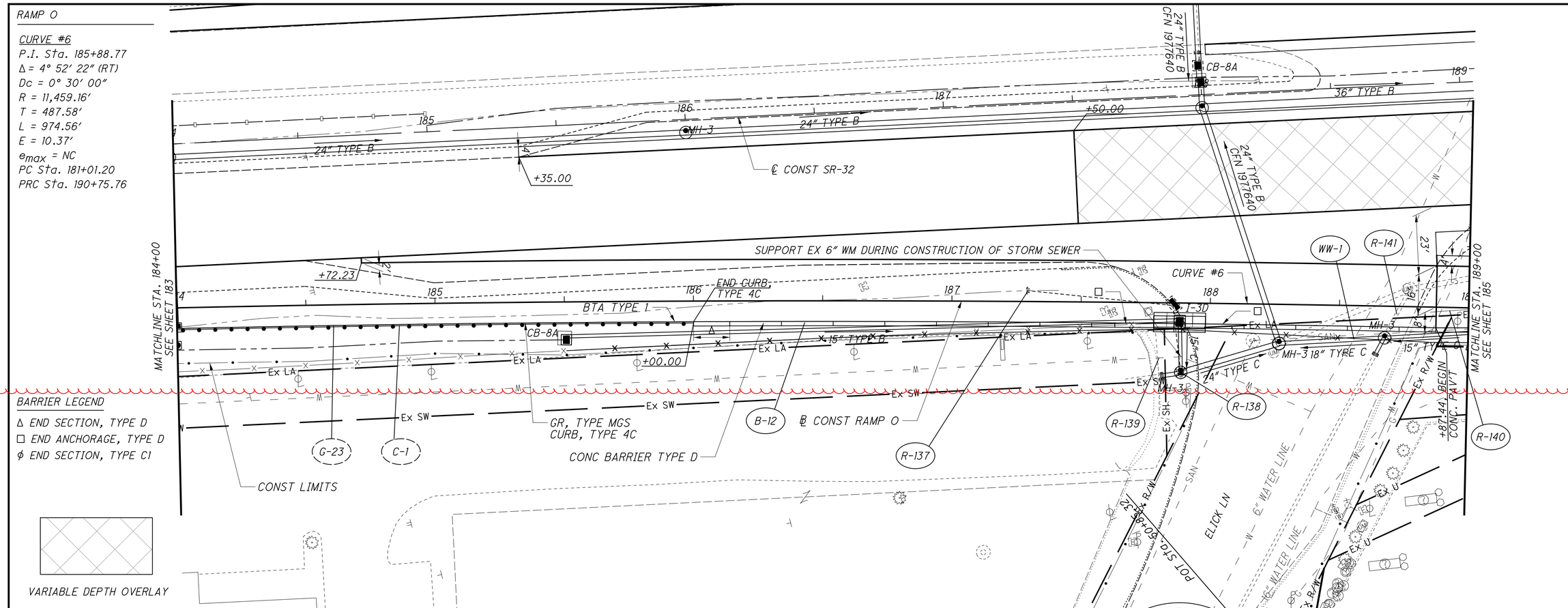

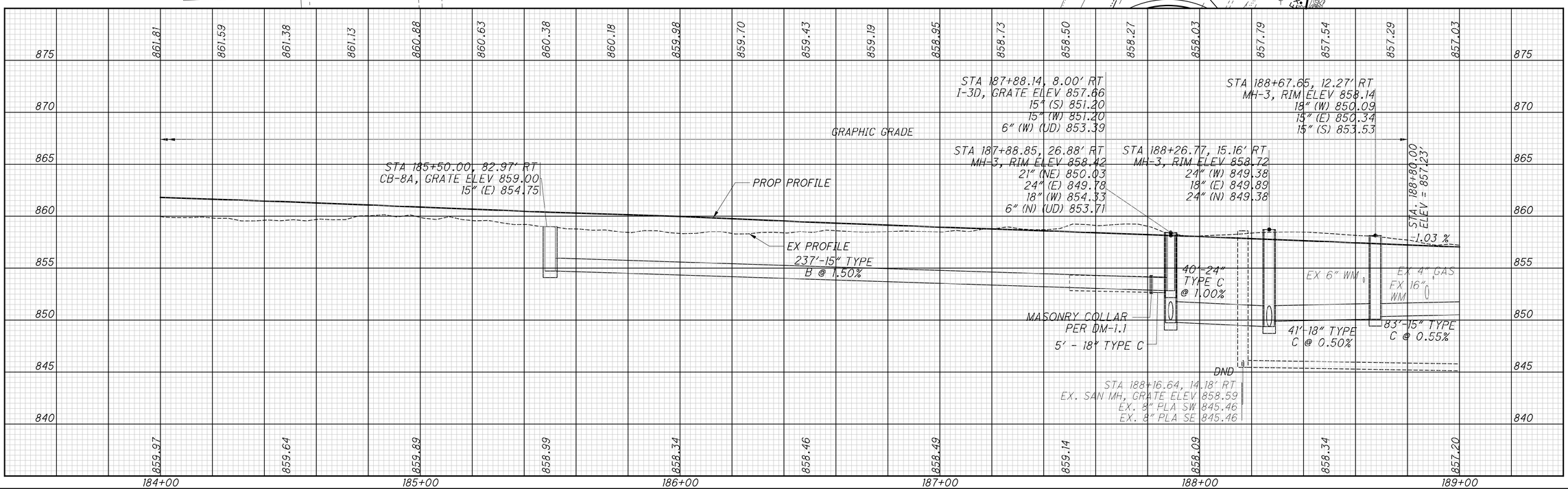

HORIZONTAL SCALE IN FEET 0 10 20 40

CALCULATED MSW
CHECKED WAA

PLAN AND PROFILE-RAMP O
STA 184+00 TO STA 189+00

CLE-32-3.50 (PHASE 5)

...\303.205\103954_GP535.dgn 11/4/2021 1:29:13 PM mswhitt

RAMP O

CURVE #6
P.I. Sta. 185+88.77
Δ = 4° 52′ 22″ (RT)
Dc = 0° 30′ 00″
R = 11,459.16′
T = 487.58′
L = 974.56′
E = 10.37′
emax = NC
PC Sta. 181+01.20
PRC Sta. 190+75.76

VARIABLE DEPTH OVERLAY

RAMP O

CURVE #7
P.I. Sta. 193+19.55
Δ = 4° 52′ 22″ (LT)
Dc = 1° 00′ 00″
R = 5,729.58′
T = 243.79′
L = 487.28′
E = 5.18′
emax = 0.016
PRC Sta. 190+75.76
PT Sta. 195+63.04

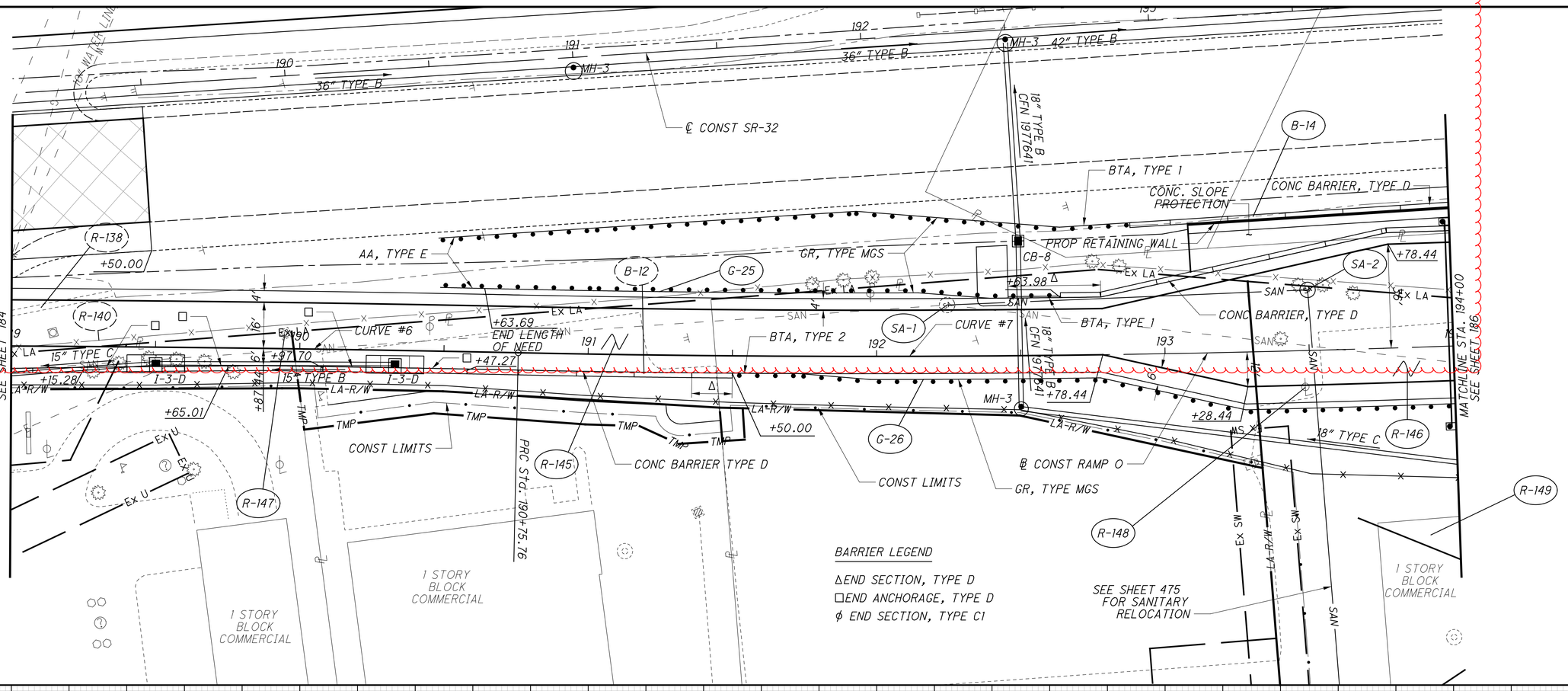

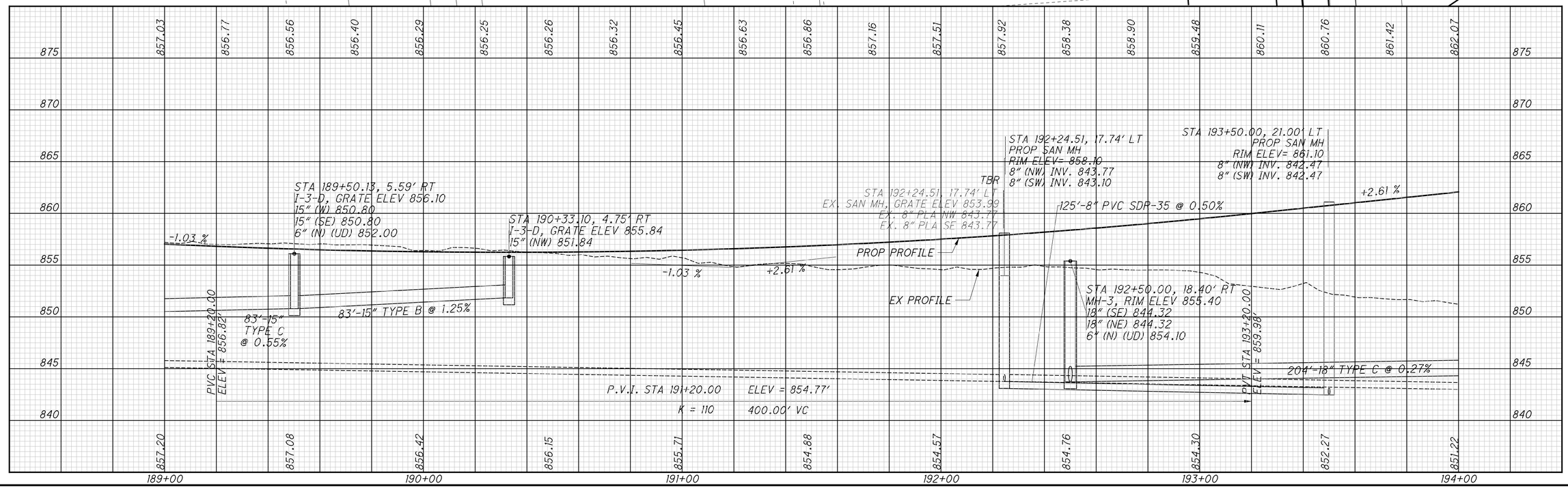

HORIZONTAL SCALE IN FEET
0 10 20 40

CALCULATED MSW
CHECKED WAA

PLAN AND PROFILE-RAMP O
STA 189+00 TO STA 194+00

CLE-32-3.50
(PHASE 5)

185
736

...\303.205\103954_GP536.dgn 11/4/2021 1:29:18 PM mswhitt

RAMP O

CURVE #7
P.I. Sta. 193+19.55
Δ = 4° 52′ 22″ (LT)
Dc = 1° 00′ 00″
R = 5,729.58′
T = 243.79′
L = 487.28′
E = 5.18′
emax = 0.016
PRC Sta. 190+75.76
PT Sta. 195+63.04

MATCHLINE STA. 194+00
SEE SHEET 185

15″ TYPE B
CB-8
CONC BARRIER, TYPE D
B-14
CONC. SLOPE PROTECTION
END ANCHORAGE, TYPE D
PROP RETAINING WALL
+06.05
PT Sta. 195+63.04
Ex R/W
STRUCTURE NO CLE-32-0374
POT Sta. 197+55.36
POT Sta. 197+49.02
341
4′
36′
Ex LA
12′
6′
SAN
195
CURVE #7
+33.38
6′
G-26
SA-1
R-148
R-159
GR, TYPE MGS
100′ R
℄ CONST RAMP O
MH-3
18″ TYPE C
R-146
18″ TYPE C
15″ TYPE B
CB-8
CONST LIMITS
CONST LIMITS
1 STORY BLOCK COMMERCIAL
R-149
Ex R/W
SAN
SA-2
R-161
+96.36
END CONC PAV'T
BEGIN APP SLAB
28′
CB-3A
2′ R
196
CR-3
2′ R
8′
15″ TYPE B
S 69° 52′ 04″ E
MH-3
143′ R
45°
Ex R/W
15″ TYPE B
R-160
CR-2
2′ R
CB-3A
60′
198
Ex LA
14′
CURB, TYPE 6
I-2
340
53′
℄ CONST RAMP P
℄ CONST BACH BUXTON RD
STA 197+55.36 ℄ CONST RAMP O
STA 340+26.51 ℄ CONST BACH BUXTON RD
TMP
CONST LIMITS
1 STORY CANOPY COMMERCIAL
1 STORY BLOCK COMMERCI
LA-R/W
339

880 / 875 / 870 / 865 / 860 / 855 / 850 / 845

862.07 862.72 863.37 864.02 864.67 865.32 865.98 866.63 867.28 867.93 868.58 869.23 869.89 870.54 871.19

851.22 850.91 850.25 847.52 848.42 847.85 847.16 847.64

194+00 195+00 196+00 197+00

STA 197+55.36
ELEV = 871.33′

STA 196+48.37, 22.02′ RT
MH-3, RIM ELEV 868.35
15″ (NW) 863.78
15″ (S) 863.78

STA 196+73.52, 57.08′ RT
CB-3A, GRATE ELEV 867.70
15″ (N) 864.45
6″ (E) (UD) 864.95

TBA
STA 195+02.61, 17.18′ RT
EX. SAN MH, GRATE ELEV 850.44
EX. 8″ PLA NW 842.55
EX. 8″ PLA SE 842.55

STA 196+13.43, 13.81′ LT
CB-3A, GRATE ELEV 867.54
15″ (SE) 864.29
6″ (N) (UD) 864.79

+2.61 %
PROP PROFILE

46′-15″ TYPE B @ 1.11%
48′-15″ TYPE B @ 1.40%

TBA
STA 196+25.67, 4.91′ LT
EX. SAN MH, GRATE ELEV 847.72
EX. 8″ PLA NW 842.10
EX. 8″ PLA SW 842.10

STA 194+50.99, 48.66′ RT
MH-3, RIM ELEV 851.25
18″ (SE) 844.87
18″ (NW) 844.87

STA 195+87.27, 83.68′ RT
CB-8, GRATE ELEV 848.50
18″ (NW) 845.25
18″ (NE) 845.25

EX PROFILE

204′-18″ TYPE C @ 0.27%
142′-18″ TYPE C @ 0.27%

HORIZONTAL SCALE IN FEET
0 10 20 40
CALCULATED MSW
CHECKED WAA

PLAN AND PROFILE-RAMP O
STA 194+00 TO STA 197+55.36

CLE-32-3.50
(PHASE 5)

186
736

...\303.205\103954_GP537.dgn 11/4/2021 1:29:21 PM mswhitt

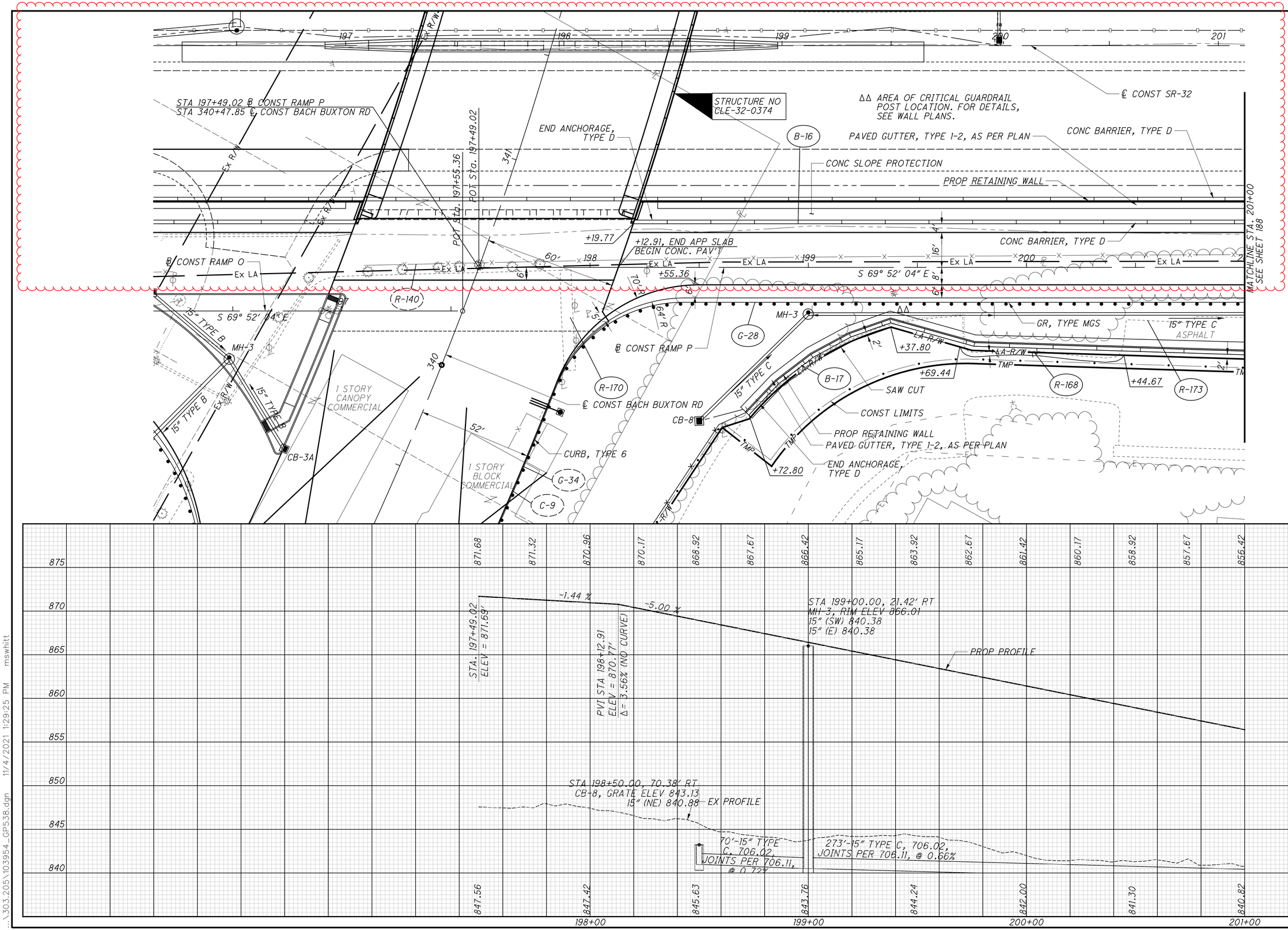

HORIZONTAL SCALE IN FEET

CALCULATED MSW
CHECKED WAA

PLAN AND PROFILE-RAMP P
STA 197+49.02 TO STA 201+00

CLE-32-3.50 (PHASE 5)

...\303.205\103954_GP538.dgn 11/4/2021 1:29:25 PM mswhitt

RAMP P

CURVE #8
P.I. Sta. 205+47.56
Δ = 8° 21' 19" (LT)
Dc = 1° 00' 00"
R = 5,729.58'
T = 418.50'
L = 835.52'
E = 15.26'
e_{max} = 0.045
PC Sta. 201+29.06
PT Sta. 209+64.58

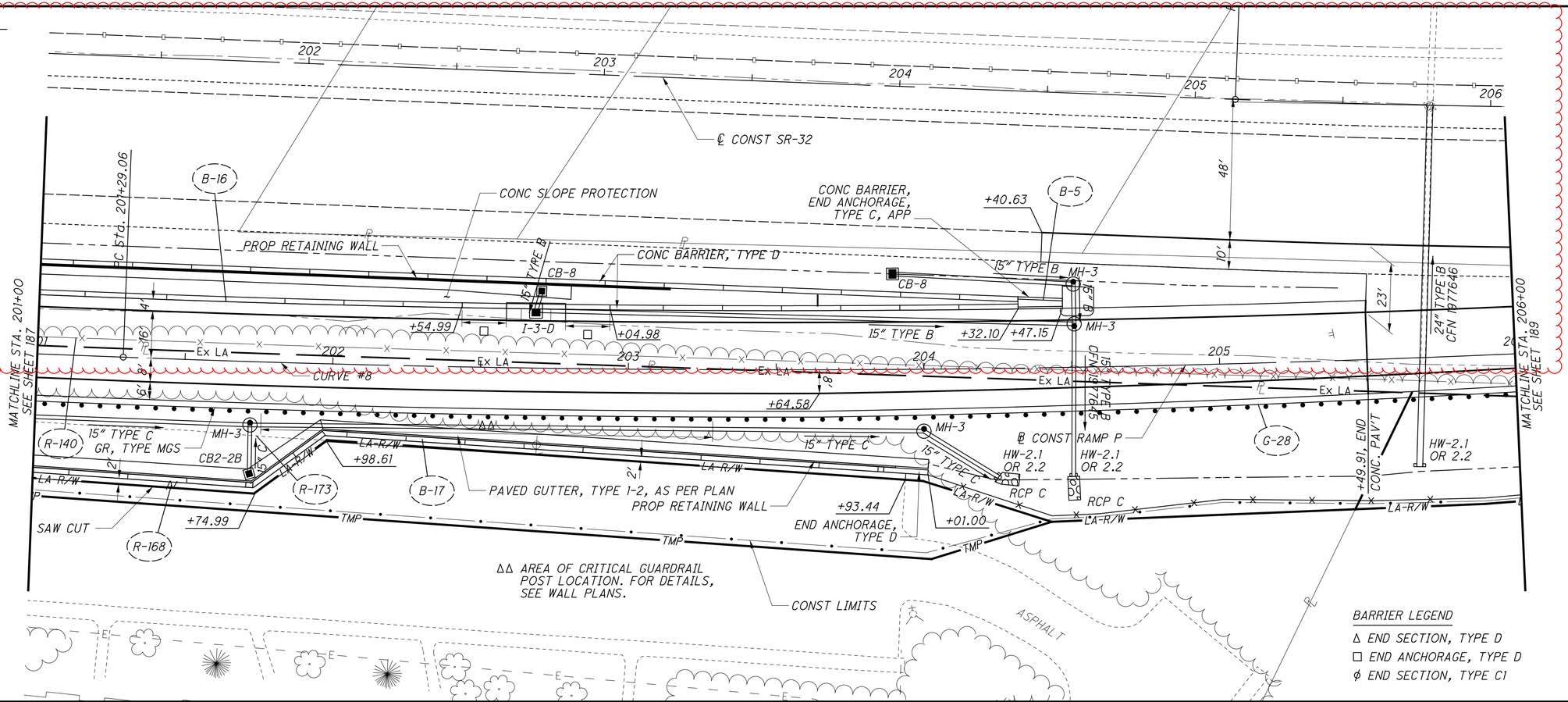

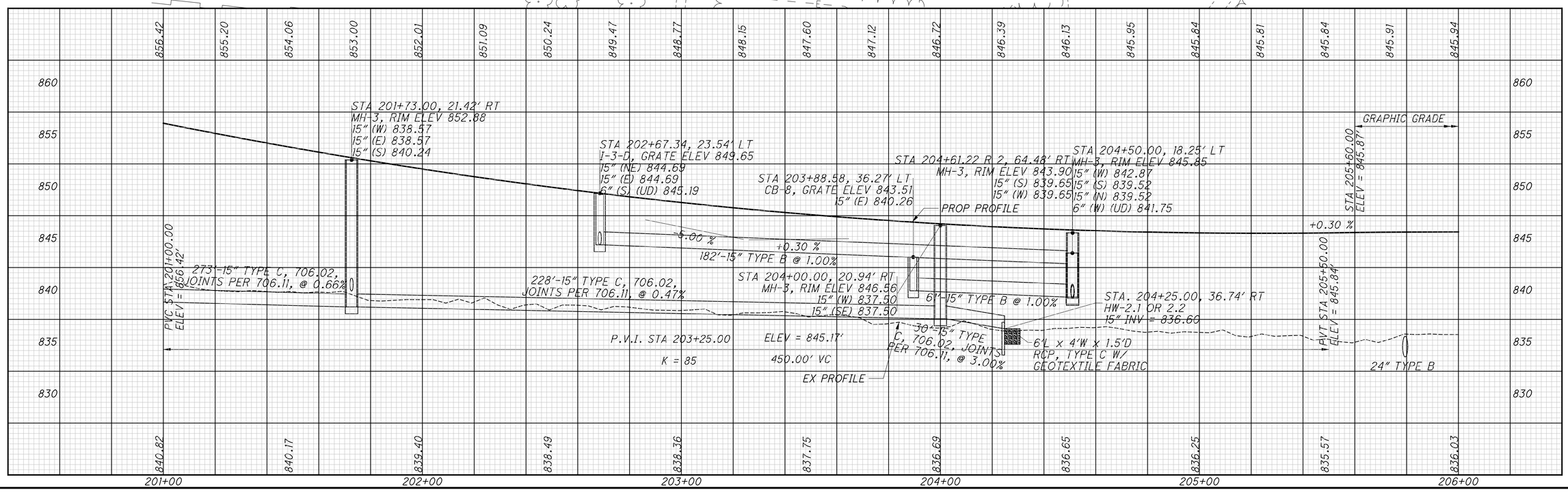

HORIZONTAL SCALE IN FEET
0 10 20 40

CALCULATED MSW
CHECKED WAA

PLAN AND PROFILE-RAMP P STA 201+00 TO STA 206+00

CLE-32-3.50 (PHASE 5)

188
736

...\303.205\103954_GP539.dgn 11/4/2021 1:29:29 PM mswhitt

RAMP P

CURVE #8
P.I. Sta. 205+47.56
Δ = 8° 21′ 19″ (LT)
Dc = 1° 00′ 00″
R = 5,729.58′
T = 418.50′
L = 835.52′
E = 15.26′
e_{max} = 0.045
PC Sta. 201+29.06
PT Sta. 209+64.58

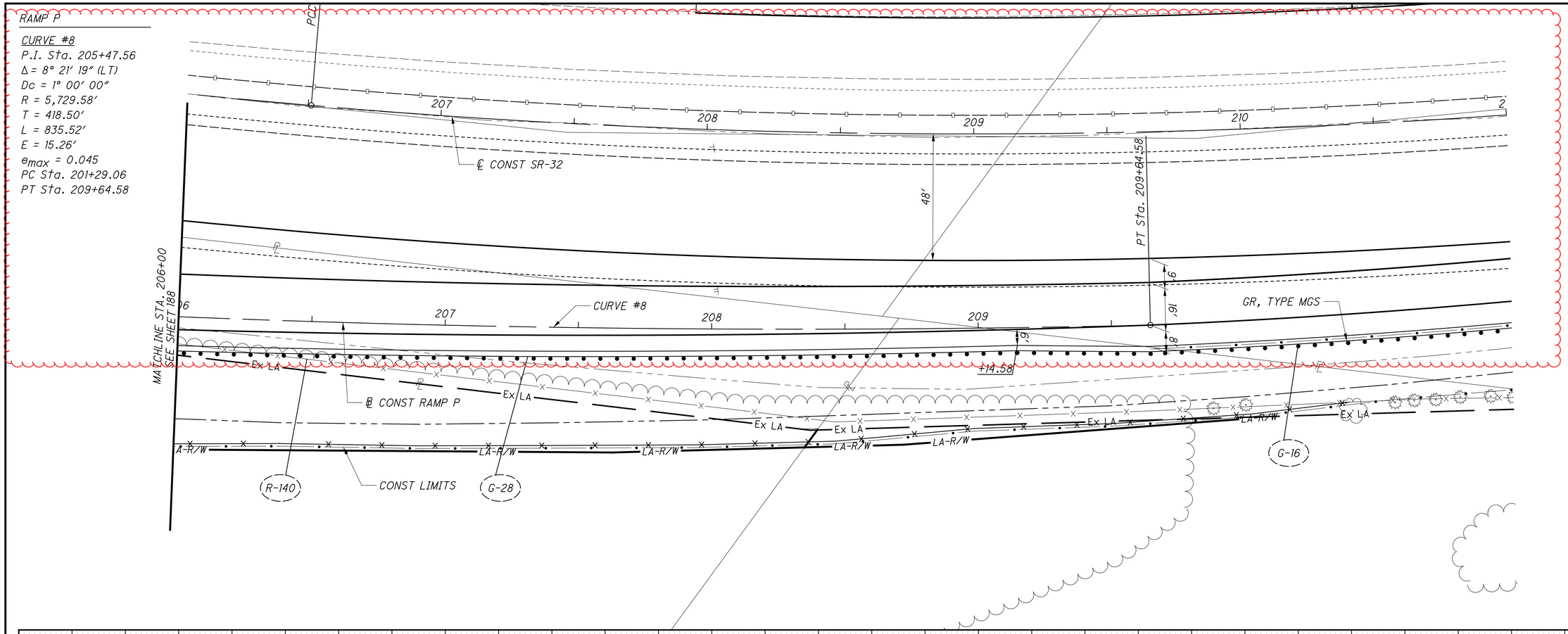

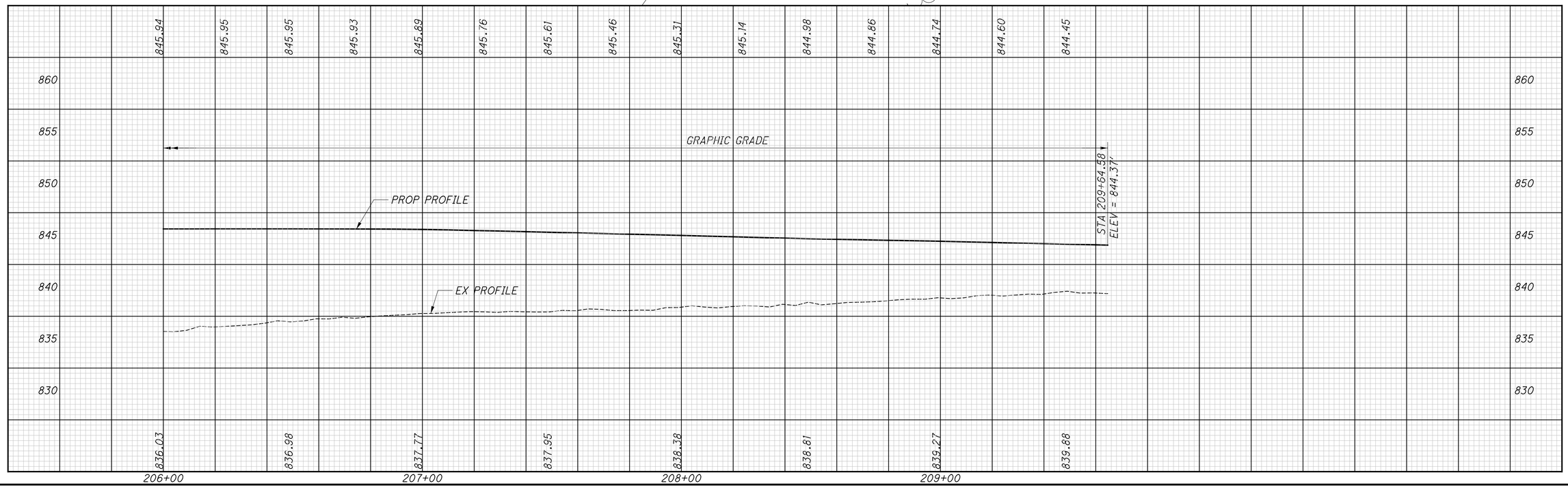

HORIZONTAL SCALE IN FEET
0 10 20 40

CALCULATED MSW
CHECKED WAA

PLAN AND PROFILE-RAMP P
STA 206+00 TO STA 209+64.58

CLE-32-3.50
(PHASE 5)

189
736

...\303.205\103954_GP540.dgn 11/4/2021 1:29:33 PM mswhitt

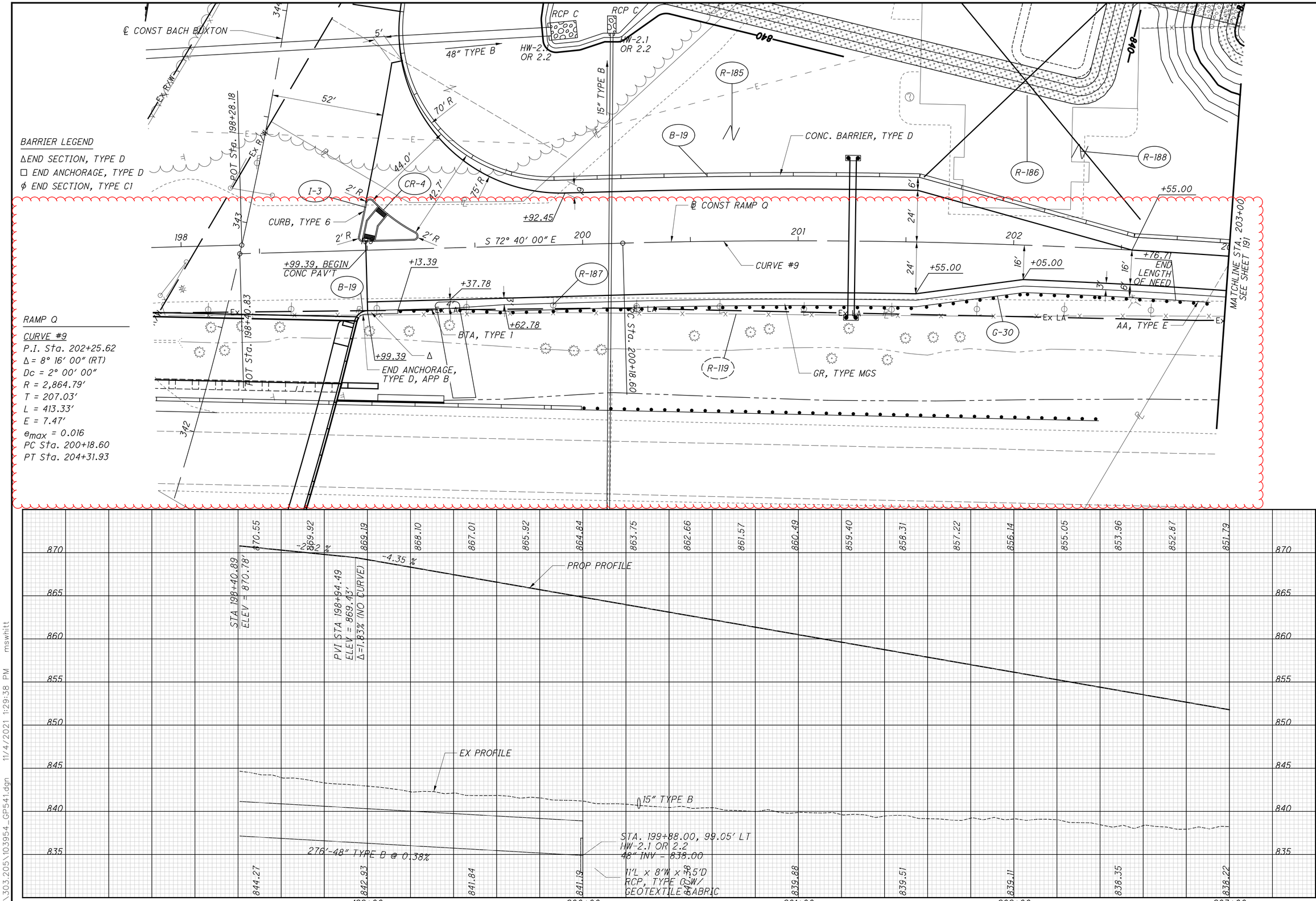

HORIZONTAL SCALE IN FEET

CALCULATED MSW
CHECKED WAA

PLAN AND PROFILE-RAMP Q
STA 198+40.83 TO STA 203+00

CLE-32-3.50
(PHASE 5)

...\303.205\103954_GP541.dgn 11/4/2021 1:29:38 PM mswhitt

RAMP Q

CURVE #9
P.I. Sta. 202+25.62
Δ = 8° 16′ 00″ (RT)
Dc = 2° 00′ 00″
R = 2,864.79′
T = 207.03′
L = 413.33′
E = 7.47′
e_{max} = 0.016
PC Sta. 200+18.60
PT Sta. 204+31.93

RAMP Q

CURVE #10
P.I. Sta. 209+85.46
Δ = 19° 53′ 17″ (LT)
Dc = 3° 30′ 00″
R = 1,637.02′
T = 287.00′
L = 568.23′
E = 24.97′
e_{max} = 0.060
PC Sta. 206+98.46
PT Sta. 212+66.69

BARRIER LEGEND

△ END SECTION, TYPE D
□ END ANCHORAGE, TYPE D
ϕ END SECTION, TYPE C1

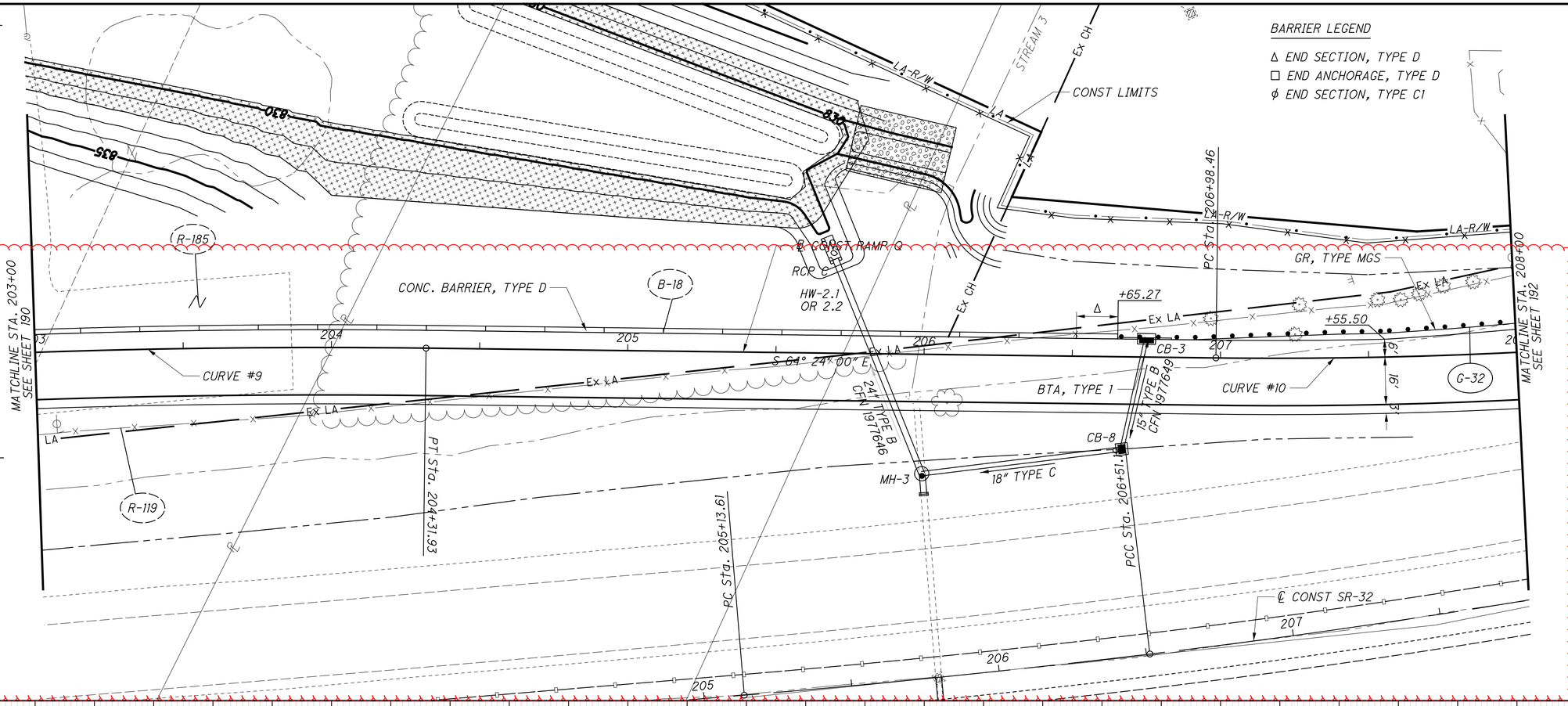

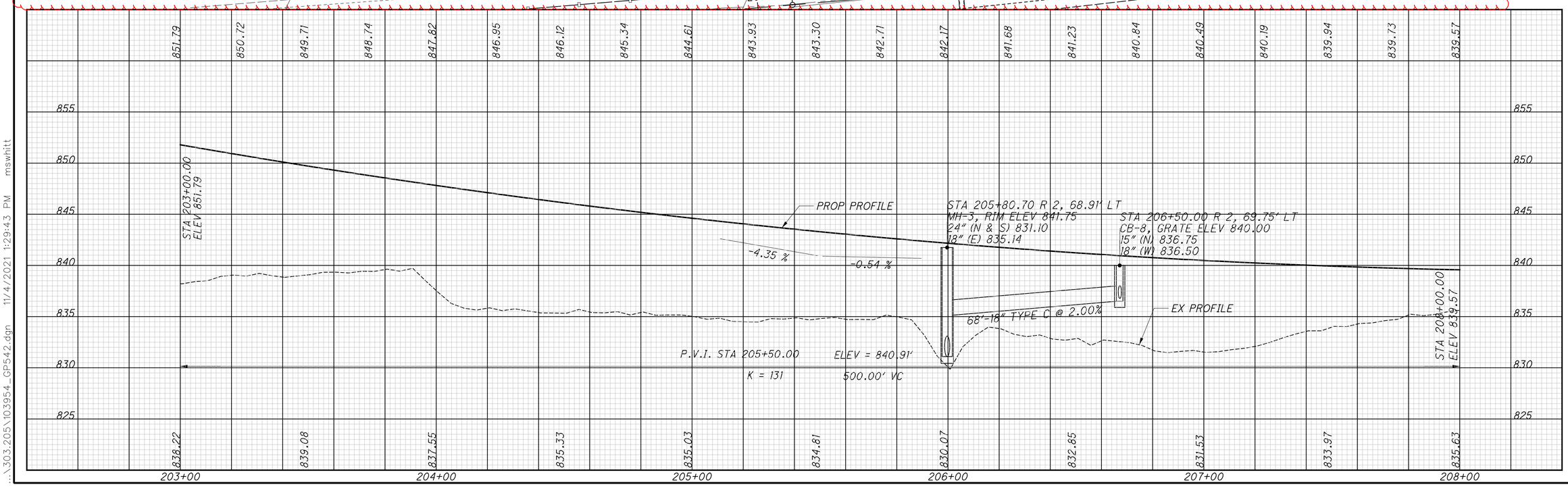

HORIZONTAL SCALE IN FEET
0 10 20 40

CALCULATED MSW
CHECKED WAA

PLAN AND PROFILE-RAMP Q
STA 203+00 TO STA 208+00

CLE-32-3.50
(PHASE 5)

191
736

\303.205\103954_GP542.dgn 11/4/2021 1:29:43 PM mswhitt

RAMP Q

CURVE #10
P.I. Sta. 209+85.46
Δ = 19° 53′ 17″ (LT)
Dc = 3° 30′ 00″
R = 1,637.02′
T = 287.00′
L = 568.23′
E = 24.97′
emax = 0.060
PC Sta. 206+98.46
PT Sta. 212+66.69

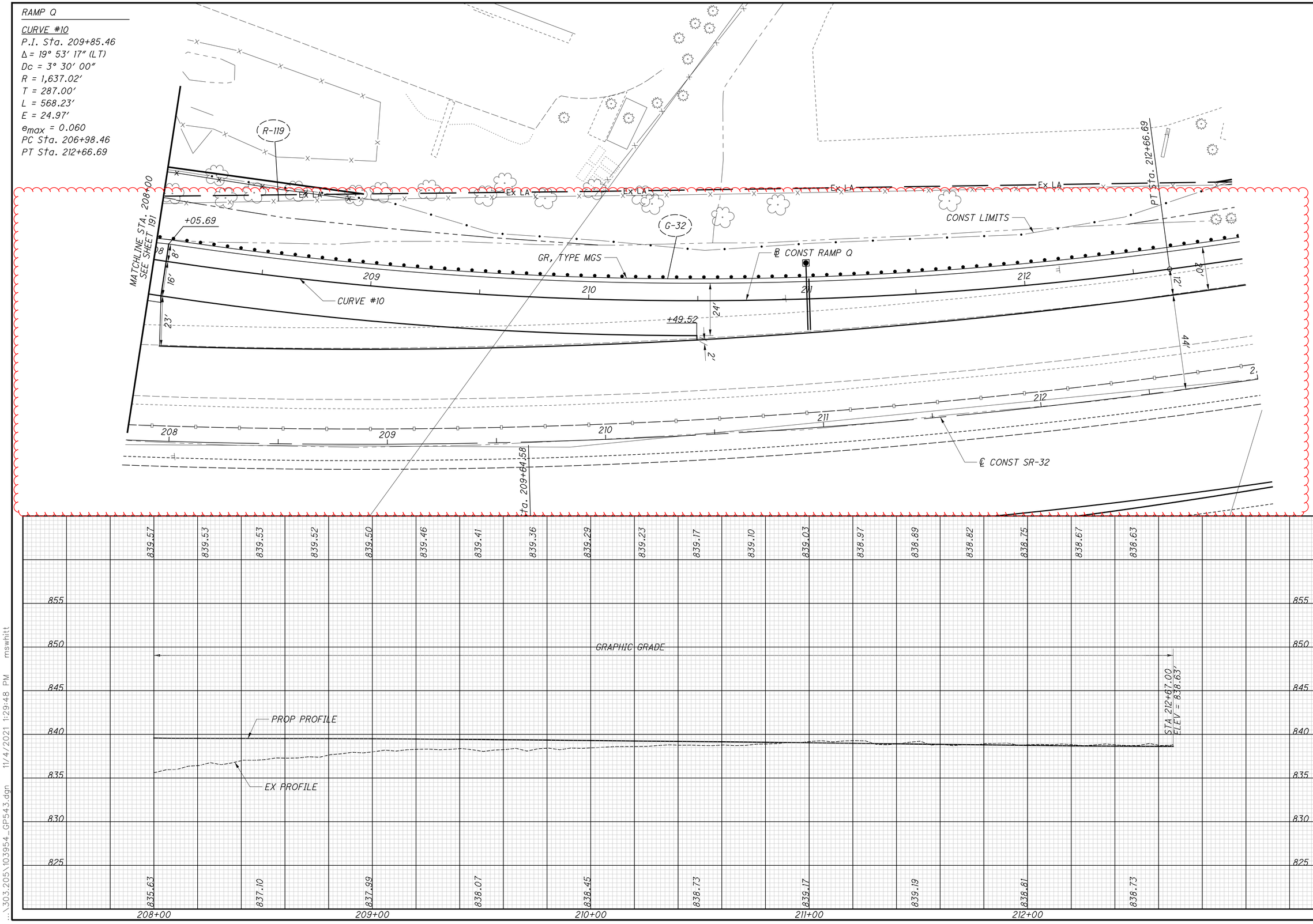

HORIZONTAL SCALE IN FEET
0 10 20 40

CALCULATED MSW
CHECKED WAA

PLAN AND PROFILE-RAMP Q
STA 208+00 TO STA 212+66.69

CLE-32-3.50
(PHASE 5)

192
736

...\303.205\103954_GP543.dgn 11/4/2021 1:29:48 PM mswhitt

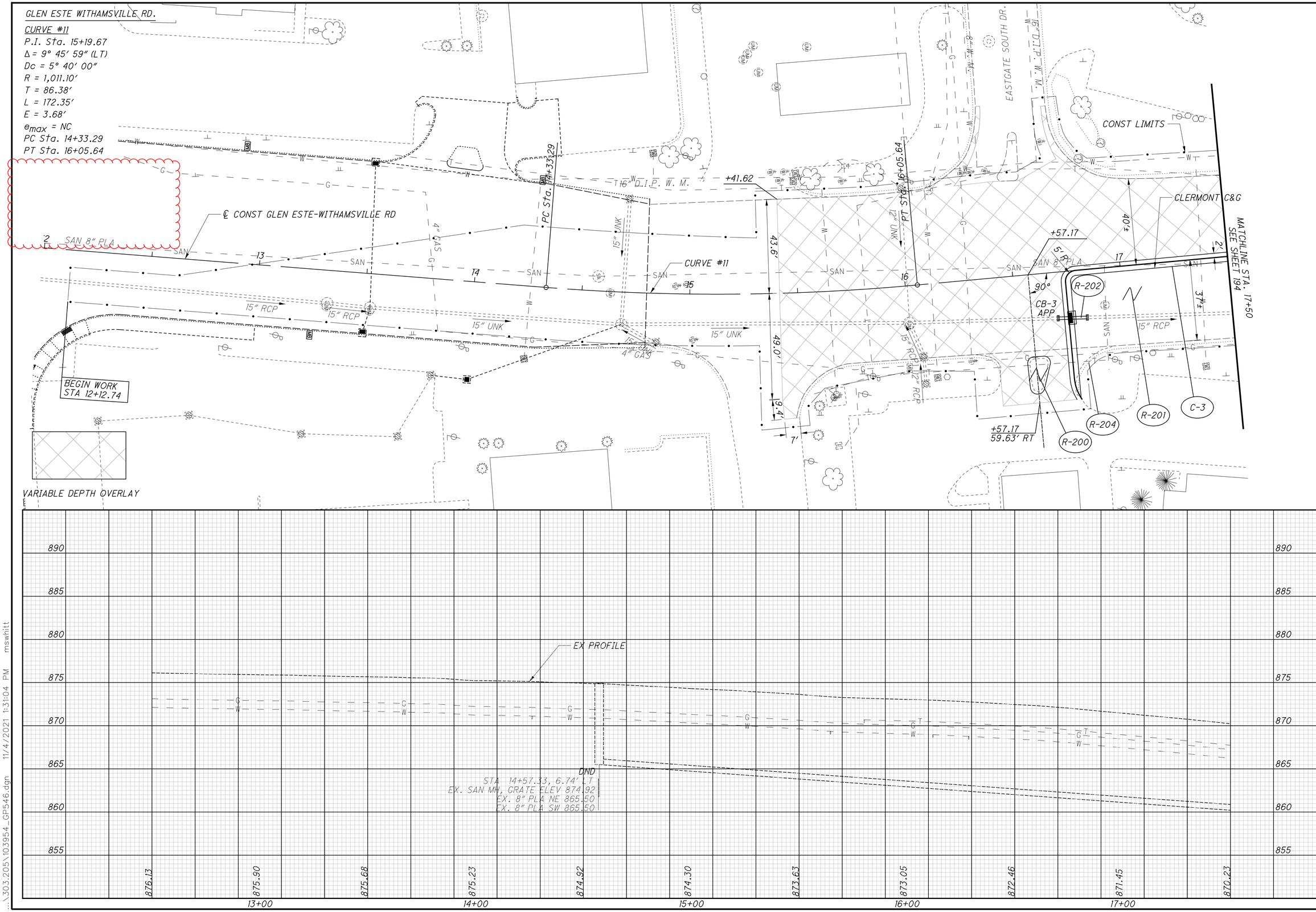

HORIZONTAL SCALE IN FEET
0 10 20 40

CALCULATED MSW
CHECKED WAA

PLAN AND PROFILE - GLEN ESTE-WITHAMSVILLE RD - STA 12+50 TO STA 17+50

CLE-32-3.50
(PHASE 5)

...\303.205\103954_GP546.dgn 11/4/2021 1:31:04 PM mswhitt

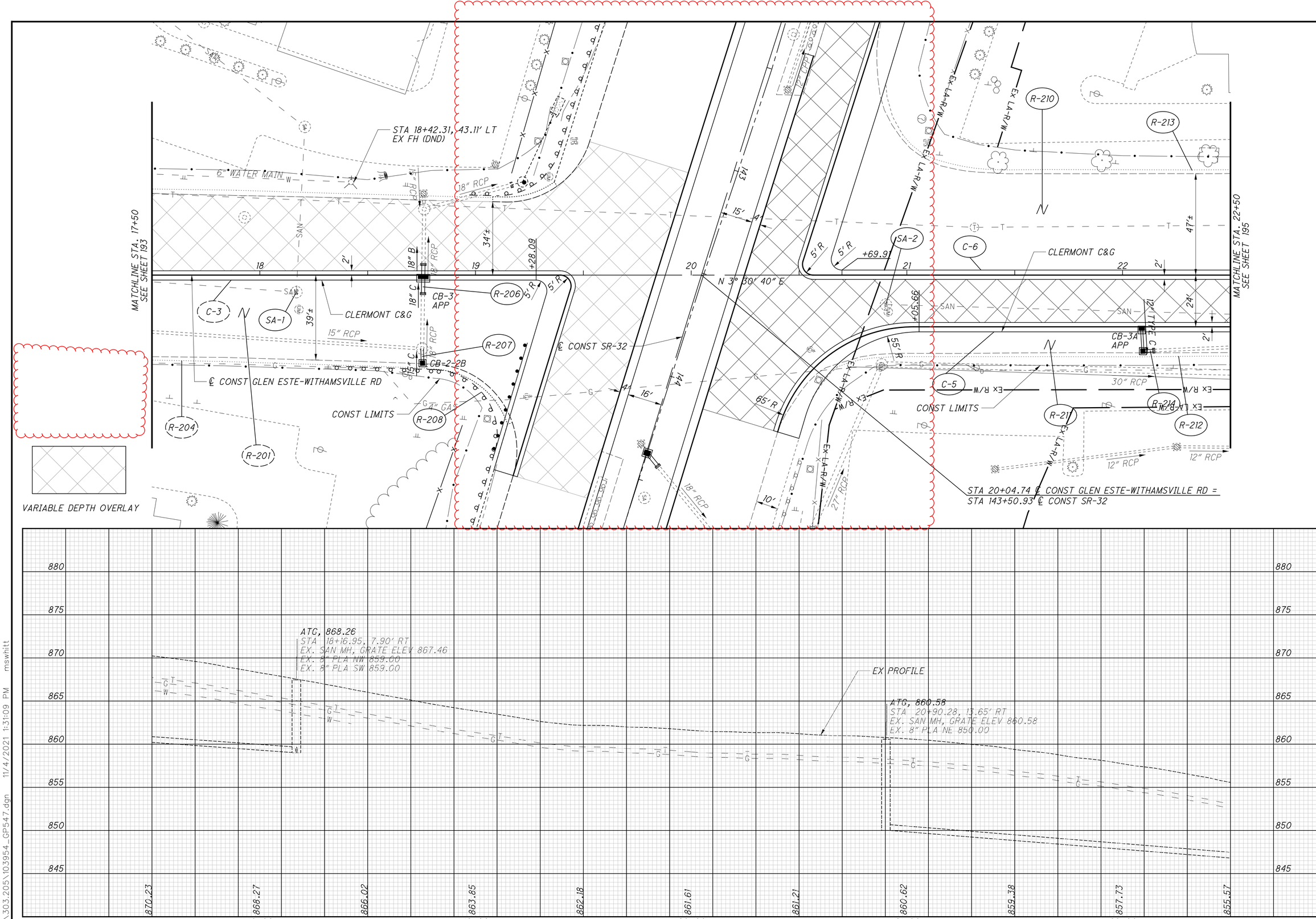

HORIZONTAL SCALE IN FEET

CALCULATED MSW
CHECKED WAA

PLAN AND PROFILE - GLEN ESTE-WITHAMSVILLE RD-STA 17+50 TO STA 22+50

CLE-32-3.50 (PHASE 5)

...\303.205\103954_GP547.dgn 11/4/2021 1:31:09 PM mswhitt

GLEN ESTE-WITHAMSVILLE RD
CURVE #12
P.I. Sta. 25+41.96
Δ = 1° 50′ 08″ (RT)
Dc = 1° 00′ 00″
R = 5,729.58′
T = 91.78′
L = 183.55′
E = 0.74′
e_{max} = NC
PC Sta. 24+50.18
PT Sta. 26+33.73

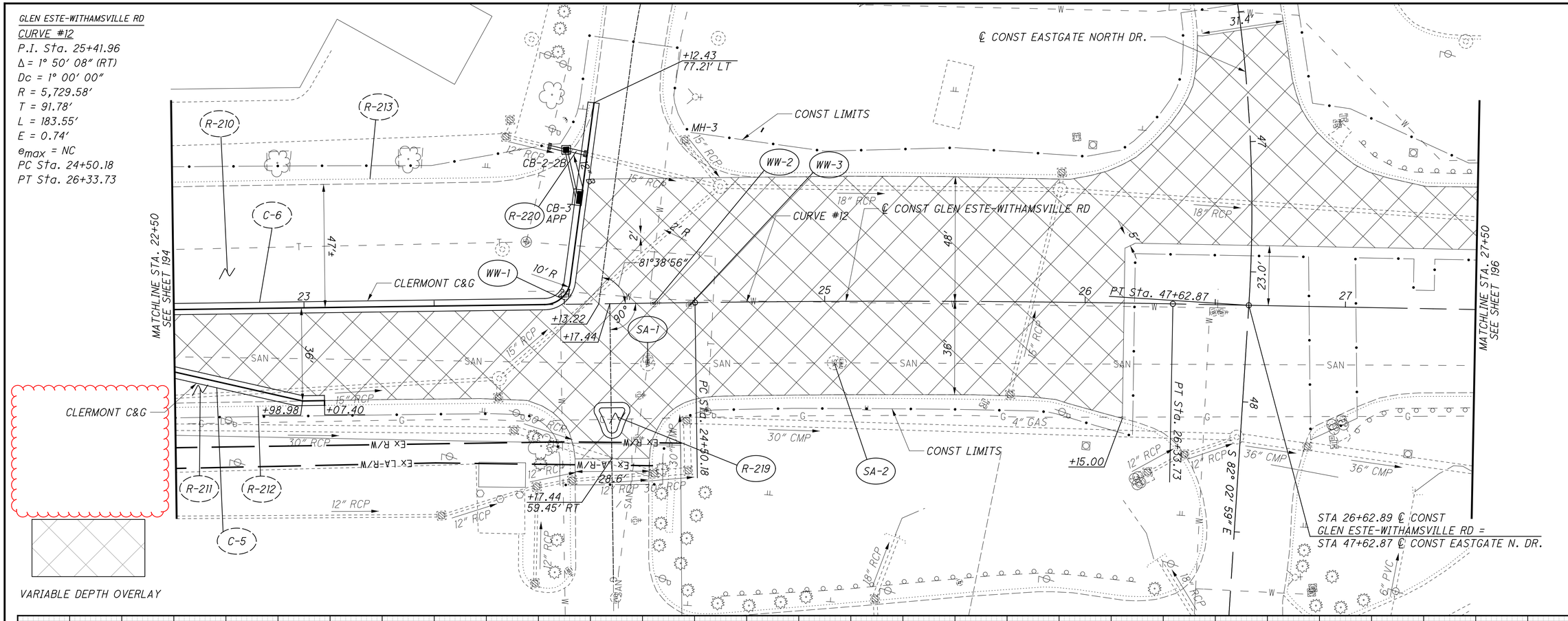

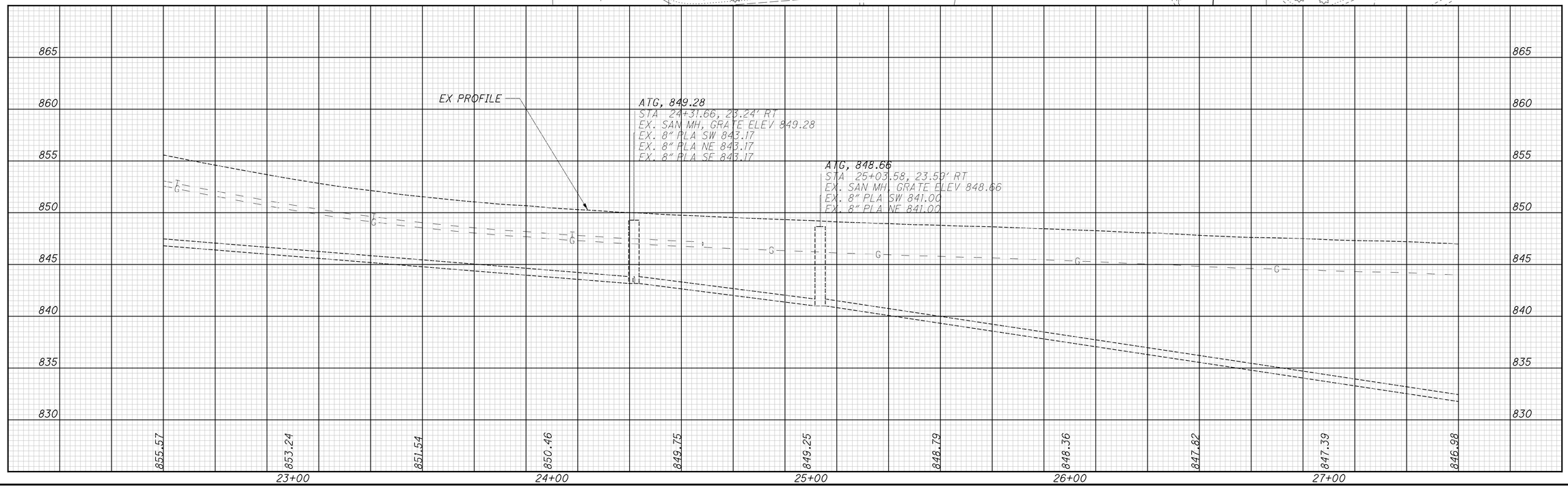

CALCULATED MSW
CHECKED WAA

HORIZONTAL SCALE IN FEET
0 10 20 40

PLAN AND PROFILE - GLEN ESTE-WITHAMSVILLE RD - STA 22+50 TO STA 27+50

CLE-32-3.50
(PHASE 5)

195
736

...\303.205\103954_GP548.dgn 11/4/2021 1:31:14 PM mswhitt

R-221

CONST LIMITS

24" RCP

END WORK
STA 28+91.07

36" CMP

EX GR, TYPE 5

16" CLASS 52 D.I.P. MAIN

18" RCP

16'

12.1'

+81.12

24" RCP

CONST LIMITS

MATCHLINE STA. 27+50
SEE SHEET 195

28 29 30 31 32

℄ CONST GLEN ESTE-WITHAMSVILLE RD

36" CMP

15" RCP

SAN 8" PLA

15" RCP

4" GAS

6" PVC

CINCINNATI
COMMERCIAL
REALTORS

VARIABLE DEPTH OVERLAY

860 855 850 845 840 835 830 825

DND
STA 27+91.23, 20.90' RT
EX. SAN MH, GRATE ELEV 846.10
EX. 8" PLA SW 830.29
EX. 8" PLA NE 830.29

EX PROFILE

DND
STA 30+89.63, 24.42' RT
EX. SAN MH, GRATE ELEV 843.65
EX. 8" PLA SW 829.90
EX. 8" PLA NE 829.90

846.98 846.46 846.26 845.91 845.48 845.22 844.75 844.11 843.38 842.48 841.18

28+00 29+00 30+00 31+00 32+00

HORIZONTAL SCALE IN FEET
0 10 20 40

CALCULATED MSW
CHECKED WAA

PLAN AND PROFILE
WITHAMSVILLE RD - STA 27+50 TO STA 32+50

CLE-32-3.50
(PHASE 5)

196
736

\303.205\103954_GP549.dgn 11/4/2021 1:31:18 PM mswhitt

...\303.205\103954_GP568.dgn 11/4/2021 1:31:22 PM mswhitt

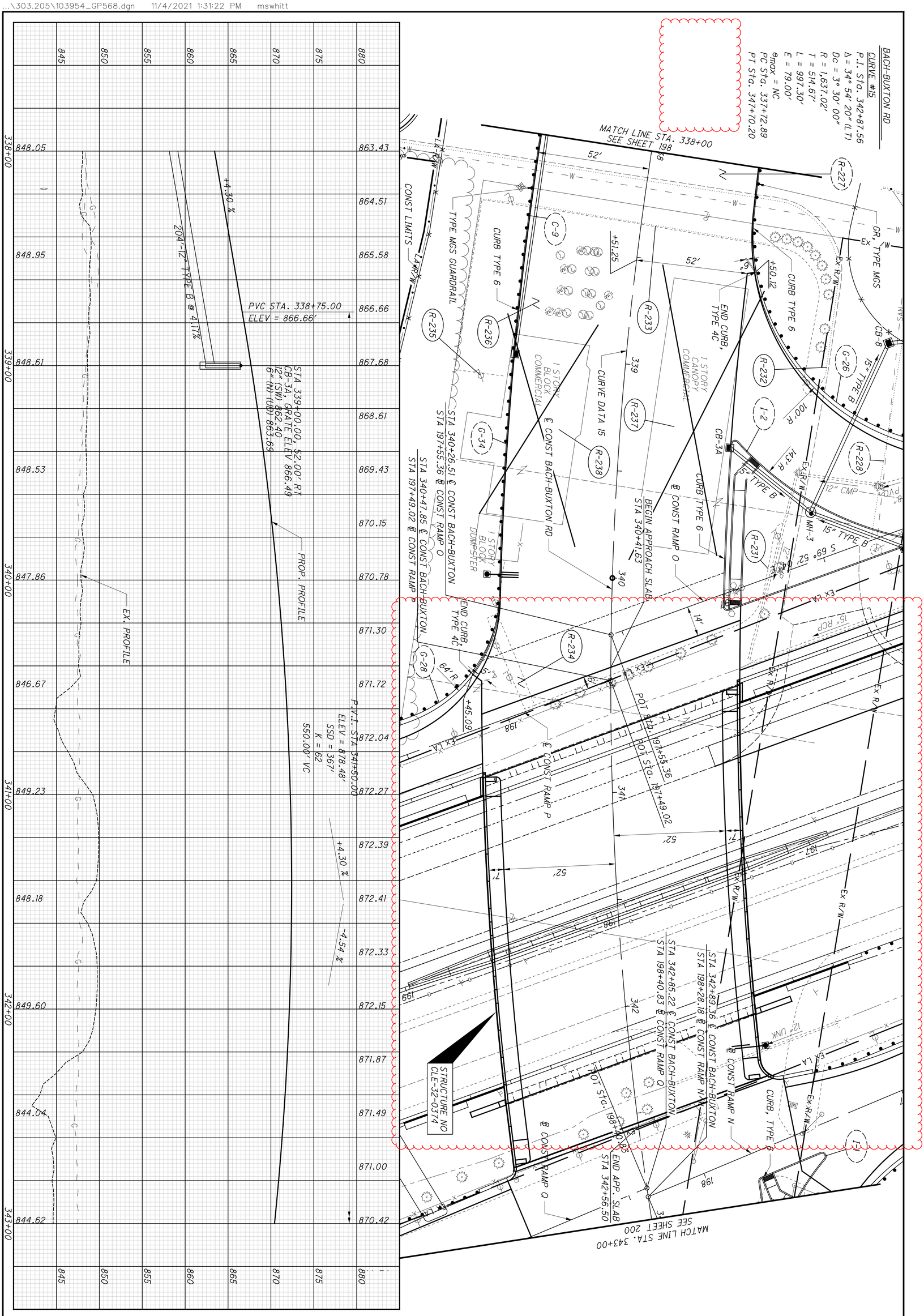

199 / 736	CLE-32-3.50 (PHASE 5)	PLAN AND PROFILE - BACH-BUXTON RD STA 338+00 TO STA 343+00	CALCULATED GAH / CHECKED WAA / HORIZONTAL SCALE IN FEET

...\303.205\103954_GP571.dgn 11/4/2021 1:31:27 PM mswhitt

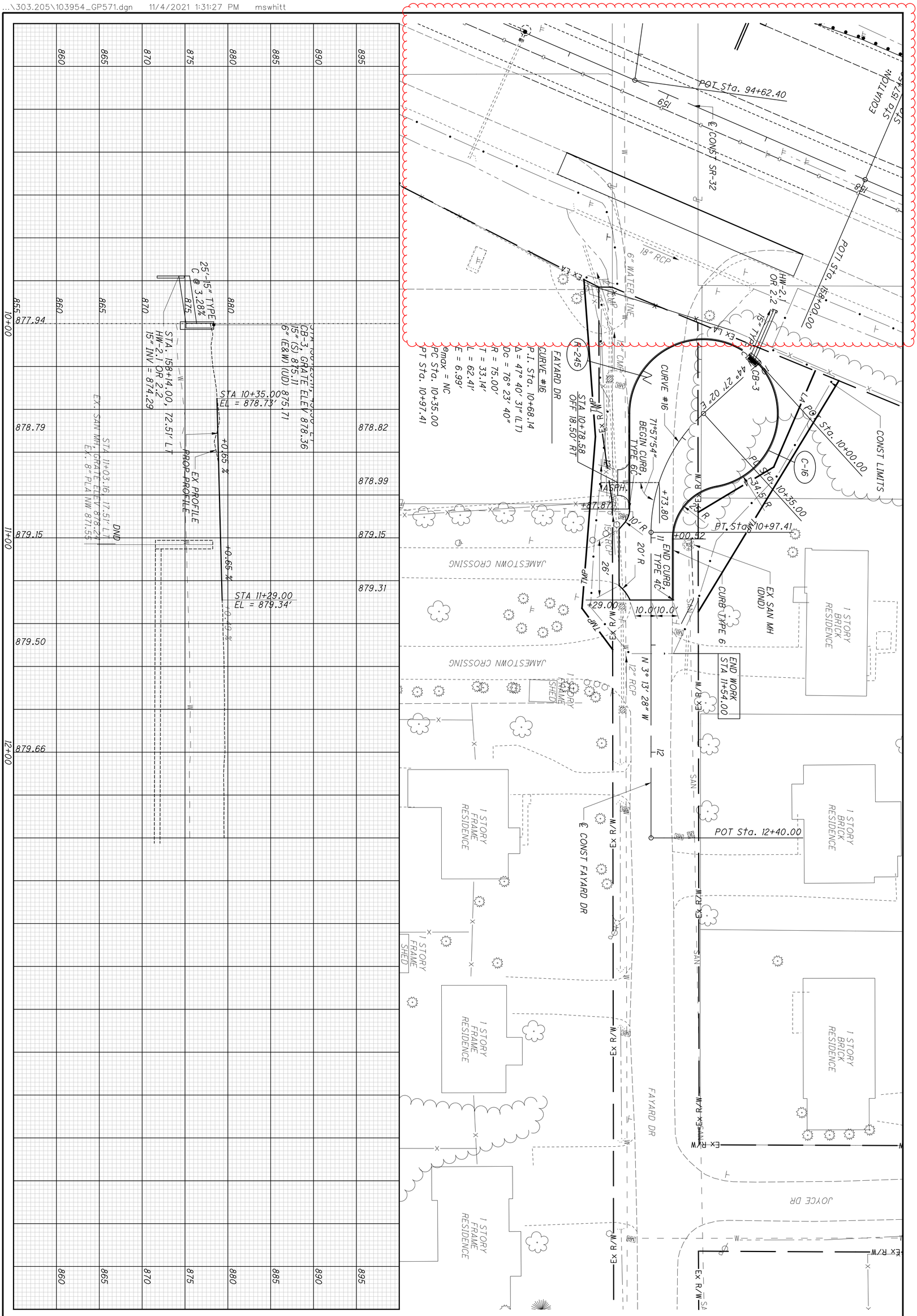

202 / 736	CLE-32-3.50 (PHASE 5)	PLAN AND PROFILE - FAYARD DR STA 10+00 TO STA 12+40	CALCULATED GAH / CHECKED WAA	0 10 20 40 HORIZONTAL SCALE IN FEET

...\303.205\103954_GP573.dgn 11/4/2021 1:31:31 PM mswhitt

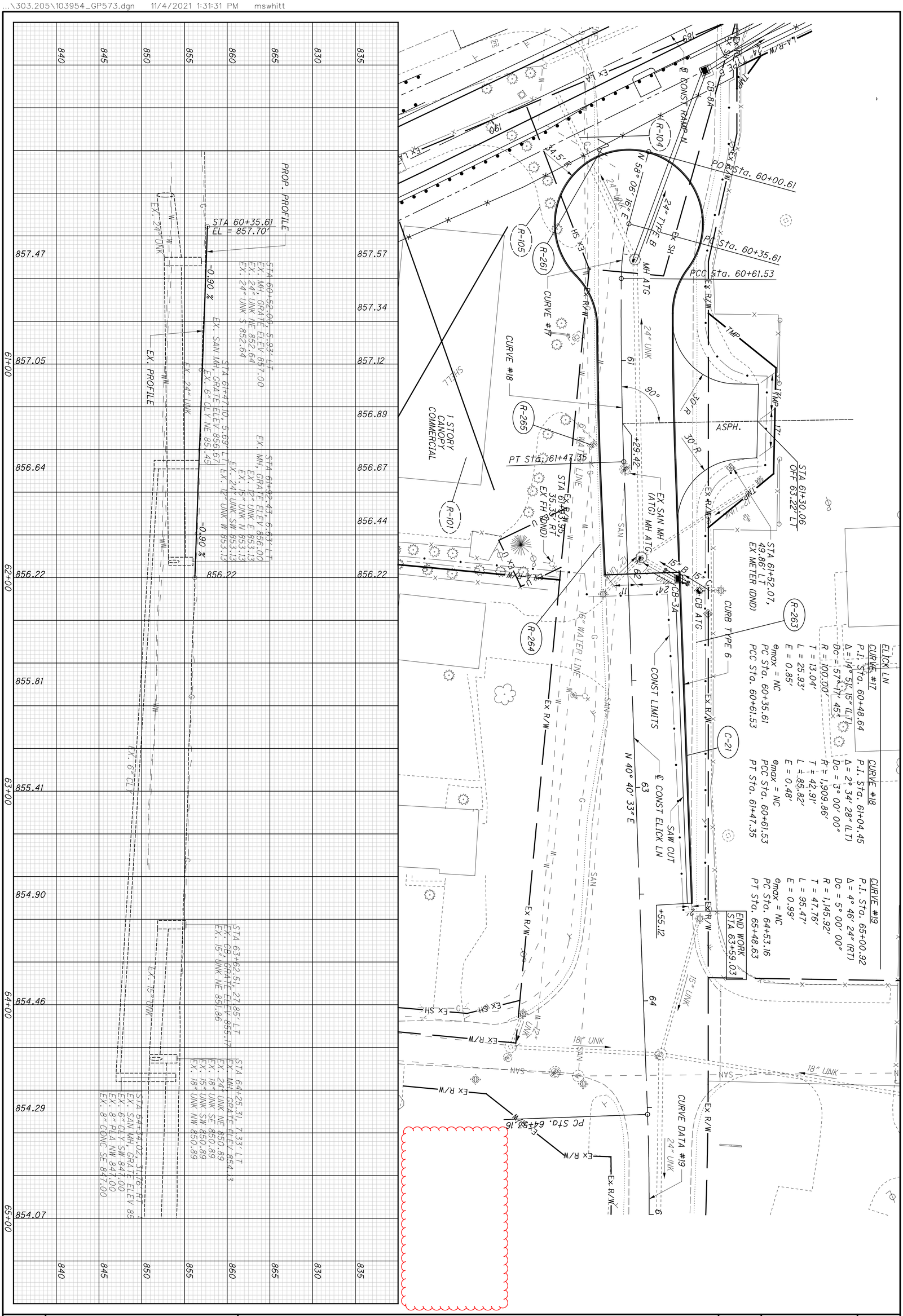

204 / 736	CLE-32-3.50 (PHASE 5)	PLAN AND PROFILE - ELICK LN (NORTH) STA 60+00.61 TO STA 65+00	CALCULATED GAH / CHECKED WAA	0 10 20 40 HORIZONTAL SCALE IN FEET

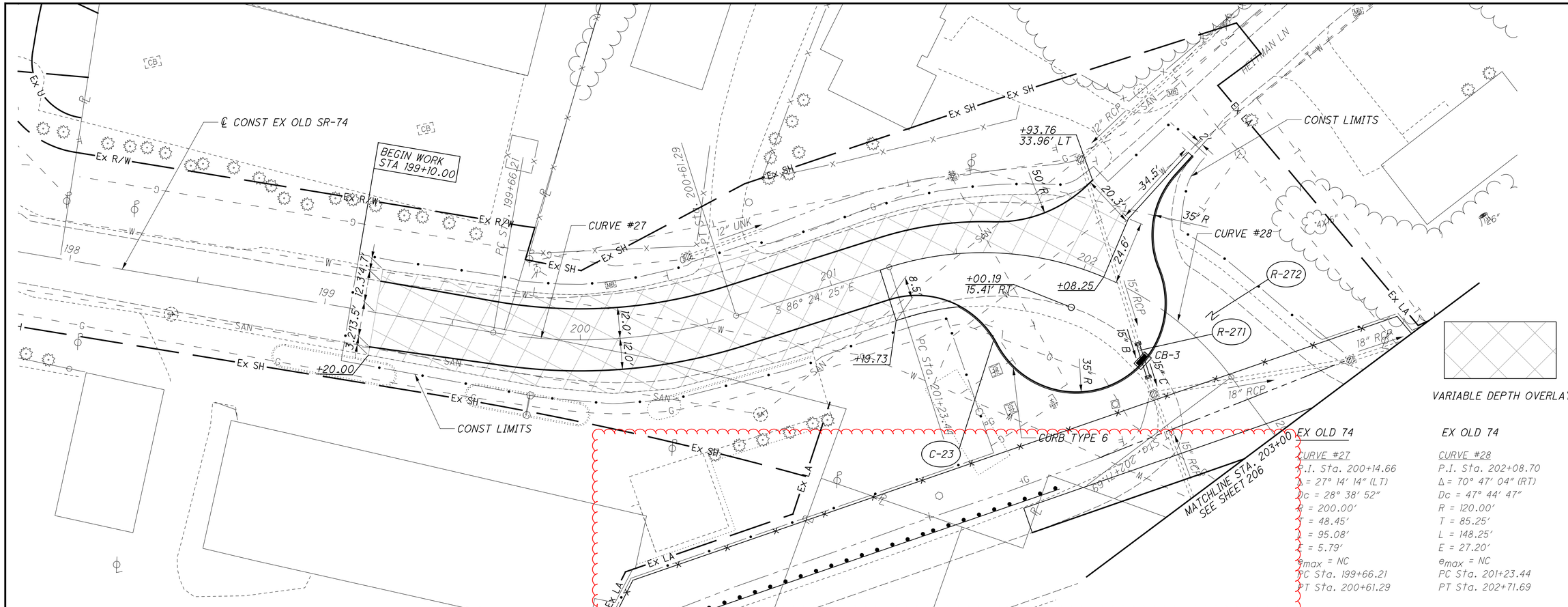

HORIZONTAL SCALE IN FEET

CALCULATED MSW

CHECKED WAA

PLAN AND PROFILE - EX OLD SR-74
STA 198+00 TO STA 203+00

CLE-32-3.50
(PHASE 5)

...\303.205\103954_GP574.dgn 11/4/2021 1:31:36 PM mswhitt

...\303.205\103954_GP575.dgn 11/4/2021 1:31:40 PM mswhitt

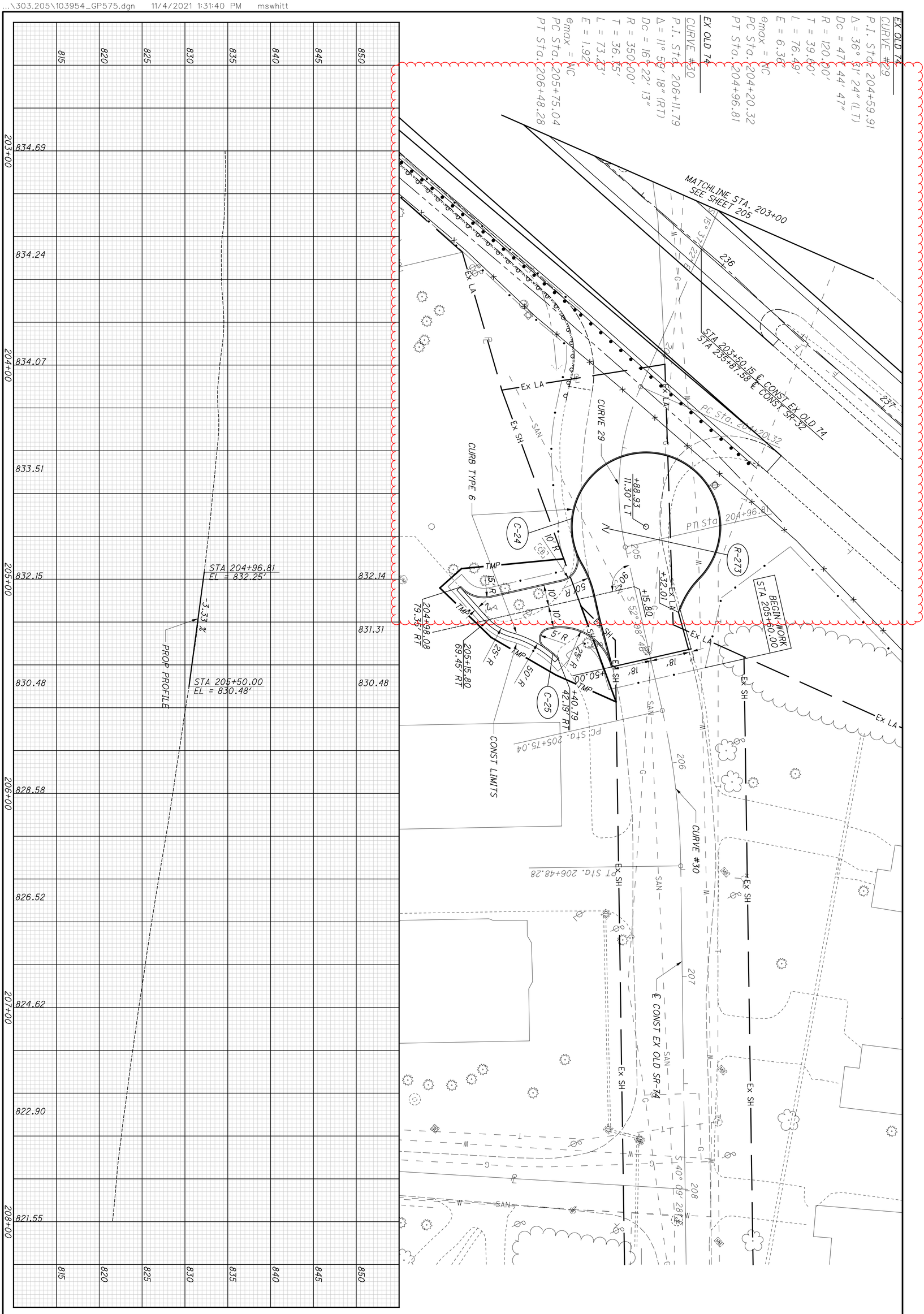

206 / 736	CLE-32-3.50 (PHASE 5)	PLAN AND PROFILE - EX OLD 74 STA 203+00 TO STA 208+00	CALCULATED MSW CHECKED WAA	0 10 20 40 HORIZONTAL SCALE IN FEET

PROJECT DESCRIPTION
THE LIGHTING ACTIVITIES AS PART OF PROJECT CLE-32-3.50, PID 103954, INCLUDES THE INSTALLATION OF LIGHT POLES WITH LUMINAIRES, CONTROL CENTER, RELATED WIRING, CONDUIT AND PULL BOXES AS SHOWN ON THE PLANS. THE LIGHTING LIMITS ARE AS FOLLOWS:

- ALONG THE REALIGNMENT OF BACH BUXTON ROAD INCLUDING A NEW STRUCTURE OVER SR 32.

THESE NOTES ARE SUPPLEMENTAL TO ITEMS 625 AND 725 OF THE STATE OF OHIO DEPARTMENT OF TRANSPORTATION CONSTRUCTION AND MATERIAL SPECIFICATIONS.

GENERAL
THE FOLLOWING CRITERIA SHALL BE USED FOR BACH BUXTON ROAD DECORATIVE LIGHTING:
A) POWER SERVICE SHALL BE 120/240 VOLT, 3 WIRE, SINGLE PHASE, GROUNDED NEUTRAL. LUMINAIRES ARE 240 VOLT, 2 WIRE GROUNDED.
B) A NOMINAL 20 FOOT MOUNTING HEIGHT SHALL BE USED. POLE SUPPORTS ARE 18 FEET.
C) CONTROL CENTER SHALL BE 60 AMP.
D) CONTROL CENTER SHALL BE METERED.

UTILITIES
THE CONTRACTOR SHALL CONTACT THE OHIO UTILITY PROTECTION SERVICE BEFORE BEGINNING WORK. THE LOCATION OF THE UNDERGROUND UTILITIES SHOWN ON THE PLANS ARE AS OBTAINED FROM THE OWNERS AS REQUIRED BY SECTION 153.64 ORC.

LAMPS
HIGH PRESSURE SODIUM LAMPS SHALL BE GENERAL ELECTRIC "LUCALOX," OSRAM SYLVANIA "LUMALUX", PHILIPS "CERAMALUX," OR EQUAL AS APPROVED BY THE ENGINEER.

625, LIGHT POLE FOUNDATION, 24" X 6' DEEP, AS PER PLAN
IN ADDITION TO THE REQUIREMENTS OF ODOT CMS, THE LIGHT POLE FOUNDATION SHALL BE MODIFIED TO MATCH THE BOLT CIRCLE OF THE SELECTED LIGHT POLE.

PAYMENT WILL BE MADE AT THE UNIT BID PRICE FOR EACH ITEM 625, "LIGHT POLE FOUNDATION, 24"X 6' DEEP, AS PER PLAN" FOR EACH FOUNDATION WHICH SHALL BE FULL COMPENSATION FOR ALL LABOR, MATERIALS AND INCIDENTALS REQUIRED TO COMPLETE THIS ITEM IN A SATISFACTORY AND WORKMANLIKE MANNER.

CONDUIT EXPANSION AND DEFLECTION
EXPANSION FITTINGS SHALL BE OZ TYPE AX, CROUSE HINDS TYPE XJG, APPLETON TYPE AX, OR EQUAL APPROVED BY THE ENGINEER. EACH EXPANSION FITTING SHALL PROVIDE EITHER 4 OR 8 INCHES TOTAL MOVEMENT AS SPECIFIED BY THE PLAN DETAILS AND SHALL HAVE AN EXTERNAL COPPER BONDING JUMPER, UNLESS SPECIFIED OTHERWISE BY THE PLAN DETAILS.

DEFLECTION COUPLINGS SHALL BE OZ TYPE DX, CROUSE HINDS TYPE XD, APPLETON TYPE DF, OR EQUAL APPROVED BY THE ENGINEER. EACH DEFLECTION COUPLING SHALL HAVE AN EXTERNAL COPPER BONDING JUMPER, UNLESS SPECIFIED OTHERWISE BY THE PLAN DETAILS.

625, POWER SERVICE, AS PER PLAN
IN ADDITION TO ODOT ITEM 625.15, ELECTRIC POWER SHALL BE OBTAINED FROM DUKE ENERGY.

THE CONTRACTOR SHALL CONTACT THE METER SECTION OF DUKE ENERGY FOR INFORMATION REGARDING THE METER BASE INSTALLATION, IF ANY.

THE CONTRACTOR SHALL COORDINATE AND COOPERATE WITH THE POWER COMPANY IN THE MAKING OF THE CONNECTIONS TO ESTABLISH ELECTRICAL SERVICE. CHARGES MADE BY THE POWER COMPANY FOR ESTABLISHING OF THE ACCOUNT, EXTENSION OF COMPANY FACILITIES, CONNECTION OF CUSTOMER EQUIPMENT TO THE POWER COMPANY FACILITIES AND ENERGY WILL BE BORNE BY ODOT. AFTER ACCEPTANCE OF THE LIGHTING, THE POWER SERVICE ELECTRICAL ENERGY ACCOUNT SHALL BE TRANSFERRED TO THE MAINTAINING AGENCY NOTED ON THE PLANS.

AFTER ACCEPTANCE OF THE LIGHTING, THE POWER SERVICE ELECTRICAL ENERGY ACCOUNT SHALL BE TRANSFERRED TO THE MAINTAINING AGENCY NOTED ON THE PLANS.

POWER REQUIREMENTS:
ELECTRIC POWER SHALL BE OBTAINED FROM DUKE ENERGY. SERVICE LOCATIONS SHALL BE SUPPLIED AT LOCATIONS AS SHOWN ON THE PLANS. POWER SUPPLIED SHALL BE 120 / 240 VOLTS, 60HZ, SINGLE PHASE, 3-WIRE SERVICE. THE SERVICE SHALL BE PROTECTED BY A 60 AMP FUSE. PROVIDE A WOOD POLE TO SUPPORT THE ELECTRICAL SERVICE EQUIPMENT.

ALL CONNECTIONS TO THE ELECTRIC POWER LINES WILL BE MADE BY THE DUKE ENERGY CREWS. THE CONTRACTOR SHALL COORDINATE WITH CLERMONT COUNTY TRANSPORTATION IMPROVEMENT DISTRICT TO SET UP NEW ELECTRIC SERVICE ACCOUNTS BY CONTACTING DUKE ENERGY.

ALL METERS AND ALL OTHER RELATED EQUIPMENT SHALL BE INCIDENTAL TO ITEM 625 "POWER SERVICE, AS PER PLAN".

PAYMENT WILL BE MADE AT THE UNIT BID PRICE FOR EACH CMS ITEM 625, "POWER SERVICE, AS PER PLAN" WHICH SHALL BE FULL COMPENSATION FOR ALL LABOR, MATERIALS AND INCIDENTALS REQUIRED TO COMPLETE THIS ITEM IN A SATISFACTORY AND WORKMANLIKE MANNER.

GROUNDING AND BONDING
THE REQUIREMENTS OF THE CONSTRUCTION AND MATERIAL SPECIFICATIONS (CMS) AND THE HL SERIES OF STANDARD CONSTRUCTION DRAWINGS ARE MODIFIED AS FOLLOWS:

1. ALL METALLIC PARTS CONTAINING ELECTRICAL CONDUCTORS SHALL BE PERMANENTLY JOINED TO FORM AN EFFECTIVE GROUND FAULT CURRENT PATH BACK TO THE GROUNDED CONDUCTOR IN THE POWER SERVICE DISCONNECT SWITCH.
   A. PROVIDE AN EQUIPMENT GROUNDING CONDUCTOR IN METALLIC CONDUITS (725.04) IN ADDITION TO THE CONDUCTORS SPECIFIED AND BOND THE CONDUIT TO THIS GROUNDING CONDUCTOR.
   B. WHEN AN EQUIPMENT GROUNDING CONDUCTOR IS REQUIRED IN PLASTIC CONDUIT (725.05), THE INSTALLATION SHALL INCLUDE A SEPARATE EQUIPMENT GROUNDING CONDUCTOR IN ADDITION TO THE CONDUCTORS SPECIFIED.
   C. IF MULTIPLE CONDUIT RUNS BEGIN AND END AT THE SAME POINTS, ONLY ONE EQUIPMENT GROUNDING CONDUCTOR IS REQUIRED.
2. CONDUITS.
   A. THE 725.04 CONDUIT SHALL HAVE GROUNDING BUSHINGS INSTALLED AT ALL TERMINATION POINTS. THE BUSHING MATERIAL SHALL BE COMPATIBLE WITH GALVANIZED STEEL CONDUIT AND THE GROUNDING LUG MATERIAL SHALL BE COMPATIBLE FOR USE WITH COPPER WIRE. THREADED OR COMPRESSION TYPE BUSHINGS MAY BE USED.
   B. THE 725.05 CONDUIT SHALL HAVE THE INSIDE AND OUTSIDE DIAMETERS OF THE CONDUIT DE-BURRED AT ALL TERMINATION POINTS.
   C. BOTH ENDS OF METALLIC CONDUIT SHALL BE BONDED TO THE EQUIPMENT GROUNDING CONDUCTOR.
   D. METALLIC CONDUIT MAY BE BONDED TO METALLIC BOXES THROUGH THE USE OF CONDUIT FITTINGS UL APPROVED FOR THIS TYPE OF CONNECTION, WITH THE BOX BONDED TO THE EQUIPMENT GROUNDING CONDUCTOR.
3. WIRE FOR GROUNDING AND BONDING.
   A. USE INSULATED, COPPER WIRE FOR THE EQUIPMENT GROUNDING CONDUCTOR. BONDING JUMPERS IN BOXES AND ENCLOSURES MAY BE BARE OR INSULATED COPPER WIRE. WIRE SIZE SHALL BE AS FOLLOWS:
      I. USE 4 AWG BETWEEN THE POWER SERVICE AND POLES.
      II. THE INSULATION SHALL BE GREEN OR GREEN WITH YELLOW STRIPE(S). FOR 4 AWG OR LARGER, INSULATION MAY ALSO BE BLACK WITH GREEN TAPE/LABELS INSTALLED AT ALL ACCESS POINTS.
   B. IN A HIGHWAY LIGHTING SYSTEM, THE EQUIPMENT GROUNDING CONDUCTOR SHALL BE THE SAME WIRE SIZE AS THE DUCT CABLE OR DISTRIBUTION CABLE CIRCUIT CONDUCTORS, WITH THE MINIMUM CONDUCTOR SIZE OF 4 AWG. BONDING JUMPERS WILL BE MINIMUM SIZE 4 AWG.

GROUNDING AND BONDING (CONT.)
4. GROUND ROD.
   A. A 3/4 INCH SCHEDULE 40 PVC CONDUIT WILL BE USED IN FOUNDATIONS AND CONCRETE WALLS FOR THE GROUNDING CONDUCTOR (GROUND WIRE) RACEWAY TO THE GROUND ROD. SHOULD METALLIC CONDUIT BE USED, BOTH ENDS OF THE CONDUIT SHALL BE BONDED TO THE GROUNDING CONDUCTOR.
   B. THE TYPICAL GROUNDING CONDUCTOR (GROUND WIRE) SHALL BE 4 AWG INSULATED, COPPER.
5. POWER SERVICE AND DISCONNECT SWITCH.
   A. AT THE POWER SERVICE LOCATION, THE GROUNDING CONDUCTOR (GROUND WIRE) FROM THE DISCONNECT SWITCH NEUTRAL (AC-) BAR TO THE GROUND ROD SHALL BE A CONTINUOUS, UN-SPLICED CONDUCTOR. IF SPLICED, IT SHALL BE AN EXOTHERMIC WELD BUTT SPLICE.
   B. THE SERVICE NEUTRAL (AC-) SHALL ONLY BE CONNECTED TO GROUND AT THE PRIMARY POWER SERVICE DISCONNECT SWITCH.
      I. NEMA CONTROLLER CABINETS: IF A POWER SERVICE DISCONNECT SWITCH IS LOCATED BEFORE THE CONTROLLER CABINET, THE NEUTRAL (AC-) AND THE GROUNDING BARS IN THE CONTROLLER CABINET SHALL NOT BE CONNECTED TOGETHER AS SHOWN IN NEMA TS-2, FIGURE 5-4.
      II. IF SECONDARY DISCONNECT SWITCHES ARE CONNECTED AFTER THE PRIMARY DISCONNECT SWITCH, THE NEUTRAL (AC-) SHALL ONLY BE GROUNDED AT THE PRIMARY SWITCH. EQUIPMENT GROUNDING CONDUCTORS SHALL BE BROUGHT TO THE PRIMARY SWITCH, BUT SHALL BE GROUNDED AT BOTH SECONDARY AND PRIMARY SWITCHES.
6. PAYMENT - ALL MATERIALS AND WORK REQUIRED TO COMPLETE THE EFFECTIVE GROUND FAULT CURRENT PATH SYSTEM ARE INCIDENTAL TO THE CONDUCTORS INSTALLED BY CONTRACT.

CALCULATED | CHECKED

LIGHTING GENERAL NOTES

CLE-32-3.50
(PHASE 5)

570
736

..\103954LN501.dgn 11/5/2021 1:28:27 PM mswhitt

MADE BY: GJZ DATE: 3/8/2018
CHECKED BY: ZTW DATE: 3/22/2018

ESTIMATED QUANTITIES - CLE-32-0374 BRIDGE

ITEM	EXTENSION	TOTAL	UNIT	DESCRIPTION	ABUT.	PIERS	SUPER.	GENERAL	SHEET #
204	50000	1151	SY	GEOTEXTILE FABRIC	1151				
503	11100	LS		COFFERDAMS AND EXCAVATION BRACING				LS	
503	21300	LS		UNCLASSIFIED EXCAVATION				LS	
505	11100	LS		PILE DRIVING EQUIPMENT MOBILIZATION				LS	
507	00100	4000	FT	STEEL PILES HP10X42, FURNISHED	3040	960			
507	00150	3380	FT	STEEL PILES HP10X42, DRIVEN	2660	720			
509	10000	243028	LB	EPOXY COATED REINFORCING STEEL	20203	40786	182039		
511	33501	2	EACH	SEMI-INTEGRAL DIAPHRAGM GUIDE, AS PER PLAN	2				3 & 11 / 54
511	46512	307	CY	CLASS QC1 CONCRETE WITH QC/QA, FOOTING	241	66			
511	53014	824	CY	CLASS QC3 CONCRETE, MISC.: CLASS QC3 CONCRETE WITH QC/QA, SUPERSTRUCTURE	184	43	597		3 & 4 / 54
511	53014	117	CY	CLASS QC3 CONCRETE, MISC.: CLASS QC3 CONCRETE WITH QC/QA, PIER ABOVE FOOTINGS		117			3 / 54
511	53014	115	CY	CLASS QC3 CONCRETE, MISC.: CLASS QC3 CONCRETE WITH QC/QA, ABUTMENT NOT INCLUDING FOOTING	115				3 / 54
512	10050	307	SY	SEALING OF CONCRETE SURFACES (NON-EPOXY)			307		
512	10100	1142	SY	SEALING OF CONCRETE SURFACES (EPOXY-URETHANE)	257	251	634		
515	15070	12	EACH	DRAPED STRAND PRESTRESSED CONCRETE BRIDGE I-BEAM MEMBERS, LEVEL 3, TYPE WF36-49 (BEAM LENGTH = 81'-11 1/4")			12		
515	15070	12	EACH	DRAPED STRAND PRESTRESSED CONCRETE BRIDGE I-BEAM MEMBERS, LEVEL 3, TYPE WF36-49 (BEAM LENGTH = 68'-6 1/4")			12		
515	20000	44	EACH	INTERMEDIATE DIAPHRAGMS			44		
516	10010	127	FT	ARMORLESS PREFORMED JOINT SEAL				127	
516	13600	4453	SF	1" PREFORMED EXPANSION JOINT FILLER	17		25	4411	
516	13900	109	SF	2" PREFORMED EXPANSION JOINT FILLER	109				
516	14020	290	FT	SEMI-INTEGRAL ABUTMENT EXPANSION JOINT SEAL	290				
516	44101	12	EACH	ELASTOMERIC BEARING WITH INTERNAL LAMINATES AND LOAD PLATE (NEOPRENE), AS PER PLAN (13"x20"x2 9/16" WITH 14"x21"x2 1/4" BOTTOM LOAD PLATE)	12				25/54
516	44101	12	EACH	ELASTOMERIC BEARING WITH INTERNAL LAMINATES AND LOAD PLATE (NEOPRENE), AS PER PLAN (13"x18"x2 9/16" WITH 14"x19"x2" BOTTOM LOAD PLATE)	12				25/54
516	44101	24	EACH	ELASTOMERIC BEARING WITH INTERNAL LAMINATES AND LOAD PLATE (NEOPRENE), AS PER PLAN (11"x21"x2" WITH 12"x40"x2 3/16" TOP BEVELED LOAD PLATE)		24			26/54
517	75123	376	FT	RAILING (CONCRETE PARAPET WITH TWIN STEEL TUBE RAILING AND VANDAL PROTECTION FENCE), AS PER PLAN			306	70	4 / 54
518	12301	4	EACH	SCUPPERS, INCLUDING SUPPORTS, AS PER PLAN			4		38/54
518	21200	36	CY	POROUS BACKFILL WITH GEOTEXTILE FABRIC	36				
518	40000	293	FT	6" PERFORATED CORRUGATED PLASTIC PIPE	293				
518	40010	1	FT	6" NON-PERFORATED CORRUGATED PLASTIC PIPE, INCLUDING SPECIALS	1				
526	30011	804	SY	REINFORCED CONCRETE APPROACH SLABS WITH QC/QA (T=17"), AS PER PLAN				804	3 & 4 / 54
526	90021	105	SY	TYPE B INSTALLATION, AS PER PLAN				105	50 / 54
526	90030	127	FT	TYPE C INSTALLATION				127	
607	39930	345	FT	VANDAL PROTECTION FENCE, 12' CURVED, COATED FABRIC				345	
608	53020	40	SF	DETECTABLE WARNING				40	
SPECIAL	69098400	LS		MISC: TEMPORARY SURCHARGE				LS	4 / 54
863	00100	2534	SY	GEOGRID, TYPE P1	2534				
863	00801	539	CY	REINFORCED EMBANKMENT, AS PER PLAN	539				4 / 54

MADE BY: GJZ DATE: 2/20/2018
CHECKED BY: ZTW DATE: 2/22/2018

ESTIMATED QUANTITIES - MSE WALLS

ITEM	EXTENSION	TOTAL	UNIT	DESCRIPTION	WALL NO. 11	WALL NO. 14	SHEET #
203	20001	1683	CY	EMBANKMENT, AS PER PLAN	694	989	3 / 54
203	35110	303	CY	GRANULAR MATERIAL, TYPE B	150	153	
SPECIAL	20365000	8	EACH	SETTLEMENT PLATFORM	6	2	4 / 54
512	10100	1455	SY	SEALING OF CONCRETE SURFACES (EPOXY-URETHANE)	1216	239	
512	33000	7	SY	TYPE 2 WATERPROOFING	7	-	18/54
516	13200	476	SF	1/2" PREFORMED EXPANSION JOINT FILLER	445	31	
601	21001	560	SY	CONCRETE SLOPE PROTECTION, AS PER PLAN	525	35	4 / 54
840	20000	19647	SF	MECHANICALLY STABILIZED EARTH WALL	16303	3344	
840	21000	3072	CY	WALL EXCAVATION	2531	541	
840	22000	678	SY	FOUNDATION PREPARATION	-	678	
840	22001	2618	SY	FOUNDATION PREPARATION, AS PER PLAN	2618	-	4 / 54
840	23000	15947	CY	SELECT GRANULAR BACKFILL	12433	3514	
840	23050	502	CY	NATURAL SOIL	316	186	
840	25010	2511	FT	6" DRAINAGE PIPE, PERFORATED	2039	472	
840	25020	266	FT	6" DRAINAGE PIPE, NON-PERFORATED	161	105	
840	26000	1262	FT	CONCRETE COPING	1036	226	
840	27000	10	DAY	ON-SITE ASSISTANCE	5	5	
878	25000	LS		INSPECTION AND COMPACTION TESTING OF UNBOUND MATERIALS	LS	LS	

DESIGN AGENCY
TranSystems
400 W. NATIONWIDE BLVD., SUITE 225
COLUMBUS, OHIO 43215

DESIGNED PJP | DRAWN PJP | REVIEWED MSL | DATE 03/01/19
CHECKED ZTW | REVISED | STRUCTURE FILE NUMBER 1300336

ESTIMATED QUANTITIES
BRIDGE NO. CLE-32-0374
BACH BUXTON ROAD OVER SR-32

CLE-32-3.50
PID No. 103954

...\Sheets\032_0374_SQ001.dgn 11/3/2021 7:16:29 AM ZTWaite

CALCULATED MSW
CHECKED WAA

GENERAL NOTES

POST CONSTRUCTION STORM WATER TREATMENT

THIS PLAN UTILIZES STRUCTURAL BEST MANAGEMENT PRACTICES (BMP'S) FOR POST CONSTRUCTION STORM WATER TREATMENT. THE BMP'S ARE PROVIDED IN OTHER PHASES OF THE SEGMENT IVa PROJECT.

CROSSINGS AND CONNECTIONS TO EXISTING PIPES AND UTILITIES

WHERE PLANS PROVIDE FOR A PROPOSED CONDUIT TO BE CONNECTED TO, OR CROSS OVER OR UNDER AN EXISTING SEWER OR UNDERGROUND UTILITY, THE CONTRACTOR SHALL LOCATE THE EXISTING PIPES OR UTILITIES BOTH AS TO LINE AND GRADE BEFORE STARTING TO LAY THE PROPOSED CONDUIT.

IF IT IS DETERMINED THAT THE ELEVATION OF THE EXISTING CONDUIT, OR EXISTING APPURTENANCE TO BE CONNECTED, DIFFERS FROM THE PLAN ELEVATION OR RESULTS IN A CHANGE IN THE PLAN CONDUIT SLOPE, THE ENGINEER SHALL BE NOTIFIED BEFORE STARTING CONSTRUCTION OF ANY PORTION OF THE PROPOSED CONDUIT WHICH WILL BE AFFECTED BY THE VARIANCE IN THE EXISTING ELEVATIONS.

IF IT IS DETERMINED THAT THE PROPOSED CONDUIT WILL INTERSECT AN EXISTING SEWER OR UNDERGROUND UTILITY IF CONSTRUCTED AS SHOWN ON THE PLAN, THE ENGINEER SHALL BE NOTIFIED BEFORE STARTING CONSTRUCTION OF ANY PORTION OF THE PROPOSED CONDIT WHICH WOULD BE AFFECTED BY THE INTERFERENCE WITH AN EXISTING FACILITY.

PAYMENT FOR ALL THE OPERATIONS DESCRIBED ABOVE SHALL BE INCLUDED IN THE CONTRACT PRICE FOR THE PERTINENT 611 CONDUIT ITEM.

CLEAN WATER CONNECTIONS TO SANITARY SEWERS

ROOF DRAINS, FOUNDATION DRAINS, DRAIN TILES, AND OTHER CLEAN WATER CONNECTIONS TO THE SANITARY SYSTEM ARE PROHIBITED.

ITEM 611 - CONDUIT BORED OR JACKED

WHERE IT IS SPECIFIED THAT A CONDUIT BE INSTALLED BY THE METHOD OF BORING OR JACKING, NO TRENCH EXCAVATION SHALL BE CLOSER THAN 10 FEET TO THE (EDGE OF PAVE-MENT) (NEAREST RAIL). PROVIDE A 0.50 INCH UNGALVANIZED CASING PIPE CONFORMING TO 748.06 THAT HAS JOINTS WITH A CIRCUMFERENCIAL FULLY PENETRATING B-U4B WELD THAT IS PERFORMED BY AN ODOT APPROVED FIELD WELDER. THE INSTALLED CASING PIPE IS THE STORM WATER CONVEYANCE CARRIER UNLESS OTHERWISE SPECIFIED IN THE PLANS. HYDROSTATIC TESTING IS NOT REQUIRED FOR THE CASING PIPE.

GRADE CHANGES

IF IT IS DETERMINED THAT THE ELEVATION OF THE EXISTING APPURTENANCE TO BE CONNECTED, DIFFERS FROM THE PLAN ELEVATION OR RESULTS IN A CHANGE IN THE PLAN SEWER SLOPE, THE ENGINEER SHALL BE NOTIFIED BEFORE STARTING CONSTRUCTION OF ANY PORTION OF THE PROPOSED SEWER WHICH WILL BE AFFECTED BY THE VARIANCE IN THE EXISTING ELEVATIONS. IF IT IS DETERMINED THAT THE PROPOSED SEWER WILL INTERSECT AN EXISTING SEWER OR UNDERGROUND UTILITY IF CONSTRUCTED AS SHOWN ON THE PLAN, THE ENGINEER SHALL BE NOTIFIED BFORE STARTING CONSTRUCTION OF ANY PORTION OF THE PROPOSED SEWER WHICH WOULD BE AFFECTED BY THE INTERFERENCE WITH AN EXISTING FACILITY.

GRADES AND ELEVATIONS SHOWN ON THE PLANS SHALL NOT BE REVISED UNDER ANY CIRCUMSTANCES WITHOUT FIRST OBTAINING WRITTEN APPROVAL FROM THE ENGINEER. INVERT ELEVATIONS SHALL NOT DEVIATE FROM THE PLAN ELEVATION BY MORE THAN 0.05 FOOT. FAILING TO MEET THE ABOVE REQUIREMENTS IS CAUSE FOR REJECTION OF THE AFFECTED SECTION OF SEWER.

TEMPORARY DRAINAGE ITEMS

TEMPORARY DRAINAGE ITEMS LABELED ON THE MAINTENANCE OF TRAFFIC PLAN ARE ITEMIZED ON THE MOT PLANS. PAYMENT FOR THE TEMPORARY DRAINAGE ITEMS ARE ITEMIZED AND CARRIED TO THE GENERAL SUMMARY.

EXISTING SUBSURFACE DRAINAGE

PROVIDE UNOBSTRUCTED OUTLETS FOR ALL EXISTING UNDERDRAINS OR AGGREGATE DRAINS ENCOUNTERED DURING CONSTRUCTION.

PROVIDE AN OUTLET PER STANDARD CONSTRUCTION DRAWING DM-1.1 FOR ALL UNDERDRAINS THAT OUTLET TO A SLOPE.

UNDERDRAINS THAT CAN BE CONNECTED TO THE NEW OR EXISTING UNDERDRAINS AT THE END OF THE PROJECT LIMITS AS WELL AS ALL NECESSARY BENDS OR BRANCHES REQUIRED FOR CONNECTION ARE INCLUDED IN THE BASIS OF PAYMENT FOR UNCLASSIFIED PIPE UNDERDRAINS.

THE FOLLOWING ESTIMATED QUANTITIES HAVE BEEN INCLUDED IN THE GENERAL SUMMARY FOR THE WORK NOTED ABOVE:

601, TIED CONCRETE BLOCK MAT, TYPE 1	8 SQ. YD.
611, 4" CONDUIT, TYPE F	200 FT.
611, PRECAST REINFORCED CONCRETE OUTLET	4 EACH
605, 6" UNCLASSIFIED PIPE UNDERDRAINS	200 FT.

REVIEW OF DRAINAGE FACILITIES

BEFORE ANY WORK IS STARTED ON THE PROJECT AND AGAIN BEFORE FINAL ACCEPTANCE BY THE STATE, REPRESENTATIVES OF THE STATE AND THE CONTRACTOR, ALONG WITH LOCAL REPRESENTATIVES, SHALL MAKE AN INSPECTION OF ALL EXISTING SEWERS WHICH ARE TO REMAIN IN SERVICE AND WHICH MAY BE AFFECTED BY THE WORK. THE CONDITION OF THE EXISTING CONDUITS AND THEIR APPURTENANCE SHALL BE DETERMINED FROM FIELD OBSERVATIONS. RECORDS OF THE INSPECTION SHALL BE KEPT IN WRITING BY THE STATE.

ALL NEW CONDUITS, INLETS, CATCH BASINS, AND MANHOLES CONSTRUCTED AS A PART OF THE PROJECT SHALL BE FREE OF ALL FOREIGN MATTER AND IN A CLEAN CONDITION BEFORE THE PROJECT WILL BE ACCEPTED BY THE STATE.

ALL EXISTING SEWERS INSPECTED INITIALLY BY THE ABOVE MENTIONED PARTIES SHALL BE MAINTAINED AND LEFT IN A CONDITION REASONABLY COMPARABLE TO THAT DETERMINED BY THE ORIGINAL INSPECTION. ANY CHANGE IN THE CONDITION RESULTING FROM THE CONTRACTOR'S OPERATIONS SHALL BE CORRECTED BY THE CONTRACTOR TO THE SATISFACTION OF THE ENGINEER.

PAYMENT FOR ALL OPERATIONS DESCRIBED ABOVE SHALL BE INCLUDED IN THE CONTRACT PRICE FOR THE PERTINENT 611 CONDUIT ITEMS.

TYING INTO EXISTING DRAINAGE STRUCTURES

WHEN A PROPOSED CONDUIT IS BEING TIED INTO AN EXISTING DRAINAGE STRUCTURE, THE HOLE BEING MADE IN THE EXISTING STRUCTURE TO RECEIVE THE PROPOSED CONDUIT SHALL BE A CORED HOLE. FOR CONDUITS OVER 24", THE HOLE CAN BE NEATLY SAWED INSTEAD OF CORED.

THE COST OF TYING INTO AN EXISTING DRAINAGE STRUCTURE SHALL BE INCLUDED IN THE COST OF INSTALLING ITEM 611 CONDUIT.

15" CONDUIT, TYPE B, AS PER PLAN

CONNECT TO EXISTING 18" WITH MANUFACTURED FITTING AND MASONRY COLLAR.

DRAINAGE AT INTERSECTION STREETS

AT INTERSECTING STREETS WHERE THE DRAINAGE IS TOWARD OR INTO THE PROJECT, SPECIAL CARE SHALL BE TAKEN BY THE CONTRACTOR TO MAINTAIN PROPER GRADE ALONG THE EDGE OF PAVEMENT SO THAT WATER WILL NOT POND. AT INTERSECTING STREETS, WHERE THE EDGE OF PAVEMENT CONTINUES ACROSS THE STREET, CARE SHALL BE TAKEN TO FEATHER DOWN AND FORM A NEAT SEAM WITH THE PROPER GRADE.

CLE-32-2.65
(PHASE 7)

...\303.207\103956_GN701.dgn 11/4/2021 10:03:42 PM mswhitt

SHEET NUM.													PART.	ITEM	ITEM EXT	GRAND TOTAL	UNIT	DESCRIPTION	SEE SHEET NO.
11	12	13	73	74	75	76	77	81	83	275			02/NHS/PV						
																		ROADWAY	
LS													LS	201	11000	LS		CLEARING AND GRUBBING	
			8										8	202	20010	8	EACH	HEADWALL REMOVED	
			8,029										8,029	202	23000	8,029	SY	PAVEMENT REMOVED	
			849										849	202	30700	849	FT	CONCRETE BARRIER REMOVED	
			1,742										1,742	202	35100	1,742	FT	PIPE REMOVED, 24" AND UNDER	
			615										615	202	38000	615	FT	GUARDRAIL REMOVED	
			54										54	202	38300	54	FT	GUARDRAIL REMOVED, BARRIER DESIGN	
			2										2	202	47800	2	EACH	IMPACT ATTENUATOR REMOVED	
			6,409										6,409	202	48000	6,409	FT	CABLE BARRIER REMOVED	
			4										4	202	58000	4	EACH	MANHOLE REMOVED	
			17										17	202	58100	17	EACH	CATCH BASIN REMOVED	
			95										95	SPECIAL	20270000	95	FT	FILL AND PLUG EXISTING CONDUIT (12"-15")	12
			1,419										1,419	202	75000	1,419	FT	FENCE REMOVED	
					11,231								11,231	203	10000	11,231	CY	EXCAVATION	
					727								727	203	20000	727	CY	EMBANKMENT	
					3,160								3,160	203	20001	3,160	CY	EMBANKMENT, AS PER PLAN	12
								114					114	204	10000	114	SY	SUBGRADE COMPACTION	
					3,160								3,160	204	13000	3,160	CY	EXCAVATION OF SUBGRADE	
	17												17	204	45000	17	HOUR	PROOF ROLLING	
								34,112					34,112	206	10020	34,112	SY	LIME STABILIZED SUBGRADE, 14 INCHES DEEP	
								1,030					1,030	206	10300	1,030	TON	LIME	
								34,226					34,226	206	11000	34,226	SY	CURING COAT	
				1,950									1,950	606	15050	1,950	FT	GUARDRAIL, TYPE MGS	
				4									4	606	26150	4	EACH	ANCHOR ASSEMBLY, MGS TYPE E (MASH 2016)	
				3									3	606	26550	3	EACH	ANCHOR ASSEMBLY, MGS TYPE T	
				1									1	606	60028	1	EACH	IMPACT ATTENUATOR, TYPE 2 (BIDIRECTIONAL) (60 MPH/34" WIDTH)	
				1,317									1,317	607	23000	1,317	FT	FENCE, TYPE CLT	
				1,317									1,317	607	70000	1,317	FT	FENCELINE SEEDING AND MULCHING	
				7,662									7,662	622	10140	7,662	FT	CONCRETE BARRIER, SINGLE SLOPE, TYPE C1	
				1									1	622	24860	1	EACH	CONCRETE BARRIER END SECTION, TYPE C1	
				42									42	622	25014	42	EACH	CONCRETE BARRIER, END ANCHORAGE, REINFORCED, TYPE C1	
				1									1	622	25015	1	EACH	CONCRETE BARRIER, END ANCHORAGE, REINFORCED, TYPE C1, AS PER PLAN	178
										13			13	623	38500	13	EACH	MONUMENT ASSEMBLY	
																		EROSION CONTROL	
		8					4						12	601	21050	12	SY	TIED CONCRETE BLOCK MAT WITH TYPE 1 UNDERLAYMENT	
						3							3	601	32204	3	CY	ROCK CHANNEL PROTECTION, TYPE C WITH GEOTEXTILE FABRIC	
	2												2	659	00100	2	EACH	SOIL ANALYSIS TEST	
	1,194												1,194	659	00300	1,194	CY	TOPSOIL	
	10,753												10,753	659	10000	10,753	SY	SEEDING AND MULCHING	
	538												538	659	14000	538	SY	REPAIR SEEDING AND MULCHING	
	538												538	659	15000	538	SY	INTER-SEEDING	
	1.5												1.5	659	20000	1.5	TON	COMMERCIAL FERTILIZER	
	2.22												2.22	659	31000	2.22	ACRE	LIME	
	60												60	659	35000	60	MGAL	WATER	
	24												24	659	40000	24	MSF	MOWING	
						142							142	670	00710	142	SY	DITCH EROSION PROTECTION MAT, TYPE A	
									LS				LS	832	15000	LS		STORM WATER POLLUTION PREVENTION PLAN	
									LS				LS	832	15002	LS		STORM WATER POLLUTION PREVENTION INSPECTIONS	
									LS				LS	832	15010	LS		STORM WATER POLLUTION PREVENTION INSPECTION SOFTWARE	
									120,281				120,281	832	30000	120,281	EACH	EROSION CONTROL	

CALCULATED MSW
CHECKED WAA

GENERAL SUMMARY

CLE-32-2.65
(PHASE 7)

...\303.207\103956_GG701.dgn 11/4/2021 10:04:34 PM mswhitt

SHEET NUM.													PART.	ITEM	ITEM EXT	GRAND TOTAL	UNIT	DESCRIPTION	SEE SHEET NO.
12	13	14	15	19	74	76	77	81	82	251			02/NHS/PV						
																		DRAINAGE	
						2							2	602	20000	2	CY	CONCRETE MASONRY	
							17,348						17,348	605	11110	17,348	FT	6" SHALLOW PIPE UNDERDRAINS WITH GEOTEXTILE FABRIC	
	200												200	605	13300	200	FT	6" UNCLASSIFIED PIPE UNDERDRAINS	
							3,743						3,743	605	14020	3,743	FT	6" BASE PIPE UNDERDRAINS WITH GEOTEXTILE FABRIC	
	200												200	611	00406	200	FT	4" CONDUIT, TYPE F	
							704						704	611	00510	704	FT	6" CONDUIT, TYPE F FOR UNDERDRAIN OUTLETS	
						21							21	611	05900	21	FT	15" CONDUIT, TYPE B	
						10							10	611	05901	10	FT	15" CONDUIT, TYPE B, AS PER PLAN	13
						30							30	611	07400	30	FT	18" CONDUIT, TYPE B, 706.02	
						21							21	611	10400	21	FT	24" CONDUIT, TYPE B	
						20							20	611	10400	20	FT	24" CONDUIT, TYPE B, 706.02	
						10							10	611	19400	10	FT	42" CONDUIT, TYPE B	
						320								611	96600	320	FT	CONDUIT, BORED OR JACKED: 15" TYPE B	
						84								611	96600	84	FT	CONDUIT, BORED OR JACKED: 24" TYPE B	
				2									2	611	98631	2	EACH	CATCH BASIN ADJUSTED TO GRADE, AS PER PLAN	19
						12							12	611	99110	12	EACH	INLET, NO. 3 FOR SINGLE SLOPE BARRIER, TYPE C1	
						1								611	99574	1	EACH	MANHOLE, NO. 3	
						7							7	611	99654	7	EACH	MANHOLE ADJUSTED TO GRADE	
						1							1	611	99660	1	EACH	MANHOLE RECONSTRUCTED TO GRADE	
	4						2						6	611	99710	6	EACH	PRECAST REINFORCED CONCRETE OUTLET	
																		PAVEMENT	
5,670													5,670	253	02000	5,670	CY	PAVEMENT REPAIR	
								105,877					105,877	254	01000	105,877	SY	PAVEMENT PLANING, ASPHALT CONCRETE (DEPTH AS SHOWN)	
10,600													10,600	254	01600	10,600	SY	PATCHING PLANED SURFACE	
			5										5	301	46000	5	CY	ASPHALT CONCRETE BASE, PG64-22	
								9,619					9,619	302	46000	9,619	CY	ASPHALT CONCRETE BASE, PG64-22	
			4					7,590					7,594	304	20000	7,594	CY	AGGREGATE BASE	
			2					18,067					18,069	407	20000	18,069	GAL	NON-TRACKING TACK COAT	
		28											28	410	12000	28	CY	TRAFFIC COMPACTED SURFACE, TYPE A OR B	
			1										1	441	50000	1	CY	ASPHALT CONCRETE SURFACE COURSE, TYPE 1, (448), PG64-22	
								6,122					6,122	442	00100	6,122	CY	ANTI-SEGREGATION EQUIPMENT	
								5,684					5,684	442	10000	5,684	CY	ASPHALT CONCRETE SURFACE COURSE, 12.5 MM, TYPE A (446)	
								3,622					3,622	442	10100	3,622	CY	ASPHALT CONCRETE INTERMEDIATE COURSE, 19 MM, TYPE A (446)	
																		WATER WORK	
									2				2	638	08704	2	EACH	6" CUTTING-IN SLEEVE	
									20				20	638	98600	20	FT	WATER WORK, MISC.: 6" DUCTILE IRON WATER MAIN AND DUCTILE IRON FITTINGS (CCWRD ITEM 2110)	214
																		SANITARY SEWER	
					1								1	611	99900	1	EACH	DRAINAGE STRUCTURE, MISC.: MANHOLE ADJUSTED TO GRADE	216
																		LIGHTING	
										74			74	625	00450	74	EACH	CONNECTION, FUSED PULL APART	
										15			15	625	00470	15	EACH	CONNECTION, UNFUSED BOLTED	
										9			9	625	00480	9	EACH	CONNECTION, UNFUSED PERMANENT	
										37			37	625	10494	37	EACH	LIGHT POLE, LOW MAST, ALM50	
										37			37	625	14306	37	EACH	MEDIAN LIGHT POLE FOUNDATION, 10' DEEP	
										24,881			24,881	625	23300	24,881	FT	NO. 2 AWG 2400 VOLT DISTRIBUTION CABLE	
										4,366			4,366	625	23400	4,366	FT	NO. 10 AWG POLE AND BRACKET CABLE	
										24			24	625	25504	24	FT	CONDUIT, 3", 725.051	
										140			140	625	25902	140	FT	CONDUIT, JACKED OR DRILLED, 725.04, 3"	
										37			37	625	26273	37	EACH	LUMINAIRE, LOW MAST, SOLID STATE (LED), AS PER PLAN, SYMMETRIC, 480 VOLT	250
										12			12	625	29000	12	FT	TRENCH	
										4			4	625	29930	4	EACH	MEDIAN JUNCTION BOX	
										2			2	625	30706	2	EACH	PULL BOX, 725.08, 24"	
										41			41	625	32000	41	EACH	GROUND ROD	
										2			2	625	34001	2	EACH	POWER SERVICE, AS PER PLAN	250
										12			12	625	36010	12	FT	UNDERGROUND WARNING/MARKING TAPE	
										1			1	625	75800	1	EACH	DISCONNECT CIRCUIT	

CALCULATED MSW CHECKED WAA

GENERAL SUMMARY

CLE-32-2.65 (PHASE 7)

...\303.207\103956_GG701.dgn 11/4/2021 10:04:35 PM mswhitt

SHEET NO.	REFERENCE NO.	STATION FROM	STATION TO	SIDE	202 HEADWALL REMOVED EACH		202 PAVEMENT REMOVED SY	202 CONCRETE BARRIER REMOVED FT		202 PIPE REMOVED, 24" AND UNDER FT		202 GUARDRAIL REMOVED FT	202 GUARDRAIL REMOVED, BARRIER DESIGN FT	202 IMPACT ATTENUATOR REMOVED EACH	202 CABLE BARRIER REMOVED FT		202 MANHOLE REMOVED EACH	202 CATCH BASIN REMOVED EACH		202 SPECIAL - FILL AND PLUG EXISTING CONDUIT (12"-15") FT	202 FENCE REMOVED FT	
86	R-1	133+95.00	143+34.25	LT			1,008.2															
86	R-2	133+95.00	142+38.41	LT			402.1															
86	R-3	133+95.00	141+82.28	LT				789.0														
86	R-4	137+99.33	140+28.89	LT								229										
86	R-5	141+82.28	142+36.58	LT									54									
86	R-7	136+36.79	136+46.80	LT														1				
86	R-8	138+39.45	142+00.00	LT						349.0								3				
86	R-9	142+31.70		LT													1					
87	R-11	153+40.00	169+00.00	LT											1,510							
87	R-12	144+10.00	174+90.33	LT			3,359.2															
87	R-13	144+37.22	144+41.59	LT						13.6								1				
87	R-14	145+68.71	147+03.68	RT						145.0							1	1				
87	R-15	149+31.30	152+47.80	CL						328.0								2				
87	R-16	150+21.50	152+75.00	RT			131.9															
87	R-17	153+50.00	158+52.30	LT			515.1															
88	R-20	158+14.44		LT	1					6.0												
88	R-21	158+29.60	159+17.67	LT	2					88.0												
88	R-22	159+05.50	159+08.87	LT						5.2												
88	R-23	159+73.04	160+50.00	LT/RT	1					117.6							1	1		24.6		
88	R-24	160+15.36	160+22.12	LT	1					9.2												
88	R-25	159+66.43	173+62.03	LT			495.1															
88	R-26	168+00.00	185+00.00	LT											1,700							
88	R-27	160+95.45	174+11.77	LT																	1,419.0	
89	R-30	175+64.35	188+02.27	LT			414.2															
89	R-31	173+46.30	173+74.06	LT	1					81.5								1				
89	R-32	173+71.39	173+72.19	LT	1					9.7												
90	R-35	181+98.45	183+30.00	CL						131.4								1				
90	R-36	192+20.00	232+35.00	LT											2,624							
90	R-37	188+00.00		LT						16.0								1				
90	R-38	192+03.94	234+95.57	LT			1,036.8															
91	R-41	194+94.86	195+00.00	CL						8.0								1				
91	R-42	195+26.98	195+36.97	CL						10.0												
91	R-43	196+25.00	196+90.50	CL				30.0						1								
91	R-44	198+98.00	199+65.00	CL				30.0						1								
91	R-45	199+99.50		CL						5.2								1				
91	R-46	205+79.50		CL						6.1												
92	R-49	213+49.50		LT	1					31.8								1		43.4		
92	R-50	216+48.58	234+83.45	LT								385.5										
92	R-51	216+53.87	216+53.87	LT			586.5															
92	R-52	232+00.00	235+34.91	LT						335.1							1	2				
93	R-54	235+34.91		LT						45.4										26.8		
93	R-55	239+25.00	245+00.00	LT											575							
93	R-56	239+21.68	241+00.00	LT			80.0															
TOTALS CARRIED TO GENERAL SUMMARY					8		8,029	849		1,742		615	54	2	6,409		4	17		95	1,419	

CALCULATED MSW CHECKED WAA

REMOVAL ESTIMATED QUANTITIES

CLE-32-2.65 (PHASE 7)

73 316

...\303.207\103956_GS701.dgn mswhitt 11/4/2021 10:05:38 PM

SHEET NO.	REF NO.	STATION FROM	STATION TO	CHAIN	SIDE	601 ROCK CHANNEL PROTECTION, TYPE C WITH GEOTEXTILE FABRIC CY	602 CONCRETE MASONRY CY	611 15" CONDUIT, TYPE B FT	611 15" CONDUIT, TYPE B, AS PER PLAN FT	611 18" CONDUIT, TYPE B, 706.02 FT	611 24" CONDUIT, TYPE B FT	611 24" CONDUIT, TYPE B, 706.02 FT	611 42" CONDUIT, TYPE B FT	611 CONDUIT, BORED OR JACKED: 15" TYPE B FT	611 CONDUIT, BORED OR JACKED: 24" TYPE B FT	611 INLET, NO. 3 FOR SINGLE SLOPE BARRIER, TYPE C1 EACH	611 MANHOLE NO. 3 EACH	611 MANHOLE ADJUSTED TO GRADE EACH	611 MANHOLE RECONSTRUCTED TO GRADE EACH	670 DITCH EROSION PROTECTION MAT, TYPE A SY
197	D1	136+41.79		SR 32	C				10											
197	D2	138+50	138+47.45	SR 32	C			8								1		1		
198	D3	144+65.26	144+41.37	SR 32	C					30						1	1			
199	D4	149+30.48		SR 32	C							10				1				
201	D5	158+14.44		SR 32	LT		0.3													
201	D6	158+44	158+00	SR 32	C		0.3							85		1				
201	D7	159+05.50		SR 32	LT		0.2													
201	D8	160+22.12		SR 32	LT		0.2													
203	D9	173+47.27	173+76.27	SR 32	C		0.5					5			84	1				
205	D10	183+25		SR 32	C			5								1				
205	D11	184+00		SR 32	C													1		
206	D12	186+00		SR 32	C													1		
206	D13	188+00		SR 32	C						16							1		
207	D14	191+00		SR 32	C													1		
207	D15	192+50		SR 32	C													1		
207	D16	194+94.86		SR 32	C													1		
207	D17	195+32		SR 32	C								10			1				
208	D18	196+50		SR 32	C														1	
208	D19	200+00		SR 32	C			8								1				
209	D20	205+80.00		SR 32	C						5	5				1				
210	D21	210+00		SR 32	C	1	0.3							90		1				
211	D22	214+00		SR 32	C	1	0.3							77		1				
212	D23	236+00		SR 32	C									68		1				
213	D24	241+00	241+50	SR 32	C															142
TOTALS CARRIED TO GENERAL SUMMARY						3	2.0	21	10	30	21	20	10	320	84	12	1	7	1	142

DRAINAGE ESTIMATED QUANTITIES

CALCULATED MHT
CHECKED WAA

CLE-32-2.65
(PHASE 7)

...\103956DS001.dgn 11/4/2021 10:06:06 PM mswhitt

ESTIMATED QUANTITIES SHEET NO.	601		605	605		611	611										
	TIED CONCRETE BLOCK MAT, TYPE 1		6" SHALLOW PIPE UNDERDRAINS WITH GEOTEXTILE FABRIC	6" BASE PIPE UNDERDRAINS WITH GEOTEXTILE FABRIC		6" CONDUIT, TYPE F FOR UNDERDRAIN OUTLETS	PRECAST REINFORCED CONCRETE OUTLET										
	SY		FT	FT		FT	EACH										
78	4		11705	3743		530	2										
79			5643			174											
TOTALS CARRIED TO GENERAL SUMMARY	4		17,348	3,743		704	2										

CALCULATED MHT
CHECKED WAA

UNDERDRAIN SUBSUMMARY

CLE-32-2.65
(PHASE 7)

...\103956DS002.dgn 11/4/2021 10:06:08 PM mswhitt

SHEET NO.	REF NO.	STATION FROM	STATION TO	CHAIN	SIDE	OUTLET ELEVATION	601 TIED CONCRETE BLOCK MAT, TYPE 1 SY	605 6" SHALLOW PIPE UNDERDRAINS WITH GEOTEXTILE FABRIC FT	605 6" BASE PIPE UNDERDRAINS WITH GEOTEXTILE FABRIC FT	611 6" CONDUIT, TYPE F FOR UNDERDRAIN OUTLETS FT	611 PRECAST REINFORCED CONCRETE OUTLET EACH		FOR INFORMATION ONLY BENDS AND BRANCHES * DENOTES TO CONNECT TO EXISTING UD: 6" PLUG EACH	6" X 22.5* BEND EACH	6" X 45* BEND EACH	6" X 90* BEND EACH	6" X 6" TEE EACH	6" WYE EACH	6" CROSS EACH
196	UD1	136+85	133+95	SR 32	LT	EX UD			289				1						
196	UD2	136+85	133+95	SR 32	LT	EX UD		289					1						
196	UD3	136+32	133+95	SR 32	C	EX UD		237					1						
196	UD4	138+40	133+95	SR 32	C	EX UD		445					1						
197	UD5	143+24	137+06	SR 32	LT				616	10			1		1			1	
197	UD6	142+04	136+73	SR 32	LT	843.52		497		91			*			4			
197	UD7	142+39	138+50	SR 32	C	851.39		385		18			*			3		1	
197	UD8	144+55	138+54	SR 32	C			592		10			1				1		
198	UD9	148+86	144+92	SR 32	LT	856.62			369	34			1		2				
198	UD10	149+21	144+37	SR 32	C	857.80		454		19			1		1				1
199	UD11	148+86	147+00	SR 32	LT			187		5			1	1		1	1		
199	UD12	157+46	149+09	SR 32	LT				837	10			1					1	
199	UD13	157+46	148+76	SR 32	LT	861.36		837		70			1			1			
199	UD14	158+34	149+30	SR 32	C	863.27		855		38			1		1	1	4		
199	UD52	152+38	150+21	SR 32	C	EX UD		217					1						
200	UD15	158+34	153+50	SR 32	C			434		5			1			2			
201	UD16	162+90	158+11	SR 32	LT	873.60	2		472	33	1		1		1	1		1	
201	UD17	162+90	158+44	SR 32	C	873.92		447		34			1		1	1	2		1
201	UD18	162+90	159+33	SR 32	LT			358		5			1			2			
201	UD19	162+90	159+73	SR 32	C			317		9			1			1			
202	UD20	163+10	173+67	SR 32	LT	867.23	2		1050	40	1		1		2	1		1	
202	UD21	163+10	171+91	SR 32	LT			881					1						
202	UD22	163+10	173+47	SR 32	C	866.58		1033		14			1			1		1	
202	UD23	163+10	173+43	SR 32	C			1033		11			1				2		
203	UD24	173+80	174+90	SR 32	LT	EX UD			110				1						
203	UD25	173+57	183+21	SR 32	C			964		11			1				2		
204	UD26	175+46	183+25	SR 32	C	858.53		757		14			*	2		1		1	
205	UD27	183+35	184+00	SR 32	C	857.53		59		19			1			1		1	
205	UD28	183+35	183+94	SR 32	C			59					1						
205	UD29	184+10	186+00	SR 32	C	855.70		184		19			1			1		1	
205	UD30	184+10	185+94	SR 32	C			184		11			1				2		1
SUBTOTAL THIS SHEET							4	11705	3743	530	2		28	3	9	22	14	9	3
TOTALS CARRIED TO UNDERDRAIN SUBSUMMARY							4	11705	3743	530	2								

CALCULATED MHT CHECKED WAA

UNDERDRAIN ESTIMATED QUANTITIES

CLE-32-2.65 (PHASE 7)

...\1039560S002.dgn 11/4/2021 10:06:08 PM mswhitt

...\303.207\103956_GP702.dgn 11/4/2021 10:07:10 PM mswhitt

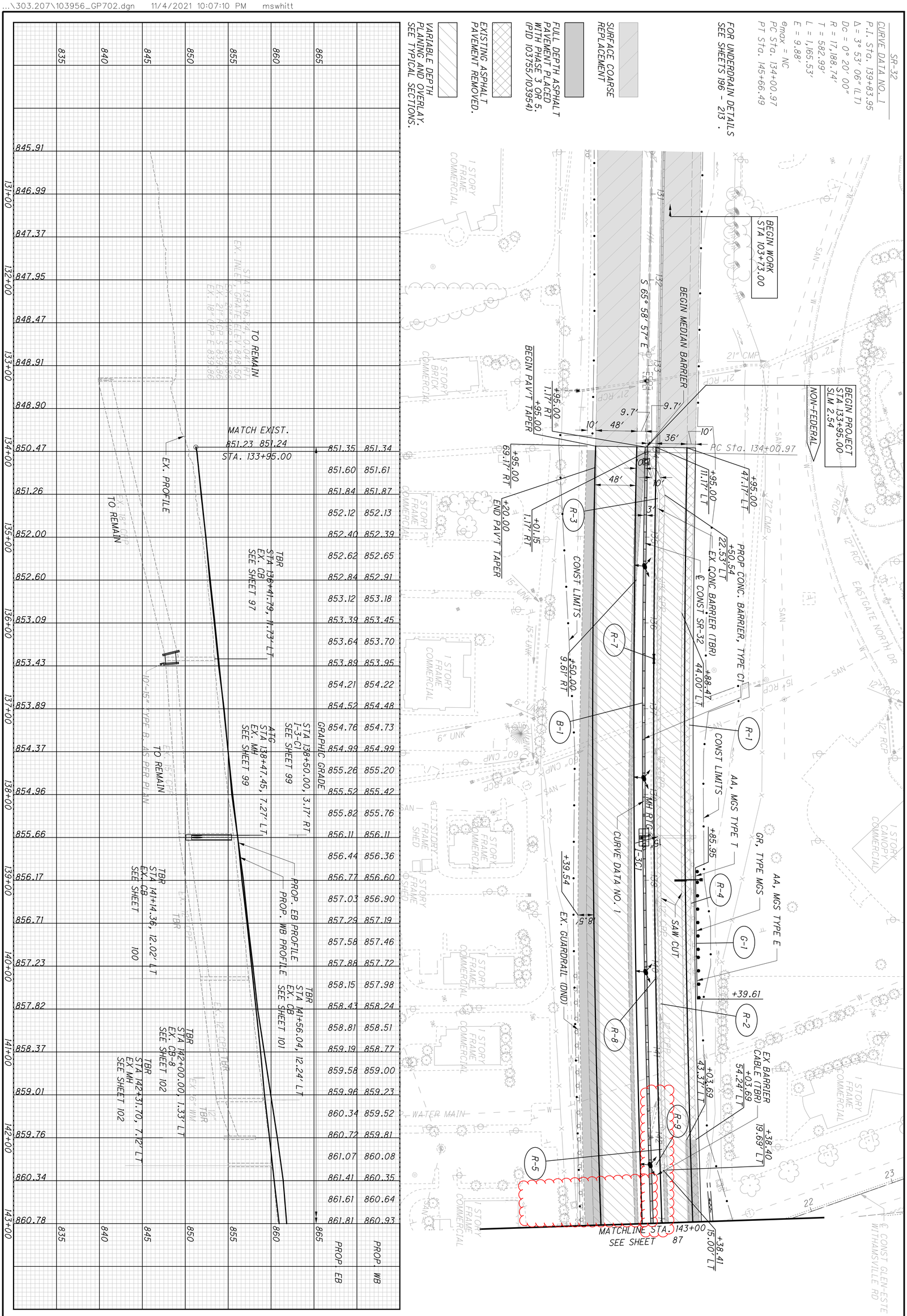

86 / 316	CLE-32-2.65 (PHASE 7)	PLAN AND PROFILE - SR-32 STA. 130+50 TO STA 143+00	CALCULATED GAH / CHECKED WAA / HORIZONTAL SCALE IN FEET

SR-32

CURVE DATA NO. 1
P.I. Sta. 139+83.95
Δ = 3° 53′ 06″ (LT)
Dc = 0° 20′ 00″
R = 17,188.74′
T = 582.99′
L = 1,165.53′
E = 9.88′
e_{max} = NC
PC Sta. 134+00.97
PT Sta. 145+66.49

FULL DEPTH ASPHALT PAVEMENT PLACED WITH PHASE 3 OR 5. (PID 103755/103954)

EXISTING ASPHALT PAVEMENT REMOVED.

STA 143+50.93 ℄ CONST SR-32 = STA 20+04.74 ℄ CONST GLEN ESTE-WITHAMSVILLE RD

FOR UNDERDRAIN DETAILS SEE SHEETS 196 - 213 .

VARIABLE DEPTH PLANING AND OVERLAY. SEE TYPICAL SECTIONS.

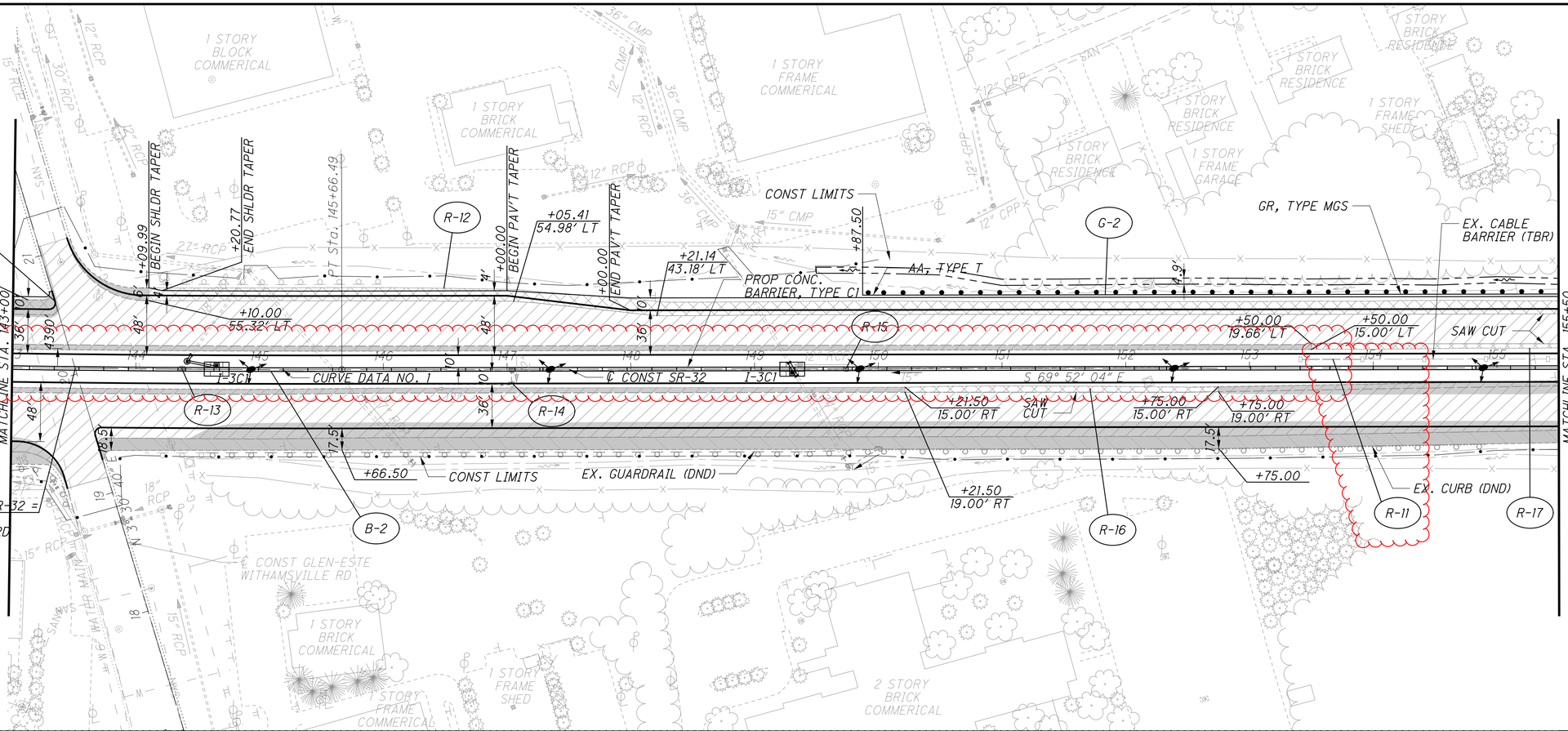

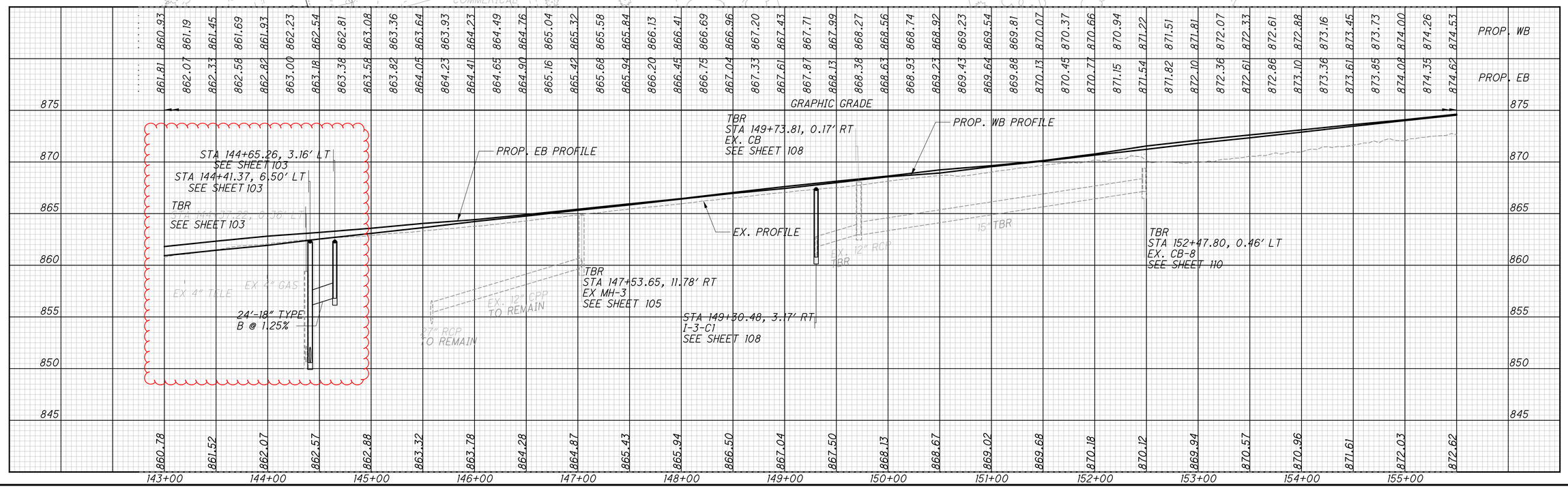

HORIZONTAL SCALE IN FEET
0 25 50 100

CALCULATED GAH CHECKED WAA

PLAN AND PROFILE - SR-32 STA. 143+00 TO STA. 155+50

CLE-32.265 (PHASE 7)

...\303.207\103956_GP703.dgn 11/5/2021 11:06:25 AM mswhitt

SURFACE COARSE REPLACEMENT

FULL DEPTH ASPHALT PAVEMENT PLACED WITH PHASE 3 OR 5. (PID 103755/103954)

EXISTING ASPHALT PAVEMENT REMOVED.

VARIABLE DEPTH PLANING AND OVERLAY. SEE TYPICAL SECTIONS.

FOR UNDERDRAIN DETAILS SEE SHEETS 196 - 213 .

GR, TYPE MGS
+52.30 18.75' LT
+12.77 47.50' LT
HW-2.1 OR 2.2
R-20
R-21
R-22
R-24
R-12
R-27
R-17
G-2
R-23
R-25
B-3
R-11
+12.80 43.57' LT
+32.74 43.62' LT
+32.74 47.50' LT
+03.13
+00.00 7.50' RT
+00.00 57.50' RT
+52.28 15.75' LT
+66.43 18.89' LT
+66.43 15.89' LT
AA, TYPE E
SAW CUT
S 69° 52' 04" E
PROP CONC. BARRIER, TYPE C1
℄ CONST SR-32
CONST LIMITS
PROP. FENCE TYPE CL
F-1
EX CABLE BARRIER (TBR)
R-26
PRESENCE OF UNDERGROUND ELECTRIC IS UNCONFIRMED. CONTRACTOR SHALL TAKE CAUTION AND FIELD VERIFY PRIOR TO PERFORMING WORK IN THIS AREA.
MATCHLINE STA. 155+50 SEE SHEET 87
MATCHLINE STA. 168+50 SEE SHEET 89
EQUATION: Sta 158+00.00 AH = Sta 157+50.00 BK
POT1 Sta. 158+00.00
I-3C1
36' 10' 10' 10' 36'
9' 4'

PROP. EB PROFILE
PROP. WB PROFILE
EX. PROFILE
GRAPHIC GRADE
STA 158+44.00 R 2, 3.17' RT
I-3-C1
SEE SHEET 114
TBR
STA 160+50.00 R 2, 0.31' LT
EX CB-8
SEE SHEET 115
TBR
STA 159+73.04 R 2, 1.17' RT
EX. MH
SEE SHEET 115
EX. 6" WM
12" TBR

PROP. WB
874.81 875.08 875.35 875.62 875.88 876.13 876.39 876.65 876.90 877.15 877.33 877.50 877.66 877.82 877.95 878.09 878.16 878.24 878.35 878.47 878.54 878.61 878.67 878.74 878.75 878.76 878.77 878.78 878.77 878.76 878.67 878.58 878.52 878.45 878.36 878.26 878.12 877.98 877.84 877.70 877.58 877.45 877.25 877.06 876.83 876.60 876.37 876.13 875.92 875.70
PROP. EB
874.86 875.10 875.36 875.62 875.88 876.13 876.39 876.65
885 880 875 870 865 860 855
873.33 874.27 875.04 875.73 876.42 877.14 877.59 876.63 876.79 876.92 877.10 877.30 877.37 877.48 877.30 877.19 877.01 876.67 876.25 876.16 875.57 875.26 874.74 874.34 873.65
156+00 157+00 158+00 159+00 160+00 161+00 162+00 163+00 164+00 165+00 166+00 167+00 168+00

HORIZONTAL SCALE IN FEET
0 25 50 100
CALCULATED GAH CHECKED WAA

PLAN AND PROFILE - SR-32
STA. 155+50 TO STA 168+50

CLE-32-2.65
(PHASE 7)

88
316

...\303.207\103956_GP704.dgn 11/4/2021 10:07:18 PM mswhitt

SURFACE COARSE REPLACEMENT

FULL DEPTH ASPHALT PAVEMENT PLACED WITH PHASE 3 OR 5. (PID 103755/103954)

EXISTING ASPHALT PAVEMENT REMOVED.

VARIABLE DEPTH PLANING AND OVERLAY. SEE TYPICAL SECTIONS.

FOR UNDERDRAIN DETAILS SEE SHEETS 196 - 213 .

PRESENCE OF UNDERGROUND ELECTRIC IS UNCONFIRMED. CONTRACTOR SHALL TAKE CAUTION AND FIELD VERIFY PRIOR TO PERFORMING WORK IN THIS AREA.

SEE SHEET 88 MATCHLINE STA. 168+50

MATCHLINE STA. 181+00 SEE SHEET 90

PROP. FENCE TYPE CL

R-26 R-27 R-12 R-11 R-25 R-31 R-32 R-30

CONST LIMITS

GR, TYPE MGS

F-1

HW-2.1 OR 2.2

24" CMP

42" UNK

AA, TYPE T

AA, TYPE E

G-3

B-4

+90.17 BEGIN RAMP TAPER

+58.11

+90.25 43.43' LT

+90.25 47.50' LT

+37.50

SAW CUT

24" TYP.

+90.25

+90.20 43.50' LT

+90.41

S 69° 52' 04" E

I-3C1

EX CABLE BARRIER (TBR)

+84.34 20.45' LT

+84.34 16.77' LT

+64.35 15.93' LT

+64.36 19.79' LT

℄ CONST SR-32

PROP CONC. BARRIER, TYPE C1

169 170 171 172 173 174 175 176 177 178 179 180

4.9' 10' 10' 36' 4' 6' 2" 18" 24" 16' 8'

5' UNK

12" PVC

1 STORY FRAME COMMERICAL

1 STORY FRAME COMMERICAL

GRAPHIC GRADE

PROP. PROFILE

EX. PROFILE

STA 173+47.27 R 2, 3.17' RT
I-3-C1
SEE SHEET 124

TBR
STA 173+50.00 R 2, 2.18' LT
EX. CB-8A
SEE SHEET 124

875.70 875.52 875.34 875.08 874.81 874.61 874.40 874.19 873.98 873.74 873.51 873.28 873.06 872.84 872.62 872.41 872.19 871.95 871.71 871.53 871.35 871.12 870.89 870.67 870.46 870.22 869.97 869.81 869.65 869.42 869.19 868.98 868.76 868.55 868.33 868.11 867.88 867.67 867.46 867.25 867.03 866.81 866.59 866.35 866.11 865.91 865.71 865.50 865.28 865.05 864.82

875 870 865 860 855 850 845

873.65 873.32 872.92 872.34 871.93 871.48 871.04 870.74 870.02 869.82 868.94 869.79 870.29 869.62 868.05 867.51 866.88 866.42 865.99 865.65 865.13 864.51 864.30 863.91 863.36 862.95

169+00 170+00 171+00 172+00 173+00 174+00 175+00 176+00 177+00 178+00 179+00 180+00 181+00

HORIZONTAL SCALE IN FEET
0 25 50 100

CALCULATED GAH CHECKED WAA

PLAN AND PROFILE - SR-32 STA. 168+50 TO STA. 181+00

CLE-32-2.65 (PHASE 7)

89 316

...\303.207\103956_GP705.dgn 11/4/2021 10:07:26 PM mswhitt

RAMP N

CURVE DATA NO. 5
P.I. Sta. 186+38.63
Δ = 1° 39′ 11″ (LT)
Dc = 0° 25′ 00″
R = 13,750.99′
T = 198.38′
L = 396.74′
E = 1.43′
e_{max} = 0.016
PC Sta. 184+40.25
PT Sta. 188+36.99

SURFACE COARSE REPLACEMENT

FULL DEPTH ASPHALT PAVEMENT PLACED WITH PHASE 3 OR 5. (PID 103755/103954)

EXISTING ASPHALT PAVEMENT REMOVED.

VARIABLE DEPTH PLANING AND OVERLAY. SEE TYPICAL SECTIONS.

FOR UNDERDRAIN DETAILS SEE SHEETS 196 - 213 .

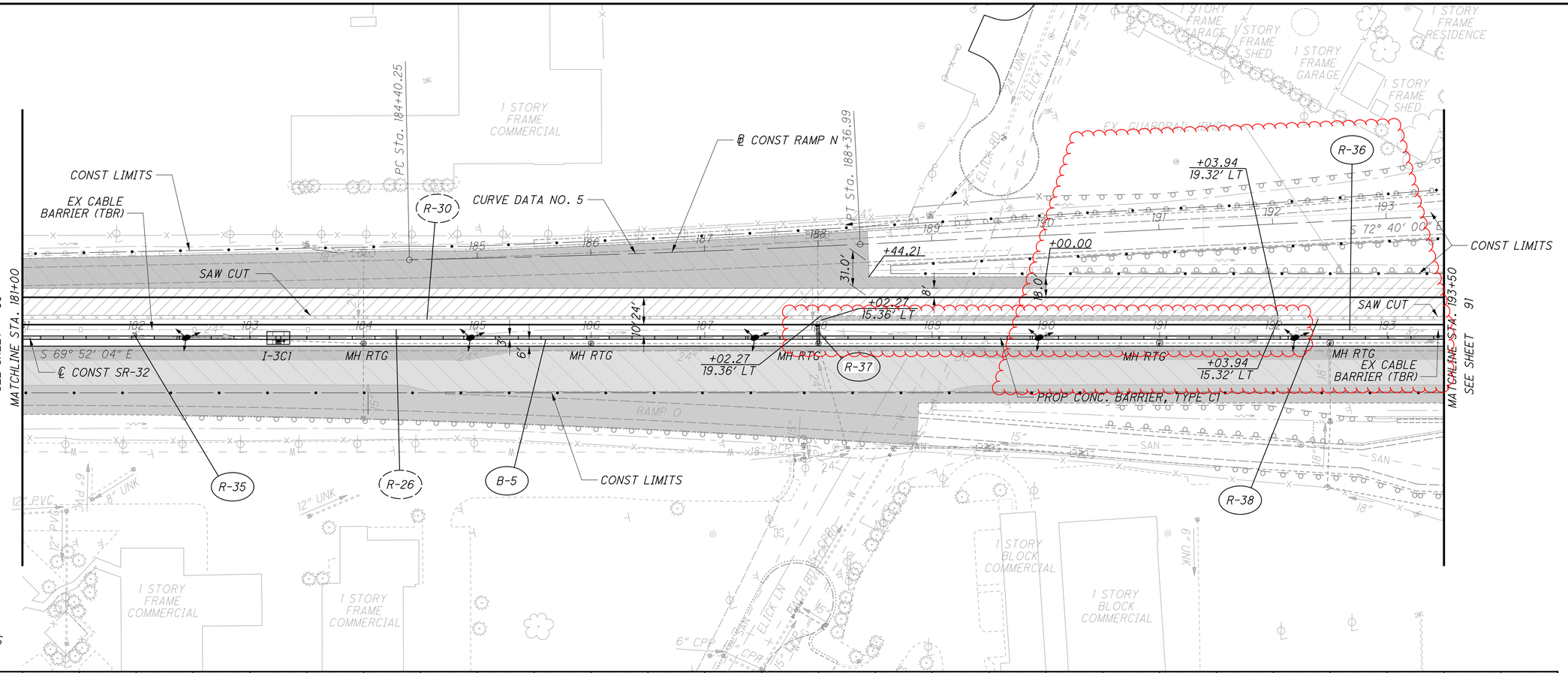

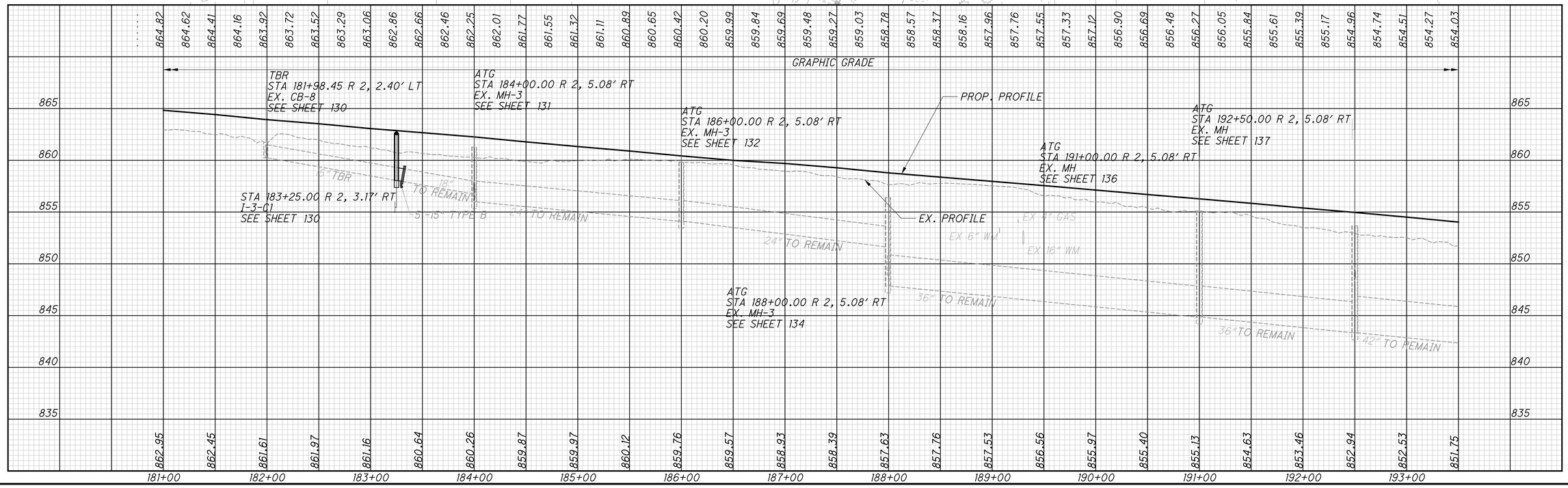

HORIZONTAL SCALE IN FEET
0 25 50 100

CALCULATED GAH
CHECKED WAA

PLAN AND PROFILE - SR-32 STA. 181+00 TO STA. 193+50

CLE-32-2.65 (PHASE 7)

...\303.207\103956_GP706.dgn 11/4/2021 10:07:29 PM mswhitt

SURFACE COARSE REPLACEMENT

FULL DEPTH ASPHALT PAVEMENT PLACED WITH PHASE 3 OR 5. (PID 103755/103954)

EXISTING ASPHALT PAVEMENT REMOVED.

VARIABLE DEPTH PLANING AND OVERLAY. SEE TYPICAL SECTIONS.

FOR UNDERDRAIN DETAILS SEE SHEETS 196 - 213 .

SEE SHEET 92
MATCHLINE STA. 233+00

R-50 R-38 R-52 R-54 R-51 R-56 I-1 R-55 B-9

+19.92 BEGIN SHLDR TAPER
+40.57 BEGIN NOISE BARRIER
GR, TYPE MGS
G-4
+09.98
AA, MGS TYPE F
+47.17 END SHLDR TAPER
+00.00 TIE INTO EXISTING
245+47.26 END NOISE WALL
PROP NOISE BARRIER
CONST LIMITS
END WORK STA 251+50.00
9.3'
24.7'
17.1'
9.0'
10.5'
SAW CUT
15" TYPE B
10.24'
I-3-C1
+95.57 18.70' LT
+95.57 15.39' LT
+00.02 BEGIN SHLDR TAPER
6'
3'
+21.68 14.74' LT
+21.68 19.05' LT
+00.00 19.56' LT
PROP CONC. BARRIER, TYPE C1
END PROJECT STA 241+00.00 SLM 4.26
NON-FEDERAL
CONST LIMITS
IA, TYPE 2
50'L x 30'W DITCH EROSION PROTECTION MAT TYPE A
EX. CABLE BARRIER (TBR)
℄ CONST SR-32
S 87° 51' 49" E
FOR PROP NOISE WALL PLAN SEE SHEETS 268 - 269 .

1 STORY BRICK COMMERCIAL
1 STORY FRAME RESIDENCE
STORY FRAME SHED
STORY BLOCK RESIDENCE
1 STORY FRAME COMMERCIAL
1 STORY CANOPY CCOMMERCIAL
OLD 74
12" RCP
12" CMP
15" RCP
18" RCP
12" UNK
SAN

GRAPHIC GRADE

TBR
STA 235+00.00 R 3, 8.23' LT
EX. CB-8
SEE SHEET 161

TBR
STA 235+34.91 R 3, 5.15' LT
EX. MH
SEE SHEET 161

STA 236+00.00 R 3, 2.75' RT
I-3-C1
SEE SHEET 162

PROP. PROFILE
EX. PROFILE
MATCH EXIST. 824.65 STA. 241+00.00
15" TBR
EX 4" GAS
EX 8" WM
EX 4" TELE

837.28 837.19 837.10 836.96 836.82 836.65 836.48 836.23 835.99 835.70 835.41 835.10 834.78 834.43 834.08 833.67 833.25 832.80 832.34 831.82 831.30 830.80 830.29 829.73 829.16 828.62 828.07 827.52 826.97 826.45 825.93 825.29 824.65

835.77 835.56 835.40 835.25 835.06 834.73 834.03 833.39 831.86 830.82 829.73 828.04 827.40 826.47 825.62 824.27 823.18 822.09 821.16 820.25 819.23 818.40 817.39 816.20 815.44 814.35

840 835 830 825 820 815 810

850 840 830 820 810 800 790

233+00 234+00 235+00 236+00 237+00 238+00 239+00 240+00 241+00 242+00 243+00 244+00 245+00

HORIZONTAL SCALE IN FEET
0 25 50 100

CALCULATED GAH CHECKED WAA

PLAN AND PROFILE
STA 233+00 TO STA 241+00

CLE-32-2.65
(PHASE 7)

93
316

\303.207\103956_GP709.dgn 11/4/2021 10:07:54 PM mswhitt

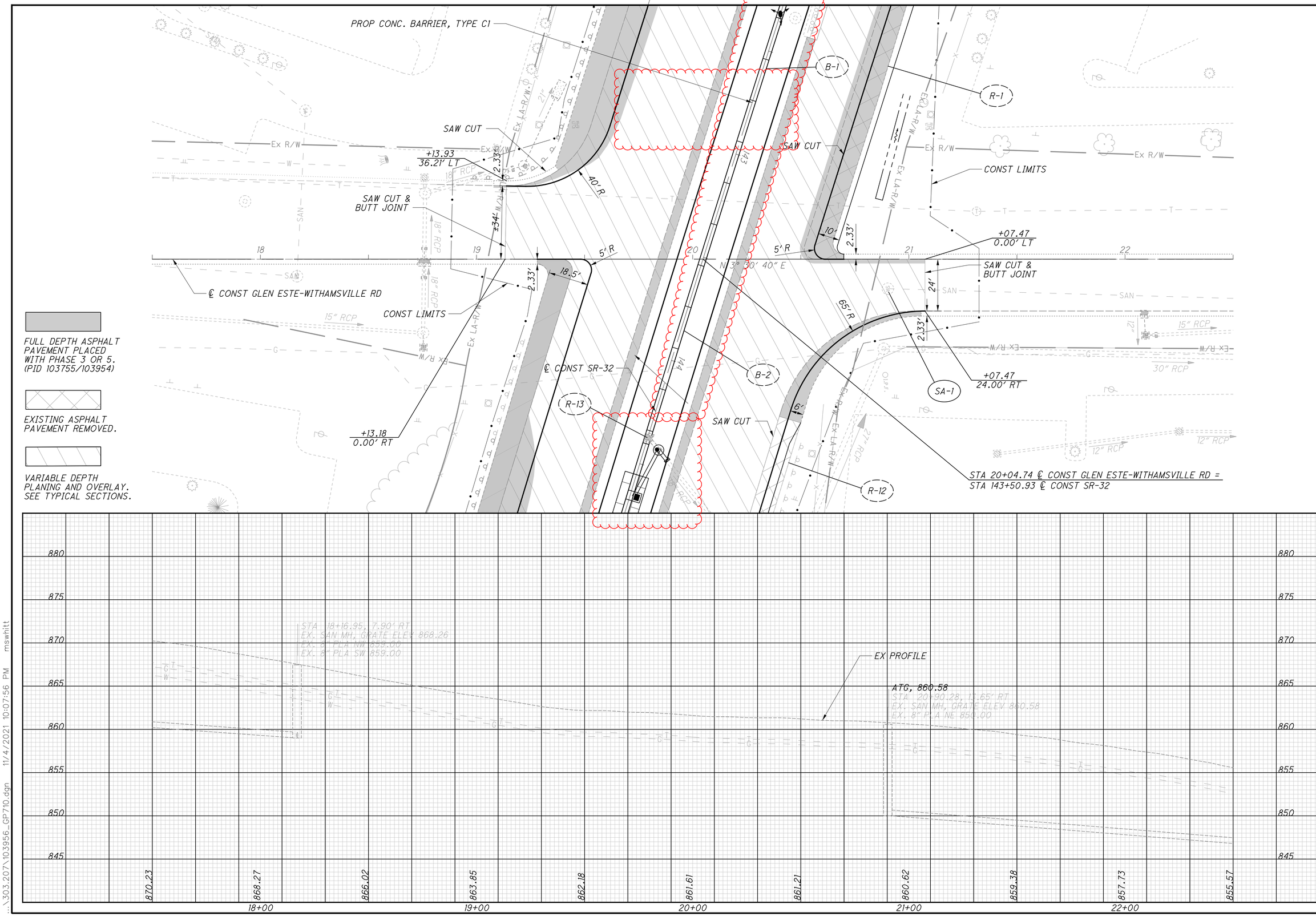

HORIZONTAL SCALE IN FEET
0 10 20 40

CALCULATED GAH
CHECKED WAA

PLAN AND PROFILE - GLEN ESTE-WITHAMSVILLE RD-STA 17+50 TO STA 22+50

CLE-32-2.65 (PHASE 7)

...\303.207\103956_GP710.dgn 11/4/2021 10:07:56 PM mswhitt

SEEDING	
END WIDTH	SQ. YDS.
11	32
0	0
0	72
26	104

END AREA	
CUT	FILL
26	3
18	2
17	2
52	2

VOLUME	
CUT	FILL
40	4
32	3
64	4
136	11

CALCULATED GAH
CHECKED WAA

STA 144+41.37, 6.50' LT
MH-3, RIM ELEV 862.29
18" (N) 850.58
18" (E) 856.50

STA 144+65.26, 3.16' LT
I-3-C1, GRATE ELEV 862.30
18" (NW) 856.80
6" UD (E) 857.80
TBR

STA 144+57.22, 0.36' LT
EX. CB-8, GRATE ELEV 862.31
18" (N) 850.66

EX R/W

12:1

TO REMAIN
27" RCP

TO REMAIN
18" RCP

862.54
144+50.00
861.96

5'-18"
TYPE B

863.18
144+50.00
862.02

EX 4" GAS

861.93
144+00.00
861.46

862.82
144+00.00
861.62

STA 143+38.41, 85.11' LT
EX. SAN MH, GRATE ELEV 860.58'
8" PLA NE 850.00

TO REMAIN
27" RCP

STA 143+63.62, 92.18' LT
EX. MH, GRATE ELEV 860.21'
27" RCP SE 848.52
30" RCP N 848.52

TO REMAIN
30" RCP

861.45
143+50.00
860.90

862.33
143+50.00
861.13

STA. 143+00.00

STA. 143+00.00

875 870 865 860 855 850

110 100 90 80 70 60 50 40 30 20 10 0 10

CROSS SECTIONS SR-32 LT
STA. 143+50.00 TO STA. 144+50.00

CLE-32-2.65
(PHASE 7)

103
316

..\303.207\103956_XS701L_1.dgn 11/4/2021 10:11:11 PM mswhitt

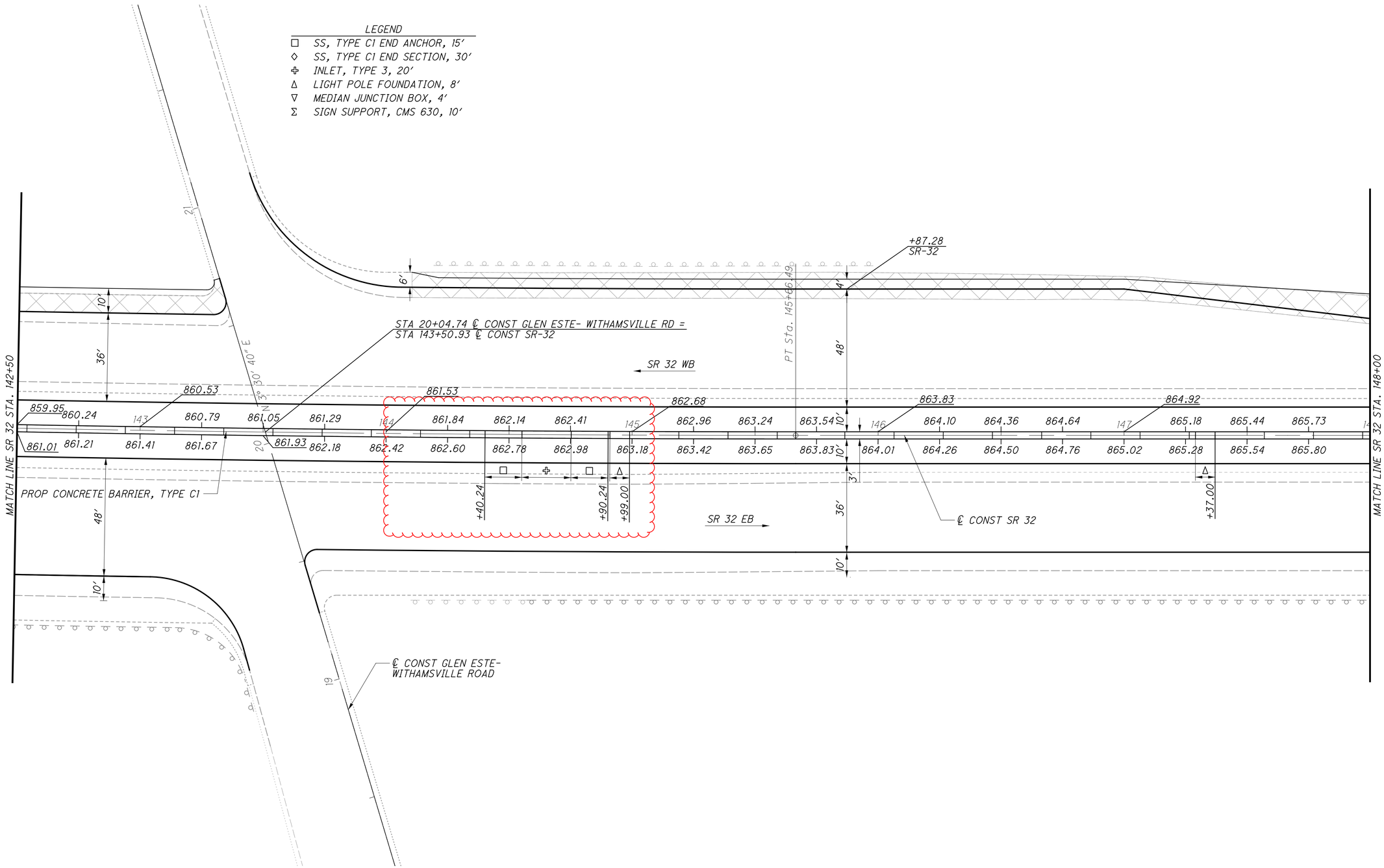

\303.207\103956_GR703.dgn 11/5/2021 11:07:07 AM mswhitt

CALCULATED NLD CHECKED GAH

HORIZONTAL SCALE IN FEET 0 10 20 40

MEDIAN BARRIER DETAILS - SR-32

STA 142+50.00 TO STA 148+00.00

CLE-32-2.65 (PHASE 7)

180
316

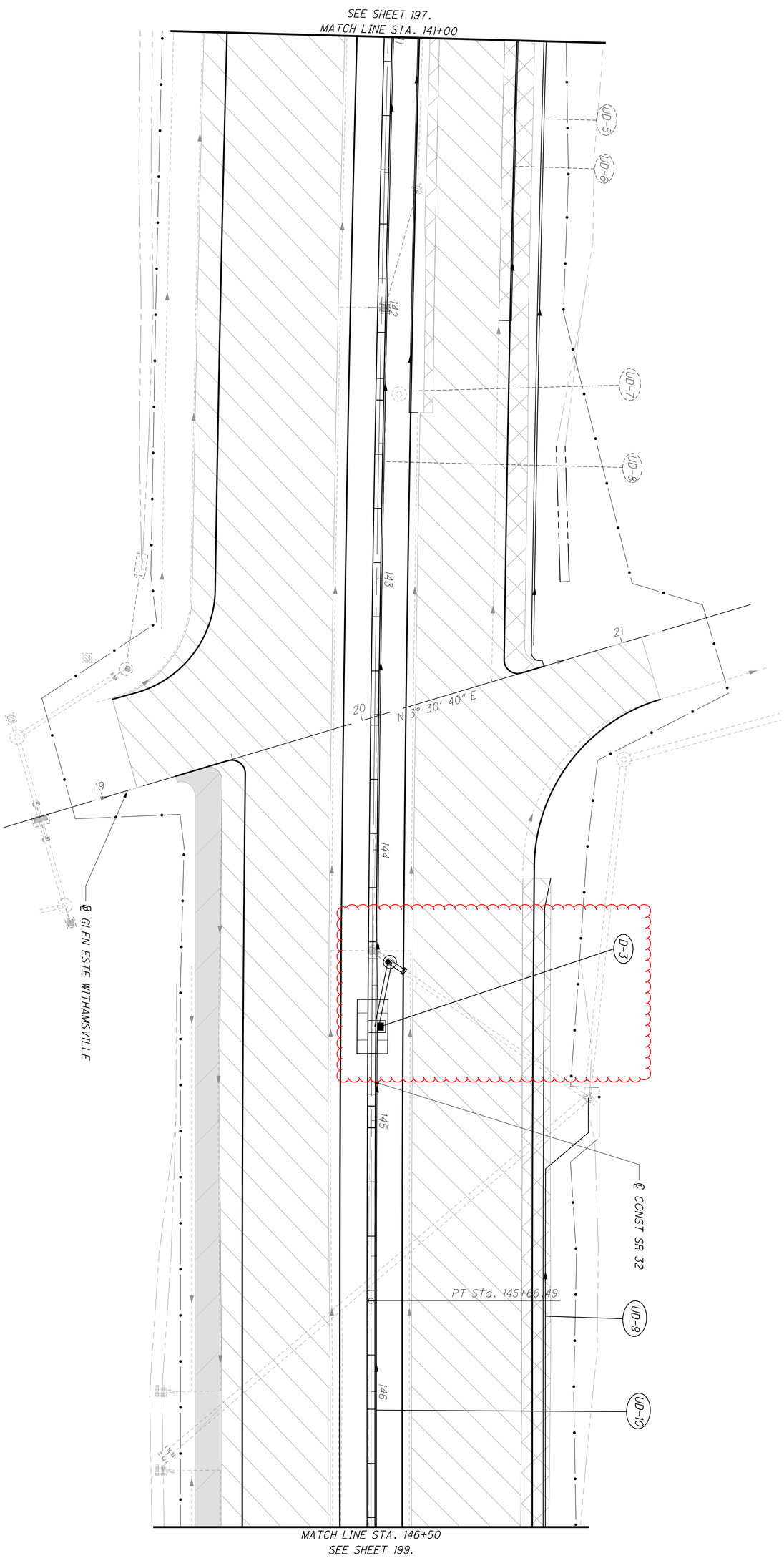

CLE-32-2.65
(PHASE 7)

DRAINAGE AND UNDERDRAIN PLAN - SR-32
STA. 141+00 TO STA. 146+50

CALCULATED MHT
CHECKED WAA

0 10 20 40
HORIZONTAL SCALE IN FEET

REFERENCE NO.	SHEET NO.	SIDE	ROADWAY	STATION TO STATION		625 CONNECTION, FUSED PULL APART EACH	625 CONNECTION, UNFUSED BOLTED EACH	625 CONNECTION, UNFUSED PERMANENT EACH	625 LIGHT POLE, LOW MAST, ALM50 EACH	625 MEDIAN LIGHT POLE FOUNDATION, 10' DEEP EACH		625 NO. 2 AWG 2400 VOLT DISTRIBUTION CABLE FT	625 NO. 10 POLE AND BRACKET CABLE FT	625 CONDUIT, 3", 725.051 FT	625 CONDUIT, JACKED OR DRILLED, 725.04, 3" FT	625 LUMINAIRE, LOW MAST, SOLID STATE (LED), AS PER PLAN, SYMMETRIC, 480 VOLT EACH		625 TRENCH FT	625 MEDIAN JUNCTION BOX EACH	625 PULL BOX, 725.08, 24" EACH	625 GROUND ROD EACH	625 POWER SERVICE, AS PER PLAN EACH		625 UNDERGROUND WARNING/MARKING TAPE FT	625 DISCONNECT CIRCUIT EACH		
L1	255	℄	SR 32	134+12																							
L2	255	℄	SR 32	135+34	167+79	2			1	1			118			1				1		1					
	255	℄	SR 32	135+34	137+81							771															
L3	255	℄	SR 32	137+81		2			1	1			118			1						1					
	255	℄	SR 32	137+81	140+07							708															
L4	255	℄	SR 32	140+07		2			1	1			118			1						1					
	255	℄	SR 32	140+07	142+32							705															
L5	255	℄	SR 32	142+32		2			1	1			118			1						1					
	255	℄	SR 32	142+32	144+93							813															
L6	256	℄	SR 32	144+93		2			1	1			118			1						1					
	256	℄	SR 32	144+93	147+35							756															
L7	256	℄	SR 32	147+35		2			1	1			118			1						1					
	256	℄	SR 32	147+35	149+85							780															
L8	256	℄	SR 32	149+85		2			1	1			118			1						1					
	256	℄	SR 32	149+85	152+39							792															
L9	256	℄	SR 32	152+39		2			1	1			118			1						1					
	256	℄	SR 32	152+39	154+89							780															
L10	256	℄	SR 32	154+89		2			1	1			118			1						1					
	256	℄	SR 32	154+89	157+39							780															
L11	257	℄	SR 32	157+39		2			1	1			118			1						1					
	257	℄	SR 32	157+39	159+64							705															
L12	257	℄	SR 32	159+64			6													1		1					
L13	257	℄	SR 32	159+64	159+64							492			72												
L14	257	℄	SR 32	159+64				6													1						
L15	257	℄	SR 32	159+64	159+70							132		12				6							6		
L16	257	℄	SR 32	159+70																			1				
L12-L17	257	℄	SR 32	159+64	160+39							255															
L17	257	℄	SR 32	160+39		2			1	1			118			1						1					
	257	℄	SR 32	160+39	162+84																						
L18	257	℄	SR 32	162+84		2			1	1			118			1						1					
	257	℄	SR 32	162+84	165+39																						
L19	257	℄	SR 32	165+39		2			1	1			118			1						1					
	257	℄	SR 32	165+39	167+79																						
L20	257	℄	SR 32	167+79		2			1	1			118			1						1					
	257	℄	SR 32	167+79																							
TOTALS CARRIED TO SHEET 251						28	6	6	14	14		8469	1652	12	72	14		6	2	1	16	1		6			

CALCULATED

CHECKED

ESTIMATED QUANTITIES

LIGHTING

CLE-32-2.65
(PHASE 7)

252
316

...\103956_LQ701.dgn 11/5/2021 11:08:42 AM mswhitt

LIGHTING PLAN NOTES (SR 32)

1. FOR LIGHTING LEGEND, SEE SHEET 255.
2. MEDIAN CONCRETE BARRIER SHALL HAVE TWO (2) 4-INCH RACEWAYS THROUGHOUT ITS LIMITS, PAYMENT INCIDENTAL TO BARRIER. RACEWAYS WHICH WILL NOT CONTAIN CABLES SHALL INCLUDE A PULL WIRE PER C&MS 625.12.
3. LOW MAST LIGHT POLES SHALL BE MOUNTED ATOP MEDIAN CONCRETE BARRIER. SEE ODOT SCD HL-20.13.
4. ALL MEDIAN JUNCTION BOXES EITHER IN MEDIAN POLE FOUNDATION OR STAND-ALONE, SHALL BE ON SOUTH FACE OF MEDIAN CONCRETE BARRIER.
5. ALL STATIONS AND OFFSETS ARE APPROXIMATE AND REFERENCED FROM CENTERLINE CONSTRUCTION OF SR-32 UNLESS SPECIFIED OTHERWISE.

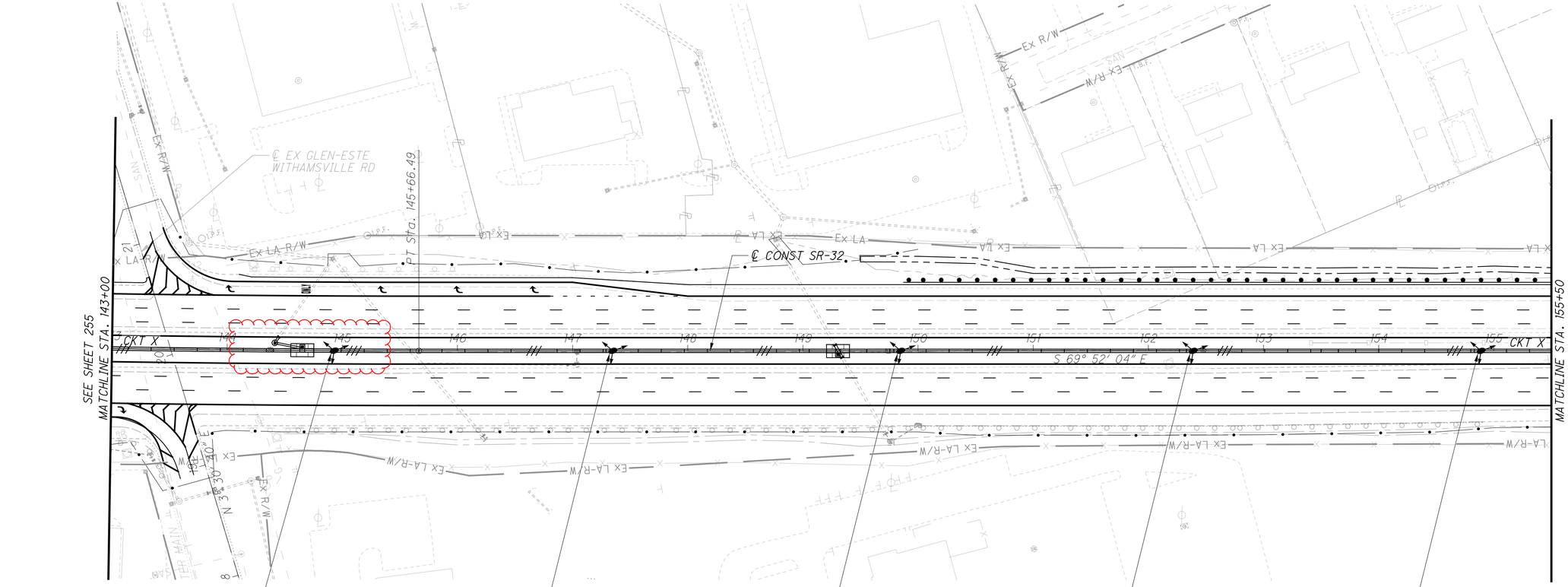

PROJECT CLE-CR55 GLEN ESTE-WITHAMSVILLE ROAD OVERPASS (PID #103958) WILL HAVE UNPERPASS LIGHTING INSTALLED FOR SR-32. THIS IS INCLUDED IN THE LIGHTING ANALYSES AND THE VOLTAGE DROP CALCULATIONS PERFORMED WITH CURRENT PROJECT.

HORIZONTAL SCALE IN FEET
0 25 50 100
CALCULATED
CHECKED

LIGHTING PLAN - SR-32
STA. 143+00 TO STA 155+50

CLE-32-2.65
(PHASE 7)

256
316

...\103956_LP703.dgn 11/5/2021 11:09:29 AM mswhitt

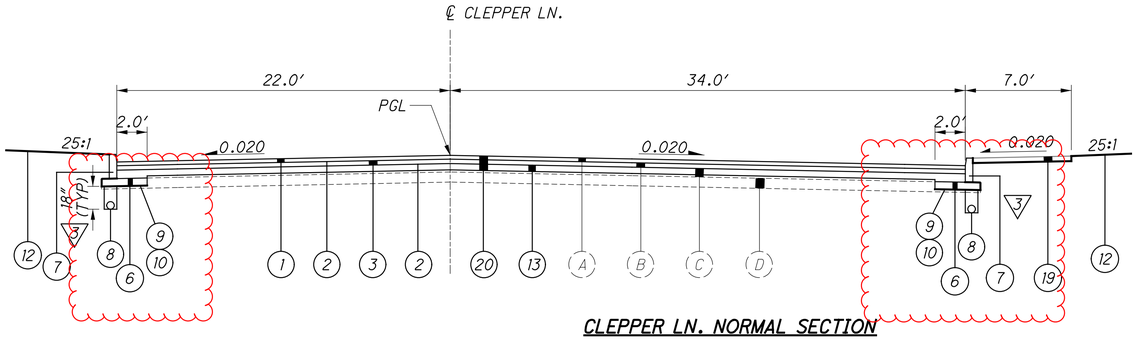

CLEPPER LN. NORMAL SECTION

SECTION APPLIES CLEPPER LN.:
STA 71+40.00 TO STA 73+27.64

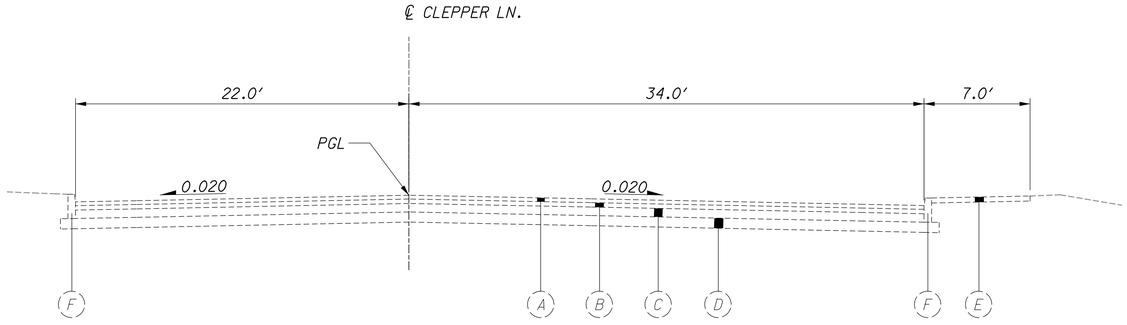

EX. CLEPPER LN. NORMAL SECTION

SECTION APPLIES CLEPPER LN.:
STA 68+67.83

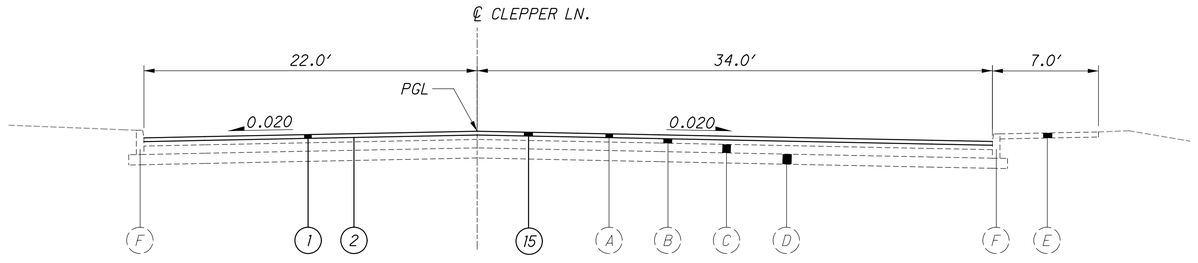

CLEPPER LN. NORMAL SECTION

SECTION APPLIES CLEPPER LN.:
STA 68+67.83 TO STA 71+40.00

▽ FOR PAVEMENT EDGE DETAILS, SEE SHEET 3

FOR LEGEND, SEE SHEET 3

...\303.20\303.204\103953GY401.dgn 11/5/2021 8:49:35 AM mswhitt

TYPICAL SECTIONS - CLEPPER LN

CLE-CR388
(PHASE 4)

SHEET NUM.													PART.	ITEM	ITEM EXT	GRAND TOTAL	UNIT	DESCRIPTION	SEE SHEET NO.
12	13	92	93	94	95	101	103						03/S>2/PV						
																		ROADWAY	
LS													LS	201	11000	LS		CLEARING AND GRUBBING	
		5											5	202	20010	5	EACH	HEADWALL REMOVED	
		9,251											9,251	202	23000	9,251	SY	PAVEMENT REMOVED	
		1,689											1,689	202	23500	1,689	SY	WEARING COURSE REMOVED	
		1,294											1,294	202	30000	1,294	SF	WALK REMOVED	
		552											552	202	32000	552	FT	CURB REMOVED	
		2,999											2,999	202	32500	2,999	FT	CURB AND GUTTER REMOVED	
		1,512											1,512	202	35100	1,512	FT	PIPE REMOVED, 24" AND UNDER	
		85											85	202	35200	85	FT	PIPE REMOVED, OVER 24"	
		326											326	202	38000	326	FT	GUARDRAIL REMOVED	
		2											2	202	58000	2	EACH	MANHOLE REMOVED	
		15											15	202	58100	15	EACH	CATCH BASIN REMOVED	
		80											80	202	75000	80	FT	FENCE REMOVED	
		1											1	202	75250	1	EACH	GATE REMOVED	
				15,125									15,125	203	10000	15,125	CY	EXCAVATION	
				10,463									10,463	203	20000	10,463	CY	EMBANKMENT	
						1,099							1,099	204	10000	1,099	SY	SUBGRADE COMPACTION	
						12							12	204	45000	12	HOUR	PROOF ROLLING	
						23,556							23,556	206	10020	23,556	SY	LIME STABILIZED SUBGRADE, 14 INCHES DEEP	
						1,264							1,264	206	10300	1,264	TON	LIME	
						23,556							23,556	206	11000	23,556	SY	CURING COAT	
			337.5										337.5	606	15050	337.5	FT	GUARDRAIL, TYPE MGS	
			100										100	606	15100	100	FT	GUARDRAIL, TYPE MGS WITH LONG POSTS	
			3										3	606	26150	3	EACH	ANCHOR ASSEMBLY, MGS TYPE E (MASH 2016)	
			3										3	606	26550	3	EACH	ANCHOR ASSEMBLY, MGS TYPE T	
			1,788										1,788	608	12000	1,788	SF	5" CONCRETE WALK	
			212										212	608	52000	212	SF	CURB RAMP	
													LS	878	25000	LS		INSPECTION AND COMPACTION TESTING OF UNBOUND MATERIALS	
																		EROSION CONTROL	
	4												4	601	21050	4	SY	TIED CONCRETE BLOCK MAT WITH TYPE 1 UNDERLAYMENT	
					28								28	601	21060	28	SY	TIED CONCRETE BLOCK MAT WITH TYPE 2 UNDERLAYMENT	
					64								64	601	32004	64	CY	ROCK CHANNEL PROTECTION, TYPE A WITH GEOTEXTILE FABRIC	
					13								13	601	32104	13	CY	ROCK CHANNEL PROTECTION, TYPE B WITH GEOTEXTILE FABRIC	
					1								1	601	32204	1	CY	ROCK CHANNEL PROTECTION, TYPE C WITH GEOTEXTILE FABRIC	
2													2	659	00100	2	EACH	SOIL ANALYSIS TEST	
1,306													1,306	659	00300	1,306	CY	TOPSOIL	
11,762													11,762	659	10000	11,762	SY	SEEDING AND MULCHING	
588													588	659	14000	588	SY	REPAIR SEEDING AND MULCHING	
588													588	659	15000	588	SY	INTER-SEEDING	
1.64													1.64	659	20000	1.64	TON	COMMERCIAL FERTILIZER	
2.43													2.43	659	31000	2.43	ACRE	LIME	
65													65	659	35000	65	MGAL	WATER	
26													26	659	40000	26	MSF	MOWING	
					185								185	670	00710	185	SY	DITCH EROSION PROTECTION MAT, TYPE A	
							LS						LS	832	15000	LS		STORM WATER POLLUTION PREVENTION PLAN	
							LS						LS	832	15002	LS		STORM WATER POLLUTION PREVENTION INSPECTIONS	
							LS						LS	832	15010	LS		STORM WATER POLLUTION PREVENTION INSPECTION SOFTWARE	
							158,166						158,166	832	30000	158,166	EACH	EROSION CONTROL	
					252								252	836	10030	252	SY	SEEDING AND EROSION CONTROL WITH TURF REINFORCING MAT, TYPE 3	

CALCULATED MSW
CHECKED WAA

GENERAL SUMMARY

CLE-CR388 (PHASE 4)

...\303.20\303.204\103953GG401.dgn 11/5/2021 8:50:35 AM mswhitt

SHEET NUM.												PART.	ITEM	ITEM EXT	GRAND TOTAL	UNIT	DESCRIPTION	SEE SHEET NO.
13	93	95	98	101	163	102						03/S>2/PV						
																	DRAINAGE	
		4.3										4.3	602	20000	4.3	CY	CONCRETE MASONRY	
		5.7										5.7	602	20001	5.7	CY	CONCRETE MASONRY, AS PER PLAN	162
100												100	605	13300	100	FT	6" UNCLASSIFIED PIPE UNDERDRAINS	
			10,017									10,017	605	14020	10,017	FT	6" BASE PIPE UNDERDRAINS WITH GEOTEXTILE FABRIC	
25												25	605	31100	25	FT	AGGREGATE DRAINS	
100												100	611	00406	100	FT	4" CONDUIT, TYPE F	
			864									864	611	00510	864	FT	6" CONDUIT, TYPE F FOR UNDERDRAIN OUTLETS	
		1,855										1,855	611	04400	1,855	FT	12" CONDUIT, TYPE B	
		145										145	611	04600	145	FT	12" CONDUIT, TYPE C	
		177										177	611	05900	177	FT	15" CONDUIT, TYPE B	
		156										156	611	06100	156	FT	15" CONDUIT, TYPE C	
		531										531	611	07400	531	FT	18" CONDUIT, TYPE B	
		41										41	611	08200	41	FT	18" CONDUIT, TYPE F, 707.05 TYPE C OR 707.21	
		146										146	611	11900	146	FT	27" CONDUIT, TYPE B	
		174										174	611	19400	174	FT	42" CONDUIT, TYPE B	
		20										20	611	98150	20	EACH	CATCH BASIN, NO. 3	
		7										7	611	98180	7	EACH	CATCH BASIN, NO. 3A	
		2										2	611	98230	2	EACH	CATCH BASIN, NO. 4	
		2										2	611	98410	2	EACH	CATCH BASIN, NO. 8	
		2										2	611	98630	2	EACH	CATCH BASIN ADJUSTED TO GRADE	
		5										5	611	99574	5	EACH	MANHOLE, NO. 3	
		132										132	611	97400	132	FT	CONDUIT, MISC.: 72" CONDUIT, TYPE A, VARIOUS MATERIALS	161
2												2	611	99710	2	EACH	PRECAST REINFORCED CONCRETE OUTLET	
																	PAVEMENT	
				1,091								1,091	254	01000	1,091	SY	PAVEMENT PLANING, ASPHALT CONCRETE, 7.25" THICK	
				4,273								4,273	302	46000	4,273	CY	ASPHALT CONCRETE BASE, PG64-22	
				4,095								4,095	304	20000	4,095	CY	AGGREGATE BASE	
				3,042								3,042	407	10000	3,042	GAL	TACK COAT	
				22								22	441	50000	22	CY	ASPHALT CONCRETE SURFACE COURSE, TYPE 1, (448), PG64-22	
				31								31	441	50300	31	CY	ASPHALT CONCRETE INTERMEDIATE COURSE, TYPE 2, (448)	
				1,054								1,054	442	10000	1,054	CY	ASPHALT CONCRETE SURFACE COURSE, 12.5 MM, TYPE A (446)	
				1,148								1,148	442	10100	1,148	CY	ASPHALT CONCRETE INTERMEDIATE COURSE, 19 MM, TYPE A (446)	
				297								297	452	12010	297	SY	8" NON-REINFORCED CONCRETE PAVEMENT, CLASS QC 1P	
	6,587											6,587	609	26000	6,587	FT	CURB, TYPE 6	
	567											567	609	98000	567	FT	CURB, MISC.: CLERMONT COUNTY CURB AND GUTTER	152
																	WATER WORK	
						2						2	602	98200	2	CY	MASONRY, MISC.:CONCRETE ENCASEMENT (CCWRD ITEM 1170)	165
						12						12	638	08706	12	EACH	8" CUTTING-IN SLEEVE	
					4	5						9	638	08712	9	EACH	16" CUTTING-IN SLEEVE	
						1						1	638	10500	1	EACH	FIRE HYDRANT REMOVED AND RESET	
						2						2	638	98000	2	EACH	WATER WORK, MISC.:8" GATE VALVE WITH VALVE BOX (CCWRD 2210)	164
						4						4	638	98000	4	EACH	WATER WORK, MISC.:16" BUTTERFLY VALVE WITH VALVE BOX (CCWRD ITEM 2210)	164
						605						605	638	98600	605	FT	WATER WORK, MISC.:8" DUCTILE IRON WATER MAIN AND DUCTILE IRON FITTINGS (CCWRD ITEM 2110)	163
					40	575						615	638	98600	615	FT	WATER WORK, MISC.:16" DUCTILE IRON WATER MAIN AND DUCTILE IRON FITTINGS (CCWRD ITEM 2110)	163

CALCULATED MSW
CHECKED WAA

GENERAL SUMMARY

CLE-CR388 (PHASE 4)

...\303.20\303.204\103953GG401.dgn 11/5/2021 8:50:36 AM mswhitt

PAV'T AREA	STATION FROM	STATION TO	SIDE	LENGTH (ALONG CURB OR EDGE LINE)	AREA (FROM CADD)	204 SUBGRADE COMPACTION	204 PROOF ROLLING	206 LIME STABILIZED SUBGRADE, 14" DEEP	206 LIME	206 CURING COAT	254 PAVEMENT PLANING, ASPHALT CONCRETE, 7.25" THICK	302 6" ASPHALT CONCRETE BASE, PG64-22	302 VARIABLE DEPTH ASPHALT CONCRETE BASE, PG64-22 (4.0"-6.8")	304 6" AGGREGATE BASE	304 8" AGGREGATE BASE	407 TACK COAT (SC) @0.06 GAL/SY	407 TACK COAT (IC) @0.06 GAL/SY	407 TACK COAT @0.09 GAL/SY	441 1-1/4" ASPHALT CONCRETE SURFACE COURSE, TYPE 1, (448), PG64-22	441 1-3/4" ASPHALT CONCRETE INTERMEDIATE COURSE, TYPE 2, (448), PG64-22	442 1-1/2" ASPHALT CONCRETE SURFACE COURSE, 12.5MM, TYPE A (446)	442 1-3/4" ASPHALT CONCRETE INTERMEDIATE COURSE, 19MM, TYPE A (446)	452 8" NON-REINFORCED CONCRETE PAVEMENT, CLASS QC1
				LF	SQ FT	SY	HR	SY	TON	SY	SY	CY	CY	CY	CY	GAL	GAL	GAL	CY	CY	CY	CY	SY
	BACH-BUXTON RD.																						
FULL DEPTH ASPH.	304+25.00	332+72.11	LT/RT		177,348.02		9.85	19,705.34	1,057.52	19,705.34		3,284.22		3,284.22		1,182.32	1,182.32				821.06	957.90	
+CURB TYPE 6	304+25.00	314+16.97	LT	1,022.54			0.09	170.42	9.15	170.42				18.94									
+CURB TYPE 6	315+65.40	330+91.40	LT	1,535.80			0.13	255.97	13.74	255.97				28.44									
+CURB TYPE 6	332+31.07	332+72.11	LT	39.09			0.003	6.52	0.35	6.52				0.72									
+CURB TYPE 6	304+25.00	314+12.53	RT	960.92			0.08	160.15	8.59	160.15				17.79									
+CURB TYPE 6	315+68.60	331+35.02	RT	1,558.75			0.13	259.79	13.94	259.79				28.87									
+CURB TYPE 6	332+43.25	332+72.11	RT	30.23			0.003	5.04	0.27	5.04				0.56									
ASHP. COMM. DRIVE	306+71.62	307+31.43	LT		1,059.85	117.76	0.06								26.17	7.07			4.09	5.72			
+ASPHALT EDGE COURSE	306+71.62	307+31.43	LT	79.81		13.30	0.01								1.64					0.29			
ASHP. COMM. DRIVE	314+12.53	315+68.60	RT		3,570.32	396.70	0.20								88.16	23.80			13.77	19.28			
+CURB TYPE 6	314+12.53	315+68.60	RT	162.42		27.07	0.01																
	CLEPPER LN.																						
RESURFACING	68+67.83	71+40.00	LT/RT		15,199.09													151.99			70.37		
FULL DEPTH ASPH.	71+40.00	73+29.10	LT		112.67	12.51	0.01					2.09		2.09		0.75	0.75				0.52	0.61	
+CURB TYPE 6	71+40.00	73+29.10	LT	218.75		36.46	0.02							4.05							70.37		
FULL DEPTH ASPH.	71+40.00	73+29.63	RT		85.05	9.45	0.005					1.58		1.58		0.57	0.57				0.39	0.46	
+CURB TYPE 6	71+40.00	73+29.63	RT	210.98		35.16	0.02							3.91									
VARIABLE OVERLAY	71+40.00	73+27.64	LT/RT		9,816.22						1,090.69		519.22			65.44	65.44				45.45	53.02	
	MARIAN DR.																						
FULL DEPTH ASPH.	50+00.00	53+31.05	LT/RT		14,102.09		0.78	1,566.90	84.09	1,566.90		261.15		261.15		94.01	94.01				65.29	76.17	
+CLERMONT C&G	50+00.00	51+22.47	LT		340.29		0.02	37.81	2.03	37.81				6.30									
+CURB TYPE 6	51+22.47	53+45.34	LT	239.31			0.02	39.89	2.14	39.89				4.43									
+CLERMONT C&G	50+00.00	51+20.00	RT		303.88		0.02	33.76	1.81	33.76				5.63									
+CURB TYPE 6	51+20.00	53+06.86	RT	223.18			0.02	37.20	2.00	37.20				4.13									
FULL DEPTH ASPH.	54+01.63	55+00.00	LT/RT		4,954.82		0.28	550.54	29.55	550.54		91.76		91.76		33.03	33.03				22.94	26.76	
+CURB TYPE 6	54+14.42	54+67.94	LT	77.27			0.01	12.88	0.69	12.88				1.43									
+CLERMONT C&G	54+67.94	54+96.22	LT		61.41		0.003	6.82	0.37	6.82				1.14									
+CURB TYPE 6	53+85.85	54+89.76	RT	119.10			0.01	19.85	1.07	19.85				2.21									
+CLERMONT C&G	50+00.00	51+22.47	RT		20.41		0.001	2.27	0.12	2.27				0.38									
ASHP. COMM. DRIVE	50+56.16	51+12.48	LT		1,127.47	125.27	0.06								27.84	7.52			4.35	6.09			
+CURB TYPE 6	50+56.16	51+12.48	LT	76.50		12.75	0.01																
	ELICK LN.																						
FULL DEPTH ASPH.	54+01.63	55+00.00	LT/RT		6,098.96		0.34	677.66	36.37	677.66		112.94		112.94		40.66	40.66				28.24	32.94	
+CLERMONT C&G	54+67.94	54+96.22	LT/RT	285.87			0.004	7.50	0.40	7.50				1.25									
CONC. COMM. DRIVE	40+15.29	40+59.54	LT		2,674.49	297.17	0.15								66.04	17.83							297.17
+CONC. EDGE COURSE	40+15.29	40+59.54	LT	89.53		14.92	0.01								1.11								
SUBTOTAL THIS SHEET						1,098.53	12.33	23,556.30	1,264.19	23,556.30	1,090.69	3,753.73	519.22	3,883.91	210.95	1,473.00	1,416.79	151.99	22.21	31.39	1,054.24	1,147.86	297.17
SUBTOTAL CARRIED TO GENERAL SUMMARY						1,099	12	23,556	1,264	23,556	1,091	4,273		4,095		3,042			22	31	1,054	1,148	297

CALCULATED MSW CHECKED WAA

PAVEMENT ESTIMATED QUANTITIES

CLE-CR388 (PHASE 4)

...\303.20\303.204\103953GQ401.dgn 11/5/2021 8:51:48 AM mswhitt