SHEET NUMBER													PART.			ITEM	ITEM EXT	GRAND TOTAL	UNIT	DESCRIPTION	SEE SHEET NO.
P.25	P.26	P.27	P.28	P. 286	P. 288	P. 290	P.294	P.296	P.711	P.727	P.1015	P.1030	01/IMS	02/IMS	03/IMS						
																				ROADWAY	
LS													LS			201	11000	LS		CLEARING AND GRUBBING	P. 25
		26		192,047									192,073			202	23000	192,073	SY	PAVEMENT REMOVED	
				4,068									4,068			202	30000	4,068	SF	WALK REMOVED	
				11									11			202	30200	11	FT	STEPS REMOVED	
				16,472									16,472			202	30700	16,472	FT	CONCRETE BARRIER REMOVED	
				221									221			202	30800	221	SY	TRAFFIC ISLAND REMOVED	
				36,794									36,794			202	32000	36,794	FT	CURB REMOVED	
							7,109						7,109			202	23500	7,109	SY	WEARING COURSE REMOVED	
									2,000	8,773	383	162	11,318			202	35100	11,318	FT	PIPE REMOVED, 24" DIAMETER AND UNDER	
									500	2,129			2,629			202	35200	2,629	FT	PIPE REMOVED, OVER 24" DIAMETER	
		25		14,427									14,452			202	38000	14,452	FT	GUARDRAIL REMOVED	
				2									2			202	47800	2	EACH	IMPACT ATTENUATOR REMOVED	
									10	61	2		73			202	58000	73	EACH	MANHOLE REMOVED	
									10	135			145			202	58100	145	EACH	CATCH BASIN REMOVED	
									10	62			72			202	58200	72	EACH	INLET REMOVED	
										1			1			202	58401	1	EACH	INLET ABANDONED, AS PER PLAN	P.711
										2	4		6			202	58700	6	EACH	MANHOLE ABANDONED	
												228	228			SPECIAL	20270000	228	FT	FILL AND PLUG EXISTING CONDUIT, 12" WATER MAIN	P.1017
												281	281			SPECIAL	20270000	281	FT	FILL AND PLUG EXISTING CONDUIT, 36" WATER MAIN	P.1017
										11,791			11,791			SPECIAL	20270000	11,791	FT	FILL AND PLUG EXISTING CONDUIT, 24" AND UNDER	P.711
										7,450			7,450			SPECIAL	20270000	7,450	FT	FILL AND PLUG EXISTING CONDUIT, 27" TO 48"	P.711
										1,954			1,954			SPECIAL	20270110	1,954	FT	PIPE CLEANOUT, 24" AND UNDER	P.711
										499			499			SPECIAL	20270120	499	FT	PIPE CLEANOUT, 27" TO 48"	P.711
					23,469								23,469			202	75000	23,469	FT	FENCE REMOVED	
				329									329			202	38500	329	FT	BRIDGE RAILING REMOVED	
					3								3			202	75250	3	EACH	GATE REMOVED	
										1			1			202	98100	1	EACH	REMOVAL MISC.: MANUFACTURED SYSTEM, TYPE 1 REMOVED	P.711
				1,724									1,724			202	98200	1,724	FT	REMOVAL MISC.: RAILROAD RAILS AND TIES	P. 26
										466			466			202	98200	466	FT	REMOVAL MISC.: TRENCH DRAIN REMOVED	P.711
						152,342							152,342			203	10000	152,342	CY	EXCAVATION	
						48,841							48,841			203	20000	48,841	CY	EMBANKMENT	
		26						7,419					7,445			204	10000	7,445	SY	SUBGRADE COMPACTION	
			112										112			204	13000	112	CY	EXCAVATION OF SUBGRADE	P.28
			112										112			204	30010	112	CY	GRANULAR MATERIAL, TYPE B	P.28
							100	22					122			204	45000	122	HOUR	PROOF ROLLING	
			461										461			204	51000	461	SY	GEOGRID	P.28
							6,140	1,091					7,231			206	10500	7,231	TON	CEMENT	
							200,527	19,197					219,724			206	11000	219,724	SY	CURING COAT	
							200,527	19,197					219,724			206	15020	219,724	SY	CEMENT STABILIZED SUBGRADE, 14 INCHES DEEP	
LS													LS			206	30000	LS		MIXTURE DESIGN FOR CHEMICALLY STABILIZED SOILS	
	2.1												2.1			209	15051	2.1	MILE	RESHAPING UNDER GUARDRAIL, AS PER PLAN	P. 26
		25			11,100								11,125			606	15050	11,125	FT	GUARDRAIL, TYPE MGS	
					16								16			606	26100	16	EACH	ANCHOR ASSEMBLY, TYPE E	
					11								11			606	26500	11	EACH	ANCHOR ASSEMBLY, TYPE T	
					24								24			606	35002	24	EACH	MGS BRIDGE TERMINAL ASSEMBLY, TYPE 1	
					2								2			606	60022	2	EACH	IMPACT ATTENUATOR, TYPE 2 (UNIDIRECTIONAL) (65MPH/34")	
					21,110								21,110			607	23000	21,110	FT	FENCE, TYPE CLT	
					992								992			607	23001	992	FT	FENCE, TYPE CLT, AS PER PLAN, A	P. 27
					2,213								2,213			607	23001	2,213	FT	FENCE, TYPE CLT, AS PER PLAN, B	P. 27
					1,621								1,621			607	23001	1,621	FT	FENCE, TYPE CLT, AS PER PLAN, C	P. 27
					3								3			607	61200	3	EACH	GATE, TYPE CLT	
					24,339								24,339			607	70000	24,339	FT	FENCELINE SEEDING AND MULCHING	
				1,027									1,027			608	10000	1,027	SF	4" CONCRETE WALK	
				3,457									3,457			608	52000	3,457	SF	CURB RAMP	
					2,040								2,040			622	10100	2,040	FT	CONCRETE BARRIER, SINGLE SLOPE, TYPE B1	

GENERAL SUMMARY

DESIGN AGENCY
HNTB

DESIGNER
ASEP

REVIEWER
KKP 05/01/26

PROJECT ID
105743

SHEET P.275 TOTAL P.1274

CUY-77-11.41 - PART 1

MODEL: Unnamed Plan - Plan 1 [Sheet] PAPERSIZE: 34x22 (in.) DATE: 11/16/2026 TIME: 4:45:50 PM PLTDRV: OHDOT_PDF.pltcfg PENTBL: OHDOT_Pen.tbl USER: kperkins@hntb.com WORKSPACE: OHDOTCEv02 WORKSET: 105743 PRODUCT: OpenRoadsDesigner 24.00.03.05
pw:\\trc-pw.bentley.com:trc-pw-01\Documents\5 - Projects - External\Ohio Department of Transportation (ODOT)\301525 - CUY-77-11.21\105743\400-Engineering\Roadway\Sheets\105743_GG001.dgn

SHEET NUMBER											PART.			ITEM	ITEM EXT	GRAND TOTAL	UNIT	DESCRIPTION	SEE SHEET NO.
P.744	P.745										01/IMS	02/IMS	03/IMS						
																		DRAINAGE (CONT.)	
3											3			611	05901	3	FT	15" CONDUIT, TYPE B, AS PER PLAN 5	P.712
739											739			611	06101	739	FT	15" CONDUIT, TYPE C, AS PER PLAN 1	P.711
283											283			611	06101	283	FT	15" CONDUIT, TYPE C, AS PER PLAN 1, 706.02	P.711
16											16			611	06101	16	FT	15" CONDUIT, TYPE C, AS PER PLAN 1, 707.65	P.711
26											26			611	06101	26	FT	15" CONDUIT, TYPE C, AS PER PLAN 3	P.712
226											226			611	06101	226	FT	15" CONDUIT, TYPE C, AS PER PLAN4	P.712
1,815											1,815			611	07401	1,815	FT	18" CONDUIT, TYPE B, AS PER PLAN1	P.711
6											6			611	07401	6	FT	18" CONDUIT, TYPE B, AS PER PLAN1, 706.02	P.711
10											10			611	07401	10	FT	18" CONDUIT, TYPE B, AS PER PLAN1, 707.65	P.711
458											458			611	07401	458	FT	18" CONDUIT, TYPE B, AS PER PLAN 2	P.712
714											714			611	07601	714	FT	18" CONDUIT, TYPE C, AS PER PLAN 1	P.711
299											299			611	07601	299	FT	18" CONDUIT, TYPE C, AS PER PLAN 1, 706.02	P.711
317											317			611	08901	317	FT	21" CONDUIT, TYPE B, AS PER PLAN 1	P.711
11											11			611	08901	11	FT	21" CONDUIT, TYPE B, AS PER PLAN 3	P.711
371											371			611	09101	371	FT	21" CONDUIT, TYPE C, AS PER PLAN 1	P.711
87											87			611	10401	87	FT	24" CONDUIT, TYPE B, AS PER PLAN 1	P.711
259											259			611	10601	259	FT	24" CONDUIT, TYPE C, AS PER PLAN 1	P.711
224											224			611	10601	224	FT	24" CONDUIT, TYPE C, AS PER PLAN 1, 706.02	P.711
5											5			611	10601	5	FT	24" CONDUIT, TYPE C, AS PER PLAN 1, 707.01	P.711
284											284			611	12101	284	FT	27" CONDUIT, TYPE C, AS PER PLAN 1	P.711
831											831			611	13401	831	FT	30" CONDUIT, TYPE B, AS PER PLAN 1	P.711
211											211			611	13401	211	FT	30" CONDUIT, TYPE B, AS PER PLAN 2	P.712
88											88			611	13601	88	FT	30" CONDUIT, TYPE C, AS PER PLAN 5	P.712
	30										30			611	16601	30	FT	36" CONDUIT, TYPE C, AS PER PLAN 1	P.711
	8										8			611	16601	8	FT	36" CONDUIT, TYPE C, AS PER PLAN 1, 706.02	P.711
	18										18			611	19601	18	FT	42" CONDUIT, TYPE C, AS PER PLAN 1, 706.02	P.711
	434										434			611	20901	434	FT	48" CONDUIT, TYPE B, AS PER PLAN 1	P.711
	149										149			611	20901	149	FT	48" CONDUIT, TYPE B, AS PER PLAN 2	P.712
	1,912										1,912			611	21101	1,912	FT	48" CONDUIT, TYPE C, AS PER PLAN 1	P.711
	8										8			611	21101	8	FT	48" CONDUIT, TYPE C, AS PER PLAN 1, 706.02	P.711
	550										550			611	22401	550	FT	54" CONDUIT, TYPE B, AS PER PLAN 1	P.711
	444										444			611	22601	444	FT	54" CONDUIT, TYPE C, AS PER PLAN 1	P.711
	3,362										3,362			611	23801	3,362	FT	60" CONDUIT, TYPE B, AS PER PLAN 1	P.711
	1,065										1,065			611	23801	1,065	FT	60" CONDUIT, TYPE B, AS PER PLAN 2	P.712
	132										132			611	25201	132	FT	66" CONDUIT, TYPE B, AS PER PLAN 1, 706.02	P.711
	133										133			611	52203	133	FT	14" X 23" CONDUIT, TYPE B, 706.04, AS PER PLAN 1	P.711
	269										269			611	52303	269	FT	19" X 30" CONDUIT, TYPE B, 706.04, AS PER PLAN 2	P.712
	1,182										1,182			611	96601	1,182	FT	CONDUIT, BORED OR JACKED, AS PER PLAN 1, 15", TYPE B	P.711
	99										99			611	96601	99	FT	CONDUIT, BORED OR JACKED, AS PER PLAN 1, 18", TYPE B	P.711
	133										133			611	96601	133	FT	CONDUIT, BORED OR JACKED, AS PER PLAN 1, 21", TYPE B	P.711
	224										224			611	96601	224	FT	CONDUIT, BORED OR JACKED, AS PER PLAN 1, 24", TYPE B	P.711
	134										134			611	96601	134	FT	CONDUIT, BORED OR JACKED, AS PER PLAN 1, 27", TYPE B	P.711
	207										207			611	96601	207	FT	CONDUIT, BORED OR JACKED, AS PER PLAN 1, 30", TYPE B	P.711
	117										117			611	96601	117	FT	CONDUIT, BORED OR JACKED, AS PER PLAN 1, 36", TYPE B	P.711
	165										165			611	96601	165	FT	CONDUIT, BORED OR JACKED, AS PER PLAN 2, 60", TYPE B	P.712
	64										64			611	97400	64	FT	CONDUIT, MISC.: 14" X 23" CONDUIT, TYPE C, 706.04, AS PER PLAN 1	P.711
	51										51			611	97400	51	FT	CONDUIT, MISC.: 24" X 38" CONDUIT, TYPE C, 706.04, AS PER PLAN 1	P.711
	3										3			611	98180	3	EACH	CATCH BASIN, NO. 3A	
	9										9			611	98300	9	EACH	CATCH BASIN, NO. 5	
	1										1			611	98301	1	EACH	CATCH BASIN, NO. 5, AS PER PLAN	P.712
	5										5			611	98371	5	EACH	CATCH BASIN, NO. 6, AS PER PLAN	P.712
	1										1			611	98430	1	EACH	CATCH BASIN, NO. 8 WITHOUT APRON	
	7										7			611	98510	7	EACH	CATCH BASIN, NO. 2-3	
	4										4			611	98520	4	EACH	CATCH BASIN, NO. 2-3 WITH BICYCLE SAFE GRATE	
	4										4			611	98580	4	EACH	CATCH BASIN, NO. 2-5 WITH BICYCLE SAFE GRATE	
	2										2			611	98610	2	EACH	CATCH BASIN, NO. 2-6 WITH BICYCLE SAFE GRATE	
	13										13			611	98630	13	EACH	CATCH BASIN ADJUSTED TO GRADE	
	2										2			611	98634	2	EACH	CATCH BASIN RECONSTRUCTED TO GRADE	

GENERAL SUMMARY

CUY-77-11.41 - PART 1

DESIGN AGENCY
HNTB

DESIGNER
ASEP

REVIEWER
KKP 05/03/26

PROJECT ID
105743

SHEET P.277 | TOTAL P.1274

MODEL: Unnamed Plan - Plan 3 [Sheet] PAPERSIZE: 34x22 (in.) DATE: 11/17/2026 TIME: 8:07:57 AM PLTDRV: OHDOT_PDF.pltcfg PENTBL: OHDOT_Pen.tbl USER: kperkins@hntb.com WORKSPACE: OHDOTCEv02 WORKSET: 105743 PRODUCT: OpenRoadsDesigner 24.00.03.05
pw:\\trc-pw.bentley.com:trc-pw-01\Documents\5 - Projects - External\Ohio Department of Transportation (ODOT)\301525 - CUY-77-11.21\105743\400-Engineering\Roadway\Sheets\105743_GG001.dgn
OHDOT_Pen.tbl

SHEET PROVIDED BECAUSE ITEMS SHIFTED BECAUSE OF NEW DRAINAGE ITEMS

SHEET NUMBER											PART.			ITEM	ITEM EXT	GRAND TOTAL	UNIT	DESCRIPTION	SEE SHEET NO.
P.27	P.294	P.296	P.711	P.746	P.753						01/IMS	02/IMS	03/IMS						
																		DRAINAGE (CONT.)	
				9							9			611	98840	9	EACH	INLET, NO. 2-A-6	
				15							15			611	98850	15	EACH	INLET, NO. 2-A-8	
				26							26			611	98860	26	EACH	INLET, NO. 2-A-10	
				9							9			611	98870	9	EACH	INLET, NO. 2-A-12	
				1							1			611	98890	1	EACH	INLET, NO. 2-A-16	
				8							8			611	99100	8	EACH	INLET, NO. 3 FOR SINGLE SLOPE BARRIER, TYPE B1	
				20							20			611	99110	20	EACH	INLET, NO. 3 FOR SINGLE SLOPE BARRIER, TYPE C1	
				2							2			611	99111	2	EACH	INLET, NO. 3 FOR SINGLE SLOPE BARRIER, TYPE C1, AS PER PLAN	P.712
				25							25			611	99114	25	EACH	INLET, NO. 3 FOR SINGLE SLOPE BARRIER, TYPE D	
				1							1			611	99115	1	EACH	INLET, NO. 3 FOR SINGLE SLOPE BARRIER, TYPE D, AS PER PLAN1	P.712
				2							2			611	99115	2	EACH	INLET, NO. 3 FOR SINGLE SLOPE BARRIER, TYPE D, AS PER PLAN2	P.712
				58							58			611	99500	58	EACH	INLET, MISC.: BARRIER INLET SCREEN	P.713
				19							19			611	99574	19	EACH	MANHOLE, NO. 3	
				12							12			611	99574	12	EACH	MANHOLE, NO. 3 WITH 60" BASE I.D.	
				2							2			611	99574	2	EACH	MANHOLE, NO. 3 WITH 72" BASE I.D.	
				7							7			611	99574	7	EACH	MANHOLE, NO. 3 WITH 84" BASE I.D.	
				2							2			611	99574	2	EACH	MANHOLE, NO. 3 WITH 90" BASE I.D.	
				1							1			611	99574	1	EACH	MANHOLE, NO. 3 WITH 96" BASE I.D.	
				1							1			611	99574	1	EACH	MANHOLE, NO. 3 WITH 108" BASE I.D.	
				1							1			611	99621	1	EACH	MANHOLE, NO. 5, AS PER PLAN	P.712
				1							1			611	99575	1	EACH	MANHOLE, NO. 3, AS PER PLAN	P.712
				1							1			611	99575	1	EACH	MANHOLE, NO. 3, AS PER PLAN WITH 72" BASE I.D.	
				1							1			611	99575	1	EACH	MANHOLE, NO. 3, AS PER PLAN WITH 84" BASE I.D.	
				1							1			611	99575	1	EACH	MANHOLE, NO. 3, AS PER PLAN WITH 96" BASE I.D.	
				6							6			611	99654	6	EACH	MANHOLE ADJUSTED TO GRADE	
				1							1			611	99655	1	EACH	MANHOLE ADJUSTED TO GRADE, AS PER PLAN	P.712
				3							3			611	99660	3	EACH	MANHOLE RECONSTRUCTED TO GRADE	
				5							5			611	99690	5	EACH	MANHOLE, MISC.: MANHOLE ADJUSTED TO GRADE WITH BOLTED COVER	P.712
				8							8			611	99690	8	EACH	MANHOLE, MISC.: MANHOLE NO. 3 WITH BOLTED COVER	P.712
				3							3			611	99690	3	EACH	MANHOLE, MISC.: MANHOLE NO. 3 WITH 60" BASE I.D. WITH BOLTED COVER	P.712
				2							2			611	99690	2	EACH	MANHOLE, MISC.: MANHOLE NO. 3 WITH 72" BASE I.D. WITH BOLTED COVER	P.712
				2							2			611	99690	2	EACH	MANHOLE, MISC.: MANHOLE NO. 3 WITH 84" BASE I.D. WITH BOLTED COVER	P.712
				6							6			611	99690	6	EACH	MANHOLE, MISC.: MANHOLE NO. 3 WITH 90" BASE I.D. WITH BOLTED COVER	P.712
				11							11			611	99690	11	EACH	MANHOLE, MISC.: MANHOLE NO. 3 WITH 96" BASE I.D. WITH BOLTED COVER	P.712
					3						3			611	99710	3	EACH	PRECAST REINFORCED CONCRETE OUTLET	
			15,000								15,000			SPECIAL	61199820	15,000	LB	MISCELLANEOUS METAL	P.711
				1							1			611	99900	1	EACH	DRAINAGE STRUCTURE, MISC.: RESHAPE AND REESTABLISH EXISTING CONNECTION	P.712
																		PAVEMENT	
	712										712			254	01000	712	SY	PAVEMENT PLANING, ASPHALT CONCRETE, 1.5"	
	9,697										9,697			254	01000	9,697	SY	PAVEMENT PLANING, ASPHALT CONCRETE, 3.25"	
	5,105										5,105			254	01001	5,105	SY	PAVEMENT PLANING, ASPHALT CONCRETE, AS PER PLAN, 3.4" AVG.	P.28
	255										255			302	56001	255	CY	ASPHALT CONCRETE BASE, (449), AS PER PLAN, PG64-22	P.28
	46,935										46,935			302	66001	46,935	CY	ASPHALT CONCRETE BASE, AS PER PLAN, 25.0 MM GYRATORY MIX	P.27-P.28
5	33,081	4,957									38,043			304	20000	38,043	CY	AGGREGATE BASE	
	602	434									1,036			407	13900	1,036	GAL	TACK COAT, 702.13	
	35,224										35,224			407	20000	35,224	GAL	NON-TRACKING TACK COAT	
		257									257			441	50000	257	CY	ASPHALT CONCRETE SURFACE COURSE, TYPE 1, (448), PG64-22	
		356									356			441	50300	356	CY	ASPHALT CONCRETE INTERMEDIATE COURSE, TYPE 2, (448)	
	289	75									364			441	70801	364	CY	ASPHALT CONCRETE INTERMEDIATE COURSE, TYPE 1, (449), (UNDER GUARDRAIL), AS PER PLAN	P.26
	11,121	1,454									12,575			442	00100	12,575	CY	ANTI-SEGREGATION EQUIPMENT	
	11,429										11,429			442	10080	11,429	CY	ASPHALT CONCRETE INTERMEDIATE COURSE, 12.5 MM, TYPE A (446)	
	8,909										8,909			442	10301	8,909	CY	ASPHALT CONCRETE SURFACE COURSE, 12.5 MM, TYPE A (447), AS PER PLAN	P.28
	429										429			442	22401	429	CY	ASPHALT CONCRETE INTERMEDIATE COURSE, 19 MM, TYPE A (449), AS PER PLAN	P.28
26		17,715									17,741			452	15010	17,741	SY	12" NON-REINFORCED CONCRETE PAVEMENT, CLASS QC 1P	

CUY-77-11.41 - PART 1

GENERAL SUMMARY

DESIGN AGENCY

HNTB

DESIGNER ASEP

REVIEWER KKP 05/04/26

PROJECT ID 105743

SHEET P.278 TOTAL P.1274

MODEL: Unnamed Plan - Plan 4 [Sheet] PAPERSIZE: 34x22 (in.) DATE: 11/17/2026 TIME: 7:43:28 AM PLTDRV: OHDOT_PDF.pltcfg PENTBL: OHDOT_Pen.tbl USER: kperkins@hntb.com WORKSPACE: OHDOTCEv02 WORKSET: 105743 PRODUCT: OpenRoadsDesigner 24.00.03.05
pw:\\trc-pw.bentley.com:trc-pw-01\Documents\5 - Projects - External\Ohio Department of Transportation (ODOT)\301628 - CUY-77-11.21\105743\400-Engineering\Roadway\Sheets\105743_GG001.dgn

SHEET PROVIDED BECAUSE ITEMS SHIFTED BECAUSE OF NEW DRAINAGE ITEMS

SHEET NUMBER											PART.			ITEM	ITEM EXT	GRAND TOTAL	UNIT	DESCRIPTION	SEE SHEET NO.
P.27	P. 28	P. 286	P. 288	P.1015	P.1017	P.1030	P.1117	P.1123	P.1124		01/IMS	02/IMS	03/IMS						
																		PAVEMENT (CONT.)	
20			4,400								4,420			609	14000	4,420	FT	CURB, TYPE 2-A	
			10,105								10,105			609	24510	10,105	FT	CURB, TYPE 4-C	
		739									739			609	26000	739	FT	CURB, TYPE 6	
		565									565			609	50000	565	SY	4" CONCRETE TRAFFIC ISLAND	
	11.43										11.43			618	40601	11.43	MILE	RUMBLE STRIPS, SHOULDER (ASPHALT CONCRETE), AS PER PLAN	P.28
																		WATER WORK	
						302					302			638	02601	302	FT	12" WATER MAIN DUCTILE IRON PIPE ANSI CLASS 52, BOLTLESS-RESTRAINED JOINTS AND FITTINGS, AS PER PLAN	P.1017
						2					2			638	08101	2	EACH	12" GATE VALVE AND VALVE BOX, AS PER PLAN	P.1017
						2					2			638	09201	2	EACH	12" CUTTING-IN SLEEVE, VALVE AND VALVE BOX, AS PER PLAN	P.1017
						121					121			SPECIAL	63820460	121	FT	20" STEEL PIPE ENCASEMENT, BORED OR JACKED, CWD	P.1017
						120					120			SPECIAL	63820484	120	FT	56" STEEL PIPE ENCASEMENT, BORED OR JACKED, CWD	P.1017
						10					10			638	98000	10	EACH	POTHOLING	P.1017
						318					318			638	98600	318	FT	WATER WORK, MISC.:WATER WORK, MISC.: 36" WATER MAIN DUCTILE IRON PIPE ANSI CLASS 52, BOLTLESS RESTRAINED JOINTS AN FITTINGS	P.1017
						1					1			638	98000	1	EACH	WATER WORK, MISC.: 4" DRAIN ASSEMBLY	P.1017
						2					2			638	98000	2	EACH	WATER WORK, MISC.: CHLORINATION PIT	P.1017
					15,000						15,000			638	98000	15,000	EACH	WATER WORK, MISC.: CITY OF CLEVELAND WATER DEPARTMENT CHARGES	P.1017
					LS						LS			638	98100	LS		WATER WORK, MISC.: AS-BUILT DRAWINGS	P.1017
																		SANITARY SEWER	
				279							279			611	10401	279	FT	24" CONDUIT, TYPE B, AS PER PLAN, 748.01	P.1015
				4							4			611	99574	4	EACH	MANHOLE, NO. 3	
				5							5			611	99654	5	EACH	MANHOLE ADJUSTED TO GRADE	
				5							5			611	99660	5	EACH	MANHOLE RECONSTRUCTED TO GRADE	
				4							4			611	99690	4	EACH	MANHOLE, MISC.: MANHOLE ADJUSTED TO GRADE WITH BOLTED COVER	P.1015
				6							6			611	99690	6	EACH	MANHOLE, MISC.: MANHOLE RECONSTRUCTED TO GRADE WITH BOLTED COVER	P.1015
				2							2			611	99690	2	EACH	MANHOLE, MISC.: MANHOLE ADJUSTED TO GRADE, BURIED MANHOLES	
				4							4			611	99690	4	EACH	MANHOLE, MISC.: MANHOLE RECONSTRUCTED TO GRADE, BURIED MANHOLES	
																		LIGHTING	
								230			230			625	00450	230	EACH	CONNECTION, FUSED PULL APART	
								96			96			625	00480	96	EACH	CONNECTION, UNFUSED PERMANENT	
								46			46			625	10490	46	EACH	LIGHT POLE, CONVENTIONAL, A12B40	
								63			63			625	10494	63	EACH	LIGHT POLE, LOW MAST, ALM 41.25	
								252			252			625	10620	252	EACH	LIGHT POLE ANCHOR BOLTS, MISC.: MEDIAN MOUNTED ALM 41.25	P.1116
								46			46			625	14100	46	EACH	LIGHT POLE FOUNDATION, 24" X 8' DEEP	
								63			63			625	14306	63	EACH	MEDIAN LIGHT POLE FOUNDATION, 10' DEEP	
								46,815			46,815			625	23200	46,815	FT	NO. 4 AWG 2400 VOLT DISTRIBUTION CABLE	
								14,988			14,988			625	23400	14,988	FT	NO. 10 AWG POLE AND BRACKET CABLE	
								13,230			13,230			625	24320	13,230	FT	1-1/2" DUCT CABLE WITH THREE NO. 4 AWG 2400 VOLT CABLES	
								740			740			625	25600	740	FT	CONDUIT, 4", 725.04	
								630			630			625	25902	630	FT	CONDUIT, JACKED OR DRILLED, 725.04, 4"	
								46			46			625	26253	46	EACH	LUMINAIRE, CONVENTIONAL, SOLID STATE (LED), AS PER PLAN (IES-II, LED, 480V, 13,400-15,000 LUMENS)	P.1116
								63			63			625	26273	63	EACH	LUMINAIRE, LOW MAST, SOLID STATE (LED), AS PER PLAN (IES-V, LED, 480V, 43,600-51,000 LUMENS)	P.1116
								5			5			625	27503	5	EACH	LUMINAIRE, UNDERPASS, SOLID STATE (LED), AS PER PLAN (LED, 120V, 4,000-6,900 LUMENS)	P.1116
								13,120			13,120			625	29000	13,120	FT	TRENCH	
								4			4			625	29910	4	EACH	TRANSITION JUNCTION BOX	
								66			66			625	29930	66	EACH	MEDIAN JUNCTION BOX	
								28			28			625	30700	28	EACH	PULL BOX, 725.08, 18"	
								3			3			625	30706	3	EACH	PULL BOX, 725.08, 24"	
									20		20			625	31510	20	EACH	PULL BOX REMOVED	
								109			109			625	32000	109	EACH	GROUND ROD	
								5			5			625	34001	5	EACH	POWER SERVICE, AS PER PLAN	P.1116
								13,120			13,120			625	36010	13,120	FT	UNDERGROUND WARNING MARKING TAPE	
								2			2			625	37101	2	EACH	SERVICE TO UNDERPASS LIGHTING, AS PER PLAN	P.1116
									1		1			625	39520	1	EACH	PULL BOX CLEANED	P.1116
							LS				LS			SPECIAL	62540000	LS		MAINTAIN EXISTING LIGHTING	P.1117
							20				20			SPECIAL	62540010	20	EACH	REPLACEMENT OF EXISTING LIGHTING UNIT	P.1117
									198		198			625	75400	198	EACH	LIGHT POLE REMOVED	
							198		198		396			625	75500	396	EACH	LIGHT POLE FOUNDATION REMOVED	

GENERAL SUMMARY

DESIGN AGENCY
HNTB

DESIGNER ASEP

REVIEWER KKP 05/05/26

PROJECT ID 105743

SHEET P.279 | TOTAL P.1274

CUY-77-11.41 - PART 1

MODEL: Unnamed Plan - Plan 5 [Sheet] PAPERSIZE: 34x22 (in.) DATE: 11/17/2026 TIME: 7:43:28 AM PLTDRV: OHDOT_PDF.pltcfg PENTBL: OHDOT_Pen.tbl USER: kperkins@hntb.com WORKSPACE: OHDOTCEv02 WORKSET: 105743 PRODUCT: OpenRoadsDesigner 24.00.03.05
pw:\\trc-pw.bentley.com:trc-pw-01\Documents\5 - Projects - External\Ohio Department of Transportation (ODOT)\301625 - CUY-77-11.21\105743\400-Engineering\Roadway\Sheets\105743_GG001.dgn

SHEET PROVIDED BECAUSE ITEMS SHIFTED BECAUSE OF NEW DRAINAGE ITEMS

SHEET NUMBER											PART.			ITEM	ITEM EXT	GRAND TOTAL	UNIT	DESCRIPTION	SEE SHEET NO.
P.1038	P.1049	P.1050	P.1099	P.1123	P.1124						01/IMS	02/IMS	03/IMS						
																		LIGHTING (CONT.)	
					5						5			625	75510	5	EACH	POWER SERVICE REMOVED	
					5						5			625	75800	5	EACH	DISCONNECT CIRCUIT	
				5							5			625	98000	5	EACH	LIGHTING, MISC.: ARC FLASH CALCULATIONS AND LABEL	P.1116
																		TRAFFIC SURVEILLANCE	
			4,245								4,245			625	22900	4,245	FT	NO. 1/0 AWG 2400 VOLT DISTRIBUTION CABLE	
			492								492			625	23300	492	FT	NO. 2 AWG 2400 VOLT DISTRIBUTION CABLE	
			1,679								1,679			625	25507	1,679	FT	CONDUIT, 3", 725.052, AS PER PLAN	P.1097
			812								812			625	25909	812	FT	CONDUIT, JACKED OR DRILLED, 725.052, AS PER PLAN, 2"	P.1097
			1,026								1,026			625	25909	1,026	FT	CONDUIT, JACKED OR DRILLED, 725.052, AS PER PLAN, 3"	P.1097
			197								197			625	25920	197	FT	CONDUIT, MISC.: CONDUIT REMOVED	P.1097
			355								355			625	25803	355	FT	CONDUIT, CONCRETE ENCASED, AS PER PLAN, 2"	P.1097
			1,677								1,677			625	29000	1,677	FT	TRENCH	
			5								5			625	30700	5	EACH	PULL BOX, 725.08, 18"	
			5								5			625	31510	5	EACH	PULL BOX REMOVED	
			1								1			625	31600	1	EACH	PULL BOX, MISC.: ENCOMPASSING WORK PAD FOR ITS INSTALLATION	P.1097
			2								2			625	31600	2	EACH	PULL BOX, MISC.: PULL BOX ADJUSTED TO GRADE	P.1097
			9								9			625	32000	9	EACH	GROUND ROD	
			1								1			625	75510	1	EACH	POWER SERVICE REMOVED	
			1								1			630	70044	1	EACH	OVERHEAD SIGN SUPPORT, DMS PEDESTAL	
			1								1			630	70060	1	EACH	CATWALK, DMS PEDESTAL	
			1								1			630	70082	1	EACH	OVERHEAD DMS SUPPORT FOUNDATION, TYPE ITS-30.12	
			3								3			633	67100	3	EACH	CABINET FOUNDATION	
			19								19			809	00530	19	EACH	ITS JUNCTION BOX, 17x24x6 INCHES	
			5								5			809	01900	5	EACH	ITS PULL BOX WITH PAD AND STANDARD LID ASSEMBLY, 32" WIDE, TYPE 1	
			2								2			809	02000	2	EACH	32" ITS PULL BOX WITH PAD AND STANDARD LID ASSEMBLY, TYPE 2	
			1								1			809	02002	1	EACH	32" ITS PULL BOX WITH PAD AND HINGED LID ASSEMBLY, TYPE 2	
			3								3			809	01920	3	EACH	ITS PULL BOX WITH PAD AND HINGED LID ASSEMBLY, 32" WIDE, TYPE 1	
			61,144								61,144			809	23100	61,144	FT	MICRO-DUCT INNERDUCT, 14/10	
			60								60			809	23900	60	FT	CONDUIT, 2" DIAMETER, HDPE	
			586								586			809	24000	586	FT	CONDUIT, MULTICELL, JACKED OR DRILLED, 4"	
			1,257								1,257			809	24500	1,257	FT	CONDUIT, 4", MULTICELL, HDPE WITH 4 - 1" INNERDUCTS	
			1								1			809	56100	1	EACH	ITS POWER SERVICE, POLE MOUNTED, 240/480V, 100 AMP	
			2								2			809	60000	2	EACH	CCTV IP-CAMERA SYSTEM, PTZ	
			1								1			809	61040	1	EACH	CCTV POLE, 70' TALL	
			2								2			809	61090	2	EACH	CCTV LOWERING UNIT	
			1								1			809	63000	1	EACH	DYNAMIC MESSAGE SIGN (DMS), FULL-SIZE WALK-IN	
			300								300			809	64550	300	FT	ETHERNET CABLE, OUTDOOR-RATED	
			2								2			809	65000	2	EACH	ITS CABINET - GROUND MOUNTED	
			1								1			809	65040	1	EACH	ITS CABINET - DMS	
			1								1			809	65110	1	EACH	STEP-DOWN TRANSFORMER, 7.5KVA	
			2								2			809	65990	2	EACH	ITS DEVICE, MISC.: REMOVAL AND DELIVERY OF CCTV AND LOWERING UNIT	P.1097
			1								1			809	65990	1	EACH	ITS DEVICE, MISC.: REMOVAL AND DELIVERY OF DYNAMIC MESSAGE SIGN	P.1097
			1								1			809	65990	1	EACH	ITS DEVICE, MISC.: REMOVAL OF CCTV POLE, CAMERA, FOUNDATION, AND CABINET ASSEMBLY	P.1097
			1								1			809	65990	1	EACH	ITS DEVICE, MISC.: REMOVAL OF DMS SUPPORT STRUCTURE, FOUNDATIONS, AND CABINET ASSEMBLY	P.1097
			1								1			809	65990	1	EACH	ITS DEVICE, MISC.: REMOVAL OF ITS CABINET	P.1097
											LS			809	70000	LS		MAINTAINING ITS DURING CONSTRUCTION	
											LS			809	70050	LS		AS-BUILT CONSTRUCTION PLANS	
																		TRAFFIC CONTROL	
1,102											1,102			621	00100	1,102	EACH	RPM	
1,102											1,102			621	54000	1,102	EACH	RAISED PAVEMENT MARKER REMOVED	
		18									18			625	32000	18	EACH	GROUND ROD	
	424										424			630	02100	424	FT	GROUND MOUNTED SUPPORT, NO. 2 POST	
	976										976			630	03100	976	FT	GROUND MOUNTED SUPPORT, NO. 3 POST	
	565										565			630	04100	565	FT	GROUND MOUNTED SUPPORT, NO. 4 POST	
	234										234			630	06100	234	FT	GROUND MOUNTED SUPPORT, NO. 6 POST	
	110										110			630	06400	110	FT	GROUND MOUNTED STRUCTURAL BEAM SUPPORT, S4X7.7	

GENERAL SUMMARY

CUY-77-11.41 - PART 1

DESIGN AGENCY
HNTB

DESIGNER ASEP
REVIEWER KKP 05/06/26
PROJECT ID 105743
SHEET P.280 TOTAL P.1274

MODEL: Unnamed Plan - Plan 6 [Sheet] PAPERSIZE: 34x22 (in.) DATE: 11/17/2026 TIME: 7:43:29 AM PLTDRV: OHDOT_PDF.pltcfg PENTBL: OHDOT_Pen.tbl USER: kperkins@hntb.com WORKSPACE: OHDOTCEv02 WORKSET: 105743 PRODUCT: OpenRoadsDesigner 24.00.03.05
pw:\\trc-pw.bentley.com:trc-pw-01\Documents\5 - Projects - External\Ohio Department of Transportation (ODOT)\301625 - CUY-77-11.21\105743\400-Engineering\Roadway\Sheets\105743_GG001.dgn

SHEET PROVIDED BECAUSE ITEMS SHIFTED BECAUSE OF NEW DRAINAGE ITEMS

SHEET NUMBER											PART.			ITEM	ITEM EXT	GRAND TOTAL	UNIT	DESCRIPTION	SEE SHEET NO.
P.1038	P.1049	P.1050	P.1053								01/IMS	02/IMS	03/IMS						
																		TRAFFIC CONTROL (CONT.)	
	141										141			630	06500	141	FT	GROUND MOUNTED STRUCTURAL BEAM SUPPORT, W6X9	
	40										40			630	07000	40	FT	GROUND MOUNTED STRUCTURAL BEAM SUPPORT, W8X18	
	38										38			630	07600	38	FT	GROUND MOUNTED STRUCTURAL BEAM SUPPORT, W10X12	
	54										54			630	08000	54	FT	GROUND MOUNTED STRUCTURAL BEAM SUPPORT, W12X30	
	356										356			630	08004	356	FT	ONE WAY SUPPORT, NO. 3 POST	
	159										159			630	08600	159	EACH	SIGN POST REFLECTOR	
	22										22			630	09000	22	EACH	BREAKAWAY STRUCTURAL BEAM CONNECTION	
	1										1			630	72320	1	EACH	OVERHEAD SIGN SUPPORT, TYPE TC-12.31, DESIGN 6	
	4										4			630	72330	4	EACH	OVERHEAD SIGN SUPPORT, TYPE TC-12.31, DESIGN 10	
	3										3			630	72340	3	EACH	OVERHEAD SIGN SUPPORT, TYPE TC-12.31, DESIGN 12	
	4										4			630	72410	4	EACH	OVERHEAD SIGN SUPPORT, TYPE TC-15.116, DESIGN 1	
	5										5			630	72420	5	EACH	OVERHEAD SIGN SUPPORT, TYPE TC-15.116, DESIGN 2	
		2									2			630	72540	2	EACH	OVERHEAD SIGN SUPPORT, TYPE TC-16.22, DESIGN 12	
		26									26			630	75000	26	EACH	SIGN ATTACHMENT ASSEMBLY	
		6									6			630	79100	6	EACH	SIGN HANGER ASSEMBLY, MAST ARM	
	3										3			630	79500	3	EACH	SIGN SUPPORT ASSEMBLY, POLE MOUNTED	
		8									8			630	79610	8	EACH	SIGN SUPPORT ASSEMBLY, BARRIER MOUNTED	
		1,831									1,831			630	80100	1,831	SF	SIGN, FLAT SHEET	
		846									846			630	80200	846	SF	SIGN, GROUND MOUNTED EXTRUSHEET	
		5,248									5,248			630	80224	5,248	SF	SIGN, OVERHEAD EXTRUSHEET	
		9									9			630	80300	9	SF	SIGN, OVERLAY	
		16									16			630	80600	16	EACH	SIGN, DOUBLE FACED, MILE MARKER	
		2									2			630	81000	2	EACH	MAINLINE REFERENCE MARKER	
		6									6			630	81010	6	EACH	RAMP REFERENCE MARKER	
		15									15			630	81020	15	EACH	CONCRETE MEDIAN BARRIER SIGN BRACKET	
		31									31			630	82000	31	EACH	SIGN BACKING ASSEMBLY	
		9									9			630	84010	9	EACH	CONCRETE BARRIER MEDIAN OVERHEAD SIGN SUPPORT FOUNDATION, TYPE TC-21.50	
		18									18			630	84500	18	EACH	GROUND MOUNTED STRUCTURAL BEAM SUPPORT FOUNDATION	
		22									22			630	84510	22	EACH	RIGID OVERHEAD SIGN SUPPORT FOUNDATION	
			176								176			630	84900	176	EACH	REMOVAL OF GROUND MOUNTED SIGN	
			2								2			630	85100	2	EACH	REMOVAL OF GROUND MOUNTED SIGN AND REERECTION	
			14								14			630	85400	14	EACH	REMOVAL OF GROUND MOUNTED MAJOR SIGN	
			179								179			630	86002	179	EACH	REMOVAL OF GROUND MOUNTED POST SUPPORT	
			28								28			630	86102	28	EACH	REMOVAL OF GROUND MOUNTED STRUCTURAL BEAM SUPPORT	
			46								46			630	87400	46	EACH	REMOVAL OF OVERHEAD MOUNTED SIGN	
			14								14			630	87500	14	EACH	REMOVAL OF POLE MOUNTED SIGN	
			12								12			630	89706	12	EACH	REMOVAL OF OVERHEAD SIGN SUPPORT, DUAL ARM CANTILEVER	
			13								13			630	89804	13	EACH	REMOVAL OF OVERHEAD SIGN SUPPORT AND DISPOSAL, TYPE TC-15.115	
			2								2			630	89902	2	EACH	REMOVAL OF MISCELLANEOUS TRAFFIC CONTROL ITEM, MEDIAN FOUNDATION	
311											311			646	10400	311	FT	STOP LINE	
1,177											1,177			646	10510	1,177	FT	CROSSWALK LINE, 12"	
41											41			646	10520	41	FT	CROSSWALK LINE, 24"	
10											10			646	10600	10	FT	TRANSVERSE/DIAGONAL LINE, WHITE	
881											881			646	10620	881	FT	CHEVRON MARKING	
1,940											1,940			646	10800	1,940	SF	ISLAND MARKING,WHITE	
34											34			646	20300	34	EACH	LANE ARROW	
13											13			646	20320	13	EACH	WRONG WAY ARROW	
832											832			646	20502	832	FT	DOTTED LINE, 4", WHITE (2' LINE, 4' GAP)	
5,210											5,210			646	20504	5,210	FT	DOTTED LINE, 6", YELLOW (3' DASH, 9' GAP)	
9.39											9.39			807	10010	9.39	MILE	WET REFLECTIVE TRAFFIC PAINT, EDGE LINE, 6", WHITE	
9.39											9.39			807	10010	9.39	MILE	WET REFLECTIVE TRAFFIC PAINT, EDGE LINE, 6", YELLOW	
15.76											15.76			807	10110	15.76	MILE	WET REFLECTIVE TRAFFIC PAINT, LANE LINE, 6"	
13,478											13,478			807	10310	13,478	FT	WET REFLECTIVE TRAFFIC PAINT, CHANNELIZING LINE, 12"	
12,402											12,402			807	10410	12,402	FT	WET REFLECTIVE TRAFFIC PAINT, DOTTED LINE, 6", WHITE (3' DASH, 9' GAP)	
495											495			807	10430	495	FT	WET REFLECTIVE TRAFFIC PAINT, DOTTED LINE, 12", WHITE (3' DASH, 9' GAP)	
35.2											35.2			850	10010	35.2	MILE	GROOVING FOR 6" RECESSED PAVEMENT MARKING, (ASPHALT)	
8,902											8,902			850	10110	8,902	FT	GROOVING FOR 6" RECESSED PAVEMENT MARKING, (ASPHALT)	
13,973											13,973			850	10130	13,973	FT	GROOVING FOR 12" RECESSED PAVEMENT MARKING, (ASPHALT)	

GENERAL SUMMARY

CUY-77-11.41 - PART 1

DESIGN AGENCY
HNTB

DESIGNER
ASEP

REVIEWER
KKP 05/07/26

PROJECT ID
105743

SHEET P.281 TOTAL P.1274

MODEL: Unnamed Plan - Plan 7 [Sheet] PAPERSIZE: 34x22 (in.) DATE: 11/17/2026 TIME: 7:43:30 AM PLTDRV: OHDOT_PDF.pltcfg PENTBL: OHDOT_Pen.tbl USER: kperkins@hntb.com WORKSPACE: OHDOTCEv02 WORKSET: 105743 PRODUCT: OpenRoadsDesigner 24.00.03.05
pw:\\trc-pw.bentley.com:trc-pw-01\Documents\5 - Projects - External\Ohio Department of Transportation (ODOT)\301525 - CUY-77-11.21\105743\400-Engineering\Roadway\Sheets\105743_GG001.dgn

SHEET PROVIDED BECAUSE ITEMS SHIFTED BECAUSE OF NEW DRAINAGE ITEMS

SHEET NUMBER											PART.			ITEM	ITEM EXT	GRAND TOTAL	UNIT	DESCRIPTION	SEE SHEET NO.
P.25	P.26	P.35	P.47	P.1096							01/IMS	02/IMS	03/IMS						
																		TRAFFIC SIGNALS	
				80							80			625	25408	80	FT	CONDUIT, 2", 725.051	
				70							70			625	29000	70	FT	TRENCH	
				10							10			625	29400	10	FT	TRENCH IN PAVED AREA	
				2							2			625	30706	2	EACH	PULL BOX, 725.08, 24"	
				1							1			625	32000	1	EACH	GROUND ROD	
				2							2			630	79500	2	EACH	SIGN SUPPORT ASSEMBLY, POLE MOUNTED	
				7.5							7.5			630	80100	7.5	SF	SIGN, FLAT SHEET	
				1							1			632	20731	1	EACH	PEDESTRIAN SIGNAL HEAD (LED), TYPE D2, COUNTDOWN, AS PER PLAN (A)	P.1096
				1							1			632	20731	1	EACH	PEDESTRIAN SIGNAL HEAD (LED), TYPE D2, COUNTDOWN, AS PER PLAN (B)	P.1096
				600							600			632	40500	600	FT	SIGNAL CABLE, 5 CONDUCTOR, NO. 14 AWG	
				1							1			632	64020	1	EACH	PEDESTAL FOUNDATION	
				1							1			632	89920	1	EACH	PEDESTAL, 10.7' TALL, TRANSFORMER BASE	
																		RETAINING WALLS	
																		FOR RETAINING WALL 1A	P. 835
																		FOR RETAINING WALL 1B	P. 851
																		FOR RETAINING WALL 1C	P. 861
																		FOR RETAINING WALL 1D	P. 876
																		FOR RETAINING WALL 2A	P. 901
																		FOR RETAINING WALL 2	P. 907
																		FOR RETAINING WALL 3	P. 921
																		FOR RETAINING WALL 4	P. 935
																		FOR RETAINING WALL 5A	P. 946
																		FOR RETAINING WALL 5B	P.968
																		FOR RETAINING WALL 5C	P. 980
																		FOR RETAINING WALL 6	P. 986
																		FOR RETAINING WALL 7	P. 1001
																		FOR MOMENT SLABS	P. 1010
																		STRUCTURE OVER 20 FOOT SPAN	
																		FOR STRUCTURE CUY-77-1322	P. 1143
																		FOR STRUCTURE CUY-77-1331	P. 1168
																		MISCELLANEOUS STRUCTURE	
LS											LS			202	11001	LS		STRUCTURE REMOVED, AS PER PLAN A	P.25
LS											LS			202	11001	LS		STRUCTURE REMOVED, AS PER PLAN B	P. 25
LS											LS			202	11001	LS		STRUCTURE REMOVED, AS PER PLAN C	P. 25
LS											LS			202	11001	LS		STRUCTURE REMOVED, AS PER PLAN D	P. 25
	LS										LS			202	11201	LS		PORTIONS OF STRUCTURE REMOVED, AS PER PLAN A	P. 26
	LS										LS			202	11201	LS		PORTIONS OF STRUCTURE REMOVED, AS PER PLAN B	P. 26
	LS										LS			202	11201	LS		PORTIONS OF STRUCTURE REMOVED, AS PER PLAN C	P. 26
	LS										LS			202	11201	LS		PORTIONS OF STRUCTURE REMOVED, AS PER PLAN D	P. 26
	LS										LS			202	11201	LS		PORTIONS OF STRUCTURE REMOVED, AS PER PLAN E	P. 26
																		MAINTENANCE OF TRAFFIC	
				1,834							1,834			202	23500	1,834	SY	WEARING COURSE REMOVED	
		3									3			202	58400	3	EACH	INLET ABANDONED	
				129,435							129,435			254	01000	129,435	SY	PAVEMENT PLANING, ASPHALT CONCRETE, T=1.5"	
				11,341							11,341			407	20000	11,341	GAL	NON-TRACKING TACK COAT	
				4,680							4,680			441	70101	4,680	CY	ASPHALT CONCRETE SURFACE COURSE, TYPE 1, (449), AS PER PLAN, PG64-22	P. 36
				LS							LS			503	11100	LS		COFFERDAMS AND EXCAVATION BRACING	
		500									500			611	05900	500	FT	15" CONDUIT, TYPE B	
		34									34			611	10400	34	FT	24" CONDUIT, TYPE B	
		947									947			611	97010	947	FT	SLOTTED DRAIN, TYPE 2, 15"	
		7									7			611	98470	7	EACH	CATCH BASIN, NO. 2-2B	
		6									6			611	99150	6	EACH	INLET ADJUSTED TO GRADE	
		3									3			611	99154	3	EACH	INLET RECONSTRUCTED TO GRADE	
		1									1			611	99574	1	EACH	MANHOLE, NO. 3	

GENERAL SUMMARY

DESIGN AGENCY

HNTB

DESIGNER ASEP

REVIEWER KKP 05/08/26

PROJECT ID 105743

SHEET P.282 TOTAL P.1274

CUY-77-11.41 - PART 1

MODEL: Unnamed Plan - Plan 8 [Sheet] PAPERSIZE: 34x22 (in.) DATE: 11/17/2026 TIME: 7:43:30 AM PLTDRV: OHDOT_PDF.pltcfg PENTBL: OHDOT_Pen.tbl USER: kperkins@hntb.com WORKSPACE: OHDOTCEv02 WORKSET: 105743 PRODUCT: OpenRoadsDesigner 24.00.03.05
pw:\\trc-pw.bentley.com:trc-pw-01\Documents\5 - Projects - External\Ohio Department of Transportation (ODOT)\301525 - CUY-77-11.21\105743\400-Engineering\Roadway\Sheets\105743_GG001.dgn

SHEET PROVIDED BECAUSE ITEMS SHIFTED BECAUSE OF NEW DRAINAGE ITEMS

SHEET NUMBER											PART.			ITEM	ITEM EXT	GRAND TOTAL	UNIT	DESCRIPTION	SEE SHEET NO.
P.30	P.31	P.32	P.33	P.34	P.35	P.42	P.47				01/IMS	02/IMS	03/IMS						
																		MAINTENANCE OF TRAFFIC (CONT.)	
				1,490							1,490			614	11110	1,490	HOUR	LAW ENFORCEMENT OFFICER WITH PATROL CAR FOR ASSISTANCE	
							27,224				27,224			614	11630	27,224	FT	INCREASED BARRIER DELINEATION	
25							41				66			614	12380	66	EACH	WORK ZONE IMPACT ATTENUATOR, 24" WIDE HAZARDS, (UNIDIRECTIONAL)	
							16				16			614	12400	16	EACH	WORK ZONE IMPACT ATTENUATOR, MISC.: 48" WIDE HAZARD (UNIDIRECTIONAL)	P. 32
											LS			614	12420	LS		DETOUR SIGNING	
		42									42			614	12484	42	EACH	WORK ZONE INCREASED PENALTIES SIGN	
	40										40			614	12500	40	EACH	REPLACEMENT SIGN	
	2										2			614	12756	2	EACH	WORK ZONE CROSSOVER LIGHTING SYSTEM	
						2,260					2,260			614	12801	2,260	EACH	WORK ZONE RAISED PAVEMENT MARKER, AS PER PLAN	P. 36
250							833				1,083			614	13000	1,083	CY	ASPHALT CONCRETE FOR MAINTAINING TRAFFIC	
							2,082				2,082			614	13310	2,082	EACH	BARRIER REFLECTOR, TYPE 1, 1 WAY	
							1,410				1,410			614	13310	1,410	EACH	BARRIER REFLECTOR, TYPE 1, BIDIRECTIONAL	
							58				58			614	13312	58	EACH	BARRIER REFLECTOR, TYPE 2, 1 WAY	
							2,852				2,852			614	13350	2,852	EACH	OBJECT MARKER, ONE WAY	
					15						15			614	18000	15	EACH	MAINTAINING TRAFFIC, MISC.: BURIAL OF EXISTING MANHOLES FOR MOT	P. 35
							607				607			614	13360	607	EACH	OBJECT MARKER, TWO WAY	
			480								480			614	18601	480	SNMT	PORTABLE CHANGEABLE MESSAGE SIGN, AS PER PLAN	P. 33
						8.99					8.99			614	20011	8.99	MILE	WORK ZONE LANE LINE, CLASS I, 6", AS PER PLAN	P. 31
						35.7					35.7			614	20056	35.7	MILE	WORK ZONE LANE LINE, CLASS I, 6", 807 PAINT	
						30.31					30.31			614	22011	30.31	MILE	WORK ZONE EDGE LINE, CLASS I, 6", AS PER PLAN	P. 31
						102.78					102.78			614	22056	102.78	MILE	WORK ZONE EDGE LINE, CLASS I, 6", 807 PAINT	
						30,176					30,176			614	23011	30,176	FT	WORK ZONE CHANNELIZING LINE, CLASS I, 12", AS PER PLAN	P. 31
						76,549					76,549			614	23110	76,549	FT	WORK ZONE CHANNELIZING LINE, CLASS I, 12", 807 PAINT	
						9,892					9,892			614	24001	9,892	FT	WORK ZONE DOTTED LINE, CLASS I, AS PER PLAN	P. 31
						48,835					48,835			614	24102	48,835	FT	WORK ZONE DOTTED LINE, CLASS I, 6", 807 PAINT	
						72					72			614	26001	72	FT	WORK ZONE STOP LINE, CLASS I, AS PER PLAN	P. 31
						810					810			614	26200	810	FT	WORK ZONE STOP LINE, CLASS I, 642 PAINT	
						1,070					1,070			614	27050	1,070	FT	WORK ZONE CROSSWALK LINE, CLASS I, 12", 642 PAINT	
							500				500			614	28400	500	FT	WORK ZONE GORE MARKING, CLASS II, 740.06, TYPE I	
						23					23			614	30001	23	EACH	WORK ZONE ARROW, CLASS I, AS PER PLAN	P. 31
						77					77			614	30200	77	EACH	WORK ZONE ARROW, CLASS I, 642 PAINT	
											LS			615	10000	LS		ROADS FOR MAINTAINING TRAFFIC	
400							3,892				4,292			615	20000	4,292	SY	PAVEMENT FOR MAINTAINING TRAFFIC, CLASS A	
	870										870			616	10000	870	MGAL	WATER	
							25,450				25,450			622	41011	25,450	FT	PORTABLE BARRIER, 50", AS PER PLAN A	P. 32
							7,300				7,300			622	41011	7,300	FT	PORTABLE BARRIER, 50", AS PER PLAN B	P. 32
8,000							84,800				92,800			622	41100	92,800	FT	PORTABLE BARRIER, UNANCHORED	
							2,330				2,330			622	41110	2,330	FT	PORTABLE BARRIER, ANCHORED	
							725				725			630	80300	725	SF	SIGN, OVERLAY	
						8,974					8,974			642	30000	8,974	FT	REMOVAL OF PAVEMENT MARKING	
						6					6			642	30020	6	EACH	REMOVAL OF PAVEMENT MARKING	
						24.77					24.77			642	30030	24.77	MILE	REMOVAL OF PAVEMENT MARKING	
		480									480			808	18700	480	SNMT	DIGITAL SPEED LIMIT (DSL) SIGN ASSEMBLY	
				144							144			829	00100	144	SNMT	WORK ZONE EGRESS WARNING SYSTEM	
				216							216			896	00010	216	SNMT	PORTABLE NON-INTRUSIVE TRAFFIC SENSOR, CLASS I	
				216							216			896	00021	216	SNMT	PORTABLE CHANGEABLE MESSAGE SIGN, AS PER PLAN	P.34

GENERAL SUMMARY

DESIGN AGENCY
HNTB

DESIGNER
ASEP

REVIEWER
KKP 05/08/26

PROJECT ID
105743

SHEET P.283 | TOTAL P.1274

CUY-77-11.41 - PART 1

MODEL: Unnamed Plan - Plan 9 [Sheet] PAPERSIZE: 34x22 (in.) DATE: 11/17/2026 TIME: 7:43:31 AM PLTDRV: OHDOT_PDF.pltcfg PENTBL: OHDOT_Pen.tbl USER: kperkins@hntb.com WORKSPACE: OHDOTCEv02 WORKSET: 105743 PRODUCT: OpenRoadsDesigner 24.00.03.05
pw:\\trc-pw.bentley.com:trc-pw-01\Documents\5 - Projects - External\Ohio Department of Transportation (ODOT)\301625 - CUY-77-11.21\105743\400-Engineering\Roadway\Sheets\105743_GG001.dgn

REF NO.	SHEET NO.	LOCATION	STATION TO STATION			SIDE	202 PAVEIMENT REMOVED	202 WALK REMOVED	202 STEPS REMOVED	202 CONCRETE BARRIER REMOVED	202 TRAFFIC ISLAND REMOVED	202 CURB REMOVED	202 GUARDRAIL REMOVED	202 IMPACT ATTENUATOR REMOVED	202 BRIDGE RAILING REMOVED	202 REMOVAL MISC.:RAILROAD RAILS AND TIES	608 4" CONCRETE WALK	608 CURB RAMP	609 CURB, TYPE 6	609 4" CONCRETE TRAFFIC ISLAND
							SY	SF	FT	FT	SY	FT	FT	EACH	FT	FT	SF	SF	FT	SY
R-68	P.321-P.322	RAMP A3	300+27.00	TO	307+03.00	LT/RT	2070													
R-69	P.321	RAMP A3	300+15.00	TO	301+62.00	RT				21			132							
R-70	P.324-P.325	RAMP A4	400+30.00	TO	406+05.00	RT						579								
R-71	P.324-P.325	RAMP A4	400+59.00	TO	406+05.00	LT						547								
R-72	P.324-P.325	RAMP A4	400+26.00	TO	405+70.00	LT/RT	1595													
R-73	P.324	RAMP A4	400+57.00	TO	401+74.00	LT				20			112							
R-74	P.327	RAMP B1	106+40.00	TO	108+19.00	RT				40			140							
R-75	P.326-P.327	RAMP B1	104+95.00	TO	109+16.00	RT						420								
R-76	P.326-P.327	RAMP B1	104+95.00	TO	109+16.00	LT						426								
R-77	P.326-P.327	RAMP B1	104+35.00	TO	109+16.00	LT/RT	1487													
R-78	P.328	RAMP B2	202+20.00	TO	204+73.00	LT						253								
R-89	P.328	RAMP B2	202+62.00	TO	204+73.00	LT/RT	570													
R-79	P.329-P.330	RAMP B3	301+70.00	TO	308+63.00	RT						689								
R-80	P.329-P.330	RAMP B3	301+70.00	TO	308+63.00	LT						694								
R-81	P.329-P.330	RAMP B3	301+70.00	TO	307+63.00	LT/RT	1894													
R-82	P.329-P.331	RAMP B3	301+76.00	TO	128+77 (I.R. 77)	LT				50			1468							
R-83	P.332-P.333	RAMP B4	401+75.00	TO	405+35.00	RT						358								
R-84	P.332-P.333	RAMP B4	401+75.00	TO	405+35.00	LT						364								
R-85	P.332-P.333	RAMP B4	401+75.00	TO	405+23.00	LT/RT	943													
R-86	P.334-P.336	RAMP C1	104+65.00	TO	112+00.00	RT						733								
R-87	P.334-P.336	RAMP C1	104+65.00	TO	112+00.00	LT						738								
R-88	P.334-P.336	RAMP C1	104+81.00	TO	112+00.00	LT/RT	1914													
R-90	P.334-P.336	RAMP C1	104+65.00	TO	111+30.00	LT							667	1						
R-91	P.337-P.338	RAMP C2	201+50.00	TO	204+80.00	RT						332								
R-92	P.337-P.338	RAMP C2	201+50.00	TO	204+80.00	LT						330								
R-93	P.337-P.338	RAMP C2	201+50.00	TO	204+28.00	LT/RT	756													
R-94	P.337-P.338	RAMP C2	200+80.00	TO	204+78.00	RT							398	1						
R-95	P.337	RAMP C2	201+31.00	TO	203+38.00	LT							208							
R-96	P.339-P.340	RAMP C3	300+47.00	TO	305+02.00	RT						455								
R-97	P.339-P.340	RAMP C3	300+47.00	TO	305+02.00	LT						456								
R-98	P.339-P.340	RAMP C3	300+47.00	TO	304+21.00	LT/RT	1010													
R-99	P.343	RAMP D1	103+37.00	TO	106+50.00	RT						311								
R-100	P.343	RAMP D1	103+37.00	TO	106+50.00	LT						317								
R-101	P.343	RAMP D1	103+42.00	TO	106+50.00	LT/RT	874													
R-102	P.344-P.345	RAMP D2	203+14.00	TO	205+90.00	RT						274								
R-103	P.344-P.345	RAMP D2	203+14.00	TO	205+90.00	LT						277								
R-104	P.344-P.345	RAMP D2	202+86.00	TO	205+90.00	LT/RT	864													
R-105	P.347-P.348	RAMP E1	107+50.00	TO	112+48.00	RT						599								
R-106	P.347-P.348	RAMP E1	107+50.00	TO	113+53.00	LT						656								
R-107	P.347-P.348	RAMP E1	105+70.00	TO	113+50.00	LT/RT	2775													
R-110	P.709	CHARD AVE	156+94.00			LT		1142	11											
R-111	P.354	RUFFINI	30+11.00 (MUP WEST)	TO	30+35.00 (MUP WEST)	RT	49													
R-112	P.305	I.R. 77	69+50.00	TO	74+75.00	LT/RT				525										
CR-8	P.709	CHARD AVE	157+09.00	TO	157+30.00	RT		286				24						181		
CR-9	P.709	CHARD AVE	157+24.00	TO	157+33.00	RT		78				6						91		
CR-1	P.321	RAMP A2	16+17.00	TO	16+30.00	RT		138				31						160		
CR-2	P.321	RAMP A3	300+85.00	TO	300+99.00	LT		135				46						148		
CR-3	P.321	RAMP A3	300+58.00	TO	300+69.00	LT												82		
CR-5	P.321	RAMP A3	300+34.00	TO	300+46.00	LT/RT												92		
CR-6	P.321	RAMP A3	300+09.00	TO	300+35.00	RT		155				32						186		
CR-4	P.324	RAMP A4	400+12.00	TO	400+30.00	RT		126				65						142		
CR-7	P.324	RAMP A4	400+51.00	TO	400+66.00	LT		112				30						146		
CR-10	P.348	RAMP E1	113+48.00	TO	113+78.00	LT		220				44						298		
CR-11	P.348	RAMP E1	112+24.00	TO	112+51.00	RT		82				41						330		
CR-12	P.348	RAMP E1	112+72.00	TO	112+85.00	RT												97		
CR-13	P.348	RAMP E1	113+18.00	TO	113+34.00	RT												97		
CR-14	P.354	MUP WEST	30+21.00	TO	30+47.00	LT/RT						18						267		
CR-15	P.354	MUP WEST	30+84.00	TO	30+09.00	LT/RT						40						333		
CR-16	P.354	MUP WEST	31+25.00	TO	31+51.00	LT/RT		157				30						432		
CR-17	P.358	MUP WEST	52+59.00	TO	52+88.00	LT/RT		164				39						375	19	
SW-1	P.709	CHARD AVE	156+91.00	TO	157+09.00	RT						18					114		18	
SW-2	P.709	CHARD AVE	157+23.00			RT						233			329		830		233	
SW-3	P.709	CHARD AVE	157+05.00	TO	157+24.00	RT						24					83		24	
I-1	P.321	RAMP A3	300+28.00	TO	300+99.00	LT/RT					221								178	186
I-2	P.348	RAMP E1	112+31.00	TO	113+38.00	RT		1273				309							267	379
TOTALS THIS SHEET							16801	4068	11	656	221	10838	3125	2	329	0	1027	3457	739	565
TOTALS FROM SHEET P.285							175246	0	0	15816	0	25956	11302	0	0	1724	0	0	0	0
TOTALS CARRIED TO GENERAL SUMMARY							192047	4068	11	16472	221	36794	14427	2	329	1724	1027	3457	739	565

ROADWAY SUBSUMMARY

CUY-77-11.41 - PART 1

DESIGN AGENCY

HNTB

DESIGNER ASEP

REVIEWER KKP 05/01/26

PROJECT ID 105743

SHEET P.286 TOTAL P.1274

MODEL: roadway subsum - Plan 2 [Sheet] PAPERSIZE: 34x22 (in.) DATE: 11/16/2026 TIME: 4:44:11 PM PLTDRV: OHDOT_PDF.pltcfg PENTBL: OHDOT_Pen.tbl USER: kperkins@hntb.com WORKSPACE: OHDOTCEv02 WORKSET: 105743 PRODUCT: OpenRoadsDesigner 24.00.03.05
pw:\\trc-pw.bentley.com:trc-pw-01\Documents\5 - Projects - External\Ohio Department of Transportation (ODOT)\301525 - CUY-77-11.21\105743\400-Engineering\Roadway\Sheets\105743_GS002.dgn

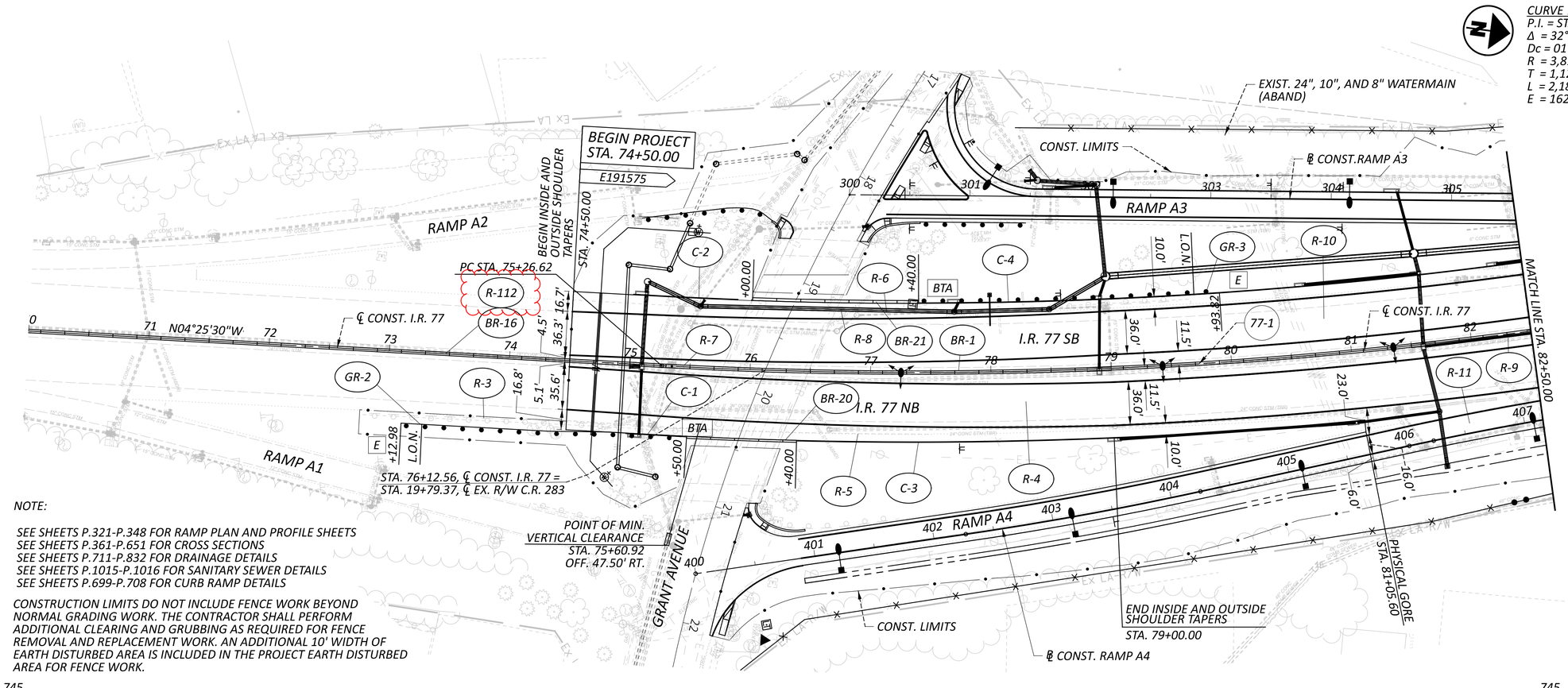

NOTE:

SEE SHEETS P.321-P.348 FOR RAMP PLAN AND PROFILE SHEETS
SEE SHEETS P.361-P.651 FOR CROSS SECTIONS
SEE SHEETS P.711-P.832 FOR DRAINAGE DETAILS
SEE SHEETS P.1015-P.1016 FOR SANITARY SEWER DETAILS
SEE SHEETS P.699-P.708 FOR CURB RAMP DETAILS

CONSTRUCTION LIMITS DO NOT INCLUDE FENCE WORK BEYOND NORMAL GRADING WORK. THE CONTRACTOR SHALL PERFORM ADDITIONAL CLEARING AND GRUBBING AS REQUIRED FOR FENCE REMOVAL AND REPLACEMENT WORK. AN ADDITIONAL 10' WIDTH OF EARTH DISTURBED AREA IS INCLUDED IN THE PROJECT EARTH DISTURBED AREA FOR FENCE WORK.

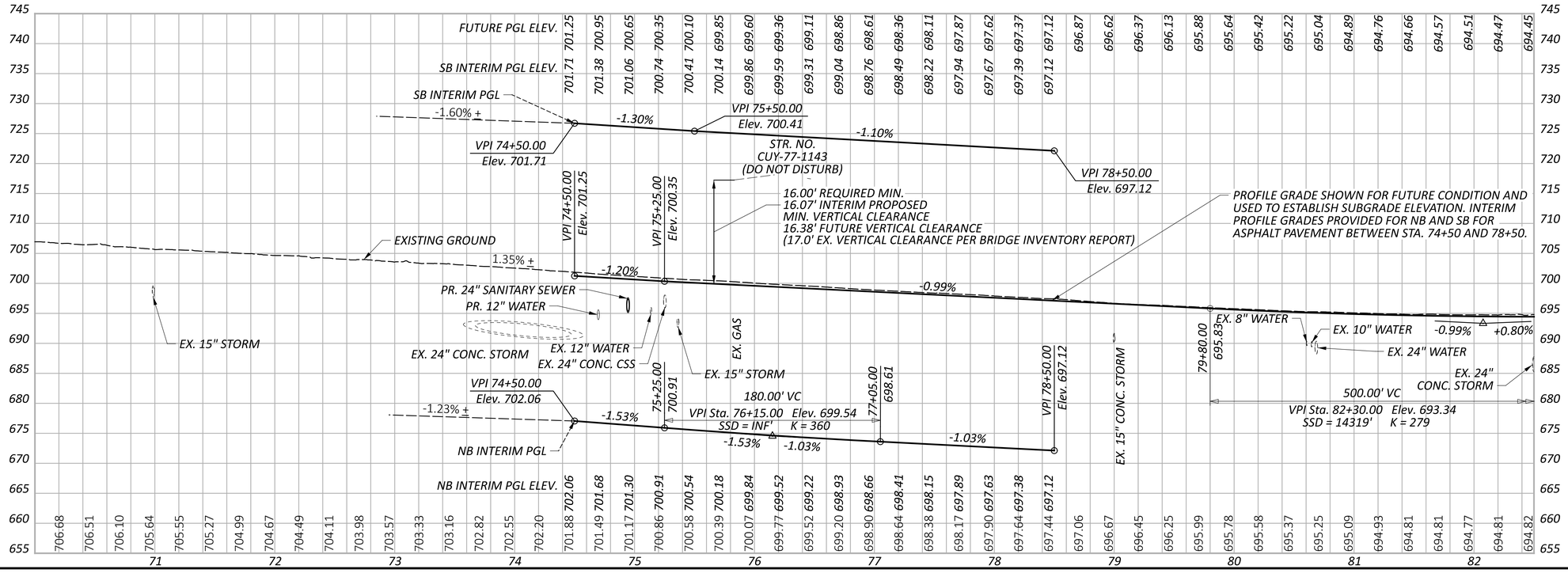

MODEL: CLP_i077 - Plan 1 [Sheet] PAPERSIZE: 34x22 (in.) DATE: 11/16/2026 TIME: 4:48:51 PM USER: kperkins
pw:\\trc-pw.bentley.com:trc-pw-01\Documents\5 - Projects - External\Ohio Department of Transportation (ODOT)\301525 - CUY-77-11.21\105743\400-Engineering\Roadway\Sheets\105743_GP101.dgn

PLAN AND PROFILE - I.R. 77
STA. 70+00.00 STA. 82+50.00

DESIGN AGENCY
HNTB

DESIGNER EAP
REVIEWER KKP 04/01/22
PROJECT ID 105743
SHEET P.305 TOTAL P.1274

MODEL: Sheet 2 PAPERSIZE: 34x22 (in.) DATE: 11/17/2026 TIME: 4:25:36 AM PLTDRV: OHDOT_PDF.pltcfg PENTBL: OHDOT_Pen.tbl USER: sydney.stefanek@aecom.com WORKSPACE: OHDOTCEv02 WORKSET: 105743 PRODUCT: OpenRoadsDesigner 24.00.02.25
pw:\\trc-pw.bentley.com:trc-pw-01\Documents\5 - Projects - External\Ohio Department of Transportation (ODOT)\301525 - CUY-77-11.21\105743\400-Engineering\Drainage\Sheets\105743_DN001.dgn

ITEM 611 - CONDUIT, AS PER PLAN 2

THE WORK SHALL BE PERFORMED IN ACCORDANCE WITH THE REQUIREMENTS OF ODOT CMS ITEM 611. IN ADDITION TO THE REQUIREMENTS STATED IN ITEM 611, CONDUIT, AS PER PLAN 1, THE FOLLOWING ADDITIONAL ELEMENTS ARE REQUIRED.

PORTIONS OF THE ABANDONED BRIDGE FOUNDATIONS, ABANDONED FOOTERS AND/OR ABANDONED PILINGS THAT CONFLICT WITH THE PROPOSED STORM SEWER THAT ARE NOT DESIGNATED AS TO REMAIN OR DO NOT DISTURB SHALL BE REMOVED WITH THE PORTION OF STRUCTURE REMOVED, AS PER PLAN PAY ITEM REFERENCED IN THE ROADWAY GENERAL NOTES. FOR THE ACTIVE EXISTING BRIDGE FOUNDATIONS, FOOTERS, AND/OR PILINGS THAT ARE TO REMAIN AND NOT BE DISTURBED, THE CONTRACTOR SHALL TAKE PRECAUTIONS DURING EXCAVATION ACTIVITES. THIS PAY ITEM SHALL INCLUDE TRENCHING/SHORING ACCOMMODATIONS REQUIRED PER ODOT ITEM 611 AND 503.03 NECESSARY TO NOT DISTURB THE EXISTING BRIDGE ELEMENTS LABELED DO NOT DISTURB.

PAYMENT FOR ALL OPERATIONS, EQUIPMENT, AND MATERIAL REQUIRED TO PERFORM THE ABOVE IS INCLUDED IN THE CONTRACT UNIT PRICE PER FOOT FOR THE PERTINENT ITEM 611, CONDUIT, AS PER PLAN 2.

ITEM 611 - CONDUIT, AS PER PLAN 3

THE WORK SHALL BE PERFORMED IN ACCORDANCE WITH THE REQUIREMENTS OF ODOT CMS ITEM 611. IN ADDITION TO THE REQUIREMENTS STATED IN ITEM 611, CONDUIT, AS PER PLAN 1, THE FOLLOWING ADDITIONAL ELEMENTS ARE REQUIRED.

FOR LOCATIONS WHERE COMPACTION EQUIPMENT CANNOT OPERATE EFFECTIVELY, LSM BACKFILL IS REQUIRED AROUND CONDUIT AND STRUCTURES TO AVOID COMPACTION ISSUES BETWEEN MANHOLES, CATCH BASINS, INLETS AND PIPES.

PAYMENT FOR ALL OPERATIONS, EQUIPMENT, AND MATERIAL REQUIRED TO PERFORM THE ABOVE IS INCLUDED IN THE CONTRACT UNIT PRICE PER FOOT FOR THE PERTINENT ITEM 611, CONDUIT, AS PER PLAN 3.

ITEM 611 - CONDUIT, AS PER PLAN 4

THE WORK SHALL BE PERFORMED IN ACCORDANCE WITH THE REQUIREMENTS OF ODOT CMS ITEM 611. IN ADDITION TO THE REQUIREMENTS STATED IN ITEM 611, CONDUIT, AS PER PLAN 1, THE FOLLOWING ADDITIONAL ELEMENTS ARE REQUIRED.

FOR LOCATIONS WHERE THE CLEARANCE BETWEEN STORM SEWER AND A UTILITY IS WITHIN 6" TO 18", INSTALL A CONCRETE CRADLE AT THE CROSSING PER THE DETAIL ON BELOW.

PAYMENT FOR ALL OPERATIONS, EQUIPMENT, AND MATERIAL REQUIRED TO PERFORM THE ABOVE IS INCLUDED IN THE CONTRACT UNIT PRICE PER FOOT FOR THE PERTINENT ITEM 611, CONDUIT, AS PER PLAN 4.

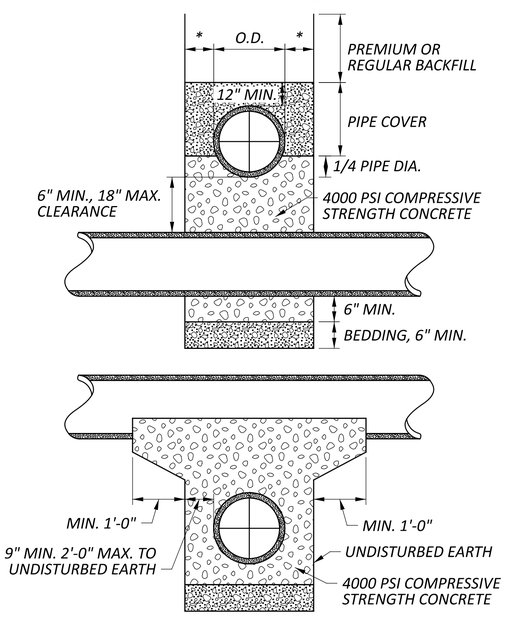

CONCRETE CRADLE DETAILS

NOT TO SCALE

ITEM 611 - CONDUIT, AS PER PLAN 5

THE WORK SHALL BE PERFORMED IN ACCORDANCE WITH THE REQUIREMENTS OF ODOT CMS ITEM 611. IN ADDITION TO THE REQUIREMENTS STATED IN ITEM 611, CONDUIT, AS PER PLAN 1, THE FOLLOWING ADDITIONAL ELEMENTS ARE REQUIRED.

FOR LOCATIONS WHERE THE EXISTING STRUCTURE IS TO REMAIN IN PLACE, THE CONTRACTOR SHALL CORE INTO THE SIDE OF THE EXISTING STRUCTURE TO ESTABLISH THE PROPOSED STORM CONNECTION.

PAYMENT FOR ALL OPERATIONS, EQUIPMENT, AND MATERIAL REQUIRED TO PERFORM THE ABOVE IS INCLUDED IN THE CONTRACT UNIT PRICE PER FOOT FOR THE PERTINENT ITEM 611, CONDUIT, AS PER PLAN 5.

ITEM 611 - CATCH BASIN, NO. 5, AS PER PLAN

THE CONTRACTOR SHALL FIELD LOCATE THE EXISTING UNDERDRAIN AND ESTABLISH A POSITIVE DRAINAGE CONNECTION TO THE D-71B CATCH BASIN.

PAYMENT FOR ALL OPERATIONS, EQUIPMENT, AND MATERIAL REQUIRED TO PERFORM THE ABOVE IS INCLUDED IN THE CONTRACT PRICE FOR THE PERTINENT ITEM 611, CATCH BASIN, NO. 5, AS PER PLAN.

ITEM 611 - INLET, NO. 3 FOR SINGLE SLOPE BARRIER, TYPE C1, AS PER PLAN

THE CONTRACTOR MUST ACCOMMODATE THE SLOTTED DRAIN OUTLET AT THIS DRAINAGE STRUCTURE.

PAYMENT FOR ALL OPERATIONS, EQUIPMENT, AND MATERIAL REQUIRED TO PERFORM THE ABOVE IS INCLUDED IN THE CONTRACT PRICE FOR THE PERTINENT ITEM 611, INLET, NO. 3 FOR SINGLE SLOPE BARRIER, TYPE C1, AS PER PLAN.

ITEM 611 - INLET, NO. 3 FOR SINGLE SLOPE BARRIER, TYPE D, AS PER PLAN 1

THE WORK SHALL BE PERFORMED IN ACCORDANCE WITH THE REQUIREMENTS OF ODOT CMS ITEM 611 AND ODOT STANDARD CONSTRUCTION DRAWING I-3D, EXCEPT AS MODIFIED HEREIN.

THE CONTRACTOR SHALL CONSTRUCT THE INLET AS CAST-IN-PLACE, ENSURING THAT THE INLET BOTTOM AND THE CONNECTION TO THE EXISTING 12-INCH STORM SEWER WHICH COMES THROUGH THE EXISTING FOOTER ARE FORMED IN THE FIELD TO MATCH EXISTING CONDITIONS. ALL FIELD ADJUSTMENTS NECESSARY TO ACHIEVE PROPER ALIGNMENT AND ELEVATION SHALL BE INCLUDED AT NO ADDITIONAL COST TO THE DEPARTMENT.

THE CONTRACTOR SHALL EXERCISE EXTREME CARE TO NOT DISTURB, UNDERMINE, OR OTHERWISE IMPACT THE EXISTING RETAINING WALL.

PAYMENT FOR ALL OPERATIONS, EQUIPMENT, AND MATERIAL REQUIRED TO PERFORM THE ABOVE IS INCLUDED IN THE CONTRACT PRICE FOR THE PERTINENT ITEM 611, INLET, NO. 3 FOR SINGLE SLOPE, TYPE D, AS PER PLAN 1.

ITEM 611 - INLET, NO. 3 FOR SINGLE SLOPE BARRIER, TYPE D, AS PER PLAN 2

THE WORK SHALL BE PERFORMED IN ACCORDANCE WITH THE REQUIREMENTS OF ODOT CMS ITEM 611 AND ODOT STANDARD CONSTRUCTION DRAWING I-3D, EXCEPT AS MODIFIED HEREIN.

THE CONTRACTOR SHALL FORM AND CONSTRUCT THE RETAINING WALL AROUND THE INLET BOTTOM IN THE FIELD. ANY FIELD MODIFICATIONS NECESSARY TO PROPERLY INTEGRATE THE WALL WITH THE INLET STRUCTURE SHALL BE INCLUDED AT NO ADDITIONAL COST TO THE DEPARTMENT.

PAYMENT FOR ALL OPERATIONS, EQUIPMENT, AND MATERIAL REQUIRED TO PERFORM THE ABOVE IS INCLUDED IN THE CONTRACT PRICE FOR THE PERTINENT ITEM 611, INLET, NO. 3 FOR SINGLE SLOPE, TYPE D, AS PER PLAN 2.

ITEM 611 - MANHOLE, NO. 5, AS PER PLAN

THE WORK SHALL BE PERFORMED IN ACCORDANCE WITH THE REQUIREMENTS OF ODOT CMS ITEM 611 AND ODOT STANDARD CONSTRUCTION DRAWING MH-5, EXCEPT AS SHOWN ON SHEETS P.717 - P.720.

PAYMENT FOR ALL OPERATIONS, EQUIPMENT, AND MATERIAL REQUIRED TO PERFORM ALL WORK SHOWN AND DESCRIBED IN THE DETAILS FOR CONSTRUCTION OF THE JUNCTION CHAMBER AND MANHOLE IS INCLUDED IN THE CONTRACT PRICE FOR THE PERTINENT ITEM 611, MANHOLE, NO. 5, AS PER PLAN.

ITEM 611 - MANHOLE ADJUSTED TO GRADE, AS PER PLAN

THE WORK SHALL BE PERFORMED IN ACCORDANCE WITH THE REQUIREMENTS OF ODOT CMS ITEM 611, EXCEPT AS MODIFIED HEREIN.

THIS STORM MANHOLE FRAME, GRATE AND LID SHALL BE OPEN GRATED AND ROUND, PER NEENAH FOUNDRY R-1792-FG SERIES, OR APPROVED EQUAL. THE CONTRACTOR SHALL TIE THE PROPOSED UNDERDRAIN CONNECTION AT THE DZ-32 MANHOLE AT AN INVERT ELEVATION OF 642.00'.

PAYMENT FOR ALL OPERATIONS, EQUIPMENT, AND MATERIAL REQUIRED TO PERFORM THE ABOVE IS INCLUDED IN THE CONTRACT PRICE FOR THE PERTINENT ITEM 611, MANHOLE ADJUSTED TO GRADE, AS PER PLAN.

ITEM 611 - CATCH BASIN, NO. 6, AS PER PLAN

CATCH BASIN SHALL BE CONSTRUCTED IN CONFORMANCE WITH ITEM 611 AND ACCORDING TO THE STANDARD CONSTRUCTION DRAWING (SCD) CB-6, EXCEPT THAT "SECTION B-B W/O GUTTER" OF THE AFOREMENTIONED SCD SHALL BE MODIFIED AS SHOWN BELOW AND THAT NO BRICK OR CONCRETE BLOCK CONSTRUCTION SHALL BE PERMITTED.

REINFORCING STEEL TO MEET AASHTO HS20-44.

SIDEWALL THICKNESSES SHALL BE PER "WALLS" NOTE ON THE APPLICABLE SCD.

* CROSS SLOPE OF PAVED SHOULDER FROM CONCRETE BARRIER FACE TO CENTER OF CATCH BASIN SHALL BE INVERTED, OVER A LONGITUDINAL DISTANCE OF 10 FEET BEFORE AND AFTER THE STRUCTURE.

** UNDERDRAN CONNECTION WILL BE MADE INTO THE SIDE OF THE CATCH BASIN STRUCTURE VIA TYPE F CONDUIT.

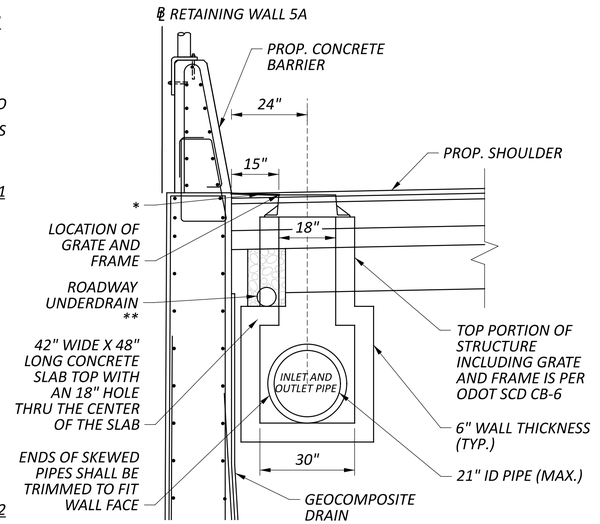

ITEM 611 - MANHOLE MISC.: MANHOLE NO. 3 WITH BOLTED COVER

INCLUDE THE COSTS TO FURNISH AND INSTALL A NO. 3 MANHOLE ACCORDING TO THE APPLICABLE STANDARD DRAWINGS AND CMS 611, EXCEPT PROVIDE A BOLTED DOWN COVER, IN THE UNIT PRICE BID PER EACH FOR ITEM 611 – MANHOLE MISC.: MANHOLE NO. 3 WITH BOLTED COVER.

FURNISH A BOLTED DOWN COVER MEETING THE FOLLOWING REQUIREMENTS:

- FOUR (4) EQUALLY SPACED HALF-INCH (1/2") STAINLESS STEEL HEX CAP SCREWS CONFORMING TO ASTM F-593, ALLOY GROUP 1.
- PROVIDE COUNTERSINKS, HOLES, THREADING, AND PLACEMENT IN ACCORDANCE WITH THE CASTING MANUFACTURER'S RECOMMENDATIONS AND METHODS.
- TIGHTEN BOLTS ACCORDING TO MANUFACTURER'S TORQUE SPECIFICATIONS.

POSITION THE MANHOLE FRAME AND COVER AS SHOWN IN THE PLANS AND PLACE THE LID OUTSIDE OF THE TRAVEL LANES. ALIGN MANHOLE STEPS WITH LID LOCATION.

ITEM 611 - DRAINAGE STRUCTURE, MISC.: RESHAPE AND REESTABLISH EXISTING CONNECTION

THIS ITEM SHALL INCLUDE ALL WORK NECESSARY FOR THE CONTRACTOR TO FIELD LOCATE AND EXPOSE THE EXISTING CONNECTION POINT AT APPROXIMATELY STA. 170+60.75, 3' LT., NEAR THE MORGANA TRAIL STRUCTURE. THE CONTRACTOR SHALL UTILIZE THE EXISTING HOLE IN THE EXISTING BRICK SEWER AND FROM SAID CONNECTION POINT INSTALL THE PROPOSED 15-INCH CONDUIT TO FORM A NEW CONNECTION, AS DIRECTED BY THE PROJECT ENGINEER. ANY GROUTING, CHISELING, MACHINING OR LABOR REQUIRED TO ACCOMODATE THE NEW CONNECTION SHALL BE INCLUDED IN THE UNIT PRICE BID PER EACH.

ITEM 611 - MANHOLE MISC.: MANHOLE ADJUSTED TO GRADE WITH BOLTED COVER

INCLUDE THE COSTS TO FURNISH AND INSTALL AN ADJUSTED TO GRADE MANHOLE ACCORDING TO ODOT CMS 611, EXCEPT PROVIDE A BOLTED DOWN COVER, IN THE UNIT PRICE BID PER EACH FOR ITEM 611 – MANHOLE MISC.: MANHOLE ADJUSTED TO GRADE WITH BOLTED COVER.

FURNISH A BOLTED DOWN COVER MEETING THE FOLLOWING REQUIREMENTS:

- FOUR (4) EQUALLY SPACED HALF-INCH (1/2") STAINLESS STEEL HEX CAP SCREWS CONFORMING TO ASTM F-593, ALLOY GROUP 1.
- PROVIDE COUNTERSINKS, HOLES, THREADING, AND PLACEMENT IN ACCORDANCE WITH THE CASTING MANUFACTURER'S RECOMMENDATIONS AND METHODS.
- TIGHTEN BOLTS ACCORDING TO MANUFACTURER'S TORQUE SPECIFICATIONS.

POST CONSTRUCTION STORM WATER TREATMENT

THIS PLAN UTILIZES STRUCTURAL BEST MANAGEMENT PRACTICES (BMP'S) FOR POST CONSTRUCTION STORM WATER TREATMENT.

VEGETATED FILTER STRIP

THIS PLAN UTILIZES VEGETATED FILTER STRIP(S) FOR POST CONSTRUCTION STORM WATER TREATMENT. PLACE EITHER ITEM 660 SODDING OR ITEM 659 SEEDING AND MULCHING WITH A 4-INCH LIFT OF TOPSOIL AND ITEM 670, SLOPE EROSION PROTECTION TO ALL DISTURBED AREAS DESIGNATED AS VEGETATED FILTER STRIPS, THE EDGE OF SHOULDER, AND THE FORESLOPE AS SPECIFIED IN THE PLANS. TWO INCHES OF THE TOTAL FOUR INCHES OF TOPSOIL REQUIRED IS ACCOUNTED FOR IN THE SEEDING AND MULCHING QUANTITY.

VEGETATED BIOFILTER

THIS PLAN UTILIZES VEGETATED BIOFILTER(S) FOR POST CONSTRUCTION STORM WATER TREATMENT. PLACE ITEM 659 SEEDING AND MULCHING WITH A 4-INCH LIFT OF TOPSOIL AS SHOWN IN THE VEGETATED BIOFILTER DETAIL BELOW TO ANY DISTURBED AREA ON THE SHOULDER AND FORESLOPE DRAINING TO A VEGETATED BIOFILTER. THE DITCH FOR EACH VEGETATED BIOFILTER IS TRAPEZOIDAL, AS SHOWN IN THE DETAIL BELOW AND PLAN CROSS SECTIONS. PROVIDE ITEM 670 AS SPECIFIED IN THE DETAIL BELOW AND WIDTH AS SPECIFIED IN THE TABLE ON P.303.

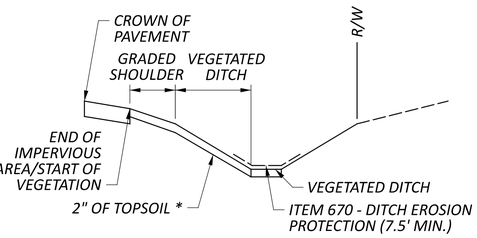

VEGETATED BIOFILTER DETAIL
CROSS SECTION VIEW

NOT TO SCALE

* 2" OF THE TOTAL 4" OF TOPSOIL REQUIRED IS ACCOUNTED FOR IN THE SEEDING AND MULCHING QUANTITY

DRAINAGE NOTES AND DETAILS

DESIGN AGENCY
AECOM

DESIGNER
SMS

REVIEWER
MAW 03/14/26

PROJECT ID
105743

SHEET P.712 TOTAL P.1274

DRAINAGE SUBSUMMARY

REF NO.	CFN NO.	SHEET NO.	STATION TO STATION					ALIGNMENT	611 36" CONDUIT, TYPE C, AS PER PLAN 1 FT	611 36" CONDUIT, TYPE C, AS PER PLAN 1, 706.02 FT	611 42" CONDUIT, TYPE C, AS PER PLAN 1, 706.02 FT	611 48" CONDUIT, TYPE B, AS PER PLAN 1 FT	611 48" CONDUIT, TYPE B, AS PER PLAN 2 FT	611 48" CONDUIT, TYPE A, AS PER PLAN 1 FT	611 48" CONDUIT, TYPE C, AS PER PLAN 1, 706.02 FT	611 54" CONDUIT, TYPE B, AS PER PLAN 1 FT	611 54" CONDUIT, TYPE C, AS PER PLAN 1 FT	611 60" CONDUIT, TYPE B, AS PER PLAN 1 FT	611 60" CONDUIT, TYPE B, AS PER PLAN 2 FT	611 66" CONDUIT, TYPE B, AS PER PLAN 1, 706.02 FT	611 14" X 23" CONDUIT, TYPE B, 706.04, AS PER PLAN 1 FT	611 19" X 30" CONDUIT, TYPE B, 706.04, AS PER PLAN 2 FT	611 CONDUIT, BORED OR JACKED, AS PER PLAN 1, 15", TYPE B FT	611 CONDUIT, BORED OR JACKED, AS PER PLAN 1, 18", TYPE B FT	611 CONDUIT, BORED OR JACKED, AS PER PLAN 1, 21", TYPE B FT	611 CONDUIT, BORED OR JACKED, AS PER PLAN 1, 24", TYPE B FT	611 CONDUIT, BORED OR JACKED, AS PER PLAN 1, 27", TYPE B FT	611 CONDUIT, BORED OR JACKED, AS PER PLAN 1, 30", TYPE B FT	611 CONDUIT, BORED OR JACKED, AS PER PLAN 1, 36", TYPE B FT	611 CONDUIT, BORED OR JACKED, AS PER PLAN 2, 60", TYPE B FT	611 CONDUIT, MISC.: 14" X 23" CONDUIT, TYPE C, 706.04, AS PER PLAN 1 FT	611 CONDUIT, MISC.: 24" X 38" CONDUIT, TYPE C, 706.04, AS PER PLAN 1 FT	611 CATCH BASIN, NO. 3A EACH	611 CATCH BASIN, NO. 5 EACH	611 CATCH BASIN, NO. 5, AS PER PLAN EACH	611 CATCH BASIN, NO. 6, AS PER PLAN EACH	611 CATCH BASIN, NO. 8 WITHOUT APRON EACH	611 CATCH BASIN, NO. 2-3 EACH	611 CATCH BASIN, NO. 2-3 WITH BICYCLE SAFE GRATE EACH	611 CATCH BASIN, NO. 2-5 WITH BICYCLE SAFE GRATE EACH	611 CATCH BASIN, NO. 2-6 WITH BICYCLE SAFE GRATE EACH	611 CATCH BASIN ADJUSTED TO GRADE EACH	611 CATCH BASIN RECONSTRUCTED TO GRADE EACH
D-4B	2001856	P.755	75+00.00	RT	TO	75+10.00	RT	CLP_I077																		62															
D-4A	2001855	P.755	75+07.00	RT	TO	75+10.00	RT	CLP_I077															57																		
D-4C		P.755	75+07.00	LT	TO	75+11.00	LT	CLP_I077																																
D-4D	2001857	P.755	75+11.00	LT	TO	75+56.50	LT	CLP_I077																																
D-3A	2001850	P.755-P.756	75+56.50	LT	TO	77+70.00	LT	CLP_I077																																
D-3B	2001851	P.756	77+70.00	LT	TO	78+50.00	LT	CLP_I077																																
D-3C	2001852	P.756	77+70.00	LT	TO	77+70.00	LT	CLP_I077																																
D-3D	2001853	P.756	78+50.00	LT	TO	78+98.50	LT	CLP_I077																																
D-5	2001858	P.756	78+90.00	RT	TO	78+90.00	LT	CLP_I077															62																	
D-6	2001859	P.756	78+90.00	LT	TO	78+98.50	LT	CLP_I077																																
D-3		P.756	78+98.50	LT	TO	81+60.50	LT	CLP_I077								257																							
D-4	2001854	P.756	79+00.00	RT	TO	80+96.00	RT	CLP_I077																																
D-10A	2001862	P.756	80+62.00	LT	TO	81+60.00	LT	CLP_I077																																
D-8	2001860	P.756	80+96.00	RT	TO	81+67.00	RT	CLP_I077																																
D-9	2001858	P.756	81+60.00	RT	TO	81+60.00	LT	CLP_I077																				62											
D-10		P.756	81+60.00	LT	TO	81+60.50	LT	CLP_I077																																
D-13A	2001866	P.756	81+60.00	RT	TO	81+67.00	RT	CLP_I077																				54											
D-14	2001867	P.756-P.757	81+60.00	RT	TO	82+56.86	RT	CLP_I077																																
D-7		P.756-P.757	81+60.50	LT	TO	83+51.00	LT	CLP_I077								187																							
D-13	2001865	P.756	81+67.00	RT	TO	81+68.41	RT	CLP_I077																				46										1	
D-15C	2001869	P.757	82+25.00	LT	TO	82+56.86	LT	CLP_I077																																
D-15	2001868	P.757	82+56.86	LT	TO	82+90.00	LT	CLP_I077																																
D-16	2001870	P.757	82+56.86	RT	TO	83+50.00	RT	CLP_I077																																
D-17A	2001871	P.757	82+90.00	LT	TO	83+49.00	LT	CLP_I077																																
D-17		P.757	83+49.00	LT	TO	83+51.00	LT	CLP_I077																																
D-12	2001864	P.757	83+51.00	LT	TO	85+99.00	LT	CLP_I077									244																							
D-19	2001873	P.757	83+51.00	LT	TO	83+72.06	LT	CLP_I077																																
D-18	2001872	P.757	83+72.06	LT	TO	83+98.50	LT	CLP_I077																																
D-18A		P.757	83+98.50	LT	TO	84+30.58	LT	CLP_I077																															1	
D-21A	2001875	P.757	84+32.23	LT	TO	84+82.84	LT	CLP_I077																																
D-21	2001874	P.757	84+82.84	LT	TO	85+99.31	LT	CLP_I077																																
D-22	2001876	P.757-P.758	85+99.00	LT	TO	89+10.00	LT	CLP_I077									306																							
D-24	2001878	P.757	85+99.31	LT	TO	85+99.00	LT	CLP_I077																																
D-23	2001877	P.757	85+99.00	LT	TO	86+00.00	RT	CLP_I077															61																	
D-26	2001879	P.758	88+17.21	LT	TO	89+10.00	LT	CLP_I077																																
D-27	2001880	P.758	89+09.16	LT	TO	90+00.00	LT	CLP_I077												89																				
D-30	2001882	P.758	89+98.44	RT	TO	90+00.00	LT	CLP_I077																																
D-28	2001881	P.758-P.759	90+00.00	LT	TO	92+94.00	LT	CLP_I077												291																				
D-31C	2001885	P.759	92+82.00	LT	TO	92+94.00	LT	CLP_I077																																
D-31	2001883	P.759	92+94.00	LT	TO	95+65.00	LT	CLP_I077												268																				
D-31A	2001884	P.759	92+94.00	LT	TO	92+94.16	RT	CLP_I077															120																	
D-31B		P.759	92+94.16	RT	TO	93+24.40	RT	CLP_I077																															1	
D-33		P.759	95+17.09	RT	TO	95+42.82	RT	CLP_I077	30	8																														
D-34A	2001889	P.759	95+42.82	RT	TO	95+56.94	LT	CLP_I077																																
D-34	2001888	P.759	95+42.82	RT	TO	95+55.00	RT	CLP_I077																																
D-36	2001890	P.759	95+55.00	LT	TO	95+65.00	LT	CLP_I077																																
D-32A	2001887	P.759	95+56.94	LT	TO	95+65.00	LT	CLP_I077																																
D-32	2001886	P.759-P.760	95+65.00	LT	TO	99+00.00	LT	CLP_I077												333																				
D-37A	2001892	P.760	98+90.00	LT	TO	99+00.00	LT	CLP_I077																																
D-37	2001891	P.760-P.761	99+00.00	LT	TO	103+77.00	LT	CLP_I077												478																				
TOTALS CARRIED TO P.745									30	8						444	550	478	981			300				224			117						1		2						

CUY-77-11.41 - PART 1

MODEL: Sheet 2 PAPERSIZE: 34x22 (in.) DATE: 11/17/2026 TIME: 1:44:49 AM PLTDRV: OHDOT_PDF.pltcfg PENTBL: OHDOT_Pen.tbl USER: sydney.stefanek@aecom.com
pw:\\trc-pw.bentley.com:trc-pw-01\Documents\5 - Projects - External\Ohio Department of Transportation (ODOT)\301525 - CUY-77-11.21\105743\400-Engineering\Drainage\Sheets\105743_DS002.dgn

DESIGN AGENCY
AECOM

DESIGNER
SMS

REVIEWER
AKM 05/01/26

PROJECT ID
105743

SHEET P.730 | TOTAL P.1274

REF NO.	CFN NO.	SHEET NO.	STATION TO STATION					ALIGNMENT	611 36" CONDUIT, TYPE C, AS PER PLAN 1 FT	611 36" CONDUIT, TYPE C, AS PER PLAN 1, 706.02 FT	611 42" CONDUIT, TYPE C, AS PER PLAN 1, 706.02 FT	611 48" CONDUIT, TYPE B, AS PER PLAN 1 FT	611 48" CONDUIT, TYPE B, AS PER PLAN 2 FT	611 48" CONDUIT, TYPE C, AS PER PLAN 1 FT	611 48" CONDUIT, TYPE C, AS PER PLAN 1, 706.02 FT	611 54" CONDUIT, TYPE B, AS PER PLAN 1 FT	611 54" CONDUIT, TYPE C, AS PER PLAN 1 FT	611 60" CONDUIT, TYPE B, AS PER PLAN 1 FT	611 60" CONDUIT, TYPE B, AS PER PLAN 2 FT	611 66" CONDUIT, TYPE B, AS PER PLAN 1, 706.02 FT	611 14" X 23" CONDUIT, TYPE B, 706.04, AS PER PLAN 1 FT	611 19" X 30" CONDUIT, TYPE B, 706.04, AS PER PLAN 2 FT	611 CONDUIT, BORED OR JACKED, AS PER PLAN 1, 15", TYPE B FT	611 CONDUIT, BORED OR JACKED, AS PER PLAN 1, 18", TYPE B FT	611 CONDUIT, BORED OR JACKED, AS PER PLAN 1, 21", TYPE B FT	611 CONDUIT, BORED OR JACKED, AS PER PLAN 1, 24", TYPE B FT	611 CONDUIT, BORED OR JACKED, AS PER PLAN 1, 27", TYPE B FT	611 CONDUIT, BORED OR JACKED, AS PER PLAN 1, 30", TYPE B FT	611 CONDUIT, BORED OR JACKED, AS PER PLAN 1, 36", TYPE B FT	611 CONDUIT, BORED OR JACKED, AS PER PLAN 2, 60", TYPE B FT	611 CONDUIT, MISC., 14" X 23", CONDUIT, TYPE C, 706.04, AS PER PLAN 1 FT	611 CONDUIT, MISC.; 24" X 38" CONDUIT, TYPE C, 706.04, AS PER PLAN 1 FT	611 CATCH BASIN, NO. 3A EACH	611 CATCH BASIN, NO. 5 EACH	611 CATCH BASIN, NO. 5, AS PER PLAN EACH	611 CATCH BASIN, NO. 6, AS PER PLAN EACH	611 CATCH BASIN, NO. 8 WITHOUT APRON EACH	611 CATCH BASIN, NO. 2-3 EACH	611 CATCH BASIN, NO. 2-3 WITH BICYCLE SAFE GRATE EACH	611 CATCH BASIN, NO. 2-5 WITH BICYCLE SAFE GRATE EACH	611 CATCH BASIN, NO. 2-6 WITH BICYCLE SAFE GRATE EACH	611 CATCH BASIN ADJUSTED TO GRADE EACH	611 CATCH BASIN RECONSTRUCTED TO GRADE EACH
D-38	2001893	P.760	99+00.00	RT	TO	99+00.00	LT	CLP_I077																		53																
D-38A	2001894	P.760	99+00.00	RT	TO	99+00.00	RT	CLP_I077																		59											1					
D-40A		P.761	102+82.00	LT	TO	103+70.00	LT	CLP_I077																																		
D-40	2001896	P.761	103+70.00	LT	TO	103+77.00	LT	CLP_I077																																		
D-39	2001895	P.761	103+77.00	LT	TO	106+08.00	LT	CLP_I077											235																							
D-44	2001901	P.761	104+29.01	RT	TO	104+39.38	RT	CLP_I077																																		
D-105	2001963	P.761	104+39.38	RT	TO	106+54.68	RT	CLP_I077																																		
D-41	2001897	P.761-P.762	106+08.00	LT	TO	108+77.88	LT	CLP_I077											279																							
D-42	2001898	P.761	106+08.00	LT	TO	106+08.00	LT	CLP_I077																																1				
D-45	2001902	P.761	106+46.03	RT	TO	106+54.68	RT	CLP_I077																																		
D-106	2001964	P.761-P.762	106+54.68	RT	TO	107+03.26	RT	CLP_I077																																		
D-46A	2001904	P.761	106+96.56	RT	TO	106+97.52	RT	CLP_I077																																1				
D-46	2001903	P.761-P.762	106+97.52	RT	TO	107+03.26	RT	CLP_I077																																		
D-107		P.762	107+03.26	RT	TO	108+16.81	RT	CLP_I077																																		
D-47C		P.762	108+06.97	RT	TO	108+08.12	RT	CLP_I077																																1				
D-47	2001905	P.762	108+08.12	RT	TO	108+16.81	RT	CLP_I077																																		
D-51	2001908	P.762	108+15.93	LT	TO	108+85.67	LT	CLP_I077																																		
D-108		P.762	108+16.81	RT	TO	110+80.00	RT	CLP_I077																																		
D-52	2001909	P.762	108+77.88	LT	TO	110+80.00	LT	CLP_I077											218																							
D-50		P.762	108+77.88	LT	TO	108+85.67	LT	CLP_I077																																		
D-49	2001907	P.762	108+85.67	LT	TO	109+17.68	LT	CLP_I077																																		
D-47A		P.762	110+67.63	RT	TO	110+80.00	RT	CLP_I077																																		
D-53	2001910	P.762	110+80.00	RT	TO	110+80.00	LT	CLP_I077																						75										1				
D-48	2001906	P.762	110+80.00	LT	TO	110+88.00	LT	CLP_I077																																		
D-43	2001899	P.762	110+80.00	LT	TO	110+88.00	LT	CLP_I077											40																							
D-54	2001911	P.762	110+80.00	LT	TO	111+12.00	LT	CLP_I077																																		
D-43C		P.762	110+88.00	LT	TO	113+39.00	LT	CLP_I077												84																					
D-43D		P.762-P.763	111+74.00	LT	TO	113+39.00	LT	CLP_I077																																165				
D-43B		P.763	113+39.00	LT	TO	113+39.00	LT	CLP_I077											40																							
D-43A	2001900	P.763-P.764	113+39.00	LT	TO	117+52.00	LT	CLP_I077											419																							
D-56	2001913	P.763	116+25.00	RT	TO	116+30.00	RT	CLP_I077																																		
D-56A		P.763-P.764	116+30.00	RT	TO	117+57.00	RT	CLP_I077																																		
D-57	2001914	P.764	117+51.00	RT	TO	117+57.00	RT	CLP_I077																																		
D-55	2001912	P.764	117+52.00	LT	TO	120+00.00	LT	CLP_I077											252																							
D-58	2001916	P.764	117+52.00	LT	TO	117+54.00	LT	CLP_I077																		67															
D-57A	2001915	P.764	117+57.00	RT	TO	117+74.52	RT	CLP_I077																																		
D-O1		P.764	117+74.52	RT				CLP_I077																																		
D-60	2001919	P.764	118+51.00	LT	TO	118+70.76	LT	CLP_I077																																1				
D-O2		P.764	118+70.76	LT				CLP_I077																																		
D-59	2001917	P.764	120+00.00	LT	TO	120+14.49	LT	CLP_I077											29																							
D-59A	2001918	P.764-P.765	120+14.49	LT	TO	125+78.00	LT	CLP_I077											572																							
DZ-32		P.765	125+46.92	RT				CLP_I077																																		
D-61	2001920	P.765-P.766	125+78.00	LT	TO	129+06.00	LT	CLP_I077											332																							
D-63	2001921	P.765	125+78.00	LT	TO	125+78.00	LT	CLP_I077																		59															
D-65	2001924	P.766	129+00.00	LT	TO	129+06.00	LT	CLP_I077																		45															
D-64A	2001923	P.766	129+06.00	LT	TO	130+65.00	LT	CLP_I077											161																							
D-69	2001928	P.766	129+06.00	LT	TO	129+07.00	LT	CLP_I077																																		
D-66	2001925	P.766	129+77.31	LT	TO	130+65.00	LT	CLP_I077																																		
D-70	2001929	P.766	129+77.31	LT	TO	130+65.00	LT	CLP_I077																																		
D-67	2001926	P.766	130+65.00	LT	TO	130+65.00	LT	CLP_I077																				45													
D-68	2001927	P.766	130+65.00	LT	TO	130+65.00	LT	CLP_I077																																		
D-64	2001922	P.766-P.767	130+65.00	LT	TO	133+71.00	LT	CLP_I077											307																							
D-74	2001932	P.767	132+98.96	RT	TO	133+00.00	RT	CLP_I077																																		
D-76	2001934	P.767	132+98.96	RT	TO	134+59.58	RT	CLP_I077																																		
D-73	2001931	P.767	132+98.96	RT	TO	133+00.15	RT	CLP_I077																																		
D-75	2001933	P.767	133+00.00	RT	TO	135+83.00	RT	CLP_I077																																		
TOTALS CARRIED TO P.745																			2884	84				283	45	75									165			2			4				

DRAINAGE SUBSUMMARY

DESIGN AGENCY
AECOM

DESIGNER
SMS

REVIEWER
AKM 05/01/26

PROJECT ID
105743

SHEET P.733 TOTAL P.1274

CUY-77-11.41 - PART 1

MODEL: Sheet 5 PAPERSIZE: 34x22 (in.) DATE: 11/17/2026 TIME: 1:44:51 AM PLTDRV: OHDOT_PDF.pltcfg PENTBL: OHDOT_Pen.tbl USER: sydney.stefanek@aecom.com
pw:\\trc-pw.bentley.com:trc-pw-01\Documents\5 - Projects - External\Ohio Department of Transportation (ODOT)\301525 - CUY-77-11.21\105743\400-Engineering\Drainage\Sheets\105743_DS002.dgn
WORKSPACE: OHDOTCEv02 WORKSET: 105743 PRODUCT: OpenRoadsDesigner 24.00.02.25

REF NO.	CFN NO.	SHEET NO.	STATION TO STATION					ALIGNMENT	602 CONCRETE MASONRY CY	611 6" CONDUIT, TYPE B, AS PER PLAN 1 FT	611 6" CONDUIT, TYPE B, AS PER PLAN 1, 707.65 FT	611 6" CONDUIT, TYPE C, AS PER PLAN 1, 707.65 FT	611 8" CONDUIT, TYPE B, AS PER PLAN 1 FT	611 8" CONDUIT, TYPE C, AS PER PLAN 1 FT	611 12" CONDUIT, TYPE B, AS PER PLAN 1, 706.02 FT	611 15" CONDUIT, TYPE B, AS PER PLAN 1 FT	611 15" CONDUIT, TYPE B, AS PER PLAN 1, 706.02 FT	611 15" CONDUIT, TYPE B, AS PER PLAN 1, 707.65 FT	611 15" CONDUIT, TYPE B, AS PER PLAN 3 FT	611 15" CONDUIT, TYPE B, AS PER PLAN 5 FT	611 15" CONDUIT, TYPE C, AS PER PLAN 1 FT	611 15" CONDUIT, TYPE C, AS PER PLAN 1, 706.02 FT	611 15" CONDUIT, TYPE C, AS PER PLAN 1, 707.65 FT	611 15" CONDUIT, TYPE C, AS PER PLAN 3 FT	611 15" CONDUIT, TYPE C, AS PER PLAN 4 FT	611 18" CONDUIT, TYPE B, AS PER PLAN 1 FT	611 18" CONDUIT, TYPE B, AS PER PLAN 1, 706.02 FT	611 18" CONDUIT, TYPE B, AS PER PLAN 1, 707.65 FT	611 18" CONDUIT, TYPE B, AS PER PLAN 2 FT	611 18" CONDUIT, TYPE C, AS PER PLAN 1 FT	611 18" CONDUIT, TYPE C, AS PER PLAN 1, 706.02 FT	611 21" CONDUIT, TYPE B, AS PER PLAN 1 FT	611 21" CONDUIT, TYPE B, AS PER PLAN 3 FT	611 21" CONDUIT, TYPE C, AS PER PLAN 1 FT	611 24" CONDUIT, TYPE B, AS PER PLAN 1 FT	611 24" CONDUIT, TYPE C, AS PER PLAN 1 FT	611 24" CONDUIT, TYPE C, AS PER PLAN 1, 706.02 FT	611 24" CONDUIT, TYPE C, AS PER PLAN 1, 707.01 FT		611 27" CONDUIT, TYPE C, AS PER PLAN 1 FT	611 30" CONDUIT, TYPE B, AS PER PLAN 1 FT	611 30" CONDUIT, TYPE B, AS PER PLAN 2 FT	611 30" CONDUIT, TYPE C, AS PER PLAN 5 FT
D-71A	2001930	P.767	133+71.00	LT	TO	134+96.00	LT	CLP_I077																																
D-71B		P.767	134+02.00	LT	TO	134+66.50	LT	CLP_I077																																
D-71C		P.767	134+54.42	LT	TO	134+66.50	LT	CLP_I077																												50	5					
D-76A	2001935	P.767	134+57.89	RT	TO	134+59.58	RT	CLP_I077								28																								
D-77	2001936	P.767	134+59.58	RT	TO	135+95.27	RT	CLP_I077								136																								
D-71D		P.767	134+66.50	LT	TO	134+96.00	LT	CLP_I077																																
D-71		P.767	134+96.00	LT				CLP_I077																																
D-72		P.767	134+96.00	LT	TO	135+80.00	LT	CLP_I077																															86			
D-83	2001943	P.767-P.768	135+80.00	LT	TO	138+75.00	LT	CLP_I077																									295								
D-82	2001942	P.767	135+80.00	LT	TO	135+80.00	LT	CLP_I077																																
D-81	2001940	P.767	135+80.00	LT	TO	135+83.00	RT	CLP_I077																																
D-81A	2001941	P.767-P.768	135+83.00	RT	TO	139+00.00	RT	CLP_I077																											317						
D-78	2001937	P.767	135+95.27	RT	TO	135+97.56	RT	CLP_I077								28																								
D-80	2001939	P.767-P.768	135+95.27	RT	TO	137+59.48	RT	CLP_I077								164																								
D-79	2001938	P.768	137+59.48	RT	TO	139+83.44	RT	CLP_I077								228																								
D-84	2001944	P.768	138+75.00	LT	TO	141+57.00	LT	CLP_I077																				283												
D-84A	2001945	P.768	139+00.00	RT	TO	141+56.00	RT	CLP_I077																				255												
D-85	2001946	P.768	141+50.00	LT	TO	141+57.00	LT	CLP_I077											9																				
D-87	2001949	P.768-P.769	141+56.00	RT	TO	142+72.00	RT	CLP_I077		9																						115								
D-86	2001947	P.768-P.769	141+57.00	LT	TO	143+30.00	LT	CLP_I077																								174								
D-94A	2001956	P.769	142+72.00	RT	TO	144+25.00	RT	CLP_I077																				152												
D-86A	2001948	P.769	143+30.00	LT	TO	143+30.00	LT	CLP_I077											9																				
D-88	2001950	P.769	143+30.00	LT	TO	146+03.00	LT	CLP_I077																				275												
D-94		P.769	144+25.00	RT	TO	146+03.64	RT	CLP_I077																									179							
D-93	2001955	P.769	145+79.78	RT	TO	146+07.19	RT	CLP_I077								19																								
D-95A		P.769	146+03.00	LT	TO	146+07.05	LT	CLP_I077																																
D-95	2001957	P.769	146+03.00	LT	TO	146+07.05	LT	CLP_I077																																
D-96		P.769-P.770	146+03.00	LT	TO	147+90.00	LT	CLP_I077																																
D-92	2001954	P.769	146+03.64	RT	TO	146+07.19	RT	CLP_I077								28																								
D-91	2001953	P.769	146+07.19	RT	TO	146+34.94	RT	CLP_I077								27																								
D-90	2001952	P.769-P.770	146+34.94	RT	TO	147+74.77	RT	CLP_I077								140																								
D-89	2001951	P.770	147+74.77	RT	TO	148+50.00	RT	CLP_I077								74																								
D-97		P.770	147+90.00	LT	TO	150+16.00	LT	CLP_I077																			226												
D-104		P.770	147+91.30	LT	TO	148+05.00	LT	CLP_I077							14																								
D-98		P.770	150+16.00	LT	TO	150+60.00	LT	CLP_I077																																
D-101	2001960	P.770	150+16.00	LT	TO	150+18.19	LT	CLP_I077								31																								
D-100	2001958	P.770	150+18.19	LT	TO	150+61.06	LT	CLP_I077								43																								
D-100A	2001959	P.770	150+61.06	LT	TO	150+62.00	LT	CLP_I077											8																				
D-102	2001961	P.770	150+61.06	LT	TO	150+99.98	LT	CLP_I077								39																								
D-103	2001962	P.770-P.771	150+99.98	LT	TO	151+99.41	LT	CLP_I077								100																								
D-163A	2001980	P.772	157+55.00	LT	TO	159+90.00	LT	CLP_I077								233																								
D-150	2001965	P.772	159+85.00	RT	TO	161+60.00	RT	CLP_I077								177																								
D-163	2001979	P.772-P.773	159+90.00	LT	TO	162+50.00	LT	CLP_I077								257																								
D-150A		P.772-P.773	161+60.00	RT	TO	162+50.00	RT	CLP_I077																																
D-168A	2001987	P.773	162+21.00	LT	TO	162+50.00	LT	CLP_I077								30																								
D-157	2001972	P.773	162+25.00	RT	TO	162+50.00	RT	CLP_I077								25																								
D-151	2001966	P.773	162+50.00	RT	TO	162+50.00	RT	CLP_I077																																
D-156	2001971	P.773	162+50.00	RT	TO	162+50.00	LT	CLP_I077																																
D-162	2001978	P.773	162+50.00	LT	TO	162+50.00	LT	CLP_I077																															17		
D-168	2001986	P.773	162+50.00	LT	TO	164+70.54	LT	CLP_I077																															218		
TOTALS CARRIED TO P.744										9					14	1807			26		330					226	965			289	474		317			50	5		86	235		

DRAINAGE SUBSUMMARY

DESIGN AGENCY
AECOM

DESIGNER
SMS

REVIEWER
AKM 05/01/26

PROJECT ID
105743

SHEET P.735 | TOTAL P.1274

CUY-77-11.41 - PART 1

MODEL: Sheet 7 PAPERSIZE: 34x22 (in.) DATE: 11/17/2026 TIME: 1:44:52 AM PLTDRV: OHDOT_PDF.pltcfg PENTBL: OHDOT_Pen.tbl USER: sydney.stefanek@aecom.com WORKSPACE: OHDOTCEv02 WORKSET: 105743 PRODUCT: OpenRoadsDesigner 24.00.02.25
pw:\\trc-pw.bentley.com:trc-pw-01\Documents\5 - Projects - External\Ohio Department of Transportation (ODOT)\301525 - CUY-77-11.21\105743\400-Engineering\Drainage\Sheets\105743_DS002.dgn
sydney.stefanek@aecom.com - WORKSPACE: OHDOTCEv02 - WORKSET: 105743 - PRODUCT: OpenRoadsDesigner 24.00.02.25
ngineering\Drainage\Sheets\105743_DS002.dgn

REF NO.	CFN NO.	SHEET NO.	STATION TO STATION					ALIGNMENT	611 36" CONDUIT, TYPE C, AS PER PLAN 1 FT	611 36" CONDUIT, TYPE C, AS PER PLAN 1, 706.02 FT	611 42" CONDUIT, TYPE C, AS PER PLAN 1, 706.02 FT	611 48" CONDUIT, TYPE B, AS PER PLAN 1 FT	611 48" CONDUIT, TYPE B, AS PER PLAN 2 FT	611 48" CONDUIT, TYPE C, AS PER PLAN 1 FT	611 48" CONDUIT, TYPE C, AS PER PLAN 1, 706.02 FT	611 54" CONDUIT, TYPE B, AS PER PLAN 1 FT	611 54" CONDUIT, TYPE C, AS PER PLAN 1 FT	611 60" CONDUIT, TYPE B, AS PER PLAN 1 FT	611 60" CONDUIT, TYPE B, AS PER PLAN 2 FT	611 66" CONDUIT, TYPE B, AS PER PLAN 1, 706.02 FT	611 14" X 23" CONDUIT, TYPE B, 706.04, AS PER PLAN 1 FT	611 19" X 30" CONDUIT, TYPE B, 706.04, AS PER PLAN 2 FT	611 CONDUIT, BORED OR JACKED, AS PER PLAN 1, 15", TYPE B FT	611 CONDUIT, BORED OR JACKED, AS PER PLAN 1, 18", TYPE B FT	611 CONDUIT, BORED OR JACKED, AS PER PLAN 1, 21", TYPE B FT	611 CONDUIT, BORED OR JACKED, AS PER PLAN 1, 24", TYPE B FT	611 CONDUIT, BORED OR JACKED, AS PER PLAN 1, 27", TYPE B FT	611 CONDUIT, BORED OR JACKED, AS PER PLAN 1, 30", TYPE B FT	611 CONDUIT, BORED OR JACKED, AS PER PLAN 1, 36", TYPE B FT	611 CONDUIT, BORED OR JACKED, AS PER PLAN 2, 60", TYPE B FT	611 CONDUIT, MISC., 14" X 23" CONDUIT, TYPE C, 706.04, AS PER PLAN 1 FT	611 CONDUIT, MISC., 24" X 38" CONDUIT, TYPE C, 706.04, AS PER PLAN 1 FT	611 CATCH BASIN, NO. 3A EACH	611 CATCH BASIN, NO. 5 EACH	611 CATCH BASIN, NO. 5, AS PER PLAN EACH	611 CATCH BASIN, NO. 6, AS PER PLAN EACH	611 CATCH BASIN, NO. 8 WITHOUT APRON EACH	611 CATCH BASIN, NO. 2-3 EACH	611 CATCH BASIN, NO. 2-3 WITH BICYCLE SAFE GRATE EACH	611 CATCH BASIN, NO. 2-5 WITH BICYCLE SAFE GRATE EACH	611 CATCH BASIN, NO. 2-6 WITH BICYCLE SAFE GRATE EACH	611 CATCH BASIN ADJUSTED TO GRADE EACH	611 CATCH BASIN RECONSTRUCTED TO GRADE EACH
D-71A	2001930	P.767	133+71.00	LT	TO	134+96.00	LT	CLP_I077												132																				
D-71B		P.767	134+02.00	LT	TO	134+66.50	LT	CLP_I077																											1						
D-71C		P.767	134+54.42	LT	TO	134+66.50	LT	CLP_I077																																
D-76A	2001935	P.767	134+57.89	RT	TO	134+59.58	RT	CLP_I077																																
D-77	2001936	P.767	134+59.58	RT	TO	135+95.27	RT	CLP_I077																																
D-71D		P.767	134+66.50	LT	TO	134+96.00	LT	CLP_I077																												51					
D-71		P.767	134+96.00	LT				CLP_I077																																
D-72		P.767	134+96.00	LT	TO	135+80.00	LT	CLP_I077																																
D-83	2001943	P.767-P.768	135+80.00	LT	TO	138+75.00	LT	CLP_I077																																
D-82	2001942	P.767	135+80.00	LT	TO	135+80.00	LT	CLP_I077																																
D-81	2001940	P.767	135+80.00	LT	TO	135+83.00	RT	CLP_I077																																
D-81A	2001941	P.767-P.768	135+83.00	RT	TO	139+00.00	RT	CLP_I077																																
D-78	2001937	P.767	135+95.27	RT	TO	135+97.56	RT	CLP_I077																																
D-80	2001939	P.767-P.768	135+95.27	RT	TO	137+59.48	RT	CLP_I077																																
D-79	2001938	P.768	137+59.48	RT	TO	139+83.44	RT	CLP_I077																																
D-84	2001944	P.768	138+75.00	LT	TO	141+57.00	LT	CLP_I077																																
D-84A	2001945	P.768	139+00.00	RT	TO	141+56.00	RT	CLP_I077																																
D-85	2001946	P.768	141+50.00	LT	TO	141+57.00	LT	CLP_I077																																
D-87	2001949	P.768-P.769	141+56.00	RT	TO	142+72.00	RT	CLP_I077																																
D-86	2001947	P.768-P.769	141+57.00	LT	TO	143+30.00	LT	CLP_I077																																
D-94A	2001956	P.769	142+72.00	RT	TO	144+25.00	RT	CLP_I077																																
D-86A	2001948	P.769	143+30.00	LT	TO	143+30.00	LT	CLP_I077																														1		
D-88	2001950	P.769	143+30.00	LT	TO	146+03.00	LT	CLP_I077																																
D-94		P.769	144+25.00	RT	TO	146+03.64	RT	CLP_I077																																
D-93	2001955	P.769	145+79.78	RT	TO	146+07.19	RT	CLP_I077																																
D-95A		P.769	146+03.00	LT	TO	146+07.05	LT	CLP_I077																																
D-95	2001957	P.769	146+03.00	LT	TO	146+07.05	LT	CLP_I077																																
D-96		P.769-P.770	146+03.00	LT	TO	147+90.00	LT	CLP_I077																																
D-92	2001954	P.769	146+03.64	RT	TO	146+07.19	RT	CLP_I077																																
D-91	2001953	P.769	146+07.19	RT	TO	146+34.94	RT	CLP_I077																																
D-90	2001952	P.769-P.770	146+34.94	RT	TO	147+74.77	RT	CLP_I077																																
D-89	2001951	P.770	147+74.77	RT	TO	148+50.00	RT	CLP_I077																																
D-97		P.770	147+90.00	LT	TO	150+16.00	LT	CLP_I077																																
D-104		P.770	147+91.30	LT	TO	148+05.00	LT	CLP_I077																																
D-98		P.770	150+16.00	LT	TO	150+60.00	LT	CLP_I077																														1		
D-101	2001960	P.770	150+16.00	LT	TO	150+18.19	LT	CLP_I077																																
D-100	2001958	P.770	150+18.19	LT	TO	150+61.06	LT	CLP_I077																																
D-100A	2001959	P.770	150+61.06	LT	TO	150+62.00	LT	CLP_I077																																1
D-102	2001961	P.770	150+61.06	LT	TO	150+99.98	LT	CLP_I077																																
D-103	2001962	P.770-P.771	150+99.98	LT	TO	151+99.41	LT	CLP_I077																																
D-163A	2001980	P.772	157+55.00	LT	TO	159+90.00	LT	CLP_I077																																
D-150	2001965	P.772	159+85.00	RT	TO	161+60.00	RT	CLP_I077																																
D-163	2001979	P.772-P.773	159+90.00	LT	TO	162+50.00	LT	CLP_I077																																
D-150A		P.772-P.773	161+60.00	RT	TO	162+50.00	RT	CLP_I077																																
D-168A	2001987	P.773	162+21.00	LT	TO	162+50.00	LT	CLP_I077																																1
D-157	2001972	P.773	162+25.00	RT	TO	162+50.00	RT	CLP_I077																																
D-151	2001966	P.773	162+50.00	RT	TO	162+50.00	RT	CLP_I077																																
D-156	2001971	P.773	162+50.00	RT	TO	162+50.00	LT	CLP_I077																																
D-162	2001978	P.773	162+50.00	LT	TO	162+50.00	LT	CLP_I077																																
D-168	2001986	P.773	162+50.00	LT	TO	164+70.54	LT	CLP_I077																																
TOTALS CARRIED TO P.745																				132			56		58		134	61			64	51			1		1	1	2				

DRAINAGE SUBSUMMARY

DESIGN AGENCY
AECOM

DESIGNER
SMS

REVIEWER
AKM 05/01/26

PROJECT ID
105743

SHEET P.736 | TOTAL P.1274

CUY-77-11.41 - PART 1

MODEL: Sheet 8 PAPERSIZE: 34x22 (in.) DATE: 11/17/2026 TIME: 1:44:53 AM PLTDRV: OHDOT_PDF.pltcfg PENTBL: OHDOT_Pen.tbl USER: sydney.stefanek@aecom.com
pw:\\trc-pw.bentley.com:trc-pw-01\Documents\5 - Projects - External\Ohio Department of Transportation (ODOT)\301525 - CUY-77-11.21\105743400-Engineering\Drainage\Sheets\105743_DS002.dgn

REF NO.	CFN NO.	SHEET NO.	STATION TO STATION					ALIGNMENT	611 36" CONDUIT, TYPE C, AS PER PLAN 1 FT	611 36" CONDUIT, TYPE C, AS PER PLAN 1, 706.02 FT	611 42" CONDUIT, TYPE C, AS PER PLAN 1, 706.02 FT	611 48" CONDUIT, TYPE B, AS PER PLAN 1 FT	611 48" CONDUIT, TYPE B, AS PER PLAN 2 FT	611 48" CONDUIT, TYPE C, AS PER PLAN 1 FT	611 48" CONDUIT, TYPE C, AS PER PLAN 1, 706.02 FT	611 54" CONDUIT, TYPE B, AS PER PLAN 1 FT	611 54" CONDUIT, TYPE C, AS PER PLAN 1 FT	611 60" CONDUIT, TYPE B, AS PER PLAN 1 FT	611 60" CONDUIT, TYPE B, AS PER PLAN 2 FT	611 66" CONDUIT, TYPE B, AS PER PLAN 1, 706.02 FT	611 14" X 23" CONDUIT, TYPE B, 706.04, AS PER PLAN 1 FT	611 19" X 30" CONDUIT, TYPE B, 706.04, AS PER PLAN 2 FT	611 CONDUIT, BORED OR JACKED, AS PER PLAN 1, 15", TYPE B FT	611 CONDUIT, BORED OR JACKED, AS PER PLAN 1, 18", TYPE B FT	611 CONDUIT, BORED OR JACKED, AS PER PLAN 1, 21", TYPE B FT	611 CONDUIT, BORED OR JACKED, AS PER PLAN 1, 24", TYPE B FT	611 CONDUIT, BORED OR JACKED, AS PER PLAN 1, 27", TYPE B FT	611 CONDUIT, BORED OR JACKED, AS PER PLAN 1, 30", TYPE B FT	611 CONDUIT, BORED OR JACKED, AS PER PLAN 1, 36", TYPE B FT	611 CONDUIT, BORED OR JACKED, AS PER PLAN 2, 60", TYPE B FT	611 CONDUIT, MISC., 14" X 23", CONDUIT, TYPE C, 706.04, AS PER PLAN 1 FT	611 CONDUIT, MISC.: 24" X 38" CONDUIT, TYPE C, 706.04, AS PER PLAN 1 FT	611 CATCH BASIN, NO. 3A EACH	611 CATCH BASIN, NO. 5 EACH	611 CATCH BASIN, NO. 5, AS PER PLAN EACH	611 CATCH BASIN, NO. 6, AS PER PLAN EACH	611 CATCH BASIN, NO. 8 WITHOUT APRON EACH	611 CATCH BASIN, NO. 2-3 EACH	611 CATCH BASIN, NO. 2-3 WITH BICYCLE SAFE GRATE EACH	611 CATCH BASIN, NO. 2-5 WITH BICYCLE SAFE GRATE EACH	611 CATCH BASIN, NO. 2-6 WITH BICYCLE SAFE GRATE EACH	611 CATCH BASIN ADJUSTED TO GRADE EACH	611 CATCH BASIN RECONSTRUCTED TO GRADE EACH
D-151A	2001967	P.773	162+50.00	RT	TO	164+70.54	RT	CLP_I077																																		
D-158A	2001974	P.773	162+50.00	RT	TO	163+35.00	RT	CLP_I077																																		
D-164	2001981	P.773	162+50.00	LT	TO	163+35.00	LT	CLP_I077																												1						
D-158	2001973	P.773	163+35.00	RT	TO	163+35.00	RT	CLP_I077																																		
D-159	2001975	P.773	163+35.00	RT	TO	164+70.54	RT	CLP_I077													136																					
D-165	2001982	P.773	163+35.00	LT	TO	164+50.00	LT	CLP_I077																												1						
D-166	2001983	P.773	164+50.00	LT	TO	165+25.00	LT	CLP_I077																												1						
D-169	2001988	P.773-P.774	164+70.54	LT		167+14.00	LT	CLP_I077																																		
D-152	2001968	P.773	164+70.54	RT	TO	165+30.00	RT	CLP_I077																																		
D-160	2001976	P.773	164+70.54	RT	TO	165+64.87	RT	CLP_I077																																		
D-166A	2001984	P.773	165+25.00	LT	TO	165+75.00	LT	CLP_I077																												1						
D-154	2001969	P.773	165+30.00	RT	TO	166+27.00	RT	CLP_I077																																		
D-167	2001985	P.773-P.774	165+75.00	LT	TO	167+75.00	LT	CLP_I077																												1						
D-155	2001970	P.773-P.774	166+27.00	RT	TO	167+60.00	RT	CLP_I077													133																					
D-170	2001989	P.774	167+14.00	LT	TO	167+14.00	LT	CLP_I077																																1				
D-170A	2001990	P.774	167+14.00	LT	TO	168+86.00	LT	CLP_I077																																		
D-161	2001977	P.774	167+60.00	RT	TO	167+70.00	RT	CLP_I077																																		
D-170B		P.774	168+86.00	LT	TO	169+10.82	LT	CLP_I077																																		
DZ-2		P.774	169+10.82	LT				CLP_I077																																		
D-220	2002016	P.774	169+78.29	RT	TO	170+60.75	LT	CLP_I077													116																				1				
DZ-3		P.774	170+05.17	LT				CLP_I077																																		
D-220A		P.774	170+60.75	LT				CLP_I077																																		
D-177		P.775	175+27.65	LT	TO	175+35.54	LT	CLP_I077			8				8																										
DZ-4A		P.775	175+32.26	T				CLP_I077																																		
D-178		P.775	175+35.54	LT	TO	175+58.05	LT	CLP_I077			10			22																											
DZ-4B		P.775	175+50.05	LT				CLP_I077																																		
D-179	2001991	P.775	175+51.28	LT	TO	175+85.00	LT	CLP_I077				39																													
D-180		P.775	175+85.00	LT	TO	176+51.00	LT	CLP_I077						75																							1				
DZ-4		P.775	176+19.99	LT				CLP_I077																																		
DZ-5		P.775	176+38.15	LT				CLP_I077																																	1		
DZ-6		P.775	176+51.07	LT				CLP_I077																																	1		
D-181		P.775-P.776	176+51.00	LT	TO	180+00.00	LT	CLP_I077						338																									1			
D-182		P.776-P.777	180+00.00	LT	TO	183+53.00	LT	CLP_I077						342																									1			
D-184	2001993	P.777	183+42.06	RT	TO	183+50.00	RT	CLP_I077																																		
D-183	2001992	P.777	183+50.00	RT	TO	183+53.00	LT	CLP_I077													83																					
D-183A		P.777	183+53.00	LT	TO	183+53.00	LT	CLP_I077																																		
D-185		P.777	183+53.00	LT	TO	186+21.00	LT	CLP_I077						267																									1			
DZ-8		P.777	185+12.23	RT				CLP_I077																																		
D-186		P.777-P.778	186+21.00	LT	TO	188+87.00	LT	CLP_I077						269																									1			
D-188	2001995	P.778	188+13.30	RT	TO	189+81.15	RT	CLP_I077																																		
D-187A		P.778	188+87.00	LT	TO	188+91.00	LT	CLP_I077																																		
D-192		P.778	188+87.00	LT	TO	191+45.00	LT	CLP_I077						270																												
D-187	2001994	P.778	188+91.00	LT	TO	189+00.00	LT	CLP_I077													86																					
D-189A	2001997	P.778	189+81.15	RT	TO	191+64.83	RT	CLP_I077																																		
D-193A		P.778-P.779	191+45.00	LT	TO	193+82.93	LT	CLP_I077						247																												
D-189	2001996	P.778	191+64.83	RT	TO	191+95.42	RT	CLP_I077																																		
D-190	2001999	P.778-P.779	191+95.42	RT	TO	192+36.22	RT	CLP_I077																																		
D-191	2002000	P.779	192+36.22	RT	TO	192+38.63	RT	CLP_I077																																		
D-191A		P.779	192+38.63	RT	TO	194+84.50	RT	CLP_I077																																		
D-193	2002001	P.779	193+82.93	LT	TO	193+98.00	LT	CLP_I077				75																													
TOTALS CARRIED TO P.745											18	114		1830	8					133			421	54									5			2	4	2	2		

DRAINAGE SUBSUMMARY

CUY-77-11.41 - PART 1

MODEL: Sheet 11 PAPERSIZE: 34x22 (in.) DATE: 11/17/2026 TIME: 1:44:55 AM PLTDRV: OHDOT_PDF.pltcfg PENTBL: OHDOT_Pen.tbl USER: sydney.stefanek@aecom.com WORKSPACE: OHDOTCEv02 WORKSET: 105743 PRODUCT: OpenRoadsDesigner 24.00.02.25
pw:\\trc-pw.bentley.com:trc-pw-01\Documents\5 - Projects - External\Ohio Department of Transportation (ODOT)\301525 - CUY-77-11.21\105743\400-Engineering\Drainage\Sheets\105743_DS002.dgn

DESIGN AGENCY
AECOM

DESIGNER
SMS

REVIEWER
AKM 05/01/26

PROJECT ID
105743

SHEET P.739 | TOTAL P.1274

| REF NO. | CFN NO. | SHEET NO. | STATION TO STATION | | | | | ALIGNMENT | 611 36" CONDUIT, TYPE C, AS PER PLAN 1 FT | 611 36" CONDUIT, TYPE C, AS PER PLAN 1, 706.02 FT | 611 42" CONDUIT, TYPE C, AS PER PLAN 1, 706.02 FT | 611 48" CONDUIT, TYPE B, AS PER PLAN 1 FT | 611 48" CONDUIT, TYPE B, AS PER PLAN 2 FT | 611 78" CONDUIT, TYPE C, AS PER PLAN 1 FT | 611 48" CONDUIT, TYPE C, AS PER PLAN 1, 706.02 FT | 611 54" CONDUIT, TYPE B, AS PER PLAN 1 FT | 611 54" CONDUIT, TYPE C, AS PER PLAN 1 FT | 611 60" CONDUIT, TYPE B, AS PER PLAN 1 FT | 611 60" CONDUIT, TYPE B, AS PER PLAN 2 FT | 611 66" CONDUIT, TYPE B, AS PER PLAN 1, 706.02 FT | 611 14" X 23" CONDUIT, TYPE B, 706.04, AS PER PLAN 1 FT | 611 19" X 30" CONDUIT, TYPE B, 706.04, AS PER PLAN 2 FT | 611 CONDUIT, BORED OR JACKED, AS PER PLAN 1, 15", TYPE B FT | 611 CONDUIT, BORED OR JACKED, AS PER PLAN 1, 18", TYPE B FT | 611 CONDUIT, BORED OR JACKED, AS PER PLAN 1, 21", TYPE B FT | 611 CONDUIT, BORED OR JACKED, AS PER PLAN 1, 24", TYPE B FT | 611 CONDUIT, BORED OR JACKED, AS PER PLAN 1, 27", TYPE B FT | 611 CONDUIT, BORED OR JACKED, AS PER PLAN 1, 30", TYPE B FT | 611 CONDUIT, BORED OR JACKED, AS PER PLAN 1, 36", TYPE B FT | 611 CONDUIT, BORED OR JACKED, AS PER PLAN 2, 60", TYPE B FT | 611 CONDUIT, MISC.,14" X 23", CONDUIT, TYPE C, 706.04, AS PER PLAN 1 FT | 611 CONDUIT, MISC.: 24" X 38" CONDUIT, TYPE C, 706.04, AS PER PLAN 1 FT | 611 CATCH BASIN, NO. 3A EACH | 611 CATCH BASIN, NO. 5 EACH | 611 CATCH BASIN, NO. 5, AS PER PLAN EACH | 611 CATCH BASIN, NO. 6, AS PER PLAN EACH | 611 CATCH BASIN, NO. 8 WITHOUT APRON EACH | 611 CATCH BASIN, NO. 2-3 EACH | 611 CATCH BASIN, NO. 2-3 WITH BICYCLE SAFE GRATE EACH | 611 CATCH BASIN, NO. 2-5 WITH BICYCLE SAFE GRATE EACH | 611 CATCH BASIN, NO. 2-6 WITH BICYCLE SAFE GRATE EACH | 611 CATCH BASIN ADJUSTED TO GRADE EACH | 611 CATCH BASIN RECONSTRUCTED TO GRADE EACH |
|---|---|---

REF NO.	CFN NO.	SHEET NO.	STATION TO STATION					ALIGNMENT	602 CONCRETE MASONRY CY	611 6" CONDUIT, TYPE B, AS PER PLAN 1 FT	611 6" CONDUIT, TYPE B, AS PER PLAN 1, 707.65 FT	611 6" CONDUIT, TYPE C, AS PER PLAN 1, 707.65 FT	611 8" CONDUIT, TYPE B, AS PER PLAN 1 FT	611 8" CONDUIT, TYPE C, AS PER PLAN 1 FT	611 12" CONDUIT, TYPE B, AS PER PLAN 1, 706.02 FT	611 15" CONDUIT, TYPE B, AS PER PLAN 1 FT	611 15" CONDUIT, TYPE B, AS PER PLAN 1, 706.02 FT	611 15" CONDUIT, TYPE B, AS PER PLAN 1, 707.65 FT	611 15" CONDUIT, TYPE B, AS PER PLAN 3 FT	611 15" CONDUIT, TYPE B, AS PER PLAN 5 FT	611 15" CONDUIT, TYPE C, AS PER PLAN 1 FT	611 15" CONDUIT, TYPE C, AS PER PLAN 1, 706.02 FT	611 15" CONDUIT, TYPE C, AS PER PLAN 1, 707.65 FT	611 15" CONDUIT, TYPE C, AS PER PLAN 3 FT	611 15" CONDUIT, TYPE C, AS PER PLAN 4 FT	611 18" CONDUIT, TYPE B, AS PER PLAN 1 FT	611 18" CONDUIT, TYPE B, AS PER PLAN 1, 706.02 FT	611 18" CONDUIT, TYPE B, AS PER PLAN 1, 707.65 FT	611 18" CONDUIT, TYPE B, AS PER PLAN 2 FT	611 18" CONDUIT, TYPE C, AS PER PLAN 1 FT	611 18" CONDUIT, TYPE C, AS PER PLAN 1, 706.02 FT	611 21" CONDUIT, TYPE B, AS PER PLAN 1 FT	611 21" CONDUIT, TYPE B, AS PER PLAN 3 FT	611 21" CONDUIT, TYPE C, AS PER PLAN 1 FT	611 24" CONDUIT, TYPE B, AS PER PLAN 1 FT	611 24" CONDUIT, TYPE C, AS PER PLAN 1 FT	611 24" CONDUIT, TYPE C, AS PER PLAN 1, 706.02 FT	611 24" CONDUIT, TYPE C, AS PER PLAN 1, 707.01 FT		611 27" CONDUIT, TYPE C, AS PER PLAN 1 FT	611 30" CONDUIT, TYPE B, AS PER PLAN 1 FT	611 30" CONDUIT, TYPE B, AS PER PLAN 2 FT	611 30" CONDUIT, TYPE C, AS PER PLAN 5 FT
DZ-28		P.784	218+44.05	LT				CLP_I077																																	
DZ-29		P.784	218+68.32	RT				CLP_I077																																	
DZ-31		P.784	219+47.00	LT				CLP_I077																																	
D-403		P.784	220+60.41	RT	TO	220+66.89	LT	CLP_I077							10																									
D-408		P.785	223+54.84	RT	TO	223+68.54	LT	CLP_I077			20				10																									
D-110		P.786	300+11.25	RT	TO	300+15.60	RT	BLP_R283A3							4																									
DZ-1		P.786	300+73.08	LT				BLP_R283A3																																	
D-1		P.786	78+32.14	LT	TO	78+94.10	LT	CLP_I077							11																						50	11							
D-2	2001848	P.786	78+52.89	LT	TO	78+94.10	LT	CLP_I077								36																												
D-2A	2001849	P.786	78+94.10	LT	TO	78+98.50	RT	CLP_I077																												77								
D-11	2001863	P.787	81+47.25	LT	TO	81+60.50	RT	CLP_I077								54																												
D-111		P.788	400+46.58	LT	TO	400+51.31	LT	BLP_R283A4							4																														
D-47B		P.790	109+10.00	RT	TO	109+12.60	RT	BLP_R043B1							8																														
D-O5		P.792	112+09.35	RT				BLP_R043E1	0.27																																				
D-208A	2002010	P.792	112+09.35	RT	TO	112+36.00	RT	BLP_R043E1								46																													
TOTALS CARRIED FROM THIS SHEET									0.27		20				47	136				52		60				7									77	50	11						
TOTALS CARRIED FROM P.729													8	20	31	1156				52		60				7									10	27					182	211	
TOTALS CARRIED FROM P.732									0.54						14	1023				88		203																				
TOTALS CARRIED FROM P.735										9					14	1807				26		330					226	965			289	474		317				50	5	86	235		
TOTALS CARRIED FROM P.738																857				5		69						735				240								414		88
TOTALS CARRIED FROM P.741											15	5				257	56	30			3	77	283	16	19			6	10			299				182	163		198			
TOTALS CARRIED TO GENERAL SUMMARY									0.81	9	35	5	8	20	92	5236	56	30	171	3	739	283	16	26	226	1700	6	10	573	714	299	317	11	371	87	259	224	5		284	831	211	88

DRAINAGE SUBSUMMARY

DESIGN AGENCY
AECOM

DESIGNER
SMS

REVIEWER
AKM 05/01/26

PROJECT ID
105743

SHEET P.744 | TOTAL P.1274

CUY-77-11.41 - PART 1

MODEL: Sheet 16 PAPERSIZE: 34x22 (in.) DATE: 11/17/2026 TIME: 1:44:58 AM PLTDRV: OHDOT_PDF.pltcfg PENTBL: OHDOT_Pen.tbl USER: sydney.stefanek@aecom.com WORKSPACE: OHDOTCEv02 WORKSET: 105743 PRODUCT: OpenRoadsDesigner 24.00.02.25
pw:\trc-pw.bentley.com:trc-pw-01\Documents\5 - Projects - External\Ohio Department of Transportation (ODOT)\301525 - CUY-77-11.21\105743\400-Engineering\Drainage\Sheets\105743_DS002.dgn

REF NO.	CFN NO.	SHEET NO.	STATION TO STATION					ALIGNMENT	611 36" CONDUIT, TYPE C, AS PER PLAN 1 FT	611 36" CONDUIT, TYPE C, AS PER PLAN 1, 706.02 FT	611 42" CONDUIT, TYPE C, AS PER PLAN 1, 706.02 FT	611 48" CONDUIT, TYPE B, AS PER PLAN 1 FT	611 48" CONDUIT, TYPE B, AS PER PLAN 2 FT	611 48" CONDUIT, TYPE C, AS PER PLAN 1 FT	611 48" CONDUIT, TYPE C, AS PER PLAN 1, 706.02 FT	611 54" CONDUIT, TYPE B, AS PER PLAN 1 FT	611 54" CONDUIT, TYPE C, AS PER PLAN 1 FT	611 60" CONDUIT, TYPE B, AS PER PLAN 1 FT	611 60" CONDUIT, TYPE B, AS PER PLAN 2 FT	611 66" CONDUIT, TYPE B, AS PER PLAN 1, 706.02 FT	611 14" X 23" CONDUIT, TYPE B, 706.04, AS PER PLAN 1 FT	611 19" X 30" CONDUIT, TYPE B, 706.04, AS PER PLAN 2 FT	611 CONDUIT, BORED OR JACKED, AS PER PLAN 1, 15", TYPE B FT	611 CONDUIT, BORED OR JACKED, AS PER PLAN 1, 18", TYPE B FT	611 CONDUIT, BORED OR JACKED, AS PER PLAN 1, 21", TYPE B FT	611 CONDUIT, BORED OR JACKED, AS PER PLAN 1, 24", TYPE B FT	611 CONDUIT, BORED OR JACKED, AS PER PLAN 1, 27", TYPE B FT	611 CONDUIT, BORED OR JACKED, AS PER PLAN 1, 30", TYPE B FT	611 CONDUIT, BORED OR JACKED, AS PER PLAN 1, 36", TYPE B FT	611 CONDUIT, BORED OR JACKED, AS PER PLAN 2, 60", TYPE B FT	611 CONDUIT, MISC., 14" X 23", CONDUIT, TYPE C, 706.04, AS PER PLAN 1 FT	611 CONDUIT, MISC.: 24" X 38" CONDUIT, TYPE C, 706.04, AS PER PLAN 1 FT	611 CATCH BASIN, NO. 3A EACH	611 CATCH BASIN, NO. 5 EACH	611 CATCH BASIN, NO. 5, AS PER PLAN EACH	611 CATCH BASIN, NO. 6, AS PER PLAN EACH	611 CATCH BASIN, NO. 8 WITHOUT APRON EACH	611 CATCH BASIN, NO. 2-3 EACH	611 CATCH BASIN, NO. 2-3 WITH BICYCLE SAFE GRATE EACH	611 CATCH BASIN, NO. 2-5 WITH BICYCLE SAFE GRATE EACH	611 CATCH BASIN, NO. 2-6 WITH BICYCLE SAFE GRATE EACH	611 CATCH BASIN ADJUSTED TO GRADE EACH	611 CATCH BASIN RECONSTRUCTED TO GRADE EACH
DZ-28		P.784	218+44.05	LT				CLP_I077																														1	
DZ-29		P.784	218+68.32	RT				CLP_I077																														1	
DZ-31		P.784	219+47.00	LT				CLP_I077																														1	
D-403		P.784	220+60.41	RT	TO	220+66.89	LT	CLP_I077																															
D-408		P.785	223+54.84	RT	TO	223+68.54	LT	CLP_I077																															
D-110		P.786	300+11.25	RT	TO	300+15.60	RT	BLP_R283A3																												1			
DZ-1		P.786	300+73.08	LT				BLP_R283A3																															1
D-1		P.786	301+45.41	LT	TO	302+05.00	LT	BLP_R283A3																															
D-2	2001848	P.786	301+65.56	LT	TO	302+05.00	LT	BLP_R283A3																															
D-2A	2001849	P.786	302+05.00	LT	TO	302+13.18	RT	BLP_R283A3																															
D-11	2001863	P.787	304+50.00	LT	TO	304+69.01	RT	BLP_R283A3																															
D-111		P.788	400+46.58	LT	TO	400+51.31	LT	BLP_R283A4																												1			
D-47B		P.790	109+10.00	RT	TO	109+12.60	RT	BLP_R043B1																															
D-O5		P.792	112+09.35	RT				BLP_R043E1																															
D-208A	2002010	P.792	112+09.35	RT	TO	112+36.00	RT	BLP_R043E1																												1			
TOTALS CARRIED FROM THIS SHEET																																		3			
TOTALS CARRIED FROM P.730									30	8						550	444	478	981			300			224			117					1			2				3	1
TOTALS CARRIED FROM P.733																		2884	84			283	45	75					165					2			4				
TOTALS CARRIED FROM P.736																				132		56		58		134	61			64	51			1		1	1	2			
TOTALS CARRIED FROM P.739											18	114		1830	8						133	421	54											5			2	4	2	2	
TOTALS CARRIED FROM P.742												320	149	82								269	122					146						6						8	1
TOTALS CARRIED TO GENERAL SUMMARY									30	8	18	434	149	1912	8	550	444	3362	1065	132	133	269	182	99	133	224	134	207	117	165	64	51	3	9	1	5	1	7	4	4	2	13	2

DRAINAGE SUBSUMMARY

DESIGN AGENCY
AECOM

DESIGNER
SMS

REVIEWER
AKM 05/01/26

PROJECT ID
105743

SHEET P.745 | TOTAL P.1274

CUY-77-11.41 - PART 1

MODEL: Sheet 17 PAPERSIZE: 34x22 (in.) DATE: 11/17/2026 TIME: 1:44:59 AM PLTDRV: OHDOT_PDF.pltcfg PENTBL: OHDOT_Pen.tbl USER: sydney.stefanek@aecom.com WORKSPACE: OHDOTCEv02 WORKSET: 105743 PRODUCT: OpenRoadsDesigner 24.00.02.25
pw:\\trc-pw.bentley.com:trc-pw-01\Documents\5 - Projects - External\Ohio Department of Transportation (ODOT)\301525 - CUY-77-11.21\105743\400-Engineering\Drainage\Sheets\105743_DS002.dgn

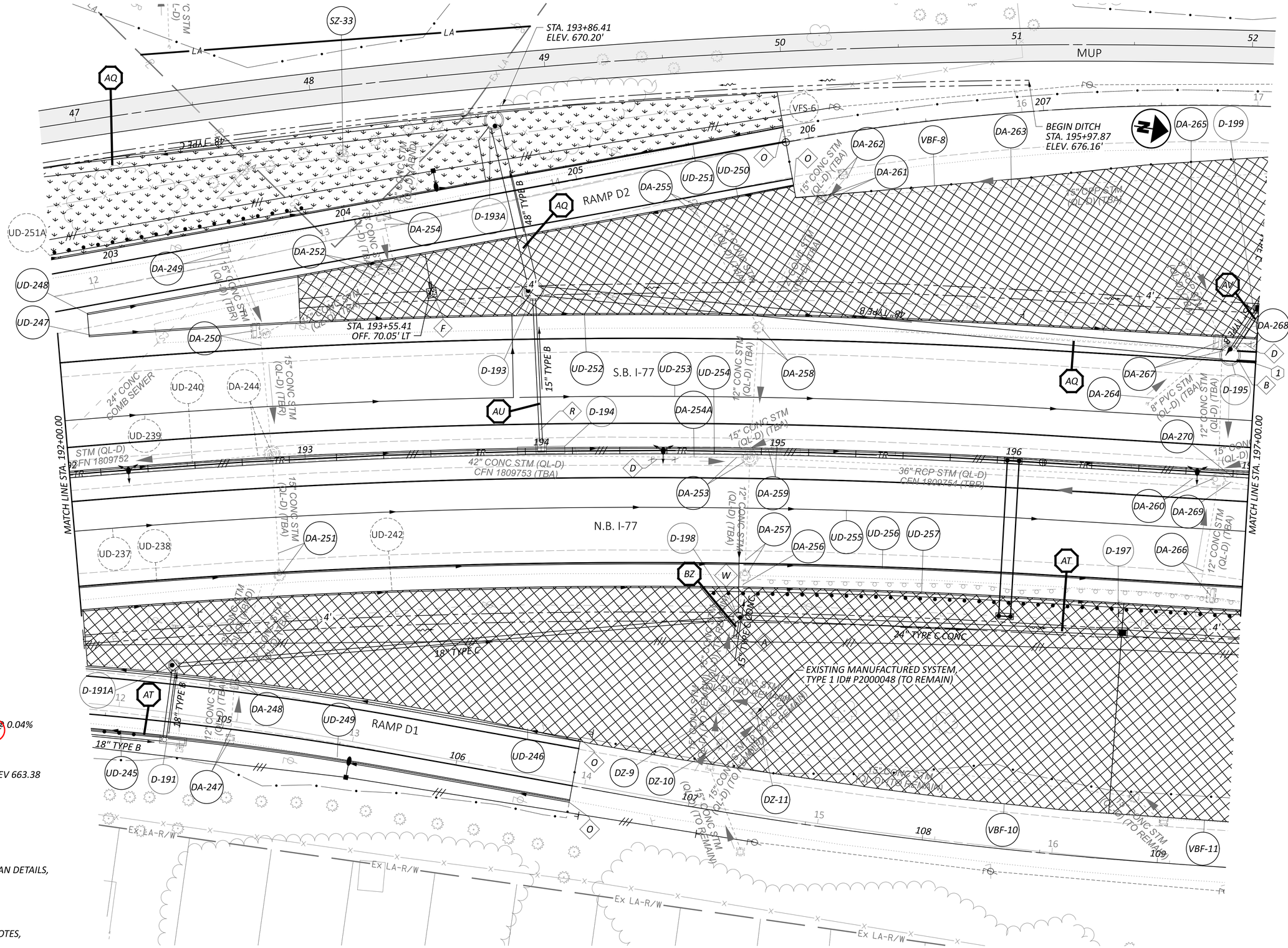

1 149' - 48" TYPE B, APP 2 @ 0.04%
CFN 2002005

D-195
STA. 196+89.00, 50.00' LT
MH-3 W/ 72" BASE I.D., RIM ELEV 663.38
48" TYPE B, APP 2 (N) 650.60
15" TYPE B, APP 1 (NW) 657.32
48" TYPE B, APP 1 (S) 650.60

NOTES

FOR ADDITIONAL ROADWAY PLAN DETAILS,
SEE SHEETS P.305 - P.360

FOR STORM SEWER PROFILES,
SEE SHEETS P.793 - P.832

FOR LEGEND AND DIAMOND NOTES,
SEE SHEET P.716

HORIZONTAL SCALE IN FEET
0 10 20 40

DRAINAGE PLAN - I.R. 77
STA. 192+00.00 TO STA. 197+00.00

DESIGN AGENCY
AECOM

DESIGNER	SMS
REVIEWER	AKM 05/01/26
PROJECT ID	105743
SHEET	P.779
TOTAL	P.1274

CUY-77-11.41 - PART 1

MODEL: CLP_I077 - Plan 26 PAPERSIZE: 34x22 (in.) DATE: 11/17/2026 TIME: 3:45:50 AM PLTDRV: OHDOT_PDF.pltcfg PENTBL: OHDOT_Pen.tbl USER: sydney.stefanek@aecom.com WORKSPACE: OHDOTCEv02 WORKSET: 105743 PRODUCT: OpenRoadsDesigner 24.00.02.25
pw:\\trc-pw.bentley.com:trc-pw-01\Documents\5 - Projects - External\Ohio Department of Transportation (ODOT)\301525 - CUY-77-11.21\105743\400-Engineering\Drainage\Sheets\105743_DP026.dgn

NOTES

FOR ADDITIONAL ROADWAY PLAN DETAILS, SEE SHEETS P.305 - P.360

FOR STORM SEWER PROFILES, SEE SHEETS P.793 - P.832

FOR RAMP E1 DRAINAGE PLAN, SEE SHEETS P.791 - P.792

FOR LEGEND AND DIAMOND NOTES, SEE SHEET P.716

D-201A
STA. 198+38.10, 50.08' LT
MH-3 W/ 84" BASE I.D. W/ BOLTED COVER, RIM ELEV 661.28
48" TYPE B, APP 1 (W) 650.66
48" TYPE B, APP 2 (S) 650.66

D-201B
STA. 198+39.30, 74.07' LT
MH-3 W/ 84" BASE I.D., RIM ELEV 665.72
48" TYPE C, APP 1 (N) 650.67
48" TYPE B, APP 1 (E) 650.67

D-201
STA. 199+21.67, 74.07' LT
MH-3 W/ 90" BASE I.D., RIM ELEV 665.33
27" TYPE C, APP 1 (N) 651.00
BORED OR JACKED APP 1,
30" TYPE B (E) 651.00
15" TYPE C, APP 1 (SE) 655.15
48" TYPE C, APP 1 (S) 650.70

D-202
STA. 199+20.00, 2.75' LT
I-3B1, GRATE ELEV 660.20
15" TYPE B, APP 1 (N) 653.49
BORED OR JACKED APP 1,
30" TYPE B (E) 652.24
BORED OR JACKED APP 1,
30" TYPE B (W) 652.24

D-210
STA. 199+06.17, 57.50' LT
I-2A-10, WINDOW ELEV 660.14
15" TYPE C, APP 1 (NW) 655.22

D-211
STA. 200+16.50, 66.00' LT
MH-3 W/ 60" BASE I.D., RIM ELEV 659.18
27" TYPE C, APP 1 (N) 652.35
15" TPYE C, APP 3 (E) 653.70
6" TYPE C CPP, APP 1 (W) 656.70
27" TYPE C, APP 1 (S) 651.80

1. 149' - 48" TYPE B, APP 2 @ 0.04% CFN 2002005
2. 24' - 48" TYPE B, APP 1 @ 0.04%
3. 82' - 48" TYPE C, APP 1 @ 0.04%
4. 18' - 15" TYPE C, APP 1 @ 0.40% CFN 2002012
5. 71' - BORED OR JACKED APP 1, 30" TYPE B @ 1.75% CFN 2002006
6. 95' - 27" TYPE C, APP 1 @ 0.84% CFN 2002013

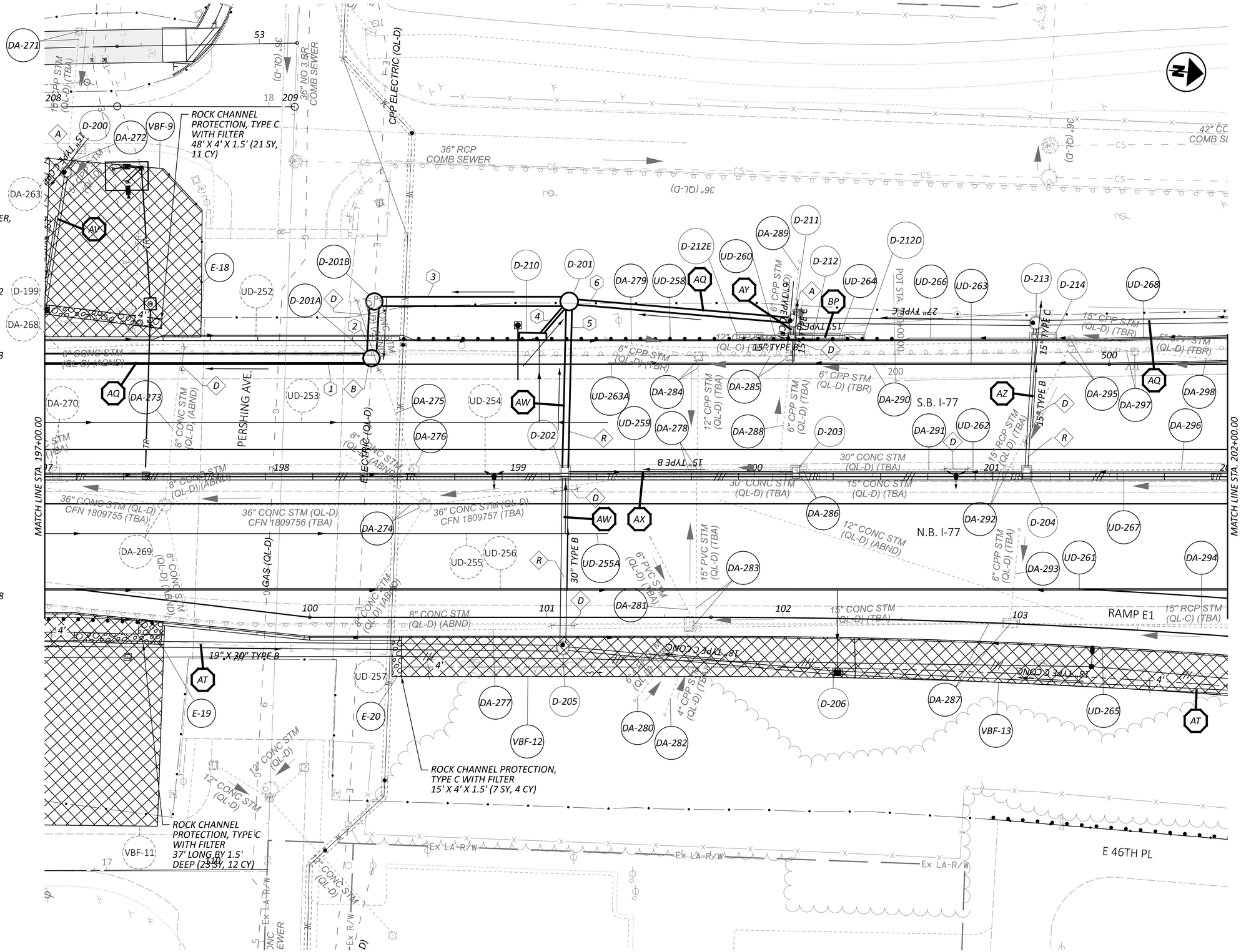

DRAINAGE PLAN - I.R. 77
STA. 197+00.00 TO STA. 202+00.00

CUY-77-11.41 - PART 1

DESIGN AGENCY: AECOM

DESIGNER	SMS
REVIEWER	AKM 05/01/26
PROJECT ID	105743
SHEET	P.780
TOTAL	P.1274

MODEL: CLP_I077 - Plan 27 PAPERSIZE: 34x22 (in.) DATE: 11/17/2026 TIME: 3:38:35 AM PLTDRV: OHDOT_PDF.pltcfg PENTBL: OHDOT_Pen.tbl USER: sydney.stefanek@aecom.com WORKSPACE: OHDOTCEv02 WORKSET: 105743 PRODUCT: OpenRoadsDesigner 24.00.02.25
pw:\\trc-pw.bentley.com:trc-pw-01\Documents\5 - Projects - External\Ohio Department of Transportation (ODOT)\301525 - CUY-77-11.21(105743)\000-Engineering\Drainage\Sheets\105743_DP027.dgn

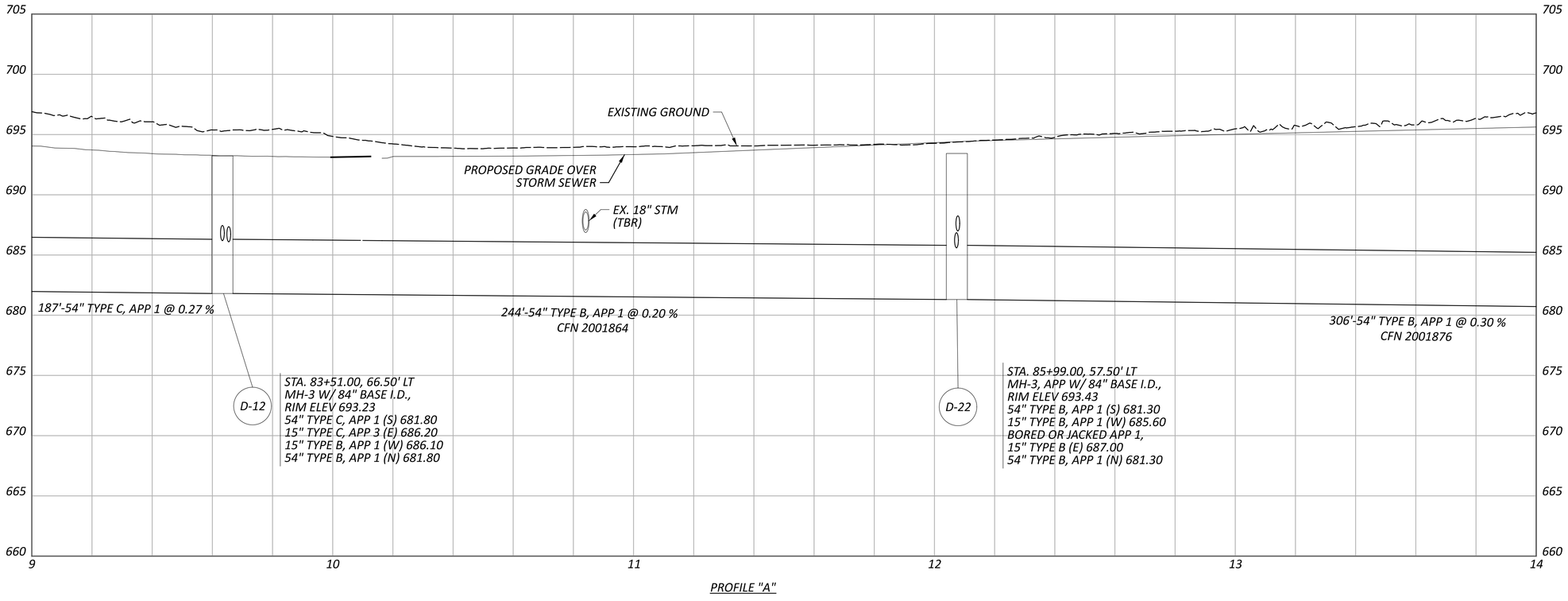

PROFILE "A"

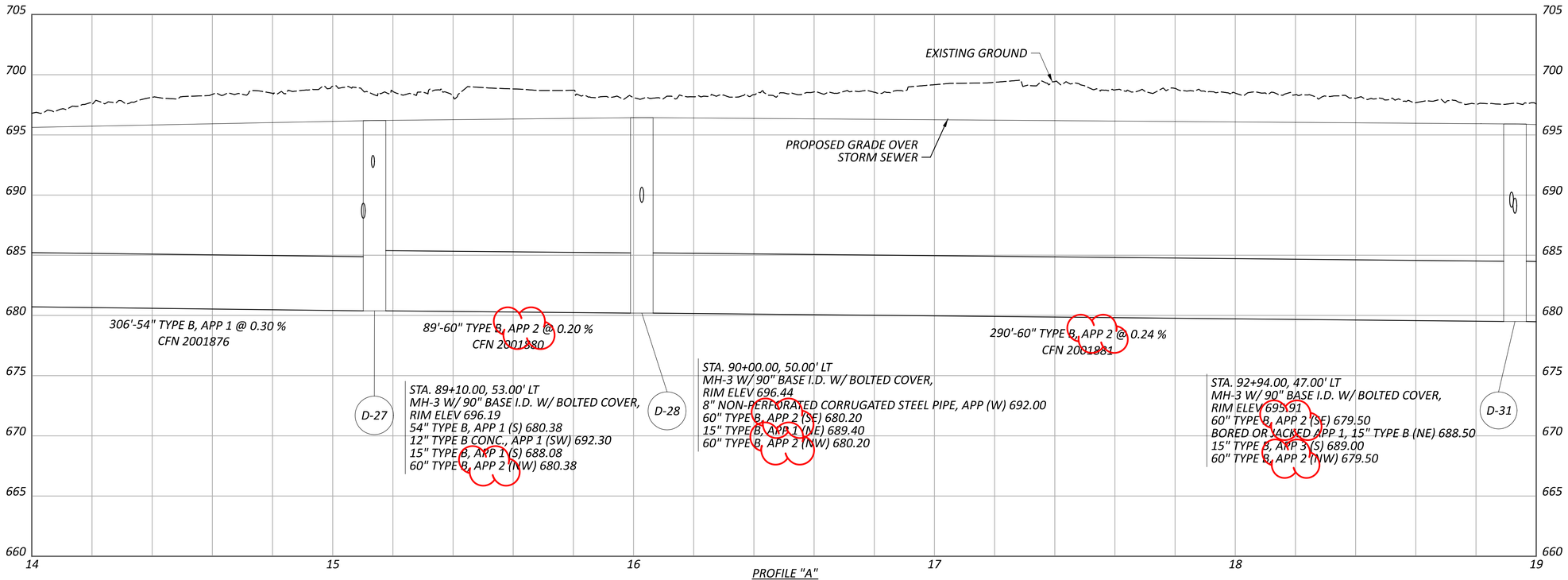

PROFILE "A"

DRAINAGE PROFILES - I.R. 77
PROFILE "A"

DESIGN AGENCY
AECOM

DESIGNER
SMS

REVIEWER
AKM 05/01/26

PROJECT ID
105743

SHEET P.794 | TOTAL P.1274

CUY-77-11.41 - PART 1

MODEL: Profile A - Sht 2 PAPERSIZE: 34x22 (in.) DATE: 11/17/2026 TIME: 2:15:39 AM PLTDRV: OHDOT_PDF.pltcfg PENTBL: OHDOT_Pen.tbl USER: sydney.stefanek@aecom.com WORKSPACE: OHDOTCEv02 WORKSET: 105743 PRODUCT: OpenRoadsDesigner 24.00.02.25
pw:\\trc-pw.bentley.com:trc-pw-01\Documents\5 - Projects - External\Ohio Department of Transportation (ODOT)\301525 - CUY-77-11.21\105743\400-Engineering\Drainage\Sheets\105743_DF101.dgn

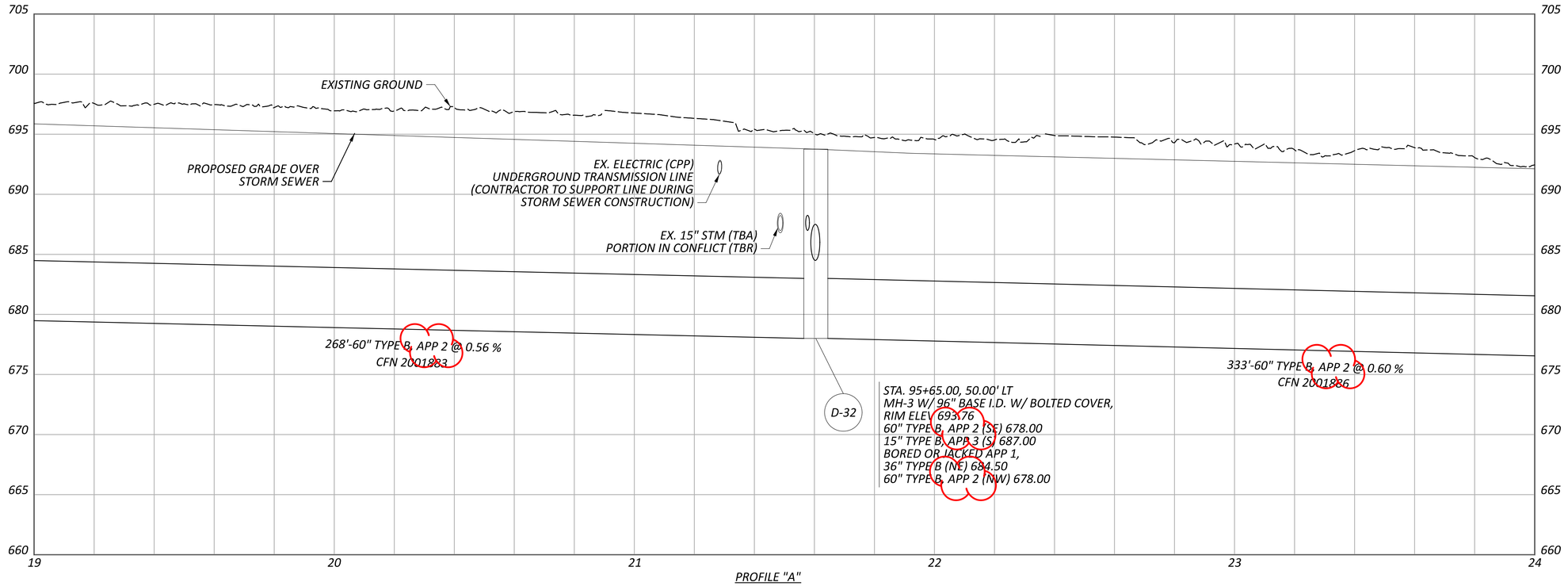

PROFILE "A"

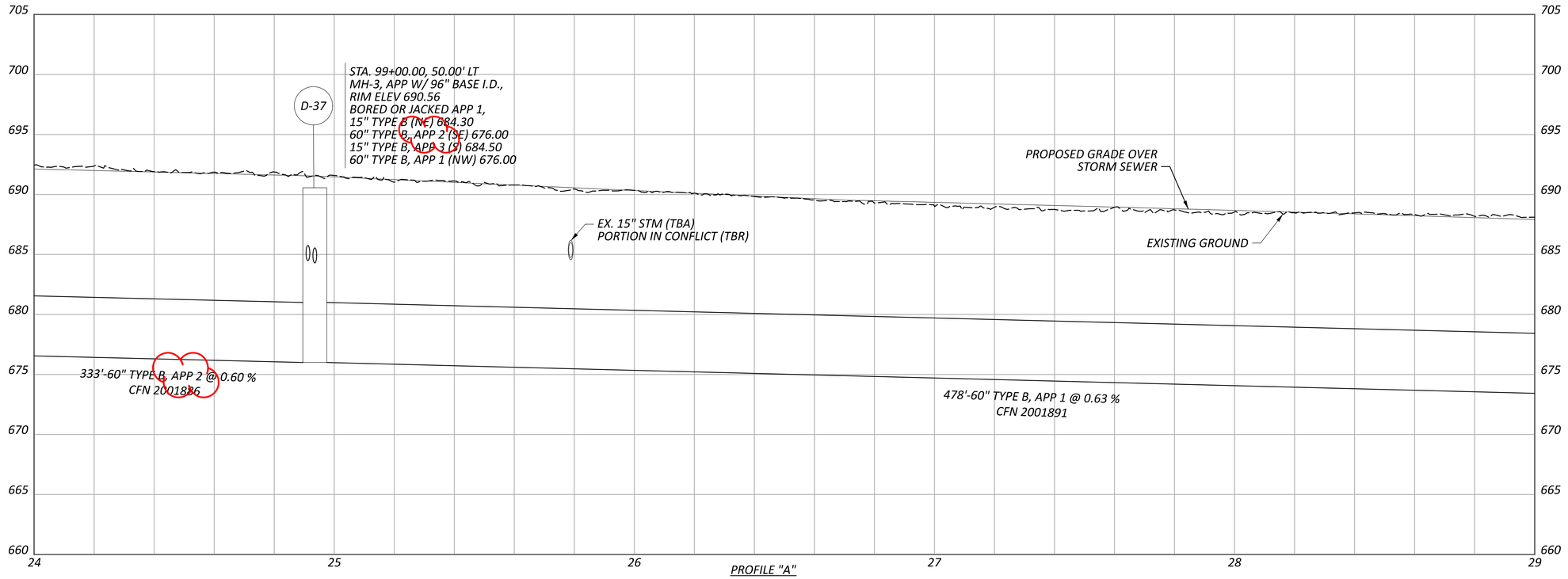

PROFILE "A"

DRAINAGE PROFILES - I.R. 77
PROFILE "A"

DESIGN AGENCY
AECOM

DESIGNER
SMS

REVIEWER
AKM 05/01/26

PROJECT ID
105743

SHEET P.795 | TOTAL P.1274

CUY-77-11.41 - PART 1

MODEL: Profile A - Sht 3 PAPERSIZE: 34x22 (in.) DATE: 11/17/2026 TIME: 2:18:06 AM PLTDRV: OHDOT_PDF.pltcfg PENTBL: OHDOT_Pen.tbl USER: sydney.stefanek@aecom.com WORKSPACE: OHDOTCEv02 WORKSET: 105743 PRODUCT: OpenRoadsDesigner 24.00.02.25
pw:\\trc-pw.bentley.com:trc-pw-01\Documents\5 - Projects - External\Ohio Department of Transportation (ODOT)\301525 - CUY-77-11.21\105743\400-Engineering\Drainage\Sheets\105743_DF101.dgn

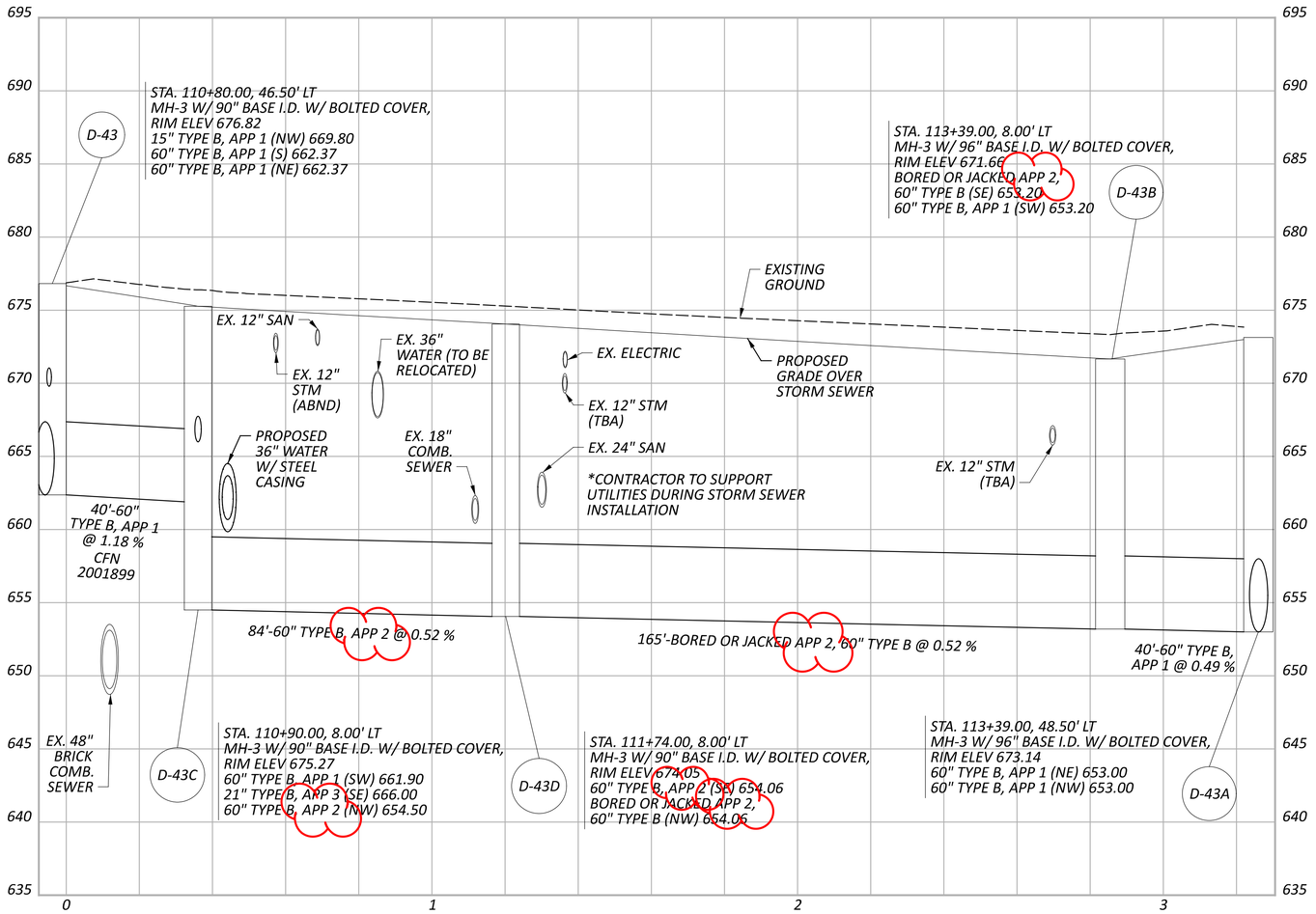

PROFILE "A"

HORIZONTAL SCALE IN FEET
0 10 20 40

DRAINAGE PROFILES - I.R. 77
PROFILE "A"

DESIGN AGENCY
AECOM

DESIGNER SMS
REVIEWER AKM 06/22/25
PROJECT ID 105743
SHEET P.797 TOTAL P.1274

CUY-77-11.41 - PART 1

MODEL: Profile A - Sht 4A PAPERSIZE: 34x22 (in.) DATE: 11/17/2026 TIME: 2:24:49 AM PLTDRV: OHDOT_PDF.pltcfg PENTBL: OHDOT_Pen.tbl USER: sydney.stefanek@aecom.com WORKSPACE: OHDOTCEv02 WORKSET: 105743 PRODUCT: OpenRoadsDesigner 24.00.02.25
pw:\\trc-pw.bentley.com:trc-pw-01\Documents\5 - Projects - External\Ohio Department of Transportation (ODOT)\301525 - CUY-77-11.21\105743\400-Engineering\Drainage\Sheets\105743_DF101.dgn

MODEL: Sheet 3 PAPERSIZE: 34x22 (in.) DATE: 11/17/2026 TIME: 2:28:59 AM PLTDRV: OHDOT_PDF.pltcfg PENTBL: OHDOT_Pen.tbl USER: sydney.stefanek@aecom.com WORKSPACE: OHDOTCEv02 WORKSET: 105743 PRODUCT: OpenRoadsDesigner 24.00.02.25
pw:\\trc-pw.bentley.com:trc-pw-01\Documents\5 - Projects - External\Ohio Department of Transportation (ODOT)\301525 - CUY-77-11.21\105743\400-Engineering\Drainage\Sheets\105743_DF102.dgn

CUY-77-11.41 - PART 1

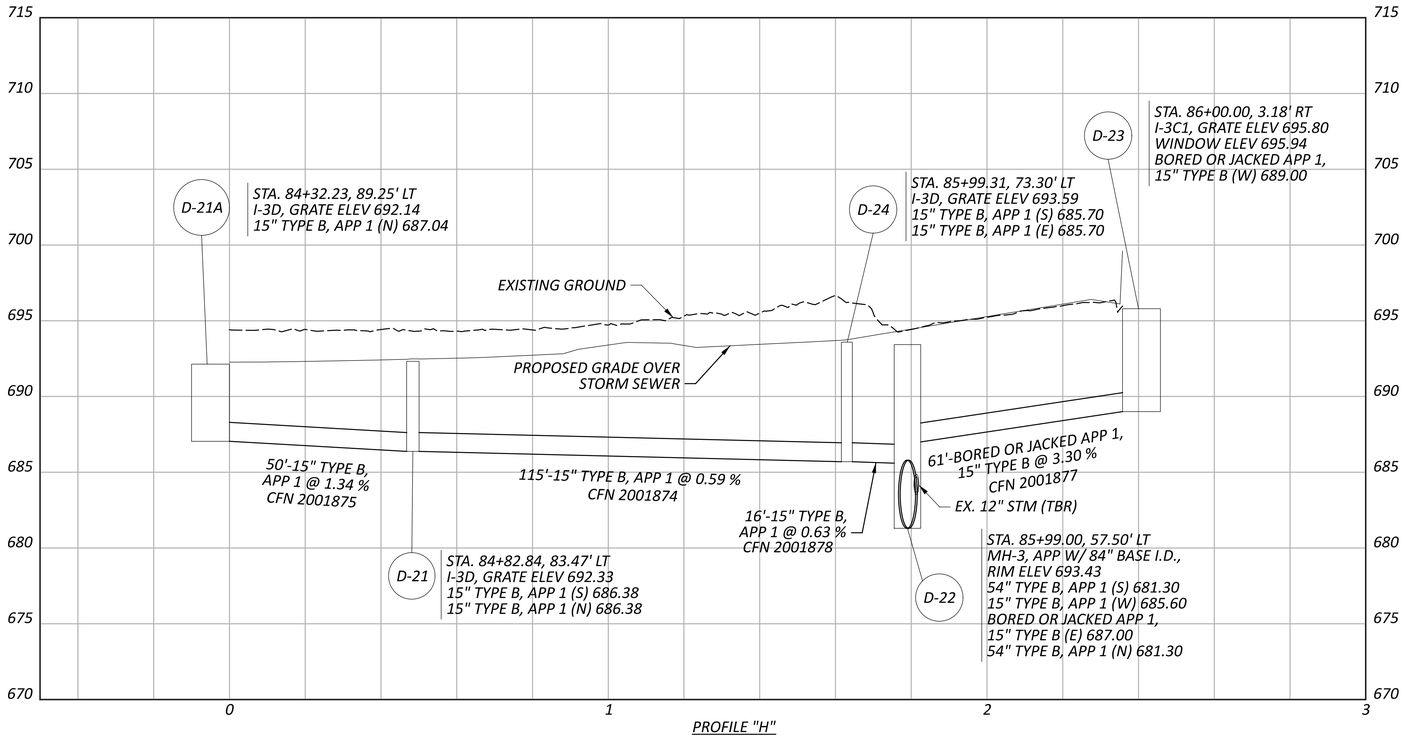

PROFILE "H"

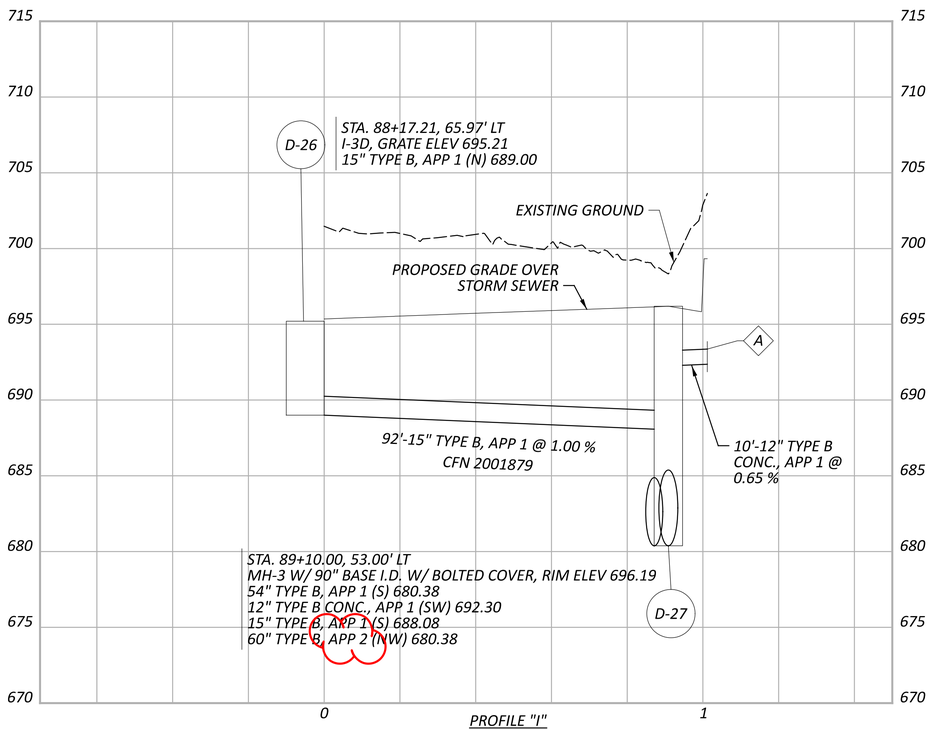

PROFILE "I"

DRAINAGE PROFILES - I.R. 77
PROFILES "H", "I"

DESIGN AGENCY
AECOM

DESIGNER
SMS

REVIEWER
AKM 05/01/26

PROJECT ID
105743

SHEET P.803 | TOTAL P.1274

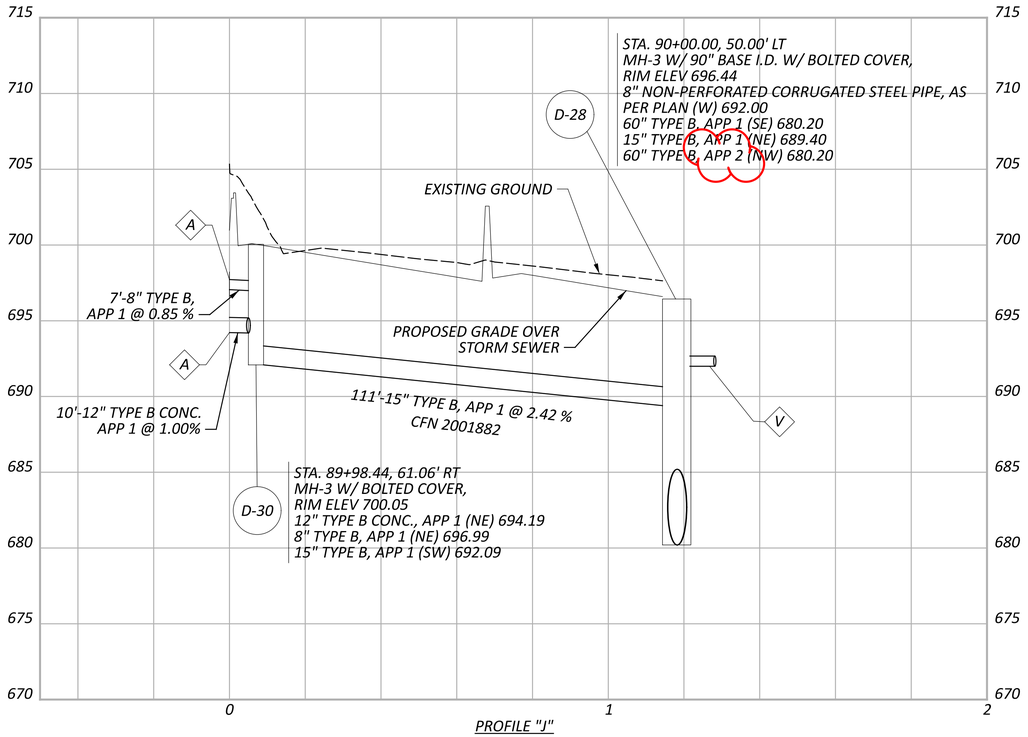

PROFILE "J"

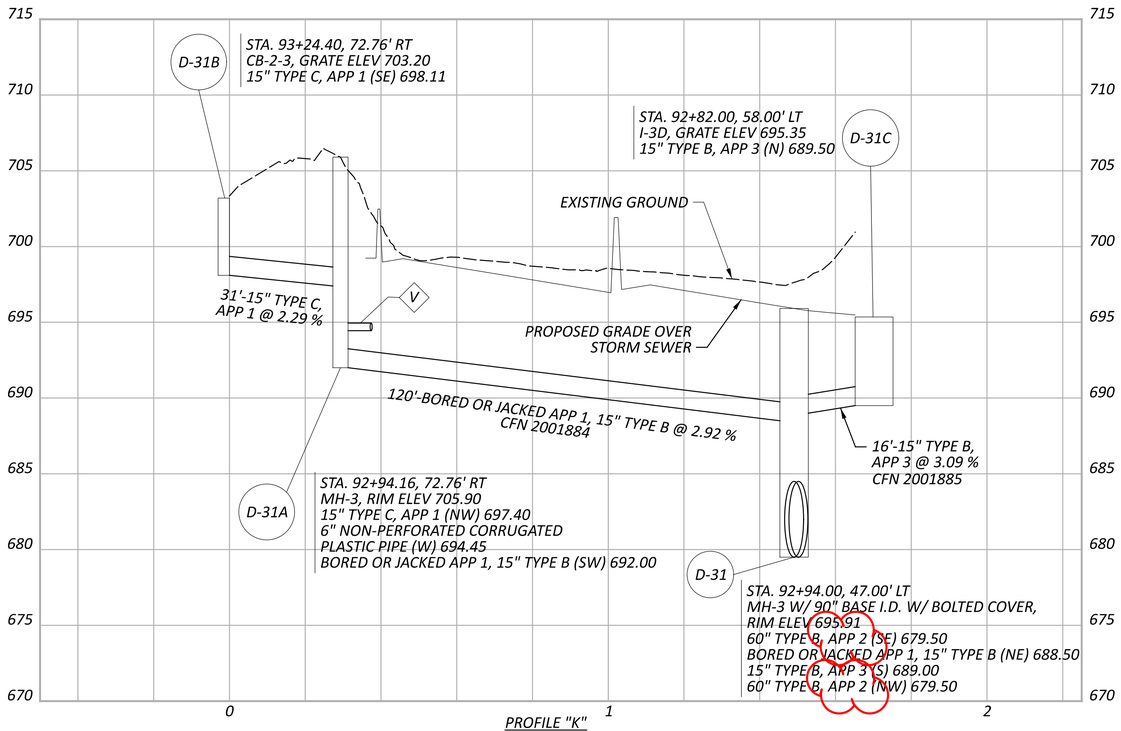

PROFILE "K"

DRAINAGE PROFILES - I.R. 77
PROFILES "J", "K"

DESIGN AGENCY
AECOM

DESIGNER
SMS

REVIEWER
AKM 05/01/26

PROJECT ID
105743

SHEET P.804 | TOTAL P.1274

CUY-77-11.41 - PART 1

MODEL: Sheet 4 PAPERSIZE: 34x22 (in.) DATE: 11/17/2026 TIME: 2:28:08 AM PLTDRV: OHDOT_PDF.pltcfg PENTBL: OHDOT_Pen.tbl USER: sydney.stefanek@aecom.com WORKSPACE: OHDOTCEv02 WORKSET: 105743 PRODUCT: OpenRoadsDesigner 24.00.02.25
pw:\\trc-pw.bentley.com:trc-pw-01\Documents\5 - Projects - External\Ohio Department of Transportation (ODOT)\301525 - CUY-77-11.21\105743\400-Engineering\Drainage\Sheets\105743_DF102.dgn

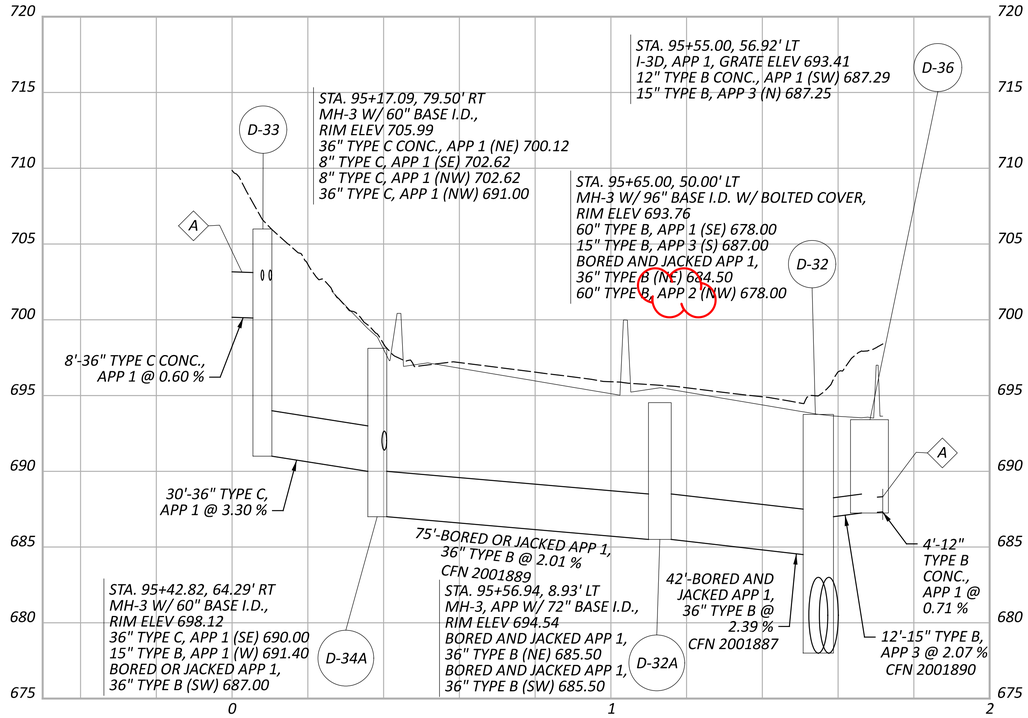

PROFILE "L"

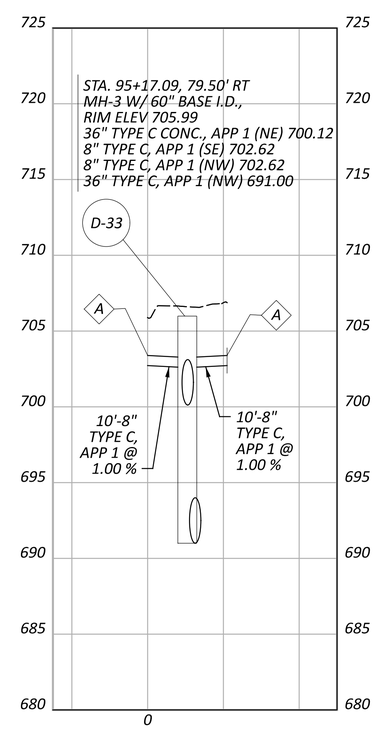

PROFILE "BV"

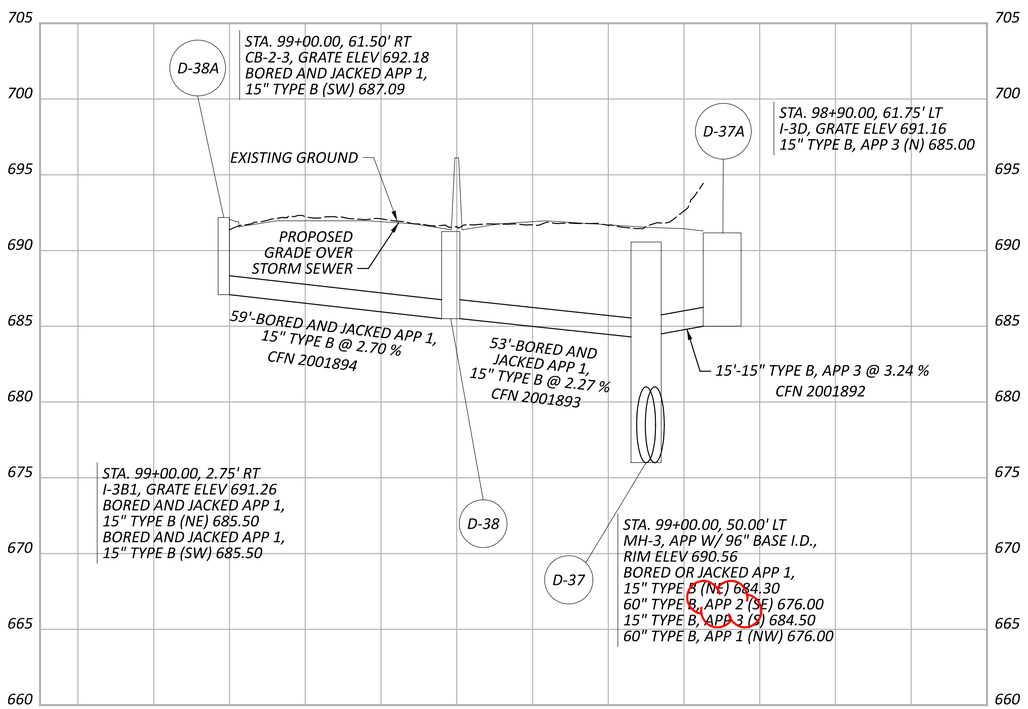

PROFILE "M"

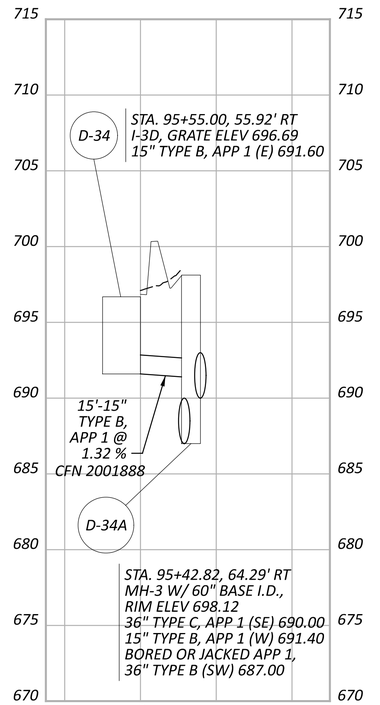

PROFILE "BW"

DRAINAGE PROFILES - I.R. 77
PROFILES "L", "M", "BV", "BW"

DESIGN AGENCY
AECOM

DESIGNER	SMS
REVIEWER	AKM 05/01/26
PROJECT ID	105743
SHEET	P.805
TOTAL	P.1274

CUY-77-11.41 - PART 1

MODEL: Sheet 5 PAPERSIZE: 34x22 (in.) DATE: 11/16/2026 TIME: 2:50:44 PM PLTDRV: OHDOT_PDF.pltcfg PENTBL: OHDOT_Pen.tbl USER: sydney.stefanek@aecom.com WORKSPACE: OHDOTCEv02 WORKSET: 105743 PRODUCT: OpenRoadsDesigner 24.00.02.25
pw:\\trc-pw.bentley.com:trc-pw-01\Documents\5 - Projects - External\Ohio Department of Transportation (ODOT)\301525 - CUY-77-11.21\105743\400-Engineering\Drainage\Sheets\105743_DF102.dgn

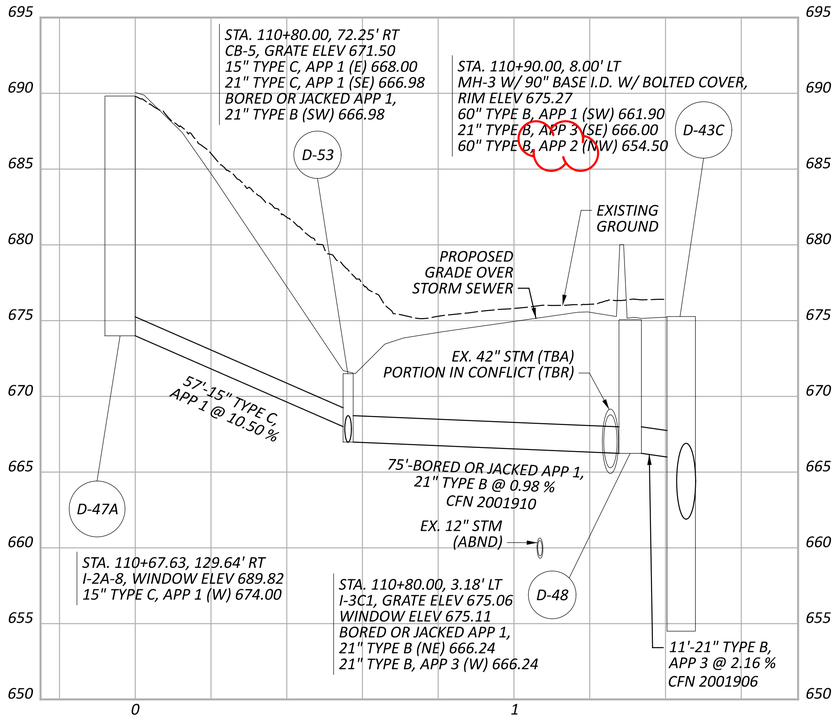

PROFILE "S"

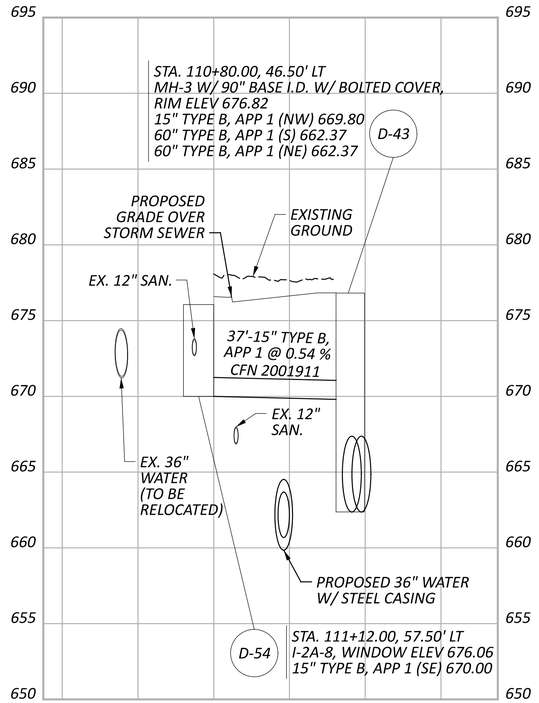

PROFILE "SS"

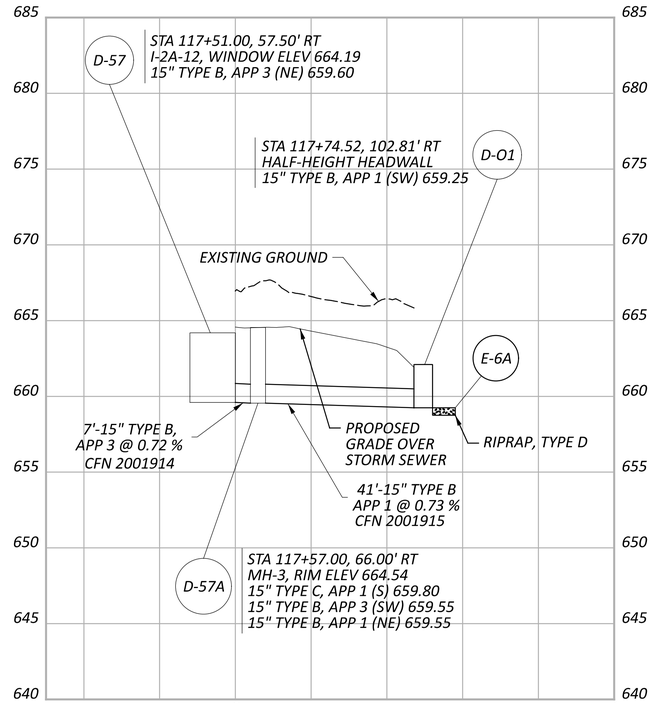

PROFILE "UU"

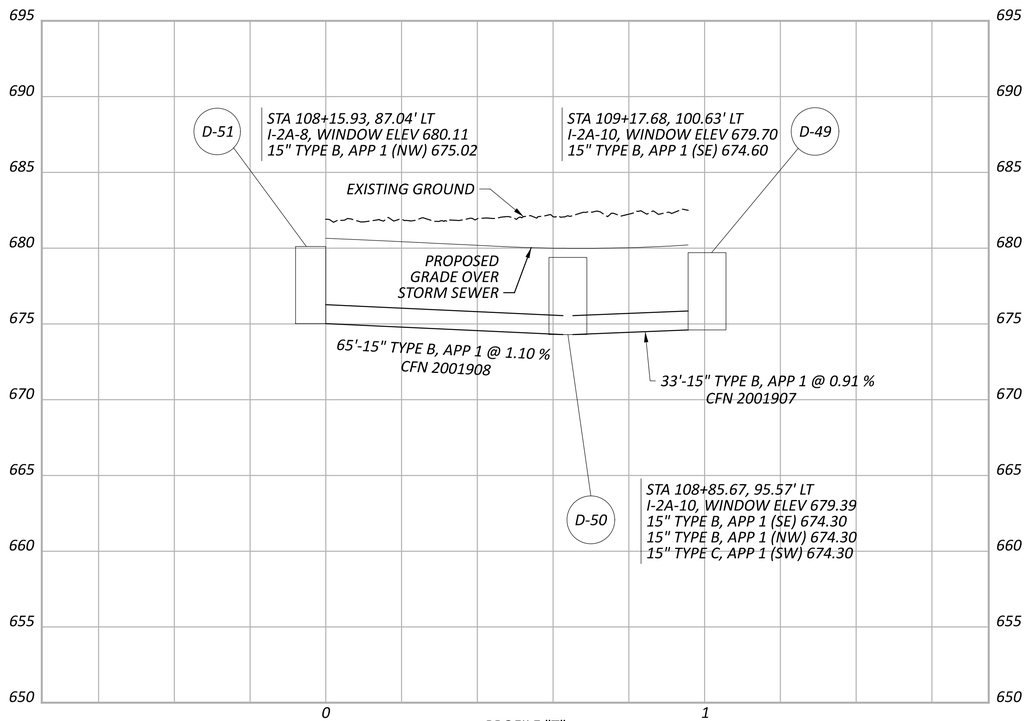

PROFILE "T"

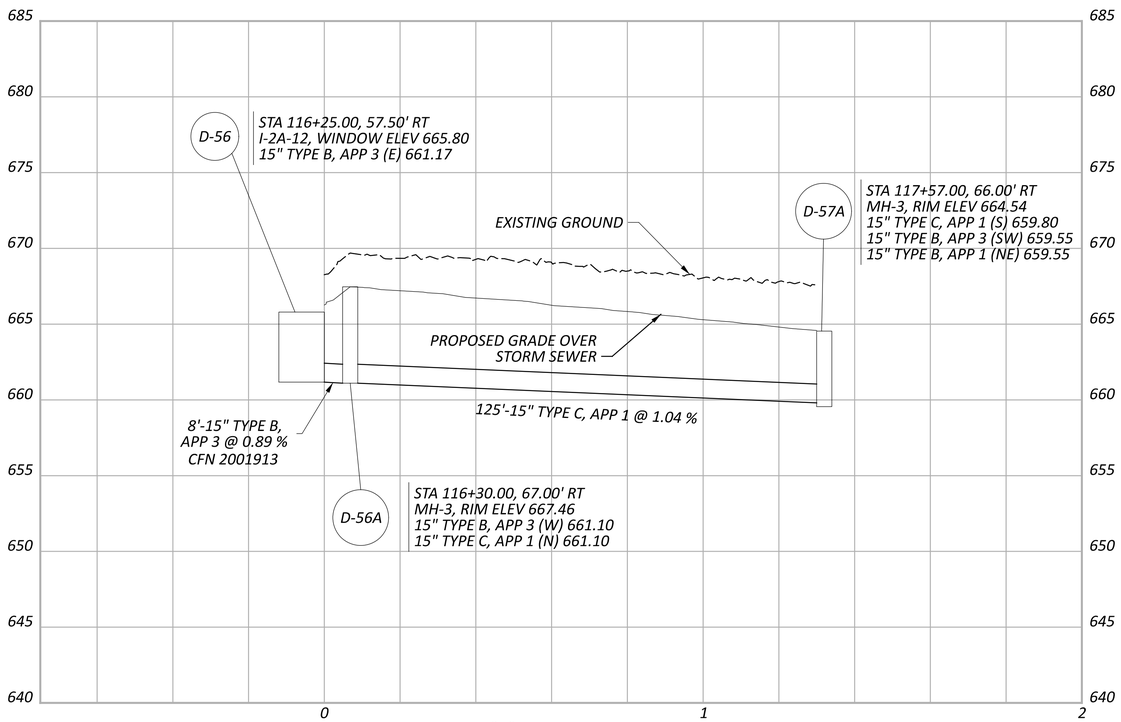

PROFILE "U"

DRAINAGE PROFILES - I.R. 77
PROFILES "S", "SS", "T", "U", "UU"

CUY-77-11.41 - PART 1

MODEL: Sheet 3 PAPERSIZE: 34x22 (in.) DATE: 11/17/2026 TIME: 3:23:13 AM PLTDRV: OHDOT_PDF.pltcfg PENTBL: OHDOT_Pen.tbl USER: sydney.stefanek@aecom.com WORKSPACE: OHDOTCEv02 WORKSET: 105743 PRODUCT: OpenRoadsDesigner 24.00.02.25
pw:\\trc-pw.bentley.com:trc-pw-01\Documents\5 - Projects - External\Ohio Department of Transportation (ODOT)\301525 - CUY-77-11.21\105743\400-Engineering\Drainage\Sheets\105743_DF103.dgn

DESIGN AGENCY
AECOM

DESIGNER SMS
REVIEWER AKM 05/01/26
PROJECT ID 105743
SHEET P.808 TOTAL P.1274

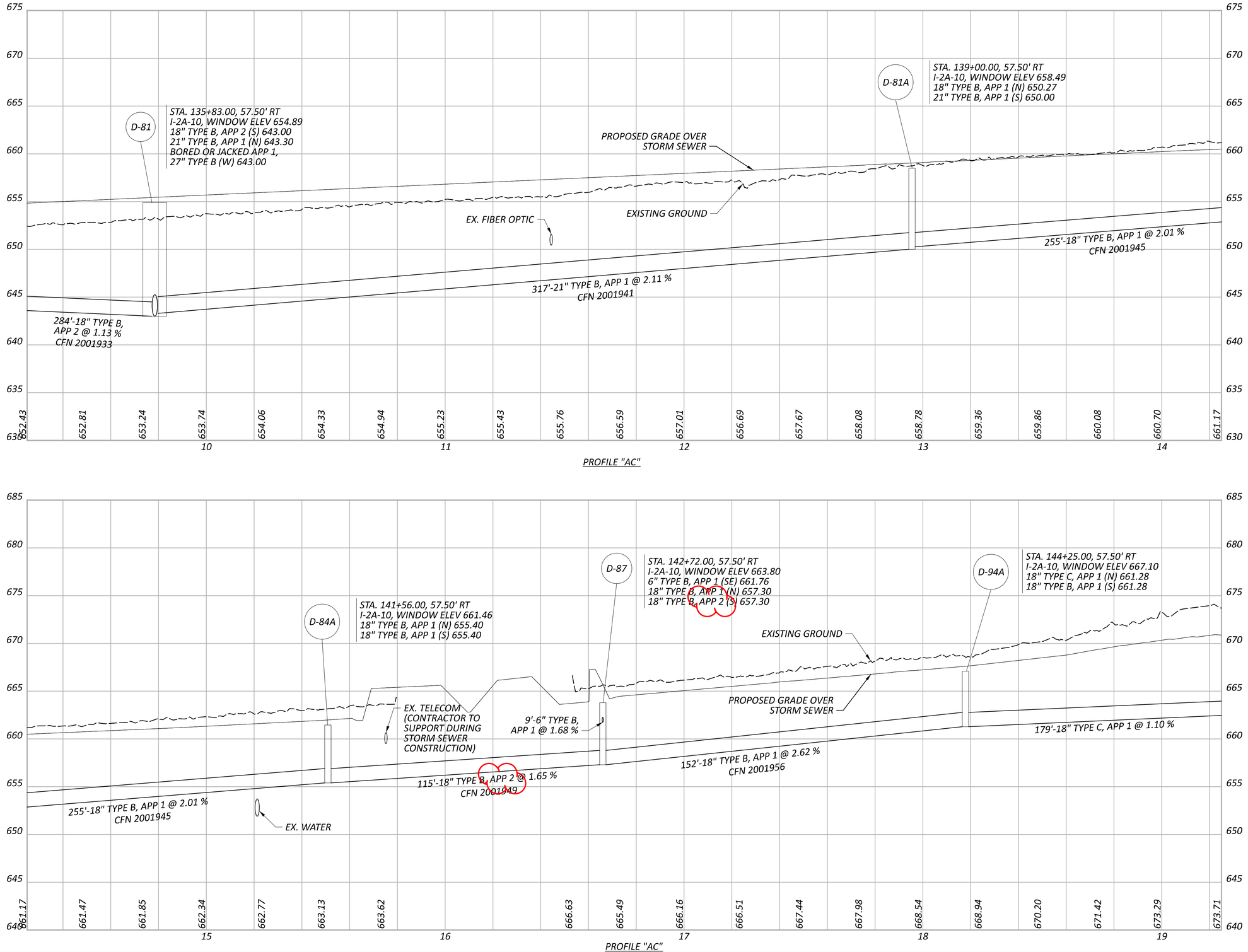

DRAINAGE PROFILES - I.R. 77
PROFILE "AC"

DESIGN AGENCY
AECOM

DESIGNER
SMS
REVIEWER
AKM 11/17/25
PROJECT ID
105743
SHEET P.814 TOTAL P.1274

CUY-77-11.41 - PART 1

MODEL: Sheet 5 - Profile AC - 2025 - Profile AC - 2027 PAPERSIZE: 34x22 (in.) DATE: 11/17/2026 TIME: 3:19:48 AM PLTDRV: OHDOT_PDF.pltcfg PENTBL: OHDOT_Pen.tbl USER: sydney.stefanek@aecom.com WORKSPACE: OHDOTCEv02 WORKSET: 105743 PRODUCT: OpenRoadsDesigner 24.00.02.25
pw:\\trc-pw.bentley.com:trc-pw-01\Documents\5 - Projects - External\Ohio Department of Transportation (ODOT)\301525 - CUY-77-11.21\105743\400-Engineering\Drainage\Sheets\105743_DF104.dgn

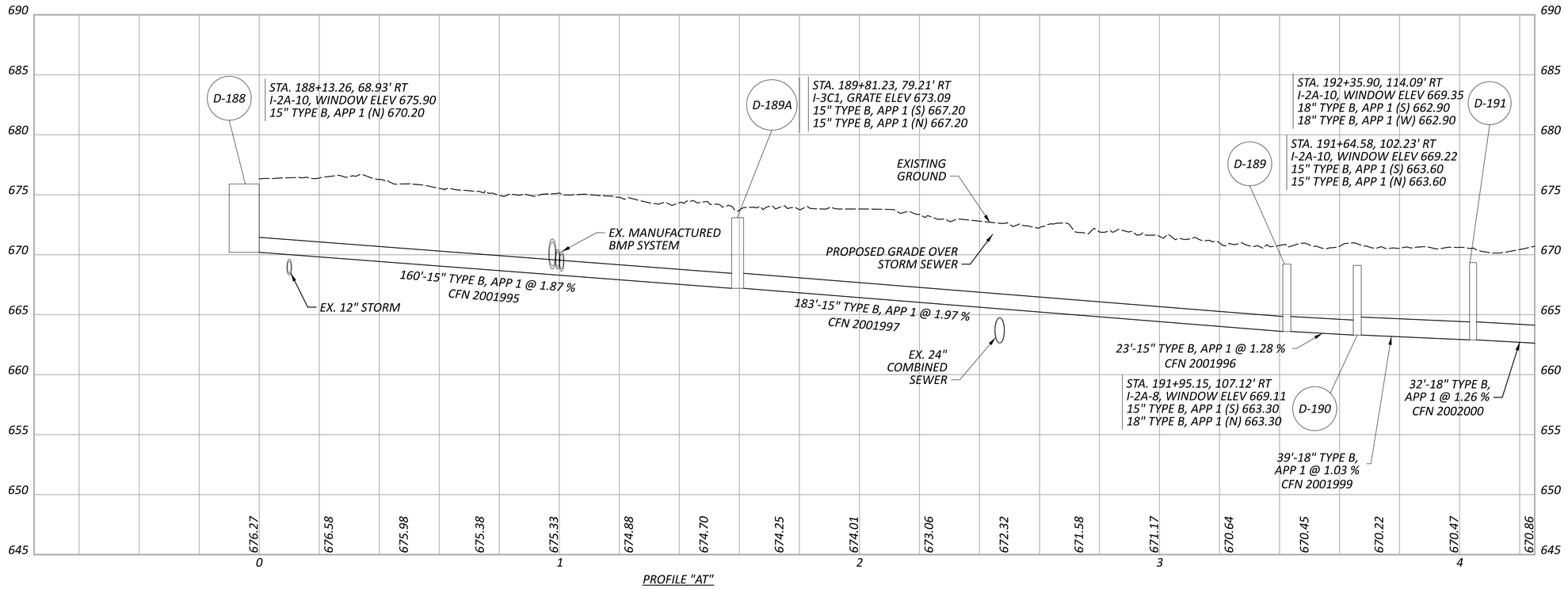

PROFILE "AT"

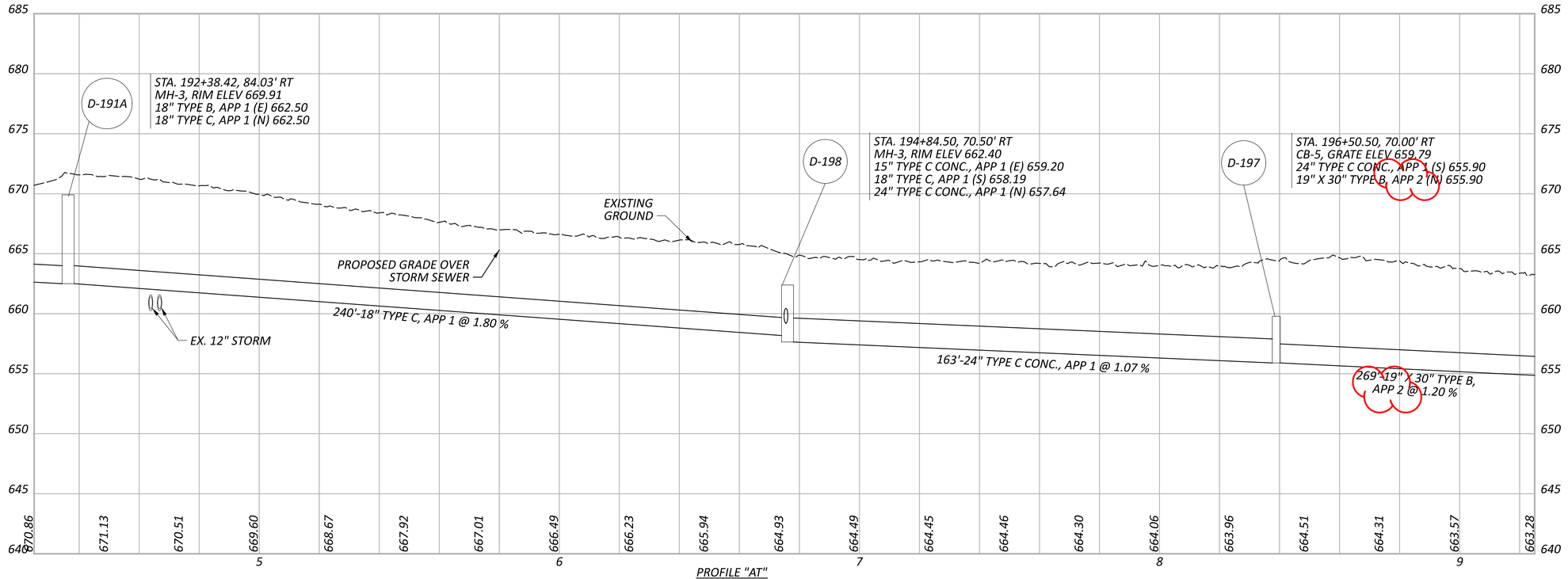

PROFILE "AT"

DRAINAGE PROFILES - I.R. 77
PROFILE "AT"

DESIGN AGENCY
AECOM

DESIGNER
SMS

REVIEWER
AKM 11/17/25

PROJECT ID
105743

SHEET P.826 TOTAL P.1274

CUY-77-11.41 - PART 1

MODEL: Sheet 6 - Profile AT - 2025 - Profile AT - 2025 PAPERSIZE: 34x22 (in.) DATE: 11/17/2026 TIME: 3:32:11 AM PLTDRV: OHDOT_PDF.pltcfg PENTBL: OHDOT_Pen.tbl USER: sydney.stefanek@aecom.com WORKSPACE: OHDOTCEv02 WORKSET: 105743 PRODUCT: OpenRoadsDesigner 24.00.02.25
pw:\\trc-pw.bentley.com:trc-pw-01\Documents\5 - Projects - External\Ohio Department of Transportation (ODOT)\301525 - CUY-77-11.21\105743\400-Engineering\Drainage\Sheets\105743_DF106.dgn

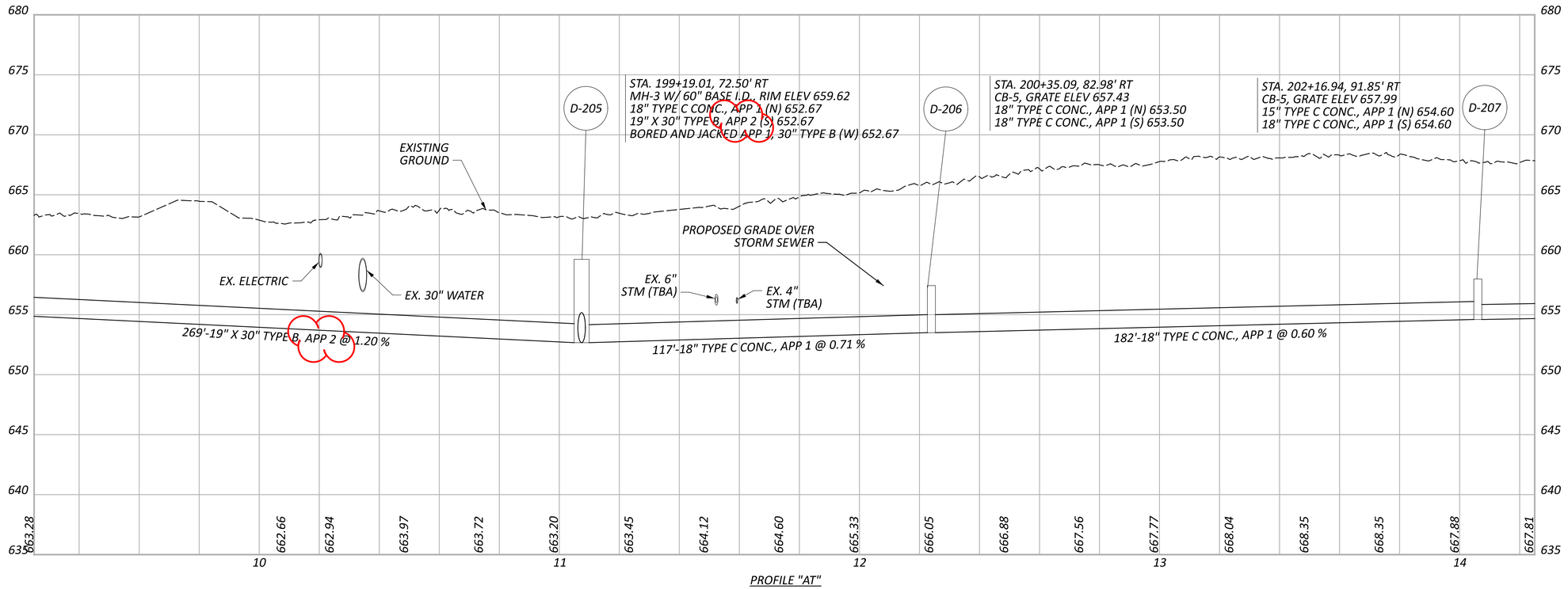

PROFILE "AT"

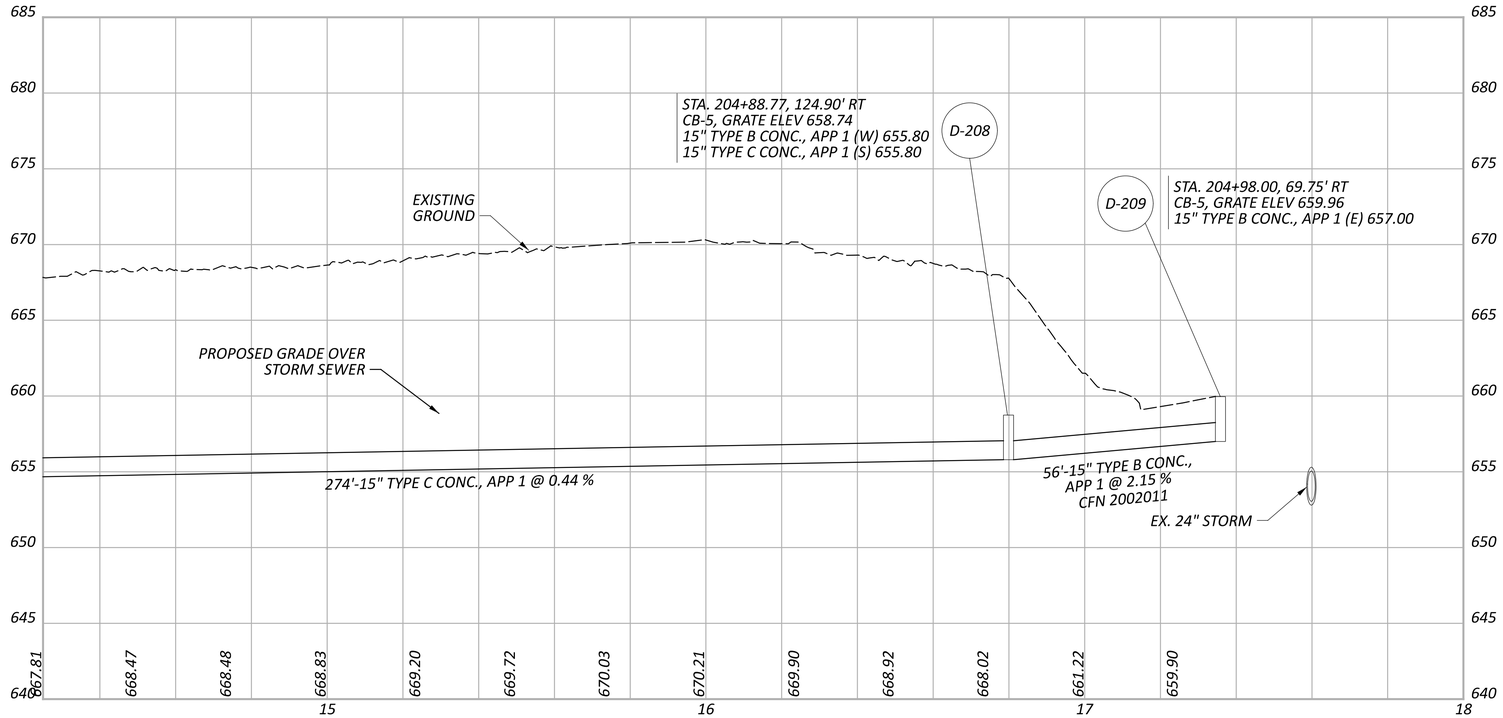

PROFILE "AT"

DRAINAGE PROFILES - I.R. 77
PROFILE "AT"

DESIGN AGENCY
AECOM

DESIGNER
SMS

REVIEWER
AKM 11/17/25

PROJECT ID
105743

SHEET P.827 | TOTAL P.1274

CUY-77-11.41 - PART 1

MODEL: Sheet 7 - Profile AT - 2025 - PAPERSIZE: 34x22 (in.) DATE: 11/17/2026 TIME: 3:32:27 AM PLTDRV: OHDOT_PDF.pltcfg PENTBL: OHDOT_Pen.tbl USER: sydney.stefanek@aecom.com WORKSPACE: OHDOTCEv02 WORKSET: 105743 PRODUCT: OpenRoadsDesigner 24.00.02.25
pw:\\trc-pw.bentley.com:trc-pw-01\Documents\5 - Projects - External\Ohio Department of Transportation (ODOT)\301525 - CUY-77-11.21\105743\400-Engineering\Drainage\Sheets\105743_DF106.dgn

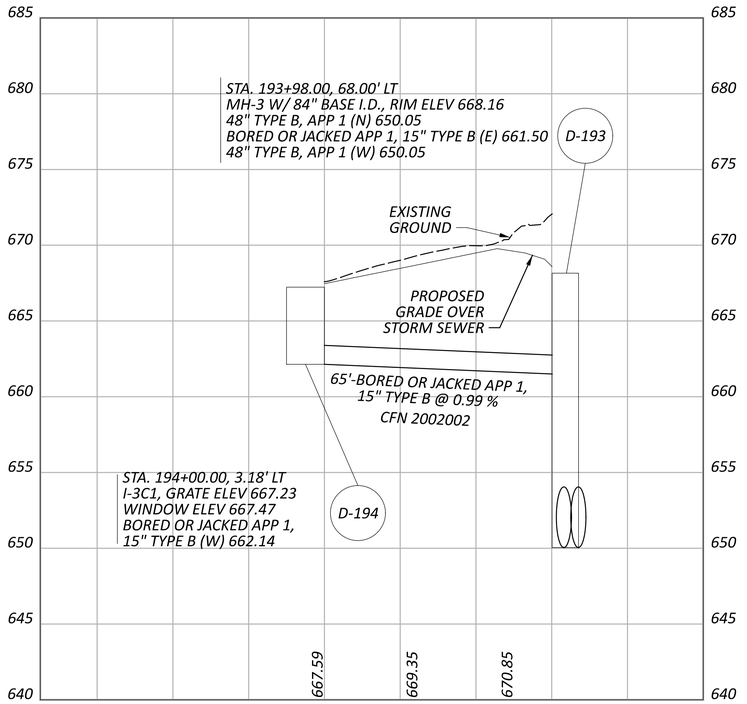

PROFILE "AU"

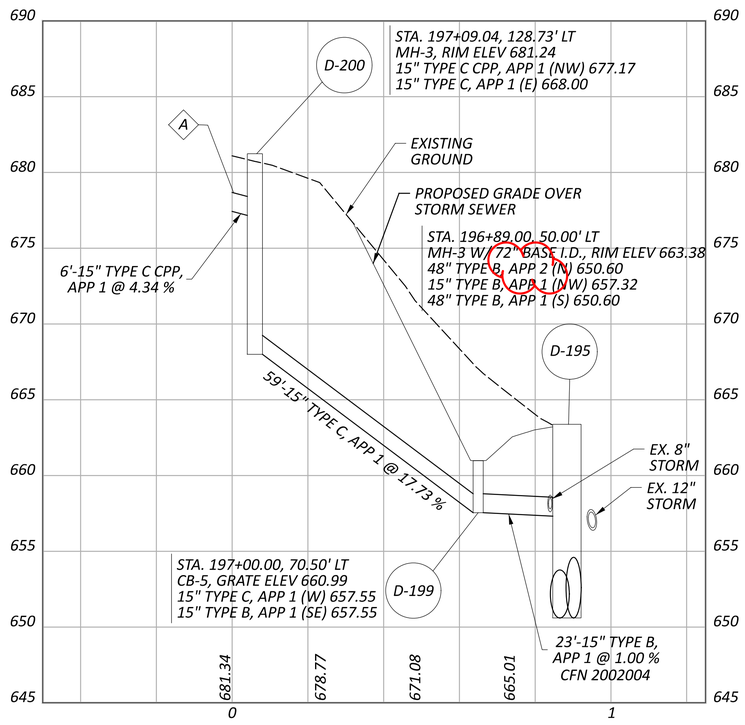

PROFILE "AV"

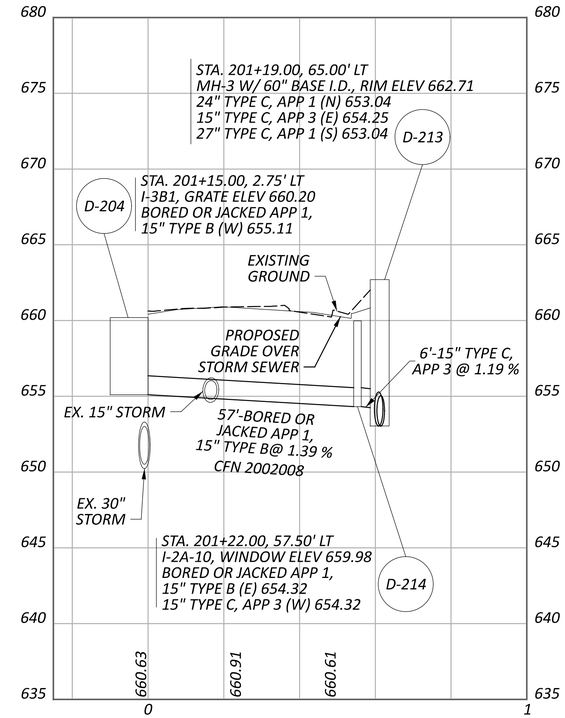

PROFILE "AZ"

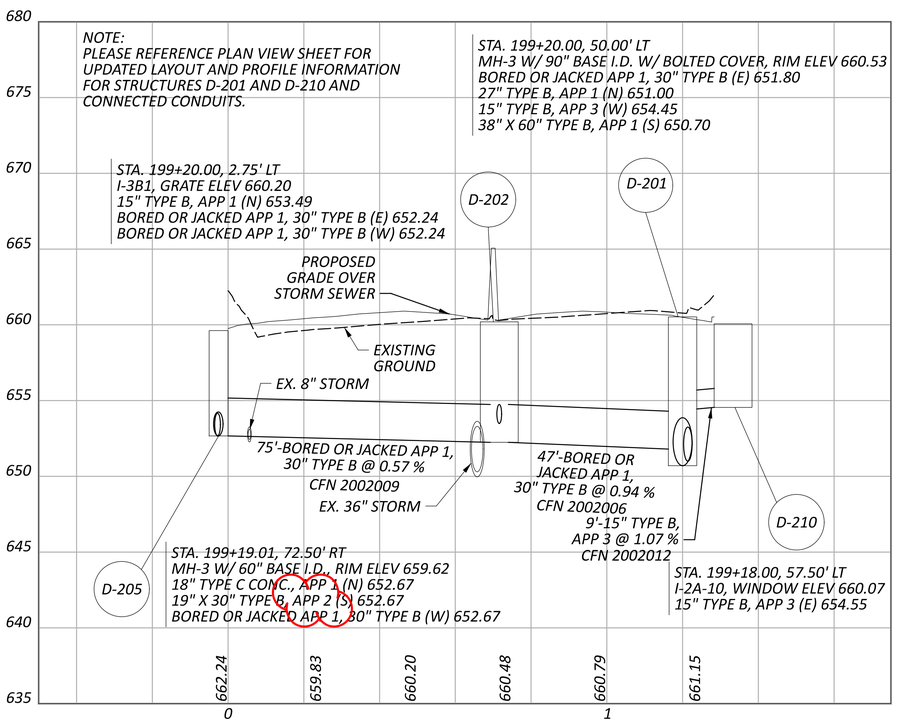

PROFILE "AW"

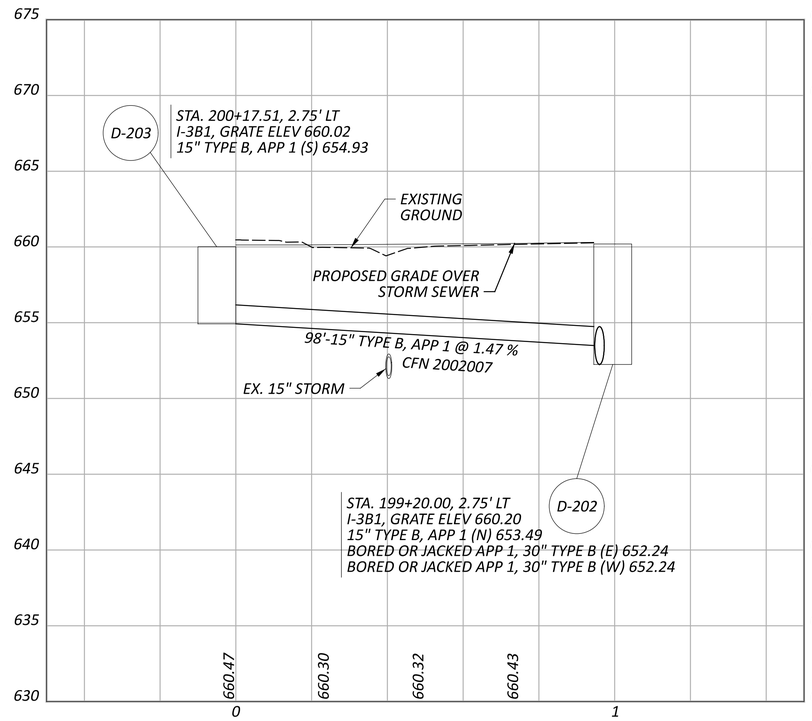

PROFILE "AX"

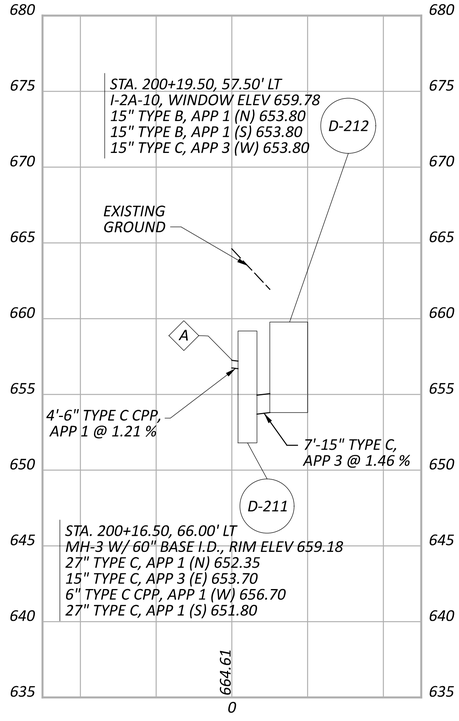

PROFILE "AY"

DRAINAGE PROFILES - I.R. 77
PROFILES "AU", "AV", "AW", "AX", "AY", "AZ"

CUY-77-11.41 - PART 1

DESIGN AGENCY	AECOM
DESIGNER	SMS
REVIEWER	AKM 11/17/25
PROJECT ID	105743
SHEET	P.828
TOTAL	P.1274

MODEL: Sheet 8 - Profile AU - 2025 - Profile AU - 2025 [Sheet] PAPERSIZE: 34x22 (in.) DATE: 11/17/2026 TIME: 3:48:30 AM PLTDRV: OHDOT_PDF.pltcfg PENTBL: OHDOT_Pen.tbl USER: sydney.stefanek@aecom.com WORKSPACE: OHDOTCEv02 WORKSET: 105743 PRODUCT: OpenRoadsDesigner 24.00.02.25
pw:\\trc-pw.bentley.com:trc-pw-01\Documents\5 - Projects - External\Ohio Department of Transportation (ODOT)\301525 - CUY-77-11.21\105743\d00-Engineering\Drainage\Sheets\105743_DF106.dgn