PLOT SUBMITTED:03-DEC-1998 08:04
CUY-90-9.68
990180
DIST 12
03-31-99
PID# 5754
05754GIA.DGN
PLOTTED BY:jgrmovse
PLOTTED FROM:c:\users\minnick\pid5754\05754gta.dgn

CUYAHOGA COUNTY CUY-90-9.68	OHIO
	FHWA REGION 5
TE21-6990(159)	FEDERAL PROJECT

1 / 220

STATE OF OHIO
DEPARTMENT OF TRANSPORTATION
CUY-90-9.68
CITY OF CLEVELAND
CUYAHOGA COUNTY

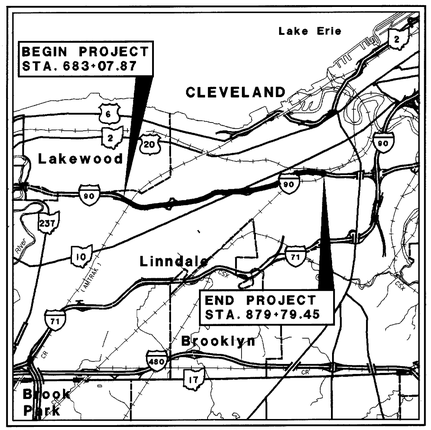

LOCATION MAP

LATITUDE: N41°28'21" LONGITUDE: W81°46'51"

SCALE IN MILES 0 1 2 3 4

PORTION TO BE IMPROVED
U.S. ROUTES
INTERSTATE ROUTES
STATE ROADS
OTHER ROADS

DESIGN DESIGNATION

CURRENT ADT (1998)	86,630
DESIGN YEAR ADT (2018)	132,130
DESIGN HOURLY VOLUME (2018)	13,213
DIRECTIONAL DISTRIBUTION	55%
TRUCKS (24 HOUR B&C)	4%
DESIGN SPEED	60 MPH
LEGAL SPEED	55 MPH

DESIGN FUNCTIONAL CLASSIFICATION - INTERSTATE (URBAN)

DESIGN EXCEPTIONS:

NONE

INDEX OF SHEETS:

TITLE SHEET	1
SCHEMATIC PLAN	2-7
TYPICAL SECTIONS	8-14, 14A-C
GENERAL NOTES	15-18, 18A
MAINTENANCE OF TRAFFIC	19-41, 41A-G
GENERAL SUMMARY	42-44, 44A
COMPUTATIONS / SUB-SUMMARY	45-63, 46A, 58A, 62A
PLAN SHEETS	65-84
PAVING, BARRIERS AND MISCELLANEOUS DETAILS	85-100, 90A, 91A, 93A-B, 97A
TRAFFIC CONTROL	101-152, 102A-C, 152A-C
STRUCTURES	153-220, 162A
SHEETS NOT USED	64

PROJECT DESCRIPTION:

THIS PROJECT INVOLVES PAVEMENT REPAIRS, RESURFACING, CONSTRUCTION OF CONCRETE SHOULDERS, REPLACEMENT OF SIGNS, REPAIR TO BRIDGES AND MICROSILICA MODIFIED CONCRETE OVERLAY.

LIMITED ACCESS

THIS IMPROVEMENT IS ESPECIALLY DESIGNED FOR THROUGH TRAFFIC AND HAS BEEN DECLARED A LIMITED ACCESS HIGHWAY OR FREEWAY BY ACTION OF THE DIRECTOR IN ACCORDANCE WITH THE PROVISIONS OF SECTION 5511.02 OF THE REVISED CODE OF OHIO.

1997 SPECIFICATIONS

THE STANDARD SPECIFICATIONS OF THE STATE OF OHIO, DEPARTMENT OF TRANSPORTATION, INCLUDING CHANGES AND SUPPLEMENTAL SPECIFICATIONS LISTED IN THE PROPOSAL SHALL GOVERN THIS IMPROVEMENT.

I HEREBY APPROVE THESE PLANS AND DECLARE THAT THE MAKING OF THIS IMPROVEMENT WILL NOT REQUIRE THE CLOSING TO TRAFFIC OF THE HIGHWAY AND THAT PROVISIONS FOR THE MAINTENANCE AND SAFETY OF TRAFFIC WILL BE AS SET FORTH IN THE PLANS AND ESTIMATES.

UNDER AUTHORITY OF SECTION 4511.21, DIVISION (I) OF THE REVISED CODE OF OHIO, THE REVISED PRIMA FACIE SPEED LIMITS AS INDICATED HEREIN ARE DETERMINED TO BE REASONABLE AND SAFE, AND ARE HEREBY ESTABLISHED FOR THE DURATION OF THIS PROJECT. THE PRIMA FACIE SPEED LIMIT OR LIMITS HEREBY ESTABLISHED SHALL BECOME EFFECTIVE WHEN APPROPRIATE SIGNS GIVING NOTICE THEREOF ARE ERECTED.

APPROVED _____
DATE 12.15.98 DISTRICT DEPUTY DIRECTOR

APPROVED _____
DATE 12.15.98 DIRECTOR, DEPARTMENT OF TRANSPORTATION

UNDERGROUND UTILITIES
TWO WORKING DAYS BEFORE YOU DIG
CALL 1-800-362-2764 (TOLL FREE)
OHIO UTILITIES PROTECTION SERVICE
NON-MEMBERS
MUST BE CALLED DIRECTLY

ROADWAY PLANS PREPARED BY:
OHIO DEPARTMENT OF TRANSPORTATION
DISTRICT 12
LOCATION & DESIGN

STATE OF OHIO ERIC N. FORSBERG 41317 REGISTERED PROFESSIONAL ENGINEER

SUPPLEMENTAL PRINTS OF STANDARD CONSTRUCTION DRAWINGS

														SUPPLEMENTAL SPECIFICATIONS	
BP-2.1M	10-28-94	GR-1.1M	10-21-97	GR-5.2	10-3-92	MH-1	12-18-84	MT-101.60	7-1-92	TC-16.20	1-20-84	TC-41.20	6-21-94	806	9-9-97
BP-2.2M	10-21-97	GR-1.2M	1-03-96	GR-5.3	10-30-92	MH-1.2M	9-6-95	MT-102.20	8-25-89	TC-18.24	4-25-79	TC-41.50	6-21-94	825	10-2-89
BP-2.3M	10-28-94	GR-1.3	2-21-92	I-1.2M	9-06-95	MH-5	6-12-75	MT-105.10	7-1-92	TC-18.26	5-31-79	TC-42.10	8-19-77	828	8-28-98
BP-2.4	2-21-92	GR-2.1M	4-14-98	I-2.1M	4-14-98	HL-20.13	5-1-87	MT-105.11	7-1-92	TC-21.20	9-1-92	TC-42.20	3-26-79	843	5-5-98
BP-2.5M	4-08-97	GR-3.7M	10-21-97							TC-22.10	9-1-92			844	5-5-98
BP-3.1	2-21-92	GR-3.1M	10-21-97	DM-1.1M	10-21-97	MT-95.30	10-10-88			TC-22.20	9-1-92	TC-51.11	9-30-94	846	9-9-97
BP-5.1	10-28-94	GR-3.2M	10-21-97	RM-3.1M	10-21-97	MT-95.31	10-10-88	TC-12.30	1-20-84	TC-31.21	9-1-92	TC-52.10	4-3-79	848	6-30-98
BP-8.1M	4-08-97	GR-3.4M	10-21-97	RM-4.2M	10-21-97	MT-95.32	8-25-89	TC-7.65	3-1-79	TC-32.10	9-1-92	TC-52.20	4-3-79	849	6-14-95
BP-1.1	2-21-92	GR-4.1	5-6-91	RM-4.3M	10-21-97	MT-95.40	10-1-92			TC-32.11	9-1-92	TC-61.10	4-5-82	863	9-9-97
CB-2.2M	7-12-95	GR-4.2M	10-21-97	RM-4.4M	10-21-97	MT-98.12	6-24-93	AS-1-81	11-27-81	TC-35.10	8-29-84	TC-71.10	9-10-91	910	7-28-98
CB-3.2M	7-12-95	GR-4.3M	10-21-97	DM-4.3M	6-30-95	MT-98.13	6-24-93	RB-1-55	3-1-55	TC-41.10	8-29-84	TC-72.20	2-26-82	932	10-2-96
CB-3.4M	7-12-95	GR-4.4	2-21-92	DM-4.4M	6-30-95	MT-98.14	6-24-93			VPF-1-90	3-24-93	TC-82.10	8-29-84	954	9-9-97
F-1.1M	4-08-97					MT-98.15	6-24-93					TC-65.10	2-1-90	1070	7-17-96
						MT-98.16	6-24-93					TC-65.11	2-1-90		
						MT-98.17	4-25-94					TC-65.12	2-1-90		
						MT-98.18	4-25-94					TC-65.13	2-1-90		
						MT-110.20M	3-1-96					TC-12.30	1-20-84		
												TC-41.40	6-18-79		

Project: CUY-90-9.68 PID 5754
Date of Letting: _____ ,19
Contract No.: _____

SCHEMATIC PLAN

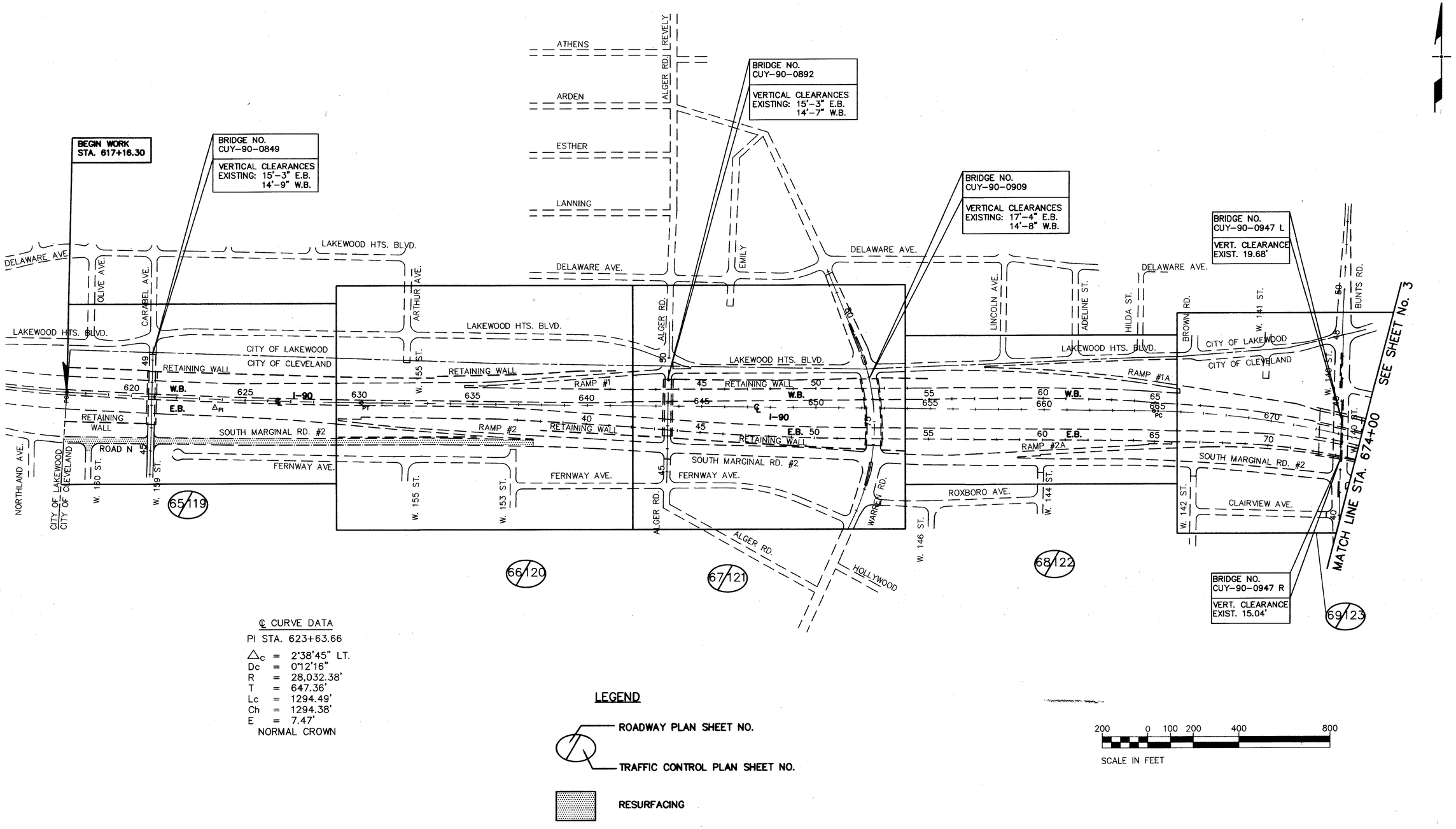

℄ CURVE DATA

PI STA. 623+63.66

Δ_c = 2°38'45" LT.
Dc = 0°12'16"
R = 28,032.38'
T = 647.36'
Lc = 1294.49'
Ch = 1294.38'
E = 7.47'
NORMAL CROWN

LEGEND

ROADWAY PLAN SHEET NO.

TRAFFIC CONTROL PLAN SHEET NO.

RESURFACING

PLOTTED BY: jgrmovse
PLOTTED FROM: Users\Blmincek\pid5754\05754gba.dgn
PLOT SUBMITTED:02-DEC-1998 16:56
05754GBA.DGN

SCHEMATIC PLAN

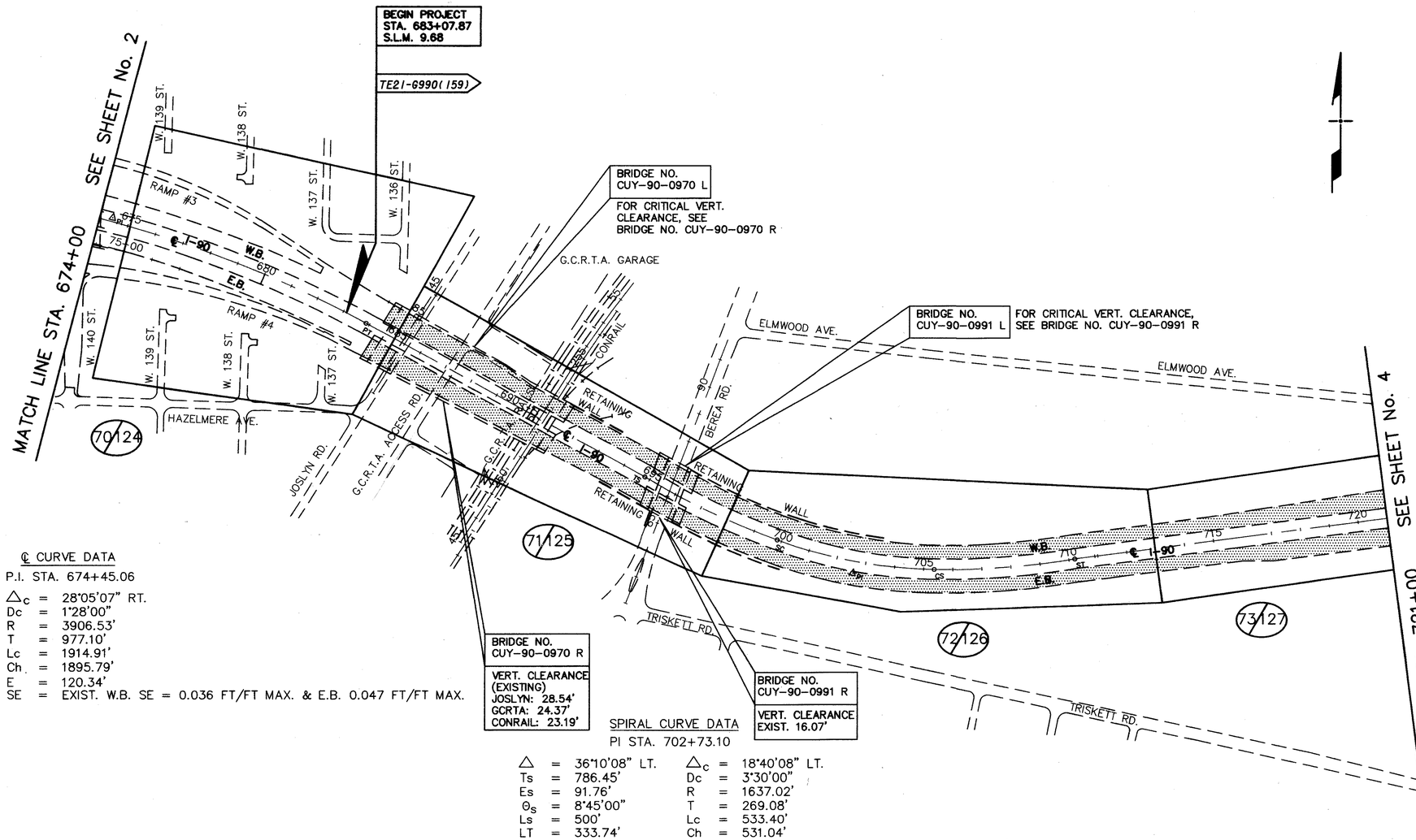

℄ CURVE DATA

P.I. STA. 674+45.06

$\triangle_c$ = 28°05'07" RT.
Dc = 1°28'00"
R = 3906.53'
T = 977.10'
Lc = 1914.91'
Ch = 1895.79'
E = 120.34'
SE = EXIST. W.B. SE = 0.036 FT/FT MAX. & E.B. 0.047 FT/FT MAX.

SPIRAL CURVE DATA

PI STA. 702+73.10

$\triangle$ = 36°10'08" LT.
Ts = 786.45'
Es = 91.76'
Θ_s = 8°45'00"
Ls = 500'
LT = 333.74'
ST = 167.04'

$\triangle_c$ = 18°40'08" LT.
Dc = 3°30'00"
R = 1637.02'
T = 269.08'
Lc = 533.40'
Ch = 531.04'
E = 21.97'
SE = EXIST. W.B. & E.B. SE 0.056 FT/FT MAX.

200 0 100 200 400 800
SCALE IN FEET

FOR LEGEND, SEE SHEET No. 2.

PLOTTED BY: jgrmovse
PLOTTED FROM: E:\miniceb\pid05754\user5\05754gbb.dgn
PLOT SUBMITTED: 03-DEC-1998 08:38
05754GBB.DGN

SCHEMATIC PLAN

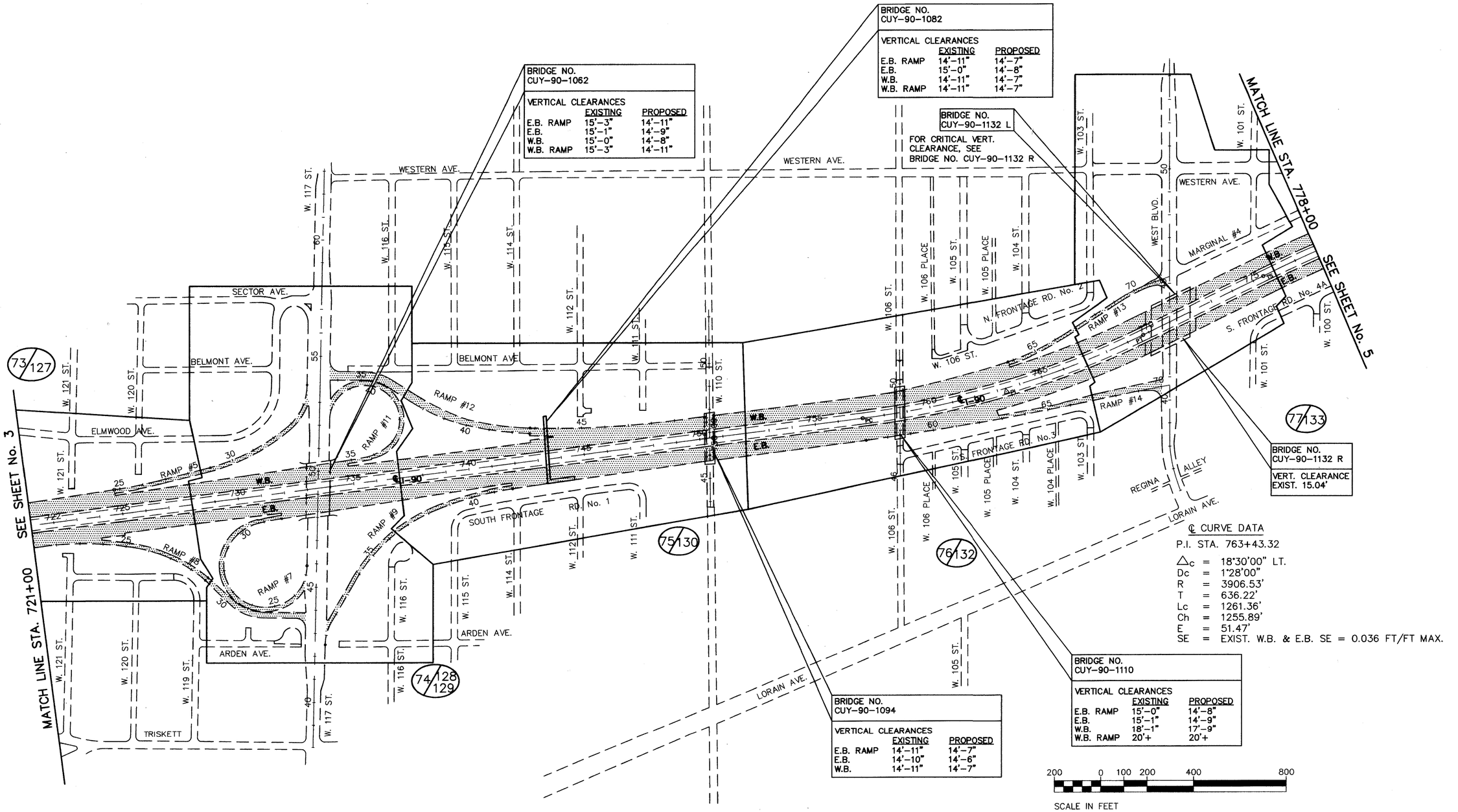

FOR LEGEND, SEE SHEET No. 2.

PLOTTED BY: jgrmovse
PLOTTED FROM: C:\Users\jmincek\pid57541\05754gbc.dgn
PLOT SUBMITTED:02-DEC-1998 16:55
05754GBC.DGN

SCHEMATIC PLAN

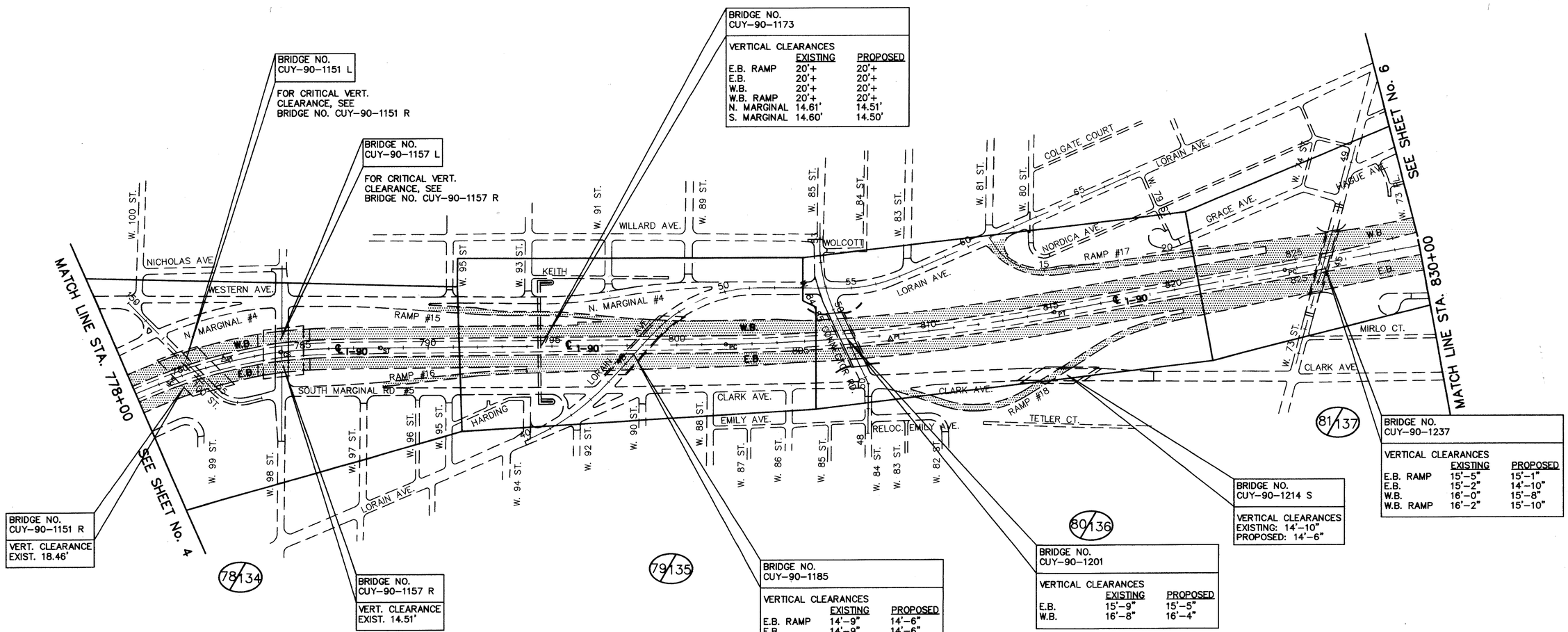

SPIRAL CURVE DATA
P.I. STA. 781+88.41

△	=	25°21'57"	RT.	△c	= 13°21'57" RT.
Ts	=	630.52'		Dc	= 3°00'00"
Es	=	51.34'		R	= 1909.86'
Θs	=	6°00'00"		T	= 223.78'
Ls	=	400'		Lc	= 445.53'
LT	=	266.82'		Ch	= 444.52'
ST	=	133.47'		E	= 13.07'
				SE	= EXIST. W.B. & E.B. SE = 0.053 FT/FT MAX.

℄ CURVE DATA
P.I. STA. 808+54.11

△c	=	9°49'25"	LT.		
Dc	=	0°45'00"			
R	=	7639.44'			
T	=	656.52'			
Lc	=	1309.82'			
Ch	=	1308.21'			
E	=	28.16'			
SE	=	EXIST. W.E. & E.B. SE = 0.018 FT/FT MAX.			

FOR LEGEND, SEE SHEET No. 2.

PLOTTED BY: jgrmovse
PLOTTED FROM: C:\Users\bimincek\bid\05754\05754gbd.dgn
PLOT SUBMITTED:02-DEC-1998 16:54
05754GBD.DGN

SCHEMATIC PLAN

CURVE DATA ℄ E.B. LANES
P.I. STA. 871+72.02
Δ_c = 1°17'20" RT.
Dc = 0°45'13"
R = 7603.44'
T = 85.52'
Lc = 171.02'
E = 0.48'
S.E. = EXIST. E.B. SE = 0.018 FT/FT MAX.

CURVE DATA ℄ E.B. LANES
PI STA. 876+32.83
Δ_c = 5°37'30" RT.
Dc = 0°45'00"
R = 7639.44'
T = 375.30'
Lc = 750.00'
E = 9.21'
SE = EXIST. E.B. SE = 0.018 FT/FT MAX.

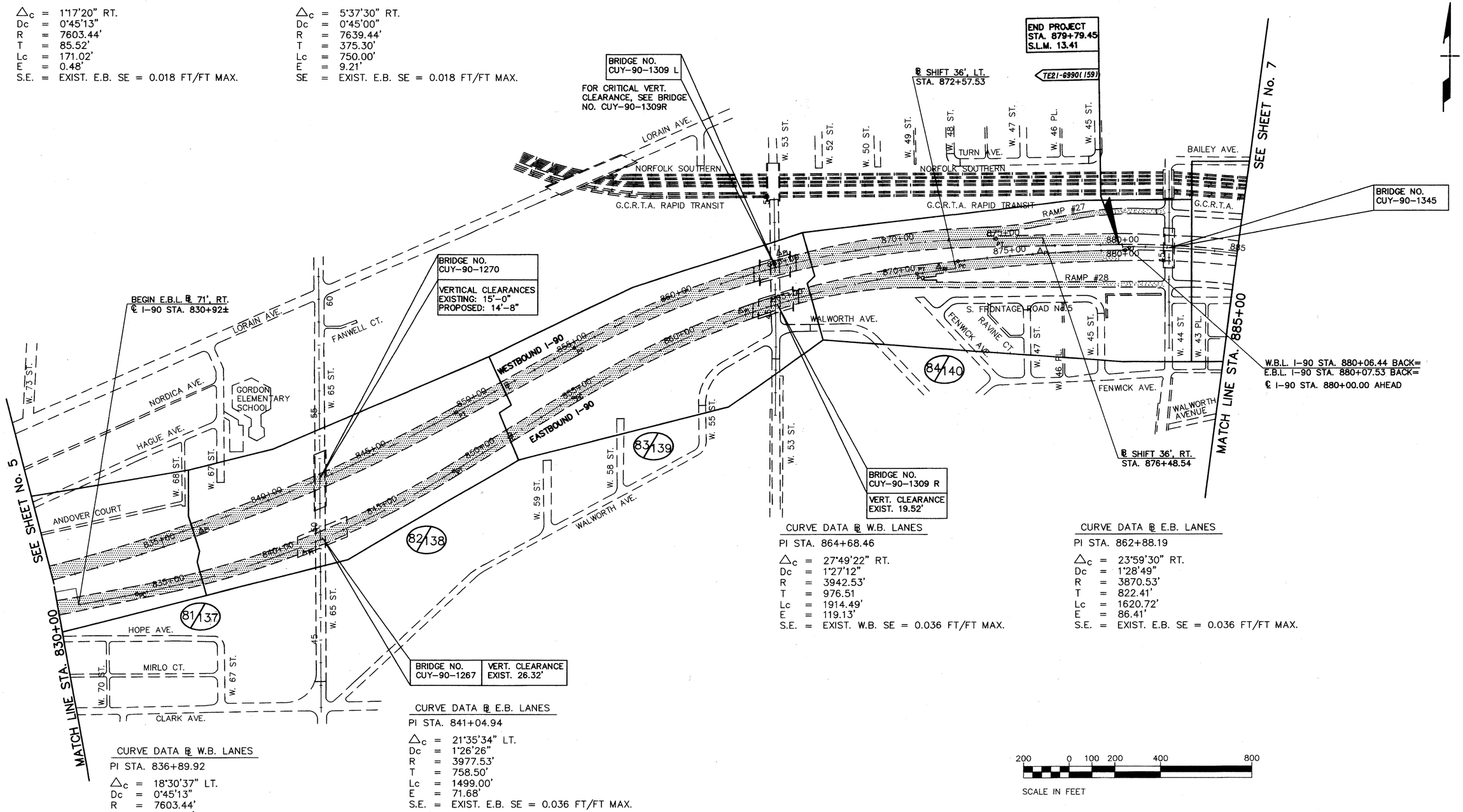

CURVE DATA ℄ W.B. LANES
PI STA. 864+68.46
Δ_c = 27°49'22" RT.
Dc = 1°27'12"
R = 3942.53'
T = 976.51
Lc = 1914.49'
E = 119.13'
S.E. = EXIST. W.B. SE = 0.036 FT/FT MAX.

CURVE DATA ℄ E.B. LANES
PI STA. 862+88.19
Δ_c = 23°59'30" RT.
Dc = 1°28'49"
R = 3870.53'
T = 822.41'
Lc = 1620.72'
E = 86.41'
S.E. = EXIST. E.B. SE = 0.036 FT/FT MAX.

CURVE DATA ℄ E.B. LANES
PI STA. 841+04.94
Δ_c = 21°35'34" LT.
Dc = 1°26'26"
R = 3977.53'
T = 758.50'
Lc = 1499.00'
E = 71.68'
S.E. = EXIST. E.B. SE = 0.036 FT/FT MAX.

CURVE DATA ℄ W.B. LANES
PI STA. 836+89.92
Δ_c = 18°30'37" LT.
Dc = 0°45'13"
R = 7603.44'
T = 1238.99'
Lc = 2456.40'
E = 100.29'
S.E. = EXIST. W.B. SE = 0.018 FT/FT MAX.

FOR LEGEND, SEE SHEET No. 2.

PLOT SUBMITTED:03-DEC-1998 08:36
05754GBE.DGN
PLOTTED BY: jgrmovse
PLOTTED FROM: Rusers@lmincek@pid5754@05754gbe.dgn

SCHEMATIC PLAN

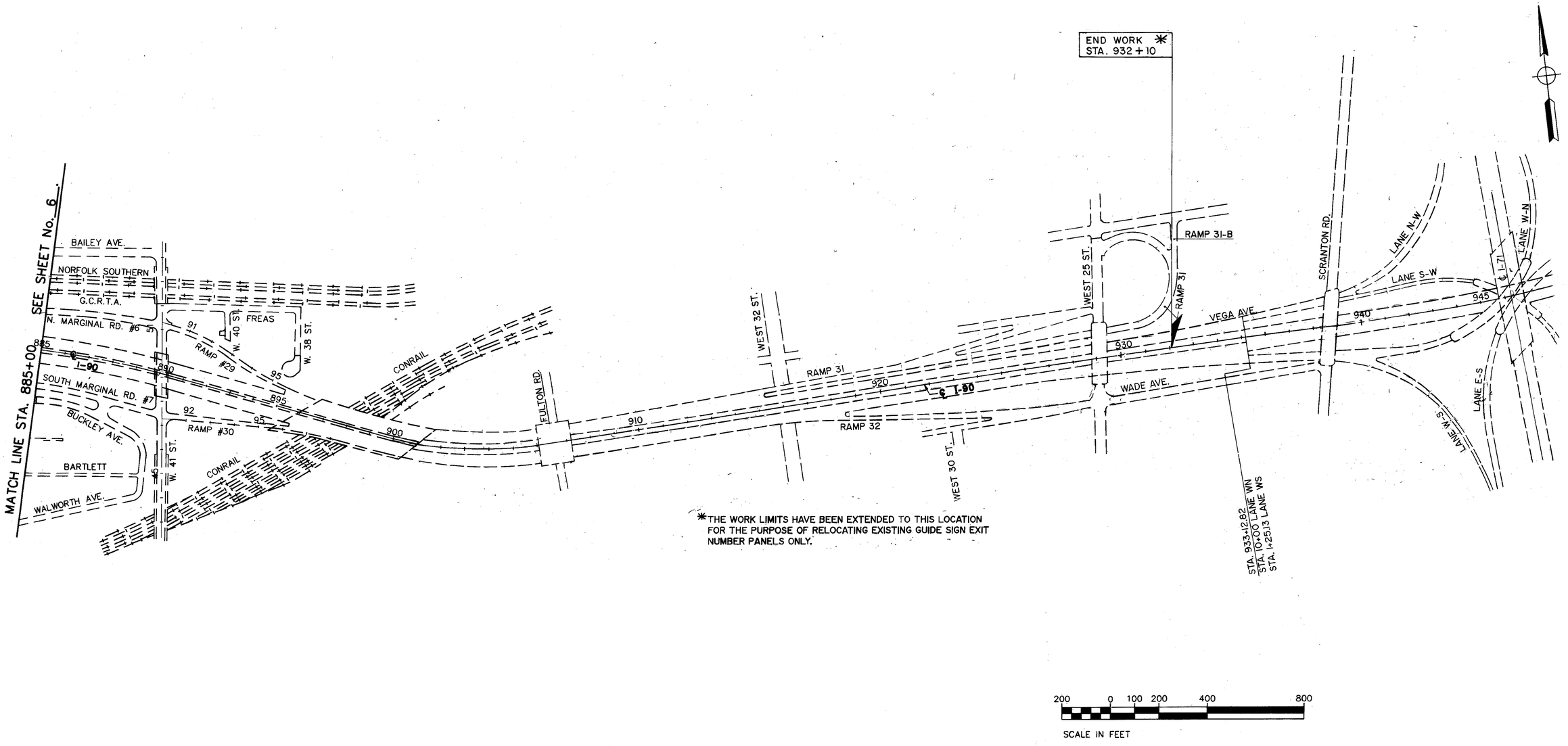

*THE WORK LIMITS HAVE BEEN EXTENDED TO THIS LOCATION FOR THE PURPOSE OF RELOCATING EXISTING GUIDE SIGN EXIT NUMBER PANELS ONLY.

FOR LEGEND, SEE SHEET No. 2

PLOTTED BY: jgrmovse
PLOTTED FROM: E:\users\lmincek\pid57541\05754gbf.dgn
PLOT SUBMITTED: 02-DEC-1998 16:53
05754GBF.DGN

TYPICAL SECTIONS

TYPE 446

0 2 4 8

SCALE IN FEET

CUYAHOGA COUNTY	OHIO
CUY-90-9.68	FHWA REGION 5
	FEDERAL PROJECT

8
220

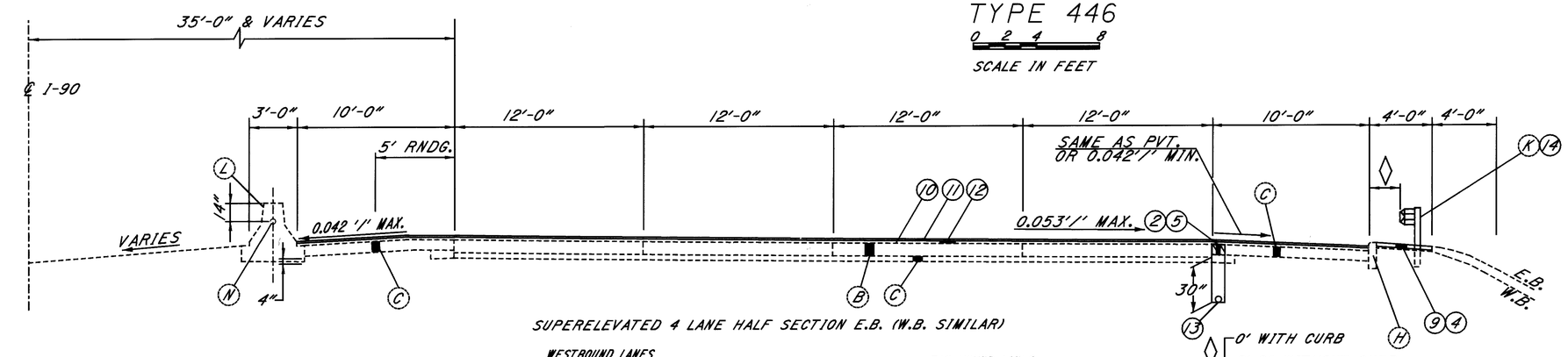

SUPERELEVATED 4 LANE HALF SECTION E.B. (W.B. SIMILAR)

WESTBOUND LANES
STA. 683+07.87 TO STA. 683+82.87 (W/EXIST. CONC. SHOULDER)
STA. 772+53.03 TO STA. 792+00.00

BRIDGE & APPROACH SLAB LIMITS
STA. 779+42.53 TO STA. 781+57.33
STA. 783+05.26 TO STA. 785+18.83

EASTBOUND LANES
STA. 683+07.87 TO STA. 683+82.87(W/EXIST. CONC. SHOULDER)
STA. 772+53.03 TO STA. 792+00.00

BRIDGE & APPROACH SLAB LIMITS
STA. 779+42.53 TO STA. 781+57.33
STA. 783+05.26 TO STA. 785+18.83

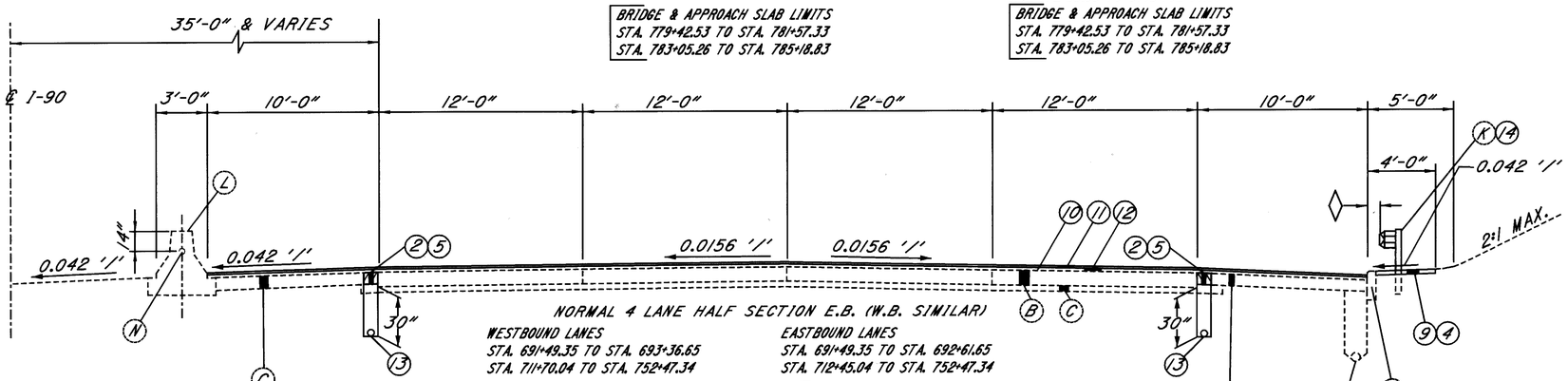

NORMAL 4 LANE HALF SECTION E.B. (W.B. SIMILAR)

WESTBOUND LANES
STA. 691+49.35 TO STA. 693+36.65
STA. 711+70.04 TO STA. 752+47.34

BRIDGE & APPROACH SLAB LIMITS
STA. 684+34.85 TO STA. 691+49.35
RETAINING WALL LIMITS
STA. 691+49.35 TO STA. 693+36.65
(SEE DETAIL 1 SHEET 13)
RETAINING WALL LIMITS
STA. 750+73.05 TO STA. 752+47.34
(SEE DETAIL 2 SHEET 13)

EASTBOUND LANES
STA. 691+49.35 TO STA. 692+61.65
STA. 712+45.04 TO STA. 752+47.34

BRIDGE & APPROACH SLAB LIMITS
STA. 684+34.85 TO STA. 691+49.35
RETAINING WALL LIMITS
STA. 691+49.35 TO STA. 693+36.65
(SEE DETAIL 1 SHEET 13)
RETAINING WALL LIMITS
STA. 750+73.05 TO STA. 752+47.34
(SEE DETAIL 2 SHEET 13)

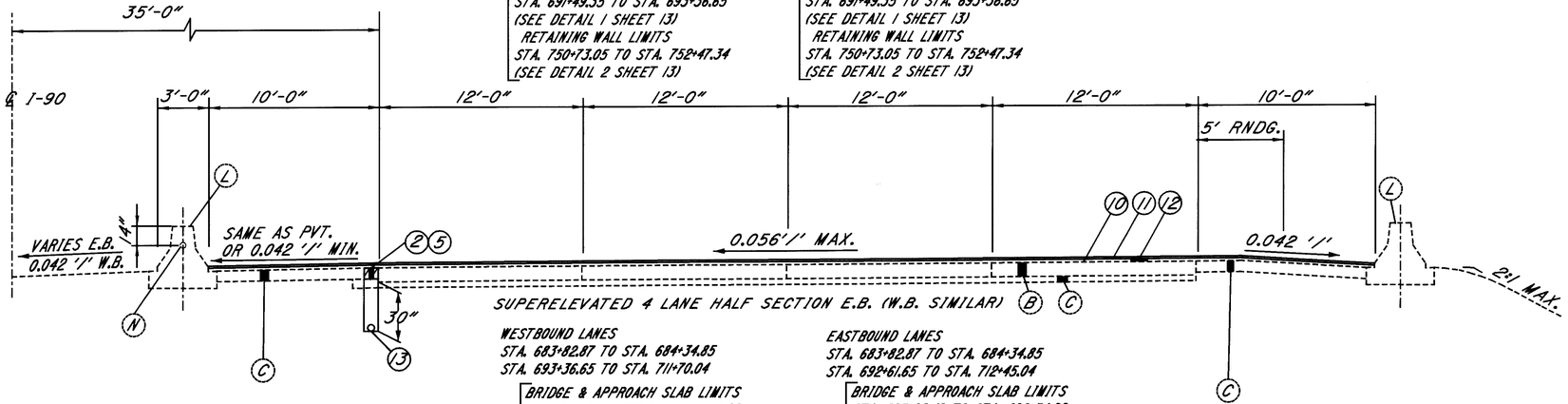

SUPERELEVATED 4 LANE HALF SECTION E.B. (W.B. SIMILAR)

WESTBOUND LANES
STA. 683+82.87 TO STA. 684+34.85
STA. 693+36.65 TO STA. 711+70.04

BRIDGE & APPROACH SLAB LIMITS
STA. 695+02.49 TO STA. 696+54.22
RETAINING WALL LIMITS
STA. 693+36.65 TO STA. 695+02.49
STA. 696+54.22 TO STA. 703+50
(SEE DETAIL 1 SHEET 13)

EASTBOUND LANES
STA. 683+82.87 TO STA. 684+34.85
STA. 692+61.65 TO STA. 712+45.04

BRIDGE & APPROACH SLAB LIMITS
STA. 695+02.49 TO STA. 696+54.22
RETAINING WALL LIMITS
STA. 693+36.65 TO STA. 695+02.49
STA. 696+54.22 TO STA. 703+50
(SEE DETAIL 1 SHEET 13)

EXISTING

- (A) - 9" REINFORCED CONCRETE PAVEMENT
- (B) - 10" REINFORCED CONCRETE PAVEMENT
- (C) - BITUMINOUS AGGREGATE BASE
- (D) - AGGREGATE BASE
- (E) - SUBBASE
- (F) - 6" DEEP, SHALLOW OR UNCLASSIFIED UNDERDRAIN (WHERE SHOWN ON PLAN)
- (G) - 9" CONCRETE MEDIAN
- (H) - CURB, TYPE6
- (J) - CURB, TYPE 2B
- (K) - GUARDRAIL, TYPE 5
- (L) - CONCRETE BARRIER
- (M) - CONCRETE WALK
- (N) - 4" LIGHTING RACEWAY (WHERE SHOWN ON PLAN)

PROPOSED

- (1) - ITEM 202 CURB REMOVED, AS PER PLAN (SEE SHEET 94)
- (2) - ITEM 203 EXCAVATION NOT INCLUDING EMBANKMENT CONSTRUCTION
- (3) - ITEM 203 SUBGRADE COMPACTION
- (4) - ITEM 203 LINEAR GRADING
- (5) - ITEM 301 BITUMINOUS AGGREGATE BASE, PG64-22
- (6) - ITEM 305 9" CONCRETE BASE, AS PER PLAN
- (7) - ITEM 305 10" CONCRETE BASE, AS PER PLAN
- (8) - ITEM 304 6" AGGREGATE BASE, AS PER PLAN
- (9) - ITEM 448 3" ASPHALT CONCRETE INTERMEDIATE COURSE,TYPE I, (UNDER GUARDRAIL), PG 64-22, AS PER PLAN
- (10) - ITEM 407 TACK COAT
- (11) - ITEM 446 1 1/2" ASPHALT CONCRETE SURFACE COURSE, TYPE IH, AS PER PLAN
- (12) - ITEM 446 1 3/4" ASPHALT CONCRETE INTERMEDIATE COURSE, TYPE 2, PG 64-28
- (13) - ITEM 605 6" SHALLOW PIPE UNDERDRAIN
- (14) - ITEM 606 GUARDRAIL, TYPE 5
- (15) - ITEM 617 COMPACTED AGGREGATE, TYPE A, AS PER PLAN (0.0625 MIN - 0.0833 MAX. & WATER)
- (16) - ITEM 612 9" CONCRETE MEDIAN
- (17) - ITEM 202 CONCRETE MEDIAN REMOVED
- (20) - ITEM 448 ASPHALT CONCRETE SURFACE COURSE, TYPE I, PG 64-22
- (21) - ITEM 254 PAVEMENT PLANING, BITUMINOUS
- (22) - ITEM 254 PAVEMENT PLANING, BITUMINOUS, AS PER PLAN

FOR LOCATION OF NEW GUARDRAILS AND UNDERDRAINS SEE PLAN SHEETS

FOR SHOULDER TREATMENT DETAILS, SEE SHEETS 14-14C.

PLOTTED BY:jgrmoyse
PLOTTED FROM:c:\users\minock\pid05754\05754gyc.dgn
PLOT SUBMITTED:02-DEC-1998 16:52
05754GYC.DGN

CUYAHOGA COUNTY
CUY-90-9.68
OHIO
FHWA REGION 5
FEDERAL PROJECT
9
220

TYPICAL SECTIONS

TYPE 446

0 2 4 8
SCALE IN FEET

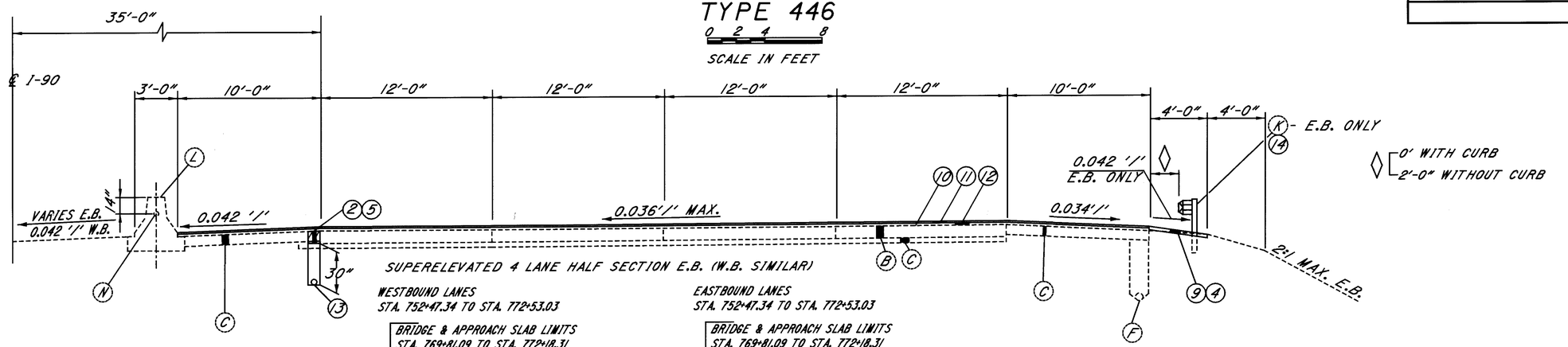

SUPERELEVATED 4 LANE HALF SECTION E.B. (W.B. SIMILAR)

WESTBOUND LANES
STA. 752+47.34 TO STA. 772+53.03

BRIDGE & APPROACH SLAB LIMITS
STA. 769+81.09 TO STA. 772+18.31
RETAINING WALL LIMITS (SEE DETAIL 2 SHEET 13)
STA. 752+47.34 TO STA. 758+58.89

EASTBOUND LANES
STA. 752+47.34 TO STA. 772+53.03

BRIDGE & APPROACH SLAB LIMITS
STA. 769+81.09 TO STA. 772+18.31
RETAINING WALL LIMITS (SEE DETAIL 2 SHEET 13)
STA. 752+47.34 TO STA. 758+58.89

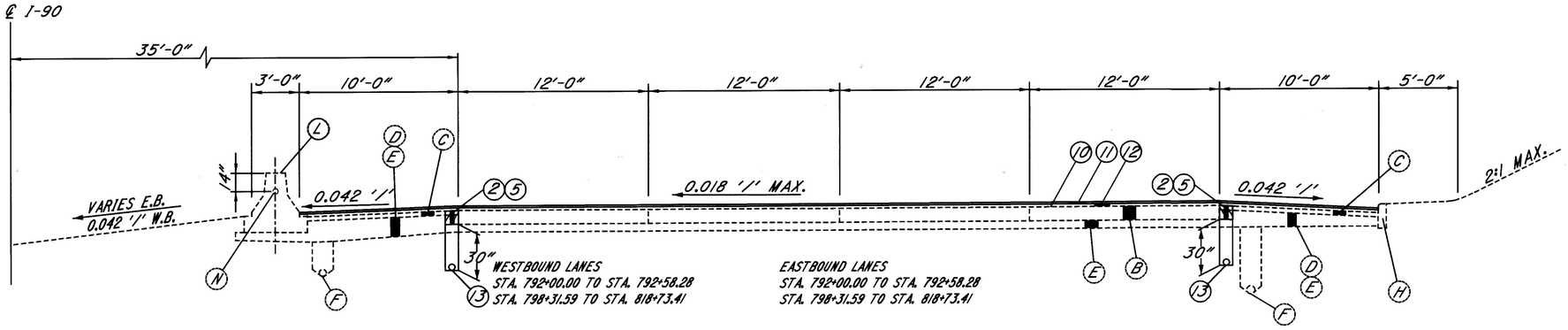

WESTBOUND LANES
STA. 792+00.00 TO STA. 792+58.28
STA. 798+31.59 TO STA. 818+73.41

EASTBOUND LANES
STA. 792+00.00 TO STA. 792+58.28
STA. 798+31.59 TO STA. 818+73.41

SUPERELEVATED 4 LANE HALF SECTION E.B. (W.B. SIMILAR)

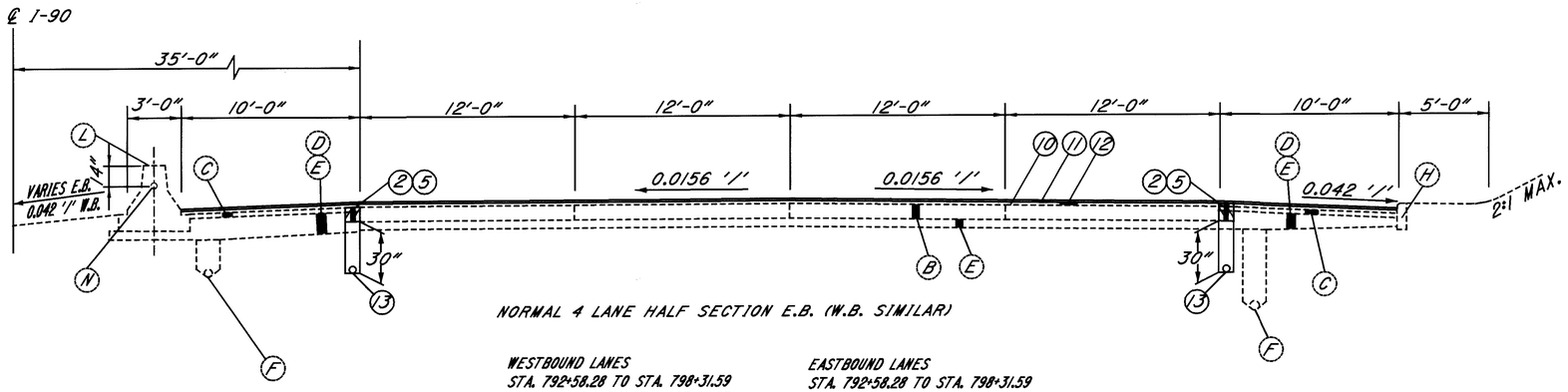

NORMAL 4 LANE HALF SECTION E.B. (W.B. SIMILAR)

WESTBOUND LANES
STA. 792+58.28 TO STA. 798+31.59
STA. 818+73.41 TO STA. 823+25.93

EASTBOUND LANES
STA. 792+58.28 TO STA. 798+31.59
STA. 818+73.41 TO STA. 823+25.93

FOR LEGEND SEE SHEET NO. 8

FOR LOCATION OF NEW GUARDRAILS AND UNDERDRAINS, SEE PLAN SHEETS

FOR SHOULDER TREATMENT DETAILS, SEE SHEETS 14-14C.

PLOTTED BY: jgrmovse
PLOTTED FROM: users@lmincek@pid5754@05754gyc.dgn
PLOT SUBMITTED: 02-DEC-1998 16:52
05754GYC.DGN

CUYAHOGA COUNTY
CUY-90-9.68
OHIO
FHWA REGION 5
FEDERAL PROJECT
10
220

TYPICAL SECTIONS

TYPE 446

0 2 4 8
SCALE IN FEET

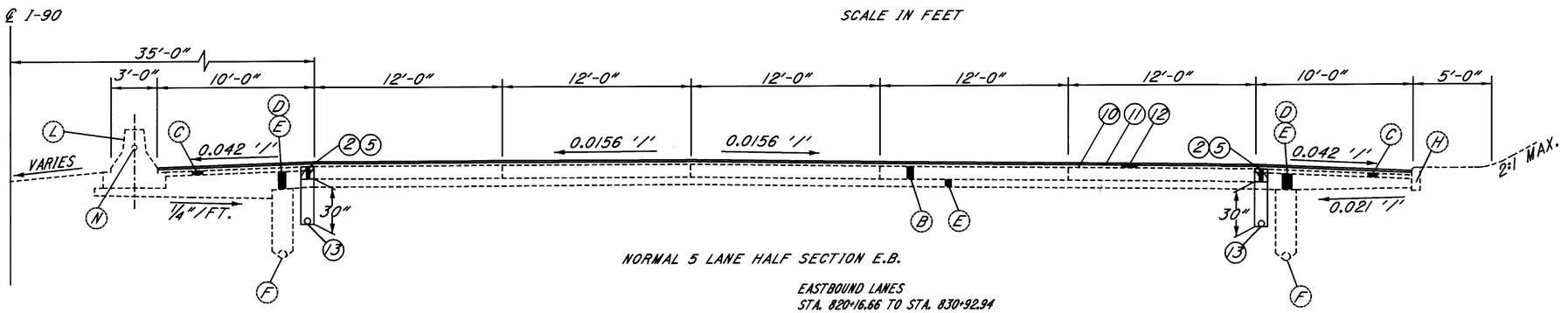

NORMAL 5 LANE HALF SECTION E.B.

EASTBOUND LANES
STA. 820+16.66 TO STA. 830+92.94

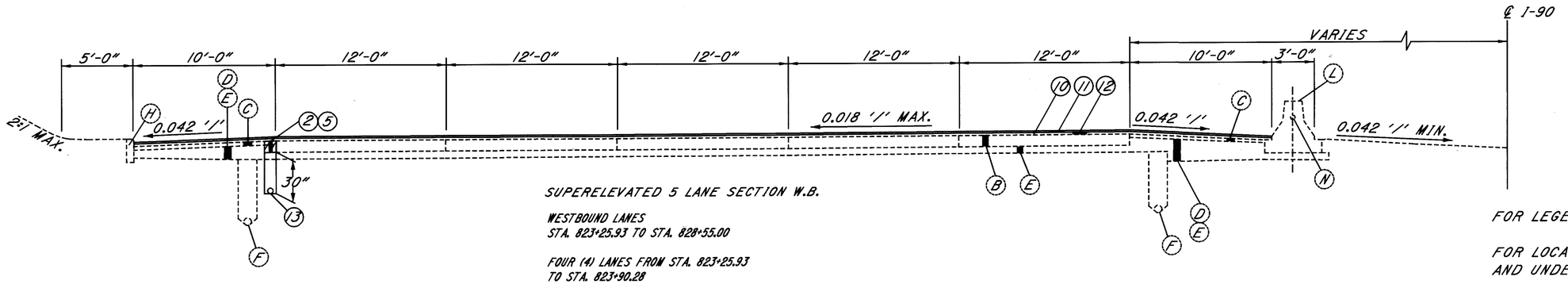

SUPERELEVATED 5 LANE SECTION W.B.

WESTBOUND LANES
STA. 823+25.93 TO STA. 828+55.00

FOUR (4) LANES FROM STA. 823+25.93
TO STA. 823+90.28

FOR LEGEND SEE SHEET NO. 8

FOR LOCATION OF NEW GUARDRAILS
AND UNDERDRAINS, SEE PLAN SHEETS

FOR SHOULDER TREATMENT DETAILS
SEE SHEETS 14-14C.

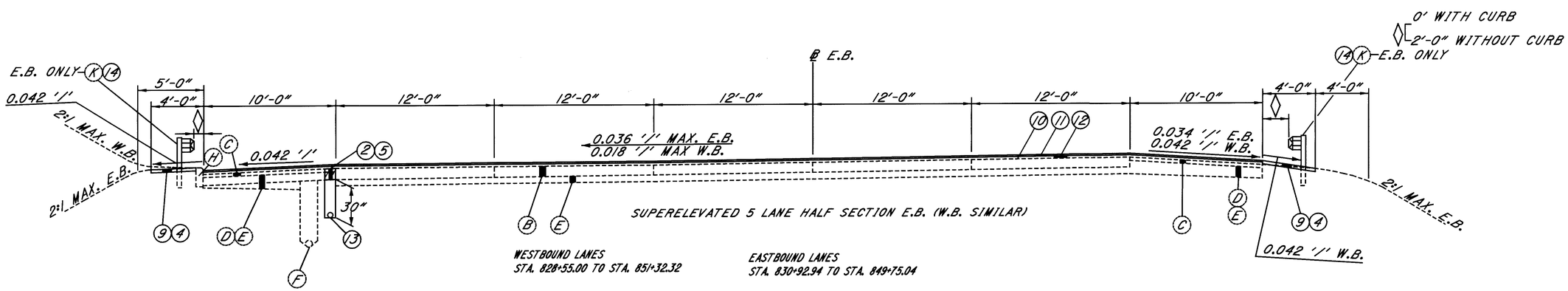

SUPERELEVATED 5 LANE HALF SECTION E.B. (W.B. SIMILAR)

WESTBOUND LANES
STA. 828+55.00 TO STA. 851+32.32

EASTBOUND LANES
STA. 830+92.94 TO STA. 849+75.04

BRIDGE & APPROACH SLAB LIMITS
STA. 840+87.49 TO STA. 843+22.29

FOR CONDITION
WITH CURB, SEE SHEET 14

PLOTTED BY: jgrmovse
PLOTTED FROM: users@lmincek@pid5754@05754gyc.dgn
PLOT SUBMITTED: 02-DEC-1998 16:51
05754GYC.DGN

CUYAHOGA COUNTY
CUY-90-9.68
OHIO
FHWA REGION 5
FEDERAL PROJECT
11
220

TYPICAL SECTIONS

TYPE 446

0 2 4 8
SCALE IN FEET

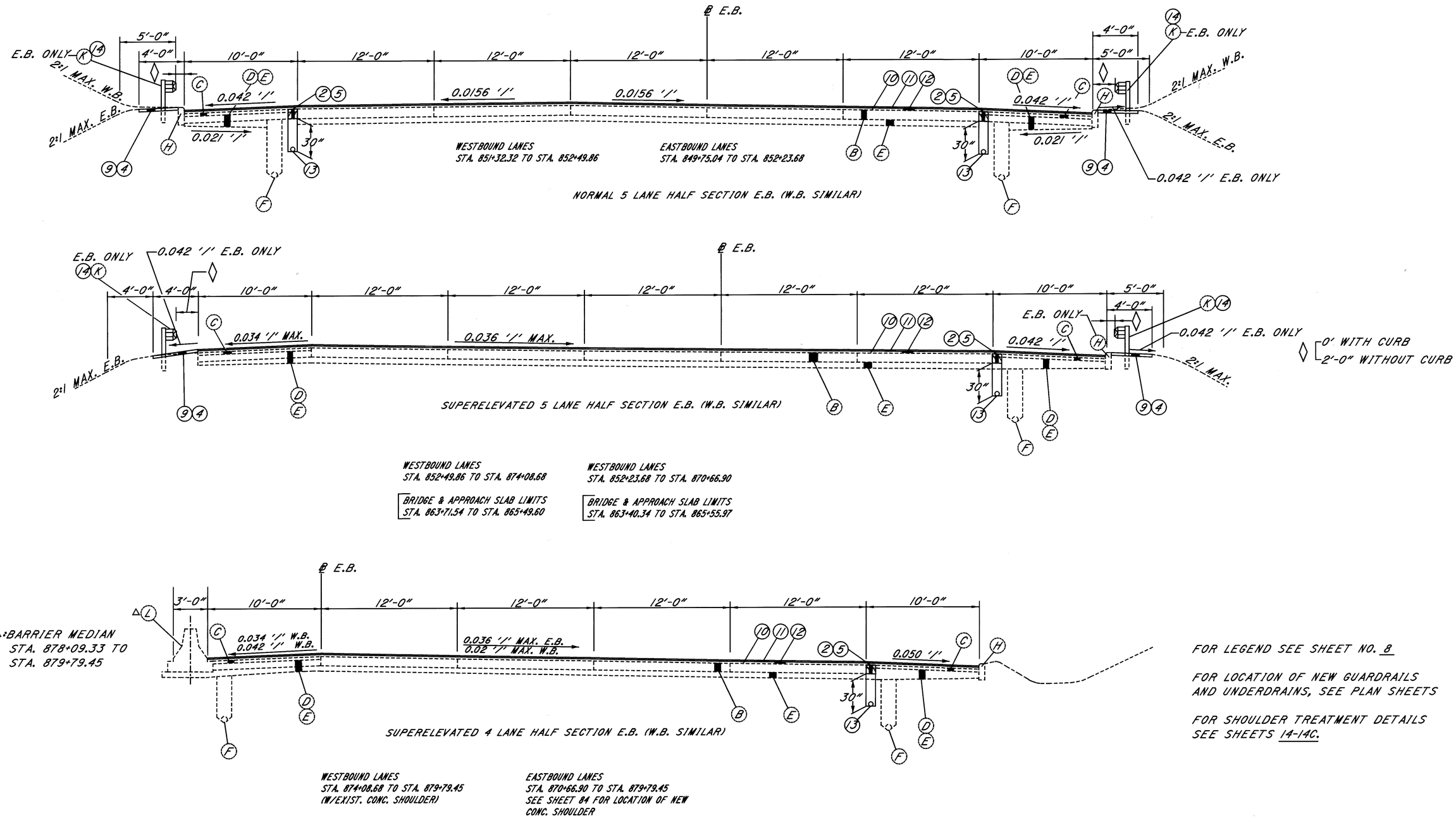

FOR LEGEND SEE SHEET NO. 8

FOR LOCATION OF NEW GUARDRAILS AND UNDERDRAINS, SEE PLAN SHEETS

FOR SHOULDER TREATMENT DETAILS SEE SHEETS 14-14C.

PLOTTED BY: jgrmovse
PLOTTED FROM: ...
05754GYC.DGN
PLOT SUBMITTED:02-DEC-1998 16:50

CUYAHOGA COUNTY
CUY-90-9.68
OHIO
FHWA REGION 5
FEDERAL PROJECT
11
220

TYPICAL SECTIONS

TYPE 446

0 2 4 8
SCALE IN FEET

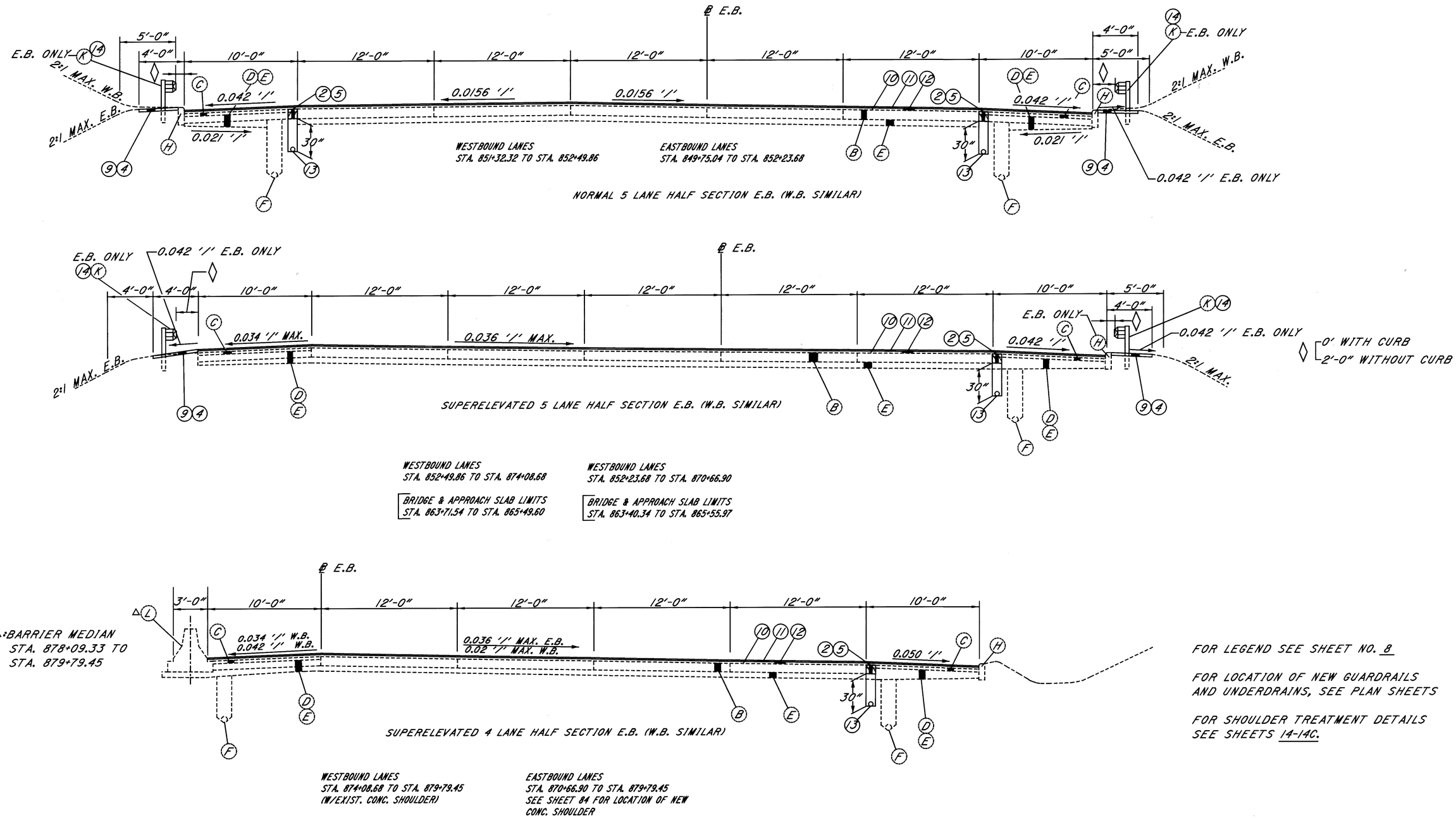

FOR LEGEND SEE SHEET NO. 8

FOR LOCATION OF NEW GUARDRAILS AND UNDERDRAINS, SEE PLAN SHEETS

FOR SHOULDER TREATMENT DETAILS SEE SHEETS 14-14C.

PLOTTED BY: jgrmovse
PLOTTED FROM: ...
PLOT SUBMITTED: 02-DEC-1998 16:50
05754GYC.DGN
...pid5754@05754gyc.dgn

TYPICAL SECTIONS

TYPE 446

0 2 4 8

SCALE IN FEET

CUYAHOGA COUNTY	OHIO	12
CUY-90-9.68	FHWA REGION 5	220
	FEDERAL PROJECT	

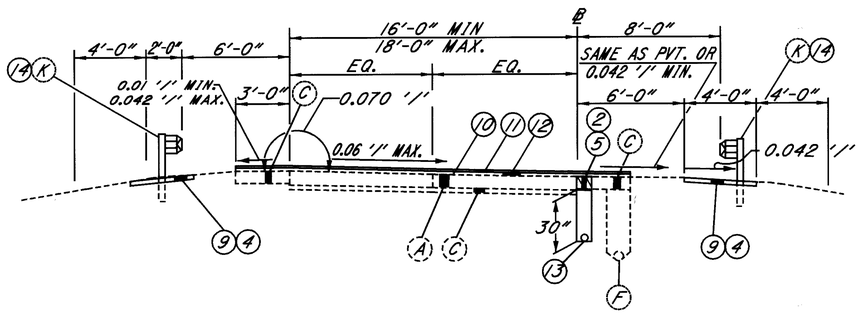

△ RAMP - SUPERELEVATED SECTION RIGHT

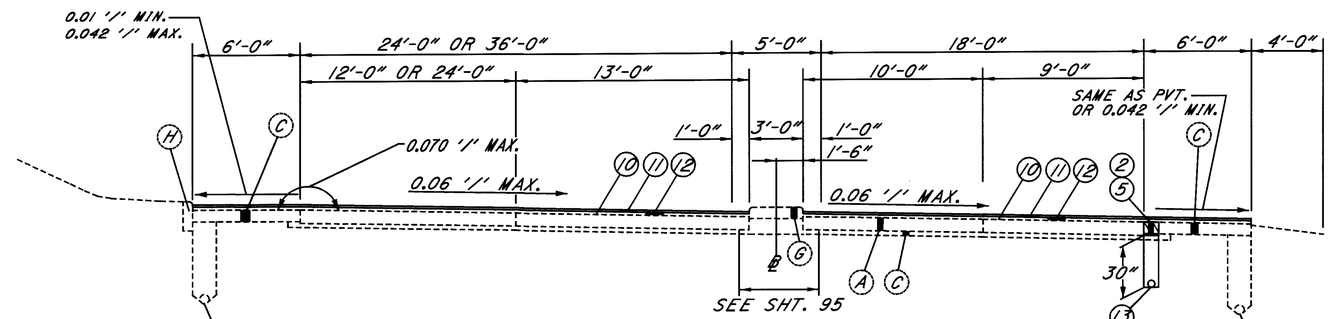

RAMP - SUPERELEVATED TWO WAY SECTION
7 & 8, 11 & 12

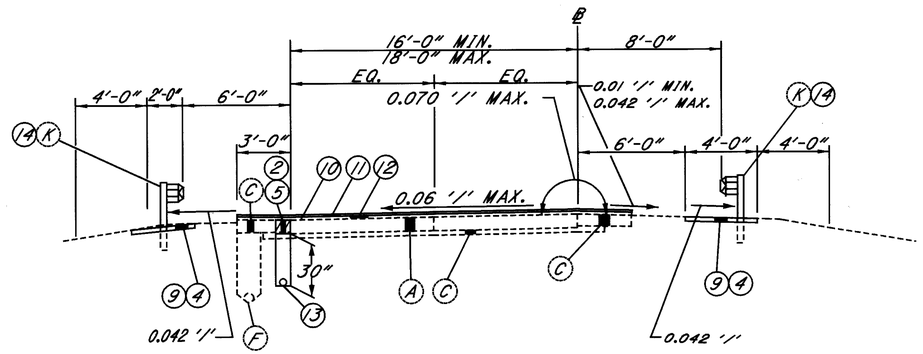

△ RAMP - SUPERELEVATED SECTION LEFT

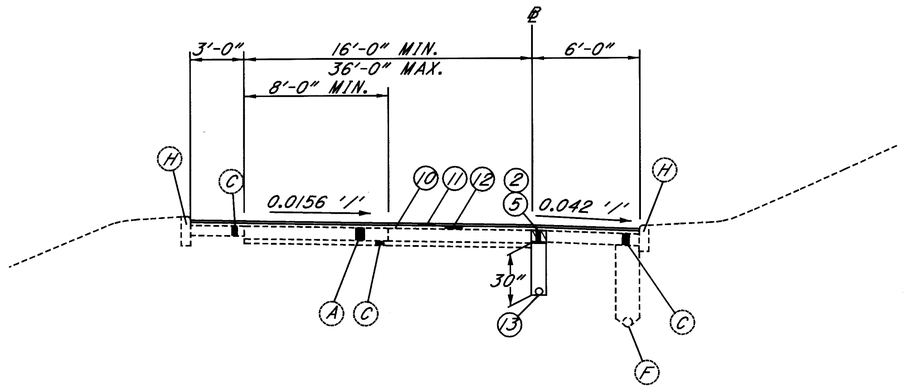

△ RAMP - NORMAL SECTION (CURBED)

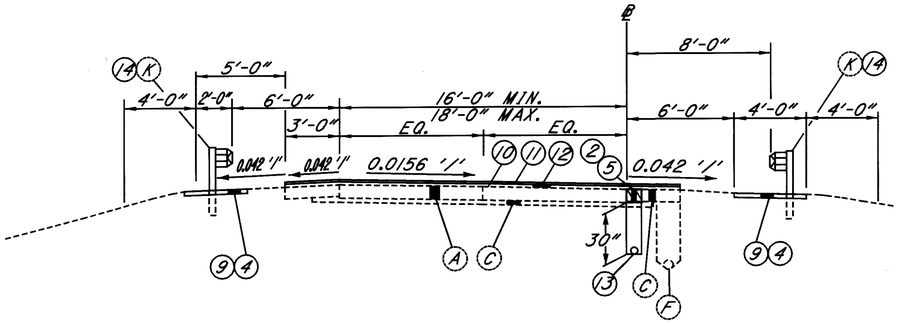

△ RAMP - SUPERELEVATED SECTION LEFT

△ APPLICABLE TO RAMPS 5,7,8,9,11,12,13, & 14

NOTES:

ALL SECTIONS SHOWN ARE FACING DIRECTION OF TRAVEL

FOR LEGEND SEE SHEET NO. 8

FOR LOCATION OF NEW GUARDRAILS AND UNDERDRAINS, SEE PLAN SHEETS

FOR SHOULDER TREATMENT DETAILS SEE SHEETS 14-14C.

FOR RAMP LIMITING STAQTIONS SEE SHEET NO. 13

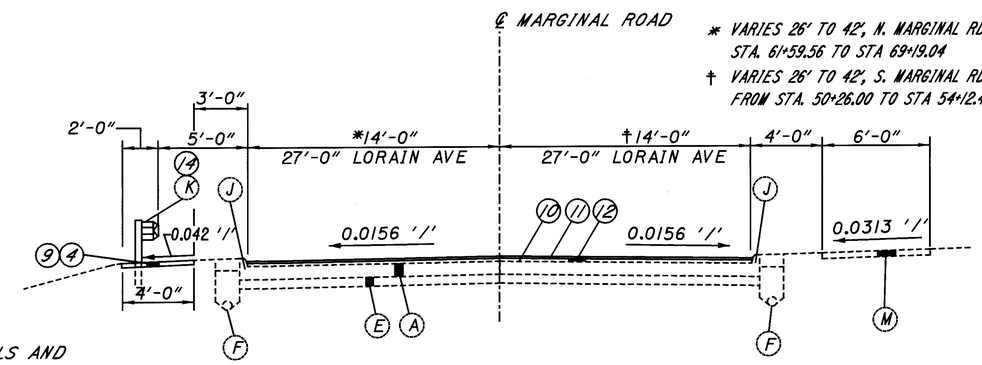

* VARIES 26' TO 42', N. MARGINAL RD. NO. 4 FROM STA. 61+59.56 TO STA 69+19.04

† VARIES 26' TO 42', S. MARGINAL RD. NO. 5 FROM STA. 50+26.00 TO STA 54+12.42

SOUTH MARGINAL RD. NO. 2 AND ROAD N

RD. N: STA. 41+66.00 TO STA. 45+25.37
S. RD. 2: STA. 0+41.51 TO STA. 16+75.00
S. RD. 2: STA. 37+85.00 TO STA. 51+89.11

N. RD. 4: STA. 50+35.45 TO STA. 80+49.87
S. RD. 5: STA. 50+26.00 TO STA. 62+44.00
LORAIN: STA. 47+67.26 TO STA. 53+70.71

PLOTTED BY: jgrmovse
PLOTTED FROM: users@lmincek@pid5754@05754gyc.dgn
PLOT SUBMITTED: 02-DEC-1998 16:49
05754GYC.DGN

CUYAHOGA COUNTY
CUY-90-9.68
OHIO
FHWA REGION 5
FEDERAL PROJECT
13
220

TYPICAL SECTIONS

TYPE 446

0 2 4 8
SCALE IN FEET

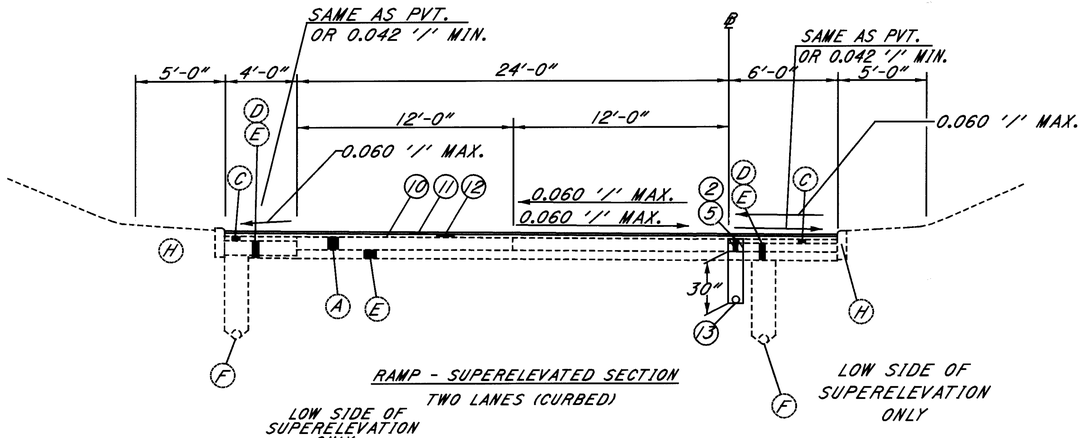

RAMP - SUPERELEVATED SECTION
TWO LANES (CURBED)

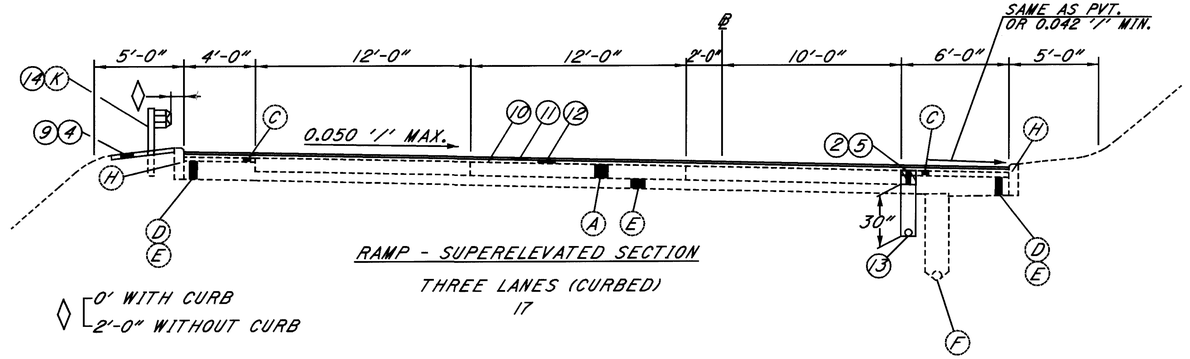

RAMP - SUPERELEVATED SECTION
THREE LANES (CURBED)
17

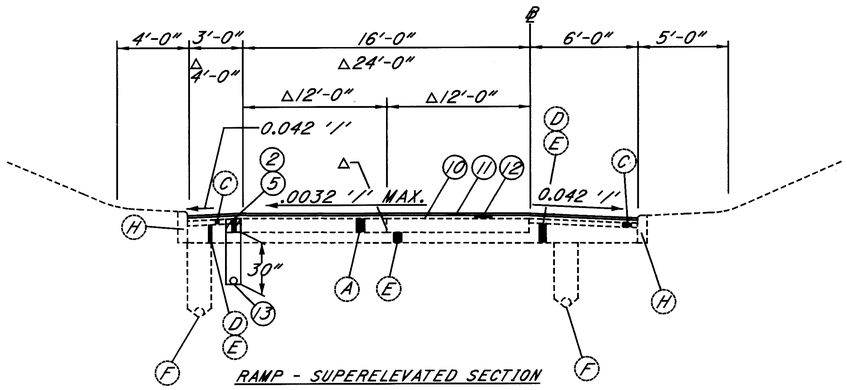

RAMP - SUPERELEVATED SECTION
(CURBED)
15

△:27 (LT. SHOULDER UNCURBED)

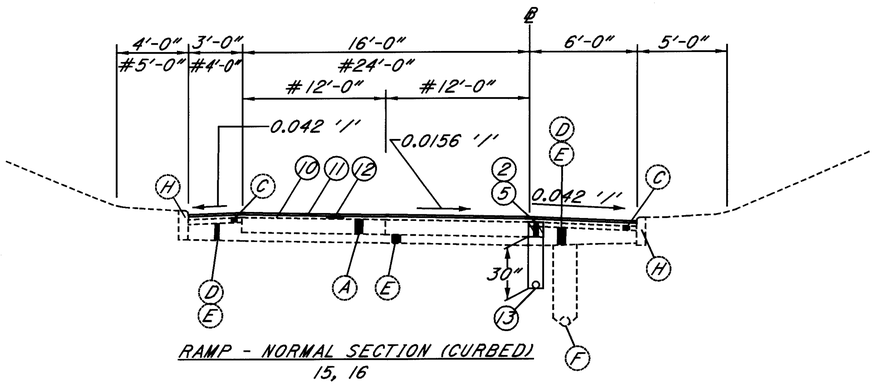

RAMP - NORMAL SECTION (CURBED)
15, 16

#: 17,18 & 28 (LT. SHOULDER UNCURBED)

APPROXIMATE RAMP LIMITING STATIONS (SEE NOTE BELOW)			
RAMP NO.	NORMAL STATIONING	SUPERELEVATED STATIONING LEFT	SUPERELEVATED STATIONING RIGHT
5	27+00 TO 28+25		24+75 TO 27+00 28+25 TO 33+99
7			23+56 TO 31+75
8	32+50 TO 33+53	29+33 TO 32+50	23+96 TO 29+33
9	31+59 TO 33+25		33+25 TO 41+75
11			34+83 TO 41+82
12	33+65 TO 34+50	34+50 TO 36+88	36+88 TO 43+78
13	67+00 TO 68+25	68+25 TO 71+30	63+75 TO 67+00
14	67+00 TO 70+04	62+84 TO 67+00	
15		93+75 TO 97+00	90+07 TO 93+75
16		50+25 TO 89+84	89+84 TO 94+00
17	16+75 TO 23+92		12+50 TO 16+75
18	8+22 TO 8+50	8+50 TO 14+93	14+93 TO 20+22
27		77+29 TO 82+00	74+07 TO 77+29
28	71+25 TO 81+75		70+56 TO 71+25

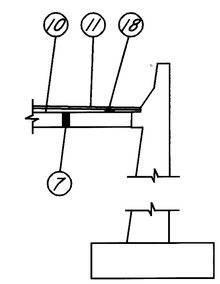

DETAIL 1
RETAINING WALL IN FILL SECTION
(N.T.S.)

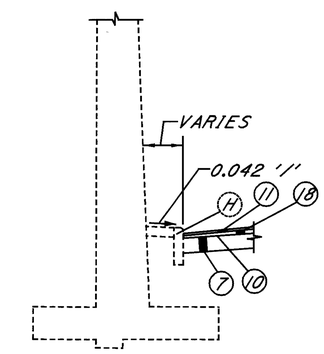

DETAIL 2
RETAINING WALL IN CUT SECTION
(N.T.S.)

NOTE:
SPEED CHANGE LANES & ACCELERATION/DECELERATION LANES ARE EXCLUDED

SEE PLANS FOR LOCATION OF SPEED CHANGE LANES & ACCELERATION/DECERATION LANES.

FOR SPEED CHANGE & ACCELERATION/DECELERATION LANES ADJACENT TO RAMPS 5,7,8,9,11,12,13 & 14, CONCRETE BASE = 9" THICK.

FOR SPEED CHANGE & ACCELERATION/DECELERATION LANES ADJACENT TO RAMPS 15,16,17,18,27 & 28 CONCRETE BASE = 10" THICK.

ALL SECTIONS SHOWN ARE FACING DIRECTION OF TRAVEL

FOR LEGEND SEE SHEET NO. 8

FOR LOCATION OF NEW GUARDRAILS AND UNDERDRAINS, SEE PLAN SHEETS

FOR SHOULDER TREATMENT DETAILS SEE SHEETS 14-14C.

PLOTTED BY: jgrmovse
PLOTTED FROM: usersBlmincekBpid5754B05754gyc.dgn
05754GYC.DGN
PLOT SUBMITTED:02-DEC-1998 16:49

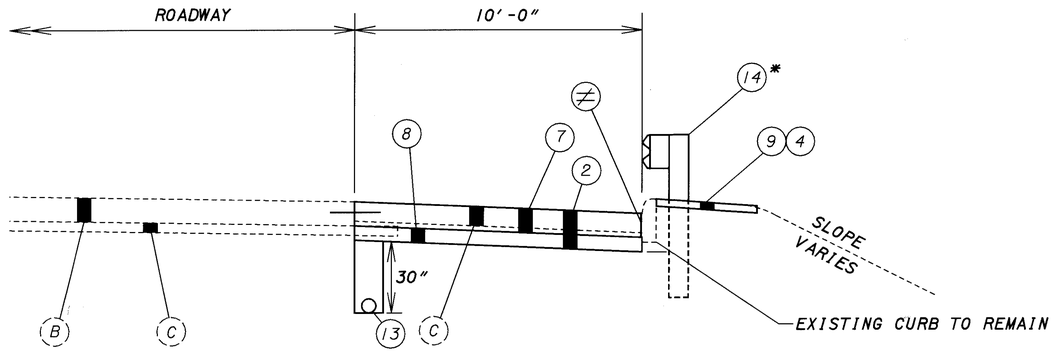

TYPICAL SECTION OF EXISTING ASPHALT
SHOULDER REPLACEMENT WITH CONCRETE (IN FILL)

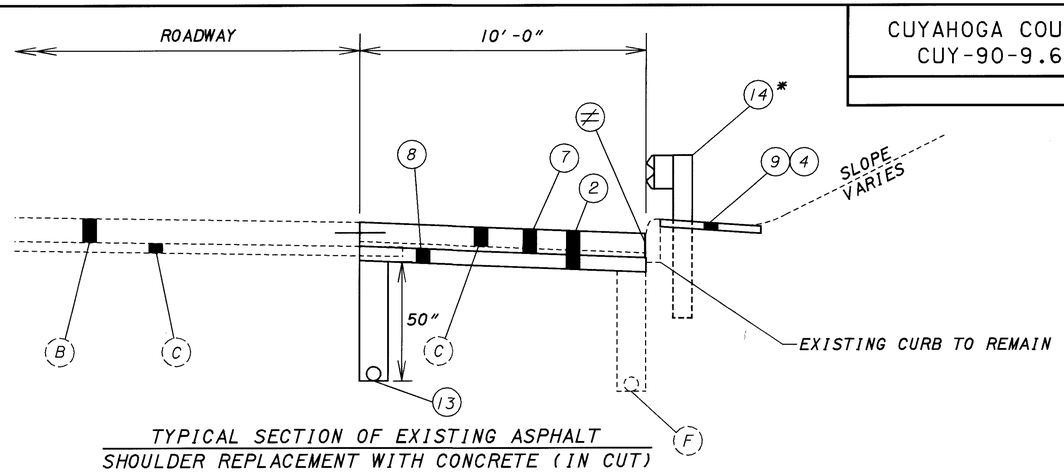

TYPICAL SECTION OF EXISTING ASPHALT
SHOULDER REPLACEMENT WITH CONCRETE (IN CUT)

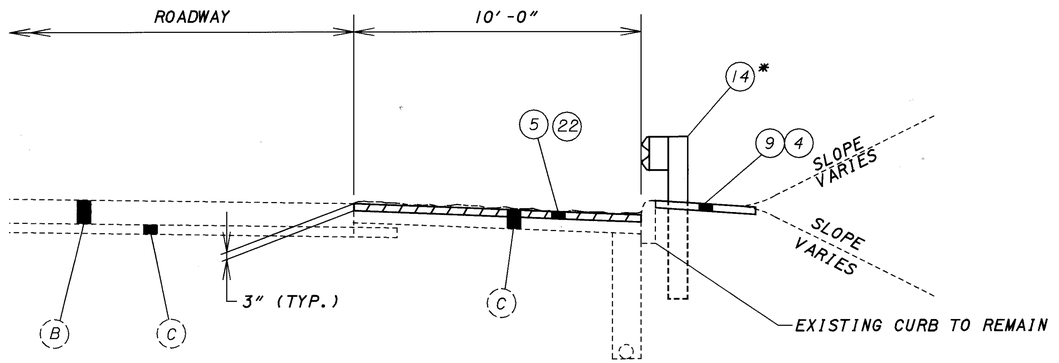

TYPICAL SECTION OF EXISTING ASPHALT
SHOULDER WITH ENTIRE MILL AND FILL

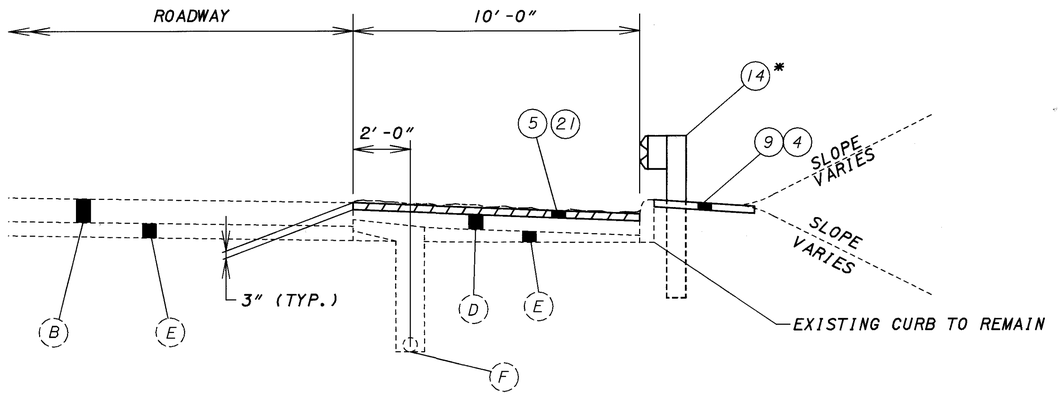

TYPICAL SECTION OF EXISTING ASPHALT
SHOULDER WITH ENTIRE MILL AND FILL

NOTES:

* SEE PLAN SHEETS FOR GUARDRAIL LOCATIONS

(≠) -3/4" P.E.J.F. (TYP.), 705.03

IN AREAS WHERE THERE IS AN EXISTING UNDERDRAIN (TO REMAIN), THE PROPOSED UNDERDRAIN SHALL BE PLACED IN THE SAME TRENCH AS THE EXISTING AT A DEPTH OF 30". SEE PLAN SHEETS FOR EXISTING UNDERDRAIN LOCATIONS.

THE DEPTH OF THE MILLING ON THE SHOULDER AT A WIDTH OF 2 FEET SHALL BE A MINIMUM 2" BELOW THE ADJOINING CONCRETE. FOR AREAS IN WHICH THE ENTIRE WIDTH OF SHOULDER IS TO BE MILLED, THE MINIMUM DEPTH OF MILLING SHALL BE 3".

SEE TYPICAL SECTIONS FOR OVERLAY COMPOSITION.

THE PROPOSED UNDERDRAIN MAY BE PLACED AT AN OFFSET OF TWO (2) FEET FROM THE FACE OF CURB TO THE CENTERLINE OF THE OF THE UNDERDRAIN IF NECESSARY TO HOLD THE EXISTING CURB IN PLACE.

SEE SHEET 8 FOR LEGEND.

PLOTTED BY: jgrmovse
PLOTTED FROM: ...users...lmincek...pid5754...05754gya.dgn
05754gya.dgn
PLOT SUBMITTED:02-DEC-1998 16:47

CUYAHOGA COUNTY CUY-90-9.68	OHIO FHWA REGION 5 FEDERAL PROJECT	14A 220

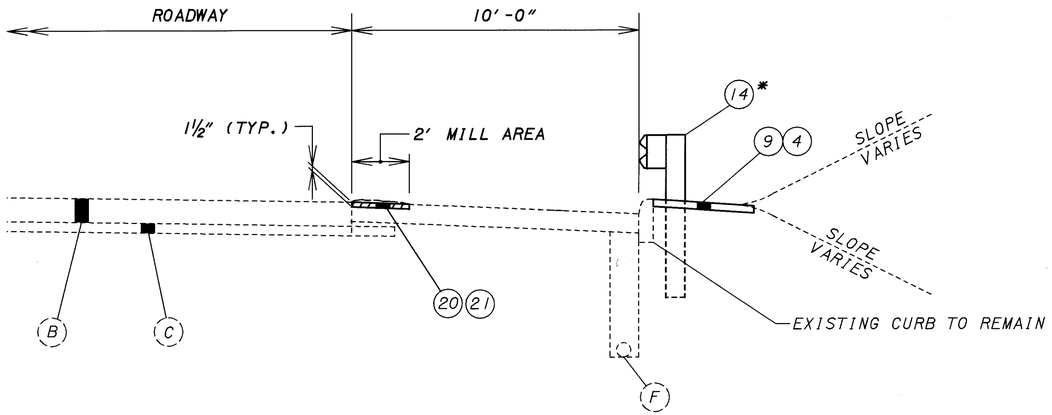

TYPICAL SECTION OF EXISTING ASPHALT
SHOULDER WITH 2' MILL AND FILL

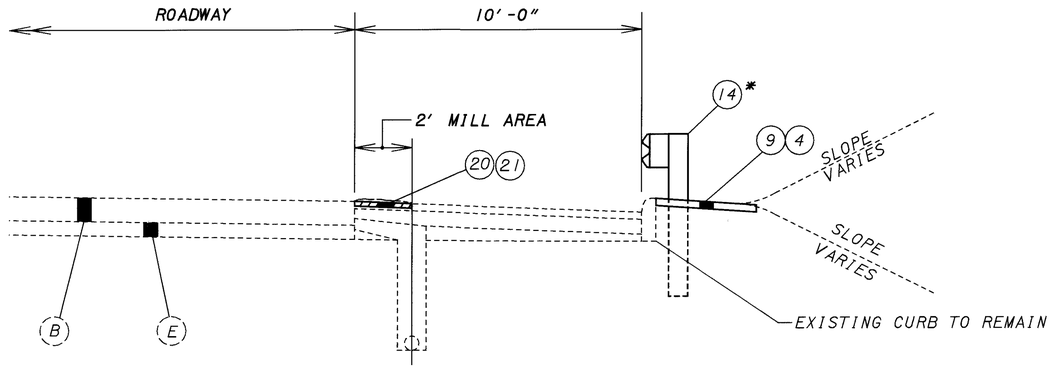

TYPICAL SECTION OF EXISTING ASPHALT
SHOULDER WITH 2' MILL AND FILL

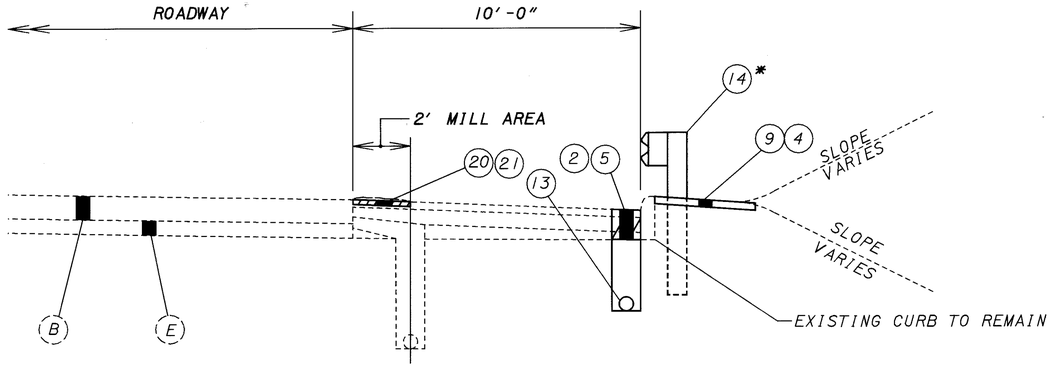

TYPICAL SECTION OF EXISTING ASPHALT
SHOULDER NOT REPLACED, WITH NEW UNDERDRAIN

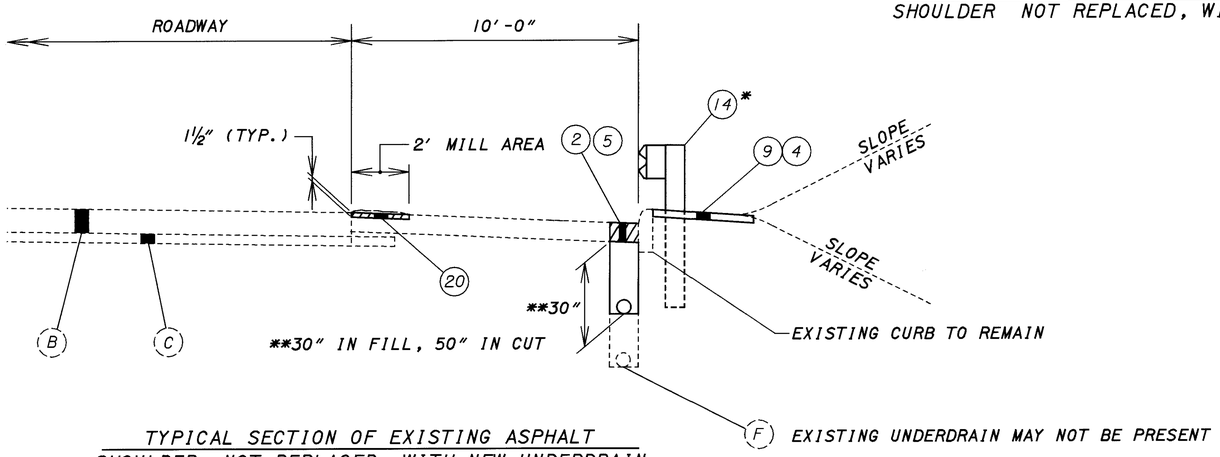

TYPICAL SECTION OF EXISTING ASPHALT
SHOULDER NOT REPLACED, WITH NEW UNDERDRAIN

NOTES:

* SEE PLAN SHEETS FOR GUARDRAIL LOCATIONS

IN AREAS WHERE THERE IS AN EXISTING UNDERDRAIN (TO REMAIN), THE PROPOSED UNDERDRAIN SHALL BE PLACED IN THE SAME TRENCH AS THE EXISTING AT A DEPTH OF 30". SEE PLAN SHEETS FOR EXISTING UNDERDRAIN LOCATIONS.

THE DEPTH OF THE MILLING ON THE SHOULDER AT A WIDTH OF 2 FEET SHALL BE A MINIMUM 2" BELOW THE ADJOINING CONCRETE. FOR AREAS IN WHICH THE ENTIRE WIDTH OF SHOULDER IS TO BE MILLED, THE MINIMUM DEPTH OF MILLING SHALL BE 3".

SEE TYPICAL SECTIONS FOR OVERLAY COMPOSITION.

THE PROPOSED UNDERDRAIN MAY BE PLACED AT AN OFFSET OF TWO (2) FEET FROM THE FACE OF CURB TO THE CENTERLINE OF THE OF THE UNDERDRAIN IF NECESSARY TO HOLD THE EXISTING CURB IN PLACE.

SEE SHEET 8 FOR LEGEND.

PLOTTED BY: jgrmovse
PLOTTED FROM: ...usersBlmincekBpid5754B05754gya.dgn
PLOT SUBMITTED:02-DEC-1998 16:46
05754gya.dgn

PLOTTED BY: jgrmovse
PLOTTED FROM: C:\Users\lmincek\pid57540\05754gya.dgn
PLOT SUBMITTED: 02-DEC-1998 16:46
05754gya.dgn

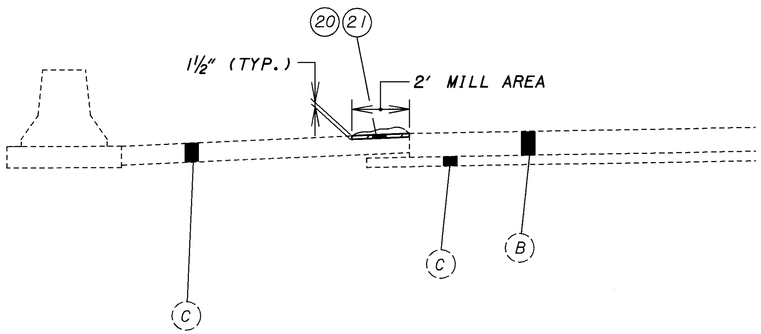

TYPICAL SECTION OF EXISTING ASPHALT
SHOULDER WITH 2' MILL AND FILL

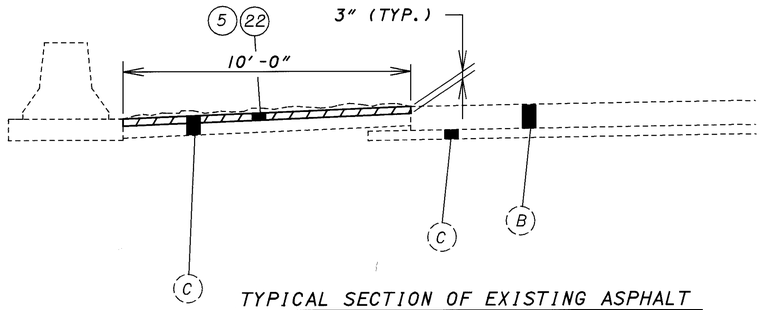

TYPICAL SECTION OF EXISTING ASPHALT
SHOULDER WITH ENTIRE MILL AND FILL

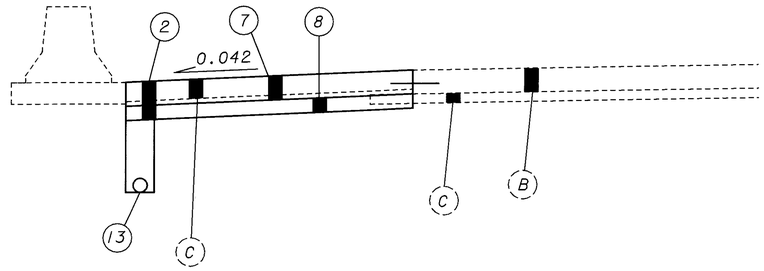

TYPICAL SECTION OF EXISTING ASPHALT
SHOULDER REPLACEMENT WITH CONCRETE

NOTES:

* SEE PLAN SHEETS FOR GUARDRAIL LOCATIONS

≠ -¾" P.E.J.F. (TYP.), 705.03

IN AREAS WHERE THERE IS AN EXISTING UNDERDRAIN (TO REMAIN), THE PROPOSED UNDERDRAIN SHALL BE PLACED IN THE SAME TRENCH AS THE EXISTING AT A DEPTH OF 30". SEE PLAN SHEETS FOR EXISTING UNDERDRAIN LOCATIONS.

THE DEPTH OF THE MILLING ON THE SHOULDER AT A WIDTH OF 2 FEET SHALL BE A MINIMUM 2" BELOW THE ADJOINING CONCRETE. FOR AREAS IN WHICH THE ENTIRE WIDTH OF SHOULDER IS TO BE MILLED, THE MINIMUM DEPTH OF MILLING SHALL BE 3".

SEE TYPICAL SECTIONS FOR OVERLAY COMPOSITION.

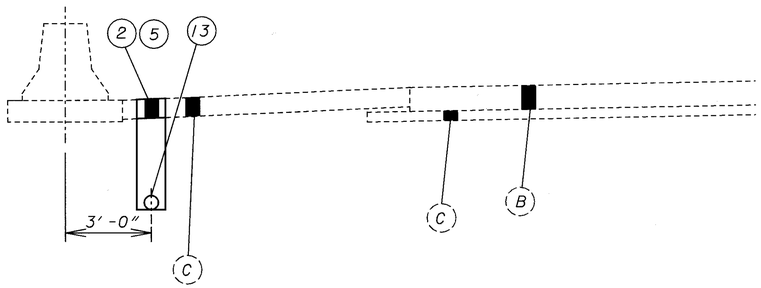

TYPICAL SECTION OF EXISTING ASPHALT
SHOULDER NOT REPLACED, WITH NEW UNDERDRAIN

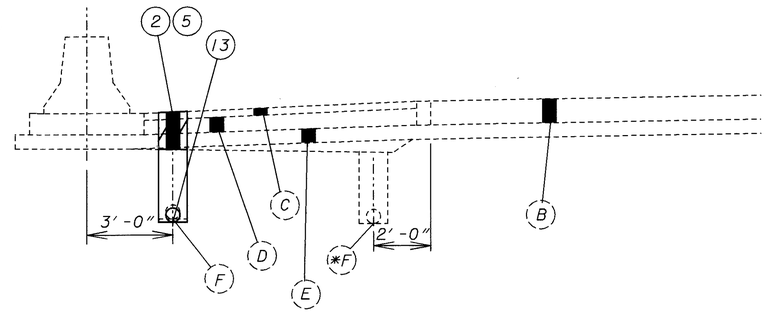

TYPICAL SECTION OF EXISTING ASPHALT
SHOULDER NOT REPLACED, WITH NEW UNDERDRAIN

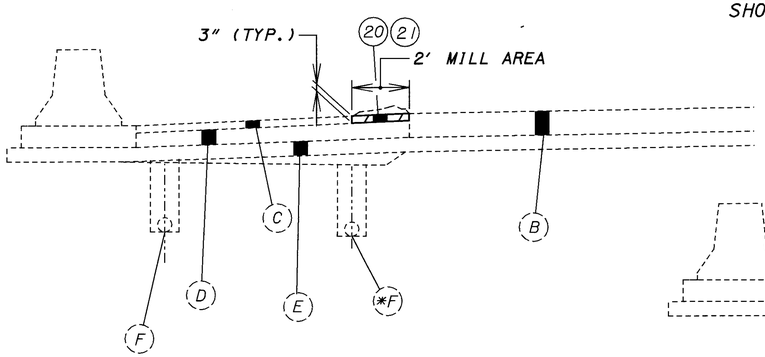

TYPICAL SECTION OF EXISTING ASPHALT
SHOULDER WITH 2' MILL AND FILL

*ALTERNATE UNDERDRAIN LOCATION WHERE BRIDGE PIERS OR LONGITUDINAL STORM SEWERS INTERFERE. SEE ORIGINAL CONSTRUCTION PLANS CUY-90-11.64 FOR LOCATIONS.

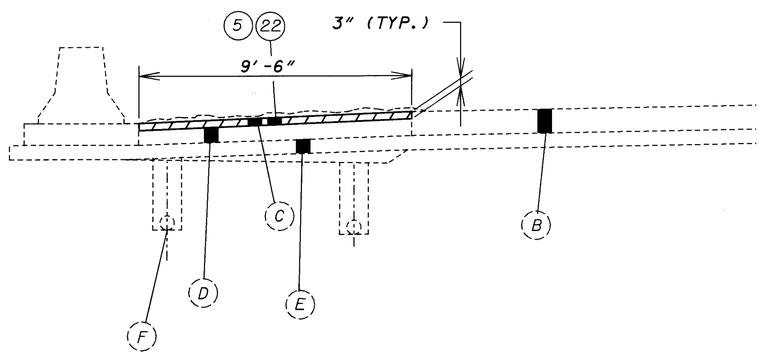

TYPICAL SECTION OF EXISTING ASPHALT
SHOULDER WITH ENTIRE MILL AND FILL

SEE SHEET 8 FOR LEGEND.

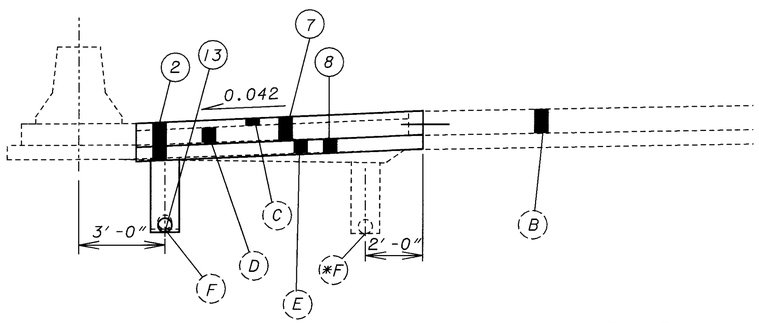

TYPICAL SECTION OF EXISTING ASPHALT
SHOULDER WITH CONCRETE REPLACEMENT

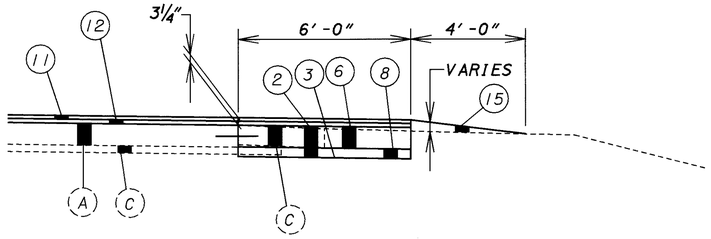

RAMP RIGHT SHOULDER WIDENING

RAMP 7 STA. 27+00 TO STA. 30+94.93
RAMP 11 STA. 35+63.26 TO STA. 39+50

FOR RAMP SHOULDER WIDENING DETAILS
SEE SHEETS 98 & 99.

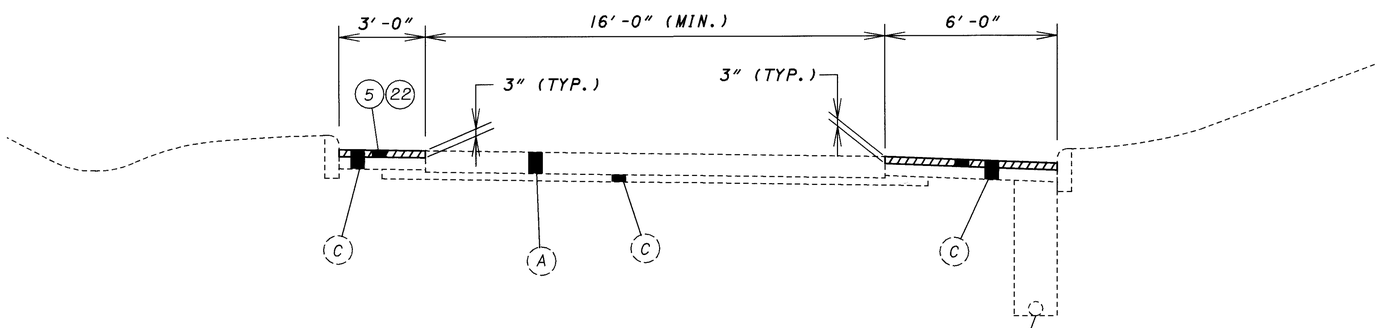

TYPICAL RAMP SHOULDER TREATMENT
FULL WIDTH MILL AND FILL (CURBED SECTION SHOWN)

NOTES:

* SEE PLAN SHEETS FOR GUARDRAIL LOCATIONS

IN AREAS WHERE THERE IS AN EXISTING UNDERDRAIN (TO REMAIN), THE PROPOSED UNDERDRAIN SHALL BE PLACED IN THE SAME TRENCH AS THE EXISTING AT A DEPTH OF 30". SEE PLAN SHEETS FOR EXISTING UNDERDRAIN LOCATIONS.

THE DEPTH OF THE MILLING ON THE SHOULDER AT A WIDTH OF 2 FEET SHALL BE A MINIMUM 2" BELOW THE ADJOINING CONCRETE. FOR AREAS IN WHICH THE ENTIRE WIDTH OF SHOULDER IS TO BE MILLED, THE MINIMUM DEPTH OF MILLING SHALL BE 3".

SEE TYPICAL SECTIONS FOR OVERLAY COMPOSITION.

THE PROPOSED UNDERDRAIN MAY BE PLACED AT AN OFFSET OF TWO (2) FEET FROM THE FACE OF CURB TO THE CENTERLINE OF THE OF THE UNDERDRAIN IF NECESSARY TO HOLD THE EXISTING CURB IN PLACE.

SEE SHEET 8 FOR LEGEND.

PLOTTED BY: jgrmovse
PLOTTED FROM: C:\Users\Blmincek\pid57541\05754gya.dgn
PLOT SUBMITTED:02-DEC-1998 16:45
05754GYA.DGN

PLOTTED BY:jgrmovse
PLOTTED FROM:C:\projects\mincek\dgn\05754gna.dgn
PLOT SUBMITTED:02-DEC-1998 16:43

GENERAL NOTES

GENERAL

PROJECT DESCRIPTION

THE FOLLOWING LIST CONTAINS SOME OF THE MAJOR WORK ITEMS INCLUDED IN THIS PROJECT:

A. SHOULDER REPAIR, REPLACEMENT OR WIDENING
B. REPAIR OF PAVEMENT JOINTS AND PANELS
C. ASPHALT CONCRETE OVERLAY
D. SAW AND SEAL ASPHALT CONCRETE PAVEMENT JOINTS
E. PAVEMENT MARKINGS
F. INSTALLATION OF GUARDRAIL
G. INSTALLATION OF NEW OVERHEAD AND GROUND MOUNTED SIGNS
H. REHABILITATE VARIOUS BRIDGES

UTILITIES

LISTED BELOW ARE ALL UTILITIES LOCATED WITHIN THE PROJECT CONSTRUCTION LIMITS TOGETHER WITH THEIR RESPECTIVE OWNERS:

1. THE ILLUMINATING CO.
4141 ROCKSIDE RD.
SEVEN HILLS, OH
(216) 520-9579

2. AMERITECH
13630 LORAIN AVE.- 4TH FL.
CLEVELAND, OHIO 44111
(216) 476-6142

3. THE EAST OHIO GAS CO.
1201 EAST 55TH ST.
CLEVELAND, OHIO 44103
(216) 736-6675

4. CITY OF CLEVELAND,
WATER AND POLLUTION CONTROL
12302 KIRBY RD.
CLEVELAND, OHIO 44108
(216) 664-2786

5. CLEVELAND PUBLIC POWER (MELP)
1300 LAKESIDE AVE.
CLEVELAND, OHIO 44114
(216) 664-4245

6. CUYAHOGA COUNTY SANITARY
ENGINEER
6100 WEST CANAL RD.
VALLEY VIEW, OHIO 44125
(216) 443-8204

7. CITY OF CLEVELAND,
DEPT. OF WATER
1201 LAKESIDE AVE.
CLEVELAND, OHIO 44114
(216) 664-24444 EXT. 5540

8. CITY OF CLEVELAND,
SAFETY SIGNAL SYSTEM
310 CARNEGIE AVE.
CLEVELAND, OHIO 44115
(216) 664-3247

9. GREATER CLEVELAND REGIONAL
TRANSIT AUTHORITY
615 SUPERIOR AVENUE NW
CLEVELAND, OH 44115
(216) 566-5100

10. AMERICAN TELEPHONE AND
TELEGRAPH
3833 WEYMOUTH RD.
MEDINA, OHIO 44256
(216) 723-9110

11. WILTEL
P.O. BOX 21348
TULSA, OKLAHOMA 74121
(918) 588-3210

12. NORTHEAST OHIO REGIONAL
SEWER DISTRICT
3826 EUCLID AVENUE
CLEVELAND, OH 44115
(216) 881-6600

13. LITEL COMMUNICATIONS
C/O JAYTEL INC.
2666 LEXINGTON AVENUE
P.O. BOX 3168
MANSFIELD, OH 44904
(419) 8841-0400

14. OHIO DEPARTMENT OF
TRANSPORTATION
5500 TRANSPORTATION BLVD.
GARFIELD HTS., OH 44125
(216) 581-2100

THE LOCATION OF THE UNDERGROUND UTILITIES SHOWN ON THE PLANS ARE AS OBTAINED FROM THE OWNERS AS REQUIRED BY SECTION 153.64 OF THE OHIO REVISED CODE.

RIGHT OF WAY

ALL WORK SHALL BE PERFORMED WITHIN THE EXISTING RIGHT OF WAY OR EASEMENTS.

ROUNDING

THE ROUNDING AT SLOPE BREAKPOINTS SHOWN ON THE TYPICAL SECTIONS APPLY TO ALL CROSS-SECTIONS EVEN THOUGH OTHERWISE SHOWN.

CONTINGENCY QUANTITIES

THE CONTRACTOR SHALL NOT ORDER MATERIALS OR PERFORM WORK FOR ITEMS DESIGNATED BY PLAN NOTE TO BE USED "AS DIRECTED BY THE ENGINEER" UNLESS AUTHORIZED BY THE ENGINEER. THE ACTUAL WORK LOCATIONS AND QUANTITIES USED FOR SUCH ITEMS SHALL BE INCORPORATED INTO THE FINAL CHANGE ORDER GOVERNING COMPLETION OF THIS PROJECT.

ELEVATION DATUM

ALL ELEVATIONS ARE BASED ON U.S.G.S. DATUM.

WORK LIMITS

THE WORK LIMITS SHOWN ON THESE PLANS ARE FOR PHYSICAL CONSTRUCTION ONLY. THE INSTALLATION AND OPERATION OF ALL TEMPORARY TRAFFIC CONTROL AND TEMPORARY TRAFFIC CONTROL DEVICES REQUIRED BY THESE PLANS SHALL BE PROVIDED BY THE CONTRACTOR WHETHER INSIDE OR OUTSIDE THESE WORK LIMITS.

COOPERATION BETWEEN CONTRACTORS

THE CONTRACTOR SHALL COOPERATE AND COORDINATE HIS OPERATION WITH THE CONTRACTOR'S ON OTHER PROJECTS THAT MAY BE IN FORCE DURING THE LIFE OF THIS CONTRACT. NO WAIVER OF ANY PROVISIONS OF 105.07 OF THE CONSTRUCTION AND MATERIAL SPECIFICATION IS INTENDED.

ALTERNATE METHODS

IF THE CONTRACTOR SO ELECTS, HE MAY SUBMIT ALTERNATE METHODS FOR THE MAINTENANCE OF TRAFFIC, PROVIDED THE INTENT OF THE PROVISIONS IS FOLLOWED AND NO ADDITIONAL INCONVENIENCE TO THE TRAVELING PUBLIC RESULTS THERE FROM. NO ALTERNATE PLAN SHALL BE PLACED INTO EFFECT UNTIL APPROVAL HAS BEEN GRANTED IN WRITING, BY THE DIRECTOR.

MORTARS FOR GROUT ANCHORING

ALL REFERENCE TO SUPPLEMENTAL SPECIFICATION 952 APPEARING ON STANDARD DRAWINGS OR THROUGHOUT THESE PLANS SHALL BE CONSIDERED TO READ 705.20.

CONTRACTORS EQUIPMENT AND OPERATION

ALL VEHICLES AND EQUIPMENT MUST BE EQUIPPED WITH AT LEAST ONE FLASHING, ROTATING, OR OSCILLATING AMBER LIGHT THAT IS VISIBLE IN ALL DIRECTIONS OF TRAFFIC FOR AT LEAST ONE QUARTER MILE, DAY OR NIGHT. THIS INCLUDES TRUCKS HAULING ASPHALT.

UNLESS BEHIND CONCRETE BARRIER, THE CONTRACTOR'S EQUIPMENT SHALL BE OPERATED IN THE DIRECTION OF TRAFFIC ONLY.

EQUIPMENT AND MATERIAL STORAGE

IN ORDER TO PROVIDE FOR THE SAFETY OF THE TRAVELING PUBLIC THE CONTRACTORS ATTENTION IS DIRECTED TO 614.03. IN ADDITION THE FOLLOWING PROVISIONS SHALL APPLY:

1) ANY REMOVED ITEMS SHALL NOT BE STORED ON THE RIGHT OF WAY FOR MORE THAN THIRTY DAYS.

2) THE STORAGE OF EQUIPMENT, MATERIALS AND VEHICLES WITHIN THE HIGHWAY RIGHT OF WAY WILL BE PERMITTED. THE NUMBER OF AREAS AND EXACT LOCATIONS SHALL BE APPROVED BY THE ENGINEER.

3) ALL DISTURBED AREAS SHALL BE RETURNED TO THEIR ORIGINAL CONDITION AT NO EXPENSE TO THE STATE.

JOINT SEALER

ALL REFERENCES TO 705.01 OR 705.02, APPEARING ON STANDARD DRAWINGS OR ON THE PLANS SHALL BE CONSIDERED TO READ 705.04.

CONVERSION OF METRIC STANDARD DRAWINGS

THE METRIC STANDARD DRAWINGS REFERENCED IN THIS PLAN SHALL BE CONVERTED TO ENGLISH UNITS USING THE SI (METRIC) TO ENGLISH CONVERSION FACTORS PROVIDED IN SECTION 109.011 OF THE 1997 CONSTRUCTION AND MATERIALS SPECIFICATIONS. THE APPENDIX OF ASTM E 380 SHALL BE UTILIZED FOR ANY ADDITIONAL CONVERSION FACTORS REQUIRED. CONVERSIONS SHALL BE APPROPRIATELY PRECISE AND SHALL REFLECT STANDARD INDUSTRY ENGLISH VALUES WHERE SUITABLE.

EXISTING TYPICAL SECTIONS

EXISTING TYPICAL SECTIONS AND UNDERDRAIN LOCATIONS HAVE BEEN TAKEN FROM THE RECORDS AND ARE BELIEVED TO REPRESENT THE EXISTING PAVEMENT, BUT THE STATE OF OHIO DOES NOT GUARANTEE THE ACCURACY OF THE SAME.

FOR FURTHER INFORMATION IN REGARD TO THE EXISTING TYPICAL SECTIONS AND UNDERDRAIN LOCATIONS, THE CONTRACTOR SHALL REFER TO THE PREVIOUS CONSTRUCTION PLANS:

CUY-90-9.63 1974	CUY-90-6.67 1988
CUY-90-10.40 1975	CUY-90-13.41 1989
CUY-90-11.64 1975	CUY-90-2.80 1991

THESE PLANS MAY BE REVIEWED AT THE OHIO DEPARTMENT OF TRANSPORTATION, DISTRICT TWELVE OFFICES, 5500 TRANSPORTATION BLVD., GARFIELD HEIGHTS, OHIO 44125.

GENERAL NOTES

ROADWAY

ITEM 201 - CLEARING AND GRUBBING

THIS ITEM IS SPECIFICALLY INTENDED TO PROVIDE FOR THE REMOVAL OF TREES AND OTHER VEGETATION WHICH RESTRICTS SIGHT DISTANCE OR BLOCKS THE VIEW OF THE EXISTING OR PROPOSED SIGNS THROUGHOUT THIS PROJECT. THIS ITEM OF WORK SHALL BE PERFORMED AT THE BEGINNING OF THE CONTRACT WORK.

ITEM 202 - GUARDRAIL REMOVED

THIS ITEM SHALL INCLUDE BOTH STANDARD AND BARRIER TYPE RAILS INCLUDING ANCHOR ASSEMBLIES AND TERMINAL ASSEMBLIES.

PAVING UNDER GUARDRAIL

THIS OPERATION SHALL INCLUDE PREPARATION OF THE GRADED SHOULDER USING ITEM 203-LINEAR GRADING, AS PER PLAN A AND PAVING UNDER THE GUARDRAIL USING ITEM 448 - ASPHALT CONCRETE INTERMEDIATE COURSE, TYPE 1, PG64-22, UNDER GUARDRAIL.

ITEM 203 - LINEAR GRADING, AS PER PLAN SHALL CONSIST OF EXCAVATING TOPSOIL AND PLACING MATERIAL AS SPECIFIED IN THE PLANS AND IN ACCORDANCE WITH THE FOLLOWING:

ALL COLLECTED DEBRIS AND TOPSOIL, INCLUDING RHIZOMES, ROOTS AND OTHER VEGETATIVE PLANT MATERIAL SHALL BE REMOVED AND DISPOSED OF AS SPECIFIED IN 203.05.

THE REMOVED MATERIAL SHALL BE REPLACED WITH MATERIAL AS DETAILED ON THE TYPICAL SECTIONS OR AS APPROVED BY THE ENGINEER.

ALL EQUIPMENT, MATERIALS AND LABOR REQUIRED TO PERFORM THE WORK OUTLINED ABOVE SHALL BE INCLUDED FOR PAYMENT UNDER ITEM 203-LINEAR GRADING, AS PER PLAN.

PAVING UNDER GUARDRAIL SHALL CONSIST OF PLACING ITEM 448 TO THE DEPTH SPECIFIED USING ONE OF THE FOLLOWING METHODS:

METHOD A:
1) SET GUARDRAIL POSTS
2) PLACE ITEM 448

METHOD B:
1) PLACE ITEM 448
2) BORE ASPHALT AT POST LOCATIONS (MAY BE OMITTED IF STEEL POSTS ARE USED)
3) SET GUARDRAIL POSTS
4) PATCH AROUND POSTS. THE MATERIALS USED FOR PATCHING SHALL BE A BITUMINOUS CONCRETE APPROVED BY THE ENGINEER. PATCHING AREAS SHALL BE COMPACTED USING EITHER HAND OR MECHANICAL METHODS. FINISHED SURFACES SHALL BE SMOOTH AND SLOPED TO DRAIN AWAY FROM THE POSTS.

ALL EQUIPMENT, MATERIALS AND LABOR REQUIRED TO PERFORM THE WORK OUTLINED ABOVE, WITH THE EXCEPTION OF SETTING GUARDRAIL POSTS, SHALL BE INCLUDED FOR PAYMENT UNDER ITEM 448 - ASPHALT CONCRETE INTERMEDIATE COURSE, TYPE 1, PG64-22, UNDER GUARDRAIL.

ITEM 203 - LINEAR GRADING, AS PER PLAN

THIS ITEM OF WORK SHALL CONSIST OF EXCAVATING ALONG THE OUTSIDE EDGE OF THE PAVED SHOULDER, AS DETAILED ON THE TYPICAL SECTIONS, TO PREPARE THE GROUND SURFACE FOR PAVING UNDER GUARDRAIL. THIS ITEM SHALL BE USED TO PREPARE PROPOSED GUARDRAIL AND EXISTING GUARDRAIL RUNS.

ALL COLLECTED DEBRIS SHALL BE REMOVED AND DISPOSED OF AS SPECIFIED IN SECTION 203.05 OF THE CONSTRUCTION AND MATERIAL SPECIFICATION.

PAYMENT FOR THE ABOVE WORK SHALL BE MADE AT THE UNIT BID PRICE FOR ITEM 203, STA., LINEAR GRADING, AS PER PLAN AND SHALL INCLUDE ALL LABOR, TOOLS, EQUIPMENT AND MATERIALS NECESSARY TO PERFORM THIS ITEM OF WORK.

GUARDRAIL PROTECTION

NO SIGN SUPPORTS SHALL BE ERECTED BEFORE THE NECESSARY GUARDRAIL PROTECTION IS IN PLACE. SIMILARILY EXISTING GUARDRAIL WHICH PROTECTS AN OBSTRUCTION OR SLOPE WHICH IS TO BE UPGRADED TO ELIMINATE GUARDRAIL, SHALL NOT BE REMOVED UNTIL THAT WORK HAS BEEN COMPLETED. EXISTING GUARDRAIL WHICH IS SCHEDULED TO BE REPLACED WITH TYPE 5 GUARDRAIL, SHALL NOT BE REMOVED UNTIL THE NEW GUARDRAIL IS READY TO BE INSTALLED, UNDER NO CIRCUMSTANCES SHALL ANY HAZARD BE WITHOUT GUARDRAIL PROTECTION FOR MORE THAN 24 HOURS. (SEE PUBLIC SAFETY NOTE SHEET NO. 19)

LOCATION OF GUARDRAIL

THE LOCATIONS OF GUARDRAIL RUNS, AS SHOWN IN THESE PLANS, ARE SUBJECT TO ADJUSTMENT PRIOR TO FINAL ACCEPTANCE. THE ENGINEER SHALL BE SATISFIED THAT ALL INSTALLATIONS WILL AFFORD MAXIMUM PROTECTION FOR TRAFFIC.

CONNECTION BETWEEN EXISTING AND PROPOSED GUARDRAIL

WHEN IT IS NECESSARY TO SPLICE PROPOSED GUARDRAIL TO EXISTING GUARDRAIL, ONLY THE EXISTING GUARDRAIL SHALL BE CUT, DRILLED, OR PUNCHED. THE CONNECTION SHALL BE MADE USING A "W-BEAM RAIL SPLICE" AS SHOWN ON STANDARD CONSTRUCTION DRAWING GR-1.1M. PAYMENT SHALL BE INCLUDED IN THE CONTRACT PRICE FOR THE RESPECTIVE GUARDRAIL ITEMS.

TYPE 5 GUARDRAIL POST SPACING

WHEN THE OFFSET BETWEEN THE FACE OF THE GUARDRAIL AND BRIDGE PIERS, MAJOR SIGNS, SIGN SUPPORTS, OR OTHER FIXED OBSTACLES IS LESS THAN 5 FEET 6 INCHES THE GUARDRAIL SHALL BE STIFFENED BY PROVIDING 3 FEET 1.5 INCH POST SPACING FROM 12.5 FEET IN ADVANCE OF THE OBSTRUCTION TO ITS END, AS PER STANDARD DRAWING GR-2.1 COST SHALL BE INCLUDED IN THE TYPE 5A UNIT PRICE BID.

THE FOLLOWING ESTIMATED QUANTITY HAS BEEN INCLUDED IN THE GENERAL SUMMARY TO BE USED, AS DIRECTED BY THE ENGINEER, IN PLACE OF TYPE 5 GUARDRAIL AS OUTLINED ABOVE:

ITEM 606-GUARDRAIL, TYPE 5A ..... 100 LIN.FT.

ITEM 202 - RAISED PAVEMENT MARKERS REMOVED FOR STORAGE, AS PER PLAN

RAISED PAVEMENT MARKERS SHALL BE REMOVED FROM THE ROADWAY IN A MANNER THAT PREVENTS DAMAGE TO THE CASTINGS. REMOVED MARKERS SHALL BE COLLECTED, STORED IN 55 GALLON DRUMS (WITH AMOUNT CLEARLY MARKED) AND THEN DELIVERED TO THE ODOT WARRENSVILLE YARD, 25609 EMERY RD., WARRENSVILLE HTS., OHIO 44128 (SR 175 AT INTERSECTION OF I-271 AND EMERY RD.), BY THE CONTRACTOR, AS DIRECTED BY THE ENGINEER. THE PROJECT ENGINEER SHALL GIVE THE WARRENSVILLE TRAFFIC DEPARTMENT (292-5801) 48 HOUR NOTICE PRIOR TO ANY DELIVERIES. THE PROJECT ENGINEER SHALL BE RESPONSIBLE FOR FURNISHING ALL NECESSARY TRANSFER/RECEIVING DOCUMENTATION TO THE YARD. ALL COSTS ASSOCIATED WITH THE REMOVAL, STORAGE AND DELIVERY OF THESE MARKERS SHALL BE INCLUDED IN THE UNIT BID PRICE FOR ITEM 202 - RAISED PAVEMENT MARKERS REMOVED FOR STORAGE, AS PER PLAN.

THE FOLLOWING ESTIMATED QUANTITY HAS BEEN INCLUDED IN THE GENERAL SUMMARY TO BE USED THROUGHOUT THIS PROJECT:

ITEM 202-RAISED PAVEMENTMARKERS REMOVED
FOR STORAGE, AS PER PLAN..... 3000 EA.

ITEM 606 - ANCHOR ASSEMBLY, TYPE E

THIS ITEM SHALL CONSIST OF FURNISHING AND INSTALLING AN ET-2000, OPTION "B" GUARDRAIL END TERMINAL AS MANUFACTURED BY SYRO STEEL COMPANY, 1170 N. STATE ST., GIRARD, OHIO 44420(TEL:216-545-4373).

THE LENGTH OF THE ET-2000 SYSTEM IS CONSIDERED TO BE 50', INCLUSIVE OF TWO 25' LONG RAIL ELEMENTS. INSTALLATION SHALL BE IN ACCORDANCE WITH THE MANUFACTURER'S SPECIFICATIONS AND AT THE LOCATIONS SHOWN IN THE PLANS.

PAYMENT FOR THE ABOVE WORK SHALL BE MADE AT THE UNIT BID PRICE FOR ITEM 606, EACH, ANCHOR ASSEMBLY, TYPE E AND SHALL INCLUDE ALL LABOR, TOOLS, EQUIPMENT AND MATERIALS NECESSARY TO CONSTRUCT A COMPLETE AND FUNCTIONAL ANCHOR ASSEMBLY SYSTEM, INCLUDING ALL RELATED HARDWARE, NOT SEPARATELY SPECIFIED, AS REQUIRED BY THE MANUFACTURER.

ITEM 202 - CURB REMOVED, AS PER PLAN A AND B
ITEM 609 - CURB, BY TYPE, AS PER PLAN

THIS WORK SHALL CONSIST OF REMOVING AND REPLACING DETERIORATED CONCRETE CURB. THE CURB REMOVAL SHALL BE PERFORMED AS SHOWN ON SHEET 94, AND NEW CURBING SHALL BE PROVIDED IN CONFORMANCE WITH THE DETAILS ON SHEET 95. IN ADDITION, THE FOLLOWING ESTIMATED QUANTITIES ARE PROVIDED FOR THE ABOVE WORK AS DIRECTED BY THE ENGINEER:

ITEM 202 - CURB REMOVED, AS PER PLAN A . . . . 1250 LIN. FT.
ITEM 202 - CURB REMOVED, AS PER PLAN B . . . . .250 LIN. FT.
ITEM 609 - CURB, TYPE 2-B, AS PER PLAN . . . . .250 LIN. FT.
ITEM 609 - CURB, TYPE 6, AS PER PLAN . . . . . 1250 LIN. FT.

ITEM 604 - MONUMENT ASSEMBLY

THE FOLLOWING ESTIMATED QUANTITY HAS BEEN INCLUDED IN THE GENERAL SUMMARY FOR USE AS DIRECTED BY THE ENGINEER FOR THE REPLACEMENT OF EXISTING MONUMENT ASSEMBLIES:

ITEM 604 - MONUMENT ASSEMBLY . . . . . 5 EACH

MONUMENT BOXES REQUIRING REPLACEMENT SHALL BE PAID FOR UNDER MISCELLANEOUS METAL.

FENCING

THE FOLLOWING ESTIMATED QUANTITIES HAVE BEEN INCLUDED FOR USE AS DIRECTED BY THE ENGINEER TO REPLACE DETERIORATED RIGHT-OF-WAY FENCING OR TO REMOVE AND REPLACE FENCING THAT INTERFERES WITH PROPOSED WORK:

ITEM 202 - FENCE REMOVED . . . . . 1500 LIN. FT.
ITEM 607 - FENCE, TYPE CLT . . . . . 1500 LIN. FT.

WHEN THE FENCE IS NOT IN PLACE AND THERE IS NO WORK BEING DONE AT THE SITE, A TEMPORARY ORANGE PLASTIC CONSTRUCTION FENCE OR A WOOD SNOW FENCE SHALL BE ERECTED, AS APPROVED BY THE ENGINEER, TO COMPLETELY CLOSE THE OPENING. TEMPORARY FENCING SHALL BE REPLACED WITH PERMANENT FENCING AS SOON AS CONSTRUCTION OPERATIONS AT THAT LOCATION ARE COMPLETE, AND SHALL NOT BE USED FOR MORE THAN FIVE CONSECUTIVE DAYS. THE COST SHALL BE INCLUDED WITH THE PERTINENT 607 ITEM.

EXISTING CONCRETE BARRIER REPAIR

WHERE DESIGNATED BY THE ENGINEER, EXISTING DETERIORATED CONCRETE BARRIER SHALL BE REPAIRED. THE FOLLOWING ESTIMATED QUANTITY IS PROVIDED AND CARRIED TO THE GENERAL SUMMARY FOR THIS WORK:

ITEM 602 - CONCRETE MASONRY . . . . . 10 CU. YD.

PLOTTED BY: jgrmovse
PLOTTED FROM: c:\projects\05754gnb\dgn\05754gnb_notes.dgn
PLOT SUBMITTED:02-DEC-1998 16:42

GENERAL NOTES

PAVEMENT

SPREADING EQUIPMENT

AN AUTOMATIC SCREED CONTROL HAVING A 40 FOOT SKI ARM SHALL BE USED FOR PLACING THE INTERMEDIATE COURSE (SEE PROPOSAL NOTE). FOR FULL WIDTH PAVING, THE WIDTH LAID SHALL NOT EXCEED THE PAVER'S RATED WIDTH AS RECOMMENDED BY THE PAVER MANUFACTURER.

LONGITUDINAL JOINTS

LONGITUDINAL JOINTS BETWEEN A PAVEMENT LANE AND ADJOINING BERM OR SPEED CHANGE LANE, AND BETWEEN A SPEED CHANGE LANE AND THE ADJOINING BERM SHALL BE MADE THE SAME DAY. EXCEPT WHERE PHASE CONSTRUCTION IS SPECIFIED, ALL LONGITUDINAL JOINTS SHALL BE HOT. LONGITUDINAL JOINT LOCATIONS SHALL BE AS APPROVED BY THE ENGINEER. EACH RAMP SHALL HAVE ONLY ONE LONGITUDINAL COLD JOINT LOCATED APPROXIMATELY HALFWAY ACROSS THE RAMP.

ALIGNMENT AND PROFILE

THE PROPOSED PAVEMENT RESURFACING SHALL FOLLOW THE ALIGNMENT AND PROFILE OF THE EXISTING PAVEMENT. THE PROPOSED ASPHALT CONCRETE OVERLAY SHALL HAVE A UNIFORM THICKNESS OF 3 1/4 " WHICH SHALL BE APPROXIMATELY 3-1/4" ABOVE THAT OF THE EXISTING PAVEMENT OF IR-90.

THE EXISTING VERTICAL ALIGNMENT HAS BEEN EXAMINED AND MEETS DESIGN SPEED CRITERIA. CONSTRUCTION PLANS, SHOWING THE ORIGINAL ALIGNMENT AND PROFILE ARE AVAILABLE FOR INSPECTION AT THE DISTRICT 12 OFFICE.

ITEM 407 - TACK COAT

THE RATE OF APPLICATION OF THE 407 TACK COAT SHALL BE SUBJECT TO ADJUSTMENT AS DIRECTED BY THE ENGINEER. PLAN QUANTITIES INDICATE AN AVERAGE APPLICATION RATE OF 0.10 GALLONS PER SQUARE YARD OF TACK COAT FOR ESTIMATING PURPOSES ONLY.

ITEM 407 - TACK COAT FOR INTERMEDIATE COURSE

THE RATE OF APPLICATION OF THE 407 TACK COAT FOR INTERMEDIATE COURSE SHALL BE SUBJECT TO ADJUSTMENT AS DIRECTED BY THE ENGINEER. PLAN QUANTITIES INDICATE AN AVERAGE APPLICATION RATE OF 0.05 GALLONS PER SQUARE YARD OF TACK COAT FOR INTERMEDIATE COURSE FOR ESTIMATING PURPOSES ONLY.

ITEM 304 - AGGREGATE BASE, AS PER PLAN

THE ONLY SLAG MATERIALS PERMITTED FOR THIS ITEM SHALL BE CRUSHED AIR-COOLED BLAST FURNACE SLAG, A MIXTURE OF CRUSHED AND GRANULATED SLAGS, OR OPEN HEARTH SLAG FROM APPROVED SOURCES ON FILE AT THE LABORATORY.

ALL MATERIALS OR BLENDED MATERIALS SHALL MEET THE GRADATION REQUIREMENTS OF 304.02.

ANY GRANULATED SLAG MATERIAL USED SHALL MEET THESE GRADATION REQUIREMENTS IN LIEU OF 703.08

ITEM 203 - EXCAVATION NOT INCLUDING EMBANKMENT CONSTRUCTION
ITEM 304 - AGGREGATE BASE, AS PER PLAN

THIS ITEM SHALL BE USED TO REPLACE EXISTING UNSUITABLE SUBBASE PRIOR TO THE PLACING OF ITEM 301 OR 305. THE FOLLOWING ESTIMATED QUANTITIES ARE INCLUDED IN THE GENERAL SUMMARY TO BE USED AS OUTLINED ABOVE:

ITEM 203-EXCAVATION NOT INCLUDING EMBANKMENT CONSTRUCTION.....200 C.Y.
ITEM 304-AGGREGATE BASE, AS PER PLAN.....200 C.Y.

ITEM 305 - CONCRETE BASE, AS PER PLAN

IN ADDITION TO THE REQUIRMENTS OF 305.01, LOAD TRANSFER DEVICES ARE REQUIRED AT ALL TRANSVERSE CONTRACTION, CONSTRUCTION, AND EXPANSION JOINTS.

WHERE PROPOSED 305 BASE PAVEMENT IS TIED LONGITUDINALLY TO EXISTING PAVEMENT,TRANSVERSE JOINT SPACING AS REQUIRED IN BP-2.2M SHALL BE WAIVED. TRANSVERSE JOINTS SHALL BE LOCATED IN THE PROPOSED 305 BASE PAVEMENT AT ALL EXISTING TRANSVERSE JOINTS TO REMAIN AND ALL PROPOSED TYPE Y OR TYPE T JOINTS. JOINTS SHALL BE CONSTRUCTED TO FORM A CONTINUOUS LINE IN THE SAME ALIGNMENT AS THE TRANSVERSE JOINT IN THE ADJACENT EXISTING PAVEMENT.

WHERE PROPOSED 305 BASE PAVEMENT IS NOT TIED LONGITUDINALLY TO EXISTING PAVEMENT, JOINT SPACING IN THE PROPOSED 305 BASE SHALL BE IN ACCORDANCE WITH THE APPLICABLE STANDARD DRAWING.

ITEM 413 - SAWING AND SEALING ASPHALT CONCRETE PAVEMENT JOINTS, 705.04

THE FOLLOWING ESTIMATED QUANTITIES HAVE BEEN INCLUDED IN THE GENERAL SUMMARY TO BE USED TO PERFORM THIS ITEM OF WORK:

ITEM	DESCRIPTION	QUANTITY	UNIT
413	SAWING AND SEALING ASPHALT CONCRETE PAVEMENT JOINTS, 705.04 . . .	70,000	LIN. FT.

ITEM 617 - COMPACTED AGGREGATE, TYPE A, AS PER PLAN

THIS ITEM SHALL BE USED ALONG ALL RESURFACED SHOULDERS EXCEPT THOSE WHICH ABUT ASPHALT CONCRETE UNDER GUARDRAIL. MATERIAL FOR THIS ITEM SHALL BE LIMITED TO CRUSHED SLAG, CRUSHED LIMESTONE OR ASPHALT GRINDINGS WITH ALL MATERIAL PASSING THE 1" SIEVE (WITH NO OTHER TESTING REQUIRED).

THE ACTUAL DEPTH USED WILL VARY DEPENDING UPON EXISTING CONDITIONS. THIS MATERIAL SHALL BE PLACED ABOVE PROPOSED UNDERDRAIN LOCATIONS PRIOR TO OPENING SHOULDER TO TRAFFIC SO NO DROP OFF EXISTS ADJACENT TO THE SHOULDER.

SEE SHEET 53 FOR STATIONS AND QUANTITIES.

ITEM 252 - FULL DEPTH PAVEMENT REMOVAL AND FLEXIBLE REPLACEMENT

THIS WORK SHALL BE PERFORMED ON THE MIDDLE LANE OF THREE LANE SECTIONS AND WHERE RIGID REPLACEMENT IS NOT REASONABLE AS DETERMINED BY THE ENGINEER (TYPICALLY THE RAMPS AND RAMP TERMINI AT INTERSECTING ROADWAYS).

THE FOLLOWING ESTIMATED QUANTITIES ARE INCLUDED TO PERFORM THIS WORK AS DIRECTED BY THE ENGINEER:

ITEM 252 - FULL DEPTH RIGID PAVEMENT REMOVAL AND FLEXIBLE REPLACEMENT . . . . . 1400 SQ. YD.
ITEM 255 - FULL DEPTH PAVEMENT SAWING . . . . . 3500 LIN. FT.

ITEM 608 - CONCRETE WALK, AS PER PLAN

THIS WORK CONSISTS OF REPLACING CONCRETE WALK WHICH IS CRACKED, BROKEN OR DETERIORATED AS SHOWN ON THE DETAIL ON SHEET 95. THE FOLLOWING ESTIMATED QUANTITIES ARE PROVIDED FOR THIS WORK AS DIRECTED BY THE ENGINEER:

ITEM 202 - WALK REMOVED . . . . . .500 SQ. FT.
ITEM 608 - 4" CONCRETE WALK, AS PER PLAN . . . 500 LIN. FT.

ITEM 251 - PARTIAL DEPTH PAVEMENT REPAIR, AS PER PLAN

THE PAVEMENT SHALL BE REMOVED TO THE SPECIFIED DEPTH WITHIN THE DESIGNATED LIMITS BY A GRINDING METHOD THAT WILL CUT NEAT VERTICAL EDGES.

IF AFTER THE REMOVAL OPERATION THE ENGINEER DETERMINES THAT A FULL DEPTH REPAIR WILL BE NECESSARY, NO FURTHER WORK WILL BE REQUIRED. PAYMENT FOR THE GRINDING OPERATION WILL BE MADE BY PAYING FOR 50 PERCENT OF THE MEASURED AREA AT THE UNIT PRICE BID FOR ITEM 251 - PARTIAL DEPTH PAVEMENT REPAIR, AS PER PLAN.

FOR ADDITIONAL DETAILS, NOTES, AND QUANTITIES SEE SHEET NO. 88.

ITEM 255 - FULL DEPTH RIGID PAVEMENT REMOVAL AND RIGID REPLACEMENT, CLASS C, AS PER PLAN A
ITEM 255 - FULL DEPTH RIGID PAVEMENT REMOVAL AND RIGID REPLACEMENT, CLASS C, AS PER PLAN B
ITEM 255 - FULL DEPTH RIGID PAVEMENT REMOVAL AND RIGID REPLACEMENT, CLASS MS, AS PER PLAN A
ITEM 255 - FULL DEPTH RIGID PAVEMENT REMOVAL AND RIGID REPLACEMENT, CLASS MS, AS PER PLAN B

THIS ITEM SHALL CONSIST OF REPLACING EXISTING PAVEMENT IN ACCORDANCE WITH ITEM 255 AND THE NOTES BELOW. PAYMENT SHALL BE MADE FOR "CLASS C" OR "CLASS MS" AS DETAILED BELOW, ALTHOUGH THE CONTRACTOR MAY USE "CLASS FS" AT NO ADDITIONAL COST TO THE STATE.

EXISTING CONCRETE PAVEMENT THICKNESS MAY VARY FROM THAT SHOWN ON THE TYPICAL SECTIONS BY PLUS TWO INCHES OR MINUS ONE INCH. NO ADJUSTMENT IN PAYMENT FOR THIS ITEM SHALL BE MADE PROVIDING THAT THE AVERAGE PAVEMENT THICKNESS IS WITHIN ON HALF INCH OF THE THICKNESS SHOWN ON THE TYPICAL SECTIONS. ADDITIONAL COMPENSATION SHALL BE MADE BY CHANGE ORDER FOR THE MATERIAL COST OF CONCRETE ONLY WHEN THE AVERAGE THICKNESS EXCEEDS THE ONE HALF INCH MAXIMUM TOLERANCE ABOVE. THE VOLUME OF ADDITIONAL CONCRETE PAID FOR SHALL BE BASED UPON THE AMOUNT OF CONCRETE ABOVE THE ONE HALF INCH TOLERANCE LIMIT.

IF, AFTER REMOVAL OF THE RIGID PAVEMENT THE ENGINEER DETERMINES THAT THE SUBBASE OR SUBGRADE HAS FAILED OR IS PUMPING, HE SHALL DIRECT THE CONTRACTOR TO EXCAVATE THE UNSUITABLE MATERIAL AND REPLACE IT WITH COMPACTED 304 AGGREGATE. QUANTITIES OF ITEM 203 - EXCAVATION AND ITEM 304 - AGGREGATE BASE, AS PER PLAN, HAVE BEEN PROVIDED TO REPAIR SAID FAILED SUBBASE OR SUBGRADE AREAS.

PAVEMENT REPAIR LESS THAN OR EQUAL TO TEN (10) FEET IN LENGTH SHALL BE PAID FOR UNDER "FULL DEPTH RIGID PAVEMENT REMOVAL AND REPLACEMENT, BY CLASS, AS PER PLAN, A". PAVEMENT REPAIRS GREATER THAN TEN (10) FEET IN LENGTH SHALL BE PAID FOR UNDER "FULL DEPTH RIGID PAVEMENT REMOVAL AND REPLACEMENT, BY CLASS, AS PER PAN B".

PAYMENT FOR THIS WORK SHALL BE MADE AT THE CONTRACT BID PRICE FOR:

ITEM	UNIT	DESCRIPTION
203	CU.YDS.	EXCAVATION NOT INCLUDING EMBANKMENT CONSTRUCTION
304	CU.YDS.	AGGREGATE BASE, AS PER PLAN
255	SQ.YDS.	FULL DEPTH RIGID PAVEMENT REMOVAL AND RIGID REPLACEMENT CLASS C, AS PER PLAN A
255	SQ.YDS.	FULL DEPTH RIGID PAVEMENT REMOVAL AND RIGID REPLACEMENT CLASS C, AS PER PLAN B
255	SQ.YDS.	FULL DEPTH RIGID PAVEMENT REMOVAL AND RIGID REPLACEMENT CLASS MS, AS PER PLAN A
255	SQ.YDS.	FULL DEPTH RIGID PAVEMENT REMOVAL AND RIGID REPLACEMENT CLASS MS, AS PER PLAN B
255	LIN.FT.	FULL DEPTH PAVEMENT SAWING

FOR ESTIMATED QUANTITIES, SEE SHEET 88

PLOTTED BY:jgrmovse
PLOTTED: 4-JAN-1999 10:57
PLOT SUBMITTED:02-DEC-1998 16:41
C_I_02_4_5_6_7_8_9_10_11_12_13_14_15_16_17_18_19_20_21_22_23_24_25_26_27_28_29_30_31_32_33_34_35_36_37_38_39_40_41_42_43_44_45_46_47_48_49_50_51_52_53_54_55_56_57_58_59_60_61_62_63
C_I_02_4_5_6_7_8_9_10_11_12_13_14_15_16_17_18_19_20_21_22_23_24_25_26_27_28_29_30_31_32_33_34_35_36_37_38_39_40_41_42_43_44_45_46_47_48_49_50_51_52_53_54_55_56_57_58_59_60_61_62_63
C:\Projects\Cuy\90\9.68\Notes\05754gnc.dgn
05754GNC.DGN

GENERAL NOTES

PAVEMENT

ITEM 254 - PAVEMENT PLANING, AS PER PLAN

IN AREAS WHERE THE ENTIRE WIDTH OF THE SHOULDER IS TO BE MILLED, THE REMOVAL OF THE EXISTING THREE (3) INCHES OF ASPHALT CAN BE ACHIEVED BY EITHER PLANING OR EXCAVATION. THE CONTRACTOR MAY CHOOSE WHICH METHOD HE PREFERS. IN EITHER CASE, PAYMENT FOR ALL LABOR, EQUIPMENT AND MATERIALS TO PERFORM THIS ITEM OF WORK SHALL BE MADE AT THE UNIT BID PRICE FOR ITEM 254, SQ. YD., PAVEMENT PLANING, AS PER PLAN.

ITEM 446 - ASPHALT CONCRETE SURFACE COURSE, TYPE 1H, AS PER PLAN

THE GRADATION FOR THIS ITEM SHALL BE AS PER 441.02, TABLE A, TYPE 1, SURFACE MEDIUM. ALL OTHER SPECIFICATIONS SHALL BE AS TYPE 1H. COARSE AGGREGATE FOR THIS ITEM SHALL BE LIMITED TO AIR COOLED BLAST FURNACE SLAG OR LIMESTONE.

ITEM SPECIAL - PRESSURE RELIEF JOINTS, TYPE A

WHEN AN EXISTING TYPE B OR C PRESSURE RELIEF JOINT FALLS WITHIN A PAVEMENT REPAIR AREA, IT SHALL BE REMOVED AND REPLACED WITH A NEW TYPE A PRESSURE RELIEF JOINT.

THE FOLLOWING ESTIMATED QUANTITY HAS BEEN CARRIED TO THE GENERAL SUMMARY TO BE USED AS OUTLINED ABOVE:

ITEM SPEC - PRESSURE RELIEF JOINT, TYPE A . . . . 100 LIN. FT.

ITEM 623 - CONSTRUCTION LAYOUT STAKES, AS PER PLAN

IN ADDITION TO THE REQUIREMENTS OF ITEM 623, THE CONTRACTOR SHALL PROVIDE FIELD SURVEY FOR ALL ASPHALT TRANSITIONS. (SEE SHEET NO. 86). SAID SURVEY SHALL CONSIST OF ELEVATIONS TAKEN AT THE BRIDGE EXPANSION JOINT (WHERE APPLICABLE) AND EXTENDING AS SHOWN ON THE DETAILS. ELEVATIONS AFTER RESURFACING SHALL BE TAKEN ALONG EACH EDGE LINE AND LANE LINE AND SHALL BE TAKEN AT THE FOLLOWING DISTANCES: 0 FEET, 5 FEET, 10 FEET, 25 FEET, 50 FEET, 65 FEET, 70 FEET, 75 FEET, THEN EVERY 25 FEET. THE CONTRACTOR SHALL PLOT THESE AT EACH LOCATION AT A SCALE OF 1 INCH EQUALS 10' HORIZONTALLY AND 1 INCH EQUALS 2' VERTICALLY. THIS SURVEY SHALL BE DONE AND THE PLOTTED RESULTS GIVEN TO THE ENGINEER AS SOON AS POSSIBLE AFTER THE PLACEMENT OF THE SURFACE COURSE.

RESURFACING AT PAVED SHOULDER INLETS WITH NEW CONCRETE SHOULDERS

THE TOP ELEVATION OF THE PROPOSED 10" CONCRETE BASE SHALL BE PLACED AT THE SAME TOP ELEVATION OF THE EXISTING ASPHALT SHOULDER. THE 3 1/4" OVERLAY SHALL BE PLACED AS SHOWN ON THE "GUTTER FINISH" DETAIL AS FOUND IN STANDARD DRAWING BP-3.1.

ASPHALT SHOULDER REPAIR

THE EXISTING ASPHALT SHOULDERS THAT WILL NOT BE REPLACED WITH CONCRETE SHALL BE REPAIRED AS DETAILED ON SHEETS 14, 14A-C. THE FOLLOWING ESTIMATED QUANTITIES SHALL BE CARRIED TO THE GENERAL SUMMARY FOR THIS WORK:

ITEM 254 -	PAVEMENT PLANING, BITUMINOUS	6000 SQ. YD.
ITEM 254 -	PAVEMENT PLANING, BITUMINOUS, AS PER PLAN.	14000 SQ. YD.
ITEM 254 -	PATCHING PLANED SURFACE	600 SQ. YD.
ITEM 301 -	BITUMINOUS AGGREGATE BASE, PG64-22 . .	1170 CU. YD.
ITEM 407 -	TACK COAT	600 GAL.
ITEM 448 -	ASPHALT CONCRETE SURFACE COURSE, TYPE 1, PG64-22	250 CU. YD.

EROSION CONTROL/DRAINAGE

REVIEW OF DRAINAGE FACILITIES

BEFORE ANY WORK IS STARTED ON THE PROJECT AND AGAIN BEFORE FINAL ACCEPTANCE BY THE STATE, REPRESENTATIVES OF THE STATE AND THE CONTRACTOR, ALONG WITH LOCAL REPRESENTATIVES, SHALL MAKE AN INSPECTION OF ALL EXISTING SEWERS WHICH ARE TO REMAIN IN SERVICE AND WHICH MAY BE AFFECTED BY THE WORK. THE CONDITION OF THE EXISTING CONDUITS AND THEIR APPURTENANCES SHALL BE DETERMINED FROM FIELD OBSERVATIONS. RECORDS OF THE INSPECTION SHALL BE KEPT IN WRITING BY THE STATE.

ALL NEW CONDUITS, INLETS, CATCH BASINS, AND MANHOLES CONSTRUCTED AS A PART OF THE PROJECT SHALL BE FREE OF ALL FOREIGN MATTER AND IN A CLEAN CONDITION BEFORE THE PROJECT WILL BE ACCEPTED BY THE STATE.

ALL EXISTING SEWERS INSPECTED INITIALLY BY THE ABOVE MENTIONED PARTIES SHALL BE MAINTAINED AND LEFT IN A CONDITION REASONABLY COMPARABLE TO THAT DETERMINED BY THE ORIGINAL INSPECTION. ANY CHANGE IN THE CONDITION RESULTING FROM THE CONTRACTOR'S OPERATIONS SHALL BE CORRECTED BY THE CONTRACTOR TO THE SATISFACTION OF THE ENGINEER.

PAYMENT FOR ALL OPERATIONS DESCRIBED ABOVE SHALL BE INCLUDED IN THE CONTRACT PRICE FOR THE PERTINENT 603 CONDUIT ITEMS.

CROSSINGS AND CONNECTIONS TO EXISTING PIPES AND UTILITIES

WHERE PLANS PROVIDE FOR A PROPOSED CONDUIT TO BE CONNECTED TO, OR CROSS OVER OR UNDER AN EXISTING SEWER OR UNDERGROUND UTILITY, THE CONTRACTOR SHALL LOCATE THE EXISTING PIPES OR UTILITIES BOTH AS TO LINE AND GRADE BEFORE STARTING TO LAY THE PROPOSED CONDUIT.

IF IT IS DETERMINED THAT THE ELEVATION OF THE EXISTING CONDUIT, OR EXISTING APPURTENANCE TO BE CONNECTED, DIFFERS FROM THE PLAN ELEVATION OR RESULTS IN A CHANGE IN THE PLAN CONDUIT SLOPE, THE ENGINEER SHALL BE NOTIFIED BEFORE STARTING CONSTRUCTION OF ANY PORTION OF THE PROPOSED CONDUIT WHICH WILL BE AFFECTED BY THE VARIANCE IN THE EXISTING ELEVATIONS.

IF IT IS DETERMINED THAT THE PROPOSED CONDUIT WILL INTERSECT AN EXISTING SEWER OR UNDERGROUND UTILITY IF CONSTRUCTED AS SHOWN ON THE PLAN, THE ENGINEER SHALL BE NOTIFIED BEFORE STARTING CONSTRUCTION OF ANY PORTION OF THE PROPOSED CONDUIT WHICH WOULD BE AFFECTED BY THE INTERFERENCE WITH AN EXISTING FACILITY.

PAYMENT FOR ALL THE OPERATIONS DESCRIBED ABOVE SHALL BE INCLUDED IN THE CONTRACT PRICE FOR THE PERTINENT 603 CONDUIT ITEM.

ITEM SPECIAL - MISCELLANEOUS METAL

EXISTING CASTINGS MAY PROVE TO BE UNSUITABLE FOR REUSE, AS DETERMINED BY THE ENGINEER. IT SHALL BE THE CONTRACTOR'S RESPONSIBILITY TO PROVIDE THE CASTINGS OF THE REQUIRED TYPE, SIZE AND STRENGTH (HEAVY OR LIGHT DUTY) FOR THE PARTICULAR STRUCTURE IN QUESTION. ALL MATERIALS SHALL MEET ITEM 604 OF THE SPECIFICATIONS AND SUPPLEMENTAL SPECIFICATION 932 AND SHALL HAVE THE PRIOR APPROVAL OF THE ENGINEER.

THE FOLLOWING ESTIMATED QUANTITY HAS BEEN CARRIED TO THE GENERAL SUMMARY FOR USE AS DIRECTED BY THE ENGINEER:

ITEM SPECIAL - MISCELLANEOUS METAL . . . . . 10000 LBS.

THE CONTRACTOR IS CAUTIONED TO USE EXTREME CARE IN THE REMOVAL, STORAGE AND REPLACEMENT OF ALL EXISTING CASTINGS. CASTINGS DAMAGED BY THE NEGLIGENCE OF THE CONTRACTOR, AS DETERMINED BY THE ENGINEER, SHALL BE REPLACED WITH THE PROPER NEW CASTINGS AT THE EXPENSE OF THE CONTRACTOR.

ITEM 604 - CATCH BASIN GRATE

THE FOLLOWING ESTIMATED QUANTITY HAS BEEN INCLUDED IN THE GENERAL SUMMARY FOR USE AS DIRECTED BY THE ENGINEER FOR REPLACEMENT OF EXISTING CATCH BASIN GRATES WITH BICYCLE SAFE GRATES:

ITEM 604 - CATCH BASIN GRATES . . . . . 10 EACH

ITEM 604 - CITY OF CLEVELAND CATCH BASIN NO. 1

THE FOLLOWING ESTIMATED QUANTITIES HAVE BEEN INCLUDED IN THE GENERAL SUMMARY FOR REPLACEMENT OF CATCH BASINS AND THEIR CONNECTING PIPES AS DIRECTED BY THE ENGINEER:

ITEM 603 - 12" CONDUIT, TYPE B, AS PER PLAN . . . 20 LIN. FT.
ITEM 604 - CITY OF CLEVELAND CATCH BASIN NO. 1 . . 4 EACH

THE COST FOR REMOVING AND DISPOSING OF THE EXISTING PIPE, AND CONNECTING THE NEW ONE WITH A CONCRETE COLLAR AS PER STANDARD DRAWING DM-1.1M, SHALL BE INCLUDED WITH ITEM 603. THE COST FOR REMOVAL AND DISPOSAL OF THE EXISTING CATCH BASIN SHALL BE INCLUDED WITH ITEM 604. ALL MATERIAL REMOVED SHALL BE DISPOSED OF AT THE CONTRACTORS OWN RESPONSIBILITY AND EXPENSE OUTSIDE THE LIMITS OF THE RIGHT-OF-WAY.

ITEM 601 - CONCRETE SLOPE PROTECTION, AS PER PLAN A

THIS WORK INCLUDE THE FOLLOWING:

1. REMOVAL OF THE ENTIRE EXISTING CONCRETE SLOPE PROTECTION
2. PROVIDING A UNIFORM PLANE FOR THE SUBGRADE. ADDITIONAL MATERIAL MEETING THE REQUIREMENTS OF ITEM 203 MAY BE REQUIRED, AS DIRECTED BY THE ENGINEER.
3. PROPOSED SLOPE PROTECTION REPLACEMENT:

   INSTALL THE NEW WELDED STEEL WIRE FABRIC REINFORCED SLOPE PROTECTION AS SHOWN ON SH. 96 (THE "A" PLAN) INCLUDING REINFORCING STEEL, WELDED STEEL FABRIC, 709.10, DOWEL HOLES AND GROUT, GEOTEXTILE FILTER, PREFORMED EXPANSION JOINT FILLER AND CONCRETE. THE FABRIC SHALL MEET THE REQUIREMENTS OF 712.09, TYPE B (NONWOVEN). FIELD SPLICES SHALL CONSIST OF 12 INCHES OVERLAP SECURED IN ANY MANNER APPROVED BY THE ENGINEER THAT WILL ASSURE THE OVERLAP IS MAINTAINED AND SECURED.

   ALL COSTS OF CONSTRUCTING THE NEW SLOPE PROTECTION INCLUDING ALL NECESSARY EMBANKMENT, EXCAVATION, REBARS, DOWELS, WELDED STEEL WIRE FABRIC, FILTER FABRIC, PREFORMED EXPANSION JOINT FILLER, JOINT SEALER AND CONCRETE SHALL BE INCLUDED UNDER ITEM 601, CONCRETE SLOPE PROTECTION, AS PER PLAN A.

TEMPORARY SOIL EROSION AND SEDIMENT CONTROL

THE FOLLOWING ESTIMATED QUANTITIES HAVE BEEN INCLUDED IN THE GENERAL SUMMARY TO BE USED AS DIRECTED BY THE ENGINEER FOR TEMPORARY EROSION AND SEDIMENT CONTROL MEASURES:

ITEM 207 - TEMPORARY SEEDING AND MULCHING . . . 2000 SQ. YD.

ITEM 207 - STRAW AND HAY BALES . . . . . 400 EACH

ITEM 207 - FILTER FABRIC FENCE . . . . . 500 LIN. FT.

ITEM 659 - COMMERCIAL FERTILIZER . . . . . 1 TON

ITEM 659 - WATER . . . . . 1 M GAL.

PLOTTED BY:jgrmovse
PLOTTED: 02-DEC-1998 16:34
PLOT SUBMITTED:02-DEC-1998 16:34
05754GND.DGN
d:\projects\05754gnd\05754gnd.dgn

PLOTTED BY:jgrmovse
PLOTTED FROM:c:\projects\cuy90\minnick\pid57548\notes\d57548notes05754gne.dgn
PLOT SUBMITTED:02-DEC-1998 16:33
05754GNE.DGN

EROSION CONTROL/DRAINAGE

ITEM 601 - CONCRETE SLOPE PROTECTION, AS PER PLAN B

THIS WORK INCLUDE THE FOLLOWING:

1. REMOVAL OF THE CRACKED AND UNEVEN SETTLED PANELS OF THE EXISTING CONCRETE SLOPE PROTECTION. THE LOCATIONS AND SIZES OF THE PANELS SHALL BE VERIFIED BY THE ENGINEER AT THE JOB SITE.

2. PROPOSED SLOPE PROTECTION REPAIR:

   INSTALL THE NEW WELDED STEEL WIRE FABRIC REINFORCED CONCRETE SLOPE PROTECTION PANELS AS SHOWN ON SH. 96 (THE "B" PLAN).

   ALL COSTS OF THE SLOPE PROTECTION REPAIR INCLUDING LABOR, EQUIPMENT, NECESSARY EMBANKMENT AND EXCAVATION SHALL BE INCLUDED UNDER ITEM 601, CONCRETE SLOPE PROTECTION, AS PER PLAN B.

   THE ESTIMATED QUANTITIES IN SQUARE YARDS ARE TABULATED IN THE CORRESPONDING PLANS. IN ADDITION, THE FOLLOWING ESTIMATED QUANTITY HAS BEEN INCLUDED IN THE GENERAL SUMMARY TO BE USED AS DIRECTED BY THE ENGINEER:

   ITEM 601 - CONCRETE SLOPE PROTECTION, AS PER PLAN B . . . . . .100 SQ. YD.

ITEM 203 - DITCH CLEANOUT

THIS WORK SHALL CONSIST OF RE-ESTABLISHING THE CROSS-SECTION OF AN EXISTING DITCH. SURPLUS OR UNSUITABLE MATERIAL, AS DETERMINED BY THE ENGINEER, SHALL BE DISPOSED OF AS PER 203.05. EMBANKMENT REQUIRED FOR ERODED CONDITIONS SHALL MEET THE REQUIREMENTS OF 203.07 EXCEPT THAT THE COMPACTION REQUIREMENTS ARE WAIVED

THE ORIGINAL DITCH CROSS SECTION AND GRADE SHALL BE RE-ESTABLISHED, AS SHOWN ON THE PREVIOUS CONSTRUCTION PLANS REFERENCED IN THE "EXISTING TYPICAL SECTIONS" NOTE ON SHT 15. THE DITCHES SHALL BE SEEDED AND MULCHED AS PER ITEM 659, INCLUDING FERTILIZER. THE LOCATIONS FOR THIS WORK SHALL BE AS DIRECTED BY THE ENGINEER.

MEASUERMENT OF THE DITCH CLEANOUT SHALL BE THE ACTUAL LINEAR FEET MEASURED ALONG THE CENTERLINE OF THE DITCH.

IN ADDITION, THIS ITEM SHALL INCLUDE THE INSTALLATION OF ITEM 670 - DITCH EROSION PROTECTION IN ALL DISTURBED DITCHES. PAYMENT FOR THIS ITEM SHALL BE INCLUDED IN THE COST FOR THE DITCH CLEANOUT.

PAYMENT FOR THE ABOVE WORK, INCLUDING EARTHWORK, SEEDING, MULCHING, FERTILIZER, AND ALL LABOR, EQUIPMENT AND INCIDENTALS SHALL BE MADE AT THE UNIT BID FOR ITEM 203, DITCH CLEANOUT.

THE FOLLOWING ESTIMATED QUANTITY IS PROVIDED FOR USE AS DIRECTED BY THE ENGINEER TO PERFORM THE ABOVE DETAILED WORK:

ITEM 203 - DITCH CLEANOUT . . . . . 2000 LIN. FT.

ITEM 604-DRAINAGE STRUCTURE, MISC.: CATCH BASIN OR INLET CLEANED

THIS WORK SHALL CONSIST OF REMOVING ALL EARTH, DEBRIS AND OTHER MATERIALS FROM CATCH BASINS OR INLETS AT LOCATIONS INDICATED BY THE PROJECT ENGINEER, TO PERMIT A FREE FLOWING USEABLE DRAINAGE STRUCTURE. ALL MATERIAL REMOVED BY THE CONTRACTOR SHALL BE DISPOSED OF AT THE CONTRACTORS OWN RESPONSIBILITY AND EXPENSE OUTSIDE THE LIMITS OF THE RIGHT-OF-WAY.

PAYMENT FOR THE ABOVE WORK SHALL BE MADE AT THE UNIT BID FOR ITEM 604, EACH, DRAINAGE STRUCTURE, MISC.: CATCH BASIN OR INLET CLEANED, WHICH SHALL INCLUDE ALL MATERIALS, LABOR, EQUIPMENT AND INCIDENTALS NECESSARY TO COMPLETE THE WORK TO THE SATISFACTION OF THE PROJECT ENGINEER. THE FOLLOWING ESTIMATED QUANTITY HAS BEEN INCLUDED IN THE GENERAL SUMMARY TO BE USED AS DIRECTED BY THE ENGINEER.

ITEM 604 - DRAINAGE STRUCTURE, MISC.: CATCH BASIN OR INLET CLEANED . . . . . 40 EACH

GENERAL NOTES

ITEM 603 - CONDUIT, MISC.: PIPE CLEANOUT, BY SIZE

THIS WORK SHALL CONSIST OF REMOVING ALL EARTH, DEBRIS AND OTHER MATERIALS FROM EXISTING SEWER PIPES AT LOCATIONS INDICATED BY THE ENGINEER TO PERMIT A FREE FLOWING USEABLE PIPE. ALL MATERIALS REMOVED BY THE CONTRACTOR SHALL BE DISPOSED OF AT THE CONTRACTORS OWN RESPONSIBILITY AND EXPENSE OUTSIDE THE LIMITS OF THE RIGHT-OF-WAY.

PAYMENT FOR THE ABOVE WORK SHALL BE MADE AT THE UNIT BID FOR ITEM 603, LINEAR FEET, CONDUIT, MISC.: PIPE CLEANOUT, BY SIZE, WHICH SHALL INCLUDE ALL MATERIALS, LABOR, EQUIPMENT AND INCIDENTALS NECESSARY TO COMPLETE THE WORK TO THE SATISFACTION OF THE PROJECT ENGINEER. THE FOLLOWING ESTIMATED QUANTITIES HAVE BEEN INCLUDED IN THE GENERAL SUMMARY TO BE USED AS DIRECTED BY THE ENGINEER.

ITEM 603-CONDUIT, MISC.: PIPE CLEANOUT, 8" TO 15" . . . 500 LF
ITEM 603-CONDUIT, MISC.: PIPE CLEANOUT, 18" TO 24". . . 200 LF
ITEM 603-CONDUIT, MISC.: PIPE CLEANOUT, 27" TO 36". . . 100 LF
ITEM 603-CONDUIT, MISC.: PIPE CLEANOUT, 42" TO 60" . . . 50 LF

UNDERDRAIN SUPPLEMENT

THE EXISTING UNDERDRAIN SYSTEM IS TO BE SUPPLEMENTED THROUGHOUT THIS PROJECT. NEW UNDERDRAINS SHALL BE INSTALLED AT THE SAME LOCATIONS AS EXISTING, EXCEPT THAT THEY SHALL BE LOCATED AT THE EDGE OF THE CONCRETE PAVEMENT AS SHOWN ON THE TYPICALS. ADDITIONAL UNDERDRAINS SHALL BE PLACED IN FRONT OF EXISTING CURB IN CUT SECTIONS OF ROADWAY.

NEW UNDERDRAIN AT THE EDGE OF CONCRETE PAVEMENT SHALL BE OUTLETTED IN THE SAME LOCATIONS AS THE EXISTING. THE UNDERDRAIN PLACED IN FRONT OF THE EXISTING CURB SHALL BE OUTLETTED AS DETAILED IN THE PLANS. THE OUTLETS SHALL BE CONSTRUCTED AT THE SAME LINE AND GRADE AS THE EXISTING OUTLET CONDUITS AND SHALL CONNECT BOTH THE OLD AND NEW UNDERDRAIN SYSTEMS INTO THE OUTLET. THE OUTLET CONDUIT SHALL BE ITEM 603 - 6" CONDUIT, TYPE F, 707.41 NON-PERFORATED ASTM D3034, SDR35, 707.42 OR 707.33. FOR ADDITIONAL DETAILS SEE SHEET NO. 97.

THE FOLLOWING ESTIMATED QUANTITIES SHALL BE USED TO EXCAVATE THE EXISTING ASPHALT SHOULDER ABOVE THE PROPOSED UNDERDRAIN AND REPLACE IT WITH ITEM 301 - BITUMINOUS AGGREGATE BASE, PG64-22, AS DETAILED ON THE TYPICAL SECTIONS:

ITEM 203 - EXCAVATION NOT INCLUDING EMBANKMENT CONSTRUCTION . . . . . 2210 CU. YD.
ITEM 301 - BITUMINOUS AGGREGATE BASE, PG64-22 . . . 2210 CU. YD.

ITEM 604-INLET ADJUSTED TO GRADE, AS PER PLAN

WHERE SHOWN IN THE PLANS AND PER DETAILS ON SHEET 85, THE CONTRACTOR SHALL ADJUST EXISTING INLETS TO GRADE. PAYMENT SHALL BE MADE AT THE CONTRACT UNIT PRICE FOR ITEM 604 - INLET, ADJUSTED TO GRADE, AS PER PLAN, WHICH SHALL INCLUDE ALL LABOR, EQUIPMENT, MATERIALS AND INCIDENTALS NECESSARY TO COMPLETE THE WORK.

RESTORATION OF DISTURBED AREAS

SEEDED AREAS DISTURBED BY CONSTRUCTION ACTIVITIESSUCH AS REPAIR OR REPLACEMENT OF SLOPE PROTECTION, BARRIER, CURBING, SIDEWALK REPAIR, MEDIAN BARRIER OPENINGS OR CATCH BASINS SHALL BE RESTORED USING THE FOLLOWING ESTIMATED QUANTITIES TO BE USED AS DIRECTED BY THE ENGINEER:

ITEM 659 - SEEDING AND MULCHING . . . . . 1000 SQ. YD.

ITEM 604 - MANHOLE ADJUSTED TO GRADE, AS PER PLAN

ALL CASTINGS, EXCEPT THOSE OWNED BY PRIVATE COMPANIES SHALL BE ADJUSTED BY THE CONTRACTOR. THE TIME BETWEEN ADJUSTING THE CASTINGS AND RESURFACING SHALL BE AN ABSOLUTE MINIMUM. THE USE OF ADJUSTING RINGS SHALL NOT BE AN ACCEPTED MEANS OF ADJUSTING CASTINGS. OTHERWISE ALL WORK SHALL BE IN ACCORDANCE WITH ITEM 604.

ITEM 604-CATCH BASIN OR MANHOLE ADJUSTED TO GRADE
ITEM 604 - CATCH BASIN, INLET OR MANHOLE, RECONSTRUCTED TO GRADE

THE CONTRACTOR AND PROJECT ENGINEER SHALL FIELD CHECK ALL EXISTING MANHOLES, CATCH BASINS, OR CURB INLETS LOCATED WITHIN THE LIMITS OF THE PROJECT. ANY MANHOLE, CATCH BASIN, OR CURB INLET FOUND THAT EXHIBITS SUBSTANTIAL DETERIORATION AND REQUIRES MORE WORK THAN IS SPECIFIED UNDER CASTINGS ADJUSTED TO GRADE, SHALL BE RECONSTRUCTED TO GRADE AS DIRECTED BY THE ENGINEER. IN ADDITION TO THE ESTIMATED QUANTITIES FOUND IN THE GENERAL SUMMARY, THE FOLLOWING CONTINGENCY QUANTITIES HAVE BEEN CARRIED TO THE GENERAL SUMMARY:

ITEM	DESCRIPTION	QUANTITY	UNIT
604	CATCH BASIN, RECONSTRUCTED TO GRADE	5	EACH
604	MANHOLE, RECONSTRUCTED TO GRADE . . .	5	EACH
604	INLET, RECONSTRUCTED TO GRADE	5	EACH
604	CATCH BASIN, ADJUSTED TO GRADE	5	EACH
604	MANHOLE, ADJUSTED TO GRADE, A.P.P. . .	5	EACH
604	MANHOLE, NO. 5	5	EACH

ITEM 604 - INLET, 2A, BY SIZE, AS PER PLAN
ITEM 604 - INLET, 3B, AS PER PLAN

WHERE SHOWN ON THE PLANS OR AS DESIGNATED BY THE PROJECT ENGINEER, DEFECTIVE OR DETERIORATED PAVED SHOULDER INLETS AND MEDIAN INLETS SHALL BE REMOVED AND REPLACED WITH NEW INLETS. PAYMENT FOR REMOVAL AND DISPOSAL OF EXISTING INLETS SHALL BE INCLUDED WITH THE CONTRACT UNIT BID FOR THE PERTINENT 604 INLET ITEM.

ITEM 603 CONDUIT SHALL BE USED IF NECESSARY TO REPLACE PORTIONS OF SEWER OR UNDERDRAIN OUTLETS CONNECTED TO THE INLETS. AT CONNECTIONS, A CONCRETE COLLAR SHALL BE PROVIDED AS PER STANDARD DRAWING DM-1.1M. THE COST OF REMOVAL AND DISPOSAL OF THE EXISTING PIPE AND THE CONCRETE COLLAR SHALL BE INCLUDED IN THE PERTINENT 603 ITEM. THE DEPTH OF THE EXISTING INLETS SHALL BE DETERMINED BY FIELD VERIFICATIONS.

IF THE BARRIER INLET TO BE REPLACED CONTAINS A LIGHTING CONDUIT, THE REPLACEMENT BARRIER INLET SHALL BE PROVIDED WITH ONE AS WELL. ANY REQUIRED ELECTRICAL WORK TO CUT AND SPLICE WIRES SHALL BE PROVIDED IN ACCORDANCE WITH SECTION 625 OF THE CONSTRUCTION AND MATERIAL SPECIFICATIONS. ALL COSTS FOR CONDUIT, ELECTRICAL WORK, AND MATERIAL, LABOR AND INCIDENTALS REQUIRED TO COMPLETE THE WORK SHALL BE INCLUDED IN THE UNIT PRICE BID FOR THE PERTINENT 604 ITEM.

ALL MATERIAL REMOVED BY THE CONTRACTOR SHALL BE DISPOSED OF AT THE CONTRACTORS OWN RESPONSIBILITY AND EXPENSE OUTSIDE THE LIMITS OF THE RIGHT-OF-WAY.

QUANTITIES FOR INSTALLATION OF NEW INLETS AND REMOVAL OF EXISTING INLETS ARE SHOWN IN THE SUB-SUMMARY SHEETS AND CARRIED TO THE GENERAL SUMMARY. THE FOLLOWING CONTINGENCY QUANTITIES HAVE BEEN INCLUDED IN THE GENERAL SUMMARY TO BE USED AS DIRECTED BY THE ENGINEER.

ITEM 603 - 6" CONDUIT, TYPE B . . . . . 50 LIN. FT.
ITEM 603 - 15" CONDUIT, TYPE B . . . . . 50 LIN. FT.
ITEM 603 - 18" CONDUIT, TYPE B . . . . . 20 LIN. FT.
ITEM 603 - 21" CONDUIT, TYPE B . . . . . 20 LIN. FT.
ITEM 604 - INLET, NO. 2-A-6, AS PER PLAN . . . . . 5 EACH
ITEM 604 - INLET, NO. 2-A-8, AS PER PLAN . . . . . 5 EACH
ITEM 604 - INLET, NO. 2-A-10, AS PER PLAN. . . . . 5 EACH
ITEM 604 - INLET, NO. 2-A-12, AS PER PLAN. . . . . 2 EACH
ITEM 604 - INLET, NO. 2-A-14, AS PER PLAN. . . . . 1 EACH
ITEM 604 - INLET, NO. 3B, AS PER PLAN. . . . . 10 EACH

MAINTAINING TRAFFIC

PUBLIC SAFETY

THE FOLLOWING PROVISIONS "A", "B",AND "C" SHALL APPLY WHEN THE LANE ADJACENT TO THE GUARDRAIL IS OPEN TO TRAFFIC:

THE PERIOD OF TIME THAT A HAZARD IS LEFT UNPROTECTED BY THE REMOVAL OF GUARDRAIL SHALL BE HELD TO AN ABSOLUTE MINIMUM AND IN NO CASE SHALL SUCH A PERIOD BE LONGER THAN ONE WORKING DAY. IF, AFTER ONE DAY, THE ENTIRE RUN OF GUARDRAIL CONSTRUCTION IS NOT COMPLETE THE FOLLOWING SHALL APPLY:

A. IN AREAS WHERE EXISTING GUARDRAIL HAS BEEN REMOVED OR THE GUARDRAIL IS IN A PARTIAL STAGE OF COMPLETION. THE CONTRACTOR SHALL PROVIDE AND MAINTAIN TYPE II BARRICADES WITH TYPE C (STEADY BURNING) WARNING LIGHTS WITHIN THE LIMITS OF THE UNPROTECTED AREA. THE BARRICADES SHALL BE PLACED AT 50' INTERVALS AND OFFSET AT LEAST TWO FEET FROM THE EDGE OF THE TRAVELED ROADWAY AND IN CLOSE PROXIMITY TO THE CONSTRUCTION. THE APPROACH END OF A PARTIALLY COMPLETED RUN OF GUARDRAIL SHALL BE FASTENED AT GROUND LEVEL TO A STEEL DRUM.

B. DURING THE REPAIR OF WINGWALL PARAPETS OR IF THE EXISTING GUARDRAIL IS FOR THE PROTECTION OF AN OBSTACLE (I.E. SIGN SUPPORT, BRIDGE PARAPET, ETC.) THE CONTRACTOR SHALL ERECT PORTABLE CONCRETE BARRIER AS DETAILED ON SHEET NO. 26 IN THE DIRECTION OF TRAFFIC. THE REQUIREMENTS OF PARAGRAPH "A" SHALL APPLY TO THE REMAINING GUARDRAIL WITHIN THE RUN. TEMPORARY BARRIER SHALL BE FLARED AT A 20:1 (MINIMUM) TAPER RATE AND SHALL INCLUDE A TEMPORARY END TERMINAL AS PER MC-9.2.

C. THE REQUIREMENTS STATED IN "A" SHALL APPLY FOR A PERIOD NOT TO EXCEED ONE WEEK. WHERE THE REBUILDING OR CONSTRUCTION OF ANY RUN OF GUARDRAIL CANNOT BE ACCOMPLISHED WITHIN ONE WEEK.

BARRIER IN THE INTERIM TIME IT TAKES TO COMPLETE THE WORK (SEE DETAIL ON SHEET 26). THE APPROACH END OF THE PORTABLE CONCRETE BARRIER SHALL BE FLARED TO THE OUTER EDGE OF THE PAVED SHOULDER AND SHALL INCLUDE A TEMPORARY END TERMINAL AS PER MC-9.2. IN ADDITION, A TYPE II BARRICADE WITH TYPE B (HIGH INTENSITY FLASHER) WARNING LIGHT SHALL BE PLACED IN FRONT OF THIS INITIAL SECTION OF TEMPORARY BARRIERS TO PROVIDE FOREWARNING TO THE APPROACHING TRAFFIC.

D. TEMPORARY CONCRETE BARRIER IS NOT REQUIRED TO SEPARATE OPPOSING TRAFFIC WHEN THE MEDIAN BARRIER IS REMOVED PROVIDED THAT BOTH MEDIAN LANES REMAIN CLOSED UNTIL THE NEW MEDIAN BARRIER IS IN PLACE. FOR HAZARDS WITHIN THESE ZONE, PARAGRAPHS A, B AND C ABOVE STILL APPLY.

WHEN THE LANE ADJACENT TO THE GUARDRAIL IS CLOSED TO TRAFFIC THE PROVISIONS OF PARAGRAPH "A" ABOVE SHALL APPLY AFTER 1 DAY. THE PROVISIONS OF PARAGRAPH "B" ABOVE SHALL APPLY AFTER 10 DAYS AND THE PROVISIONS OF PARAGRAPH "C" ABOVE SHALL APPLY AFTER 15 DAYS.

THE TERM "GUARDRAIL" AS USED HEREIN SHALL BE UNDERSTOOD TO COVER ALL TYPES OF GUARDRAIL, EXISTING OR PROPOSED FOR THE PROJECT, INCLUDING BARRIER DESIGN GUARDRAIL, BRIDGE WINGWALL PARAPETS. AND CONCRETE BARRIER.

THE COST OF COMPLYING WITH THESE SAFETY PROCEDURES SHALL BE INCLUDED IN THE LUMP SUM BID PRICE FOR ITEM 614 - MAINTAINING TRAFFIC.

MAJOR WORK ITEMS

THE FOLLOWING MAJOR WORK ITEMS WILL REQUIRE TRAFFIC MAINTENANCE WHICH SHALL BE INCORPORATED INTO THE CONTRACTORS SEQUENCE OF OPERATIONS.

A. SHOULDER REPAIR, WIDENING OR REPLACEMENT
B. INSTALLATION OF SUPPLEMENTAL UNDERDRAINS
C. REPAIR OF CONCRETE PAVEMENT JOINTS AND PANELS
D. BRIDGE DECK REPAIR AND OVERLAY
E. ASPHALT CONCRETE OVERLAY
F. SAW AND SEAL ASPHALT CONCRETE PAVEMENT JOINTS
G. PAVEMENT MARKINGS
H. INSTALLATION OF GUARDRAIL
I. INSTALLATION OF NEW OVERHEAD AND GROUND MOUNTED SIGNS

PROGRESS SCHEDULE (CRITICAL PATH METHOD)

THE PRE-CONSTRUCTION MEETING SHALL BE HELD NO LATER THAN 30 CALENDAR DAYS AFTER THE CONTRACT IS SIGNED. THE CONTRACTOR SHALL SUBMIT THEIR PROPOSED CPM SCHEDULE AT THE PRE-CONSTRUCTION MEETING FOR REVIEW BY THE CONSTRUCTION ENGINEER WITHIN 14 CALENDAR DAYS AFTER THE PRE-CONSTRUCTION MEETING.

A FINAL CPM SCHEDULE SHALL BE SUBMITTED TO THE CONSTRUCTION ENGINEER WITHIN 30 CALENDAR DAYS FROM THE DATE OF THE PRE-CONSTRUCTION MEETING BUT AT LEAST SEVEN (7) CALENDAR DAYS PRIOR TO THE DATE DESIGNATED AS THE STARTING DATE IN THE CPM SCHEDULE. THE SCHEDULE SHALL BE SIGNED AND DATED BY THE PRIME CONTRACTOR AND NAMED SUBCONTRACTORS.

PROJECT PROGRESS MEETINGS

PROGRESS MEETINGS WILL BE HELD EVERY FOUR (4) WEEKS AT THE PROJECT OFFICE, OR OTHER LOCATION DESIGNATED BY THE CONSTRUCTION ENGINEER AND ATTENDED BY O.D.O.T. AND CONTRACTOR DECISION-MAKING PERSONNEL.

THE PURPOSE OF THESE MEETINGS WILL BE TO DISCUSS CRITICAL OPERATIONS AND POTENTIAL PROBLEMS. THE CONTRACTOR WILL CONFIRM THE NUMBER AND DURATION OF WORK SHIFTS, NUMBER OF WORK CREWS, AND SPECIFIC PORTIONS OF THE WORK TO BE PERFORMED DURING THE FOLLOWING WEEKS.

THESE MEETINGS CAN ONLY BE WAIVED BY THE CONSTRUCTION ENGINEER.

MAINTAINING VEHICULAR TRAFFIC

GENERAL PROVISIONS

1. TRAFFIC SHALL BE MAINTAINED IN ACCORDANCE WITH THE "SCHEDULE OF THRU LANES TO BE MAINTAINED" DESCRIBED ON SHEET NO. 25 . THE CONTRACTOR SHALL SET UP AND OPERATE HIS EQUIPMENT IN SUCH A MANNER AS TO MINIMIZE ENCROACHMENT UPON THE TRAVELED WIDTH OF PAVEMENT.

2. THE CONTRACTOR SHALL NOTIFY THE ENGINEER, THE RESPONSIBLE LAW ENFORCEMENT AGENCY AND THE OHIO DEPARTMENT OF TRANSPORTATION, DISTRICT 12 PUBLIC INFORMATION OFFICER ((216) 581-2333, EXT. 244) NOT LESS THAN TWENTY-FOUR (24) HOURS PRIOR TO A SCHEDULED DISRUPTION OF TRAFFIC.

3. DURING OVERHEAD CONSTRUCTION THE CONTRACTOR SHALL PROVIDE, IF DEEMED NECESSARY BY THE ENGINEER, SAFETY NETS AND OR OTHER SAFETY DEVICES UNDER THE STRUCTURES TO PROTECT TRAFFIC IN THE AREA OF CONSTRUCTION.

4. DURING NON-WORKING PERIODS, OPEN EXCAVATIONS SHALL BE DELINEATED WITH WARNING FLASHERS AND/OR OTHER APPROVED DEVICES AS DEEMED APPROPRIATE BY THE ENGINEER.

5. EXISTING SIGNS LOCATED WITHIN THE ROAD WORK AREAS WHICH ARE NECESSARY FOR INTERIM OR PERMANENT TRAFFIC CONTROL SHALL BE REMOVED AND REERECTED IN LOCATIONS AS APPROVED BY THE ENGINEER.

6. THE CONTRACTOR SHALL FURNISH, ERECT AND MAINTAIN ALL NEW WARNING AND INFORMATION SIGNS NECESSARY FOR MAINTAINING TRAFFIC. THE CONTRACTOR SHALL DETERMINE WHAT SIGNS ARE NEEDED AND ADVISE THE ENGINEER TWO (2) WEEKS IN ADVANCE OF HIS DETAILED PLANS.

SEE THE TRAFFIC MAINTENANCE DETAILS FOR THE MINIMUM SIGNAGE REQUIRED.

7. TRAFFIC CONTROL DEVICES SHALL BE SET UP PRIOR TO THE START OF CONSTRUCTION, AND SHALL BE PROPERLY MAINTAINED DURING THE TIME SPECIAL CONDITIONS EXIST. THEY SHALL REMAIN IN PLACE ONLY AS LONG AS THEY ARE NEEDED AND SHALL BE IMMEDIATELY REMOVED THEREAFTER. WHERE OPERATIONS ARE PERFORMED IN STAGES, THERE SHALL BE IN PLACE ONLY THOSE DEVICES THAT APPLY TO THE CONDITION PRESENT DURING STAGE IN PROGRESS. ALL SIGNS WITH MESSAGES WHICH DO NOT APPLY DURING A CERTAIN PERIOD SHALL BE COVERED OR SET ASIDE OUT OF THE VIEW OF TRAFFIC.

8. PLACEMENT OF FINAL ROADWAY PAVEMENT MARKINGS AND RAISED PAVEMENT MARKERS SHALL BE ACCOMPLISHED IN ACCORDANCE WITH THE "SCHEDULE OF THRU LANES TO BE MAINTAINED" DESCRIBED ON SHEET NO. 25.

THE CONTRACTOR SHALL PROVIDE TWO (2) TRAILING VEHICLES AS PER MT-99.20 FOLLOWING THE PAVEMENT MARKING EQUIPMENT. THE TWO (2) TRAILING VEHICLES SHALL TRAVEL 500 FEET APART WITH THE REMOTE VEHICLE TRAVELING ON THE SHOULDER (LEFT OR RIGHT AS APPLICABLE) WHERE USABLE SHOULDER IS AVAILABLE. THE FIRST TRAIL VEHICLE IN A TRAFFIC LANE SHALL BE EQUIPPED WITH A TRUCK MOUNTED ATTENUATOR MEETING NCHRP 350 REQUIREMENTS. THE INTERMEDIATE TRAILING VEHICLE SHALL TRAVEL IN THE CLOSED LANE 500 FEET BEHIND THE PAVEMENT MARKING EQUIPMENT. THE POLICE CRUISER SHALL TRAVEL 500 TO 1000 FEET BEHIND THE REMOTE TRAILING VEHICLE. EACH TRAILING VEHICLE SHALL HAVE A YELLOW FLASHING BEACON PLUS 48" MIN. ORANGE AND BLACK CONSTUCTION WARNING SIGNS MOUNTED ON THE BACK FACING TRAFFIC WITH STANDARD TYPE MESSAGES ADVISING MOTORISTS OF THE WORK AHEAD, ADVISORY WARNING SPEED AND WHICH LANE IS CLOSED.

9. ANY TIME TRAFFIC MUST BE COMPLETELY STOPPED ON A FREEWAY, OR INTERSTATE IT SHALL BE DONE IN THE FOLLOWING MANNER: (THIS INCLUDES THE ERECTION OF OVER HEAD SUPPORTS.) THE COMPLETE TRAFFIC STOPPAGE ON ALL LANES OF ANY DIRECTIONAL ROADWAY SHALL BE NO MORE THAN 10 MINUTES IN ANY ONE CONSECUTIVE 30 MINUTE PERIOD.

A MINIMUM OF TWO (2) LAW ENFORCEMENT OFFICERS (L.E.O.) WITH PATROL VEHICLES SHALL BE USED TO PACE MOTORISTS TO A STOP. THERE SHALL BE ONE L.E.O. FOR EACH LANE ON THE FREEWAY.

AFTER TRAFFIC HAS BEEN SLOWED, ONE (1) PATROL VEHICLE SHALL TRAVEL ALONG THE ROADWAY SHOULDER 500 FEET BEHIND THE BACK UP OF STOPPED VEHICLES. WHERE STOPPAGE OCCURS IN THE VICINITY OF FREEWAY ENTRANCES, THE CONTRACTOR SHALL PLACE FLAGMEN ON THE RAMPS TO STOP TRAFFIC. PATROL VEHICLES SHALL HAVE FLASHING BEACONS.

TO PROVIDED ADEQUATE VISIBILITY TO APPROACHING MOTORIST THE CONTRACTOR SHALL ERECT AND MAINTAIN "ROADWORK AHEAD","PREPARE TO STOP", AND "STOP AHEAD" SIGNS WITH TWO FLASHING TWELVE INCH (12) TRAFFIC SIGNAL HEADS IN ACCORDANCE WITH 632.05. THESE SIGNS SHALL BE ILLUMINATED DURING NIGHT OPERATIONS AND SHALL BE 48 INCH BY 48 INCH SIGNS. PATROL VEHICLES AND SIGNS SHALL BE LOCATED IN ACCORDANCE WITH THE SKETCH BELOW.

STOPPING TRAFFIC SHALL BE DONE WHEN THE GREATEST NUMBER OF LANES IS PERMITTED TO BE CLOSED BY THE PLANS OR BY DISTRICT 12'S PERMITTED LANE CLOSURES REFERENCE MAP.

A PORTABLE CHANGEABLE MESSAGE SIGN, TYPE TO BE ON ODOTS PRE-APPROVED LIST, SHALL BE PLACED 1.5 MILES TO 2 MILES IN ADVANCE OF THE CLOSURE OR AS DIRECTED BY THE ENGINEER..

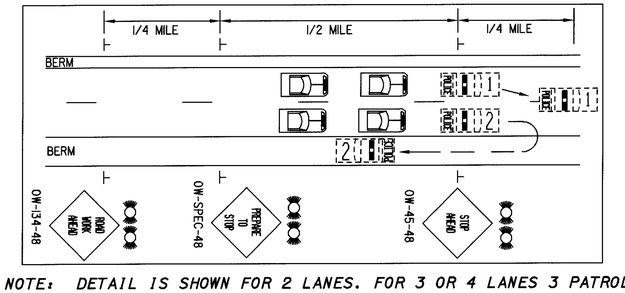

NOTE: DETAIL IS SHOWN FOR 2 LANES. FOR 3 OR 4 LANES 3 PATROL VEHICLES ARE REQUIRED.

PLOTTED BY:jgrmovse
PLOTTED: 02-DEC-1998 16:32
PLOT SUBMITTED:02-DEC-1998 16:32
05754MNA.DGN
C:\projects\Pid05754\notes\D05754mna.dgn

MAINTAINING TRAFFIC

MAINTAINING VEHICULAR TRAFFIC (CONT.)

GENERAL PROVISIONS

10. A 50 MPH REGULATORY SPEED LIMIT ZONE WILL BE ESTABLISHED FOR THIS PROJECT AS INDICATED ON THE MAINTENANCE OF TRAFFIC SHEETS. THIS WILL REQUIRE TEMPORARY R-10-48 SPEED LIMIT SIGNS. SEE NOTE ON SHEET 21.

11. CONTRACTOR SHALL BE REQUIRED TO PROVIDE SUFFICIENT CREWS TO IMPLEMENT ALL OR A SUB-PHASE OF THE TRAFFIC CONTROL IN THE MAINTENANCE OF TRAFFIC PLANS WITHIN THE SAME WORK DAY. THIS WILL PREVENT ANY CONFUSION BETWEEN THE CONSTRUCTION PHASE TRAFFIC PATTERN AND THE EXISTING TRAFFIC PATTERN. THE MAINTENANCE OF TRAFFIC PLANS CAN BE SUB-PHASED BY CONCENTRATING ON ONE DIRECTION OR A LENGTH WITHIN THAT DIRECTION. HOWEVER, IN EACH SUB-PHASE THE MAINTENANCE OF TRAFFIC PLAN SHALL BE COMPLETELY IMPLEMENTED WITHIN THE SAME WORK DAY.

12. FOR ANY OPERATION NOT SPECIFICALLY MENTIONED IN THESE PLANS, THE TRAFFIC SHALL BE MAINTAINED IN ACCORDANCE WITH THE "OHIO MANUAL OF UNIFORM TRAFFIC CONTROL DEVICES".

13. ALL LABOR, MATERIALS, EQUIPMENT AND ANY INCIDENTALS REQUIRED TO COMPLETE THE WORK AS DESCRIBED ABOVE SHALL BE INCLUDED IN THE LUMP SUM BID FOR ITEM 614 - MAINTAINING TRAFFIC.

NOTIFICATION

THE CONTRACTOR SHALL NOTIFY IN WRITING THE FOLLOWING AGENCIES AT LEAST 72 HOURS BEFORE IMPLEMENTING ANY SUBSTANTIAL CHANGE IN THE TRAFFIC PATTERN OR CLOSING ANY STREET TO TRAFFIC:

-THE OHIO DEPARTMENT OF TRANSPORTATION, DISTRICT 12
-THE CITY OF CLEVELAND, TRAFFIC ENGINEER
-THE CUYAHOGA COUNTY ENGINEER
-THE GREATER CLEVELAND REGIONAL TRANSIT AUTHORITY
-THE CITY OF CLEVELAND SAFETY DEPARTMENT
-THE CITY OF CLEVELAND BOARD OF EDUCATION

IN ADDITION, WHEN WORK AFFECTS THE AREA FROM THE BEGINING OF THE PROJECT TO STATION 865+00, THE FOLLOWING AGENCIES SHALL ALSO BE NOTIFIED:

-THE CITY OF LAKEWOOD
-THE CITY OF LAKEWOOD SAFETY DEPARTMENT
-THE CITY OF LAKEWOOD BOARD OF EDUCATION

SPECIAL EVENT LIMITATIONS

IN THE WESTBOUND DIRECTION THE 8:00 P.M. TIME FOR ALLOWING AN ADDITIONAL LANE CLOSURE SHALL BE CHANGED TO 11:00 P.M. DURING THE NIGHT OF ALL CLEVELAND INDIANS GAMES, DURING ANY STADIUM, GUND ARENA OR DOWNTOWN EVENT WITH ATTENDANCE IN EXCESS OF 20,000. NO ADDITIONAL LANE CLOSURES SHALL BE IMPLEMENTED UNTIL ONE (1) HOUR AFTER THE EVENT. ANTICIPATED EVENTS INCLUDE GAMES OF THE INDIANS, BROWNS, CAVALIERS, CONCERTS, FIREWORKS, ETC.

TRAFFIC CONTROL MATERIALS

A. SIGNS

SIGN DIMENSIONS AND SPECIFICATIONS, INCLUDING LETTER SIZES, SHALL BE AS PROVIDED IN THE "MANUAL", OR IN SIGN DESIGN DRAWINGS PROVIDED BY THE DEPARTMENT OF TRANSPORTATION. THE SIGNS SHALL BE SUBJECT TO APPROVAL OF THE ENGINEER PRIOR TO THE START OF THE PROJECT.

ALL SIGNS SHALL HAVE A REFLECTORIZED BACKGROUND OF REFLECTIVE MATERIALS AS DESCRIBED IN THE "MANUAL".

B. SIGN SUPPORTS

TEMPORARY SIGN SUPPORTS SHALL BE AS SHOWN ON MT-105.10 AND MT-105.11

C. DRUMS

DRUMS SHALL BE IN ACCORDANCE WITH PERTINENT SECTIONS OF THE OHIO MANUAL OF UNIFORM TRAFFIC CONTROL DEVICES. ALL PERMANENT LANE CLOSURES SHALL BE DELINEATED WITH DRUMS SPACED AT 50 FEET CENTER TO CENTER. ALL COSTS FOR INSTALLING, MAINTAINING AND SUBSEQUENT REMOVAL OF SAID DRUMS SHALL BE INCLUDED IN THE LUMP SUM BID PRICE FOR ITEM 614 - MAINTAINING TRAFFIC.

D. SMALL BARRICADES

TYPE II BARRICADES MAY BE USED INSTEAD OF DRUMS TO CLOSE LANES WHERE REQUIRED FOR RESURFACING. THESE SHALL BE AT LEAST 36" HIGH AND 12" WIDE. NEAR THE TOP OF THE BARRICADE THERE SHALL BE A PANEL WITH ALTERNATE ORANGE AND REFLECTORIZED WHITE 6" WIDE STRIPS. THIS PANEL SHALL BE AT LEAST 12" WIDE AND 24" HIGH. THE BARRICADE SHALL BE OF SUFFICIENT STABILITY SO THAT WIND OR TRAFFIC AIR TURBULENCE WILL NOT UPSET THEM. BARRICADES SHALL BE IN ACCORDANCE WITH PERTINENT SECTIONS OF THE OHIO MANUAL OF UNIFORM TRAFFIC CONTROL DEVICES. BARRICADES SHALL BE USED DURING NIGHT TIME HOURS ONLY.

E. LIGHTING DEVICES

FLASHERS SHALL BE 12 VOLT BATTERY OPERATED MODELS WITH 7 INCH DIAMETER YELLOW LENSES ILLUMINATED BY RAPID INTERMITTENT FLASHES OF SHORT DURATION AND SHALL BE PLACED ON ALL SIGNS AT ALL TIMES.

CONTINUOUS BURN LIGHTS SHALL BE 12 VOLT BATTERY OPERATED MODELS WITH MINIMUM 7 INCH DIAMETER YELLOW LENSES.

F. FLASHING ARROW BARRICADE

WHENEVER ANY PART OF THE TRAVELED SURFACE IS CLOSED. THE MOTORIST SHALL BE WARNED AND DIVERTED BY THE CONTRACTOR THROUGH THE USE OF ONE FLASHING ARROW BARRICADE FOR EACH LANE CLOSED. THE CONTRACTOR SHALL REFER TO STD. DRWG. TC-35.10 AND THE PROVISION SET FORTH IN OHIO MANUAL OF UNIFORM TRAFFIC CONTROL DEVICES FOR STREETS AND HIGHWAYS FOR ALL INFORMATION REGARDING FURNISHING, MAINTAINING. AND USE OF FLASHING ARROW BARRICADES. IF THE FLASHING ARROW BARRICADE IS WITHIN 300 FT OF A RESIDENCE OR ON A SURFACE STREET, A SOLAR POWERED FLASHING ARROW BARRICADE SHALL BE USED. PAYMENT FOR THE ABOVE SHALL BE INCLUDED IN THE LUMP SUM BID FOR ITEM 614 - MAINTAINING TRAFFIC.

ITEM 614 - LAW ENFORCEMENT OFFICER WITH PATROL CAR

IN ADDITION TO THE REQUIREMENTS OF ITEM 614 AND THE LATEST EDITION OF THE OHIO MANUAL OF UNIFORM TRAFFIC CONTROL DEVICES (OMUTCD), A UNIFORMED LAW ENFORCEMENT OFFICER AND OFFICIAL PATROL CAR WITH WORKING TOP MOUNTED EMERGENCY FLASHING LIGHTS SHALL BE PROVIDED FOR CONTROLLING TRAFFIC FOR THE FOLLOWING TASKS:

-FOR LANE CLOSURES: DURING INITIAL SET-UP PERIODS, TAKE DOWN PERIODS, SUBSTANTIAL SHIFTS OF A CLOSURE POINT OR WHEN NEW LANE CLOSURE ARRANGEMENTS ARE INITIATED.

-DURING THE ADVANCE PREPARATION AND CLOSURE SEQUENCE WHERE COMPLETE BLOCKAGE OF TRAFFIC IS REQUIRED.

-WHEN DIRECTED BY THE ENGINEER.

LAW ENFORCEMENT OFFICERS (L.E.O.'S) SHOULD NOT BE USED WHERE THE OMUTCD INTENDS THAT FLAGGERS BE USED. THE LEO'S ARE CONSIDERED TO BE EMPLOYED BY THE CONTRACTOR AND THE CONTRACTOR SHALL BE RESPONSIBLE FOR THEIR ACTIONS. ALTHOUGH THEY ARE EMPLOYED BY THE CONTRACTOR, THE PROJECT ENGINEER SHALL HAVE CONTROL OVER THEIR PLACEMENT. THE OFFICIAL PATROL CAR SHALL BE A PUBLIC SAFETY VEHICLE AS REQUIRED BY THE OHIO REVISED CODE.

THE CONTRACTOR SHALL MAKE ARRANGEMENTS FOR THESE SERVICES WITH:

CITY OF CLEVELAND
DEPARTMENT OF PUBLIC SAFETY
POLICE DIVISION
1300 ONTARIO
CLEVELAND, OHIO 44143 (216)623-5000

LAW ENFORCEMENT OFFICERS WITH PATROL CAR REQUIRED BY THE TRAFFIC MAINTENANCE TASKS ABOVE SHALL BE PAID FOR ON A UNIT PRICE (HOURLY) BASIS UNDER ITEM 614 - LAW ENFORCEMENT OFFICER WITH PATROL CAR. THE FOLLOWING ESTIMATED QUANTITIES HAVE BEEN CARRIED TO THE GENERAL SUMMARY:

ITEM 614 - LAW ENFORCEMENT OFFICER W/PATROL CAR . . . . . 1000 HRS

THE HOURS PAID SHALL INCLUDE MINIMUM SHOW-UP TIME REQUIRED BY THE LAW ENFORCEMENT AGENCY INVOLVED.

IF THE CONTRACTOR WISHES TO UTILIZE LEO'S FOR FLAGGING AND TRAFFIC CONTROL OTHER THAN FOR THAT REQUIRED IN THESE PLANS, HE MAY DO SO AT HIS OWN EXPENSE.

TEMPORARY CONCRETE BARRIER (PUBLIC SAFETY)

TEMPORARY CONCRETE BARRIER SECTIONS (10 FT. LONG) AS REQUIRED BY THE PUBLIC SAFETY NOTE SHALL BE SUPPLIED BY THE CONTRACTOR. THE CONTRACTOR SHALL BE RESPONSIBLE FOR ALL LOADING, UNLOADING AND TRANSPORTATION OF THE BARRIER.

THE BARRIER SECTIONS SHALL BE BOLTED TOGETHER WITH STEEL CONNECTIONS AS PER STANDARD CONSTRUCTION DRAWING RM-4.2M.

IT IS ANTICIPATED THAT THE SAME BARRIER WILL BE USED IN VARIOUS PHASES OF CONSTRUCTION. MOVEMENT OF THE CONCRETE BARRIER BETWEEN PHASES SHALL BE ACCOMPLISHED IN ONE WORKING DAY.

ALL COSTS FOR FURNISHING, INSTALLING, REINSTALLING AND SUBSEQUENT REMOVING TEMPORARY CONCRETE BARRIER AS DESCRIBED UNDER PUBLIC SAFETY WILL BE INCLUDED IN THE CONTRACT PRICE FOR ITEM 622 - PORTABLE CONCRETE BARRIER.

PLOTTED BY:jgrmovse
PLOTTED:FRIDAY
PLOT SUBMITTED:02-DEC-1998 16:32
05754MNB.DGN
C:\projects\mincek\pid5754\notes\05754mnb.dgn

MAINTAINING TRAFFIC

ITEM 614 - WORK ZONE SPEED LIMIT SIGN

THE CONTRACTOR SHALL FURNISH, INSTALL, MAINTAIN, COVER DURING SUSPENSION OF WORK, AND REMOVE WORK ZONE SPEED LIMIT SIGNS AND SUPPORTS (R-10-48) (50 MPH) WITHIN THE WORK LIMITS IN ACCORDANCE WITH THE FOLLOWING REQUIREMENTS.

THE CONTRACTOR SHALL COVER OR REMOVE ANY EXISTING SPEED LIMIT OR MINIMUM SPEED SIGNS WITHIN THE REDUCED SPEED ZONE. THESE SIGNS SHALL BE RESTORED DURING SUSPENSION OR TERMINATION OF THE REDUCED SPEED LIMIT. THE EXPENSE OF COVERING OR REMOVAL AND RESTORATION OF EXISTING SPEED LIMIT OR MINIMUM SPEED SIGNS IS INCIDENTAL TO THE PAY ITEM FOR THE WORK ZONE SPEED LIMIT SIGNS.

THE WORK ZONE SPEED LIMIT SIGNS MAY BE ERECTED AND COVERED PRIOR TO STARTING WORK OR MAY BE ERECTED UNCOVERED NO MORE THAN 4 HOURS BEFORE THE ACTUAL START OF WORK. THE SIGNS SHALL BE REMOVED OR COVERED NO LATER THAN 4 HOURS FOLLOWING RESTORATION OF ALL LANES TO TRAFFIC WITH NO RESTRICTIONS OR SOONER AS DIRECTED BY THE ENGINEER.

THE CONTRACTOR SHALL ERECT A WORK ZONE SPEED LIMIT SIGN IN ADVANCE OF ANY LANE RESTRICTION EXPECTED TO LAST AT LEAST 30 DAYS OR AS DIRECTED BY THE ENGINEER. THE SIGN SHALL BE MOUNTED ON BOTH SIDES OF DIVIDED HIGHWAYS, 500 FEET IN ADVANCE OF THE LANE REDUCTION TAPER. THE SIGN SHALL BE MOUNTED ON THE RIGHT SIDE, 250 FEET IN ADVANCE OF THE LANE REDUCTION TAPER ON UNDIVIDED HIGHWAYS. THE SIGN SHALL BE REPEATED, ON THE SIDE NEAREST TRAFFIC, EVERY 1 MILE FOR 55MPH ZONES AND EVERY 1/2 MILE FOR 50 MPH ZONES. THESE SIGNS SHALL ALSO BE ERECTED IMMEDIATELY AFTER EACH ENTRANCE RAMP WITHIN THE ZONE. A SIGN TO INDICATE THE RESUMPTION OF THE STATUTORY SPEED LIMIT SHALL BE ERECTED AT THE END OF ANY REDUCED SPEED ZONE. THIS SIGN SHALL BE A R-8A.

THE CONTRACTOR MAY USE SIGNS AND SUPPORTS IN USED BUT GOOD CONDITION PROVIDED THE SIGNS MEET CURRENT ODOT SPECIFICATIONS. SIGN FACES SHALL BE REFLECTORIZED WITH TYPE G SHEETING COMPLYING WITH THE REQUIREMENTS OF 730.19 AND U.S. DEPARTMENT OF TRANSPORTATION SUPPLEMENTAL SPECIFICATION FOR TYPE III SHEETING, FP-85. WORK ZONE SPEED LIMIT SIGN SHALL BE MOUNTED ON TWO (2) ITEM 630 - GROUND MOUNTED SUPPORTS, NO. 4 POST IF PROTECTED, ELSE ITEM 630 - GROUND MOUNTED SUPPORTS, NO. 3 POST.

WORK ZONE SPEED LIMIT SIGN AND SUPPORTS WILL BE MEASURED AS THE NUMBER OF SIGN INSTALLATIONS, INCLUDING THE SIGN AND NECESSARY SUPPORTS. IF A SIGN AND SUPPORT COMBINATION IS REMOVED AND REERECTED AT ANOTHER LOCATION WITHIN THE PROJECT DUE TO CHANGES IN THE SPEED ZONE DIRECTED BY THE ENGINEER, IT SHALL BE CONSIDERED ANOTHER UNIT.

PAYMENT FOR ACCEPTED QUANTITIES, COMPLETE, IN PLACE WILL BE MADE AT THE CONTRACT UNIT PRICE. PAYMENT SHALL BE FULL COMPENSATION FOR ALL MATERIALS, LABOR, INCIDENTALS AND EQUIPMENT FOR FURNISHING, ERECTION, MAINTENANCE, COVERING DURING SUSPENSION OF WORK, AND REMOVAL OF THE SIGNS AND SUPPORTS.

THE FOLLOWING ESTIMATED QUANTITY HAS BEEN INCLUDED IN THE GENERAL SUMMARY TO BE USED AS OUTLINED ABOVE:

ITEM 614 - WORK ZONE SPEED LIMIT SIGN . . . . . 24 EACH

ITEM 614 - TEMPORARY MARKINGS (PLANING, RESURFACING OR LANE SHIFT REMOVALS)

TEMPORARY MARKINGS SHALL BE PLACED AT THE LOCATIONS OF THE PERMANENT MARKINGS AS SHOWN IN THE TRAFFIC CONTROL PLANS.

THIS ITEM SHALL BE USED AFTER PLANING, OR AFTER THE OVERLAYS ARE PLACED OR FOLLOWING LANE SHIFT REMOVALS. THE ESTIMATED QUANTITIES FOR THIS WORK ARE TABULATED ON SHEETS 41F-41G.

ITEM 614 - TEMPORARY PAVEMENT MARKINGS (TRAFFIC SHIFTS)

LANE SHIFTS OR LANE CLOSURES SHALL BE IMPLEMENTED USING 60:1 MAXIMUM TAPER RATES ON MAINLINE PAVEMENT AND DIRECTIONAL ROADWAYS AND 25:1 MAXIMUM TAPER RATES ON RAMPS. (SEE TRAFFIC MAINTENANCE DETAIL SHEETS)

TYPICAL LOCATIONS INCLUDE:

A) LANE CLOSURES
B) LANE SHIFTS
C) ENTRANCE/EXIT RAMP EXTENSIONS ACROSS CLOSED OUTSIDE LANES.

ALL CONFLICTING PAVEMENT MARKINGS (INCLUDING THE LANE LINE ADJACENT TO THE LANE CLOSURE TAPER) SHALL BE REMOVED PRIOR TO PLACING THESE PAVEMENT MARKINGS.

ALL TEMPORARY PAVEMENT MARKINGS WHICH ARE INSTALLED BEYOND THE PROPOSED RESURFACING LIMITS SHALL BE 740.06, TYPE 1. (THIS ALSO INCLUDES RECONSTRUCTED BRIDGE DECKS)

THE ESTIMATED QUANTITIES FOR THIS WORK ARE TABULATED ON SHEETS 41F-41G.

PERMANENT PAVEMENT MARKINGS

AFTER PLACING THE SURFACE COURSE, THE CONTRACTOR MAY PLACE PERMANENT PAVEMENT MARKINGS AT LOCATIONS SHOWN IN THE TYPICALS AND THE TRAFFIC CONTROL SHEETS INSTEAD OF PLACING TEMPORARY PAVEMENT MARKINGS, WHICH SHALL BE NON-PERFORMED AT THESE LOCATIONS.

LIQUIDATED DAMAGES/SHORT TERM LANE CLOSURES

SHORT TERM LANE CLOSURES ARE THOSE WHICH ARE PERMITTED BY THE PLANS ON SHEET 25. SHORT TERM CLOSURES CAN BE IMPLEMENTED DURING LONG TERM MAINTENANCE OF TRAFFIC PHASES FOR THE TIMES GIVEN.

THESE TIMES SHALL NOT BE REVISED WITHOUT PRIOR APPROVAL FROM THE DISTRICT 12 WORK ZONE TRAFFIC CONTROL ENGINEER.

IF SHORT TERM LANE CLOSURES ARE IN PLACE OUTSIDE THE SPECIFIED TIMES, LIQUIDATED DAMAGES IN THE AMOUNT OF **$ 50.00** PER MINUTE THE FIRST TEN (10) MINUTES AND **$ 100.00** PER MINUTE AFTER TEN (10) MINUTES SHALL BE ACCESSED THE CONTRACTOR FOR EACH MINUTE THE LANE REMAINS CLOSED.

SHORT TERM LANE CLOSURES SHALL ONLY BE IMPLEMENTED WHEN WORK IS BEING CONTINUOUSLY PERFORMED. THE CLOSURE SHALL BE REMOVED AS SOON AS POSSIBLE AFTER WORK HAS STOPPED.

NO SHORT TERM LANE CLOSURES WILL BE PERMITTED ON THE FOLLOWING HOLIDAYS OR HOLIDAY WEEKENDS:EASTER, MEMORIAL DAY, FORTH OF JULY, LABOR DAY, THANKSGIVING, CHRISTMAS, NEW YEARS. (A HOLIDAY WEEKEND STARTS ON FRIDAY AT NOON AND ENDS ON TUESDAY 12:01 AM.)

THE HOURS MAY BE EXTENDED ON SATURDAY OR SUNDAY MORNING WHEN NO SPECIAL EVENT OR HOLIDAY IS OCCURRING. THE CONTRACTOR NEED NOT OPEN THE LANE UNTIL TRAFFIC IS BACKED UP ONE QUARTER MILE AS DETERMINED BY THE ENGINEER. AT THAT TIME, THE CONTRACTOR WILL HAVE FIFTEEN (15) MINUTES TO RE-OPEN THE LANE. IF THE LANE IS NOT OPENED IN FIFTEEN (15) MINUTES, LIQUIDATED DAMAGES SHALL APPLY.

IT SHALL BE THE CONTRACTOR'S RESPONSIBILITY TO BE AWARE OF THE BACKUP SO THAT WHEN THE ENGINEER NOTIFIES THE CONTRACTOR TO OPEN THE LANE, THE CONTRACTOR CAN DO SO.

TRAFFIC CONTROL AND SEQUENCE OF ASPHALT CONCRETE WORK

ALL ASPHALT CONCRETE OPERATIONS SHALL BE CONDUCTED IN A MANNER THAT WILL ASSURE MINIMUM DANGER AND INCONVENIENCE TO THE HIGHWAY USERS. ALL 446 SURFACE AND INTERMEDIATE COURSE WORK SHALL BE PERFORMED AT TIMES PROVIDED ON SHEET 25 . THE PROCEDURE FOR INSTALLATION OF ANY ASPHALT LAYER SHALL BE SUCH THAT NO GREATER THAN 1-3/4 INCH DISCONTINUITY IN THE ELEVATION OF THE TRAVELED SURFACE SHALL EXIST AT ANY TIME OTHER THAN DURING THE PERMITTED WORKING HOURS AND THEN ONLY WHEN SUCH PROPER TRAFFIC CONTROL DEVICES ARE IN PLACE AS WILL PREVENT SUCH A DISCONTINUITY BEING A DANGER TO HIGHWAY USERS.

ALL ASPHALT OVERLAYS (INTERMEDIATE AND SURFACE COURSES) SHALL BE PLACED AS SHOWN ON THE TRAFFIC MAINTENANCE PHASING DETAILS (SHTS. 27-30). EACH COURSE SHALL ALSO BE PLACED FULL WIDTH OF EXISTING PAVEMENT WITH TEMPORARY PAVEMENT MARKINGS PRIOR TO STARTING THE NEXT COURSE.

TRAFFIC SHALL NOT BE PERMITTED TO CROSS ANY PART-WIDTH RESURFACING JOINT EXCEPT AS IS NECESSARY DURING THE ACTUAL RESURFACING OPERATION. ANY PART WIDTH RESURFACING JOINTS WHICH MUST BE EXPOSED TO TRAFFIC SHALL BE RAMPED USING ITEM 614 - BITUMINOUS CONCRETE FOR MAINTAINING TRAFFIC AT A RATE NOT TO EXCEED 2 INCHES IN 1 FOOT (LONGITUDINAL JOINTS).

TEMPORARY TRANSVERSE RESURFACING JOINTS WHICH MUST BE EXPOSED TO TRAFFIC SHALL BE RAMPED USING ITEM 614 - BITUMINOUS CONCRETE FOR MAINTAINING TRAFFIC AT A RATE NOT TO EXCEED 1 INCH IN 4 FEET.

WHENEVER TRAFFIC IS SUBJECTED TO HALF-WIDTH OVERLAYS PRIOR TO COMPLETING THE ASPHALT COURSE, THE CONTRACTOR SHALL PROVIDE OW-1-71-48 AND OW-P-171-24 SIGNS (DUAL SIGN INSTALLATION). PLACEMENT SHALL BE AS DIRECTED BY THE ENGINEER AND INCLUDED IN THE LUMP SUM BID FOR ITEM 614-MAINTAINING TRAFFIC.

TRAFFIC MUST BE MAINTAINED AT ALL TIMES IN BOTH DIRECTIONS IN ACCORDANCE WITH THE "SCHEDULE OF THRU LANES TO BE MAINTAINED".

WHENEVER ANY PART OF THE TRAVELED SURFACE IS CLOSED, THE MOTORISTS SHALL BE WARNED AND DIVERTED BY THE CONTRACTOR THROUGH THE USE OF A FLASHING ARROW, IN ADDITION TO THOSE PROVISIONS SET FORTH IN THE "OHIO MANUAL OF UNIFORM TRAFFIC CONTROL DEVICES" AND RAMPED AS STATED ABOVE.

PRIOR TO OPENING THE ROADWAY TO NORMAL TRAFFIC DURING WINTER MONTHS, ALL ASPHALT WORK INCLUDING THE SURFACE COURSE MUST BE COMPLETED AN EQUAL FULL WIDTH DISTANCE. NO INTERMEDIATE LEVELING COURSE IS TO BE TRAVELED ON DURING WINTER MONTHS NOR SHALL ANY PART WIDTH RESURFACING REMAIN DURING THE WINTER. THE CONTRACTOR IS CAUTIONED TO SCHEDULE HIS OPERATIONS TO MEET THIS REQUIREMENT. IF THE CONTRACTOR DOES NOT MEET THIS REQUIREMENT OR HAS THIS REQUIREMENT WAIVED, THE CONTRACTOR SHALL INCREASE THE THICKNESS OF THE 446 SURFACE COURSE BY 1/2" ENTIRELY AT HIS EXPENSE FOR LABOR, MATERIALS, AND EQUIPMENT.

SUSPENSION OF WORK

IF THE CONTRACTOR FAILS TO COMPLY WITH THE PROVISIONS FOR TRAFFIC CONTROL AS SET FORTH IN THESE PLANS OR WITH PROVISIONS OF THE OHIO MANUAL OF UNIFORM TRAFFIC CONTROL DEVICES, THE ENGINEER SHALL SUSPEND WORK UNTIL THE CONTRACTOR COMPLIES WITH THE NECESSARY REQUIREMENTS.

ITEM 642 - REMOVAL OF PAVEMENT MARKINGS

THIS ITEM SHALL BE USED TO REMOVE EXISTING PERMANENT PAVEMENT MARKINGS WHICH ARE IN CONFLICT WITH THE TEMPORARY MARKINGS AS SHOWN ON THE TRAFFIC MAINTENANCE DETAILS. PAYMENT SHALL BE BASED UPON THE ACTUAL LENGTH REMOVED. (GAPS SHALL NOT BE INCLUDED IN THE MEASURED LENGTH). SEE SHEETS 41F-41G FOR QUANTITIES.

PLOTTED BY:jgrmovse
PLOTTED FROM:/usr5/mincek/pid05754/notes/05754mnc.dgn
05754MNC.DGN
PLOT SUBMITTED:02-DEC-1998 16:31

MAINTAINING TRAFFIC

ITEM 614 - PORTABLE CHANGEABLE MESSAGE SIGN, AS PER PLAN

THE CONTRACTOR SHALL FURNISH, INSTALL, MAINTAIN, AND REMOVE WHEN NO LONGER NEEDED A PORTABLE CHANGEABLE MESSAGE SIGN (S). THE PCMS SHALL BE OF THE TYPE SHOWN ON THE LIST OF APPROVED PCMS MAINTAINED BY THE DIRECTOR. THE PCMS SHALL BE A CLASS I OR II TYPE UNIT.

THE PORTABLE CHANGEABLE MESSAGE SIGN SHALL BE MOUNTED ON A TRAILER. THE LOCATION OF THE PCMS SHALL BE AS DIRECTED BY THE ENGINEER. THE ENGINEER SHALL BE PROVIDED ACCESS TO EACH SIGN UNIT AND SHALL BE PROVIDED WITH APPROPRIATE TRAINING AND OPERATION INSTRUCTIONS.

THE PCMS SHALL CONTAIN A CELLULAR TELEPHONE LINK WHICH WILL ALLOW REMOTE SIGN ACTIVATION, DEACTIVATION, MESSAGE CHANGES, MESSAGE ADDITIONS AND REVISIONS TO TIME OF DAY PROGRAMS. THE SYSTEM SHALL ALSO PERMIT VERIFICATION OF CURRENT AND PROGRAMMED MESSAGES.

THE CONTRACTOR SHALL PROVIDE TO THE ENGINEER THE SOFTWARE NECESSARY TO CONTROL THE PCMS REMOTELY.

THE PCMS SHALL BE EQUIPPED WITH A MYRIAD SAFETY BEAM OR AN APPROVED EQUAL AS DETERMINED BY THE ENGINEER. THE MYRIAD SAFETY BEAM SENDS OUT A SIGNAL THAT ACTIVATES RADAR DETECTORS. THE BEAM IS APPROVED BY THE F.C.C. THE MYRIAD SAFETY BEAM SHALL USE THE SAME POWER SUPPLY AS THE PCMS. THE MYRIAD SAFETY BEAM SHALL BE ABLE TO BE ACTIVATED WITH THE PCMS RUNNING OR NOT. THE MYRIAD SAFETY BEAM IS DISTRIBUTED BY THE TRIPLEX GROUP. INC. P.O. BOX 428. NEW HOPE, PA. 18938. PHONE (215) 862-5077.

AT THE DIRECTION OF THE ENGINEER THE PCMS MAY BE REMOVED FOR PERIODS OR TIMES WHEN NOT IN USE. NO PAYMENT WILL BE MADE FOR THESE TIMES (EX. WINTER MONTHS).

THERE SHALL BE ONE CLASS I OR II CHANGEABLE MESSAGE SIGN AT 20 MONTHS EACH.

ITEM 614 - PORTABLE CHANGEABLE MESSAGE SIGN,
AS PER PLAN . . . . . 20 SIGN-MONTHS

ITEM 614-BITUMINOUS CONCRETE FOR MAINTAINING TRAFFIC, AS PER PLAN

THIS ITEM SHALL BE USED TO REPAIR HOLES IN BRIDGE DECKS, ROADWAY SURFACE AND BERMS. IT SHALL BE THE CONTRACTORS RESPONSIBILITY TO MONITOR THE ROADWAY TO DETERMINE WHEN THE HOLES SHALL BE PATCHED. THE CONTRACTOR MUST NOTIFY THE ENGINEER FOR HIS APPROVAL.

THE CONTRACTOR WILL BE RESPONSIBLE FOR DAMAGES TO MOTORIST VEHICLES IF THE HOLES ARE NOT FILLED IN A REASONABLE AMOUNT OF TIME.

THE CONTRACTOR IS RESPONSIBLE FOR MAINTAINING THE ROADWAY, BRIDGE DECKS AND BERMS (IN THE DIRECTION WORK IS BEING PERFORMED) THE FIRST DAY OF WORK UNTIL CONSTRUCTION IS COMPLETE. THIS INCLUDES PERIODS WHEN WORK IS SUSPENDED.

THE PROCEDURE FOR PATCHING A HOLE IS:
REMOVE ALL LOOSE AND DISINTEGRATED ASPHALT OR CONCRETE TO AN EXTENT TO EXPOSE SOUND CONCRETE OR ASPHALT. THE PERIMETER OF ALL REMOVAL AREAS SHALL BE VERTICAL.

CARE SHALL BE TAKEN ON BRIDGE DECKS NOT TO PUNCTURE THE DECK OR DAMAGE THE REINFORCING STEEL. THE CONTRACTOR SHALL TAKE WHAT EVER STEPS NECESSARY TO MAKE THE BRIDGE DECK PASSABLE.

THE SURFACE TO BE PATCHED MUST BE CLEANED AND DRIED.

THE ENTIRE SURFACE SHALL BE TACK COATED, INCLUDING THE VERTICAL FACES.

ASPHALT CONCRETE SHALL BE IN ACCORDANCE TO ITEM 404 OR 402 AS DETERMINED BY THE ENGINEER. IT SHALL BE PLACED IN 2 INCH LIFTS AND COMPACTED TO THE LEVEL OF THE WEARING SURFACE.

ITEM 614-BITUMINOUS CONCRETE FOR MAINTAINING TRAFFIC, AS PER PLAN (CONT.)

DURING WINTER MONTHS ONLY WHEN ASPHALT IS NOT AVAILABLE OR AT THE DIRECTION OF THE ENGINEER COLD MIX MAY BE USED. COMPACTION EQUIPMENT MUST BE APPROVED BY THE ENGINEER.

ALL TRAFFIC CONTROL NEEDED FOR THIS ITEM OF WORK SHALL BE INCLUDED IN THIS ITEM OF WORK.

ITEM 614 - BITUMINOUS CONCRETE FOR MAINTAINING
TRAFFIC, AS PER PLAN . . . . . 500 CU. YD.

ITEM 614 - BITUMINOUS CONCRETE FOR MAINTAINING TRAFFIC

THIS ITEM SHALL BE USED TO PROVIDED TEMPORARY ASPHALTS RAMPS. TEMPORARY ASPHALT RAMPS SHALL BE REMOVED AS PART OF THIS ITEM.

ITEM 614 - BITUMINOUS CONCRETE FOR MAINTAINING
TRAFFIC . . . . . .500 CU. YD.

ITEM SPECIAL - REPLACEMENT SIGN

FLAT SHEET SIGNS FURNISHED BY THE CONTRACTOR IN ACCORDANCE WITH THE REQUIREMENT OF THE PLANS, SPECIFICATIONS AND PROPOSAL WHICH BECOME DAMAGED BY TRAFFIC FOR REASONS BEYOND THE CONTROL OF THE CONTRACTOR SHALL BE REPLACED IN KIND WHEN ORDERED BY THE ENGINEER. REPLACEMENT SIGNS SHALL BE NEW. OTHER MATERIAL MAY BE USED BUT, MUST BE IN GOOD CONDITION SUBJECT TO APPROVAL BY THE ENGINEER.

PAYMENT FOR THE NEW SIGNS SHALL BE MADE AT THE BID PRICE PER SQUARE FOOT FOR ITEM SPECIAL - REPLACEMENT SIGN AND SHALL INCLUDE THE COST OF REMOVING AND DISPOSING OF THE DAMAGED SIGNS, HARDWARE AND SUPPORTS AND PROVIDING NECESSARY REPLACEMENT HARDWARE SUPPORTS, ETC.

AN ESTIMATED QUANTITY OF ITEM SPECIAL- REPLACEMENT SIGN HAS BEEN CARRIED TO THE GENERAL SUMMARY:

ITEM SPECIAL - REPLACEMENT SIGN . . . . . 400 SQ. FT.

REPLACEMENT DRUMS

DRUMS FURNISHED BY THE CONTRACTOR IN ACCORDANCE WITH THE REQUIREMENT OF THE PLANS, SPECIFICATIONS AND PROPOSAL WHICH BECOME DAMAGED BY TRAFFIC FOR REASONS BEYOND THE CONTROL OF THE CONTRACTOR SHALL BE REPLACED AS DIRECTED BY THE ENGINEER.

PAYMENT FOR THE NEW DRUMS SHALL BE INCLUDED IN THE LUMP SUM BID PRICE FOR ITEM 614 - MAINTAINING TRAFFIC, AND SHALL INCLUDE THE COST OF REMOVING AND DISPOSING OF THE DAMAGED DRUM AND PROVIDING AND MAINTAINING THE REPLACEMENT DRUMS IN ACCORDANCE WITH THE CONTRACT REQUIREMENTS FOR THE ORIGINAL DRUM.

FLASHING ARROW PANEL

DURING ANY CONSTRUCTION PHASE WHEN FLASHING ARROW PANELS ARE SHOWN ON THE PLANS, ELECTRIC POWERED EQUIPMENT OR SOLAR POWERED EQUIPMENT APPROVED BY THE ENGINEER SHALL BE EXCLUSIVELY UTILIZED WHEN LOCATED WITHIN 300 FEET OF ANY RESIDENCE. DIESEL OR GASOLINE POWERED GENERATORS WILL NOT BE PERMITTED IN THESE AREAS.

MAINTENANCE OF TRAFFIC STANDARD DRAWINGS

REFERENCES TO SECTION 621, OR SUPPLEMENTAL SPECIFICATIONS 806, 847, 906, OR 947 ON THE STANDARD DRAWINGS OR ELSEWHERE IN THESE PLANS SHALL BE CONSIDERED TO READ AS REFERENCES TO THE APPROPRIATE PORTIONS OF SECTIONS 641, 642, 643, 644, 645 AND 740.

CONSTRUCTION TRAFFIC

ALL CONSTRUCTION TRAFFIC SHALL USE ACCEPTABLE TRUCK ROUTES TO ACCESS THE CONSTRUCTION AREA. USE OF LOCAL RESIDENTIAL STREETS IS STRICTLY PROHIBITED UNLESS ALLOWED IN WRITING BY THE LOCAL ENFORCEMENT AUTHORITY.

CLEAR ZONE

THE CONTRACTOR SHALL NOT STORE ANY MATERIALS OR EQUIPMENT, NOR PERMIT PARKING OF PRIVATE VEHICLES WITHIN 30 FEET OF AN ACTIVE EDGE OF A TRAVELED WAY, UNLESS BEHIND A PORTABLE CONCRETE BARRIER.

COVERING OF SIGNS

WHEN THE MESSAGE OF A PERMANENT SIGN CONFLICTS WITH A LONG TERM CLOSURE DURING BRIDGE OR ROAD REPAIRS, THE SIGN SHALL BE COVERED. THE CONTRACTOR SHALL DO SO IN SUCH A MANNER AS TO AVOID DAMAGING THE PERMANENT SIGN WHEN THE COVER IS REMOVED. THE COVER SHALL BE TOTALLY OPAQUE. THE USE OF ADHESIVE TAPE APPLIED DIRECTLY TO A SIGN FACE IS STRICTLY PROHIBITED.

THERE ARE APPROXIMATELY 6 LEFT TURN ONLY SIGNS WHICH WILL NEED TO BE COVERED AS PART OF THIS PROJECT. ALL COST FOR THIS WORK SHALL BE INCLUDED IN THE LUMP SUM BID FOR ITEM, MAINTAINING TRAFFIC.

OVERHEAD SIGNS, COVERING OF DOWN ARROWS

OVERHEAD SIGNS ON THE FREEWAY WHICH CONTAIN DOWN ARROW LANE CONTROLS SHALL BE MODIFIED AS FOLLOWS:

DOWN ARROWS OVER CLOSED LANE:

SHORT TERM LANE CLOSURE: NO WORK

LONG TERM LANE CLOSURE: COVER ARROW WITH 3 FT HIGH BY 3 FT WIDE ORANGE PANEL

DOWN ARROWS OVER SHIFTED LANE: NO WORK

THE BLANK PANELS SHALL BE INSTALLED WITHIN FOUR (4) HOURS AFTER IMPLEMENTATION OF THE LANE CLOSUREE. THEY SHALL BE REMOVED NO EARLIER THAN 24 HOURS IN ADVANCE OF THE REOPENING OF THE LANE.

THERE ARE APPROXIMATELY 2 DOWN ARROWS WHICH WILL HAVE TO BE COVERED AS PART OF THIS PROJECT. ALL COSTS FOR THIS WORK SHALL BE INCLUDED IN THE LUMP SUM BID FOR ITEM 614, MAINTAINING TRAFFIC.

RAMP CLOSURES FOR REPAIR OR RESURFACING

THE CONTRACTOR MAY CLOSE ONE RAMP AT A TIME FOR PAVEMENT PLANING, PAVEMENT REPAIRS OR RESURFACING. THE CLOSURES SHALL BE LIMITED TO BETWEEN 10:00 PM AND 5:30 AM. THE MOTORING PUBLIC SHALL BE GIVEN ADVANCE WARNING OF RAMP CLOSURES AT LEAST 72 HOURS IN ADVANCE THROUGH THE USE OF EITHER A GROUND MOUNTED FLAT SHEET SIGN OR A PORTABLE CHANGEABLE MESSAGE SIGN. AN LEO WITH PATROL CAR (PAID FOR BY THE CONTRACTOR) SHALL BE USED FOR EACH RAMP CLOSURE AND BE PRESENT FOR THE ENTIRE CLOSURE TIME.

FREEWAY ENTRANCE RAMPS SHALL BE CLOSED WITH A PCMS SUGGESTING A RECOMMENDED DETOUR.

FREEWAY EXIT RAMPS SHALL BE CLOSED WITH A PCMS ROUTING TRAFFIC TO THE NEXT EXIT AND A SECOND PCMS INDICATING A U-TURN AT THAT EXIT (UNLESS DIRECTED DIFFERENTLY BY THE ENGINEER).

FOR RAMP CLOSURES ONE OR TWO ADDITIONAL PCMS UNITS WILL BE NEEDED AS DESCRIBED ABOVE. THESE WILL BE IN ADDITION TO THE PCMS UNITS SPECIFIED IN THE PLANS AND SHALL BE PAID FOR BY THE CONTRACTOR.

PLOTTED BY:jgrmovse
PLOTTED FROM: slmincek@pid5754@notes@05754mnd.dgn
PLOT SUBMITTED:02-DEC-1998 16:30
05754MND.DGN

MAINTAINING TRAFFIC

NIGHT VESTS

ALL OF THE CONTRACTORS AND SUB CONTRACTORS PERSONNEL WORKING DURING THE HOURS OF DARKNESS SHALL WEAR A 100% SILVER REFLECTIVE SAFETY VEST. THE SAFETY VEST SHALL BE PROVIDED BY THE CONTRACTOR. THE VEST MAY HAVE SEVERAL LIME OR ORANGE STRIPES ON IT.

CITY NOISE ORDINANCES

THE CONTRACTOR MUST NOTIFY THE AFFECTED MUNICIPALITIES OF NIGHT WORK . IT IS THE CONTRACTORS RESPONSIBILITY TO OBTAIN PERMISSION FROM THE AFFECTED CITIES TO WORK AT NIGHT. IF THE CITY WILL NOT ALLOW A CERTAIN OPERATION AT NIGHT THE CONTRACTOR WILL INCREASE HIS WORK FORCE TO PERFORM THE OPERATION AT TIMES THE CITY WILL ALLOW.

SIDE STREET CLOSURE LIMITATION

TWO-WAY TRAFFIC SHALL BE MAINTAINED AT ALL TIME ON ALL SIDE STREETS EXCEPT FOR:

ALGER ROAD
WEST 110TH STREET
WEST 106TH STREEET
WEST 73RD STREET
WEST 65TH STREET

WHICH MAY BE CLOSED FOR A PERIOD NOT TO EXCEED 30 CONSECUTIVE CALENDAR DAYS, WHEN THROUGH TRAFFIC MAY BE DETOURED AS SHOWN ON SHEET 41C. LIQUIDATED DAMAGES SHALL BE ASSESSED IN ACCORDANCE WITH SECTION 108.07 OF THE CONSTRUCTION AND MATERIAL SPECIFICATIONS FOR EACH CALENDAR DAY THAT ANY OF THESE STREETS REMAIN CLOSED TO TRAFFIC BEYOND THE SPECIFIED LIMIT, WHICH LIMIT SHALL BE CONSIDERED TO CONSTITUTE AN INTERIM COMPLETION DATE FOR THE PURPOSE OF THIS NOTE.

THE WORK ON THE BRIDGE CROSSINGS OVER THE MAINLINE MAY BE PERFORMED AT ANY TIME DURING THE CONSTRUCTION PHASING FOR THE MAINLINE, WITH THE FOLLOWING RESTRICTIONS:

WORK ON THE ALGER ROAD BRIDGE AND WARREN ROAD BRIDGE CANNOT BE CONNCURRENT.

WORK ON THE WEST 110TH STREET BRIDGE AND THE WEST 106TH STREET BRIDGE CANNOT BE CONCURRENT.

WORK ON THE WEST 65TH STREET BRIDGE AND WEST 73RD STREET BRIDGE CANNOT BE CONCURRENT.

WORK ON THE LORAIN AVENUE BRIDGE AND CONNECTOR ROAD BRIDGE CANNOT BE CONCURRENT.

WORK ON THE WEST 117TH STREET BRIDGE SHALL BE PERFORMED WITHIN THE 1999 CONSTRUCTION YEAR.

ALL CLOSED STREETS SHALL BE BARRICADED AT THE WORK LIMITS WITH FULL WIDTH CLASS III BARRICADE AND SIGNED WITH A 'ROAD CLOSED' (R-75-48) SIGN MOUNTED ON THE BARRICADES. IN ADDITION, A 'ROAD CLOSED AHEAD' (OW-120-36) SIGN SHALL BE INSTALLED AT THE FIRST INTERSECTION BEYOND THE WORK. THE CONTRACTOR SHALL FURNISH, ERECT, MAINTAIN AND REMOVE ALL SIGNS AND BARRICADES REQUIRED FOR THIS PURPOSE.

PEDESTRIAN BRIDGE CLOSURES

CLOSURE SHALL BE PERMITTED ONLY AS LONG AS NECESSARY TO PERFORM THE PROPOSED WORK. NO CLOSURES SHALL BE IMPLEMENTED ON SCHOOL DAYS.

WORKSITE TRAFFIC SUPERVISOR

THE CONTRACTOR SHALL EMPLOY (OTHER THAN THE SUPERINTENDENT) AND SUBJECT TO THE APPROVAL OF THE ENGINEER A CERTIFIED WORKSITE TRAFFIC SUPERVISOR (WTS). THE WTS MAY BE CERTIFIED FROM ONE OF THE FOLLOWING ORGANIZATIONS 1) AMERICAN TRAFFIC SAFETY SERVICE ASSOCIATION (A.T.S.S.A., PHONE NO. 1-800-272-8772) CERTIFIED WORKSITE TRAFFIC SUPERVISOR (WTS), 2) THE NATIONAL SAFETY COUNCIL, TRAFFIC CONTROL ZONES SUPERVISORS COURSE, PHONE NO. 1-800-441-5103, OR TAKE THE FOLLOWING COURSE BY THE THE NATIONAL HIGHWAY INSTITUTE, DESIGN AND OPERATION OF WORK ZONE TRAFFIC CONTROL PH. NO. 1-(703) 235-0528 .THE WTS POSITION IS ESTABLISHED FOR THE PURPOSE OF MONITORING AND CORRECTING ANY TRAFFIC CONTROL DEFICIENCIES IN THE WORK ZONE. THE WTS SHALL OVERSEE ALL OPERATIONS THAT AFFECT THE MOVEMENT OF VEHICULAR AND PEDESTRIAN TRAFFIC THROUGH THE WORK ZONE.

THE WTS SHALL BE PRESENT WHEN THE CONTRACTOR OR SUBCONTRACTOR INSTALLS A TRAFFIC RESTRICTION, LANE CLOSURE ETC. IN LIEU OF THE WTS BEING PRESENT WHEN A SUBCONTRACTOR HAS A TRAFFIC CONTROL ZONE IN PLACE THE SUBCONTRACTOR MAY USE HIS OWN PERSONNEL THAT IS A CERTIFIED WTS. THE SUBCONTRACTOR MUST PRESENT A COPY OF HIS WTS CERTIFICATE TO THE PROJECT ENGINEER. A WTS MUST BE PRESENT WHEN THE WORK ZONE IS BEING SET UP. HE MUST APPROVE THE WORK ZONE BEFORE HE LEAVES OR PERFORMS OTHER DUTIES.

IF THE RESTRICTIONS ARE SHORT TERM, THE WTS SHALL MONITOR THE ZONE FOR COMPLIANCE. DURING THE LANE CLOSURE HE SHALL MAKE SURE ALL TRAFFIC CONTROL ITEMS ARE FUNCTIONING PROPERLY. TRAFFIC CONTROL WILL BE THE WTS MAIN DUTY DURING IMPLEMENTATION OF ZONES OR SHORT TERM ZONES. THE WTS SHALL HAVE THE AUTHORITY TO HAVE DEFICIENCIES CORRECTED AS SOON AS POSSIBLE. THE WTS SHALL PROVIDE THE PROJECT ENGINEER A SKETCH OF THE (TCP) TRAFFIC CONTROL PLAN EVERY DAY THERE IS TO BE A SHORT TERM TRAFFIC RESTRICTION, LANE CLOSURE ETC. THIS TCP SHALL SHOW HOW THE WORK ZONES ARE TO BE IMPLEMENTED.

DAILY, INCLUDING ONE DAY DURING THE WEEKEND AND HOLIDAYS THE WTS SHALL SPEND A MINIMUM OF ONE HOUR REVIEWING AND MAINTAINING THE WORK ZONE. THESE HOURS MAY BE ADJUSTED BY THE ENGINEER. THE HOURS MAY BE REDUCED DURING THE WINTER CONSTRUCTION SEASON IF DIRECTED BY THE ENGINEER. THE WTS SHALL INSPECT THE WORK ZONE AT THE BEGINNING AND END OF EACH WORK DAY AND ONE TIME PER WEEK DURING THE HOURS OF DARKNESS AND ONCE DURING A WEEKEND.

A RECORD OF EACH DAY'S REVIEW SHALL BE GIVEN TO THE PROJECT ENGINEER THE FOLLOWING WORKDAY, IN WRITING AND SHALL INCLUDE: TRAFFIC CONTROL DEVICE CONDITION, PLACEMENT, VISIBILITY, TRAFFIC FLOW CONDITIONS, INCIDENTS, CONGESTION POINTS, ADEQUACY OF ADVANCED WARNING SIGNS BEYOND THE PROJECT LIMITS, INTERACTION OF WORK VEHICLES WITH TRAFFIC, PROPER STORAGE OF MATERIALS AND EQUIPMENT, ACCIDENTS ETC. THE RECORD OF REVIEW SHALL BE GIVEN TO THE PROJECT ENGINEER DAILY IN WRITING AND SHALL INCLUDE A RECORD OF DEFICIENCIES AND RESOLUTIONS OF THE DEFICIENCIES.

THE WTS SHALL BE AVAILABLE ON A 24-HOUR BASIS TO REPAIR AND/OR REPLACE DAMAGED OR MISSING TRAFFIC CONTROL DEVICES. A 24-HOUR PHONE NUMBER SHALL BE MADE AVAILABLE TO THE PROJECT ENGINEER IN ORDER TO CONTACT THE WTS. THE WTS SHALL HAVE A PAGER AND THE PHONE NUMBER PROVIDED TO THE PROJECT ENGINEER.

FAILURE OF THE CONTRACTOR TO COMPLY WITH ANY OF THE ABOVE ,SHALL CONSTITUTE CAUSE FOR THE PROJECT ENGINEER TO DEDUCT $500.00 PER DAY FROM MONEY DUE THE CONTRACTOR NOT AS A PENALTY BUT AS A LIQUIDATED DAMAGE.

PAYMENT FOR THE WTS SHALL BE INCLUDED UNDER THE LUMP SUM ITEM 614 MAINTAINING TRAFFIC.

FLASHING LIGHTS

ALL WORK VEHICLES AND EQUIPMENT THAT ENTER THE WORK ZONE MORE THAN ONCE A DAY MUST BE EQUIPPED WITH AT LEAST ONE FLASHING, ROTATING , OR OSCILLATING AMBER LIGHT THAT IS VISIBLE IN ALL DIRECTIONS OF TRAFFIC FOR AT LEAST ONE QUARTER OF A MILE, DAY OR NIGHT.

EXISTING TRAFFIC SIGNAL MAINTENANCE

INCIDENTAL TO THE REQUIREMENTS FOR MAINTAINING TRAFFIC IN ACCORDANCE WITH 614.03, EXISTING CITY OF CLEVELAND TRAFFIC SIGNALS SHALL BE TEMPORARILY MAINTAINED FOR ALL CONSTRUCTION PHASES AT THE FOLLOWING LOCATIONS:

1. ALONG THE DETOUR ROUTES FOR THE BRIDGE CLOSURES AT W. 110TH ST., W. 73RD ST., W. 106TH ST., AND W. 65TH ST.
2. ALONG THE DETOUR ROUTE FOR THE BRIDGE CLOSURES AT ALGER ROAD, FOR THE LOCATIONS WITHIN THE CITY OF CLEVELAND LIMITS.
3. AT THE BRIDGES WHERE TRAFFIC IS MAINTAINED DURING CONSTRUCTION AT WARREN RD., WEST 117TH ST., CONNECTOR RD. AND CLARK AVE.

THERE ARE THIRTY TWO (32) SIGNALIZED INTERSECTIONS WITHIN THESE DETOUR ROUTES AND LOCATIONS.

THE CONTRACTOR SHALL BE RESPONSIBLE FOR MODIFICATION TO THE TRAFFIC SIGNALS TIMING AND PHASING FROM THE TIME THE CONTRACTORS OPERATIONS FIRST DISTURB THE TRAFFIC PATTERNS UNTIL THE TRAFFIC PATTERNS HAVE BEEN RETURNED TO PRE-CONSTRUCTION CONDITION AND THE WORK HAS BEEN ACCEPTED.

ALL HARDWARE REQUIRED TO PERFORM TIMING AND PHASING CHANGES SHALL BE THE RESPONSIBILITY OF THE CONTRACTOR. THE CONTRACTOR'S TECHNICIAN SHALL WORK WITH THE CITY OF CLEVELAND, DIVISION OF TRAFFIC ENGINEERING TO PERFORM ALL TIMING CHANGES. COST FOR CONTRACTORS TECHNICIAN SHALL BE INCLUDED WITH ITEM 614 MAINTAINING TRAFFIC FOR PAYMENT. CONTACT TELEPHONE NUMBERS AT THE CITY OF CLEVELAND DIVISION OF TRAFFIC ENGINEERING ARE:

SIGNAL SHOP: (216) 271-3222
ENGINEERING: (216) 664-3194

THE NORMAL MAINTENANCE OF EXISTING SIGNALS SHALL BE THE RESPONSIBILITY OF THE CITY OF CLEVELAND. OUTAGES, OTHER THAN THAT OF NORMAL WEAR, SHALL BE THE RESPONSIBILITY OF THE CONTRACTOR.

IF POLES, SIGNALS HEADS AND/OR CONTROL EQUIPMENT ARE DAMAGED AND MUST BE REPLACED, THE CONTRACTOR SHALL MAKE THE TEMPORARY REPAIRS AS NECESSARY TO BRING THE SIGNAL BACK INTO FULL OPERATION WITHOUT UNDUE DELAY AND SHALL MAKE PERMANENT REPAIRS AND REPLACEMENT AS SOON THEREAFTER AS POSSIBLE.

THE EXISTING TRAFFIC SIGNAL HEADS SHALL BE ADJUSTED AS REQUIRED TO PROVIDE THE SAFEST INSTALLATION FOR THE TRAVELING PUBLIC. THE LOCATION, OR ANGLE, ETC. OF THE HEADS WILL BE ADJUSTED AS REQUIRED BY THE ENGINEER, OR SHALL BE COVERED IF DIRECTED BY THE ENGINEER.

ALL COSTS RESULTING FROM THE ABOVE REQUIREMENTS SHALL BE CONSIDERED INCLUDED IN THE LUMP SUM PRICE BID FOR ITEM 614, MAINTAINING TRAFFIC.

CURE WATER

THE CONTRACTOR IS RESPONSIBLE TO CONTROL ANY WATER THAT FLOWS ONTO THE ROADWAY. DURING TIMES WHEN THE WATER MAY FREEZE. IT IS THE CONTRACTORS RESPONSIBILITY TO MAKE SURE THE ROADWAY DOES NOT BECOME ICY.

PLOTTED BY:jgrmovse
PLOTTED #Rdwy#s#mincek#pid05754#notes#05754mne.dgn
PLOT SUBMITTED:02-DEC-1998 16:30
05754MNE.DGN

MAINTAINING TRAFFIC

LIQUIDATED DAMAGES / INTERIM COMPLETION REQUIREMENTS

THE CONTRACTOR SHALL SCHEDULE HIS OPERATIONS AND INCREASE HIS WORK FORCE AS NECESSARY SO AS TO COMPLETE ALL WORK ITEMS REQUIRING PERMANENT LANE CLOSURES FOR THE IDENTIFIED WORK ZONES (SEE "CONSTRUCTION PHASING" NOTES), WITHIN THE TIME LIMITS ALLOCATED.

NON-RUSH HOUR CLOSURES, AS PERMITTED BY THE "SCHEDULE OF THRU LANES TO BE MAINTAINED" TABLE ON SHEET 25, ARE NOT CONSIDERED WITHIN TIME LIMITS ABOVE. (THOSE CLOSURES ARE DISCUSSED IN THE "LIQUIDATED DAMAGES/SHORT TERM LANE CLOSURES" NOTE).

THE COMPLETION OF A PHASE REQUIRES THAT ALL WORK, AS LISTED ON SHEETS 27-30, TO THAT LANE BE COMPLETED.

THE TIME LIMIT SHOWN SHALL BEGIN ON THE FIRST DAY THAT PERMANENT (CLOSURES EXTENDING THROUGH RUSH HOURS) ARE IMPLEMENTED AND SHALL CONTINUE COUNTING BASED UPON CALENDAR DAYS UNTIL COMPLETION AS DEFINED ABOVE.

LIQUIDATED DAMAGES AS DETERMINED FROM THE TABLE IN SECTION 108.07 OF THE SPECIFICATIONS SHALL BE ASSESSED FOR EACH DAY (OR PORTION THEREOF) FOR WHICH THESE TIME LIMITS ARE NOT MET. IF MORE THAN ONE PHASE OF THIS WORK IS IN VIOLATION OF THE STATED TIME LIMITS THEN LIQUIDATED DAMAGES IN THE AMOUNT NOTED ABOVE SHALL BE ASSESSED FOR EACH PHASE AND WILL BE CUMULATIVE. LIQUIDATED DAMAGES SHALL ALSO BE ASSESSED FOR WHEN A CITY STREET RAMP CLOSURE IS VIOLATED.

PLACING PORTABLE CONCRETE BARRIER

WHEN PLACING OR REMOVING PCB THE ADJACENT LANE SHALL BE CLOSED WHEN POSSIBLE.

ITEM 630 - SIGNING MISC.: ADDITIONAL SIGNS, GROUND MOUNTED, AS DIRECTED BY THE ENGINEER

WHEN ADDITIONAL SIGNING IS NEEDED TO MAINTAIN TRAFFIC, THE CONTRACTOR SHALL FURNISH THE SIGN OR SINGS AS DIRECTED BY THE ENGINEER. THESE SIGNS SHALL BE GROUND MOUNTED AND MEET ALL THE SPECIFICATIONS OF THE PLAN, PROPOSAL AND CURRENT YEAR CMS.

PAYMENT FOR THIS ITEM SHALL INCLUDE BUT NOT BE LIMITED TO THE COST TO FURNISH AND ERECT THE SIGN, INCLUDING DRIVE POSTS OR OTHER APPROVED METHODS OF SUPPORT, MAINTAINING THE SIGN AND REMOVAL OF THE SIGN.

THE FOLLOWING QUANTITY SHALL BE CARRIED TO THE GENERAL SUMMARY:

ITEM 630 - SIGNING MISC.: ADDITIONAL SIGNS, GROUND MOUNTED, AS DIRECTED BY THE ENGINEER...400 SQ. FT.

DUST CONTROL

THE FOLLOWING ESTIMATED QUANTITIES HAVE BEEN INCLUDED IN THE GENERAL SUMMARY TO BE USED AS DIRECTED BY THE ENGINEER FOR DUST CONTROL:

ITEM 616 - WATER . . . . . .500 M. GAL.
ITEM 616 - CALCIUM CHLORIDE . . . . . .50 TON

ITEM 806 - FIELD OFFICE, TYPE C, AS PER PLAN

IN ADDITION TO THE REQUIREMENTS STATED IN THE SUPPLEMENTAL SPECIFICATIONS, THE FOLLOWING EQUIPMENT SHALL BE INCLUDED FOR PAYMENT UNDER THIS ITEM:

ONE CELLULAR PHONE FOR USE AS DIRECTED BY THE ENGINEER. THIS IS IN addition TO THE REQUIREMENT FOR TELEPHONES PER S.S. 806.

CONSTRUCTION PHASING IR-90 (4 & 5 LANE SECTION)
MAJOR WORK ITEMS IN EACH PHASE

WORK TO BE PERFORMED IN 1999

-EASTBOUND IR-90, 4 AND 5 LANE SECTION

WORK TO BE PERFORMED IN 2000

-WESTBOUND IR-90, 4 AND 5 LANE SECTION

PHASE I

-CONSTRUCT OUTSIDE CONCRETE SHOULDERS AT BRIDGES USING A ONE LANE CLOSURE

PHASE I SHALL BE COMPLETED IN 20 DAYS (1999 CLOSURES)
PHASE I SHALL BE COMPLETED IN 20 DAYS (2000 CLOSURES)

PHASE II

ONCE PHASE I WORK IS COMPLETED THE CONTRACTOR SHALL:
-ESTABLISH A PERMANENT TRAFFIC CONTROL ZONE TO CLOSE THE INSIDE LANE AND SHOULDER
-REPAIR OR REPLACE INSIDE SHOULDER, INSTALL SUPPLEMENTAL UNDERDRAIN AND PERFORM CONCRETE REPAIRS TO INSIDE LANES
-PART-WIDTH BRIDGE DECK OVERLAY AND PARAPET FACING

PHASE II SHALL BE COMPLETED IN 60 DAYS (1999 CLOSURES)
PHASE II SHALL BE COMPLETED IN 60 DAYS (2000 CLOSURES)

PHASE III

ONCE PHASE II IS COMPLETED THE CONTRACTOR SHALL:
-ESTABLISH A PERMANENT TRAFFIC CONTROL ZONE TO CLOSE THE OUTSIDE LANE AND SHOULDER
-REPAIR OR REPLACE OUTSIDE SHOULDER, INSTALL SUPPLEMENTAL UNDERDRAINS AND PERFORM CONCRETE REPAIRS TO OUTSIDE LANES
-PART-WIDTH BRIDGE DECK OVERLAY
-INSTALL TEMPORARY PAVEMENT MARKINGS FOR PHASE III

PHASE III SHALL BE COMPLETED IN 60 DAYS (1999 CLOSURES)
PHASE III SHALL BE COMPLETED IN 60 DAYS (2000 CLOSURES)

PHASE IV & V

ONCE PHASE III IS COMPLETED THE CONTRACTOR SHALL:
-PLACE ASPHALT INTERMEDIATE COURSE ON ALL LANES USING SHORT TERM LANE CLOSURES
-INSTALL TEMPORARY PAVEMENT MARKINGS

PHASE IV & V SHALL BE COMPLETED IN 10 DAYS(1999 CLOSURES)
PHASE IV & V SHALL BE COMPLETED IN 10 DAYS(2000 CLOSURES)

PHASE VI & VII

ONCE PHASE IV & V IS COMPLETED THE CONTRACTOR SHALL:
-PLACE ASPHALT SURFACE COURSE ON ALL LANES USING SHORT TERM LANE CLOSURES
-INSTALL TEMPORARY PAVEMENT MARKINGS

PHASE VI & VII SHALL BE COMPLETED IN 10 DAYS (1999 CLOSURES)
PHASE VI & VII SHALL BE COMPLETED IN 10 DAYS (2000 CLOSURES)

INTERIM COMPLETION DATES

THE NUMBER OF DAYS TO COMPLETE EACH PHASE OF WORK (OR PHASES OF WORK) AS SHOWN ON THIS SHEET ARE CONSIDERED INTERIM COMPLETION DATES AND SUBJECT TO LIQUIDATED DAMAGES (SEE NOTE THIS SHEET).

PEDESTRIAN TRAFFIC

WHEN BRIDGES WITH EXISTING SIDEWALKS MUST BE CLOSED FOR REPAIRS OR WHEN SIDEWALKS UNDER BRIDGES ARE BEING REPAIRED, APPROPRIATE PEDESTRIAN SIGNS AND SEPARATORS SHALL BE PROVIDED, INSTALLED AND MAINTAINED AS PER THE STANDARD DRAWING MT - 110.20M. ON BRIDGES WHICH ARE CLOSED TO VEHICULAR TRAFFIC, AT LEAST ONE SIDEWALK SHALL REMAIN OPEN AT ALL TIMES FOR USE BY PEDESTRIANS. ON BRIDGES WHICH REQUIRE PHASE CONSTRUCTION, THE WORK ON THE SIDEWALKS SHALL NOT BE DONE SIMULTANEOUSLY SO THAT AT LEAST ONE SIDEWALK AT A TIME REMAINS OPEN FOR USE BY PEDESTRIANS.

AT A MINIMUM, THESE LOCATIONS WILL REQUIRE THE FOLLOWING SIGNS AND SEPARATIONS:

	R-175-30	R-177-24	R-178-24	SEPARATOR
ALGER RD.	2	2	2	YES
WARREN RD.	2	2	2	YES
W. 140TH ST.	2	2		NO
BEREA RD.	2	2		NO
W. 117TH ST.	2	2		YES
W. 114TH ST. (PED)	2			NO
W. 110TH ST	2	2		YES
W. 106TH ST.	2	2		YES
WEST BLVD	2	2	2	NO
W. 98TH ST.	2	2	2	NO
W. 93RD ST. (PED)	2			NO
LORAIN AVE.	2	2		YES
CONNECTOR RD.	2	2		YES
CLARK AVE.	2	2		YES
W. 73RD ST.	2	2		YES
W. 65TH ST.	2	2		YES

ADDITIONAL SIGNS AND SEPARATORS SHALL BE PROVIDED AND INSTALLED WHEN DIRECTED BY THE ENGINEER. ALL COSTS FOR THIS WORK SHALL BE INCLUDED UNDER ITEM 614, MAINTAINING TRAFFIC.

DOUBLE THE FINES SIGNS

THE CONTRACTOR SHALL FURNISH , INSTALL, MAINTAIN, COVER WHEN DIRECTED BY THE ENGINEER AND REMOVE R-180-48 SIGNS. THE SIGNS SHALL BE DUAL MOUNTED APPROXIMATELY 500 FT AFTER THE ROAD WORK AHEAD SIGNS. THE SIGNS SHALL BE INSTALLED ON ALL FREEWAYS LEADING INTO THE PROJECT. SIGNS SHALL BE POSTED ON ALL ENTRANCE RAMPS ENTERING THE PROJECT ON THE RIGHT SIDE ONLY. THE SIGNS SHALL BE DUAL MOUNTED EVERY 2 MILES. THE SIGNS MAY HAVE TO BE ADJUSTED WHEN TRAFFIC IS SWITCHED EITHER NORTHBOUND OR SOUTHBOUND. PAYMENT FOR THE ADJUSTMENT OF THE SIGNS WILL BE INCLUDED IN THE PAYMENT FOR EACH SIGN.

THE FOLLOWING QUANTITY HAS BEEN CARRIED TO THE GENERAL SUMMARY.

ITEM 614- DOUBLE FINES IN WORK ZONE SIGN, R-180-48.. 15 EACH

PLOTTED BY:jgrmovse
PLOTTED FROM:c:\projects\mincek\pids754\notes\pids754mnf.dgn
PLOT SUBMITTED:02-DEC-1998 16:29
05754MNF.DGN

MAINTAINING TRAFFIC

GENERAL CONSTRUCTION SEQUENCE

THE CONTRACTOR IS REMINDED THAT, IN THE CONDUCT OF THIS PROJECT, HIS SEQUENCE OF OPERATIONS SHALL BE PLANNED AND EXECUTED IN SUCH A WAY AS TO MINIMIZE THE NUMBER OF LANE REDUCTIONS AND/OR LANE WIDTH RESTRICTIONS REQUIRED TO MAINTAIN TRAFFIC THROUGH THE PROJECT.

BOTH SHORT TERM CLOSURES AND PERMANENT TRAFFIC CONTROL ZONES (LONG TERM CLOSURES) WILL BE UTILIZED TO PERFORM THE WORK. TRAFFIC SHALL BE MAINTAINED IN ACCORDANCE WITH THE "SCHEDULE OF THRU LANES TO BE MAINTAINED" DESCRIBED ON THIS SHEET. THIS TABLE SUMMARIZES THE NUMBER OF LANES TO BE MAINTAINED WHILE WORKING UNDER A LONG TERM CLOSURE AND WHEN ADDITIONAL LANES MAY BE CLOSED. THE TIME LIMITS SHOWN IN THIS TABLE SHALL BE ADHERED TO OR LIQUIDATED DAMAGES WILL BE ASSESSED (SEE SHEETS 21 & 24).

THE CONTRACTOR SHALL HAVE ALL NORMAL LANES OF TRAFFIC OPENED THROUGHOUT THE WINTER SEASON. NO LONG TERM LANE RESTRICTIONS, INCLUDING RAMPS, SHALL BE ALLOWED DURING THIS TIME. THE CONTRACTOR IS CAUTIONED TO SCHEDULE HIS WORK, ESPECIALLY ASPHALT OVERLAYS, TO MEET THIS REQUIREMENT. SHORT TERM LANE CLOSURES MAY BE PERMITTED BETWEEN NOVEMBER 1 AND APRIL 1, AS APPROVED BY THE PROJECT ENGINEER AND ACCORDING TO THE "SCHEDULE OF THRU LANES TO BE MAINTAINED" DESCRIBED ON THIS SHEET.

ALL LONG TERM CLOSURES SHALL BE SCHEDULED BETWEEN APRIL 1 AND OCTOBER 1.

WORK TO BE PERFORMED IN 1999

-EASTBOUND IR-90, 4 AND 5 LANE SECTION

WORK TO BE PERFORMED IN 2000

-WESTBOUND IR-90, 4 AND 5 LANE SECTION

OVERHEAD BRIDGE WORK SHALL BE PERFORMED IN EITHER YEAR EXCEPT AS LIMITED BY OTHER NOTES THROUGHOUT THESE PLANS. PHASE I AND PHASE II ON OVERHEAD STRUCTURES ARE NOT INTENDED TO IMPLY ANY COORDINATION WITH MAINLINE PHASES. CLOSURES FOR OVERHEAD BRIDGE NOS. 0892 AND 0909 SHALL NOT BE IMPLEMENTED WHEN RAMP 3 OR RAMP 4 IS CLOSED.

THE GENERAL CONSTRUCTION SEQUENCE SHALL BE PERFORMED AS INDICATED IN THE TRAFFIC MAINTENANCE PHASING PLANS ON SHEET NOS. 27-30.

THE SCHEDULED DATE FOR COMPLETION OF ALL PHASES REQUIRING LONG TERM CLOSURES SHALL BE NO LATER THAN OCTOBER 1ST. APPROVED TIME EXTENSIONS DUE TO WEATHER OR OTHER REASONS SHALL EXTEND THE OCTOBER 1ST DATE IN THE YEAR WHICH THEY OCCUR. ANY EXTENSIONS GRANTED DURING THE FIRST YEAR OF THE CONTRACT SHALL NOT EXTEND THE OVERALL COMPLETION DATE UNLESS THOSE TIME EXTENSIONS EXTEND BEYOND NOVEMBER 30TH.

THE TIME BETWEEN DECEMBER 1 AND MARCH 31 IS CONSIDERED WINTER MONTHS AND NO EXTENSIONS WILL BE GRANTED FOR THIS TIME.

SCHEDULE OF THRU LANES TO BE MAINTAINED

ROAD	3 LANES OPEN			2 LANES OPEN			1 LANE OPEN		
	LONG TERM CLOSURE	SHORT TERM CLOSURE		LONG TERM CLOSURE	SHORT TERM CLOSURE		LONG TERM CLOSURE	SHORT TERM CLOSURE	
		WEEKDAYS	WEEKENDS		WEEKDAYS	WEEKENDS		WEEKDAYS	WEEKENDS
IR-90 EASTBOUND (4 LANES)	CONSTRUCTION YEAR 1999	*** 9:00 AM-6:00 AM (21 HOURS)	*** 7:00 PM FRI.-6:00 AM MON.	N/A	10:00 AM-2:00 PM 7:00 PM-6:00 AM	12:01 AM SAT.-6:00 AM MON.	N/A	10:00 PM-6:00 AM	11:00 PM FRI-7 AM SAT 11:00 PM SAT-7 AM SUN 11:00 PM SUN-6 AM MON
IR-90 WESTBOUND (4 LANES)	CONSTRUCTION YEAR 2000	*** 7:00 PM-3:00 PM (20 HOURS)	*** 7:30 PM FRI.-6:00 AM MON.	N/A	9:00 AM-2:00 PM 8:00 PM-6:00 AM	12:01 AM SAT.-6:00 AM MON.	N/A	10:00 PM-6:00 AM	12:01 AM SAT-8 AM SAT 12:01 AM SUN-9 AM SUN 12:01 AM MON-6 AM MON
ALL RAMPS	N/A	N/A	N/A	N/A	N/A	N/A	N/A	⊕	⊕

*** APPLIES EXCEPT WHEN LONG TERM CLOSURES ARE IMPLEMENTED

⊕ - PERFORM WORK USING FLAGMEN, SHIFTING TRAFFIC ON TO THE SHOULDERS EXCEPT WHEN CLOSING THE RAMP ENTIRELY. RAMPS MAY BE CLOSED A MAXIMUM OF 5 TIMES EACH. ONE DAY ADVANCE NOTIFICATION OF RAMP CLOSURES SHALL BE GIVEN TO THE ENGINEER. SEE NOTE ON SHEET 22.

PLOTTED BY:jgrmovse
PLOTTED FROM:$BROWSER$lmincek$pid05754$notes$05754mng.dgn
PLOT SUBMITTED:02-DEC-1998 16:28
05754MNG.DGN

MAINTAINING TRAFFIC

* NOTE: ADDITIONAL ADVANCE WARNING SIGNS SHALL BE USED PER MT-95.30.

ADVANCE WARNING SIGNS

	DISTANCE ①	SIGN	SIZE	DISCRIPTION	
LEFT LANE CLOSED	500′	OW-60D	48″X48″	WIDTH TRANSITION (SYMBOLIC)	DUAL SIGN INSTALLATION
	1000′	OW-143	24″X24″	50 MPH	
		OW-123 MOD	48″X48″	LEFT LANE CLOSED 1000 FT.	
	2000′	OW-123 MOD	48″X48″	LEFT LANE CLOSED 2000 FT.	
	3000′	OW-134	48″X48″	ROAD WORK AHEAD	
	* 5200′	OW-134	48″X48″	ROAD WORK AHEAD	
RIGHT LANE CLOSED	500′	OW-60C	48″X48″	WIDTH TRANSITION (SYMBOLIC)	
	1000′	OW-143	24″X24″	50 MPH	
		OW-122 MOD	48″X48″	RIGHT LANE CLOSED 1000 FT.	
	2000′	OW-122 MOD	48″X48″	RIGHT LANE CLOSED 2000 FT.	
	3000′	OW-134	48″X48″	ROAD WORK AHEAD	
	* 5200′	OW-134	48″X48″	ROAD WORK AHEAD	
LEFT 2 LANES CLOSED	500′	OW-60C	48″X48″	WIDTH TRANSITION (SYMBOLIC)	
	1000′	OW-143	24″X24″	50 MPH	
		OW-123 MOD	48″X48″	LEFT 2 LANES CLOSED 1000 FT.	
	2000′	OW-123 MOD	48″X48″	LEFT 2 LANES CLOSED 2000 FT.	
	3000′	OW-134	48″X48″	ROAD WORK AHEAD	
	5200′	OW-134	48″X48″	ROAD WORK AHEAD	
RIGHT 2 LANES CLOSED	500′	OW-60C	48″X48″	WIDTH TRANSITION (SYMBOLIC)	
	1000′	OW-143	24″X24″	50 MPH	
		OW-122 MOD	48″X48″	RIGHT 2 LANES CLOSED 1000 FT.	
	2000′	OW-122 MOD	48″X48″	RIGHT 2 LANES CLOSED 2000 FT.	
	3000′	OW-134	48″X48″	ROAD WORK AHEAD	
	5200′	OW-134	48″X48″	ROAD WORK AHEAD	
REVERSE FOR LEFT LANE SHIFT — LANE SHIFT (ADVANCE)	500′	OW-5,5A OR 5B	48″X48″	LANE SHIFT (SYMBOLIC)	
		OW-143	24″X24″	50 MPH	
	1000′	OC-53	36″X36″	MAINTAIN PRESENT LANE	
	2000′	OC-49R	48″X48″	RIGHT LANE MUST USE SHOULDER	
		OW-145A	30″X16″	2000 FT.	
	3000′	OC-39AL	48″X48″	ALL TRUCKS LEFT 2 LANES	
LANE SHIFT (END)	500′	OC-49R	48″X48″	RIGHT LANE MUST USE SHOULDER	DUAL SINGLE
	1500′ c/c	OC-49R	48″X48″	RIGHT LANE MUST USE SHOULDER	
LANE SHIFT THRU	0′	OC-6,6A OR 6B	48″X48″	LANE SHIFT (SYMBOLIC)	DUAL
		OW-143	24″X24″	50 MPH	
EXIT RAMP ACROSS CLSD LANE	GORE	OW-SPEC	48″X48″	EXIT RAMP ⇗	SINGLE INSTALLATION
	500′	OW-SPEC	48″X48″	EXIT RAMP 500 FT.	
	1000′	OW-SPEC	48″X48″	EXIT RAMP 1000 FT.	
EXIT ONLY LANE	500′	OW-SPEC	48″X48″	RIGHT LANE MUST EXIT	
	1000′	OW-SPEC	48″X48″	RIGHT LANE MUST EXIT	
	2000′	OW-SPEC	48″X48″	RIGHT LANE MUST EXIT	

① DISTANCES ARE MEASURED FROM BEGINNING OF LANE CLOSURE, LANE SHIFT OR PAINTED GORE.

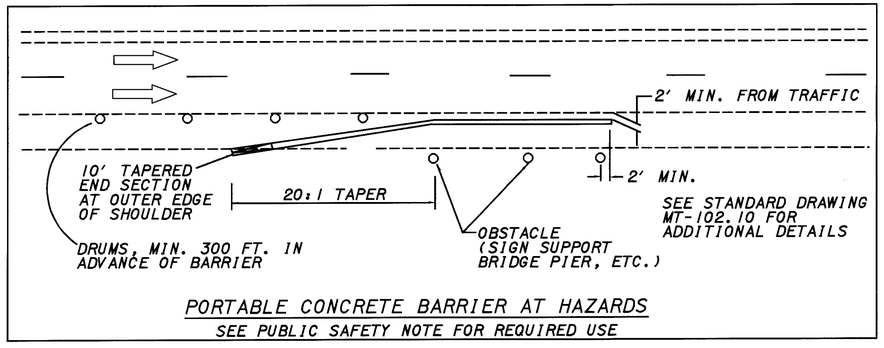

PORTABLE CONCRETE BARRIER AT HAZARDS
SEE PUBLIC SAFETY NOTE FOR REQUIRED USE

SPEED LIMIT REDUCTION

A 50 MPH REGULATORY SPEED LIMIT ZONE WILL BE ESTABLISHED FOR THIS PROJECT. SEE "WORK ZONE SPEED LIMIT" NOTE ON SHEET 21.

EXTRA ADVANCE WARNING SIGN GROUPS AS PER STANDARD DRAWING MT-95.30 SHALL BE INSTALLED WHEN DIRECTED BY THE ENGINEER.

SEE STANDARD DRAWING MT-98.15 AND MT-98.16 FOR ENTRANCE RAMPS APPROACH A CLOSED LANE.

PLOTTED BY:jgrmovse
PLOTTED FROM:c:\projects\mincek\dgn\d05754notes.dgn
PLOT SUBMITTED:02-DEC-1998 16:28
05754MDW.DGN

PHASE I (3 LANES OPEN) — DETAIL A

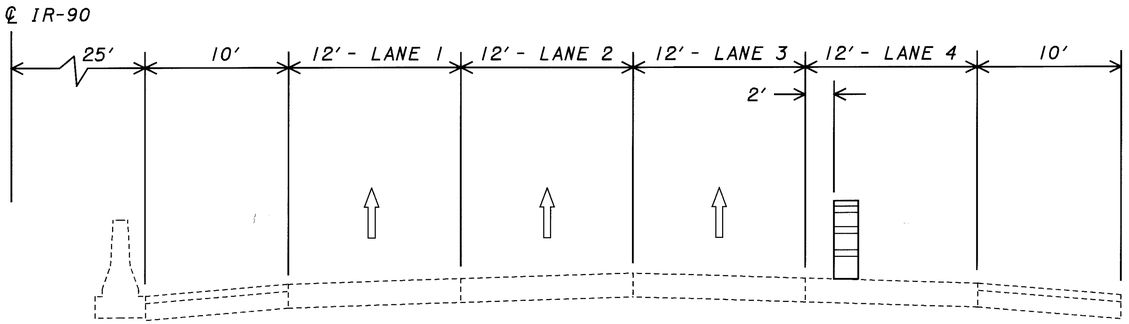

CLOSE LANE 4 (RIGHT LANE)

LONG TERM CLOSURE

CONSTRUCT CONCRETE SHOULDER (OUTSIDE)
INSTALL SUPPLEMENTAL UNDERDRAIN

INSTALL "NO EDGE LINES" SIGNS, OW-167-48

PHASE II (2 LANES OPEN) — DETAIL C

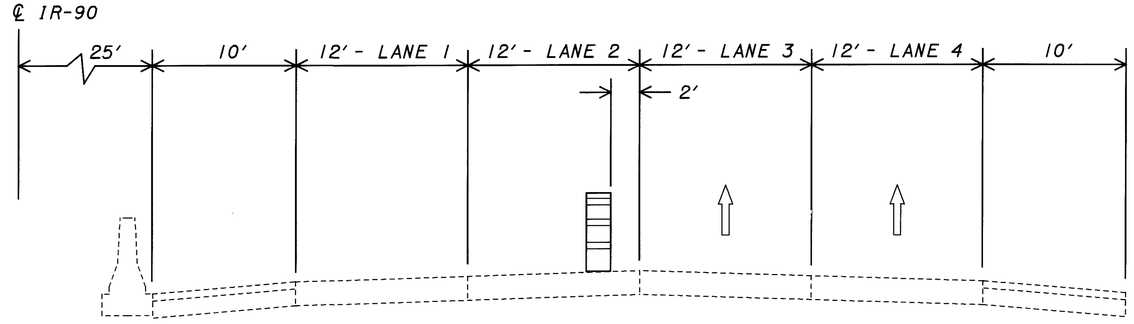

CLOSE LANES 1 & 2

10 AM-2 PM MON.-FRI. EB
7 PM-6 AM MON.-FRI. EB
9 AM-2 PM MON.-FRI. WB
8 PM-6 AM MON.-FRI. WB
12:01 AM SAT.-6 AM MON. EB & WB

PERFORM CONCRETE REPAIRS TO LANE 1

RE-OPEN LANE 2

IR-90 E.B. & W.B.
(FOR BRIDGE AREAS, SEE SHEETS 31-40)

PHASE II (3 LANES OPEN) — DETAIL B

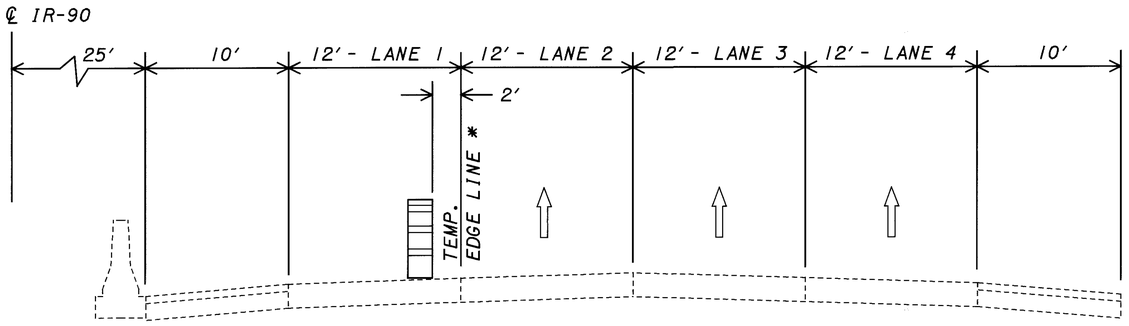

CLOSE LANE 1 (LEFT LANE)

LONG TERM CLOSURE

INSTALL TEMPORARY EDGE LINE
INSTALL SUPPLEMENTAL UNDERDRAIN
REPLACE OR REPAIR INSIDE SHOULDER

* THE QUANTITY PROVIDED IN THE GENERAL SUMMARY FOR TEMPORARY EDGE LINE IS ITEM 642, EDGE LINE, CLASS I AND PAVEMENT MARKING REMOVED. THE CONTRACTOR MAY CHOOSE TO USE TEMPORARY EDGE LINE, CLASS I, 740.06, TYPE I, AT NO ADDITIONAL COST TO THE STATE.

PHASE II (1 LANE OPEN) — DETAIL D

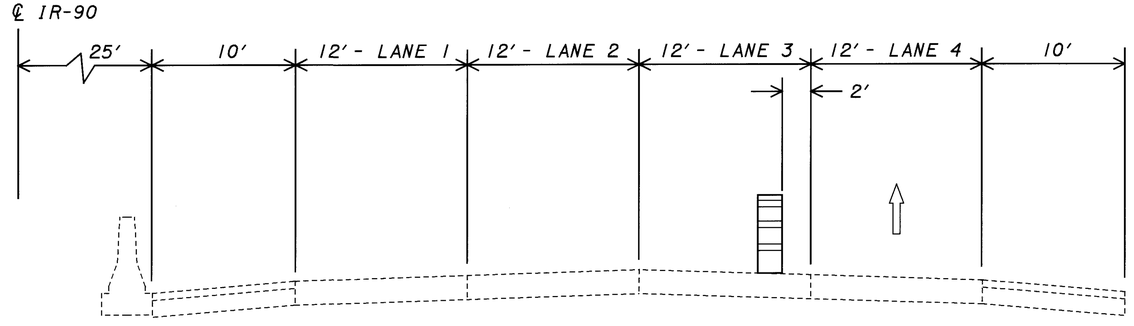

CLOSE LANES 1, 2 & 3

10 PM-6 AM MON.-FRI. EB & WB
11 PM FRI.-7 AM SAT. EB
11 PM SAT.-7 AM SUN. EB
11 PM SUN.-6 AM MON. EB
12:01 AM SAT.-8 AM SAT. WB
12:01 AM SUN.-9 AM SUN. WB
12:01 AM MON.-6 AM MON. WB

PERFORM CONCRETE REPAIRS TO LANE 2

RE-OPEN LANE 3, RE-OPEN LANE 2 UNLESS CLOSURE PERMITTED BY "PHASE II (2 LANES OPEN)" DETAIL C

PLOTTED BY: jgrmovse
PLOTTED: Rob rsblmincek pid5754 notes 05754mda.dgn
05754MDA.DGN
PLOT SUBMITTED: 02-DEC-1998 16:27

PHASE III (3 LANES OPEN) DETAIL E

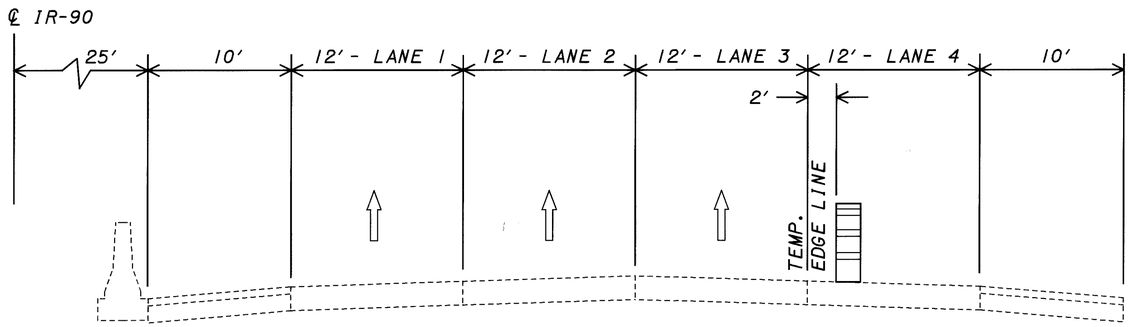

CLOSE LANE 4 (RIGHT LANE)

LONG TERM CLOSURE

INSTALL TEMPORARY EDGE LINE
INSTALL SUPPLEMENTAL UNDERDRAIN
REPLACE OR REPAIR OUTSIDE SHOULDER

PHASE III (1 LANE OPEN) DETAIL G

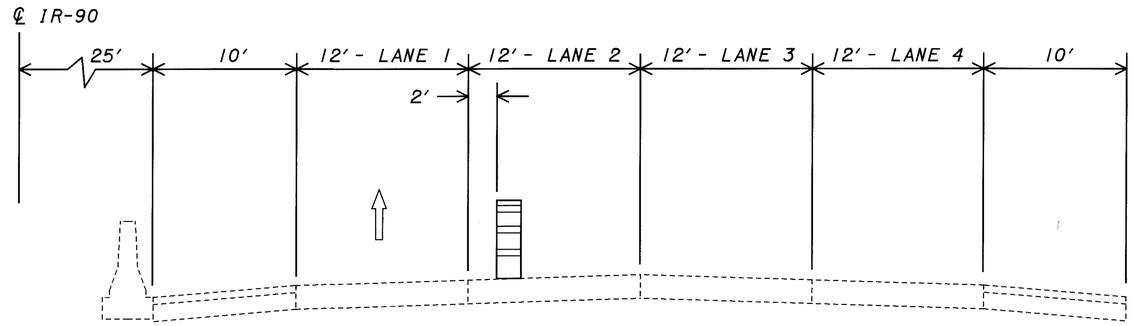

CLOSE LANES 2, 3 & 4

10 PM-6 AM MON.-FRI. EB & WB
11 PM FRI.-7 AM SAT. EB
11 PM SAT.-7 AM SUN. EB
11 PM SUN.-6 AM MON. EB
12:01 AM SAT.-8 AM SAT. WB
12:01 AM SUN.-9 AM SUN. WB
12:01 AM MON.-6 AM MON. WB

PERFORM CONCRETE REPAIRS TO LANE 3

RE-OPEN LANE 2, RE-OPEN LANE 3 UNLESS CLOSURE PERMITTED BY "PHASE III (2 LANES OPEN)" DETAIL F

IR-90 E.B. & W.B.

(FOR BRIDGE AREAS, SEE SHEETS 31-40)

PHASE III (2 LANES OPEN) DETAIL F

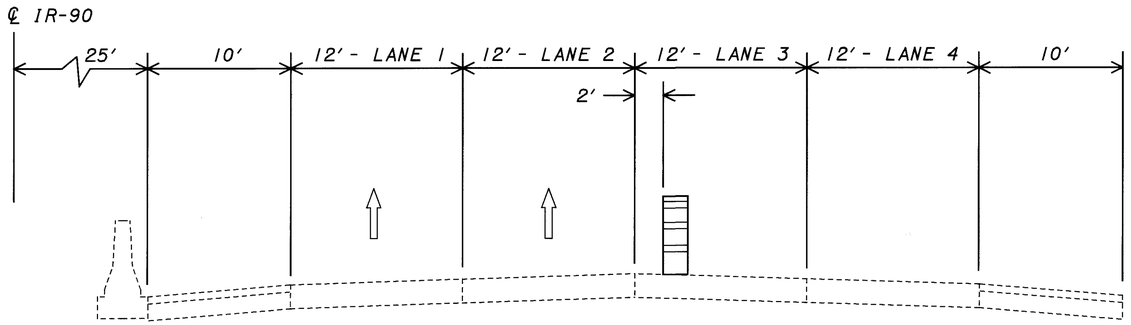

CLOSE LANES 3 & 4

10 AM-2 PM MON.-FRI. EB
7 PM-6 AM MON.-FRI. EB
9 AM-2 PM MON.-FRI. WB
8 PM-6 AM MON.-FRI. WB
12:01 AM SAT.-6 AM MON. EB & WB

PERFORM CONCRETE REPAIRS TO LANE 4

RE-OPEN LANE 3

PLOT SUBMITTED:02-DEC-1998 16:27
05754MDB.DGN
PLOTTED BY:jgrmovse
PLOTTED:Fri Nov 8 1:05:54 PM
Rpid5754Bnotes05754mdb.dgn

PHASE IV (2 LANES OPEN) — DETAIL H

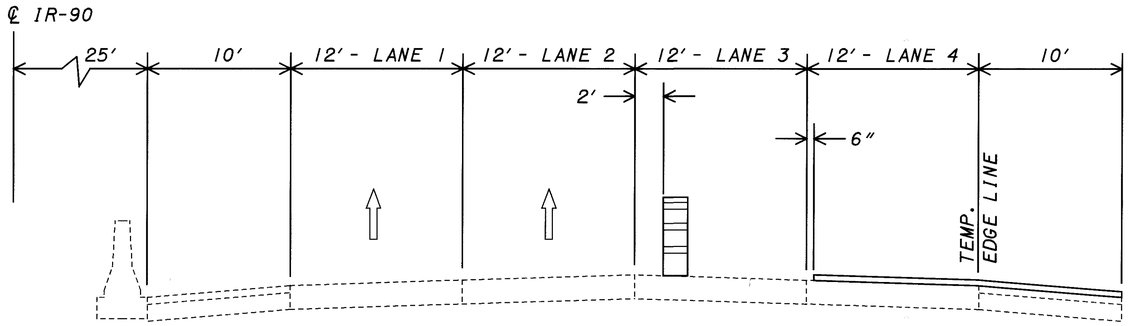

CLOSE LANE 3 & 4

10 AM-2 PM MON.-FRI. EB
7 PM-6 AM MON.-FRI. EB
9 AM-2 PM MON.-FRI. WB
8 PM-6 AM MON.-FRI. WB
12:01 AM SAT.-6 AM MON. EB & WB

PLACE 1-3/4" ITEM 446 - INTERMEDIATE COURSE ON LANE 4 AND SHOULDER
INSTALL TEMPORARY PAVEMENT MARKINGS

RE-OPEN LANE 3

PAVE AS SHOWN ON DETAIL H. WHEN AN ADDITIONAL LANE CLOSURE IS PERMITTED, DROP BACK AND PAVE AS PER DETAIL I. ALL DETAIL H & I WORK SHALL BE COMPLETED TO THE SAME DISTANCE BEFORE RE-OPENING TO TRAFFIC.

PHASE V (2 LANES OPEN) — DETAIL J

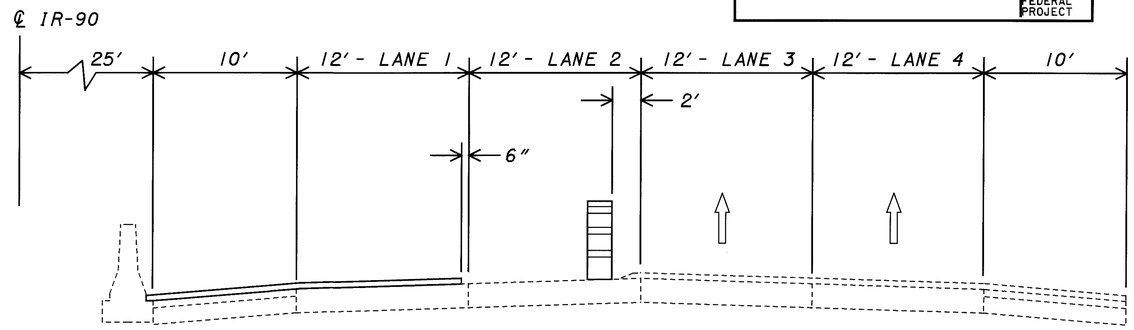

CLOSE LANES 1 & 2

10 AM-2 PM MON.-FRI. EB
7 PM-6 AM MON.-FRI. EB
9 AM-2 PM MON.-FRI. WB
8 PM-6 AM MON.-FRI. WB
12:01 AM SAT.-6 AM MON. EB & WB

PLACE 1-3/4" ITEM 446 - INTERMEDIATE COURSE ON SHOULDER AND LANE 1

RE-OPEN LANE 2 AS PER DETAIL B

PAVE AS SHOWN ON DETAIL J. WHEN AN ADDITIONAL LANE CLOSURE IS PERMITTED, DROP BACK AND PAVE AS PER DETAIL K. ALL DETAIL J & K WORK SHALL BE COMPLETED TO THE SAME DISTANCE BEFORE RE-OPENING TO TRAFFIC.

IR-90 E.B. & W.B.
(FOR BRIDGE AREAS, SEE SHEETS 31-40)

PHASE IV (1 LANE OPEN) — DETAIL I

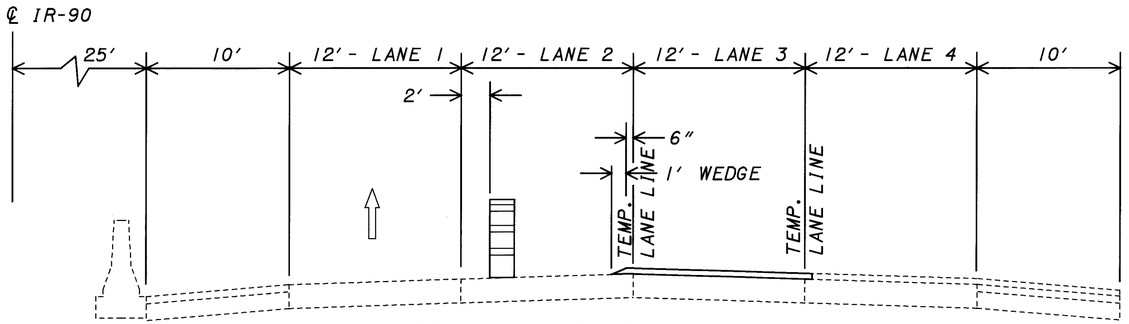

CLOSE LANE 2, 3 & 4

10 PM-6 AM MON.-FRI. EB & WB
11 PM FRI.-7 AM SAT. EB
11 PM SAT.-7 AM SUN. EB
11 PM SUN.-6 AM MON. EB
12:01 AM SAT.-8 AM SAT. WB
12:01 AM SUN.-9 AM SUN. WB
12:01 AM MON.-6 AM MON. WB

PLACE 1-3/4" ITEM 446 - INTERMEDIATE COURSE ON LANE 3
WEDGE AS SHOWN
INSTALL TEMPORARY PAVEMENT MARKINGS

RE-OPEN LANES 2 & 3

WHEN COMPLETE, OPEN ALL LANES, THEN CLOSE LANE 1 AS PER DETAIL B (OMITTING TEMP EDGE LINE SHOWN ON DETAIL B)

PHASE V (1 LANE OPEN) — DETAIL K

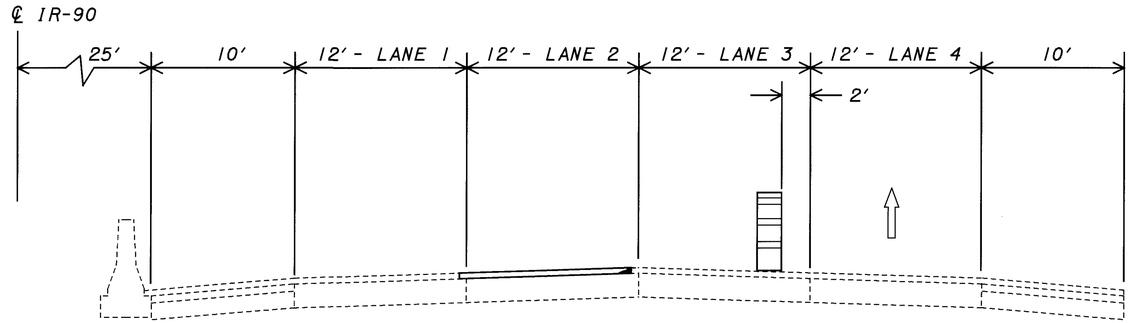

CLOSE LANES 1, 2 & 3

10 PM-6 AM MON.-FRI. EB & WB
11 PM FRI.-7 AM SAT. EB
11 PM SAT.-7 AM SUN. EB
11 PM SUN.-6 AM MON. EB
12:01 AM SAT.-8 AM SAT. WB
12:01 AM SUN.-9 AM SUN. WB
12:01 AM MON.-6 AM MON. WB

REMOVE WEDGE
PLACE 1-3/4" ITEM 446 - INTERMEDIATE COURSE ON LANE 2

RE-OPEN LANES 2 & 3 AS PER DETAIL B

WHEN COMPLETE, OPEN ALL LANES

PLOT SUBMITTED:02-DEC-1998 16:26
05754MDC.DGN
PLOTTED BY:jgrmovse
PLOTTED:Rover:Blmincek:Bpid5754Bnotes:B05754mdc.dgn

PHASE VI (2 LANES OPEN) — DETAIL L

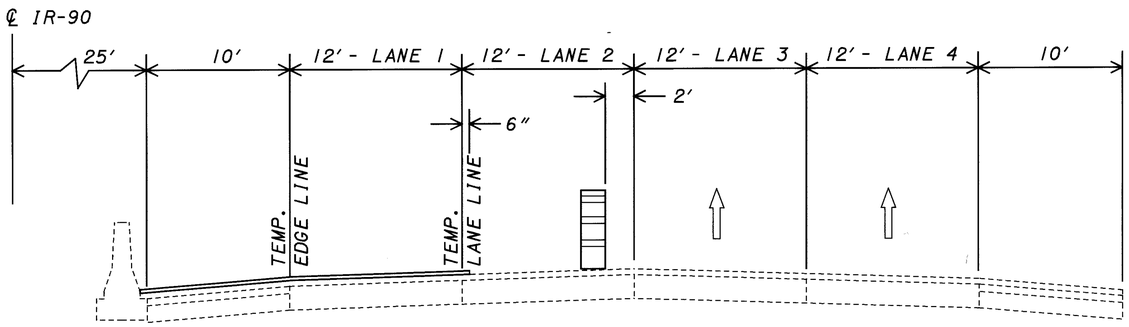

CLOSE LANES 1 & 2

10 AM-2 PM MON.-FRI. EB
7 PM-6 AM MON.-FRI. EB
9 AM-2 PM MON.-FRI. WB
8 PM-6 AM MON.-FRI. WB
12:01 AM SAT.-6 AM MON. EB & WB

PLACE 1-1/2" ITEM 446 - SURFACE COURSE
ON SHOULDER AND LANE 1
INSTALL TEMPORARY PAVEMENT MARKINGS

RE-OPEN ALL LANES

PAVE AS SHOWN ON DETAIL L. WHEN AN ADDITIONAL LANE CLOSURE IS PERMITTED, DROP BACK AND PAVE AS PER DETAIL M. ALL DETAIL L & M WORK SHALL BE COMPLETED TO THE SAME DISTANCE BEFORE RE-OPENING TO TRAFFIC.

PHASE VII (2 LANES OPEN) — DETAIL N

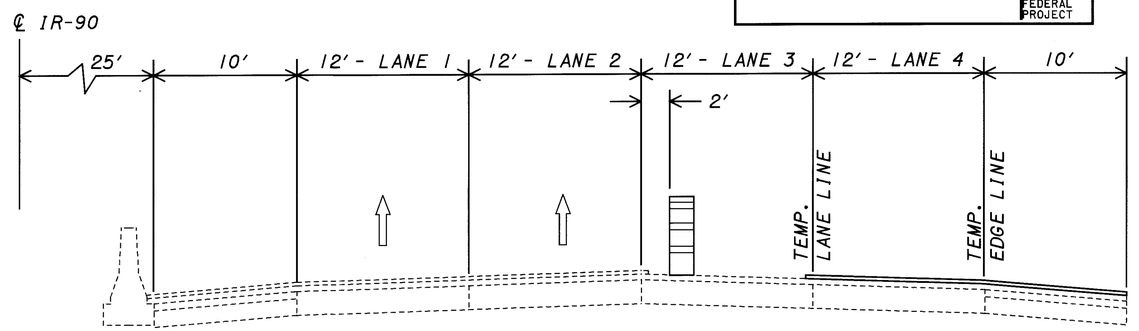

CLOSE LANES 3 & 4

10 AM-2 PM MON.-FRI. EB
7 PM-6 AM MON.-FRI. EB
9 AM-2 PM MON.-FRI. WB
8 PM-6 AM MON.-FRI. WB
12:01 AM SAT.-6 AM MON. EB & WB

PLACE 1-1/2" ITEM 446 - SURFACE COURSE
ON SHOULDER AND LANE 4
INSTALL TEMPORARY PAVEMENT MARKINGS

RE-OPEN ALL LANES

PAVE AS SHOWN ON DETAIL N. WHEN AN ADDITIONAL LANE CLOSURE IS PERMITTED, DROP BACK AND PAVE AS PER DETAIL O. ALL DETAIL N & O WORK SHALL BE COMPLETED TO THE SAME DISTANCE BEFORE RE-OPENING TO TRAFFIC.

IR-90 E.B. & W.B.
(FOR BRIDGE AREAS, SEE SHEETS 31-40)

PHASE VI (1 LANE OPEN) — DETAIL M

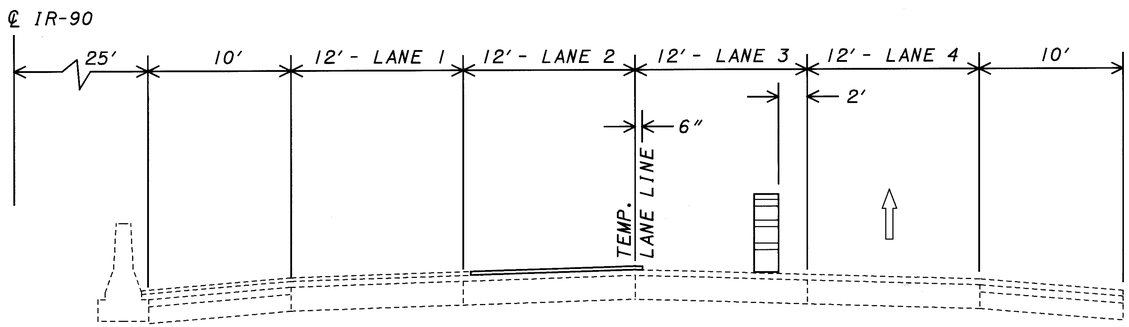

CLOSE LANES 1, 2 & 3

10 PM-6 AM MON.-FRI. EB & WB
11 PM FRI.-7 AM SAT. EB
11 PM SAT.-7 AM SUN. EB
11 PM SUN.-6 AM MON. EB
12:01 AM SAT.-8 AM SAT. WB
12:01 AM SUN.-9 AM SUN. WB
12:01 AM MON.-6 AM MON. WB

PLACE 1-1/2" ITEM 446 - SURFACE COURSE
ON LANE 2
INSTALL TEMPORARY PAVEMENT MARKINGS

RE-OPEN ALL LANES

PHASE VII (1 LANE OPEN) — DETAIL O

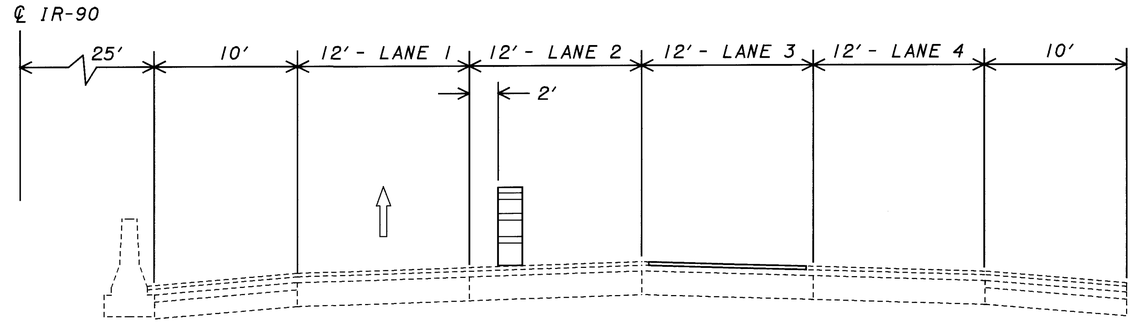

CLOSE LANES 2, 3 & 4

10 PM-6 AM MON.-FRI. EB & WB
11 PM FRI.-7 AM SAT. EB
11 PM SAT.-7 AM SUN. EB
11 PM SUN.-6 AM MON. EB
12:01 AM SAT.-8 AM SAT. WB
12:01 AM SUN.-9 AM SUN. WB
12:01 AM MON.-6 AM MON. WB

PLACE 1-1/2" ITEM 446 - SURFACE COURSE
ON LANE 3

RE-OPEN ALL LANES

PLOT SUBMITTED:02-DEC-1998 16:19
05754MDD.DGN
PLOTTED BY:jgrmovse
PLOTTED:Fri Dec 4 15:54 Pid5754Enotes05754mdd.dgn

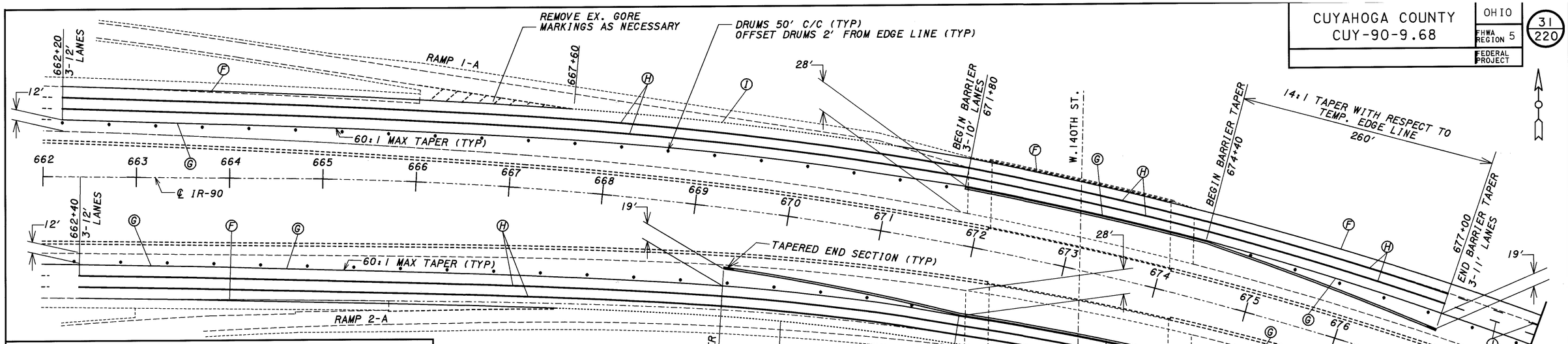

LEGEND

- Ⓐ TEMP. EDGE LINE, CLASS I (WHITE)
- Ⓑ TEMP. EDGE LINE, CLASS I (YELLOW)
- Ⓒ TEMP. LANE LINE, CLASS I (WHITE)
- Ⓓ TEMP. CHANNELIZING LINE, CLASS I (WHITE)
- Ⓔ TEMP. DOTTED LINE, CLASS I (WHITE)
- Ⓕ TEMP. EDGE LINE, CLASS I, 740.06, TYPE I (WHITE)
- Ⓖ TEMP. EDGE LINE, CLASS I, 740.06, TYPE I (YELLOW)
- Ⓗ TEMP. CHANNELIZING LINE, CLASS I, 740.06, TYPE I (WHITE)
- Ⓘ TEMP. DOTTED LINE, CLASS I, 740.06, TYPE I (WHITE)
- Ⓙ TEMP. LANE LINE, CLASSI, 740.06, TYPE I (WHITE)

PHASE II EASTBOUND (1999)
PHASE II WESTBOUND (2000)

NOTE: LEFT EDGE LINE 1.0' FROM TOE OF PCB (ON BRIDGES) TYP.
RIGHT EDGE LINE 1.25' FROM THE TOE OF PARAPET (LEFT BRIDGE)
RIGHT EDGE LINE VARIES FROM THE TOE OF PARAPET (RIGHT BRIDGE)

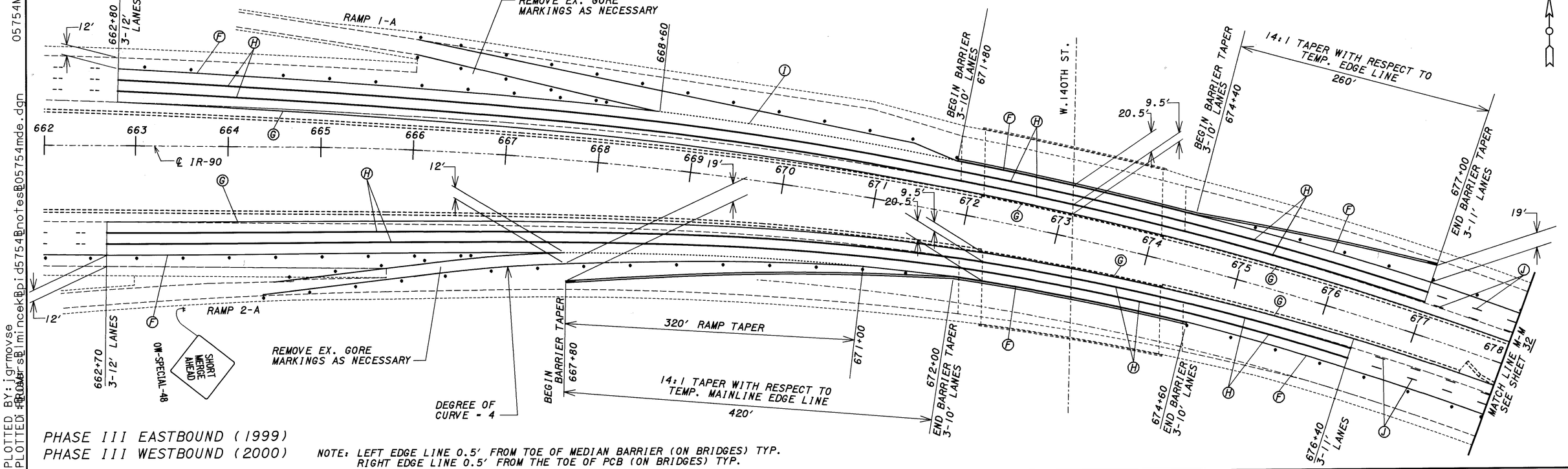

PHASE III EASTBOUND (1999)
PHASE III WESTBOUND (2000)

NOTE: LEFT EDGE LINE 0.5' FROM TOE OF MEDIAN BARRIER (ON BRIDGES) TYP.
RIGHT EDGE LINE 0.5' FROM THE TOE OF PCB (ON BRIDGES) TYP.

W 140TH ST, JOSLYN RD & GCRTA, BEREA RD BRIDGE TRANSITION DETAILS

PLOTTED BY: jgrmovse
PLOTTED: Robert Blmincek Bpid5754Bnotes B05754mde.dgn
05754MDE.DGN
PLOT SUBMITTED:02-DEC-1998 16:19

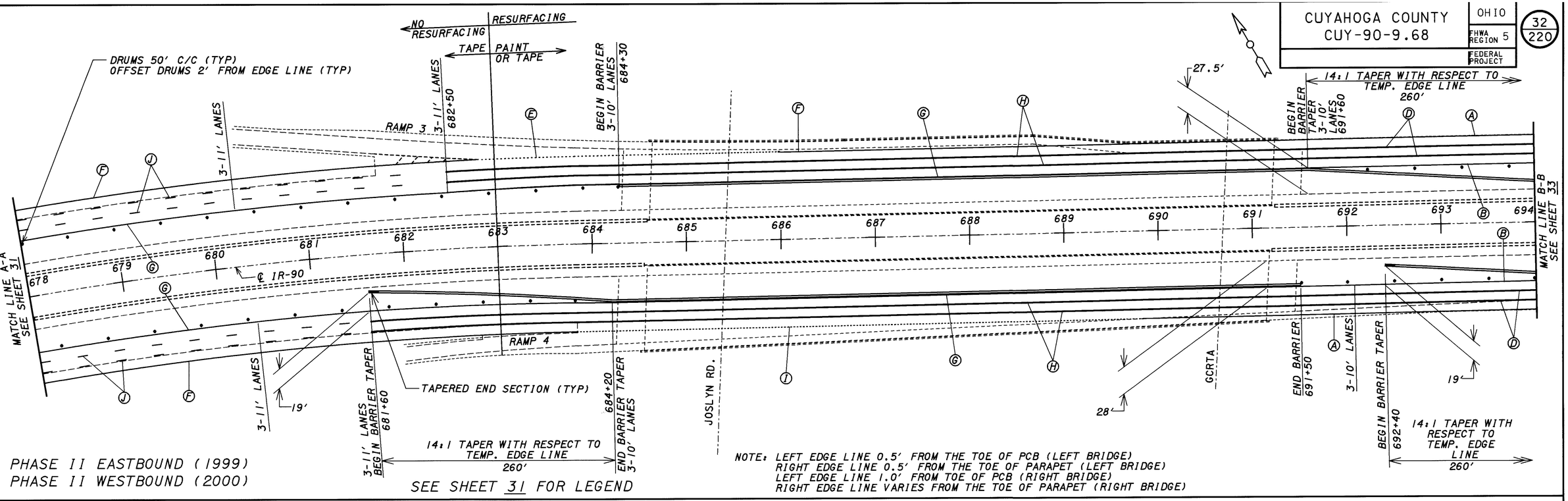

W 140TH ST, JOSLYN RD & GCRTA, BEREA RD BRIDGE TRANSITION DETAILS

PLOT SUBMITTED:02-DEC-1998 16:18
05754MDF.DGN
PLOTTED BY:jgrmovse
PLOTTED FROM:rsElmincekBpid5754Bnotes805754mdf.dgn

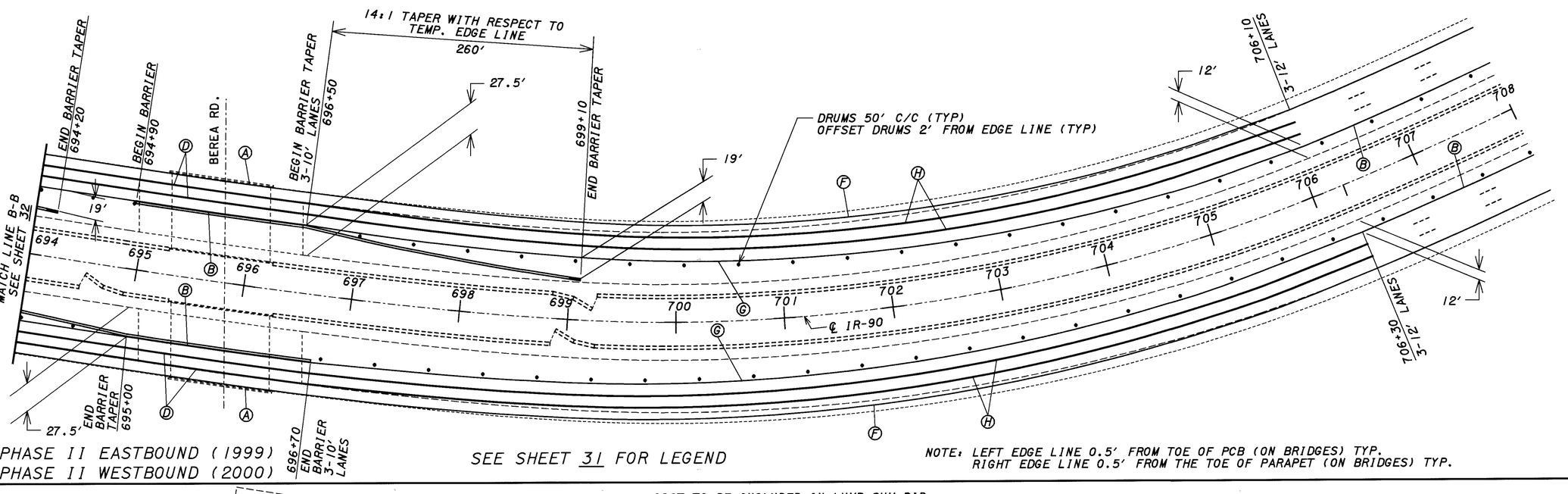

PHASE II EASTBOUND (1999)
PHASE II WESTBOUND (2000)

SEE SHEET 31 FOR LEGEND

NOTE: LEFT EDGE LINE 0.5' FROM TOE OF PCB (ON BRIDGES) TYP.
RIGHT EDGE LINE 0.5' FROM THE TOE OF PARAPET (ON BRIDGES) TYP.

* COST TO BE INCLUDED IN LUMP SUM BID FOR ITEM 614 - MAINTAINING TRAFFIC

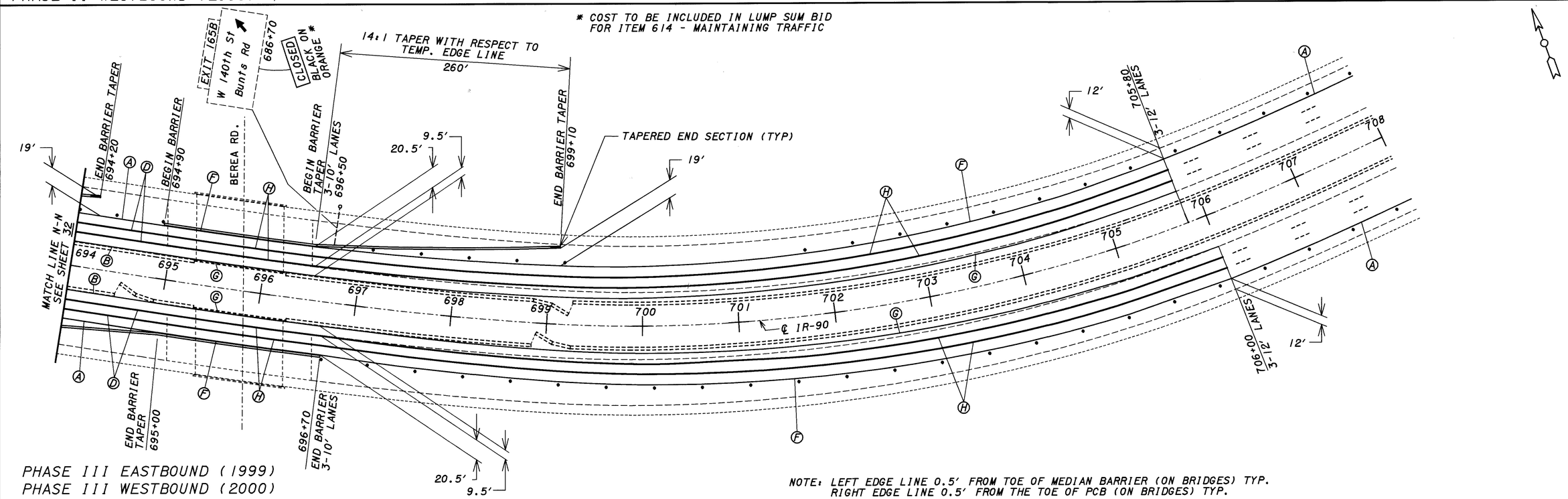

PHASE III EASTBOUND (1999)
PHASE III WESTBOUND (2000)

NOTE: LEFT EDGE LINE 0.5' FROM TOE OF MEDIAN BARRIER (ON BRIDGES) TYP.
RIGHT EDGE LINE 0.5' FROM THE TOE OF PCB (ON BRIDGES) TYP.

W 140TH ST, JOSLYN RD & GCRTA, BEREA RD BRIDGE TRANSITION DETAILS

PLOTTED BY: jgrmovse
PLOTTED: PROJ: Rmbrs@lmincek@pid5754@notes@05754mdg.dgn
PLOT SUBMITTED: 02-DEC-1998 16:17
05754MDG.DGN

NOTE: LEFT EDGE LINE 0.5' FROM TOE OF PCB (LEFT BRIDGE)
RIGHT EDGE LINE 0.5' FROM TOE OF PARAPET (LEFT BRIDGE)
LEFT EDGE LINE 1.0' FROM TOE OF PCB (RIGHT BRIDGE)
RIGHT EDGE LINE 1.25' FROM THE TOE OF PARAPET (RIGHT BRIDGE)

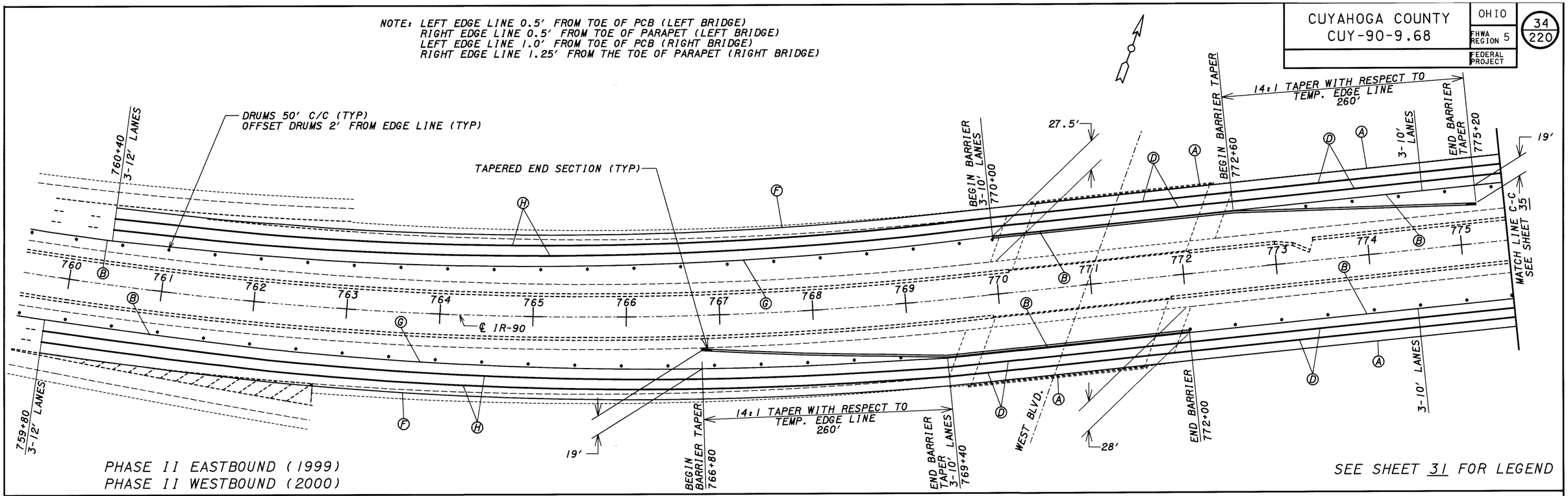

NOTE: LEFT EDGE LINE 0.5' FROM TOE OF MEDIAN BARRIER (ON BRIDGES) TYP.
RIGHT EDGE LINE 0.5' FROM THE TOE OF PCB (ON BRIDGES) TYP.

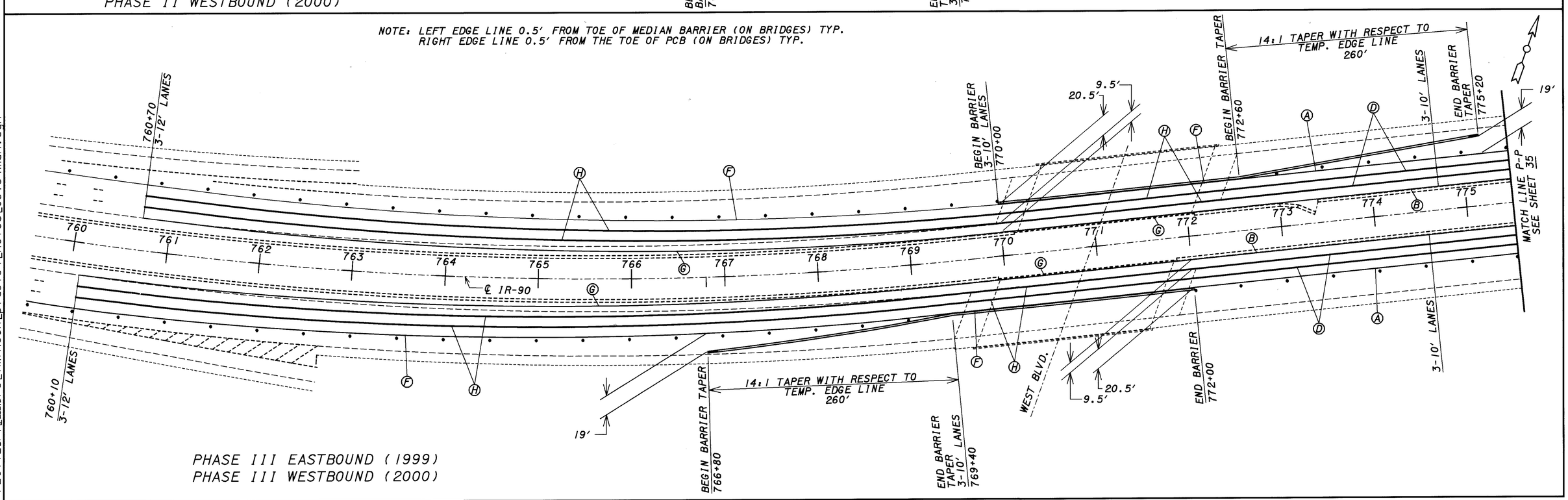

WEST BLVD, W 100TH ST AND W 98TH ST BRIDGE TRANSITION DETAILS

PLOTTED BY: jgrmovse
PLOTTED: Rowers@lmincek@pid5754@notes@05754mdh.dgn
PLOT SUBMITTED: 02-DEC-1998 16:17
05754MDH.DGN

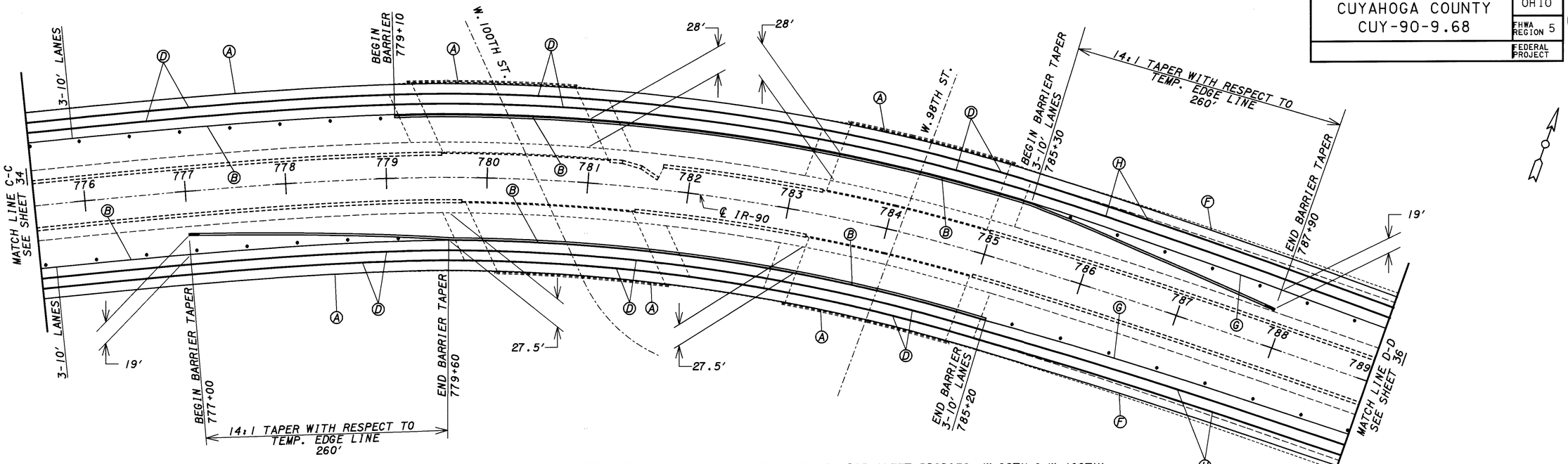

NOTE: LEFT EDGE LINE 1.0' FROM TOE OF PCB (LEFT BRIDGES, W 98TH & W 100TH)
RIGHT EDGE LINE 1.25' FROM TOE OF PARAPET (LEFT BRIDGES, W 98TH & W 100TH)
LEFT EDGE LINE 0.5' FROM TOE OF PCB (RIGHT BRIDGES, W 98TH & W 100TH)
RIGHT EDGE LINE 0.5' FROM THE TOE OF PARAPET (RIGHT BRIDGES, W 98TH & W 100TH)

PHASE II EASTBOUND (1999)
PHASE II WESTBOUND (2000)

SEE SHEET 31 FOR LEGEND

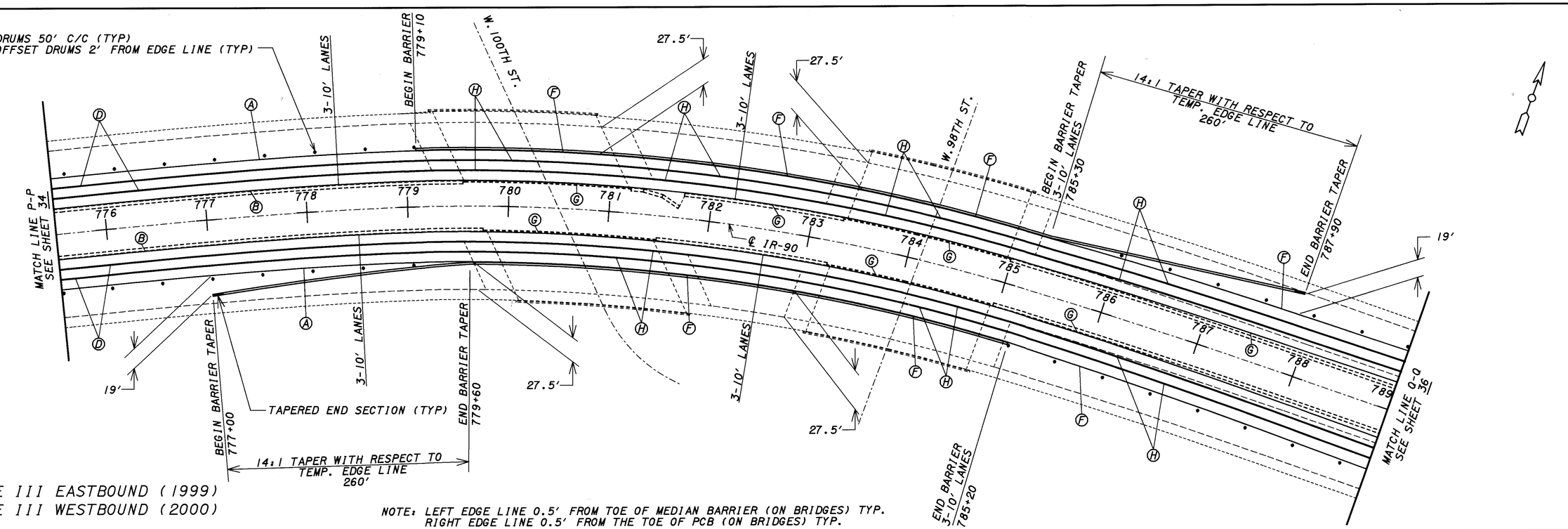

PHASE III EASTBOUND (1999)
PHASE III WESTBOUND (2000)

NOTE: LEFT EDGE LINE 0.5' FROM TOE OF MEDIAN BARRIER (ON BRIDGES) TYP.
RIGHT EDGE LINE 0.5' FROM THE TOE OF PCB (ON BRIDGES) TYP.

WEST BLVD, W 100TH ST AND W 98TH ST BRIDGE TRANSITION DETAILS

PLOT SUBMITTED:02-DEC-1998 16:16
PLOTTED BY:jgrmovse
PLOTTED FROM:rsblmincek@pid5754@notes@05754mdj.dgn
05754MDJ.DGN

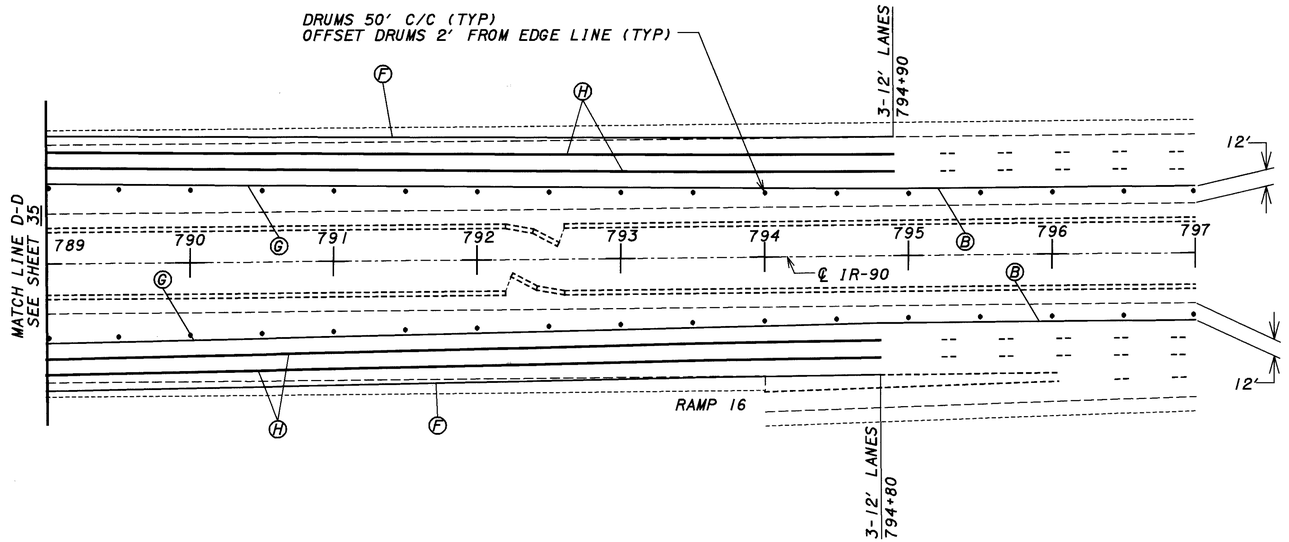

PHASE II EASTBOUND (1999)
PHASE II WESTBOUND (2000)

SEE SHEET 31 FOR LEGEND

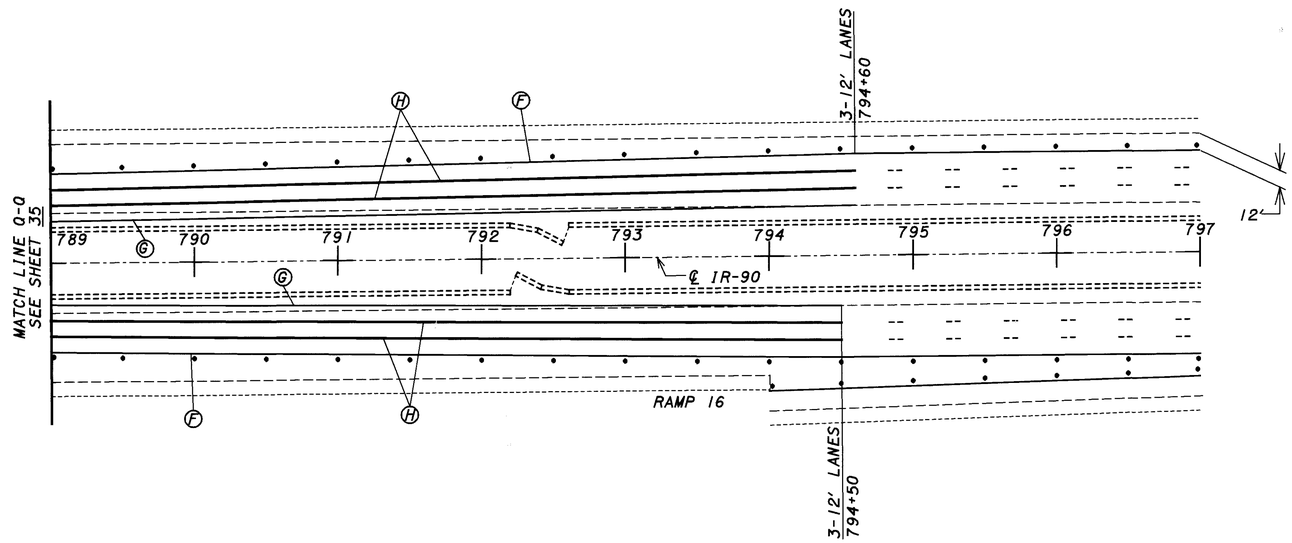

PHASE III EASTBOUND (1999)
PHASE III WESTBOUND (2000)

WEST BLVD, W 100TH ST AND W 98TH ST BRIDGE TRANSITION DETAILS

PLOTTED BY: jgrmovse
PLOTTED: FRUMBrsB1mincekBpid5754Bnotes05754mdk.dgn
PLOT SUBMITTED:02-DEC-1998 16:15
05754MDK.DGN

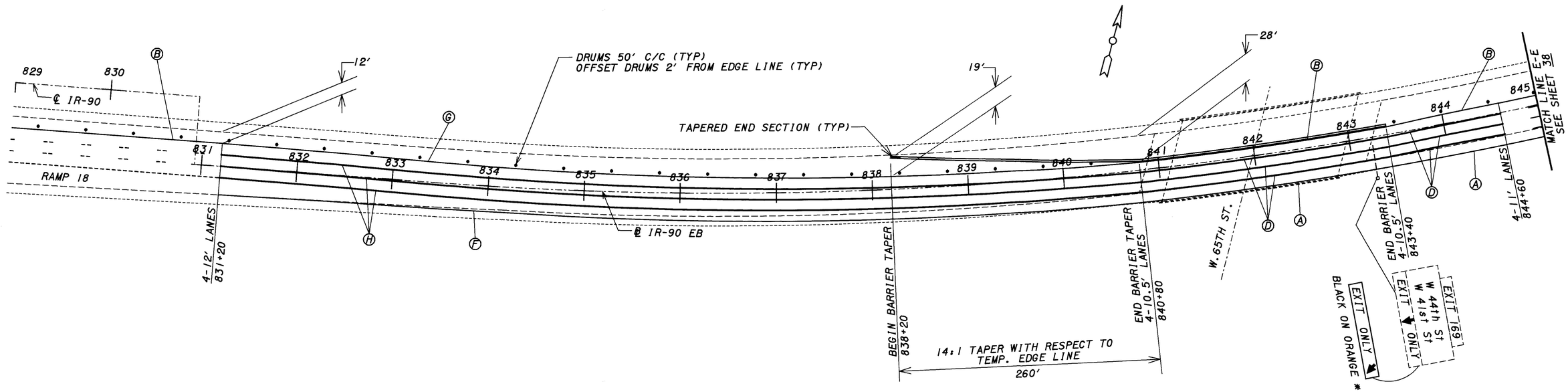

PHASE II EASTBOUND (1999)

SEE SHEET 31 FOR LEGEND

NOTE: LEFT EDGE LINE 1.0′ FROM TOE OF PCB (ON BRIDGE) TYP.
RIGHT EDGE LINE 1.25′ FROM THE TOE OF PARAPET (ON BRIDGE) TYP.

* COST TO BE INCLUDED IN LUMP SUM BID FOR ITEM 614 - MAINTAINING TRAFFIC

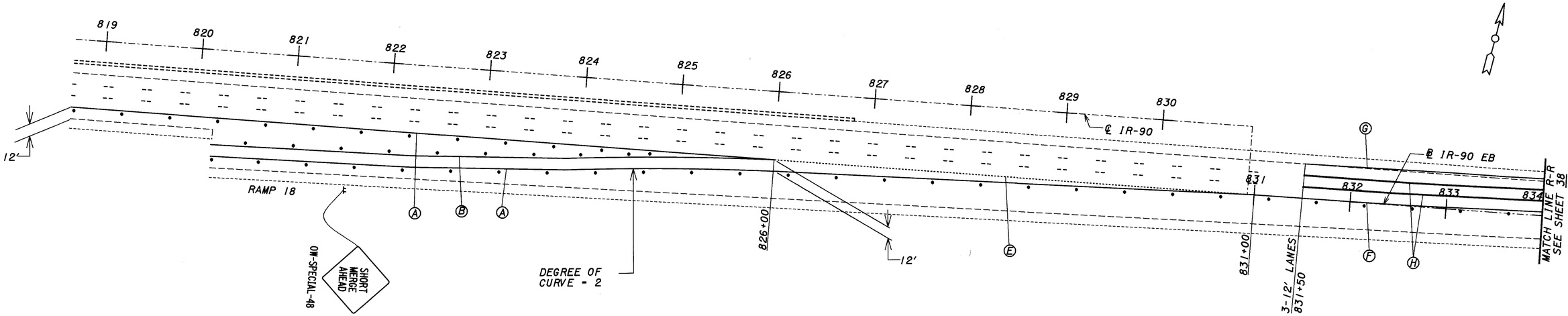

PHASE III EASTBOUND (1999)

W 65TH ST BRIDGE TRANSITION DETAILS

PLOTTED BY:jgrmovse
PLOTTED:[illegible]
[illegible]\mincek\pids\05754notes\05754mdl.dgn
PLOT SUBMITTED:02-DEC-1998 16:14
05754MDL.DGN

PLOTTED BY: jgrmovse
PLOTTED: 02-DEC-1998 16:14
PLOT SUBMITTED:02-DEC-1998 16:14
FROM: s:\projects\cuy9096\plans\pid05754\notes\p05754mdm.dgn
TO: s:\projects\cuy9096\plans\pid05754\minceke\p05754mdm.dgn

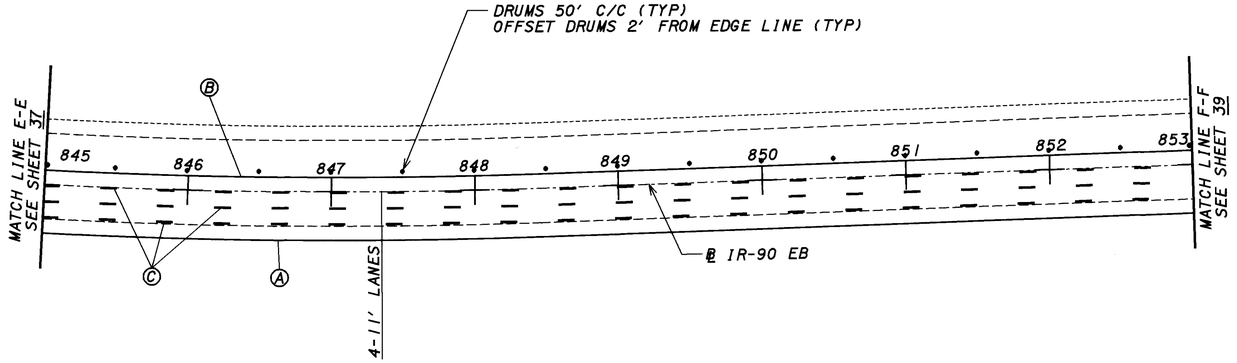

SEE SHEET 31 FOR LEGEND

PHASE II EASTBOUND (1999)

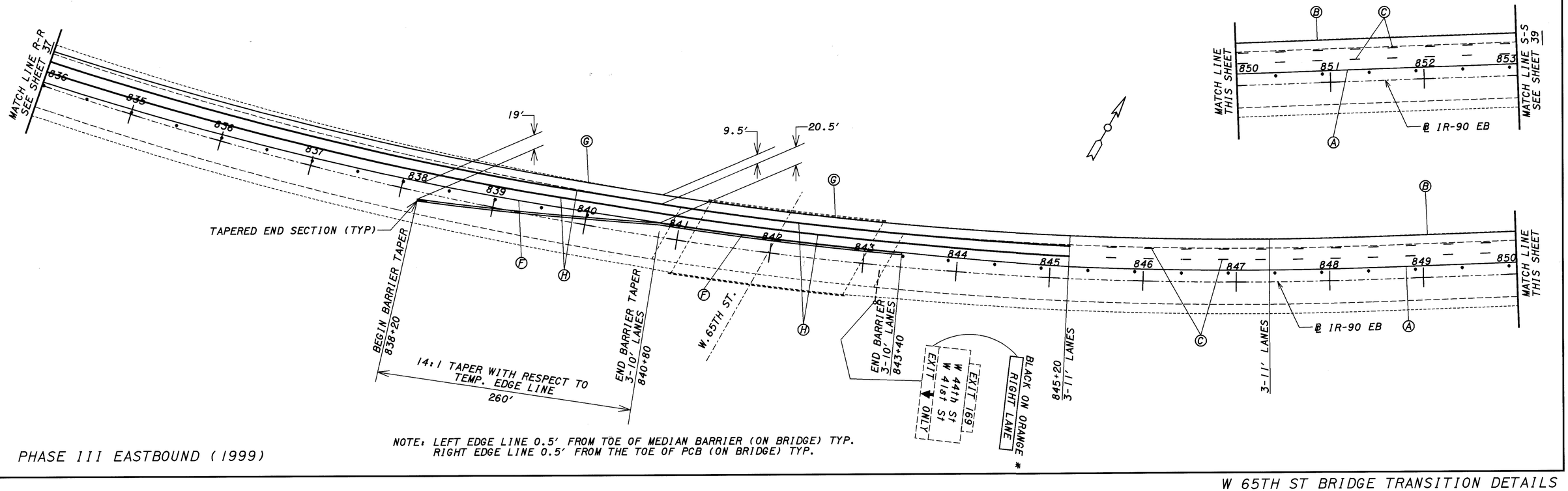

NOTE: LEFT EDGE LINE 0.5' FROM TOE OF MEDIAN BARRIER (ON BRIDGE) TYP.
RIGHT EDGE LINE 0.5' FROM THE TOE OF PCB (ON BRIDGE) TYP.

PHASE III EASTBOUND (1999)

W 65TH ST BRIDGE TRANSITION DETAILS

NOTE: LEFT EDGE LINE 1.0′ FROM THE TOE OF PCB (LEFT BRIDGE)
RIGHT EDGE LINE VARIES FROM THE TOE OF PARAPET (LEFT BRIDGE)
LEFT EDGE LINE 0.5′ FROM THE TOE OF PCB (RIGHT BRIDGE)
RIGHT EDGE LINE 0.5′ FROM THE TOE OF PARAPET (RIGHT BRIDGE)

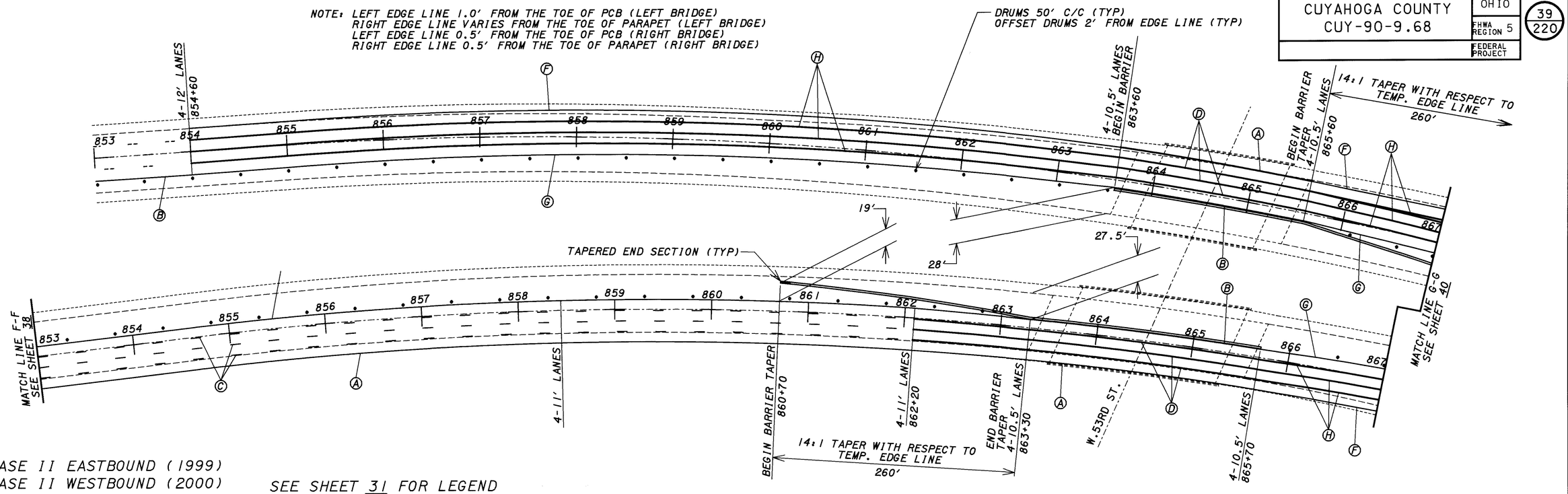

PHASE II EASTBOUND (1999)
PHASE II WESTBOUND (2000)

SEE SHEET 31 FOR LEGEND

NOTE: LEFT EDGE LINE 0.5′ FROM THE TOE OF MEDIAN BARRIER (LEFT BRIDGE)
RIGHT EDGR LINE 0.5′ FROM THE TOE OF PCB (LEFT BRIDGE)
LEFT EDGE LINE 1.25′ FROM THE TOE OF MEDIAN BARRIER (RIGHT BRIDGE)
RIGHT EDGE LINE 1.0′ FROM THE TOE OF PCB (RIGHT BRIDGE)

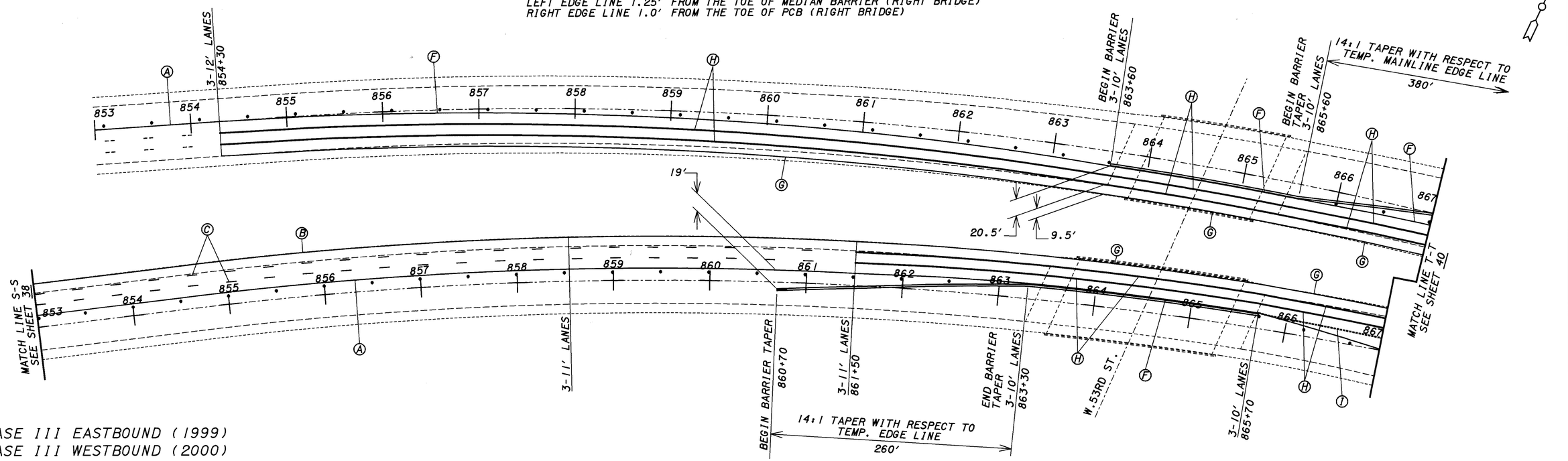

PHASE III EASTBOUND (1999)
PHASE III WESTBOUND (2000)

W 53RD ST BRIDGE TRANSITION DETAILS

PLOTTED BY:jgrmovse
PLOTTED :12-DEC-1998 16:13
PLOT SUBMITTED:02-DEC-1998 16:13
d:\projects\cuy\05754\plans\05754mdn.dgn
d:\projects\cuy\05754\notes\05754mdh.dgn
d:\projects\cuy\05754\misc\kbpid05754.dgn

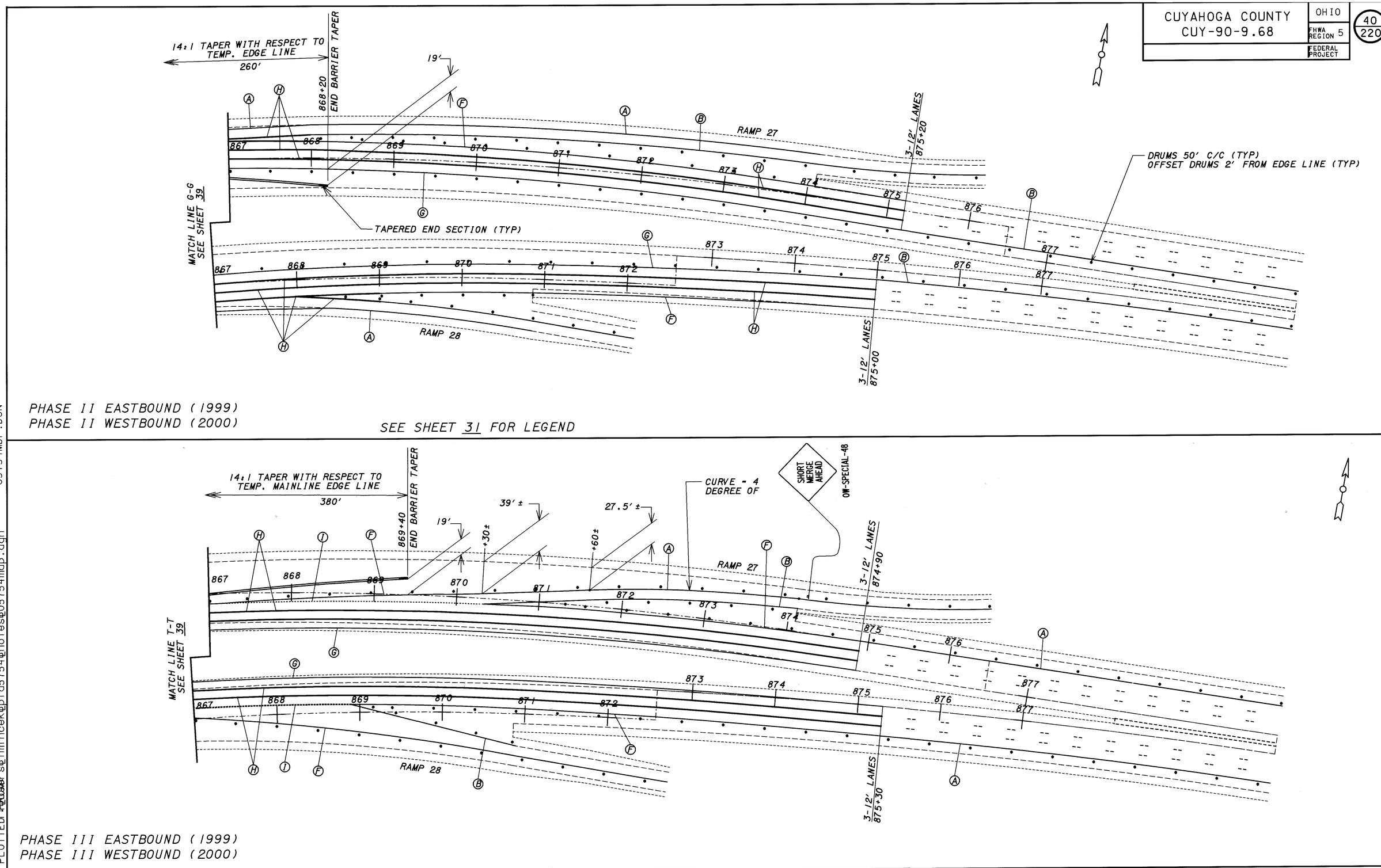

W 53RD ST BRIDGE TRANSITION DETAILS

PLOT SUBMITTED:02-DEC-1998 16:12
05754MDP.DGN
PLOTTED BY:jgrmovse
PLOTTED:Rubrs@lmincek@pid5754@notes@05754mdp.dgn

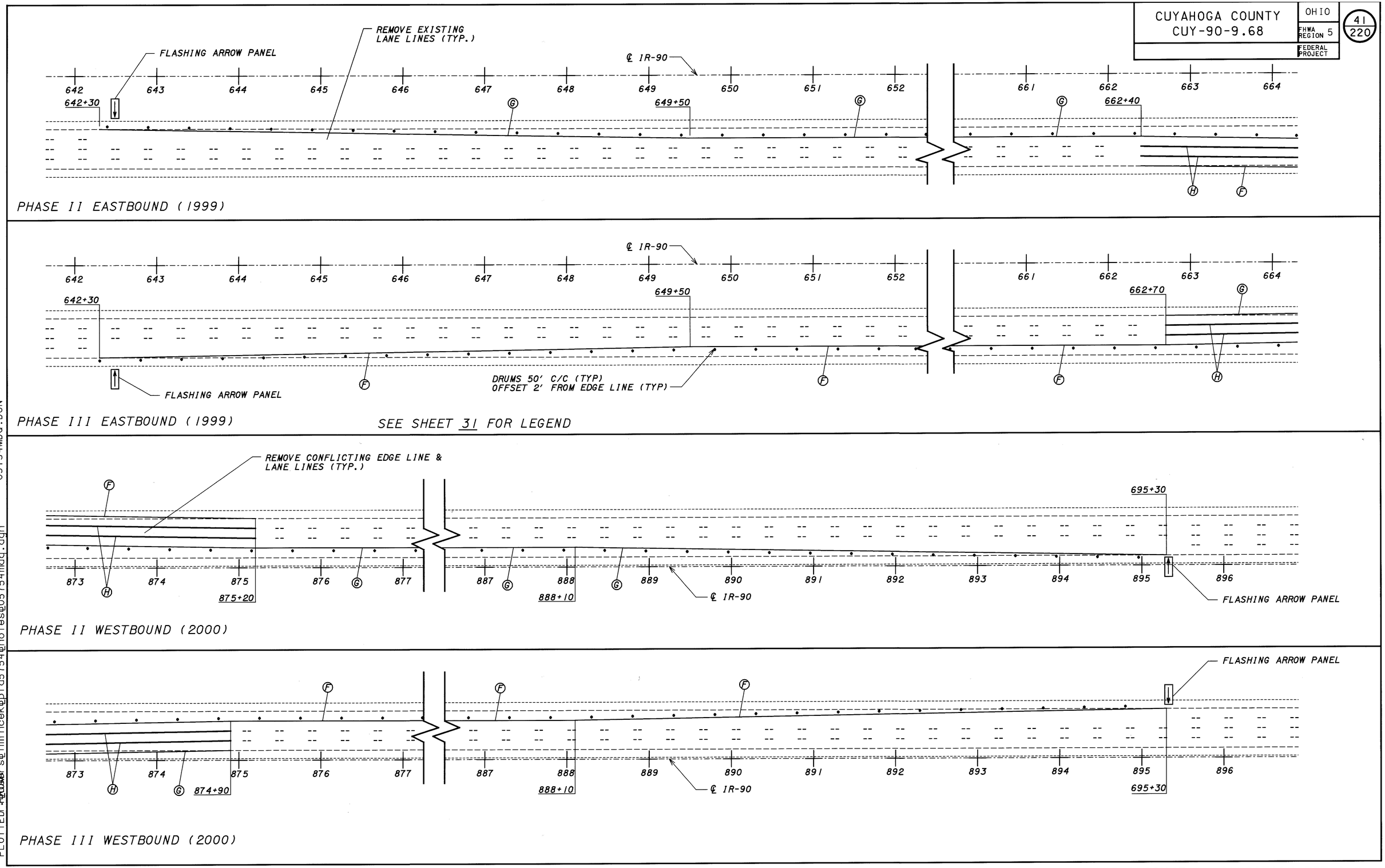

LANE CLOSURE & TRANSITION DETAILS

PLOT SUBMITTED:02-DEC-1998 16:11
PLOTTED BY:jgrmovse
PLOTTED:Rowers@lmincek@pid5754@notes@05754mdq.dgn
05754MDQ.DGN

FHWA REGION	STATE	PROJECT	
5	OHIO		

41A
220

CUYAHOGA COUNTY
CUY – 90 – 9.68

LEGEND:

WORK AREA PHASE I

WORK AREA PHASE II

	SOUTH TAPER	NORTH TAPER
WARREN		
PHASE I	125'	125'
PHASE II	125'	125'
LORAIN		
PHASE I	0	125'
PHASE II	0	125'
CONNECTOR		
PHASE I	0	40
PHASE II	0	40
CLARK		
PHASE I	125'	125'
PHASE II	125'	125'

WARREN RD BRIDGE

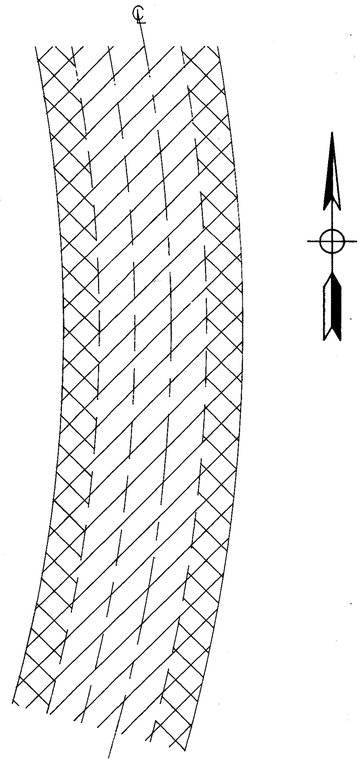

TYPICAL FOUR LANE CITY
STREET BRIDGES
(LORAIN, CONNECTOR & CLARK BRIDGES)

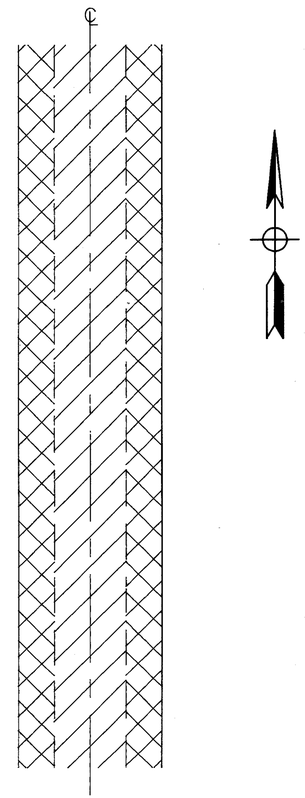

NOTES:

1) DRUMS SPACED 20' C/C WILL BE USED TO SEPARATE WORK ZONES FROM MAINTAINED TRAFFIC.

2) SPEED LIMIT ON THESE BRIDGES DURING CONSTRUCTION WILL BE 25 MPH.

3) REFER TO STANDARD DRAWINGS MT–95.31 & MT–95.32.

4) OTHER PROTECTIVE DEVICES MAY BE USED WHEN SPACE RESTRICTIONS DON'T ALLOW FOR USE OF A BARRIER TRUCK.

CAD DWG. FILE:MT-BRDG1 DATE: NOV 21, 1994

TRAFFIC MAINTENANCE – WARREN, LORAIN, CONNECTOR & CLARK BRIDGES

FHWA REGION	STATE	PROJECT	
5	OHIO		

41B/220

CUYAHOGA COUNTY
CUY-90-9.68

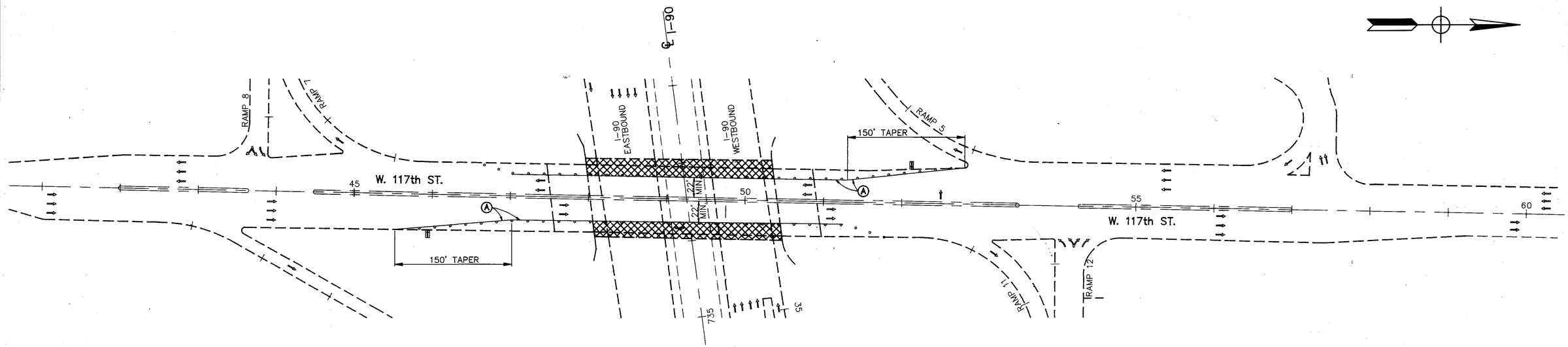

PHASE I

CLOSE RIGHT LANE IN EACH DIRECTION, PROVIDING SIGNS AS PER MT-95.31, AND COMPLETE WORK ON OUTSIDE LANES AND SIDEWALKS OF BRIDGE. FOR NOTES, REFER TO MT-95.31.

LEGEND

- WORK AREA
- DRUM @ 20' c/c
- TYPE III BARRICADE WITH TYPE B FLASHING LIGHT
- FLASHING ARROW PANEL

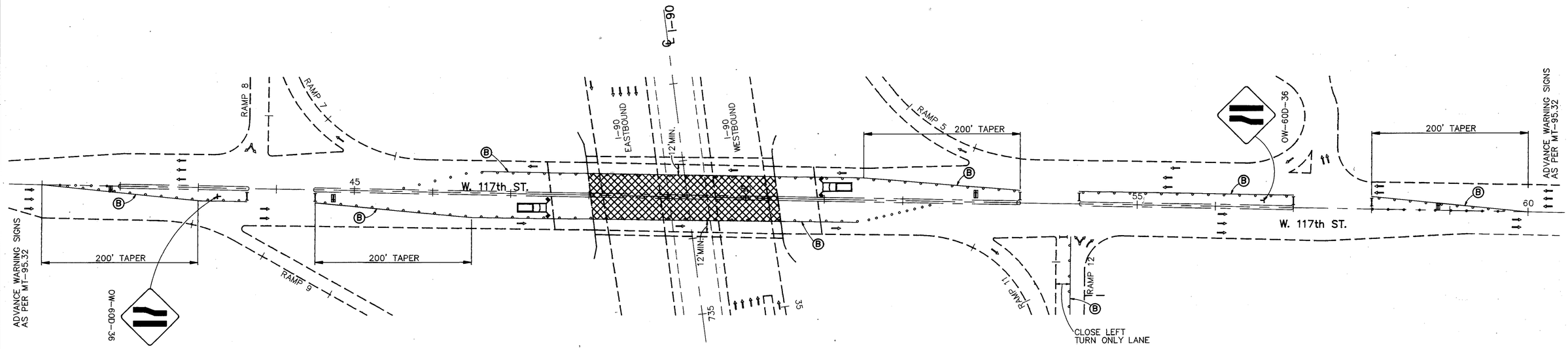

PHASE II

CLOSE TWO LEFT LANES IN EACH DIRECTION

FOR NOTES, SEE STD. DWG. MT-95.32

DRAWING = MT-BRDG2 DATE: NOV 21, 1994

FHWA REGION	STATE	PROJECT	
5	OHIO		

41C
220

CUYAHOGA COUNTY
CUY-90-9.68

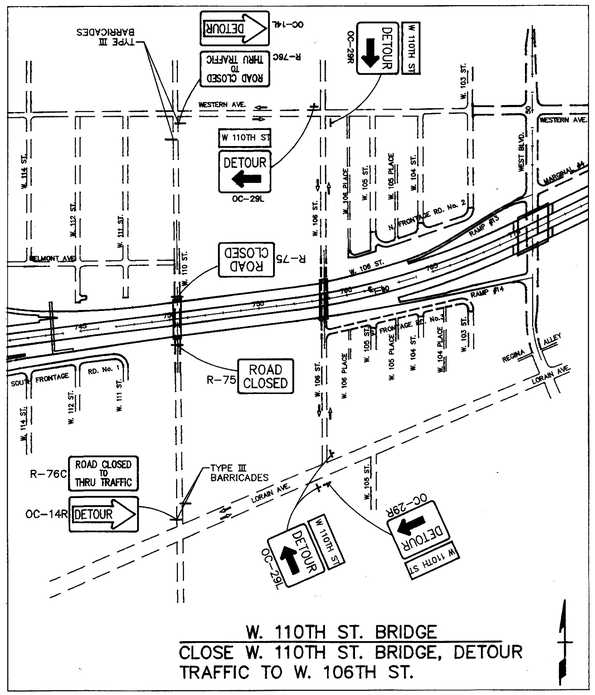

W. 110TH ST. BRIDGE
CLOSE W. 110TH ST. BRIDGE, DETOUR TRAFFIC TO W. 106TH ST.

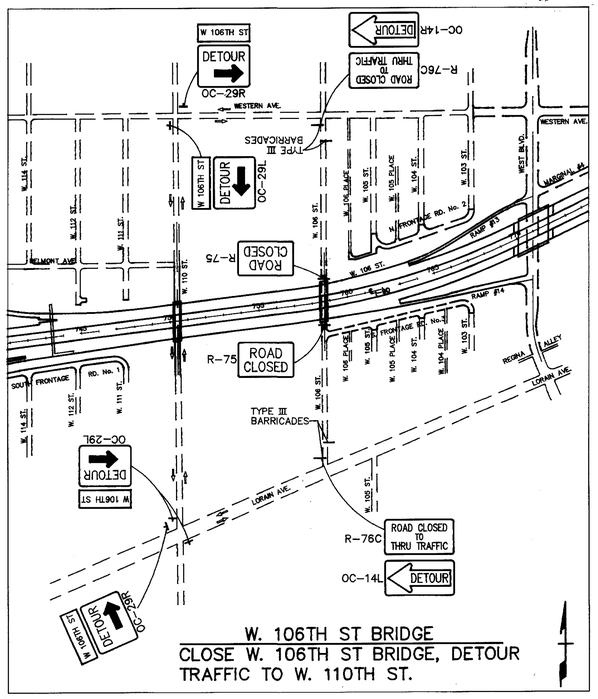

W. 106TH ST BRIDGE
CLOSE W. 106TH ST BRIDGE, DETOUR TRAFFIC TO W. 110TH ST.

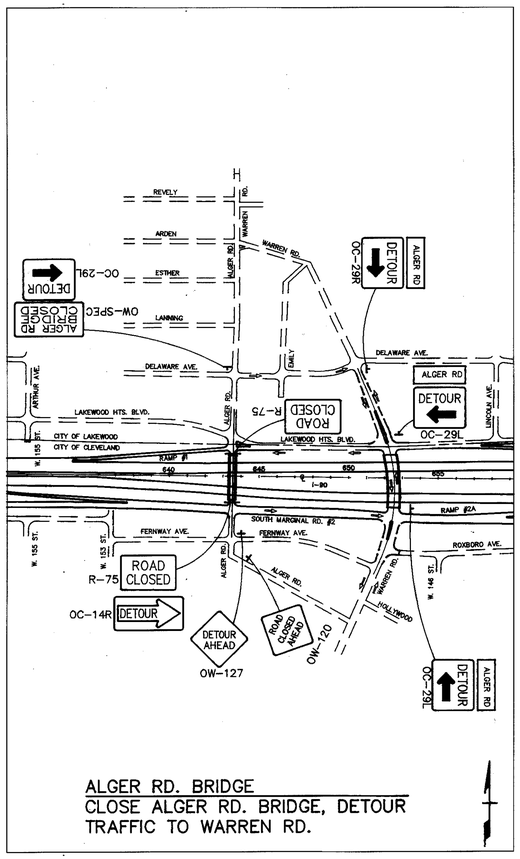

ALGER RD. BRIDGE
CLOSE ALGER RD. BRIDGE, DETOUR TRAFFIC TO WARREN RD.

NOTE: NORTHBOUND TRAFFIC TO DETOUR ONTO S. MARGINAL ROAD #2, TO WARREN ROAD, TO LAKEWOOD HTS. BLVD.

SOUTHBOUND TRAFFIC TO DETOUR ONTO DELAWARE AVE., TO WARREN ROAD.

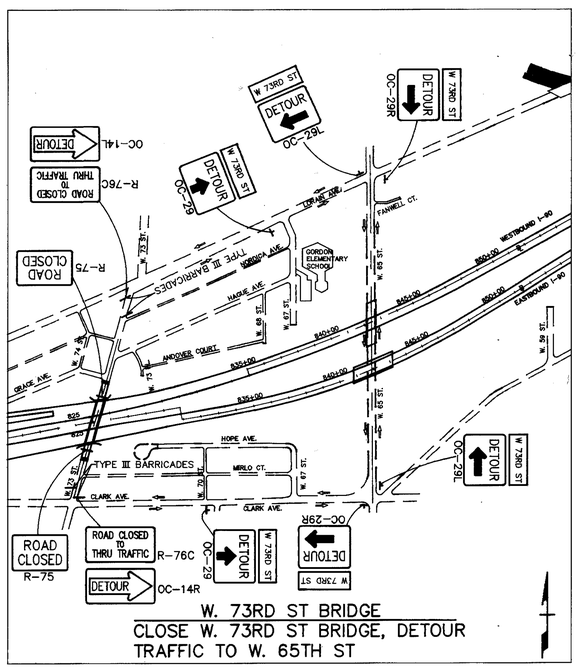

W. 73RD ST BRIDGE
CLOSE W. 73RD ST BRIDGE, DETOUR TRAFFIC TO W. 65TH ST

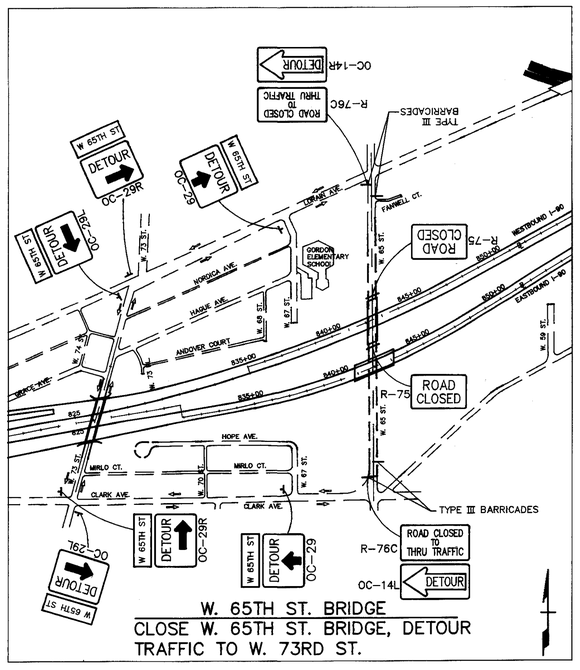

W. 65TH ST. BRIDGE
CLOSE W. 65TH ST. BRIDGE, DETOUR TRAFFIC TO W. 73RD ST.

NOTES:

1) AT EACH CLOSED BRDIGE, GATES AND BARRICADES SHALL BE ERECTED AS PER MT-101.60.

2) STREET SIGNS SHALL BE THE DESTINATION SERIES D-8 TYPE, EXCEPT THAT THE COLOR SHALL BE BLACK ON ORANGE.

3) "OW" SIGNS INFORMING WHICH BRIDGE IS CLOSED AND WHAT BRIDGE TO USE AS A DETOUR WILL BE INSTALLED ON MAJOR STREETS 200' (MIN.) IN ADVANCE OF THE CLOSED INTERSECTION FOR W65TH, W73RD, W106TH, W110TH ST. BRIDGES.
EXAMPLE:

W 110TH ST BRIDGE CLOSED	OW-SPEC
USE W 106TH ST BRIDGE	OW-SPEC

4) PEDESTRIAN TRAFFIC SHALL BE MAINTAINED ON AT LEAST ONE SIDEWALK AT ALL TIMES. REFER TO THE GENERAL NOTES AND TO STANDARD DRAWING MT-110.20M.

5) SEE "SIDE STREET CLOSURE LIMITATION" NOTE ON SHEET 23 .

CAD DWG. FILE: MT-DETR DATE: NOV 21, 1994

CUYAHOGA COUNTY
CUY-90-9.68

OHIO
FHWA REGION 5
FEDERAL PROJECT

41D
220

RAMP 4 DETOUR

PLOTTED BY:jgrmovse
PLOTTED:02-DEC-1998 16:05
PLOT SUBMITTED:02-DEC-1998 16:05
05754MDX.DGN

SHEET NO.	LOCATION	STATION FROM	STATION TO	DIRECTION	PHASE	614 BARRIER REFLECTOR, TYPE B EACH	614 OBJECT MARKER EACH		622 PORTABLE CONCRETE BARRIER, 32" LIN. FT.	
31	IR-90	669+40	674+60	EB	II	21	21		520	
	IR-90	667+80	674+60	EB	III	27	27		680	
	IR-90	671+80	677+00	WB	II	21	21		520	
	IR-90	671+80	677+00	WB	III	21	21		520	
32	IR-90	681+60	691+50	EB	II	40	40		990	
	IR-90	681+60	691+50	EB	III	40	40		990	
32,33	IR-90	684+30	694+20	WB	II	40	40		990	
32,33	IR-90	684+30	694+20	WB	III	40	40		990	
32,33	IR-90	692+40	696+70	EB	II	17	17		430	
32,33	IR-90	692+40	696+70	EB	III	17	17		430	
33	IR-90	694+90	699+10	WB	II	17	17		420	
33	IR-90	694+90	699+10	WB	III	17	17		420	
34	IR-90	766+80	772+00	EB	II	21	21		520	
34	IR-90	766+80	772+00	EB	III	21	21		520	
34	IR-90	770+00	775+20	WB	II	21	21		520	
34	IR-90	770+00	775+20	WB	III	21	21		520	
35	IR-90	777+00	785+20	EB	II	33	33		820	
35	IR-90	777+00	785+20	EB	III	33	33		820	
35	IR-90	779+10	787+90	WB	II	35	35		880	
35	IR-90	779+10	787+90	WB	III	35	35		880	
37	IR-90	838+20	843+40	EB	II	21	21		520	
38	IR-90	838+20	843+40	EB	III	21	21		520	
39	IR-90	860+70	865+70	EB	II	20	20		500	
39	IR-90	860+70	865+70	EB	III	20	20		500	
39,40	IR-90	863+60	868+20	WB	II	18	18		460	
39,40	IR-90	863+60	869+40	WB	III	23	23		580	
TOTALS CARRIED TO GENERAL SUMMARY						661	661		16,460	

PLOTTED BY:jgrmovse
PLOTTED FROM:E:\users\lmincek\pid05754\05754msa.dgn
PLOT SUBMITTED:02-DEC-1998 16:04
05754MSA.DGN

PHASE	LOCATION	STATION FROM	STATION TO	DIRECTION	LENGTH	614 TEMPORARY LANE LINE, CLASS I LIN. FT.	614 TEMPORARY EDGE LINE, CLASS I (WHITE) LIN. FT.	614 TEMPORARY EDGE LINE, CLASS I (YELLOW) LIN. FT.	614 TEMPORARY CHANNELIZING LINE, CLASS I LIN. FT.	614 TEMPORARY DOTTED LINE, CLASS I (WHITE) LIN. FT.		614 TEMPORARY EDGE LINE, 740.06, CLASS 1, TPYE 1 (WHITE) LIN. FT.	614 TEMPORARY EDGE LINE, 740.06, CLASS 1, TPYE 1 (YELLOW) LIN. FT.	614 TEMPORARY CHANNELIZNG LINE, CLASS 1, 740.06, TPYE 1 LIN. FT.	614 TEMPORARY DOTTED LINE, CLASS 1, 740.06, TYPE 1 LIN. FT.	614 TEMPORARY LANE LINE, CLASS 1, 740.06, TYPE 1 LIN. FT.			642 REMOVAL OF PAVEMENT MARKING LIN. FT.
II	IR-90	642+30	662+40	EB	2010								2010						2010
		662+40	676+40	EB	1400							925	1400	2800	475				5600
		676+40	681+60	EB	520							520	520			1040			2080
		681+60	683+00	EB	140							140	140	280					560
		683+00	696+70	EB	1370		1370	1370	2740										5480
II	IR-90	696+70	706+30	EB	960							960	960	1920					3840
		706+30	759+80	EB	5350			5350											5350
		759+80	769+40	EB	960							960	960	1920					3840
		769+40	785+20	EB	1580		1580	1580	3160										6320
		785+20	794+80	EB	960							960	960	1920					3840
II	IR-90	794+80	831+20	EB	3640			3640											3640
		831+20	840+80	EB	960							960	960	2880					4800
		840+80	844+60	EB	380		380	380	1140										1900
		844+60	862+20	EB	1760	5280	1760	1760											8800
		862+20	865+70	EB	350		350	350	1050										1750
II	IR-90	865+70	875+00	EB	930							930	930	2790					4650
		875+00	879+80	EB	480			480											480
II	IR-90	662+20	677+00	WB	1480							1130	1480	2960	350				5920
		677+00	682+50	WB	550							550	550		1100				2200
		682+50	683+00	WB	50							50	50	100					200
II	IR-90	683+00	696+50	WB	1350		1350	1350	2700										5400
		696+50	706+10	WB	960							960	960	1920					3840
		706+10	760+40	WB	5430			5430											5430
		760+40	770+00	WB	960							960	960	1920					3840
		770+00	785+30	WB	1530		1530	1530	3060										6120
II	IR-90	785+30	794+90	WB	960							960	960	1920					3840
		794+90	854+60	WB	5970			5970											5970
		854+60	863+60	WB	900							900	900	2700					4500
		863+60	865+60	WB	200		200	200	600										1000
		865+60	875+20	WB	960							960	960	1920					3840
II	IR-90	875+20	879+80	WB	460			460											460
		879+80	895+30	WB	1550								1550						1550
III	IR-90	642+30	662+70	EB	2040							2040							2040
		662+70	676+40	EB	1370							1050	1370	2740					
III	IR-90	676+40	681+60	EB	520							520	520			1040			
		681+60	706+00	EB	2440							2440	2440	4880					
		706+00	760+10	EB	5410		5410												5410
		760+10	771+80	EB	1170							1170	1170	2340					
		771+80	779+50	EB	770		770	770	1540										
TOTALS CARRIED TO GENERAL SUMMARY						5,280	14,700	30,620	15,990			20,045	22,710	37,910	1,925	2,080			126,500
						1.00 MI	8.58 MI					8.10 MI				0.39 MI			

TEMPORARY PAVEMENT MARKING SUB-SUMMARY

PLOTTED BY:jgrmovse
PLOTTED FROM:user$d1:[mincek.dpi]05754msb.dgn
05754MSB.DGN
PLOT SUBMITTED:02-DEC-1998 16:03

PHASE	LOCATION	STATION FROM	STATION TO	DIRECTION	LENGTH	614 TEMPORARY LANE LINE, CLASS I LIN. FT.	614 TEMPORARY EDGE LINE, CLASS I (WHITE) LIN. FT.	614 TEMPORARY EDGE LINE, CLASS I (YELLOW) LIN. FT.	614 TEMPORARY CHANNELIZING LINE, CLASS I LIN. FT.	614 TEMPORARY DOTTED LINE, CLASS I (WHITE) LIN. FT.	614 TEMPORARY STOP LINE, CLASS I (WHITE) LIN. FT.	614 TEMPORARY CROSSWALK LINE, CLASS I (WHITE) LIN. FT.	614 TEMPORARY EDGE LINE, CLASS 1, 740.06, TYPE 1 (WHITE) LIN. FT.	614 TEMPORARY EDGE LINE, CLASS 1, 740.06, TYPE 1 (YELLOW) LIN. FT.	614 TEMPORARY CHANNELIZNG LINE, CLASS 1, 740.06, TYPE 1 LIN. FT.	614 TEMPORARY DOTTED LINE, CLASS 1, 740.06, TYPE 1 LIN. FT.	614 TEMPORARY LANE LINE, CLASS 1, 740.06, TYPE 1 LIN. FT.		642 REMOVAL OF PAVEMENT MARKING LIN. FT.
III	IR-90	779+50	794+50	EB	1500								1500	1500	3000				
		794+50	831+50	EB	3700		3300			400									3700
		831+50	843+10	EB	1160								1160	1160	2320				
		843+10	845+20	EB	210		210	210	420										
		845+20	861+50	EB	1630	3260	1630	1630											
III	IR-90	861+50	863+60	EB	210		210	210	210										
		863+60	875+30	EB	1170								850	1170	2340	320			
		875+30	879+80	EB	450		450												450
III	IR-90	662+80	677+00	WB	1420								1080	1420	2840		340		
		677+00	682+50	WB	550								550	550		1100			
		682+50	705+80	WB	2330								2330	2330	4660				
		705+80	760+70	WB	5490		5490												5490
		760+70	772+10	WB	1140								1140	1140	2280				
III	IR-90	772+10	779+50	WB	740		740	740	740										
		779+50	794+60	WB	1510								1510	1510	3020				
		794+60	854+30	WB	5970		5970												5970
		854+30	874+90	WB	2060								1740	2060	4120	320			
		874+90	879+80	WB	490		490												490
III	IR-90	879+80	895+30	WB	1550								1550						1550
III	RAMP 1-A	666+00	668+60	WB	260								260	260					
III	RAMP 2-A	664+20	667+80	EB	360								360	360					
II, III	RAMP 12	33+65	46+00	WB	1235		1235	1235											
II, III	RAMP 18	7+00	26+00	EB	1900		1900	1900											
II, III	RAMP 27	70+00	82+00	WB	1200		1200	1200											
II, III	RAMP 28	70+00	82+00	EB	1200		1200	1200											
IV, V	IR-90	684+60	879+00	WB	19440	77760	19440	19440											
IV, V	IR-90	684+60	879+00	EB	19440	77760	19440	19440											
IV, V	RAMPS			WB, EB	12500		12500	12500			400	1200							
TOTALS CARRIED TO GENERAL SUMMARY						158,780	72,405	59,705	1,370	400	400	1200	14,030	13,460	24,580	1,740	340		17,650
						30.07 MI	25.02 MI						5.21 MI				0.06 MI		

TEMPORARY PAVEMENT MARKING SUB-SUMMARY

PLOT SUBMITTED:02-DEC-1998 16:02
05754MSC.DGN
PLOTTED BY:jgrmovse
PLOTTED FROM:D:\users\lmincek\pid05754\05754msc.dgn

GENERAL SUMMARY

SHEET NUMBER																	ITEM	ITEM EXT.	GRAND TOTAL	UNIT	DESCRIPTION	SEE SHEET NO.
16	17	18	18A		50	52	53	54		62	62A	63	88	89	90A	100						
																					ROADWAY	
																82	202	23800	82	SQ YD	BASE REMOVED	
	500						3800									741	202	30000	5041	SQ FT	WALK REMOVED	
							215										202	30500	215	LIN FT	CONCRETE MEDIAN REMOVED	
														600	110		202	30700	710	LIN FT	CONCRETE BARRIER REMOVED	
1250							1532										202	32001	2782	LIN FT	CURB REMOVED, AS PER PLAN, A	16, 94
250							1816										202	32001	2066	LIN FT	CURB REMOVED, AS PER PLAN, B	16, 94
							546										202	32001	546	LIN FT	CURB REMOVED, AS PER PLAN, C	94
											30						202	35100	30	LIN FT	PIPE REMOVED, 24" AND UNDER	
											71						202	35200	71	LIN FT	PIPE REMOVED, OVER 24"	
												20395					202	38000	20395	LIN FT	GUARDRAIL REMOVED	
3000																	202	54100	3000	EACH	RAISED PAVEMENT MARKER REMOVED FOR STORAGE	
											1						202	58100	1	EACH	CATCH BASIN REMOVED	
1500																	202	75000	1500	LIN FT	FENCE REMOVED	
	200		2210		16167								30	190			203	12000	18797	CU YD	EXCAVATION NOT INCLUDING EMBANKMENT CONSTRUCTION	
					36470												203	50000	36470	SQ YD	SUBGRADE COMPACTION	
			2000														203	55000	2000	LIN FT	DITCH CLEANOUT	
												207					203	60001	207	STATION	LINEAR GRADING, AS PER PLAN	16
5																	604	38500	5	EACH	MONUMENT ASSEMBLY	
										1							604	39500	1	EACH	MONUMENT BOX ADJUSTED TO GRADE	
												562.5					606	11000	562.5	LIN FT	GUARDRAIL, THRIE BEAM RAIL AND TRANSITION SECTION	
												18000					606	13000	18000	LIN FT	GUARDRAIL, TYPE 5	
100												212.5					606	13050	312.5	LIN FT	GUARDRAIL, TYPE 5A	
												6					606	25000	6	EACH	ANCHOR ASSEMBLY, TYPE A	
												25					606	26100	25	EACH	ANCHOR ASSEMBLY, TYPE E	
												21					606	26500	21	EACH	ANCHOR ASSEMBLY, TYPE T	
												22					606	35000	22	EACH	BRIDGE TERMINAL ASSEMBLY, TYPE 1	
												14					606	35100	14	EACH	BRIDGE TERMINAL ASSEMBLY, TYPE 2	
												8					606	35141	8	EACH	BRIDGE TERMINAL ASSEMBLY, TYPE 4, AS PER PLAN	93A
1500																	607	23000	1500	LIN FT	FENCE, TYPE CLT	
	500						3800									741	608	10001	4300	SQ FT	4" CONCRETE WALK, AS PER PLAN	17, 95
																	608	12001	741	SQ FT	5" CONCRETE WALK, AS PER PLAN	100
																					EROSION CONTROL	
		2000															207	10000	2000	SQ YD	TEMPORARY SEEDING AND MULCHING	
		500															207	30000	500	LIN FT	FILTER FABRIC FENCE	
		400															207	70000	400	EACH	STRAW OR HAY BALES	
								794									601	21001	794	SQ YD	CONCRETE SLOPE PROTECTION, AS PER PLAN, A	18, 96
			100					1124									601	21001	1224	SQ YD	CONCRETE SLOPE PROTECTION, AS PER PLAN, B	19, 96
			1000														659	10000	1000	SQ YD	SEEDING AND MULCHING	
		1															659	20000	1	TON	COMMERCIAL FERTILIZER	
		1															659	35000	1	M GAL	WATER	
							122										660	30000	122	SQ YD	SODDING UNSTAKED	

PLOTTED BY: jgrmovse
PLOTTED FROM: C:\Users\Blmincek\Bpid05754\B05754gga.dgn
PLOT SUBMITTED:02-DEC-1998 15:58
05754GGA.DGN

GENERAL SUMMARY

SHEET NUMBER																	ITEM	ITEM EXT.	GRAND TOTAL	UNIT	DESCRIPTION	SEE SHEET NO.
					16		18	18A		54	58	58A	62	62A							DRAINAGE	
					10												602	20000	10	CU YD	CONCRETE MASONRY	
								50									603	00900	50	LIN FT	6" CONDUIT, TYPE B	
											1653						603	00900	1653	LIN FT	6" CONDUIT, TYPE B, 707.41 NON-PERFORATED, ASTM 3034 SDR 35, 707.42 OR 707.33	
										30	150	760					603	01500	940	LIN FT	6" CONDUIT, TYPE F, 707.41 NON-PERFORATED, ASTM 3034 SDR 35, 707.42 OR 707.33	
							20						68				603	04401	88	LIN FT	12" CONDUIT, TYPE B, AS PER PLAN,	18
								50									603	05900	50	LIN FT	15" CONDUIT, TYPE B	
														15			603	06700	15	LIN FT	15" CONDUIT, TYPE F, 707.05, TYPE C	
								20									603	07400	20	LIN FT	18" CONDUIT, TYPE B	
								20									603	08900	20	LIN FT	21" CONDUIT, TYPE B	
														15			603	10400	15	LIN FT	24" CONDUIT, TYPE B, 706.02	
														71			603	14200	71	LIN FT	30" CONDUIT, TYPE F, 707.05, TYPE C	
								500		937							603	98300	1437	LIN FT	CONDUIT, MISC.: PIPE CLEANOUT, 8" TO 15"	18A
								200									603	98300	200	LIN FT	CONDUIT, MISC.: PIPE CLEANOUT, 18" TO 24"	18A
								100									603	98300	100	LIN FT	CONDUIT, MISC.: PIPE CLEANOUT, 27" TO 36"	18A
								50									603	98300	50	LIN FT	CONDUIT, MISC.: PIPE CLEANOUT, 42" TO 60"	18A
							4						2				604	00300	6	EACH	CATCH BASIN, CITY OF CLEVELAND NO. 1	18
														1			604	01800	1	EACH	CATCH BASIN, NO. 5A	
								5					54				604	09000	59	EACH	CATCH BASIN ADJUSTED TO GRADE	
								5									604	09500	5	EACH	CATCH BASIN RECONSTRUCTED TO GRADE	
							10										604	09900	10	EACH	CATCH BASIN GRATE	
								10									604	14601	10	EACH	INLET, NO. 3B, AS PER PLAN	18A
								5									604	17501	5	EACH	INLET, NO. 2-A-6, AS PER PLAN	18A
								5									604	17901	5	EACH	INLET, NO. 2-A-8, AS PER PLAN	18A
								5									604	18301	5	EACH	INLET, NO. 2-A-10, AS PER PLAN	18A
								2									604	18701	2	EACH	INLET, NO. 2-A-12, AS PER PLAN	18A
								1									604	19101	1	EACH	INLET, NO. 2-A-14, AS PER PLAN	18A
													39				604	20601	39	EACH	INLET ADJUSTED TO GRADE, AS PER PLAN	18A
								5					3				604	20800	8	EACH	INLET RECONSTRUCTED TO GRADE	
								5									604	32100	5	EACH	MANHOLE, NO. 5	
								5					32				604	34501	37	EACH	MANHOLE ADJUSTED TO GRADE, AS PER PLAN	18A
								5									604	35500	5	EACH	MANHOLE RECONSTRUCTED TO GRADE	
											10						604	36600	10	EACH	PRECAST REINFORCED CONCRETE OUTLET	
							10000										SPECIAL	60450000	10000	POUND	MISCELLANEOUS METAL	18
								40		20							604	98000	60	EACH	DRAINAGE STRUCTURE, MISC.: CATCH BASIN OR INLET TO BE CLEANED	18A
											63755	2177					605	11100	65932	LIN FT	6" SHALLOW PIPE UNDERDRAIN	
											1097	1355					605	13300	2452	LIN FT	6" UNCLASSIFIED PIPE UNDERDRAIN	
										394							605	11110	394	LIN FT	6" SHALLOW PIPE UNDERDRAIN WITH FABRIC WRAP, 707.01 OR 707.21	
												20014					605	12200	20014	LIN FT	6" DEEP PIPE UNDERDRAIN	
													24				638	10800	24	EACH	VALVE BOX ADJUSTED TO GRADE (WATER)	

PLOTTED BY: jgrmovse
PLOTTED FROM: C:\Users\jgrmovse\Documents\projects\05754GGB\pid05754ggb.dgn
PLOT SUBMITTED: 02-DEC-1998 15:57
05754GGB.DGN

GENERAL SUMMARY

SHEET NUMBER																	ITEM	ITEM EXT.	GRAND TOTAL	UNIT	DESCRIPTION	SEE SHEET NO.
	16	17	18	18A	50	52	53	54	58		63		88	89	90A	100						
																					PAVEMENT	
													800				251	01001	800	SQ YD	PARTIAL DEPTH PAVEMENT REPAIR, AS PER PLAN	17
		1400															252	01000	1400	SQ YD	FULL DEPTH RIGID PAVEMENT REMOVAL AND FLEXIBLE REPLACEMENT	
		3500															252	01500	3500	LIN FT	FULL DEPTH PAVEMENT SAWING	
			6000			17379											254	01000	23379	SQ YD	PAVEMENT PLANING, BITUMINOUS	
			14000														254	01001	14000	SQ YD	PAVEMENT PLANING, BITUMINOUS, AS PER PLAN	18
						10707											254	01010	10707	SQ YD	PAVEMENT PLANING, PORTLAND CEMENT CONCRETE	
			600														254	01600	600	SQ YD	PATCHING PLANED SURFACE	
													400				255	10001	400	SQ YD	FULL DEPTH PAVEMENT REMOVAL AND RIGID REPLACEMENT, CLASS C, AS PER PLAN, A	17
													1900				255	10001	1900	SQ YD	FULL DEPTH PAVEMENT REMOVAL AND RIGID REPLACEMENT, CLASS C, AS PER PLAN, B	17
													400				255	10151	400	SQ YD	FULL DEPTH PAVEMENT REMOVAL AND RIGID REPLACEMENT, CLASS MS,AS PER PLAN A	17
													1900				255	10151	1900	SQ YD	FULL DEPTH PAVEMENT REMOVAL AND RIGID REPLACEMENT, CLASS MS,AS PER PLAN B	17
													10700				255	20000	10700	LIN FT	FULL DEPTH PAVEMENT SAWING	
			1170	2210	254									51			301	46000	3685	CU YD	BITUMINOUS AGGREGATE BASE, PG64-22	
		200			6078								30	73		9	304	20001	6390	CU YD	AGGREGATE BASE, AS PER PLAN	17
					10883									253			305	14001	11136	SQ YD	10" CONCRETE BASE, AS PER PLAN	17
			600		36296	53								25			407	10000	36374	GALLON	TACK COAT	
					18772									22			407	14000	18794	GALLON	TACK COAT FOR INTERMEDIATE COURSE	
		70000															413	14000	70000	LIN FT	SAWING AND SEALING ASPHALT CONCRETE PAVEMENT JOINTS	
					17558									21			446	46040	17579	CU YD	ASPHALT CONCRETE INTERMEDIATE COURSE, TYPE 2, PG64-28	
					15737	57								18			446	50001	15812	CU YD	ASPHALT CONCRETE SURFACE COURSE, TYPE IH, AS PER PLAN	
											774						448	46060	774	CU YD	ASPHALT CONCRETE INTEREMEDIATE COURSE, TYPE I, PG64-22 (UNDER GUARDRAIL)	
			250														448	47020	250	CU YD	ASPHALT CONCRETE SURFACE COURSE, TYPE I, PG64-22	
			100					394									SPECIAL	45130000	494	LIN FT	PRESSURE RELIEF JOINT, TYPE A	18
							460										609	14000	460	LIN FT	CURB, TYPE 2-A	
	250						400										609	16001	650	LIN FT	CURB, TYPE 2-B, AS PER PLAN	16
	1250																609	26001	1250	LIN FT	CURB, TYPE 6, AS PER PLAN	16
							215										612	42001	215	SQ YD	CONCRETE MEDIAN, AS PER PLAN, 9" THICK	96
							200										617	10100	200	CU YD	COMPACTED AGGREGATE, TYPE A	
							4										617	25000	4	M GAL	WATER	
														600			622	23401	600	LIN FT	CONCRETE BARRIER, TYPE B, AS PER PLAN	89
											10						622	24001	10	LIN FT	CONCRETE BARRIER, TYPE D, AS PER PLAN	90
											252						622	25001	252	LIN FT	CONCRETE BARRIER, AS PER PLAN	92
															110		622	25001	110	LIN FT	CONCRETE BARRIER, AS PER PLAN A	90A
																					LIGHTING	
															16		625	00800	16	EACH	CONNECTOR KIT, TYPE V	
														12			625	01000	12	EACH	CONNECTOR KIT, TYPE VII A	
															12		625	01004	12	EACH	CONNECTOR KIT, TYPE VII B	
														5880	2950		625	23200	8830	LIN FT	NO. 4 AWG 5000 VOLT DISTRIBUTION CABLE	
														330			625	25500	330	LIN FT	CONDUIT, 3", 713.04	
														306			625	29002	306	LIN FT	TRENCH, 24" DEEP	
														12			625	29900	12	EACH	JUNCTION BOX	
															7		625	29910	7	EACH	TRANSITION JUNCTION BOX	
														12			625	32000	12	EACH	GROUND ROD	

PLOTTED BY: jgrmovse
PLOTTED FROM: \\Users\limcekb\id05754ggc.dgn
PLOT SUBMITTED: 02-DEC-1998 15:56
05754GGC.DGN

GENERAL SUMMARY

SHEET NUMBER																ITEM	ITEM EXT.	GRAND TOTAL	UNIT	DESCRIPTION	SEE SHEET NO.
								20	21	22	24		41E	41F	41G						
																				FOR TRAFFIC CONTROL GEN. SUM. SEE SHTS. 115 & 116	
																				FOR STRUCTURE SUB-SUM. SEE SHTS. 157-161	
																				MAINTENANCE OF TRAFFIC	
										500						614	13000	500	CU YD	BITUMINOUS CONCRETE FOR MAINTAINING TRAFFIC	
										500						614	13001	500	CU YD	BITUMINOUS CONCRETE FOR MAINTAINING TRAFFIC, AS PER PLAN	22
								1000								614	11100	1000	HOUR	LAW ENFORCEMENT OFFICER WITH PATROL CAR	
									24							614	12470	24	EACH	WORK ZONE SPEED LIMIT SIGN	
											15					614	12480	15	EACH	DOUBLED FINES IN WORK ZONE SIGN	
										400						SPECIAL	61412500	400	SQ FT	REPLACEMENT SIGN	22
													661			614	13300	661	EACH	BARRIER REFLECTOR, TYPE B	
													661			614	13350	661	EACH	OBJECT MARKER	
											400					614	18010	400	SQ FT	MAINTAINING TRAFFIC, MISC.:ADDITIONAL SIGNS, GROUND MOUNTED, AS DIRECTED BY THE ENGINEER	24
										20						614	18601	20	SIGN MNTH	PORTABLE CHANGEABLE MESSAGE SIGN, AS PER PLAN	22
														1.00	30.07	614	20000	31.07	MILE	TEMPORARY LANE LINE, CLASS I	
														0.39	0.06	614	20200	0.45	MILE	TEMPORARY LANE LINE, CLASS I, 740.06, TYPE I	
														8.58	25.02	614	22000	33.60	MILE	TEMPORARY EDGE LINE, CLASS I	
														8.10	5.21	614	22200	13.31	MILE	TEMPORARY EDGE LINE, CLASS I, 740.06, TYPE I	
														15990	1370	614	23000	17360	LIN FT	TEMPORARY CHANNELIZING LINE, CLASS I	
														37910	24580	614	23400	62490	LIN FT	TEMPORARY CHANNELIZING LINE, CLASS I, 740.06, TYPE I	
															400	614	24000	400	LIN FT	TEMPORARY DOTTED LINE, CLASS I	
														1925	1740	614	24400	3665	LIN FT	TEMPORARY DOTTED LINE, CLASS I, 740.06, TYPE I	
															400	614	26000	400	LIN FT	TEMPORARY STOP LINE, CLASS I	
															1200	614	27000	1200	LIN FT	TEMPORARY CROSSWALK LINE, CLASS I	
											500					616	10000	500	M GAL	WATER	
											50					616	20000	50	TON	CALCIUM CHLORIDE	
													16460			622	40020	16460	LIN FT	PORTABLE CONCRETE BARRIER, 32"	
														126500	17650	642	30000	144150	LIN FT	REMOVAL OF PAVEMENT MARKING	
																614	11000		LUMP	MAINTAINING TRAFFIC	
																623	10001		LUMP	CONSTRUCTION LAYOUT STAKES, AS PER PLAN	18
																624	10000		LUMP	MOBILIZATION	
																806	16021	20	MONTH	FIELD OFFICE, TYPE C, AS PER PLAN	24

PLOT SUBMITTED:02-DEC-1998 15:55
05754GGD.DGN
PLOTTED BY: jgrmovse
PLOTTED FROM: c:\users\mincek\pids754\05754ggd.dgn

NOTE:
THE RESURFACING LIMITING STATIONS INCLUDE THE APPROACH SLAB. THE ASPHALT INTERMEDIATE COURSE WILL NOT INCLUDE THE APPROACH SLAB AND A DEDUCTION WILL BE MADE ACCORDINGLY, AS SHOWN ON SHEET 87, TAPERING DETAIL.

NOTE:
THE QUANTITIES FOR THE SHOULDER REPLACEMENT, ARE BASED ON THE ASPHALT OVERLAY LIMITS MINUS THE APPROACH SLAB LENGTH.

MAINLINE EASTBOUND RESURFACING QUANITITES (EXCLUDING SHOULDERS)

STATION FROM	STATION TO	SIDE	SHEET NUMBER	LENGTH	END WIDTHS FOR OVERLAY	SURFACE AREA OF OVERLAY	446 1½" ASPHALT CONCRETE, SURFACE COURSE, TYPE 1H, AS PER PLAN	446 1 3/4 " ASPHALT CONCRETE INTERMEDIATE COURSE, TYPE 2, P664-28	446 VARIABLE ASPHALT CONCRETE INTERMEDIATE COURSE, TYPE 2, P664-28				407 TACK COAT	407 TACK COAT FOR INTERMEDIATE COURSE
				LIN.FT.	LIN.FT.	SQ.YD.	CU.YD.	CU.YD.	CU.YD.				GALLON	GALLON
EASTBOUND MAINLINE														
683+07.87	683+82.87	E.B.	70	75	92 TO 91	763	32						76	
683+82.87	684+34.87	E.B.	70	52	73 TO 71.7	418	17						42	
684+34.87	684+59.85	E.B.	70	25	90.2 TO 89.2	249	10		10				12	25
691+15.94	695+41.19	E.B.	71	425	54 TO 48	2410	100	117					241	120
696+32.97	715+97.11	E.B.	71-73	1964	48	10476	436	509					1048	524
715+97.11	716+97.11	E.B.	73	100	48 TO 60	600	25	29					60	30
716+97.11	721+40	E.B.	73	443	60	2953	123	144					295	148
721+40	731+74.93	E.B.	73-74	1034	48	5515	230	268					551	276
731+74.93	741+74.93	E.B.	74-75	1000	73 TO 48	6722	280	327					672	336
741+74.93	746+94.93	E.B.	75	500	48	2667	111	130					267	133
746+94.93	757+07.10	E.B.	75-76	1012	60	6748	281	328					675	337
757+07.10	769+77.98	E.B.	76-77	1271	48	6778	282	324					678	339
771+65.20	779+98.19	E.B.	77-78	833	48	4443	185	216					444	222
781+62.89	783+23.55	E.B.	78	161	48	857	36	42					86	43
784+87.12	834+16.66	E.B.	78-81	4930	48	26291	1095	1278					2629	1315
834+16.66	841+14.91	E.B.	81-82	698	60	4655	194	226					466	233
842+99.71	863+66.82	E.B.	82-83	2067	60	13781	574	670					1378	689
865+32.45	879+79.45	E.B.	83-84	1447	48	7717	322	375					772	386
(LEFT SIDE)				18037		104043	4333	4983	10				10392	5156

MAINLINE WESTBOUND RESURFACING QUANITITES (EXCLUDING SHOULDERS)

STATION FROM	STATION TO	SIDE	SHEET NUMBER	LENGTH	END WIDTHS FOR OVERLAY	SURFACE AREA OF OVERLAY	446 1½" ASPHALT CONCRETE, SURFACE COURSE, TYPE 1H, AS PER PLAN	446 1 3/4 " ASPHALT CONCRETE INTERMEDIATE COURSE, TYPE 2, P664-28	446 VARIABLE ASPHALT CONCRETE INTERMEDIATE COURSE, TYPE 2, P664-28				407 TACK COAT	407 TACK COAT FOR INTERMEDIATE COURSE
				LIN.FT.	LIN.FT.	SQ.YD.	CU.YD.	CU.YD.	CU.YD.	CU.YD.	CU.YD.	CU.YD.	GALLON	GALLON
WESTBOUND MAINLINE														
683+07.87	683+82.87		70	75	90 TO 84.9	729	30						73	
683+82.87	684+34.87		70	52	66.9 TO 64	378	16						38	
684+34.87	684+59.87		70	25	82 TO 81	226	9		9				12	23
691+22.76	695+23.79		71	401	48	2139	89	104					214	107
696+15.52	714+75		71-73	1859	48	9917	413	482					992	496
714+75	744+00		73-75	2925	48	15600	650	758					1560	780
744+00	749+00		75	500	36	2000	83	97					200	100
749+00	758+55		75-76	955	60	6367	265	309					637	318
758+55	770+34.20		76-77	1179	48	6289	262	306					629	314
772+21.42	779+36.87		77-78	715	48	3816	159	185					382	191
781+01.57	783+36.97		78	235	48	1255	52	61					126	63
785+00.54	830+89.93		78-82	4589	48	24477	1020	1190					2448	1224
830+89.93	860+08.68		82-83	2919	60	19458	811	946					1946	973
860+08.68	863+96.54		83	388	48	2069	86	101					207	103
865+24.60	879+79.45		83-84	1455	48	7759	323	377					776	388
			SUB-TOTAL (RIGHT SIDE)			102479	4268	4916	9				10240	5080
			SUB-TOTAL (LEFT SIDE)			104043	4333	4983	10				10392	5156
			TOTALS (CARRIED TO SHEET 50)			206522	8601	9899	19				20632	10236

PLOTTED BY: jgrmovse
PLOTTED FROM: C:\Users\Imincekb\pid05754\05754gsa.dgn
PLOT SUBMITTED: 02-DEC-1998 15:46

NOTE:
THE RESURFACING LIMITING STATIONS INCLUDE THE APPROACH SLAB. THE ASPHALT INTERMEDIATE COURSE WILL NOT INCLUDE THE APPROACH SLAB AND A DEDUCTION WILL BE MADE ACCORDINGLY, AS SHOWN ON SHEET 87, TAPERING DETAIL.

NOTE:
THE QUANTITIES FOR THE SHOULDER REPLACEMENT, ARE BASED ON THE ASPHALT OVERLAY LIMITS MINUS THE APPROACH SLAB LENGTH.

MAINLINE RESURFACING AND SHOULDER REPLACEMENT QUANTITIES

STATION FROM	STATION TO	SIDE	SHEET NUMBER	LENGTH ALONG SHOULDER	END WIDTHS FOR OVERLAY ( ) FOR CONCRETE BASE, IF DIFFERENT FROM OVERLAY	SURFACE AREA OF OVERLAY	446 1½" ASPHALT CONCRETE, SURFACE COURSE, TYPE 1H, AS PER PLAN	446 1 3/4 " ASPHALT CONCRETE, INTERMEDIATE COURSE, TYPE 2, P664-28	305 10" CONCRETE BASE, AS PER PLAN	304 6" AGGREGATE BASE, AS PER PLAN	203 EXCAVATING NOT INCLUDING EMBANKMENT CONSTRUCTION	203 SUBGRADE COMPACTION	407 TACK COAT	407 TACK COAT FOR INTERMEDIATE COURSE
				LIN.FT.	LIN.FT.	SQ.YD.	CU.YD.	CU.YD.	CU.YD.	CU.YD.	CU.YD.	SQ.YD.	GALLON	GALLON
MAINLINE INSIDE SHOULDERS EASTBOUND														
662+00	672+26.56	LT	68-69	1027	10(9.50)	1141	48	55	294	176	482	1058	114	57
674+20.82	684+58.18	LT	69-70	1037	10(9.50)	1153	48	56	290	174	463	1042	115	58
691+17.62	695+36.92	LT	71	419	10(9.50)	466	19	23	108	65	173	390	47	23
696+28.65	706+00	LT	71-72	971	10(9.50)	1079	45	52	277	166	444	999	108	54
706+00	760+00	LT	72-76	5400	10	6000	250	292					600	300
760+00	769+91.80	LT	76-77	992	10(9.50)	1102	46	54	1134	170	454	1021	110	55
771+79.02	779+83.12	LT	77-78	804	10(9.50)	893	37	43	236	141	377	849	89	45
781+47.92	783+26.85	LT	78	179	10(9.50)	194	8	10	38	23	60	136	20	10
784+90.42	795+00	LT	78-79	1010	10(9.50)	1122	47	55	289	173	462	1039	112	56
795+00	826+80	LT	79-81	3180	10	3533	147	172					353	177
826+80	831+00	LT	81	420	10	467	19	23					47	23
831+00	841+29.06	LT	81-82	1029	10	1143	48	56	310	186	496	1116	114	57
843+13.86	863+75.48	LT	82-83	2062	10	2291	95	111	621	373	993	2235	229	115
865+41.11	873+03	LT	83-84	762	10	847	35	41	227	136	364	819	85	42
873+03	879+79.45	LT	84	676	10	752	31	37					75	38
(LEFT SIDE)							923	1080	3824	1783	4768	10704	2218	1110

MAINLINE RESURFACING AND SHOULDER REPLACEMENT QUANTITIES

STATION FROM	STATION TO	SIDE	SHEET NUMBER	LENGTH	END WIDTHS FOR OVERLAY	SURFACE AREA OF OVERLAY	446 1½" ASPHALT CONCRETE, SURFACE COURSE, TYPE 1H, AS PER PLAN	446 1 3/4 " ASPHALT CONCRETE, INTERMEDIATE COURSE, TYPE 2, P664-28	305 10" CONCRETE BASE, AS PER PLAN	304 6" AGGREGATE BASE, AS PER PLAN	203 EXCAVATING NOT INCLUDING EMBANKMENT CONSTRUCTION	203 SUBGRADE COMPACTION	407 TACK COAT	407 TACK COAT FOR INTERMEDIATE COURSE
				LIN.FT.	LIN.FT.	SQ.YD.	CU.YD.	CU.YD.	CU.YD.	CU.YD.	CU.YD.	SQ.YD.	GALLON	GALLON
MAINLINE OUTSIDE SHOULDERS EASTBOUND														
662+00	665+75	RT	68	375	10	417	17	20	116	69	185	417	42	21
670+00	672+38.29	RT	69	238	8	212	9	10	66	39	105	237	21	11
674+32.91	675+22	RT	69-70	89	8	79	3	4	16	10	25	57	8	4
675+22	676+02	RT	70	80	8 TO 10	80	3	4	22	13	36	80	8	4
676+02	683+82.87	RT	70	781	10	868	36	42	233	140	373	840	87	43
691+14.01	693+02.87	RT	71	189	8	168	7	8	40	24	65	146	17	8
693+02.87	693+82.87	RT	71	80	8 TO 10	80	3	4	22	13	36	80	8	4
693+82.87	695+45.47	RT	71	163	10	181	8	9	41	25	65	147	18	9
696+37.20	706+00	RT	71-72	963	10	1070	45	52	288	173	461	1036	107	53
706+00	715+97.11	RT	72-73	997	10	1108	46	54					111	55
715+97.11	716+97.11	RT	73	100	10 TO 8	100	4	5					10	5
716+97.11	723+97.11	RT	73	700	8	622	26	30					62	31
723+97.11	730+47	RT	73-74	650	10	722	30	35					72	36
730+47	731+75	RT	74	128	19 TO 10	206	9	10					21	10
731+75	739+88	RT	74-75	813	8	723	30	35					72	36
739+88	741+74.93	RT	75	187	18 TO 10	291	12	14					29	15
741+74.93	762+69.29	RT	75-76	2094	10	2327	97	113					233	116
762+69.29	769+64.16	RT	76-77	695	10	772	32	38	207	124	331	744	77	39
771+51.38	780+13.25	RT	77-78	862	10	958	40	47	251	150	401	902	96	48
781+78.05	783+20.26	RT	78	142	10	158	7	8	28	17	46	102	16	8
784+83.83	791+55	RT	78-79	671	10	746	31	36	200	120	319	718	75	37
791+55	794+00	RT	79	245	10	272	11	13					27	14
794+00	820+16.66	RT	79-80	2617	10	2908	121	141					291	145
820+16.66	831+00	RT	80-81	1083	10	1204	50	59					120	60
831+00	841+00.77	RT	81-82	1001	10	1112	46	54	301	181	482	1084	111	56
842+85.57	863+58.17	RT	82-83	2073	10	2303	96	112	624	375	999	2247	230	115
865+23.80	869+00	RT	83-84	376	10	418	17	20	108	65	173	390	42	21
869+00	870+66.90	RT	84	167	10	185	8	9					19	9
871+61	875+90	RT	84	429	10	477	20	23	132	79	212	477	48	24
875+90	879+79.45	RT	84	389	10	433	18	21					43	22
			SUB-TOTAL (RIGHT SIDE)				882	1030	2695	1617	4314	9704	2121	1059
			SUB-TOTAL (LEFT SIDE)				923	1080	3824	1783	4768	10704	2218	1110
TOTALS (CARRIED TO SHEET 50)							1805	2110	6519	3400	9082	20408	4339	2169

PLOTTED BY:jgrmovse
PLOTTED FROM:C:\Users\lmincek\pids754\05754gsa.dgn
PLOT SUBMITTED:02-DEC-1998 15:45
05754gsa.dgn

NOTE:
THE RESURFACING LIMITING STATIONS INCLUDE THE APPROACH SLAB. THE ASPHALT INTERMEDIATE COURSE WILL NOT INCLUDE THE APPROACH SLAB AND A DEDUCTION WILL BE MADE ACCORDINGLY, AS SHOWN ON SHEET 87, TAPERING DETAIL.

NOTE:
THE QUANTITIES FOR THE SHOULDER REPLACEMENT, ARE BASED ON THE ASPHALT OVERLAY LIMITS MINUS THE APPROACH SLAB LENGTH.

MAINLINE RESURFACING AND SHOULDER REPLACEMENT QUANTITIES

STATION FROM	STATION TO	SIDE	SHEET NUMBER	LENGTH ALONG SHOULDER	END WIDTHS FOR OVERLAY ( ) FOR CONCRETE BASE, IF DIFFERENT FROM OVERLAY	SURFACE AREA OF OVERLAY	446: 1½" ASPHALT CONCRETE, SURFACE COURSE, TYPE 1H, AS PER PLAN	446: 1 3/4" ASPHALT CONCRETE, INTERMEDIATE COURSE, TYPE 2, PG64-28	305: 10" CONCRETE BASE, AS PER PLAN	304: 6" AGGREGATE BASE, AS PER PLAN	203: EXCAVATING NOT INCLUDING EMBANKMENT CONSTRUCTION	203: SUBGRADE COMPACTION	407: TACK COAT	407: TACK COAT FOR INTERMEDIATE COURSE
				LIN.FT.	LIN.FT.	SQ.YD.	CU.YD.	CU.YD.	CU.YD.	CU.YD.	CU.YD.	SQ.YD.	GALLON	GALLON
MAINLINE INSIDE SHOULDERS WESTBOUND														
662+00	672+14.83	RT	68-69	1015	10(9.50)	1128	47	55	290	174	464	1045	113	56
674+11.40	684+61.24	RT	69-70	1050	10(9.50)	1166	49	57	293	176	469	1055	117	58
691+21.08	695+28.06	RT	71	407	10(9.50)	452	19	22	103	62	165	372	45	23
696+19.79	706+00	RT	71-72	980	10(9.50)	1089	45	53	279	167	446	1003	109	54
706+00	760+00	RT	72-76	5400	10	6000	250	292					600	300
760+00	770+20.30	RT	76-77	1020	10(9.50)	1134	47	55	292	175	467	1051	113	57
772+07.60	779+51.14	RT	77-78	744	10(9.50)	827	34	40	204	122	326	733	83	41
781+16.74	783+33.67	RT	78	217	10(9.50)	241	10	12	49	29	78	176	24	12
784+97.24	795+00	RT	78-79	1003	10(9.50)	1114	46	54	287	172	459	1032	111	56
795+00	854+00	RT	79-83	5900	10	6556	273	319					656	328
854+00	863+55.20	RT	83	955	10	1061	44	52	287	172	459	1034	106	53
865+20.83	874+08	RT	83-84	887	10	986	41	48	266	160	426	958	99	49
874+08	879+79.45	RT	84	571	10	635	26	31					63	32
(LEFT SIDE)							931	1090	2350	1409	3759	8459	2239	1119

MAINLINE RESURFACING AND SHOULDER REPLACEMENT QUANTITIES

STATION FROM	STATION TO	SIDE	SHEET NUMBER	LENGTH	END WIDTHS FOR OVERLAY	SURFACE AREA OF OVERLAY	446: 1½" ASPHALT CONCRETE, SURFACE COURSE, TYPE 1H, AS PER PLAN	446: 1 3/4" ASPHALT CONCRETE, INTERMEDIATE COURSE, TYPE 2, PG64-28	305: 10" CONCRETE BASE, AS PER PLAN	304: 6" AGGREGATE BASE, AS PER PLAN	203: EXCAVATING NOT INCLUDING EMBANKMENT CONSTRUCTION	203: SUBGRADE COMPACTION	407: TACK COAT	407: TACK COAT FOR INTERMEDIATE COURSE
				LIN.FT.	LIN.FT.	SQ.YD.	CU.YD.	CU.YD.	CU.YD.	CU.YD.	CU.YD.	SQ.YD.	GALLON	GALLON
MAINLINE OUTSIDE SHOULDERS WESTBOUND														
662+00	665+00	LT	68	300	10	333	14	16	95	56	148	333	33	17
666+00	670+80	LT	69	480	8	427	18	21					43	21
670+80	671+80	LT	69	100	8 TO 11.25	107	4	5	29	18	47	105	11	5
671+80	672+03.27	LT	69	23	11.25	29	1	1					3	2
673+95	674+50	LT	69	55	11.25 TO 10	65	3	3	10	6	16	35	6	3
674+50	681+75	LT	69-70	725	10	806	34	39	224	134	358	806	81	40
681+75	684+65.80	LT	70	291	8	258	11	13					26	13
691+24.43	695+19.50	LT	71	395	10	439	18	21	105	63	168	378	44	22
696+11.24	706+00	LT	71-72	989	10	1099	46	53	296	178	473	1065	110	55
706+00	714+75	LT	72-73	875	10	972	41	47					97	49
714+75	715+55	LT	73	80	10 TO 8	80	3	4					8	4
715+55	724+75	LT	73	920	8	818	34	40					82	41
726+83	734+83.26	LT	73-74	800	8	711	30	35					71	36
734+83.26	736+03	LT	74	120	10 TO 19	193	8	9					19	10
736+03	743+74.34	LT	74-75	771	10	857	36	42					86	43
743+74.34	763+75	LT	75-76	2001	10	2223	93	108					222	111
763+75	765+46	LT	76	171	11 TO 20	295	12	14	82	49	131	295	29	15
765+46	770+48.02	LT	76-77	502	10	558	23	27	147	88	236	530	56	28
772+35.24	779+21.81	LT	77-78	687	10	763	32	37	196	118	314	707	76	38
780+86.61	783+40.26	LT	78	254	10	282	12	14	63	38	101	226	28	14
785+03.83	796+00	LT	78-79	1096	10	1218	51	59	371	198	529	1190	122	61
796+00	797+00	LT	79	100	10	111	5	5					11	6
797+00	823+90.03	LT	79-81	2690	10	2989	125	145					299	149
823+90.03	854+00	LT	81-83	3010	10	3344	139	163					334	167
854+00	863+74.49	LT	83	974	10	1083	45	53	293	176	469	1055	108	54
865+41.11	869+00	LT	83-84	359	10	399	17	19	103	62	165	371	40	20
869+00	874+08.68	LT	84	509	10	565	24	27					57	28
874+08.68	879+79.45	LT	84	571	10	634	26	31					63	32
			SUB-TOTAL (RIGHT SIDE)				905	1051	2014	1184	3155	7096	2165	1084
			SUB-TOTAL (LEFT SIDE)				931	1090	2350	1409	3759	8459	2239	1119
			TOTALS (CARRIED TO SHEET 50)				1836	2141	4364	2593	6914	15555	4404	2203

PLOTTED BY: jgrmovse
PLOTTED FROM: D:\Users\Blmincek\Bpid05754\B05754gsa.dgn
PLOT SUBMITTED: 02-DEC-1998 15:44
05754gsa.dgn

NOTE:
THE RESURFACING LIMITING STATIONS INCLUDE THE APPROACH SLAB. THE ASPHALT INTERMEDIATE COURSE WILL NOT INCLUDE THE APPROACH SLAB AND A DEDUCTION WILL BE MADE ACCORDINGLY, AS SHOWN ON SHEET 87, TAPERING DETAIL.

NOTE:
THE QUANTITIES FOR THE SHOULDER REPLACEMENT, ARE BASED ON THE ASPHALT OVERLAY LIMITS MINUS THE APPROACH SLAB LENGTH.

MAINLINE RESURFACING AND SHOULDER REPLACEMENT QUANTITIES

STATION FROM	STATION TO	SIDE	SHEET NUMBER	LENGTH ALONG SHOULDER	END WIDTHS FOR OVERLAY	SURFACE AREA OF OVERLAY	446 1½" ASPHALT CONCRETE, SURFACE COURSE, TYPE 1H, AS PER PLAN	446 1 3/4 " ASPHALT CONCRETE, INTERMEDIATE COURSE, TYPE 2, P064-28						407 TACK COAT	407 TACK COAT FOR INTERMEDIATE COURSE
				LIN.FT.	LIN.FT.	SQ.YD.	CU.YD.	CU.YD.						GALLON	GALLON
RAMP SHOULDER RESURFACING QUANTITIES															
RAMP #5															
24+75	25+75	LT	73	100	8 TO 7	83	3	4						8	4
25+75	26+75	LT	73	100	7 TO 6	72	3	4						7	4
26+75	32+48.98	LT	73-74	574	6	383	16	19						38	19
32+48.98	32+98.98	LT	74	50	6 TO 1	19	1	1						2	1
25+75	26+75	RT	73	100	2 TO 3	28	1	1						3	1
26+75	32+98.98	RT	73-74	624	3	208	9	10						21	10
RAMP #7															
24+55.99	27+00	RT	74	244	6	163	7	8						16	8
30+94.93	31+74.93	RT	74	80	6 TO 8	62	3	3						6	3
27+75	29+74.93	LT	74	200	3	67	3	3						7	3
29+74.93	30+80	LT	74	105	3 TO 2	29	1	1						3	1
RAMP #8															
23+95.61	24+95.61	RT	73	100	8 TO 6	78	3	8						8	4
24+95.61	32+50	RT	73-74	754	6	503	21	24						50	25
32+50	33+00	RT	74	50	6 TO 0	17	1	1						2	1
23+95.61	24+95.61	LT	73	100	5 TO 3	44	2	2						4	2
24+95.61	28+75.41	LT	73	380	3	127	5	6						13	6
RAMP #9															
32+59.43	39+74.93	LT	74-75	716	3	239	10	12						24	12
39+74.93	40+74.93	LT	75	100	3 TO 2	17	1	1						2	1
32+59.49	33+09.49	RT	74	50	1 TO 6	19	1	1						2	1
33+09.49	39+74.93	RT	74-75	665	6	444	18	22						44	22
39+74.93	41+74.93	RT	75	200	6 TO 10	178	7	9						18	9
RAMP #11															
35+83.26	36+83.26	RT	74	100	2 TO 3	28	1	1						3	1
36+83.26	38+50	RT	74	167	3	56	2	3						6	3
34+83.26	36+83.26	LT	74	200	8 TO 6	156	6	8						16	8
39+50	40+82.17	LT	74	132	6	88	4	4						9	4
RAMP #12															
34+16.91	34+66.91	LT	74	50	0 TO 6	17	1	1						2	1
34+66.91	42+77.63	LT	74-75	811	6	540	23	26						57	27
42+77.63	43+77.63	LT	75	100	6 TO 10	89	4	4						9	4
37+62.77	41+02.63	RT	75	340	3	113	5	6						11	6
41+02.63	42+77.63	RT	75	175	3 TO 10	126	5	6						13	6
(LEFT SIDE)							167	199						404	197

MAINLINE RESURFACING AND SHOULDER REPLACEMENT QUANTITIES

STATION FROM	STATION TO	SIDE	SHEET NUMBER	LENGTH	END WIDTHS FOR OVERLAY	SURFACE AREA OF OVERLAY	446 1½" ASPHALT CONCRETE, SURFACE COURSE, TYPE 1H, AS PER PLAN	446 1 3/4 " ASPHALT CONCRETE, INTERMEDIATE COURSE, TYPE 2, P664-28						407 TACK COAT	407 TACK COAT FOR INTERMEDIATE COURSE
				LIN.FT.	LIN.FT.	SQ.YD.	CU.YD.	CU.YD.						GALLON	GALLON
RAMP SHOULDER RESURFACING QUANTITIES															
RAMP #13															
63+75	65+75	LT	76	200	10 TO 6	178	7	9						18	9
65+75	70+36.92	LT	76-77	462	6	308	13	15						31	15
70+36.92	70+77	LT	77	40	6 TO 2	18	1	1						2	1
64+75	65+75	RT	76	100	2 TO 3	28	1	1						3	1
65+75	70+55.48	RT	76-77	480	3	160	7	8						16	8
70+55.48	70+65.48	RT	77	10	3 TO 2	3	1	1						1	1
RAMP #14															
62+83.60	69+63.05	LT	76-77	679	3	226	9	11						23	11
69+63.05	69+73.05	LT	77	10	3 TO 2	3	1	1						1	1
62+83.60	63+83.60	RT	76	100	10 TO 6	89	4	4						9	4
63+83.60	68+81.50	RT	76-77	498	6	332	14	16						33	17
68+81.50	69+21.50	RT	77	40	6 TO 2	18	1	1						2	1
RAMP #15															
91+38	91+56.80	RT	78-79	19	2.25 TO 3	5	1	1						1	1
91+56.80	96+00.90	RT	79	444	3	148	6	7						15	7
96+00.90	97+00.90	RT	79	100	3 TO 5	44	2	2						4	2
92+06.80	93+06.80	LT	79	100	1 TO 6	39	2	2						4	2
93+06.80	96+00.90	LT	79	294	6	196	8	10						20	10
96+00.90	97+00.90	LT	79	100	6 TO 10	89	4	4						9	4
RAMP #16															
89+20.55	89+70.55	LT	78	50	1 TO 3	11	1	1						1	1
89+70.55	92+00	LT	78-79	229	3	76	3	4						8	4
92+00	93+00	LT	79	100	3 TO 2	28	1	1						3	1
89+20.55	89+70.55	RT	78	50	1 TO 6	19	1	1						2	1
89+70.55	92+00	RT	78-79	229	6	153	6	7						15	8
92+00	94+00	RT	79	200	6 TO 10	178	7	9						18	9
RAMP #17															
12+75	13+25	RT	80	50	3 TO 4	19	1	1						2	1
13+25	21+41.98	RT	80-81	817	4	363	15	18						36	18
21+41.98	22+41.98	RT	81	100	4 TO 10	78	3	4						8	4
13+50	14+50	LT	80	100	2 TO 6	44	2	2						4	2
14+50	21+91.98	LT	80-81	742	6	495	21	24						49	25
21+91.98	22+91.98	LT	81	100	6 TO 10	89	4	4						9	4
		SUB-TOTAL (RIGHT SIDE)					147	170						347	173
		SUB-TOTAL (LEFT SIDE)					167	199						404	197
TOTALS (CARRIED TO SHEET 50)							314	369						751	370

PLOTTED BY: jgrmovse
PLOTTED FROM: C:\Users\Public\d05754gsa.dgn
PLOT SUBMITTED: 02-DEC-1998 15:44
d05754gsa.dgn

NOTE:
THE RESURFACING LIMITING STATIONS INCLUDE THE APPROACH SLAB. THE ASPHALT INTERMEDIATE COURSE WILL NOT INCLUDE THE APPROACH SLAB AND A DEDUCTION WILL BE MADE ACCORDINGLY, AS SHOWN ON SHEET 87, TAPERING DETAIL.

NOTE:
THE QUANTITIES FOR THE SHOULDER REPLACEMENT, ARE BASED ON THE ASPHALT OVERLAY LIMITS MINUS THE APPROACH SLAB LENGTH.

RAMP SHOULDER RESURFACING QUANTITIES

STATION FROM	STATION TO	SIDE	SHEET NUMBER	LENGTH ALONG SHOULDER (LIN.FT.)	END WIDTHS FOR OVERLAY (LIN.FT.)	SURFACE AREA OF OVERLAY (SQ.YD.)	446 1½" ASPHALT CONCRETE, SURFACE COURSE, TYPE 1H, AS PER PLAN (CU.YD.)	446 1¾" ASPHALT CONCRETE, INTERMEDIATE COURSE, TYPE 2, PG64-28 (CU.YD.)	446 VARIABLE ASPHALT CONCRETE INTERMEDIATE COURSE, TYPE 2, PG64-28 (CU.YD.)				407 TACK COAT (GALLON)	407 TACK COAT FOR INTERMEDIATE COURSE (GALLON)
RAMP #18														
7+75	8+25	RT	80	50	0 TO 6	17	1	1					2	1
8+25	19+22.32	RT	80	1097	6	732	30	36					73	37
19+22.32	20+22.32	RT	80	100	6 TO 10	89	4	4					9	4
9+22.21	19+22.32	LT	80	1000	4	444	19	22					44	22
19+22.32	20+22.32	LT	80	100	4 TO 5	50	2	2					5	3
RAMP #27														
74+07.17	75+07.17	LT	84	100	10 TO 6	89	4	4					9	4
75+07.17	81+53.23	LT	84	646	6	431	18	21					43	22
74+07.17	75+07.17	RT	84	100	5 TO 4	50	2	2					5	3
75+07.17	81+03.23	RT	84	596	4	265	11	13					26	13
81+03.23	81+53.23	RT	84	50	4 TO 3	19	1	1					2	1
RAMP #28														
70+55.89	71+55.89	RT	84	100	10 TO 6	89	4	4					9	4
71+55.89	81+20.04	RT	84	964	6	643	27	31					64	32
71+55.89	73+05.89	LT	84	150	10 TO 4	117	5	6					12	6
73+05.89	80+70.04	LT	84	764	4	340	14	17					34	17
80+70.04	81+70.04	LT	84	100	4 TO 3	39	2	2					4	2
							144	166					341	171
(LEFT SIDE)							144	166					341	171

RAMP SHOULDER RESURFACING QUANTITIES

STATION FROM	STATION TO	SIDE	SHEET NUMBER	LENGTH (LIN.FT.)	END WIDTHS FOR OVERLAY (LIN.FT.)	SURFACE AREA OF OVERLAY (SQ.YD.)	446 1½" ASPHALT CONCRETE, SURFACE COURSE, TYPE 1H, AS PER PLAN (CU.YD.)	446 1¾" ASPHALT CONCRETE, INTERMEDIATE COURSE, TYPE 2, PG64-28 (CU.YD.)	446 VARIABLE ASPHALT CONCRETE INTERMEDIATE COURSE, TYPE 2, PG64-28 (CU.YD.)				407 TACK COAT (GALLON)	407 TACK COAT FOR INTERMEDIATE COURSE (GALLON)
		SUB-TOTAL (RIGHT SIDE)					0	0					0	0
		SUB-TOTAL (LEFT SIDE)					144	166					341	171
TOTALS (CARRIED TO SHEET 50)							144	166					341	171

PLOTTED BY: jgrmovse
PLOTTED FROM: Rusers@lmincek@pid5754@05754gsa.dgn
PLOT SUBMITTED:02-DEC-1998 15:42
05754gsa.dgn

NOTE:
THE RESURFACING LIMITING STATIONS INCLUDE THE APPROACH SLAB. THE ASPHALT INTERMEDIATE COURSE WILL NOT INCLUDE THE APPROACH SLAB AND A DEDUCTION WILL BE MADE ACCORDINGLY, AS SHOWN ON SHEET 87, TAPERING DETAIL.

NOTE:
THE QUANTITIES FOR THE SHOULDER REPLACEMENT, ARE BASED ON THE ASPHALT OVERLAY LIMITS MINUS THE APPROACH SLAB LENGTH.

RAMP AND MARGINAL ROAD RESURFACING QUANTITIES (EXCLUDING SHOULDERS)

STATION FROM	STATION TO	SIDE	SHEET NUMBER	LENGTH	END WIDTHS FOR OVERLAY	SURFACE AREA OF OVERLAY	446 1½" ASPHALT CONCRETE, SURFACE COURSE, TYPE 1H, AS PER PLAN	446 1¾" ASPHALT CONCRETE, INTERMEDIATE COURSE, TYPE 2, P664-28	446 VARIABLE ASPHALT CONCRETE INTERMEDIATE COURSE, TYPE 2, P664-28				407 TACK COAT	407 TACK COAT FOR INTERMEDIATE COURSE
				LIN.FT.	LIN.FT.	SQ.YD.	CU.YD.	CU.YD.	CU.YD.				GALLON	GALLON
RAMP #5														
714+75	724+75		73	1000	0 TO 25	1389	58	68					139	69
24+75	25+75		73	100	15	167	7	8					17	8
25+75	26+75		73	100	14 TO 16	167	7	8					17	8
26+75	32+98.98		73-74	624	16	1109	46	54					111	55
32+98.98	33+71		74	75	18 TO 19	154	6	7					15	8
33+71	34+84.99		74	114	VAR	155	6	8					16	8
RAMP #7														
22+60.36	23+88		74	128	VAR	162	7	8					16	8
23+88	24+55.99		74	68	20	151	6	7					15	8
24+55.99	27+75		74	319	19	673	28	33					67	34
27+75	29+74.93		74	200	18	400	17	19					40	20
29+74.93	30+74.93		74	100	18 TO 15	183	8	9					18	9
30+74.93	31+74.93		74	100	17 TO 14	172	7	8					17	9
RAMP #8														
21+40	23+95.61		73	256	12 TO 35	667	28	32					67	33
23+95.61	28+79.41		73	484	16	860	36	42					86	43
28+79.41	30+29.41		73-74	150	17 TO 25	350	15	17					35	18
30+29.41	32+50		74	221	25	613	26	30					61	31
32+50	33+00		74	50	25 TO 31	156	6	8					16	8
33+00	33+53		74	53	VAR	214	9	10					21	11
RAMP #9														
30+57.89	31+91		74	133	VAR	160	7	8					16	8
31+91	32+59.43		74	68	19.37 TO 18	142	6	7					14	7
32+59.43	39+74.93		74-75	716	16	1272	53	62					127	64
39+74.93	40+74.93		75	100	16 TO 14	167	7	8					17	8
40+74.93	41+74.93		75	100	16 TO 14	167	7	8					17	8
41+74.93	746+94.93		75	520	26 TO 12	1098	46	53					110	55
RAMP #11														
724+83.26	734+83.26		74	1000	0 TO 25	1389	58	68					139	69
34+83.26	35+83.26		74	100	14 TO 17	172	7	8					17	9
35+83.26	36+83.26		74	100	15 TO 18	183	8	9					18	9
36+83.26	38+50		74	167	18	333	14	16					33	17
38+50	40+82.17		74	232	19	490	20	24					49	25
40+82.17	41+50		74	68	20	151	6	7					15	8
41+50	42+69.21		74	119	VAR	155	6	8					16	8
(LEFT SIDE)							568	662					1362	683

RAMP AND MARGINAL ROAD RESURFACING QUANTITIES (EXCLUDING SHOULDERS)

STATION FROM	STATION TO	SIDE	SHEET NUMBER	LENGTH	END WIDTHS FOR OVERLAY	SURFACE AREA OF OVERLAY	446 1½" ASPHALT CONCRETE, SURFACE COURSE, TYPE 1H, AS PER PLAN	446 1¾" ASPHALT CONCRETE, INTERMEDIATE COURSE, TYPE 2, P664-28	446 VARIABLE ASPHALT CONCRETE INTERMEDIATE COURSE, TYPE 2, P664-28				407 TACK COAT	407 TACK COAT FOR INTERMEDIATE COURSE
				LIN.FT.	LIN.FT.	SQ.YD.	CU.YD.	CU.YD.	CU.YD.				GALLON	GALLON
RAMP #12														
33+65	34+05		74	40	VAR	250	10	12					25	13
34+05	34+16.91		74	12	44	58	2	3					6	3
34+16.91	34+66.91		74	50	43 TO 37	222	9	11					22	11
34+66.91	37+62.77		74-75	296	37	1216	51	59					122	61
37+62.77	40+00.41		75	238	36 TO 24	792	33	39					79	40
40+00.41	42+77.63		75	277	24	739	31	36					74	37
42+77.63	43+77.63		75	100	34	378	16	18					38	19
43+77.63	49+00		75	522	48 TO 24	2089	87	102					209	104
RAMP #13														
758+55	763+75		76	520	12 TO 25	1069	45	52					107	53
63+75	64+75		76	100	14 TO 16	167	7	8					17	8
64+75	65+75		76	100	14 TO 16	167	7	8					17	8
65+75	70+36.92		76-77	462	16	821	34	40					82	41
70+36.92	70+55.48		77	19	16 TO 17.85	314	13	15					31	16
70+55.48	70+65.48		77	10	17.85 TO 19.85	21	1	1					2	1
70+65.48	70+76.92		77	11	19.85 TO 23	27	1	1					3	1
70+76.92	70+81.98		77	5	25	14	1	1					1	1
70+81.98	71+32		77	50	VAR	163	7	8					16	8
RAMP #14														
57+07.10	62+83.60		76	577	12 TO 39	1633	68	79					163	82
62+83.60	65+50		76	266	16	474	20	23					47	24
65+50	67+00		76	150	16 TO 24	333	14	16					33	17
67+00	68+81.50		77	181	24	484	20	24					48	24
68+81.50	69+21.50		77	40	24 TO 28	116	5	6					12	6
69+21.50	69+60		77	39	VAR	133	6	6					13	7
69+60	70+04.57		77	45	VAR	261	11	13					26	13
RAMP #15 (NORTH MARGINAL ROAD #4)														
63+48	63+88.09		78	40	VAR	207	9	10					21	10
63+88.09	65+57.09		78	169	40	751	31	37					75	38
65+57.09	69+19.04		78	362	40 TO 57	1951	81	95					195	98
69+19.04	69+49.04		78	30	28	93	4	5					9	5
90+06.80	91+06.80		78	100	25 TO 26	283	12	14					28	14
91+06.80	92+06.80		78-79	100	26	289	12	14					29	14
92+06.80	93+06.80		79	100	25 TO 16	228	9	11					23	11
93+06.80	97+00.91		79	394	16	701	29	34					70	35
797+00	799+10		79	210	35 TO 18	618	26	30					62	31
799+10	804+00		79	490	18 TO 12	817	34	40					82	41
804+00	805+00		79	100	12 TO 0	67	3	3					7	3
		SUB-TOTAL (RIGHT SIDE)					749	874					1794	898
		SUB-TOTAL (LEFT SIDE)					568	662					1362	683
TOTALS (CARRIED TO SHEET 50)							1317	1536					3156	1581

PLOTTED BY: jgrmovse
PLOTTED FROM: C:\Users\Blmincek\Bpid05754\Bpid05754gsa.dgn
PLOT SUBMITTED:02-DEC-1998 15:42

NOTE:
THE RESURFACING LIMITING STATIONS INCLUDE THE APPROACH SLAB. THE ASPHALT INTERMEDIATE COURSE WILL NOT INCLUDE THE APPROACH SLAB AND A DEDUCTION WILL BE MADE ACCORDINGLY, AS SHOWN ON SHEET 87, TAPERING DETAIL.

NOTE:
THE QUANTITIES FOR THE SHOULDER REPLACEMENT, ARE BASED ON THE ASPHALT OVERLAY LIMITS MINUS THE APPROACH SLAB LENGTH.

RAMP AND MARGINAL ROAD RESURFACING QUANTITIES (EXCLUDING SHOULDERS)

STATION FROM	STATION TO	SIDE	SHEET NUMBER	LENGTH	END WIDTHS FOR OVERLAY	SURFACE AREA OF OVERLAY	446 1½" ASPHALT CONCRETE, SURFACE COURSE, TYPE 1H, AS PER PLAN	446 1¾" ASPHALT CONCRETE, INTERMEDIATE COURSE, TYPE 2, P064-28	446 VARIABLE ASPHALT CONCRETE INTERMEDIATE COURSE, TYPE 2, P064-28		407 TACK COAT	407 TACK COAT FOR INTERMEDIATE COURSE
				LIN.FT.	LIN.FT.	SQ.YD.	CU.YD.	CU.YD.	CU.YD.		GALLON	GALLON
SOUTH MARGINAL ROAD NO. 5												
50+26	50+66		78	40	VAR	257	11	11			26	13
50+66	54+12.42		78	346	40 TO 56	1848	77	90			185	92
54+12.42	55+12.42		78	100	32 TO 28	333	14	16			33	17
RAMP #16												
88+20.55	89+20.55		78	100	20 TO 18	211	9	10			21	11
89+20.55	92+00		78-79	279	16	497	21	24			50	25
92+00	93+00		79	100	16 TO 14	167	7	8			17	8
93+00	94+00		79	100	16 TO 14	167	7	8			17	8
794+00	797+50		79	350	24 TO 16	778	32	38			78	39
797+50	803+75		79	575	16 TO 2	575	24	28			58	29
RAMP #17												
12+50	12+96.50		80	47	VAR	363	15	18			36	18
12+96.50	13+50		80	54	VAR	273	11	13			27	14
13+50	14+00		80	50	40 TO 36	211	9	10			21	11
14+00	15+75		80	175	36	700	29	34			70	35
15+75	16+75		80	100	36 TO 24	333	14	16			33	17
16+75	22+91.98		80-81	617	24	1645	69	80			165	82
22+91.98	23+91.92		81	100	43 TO 38	450	19	22			45	23
23+91.98	30+89.93		81	698	42 TO 12	2094	87	102			209	105
RAMP #18												
6+94.25	8+52		80	158	VAR	319	13	16			32	16
8+52	9+22.21		80	70	50.81 TO 24	213	9	10			21	11
9+22.21	20+22.32		80	1100	24	2934	122	143			293	147
820+16.66	834+16.66		80-81	1400	40 TO 12	4044	169	197			404	202
RAMP #27												
860+08.08	864+02.48		83	394	12 TO 20	701	29	34			70	35
865+30.54	874+08.68		83-84	878	22.4 TO 40	3044	127	148			304	152
74+07.17	81+53.23		84	746	24	1989	83	97			199	99
81+53.23	82+00		84	47	VAR	233	10	11			23	12
RAMP #28												
65+23.19	70+55.89		83-84	533	12 TO 48	1776	74	86			178	89
70+55.89	71+55.89		84	100	34	378	16	18			38	19
870+66.90	871+66.90		84	100	10	111	5	5			11	6
71+55.89	81+20.04		84	964	24	2571	107	125			257	129
81+20.04	82+00		84	80	VAR	233	10	11			23	12
(LEFT SIDE)												

RAMP AND MARGINAL ROAD RESURFACING QUANTITIES (EXCLUDING SHOULDERS)

STATION FROM	STATION TO	SIDE	SHEET NUMBER	LENGTH	END WIDTHS FOR OVERLAY	SURFACE AREA OF OVERLAY	446 1½" ASPHALT CONCRETE, SURFACE COURSE, TYPE 1H, AS PER PLAN	446 1¾" ASPHALT CONCRETE, INTERMEDIATE COURSE, TYPE 2, P064-28	446 VARIABLE ASPHALT CONCRETE INTERMEDIATE COURSE, TYPE 2, P064-28	305 10" CONCRETE BASE, AS PER PLAN	304 6" AGGREGATE BASE, AS PER PLAN	203 EXCAVATING NOT INCLUDING EMBANKMENT CONSTRUCTION	203 SUBGRADE COMPACTION	407 TACK COAT	407 TACK COAT FOR INTERMEDIATE COURSE	301 8" BITUMINOUS AGGREGATE BASE
				LIN.FT.	LIN.FT.	SQ.YD.	CU.YD.	CU.YD.	CU.YD.	CU.YD.	CU.YD.	CU.YD.	SQ.YD.	GALLON	GALLON	SQ.YD.
ROAD N																
41+66	41+96		65	30	28	93	4	5						9	5	
41+96	44+95.37		65	299	28	931	39	45						93	47	
44+95.37	45+25.37		65	30	VAR	135	6	7						14	7	
W. 16TH@ROAD N			65		VAR	117	5	6						12	6	
S. MARGINAL ROAD NO. 2																
0+14.51	0+44.51		65		VAR	140	6	7						14	7	
0+44.51	16+00		65	1585	28	4932	206	240						493	247	
16+00	16+75		66	75	28	233	10	11						23	12	
37+85	38+60		68	75	28	233	10	11						23	12	
38+60	51+59.11		68-69	1299	28	4042	168	196						404	202	
51+59.11	51+89.11		69		VAR	145	6	7						15	7	
W. 144TH@S. MARGINAL			68		VAR	130	5	6						13	7	
W. 142TH@S. MARGINAL			69		VAR	130	5	6						13	7	
			SUB-TOTAL (RIGHT SIDE)				470	547						1126	566	
			SUB-TOTAL (LEFT SIDE)				1229	1429						2944	1476	
			TOTALS (THIS SHEET)				1699	1976						4070	2042	
			TOTALS FROM SHEET 45				8601	9899	19					20632	10236	
			TOTALS FROM SHEET 46				1805	2110		6519	3400	9082	20408	4339	2169	
			TOTALS FROM SHEET 46A				1836	2141		4364	2593	6914	15555	4404	2203	
			TOTALS FROM SHEET 47				314	369						751	370	
			TOTALS FROM SHEET 48				144	166						341	171	
			TOTALS FROM SHEET 49				1317	1536						3156	1581	
			TOTALS FROM SHEET 98				11	13			44	110	263			66
			TOTALS FROM SHEET 99				10	12			41	61	244			61
			SUB-TOTAL (THIS SHEET)				15737	18222	19	10883	6078	16167	36470	37693	18772	127
			DEDUCTIONS FROM SHEET 87 (LT COLUMN)					-368						-755		
			DEDUCTIONS FROM SHEET 87 (RT COLUMN)					-315						-642		
TOTALS CARRIED TO GENERAL SUMMARY							15737	17539 / 17558	19	10883	6078	16167	36470	36296	18772	254

PLOTTED BY: jgrmovse
PLOTTED FROM: C:\Users\lmincek\pid57541\05754gsa.dgn
PLOT SUBMITTED: 02-DEC-1998 15:39
05754gsa.dgn

RESURFACING: PAVEMENT PLANING

STATION FROM	STATION TO	SIDE	SHEET NUMBER	END WIDTHS	SURFACE AREA	254 PAVEMENT PLANING, BITUMINOUS 1 1/2"	254 PAVEMENT PLANING, CONCRETE 1 1/2"
				LIN.FT.	SQ.YD.	SQ.YD.	SQ.YD.
ROAD "N"							
41+66	41+78.5	CL	65	28	50		50
W. 160TH ST.@ROAD "N"		CL	65	VAR	45		45
45+12.87	45+25.37	CL	65	VAR	92		92
S. MARGINAL NO. 2							
0+14.51	0+27.01	CL	65	VAR	92		92
16+62.50	16+75	CL	66	28	50	50	
37+85	37+97.5	CL	68	28	50	50	
W. 144TH ST.@S. MARG.		CL	68	VAR	54	54	
W. 142ND ST.@S. MARG.		CL	69	VAR	54		54
51+76.61	51+89.11	CL	69	VAR	92		92
N. MARGINAL NO. 4							
63+48.09	63+60.59	CL	77	VAR	97		97
69+33.04	69+49.04	CL	78	28	50		50
S. MARGINAL NO. 5							
50+26	50+38.50	CL	78	VAR	121		121
W. 97TH @ S. MARGINAL		CL	78	24	43		43
54+26.42	54+42.42	CL	78	32-30	55		55
S. MARGINAL / LORAIN CONN.							
62+31.05	62+44	CL	79	VAR	83		83
(LEFT SIDE)						154	874

RESURFACING: PAVEMENT PLANING

STATION FROM	STATION TO	SIDE	SHEET NUMBER	END WIDTHS	SURFACE AREA	254 PAVEMENT PLANING, BITUMINOUS (VARIES FROM 0 TO 1 1/2"	254 PAVEMENT PLANING, CONCRETE (VARIES FROM 0 TO 1 1/2"	254 PAVEMENT PLANING, CONCRETE (VARIES FROM 0 TO 1 3/4"	254 PAVEMENT PLANING, BITUMINOUS (2 1/2")
				LIN.FT.	SQ.YD.	SQ.YD.	SQ.YD.	SQ.YD.	SQ.YD.
MAINLINE									
683+07	683+82	LT	70	74-70	600	600			
683+82	684+34.85	LT	70	70-68	399		399		
684+34.85	684+59.85	LT	70	85	239				239
683+07	683+82	RT	70	63	525	525			
683+82	684+34.85	RT	70	73-72	419		419		
684+34.85	684+59.85	RT	70	85	247				247
691+19.35	691+89.35	LT	71	68	529	529			
691+89.35	692+29.35	LT	71	68	302			302	
691+19.35	691+89.35	RT	71	68	529	529			
691+89.35	692+29.35	RT	71	68	302			302	
694+22.49	694+62.49	LT	71	68	302			302	
694+62.49	695+32.49	LT	71	68	529	529			
694+22.49	694+62.49	RT	71	68	302			302	
694+62.49	695+32.49	RT	71	68	529	529			
696+24.22	696+94.22	LT	71	68	529	529			
696+94.22	697+34.22	LT	71	68	302			302	
696+24.22	696+94.22	RT	71	68	529	529			
696+94.22	697+34.22	RT	71	68	302			302	
769+01.09	769+41.09	LT	77	68	302			302	
769+41.09	770+06.09	LT	77	68	491	491			
769+01.09	769+41.09	RT	77	68	302			302	
769+41.09	770+06.09	RT	77	68	491	491			
771+93.31	772+58.31	LT	77	68	491	491			
772+58.31	772+98.31	LT	77	68	302			302	
771+93.31	772+58.31	RT	77	68	491	491			
772+58.31	772+98.31	RT	77	68	302			302	
778+62.53	779+02.53	LT	78	68	491	491			
779+02.53	779+67.53	LT	78	68	302			302	
778+62.53	779+02.53	RT	78	68	491	491			
779+02.53	779+67.53	RT	78	68	302			302	
781+32.33	781+97.33	LT	78	68	491	491			
781+97.33	782+37.33	LT	78	68	302			302	
781+32.33	781+97.33	RT	78	68	491	491			
781+97.33	782+37.33	RT	78	68	302			302	
		SUB-TOTAL (RIGHT SIDE)				8227	818	4228	486
		SUB-TOTAL (LEFT SIDE)				154	874	0	0
TOTALS (CARRIED TO SHEET 52)						8381	1692	4228	486

PLOTTED BY: jgrmovse
PLOTTED FROM: C:\Users\jgrmovse\mincek\Dgn\d5754b05754gsa.dgn
PLOT SUBMITTED:02-DEC-1998 15:37
05754gsa.dgn

RESURFACING: PAVEMENT PLANING

STATION FROM	STATION TO	SIDE	SHEET NUMBER	END WIDTHS	SURFACE AREA	254 PAVEMENT PLANING, BITUMINOUS 1 1/2"	254 PAVEMENT PLANING, CONCRETE 1 1/2"	254 PAVEMENT PLANING, BITUMINOUS (VARIES FROM 0 TO 1 1/2"	254 PAVEMENT PLANING, CONCRETE (VARIES FROM 0 TO 1 1/2"	254 PAVEMENT PLANING, CONCRETE (VARIES FROM 0 TO 1 3/4"	254 PAVEMENT PLANING, BITUMINOUS (VARIES 1 1/2" TO 2 1/2")	446 1 1/2" ASPHALT CONCRETE, SURFACE COURSE, TYPE 1H, AS PER PLAN	407 TACK COAT (0.10 GAL/SQ. YD.)
				LIN.FT.	SQ.YD.	SQ.YD.	SQ.YD.	SQ.YD.	SQ.YD.	SQ.YD.	SQ.YD.	CU.YD.	GAL.
MAINLINE													
782+25.26	782+65.26	LT	78	68	302					302			
782+65.26	783+30.26	LT	78	68	491			491					
782+25.26	782+65.26	RT	78	68	302					302			
782+65.26	783+30.26	RT	78	68	491			491					
794+93.83	795+58.83	LT	78	68	491			491					
795+58.83	795+98.83	LT	78	68	302					302			
794+93.83	795+58.83	RT	78	68	491			491					
795+58.83	795+98.83	RT	78	68	302					302			
840+07.49	840+47.49	WB	82	80	356					356			
840+47.49	841+12.49	WB	82	80	578			578					
840+07.49	840+47.49	EB	82	80	356					356			
840+47.49	841+12.49	EB	82	80	578			578					
862+91.54	863+31.54	WB	83	90	400					400			
863+31.54	863+96.54	WB	83	90	650			650					
862+60.34	863+00.34	EB	83	80	356					356			
863+00.34	863+65.34	EB	83	80	578			578					
865+24.60	865+89.60	WB	83	93	672			672					
865+89.60	866+29.60	WB	83	93	413					413			
865+30.97	865+95.97	EB	83	80	578			578					
865+95.97	866+35.97	EB	83	80	356					356			
878+79.45	879+79.45	LT	84	68	756						756		
878+79.45	879+79.45	RT	84	68	756						756		
RAMPS													
R5:34+00	R5:34+24.99	RT	VAR	110			110						
R7:22+60.36	R7+23+60	RT	VAR	88			88						
R8:33+40.50	R8:33+53	RT	VAR	76			76						
R9:30+57.89	R9:31+72	LT	VAR	100			100						
R11:41+80	R11:42+69.21	RT	VAR	88			88						
R12:33+65	R12:33+77.50	LT	VAR	95			95						
R13:71+19.50	R13:71+32	RT	VAR	76			76						
R14:69+92.07	R14:70+04.57	LT	VAR	104			104						
R17:12+50	R17:12+62.50	RT	VAR	118			118						
R18:6+94.25	R18:8+05	LT	VAR	153			153						
R27 @ W. 44TH ST.			VAR	167			167						
R28 @ W. 44TH ST.			VAR	167			167						
(LEFT SIDE)							1342	5598		3445	1512		

RESURFACING: PAVEMENT PLANING

STATION FROM	STATION TO	SIDE	SHEET NUMBER	END WIDTHS	SURFACE AREA	254 PAVEMENT PLANING, CONCRETE 1 1/2"	254 PAVEMENT PLANING, CONCRETE (VARIES FROM 0 TO 1 1/2"	254 PAVEMENT PLANING, CONCRETE (VARIES FROM 0 TO 1 3/4"	254 PAVEMENT PLANING, BITUMINOUS 1 1/2"	254 PAVEMENT PLANING, BITUMINOUS (VARIES FROM 0 TO 1 1/2"	254 PAVEMENT PLANING, BITUMINOUS (VARIES 1 1/2" TO 2 1/2")	254 PAVEMENT PLANING, BITUMINOUS 2 1/2"	446 1 1/2" ASPHALT CONCRETE, SURFACE COURSE, TYPE 1H, AS PER PLAN	407 TACK COAT (0.10 GAL/SQ. YD.)
				LIN.FT.	SQ.YD.	SQ.YD.	SQ.YD.	SQ.YD.	SQ.YD.	SQ.YD.	SQ.YD.	SQ.YD.	CU.YD.	GAL.
CITY STREET BRIDGE APPROACH SLABS (DETAILS D & E, SHT 85)														
ALGER ROAD														
SOUTH APPROACH SLAB		CL	67	VAR	113				113				5	
NORTH APPROACH SLAB		CL	67	VAR	69				69				3	
WARREN ROAD														
SOUTH APPROACH SLAB		CL	67	VAR	217				217				9	
NORTH APPROACH SLAB		CL	67	VAR	138				138				6	
CLARK AVE.														
SOUTH APPROACH SLAB		CL	80	VAR	142				142				6	
NORTH APPROACH SLAB		CL	80	VAR	142				142				6	
CONNECTOR ROAD														
SOUTH APPROACH SLAB		CL	80	VAR	183				183				8	18
W. 73RD ST.														
SOUTH APPROACH SLAB		CL	81	VAR	125				125				5	13
NORTH APPROACH SLAB		CL	81	VAR	125				125				5	13
W. 117TH ST. PRESSURE RELIEF JOINT			73	4	39					39				
W. 73RD ST. PRESSURE RELIEF JOINT			81	4	20					20				
W. 98TH ST. ALONG CURB		LT &	RT 78	2	89				89				4	9
		SUB-TOTAL (RIGHT SIDE)				0		0	1343	59	0		57	53
		SUB-TOTAL (LEFT SIDE)				1342		3445	0	5598	1512		0	0
	TOTALS (THIS SHEET)					1342		3445	1343	5657	1512		57	53
	TOTALS (FROM SHEET 51)						1692	4228		8381		486		
TOTALS CARRIED TO GENERAL SUMMARY:						1342	1692	7673	1343	14038	1512	486	57	53
							10707			16893				

PLOTTED BY: jgrmovse
PLOTTED FROM: M:\users\mincek\pid57540\05754gsa.dgn
PLOT SUBMITTED:02-DEC-1998 14:47
05754gsa.dgn

MISCELLANEOUS QUANTITIES

ROADWAY QUANTITIES (SEE DETAILS, SHEETS 94 & 95)

REF. NO.	SHEET NO.	STATION FROM	STATION TO	SIDE	202 CURB REMOVED, AS PER PLAN, A (LIN FT)	202 CURB REMOVED, AS PER PLAN, B (LIN FT)	202 CURB REMOVED, AS PER PLAN, C (LIN FT)	609 CURB, TYPE 2-A (LIN FT)	609 CURB TYPE 2-B, AS PER PLAN (LIN FT)
CU-1	72	703+50	703+64	LT.		14			
CU-1	73	R5: 24+75	R5: 26+83	RT			208		
CU-2	73	R5: 26+83	R5: 28+68	RT		185			
CU-1	74	R7: 22+60.36	R7: 24+55.99	RT	196				
CU-2	74	R7: 27+18.00	R7: 27+75	LT		57			
CU-3	74	R7: 29+74.93	R7: 30+74.93	LT		100			
CU-4	74	R7: 30+74.93	R7: 31+74.93	LT			100		
CU-5	74	R9: 31+71.00	R9: 32+59.43	LT		88			
CU-6	74	R9: 31+59.43	R9: 32+59.43	RT	100				
CU-7	74	R9: 32+59.43	R9: 33+09.43	RT		50			
CU-8	74	R5: 32+48.98	R5: 32+98.98	LT		50			
CU-9	74	R5: 32+98.98	R5: 34+84.99	LT	186				
CU-10	74	R5: 32+98.98	R5: 33+87.99	RT		89			
CU-11	74	R11: 34+83.26	R11: 35+83.62	RT			100		
CU-12	74	R11: 35+83.26	R11: 36+83.26	RT		100			
CU-13	74	R11: 38+50.00	R11: 39+06.00	RT		56			
CU-14	74	R11: 40+82.17	R11: 42+69.21	LT	87				
CU-1	75	R9: 38+64.00	R9: 41+74.93	LT		311			
CU-2	75	RI2: 43+50	RI2: 43+94	LT.		34			
CU-1	76	R13: 63+75.00	R13: 66+41.00	RT		266			
CU-1	78	R16: 88+18	R16: 89+20.55	LT	103				
CU-2	78	R16; 89+20.55	R16: 89+70.55	LT		50			
CU-3	78	R16: 88+60.00	R16: 89+70.55	RT		111			
CU-4	78	W100: 152+80±	W100: 155+10±	LT&RT	460			460	
CU-5	78	W98: 45+50±	W98: 47+50±	LT&RT	400				400
CU-1	79	R16: 91+38	R16: 92+62	LT		124			
CU-2	79	R16: 92+62	R16: 94+00	LT			138		
CU-1	80	R18: 6+94.25	R18: 8+25	RT		131			
TOTAL					1532	1816	546	460	400

ROADWAY QUANTITIES

REF. NO.	SHEET NO.	STATION FROM	STATION TO	SIDE	202 CONCRETE MEDIAN REMOVED (SQ YD)	202 WALK REMOVED (SQ FT)	608 4" CONCRETE WALK, AS PER PLAN (SQ FT)	612 9" CONCRETE MEDIAN (SQ YD)	660 SODDING, UNSTAKED (SQ YD)
SW-1	69	W140: 44+00±	W140: 44+50±	LT		100	100		
SW-2	69	W140: 44+00±	W140: 44+50±	RT		100	100		
SW-1	71	BEREA: 85+20±	BEREA: 85+90±	LT		100	100		
SW-2	71	BEREA: 85+20±	BEREA: 85+90±	RT		100	100		
CM-1	74	R8: 29+78.00	R8: 32+25.00	LT	118			118	
CM-2	74	R12: 34+70.00	R12: 36+62.00	RT	97			97	
SW-1	75	W110: 45+10	W110: 45+70±	LT&RT		600	600		33
SW-2	75	W110: 47+90±	W110: 48+40±	LT&RT		600	600		28
SW-1	76	W106: 47+00±	W106: 47+50±	LT&RT		600	600		28
SW-2	76	W106: 49+90±	W106: 50+40±	LT&RT		600	600		33
SW-1	77	WEST BLVD: 43+70±	WEST BLVD: 44+40±	LT		50	50		
SW-2	77	WEST BLVD: 43+70±	WEST BLVD: 44+40±	RT		50	50		
SW-1	78	W98: 47+00±	W98: 47+50±	LT		100	100		
SW-2	78	W98: 47+00±	W98: 47+50±	RT		100	100		
SW-3	78	W98: 45+70±	W98: 46+40±	LT		100	100		
SW-4	78	W98: 45+70±	W98: 46+40±	RT		100	100		
SW-1	80	I-90: 806+00±	I-90: 807+00±	LT		500	500		
TOTAL					215	3800	3800	215	122

ITEM 617 – COMPACTED AGGREGATE, TYPE A

15,983 LIN. FT. X (2 IN. X 1 FT./12 IN.) X 4 FT./2 = 5328 CU. FT.

5328 CU. FT. X 1 CU. YD./27 CU. FT. = 200 CU. YD.

ITEM 617 – WATER

200 CU. YD. X (1.8 TON/CU. YD.) X (10 GAL./TON) = 4 M. GAL.

ITEM 617 – COMPACTED AGGREGATE, TYPE A

STATIONS FROM	STATIONS TO	SHEET NUMBER	SIDE	LENGTH (FT) LEFT	LENGTH (FT) RIGHT
MAINLINE E.B					
683+07.87	683+82.87	70	E.B.		75
752+47.34	772+53.03	77,76	E.B.		2006
772+53.03	792+00.00	77–79	E.B.		1947
834+50.00	840+73.00	81,82	E.B.		623
842+85.00	849+25.00	82	E.B.		640
853+75.00	863+78.00	83	E.B.	1003	
865+44.00	872+50.00	83,84	E.B.	706	
TOTAL EASTBOUND				1709	5291
MAINLINE W.B.					
683+07.87	683+82.87	70	W.B.		75
772+53.03	792+00.00	77–79	W.B.		1947
854+00.00	864+08.00	83	W.B.	1008	
865+36.00	874+08.08	83,84	W.B.	873	
TOTAL WESTBOUND				1881	2022
			RAMP		
28+68.00	32+98.98	74	5		430
24+55.99	29+74.93	74	7		685
27+75.00	29+74.93	74	7	222	
24+95.61	28+79.41	73	8	390	
30+05.00	31+42.50	74	8	148	
32+59.43	38+64.00	74,75	9	590	
34+75.00	40+82.17	74	11	570	
36+83.26	38+50.00	74	11		190
34+40.00	35+50.00	74	12	135	
62+83.60	69+63.05	76,77	14		680
76+41.00	81+53.23	84	27		490
75+50.00	81+20.04	84	28	550	
SUBTOTAL RAMPS				2605	2475
SUBTOTAL MAINLINE				3590	7313
TOTAL				6195	9788
TOTAL FROM LEFT & RIGHT				15,983 LIN. FT.	

PLOTTED BY: jgrmovse
PLOTTED FROM: users\mincekp\d05754gmd.dgn
PLOT SUBMITTED: 02-DEC-1998 14:46
057546MD

MISCELLANEOUS QUANTITIES

PRESSURE RELIEF JOINTS					
LOCATION		SPECIAL		605	603
ROADWAY	STATION	PRESSURE RELIEF JOINT, TYPE A		6" SHALLOW PIPE UNDERDRAIN WITH FABRIC WRAP, 707.01 OR 707.21	6" CONDUIT, TYPE F, 707.41 NON PERFO RATED, ASTM D3034, SDR35, 707.42 OR 707.33
		RIGHT LIN. FT.	LEFT LIN. FT.	LIN. FT.	LIN. FT.
I-90 E.B.	684+00	8	10	18	15
I-90 W.B.	684+00	10	8	18	15
I-90 E.B.	692+00	8	10	18	
I-90 W.B.	692+00	10	10	20	
I-90 E.B.	695+00	10	10	20	
I-90 W.B.	695+00	10	10	20	
I-90 E.B.	697+00	10	10	20	
I-90 W.B.	697+00	10	10	20	
I-90 E.B.	769+21	10	10	20	
I-90 W.B.	769+82	10	10	20	
I-90 E.B.	772+17	10	10	20	
I-90 W.B.	772+79	10	10	20	
I-90 W.B.	778+85	10	10	20	
I-90 E.B.	779+41	10	10	20	
I-90 E.B.	840+33	10	10	20	
I-90 E.B.	843+77	10	10	20	
I-90 E.B.	862+93	10	10	20	
I-90 W.B.	863+16	10	10	20	
I-90 E.B.	866+03	10	10	20	
I-90 W.B.	865+96	10	10	20	
SUBTOTAL:		196	198	394	30
TOTAL:		394			

EROSION CONTROL				
REF. NO.	SHT. NO.	LOCATION	601	
		BRIDGE NO.	CONCRETE SLOPE PROTECTION, AS PER PLAN, A	CONCRETE SLOPE PROTECTION, AS PER PLAN, B
			SQ. YD.	SQ. YD.
SE-1	67	CUY-90-0892	119	
SE-2	67	CUY-90-0892		27
SE-3	67	CUY-90-0909	206	
SE-4	67	CUY-90-0947R		67
SE-5	69	CUY-90-0947L		10
SE-6	75	CUY-90-1082	53	
SE-7	75	CUY-90-1082		21
SE-8	77	CUY-90-1132L		31
SE-9	77	CUY-90-1132R		31
SE-10	78	CUY-90-1151L		62
SE-11	78	CUY-90-1151R		45
SE-12	78	CUY-90-1157L		10
SE-13	78	CUY-90-1157R		10
SE-14	80	CUY-90-1214S		415
SE-15	82	CUY-90-1267		156
SE-16	82	CUY-90-1270	416	
SE-17	83	CUY-90-1390L		124
SE-18	84	CUY-90-1309R		115
		TOTAL	794	1124

CATCH BASIN AND PIPE CLEANOUT				
REF. NO.	SHEET NO.	LOCATION	CATCH BASIN OR INLET TO BE CLEANED	PIPE CLEAN OUT, 8" TO 15"
			EACH	LIN. FT.
PC - 1	67	WARREN ROAD 77+20, LT,	1	75'
PC - 2	74	WEST 117TH. ST. 45+85, LT.	1	43'
PC - 3	74	WEST 117TH ST. 46+00, RT.	1	43'
PC - 4	74	WEST 117TH. ST. 52+25, LT.	1	45'
PC - 5	74	WEST 117TH. ST. 52+67, LT.	1	47'
PC - 6	74	WEST 117TH. ST. 52+22, RT.	1	48'
PC - 7	75	WEST 110TH. ST. 47+90, LT.	1	35'
PC - 8	75	WEST 110TH. ST. 47+90, RT.	1	35'
PC - 9	75	WEST 110TH. ST 45+65, RT.	1	40'
PC - 10	75	WEST 110 TH. ST. 45+65, LT.	1	42'

CONTINUES ON NEXT COLUMN

CONTINUED FROM PREVIOUS COLUMN

CATCH BASIN AND PIPE CLEANOUT				
REF. NO.	SHEET NO.	LOCATION	CATCH BASIN OR INLET TO BE CLEANED	PIPE CLEAN OUT, 8" TO 15"
			EACH	LIN. FT.
PC - 11	76	SOUTH FRONTAGE ROAD NO. 3 38+60, LT.	1	30'
PC - 12	79	LORAIN AVE. 48+65, RT.	1	90'
PC - 13	79	LORAIN AVE. 50+27, RT	1	100'
PC - 14	80	CONNECTOR ROAD 55+42, LT.	1	70'
PC - 15	80	CONNECTOR ROAD 54+90, RT.	1	82'
PC - 16	80	CONNECTOR ROAD 52+05, LT.	1	35'
PC - 17	81	WEST 73RD. ST. 47+00, LT.	1	23'
PC - 18	81	WEST 73RD. ST. 47+08 RT.	1	18'
PC - 19	81	WEST 73RD ST. 42+72, LT.	1	18'
PC - 20	81	WEST 73RD. ST. 42+80, RT.	1	18'
TOTAL			20	937

PLOTTED BY: jgrmovse
PLOTTED FROM: C:\Users\Blmincek\Bpid05754B05754gme.dgn
PLOT SUBMITTED: 02-DEC-1998 14:45
05754GME.DGN

DRAINAGE QUANTITIES

CUYAHOGA COUNTY CUY-90-9.68	OHIO	55
	FHWA REGION 5	220
	FEDERAL PROJECT	

DRAINAGE QUANTITIES													
				STATION		605		603		604			
REF. NO.	SHEET NO.	LOCATION	SIDE	FROM	TO	6" SHALLOW PIPE UNDERDRAIN	6" UNCLASSIFIED PIPE UNDERDRAIN	6" CONDUIT, TYPE B, 707.41 NON-PERFORATED, ASTM D3034 SDR35, 707.42 OR 707.33	CONNECTION (C) OR OUTLET (O) TYPE	PRE-CAST REINFORCED CONCRETE OUTLET			
						LIN FT	LIN FT	LIN FT		EACH			
1-UD	71	W.B.	LT.	691+55	694+90	335							
2-UD	71	W.B.	LT.	691+52	694+97	345							
3-UD	71	W.B.	LT.	694+97				85	C				
4-UD	71	W.B.	LT.	696+45	698+00	155							
5-UD	71	E.B.	RT.	691+49	695+07	358							
6-UD	71	E.B.	RT.	691+45	695+15	370							
7-UD	71	E.B.	RT.	695+15				90	C				
8-UD	71	E.B.	RT.	696+60	698+00	140							
				SHEET 71 SUBTOTALS		1703	0	175	—	0			
1-UD	72	W.B.	LT.	698+00	698+75	75							
2-UD	72	W.B.	LT.	698+75				12	C				
3-UD	72	W.B.	LT.	698+80	708+75	995							
4-UD	72	W.B.	LT.	708+75				12	C				
5-UD	72	W.B.	LT.	708+80	713+00	420							
6-UD	72	W.B.	LT.	708+75	713+00	425							
7-UD	72	E.B.	RT.	698+00	698+75	75							
8-UD	72	E.B.	RT.	698+75				12	C				
9-UD	72	E.B.	RT.	698+80	708+75	995							
10-UD	72	E.B.	RT.	708+75				12	C				
11-UD	72	E.B.	RT.	708+80	713+00	420							
12-UD	72	E.B.	RT.	708+75	713+00	425							
				SHEET 72 SUBTOTALS		3,830	0	48	—	0			
1-UD	73	W.B.	LT.	713+00	718+70	570							
2-UD	73	W.B.	LT.	718+70				12	C				
3-UD	73	W.B.	LT.	718+75	727+00	825							
4-UD	73	W.B.	LT.	727+00				12	C				
5-UD	73	W.B.	LT.	27+01	28+00	99							
6-UD	73	W.B.	LT.	28+00				12	C				
7-UD	73	W.B.	LT.	28+05	28+50	45							
8-UD	73	W.B.	LT.	713+00	718+70	570							
9-UD	73	W.B.	LT.	718+70				12	C				
10-UD	73	W.B.	LT.	718+75	728+00	925							
11-UD	73	W.B.	LT.	724+75	728+00	325							
12-UD	73	W.B.	LT.	728+00				12	C				
13-UD	73	E.B.	RT.	713+00	718+70	570							
14-UD	73	E.B.	RT.	718+70				12	C				
15-UD	73	E.B.	RT.	718+75	728+00	925							
16-UD	73	E.B.	RT.	728+00				12	C				
17-UD	73	E.B.	RT.	713+00	713+60	60							
18-UD	73	E.B.	RT.	713+60				12	C				
19-UD	73	E.B.	RT.	713+65	718+70	505							
20-UD	73	E.B.	RT.	718+70				12	C				
21-UD	73	E.B.	RT.	718+75	722+05	330							
22-UD	73	E.B.	RT.	22+05				12	C				
23-UD	73	E.B.	RT.	22+10	26+45	435							
24-UD	73	E.B.	RT.	26+45				8	C				
25-UD	73	E.B.	RT.	26+45	27+90	145							
26-UD	73	E.B.	RT.	27+90				10	C				
27-UD	73	E.B.	RT.	27+91	29+00	109							
28-UD	73	E.B.	RT.	725+00	728+00	300							
29-UD	73	E.B.	RT.	728+00				12	C				
				SHEET 73 SUBTOTALS		6,738	0	150	—	0			

DRAINAGE QUANTITIES													
				STATION		605		603		604			
REF. NO.	SHEET NO.	LOCATION	SIDE	FROM	TO	6" SHALLOW PIPE UNDERDRAIN	6" UNCLASSIFIED PIPE UNDERDRAIN	6" CONDUIT, TYPE B, 707.41 NON-PERFORATED, ASTM D3034 SDR35, 707.42 OR 707.33	CONNECTION (C) OR OUTLET (O) TYPE	PRE-CAST REINFORCED CONCRETE OUTLET			
						LIN FT	LIN FT	LIN FT		EACH			
1-UD	74	W.B.	LT.	728+00	732+35	435							
2-UD	74	W.B.	LT.	732+35				12	C				
3-UD	74	W.B.	LT.	732+40	734+80	240							
4-UD	74	W.B.	LT.	734+80				12	C				
5-UD	74	W.B.	LT.	R11: 34+85	R11: 36+00	115							
6-UD	74	W.B.	LT.	R11: 36+00				30	C				
7-UD	74	W.B.	LT.	R11: 36+00	R11: 40+82.17	482							
8-UD	74	W.B.	LT.	R5: 28+50	R5: 32+98.98	449							
9-UD	74	W.B.	LT.	R12: 34+66.91	R12: 37+00	233							
10-UD	74	W.B.	LT.	734+83	737+00	217							
11-UD	74	W.B.	LT.	728+00	736+00	800							
12-UD	74	W.B.	LT.	736+00				12	C				
13-UD	74	W.B.	LT.	736+05	737+00	95							
14-UD	74	E.B.	RT.	728+00	736+00	800							
15-UD	74	E.B.	RT.	736+00				12	C				
16-UD	74	E.B.	RT.	736+05	737+00	95							
17-UD	74	E.B.	RT.	728+00	730+50	250							
18-UD	74	E.B.	RT.	730+50				10	C				
19-UD	74	E.B.	RT.	730+50	731+75	125							
20-UD	74	E.B.	RT.	R8: 29+00	R8: 32+50	350							
21-UD	74	E.B.	RT.	R7: 24+55.99	R7: 30+55	599							
22-UD	74	E.B.	RT.	R7: 30+55				30	C				
23-UD	74	E.B.	RT.	730+60	736+00	540							
24-UD	74	E.B.	RT.	736+00				12	C				
25-UD	74	E.B.	RT.	736+05	737+00	95							
26-UD	74	E.B.	RT.	R9: 32+59.43	R9: 36+50	391							
				SHEET 74 SUBTOTALS		6,311	0	130	—	0			

PLOTTED BY: jgrmovse
PLOTTED FROM: C:\Users\Blmincek\Dgn\d05754dsf.dgn
PLOT SUBMITTED: 02-DEC-1998 14:44
05754DSF.DGN

DRAINAGE QUANTITIES

CUYAHOGA COUNTY CUY-90-9.68	OHIO	56 220
	FHWA REGION 5	
	FEDERAL PROJECT	

DRAINAGE QUANTITIES

REF. NO.	SHEET NO.	LOCATION	SIDE	STATION FROM	STATION TO	605 6" SHALLOW PIPE UNDERDRAIN LIN FT	605 6" UNCLASSIFIED PIPE UNDERDRAIN LIN FT	603 6" CONDUIT, TYPE B, 707.41 NON-PERFORATED ASTM 3034 SDR35, OR 707.42 OR 707.33 LIN FT	603 CONNECTION (C) OR OUTLET (O) TYPE	604 PRE-CAST REINFORCED CONCRETE OUTLET EACH			
1-UD	75	W.B.	LT.	R12: 37+00	R12: 39+45	245							
2-UD	75	W.B.	LT.	R12: 39+45				8	C				
3-UD	75	W.B.	LT.	R12: 39+50	R12: 49+45	995							
4-UD	75	W.B.	LT.	749+45				12	C				
5-UD	75	W.B.	LT.	749+50	752+00	250							
6-UD	75	W.B.	LT.	737+00	742+20	520							
7-UD	75	W.B.	LT.	742+20				10	C				
8-UD	75	W.B.	LT.	742+20	742+77		57						
9-UD	75	W.B.	LT.	737+00	744+25	725							
10-UD	75	W.B.	LT.	744+25				12	C				
11-UD	75	W.B.	LT.	744+30	751+55	725							
12-UD	75	W.B.	LT.	751+55				12	C				
13-UD	75	W.B.	LT.	751+60	752+00	40							
14-UD	75	E.B.	RT.	737+00	744+25	725							
15-UD	75	E.B.	RT.	744+25				12	C				
16-UD	75	E.B.	RT.	744+30	752+00	770							
17-UD	75	E.B.	RT.	737+00	739+75	275							
18-UD	75	E.B.	RT.	739+75				10	C				
19-UD	75	E.B.	RT.	739+75	741+75		200						
20-UD	75	E.B.	RT.	R9: 36+50	R9: 40+45	395							
21-UD	75	E.B.	RT.	R9: 40+45				12	C				
22-UD	75	E.B.	RT.	740+50	744+25	375							
23-UD	75	E.B.	RT.	744+25				12	C				
24-UD	75	E.B.	RT.	744+30	749+50	520							
25-UD	75	E.B.	RT.	749+50				12	C				
26-UD	75	E.B.	RT.	749+55	752+00	245							
				SHEET 75 SUBTOTALS		6,805	257	112	—	0			

DRAINAGE QUANTITIES

REF. NO.	SHEET NO.	LOCATION	SIDE	STATION FROM	STATION TO	605 6" SHALLOW PIPE UNDERDRAIN LIN FT	605 6" UNCLASSIFIED PIPE UNDERDRAIN LIN FT	603 6" CONDUIT, TYPE B, 707.41 NON-PERFORATED ASTM 3034 SDR35, 707.42 OR 707.33 LIN FT	603 CONNECTION (C) OR OUTLET (O) TYPE	604 PRE-CAST REINFORCED CONCRETE OUTLET EACH	6" CONDUIT, TYPE F, 707.41 NON-PERFORATED, ASTM 3034 SDR35, 707.42 OR 707.33 LIN FT		
1-UD	76	W.B.	LT.	752+00	755+75	375							
2-UD	76	W.B.	LT.	755+75				12	C				
3-UD	76	W.B.	LT.	755+80	760+00	420							
4-UD	76	W.B.	LT.	760+00				10	C				
5-UD	76	W.B.	LT.	760+00	763+70	370							
6-UD	76	W.B.	LT.	763+75				20	C				
7-UD	76	W.B.	LT.	R13: 63+75	R13: 67+00	325							
8-UD	76	W.B.	LT.	763+80				12	C				
9-UD	76	W.B.	LT.	763+75	767+00	325							
10-UD	76	W.B.	LT.	752+00	754+75	275							
11-UD	76	W.B.	LT.	754+75				12	C				
12-UD	76	W.B.	LT.	754+80	758+00	320							
13-UD	76	W.B.	LT.	758+00				12	C				
14-UD	76	E.B.	RT.	752+00	754+25	225							
15-UD	76	E.B.	RT.	754+25				12	C				
16-UD	76	E.B.	RT.	754+30	756+25	195							
17-UD	76	E.B.	RT.	756+25				10	C				
18-UD	76	E.B.	RT.	756+25	763+75	750							
19-UD	76	E.B.	RT.	763+75				12	C				
20-UD	76	E.B.	RT.	763+80	767+00	320							
21-UD	76	E.B.	RT.	752+00	755+50	350							
22-UD	76	E.B.	RT.	755+50				10	C				
23-UD	76	E.B.	RT.	755+50	R14: 67+00	1150							
24-UD	76	E.B.	LT.	R14: 62+84	R14: 64+00		116						
25-UD	76	E.B.	LT.	R14: 64+00				12	C				
26-UD	76	E.B.	LT.	R14: 64+00	R14: 67+00	300							
				SHEET 76 SUBTOTALS		5,700	116	134	—	0	0		
1-UD	77	W.B.	RT.	R13: 67+00	R13: 70+50	350							
2-UD	77	W.B.	RT.	R13: 70+50				10	C				
3-UD	77	W.B.	LT.	767+00	770+20	320							
4-UD	77	W.B.	LT.	770+20				10	O	1	15		
5-UD	77	W.B.	LT.	772+70				10	O	1	15		
6-UD	77	W.B.	LT.	772+65	775+55	290							
7-UD	77	W.B.	LT.	775+55				10	O	1	15		
8-UD	77	W.B.	LT.	775+55	776+00		45						
9-UD	77	W.B.	LT.	767+00	769+96	296							
10-UD	77	W.B.	LT.	769+90				10	O	1	15		
11-UD	77	W.B.	LT.	772+40				10	O	1	15		
12-UD	77	W.B.	LT.	772+37	776+00	363							
13-UD	77	E.B.	RT.	767+00	769+63	263							
14-UD	77	E.B.	RT.	769+60				10	O	1	15		
15-UD	77	E.B.	RT.	772+10				10	O	1	15		
16-UD	77	E.B.	RT.	772+03	776+00	397							
17-UD	77	E.B.	RT.	776+00				10	O	1	15		
18-UD	77	E.B.	RT.	767+00	769+40	240							
19-UD	77	E.B.	RT.	769+35				10	O	1	15		
20-UD	77	E.B.	RT.	771+78				10	O	1	15		
21-UD	77	E.B.	RT.	771+78	776+00	422							
22-UD	77	E.B.	LT.	R14: 67+00	R14: 69+63.05	263							
23-UD	77	E.B.	LT.	R14: 69+52				20	C				
24-UD	77	E.B.	LT.	R14: 69+52	R14: 69+73		21						
25-UD	77	E.B.	RT.	R14: 67+00	R14: 68+75	175							
26-UD	77	E.B.	RT.	R14: 68+75				8	C				
				SHEET 77 SUBTOTALS		3,379	66	138	—	10	150		

PLOTTED BY: jgrmovse
PLOTTED FROM: c:\users\minceki\pid05754\d05754dsg.dgn
PLOT SUBMITTED: 02-DEC-1998 14:44
05754DSG.DGN

DRAINAGE QUANTITIES

CUYAHOGA COUNTY CUY-90-9.68	OHIO	57
	FHWA REGION 5	220
	FEDERAL PROJECT	

DRAINAGE QUANTITIES

REF. NO.	SHEET NO.	LOCATION	SIDE	STATION FROM	STATION TO	605 6" SHALLOW PIPE UNDERDRAIN	605 6" UNCLASSIFIED PIPE UNDERDRAIN	603 6" CONDUIT, TYPE B, 707.41 NON-PERFORATED, ASTM 3034 SDR35, 707.42 OR 707.33	603 CONNECTION (C) OR OUTLET (O) TYPE	604 PRE-CAST REINFORCED CONCRETE OUTLET			
						LIN FT	LIN FT	LIN FT		EACH			
1-UD	78	W.B.	LT.	776+00	779+15	315							
2-UD	78	W.B.	LT.	779+15				10	C				
3-UD	78	W.B.	LT.	779+15	779+27		12						
4-UD	78	W.B.	LT.	781+39	782+75	136							
5-UD	78	W.B.	LT.	782+75				10	C				
6-UD	78	W.B.	LT.	782+75	783+10		35						
7-UD	78	W.B.	LT.	785+23	791+25	602							
8-UD	78	W.B.	LT.	785+20	791+25	605							
9-UD	78	E.B.	RT.	776+00	779+65	365							
10-UD	78	E.B.	RT.	779+75				10	C				
11-UD	78	E.B.	RT.	779+75	779+81		6						
12-UD	78	E.B.	RT.	782+11	782+75	64							
13-UD	78	E.B.	RT.	782+75				10	C				
14-UD	78	E.B.	RT.	782+75	782+90		15						
15-UD	78	E.B.	RT.	785+15	791+25	610							
16-UD	78	E.B.	RT.	785+12	790+00	488							
17-UD	78	E.B.	RT.	790+00									
18-UD	78	E.B.	RT.	790+05	791+25	120		12	C				
19-UD	78	E.B.	RT.	R16:90+00	R16:91+25	125							
				SHEET 78 SUBTOTALS		3,430	68	52	—	0			
1-UD	79	W.B.	LT.	R15:93+06.8	R15:95+90	283							
2-UD	79	W.B.	LT.	R15:95+90				8	C				
3-UD	79	W.B.	LT.	795+95	801+00	505							
4-UD	79	W.B.	LT.	802+00				12	C				
5-UD	79	W.B.	LT.	802+05	804+83	278							
6-UD	79	W.B.	LT.	804+83				14	C				
7-UD	79	W.B.	LT.	804+88	805+50	62							
8-UD	79	W.B.	LT.	94+00	96+90	290							
9-UD	79	W.B.	LT.	96+90				12	C				
10-UD	79	W.B.	LT.	791+25	792+00	75							
11-UD	79	W.B.	LT.	792+00				30	C				
12-UD	79	W.B.	LT.	792+05	795+90	385							
13-UD	79	W.B.	LT.	795+90				12	C				
14-UD	79	W.B.	LT.	791+25	792+10	85							
15-UD	79	W.B.	LT.	792+10				12	C				
16-UD	79	W.B.	LT.	792+15	796+90	475							
17-UD	79	W.B.	LT.	796+90				12	C				
18-UD	79	W.B.	LT.	796+95	801+00	405							
19-UD	79	W.B.	LT.	802+00				12	C				
20-UD	79	W.B.	LT.	802+05	805+50		345						
21-UD	79	E.B.	RT.	791+25	792+10	85							
22-UD	79	E.B.	RT.	792+10				12	C				
23-UD	79	E.B.	RT.	792+15	802+00	985							
24-UD	79	E.B.	RT.	802+00				12	C				
25-UD	79	E.B.	RT.	802+00	805+50	350							
26-UD	79	E.B.	RT.	791+25	793+90	265							
27-UD	79	E.B.	RT.	793+90				12	C				
28-UD	79	E.B.	RT.	791+25	796+50	525							
29-UD	79	E.B.	RT.	796+50				12	C				
30-UD	79	E.B.	RT.	796+55	800+50	395							
31-UD	79	E.B.	RT.	800+50				12	C				
				SHEET 79 SUBTOTALS		5,448	345	184	—	0			

DRAINAGE QUANTITIES

REF. NO.	SHEET NO.	LOCATION	SIDE	STATION FROM	STATION TO	605 6" SHALLOW PIPE UNDERDRAIN	605 6" UNCLASSIFIED PIPE UNDERDRAIN	603 6" CONDUIT, TYPE B, 707.41 NON-PERFORATED, ASTM 3034 SDR35, OR 707.42 OR 707.33	603 CONNECTION (C) OR OUTLET (O) TYPE	604 PRE-CAST REINFORCED CONCRETE OUTLET			
						LIN FT	LIN FT	LIN FT		EACH			
1-UD	80	W.B.	LT.	R17:14+00	R17:17+80	380							
2-UD	80	W.B.	LT.	R17:17+80				8	C				
3-UD	80	W.B.	LT.	R17:17+85	R17:21+00	315							
4-UD	80	W.B.	LT.	805+50	807+75	225							
5-UD	80	W.B.	LT.	807+75				16	C				
6-UD	80	W.B.	LT.	807+80	812+00	420							
7-UD	80	W.B.	LT.	811+95				16	C				
8-UD	80	W.B.	LT.	812+96	817+50	454							
9-UD	80	W.B.	LT.	817+50				12	C				
10-UD	80	W.B.	LT.	817+55	821+00	345							
11-UD	80	W.B.	LT.	815+00	821+00	600							
12-UD	80	E.B.	RT.	805+50	807+75	225							
13-UD	80	E.B.	RT.	807+75				12	C				
14-UD	80	E.B.	RT.	807+80	811+95	415							
15-UD	80	E.B.	RT.	811+95				12	C				
16-UD	80	E.B.	RT.	812+00	817+00	500							
17-UD	80	E.B.	RT.	817+00				12	C				
18-UD	80	E.B.	RT.	817+05	821+00	395							
19-UD	80	E.B.	RT.	815+00	820+00	500							
20-UD	80	E.B.	RT.	820+00				12	C				
21-UD	80	E.B.	LT.	R18:9+25	R18:13+00	375							
22-UD	80	E.B.	LT.	R18:13+00				8	C				
23-UD	80	E.B.	LT.	R18:13+05	R18:15+70	265							
24-UD	80	E.B.	LT.	R18:15+70				8	C				
25-UD	80	E.B.	RT.	R18:14+75	R18:18+50	375							
26-UD	80	E.B.	RT.	R18:18+50				6	C				
27-UD	80	E.B.	RT.	R18:18+50	R18:21+00	250							
				SHEET 80 SUBTOTALS		6,039	0	122	—	0			
1-UD	81	W.B.	LT.	R17:21+00	R17:23+25	225							
2-UD	81	W.B.	LT.	R17:23+25				12	C				
3-UD	81	W.B.	LT.	R17:23+30	R17:27+75	445							
4-UD	81	W.B.	LT.	R17:27+75				14	C				
5-UD	81	W.B.	LT.	827+80	833+25	545							
6-UD	81	W.B.	LT.	833+25				12	C				
7-UD	81	W.B.	LT.	833+30	836+50	320							
8-UD	81	W.B.	LT.	821+00	822+25	125							
9-UD	81	W.B.	LT.	822+25				12	C				
10-UD	81	W.B.	LT.	822+30	822+90		60						
11-UD					NOT USED								
12-UD					NOT USED								
13-UD	81	W.B.	LT.	821+00	823+25	225							
14-UD	81	W.B.	LT.	823+25				10	C				
15-UD	81	W.B.	LT.	823+25	825+00	175							
16-UD	81	E.B.	RT.	821+00	823+25	225							
17-UD	81	E.B.	RT.	823+25				10	C				
18-UD	81	E.B.	RT.	823+25	828+00	475							
19-UD	81	E.B.	RT.	828+00				12	C				
20-UD	81	E.B.	RT.	828+05	833+00	495							
21-UD	81	E.B.	RT.	833+00				12	C				
											CONTINUE ON SHT. 58			

PLOTTED BY:jgrmovse
PLOTTED FROM:C:\Users\jminck\Dgn\d5754DSH.dgn
PLOT SUBMITTED:02-DEC-1998 14:43
05754DSH.DGN

DRAINAGE QUANTITIES

CUYAHOGA COUNTY CUY-90-9.68	OHIO	58 220
	FHWA REGION 5	
	FEDERAL PROJECT	

PLOTTED BY: jgrmoose
PLOTTED FROM: C:\Users\Bjmincek\Dgn\d05754dsj.dgn
PLOT SUBMITTED: 02-DEC-1998 14:42
05754DSJ.DGN

DRAINAGE QUANTITIES

REF. NO.	SHEET NO.	LOCATION	SIDE	STATION FROM	STATION TO	605 6" SHALLOW PIPE UNDERDRAIN LIN FT	605 6" UNCLASSIFIED PIPE UNDERDRAIN LIN FT	603 6" CONDUIT, TYPE B, 707.41 NON-PERFORATED, ASTM 3034 SDR35, OR 707.42 OR 707.33 LIN FT	603 CONNECTION (C) OR OUTLET (O) TYPE	604 PRE-CAST REINFORCED CONCRETE OUTLET EACH			
CONTINUE FROM SHT. 57													
22-UD	81	E.B.	RT.	833+05	836+50	345							
23-UD	81	E.B.	RT.	821+00	823+25	225							
24-UD	81	E.B.	RT.	823+25				10	C				
25-UD	81	E.B.	RT.	823+25	828+00	475							
26-UD	81	E.B.	RT.	828+00				12	C				
27-UD	81	E.B.	RT.	828+05	832+50	445							
				SHEET 81 SUBTOTALS		4,745	60	116	—	0			
1-UD	82	W.B.	LT.	836+50	837+00	50							
2-UD	82	W.B.	LT.	837+00				12	C				
3-UD	82	W.B.	LT.	837+05	841+00	395							
4-UD	82	W.B.	LT.	841+00				10	C				
5-UD	82	W.B.	LT.	841+00	844+95	395							
6-UD	82	W.B.	LT.	844+95				12	C				
7-UD	82	W.B.	LT.	845+00	847+95	295							
8-UD	82	W.B.	LT.	847+95				12	C				
9-UD	82	W.B.	LT.	848+00	851+50	350							
10-UD	82	W.B.	LT.	847+95				12	C				
11-UD	82	W.B.	LT.	847+95	851+50	355							
12-UD	82	E.B.	LT.	836+50	838+00	150							
13-UD	82	E.B.	LT.	838+00				12	C				
14-UD	82	E.B.	LT.	838+05	841+00	295							
15-UD	82	E.B.	LT.	843+40	843+50		10						
16-UD	82	E.B.	LT.	843+50				10	C				
17-UD	82	E.B.	LT.	843+50	851+50	800							
18-UD	82	E.B.	RT.	849+22	851+50	228							
				SHEET 82 SUBTOTALS		3,313	10	80	—	0			
1-UD	83	W.B.	LT.	851+50	854+00	250							
2-UD	83	W.B.	RT.	851+50	852+00	50							
3-UD	83	W.B.	RT.	852+00				12	C				
4-UD	83	W.B.	RT.	852+05	856+50	445							
5-UD	83	W.B.	RT.	856+50				12	C				
6-UD	83	W.B.	RT.	856+55	863+60	705							
7-UD	83	W.B.	RT.	865+42	866+00	58							
8-UD	83	E.B.	LT.	851+50	853+70	220							
9-UD	83	E.B.	LT.	853+70				12	C				
10-UD	83	E.B.	RT.	851+50	853+75	225							
11-UD	83	E.B.	RT.	853+75				12	C				
12-UD	83	E.B.	RT.	853+80	856+55	275							
13-UD	83	E.B.	RT.	856+55				12	C				
14-UD	83	E.B.	RT.	856+60	862+00	540							
15-UD	83	E.B.	RT.	862+00				12	C				
16-UD	83	E.B.	RT.	862+05	863+15	110							
17-UD	83	E.B.	RT.	863+15				12	C				
18-UD	83	E.B.	RT.	863+15	863+30		15						
19-UD	83	E.B.	RT.	865+50	866+00	50							
				SHEET 83 SUBTOTALS		2943	15	84	—	0			

DRAINAGE QUANTITIES

REF. NO.	SHEET NO.	LOCATION	SIDE	STATION FROM	STATION TO	605 6" SHALLOW PIPE UNDERDRAIN LIN FT	605 6" UNCLASSIFIED PIPE UNDERDRAIN LIN FT	603 6" CONDUIT, TYPE B, 707.41 NON-PERFORATED, ASTM 3035 SDR35, OR 707.42 OR 707.33 LIN FT	603 6" CONDUIT, TYPE F, 707.41 NON-PERFORATED, ASTM 3034 SDR35, OR 707.42 OR 707.33 LIN FT	604 PRE-CAST REINFORCED CONCRETE OUTLET EACH			
1-UD	84	W.B.	LT.	R27: 73+00	R27: 77+25	425							
2-UD	84	W.B.	LT.	R27: 77+25				8 C					
3-UD	84	W.B.	RT.	R27: 78+00				50 C					
4-UD	84	W.B.	RT.	R27: 78+00	R27: 80+00	200							
5-UD					NOT USED								
6-UD					NOT USED								
7-UD					NOT USED								
8-UD	84	W.B.	RT.	866+00	868+80	280							
9-UD	84	W.B.	RT.	868+80				12 C					
10-UD	84	W.B.	RT.	868+85	872+35	350							
11-UD	84	W.B.	RT.	872+35				12 C					
12-UD	84	W.B.	RT.	872+40	874+00		160						
13-UD					NOT USED								
14-UD					NOT USED								
15-UD	84	E.B.	RT.	871+67	876+00	433							
16-UD	84	E.B.	RT.	876+00				12 C					
17-UD					NOT USED								
18-UD					NOT USED								
19-UD					NOT USED								
20-UD	84	E.B.	RT.	866+00	869+00	300							
21-UD	84	E.B.	RT.	869+00				12 C					
22-UD	84	E.B.	RT.	R28: 69+05	R28: 72+50	345							
23-UD	84	E.B.	RT.	R28: 72+50				8 C					
24-UD	84	E.B.	RT.	R28: 72+55	R28: 75+50	295							
25-UD	84	E.B.	RT.	R28: 75+50				8 C					
26-UD	84	E.B.	RT.	R28: 75+55	R28: 79+70	415							
27-UD	84	E.B.	RT.	R28: 79+70				6 C					
28-UD	84	E.B.	RT.	R28: 79+70	R28: 80+00	30							
29-UD	84	E.B.	RT.	R28: 80+00	R28: 81+20.04	120							
30-UD	84	W.B.	RT.	R27: 80+00	R27: 81+77.54	178							
				SHEET 84 SUBTOTALS		3,371	160	128	0	0			
				SUBTOTAL FOR SHEET NO.	71	1703	0	175	0	0			
				" " " "	72	3830	0	48	0	0			
				" " " "	73	6738	0	150	0	0			
				" " " "	74	6311	0	130	0	0			
				" " " "	75	6805	257	112	0	0			
				" " " "	76	5700	116	134	0	0			
				" " " "	77	3379	66	138	150	10			
				" " " "	78	3430	68	52	0	0			
				" " " "	79	5448	345	184	0	0			
				" " " "	80	6039	0	122	0	0			
				" " " "	81	4745	60	116	0	0			
				" " " "	82	3313	10	80	0	0			
				" " " "	83	2943	15	84	0	0			
				" " " "	84	3371	160	128	0	0			
					TOTAL	63,755	1,097	1,653	150	10			

NOTES: 1) ALL SHALLOW UNDERDRAINS SHALL BE PLACED AT DEPTH OF 30" FROM THE TOP OF CURB TO THE BOTTOM OF THE PIPE.
2) ALL DEEP UNDERDRAINS SHALL BE PLACED AT DEPTH OF 50" FROM THE TOP OF THE CURB TO THE BOTTOM OF THE PIPE.
3) SEE TABLE BELOW FOR UNCLASSIFIED UNDERDRAIN LIMITS AND DEPTHS. THE DEPTH OF THE UNDERDRAIN IS FROM THE TOP OF THE CURB OR GROUND TO THE BOTTOM OF THE PIPE. THE BEGINNING AND END LIMITS SHALL BE CONNECTED WITH STRAIGHT LINE RUN OF PIPE.

✳ - 707.41 NON-PERFORATED ASTM D-3034 SDR 35, 707.42 OR 707.33

DRAINAGE QUANTITIES

REF. NO.	LOCATION	SIDE	STATION FROM	STATION TO	605 6" DEEP PIPE UNDERDRAIN	605 6" SHALLOW PIPE UNDERDRAIN	605 6" UNCLAAIFIED UNDERDRAIN	603 6" CONDUIT TYPE F ✳	UNDERDRAIN DEPTH (INCHES)	OUTLET TO DRAINAGE STRUCTURE (TYPE AND OFFSET)
					LF	LF	LF	LF		
100-UD	EB I-90	RT	701+50	704+00	240			10	50	2-A-10, 93' RT
101-UD	EB I-90	RT	704+05	708+75	465			10	50	2-A-16, 93' RT
102-UD	EB I-90	RT	708+80	711+00	210			10	50	2-A-14, 93' RT
103-UD	EB I-90	RT	711+05	715+75	460			10	50	2-A-14, 93' RT
104-UD	EB I-90	RT	715+80	716+50	60			10	50	2-A-14, 98' RT
105-UD	EB I-90	RT	716+55	717+50	85			10	50	2-A-10, 103' RT
106-UD	EB I-90	RT	717+55	718+75	110			10	50	2-A-12, 103' RT
107-UD	EB I-90	RT	718+30	720+25	135			10	50	2-A-12, 103' RT
108-UD	EB I-90	RT	720+30	722+25	185			10	50	2-A-16, 106' RT
109-UD	EB I-90	RT	722+30	25+25 (RAMP 8)	287			10	50	2-A-12, 6' RT
110-UD	EB I-90	RT	725+00	728+00	290			10	50	2-A-6, 93' RT
111-UD	EB I-90	RT	728+05	30+75 (RAMP 7)	260			10	50	C.B. NO. 5A, 26' RT
112-UD	EB I-90	RT	735+00	736+00	90			10	50	2-A-8, 106' RT
113-UD	EB I-90	RT	736+05	739+78	365			10	50	2-A-14, 95.5' RT
114-UD	EB I-90	RT	739+78	741+00	115			10	50	2-A-14, 95.5' RT
115-UD	EB I-90	RT	40+50 (RAMP 9)	744+25	365			10	50	MH NO. 1A, 115' RT
116-UD	EB I-90	RT	744+30	749+50	510			10	50	2-A-16, 105' RT
117-UD	EB I-90	RT	749+50	750+00	40			10	50	2-A-16, 105' RT
118-UD	EB I-90	RT	759+00	65+25 (RAMP 14)	605			20	50	SEE DETAIL SHEET
119-UD	EB I-90	RT	91+33 (RAMP 16)	796+50	605			10	50	2-A-18, 111' RT
120-UD	EB I-90	RT	796+55	798+15	160				30	
			798+15	798+55	40				50	
			798+55	800+56	190			10	50	2-A-12, 101.75' RT
121-UD	EB I-90	RT	800+60	805+00			430		30 TO 56	2-A-12, 101.75' RT
122-UD	EB I-90	RT	805+00	812+00	690			10	50	2-A-12, 93' RT
123-UD	EB I-90	RT	812+05	817+00	485			10	50	2-A-10, 93' RT
124-UD	EB I-90	RT	817+05	819+25	210			10	50	2-A-6, 93' RT
125-UD	EB I-90	RT	819+30	819+55			15	10	50 TO 53	2-A-6, 93' RT
126-UD	EB I-90	RT	20+00 (RAMP 18)	823+25	320			10	50	2-A-6, 126.83' RT
127-UD	EB I-90	RT	823+30	824+85	145			10	50	2-A-6, 123.63' RT
128-UD	EB I-90	RT	824+90	828+00				10	36 TO 50	2-A-6, 123.63' RT
129-UD	EB I-90	RT	828+05	834+50	635			10	50	2-A-14, 117.33' RT
130-UD	EB I-90	RT	871+68	876+00	472			10	50	2-A-16, 58' RT
131-UD	EB I-90	RT	876+05	878+00	185			10	50	2-A-14, 58' RT
132-UD	EB I-90	RT	878+05	881+00	285			10	50	MH NO. 1, 71.16' RT
133-UD	WB I-90	RT	852+00	856+45	435			10	50	2-A-16, 46' RT
134-UD	WB I-90	RT	848+00	851+95	385			10	50	2-A-14, 46' RT
135-UD	WB I-90	LT	848+00	854+00	590			10	50	2-A-14, 34' LT
136-UD	WB I-90	LT	844+00	847+95	385			10	50	2-A-14, 34' LT
137-UD	WB I-90	RT	844+00	847+95	385			10	50	2-A-14, 46' RT
138-UD	WB I-90	LT	841+75	843+90		205		10	30	2-A-6, 34' LT
139-UD	WB I-90	RT	841+80	843+90		200		10	30	2-A-6, 46' RT
140-UD	WB I-90	RT	841+05	841+75			60	10	30	2-A-6, 46' RT
(LEFT SIDE)					11479	405	505	410		

DRAINAGE QUANTITIES

REF. NO.	LOCATION	SIDE	STATION FROM	STATION TO	605 6" DEEP PIPE UNDERDRAIN	605 6" SHALLOW PIPE UNDERDRAIN	605 6" UNCLASSIFIED UNDERDRAIN	603 6" CONDUIT TYPE F ✳	UNDERDRAIN DEPTH (INCHES)	OUTLET TO DRAINAGE STRUCTURE (TYPE AND OFFSET)
					LF	LF	LF	LF		
141-UD	WB I-90	RT	840+00	841+00	90			10	50	CB NO. 3, 46' RT
142-UD	WB I-90	LT	840+05	841+75	160			10	50	2-A-6, 34' LT
143-UD	WB I-90	LT	837+05	840+00	285			10	50	CB NO. 3, 34' LT
144-UD	WB I-90	RT	837+05	840+00	285			10	50	2-A-6, 46' RT
145-UD	WB I-90	RT	833+30	837+00	360			10	50	2-A-6, 46' RT
146-UD	WB I-90	LT	833+30	837+00	360			10	50	2-A-14, 34' LT
147-UD	WB I-90	LT	830+05	833+25	310			10	50	2-A-12, 34' LT
148-UD	WB I-90	LT	827+80	830+00	210			10	50	2-A-10, 34' LT
149-UD	WB I-90	LT	73+25 (RAMP 17)	827+75		440		10	30	2-A-12, 7' LT
150-UD	WB I-90	LT	817+50	820+00			240	10	50 TO 75	2-A-6, 93' LT
151-UD	WB I-90	LT	815+10	817+50	230			10	50	2-A-6, 93' LT
152-UD	WB I-90	LT	814+55	815+05	40			10	50	CB NO. 3, 93' LT
153-UD	WB I-90	LT	812+05	814+50	235			10	50	2-A-6, 93' LT
154-UD	WB I-90	LT	807+80	812+00	410			10	50	2-A-10, 93' LT
155-UD	WB I-90	LT	804+80	807+75		285		10	30	2-A-10, 105' LT
156-UD	WB I-90	LT	802+05	804+75	260			10	50	2-A-12, 96' LT
157-UD	WB I-90	LT	796+05	802+00		585		10	50	2-A-12, 105' LT
158-UD	WB I-90	LT	793+55	795+90	225			10	50	2-A-8, 6' LT
159-UD	WB I-90	LT	759+92	763+70	368			10	50	, 112' LT
160-UD	WB I-90	LT	749+50	750+20			70	10	60 TO 50	2-A-14, 105' LT
161-UD	WB I-90	LT	39+55 (RAMP 12)	749+50	985			10	50	2-A-14, 105' LT
162-UD	WB I-90	LT	732+43	734+80		227		10	30	2-A-6, 100' LT
163-UD	WB I-90	LT	726+83	732+38	545			10	50	2-A-10, 111' LT
164-UD	WB I-90	LT	718+78	27+00 (RAMP 5)	812			10	50	2-A-6, 6' LT
165-UD	RAMP #5	LT	27+00	28+00			90	10	50 TO 56	2-A-6, 6' LT
166-UD	RAMP #5	LT	28+05	32+00	150	235		10	56 TO 50	2-A-6, 6' LT
167-UD	RAMP #8	RT	25+30	26+50			110	10	50 TO 40	2-A-6, 6' RT
168-UD	RAMP #8	RT	26+50	27+80			120	10	40 TO 50	2-A-6, 6' RT
169-UD	RAMP #8	RT	27+85	33+50	400		155	10	40 TO 50	2-A-6, 6' RT
170-UD	RAMP #9	RT	33+10	40+50	730			10	50	2-A-10, 7.5' RT
171-UD	RAMP #13	LT	63+75	65+50	165			10	50	2-A-6, 6' LT
172-UD	RAMP #13	LT	65+50	68+50	290			10	50	2-A-6, 6' LT
173-UD	RAMP #13	LT	68+50	69+75	125				50	
			69+75	70+50			65	10	50 TO 30	2-A-6, 6' LT
174-UD	RAMP #17	LT	14+00	17+75	365			10	50	2-A-16, 6' LT
175-UD	RAMP #17	LT	21+75	23+25	140			10	50	2-A-8, 7' LT
			SUB-TOTAL (RIGHT SIDE)		8535	1772	850	350		
			SUB-TOTAL (LEFT SIDE)		11479	405	505	410		
			TOTAL TO GENERAL SUMMARY		20014	2177	1355	760		

PLOTTED BY: jgrmovse
PLOTTED FROM: C:\Users\Lmincek\Dgn\d05754bpid05754dsa.dgn
PLOT SUBMITTED: 02-DEC-1998 14:28
05754dsa.dgn

DRAINAGE QUANTITIES

CUYAHOGA COUNTY CUY-90-9.68	OHIO	59 / 220
	FHWA REGION 5	
	FEDERAL PROJECT	

DRAINAGE QUANTITIES

REFERENCE NO.	SHEET NO.	STATION	SIDE	604 CATCH BASIN ADJUSTED TO GRADE	604 CATCH BASIN RECONSTRUCTED TO GRADE	604 INLET ADJUSTED TO GRADE, AS PER PLAN, (DETAIL ON SHEET 85)	604 INLET ADJUSTED TO GRADE, AS PER PLAN, B (DETAIL D1 ON SHEET 85)	604 INLET RECONSTRUCTED TO GRADE	604 MANHOLE ADJUSTED TO GRADE	604 MONUMENT BOX ADJUSTED TO GRADE	638 VALVE BOX ADJUSTED TO GRADE (WATER)	604 CITY OF CLEVELAND CATCH BASIN NO.1	603 12" CONDUIT, TYPE B, A.P.P.
				EACH	EACH	EACH	EACH	EACH	EACH	EACH	EACH	EACH	LIN. FT.
CB-1	65	44+95, ROAD N	LT	1									
CB-2	65	44+95, ROAD N	RT	1									
CB-3	65	1+00, S. MARGINAL #2	LT	1									
CB-4	65	1+00, S. MARGINAL #2	RT	1									
~~CB-5~~	~~65~~	~~3+00, S. MARGINAL #2~~	~~RT~~				1						
~~CB-6~~	~~65~~	~~5+75, S. MARGINAL #2~~	~~RT~~				1						
		SHEET 65 SUBTOTALS		4	0	0	2	0	0	0	0	0	0
CB-1	66	8+40, S. MARGINAL #2	LT					1					
~~CB-2~~	~~66~~	~~8+40, S. MARGINAL #2~~	~~RT~~				1						
MH-1	66	11+00, S. MARGINAL #2	℄						1				
MH-2	66	11+15, S. MARGINAL #2	RT						1				
~~CB-3~~	~~66~~	~~11+25, S. MARGINAL #2~~	~~RT~~				1						
~~CB-4~~	~~66~~	~~14+00, S. MARGINAL #2~~	~~RT~~				1						
MH-3	66	13+00, S. MARGINAL #2	℄						1				
MH-4	66	14+10, S. MARGINAL #2	RT						1				
MH-5	66	15+35, S. MARGINAL #2	RT						1				
MH-6	66	15+90, S. MARGINAL #2	RT						1				
MH-7	66	15+90, S. MARGINAL #2	℄						1				
		SHEET 66 SUBTOTALS		0	0	0	5	1	7	0	0	0	0
~~CB-1~~	~~68~~	~~38+65, S. MARGINAL #2~~	~~RT~~										
MH-1	68	39+10, S. MARGINAL #2							1				
MH-2	68	39+75, S. MARGINAL #2	RT						1				
CB-2	68	40+05, S. MARGINAL #2	LT	1									
CB-3	68	40+05, S. MARGINAL #2	RT	1									
MH-3	68	43+05, S. MARGINAL #2	RT						1				
		SHEET 68 SUBTOTALS		2	0	0	1	0	3	0	0	0	0
MH-1	69	45+65, S. MARGINAL #2	℄						1				
MH-2	69	45+70, S. MARGINAL #2	RT						1				
CB-1	69	46+20, S. MARGINAL #2	RT					1					
CB-2	69	50+25, S. MARGINAL #2	LT	1									
CB-3	69	50+25, S. MARGINAL #2	RT	1									
		SHEET 69 SUBTOTALS		2	0	0	0	1	2	0	0	0	0
CB-1	72	698+75, I-90	93'LT	1									
CB-2	72	698+75, I-90	22'LT			1							
CB-3	72	698+75, I-90	25'RT			1							
~~CB-4~~	~~72~~	~~700+50, I-90~~	~~RT~~				1						
~~CB-5~~	~~72~~	~~704+00, I-90~~	~~RT~~				1						
CB-6	72	708+75, I-90	93'LT										
CB-7	72	708+75, I-90	22'LT										
CB-8	72	708+75, I-90	25'RT										
CB-9	72	708+75, I-90	93'RT										
MH-1	72	710+27, I-90	RT						1				
~~CB-10~~	~~72~~	~~711+00, I-90~~	~~RT~~				1						
		SHEET 72 SUBTOTALS		1	0	2	3	0	1	0	0	0	0

DRAINAGE QUANTITIES

REFERENCE NO.	SHEET NO.	STATION	SIDE	604 CATCH BASIN ADJUSTED TO GRADE	604 CATCH BASIN RECONSTRUCTED TO GRADE	604 INLET ADJUSTED TO GRADE, AS PER PLAN (DETAIL ON SHEET 85)	604 INLET ADJUSTED TO GRADE, AS PER PLAN, B (DETAIL D1 ON SHEET 85)	604 INLET RECONSTRUCTED TO GRADE	604 MANHOLE ADJUSTED TO GRADE	604 MONUMENT BOX ADJUSTED TO GRADE	638 VALVE BOX ADJUSTED TO GRADE (WATER)	604 CITY OF CLEVELAND CATCH BASIN NO.1	603 12" CONDUIT, TYPE B, A.P.P.
				EACH	EACH	EACH	EACH	EACH	EACH	EACH	EACH	EACH	LIN. FT.
~~CB-1~~	~~73~~	~~713+75, I-90~~	~~RT~~				1						
~~CB-2~~	~~73~~	~~716+50, I-90~~	~~RT~~				1						
~~CB-3~~	~~73~~	~~717+50, I-90~~	~~RT~~				1						
~~CB-4~~	~~73~~	~~718+75, I-90~~	~~102' LT~~				1						
CB-5	73	718+75, I-90	25' LT			1							
CB-6	73	718+75, I-90	25' RT			1							
~~CB-7~~	~~73~~	~~718+75, I-90~~	~~103' RT~~				1						
~~CB-8~~	~~73~~	~~720+25, I-90~~	~~RT~~				1						
~~CB-9~~	~~73~~	~~722+25, I-90~~	~~RT~~				1						
~~CB-10~~	~~73~~	~~25+25, RAMP 8~~	~~RT~~				1						
~~CB-11~~	~~73~~	~~27+00, RAMP 5~~	~~LT~~				1						
CB-12	73	27+50, RAMP 5	LT	1									
~~CB-13~~	~~73~~	~~28+00, RAMP 5~~	~~LT~~				1						
CB-14	73	728+00, I-90	LT			1							
CB-15	73	728+00, I-90	25' RT			1							
~~CB-16~~	~~73~~	~~728+00, I-90~~	~~93' RT~~				1						
~~CB-17~~	~~73~~	~~26+50, RAMP 8~~	~~RT~~				1						
CB-18	73	27+25, RAMP 8	RT	1									
~~CB-19~~	~~73~~	~~27+85, RAMP 8~~	~~RT~~				1						
		SHEET 73 SUBTOTALS		2	0	4	3	0	0	0	0	0	0
~~CB-1~~	~~74~~	~~29+75, RAMP 8~~	~~℄~~				1						
CB-2	74	30+50, RAMP 8	℄					1					
~~CB-3~~	~~74~~	~~730+41, I-90~~	~~RT~~				1						
CB-4	74	731+65, I-90	RT	1									
~~CB-5~~	~~74~~	~~736+00, I-90~~	~~140' RT~~				1						
CB-6	74	736+00, I-90	26' RT			1							
~~CB-7~~	~~74~~	~~732+38, I-90~~	~~LT~~				1						
~~CB-8~~	~~74~~	~~734+86, I-90~~	~~LT~~				1						
CB-9	74	736+00, I-90	27' LT			1							
CB-10	74	34+75, RAMP 12	℄	1									
~~CB-11~~	~~74~~	~~36+00, RAMP 12~~	~~℄~~				1						
~~CB-12~~	~~74~~	~~36+62.5, RAMP 12~~	~~℄~~				1						
		SHEET 74 SUBTOTALS		2	0	2	7	1	0	0	0	0	0
~~CB-1~~	~~75~~	~~30+50, RAMP 12~~	~~LT~~				1						
~~CB-2~~	~~75~~	~~739+78, I-90~~	~~RT~~				1						
~~CB-3~~	~~75~~	~~40+50, RAMP 9~~	~~RT~~				1						
~~CB-4~~	~~75~~	~~742+25, I-90~~	~~LT~~				1						
CB-5	75	741+65, I-90	RT	1									
CB-6	75	743+64, I-90	LT	1									
CB-7	75	744+25, I-90	LT			1							
CB-8	75	744+25, I-90	RT			1							
~~CB-9~~	~~75~~	~~749+50, I-90~~	~~LT~~				1						
~~CB-10~~	~~75~~	~~749+50, I-90~~	~~RT~~				1						
MH-1	75	751+57, I-90	LT										
		SHEET 75 SUBTOTALS		2	0	2	6	0	0	0	0	0	0

PLOTTED BY: jgrmovse
PLOTTED FROM: c:\users\lmincek\pid05754\d05754dsb.dgn
PLOT SUBMITTED: 02-DEC-1998 14:27
05754DSB.DGN

DRAINAGE QUANTITIES

PLOTTED BY: jgrmovse
PLOTTED FROM: c:\users\dmincek\pid05754\05754dsc.dgn
PLOT SUBMITTED: 02-DEC-1998 14:27

DRAINAGE QUANTITIES

REFERENCE NO.	SHEET NO.	STATION	SIDE	604 CATCH BASIN ADJUSTED TO GRADE	604 CATCH BASIN RECONSTRUCTED TO GRADE	604 INLET ADJUSTED TO GRADE, AS PER PLAN, (DETAIL C ON SHEET 85)	604 INLET ADJUSTED TO GRADE, AS PER PLAN, B (DETAIL D2 ON SHEET 85)	604 INLET RECONSTRUCTED TO GRADE	604 MANHOLE ADJUSTED TO GRADE	604 MONUMENT BOX ADJUSTED TO GRADE	638 VALVE BOX ADJUSTED TO GRADE (WATER)	604 CITY OF CLEVELAND CATCH BASIN NO.1	603 12" CONDUIT, TYPE B, A.P.P.
				EACH	EACH	EACH	EACH	EACH	EACH	EACH	EACH	EACH	LIN. FT.
CB-1	76	754+75, I-90	LT			1							
CB-2	76	754+25, I-90	RT			1							
CB-3	76	754+00, I-90	RT	1									
CB-4	76	755+75, I-90	LT	1									
CB-5	76	755+68, I-90	LT			1							
CB-6	76	755+25, I-90	RT			1							
CB-7	76	754+75, I-90	RT	1									
CB-8	76	755+75, I-90	LT	1									
CB-9	76	756+75, I-90	LT			1							
CB-10	76	756+25, I-90	RT			1							
CB-11	76	755+50, I-90	RT	1									
MH-1	76	757+98, I-90	LT						1				
MH-2	76	759+92, I-90	LT						1				
CB-12	76	757+75, I-90	LT	1									
~~CB-13~~	~~76~~	~~763+75, I-90~~	~~LT~~										
CB-14	76	763+85, I-90	LT	1									
CB-15	76	763+75, I-90	LT			1							
CB-16	76	763+75, I-90	RT			1							
CB-17	76	765+57, I-90	LT			1							
CB-18	76	47+25, W 106th ST.	LT									1	18
		SHEET 76 SUBTOTALS		**7**	**0**	**9**	**1**	**0**	**2**	**0**	**0**	**1**	**18**
~~CB-1~~	~~77~~	~~68+50, RAMP 13~~	~~LT~~				1						
~~CB-2~~	~~77~~	~~68+75, RAMP 14~~	~~RT~~				1						
~~CB-3~~	~~77~~	~~70+50, RAMP 13~~	~~LT~~				1						
~~CB-4~~	~~77~~	~~70+50, RAMP 13~~	~~RT~~				1						
CB-5	77	70+98, RAMP 13	LT	1									
MH-1	77	51+80, N. MARGINAL #4	LT								1		
~~CB-6~~	~~77~~	~~53+60, N. MARGINAL #4~~	~~LT~~				1						
MH-2	77	53+80, N. MARGINAL #4	LT								1		
~~CB-7~~	~~77~~	~~53+75, N. MARGINAL #4~~	~~RT~~				1						
MH-3	77	54+08, N. MARGINAL #4	LT						1				
MH-4	77	54+20, MARGINAL #4	LT								1		
		SHEET 77 SUBTOTALS		**1**	**0**	**0**	**6**	**0**	**1**	**0**	**3**	**0**	**0**
~~CB-1~~	~~78~~	~~55+25, N. MARGINAL #4~~	~~RT~~				1						
~~CB-2~~	~~78~~	~~56+75, N. MARGINAL #4~~	~~RT~~				1						
~~CB-3~~	~~78~~	~~67+10, N. MARGINAL #4~~	~~LT~~				1						
CB-4	78	151+14, W. 100th ST.	RT	1									
~~CB-5~~	~~78~~	~~57+75, N. MARGINAL #4~~	~~RT~~				1						
CB-6	78	779+14, I-90	LT			1							
CB-7	78	779+34, I-90	RT			1							
~~CB-8~~	~~78~~	~~779+64, I-90~~	~~RT~~				1						
~~CB-9~~	~~78~~	~~61+00, N. MARGINAL #4~~	~~LT~~				1						
~~CB-10~~	~~78~~	~~60+25, N. MARGINAL #4~~	~~RT~~				1						
~~CB-11~~	~~78~~	~~61+25, N. MARGINAL #4~~	~~RT~~				1						
CB-12	78	72+20, WESTERN AVE.	RT	1									
CB-13	78	72+75, WESTERN AVE.	LT	1									
CB-14	78	61+87, N. MARGINAL #4	RT	1									
CB-15	78	48+23, W. 98th ST.	LT	1									
CB-16	78	782+75, I-90	LT			1							
CB-17	78	782+75, I-90	22' RT			1							
~~CB-18~~	~~78~~	~~782+75, I-90~~	~~93' RT~~				1						

DRAINAGE QUANTITIES

REFERENCE NO.	SHEET NO.	STATION	SIDE	604 CATCH BASIN ADJUSTED TO GRADE	604 CATCH BASIN RECONSTRUCTED TO GRADE	604 INLET ADJUSTED TO GRADE, AS PER PLAN (DETAIL C ON SHEET 85)	604 INLET ADJUSTED TO GRADE, AS PER PLAN B (DETAIL D2 ON SHEET 85)	604 INLET RECONSTRUCTED TO GRADE	604 MANHOLE ADJUSTED TO GRADE	604 MONUMENT BOX ADJUSTED TO GRADE	638 VALVE BOX ADJUSTED TO GRADE (WATER)	604 CITY OF CLEVELAND CATCH BASIN NO.1	603 12"CONDUIT, TYPE B, A.P.P.
				EACH	EACH	EACH	EACH	EACH	EACH	EACH	EACH	EACH	LIN. FT.
~~CB-19~~	~~78~~	~~65+36, N. MARGINAL #4~~	~~RT~~				1						
CB-20	78	51+25, S. MARGINAL #5	LT	1									
MH-1	78	62+70, N. MARGINAL #4	LT								1		
MH-2	78	62+85, N. MARGINAL #4	LT								1		
MH-3	78	50+35, S. MARGINAL #5	LT						1				
CB-21	78	51+25, S. MARGINAL #5	RT	1									
~~CB-22~~	~~78~~	~~67+00, N. MARGINAL #4~~	~~LT~~				1						
~~CB-23~~	~~78~~	~~67+35, N. MARGINAL #4~~	~~RT~~				1						
~~CB-24~~	~~78~~	~~69+45, N. MARGINAL #4~~	~~LT~~				1						
~~CB-25~~	~~78~~	~~90+00, RAMP 15~~	~~℄~~				1						
~~CB-26~~	~~78~~	~~790+00, I-90~~	~~RT~~				1						
~~CB-27~~	~~78~~	~~90+00, RAMP 16~~	~~LT~~				1						
CB-28	78	49+14, W. 96th ST.	LT	1									
CB-29	78	49+15, W. 96th ST.	RT	1									
CB-30	78	47+89, W. 95th ST.	LT	1									
MH-4	78	53+08, S. MARGINAL #5	LT						1				
MH-5	78	49+75, W. 97th ST.	℄						1				
MH-6	78	53+50, S. MARGINAL #5	RT								1		
MH-7	78	53+75, S. MARGINAL #5	RT								1		
MH-8	78	69+95, N. MARGINAL #4	LT						1				
MH-9	78	70+00, N. MARGINAL #4	LT								1		
MH-10	78	70+20, N. MARGINAL #4	LT								1		
MH-11	78	55+49, S. MARGINAL #5	℄						1				
MH-12	78	55+72, S. MARGINAL #5	RT								1		
MH-13	78	56+55, S. MARGINAL #5	RT								1		
MH-14	78	56+99, S. MARGINAL #5	RT								1		
MH-15	78	57+10, S. MARGINAL #5	RT								1		
MH-16	78	47+89, W. 95th ST.	℄						1				
		SHEET 78 SUBTOTALS		10	0	4	16	0	6	0	10	0	0
MH-1	79	72+07, N. MARGINAL #4	℄						1				
MH-2	79	72+72, N. MARGINAL #4	LT								1		
MH-3	79	73+17, N. MARGINAL #4	LT								1		
MH-4	79	73+30, N. MARGINAL #4	LT								1		
MH-5	79	73+05, N. MARGINAL #4	℄						1				
CB-1	79	792+10, I-90	29' LT			1							
CB-2	79	792+10, I-90	24' RT			1							
~~CB-3~~	~~79~~	~~792+10, I-90~~	~~93' RT~~				1						
~~CB-4~~	~~79~~	~~72+68, N. MARGINAL #4~~	~~LT~~				1						
~~CB-5~~	~~79~~	~~93+50, RAMP 15~~	~~LT~~				1						
~~CB-6~~	~~79~~	~~93+50, RAMP 15~~	~~RT~~				1						
~~CB-7~~	~~79~~	~~793+50, I-90~~	~~LT~~				1						
~~CB-8~~	~~79~~	~~59+00, S. MARGINAL #5~~	~~LT~~				1						
MH-6	79	58+90, S. MARGINAL #5	LT						1				
~~CB-9~~	~~79~~	~~59+00, S. MARGINAL #5~~	~~RT~~				1						
~~CB-10~~	~~79~~	~~73+10, N. MARGINAL #4~~	~~RT~~				1						
CB-11	79	793+90, I-90	RT	1									
~~PC 12~~	~~79~~	~~48+66, LORAIN~~	~~RT~~				1						
~~PC 13~~	~~79~~	~~50+27, LORAIN~~	~~RT~~				1						
		CONTINUE ON SHT. 61											

DRAINAGE QUANTITIES

DRAINAGE QUANTITIES

DRAINAGE QUANTITIES

REFERENCE NO.	SHEET NO.	STATION	SIDE	604 CATCH BASIN ADJUSTED TO GRADE	604 CATCH BASIN RECONSTRUCTED TO GRADE	604 INLET ADJUSTED TO GRADE, AS PER PLAN, (DETAIL C ON SHEET 85)	604 INLET ADJUSTED TO GRADE, AS PER PLAN, B (DETAIL D2 ON SHEET 85)	604 INLET RECONSTRUCTED TO GRADE,	604 MANHOLE ADJUSTED TO GRADE	604 MONUMENT BOX ADJUSTED TO GRADE	638 VALVE BOX ADJUSTED TO GRADE (WATER)	604 CITY OF CLEVELAND CATCH BASIN NO. 1	603 12" CONDUIT, TYPE B, A.P.P.
				EACH	EACH	EACH	EACH	EACH	EACH	EACH	EACH	EACH	LIN. FT.
CONTINUE FROM SHT. 60													
CB-12	79	60+62, S. MARGINAL #5	LT	1									
MH-7	79	60+55, S. MARGINAL #5	LT						1				
CB-13	79	60+62, S. MARGINAL #5	RT	1									
CB-14	79	61+25, S. MARGINAL #5	RT	1									
CB-15	79	61+41, S. MARGINAL #5	RT	1									
~~CB-16~~	~~79~~	~~93+50, RAMP 15~~	LT				1						
~~CB-17~~	~~79~~	~~93+50, RAMP 15~~	RT				1						
~~CB-18~~	~~79~~	~~793+50, I-90~~	LT				1						
~~CB-19~~	~~79~~	~~75+88, N. MARGINAL #4~~	LT				1						
MH-8	79	75+68, N. MARGINAL #4	LT								1		
MH-9	79	76+05, N. MARGINAL #4	LT								1		
MH-10	79	76+32, N. MARGINAL #4	LT								1		
MH-11	79	76+29, N. MARGINAL #4	RT						1				
MH-12	79	61+43, S. MARGINAL #5	LT						1				
~~CB-20~~	~~79~~	~~76+00, S. MARGINAL #5~~	RT				1						
CB-21	79	796+90, I-90	93' LT	1									
CB-22	79	796+90, I-90	23.5' LT			1							
CB-23	79	796+50, I-90	RT										
CB-24	79	78+66, N. MARGINAL #4	LT	1									
CB-25	79	78+66, N. MARGINAL #4	RT	1									
~~CB-26~~	~~79~~	~~800+56, I-90~~	RT				1						
MH-13	79	79+36, N. MARGINAL #4	LT								1		
MH-14	79	79+36, N. MARGINAL #4	RT								1		
MH-15	79	79+53, N. MARGINAL #4	LT								1		
MH-16	79	79+80, N. MARGINAL #4	LT								1		
MH-17	79	79+48, N. MARGINAL #4	℄						1				
MH-18	79	801+25, I-90	LT								1		
~~CB-27~~	~~79~~	~~802+00, I-90~~	105' LT				1						
CB-28	79	802+00, I-90	24' LT			1							
CB-29	79	802+00, I-90	24' RT			1							
~~CB-30~~	~~79~~	~~51+50, LORAIN AVE.~~	RT				1						
MH-19	79	51+23, LORAIN AVE.	RT						1				
MH-20	79	51+32, LORAIN AVE.	℄							1			
MH-21	79	51+56, LORAIN AVE.	LT						1				
~~CB-31~~	~~79~~	~~804+75, I-90~~	LT				1						
		SHEET 79 SUBTOTALS		**8**	**0**	**5**	**20**	**0**	**9**	**1**	**11**	**0**	**0**
~~CB-1~~	~~80~~	~~807+75, I-90~~	LT				1						
CB-2	80	807+75, I-90	RT			1							
~~CB-3~~	~~80~~	~~812+00, I-90~~	93' LT				1						
CB-4	80	812+00, I-90	24' LT			1							
CB-5	80	812+00, I-90	24' RT			1							
~~CB-6~~	~~80~~	~~812+00, I-90~~	93' RT				1						
~~CB-7~~	~~80~~	~~11+00, RAMP 18~~	LT				1						
~~CB-8~~	~~80~~	~~814+50, I-90~~	LT				1						
CB-9	80	815+07, I-90	LT	1									
~~CB-10~~	~~80~~	~~13+00, RAMP 18~~	LT				1						
~~CB-11~~	~~80~~	~~17+75, RAMP 17~~	LT				1						
CB-12	80	17+75, RAMP 17	RT	1									
~~CB-13~~	~~80~~	~~817+50, I-90~~	LT				1						
CB-14	80	817+00, I-90	24' RT			1							
		CONTINUE ON THIS SHT.											

DRAINAGE QUANTITIES

REFERENCE NO.	SHEET NO.	STATION	SIDE	604 CATCH BASIN ADJUSTED TO GRADE	604 CATCH BASIN RECONSTRUCTED TO GRADE	604 INLET ADJUSTED TO GRADE, AS PER PLAN, (DETAIL C ON SHEET 85)	604 INLET ADJUSTED TO GRADE, AS PER PLAN, B (DETAIL D2 ON SHEET 85)	604 INLET RECONSTRUCTED TO GRADE,	604 MANHOLE ADJUSTED TO GRADE	604 MONUMENT BOX ADJUSTED TO GRADE	638 VALVE BOX ADJUSTED TO GRADE (WATER)	604 CITY OF CLEVELAND CATCH BASIN NO.1	603 12" CONDUIT, TYPE B, A.P.P.
				EACH	EACH	EACH	EACH	EACH	EACH	EACH	EACH	EACH	LIN. FT.
CONTINUE FROM THIS SHT.													
~~CB-15~~	~~80~~	~~817+00, I-90~~	93' RT				1						
~~CB-16~~	~~80~~	~~15+75, RAMP 18~~	LT				1						
~~CB-17~~	~~80~~	~~17+75, RAMP 18~~	RT				1						
CB-18	80	18+50, RAMP 18	RT	1									
~~CB-19~~	~~80~~	~~819+25, I-90~~	RT				1						
~~CB-20~~	~~80~~	~~10+00, RAMP 18~~	RT				1						
CB-21	80	820+06, I-90	RT	1									
CB-22	80	51+00, CONNECTOR RD.										1	50
		SHEET 80 SUBTOTALS		**4**	**0**	**4**	**13**	**0**	**0**	**0**	**0**	**1**	**50**
~~CB-1~~	~~81~~	~~21+75, RAMP 17~~	LT				1						
~~CB-2~~	~~81~~	~~22+25, RAMP 17~~	RT				1						
~~CB-3~~	~~81~~	~~822+25, I-90~~	LT				1						
~~CB-4~~	~~81~~	~~23+25, RAMP 17~~	LT				1						
CB-5	81	823+25, I-90 W.B.L.	RT			1							
CB-6	81	823+25, I-90	26' RT			1							
~~CB-7~~	~~81~~	~~823+25, I-90~~	127' RT				1						
CB-8	81	823+75, I-90 W.B.L.	LT	1									
CB-9	81	824+25, I-90 W.B.L.	RT			1							
CB-10	81	824+25, I-90	25.5 RT			1							
CB-11	81	824+25, I-90	125' RT	1									
CB-12	81	825+00, I-90,W.B.L.	RT			1							
CB-13	81	825+00, I-90	RT			1							
~~CB-14~~	~~81~~	~~824+85, I-90~~	RT				1						
~~CB-15~~	~~81~~	~~827+75, I-90 W.B.L.~~	LT				1						
~~CB-16~~	~~81~~	~~828+00, I-90~~	25' RT				1						
~~CB-17~~	~~81~~	~~828+00, I-90~~	117' RT				1						
~~CB-18~~	~~81~~	~~30+00, RAMP 17~~	LT				1						
~~CB-19~~	~~81~~	~~833+25, I-90 W.B.L.~~	LT				1						
~~CB-20~~	~~81~~	~~833+25, I-90 W.B.L.~~	RT				1						
~~CB-21~~	~~81~~	~~833+00, I-90 E.B.L.~~	LT				1						
CB-22	81	23+30, RAMP 17	RT	1									
MH-1	81	23+25, RAMP 17	RT							1			
		SHEET 81 SUBTOTALS		**3**	**0**	**6**	**13**	**0**	**1**	**0**	**0**	**0**	**0**
~~CB-1~~	~~82~~	~~837+00, I-90 W.B.L.~~	LT				1						
~~CB-2~~	~~82~~	~~837+00, I-90 W.B.L.~~	RT				1						
~~CB-3~~	~~82~~	~~838+00, I-90 E.B.L.~~	LT				1						
~~CB-4~~	~~82~~	~~840+00, I-90 W.B.L.~~	LT				1						
CB-5	82	841+00, I-90 W.B.L.	LT	1									
~~CB-6~~	~~82~~	~~841+75, I-90 W.B.L.~~	LT				1						
~~CB-7~~	~~82~~	~~840+00, I-90 W.B.L.~~	RT				1						
CB-8	82	841+00, I-90 W.B.L.	RT	1									
CB-9	82	841+75, I-90 W.B.L.	RT	1									
~~CB-10~~	~~82~~	~~844+00, I-90 W.B.L.~~	LT				1						
~~CB-11~~	~~82~~	~~844+00, I-90 W.B.L.~~	RT				1						
~~CB-12~~	~~82~~	~~843+54, I-90 E.B.L.~~	LT				1						
~~CB-13~~	~~82~~	~~848+00, I-90 W.B.L.~~	LT				1						
~~CB-14~~	~~82~~	~~848+00, I-90 W.B.L.~~	RT				1						
		SHEET 82 SUBTOTALS		**3**	**0**	**0**	**11**	**0**	**0**	**0**	**0**	**0**	**0**

PLOTTED BY: igrmovse
PLOTTED FROM: C:\Users\mincek\pid05754\05754dsd.dgn
PLOT SUBMITTED:02-DEC-1998 14:26
05754DSD.DGN

DRAINAGE QUANTITIES

DRAINAGE QUANTITIES

REFERENCE NO.	SHEET NO.	STATION	SIDE	604 CATCH BASIN ADJUSTED TO GRADE	604 CATCH BASIN RECONSTRUCTED TO GRADE	604 INLET ADJUSTED TO GRADE, AS PER PLAN, (DETAIL C ON SHEET 85)	604 INLET ADJUSTED TO GRADE, AS PER PLAN, B (DETAIL D2 ON SHEET 85)	604 INLET RECONSTRUCTED TO GRADE	604 MANHOLE ADJUSTED TO GRADE	604 MONUMENT BOX ADJUSTED TO GRADE	638 VALVE BOX ADJUSTED TO GRADE (WATER)	604 CITY OF CLEVELAND CATCH BASIN NO.1	603 12" CONDUIT, TYPE B, A.P.P.
				EACH	EACH	EACH	EACH	EACH	EACH	EACH	EACH	EACH	LIN. FT.
~~CB-1~~	~~83~~	~~852+00, I-90 W.B.L.~~	~~RT~~				1						
~~CB-2~~	~~83~~	~~853+60, I-90 E.B.L.~~	~~LT~~				1						
~~CB-3~~	~~83~~	~~853+75, I-90 E.B.L.~~	~~RT~~				1						
~~CB-4~~	~~83~~	~~856+50, I-90 W.B.L.~~	~~RT~~				1						
~~CB-5~~	~~83~~	~~856+50, I-90 E.B.L.~~	~~RT~~				1						
~~CB-6~~	~~83~~	~~862+00, I-90 E.B.L.~~	~~RT~~				1						
~~CB-7~~	~~83~~	~~863+18, I-90 E.B.L.~~	~~RT~~				1						
		SHEET 83 SUBTOTALS		0	0	0	7	0	0	0	0	0	0
~~CB-1~~	~~84~~	~~868+75, I-90 W.B.L.~~	~~RT~~				1						
~~CB-2~~	~~84~~	~~68+92, RAMP 28~~	~~RT~~				1						
~~CB-3~~	~~84~~	~~872+25, I-90 E.B.L.~~	~~RT~~				1						
~~CB-4~~	~~84~~	~~72+50, RAMP 28~~	~~RT~~				1						
~~CB-5~~	~~84~~	~~76+75, RAMP 27~~	~~LT~~				1						
~~CB-6~~	~~84~~	~~876+00, I-90 W.B.L.~~	~~RT~~				1						
~~CB-7~~	~~84~~	~~876+00, I-90 E.B.L.~~	~~LT~~				1						
~~CB-8~~	~~84~~	~~876+00, I-90 E.B.L.~~	~~RT~~				1						
~~CB-9~~	~~84~~	~~75+25, RAMP 28~~	~~LT~~				1						
~~CB-10~~	~~84~~	~~75+50, RAMP 28~~	~~RT~~				1						
CB-11	84	77+25, RAMP 27	LT	1			1						
~~CB-12~~	~~84~~	~~77+75, RAMP 27~~	~~LT~~				1						
~~CB-13~~	~~84~~	~~878+00, I-90 W.B.L.~~	~~LT~~				1						
~~CB-14~~	~~84~~	~~878+00, I-90 W.B.L.~~	~~RT~~				1						
~~CB-15~~	~~84~~	~~878+00, I-90 E.B.L.~~	~~RT~~				1						
~~CB-16~~	~~84~~	~~78+75, RAMP 28~~	~~RT~~				1						
CB-17	84	79+75, RAMP 28	RT	1			1						
~~CB-18~~	~~84~~	~~80+25, RAMP 28~~	~~RT~~				1						
~~CB-19~~	~~84~~	~~881+00, I-90~~	~~RT~~				1						
CB-20	84	881+00, I-90	℄			1							
~~CB-21~~	~~84~~	~~881+00, I-90~~	~~LT~~				1						
CB-22	84	81+80, RAMP 27	LT	1									
		SHEET 84 SUBTOTALS		3	0	1	18	0	0	0	0	0	0

DRAINAGE QUANTITIES

REFERENCE NO.	SHEET NO.	STATION	SIDE	604 CATCH BASIN ADJUSTED TO GRADE	604 CATCH BASIN RECONSTRUCTED TO GRADE	604 INLET ADJUSTED TO GRADE, AS PER PLAN, (DETAIL C ON SHEET 85)	604 INLET ADJUSTED TO GRADE, AS PER PLAN, B (DETAIL D2 ON SHEET 85)	604 INLET RECONSTRUCTED TO GRADE	604 MANHOLE ADJUSTED TO GRADE	604 MONUMENT BOX ADJUSTED TO GRADE	638 VALVE BOX ADJUSTED TO GRADE (WATER)	604 CITY OF CLEVELAND CATCH BASIN NO.1	603 12" CONDUIT, TYPE B, A.P.P.
				EACH	EACH	EACH	EACH	EACH	EACH	EACH	EACH	EACH	LIN. FT.
		SUBTOTAL FOR SHEET NO. 65		4	0	0	2	0	0	0	0	0	0
		" " " " 66		0	0	0	3	1	7	0	0	0	0
		" " " " 68		2	0	0	1	0	3	0	0	0	0
		" " " " 69		2	0	0	0	1	2	0	0	0	0
		" " " " 72		1	0	2	3	0	1	0	0	0	0
		" " " " 73		2	0	4	13	0	0	0	0	0	0
		" " " " 74		2	0	2	7	1	0	0	0	0	0
		" " " " 75		2	0	2	6	0	0	0	0	0	0
		" " " " 76		7	0	9	1	0	2	0	0	1	18
		" " " " 77		1	0	0	6	0	1	0	3	0	0
		" " " " 78		10	0	4	16	0	6	0	10	0	0
		" " " " 79		8	0	5	20	0	9	1	11	0	0
		" " " " 80		4	0	4	13	0	0	0	0	1	50
		" " " " 81		3	0	6	13	0	1	0	0	0	0
		" " " " 82		3	0	0		0	0	0	0	0	0
		" " " " 83		0	0	0		0	0	0	0	0	0
		" " " " 84		3	0	1	18	0	0	0	0	0	0
		TOTAL		**54**	**0**	**39**	**140**	**3**	**32**	**1**	**24**	**2**	**68**

PLOTTED BY: igrmovse
PLOTTED FROM: C:\Users\Public\d05754dse.dgn
PLOT SUBMITTED: 02-DEC-1998 14:25
05754DSE.DGN

CUYAHOGA COUNTY
CUY-90-9.68
OHIO
FHWA REGION 5
FEDERAL PROJECT
62A
220

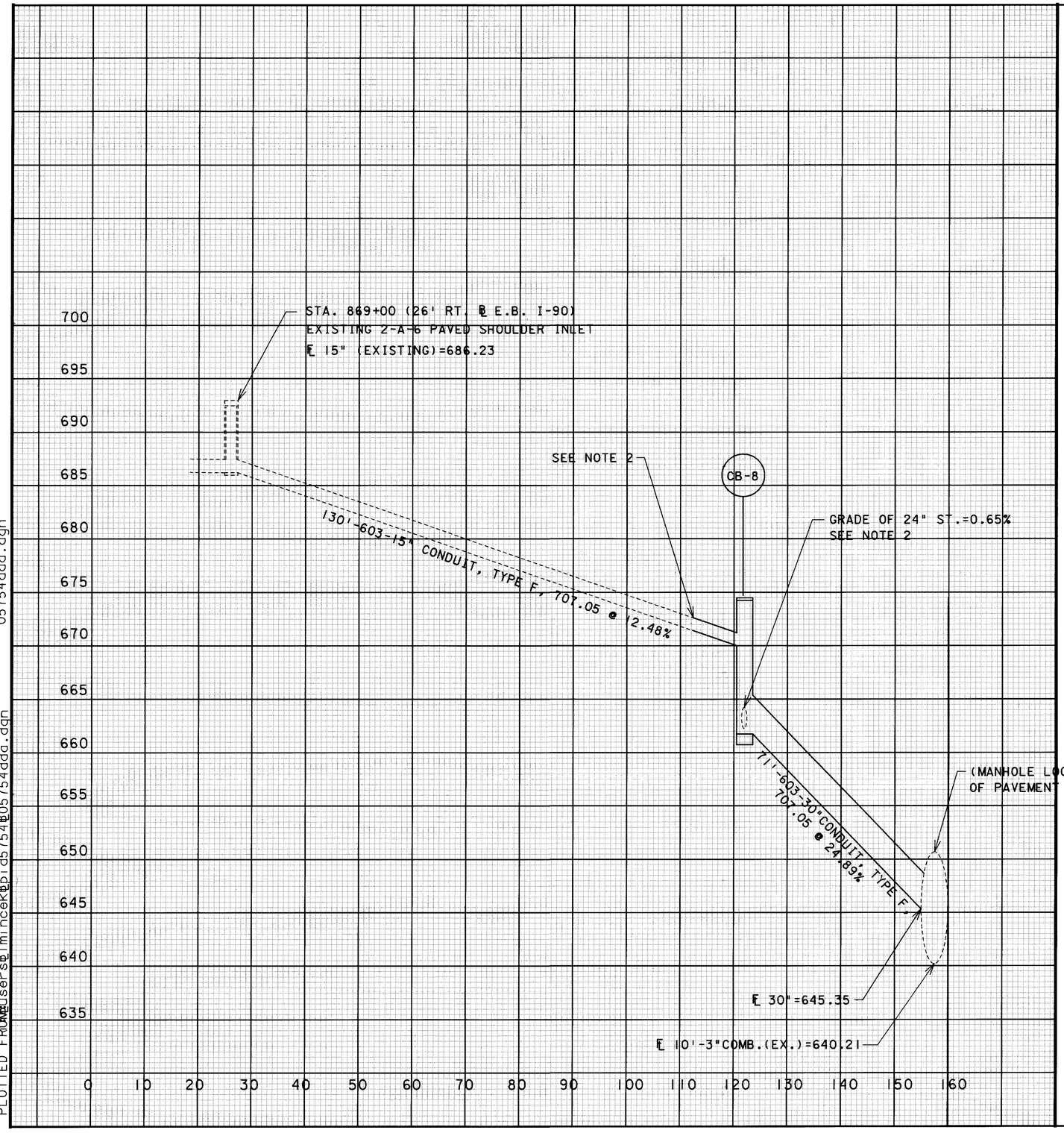

NOTES:

1.) REMOVE EXISTING CATCHBASIN AT STA. 868+00.
2.) REMOVE EXISTING PIPE TO A POINT WHERE THE PIPE IS SOUND AND CAN BE EXTENDED.
3.) MATCH EXISTING CONDUIT GRADES AND FLOW LINES.

QUANTITES CARRIED TO THE GENERAL SUMMARY

ITEM 202 - PIPE REMOVED, 24" AND UNDER....30 L.F.
ITEM 202 - PIPE REMOVED, OVER 24".....71 L.F.
ITEM 202 - CATCH BASIN REMOVED.....1 EACH
ITEM 603 - 15" CONDUIT, TYPE F, 707.05....15 L.F.
ITEM 603 - 24" CONDUIT, TYPE B, 706.02....15 L.F.
ITEM 603 - 30" CONDUIT, TYPE F, 707.05....71 L.F.
ITEM 604 - CATCH BASIN, No.5A.....1 EACH

CB-8
STA. 868+00 (122' RT. ℄ E.B. I-90)
EX. STD. No. 5A REINFORCED CONCRETE,
CATCHBASIN TO BE REMOVED.
PROPOSED No. 5A CATCHBASIN, SIZE
TO ACCEPT EXISTING PIPE GEOMETRY
AS SHOWN ON THE PLAN VIEW.
DITCH ELEVATION=675.00
GRATE ELEVATION=674.50
℄ 15"(EXISTING)=670.00
℄ 24"(EXISTING)=662.25
℄ 30"(EX.&PROP.)=661.75

DRAINAGE QUANTITIES AND DETAIL

PLOTTED BY: jgrmovse
PLOTTED FROM: ℄users℄mincek℄pid5754℄05754dda.dgn
PLOT SUBMITTED:02-DEC-1998 14:25
05754dda.dgn

GUARDRAIL AND RELATED QUANTITIES

OFFSET FROM EOP TO FACE OF HAZARD	REFERENCE NO.	SHEET NO.	EXISTING FROM	EXISTING TO	PROPOSED FROM	PROPOSED TO	SIDE	202 GUARDRAIL, REMOVED LIN.FT.	606 GUARDRAIL, TYPE 5 LIN.FT.	606 GUARDRAIL, TYPE 5A LIN.FT.	606 ANCHOR ASSEMBLY, TYPE A EACH	606 ANCHOR ASSEMBLY, TYPE T EACH	606 ANCHOR ASSEMBLY, TYPE E EACH	606 THRIE BEAM RAIL AND TRANSITION SECTION LIN.FT.	606 BRIDGE TERMINAL ASSEMBLY, TYPE 4, AS PER PLAN EACH	606 BRIDGE TERMINAL ASSEMBLY, TYPE 1 EACH	606 BRIDGE TERMINAL ASSEMBLY, TYPE 2 EACH	622 CONCRETE BARRIER, TYPE D, AS PER PLAN LIN.FT.	622 CONCRETE BARRIER, AS PER PLAN LIN.FT.	SEE DETAIL XX, SHEET NO. 91 DETAIL	203 LINEAR GRADING, AS PER PLAN LIN.FT.	448 ASPHALT CONCRETE INTERMEDIATE COURSE, TYPE 1, P664-22 (UNDER GUARDRAIL) CU.YD.	626 BARRIER REFLECTOR, TYPE A EACH	
	G-1	65	N:42+25	N:43+12.5			LT.	87.5																
	G-2	65	N:44+61	W. 159TH ST. BR	N:44+61	W. 159TH ST. BR	LT.	87.5	50.0		1					1			14		91.0	4	2	
	G-3	65,66	W. 159TH ST. BR.	8+47	W. 159TH ST. BR.	8+47	LT.	850.0	825.0			1				1			14		853.0	32	9	
	G-4	68	M2:38+70	M2:39+45			LT.	75.0																
	G-5	72	703+50	704+75	703+50	705+11.90	LT.	125.0	62.5				1			1			14	B	140.0	5	2	
	G-6	NOT USED																						
	G-7	72,73	711+50	713+25	710+95	712+32.5	LT.	175.0	25.0			1	1	50.0						A	140.5	5	2	
	G-8	74			R8: 29+92.50	R8: 31+42.5	RT.		87.5			1	1								153.0	6	2	
	G-9	74	731+13.5	732+76	731+13.5	732+76	RT.	162.5	112.5				1		1						166.0	6	2	W. 117TH E.B.
	G-10	74	R11: 34+13.5	R11: 35+76	R11: 34+13.5	R11: 35+76	LT.	162.5	112.5				1		1						166.0	6	2	W. 117TH W.B.
	G-11	75	R12:43+03	R12: 47+25	R12: 43+45+/-	R12: 47+31.5	LT.	425.0	350.0	12.5			1			1		10	14	A,B	390.0	14	4	
	G-12	75	748+75	750+00	748+75	750+00	RT.	125.0	75.0				1		1						166.0	6	2	W. 110TH ST
	G-13	76	759+03	760+70	759+03	761+03	LT.	162.5	150.0				1		1						203.0	8	3	W. 106TH W.B.
	G-14	77	767+07.23	770+51	767+76	770+51	LT.	337.5	250.0	12.5		1					1			A	278.0	14	4	
	G-15	77	767+96.5	769+59	767+96.5	769+59	RT.	162.5	100.0				1			1			14		166.0	6	2	
	G-16	77,78	771+47.5	780+12	771+47.5	780+12	RT.	864.5	862.5							1	1		14		865.0	32	9	
	G-17	77,78	772+39	779+24	772+39	779+24	LT.	694.0	675.0							1	1		14		691.0	26	7	
	G-18	78	781+91.5	783+13.5	781+91.5	783+13.5	RT.	116.5	112.5							1	1		14		122.0	5	2	
	G-19	78	780+83	783+44	780+83	783+44	LT.	273.0	250.0							1	1		14		266.0	10	4	
	G-20	78	784+86.5	787+92.5	784+86.5	787+86.5	RT.	300.0	287.5			1					1				303.0	11	4	
	G-21	78	785+02	790+20	785++02	790+02	LT.	500.0	437.5				1			1			14		503.0	19	6	
	G-22	79	M4:71+25	M4: 76+75	M4: 71+25	M4: 76+75	RT.	550.0	512.5		1	1								A	553.0	20	6	
	G-23	79	R15:93+98.5	R15: 95+73.5	R15: 94+17.5	R15: 95+80	RT.	175.0	50.0			1	1	50.0						A	166.0	6	2	
	G-24	79	R16:93+15.5	797+03	R16: 93+15.5	797+03	RT.	387.5	287.5				1	50.0	1						391.0	14	4	LORAIN RD.
	G-25	79	M5:59+98	LORAIN: 44+07	M5: 59+98	LORAIN: 44+07	LT.	312.5	225.0		1			50.0		1			14		315.0	12	4	
	G-26	79	LORAIN:47+36	LORAIN: 48+82	LORAIN: 47+36	LORAIN: 48+82	LT.	150.0	112.5		1					1			14		153.0	6	2	
	G-27	79,80	LORAIN:48+22	CONN: 55+00	LORAIN: 48+22	CONN: 55+00	RT.	596.4	575.0							2			28		596.0	22	7	
	G-28	79.8	801+23	802+38	801+23	809+10.5+/-	LT.	115.0	700.0	25.0			1			1			14	A	791.0	29	9	
	G-29	80	806+67	808+02.77			LT.	137.5																
	G-30	79,80	805+48	807+95.58	804+55.5	808+05.5	RT.	250.0	287.5			1	1								353.0	13	4	
	G-31	80	R17:13+00	R17: 16+35.77			RT.	362.5																
	G-32	80			R17: 18+60.5	R17: 19+23	LT.		37.5	12.5		1					1			A	66.0	2	2	
	G-33	80	R18:12+37	R18: 15+40.85	R18: 12+50	R18: 15+00	LT.	300.0	25.0			1	1	162.5						A	253.0	9	3	
	G-34	80	R18:13+16	R18: 16+03.5	R18: 13+25	R18: 15+75	RT.	287.5	62.5	125.0		1	1							A	253.0	9	3	
	G-35	81	R17:21+42	R17: 22+92	R17: 21+42	R17: 22+92	LT.	150.0	100.0				1		1						153.0	6	2	
	G-36	81	822+47	825+22	822+47	825+22	RT.	275.0	275.0				1		1						253.0	9	4	
	G-37	81	R17:27+05	R17: 28+30.38	R17: 27+05	R17: 28+68.07	LT.	125.0	112.5				1		1						166.0	6	2	
	G-38	81,82	E.B. 831+45.79	E.B. 841+30	E.B. 831+55	E.B. 841+30.0	LT.	975.0	925.0				1			1					978.0	36	10	W. 65TH ST.
	G-39	81,82	E.B. 835+65.10	E.B. 840+98	E.B. 835+60.5	E.B. 840+98	RT.	537.5	475.0				1			1			14		541.0	20	6	
	G-40	82	W.B. 841+96	W.B. 844+21.80	W.B. 842+20	W.B. 844+20	LT.	225.0	37.5			1	1	100.0						A	203.0	8	2	
	G-41	82	W.B. 841+57	W.B. 843+80.33	W.B. 841+80	W.B. 843+80	RT.	225.0	37.5			1	1	100.0						A	203.0	8	2	
	G-42	82,83	E.B. 843+15	E.B. 863+78	E.B. 843+15	E.B. 863+78	LT.	2050.0	+/- 2062.5							1	1				2066.0	77	22	W. 53RD ST.
	G-43	82,83	E.B. 842+85	E.B. 863+55	E.B. 842+85	E.B. 863+55	RT.	2060.0	+/- 2062.5							1	1		14		2078.0	77	22	
	G-44	83	W.B. 853+91.55	W.B. 864+08	W.B. 853+95.5	W.B. 864+08	LT.	1025.0	1000.0			1					1				1016.0	38	11	
	G-45	83	W.B. 863+33.7	W.B. 863+84	W.B. 863+34	W.B. 863+84	RT.	50.0	37.5			1					1				53.0	2	2	
	G-46	83,84	W.B. 865+36	W.B. 868+36	W.B. 865+36	W.B. 868+36	LT.	300.0	237.5				1			1			14		303.0	11	4	
	G-47	83,84	W.B. 865+14	W.B. 866+39.20	W.B. 865+14	W.B. 866+76.5	RT.	125.0	112.5				1			1					153.0	8	2	W. 53RD ST.
	G-48	83,84	E.B. 865+44	E.B. 878+09.33	E.B. 865+44	E.B. 878+09.33	LT.	1275.0	+/- 1250.0	25.0						1	1			A	1270.0	47	14	
	G-49	83,84	E.B. 865+22	E.B. 70+84.50	E.B. 865+22	E.B. 70+90.2	RT.	562.5	550.0			1					1				566.0	21	7	
	G-50	84	W.B. 871+81.96	W.B. 878+09.33	W.B. 871+84.33	W.B. 878+09.33	RT.	625.0	612.5			1					1				628.0	23	7	
	G-51	84	R27: 79+57.43	R27: 81+75+/-	R27: 79+40	R27: 81+75+/-	LT.	250.0	200.0		1	2									241.0	9	3	
	G-52	84	R27: 80+36.52	R27: 81+77.54	R27: 80+30	R27: 81+80+/-	RT.	150.0	137.5			2									141.0	7	2	
	G-53	84	R28: 80+73.57	R28: 81+60.76	R28: 80+60	R28: 81+60+/-	LT.	100.0	75.0		1										103.0	4	2	
	TOTALS CARRIED TO SHEET XX.							20394.4	18000.0	212.5	6	21	25	562.5	8	22	14	10	252	0	20667.5	774	240	

GUARDRAIL SUB-SUMMARY

PLOTTED BY: jgrmovse
PLOTTED FROM: /users2/minceki/pid05754gsb/05754GSB.DGN
PLOT SUBMITTED: 02-DEC-1998 14:08

CUYAHOGA COUNTY
CUY-90-9.68
OHIO
FHWA REGION 5
FEDERAL PROJECT
65
220

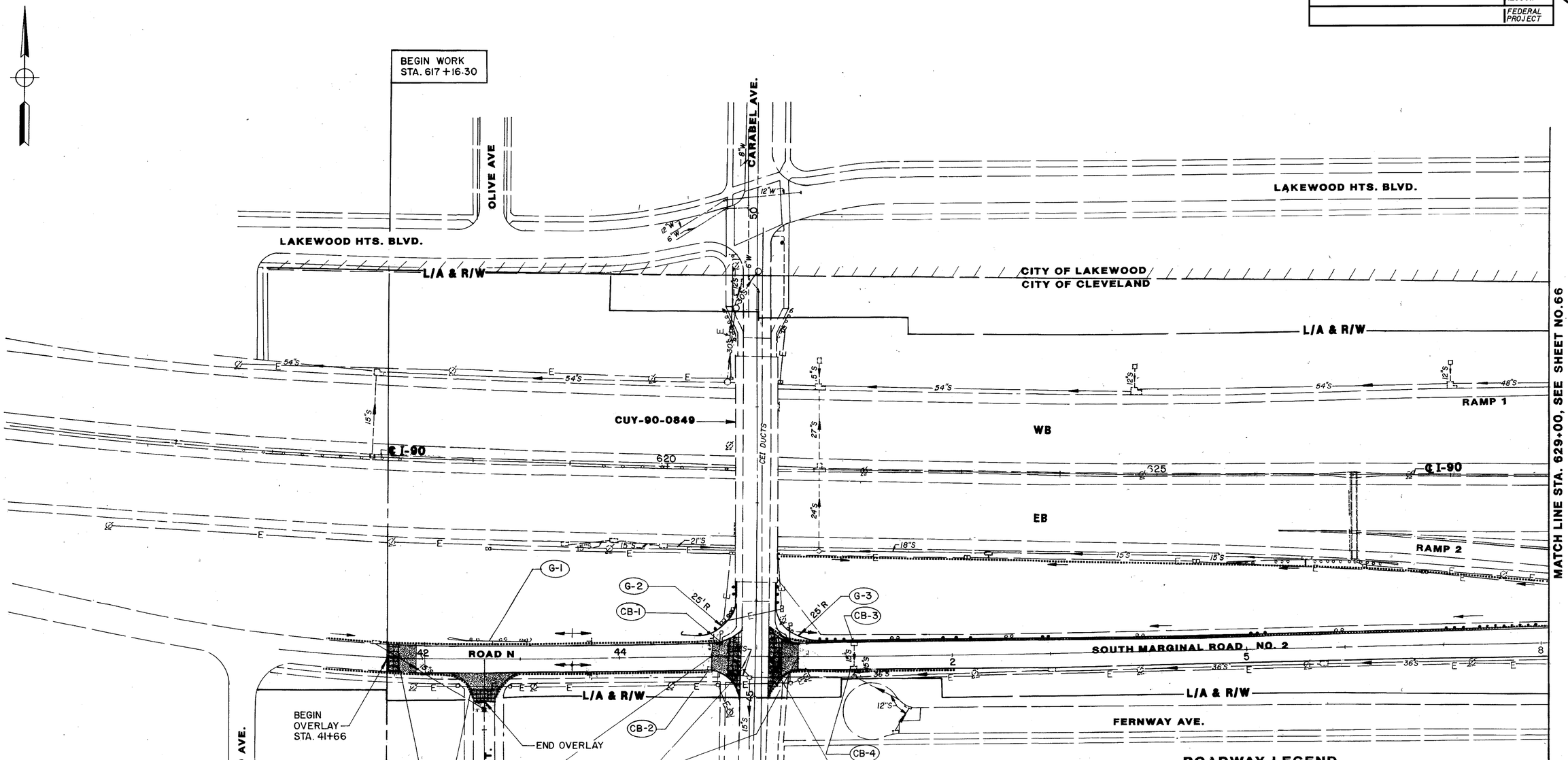

CROSS REFERENCE	
ITEM	SHEET
RESURFACING QUANTITIES	50, 51
ROADWAY QUANTITIES	—
GUARDRAIL QUANTITIES	63
EROSION CONTROL QUANTITIES	—
DRAINAGE QUANTITIES	59
ROADWAY LEGEND	65
TRAFFIC CONTROL PLAN	119

ROADWAY LEGEND

- FEATHERING
- PAVEMENT PLANING, BITUMINOUS
- PAVEMENT PLANING, CONCRETE
- FEATHERING AND PAVEMENT PLANING, BITUMINOUS
- FEATHERING AND PAVEMENT PLANING, CONCRETE
- EXISTING ASPHALT SHOULDER
- CONC. SLOPE PROTECTION REPAIR/ REPLACEMENT
- EXISTING UNDERDRAIN
- NEW UNDERDRAIN

PLAN SHEET - STA 615+00 TO STA 629+00

PLOTTED BY: jgrmovse
PLOTTED FROM: ...
PLOT SUBMITTED: 02-DEC-1998 17:16
05754GPA.DGN

CUYAHOGA COUNTY CUY-90-9.68	OHIO	66 220
	FHWA REGION 5	
	FEDERAL PROJECT	

PLOTTED BY: jgrmovse
PLOTTED FROM: c:\users\lmincek\pid57548\05754gpb.dgn
05754GPB.DGN PLOT SUBMITTED: 02-DEC-1998 17:16

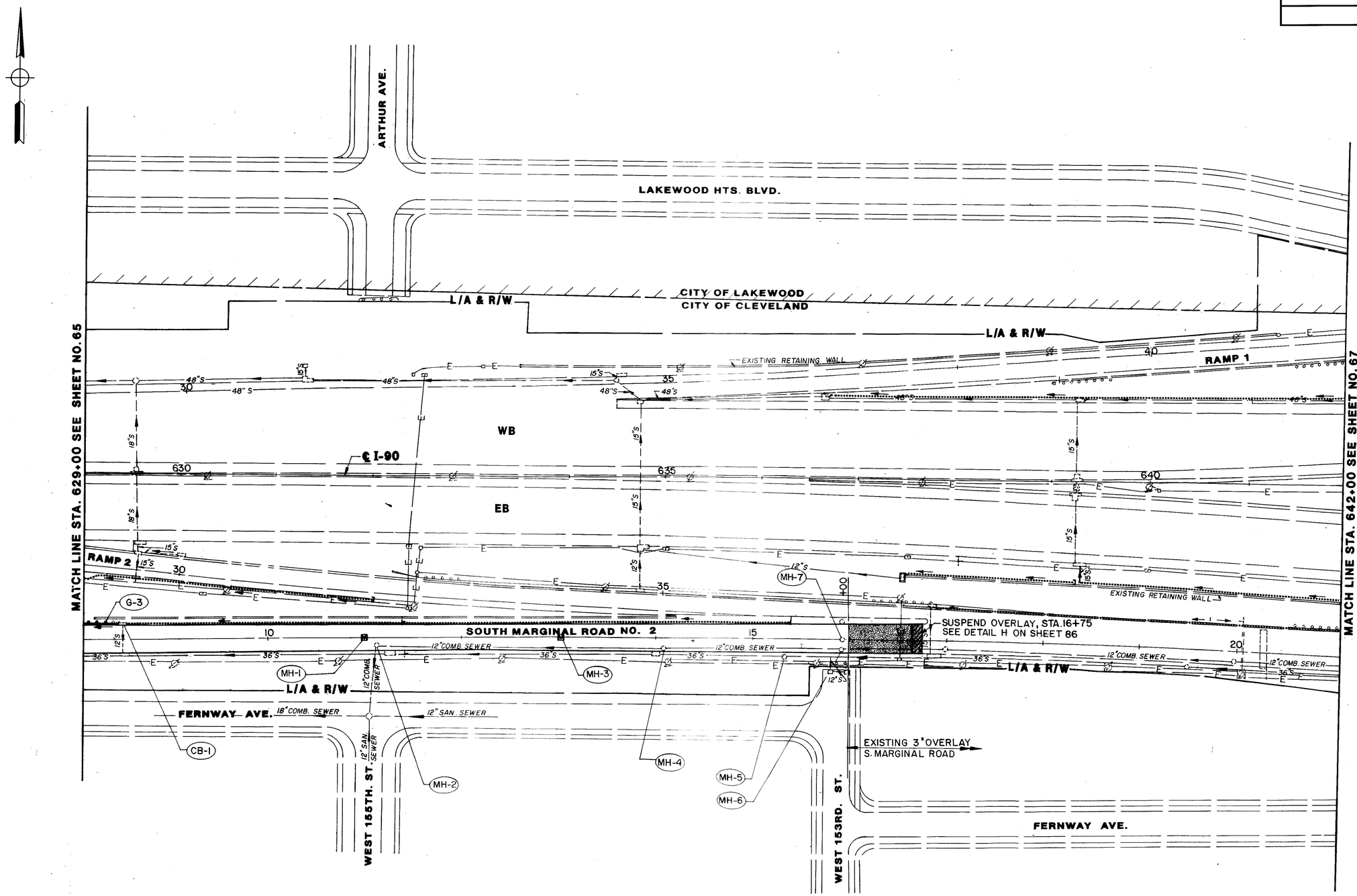

CROSS REFERENCE	
ITEM	SHEET
RESURFACING QUANTITIES	50, 51
ROADWAY QUANTITIES	—
GUARDRAIL QUANTITIES	63
EROSION CONTROL QUANTITIES	—
DRAINAGE QUANTITIES	59
ROADWAY LEGEND	65
TRAFFIC CONTROL PLAN	120

PLAN SHEET - STA 629+00 TO STA 642+00

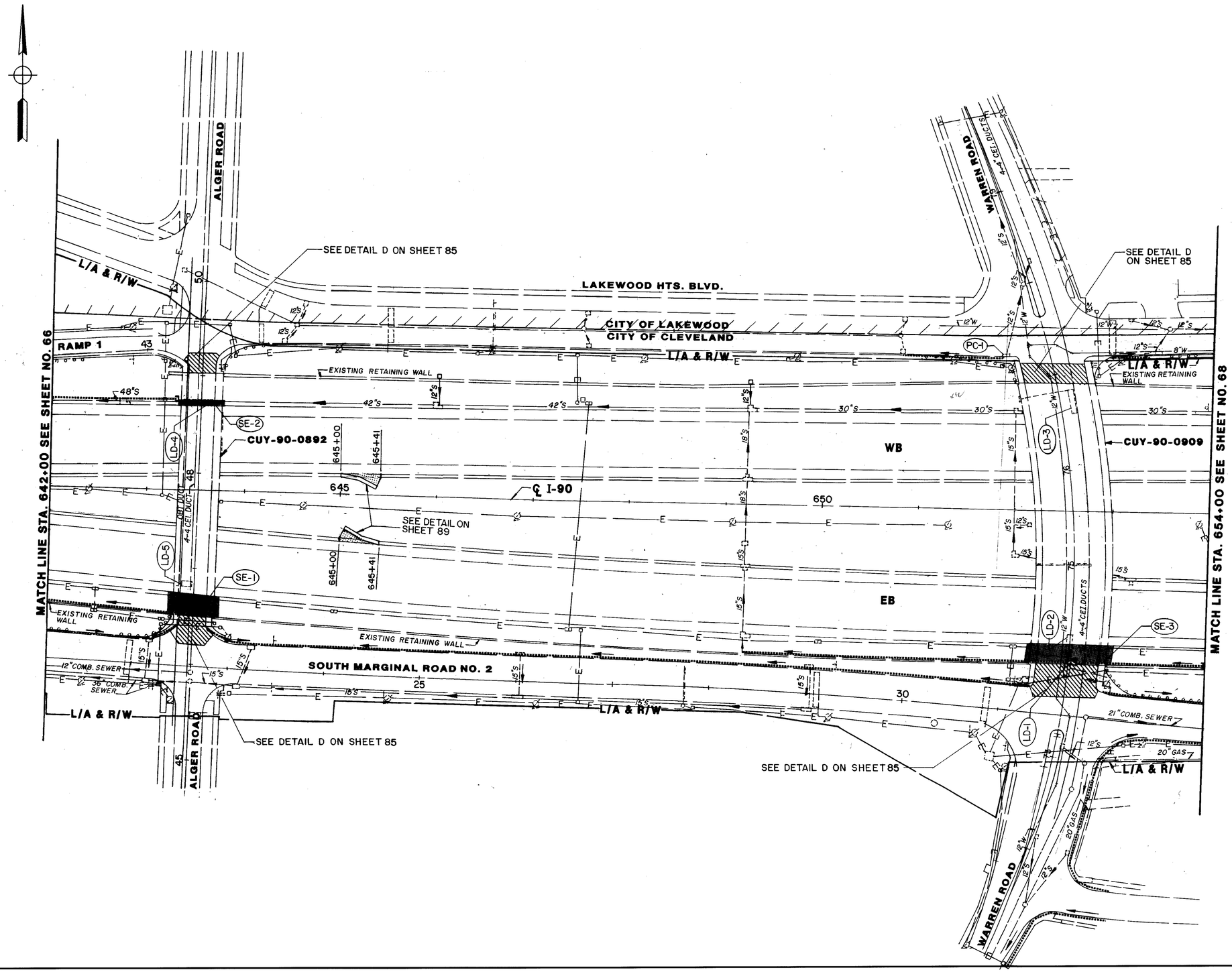

CROSS REFERENCE	
ITEM	SHEET
RESURFACING QUANTITIES	52
ROADWAY QUANTITIES	54
GUARDRAIL QUANTITIES	—
EROSION CONTROL QUANTITIES	54
DRAINAGE QUANTITIES	—
ROADWAY LEGEND	—
TRAFFIC CONTROL PLAN	121
LOOP DETECTOR QUANT.	54

PLAN SHEET - STA 642+00 TO STA 654+00

PLOT SUBMITTED:02-DEC-1998 17:19
05754GPC.DGN
PLOTTED BY: jgrmovse
PLOTTED FROM: Users@lmincek@pid5754@05754gpc.dgn

CUYAHOGA COUNTY CUY-90-9.68	OH10 FHWA REGION 5 FEDERAL PROJECT	68 220

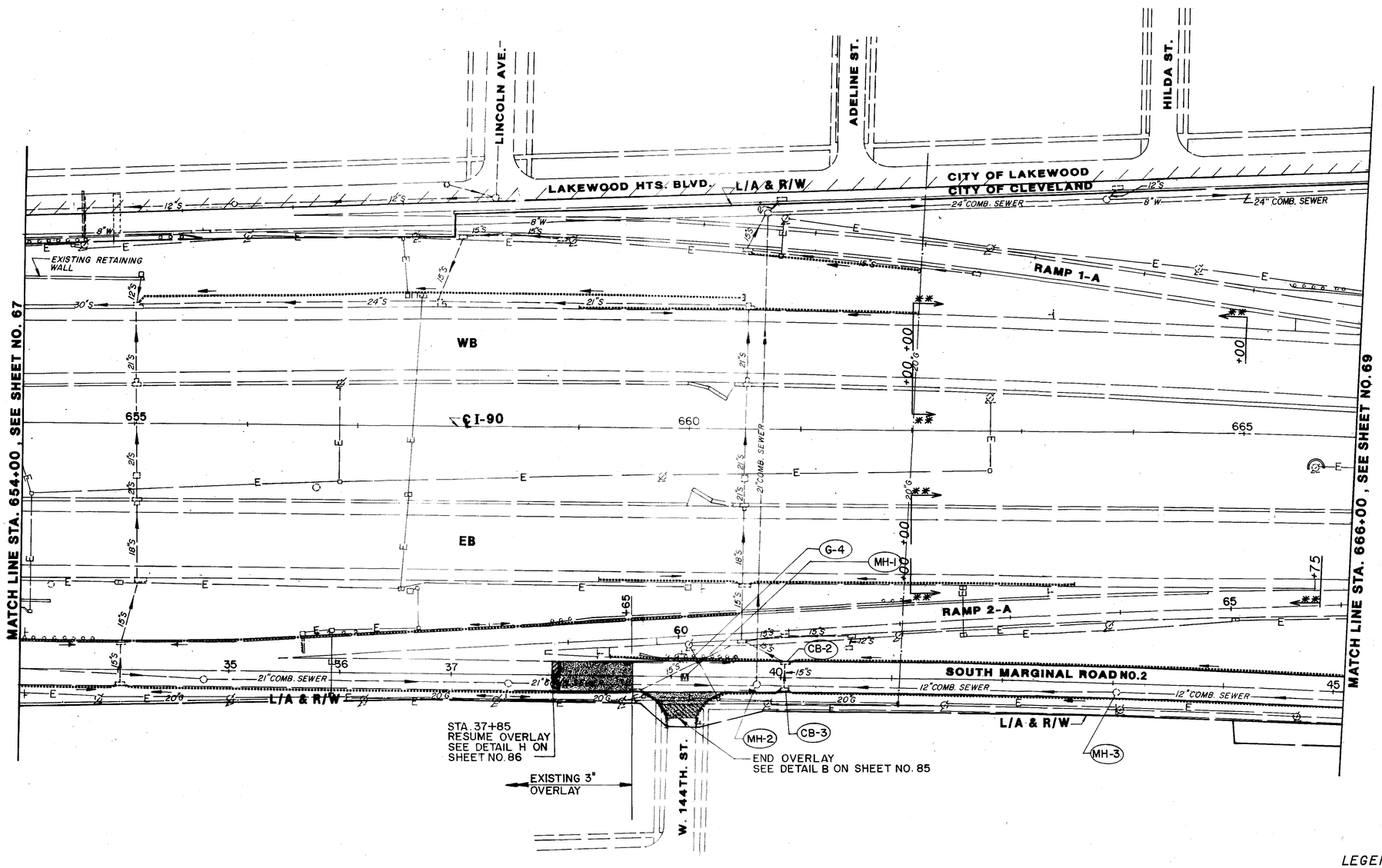

CROSS REFERENCE	
ITEM	SHEET
RESURFACING QUANTITIES	50, 51
ROADWAY QUANTITIES	—
GUARDRAIL QUANTITIES	63
EROSION CONTROL QUANTITIES	—
DRAINAGE QUANTITIES	59
ROADWAY LEGEND	65
TRAFFIC CONTROL PLAN	122

LEGEND:

** - PROP. CONCRETE SHOULDER LIMITS

PLAN SHEET - STA 654+00 TO STA 666+00

PLOTTED BY: igrmovse
PLOTTED FROM: C:\Users\Blmincek\pid57548\05754gpd.dgn
05754GPD.DGN
PLOT SUBMITTED:02-DEC-1998 17:21

CUYAHOGA COUNTY
CUY-90-9.68
OHIO
FHWA REGION 5
FEDERAL PROJECT
69
220

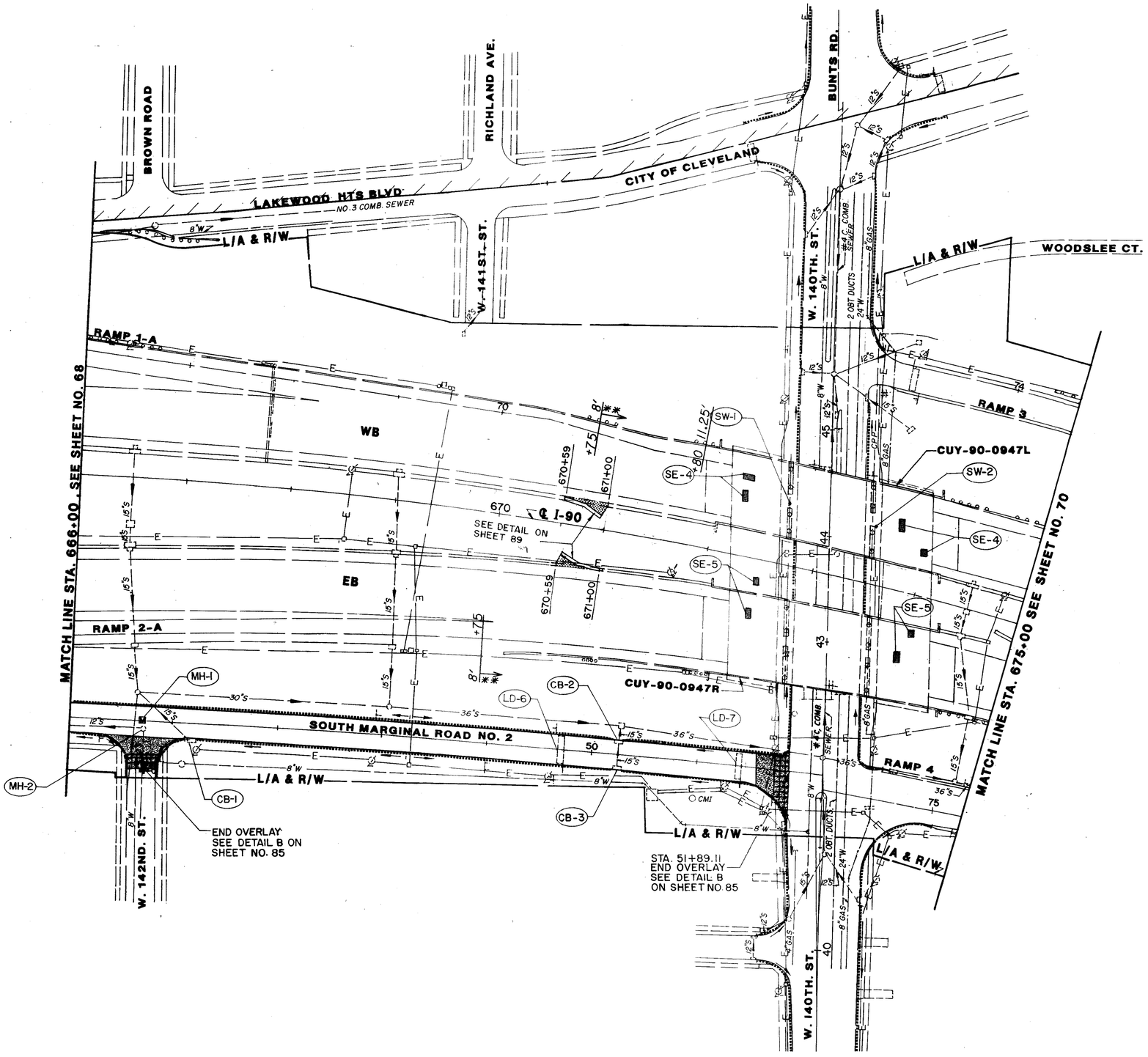

CROSS REFERENCE	
ITEM	SHEET
RESURFACING QUANTITIES	50, 51
ROADWAY QUANTITIES	53
GUARDRAIL QUANTITIES	
EROSION CONTROL QUANTITIES	54
DRAINAGE QUANTITIES	59
ROADWAY LEGEND	65
TRAFFIC CONTROL PLAN	123
LOOP DETECTOR QUANT.	54

LEGEND:

** - PROP. CONCRETE SHOULDER LIMITS

PLAN SHEET - STA 666+00 TO STA 675+00

PLOTTED BY: jgrmovse
PLOTTED FROM: usersBlmincekBpid5754B05754gpe.dgn
05754GPE.DGN
PLOT SUBMITTED: 02-DEC-1998 17:21

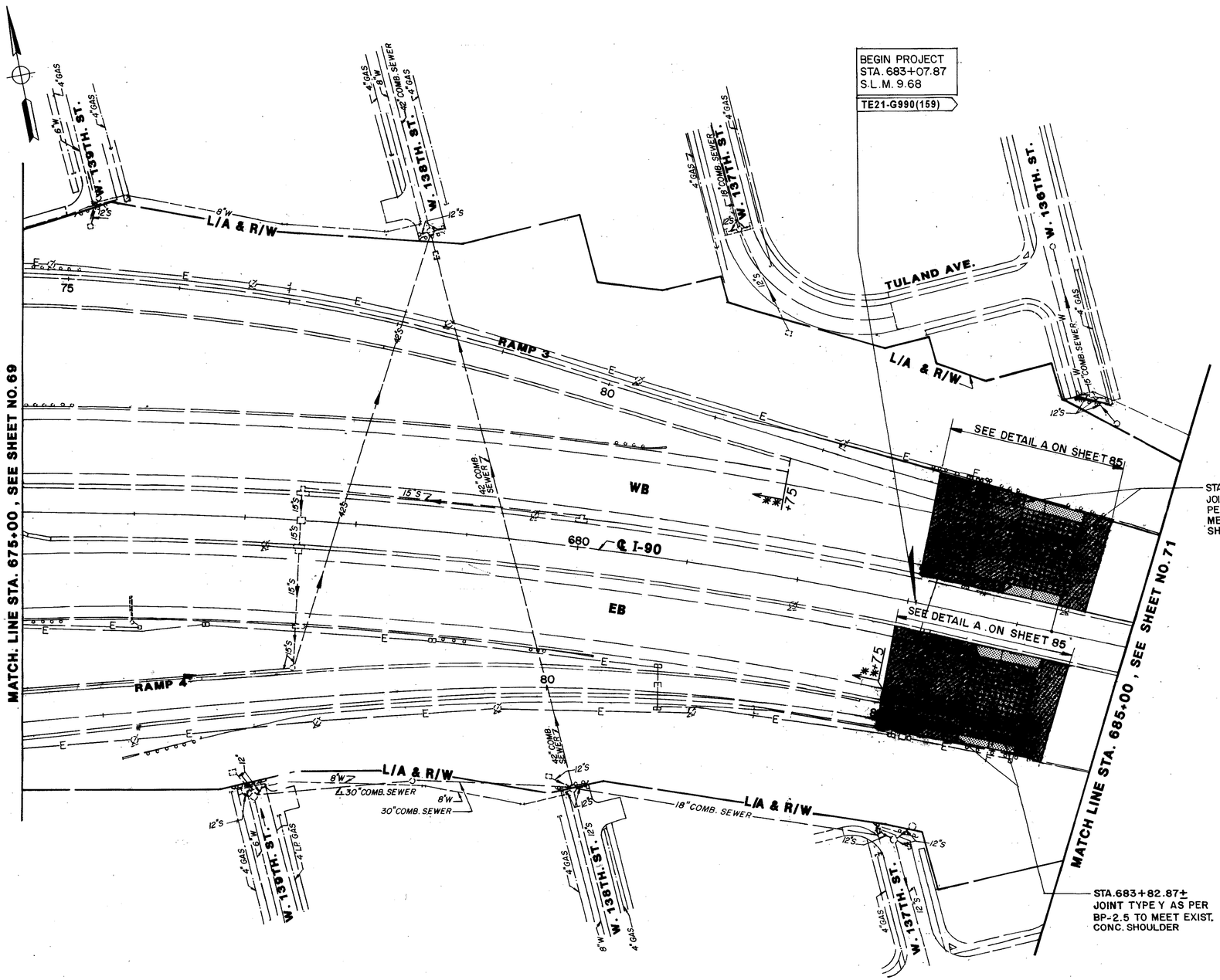

CROSS REFERENCE	
ITEM	SHEET
RESURFACING QUANTITIES	45, 46, 47, 51
ROADWAY QUANTITIES	53
GUARDRAIL QUANTITIES	—
EROSION CONTROL QUANTITIES	—
DRAINAGE QUANTITIES	—
ROADWAY LEGEND	65
TRAFFIC CONTROL PLAN	124

LEGEND:

** - PROP. CONCRETE SHOULDER LIMITS

PLAN SHEET - STA 675+00 TO STA 685+00

PLOT SUBMITTED:02-DEC-1998 17:23
05754GPF.DGN
PLOTTED BY:jgrmovse
PLOTTED FROM:usersBlmincekBpid5754B05754gpf.dgn

CUYAHOGA COUNTY
CUY-90-9.68
OHIO
FHWA REGION 5
FEDERAL PROJECT
71
220

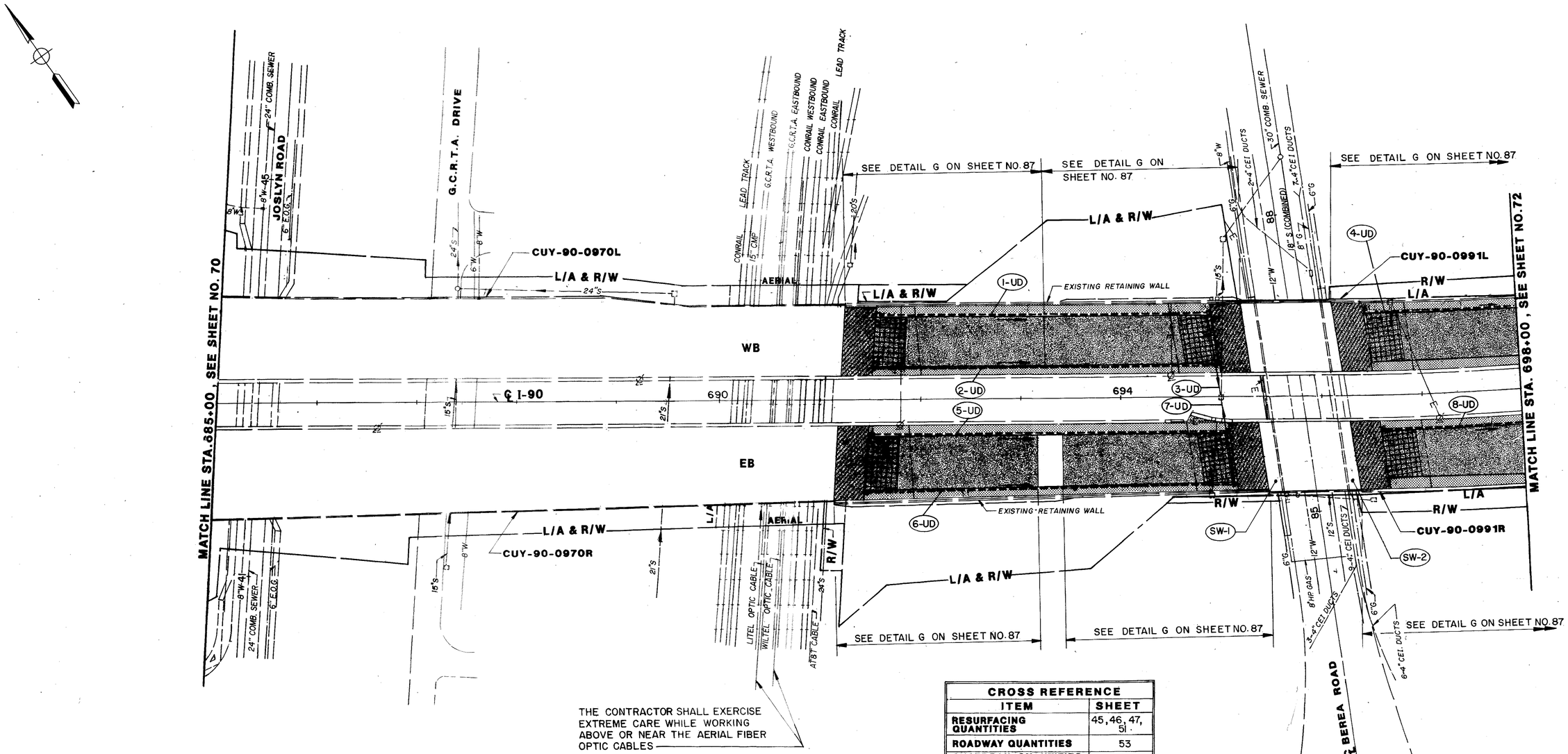

CROSS REFERENCE	
ITEM	SHEET
RESURFACING QUANTITIES	45, 46, 47, 51
ROADWAY QUANTITIES	53
GUARDRAIL QUANTITIES	—
EROSION CONTROL QUANTITIES	—
DRAINAGE QUANTITIES	55
ROADWAY LEGEND	65
TRAFFIC CONTROL PLAN	125

PLAN SHEET - STA. 685+00 TO STA. 698+00

PLOTTED BY: jgrmovse
PLOTTED FROM: users@lmincek@pid5754@05754gpg.dgn
05754GPG.DGN
PLOT SUBMITTED: 02-DEC-1998 17:24

CUYAHOGA COUNTY
CUY-90-9.68
OHIO
FHWA REGION 5
FEDERAL PROJECT
72
220

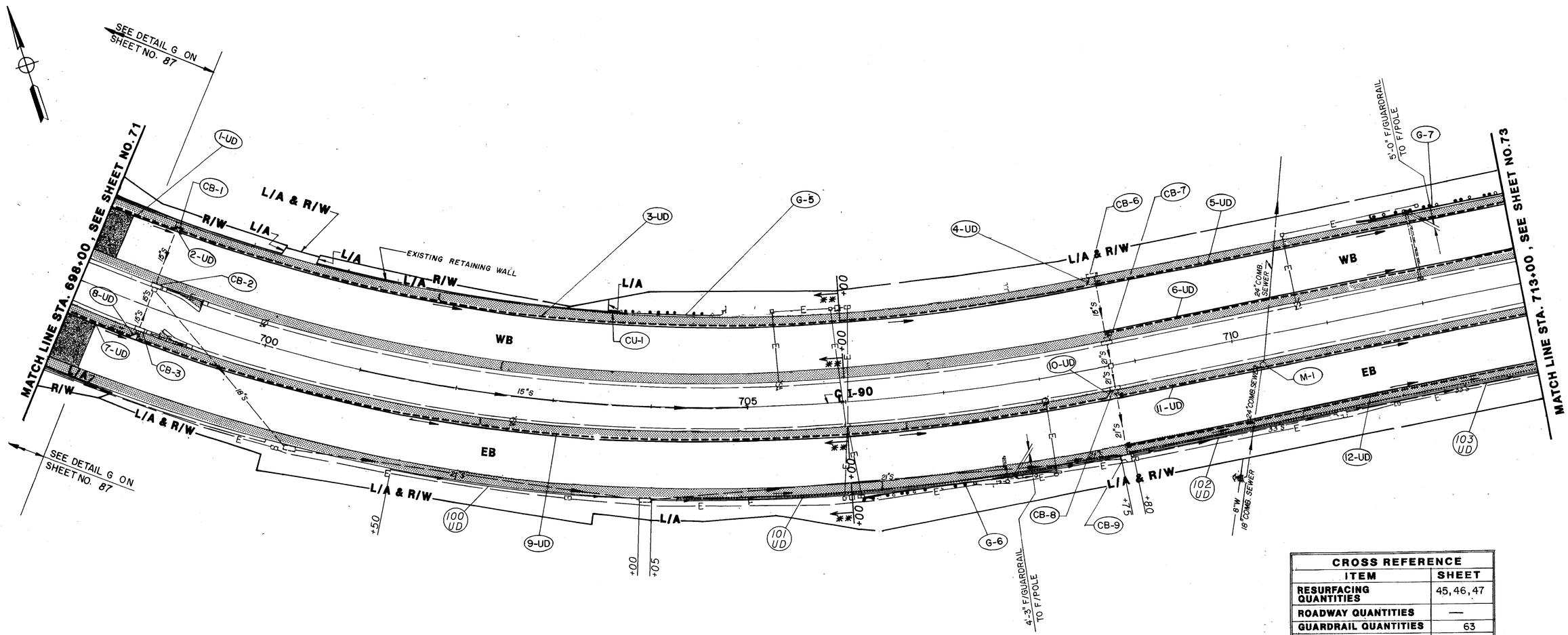

CROSS REFERENCE	
ITEM	SHEET
RESURFACING QUANTITIES	45, 46, 47
ROADWAY QUANTITIES	—
GUARDRAIL QUANTITIES	63
EROSION CONTROL QUANTITIES	—
DRAINAGE QUANTITIES	55,59
ROADWAY LEGEND	65
TRAFFIC CONTROL PLAN	126

LEGEND:

** - PROP. CONCRETE SHOULDER LIMITS

PLAN SHEET - STA 698+00 TO STA 713+00

PLOTTED BY: jgrmovse
PLOTTED FROM: ...users@lmincek@pid5754@05754gph.dgn
05754GPH.DGN
PLOT SUBMITTED: 02-DEC-1998 17:25

CUYAHOGA COUNTY CUY-90-9.68	OHIO FHWA REGION 5 FEDERAL PROJECT	73 220

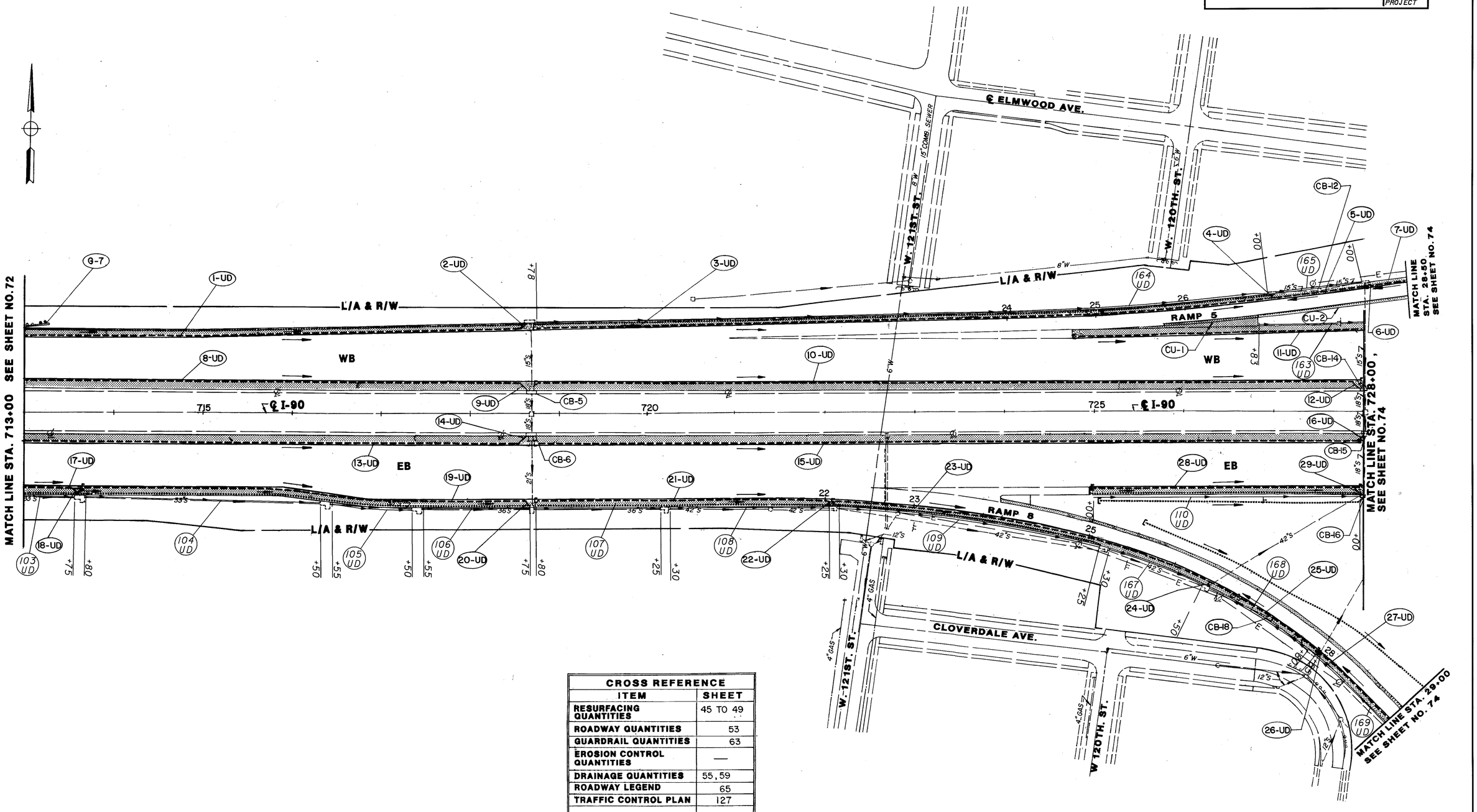

CROSS REFERENCE	
ITEM	SHEET
RESURFACING QUANTITIES	45 TO 49
ROADWAY QUANTITIES	53
GUARDRAIL QUANTITIES	63
EROSION CONTROL QUANTITIES	—
DRAINAGE QUANTITIES	55, 59
ROADWAY LEGEND	65
TRAFFIC CONTROL PLAN	127

PLAN SHEET - STA 713+00 TO STA 728+00

PLOTTED BY: jgrmovse
PLOTTED FROM: ...
PLOT SUBMITTED: 02-DEC-1998 17:26
05754GPJ.DGN

CUYAHOGA COUNTY
CUY-90-9.68
OHIO
FHWA REGION 5
FEDERAL PROJECT
74
220

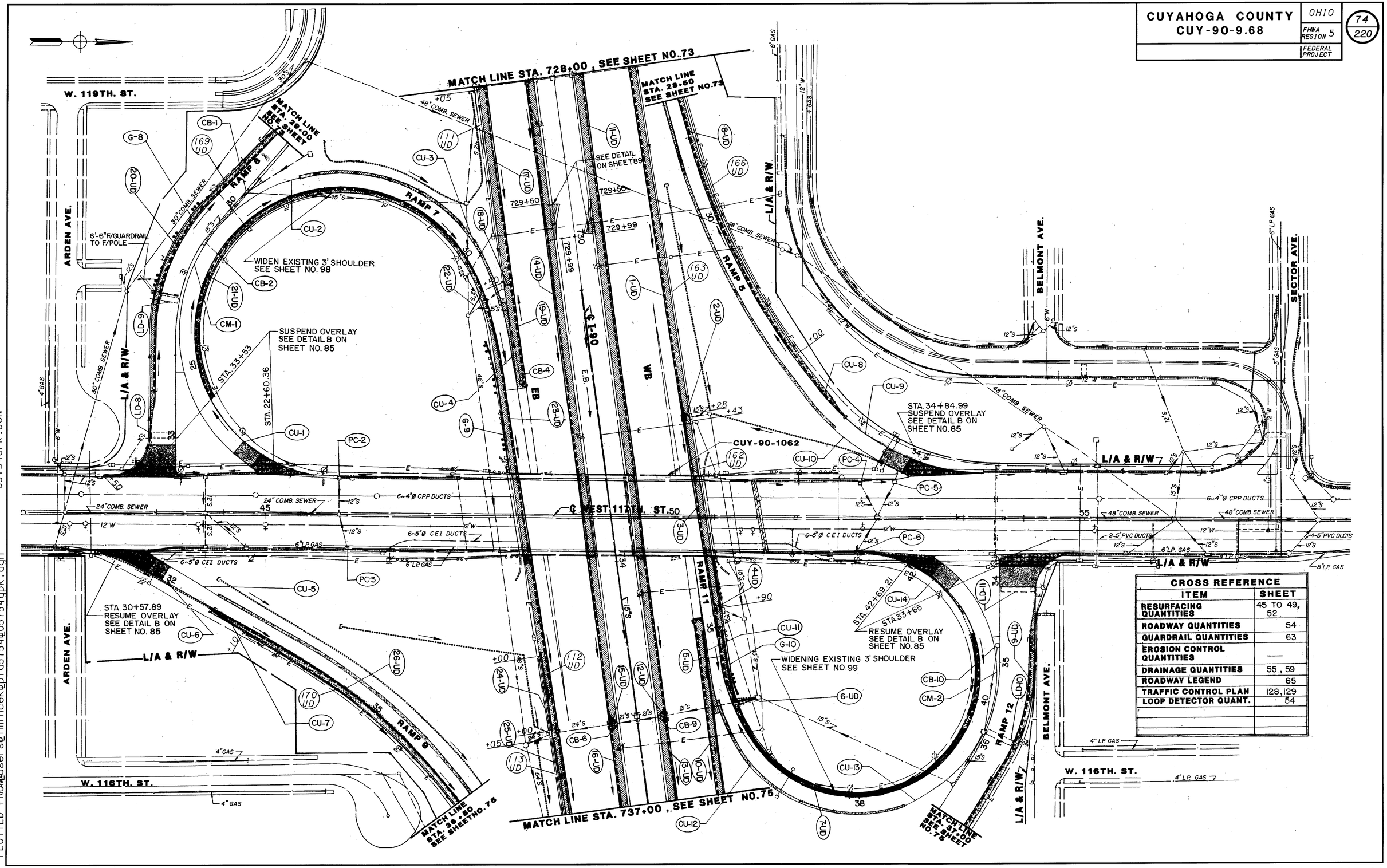

CROSS REFERENCE	
ITEM	SHEET
RESURFACING QUANTITIES	45 TO 49, 52
ROADWAY QUANTITIES	54
GUARDRAIL QUANTITIES	63
EROSION CONTROL QUANTITIES	—
DRAINAGE QUANTITIES	55, 59
ROADWAY LEGEND	65
TRAFFIC CONTROL PLAN	128,129
LOOP DETECTOR QUANT.	54

PLAN SHEET - STA 728+00 TO STA 737+00

PLOTTED BY: jgrmovse
PLOTTED FROM: ...
PLOT SUBMITTED: 02-DEC-1998 17:27
05754GPK.DGN

CUYAHOGA COUNTY
CUY-90-9.68
OHIO
FHWA REGION 5
FEDERAL PROJECT
75
220

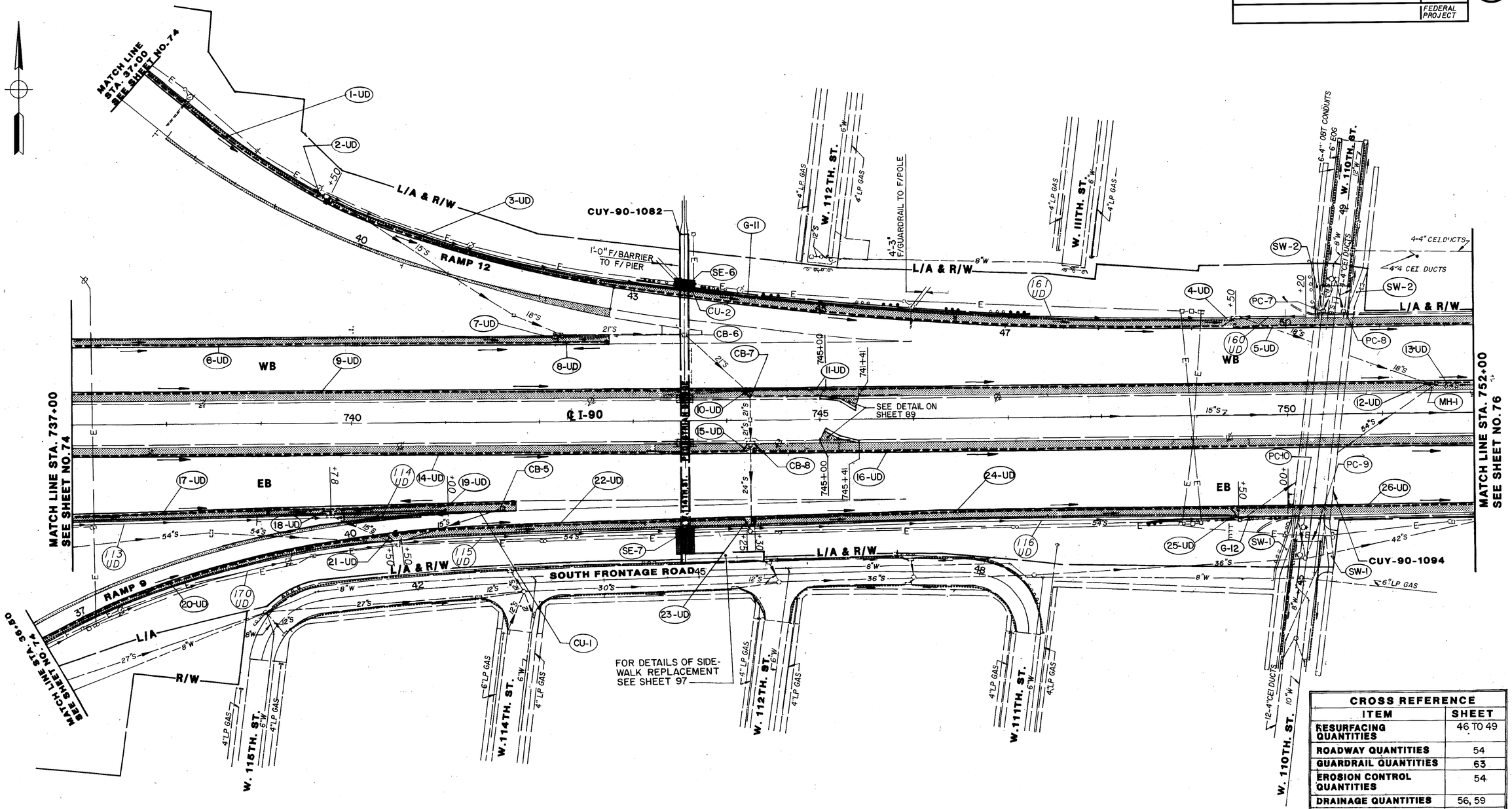

CROSS REFERENCE	
ITEM	SHEET
RESURFACING QUANTITIES	46 TO 49
ROADWAY QUANTITIES	54
GUARDRAIL QUANTITIES	63
EROSION CONTROL QUANTITIES	54
DRAINAGE QUANTITIES	56, 59
ROADWAY LEGEND	65
TRAFFIC CONTROL PLAN	130

PLAN SHEET - STA 737+00 TO STA 752+00

PLOTTED BY: jgrmovse
PLOTTED FROM: ...
PLOT SUBMITTED: 02-DEC-1998 17:28
05754GPL.DGN

CUYAHOGA COUNTY
CUY-90-9.68
OHIO
FHWA REGION 5
FEDERAL PROJECT
76
220

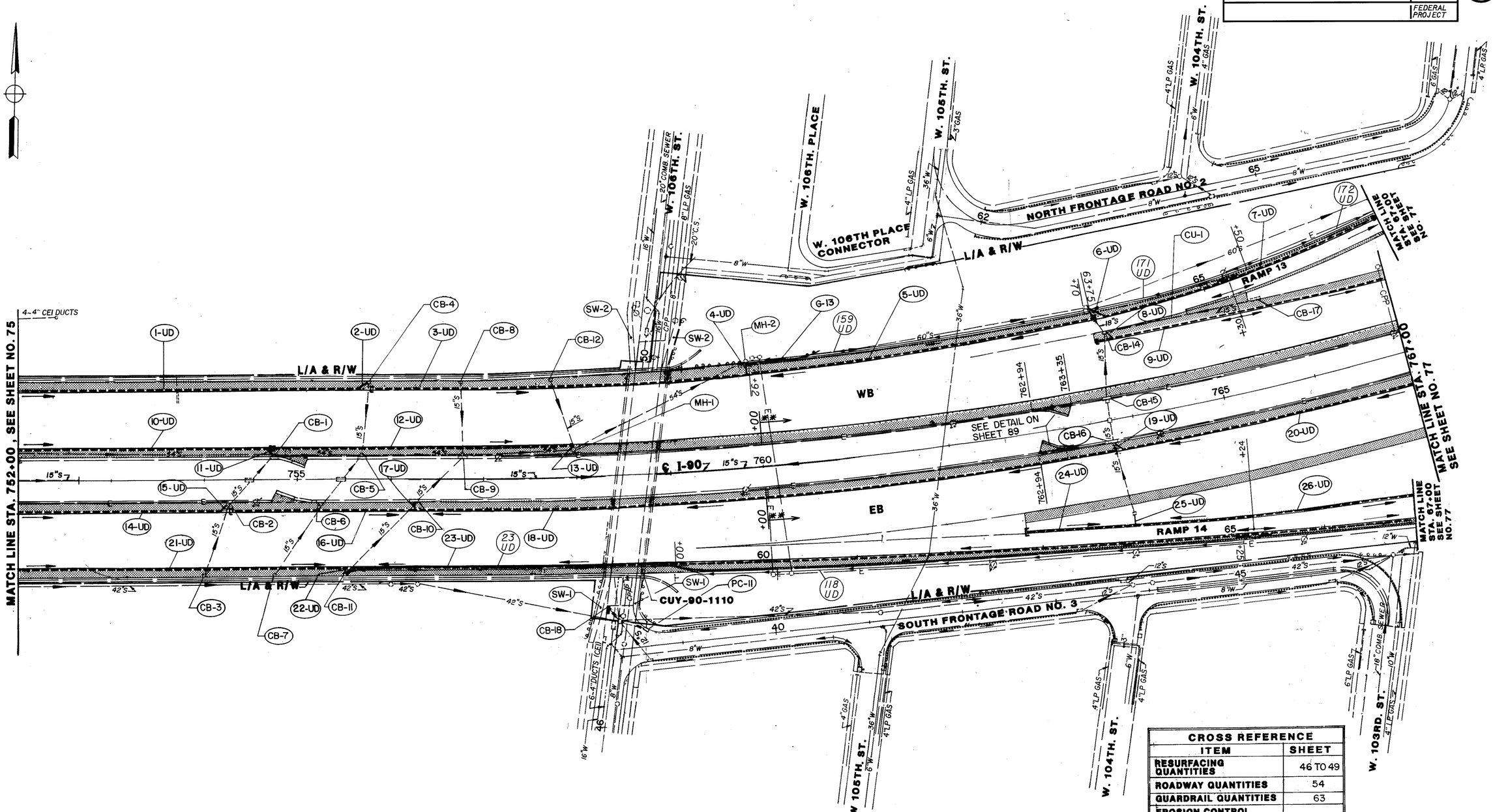

CROSS REFERENCE	
ITEM	SHEET
RESURFACING QUANTITIES	46 TO 49
ROADWAY QUANTITIES	54
GUARDRAIL QUANTITIES	63
EROSION CONTROL QUANTITIES	—
DRAINAGE QUANTITIES	56,60
ROADWAY LEGEND	65
TRAFFIC CONTROL PLAN	132

LEGEND:

** - PROP. CONCRETE SHOULDER LIMITS

PLAN SHEET - STA 752+00 TO STA 767+00

PLOTTED BY: jgrmovse
PLOTTED FROM: Rusers8lmincek8pid5754805754gpm.dgn
05754GPM.DGN
PLOT SUBMITTED:02-DEC-1998 17:29

CUYAHOGA COUNTY
CUY-90-9.68
OHIO
FHWA REGION 5
FEDERAL PROJECT
77
220

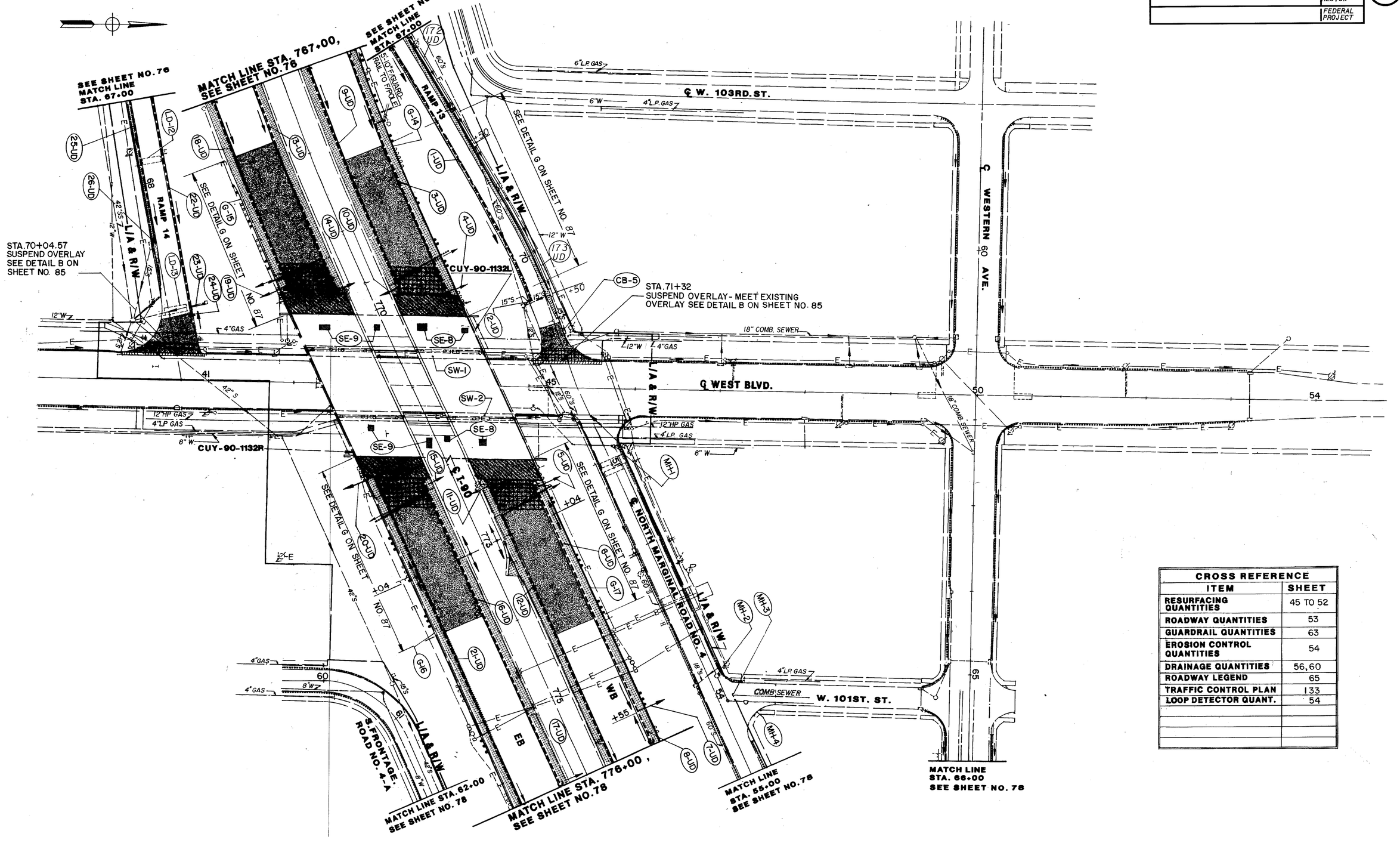

CROSS REFERENCE	
ITEM	SHEET
RESURFACING QUANTITIES	45 TO 52
ROADWAY QUANTITIES	53
GUARDRAIL QUANTITIES	63
EROSION CONTROL QUANTITIES	54
DRAINAGE QUANTITIES	56,60
ROADWAY LEGEND	65
TRAFFIC CONTROL PLAN	133
LOOP DETECTOR QUANT.	54

PLAN SHEET - STA 767+00 TO STA 776+00

PLOTTED BY: jgrmovse
PLOTTED FROM: Users\Blmincek\Bpid5754B\05754gpn.dgn
05754GPN.DGN
PLOT SUBMITTED:02-DEC-1998 17:30

CUYAHOGA COUNTY
CUY-90-9.68
OHIO
FHWA REGION 5
FEDERAL PROJECT
78
220

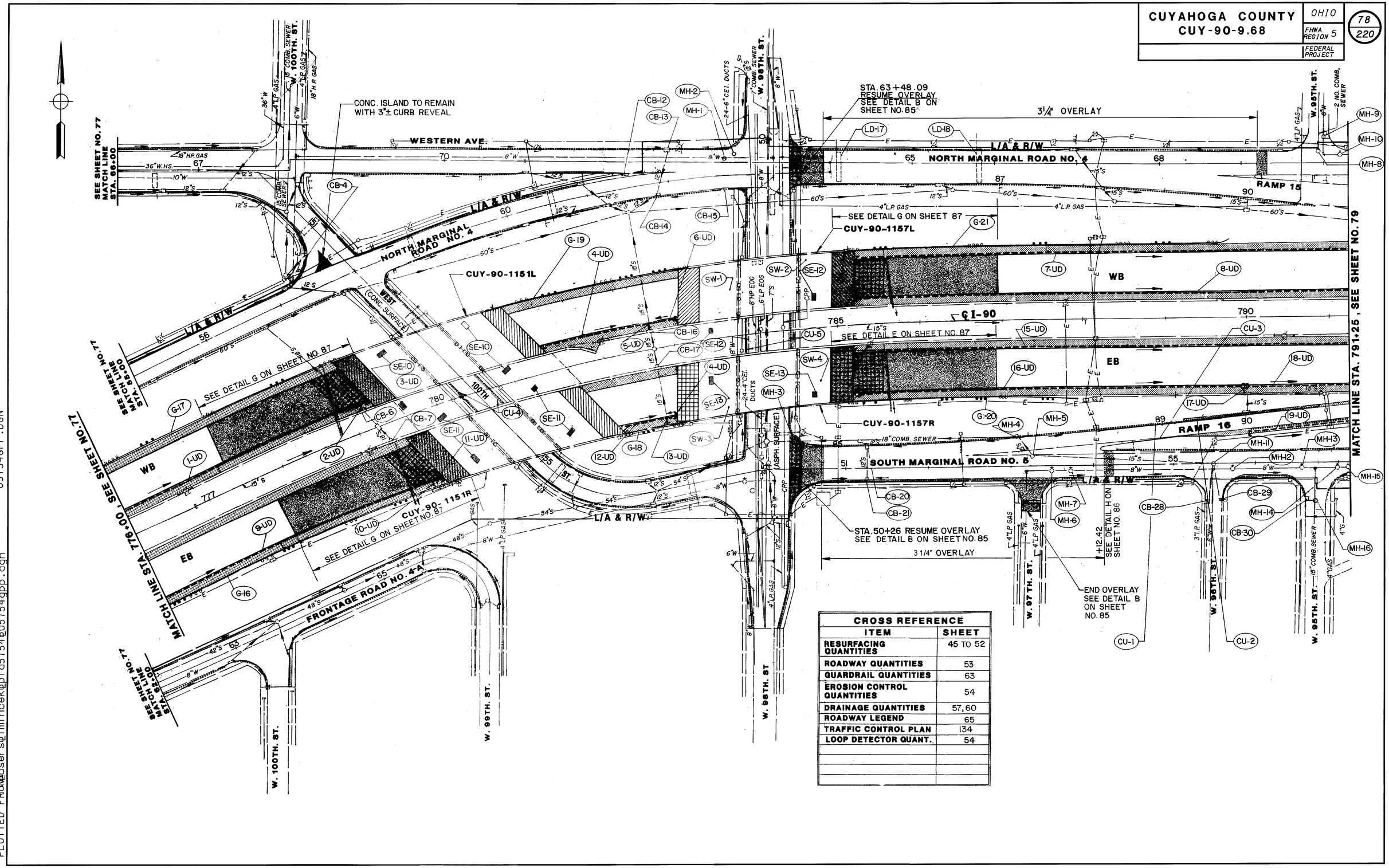

CROSS REFERENCE	
ITEM	SHEET
RESURFACING QUANTITIES	45 TO 52
ROADWAY QUANTITIES	53
GUARDRAIL QUANTITIES	63
EROSION CONTROL QUANTITIES	54
DRAINAGE QUANTITIES	57, 60
ROADWAY LEGEND	65
TRAFFIC CONTROL PLAN	134
LOOP DETECTOR QUANT.	54

PLAN SHEET - STA 776+00 TO STA 791+25

PLOTTED BY: jgrmovse
PLOTTED FROM: usersBlmincekBpid5754B05754gpp.dgn
05754GPP.DGN
PLOT SUBMITTED: 02-DEC-1998 17:31

PLOT SUBMITTED:03-DEC-1998 06:38
05754GPQ.DGN
PLOTTED BY:jgrmovse
PLOTTED FROM:C:\Users\Slmincek\pid05754\05754gpq.dgn

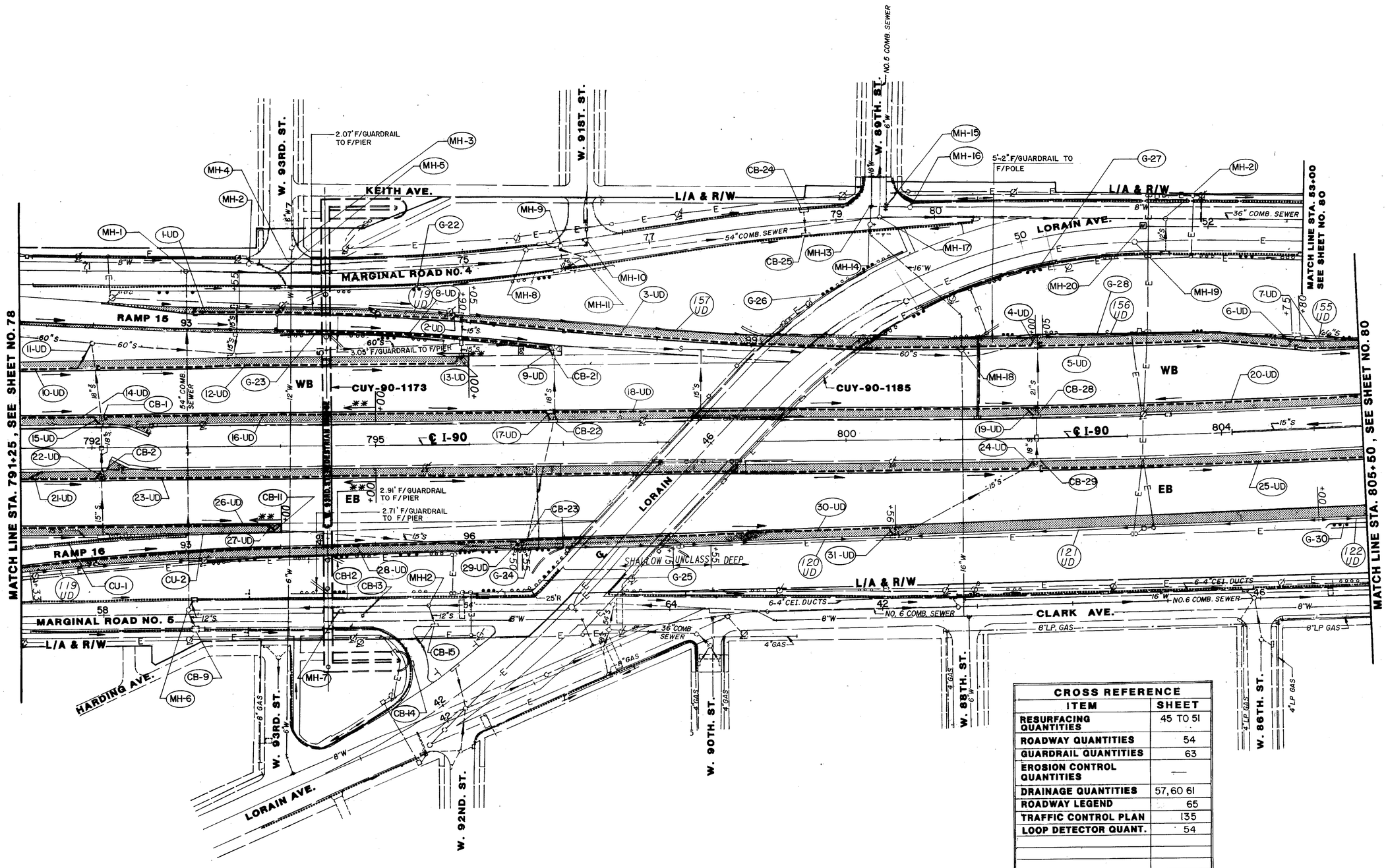

CROSS REFERENCE	
ITEM	SHEET
RESURFACING QUANTITIES	45 TO 51
ROADWAY QUANTITIES	54
GUARDRAIL QUANTITIES	63
EROSION CONTROL QUANTITIES	—
DRAINAGE QUANTITIES	57, 60 61
ROADWAY LEGEND	65
TRAFFIC CONTROL PLAN	135
LOOP DETECTOR QUANT.	54

PLAN SHEET - STA 791+25 TO STA 805+50

CUYAHOGA COUNTY
CUY-90-9.68
OHIO
FHWA REGION 5
FEDERAL PROJECT
80
220

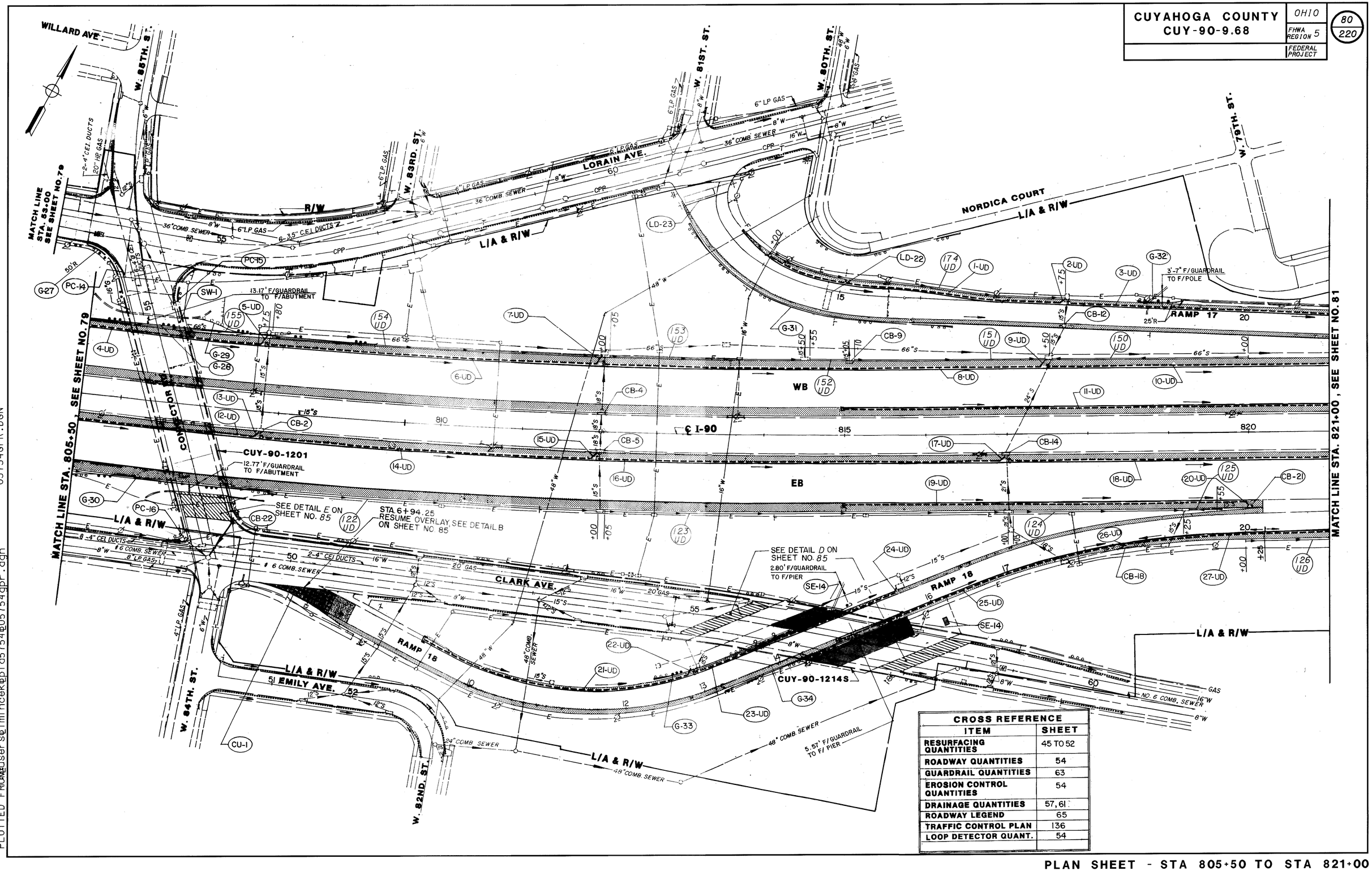

CROSS REFERENCE	
ITEM	SHEET
RESURFACING QUANTITIES	45 TO 52
ROADWAY QUANTITIES	54
GUARDRAIL QUANTITIES	63
EROSION CONTROL QUANTITIES	54
DRAINAGE QUANTITIES	57, 61
ROADWAY LEGEND	65
TRAFFIC CONTROL PLAN	136
LOOP DETECTOR QUANT.	54

PLAN SHEET - STA 805+50 TO STA 821+00

PLOTTED BY: jgrmovse
PLOTTED FROM: Users@lmincek@pid5754@05754gpr.dgn
PLOT SUBMITTED: 03-DEC-1998 06:39
05754GPR.DGN

CUYAHOGA COUNTY
CUY-90-9.68
OHIO
FHWA REGION 5
FEDERAL PROJECT
81
220

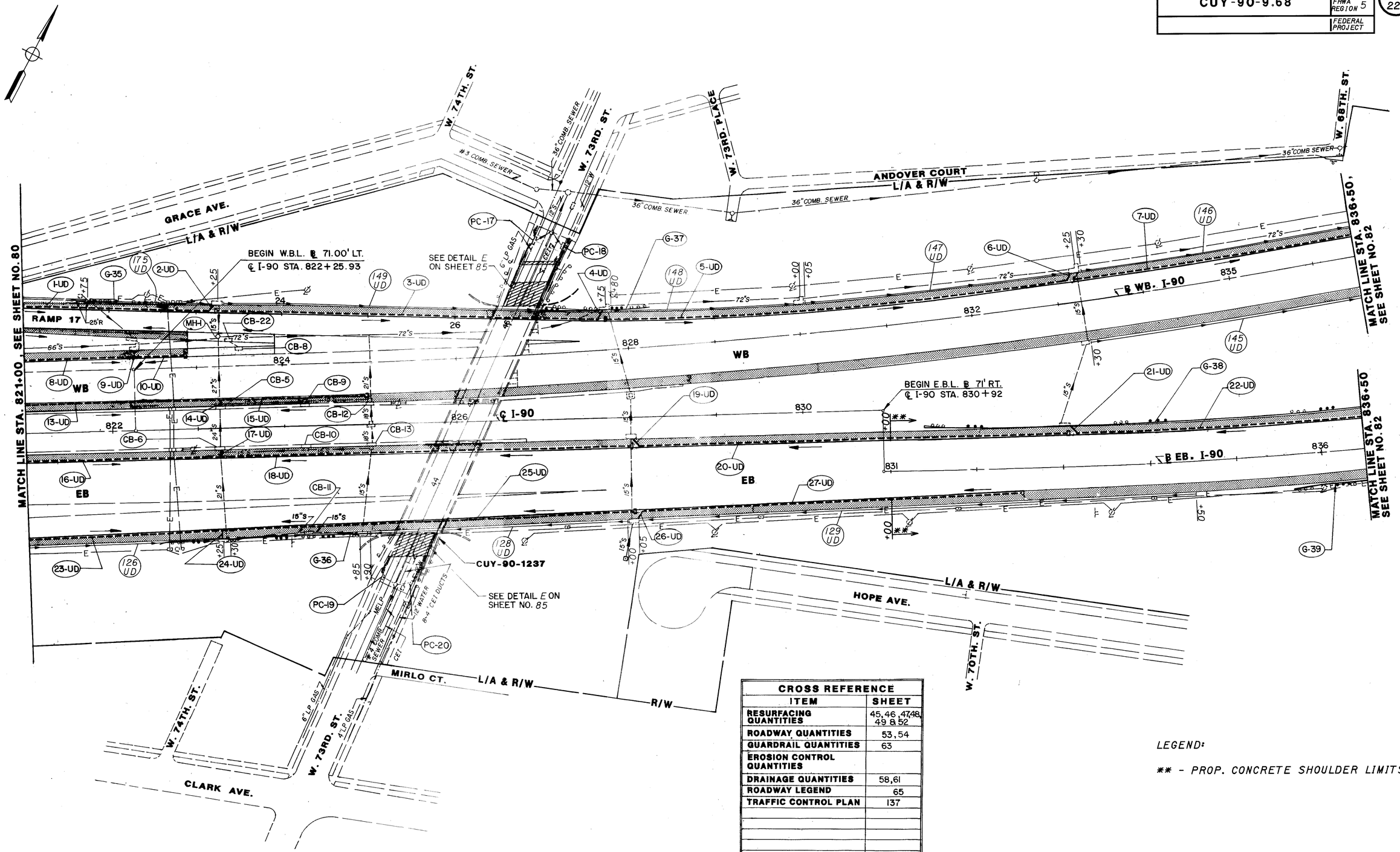

CROSS REFERENCE	
ITEM	SHEET
RESURFACING QUANTITIES	45, 46, 47, 48, 49 & 52
ROADWAY QUANTITIES	53, 54
GUARDRAIL QUANTITIES	63
EROSION CONTROL QUANTITIES	
DRAINAGE QUANTITIES	58, 61
ROADWAY LEGEND	65
TRAFFIC CONTROL PLAN	137

LEGEND:

** - PROP. CONCRETE SHOULDER LIMITS

PLAN SHEET - STA 821+00 TO STA 836+50

PLOTTED BY: jgrmovse
PLOTTED FROM: Rusers\lmincek\pid5754\05754gps.dgn
PLOT SUBMITTED: 03-DEC-1998 06:40
05754GPS.DGN

CUYAHOGA COUNTY CUY-90-9.68	OHIO	82 / 220
	FHWA REGION 5	
	FEDERAL PROJECT	

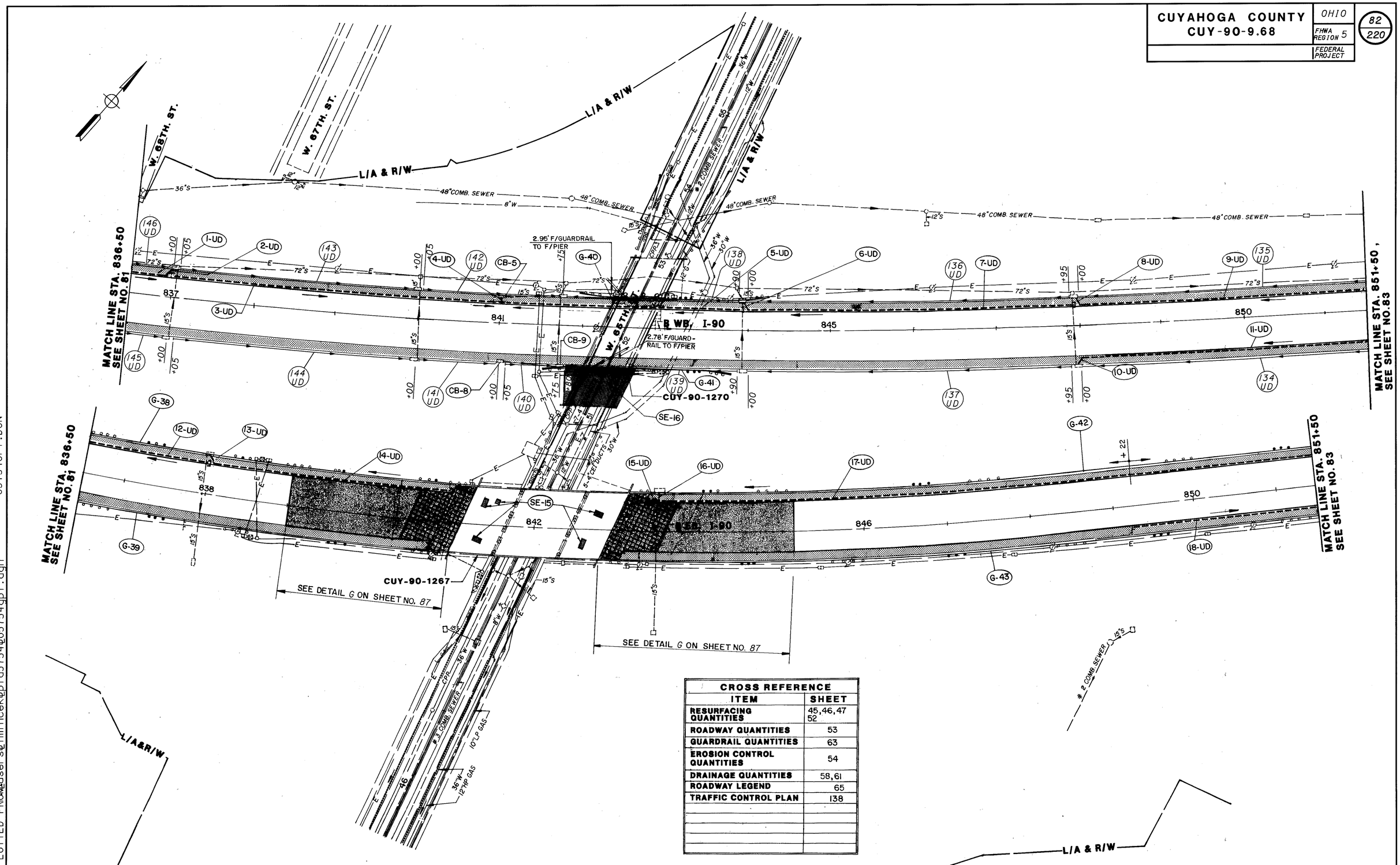

CROSS REFERENCE	
ITEM	SHEET
RESURFACING QUANTITIES	45,46,47 52
ROADWAY QUANTITIES	53
GUARDRAIL QUANTITIES	63
EROSION CONTROL QUANTITIES	54
DRAINAGE QUANTITIES	58,61
ROADWAY LEGEND	65
TRAFFIC CONTROL PLAN	138

PLAN SHEET - STA 836+50 TO STA 851+50

PLOTTED BY: jgrmovse
PLOTTED FROM: Rusers Blmincek Bpid5754B05754gpt.dgn
05754GPT.DGN
PLOT SUBMITTED: 03-DEC-1998 06:40

CUYAHOGA COUNTY
CUY-90-9.68
OHIO
FHWA REGION 5
FEDERAL PROJECT
83
220

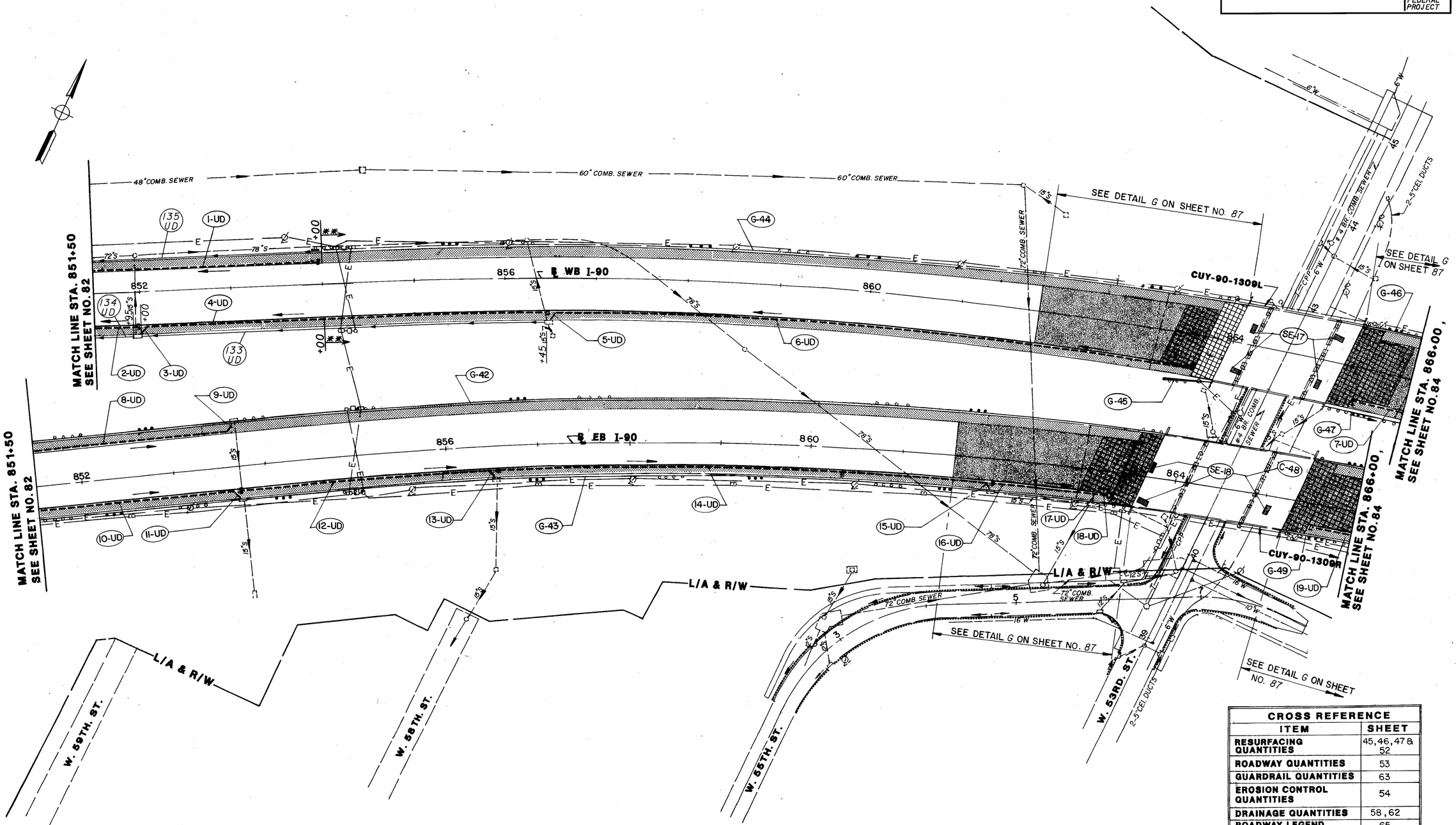

CROSS REFERENCE	
ITEM	SHEET
RESURFACING QUANTITIES	45, 46, 47 & 52
ROADWAY QUANTITIES	53
GUARDRAIL QUANTITIES	63
EROSION CONTROL QUANTITIES	54
DRAINAGE QUANTITIES	58, 62
ROADWAY LEGEND	65
TRAFFIC CONTROL PLAN	139

LEGEND:

** - PROP. CONCRETE SHOULDER LIMITS

PLAN SHEET - STA 851+50 TO STA 866+00

PLOTTED BY: jgrmovse
PLOTTED FROM: users@lmincek@pid5754@05754gpu.dgn
PLOT SUBMITTED: 03-DEC-1998 06:41
05754GPU.DGN

PLOTTED BY: jgrmovse
PLOTTED FROM: C:\Users\jmincek\pid05754\d05754gpv.dgn
PLOT SUBMITTED: 03-DEC-1998 06:42
05754GPV.DGN

CUYAHOGA COUNTY CUY-90-9.68	OHIO	84 / 220
	FHWA REGION 5	
	FEDERAL PROJECT	

LEGEND:

** - PROP. CONCRETE SHOULDER LIMITS

END PROJECT STA. 879+79.45 S.L.M. 13.41

TE21-G990(159)

L/A & R/W

℄ SHIFT 36' RT STA. 876+48.54

℄ SHIFT 36' LT. STA. 872+57.53

STA. 874+08± JOINT TYPE Y AS PER BP 2.5 TO MEET EXIST CONC. SHOULDER

STA. 875+90± JOINT TYPE Y AS PER BP 2.5 TO MEET EXIST CONC. SHOULDER

STA. 873+03± JOINT TYPE Y AS PER BP-2.5 TO MEET EXIST. CONC. SHOULDER

SEE DETAIL F ON SHEET 86 (E.B. & W.B.)

EXIST. MEDIAN BARRIER

EXISTING OVERLAY

℄ WB. I-90

℄ EB. I-90

RAMP 27

RAMP 28

FRONTAGE RD.

4'-2" F/GUARDRAIL TO F/POLE

9'-2" F/GUARDRAIL TO F/POLE

SEE DETAIL G ON SHEET NO. 87

MATCH LINE STA. 866+00, SEE SHEET NO. 83

MATCH LINE STA. 880+00, SEE ON THIS SHEET

WALWORTH AVE.

FENWICK AVE.

RAVINE CT.

W. 46TH ST.

W. 47TH ST.

W. 45TH ST.

W. 44TH. ST.

2 COMB. SEWER

10'-3" COMB. SEWER

2 COMBINED SEWER

2-4 CEI. DUCTS

6" L.P. GAS IN 10" CASING

CONNECT TO EXIST GR

STA. 81+20.04 BACK = STA. 81+11.47 AHEAD

STA. 82+00± END OVERLAY (MEET EXISTING OVERLAY) SEE DETAIL B ON SHEET NO. 85

STA. 81+53.23 BACK = STA. 81+46.29 AHEAD

STA. 82+00± END OVERLAY (MEET EXISTING OVERLAY) SEE DETAIL B ON SHEET NO. 85

WB. I-90 STA. 880+06.44 BACK = EB. I-90 STA. 880+00.00 AHEAD

EB. I-90 STA. 880+07.53 BACK = WB. I-90 STA. 880+00.00 AHEAD

CUY-90-13.48

CROSS REFERENCE	
ITEM	SHEET
RESURFACING QUANTITIES	45, 46, 47, 48, 49, 52
ROADWAY QUANTITIES	53
GUARDRAIL QUANTITIES	63, 64
EROSION CONTROL QUANTITIES	—
DRAINAGE QUANTITIES	58, 62
ROADWAY LEGEND	65
TRAFFIC CONTROL PLAN	140

PLAN SHEET - STA 866+00 TO STA 880+00

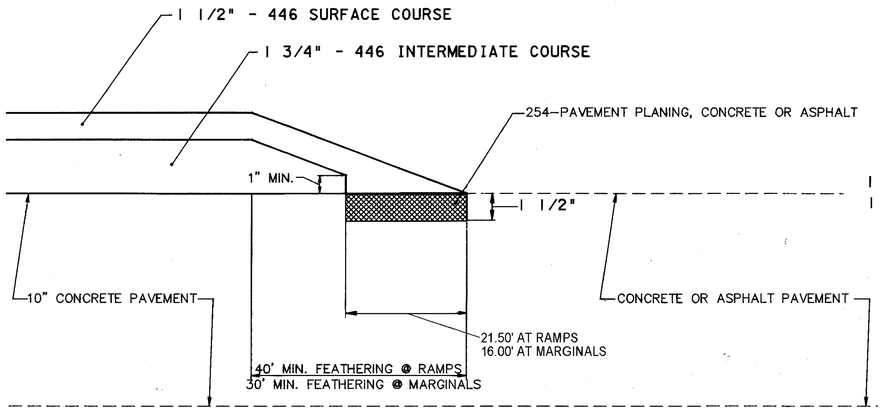

OVERLAY BUTT JOINT MEETING EXISTING PAVEMENT
3 1/4" THICK
DETAIL B

NOTE: ALL DISTANCES ARE MEASURED IN THE DIRECTION OF TRAVEL

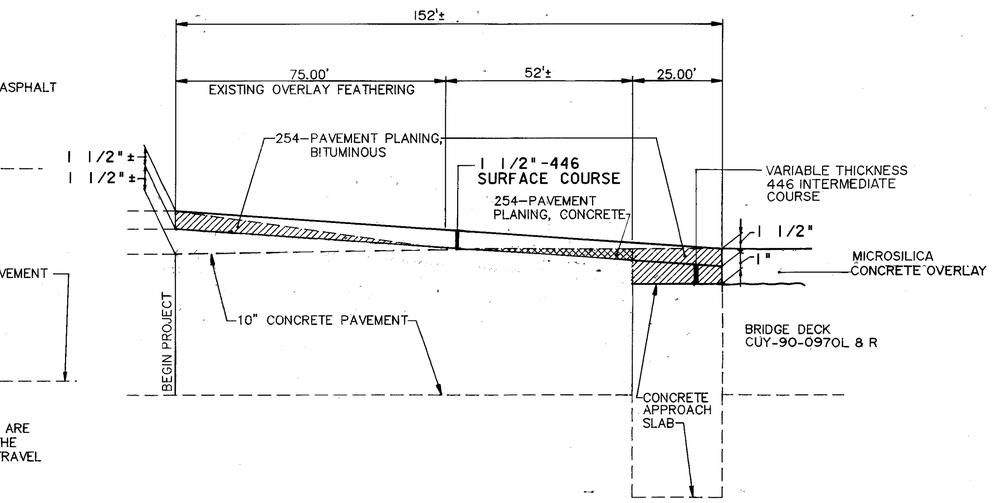

PAVING DETAIL A
STA. 683+07± TO STA. 684+59.85

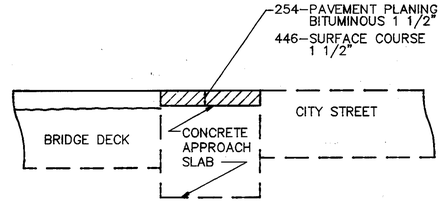

*CITY STREET BRIDGE 1 1/2" OR 0" ASPHALT OVERLAY ON APPROACH SLAB (DETAIL D) (SEE BELOW FOR LOCATIONS)

CITY STREET BRIDGE	APPROACH SLAB 1 1/2" OVERLAY	APPROACH SLAB 0" OVERLAY
CUY-90-0892 (ALGER)	BOTH	
CUY-90-0909 (WARREN)	BOTH	
CUY-90-1062 (W. 117TH)		BOTH
CUY-90-1094 (W. 110TH)		BOTH
CUY-90-1110 (W. 106TH)		BOTH
CUY-90-1185 (LORAIN)		△BOTH
CUY-90-1201 (CONNECTOR)		NORTH
CUY-90-1214S (CLARK)	BOTH	
CUY-90-1270 (W. 65TH)		BOTH

* FOR CITY STREET BRIDGES WITHOUT EXIST. APPROACH SLAB OVERLAY (0" OVERLAY), DO NOT OVERLAY UNLESS INDICATED OTHERWISE.

△ FEATHER NORTH APPROACH SLAB PER DETAIL B ON SHEET 85.

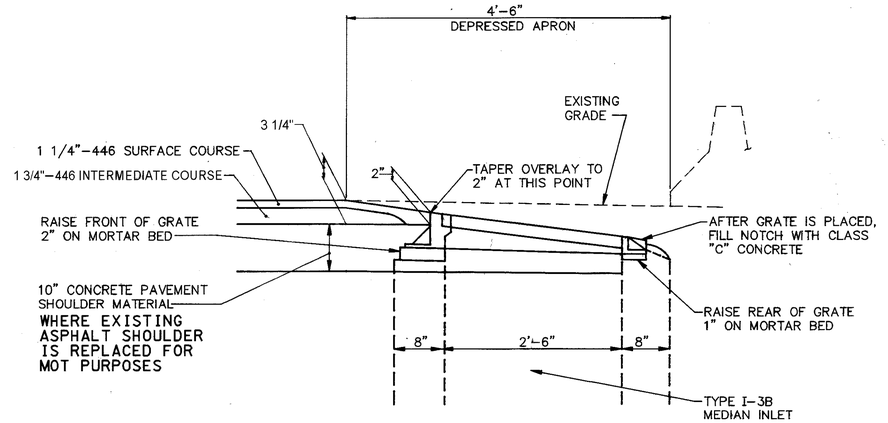

MEDIAN INLET, I-3B ADJUSTED TO GRADE AS PER PLAN (DETAIL C)

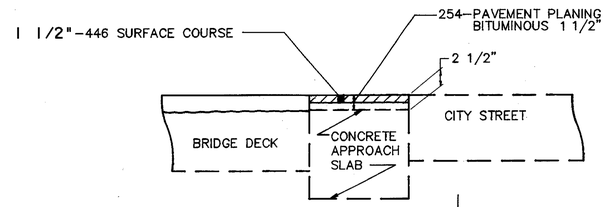

CITY STREET BRIDGE 2 1/2" EXISTING ASPHALT OVERLAY ON APPROACH SLAB (DETAIL E) (SEE BELOW FOR LOCATIONS)

CITY STREET BRIDGE	APPROACH SLAB 2 1/2" OVERLAY
CUY-90-1201 (CONNECTOR)	SOUTH
CUY-90-1237 (W. 73RD)	BOTH

PAVEMENT DETAILS

PLOTTED BY: jgrmovse
PLOTTED FROM: ...users$lmincekBpid5754B05754gac.dgn
05754GAC.DGN
PLOT SUBMITTED:02-DEC-1998 14:21

PLOT SUBMITTED:02-DEC-1998 14:07
05754gmc.dgn
PLOTTED BY:jgrmovse
PLOTTED FROM:c:\users\lmincek\pid05754\05754gmc.dgn

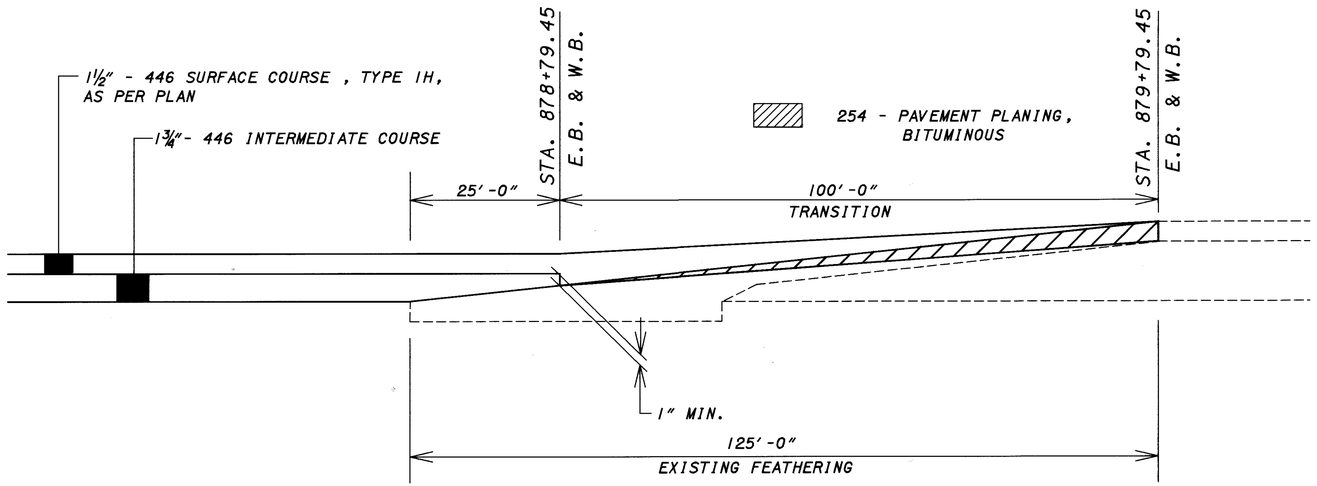

3¼" OVERLAY BUTT JOINT MEETING EXISTING PAVEMENT
WITH 5" OVERLAY (DETAIL F)

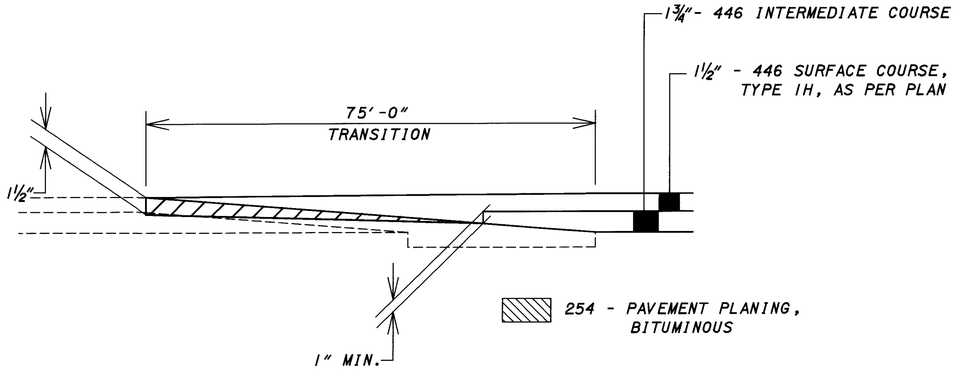

3¼" OVERLAY BUTT JOINT MEETING EXISTING PAVEMENT
WITH 3" OVERLAY (DETAIL H)

ROADWAY	STATION
SOUTH MARGINAL NO. 2	16+00±
SOUTH MARGINAL NO. 2	38+65±

* - STRAIGHT GRADE - THE ASPHALT TRANSITIONS SHALL BE CONSIDERED UNACCEPTABLE IF THE FINAL GRADE VARIES FROM THE DESIRED STRAIGHT GRADE BY GREATER THAN 3/8 INCHES ANYWHERE THROUGHOUT THE LENGTH OF THE TRANSITION. THIS TOLERANCE IS REDUCED TO 1/4 INCH FOR THE FIRST 5 FEET ADJACENT TO AN EXPANSION JOINT.

PAYMENT WILL BE HELD FOR 1 C.Y. OF ASPHALT PER FOOT OF PAVING WIDTH AT EACH TRANSITION LOCATION UNTIL THE TRANSITION IS SHOWN TO BE ACCEPTABLE. THE CONTRACTOR IS TO PROVIDE THE NECESSARY SURVEY WORK TO SHOW THAT THESE STRAIGHT GRADES ARE MET ALONG EACH EDGE LINE AND LANE LINE.

ALL UNACCEPTABLE ASPHALT TRANSITIONS SHALL BE REPAIRED AT THE CONTRACTORS EXPENSE. THE REPAIR METHOD SHALL BE AS FOLLOWS:

A. DETERMINE FINAL GRADE LINE BY EXTENDING A STRAIGHT LINE FROM THE TOP OF THE BRIDGE END DAM JOINT TO A POINT 75' AWAY ON THE TOP OF RESURFACING.

B. REMOVE ASPHALT CONCRETE EXACTLY 1" BELOW THE FINAL GRADE.

C. PLACE ITEM 407 - TACK COAT AND ITEM 446 - ASPHALT CONCRETE, TO DESIRED GRADE.

D. SURVEY TRANSITION TO VERIFY THAT THE REPAIR IS WITHIN THE ALLOWABLE TOLERANCE.

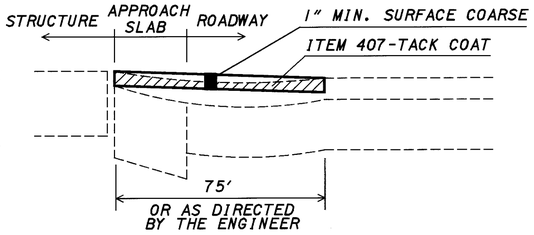

CORRECTION OF UNACCEPTABLE ASPHALT TRANSITIONS

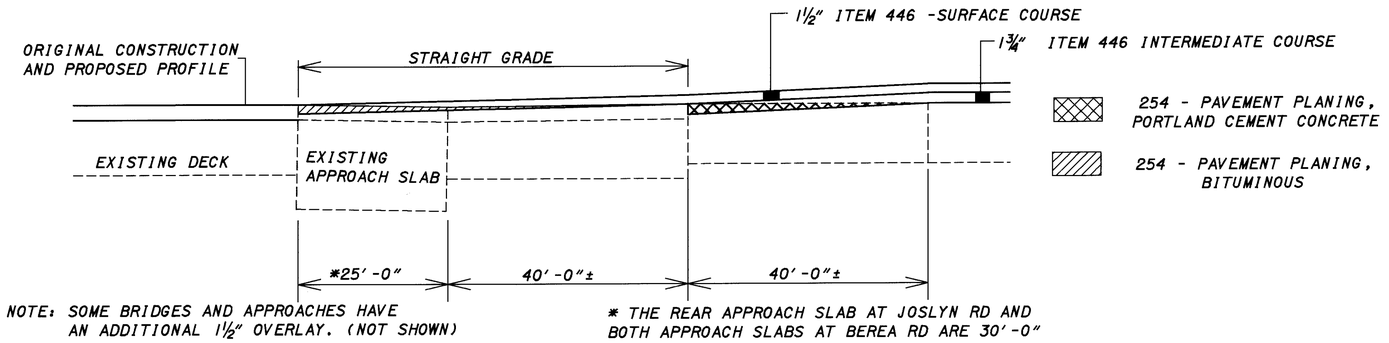

3-1/4" OVERLAY BUTT JOINT MEETING PROPOSED
MICROSILICA OVERLAY AT BRIDGES
PER STANDARD DRAWING BP-3.1 (DETAIL G)

RESURFACING DEDUCTION QUANTITIES (E.B.)

BRIDGE NO.	LOCATION (I-90 OVER)	APPROACH SLAB (LENGTH)	TOTAL LENGTH	END WIDTH	AREA	446 1¾" ASPHALT CONCRETE INTERMEDIATE COURSE, TYPE 2, PG64-28	407 TACK COAT FOR INTERMEDIATE COURSE
			LIN.FT.	LIN.FT.	SQ.YD.	CU.YD.	GALLON
CUY-90-0970	JOSLYN/RTA	REAR (30')	70	90.2-89.2	698	-34	-70
		FORWARD (25')	65	74.6-72.4	531	-26	-53
CUY-90-0991	BEREA RD.	REAR (30')	70	68	529	-26	-53
		FORWARD (30')	70	68	529	-26	-53
CUY-90-1132	WEST BLVD.	REAR (25')	65	68	491	-24	-49
		FORWARD (25')	65	68	491	-24	-49
CUY-90-1151	W.100TH ST.	REAR (25')	65	68	491	-24	-49
		FORWARD (25')	65	68	491	-24	-49
CUY-90-1157	W.98TH ST.	REAR (25')	65	68	491	-24	-49
		FORWARD (25')	65	68	491	-24	-49
CUY-90-1267	W.65TH ST.	REAR (25')	65	80	578	-28	-58
		FORWARD (25')	65	80	578	-28	-58
CUY-90-1309	W.53RD ST.	REAR (25')	65	80	578	-28	-58
		FORWARD (25')	65	80	578	-28	-58
TOTAL (CARRIED TO SHEET 50).						-368	-755

RESURFACING DEDUCTION QUANTITIES (W.B.)

BRIDGE NO.	LOCATION (I-90 OVER)	APPROACH SLAB (LENGTH)	TOTAL LENGTH	END WIDTH	AREA	446 1¾" ASPHALT CONCRETE INTERMEDIATE COURSE, TYPE 2, PG64-28	407 TACK COAT FOR INTERMEDIATE COURSE
			LIN.FT.	LIN.FT.	SQ.YD.	CU.YD.	GALLON
CUY-90-0970	JOSLYN/RTA	REAR (25')	65	82-81	589	-29	-59
		FORWARD (30')	70	68	529	-26	-53
CUY-90-0991	BEREA RD.	REAR (30')	70	68	529	-26	-53
		FORWARD (30')	70	68	529	-26	-53
CUY-90-1132	WEST BLVD.	REAR (25')	65	68	491	-24	-49
		FORWARD (25')	65	68	491	-24	-49
CUY-90-1151	W.100TH ST.	REAR (25')	65	68	491	-24	-49
		FORWARD (25')	65	68	491	-24	-49
CUY-90-1157	W.98TH ST.	REAR (25')	65	68	491	-24	-49
		FORWARD (25')	65	68	491	-24	-49
CUY-90-1309	W.53RD ST.	REAR (25')	65	90	650	-32	-65
		FORWARD (25')	65	90	650	-32	-65
TOTAL (CARRIED TO SHEET 50).						-315	-642

SAMPLE CALCULATION FOR PAVEMENT DUCTIONS:
TOTAL LENTH=APPROACH SLAB LENTGH+40 FEET
AREA=AVERAGE END WIDTH*TOTAL LENGHT/9
INTERMEDIATE COURSE DEDUCTION=[WIDTH*LENTGH*(THICKNESS/12)]/27
TACK COAT FOR INTERMEDIATE COURSE DEDUCTION=AREA*0.1

PLOTTED BY:jgrmovse
PLOTTED FROM:users@lmincek@pid5754@05754gmc.dgn
PLOT SUBMITTED:02-DEC-1998 14:06
05754gmc.dgn

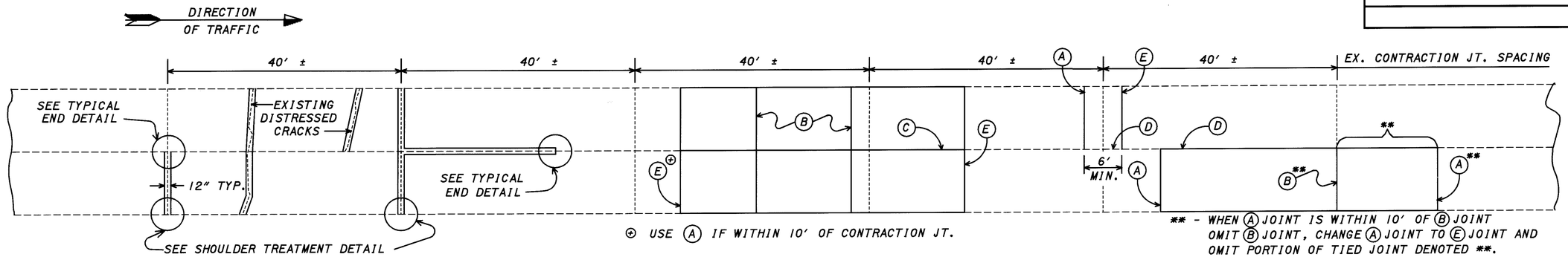

⊕ USE (A) IF WITHIN 10' OF CONTRACTION JT.

** - WHEN (A) JOINT IS WITHIN 10' OF (B) JOINT OMIT (B) JOINT, CHANGE (A) JOINT TO (E) JOINT AND OMIT PORTION OF TIED JOINT DENOTED **.

PARTIAL DEPTH JOINT OR CRACK REPAIR

TYPICAL TWO LANE REPLACEMENT

TYPICAL ONE LANE REPLACEMENT

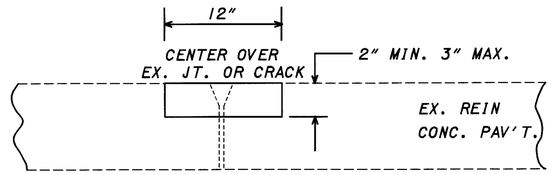

ITEM 251 - PARTIAL DEPTH PAV'T REPAIR

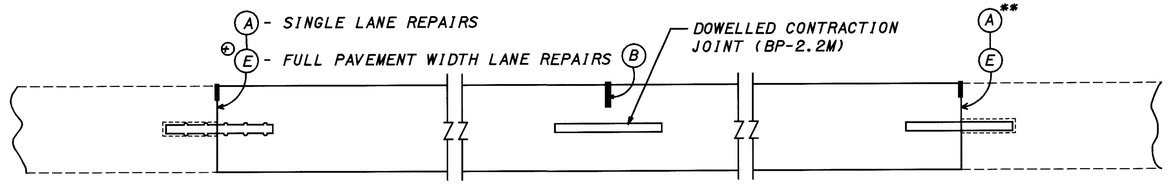

ITEM 255 - FULL DEPTH RIGID PAVEMENT REMOVAL AND RIGID REPLACEMENT

SEE GENERAL NOTES ON SHEET 17 FOR ADDITIONAL INFORMATION.

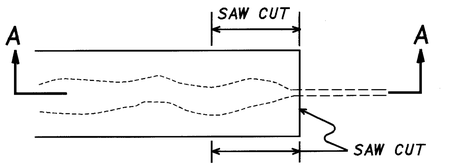

DISTRESSED JOINT-PLAN VIEW

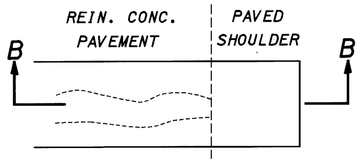

DISTRESSED JOINT-PLAN VIEW

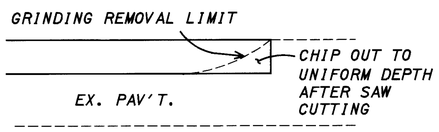

SECTION A-A

TYPICAL END DETAIL

NO SEPARATE PAYMENT WILL BE MADE FOR THESE SAW CUTS

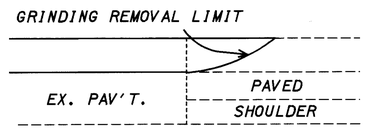

SECTION B-B

SHOULDER TREATMENT DETAIL

MEASURED QUANTITY SHALL NOT INCLUDE THE PAVED SHOULDER AREA

SEE GENERAL NOTES ON SHEET NO. 17 FOR ADDITIONAL INFORMATION.

ESTIMATED QUANTITY *
ITEM 251 - PARTIAL DEPTH PAVEMENT REPAIR, AS PER PLAN 800 SQ.YDS.

ESTIMATED QUANTITIES *		
ITEM 255	FULL DEPTH PAVEMENT REMOVAL AND RIGID REPLACEMENT, CLASS C AS PER PLAN A	400 SQ.YDS.
ITEM 255	FULL DEPTH PAVEMENT REMOVAL AND RIGID REPLACEMENT, CLASS C AS PER PLAN B	1900 SQ.YDS.
ITEM 255	FULL DEPTH PAVEMENT REMOVAL AND RIGID REPLACEMENT, CLASS MS AS PER PLAN A	400 SQ.YDS.
ITEM 255	FULL DEPTH PAVEMENT REMOVAL AND RIGID REPLACEMENT, CLASS MS AS PER PLAN B	1900 SQ.YDS.
ITEM 255	FULL DEPTH PAVEMENT SAWING	10700 LIN.FT.
ITEM 203	EXCAVATION NOT INCLUDING EMBANKMENT CONSTRUCTION	30 CU.YDS.
ITEM 304	AGGREGATE BASE, AS PER PLAN	30 CU.YDS.

LEGEND

(A) TYPE T TIED REPAIR JOINT, AS PER BP-2.5M

(B) SAWED AND DOWELED CONTRACTION JOINT AS PER BP-2.2M MAX. SPACING 20' C/C FOR FULL PAVEMENT WIDTH LANE REPAIRS

(C) LONGITUDINAL BUTT JOINT AS PER BP-2.1M

(D) LONGITUDINAL JOINTS AS PER BP-2.1M FOR PATCHES 10' OR GREATER IN LENGTH

(E) TYPE Y DOWELED REPAIR JOINTS, AS PER BP-2.5M

* QUANTITY ESTIMATES ARE BASED ON VISUAL INSPECTION. AN ADDITIONAL 25% WAS ADDED TO THE REPAIR AREA TO COMPENSATE FOR ANY ROADWAY DETERIORATION THAT MAY OCCUR BETWEEN THE TIME OF PLAN PREPARATION AND ACTUAL CONSTRUCTION.

VISUAL SURVEY DATE - 9-16-98

EXISTING PORTLAND CEMENT CONCRETE SURFACE AREA = 300,000± SQ.YDS.

PLOTTED BY:jgrmovse
PLOTTED FROM:C:\Users\climincek\pid05754\d05754gmb.dgn
PLOT SUBMITTED:02-DEC-1998 14:05
05754GMB.DGN

PLOTTED BY: igrmovse
PLOTTED FROM: c:\users\lmincek\pid05754\05754grk.dgn
PLOT SUBMITTED:02-DEC-1998 14:03
05754GRK.DGN

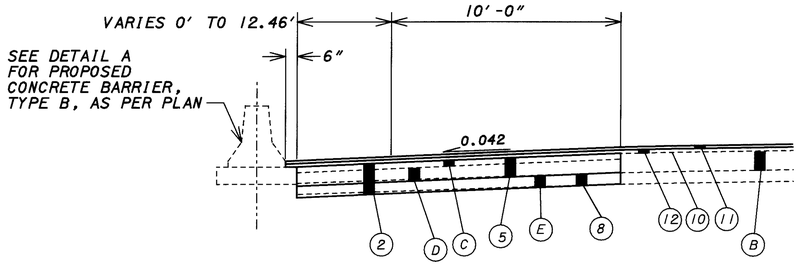

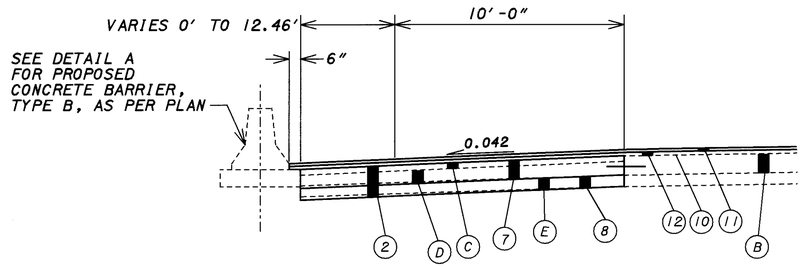

SECTION A-A

MEDIAN BARRIER MAINTENANCE OPENING
ADJACENT TO PROPOSED CONCRETE SHOULDER

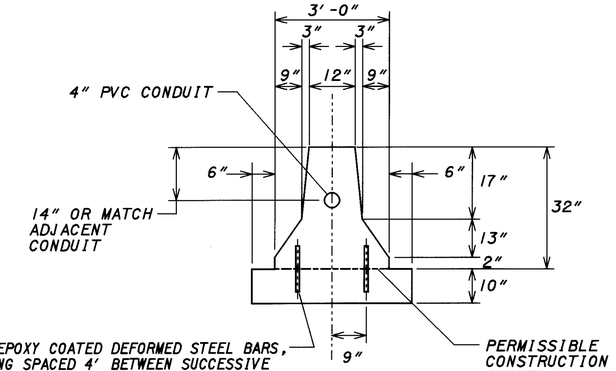

DETAIL A

CONCRETE BARRIER,
TYPE B, AS PER PLAN

MEDIAN BARRIER MAINTENANCE OPENING QUANTITIES

LOCATION	PLAN SHEET NUMBER	STATUS	202 CONCRETE BARRIER REMOVED L. F.	203 EXCAVATION NOT INCLUDING EMBANKMENT CONSTRUCTION C. Y.	301 BITUMINOUS AGGREGATE BASE, P664-22 C. Y.	304 AGGREGATE BASE, AS PER PLAN C. Y.	305 10" CONCRETE BASE, AS PER PLAN S. Y.	407 TACK COAT (0.10 GAL./S. Y.) GAL.	407 TACK COAT, FOR INTERMEDIATE COURSE (0.05 GAL./S. Y.) GAL.	446 1-3/4" ASPHALT CONCRETE INTERMEDIATE COURSE, TYPE 2, P664-28 C. Y.	446 1-1/2" ASPHALT CONCRETE SURFACE COURSE, TYPE 1H, AS PER PLAN C. Y.	622 CONCRETE BARRIER, TYPE B, AS PER PLAN L. F.	625 CONNECTOR KIT, TYPE V11 A EACH	625 NO. 4 AWG 5000 VOLT DISTRIBUTION CABLE L. F.	625 CONDUIT, 3", 713.04 L. F.	625 TRENCH, 24" DEEP L. F.	625 JUNCTION BOX EACH	625 GROUND ROD EACH
645+00, WB & EB	67	NEW	120	20	12.8	7.7			2.3	2.2	1.9	120						
670+59, WB & EB	69	NEW	120	20		7.7	46	4.6	2.3	2.2	1.9	120						
694+50, EB	71	EXIST		10		3.8	23	2.3	1.1	1.1	1.0							
699+00, WB & EB	72	EXIST		20		7.7	46	4.6	2.3	2.2	1.9							
729+50, WB & EB	74	NEW	120	20	12.8	7.7			2.3	2.2	1.9	120	4	1840	110	102	4	4
745+00, WB & EB	75	NEW	120	20	12.8	7.7			2.3	2.2	1.9	120	4	2000	110	102	4	4
755+00, WB & EB	76	EXIST		20	12.8	7.7			2.3	2.2	1.9							
762+94, WB & EB	76	NEW	120	20		7.7	46	4.6	2.3	2.2	1.9	120	4	2040	110	102	4	4
773+00, WB	77	EXIST		10		3.8	23	2.3	1.1	1.1	1.0							
782+00, WB	78	EXIST		10		3.8	23	2.3	1.1	1.1	1.0							
792+00, WB & EB	79	EXIST		20		7.7	46	4.6	2.3	2.2	1.9							
TOTALS TO GENERAL SUMMARY			600	190	51.2	73	253	25.3	21.7	20.9	18.2	600	12	5880	330	306	12	12
					51			25	22	21	18							

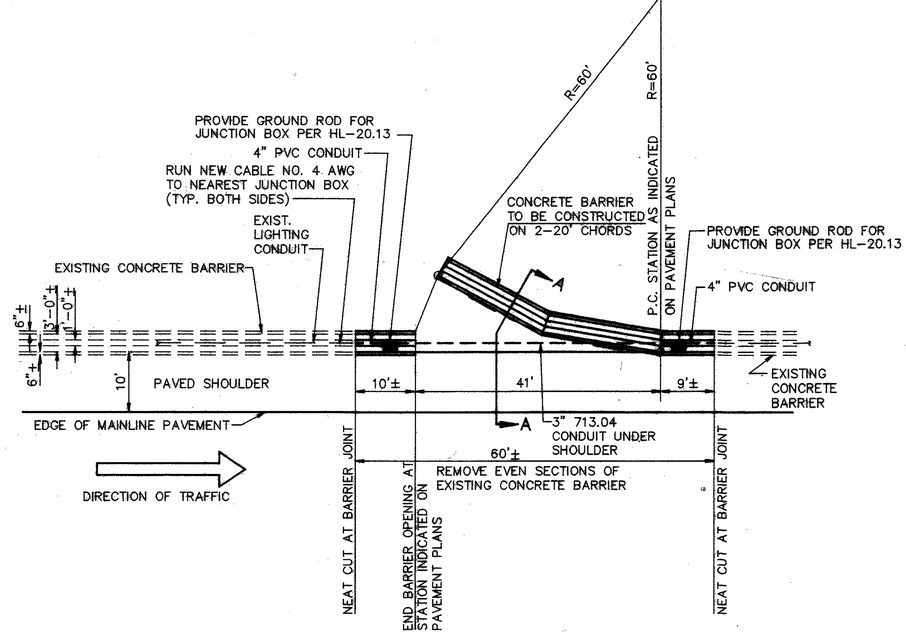

PLAN AT NEW MAINTENANCE OPENING

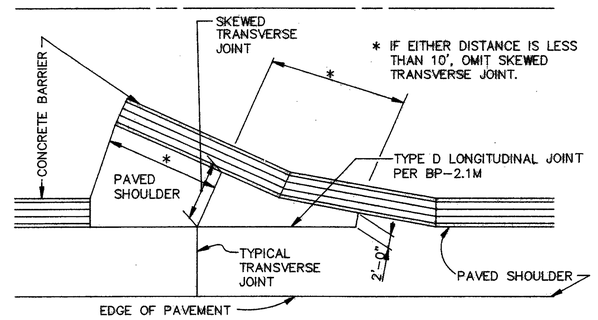

CONCRETE JOINT PLAN AT MAINTENANCE OPENINGS
(ABUTTING PROPOSED CONCRETE SHOULDER)

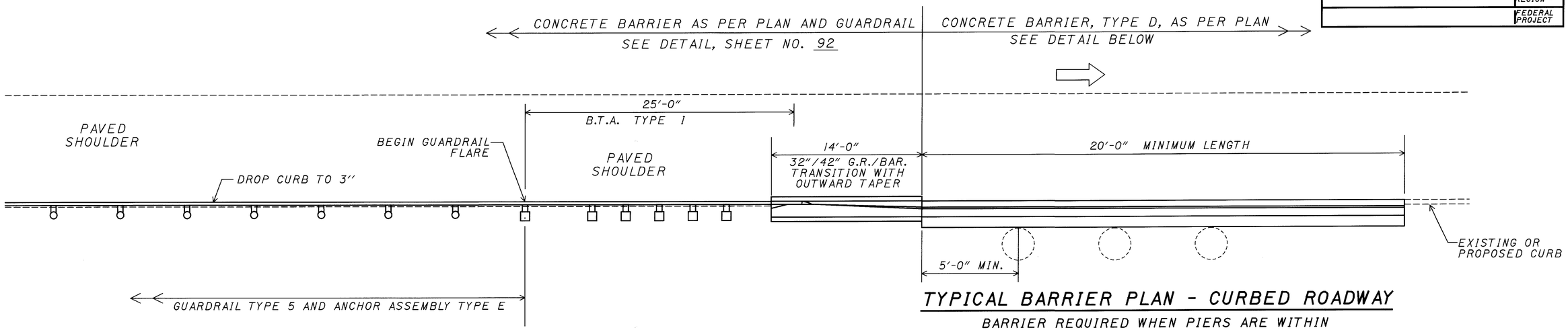

TYPICAL BARRIER PLAN - CURBED ROADWAY

BARRIER REQUIRED WHEN PIERS ARE WITHIN 2'-9" OF NORMAL GUARDRAIL OFFSET

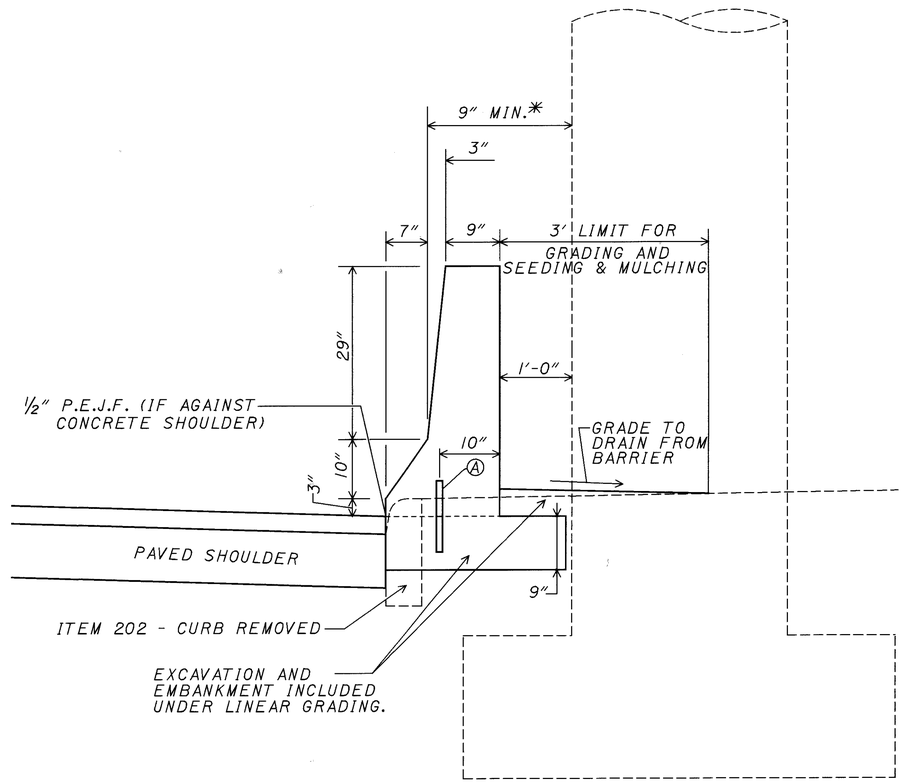

* - IF PIER IS CLOSER THAN 12 1/2 INCHES TO NORMAL GUARDRAIL OFFSET THEN REDUCE BARRIER TOP WIDTH AT PIER ONLY AND PLACE 1/2 " P.E.J.F. (705.03) BETWEEN PIER AND BARRIER. TREAT CONCRETE BASE SIMILARLY.

Ⓐ - No. 8 DEFORMED STEEL BARS, 12" LONG, SPACED ON 2' CENTERS

TYPICAL BARRIER SECTION - CURBED ROADWAY

ITEM 622 - CONCRETE BARRIER, TYPE D, AS PER PLAN

BARRIER PROTECTION OF PIERS - TRANSITION WITH TAPERED TOP, CURBED

PLOTTED BY: jgrmovse
PLOTTED FROM: ...Bpid5754B05754gre.dgn
PLOT SUBMITTED: 02-DEC-1998 13:51
05754GRE.DGN

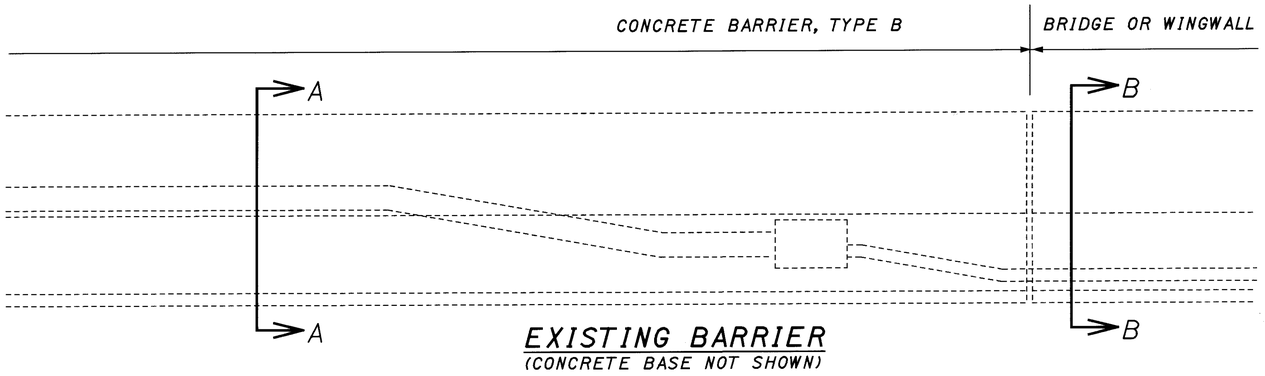

EXISTING BARRIER
(CONCRETE BASE NOT SHOWN)

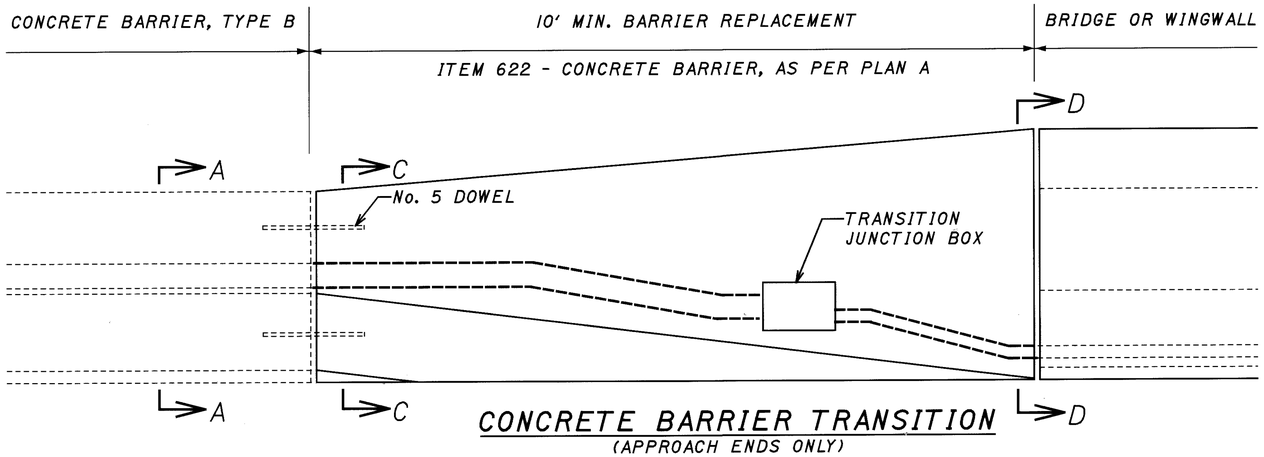

CONCRETE BARRIER TRANSITION
(APPROACH ENDS ONLY)

CONCRETE BARRIER TRANSITION SECTION AT BRIDGES

THE MAINLINE STRUCTURES WHICH HAVE MEDIAN BARRIER REFACING WILL ALL REQUIRE A TEN FOOT MINIMUM TRANSITION SECTION TO BE CONSTRUCTED ON THE APPROACH ENDS ONLY. FOR DIMENSIONS SEE DETAILS ABOVE . REMOVAL SHALL REQUIRE A 6 INCH MINIMUM DEEP SAW CUT AROUND THE PERIMETER OF THE EXISTING TYPE B BARRIER. REMOVAL LIMITS SHALL BE AS DIRECTED BY THE ENGINEER TO AN EXISTING JOINT IF WITHIN 5 ADDITIONAL FEET OR TO REPLACE ADJACENT DAMAGED BARRIER. THE CONCRETE BASE SHALL BE REUSED FOR THE NEW BARRIER , HOWEVER , IF THE CONTRACTOR DESIRES OR DAMAGES THE BASE HE SHALL REPLACE THE BASE AT HIS COST. CARE SHALL BE TAKEN DURING REMOVAL TO NOT DAMAGE THE CONDUITS ADJACENT TO THE REMOVAL AREA.

THE TRANSITION BARRIER SECTION SHALL BE DOWELED INTO THE EXISTING TYPE BARRIER USING TWO 18 INCH LONG No. 5 BARS. No. 8 BARS AS PER RM-4.3M SHALL BE ADDED TO THE BASE IF EXISTING BARS ARE MISSING OR DAMAGED.

ALL EXISTING CONDUITS SHALL BE REPLACED IN SIZE AND TYPE, THE COST OF WHICH SHALL BE INCLUDED UNDER ITEM 622. A NEW TRANSITION JUNCTION BOX (HL-30.33) SHALL BE INSTALLED AT A LOCATION SIMILAR TO THE EXISTING. WIRING SHALL BE REPLACED TO THE NEAREST MEDIAN PULLBOX OR JUNCTION BOX. TWO TYPE V CONNECTOR KITS ARE INCLUDED FOR USE AT EACH STRUCTURE JUNCTION BOX (UNLESS THE NEXT CONNECTION POINT IS WITHIN 50 FT.) AND TWO TYPE VIIB CONNECTOR KITS ARE INCLUDED FOR USE AT EACH MEDIAN PULLBOX. WIRING SHALL MATCH THE EXISTING SIZE AWG WIRE AND SHALL BE 5000 VOLT CABLES.

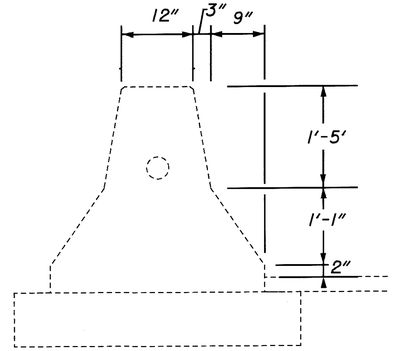

SECTION A-A

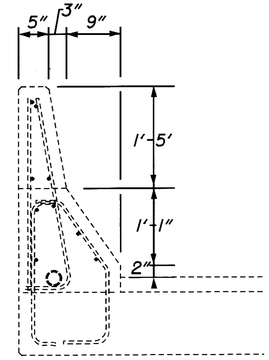

SECTION B-B

NOTE: NUMBER OF CONDUITS, SIZE OF CONDUITS AND LOCATION OF CONDUITS UNKNOWN.

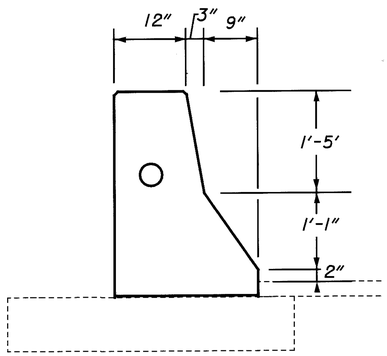

SECTION C-C

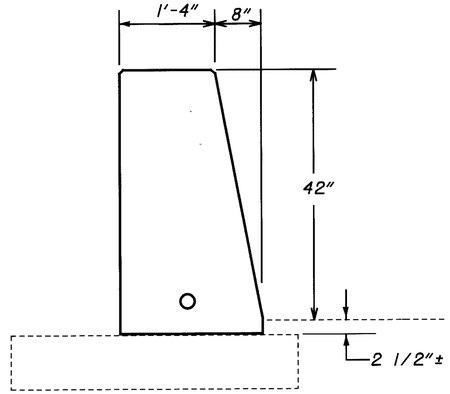

SECTION D-D

ESTIMATED QUATITIES

LOCATION - BR. NO. CUY-90-	0947L	0970L	0970R	0991L	0991R	1132L	1132R	1151L	1151R	1157L	1157R	TOTAL	UNITS
ITEM 202 - CONCRETE BARRIER REMOVED	10	10	10	10	10	10	10	10	10	10	10	110	L.F.
ITEM 622 - CONCRETE BARRIER, AS PER PLAN A	10	10	10	10	10	10	10	10	10	10	10	110	L.F.
ITEM 625 - TRANSITION JUNCTION BOX		1	1	1	1	1	1			1		7	EACH
ITEM 625 - NO. 4 AWG, 5000 VOLT DISTRIBUTION CABLE		684		734	288	462	462			936		2950	L.F.
ITEM 625 - CONNECTOR KIT, TYPE V		2		4	2	2	2			4		16	EACH
ITEM 625 - CONNECTOR KIT, TYPE VIIB		2		2	2	2	2			2		12	EACH

MISC. DETAILS

PLOT SUBMITTED: 02-DEC-1998 13:49
05754gra.dgn
PLOTTED BY: jgrmovse
PLOTTED FROM: \users\lmincek\pid5754\05754gra.dgn

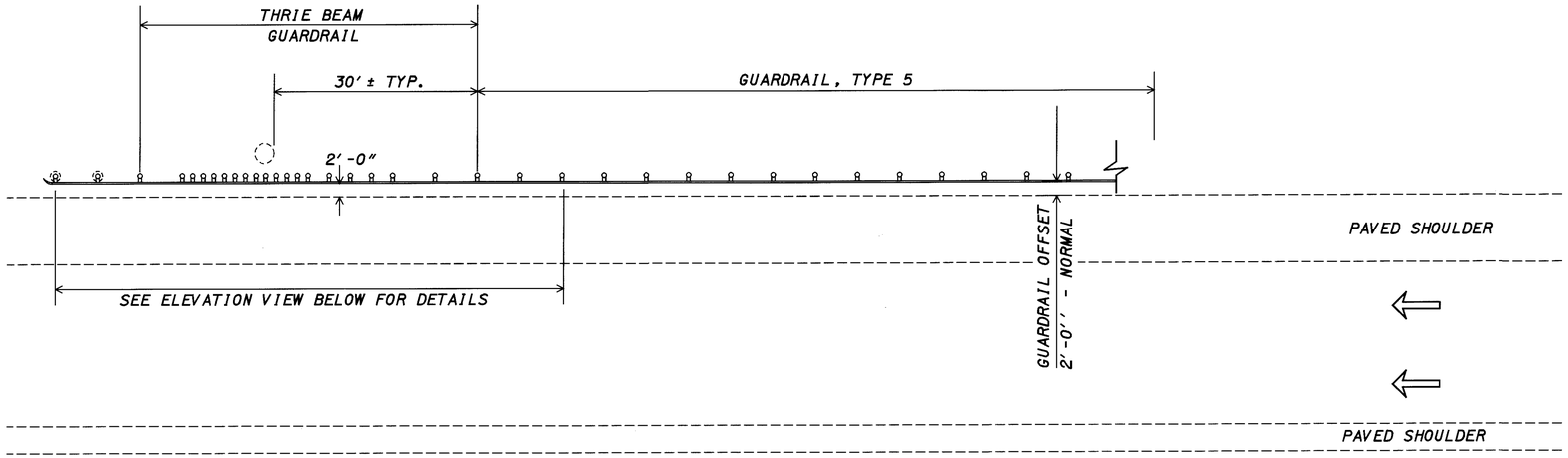

THRIE BEAM GUARDRAIL PROTECTION FOR OVERHEAD SIGN SUPPORTS

REQUIRED WHEN FACE OF HAZARD IS BETWEEN 3'-6" AND 2'-9" OF FACE OF GUARDRAIL

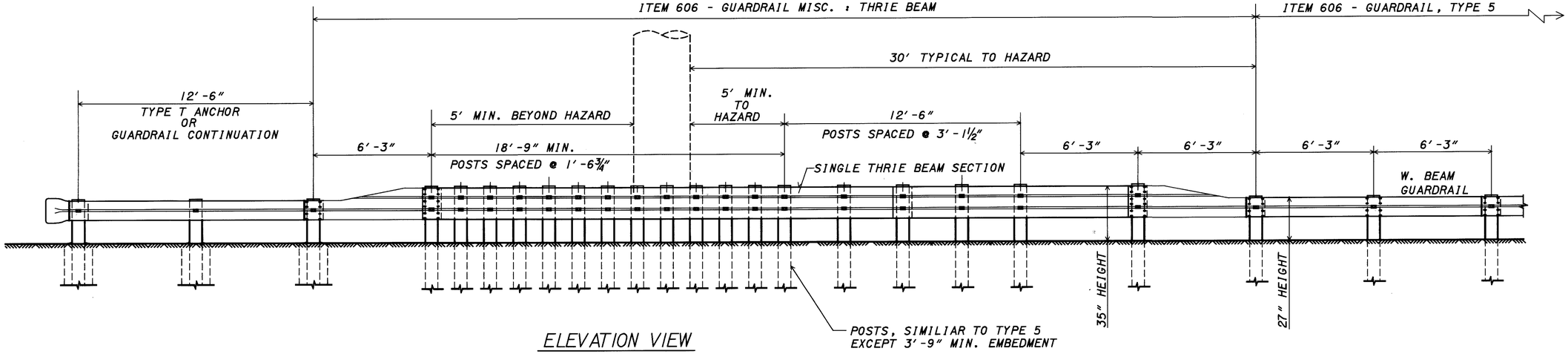

ELEVATION VIEW

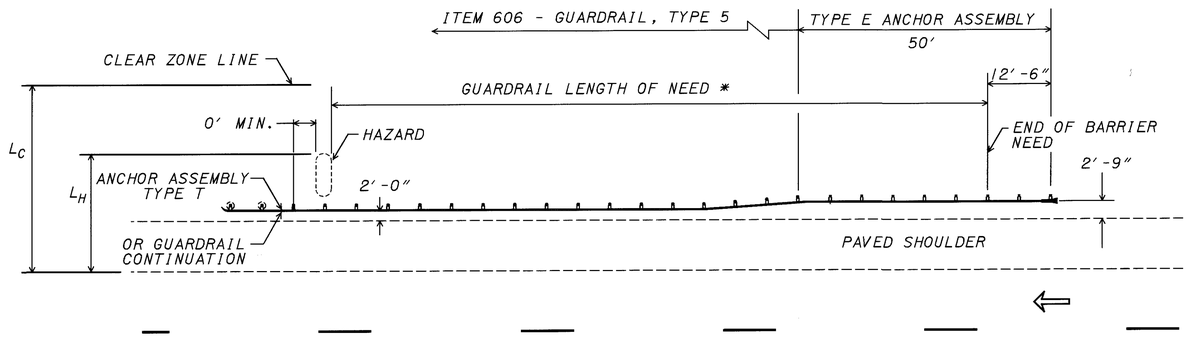

* - THIS DISTANCE IS DETERMINED FROM DESIGN CHARTS AND TABULATED IN THE PLANS FOR INFORMATION

TYPICAL GUARDRAIL PROTECTION OF HAZARDS

DETAILS - BARRIER PROTECTION OF OVERHEAD SIGN SUPPORT

PLOTTED BY: jgrmovse
PLOTTED FROM: Ne users Blmincek Bpid5754B05754grj.dgn
05754GRJ.DGN
PLOT SUBMITTED:02-DEC-1998 13:48

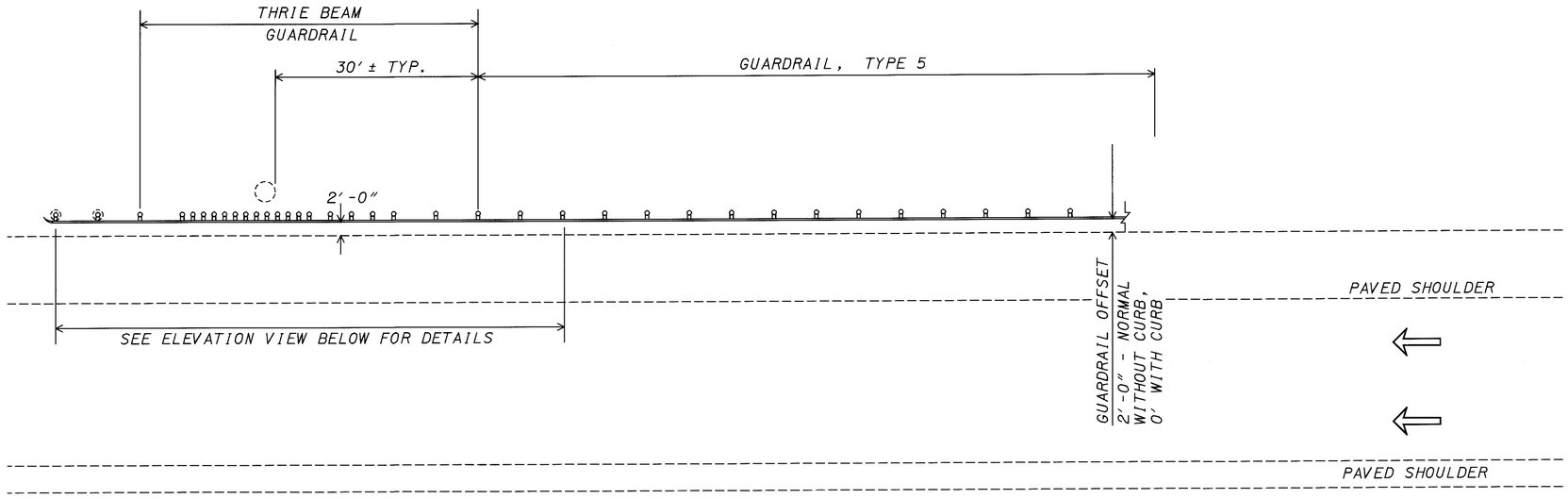

THRIE BEAM GUARDRAIL PROTECTION FOR OVERHEAD SIGN SUPPORTS OR PIERS

REQUIRED WHEN FACE OF HAZARD IS BETWEEN 3'-6" AND 2'-9" OF NORMAL GUARDRAIL OFFSET

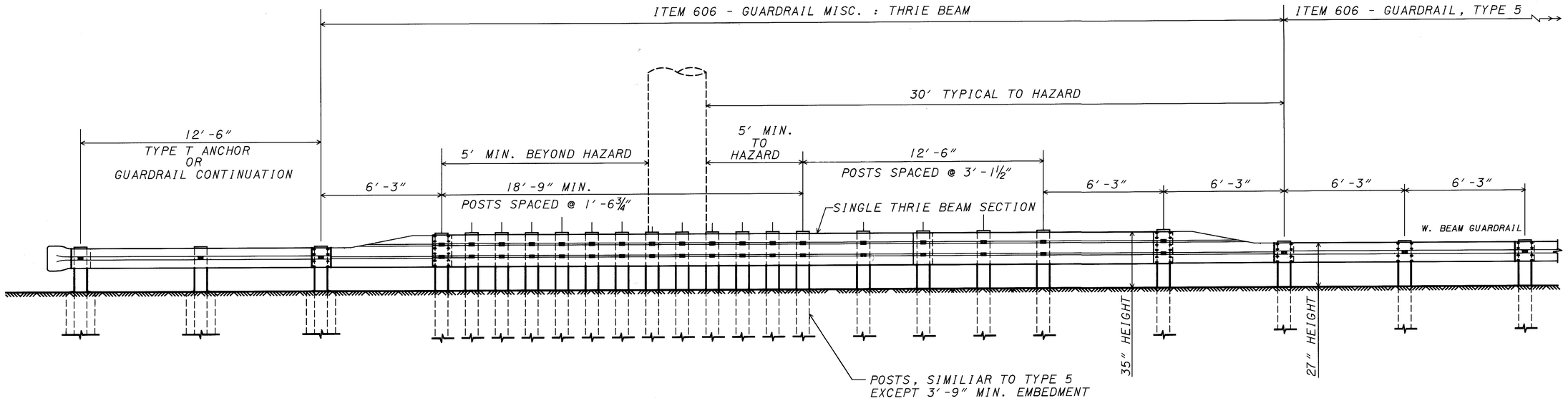

ELEVATION VIEW

THRIE BEAM GUARDRAIL PROTECTION FOR OVERHEAD SIGN SUPPORTS OR PIERS

PLOTTED BY: jgrmovse
PLOTTED FROM: ...
PLOT SUBMITTED: 02-DEC-1998 13:47
05754GRG.DGN
...pid5754B05754grg.dgn

CUYAHOGA COUNTY
CUY-90-9.68
OHIO
FHWA REGION 5
FEDERAL PROJECT
92
220

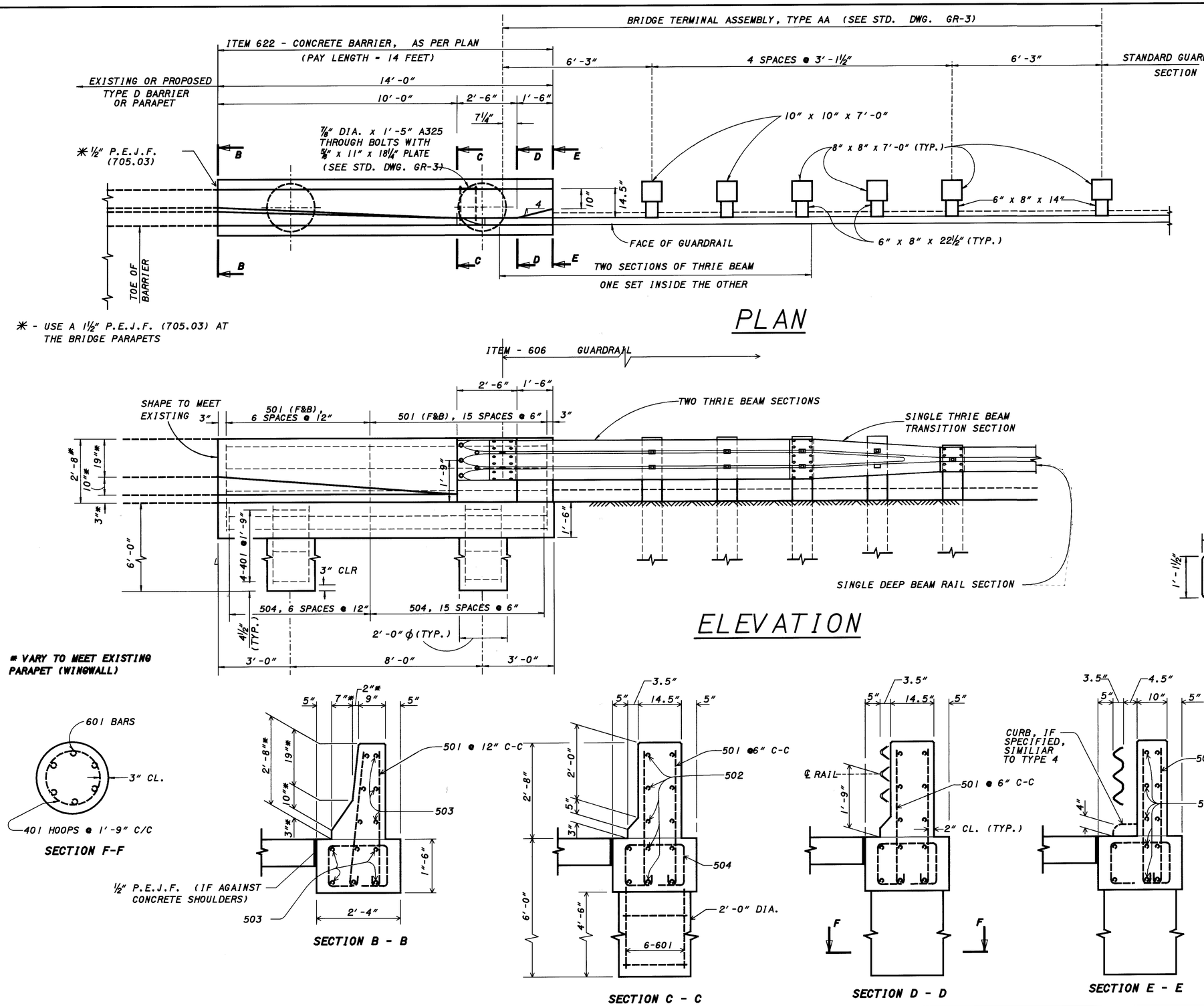

GENERAL NOTES

DESIGN DATA: CONCRETE SHALL BE CLASS C, REINFORCING STEEL SHALL BE GRADE 60

ALL COSTS FOR EXCAVATION AND EMBANKMENT SHALL BE PAID FOR SEPARATELY UNDER LINEAR GRADING.

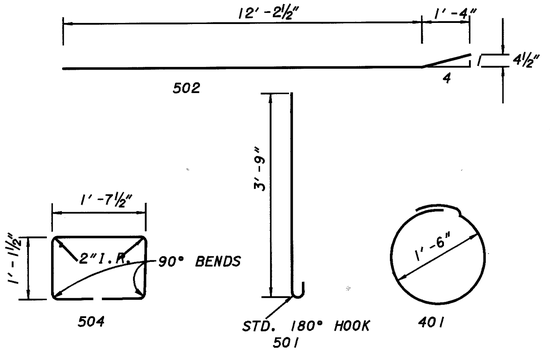

BENDING DIAGRAMS

REINFORCING BAR LIST

MARK	NO.	LENGTH	TYPE
401	8	6'-0"	BT.
501	44	4'-4"	BT.
502	5	13'-7"	BT.
503	7	13'-7"	STR.
504	22	5'-0½"	BT.
601	12	5'-6"	STR.

ALL REINFORCING BARS SHALL BE EPOXY COATED

STATE OF OHIO
DEPARTMENT OF TRANSPORTATION
DISTRICT 12 LOCATION & DESIGN

32"/32" GUARDRAIL/BARRIER TRANSITION WITH TAPERED TOP (WITH OR WITHOUT CURBS)

OHIO

DESIGNED	TRACED	CHECKED	REVIEWED	REVISED
DATE	DATE	DATE	DATE	SHEET 1

PLOT SUBMITTED:02-DEC-1998 13:59
05754GRD.DGN
PLOTTED BY: jgrmovse
PLOTTED FROM: users@lmincek@pid5754@05754grd.dgn

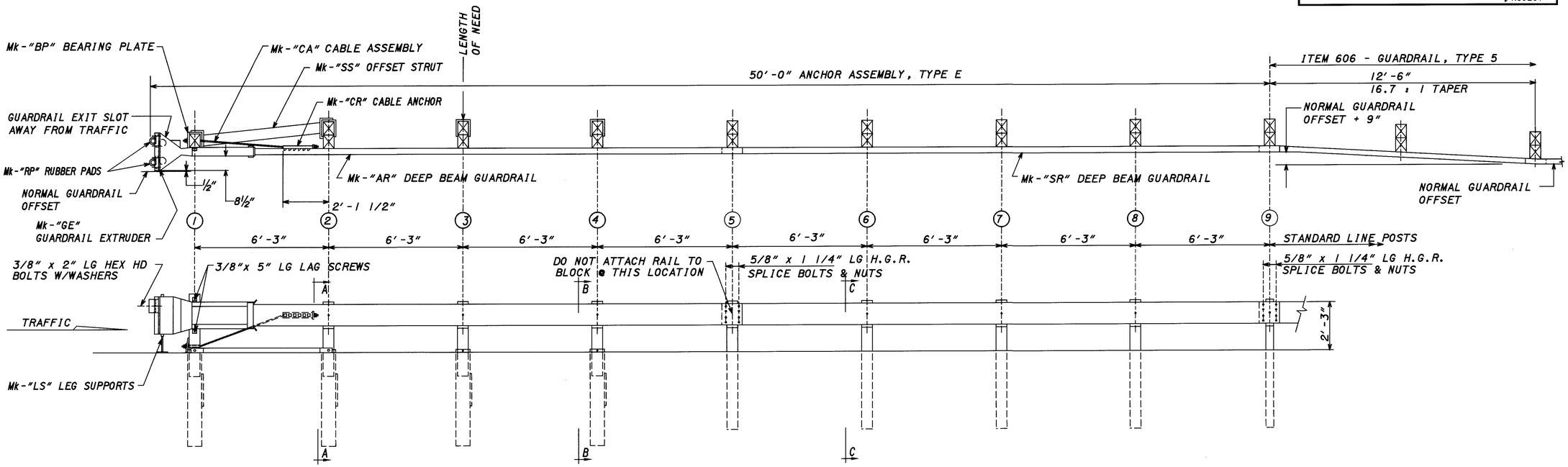

NOTES:

1.) THE 5/8" FLAT WASHER IS USED UNDER THE NUT, BEHIND THE POST ONLY. NO WASHER IS USED AT THE RAIL.

2.) THE BREAKAWAY POSTS @ LOCATIONS #5, 6, 7 & 8 MAY BE AS SHOWN OR MAY UTILIZE POSTS AS SHOWN WITH FOUNDATION TUBES. POSTS @ LOCATIONS #1,2,3 & 4 MUST USE FOUNDATION TUBES.

3.) TYPE E WAS TESTED ON FLAT & LEVEL TERRAIN. IT IS NOT RECOMMENDED ON SLOPES.

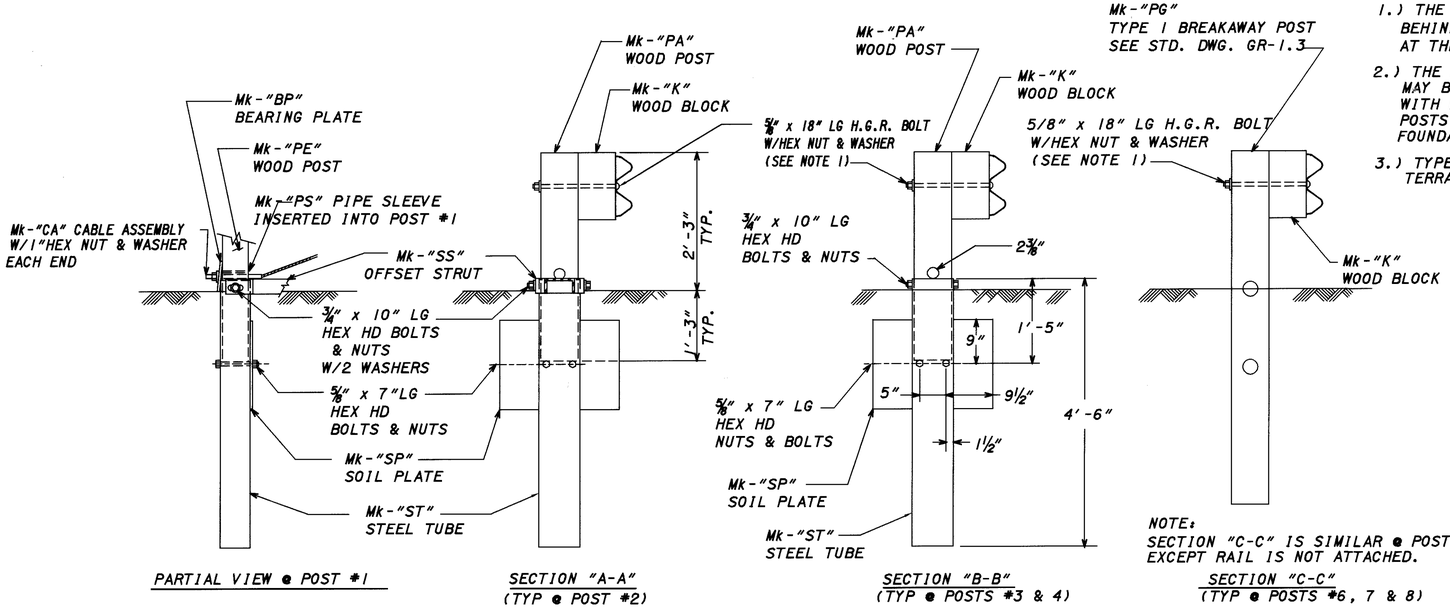

PARTIAL VIEW @ POST #1

SECTION "A-A" (TYP @ POST #2)

SECTION "B-B" (TYP @ POSTS #3 & 4)

NOTE:
SECTION "C-C" IS SIMILAR @ POST #5 EXCEPT RAIL IS NOT ATTACHED.

SECTION "C-C" (TYP @ POSTS #6, 7 & 8)

THIS DETAIL IS SHOWN FOR ILLUSTRATIVE PURPOSES ONLY.

THE EXACT REQUIREMENTS SHALL BE IN ACCORDANCE WITH THE MANUFACTURERS RECOMMENDATIONS AND SPECIFICATIONS

TYPE E ANCHOR ASSEMBLY PLAN, ELEVATION & SECTIONS, OPTION "B"

PLOTTED BY: jgrmovse
PLOTTED FROM: ...users@lmincek@pid5754@05754grh.dgn
PLOT SUBMITTED: 02-DEC-1998 13:46
05754GRH.DGN

CUYAHOGA COUNTY
CUY-90-9.68
OHIO
FHWA REGION 5
FEDERAL PROJECT
93A
220

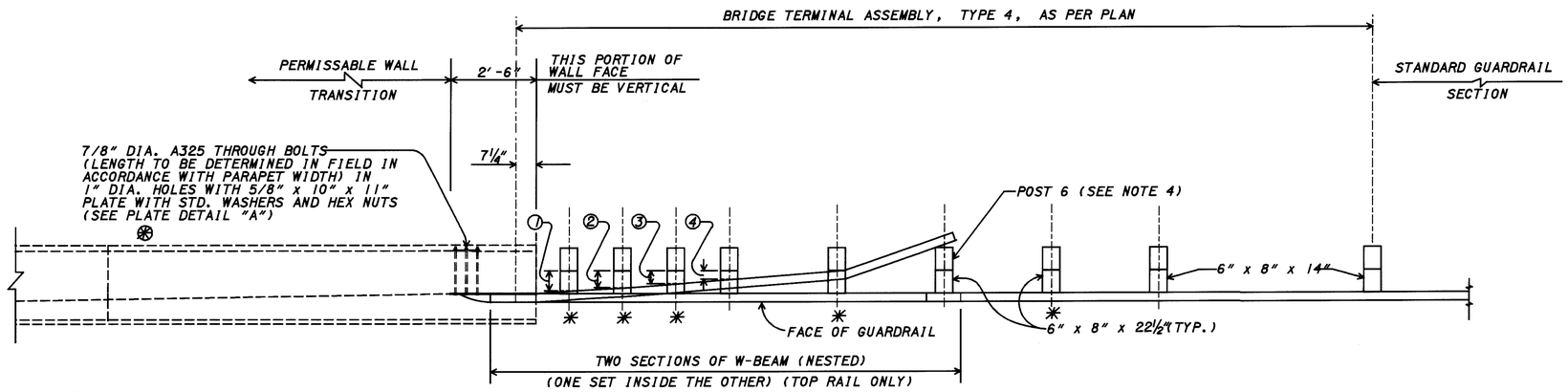

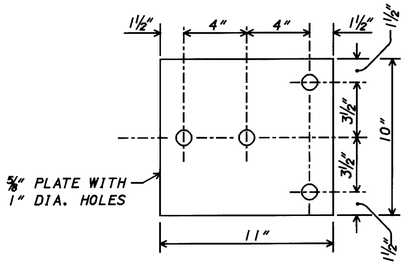

PLATE DETAIL "A"

PLAN

⊛-FOR ATTACHMENT TO ABUTMENT WALLS, THIS ITEM REQUIRES THE USE OF POLYESTER RESIN ANCHORS WITH FEMALE THREADED INSERTS (10" LONG) TO ACCEPT 7/8" DIAMETER BOLTS. (PLATE DETAIL NOT REQUIRED)

✳ GUARDRAIL NOT ATTACHED TO POSTS. BLOCKOUT FASTENED TO POST WITH STD. POST BOLT.

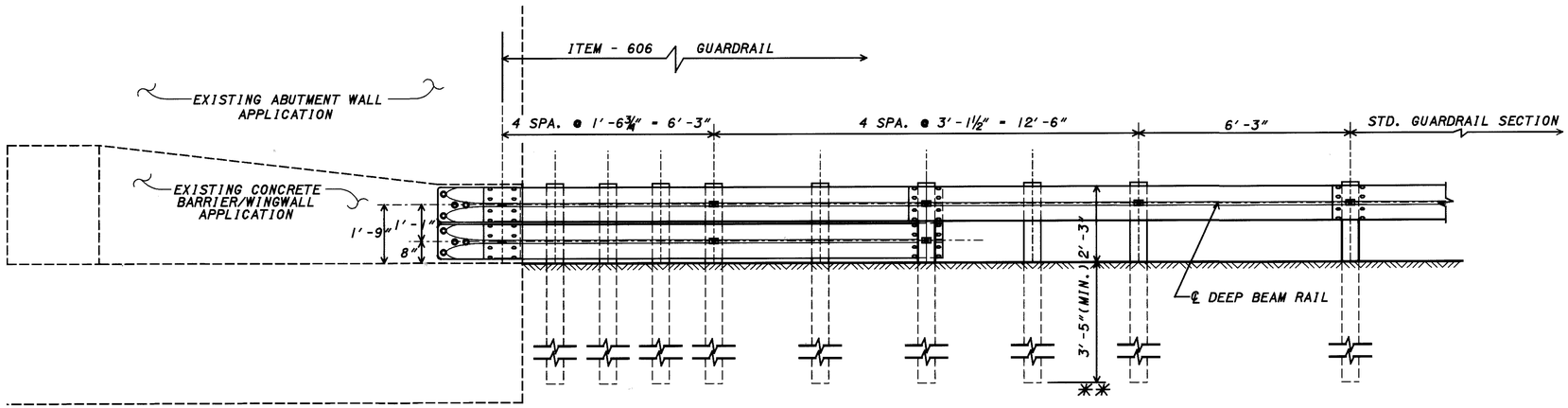

ELEVATION

✳✳SEE STD. CONSTRUCTION DRAWING GR-1.2 FOR ADDITIONAL POST EMBEDMENT DETAILS.

THIS DETAIL MODIFIES A BRIDGE TERMINAL ASSEMBLY, TYPE 4 FOR CONNECTION TO A VERTICAL WALL.
ALL DIMENSIONS AND DETAILS SHOWN ARE IN AGREEMENT WITH THE APPROVED CRASHWORTHY GUARDRAIL TRANSITION FOUND IN "FHWA TECHNICAL ADVISORY T 5040.26" AND THE "ROADSIDE DESIGN GUIDE"

GENERAL NOTES

1. THIS GUARDRAIL TRANSITION IS APPROPRIATE FOR CONNECTION TO A VERTICAL CONCRETE SHAPE AND AND SHOULD NOT BE CONNECTED DIRECTLY TO A CONCRETE SAFETY SHAPE. CONCRETE SAFETY SHAPE BARRIERS SHOULD BE TRANSITIONED TO A VERTICAL SHAPE AT THE GUARDRAIL CONNECTION.
2. THE RUBRAIL MAY BE SHOP BENT IN THE LAST 3 FEET TO FACILITATE INSTALLATION.
3. BOTTOM WOOD BLOCKS, LOCATED ON POSTS 1,2,3, AND 4 ARE CENTER DRILLED AND SECURED WITH 5/8" CARRIAGE BOLTS.
4. POSTS 1,2,3,4, AND 6 REQUIRE AN ADDITIONAL HOLE TO ATTACH LOWER BLOCKS AND/OR LOWER BEAM.
5. SEE STANDARD CONSTRUCTION DRAWINGS GR-1.2M AND GR-3.4M FOR ADDITIONAL DETAILS.

BLOCKOUT CHART
BOTTOM BEAM WOOD BLOCKS
1'-2" X 6"

POST	THICKNESS
①	7"
②	6"
③	4.5"
④	3"

STATE OF OHIO
DEPARTMENT OF TRANSPORTATION
DISTRICT 12 LOCATION & DESIGN

BRIDGE TERMINAL ASSEMBLY, TYPE 4, AS PER PLAN

OHIO

DESIGNED	TRACED	CHECKED	REVIEWED	REVISED
DATE	DATE	DATE	DATE	SHEET 1

BRIDGE TERMINAL ASSEMBLY, TYPE 4, AS PER PLAN

PLOT SUBMITTED:02-DEC-1998 13:45
05754GRF.DGN
PLOTTED BY:jgrmovse
PLOTTED FROM:Users@lmincek@pid5754@05754grf.dgn

PLOT SUBMITTED:02-DEC-1998 13:44
05754GRB.DGN
PLOTTED BY:jgrmovse
PLOTTED FROM:users@lmincek@pid5754@05754grb.dgn

ITEM 606, ANCHOR ASSEMBLY, TYPE E-98:

THIS ITEM SHALL CONSIST OF FURNISHING AND INSTALLING EITHER OF THE FOLLOWING GUARDRAIL END TERMINALS.

1) THE ET-2000 (1997) MANUFACTURED BY SYRO, INC., 1170 N. STATE STREET, GIRARD, OHIO 44420 (TELEPHONE:330.545.4373).

THE LENGTH OF THE ET-2000 (1997) SYSTEM IS CONSIDERED TO BE 50 FT, INCLUSIVE OF TWO 25 FT LONG RAIL ELEMENTS. INSTALLATION SHALL BE AT THE LOCATIONS SPECIFIED IN THE PLANS, IN ACCORDANCE WITH THE MANUFACTURER'S SPECIFICATIONS AS DETAILED ON THE FOLLOWING PRE-APPROVED SHOP DRAWINGS:

DWG. #	DRAWING NAME	DWG./REV. DATE	ODOT APPROVAL DATE
SS265M	ET-2000 (1997) PLAN, ELEVATION & SECTIONS	6/20/97	3/6/98

2) THE SKT-350 MANUFACTURED BY ROAD SYSTEMS, INC., 7631 NEW CASTLE DRIVE, FRANKFORT, IL 60423 (TELEPHONE: 815.464.5917).

THE LENGTH OF THE SKT-350 SYSTEM IS CONSIDERED TO BE 50 FT, INCLUSIVE OF FOUR 12.5 FT LONG RAIL ELEMENTS. INSTALLATION SHALL BE AT THE LOCATIONS SPECIFIED IN THE PLANS, IN ACCORDANCE WITH THE MANUFACTURER'S SPECIFICATIONS AS DETAILED ON THE FOLLOWING PRE-APPROVED SHOP DRAWINGS:

DWG. #	DRAWING NAME	DWG./REV. DATE	ODOT APPROVAL DATE
SKT-4M	SEQUENTIAL KINKING TERMINAL (SKT-350) ASSEMBLY WITH 4 FOUNDATION TUBES	12/11/97	3/6/98

THE FACE OF THE TYPE E-98 IMPACT HEAD SHALL BE COVERED WITH A SHEET OF TYPE G REFLECTIVE SHEETING, PER CMS 730.19, APPROXIMATELY 18"x18".

A TYPE C DELINEATOR SHALL BE INSTALLED AT THE HEAD OF ALL TYPE E-98 UNITS LOCATED ON THE RIGHT SIDE OF THE THROUGH ROADWAY. A TYPE D DELINEATOR SHALL BE INSTALLED AT THE HEAD OF ALL TYPE E-98 UNITS LOCATED ON THE LEFT SIDE OF THE THROUGH ROADWAY. DELINEATORS SHALL COMPLY WITH STANDARD TRAFFIC DRAWING TC-61.10M.

PAYMENT FOR THE ABOVE WORK SHALL BE MADE AT THE UNIT PRICE BID FOR ITEM 606, ANCHOR ASSEMBLY, TYPE E-98, EACH, AND SHALL INCLUDE ALL LABOR, TOOLS, EQUIPMENT AND MATERIALS NECESSARY TO CONSTRUCT A COMPLETE AND FUNCTIONAL ANCHOR ASSEMBLY SYSTEM, INCLUDING ALL RELATED TRANSITIONS, DELINEATORS, HARDWARE AND GRADING, NOT SEPARATELY SPECIFIED, AS REQUIRED BY THE MANUFACTURER.

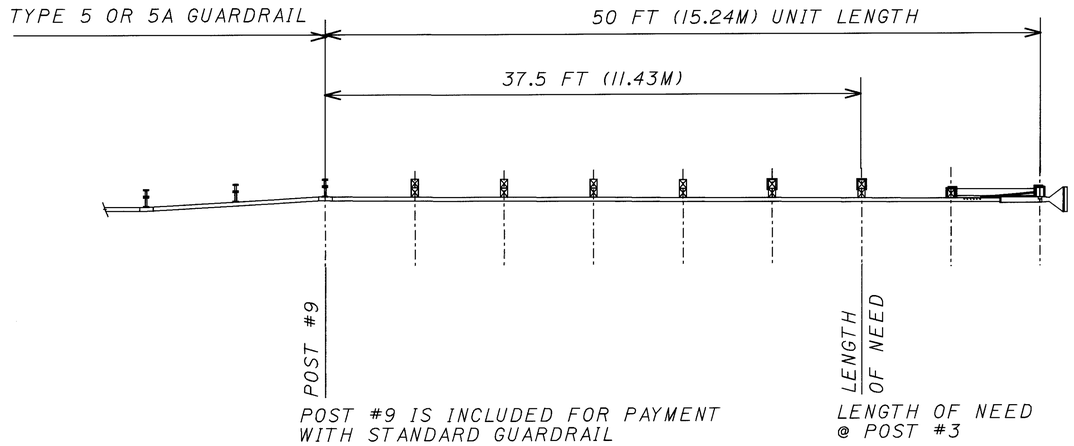

ET-2000

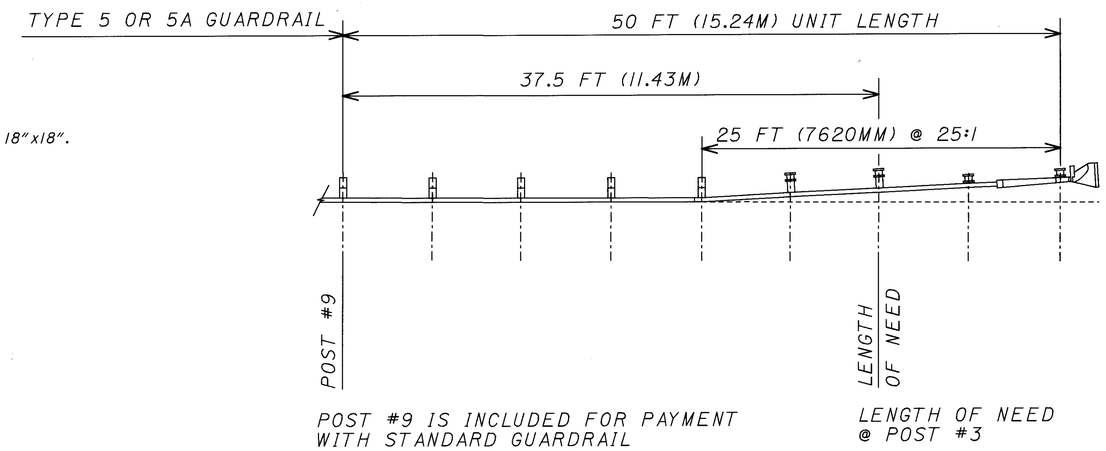

SKT-350

NCHRP REPORT 350 COMPLIANCE

TYPE E-98 ANCHOR ASSEMBLY DETAILS

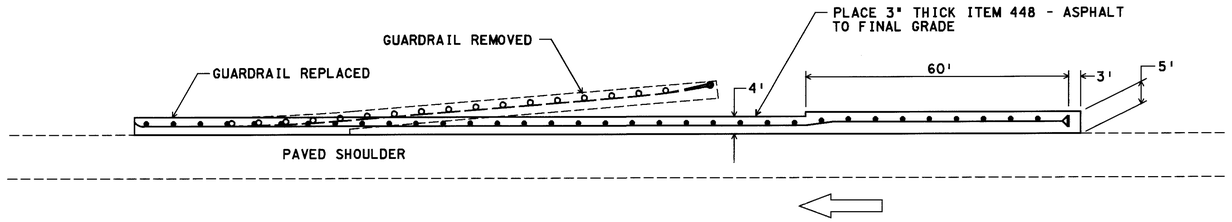

ITEM 448 FOR EROSION CONTROL WITH TYPE E ANCHOR ASSEMBLY

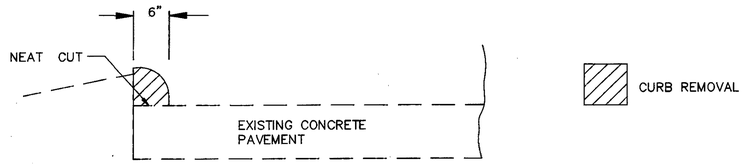

ITEM 202 CURB REMOVED, AS PER PLAN, A
(NOT TO SCALE)
A NEAT JOINT IS REQUIRED IN ORDER TO REMOVE PORTION OF EXISTING CONCRETE CURB

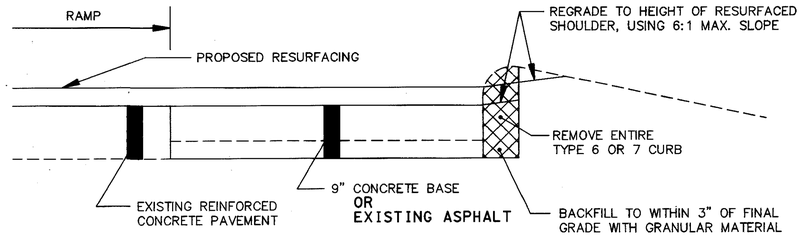

NOTE: RESTORE DISTURBED AREA IN CONFORMANCE WITH ITEM 659. ALL WORK SHOWN SHALL BE INCLUDED UNDER ITEM 202 WITH THE EXCEPTION OF THE RESURFACING ITEMS.

ITEM 202 CURB REMOVED, AS PER PLAN, B

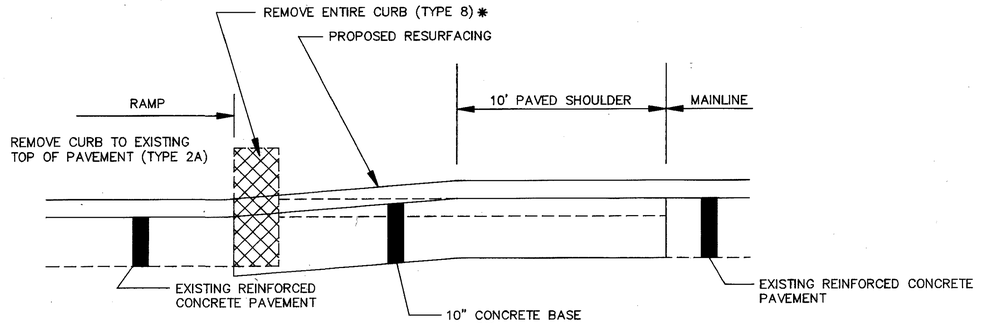

NOTE: CONNECT THE OUTSIDE EDGE OF THE 10 FT. PAVED SHOULDER AND THE CURB GUTTER LINE WITH A STRAIGHT GRADE.

ITEM 202 CURB REMOVED, AS PER PLAN C

* - IF ADJACENT SHOULDER IS NOT BEING REPLACED WITH CONCRETE, FILL VOID WITH ITEM 301 - BITUMINOUS AGGREGATE BASE, PG64-22.

PLOTTED BY: jgrmovse
PLOTTED FROM: ...Bpid5754B05754gmf.dgn
05754GMF.DGN
PLOT SUBMITTED:02-DEC-1998 13:37

PLOTTED BY: jgrmovse
PLOTTED FROM: C:\Users\Public\d05754gmg.dgn
PLOT SUBMITTED:02-DEC-1998 13:36

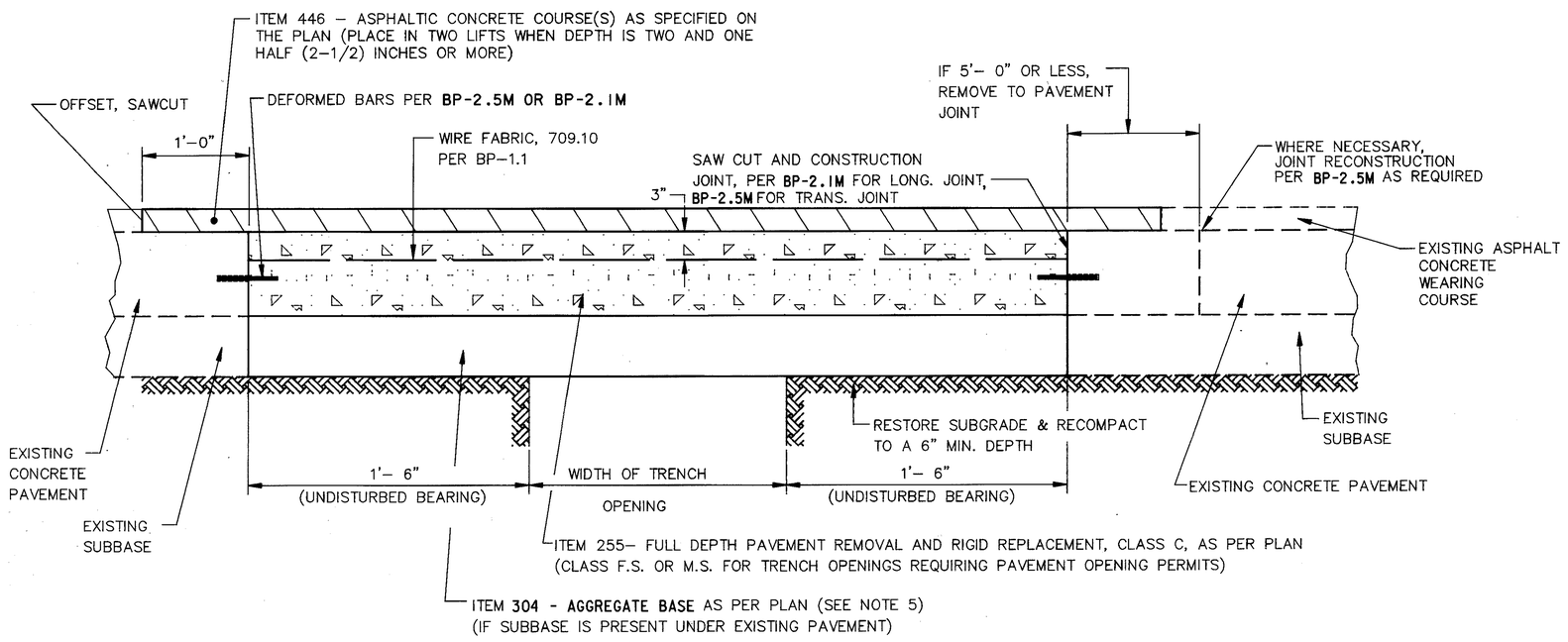

REPAIR OF PAVEMENT OPENING
FOR CONDUIT TYPE B, AS PER PLAN

NOTES FOR REPAIR OF PAVEMENT OPENING

1. THIS DETAIL IS APPLICABLE TO LOCATIONS WHERE NEW CONDUIT TYPE B, IS INSTALLED UNDER EXISTING PAVEMENT
2. TRENCH BACKFILL MATERIAL SHALL BE IN ACCORDANCE WITH SECTION 603.08, TYPE B CONDUIT AND SHALL TO THE EXTENT POSSIBLE, EXHIBIT THE SAME PHYSICAL PROPERTIES AS THE SOUND SUB–GRADE MATERIAL ADJACENT TO THE TRENCH; UNLESS OTHERWISE SPECIFIED OR APPROVED BY THE ENGINEER. GRANULAR BACKFILL MATERIAL SHALL BE LIMITED TO AIR– COOLED BLAST FURNACE SLAG, GRANULATED SLAG OR CRUSHED STONE, PER 603.02.
3. EXISTING JOINTS SHALL BE RESTORED IN ACCORDANCE WITH BP–2.5**M** .
4. THICKNESSES OF ITEM 255, ITEM **304**, AND ITEM 446 SHALL EQUAL THOSE EXISTING OR AS CALLED FOR ON THE PLAN.
5. WHERE THREE (3) INCHES OR LESS OF **304**, AS PER PLAN, IS REPLACED, USE SCREENINGS GRADED IN ACCORDANCE WITH 703.10 EXCEPT THAT THE MINIMUM PERCENT PASSING THE No. 100 SIEVE SHALL BE FIVE (5) PERCENT.
6. TRAFFIC SHALL BE MAINTAINED IN A SAFE AND SATISFACTORY MANNER CONFORM–ING TO THE REQUIREMENTS OF ITEM 614 MAINTAINING TRAFFIC AND THE GENERAL PROVISIONS OF THE O.D.O.T. CONSTRUCTION AND MATERIAL SPECIFICATIONS, AND IN COMPLIANCE WITH THE OHIO MANUAL OF UNIFORM TRAFFIC CONTROL DEVICES (O.M.U.T.C.D.). FOR TRENCH OPENING PERMIT(S), THE APPLICANT SHALL FURNISH A MAINTENANCE OF TRAFFIC PLAN TO THE ENGINEER FOR REVIEW AND APPROVAL.
7. AGGREGATE OR PAVED SHOULDER AREAS AND NON–PAVED BERM OR TREE LAWN AREAS WITHIN THE RIGHT–OF–WAY SHALL BE RESTORED OR REPLACED IN ACCOR–DANCE WITH THE PLANS OR AS DIRECTED TO MINIMALLY MATCH THEIR PREVIOUSLY UNDISTURBED CONDITION; ALL IN ACCORDANCE WITH THE APPLICABLE GENERAL PROVISIONS AND ITEMIZED O.D.O.T. SPECIFICATIONS AS DETERMINED BY THE ENGI–NEER.
8. THE COST OF ALL PAVEMENT REPAIR WORK INCLUDING LABOR, MATERIALS AND INCIDENTALS SHALL BE INCLUDED IN THE UNIT PRICE BID FOR ITEM 603, CONDUIT, TYPE B, AS PER PLAN.

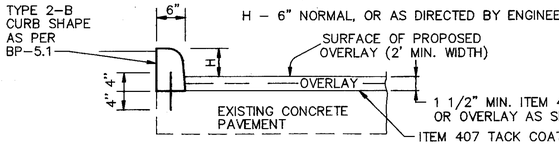

ITEM 609 CURB TYPE 2–B , AS PER PLAN

THE NEW CONCRETE CURB TYPE 2B, AS PER PLAN SHALL BE CONNECTED TO THE EXISTING CONCRETE PAVEMENT WITH No.4 DOWEL BARS SPACED AT 18" CENTERS. INSTALLATION OF THE DOWEL BARS SHALL BE IN ACCORDANCE WITH ITEM 510. THE FULL COST OF THE DOWEL HOLES, BARS, AND MORTAR SHALL BE INCLUDED IN THE UNIT PRICE BID FOR ITEM 609, CURB TYPE 2B, AS PER PLAN.

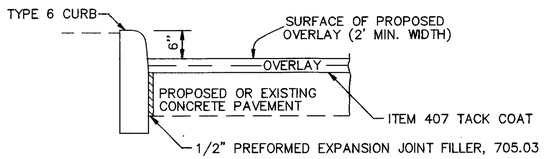

ITEM 609 CURB TYPE 6, AS PER PLAN

NOTE: FOR MORE DETAILS AND INFORMATION, SEE STANDARD CONSTRUCTION DRAWING BP–5.1

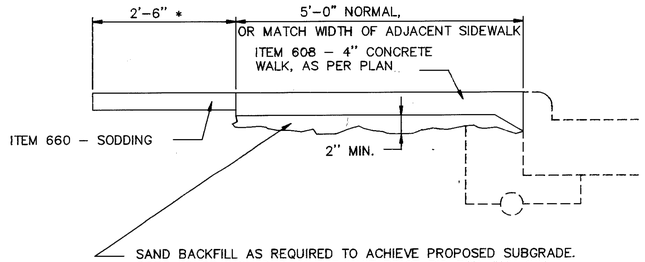

ITEM 608 – 4" CONCRETE WALK, AS PER PLAN

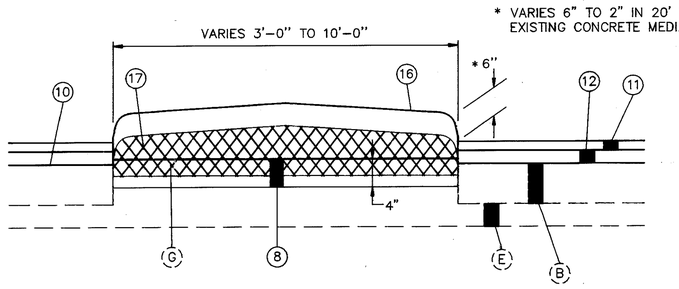

ITEM 612–9" CONCRETE MEDIAN

FOR LEGEND, SEE SHEET 8.

REMOVAL AREA

NOTE: FOR MORE DETAILS AND INFORMATION, SEE STANDARD CONSTRUCTION DRAWING **RM–3.1M**

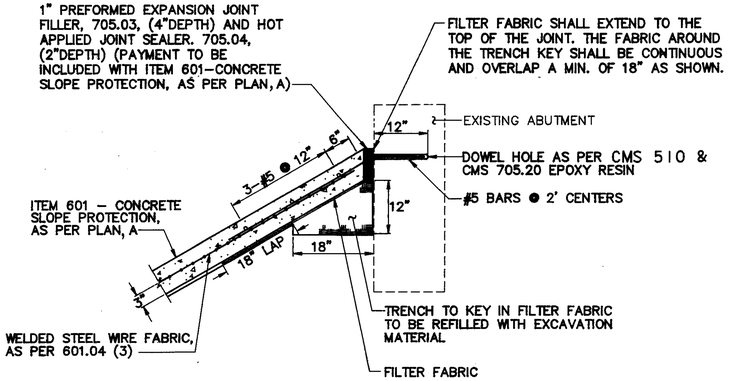

CONCRETE SLOPE ANCHORING DETAIL
SECTION A-A

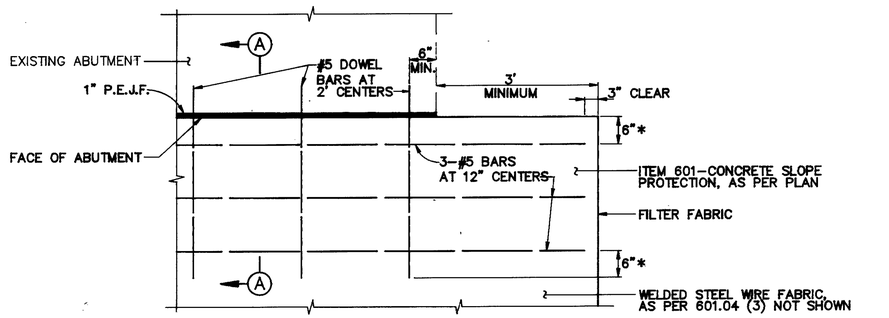

* LENGTH AS MEASURED ALONG SLOPE

SLOPE PROTECTION REINFORCING DETAIL
PLAN VIEW

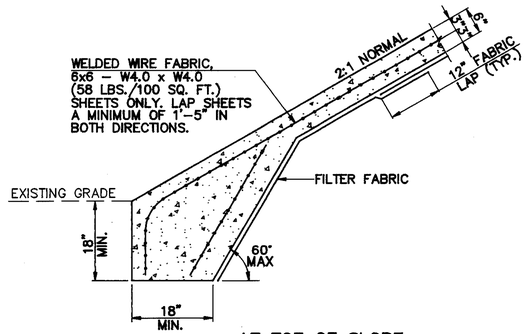

AT TOE OF SLOPE

CONCRETE SLOPE PROTECTION, AS PER PLAN, A
(REPLACEMENT)

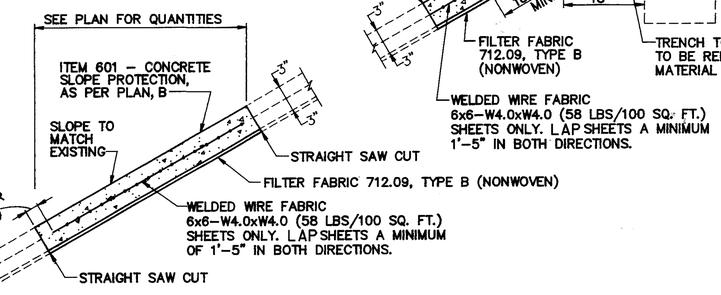

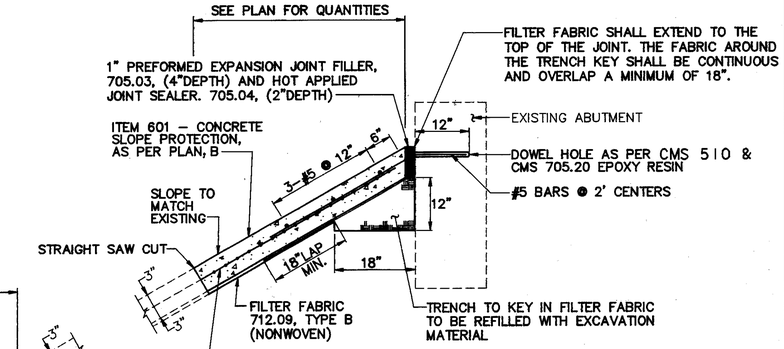

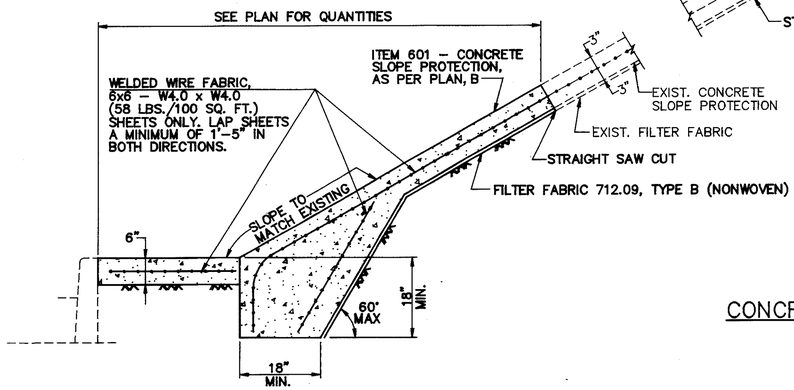

CONCRETE SLOPE PROTECTION, AS PER PLAN, B
(REPAIR)

CONCRETE SLOPE PROTECTION DETAILS

PLOTTED BY: jgrmovse
PLOTTED FROM: C:\Users\jmincek\Bpid57541\05754ddb.dgn
05754DDB.DGN
PLOT SUBMITTED: 02-DEC-1998 13:36

OUTLET DETAIL

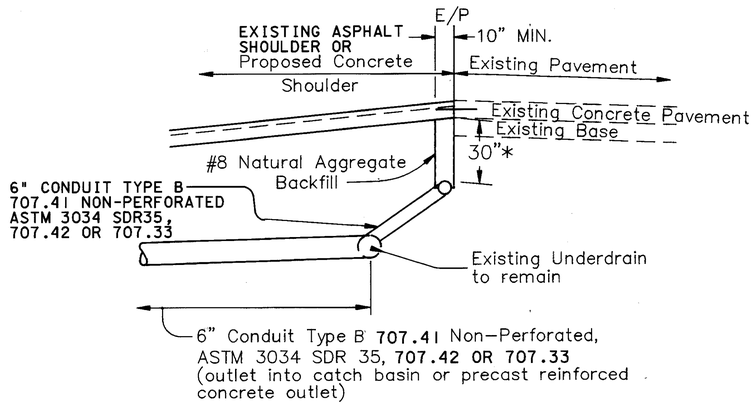

NOTE: THE COST OF THE NECESSARY PIPE BENDS AND BRANCHES NEEDED TO CONNECT THE EXISTING AND PROPOSED UNDERDRAINS SHALL BE INCLUDED WITH THE COST OF THE 6" CONDUIT TYPE B BEYOND THE EXISTING UNDERDRAIN.

DESCRIPTION: The item shall consist of furnishing and installing a pipe underdrain system in accordance with the specifications, details as shown on the plans, and as directed by the Engineer.

MATERIALS: The underdrain shall be a pipe underdrain system per Item 605

The outlets for the underdrain system shall be constructed as soon as possible after placement of the underdrain to drain the subbase & subgrade. All pipe bends & branches needed to connect the proposed underdrain to the proposed outlet or to an existing underdrain shall be manufactured fittings.

METHOD OF MEASUREMENT: Completed and accepted underdrains will be measured by the linear foot in place.

BASIS OF PAYMENT: Work completed and accepted under this item and measured will be paid for at the contract unit price bid per linear foot for Item 605 6" Shallow Pipe Underdrain

The price shall be full compensation for excavation and backfill; for furnishing materials, including material for outlet fittings for all labor, tools equipment, and incidentals necessary to complete the work.

PIPE UNDERDRAIN DETAIL

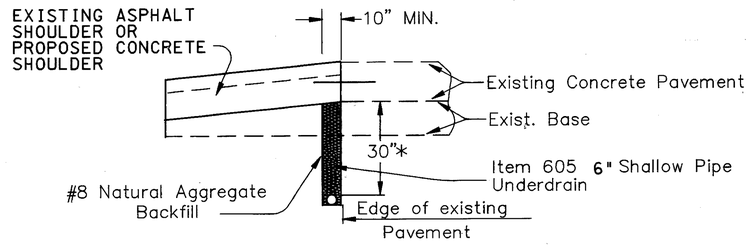

NOTE
Provide a 5' gap between capped sections of underdrains to minimize the likelihood of water flowing across the gap. See plans for locations. The gap shall be excavated to the bottom of underdrain trench, 4' wide, and backfilled to the top of subgrade with impervious material. The cost shall be incidental to the corresponding underdrain installation.

STATE OF OHIO
DEPARTMENT OF TRANSPORTATION
DISTRICT 12 LOCATION & DESIGN

UNDERDRAIN DETAILS

PLOT SUBMITTED:02-DEC-1998 13:35
05754DDC.DGN
PLOTTED BY:jgrmovse
PLOTTED FROM:E:\users\lmincek\pid05754\b05754ddc.dgn

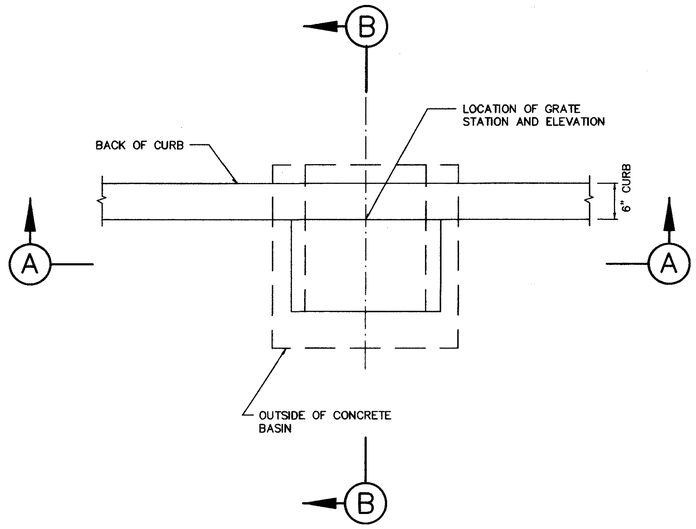

PLAN

NOTES:

1. CATCH BASINS MAY BE CAST-IN-PLACE CONCRETE, CONCRETE BLOCK, BRICK OR PRECAST CONCRETE. BRICK, CONCRETE BLOCK OR CAST-IN-PLACE WALLS SHALL HAVE A NORMAL THICKNESS OF 8 INCHES FROM THE BOTTOM SLAB TO THE UPPER BOX. PRECAST WALLS SHALL HAVE A MINIMUM THICKNESS OF 6 INCHES AND BE REINFORCED SUFFICIENTLY TO PERMIT SHIPPING AND HANDLING WITHOUT DAMAGE. ALL CONSTRUCTION AND MATERIALS SHALL BE IN CONFORMANCE WITH ODOT SPECIFICATION 604.
2. STEPS SHALL BE PROVIDED, AND SHALL MEET THE REQUIREMENTS SHOWN ON STANDARD DRAWING MH-1.
3. THE LOCATIONS OF THE TRAP AND THE CONDUIT SHALL MATCH THE EXISTING CONDITIONS, OR SHALL BE AS DIRECTED BY THE ENGINEER.
4. WHEN CATCH BASIN IS CONSTRUCTED IN CONCRETE PAVEMENT, A BLOCKOUT SHALL BE PROVIDED AS STD. DWG. CB-2.2M

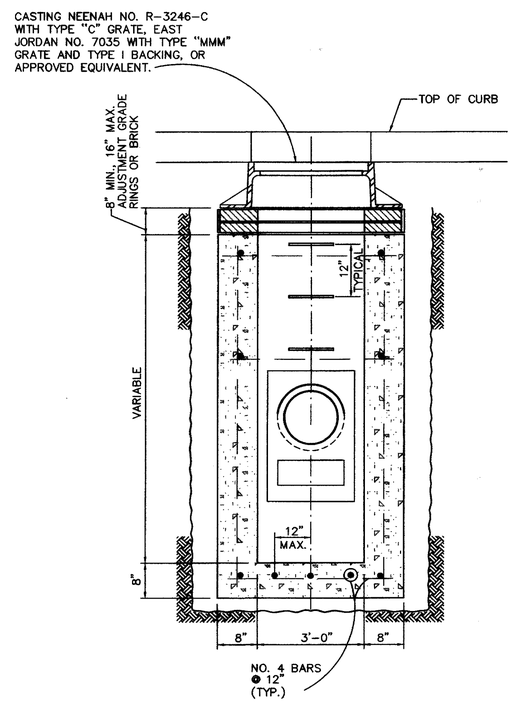

SECTION A-A

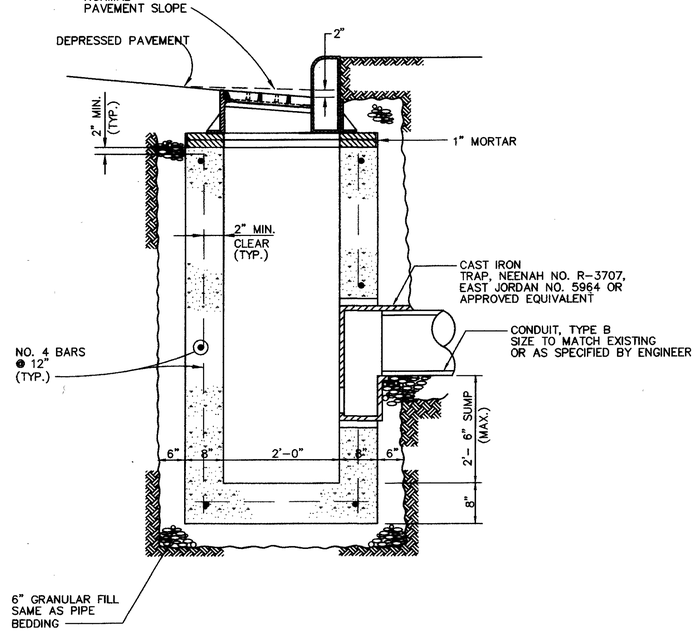

SECTION B-B

CITY OF CLEVELAND CATCH BASIN NO. 1

CITY OF CLEVELAND CATCH BASIN NO. 1

PLOT SUBMITTED:02-DEC-1998 13:34
05754DDD.DGN
PLOTTED BY: jgrmovse
PLOTTED FROM: users@lmincek@pid5754@05754ddd.dgn

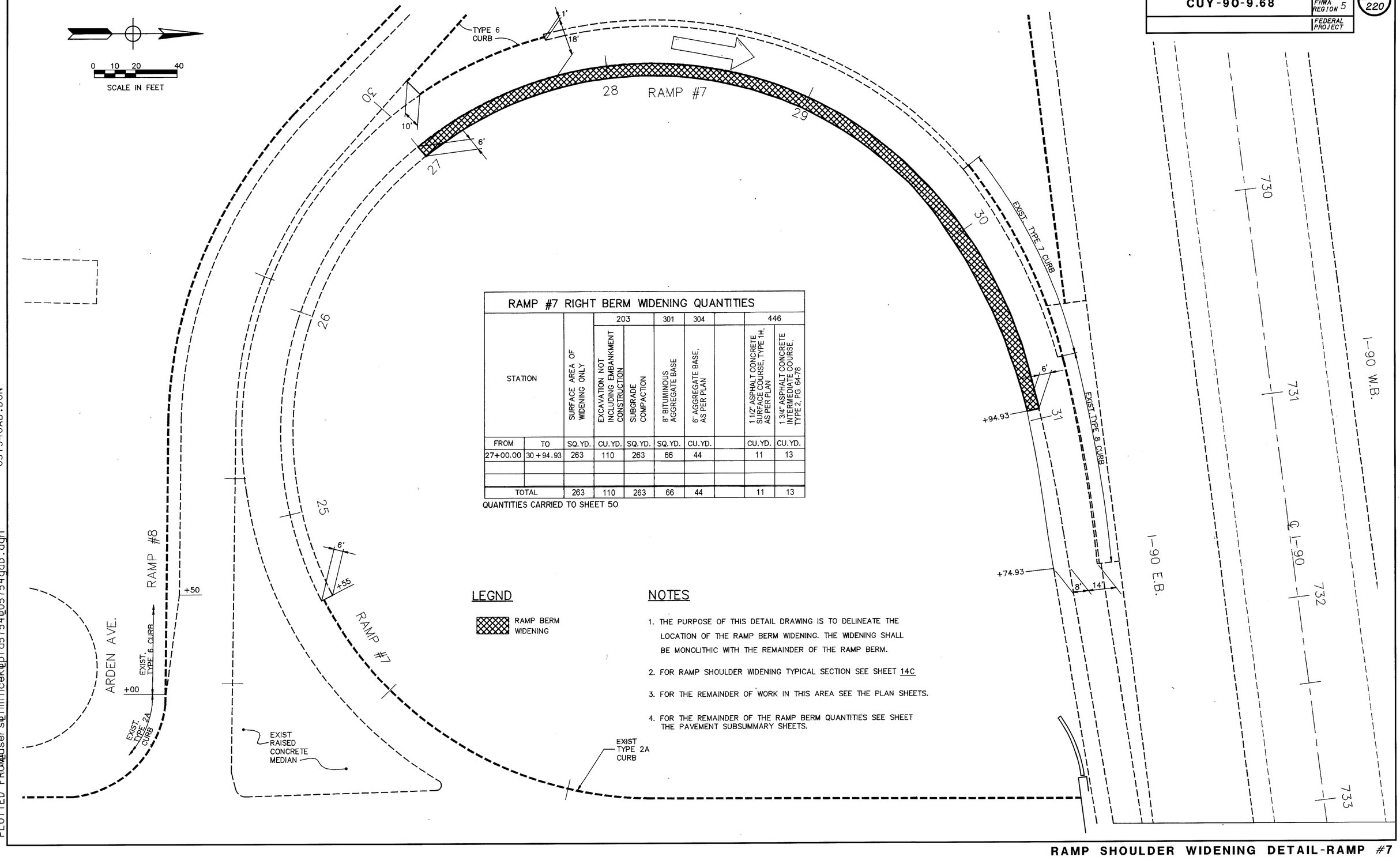

RAMP #7 RIGHT BERM WIDENING QUANTITIES

STATION		SURFACE AREA OF WIDENING ONLY	203 EXCAVATION NOT INCLUDING EMBANKMENT CONSTRUCTION	203 SUBGRADE COMPACTION	301 8" BITUMINOUS AGGREGATE BASE	304 6" AGGREGATE BASE, AS PER PLAN		446 1 1/2" ASPHALT CONCRETE SURFACE COURSE, TYPE 1H, AS PER PLAN	446 1 3/4" ASPHALT CONCRETE INTERMEDIATE COURSE, TYPE 2, PG. 64-78
FROM	TO	SQ.YD.	CU.YD.	SQ.YD.	SQ.YD.	CU.YD.		CU.YD.	CU.YD.
27+00.00	30+94.93	263	110	263	66	44		11	13
TOTAL		263	110	263	66	44		11	13

QUANTITIES CARRIED TO SHEET 50

LEGND

RAMP BERM WIDENING

NOTES

1. THE PURPOSE OF THIS DETAIL DRAWING IS TO DELINEATE THE LOCATION OF THE RAMP BERM WIDENING. THE WIDENING SHALL BE MONOLITHIC WITH THE REMAINDER OF THE RAMP BERM.
2. FOR RAMP SHOULDER WIDENING TYPICAL SECTION SEE SHEET 14C
3. FOR THE REMAINDER OF WORK IN THIS AREA SEE THE PLAN SHEETS.
4. FOR THE REMAINDER OF THE RAMP BERM QUANTITIES SEE SHEET THE PAVEMENT SUBSUMMARY SHEETS.

RAMP SHOULDER WIDENING DETAIL-RAMP #7

PLOTTED BY: jgrmovse
PLOTTED FROM: /users/lmincek/pid5754/05754gab.dgn
PLOT SUBMITTED: 02-DEC-1998 13:33
05754GAB.DGN

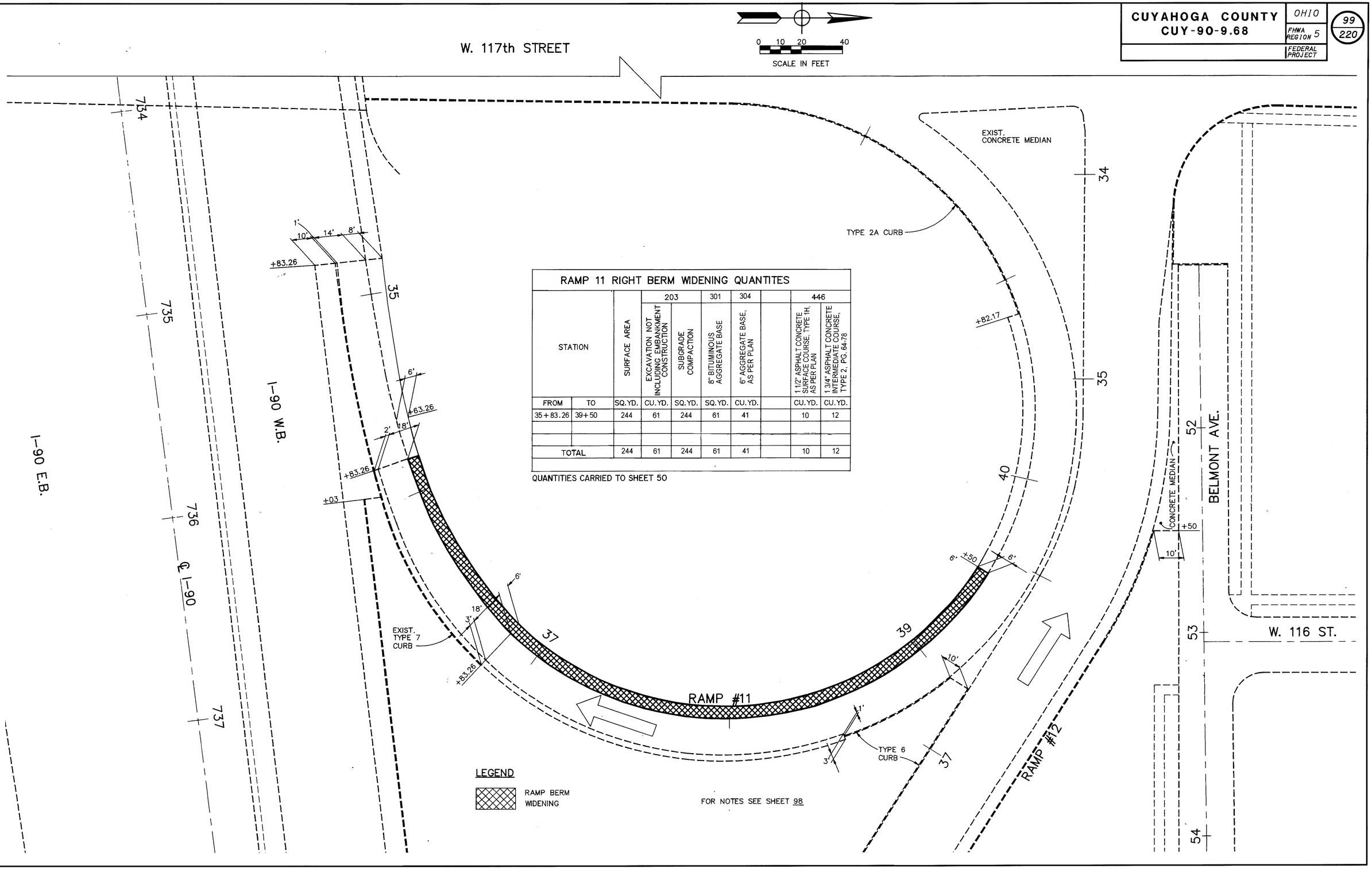

RAMP 11 RIGHT BERM WIDENING QUANTITES

STATION		SURFACE AREA	203 EXCAVATION NOT INCLUDING EMBANKMENT CONSTRUCTION	203 SUBGRADE COMPACTION	301 8" BITUMINOUS AGGREGATE BASE	304 6" AGGREGATE BASE, AS PER PLAN		446 1 1/2" ASPHALT CONCRETE SURFACE COURSE, TYPE 1H, AS PER PLAN	446 1 3/4" ASPHALT CONCRETE INTERMEDIATE COURSE, TYPE 2, PG. 64-78
FROM	TO	SQ.YD.	CU.YD.	SQ.YD.	SQ.YD.	CU.YD.		CU.YD.	CU.YD.
35+83.26	39+50	244	61	244	61	41		10	12
TOTAL		244	61	244	61	41		10	12

QUANTITIES CARRIED TO SHEET 50

RAMP SHOULDER WIDENING DETAIL-RAMP #11

PLOT SUBMITTED:02-DEC-1998 13:32
05754GAA.DGN
PLOTTED BY:jgrmovse
PLOTTED FROM:users@lmincek@pid5754@05754gaa.dgn

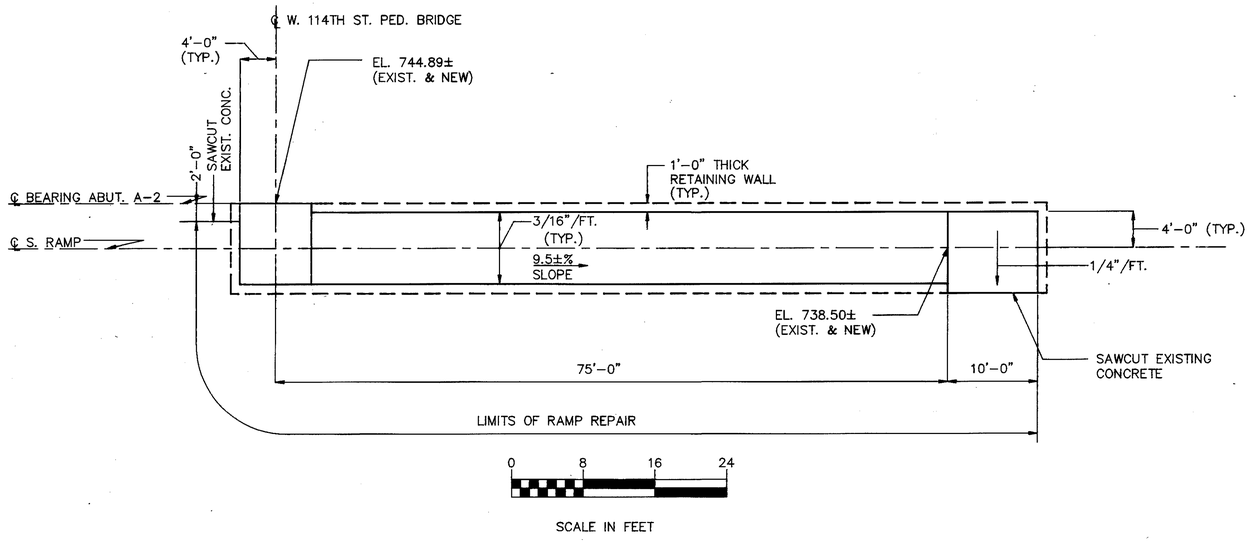

W. 114TH ST. PEDESTRIAN BRIDGE

SOUTH RAMP REPAIR PLAN

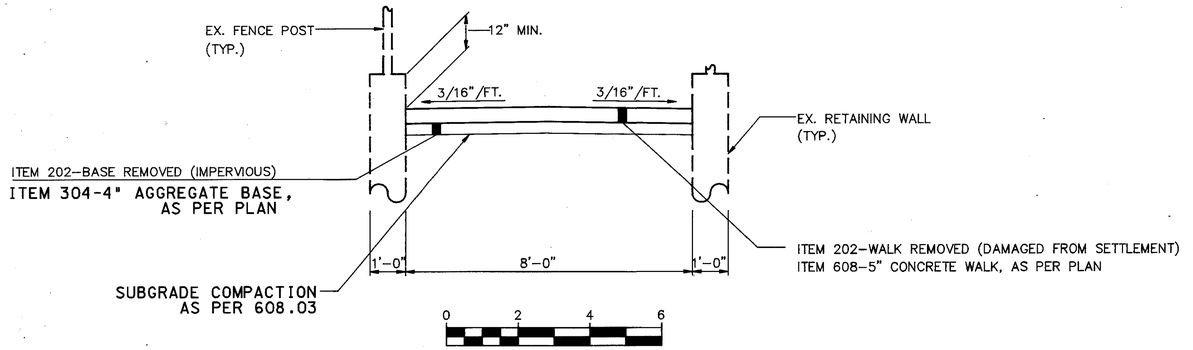

W. 114TH ST. PEDESTRIAN BRIDGE

SOUTH RAMP TYPICAL SECTION

ESTIMATED QUANTITIES			
ITEM	DESCRIPTION	QUANTITY	UNIT
202	BASE REMOVED	82	SQ. YD.
202	WALK REMOVED	741	SQ. FT.
304	AGGREGATE BASE, AS PER PLAN	9	CU. YD.
608	5" CONCRETE WALK, AS PER PLAN	741	SQ. FT.

NOTES:

1) ALL PAVEMENT REMOVAL SHALL BE PERFORMED USING HAND HELD EQUIPMENT SUCH AS JACK HAMMERS TO PREVENT DAMAGE TO EXISTING RETAINING WALLS. SIMILARLY, COMPACTION OF SUBGRADE AND BITUMINOUS AGGREGATE BASE SHALL BE PERFORMED USING HAND HELD PLATE TAMPERS AND/OR WALK BEHIND VIBRATORY ROLLERS.

2) PROVIDE 6X6 – W2.0 X W2.0 WWF FOR NEW CONCRETE WALK. SPACE TRANSVERSE JOINTS @ EQUAL SPACES OF APPROXIMATLY 8' APART. LONGITUDINAL JOINTS ARE NOT REQUIRED.

PLOTTED BY: jgrmovse
PLOTTED FROM: ...usersBlmincekBpid5754B05754gmh.dgn
PLOT SUBMITTED: 02-DEC-1998 13:31
05754GMH.DGN

TRAFFIC CONTROL

TRAFFIC CONTROL STANDARD CONSTRUCTION DRAWINGS

REFERENCES TO SUPPLEMENTAL SPECIFICATION 857, 858, 861, 957, 958 AND 961 ON THE TRAFFIC CONTROL STANDARD CONSTRUCTION DRAWINGS IN THESE PLANS SHALL BE CONSIDERED TO READ AS RESPECTIVE REFERENCES TO ITEMS 630, 633, 730, 731, AND 733.

ORIGINAL CONSTRUCTION PLANS

FOR EXISTING SIGNING DETAILS, REFER TO APPLICABLE PLANS LISTED BELOW:

COUNTY-ROUTE-SECTION

CUY-90-10.40
CUY-90-11.64

COPIES OF THESE PLANS ARE AVAILABLE FOR REFERENCE THROUGH THE DISTRICT 12 OFFICES OF THE OHIO DEPARTMENT OF TRANSPORTATION, 5500 TRANSPORTATION BLVD., GARFIELD HTS., OHIO .

LAYOUT OF PAVEMENT MARKINGS

THE CONTRACTOR SHALL BE RESPONSIBLE FOR ALL THE LAYOUT AND LOCATIONS OF THE VARIOUS PAVEMENT MARKINGS.

REMOVAL OF EXISTING ITEMS

ALL 630 REMOVAL ITEMS NOT SPECIFICALLY INCLUDING STORAGE OR REERECTION SHALL BECOME THE PROPERTY OF THE CONTRACTOR. REMOVAL AND DISPOSAL SHALL BE THE RESPONSIBILITY OF THE CONTRACTOR.

LEVEL I GUIDE SIGNS WITH WARNING PANELS

THE WARNING PANELS (BLACK ON YELLOW) FOR ALL LEVEL I GUIDE SIGNS SHALL BE DESIGNED PER LEVEL II STANDARDS TO MATCH EXISTING SIGNS.

ITEM 630-SIGN LOCATIONS

SIGN LOCATIONS OF EXISTING AND PROPOSED SIGNS ON THE PLANS ARE APPROXIMATE. THE CONTRACTOR PRIOR TO ERECTION OF ALL SIGN SUPPORTS (POSTS, BEAMS AND OVERHEADS) SHALL STAKE THE PROPOSED LOCATION, INCLUDING OFFSET. OVERHEAD SUPPORT LOCATIONS SHALL ALSO INCLUDE FOUNDATION ELEVATIONS. THE ENGINEER SHALL APPROVE ALL SUPPORT LOCATIONS AND MAY ADJUST THE LOCATION TO CORRECT SLOPE AND SUB-SURFACE DIFFICULTIES, SIGN SIGHT DISTANCE OBSTRUCTIONS, IMPROVE SAFETY AND ELIMINATE OVERHEAD OBSTACLES.

PAYMENT FOR STAKING SHALL BE INCIDENTAL TO THE VARIOUS SIGN SUPPORT ITEMS.

ITEM 630-FLAT SHEET SIGN INSTALLATIONS

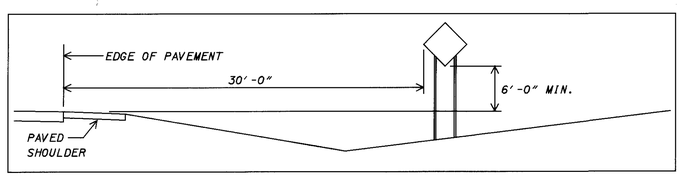

ALL FREEWAY FLATSHEET SIGN INSTALLATIONS NOT BEHIND GUARDRAIL SHALL BE OFFSET 30 FEET FROM THE EDGE OF PAVEMENT.

REFER TO STANDARD DRAWING NO. TC-42.20 FOR FLATSHEET SIGNS INSTALLED BEHIND GUARDRAIL, ON CROSS ROADS, ON RAMPS AND BETWEEN RAMPS AND MAINLINE.

ITEM 630-GF SERIES SIGN INSTALLATIONS

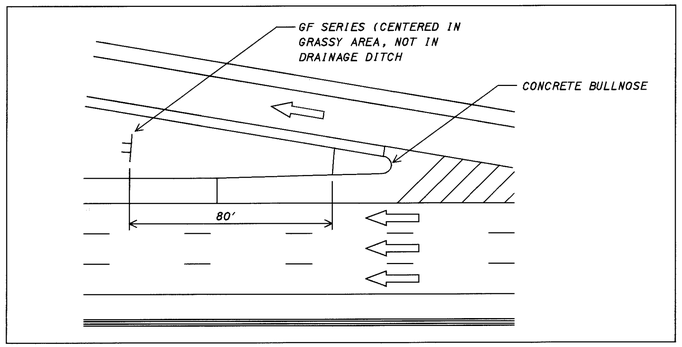

ITEM 630-REMOVAL OF OVERHEAD SIGN SUPPORT AND REERECTION, TYPE TC-18.26, AS PER PLAN

THIS ITEM OF WORK SHALL CONSIST OF ALL LABOR, EQUIPMENT, AND MATERIALS NECESSARY TO REMOVE AND REMOUNT AN EXISTING OVERPASS MOUNTED SIGN STRUCTURE ON TO NEW STAINLESS STEEL ANCHORS.

SEQUENCE OF WORK SHALL BE AS FOLLOWS (WORK SHALL BE COORDINATED WITH THE EPOXY COATING OF BRIDGE PARAPETS:

1) DISCONNECT ANY LIGHTING CIRCUITS IF NECESSARY.

2) PROVIDE TEMPORARY CRANE SUPPORT OF THE SIGN AND SUPPORT.

3) REMOVE ALL EXISTING EXPANSION ANCHORS AND DISCONNECT ANY BEAM CONNECTIONS.

4) RELOCATE ALL SUPPORTS LATERALLY 6" TO 12" FROM THEIR EXISTING LOCATIONS. (EXACT LOCATIONS TO BE APPROVED BY THE ENGINEER)

5) INSTALL NEW 6 1/2" X 1/2" STAINLESS STEEL THREADED ANCHOR RODS WITH A MINIMUM EMBEDMENT OF 4 1/4". THE GROUT AND HOLES SHALL CONFORM TO C.M.S. 705.20 AND 510 RESPECTIVELY. GROUT MATERIAL SHALL BE LIMITED TO EPOXY RESIN ONLY.

6) REERECT THE SIGN SUPPORT USING NEW STAINLESS STEEL NUTS AND WASHERS. USE NEW 1/16" MIN. CHLOROPRENE GASKETS SEPARATING GALVANIZED AND ALUMINUM PARTS.

7) GROUT THE EXISTING ANCHOR HOLES FLUSH WITH A PORTLAND CEMENT MORTAR GROUT.

8) RECONNECT ANY BEAM CONNECTIONS (THESE MAY BE SHIMMED, BENT, OR REPLACED, IF NECESSARY TO AVOID REPLACEMENT OF THE BEAM WEB CONNECTIONS).

9) RECONNECT LIGHTING CIRCUIT, IF NECESSARY.

THE FOLLOWING ESTIMATED QUANTITIES HAVE BEEN INCLUDED IN THE GENERAL SUMMARY TO BE USED AS OUTLINED ABOVE:

ITEM 630-REMOVAL OF OVERHEAD SIGN SUPPORT AND REERECTION TYPE TC-18.26, AS PER PLAN.....5 EACH

ITEM 630-REMOVAL OF OVERHEAD MOUNTED SIGN AND REERECTION, AS PER PLAN

ALL EXISTING GUIDE SIGNS TO REMAIN WITH EXIT NO. PANELS SHALL HAVE THE EXIT NO. PANELS REMOVED AND REERECTED TO THE LEFT OR RIGHT AS INDICATED. SEE DETAILS BELOW FOR PANEL POSITIONING (ALSO APPLIES TO PROPOSED SIGNS WITH EXIT NO. PANELS), SIGN LOCATION LEGEND, AND CHART FOR LOCATIONS OF EXIT NO. PANELS TO BE RELOCATED.

THE FOLLOWING QUANTITIES HAVE BEEN CARRIED TO THE GENERAL SUMMARY:

ITEM 630-REMOVAL OF OVERHEAD MOUNTED SIGN AND REERECTION, AS PER PLAN.....18 EACH

SIGN LOCATION LEGEND
(FRONT 3 SIGNS SHOWN

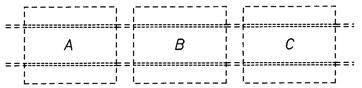

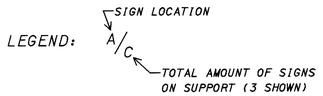

EXISTING SIGN EXIT PANEL REERECTION TABLE

STATION	SIGN SUPPORT TYPE	SIGN LOCATION	PANEL POSITIONING	PANEL SIZE
683+48, LT.	SPAN	B/C	RIGHT	9'X 2'
683+48, LT.	SPAN	C/C	RIGHT	9'X 2'
882+40, LT.	ON STRUCTURE	A/B	RIGHT	9'X 2'
882+40, LT.	ON STRUCTURE	B/B	RIGHT	9'X 2'
887+90, RT.	SPAN	A/B	LEFT	9'X 2'
894+20, RT.	SPAN	A/B	RIGHT	9'X 2'
894+20, RT.	SPAN	B/B	RIGHT	9'X 2'
896+40, LT.	SPAN	B/B	RIGHT	8'X 2'
905+10, RT.	SPAN	C/C	RIGHT	9'X 2'
909+25, LT.	CANTILEVER	A/A	RIGHT	8'X 2'
911+80, LT.	GROUND	A/A	RIGHT	8'X 2'
917+20, RT.	SPAN	A/C	LEFT	9'X 2'
917+20, RT.	SPAN	C/C	RIGHT	9'X 2'
924+75, RT.	CANTILEVER	A/A	RIGHT	9'X 2'
925+25, LT.	SPAN	B/B	RIGHT	8'X 2'
929+43, RT.	ON STRUCTURE	A/B	LEFT	9'X 2'
932+10, RT.	SPAN	A/C	LEFT	9'X 2'
932+10, RT.	SPAN	C/C	RIGHT	9'X 2'
TOTAL			18	

PLOTTED BY: fkonopka
PLOTTED FROM: c:\Users\fkonopka\Desktop\temp\05754tna.dgn
PLOT SUBMITTED: 03-DEC-1998 08:59
05754

TRAFFIC CONTROL

ITEM 630-REMOVAL OF OVERHEAD MOUNTED SIGN AND REERECTION, AS PER PLAN (CONT.)

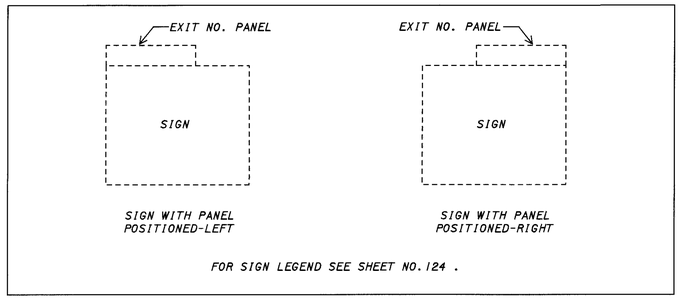

ITEM 630-SIGNING MISC.: REPLACE HANDHOLE COVER

REPLACE ALL MISSING OR UNFASTENED HANDHOLE COVERS ON THE OVERHEAD SIGN SUPPORTS INCLUDING NEW 1/4" MIN. STAINLESS STEEL SCREWS. RE-TAP ALL HOLES TO ALLOW FOR EASY INSTALLATION AND REMOVAL OF HANDHOLE COVER. A 12" #35 S.S. CHAIN SHALL BE PROVIDED CONNECTING THE HANDHOLE COVER TO THE VERTICAL POLE. THIS WORK SHALL BE COMPLETED PRIOR TO THE SURFACE PREPARATION OF THE EXISTING SIGN SUPPORTS.

THE FOLLOWING QUANTITY HAS BEEN CARRIED TO THE GENERAL SUMMARY:

ITEM 630-SIGNING MISC.: REPLACE HANDHOLE COVER.....25 EACH

ITEM 630-SIGNING MISC.: 2" DIA. BARRIER MOUNTED SIGN SUPPORT

USE FOR INSTALLATION OF X-6L BRIDGE END MARKERS MOUNTED ON THE MEDIAN BARRIER.

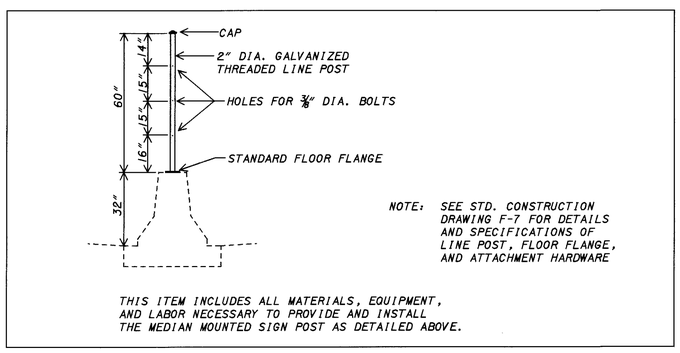

ITEM 631-REMOVAL OF DISCONNECT SWITCH ENCLOSURE AND DISPOSAL

INCIDENTAL TO THE REMOVAL OF DISCONNECT SWITCH ENCLOSURE, THE DISCONNECT SWITCH SHALL BE REMOVED AND DISPOSED OF BY THE CONTRACTOR.

ITEM 631-REMOVAL OF LUMINAIRE AND DISPOSAL

INCIDENTAL TO THE REMOVAL OF THE LUMINAIRE, THE BALLAST, AND THE MOUNTING BRACKET ASSEMBLY SHALL BE REMOVED AND DISPOSED OF BY THE CONTRACTOR.

ITEM 631-BALLAST, BY TYPE, INTEGRAL

BALLAST FOR MERCURY VAPOR LUMINAIRES SHALL BE MOUNTED WITHIN THE LUMINAIRE HOUSING (INTEGRAL) OR MOUNTED IN A WEATHERPROOF HOUSING ATTACHED TO OR BESIDE THE LUMINAIRE (CONTIGUOUS). BALLAST HOUSINGS SHALL BE OF CORROSION RESISTANT MATERIALS.

INTEGRAL BALLASTS SHALL BE USED TO LIGHT ALL NON-STRUCTURALLY MOUNTED OVERHEAD SIGNS AS SHOWN IN THE PLANS.

ITEM 620-DELINEATOR, TYPE D, DESIGN 6, POST MOUNTED, AS PER PLAN

A QUANTITY OF 50 TYPE D, DESIGN 6 DELINEATORS HAS BEEN CARRIED TO THE GENERAL SUMMARY. THE CONTRACTOR SHALL REPLACE BROKEN OR DAMAGED DELINEATOR REFLECTORS AND POSTS IN THE QUANTITY AND AT THE LOCATIONS AS DETERMINED BY THE ENGINEER. DELINEATORS SHALL BE REPLACED IN ACCORDANCE WITH TC-61.10 .

ITEM 626-BARRIER REFLECTORS, TYPE A

THIS ITEM SHALL BE USED TO PLACE THE FINAL BARRIER REFLECTORS. THE EXISTING TEMPORARY BARRIER REFLECTORS SHALL REMAIN AND THE PROPOSED REFLECTORS SHALL BE USED IN ALL OTHER AREAS. FINAL SPACINGS FOR ALL BARRIER REFLECTORS SHALL CONFORM TO C.M.S. 626.03.

THE FOLLOWING QUANTITIES HAVE BEEN CARRIED TO THE GENERAL SUMMARY (SEE SHEET 63 FOR BARRIER REFLECTOR LOCATIONS):

ITEM 626-BARRIER REFLECTORS, TYPE A.....240 EACH

RAISED PAVEMENT MARKERS

MATERIALS SUPPLIED BY THE DEPARTMENT

ALL MATERIALS ARE TO BE CONTRACTOR FURNISHED, EXCEPT THAT THE DEPARTMENT SHALL SUPPLY RPM MATERIALS IN THE QUANTITIES SHOWN HEREIN TO THE CONTRACTOR. PAY ITEMS FOR THE DEPARTMENT SUPPLIED MATERIALS SHALL BE INDICATED AS "INSTALLATION ONLY". THE TYPE OF DEPARTMENT SUPPLIED MATERIAL SHALL BE RAISED PAVEMENT MARKER CASTINGS.

THE CONTRACTOR SHALL PICK UP THE DEPARTMENT SUPPLIED RPM MATERIALS AT THE OPI WAREHOUSE IN COLUMBUS, OHIO.

THE CONTRACTOR SHALL PICK UP DEPARTMENT SUPPLIED RPM MATERIALS AT THE SPECIFIED LOCATION(S) FOR TRANSPORT TO THE WORK SITE OR TO THE CONTRACTOR'S STORAGE FACILITY. THE RECYCLED RAISED PAVEMENT MARKER (RPM) AUTHORIZATION FORM IS TO BE SIGNED BY THE DISTRICT CONSTRUCTION ENGINEER PRIOR TO PICK UP OF THE RPMS. THE CONTRACTOR SHALL NOTIFY THE DISTRICT AND / OR THE PARTIES LISTED ON THE AUTHORIZATION FORM IN WRITING AT LEAST FIVE (5) CALENDAR DAYS PRIOR TO PICK UP OF THE DEPARTMENT SUPPLIED MATERIALS. THE CONTRACTOR SHALL STORE THE RPMS WITHOUT DAMAGE OR CONTAMINATION WITH FOREIGN MATTER. A DEDUCTION IN THE AMOUNT OF THE ACTUAL COST TO THE DEPARTMENT SHALL BE MADE FOR MATERIALS DAMAGED BY THE CONTRACTOR OR FOR CASTINGS RECEIVED BY THE CONTRACTOR WHICH WERE NOT INSTALLED AND WERE NOT RETURNED TO THE DEPARTMENT.

RETURN OF NON-PERFORMED RAISED PAVEMENT MARKER MATERIALS SUPPLIED BY THE DEPARTMENT

RAISED PAVEMENT MARKER MATERIALS SUPPLIED BY THE DEPARTMENT, THAT ARE NON-PERFORMED SHALL BE CAREFULLY REPACKED OR PACKED IN THE BOXES IN THE SAME STYLE AND QUANTITY AS ORIGINALLY RECEIVED FROM THE DEPARTMENT. CASTING STYLES SHALL NOT BE MIXED WITHIN ANY ONE CONTAINER. THE CONTRACTOR SHALL CLEARLY MARK ON THE OUTSIDE OF EACH CONTAINER THE STYLE OF CASTING. BOXES SHALL BE PLACED ON SKIDS OR PALLETS IN THE SAME STYLE (LOW PROFILE OR CONVENTIONAL, REFLECTORISED OR NON REFLECTORISED) AND NO MORE THAN 420 RPMS (OR 21 BOXES) ON ONE SKID.

ONLY USE THE BOXES SUPPLIED BY THE RAISED PAVEMENT MARKER RECYCLER. BOXES MUST BE MARKED WITH THE RECYCLER'S PART OR CATALOG NUMBER AND THE PROJECT NUMBER. THE RECYCLER'S CATALOG OR PART NUMBERS MAY BE OBTAINED FROM THE OFFICE OF TRAFFIC ENGINEERING IN COLUMBUS, OHIO OR FROM THE RECYCLER. BOXES NOT MARKED WITH THE PROPER RECYCLER'S CATALOG OR PART NUMBERS, AND THE DEPARTMENT'S PROJECT NUMBER WILL NOT BE ACCEPTED AT THE RECYCLER'S WAREHOUSE.

NON PERFORMED MATERIALS WILL BE RETURNED TO THE LOCATION AS SPECIFIED BY THE DISTRICT CONSTRUCTION ENGINEER WITHIN 30 DAYS OF THE COMPLETION OF THE PROJECT.

THE ABOVE WORK INCLUDING ALL LABOR, EQUIPMENT AND MATERIAL NEEDED TO PERFORM THE WORK, SHALL BE CONSIDERED INCIDENTAL TO THE RESPECTIVE PAY ITEM.

IF THE DEPARTMENT HAS TO REPACKAGE THE RPMS CORRECTLY, THE CONTRACTOR WILL BE ASSESSED THE ACTUAL COST FOR REPACKAGING THE MATERIALS BY THE DEPARTMENT'S FORCES.

LOADING OF MATERIALS SUPPLIED BY THE DEPARTMENT AT THE RECYCLER'S WAREHOUSE

TRUCKS SHALL HAVE A LOADING HEIGHT OF 48 INCHES AND BE ABLE TO BACK UP FLUSH TO THE LOADING DOCK.

TRUCKS SHALL NOT HAVE ANY OBSTRUCTIONS OR PROTRUSIONS THAT PREVENT THE LOADING BY A STANDARD FORKLIFT OR LIFT TRUCK.

SEMI TRUCKS OR 20 FOOT COMMERCIAL TRUCKS ARE THE MOST APPROPRIATE TRUCKS FOR LOADS IN EXCESS OF 4 PALLETS (ONE PALLET = 21 BOXES = 2100 LBS).

STAKE BODY TRUCKS ARE APPROPRIATE TO LOAD LESS THAN 4 PALLETS, PROVIDED THE TRUCK IS RATED FOR THE LOAD AND THE LOAD CAN BE SAFELY SECURED FOR TRANSPORT BY CHAINING OR STRAPPING DOWN AS NEEDED.

PICKUP TRUCKS ARE APPROPRIATE FOR LOADS OF APPROXIMATELY ONE PALLET, PROVIDED THE PICKUP TRUCK IS RATED FOR THE LOAD AND THE LOAD CAN BE SAFELY SECURED FOR TRANSPORT.

DUMP TRUCKS, TILT BED TRUCKS, AND NON COMMERCIAL MOVING VANS WILL NOT BE LOADED BY THE RECYCLERS WAREHOUSE.

THE WAREHOUSE SUPERVISOR WILL REFUSE TO LOAD ANY TRUCK THAT IS UNSAFE TO LOAD OR UNSUITABLE FOR THE LOAD BEING PLACED ON THE TRUCK.

THE FOLLOWING ESTIMATED QUANTITIES HAVE BEEN CARRIED TO THE GENERAL SUMMARY TO SUPPLY THE CONTRACTOR WITH RECYCLED RAISED PAVEMENT MARKER CASTINGS, AND PRISMATIC REFLECTORS:

ITEM 621-RAISED PAVEMENT MARKER CASTING, INSTALLATION ONLY.....2000 EACH

ITEM 621-PRISMATIC RETROREFLECTOR.....2000 EACH

PLOT SUBMITTED:03-DEC-1998 09:00
05754TNA.DGN
PLOTTED BY: fkonopka
PLOTTED FROM: c:\users\pid05754\minceki\pid05754tna.dgn

TRAFFIC CONTROL

RETROREFLECTOR REPLACEMENT

THE FOLLOWING ESTIMATED QUANTITY HAS BEEN INCLUDED IN THE GENERAL SUMMARY TO BE USED AS DIRECTED BY THE ENGINEER TO REPLACE THE RETROREFLECTORS WHICH WERE REMOVED IN THE LANE CLOSURE AREAS WHICH WERE BEYOND THE RESURFACING LIMITS AND TO INSTALL (OR REPLACE) THE PROPER COLOR REFLECTOR(S) INTO DEPARTMENT SUPPLIED CASTINGS. THE RETROREFLECTORS IN THE DEPARTMENT SUPPLIED CASTINGS ONLY NEED TO BE REPLACED IF THE COLOR IN THE CASTINGS CONFLICTS WITH THE COLOR SPECIFIED FOR THE RPM'S LOCATION.

THIS ITEM SHALL INCLUDE THE COST OF REMOVING THE RETROREFLECTOR AND REPLACING IT WITH A CONTRACTOR SUPPLIED REFLECTOR OF THE REQUIRED COLOR.

ITEM 621-PRISMATIC RETROREFLECTOR.....370 EACH

ITEM 632-DETECTOR LOOP, AS PER PLAN

THE CONTRACTOR IS CAUTIONED AS TO THE PRESENCE OF EXISTING TRAFFIC SIGNAL LOOP DETECTORS LOCATED IN THE PAVEMENT AT THE STATIONS LISTED BELOW. NEW LOOP DETECTORS SHALL BE PLACED AT THE SAME LOCATIONS AND SAME SIZE AS THE EXISTING LOOP. THE LOOP DETECTOR WIRE SHALL BE REPLACED TO THE EXISTING PULL BOX.

REF. #	STATION		SHT. #	SIZE	# OF TURNS
LD-1	WARREN RD:	73+90	67	6'x14'	2
LD-2	WARREN RD:	74+15	67	6'x21'	2
LD-3	WARREN RD:	76+65	67	6'x25'	2
LD-4	ALGER RD:	48+75	67	6'x12'	2
LD-5	ALGER RD:	46+80	67	6'x12'	2
LD-6	S. MARG. RD:	49+70	69	6'x26'	2
LD-7	S. MARG. RD:	51+40	69	6'x25'	2
LD-8	RAMP 8:	33+00	74	6'x28'	2
LD-9	RAMP 8:	31+35	74	6'x21'	2
LD-10	RAMP 12:	35+38	74	6'x34'	2
LD-11	RAMP 12:	34+10	74	6'x43'	2
LD-12	RAMP 14:	67+75	77	6'x22'	2
LD-13	RAMP 14:	69+55	77	6'x27'	2
LD-17	N. MARG. RD:	64+05	78	6'x36'	2
LD-18	N. MARG. RD:	65+80	78	6'x36'	2
LD-22	RAMP 17:	14+85	80	6'x22'	2
LD-23	RAMP 17:	12+75	80	6'x55'	2

THE UNIT PRICE FOR EACH ITEM 632 - DETECTOR LOOP, AS PER PLAN SHALL INCLUDE ALL LOOP DETECTOR WIRE, CABLE SPLICE KITS IN THE PULL BOX, AS PER SECTION 632.22, SEALENT AND FURNISHING ALL LABOR, TOOLS, MATERIALS AND INCIDENTALS NECESSARY TO COMPLETE THE WORK IN PLACE.

THE FOLLOWING ESTIMATED QUANTITIES HAVE BEEN CARRIED TO THE GENERAL SUMMARY, TO BE USED AS DIRECTED BY THE ENGINEER.

ITEM 632-DETECTOR LOOP, AS PER PLAN.....15 EACH

PROTECTIVE COATING OF SIGN SUPPORTS

GENERAL

OVERHEAD SIGN SUPPORTS CAN BE SEPARATED INTO MAJOR SECTIONS SUCH AS END FRAMES, TRUSSES, VERTICAL POLES AND CANTILEVER ARMS. DURING THE IMPLEMENTATION OF THIS WORK ITEM IT WILL BE BENEFICIAL TO REFER TO THE MAJOR SECTIONS OF THE OVERHEAD SIGN SUPPORTS RATHER THAN THE WHOLE SUPPORT. MORE SPECIFIC INSTRUCTIONS AND FLEXIBILITY CAN BE GIVEN BASED UPON THE UNIT OF MEASURE AND PAYMENT PER MAJOR SUPPORT SECTION.

THE PROTECTIVE COATING OF OVERHEAD SIGN SUPPORT SECTIONS SHALL BE A FOUR PART PROCESS TO INCLUDE SURFACE PREPARATION FOLLOWED BY A THREE STEP COATING SYSTEM. THIS THREE STEP COATING SYSTEM SHALL CONSIST OF AN EPOXY PRIME COAT, AN EPOXY INTERMEDIATE COAT, AND A URETHANE TOP COAT, WITH EACH COAT A DIFFERENT COLOR. FOR AN EXPLANATION OF THE MATERIALS TO BE USED SEE NOTE ENTITLED "COATING SYSTEM". THE PURPOSE OF THIS COATING IS TO PROVIDE PROTECTION FOR NEW (UNWEATHERED) AND OLDER (WEATHERED) GALVANIZED STEEL SUPPORT SECTIONS FROM CORROSIVE ELEMENTS IN THE ATMOSPHERE. COATING AND SURFACE PREPARATION OF THE NEW GALVANIZED SUPPORT SECTIONS SHOULD BE DONE BY THE MANUFACTURER.

THE CONTRACTOR SHALL TAKE ALL NECESSARY PRECAUTIONS TO COMPLY WITH POLLUTION LAWS. RULES OR REGULATIONS OF FEDERAL, STATE, OR LOCAL AGENCIES. THE COATING MATERIALS SPECIFIED FOR THE WORK CAN BE HAZARDOUS TO THE HEALTH OF THE APPLICATOR IF NOT APPLIED AS PER THE MANUFACTURER'S INSTRUCTIONS. THE CONTRACTOR SHALL FOLLOW THE DATA SHEET AND THE LABEL ON THE PAINT CONTAINERS. THESE PRECAUTIONS SHALL INCLUDE THE USE OF RESPIRATORS AND EYE AND SKIN PROTECTION AS SPECIFIED. THE CONTRACTOR SHALL ALSO INSURE THAT HIS PAINTING OPERATIONS AND LOCATION WILL NOT ENDANGER OR ADVERSELY AFFECT THE PUBLIC IN GENERAL.

THE PROPOSED CLEANING AND COATING OPERATIONS SHALL BE PERFORMED ONLY WHEN THE AMBIENT TEMPERATURE IS 50 DEGREES F OR ABOVE FOR A PERIOD OF 24 CONTINUOUS HOURS. PAINT SHALL NOT BE APPLIED DURING RAIN, FOG, OR MIST, OR WHEN THE STEEL SURFACE TEMPERATURE IS LESS THAN 5 DEGREES F ABOVE THE DEW POINT. PAINT SHALL NOT BE APPLIED TO WET OR DAMP SURFACES OR ON FROSTED OR ICE COATED SURFACES. PAINT SHALL NOT BE APPLIED WHEN THE RELATIVE HUMIDITY IS GREATER THAN 85%. ALL STEEL SURFACES OF TRUSS AND END FRAMES INCLUDING THE WELDED AREAS, BALLAST ENCLOSURE MOUNTING BRACKET AND THE BASE PLATES ARE TO BE CLEANED AND COATED. BEFORE EACH COATING IS APPLIED, IT SHALL BE MIXED WITH AN APPROVED POWER MECHANICAL MIXER TO A UNIFORM CONSISTENCY WHICH SHALL BE MAINTAINED DURING ITS APPLICATION. EACH COAT SHALL BE APPLIED IN A WORKMANLIKE MANNER AS A CONTINUOUS FILM OF UNIFORM THICKNESS WHICH IS FREE OF HOLIDAYS, PORES, RUNS, OR SAGS. ALL COATS SHALL BE APPLIED BY BRUSH. THINNING OF PAINT IS STRICTLY PROHIBITED. PAINT NOT CAPABLE OF BEING APPLIED AS SPECIFIED SHALL NOT BE USED. THE COATING SHALL PENETRATE ALL JOINTS AND CONNECTIONS. THE ENGINEER SHALL BE NOTIFIED 24 HOURS PRIOR TO ANY CLEANING OR COATING OPERATIONS SO THAT INSPECTION SERVICES CAN BE PROVIDED.

TO PROVIDE ASSURANCES THAT NO THINNING OF THE PROTECTIVE COATING MATERIAL IS BEING DONE, PERIODIC CHECKS BY A STATE INSPECTOR WILL BE MADE OF THE MATERIAL. THESE CHECKS WILL BE MADE UTILIZING A VISCOSITY TEST CUP PROCEDURE AS PROVIDED BY THE MANUFACTURER OF THE MATERIAL. THE FREQUENCY OF THESE CHECKS WILL BE DETERMINED BY THE ENGINEER BASED UPON FIELD EVALUATION AND JOB PERFORMANCE.

IF THE VISCOSITY CHECK REVEALS THAT THE MATERIAL HAS BEEN THINNED, IMMEDIATE REJECTION OF THE MATERIAL SHALL BE MADE. THIS REJECTION SHALL REQUIRE THE CONTRACTOR TO IMMEDIATELY STOP USING THE MATERIAL AND PROVIDE NEW MATERIAL OF THE PROPER SPECIFICATION PER PLAN. IN ADDITION, THE COATING OF THE SIGN SUPPORT WITH THE NON-APPROVED MATERIAL BE COSIDERED UNACCEPTABLE. THEREFORE THE SUPPORT SHALL BE STRIPPED AND RE-COATED WITH APPROVED MATERIAL (UNTHINNED MATERIAL).

3 TO 4 VISCOSITY CHECKS INDICATING A PERPETUAL QUALITY CONTROL PROBLEM (THINNED MATERIAL) SHALL BE CONSIDERED SUFFICIENT JUSTIFICATION TO TERMINATE THE CONTRACT.

THE COST FOR THE VISCOSITY TEST KIT SHALL BE BORN BY THE CONTRACTOR AND CONSIDERED INCIDENTAL TO THE ITEM SPECIALS PER COAT. THE TEST KIT SHALL CONTAIN ITEMS SUCH AS INSTRUCTIONS, VISCOSITY CUP, STANDARD COMPARISON RATES, CARRYING CASE, CLEANING EQUIPMENT, STOPWATCH, ETC. THE KIT SHALL BE GIVEN TO THE STATE INSPECTOR FOR USE DURING THE PERFORMANCE OF THE WORK. AFTER THE PROJECT IS COMPLETE, THE TEST KIT SHALL REVERT TO THE STATE AS STATE PROPERTY.

COATING SYSTEM

THE COATING SYSTEM SHALL CONSIST OF A POLYAMIDE-CURED EPOXY PRIME COAT, A POLYAMIDE-CURED EPOXY INTERMEDIATE COAT AND AN ALIPHATIC POLYURETHANE TOP COAT. THE COATING MATERIALS USED SHALL BE THOSE AS LISTED FROM ONE OF THE FOLLOWING MANUFACTURERS OR AN APPROVED EQUAL:

1. *AMERON*
   210 NORTH BERRY STREET
   BREA, CALIFORNIA 92622
   LOCAL TELEPHONE CONTACT : (419) 885-5336
   PRIME COAT : AMERCOAT 385
   INTERMEDIATE COAT : AMERLOCK 400
   TOP COAT : AMERCOAT 450 HS

2. *ICI/DEVOE COATINGS*
   5480 CLOVERLEAF PKWY. #5
   VALLEY VIEW, OHIO 44125
   LOCAL TELEPHONE CONTACT : (216) 328-1581
   PRIME COAT : DEVRAN 4170 CORROSION RESISTANT EPOXY
   INTERMEDIATE COAT : DEVRAN 4170 CORROSION RESISTANT EPOXY
   TOP COAT : DEVTHANE 4708 ALIPHATIC URETHANE ENAMEL

3. *PORTER PAINT CO.*
   400 SOUTH 13TH STREET
   LOUISVILLE, KY 40201
   LOCAL TELEPHONE CONTACT : (419) 666-0026
   PRIME COAT : PORTER PAINTS MCR 4300
   INTERMEDIATE COAT : PORTER PAINTS MCR 4300
   TOP COAT : PORTER PAINTS HYTHANE

4. *POLYCARB*
   33095 BAINBRIDGE ROAD
   P.O. BOX 39278
   SOLON, OHIO 44139
   LOCAL TELEPHONE CONTACT : (440) 248-1223
   PRIME COAT : MARK-60 (ULTRAPOX)
   INTERMEDIATE COAT : MARK-60 (ULTRAPOX)
   TOP COAT : MARK-73 (ULTRA-KOTE)

PLOTTED BY: fkonopka
PLOTTED FROM: c:\users\lmincek\pid05754\05754tna.dgn
PLOT SUBMITTED:03-DEC-1998 09:01
05754TNA.DGN

TRAFFIC CONTROL

5. SHERWIN-WILLIAMS COMPANY
   671 BETA DRIVE
   MAYFIELD VILLAGE, OHIO 44143
   LOCAL TELEPHONE CONTACT : (440) 461-3310
   PRIME COAT : TILE-CLAD II HI-BILD PRIMER
   INTERMEDIATE COAT : HI-SOLIDS CATALYZED EPOXY
   TOP COAT : HI-BILD ALIPHATIC POLYURETHANE ENAMEL

ALL THREE COATS OF THE SYSTEM SHALL BE MANUFACTURED BY THE SAME COMPANY TO INSURE COMPATIBILITY AMONG COATS.

SURFACE PREPARATIONS, NEW SUPPORT SECTIONS

NEW UNWEATHERED GALVANIZED SUPPORT SECTIONS SHALL HAVE THEIR SURFACE PREPARATION AS WELL AS THEIR PROTECTIVE COATING DONE AT THE MANUFACTURER OF THE SUPPORT SECTIONS.

THE SUPPORT SECTIONS SHALL BE PREPARED FOR COATING BY SSPC - SP1 FOLLOWED BY SSPC - SP7 (SOLVENT CLEANING) FOLLOWED BY A BRUSH-OFF BLAST. BLASTING ABRASIVES CONTAINING MORE THAN 1% FREE SILICA SHALL NOT BE ALLOWED. BEFORE THE PREPARED SURFACE DEGRADES FROM THE PRESCRIBED STANDARDS, THE PRIME COAT SHALL BE APPLIED. IN EVERY CASE, THE SURFACE SHALL BE COATED WITH THE EPOXY PRIME COAT ON THE SAME DAY OF SURFACE PREPARATION. CAREFUL HANDLING AND STORAGE WILL BE REQUIRED TO PREVENT AND SCRAPING, MARRING, OR OTHER SURFACE DAMAGE TO THE PREPARED SURFACE.

PAYMENT SHALL INCLUDE ALL LABOR, EQUIPMENT, HANDLING, TRANSPORTATION COSTS AND MATERIALS NECESSARY TO ACCOMPLISH THIS ITEM OF WORK PER MAJOR SUPPORT SECTION.

BASIS OF PAYMENT WILL BE AS FOLLOWS:
ITEM 630-SURFACE PREPARATION, NEW SUPPORT SECTIONS AT THE CONTRACT BID PRICE PER EACH MAJOR SUPPORT SECTION.

SURFACE PREPARATION, EXISTING SUPPORT SECTIONS

EXISTING, WEATHERED GALVANIZED SUPPORT SECTIONS SHALL HAVE THEIR SURFACE PREPRATION AS WELL AS THEIR PROTECTIVE COATING UNDER CONDITIONS OF TEMPERATURE AND HUMIDITY WITHIN THE SAME RANGE AS SPECIFIED BY THE MANUFACTURER OF THE EPOXY - PRIME COAT MATERIAL TO BE USED IMMEDIATELY AFTER THIS CLEANING OPERATION. THE SUPPORT SECTIONS SHALL BE PREPARED FOR COATING BY SSPC - SP1 FOLLOWED BY SSPC - SP6 (SOLVENT CLEANING FOLLOWED BY A COMMERCIAL BLAST CLEANING). BEFORE THE PREPARED SURFACE DEGRADES FROM THE PRESCRIBED STANDARDS, THE PRIME COAT SHALL BE APPLIED. IN EVERY CASE, THE SURFACE SHALL BE COATED WITH THE EPOXY PRIME COAT ON THE SAME DAY AS THE SURFACE PREPARATION. CAREFUL HANDLING AND STORAGE WILL BE REQUIRED TO PREVENT ANY SCRAPING, MARRING, OR OTHER SURFACE DAMAGE TO THE PREPARED SURFACE.

PAYMENT SHALL INCLUDE ALL LABOR, EQUIPMENT, HANDLING, TRANSPORTATION COSTS AND MATERIALS NECESSARY TO ACCOMPLISH THIS ITEM OF WORK PER MAJOR SUPPORT SECTION.

BASIS OF PAYMENT WILL BE AS FOLLOWS:
ITEM 630-SURFACE PREPARATION, EXISTING SUPPORT SECTIONS AT THE CONTRACT BID PRICE PER EACH MAJOR SUPPORT SECTION.

COATING, EPOXY PRIME COAT, SUPPORT SECTIONS

THIS ITEM SHALL CONSIST OF ONE (1) COAT OF AN EPOXY PRIMER TO SUPPORT SECTIONS. THE TOTAL DRY FILM THICKNESS OF THIS COAT SHALL BE BETWEEN 1.5 AND 2.0 MILS. IF MORE THAN ONE PASS IS NECESSARY TO OBTAIN THE REQUIRED THICKNESS, THAT COAT SHALL BE BORNE BY THE CONTRACTOR.

THIS COAT SHALL IN ALL CASES BE APPLIED BY BRUSH OVER SURFACES THAT WERE PREPARED EARLIER THAT SAME DAY. THE THINNING OF THE EPOXY MATERIAL IS STRICTLY PROHIBITED. MATERIAL NOT CAPABLE OF BEING APPLIED AS SPECIFIED SHALL NOT BE USED.

WHEN THE AVERAGE DRY FILM THICKNESS OF THIS COAT OVER THE ENTIRE SUPPORT SECTION IS LESS THAN THE SPECIFIED 1.5 BUT IS AT LEAST 1.25 MILS, THE CONTRACT BID PRICE FOR THIS ITEM SHALL BE REDUCED IN DIRECT PROPORTION TO THE PERCENT DEFICIENCY OF COATING UP TO 16-2/3%. IF THE DEFICIENCY OF COATING IS MORE THAN 16-2/3% (I.E. THE AVERAGE DRY FILM THICKNESS IS LESS THAN 1.25 MILS) THE WORK FOR THIS ITEM SHALL BE CONSIDERED UNSATISFACTORY AND SHALL BE RECOATED AT THE FULL EXPENSE OF THE CONTRACTOR, INCLUDING ALL LABOR, EQUIPMENT AND MATERIAL.

THE EPOXY PRIME COAT CHOSEN BY THE CONTRACTOR SHALL BE ONE OF THE FOLLOWING TWO-COMPONENT COMPOSITIONS CONFORMING TO ITS LISTED PROPERTIES:

AMERCOAT 385
% SOLIDS BY VOLUME : 47% +/- 3 %
POT LIFE : 8 HRS. @ 77 DEGREES F (25 DEGREES C)
DRYING TIME : 4 HRS. @ 77 DEGREES F

DEVRAN 4170 CORROSION RESISTANT EPOXY PRIMER 5465 SERIES
% SOLIDS BY VOLUME : 54% +/- 1%
% SOLIDS BY WEIGHT : 71 % +/- 1%
POT LIFE : 4 HRS. @ 77 DEGREES F
DRYING TIME : TOUCH 1-2 HRS., RECOAT 7 HRS.
VISCOSITY : 95-100 KU

MCR-4301 EPOXY PRIMER
% SOLIDS BY VOLUME : 48.0% +/- 2%
POT LIFE : 30 HRS. @ 50-60 DEGREES F
16 HRS. @ 80-100 DEGREES F
DRYING TIME : 4-6 HRS. @ 50-60 DEGREES F

MARK-60 ULTRAPOX
% SOLIDS BY WEIGHT : 70-75% +/- 2%
POT LIFE : 6 HRS. @ 75 DEGREES F
DRYING TIME : 2-3 HRS. INITIAL SET @ 75 DEGREES F
VISCOSITY : 300-500 CPS @ 75 DEGREES F

TILE-CLAD II HI-BILD PRIMER
% SOLIDS BY VOLUME : 48% +/- 2%
% SOLIDS BY WEIGHT : 63% +/- 2%
POT LIFE : 8 HRS. @ 77 DEGREES F
@ 77 DEGREES F
DRYING TIME : 1 HR. TO TOUCH, 6 HRS. TO RECOAT

FOR NEW SUPPORT SECTIONS THIS PRIME COAT SHALL BE DONE AT THE MANUFACTURER OF THE SUPPORT SECTIONS. VERIFICATION BY THE MANUFACTURER OF THE COATING MATERIAL FOR THE PRIME COAT PROCEDURES WILL BE REQUIRED. CAREFUL HANDLING AND STORAGE WILL BE REQUIRED TO PREVENT ANY SCRAPING, MARRING OR OTHER SURFACE DAMAGE TO THE PRIME COAT.

THE PAYMENT SHALL INCLUDE ALL LABOR, EQUIPMENT, HANDLING COSTS, AND MATERIALS NECESSARY TO ACCOMPLISH THIS ITEM OF WORK. THIS PRIME COAT SHALL BE MANUFACTURED BY THE SAME COMPANY SUPPLYING THE INTERMEDIATE AND TOP COATS. A PROPERLY CALIBRATED DRY FILM THICKNESS INSTRUMENT WILL BE USED TO CHECK THE COATING.

BASIS OF PAYMENT WILL BE AS FOLLOWS:
ITEM 630-COATING, EPOXY PRIME COAT, SUPPORT SECTIONS, AT THE CONTRACT BID PRICE PER EACH MAJOR SUPPORT SECTION.

COATING EPOXY INTERMEDIATE COAT, SUPPORT SECTIONS

THIS ITEM SHALL CONSIST OF THE APPLICATION OF ONE (1) COAT OF EPOXY TO SUPPORT SECTIONS. THE TOTAL DRY FILM THICKNESS OF THIS COAT SHALL NOT BE LESS THAN SIX (6.0) MILS. IF MORE THAN ONE PASS IS NECESSARY TO OBTAIN THE REQUIRED THICKNESS, THAT COAT SHALL BE BORNE BY THE CONTRACTOR. THIS COAT SHALL BE APPLIED BY BRUSH. THINNING OF THE EPOXY MATERIAL IS STRICTLY PROHIBITED.MATERIAL NOT CAPABLE OF BEING APPLIED AS SPECIFIED SHALL NOT BE USED.

WHEN THE AVERAGE DRY FILM THICKNESS OF THIS COAT OVER THE ENTIRE SUPPORT SECTION IS LESS THAN THE SPECIFIED SIX (6.0) MILS, BUT IS AT LEAST FIVE (5.0) MILS, THE CONTRACT PRICE FOR THIS ITEM SHALL BE REDUCED IN DIRECT PROPORTION TO THE PERCENT DEFICIENCY OF COATING UP TO 16-2/3%. IF THE DEFICIENCY OF COATING IS MORE THAN 16-2/3 %, (I.E. THE AVERAGE FILM THICKNESS IS LESS THAN 5.0 MILS), THE WORK FOR THIS ITEM SHALL BE CONSIDERED UNSATISFACTORY AND SHALL BE RECOATED AT THE FULL EXPENSE OF THE CONTRACTOR, INCLUDING ALL LABOR, EQUIPMENT, AND MATERIAL. THE EPOXY INTERMEDIATE COAT CHOSEN BY THE CONTRACTOR SHALL BE ONE OF THE FOLLOWING TWO-COMPONENT COMPOSITIONS CONFORMING TO ITS LISTED PROPERTIES:

AMERLOCK 400
% SOLIDS BY VOLUME : 83% +/- 2%
POT LIFE : 2-1/2 HRS. @ 70 DEGREES F
DRYING TIME : 20 HRS. @ 70 DEGREES F

DEVRAN 4170 CORROSION RESISTANT EPOXY PRIMER 5465 SERIES
% SOLIDS BY VOLUME : 54% +/- 1%
% SOLIDS BY WEIGHT : 71 % +/- 1%
POT LIFE : 4 HRS. @ 77 DEGREES F
DRYING TIME : TOUCH 1-2 HRS., RECOAT 7 HRS.
VISCOSITY : 95-100 KU
70 DEGREES F, 50% R.H.

MCR-4301 EPOXY PRIMER
% SOLIDS BY VOLUME : 48.0% +/- 2%
POT LIFE : 30 HRS. @ 50-0 DEGREES F, 16 HRS. @ 80 DEGREES F
DRYING TIME : 1-2 HRS. @ 60-80 DEGREES F

MARK-60 ULTRAPOX
% SOLIDS BY WEIGHT : 70-75% +/- 2%
POT LIFE : 6 HRS. @ 75 DEGREES F
DRYING TIME : 2-3 HRS. INITIAL SET @ 75 DEGREES F

HI-SOLIDS CATALYZED EPOXY
% SOLIDS BY VOLUME : 61% +/- 2% (SLATE GRAY)
% SOLIDS BY WEIGHT : 77% +/- 2%
POT LIFE : 5 HRS. @ 77 DEGREES F
DRYING TIME : 1 HR. TO TOUCH, 4 HRS. TACK FREE
6 HRS. TO RECOAT @ 77 DEGREES F, 50% R.H.

AT LEAST 24 HOURS BUT NO MORE THAN THREE (3) DAYS SHALL ELAPSE AFTER THE APPLICATION OF THE EPOXY PRIME COAT AND BEFORE THE APPLICATION OF THE EPOXY INTERMEDIATE COAT. SURFACES SHALL IN ALL CASES BE CLEAN BEFORE THE INTERMEDIATE COAT IS APPLIED.

FOR NEW SUPPORT SECTIONS, THE INTERMEDIATE COAT SHALL BE DONE AT THE MANUFACTURER OF THE SUPPORT SECTIONS. VERIFICATION BY THE MANUFACTURER FOR THE INTERMEDIATE COAT PROCEDURE WILL BE REQUIRED. CAREFUL HANDLING AND STORAGE WILL BE REQUIRED TO PREVENT ANY SCRAPING, MARRING OR OTHER SURFACE DAMAGE TO THE INTERMEDIATE COAT.

THE PAYMENT SHALL INCLUDE ALL LABOR, EQUIPMENT, HANDLING COSTS AND MATERIAL NECESSARY TO ACCOMPLISH THIS ITEM OF WORK. THIS INTERMEDIATE COAT SHALL BE MANUFACTURED BY THE SAME COMPANY SUPPLYING THE PRIME AND TOP COATS. A PROPERLY CALIBRATED DRY FILM THICKNESS INSTRUMENT WILL BE USED TO CHECK THE COATING.

BASIS OF PAYMENT WILL BE AS FOLLOWS:
ITEM 630-COATING, EPOXY, INTERMEDIATE COAT, SUPPORT SECTIONS AT THE CONTRACT BID PRICE PER EACH MAJOR SUPPORT SECTION.

PLOTTED BY: fkonopka
PLOTTED FROM: c:\users\lmincek\pid05754\05754tna.dgn
PLOT SUBMITTED:03-DEC-1998 09:01
05754TNA.DGN

TRAFFIC CONTROL

COATING, URETHANE TOP COAT, SUPPORT SECTIONS

THIS ITEM SHALL CONSIST OF THE APPLICATION OF ONE (1) COAT OF URETHANE TO SUPPORT SECTIONS. THE TOTAL DRY FILM THICKNESS OF THIS COAT SHALL NOT BE LESS THAN ONE AND ONE-HALF (1.5) MILS. IF MORE THAN ONE PASS IS NECESSARY TO OBTAIN THE REQUIRED THICKNESS, THAT COAT SHALL BE BORNE BY THE CONTRACTOR. THIS COAT SHALL BE APPLIED BY BRUSH. THINNING OF THE URETHANE MATERIAL IS STRICTLY PROHIBITED. MATERIAL NOT CAPABLE OF BEING APPLIED AS SPECIFIED SHALL NOT BE USED.

WHEN THE AVERAGE DRY FILM THICKNESS OF THIS COAT OVER THE ENTIRE SUPPORT SECTION IS LESS THAN THE SPECIFIED ONE AND ONE-HALF (1.5) MILS BUT IS AT LEAST ONE (1.0) MIL, THE CONTRACT PRICE FOR THIS ITEM SHALL BE REDUCED IN DIRECT PROPORTION TO THE PERCENT DEFICIENCY OF COATING UP TO 33 1/3%. IF THE DEFICIENCY OF THE COATING IS MORE THAN 33 1/3% , (I.E. THE AVERAGE DRY FILM THICKNESS IS LESS THAN 1.0 MIL), THE WORK FOR THIS ITEM SHALL BE CONSIDERED UNSATISFACTORY AND SHALL BE RECOATED AT THE FULL EXPENSE OF THE CONTRACTOR, INCLUDING ALL LABOR, EQUIPMENT AND MATERIAL.

THE URETHANE TOP COAT CHOSEN BY THE CONTRACTOR SHALL BE ONE OF THE FOLLOWING MATERIALS CONFORMING TO ITS LISTED PROPERTIES:

AMERCOAT 450 HS
% SOLIDS BY VOLUME : 45% +/- 2%
POT LIFE : 20 HRS. @ 77 DEGREES F
DRYING TIME : 8 HRS. @ 77 DEGREES F DRY THROUGH

DEVTHANE 4708 ALIPHATIC URETHANE ENAMEL (6200/6252)
% SOLIDS BY VOLUME : 48 +/- 1%
% SOLIDS BY WEIGHT : 59 +/- 1%
POT LIFE : 6 HRS. @ 70 DEGREES F
DRYING TIME: 4 HRS. @ 77 DEGREES F RECOAT

HYTHANE
% SOLIDS BY VOLUME : 42 +/- 2%
POT LIFE : 16 HRS. @ 50 DEGREES F
12 HRS. @ 75 DEGREES F

MARK-73 (ULTRA-KOTE)
% SOLIDS BY VOLUME : 52.5% +/- 2%
% SOLIDS BY WEIGHT : 55% +/- 2%
POT LIFE : 8 HRS. @ 75 DEGREE F
DRYING TIME : 4-5 HRS. @ 75 DEGREES F TACK FREE
VISCOSITY : 70-75 KU @ 75 DEGREES F

HI-BILD ALIPHATIC POLYURETHANE ENAMEL
% SOLIDS BY VOLUME : 40% +/- 2% (CATALYZED)
% SOLIDS BY WEIGHT : 48 % +/- 2%
POT LIFE : 6 HRS. @ 77 DEGREES F
DRYING TIME : 30 MIN. TO TOUCH, 4 HRS. TAK FREE
18 HRS. MIN. 72 HRS. MAX TO RECOAT

AT LEAST 24 HOURS BUT NO MORE THAN THREE (3) DAYS SHALL ELAPSE AFTER THE APPLICATION OF THE EPOXY INTERMEDIATE COAT AND BEFORE THE APPLICATION OF THE URETHANE TOP COAT. SURFACES SHALL IN ALL CASES BE CLEAN BEFORE THE TOP COAT IS APPLIED.

FOR NEW SUPPORT SECTIONS, THIS TOP COAT SHALL BE DONE AT THE MANUFACTURER OF THE SUPPORT SECTIONS. VERIFICATION BY THE MANUFACTURER FOR THE TOP COAT PROCEDURE WILL BE REQUIRED. CAREFUL HANDLING AND STORAGE WILL BE REQUIRED TO PREVENT ANY SCRAPING, MARRING OR OTHER SURFACE DAMAGE TO THE TOP COAT.

THE PAYMENT SHALL INCLUDE ALL LABOR, EQUIPMENT, HANDLING COST AND MATERIALS NECESSARY TO ACCOMPLISH THIS ITEM OF WORK. THIS TOP COAT SHALL BE MANUFACTURED BY THE SAME COMPANY SUPPLYING THE PRIME AND INTERMEDIATE COATS. A PROPERLY CALIBRATED DRY FILM INSTRUMENT WILL BE USED TO CHECK THE COATING.

BASIS OF PAYMENT WILL BE AS FOLLOWS:
ITEM 630-COATING, URETHANE TOP COAT, SUPPORT SECTIONS AT THE CONTRACT BID PRICE PER EACH MAJOR SUPPORT SECTION.

PREQUALIFICATION

PRIOR TO USE, THE CONTRACTOR SHALL SUBMIT TO THE DIRECTOR COPIES OF THE MANUFACTURER'S CERTIFIED TEST DATA SHOWING THAT THE MATERIAL COMPLIES WITH THE REQUIREMENTS OF THIS SPECIFICATION. THE TEST DATA SHALL INCLUDE THE BRAND NAME OF THE PAINT, NAME OF MANUFACTURER, NUMBER OF THE LOT TESTED AND DATE OF MANUFACTURE. WHEN THE PAINT HAS BEEN APPROVED BY THE DIRECTOR, FURTHER PERFORMANCE TESTING BY THE MANUFACTURER WILL NOT BE REQUIRED UNLESS THE FORMULATION OR MANUFACTURING PROCESS HAS BEEN CHANGED, IN WHICH CASE NEW CERTIFIED TEST RESULTS WILL BE REQUIRED.

ACCEPTANCE

THE MANUFACTURER SHALL SUBMIT CERTIFIED TEST DATA IN ACCORDANCE WITH THE REQUIREMENTS OF THIS SPECIFICATION. THE STATE RESERVES THE RIGHT TO SAMPLE AND TEST DELIVERED LOTS FOR COMPLIANCE.

LOCATIONS

THE FOLLOWING SUMMARY OF MAJOR SUPPORT SECTIONS TO HAVE A PROTECTIVE COATING APPLIED IS NOTE BELOW:

SUPPORT NO.	MAJOR SECTIONS	SUPPORT NO.	MAJOR SECTIONS
302	1 POLE, 1 ARM	327	1 POLE, 1 ARM
303	1 POLE, 1 ARM	330	1 POLE, 1 ARM
304	1 POLE, 1 ARM	331	1 POLE, 1 ARM
305	2 END FRAMES	332	1 POLE, 1 ARM
306	2 END FRAMES	333	1 POLE, 1 ARM
309	1 POLE, 1 ARM	334	1 POLE, 1 ARM
310	1 POLE, 1 ARM	335	1 POLE, 1 ARM
311	1 POLE, 1 ARM	336	1 POLE, 1 ARM
312	1 POLE, 1 ARM	337	2 END FRAMES
313	1 POLE, 1 ARM	338	1 POLE, 1 ARM
314	1 POLE, 1 ARM	339	1 POLE, 1 ARM
315	1 POLE, 1 ARM	340	1 POLE, 1 ARM
316	1 POLE, 1 ARM	341	1 POLE, 1 ARM
317	1 POLE, 1 ARM	342	1 POLE, 1 ARM
318	1 POLE, 1 ARM	343	1 POLE, 1 ARM
320	1 POLE, 1 ARM	344	1 POLE, 1 ARM
322	1 POLE, 1 ARM	349	1 POLE, 1 ARM
*325	1 POLE, 1 ARM	*353	1 POLE, 1 ARM
326	1 POLE, 1 ARM		

**-NEW SUPPORT*

THE FOLLOWING QUANTITIES HAVE BEEN CARRIED TO THE GENERAL SUMMARY TO PERFORM THIS WORK:

ITEM SPECIAL-SURFACE PREPARATION, EXISTING SUPPORT SECTIONS.....70 EACH
ITEM SPECIAL-SURFACE PREPARATION, NEW SUPPORT SECTIONS.....4 EACH
ITEM SPECIAL-COATING, EPOXY PRIME COAT, SUPPORT SECTIONS..74 EACH
ITEM SPECIAL-COATING, EPOXY INTERMEDIATE COAT, SUPPORT SECTIONS.....74 EACH
ITEM SPECIAL-COATING, URETHANE TOP COAT, SUPPORT SECTIONS.....74 EACH

PLOT SUBMITTED:03-DEC-1998 09:02
05754TNA.DGN
PLOTTED BY:fkonopka
PLOTTED FROM:R:\users\lmincek\pids\05754tna.dgn

PAVEMENT MARKINGS

	BY	DATE
CALC.	SP	8/94
CHECKED	EDV	9/94

FHWA REGION	STATE	PROJECT	
5	OHIO		

(103) 220

CUYAHOGA COUNTY
CUY-90-9.68

PLAN SHEET NO.	ROADWAY	FROM STATION	TO STATION	828 EDGE LINES (WHITE) LIN. FT.	828 EDGE LINES (YELLOW) LIN. FT.	828 LANE LINES LIN. FT.	828 CHANNELIZING LINES LIN. FT.	828 TRANSVERSE LINES (WHITE) LIN. FT.	828 STOP LINES LIN. FT.	828 CENTER LINES SOLID, DOUBLE LIN. FT.	828 CROSSWALK LINES LIN. FT.	828 ISLAND MARKING (WHITE) SQ. FT.	828 ISLAND MARKING (YELLOW) SQ. FT.	828 LANE ARROWS EACH	828 WORD "ONLY" ON PAVEMENT 72 INCH EACH	828 DOTTED LINES, 6 INCH (WHITE) LIN. FT.	828 CURB MARKING (YELLOW) LIN. FT.		
119	S. MARG #2	41+65	45+12			340			40	10	150								
119	S. MARG #2	0+22	8+07			775					75								
120	S. MARG #2	8+07	16+85			878													
121	ALGER RD	46+49	49+05						28	260									
121	WARREN RD	72+64	76+95			665	320		70	305				6	2				
122	S. MARG #2	37+90	45+10			720						390							
122	W.144TH ST								14	10	100								
123	W.142ND ST								14	15	84								
123	S. MARG #2	45+10	51+00			590													
123	S. MARG #2	51+00	51+83				65		35		85								
123	I-90 EB	666+00	675+00	900	900	2700													
123	I-90 WB	666+00	675+00	900	900	2700													
121	I-90 EB	642+30	654+00	1170	1170	3510													
122	I-90 WB	662+00	666+00	400	400	1200													
122	I-90 EB	654+00	666+00	1200	1200	3600													
124	I-90 EB	675+00	685+00	1000	1000	3000	200												
124	I-90 WB	675+00	685+00	1000	1000	3000	300	100											
125	I-90 EB	685+00	698+00	1395	1300	4140	95												
125	I-90 WB	685+00	698+00	1305	1300	4065													
126	I-90 EB	698+00	713+00	1500	1500	4500													
126	I-90 WB	698+00	713+00	1500	1500	4500													
127	I-90 EB	713+00	728+00	1250	1500	4780	505	150											
127	I-90 WB	713+00	728+00	1500	1500	4720													
127	RAMP 8	22+50	29+00	650	405							240							
127	RAMP 5	22+75	28+50	575	280		305												
129	I-90 EB	728+00	737+00	900	900	2700	520												
129	I-90 WB	728+00	737+00	900	900	2700	495												
129	RAMP 5	28+50	34+40	590	550						75	90							
129	RAMP 9	31+00	36+50	550							145	70							
129	RAMP 7	23+10	31+75	870	765						100	70	1500						
129	RAMP 11	34+85	42+40	755	650						95	70	1000						
129	RAMP 8	29+00	33+50	450	450		180		45		120			4	1	100			
129	RAMP 12	37+00	33+70	340	330	310	350		55		140			6	2	140			
129	W.117TH ST	47+75	30+75	600	600	1200													
131	I-90 EB	737+00	752+00	1500	1500	5365													
131	I-90 WB	737+00	752+00	1180	1500	4700													
131	RAMP 9	36+50	43+35	685	425		260												
131	RAMP 12	37+00	46+00	900	575	755	600	335				315							
131	W.110TH ST									270									
132	I-90 EB	752+00	767+00	1145	1500	4835	400												
132	I-90 WB	752+00	767+00	1500	1500	5535													
132	RAMP 14	59+25	67+00	775	415		700	270											
132	RAMP 15	62+35	67+00	465	230		235												
132	W.106TH ST									285									
SUBTOTALS	(CARRIED FOWARD TO SHEET NO. 104)			27,580	25,875	70,173	5,530	855	301	1,155	1,169	1,245	2,500	16	5	240	0		
				10.12 Mi.		14.34 Mi.				0.22 Mi.		3,745 SQ. FT.							

PAVEMENT MARKINGS

	BY	DATE
CALC.	SP	8/94
CHECKED	EDV	9/94

FHWA REGION	STATE	PROJECT	
5	OHIO		

104
220

CUYAHOGA COUNTY
CUY-90-9.68

PLAN SHEET NO.	ROADWAY	FROM STATION	TO STATION	828 EDGE LINES (WHITE) LIN. FT.	828 EDGE LINES (YELLOW) LIN. FT.	828 LANE LINES LIN. FT.	828 CHANNELIZING LINES LIN. FT.	828 TRANSVERSE LINES (WHITE) LIN. FT.	828 STOP LINES LIN. FT.	828 CENTER LINES SOLID, DOUBLE LIN. FT.	828 CROSSWALK LINES LIN. FT.	828 ISLAND MARKING (WHITE) SQ. FT.	828 ISLAND MARKING (YELLOW) SQ. FT.	828 LANE ARROWS EACH	828 WORD "ONLY" ON PAVEMENT 72 INCH EACH	828 DOTTED LINES, 6 INCH (WHITE) LIN. FT.	828 CURB MARKING (YELLOW) LIN. FT.		
133	I-90 EB	767+00	776+00	900	900	2700													
133	I-90 WB	767+00	776+00	900	900	2700													
133	RAMP 14	67+00	69+82	280	280	100	180		50		125			4	1	60			
133	RAMP 15	67+00	71+25	425	425						85								
133	N. MARG #4	50+50	55+00			250	180		50		200			4	1	80	450		
134	I-90 EB	776+00	791+25	1525	1525	4575													
134	I-90 WB	776+00	791+25	1525	1525	4575													
134	N. MARG #4	55+00	57+75			275					75						275		
134	N. MARG #4	58+15	62+85			590			32		190								
134	N. MARG, RAMP 15	W.98TH ST	91+25			1140	300		59		195			6	2	80	675		
134	S. MARG, RAMP 16	W.98TH ST	91+25		675	865	420	145	45		385	300							
135	I-90 EB	791+25	805+50	1425	1425	4275	225												
135	I-90 WB	791+25	805+50		1425	4500													
135	RAMP 15	91+25	99+50	825	480		700	360											
135	RAMP 16	91+25	96+00	475	175		300												
135	N. MARG #4	70+30	81+05			1015			50		260								
135	S. MARG #5	57+30	62+35			340	155		45		150	210							
135	LORAIN AVE	44+15	53+00			1770	185	50		885									
136	I-90 EB	805+50	821+00	1550	1550	4650													
136	I-90 WB	805+50	821+00	1550	1550	4650													
136	LORAIN AVE	53+00	53+60			70			26	35	130					130			
136	RAMP 17	11+65	21+00	935	935	860	370							6	2				
136	RAMP 18	7+60	21+00	1340	1200	1340	190	60			70	100							
136	CONNECTOR					490	90			290						30			
136	CLARK					560				280									
137	I-90 EB	821+00	836+50	1550	1550	4880	642												
137	I-90 WB	821+00	836+50	1090	1550	4750	800												
137	RAMP 17	21+00	27+50	650	190	450	920	495				700							
137	RAMP 18	21+00	27+75	675		700	675												
137	W.73RD ST									350									
138	I-90 EB	836+50	851+50	1500	1500	6000													
138	I-90 WB	836+50	851+50	1500	1500	6000													
138	W.65TH ST									245									
139	I-90 EB	851+50	866+00	1450	1450	5250	550												
139	I-90 WB	851+50	866+00	1450	1450	5210	590												
140	I-90 EB	866+00	882+00	1285	1600	4800	250												
140	I-90 WB	866+00	882+00	1600	1600														
—	I-90 WB	882+00	895+30	1330	1330	3990													
140	RAMP 27	66+00	82+00	1600	790	1485	810				100								
140	RAMP 28	68+50	82+00	1350	1035	1050	295		32		100			4	1				
	SUBTOTALS			30,685	30,515	86,855	8,827	1,110	389	2,085	2,065	1,310	0	24	7	380	1,400		
				11.59 Mi.		16.45 Mi.				0.39 Mi.		1,310 SQ.FT.							
	TOTALS (SHEETS 103 & 104)			58,265	56,390	157,028	14,357	1,965	690	3,240	3,234	2,555	2,500	40	12	620	1,400		
				21.71 Mi.		30.79 Mi.				0.61 Mi.		5,055 SQ.FT.							

DRAWING = CHART-2 DATE: NOV 14, 1994

GROUND MOUNTED SIGNS

	BY	DATE
CALC.	SP	8/94
CHECKED	EDV	9/94

FHWA REGION	STATE	PROJECT	
5	OHIO		

105/220

CUYAHOGA COUNTY
CUY-90-9.68

SUPPORT NUMBER	PLAN SHEET NUMBER	ELEVATION VIEW SHEET NUMBER	SPECIAL DETAIL SHEET NUMBER	LOCATION	SIGN CODE NO.	ACTUAL SIGN SIZE	630 SIGNS, FLAT SHEET TYPE G	630 SIGNS, FLAT SHEET, TYPE G, AS PER PLAN	630 SIGNS, EXTRUSHEET TYPE G	630 GROUND MOUNTED SUPPORTS, NO. 3 POST	630 GROUND MOUNTED SUPPORTS, NO. 4 POST	630 ONE WAY SUPPORTS, NO. 4 POST	630 GROUND MOUNTED SUPPORTS, S4 X 7.7 BEAM	630 GROUND MOUNTED SUPPORTS, W6 X 9 BEAM	630 GROUND MOUNTED SUPPORTS, W10 X 12 BEAM	630 GROUND MOUNTED SUPPORTS, W8 X 18 BEAM	630 BREAKAWAY BEAM CONNECTION	630 2" DIA. BARRIER MOUNTED SIGN SUPPORT	630 SIGN SUPPORT ASSEMBLY, POLE MOUNTED	630 GROUND MOUNTED BEAM SUPPORT FOUNDATION	630 REMOVAL OF POLE MOUNTED SIGN AND DISPOSAL	630 REMOVAL OF GROUND MOUNTED SIGN AND DISPOSAL	630 REMOVAL OF GROUND MOUNTED MAJOR SIGN AND DISPOSAL	630 REMOVAL OF GROUND MOUNTED POST SUPPORT AND DISPOSAL	630 REMOVAL OF GROUND MOUNTED BEAM SUPPORT AND DISPOSAL	SUPPORT NUMBER
						INCHES	SQ. FT.	SQ. FT.	SQ. FT.	LIN. FT.	LIN. FT.	LIN. FT.	LIN. FT.	LIN. FT.	LIN. FT.	LIN. FT.	EACH	EACH	EACH	EACH	EACH	EACH	EACH	EACH	EACH	
1	124		118	679+00, RT, I-90	W-68-48	48x48		16			15,15															1
2	124			684+00, RT, I-90	R-2-60	60x60x60	10.8			16,16											1			2		2
3	124		102	684+50, 25' RT, I-90	X-6L	12x36	3											1								3
4	124			684+50, 118' RT, I-90	X-6R	12x36	3			14.5											1		1			4
5	125			691+25, 97' LT, I-90	X-6R	12x36	3			14.5																5
6	125		118	695+65, LT, I-90	W-68-48	48x48		16			15,15															6
7	125		102	691+25, 22' LT, I-90	X-6L	12x36	3											1								7
8	126			704+75, LT, I-90	N-41-12	12x48	4			15.5													1		1		8
9	126			704+75, RT, I-90	N-41-12	12x48	4			15.5																	9
10	126	143		707+40, RT, I-90	R-9B-48	48x96			32				19,19				2			2			1		2	10
11	126	143		707+85, LT, I-90	R-9B-48	48x96			32				19.5,20				2			2			1		2	11
12	127			715+00, LT, I-90	IM-40-36	36x18	4.5			16,16																12
12	127			715+00, LT, I-90	M-5-36-2	36x36	9																			12
13	127			25+00, LT, RAMP 5	R-2-60	60x60x60	10.8			16,16													1		2		13
14	127	141		725+08, RT, I-90	GF-96	96x60			40				18,18				2			2						14
15	127			26+60, RT, RAMP 8																		4				15
16	127			727+00, RT, I-90																			1		2		16
17	127			727+75, LT, I-90	W-49R-48	48x48	16			15.5,15.5													1		2		17
18	127			28+35, RT, RAMP 8																		1					18
19	128			42+90, LT, W.117TH ST																			1		1		19
20	128			43+95, RT, W.117TH ST																		4					20
21	128			31+70, RT, RAMP 9	R-15B-30	30x18	3.75													1							21
22	128			44+50, W.117TH ST	R-37R-24	24x30	5			14													1		1		22
23	128			43+60, W.117TH ST	R-37R-24	24x30	5			14													1		1		23
24	128			23+95, RT, RAMP 7	R-15B-30	30x18	3.75													1							24
25	128			44+00, LT, W.117TH ST	R-41B-36	36x36	9				14.5	16										3					25
25	128			44+00, LT, W.117TH ST	R-43L-48	48x18	6																				25
25	128			44+00, LT, W.117TH ST	R-43R-48	48x18	6																				25
25	128			44+00, LT, W.117TH ST	R-31J-42	42x30	8.75																				25
26	128			43+40, LT, W.117TH ST	R-41B-36	36x36	9				14.5	16											2		1		26
26	128			43+40, LT, W.117TH ST	R-43L-48	48x18	6																				26
26	128			43+40, LT, W.117TH ST	R-43R-48	48x18	6																				26
26	128			43+40, LT, W.117TH ST	R-31J-42	42x30	8.75																				26
27	128			45+70, LT, W.117TH ST	W-SPL-36	36x36	9													1		1					27
27	128			45+70, LT, W.117TH ST	W-143-24	24x24	4													1							27
28	128			29+85, RT, RAMP 8	R-41A-36	36x24	6			13																	28
29	128			29+85, LT, RAMP 8	R-41A-36	36x24	6			13																	29
30	128			27+90, LT, RAMP 7	W-33-30	30x36	7.5			14																	30
31	128			28+55, LT, RAMP 7	W-33-30	30x36	7.5			14																	31
32	128			29+25, LT RAMP 7	W-33-30	30x36	7.5			14																	32
33	128			30+00, LT RAMP 7	W-33-30	30x36	7.5			14																	33
34	129	141		29+45, RT, RAMP 8		120x36			30				15.5,15.5				2			2			1		2	34
35	128			729+50, RT, I-90	W-49R-48	48x48	16			15.5,15.5																	35
36	128			736+80, LT, I-90	W-49R-48	48x48	16			15.5,15.5													1		2		36
37	128			50+45, W.117TH ST	R-36R-24	24x30	5			13.5													1				37
38	128			53+45, W.117TH ST	R-36R-24	24x30	5			13.5													2		1		38
38	128			53+45, W.117TH ST	R-37R-24	24x30	5																				38
SUBTOTALS (CARRIED FOWARD TO SHEET NO. 111)							250.10	32	134	386	89	32	144.5	0	0	0	8	2	4	8	13	15	3	17	6	

TRAFFIC CONTROL QUANTITIES, GROUND MOUNTED SIGNS

GROUND MOUNTED SIGNS

	BY	DATE
CALC.	SP	8/94
CHECKED	EDV	9/94

FHWA REGION	STATE	PROJECT	
5	OHIO		

106
220

CUYAHOGA COUNTY
CUY-90-9.68

SUPPORT NUMBER	PLAN SHEET NUMBER	ELEVATION VIEW SHEET NUMBER	SPECIAL DETAIL SHEET NUMBER	LOCATION	SIGN CODE NO.	ACTUAL SIGN SIZE	630 SIGNS, FLAT SHEET TYPE G	630 SIGNS, FLAT SHEET, TYPE G, AS PER PLAN	630 SIGNS, EXTRUSHEET TYPE G	630 GROUND MOUNTED SUPPORTS, NO. 3 POST	630 GROUND MOUNTED SUPPORTS, NO. 4 POST	630 ONE WAY SUPPORTS, NO. 4 POST	630 GROUND MOUNTED SUPPORTS, S4 X 7.7 BEAM	630 GROUND MOUNTED SUPPORTS, W6 X 9 BEAM	630 GROUND MOUNTED SUPPORTS, W10 X 12 BEAM	630 GROUND MOUNTED SUPPORTS, W8 X 18 BEAM	630 BREAKAWAY BEAM CONNECTION	630 2" DIA. BARRIER MOUNTED SIGN SUPPORT	630 SIGN SUPPORT ASSEMBLY, POLE MOUNTED	630 GROUND MOUNTED BEAM SUPPORT FOUNDATION	630 REMOVAL OF POLE MOUNTED SIGN AND DISPOSAL	630 REMOVAL OF GROUND MOUNTED SIGN AND DISPOSAL	630 REMOVAL OF GROUND MOUNTED MAJOR SIGN AND DISPOSAL	630 REMOVAL OF GROUND MOUNTED POST SUPPORT AND DISPOSAL	630 REMOVAL OF GROUND MOUNTED BEAM SUPPORT AND DISPOSAL	SUPPORT NUMBER
						INCHES	SQ. FT.	SQ. FT.	SQ. FT.	LIN. FT.	LIN. FT.	LIN. FT.	LIN. FT.	LIN. FT.	LIN. FT.	LIN. FT.	EACH	EACH	EACH	EACH	EACH	EACH	EACH	EACH	EACH	
39	128			52+25, RT, W.117TH ST	W-SPL-36	36x36	9												1		1					39
39	128			52+25, RT, W.117TH ST	W-143-24	24x24	4												1							39
40	128			33+20, LT, RAMP 5	R-15B-30	30x18	3.75												1		1					40
41	128			41+50, LT, RAMP 11	R-15B-30	30x18	3.75												1							41
42	128			33+80, RT, RAMP 12	R-31U-54	54x30	11.25												1							42
43	128			33+85, LT, RAMP 12	R-31U-54	54x30	11.25																			43
44	128			33+80, RT, RAMP 12	R-41B-36	36x36	9												1		1					44
44	128			33+80, RT, RAMP 12	R-43L-48	48x18	6												1							44
44	128			33+80, RT, RAMP 12	R-43R-48	48x18	6												1							44
45	128			33+85, LT, RAMP 12	R-41B-36	36x36	9				14.5	16										1		1		45
45	128			33+85, LT, RAMP 12	R-43L-48	48x18	6																			45
45	128			33+85, LT, RAMP 12	R-43R-48	48x18	6																			45
46	128			54+45, LT, W.117TH ST	R-32R-30	30x30	6.25			13.5												1		1		46
47	128			55+45, LT, W.117TH ST	R-32R-30	30x30	6.25			13.5												1		1		47
48	128			54+30, W.117TH ST	R-37R-24	24x30	5			12.5																48
49	128			34+15, LT, RAMP 12																		2		2		49
50	128			36+70, RAMP 11	W-33-30	30x36	7.5			14																50
51	128			37+30, RAMP 11	W-33-30	30x36	7.5			14																51
52	128			38+00, RAMP 11	W-33-30	30x36	7.5			14																52
53	128			38+65, RAMP 11	W-33-30	30x36	7.5			14																53
54	128			56+95, W.117TH ST	R-37R-24	24x30	5			12.5												2		1		54
54	128			56+95, W.117TH ST	R-123-24	24x24	4																			54
55	128			53+95, LT, W.117TH ST																	3					55
56	131			35+25, RT W.117TH ST	M-5-24-2	24x24	4			13																56
56	131			35+25, RT W.117TH ST	1M-17-24	24x12	2															2		1		56
57	131			42+00, W.117TH ST	W-85-36	36x36	9			13												1		1		57
58	131			64+65, LT, W.117TH ST	M-5-24-2	24x24	4			13												2		1		58
58	131			64+65, LT, W.117TH ST	1M-17-24	24x12	2																			58
59	130			37+55, LT, RAMP 12	R-41A-36	36x24	6												1		1					59
60	130			37+55, RT, RAMP 12	R-41A-36	36x24	6			13												1		1		60
61	130			739+00, RT, I-90	W-50R-48	48x48	16															1		2		61
62	130			40+50, RT, RAMP 12						16,16												1		1		62
63	130	141		38+50, LT, RAMP 12		120x36			30				16,16				2			2			1		2	63
64	130			740+00, LT, I-90	W-49R-48	48x48	16			16,16												1		2		64
65	130			41+20, LT, RAMP 12	W-47-48	48x48	16			16,16									1		1					65
66	130	141		742+50, LT, I-90	GF-96	96x60			40				18,18				2			2						66
67	130	141		749+35, RT, I-90		156x48			52					16,16			2			2			1	4		67
68	132			759+00, LT, I-90	N-41-12	12x48	4			15.5												1		1		68
69	132			759+00, RT, I-90	N-41-12	12x48	4			15.5												1		1		69
70	132			60+10, RT, RAMP 14	W-97-48	48x60	20			18,18																70
71	132			62+45, RT, RAMP 14	W-47-48	48x48	16												1		1					71
72	132	141		763+50, RT, I-90	GF-96	96x60			40				18,18				2			2						72
SUBTOTALS (CARRIED FOWARD TO SHEET NO. 111)							266.50	0	162	323	14.5	16	104	32	0	0	8	0	11	8	9	18	2	21	2	

TRAFFIC CONTROL QUANTITIES, GROUND MOUNTED SIGNS

GROUND MOUNTED SIGNS

	BY	DATE
CALC.	SP	8/94
CHECKED	EDV	9/94

FHWA REGION	STATE	PROJECT	
5	OHIO		

CUYAHOGA COUNTY
CUY-90-9.68

(107/220)

SUPPORT NUMBER	PLAN SHEET NUMBER	ELEVATION VIEW SHEET NUMBER	SPECIAL DETAIL SHEET NUMBER	LOCATION	SIGN CODE NO.	ACTUAL SIGN SIZE	630 SIGNS, FLAT SHEET TYPE G	630 SIGNS, FLAT SHEET, TYPE G, AS PER PLAN	630 SIGNS, EXTRUSHEET TYPE G	630 GROUND MOUNTED SUPPORTS, NO. 3 POST	630 GROUND MOUNTED SUPPORTS, NO. 4 POST	630 ONE WAY SUPPORTS, NO. 4 POST	630 GROUND MOUNTED SUPPORTS, S4 X 7.7 BEAM	630 GROUND MOUNTED SUPPORTS, W6 X 9 BEAM	630 GROUND MOUNTED SUPPORTS, W10 X 12 BEAM	630 GROUND MOUNTED SUPPORTS, W8 X 18 BEAM	630 BREAKAWAY BEAM CONNECTION	630 2" DIA. BARRIER MOUNTED SIGN SUPPORT	630 SIGN SUPPORT ASSEMBLY, POLE MOUNTED	630 GROUND MOUNTED BEAM SUPPORT FOUNDATION	630 REMOVAL OF POLE MOUNTED SIGN AND DISPOSAL	630 REMOVAL OF GROUND MOUNTED SIGN AND DISPOSAL	630 REMOVAL OF GROUND MOUNTED MAJOR SIGN AND DISPOSAL	630 REMOVAL OF GROUND MOUNTED POST SUPPORT AND DISPOSAL	630 REMOVAL OF GROUND MOUNTED BEAM SUPPORT AND DISPOSAL	SUPPORT NUMBER
						INCHES	SQ. FT.	SQ. FT.	SQ. FT.	LIN. FT.	LIN. FT.	LIN. FT.	LIN. FT.	LIN. FT.	LIN. FT.	LIN. FT.	EACH	EACH	EACH	EACH	EACH	EACH	EACH	EACH	EACH	
73	132	142		65+00, RT, RAMP 14		144x60			60	13					18,18		2			2						73
73	132	142		65+00, RT, RAMP 14	M-8-24	24x12	2																			73
73	132	142		65+00, RT, RAMP 14	M-2-24-2	24x24	4																			73
73	132	142		65+00, RT, RAMP 14	M-24-21	21x15	2.19																			73
74	133			67+60, LT, RAMP 14	R-41A-36	36x24	6			16,16												2		2		74
74	133			67+60, LT, RAMP 14	R-31J-42	42x30	8.75																			74
75	133			67+60, RT, RAMP 14	R-41A-36	36x24	6												1		2					75
75	133			67+60, RT, RAMP 14	R-31J-42	42x30	8.75																			75
76	133			69+90, LT, RAMP 14	R-31J-42	42x30	8.75				16	18										4		1		76
76	133			69+90, LT, RAMP 14	R-41B-36	36x36	9																			76
76	133			69+90, LT, RAMP 14	R-43L-48	48x18	6																			76
76	133			69+90, LT, RAMP 14	R-43R-48	48x18	6																			76
77	133			69+90, RT, RAMP 14	R-31J-42	42x30	8.75				16	18										4		1		77
77	133			69+90, RT, RAMP 14	R-41B-36	36x36	9																			77
77	133			69+90, RT, RAMP 14	R-43L-48	48x18	6																			77
77	133			69+90, RT, RAMP 14	R-43R-48	48x18	6																			77
78	133			767+75, RT, I-90	M-5-36-2	36x36	9			16,16																78
78	133			767+75, RT, I-90	IM-39-36	36x18	4.5																			78
79	133		102	769+80, RT, I-90	X-6L	12x36	3											1								79
80	133			769+50, RT, I-90	X-6R	12x36	3			15.5												1		1		80
81	133			768+00, LT, I-90	W-49R-48	48x48	16												1							81
82	133	142		35+65, RT, WEST BLVD	M-52A-108	108x30	22.5						16,16				2			2				4		82
83	133			38+80, RT, WEST BLVD	R-10-24	24x30	5												1		1					83
84	133		102	772+15, LT, I-90	X-6L	12x36	3											1								84
85	133			772+50, LT, I-90	X-6R	12x36	3			15.5												1		1		85
86	133	143		773+00, RT, I-90	R-9B-48	48x96			32				19,19.5							2		1			2	86
87	133	143		774+40, LT, I-90	R-9B-48	48x96			32				19,19.5							2		1			2	87
88	133			53+70, LT, MARG #4	W-47-36	36x36	9												1							88
89	133			54+00, RT, MARG #4	R-43R-48	48x18	6			13												1		1		89
90	133			53+00, RT, MARG #4	R-31A-36	36x30	7.5			16,16												2		2		90
90	133			53+00, RT, MARG #4	R-41A-36	36x24	6																			90
91	133			53+00, LT, MARG #4	R-31A-36	36x30	7.5			16,16												2		2		91
91	133			53+00, LT, MARG #4	R-41A-36	36x24	6																			91
92	133			52+30, LT, MARG #4																	1					92
93	133			51+00, RT, MARG #4																		1		1		93
94	133			51+00, LT, MARG #4																		1		1		94
95	133			51+05, LT, MARG #4																		1		1		95
96	133			50+35, RT, MARG #4	R-41B-36	36x36	9				16.5	18										2		1		96
96	133			50+35, RT, MARG #4	R-43L-48	48x18	6																			96
96	133			50+35, RT, MARG #4	R-43R-48	48x18	6																			96
96	133			50+35, RT, MARG #4	R-31A-36	36x30	7.5																			96
97	133			50+60, LT, MARG #4	R-41B-36	36x36	9				16.5	18							5		3					97
97	133			50+60, LT, MARG #4	R-43L-48	48x18	6																			97
97	133			50+60, LT, MARG #4	R-43R-48	48x18	6																			97
97	133			50+60, LT, MARG #4	R-31A-36	36x30	7.5																			97
97	133			50+60, LT, MARG #4	R-42-24	24x24	4																			97
SUBTOTALS (CARRIED FOWARD TO SHEET NO. 111)							269.19	0	124	185	65	72	109	0	36	0	4	2	9	8	7	24	0	19	4	

TRAFFIC CONTROL QUANTITIES, GROUND MOUNTED SIGNS

GROUND MOUNTED SIGNS

	BY	DATE
CALC.	SP	8/94
CHECKED	EDV	9/94

FHWA REGION	STATE	PROJECT	
5	OHIO		

108
220

CUYAHOGA COUNTY
CUY-90-9.68

SUPPORT NUMBER	PLAN SHEET NUMBER	ELEVATION VIEW SHEET NUMBER	SPECIAL DETAIL SHEET NUMBER	LOCATION	SIGN CODE NO.	ACTUAL SIGN SIZE	630 SIGNS, FLAT SHEET TYPE G	630 SIGNS, FLAT SHEET, TYPE G, AS PER PLAN	630 SIGNS, EXTRUSHEET TYPE G	630 GROUND MOUNTED SUPPORTS, NO. 3 POST	630 GROUND MOUNTED SUPPORTS, NO. 4 POST	630 ONE WAY SUPPORTS, NO. 4 POST	630 GROUND MOUNTED SUPPORTS, S4 X 7.7 BEAM	630 GROUND MOUNTED SUPPORTS, W6 X 9 BEAM	630 GROUND MOUNTED SUPPORTS, W10 X 12 BEAM	630 GROUND MOUNTED SUPPORTS, W8 X 18 BEAM	630 BREAKAWAY BEAM CONNECTION	630 2" DIA. BARRIER MOUNTED SIGN SUPPORT	630 SIGN SUPPORT ASSEMBLY, POLE MOUNTED	630 GROUND MOUNTED BEAM SUPPORT FOUNDATION	630 REMOVAL OF POLE MOUNTED SIGN AND DISPOSAL	630 REMOVAL OF GROUND MOUNTED SIGN AND DISPOSAL	630 REMOVAL OF GROUND MOUNTED MAJOR SIGN AND DISPOSAL	630 REMOVAL OF GROUND MOUNTED POST SUPPORT AND DISPOSAL	630 REMOVAL OF GROUND MOUNTED BEAM SUPPORT AND DISPOSAL	SUPPORT NUMBER
						INCHES	SQ. FT.	SQ. FT.	SQ. FT.	LIN. FT.	LIN. FT.	LIN. FT.	LIN. FT.	LIN. FT.	LIN. FT.	LIN. FT.	EACH	EACH	EACH	EACH	EACH	EACH	EACH	EACH	EACH	
98	133			48+40, RT, WEST BLVD	M-45	42x60	17.5												1							98
99	133			50+40, RT, WEST BLVD	M-45	42x60	17.5												1							99
100	133			43+00, LT, WEST BLVD	R-120-24	24x24	4			14												1		1		100
101	133			43+00, RT, WEST BLVD	R-120-24	24x24	4			14												1		1		101
102	134			55+50, LT, MARG #4	R-41A-36	36x24	6												1		1					102
103	134			55+50, RT, MARG #4	R-41A-36	36x24	6			13																103
104	134		102	779+55, RT, I-90	X-6L	12x36	3											1								104
105	134			779+90, RT, I-90	X-6R	12x36	3			15.5																105
106	134			151+40, LT, W.100TH ST	R-41B-36	36x36	9				14.5	16														106
106	134			151+40, LT, W.100TH ST	R-43R-48	48x18	6																			106
107	134			151+30, RT, W.100TH ST	R-41B-36	36x36	9				14.5	16														107
107	134			151+30, RT, W.100TH ST	R-43L-48	48x18	6																			107
108	134			152+30, RT, W.100TH ST	W-2-36	36x36	9												2		1					108
108	134			152+30, RT, W.100TH ST	W-143-24	24x24	4																			108
109	134			152+30, LT, W.100TH ST	W-2-36	36x36	9				17.5													1	1		109
109	134			152+30, LT, W.100TH ST	W-143-24	24x24	4																			109
110	134			155+20, RT, W.100TH ST	W-47-36	36x36	9												1		1					110
111	134			157+10, RT, W.100TH ST	R-41B-36	36x36	9				14.5	16										1		1		111
111	134			157+10, RT, W.100TH ST	R-43L-48	48x18	6																			111
111	134			157+10, RT, W.100TH ST	R-43R-48	48x18	6																			111
112	134			155+20, RT, W.100TH ST	R-41A-36	36x24	6												1							112
113	134			155+20, LT, W.100TH ST	R-41A-36	36x24	6			13																113
114	134			58+30, LT, MARG #4	R-41B-36	36x36	9				14.5	16										1		1		114
114	134			58+30, LT, MARG #4	R-43R-48	48x18	6																			114
115	134			58+30, RT, MARG #4	R-41B-36	36x36	9				14.5	16														115
115	134			58+30, RT, MARG #4	R-43R-48	48x18	6																			115
116	134			60+40, LT, MARG #4	R-41A-36	36x24	6												1							116
116	134			60+40, LT, MARG #4	M-45	42x60	17.5												1							116
117	134			60+40, RT, MARG #4	R-41A-36	36x24	6			13												1		1		117
118	134			781+00, LT, I-90	X-6R	12x36	3			15.5												1		1		118
119	134		102	781+30, LT, I-90	X-6L	12x36	3											1								119
120	134		102	783+00, RT, I-90	X-6L	12x36	3											1								120
121	134			783+00, RT, I-90	X-6R	12x36	3			15.5												1		1		121
122	134			157+70, LT, W.100TH ST	R-41B-36	36x36	9				14.5	16										3		1		122
122	134			157+70, LT, W.100TH ST	R-43L-48	48x18	6																			122
122	134			157+70, LT, W.100TH ST	R-43R-48	48x18	6																			122
123	134			50+55, RT, MARG #5	R-43L-48	48x18	6												1							123
123	134			50+55, RT, MARG #5	R-43R-48	48x18	6																			123
124	134			LORAIN AVE, SOUTH SIDE	M-45	42x60	17.5				18,18											1		2		124
125	134			LORAIN AVE, SOUTH SIDE	M-45	42x60	17.5				18,18											2		2		125
125	134			LORAIN AVE, SOUTH SIDE	M-45	42x60	17.5																			125
126	134			LORAIN AVE, NORTH SIDE	M-45	42x60	17.5				18,18											2		2		126
126	134			LORAIN AVE, NORTH SIDE	M-45	42x60	17.5																			126
SUBTOTALS (CARRIED FOWARD TO SHEET NO. 111)							351.00	0	0	113.5	212.5	96	0	0	0	0	0	3	10	0	3	15	1	15	0	

TRAFFIC CONTROL QUANTITIES, GROUND MOUNTED SIGNS

GROUND MOUNTED SIGNS

	BY	DATE
CALC.	SP	8/94
CHECKED	EDV	9/94

FHWA REGION	STATE	PROJECT	
5	OHIO		

109
220

CUYAHOGA COUNTY
CUY-90-9.68

SUPPORT NUMBER	PLAN SHEET NUMBER	ELEVATION VIEW SHEET NUMBER	SPECIAL DETAIL SHEET NUMBER	LOCATION	SIGN CODE NO.	ACTUAL SIGN SIZE	630 SIGNS, FLAT SHEET TYPE G	630 SIGNS, FLAT SHEET, TYPE G, AS PER PLAN	630 SIGNS, EXTRUSHEET TYPE G	630 GROUND MOUNTED SUPPORTS, NO. 3 POST	630 GROUND MOUNTED SUPPORTS, NO. 4 POST	630 ONE WAY SUPPORTS, NO. 4 POST	630 GROUND MOUNTED SUPPORTS, S4 X 7.7 BEAM	630 GROUND MOUNTED SUPPORTS, W6 X 9 BEAM	630 GROUND MOUNTED SUPPORTS, W10 X 12 BEAM	630 GROUND MOUNTED SUPPORTS, W8 X 18 BEAM	630 BREAKAWAY BEAM CONNECTION	630 2" DIA. BARRIER MOUNTED SIGN SUPPORT	630 SIGN SUPPORT ASSEMBLY, POLE MOUNTED	630 GROUND MOUNTED BEAM SUPPORT FOUNDATION	630 REMOVAL OF POLE MOUNTED SIGN AND DISPOSAL	630 REMOVAL OF GROUND MOUNTED SIGN AND DISPOSAL	630 REMOVAL OF GROUND MOUNTED MAJOR SIGN AND DISPOSAL	630 REMOVAL OF GROUND MOUNTED POST SUPPORT AND DISPOSAL	630 REMOVAL OF GROUND MOUNTED BEAM SUPPORT AND DISPOSAL	SUPPORT NUMBER
						INCHES	SQ. FT.	SQ. FT.	SQ. FT.	LIN. FT.	LIN. FT.	LIN. FT.	LIN. FT.	LIN. FT.	LIN. FT.	LIN. FT.	EACH	EACH	EACH	EACH	EACH	EACH	EACH	EACH	EACH	
127	134			LORAIN AVE, NORTH SIDE	M-45	42x60	17.5				18,18											1		2		127
128	134			87+35, LT, RAMP 16	R-43R-48	48x18	6			13.5												1		1		128
129	134			55+50, LT, MARG #5	R-43R-48	48x18	6												1			1		1		129
130	134			57+00, LT, MARG #5	R-43R-48	48x18	6			13.5												1		1		130
131	134			46+05, RT, W.98TH ST	R-120-24	24x24	4			14												1		1		131
132	134			789+10, RT, I-90																		1		1		132
133	134			55+50, LT, MARG #5	M-45	42x60	17.5												1							133
134	134			789+85, RT, I-90	W-49R-48	48x48	16				17,17															134
135	134			47+70, RT, W.98TH ST	R-120-24	24x24	4			14																135
136	134			49+00, LT, W.98TH ST	R-43L-48	48x18	6			13.5												2		1		136
136	134			49+00, LT, W.98TH ST	R-43R-48	48x18	6																			136
137	134			48+45, RT, W.98TH ST	R-41B-36	36x36	9				14.5	16										4		1		137
137	134			48+45, RT, W.98TH ST	R-43L-48	48x18	6																			137
137	134			48+45, RT, W.98TH ST	R-43R-48	48x18	6																			137
137	134			48+45, RT, W.98TH ST	R-SPL	36x24	6																			137
138	134			49+00, RT, W.98TH ST	R-41B-36	36x36	9				14.5	16									4					138
138	134			49+00, RT, W.98TH ST	R-43L-48	48x18	6																			138
138	134			49+00, RT, W.98TH ST	R-43R-48	48x18	6																			138
138	134			49+00, RT, W.98TH ST	R-SPL	36x24	6																			138
139	134		102	785+10, LT, I-90	X-6L	12x36	3												1							139
140	134		102	785+10, LT, I-90	X-6R	12x36	3												1			1		1		140
141	134			86+95, LT, RAMP 15	R-41A-36	36x24	6				17,17															141
141	134			86+95, LT, RAMP 15	R-31HH-48	48x30	10																			141
142	134			86+95, RT, RAMP 15	R-41A-36	36x24	6				17,17															142
142	134			86+95, RT, RAMP 15	R-31HH-48	48x30	10																			142
143	134			W.98TH ST WEST SIDE	M-5-24-2	24x24	4			16												2		1		143
143	134			W.98TH ST WEST SIDE	IM-17-24	24x12	2																			143
144	134	142		67+00, LT, MARG #4	D-4B-48	144x48	48								18,18		2			2		2		3		144
144	134	142		67+00, LT, MARG #4	M-45	42x60	17.5				9,9															144
145	134			69+90, RT, MARG #4	R-43R-48	48x18	6			13.5												1		1		145
146	134			91+00, LT, RAMP 15	W-49R-36	36x36	9															1		1		146
147	135			72+00, RT, MARG #4	W-49L-36	36x36	9			15																147
148	135			72+85, LT, MARG #4	R-1-30	30x30	6.25				18															148
148	135			72+85, LT, MARG #4	R-25A-24	24x30	5																			148
149	135			73+00, RT, MARG #4	R-43R-48	48x18	6			13.5												1		1		149
150	135			59+55, LT, MARG #5	R-41A-36	36x24	6			14												1		1		150
151	135			59+55, RT, MARG #5	R-41A-36	36x24	6			14												1		1		151
152	135			94+30, RT, RAMP 16	R-2-60	60x60x60	10.8				17,17											1		2		152
153	135			41+67, RT, LORAIN AVE	R-121-24	24x24	4													1	1					153
154	135			41+67, RT, LORAIN AVE																	3					154
155	135			62+05, RT, MARG #5	R-41B-36	36x36	9					16.5														155
155	135			62+05, RT, MARG #5	R-43L-48	48x18	6																			155
155	135			62+05, RT, MARG #5	R-43R-48	48x18	6																			155
SUBTOTALS (CARRIED FOWARD TO SHEET NO. 111)							341.55	0	0	154.5	237	48.5	0	0	36	0	2	2	7	2	4	23	0	21	0	

GROUND MOUNTED SIGNS

	BY	DATE
CALC.	SP	8/94
CHECKED	EDV	9/94

FHWA REGION	STATE	PROJECT	
5	OHIO		

CUYAHOGA COUNTY
CUY-90-9.68

110
220

SUPPORT NUMBER	PLAN SHEET NUMBER	ELEVATION VIEW SHEET NUMBER	SPECIAL DETAIL SHEET NUMBER	LOCATION	SIGN CODE NO.	ACTUAL SIGN SIZE	630 SIGNS, FLAT SHEET TYPE G	630 SIGNS, FLAT SHEET, TYPE G, AS PER PLAN	630 SIGNS, EXTRUSHEET TYPE G	630 GROUND MOUNTED SUPPORTS, NO. 3 POST	630 GROUND MOUNTED SUPPORTS, NO. 4 POST	630 ONE WAY SUPPORTS, NO. 4 POST	630 GROUND MOUNTED SUPPORTS, S4 X 7.7 BEAM	630 GROUND MOUNTED SUPPORTS, W6 X 9 BEAM	630 GROUND MOUNTED SUPPORTS, W10 X 12 BEAM	630 GROUND MOUNTED SUPPORTS, W8 X 18 BEAM	630 BREAKAWAY BEAM CONNECTION	630 2" DIA. BARRIER MOUNTED SIGN SUPPORT	630 SIGN SUPPORT ASSEMBLY, POLE MOUNTED	630 GROUND MOUNTED BEAM SUPPORT FOUNDATION	630 REMOVAL OF POLE MOUNTED SIGN AND DISPOSAL	630 REMOVAL OF GROUND MOUNTED SIGN AND DISPOSAL	630 REMOVAL OF GROUND MOUNTED MAJOR SIGN AND DISPOSAL	630 REMOVAL OF GROUND MOUNTED POST SUPPORT AND DISPOSAL	630 REMOVAL OF GROUND MOUNTED BEAM SUPPORT AND DISPOSAL	SUPPORT NUMBER
						INCHES	SQ. FT.	SQ. FT.	SQ. FT.	LIN. FT.	LIN. FT.	LIN. FT.	LIN. FT.	LIN. FT.	LIN. FT.	LIN. FT.	EACH	EACH	EACH	EACH	EACH	EACH	EACH	EACH	EACH	
156	135			62+50, LT, MARG #5	R-41B-36	36x36	9				14.5	16.5														156
156	135			62+50, LT, MARG #5	R-43L-48	48x18	6																			156
156	135			62+50, LT, MARG #5	R-43R-48	48x18	6																			
																										157
157	135			62+20, LT, MARG #5																		2		1		157
157	135			62+20, LT, MARG #5																						
																										158
158	135			64+45, LT, MARG #5	R-43R-48	48x18	6			13.5																159
159	135			805+00, RT, I-90	M-5-36-2	36x36	9			16,16																159
159	135			805+00, RT, I-90	IM-39-36	36x18	4.5																			
																										160
160	135			76+00, LT, MARG #4	R-1-30	30x30	6.25				18															160
160	135			76+00, LT, MARG #4	R-25A-24	24x30	5																			161
161	135	142		795+80, LT, I-90	GF-108	108x60			45					18,18			2			2				1		2	162
162	135			96+53, LT, RAMP 15																		1		1		163
163	135			76+20, RT, MARG #4	R-43R-48	48x18	6			13.5												1		1		164
164	135			76+55, LT, MARG #4	W-48-30	30x30	6.25			13																
																										165
165	135			79+25, LT, MARG #4	R-1-30	30x30	6.25				18											2		1		165
165	135			79+25, LT, MARG #4	R-25A-30	24x30	5																			166
166	135			79+50, RT, MARG #4	R-43R-48	48x18	6			13.5																167
167	135			77+35, LT, MARG #4	R-10-24	24x30	5			15										1		1				
																										168
168	135			801+40, LT, I-90	W-97-48	48x60	20													1		1				169
169	135			79+54, RT, MARG #4	M-45	42x60	17.5				18,18															170
170	135			51+93, LT, LORAIN	W-76AP-36	36x36	9													1		1				
																										171
171	136			51+55, LT, CONN. RD.	R-121-24	24x24	4			14																172
172	136			50+25, RT, CONN. RD.	R-121-24	24x24	4			14																173
173	136			W.85TH ST, WEST SIDE	M-5-24-2	24x24	4			15												2		1		173
173	136			W.85TH ST, WEST SIDE	IM-17-24	24x12	2																			
																										174
174	136			49+40, LT, CONN. RD.	R-31A-36	36x30	7.5													1		1				
																										175
175	136			47+45, LT, CONN. RD.	R-31A-36	36x30	7.5			14.5,14.5												1		2		176
176	136	142		807+20, LT, I-90		96x48	32							16,16			2			2			1	4		177
177	136			48+55, LT, CLARK AVE	W-32-48	48x24	8			14,14												1		1		178
178	136			49+35, RT, CLARK AVE	M-45	42x60	17.5				18,18											1		2		179
179	136			49+20, RT, CLARK AVE	R-121-24	24x24	4			14																
																										180
180	136			49+40, RT, CLARK AVE	R-72E-18	18x18	2.25			13.5																181
181	136			48+45, RT, CLARK AVE	M-45	42x60	17.5				18,18															182
182	136			49+65, LT, CLARK AVE	R-31G-36	36x30	7.5			14.5,14.5												1		2		183
183	136			7+75, RT, RAMP 18	W-76AP-36	36x36	9													1		1				184
184	136			W.84TH ST, EAST SIDE	IM-17-24	24x12	2			15														1		184
184	136			W.84TH ST, EAST SIDE	M-5-24-2	24x24	4																			
																										185
185	136			49+45, LT, CLARK AVE	R-72E-18	18x18	2.25			13.5																186
186	136			57+00, RT, LORAIN AVE	R-121-24	24x24	4			14																187
187	136			8+60, LT, RAMP 8	R-15B-30	30x18	3.75			13.5												1		1		188
188	136			8+60, RT, RAMP 8	R-15B-30	30x18	3.75																			
SUBTOTALS (CARRIED FOWARD TO SHEET NO. 111)							279.25	0	45	313	158.5	16.5	0	68	0	0	4	0	6	4	6	14	2	19	2	

TRAFFIC CONTROL QUANTITIES, GROUND MOUNTED SIGNS

GROUND MOUNTED SIGNS

	BY	DATE
CALC.	SP	8/94
CHECKED	EDV	9/94

FHWA REGION	STATE	PROJECT	
5	OHIO		

CUYAHOGA COUNTY
CUY-90-9.68

111
220

SUPPORT NUMBER	PLAN SHEET NUMBER	ELEVATION VIEW SHEET NUMBER	SPECIAL DETAIL SHEET NUMBER	LOCATION	SIGN CODE NO.	ACTUAL SIGN SIZE	630 SIGNS, FLAT SHEET TYPE G	630 SIGNS, FLAT SHEET, TYPE G, AS PER PLAN	630 SIGNS, EXTRUSHEET TYPE G	630 GROUND MOUNTED SUPPORTS, NO. 3 POST	630 GROUND MOUNTED SUPPORTS, NO. 4 POST	630 ONE WAY SUPPORTS, NO. 4 POST	630 GROUND MOUNTED SUPPORTS, S4 X 7.7 BEAM	630 GROUND MOUNTED SUPPORTS, W6 X 9 BEAM	630 GROUND MOUNTED SUPPORTS, W10 X 12 BEAM	630 GROUND MOUNTED SUPPORTS, W8 X 18 BEAM	630 BREAKAWAY BEAM CONNECTION	630 2" DIA. BARRIER MOUNTED SIGN SUPPORT	630 SIGN SUPPORT ASSEMBLY, POLE MOUNTED	630 GROUND MOUNTED BEAM SUPPORT FOUNDATION	630 REMOVAL OF POLE MOUNTED SIGN AND DISPOSAL	630 REMOVAL OF GROUND MOUNTED SIGN AND DISPOSAL	630 REMOVAL OF GROUND MOUNTED MAJOR SIGN AND DISPOSAL	630 REMOVAL OF GROUND MOUNTED POST SUPPORT AND DISPOSAL	630 REMOVAL OF GROUND MOUNTED BEAM SUPPORT AND DISPOSAL	SUPPORT NUMBER
						INCHES	SQ. FT.	SQ. FT.	SQ. FT.	LIN. FT.	LIN. FT.	LIN. FT.	LIN. FT.	LIN. FT.	LIN. FT.	LIN. FT.	EACH	EACH	EACH	EACH	EACH	EACH	EACH	EACH	EACH	
189	136			51+80, RT, CLARK AVE	M-45	42x60	17.5				18,18															189
190	136			50+70, LT, CLARK AVE	W-13-36	36x36	9												2		2					190
190	136			50+70, LT, CLARK AVE	W-143-24	24x24	4																			190
191	136			59+00, LT, LORAIN AVE	M-45	42x60	17.5												1							191
192	136			60+70, RT, LORAIN AVE	R-41B-36	36x36	9				14.5	16										4		2		192
192	136			59+00, RT, LORAIN AVE	R-43L-48	48x18	6																			192
192	136			60+70, RT, LORAIN AVE	R-43R-48	48x18	6																			192
193	136			60+70, RT, LORAIN AVE	R-31U-54MOD	54x30	11.25																			193
194	136			61+40, RT, LORAIN AVE	R-41B-36	36x36	9				16	16										3		2		194
194	136			61+40, RT, LORAIN AVE	R-43L-48	48x18	6																			194
194	136			61+40, RT, LORAIN AVE	R-43R-48	48x18	6																			194
195	136			61+40, RT, LORAIN AVE	R-31U-54MOD	54x30	11.25																			195
196	136			13+00, LT, RAMP 17																		1		2		196
197	136			14+00, RT, RAMP 17	W-32-48	48x24	8			14,14												1		2		197
198	136			811+25, LT, I-90	N-41-12	12x48	4			15.5																198
199	136			811+25, RT, I-90	N-41-12	12x48	4			15.5												1		1		199
200	136			53+35, LT, CLARK AVE	R-31G-36	36x30	7.5												1		1					200
201	136			14+35, RT, RAMP 18																	1					201
202	136			57+50, RT, CLARK AVE	W-60D-36	36x36	9												1							202
203	136			814+15, RT, I-90																		1		2		203
204	136			15+00, LT, RAMP 17	R-41A-36	36x24	6			14												1		1		204
205	136			15+00, RT, RAMP 17	R-41A-36	36x24	6			14												1		1		205
206	136			816+90, RT, I-90	W-50R-48	48x48	16			17,17																206
207	136			59+00, LT, CLARK AVE	R-31G-36	36x30	7.5			14.5,14.5												1		2		207
208	136			19+60, RT, RAMP 18	W-53-36	36x36	9												1							208
209	136			18+75, LT, RAMP 17	W-47-36	36x36	9												1	2						209
210	137	142		821+60, LT, I-90	GF-108	108x60			45					18,18			2			2						210
211	137			824+00, RT, I-90	W-60C-48	48x48	16				17,17											1		2		211
212	137			833+35, RT, I-90																		1			2	212
213	138			837+80, RT, I-90	GSH-1	120x48			40					16,16			2			2			1		2	213
213	138			837+80, RT, I-90	GEP-96	96x24			16																	213
214	138		102	841+25, LT, I-90 EB	X-6L	12x36	3											1								214
215	138			840+95, RT, I-90 EB	X-6R	12x36	3			15												1		1		215
216	138			848+00, RT, I-90 EB	IM-39-36	36x18	4.5				15.5,15.5															216
216	138			848+00, RT, I-90 EB	M-5-36-2	36x36	9																			216
217	138	143		849+00, LT, I-90 WB	R-9B-48	48x96			32				19.5,20							2		2		4		217
218	139	143		853+00, RT, I-90 EB	R-9B-48	48x96			32				19,19.5				2			2						218
219	139			854+00, LT, I-90 WB	IM-40-36	36x18	4.5				15.5,15.5															219
219	139			854+00, LT, I-90 WB	M-5-36-2	36x36	9																			219
220	139			862+95, RT, I-90 EB	N-41-12	12x48	4												1		1					220
221	139		102	863+80, LT, I-90 EB	X-6L	12x36	3			15																221
222	139			863+55, RT, I-90 EB	X-6R	12x36	3			15																222
223	139			862+65, LT, I-90, WB	N-41-12	12x48	4			15.5												1		1		223
224	139		102	865+10, RT, I-90, WB	X-6L	12x36	3			15																224
225	139			865+35, LT, I-90, WB	X-6R	12x36	3			15												1		1		225
226	140			END OF FENWICK AVE	X-4	18x18	2.25			15												1		1		226
227	140	143		871+97, RT, I-90, EB	GF-96	96x60			40				18,18				2			2			1		2	227
228	140	143		877+26, RT, I-90, EB		156x96			104							21,21	2			2			1		2	228
SUBTOTALS							269.75	0	309	255.5	162.5	32	114	68	0	42	8	1	8	12	5	22	3	25	8	
TOTALS (SHEETS 101 THRU 111)							2026.34	32	774	1730.5	939	313	471.5	168	72	42	34	10	55	42	47	131	11	137	22	

OVERHEAD MOUNTED SIGNS

	BY	DATE
CALC.	SP	8/94
CHECKED	EDV	9/94

FHWA REGION	STATE	PROJECT	
5	OHIO		

CUYAHOGA COUNTY
CUY-90-9.68

SUPPORT NUMBER	PLAN SHEET NUMBER	ELEVATION VIEW SHEET NUMBER	LOCATION	ACTUAL SIGN SIZE	SIGN CODE NO.	630 SIGNS, EXTRUSHEET TYPE G	630 REMOVAL OF OVERHEAD MOUNTED SIGN AND DISPOSAL	630 SIGN ATTACHMENT ASSEMBBLY	630 REMOVAL OF OVERHEAD SIGN SUPPORT AND DISPOSAL TYPE TC-18.24	630 OVERPASS STRUCTURE MOUNTED SIGN SUPPORT TYPE TC-18.24	631 SIGNS WIRED, OVERPASS STRUCTURE MOUNTED	631 REMOVAL OF LUMINAIRE AND DISPOSAL	631 REMOVAL OF DISCONNECT SWITCH AND DISPOSAL	631 DISCONNECT SWITCH WITH ENCLOSURE, TYPE "X"	631 SIGN SERVICE	631 SIGNS WIRED	631 SWITCH ENCLOSURE MOUNTING BRACKET ASSEMBLY	630 LUMINAIRE SUPPORT ASSEMBLY TC-31.21				631 MERCURY VAPOR LUMINAIRE WITH LAMP TC-31.21			631 BALLAST INTEGRAL (REMOTE WHEN NOTED)			SIGN, TEMPORARY OVERLAY	SUPPORT NUMBER
																		2'-9" ARMS	3'-3" ARMS	4'-3" ARMS	5'-9" ARMS	100W	175W	250W	100W 480V	175W 480V	250W 480V		
				SF X SF		EA	EA	EA	EA	EA	EA	EA	EA	EA	EA	EA	EA	EA	EA	EA	EA	EA	EA	EA	EA	EA	EA	SF	
301	124		683+48, W.B. I-90																										
302	125	148	694+95, E.B. I-90	15x6.5		97.5	1	3				2	1	1	1	1	1		2				2			2			302
302	125	148	694+95, E.B. I-90	8x2	GEP-96	16																							302
303	125	148	696+70, W.B. I-90	14x9		126	1	3				2	1	1	1	1	1			2			2			2			303
303	125	148	696+70, W.B. I-90	9x2	GEP-108	18																							303
304	126	148	707+50±, E.B. I-90																										
305A	126	144	712+00, W.B. I-90	14x6.5		91	1	3				2	1	1	1	1	1		2				2			2			305A
305A	126	144	712+00, W.B. I-90	9x2	GEP-108	18																							305A
305B	126	144	712+00, W.B. I-90	16x9		144	1	3				2								2			2			2			305B
305B	126	144	712+00, W.B. I-90	9x2	GEP-108	18																							305B
306A	127	144	722+70, E.B. I-90	15x7.5			1					2					1												306A
306B	127	144	722+70, E.B. I-90	15x12.5		187.5	1	5				2	1	1	1	1	1				2			2			2		306B
306B	127	144	722+70, E.B. I-90	8x2	GEP-96	16																							306B
306C	127	144	722+70, E.B. I-90	14x6.5		91	1	3				2				1			2				2			2			306C
306C	127	144	722+70, E.B. I-90	8x2	GEP-96	16																							306C
307	129	145	732+85, E.B. I-90	15x12.5		187.5	1		1	1	1	2	1	1	1		1				2			2			2 REMOTE		307
307	129	145	732+85, E.B. I-90	8x2	GEP-96	16																							307
308	129	145	734+00, W.B I-90	12x5.5		66	1		1	1	1	2	1	1	1		1	2				2			2 REMOTE				308
309	129	148	45+70, S.B. W.117TH ST	11x5		55	1	2				2	1	1	1	1	1	1				1			1				309
310	129	148	42+50, N.B. W.117TH ST	11x5		55	1	2				2	1	1	1	1	1	1				1			1				310
311	129	148	46+50, N.B. W.117TH ST	9x7		63	1	2				1	1	1	1	1	1		1				1			1			311
312	129	148	52+25, N.B. W.117TH ST	9x5		45	1	2				2	1	1	1	1	1	1				1			1				312
313	129	148	53+90, S.B. W.117TH ST	9x7		63	1	2				2	1	1	1	1	1		1				1			1			313
314	129	149	51+50, S.B. W.117TH ST	9x7		63	1	2				1	1	1	1	1	1		1				1			1			314
315A	128	151	55+85, N.B. W.117TH ST	3x4	R-26A-36	12	1	2				1	1	1	1	1	1	1				1			1				315A
315B	128	151	55+85, N.B. W.117TH ST	3x4	R-30A-36	12	1	2				1						1				1			1				315B
315C	128	151	55+85, N.B. W.117TH ST	3x4	R-30A-36	12	1	2				1						1				1			1				315C
316	131	149	62+65, S.B. W.117TH ST	8x8.5		68	1	2				1	1	1	1	1	1			1			1			1			316
317	131	149	37+75, N.B. W.117TH ST	9x8.5		76.5	1	2				1	1	1	1	1	1			1			1			1			317
318A	130	150	37+55, RAMP 12	3x4	R-26A-36	12	1	2				1	1	1	1	1	1	1				1			1				318A
318B	130	150	37+55, RAMP 12	2.5x3.5	R-28B-30	8.75	1	2				1																	318B
318C	130	150	37+55, RAMP 12	3x4	R-27A-36	12	1	2				1																	318C
319A	130	145	743+60, W.B. I-90	15x7.5			1		1	1		2																	319A
319B	130	145	743+60, W.B. I-90	16x9		144	1		1	1	1	2	1	1	1		1			2			2			2 REMOTE			319B
				9x2	GEP-108	18																							
320	130	149	46+00, RAMP 12	14x9		126	1	3				2	1	1	1	1	1			2			2			2			320
320	130	149	46+00, RAMP 12	8x2	GEP-96	16																							320
321	130	145	750+15, E.B. I-90	15x12.5		187.5	1		1	1	1	2	1	1	1		1				2			2			2 REMOTE		321
321	130	145		8x2	GEP-96	16																							
322	132	149	753+71, W.B. I-90	14x6.5		91	1	3				2	1	1	1	1	1		2				2			2			322
				8x2	GEP-96	16																							
323A	132	146	758+42, E.B. I-90	18x7.5			1		1	1	1	2																	323A
323B	132	146	758+42, E.B. I-90	18x12.5		225	1		1	1	1	2	1	1	1		1				2			2			2 REMOTE		323B
				8x2	GEP-96	16																							
324	133	146	42+25, N.B. WEST BLVD	11x5		55	1	2			1	2	1	1	1		1	1				1			2 REMOTE				324
SUBTOTALS (CARRIED FOWARD TO SHEET NO. 114)						2576.25	31	56	7	7	7	52	22	22	22	17	23	10	11	8	8	10	21	8	7 INT. 3 REM.	19 INT. 2 REM.	2 INT. 6 REM.	0	
																		39											

TRAFFIC CONTROL QUANTITIES, OVERHEAD MOUNTED SIGNS

OVERHEAD MOUNTED SIGNS

	BY	DATE
CALC.	SP	8/94
CHECKED	EDV	9/94

FHWA REGION	STATE	PROJECT	
5	OHIO		

CUYAHOGA COUNTY
CUY-90-9.68

(113) 220

SUPPORT NUMBER	PLAN SHEET NUMBER	ELEVATION VIEW SHEET NUMBER	LOCATION	ACTUAL SIGN SIZE	SIGN CODE NO.	630 SIGNS, EXTRUSHEET TYPE G	630 REMOVAL OF OVERHEAD MOUNTED SIGN AND DISPOSAL	630 SIGN ATTACHMENT ASSEMBBLY	630 REMOVAL OF OVERHEAD SIGN SUPPORT AND DISPOSAL TYPE TC-18.24	630 OVERPASS STRUCTURE MOUNTED SIGN SUPPORT TYPE TC-18.24	631 SIGNS WIRED, OVERPASS STRUCTURE MOUNTED	631 REMOVAL OF LUMINAIRE AND DISPOSAL	631 REMOVAL OF DISCONNECT SWITCH AND DISPOSAL	631 DISCONNECT SWITCH, WITH ENCLOSURE, TYPE "X"	631 SIGN SERVICE	631 SIGNS WIRED	631 SWITCH ENCLOSURE MOUNTING BRACKET ASSEMBLY	630 LUMINAIRE SUPPORT ASSEMBLY TC-31.21				631 MERCURY VAPOR LUMINAIRE WITH LAMP TC-31.21			631 BALLAST, INTEGRAL (REMOTE WHEN NOTED)			SIGN, TEMPORARY OVERLAY	SUPPORT NUMBER
																		2'-9" ARMS	3'-3" ARMS	4'-3" ARMS	5'-9" ARMS	100W	175W	250W	100W 480V	175W 480V	250W 480V		
				LF X LF		SF	EA	EA	EA	EA	EA	EA	EA	EA	EA	EA	EA	EA	EA	EA	EA	EA	EA	EA	EA	EA	EA	SF	
325	133	149	767+95, W.B. I-90	15x6.5		97.5	1							1	1 *	1	1		2				2			2			325
			768+00, W.B. I-90	8x2	GEP-96	16																							
326A	133	151	45+62, S.B. WEST BLVD	7x7		49	1	2				1	1	1	1	1	1		1				1			1			326A
326B	133	151	45+62, S.B. WEST BLVD	7x7		49	1	2				1				1			1				1			1			326B
327	133	149	49+59, S.B. WEST BLVD	11x5.5		60.5	1	2				1	1	1	1	1	1	1					1			1			327
328	134	146	47+58, S.B. W.98TH ST	8x5		40	1		1	1	1	1	1	1	1		1	1				1			1 REMOTE				328
329	134	146	45+65, N.B. W.98TH ST	8x5		40	1		1	1	1	1	1	1	1		1	1				1			1 REMOTE				329
330A	134	152	45+37, N.B. W.98TH ST	9x7		63	1	2				1	1	1	1	1	1		1				1			1			330A
330B	134	152	45+37, N.B. W.98TH ST	9x7		63	1	2				1				1			1				1			1			330B
331	134	149	86+50, RAMP 16	11x5		55	1	2				2	1	1	1	1	1	1					1			1			331
332	134	150	152+60, W.100TH ST	9x7		63	1	2				1	1	1	1	1	1		1				1			1			332
333	134	150	48+34 W.B. W.98TH ST	9x5		45	1	2				2	1	1	1	1	1	1					1			1			333
334A	134	150	48+34, S.B. W.98TH ST	7x7		49	1	2				1				1			1				1			1			334A
334B	134	150	48+34, S.B. W.98TH ST	7x7		49	1	2				1				1			1				1			1			334B
335A	135	150	41+67, E.B. LORAIN AVE	11x5		55	1	2				1	1	1	1	1	1	1					1			1			335A
335B	135	150	41+67, E.B. LORAIN AVE	12x5		60	1	3				1				1		2					2			2			335B
336A	135	150	51+93, W.B LORAIN AVE	12x5		60	1	3				1	1	1	1	1	1	2					2			2			336A
336B	135	150	51+93, W.B LORAIN AVE	9x5		45	1	2				1				1		1					1			1			336B
337A	135	144	801+40, W.B. I-90	18x7.5			1					2				1													337A
337B	135	144	801+40, W.B. I-90	15x6.5		97.5	1	3				2	1	1	1	1	1		2				2			2			337B
337B	135	144	801+40, W.B. I-90	8x2		16																							337B
337C	135	144	801+40, W.B. I-90	18x6.5		117	1	3				2				1			2				2			2			337C
				9x2		18																							
338A	136	150	53+63, 43'RT LORAIN AVE	7x7		49	1	2				1	1	1	1	1	1		1				1			1			338A
338B	136	150	53+63, 43'RT LORAIN AVE	7x7		49	1	2				1				1			1				1			1			338B
339A	136	152	49+34, N.B. CLARK AVE	9x7		63	1	2				1	1	1	1	1	1		1				1			1			339A
339B	136	152	49+34, N.B. CLARK AVE	9x7		63	1	2				1				1			1				1			1			339B
340	136	150	49+40, S.B. CONNECTOR	10x8.5		85	1	2				1	1	1	1	1	1			1			1			1			340
341	136	150	7+75, RAMP 18	11x5		55	1	2				2	1	1	1	1	1	1				1			1				341
342A	136	151	49+16, N.B. CONNECTOR	3x4	R-26A-36	12	1	2				1	1	1	1	1	1	1				1			1				342A
342B	136	151	49+16, N.B. CONNECTOR	3x4.5	R-29A-36	13.5	1	2				1				1		1				1			1				342B
343	136	151	18+75, RAMP 17	8x7		56	1	2				1	1	1	1	1	1		1				1			1			343
344A	136	151	15+55,RAMP 17	3x4	R-26A-36	12	1	2				1	1	1	1	1	1	1				1			1				344A
344B	136	151	15+55,RAMP 17	3.5x4	R-28C-42	14	1	2				1				1		1				1			1				344B
344C	136	151	15+55,RAMP 17	3x4	R-27A-36	12	1	2				1				1		1				1			1				344C
345	136	147	806+60, E.B. I-90	15x9		135	1	3				2	1	1	1	1	1			2			2			2 REMOTE			345
				8x2	GEP-96	16																								
346	136	147	806+85, W.B. I-90	15x9		135	1	3			1	2	1	1	1		1			2			2			2 REMOTE			346
				9x2	GEP-108	18																								
347A	137	147	826+90, W.B. I-90	16x9			1					2																	347A
347B	137	147	826+90, W.B. I-90	15x9		135	1	3			1	2	1	1	1		1			2			2			2 REMOTE			347B
347B	137	147	826+90, W.B. I-90	9x2	GEP-108	18																							347B
347C	137	147	826+90, W.B. I-90	18x10		180	1	5			1	2								2			2			2 REMOTE			347C
347C	137	147	826+90, W.B. I-90	9x2	GEP-108	18																							347C
348A	138	147	842+90, W.B. I-90	15x9		135	1	3			1	2	1	1	1		1			2			2			2 REMOTE			348A
348A	138	147	842+90, W.B. I-90	9x2	GEP-108	18																							348A
348B	138	147	842+90, W.B. I-90	15x10		150	1	3			1	2								2			2			2 REMOTE			348B
348B	138	147	842+90, W.B. I-90	9x2	GEP-108	18																							348B
SUBTOTALS (CARRIED FOWARD TO SHEET NO. 114)						2,667.00	39	80	2	2	7	51	22	23	23	31	23	17	18	13	0	17	31	0	15 INT. 2 REM	19 INT. 12 REM	0	0	
																		48											

* SEE DETAILS SHEET NO. 118

TRAFFIC CONTROL QUANTITIES, OVERHEAD MOUNTED SIGNS

OVERHEAD MOUNTED SIGNS

	BY	DATE
CALC.	SP	8/94
CHECKED	EDV	9/94

FHWA REGION	STATE	PROJECT	
5	OHIO		

CUYAHOGA COUNTY
CUY-90-9.68

SUPPORT NUMBER	PLAN SHEET NUMBER	ELEVATION VIEW SHEET NUMBER	LOCATION	ACTUAL SIGN SIZE	SIGN CODE NO.	630 SIGNS, EXTRUSHEET TYPE G	630 REMOVAL OF OVERHEAD MOUNTED SIGN AND DISPOSAL	630 SIGN ATTACHMENT ASSEMBLY	630 REMOVAL OF OVERHEAD SIGN SUPPORT AND DISPOSAL, TYPE TC-18.24	630 OVERPASS STRUCTURE MOUNTED SIGN SUPPORT TYPE TC-18.24	SIGNS WIRED, OVERPASS STRUCTURE MOUNTED	REMOVAL OF LUMINAIRE AND DISPOSAL	REMOVAL OF DISCONNECT SWITCH AND DISPOSAL	631 DISCONNECT SWITCH WITH ENCLOSURE, TYPE "X"	631 SIGN SERVICE	631 SIGNS WIRED	631 SWITCH ENCLOSURE MOUNTING BRACKET ASSEMBLY	630 LUMINAIRE SUPPORT ASSEMBLY TC-31.21				631 MERCURY VAPOR LUMINAIRE WITH LAMP TC-31.21			631 BALLAST INTEGRAL (REMOTE WHEN NOTED)			SIGNS, TEMPORARY OVERLAY	SUPPORT NUMBER
																		2'-9" ARMS	3'-3" ARMS	4'-3" ARMS	5'-9" ARMS	100W	175W	250W	100W 480V	175W 480V	250W 480V		
				LF X LF		SF	EA	EA	EA	EA	EA	EA	EA	EA	EA	EA	EA	EA	EA	EA	EA	EA	EA	EA	EA	EA	EA	SF	
349	138	151	843+30, E.B. I-90	15x9		135	1	3				2	1	1	1	1	1			2			2			2			349
349	138	151	843+30, E.B. I-90	8x2	GEP-96	16																							349
350A	140	152	868+75, E.B. I-90	17x11.5			1	3				2	1	1	1		1												350A
350B	140	152	868+75, E.B. I-90	15x10		150	1	3				2				1				2			2			2			350B
350B	140	152	868+75, E.B. I-90	9x2	GEP-108	18																							350B
350C	140	152	868+75, E.B. I-90	18x9		162	1	3				2				1				2			2			2			350C
350C	140	152	868+75, E.B. I-90	8x2	GEP-96	16																							350C
351A	140	152	881+87, E.B. I-90	17x9.5		161.5				1	1			1	1		1			2			2			2 REMOTE			351A
351A	140	152	881+87, E.B. I-90	9x2	GEP-108	18																							351A
351B	140	152	881+87, E.B. I-90	14x10		140				1	1									2			2			2 REMOTE			351B
351C	140	152	881+87, E.B. I-90	13x12		156				1	1										2			2			2 REMOTE	9	351C
351C	140	152	881+87, E.B. I-90	9x2	GEP-108	18																							351C
352A	140	152	882+40, E.B. I-90	EXIST.																									352A
352B	140	152	882+40, E.B. I-90	EXIST.																									352B
353A	128	151	31+30, RAMP 8	3x3.5	R-26A-36	10.5								1	1	1	1	1				1			1				353A
353B	128	151	31+30, RAMP 8	2.5x3	R-28B-30	7.5										1		1				1			1				353B
SUBTOTALS						1008.50	4	12	0	3	3	8	2	4	4	5	4	2	0	10	2	2	10	2	2 INT. 0 REM.	6 INT. 4 REM.	0 INT. 2 REM	9	
																		14											
TOTALS (SHEETS 112 THRU 114)						6251.75	74	148	9	12	17	111	46	49	49	53	50	29	29	33	10	29	62	10	24 INT. 5 REM.	44 INT. 18 REM.	2 INT. 8 REM.	9	
																		101											

TRAFFIC CONTROL QUANTITIES, OVERHEAD MOUNTED SIGNS

TRAFFIC CONTROL GENERAL SUMMARY

SHEET NUMBER																	ITEM	ITEM EXT.	GRAND TOTAL	UNIT	DESCRIPTION	SEE SHEET NO.
		101	102	102A	102C	105	106	107	108	109	110	111	112	113	114	118						
																					TRAFFIC CONTROL	
			50														620	15721	50	EACH	DELINEATOR, TYPE D, DESIGN 6, POST MOUNTED, AS PER PLAN	102
			2000	370													621	00300	2370	EACH	PRISMATIC RETROREFLECTOR	
			2000														621	00600	2000	EACH	RAISED PAVEMENT MARKER CASTING, INSTALLATION ONLY	
																2	625	32000	2	EACH	GROUND ROD	
			240														626	00100	240	EACH	BARRIER REFLECTOR, TYPE A	102
						386	323	185	113.5	154.5	313	255.5					630	03100	1731	LIN. FT.	GROUND MOUNTED SUPPORT, NO. 3 POST	
						89	14.5	65	212.5	237	158.5	162.5					630	04100	939	LIN. FT.	GROUND MOUNTED SUPPORT, NO. 4 POST	
						144.5	104	109				114					630	06400	472	LIN. FT.	GROUND MOUNTED SUPPORT, S4x7.7 BEAM	
							32				68	68					630	06500	168	LIN. FT.	GROUND MOUNTED SUPPORT, W6x9 BEAM	
												42					630	07000	42	LIN. FT.	GROUND MOUNTED SUPPORT, W8x18 BEAM	
								36		36							630	07600	72	LIN. FT.	GROUND MOUNTED SUPPORT, W10x12 BEAM	
						32	16	72	96	48.5	16.5	32					630	08100	313	LIN. FT.	ONE WAY SUPPORT, NO. 4 POST	
						8	8	4		2	4	8					630	09000	34	EACH	BREAKAWAY BEAM CONNECTION	
					70												630	09100	70	EACH	SURFACE PREPARATION, EXISTING SUPPORT SECTION	102A
					4												630	09102	4	EACH	SURFACE PREPARATION, NEW SUPPORT SECTION	102A
					74												630	09104	74	EACH	COATING, EPOXY PRIME COAT, SUPPORT SECTION	102A
					74												630	09106	74	EACH	COATING, EPOXY INTERMEDIATE COAT, SUPPORT SECTION	102A
					74												630	09108	74	EACH	COATING, URETHANE TOP COAT, SUPPORT SECTION	102A
																1	630	10800	1	EACH	OVERHEAD SIGN SUPPORT, TYPE TC-16.20 DESIGN 8	
																1	630	20600	1	EACH	OVERHEAD SIGN SUPPORT, TYPE TC-12.30, DESIGN 6	
													56	80	12		630	75000	148	EACH	SIGN ATTACHMENT ASSEMBLY	
													39	48	14		630	75106	101	EACH	LUMINAIRE SUPPORT ASSEMBLY, TYPE TC-31.21	
													7	2	3		630	77000	12	EACH	OVERPASS STRUCTURE MOUNTED SIGN SUPPORT, TYPE TC-18.24	
						4	11	9	10	7	6	8					630	79500	55	EACH	SIGN SUPPORT ASSEMBLY, POLE MOUNTED	
						250.10	266.50	269.19	351	341.55	279.25	269.75					630	80102	2026	SQ. FT.	SIGN, FLAT SHEET, TYPE G	
						32											630	80103	32	SQ. FT.	SIGN, FLAT SHEET, TYPE G, AS PER PLAN	118
						134	162	124			45	309	2576.25	2667	1008.5		630	80204	7026	SQ. FT.	SIGN, EXTRUSHEET, TYPE G	
															9		630	80300	9	SQ. FT.	SIGN, TEMPORARY OVERLAY	
						8	8	8		2	4	12					630	84500	42	EACH	GROUND MOUNTED BEAM SUPPORT FOUNDATION	
																2	630	84510	2	EACH	RIGID OVERHEAD SIGN SUPPORT FOUNDATION	
						15	18	24	15	23	14	22					630	84900	131	EACH	REMOVAL OF GROUND MOUNTED SIGN AND DISPOSAL	
						3	2		1		2	3					630	85400	11	EACH	REMOVAL OF GROUND MOUNTED MAJOR SIGN AND DISPOSAL	
						17	21	19	15	21	19	25					630	86002	137	EACH	REMOVAL OF GROUND MOUNTED POST SUPPORT AND DISPOSAL	
						6	2	4			2	8					630	86102	22	EACH	REMOVAL OF GROUND MOUNTED BEAM SUPPORT AND DISPOSAL	
		18															630	87101	18	EACH	REMOVAL OF OVERHEAD MOUNTED SIGN AND REERECTION, AS PER PLAN	101
													31	39	4		630	87400	74	EACH	REMOVAL OF OVERHEAD MOUNTED SIGN AND DISPOSAL	
						13	9	7	3	4	6	5					630	87500	47	EACH	REMOVAL OF POLE MOUNTED SIGN AND DISPOSAL	
		5															630	89701	5	EACH	REMOVAL OF OVERHEAD SIGN SUPPORT AND REERECTION, TYPE TC-18.26, AS PER PLAN	101
													7	2			630	89806	9	EACH	REMOVAL OF OVERHEAD SIGN SUPPORT AND DISPOSAL, TYPE TC-18.24	
						2		2	3	2		1					630	97700	10	EACH	SIGNING MISC.: 2" DIAMETER BARRIER MOUNTED SIGN SUPPORT	102
			25														630	97700	25	EACH	SIGNING MISC.: REPLACE HANDHOLE COVER	102

PLOTTED BY: fkonopka
PLOTTED FROM: C:\Users\blmincek\Desktop\d05754tga.dgn
PLOT SUBMITTED:03-DEC-1998 09:53
05754TGA.DGN

TRAFFIC CONTROL GENERAL SUMMARY

SHEET NUMBER																	ITEM	ITEM EXT.	GRAND TOTAL	UNIT	DESCRIPTION	SEE SHEET NO.
											102A	103	104	112	113	114						
																					TRAFFIC CONTROL	
														22	23	4	631	84000	49	EACH	SIGN SERVICE	
														17	31	5	631	84300	53	EACH	SIGN WIRED	
														7	7	3	631	84400	17	EACH	SIGN WIRED, OVERPASS STRUCTURE MOUNTED	
														22	23	4	631	85100	49	EACH	DISCONNECT SWITCH WITH ENCLOSURE, TYPE X	
														23	23	4	631	85500	50	EACH	SWITCH ENCLOSURE MOUNTING BRACKET ASSEMBLY	
														3	2		631	87100	5	EACH	BALLAST, TYPE CMRI-100-480, REMOTE	
														7	15	2	631	87102	24	EACH	BALLAST, TYPE CMRI-100-480, INTEGRAL	
														2	12	4	631	87200	18	EACH	BALLAST, TYPE CMRI-175-480, REMOTE	
														19	19	6	631	87202	44	EACH	BALLAST, TYPE CMRI-175-480, INTEGRAL	
														6		2	631	87300	8	EACH	BALLAST, TYPE CMRI-250-480, REMOTE	
														2			631	87302	2	EACH	BALLAST, TYPE CMRI-250-480, INTEGRAL	
														10	17	2	631	89100	29	EACH	MERCURY VAPOR LUMINAIRE, TYPE TC-31.21 WITH	
																					100 WATT LAMP	
														21	31	10	631	89200	62	EACH	MERCURY VAPOR LUMINAIRE, TYPE TC-31.21 WITH	
																					175 WATT LAMP	
														8		2	631	89300	10	EACH	MERCURY VAPOR LUMINAIRE, TYPE TC-31.21 WITH	
																					250 WATT LAMP	
														52	51	8	631	94200	111	EACH	REMOVAL OF LUMINAIRE AND DISPOSAL	
														22	22	2	631	94304	46	EACH	REMOVAL OF DISCONNECT SWITCH AND DISPOSAL	
											15						632	26501	15	EACH	DETECTOR LOOP, AS PER PLAN	102A
												10.12	11.59				828	10000	21.71	MILE	EDGE LINE	
												14.34	16.45				828	10100	30.79	MILE	LANE LINE	
												0.22	0.39				828	10200	0.61	MILE	CENTER LINE	
												5530	8827				828	10300	14357	LIN. FT.	CHANNELIZING LINE	
												301	389				828	10400	690	LIN. FT.	STOP LINE	117
												1169	2065				828	10500	3234	LIN. FT.	CROSSWALK LINE	
												855	1110				828	10600	1965	LIN. FT.	TRANSVERSE LINE	
													1400				828	10700	1400	LIN. FT.	CURB MARKING	
												3745	1310				828	10800	5055	SQ. FT.	ISLAND MARKING	
												16	24				828	20300	40	EACH	LANE ARROW	117
												5	7				828	20400	12	EACH	WORD ON PAVEMENT, 72"	117
												240	380				828	20500	620	LIN. FT.	DOTTED LINE, 6"	

PLOTTED BY: fkonopka
PLOTTED FROM: C:\Users\Slmincek\Desktop\d05754tga.dgn
PLOT SUBMITTED:03-DEC-1998 09:54
05754TGA.DGN

FHWA REGION	STATE	PROJECT	
5	OHIO		

117
220

CUYAHOGA COUNTY
CUY-90-9.68

WORD AND SYMBOL PAVEMENT MARKINGS DETAILS

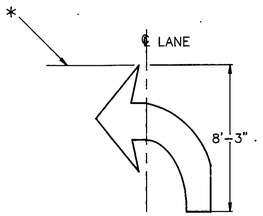

TURN ARROW
(LEFT ARROW SHOWN
RIGHT ARROW OPPOSITE)

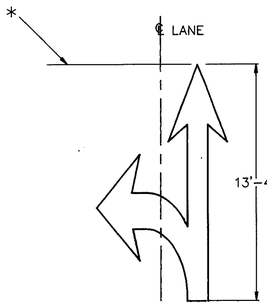

COMBINED ARROW
(THREE HEAD DIRECTIONAL ARROWS CAN BE ACHIEVED
BY THE COMBINATION OF TURN ARROWS)

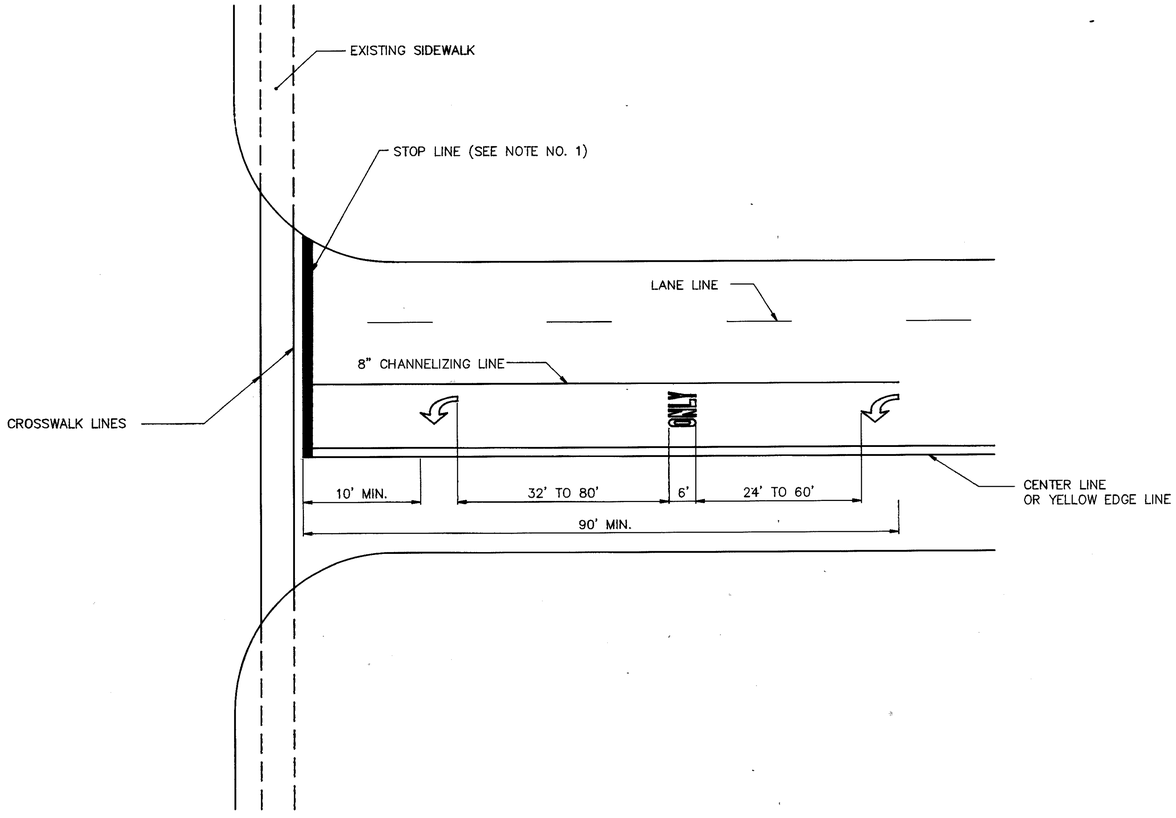

TYPICAL INTERSECTION

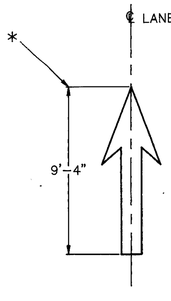

THROUGH ARROW

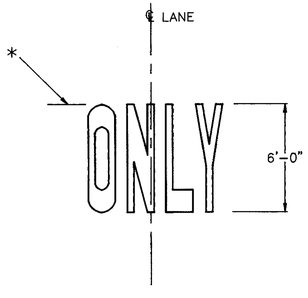

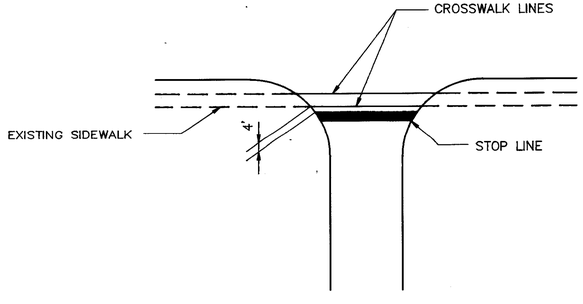

TYPICAL PLACEMENT OF STOP LINE
(WITH SIDEWALKS)

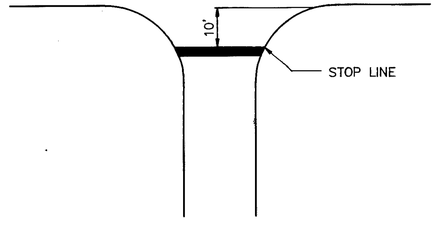

TYPICAL PLACEMENT OF STOP LINE
(WITHOUT SIDEWALKS)

NOTES

1. THE STOP LINE SHOULD BE PLACED WHERE CROSS-CORNER VISION IS MAXIMUM. IN NO CASE MORE THAN 30 FEET OR LESS THAN 4 FEET FROM THE NEAREST EDGE OF THE INTERSECTING ROADWAY. FOR NORMAL INTERSECTIONS A MAXIMUM DISTANCE OF 10 FEET IS RECOMMENDED.

   THE STOP LINE SHOULD BE LOCATED 40' MIN. FROM AT LEAST ONE SIGNAL HEAD WHICH APPLIES TO THAT APPROACH.

   IF A MARKED CROSSWALK IS PRESENT THE STOP LINE SHOULD BE PLACED 4 FEET IN ADVANCE OF AND PARALLEL TO THE NEAREST CROSSWALK.

   SEE DETAILS THIS SHEET FOR PLACEMENT OF STOP LINES WITH OR WITHOUT SIDEWALKS.

2. FOR TRAFFIC PAINT AND POLYESTER APPLICATION, TEMPLATE GAPS SHALL BE FILLED WITH MARKING MATERIAL. FOR EXTRUDED THERMOPLASTIC MATERIAL, THESE GAPS MAY REMAIN UNFILLED.

3. FOR OTHER DETAILS OF WORDS AND SYMBOLS NOT SHOWN SEE STANDARD DRAWING TC-71.10.

* INDICATES STATION REFERENCE POINT

FHWA REGION	STATE	PROJECT	
5	OHIO		

118
220

CUYAHOGA COUNTY
CUY-90-9.68

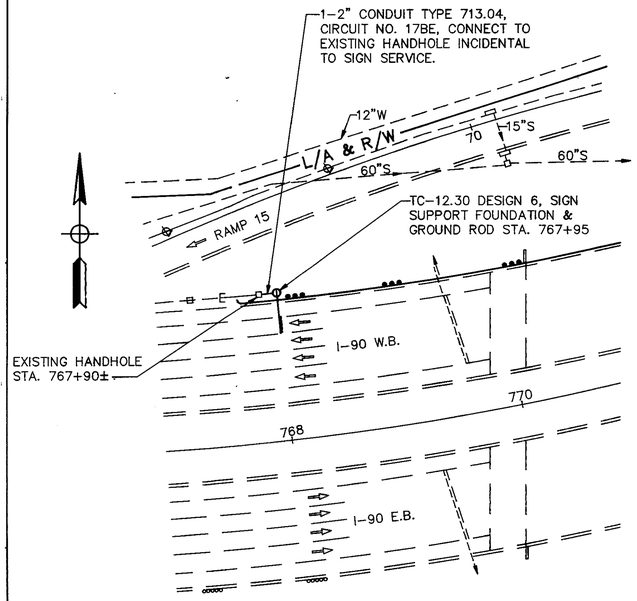

NEW OVERHEAD SIGN SUPPORT NO. 325
NOT TO SCALE

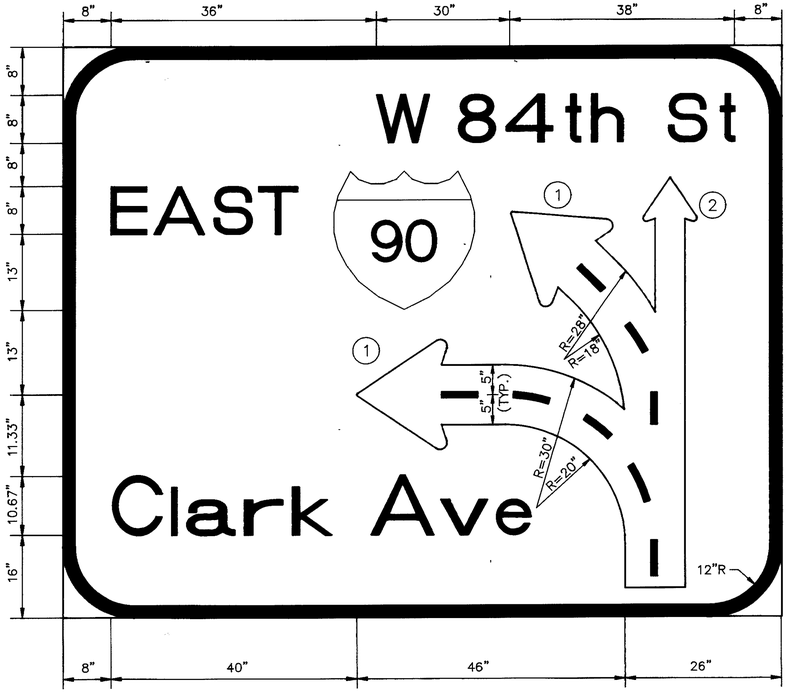

SIGN NO. 340 LAYOUT DETAIL

GDG 8'X10', LEVEL III
STA. 49+40 CONNECTOR ROAD
(SHOWN ON PLAN SHEET 136,
DETAIL SHEET 150)

	ARROW	
	1	2
A	70°00'00"	
B	36°00'00"	
C	1'-3"	8"
D	3"	1 1/2"
E	10"	5"
R	1/4"	1/16"

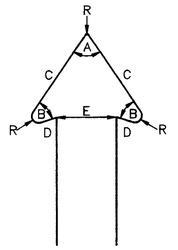

ITEM 630- SIGNS, FLAT SHEET, TYPE G, AS PER PLAN

THE MATERIAL SHALL CONFORM TO F-730.18 REFLECTIVE SHEETING AND SHALL BE HINGED. ALL MATERIAL AND LABOR NEEDED FOR THIS ITEM SHALL BE INCLUDED IN PAYMENT FOR ITEM 630 SIGNS, FLAT SHEET, AS PER PLAN.

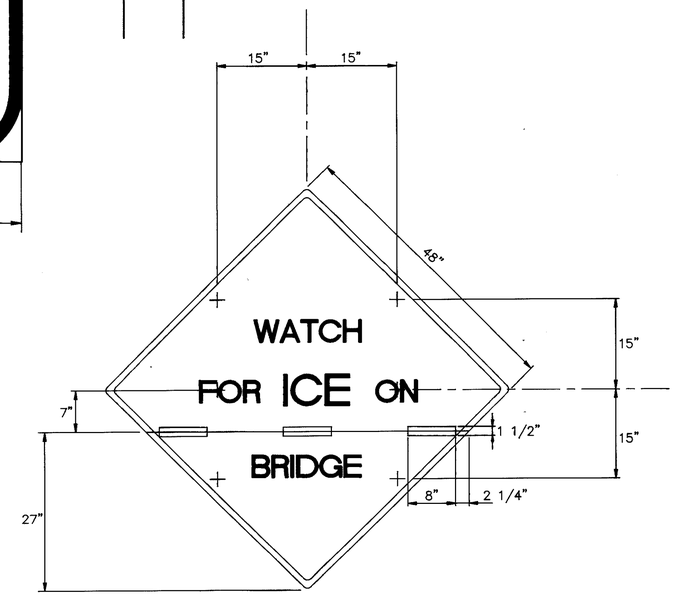

W-68-48
"HINGED" WATCH FOR ICE ON BRIDGE SIGN

SIGN NOTES:
1) THE SIGN SHALL BE HINGED WITH 8" LENGTHS OF 1 1/2" BRASS-PLATED HINGE WHICH IS RIVETED TO EACH SECTION OF THE SIGN AND THEN COVERED WITH YELLOW REFLECTIVE SHEETING (TYPE G-730.19) TO MATCH THE BACKGROUND OF THE SIGN.

2) TO FOLD THE SIGN DOWN, REMOVE THE TOP FOUR BOLTS, FOLD THE UPPER PART OF THE SIGN DOWN AND INSERT A BOLT THROUGH THE TWO LOWEST HOLES IN THE SIGN AND INTO THE POSTS. TIGHTEN THE BOLTS TO PREVENT THE SIGN FROM FLAPPING IN THE WIND AND SUSTAINING DAMAGE.

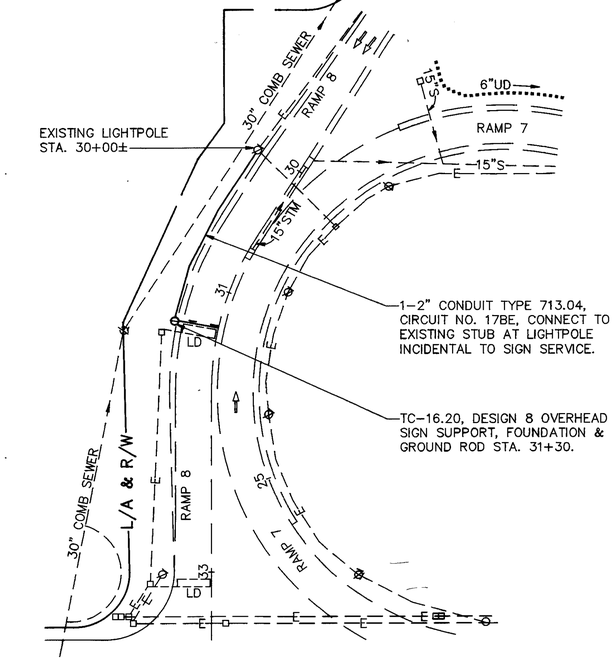

NEW OVERHEAD SIGN SUPPORT NO. 353
NOT TO SCALE

OVERHEAD SIGN SUPPORTS (NO. 325 AND 353) SUB SUMMARY *			
ITEM	DESCRIPTION	QUANTITY	UNIT
625	GROUND ROD	2	EA
630	RIGID OVERHEAD SIGN SUPPORT FOUNDATION	2	EA
630	OVERHEAD SIGN SUPPORT TC-16.20, DESIGN 8	1	EA
630	OVERHEAD SIGN SUPPORT TC-12.30, DESIGN 6	1	EA

* QUANTITIES CARRIED TO GENERAL SUMMARY, SHEET 115

DRAWING = TRAFDET1 DATE: NOV 14, 1994

TRAFFIC CONTROL

FHWA REGION	STATE	PROJECT	
5	OHIO		

119/220

CUYAHOGA COUNTY
CUY - 90 - 9.68

0 50 100 200
SCALE IN FEET

BEGIN WORK
STA. 617+16.30

OLIVE AVE

CANABEL AVE.

LAKEWOOD HTS. BLVD.

L/A & R/W

CITY OF LAKEWOOD
CITY OF CLEVELAND

CUY - 90 - 0849

℄ I-90

RAMP 1

RAMP 2

MATCH LINE STA. 629+00, SEE SHEET NO. 120

SOUTH MARGINAL ROAD NO. 2

BEGIN PAVEMENT MARKING

RESUME PAVEMENT MARKING

END PAVEMENT MARKING

SUSPEND PAVEMENT MARKING

NORTHLAND AVE.

W. 160TH. ST.

W. 159TH. ST.

FERNWAY AVE.

PAVEMENT MARKING LEGEND

- Ⓐ - EDGE LINE (WHITE)
- Ⓑ - EDGE LINE (YELLOW)
- Ⓒ - LANE LINE
- Ⓓ - CHANNELIZING LINE
- Ⓔ - TRANSVERSE LINE (WHITE)
- Ⓕ - STOP LINE
- Ⓖ - CENTER LINES: SOLID, DOUBLE
- Ⓗ - CROSSWALK LINE

FOR WORD AND SYMBOL PAVEMENT MARKING DETAILS SEE SHEET NO. 117

STA. 617+00 TO STA. 629+00

FHWA REGION	STATE	PROJECT	
5	OHIO		

120
220

CUYAHOGA COUNTY
CUY - 90 - 9.68

TRAFFIC CONTROL

0 50 100 200
SCALE IN FEET

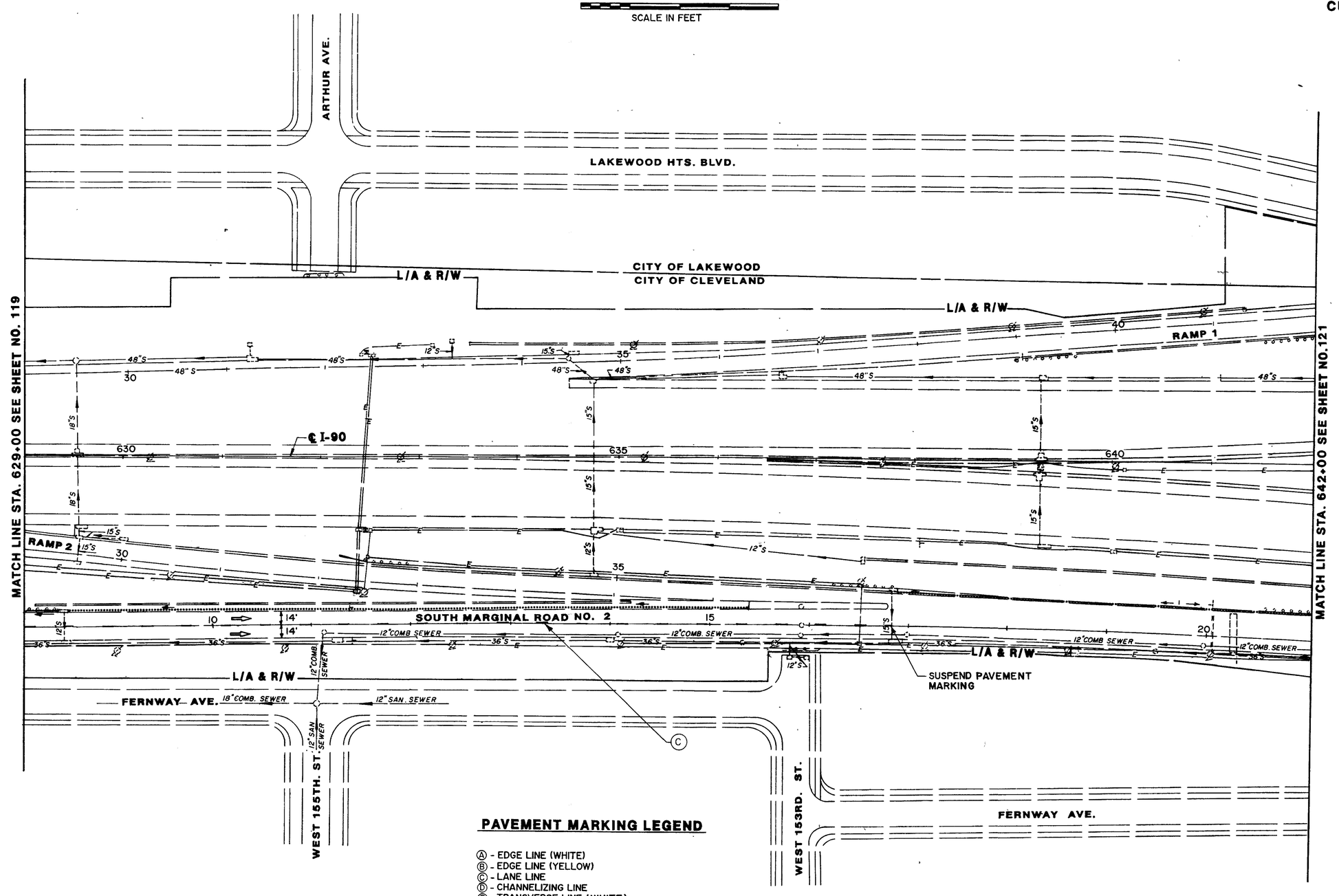

PAVEMENT MARKING LEGEND

Ⓐ - EDGE LINE (WHITE)
Ⓑ - EDGE LINE (YELLOW)
Ⓒ - LANE LINE
Ⓓ - CHANNELIZING LINE
Ⓔ - TRANSVERSE LINE (WHITE)
Ⓕ - STOP LINE

FOR WORD AND SYMBOL PAVEMENT MARKING DETAILS SEE SHEET NO. 117

STA. 629+00 TO STA. 642+00

FHWA REGION	STATE	PROJECT	
5	OHIO		

121
220

CUYAHOGA COUNTY
CUY - 90 - 9.68

TRAFFIC CONTROL

0 50 100 200
SCALE IN FEET

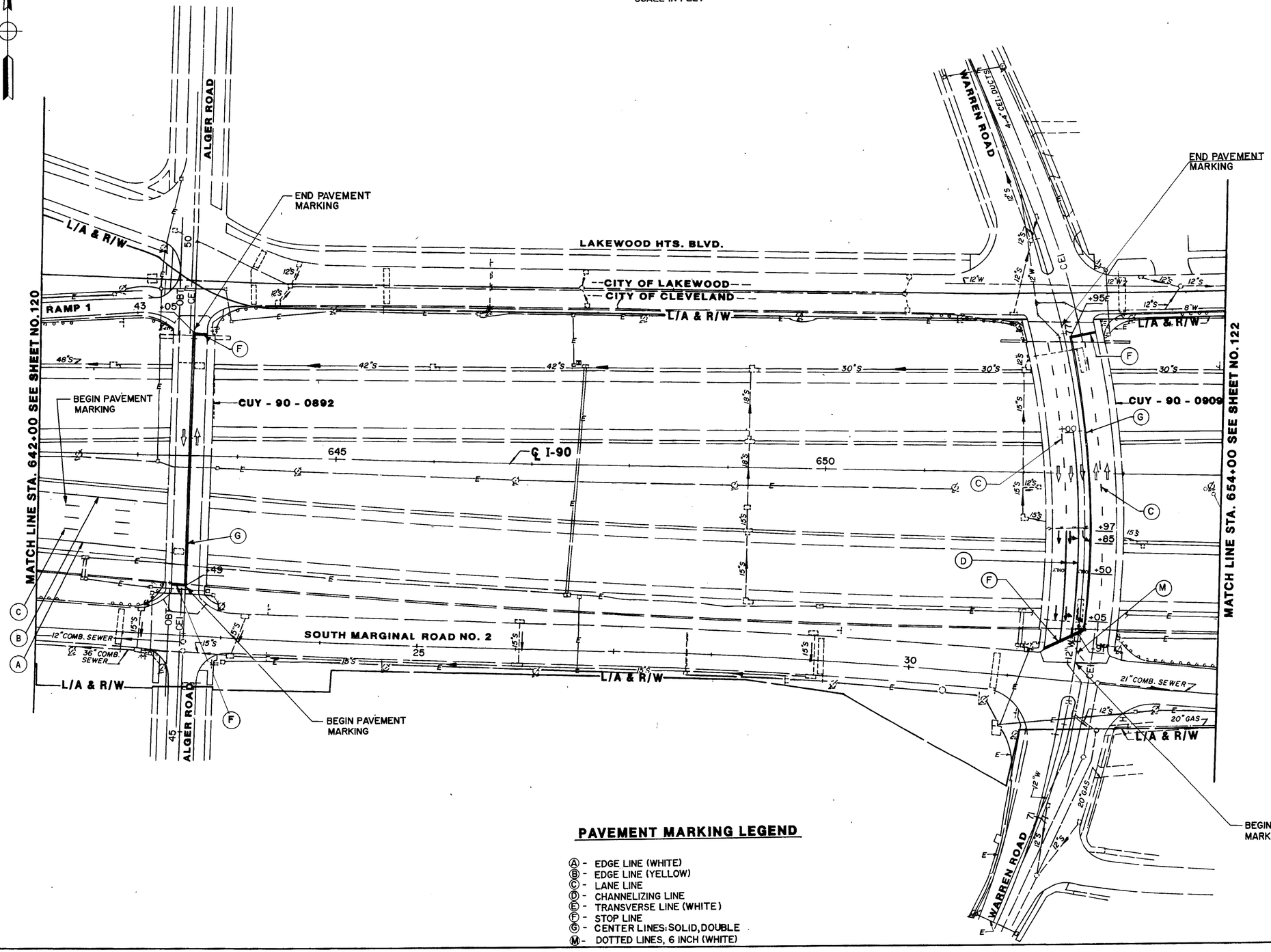

PAVEMENT MARKING LEGEND

- Ⓐ - EDGE LINE (WHITE)
- Ⓑ - EDGE LINE (YELLOW)
- Ⓒ - LANE LINE
- Ⓓ - CHANNELIZING LINE
- Ⓔ - TRANSVERSE LINE (WHITE)
- Ⓕ - STOP LINE
- Ⓖ - CENTER LINES: SOLID, DOUBLE
- Ⓜ - DOTTED LINES, 6 INCH (WHITE)

FOR WORD AND SYMBOL PAVEMENT MARKING DETAILS SEE SHEET NO. 117

STA. 642+00 TO STA. 654+00

TRAFFIC CONTROL

0 50 100 200
SCALE IN FEET

FHWA REGION	STATE	PROJECT	
5	OHIO		

122
220

CUYAHOGA COUNTY
CUY - 90 - 9.68

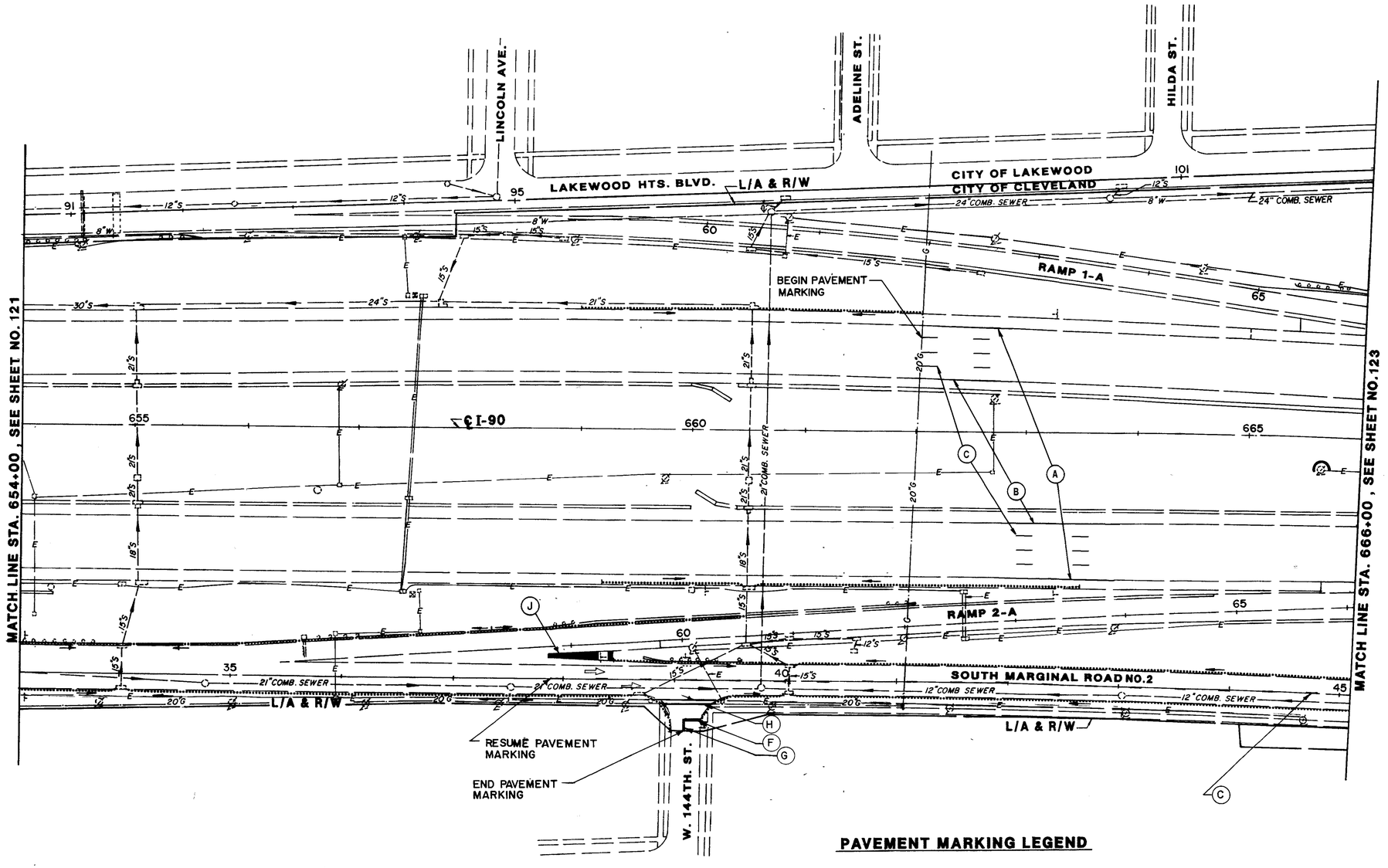

PAVEMENT MARKING LEGEND

Ⓐ - EDGE LINE (WHITE)
Ⓑ - EDGE LINE (YELLOW)
Ⓒ - LANE LINE
Ⓓ - CHANNELIZING LINE
Ⓔ - TRANSVERSE LINE (WHITE)
Ⓕ - STOP LINE
Ⓖ - CENTER LINES: SOLID, DOUBLE
Ⓗ - CROSSWALK LINES
Ⓙ - ISLAND MARKING (WHITE)

FOR WORD AND SYMBOL PAVEMENT MARKING DETAILS
SEE SHEET NO. 117

STA. 654+00 TO STA. 666+00

TRAFFIC CONTROL

FHWA REGION	STATE	PROJECT	
5	OHIO		

123/220

CUYAHOGA COUNTY
CUY - 90 - 9.68

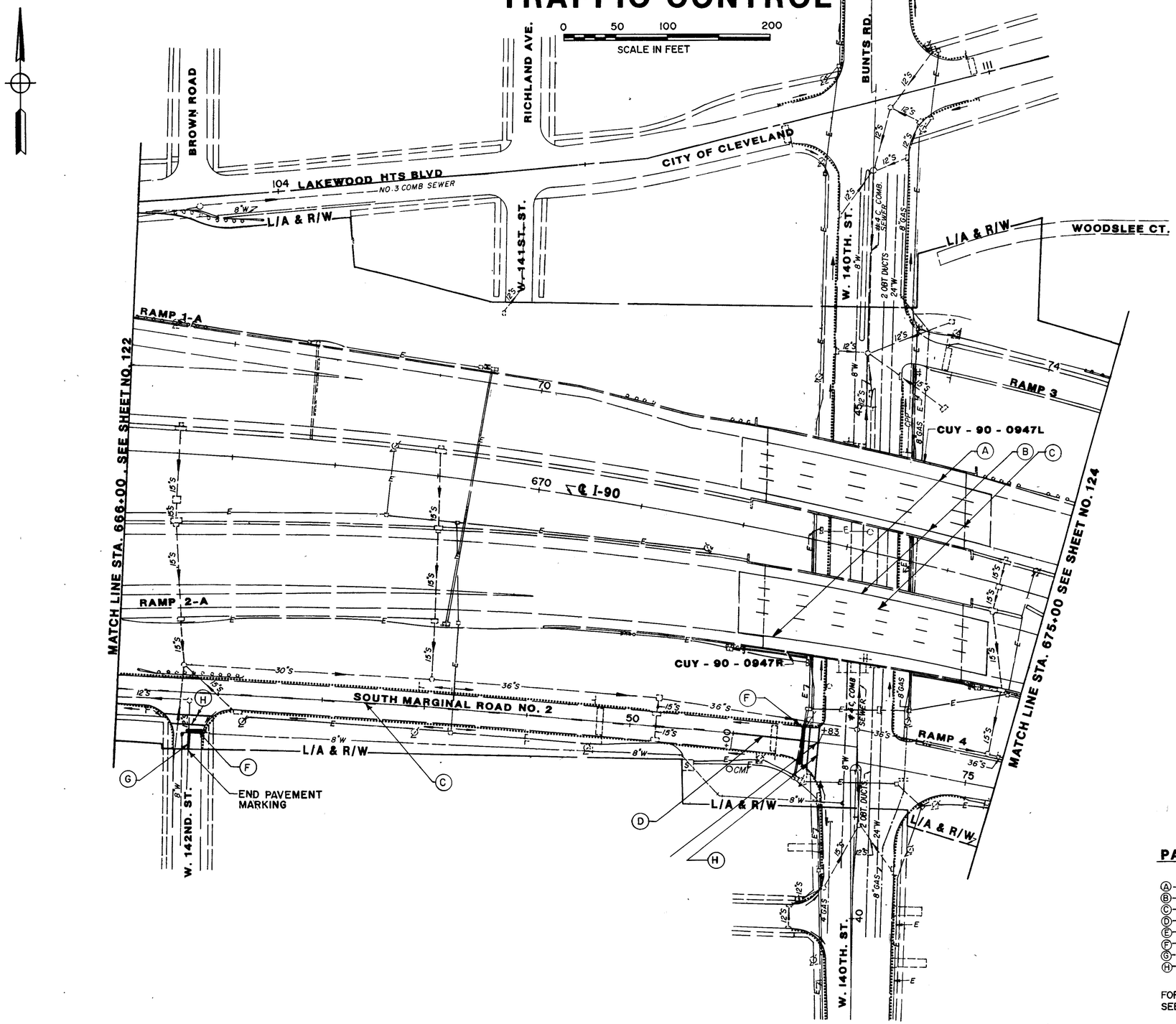

PAVEMENT MARKING LEGEND

Ⓐ-EDGE LINE (WHITE)
Ⓑ-EDGE LINE (YELLOW)
Ⓒ-LANE LINE
Ⓓ-CHANNELIZING LINE
Ⓔ-TRANSVERSE LINE (WHITE)
Ⓕ-STOP LINE
Ⓖ-CENTER LINES: SOLID, DOUBLE
Ⓗ-CROSSWALK LINES

FOR WORDS AND SYMBOL PAVEMENT MARKING DETAILS SEE SHEET NO. 117

STA. 666+00 TO STA. 675+00

TRAFFIC CONTROL

FHWA REGION	STATE	PROJECT	
5	OHIO		

124/220

CUYAHOGA COUNTY
CUY - 90 - 9.68

0 50 100 200
SCALE IN FEET

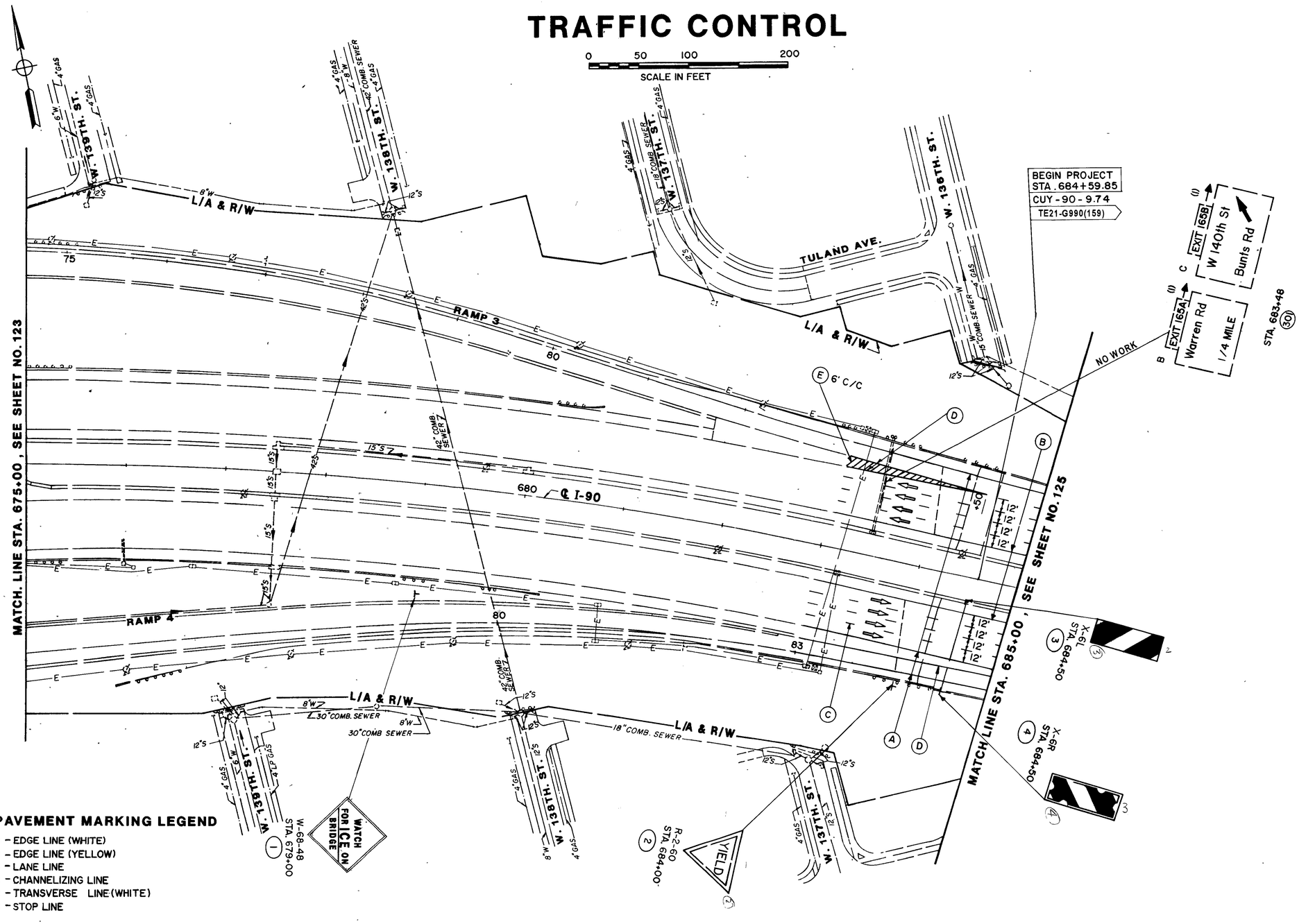

PAVEMENT MARKING LEGEND

- Ⓐ - EDGE LINE (WHITE)
- Ⓑ - EDGE LINE (YELLOW)
- Ⓒ - LANE LINE
- Ⓓ - CHANNELIZING LINE
- Ⓔ - TRANSVERSE LINE (WHITE)
- Ⓕ - STOP LINE

SIGN LEGEND

- EXISTING SIGN (TO BE REMOVED UNLESS "NO WORK" SHOWN)
- PROPOSED SIGN
- PROPOSED SIGN (SAME LEGEND AND SIZE AS EXISTING)
- *EXISTING SIGN (REMOVE AND RE-ERECT EXISTING EXIT NO. PANEL TO THE LEFT OR RIGHT AS INDICATED BY ARROW)
- *PROPOSED SIGN (WITH NEW EXIT NO. PANEL POSITIONED TO THE LEFT OR RIGHT AS INDICATED BY ARROW)
- *PROPOSED SIGN (SAME LEGEND AND SIZE AS EXISTING, WITH NEW EXIT NO. PANEL POSITIONED TO THE LEFT OR RIGHT AS INDICATED BY ARROW)

* SEE SHEET NO. 16 FOR DETAILS OF EXIT NO. PANEL POSITIONING

FOR WORD AND SYMBOL PAVEMENT MARKING DETAILS SEE SHEET NO. 117.

STA. 675+00 TO STA. 685+00

TRAFFIC CONTROL

0 50 100 200
SCALE IN FEET

FHWA REGION	STATE	PROJECT	
5	OHIO		

125/220

CUYAHOGA COUNTY
CUY - 90 - 9.68

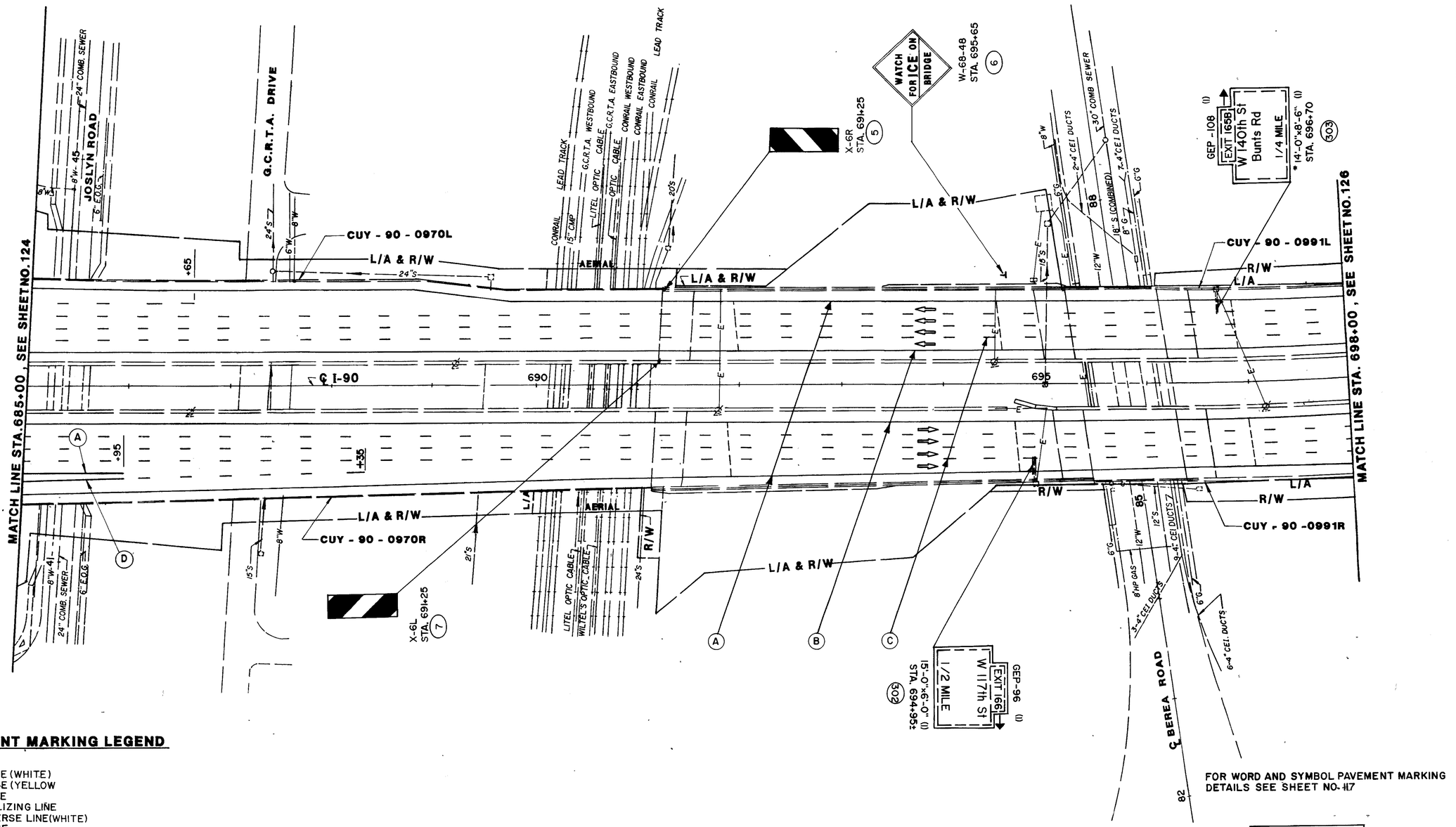

PAVEMENT MARKING LEGEND

Ⓐ-EDGE LINE (WHITE)
Ⓑ-EDGE LINE (YELLOW
Ⓒ-LANE LINE
Ⓓ-CHANNELIZING LINE
Ⓔ-TRANSVERSE LINE(WHITE)
Ⓕ-STOP LINE
Ⓖ-CENTER LINES: SOLID, DOUBLE
Ⓗ-CROSSWALK LINES

* THE EDGE SPACE FACTOR SHALL BE 12" IN LIEU OF 36" SPECIFIED FOR A LEVEL I SIGN TO REDUCE THE SIGN AREA, THEREBY REDUCING THE LOADING ON THE SIGN SUPPORT.

FOR WORD AND SYMBOL PAVEMENT MARKING DETAILS SEE SHEET NO. 117

FOR SIGN LEGEND SEE SHEET NO. 124

STA. 685+00 TO STA. 698+00

TRAFFIC CONTROL

0 50 100 200
SCALE IN FEET

FHWA REGION	STATE	PROJECT	
5	OHIO		

126
220

CUYAHOGA COUNTY
CUY - 90 - 9.68

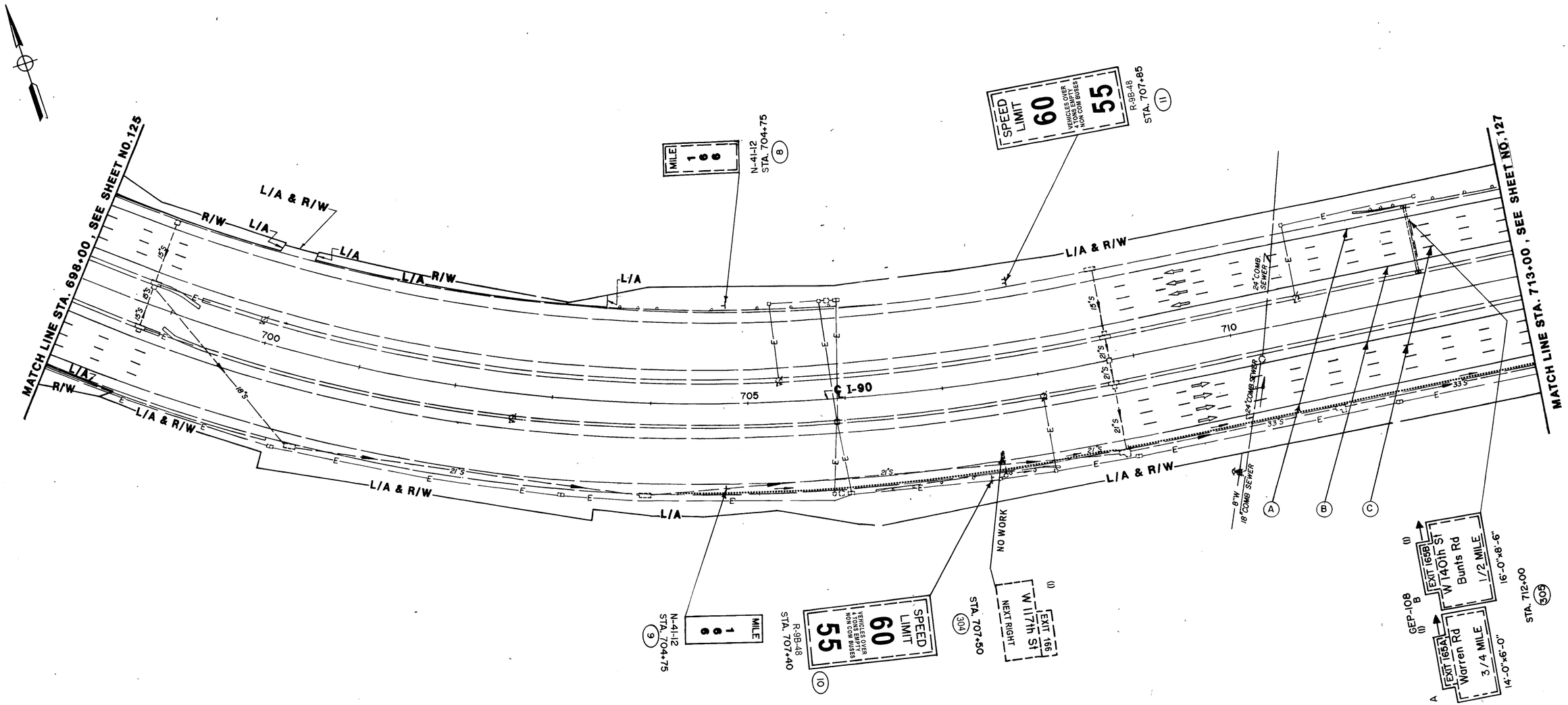

PAVEMENT MARKING LEGEND

Ⓐ - EDGE LINE (WHITE)
Ⓑ - EDGE LINE (YELLOW)
Ⓒ - LANE LINE
Ⓓ - CHANNELIZING LINE
Ⓔ - TRANSVERSE LINE (WHITE)
Ⓕ - STOP LINE

FOR WORD AND SYMBOL PAVEMENT MARKING DETAILS SEE SHEET NO. 117

FOR SIGN LEGEND SEE SHEET NO.124

STA. 698+00 TO STA. 713+00

TRAFFIC CONTROL

0 50 100 200
SCALE IN FEET

FHWA REGION	STATE	PROJECT	
5	OHIO		

127
220

CUYAHOGA COUNTY
CUY - 90 - 9.68

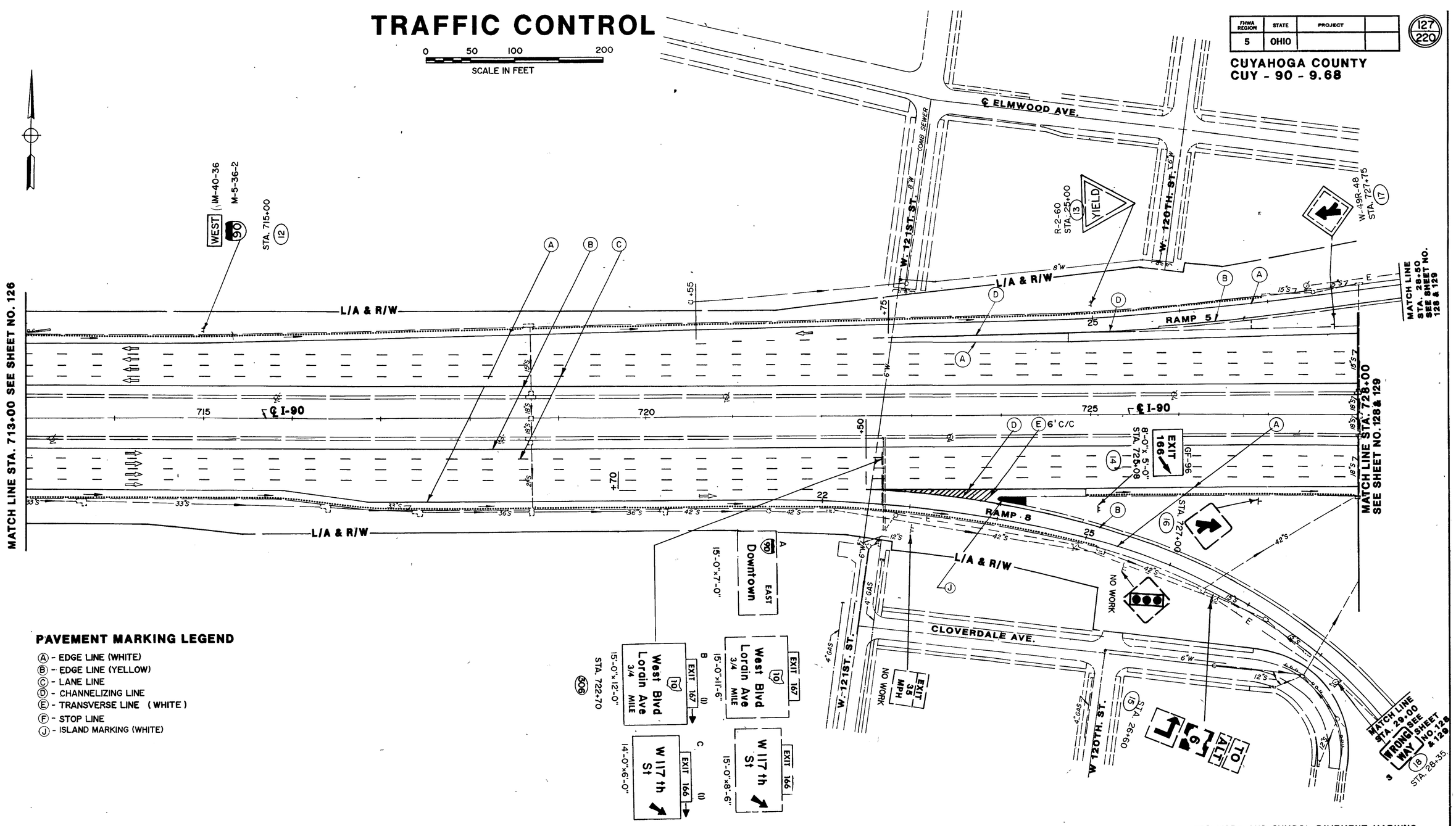

PAVEMENT MARKING LEGEND

- Ⓐ - EDGE LINE (WHITE)
- Ⓑ - EDGE LINE (YELLOW)
- Ⓒ - LANE LINE
- Ⓓ - CHANNELIZING LINE
- Ⓔ - TRANSVERSE LINE (WHITE)
- Ⓕ - STOP LINE
- Ⓙ - ISLAND MARKING (WHITE)

FOR WORD AND SYMBOL PAVEMENT MARKING DETAILS SEE SHEET NO. 117

FOR SIGN LEGEND SEE SHEET NO. 124

STA. 713+00 TO STA. 728+00

TRAFFIC CONTROL

FHWA REGION	STATE	PROJECT	
5	OHIO		

128
220

CUYAHOGA COUNTY
CUY - 90 - 9.68

0 50 100 200
SCALE IN FEET

MATCH LINE STA. 728+00, SEE SHEET NO. 127

MATCH LINE STA. 28+50 SEE SHEET NO.127

MATCH LINE STA. 29+00 SEE SHEET NO. 127

W. 119TH. ST.

ARDEN AVE.

L/A & R/W

RAMP 5

RAMP 6

RAMP 7

RAMP 9

RAMP 12

I-90

BELMONT AVE.

SECTOR AVE.

W. 116TH. ST.

G WEST 117TH. ST. 50

CUY - 90 - 1062

MATCH LINE STA. 737+00 SEE SHEET NO. 130

MATCH LINE STA. 36+50 SEE SHEET NO. 130

MATCH LINE STA. 37+00 SEE SHEET NO. 130

MATCH LINE STA. 58+25, SEE SHEET NO.131

MATCH LINE STA. 42+00, SEE SHEET NO.131

STA. 42+90 (19)

STA. 43+95 (20)

STA. 27+90 (30)

STA. 28+55 (31)

STA. 29+25 (32)

STA. 30+00 (33)

STA. 31+30 (353)

STA. 33+80 (42, 44)

STA. 33+85 (43, 45)

STA. 34+15 (49)

STA. 36+70 (50)

STA. 37+30 (51)

STA. 38+00 (52)

STA. 38+65 (53)

STA. 53+95 (55)

STA. 54+45 (46)

STA. 55+45 (47)

STA. 56+95 (54)

STA. 55+85 (315)

STA. 729+50 (35)

STA. 730

STA. 734

STA. 735

W-33-30

W-49R-48 STA. 729+50

W-49R-48 STA. 736+80 (36)

W-SPL-36 STA. 45+70

W-143-24 STA. 45+70

W-SPL-36 (39)

W-143-24 STA. 52+25

R-4IA-36 STA. 29+85

R-4IB-36 STA. 43+40

R-4IB-36 STA. 44+00

R-4IB-36

R-43R-48

R-43L-48

R-3IU-42

R-3IU-54

R-15B-30 STA. 23+95

R-15B-30 STA. 31+70

R-15B-30 STA. 33+20 (40)

R-15B-30 STA. 41+50 (41)

R-37R-60 STA. 43+60 (23)

R-37R-24 STA. 44+50 (22)

R-36R-24 STA. 50+45 (37)

R-36R-24 STA. 53+45 (38)

R-37R-24 STA. 54+30 (48)

R-37R-24 STA. 56+95

R-37R-24

R-32R-30

R-123-24

R-26A-36 (A)

R-30A-36 (B)

R-30A-36 (C)

W-SPL-36

W-49R-48

W-33-30

W-37R-24

W-32R-30

W-123-24

W-143-24

W-15B-30

W-3IU-54

W-3IU-42

W-43R-48

W-43L-48

W-4IB-36

W-4IA-36

W-26A-36

W-30A-36

W-37R-24

W-32R-30

W-123-24

25 MPH

ONE WAY

DO NOT ENTER

WRONG WAY

KEEP RIGHT

ONLY

THROUGH TRAFFIC KEEP RIGHT

PEDESTRIANS AND BICYCLES PROHIBITED

NO WORK

RIGHT LANE MUST TURN RIGHT

WEST

2

ALT TO 6

6"LP GAS

4"LP GAS

4"GAS

6"GAS

8"GAS

3"GAS

12"W

6"W

4"W

6-4"Ø CPP DUCTS

6-5"Ø CEI DUCTS

2-5"PVC DUCTS

4-5"PVC DUCTS

24"COMB SEWER

30"COMB SEWER

48"COMB SEWER

15"CONDUIT TYPE E

FOR SIGN LEGEND SEE SHEET NO.124

NOTE: REGULATORY AND WARNING SIGNS ONLY ON THIS SHEET

STA. 728+00 TO STA. 737+00

TRAFFIC CONTROL

FHWA REGION	STATE	PROJECT	
5	OHIO		

129/220

CUYAHOGA COUNTY
CUY - 90 - 9.68

0 50 100 200
SCALE IN FEET

MATCH LINE STA. 728+00, SEE SHEET NO. 127

SEE SHEET NO. 41 MATCH LINE STA. 28+50

MATCH LINE STA. 42+00, SEE SHEET NO. 131

MATCH LINE STA. 58+25, SEE SHEET NO. 131

MATCH LINE STA. 737+00, SEE SHEET NO. 130

MATCH LINE STA. 36+50 SEE SHEET NO. 130

MATCH LINE STA. 97+00 SEE SHEET NO. 130

W. 119TH. ST.

W. 117TH ST. NORTH/SOUTH (All)

W. 117TH ST. NORTH/SOUTH (34) STA. 29+45 10'-0"x3'-0" 9'-0"x3'-0"

ARDEN AVE.

BELMONT AVE.

SECTOR AVE.

W. 116TH. ST.

RAMP 5

RAMP 6

RAMP 7

RAMP 8

RAMP 9

RAMP 11

RAMP 12

L/A & R/W

C WEST 117TH. ST. 50

C I-90

CUY-90-1062

ON STRUCTURE GEP-96 (I)
West Blvd
Lorain Ave
1/2 MILE
EXIT 167
(10)
15'-0"x13'-6"

(307) STA. 732+85 15'-0"x12'-0"

(308) STA. 45+70 11'-0"x4'-6" EAST Cleveland

(309) EAST Downtown 12'-0"x5'-0"

(310) STA. 42+50 11'-0"x4'-6" EAST Cleveland

(311) STA. 46+50 9'-0"x6'-6" WEST Toledo KEEP RIGHT

(311) 10'-0"x6'-6" WEST Toledo NEXT RIGHT

(312) STA. 52+25 9'-0"x4'-6" WEST Toledo

12'-0"x5'-0" WEST Toledo ONLY

(313) STA. 53+90 9'-0"x6'-6" WEST Toledo ONLY

12'-0"x6'-0" WEST Toledo ONLY

(314) STA. 51+50 9'-0"x6'-6" EAST Cleveland KEEP RIGHT

10'-0"x6'-6" EAST Downtown NEXT RIGHT

ON STRUCTURE Lakewood NEXT 3 EXITS 12'-0"x5'-0" (II) STA. 734+00 (308)

SUSPEND PAVEMENT MARKING

BEGIN PAVEMENT MARKING

END PAVEMENT MARKING

RESUME PAVEMENT MARKING

DOTTED LINE

PAVEMENT MARKING LEGEND

- (A) - EDGE LINE (WHITE)
- (B) - EDGE LINE (YELLOW)
- (C) - LANE LINE
- (D) - CHANNELIZING LINE
- (E) - TRANSVERSE LINE (WHITE)
- (F) - STOP LINE
- (G) - CENTER LINES: SOLID DOUBLE
- (H) - CROSSWALK LINES
- (J) - ISLAND MARKING (WHITE)
- (K) - ISLAND MARKING (YELLOW)

FOR WORD AND SYMBOL PAYMENT MARKING DETAILS SEE SHEET NO. 117

FOR SIGN LEGEND SEE SHEET NO. 124

NOTE: GUIDE SIGNS AND PAVEMENT MARKINGS ONLY ON THIS SHEET

STA. 728+00 TO STA. 737+00

TRAFFIC CONTROL

FHWA REGION	STATE	PROJECT	
5	OHIO		

130/200

CUYAHOGA COUNTY
CUY - 90 - 9.68

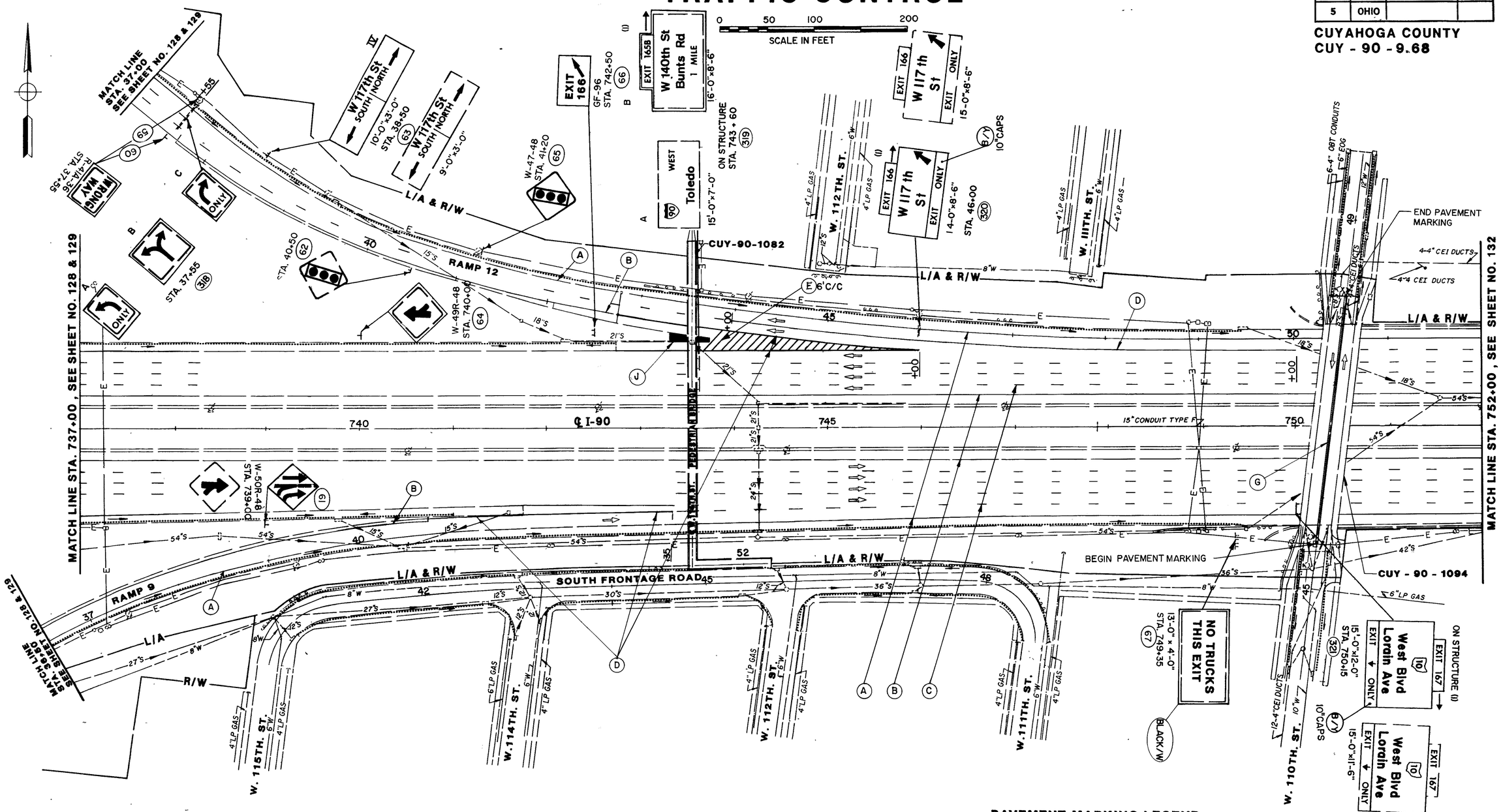

PAVEMENT MARKING LEGEND

- Ⓐ - EDGE LINE (WHITE)
- Ⓑ - EDGE LINE (YELLOW)
- Ⓒ - LANE LINE
- Ⓓ - CHANNELIZING LINE
- Ⓔ - TRANSVERSE LINE (WHITE)
- Ⓕ - STOP LINE
- Ⓖ - CENTER LINES: SOLID, DOUBLE
- Ⓗ - CROSSWALK LINES
- Ⓙ - ISLAND MARKING (WHITE)

FOR WORD AND SYMBOL PAVEMENT MARKING DETAILS SEE SHEET NO. 117

FOR SIGN LEGEND SEE SHEET NO. 124

STA. 737+00 TO STA. 752+00

TRAFFIC CONTROL

0 50 100 200
SCALE IN FEET

FHWA REGION	STATE	PROJECT	
5	OHIO		

131/200

CUYAHOGA COUNTY
CUY - 90 - 9.68

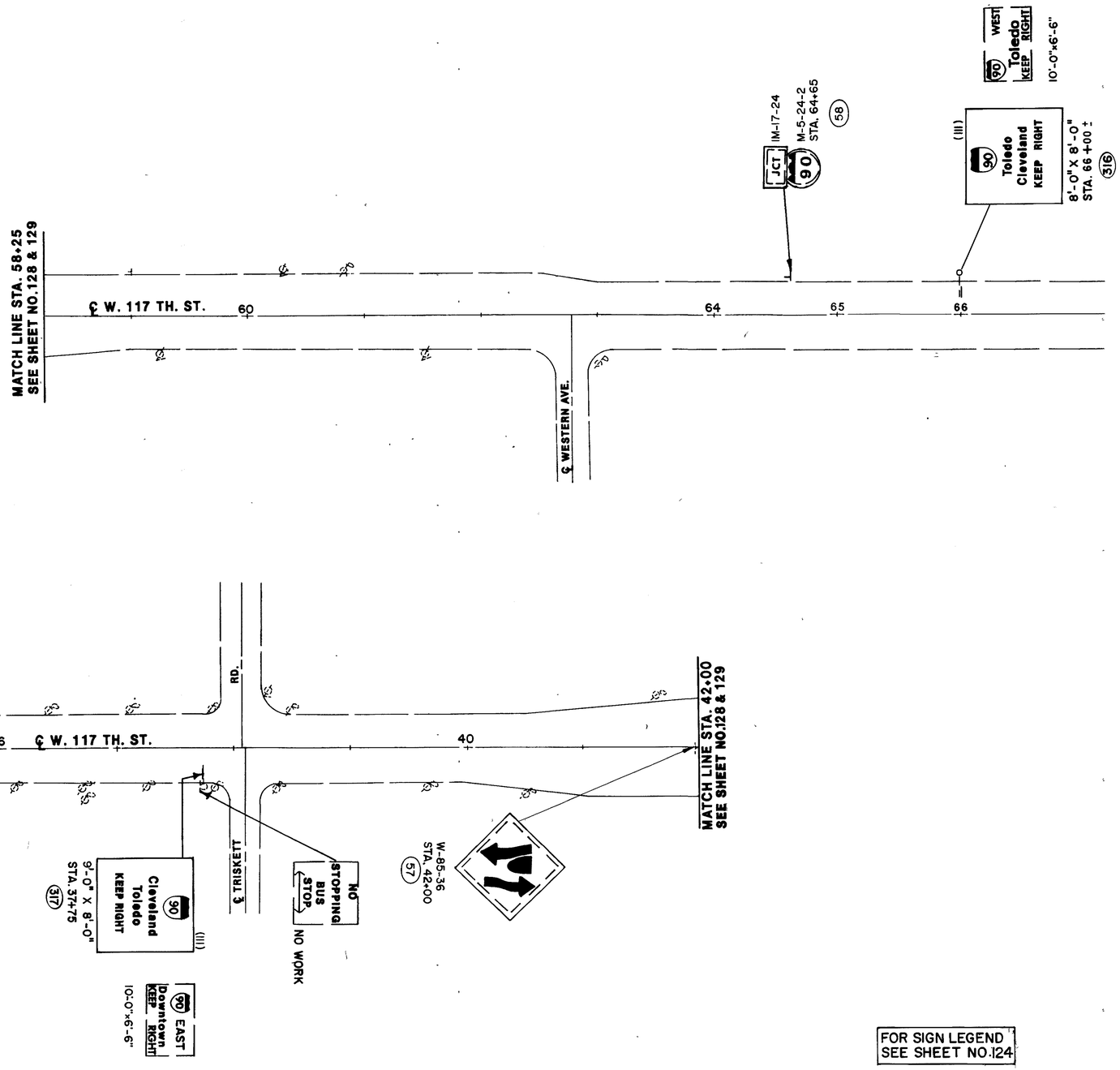

FOR SIGN LEGEND
SEE SHEET NO.124

W. 117 TH. ST. STA. 36+00 TO STA. 42+00 AND STA. 58+25 TO STA. 64+00

TRAFFIC CONTROL

FHWA REGION	STATE	PROJECT	
5	OHIO		

132/220

CUYAHOGA COUNTY
CUY - 90 - 9.68

0 50 100 200
SCALE IN FEET

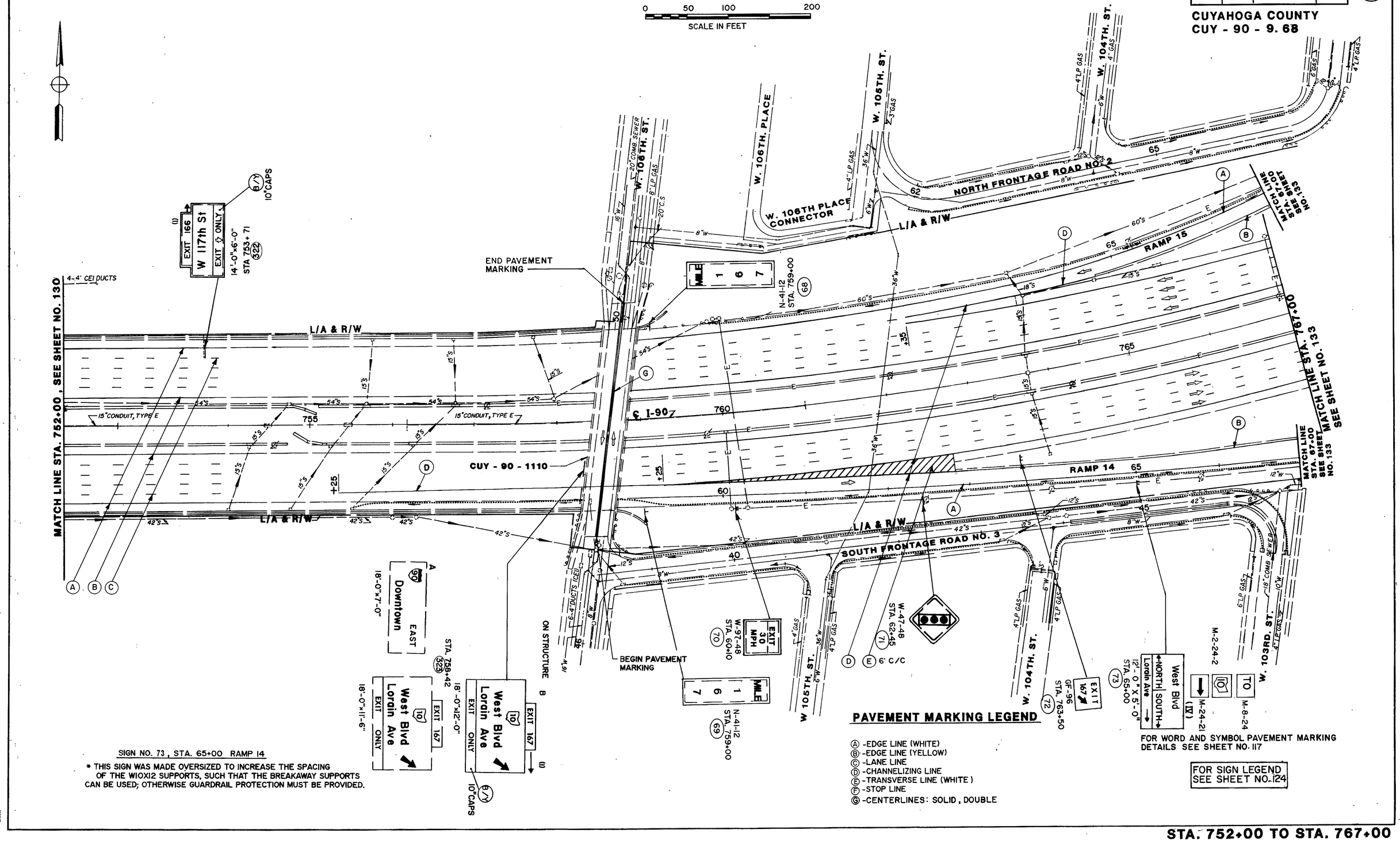

SIGN NO. 73, STA. 65+00 RAMP 14

* THIS SIGN WAS MADE OVERSIZED TO INCREASE THE SPACING OF THE W10X12 SUPPORTS, SUCH THAT THE BREAKAWAY SUPPORTS CAN BE USED; OTHERWISE GUARDRAIL PROTECTION MUST BE PROVIDED.

PAVEMENT MARKING LEGEND

- Ⓐ -EDGE LINE (WHITE)
- Ⓑ -EDGE LINE (YELLOW)
- Ⓒ -LANE LINE
- Ⓓ -CHANNELIZING LINE
- Ⓔ -TRANSVERSE LINE (WHITE)
- Ⓕ -STOP LINE
- Ⓖ -CENTERLINES: SOLID, DOUBLE

FOR WORD AND SYMBOL PAVEMENT MARKING DETAILS SEE SHEET NO. 117

FOR SIGN LEGEND SEE SHEET NO. 124

STA. 752+00 TO STA. 767+00

TRAFFIC CONTROL

FHWA REGION	STATE	PROJECT	
5	OHIO		

133
220

CUYAHOGA COUNTY
CUY - 90 - 9.68

0 50 100 200
SCALE IN FEET

MATCH LINE STA. 39+00, SEE ON THIS SHEET

SEE SHEET NO. 132 MATCH LINE STA. 67+00

MATCH LINE STA. 767+00, SEE SHEET NO. 132

SEE SHEET NO. 132 MATCH LINE STA. 67+00

EXIT 166 W 117th St 1/2 Mile

℄ W. 103RD. ST.

℄ WEST BLVD.

℄ WESTERN 60 AVE.

℄ NORTH MARGINAL ROAD NO. 4

W. 101ST. ST.

WEST BLVD WORK

S. FRONTAGE ROAD NO. 4-A

RAMP 14 L/A & R/W

RAMP 15 L/A & R/W

L/A & R/W

I-90

CUY-90-1132L

CUY- 90 - 1132R

SUSPEND PAVEMENT MARKING

RESUME PAVEMENT MARKING

DOTTED LINE

NO TRUCKS ON WEST BLVD.

THROUGH TRUCKS PROHIBITED

THROUGH COMM. VEH. PROHIBITED

SPEED LIMIT 60 (VEHICLES OVER 4 TONS EMPTY, NON COM BUSES) 55

SPEED LIMIT 55

SPEED LIMIT 35

MATCH LINE STA. 62+00 SEE SHEET NO. 134

MATCH LINE STA. 776+00 SEE SHEET NO. 134

MATCH LINE STA. 55+00 SEE SHEET NO. 134

MATCH LINE STA. 66+00 SEE SHEET NO. 134

PAVEMENT MARKING LEGEND

- (A) - EDGE LINE (WHITE)
- (B) - EDGE LINE (YELLOW)
- (C) - LANE LINE
- (D) - CHANNELIZING LINE
- (E) - TRANSVERSE LINE
- (F) - STOP LINE
- (G) - CENTER LINES SOLID, DOUBLE
- (H) - CROSSWALK LINES
- (L) - CURB MARKING (YELLOW)

FOR WORD AND SYMBOL PAVEMENT MARKING DETAILS SEE SHEET NO. 117

FOR SIGN LEGEND SEE SHEET NO. 124

STA. 767+00 TO STA. 776+00

TRAFFIC CONTROL

FHWA REGION	STATE	PROJECT	
5	OHIO		

134/220

CUYAHOGA COUNTY
CUY - 90 - 9.68

MATCH LINE STA. 776+00 SEE SHEET NO. 133

MATCH LINE STA. 791+25, SEE SHEET NO. 135

RESUME PAVEMENT MARKING

SUSPEND PAVEMENT MARKING

END PAVEMENT MARKING

RESUME PAVEMENT MARKING

MATCH LINE SEE ON THIS SHEET

MATCH LINE SEE ON THIS SHEET

FOR WORD AND SYMBOL PAVEMENT MARKING DETAILS SEE SHEET NO. 117

FOR SIGN LEGEND SEE SHEET NO. 124

PAVEMENT MARKING LEGEND

- (A) - EDGE LINE (WHITE)
- (B) - EDGE LINE (YELLOW)
- (C) - LANE LINE
- (D) - CHANNELIZING LINE
- (E) - TRANSVERSE LINE (WHITE)
- (F) - STOP LINE
- (G) - CENTER LINES: SOLID, DOUBLE
- (H) - CROSSWALK LINES
- (J) - ISLAND MARKING (WHITE)
- (L) - CURB MARKING (YELLOW)

0 50 100 200
SCALE IN FEET

STA. 776+00 TO STA. 791+25

TRAFFIC CONTROL

FHWA REGION	STATE	PROJECT	
5	OHIO		

135/220

CUYAHOGA COUNTY
CUY - 90 - 9.68

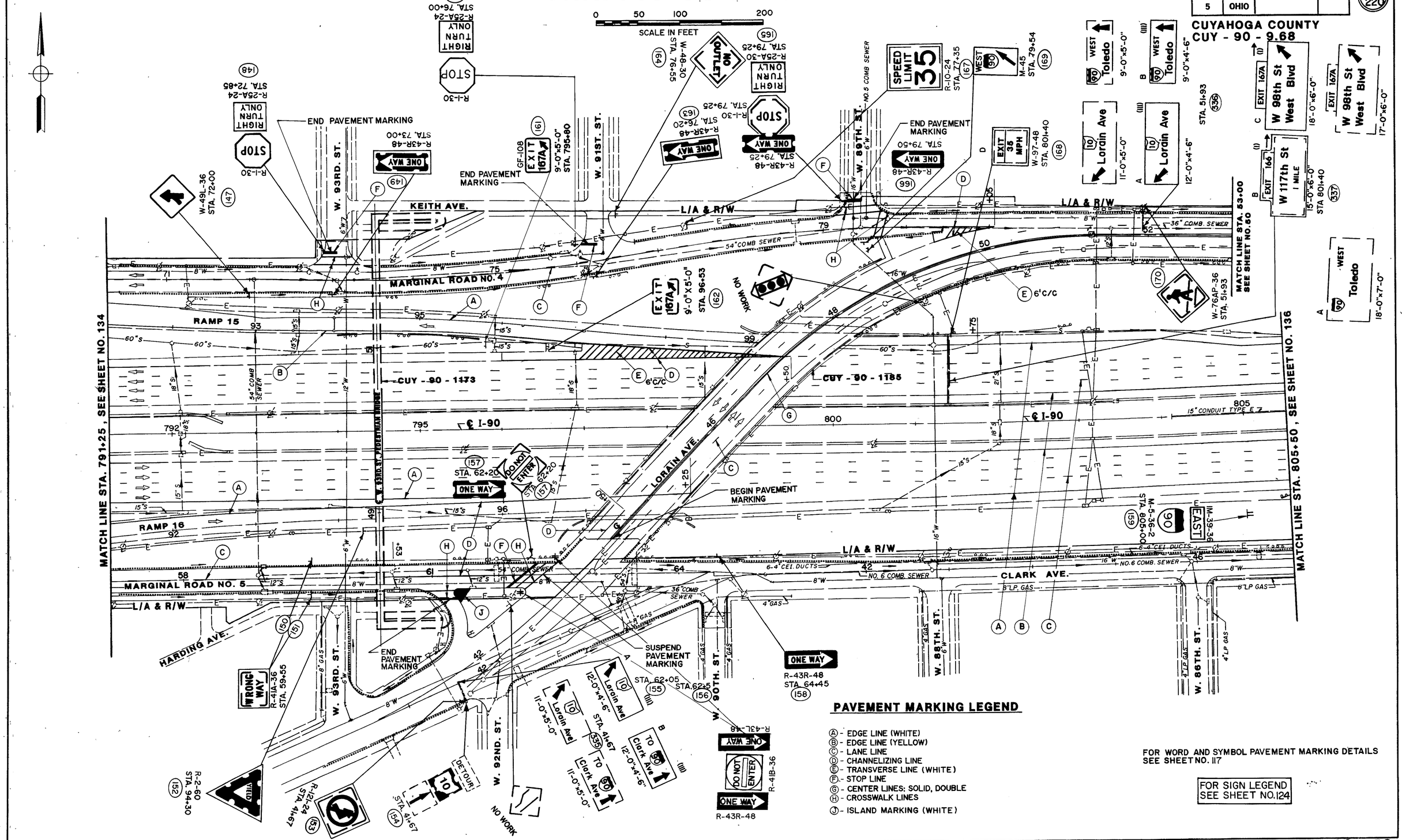

PAVEMENT MARKING LEGEND

- Ⓐ - EDGE LINE (WHITE)
- Ⓑ - EDGE LINE (YELLOW)
- Ⓒ - LANE LINE
- Ⓓ - CHANNELIZING LINE
- Ⓔ - TRANSVERSE LINE (WHITE)
- Ⓕ - STOP LINE
- Ⓖ - CENTER LINES: SOLID, DOUBLE
- Ⓗ - CROSSWALK LINES
- Ⓙ - ISLAND MARKING (WHITE)

FOR WORD AND SYMBOL PAVEMENT MARKING DETAILS SEE SHEET NO. 117

FOR SIGN LEGEND SEE SHEET NO. 124

STA. 791+25 TO STA. 805+50

TRAFFIC CONTROL

FHWA REGION	STATE	PROJECT	
5	OHIO		

136
220

CUYAHOGA COUNTY
CUY - 90 - 9.68

SCALE IN FEET 0 50 100 200

WILLARD AVE.
W. 85TH. ST.
W. 83RD. ST.
W. 81ST. ST.
W. 80TH. ST.
W. 79TH. ST.
W. 84TH. ST.
W. 82ND. ST.
LORAIN AVE.
CLARK AVE.
EMILY AVE.
NORDICA COURT
CONNECTOR RD.
CUY-9-1201
CUY-90-12148
I-90
RAMP 17
L/A & R/W
R/W
MATCH LINE STA. 805+50, SEE SHEET NO. 135
MATCH LINE STA. 821+00, SEE SHEET NO. 137
SUSPEND PAVEMENT MARKING
RESUME PAVEMENT MARKING
BEGIN PAVEMENT MARKING
END PAVEMENT MARKING
NO TRUCKS THIS EXIST 8'-0"X4'-0" STA. 807+20
NO TRUCKS THIS EXIST 12'-0"X4'-0"
W 98th St West Blvd 1/4 MILE EXIT 167A
W 98th St West Blvd NEXT RIGHT EXIT 167A
W 44th St 1 MILE EXIT 169
W 41st St 1 MILE
Toledo WEST
Cleveland EAST
Downtown EAST
Lorain Ave WEST/EAST
STOP
ONE WAY
DO NOT ENTER
WRONG WAY
NO WORK
RIGHT LANE ENDS
ONLY
R-3IJ-54MOD STA. 60+70
R-43L-48 STA. 69+00
R-43R-48 STA. 61+40
R-43L-48 STA. 63+40
R-41B-36 STA. 61+40
R-41A-36 STA. 15+00
R-43R-48 STA. 60+70
R-41B-36 STA. 60+70
R-43L-48 STA. 59+00
R-43R-48 STA. 58+00
R-41B-36 STA. 58+00
R-31A-36 STA. 51+55
R-121-24 STA. 51+00
R-121-24 STA. 49+20
R-72E-18 STA. 49+40
R-56-18 STA. 49+16
R-31G-36 STA. 49+34
R-31G-36 STA. 49+65
R-31G-36 STA. 48+84
R-31G-36 STA. 48+45
W-32-36 STA. 48+45
W-41-12 STA. 81+25
W-41-12 STA. 81+99
W-143-24 STA. 50+70
W-13-36
W-316-36 STA. 53+36
W-316-36 STA. 59+00
W-600-36 STA. 57+50
W-50R-48 STA. 816+90
W-53-36 STA. 19+60
W-47-36 STA. 18+75
M-45 WEST STA. 49+35
M-45 EAST STA. 51+80
M-5-24-2 W. 85th ST. EAST SIDE
M-17-24
LOCATED ON THE EAST SIDE OF W. 84TH ST., 450' SOUTH OF EMILY AVE
LOCATED ON THE SOUTH SIDE OF W. 85TH ST. 400 NORTH OF MILLARD AVE.
MATCH LINE STA. 83+00 SEE SHEET NO. 136
6" LP GAS
8" W
36" COMB. SEWER
6-3.5" C.E.I. DUCTS
4" C.E.I. DUCTS
2-4" C.E.I. DUCTS
16" LP. GAS
6-4" OBT CONDUITS
15" CONDUIT TYPE E-7
48" COMB. SEWER
24" COMB. SEWER
NO. 6 COMB. SEWER
CPP
DOTTED LINE
6'C/C
CROSS WALK

PAVEMENT MARKING LEGEND

- (A) - EDGE LINE (WHITE)
- (B) - EDGE LINE (YELLOW)
- (C) - LANE LINE
- (D) - CHANNELIZING LINE
- (E) - TRANSVERSE LINE (WHITE)
- (F) - STOP LINE
- (G) - CENTER LINES: SOLID, DOUBLE
- (H) - CROSSWALK LINES
- (J) - ISLAND MARKING (WHITE)
- (M) - DOTTED LINES, 6" (WHITE)

FOR WORD AND SYMBOL PAVEMENT MARKING DETAILS SEE SHEET NO. 117

FOR SIGN LEGEND SEE SHEET NO. 124

STA. 805+50 TO STA. 821+00

TRAFFIC CONTROL

FHWA REGION	STATE	PROJECT	
5	OHIO		

137/220

CUYAHOGA COUNTY
CUY - 90 - 9.68

0 50 100 200
SCALE IN FEET

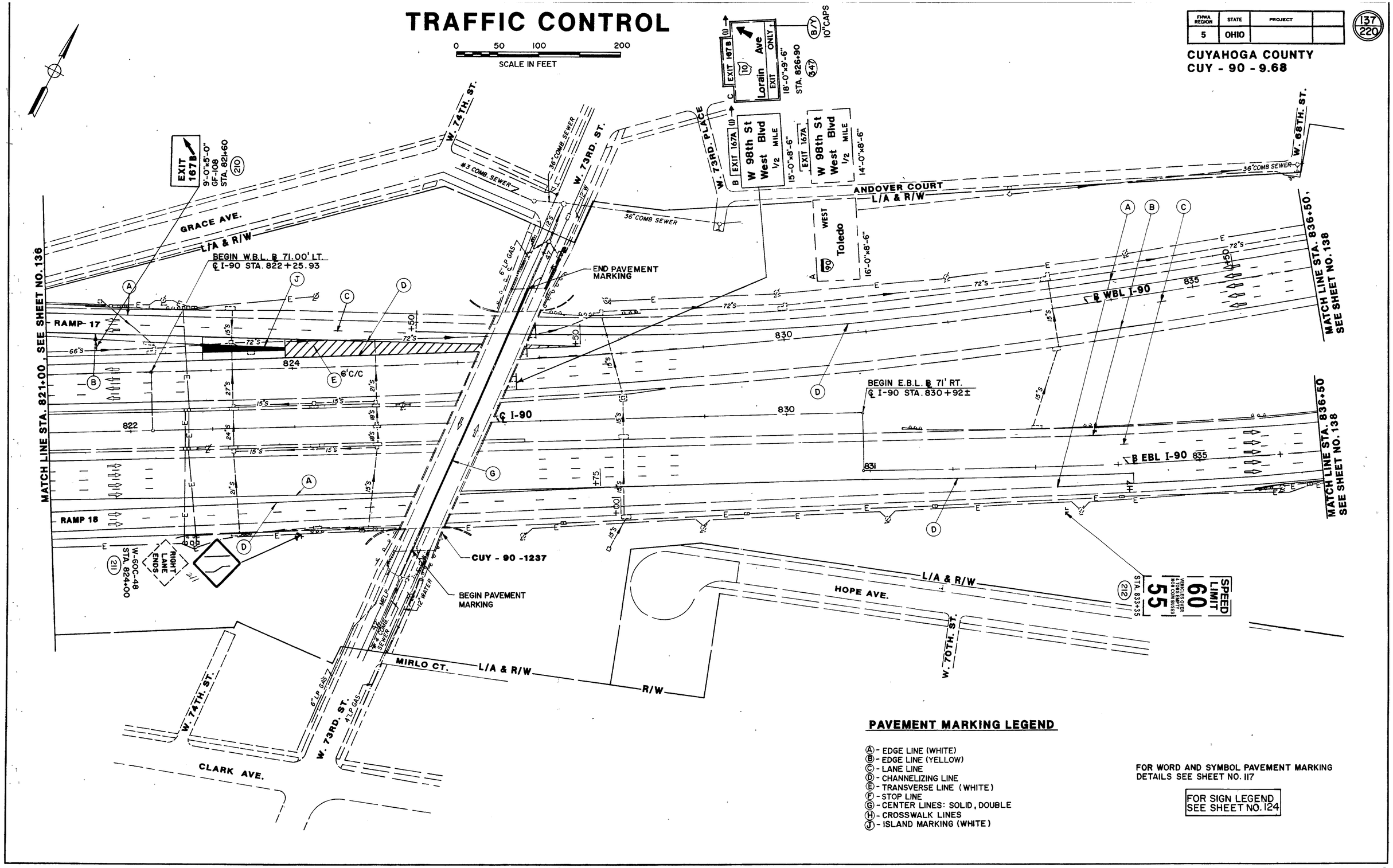

PAVEMENT MARKING LEGEND

- Ⓐ - EDGE LINE (WHITE)
- Ⓑ - EDGE LINE (YELLOW)
- Ⓒ - LANE LINE
- Ⓓ - CHANNELIZING LINE
- Ⓔ - TRANSVERSE LINE (WHITE)
- Ⓕ - STOP LINE
- Ⓖ - CENTER LINES: SOLID, DOUBLE
- Ⓗ - CROSSWALK LINES
- Ⓙ - ISLAND MARKING (WHITE)

FOR WORD AND SYMBOL PAVEMENT MARKING DETAILS SEE SHEET NO. 117

FOR SIGN LEGEND SEE SHEET NO. 124

STA. 821+00 TO STA. 836+50

TRAFFIC CONTROL

FHWA REGION	STATE	PROJECT	
5	OHIO	.	

138/220

CUYAHOGA COUNTY
CUY - 90 - 9.68

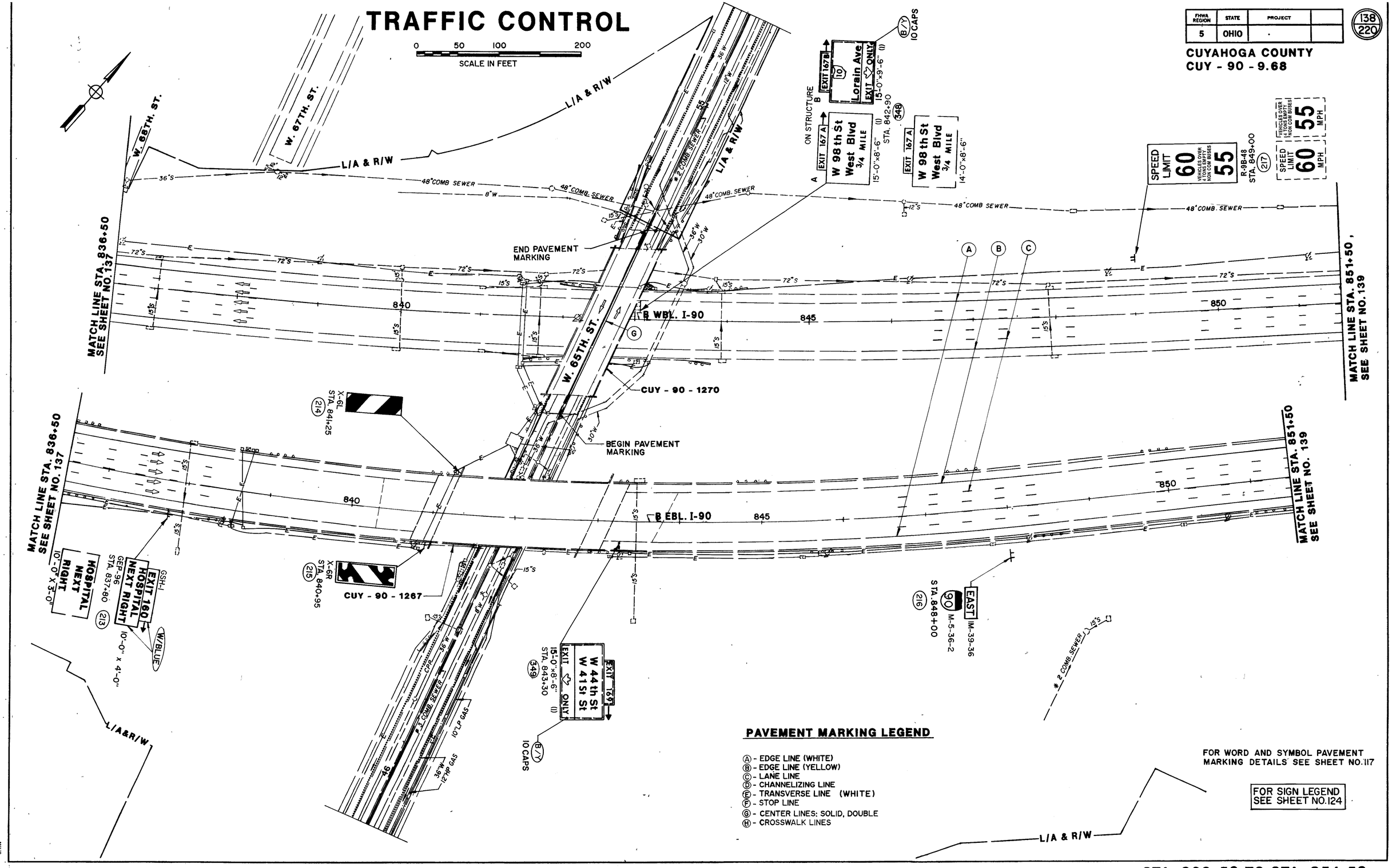

PAVEMENT MARKING LEGEND

- Ⓐ - EDGE LINE (WHITE)
- Ⓑ - EDGE LINE (YELLOW)
- Ⓒ - LANE LINE
- Ⓓ - CHANNELIZING LINE
- Ⓔ - TRANSVERSE LINE (WHITE)
- Ⓕ - STOP LINE
- Ⓖ - CENTER LINES: SOLID, DOUBLE
- Ⓗ - CROSSWALK LINES

FOR WORD AND SYMBOL PAVEMENT MARKING DETAILS SEE SHEET NO. 117

FOR SIGN LEGEND SEE SHEET NO. 124

STA. 836+50 TO STA. 851+50

TRAFFIC CONTROL

0 50 100 200
SCALE IN FEET

FHWA REGION	STATE	PROJECT	
5	OHIO		

139
220

CUYAHOGA COUNTY
CUY - 90 - 9.68

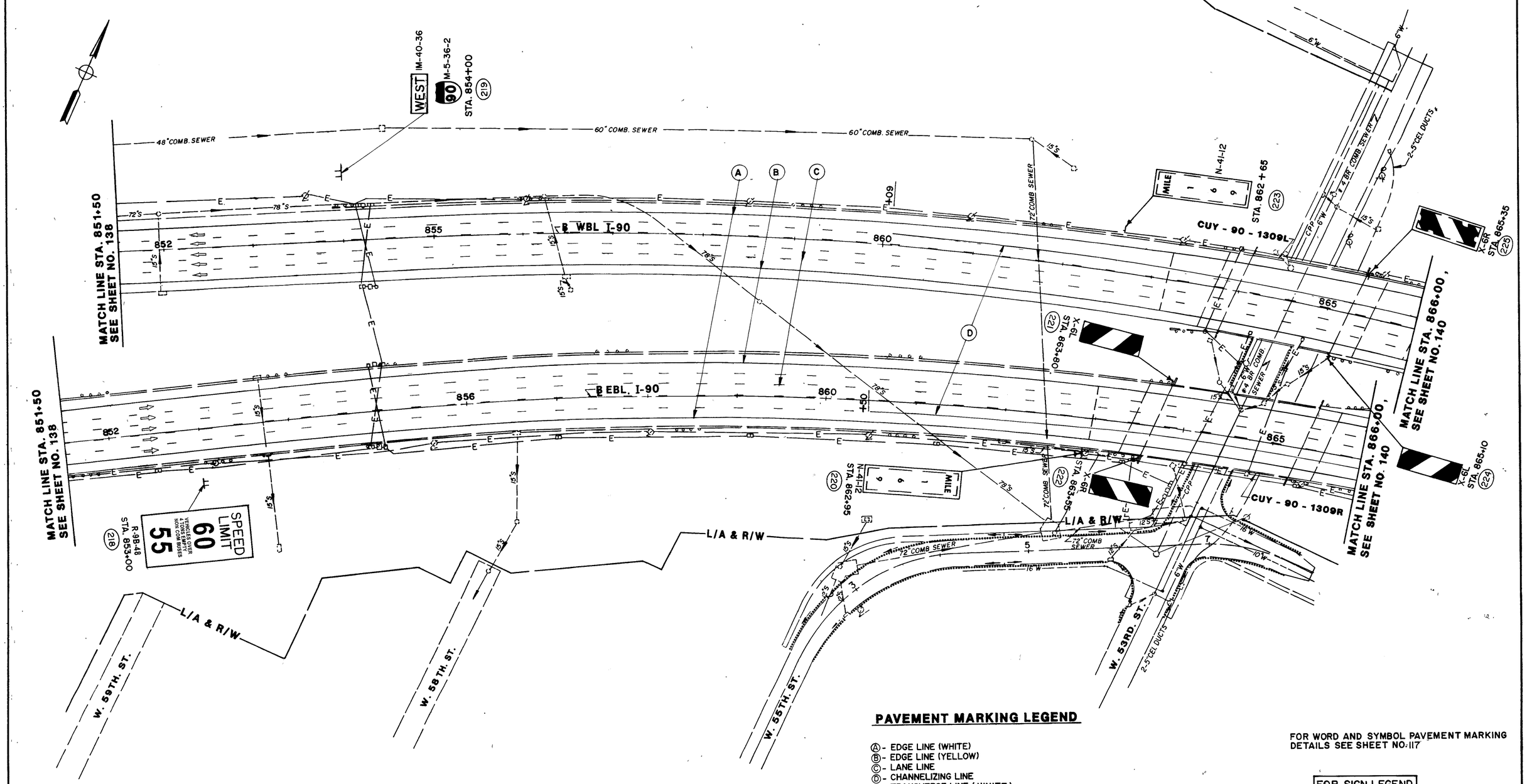

PAVEMENT MARKING LEGEND

Ⓐ - EDGE LINE (WHITE)
Ⓑ - EDGE LINE (YELLOW)
Ⓒ - LANE LINE
Ⓓ - CHANNELIZING LINE
Ⓔ - TRANSVERSE LINE (WHITE)
Ⓕ - STOP LINE

FOR WORD AND SYMBOL PAVEMENT MARKING DETAILS SEE SHEET NO. 117

FOR SIGN LEGEND SEE SHEET NO. 124

STA. 851+50 TO STA. 866+00

TRAFFIC CONTROL

FHWA REGION	STATE	PROJECT	
5	OHIO		

140/220

CUYAHOGA COUNTY
CUY - 90 - 9.68

0 50 100 200
SCALE IN FEET

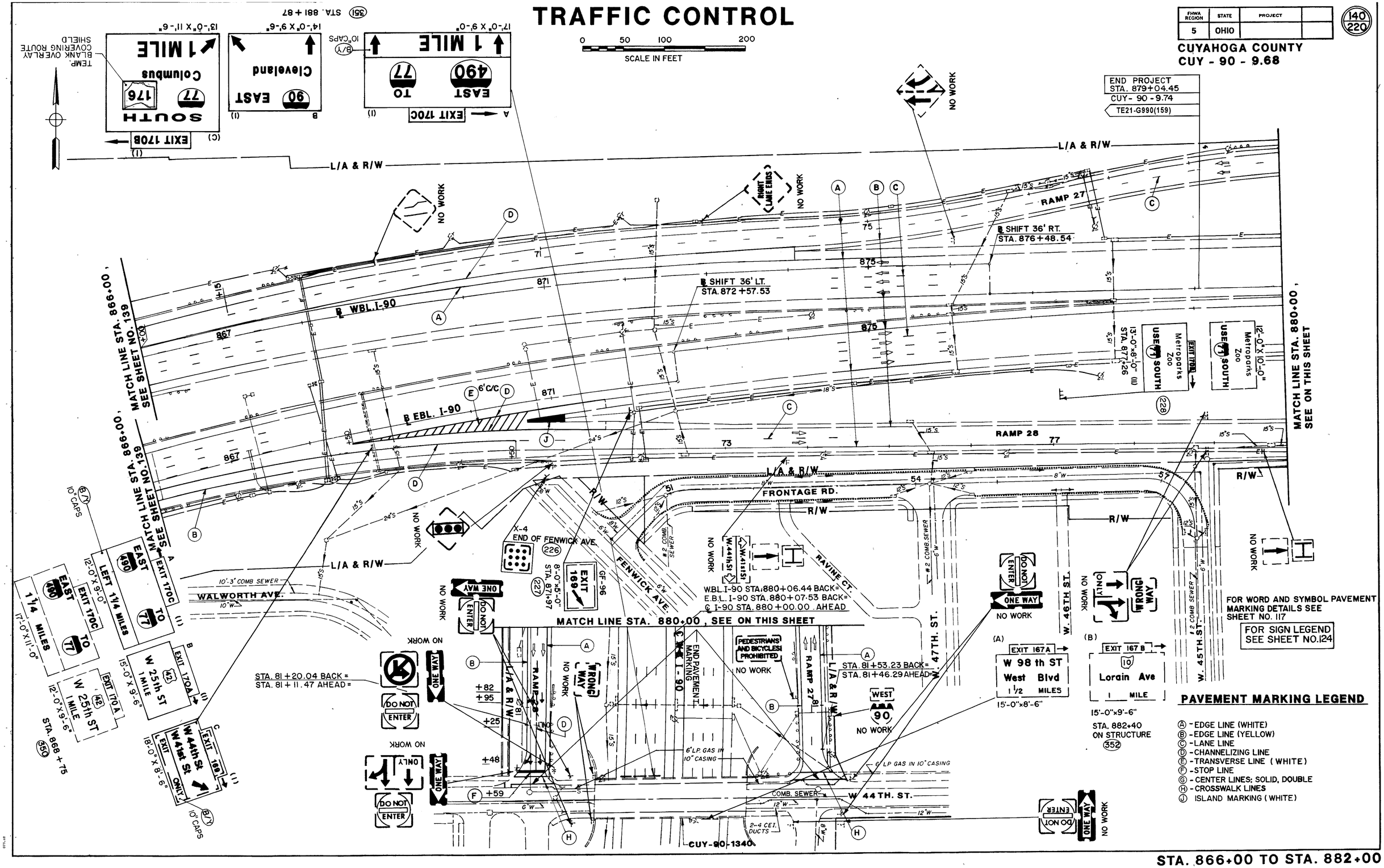

PAVEMENT MARKING LEGEND

- Ⓐ - EDGE LINE (WHITE)
- Ⓑ - EDGE LINE (YELLOW)
- Ⓒ - LANE LINE
- Ⓓ - CHANNELIZING LINE
- Ⓔ - TRANSVERSE LINE (WHITE)
- Ⓕ - STOP LINE
- Ⓖ - CENTER LINES: SOLID, DOUBLE
- Ⓗ - CROSSWALK LINES
- Ⓙ ISLAND MARKING (WHITE)

STA. 866+00 TO STA. 882+00

FHWA REGION	STATE	PROJECT	
5	OHIO		

141
220

CUYAHOGA COUNTY
CUY-90-9.68

NOTE: ELEVATIONS INCLUDE PROPOSED 3 1/4" RESURFACING

0 2 4 6 8
SCALE IN FEET

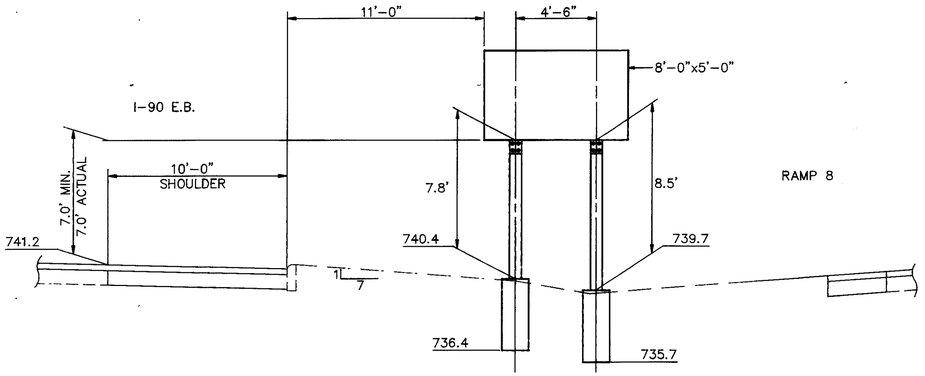

SIGN NO. 14
STA. 725+08, RT, I-90
TWO BEAMS: S4x7.7 BREAKAWAY

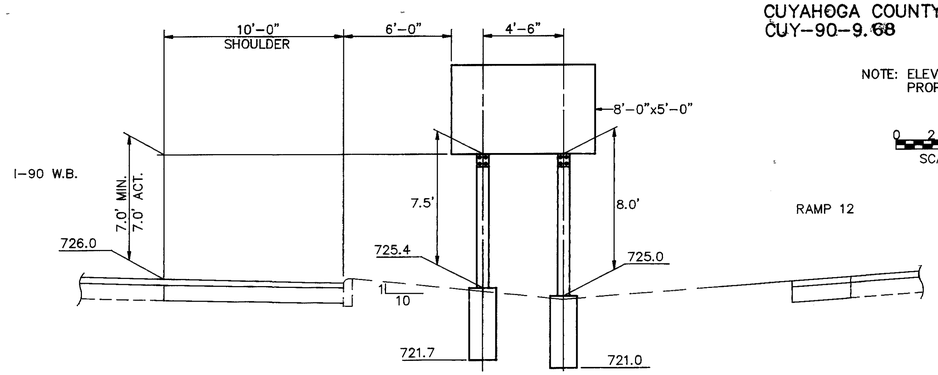

SIGN NO. 66
STA. 742+50, LT, I-90
TWO BEAMS: S4x7.7 BREAKAWAY

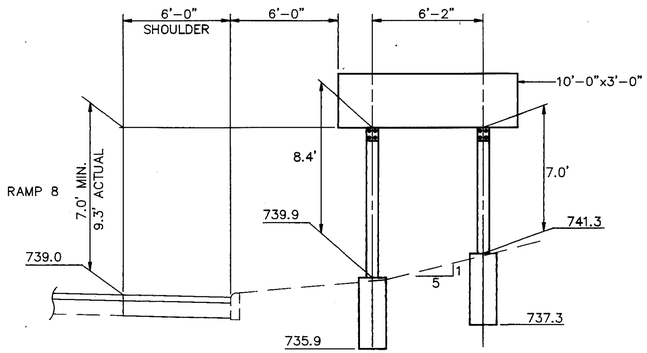

SIGN NO. 34
STA. 29+45, RT, RAMP 8
TWO BEAMS: S4x7.7 BREAKAWAY

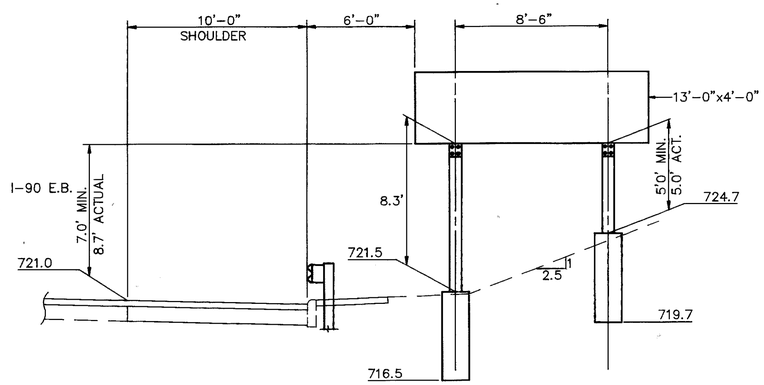

SIGN NO. 67
STA. 749+35, RT, I-90
TWO BEAMS: W6x9 BREAKAWAY

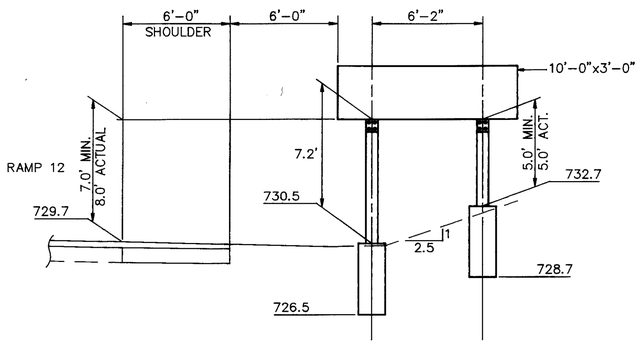

SIGN NO. 63
STA. 38+50, RT, RAMP 12
TWO BEAMS: S4x7.7 BREAKAWAY

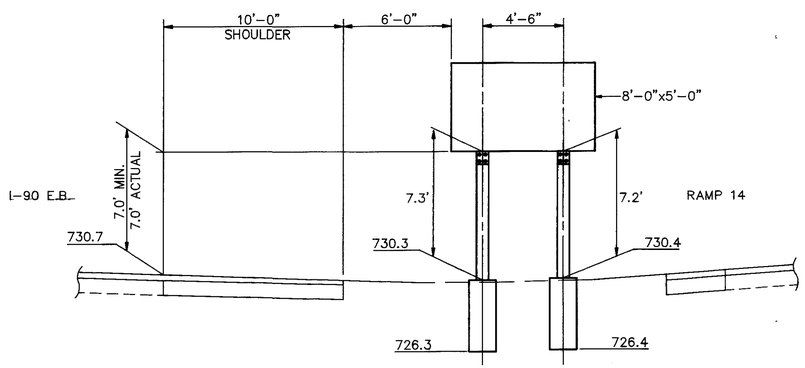

SIGN NO. 72
STA. 763+50, RT, I-90
TWO BEAMS: S4x7.7 BREAKAWAY

FHWA REGION	STATE	PROJECT	
5	OHIO		

142/220

CUYAHOGA COUNTY
CUY-90-9.68

NOTE: ELEVATIONS INCLUDE PROPOSED 3 1/4" RESURFACING

0 2 4 6 8
SCALE IN FEET

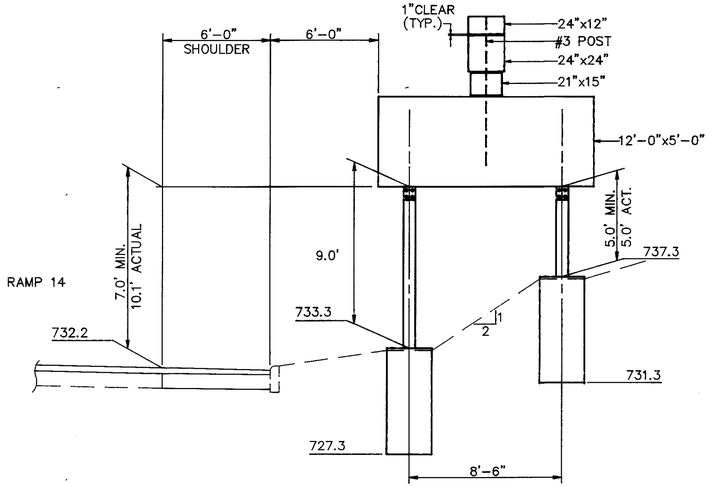

SIGN NO. 73
STA. 65+00, RT, RAMP 14
TWO BEAMS: W10x12 BREAKAWAY

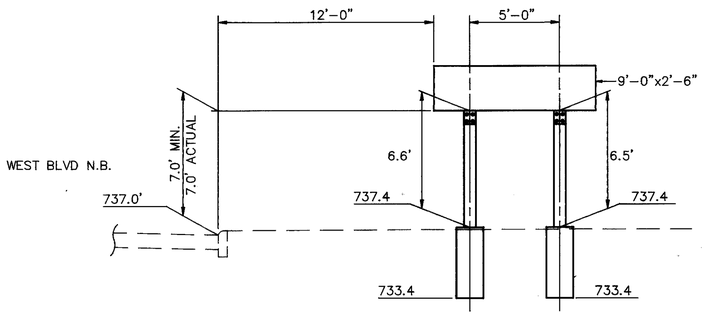

SIGN NO. 82
STA. 35+65, RT, WEST BLVD
TWO BEAMS: S4x7.7 BREAKAWAY

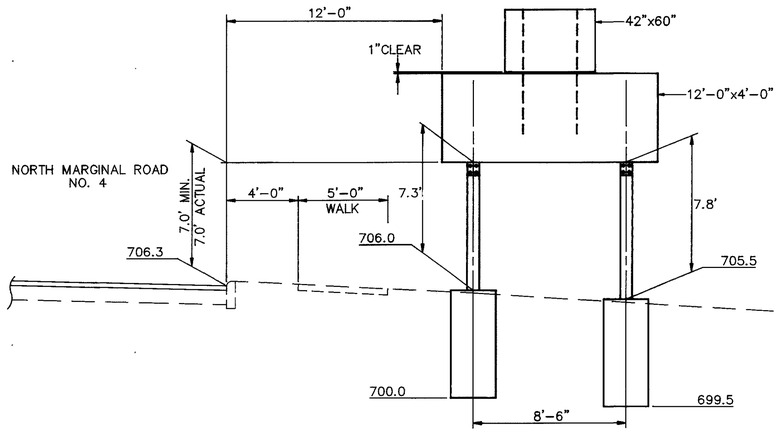

SIGN NO. 144
STA. 67+00, RT, N. MARG #4
TWO BEAMS: W10x12 BREAKAWAY

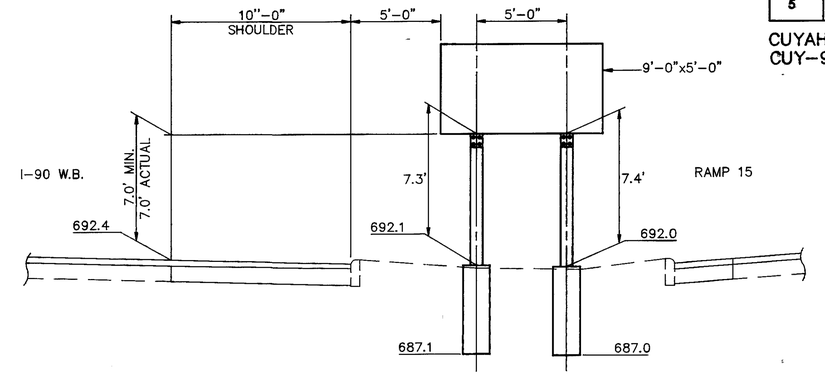

SIGN NO. 1161
STA. 795+80, LT. I-90
TWO BEAMS: W6x9 BREAKAWAY

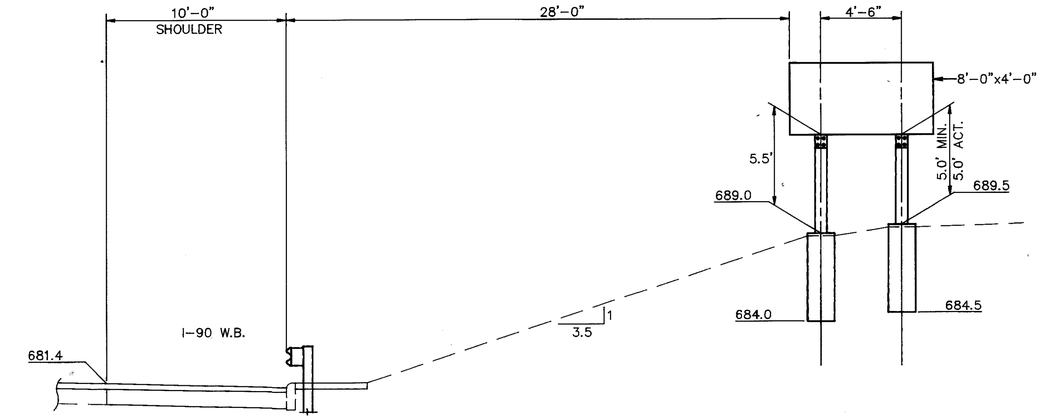

SIGN NO. 176
STA. 807+20, LT, I-90
TWO BEAMS: W6x9 BREAKAWAY

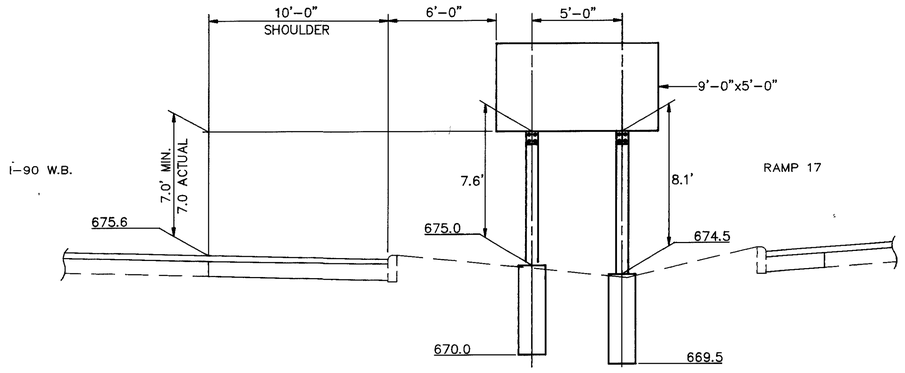

SIGN NO. 209
STA. 821+60, LT, I-90
TWO BEAMS: W6x9 BREAKAWAY

FHWA REGION	STATE	PROJECT	
5	OHIO		

143
220

CUYAHOGA COUNTY
CUY-90-9.68

NOTE: ELEVATIONS INCLUDE PROPOSED 3 1/4" RESURFACING

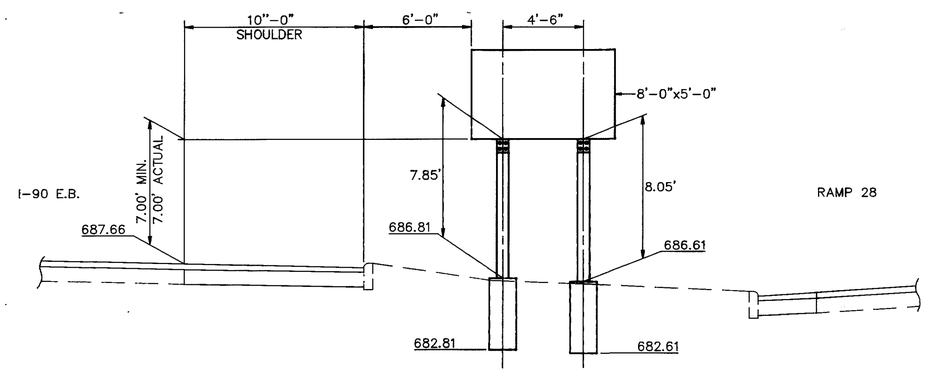

SIGN NO. 227
STA. 871+97, RT, I-90 E.B.
TWO BEAMS: S4x7.7 BREAKAWAY

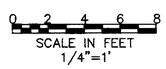

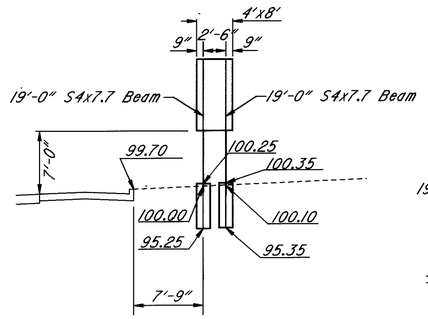

SIGN NO. 10
STA. 707+40 EB I-90
GROUND MOUNTED

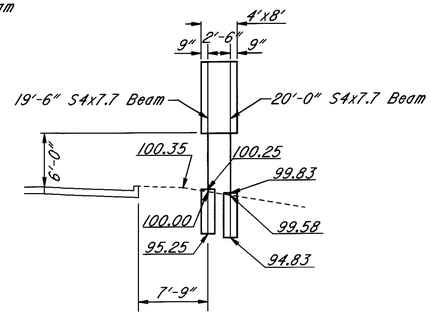

SIGN NO. 11
STA. 707+85 WB I-90
GROUND MOUNTED

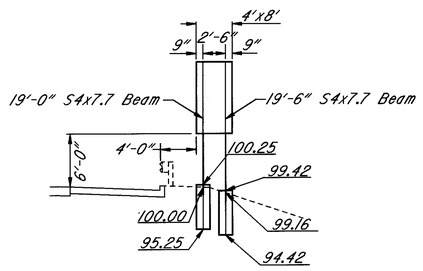

SIGN NO. 86
STA. 773+00 EB I-90
GROUND MOUNTED

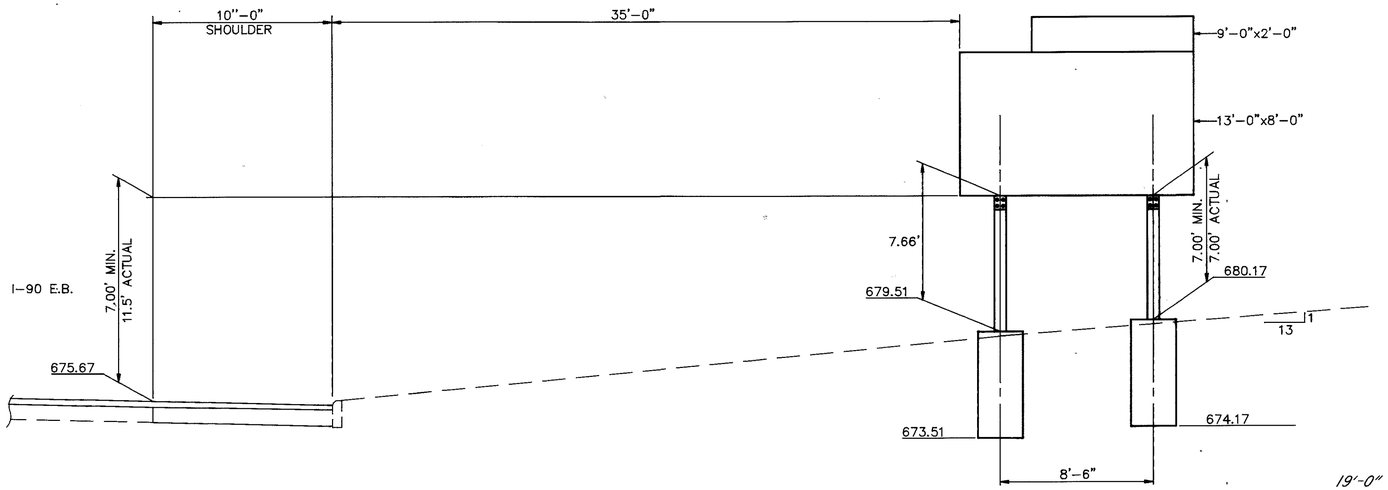

SIGN NO. 228
STA. 877+26, RT, I-90, E.B.
TWO BEAMS: W8x18 BREAKAWAY

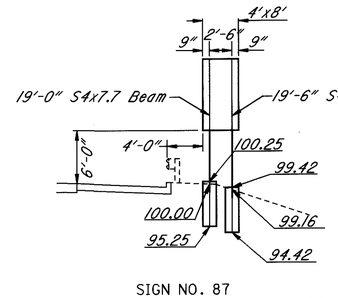

SIGN NO. 87
STA. 774+40 WB I-90
GROUND MOUNTED

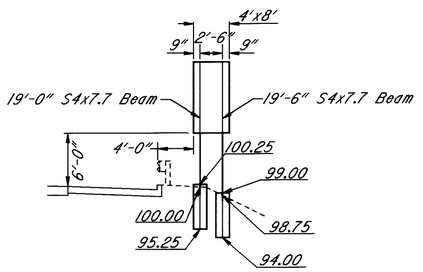

SIGN NO. 218
STA. 853+00 EB I-90
GROUND MOUNTED

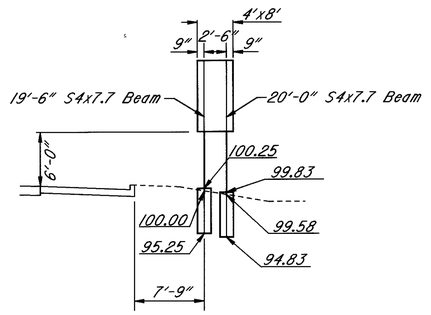

SIGN NO. 217
STA. 849+00 WB I-90
GROUND MOUNTED

SPEED LIMIT SIGN SUPPORTS

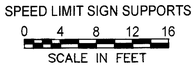

227 228 10 11 86 87 217 218

GROUND MOUNTED SIGN SUPPORT ELEVATIONS

FHWA REGION	STATE	PROJECT	
5	OHIO		

144
220

CUYAHOGA COUNTY
CUY-90-9.68

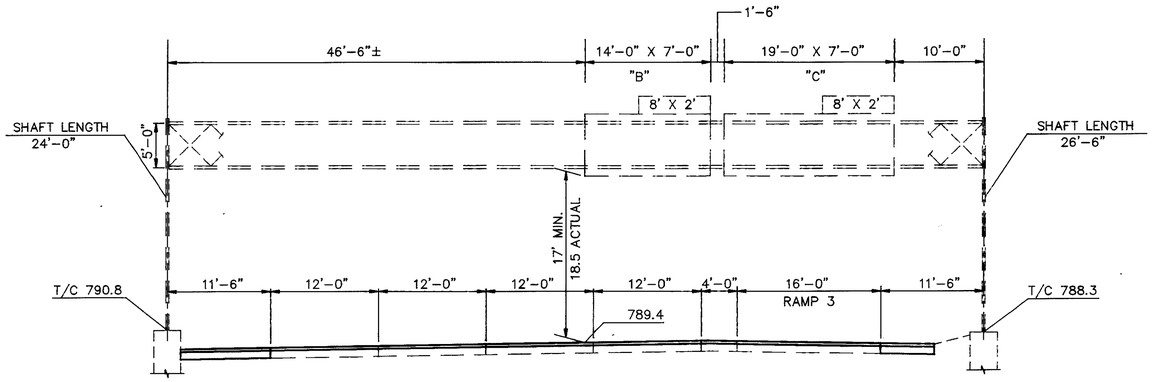

OVERHEAD SIGN NO. 301
STA. 683+48 W.B. I-90
STD. NO. 7.6, DESIGN 4 (MOD.)
SPAN = 91'

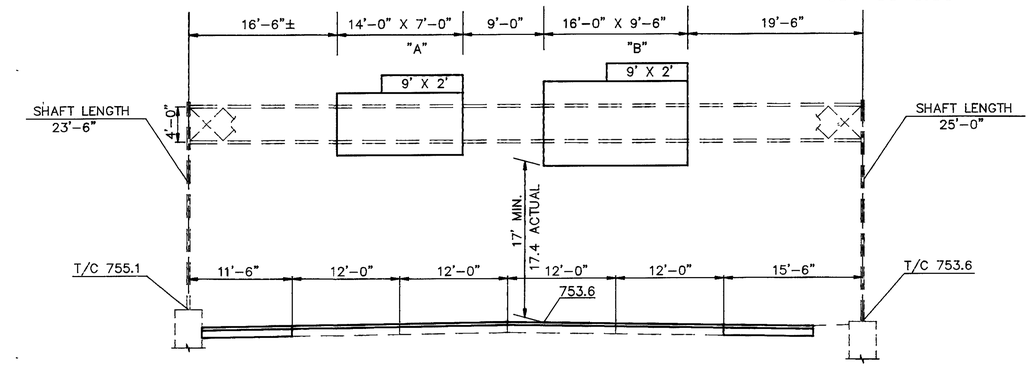

OVERHEAD SIGN NO. 305
STA. 712+00 W.B. I-90
STD. NO. 7.6, DESIGN 2 (MOD.)
SPAN = 75'

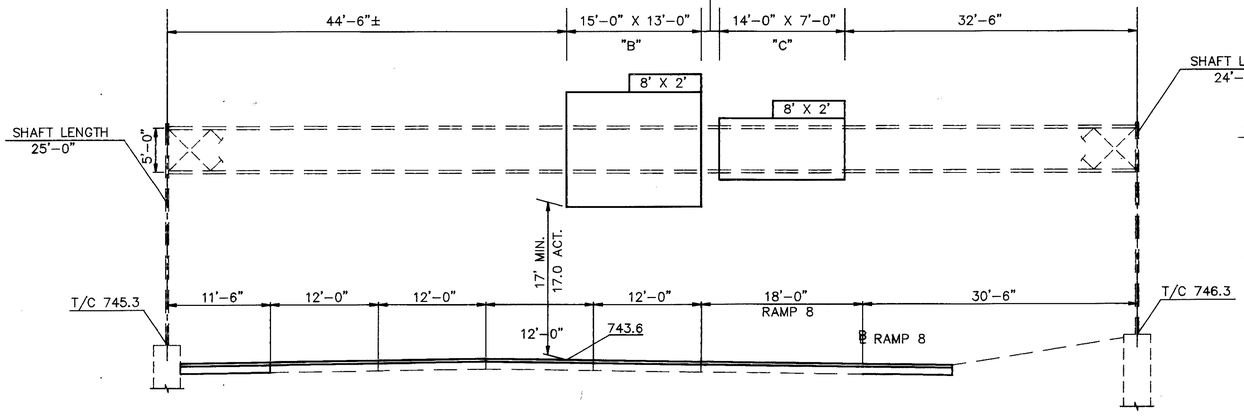

OVERHEAD SIGN NO. 306
STA. 772+70 E.B. I-90
STD. NO. 7.6, DESIGN 4 (MOD.)
SPAN = 108'

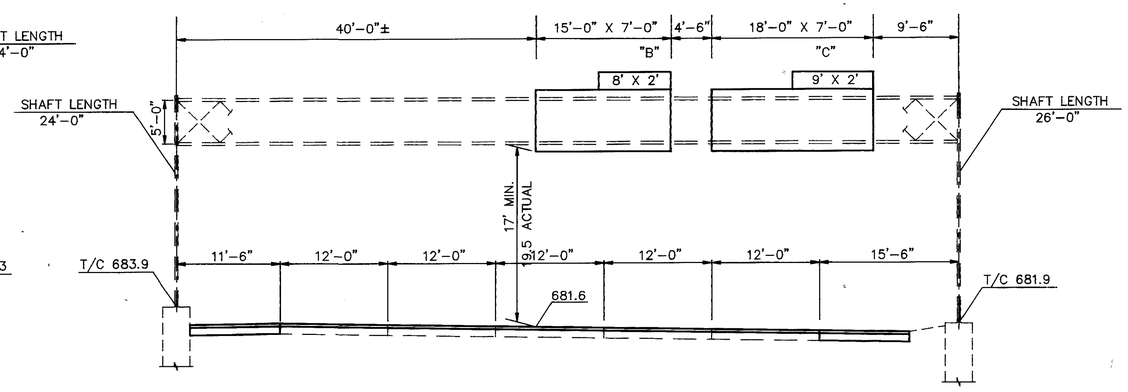

OVERHEAD SIGN NO. 337
STA. 801+40 W.B. I-90
STD. NO. 7.65, DESIGN 8 (MOD.)
SPAN = 87'

NOTES:

1) SIGN SIZES ARE ACTUAL AND INCLUDE THE ADDITIONAL 1'-0" FOR GLARE SHIELD AND LUMINAIRE ASSEMBLIES.

2) VERTICAL CLEARANCE INCLUDES PROPOSED RESURFACING.

0 4 8 12 16

SCALE IN FEET

301 305 306 337

OVERHEAD SIGN SUPPORT ELEVATIONS

FHWA REGION	STATE	PROJECT	
5	OHIO		

145
220

CUYAHOGA COUNTY
CUY-90-9.68

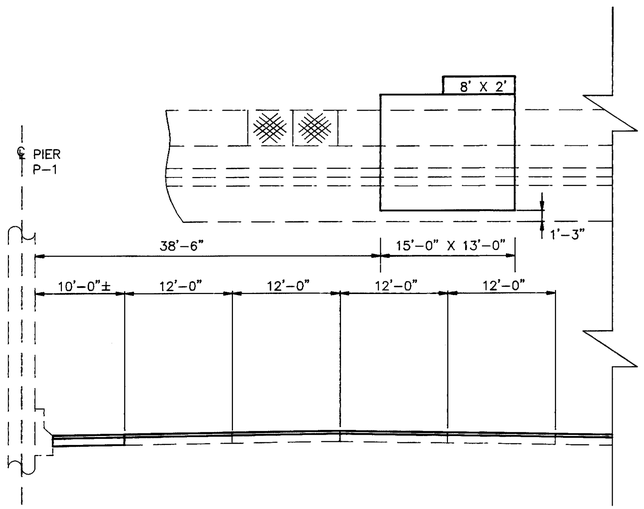

STRUCTURE. MOUNTED SIGN NO. 307
STA. 732+35, E.B. I-90
STD. NO. TC-18.24, BEAM BRIDGE MOUNT
BRIDGE NO. CUY-90-1062
VERTICAL BRIDGE CLEARANCE = 14.5' MIN.
14-9" ACTUAL

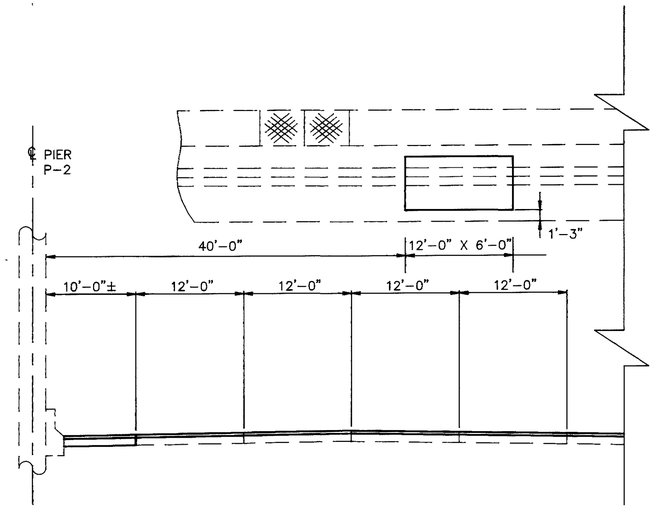

STRUCTURE MOUNTED SIGN NO. 308
STA. 734+00, W.B. I-90
STD. NO. TC-18.24, BEAM BRIDGE MOUNT
BRIDGE NO. CUY-90-1062
VERTICAL BRIDGE CLEARANCE = 14.5' MIN.
14-8" ACTUAL

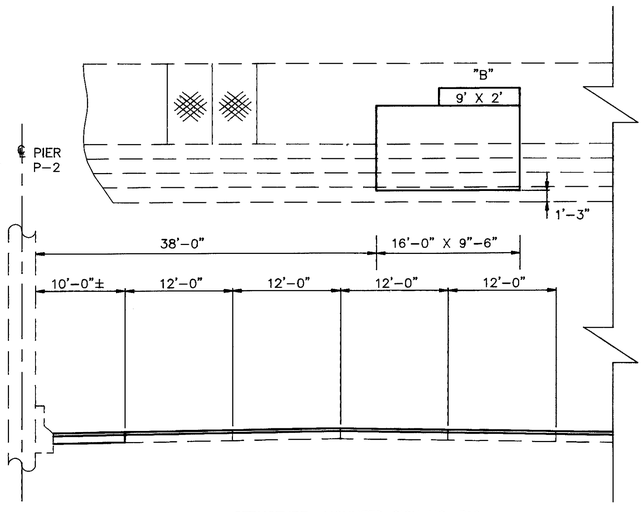

STRUCTURE MOUNTED SIGN NO. 319
STA. 743+60, W.B. I-90
STD. NO. TC-18.24, BEAM BRIDGE MOUNT
BRIDGE NO. CUY-90-1082
VERTICAL BRIDGE CLEARANCE = 14.5' MIN.
14-7" ACTUAL

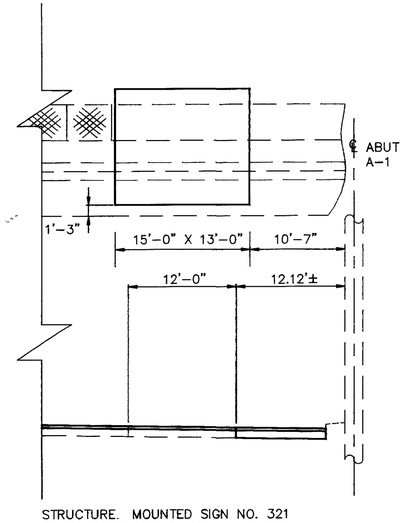

STRUCTURE. MOUNTED SIGN NO. 321
STA. 750+15, E.B. I-90
STD. NO. TC-18.24, BEAM BRIDGE MOUNT
BRIDGE NO. CUY-90-1094
VERTICAL BRIDGE CLEARANCE = 14.5' MIN.
14-8"ACTUAL

NOTES:

1) SIGN SIZES ARE ACTUAL AND INCLUDE THE ADDITIONAL 1'-0" FOR GLARE SHIELD AND LUMINAIRE ASSEMBLIES.

2) VERTICAL CLEARANCE INCLUDES PROPOSED 3 1/4" RESURFACING.

0 4 8 12 16

SCALE IN FEET

307 308 319 321

OVERHEAD SIGN SUPPORT ELEVATIONS

FHWA REGION	STATE	PROJECT	
5	OHIO		

146
220

CUYAHOGA COUNTY
CUY-90-9.68

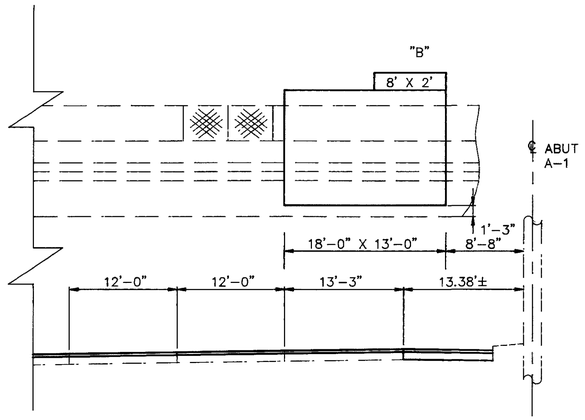

STRUCTURE. MOUNTED SIGN NO. 323
STA. 758+42, E.B. I-90
STD. NO. TC-18.24, BEAM BRIDGE MOUNT
BRIDGE NO. CUY-90-1110
VERTICAL BRIDGE CLEARANCE = 14.5' MIN.
14'-9 " ACTUAL

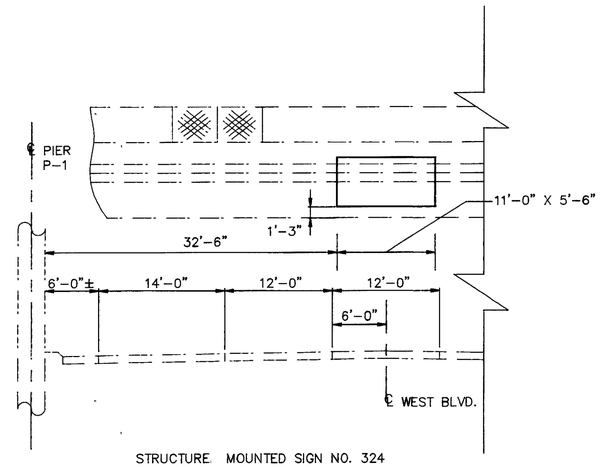

STRUCTURE. MOUNTED SIGN NO. 324
STA. 42+25, N.B. WEST BLVD.
STD. NO. TC-18.26, DESIGN 7 (VIF)
BRIDGE NO. CUY-90-1132R
VERTICAL BRIDGE CLEARANCE = 14.5' MIN.
15.04' ACTUAL

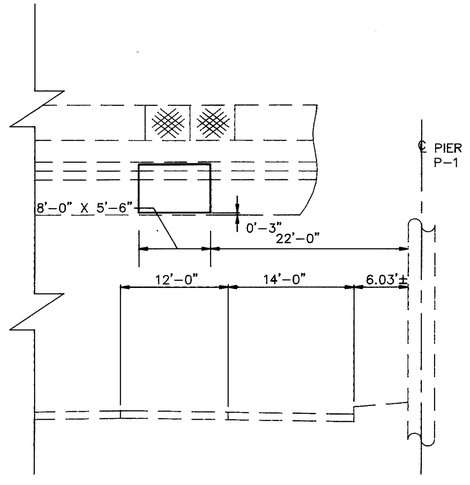

STRUCTURE MOUNTED SIGN NO. 328
STA. 47+58, S.B. W 98TH ST
STD. NO. TC-18.24, BEAM BRIDGE MOUNT
BRIDGE NO. CUY-90-1157L
VERTICAL BRIDGE CLEARANCE = 14.5' MIN.
21.85' ACT.

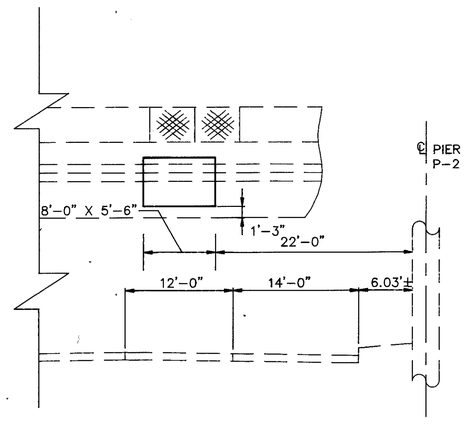

STRUCTURE MOUNTED SIGN NO. 329
STA. 45+65, N.B. W 98TH ST
STD. NO. TC-18.24, BEAM BRIDGE MOUNT
BRIDGE NO. CUY-90-1157R
VERTICAL BRIDGE CLEARANCE = 14.5' MIN.
14.51' ACTUAL

NOTES:

1) SIGN SIZES ARE ACTUAL AND INCLUDE THE ADDITIONAL 1'-0" FOR GLARE SHIELD AND LUMINAIRE ASSEMBLIES.

2) VERTICAL CLEARANCE INCLUDES PROPOSED 3 1/4" RESURFACING.

0 4 8 12 16

SCALE IN FEET

323 324 328 329

OVERHEAD SIGN SUPPORT ELEVATIONS

FHWA REGION	STATE	PROJECT	
5	OHIO		

147
220

CUYAHOGA COUNTY
CUY-90-9.68

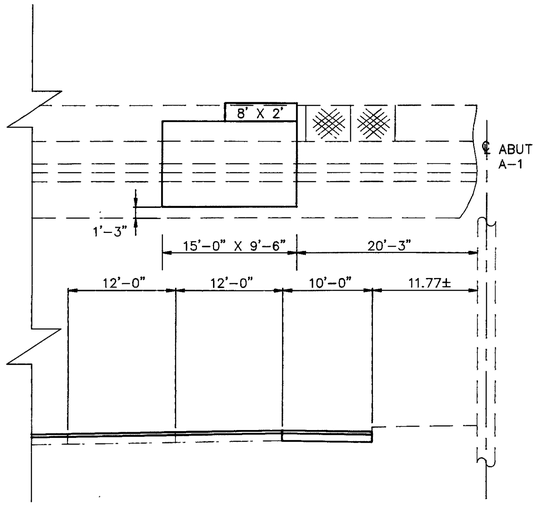

STRUCTURE. MOUNTED SIGN NO. 345
STA. 806+60, E.B. I-90
STD. NO. TC-18.26, DESIGN 3
BRIDGE NO. CUY-90-1201
VERTICAL BRIDGE CLEARANCE = 14.5' MIN.
15'-5" ACTUAL

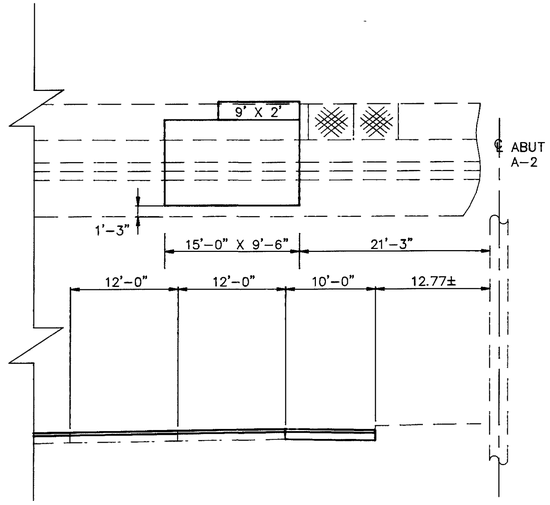

STRUCTURE MOUNTED SIGN NO. 346
STA. 806+85, W.B. I-90
STD. NO. TC-18.26, DESIGN 3
BRIDGE NO. CUY-90-1201
VERTICAL BRIDGE CLEARANCE = 14.5' MIN.
16'-4" ACTUAL

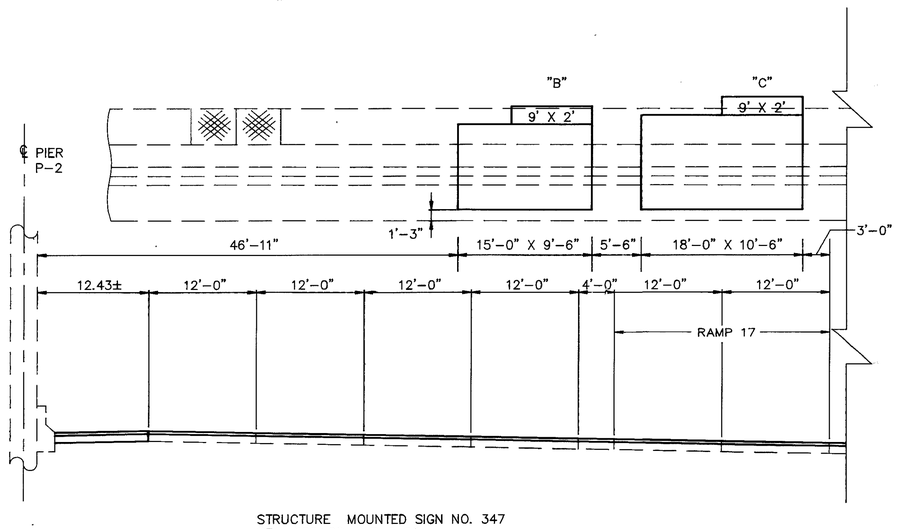

STRUCTURE MOUNTED SIGN NO. 347
STA. 826+90, W.B. I-90
STD. NO. TC-18.26, DESIGN 7, (SIGN C: DESIGN 7 MOD.)
BRIDGE NO. CUY-90-1237
VERTICAL BRIDGE CLEARANCE = 14.5' MIN.
15'-8" ACTUAL

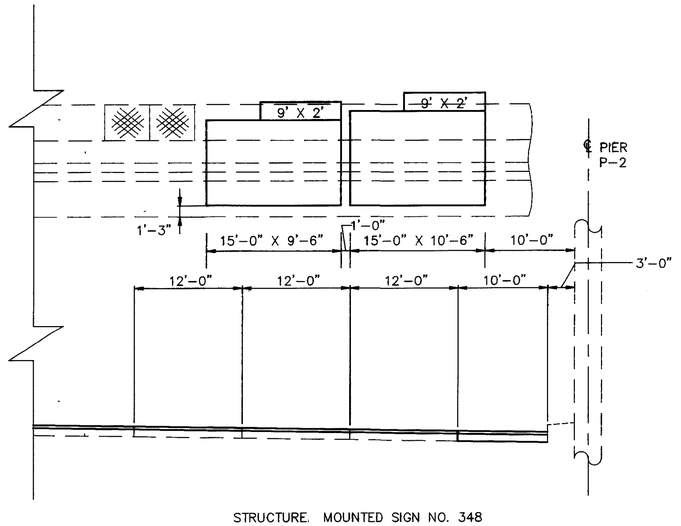

STRUCTURE. MOUNTED SIGN NO. 348
STA. 842+90, W.B. I-90
STD. NO. TC-18.26, DESIGN 3 (VIF DESIGN)
BRIDGE NO. CUY-90-1270
VERTICAL BRIDGE CLEARANCE = 14.5' MIN.
14'-8" ACTUAL

NOTES:

1) SIGN SIZES ARE ACTUAL AND INCLUDE THE ADDITIONAL 1'-0" FOR GLARE SHIELD AND LUMINAIRE ASSEMBLIES.

2) VERTICAL CLEARANCE INCLUDES PROPOSED 3 1/4" RESURFACING.

0 4 8 12 16

SCALE IN FEET

345 346 347 348

OVERHEAD SIGN SUPPORT ELEVATIONS

FHWA REGION	STATE	PROJECT	
5	OHIO		

148
220

CUYAHOGA COUNTY
CUY-90-9.68

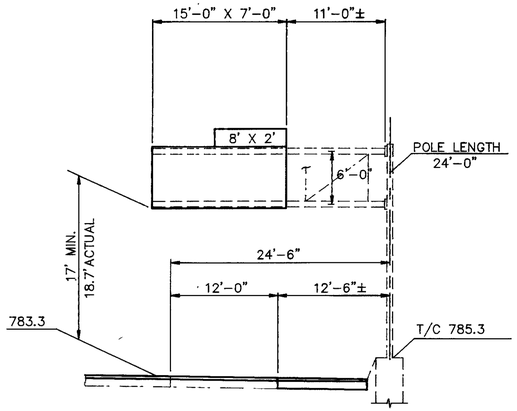

OVERHEAD SIGN NO. 302
STA. 694+95, E.B. I-90
STD. NO. 12.30, DESIGN 6 (MOD.)
ARMS = 26'

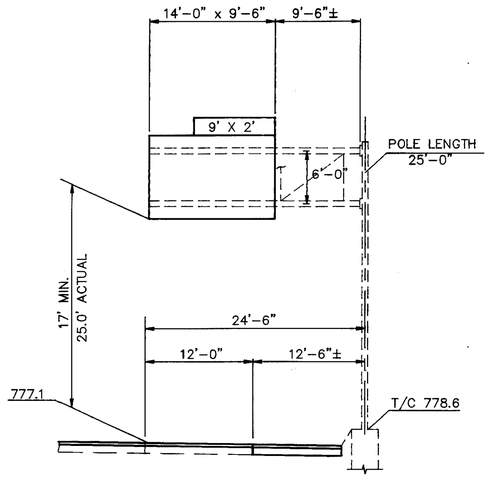

OVERHEAD SIGN NO. 303
STA. 696+70, W.B. I-90
STD. NO. 12.30, DESIGN 6 (MOD.)
ARMS = 26'

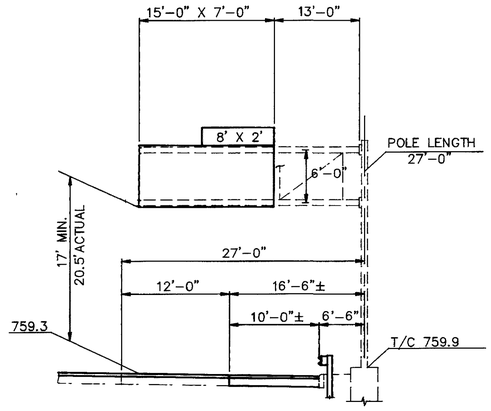

OVERHEAD SIGN NO. 304
STA. 707+50, E.B. I-90
STD. NO. 12.30, DESIGN 8 (MOD.)
ARMS = 28'

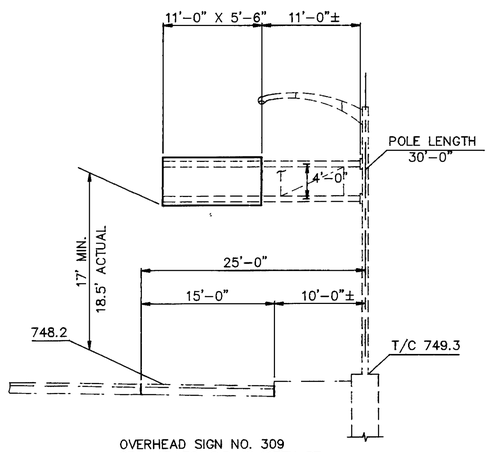

OVERHEAD SIGN NO. 309
STA. 45+70, S.B. W 117TH ST
STD. NO. 12.30, DESIGN 3 (MOD.)
ARMS = 22'

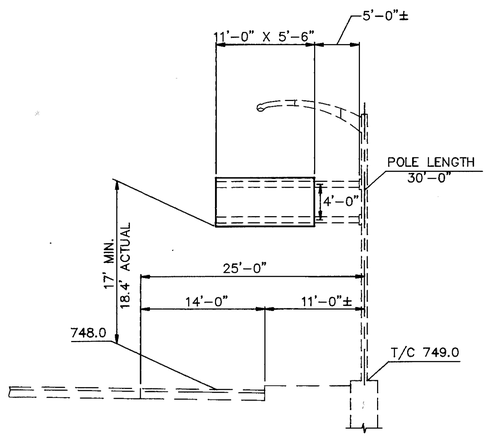

OVERHEAD SIGN NO. 310
STA. 42+50, N.B. W 117TH ST
STD. NO. 12.30, DESIGN 1 (MOD.)
ARMS = 16'

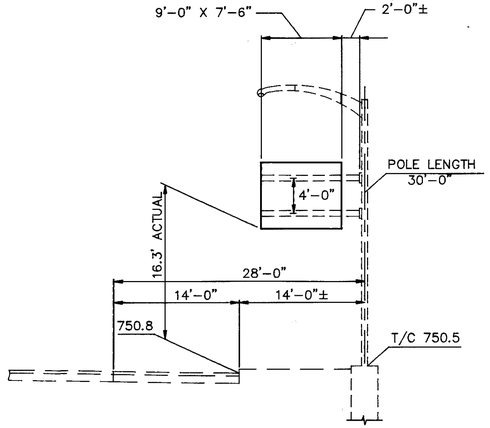

OVERHEAD SIGN NO. 311
STA. 46+50, N.B. W 117TH ST
STD. NO. 12.30, DESIGN 1 (MOD.)
ARMS = 11'

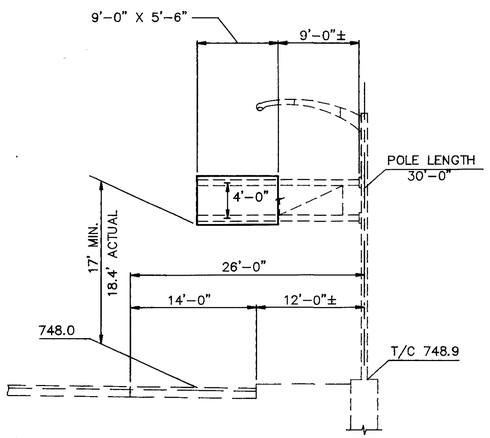

OVERHEAD SIGN NO. 312
STA. 52+25, N.B. W 117TH ST.
STD. NO. 12.30, DESIGN 1 (MOD.)
ARMS = 18'

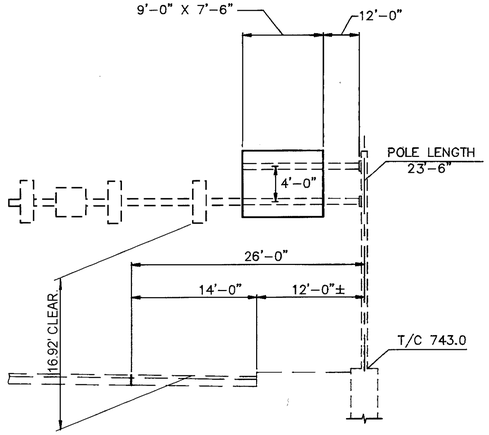

OVERHEAD SIGN NO. 313
STA. 53+90, S.B. W 117TH ST.
STD. NO. 12.30, DESIGN 5 (MOD.)
ARMS = 21',48'

NOTES:

1) SIGN SIZES ARE ACTUAL AND INCLUDE THE ADDITIONAL 1'-0" FOR GLARE SHIELD AND LUMINAIRE ASSEMBLIES.

2) VERTICAL CLEARANCE INCLUDES PROPOSED 3 1/4" RESURFACING.

0 4 8 12 16

SCALE IN FEET

302 303 304 309 310 311 312 313

OVERHEAD SIGN SUPPORT ELEVATIONS

FHWA REGION	STATE	PROJECT	
5	OHIO		

149
220

CUYAHOGA COUNTY
CUY-90-9.68

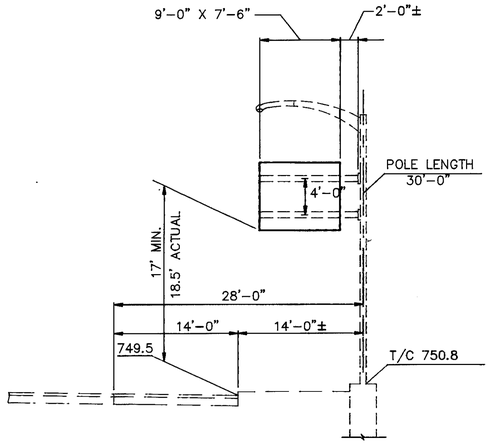

OVERHEAD SIGN NO. 314
STA. 51+50, S.B. W 117TH ST
STD. NO. 12.30, DESIGN 1 (MOD.)
ARMS = 11'

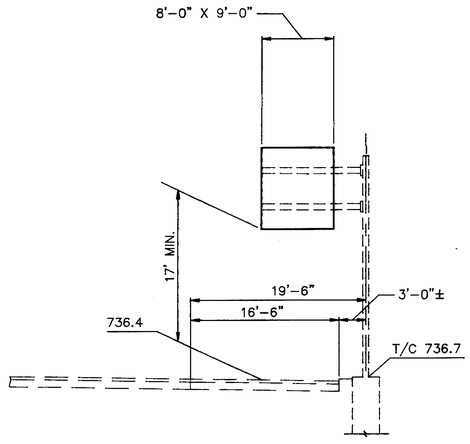

OVERHEAD SIGN NO. 316
STA. 66+00, S.B. W 117TH ST

*** THE DESIGN INFORMATION FOR THIS STRUCTURE HAS YET TO BE DETERMINED. IT WILL BE FINAL WITH THE SUBMISSION OF FINAL PLANS OF CUY-W117TH STREET.**

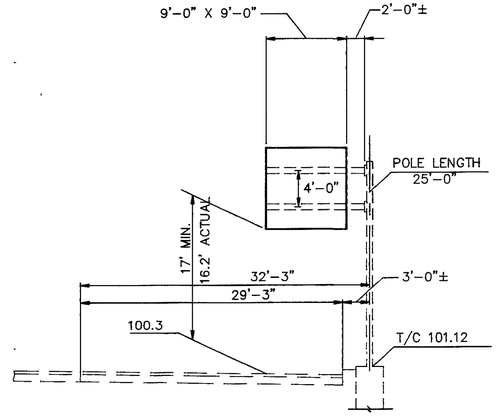

OVERHEAD SIGN NO. 317
STA. 37+75, N.B. W 117TH ST
STD. NO. 12.30, DESIGN 1
ARMS = 11'

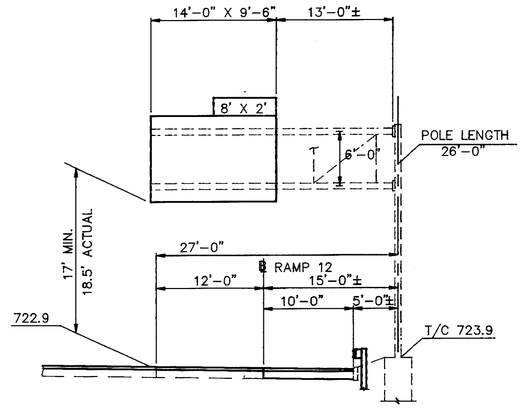

OVERHEAD SIGN NO. 320
STA. 46+00 RAMP 12
STD. NO. 12.30, DESIGN 8
ARMS = 27'

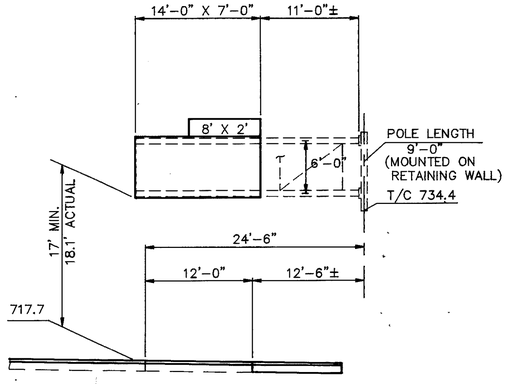

OVERHEAD SIGN NO. 322
STA. 753+71, W.B. I-90
STD. NO. 12.30, DESIGN 5
ARMS = 25'

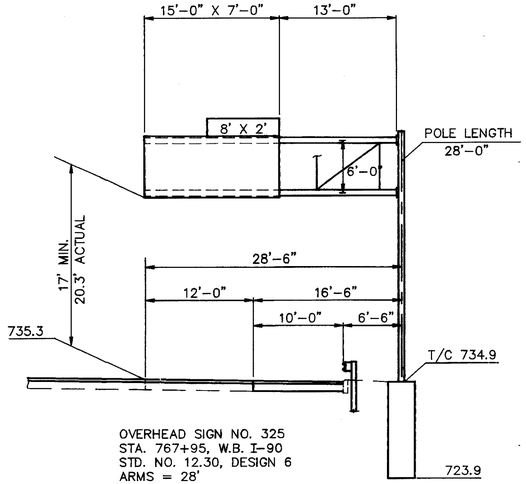

OVERHEAD SIGN NO. 325
STA. 767+95, W.B. I-90
STD. NO. 12.30, DESIGN 6
ARMS = 28'

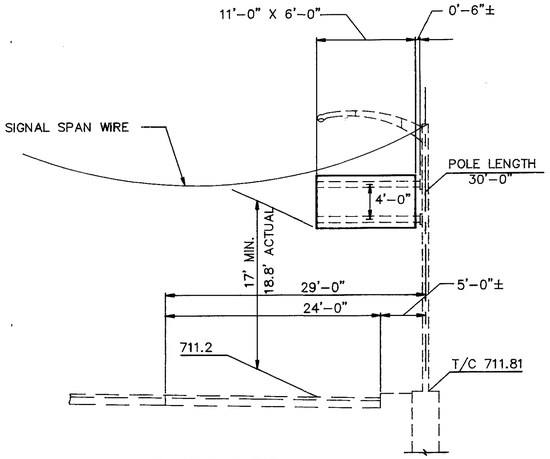

OVERHEAD SIGN NO. 327
STA. 49+59 S.B. WEST BLVD.
STD. NO. 12.30, DESIGN 1 (MOD.)
ARMS = 11'

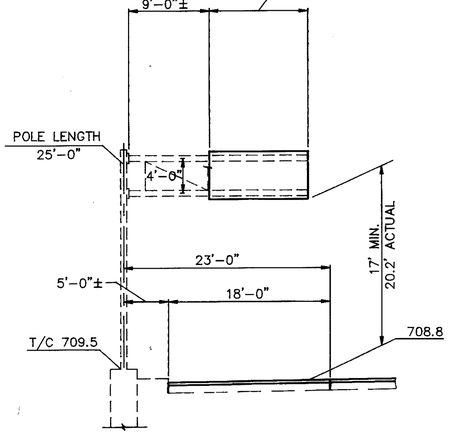

OVERHEAD SIGN NO. 331
STA. 86+50, RAMP 16
STD. NO. 12.30 DESIGN 2
ARMS = 20'

NOTES:

1) SIGN SIZES ARE ACTUAL AND INCLUDE THE ADDITIONAL 1'-0" FOR GLARE SHIELD AND LUMINAIRE ASSEMBLIES.

2) VERTICAL CLEARANCE INCLUDES PROPOSED 3 1/4" RESURFACING.

0 4 8 12 16

SCALE IN FEET

314 316 317 320 322 325 327 331

OVERHEAD SIGN SUPPORT ELEVATIONS

FHWA REGION	STATE	PROJECT	
5	OHIO		

150
220

CUYAHOGA COUNTY
CUY-90-9.68

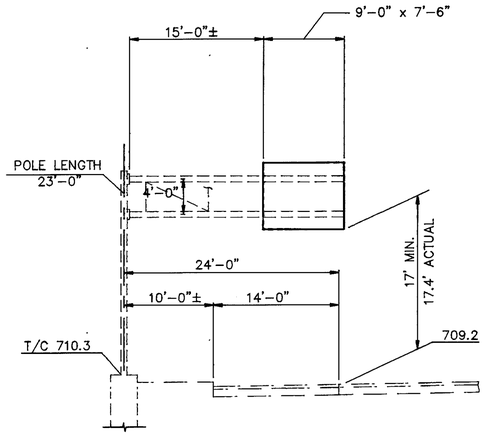

OVERHEAD SIGN NO. 332
STA. 152+60, S.B. W 100TH ST
STD. NO. 12.30, DESIGN 4
ARMS = 24'

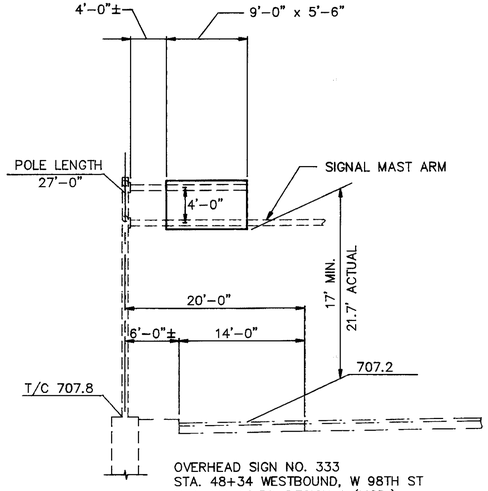

OVERHEAD SIGN NO. 333
STA. 48+34 WESTBOUND, W 98TH ST
STD. NO. 12.30, DESIGN 1 (MOD.)
SIGN ARM 13'

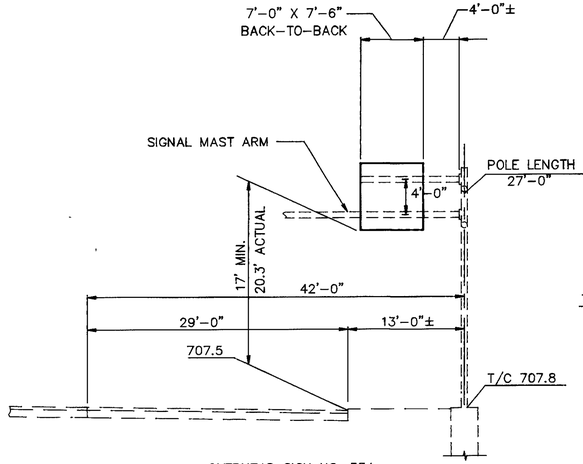

OVERHEAD SIGN NO. 334
STA. 48+34, SOUTHBOUND, W 98TH ST
STD. NO. 12.30, DESIGN 1 (MOD.)
SIGN ARM = 11'

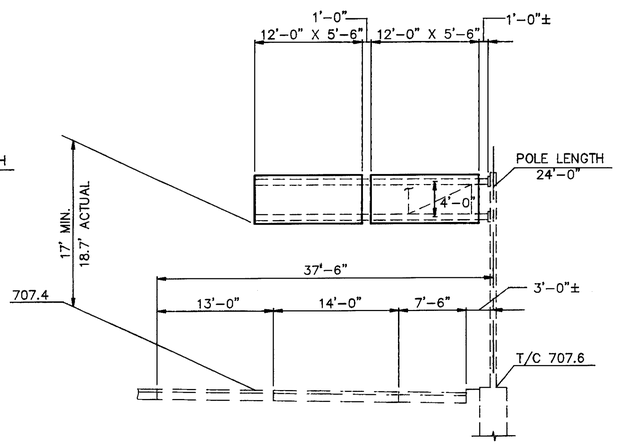

OVERHEAD SIGN NO. 335
STA. 41+67, LORAIN AVE.
STD. NO. 12.30, DESIGN 6
ARMS = 26'

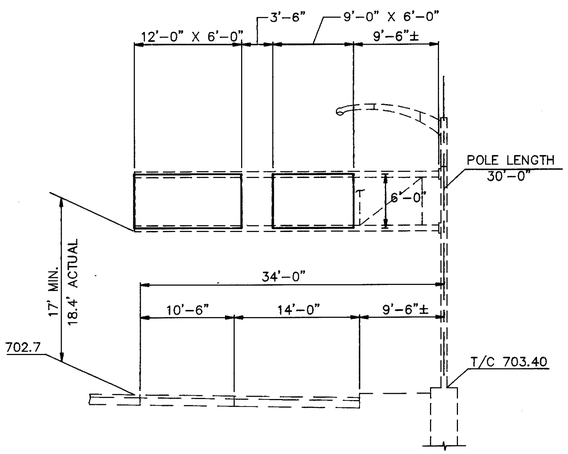

OVERHEAD SIGN NO. 336
STA. 51+93, W.B. LORAIN AVE.
STD. NO. 12.30, DESIGN 8 (MOD.)
ARMS = 34'

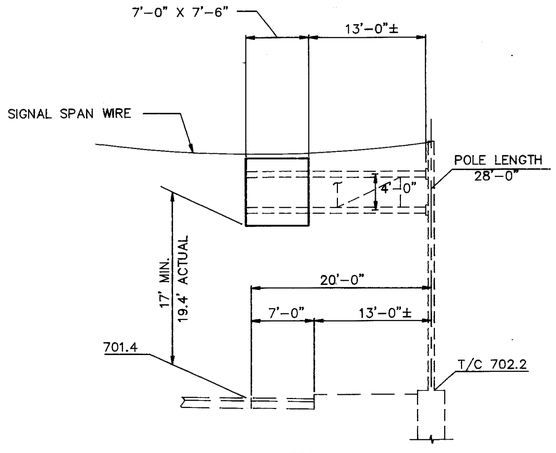

OVERHEAD SIGN NO. 338
STA. 53+63, LORAIN AVE.
STD. NO. 12.30, DESIGN 3
ARMS = 20'

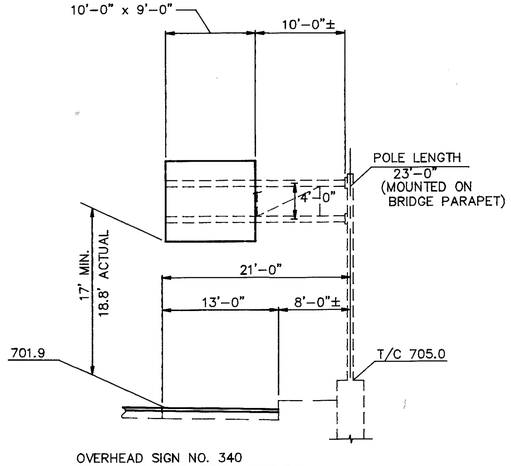

OVERHEAD SIGN NO. 340
STA. 49+40, S.B. CONNECTOR RD.
STD. NO. 12.30, DESIGN 4
ARMS = 20'

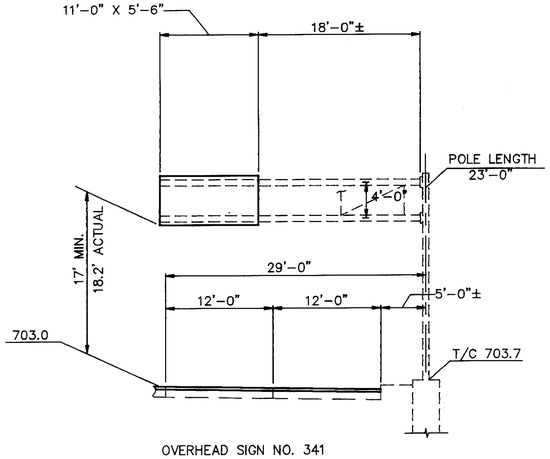

OVERHEAD SIGN NO. 341
STA. 7+75, RAMP 18
STD, NO. 12.30, DESIGN 6
ARMS = 29'

NOTES:

1) SIGN SIZES ARE ACTUAL AND INCLUDE THE ADDITIONAL 1'-0" FOR GLARE SHIELD AND LUMINAIRE ASSEMBLIES.

2) VERTICAL CLEARANCE INCLUDES PROPOSED 3 1/4" RESURFACING.

0 4 8 12 16

SCALE IN FEET

332 333 334 335 336 338 340 341

OVERHEAD SIGN SUPPORT ELEVATIONS

FHWA REGION	STATE	PROJECT	
5	OHIO		

151
220

CUYAHOGA COUNTY
CUY-90-9.68

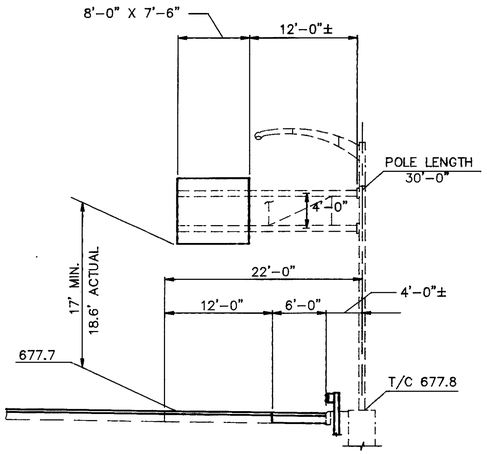

OVERHEAD SIGN NO. 343
STA. 18+75, RAMP 17
STD. NO. 12.30, DESIGN 2 (MOD.)
ARMS = 20'

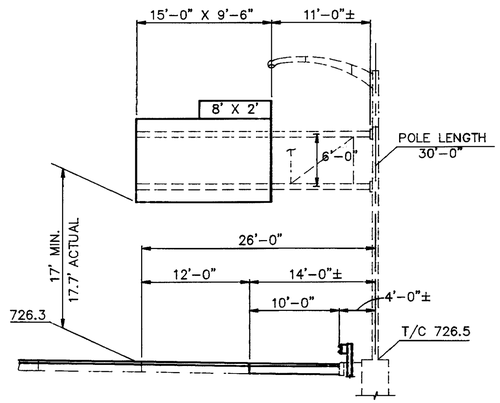

OVERHEAD SIGN NO. 349
STA. 843+30, E.B. I-90
STD. NO. 12.30, DESIGN 8 (MOD.)
ARMS = 26'

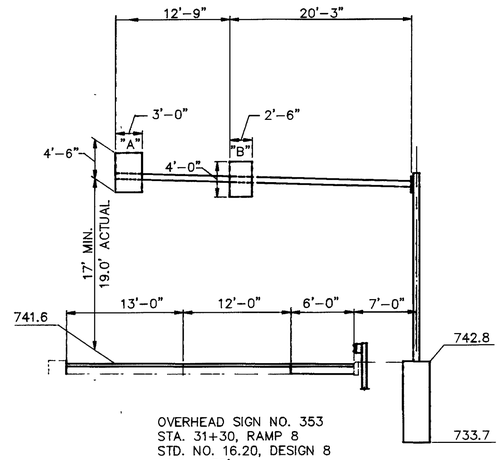

OVERHEAD SIGN NO. 353
STA. 31+30, RAMP 8
STD. NO. 16.20, DESIGN 8
ARM = 33'

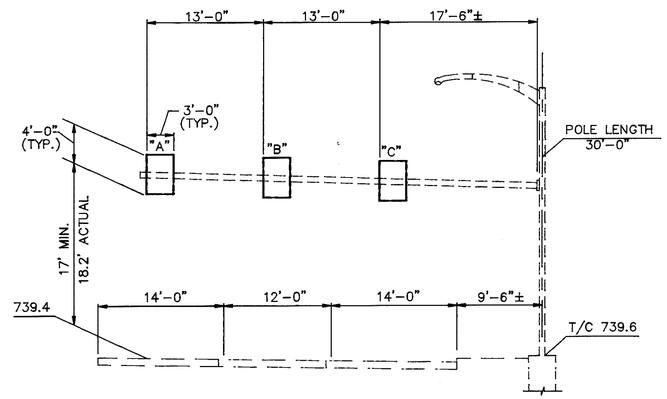

OVERHEAD SIGN NO. 315
STA. 55+85, N.B. W 117TH ST
STD. NO. 816-16.10, DESIGN 4 (MOD.)
ARM = 44'-3"

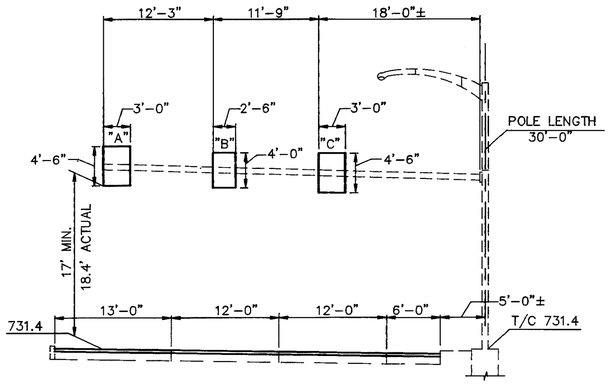

OVERHEAD SIGN NO. 318
STA. 37+55, RAMP 12
STD. NO. 16.10, DESIGN 4 (MOD.)
ARM = 42'

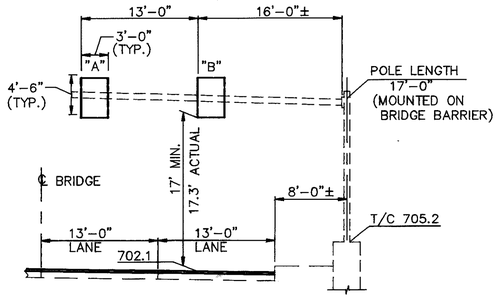

OVERHEAD SIGN NO. 342
STA. 49+16, N.B. CONNECTOR
STD. NO. 16.10, DESIGN 6 (MOD.)
ARM = 30'

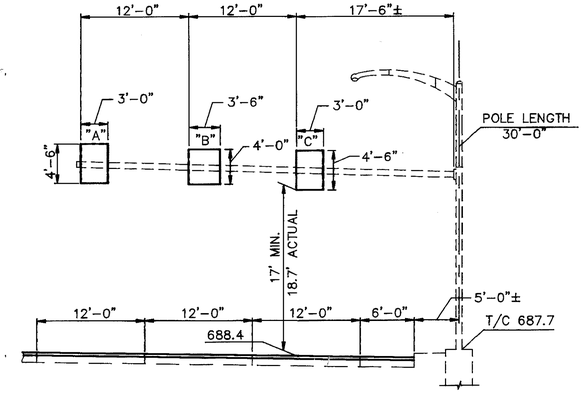

OVERHEAD SIGN NO. 344
STA. 15+55, RAMP 17
STD. NO. 16.10, DESIGN 4 (MOD.)
ARM = 42'

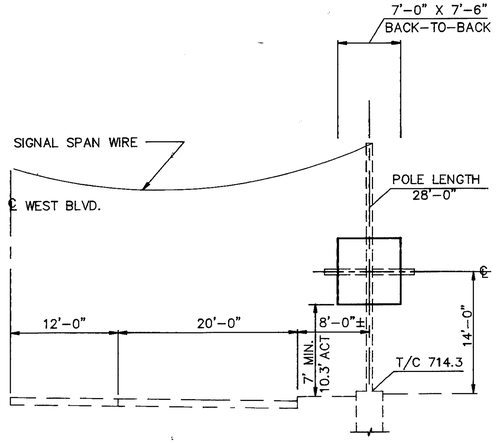

OVERHEAD SIGN NO. 326
STA. 45+62, S.B. WEST BLVD.
STD. NO. 816-9.12, DESIGN 2 (MOD.)
ARMS = 10'-0" (2 TOTAL)

NOTES:

1) SIGN SIZES ARE ACTUAL AND INCLUDE THE ADDITIONAL 1'-0" FOR GLARE SHIELD AND LUMINAIRE ASSEMBLIES.

2) VERTICAL CLEARANCE INCLUDES PROPOSED 4" RESURFACING.

0 4 8 12 16

SCALE IN FEET

343 349 353 315 318 342 344 326

OVERHEAD SIGN SUPPORT ELEVATIONS

FHWA REGION	STATE	PROJECT	
5	OHIO		

(152/220)

CUYAHOGA COUNTY
CUY-90-9.68

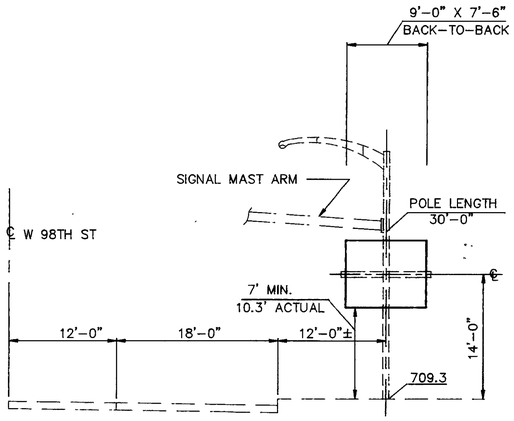

OVERHEAD SIGN NO. 330
STA. 45+37, N.B. W 98TH ST
STD, NO. 816-9.12, DESIGN 2 (MOD.)
ARMS = 10' (2 TOTAL)

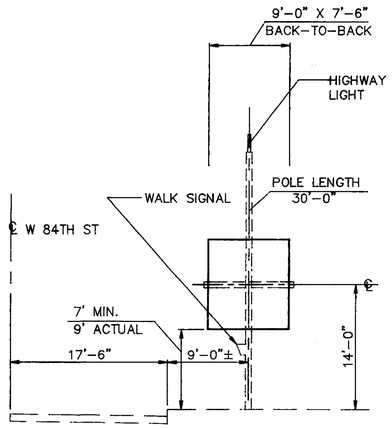

OVERHEAD SIGN NO. 339
STA. 49+34, N.B. CLARK AVE.
STD, NO. 816-9.12, DESIGN 2 (MOD.)
ARMS = 10' (2 TOTAL)

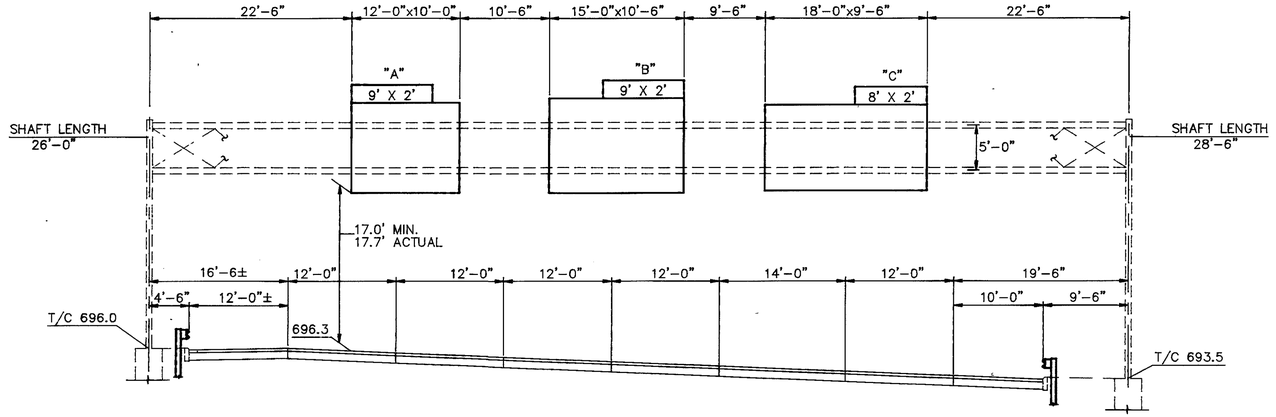

OVERHEAD SIGN NO. 350
STA. 868+75 E.B. I-90
STD. NO. 7.65, DESIGN 8 (MOD.)
SPAN = 110'-0"

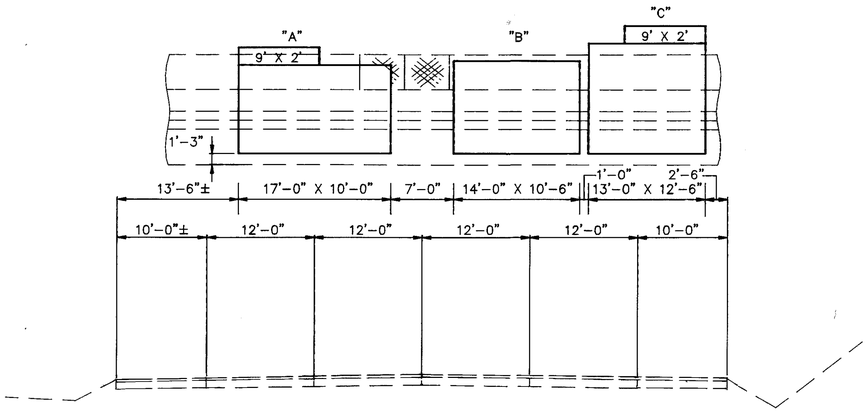

STRUCTURE MOUNTED SIGN NO. 351
STA. 881+87, E.B. I-90
STD. NO. TC-18.24, BEAM BRIDGE MOUNT
BRIDGE NO. CUY-90-1345
VERTICAL BRIDGE CLEARANCE = 14.50' MIN.
14.67' ACTUAL

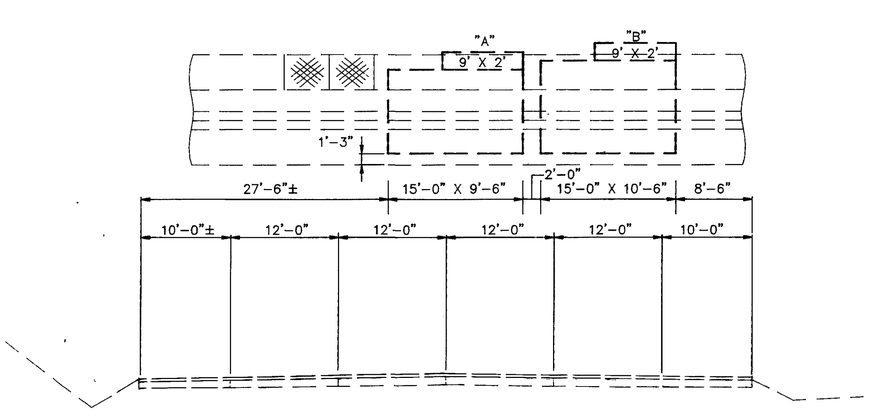

STRUCTURE MOUNTED SIGN NO. 352
STA. 882+40, W.B. I-90
STD. NO. TC-18.24, BEAM BRIDGE MOUNT
BRIDGE NO. CUY-90-1345
VERTICAL BRIDGE CLEARANCE = 14.50' MIN.
14.67' ACTUAL

NOTES:

1) SIGN SIZES ARE ACTUAL AND INCLUDE THE ADDITIONAL 1'-0" FOR GLARE SHIELD AND LUMINAIRE ASSEMBLIES.

2) VERTICAL CLEARANCE INCLUDES PROPOSED 3 1/4" RESURFACING.

0 4 8 12 16

SCALE IN FEET

(330) (339) (350) (351) (352)

OVERHEAD SIGN SUPPORT ELEVATIONS

FED. RD. DIVISION	STATE	PROJECT	
2	OHIO		

152A 220

CUYAHOGA COUNTY
CUY-90-9.68

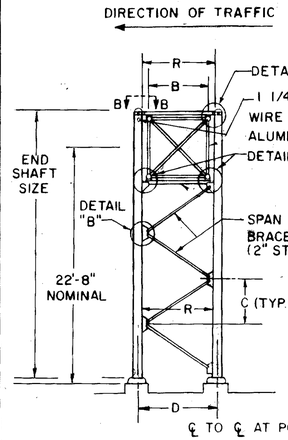

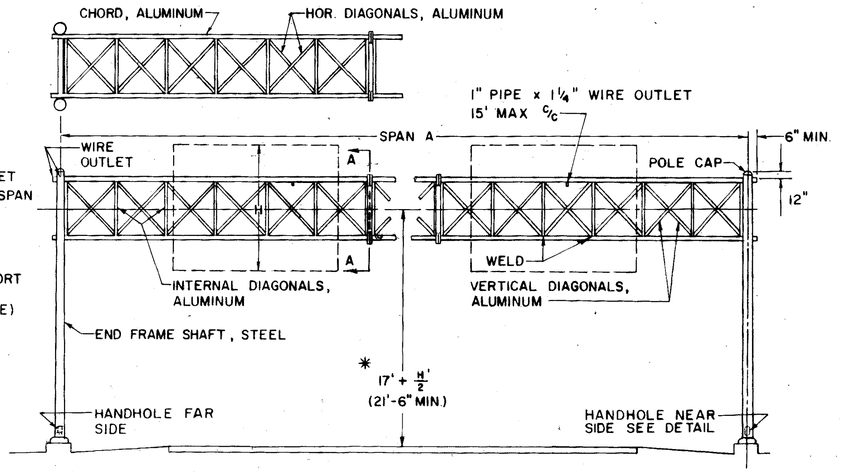

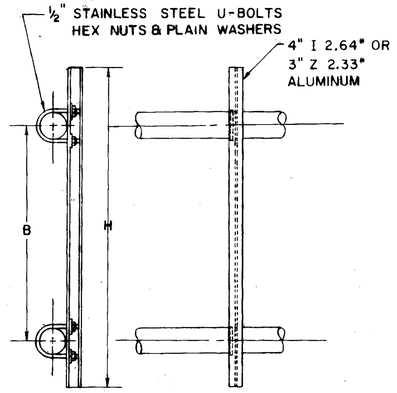

SIGN BRACKET

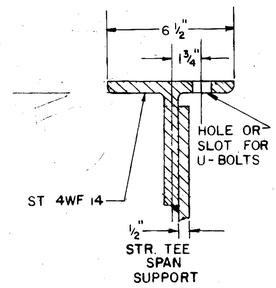

SECTION D-D

NOTES

MATERIALS

THE OVERHEAD SPAN TRUSS SHALL BE ALUMINUM AND THE END FRAMES SHALL BE STEEL.

SPAN TRUSS AND END FRAMES, INCLUDING HARDWARE, SHALL BE IN ACCORDANCE WITH SUPPLEMENTAL SPECIFICATION 816 UNLESS OTHERWISE NOTED.

STEEL POLE BASES AND GUSSETS SHALL CONFORM TO THE REQUIREMENTS OF ASTM SPECIFICATION A-373.

AFTER FABRICATION THE TAPERED POLES SHALL HAVE A MINIMUM YIELD STRENGTH OF 48,000 PSI.

FABRICATION

THE ENTIRE STEEL END FRAME SHALL BE HOT DIP GALVANIZED IN ACCORDANCE WITH SEC. 711.02

MAXIMUM LENGTH OF SPAN SECTIONS IS 30 FT.

EREGTION

USE A MINIMUM OF 1" CAMBER IN SPAN TRUSS MEMBER FOR A 50' SPAN; ADD 1/4" OF CAMBER FOR EACH 5' OF INCREASE IN SPAN OVER 50'.

PAYMENT

PAYMENT FOR THE GALVANIZED CONDUIT SHALL BE INCLUDED IN THE UNIT PRICE BID FOR OVERHEAD SIGN SUPPORTS.

SOILS

THE FOUNDATION DETAILS SHOWN ARE FOR AVERAGE SOIL CONDITIONS (MEDIUM CLAY, CEMENTED SAND AND GRAVEL, SANDY CLAY, OR STIFF CLAY).

FOR POOR SOIL CONDITIONS, INCREASE "D" MIN. BY: 50% IN DRY OR WET SAND, 60% IN SILTY CLAY, 100% IN SOFT CLAY, AND FROM 75% TO 150% IN WET SILT, DEPENDING ON QUICKSAND ACTION.

REINFORCING STEEL

COST OF REINFORCING STEEL SHALL BE INCLUDED IN THE UNIT PRICE FOR ITEM 816 CONCRETE FOR SIGN SUPPORT FOUNDATIONS.

BAR SIZE IS INDICATED IN THE BAR MARK. THE FIRST DIGIT WHERE THREE DIGITS ARE USED AND THE FIRST TWO DIGITS WHERE FOUR DIGITS ARE USED, INDICATE THE BAR SIZE NUMBER.

*FOUNDATION ELEVATION

ELEVATION OF TOPS OF FOUNDATIONS SHALL BE BUILT UP SO THAT 17' CLEARANCE IS MAINTAINED OVER THE ENTIRE WIDTH OF THE PAVEMENT AND SHOULDERS

DESIGN

THE DESIGN OF OVERHEAD SUPPORTS IS IN ACCORDANCE WITH A.A.S.H.O. SPECIFICATION FOR THE DESIGN AND CONSTRUCTION OF STRUCTURAL SUPPORTS FOR HIGHWAY SIGNS, ADOPTED JUNE 12, 1961.

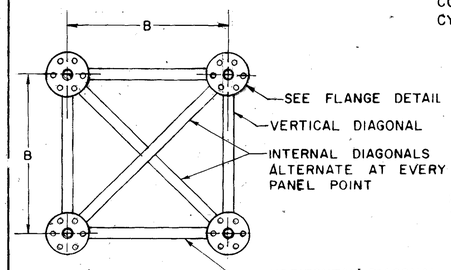

SECTION A-A

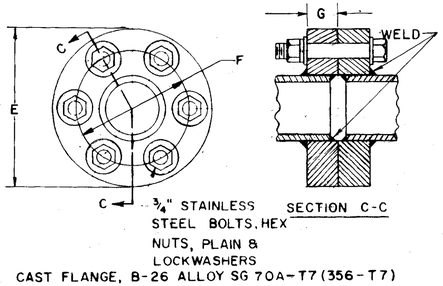

CAST FLANGE, B-26 ALLOY SG 70A-T7 (356-T7)

FLANGE DETAIL

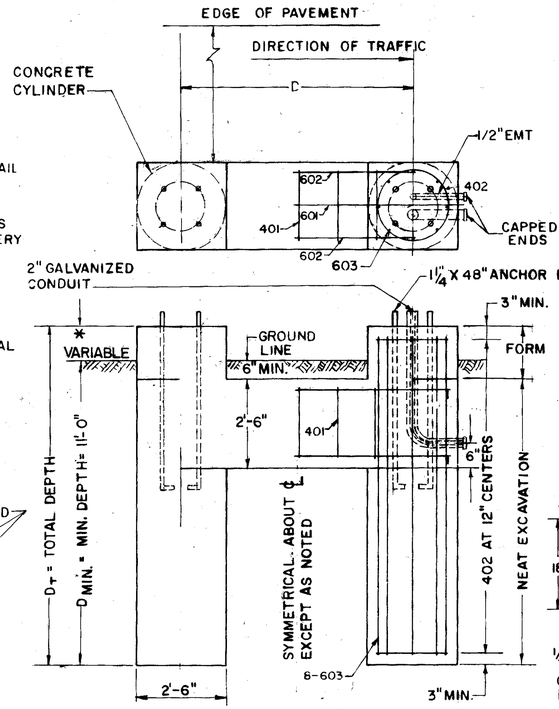

FOUNDATION DETAIL

(RIGHT HAND SHOWN — LEFT HAND OPPOSITE)

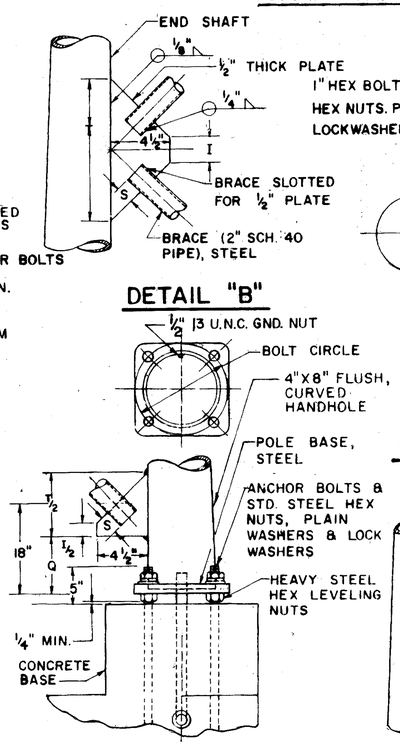

POLE BASE DETAIL

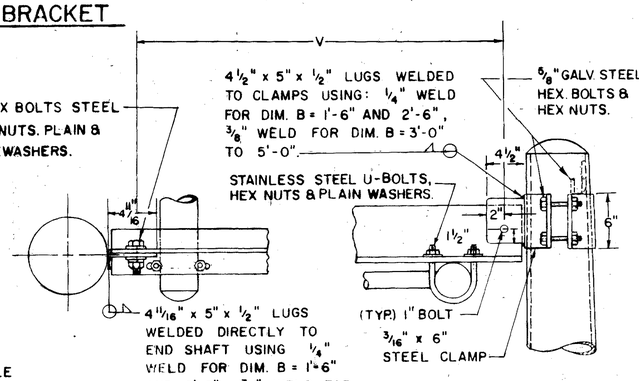

VIEW B-B

DETAIL "D"

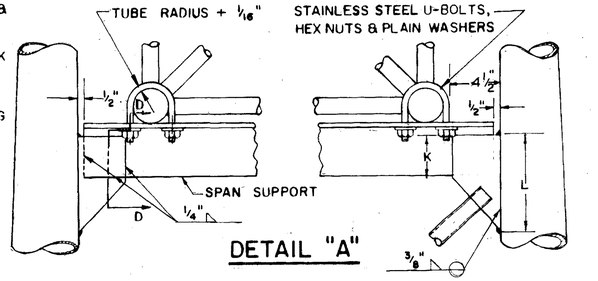

DETAIL "A"

UPPER SPAN SUPPORT (ALTERNATE METHODS)

LOWER SPAN SUPPORT

4"X3/8" DIA. "J" HOOK

DESIGN NO.	SPAN A	B	C	D	E	END SHAFT	BRACE LENGTH	F	G	I	K	L	P	Q	R	S	T	U BOLTS	V	BOLT CIRCLE	SPAN SUPPORT SECTION D-D	CHORDS	HORIZONTAL AND INTERNAL DIAGONAL	VERTICAL DIAGONAL
1.	50' thru 65'	3'-0"	4'-11 3/4"	4'-5"	9 1/4"	8"X4.5 X25'-0",36A	5'-10 13/16"	7 7/16"	1 3/8"	3 1/2"	4 3/4"	8"	12"	6 5/8"	3'-9"	1 1/2"	10"	5/8"	3'-3 5/8"	11"	Split Tee 3'-8"	4 3/4" X .188"	2" X .188"	1.660"X .140"
2.	70' thru 75'	4'-0"	4'-10 1/4"	5'-7"	9 1/4"	8"X6.22X25'-6",36A	6'-7 1/8"	7 7/16"	1 3/8"	5/8"	4 3/4"	7 3/4"	12"	6 1/4"	4'-11"	1 1/2"	9 1/2"	5/8"	4'-5 5/8"	11"	Split Tee 4'-10"	4 3/4" X .188"	2' X .188"	1.900"X .145"
3	76' thru 80'	4'-0"	4'-10 1/4"	5'-7"	11"	8"X6.22X25'-6",36A	6'-7 1/8"	8 1/2"	1 1/2"	5/8"	4 3/4"	7 3/4"	12"	6 1/4"	4'-11"	1 1/2"	9 1/2"	5/8"	4'-5 5/8"	11"	Split Tee 4'-10"	5 1/2" X .250	2 1/2" X .188"	1.900"X .145"
4.	81' thru 110'	5'-0"	4'-8 1/2"	6'-7"	11"	8"X6.18 X26'-0",36A	7' 3 1/4"	8 1/2"	1 1/2"	—	3 1/2"	7 3/4"	12"	7 1/4"	5'-11"	1 3/4"	11 1/4"	3/4"	5'-5 5/8"	11'	Split Tee 5'-10"	5 1/2" X .250	2 1/2" X .188	2 1/2" X .188

REINFORCEMENT SCHEDULE			
MARK	NO.	LENGTH	TYPE
401	12" C/C	8'-6"	102
402	12" C/C	7"-6"	103
601	4	D+ 4'-0"	101
602	8	D+ 2'-0"	101
603	32	D+ — 6"	STR.

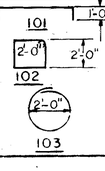

BUREAU OF TRAFFIC
OHIO DEPARTMENT OF HIGHWAYS

OVERHEAD SIGN SUPPORTS

816 No.7.6

DATE 5-6 64, 5-5 64, 6-20-60

APPROVED _____ ENGINEER OF TRAFFIC

FED. RD DIVISION	STATE	PROJECT	
2	OHIO		

1528
220

CUYAHOGA COUNTY
CUY - 90 - 9.68

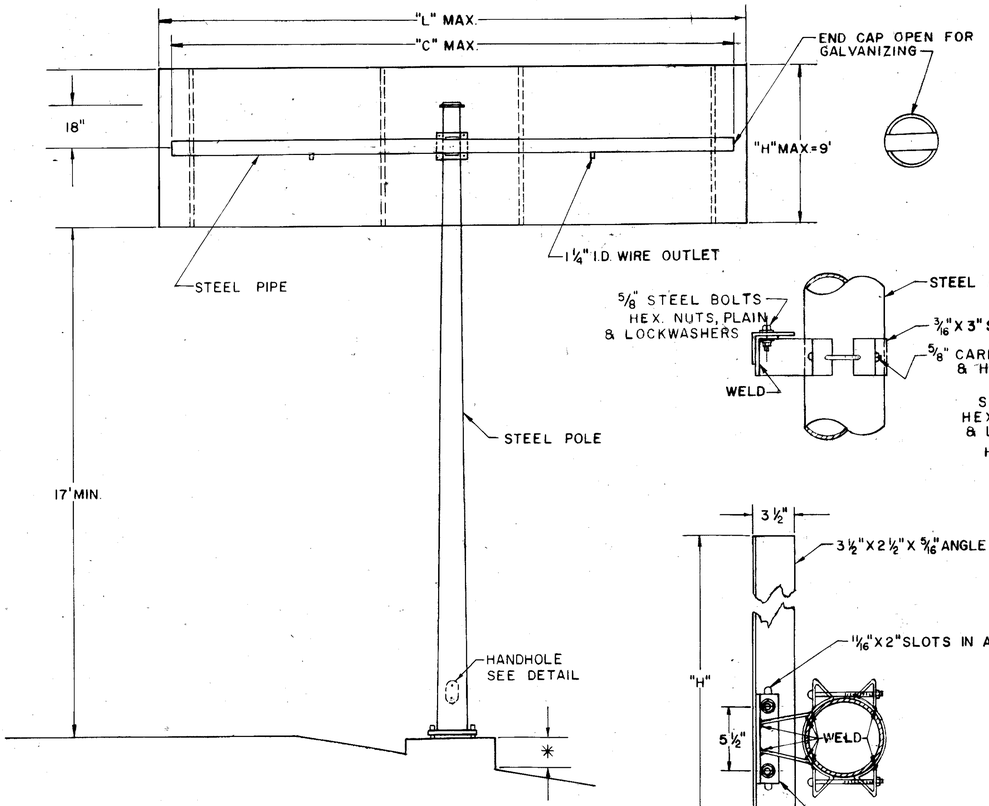

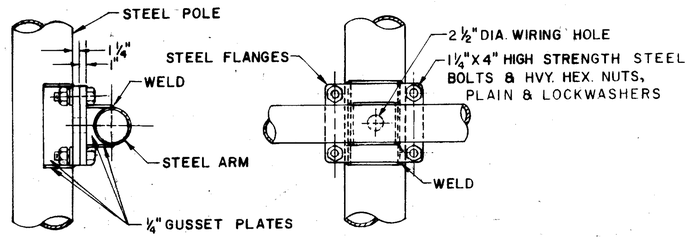

ARM ATTACHMENT

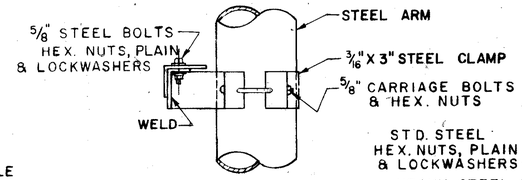

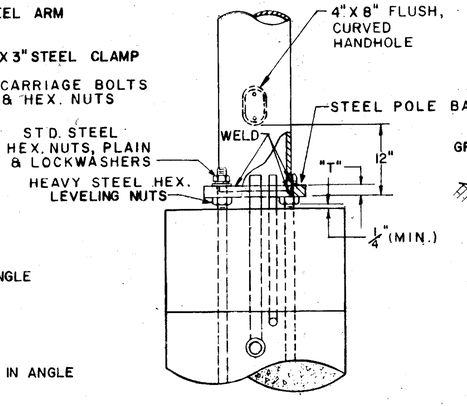

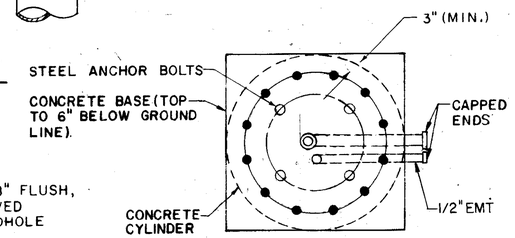

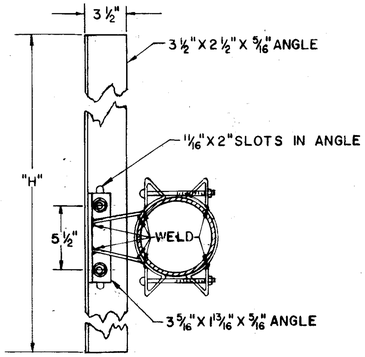

SIGN ATTACHMENT DETAIL

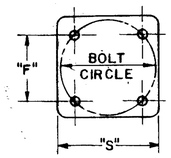

POLE DETAIL

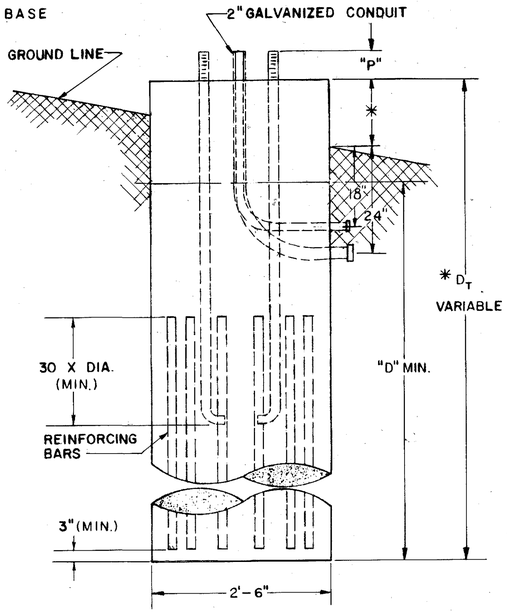

FOUNDATION DETAIL

DESIGN NO.	POLE SIZE	PIPE SIZE	DIM C	DIM F	DIM P	DIM S	DIM T	BOLT CIRCLE	ANCHOR BOLT SIZE	MAX SIGN AREA	MAX. "L" WITH MAX SIGN AREA	"D" MIN.	REINF. BARS TYPE	REINF. BARS NO.
1	7ga, 11" X 7.99 X 21'-6"	4" SCH 40 GRADE A	18'	10 5/8"	6 1/2"	15 5/8"	1 1/2"	15"	1 1/2" X 60"	60	24'-9"	7'-0"	#6	8
2	3ga, 13" X 9.99 X 21'-6"	4" SCH 80 GRADE A	14'	12 3/4"	7 3/4"	18 1/2"	2"	18"	1 3/4" X 90"	120	16'-9"	8'-6"	#7	12
3	3ga, 13" X 9.99 X 21'-6"	6" SCH 40 GRADE A	20'	12 3/4"	7 3/4"	18 1/2"	2"	18"	1 3/4" X 90"	120	24'-0"	9'-0"	#7	12

NOTES

FABRICATION – ALL PORTIONS OF THE SIGN SUPPORT, INCLUDING SIGN ATTACHMENTS, SHALL BE HOT DIP GALVANIZED IN ACCORDANCE WITH THE REQUIREMENTS OF A.S.T.M. DESIGNATIONS A-123 AND A-153. THE CONDUIT SHALL BE GALVANIZED IN ACCORDANCE WITH SEC. 625.13 AND SHALL BE INCLUDED IN THE UNIT PRICE BID FOR OVERHEAD SIGN SUPPORTS FOR PAYMENT. * *

* FOUNDATION – THE TOP ELEVATION OF FOUNDATIONS SHALL BE VARIED SO AS TO MAINTAIN A MINIMUM CLEARANCE OF 17' BETWEEN THE BOTTOM OF THE SIGN AND THE HIGHWAY CROWN.

MATERIAL – STEEL POLE BASES, FLANGES, AND END CAPS SHALL CONFORM TO THE REQUIREMENTS OF ASTM SPECIFICATION A 30 GRADE B. HIGH STRENGTH STEEL BOLTS SHALL CONFORM TO ASTM SPECIFICATION A 193 GRADE B 7. AFTER FABRICATION TAPERED POLES SHALL HAVE A MINIMUM YIELD STRENGTH OF 48,000 PSI.

SOILS – THE FOUNDATION DETAILS SHOWN ARE FOR AVERAGE SOIL CONDITIONS (MEDIUM CLAY, CEMENTED SAND AND GRAVEL, SANDY CLAY, OR STIFF CLAY). FOR POOR SOIL CONDITIONS, INCREASE "D" MIN. BY: 50% IN DRY OR WET SAND, 60% IN SILTY CLAY, 100% IN SOFT CLAY, AND FROM 75% TO 150% IN WET SILT, DEPENDING ON QUICKSAND ACTION.

REINFORCING STEEL – REINFORCING STEEL AS SHOWN IN TABLE SHALL BE INSTALLED WHEN "D_T" EXCEEDS THE ANCHOR BOLT LENGTH BY MORE THAN 3 FT. THE COST AND PLACEMENT OF REINFORCING STEEL SHALL BE INCLUDED IN THE UNIT PRICE FOR 816 CONCRETE FOR SIGN SUPPORT FOUNDATION.

DESIGN
THE DESIGN OF OVERHEAD SUPPORTS IS IN ACCORDANCE WITH A.A.S.H.O. SPECIFICATION FOR THE DESIGN AND CONSTRUCTION OF STRUCTURAL SUPPORTS FOR HIGHWAY SIGNS, ADOPTED JUNE 12, 1961.

BUREAU OF TRAFFIC
OHIO DEPARTMENT OF HIGHWAYS

OVERHEAD SIGN SUPPORT | 816 No. 9.12 | DATE 1-19-62 3-30-62

APPROVED Robert S. Comer
ENGINEER OF TRAFFIC

OVERHEAD SIGN SUPPORT, 816 No. 9.12

FED. RD. DIVISION	STATE	PROJECT	
2	OHIO		

152C
220

CUYAHOGA COUNTY
CUY-90-9.68

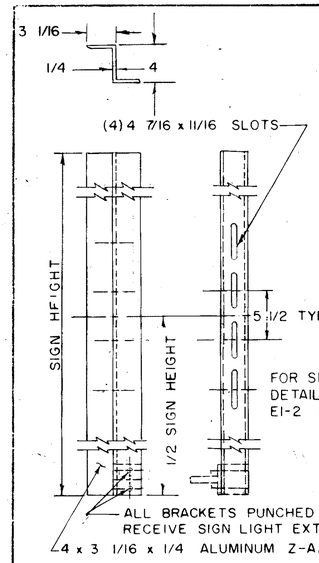

SIGN BRACKET

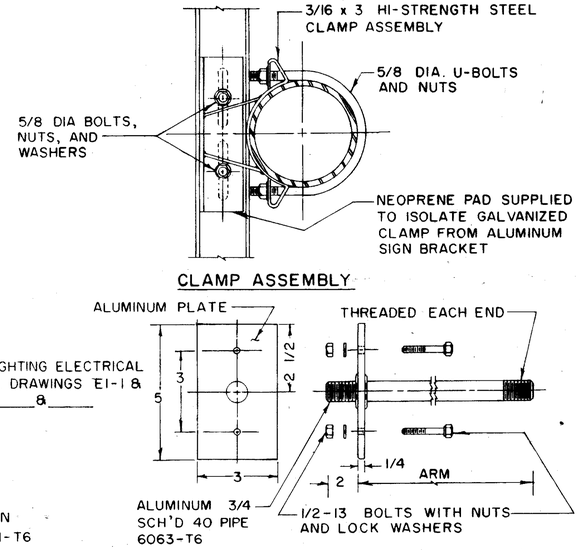

SIGN LIGHTING SUPPORT ARM

DES. NO.	ARM SIZE
3 4	2' - 9"
5 6	3' - 3"
7	4 - 3"

SIGN BRACKET & FIXTURE SUPPORT ARM DETAIL

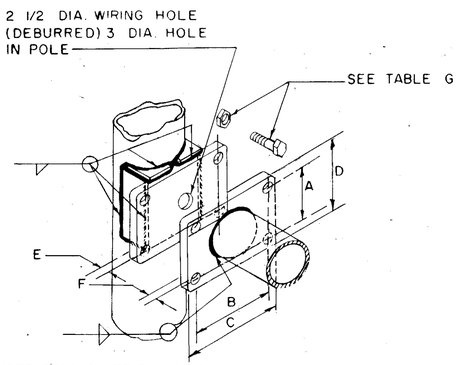

NOTE: POLE PLATE SHALL BE WELDED TO POLE WITH 1/4 GUSSET PLATES ON TOP, BOTTOM & SIDES

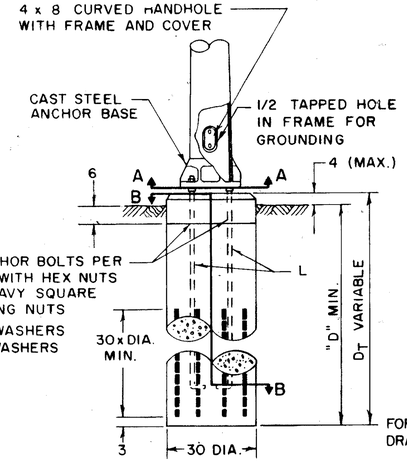

FOR ELECTRICAL DETAILS SEE DRAWING ES-3A PAGE ___

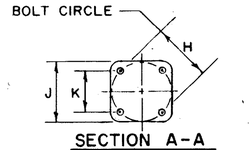

SECTION A-A

SECTION B-B

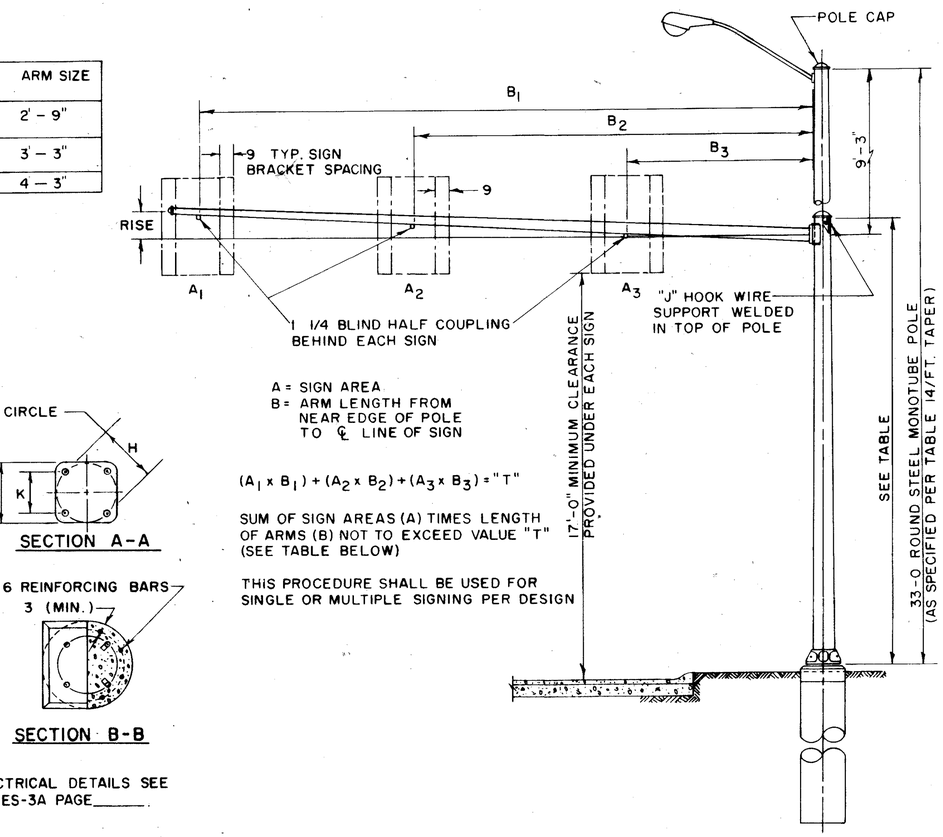

A = SIGN AREA
B = ARM LENGTH FROM NEAR EDGE OF POLE TO ℄ LINE OF SIGN

$(A_1 \times B_1) + (A_2 \times B_2) + (A_3 \times B_3) = "T"$

SUM OF SIGN AREAS (A) TIMES LENGTH OF ARMS (B) NOT TO EXCEED VALUE "T" (SEE TABLE BELOW)

THIS PROCEDURE SHALL BE USED FOR SINGLE OR MULTIPLE SIGNING PER DESIGN

NOTES

MATERIALS

STEEL	SAE 1020
POLES & ARMS PLATES ARM CAP & HANDHOLE COVER	A 36 AND A 441
ARM ATTACHMENT BOLT & NUTS	A 325
U-BOLTS ANCHOR BOLTS BOLT FOR ARM CAP & NUTS	A 307
CLAMP BODY	A 242 AND A 375
CAST BASE & HANDHOLE FRAME	A 27 GRADE 65-35
ALL OTHERS	300 SERIES, STAINLESS
CONCRETE	CLASS "C"
ALUMINUM ALLOY	ALUMINUN NO.
3/4 PIPE	6063-T6
4 ZEE (SIGN BRACKETS)	6061-T6
PLATES	6061-T6
POLE TOP	# 43
FINISH	ASTM
GALVANIZING, STRUCTURAL STEEL	A 123
GALVANIZING STEEL HARDWARE	A 153
STAINLESS STEEL	PASSIVATED
ALUMINUM ALLOY	NATURAL

AFTER FABRICATION TAPPERED POLES & ARMS SHALL HAVE A MINIMUM YIELD STRENGTH OF 55,000 PSI.

ALL MATERIALS SHALL CONFORM TO THE STATE OF OHIO, CONSTRUCTIONS & MATERIALS SPECIFICATION, AND THE SUPPLEMENTAL SPECIFICATONS 816, OR AS OTHER-WISE SPECIFIED.

SOILS

THE FOUNDATION DETAIL SHOWN ARE FOR AVERAGE SOIL CONDITIONS (MEDIUM CLAY, CEMENTED SAND AND GRAVEL, SANDY CLAY, OR STIFF CLAY.)

FOR POOR SOIL CONDITIONS, INCREASE "D" MIN. BY: 50% IN DRY OR WET SAND, 60% IN SILTY CLAY, 100% IN SOFT CLAY, AND FROM 75% TO 150% IN WET SILT, DEPENDING ON QUICKSAND ACT.ON.

FOUNDATIONS

THE TOP ELEVATION OF ALL FOUNDATIONS SHALL BE FORMED TO BE FLUSH WITH ADJOINING CONCRETE CONSTRUCTION, OR A MAXIMUM OF 4" ABOVE FINISHED GRADE.

ARM ATTACHMENT DETAIL

FOUNDATION & POLE BASE DETAIL

FRONT ELEVATION & SIGN PLACEMENT DETAIL

DES. NO.	POLE SIZE	SIGN SIZE		MAX. SIGN AREA	VALUE "T"	RISE MIN	RISE MAX	ARM SIZE	ARM ATTACHMENT DATA A	B	C	D	E	F	G	ANCHOR BOLT DATA H	J	K	L	REINF. BAR TYPE	REINF. BAR NO. REQ'D	FOUNDATIONS "D" MIN.
1.	Oga 12" x 9.27" x 19'-6"	2'-6"	3'-0"	22.5	585	11	24	2-7ga-9.0" x 3.68" x 38'-0"	9	13 1/2	17 1/2	13	2	1 1/4	1 1/4	16	17	11 5/16	1 3/4 x 90	6	8	7'-0"
2.	7ga 11" x 8.27" x 19'-6"	2'-6"	3'-0"	22.5	315	9	18	7ga-8.0" x 4.08" x 28'-0"	8	12	16	12	1 1/4	1	1	15	15 5/8	10 5/8	1 1/2 x 60	6	8	5'-0"
3.	Oga 14" x 10.54" x 24'-9" Oga 14" x 9.38" x 33'-0"	4'-0"	5'-6"	66.0	1485	11	23	2-7ga-9.0" x 3.96" x 36'-0"	9	13 1/2	17 1/2	13	2	1 1/4	1 1/4	20	20 1/2	14 1/8	2 x 96	6	8	8'-0"
4.	Oga 14" x 10.54" x 24'-9" Oga 14" x 9.38" x 33'-0"	4'-0"	5'-6"	66.0	1881	12	28	2-7ga-10.0" x 6.50" x 25'-0" 7ga-7.0" x 4.48" x 18'-0"	11	14 1/2	18 1/2	15	2	1 1/4	1 1/4	20	20 1/2	14 1/8	2 x 96	6	8	8'-0"
5.	3ga 14" x 11.06" x 21'-0"	4'-0"	6'-0"	72.0	1848	11	24	3ga-11" x 5.68" x 38'-0"	11	15 1/2	19 1/2	15	2	1 1/4	1 1/4	20	20 1/2	14 1/8	1 3/4 x 90	6	8	7'-6"
6.	3ga 11" x 8.06" x 21'-0"	4'-0"	6'-0"	72.0	984	9	18	3ga-8.0" x 4.08" x 28'-0"	8	12	16	12	1 1/2	1	1	15	15 5/8	10 5/8	1 3/4 x 90	6	8	7'-6"
7.	Oga 12" x 9.06" x 21'-0"	5'-0"	7'-0"	105.0	1435	9	18	2-7ga-8.0" x 4.08" x 28'-0"	8	13 1/2	17 1/2	12	2	1 1/4	1 1/4	16	17	11 5/16	1 3/4 x 90	6	8	7'-6"

NOTE:
ALL DIMENSIONS ARE IN INCHES UNLESS OTHERWISE SHOWN.

BUREAU OF TRAFFIC
OHIO DEPARTMENT OF HIGHWAYS

OVERHEAD SIGN SUPPORT

816-16.10

DATE 5-31-88

APPROVED _____
ENGINEER OF TRAFFIC

FHWA REGION	STATE	PROJECT	
5	OHIO		

153/220

CUYAHOGA COUNTY
CUY–90–9.68

STRUCTURE NOTES

1 REFERENCE DRAWINGS
REFERENCE SHALL BE MADE TO STANDARD DRAWINGS

RB-1-55	DATED	2-2-59
AS-1-81	DATED	11-27-81
VPF-1-90	DATED	3-24-93

2 SUPPLEMENT SPECIFICATIONS
REFERENCE SHALL BE MADE TO SUPPLEMENT SPECIFICATIONS

NO	816	DATED	04-21-97
NO	843	DATED	05-05-98
NO	844	DATED	05-05-98
NO	846	DATED	09-09-97
NO	848	DATED	06-30-98
NO	849	DATED	06-14-95
NO	863	DATED	09-09-97
NO	910	DATED	07-28-98
NO	954	DATED	09-09-97

3. DESIGN DATA

CONCRETE CLASS S – COMPRESSIVE STRENGTH FC' = 4,500 PSI FOR SUPERSTRUCTURE

CONCRETE CLASS C – COMPRESSIVE STRENGTH FC' = 4,000 PSI FOR SUBSTRUCTURE

REINFORCING STEEL – ASTM A615, A616, A617 – GRADE 60 MINIMUM YIELD STRENGTH FY = 60,000 PSI

STRUCTURAL STEEL – ASTM A36 – MINIMUM YIELD STRENGTH FY = 36,000 PSI

DECK PROTECTION METHOD – MICRO–SILICA MODIFIED CONCRETE

4. EXISTING STRUCTURE VERIFICATION

DETAILS AND DIMENSIONS SHOWN ON THESE PLANS PERTAINING TO THE EXISTING STRUCTURES HAVE BEEN OBTAINED FROM PLANS OF THE EXISTING STRUCTURES AND/OR FROM FIELD OBSERVATIONS AND MEASUREMENTS. CONSEQUENTLY, THEY ARE INDICATIVE OF THE EXISTING STRUCTURES AND THE PROPOSED WORK, BUT SHALL BE CONSIDERED TENTATIVE AND APPROXIMATE. THE CONTRACTOR IS REFERRED TO CONSTRUCTION AND MATERIAL SPECIFICATIONS (CMS) SECTIONS 102.05, 105.02 AND 513.02.

CONTRACT BID PRICES SHALL BE BASED UPON A RECOGNITION OF THE UNCERTAINTIES DESCRIBED ABOVE AND UPON A PREBID EXAMINATION OF THE EXISTING STRUCTURES BY THE CONTRACTOR. HOWEVER, ALL PROJECT WORK SHALL BE BASED UPON ACTUAL DETAILS AND DIMENSIONS WHICH HAVE BEEN VERIFIED BY THE CONTRACTOR IN THE FIELD.
PLANS OF EXISTING STRUCTURES ARE AVAILABLE FOR EXAMINATION AT THE OHIO DEPARTMENT OF TRANSPORTATION, DISTRICT 12 OFFICE, 5500 TRANSPORTATION BOULEVARD, GARFIELD HEIGHTS, OHIO AND AT THE ODOT BUREAU OF BRIDGES, 25 SOUTH FRONT STREET, COLUMBUS, OHIO.

5. UTILITY LINES

ALL EXPENSE INVOLVED IN RELOCATION(INSTALLING) THE AFFECTED UTILITY LINES SHALL BE BORNE BY THE UTILITY(IES). THE CONTRACTOR AND UTILITY(IES) ARE TO COOPERATE BY ARRANGING THEIR WORK IN SUCH A MANNER THAT INCONVENIENCE TO EITHER WILL BE HELD TO A MINIMUM.

THE CONTRACTOR SHALL REFER TO GENERAL NOTES – UTILITY OWNERSHIP – ON ROADWAY SHEET 15 FOR UTILITIES AND OWNERS WHICH ARE LOCATED WITHIN THE WORK LIMITS OF THIS PROJECT.

6. COOPERATION BETWEEN CONTRACTORS

CONTRACTORS SHALL REFER TO SECTION 105.07 OF THE CMS.

7. LIMITATIONS OF OPERATIONS

THE CONTRACTOR'S ACTIVITIES AND WORK SCHEDULE SHALL BE CONSTRAINED BY THE FOLLOWING SPECIAL LIMITATIONS:

- MAINTENANCE OF TRAFFIC AND LANE CLOSURE RESTRICTIONS – THE CONTRACTOR SHALL REFER TO THE ROADWAY PLANS (SHEETS 19–41A) AND THE OHIO MANUAL OF UNIFORM TRAFFIC CONTROL DEVICES FOR STREETS AND HIGHWAYS.
- NO WORK SHALL BE PERFORMED OVER TRAVELED LANES THAT ARE NOT APPROPRIATELY PROTECTED.
- THE CONTRACTOR SHALL CLEAR SITE OF ALL DEBRIS AT THE END OF EACH WORKING DAY, LEAVING SITE IN A CLEAN CONDITION TO DETER POSSIBLE "ROCK THROWING" AND VANDALISM.
- NO CONCRETE DECK OVERLAY SHALL BE PLACED BEFORE APRIL 15TH. THE CONTRACTOR SHALL SCHEDULE THE WORK SO THAT ALL DECK OVERLAYS ARE PLACED BEFORE OCTOBER 15TH. IF FOR SOME UNFORESEEN CIRCUMSTANCES, THE DECK OVERLAY IS NOT PLACED BY OCTOBER 15TH, REGARDLESS OF THE WORK REMAINING, THE CONCRETE DECK REPAIRS SHALL BE COMPLETED AS PER ITEM 511 OF THE CMS AND THE UNFINISHED DECK SHALL BE RESURFACED WITH ASPHALT CONCRETE AND OPENED TO TRAFFIC. THE CONTRACTOR SHALL PLACE AND MAINTAIN AT HIS EXPENSE THE ASPHALT WEARING SURFACE UNTIL REMOVED AT HIS EXPENSE THE FOLLOWING SPRING WHEN THE DECK OVERLAY CAN BE PLACED AFTER APRIL 15TH.
- THE CONTRACTOR SHALL EXECUTE TO THE FULLEST EXTENT THE WORK INVOLVED, SO AS TO REDUCE TO A MINIMUM THE LENGTH OF TIME OF THE REQUIRED LANE RESTRICTION OR CLOSURE.

8. CONTINGENCY QUANTITIES

THE CONTRACTOR SHALL NOT ORDER MATERIALS OR PERFORM WORK FOR PLAN ITEMS SET UP TO BE USED "AS DIRECTED BY THE ENGINEER" UNLESS AUTHORIZED BY THE ENGINEER. THE ACTUAL WORK LOCATIONS AND QUANTITIES USED AT THE ENGINEER'S DISCRETION, SHALL BE MADE A MATTER OF RECORD BY INCORPORATION INTO THE FINAL CHANGE ORDER COVERING COMPLETION OF THIS PROJECT.

9. PROPOSED WORK

IN GENERAL, THE PROPOSED WORK INCLUDES:

- REMOVING THE ENTIRE ASPHALTIC WEARING CONCRETE SURFACES WITHIN BRIDGE LIMITS, HYDRO-DEMOLITION 1" DEEP SOUND CONCRETE DECK BELOW, REMOVING ALL LOOSE AND UNSOUND CONCRETE AREAS, LAYING MICRO-SILICA MODIFIED CONCRETE TO THE SPECIFIED THICKNESS (2 1/2" OR 3 1/2")
- REMOVING LOOSE DECK BOTTOM CONCRETE AND REPAIRING BY LOW–PRESSURE EPOXY INJECTION.
- REPAIRING THE UNSOUND AREAS OF THE BRIDGE CONCRETE COMPONENTS (ABUTMENTS, PIERS, WINGWALLS, PARAPETS, ETC.) AND SEALING OF CONCRETE SURFACES.
- MODIFYING THE EXISTING END DAM EXPANSION JOINTS WITH NEW STRIP SEAL GLAND.
- RESETTING THE ROCKER BEARINGS.
- PLUGGING SCUPPERS
- RETROFITTING THE DRAINAGE PIPE SYSTEM.

ITEM 202 – PORTIONS OF STRUCTURE REMOVED

THE WORK SHALL CONSIST OF REMOVING ALL LOOSE CONCRETE FROM BRIDGE DECK UNDERSIDES AS PAINT–MARKED ON THE STRUCTURE AND AS SHOWN ON THE PLANS. THE DEPTH OF CONCRETE TO BE REMOVED AT EACH LOCATION WILL BE DICTATED BY THE FIELD CONDITIONS AND THE FIELD ENGINEER'S JUDGEMENT. THE METHOD OF REMOVAL, THE TYPE AND WEIGHT OF HAMMER SHALL BE APPROVED BY THE ENGINEER. ALL WORK SHALL BE DONE IN A MANNER THAT WILL NOT CUT, ELONGATE OR DAMAGE THE EXISTING REINFORCING STEEL TO BE PRESERVED. ANY DAMAGED REINFORCING STEEL DUE TO THE WORK SHALL BE REPAIRED BY THE CONTRACTOR AT HIS EXPENSE AND TO THE SATISFACTION OF THE ENGINEER. THE WORK SHALL BE PERFORMED AFTER ALL ABOVE–DECK REMOVAL OPERATIONS ON A GIVEN BRIDGE ARE COMPLETED.
PAYMENT FOR ALL LABOR, TOOLS, EQUIPMENT NECESSARY TO COMPLETE THIS WORK WILL BE MADE UNDER ITEM 202, LUMP SUM, PORTIONS OF STRUCTURE REMOVED.

ITEM 513 – STRUCTURAL STEEL, MISC.: REPLACEMENT OF DETERIORATED INTERMEDIATE CROSS FRAMES

THIS ITEM CONSISTS OF ALL MATERIAL, LABOR AND EQUIPMENT NECESSARY TO REMOVE SEVERELY RUSTED OR DAMAGED CROSS–FRAMES AND INSTALL NEW CROSS FRAME ON STRUCTURES AS SHOWN ON SHEET NO. 67/68

STEEL MEMBERS UNDER THIS ITEM WILL NOT REQUIRE SHOP DRAWINGS PRIOR TO FABRICATION. THE CONTRACTOR SHALL MAKE NECESSARY MEASUREMENTS AND PREPARE SKETCHES, DRAWINGS, TABLES, ETC. THE ENGINEER SHALL HAVE AUTHORITY AND RESPONSIBILITY FOR ENSURING THAT THE FABRICATED STEEL IS ACCEPTABLE. TECHNICAL ASSISTANCE WILL BE PROVIDED ON REQUEST BY THE BUREAU OF BRIDGES. MILL TEST REPORTS AND SHIPPING DOCUMENTS SHALL BE SUBMITTED TO THE ENGINEER FOR REVIEW AND APPROVAL PRIOR TO INCORPORATING STEEL ITEMS INTO THE WORK AS REQUIRED BY SECTION 501.07 OF THE CMS. AFTER FABRICATION, THE CONTRACTOR SHALL SUBMIT SHOP DRAWINGS TO THE ENGINEER FOR REVIEW AND APPROVAL TO ENSURE THAT THE DRAWINGS DEPICT THE STEEL AS ACTUALLY INCORPORATED INTO THE WORK. THE ENGINEER WILL THEN SEND AN APPROVED SET TO THE BUREAU OF BRIDGES FOR INFORMATION. PAY WEIGHTS SHALL BE COMPUTED IN COMPLIANCE WITH SECTION 513 AND SUBMITTED TO THE ENGINEER FOR REVIEW AND APPROVAL. THE FABRICATOR SHALL FINISH A 35 MILLIMETER MICROFILM COPY OF EACH SHOP DRAWING, WHICH SHALL BE MOUNTED ON AN APERTURE CARD AS SPECIFIED IN SECTION 501.05.

PAYMENT FOR THIS WORK SHALL BE MADE PER POUND UNDER ITEM 863, STRUCTURAL STEEL MEMBERS, MISCELLANEOUS LEVEL FABRICATION

ITEM 513 STRUCTURAL STEEL SUPPLEMENT SPECIFICATION 863

ALL REFERENCE TO ITEM 513 APPEARING THROUGHOUT THESE PLANS SHALL BE CONSIDERED TO READ ITEM 863 QUANTITY PAY ITEMS AND EXTENSIONS HAVE BEEN UPDATED ACCORDINGLY FOR ADDITIONAL DETAILS SEE NOTE IN PROPOSAL REGARDING THIS ITEM OF WORK

ITEM 513 – STRUCTURAL STEEL, MISC.: ACCESS HAND RAIL

THIS WORK SHALL CONSIST OF FURNISHING AND INSTALLING A SAFETY SYSTEM CONSISTING OF ONE–INCH DIAMETER STEEL BAR WELDED TO ALL EXISTING TRANSVERSE STIFFENERS IN ACCORDANCE WITH THESE SPECIFICATIONS, IN REASONABLY CLOSE CONFORMITY WITH THE PLANS (SHEETS 22/68, 26/68), AND AS DIRECTED BY THE ENGINEER.

THE HAND RAIL SYSTEM SHALL BE CONTINUOUS AND PLACED ON BOTH SIDES OF THE INTERIOR GIRDERS AND ON THE INSIDE OF THE EXTERIOR GIRDERS. ALL STRUCTURAL STEEL WORK SHALL BE ASTM A36 PER 711.01.

THE ACCEPTED QUANTITY OF ACCESS HAND RAIL SHALL BE PAID FOR AT THE CONTRACT UNIT PRICE PER LINEAR FOOT OF ITEM 863 – STRUCTURAL STEEL MISC: (ACCESS HANDRAIL , MISCELLANEOUS LEVEL FABRICATION), WHICH PRICE AND PAYMENT SHALL BE FULL COMPENSATION FOR FURNISHING AND INSTALLING THE ACCESS HAND RAIL SYSTEM, ALL MATERIAL, LABOR AND EQUIPMENT NECESSARY TO COMPLETE THIS WORK.

ITEM 516 – RESET BEARING, AS PER PLAN

A. THE FOLLOWING PROCEDURE SHALL BE USED TO RESET THE ROCKER BEARINGS:

1. RAISE THE ENTIRE SUPERSTRUCTURE AT THE ABUTMENT UNTIL THERE IS NO CONTACT BETWEEN THE SOLE PLATES AND THE BEARINGS. MAXIMUM LIFT OF SUPERSTRUCTURE SHALL BE 1/4". ALL BEAMS SHALL BE RAISED SIMULTANEOUSLY. HOWEVER, BEAMS SHALL NOT BE RAISED AT THE REAR ABUTMENT AND AT THE FORWARD ABUTMENT AT THE SAME TIME.

2. RESET ROCKERS AND/OR BASE PLATES IN FINAL POSITION BY CENTERING THE BASE PLATES UNDER THE SOLE PLATES BOTH IN THE LONGITUDINAL AND TRANSVERSE DIRECTION AT 60° F (+10° F,–0° F).

3. LOWER ENTIRE SUPERSTRUCTURE SIMULTANEOUSLY.

THE CONTRACTOR SHALL BE RESPONSIBLE FOR THE DESIGN AND INSTALLATION OF AN ADEQUATE SUPPORT AND JACKING SYSTEM CAPABLE OF RAISING THE STRUCTURE AND WILL BE RESPONSIBLE FOR PROPERLY ARRANGING ALL TEMPORARY SUPPORTS SO AS NOT TO DAMAGE OR INDUCE OVERSTRESS IN ANY EXISTING BRIDGE MEMBERS. ANY DAMAGE TO STRUCTURAL MEMBERS, CONNECTIONS OR PARTS THAT ARE TO REMAIN AS PART OF THE PERMANENT CONSTRUCTION SHALL BE CORRECTED AND/OR REPAIRED BY THE CONTRACTOR AT HIS EXPENSE TO THE SATISFACTION OF THE ENGINEER. THE CONTRACTOR'S DETAILED PROCEDURES FOR RESETTING THE ROCKER BEARING, SHALL BE SUBMITTED TO THE DIRECTOR FOR APPROVAL.

B. DETAILED PLANS AND PROCEDURES SHALL INCLUDE THE FOLLOWING:

1. METHODS OF PREVENTING HORIZONTAL MOVEMENT DURING AND AFTER JACKING.

2. METHODS OF KEEPING BEAMS SOCKETED IN THE DECK AND VERIFICATION OF SUCH.

3. METHODS OF VERIFYING THAT ALL BEARINGS ARE SEATED IN THE FINAL POSITION.

C. CONTRACTOR SHALL DO THE FOLLOWING:

1. ATTACHMENTS MADE BY WELDING TO ANY MAIN STRUCTURAL MEMBER SHALL BE APPROVED BY THE ENGINEER BEFORE SUCH ATTACHMENTS ARE MADE. DETAILS OF THE ATTACHMENTS SHALL BE SUBMITTED FOR APPROVAL AS PART OF THE RESETTING BEARINGS. WELDING TO TENSION AREAS WILL NOT BE PERMITTED.

2. A REGISTERED PROFESSIONAL ENGINEER SHALL BE ON THE SITE DURING ALL PHASES OF JACKING OPERATION. FAILURE TO HAVE SAID ENGINEER ON THE SITE SHALL BE JUST CAUSE TO CEASE ALL JACKING OPERATIONS.

3. CONSTRUCTION "BUMP" SIGNS (OW–62 AND OW–14–3) SHALL BE ERECTED AND MAINTAINED DURING THE PERIOD THAT THE SUPERSTRUCTURE IS RAISED. THE SUPERSTRUCTURE SHALL NOT BE KEPT RAISED OVERNIGHT.

D. PAYMENT SHALL BE AT THE CONTRACT PRICE BID FOR ITEM 516 "RESET BEARING, AS PER PLAN" WHICH SHALL INCLUDE ALL MATERIAL, LABOR, TOOLS, AND INCIDENTALS NECESSARY TO CLEAN THE BEARINGS, AND RESET THEM IN PLACE, INCLUDING SHIMS, IF REQUIRED.

POLYTECH, INC. 1/68
CONSULTING ENGINEERS CLEVELAND, OHIO

GENERAL STRUCTURE NOTES

CUY–90–9.68

DESIGNED	DRAWN	TRACED	CHECKED	REVIEWED	DATE	REVISED
PSS	RG	–	EDV	BRS	9/94	

FHWA REGION	STATE	PROJECT	
5	OHIO		

(154/220)

CUYAHOGA COUNTY
CUY-90-9.68

STRUCTURE NOTES

ITEM 516 – STRUCTURAL STEEL EXPANSION JOINT RETROFIT, AS PER PLAN

THIS ITEM SHALL INCLUDE ALL THE LABOR, MATERIALS AND INCIDENTALS NECESSARY TO RETROFIT THE EXISTING END DAM EXPANSION JOINTS AS SHOWN ON THE PLANS. THE REQUIRED WORK INCLUDES TRIMMING EXISTING ANGLE, REMOVAL OF SHIM PLATE, SHOP FABRICATION OF NEW BACK-UP PLATES AND STEEL EDGE RETAINERS, NEW HORIZONTAL AND VERTICAL BARS, FIELD WELDINNG AND ELASTOMERIC STRIP SEALING ELEMENT INSTALLATION.

THE STEEL RETAINER SHALL BE PROVIDED IN MAXIMUM LENGTHS POSSIBLE ALLOWED BY TRAFFIC MAINTENANCE REQUIREMENTS, AND SHALL BE WELDED TOGETHER TO FORM A WATER TIGHT JOINT. THE SEALING ELEMENT SHALL BE ONE CONTINUOUS PIECE, NO SPLICES WILL BE ACCEPTABLE AND SHALL NOT BE INSTALLED UNTILL ALL OTHER WORK IS COMPLETED UPON THE STRUCTURE. AN ADHESIVE SHALL BE USED TO FACILITATE PLACEMENT OF THE SEALING ELEMENT. THE CONTRACTOR SHALL VERIFY ALL DIMENSIONS PRIOR TO FABRICATION.

PHYSICAL PROPERTIES:

A. THE STEEL RETAINER SHALL CONFORM TO ASTM A242, A36 OR A709 GRADE 36.

B. ADHESIVE SHALL BE ONE-PART MOISTURE CURING POLYURETHANE AND HYDROCARBON SOLVENT MIXTURE AS SPECIFIED BY THE SEAL MANUFACTURER UNLESS OTHERWISE APPROVED BY THE ENGINEER. IT SHALL HAVE A SUITABLE CONSISTENCY AT THE TEMPERATURE AT WHICH THE SEALS ARE INSTALLED AND SHALL BE COMPATIBLE WITH THE SEALS AND THE STEEL RETAINERS.

C. THE SEALING ELEMENT SHALL CONFORM TO THE PHYSICAL PROPERTIES SPECIFIED FOR AASHTO M220 EXCEPT FOR THE RECOVERY TEST. IT SHALL BE ONE CONTINUOUS PIECE FOR EACH JOINT.

D. SET SCREWS FOR FASTENING OF OPTIONAL SPLIT RETAINER SHALL BE STAINLESS STEEL.

THE RETAINER SHALL BE TYPE E WITH SE-400 ELASTOMERIC SEALING ELEMENT AS MANUFACTURED BY WATSON-BOWMAN-ACME CORP., 1280 NIAGARA ST., BUFFALO, N.Y. 14213.

THE D.S. BROWN COMPANY, P.O. BOX 158, NORTH BALTIMORE, OHIO 45872 WILL BE ACCEPTED AS ONE ALTERNATE. THE STEEL RETAINER SHALL BE TYPE SS-E WITH NO. 300 SEAL. ANOTHER ALTERNATE WILL BE STRUCTURAL ACCESSORIES, INC., P.O. BOX 10, TERRYVILLE, C.T. 06786 (TYPE SA RETAINER AND 40SD GLAND).

THE CONTRACTOR SHALL FURNISH MATERIAL SPECIFICATION, CERTIFIED MATERIAL TEST RESULTS, CERTIFICATION THAT THE PRODUCT MEETS SPECIFICATIONS, APPROPRIATE INSTALLATION PROCEDURES NECESSARY TO ACCOMMODATE ANY ALTERNATE DESIGN. THE APPROVAL FOR AN ALTERNATE JOINT SEAL DESIGN AND THE ISSUANCE OF REVISED PROJECT PLANS SHALL BE BASED ON THE UNDERSTANDING THAT SUCH PROJECT MODIFICATIONS WILL BE DONE WITHOUT EXTRA COST TO THE STATE.

PAYMENT FOR ALL OF THE ABOVE SHALL BE AT THE UNIT PRICE BID PER LINEAR FOOT FOR ITEM 516, "STRUCTURAL STEEL EXPANSION JOINT RETROFIT, AS PER PLAN", WHICH SHALL INCLUDE ALL LABOR, EQUIPMENT, MATERIALS, AND INCIDENTALS NECESSARY TO COMPLETE THE WORK AS DESCRIBED ABOVE.

ITEM 516 – STRUCTURAL JOINT OR JOINT SEALER, MISC.: 705.03 OR 705.04

THE WORK FOR THIS ITEM CONSISTS IN SEALING THE VOIDS BETWEEN SLOPE PROTECTION, ABUTMENT AND WINGWALLS AS SHOWN ON THE PLANS. IT IS THE CONTRACTOR'S OPTION TO SELECT THE MATERIAL AS PER 705.03 OR 705.04 DEPENDING ON THE SIZE (WIDTH & DEPTH) OF THE VOID AND FIELD PRACTICALITY OF HOT APPLIED JOINT SEALER WITH DAMS.

PAYMENT FOR THE ABOVE SHALL BE AT THE UNIT PRICE BID PER LINEAR FOOT FOR ITEM 516 "STRUCTURAL JOINT OR JOINT SEALER, MISC: 705.03 OR 705.04", WHICH SHALL INCLUDE ALL LABOR, EQUIPMENT, MATERIALS, AND INCIDENTALS NECESSARY TO COMPLETE THE WORK.

ITEM 516 – ELASTOMERIC COMPRESSION SEAL, 705.11, AS PER PLAN

THIS WORK SHALL INCLUDE THE FOLLOWING:

A. REMOVAL OF THE EXISTING PREFORMED ELASTOMERIC COMPRESSION SEAL ELEMENT.

B. INSTALLATION OF NEW COMPRESSION SEAL ELEMENT.

MANUFACTURED BY :

- WATSON-BOMAN-ACMC CORP., 1280 NIAGARA ST., BUFFALO, N.Y. 14213 OR
- ENERGY ABSORBTION SYSTEM, INC., 1 E. WACKER DR., CHICAGO, IL 60601-2076 OR
- ROYSTON LABORATORIES, INC., 128 FIRST ST., PITTSBURGH, PA 15238

OR APPROVED EQUAL AS PER 705.11 OF THE CMS.

THE WORK SHALL ALSO CONFORM TO ODOT SUPPLEMENTAL SPECIFICATION NO. 849 DATED 6-14-95 .

PAYMENT OF THE WORK SHALL BE AT THE UNIT PRICE BID PER LINEAR FOOT FOR ITEM 516 – "ELASTOMERIC COMPRESSION SEAL, 705.11, AS PER PLAN", WHICH SHALL INCLUDE ALL LABOR, EQUIPMENT, MATERIALS AND INCIDENTALS NECESSARY TO COMPLETE THE WORK AS DESCRIBED ABOVE.

ITEM 516 – JACKING AND TEMPORARY SUPPORT OF SUPERSTRUCTURE

THE CONTRACTOR SHALL BE RESPONSIBLE FOR THE DESIGN, INSTALLATION AND OPERATION OF AN ADEQUATE JACKING SYSTEM, INCLUDING ANY TEMPORARY OR PERMANENT SUPPORTS, TO PERFORM THE WORK DESCRIBED IN THE PROJECT PLANS. THREE (3) SETS OF JACKING AND SUPPORT PLANS, PROCEDURES AND LOADING CALCULATIONS, PERFORMED AND STAMPED BY A REGISTERED PROFESSIONAL ENGINEER, SHALL BE SUBMITTED TO THE DIRECTOR FOR APPROVAL AT LEAST THIRTY (30) DAYS BEFORE ACTUAL WORK IS TO BEGIN. SUBMITTALS SHALL INCLUDE AT LEAST THE FOLLOWING:

- PHYSICAL DIMENSIONS AND CAPACITY OF THE JACKING SYSTEMS ALONG WITH THE ACTUAL POSITIONS, INCLUDING DIMENSIONS, DEFINING WHERE THE JACKING SYSTEMS WILL BE PHYSICALLY LOCATED ON THE STRUCTURE TO PERFORM THE REQUIRED LIFTS.
- PHYSICAL DIMENSIONS, MATERIALS, FABRICATION DETAILS AND DESIGN CALCULATIONS FOR ANY TEMPORARY OR PERMANENT SUPPORTS ALONG WITH ACTUAL DETAILS OF THEIR INSTALLED LOCATIONS ON THE STRUCTURE. HORIZONTAL MOVEMENT RESTRAINTS SHALL BE DESIGNED AND DETAILED. LATERAL AND LONGITUDINAL DESIGN LOADS AND SUPPORTING DESIGN CALCULATIONS SHALL BE INCLUDED.
- A JACKING PLAN SHEET LAYOUT, WITH ADEQUATE DETAILS TO SHOW ALL JACKING POINTS, CALCULATED LOADINGS AT THOSE POINTS, LOCATIONS OF JACKING EQUIPMENT AND TEMPORARY OR PERMANENT SUPPORTS SHALL BE INCLUDED IN THE SUBMITTAL. ANY PHASED CONSTRUCTION, SPECIAL TRAFFIC REQUIREMENTS, CLEARANCE REQUIREMENTS, RAILROAD DETAILS OR SPECIAL CONSTRUCTION DETAILS THAT AFFECT THE JACKING OPERATION AND ANY OTHER DETAILS THE CONTRACTOR DEEMS NECESSARY TO ADQUATELY VISUALLY DESCRIBE THE JACKING OPERATION SHALL ALSO INCLUDED IN THE JACKING PLAN SHEET.
- THE PLAN SHEET SHALL INCLUDE A STEP BY STEP JACKING PROCEDURE DETAILING ALL STEPS IN THE OPERATION INCLUDING THE REQUIRED WORK DESCRIBED IN THE PROJECT PLANS.

JACKING OPERATIONS ARE LIMITED TO A MAXIMUM DIFFERENTIAL JACKING HEIGHT BETWEEN ADJACENT BEARINGS OF 1/4 INCH.

AT A MINIMUM, A JACKING OPERATION SHALL LIFT ALL BEARINGS AT ANY ONE ABUTMENT OR PIER SIMULTANEOUSLY. MAXIMUM DIFFERENTIAL JACKING HEIGHT BETWEEN ANY ADJACENT ABUTMENTS OR PIERS SHALL BE LIMITED BY STRESSES INDUCED IN THE AFFECTED STRUCTURAL MEMBERS. CALCULATIONS DETAILING ALL STRESSES INDUCED IN THE AFFECTED MEMBERS AND LIMITED BY ALLOWABLE STRESSES OF 136.5% OF NORMAL DESIGN STRESSES, SHALL BE INCLUDED IN THE JACKING PROCEDURE SUBMITTAL. THE ONLY EXCEPTION TO THE SILMUTANEOUS JACKING REQUIREMENT IS WHEN ACTUAL PROJECT WORK REQUIRES INDIVIDUAL BEARINGS TO BE REPLACED OR REHABILITATED, NO PERMANENT SHIMMING IS REQUIRED AND THE HEIGHT OF THE TOTAL LIFT DOES NOT EXCEED 1/4 INCH.

ALL LABOR, TOOLS, EQUIPMENT, MATERIALS AND INCIDENTALS NECESSARY TO COMPLETE THIS WORK ARE INCLUDED UNDER ITEM SPECIAL, LUMP SUM, JACKING AND TEMPORARY SUPPORT OF SUPERSTRUCTURE.

ITEM 518 – STRUCTURE DRAINAGE, MISC.: RETROFITTING DRAINAGE SYSTEM

THIS ITEM SHALL CONSIST OF CLEANING THE UNPLUGGED SCUPPERS, REMOVING THE EXISTING DRAINAGE PIPE SYSTEM AND REPLACING WITH NEW PIPE SYSTEM AS SHOWN ON THE PLANS. THE PIPE SHALL BE GALVANIZED STEEL PIPE, 707.08, 711.02.

THE SPECIALS, ELBOWS, TEES, REDUCERS, ETC., ESSENTIAL FOR A COMPLETE AND SATISFACTORY INSTALLATION SHALL BE APPLIED WITH THE SAME MATERIAL AND HAVE THE SAME QUALITY AS THE PIPE FURNISHED. THE PIPE SHALL BE SECURELY SUPPORTED BY NEW SUPPORTING SYSTEM AND CLAMP ASSEMBLIES TO THE STRUCTURE. THESE ASSEMBLIES SHALL BE GALVANIZED IN ACCORDANCE WITH 711.02.

PAYMENT FOR THE ABOVE SHALL BE INCLUDED IN THE LUMP SUM BID PRICE WHICH SHALL INCLUDE ALL LABOR, EQUIPMENT, MATERIALS AND INCIDENTALS NECESSARY TO COMPLETE THE WORK.

ITEM 518 – STRUCTURE DRAINAGE, MISC.: SCUPPER PLUGGING

THIS ITEM SHALL CONSIST OF :–

– REMOVING THE EXISTING ABOVE GROUND DRAINAGE PIPE SYSTEM INCLUDING SUPPORTS, FILLING HOLES IN CONCRETE AT THE REMOVED SUPPORTS, CAPPING THE EXISTING DRAINAGE PIPE 6" BEFORE GOING INTO THE ABUTMENT OR GROUND.

– REMOVING THE TOP BARS OF THE SCUPPER TO BE PLUGGED AS SHOWN ON THE PLANS, PLACING STEEL PLATE CUT TO FIT IN THE SCUPPER HORIZONTALLY AND WATER TIGHT WELDING TO THE EXISTING SIDES, WELDING STUDS TO THE PLATE, AND FILLING THE SCUPPER WITH MICRO-SILICA CONCRETE.

THE CONTRACTOR SHALL MAKE NECESSARY MEASUREMENTS FOR SHOP FABRICATION OF THE PLATE.
PAYMENT FOR THE ITEM SHALL BE THE UNIT PRICE BID PER EACH FOR ITEM 518, "STRUCTURE DRAINAGE, MISC.: SCUPPER PLUGGING", WHICH SHALL INCLUDE ALL LABOR, EQUIPMENT, MATERIALS AND INCIDENTALS NECESSARY TO COMPLETE THE WORK.

ITEM 519 – PATCHING CONCRETE STRUCTURES, AS PER PLAN

THIS ITEM SHALL CONSIST OF PATCHING EXISTING CONCRETE AT THE LOCATIONS SHOWN IN THE PLANS AND AS DIRECTED BY THE ENGINEER IN ACCORDANCE WITH ITEM 519 AND THE FOLLOWING ADDITIONAL REQUIREMENTS.

A. SURFACE PREPARATION UNDER 519.04 SHALL INCLUDE THE THOROUGH ABRASIVE BLASTING AND AIR CLEANING OF ALL SURFACES WHICH ARE TO BE IN CONTACT WITH THE PATCHING MATERIAL.

B. CLEANING SHALL PRECEDE THE APPLICATION OF THE PATCHING MATERIAL OR THE ERECTION OF THE FORMS BY LESS THAN 24 HOURS.

C. REMOVAL DEPTH SHALL BE 3 INCHES MINIMUM OR TO SOUND CONCRETE.

D. NO STEEL WIRE FABRIC SHALL BE REQUIRED.

E. THE CONCRETE MAY BE TROWELLED IN PLACE, PROVIDING THAT AN ACCEPTABLE SMOOTH APPEARANCE CAN BE ACHIEVED AS DETERMINED BY THE ENGINEER.

PAYMENT SHALL BE MADE UNDER THE SQUARE FOOT UNIT PRICE FOR ITEM 519, "PATCHING CONCRETE STRUCTURES, AS PER PLAN".

ITEM 607 – FENCE, TYPE CL, AS PER PLAN (8' FABRIC)

THIS ITEM SHALL CONSIST OF FURNISHING ALL MATERIALS, LABOR, EQUIPMENT AND INCIDENTALS NECESSARY TO COMPLETE THE FENCING RETROFIT AS SHOWN ON SHEET 33/68. ALL MATERIAL SHALL CONFORM TO THE CMS SECTION 607.02. THE FABRIC SHALL BE 1" MESH WOVEN FROM NO. 9 GAUGE, ALUMINUM COATED STEEL (AASHTO M-181 TYPE II).

THIS ITEM SHALL INCLUDE REMOVAL OF THE EXISTING FABRIC, CUTTING OFF FENCE POSTS AS SHOWN ON THE PLANS, AND INSTALLING NEW 8' FABRIC AS PER SECTION 710.03 CMS.

THE QUANTITY SHALL BE PAID AT THE CONTRACT UNIT PRICE PER ACTUAL LINEAR FEET OF FENCE ON BOTH SIDES OF THE BRIDGE IN PLACE AND ACCEPTED.

POLYTECH, INC. 2/68
CONSULTING ENGINEERS CLEVELAND, OHIO

GENERAL STRUCTURE NOTES

CUY-90-9.68

DESIGNED	DRAWN	TRACED	CHECKED	REVIEWED	DATE	REVISED
PSS	RG	–	EDV	BRS	9/94	

FHWA REGION	STATE	PROJECT	
5	OHIO		

155/220

CUYAHOGA COUNTY
CUY-90-9.68

STRUCTURE NOTES

ITEM SPECIAL – SEALING OF CONCRETE SURFACES (NON-EPOXY)

THE NON-EPOXY SEALER SHALL BE APPLIED TO THE FOLLOWING CONCRETE SURFACES OF ALL BRIDGES. SEE THE PROPOSAL NOTE TITLED SEALING OF CONCRETE SURFACES FOR SEALER MATERIAL, SURFACE PREPARATION REQUIREMENTS, APPLICATION RATES, PROCEDURES AND CONCRETE CURING. THE REQUIRED CURING AS REFERENCED IN THE PROPOSAL NOTE SHALL BE DEFINED AS A MINIMUM OF THIRTY (30) DAYS.

SUPERSTRUCTURE: (WITH SIDEWALK)

9 INCHES OF GUTTER, VERTICAL FACE OF CURB, TOP OF SIDEWALK.

THE NON-EPOXY SEALER SHALL BE TINTED TO FEDERAL COLOR STANDARD NO. 595A-36492, AS TO MATCH THE EPOXY SEALER.

ITEM SPECIAL – SEALING OF CONCRETE SURFACES (EPOXY)

AN EPOXY SEALER SHALL BE APPLIED TO THE FOLLOWING CONCRETE SURFACES OF ALL BRIDGES. SEE THE PROPOSAL NOTE TITLED SEALING OF CONCRETE SURFACES FOR SEALER MATERIAL, SURFACE PREPARATION REQUIREMENTS, APPLICATION RATES, PROCEDURES AND CONCRETE CURING. THE REQUIRED CURING AS REFERENCED IN THE PROPOSAL NOTE SHALL BE DEFINED AS A MINIMUM OF THIRTY (30) DAYS.

SUPERSTRUCTURE: (WITHOUT SIDEWALK)

9 INCHES OF GUTTER, INSIDE FACE, TOP AND OUTSIDE FACE OF PARAPET DECK FASCIA AND UNDER DECK RETURN TO THE OUTSIDE EDGE OF THE DECK BEAM TOP FLANGE.

SUBSTRUCTURE:

A. – INTEGRAL ABUTMENT
BREAST WALL DOWN TO THE GROUNDLINE OR TOP OF THE CONCRETE SLOPE PROTECTION (IF ANY).

– NON-INTEGRAL ABUTMENT
FRONT FACE OF ABUTMENT BACKWALLS FROM TOP TO BRIDGE SEAT, BRIDGE SEAT, AND BREAST WALL DOWN TO THE GROUNDLINE OR TOP OF THE CONCRETE SLOPE PROTECTION (IF ANY).

B. – WINGWALLS
ALL EXPOSED SURFACES ABOVE THE GROUNDLINE OF WINGWALLS

C. – PIERS
SIDES, ENDS, BOTTOM OF PIER CAPS AND ENTIRE CIRCUMFERENCE ABOVE GROUNDLINE OR TOP OF THE MEDIAN WALL (IF ANY) OF PIER COLUMNS.

ASPHALT DRAIN PLUGGING

THIS WORK SHALL BE INCIDENTAL TO THE BRIDGE DECK REPAIR AND OVERLAY WITH MICRO-SILICA CONCRETE AS DESCRIBED BELOW:

2-1/2" THICK OVERLAY: REMOVE HARDWARE CLOTH AND PLUG ALL ASPHALT DRAINS TO PREVENT CONCRETE OVERLAY FROM LEAKING DURING THE POURING OPERATION. METHOD TO BE APPROVED BY THE ENGINEER.

3-1/2" THICK OVERLAY: REMOVE THE PERFORATED STRUCTURAL TUBING, SUPPORT ANGLE AND APPURTENANCES AND PLUG ALL ASPHALT DRAINS TO PREVENT CONCRETE OVERLAY FROM LEAKING DURING THE POURING OPERATION. METHOD TO BE APPROVED BY THE ENGINEER.

ITEM 816 FIELD– PAINTING OF NEW STEEL, INTERMEDIATE AND FINISH COAT, SYSTEM IZEU

ALL NEW STRUCTURAL STEEL SHALL BE CLEANED AND PRIME PAINTED IN THE SHOP IN CONFORMANCE WITH ITEM 513.222 THE FINISH TOP COAT PAINT SHALL BE FIELD PAINTED WITH SYSTEM IZEU AND SHALL BE GRAY FEDERAL SPECIFICATION NO. 595a-16440 (SEE SUPPLEMENT SPECIFICATION 816 "FIELD PAINTING OF NEW STEEL, SYSTEM IZEU".)

ITEM 514 – FIELD PAINTING, MISC.: RETROFITTED AREAS

THIS ITEM SHALL CONSIST OF PREPARING AND COATING THE FOLLOWING AREAS OF EXISTING STEEL:

1) ANY AREA WHERE DRILLING, GRINDING, OR WELDING HAS OCCURRED.
2) AREAS THAT WHERE ABRASIVE BLASTED.
3) ANY AREAS DAMAGED BY THE CONTRACTORS OPERATIONS.
4) ACCESS HAND RAIL.
5) STIFFENERS TO TOP FLANGE WELDS
6) STRUCTURAL STEEL EXPANSION JOINT RETROFIT
7) RETROFITTED DRAINAGE SYSTEM

SURFACE PREPARATION SHALL CONSIST OF ABRASIVE BLASTING THE AREA TO BE COATED TO AN SA 2-1/2 NEAR-WHITE CONDITION. BLASTING ABRASIVE CONTAINING MORE THAN 1% FREE SILICA SHALL NOT BE ALLOWED. THESE AREAS SHALL BE COATED THE SAME DAY THAT THEY ARE BLASTED.

THE PREPARED AREAS SHALL BE COATED WITH ONE COAT OF A HIGH SOLIDS EPOXY AT LEAST 5 MILS THICK. THE HIGH SOLIDS EPOXY SHALL BE APPLIED BY BRUSH. THE COLOR OF THE HIGH SOLIDS EPOXY SHALL CLOSELY MATCH THAT COLOR WHICH IS EXISTING.

THE HIGH SOLIDS EPOXY SHALL BE ONE OF THE FOLLOWING PRODUCTS:

1) AMERON AMERLOCK 400
2) VALSPAR HIGH SOLIDS EPOXY 76 SERIES
3) TNEMEC CHEMBUILD SERIES 135
4) SHERWIN WILLIAMS – EPOXY-MASTIC COATING

COST FOR FURNISHING ALL MATERIALS, LABOR AND EQUIPMENT NECESSARY TO COMPLETE THIS ITEM SHALL BE INCLUDED IN THE LUMP SUM BID PRICE FOR THIS ITEM.

ITEM SPECIAL – STRUCTURE, MISC.: WELD STIFFENERS TO TOP FLANGE RETROFIT

THIS WORK SHALL CONSIST OF THE FOLLOWING SEQUENCE OF OPERATIONS TO WELD TWO TRANSVERSE STIFFENERS TO THE TOP FLANGE OF THE GIRDER.

1. ABRASIVE BLAST THE AREA TO RECEIVE THE FILLET WELDS.
2. MAKE THE FILLET WELD CONNECTIONS AS SHOWN ON THE DETAILS AT THE LOCATIONS INDICATED ON THE FRAMING PLANS AND GIRDER DETAIL (SHEET 23/68).
3. PERFORM NONDESTRUCTIVE TESTING (NDT) BY MAGNETIC PARTICLE INSPECTION AND INSPECTION ACCORDING TO SECTION 513.21 OF THE CMS.

THE ACCEPTED NUMBER OF RETROFITS AS DETAILED ABOVE WILL BE PAID FOR AT THE CONTRACT UNIT PRICE PER LOCATION, WHICH PRICE AND PAYMENT SHALL BE FULL COMPENSATION FOR FURNISHING MATERIAL, LABOR AND EQUIPMENT NECESSARY TO MAKE THE FILLET WELDED CONNECTIONS AND PERFORM NDT ON THE WELDS.

ITEM SPECIAL – POURED POLYURETHANE JOINT SEAL

I. DESCRIPTION: THIS WORK SHALL CONSIST OF SEALING JOINTS WITH POURED POLYURETHANE JOINT SEAL IN ACCORDANCE WITH THESE SPECIFICATIONS, IN REASONABLY CLOSE CONFORMITY WITH THE PLANS AND MANUFACTURER'S SPECIFICATIONS AND RECOMMENDATIONS AND AS DIRECTED BY THE ENGINEER.

II. MATERIAL: THE MATERIAL FOR THIS ITEM IS A TWO-PART, COLD APPLIED, CHEMICALLY CURING, SELF LEVELING, ELASTOMERIC, POLYURETHANE JOINT SEALANT MEETING THE REQUIREMENTS OF FEDERAL SPECIFICATION TT-S-00227E AND ASTM C-920. ALL MATERIALS SHALL BE STORED AND INCORPORATED IN THE WORK AS SPECIFIED BY THE MANUFACTURER.

III. APPLICATION: THE CONCRETE SURFACES TO WHICH THE SEALER IS TO ADHERE SHALL FIRST BE THOROUGHLY CLEANED BY ABRASIVE BLASTING. POLYURETHANE JOINT SEAL SHALL BE POURED OVER THE FULL LENGTH OF THE BITUMEN IMPREGNATED FOAM SEAL PREVIOUSLY INSTALLED IN THE OPEN JOINT AND SHALL BE APPLIED ONLY WHEN THE CONCRETE IS DRY AND ITS TEMPERATURE IS ABOVE 50° F. THE POURED JOINT SEALER SHALL ACT AS A SECOND SEAL UNDERNEATH AND ON TOP OF THE BITUMEN IMPREGNATED FOAM JOINT SEAL. THE INSTALLED AND CURED MATERIAL SHALL BE THE DEPTH AS SHOWN IN THE PLANS AND SHALL BE BONDED TO THE CONCRETE SIDES OF THE JOINT. ANY UNBONDED SECTION SHALL BE REMOVED AND REPLACED AT THE CONTRACTOR'S EXPENSE. DAMS AS REQUIRED TO CONTAIN THE POURED SEALER SHALL BE INCIDENTAL TO THIS ITEM OF WORK.

IV. METHOD OF MEASUREMENT: FOOTAGE UNDER THIS ITEM SHALL BE THE LINEAR FEET OF URETHANE JOINT SEAL POURED OVER THE FOAM JOINT SEAL THAT ARE COMPLETE, IN PLACE AND ACCEPTED.

V. BASIS OF PAYMENT: THE ACCEPTED QUANTITIES OF POURED POLYURETHANE JOINT SEAL SHALL BE PAID FOR AT THE CONTRACT UNIT PRICE PER LINEAR FOOT, WHICH PRICE AND PAYMENT SHALL BE IN FULL COMPENSATION FOR PREPARING THE SURFACES, FURNISHING AND PLACING ALL MATERIALS AND ALL OTHER MATERIALS, LABOR AND EQUIPMENT NECESSARY TO COMPLETE THE JOINT SEAL ACCORDING TO SPECIFICATIONS. PAYMENT WILL BE MADE UNDER:

ITEM	UNIT	DESCRIPTION
SPECIAL	LINEAR FOOT	POURED POLYURETHANE JOINT SEAL

POLYTECH, INC. 3/68
CONSULTING ENGINEERS CLEVELAND, OHIO

GENERAL STRUCTURE NOTES

CUY-90-9.68

DESIGNED	DRAWN	TRACED	CHECKED	REVIEWED	DATE	REVISED
PSS	RG	–	EDV	BRS	9/94	

FHWA REGION	STATE	PROJECT	
5	OHIO		

156/220

CUYAHOGA COUNTY
CUY-90-9.68

STRUCTURE NOTES

ITEM SPECIAL – LOW–PRESSURE EPOXY INJECTING OF DELAMINATED CONCRETE

I. DESCRIPTION : THIS WORK SHALL CONSIST OF LOW–PRESSURE EPOXY INJECTION OF DELAMINATED BOTTOM COVER CONCRETE OF BRIDGE DECKS IN ACCORDANCE WITH THESE SPECIFICATIONS, IN RESONABLE CLOSE CONFORMITY WITH THE PLANS AND MANUFACTURER'S RECOMMENDATIONS AS DIRECTED BY THE ENGINEER.

II. MATERIALS : THE INJECTION RESIN SHALL BE THERMAL–CHEM INJECTION RESIN PRODUCT NO. 2, POLY–CARB MARK–10 INJECTION RESIN, DURALCRETE LV OR SIKADUR 52 INJECTION RESIN. THE BONDER SHALL BE THERMAL–CHEM BONDER PRODUCT NO. 4, POLY–CARB MARK 8 NON–SAG EPOXY BONDER DURALCRETE GEL OR SIKADUR HI–MOD GEL (SIKASTIX 31). ALL MATERIALS SHALL BE STORED AND INCORPORATED IN THE WORK AS RECOMMENDED BY THE MANUFACTURER. A MANUFACTURER'S REPRESENTATIVE SHALL BE PRESENT AT THE JOB SITE UNTIL SUCH A TIME AS HE AND THE ENGINEER ARE SURE THAT THE CONTRACTOR IS QUALIFIED IN ALL ASPECTS OF EPOXY PRESSURE GROUTING.

III. PREPARATION : PORTS SHALL BE INSTALLED IN CLEAN HOLES WHICH ARE VACUUM DRILLED (TO PREVENT FINES BEING IMPACTED IN THE CRACK) 3–INCHES UP INTO THE DECK BOTTOM SO THAT THE EPOXY WILL PENETRATE THE HOLLOW PLANE. THE FIRST PORT SHALL BE LOCATED NEAR THE EDGE OF THE OUTLINED UNSOUND AREA. ADDITIONAL PORTS SHALL BE PLACED AT DISTANCES SLIGHTLY GREATER THAN THE DISTANCE FROM THE FIRST PORT TO THE VOID EDGE. PORT PLACEMENT MUST ENSURE THAT THE GROUT FACE REACHES THE EDGE OF THE VOID BEFORE REACHING THE NEXT PORT. BONDER SHALL BE USED ONLY TO PREVENT EMISSION OF THE INJECTION RESIN BY SEALING THE PORTS AND VISIBLE CRACKS AND SHALL NOT BE INDISCRIMINATELY TROWELLED ON THE DECK BOTTOM. A MAXIMUM OF 1/16 INCH THICK BY 1 INCH WIDE SHALL BE SUFFICIENT TO SEAL CRACKS FOR INJECTION. THE BONDER SHALL CURE 24 HOURS PRIOR TO INJECTION OF EPOXY RESIN AND NEED NOT BE REMOVED FROM THE CONCRETE.

IV. INJECTION : THE DECK SHALL BE INJECTED ONLY WHEN IT IS DRY AND ITS TEMPERATURE IS ABOVE 50° F. THE INJECTION RESIN SHALL BE AT 70° F PRIOR TO MIXING THE COMPONENTS.

THE EPOXY INJECTION EQUIPMENT SHALL BE CAPABLE OF INJECTING THE MATERIAL INTO THE PORTS AT LOW PRESSURES OF 14 TO 20 PSI. THE INJECTION EQUIPMENT SHALL BE CAPABLE OF METERING, MIXING, INJECTING AND MEASURING THE FLOW OF THE EPOXY RESIN ACCORDING TO THE MANUFACTURER'S SPECIFICATIONS.

THE INJECTION SHALL COMMENCE AT THE EDGE OF THE DELAMINATION AND CONTINUE UNTIL THE EPOXY RESIN APPEARS AT THE NEXT PORT. MOST INCOMPLETELY FILLED VOIDS ARE CAUSED BY THE OPERATOR STOPPING THE INJECTION PROCESS PRE–MATURELY. THEREFORE, A STEADY, LOW PRESSURE SHALL BE MAINTAINED ON THE EPOXY UNTIL A STEADY CLEAR FLOW APPEARS AT THE NEXT PORT. THEN THE INJECTION NOZZLE SHALL BE REMOVED AND THE PORT CLOSED. THE INJECTION SHALL BE CONTINUED FROM PORT TO PORT UNTIL THE VOID IS COMPLETELY FILLED. SINCE THE FACE GROUT IS MOVING UNDER VISCOUS FLOW CONDITIONS WHICH ARE GOVERNED BY FLUID SURFACE FRICTION, THE INJECTION PROCESS IS SLOW. REGARDLESS, INJECTION PRESSURE SHALL BE 20 PSI MAXIMUM SO THAT BOTTOM COVER CONCRETE IS NOT BLOWN OFF. PROGRESS OF THE EPOXY SHALL BE CHECKED WITH A TAPPING HAMMER.

V. TESTING THE INJECTED VOID : THE OUTLINED INJECTED VOIDS SHALL BE SOUNDED WITH A HAMMER BY THE ENGINEER. ANY REMAINING UNSOUND AREAS SHALL BE PORTED AND REINJECTED AT NO ADDITIONAL COST TO THE STATE. ALL PORTS SHALL BE CUT OFF FLUSH WITH THE SURFACE. ALL PAINT MARKS SHALL BE REMOVED. ALL EQUIPMENT, LABOR AND MATERIAL REQUIRED BY THE ENGINEER TO ACCOMPLISH THIS WORK SHALL BE SUPPLIED BY THE CONTRACTOR.

VI. METHOD OF MEASUREMENT : THE FOOTAGE UNDER THIS ITEM SHALL BE THE NUMBER OF SQUARE FEET OF DELAMINATED DECK BOTTOM CONCRETE THAT ARE SATISFACTORILY LOW–PRESSURE EPOXY INJECTED AND ACCEPTED.

VII. BASIS OF PAYMENT : THE ACCEPTED QUANTITIES OF LOW PRESSURE EPOXY INJECTED CONCRETE WILL BE PAID FOR AT THE CONTRACT UNIT PRICE PER SQUARE FOOT, WHICH PRICE AND PAYMENT SHALL BE FULL COMPENSATION FOR FURNISHING AND PLACING ALL MATERIALS, SOUNDING THE INJECTED AREAS, SUPPLYING THE MANUFACTURER'S REPRESENTATIVE AND ALL OTHER MATERIAL, LABOR AND EQUIPMENT NECESSARY TO COMPLETE THIS WORK ACCORDING TO SPECIFICATIONS.

PAYMENT WILL BE MADE UNDER:

ITEM	UNIT	DESCRIPTION
SPECIAL	SQ. FT.	LOW–PRESSURE EPOXY INJECTING OF DELAMINATED CONCRETE

ADDITIONAL REPAIR AREAS

A QUANTITY OF ADDITIONAL REPAIR ITEMS IS INCLUDED FOR USE ON ALL PORTIONS OF THIS PROJECT.

LOW PRESSURE EPOXY INJECTING:
THE CONTRACTOR SHALL SOUND AROUND THE OUTSIDE OF THE EXISTING MARKED UNSOUND AREAS. ANY ADDITIONAL UNSOUND AREAS SHALL BE OUTLINED AND REPAIRED USING THIS ITEM. LOOSE CONCRETE WITHIN THESE AREAS SHALL BE REMOVED UNDER ITEM 202 - PORTIONS OF STRUCTURES REMOVED.

THE FOLLOWING ESTIMATED QUANTITIES HAVE BEEN INCLUDED IN THE GENERAL SUMMARY TO PERFORM THIS WORK:

ITEM 519 - PATCHING CONCRETE STRUCTURE,
AS PER PLAN..... 20 SQ. FT.
ITEM SPECIAL - LOW PRESSURE EPOXY INJECTING
OF DELAMINATED CONCRETE.....500 SQ. FT.
ITEM 843 - PATCHING CONCRETE STRUCTURES
WITH TROWELABLE MORTAR.....250 SQ. FT.

ITEM 848 - TEST SLAB

THIS ITEM SHALL BE USED PRIOR TO THE FIRST OVERLAY PLACED.

POLYTECH, INC. 4/68
CONSULTING ENGINEERS CLEVELAND, OHIO

GENERAL STRUCTURE NOTES

CUY–90–9.68

DESIGNED	DRAWN	TRACED	CHECKED	REVIEWED	DATE	REVISED
PSS	RG	–	EDV	BRS	9/94	

PLOT SUBMITTED: 02-DEC-1998 02
PLOT SUBMITTED BY: fkonopka
I:\users\lmncek\prd5754\05754sga.dgn

STRUCTURE SUMMARY

CUYAHOGA COUNTY CUY-90-9.68	OHIO	157 / 220
	FHWA REGION 5	
	FEDERAL PROJECT	

* = SEE PROPOSAL NOTE

ITEM	SUB-SUMMARY SHEET NUMBER: GEN. NOTES	6/68	7/68	8/68	9/68				ITEM	ITEM EXT.	GRAND TOTAL	UNIT	DESCRIPTION	SEE SHEET NO.
202		LUMP	LUMP	LUMP	LUMP				202	11200	LUMP	LUMP	PORTIONS OF STRUCTURE REMOVED	1/68
SPECIAL		1094	1295	1864	336				SPECIAL	51267504	4589	SQ. YD.	SEALING OF CONCRETE SURFACES (NON-EPOXY)*	3/68
SPECIAL		12670	7884	7428	3293				SPECIAL	51267510	31275	SQ. YD.	SEALING OF CONCRETE SURFACES (EPOXY-URETHANE)*	3/68
514		LUMP	LUMP	LUMP	LUMP				514	27704	LUMP	LUMP	FIELD PAINTING, MISC.: RETROFITTED AREAS	3/68
516		150	239						516	10901	389	LIN. FT.	ELASTOMETRIC COMPRESSION SEAL (705.11), AS PER PLAN	2/68
516		634	285	534					516	12201	1453	LIN. FT.	STRUCTURAL STEEL EXPANSION JOINT (RETROFIT), AS PER PLAN	2/68
SPECIAL		292	610	280	626				SPECIAL	51614010	1808	LIN. FT.	POURED POLYURETHANE JOINT SEAL	3/68
516		1091	1239	1012	816				516	14600	4158	LIN. FT.	STRUCTURAL JOINT OR JOINT SEALER, MISC.: 705.03 OR 705.04	2/68
516		36							516	46701	36	EACH	RESET BEARING, AS PER PLAN	1/68
516		LUMP							516	47000	LUMP	LUMP	JACKING AND TEMPORARY SUPPORT OF SUPERSTRUCTURE	2/68
517		1743	707	328					517	76201	2778	LIN. FT.	RAILING FACED, AS PER PLAN	10A/68
518		42	42	31					518	62200	115	EACH	STRUCTURAL DRAINAGE MISC.: SCUPPER PLUGGING	2/68
518		LUMP		LUMP					518	63300	LUMP	LUMP	STRUCTURAL DRAINAGE MISC.: RETROFITTING DRAINAGE SYSTEM	2/68
519	20	15	1	21					519	11101	57	SQ. FT.	PATCHING CONCRETE STRUCTURE, AS PER PLAN	2/68
SPECIAL	500	892	218	192	142				SPECIAL	51912602	1944	SQ. FT.	LOW PRESSURE EPOXY INJECTING OF DELAMINATED CONCRETE	4/68
SPECIAL		283							SPECIAL	53000400	283	EACH	STRUCTURE MISC.: WELD STIFFENERS TO TOP FLANGE RETROFIT	3/68
607			576						607	20101	576	LIN. FT.	FENCE, TYPE CL, MISC., AS PER PLAN (8' FABRIC)	2/68
816					195				816	00610	195	POUND	FIELD PAINTING OF NEW STEEL, INTERMEDIATE AND FINISH COAT, SYSTEM IZEU	3/68
843	250	443	132	80	66				843	50000	971	SQ. FT.	PATCHING CONCRETE STRUCTURES WITH TROWELABLE MORTAR	
846			284	742					846	73000	1026	SQ. YD.	TREATING CONCRETE BRIDGE DECKS WITH HMWM RESIN	
848		4453	6332	5650	1495				848	10000	17930	SQ. YD.	MICROSILICA MODIFIED CONCRETE OVERLAY USING HYDRO-DEMOLITION 2½ INCH THICK	
848		14053	2522	2466	3803				848	10000	22844	SQ. YD.	MICROSILICA MODIFIED CONCRETE OVERLAY USING HYDRO-DEMOLITION 3½ INCH THICK	
848		18506	8854	8116	5298				848	20000	40774	SQ. YD.	SURFACE PREPARATION USING HYDRO-DEMOLITION	
848		262	123	110	74				848	30000	569	CU. YD.	MICROSILICA MODIFIED CONCRETE OVERLAY (VARIABLE THICKNESS), MATERIAL ONLY	
848		554	265	243	159				848	50000	1221	SQ. YD.	HAND CHIPPING	
848	LUMP								848	50100	LUMP	LUMP	TEST SLAB	
848		2							848	50200	2	CU. YD.	FULL DEPTH REPAIR	
848		18506	8854	8116	5298				848	50300	40774	SQ. YD.	WEARING COURSE REMOVED, ASPHALT	
863					195				863	10200	195	POUND	STRUCTURAL STEEL MEMBERS, MISCELLANEOUS LEVEL FABRICATION	1/68
863		3498							863	95000	3498	LIN. FT.	STRUCTURAL STEEL MISC.: (ACCESS HAND RAIL, MISCELLANEOUS LEVEL FABRICATION)	1/68

STATE OF OHIO
DEPARTMENT OF TRANSPORTATION
DISTRICT 12 LOCATION & DESIGN

5/68

STRUCTURE SUMMARY

DESIGNED	DRAWN	CHECKED	REVIEWED	REVISED
PSS	RG	VKB	BRS	ENF 11/98

PLOT SUBMITTED: 02-DEC-1998 09:54:54
PLOT SUBMITTED BY: fkonopka
I:\users\lmincek\pid5754\05754sga.dgn

STRUCTURE SUB-SUMMARY

* = SEE PROPOSAL NOTE

ITEM	BRIDGE NUMBER								ITEM	ITEM EXT.	TOTAL	UNIT	DESCRIPTION
	CUY-90-0892	CUY-90-0909	CUY-90-0947L	CUY-90-0947R	CUY-90-0970L	CUY-90-0970R	CUY-90-0991L	CUY-90-0991R					
202	LUMP	LUMP	LUMP	LUMP			LUMP	LUMP	202	11200	LUMP	LUMP	PORTIONS OF STRUCTURE REMOVED
SPECIAL	437	657							SPECIAL	51267504	1094	SQ. YD.	SEALING OF CONCRETE SURFACES (NON-EPOXY)*
SPECIAL	850	1054	879	847	3479	3651	1026	884	SPECIAL	51267510	12670	SQ. YD.	SEALING OF CONCRETE SURFACES (EPOXY-URETHANE)*
514	LUMP	LUMP			LUMP	LUMP	LUMP	LUMP	514	27704	LUMP	LUMP	FIELD PAINTING, MISC.: RETROFITTED AREAS
516							75	75	516	10901	150	LIN. FT.	ELASTOMETRIC COMPRESSION SEAL (705.11), AS PER PLAN
516	56	129			153	158	69	69	516	12201	634	LIN. FT.	STRUCTURAL STEEL EXPANSION JOINT (RETROFIT), AS PER PLAN
SPECIAL			142	150					SPECIAL	51614010	292	LIN. FT.	POURED POLYURETHANE JOINT SEAL
516	127	210	237	264	121	132			516	14600	1091	LIN. FT.	STRUCTURAL JOINT OR JOINT SEALER, MISC.: 705.03 OR 705.04
516	10	10					8	8	516	46701	36	EACH	RESET BEARING, AS PER PLAN
516	LUMP	LUMP					LUMP	LUMP	516	47000	LUMP	LUMP	JACKING AND TEMPORARY SUPPORT OF SUPERSTRUCTURE
517			197		681	681	92	92	517	76201	1743	LIN. FT.	RAILING FACED, AS PER PLAN
518		15			15	12			518	62200	42	EACH	STRUCTURAL DRAINAGE MISC.: SCUPPER PLUGGING
518		LUMP							518	63300	LUMP	LUMP	STRUCTURAL DRAINAGE MISC.: RETROFITTING DRAINAGE SYSTEM
519				15					519	11101	15	SQ. FT.	PATCHING CONCRETE STRUCTURE, AS PER PLAN
SPECIAL	224	149	415	100			1	3	SPECIAL	51912602	892	SQ. FT.	LOW PRESSURE EPOXY INJECTING OF DELAMINATED CONCRETE
SPECIAL					133	150			SPECIAL	53000400	283	EACH	STRUCTURE MISC.: WELD STIFFENERS TO TOP FLANGE RETROFIT
607									607	20101		LIN. FT.	FENCE, TYPE CL, MISC., AS PER PLAN (8' FABRIC)
816									816	00610		POUND	FIELD PAINTING OF NEW STEEL, INTERMEDIATE AND FINISH COAT, SYSTEM IZEU
843	51	114	40	26	62	69	38	43	843	50000	443	SQ. FT.	PATCHING CONCRETE STRUCTURES WITH TROWELABLE MORTAR
846									846	73000		SQ. YD.	TREATING CONCRETE BRIDGE DECKS WITH HMWM RESIN
848	783	2098		1572					848	10000	4453	SQ. YD.	MICROSILICA MODIFIED CONCRETE OVERLAY USING HYDRO-DEMOLITION 2½ INCH THICK
848			1503		5477	5747	663	663	848	10000	14053	SQ. YD.	MICROSILICA MODIFIED CONCRETE OVERLAY USING HYDRO-DEMOLITION 3½ INCH THICK
848	783	2098	1503	1572	5477	5747	663	663	848	20000	18506	SQ. YD.	SURFACE PREPARATION USING HYDRO-DEMOLITION
848	12	31	22	23	76	80	9	9	848	30000	262	CU. YD.	MICROSILICA MODIFIED CONCRETE OVERLAY (VARIABLE THICKNESS), MATERIAL ONLY
848	23	63	45	47	164	172	20	20	848	50000	554	SQ. YD.	HAND CHIPPING
848									848	50100		LUMP	TEST SLAB
848			2						848	50200	2	CU. YD.	FULL DEPTH REPAIR
848	783	2098	1503	1572	5477	5747	663	663	848	50300	18506	SQ. YD.	WEARING COURSE REMOVED, ASPHALT
863									863	10200		POUND	STRUCTURAL STEEL MEMBERS, MISCELLANEOUS LEVEL FABRICATION
863					1610	1888			863	95000	3498	LIN. FT.	STRUCTURAL STEEL MISC.: ACCESS HAND RAIL, MISCELLANEOUS LEVEL FABRICATION

STATE OF OHIO
DEPARTMENT OF TRANSPORTATION
DISTRICT 12 LOCATION & DESIGN

6/68

STRUCTURE SUB-SUMMARY

CUY-90-0892
CUY-90-0909
CUY-90-0947L&R
CUY-90-0970L&R
CUY-90-0991L&R

DESIGNED	DRAWN	CHECKED	REVIEWED	REVISED
PSS	RG	VKB	BRS	ENF 11/98

PLOT SUBMITTED: Ø2-DEC-1998 Ø
PLOT SUBMITTED BY: fkonopka
I:\users\lmincek\pid5754\Ø5754sga.dgn

STRUCTURE SUB-SUMMARY

CUYAHOGA COUNTY CUY-90-9.68	OHIO	159 / 220
	FHWA REGION 5	
	FEDERAL PROJECT	

* = SEE PROPOSAL NOTE

ITEM	BRIDGE NUMBER								ITEM	ITEM EXT.	TOTAL	UNIT	DESCRIPTION
	CUY-90-1062	CUY-90-1082	CUY-90-1094	CUY-90-1110	CUY-90-1132L	CUY-90-1132R	CUY-90-1151L	CUY-90-1151R					
202	LUMP	LUMP	LUMP	LUMP	LUMP	LUMP	LUMP	LUMP	202	11200	LUMP	LUMP	PORTIONS OF STRUCTURE REMOVED
SPECIAL	420		381	494					SPECIAL	51267504	1295	SQ. YD.	SEALING OF CONCRETE SURFACES (NON-EPOXY)*
SPECIAL	2102	434	988	1225	766	777	797	795	SPECIAL	51267510	7884	SQ. YD.	SEALING OF CONCRETE SURFACES (EPOXY-URETHANE)*
514	LUMP		LUMP	LUMP					514	27704	LUMP	LUMP	FIELD PAINTING, MISC.: RETROFITTED AREAS
516	239								516	10901	239	LIN. FT.	ELASTOMETRIC COMPRESSION SEAL (705.11), AS PER PLAN
516	170		57	58					516	12201	285	LIN. FT.	STRUCTURAL STEEL EXPANSION JOINT (RETROFIT), AS PER PLAN
SPECIAL					150	150	155	155	SPECIAL	51614010	610	LIN. FT.	POURED POLYURETHANE JOINT SEAL
516	90	36	88	53	238	238	248	248	516	14600	1239	LIN. FT.	STRUCTURAL JOINT OR JOINT SEALER, MISC.: 705.03 OR 705.04
516									516	46701		EACH	RESET BEARING, AS PER PLAN
516									516	47000		LUMP	JACKING AND TEMPORARY SUPPORT OF SUPERSTRUCTURE
517					188	188	165	166	517	76201	707	LIN. FT.	RAILING FACED, AS PER PLAN
518	22		12	8					518	62200	42	EACH	STRUCTURAL DRAINAGE MISC.: SCUPPER PLUGGING
518									518	63300		LUMP	STRUCTURAL DRAINAGE MISC.: RETROFITTING DRAINAGE SYSTEM
519								1	519	11101	1	SQ. FT.	PATCHING CONCRETE STRUCTURE, AS PER PLAN
SPECIAL	66	8	33	4	28	6	10	63	SPECIAL	51912602	218	SQ. FT.	LOW PRESSURE EPOXY INJECTING OF DELAMINATED CONCRETE
SPECIAL									SPECIAL	53000400		EACH	STRUCTURE MISC.: WELD STIFFENERS TO TOP FLANGE RETROFIT
607		576							607	20101	576	LIN. FT.	FENCE, TYPE CL, MISC., AS PER PLAN (8' FABRIC)
816									816	00610		POUND	FIELD PAINTING OF NEW STEEL, INTERMEDIATE AND FINISH COAT, SYSTEM IZEU
843	41	39	10	24	1	8		9	843	50000	132	SQ. FT.	PATCHING CONCRETE STRUCTURES WITH TROWELABLE MORTAR
846		284							846	73000	284	SQ. YD.	TREATING CONCRETE BRIDGE DECKS WITH HMWM RESIN
848	2098		682	700	1413	1439			848	10000	6332	SQ. YD.	MICROSILICA MODIFIED CONCRETE OVERLAY USING HYDRO-DEMOLITION 2½ INCH THICK
848							1258	1264	848	10000	2522	SQ. YD.	MICROSILICA MODIFIED CONCRETE OVERLAY USING HYDRO-DEMOLITION 3½ INCH THICK
848	2098		682	700	1413	1439	1258	1264	848	20000	8854	SQ. YD.	SURFACE PREPARATION USING HYDRO-DEMOLITION
848	29		10	10	20	20	17	17	848	30000	123	CU. YD.	MICROSILICA MODIFIED CONCRETE OVERLAY (VARIABLE THICKNESS), MATERIAL ONLY
848	63		20	21	42	43	38	38	848	50000	265	SQ. YD.	HAND CHIPPING
848									848	50100		LUMP	TEST SLAB
848									848	50200		CU. YD.	FULL DEPTH REPAIR
848	2098		682	700	1413	1439	1258	1264	848	50300	8854	SQ. YD.	WEARING COURSE REMOVED, ASPHALT
863									863	10200		POUND	STRUCTURAL STEEL MEMBERS, MISCELLANEOUS LEVEL FABRICATION
863									863	95000		LIN. FT.	STRUCTURAL STEEL MISC.: ACCESS HAND RAIL, MISCELLANEOUS LEVEL FABRICATION

STATE OF OHIO
DEPARTMENT OF TRANSPORTATION
DISTRICT 12 LOCATION & DESIGN

7/68

STRUCTURE SUB-SUMMARY

CUY-90-1062 CUY-90-1110
CUY-90-1082 CUY-90-1132L&R
CUY-90-1094 CUY-90-1151L&R

DESIGNED	DRAWN	CHECKED	REVIEWED	REVISED
PSS	RG	VKB	BRS	ENF 11/98

PLOT SUBMITTED: 02-DEC-1998 02
PLOT SUBMITTED BY: fkonopka
I:\users\lmincek\prd5754\05754sga.dgn

STRUCTURE SUB-SUMMARY

CUYAHOGA COUNTY CUY-90-9.68	OHIO	160 / 220
	FHWA REGION 5	
	FEDERAL PROJECT	

* = SEE PROPOSAL NOTE

ITEM	BRIDGE NUMBER								ITEM	ITEM EXT.	TOTAL	UNIT	DESCRIPTION
	CUY-90-1157L	CUY-90-1157R	CUY-90-1173	CUY-90-1185	CUY-90-1201	CUY-90-1214S	CUY-90-1237						
202	LUMP	LUMP			LUMP	LUMP	LUMP		202	11200	LUMP	LUMP	PORTIONS OF STRUCTURE REMOVED
SPECIAL				557	410	393	504		SPECIAL	51267504	1864	SQ. YD.	SEALING OF CONCRETE SURFACES (NON-EPOXY)*
SPECIAL	759	757		1963	1445	1049	1455		SPECIAL	51267510	7428	SQ. YD.	SEALING OF CONCRETE SURFACES (EPOXY-URETHANE)*
514				LUMP	LUMP	LUMP	LUMP		514	27704	LUMP	LUMP	FIELD PAINTING, MISC.: RETROFITTED AREAS
516									516	10901		LIN. FT.	ELASTOMETRIC COMPRESSION SEAL (705.11), AS PER PLAN
516				146	111	197	80		516	12201	534	LIN. FT.	STRUCTURAL STEEL EXPANSION JOINT (RETROFIT), AS PER PLAN
SPECIAL	140	140							SPECIAL	51614010	280	LIN. FT.	POURED POLYURETHANE JOINT SEAL
516	218	218		101	92	280	103		516	14600	1012	LIN. FT.	STRUCTURAL JOINT OR JOINT SEALER, MISC.: 705.03 OR 705.04
516									516	46701		EACH	RESET BEARING, AS PER PLAN
516									516	47000		LUMP	JACKING AND TEMPORARY SUPPORT OF SUPERSTRUCTURE
517	164	164							517	76201	328	LIN. FT.	RAILING FACED, AS PER PLAN
518				9	8		14		518	62200	31	EACH	STRUCTURAL DRAINAGE MISC.: SCUPPER PLUGGING
518				LUMP					518	63300	LUMP	LUMP	STRUCTURAL DRAINAGE MISC.: RETROFITTING DRAINAGE SYSTEM
519	4					17			519	11101	21	SQ. FT.	PATCHING CONCRETE STRUCTURE, AS PER PLAN
SPECIAL	79	45			35	17	16		SPECIAL	51912602	192	SQ. FT.	LOW PRESSURE EPOXY INJECTING OF DELAMINATED CONCRETE
SPECIAL									SPECIAL	53000400		EACH	STRUCTURE MISC.: WELD STIFFENERS TO TOP FLANGE RETROFIT
607									607	20101		LIN. FT.	FENCE, TYPE CL, MISC., AS PER PLAN (8' FABRIC)
816									816	00610		POUND	FIELD PAINTING OF NEW STEEL, INTERMEDIATE AND FINISH COAT, SYSTEM IZEU
843		11		20	13		36		843	50000	80	SQ. FT.	PATCHING CONCRETE STRUCTURES WITH TROWELABLE MORTAR
846			742						846	73000	742	SQ. YD.	TREATING CONCRETE BRIDGE DECKS WITH HMWM RESIN
848	1258	1236		1905		1251			848	10000	5650	SQ. YD.	MICROSILICA MODIFIED CONCRETE OVERLAY USING HYDRO-DEMOLITION 2½ INCH THICK
848					1331		1135		848	10000	2466	SQ. YD.	MICROSILICA MODIFIED CONCRETE OVERLAY USING HYDRO-DEMOLITION 3½ INCH THICK
848	1258	1236		1905	1331	1251	1135		848	20000	8116	SQ. YD.	SURFACE PREPARATION USING HYDRO-DEMOLITION
848	17	16		26	18	17	16		848	30000	110	CU. YD.	MICROSILICA MODIFIED CONCRETE OVERLAY (VARIABLE THICKNESS), MATERIAL ONLY
848	38	37		57	40	37	34		848	50000	243	SQ. YD.	HAND CHIPPING
848									848	50100		LUMP	TEST SLAB
848									848	50200		CU. YD.	FULL DEPTH REPAIR
848	1258	1236		1905	1331	1251	1135		848	50300	8116	SQ. YD.	WEARING COURSE REMOVED, ASPHALT
863									863	10200		POUND	STRUCTURAL STEEL MEMBERS, MISCELLANEOUS LEVEL FABRICATION
863									863	95000		LIN. FT.	STRUCTURAL STEEL MISC.: ACCESS HAND RAIL, MISCELLANEOUS LEVEL FABRICATION

STATE OF OHIO
DEPARTMENT OF TRANSPORTATION
DISTRICT 12 LOCATION & DESIGN

8/68

STRUCTURE SUB-SUMMARY

CUY-90-1157L&R CUY-90-1201
CUY-90-1173 CUY-90-1214S
CUY-90-1185 CUY-90-1237

DESIGNED	DRAWN	CHECKED	REVIEWED	REVISED
PSS	RG	VKB	BRS	ENF 11/98

PLOT SUBMITTED: 02-DEC-1998 0
PLOT SUBMITTED BY: fkonopka
I:\users\lmincek\prj5754\05754sga.dgn

STRUCTURE SUB-SUMMARY

CUYAHOGA COUNTY	OHIO	161
CUY-90-9.68	FHWA REGION 5	220
	FEDERAL PROJECT	

* = SEE PROPOSAL NOTE

ITEM	BRIDGE NUMBER							ITEM	ITEM EXT.	TOTAL	UNIT	DESCRIPTION
		CUY-90-1267	CUY-90-1270	CUY-90-1309L	CUY-90-1309R							
202		LUMP	LUMP	LUMP	LUMP			202	11200	LUMP	LUMP	PORTIONS OF STRUCTURE REMOVED
SPECIAL			336					SPECIAL	51267504	336	SQ. YD.	SEALING OF CONCRETE SURFACES (NON-EPOXY)*
~~SPECIAL~~		~~965~~	~~727~~	~~749~~	~~852~~			~~SPECIAL~~	~~51267510~~	~~3293~~	~~SQ. YD.~~	~~SEALING OF CONCRETE SURFACES (EPOXY-URETHANE)*~~
514					LUMP			514	27704	LUMP	LUMP	FIELD PAINTING, MISC.: RETROFITTED AREAS
516								516	10901		LIN. FT.	ELASTOMETRIC COMPRESSION SEAL (705.11), AS PER PLAN
516								516	12201		LIN. FT.	STRUCTURAL STEEL EXPANSION JOINT (RETROFIT), AS PER PLAN
SPECIAL		176	90	190	170			SPECIAL	51614010	626	LIN. FT.	POURED POLYURETHANE JOINT SEAL
516		220	158	228	210			516	14600	816	LIN. FT.	STRUCTURAL JOINT OR JOINT SEALER, MISC.: 705.03 OR 705.04
516								516	46701		EACH	RESET BEARING, AS PER PLAN
516								516	47000		LUMP	JACKING AND TEMPORARY SUPPORT OF SUPERSTRUCTURE
517								517	76201		LIN. FT.	RAILING FACED, AS PER PLAN
518								518	62200		EACH	STRUCTURAL DRAINAGE MISC.: SCUPPER PLUGGING
518								518	63300		LUMP	STRUCTURAL DRAINAGE MISC.: RETROFITTING DRAINAGE SYSTEM
519								519	11101		SQ. FT.	PATCHING CONCRETE STRUCTURE, AS PER PLAN
SPECIAL		8	45	29	60			SPECIAL	51912602	142	SQ. FT.	LOW PRESSURE EPOXY INJECTING OF DELAMINATED CONCRETE
SPECIAL								SPECIAL	53000400		EACH	STRUCTURE MISC.: WELD STIFFENERS TO TOP FLANGE RETROFIT
607								607	20101		LIN. FT.	FENCE, TYPE CL, MISC., AS PER PLAN (8' FABRIC)
816					195			816	00610	195	POUND	FIELD PAINTING OF NEW STEEL, INTERMEDIATE AND FINISH COAT, SYSTEM IZEU
843		1	64		1			843	50000	66	SQ. FT.	PATCHING CONCRETE STRUCTURES WITH TROWELABLE MORTAR
846								846	73000		SQ. YD.	TREATING CONCRETE BRIDGE DECKS WITH HMWM RESIN
848					1495			848	10000	1495	SQ. YD.	MICROSILICA MODIFIED CONCRETE OVERLAY USING HYDRO-DEMOLITION 2½ INCH THICK
848		1658	865	1280				848	10000	3803	SQ. YD.	MICROSILICA MODIFIED CONCRETE OVERLAY USING HYDRO-DEMOLITION 3½ INCH THICK
848		1658	865	1280	1495			848	20000	5298	SQ. YD.	SURFACE PREPARATION USING HYDRO-DEMOLITION
848		23	12	18	21			848	30000	74	CU. YD.	MICROSILICA MODIFIED CONCRETE OVERLAY (VARIABLE THICKNESS), MATERIAL ONLY
848		50	26	38	45			848	50000	159	SQ. YD.	HAND CHIPPING
848								848	50100		LUMP	TEST SLAB
848								848	50200		CU. YD.	FULL DEPTH REPAIR
848		1658	865	1280	1495			848	50300	5298	SQ. YD.	WEARING COURSE REMOVED, ASPHALT
863					195			863	10200	195	POUND	STRUCTURAL STEEL MEMBERS, MISCELLANEOUS LEVEL FABRICATION
863								863	95000		LIN. FT.	STRUCTURAL STEEL MISC.: ACCESS HAND RAIL, MISCELLANEOUS LEVEL FABRICATION

STATE OF OHIO DEPARTMENT OF TRANSPORTATION DISTRICT 12 LOCATION & DESIGN	9/68

STRUCTURE SUB-SUMMARY

CUY-90-1267 CUY-90-1309L&R
CUY-90-1270

DESIGNED	DRAWN	CHECKED	REVIEWED	REVISED
PSS	RG	VKB	BRS	ENF 11/98

FHWA REGION	STATE	PROJECT	
5	OHIO		

CUYAHOGA COUNTY
CUY-90-9.68

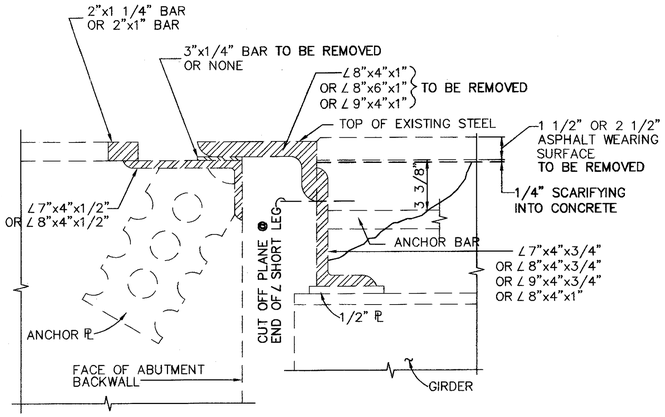

EXISTING END DAM EXPANSION JOINT

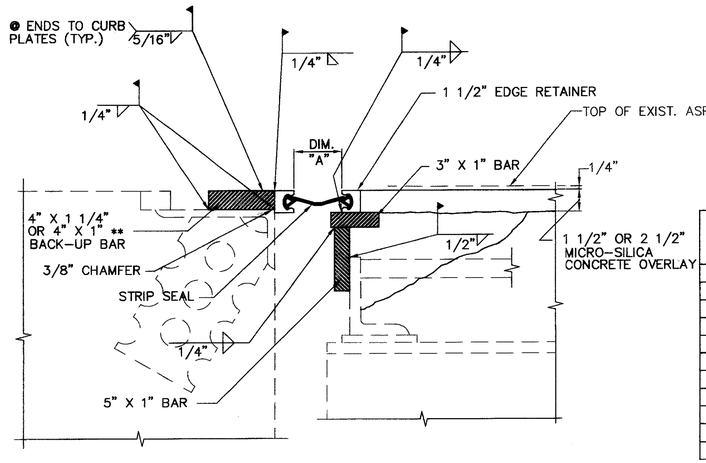

** 4"X1" BACK-UP BAR FOR CUY-90-0892 & CUY-90-0909 ONLY

END DAM EXPANSION JOINT RETROFIT DETAIL

BRIDGE NO.	REAR ABUTMENT A-1								FORWARD ABUTMENT A-2							
	STRIP SEAL SIZE (IN.)	DIM. "A" AT TIME OF CONSTRUCTION (IN.)							STRIP SEAL SIZE (IN.)	DIM. "A" AT TIME OF CONSTRUCTION (IN.)						
		30℉	40℉	50℉	60℉	70℉	80℉	90℉		30℉	40℉	50℉	60℉	70℉	80℉	90℉
CUY-90-0892	3	1.91	1.81	1.72	1.61	1.50	1.50	1.50	3	1.91	1.81	1.72	1.63	1.50	1.50	1.50
CUY-90-0909	3	1.92	1.82	1.70	1.60	1.50	1.50	1.50	3	1.92	1.82	1.70	1.59	1.50	1.50	1.50
CUY-90-0970 L/R	4	2.63	2.38	2.13	1.85	1.62	1.50	1.50	4	2.66	2.39	2.12	1.87	1.61	1.50	1.50
CUY-90-0991 L/R	3	1.87	1.80	1.72	1.66	1.59	1.52	1.50	3	1.87	1.80	1.72	1.66	1.59	1.52	1.50
CUY-90-1062	3	1.88	1.80	1.73	1.65	1.58	1.50	1.50	3	1.92	1.81	1.70	1.61	1.50	1.50	1.50
CUY-90-1094	3	1.88	1.79	1.74	1.67	1.59	1.52	1.50	3	1.91	1.83	1.71	1.61	1.50	1.50	1.50
CUY-90-1110	3	1.87	1.79	1.72	1.65	1.58	1.51	1.50	3	1.92	1.81	1.70	1.60	1.50	1.50	1.50
CUY-90-1185	4	2.42	2.32	2.21	2.10	1.99	1.88	1.77	3	1.87	1.79	1.73	1.65	1.59	1.51	1.50
CUY-90-1201	3	1.91	1.81	1.71	1.61	1.50	1.50	1.50	3	1.86	1.80	1.74	1.67	1.60	1.54	1.50
CUY-90-1214S	3	1.81	1.79	1.75	1.73	1.70	1.68	1.65	4	2.36	2.30	2.24	2.16	2.09	2.03	1.98
CUY-90-1237	3	1.93	1.83	1.71	1.58	1.50	1.50	1.50	3	1.89	1.81	1.71	1.63	1.55	1.50	1.50

NOTE MINIMUM JOINT OPENING (DIMENSION "A") AT TIME OF SEAL GLAND INSTALLATION SHALL NOT BE LESS THAN 1 1/2". IF THE JOINT OPENING IS LESS, INSTALLATION SHALL BE POSTPONED UNTIL THE TEMPERATURE DROPS A SUFFICIENT AMOUNT TO ALLOW THE MINIMUM 1 1/2" OPENING.

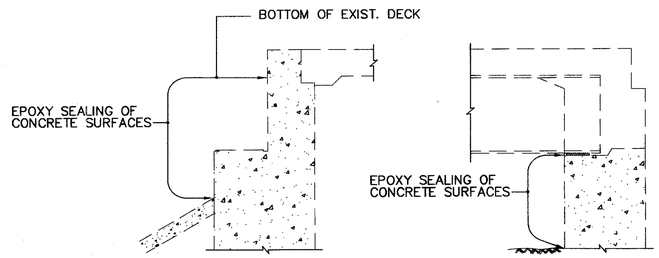

NON-INTEGRAL ABUTMENT

INTEGRAL ABUTMENT

ABUTMENT EPOXY SEALING

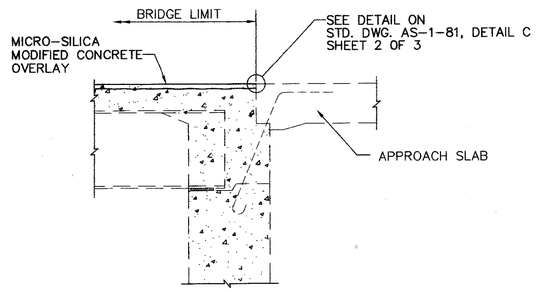

POLYURETHANE JOINT SEALING

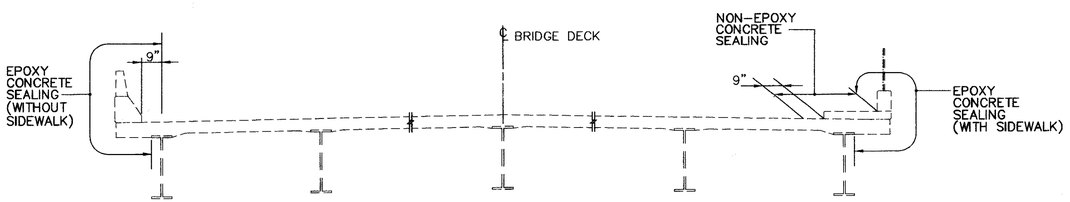

TRANSVERSE SECTION (BRIDGE DECK SEALING LIMITS)

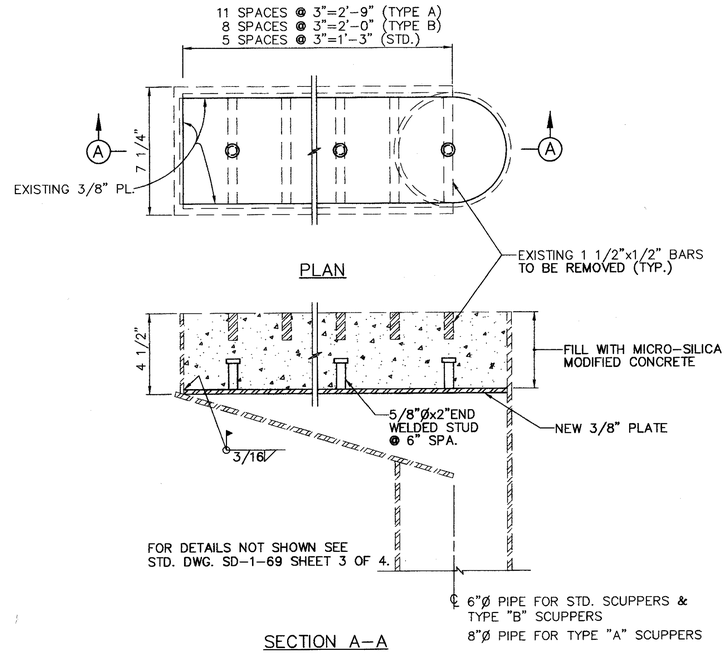

PLAN

SECTION A-A
SCUPPER PLUGGING

POLYTECH, INC. 10 / 68
CONSULTING ENGINEERS CLEVELAND, OHIO

MISCELLANEOUS DETAILS

CUY-90-9.68

DESIGNED	DRAWN	TRACED	CHECKED	REVIEWED	DATE	REVISED
PSS	RG	-	VB	BRS	8/94	

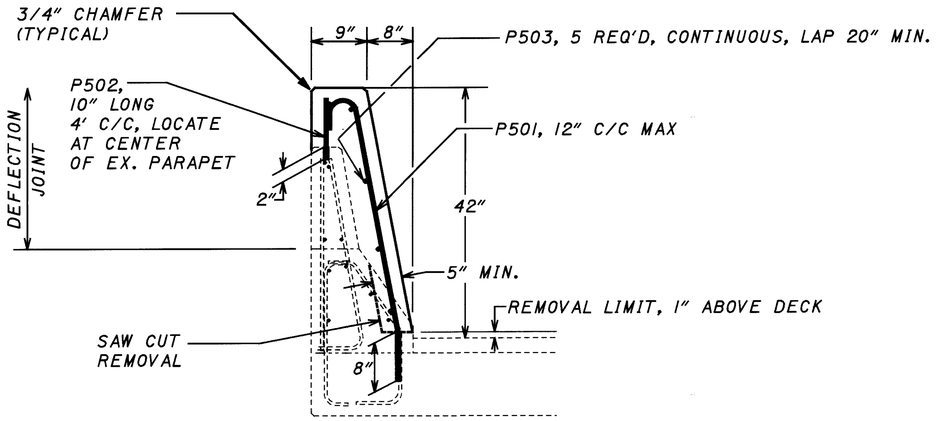

ITEM 517, RAILING FACED, AS PER PLAN

(SINGLE SLOPE BARRIER)

CONCRETE SHALL BE AS PER SUPPLEMENTAL SPECIFICATION 844, OPTION 3 OR OPTION 4.

CURING SHALL BE AS PER 511.14 METHOD(b). IF THE CONTRACTOR USES CHEMASTERS EPOXY-URETHANE SYSTEM FOR "SEALING OF CONCRETE SURFACES" HE MAY USE THE EPOXY PORTION OF THAT SYSTEM (CHEMASTERS "SAFE-CURE & SEAL EPX") AS THE CURING COMPOUND TO MEET THE REQUIREMENTS OF 511.14(b). IF USED, REMOVAL OF THE CURING COMPOUND SHALL NOT BE REQUIRED PRIOR TO APPLYING THE URETHANE TOP COAT.

SLIP FORMING SHALL NOT BE PERMITTED.

DOWEL HOLES SHALL BE AS PER ITEM 510 USING EPOXY GROUT AS PER 705.20. P501 BARS SHALL BE 4" FROM DEFLECTION JOINTS. P502 BARS SHALL BE 6" FROM DEFLECTION JOINTS.

CONCRETE REMOVAL SHALL BE MADE BY SAW CUTTING.

1/4" DEFLECTION JOINTS AT ALL EXISTING DEFLECTION JOINT LOCATIONS SHALL BE SAWED FULL DEPTH IN THE NEW CONCRETE WITHIN THE DEFLECTION JOINT LIMITS SHOWN. THE JOINTS SHALL BE SAWED AS SOON AS POSSIBLE AFTER PLACEMENT, BEFORE ANY SHRINKAGE CRACKS DEVELOP. ALL JOINTS SHALL BE SAWED WITHIN 24 HOURS. THE USE OF AN EDGE GUIDE, FENCE OR JIG IS REQUIRED TO ENSURE THAT THE JOINT IS STRAIGHT, TRUE AND ALIGNED ON ALL FACES OF THE PARAPET. THE PERIMETER OF THE DEFLECTION JOINT SHALL BE SEALED A MINIMUM 1" DEEP USING A CAULKING MATERIAL CONFORMING TO FEDERAL SPECIFICATION TT-S-00227E.

MINIMUM CONCRETE COVER SHALL BE 2" .

PROVIDE RECESS IN PROPOSED CONCRETE FOR EXISTING JUNCTION BOXES. PROVIDE 2-P501 BARS, 6" C/C, EACH SIDE OF JUNCTION BOX.

STATE OF OHIO
DEPARTMENT OF TRANSPORTATION
DISTRICT 12 LOCATION & DESIGN
10A/68

RAILING FACING DETAILS

DESIGNED	DRAWN	CHECKED	REVIEWED	REVISED
ENF	ENF			

PLOTTED BY: fkonopka
PLOTTED FROM: \\users\lmincek\pid5754\05754gra.dgn
PLOT SUBMITTED: 02-DEC-1998 11:35
05754gra.dgn

FHWA REGION	STATE	PROJECT	
5	OHIO		

163/220

CUYAHOGA COUNTY
CUY – 90 – 9.68

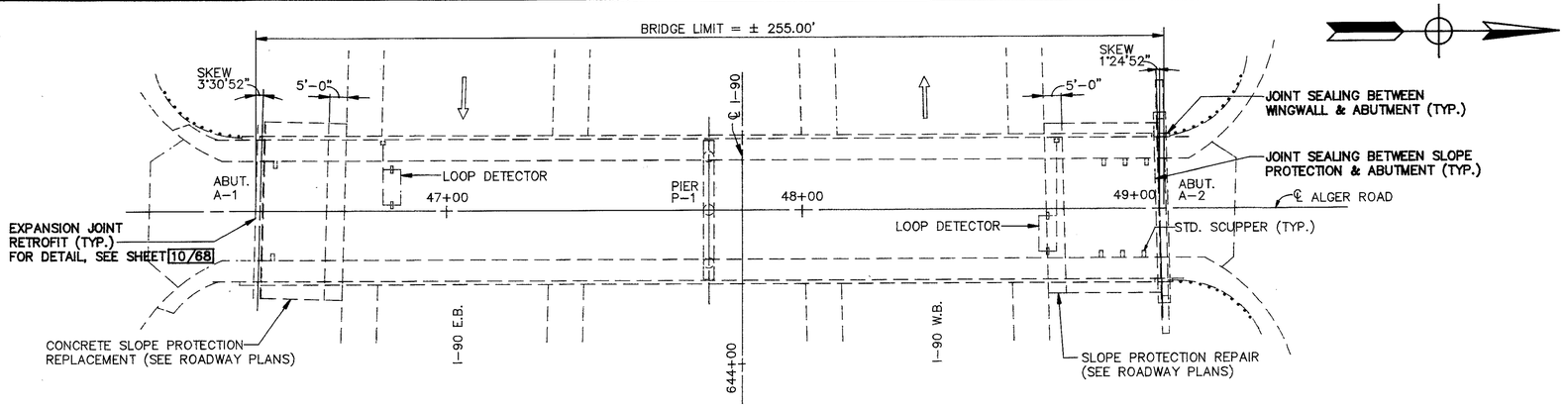

PLAN

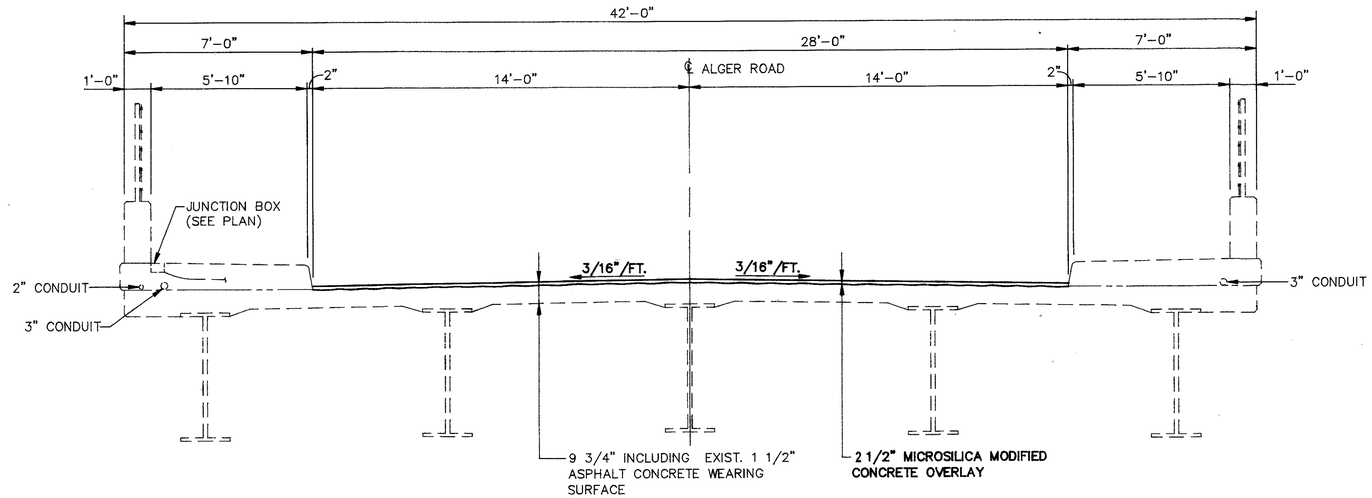

TRANSVERSE SECTION

EXISTING STRUCTURE

TYPE: 2 SPAN CONTINUOUS STEEL BEAM WITH REINFORCED CONCRETE DECK AND SUB-STRUCTURE

SPANS: 123'-0", 127'-6" C/C BRGS.

ROADWAY: 28'-0" F/F CURBS WITH 6'-0" SIDEWALKS.

ALIGNMENT: TANGENT

SKEW: 0°0'00" ● PIER, ABUTS. VARY (SEE PLAN)

LOADING: HS20-44

APPROACH SLABS: 30' ABUT. A-1 & 20' ABUT. A-2 (AS-1-67 & SPECIAL)

WEARING SURFACE: 1 1/2" ASPHALT CONCRETE

PROPOSED WORK

1. REMOVE THE ENTIRE EXISTING 1 1/2" ASPHALT WEARING SURFACE AND THE TOP 1" (MINIMUM) OF EXISTING CONCRETE DECK BELOW AND OVERLAY WITH 2 1/2" MICROSILICA MODIFIED CONCRETE.
2. CONCRETE REPAIR AND SEALING
3. ASPHALT DRAIN PLUGGING
4. EXPANSION JOINT RETROFIT
5. JOINT SEALING BETWEEN SLOPE PROTECTION & ABUTMENT
6. RESET BEARINGS ● NORTH & SOUTH ABUTMENTS
7. JOINT SEALING BETWEEN WINGWALL & ABUTMENT

PROPOSED STRUCTURE

TYPE: 2 SPAN CONTINUOUS STEEL BEAM WITH REINFORCED CONCRETE DECK AND SUB-STRUCTURE

SPANS: 123'-0", 127'-6" C/C BRGS.

ROADWAY: 28'-0" F/F CURBS WITH 6'-0" SIDEWALKS.

ALIGNMENT: TANGENT

SKEW: 0°0'00" ● PIER, ABUTS. VARY (SEE PLAN)

LOADING: HS20-44

APPROACH SLABS: 30' ABUT. A-1 & 20' ABUT. A-2 (AS-1-67 & SPECIAL)

WEARING SURFACE: 2 1/2" MICROSILICA MODIFIED CONCRETE

ESTIMATED QUANTITIES

* = SEE PROPOSAL NOTE

ITEM	TOTAL	UNIT	DESCRIPTION	ABUTMENT	PIERS	SUPER STRUCTURE	GENERAL
SPEC	437	SQ YD	SEALING OF CONCRETE SURFACES (NON-EPOXY)*			437	
SPEC	850	SQ YD	SEALING OF CONCRETE SURFACES (EPOXY-URETHANE)*	180	98	572	
514	LUMP	LUMP	FIELD PAINTING, MISC.: RETROFITTED AREAS			LUMP	
516	56	LN FT	STRUCTURAL STEEL EXPANSION JOINT (RETROFIT), AS PER PLAN	56			
516	127	LN FT	STRUCTURAL JOINT OR JOINT SEALER, MISC.: 705.03 OR 705.04	127			
516	10	EACH	RESET BEARING, AS PER PLAN	10			

ESTIMATED QUANTITIES

ITEM	TOTAL	UNIT	DESCRIPTION	ABUTMENT	PIERS	SUPER STRUCTURE	GENERAL
516	LUMP	LUMP	JACKING AND TEMPORARY SUPPORT OF SUPERSTRUCTURE			LUMP	
848	783	SQ YD	MICROSILICA MODIFIED CONCRETE OVERLAY USING HYDRO-DEMOLITION 2½ INCH THICK			783	
848	783	SQ YD	SURFACE PREPARATION USING HYDRO-DEMOLITION			783	
848	12	CU YD	MICROSILICA MODIFIED CONCRETE OVERLAY (VARIABLE THICKNESS) MATERIALS ONLY			12	
848	23	SQ YD	HAND CHIPPING			23	
848	783	SQ YD	WEARING COURSE REMOVED, ASPHALT			783	

NOTE: THESE QUANTITIES ARE CARRIED TO THE STRUCTURE SUB-SUMMARY ON SHEET 6/68.

POLYTECH, INC. 11/68
CONSULTING ENGINEERS CLEVELAND, OHIO

GENERAL PLAN & TRANSVERSE SECTION
BRIDGE NO. CUY-90-0892
I-90 UNDER ALGER ROAD

DESIGNED	DRAWN	TRACED	CHECKED	REVIEWED	DATE	REVISED
PSS	RG	–	VB	BS	9/94	ENF

FHWA REGION	STATE	PROJECT	
5	OHIO		

164
220

CUYAHOGA COUNTY
CUY-90-9.68

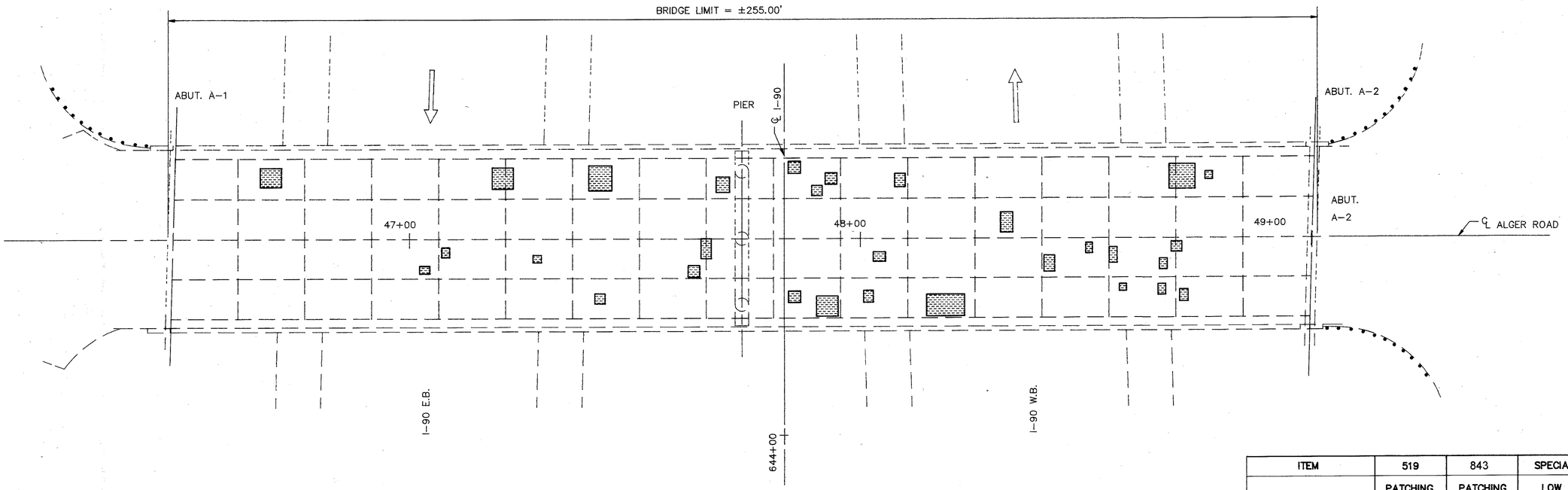

PLAN

BOTTOM OF DECK

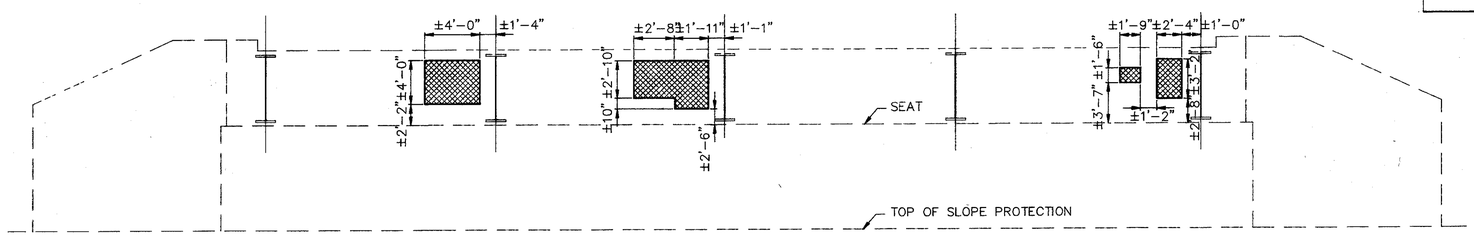

ELEVATION

ABUTMENT A-2

ITEM	519	843	SPECIAL	202
LOCATION	PATCHING CONCRETE STRUCTURE AS PER PLAN SQ FT	PATCHING CONCRETE TROWELABLE MORTAR SQ FT	LOW PRESSURE EPOXY INJECTING SQ FT	PORTIONS OF STRUCTURE REMOVED LUMP
ABUTMENTS	–	41	–	–
PIERS AND CAPS	–	–	–	–
DECK UNDERSIDE	–	–	179	LUMP
25% EXPANSION FACTOR	–	10	45	–
TOTAL	–	51	224	LUMP

ITEM 519, PATCHING CONCRETE STRUCTURE, AS PER PLAN

ITEM 843 , PATCHING CONCRETE WITH TROWELABLE MORTAR

ITEM SPECIAL, LOW PRESSURE EPOXY INJECTING OF DELAMINATED CONCRETE

POLYTECH, INC. 12/68
CONSULTING ENGINEERS CLEVELAND, OHIO

BRIDGE CONCRETE REPAIR

BRIDGE NO. CUY-90-0892
I-90 UNDER ALGER ROAD

DESIGNED	DRAWN	TRACED	CHECKED	REVIEWED	DATE	REVISED
PSS	RG	–	VB	BRS	9/94	

FHWA REGION	STATE	PROJECT	
5	OHIO		

165/220

CUYAHOGA COUNTY
CUY – 90 – 9.68

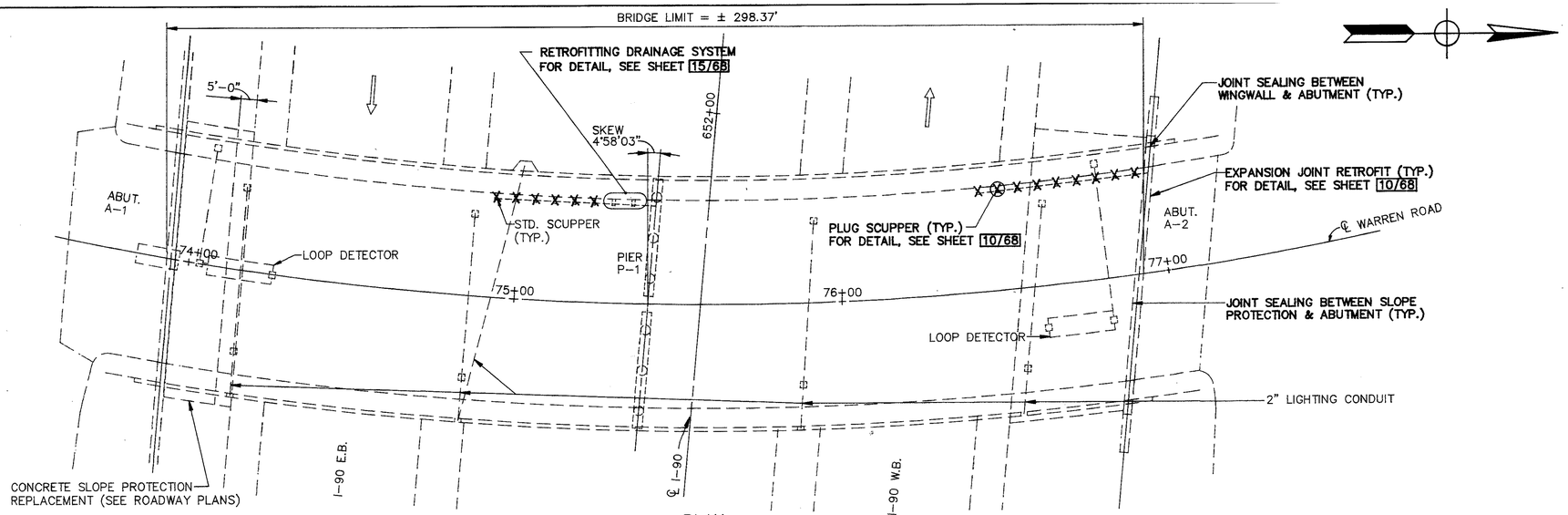

PLAN

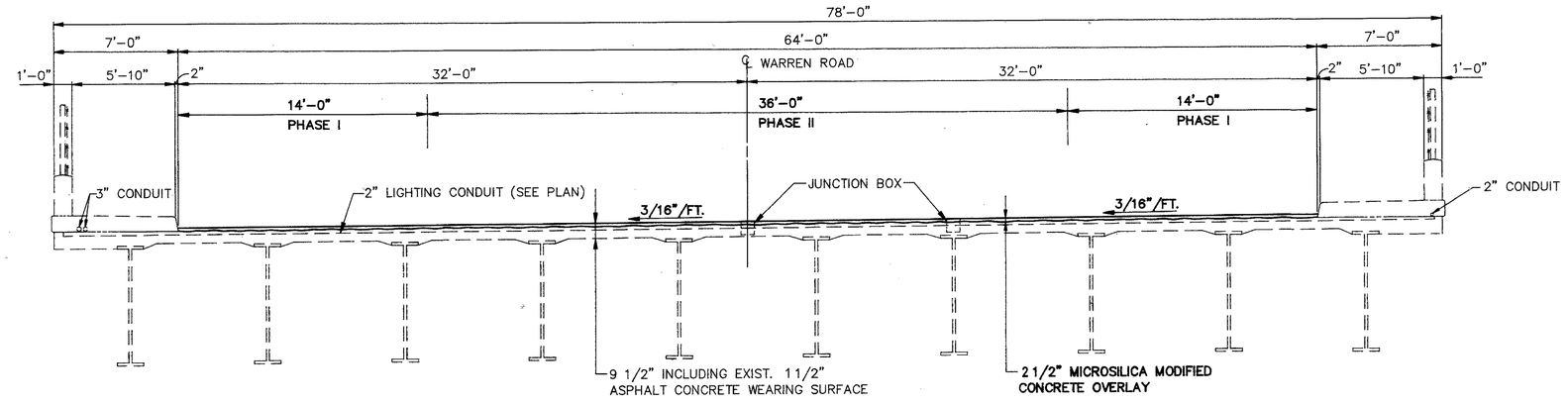

TRANSVERSE SECTION

EXISTING STRUCTURE

TYPE: 2 SPAN CONTINUOUS STEEL BEAM WITH REINFORCED CONCRETE DECK AND SUB-STRUCTURE

SPANS: 145'-9", 147'-3" C/C BRGS.

ROADWAY: 64'-0" F/F CURBS WITH 6'-0" SIDEWALKS.

ALIGNMENT: 6° 00' 00" CURVE LEFT

SKEW: 4° 58' 03" LEFT FORWARD

LOADING: HS20-44

APPROACH SLABS: 30' ABUT. A-1 & 20' ABUT. A-2

WEARING SURFACE: 1 1/2" ASPHALT CONCRETE

PROPOSED WORK

1. REMOVE THE ENTIRE EXISTING 1 1/2" ASPHALT WEARING SURFACE AND THE TOP 1" (MINIMUM) OF EXISTING CONCRETE DECK BELOW AND OVERLAY WITH 2 1/2" MICROSILICA MODIFIED CONCRETE.
2. CONCRETE REPAIR AND SEALING
3. ASPHALT DRAIN PLUGGING
4. SCUPPER PLUGGING
5. RETROFITTING DRAINAGE SYSTEM
6. EXPANSION JOINT RETROFIT
7. RESET BEARINGS @ NORTH ABUTMENT
8. JOINT SEALING BETWEEN SLOPE PROTECTION & ABUTMENT
9. JOINT SEALING BETWEEN WINGWALL & ABUTMENT

PROPOSED STRUCTURE

TYPE: 2 SPAN CONTINUOUS STEEL BEAM WITH REINFORCED CONCRETE DECK AND SUB-STRUCTURE

SPANS: 145'-9", 147'-3" C/C BRGS.

ROADWAY: 64'-0" F/F CURBS WITH 6'-0" SIDEWALKS.

ALIGNMENT: 6° 00' 00" CURVE LEFT

SKEW: 4° 58' 03" LEFT FORWARD

LOADING: HS20-44

APPROACH SLABS: 30' ABUT. A-1 & 20' ABUT. A-2

WEARING SURFACE: 2 1/2" MICROSILICA MODIFIED CONCRETE

ESTIMATED QUANTITIES

* = SEE PROPOSAL NOTE

ITEM	TOTAL	UNIT	DESCRIPTION	ABUTMENT	PIERS	SUPER STRUCTURE	GENERAL
SPEC	657	SQ YD	SEALING OF CONCRETE SURFACES (NON-EPOXY)*			657	
SPEC	1054	SQ YD	SEALING OF CONCRETE SURFACES (EPOXY-URETHANE)*	354	182	518	
514	LUMP	LUMP	FIELD PAINTING, MISC.: RETROFITTED AREAS			LUMP	
516	129	LN FT	STRUCTURAL STEEL EXPANSION JOINT (RETROFIT), AS PER PLAN			129	
516	210	LN FT	STRUCTURAL JOINT OR JOINT SEALER, MISC.: 705.03 OR 705.04	210			
516	10	EACH	RESET BEARING, AS PER PLAN	10			

ESTIMATED QUANTITIES

ITEM	TOTAL	UNIT	DESCRIPTION	ABUTMENT	PIERS	SUPER STRUCTURE	GENERAL
516	LUMP	LUMP	JACKING AND TEMPORARY SUPPORT OF SUPERSTRUCTURE			LUMP	
518	15	EACH	STRUCTURAL DRAINAGE MISC.: SCUPPER PLUGGING			15	
518	LUMP	LUMP	STRUCTURAL DRAINAGE MISC.: RETROFITTING DRAINAGE SYSTEM			LUMP	
848	2098	SQ YD	MICROSILICA MODIFIED CONCRETE OVERLAY USING HYDRO-DEMOLITION 2½ INCH THICK			2098	
848	2098	SQ YD	SURFACE PREPARATION USING HYDRO-DEMOLITION			2098	
848	31	CU YD	MICROSILICA MODIFIED CONCRETE OVERLAY (VARIABLE THICKNESS) MATERIALS ONLY			31	
848	63	SQ YD	HAND CHIPPING			63	
848	2098	SQ YD	WEARING COURSE REMOVED, ASPHALT			2098	

NOTE: THESE QUANTITIES ARE CARRIED TO THE STRUCTURE SUB-SUMMARY ON SHEET 6/68.

POLYTECH, INC. 13/68
CONSULTING ENGINEERS CLEVELAND, OHIO

GENERAL PLAN & TRANSVERSE SECTION
BRIDGE NO. CUY-90-0909
I-90 UNDER WARREN ROAD

DESIGNED	DRAWN	TRACED	CHECKED	REVIEWED	DATE	REVISED
PSS	RG	–	VB	BS	8/94	ENF

FHWA REGION	STATE	PROJECT	
5	OHIO		

166
220

CUYAHOGA COUNTY
CUY–90–9.68

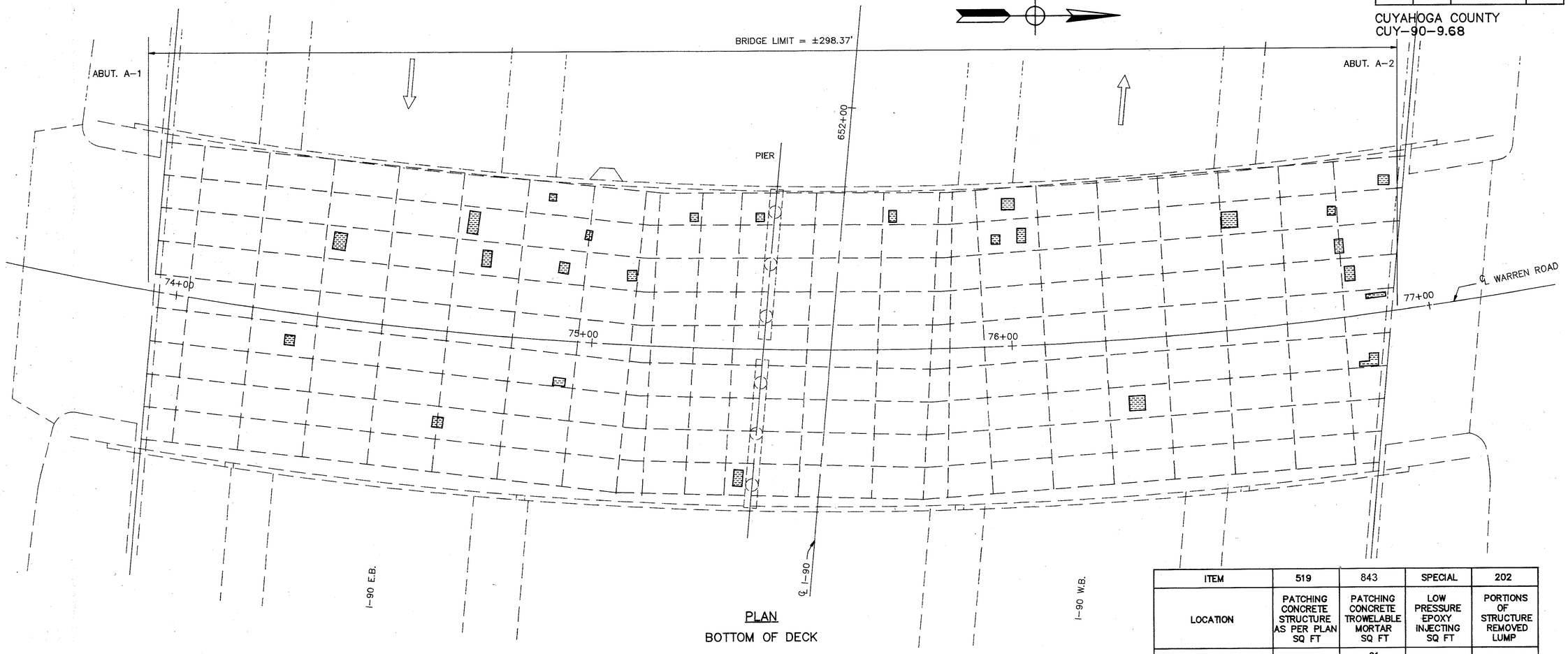

PLAN
BOTTOM OF DECK

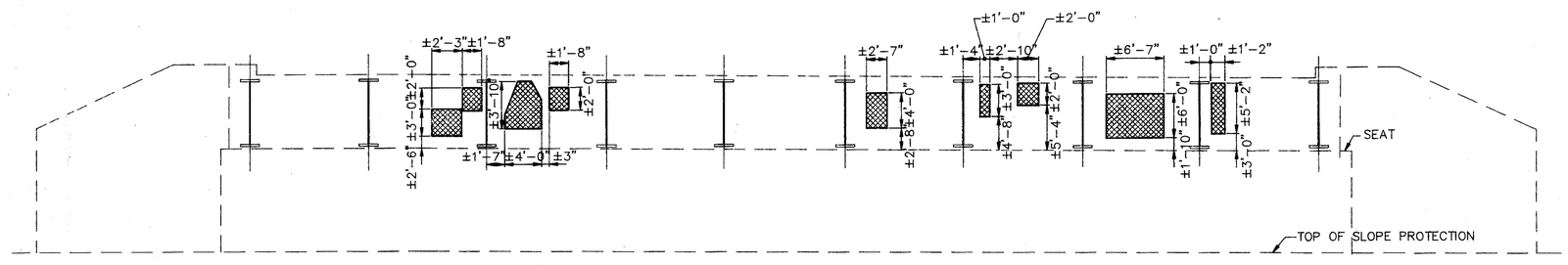

ELEVATION
ABUTMENT A–2

ITEM	519	843	SPECIAL	202
LOCATION	PATCHING CONCRETE STRUCTURE AS PER PLAN SQ FT	PATCHING CONCRETE TROWELABLE MORTAR SQ FT	LOW PRESSURE EPOXY INJECTING SQ FT	PORTIONS OF STRUCTURE REMOVED LUMP
ABUTMENTS	–	91	–	–
PIERS AND CAPS	–	–	–	–
DECK UNDERSIDE	–	–	119	LUMP
25% EXPANSION FACTOR	–	23	30	–
TOTAL	–	114	149	LUMP

ITEM 519, PATCHING CONCRETE STRUCTURE, AS PER PLAN

ITEM 843 , PATCHING CONCRETE WITH TROWELABLE MORTAR

ITEM SPECIAL, LOW PRESSURE EPOXY INJECTING OF DELAMINATED CONCRETE

POLYTECH, INC. 14/68
CONSULTING ENGINEERS CLEVELAND, OHIO

BRIDGE CONCRETE REPAIR

BRIDGE NO. CUY–90–0909
I–90 UNDER WARREN ROAD

DESIGNED	DRAWN	TRACED	CHECKED	REVIEWED	DATE	REVISED
PSS	PSS	–	VB	BRS	9/94	

FHWA REGION	STATE	PROJECT	
5	OHIO		

167
220

CUYAHOGA COUNTY
CUY-90-9.68

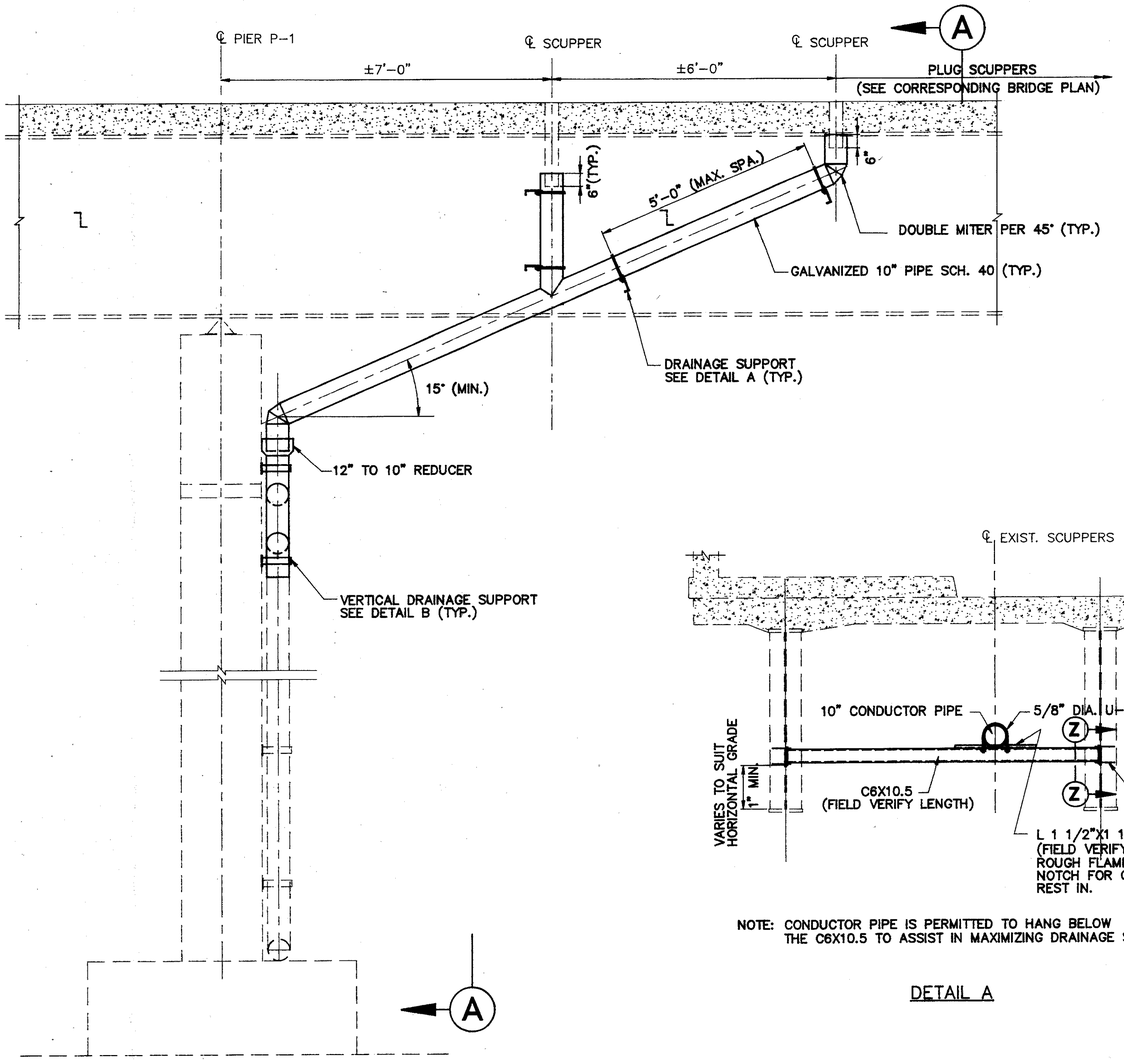

ELEVATION

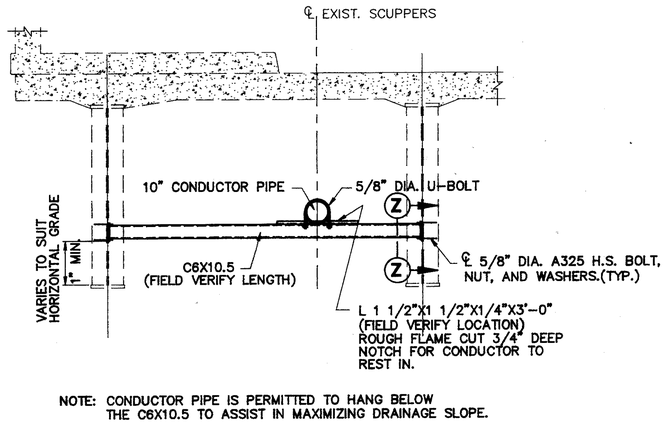

NOTE: CONDUCTOR PIPE IS PERMITTED TO HANG BELOW THE C6X10.5 TO ASSIST IN MAXIMIZING DRAINAGE SLOPE.

DETAIL A

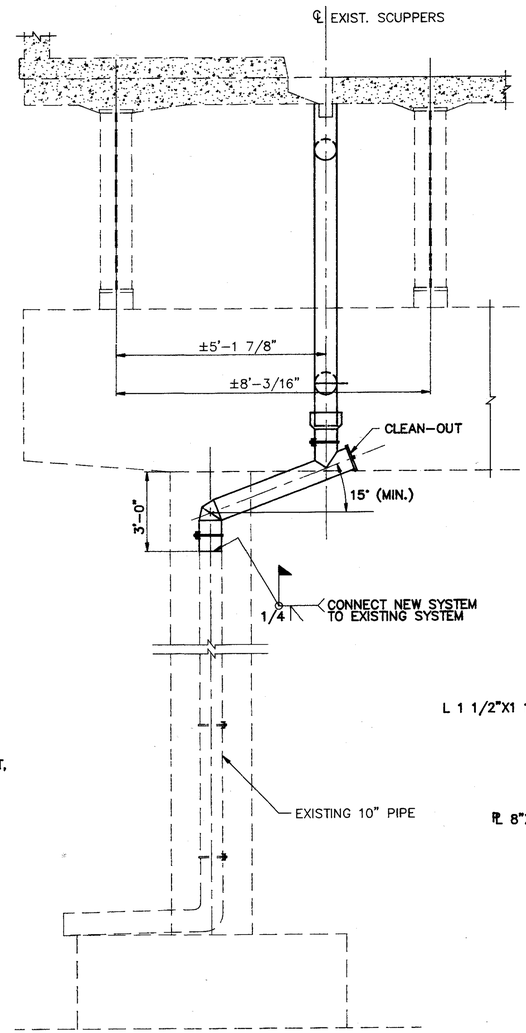

VIEW A-A

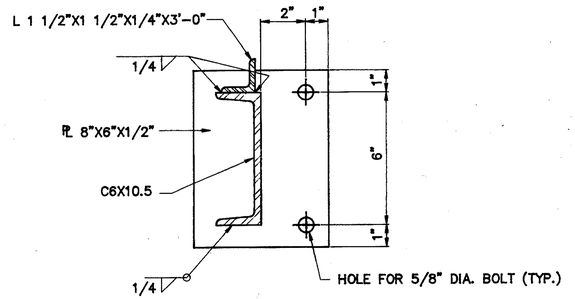

SECTION Z-Z

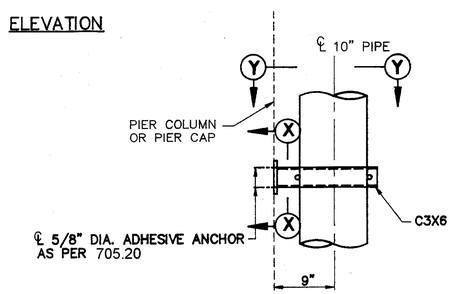

ELEVATION

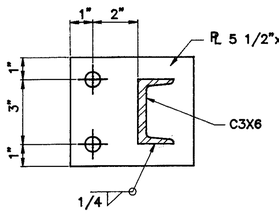

SECTION X-X

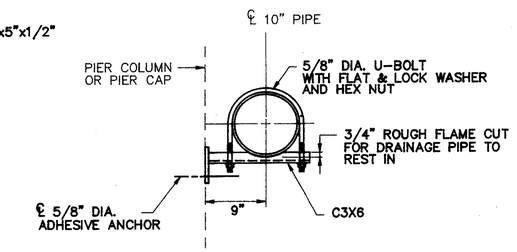

SECTION Y-Y

DETAIL B
VERTICAL DRAINAGE SUPPORT
(TYPICAL)

POLYTECH, INC. 15 / 68
CONSULTING ENGINEERS CLEVELAND, OHIO

RETROFITTING DRAINAGE SYSTEM
DETAILS
BRIDGE NO. CUY-90-0909
I-90 UNDER WARREN ROAD

DESIGNED	DRAWN	TRACED	CHECKED	REVIEWED	DATE	REVISED
PSS	RG	-	VB	BRS	9/94	

FHWA REGION	STATE	PROJECT	
5	OHIO		

168
220

CUYAHOGA COUNTY
CUY – 90 – 9.68

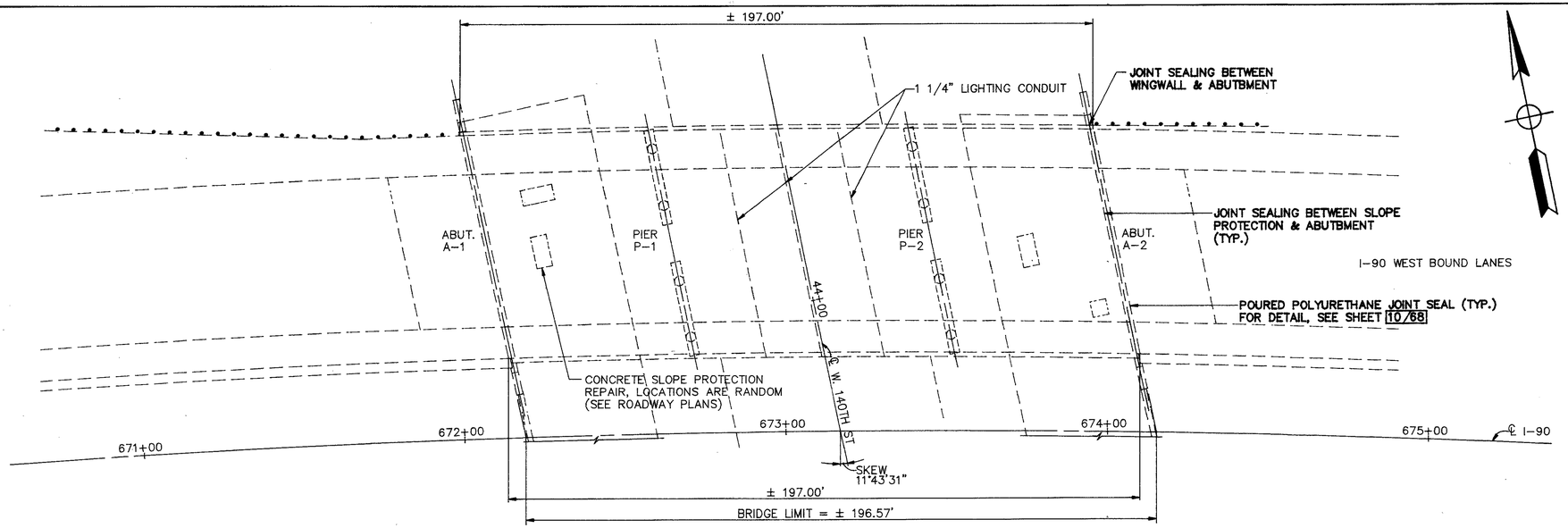

PLAN

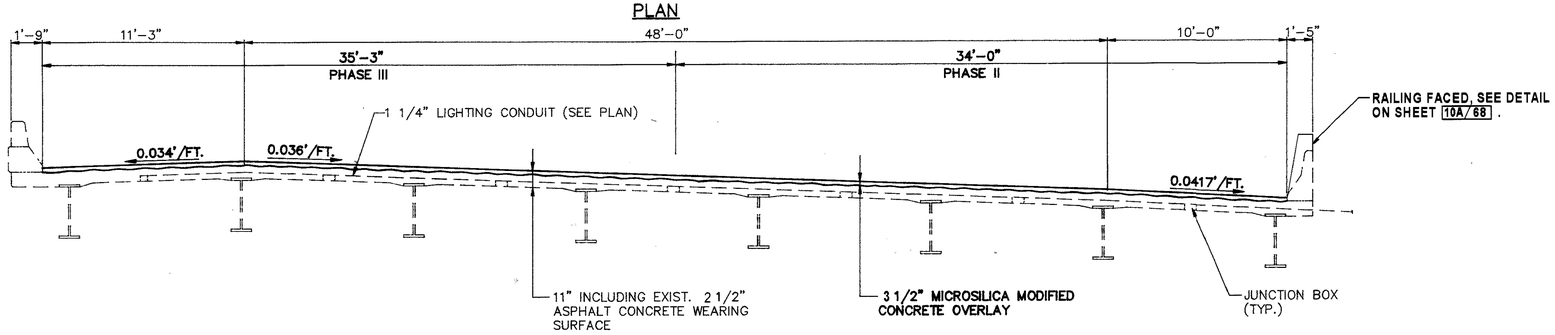

TRANSVERSE SECTION

EXISTING STRUCTURE

TYPE: 3 SPAN CONTINUOUS STEEL BEAM WITH REINFORCED CONCRETE DECK AND SUBSTRUCTURE

SPANS: 56'–9", 81'–0", 56'–9"

ROADWAY: 69'-3" T/T PARAPETS

ALIGNMENT: 1° 28' 00" CURVE RIGHT (℄ I–90)

SKEW: 11° 43' 31" RIGHT FORWARD

LOADING: HS20–44 & INT. ALT. LOADING

APPROACH SLABS: 25' LONG

WEARING SURFACE: 2 1/2" ASPHALT CONCRETE

PROPOSED WORK

1. REMOVE THE ENTIRE EXISTING 2 1/2" ASPHALT WEARING SURFACE AND THE TOP 1 " (MINIMUM) OF EXISTING CONCRETE DECK BELOW AND OVERLAY WITH 3 1/2" MICROSILICA MODIFIED CONCRETE.
2. CONCRETE REPAIR AND SEALING
3. ASPHALT DRAIN PLUGGING
4. JOINT SEALING BETWEEN SLOPE PROTECTION AND ABUTMENT
5. JOINT SEALING BETWEEN WINGWALL & ABUTMENT
6. POURED POLYURETHANE JOINT SEAL
7. REFACE MEDIAN PARAPET

PROPOSED STRUCTURE

TYPE: 3 SPAN CONTINUOUS STEEL BEAM WITH REINFORCED CONCRETE DECK AND SUBSTRUCTURE

SPANS: 56'–9", 81'–0", 56'–9"

ROADWAY: 69'-3" T/T PARAPETS

ALIGNMENT: 1° 28' 00" CURVE RIGHT (℄ I–90)

SKEW: 11° 43' 31" RIGHT FORWARD

LOADING: HS20–44 & INT. ALT. LOADING

APPROACH SLABS: 25' LONG

WEARING SURFACE: 3 1/2" MICROSILICA MODIFIED CONCRETE

ESTIMATED QUANTITIES

* = SEE PROPOSAL NOTE

ITEM	TOTAL	UNIT	DESCRIPTION	ABUTMENT	PIERS	SUPER STRUCTURE	GENERAL
SPEC	879	SQ YD	SEALING OF CONCRETE SURFACES (EPOXY-URETHANE)*	70	305	504	
SPEC	142	LN FT	POURED POLYURETHANE JOINT SEAL			142	
516	237	LN FT	STRUCTURAL JOINT OR JOINT SEALER, MISC.: 705.03 OR 705.04	237			

ESTIMATED QUANTITIES

ITEM	TOTAL	UNIT	DESCRIPTION	ABUTMENT	PIERS	SUPER STRUCTURE	GENERAL
517	197	LN FT	RAILING FACED, AS PER PLAN			197	
848	1503	SQ YD	MICROSILICA MODIFIED CONCRETE OVERLAY USING HYDRO-DEMOLITION 3½ INCH THICK			1503	
848	1503	SQ YD	SURFACE PREPARATION USING HYDRO-DEMOLITION			1503	
848	22	CU YD	MICROSILICA MODIFIED CONCRETE OVERLAY (VARIABLE THICKNESS) MATERIALS ONLY			22	
848	45	SQ YD	HAND CHIPPING			45	
848	2	CU YD	FULL DEPTH REPAIR			2	
848	1503	SQ YD	WEARING COURSE REMOVED, ASPHALT			1503	

NOTE: THESE QUANTITIES ARE CARRIED TO THE STRUCTURE SUB-SUMMARY ON SHEET 6/68.

POLYTECH, INC. 16/68
CONSULTING ENGINEERS CLEVELAND, OHIO

GENERAL PLAN & TRANSVERSE SECTION
BRIDGE NO. CUY–90–0947 L
I–90 OVER WEST 140th ST.

DESIGNED	DRAWN	TRACED	CHECKED	REVIEWED	DATE	REVISED
PSS	RG	–	VB	BS	9/94	ENF

FHWA REGION	STATE	PROJECT	
5	OHIO		

169
220

CUYAHOGA COUNTY
CUY-90-9.68

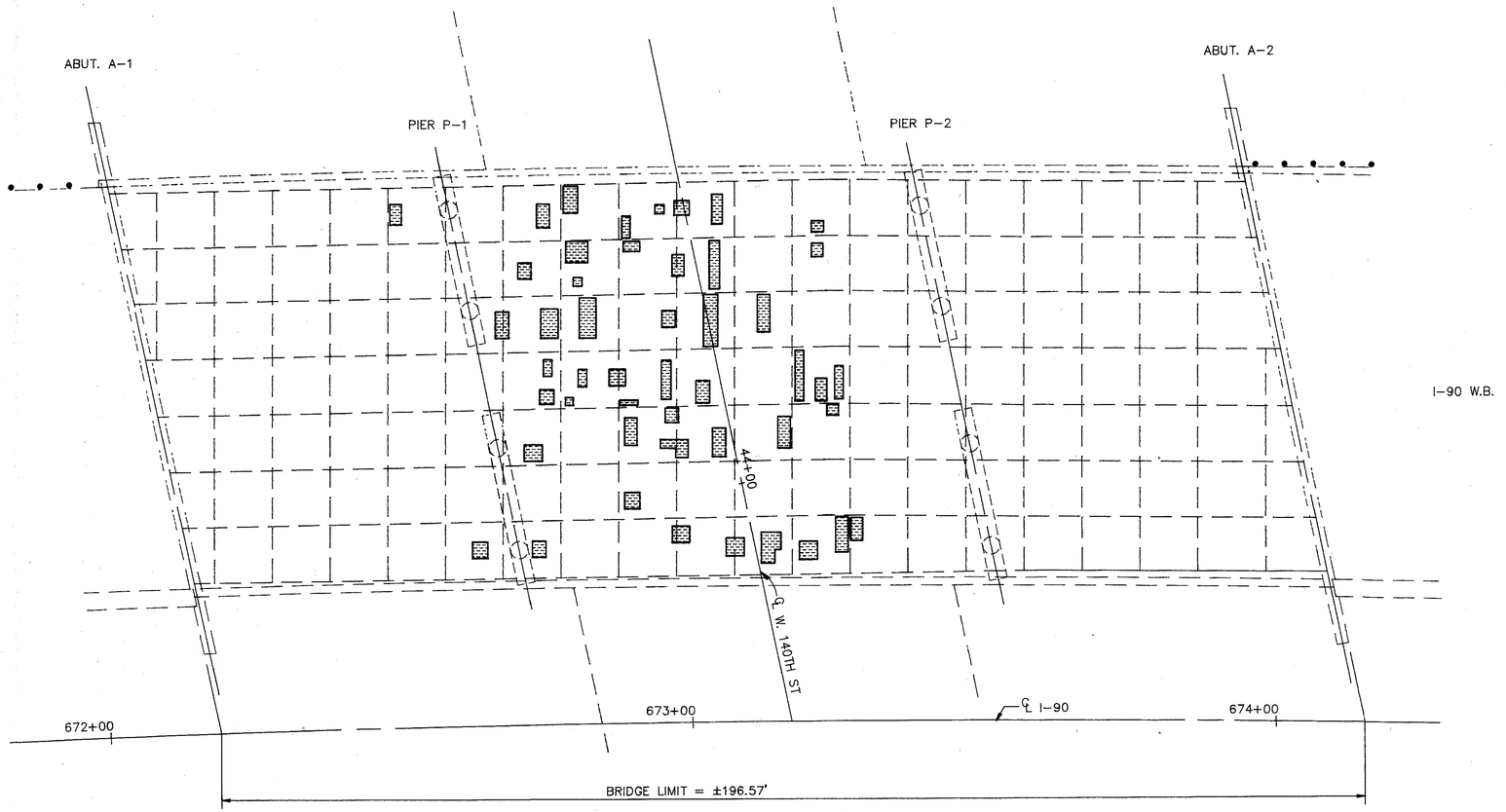

PLAN
BOTTOM OF DECK

ITEM	519	843	SPECIAL	202
LOCATION	PATCHING CONCRETE STRUCTURE AS PER PLAN SQ FT	PATCHING CONCRETE TROWELABLE MORTAR SQ FT	LOW PRESSURE EPOXY INJECTING SQ FT	PORTIONS OF STRUCTURE REMOVED LUMP
ABUTMENTS	–	32	–	–
PIERS AND CAPS	–	–	–	–
DECK UNDERSIDE	–	–	332	LUMP
25% EXPANSION FACTOR	–	8	83	–
TOTAL	–	40	415	LUMP

ITEM 519, PATCHING CONCRETE STRUCTURE, AS PER PLAN

ITEM 843 , PATCHING CONCRETE WITH TROWELABLE MORTAR

ITEM SPECIAL, LOW PRESSURE EPOXY INJECTING OF DELAMINATED CONCRETE

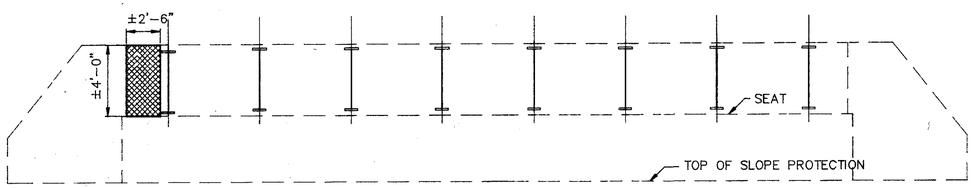

ELEVATION
ABUTMENT A-1

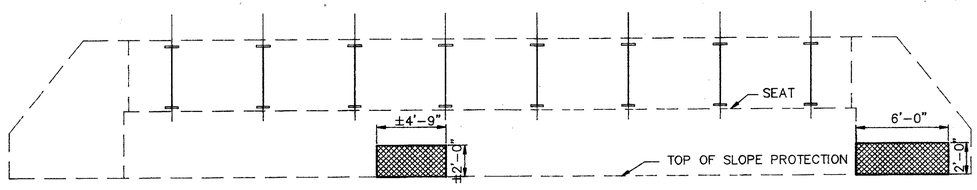

ELEVATION
ABUTMENT A-2

POLYTECH, INC.
CONSULTING ENGINEERS CLEVELAND, OHIO

17 / 68

BRIDGE CONCRETE REPAIR

BRIDGE NO. CUY-90-0947 L
I-90 OVER WEST 140th ST.

DESIGNED	DRAWN	TRACED	CHECKED	REVIEWED	DATE	REVISED
PSS	PSS	–	VB	BRS	9/94	

FHWA REGION	STATE	PROJECT	
5	OHIO		

170
220

CUYAHOGA COUNTY
CUY – 90 – 9.68

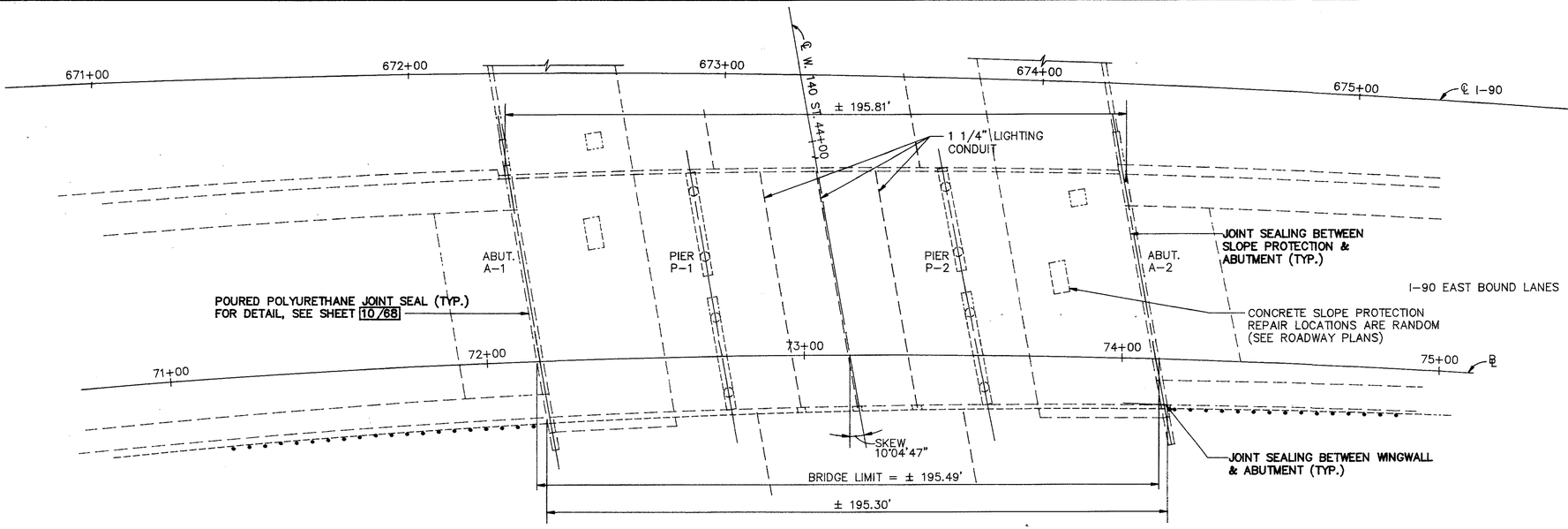

PLAN

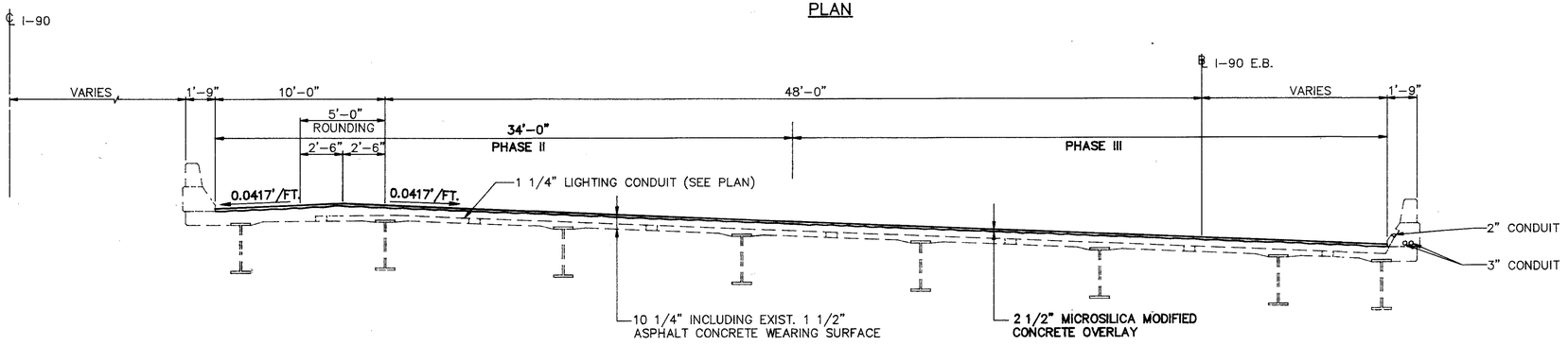

TRANSVERSE SECTION

EXISTING STRUCTURE

TYPE: 3 SPAN CONTINUOUS STEEL BEAM WITH REINFORCED CONCRETE DECK AND SUBSTRUCTURE

SPANS: 56.44', 80.55', 56.44'

ROADWAY: VARIES, 73.88' AVG. T/T PARAPET

ALIGNMENT: 2° 00' 00" CURVE RIGHT (℄ #1)

SKEW: 10° 04' 47" RIGHT FORWARD

LOADING: HS20–44 & INT. ALT. LOADING

APPORACH SLABS: 25' LONG

WEARING SURFACE: 1 1/2" ASPHALT CONCRETE

PROPOSED WORK

1. REMOVE THE ENTIRE EXISTING 1 1/2" ASPHALT WEARING SURFACE AND THE TOP 1" (MINIMUM) OF EXISTING CONCRETE DECK BELOW AND OVERLAY WITH 2 1/2" MICROSILICA MODIFIED CONCRETE.
2. CONCRETE REPAIR AND SEALING
3. ASPHALT DRAIN PLUGGING
4. JOINT SEALING BETWEEN SLOPE PROTECTION & ABUTMENT
5. JOINT SEALING BETWEEN WINGWALL & ABUTMENT
6. POURED POLYURETHANE JOINT SEAL

PROPOSED STRUCTURE

TYPE: 3 SPAN CONTINUOUS STEEL BEAM WITH REINFORCED CONCRETE DECK AND SUBSTRUCTURE

SPANS: 56.44', 80.55', 56.44'

ROADWAY: VARIES, 73.88' AVG. T/T PARAPET

ALIGNMENT: 2° 00' 00" CURVE RIGHT (℄ #1)

SKEW: 10° 04' 47" RIGHT FORWARD

LOADING: HS20–44 & INT. ALT. LOADING

APPORACH SLABS: 25' LONG

WEARING SURFACE: 2 1/2" MICROSILICA MODIFIED CONCRETE

ESTIMATED QUANTITIES

* = SEE PROPOSAL NOTE

ITEM	TOTAL	UNIT	DESCRIPTION	ABUTMENT	PIERS	SUPER STRUCTURE	GENERAL
SPEC	847	SQ YD	SEALING OF CONCRETE SURFACES (EPOXY-URETHANE)*	63	319	465	
SPEC	150	LN FT	POURED POLYURETHANE JOINT SEAL			150	
516	264	LN FT	STRUCTURAL JOINT OR JOINT SEALER, MISC.: 705.03 OR 705.04	264			

ESTIMATED QUANTITIES

ITEM	TOTAL	UNIT	DESCRIPTION	ABUTMENT	PIERS	SUPER STRUCTURE	GENERAL
848	1572	SQ YD	MICROSILICA MODIFIED CONCRETE OVERLAY USING HYDRO-DEMOLITION 2½ INCH THICK			1572	
848	1572	SQ YD	SURFACE PREPARATION USING HYDRO-DEMOLITION			1572	
848	23	CU YD	MICROSILICA MODIFIED CONCRETE OVERLAY (VARIABLE THICKNESS) MATERIALS ONLY			23	
848	47	SQ YD	HAND CHIPPING			47	
848	1572	SQ YD	WEARING COURSE REMOVED, ASPHALT			1572	

NOTE: THESE QUANTITIES ARE CARRIED TO THE STRUCTURE SUB-SUMMARY ON SHEET 6/68.

POLYTECH, INC. 18/68
CONSULTING ENGINEERS CLEVELAND, OHIO

GENERAL PLAN & TRANSVERSE SECTION

BRIDGE NO. CUY–90–0947 R
I–90 OVER WEST 140th ST.

DESIGNED	DRAWN	TRACED	CHECKED	REVIEWED	DATE	REVISED
PSS	RG	–	VB	BS	9/94	ENF

FHWA REGION	STATE	PROJECT	
5	OHIO		

171/220

CUYAHOGA COUNTY
CUY-90-9.68

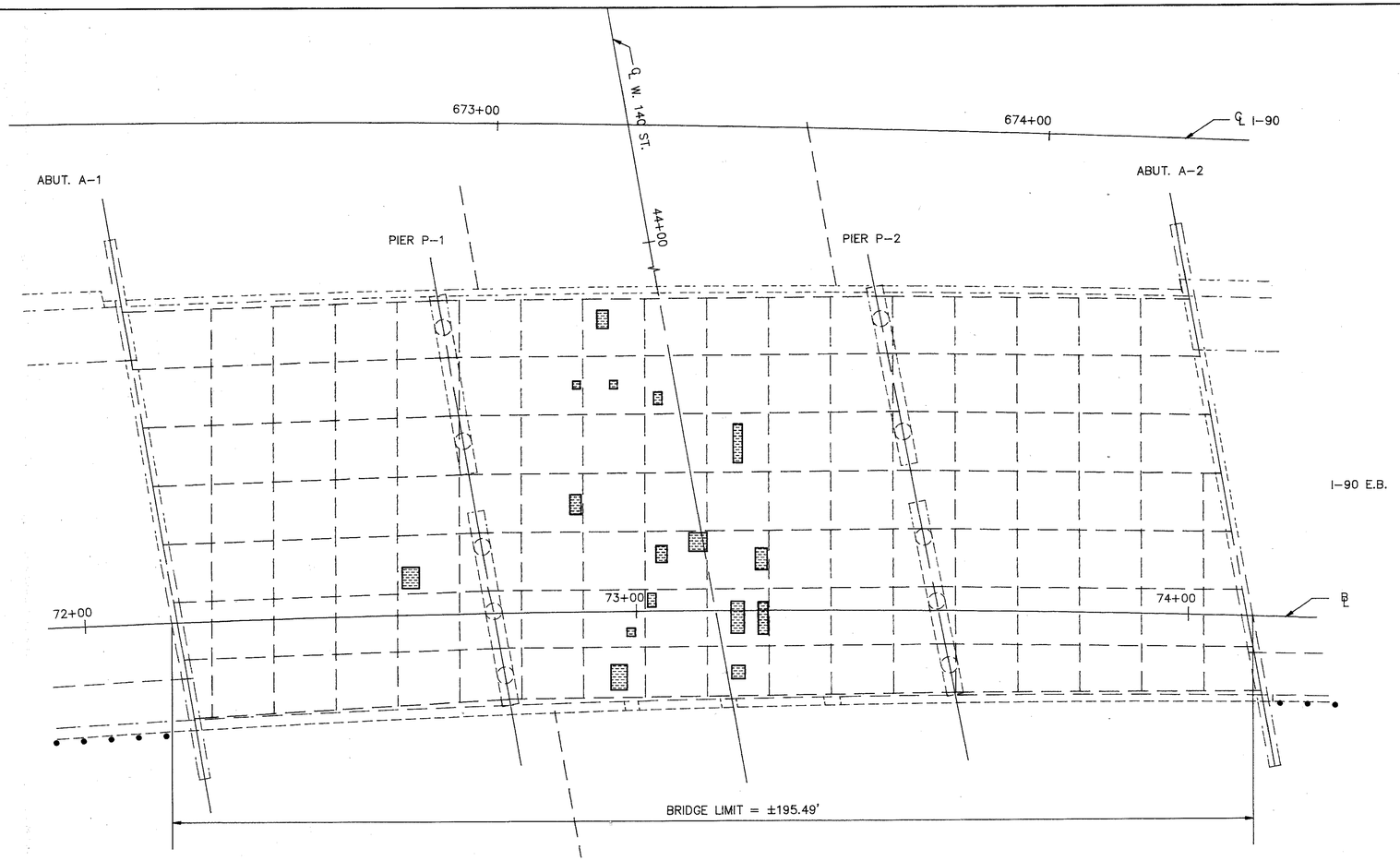

PLAN
BOTTOM OF DECK

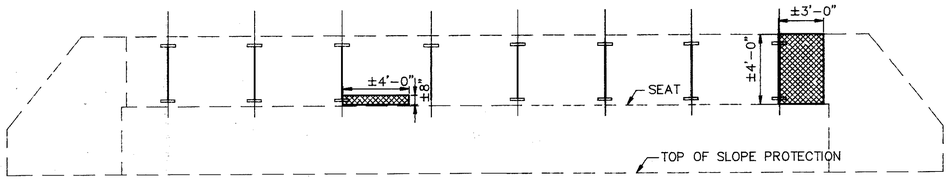

ELEVATION
ABUTMENT A-1

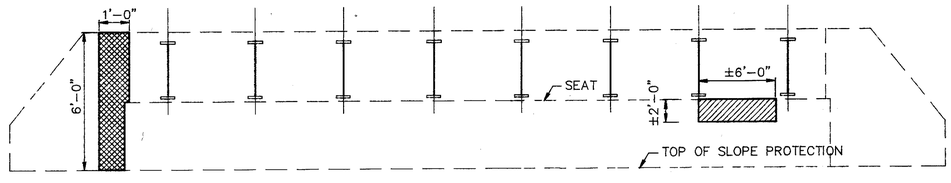

ELEVATION
ABUTMENT A-2

ITEM	519	843	SPECIAL	202
LOCATION	PATCHING CONCRETE STRUCTURE AS PER PLAN SQ FT	PATCHING CONCRETE TROWELABLE MORTAR SQ FT	LOW PRESSURE EPOXY INJECTING SQ FT	PORTIONS OF STRUCTURE REMOVED LUMP
ABUTMENTS	12	21	–	–
PIERS AND CAPS	–	–	–	–
DECK UNDERSIDE	–	–	80	LUMP
25% EXPANSION FACTOR	3	5	20	–
TOTAL	15	26	100	LUMP

ITEM 519, PATCHING CONCRETE STRUCTURE, AS PER PLAN

ITEM 843 , PATCHING CONCRETE WITH TROWELABLE MORTAR

ITEM SPECIAL, LOW PRESSURE EPOXY INJECTING OF DELAMINATED CONCRETE

POLYTECH, INC. 19/68
CONSULTING ENGINEERS CLEVELAND, OHIO

BRIDGE CONCRETE REPAIR

BRIDGE NO. CUY-90-0947 R
I-90 OVER WEST 140th ST.

DESIGNED	DRAWN	TRACED	CHECKED	REVIEWED	DATE	REVISED
PSS	PSS	–	VB	BRS	9/94	

FHWA REGION	STATE	PROJECT	
5	OHIO		

172/220

CUYAHOGA COUNTY
CUY – 90 – 9.68

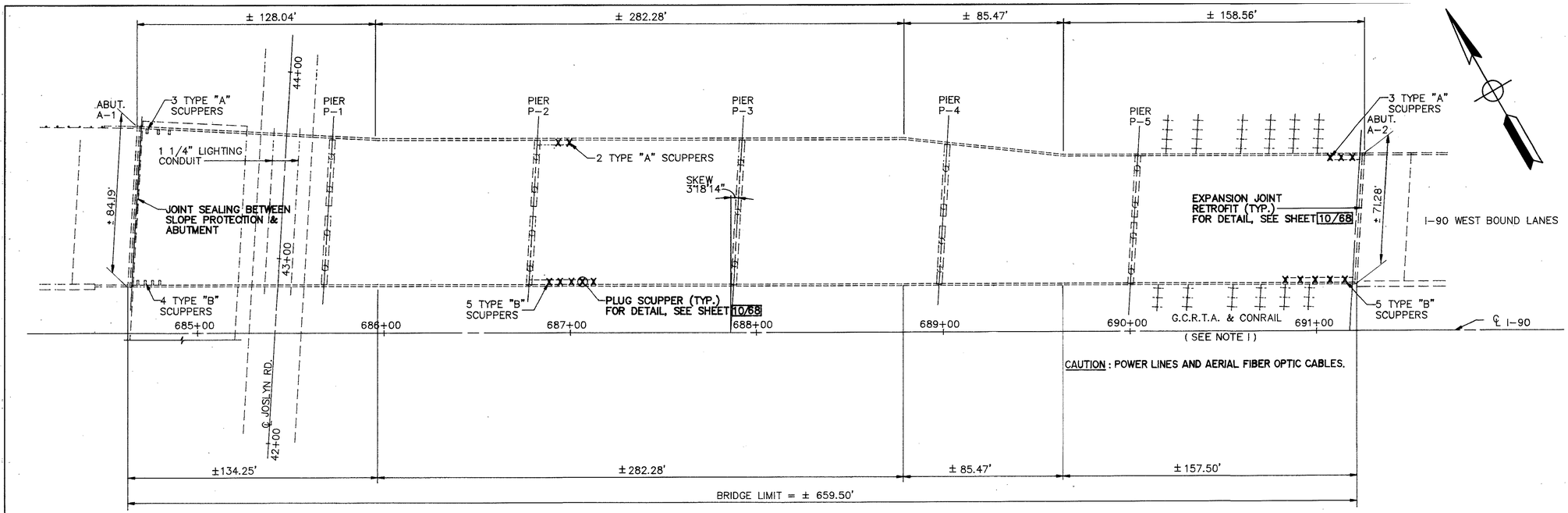

PLAN

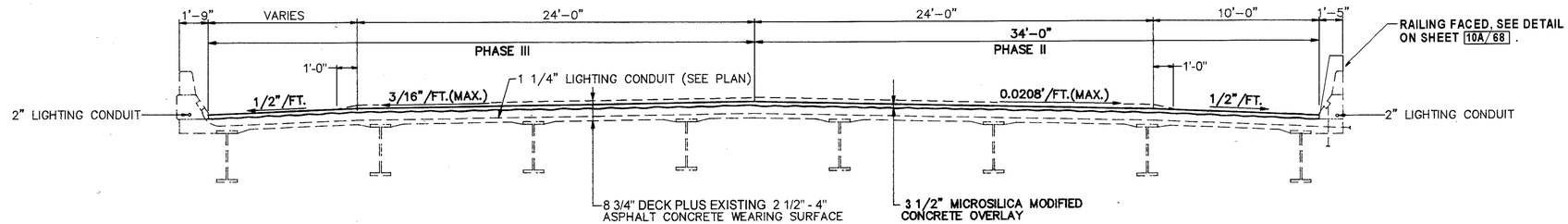

TRANSVERSE SECTION

NOTE 1: FOR EXISTING CRITICAL VERTICAL CLEARANCES, SEE SHEET 24/68

EXISTING STRUCTURE

TYPE: 6 SPAN CONTINUOUS STEEL BEAM WITH REINFORCED CONCRETE DECK AND SUBSTRUCTURE

SPANS: 103'–0", 110'–0", 110'–0", 110'–0", 102'–6", 119'–6"

ROADWAY: VARIES

ALIGNMENT: TANGENT

SKEW: 3° 18' 14" LEFT FORWARD

LOADING: HS20–44 & INT. ALT. LTD.

APPROACH SLABS: 25' REAR & 30' FORWARD (AS–1–72)

WEARING SURFACE: 2 1/2" - 4" ASPHALT CONCRETE

PROPOSED WORK

1. REMOVE THE ENTIRE EXISTING ASPHALT OVERLAY AND THE TOP 1" (MINIMUM) OF EXISTING CONCRETE DECK BELOW AND OVERLAY WITH 3 1/2" MICROSILICA MODIFIED CONCRETE
2. CONCRETE REPAIR AND SEALING
3. ASPHALT DRAIN PLUGGING
4. JOINT SEALING BETWEEN SLOPE PROTECTION & ABUTMENT
5. EXPANSION JOINT RETROFIT
6. ACCESS HAND RAIL SYSTEM
7. SCUPPER PLUGGING
8. WELD STIFENERS TO TOP FLANGE RETROFIT
9. FIELD PAINTING OF RETROFITTED AREAS
10. REFACE MEDIAN PARAPET AND WINGWALL

PROPOSED STRUCTURE

TYPE: 6 SPAN CONTINUOUS STEEL BEAM WITH REINFORCED CONCRETE DECK AND SUBSTRUCTURE

SPANS: 103'–0", 110'–0", 110'–0", 110'–0", 102'–6", 119'–6"

ROADWAY: VARIES

ALIGNMENT: TANGENT

SKEW: 3° 18' 14" LEFT FORWARD

LOADING: HS20–44 & INT. ALT. LTD.

APPROACH SLABS: 25' REAR & 30' FORWARD (AS–1–72)

WEARING SURFACE: 3 1/2" MICROSILICA MODIFIED CONCRETE

ESTIMATED QUANTITIES

* = SEE PROPOSAL NOTE

ITEM	TOTAL	UNIT	DESCRIPTION	ABUTMENT	PIERS	SUPER STRUCTURE	GENERAL
SPEC	3479	SQ YD	SEALING OF CONCRETE SURFACES (EPOXY-URETHANE)*	613	1191	1675	
514	LUMP	LUMP	FIELD PAINTING, MISC.: RETROFITTED AREAS			LUMP	
516	153	LN FT	STRUCTURAL STEEL EXPANSION JOINT (RETROFIT), AS PER PLAN			153	
516	121	LN FT	STRUCTURAL JOINT OR JOINT SEALER, MISC.: 705.03 OR 705.04	121			
518	15	EACH	STRUCTURAL DRAINAGE MISC.: SCUPPER PLUGGING			15	

ESTIMATED QUANTITIES

ITEM	TOTAL	UNIT	DESCRIPTION	ABUTMENT	PIERS	SUPER STRUCTURE	GENERAL
517	681	LN FT	RAILING FACED, AS PER PLAN	21		660	
SPEC	133	EACH	STRUCTURE MISC.: WELD STIFFENERS TO TOP FLANGE RETROFIT			133	
848	5477	SQ YD	MICROSILICA MODIFIED CONCRETE OVERLAY USING HYDRO-DEMOLITION 3½ INCH THICK			5477	
848	5477	SQ YD	SURFACE PREPARATION USING HYDRO-DEMOLITION			5477	
848	76	CU YD	MICROSILICA MODIFIED CONCRETE OVERLAY (VARIABLE THICKNESS) MATERIALS ONLY			76	
848	164	SQ YD	HAND CHIPPING			164	
848	5477	SQ YD	WEARING COURSE REMOVED, ASPHALT			5477	
863	1610	LN FT	STRUCTURAL STEEL MISC.: (ACCESS HAND RAIL, MISCELLANEOUS LEVEL FABRICATION)			1610	

NOTE: THESE QUANTITIES ARE CARRIED TO THE STRUCTURE SUB-SUMMARY ON SHEET 6/68.

POLYTECH, INC. 20/68
CONSULTING ENGINEERS CLEVELAND, OHIO

GENERAL PLAN & TRANSVERSE SECTION

BRIDGE NO. CUY–90–0970 L
I–90 OVER JOSLYN ROAD

DESIGNED	DRAWN	TRACED	CHECKED	REVIEWED	DATE	REVISED
PSS	RG	–	VB	BS	9/94	ENF

FHWA REGION	STATE	PROJECT	
5	OHIO		

173
220

CUYAHOGA COUNTY
CUY-90-9.68

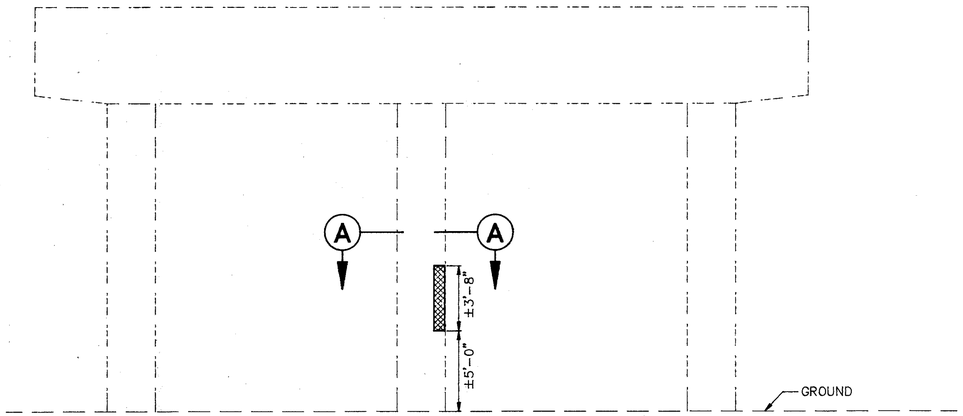

ELEVATION
PIER P-3 (LOOKING EAST)

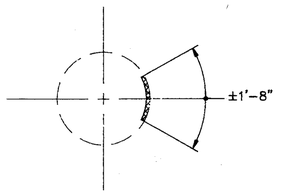

SECTION A-A

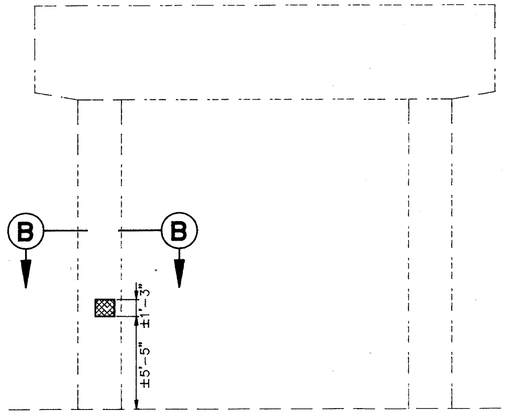

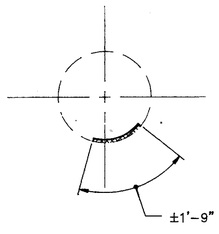

SECTION B-B

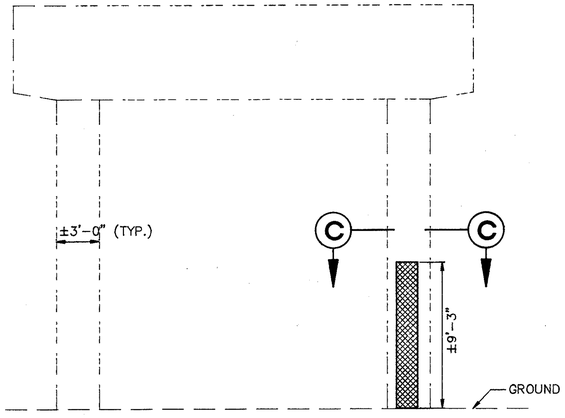

ELEVATION
PIER P-5 (LOOKING EAST)

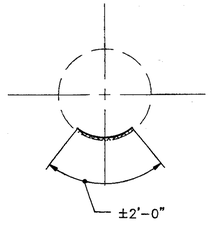

SECTION C-C

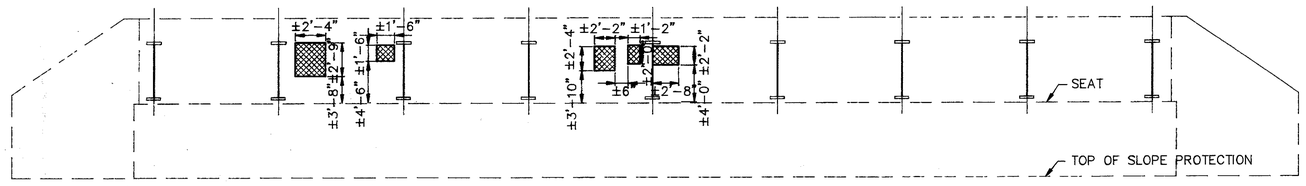

ELEVATION
ABUTMENT A-1

ITEM	519	843
LOCATION	PATCHING CONCRETE STRUCTURE AS PER PLAN SQ FT	PATCHING CONCRETE TROWELABLE MORTAR SQ FT
ABUTMENTS	–	22
PIERS AND CAPS	–	27
DECK UNDERSIDE	–	–
25% EXPANSION FACTOR	–	13
TOTAL	–	62

ITEM 519, PATCHING CONCRETE STRUCTURE, AS PER PLAN

ITEM 843 , PATCHING CONCRETE WITH TROWELABLE MORTAR

POLYTECH, INC. 21 / 68
CONSULTING ENGINEERS CLEVELAND, OHIO

BRIDGE CONCRETE REPAIR

BRIDGE NO. CUY-90-0970 L
I-90 OVER JOSLYN ROAD

DESIGNED	DRAWN	TRACED	CHECKED	REVIEWED	DATE	REVISED
PSS	PSS	–	VB	BRS	9/94	

FHWA REGION	STATE	PROJECT	
5	OHIO		

174
220

CUYAHOGA COUNTY
CUY-90-9.68

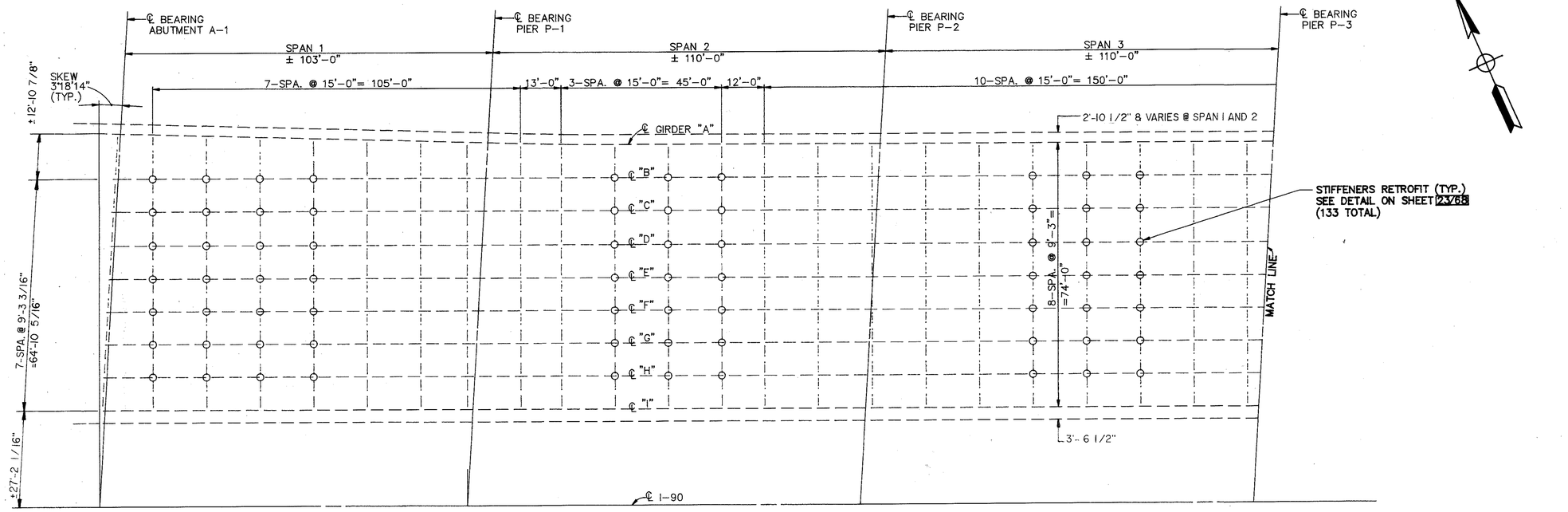

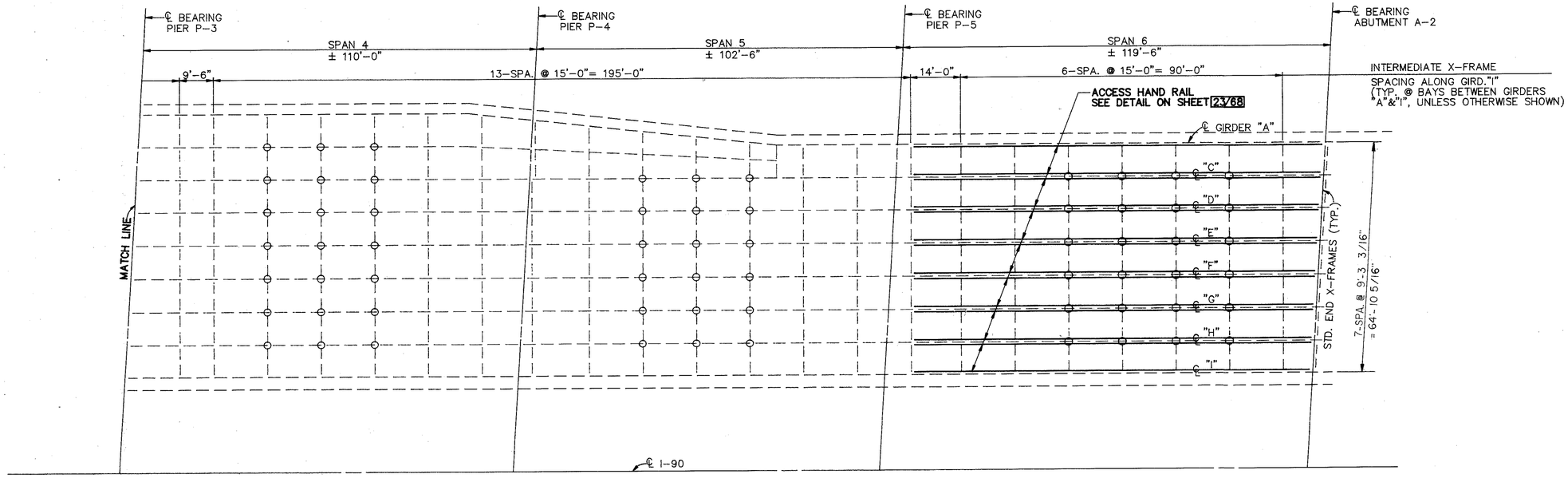

DRAWING = FRAMING1 DATE = AUGUST 1,1994

POLYTECH, INC. 22/68
CONSULTING ENGINEERS CLEVELAND, OHIO

FRAMING PLAN

BRIDGE NO. CUY-90-0970 L
I-90 OVER JOSLYN ROAD

DESIGNED	DRAWN	TRACED	CHECKED	REVIEWED	DATE	REVISED
PSS	RG	–	VKB	BRS	9/94	

FHWA REGION	STATE	PROJECT	
5	OHIO		

175/220

CUYAHOGA COUNTY
CUY-90-9.68

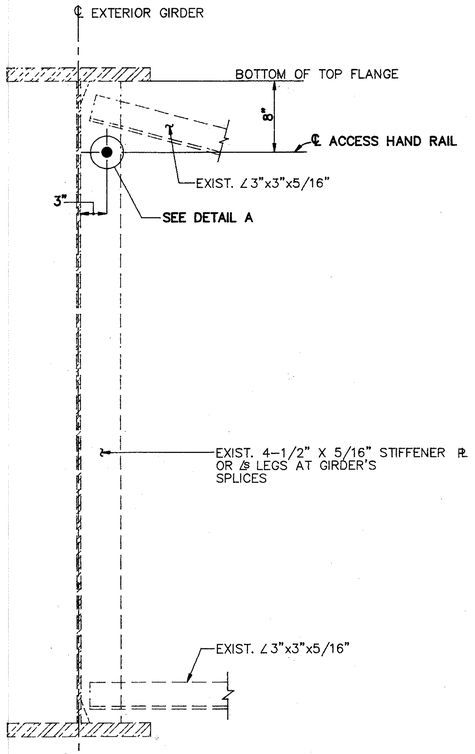

TYPICAL SECTION OF EXTERIOR GIRDER

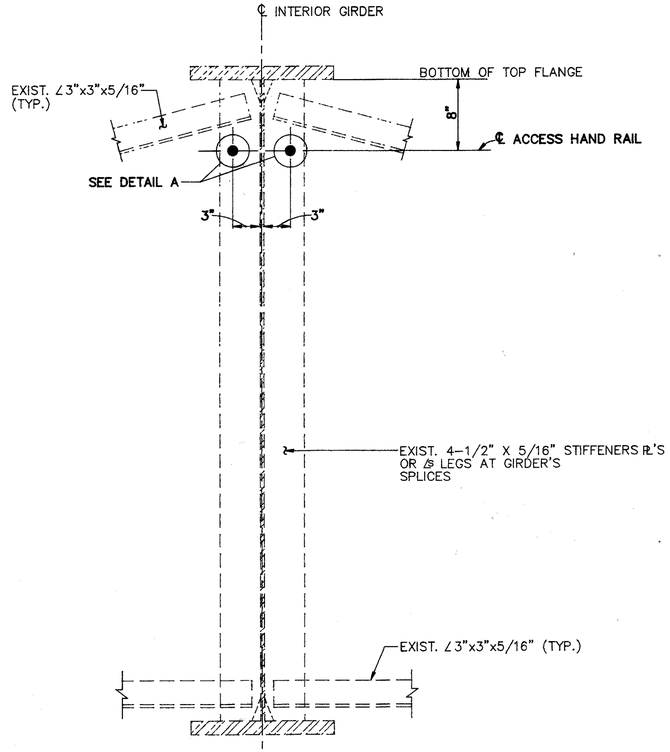

TYPICAL SECTION OF INTERIOR GIRDER

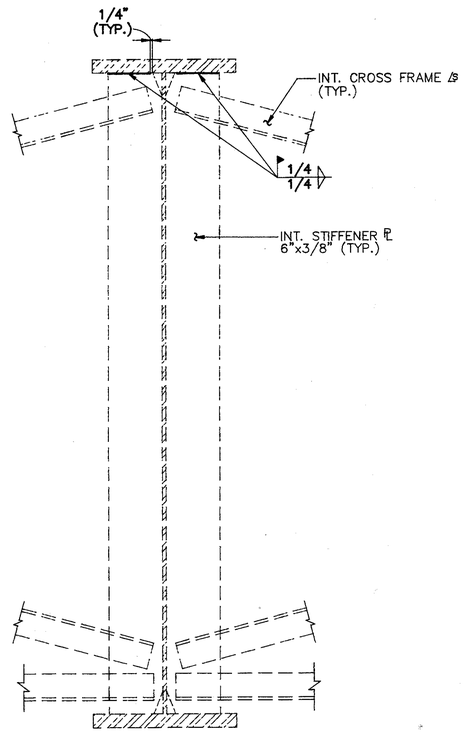

STIFFENER RETROFIT DETAIL

ACCESS HAND RAIL

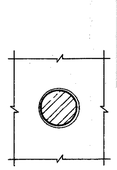

SECTION A-A

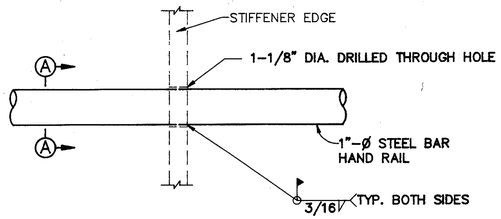

DETAIL A

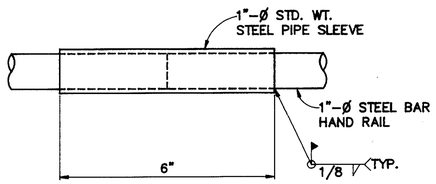

SPLICE DETAIL

DATE = AUGUST 3, 1994

DRAWING = HRAIL1

POLYTECH, INC. 23/68
CONSULTING ENGINEERS CLEVELAND, OHIO

HAND RAIL & STIFFENERS
RETROFIT DETAILS
BRIDGE NO. CUY-90-0970 L/R
I-90 OVER JOSLYN ROAD

DESIGNED	DRAWN	TRACED	CHECKED	REVIEWED	DATE	REVISED
PSS	RG	-	VKB	BRS	9/94	

FHWA REGION	STATE	PROJECT	
5	OHIO		

176
220

CUYAHOGA COUNTY
CUY – 90 – 9.68

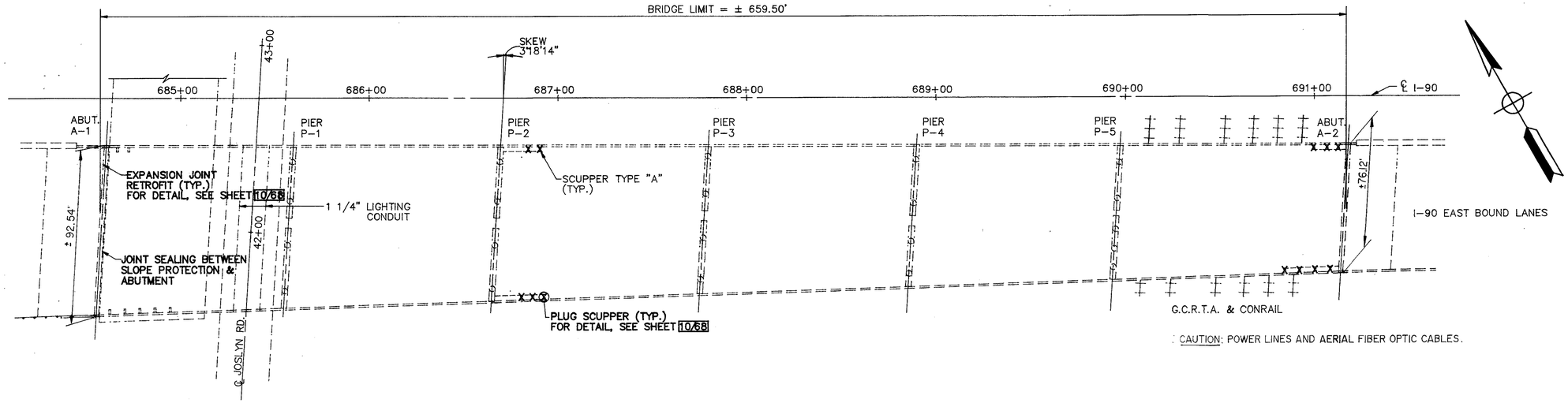

PLAN

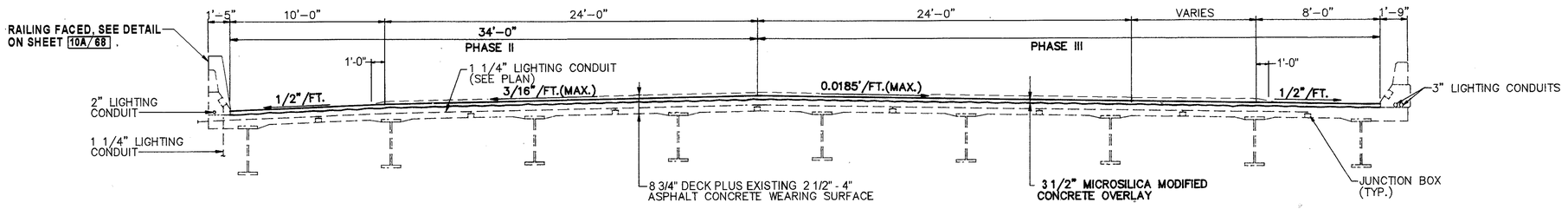

TRANSVERSE SECTION

EXISTING STRUCTURE

TYPE: 6 SPAN CONTINUOUS STEEL BEAM WITH REINFORCED CONCRETE DECK AND SUBSTRUCTURE

SPANS: 103'–0", 110'–0", 110'–0", 110'–0", 102'–6", 119'–6"

ROADWAY: VARIES

ALIGNMENT: TANGENT

SKEW: 3° 18' 14" LEFT FORWARD

LOADING: HS20–44 & INTERSTATE ALT. LTD.

APPROACH SLABS: 25' REAR & 30' FORWARD (AS–1–72)

WEARING SURFACE: 2 1/2" - 4" ASPHALT CONCRETE

PROPOSED WORK

1. REMOVE THE ENTIRE EXISTING ASPHALT OVERLAY AND THE TOP 1" (MINIMUM) OF EXISTING CONCRETE DECK BELOW AND OVERLAY WITH 3 1/2" MICROSILICA MODIFIED CONCRETE
2. CONCRETE PACTHING AND SEALING
3. ASPHALT DRAIN PLUGGING
4. EXPANSION JOINT RETROFIT
5. ACCESS HAND RAIL SYSTEM
6. JOINT SEALING BETWEEN SLOPE PROTECTION & ABUTMENT
7. SCUPPER PLUGGING
8. WELD STIFFENERS TO TOP FLANGE RETROFIT
9. FIELD PAINTING OF RETROFIT AREAS
10. REFACE MEDIAN PARAPET AND WINGWALL

EXISTING VERTICAL CLEARANCES

TO GCRTA CATENARY SUPPORTS	3.33'
TO GCRTA TRACKS	24.37'
TO GCRTA TRACKS	23.19'

PROPOSED STRUCTURE

TYPE: 6 SPAN CONTINUOUS STEEL BEAM WITH REINFORCED CONCRETE DECK AND SUBSTRUCTURE

SPANS: 103'–0", 110'–0", 110'–0", 110'–0", 102'–6", 119'–6"

ROADWAY: VARIES

ALIGNMENT: TANGENT

SKEW: 3° 18' 14" LEFT FORWARD

LOADING: HS20–44 & INTERSTATE ALT. LTD.

APPROACH SLABS: 25' REAR & 30' FORWARD (AS–1–72)

WEARING SURFACE: 3 1/2" MICROSILICA MODIFIED CONCRETE

ESTIMATED QUANTITIES

* = SEE PROPOSAL NOTE

ITEM	TOTAL	UNIT	DESCRIPTION	ABUTMENT	PIERS	SUPER STRUCTURE	GENERAL
SPEC	3651	SQ YD	SEALING OF CONCRETE SURFACES (EPOXY-URETHANE)*	727	1253	1671	
514	LUMP	LUMP	FIELD PAINTING, MISC.: RETROFITTED AREAS			LUMP	
516	158	LN FT	STRUCTURAL STEEL EXPANSION JOINT (RETROFIT), AS PER PLAN			158	
516	132	LN FT	STRUCTURAL JOINT OR JOINT SEALER, MISC.: 705.03 OR 705.04	132			
518	12	EACH	STRUCTURAL DRAINAGE MISC.: SCUPPER PLUGGING			12	

ESTIMATED QUANTITIES

ITEM	TOTAL	UNIT	DESCRIPTION	ABUTMENT	PIERS	SUPER STRUCTURE	GENERAL
517	681	LN FT	RAILING FACED, AS PER PLAN	21		660	
SPEC	150	EACH	STRUCTURE MISC.: WELD STIFFENERS TO TOP FLANGE RETROFIT			150	
848	5747	SQ YD	MICROSILICA MODIFIED CONCRETE OVERLAY USING HYDRO-DEMOLITION 3½ INCH THICK			5747	
848	5747	SQ YD	SURFACE PREPARATION USING HYDRO-DEMOLITION			5747	
848	80	CU YD	MICROSILICA MODIFIED CONCRETE OVERLAY (VARIABLE THICKNESS) MATERIALS ONLY			80	
848	172	SQ YD	HAND CHIPPING			172	
848	5747	SQ YD	WEARING COURSE REMOVED, ASPHALT			5747	
863	1888	LN FT	STRUCTURAL STEEL MISC.: (ACCESS HAND RAIL, MISCELLANEOUS LEVEL FABRICATION)			1888	

NOTE: THESE QUANTITIES ARE CARRIED TO THE STRUCTURE SUB-SUMMARY ON SHEET 6/68.

POLYTECH, INC. 24/68
CONSULTING ENGINEERS CLEVELAND, OHIO

GENERAL PLAN & TRANSVERSE SECTION
BRIDGE NO. CUY–90–0970 R
I–90 OVER JOSLYN ROAD

DESIGNED	DRAWN	TRACED	CHECKED	REVIEWED	DATE	REVISED
PSS	RG	–	VB	BS	9/94	ENF

FHWA REGION	STATE	PROJECT	
5	OHIO		

CUYAHOGA COUNTY
CUY-90-9.68

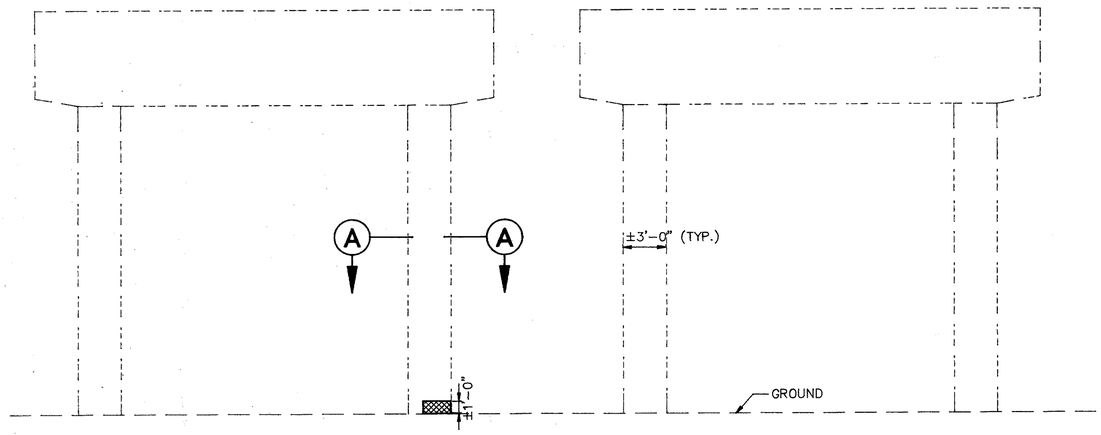

ELEVATION
PIER P-4 (LOOKING WEST)

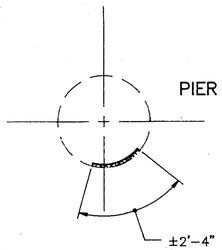

SECTION A-A

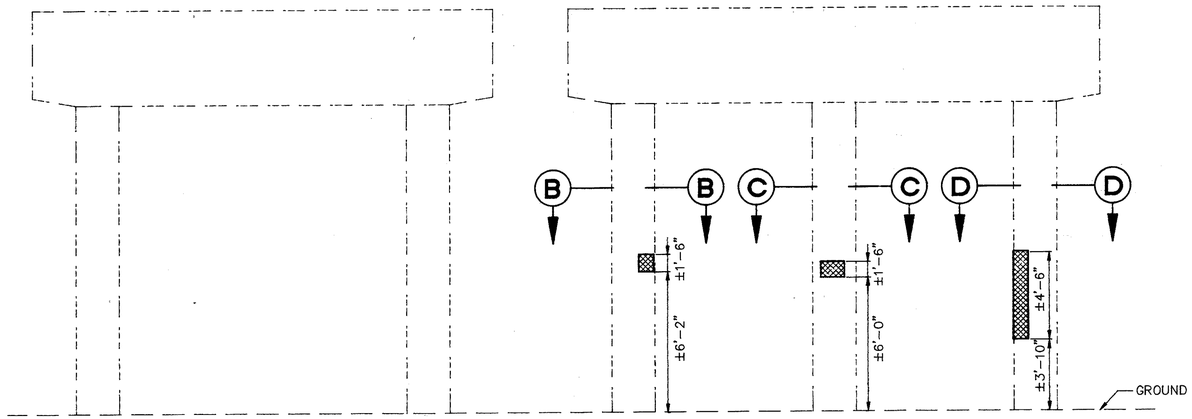

ELEVATION
PIER P-5 (LOOKING EAST)

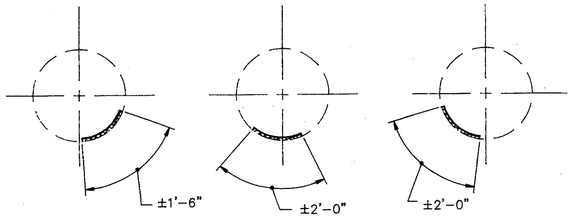

SECTION B-B SECTION C-C SECTION D-D

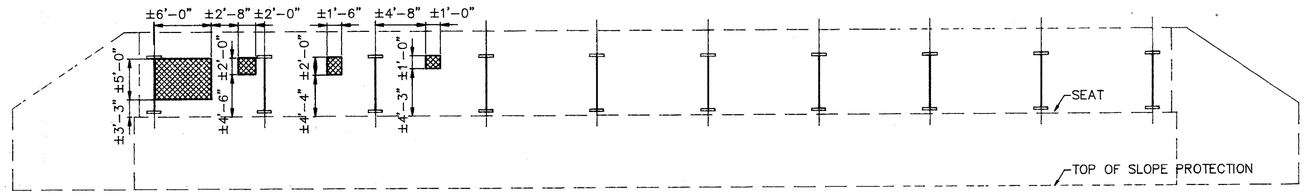

ELEVATION
ABUTMENT A-1

ITEM	519	843
LOCATION	PATCHING CONCRETE STRUCTURE AS PER PLAN SQ FT	PATCHING CONCRETE TROWELABLE MORTAR SQ FT
ABUTMENTS	–	38
PIERS AND CAPS	–	17
DECK UNDERSIDE	–	–
25% EXPANSION FACTOR	–	14
TOTAL	–	69

ITEM 519, PATCHING CONCRETE STRUCTURE, AS PER PLAN

ITEM 843 , PATCHING CONCRETE WITH TROWELABLE MORTAR

POLYTECH, INC. 25/68
CONSULTING ENGINEERS CLEVELAND, OHIO

BRIDGE CONCRETE REPAIR

BRIDGE NO. CUY-90-0970 R
I-90 OVER JOSLYN ROAD

DESIGNED	DRAWN	TRACED	CHECKED	REVIEWED	DATE	REVISED
PSS	PSS	–	VB	BRS	9/94	

FHWA REGION	STATE	PROJECT	
5	OHIO		

178/220

CUYAHOGA COUNTY
CUY-90-9.68

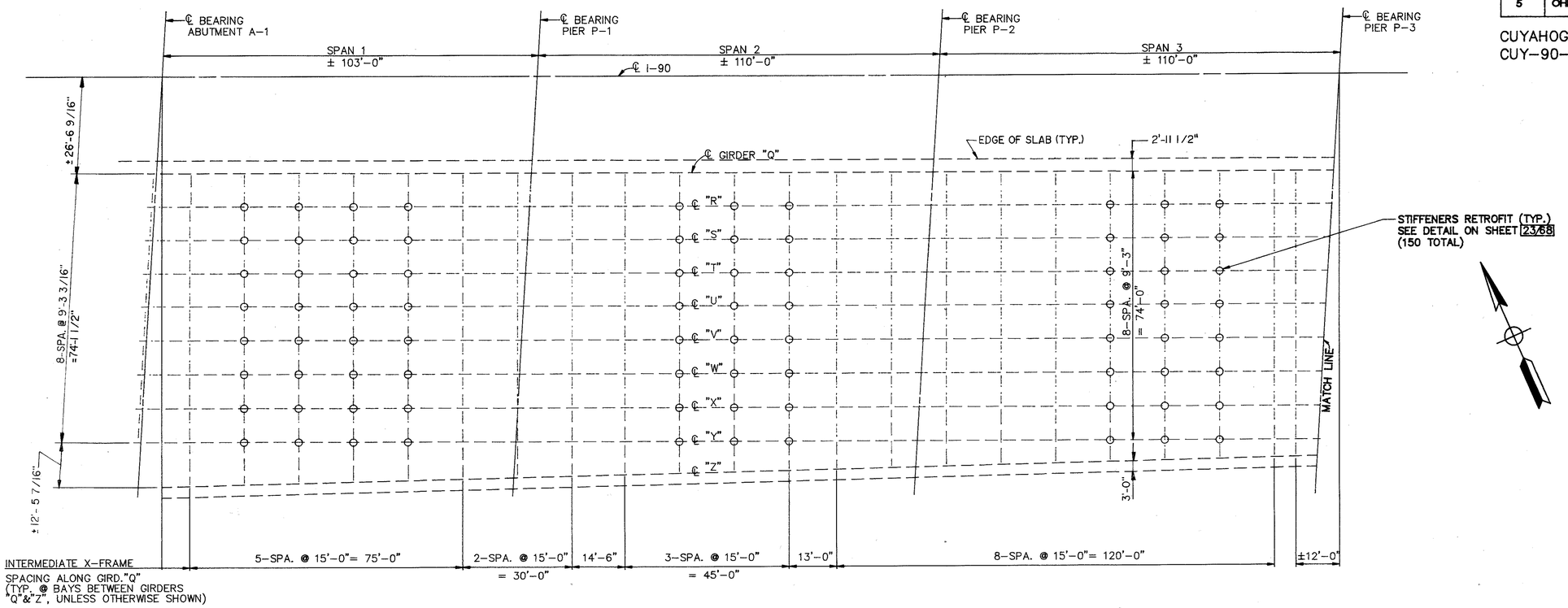

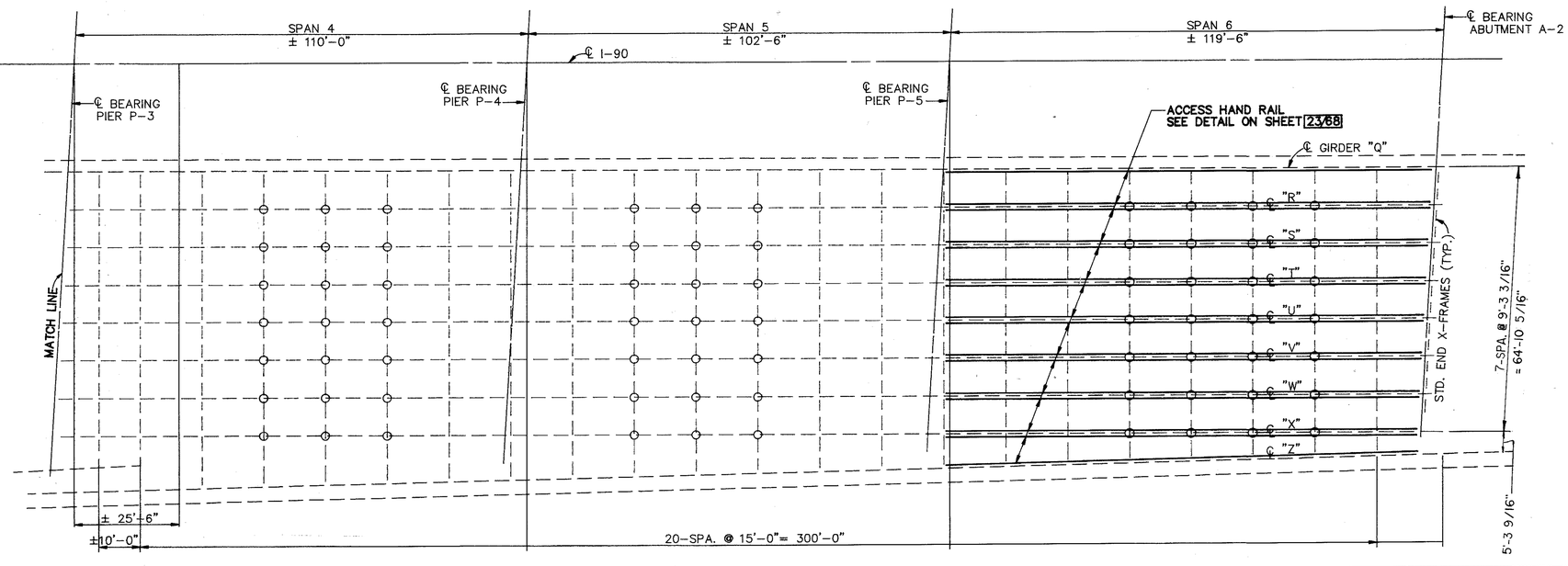

DRAWING = FRAMING2 DATE = AUGUST 1,1994

POLYTECH, INC. 26/68
CONSULTING ENGINEERS CLEVELAND, OHIO

FRAMING PLAN

BRIDGE NO. CUY-90-0970 R
I-90 OVER JOSLYN ROAD

DESIGNED	DRAWN	TRACED	CHECKED	REVIEWED	DATE	REVISED
PSS	RG	–	VKB	BRS	9/94	

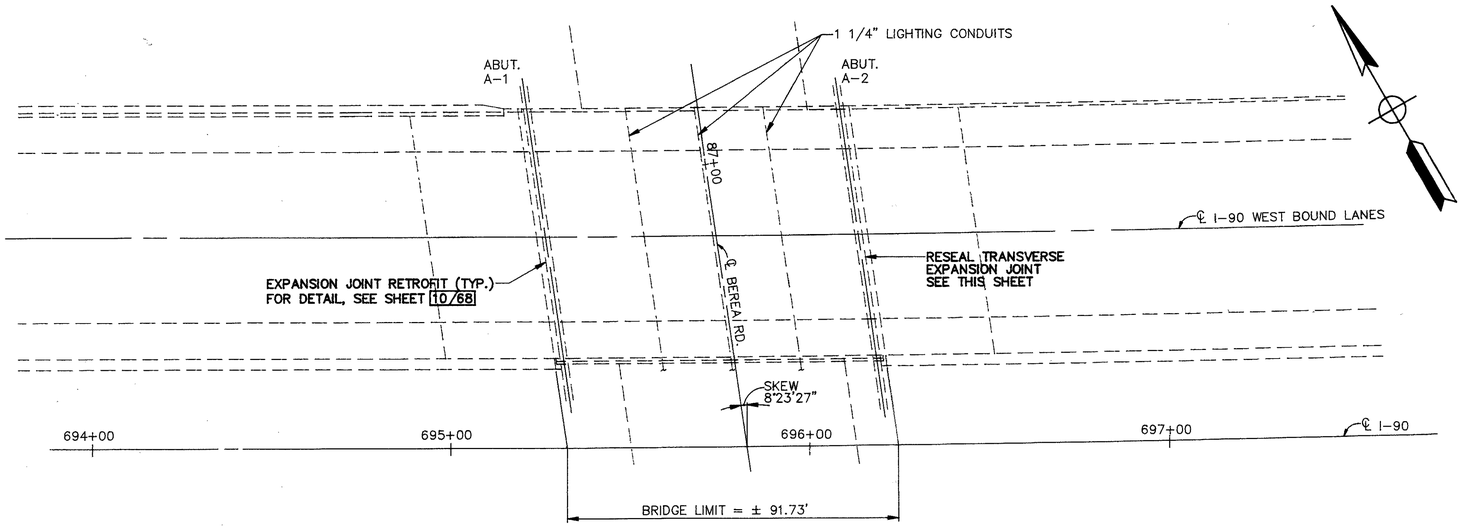

PLAN

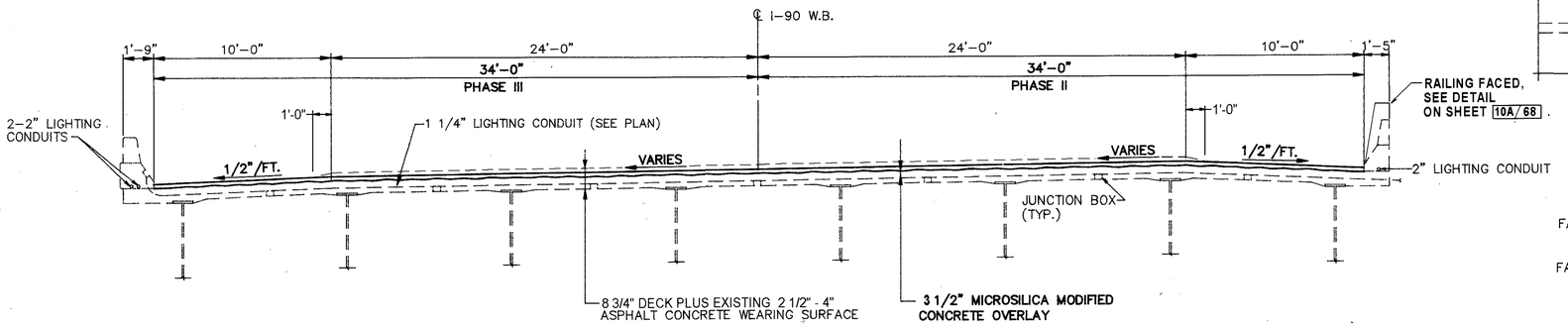

TRANSVERSE SECTION

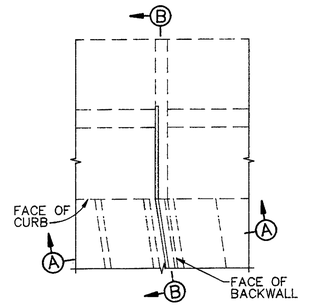

PARTIAL DECK PLAN
(ABUTMENT A-2)

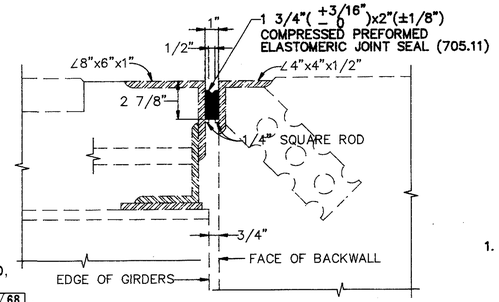

SECTION A-A

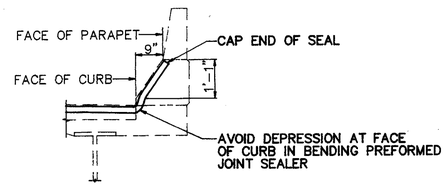

SECTION B-B

FHWA REGION	STATE	PROJECT	
5	OHIO		

179/220

CUYAHOGA COUNTY
CUY - 90 - 9.68

EXISTING STRUCTURE

TYPE: ONE SPAN STEEL BEAM WITH REINFORCED CONCRETE DECK AND SUBSTRUCTURE

SPANS: 87'-3" C/C BRGS

ROADWAY : 68'-0" T/T PARAPETS

ALIGNMENT: SPIRAL TO LEFT

SKEW: 8° 23' 27" RIGHT FORWARD

LOADING: HS20-44 & INTERSTATE ALT. LD.

APPROACH SLABS: 30' LONG (AS-1-72)

WEARING SURFACE: 2 1/2" - 4" ASPHALT CONCRETE

PROPOSED WORK

1. REMOVE THE ENTIRE EXISTING ASPHALT OVERLAY AND THE TOP 1" (MINIMUM) OF EXISTING CONCRETE DECK BELOW AND OVERLAY WITH 3 1/2" MICROSILICA MODIFIED CONCRETE.
2. CONCRETE REPAIR AND SEALING
3. ASPHALT DRAIN PLUGGING
4. RE-SEAL TRANSVERSE EXPANSION JOINT (EAST ABUTMENT)
5. EXPANSION JOINT RETROFIT (WEST ABUTMENT)
6. RESET BEARINGS (WEST ABUTMENT)
7. REFACE MEDIAN PARAPET

PROPOSED STRUCTURE

TYPE: ONE SPAN STEEL BEAM WITH REINFORCED CONCRETE DECK AND SUBSTRUCTURE

SPANS: 87'-3" C/C BRGS

ROADWAY : 68'-0" T/T PARAPETS

ALIGNMENT: SPIRAL TO LEFT

SKEW: 8° 23' 27" RIGHT FORWARD

LOADING: HS20-44 & INTERSTATE ALT. LD.

APPROACH SLABS: 30' LONG (AS-1-72)

WEARING SURFACE: 3 1/2" MICROSILICA MODIFIED CONCRETE

ESTIMATED QUANTITIES

* = SEE PROPOSAL NOTE

ITEM	TOTAL	UNIT	DESCRIPTION	ABUTMENT	PIERS	SUPER STRUCTURE	GENERAL
SPEC	1026	SQ YD	SEALING OF CONCRETE SURFACES (EPOXY-URETHANE)*	789		237	
514	LUMP	LUMP	FIELD PAINTING, MISC.: RETROFITTED AREAS			LUMP	
516	75	LN FT	ELASTOMETRIC COMPRESSION SEAL (705.11), AS PER PLAN			75	
516	69	LN FT	STRUCTURAL STEEL EXPANSION JOINT (RETROFIT), AS PER PLAN			69	
516	8	EACH	RESET BEARING, AS PER PLAN	8			

ESTIMATED QUANTITIES

ITEM	TOTAL	UNIT	DESCRIPTION	ABUTMENT	PIERS	SUPER STRUCTURE	GENERAL
516	LUMP	LUMP	JACKING AND TEMPORARY SUPPORT OF SUPERSTRUCTURE			LUMP	
517	92	LN FT	RAILING FACED, AS PER PLAN			92	
848	663	SQ YD	MICROSILICA MODIFIED CONCRETE OVERLAY USING HYDRO-DEMOLITION 3½ INCH THICK			663	
848	663	SQ YD	SURFACE PREPARATION USING HYDRO-DEMOLITION			663	
848	9	CU YD	MICROSILICA MODIFIED CONCRETE OVERLAY (VARIABLE THICKNESS) MATERIALS ONLY			9	
848	20	SQ YD	HAND CHIPPING			20	
848	663	SQ YD	WEARING COURSE REMOVED, ASPHALT			663	

NOTE: THESE QUANTITIES ARE CARRIED TO THE STRUCTURE SUB-SUMMARY ON SHEET 6/68.

POLYTECH, INC. 27/68
CONSULTING ENGINEERS CLEVELAND, OHIO

GENERAL PLAN &
TRANSVERSE SECTION
BRIDGE NO. CUY-90-0991 L
I-90 OVER BEREA ROAD

DESIGNED	DRAWN	TRACED	CHECKED	REVIEWED	DATE	REVISED
PSS	RG	-	VB	BS	9/94	ENF

FHWA REGION	STATE	PROJECT	
5	OHIO		

180/220

CUYAHOGA COUNTY
CUY-90-9.68

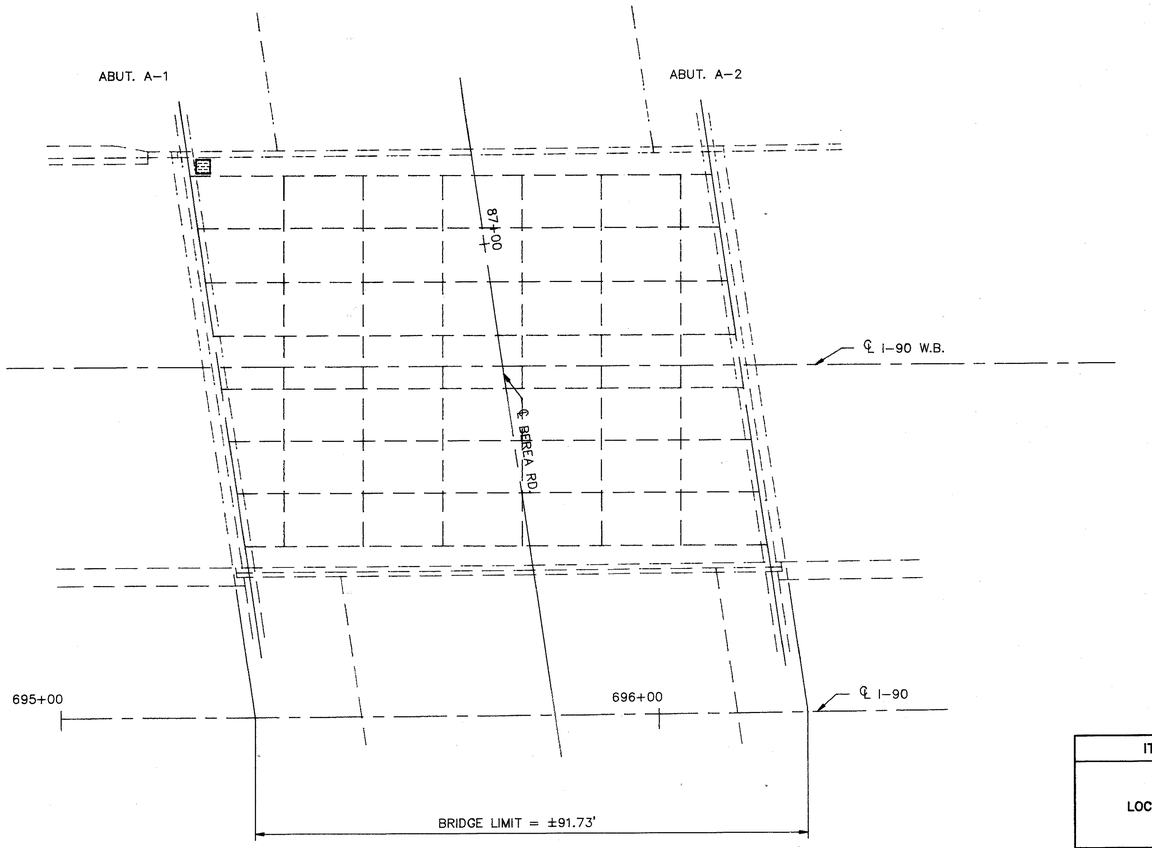

PLAN

BOTTOM OF DECK

ITEM	519	843	SPECIAL	202
LOCATION	PATCHING CONCRETE STRUCTURE AS PER PLAN SQ FT	PATCHING CONCRETE TROWELABLE MORTAR SQ FT	LOW PRESSURE EPOXY INJECTING SQ FT	PORTIONS OF STRUCTURE REMOVED LUMP
ABUTMENTS	–	30	–	–
PIERS AND CAPS	–	–	–	–
DECK UNDERSIDE	–	–	1	LUMP
25% EXPANSION FACTOR	–	8	–	–
TOTAL	–	38	1	LUMP

ITEM 519, PATCHING CONCRETE STRUCTURE, AS PER PLAN

ITEM 843 , PATCHING CONCRETE WITH TROWELABLE MORTAR

ITEM SPECIAL, LOW PRESSURE EPOXY INJECTING OF DELAMINATED CONCRETE

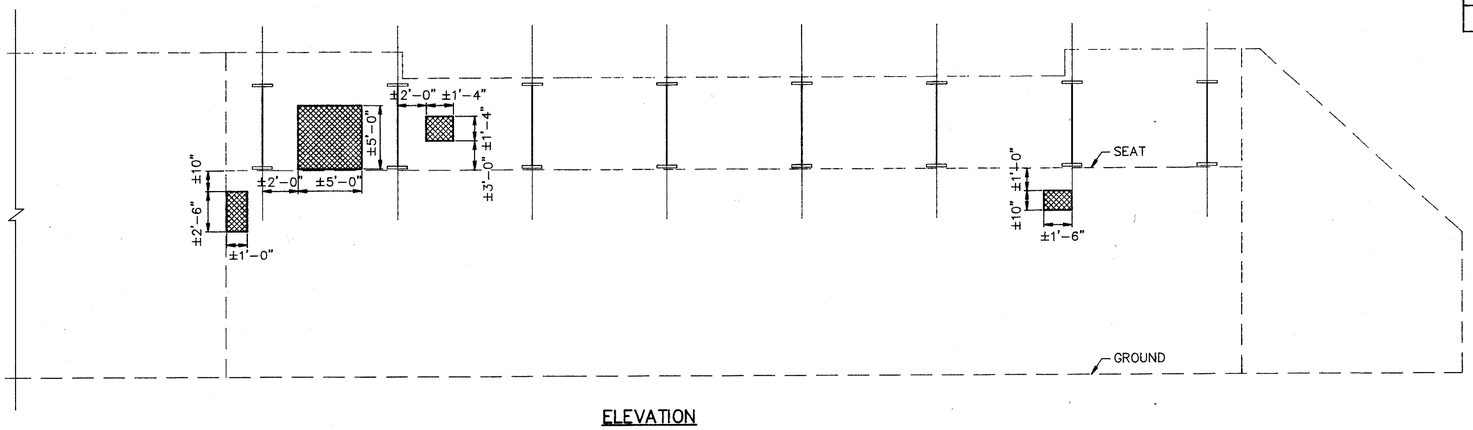

ELEVATION

ABUTMENT A-1

POLYTECH, INC. 28 / 68
CONSULTING ENGINEERS CLEVELAND, OHIO

BRIDGE CONCRETE REPAIR

BRIDGE NO. CUY-90-0991 L
I-90 OVER BEREA ROAD

DESIGNED	DRAWN	TRACED	CHECKED	REVIEWED	DATE	REVISED
PSS	PSS	–	VB	BRS	9/94	

FHWA REGION	STATE	PROJECT	
5	OHIO		

181
220

CUYAHOGA COUNTY
CUY – 90 – 9.68

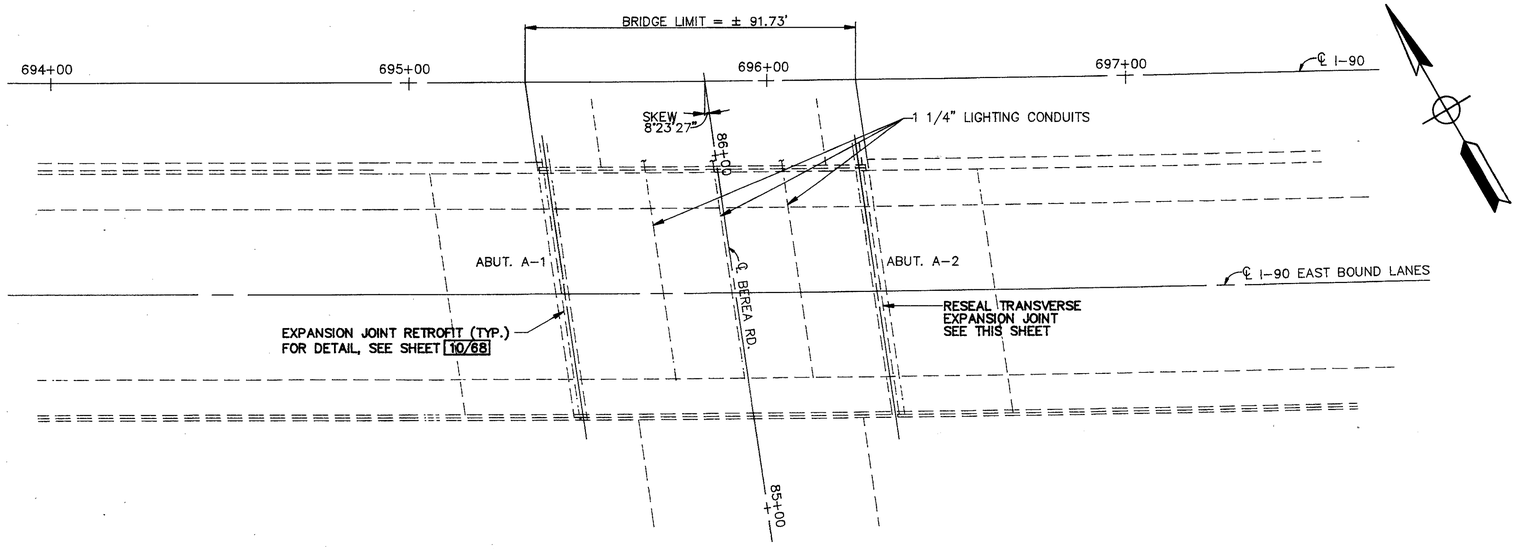

PLAN

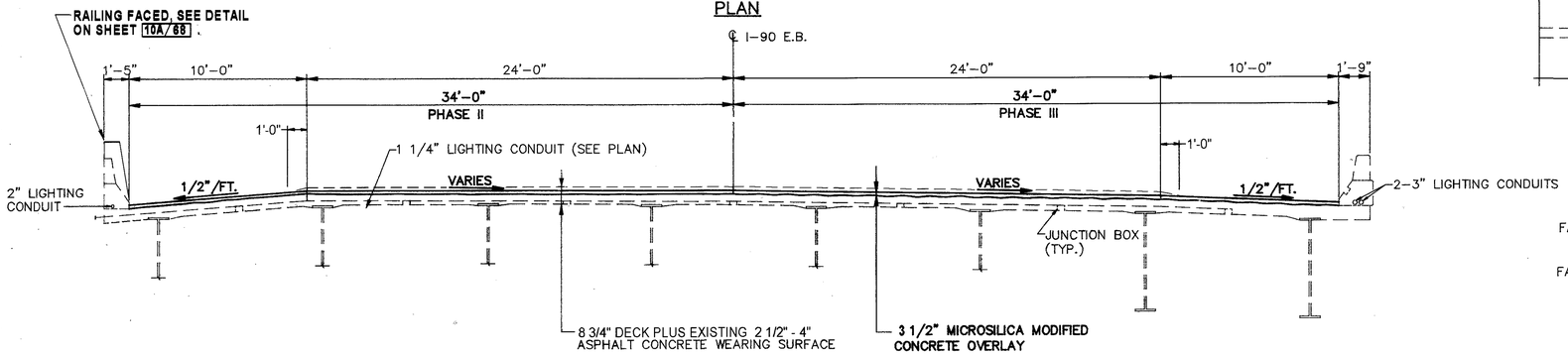

TRANSVERSE SECTION

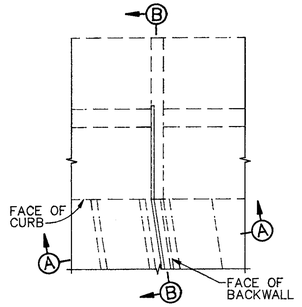

PARTIAL DECK PLAN
(ABUTMENT A–2)

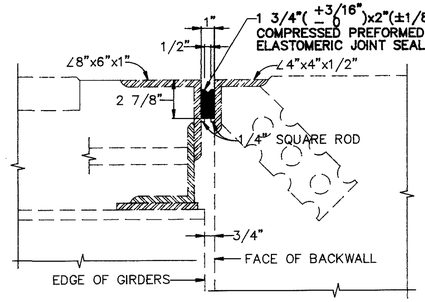

SECTION A–A

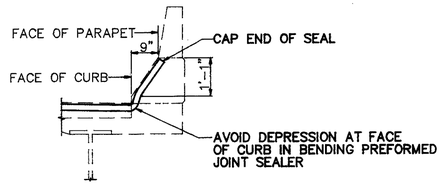

SECTION B–B

EXISTING STRUCTURE

TYPE: ONE SPAN STEEL BEAM WITH REINFORCED CONCRETE DECK AND SUBSTRUCTURE

SPANS: 87'–3"

ROADWAY : 68'–0" T/T PARAPETS

ALIGNMENT: SPIRAL TO LEFT

SKEW: 8° 23' 27" RIGHT FORWARD

LOADING: HS20–44 & INTERSTATE ALT. LD.

APPROACH SLAB: 30' LONG (AS–1–72)

WEARING SURFACE: 2 1/2" - 4" ASPHALT CONCRETE

PROPOSED WORK

1. REMOVE THE ENTIRE EXISTING ASPHALT OVERLAY AND THE TOP 1" (MINIMUM) OF EXISTING CONCRETE DECK BELOW AND OVERLAY WITH 3 1/2" MICROSILICA MODIFIED CONCRETE.
2. CONCRETE REPAIR AND SEALING
3. ASPHALT DRAIN PLUGGING
4. RE--SEAL TRANSVERSE EXPANSION JOINT (EAST ABUTMENT)
5. EXPANSION JOINT RETROFIT (WEST ABUTMENT)
6. RESET BEARINGS (WEST ABUTMENT)
7. REFACE MEDIAN PARAPET

PROPOSED STRUCTURE

TYPE: ONE SPAN STEEL BEAM WITH REINFORCED CONCRETE DECK AND SUBSTRUCTURE

SPANS: 87'–3"

ROADWAY : 68'–0" T/T PARAPETS

ALIGNMENT: SPIRAL TO LEFT

SKEW: 8° 23' 27" RIGHT FORWARD

LOADING: HS20–44 & INTERSTATE ALT. LD.

APPROACH SLAB: 30' LONG (AS–1–72)

WEARING SURFACE: 3 1/2" MICROSILICA MODIFIED CONCRETE

ESTIMATED QUANTITIES

* = SEE PROPOSAL NOTE

ITEM	TOTAL	UNIT	DESCRIPTION	ABUTMENT	PIERS	SUPER STRUCTURE	GENERAL
SPEC	884	SQ YD	SEALING OF CONCRETE SURFACES (EPOXY-URETHANE)*	648		236	
514	LUMP	LUMP	FIELD PAINTING, MISC.: RETROFITTED AREAS			LUMP	
516	75	LN FT	ELASTOMETRIC COMPRESSION SEAL (705.11), AS PER PLAN			75	
516	69	LN FT	STRUCTURAL STEEL EXPANSION JOINT (RETROFIT), AS PER PLAN			69	
516	8	EACH	RESET BEARING, AS PER PLAN	8			

ESTIMATED QUANTITIES

ITEM	TOTAL	UNIT	DESCRIPTION	ABUTMENT	PIERS	SUPER STRUCTURE	GENERAL
516	LUMP	LUMP	JACKING AND TEMPORARY SUPPORT OF SUPERSTRUCTURE			LUMP	
517	92	LN FT	RAILING FACED, AS PER PLAN			92	
848	663	SQ YD	MICROSILICA MODIFIED CONCRETE OVERLAY USING HYDRO-DEMOLITION 3½ INCH THICK			663	
848	663	SQ YD	SURFACE PREPARATION USING HYDRO-DEMOLITION			663	
848	9	CU YD	MICROSILICA MODIFIED CONCRETE OVERLAY (VARIABLE THICKNESS) MATERIALS ONLY			9	
848	20	SQ YD	HAND CHIPPING			20	
848	663	SQ YD	WEARING COURSE REMOVED, ASPHALT			663	

NOTE: THESE QUANTITIES ARE CARRIED TO THE STRUCTURE SUB-SUMMARY ON SHEET 6/68.

POLYTECH, INC. 29/68
CONSULTING ENGINEERS CLEVELAND, OHIO

GENERAL PLAN &
TRANSVERSE SECTION
BRIDGE NO. CUY–90–0991 R
I–90 OVER BEREA ROAD

DESIGNED	DRAWN	TRACED	CHECKED	REVIEWED	DATE	REVISED
PSS	RG	–	VB	BS	9/94	ENF

FHWA REGION	STATE	PROJECT	
5	OHIO		

182
220

CUYAHOGA COUNTY
CUY-90-9.68

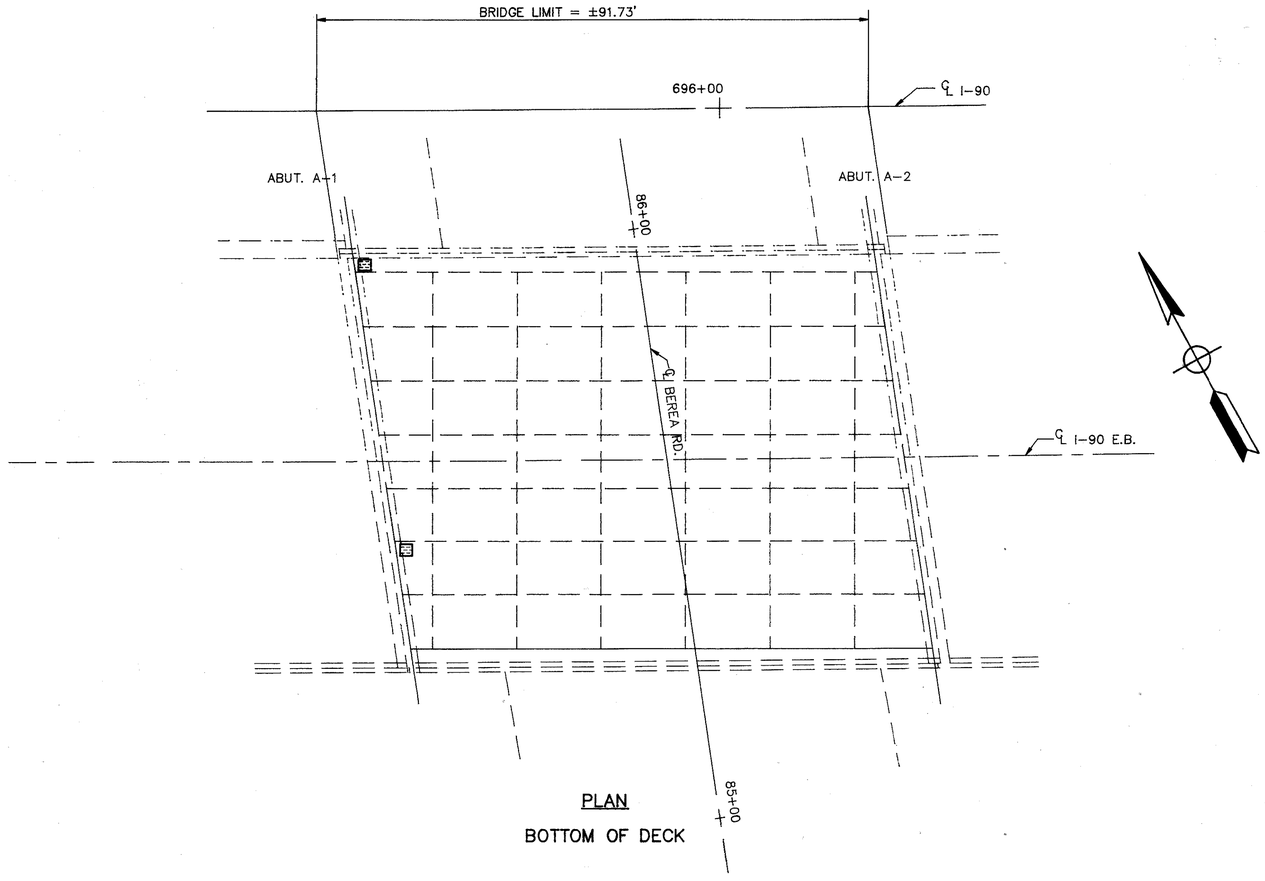

PLAN

BOTTOM OF DECK

ITEM	519	843	SPECIAL	202
LOCATION	PATCHING CONCRETE STRUCTURE AS PER PLAN SQ FT	PATCHING CONCRETE TROWELABLE MORTAR SQ FT	LOW PRESSURE EPOXY INJECTING SQ FT	PORTIONS OF STRUCTURE REMOVED LUMP
ABUTMENTS	–	34	–	–
PIERS AND CAPS	–	–	–	–
DECK UNDERSIDE	–	–	2	LUMP
25% EXPANSION FACTOR	–	9	1	–
TOTAL	–	43	3	LUMP

ITEM 519, PATCHING CONCRETE STRUCTURE, AS PER PLAN

ITEM 843 , PATCHING CONCRETE WITH TROWELABLE MORTAR

ITEM SPECIAL, LOW PRESSURE EPOXY INJECTING OF DELAMINATED CONCRETE

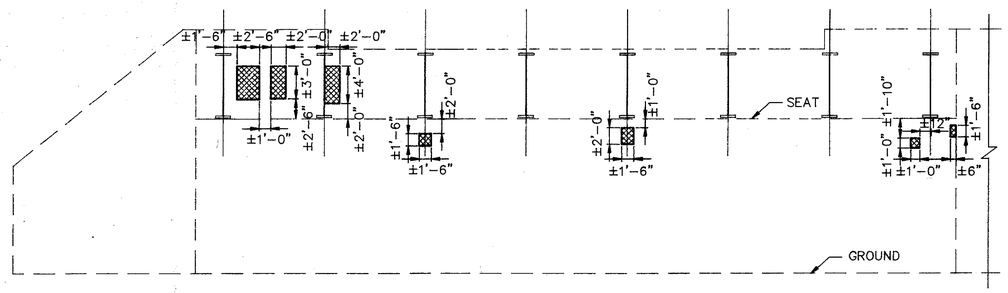

ELEVATION

ABUTMENT A-1

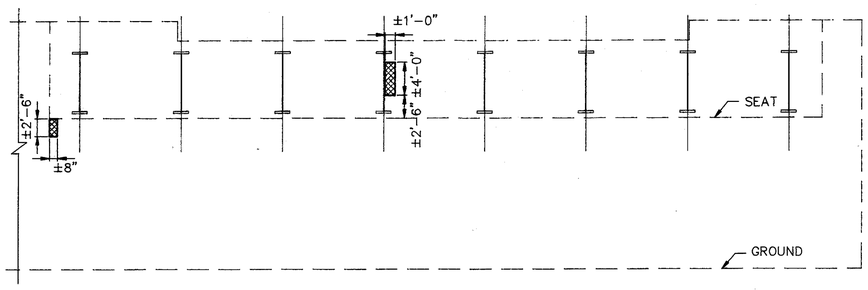

ELEVATION

ABUTMENT A-2

POLYTECH, INC. 30 / 68
CONSULTING ENGINEERS CLEVELAND, OHIO

BRIDGE CONCRETE REPAIR

BRIDGE NO. CUY-90-0991 R
I-90 OVER BEREA ROAD

DESIGNED	DRAWN	TRACED	CHECKED	REVIEWED	DATE	REVISED
PSS	PSS	–	VB	BRS	9/94	

FHWA REGION	STATE	PROJECT	
5	OHIO		

183/220

CUYAHOGA COUNTY
CUY – 90 – 9.68

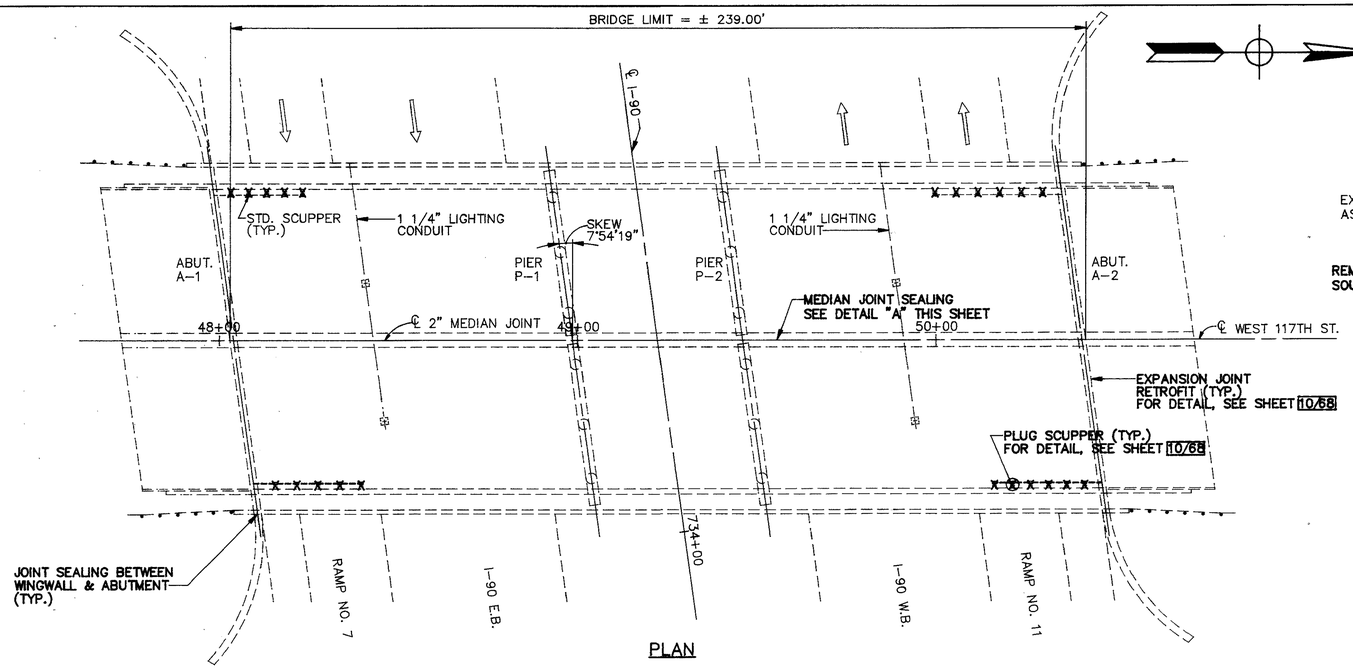

PLAN

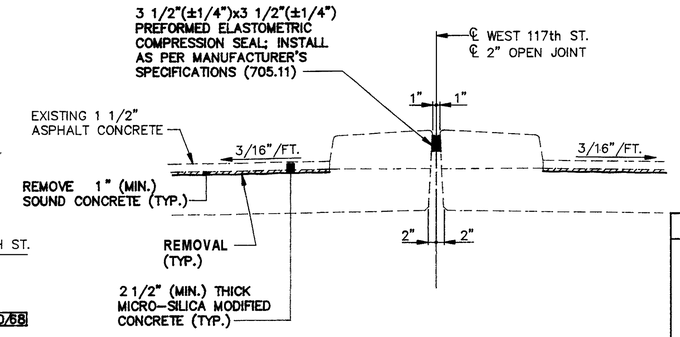

DETAIL A

EXISTING STRUCTURE

TYPE: 3 SPAN CONTINUOUS STEEL BEAM WITH REINFORCED CONCRETE DECK AND SUBSTRUCTURE

SPANS: 93'–6", 47'–5 1/2", 93'–6"

ROADWAY : 84'–0" F/F CURBS WITH 6'–0" SIDEWALKS, 4'–0" MEDIAN

ALIGNMENT: TANGENT

SKEW: 7° 54' 19" RIGHT FORWARD

LOADING: HS20–44

APPROACH SLABS: 30' LONG (AS–1–72)

WEARING SURFACE: 1 1/2" ASPHALT CONCRETE

PROPOSED WORK

1. REMOVE THE ENTIRE EXISTING 1 1/2" ASPHALT OVERLAY AND THE TOP 1" (MINIMUM) OF EXISTING CONCRETE DECK BELOW AND OVERLAY WITH 2 1/2" MICROSILICA MODIFIED CONCRETE.
2. CONCRETE REPAIR AND SEALING
3. ASPHALT DRAIN PLUGGING
4. SEAL MEDIAN JOINT WITH COMPRESSION SEAL
5. EXPANSION JOINT RETROFIT
6. JOINT SEALING BETWEEN WINGWALL & ABUTMENT
7. SCUPPER PLUGGING

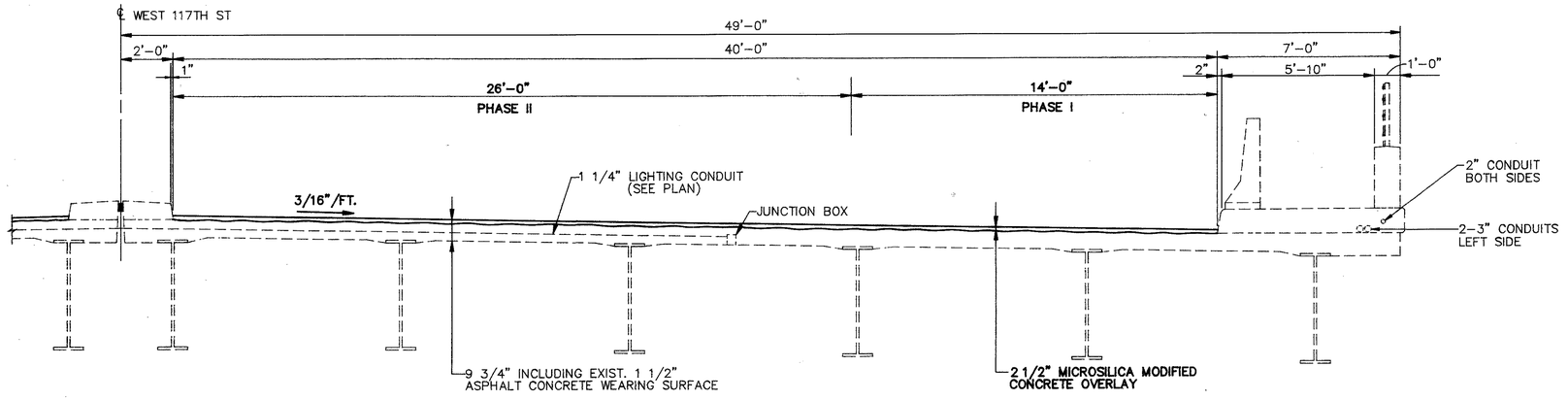

TRANSVERSE HALF SECTION

PROPOSED STRUCTURE

TYPE: 3 SPAN CONTINUOUS STEEL BEAM WITH REINFORCED CONCRETE DECK AND SUBSTRUCTURE

SPANS: 93'–6", 47'–5 1/2", 93'–6"

ROADWAY : 84'–0" F/F CURBS WITH 6'–0" SIDEWALKS, 4'–0" MEDIAN

ALIGNMENT: TANGENT

SKEW: 7° 54' 19" RIGHT FORWARD

LOADING: HS20–44

APPROACH SLABS: 30' LONG (AS–1–72)

WEARING SURFACE: 2 1/2" MICROSILICA MODIFIED CONCRETE

ESTIMATED QUANTITIES

* = SEE PROPOSAL NOTE

ITEM	TOTAL	UNIT	DESCRIPTION	ABUTMENT	PIERS	SUPER STRUCTURE	GENERAL
SPEC	420	SQ YD	SEALING OF CONCRETE SURFACES (NON-EPOXY)*			420	
SPEC	2102	SQ YD	SEALING OF CONCRETE SURFACES (EPOXY-URETHANE)*	823	402	877	
514	LUMP	LUMP	FIELD PAINTING, MISC.: RETROFITTED AREAS			LUMP	
516	239	LN FT	ELASTOMETRIC COMPRESSION SEAL (705.11), AS PER PLAN			239	
516	170	LN FT	STRUCTURAL STEEL EXPANSION JOINT (RETROFIT), AS PER PLAN			170	
516	90	LN FT	STRUCTURAL JOINT OR JOINT SEALER, MISC.: 705.03 OR 705.04	90			

ESTIMATED QUANTITIES

ITEM	TOTAL	UNIT	DESCRIPTION	ABUTMENT	PIERS	SUPER STRUCTURE	GENERAL
518	22	EACH	STRUCTURAL DRAINAGE MISC.: SCUPPER PLUGGING			22	
848	2098	SQ YD	MICROSILICA MODIFIED CONCRETE OVERLAY USING HYDRO-DEMOLITION 2½ INCH THICK			2098	
848	2098	SQ YD	SURFACE PREPARATION USING HYDRO-DEMOLITION			2098	
848	29	CU YD	MICROSILICA MODIFIED CONCRETE OVERLAY (VARIABLE THICKNESS) MATERIALS ONLY			29	
848	63	SQ YD	HAND CHIPPING			63	
848	2098	SQ YD	WEARING COURSE REMOVED, ASPHALT			2098	

NOTE: THESE QUANTITIES ARE CARRIED TO THE STRUCTURE SUB-SUMMARY ON SHEET 7/68.

POLYTECH, INC. 31/68
CONSULTING ENGINEERS CLEVELAND, OHIO

GENERAL PLAN &
HALF TRANSVERSE SECTION
BRIDGE NO. CUY–90–1062
I–90 UNDER WEST 117TH ST.

DESIGNED	DRAWN	TRACED	CHECKED	REVIEWED	DATE	REVISED
PSS	RG	–	VB	BS	9/94	ENF

FHWA REGION	STATE	PROJECT	
5	OHIO		

184/220

CUYAHOGA COUNTY
CUY-90-9.68

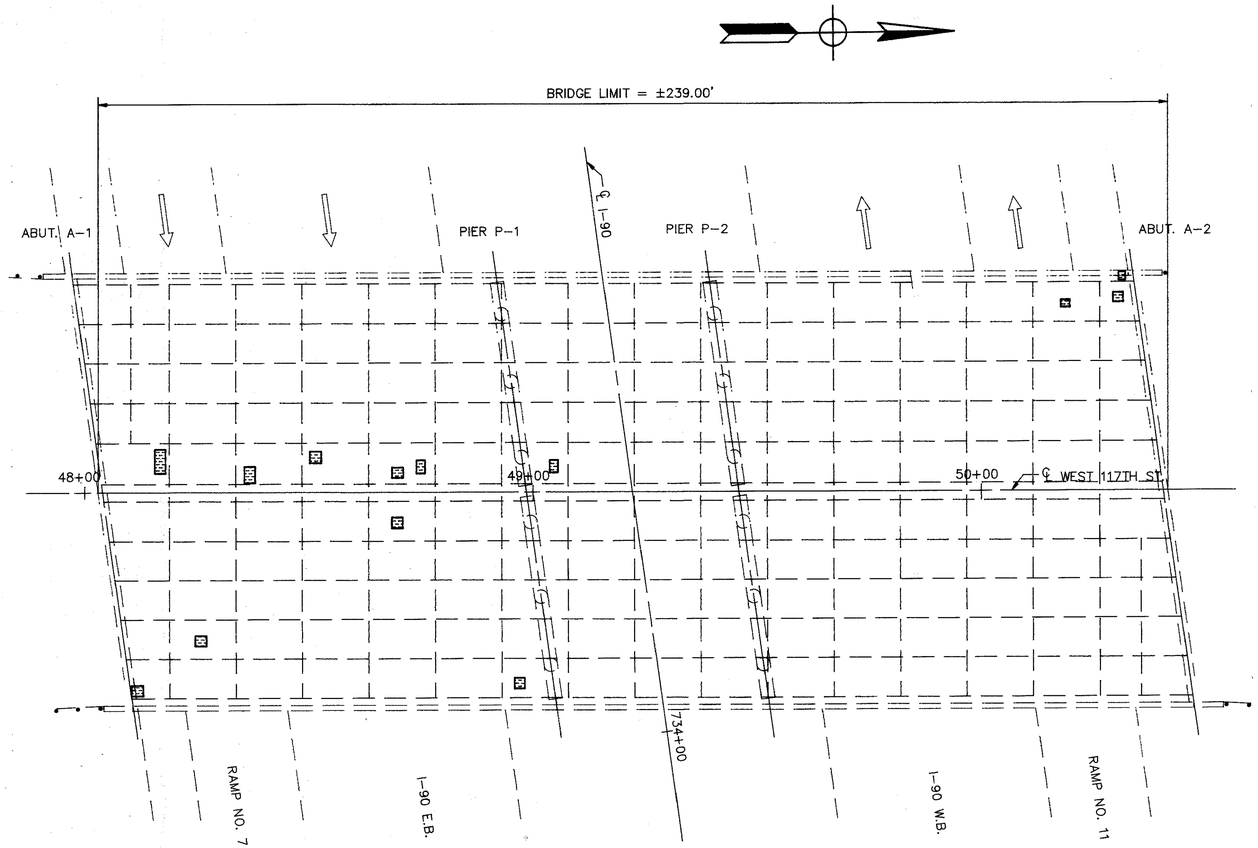

PLAN
BOTTOM OF DECK

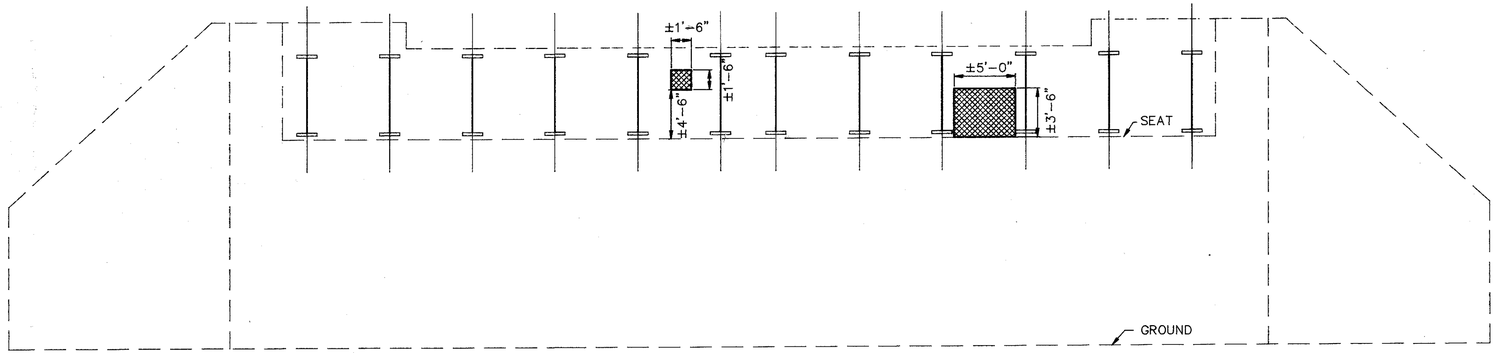

ELEVATION
ABUTMENT A-2

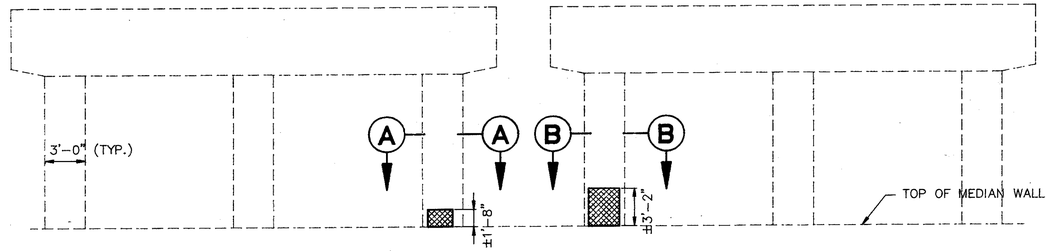

ELEVATION
PIER P-2 (LOOKING SOUTH)

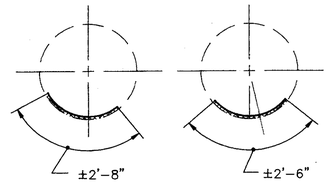

SECTION A-A SECTION B-B

ITEM	519	843	SPECIAL	202
LOCATION	PATCHING CONCRETE STRUCTURE AS PER PLAN SQ FT	PATCHING CONCRETE TROWELABLE MORTAR SQ FT	LOW PRESSURE EPOXY INJECTING SQ FT	PORTIONS OF STRUCTURE REMOVED LUMP
ABUTMENTS	–	20	–	–
PIERS AND CAPS	–	13	–	–
DECK UNDERSIDE	–	–	53	LUMP
25% EXPANSION FACTOR	–	8	13	–
TOTAL	–	41	66	LUMP

ITEM 519, PATCHING CONCRETE STRUCTURE, AS PER PLAN

ITEM 843 , PATCHING CONCRETE WITH TROWELABLE MORTAR

ITEM SPECIAL, LOW PRESSURE EPOXY INJECTING OF DELAMINATED CONCRETE

POLYTECH, INC. 32/68
CONSULTING ENGINEERS CLEVELAND, OHIO

BRIDGE CONCRETE REPAIR

BRIDGE NO. CUY-90-1062
I-90 UNDER WEST 117TH ST.

DESIGNED	DRAWN	TRACED	CHECKED	REVIEWED	DATE	REVISED
PSS	PSS	–	VB	BRS	9/94	

FHWA REGION	STATE	PROJECT	
5	OHIO		

185/220

CUYAHOGA COUNTY
CUY – 90 – 9.68

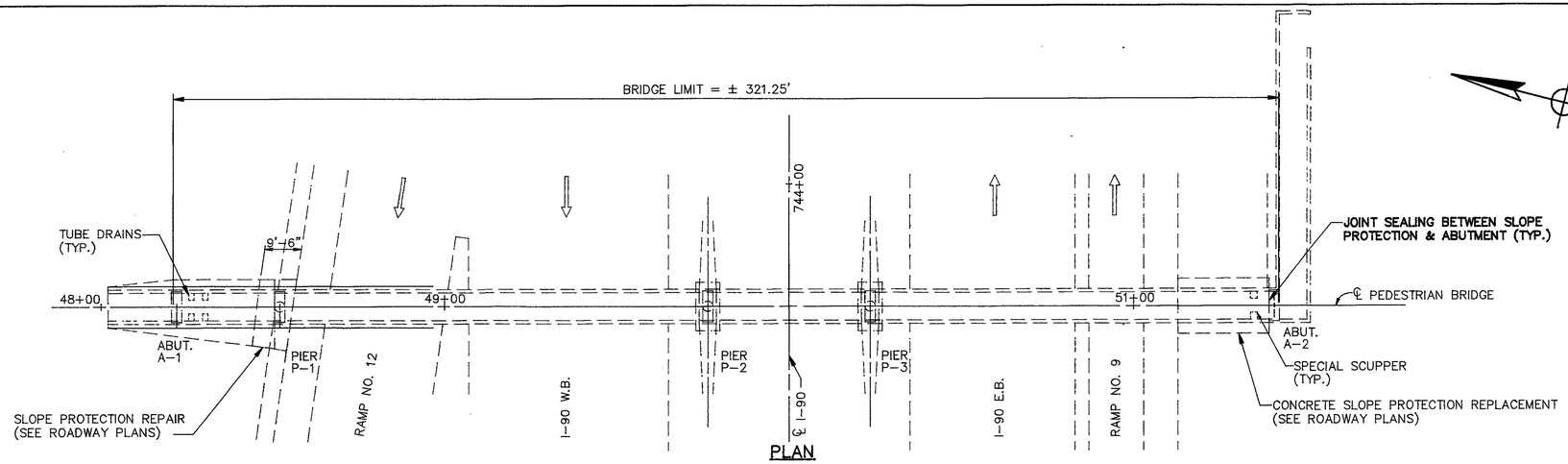

PLAN

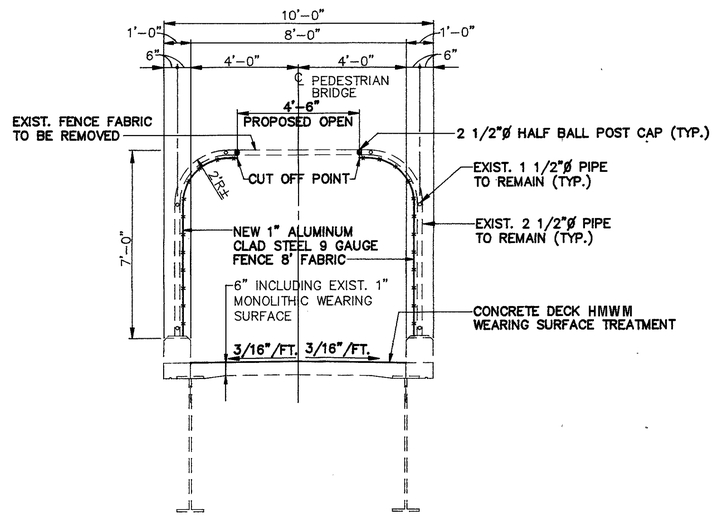

TRANSVERSE SECTION

EXISTING STRUCTURE

TYPE: 4 SPAN CONTINUOUS STEEL BEAM WITH REINFORCED CONCRETE DECK AND SUBSTRUCTURE, REINFORCED CONCRETE RAMPS

SPANS:30'–0",124'–6",47'–0",117'–6" C/C BRGS.

WALKWAY 8'–0" F/F, 1'–0" CURBS

ALIGNMENT: TANGENT

SKEW: 00° 00' 00"

LOADING: 85 P.S.F. LIVE LOAD

WEARING SURFACE: 1" MONOLITHIC

PROPOSED WORK

1. CONCRETE DECK HMWM WEARING SURFACE TREATMENT
2. CONCRETE SEALING
3. REPLACE SOUTH APPROACH SLAB (SEE ROADWAY PLANS)
4. FENCE RETROFIT
5. JOINT SEALING BETWEEN SLOPE PROTECTION & ABUTMENT

PROPOSED STRUCTURE

TYPE: 4 SPAN CONTINUOUS STEEL BEAM WITH REINFORCED CONCRETE DECK AND SUBSTRUCTURE, REINFORCED CONCRETE RAMPS

SPANS:30'–0",124'–6",47'–0",117'–6" C/C BRGS.

WALKWAY 8'–0" F/F, 1'–0" CURBS

ALIGNMENT: TANGENT

SKEW: 00° 00' 00"

LOADING: 85 P.S.F. LIVE LOAD

WEARING SURFACE: 1" MONOLITHIC

ESTIMATED QUANTITIES

* = SEE PROPOSAL NOTE

ITEM	TOTAL	UNIT	DESCRIPTION	ABUTMENT	PIERS	SUPER STRUCTURE	GENERAL
SPEC	434	SQ YD	SEALING OF CONCRETE SURFACES (EPOXY-URETHANE)*	16	74	344	
516	36	LN FT	STRUCTURAL JOINT OR JOINT SEALER, MISC.: 705.03 OR 705.04	36			
607	576	LN FT	FENCE, TYPE CL, MISC., AS PER PLAN (8' FABRIC)			576	
846	284	SQ YD	TREATING CONCRETE BRIDGE DECKS WITH HMWM RESIN			284	

NOTE: THESE QUANTITIES ARE CARRIED TO THE STRUCTURE SUB-SUMMARY ON SHEET 7/68.

POLYTECH, INC. 33/68
CONSULTING ENGINEERS CLEVELAND, OHIO

GENERAL PLAN & TRANSVERSE SECTION

BRIDGE NO. CUY–90–1082
I–90 UNDER WEST 114TH ST.

DESIGNED	DRAWN	TRACED	CHECKED	REVIEWED	DATE	REVISED
PSS	RG	–	VB	BS	9/94	ENF

FHWA REGION	STATE	PROJECT	
5	OHIO		

CUYAHOGA COUNTY
CUY-90-9.68

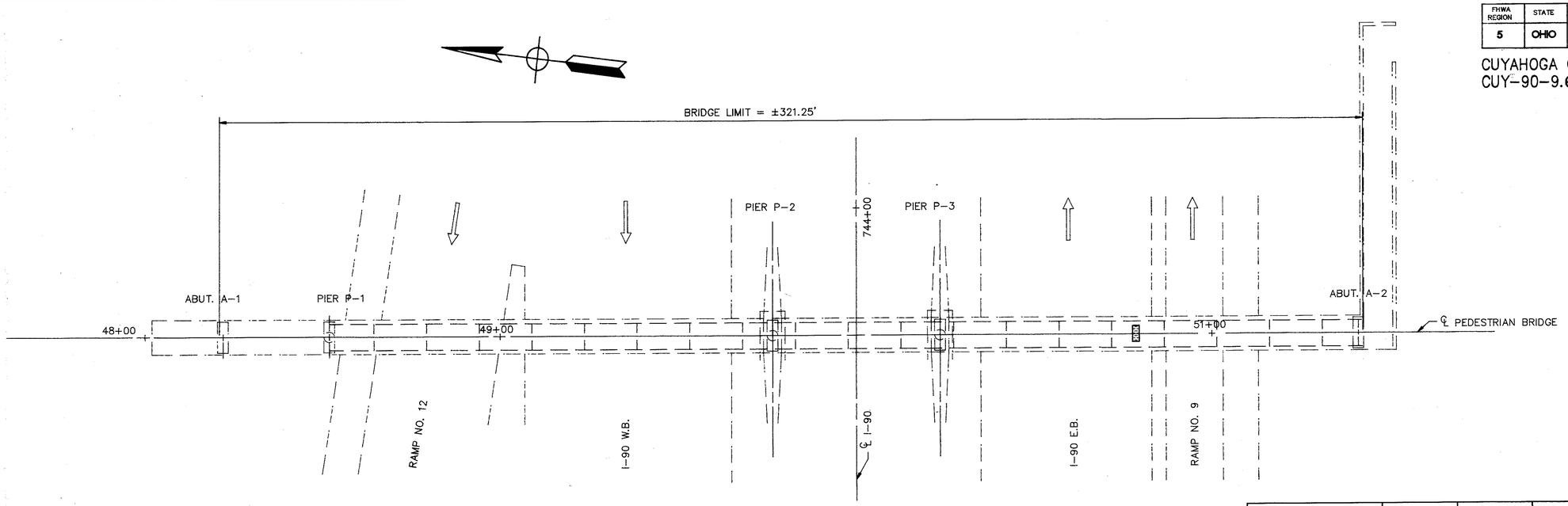

PLAN
BOTTOM OF DECK

ITEM	519	843	SPECIAL	202
LOCATION	PATCHING CONCRETE STRUCTURE AS PER PLAN SQ FT	PATCHING CONCRETE TROWELABLE MORTAR SQ FT	LOW PRESSURE EPOXY INJECTING SQ FT	PORTIONS OF STRUCTURE REMOVED LUMP
ABUTMENTS	–	13	–	–
PIERS AND CAPS	–	18	–	–
DECK UNDERSIDE	–	–	6	LUMP
25% EXPANSION FACTOR	–	8	2	–
TOTAL	–	39	8	LUMP

ITEM 519, PATCHING CONCRETE STRUCTURE, AS PER PLAN

ITEM 843 , PATCHING CONCRETE WITH TROWELABLE MORTAR

ITEM SPECIAL, LOW PRESSURE EPOXY INJECTING OF DELAMINATED CONCRETE

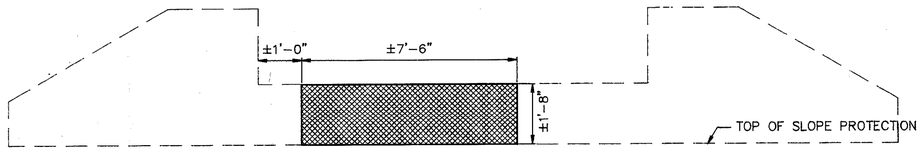

ELEVATION
ABUTMENT A-1

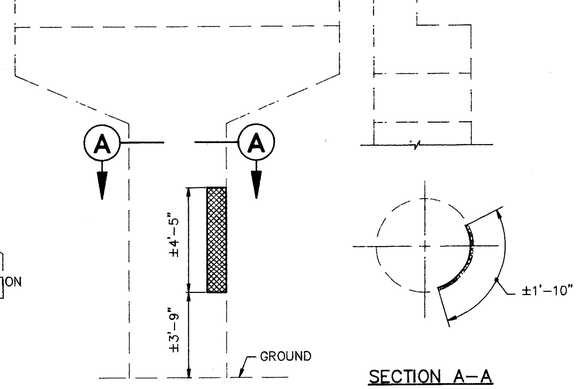

ELEVATION
PIER P-1 (LOOKING SOUTH)

SECTION A-A

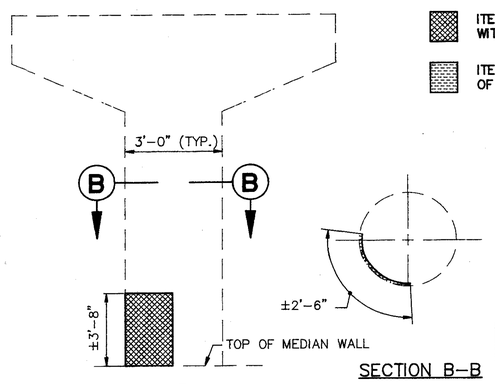

ELEVATION
PIER P-2 (LOOKING SOUTH)

SECTION B-B

POLYTECH, INC.
CONSULTING ENGINEERS CLEVELAND, OHIO

BRIDGE CONCRETE REPAIR

BRIDGE NO. CUY-90-1082
I-90 UNDER WEST 114TH ST.

DESIGNED	DRAWN	TRACED	CHECKED	REVIEWED	DATE	REVISED
PSS	PSS	–	VB	BRS	9/94	

FHWA REGION	STATE	PROJECT	
5	OHIO		

187/220

CUYAHOGA COUNTY
CUY – 90 – 9.68

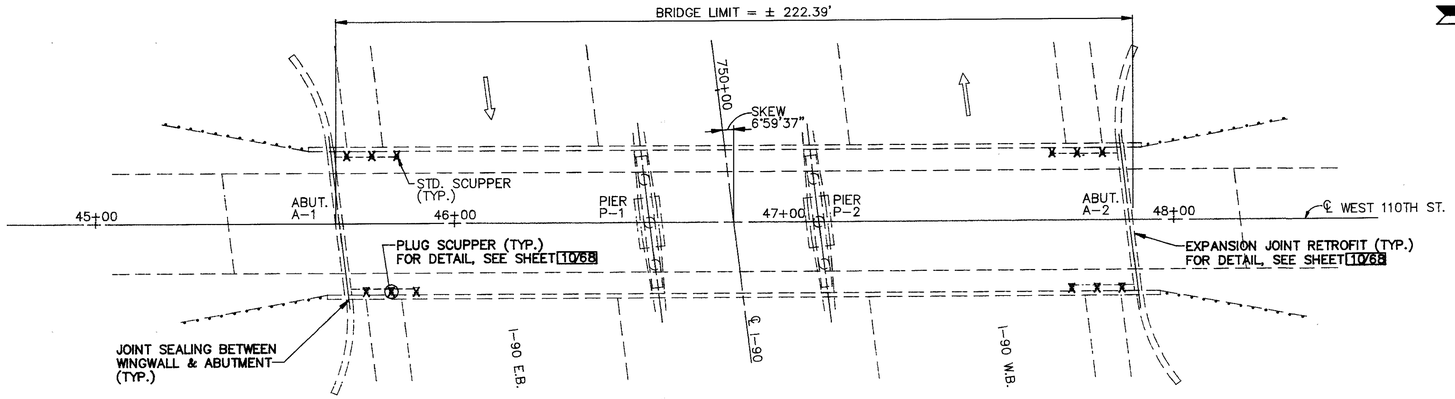

PLAN

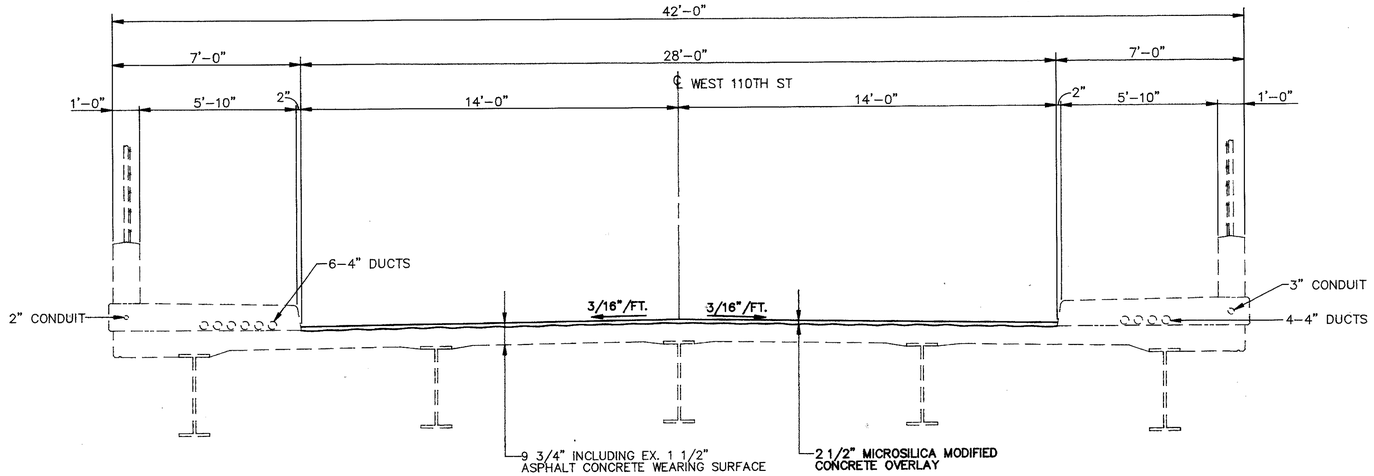

TRANSVERSE SECTION

EXISTING STRUCTURE

TYPE: 3 SPAN CONTINUOUS STEEL BEAM WITH REINFORCED CONCRETE DECK AND SUBSTRUCTURE

SPANS: 85'–3", 47'–4 1/4", 85'–3"

ROADWAY: 28'–0", F/F CURBS WITH 6'–0" SIDEWALKS

ALIGNMENT: TANGENT

SKEW: 6° 59' 37" RIGHT FORWARD

LOADING: HS20–44

APPROACH SLABS: 30' LONG (AS–1–72)

WEARING SURFACE: 1 1/2" ASPHALT CONCRETE

PROPOSED WORK

1. REMOVE THE ENTIRE EXISTING 1 1/2" ASPHALT OVERLAY AND THE TOP 1" (MINIMUM) OF EXISTING CONCRETE DECK BELOW AND OVERLAY WITH 2 1/2" MICROSILICA MODIFIED CONCRETE.
2. CONCRETE REPAIR AND SEALING
3. ASPHALT DRAIN PLUGGING
4. EXPANSION JOINTS RETROFIT
5. JOINT SEALING BETWEEN SLOPE PROTECTION & ABUTMENT
6. SCUPPER PLUGGING

MODIFIED STRUCTURE

TYPE: 3 SPAN CONTINUOUS STEEL BEAM WITH REINFORCED CONCRETE DECK AND SUBSTRUCTURE

SPANS: 85'–3", 47'–4 1/4", 85'–3"

ROADWAY: 28'–0", F/F CURBS WITH 6'–0" SIDEWALKS

ALIGNMENT: TANGENT

SKEW: 6° 59' 37" RIGHT FORWARD

LOADING: HS20–44

APPROACH SLABS: 30' LONG (AS–1–72)

WEARING SURFACE: 2 1/2" MICROSILICA MODIFIED CONCRETE

ESTIMATED QUANTITIES

* = SEE PROPOSAL NOTE

ITEM	TOTAL	UNIT	DESCRIPTION	ABUTMENT	PIERS	SUPER STRUCTURE	GENERAL
SPEC	381	SQ YD	SEALING OF CONCRETE SURFACES (NON-EPOXY)*			381	
SPEC	988	SQ YD	SEALING OF CONCRETE SURFACES (EPOXY-URETHANE)*	320	174	494	
514	LUMP	LUMP	FIELD PAINTING, MISC.: RETROFITTED AREAS			LUMP	
516	57	LN FT	STRUCTURAL STEEL EXPANSION JOINT (RETROFIT), AS PER PLAN			57	
516	88	LN FT	STRUCTURAL JOINT OR JOINT SEALER, MISC.: 705.03 OR 705.04	88			

ESTIMATED QUANTITIES

ITEM	TOTAL	UNIT	DESCRIPTION	ABUTMENT	PIERS	SUPER STRUCTURE	GENERAL
518	12	EACH	STRUCTURAL DRAINAGE MISC.: SCUPPER PLUGGING			12	
848	682	SQ YD	MICROSILICA MODIFIED CONCRETE OVERLAY USING HYDRO-DEMOLITION 2½ INCH THICK			682	
848	682	SQ YD	SURFACE PREPARATION USING HYDRO-DEMOLITION			682	
848	10	CU YD	MICROSILICA MODIFIED CONCRETE OVERLAY (VARIABLE THICKNESS) MATERIALS ONLY			10	
848	20	SQ YD	HAND CHIPPING			20	
848	682	SQ YD	WEARING COURSE REMOVED, ASPHALT			682	

NOTE: THESE QUANTITIES ARE CARRIED TO THE STRUCTURE SUB-SUMMARY ON SHEET 7/68.

POLYTECH, INC. 35/68
CONSULTING ENGINEERS CLEVELAND, OHIO

GENERAL PLAN & TRANSVERSE SECTION
BRIDGE NO. CUY–90–1094
I–90 UNDER WEST 110TH ST.

DESIGNED	DRAWN	TRACED	CHECKED	REVIEWED	DATE	REVISED
PSS	RG	–	VB	BS	9/94	ENF

FHWA REGION	STATE	PROJECT	
5	OHIO		

188/220

CUYAHOGA COUNTY
CUY-90-9.68

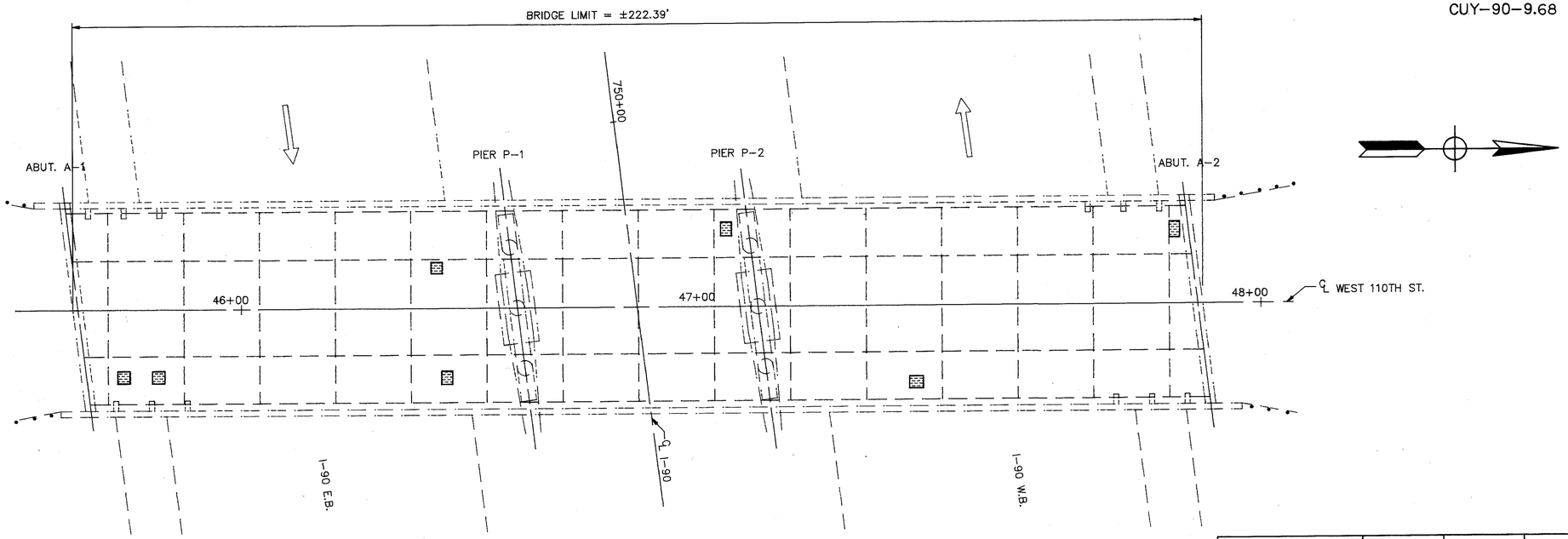

PLAN
BOTTOM OF DECK

ITEM	519	843	SPECIAL	202
LOCATION	PATCHING CONCRETE STRUCTURE AS PER PLAN SQ FT	PATCHING CONCRETE TROWELABLE MORTAR SQ FT	LOW PRESSURE EPOXY INJECTING SQ FT	PORTIONS OF STRUCTURE REMOVED LUMP
ABUTMENTS	–	–	–	–
PIERS AND CAPS	–	8	–	–
DECK UNDERSIDE	–	–	26	LUMP
25% EXPANSION FACTOR	–	2	7	–
TOTAL	–	10	33	LUMP

ITEM 519, PATCHING CONCRETE STRUCTURE, AS PER PLAN

ITEM 843 , PATCHING CONCRETE WITH TROWELABLE MORTAR

ITEM SPECIAL, LOW PRESSURE EPOXY INJECTING OF DELAMINATED CONCRETE

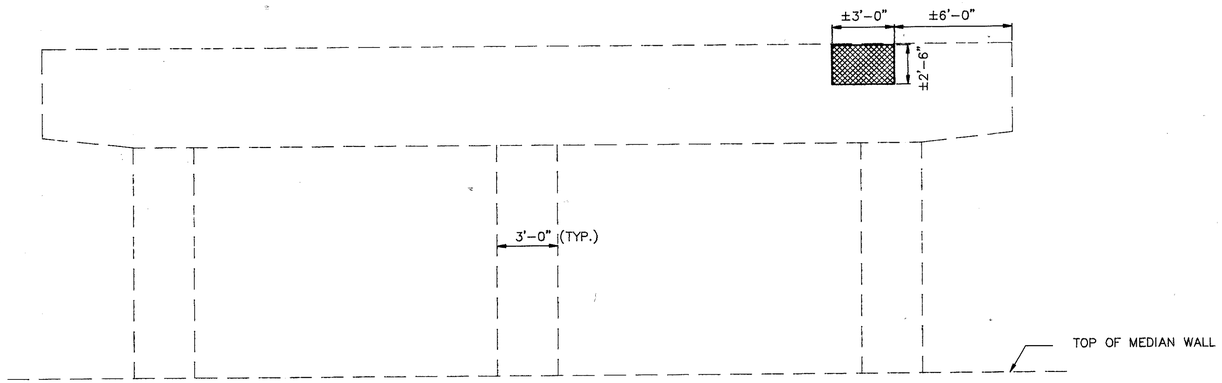

ELEVATION
PIER P-1 (LOOKING NORTH)

POLYTECH, INC. 38/68
CONSULTING ENGINEERS CLEVELAND, OHIO

BRIDGE CONCRETE REPAIR

BRIDGE NO. CUY-90-1094
I-90 UNDER WEST 110TH ST.

DESIGNED	DRAWN	TRACED	CHECKED	REVIEWED	DATE	REVISED
PSS	PSS	–	VB	BRS	9/94	

FHWA REGION	STATE	PROJECT	
5	OHIO		

189
220

CUYAHOGA COUNTY
CUY – 90 – 9.68

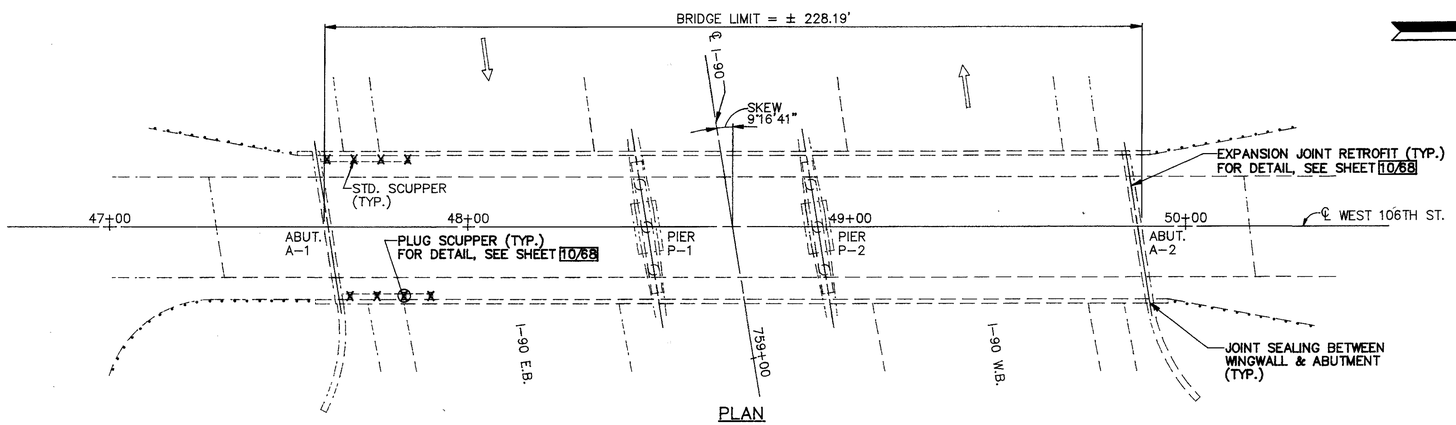

PLAN

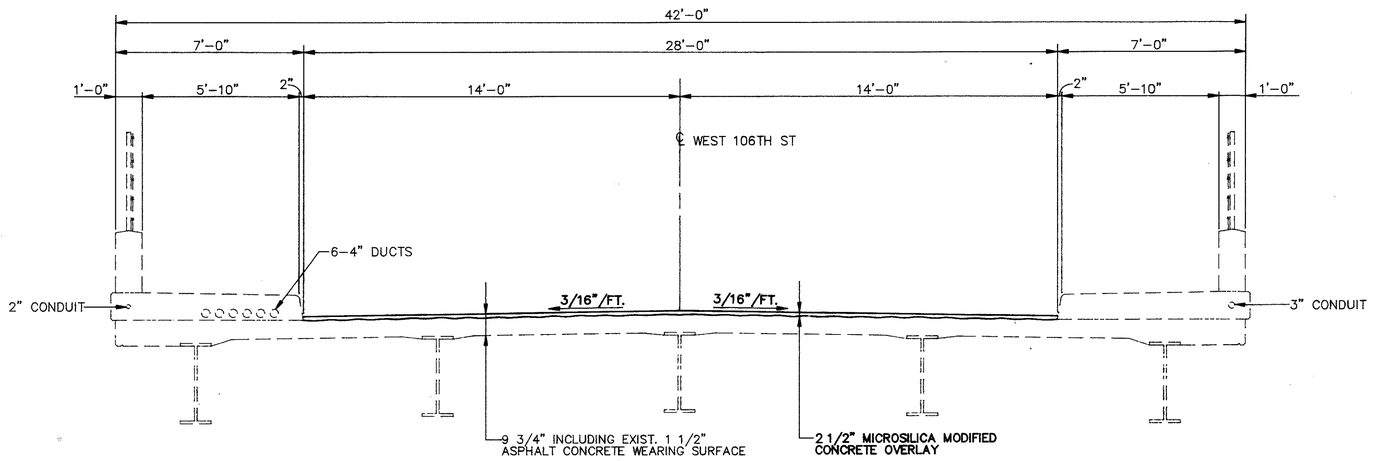

TRANSVERSE SECTION

EXISTING STRUCTURE

TYPE: 3 SPAN CONTINUOUS STEEL BEAM WITH REINFORCED CONCRETE DECK AND SUBSTRUCTURE

SPANS: 88'–0", 47'–7 1/2", 88'–0"

ROADWAY: 28'–0", F/F CURBS WITH 6'–0" SIDEWALKS

ALIGNMENT: TANGENT

SKEW: 9° 16' 41" RIGHT FORWARD

LOADING: HS20–44

APPROACH SLABS: 30' LONG (AS–1–72)

WEARING SURFACE: 1 1/2" ASPHALT CONCRETE

PROPOSED WORK

1. REMOVE THE ENTIRE EXISTING 1 1/2" ASPHALT OVERLAY AND THE TOP 1" (MINIMUM) OF EXISTING CONCRETE DECK BELOW AND OVERLAY WITH 2 1/2" MICROSILICA MODIFIED CONCRETE.
2. CONCRETE REPAIR AND SEALING
3. ASPHALT DRAIN PLUGGING
4. EXPANSION JOINTS RETROFIT
5. JOINT SEALING BETWEEN WINGWALL & ABUTMENT
6. SCUPPER PLUGGING

PROPOSED STRUCTURE

TYPE: 3 SPAN CONTINUOUS STEEL BEAM WITH REINFORCED CONCRETE DECK AND SUBSTRUCTURS

SPANS: 88'–0", 47'–7 1/2", 88'–0"

ROADWAY: 28'–0", F/F CURBS WITH 6'–0" SIDEWALKS

ALIGNMENT: TANGENT

SKEW: 9° 16' 41" RIGHT FORWARD

LOADING: HS20–44

APPROACH SLABS: 30' LONG (AS–1–72)

WEARING SURFACE: 2 1/2" MICROSILICA MODIFIED CONCRETE

ESTIMATED QUANTITIES

* = SEE PROPOSAL NOTE

ITEM	TOTAL	UNIT	DESCRIPTION	ABUTMENT	PIERS	SUPER STRUCTURE	GENERAL
SPEC	494	SQ YD	SEALING OF CONCRETE SURFACES (NON-EPOXY)*			494	
SPEC	1225	SQ YD	SEALING OF CONCRETE SURFACES (EPOXY-URETHANE)*	411	180	634	
514	LUMP	LUMP	FIELD PAINTING, MISC.: RETROFITTED AREAS			LUMP	
516	58	LN FT	STRUCTURAL STEEL EXPANSION JOINT (RETROFIT), AS PER PLAN			58	
516	53	LN FT	STRUCTURAL JOINT OR JOINT SEALER, MISC.: 705.03 OR 705.04	53			

ESTIMATED QUANTITIES

ITEM	TOTAL	UNIT	DESCRIPTION	ABUTMENT	PIERS	SUPER STRUCTURE	GENERAL
518	8	EACH	STRUCTURAL DRAINAGE MISC.: SCUPPER PLUGGING			8	
848	700	SQ YD	MICROSILICA MODIFIED CONCRETE OVERLAY USING HYDRO-DEMOLITION 2½ INCH THICK			700	
848	700	SQ YD	SURFACE PREPARATION USING HYDRO-DEMOLITION			700	
848	10	CU YD	MICROSILICA MODIFIED CONCRETE OVERLAY (VARIABLE THICKNESS) MATERIALS ONLY			10	
848	21	SQ YD	HAND CHIPPING			21	
848	700	SQ YD	WEARING COURSE REMOVED, ASPHALT			700	

NOTE: THESE QUANTITIES ARE CARRIED TO THE STRUCTURE SUB-SUMMARY ON SHEET 7/68.

POLYTECH, INC. 37/68
CONSULTING ENGINEERS CLEVELAND, OHIO

GENERAL PLAN & TRANSVERSE SECTION
BRIDGE NO. CUY–90–1110
1–90 UNDER WEST 106TH ST.

DESIGNED	DRAWN	TRACED	CHECKED	REVIEWED	DATE	REVISED
PSS	RG	–	VB	BS	9/94	ENF

FHWA REGION	STATE	PROJECT	
5	OHIO		

190
220

CUYAHOGA COUNTY
CUY-90-9.68

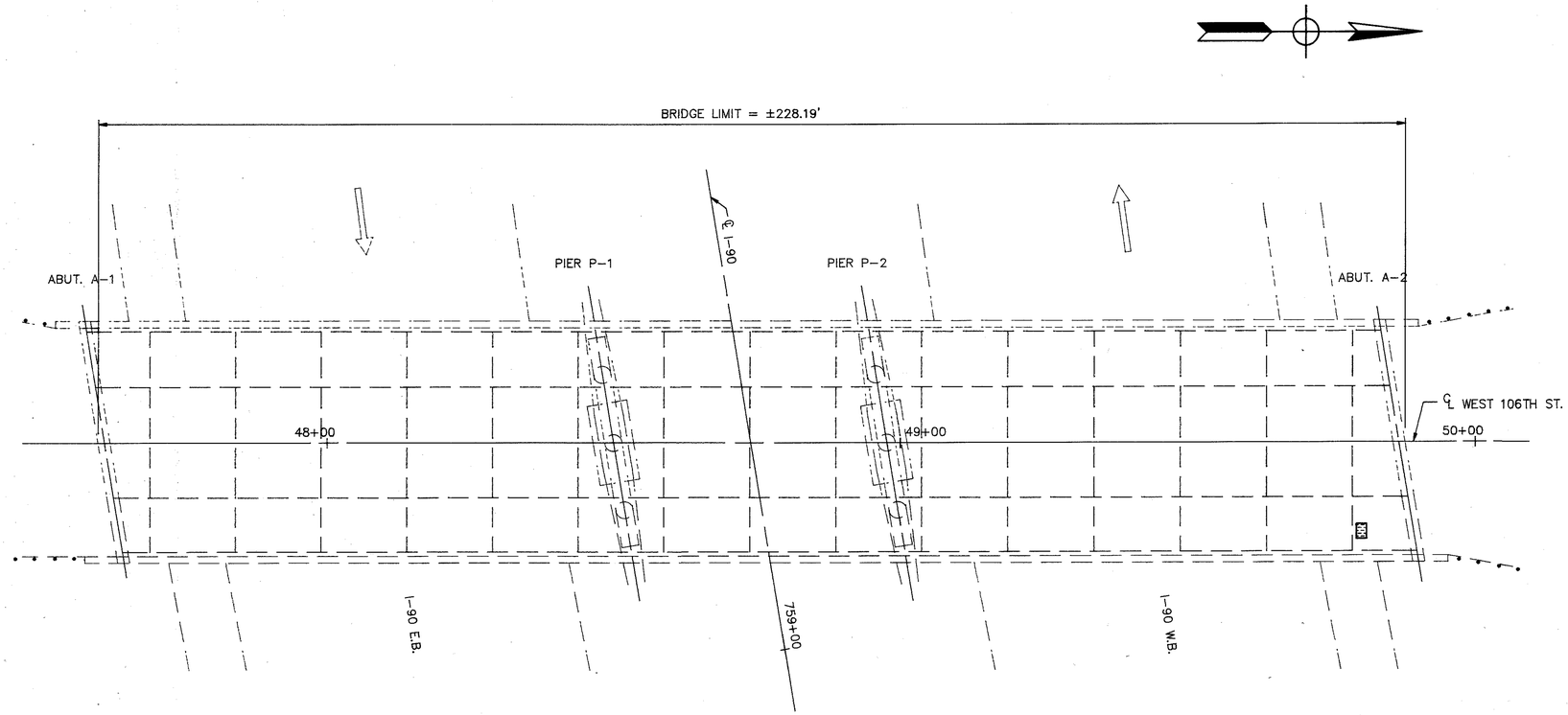

PLAN
BOTTOM OF DECK

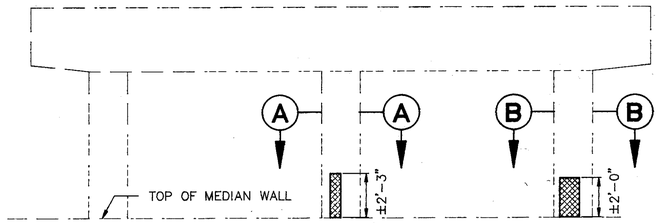

ELEVATION
PIER P-2 (LOOKING SOUTH)

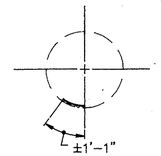

SECTION A-A

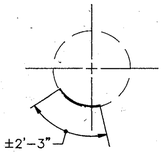

SECTION B-B

ITEM	519	843	SPECIAL	202
LOCATION	PATCHING CONCRETE STRUCTURE AS PER PLAN SQ FT	PATCHING CONCRETE TROWELABLE MORTAR SQ FT	LOW PRESSURE EPOXY INJECTING SQ FT	PORTIONS OF STRUCTURE REMOVED LUMP
ABUTMENTS	–	11	–	–
PIERS AND CAPS	–	8	–	–
DECK UNDERSIDE	–	–	3	LUMP
25% EXPANSION FACTOR	–	5	1	–
TOTAL	–	24	4	LUMP

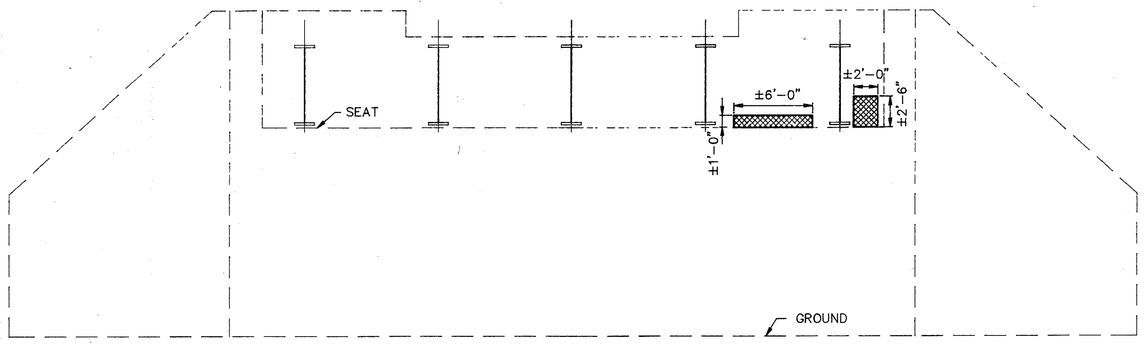

ELEVATION
ABUTMENT A-1

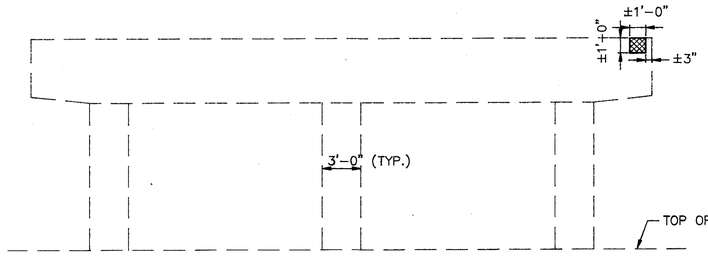

ELEVATION
PIER P-1 (LOOKING NORTH)

ITEM 519, PATCHING CONCRETE STRUCTURE, AS PER PLAN

ITEM 843 , PATCHING CONCRETE WITH TROWELABLE MORTAR

ITEM SPECIAL, LOW PRESSURE EPOXY INJECTING OF DELAMINATED CONCRETE

POLYTECH, INC. 38 / 68
CONSULTING ENGINEERS CLEVELAND, OHIO

BRIDGE CONCRETE REPAIR

BRIDGE NO. CUY-90-1110
I-90 UNDER WEST 106TH ST.

DESIGNED	DRAWN	TRACED	CHECKED	REVIEWED	DATE	REVISED
PSS	PSS	–	VB	BRS	9/94	

FHWA REGION	STATE	PROJECT	
5	OHIO		

191
220

CUYAHOGA COUNTY
CUY – 90 – 9.68

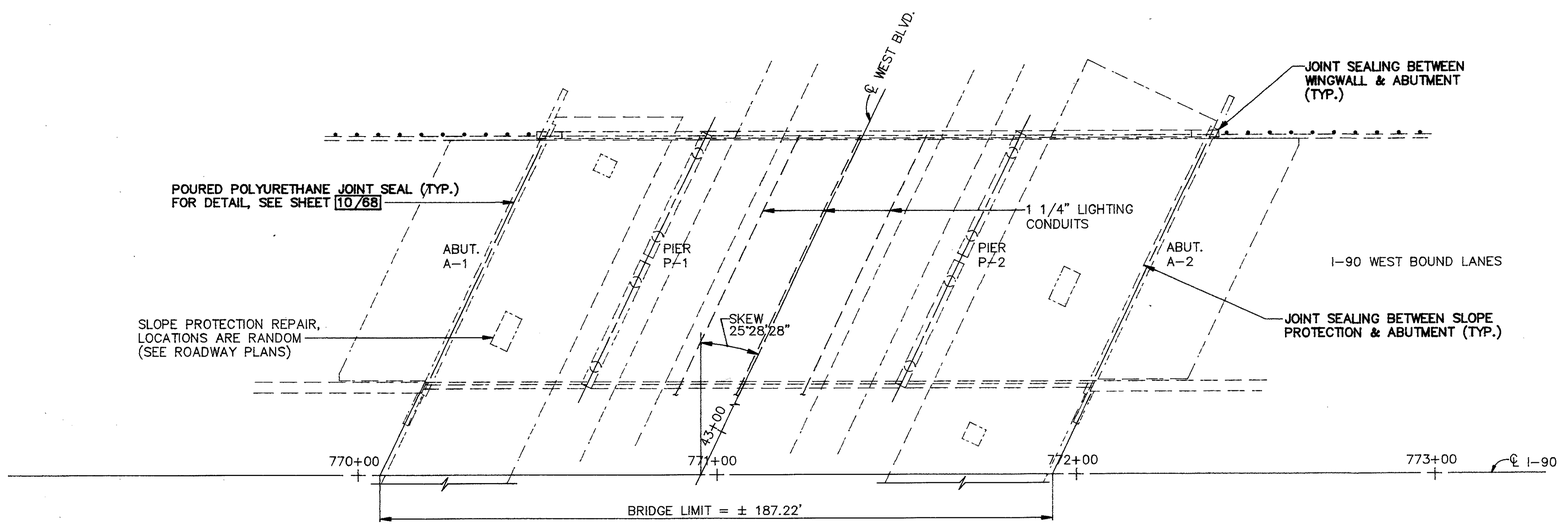

PLAN

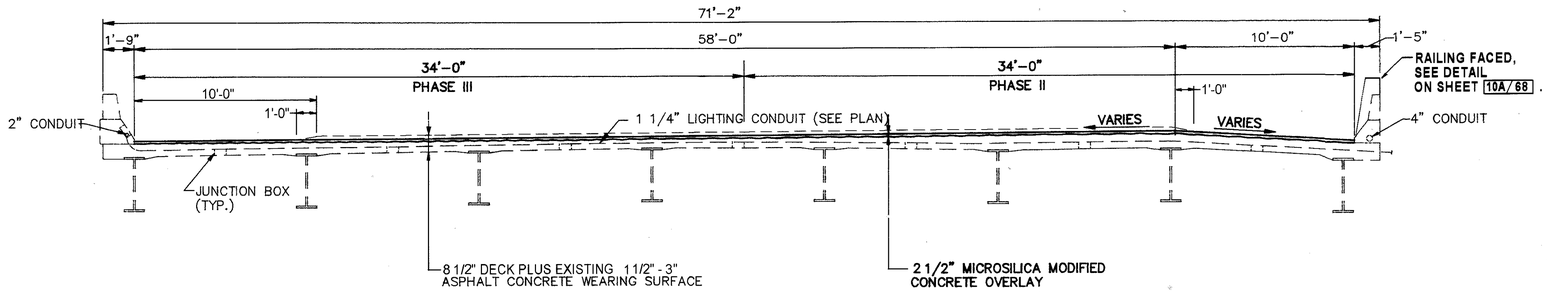

TRANSVERSE SECTION

EXISTING STRUCTURE

TYPE: 3 SPAN CONTINUOUS STEEL BEAM WITH REINFORCED CONCRETE DECK AND SUBSTRUCTURE
SPANS: 44'–6", 87'–6", 53'–0"
ROADWAY : 68'–0" T/T PARAPETS
ALIGNMENT: TANGENT
SKEW: 25° 28' 28" LEFT FORWARD
LOADING: HS20–44 & INT. ALT. LOADING
APPROACH SLABS: 25' LONG (AS–1–72)
WEARING SURFACE: 1 1/2" - 3" ASPHALT CONCRETE

PROPOSED WORK

1. REMOVE THE ENTIRE EXISTING ASPHALT OVERLAY AND THE TOP 1" (MINIMUM) OF EXISTING CONCRETE DECK BELOW AND OVERLAY WITH 2 1/2" MICROSILICA MODIFIED CONCRETE.
2. CONCRETE REPAIR AND SEALING
3. ASPHALT DRAIN PLUGGING
4. JOINT SEALING BETWEEN SLOPE PROTECTION & ABUTMENT
5. JOINT SEALING BETWEEN WINGWALL & ABUTMENT
6. POURED POLYURETHANE JOINT SEAL
7. REFACE MEDIAN PARAPET

PROPOSED STRUCTURE

TYPE: 3 SPAN CONTINUOUS STEEL BEAM WITH REINFORCED CONCRETE DECK AND SUBSTRUCTURE
SPANS: 44'–6", 87'–6", 53'–0"
ROADWAY : 68'–0" T/T PARAPETS
ALIGNMENT: TANGENT
SKEW: 25° 28' 28" LEFT FORWARD
LOADING: HS20–44 & INT. ALT. LOADING
APPROACH SLABS: 25' LONG (AS–1–72)
WEARING SURFACE: 2 1/2" MICROSILICA MODIFIED CONCRETE

ESTIMATED QUANTITIES

* = SEE PROPOSAL NOTE

ITEM	TOTAL	UNIT	DESCRIPTION	ABUTMENT	PIERS	SUPER STRUCTURE	GENERAL
SPEC	766	SQ YD	SEALING OF CONCRETE SURFACES (EPOXY-URETHANE)*	57	284	425	
SPEC	150	LN FT	POURED POLYURETHANE JOINT SEAL			150	
516	238	LN FT	STRUCTURAL JOINT OR JOINT SEALER, MISC.: 705.03 OR 705.04	238			

ESTIMATED QUANTITIES

ITEM	TOTAL	UNIT	DESCRIPTION	ABUTMENT	PIERS	SUPER STRUCTURE	GENERAL
517	188	LN FT	RAILING FACED, AS PER PLAN			188	
848	1413	SQ YD	MICROSILICA MODIFIED CONCRETE OVERLAY USING HYDRO-DEMOLITION 2½ INCH THICK			1413	
848	1413	SQ YD	SURFACE PREPARATION USING HYDRO-DEMOLITION			1413	
848	20	CU YD	MICROSILICA MODIFIED CONCRETE OVERLAY (VARIABLE THICKNESS) MATERIALS ONLY			20	
848	42	SQ YD	HAND CHIPPING			42	
848	1413	SQ YD	WEARING COURSE REMOVED, ASPHALT			1413	

NOTE: THESE QUANTITIES ARE CARRIED TO THE STRUCTURE SUB-SUMMARY ON SHEET 7/68.

POLYTECH, INC. 39 / 68
CONSULTING ENGINEERS CLEVELAND, OHIO

GENERAL PLAN & TRANSVERSE SECTION
BRIDGE NO. CUY–90–1132 L
I–90 OVER WEST BLVD.

DESIGNED	DRAWN	TRACED	CHECKED	REVIEWED	DATE	REVISED
PSS	RG	–	VB	BS	9/94	ENF

FHWA REGION	STATE	PROJECT	
5	OHIO		

192
220

CUYAHOGA COUNTY
CUY-90-9.68

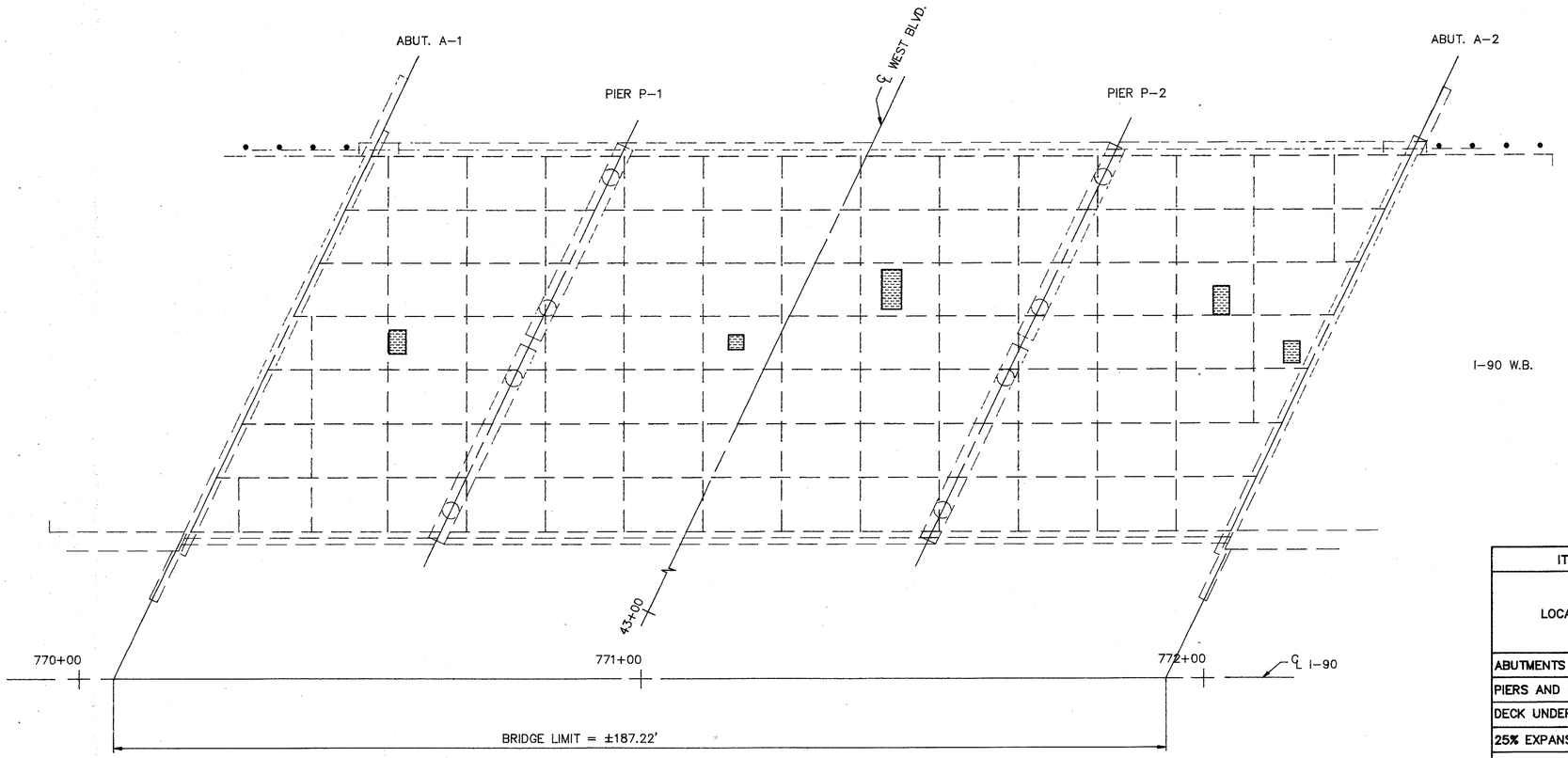

PLAN
BOTTOM OF DECK

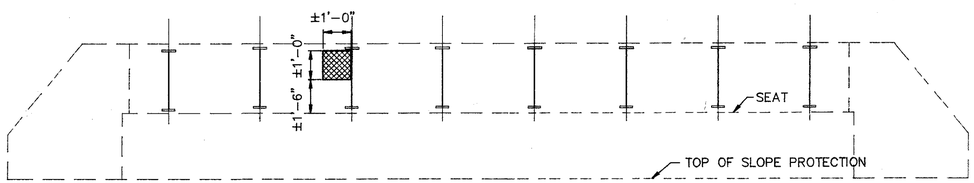

ELEVATION
ABUTMENT A-1

ITEM	519	843	SPECIAL	202
LOCATION	PATCHING CONCRETE STRUCTURE AS PER PLAN SQ FT	PATCHING CONCRETE TROWELABLE MORTAR SQ FT	LOW PRESSURE EPOXY INJECTING SQ FT	PORTIONS OF STRUCTURE REMOVED LUMP
ABUTMENTS	–	1	–	–
PIERS AND CAPS	–	–	–	–
DECK UNDERSIDE	–	–	22	LUMP
25% EXPANSION FACTOR	–	–	6	–
TOTAL	–	1	28	LUMP

ITEM 519, PATCHING CONCRETE STRUCTURE, AS PER PLAN

ITEM 843 , PATCHING CONCRETE WITH TROWELABLE MORTAR

ITEM SPECIAL, LOW PRESSURE EPOXY INJECTING OF DELAMINATED CONCRETE

POLYTECH, INC. 40 / 68
CONSULTING ENGINEERS CLEVELAND, OHIO

BRIDGE CONCRETE REPAIR

BRIDGE NO. CUY-90-1132 L
I-90 OVER WEST BLVD.

DESIGNED	DRAWN	TRACED	CHECKED	REVIEWED	DATE	REVISED
PSS	PSS	–	VB	BRS	9/94	

FHWA REGION	STATE	PROJECT	
5	OHIO		

193/220

CUYAHOGA COUNTY
CUY – 90 – 9.68

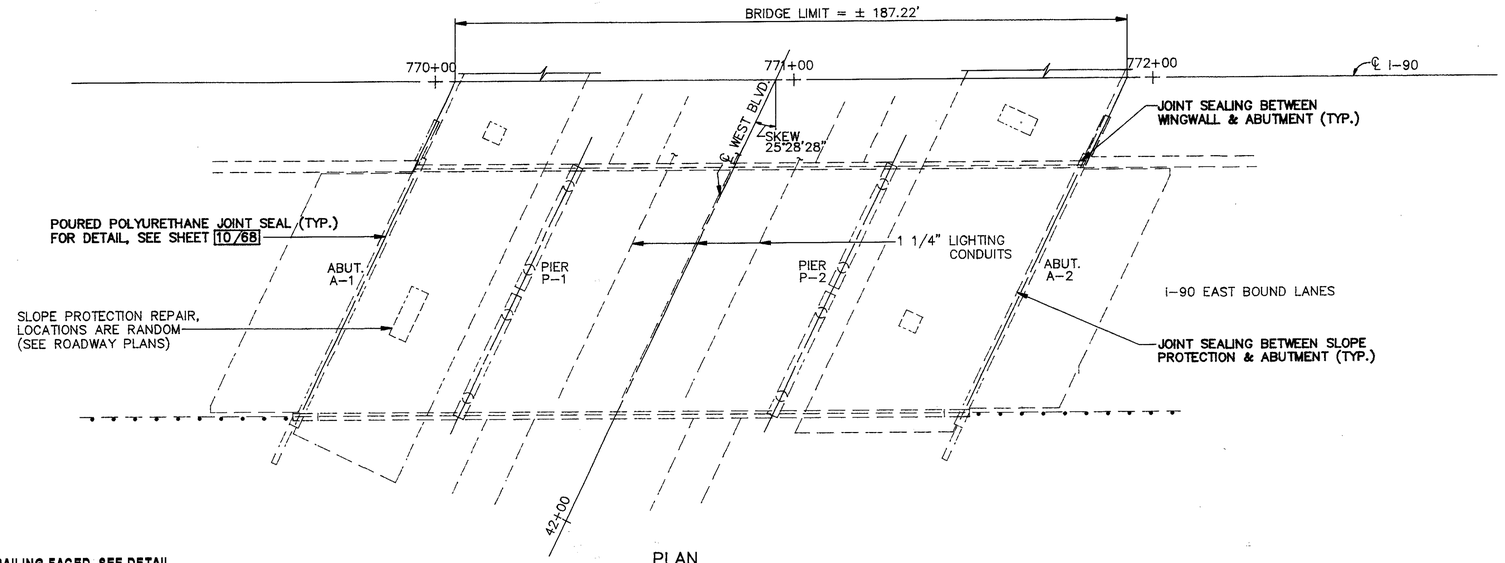

PLAN

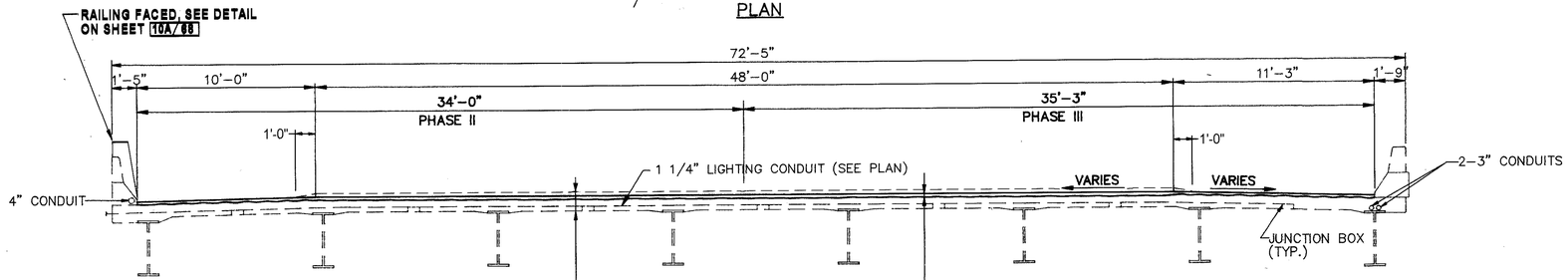

TRANSVERSE SECTION

EXISTING STRUCTURE

TYPE: 3 SPAN CONTINUOUS STEEL BEAM WITH REINFORCED CONCRETE DECK AND SUBSTRUCTURE

SPANS: 44'–6", 87'–6", 53'–0"

ROADWAY : 69'–3" T/T PARAPETS

ALIGNMENT: TANGENT

SKEW: 25° 28' 28" LEFT FORWARD

LOADING: HS20–44 & INT. ALT. LOADING

APPROACH SLABS: 25' LONG (AS–1–72)

WEARING SURFACE: 1 1/2" - 3" ASPHALT CONCRETE

PROPOSED WORK

1. REMOVE THE ENTIRE EXISTING ASPHALT OVERLAY AND THE TOP 1" (MINIMUM) OF EXISTING CONCRETE DECK BELOW AND OVERLAY WITH 2 1/2" MICROSILICA MODIFIED CONCRETE.
2. CONCRETE REPAIR AND SEALING
3. ASPHALT DRAIN PLUGGING
4. JOINT SEALING BETWEEN SLOPE PROTECTION & ABUTMENT
5. JOINT SEALING BETWEEN WINGWALL & ABUTMENT
6. POURED POLYURETHANE JOINT SEAL
7. REFACE MEDIAN PARAPET

PROPOSED STRUCTURE

TYPE: 3 SPAN CONTINUOUS STEEL BEAM WITH REINFORCED CONCRETE DECK AND SUBSTRUCTURE

SPANS: 44'–6", 87'–6", 53'–0"

ROADWAY : 69'–3" T/T PARAPETS

ALIGNMENT: TANGENT

SKEW: 25° 28' 28" LEFT FORWARD

LOADING: HS20–44 & INT. ALT. LOADING

APPROACH SLABS: 25' LONG (AS–1–72)

WEARING SURFACE: 2 1/2" MICROSILICA MODIFIED CONCRETE

ESTIMATED QUANTITIES

* = SEE PROPOSAL NOTE

ITEM	TOTAL	UNIT	DESCRIPTION	ABUTMENT	PIERS	SUPER STRUCTURE	GENERAL
SPEC	777	SQ YD	SEALING OF CONCRETE SURFACES (EPOXY-URETHANE)*	67	284	426	
SPEC	150	LN FT	POURED POLYURETHANE JOINT SEAL			150	
516	238	LN FT	STRUCTURAL JOINT OR JOINT SEALER, MISC.: 705.03 OR 705.04	238			

ESTIMATED QUANTITIES

ITEM	TOTAL	UNIT	DESCRIPTION	ABUTMENT	PIERS	SUPER STRUCTURE	GENERAL
517	188	LN FT	RAILING FACED, AS PER PLAN			188	
848	1439	SQ YD	MICROSILICA MODIFIED CONCRETE OVERLAY USING HYDRO-DEMOLITION 2½ INCH THICK			1439	
848	1439	SQ YD	SURFACE PREPARATION USING HYDRO-DEMOLITION			1439	
848	20	CU YD	MICROSILICA MODIFIED CONCRETE OVERLAY (VARIABLE THICKNESS) MATERIALS ONLY			20	
848	43	SQ YD	HAND CHIPPING			43	
848	1439	SQ YD	WEARING COURSE REMOVED, ASPHALT			1439	

NOTE: THESE QUANTITIES ARE CARRIED TO THE STRUCTURE SUB-SUMMARY ON SHEET 7/68.

POLYTECH, INC. 41/68
CONSULTING ENGINEERS CLEVELAND, OHIO

GENERAL PLAN & TRANSVERSE SECTION
BRIDGE NO. CUY–90–1132 R
I–90 OVER WEST BLVD.

DESIGNED	DRAWN	TRACED	CHECKED	REVIEWED	DATE	REVISED
PSS	RG	–	VB	BS	9/94	ENF

FHWA REGION	STATE	PROJECT	
5	OHIO		

194/220

CUYAHOGA COUNTY
CUY-90-9.68

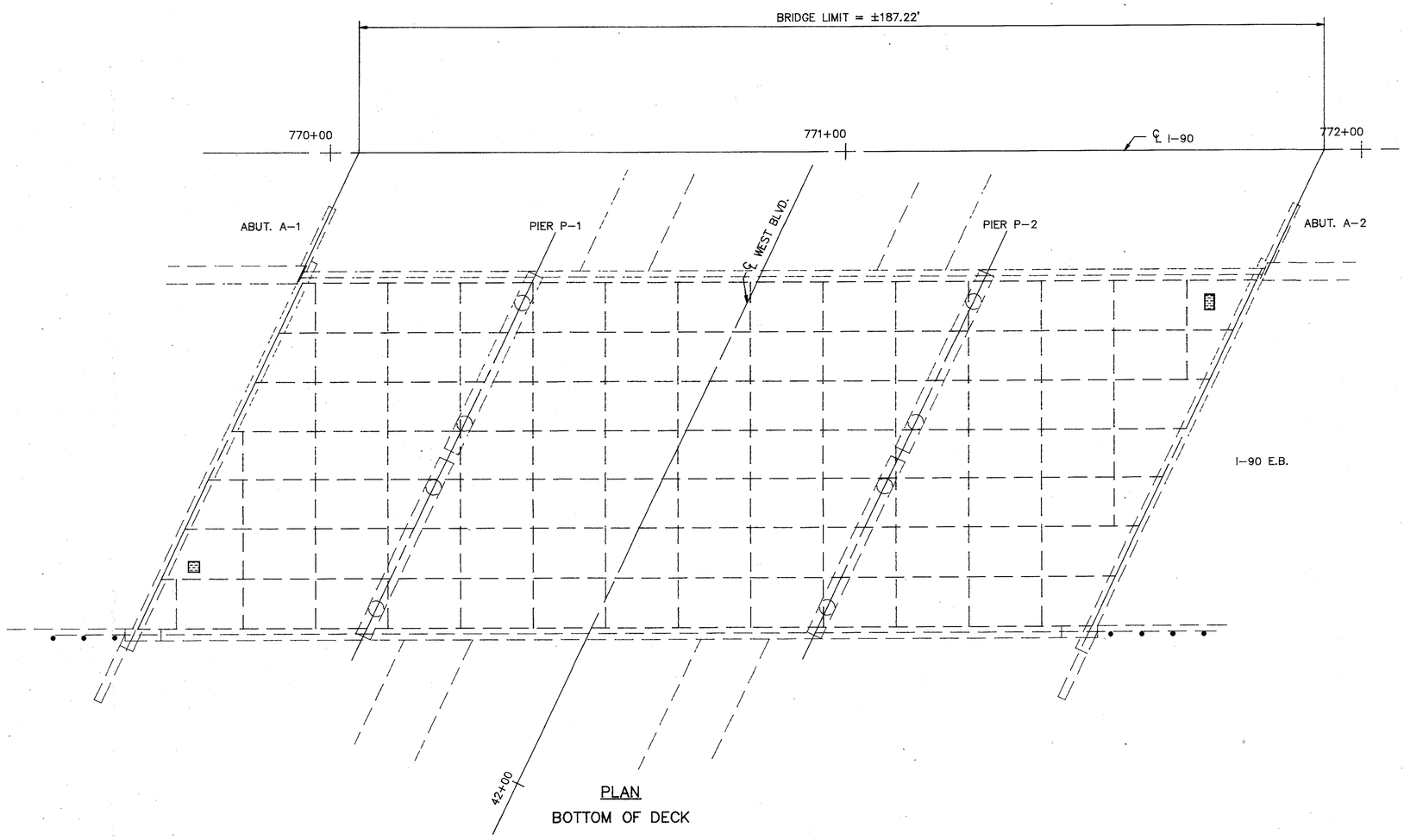

PLAN
BOTTOM OF DECK

ITEM	519	843	SPECIAL	202
LOCATION	PATCHING CONCRETE STRUCTURE AS PER PLAN SQ FT	PATCHING CONCRETE TROWELABLE MORTAR SQ FT	LOW PRESSURE EPOXY INJECTING SQ FT	PORTIONS OF STRUCTURE REMOVED LUMP
ABUTMENTS	–	4	–	–
PIERS AND CAPS	–	2	–	–
DECK UNDERSIDE	–	–	5	LUMP
25% EXPANSION FACTOR	–	2	1	–
TOTAL	–	8	6	LUMP

ITEM 519, PATCHING CONCRETE STRUCTURE, AS PER PLAN

ITEM 843 , PATCHING CONCRETE WITH TROWELABLE MORTAR

ITEM SPECIAL, LOW PRESSURE EPOXY INJECTING OF DELAMINATED CONCRETE

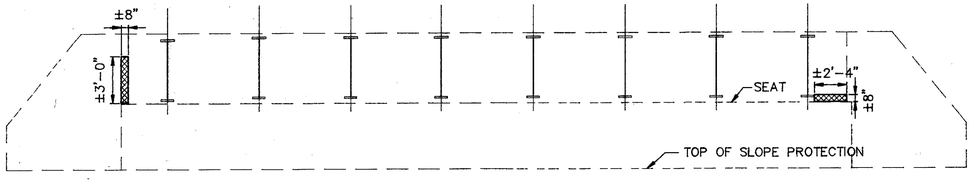

ELEVATION
ABUTMENT A-1

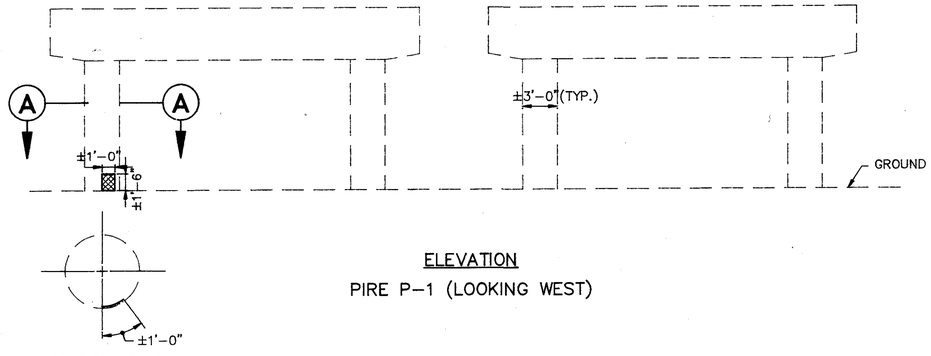

SECTION A-A

ELEVATION
PIRE P-1 (LOOKING WEST)

POLYTECH, INC. 42/68
CONSULTING ENGINEERS CLEVELAND, OHIO

BRIDGE CONCRETE REPAIR

BRIDGE NO. CUY-90-1132 R
I-90 OVER WEST BLVD.

DESIGNED	DRAWN	TRACED	CHECKED	REVIEWED	DATE	REVISED
PSS	PSS	–	VB	BRS	9/94	

FHWA REGION	STATE	PROJECT	
5	OHIO		

195/220

CUYAHOGA COUNTY
CUY – 90 – 9.68

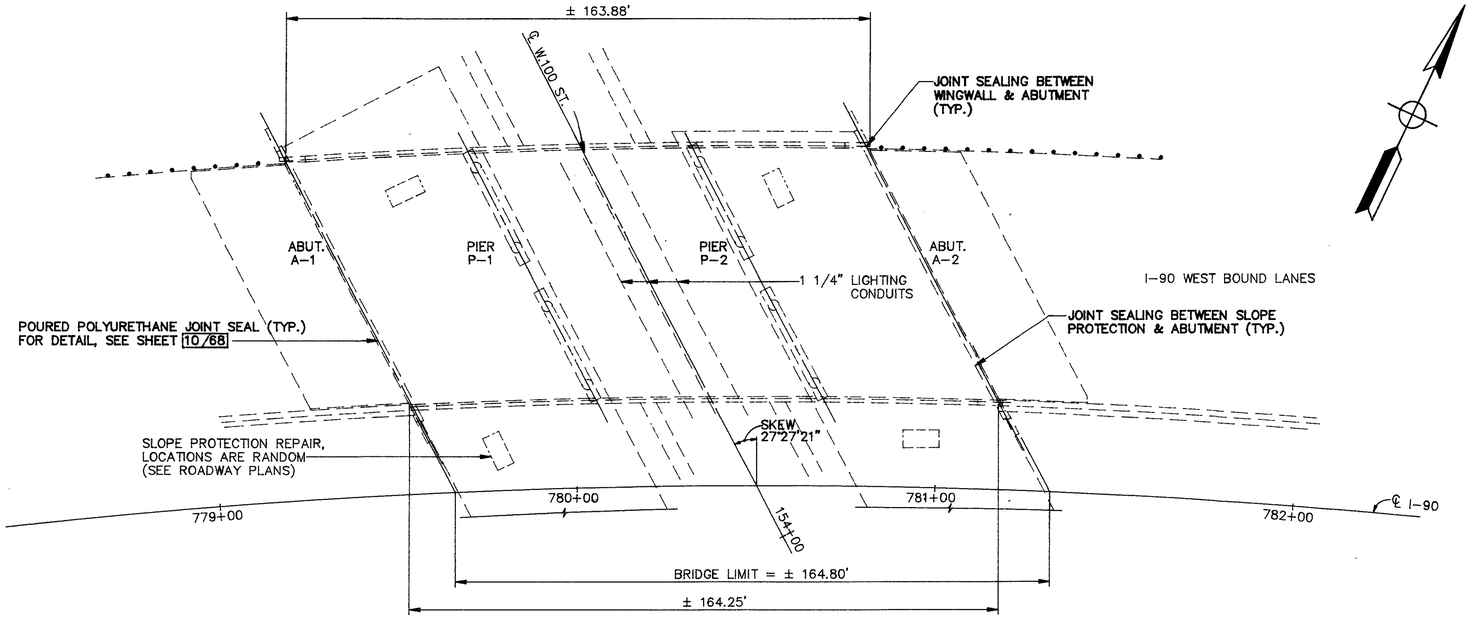

PLAN

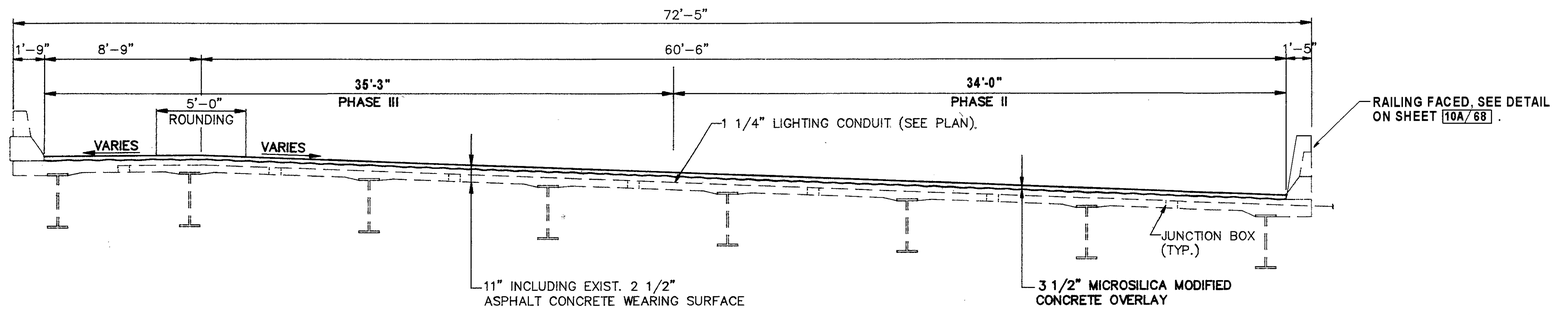

TRANSVERSE SECTION

EXISTING STRUCTURE

TYPE: 3 SPAN CONTINUOUS STEEL BEAM WITH REINFORCED CONCRETE DECK AND SUBSTRUCTURE

SPANS: 50'–0", 62'–6", 50'–0" C/C BRGS.

ROADWAY : 69'–3" T/T PARAPETS

ALIGNMENT: SPIRAL AND 3° 00' 00" CURVE RT.

SKEW: 27° 27' 21" RIGHT FORWARD

LOADING: HS20–44 AND INT. ALT. LOADING

APPROACH SLAB: 25' LONG (AS–1–72)

WEARING SURFACE: 2 1/2" ASPHALT CONCRETE

PROPOSED WORK

1. REMOVE THE ENTIRE EXISTING 2 1/2" ASPHALT OVERLAY AND THE TOP 1" (MINIMUM) OF EXISTING CONCRETE DECK BELOW AND OVERLAY WITH 3 1/2" MICROSILICA MODIFIED CONCRETE.
2. CONCRETE REPAIR AND SEALING
3. ASPHALT DRAIN PLUGGING
4. JOINT SEALING BETWEEN SLOPE PROTECTION & ABUTMENT
5. JOINT SEALING BETWEEN WINGWALL & ABUTMENT
6. POURED POLYURETHANE JOINT SEAL
7. REFACE MEDIAN PARAPET

PROPOSED STRUCTURE

TYPE: 3 SPAN CONTINUOUS STEEL BEAM WITH REINFORCED CONCRETE DECK AND SUBSTRUCTURE

SPANS: 50'–0", 62'–6", 50'–0" C/C BRGS.

ROADWAY : 69'-3" T/T PARAPETS

ALIGNMENT: SPIRAL AND 3° 00' 00" CURVE RT.

SKEW: 27° 27' 21" RIGHT FORWARD

LOADING: HS20–44 AND INT. ALT. LOADING

APPROACH SLAB: 25' LONG (AS–1–72)

WEARING SURFACE: 3 1/2" MICROSILICA MODIFIED CONCRETE

ESTIMATED QUANTITIES

* = SEE PROPOSAL NOTE

ITEM	TOTAL	UNIT	DESCRIPTION	ABUTMENT	PIERS	SUPER STRUCTURE	GENERAL
SPEC	797	SQ YD	SEALING OF CONCRETE SURFACES (EPOXY-URETHANE)*	65	309	423	
SPEC	155	LN FT	POURED POLYURETHANE JOINT SEAL			155	
516	248	LN FT	STRUCTURAL JOINT OR JOINT SEALER, MISC.: 705.03 OR 705.04	248			

ESTIMATED QUANTITIES

ITEM	TOTAL	UNIT	DESCRIPTION	ABUTMENT	PIERS	SUPER STRUCTURE	GENERAL
517	165	LN FT	RAILING FACED, AS PER PLAN			165	
848	1258	SQ YD	MICROSILICA MODIFIED CONCRETE OVERLAY USING HYDRO-DEMOLITION 3½ INCH THICK			1258	
848	1258	SQ YD	SURFACE PREPARATION USING HYDRO-DEMOLITION			1258	
848	17	CU YD	MICROSILICA MODIFIED CONCRETE OVERLAY (VARIABLE THICKNESS) MATERIALS ONLY			17	
848	38	SQ YD	HAND CHIPPING			38	
848	1258	SQ YD	WEARING COURSE REMOVED, ASPHALT			1258	

NOTE: THESE QUANTITIES ARE CARRIED TO THE STRUCTURE SUB-SUMMARY ON SHEET 7/68.

POLYTECH, INC. 43/68
CONSULTING ENGINEERS CLEVELAND, OHIO

GENERAL PLAN & TRANSVERSE SECTION

BRIDGE NO. CUY–90–1151 L
I–90 OVER WEST 100TH ST.

DESIGNED	DRAWN	TRACED	CHECKED	REVIEWED	DATE	REVISED
PSS	RG	–	VB	BS	9/94	

FHWA REGION	STATE	PROJECT	
5	OHIO		

196
220

CUYAHOGA COUNTY
CUY-90-9.68

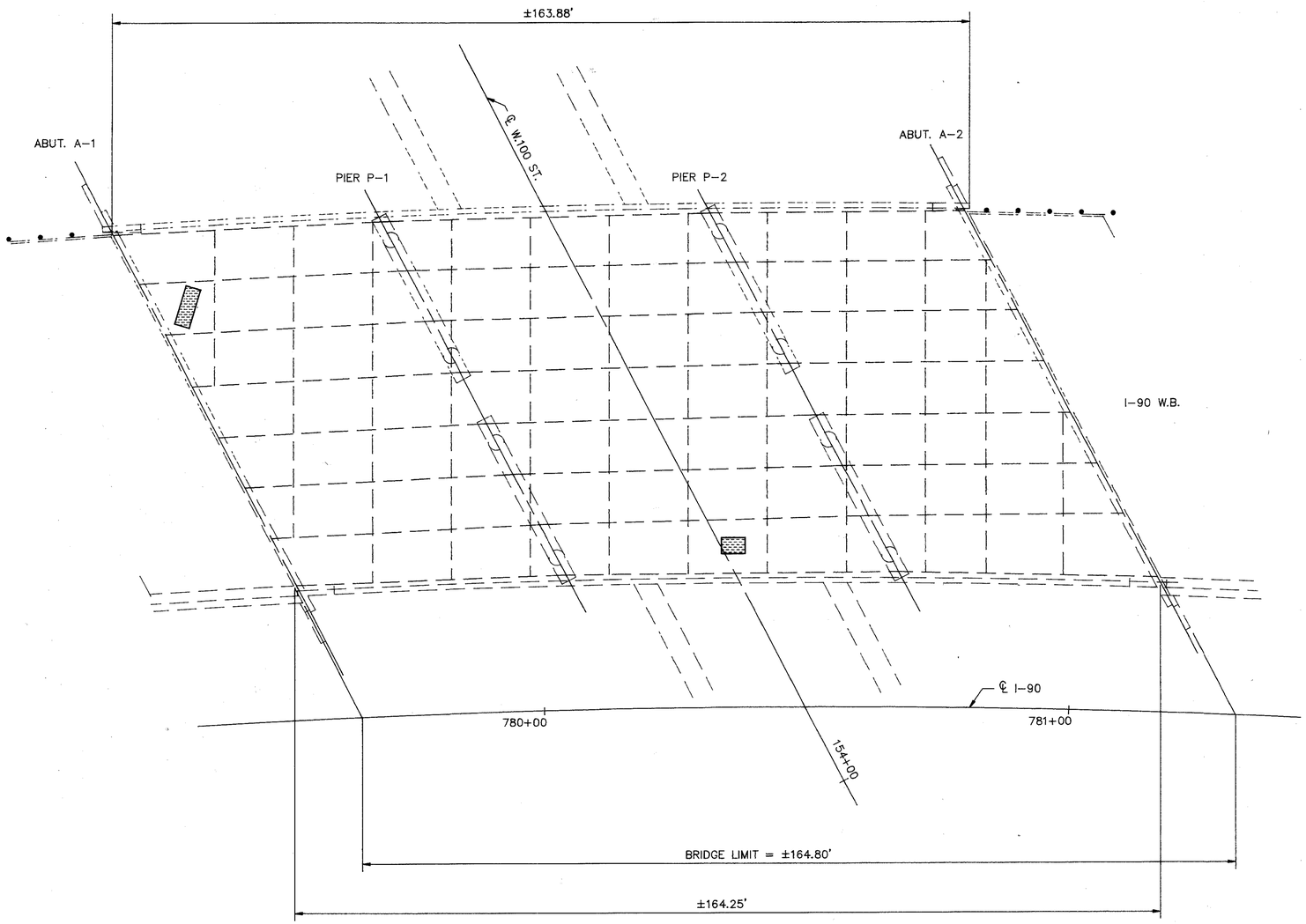

ITEM	519	843	SPECIAL	202
LOCATION	PATCHING CONCRETE STRUCTURE AS PER PLAN SQ FT	PATCHING CONCRETE TROWELABLE MORTAR SQ FT	LOW PRESSURE EPOXY INJECTING SQ FT	PORTIONS OF STRUCTURE REMOVED LUMP
ABUTMENTS	–	–	–	–
PIERS AND CAPS	–	–	–	–
DECK UNDERSIDE	–	–	8	LUMP
25% EXPANSION FACTOR	–	–	2	–
TOTAL	–	–	10	LUMP

ITEM 519, PATCHING CONCRETE STRUCTURE, AS PER PLAN

ITEM 843 , PATCHING CONCRETE WITH TROWELABLE MORTAR

ITEM SPECIAL, LOW PRESSURE EPOXY INJECTING OF DELAMINATED CONCRETE

PLAN

BOTTOM OF DECK

POLYTECH, INC. 44 / 68
CONSULTING ENGINEERS CLEVELAND, OHIO

BRIDGE CONCRETE REPAIR

BRIDGE NO. CUY-90-1151 L
I-90 OVER WEST 100TH ST.

DESIGNED	DRAWN	TRACED	CHECKED	REVIEWED	DATE	REVISED
PSS	PSS	–	VB	BRS	9/94	

FHWA REGION	STATE	PROJECT	
5	OHIO		

197/220

CUYAHOGA COUNTY
CUY – 90 – 9.68

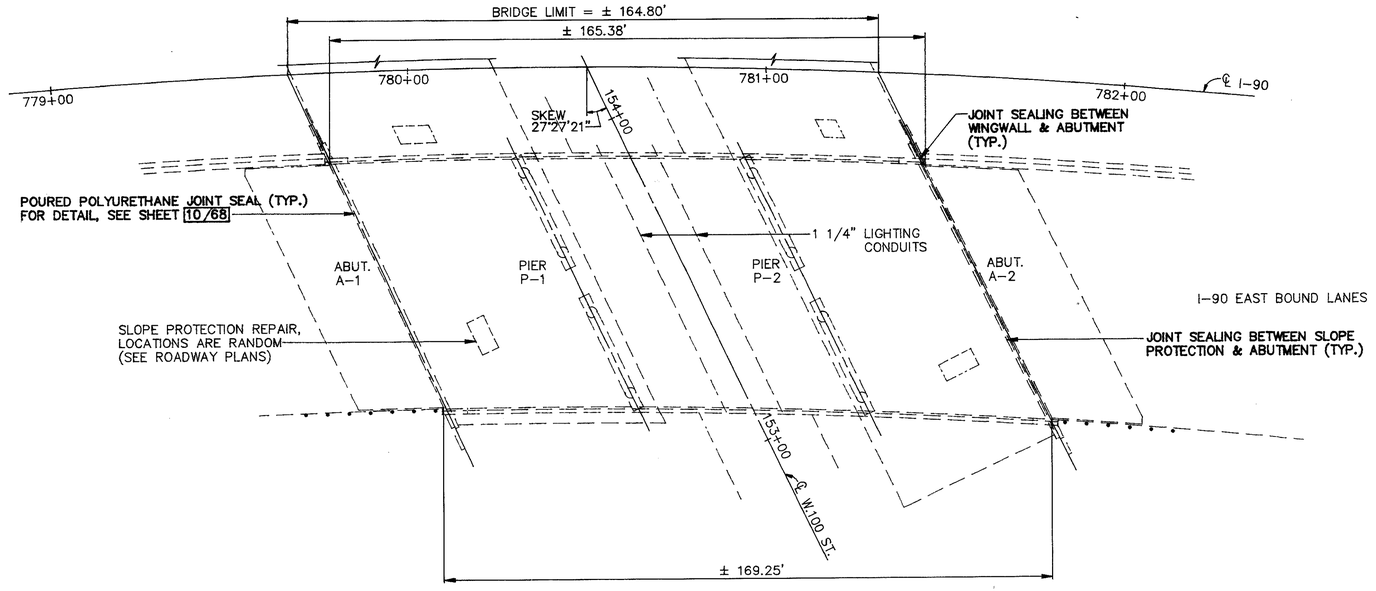

PLAN

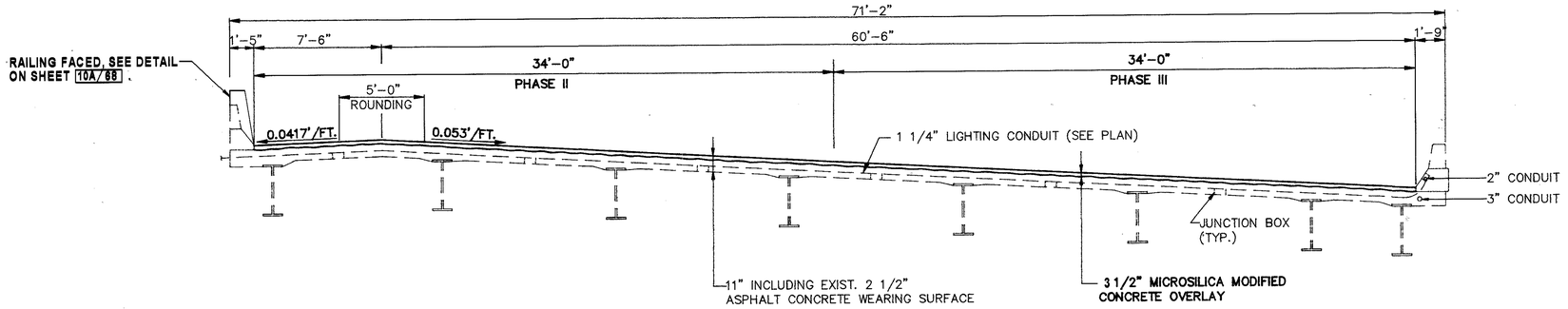

TRANSVERSE SECTION

ESTIMATED QUANTITIES

* = SEE PROPOSAL NOTE

ITEM	TOTAL	UNIT	DESCRIPTION	ABUTMENT	PIERS	SUPER STRUCTURE	GENERAL
SPEC	795	SQ YD	SEALING OF CONCRETE SURFACES (EPOXY-URETHANE)*	63	308	424	
SPEC	155	LN FT	POURED POLYURETHANE JOINT SEAL			155	
516	248	LN FT	STRUCTURAL JOINT OR JOINT SEALER, MISC.: 705.03 OR 705.04	248			

ESTIMATED QUANTITIES

ITEM	TOTAL	UNIT	DESCRIPTION	ABUTMENT	PIERS	SUPER STRUCTURE	GENERAL
517	166	LN FT	RAILING FACED, AS PER PLAN			166	
848	1264	SQ YD	MICROSILICA MODIFIED CONCRETE OVERLAY USING HYDRO-DEMOLITION 3½ INCH THICK			1264	
848	1264	SQ YD	SURFACE PREPARATION USING HYDRO-DEMOLITION			1264	
848	17	CU YD	MICROSILICA MODIFIED CONCRETE OVERLAY (VARIABLE THICKNESS) MATERIALS ONLY			17	
848	38	SQ YD	HAND CHIPPING			38	
848	1264	SQ YD	WEARING COURSE REMOVED, ASPHALT			1264	

NOTE: THESE QUANTITIES ARE CARRIED TO THE STRUCTURE SUB-SUMMARY ON SHEET 7/68.

EXISTING STRUCTURE

TYPE: 3 SPAN CONTINUOUS STEEL BEAM WITH REINFORCED CONCRETE DECK AND SUBSTRUCTURE

SPANS: 50'–0", 62'–6", 50'–0" C/C BRGS.

ROADWAY : 68'– 0" T/T PARAPETS

ALIGNMENT: SPIRAL AND 3° 00' 00" CURVE RT.

SKEW: 27° 27' 21" RIGHT FORWARD

LOADING: HS20–44 AND INT. ALT. LOADING

APPROACH SLABS: 25' LONG (AS–1–72)

WEARING SURFACE: 2 1/2" ASPHALT CONCRETE

PROPOSED WORK

1. REMOVE THE ENTIRE EXISTING 2 1/2" ASPHALT OVERLAY AND THE TOP 1" (MINIMUM) OF EXISTING CONCRETE DECK BELOW AND OVERLAY WITH 3 1/2" MICROSILICA MODIFIED CONCRETE.
2. CONCRETE REPAIR AND SEALING
3. ASPHALT DRAIN PLUGGING
4. JOINT SEALING BETWEEN SLOPE PROTECTION & ABUTMENT
5. JOINT SEALING BETWEEN WINGWALL & ABUTMENT
6. POURED POLYURETHANE JOINT SEAL
7. REFACE MEDIAN PARAPET

PROPOSED STRUCTURE

TYPE: 3 SPAN CONTINUOUS STEEL BEAM WITH REINFORCED CONCRETE DECK AND SUBSTRUCTURE

SPANS: 50'–0", 62'–6", 50'–0" C/C BRGS.

ROADWAY : 68'– 0" T/T PARAPETS

ALIGNMENT: SPIRAL AND 3° 00' 00" CURVE RT.

SKEW: 27° 27' 21" RIGHT FORWARD

LOADING: HS20–44 AND INT. ALT. LOADING

APPROACH SLABS: 25' LONG (AS–1–72)

WEARING SURFACE: 3 1/2" MICROSILICA MODIFIED CONCRETE

POLYTECH, INC. 45/68
CONSULTING ENGINEERS CLEVELAND, OHIO

GENERAL PLAN & TRANSVERSE SECTION

BRIDGE NO. CUY–90–1151 R
I–90 OVER WEST 100TH ST.

DESIGNED	DRAWN	TRACED	CHECKED	REVIEWED	DATE	REVISED
PSS	RG	–	VB	BS	9/94	ENF

FHWA REGION	STATE	PROJECT	
5	OHIO		

198/220

CUYAHOGA COUNTY
CUY-90-9.68

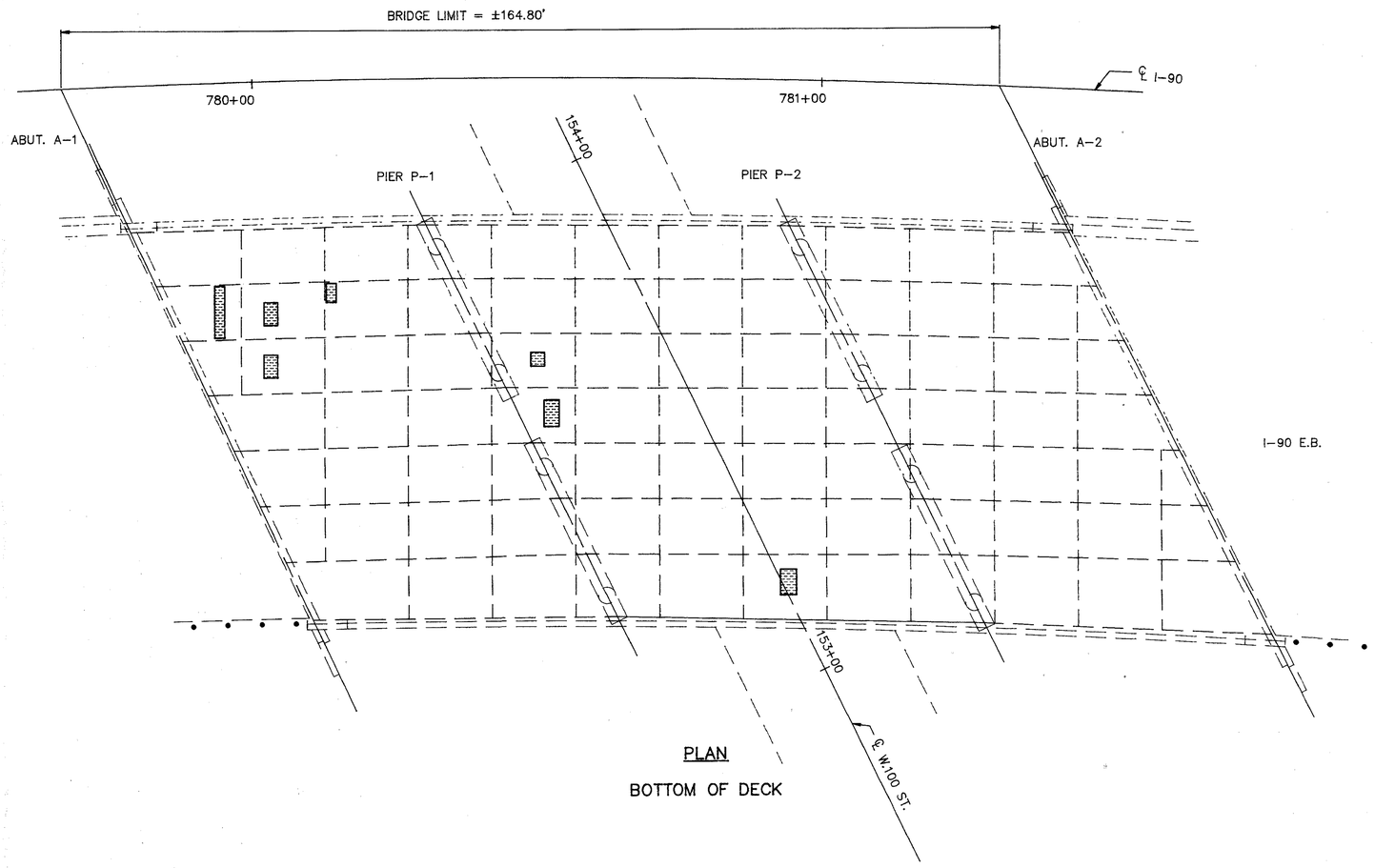

PLAN

BOTTOM OF DECK

ITEM	519	843	SPECIAL	202
LOCATION	PATCHING CONCRETE STRUCTURE AS PER PLAN SQ FT	PATCHING CONCRETE TROWELABLE MORTAR SQ FT	LOW PRESSURE EPOXY INJECTING SQ FT	PORTIONS OF STRUCTURE REMOVED LUMP
ABUTMENTS	1	7	–	–
PIERS AND CAPS	–	–	–	–
DECK UNDERSIDE	–	–	50	LUMP
25% EXPANSION FACTOR	–	2	13	–
TOTAL	1	9	63	LUMP

ITEM 519, PATCHING CONCRETE STRUCTURE, AS PER PLAN

ITEM 843 , PATCHING CONCRETE WITH TROWELABLE MORTAR

ITEM SPECIAL, LOW PRESSURE EPOXY INJECTING OF DELAMINATED CONCRETE

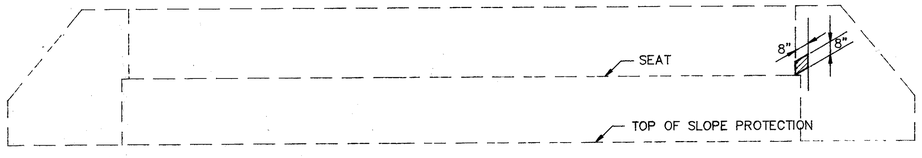

ELEVATION

ABUTMENT A-1

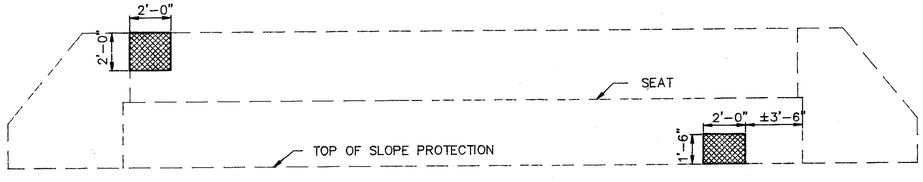

ELEVATION

ABUTMENT A-2

POLYTECH, INC. 46/68

CONSULTING ENGINEERS CLEVELAND, OHIO

BRIDGE CONCRETE REPAIR

BRIDGE NO. CUY-90-1151 R
I-90 OVER WEST 100TH ST.

DESIGNED	DRAWN	TRACED	CHECKED	REVIEWED	DATE	REVISED
PSS	RG	–	VB	BRS	9/94	

FHWA REGION	STATE	PROJECT	
5	OHIO		

199
220

CUYAHOGA COUNTY
CUY – 90 – 9.68

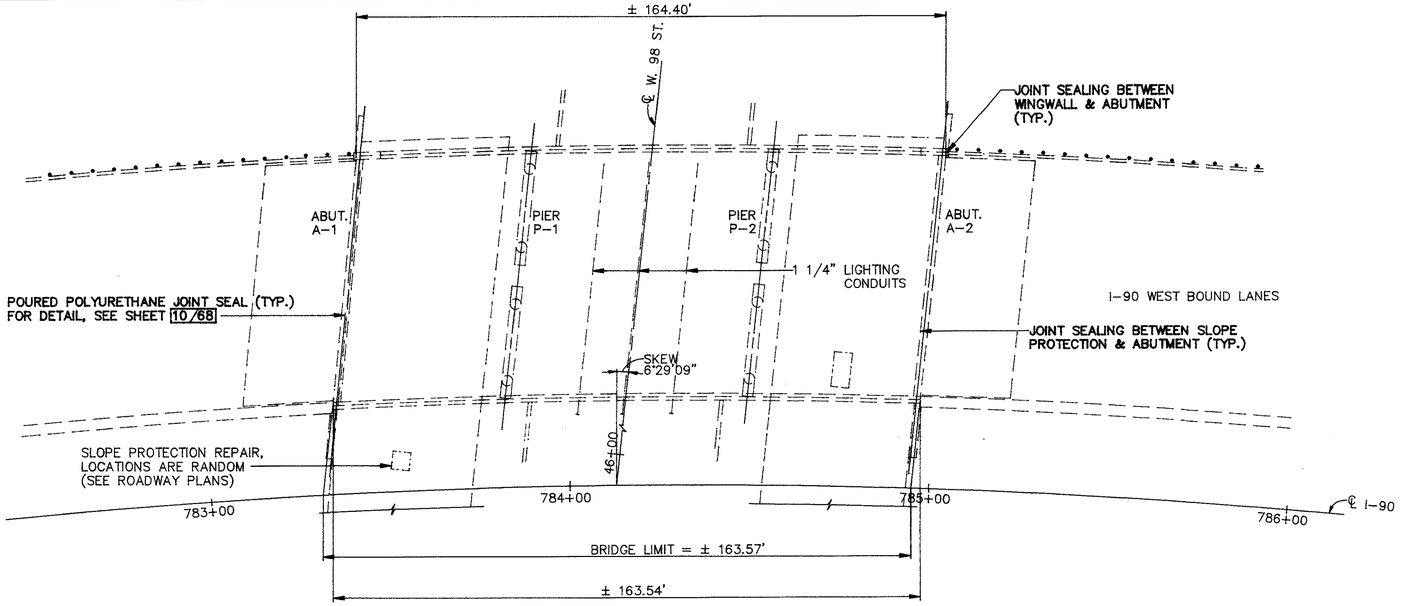

PLAN

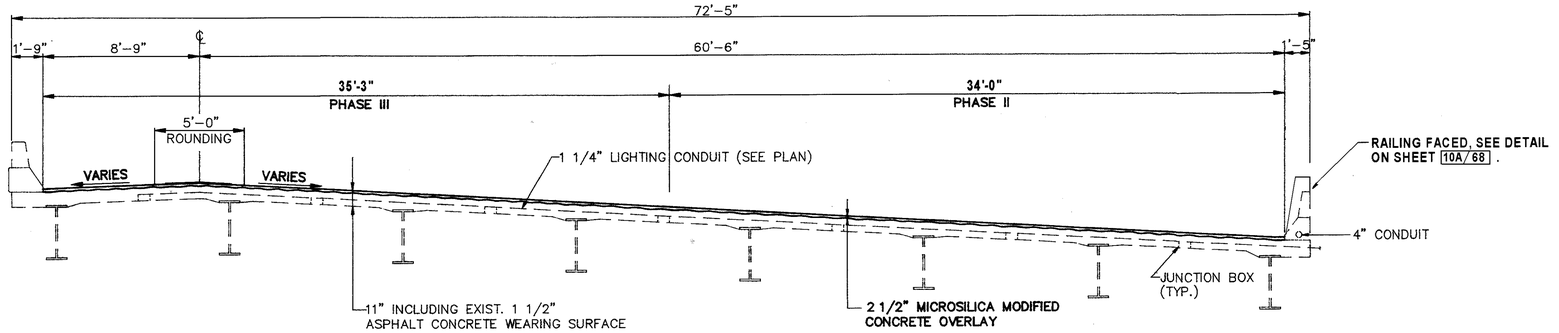

TRANSVERSE SECTION

EXISTING STRUCTURE

TYPE: 3 SPAN CONTINUOUS STEEL BEAM WITH REINFORCED CONCRETE DECK AND SUBSTRUCTURE

SPANS: 47'–0", 67'–6", 47'–0" C/C BRGS.

ROADWAY : 69'–3" T/T PARAPETS

ALIGNMENT: 3° 00' 00" CURVE RT. & SPIRAL

SKEW: 6° 29' 09" LEFT FORWARD

LOADING: HS20–44 AND INT. ALT. LOADING

APPROACH SLABS: 25' LONG (AS–1–72)

WEARING SURFACE: 1 1/2" ASPHALT CONCRETE

PROPOSED WORK

1. REMOVE THE ENTIRE EXISTING 1 1/2" ASPHALT OVERLAY AND THE TOP 1" (MINIMUM) OF EXISTING CONCRETE DECK BELOW AND OVERLAY WITH 2 1/2" MICROSILICA MODIFIED CONCRETE.
2. CONCRETE REPAIR AND SEALING
3. ASPHALT DRAIN PLUGGING
4. CORRECTION OF SIDEWALK SETTLEMENT UNDER THE BRIDGE (SEE ROADWAY PLANS)
5. JOINT SEALING BETWEEN SLOPE PROTECTION & ABUTMENT
6. JOINT SEALING BETWEEN WINGWALL & ABUTMENT
7. POURED POLYURETHANE JOINT SEAL
8. REFACE MEDIAN PARAPET

PROPOSED STRUCTURE

TYPE: 3 SPAN CONTINUOUS STEEL BEAM WITH REINFORCED CONCRETE DECK AND SUBSTRUCTURE

SPANS: 47'–0", 67'–6", 47'–0" C/C BRGS.

ROADWAY : 69'–3" T/T PARAPETS

ALIGNMENT: 3° 00' 00" CURVE RT. & SPIRAL

SKEW: 6° 29' 09" LEFT FORWARD

LOADING: HS20–44 AND INT. ALT. LOADING

APPROACH SLABS: 25' LONG (AS–1–72)

WEARING SURFACE: 2 1/2" MICROSILICA MODIFIED CONCRETE

ESTIMATED QUANTITIES

* = SEE PROPOSAL NOTE

ITEM	TOTAL	UNIT	DESCRIPTION	ABUTMENT	PIERS	SUPER STRUCTURE	GENERAL
SPEC	759	SQ YD	SEALING OF CONCRETE SURFACES (EPOXY-URETHANE)*	63	271	425	
SPEC	140	LN FT	POURED POLYURETHANE JOINT SEAL			140	
516	218	LN FT	STRUCTURAL JOINT OR JOINT SEALER, MISC.: 705.03 OR 705.04	218			

ESTIMATED QUANTITIES

ITEM	TOTAL	UNIT	DESCRIPTION	ABUTMENT	PIERS	SUPER STRUCTURE	GENERAL
517	164	LN FT	RAILING FACED, AS PER PLAN			164	
848	1258	SQ YD	MICROSILICA MODIFIED CONCRETE OVERLAY USING HYDRO-DEMOLITION 2½ INCH THICK			1258	
848	1258	SQ YD	SURFACE PREPARATION USING HYDRO-DEMOLITION			1258	
848	17	CU YD	MICROSILICA MODIFIED CONCRETE OVERLAY (VARIABLE THICKNESS) MATERIALS ONLY			17	
848	38	SQ YD	HAND CHIPPING			38	
848	1258	SQ YD	WEARING COURSE REMOVED, ASPHALT			1258	

NOTE: THESE QUANTITIES ARE CARRIED TO THE STRUCTURE SUB-SUMMARY ON SHEET 8/68.

POLYTECH, INC. 47/68
CONSULTING ENGINEERS CLEVELAND, OHIO

GENERAL PLAN & TRANSVERSE SECTION
BRIDGE NO. CUY–90–1157 L
I–90 OVER WEST 98th ST.

DESIGNED	DRAWN	TRACED	CHECKED	REVIEWED	DATE	REVISED
PSS	RG	–	VB	BS	9/94	ENF

FHWA REGION	STATE	PROJECT	
5	OHIO		

200
220

CUYAHOGA COUNTY
CUY-90-9.68

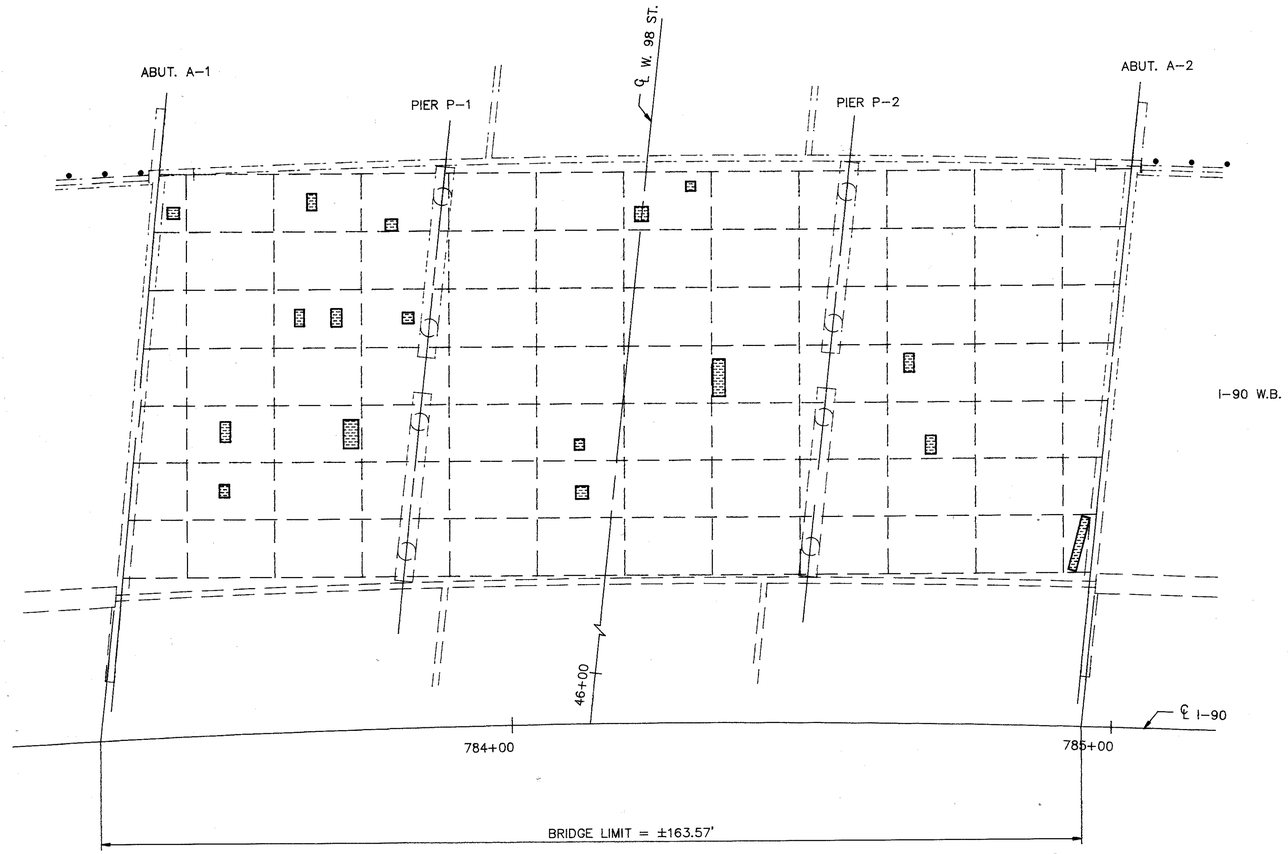

PLAN
BOTTOM OF DECK

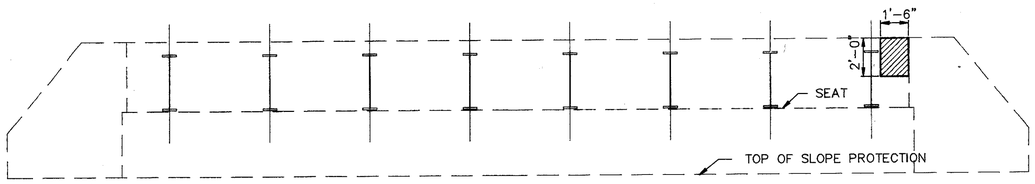

ELEVATION
ABUTMENT A-2

ITEM	519	843	SPECIAL	202
LOCATION	PATCHING CONCRETE STRUCTURE AS PER PLAN SQ FT	PATCHING CONCRETE TROWELABLE MORTAR SQ FT	LOW PRESSURE EPOXY INJECTING SQ FT	PORTIONS OF STRUCTURE REMOVED LUMP
ABUTMENTS	3	–	–	–
PIERS AND CAPS	–	–	–	–
DECK UNDERSIDE	–	–	63	LUMP
25% EXPANSION FACTOR	1	–	16	–
TOTAL	4	–	79	LUMP

ITEM 519, PATCHING CONCRETE STRUCTURE, AS PER PLAN

ITEM 843 , PATCHING CONCRETE WITH TROWELABLE MORTAR

ITEM SPECIAL, LOW PRESSURE EPOXY INJECTING OF DELAMINATED CONCRETE

POLYTECH, INC. 48/68
CONSULTING ENGINEERS CLEVELAND, OHIO

BRIDGE CONCRETE REPAIR

BRIDGE NO. CUY-90-1157 L
I-90 OVER WEST 98th ST.

DESIGNED	DRAWN	TRACED	CHECKED	REVIEWED	DATE	REVISED
PSS	RG	–	VB	BRS	9/94	

FHWA REGION	STATE	PROJECT	
5	OHIO		

201
220

CUYAHOGA COUNTY
CUY – 90 – 9.68

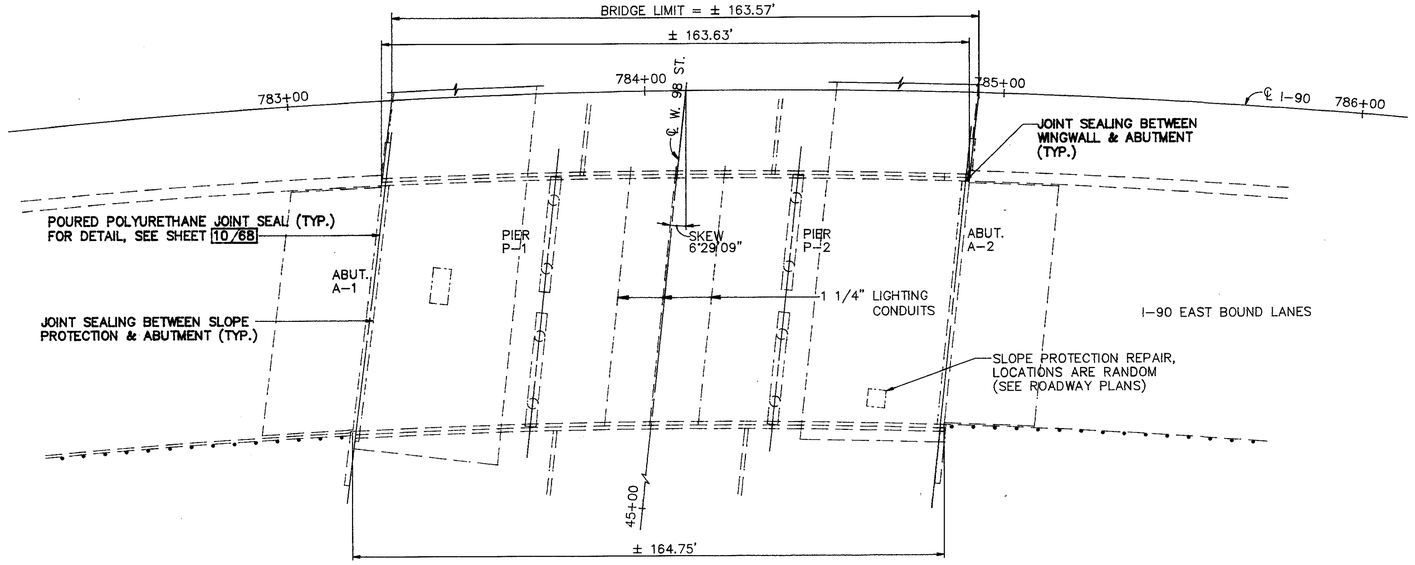

PLAN

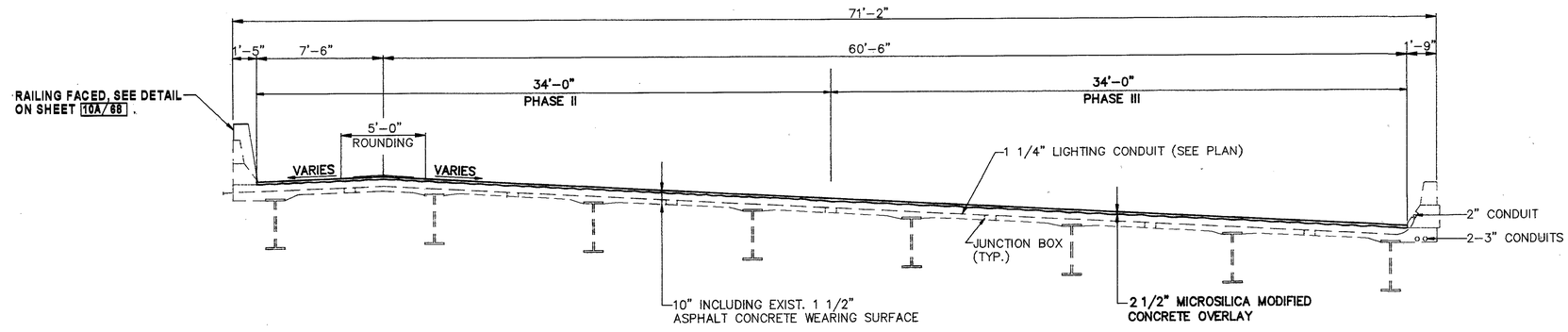

TRANSVERSE SECTION

ESTIMATED QUANTITIES

* = SEE PROPOSAL NOTE

ITEM	TOTAL	UNIT	DESCRIPTION	ABUTMENT	PIERS	SUPER STRUCTURE	GENERAL
SPEC	757	SQ YD	SEALING OF CONCRETE SURFACES (EPOXY-URETHANE) *	63	268	426	
SPEC	140	LN FT	POURED POLYURETHANE JOINT SEAL			140	
516	218	LN FT	STRUCTURAL JOINT OR JOINT SEALER, MISC.: 705.03 OR 705.04	218			

ESTIMATED QUANTITIES

ITEM	TOTAL	UNIT	DESCRIPTION	ABUTMENT	PIERS	SUPER STRUCTURE	GENERAL
517	164	LN FT	RAILING FACED, AS PER PLAN			164	
848	1236	SQ YD	MICROSILICA MODIFIED CONCRETE OVERLAY USING HYDRO-DEMOLITION 2½ INCH THICK			1236	
848	1236	SQ YD	SURFACE PREPARATION USING HYDRO-DEMOLITION			1236	
848	16	CU YD	MICROSILICA MODIFIED CONCRETE OVERLAY (VARIABLE THICKNESS) MATERIALS ONLY			16	
848	37	SQ YD	HAND CHIPPING			37	
848	1236	SQ YD	WEARING COURSE REMOVED, ASPHALT			1236	

NOTE: THESE QUANTITIES ARE CARRIED TO THE STRUCTURE SUB-SUMMARY ON SHEET 8/68.

EXISTING STRUCTURE

TYPE: 3 SPAN CONTINUOUS STEEL BEAM WITH REINFORCED CONCRETE DECK AND SUBSTRUCTURE

SPANS: 47'–0", 67'–6", 47'–0" C/C BRGS.

ROADWAY : 68'–0" T/T PARAPETS

ALIGNMENT: 3° 00' 00" CURVE RT. & SPIRAL

SKEW: 6° 29' 09" LEFT FORWARD

LOADING: HS20–44 AND INT. ALT. LOADING

APPROACH SLABS: 25' LONG (AS–1–72)

WEARING SURFACE: 1 1/2" ASPHALT CONCRETE

PROPOSED WORK

1. REMOVE THE ENTIRE EXISTING 1 1/2" ASPHALT OVERLAY AND THE TOP 1" (MINIMUM) OF EXISTING CONCRETE DECK BELOW AND OVERLAY WITH 2 1/2" MICROSILICA MODIFIED CONCRETE.
2. CONCRETE REPAIR AND SEALING
3. ASPHALT DRAIN PLUGGING
4. CORRECTION OF SIDEWALK SETTLEMENT UNDER THE BRIDGE (SEE ROADWAY PLANS)
5. JOINT SEALING BETWEEN SLOPE PROTECTION & ABUTMENT
6. JOINT SEALING BETWEEN WINGWALL & ABUTMENT
7. POURED POLYURETHANE JOINT SEAL
8. REFACE MEDIAN PARAPET

PROPOSED STRUCTURE

TYPE: 3 SPAN CONTINUOUS STEEL BEAM WITH REINFORCED CONCRETE DECK AND SUBSTRUCTURE

SPANS: 47'–0", 67'–6", 47'–0" C/C BRGS.

ROADWAY : 68'–0" T/T PARAPETS

ALIGNMENT: 3° 00' 00" CURVE RT. & SPIRAL

SKEW: 6° 29' 09" LEFT FORWARD

LOADING: HS20–44 AND INT. ALT. LOADING

APPROACH SLABS: 25' LONG (AS–1–72)

WEARING SURFACE: 2 1/2" MICROSILICA MODIFIED CONCRETE

POLYTECH, INC. 49/68
CONSULTING ENGINEERS CLEVELAND, OHIO

GENERAL PLAN & TRANSVERSE SECTION

BRIDGE NO. CUY–90–1157 R
I–90 OVER WEST 98TH ST.

DESIGNED	DRAWN	TRACED	CHECKED	REVIEWED	DATE	REVISED
PSS	RG	–	VB	BS	9/94	ENF

FHWA REGION	STATE	PROJECT	
5	OHIO		

202/220

CUYAHOGA COUNTY
CUY-90-9.68

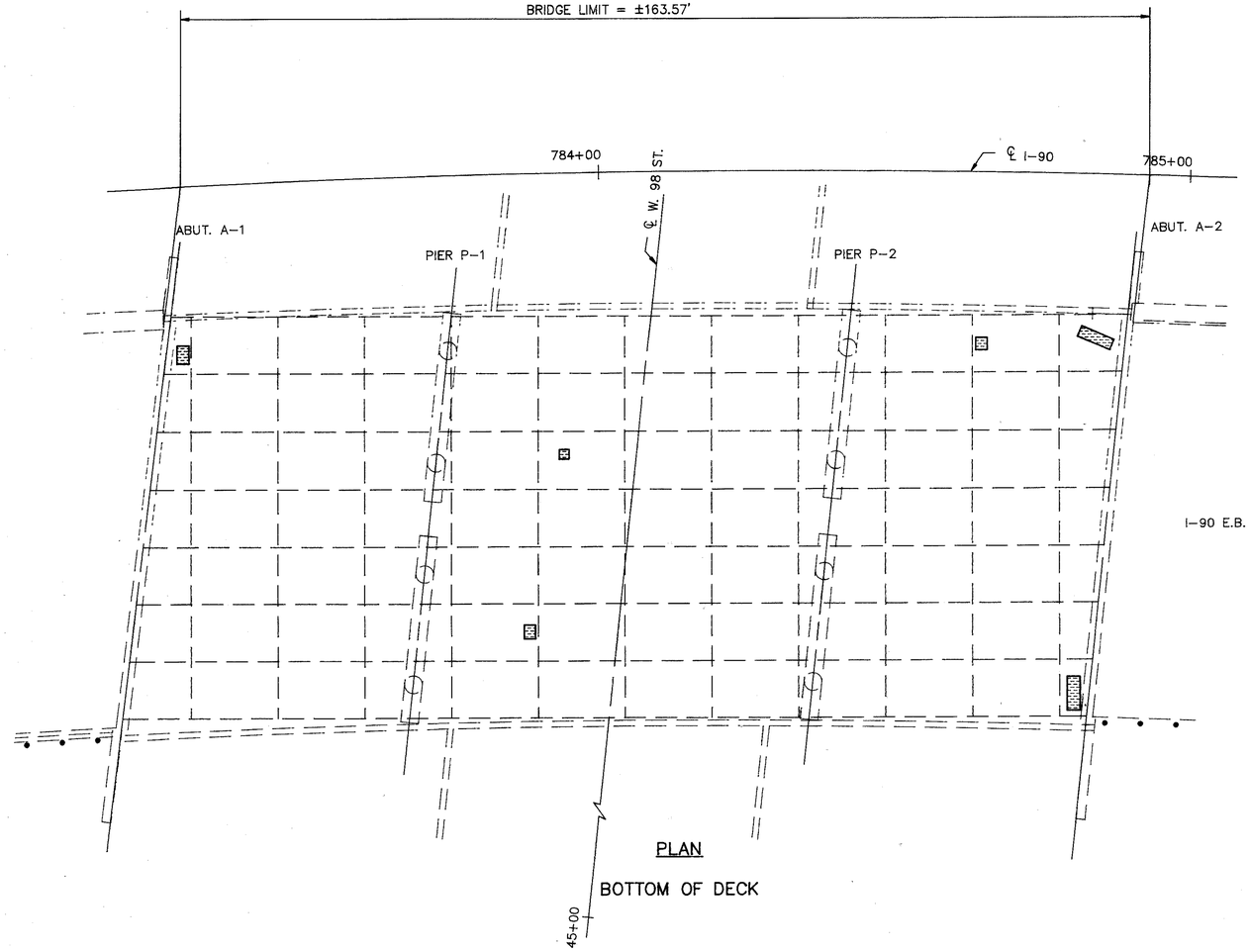

PLAN

BOTTOM OF DECK

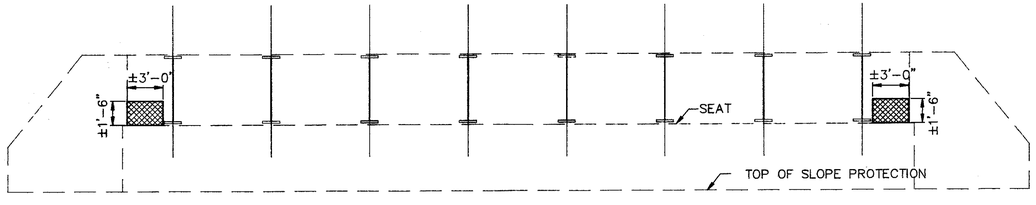

ELEVATION

ABUTMENT A-2

ITEM	519	843	SPECIAL	202
LOCATION	PATCHING CONCRETE STRUCTURE AS PER PLAN SQ FT	PATCHING CONCRETE TROWELABLE MORTAR SQ FT	LOW PRESSURE EPOXY INJECTING SQ FT	PORTIONS OF STRUCTURE REMOVED LUMP
ABUTMENTS	–	9	–	–
PIERS AND CAPS	–	–	–	–
DECK UNDERSIDE	–	–	36	LUMP
25% EXPANSION FACTOR	–	2	9	–
TOTAL	–	11	45	LUMP

ITEM 519, PATCHING CONCRETE STRUCTURE, AS PER PLAN

ITEM 843 , PATCHING CONCRETE WITH TROWELABLE MORTAR

ITEM SPECIAL, LOW PRESSURE EPOXY INJECTING OF DELAMINATED CONCRETE

POLYTECH, INC. 50/68
CONSULTING ENGINEERS CLEVELAND, OHIO

BRIDGE CONCRETE REPAIR

BRIDGE NO. CUY-90-1157 R
I-90 OVER WEST 98th ST.

DESIGNED	DRAWN	TRACED	CHECKED	REVIEWED	DATE	REVISED
PSS	RG	–	VB	BRS	9/94	

FHWA REGION	STATE	PROJECT	
5	OHIO		

203/220

CUYAHOGA COUNTY
CUY – 90 – 9.68

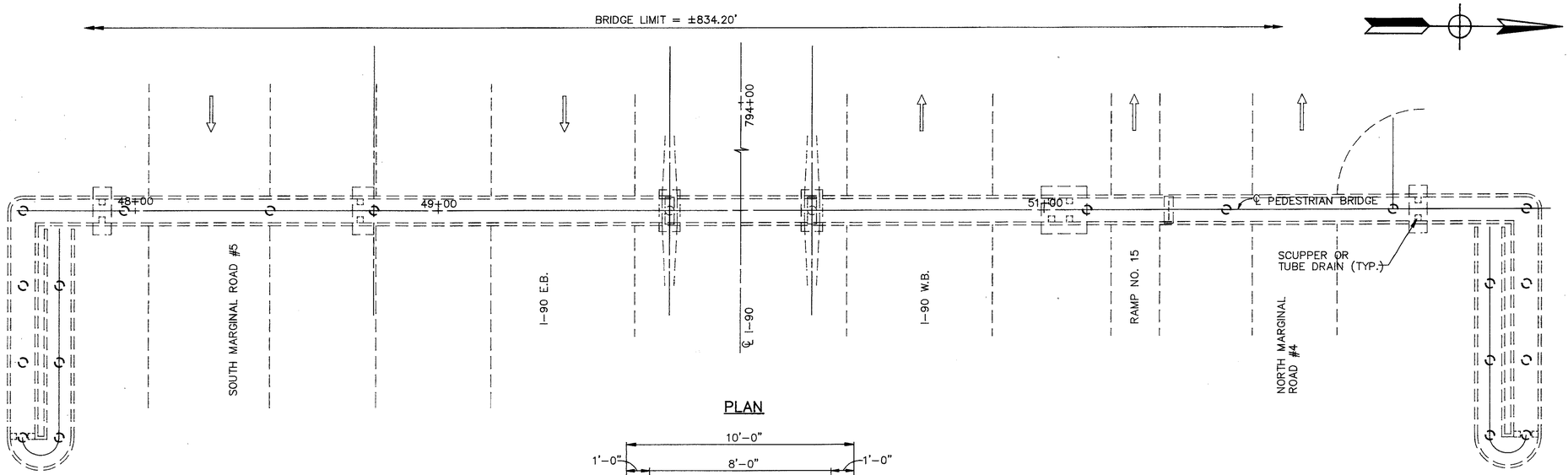

PLAN

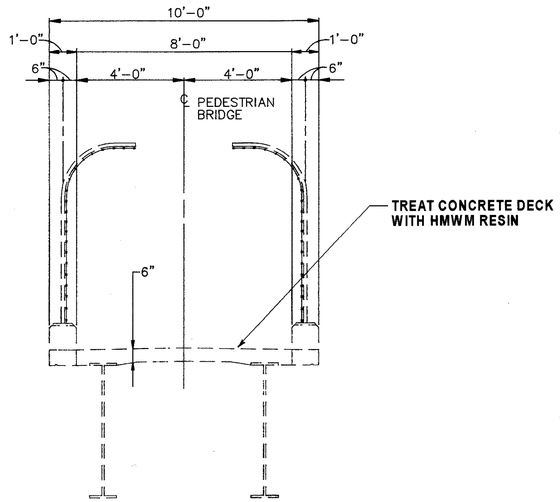

TRANSVERSE SECTION

EXISTING STRUCTURE

TYPE: 23 SPAN CONTINUOUS STEEL BEAM WITH REINFORCED CONCRETE DECK AND SUBSTRUCTURE, REINFORCED CONCRETE RAMPS

SPANS: 3 @ 25', 18.85', 3 @ 25', 33'-3", 48'-3", 34'-3", 97'-9", 47'-0", 90'-3" 46'-9", 55'-0", 44'-0", 3 @ 25' 18.85' 3 @ 25'

WALKWAY 8'-0" F/F, 1'-0" CURBS

ALIGNMENT: TANGENT AND CURVES

SKREW: 00° 00' 00"

LOADING: 85 P.S.F. LIVE LOAD

APPROACH SLAB: NONE

WEARING SURFACE: 1" MONOLITHIC

PROPOSED WORK

1. TREAT CONCRETE DECK WITH HMWM RESIN

PROPOSED STRUCTURE

TYPE: 23 SPAN CONTINUOUS STEEL BEAM WITH REINFORCED CONCRETE DECK AND SUBSTRUCTURE, REINFORCED CONCRETE RAMPS

SPANS: 3 @ 25', 18.85', 3 @ 25', 33'-3", 48'-3", 34'-3", 97'-9", 47'-0", 90'-3" 46'-9", 55'-0", 44'-0", 3 @ 25' 18.85' 3 @ 25'

WALKWAY 8'-0" F/F, 1"-0" CURBS

ALIGNMENT: TANGENT AND CURVES

SKEW: 00° 00' 00"

LOADING: 85 P.S.F. LIVE LOAD

APPROACH SLAB: NONE

WEARING SURFACE: 1" MONOLITHIC

ESTIMATED QUANTITIES

* = SEE PROPOSAL NOTE

ITEM	TOTAL	UNIT	DESCRIPTION	ABUTMENT	PIERS	SUPER STRUCTURE	GENERAL
846	742	SQ YD	TREATING CONCRETE BRIDGE DECKS WITH HMWM RESIN			742	

NOTE: THESE QUANTITIES ARE CARRIED TO THE STRUCTURE SUB-SUMMARY ON SHEET 8/68.

POLYTECH, INC. 51/68
CONSULTING ENGINEERS CLEVELAND, OHIO

GENERAL PLAN & TRANSVERSE SECTION
BRIDGE NO. CUY-90-1173
I-90 UNDER WEST 93rd ST.

DESIGNED	DRAWN	TRACED	CHECKED	REVIEWED	DATE	REVISED
PSS	RG	–	VB	BS	9/94	ENF

FHWA REGION	STATE	PROJECT	
5	OHIO		

204/220

CUYAHOGA COUNTY
CUY – 90 – 9.68

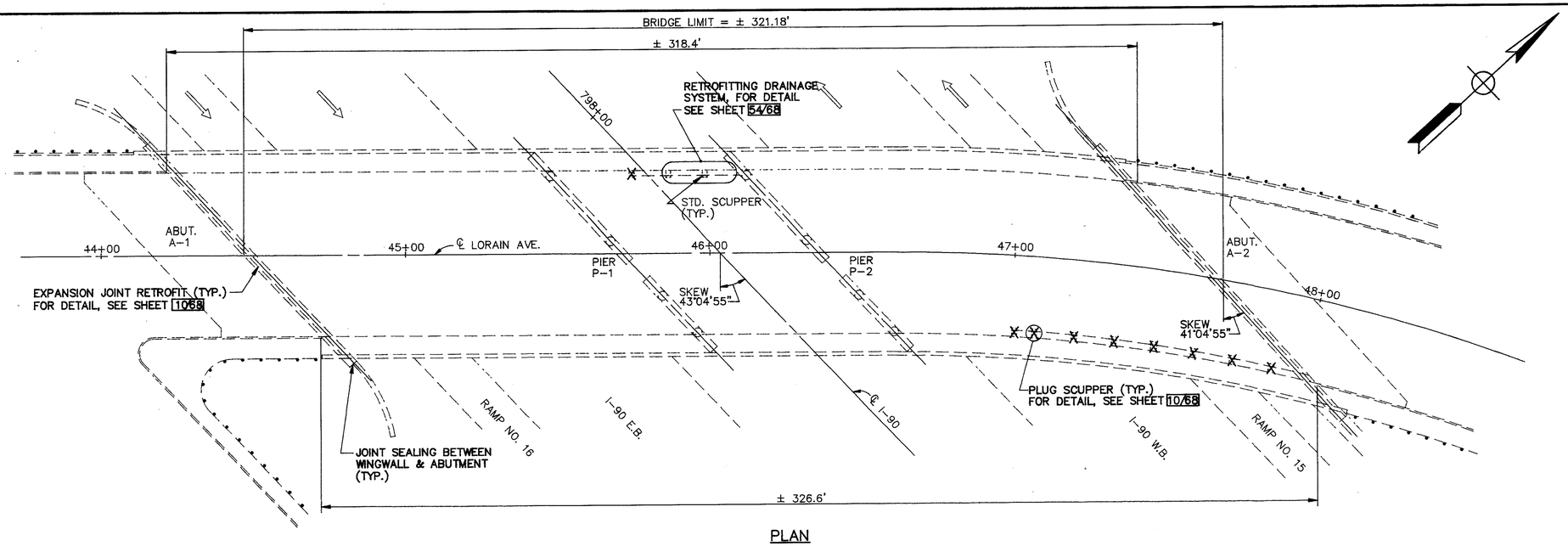

PLAN

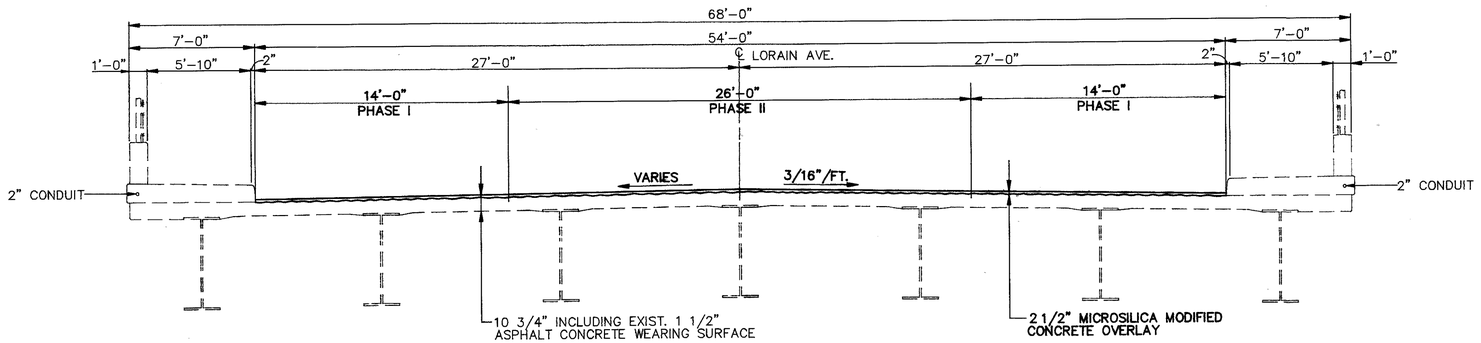

TRANSVERSE SECTION

EXISTING STRUCTURE

TYPE: 3 SPAN CONTINUOUS STEEL BEAM WITH REINFORCED CONCRETE DECK AND SUBSTRUCTURE
SPANS: 121'-7", 64'-4 1/4", 119'-2" C/C BRGS
ROADWAY: 54'-0" F/F CURBS & 6'-0" SIDEWALKS
ALIGNMENT: TANGENT AND 10° 00' 00" CURVE RT.
SKEW: 43° 04' 55" AND 41° 04' 55" A-2 ONLY
LOADING: HS20-44
APPROACH SLABS: 30' LONG (AS-1-72)
WEARING SURFACE: 1 1/2" ASPHALT CONCRETE

PROPOSED WORK

1. REMOVE THE ENTIRE EXISTING 1 1/2" ASPHALT OVERLAY AND THE TOP 1" (MINIMUM) OF EXISTING CONCRETE DECK BELOW AND OVERLAY WITH 2 1/2" MICROSILICA MODIFIED CONCRETE.
2. CONCRETE REPAIR AND SEALING
3. ASPHALT DRAIN PLUGGING
4. EXPANSION JOINTS RETROFIT
5. RETROFITTING DRAINAGE SYSTEM
6. SCUPPER PLUGGING
7. JOINT SEALING BETWEEN WINGWALL & ABUTMENT

PROPOSED STRUCTURE

TYPE: 3 SPAN CONTINUOUS STEEL BEAM WITH REINFORCED CONCRETE DECK AND SUBSTRUCTURE
SPANS: 121'-7", 64'-4 1/4", 119'-2" C/C BRGS
ROADWAY: 54'-0" F/F CURBS & 6'-0" SIDEWALKS
ALIGNMENT: TANGENT AND 10° 00' 00" CURVE RT.
SKEW: 43° 04' 55" AND 41° 04' 55" A-2 ONLY
LOADING: HS20-44
APPROACH SLABS: 30' LONG (AS-1-72)
WEARING SURFACE: 2 1/2" MICROSILICA MODIFIED CONCRETE

ESTIMATED QUANTITIES

* = SEE PROPOSAL NOTE

ITEM	TOTAL	UNIT	DESCRIPTION	ABUTMENT	PIERS	SUPER STRUCTURE	GENERAL
SPEC	557	SQ YD	SEALING OF CONCRETE SURFACES (NON-EPOXY)*			557	
SPEC	1963	SQ YD	SEALING OF CONCRETE SURFACES (EPOXY-URETHANE)*	928	321	714	
514	LUMP	LUMP	FIELD PAINTING, MISC.: RETROFITTED AREAS			LUMP	
516	146	LN FT	STRUCTURAL STEEL EXPANSION JOINT (RETROFIT), AS PER PLAN			146	
516	101	LN FT	STRUCTURAL JOINT OR JOINT SEALER, MISC.: 705.03 OR 705.04	101			

ESTIMATED QUANTITIES

ITEM	TOTAL	UNIT	DESCRIPTION	ABUTMENT	PIERS	SUPER STRUCTURE	GENERAL
518	9	EACH	STRUCTURAL DRAINAGE MISC.: SCUPPER PLUGGING			9	
518	LUMP	LUMP	STRUCTURAL DRAINAGE MISC.: RETROFITTING DRAINAGE SYSTEM			LUMP	
848	1905	SQ YD	MICROSILICA MODIFIED CONCRETE OVERLAY USING HYDRO-DEMOLITION 2½ INCH THICK			1905	
848	1905	SQ YD	SURFACE PREPARATION USING HYDRO-DEMOLITION			1905	
848	26	CU YD	MICROSILICA MODIFIED CONCRETE OVERLAY (VARIABLE THICKNESS) MATERIALS ONLY			26	
848	57	SQ YD	HAND CHIPPING			57	
848	1905	SQ YD	WEARING COURSE REMOVED, ASPHALT			1905	

NOTE: THESE QUANTITIES ARE CARRIED TO THE STRUCTURE SUB-SUMMARY ON SHEET 8/68.

POLYTECH, INC. 52/68
CONSULTING ENGINEERS CLEVELAND, OHIO

GENERAL PLAN & TRANSVERSE SECTION
BRIDGE NO. CUY-90-1185
I-90 UNDER LORAIN AVE.

DESIGNED	DRAWN	TRACED	CHECKED	REVIEWED	DATE	REVISED
PSS	RG	–	VB	BS	9/94	ENF

FHWA REGION	STATE	PROJECT	
5	OHIO		

205
220

CUYAHOGA COUNTY
CUY–90–9.68

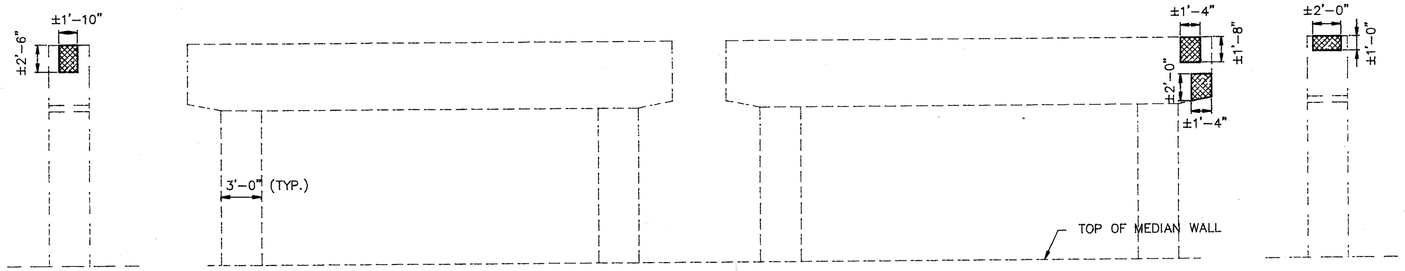

ELEVATION
PIER P–2 (LOOKING SOUTH)

ITEM	519	843
LOCATION	PATCHING CONCRETE STRUCTURE AS PER PLAN SQ FT	PATCHING CONCRETE TROWELABLE MORTAR SQ FT
ABUTMENTS	–	4
PIERS AND CAPS	–	12
DECK UNDERSIDE	–	–
25% EXPANSION FACTOR	–	4
TOTAL	–	20

ITEM 519, PATCHING CONCRETE STRUCTURE, AS PER PLAN

ITEM 843 , PATCHING CONCRETE WITH TROWELABLE MORTAR

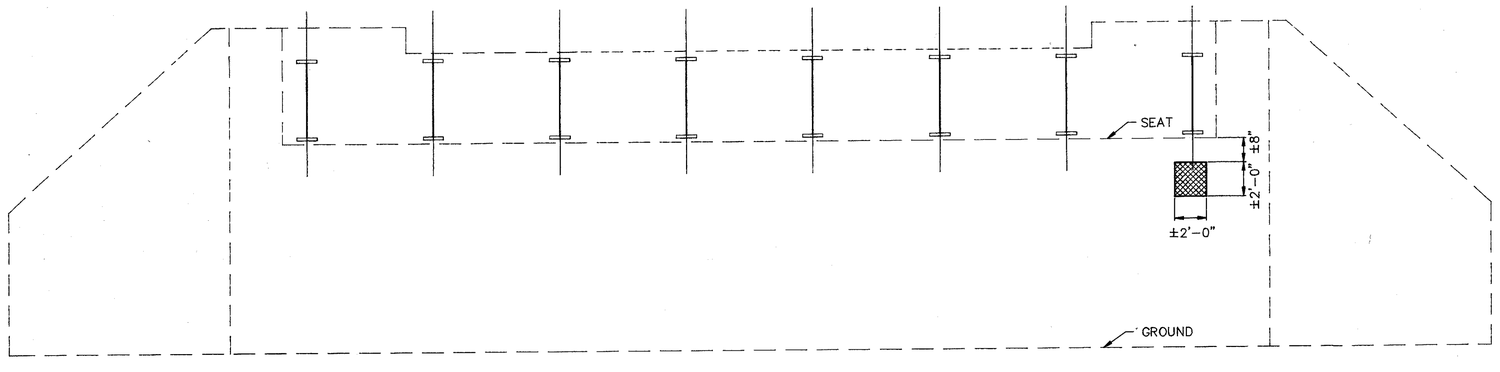

ELEVATION
ABUTMENT A–2

POLYTECH, INC. 53 / 68
CONSULTING ENGINEERS CLEVELAND, OHIO

BRIDGE CONCRETE REPAIR

BRIDGE NO. CUY–90–1185
I–90 UNDER LORAIN AVE.

DESIGNED	DRAWN	TRACED	CHECKED	REVIEWED	DATE	REVISED
PSS	PSS	–	VB	BRS	9/94	

FHWA REGION	STATE	PROJECT	
5	OHIO		

206
220

CUYAHOGA COUNTY
CUY-90-9.68

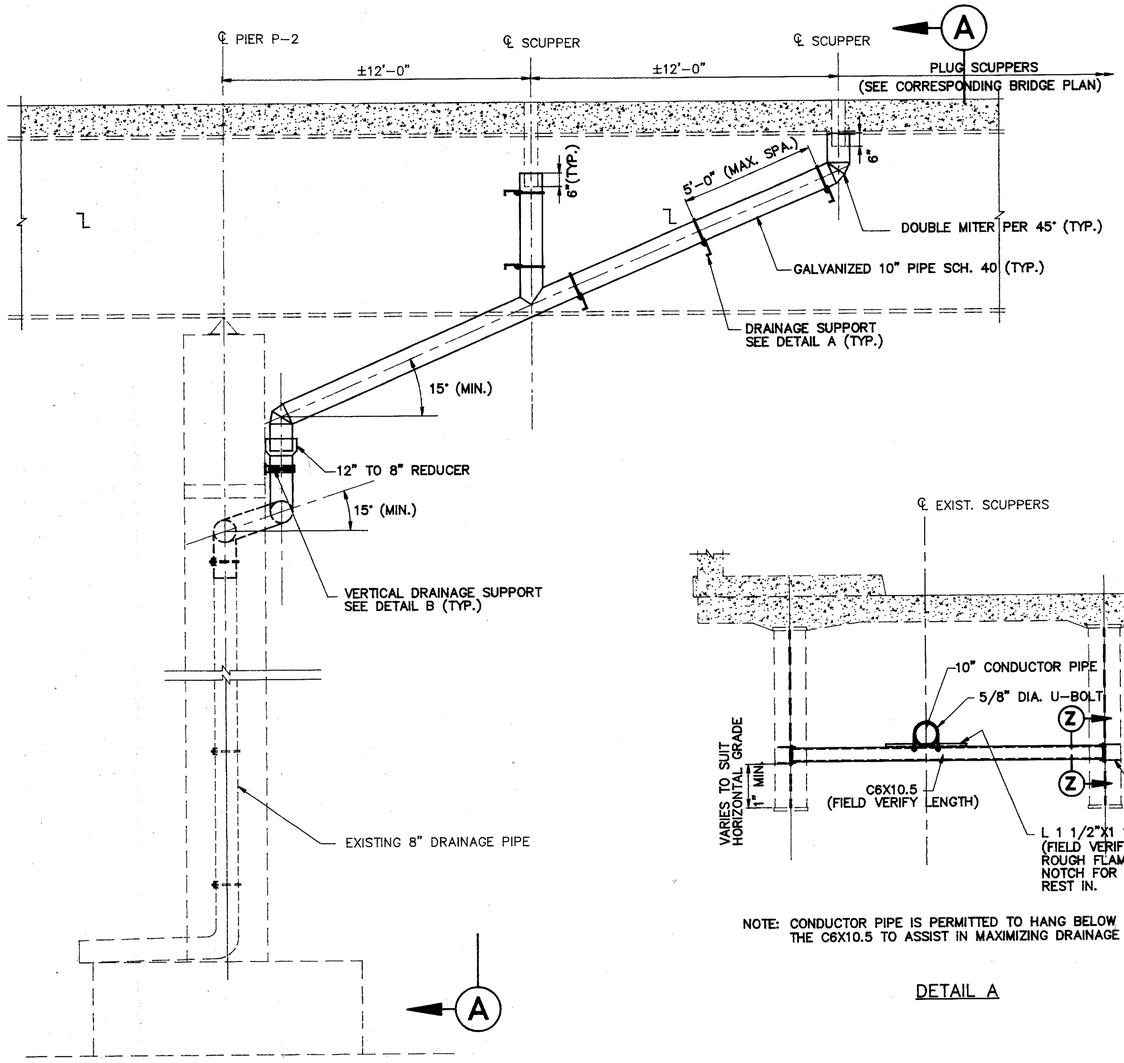

ELEVATION

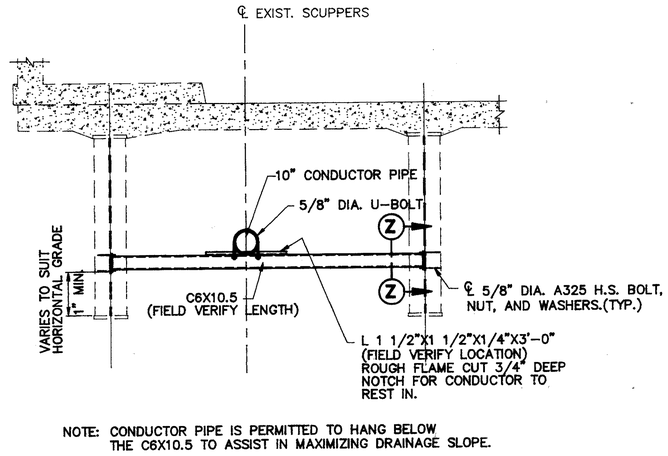

NOTE: CONDUCTOR PIPE IS PERMITTED TO HANG BELOW THE C6X10.5 TO ASSIST IN MAXIMIZING DRAINAGE SLOPE.

DETAIL A

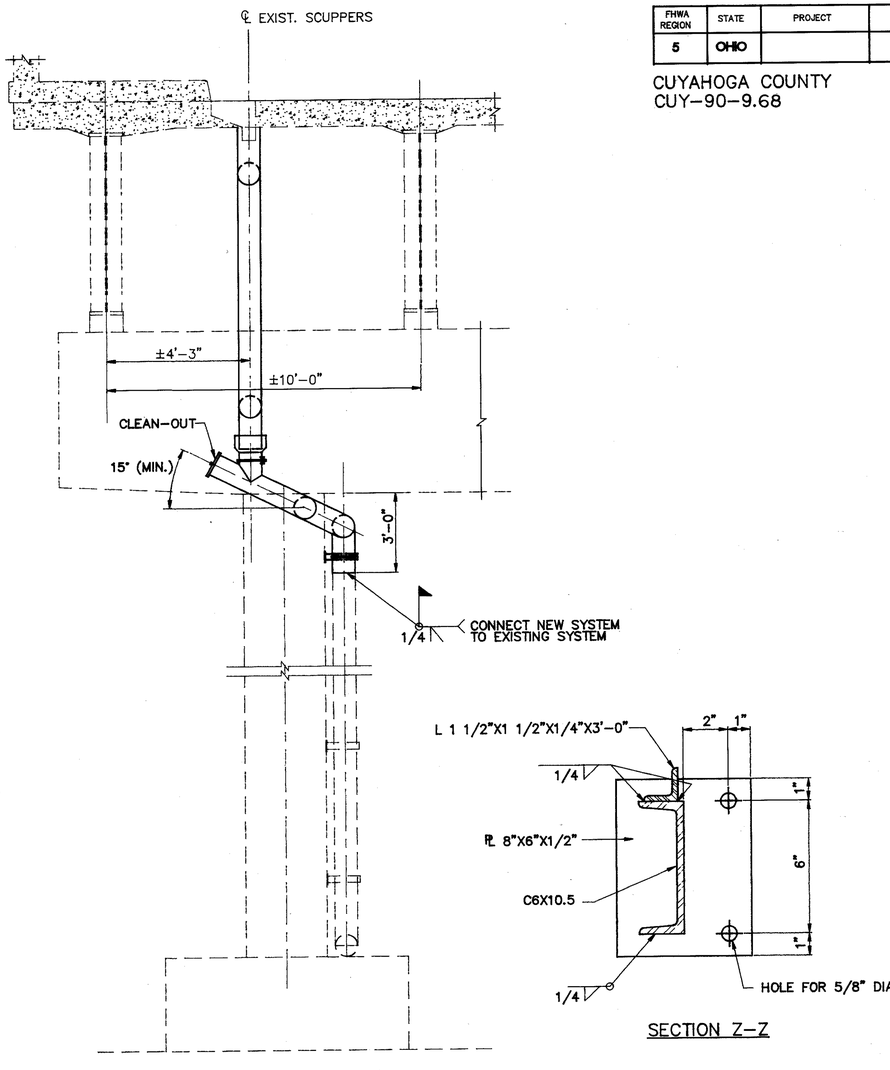

VIEW A-A

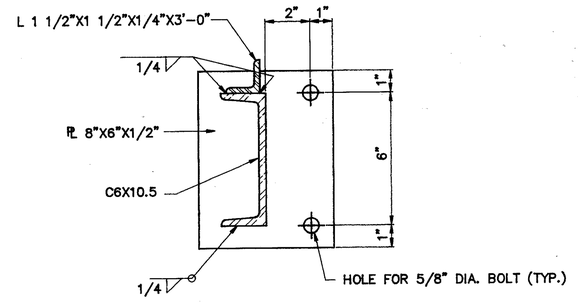

SECTION Z-Z

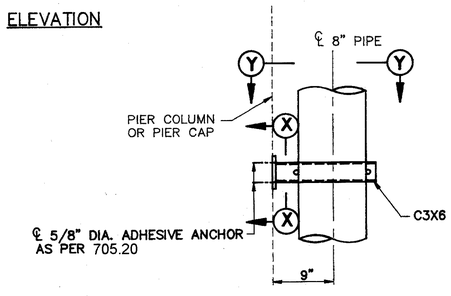

ELEVATION

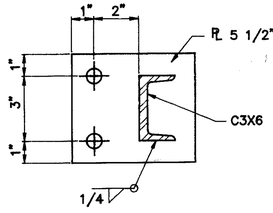

SECTION X-X

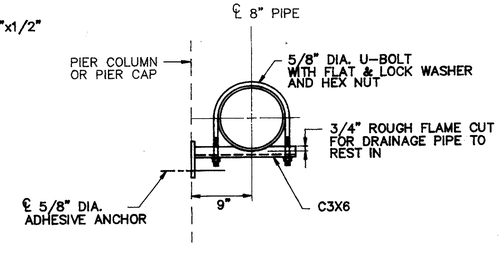

SECTION Y-Y

DETAIL B
VERTICAL DRAINAGE SUPPORT
(TYPICAL)

POLYTECH, INC. 54/68
CONSULTING ENGINEERS CLEVELAND, OHIO

RETROFITTING DRAINAGE SYSTEM
DETAILS

BRIDGE NO. CUY-90-1185
I-90 UNDER LORAIN AVE.

DESIGNED	DRAWN	TRACED	CHECKED	REVIEWED	DATE	REVISED
PSS	RG	-	VB	BRS	9/94	

FHWA REGION	STATE	PROJECT	
5	OHIO		

207/220

CUYAHOGA COUNTY
CUY – 90 – 9.68

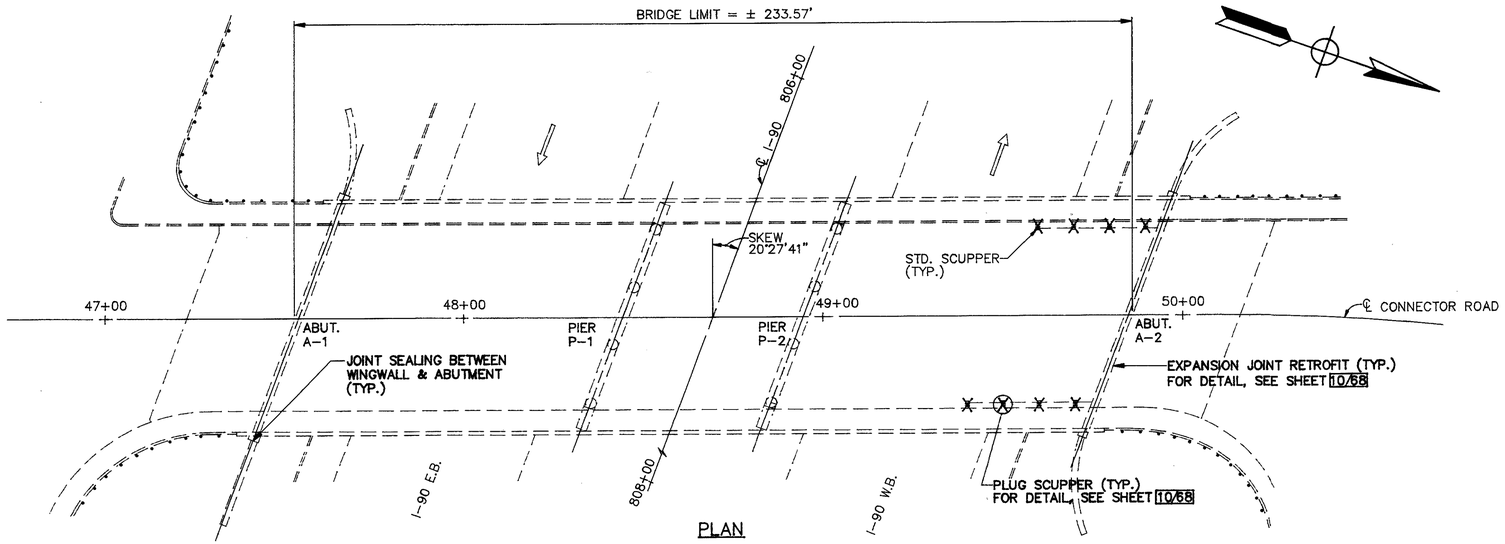

PLAN

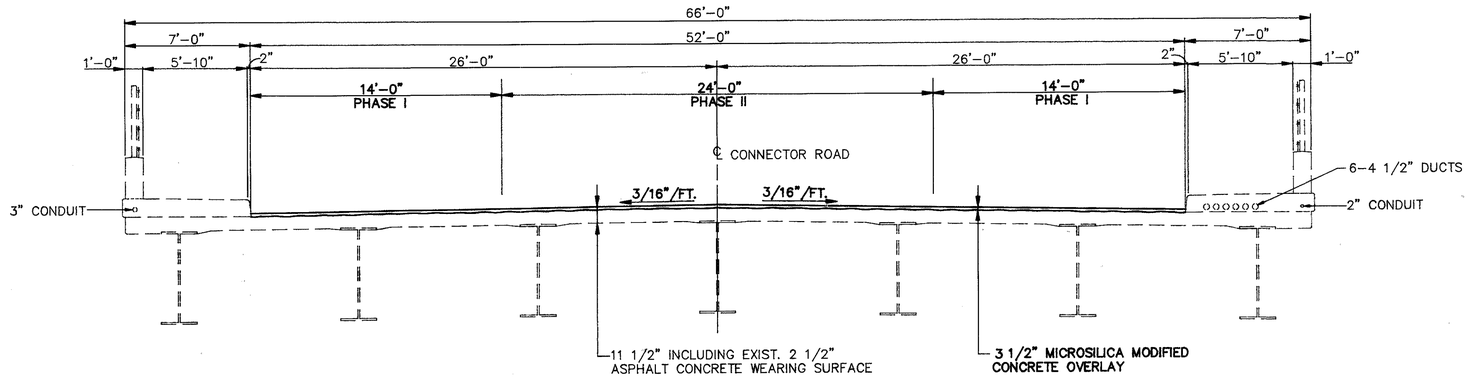

TRANSVERSE SECTION

EXISTING STRUCTURE

TYPE: 3 SPAN CONTINUOUS STEEL BEAM WITH REINFORCED CONCRETE DECK AND SUBSTRUCTURE

SPANS: 89'–3", 50'–3 1/4", 89'–3"

ROADWAY : 52'–0" F/F CURBS & 6'–0" SIDEWALKS

ALIGNMENT: TANGENT AND 10° 00' 00" CURVE RT.

SKEW: 20° 27' 41"

LOADING: HS20–44

APPROACH SLABS: 30' LONG (SPECIAL)

WEARING SURFACE: 2 1/2" ASPHALT CONCRETE

PROPOSED WORK

1. REMOVE THE ENTIRE EXISTING 2 1/2" ASPHALT OVERLAY AND THE TOP 1" (MINIMUM) OF EXISTING CONCRETE DECK BELOW AND OVERLAY WITH 3 1/2" MICROSILICA MODIFIED CONCRETE.
2. CONCRETE REPAIR AND SEALING
3. ASPHALT DRAIN PLUGGING
4. EXPANSION JOINTS RETROFIT
5. SCUPPER PLUGGING
6. JOINT SEALING BETWEEN WINGWALL & ABUTMENT

PROPOSED STRUCTURE

TYPE: 3 SPAN CONTINUOUS STEEL BEAM WITH REINFORCED CONCRETE DECK AND SUBSTRUCTURE

SPANS: 89'–3", 50'–3 1/4", 89'–3"

ROADWAY : 52'–0" F/F CURBS & 6'–0" SIDEWALKS

ALIGNMENT: TANGENT AND 10° 00' 00" CURVE RT.

SKEW: 20° 27' 41"

LOADING: HS20–44

APPROACH SLABS: 30' LONG (SPECIAL)

WEARING SURFACE: 3 1/2" MICROSILICA MODIFIED CONCRETE

ESTIMATED QUANTITIES

* = SEE PROPOSAL NOTE

ITEM	TOTAL	UNIT	DESCRIPTION	ABUTMENT	PIERS	SUPER STRUCTURE	GENERAL
SPEC	410	SQ YD	SEALING OF CONCRETE SURFACES (NON-EPOXY)*			410	
SPEC	1445	SQ YD	SEALING OF CONCRETE SURFACES (EPOXY-URETHANE)*	658	262	525	
514	LUMP	LUMP	FIELD PAINTING, MISC.: RETROFITTED AREAS			LUMP	
516	111	LN FT	STRUCTURAL STEEL EXPANSION JOINT (RETROFIT), AS PER PLAN			111	
516	92	LN FT	STRUCTURAL JOINT OR JOINT SEALER, MISC.: 705.03 OR 705.04	92			

ESTIMATED QUANTITIES

ITEM	TOTAL	UNIT	DESCRIPTION	ABUTMENT	PIERS	SUPER STRUCTURE	GENERAL
518	8	EACH	STRUCTURAL DRAINAGE MISC.: SCUPPER PLUGGING			8	
848	1331	SQ YD	MICROSILICA MODIFIED CONCRETE OVERLAY USING HYDRO-DEMOLITION 3½ INCH THICK			1331	
848	1331	SQ YD	SURFACE PREPARATION USING HYDRO-DEMOLITION			1331	
848	18	CU YD	MICROSILICA MODIFIED CONCRETE OVERLAY (VARIABLE THICKNESS) MATERIALS ONLY			18	
848	40	SQ YD	HAND CHIPPING			40	
848	1331	SQ YD	WEARING COURSE REMOVED, ASPHALT			1331	

NOTE: THESE QUANTITIES ARE CARRIED TO THE STRUCTURE SUB-SUMMARY ON SHEET 8/68.

POLYTECH, INC. 55/68
CONSULTING ENGINEERS CLEVELAND, OHIO

GENERAL PLAN & TRANSVERSE SECTION
BRIDGE NO. CUY–90–1201
I–90 UNDER CONNECTOR RD.

DESIGNED	DRAWN	TRACED	CHECKED	REVIEWED	DATE	REVISED
PSS	RG	–	VB	BS	9/94	ENF

FHWA REGION	STATE	PROJECT	
5	OHIO		

208
220

CUYAHOGA COUNTY
CUY-90-9.68

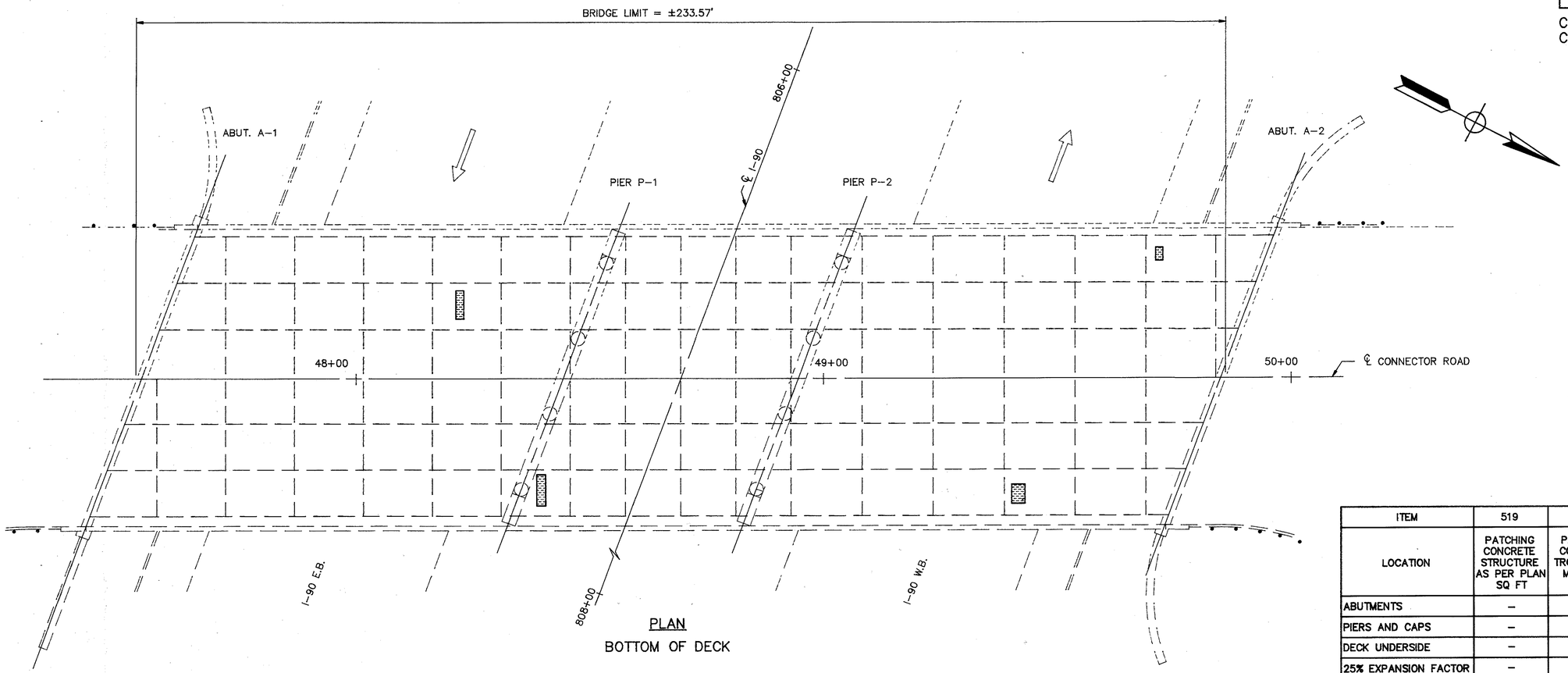

PLAN
BOTTOM OF DECK

ITEM	519	843	SPECIAL	202
LOCATION	PATCHING CONCRETE STRUCTURE AS PER PLAN SQ FT	PATCHING CONCRETE TROWELABLE MORTAR SQ FT	LOW PRESSURE EPOXY INJECTING SQ FT	PORTIONS OF STRUCTURE REMOVED LUMP
ABUTMENTS	–	–	–	–
PIERS AND CAPS	–	10	–	–
DECK UNDERSIDE	–	–	28	LUMP
25% EXPANSION FACTOR	–	3	7	–
TOTAL	–	13	35	LUMP

ITEM 519, PATCHING CONCRETE STRUCTURE, AS PER PLAN

ITEM 843 , PATCHING CONCRETE WITH TROWELABLE MORTAR

ITEM SPECIAL, LOW PRESSURE EPOXY INJECTING OF DELAMINATED CONCRETE

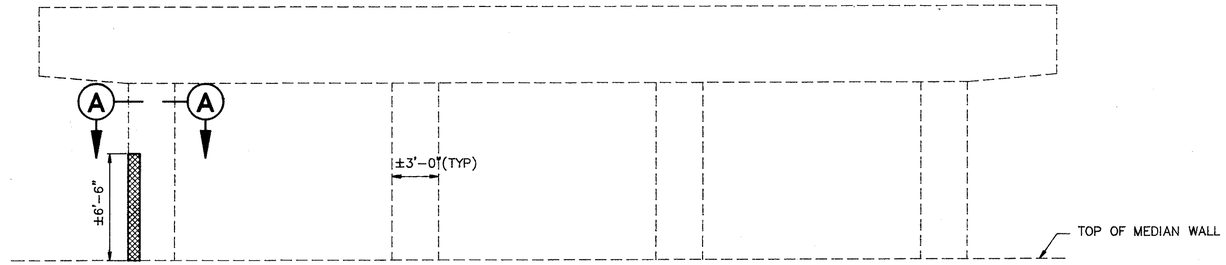

ELEVATION
PIER P-1 (LOOKING NORTH)

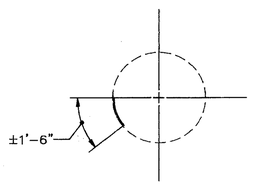

SECTION A-A

POLYTECH, INC. 56 / 68
CONSULTING ENGINEERS CLEVELAND, OHIO

BRIDGE CONCRETE REPAIR

BRIDGE NO. CUY-90-1201
I-90 UNDER CONNECTOR RD.

DESIGNED	DRAWN	TRACED	CHECKED	REVIEWED	DATE	REVISED
PSS	PSS	–	VB	BRS	9/94	

FHWA REGION	STATE	PROJECT	
5	OHIO		

209/220

CUYAHOGA COUNTY
CUY – 90 – 9.68

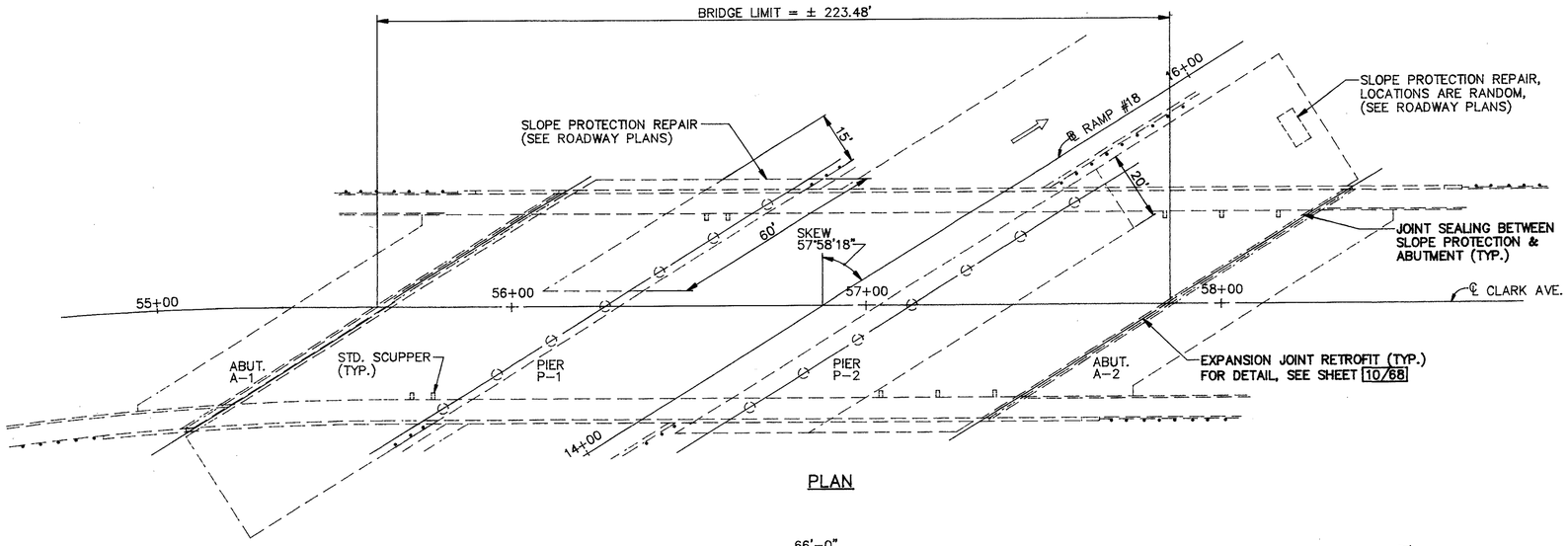

PLAN

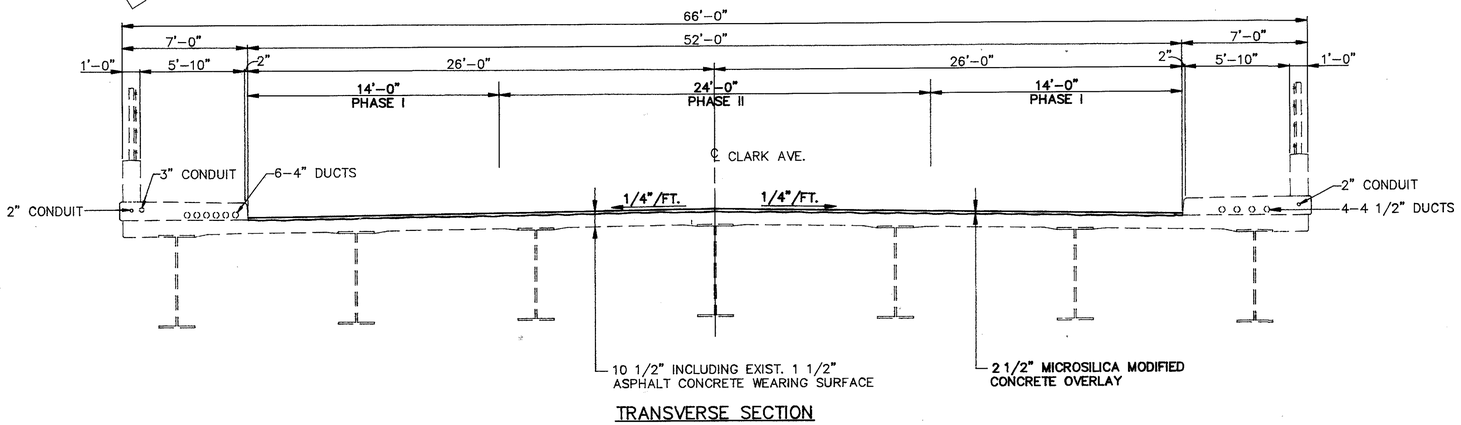

TRANSVERSE SECTION

EXISTING STRUCTURE

TYPE: 3 SPAN CONTINUOUS STEEL BEAM WITH REINFORCED CONCRETE DECK AND SUBSTRUCTURE

SPANS: 59'–9", 86'–6", 68'–9"

ROADWAY : 52'–0" F/F CURBS & 6'–0" SIDEWALKS

ALIGNMENT: 10° 00' 00" CURVE RT. & TANGENT

SKEW: 57° 58' 18" LEFT FORWARD

LOADING: HS20–44

APPROACH SLABS: 25' LONG (SPECIAL)

WEARING SURFACE: 1 1/2" ASPHALT CONCRETE

PROPOSED WORK

1. REMOVE THE ENTIRE EXISTING 1 1/2" ASPHALT OVERLAY AND THE TOP 1" (MINIMUM) OF EXISTING CONCRETE DECK BELOW AND OVERLAY WITH 2 1/2" MICROSILICA MODIFIED CONCRETE.
2. CONCRETE REPAIR AND SEALING
3. ASPHALT DRAIN PLUGGING
4. EXPANSION JOINTS RETROFIT
5. JOINT SEALING BETWEEN SLOPE PROTECTION & ABUTMENT

PROPOSED STRUCTURE

TYPE: 3 SPAN CONTINUOUS STEEL BEAM WITH REINFORCED CONCRETE DECK AND SUBSTRUCTURE

SPANS: 59'–9", 86'–6", 68'–9"

ROADWAY : 52'–0" F/F CURBS & 6'–0" SIDEWALKS

ALIGNMENT: 10° 00' 00" CURVE RT. & TANGENT

SKEW: 57° 58' 18" LEFT FORWARD

LOADING: HS20–44

APPROACH SLABS: 25' LONG (SPECIAL)

WEARING SURFACE: 2 1/2" MICROSILICA MODIFIED CONCRETE

ESTIMATED QUANTITIES

* = SEE PROPOSAL NOTE

ITEM	TOTAL	UNIT	DESCRIPTION	ABUTMENT	PIERS	SUPER STRUCTURE	GENERAL
SPEC	393	SQ YD	SEALING OF CONCRETE SURFACES (NON-EPOXY)*			393	
SPEC	1049	SQ YD	SEALING OF CONCRETE SURFACES (EPOXY-URETHANE)*	327	220	502	
514	LUMP	LUMP	FIELD PAINTING, MISC.: RETROFITTED AREAS			LUMP	
516	197	LN FT	STRUCTURAL STEEL EXPANSION JOINT (RETROFIT), AS PER PLAN			197	
516	280	LN FT	STRUCTURAL JOINT OR JOINT SEALER, MISC.: 705.03 OR 705.04	280			

ESTIMATED QUANTITIES

ITEM	TOTAL	UNIT	DESCRIPTION	ABUTMENT	PIERS	SUPER STRUCTURE	GENERAL
848	1251	SQ YD	MICROSILICA MODIFIED CONCRETE OVERLAY USING HYDRO-DEMOLITION 2½ INCH THICK			1251	
848	1251	SQ YD	SURFACE PREPARATION USING HYDRO-DEMOLITION			1251	
848	17	CU YD	MICROSILICA MODIFIED CONCRETE OVERLAY (VARIABLE THICKNESS) MATERIALS ONLY			17	
848	37	SQ YD	HAND CHIPPING			37	
848	1251	SQ YD	WEARING COURSE REMOVED, ASPHALT			1251	

NOTE: THESE QUANTITIES ARE CARRIED TO THE STRUCTURE SUB-SUMMARY ON SHEET 8/68.

POLYTECH, INC. 57/68
CONSULTING ENGINEERS CLEVELAND, OHIO

GENERAL PLAN & TRANSVERSE SECTION
BRIDGE NO. CUY–90–1214S
I–90 RAMP 18 UNDER CLARK AVE.

DESIGNED	DRAWN	TRACED	CHECKED	REVIEWED	DATE	REVISED
PSS	RG	–	VB	BS	9/94	ENF

FHWA REGION	STATE	PROJECT	
5	OHIO		

210
220

CUYAHOGA COUNTY
CUY-90-9.68

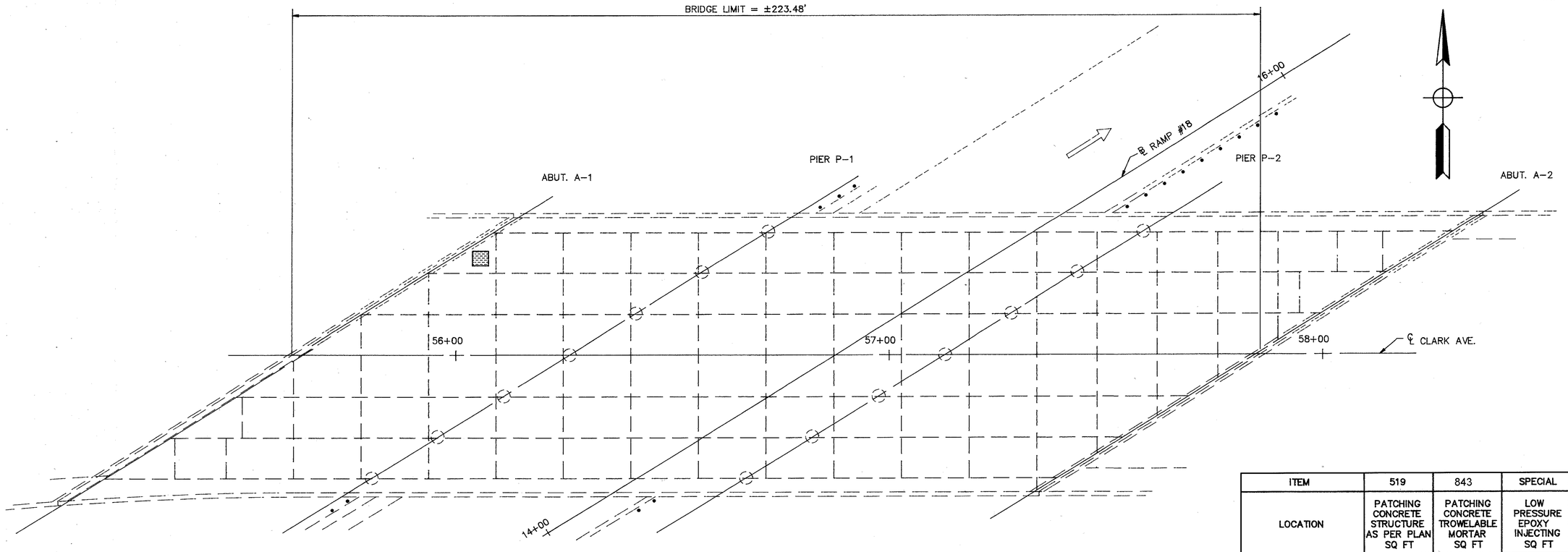

PLAN

BOTTOM OF DECK

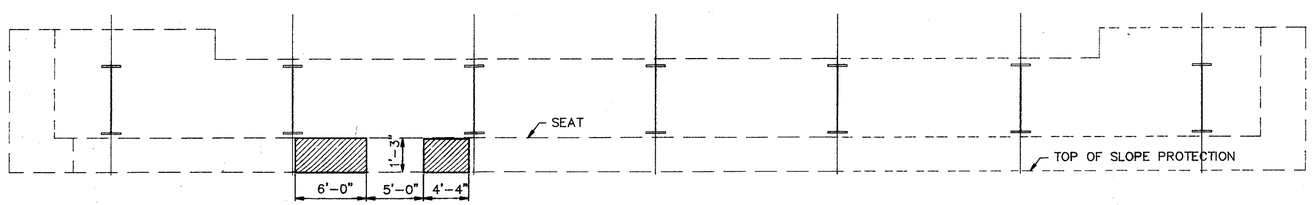

ELEVATION

ABUTMENT A-2

ITEM	519	843	SPECIAL	202
LOCATION	PATCHING CONCRETE STRUCTURE AS PER PLAN SQ FT	PATCHING CONCRETE TROWELABLE MORTAR SQ FT	LOW PRESSURE EPOXY INJECTING SQ FT	PORTIONS OF STRUCTURE REMOVED LUMP
ABUTMENTS	13	–	–	–
PIERS AND CAPS	–	–	–	–
DECK UNDERSIDE	–	–	13	LUMP
25% EXPANSION FACTOR	4	–	4	–
TOTAL	17	–	17	LUMP

ITEM 519, PATCHING CONCRETE STRUCTURE, AS PER PLAN

ITEM 843 , PATCHING CONCRETE WITH TROWELABLE MORTAR

ITEM SPECIAL, LOW PRESSURE EPOXY INJECTING OF DELAMINATED CONCRETE

POLYTECH, INC. 58/68
CONSULTING ENGINEERS CLEVELAND, OHIO

BRIDGE CONCRETE REPAIR

BRIDGE NO. CUY-90-1214S
I-90 RAMP 18 UNDER CLARK AVE.

DESIGNED	DRAWN	TRACED	CHECKED	REVIEWED	DATE	REVISED
PSS	PSS	–	VB	BRS	9/94	

FHWA REGION	STATE	PROJECT	
5	OHIO		

211/220

CUYAHOGA COUNTY
CUY – 90 – 9.68

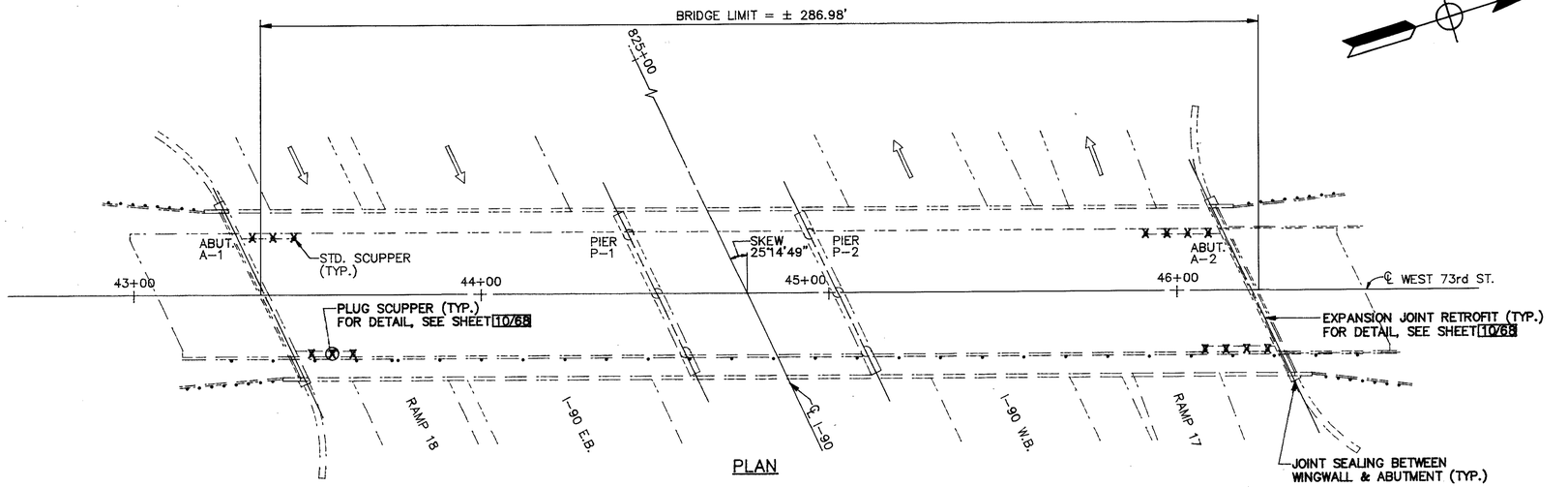

PLAN

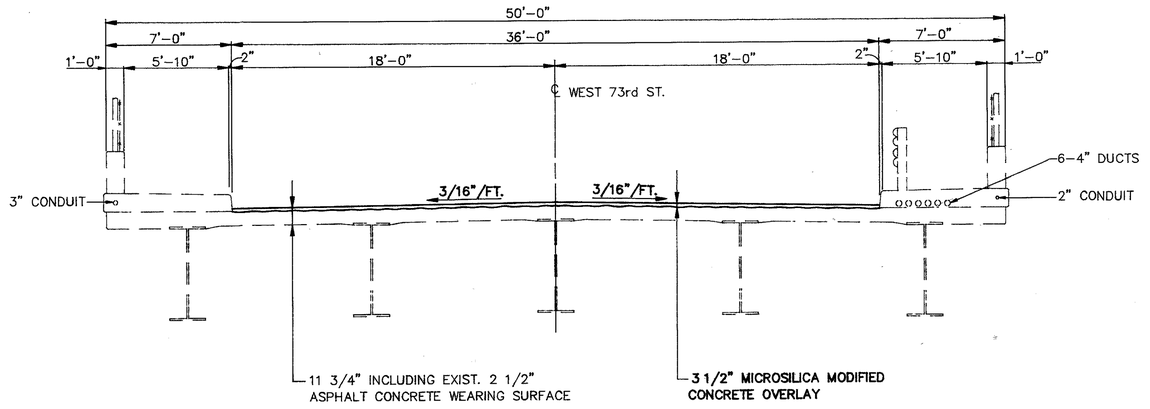

TRANSVERSE SECTION

EXISTING STRUCTURE

TYPE: 3 SPAN CONTINUOUS STEEL BEAM WITH REINFORCED CONCRETE DECK AND SUBSTRUCTURE

SPANS: 112'–0", 52'–0", 118'–0" C/C BRGS.

ROADWAY: 36'–0" F/F CURBS, 6'–0" SIDEWALKS

ALIGNMENT: TANGENT

SKEW: 25° 14' 49" RIGHT FORWARD

LOADING: HS20–44

APPROACH SLABS: 30' LONG (AS–1–72)

WEARING SURFACE: 2 1/2" ASPHALT CONCRETE

PROPOSED WORK

1. REMOVE THE ENTIRE EXISTING 2 1/2" ASPHALT OVERLAY AND THE TOP 1" (MINIMUM) OF EXISTING CONCRETE DECK BELOW AND OVERLAY WITH 3 1/2" MICROSILICA MODIFIED CONCRETE.
2. CONCRETE REPAIR AND SEALING
3. ASPHALT DRAIN PLUGGING
4. EXPANSION JOINT RETROFIT
5. SCUPPER PLUGGING
6. JOINT SEALING BETWEEN SLOPE PROTECTION & ABUTMENT

PROPOSED STRUCTURE

TYPE: 3 SPAN CONTINUOUS STEEL BEAM WITH REINFORCED CONCRETE DECK AND SUBSTRUCTURE

SPANS: 112'–0", 52'–0", 118'–0" C/C BRGS.

ROADWAY: 36'–0" F/F CURBS, 6'–0" SIDEWALKS

ALIGNMENT: TANGENT

SKEW: 25° 14' 49" RIGHT FORWARD

LOADING: HS20–44

APPROACH SLABS: 30' LONG (AS–1–72)

WEARING SURFACE: 3 1/2" MICROSILICA MODIFIED CONCRETE

ESTIMATED QUANTITIES

* = SEE PROPOSAL NOTE

ITEM	TOTAL	UNIT	DESCRIPTION	ABUTMENT	PIERS	SUPER STRUCTURE	GENERAL
SPEC	504	SQ YD	SEALING OF CONCRETE SURFACES (NON-EPOXY)*			410	
SPEC	1455	SQ YD	SEALING OF CONCRETE SURFACES (EPOXY-URETHANE)*	614	190	651	
514	LUMP	LUMP	FIELD PAINTING, MISC.: RETROFITTED AREAS			LUMP	
516	80	LN FT	STRUCTURAL STEEL EXPANSION JOINT (RETROFIT), AS PER PLAN			80	
516	103	LN FT	STRUCTURAL JOINT OR JOINT SEALER, MISC.: 705.03 OR 705.04	103			

ESTIMATED QUANTITIES

ITEM	TOTAL	UNIT	DESCRIPTION	ABUTMENT	PIERS	SUPER STRUCTURE	GENERAL
518	14	EACH	STRUCTURAL DRAINAGE MISC.: SCUPPER PLUGGING			14	
848	1135	SQ YD	MICROSILICA MODIFIED CONCRETE OVERLAY USING HYDRO-DEMOLITION 3½ INCH THICK			1135	
848	1135	SQ YD	SURFACE PREPARATION USING HYDRO-DEMOLITION			1135	
848	16	CU YD	MICROSILICA MODIFIED CONCRETE OVERLAY (VARIABLE THICKNESS) MATERIALS ONLY			16	
848	34	SQ YD	HAND CHIPPING			34	
848	1135	SQ YD	WEARING COURSE REMOVED, ASPHALT			1135	

NOTE: THESE QUANTITIES ARE CARRIED TO THE STRUCTURE SUB-SUMMARY ON SHEET 8/68.

POLYTECH, INC. 59/68
CONSULTING ENGINEERS CLEVELAND, OHIO

GENERAL PLAN & TRANSVERSE SECTION
BRIDGE NO. CUY–90–1237
I–90 UNDER WEST 73rd ST.

DESIGNED	DRAWN	TRACED	CHECKED	REVIEWED	DATE	REVISED
PSS	RG	–	VB	BS	9/94	ENF

FHWA REGION	STATE	PROJECT	
5	OHIO		

212/220

CUYAHOGA COUNTY
CUY-90-9.68

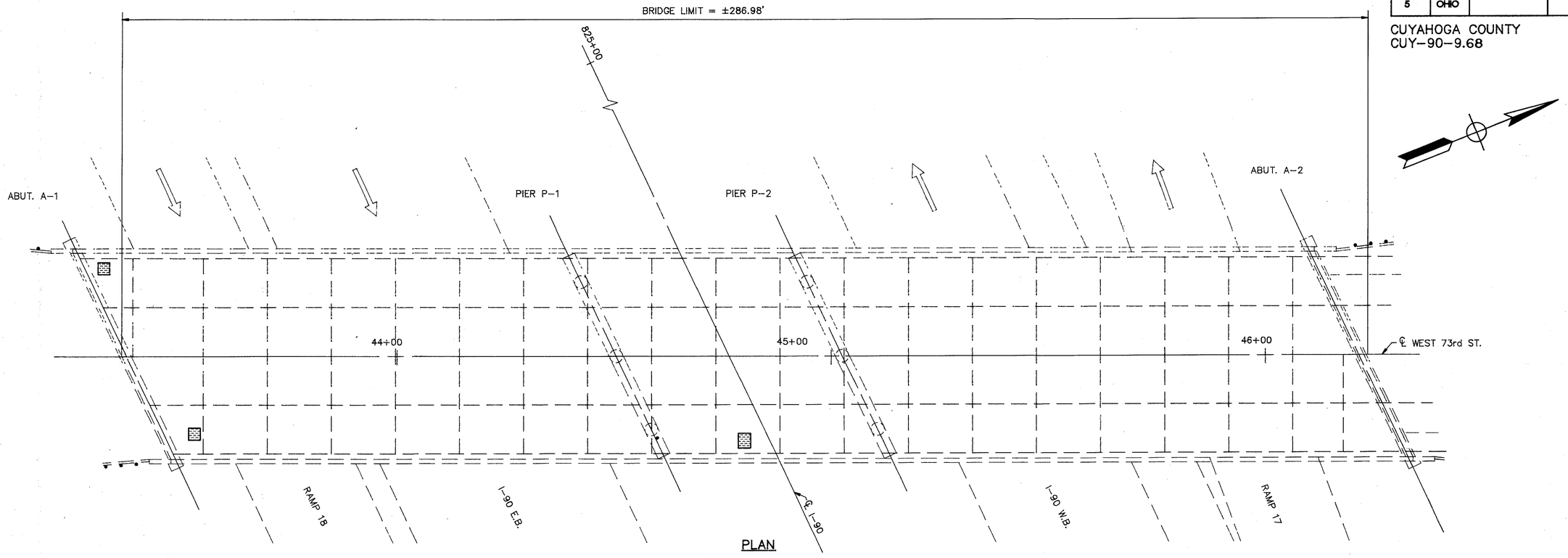

PLAN
BOTTOM OF DECK

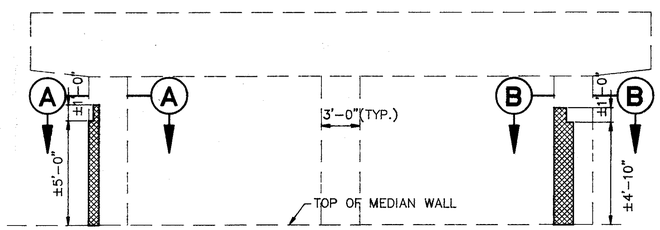

ELEVATION
PIER P-1 (LOOKING NORTH)

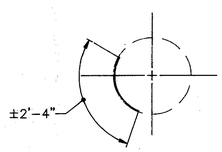

SECTION A-A

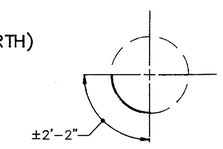

SECTION B-B

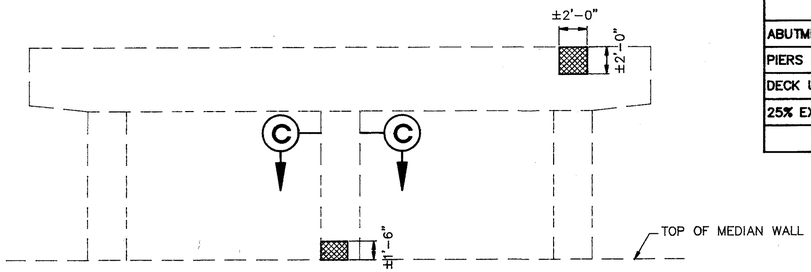

ELEVATION
PIER P-2 (LOOKING NORTH)

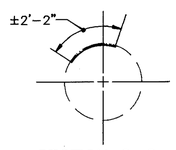

SECTION C-C

ITEM	519	843	SPECIAL	202
LOCATION	PATCHING CONCRETE STRUCTURE AS PER PLAN SQ FT	PATCHING CONCRETE TROWELABLE MORTAR SQ FT	LOW PRESSURE EPOXY INJECTING SQ FT	PORTIONS OF STRUCTURE REMOVED LUMP
ABUTMENTS	–	–	–	–
PIERS AND CAPS	–	29	–	–
DECK UNDERSIDE	–	–	13	LUMP
25% EXPANSION FACTOR	–	7	3	–
TOTAL	–	36	16	LUMP

ITEM 519, PATCHING CONCRETE STRUCTURE, AS PER PLAN

ITEM 843 , PATCHING CONCRETE WITH TROWELABLE MORTAR

ITEM SPECIAL, LOW PRESSURE EPOXY INJECTING OF DELAMINATED CONCRETE

POLYTECH, INC. 60/68
CONSULTING ENGINEERS CLEVELAND, OHIO

BRIDGE CONCRETE REPAIR

BRIDGE NO. CUY-90-1237
I-90 UNDER WEST 73TH ST.

DESIGNED	DRAWN	TRACED	CHECKED	REVIEWED	DATE	REVISED
PSS	PSS	–	VB	BRS	9/94	

FHWA REGION	STATE	PROJECT	
5	OHIO		

213/220

CUYAHOGA COUNTY
CUY – 90 – 9.68

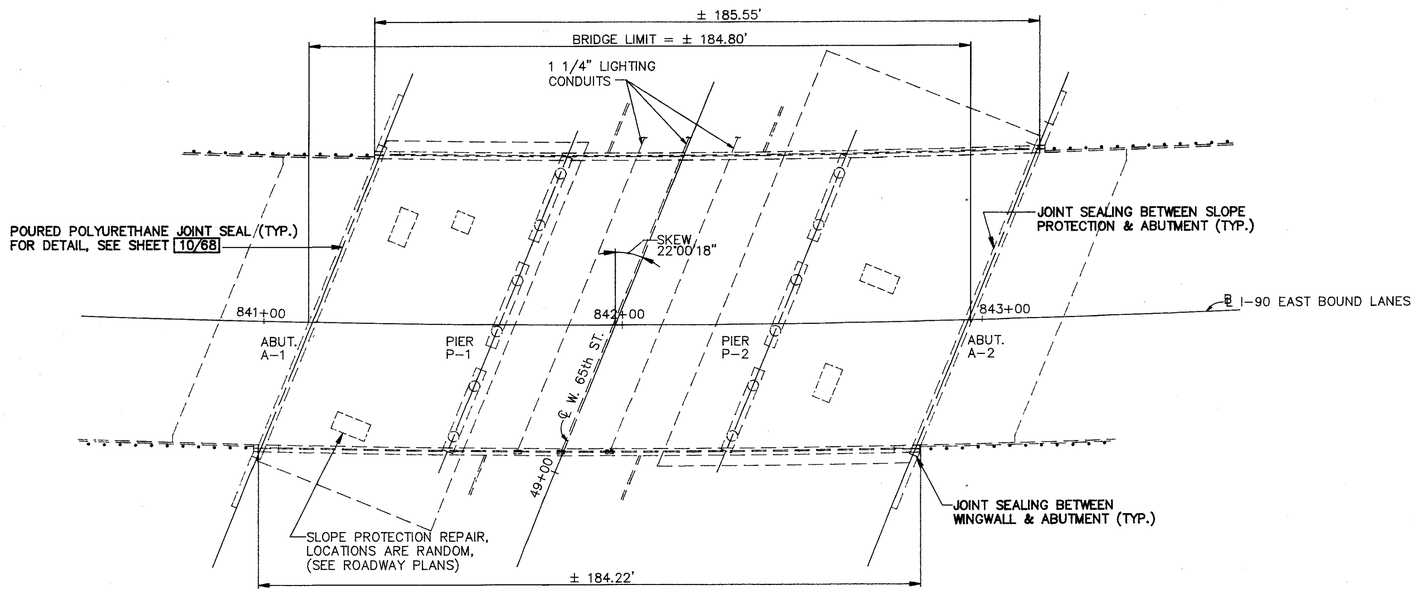

PLAN

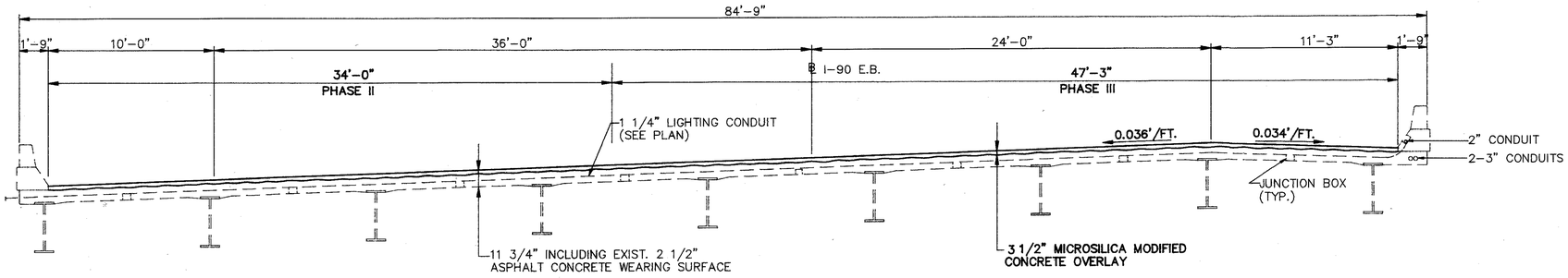

TRANSVERSE SECTION

PROPOSED WORK

1. REMOVE THE ENTIRE EXISTING 2 1/2" ASPHALT OVERLAY AND THE TOP 1/4" (MINIMUM) OF EXISTING CONCRETE DECK BELOW AND OVERLAY WITH 3 1/2" MICROSILICA MODIFIED CONCRETE.
2. CONCRETE REPAIR AND SEALING
3. ASPHALT DRAIN PLUGGING
4. JOINT SEALING BETWEEN SLOPE PROTECTION & ABUTMENT
5. JOINT SEALING BETWEEN WINGWALL & ABUTMENT
6. POURED POLYURETHANE JOINT SEAL

EXISTING STRUCTURE

TYPE: 3 SPAN CONTINUOUS STEEL BEAM WITH REINFORCED CONCRETE DECK AND SUBSTRUCTURE

SPANS: 52'–6", 77'–6", 52'–6"

ROADWAY: 81'–3" T/T PARAPETS

ALIGNMENT: 1° 26' 25.8" CURVE LT.

SKEW: 22° 00' 18"

LOADING: HS20–44 AND INT. ALT. LOADING

APPROACH SLABS: 25' LONG (SPECIAL)

WEARING SURFACE: 2 1/2" ASPHALT CONCRETE

PROPOSED STRUCTURE

TYPE: 3 SPAN CONTINUOUS STEEL BEAM WITH REINFORCED CONCRETE DECK AND SUBSTRUCTURE

SPANS: 52'–6", 77'–6", 52'–6"

ROADWAY: 81'–3" T/T PARAPETS

ALIGNMENT: 1° 26' 25.8" CURVE LT.

SKEW: 22° 00' 18"

LOADING: HS20–44 AND INT. ALT. LOADING

APPROACH SLABS: 25' LONG (SPECIAL)

WEARING SURFACE: 3 1/2" MICROSILICA MODIFIED CONCRETE

ESTIMATED QUANTITIES

* = SEE PROPOSAL NOTE

ITEM	TOTAL	UNIT	DESCRIPTION	ABUTMENT	PIERS	SUPER STRUCTURE	GENERAL
SPEC	965	SQ YD	SEALING OF CONCRETE SURFACES (EPOXY-URETHANE)*	71	466	428	
SPEC	176	LN FT	POURED POLYURETHANE JOINT SEAL			176	
516	220	LN FT	STRUCTURAL JOINT OR JOINT SEALER, MISC.: 705.03 OR 705.04	220			

ESTIMATED QUANTITIES

ITEM	TOTAL	UNIT	DESCRIPTION	ABUTMENT	PIERS	SUPER STRUCTURE	GENERAL
848	1658	SQ YD	MICROSILICA MODIFIED CONCRETE OVERLAY USING HYDRO-DEMOLITION 3½ INCH THICK			1658	
848	1658	SQ YD	SURFACE PREPARATION USING HYDRO-DEMOLITION			1658	
848	23	CU YD	MICROSILICA MODIFIED CONCRETE OVERLAY (VARIABLE THICKNESS) MATERIALS ONLY			23	
848	50	SQ YD	HAND CHIPPING			50	
848	1658	SQ YD	WEARING COURSE REMOVED, ASPHALT			1658	

NOTE: THESE QUANTITIES ARE CARRIED TO THE STRUCTURE SUB-SUMMARY ON SHEET 9/68.

POLYTECH, INC. 61/68
CONSULTING ENGINEERS CLEVELAND, OHIO

GENERAL PLAN & TRANSVERSE SECTION
BRIDGE NO. CUY–90–1267
I–90 OVER WEST 65th ST.

DESIGNED	DRAWN	TRACED	CHECKED	REVIEWED	DATE	REVISED
PSS	RG	–	VB	BS	9/94	

FHWA REGION	STATE	PROJECT	
5	OHIO		

214/220

CUYAHOGA COUNTY
CUY-90-9.68

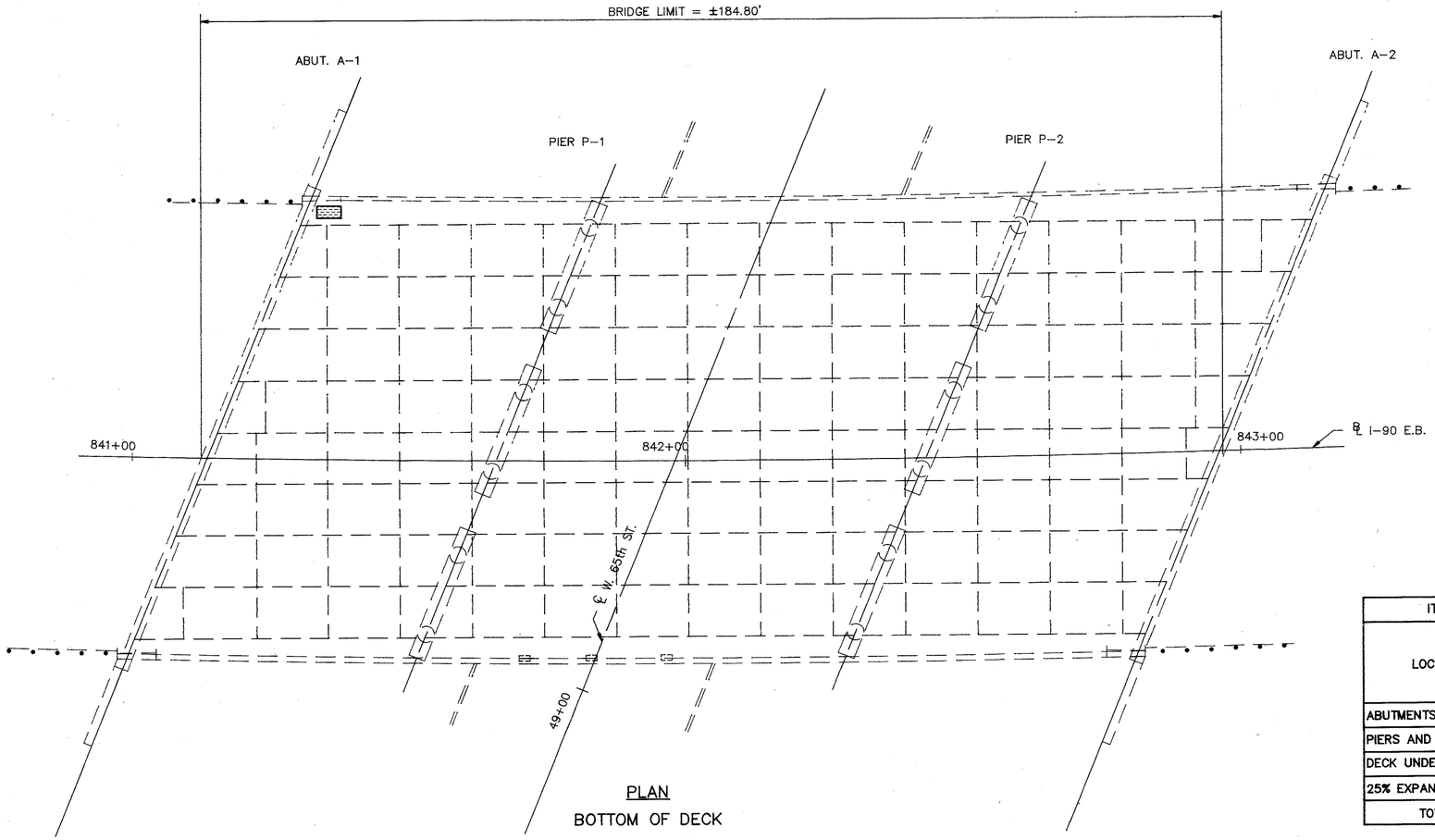

PLAN
BOTTOM OF DECK

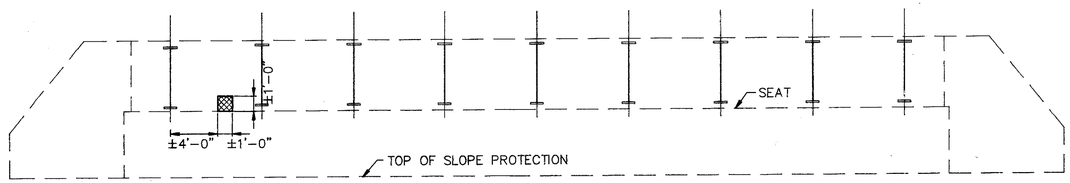

ELEVATION
ABUTMENT A-1

ITEM	519	843	SPECIAL	202
LOCATION	PATCHING CONCRETE STRUCTURE AS PER PLAN SQ FT	PATCHING CONCRETE TROWELABLE MORTAR SQ FT	LOW PRESSURE EPOXY INJECTING SQ FT	PORTIONS OF STRUCTURE REMOVED LUMP
ABUTMENTS	–	1	–	–
PIERS AND CAPS	–	–	–	–
DECK UNDERSIDE	–	–	6	LUMP
25% EXPANSION FACTOR	–	–	2	–
TOTAL	–	1	8	LUMP

ITEM 519, PATCHING CONCRETE STRUCTURE, AS PER PLAN

ITEM 843 , PATCHING CONCRETE WITH TROWELABLE MORTAR

ITEM SPECIAL, LOW PRESSURE EPOXY INJECTING OF DELAMINATED CONCRETE

POLYTECH, INC. 62/68
CONSULTING ENGINEERS CLEVELAND, OHIO

BRIDGE CONCRETE REPAIR

BRIDGE NO. CUY-90-1267
I-90 OVER WEST 65TH ST.

DESIGNED	DRAWN	TRACED	CHECKED	REVIEWED	DATE	REVISED
PSS	PSS	–	VB	BRS	9/94	

FHWA REGION	STATE	PROJECT	
5	OHIO		

214/220

CUYAHOGA COUNTY
CUY-90-9.68

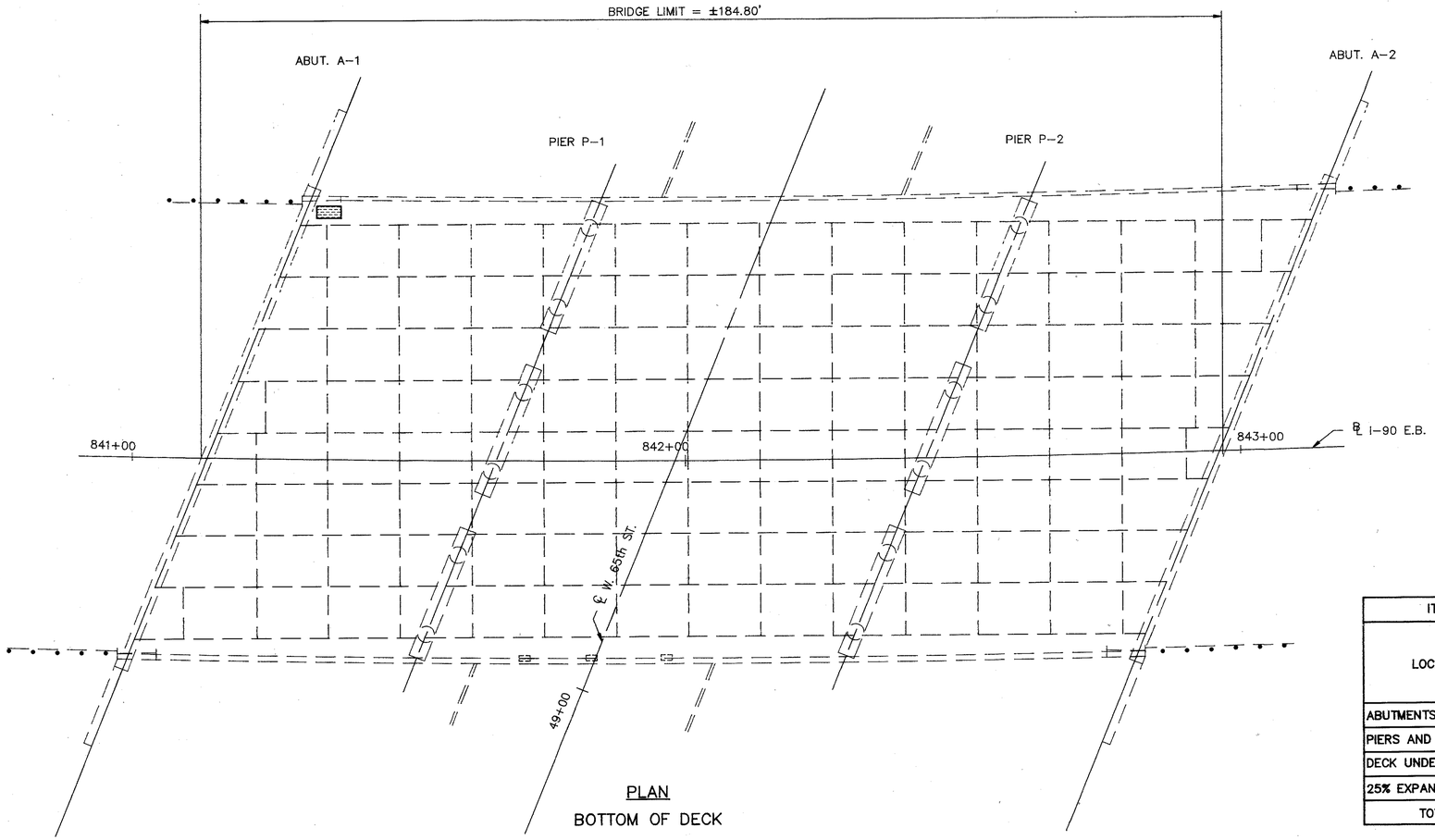

PLAN
BOTTOM OF DECK

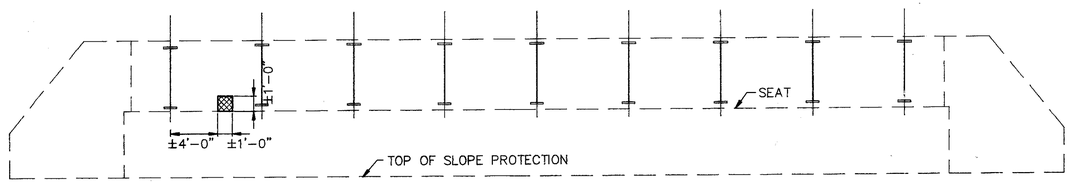

ELEVATION
ABUTMENT A-1

ITEM	519	843	SPECIAL	202
LOCATION	PATCHING CONCRETE STRUCTURE AS PER PLAN SQ FT	PATCHING CONCRETE TROWELABLE MORTAR SQ FT	LOW PRESSURE EPOXY INJECTING SQ FT	PORTIONS OF STRUCTURE REMOVED LUMP
ABUTMENTS	–	1	–	–
PIERS AND CAPS	–	–	–	–
DECK UNDERSIDE	–	–	6	LUMP
25% EXPANSION FACTOR	–	–	2	–
TOTAL	–	1	8	LUMP

ITEM 519, PATCHING CONCRETE STRUCTURE, AS PER PLAN

ITEM 843 , PATCHING CONCRETE WITH TROWELABLE MORTAR

ITEM SPECIAL, LOW PRESSURE EPOXY INJECTING OF DELAMINATED CONCRETE

POLYTECH, INC. 62/68
CONSULTING ENGINEERS CLEVELAND, OHIO

BRIDGE CONCRETE REPAIR

BRIDGE NO. CUY-90-1267
I-90 OVER WEST 65TH ST.

DESIGNED	DRAWN	TRACED	CHECKED	REVIEWED	DATE	REVISED
PSS	PSS	–	VB	BRS	9/94	

FHWA REGION	STATE	PROJECT	
5	OHIO		

215/220

CUYAHOGA COUNTY
CUY-90-9.68

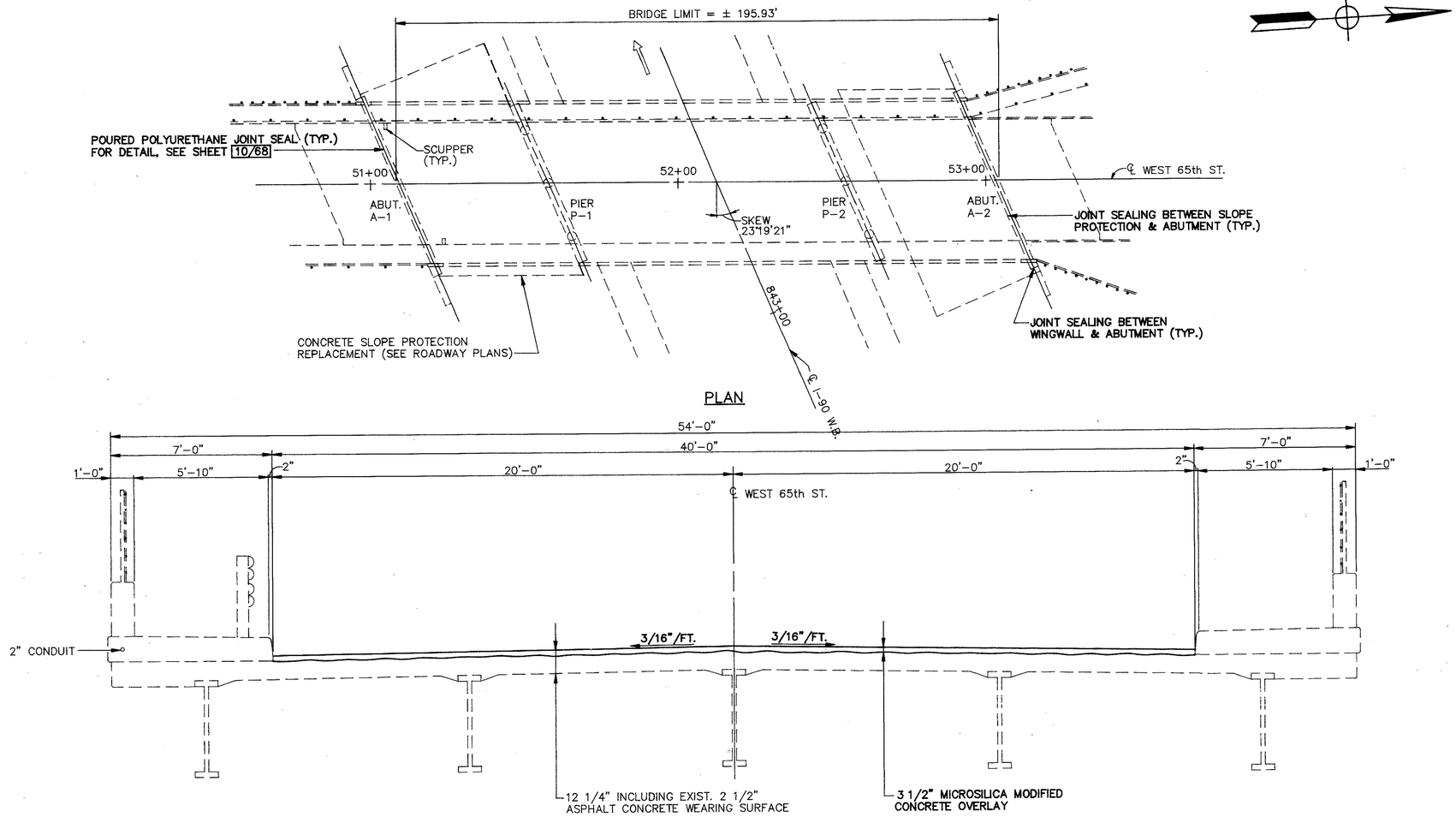

EXISTING STRUCTURE

TYPE: 3 SPAN CONTINUOUS STEEL BEAM WITH REINFORCED CONCRETE DECK AND SUBSTRUCTURE

SPANS: 48'-6", 96'-9", 48'-6" C/C BRGS.

ROADWAY: 40'-0" F/F CURBS, 6'-0" SIDEWALKS

ALIGNMENT: TANGENT

SKEW: 23° 19' 21" RIGHT FORWARD

LOADING: HS20-44

APPROACH SLABS: 25' LONG (AS-1-72)

WEARING SURFACE: 2 1/2" ASPHALT CONCRETE

PROPOSED WORK

1. REMOVE THE ENTIRE EXISTING 2 1/2" ASPHALT OVERLAY AND THE TOP 1" (MINIMUM) OF EXISTING CONCRETE DECK BELOW AND OVERLAY WITH 3 1/2" MICROSILICA MODIFIED CONCRETE.
2. CONCRETE REPAIR AND SEALING
3. ASPHALT DRAIN PLUGGING
4. JOINT SEALING BETWEEN SLOPE PROTECTION & ABUTMENT
5. JOINT SEALING BETWEEN WINGWALL & ABUTMENT
6. POURED POLYURETHANE JOINT SEAL

ESTIMATED QUANTITIES

* = SEE PROPOSAL NOTE

ITEM	TOTAL	UNIT	DESCRIPTION	ABUTMENT	PIERS	SUPER STRUCTURE	GENERAL
SPEC	336	SQ YD	SEALING OF CONCRETE SURFACES (NON-EPOXY)*			336	
SPEC	727	SQ YD	SEALING OF CONCRETE SURFACES (EPOXY-URETHANE)*	77	215	435	
SPEC	90	LN FT	POURED POLYURETHANE JOINT SEAL			90	
516	158	LN FT	STRUCTURAL JOINT OR JOINT SEALER, MISC.: 705.03 OR 705.04	158			

ESTIMATED QUANTITIES

ITEM	TOTAL	UNIT	DESCRIPTION	ABUTMENT	PIERS	SUPER STRUCTURE	GENERAL
848	865	SQ YD	MICROSILICA MODIFIED CONCRETE OVERLAY USING HYDRO-DEMOLITION 3½ INCH THICK			865	
848	865	SQ YD	SURFACE PREPARATION USING HYDRO-DEMOLITION			865	
848	12	CU YD	MICROSILICA MODIFIED CONCRETE OVERLAY (VARIABLE THICKNESS) MATERIALS ONLY			12	
848	26	SQ YD	HAND CHIPPING			26	
848	865	SQ YD	WEARING COURSE REMOVED, ASPHALT			865	

NOTE: THESE QUANTITIES ARE CARRIED TO THE STRUCTURE SUB-SUMMARY ON SHEET 9/68.

PROPOSED STRUCTURE

TYPE: 3 SPAN CONTINUOUS STEEL BEAM WITH REINFORCED CONCRETE DECK AND SUBSTRUCTURE

SPANS: 48'-6", 96'-9", 48'-6" C/C BRGS.

ROADWAY: 40'-0" F/F CURBS, 6'-0" SIDEWALKS

ALIGNMENT: TANGENT

SKEW: 23° 19' 21" RIGHT FORWARD

LOADING: HS20-44

APPROACH SLABS: 25' LONG (AS-1-72)

WEARING SURFACE: 3 1/2" MICROSILICA MODIFIED CONCRETE

POLYTECH, INC. 63/68
CONSULTING ENGINEERS CLEVELAND, OHIO

GENERAL PLAN & TRANSVERSE SECTION
BRIDGE NO. CUY-90-1270
I-90 UNDER WEST 65th ST.

DESIGNED	DRAWN	TRACED	CHECKED	REVIEWED	DATE	REVISED
PSS	RG	-	VB	BS	9/94	ENF

FHWA REGION	STATE	PROJECT	
5	OHIO		

216
220

CUYAHOGA COUNTY
CUY-90-9.68

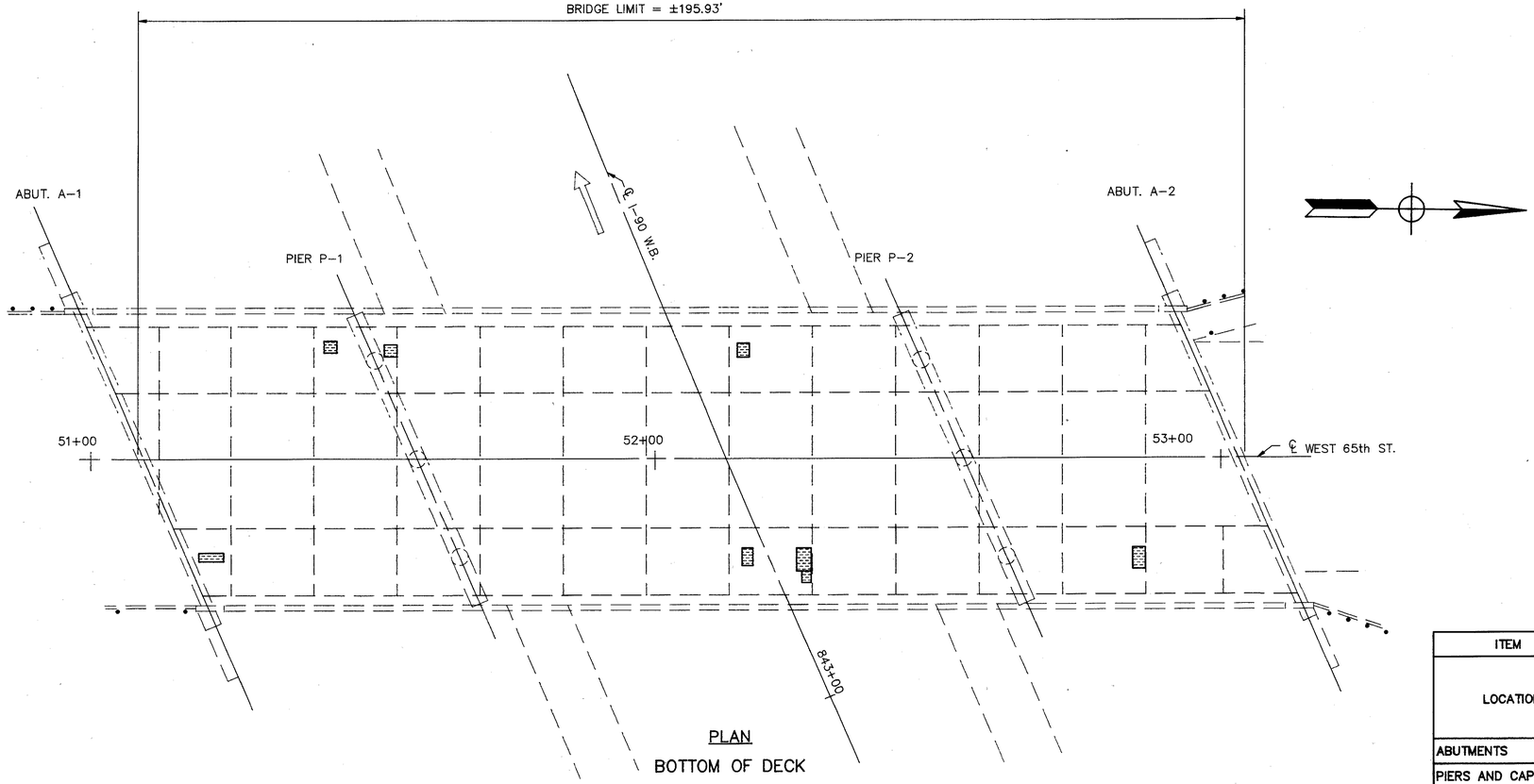

PLAN
BOTTOM OF DECK

ITEM	519	843	SPECIAL	202
LOCATION	PATCHING CONCRETE STRUCTURE AS PER PLAN SQ FT	PATCHING CONCRETE TROWELABLE MORTAR SQ FT	LOW PRESSURE EPOXY INJECTING SQ FT	PORTIONS OF STRUCTURE REMOVED LUMP
ABUTMENTS	–	–	–	–
PIERS AND CAPS	–	51	–	–
DECK UNDERSIDE	–	–	36	LUMP
25% EXPANSION FACTOR	–	13	9	–
TOTAL	–	64	45	LUMP

ITEM 519, PATCHING CONCRETE STRUCTURE, AS PER PLAN

ITEM 843 , PATCHING CONCRETE WITH TROWELABLE MORTAR

ITEM SPECIAL, LOW PRESSURE EPOXY INJECTING OF DELAMINATED CONCRETE

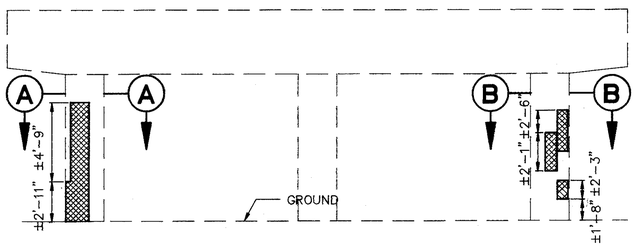

ELEVATION
PIER P-1 (LOOKING SOUTH)

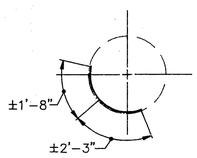

SECTION A-A

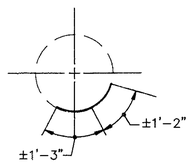

SECTION B-B

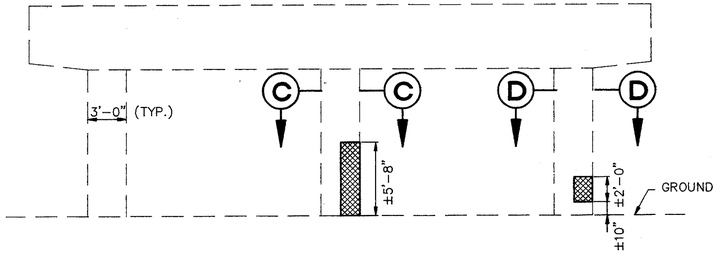

ELEVATION
PIER P-2 (LOOKING NORTH)

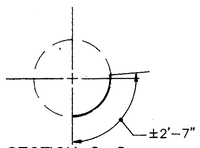

SECTION C-C

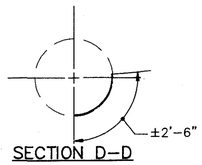

SECTION D-D

POLYTECH, INC. 64 / 68
CONSULTING ENGINEERS CLEVELAND, OHIO

BRIDGE CONCRETE REPAIR

BRIDGE NO. CUY-90-1270
I-90 UNDER WEST 65TH ST.

DESIGNED	DRAWN	TRACED	CHECKED	REVIEWED	DATE	REVISED
PSS	PSS	–	VB	BRS	9/94	

FHWA REGION	STATE	PROJECT	
5	OHIO		

217
220

CUYAHOGA COUNTY
CUY – 90 – 9.68

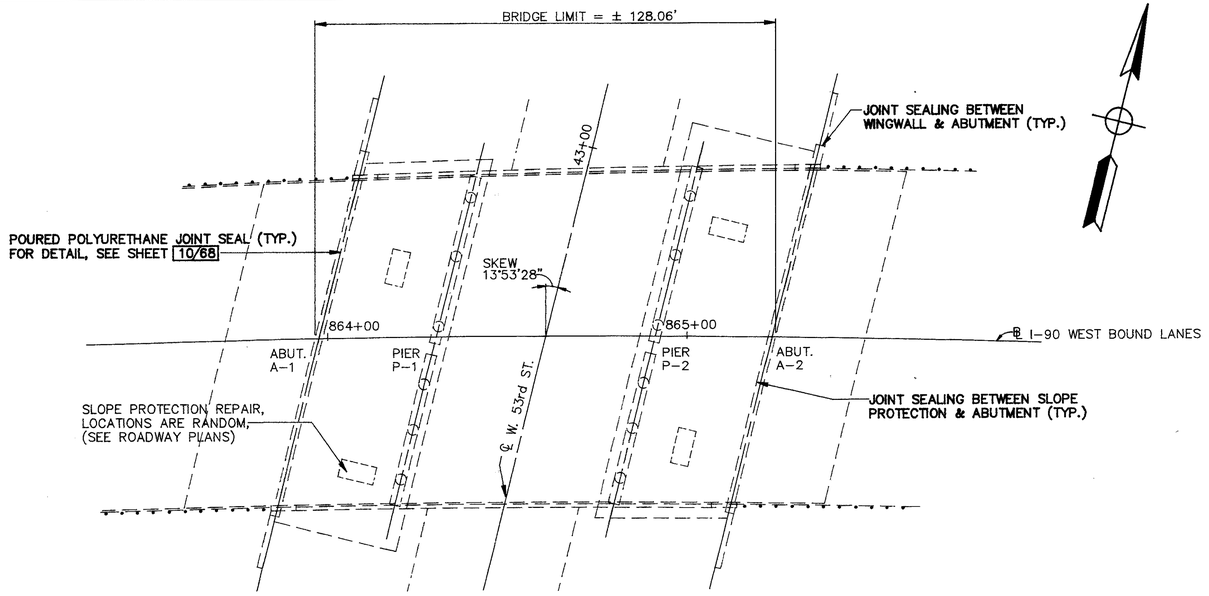

PLAN

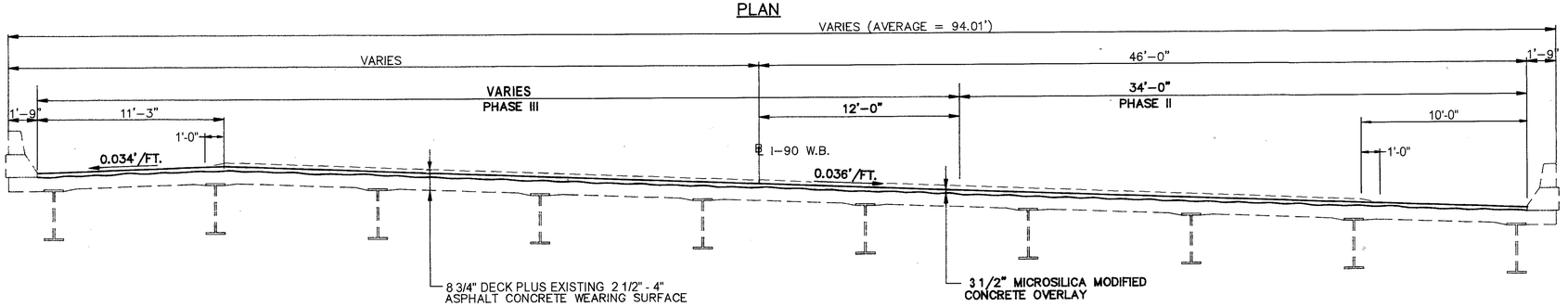

TRANSVERSE SECTION

EXISTING STRUCTURE

TYPE: 3 SPAN CONTINUOUS STEEL BEAM WITH REINFORCED CONCRETE DECK AND SUBSTRUCTURE

SPANS: 32'–6", 61'–0", 32'–6" C/C BRGS.

ROADWAY: 90.51' AVG. T/T PARAPETS

ALIGNMENT: 1° 27' 11.8" CURVE RT.

SKEW: 13° 53' 28" LEFT FORWARD

LOADING: HS20–44 & INT. ALT. LOADING

APPROACH SLABS: 25' LONG (AS–1–72) & SPECIAL

WEARING SURFACE: 2 1/2" - 4" ASPHALT CONCRETE

PROPOSED WORK

1. REMOVE THE ENTIRE EXISTING ASPHALT OVERLAY AND THE TOP 1" (MINIMUM) OF EXISTING CONCRETE DECK BELOW AND OVERLAY WITH 3 1/2" MICROSILICA MODIFIED CONCRETE.
2. CONCRETE REPAIR AND SEALING
3. ASPHALT DRAIN PLUGGING
4. JOINT SEALING BETWEEN SLOPE PROTECTION & ABUTMENT
5. JOINT SEALING BETWEEN WINGWALL & ABUTMENT
6. POURED POLYURETHANE JOINT SEAL

PROPOSED STRUCTURE

TYPE: 3 SPAN CONTINUOUS STEEL BEAM WITH REINFORCED CONCRETE DECK AND SUBSTRUCTURE

SPANS: 32'–6", 61'–0", 32'–6" C/C BRGS.

ROADWAY: 90.51' AVG. T/T PARAPETS

ALIGNMENT: 1° 27' 11.8" CURVE RT.

SKEW: 13° 53' 28" LEFT FORWARD

LOADING: HS20–44 & INT. ALT. LOADING

APPROACH SLABS: 25' LONG (AS–1–72) & SPECIAL

WEARING SURFACE: 3 1/2" MICROSILICA MODIFIED CONCRETE

ESTIMATED QUANTITIES

* = SEE PROPOSAL NOTE

ITEM	TOTAL	UNIT	DESCRIPTION	ABUTMENT	PIERS	SUPER STRUCTURE	GENERAL
SPEC	749	SQ YD	SEALING OF CONCRETE SURFACES (EPOXY-URETHANE)*	63	381	305	
SPEC	190	LN FT	POURED POLYURETHANE JOINT SEAL			190	
516	228	LN FT	STRUCTURAL JOINT OR JOINT SEALER, MISC.: 705.03 OR 705.04	228			

ESTIMATED QUANTITIES

ITEM	TOTAL	UNIT	DESCRIPTION	ABUTMENT	PIERS	SUPER STRUCTURE	GENERAL
848	1280	SQ YD	MICROSILICA MODIFIED CONCRETE OVERLAY USING HYDRO-DEMOLITION 3½ INCH THICK			1280	
848	1280	SQ YD	SURFACE PREPARATION USING HYDRO-DEMOLITION			1280	
848	18	CU YD	MICROSILICA MODIFIED CONCRETE OVERLAY (VARIABLE THICKNESS) MATERIALS ONLY			18	
848	38	SQ YD	HAND CHIPPING			38	
848	1280	SQ YD	WEARING COURSE REMOVED, ASPHALT			1280	

NOTE: THESE QUANTITIES ARE CARRIED TO THE STRUCTURE SUB-SUMMARY ON SHEET 9/68.

POLYTECH, INC. 65/68
CONSULTING ENGINEERS CLEVELAND, OHIO

GENERAL PLAN & TRANSVERSE SECTION
BRIDGE NO. CUY–90–1309 L
I–90 OVER WEST 53rd ST.

DESIGNED	DRAWN	TRACED	CHECKED	REVIEWED	DATE	REVISED
PSS	RG	–	VB	BS	9/94	ENF

FHWA REGION	STATE	PROJECT	
5	OHIO		

218
220

CUYAHOGA COUNTY
CUY-90-9.68

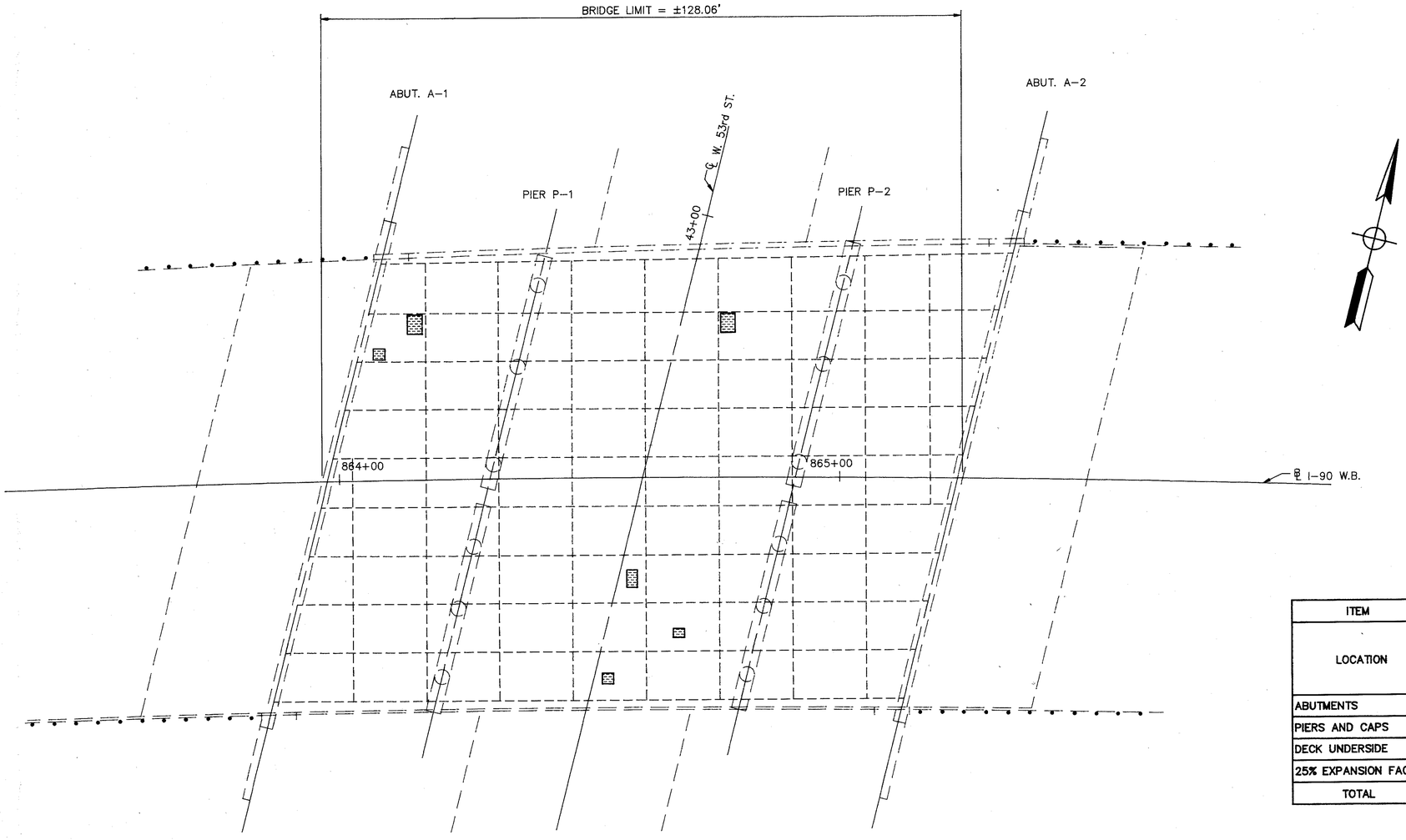

PLAN
BOTTOM OF DECK

ITEM	519	843	SPECIAL	202
LOCATION	PATCHING CONCRETE STRUCTURE AS PER PLAN SQ FT	PATCHING CONCRETE TROWELABLE MORTAR SQ FT	LOW PRESSURE EPOXY INJECTING SQ FT	PORTIONS OF STRUCTURE REMOVED LUMP
ABUTMENTS	–	–	–	–
PIERS AND CAPS	–	–	–	–
DECK UNDERSIDE	–	–	23	LUMP
25% EXPANSION FACTOR	–	–	6	–
TOTAL	–	–	29	LUMP

ITEM 519, PATCHING CONCRETE STRUCTURE, AS PER PLAN

ITEM 843 , PATCHING CONCRETE WITH TROWELABLE MORTAR

ITEM SPECIAL, LOW PRESSURE EPOXY INJECTING OF DELAMINATED CONCRETE

POLYTECH, INC. 66 / 68
CONSULTING ENGINEERS CLEVELAND, OHIO

BRIDGE CONCRETE REPAIR

BRIDGE NO. CUY-90-1309 L
I-90 OVER WEST 53RD ST.

DESIGNED	DRAWN	TRACED	CHECKED	REVIEWED	DATE	REVISED
PSS	PSS	–	VB	BRS	9/94	

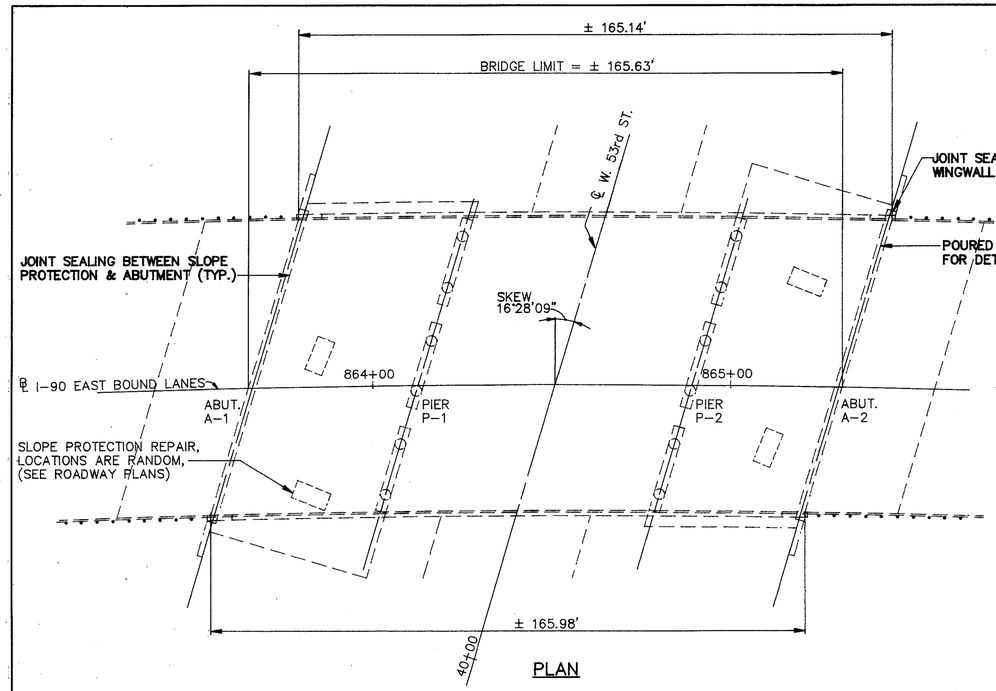

PLAN

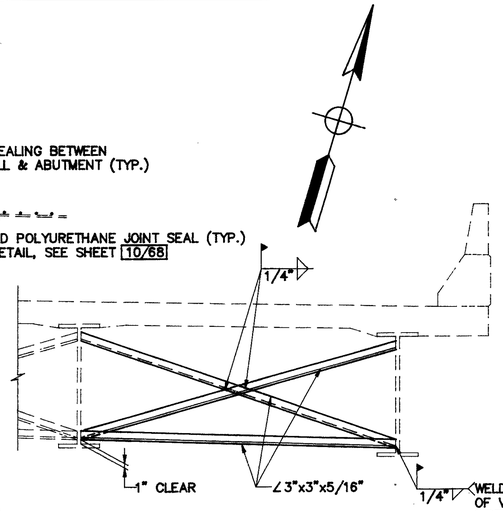

VIEW A-A

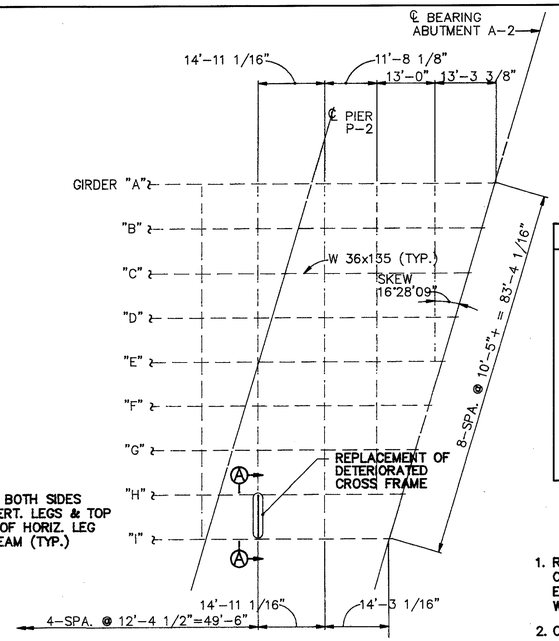

PARTIAL FRAMING PLAN

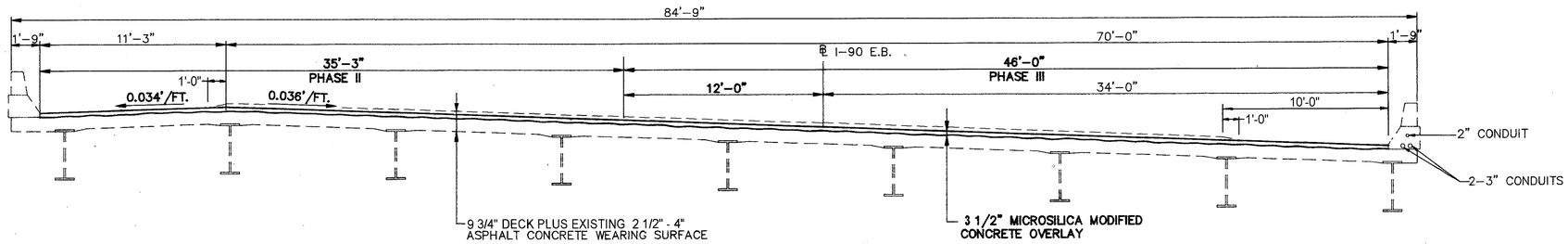

TRANSVERSE SECTION

ESTIMATED QUANTITIES

* = SEE PROPOSAL NOTE

ITEM	TOTAL	UNIT	DESCRIPTION	ABUTMENT	PIERS	SUPER STRUCTURE	GENERAL
SPEC	852	SQ YD	SEALING OF CONCRETE SURFACES (EPOXY-URETHANE)*	63	395	394	
514	LUMP	LUMP	FIELD PAINTING, MISC.: RETROFITTED AREAS			LUMP	
SPEC	170	LN FT	POURED POLYURETHANE JOINT SEAL			170	
516	210	LN FT	STRUCTURAL JOINT OR JOINT SEALER, MISC.: 705.03 OR 705.04	210			

ESTIMATED QUANTITIES

ITEM	TOTAL	UNIT	DESCRIPTION	ABUTMENT	PIERS	SUPER STRUCTURE	GENERAL
848	1495	SQ YD	MICROSILICA MODIFIED CONCRETE OVERLAY USING HYDRO-DEMOLITION 2½ INCH THICK			1495	
848	1495	SQ YD	SURFACE PREPARATION USING HYDRO-DEMOLITION			1495	
848	21	CU YD	MICROSILICA MODIFIED CONCRETE OVERLAY (VARIABLE THICKNESS) MATERIALS ONLY			21	
848	45	SQ YD	HAND CHIPPING			45	
848	1495	SQ YD	WEARING COURSE REMOVED, ASPHALT			1495	
816	195	POUND	FIELD PAINTING OF NEW STEEL, INTERMEDIATE AND FINISH COAT, SYSTEM IZEU			195	
863	195	POUND	STRUCTURAL STEEL MEMBERS, MISCELLANEOUS LEVEL FABRICATION			195	

NOTE: THESE QUANTITIES ARE CARRIED TO THE STRUCTURE SUB-SUMMARY ON SHEET 9/68.

FHWA REGION	STATE	PROJECT	
5	OHIO		

219 / 220

CUYAHOGA COUNTY
CUY – 90 – 9.68

EXISTING STRUCTURE

TYPE: 3 SPAN CONTINUOUS STEEL BEAM WITH REINFORCED CONCRETE DECK AND SUBSTRUCTURE

SPANS: 46'–0", 76'–6", 41'–0" C/C BRGS.

ROADWAY: 81'–3" T/T PARAPETS

ALIGNMENT: 1° 28' 49.1" CURVE RT.

SKEW: 16° 28' 09" LEFT FORWARD

LOADING: HS20–44 & INT. ALT. LOADING

APPROACH SLABS: 25' LONG (SPECIAL)

WEARING SURFACE: 2 1/2" - 4" ASPHALT CONCRETE

PROPOSED WORK

1. REMOVE THE ENTIRE EXISTING ASPHALT OVERLAY AND THE TOP 1" (MINIMUM) OF EXISTING CONCRETE DECK BELOW AND OVERLAY WITH 3 1/2" MICROSILICA MODIFIED CONCRETE.
2. CONCRETE REPAIR AND SEALING
3. ASPHALT DRAIN PLUGGING
4. JOINT SEALING BETWEEN SLOPE PROTECTION & ABUTMENT
5. JOINT SEALING BETWEEN WINGWALL & ABUTMENT
6. REPLACEMENT OF DETERIORATED CROSS FRAME
7. FIELD PAINTING OF RETROFITTED AREAS
8. PAINTING OF NEW CROSS FRAME
9. POURED POLYURETHANE JOINT SEAL

PROPOSED STRUCTURE

TYPE: 3 SPAN CONTINUOUS STEEL BEAM WITH REINFORCED CONCRETE DECK AND SUBSTRUCTURE

SPANS: 46'–0", 76'–6", 41'–0" C/C BRGS.

ROADWAY: 81'–3" T/T PARAPETS

ALIGNMENT: 1° 28' 49.1" CURVE RT.

SKEW: 16° 28' 09" LEFT FORWARD

LOADING: HS20–44 & INT. ALT. LOADING

APPROACH SLABS: 25' LONG (SPECIAL)

WEARING SURFACE: 3 1/2" MICROSILICA MODIFIED CONCRETE

POLYTECH, INC. 67 / 68
CONSULTING ENGINEERS CLEVELAND, OHIO

GENERAL PLAN & TRANSVERSE SECTION
BRIDGE NO. CUY–90–1309 R
I–90 OVER WEST 53rd ST.

DESIGNED	DRAWN	TRACED	CHECKED	REVIEWED	DATE	REVISED
PSS	RG	–	VB	BS	9/94	ENF

FHWA REGION	STATE	PROJECT	
5	OHIO		

220
220

CUYAHOGA COUNTY
CUY–90–9.68

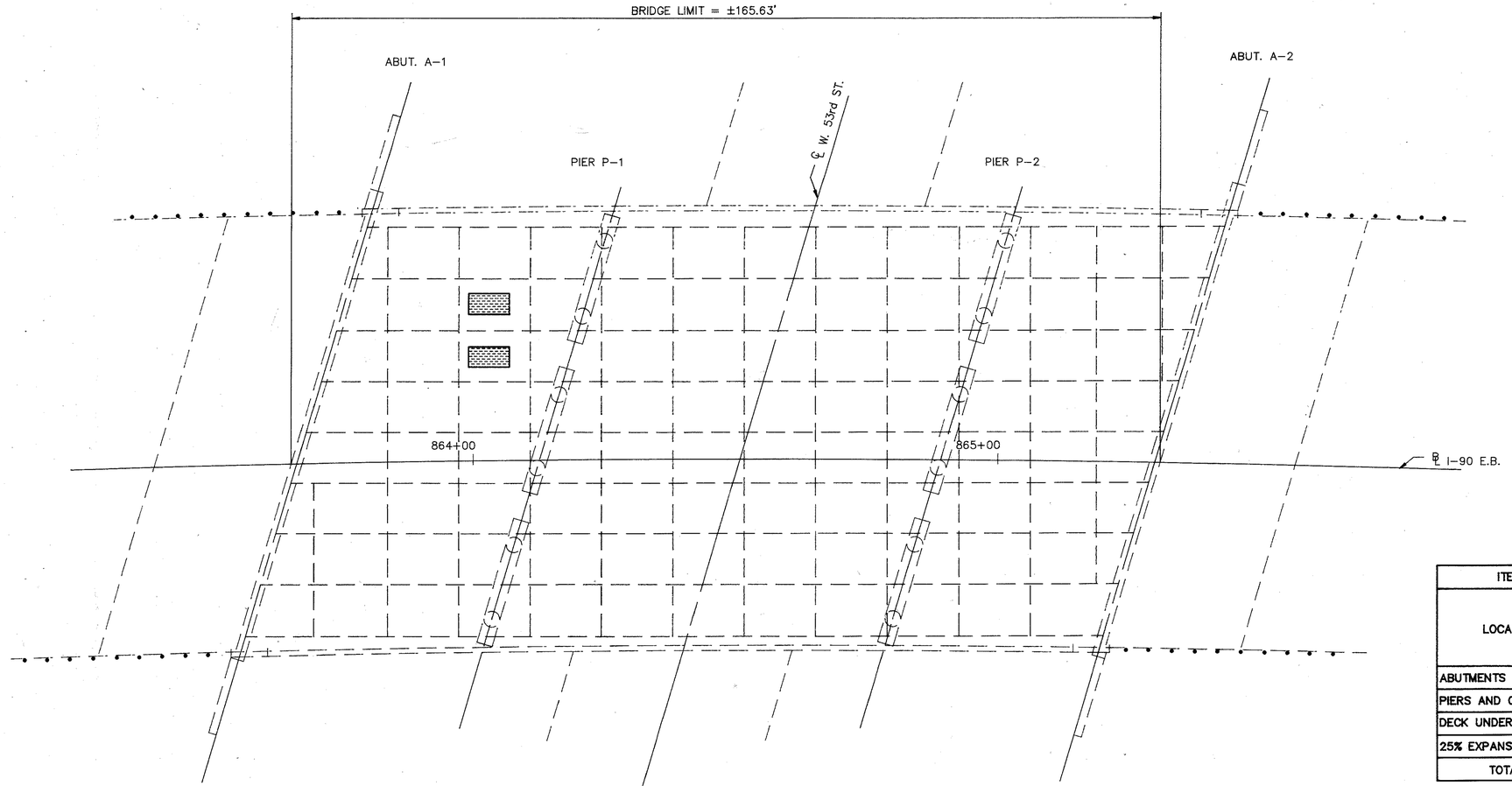

PLAN
BOTTOM OF DECK

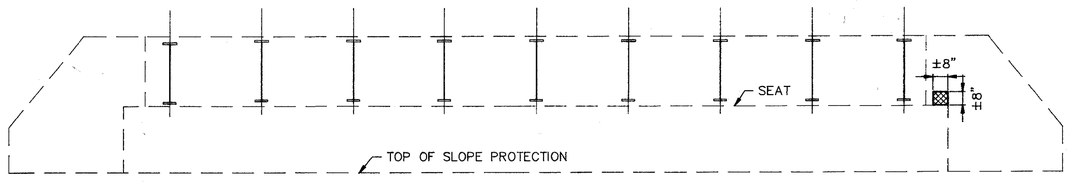

ELEVATION
ABUTMENT A–1

ITEM	519	843	SPECIAL	202
LOCATION	PATCHING CONCRETE STRUCTURE AS PER PLAN SQ FT	PATCHING CONCRETE TROWELABLE MORTAR SQ FT	LOW PRESSURE EPOXY INJECTING SQ FT	PORTIONS OF STRUCTURE REMOVED LUMP
ABUTMENTS	–	1	–	–
PIERS AND CAPS	–	–	–	–
DECK UNDERSIDE	–	–	48	LUMP
25% EXPANSION FACTOR	–	–	12	–
TOTAL	–	1	60	LUMP

ITEM 519, PATCHING CONCRETE STRUCTURE, AS PER PLAN

ITEM 843 , PATCHING CONCRETE WITH TROWELABLE MORTAR

ITEM SPECIAL, LOW PRESSURE EPOXY INJECTING OF DELAMINATED CONCRETE

POLYTECH, INC. 68 / 68
CONSULTING ENGINEERS CLEVELAND, OHIO

BRIDGE CONCRETE REPAIR

BRIDGE NO. CUY–90–1309 R
I–90 OVER WEST 53RD ST.

DESIGNED	DRAWN	TRACED	CHECKED	REVIEWED	DATE	REVISED
PSS	PSS	–	VB	BRS	9/94	

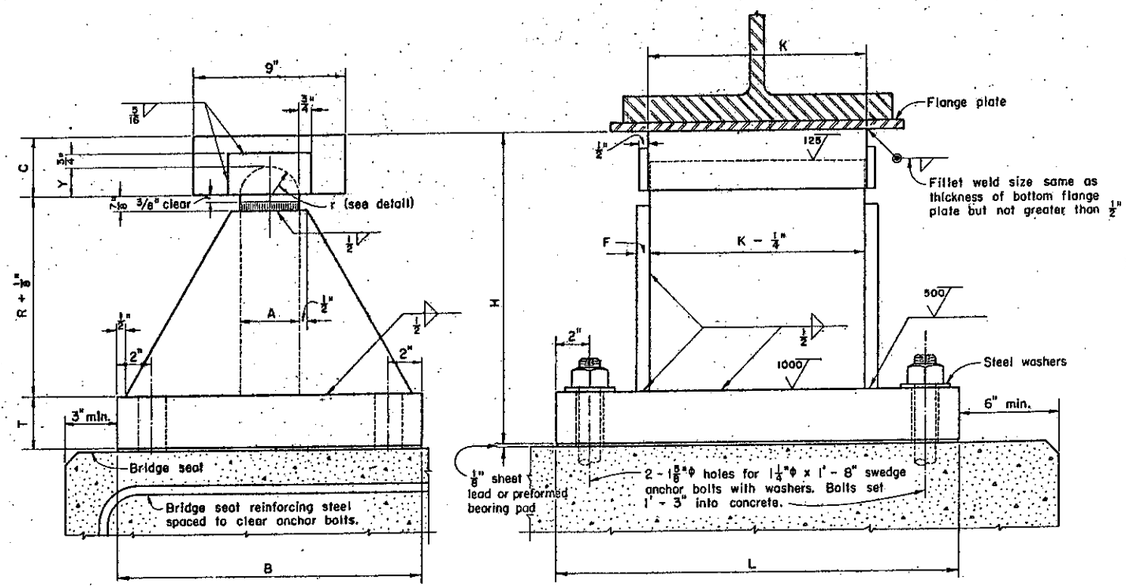

STRUCTURAL STEEL BOLSTER

See table below for additional dimensions.

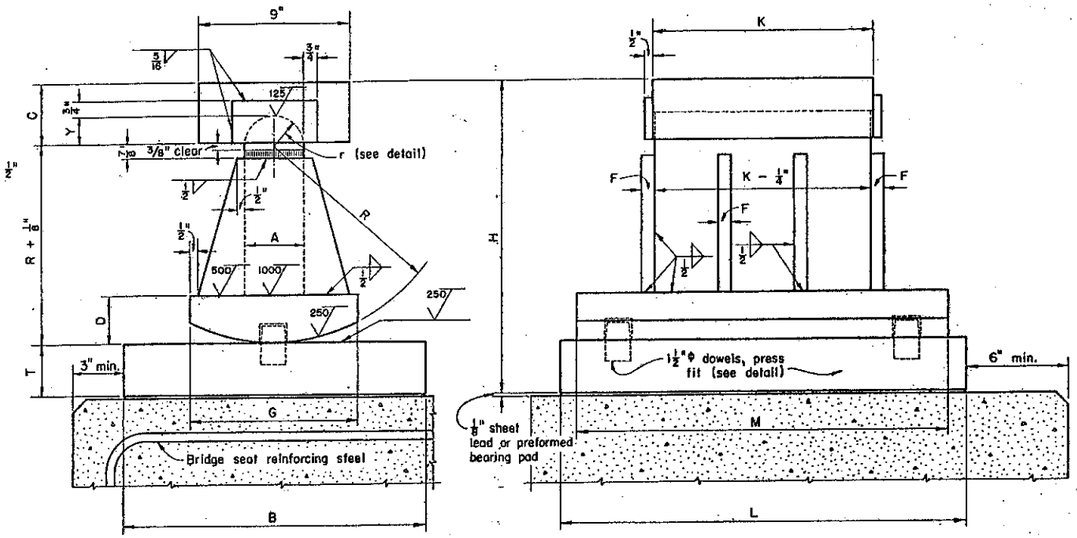

STRUCTURAL STEEL ROCKER

See table below for additional dimensions.

Bolster No.	Rocker No.	Dimensions (inches)													Weight each (lb.)		Maximum Load (lb.)
		A	B	C	D	F	G	H	K	L	M	R	T	Y	Bolster	Rocker	
	R-75	2 1/2	8	2 1/2	1 3/4	1/2	7	9 5/8	9	18	16	5 1/2	1 1/2	1 3/16		205	75,000
B-100	R-100	2 1/2	10	2 1/2	2	1/2	7 1/2	10 5/8	9	19	17	6 1/2	1 1/2	1 3/16	225	250	100,000
B-125	R-125	3	11	3	2	1/2	8	12 1/8	10 1/2	20	18	7 1/2	1 1/2	1 7/16	295	315	125,000
B-150	R-150	3	12	3	2 1/4	1/2	8 1/2	13 3/8	11 1/2	22	19	8 1/2	1 3/4	1 7/16	360	400	150,000
B-175	R-175	3	14	3 1/2	2 1/2	1/2	9	15 1/8	12	23	20	9 1/2	2	1 7/16	455	505	175,000
B-200	R-200	3	16	3 1/2	2 3/4	5/8	9	16 3/8	12	24	21	10 1/2	2 1/4	1 7/16	540	605	200,000
B-225	R-225	3	17	3 1/2	2 3/4	5/8	9	16 7/8	13	25	22	11	2 1/4	1 7/16	590	665	225,000
B-250	R-250	3 1/2	18	3 1/2	2 3/4	5/8	10	17 5/8	13	26	23	11 1/2	2 1/2	1 11/16	695	775	250,000
B-275	R-275	3 1/2	19	3 1/2	3 1/4	3/4	12	18 3/8	14	27	24	12	2 3/4	1 11/16	800	945	275,000
B-300	R-300	3 1/2	20	3 1/2	3 1/4	3/4	12	19 1/8	14	28	25	12 1/2	3	1 11/16	895	1050	300,000

Weights given are for one rocker or bolster complete (including sheet lead, anchor bolts and washers).

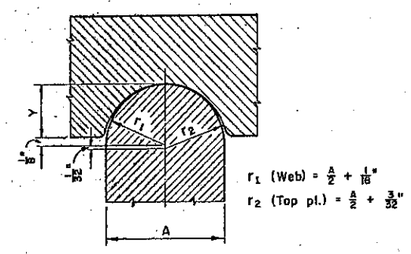

TOP BEARING DETAIL

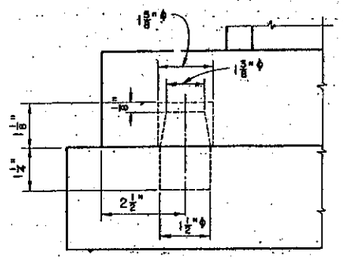

DOWEL DETAIL

DESIGN SPECIFICATIONS: This standard drawing conforms to the requirements of "Design Specifications for Highway Structures" of the State of Ohio, Department of Highways, dated October 1, 1951, together with revisions thereof dated July 15, 1952, April 1, 1954 and February 1, 1955.

LIMITATION: This rocker and bolster design shall not be used where the anticipated movement is in excess of 2 inches.

REVISIONS.
2-2-59

STATE OF OHIO
DEPARTMENT OF HIGHWAYS
DIVISION OF DESIGN AND CONSTRUCTION
BUREAU OF BRIDGES

STANDARD

ROCKERS AND BOLSTERS

FOR STEEL BEAM AND GIRDER BRIDGES

REACTIONS 75,000 lb. TO 300,000 lb.

APPROVED: Richard D. Hall ENGINEER OF BRIDGES
DATE: 3-1-55

PREPARED	TRACED	CHECKED	REVIEWED
MPB CFB JCM WHR	JVP	GEM GPH	CDD BFG CHA AJF DHD

DRAWING NUMBER
RB-1-55

9.8

8

MICROFILMED
FEB 12 1980

STATE OF OHIO
DEPARTMENT OF TRANSPORTATION

CUY-90-21.27
LAK-90-0.00

CUYAHOGA COUNTY
CITIES OF CLEVELAND AND EUCLID
VILLAGE OF BRATENAHL
LAKE COUNTY
CITY OF WICKLIFFE
CITY OF WILLOUGHBY HILLS

CONVENTIONAL SIGNS

SECTION LINE	LIMITED ACCESS (ONLY) — LA
CORPORATION LINE	RIGHT OF WAY (ONLY) — RW
FENCE LINE (EXISTING) (PROPOSED)	LIMITED ACCESS & RIGHT OF WAY — LA&RW
CENTER LINE	EXISTING RIGHT OF WAY
TREES, STUMPS (TO BE REMOVED)	PROPERTY LINE (IN EXISTING FENCE)
UTILITY POLES: TELEPHONE, POWER, LIGHT	EXISTING CULVERT
RAILROAD	PROPOSED CULVERT
GUARDRAIL (EXISTING) (PROPOSED)	PROPOSED REGRADING
EXISTING CURB INLET	EXISTING CATCH BASIN
	PROPOSED CATCH BASIN
	EXISTING MANHOLE
	PROPOSED MANHOLE

Project designation CUY-90-23.73; LAK-90-0.00 appearing throughout this plan shall be considered to read CUY-90-21.27; LAK-90-0.00

INDEX OF SHEETS

TITLE SHEET	1	CONCRETE BARRIER DETAILS	72-74
TYPICAL SECTIONS	2, 2A	DRAINAGE DETAILS	75-77
GENERAL NOTES	3-9, 84, 9A	MISCELLANEOUS DETAILS	78-81, 81A, 82
SUB-SUMMARIES	10, 10A	EDDY ROAD RAMP REALIGNMENTS	83, 83A, 84-85, 85A, 86-91
GENERAL SUMMARY	11, 11A	S. WATERLOO RD. AND RAMP 8 IMPROVEMENT	91A-91I
ASPHALT RESURFACING SCHEMATIC PLAN AND QUANTITIES	12-17	TRAFFIC MAINTENANCE	92-106
		TRAFFIC CONTROL SUB-SUMMARY	107, 107A
PLAN AND QUANTITY SHEETS	18-58	TRAFFIC CONTROL GENERAL SUMMARY	108
CONCRETE BARRIER AND DRAINAGE	59-71	TRAFFIC CONTROL DETAILS	109-123, 123A, 123B
SCHEMATIC PLANS AND QUANTITIES		SIGN LIGHTING PLANS	124-130, 130A, 131
		TRAFFIC SIGNALIZATION PLANS	132-140
		LIGHTING PLANS	141-169
		EROSION CONTROL PLANS	170-174
		STRUCTURE PLANS	175-354

LINE DATA

Begin Project	Sta. 251+04.21 I-90 to 403+00.00 I-90 (Eqn: 252+98.80 BK. I-90 = 1+99.84 AH. I-90) (Eqn: 403+00.00 I-90 BK. = 41+12.20 S.R.2 AH.)	= 40,294.75 Lin. Ft.
	Sta. 41+12.20 S.R.2 to Sta. 79+31.95 (Eqn: 79+31.95 S.R.2 = 28+52.20 Euc. Spur AH)	= 3819.75 Lin. Ft.
	Sta. 28+ 52.20 to	
End Project	Sta. 162+08.40 Euc. Spur	13,356.20 Lin. Ft.
Net Length of Project		57,470.70 Lin. Ft. or 10.884 Miles.
ADD WORK		
Begin Work	Sta. 164+00.00 I-90 to Sta. 251+04.21 I-90 (Eqn: 170+49.90 I-90 BK = 200+83.36 I-90 AH)	5,670.75 Lin. Ft.
End Work	Sta. 10+00 Euc. Spur to Sta. 25+75 (Eqn: 162+08.40 Euc. Spur BK = 10+00.00 Euc. Spur AH)	1,575.00 Lin. Ft.
Add Work for Side Roads		
Eddy Road	Sta. 0+00 to Sta. 20+90	2,090.00 Lin. Ft.
Lakeshore Blvd. @ Eddy Rd.	Sta. 0+50W to Sta. 4+10E	460.00 Lin. Ft.
Lakeshore Blvd. @ Ramp 1	Sta. 4+00W to Sta. 2+70E	670.00 Lin. Ft.
S. Waterloo Rd. @ Ramp 8	Sta. 179+00 to Sta. 193+25	1,425.00 Lin. Ft.
E. 185th St.	Sta. 5+65S to Sta. 11+00N	1,665.00 Lin. Ft.
Neff Rd.	Sta. 2+30S to Sta. 5+60N	790.00 Lin. Ft.
S.R. 2	Sta. 79+31.95 to Sta. 100+00.00	2,068.05 Lin. Ft.
Euclid Ave. (S.R. 20)	Sta. 8+00 to Sta. 26+00	1,800.00 Lin. Ft.
Bishop Rd. (S.R. 84)	Sta. 0+70 to Sta. 19+25	1,855.00 Lin. Ft.
Net Length of Work		77,539.50 Lin. Ft. or 14.685 Miles

PREPARED AND RECOMMENDED BY

HOWARD NEEDLES TAMMEN & BERGENDOFF

CONSULTING ENGINEERS

CLEVELAND

Browning Crow

BROWNING CROW

FILE NO.	CUY-90-23.73 00523 LAK-90-0.00 DATE OF LETTING CONTRACT NO.

SUPPLEMENTAL SPECIFICATIONS

NUMBER	DATE	NUMBER	DATE
5625	1-11-74	934	1-1-69
5713	1-11-74	941	11-28-73
836	3-12-75		
837	12-7-72		
839	11-25-70		
842	8-29-74		
844	11-8-74		
1001	9-20-72		

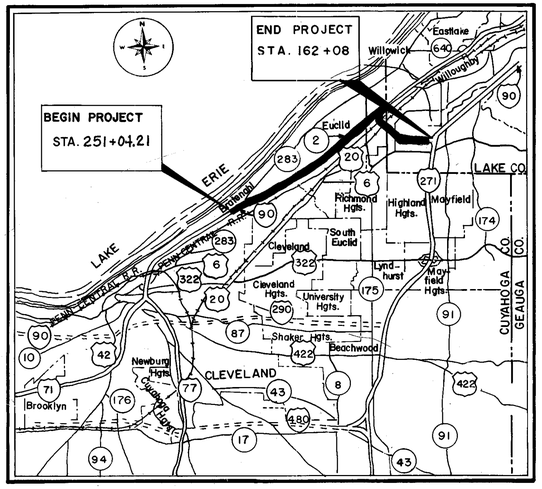

LOCATION MAP

0 1 2 3 4 5
Scale in Miles

MAP LEGEND

PORTION TO BE IMPROVED
STATE ROUTE
U.S. ROUTE
INTERSTATE HIGHWAY
OTHER ROUTE
FUTURE CONSTRUCTION

Scale 1"=100'

GENERAL PLANS

100 0 100 200 300 400
SCALE IN FEET

Sheets 272 & 273 revised 2-2-76 EBL
Sheets 247, 248, 249, 250, 251, 253 revised 7-14-76 E.B.L.

MICROFILMED
MAR 21 1985

I-90-1 (95) 33

FHWA REGION	STATE	PROJECT	
5	OHIO	I-90-1(95)33	

1
354

CUYAHOGA COUNTY
CUY-90-21.27
LAKE COUNTY
LAK-90-0.00

LIMITED ACCESS

THIS IMPROVEMENT IS ESPECIALLY DESIGNED FOR THROUGH TRAFFIC AND HAS BEEN DECLARED A LIMITED ACCESS HIGHWAY OR FREEWAY BY ACTION OF THE DIRECTOR IN ACCORDANCE WITH THE PROVISIONS OF SECTION 5511.02, REVISED CODE OF OHIO.

PART I - FOR PART II OF THIS CONTRACT SEE PLANS FOR SECTION CUY-90-29.69

1975 SPECIFICATIONS

THE STANDARD SPECIFICATIONS OF THE STATE OF OHIO, DEPARTMENT OF TRANSPORTATION, INCLUDING CHANGES AND SUPPLEMENTAL SPECIFICATIONS LISTED IN THE PROPOSAL SHALL GOVERN THIS IMPROVEMENT.

THE RIGHT OF WAY FOR THIS IMPROVEMENT WILL BE PROVIDED BY THE STATE OF OHIO.

I HEREBY APPROVE THESE PLANS AND DECLARE THAT THE MAKING OF THIS IMPROVEMENT WILL NOT REQUIRE THE CLOSING OF THE HIGHWAY TO TRAFFIC AND THAT PROVISIONS FOR THE MAINTENANCE AND SAFETY OF TRAFFIC WILL BE AS SET FORTH ON THE PLANS AND ESTIMATES.

APPROVED Thomas M. Krall
DATE 1-31-75 — DISTRICT DEPUTY DIRECTOR OF TRANSPORTATION

APPROVED Robert B. Pfeifer
DATE 5-7-75 — ENGINEER, BUREAU OF BRIDGES

APPROVED E. J. Schaefer
DATE 5-23-75 — ENGINEER, BUREAU OF ROADWAY DESIGN

APPROVED John B. Ellis
DATE 5-23-75 — ASSISTANT DEPUTY DIRECTOR FOR HIGHWAY DESIGN

APPROVED
DATE ____ — ASSISTANT DEPUTY DIRECTOR FOR REAL ESTATE

APPROVED Howard E. Nolan
DATE 5-23-75 — ASSISTANT DEPUTY DIRECTOR FOR PROGRAM DEVELOPMENT

APPROVED R. E. Gatlin
DATE 5-23-75 — CHIEF ENGINEER, DESIGN

APPROVED David L. Weis
DATE 5-23-75 — ASSISTANT DIRECTOR, DEPARTMENT OF TRANSPORTATION

APPROVED Robert D. Pfeifer
DATE 5-23-75 — DIRECTOR, DEPARTMENT OF TRANSPORTATION

STANDARD DRAWINGS

NUMBER	DATE	NUMBER	DATE	NUMBER	DATE	NUMBER	DATE	NUMBER	DATE
AR-1-57	4-2-62	CB-3A	6-1-65	GR-6	1-1-71	HL-16	4-6-73	MH-1	10-1-68
AS-1-72	6-30-72	CB-5	9-1-69	HL-1	9-6-73	HW-1	1-1-70	SD-1-69	6-12-69
BP-1	6-1-65	F-1	6-1-72	HL-2	7-27-73			TC-18.26	10-1-74
BP-2	12-1-68	F-2	1-1-71	HL-3	7-27-73	I-2A	6-6-69		
BP-3	1-1-71	F-3	3-10-69	HL-7	9-6-73	I-3	1-20-70	MC-7	3-1-66
BP-4	1-1-71	F-5	3-10-69	HL-8	9-6-73	MC-1	6-13-69	RB-1-55	9-6-73
BP-5	6-1-72	GR-2A	1-1-71	HL-9	9-6-73	MC-3	6-1-73	HL-5	9-6-73
BP-7	1-1-66	GR-2B	11-9-71	HL-10	9-6-73	MC-4	6-13-69	CB-6	6-1-65
				HL-11	4-6-73	MC-5	6-1-65	MH-1A	10-1-68
BP-9	1-1-71	GR-4	11-9-71	HL-12	4-6-73	MC-6	6-1-65		
CB-3	6-1-65	GR-5	1-1-71	HL-15	4-6-73	MC-9	1-1-74		

DEPARTMENT OF TRANSPORTATION
FEDERAL HIGHWAY ADMINISTRATION

APPROVED

DIVISION ENGINEER — DATE

TYPICAL SECTIONS

FHWA REGION	STATE	PROJECT	
5	OHIO		

2
354

CUYAHOGA COUNTY
CUY-90-23.73
LAKE COUNTY
LAK-90-0.00

TYPE 404

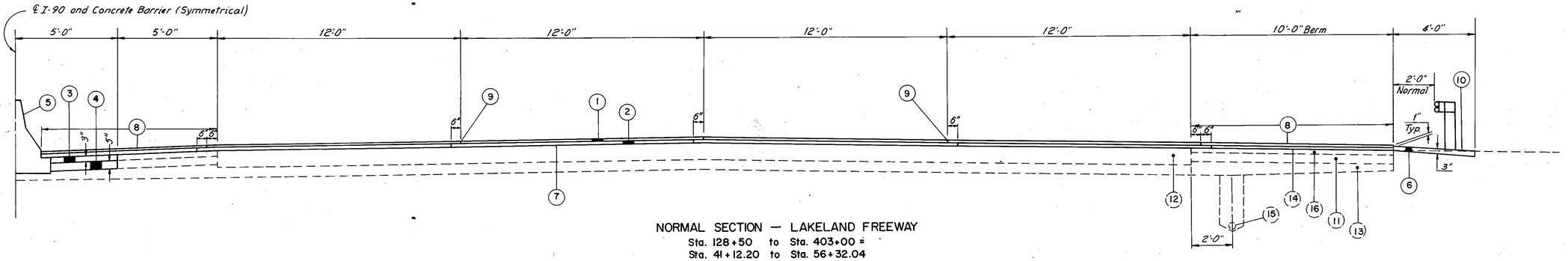

NORMAL SECTION — LAKELAND FREEWAY
Sta. 128+50 to Sta. 403+00 ±
Sta. 41+12.20 to Sta. 56+32.04

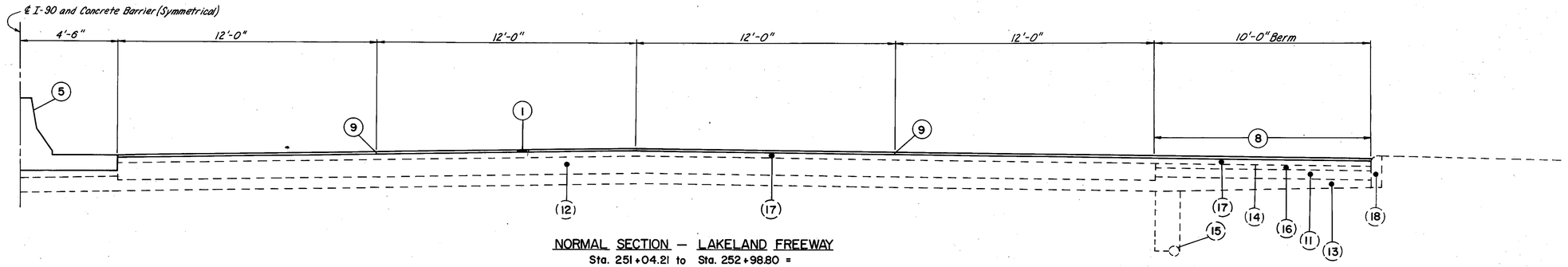

NORMAL SECTION — LAKELAND FREEWAY
Sta. 251+04.21 to Sta. 252+98.80 =
Sta. 1+99.84 to Sta. 128+50

NOTES

SPREADING EQUIPMENT: An automatic screed control having a 40 foot ski arm shall be used for placing the 402 course (see proposed note). The maximum paver operating speed shall be 30 feet per minute for rubber tired pavers. For full width paving, the width laid shall not exceed the paver's rated width as recommended by the paver manufacturer.

TEMPORARY LANE LINES: In the event traffic is returned to the 402 intermediate course of resurfacing after rolling is completed, the contractor shall furnish and apply a 4" painted lane line as per 621.07. This line shall be placed as shown in the typical section. Cost of furnishing and placing the lane line shall be included in the unit price bid for Item 614 Maintaining Traffic

The contractors attention is directed to section 401.15 of the specifications. Longitudinal and transverse joints shall be painted with the bituminous material used in the mixture on both surface courses as directed by the engineer.

LONGITUDINAL JOINTS- 402 AND 404 COURSES: Longitudinal joints between a pavement lane and adjoining berm of speed change lane and between a speed change land and the adjoining berm shall be made the same day.

Longitudinal joints between pavement lanes shall be made within twenty-four (24) hours.

LEGEND

PROPOSED

(1)	Item 404	1¼" Asphalt Concrete, AC-20
(2)	Item 402	1¾" Asphalt Concrete, AC-20
(3)	Item 301	Bituminous Aggregate Base: 702.01, AC-20; or 702.09 RT-11 or RT-12
(4)	Item 304	Aggregate Base
(5)	Item 622	Concrete Barrier
(6)	Item 617	Compacted Aggregate, as per plan
(7)	Item 407	Tack Coat: 702.02, RC-250; or 702.04, SS-1, SS-1H, MS-2 or RS-1 with Cover Aggregate.
(8)	Item 409	Seal Coat Bituminous Material, 702.02, MC-800 or MC-3000; 702.03, CBAE-800; 702.04, RS-1, RS-2 or CRS-2; or 702.09, RT-9 or RT-10. Applied at the rate of 0.30 Gal. per Sq. Yds. & Cover Aggregate No. 8 at the rate of 0.008 Cu. Yds. per Sq. Yd.
(9)		Hot Longitudinal Joint
(10)	Item 409	Seal Coat Bituminous Material, 702.02, MC-800 or MC-3000; 702.03, CBAE-800; or 702.04, RS-1, RS-2 or CRS-2

EXISTING

(11)	Stabilized Crushed Aggregate Shoulders
(12)	Portland Cement Concrete Pavement
(13)	Subbase
(14)	Surface Treatment
(15)	Underdrain
(16)	Waterproofed Aggregate Base
(17)	Asphalt Overlay
(18)	Curb

Note:
Typical Sections are intended to show the general roadway and pavement features only. For details see the plan sheets & detail sheets.
For Median Typical Sections see sheets 72 & 73.

MADE GFM DATE 10-1-74
TRACED MET DATE 10-8-74
CHECKED DSP DATE 10-16-74
SCALE 3/8"=1'-0"

HOWARD, NEEDLES, TAMMEN & BERGENDOFF
CONSULTING ENGINEERS
CLEVELAND, OHIO
HNTB

3/8"=1'-0"

FHWA REGION	STATE	PROJECT	
5	OHIO		

2A
354

CUYAHOGA COUNTY
CUY-90-23.73
LAKE COUNTY
LAK-90-0.00

TYPICAL SECTIONS

TYPE 404

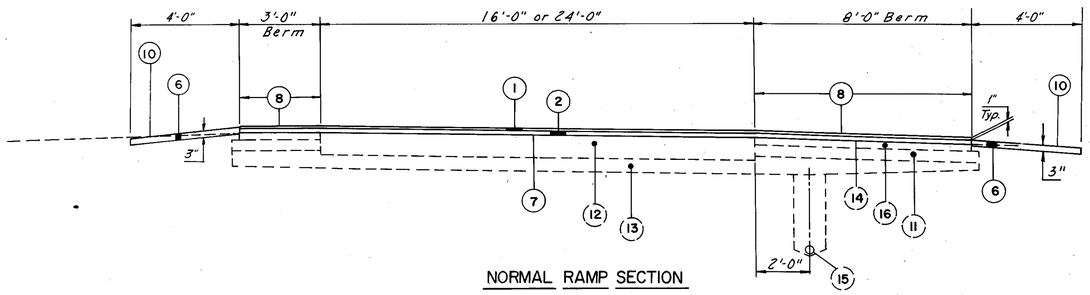

NORMAL RAMP SECTION

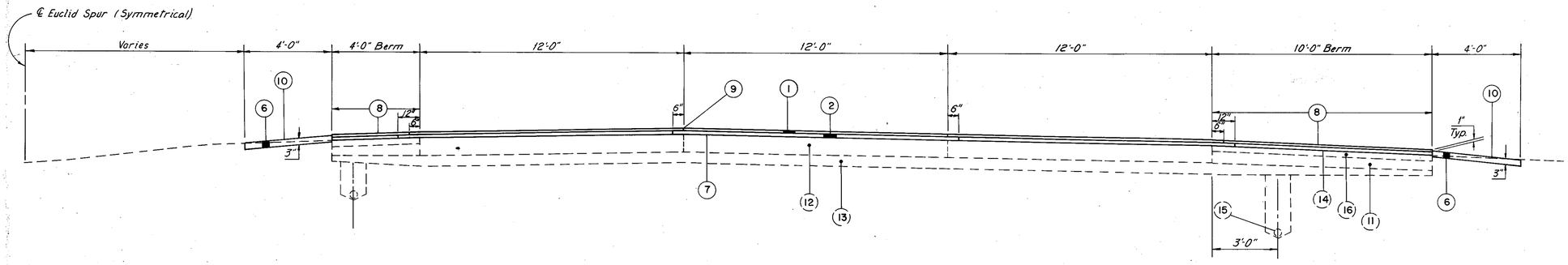

NORMAL SECTION – EUCLID SPUR

NOTES

SPREADING EQUIPMENT: An automatic screed control having a 40 foot ski arm shall be used for placing the 402 course (see proposed note). The maximum paver operating speed shall be 30 feet per minute for rubber tired pavers. For full width paving, the width laid shall not exceed the paver's rated width as recommended by the paver manufacturer.

TEMPORARY LANE LINES: In the event traffic is returned to the 402 intermediate course of resurfacing after rolling is completed, the contractor shall furnish and apply a 4" painted lane line as per 621.07. This line shall be placed as shown in the typical section. Cost of furnishing and placing the lane line shall be included in the unit price bid for Item 614 Maintaining Traffic.

The contractors attention is directed to section 401.15 of the specifications. Longitudinal and transverse joints shall be painted with the bituminous material used in the mixture on both surface courses as directed by the engineer.

LONGITUDINAL JOINTS- 402 AND 404 COURSES: Longitudinal joints between a pavement lane and adjoining berm of speed change lane and between a speed change land and the adjoining berm shall be made the same day.

Longitudinal joints between pavement lanes shall be made within twenty-four (24) hours.

LEGEND

PROPOSED

1	Item 404	1¼" Asphalt Concrete, AC-20
2	Item 402	1¾" Asphalt Concrete, AC-20
6	Item 617	Compacted Aggregate, as per plan
7	Item 407	Tack Coat: 702.02, RC-250; or 702.04, SS-1, SS-1H, MS-2 or RS-1 with Cover Aggregate.
8	Item 409	Seal Coat Bituminous Material, 702.02, MC-800 or MC-3000; 702.03, CBAE-800; 702.04, RS-1, RS-2 or CRS-2; or 702.09, RT-9 or RT-10 Applied at the rate of 0.30 Gal. per Sq. Yds. Cover Aggregate No. 8 at the rate of 0.008 Cu. Yds. per Sq. Yd.
9		Hot Longitudinal Joint
10	Item 409	Seal Coat Bituminous Material, 702.02, MC-800 or MC-3000; 702.03, CBAE-800; or 702.04, RS-1, RS-2 or CRS-2

EXISTING

11	Stabilized Crushed Aggregate Shoulders
12	Portland Cement Concrete Pavement
13	Subbase
14	Surface Treatment
15	Underdrain
16	Waterproofed Aggregate Base
18	Curb

Note:

Typical Seations are intended to show the general roadway and pavement features only. For details see the plan sheets & detail sheets.

For Median Typical Sections see sheets 72 & 73.

MADE GFM DATE 10-1-74
TRACED MEL DATE 10-2-74
CHECKED DSP DATE 10-16-74
SCALE 3/8"=1'-0"

HOWARD, NEEDLES, TAMMEN & BERGENDOFF
CONSULTING ENGINEERS
CLEVELAND, OHIO
HNTB

3/8"=1'-0"

FHWA REGION	STATE	PROJECT	
5	OHIO		

3
354

CUYAHOGA COUNTY
CUY-90-23.73
LAKE COUNTY
LAK-90-0.00

GENERAL NOTES

GENERAL

FIELD OFFICE

The Contractor shall provide a suitable field office having a minimum of 800 sq. Ft., of floor space and in addition to the requirements of Item 619, he shall provide and maintain sanitary provisions as per 107.06. All the above is included in the lump sum price bid for Item 619, Field Office.

ESTIMATED QUANTITIES

Specific locations and usage of the estimated quantities set up on this plan to be used as directed by the Engineer shall be made a matter of record by incorporation into the final change order governing completion on this project. Estimated quantities of materials shall not be ordered for delivery to the project unless authorized by the Engineer.

PROTECTION OF 69 KV PIPE TYPE CABLE

1) The existing pipe-type cable installation located on the south side of the freeway between Stations 164+00 and 88+75 on I.R. 90 consists of two cable systems in 4" schedule 40 pipes. The pipes are coated with a somastic coating approximately ¼" thick for corrosion resistance. It is of particular importance that this coating should not be damaged. The City of Cleveland will provide continuous testing for damage to the coating. Should damage occur, the contractor will be required to cease operation in the area of the damage to permit the City of Cleveland to make the necessary repairs, at the expense of the contractor.

2) No hubs, stakes, or pins may be driven into the ground in the area of the pipe-type cable installation.

3) Tamping rollers, or rollers fitted with picks or spikes will not be permitted for compaction of the subgrade for berm construction over the pipe-type cable installation.

4) Self-propelled, crawler driven machinery shall not be operated on the subgrade over the pipe-type cable unless pads are fastened between cleats such that cleats will be prevented from making contact with the subgrade.

5) No penetration of the subgrade due to operation of heavy equipment on unstable soil conditions resulting from poor drainage, will be permitted in the area of the pipe-type cable. If such operation cannot be avoided, the contractor will be required to provide steel plate or other acceptable means to distribute wheel loads so that penetration to the subgrade does not occur.

6) M.E.L.P. will stake out the existing 69 KV line in the vicinity of project construction prior to start of construction, and expose sufficient lengths of cable in such areas as is necessary to insure that no interruption in cable operation will occur during construction.

MATERIAL AND EQUIPMENT STORAGE

Equipment, private vehicles and materials shall not be stored or parked within the median or within thirty (30) feet of the outside edge of the existing I.R. 90 pavement or within thirty (30) feet of either edge of the interchange ramp pavement unless behind guard rail.

COST PARTICIPATION

The Quantities which appear in the plans have been placed in one of the following participation areas:

COST PARTICIPATION I

FEDERAL AND STATE PARTICIPATION

COST PARTICIPATION II

FEDERAL, STATE AND CLEVELAND PARTICIPATION

COST PARTICIPATION III

100% STATE PARTICIPATION

COST PARTICIPATION IV

STATE AND CLEVELAND PARTICIPATION

EXISTING TYPICAL SECTIONS

Existing typical sectionshave been taken from records and are believed to represent the existing pavement, but the State of Ohio does not guarantee the accuracy of the same.

UNDERGROUND UTILITIES

Extreme caution should be exercised in areas with underground electrical conduit or cable, sewers, drains, water lines or other underground utilities.

The contractor is fully responsible for all damage inflicted on underground utilities in the excavation and replacement of sign support foundations, guard rail and the like.

PUBLIC SAFETY

The period of time that any hazard is left unprotected by removal of guard rail shall be held to an absolute minimum, and in no case shall such a period be longer than one day. Where the rebuilding of any run of guard rail is not accomplished within two weeks after removal of existing guard rail, the Contractor will erect and maintain acceptable temporary guard rails in the interim, at no additional cost to the State. On the traffic approach end of the temporary rail the end of the first section of rail shall be fastened to the steel drum or other support so that the bottom of the rail is at the pavement or ground surface.

ROADWAY

CONTRACTION JOINTS IN PAVEMENT WIDENING

Where new pavement is placed adjacent to existing pavement, contraction joints shall be provided in the pavement so as to form a continuous joint with that in the existing pavement.

Additional contraction joints will be required in the new pavement at midpoints between existing joints to provide contraction joints at intervals of approximately 30 feet.

RESET STONE CURB

Existing Sandstone Curb removed for the purpose of constructing temporary pavement for maintaining traffic at Liberty Blvd. and E. 185th St. may be reset on Type 2B Concrete Curb as per Standard Drawing BP-7.

The location, method of placing and amount of sandstone curb to be reset on Type 2B Concrete Curb shall be designated by the Engineer. Payment for this work shall be considered incidental and included in payment for 614 Maintenance of Traffic.

622 CONCRETE BARRIER, TYPE A

Payment shall include all labor and materials necessary to complete this item as detailed in the plans including transitions at bridge piers, sign supports, lead-in parapets to structures and station marking. Station marking shall be performed as described in Pavement Marking Notes Sheet No. 8.

Where median lighting is called for in the plans the 4" raceway alignment in transition sections shall be adjusted to permit alignment with the pull boxes and the 4" Conduit in the "Sign Support Barrier Wall Assemblies". Reference shall be made to the Lighting Plans.

Payment for the above shall be included in the unit price bid per linear feet of Item 622- Concrete Barrier, Type A.

CONCRETE BARRIER, TYPE B, AS PER PLAN

This item of work shall provide for a continuous concrete berm and concrete median base as per Item 452, and as detailed in the plans. The median base shall be from edge of pavement to edge of pavement throughout the narrow media section in Bratenahl.

Where median lighting is called for in the plans, the 4" raceway alignment in transition sections shall be adjusted to permit alignment with the pull boxes and the 4" conduit in the "Sign Support Barrier Wall Assemblies". Reference shall be made to the Lighting Plans.

Station marking shall be performed as described in Pavement Marking Notes, Sheet 8.

Payment for the above shall include all labor and materials necessary to complete this item as detailed in the plans including transitions at bridge piers and sign supports. Payment shall be at the unit price bid per linear feet of Item 622 - Concrete Barrier, Type B, as per plan.

ROCK CHANNEL PROTECTION, AS PER PLAN

This item of work shall involve the placing of No. 1 stone or slag to depth and location in the plans on Sheet 174. Payment for this item shall be at the unit price per cubic yard for Rock Channel Protection, as per plan. No bedding required.

MADE D.S.P. DATE 8-7-74
TRACED G.P.L. DATE 8-15-74
CHECKED E.R.H. DATE 8-12-74
SCALE —

Howard, Needles, Tammen & Bergendoff
CONSULTING ENGINEERS
CLEVELAND, OHIO

HNTB

FHWA REGION	STATE	PROJECT	
5	OHIO		

4
354

CUYAHOGA COUNTY
CUY-90-23.73
LAKE COUNTY
LAK-90-0.00

GENERAL NOTES

QUANTITY CALCULATIONS
MADE BY D.S.P. DATE 8-7-74
CHECKED BY E.R.H. DATE 8-12-74

ROADWAY

GUARD RAIL REMOVED

Guard rail designated for removal on this project shall be carefully dismantled and the salvageable rail elements stored for either re-use elsewhere on the project or removal by State forces. All posts, blocks, bolts, damaged rail and other material not considered salvageable shall be disposed of as directed. All post holes shall be carefully filled and tamped and the site cleaned and restored.

Site restoration will include grading of the shoulder in the area of the guard rail removal to provide proper shoulder drainage and smooth shoulder slopes where traffic or weather may have built a ridge of earth and debris under the guard rail. The graded or disturbed area shall be reseeded except, where new guard rail is to be constructed, an area under the new guard rail 3' wide, measured from one foot in front of the rail (or centered under guard rail, barrier design) shall not be seeded.

Payment for all of the above shall be at the unit price bid for 202 Guard rail removed for re-use or storage or 202 Guard rail, barrier design, removed for re-use or storage, measured by the linear foot center to center of terminal posts or center of bridge connection splices.

GUARD RAIL REPLACEMENT POSTS

If, within runs of guard rail indicated to be rebuilt on this project, specific posts are found to be damaged or in need of replacement at the time this contract is awarded, those posts shall be removed and disposed of. New posts of similar type shall be furnished and installed, meeting current requirements of 606 and plan details.

Payment for each post replaced shall be made at the unit price bid per each for 606 Guard rail replacement post. It is not the intent of this plan that this item be used to pay for additional posts furnished to meet spacing requirements for guard rail rebuilt as Type 5.

An estimated quantity of 500 replacement posts have been set up on this plan to be used as directed by the Engineer. Payment shall be split as follows:
250 Cost Participation I
250 Cost Participation II

GUARD RAIL REBUILT, TYPE 5, AS PER PLAN

This work shall consist of dismantling existing galvanized guard rail, and re-erecting that rail on the existing posts and furnishing all other material necessary to meet the requirements of Type 5 guard rail. The extent to which the rail must be dismantled shall be only that which is necessary to meet the requirements of this plan, consistent with good and safe construction methods, and preservation of the rail element.

Additional new posts shall be furnished and installed where needed to meet the spacing requirements of Type 5 guard rail. New posts shall be of the same general type as the existing posts, however, they shall meet the requirements of current specifications and plan details. All new spacer blocks, post bolts, splice bolts (except where rail sections are not dismantled), and miscellaneous hardware shall be furnished and installed in accordance with plan details and specifications.

If, within the run of rail to be rebuilt, some posts are found to be damaged or not satisfactory, they shall be removed and replaced under 606 Guard Rail Replacment Posts.

Rails shall be cleaned of rust, dirt or other foreign materials. Intermediate post bolt slots $\frac{3}{4}$" x 2-$\frac{1}{2}$" shall be field punched or drilled. Areas on which the spelter coating has been damaged and intermediate holes shall be repaired or regalvanized in accordance with AASHO Specification M 36-73I Section 23 or they may be repaired under the direction of the Engineer with stick-form galvanizing repair compound meeting the requirements of FSS O-G-93.

The Contractor may, at his option, remove and dispose of rails suitable for reuse and substitute, at no additional cost, new material conforming to 710.06.

The accepted quantities of rebuilt guard rail, measured in accordance with 606.07, will be paid for at the unit price bid per linear foot for Guard rail rebuilt, Type 5, as per plan, or 606, Guard rail rebuilt, Type 5, barrier design, as per plan.

GUARD RAIL, TYPE 5, AS PER PLAN

Rail elements salvaged under 202 on this project may be used in lieu of furnishing new rail elements for 606 Guardrail. If salvaged rail is used, it must be renovated prior to installation and new splice bolts furnished.

Painted rail elements shall be dismantled and all paint, rust, dirt and other foreign material detrimental to galvanizing shall be removed from rails, and intermediate post bolt slots $\frac{3}{4}$" x 2-$\frac{1}{2}$" shall be punched where required for Type 5 installations. The rail shall then be galvanized in accordance with 710.06. Immediately after award of the contract, the Contractor shall submit an **outline** of the galvanizing plant operations. The outline shall include information on the plant capacity and storage facilities for the articles as delivered for galvanizing and storage facilities for the articles after the work is completed. This outline, when approved by the Department, will become a part of the contract.

The Contractor shall notify the Engineer at least 72 hours in advance of galvanizing any lot of articles in order that arrangements may be made to have the Department Inspector at the plant when the work is in progress. The Inspector shall have free entry, at all times while work on the contract is being performed, to all parts of the plant that concern the cleaning and galvanizing of the articles. The Contractor shall afford the Inspector all reasonable facilities without charge, to satisfy him that the work is being performed in accordance with these specifications.

Existing galvanized rail elements shall be cleaned of rust, dirt and other foreign materials. Intermediate post bolt slots $\frac{3}{4}$" x 2-$\frac{1}{2}$" shall be field punched or drilled. Areas on which the spelter coating has been damaged and intermediate holes shall be repaired or regalvanized in accordance with AASHO Specification M 36-73I Section 23 or they may be repaired under the direction of the Engineer with stick-form galvanizing repair compound meeting the requirements of FSS O-G-93.

Payment for all of the above shall be included in the unit price bid for 606 Guard rail, Type 5, as per plan or 606 Guard rail, Type 5, barrier design, as per plan.

CURB REMOVED, AS PER PLAN

This work shall consist of removing entrance ramps and exit ramps curb as detailed in the plans on Sheet 82. Removal of curb is to provide a continuous minimum ten foot mainline berm. Any open trenches resulting from removing curb shall be back filled with Item 452 Plain Portland Cement Concrete Pavement.

Payment for all of the above shall be at the unit price bid per linear foot of 202 Curb Removed, as per plan.

PAVEMENT REMOVAL, AS PER PLAN

The existing pavement shall be removed by sawing a neat line for the full depth required by the pavement replacement details, Sheet No. 81. In addition the cost of removing the subbase material for the 305 replacements shall be included in the unit price bid for the pavement removal item. All loose and broken concrete must be removed from the joints. Adequate protection against damaging the abutting pavement shall be taken. The Contractor's attention is directed to 107.12 of the specifications. The cost of reshaping and recompacting the subbase or subgrade disturbed during the removal operations and any additional excavation along the existing paved berm necessary for the pavement replacement operations shall also be included in the unit price bid for the pavement removal item.

LOCATIONS OF GUARD RAIL

The location of guard rail runs as shown in these plans are subject to adjustment, as determined by the Engineer, to assure that the planned installations will afford maximum protection for traffic. The location of proposed guard rail as shown on the plans may need to be shifted longitudinally so that the locations of the new guard rail posts do not coincide with the old rail post locations.

SEEDING AND MULCHING

Seeding quantities associated with the 203 earthwork items shown on the plan are only approximate and final payment will be for the actual number of square yards of disturbed area seeded and mulched as per 659.

Commercial fertilizer having a formula of 12-12-12 shall be applied as per 659.08

Cost Participation I 1032 x 20 x 9 ÷ (1000 x 2000) = 0.09 Tons
Cost Participation II 7404 x 20 x 9 ÷ (1000 x 2000) = 0.67 Tons
Cost Participation III 2723 x 20 x 9 ÷ (1000 x 2000) = 0.25 Tons

AGRICULTURAL LIMING, AS PER PLAN

The location and need for agricultural liming will be determined by laboratory tests, after rough grading operations have been performed. Quantities of agricultural liming, as shown on the plans, are sufficient for the entire project, but will be nonperformed for the areas where tests show that liming is not required.

The following quantities have been added to the General Summary.

Cost Participation I (1032+67) 100 x 9 ÷ (1000) (2000) = 0.49 Tons
Cost Participation II (7404+310) 100 x 9 ÷ (1000) (2000) = 3.49 Tons
Cost Participation III 2723 100 x 9 ÷ (1000) (2000) = 1.23 Tons

REMOVAL OF EXISTING PIPE

The removal of all existing pipe drains which would normally be removed in various excavation items shall be included for payment in the unit price bid for the respective excavation items unless otherwise itemized in the plans. Any pipes abandoned will have ends plugged.

FENCE, TYPE 47, AS PER PLAN AND FENCE, TYPE CL, , AS PER PLAN

Fence lines and locations shown on the plan are only approximate and may be adjusted by the Engineer for actual ground conditions. Final payment for **Fence, Type 47**, as per plan and **Fence, Type CL**, as per plan shall be the actual linear feet of fence, complete in place. No intermediate anchor posts or corner post assemblies are shown on the plan sheets, but it is not intended that the requirements of 607.05(b) shall be waived. Fence terminals at culvert ends shall be as per Standard Drawing F-5 or as directed by the Engineer. Additional stream crossing shall be provided where requested by the Engineer.

Also included in this item is all work necessary to remove the existing damaged Type 47 and Type CL Fence, as indicated in the plans.

Payment of all of the above shall be included in the unit price bid for:
607 **Fence, Type 47**, as per plan and 607 **Fence, Type CL**, as per plan.

SPECIAL - EROSION REPAIR

Eroded areas shown in the plans and cross-sections, to be repaired, shall be graded smooth (eliminating all erosion ridges) to a level just beneath the bottom of the erosion gulleys and in the same plane as the fill slope.

The fill slope shall be returned to its original slope by filling with suitable material and compacting.

The repair area shall be seeded and mulched unless otherwise directed by the Engineer.

Payment for excavation and embankment required to regrade the slopes shall be included in the lump sum bid for Item - Special - Erosion Repair; Payment for Seeding and Mulching shall be in accordance with Item 659.

MADE D.S.P. DATE 8-7-74
TRACED G.F.L. DATE 8-12-74
CHECKED E.R.H. DATE 8-12-74
SCALE

Howard, Needles, Tammen & Bergendoff
CONSULTING ENGINEERS
CLEVELAND, OHIO

HNTB

GENERAL NOTES

QUANTITY CALCULATIONS
MADE BY E.P.S. DATE 8-7-74
CHECKED BY E.R.H. DATE 8-12-74

FHWA REGION	STATE	PROJECT	
5	OHIO		

5
354

CUYAHOGA COUNTY
CUY-90-23.73
LAKE COUNTY
LAK-90-0.00

PAVEMENT

ITEM 305 - 16" PLAIN PORTLAND CEMENT CONCRETE BASE, AS PER PLAN

All patches are to undercut a minimum of 6 inches below the bottom of the existing pavement and shall extend back under the existing pavement 9 inches along all sides. No dowels are required at the joints. One inch performed expansion joint Material, 705.03 shall be installed along one side of full width replacement, the cost to be included in the unit price bid for Item 305, as per plan.

Item 404 ASPHALT CONCRETE

Included in the payment per cubic yard of the accepted quantities of Item 404, Asphalt Concrete, complete in place, shall be any pavement removed by chipping or other means, for installing butt joints as per Standard Drawing BP-5, where called for in the plans.

ITEM 451 - REINFORCED PORTLAND CEMENT CONCRETE PAVEMENT, AS PER PLAN

This item of work shall involve the replacement of pavement sections as designated in the plans on Sheet 81 Removal of pavement full depth and cutting off all protruding dowel bars. Before any section is replaced the existing base shall be examined and determined if suitable, by the Engineer. The surface smoothness required by 451.12 shall be waived. A one inch performed expansion joint filler, 705.03, and hook bolts, as per BP-3 shall be placed at each transverse joint abutting existing pavement.

Payment for all operations, and material necessary to perform the work shall be at the unit price bid per square yard of Item 451, Reinforced Portland Cement Concrete Pavement, as per plan.

COMPACTED AGGREGATE, AS PER PLAN

All excavation and embankment operations necessary for the placement of this item shall meet the requirements of Item 203, Roadway Excavation and Embankment. Payment for all excavation and embankment operations shall be included in the unit price bid for Item 617, Compacted Aggregate, as per plan.

All necessary water required to aid compaction of the aggregate shall be included in the unit price bid for Item 617, Compacted Aggregate, as per plan.

The following estimated quantities have been provided in the General Summary, Item 617 Compacted Aggregate, as per plan.

4110 Cu. Yds. Cost Participation I
1462 Cu. Yds. Cost Participation II

Item 616 Calcium Chloride
82.2 Tons Cost Participation I
29.2 Tons Cost Participation II

DIMENSIONS FOR PAVEMENT REPLACEMENTS

The dimensions for the concrete pavement replacements shown in the plans are approximate. The field dimensions for the replacements may be adjusted by the Engineer and final payment quantities shall be actual completed work dimensions.

SUBBASE GRADING "A", AS PER PLAN

Material for this item shall meet the requirements of grading A of 310.02 except that no more than 10% of the material shall pass a No. 200 sieve after all operations of placing and compacting have been completed.

UNSTABLE MATERIALS REMOVED AND REPLACED

This work shall consist of removing of unstable subbase and subgrade materials as encountered in areas of 451 and 305 pavement replacement, preparing a new surface as required, furnishing, placing and compacting aggregate base as resonably close as possible to conform with existing cross-sections. All undercut areas are to be drained to existing underdrain, cost to be included in this item. This work shall be performed only when deemed necessary and in specific areas determined by the Engineer. The aggregate base specifications, Item 304, of the construction and materials specifications, shall apply where pertinent to the operations being performed. Otherwise work shall be as directed by the Engineer.

The following estimated quantity is provided to be used as directed by the Engineer for such unsuitable material replacement and payment for accepted quantities complete in place shall be made at the unit price bid.

Item Special Removal and Replacement of Unstable Materials using 304 Aggregate Base, as per plan. COST PARTICIPATION III 250 Cu.Yds.

DRAINAGE

REVIEW AND INSPECTION OF DRAINAGE FACILITIES

Before any work is started on the project, and again before final acceptance by the State, representatives of the State, Cities or Village and the Contractor shall make a visual inspection of the existing storm and sanitary sewers within the work limits which are to remain in service and which may be affected by the work. Records of the inspections shall be kept in writing by the State.

All existing sewers inspected initially by the above mentioned parties shall be maintained and left in a condition reasonably comparable to that determined by the original inspection. Any change in the condition resulting from the Contractor's operations shall be corrected by the Contractor to the satisfaction of the Engineer.

Payment for all operations described above shall be included in the unit prices bid for the pertinent 603 conduit items of the contract.

ITEM SPECIAL, CLEAN EXISTING SEWER:

The existing I-90 centerline sewers from stations 251+00 to 120+00 in the village of Bratenahl shall be cleaned out as directed by the Engineer. This work shall consist of the removal of all the material from the inside of the existing sewers. The material removed shall be disposed of in accordance with the requirements of 203.05.

Cost of this work shall be paid for at the contract unit price bid per lineal foot for "Item Special, Clean Existing Sewer", which price and payment shall constitute full compensation for removal and disposal of all material found in the sewers and the furnishing of all labor, equipment, tools and incidentals necessary to complete this item.

The following Estimated Quantities represents the work which shall be included in the item special, Clean Existing Sewer, as shown in the General Summary.

	COST PARTICIPATION III
Item Special, Clean Existing Sewer, 12"	2250 Lin. Ft.
Item Special, Clean Existing Sewer, 15"	625 Lin. Ft.
Item Special, Clean Existing Sewer, 18"	2225 Lin. Ft.
Item Special, Clean Existing Sewer, 21"	1600 Lin. Ft.
Item Special, Clean Existing Sewer, 24"	1925 Lin. Ft.
Item Special, Clean Existing Sewer, 27"	975 Lin. Ft.
TOTAL	9600 Lin. Ft.

604 - FURNISH COMPLETE CASTINGS FOR EXISTING MANHOLES, AS PER PLAN AND OR CATCH BASINS, AS PER PLAN

All existing structures to be adjusted to grade have been field checked to determine that the existing castings are suitable for salvage and reuse at the particular structure to be adjusted to grade. However, existing castings may prove to be unsuitable, as determined by the engineer, during construction of the project. To provide for this contingency, an estimated quantity of one (1) each "604, Furnish Complete Castings For Existing Manholes, As Per Plan" and one (1) each "604, Furnish Complete Castings For Existing Catch Basins, As Per Plan" have been included in the general summary to be used in any quantity required, as determined by the engineer. It shall be the Contractor's responsibility to provide the casting of the required type, size and strength for the particular structure in question.

The Contractor is cautinned to use extreme care in the removal, storage and placement of all existing castings. Any castings damaged by the Contractor's negligent operations, as determined by the Engineer, shall be replaced with the proper new casting by the Contractor, at no expense to the State.

MANHOLES, CATCH BASINS AND INLETS

Removal and disposal of structures, not specifically abandoned or removed under Item 202 shall be paid for under "Item 203, Roadway Excavation".

MANHOLE COVERS

The Contractor shall set the frames for manhole covers at such an elevation and inclination as to place the surface of the cover in the plane of the finished surface.

EXISTING PIPES

Where existing pipes are encountered and no provision has been made for the removal of existing pipe (Item 202) disturbed by the removal of inlets and the replacement of new pipes, they shall be connected to new inlets with Item 603, Conduit, Type B.

The following Estimated Quantities have been provided in the General Summary to be used as directed by the Engineer for that purpose.

	COST PARTICIPATION I	II
Item 202 Pipe Removed 15" and Under	100 Lin.Ft.	100 Lin.Ft.
Item 202 Pipe Removed Over 15"	100 Lin.Ft.	100 Lin.Ft.
Item 603 12" Conduit, Type B,	100 Lin.Ft.	100 Lin.Ft.
Item 603 15" Conduit, Type B,	100 Lin.Ft.	100 Lin.Ft.

The materials shall not be ordered by the Contractor unless prior approval is received from the Project Engineer.

EXISTING UNDERDRAINS

Where existing underdrains are encountered and no provision has been made for the removal of existing 6" underdrain pipe (Item 202) disturbed by the removal of inlets and the replacement of new underdrains, they shall be connected to new inlets with Item 603, 6" Conduit, Type F.

The following Estimated Quantities have been provided in the Genneral Summary to be used as directed by the Engineer for that purpose.

	COST PARTICIPATION I	II
Item 202 Pipe Removed, 15" and Under	100 Lin.Ft.	100 Lin.Ft.
Item 603 6" Conduit, Type F.	100 Lin.Ft.	100 Lin.Ft.

The materials shall not be ordered by the Contractor unless prior approval is received from the Project Engineer.

CONNECTIONS TO EXISTING PIPES

Where the plans provide for a proposed conduit to be connected to, or to cross either over or under an existing sewer, it shall be the responsibility of the contractor to locate the existing pipe both as to line and grade before he starts to lay the proposed conduit.

Payment for all operations described above shall be included in the unit price bid for the pertinent 603 conduit items.

604 - STANDARD NO I-3B MEDIAN INLET, AS PER PLAN

The existing pavement removed for construction of proposed inlets shall be replaced by Item 305, Portland Cement Concrete Base using dowelled joints as per BP-4. In place of the standard 4'-6" depressed apron, a 3'-0" apron shall be provided and depressed to ½" below normal shoulder slope. Existing pipes are to be left in place, unless otherwise noted on plans, and proposed structures are to be built around existing pipes. Care should be taken to protect existing pipes from damage during construction of the inlets. All inlets shall be cast-in-place.
Payment for all operations and materials for above, shall be included in the contract bid price per each Item 604 - Standard No. I-3B Median Inlet, as per plan.

604-STANDARD NO-1 MANHOLE, AS PER PLAN

Use bolted down castings EAST JORDAN IRON WORKS CATALOGUE NO. 1040-T or NEENAH FOUNDRY CATALOGUE NO. R-1915 G or APPROVED EQUAL.

Payment for above work shall be included in the contract bid price per each Item 604-Standard No-1 Manhole as per plan.

604-MANHOLE ADJUSTED TO GRADE, AS PER PLAN

Existing castings of manholes "Adjusted to grade" with bolt down castings which are to remain within the pavement or berm limits shall be replaced with EAST JORDAN IRON WORKS CATALOGUE NO. 1040-T or NEENAH FOUNDRY CATALOGUE NO. R-1915 G or approved equal bolt down casting.

Adjustment to grade shall be done as specified in method (a) under 604-03.

Payment for above work shall be included in the contract bid price per each Item 604-Manhole adjusted to grade, as per plan

604 - MANHOLE RECONSTRUCTED TO GRADE, AS PER PLAN

Existing castings of manholes "reconstructed to grade" with bolt down castings which are to remain within the pavement or berm limits shall be replaced with EAST JORDAN IRON WORKS CATALOGUE NO. 1040-T or NEENAH FOUNDRY CATALOGUE NO. R-1915 G or approved equal bolt down casting.

Payment for the above shall be included in the contract bid price per each Item 604 - Manhole reconstructed to grade, as per plan.

604 - STANDARD NO. I-3A MEDIAN INLET, AS PER PLAN

Payment for proposed inlets includes all excavation, labor and materials to construct new structures. Existing pipes are to be left in place, unless otherwise noted on plans, and proposed structures are to be built around existing pipes. Care should be taken to protect existing pipes from damage during construction of the inlets. All inlets shall be cast-in-place.
The cost of this work shall be at contract bid price per each Item 604 - Standard No. I-3A Median Inlet, as per plan.

604- STANDARD NO. I-3B MEDIAN INLET, MODIFIED, AS PER PLAN

Payment for proposed inlet shall include all excavation, labor and materials to construct new structure. Existing pipes are to be left in place, unless otherwise noted on plans, and proposed structures are to be built around existing pipes. Care should be taken to protect existing pipes from damage during construction. All inlets shall be cast-in-place. The cost of this work shall be at the contract bid price per each Item 604 - Standard No. I-3B MEDIAN INLET, modified, as per plan. See detail, sheet 76.

MADE E.P.S. DATE 8-7-74
TRACED G.L. DATE 8-12-74
CHECKED E.R.H. DATE 8-12-74
SCALE

Howard, Needles, Tammen & Bergendoff
CONSULTING ENGINEERS
CLEVELAND, OHIO

HNTB

SIGNING NOTES

FHWA REGION	STATE	PROJECT	
5	OHIO		

6
354

CUYAHOGA COUNTY
CUY-90-23.73
LAKE COUNTY
LAK-90-0.00

DIMENSIONS

Dimensions of signs are indicated on the plans with the horizontal dimension shown first, then the vertical dimension.

IDENTIFICATION OF TRAFFIC SIGNS

Identification of all traffic signs is by reference number or code number. Reference numbers refer to the sign design bearing the same number. Code numbers refer to Standard Drawings with the same number.

ORIENTATION OF SIGN FACES

Signs shall be erected so that the face of the sign is vertical and at a right angle to the center of the lane which it serves except where otherwise noted. Where lanes divide and on sharp horizontal curves, sign faces shall be placed perpendicular to the tangent point of the curve at the station location, so as to be most effective both day and night.

CONSTRUCTION LAYOUT STAKES FOR SIGNS SUPPORTS

The Contractor shall stake out all sign supports in accordance with supplemental specification 816 prior to installation of any foundations or supports.

After stakeout the Contractor shall notify the Engineer a minimum of seven (7) days in advance of scheduled work. Support locations for each support will be field checked and approved by the Engineer who shall coordinate with the Division and/or City Traffic Engineer prior to proceeding with construction work required.

Cost for this work will be included in Item 623- Construction Layout Stakes

SIGNS FURNISHED AND ERECTED

All new signs shown in the plans shall be furnished and erected by the Contractor. Payment shall be under the unit price bid for the pertinent signing items.

REVISE EXISTING SIGN LEGEND, EXIT ACTION MESSAGE, AS PER PLAN

This work shall consist of the removal of the word "EXIT" or "JCT" and the respacing of the bottom line of the legend or the changing of the bottom line of legend from "RIGHT LANE" to "NEXT RIGHT". New copy for the word "NEXT" shall be furnished under this item as needed. Care shall be taken not to damage the sign face or the letters to be reused.

This work shall be paid at the unit price bid for each Revised Existing Sign Legend, Exit Action Message as per plan including all labor and materials required to complete this item of work in a craftsman line manner.

EXISTING SIGN REVISED, AS PER PLAN

This item of work shall consist of revising an existing sign by removing existing legend and furnishing and installing demountable copy and extrusheet sign panel and back bracing as needed to change the sign as detailed on the plan sheets.

Payment will be made for each Existing Sign Revised as per plan at the contract unit price and be full compensation for all labor and materials required to complete the work in a craftsman like manner.

CERTIFICATION AND APPROVAL OF SIGN SUPPORT SIGN LIGHTING ITEMS

The contractor shall submit the drawings, information and samples as required below:

A. 8 copies of shop drawings and material lists for approval:

1. Overhead sign supports
2. Breakaway Sign Supports
3. Sign Lighting Items
4. Sign Face- Copy Layouts
5. Sign Panels and Accessories

B. 8 copies of a catalog of cuts, descriptions, or samples of fabricators standard items (or their equals) as shown in the plans for approval of their use.

C. Certifications and/or samples for all materials which have been approved above under "A" and "B".

D. Approval of items under "A" and "B" shall be obtained in writing by the contractor prior to any purchase of materials.

E. Certifications of samples under "C" must be obtained and approved prior to contract completion.

REVISE EXISTING SIGN SERVICE, AS PER PLAN

This item shall consist of reconnecting the electrical cables in the pull box. (Electrical connectors furinished within Roadway Lighting Quantities).

Basis of Payment for this item shall be at contract unit price per each, which shall include all labor, material, and equipment required to complete this item of work.

MADE DSP DATE 8-7-74
TRACED RDJ DATE 8-12-74
CHECKED ERH DATE 8-15-74
SCALE —

Howard, Needles, Tammen & Bergendoff
CONSULTING ENGINEERS
CLEVELAND, OHIO

HNTB

FHWA REGION	STATE	PROJECT	
5	OHIO		

7
354

CUYAHOGA COUNTY
CUY-90-23.73
LAKE COUNTY
LAK-90-0.00

SIGNING NOTES

REMOVAL OF EXISTING SIGN FACES

The work shall consist of the removal of existing sign faces from supports to remain in place on main roadway, ramps and approach roadways as specified in the plans.

All signs and accessories removed shall be stored neatly within the limits of the project at locations approved by the Engineer for removal by the Maintaining Agencies.

To assure maintenance of adequate traffic control at all times, no signs are to be removed without the approval of the Engineer.

Payment for removal of existing sign faces shall include all necessary labor and equipment required to perform the required work as indicated above.

Basis of payment shall be for Item 202, Removal of Existing Sign Faces at the contract price per each.

REMOVAL OF EXISTING SIGN INSTALLATIONS AS PER PLAN

This work shall consist of the removal of the existing sign installations on main roadway, ramps and approach roadways within work limits of this project, as indicated on the plan sheets.

Work shall also include removal of sign supports and foundations as required in Section 202.

All signs removed shall be stored neatly within the limits of the project at locations approved by the Engineer for pick-up by the Maintaining Agencies. This work shall include disposal of all waste material including the sign supports and hardware.

To assure maintenance of adequate traffic control at all times, no signs are to be removed without the approval of the Engineer.

Payment for removal of existing signs shall include all necessary labor and equipment required to perform the required work as indicated above.

1. *Basis of payment shall be as follows for signs forty (40) square feet or greater:*
   REMOVAL OF EXISTING MAJOR SIGN INSTALLATIONS AS PER PLAN at the contract price per each.
2. *Basis of payment shall be as follows for all other signs:*
   REMOVAL OF EXISTING SIGN INSTALLATIONS AS PER PLAN at the contract price per each.

MILE MARKER LOCATION

The Bureau of Transportation Technical Services will locate the longitudinal position of mile markers by a paint blotch on the completed pavement edge.

On divided highways only one pavement edge will be marked. Markers for the opposite direction will be set "across" from those on the marked edge.

The Contractor will notify the Project Engineer thirty (30) days in advance of the planned marker installation. The project Engineer will then immediately notify the Bureau of Transportation Technical Services by letter of the planned marker installation.

Any delineator that is within fifty (50) feet of a mile marker shall be removed.

POLE MOUNTED SIGN ATTACHMENT, AS PER PLAN

This item of work shall consist of the furnishing and installation of stainless steel straps, mounting brackets, and hardware as detailed on Sheet 110.

Basis of payment shall be at the contract bid price per each Pole Mounted Sign Attachment, as per plan which price shall include all labor, material, equipment and incidentals necessary to perform the required item of work.

REPAIR EXISTING STRUCTURE MOUNTED SIGN SUPPORTS, AS PER PLAN

This item shall include the removal and replacement of frames, internal diagonals, fixture arm braces and angles as detailed on Sheet 123. All labor, material and incidentals necessary to perform the work shall be included in the unit price bid per each sign. Payment shall be per Item 844, "Repair Existing Structure Mounted Sign Support, As Per Plan".

STRUCTURAL SUPPORTS, DRIVEN TYPE

Driven type structural supports will be driven to a depth of five feet (5'-0") minimum below ground line in such a manner that no deformation within the length of the support, or damage to the support, will occur.

Prior to installation each support shall be significantly marked with paint at a location on the support 5'-6" from the embedded end, and approved by the Engineer.

"Structural Supports 6 Lb. Beam, Driven and 6 Lb. Beam, as per plan Driven" will include the 10"x12"x¼" soil plate detailed in the plans.

Payment for installation of sign supports by the above method shall be included in the cost of the various support types specified including all labor, equipment and materials required.

STRUCTURAL SUPPORTS, STEEL BEAM (TYPE)

The structural steel beam supports including 6 pound beams, 4 pound post and hardware shall be galvanized in accordance with ASTM A-123 and A-153 respectively. All fabrication shall be completed prior to galvanizing.

Quantities for Item 816 "Structural Supports, Steel Beam (Type)" appearing in the quantity tables are approximate. The Contractor shall be responsible for determining exact support lengths prior to fabrication and galvanizing of supports. Payment shall be at the contract unit price bid per lin. ft. which price and payment shall include all costs in connection with the embedment of the supports.

The cost of the concrete used for embedment if required will be a separate pay item.

STRUCTURAL SUPPORTS, 6LB. BEAM, AS PER PLAN, DRIVEN

This item shall consist of the furnishing, assembly, and installation of two (2) 3lb. per foot drive posts (6lb. beam) in combination with a square welded or seamless galvanized tubular posts extension spliced to the top of the 6lb. beam. Details are shown on sheet 119 .

Square tubular post material shall conform to ASTM A-570 Grade "B" after fabrication.

Work shall include all labor, materials, equipment, tools, and hardware necessary to perform the required item of work.

Basis of payment shall be for Structural Supports, 6lb. Beam, As Per Plan, Driven per linear foot measured by total length of combination beam from end to end.

CONCRETE FOUNDATIONS, FOR SIGN SUPPORTS

Payment for this item shall be based on plan dimensions (or dimensions as modified by the Engineer in lieu of the plan quantities) as required in supplemental specification 816.

Payment for reinforcing steel and installation only of conduit ells shall be included in the cost of the concrete foundations for overhead sign supports. Concrete shall be class "C".

Basis of payment shall be as follows:

Concrete for ground mounted sign support foundations, per cubic yard.

MADE O.S.P. DATE 8-7-74
TRACED G.F.L. DATE 8-15-74
CHECKED E.R.H DATE 8-12-74
SCALE —

Howard, Needles, Tammen & Bergendoff
CONSULTING ENGINEERS
CLEVELAND OHIO

HNTB

FHWA REGION	STATE	PROJECT	
5	OHIO		

8
354

PAVEMENT MARKING NOTES

QUANTITY CALCULATIONS
MADE BY A. J. S. DATE 1-7-75
CHECKED BY D. S. P. DATE 1-8-75

CUYAHOGA COUNTY
CUY-90-23.73
LAKE COUNTY
LAK-90-0.00

GENERAL

This work shall consist of furnishing and installing pavement arrows, cross walk lines, edge lines, stop lines, channelizing lines, lane lines, center lines, words and island outline lines, such as shown on the plans in the proposal or special provisions and specifications herein set forth. Placement of all markings shall be in accordance with the plans, subject to any adjustments as directed by the Engineer.

This work shall also include all services, labor, materials, equipment and incidentals necessary for the required surface cleaning, preparation and construction of thermo-plastic pavement markings under traffic-maintained by-contractor operation conditions.

MAINTENANCE OF TRAFFIC

The marking of the improvements will not require the closing of the highway to traffic and the Contractor shall provide signs, guards, flagmen and all other traffic control devices for the maintenance and safety of traffic and protection of the line while being applied. The Contractor shall comply with Ohio Manual Of Uniform Traffic Control Devices For Streets and Highways.
Placement of pavement markings on the roadway shall be accomplished on weekdays (Monday thru Friday, 9:00 AM to 3:00 PM) with a maximum of one directional lane closed at anytime.

THERMO-PLASTIC PAVEMENT MARKING MATERIAL

This pavement marking material shall be reflectorized "Permaline" thermoplastic compound as manufactured by Permaline Corporation of America or reflectorized "Catatherm" thermoplastic compound as manufactured by Cataphote Corporation, or approved equal. In addition, the thermoplastic material furnished on this contract shall meet the following specifications:

Glass beads meeting Ohio Specification No. 712.05 shall be uniformly mixed throughout the material at the rate of not less than 250 lbs. of beads per 1,000 lbs. of thermo-plastic material. Immediate reflectorization shall be accomplished by an application of beads to the surface of the compound at the time the thermo-plastic material is applied. A glass bead dispenser of approved design shall be used for a uniform surface application of beads at a rate of not less than two pounds of beads per 33 square feet of line. The beads shall conform to the following grades:

SIEVE NO.	TOTAL PERCENT PASSING
20	90 - 100
35	0 - 10

The material shall withstand temperature variation from minus 20°F. to plus 120°F., without deformation or discoloration, and shall maintain its original dimensions and placement, free from tack, chipping, or spalling. White thermo-plastic material shall be free of dirt or tint.

[illegible] of the contract bid price for Temporary 4" Line - Including [illegible] when, and inside the necessary [illegible] or The [illegible] Pavement [illegible] Section III 12 miles [illegible] Section IV

SAMPLES

The Contractor shall furnish a 10-pound material sample of the white thermoplastic compounds he proposes to furnish and also white typical samples of line 4 inches wide by 10 inches long.

Material installed on the road on this contract in accordance with the contractor's standard practice shall be compared with the original samples at least 90 days after construction and shall show no darkening or discoloration. The material shall harden sufficiently within 15 minutes after application to allow traffic over the line without pickup or impression.

CONSTRUCTION DETAILS

All pavement marking shall be applied in accordance with the standard pavement marking symbol, word or line specifications dimension drawing governing the types of symbols or lines shown on the plans. A set of templates are required for layout prior to the installation of arrows and words.

The material shall be applied to a uniform minimum thickness of $\frac{1}{8}$ inch by a single application and to the width specified. Lines shall be straight and true and at the location designated by the engineer. Line withts shall be achieved by the use of 4", 6", 8", and 12" combination applicators. The minimum number of passes shall be used, that is, a 24" line should consist of two 12" passes. When the width of line requires more than one pass, the individual lines shall not overlap. A 4" gap will be acceptable between lines in this case.

On all pavement surfaces and at locations where a new thermo-plastic line is to be applied over an old painted line, the contractor shall prepare the surface to insure adhesion. No lines shall be applied directly longitudinally over any construction crack or joint. Epoxy resin primer shall be used on all pavement surfaces prior to applying plastic markings. Type and application rate of primer shall be submitted to the engineer for approval.

The primer shall be applied with a minimum tolerance of 1 inch on each side of all pavement markings. The primer shall be a two component solvent epoxy adhesive compound of spraying consistency especially compounded for traffic marking. Resin and hardener shall be mixed in the exact proportion recommended by the manufacturer.

The air temperature at the time for application shall be not less than 50 degrees F. The temperature of the compound during application shall never fall below 375 degrees F.

METHOD OF MEASUREMENT

The length paid for shall be the number of lineal feet or miles of the several types of lines, and each symbol or word, installed and accepted, measured in place. Measurement shall be made by a representative of the Contractor and the Engineer. The length of lane lines to be paid for shall be the actual number of miles, exclusive of gaps, measured in place, completed and accepted. Pavement arrows shall be measured per each, lettering per word, and 24" transverse stripe shall be paid for on a per lineal foot basis.

Placement of all markings shall be in accordance with the plans subject to any adjustments as directed by the Engineer.

STATION MARKING

The Contractor shall stencil station numbers into both sides of the concrete barrier before it takes its final set. The complete station number is to be marked each 100 feet. The numerals shall be 3 to 4 inches in height and $\frac{1}{4}$ inch in depth. The station numbers shall be placed parallel with the pavement edge and centered on the top of the concrete barrier. Payment shall be included in the contract price bid per Item 622- Concrete Barrier.

BASIS OF PAYMENT

Pavement marking items shall be paid for in accordance with Item 621. These items shall include all materials, hauling, surface preparation, placing, protecting all applied items as specified or required by the Engineer, and for all labor, tools, materials, equipment and incidentals necessary to layout and complete the work.
Payment for these items is as follows:

℄ Lines, Thermoplastic	Mile
Edge Lines, Thermoplastic	Mile
6" Lane Lines, Thermoplastic	Mile
Channelizing Lines, Thermoplastic	Lin. Ft.
24" Stop Lines, Thermoplastic	Lin. Ft.
24" Broad Transverse Lines, Thermoplastic	Lin. Ft.
Lane Arrows, Thermoplastic	Each
Word ( ) on Pavement, Thermoplastic	Each
4" Dotted Lane Line, Thermoplastic	Lin. Ft.
Curb Marking, Paint	Lin. Ft.
Island Marking, Paint	Sq. Ft.

MADE D.S.P. DATE 9-7-74
TRACED G.F.L. DATE 9-15-74
CHECKED E.R.H. DATE 9-12-74
SCALE

Howard, Needles, Tammen & Bergendoff
CONSULTING ENGINEERS
CLEVELAND OHIO

HNTB

FED. RD.	STATE	PROJECT	
2	OHIO		

8A 354

CUYAHOGA COUNTY
CUY-90-23.73
LAK-90-0.00

CONTROLLER SPECIFICATIONS

SIGNAL CONTROLLERS

THIS ITEM OF WORK SHALL INCLUDE FURNISHING AND INSTALLATION OF THE CONTROLLER BY THE CONTRACTOR. THE CONTRACTOR SHALL NOTIFY THE ENGINEER 7 DAYS IN ADVANCE OF THE CONTROLLER BY THE CITY OF CLEVELAND. THE CITY WILL MAKE THE CONNECTIONS OF THE EXTERNAL SERVICE AND VARIOUS CABLE LEADS TO THE CONTROLLER EQUIPMENT AND PLACE THE SIGNAL IN OPERATION.

THE CONTRACTOR WILL BE RESPONSIBLE FOR MAINTENANCE OF THE TRAFFIC SIGNAL EQUIPMENT FOLLOWING THE INSTALLATION UNTIL SUCH TIME AS THE TESTING REQUIREMENTS ARE SATISFIED AND THE INSTALLATION IS COMPLETE AND ACCEPTED. THE CONTRACTOR WILL BE RESPONSIBLE FOR IMMEDIATE ACTION TO CORRECT ANY FAILURES OR DEFECTS IN THE TRAFFIC SIGNAL EQUIPMENT DURING OPERATION THAT OCCUR PRIOR TO ACCEPTANCE OF THE INSTALLATION.

A. FULL-ACTUATED CONTROLLERS SHALL BE SOLID STATE, FIVE MODULE WITH CONCURRENT PEDESTRIAN PHASES. FULL-ACTUATED CONTROLLERS SHALL MEET THE FOLLOWING SPECIFICATIONS:

THESE CONTROLLERS SHALL MEET ALL REQUIREMENTS AS OUTLINED IN THE INSTITUTE OF TRAFFIC ENGINEERS TECHNICAL REPORT #3 DATED 1958, OR LATEST REVISION.

THE CONTROL SYSTEM SHALL BE OF MODULAR PLUG-IN TYPE. ALL CONTROLLER COMPONENTS SHALL BE SOLID-STATE.

THE CONTROL SYSTEM SHALL BE DESIGNED TO OPERATE ON 105V TO 125V AC, 60 HZ.

ALL CONTROL CIRCUITS SHALL EMPLOY INTEGRATED CIRCUIT COMPONENTS FOR MAXIMUM RELIABILITY.

THE CONTROL SYSTEM SHALL BE DESIGNED TO OPERATE IN AMBIENT TEMPERATURES OF -30°F TO 160°F.

THE CONTROLLER SHALL CONTINUE NORMAL OPERATION IN THE EVENT OF A 0.25 SECOND POWER INTERRUPTION.

ALL CIRCUIT BOARDS SHALL CONSIST OF PRINTED COPPER CIRCUITS.

ALL PRINTED CIRCUIT BOARDS SHALL BE CONSTRUCTED TO INSURE TROUBLE-FREE OPERATION.

THE CONTROLLER SHALL BE DESIGNED FOR FAIL-SAFE OPERATION.

ALL VEHICLE PHASE MODULES SHALL BE FURNISHED WITH MULTIPLE EXTENSION LIMITS AND ALL-RED TIMING CAPABILITY.

ALL VEHICLE ACTUATED PHASE MODULES SHALL BE PROVIDED WITH GUARANTEED PASSAGE TIME.

ALL ACTUATED PHASE MODULES SHALL HAVE REMOTE RECALL CAPABILITY.

ALL VEHICLE ACTUATED PHASES WITH CONCURRENT PEDESTRIAN PHASES SHALL BE PROVIDED WITH GUARANTEED PEDESTRIAN WALK AND CLEARANCE TIME.

THE PHASE MODULES SHALL INCLUDE AN INDIVIDUAL ILLUMINATED INDICATOR FOR INDICATING THE INTERVAL TIMING AND MAXIMUM TIMING TERMINATION.

THE MODULE SHALL PROVIDE FOR THE SETTING UP OF EACH INTERVAL OR PERIOD BY MEANS OF SETTING CALIBRATED DIALS. THE TIMING DIALS SHALL BE CALIBRATED IN SECONDS AND SHALL GIVE A CLEAR VISUAL INDICATION OF THE LENGTH OF EACH INTERVAL. THE TIMING DIALS SHALL BE ON THE FRONT OF THE MODULE. IT SHALL NOT BE NECESSARY TO REMOVE OR CHANGE WIRES OR CONTACTS OR TO USE ANY TOOLS IN MAKING INTERVAL ADJUSTMENTS.

IN THE ABSENCE OF OPPOSING CALLS THE CONTROLLER SHALL REMAIN IN A REST CONDITION ON THE LAST CALLED PHASE. ALSO SWITCHES SHALL BE PROVIDED FOR RECALLING ANY ONE OR ALL PHASES.

THE CONTROLLER SHALL BE PROVIDED WITH INPUTS FOR AUTOMATIC PHASE SKIPPING ABILITY.

THE AFOREMENTIONED TYPE OF FULL-ACTUATED CONTROLLERS SHALL BE CROUSE-HINDS SFT2 SERIES, OR EAGLE SIGNAL DIVISION ET600 SERIES, OR ECONOMOLITE SERIES D-4000 OR EQUAL.

THE CONTROLLER SHALL HAVE THE CAPABILITY TO BE COORDINATED BY AUXILLARY EQUIPMENT TO FUNCTION IN AN INTERCONNECTED PROGRESSIVE SYSTEM.

THE COORDINATION EQUIPMENT SHALL BE INCLUDED WITHIN THIS ITEM AND SHALL BE EAGLE ET-228-AAA, CROUSE-HINDS PCU-153 OR ANY OTHER APPROVED EQUAL THREE DIAL THREE OFFSET TYPE EQUIPMENT.

B. SEMI-ACTUATED CONTROLLERS SHALL HAVE CONCURRENT PEDESTRIAN PHASES AND INCLUDE A THREE DIAL BACKGROUND COORDINATING UNIT.

SEMI-ACTUATED CONTROLLERS SHALL MEET THE FOLLOWING SPECIFICATIONS:

THIS CONTROLLER SHALL MEET ALL REQUIREMENTS AS OUTLINED IN THE INSTITUTE OF TRAFFIC ENGINEERS TECHNICAL REPORT #3 DATED 1958 OR LATEST REVISION.

THE CONTROL SYSTEM SHALL BE OF MODULAR CONSTRUCTION AND ALL COMPONENTS SHALL BE SOLID-STATE.

THE CONTROL SYSTEM SHALL BE DESIGNED TO OPERATE ON 105 V TO 125 V AC 60 HZ.

THE CONTROL SYSTEM SHALL BE DESIGNED TO OPERATE IN AMBIENT TEMPERATURES OF -30° F TO 160° F.

THE CONTROLLER SHALL CONTINUE NORMAL OPERATION IN THE EVENT OF A 0.25 SECOND POWER INTERRUPTION.

ALL PRINTED CIRCUIT BOARDS SHALL BE CONSTRUCTED TO INSURE TROUBLE-FREE OPERATION.

THE CONTROLLER SHALL HAVE THE CAPABILITY OF MANUAL CONTROL THROUGH EACH INTERVAL.

THE CONTROLLER SHALL BE DESIGNED FOR FAIL-SAFE OPERATION.

THE VEHICLE ACTUATED PHASE WITH CONCURRENT PEDESTRIAN PHASE SHALL BE PROVIDED WITH GUARANTEED PEDESTRIAN WALK AND CLEARANCE TIME.

THE CONTROLLER SHALL INCLUDE INDIVIDUAL ILLUMINATED INDICATORS FOR INDICATING THE INTERVAL TIMING AND MAXIMUM TIMING TERMINATION.

THE MODULE SHALL PROVIDE FOR THE SETTING UP OF EACH INTERVAL OR PERIOD BY MEANS OF SETTING CALIBRATED DIALS. THE TIMING DIALS SHALL BE CALIBRATED IN SECONDS AND SHALL GIVE A CLEAR VISUAL INDICATION OF THE LENGTH OF EACH INTERVAL. THE TIMING DIALS SHALL BE ON THE FRONT OF THE MODULE. IT SHALL NOT BE NECESSARY TO REMOVE OR CHANGE WIRES OR CONTACTS OR TO USE ANY TOOLS IN MAKING INTERVAL ADJUSTMENTS.

THE CONTROLLER SHALL ALWAYS REMAIN IN A REST CONDITION IN THE NON-ACTUATED PHASE, CHANGING THE ACTUATED PHASE ONLY AS A RESULT VEHICLE DETECTOR OR PEDESTRIAN PUSH BUTTON ACTUATION.

THE CONTROLLER SHALL HAVE THE CAPABILITY TO BE COORDINATED BY AUXILLARY EQUIPMENT TO FUNCTION IN AN INTERCONNECTED PROGRESSIVE SYSTEM.

THE AFOREMENTIONED TYPE OF SEMI-ACTUATED CONTROLLER WITH A THREE DIAL BACKGROUND COORDINATING UNIT SHALL BE EAGLE ET-495 SEMI-ACTUATED SOLID STATE CONTROLLER AND WITH EAGLE ET-228-AAA TYPE COORDINATING UNIT, OR CROUSE-HINDS SERIES SST-23 SEMI-ACTUATED CONTROLLER AND WITH A CROUSE-HINDS DCU-153 COORDINATING UNIT OR EQUAL.

C. CONTROLLER CABINET

THE CABINET SHALL BE CLEAN-CUT IN DESIGN AND APPEARANCE AND SHALL CONFORM TO THE FOLLOWING:

IT SHALL BE MADE OF DIE CAST ALUMINUM ALLOY WITH A WALL THICKNESS OF APPROXIMATELY ONE-QUARTER INCH AND MINIMUM OF 18,000 PSI YIELD STRENGTH.

THE MINIMUM INSIDE DIMENSIONS SHALL BE: HEIGHT 38", WIDTH 28" AND DEPTH 12/7/16".

THE CABINET SHALL CONTAIN AT LEAST 7.7 CUBIC FEET OF USABLE VOLUME.

HINGED DOOR, WITH POLICE PANEL, SHALL BE PROVIDED ON THE FRONT OF THE CABINET WHICH SHALL INCLUDE SUBSTANTIALLY THE FULL AREA OF THE FRONT OF THE CABINET.

ALL DOORS SHALL BE FULLY GASKETED WITH ELASTOMERIC GASKETING MATERIAL SO THAT WHEN CLOSED THEY SHALL FIT CLOSELY TO THE GASKETING MATERIAL, MAKING THE CABINET WEATHER RESISTENT AND DUST TIGHT. THREE POINT LATCHING SHALL BE PROVIDED FOR THIS PURPOSE.

THE DOOR SHALL BE PROVIDED WITH LOCK WITH PERMANENT TYPE LUBRICATION AND A WEATHERPROOF TAB AND FURNISHED WITH TWO KEYS FOR BOTH THE DOOR AND THE POLICE PANEL.

(CON'T.)

AN ELBOW VENT SHALL BE MOUNTED ON BOTH SIDES OF THE CABINET BASE AND SHALL BE MACHANICALLY SCREENED AND BAFFLED TO PROTECT AGAINST RAIN, DUST AND ALL TYPES OF FOREIGN OBJECTS.

THERE SHALL BE ONE BAR DOOR STOP AT APPROXIMATELY 135°.

THE DOOR PINS, RECESSED TO PREVENT BREAK AND ENTRY, SHALL BE GREASE LUBRICATED AND FABRICATED OF A NON-CORRODING MATERIAL.

CABINET SHALL CONTAIN TWO CAST METAL SHELVES FOR THE SUPPORT OF TRAFFIC CONTROL EQUIPMENT. THE SHELVES SHALL BE ADJUSTABLE ON A MINIMUM OF 1-1/2" CENTERS FROM A MINIMUM OF 10" FROM THE TOP OF THE CABINET TO THE BOTTOM OF THE CABINET.

THE CABINET SHALL BE EQUIPPED WITH A POLICE PANEL DOOR AND THE FOLLOWING EQUIPMENT:

1 EACH THYRECTOR PROVIDING STEADY STATE INPUT VOLTAGE OF 150 RMS OR 210 PEAK AND PROVIDING A MAXIMUM CURRENT OF 3 AMPS AT .001 SEC. PULSE AT 60 HZ. FOR LIGHTING PROTECTION OF TRAFFIC CONTROL EQUIPMENT FOR CONNECTION ACROSS THE LINE AFTER THE FUSES AND BEFORE FLASHER FILTER MOUNTED USING 150 V MINIMUM BREAKDOWN INSULATED HOLLOW RIVIT USING #8-32 SCREW.

10 EACH 12 WIRE TERMINAL BLOCKS (PENN UNION #6012 MARATHON #6012 OR APPROVED EQUAL).

3 EACH 4 PDT 10 AMPERE 250 V.A.C. SWITCH (CUTLER-HAMMER #7693, CARLING ELECTRIC IL 253 OR APPROVED EQUAL).

1 EACH GROUND BUS BAR WITH 15 GROUND TERMINAL POINTS.

THE OUTGOING TRAFFIC CONTROL SIGNAL CIRCUITS SHALL BE OF THE SAME POLARITY AS THE LINE SIDE OF THE POWER SUPPLY; THE COMMON RETURN OF THE SIGNAL CIRCUIT SHALL BE OF THE SAME POLARITY AS THE GROUND SIDE OF THE POWER SUPPLY.

THE GROUNDED SIDE OF THE POWER SUPPLY SHALL BE GROUNDED TO THE CONTROLLER CABINET IN AN APPROVED MANNER.

THE CABINET SHALL BE BASE MOUNTED AND FURNISHED WITH TWO 3/4" X 16" ANCHOR BOLTS FOR KEYING TO A CONCRETE FOUNDATION. A DRAWING SHOWING PROPER CONSTRUCTION OF THE CABINET FOUNDATION AND METHOD OF MOUNTING THE CABINET SHALL BE FURNISHED WITH THE CABINET BASE.

THE CABINET SHALL BE EQUIPPED WITH A TOP MOUNTED VENTILATION FAN 134 C.F.M. AT 0.160" OF WATER STATIC PRESSURE. SEPARATE ADJUSTABLE THERMOSTAT.

ALL CAST PIECES SHALL BE CLEAN, SMOOTH, AND FREE FROM FLAWS, CRACKS, BLOWHOLES, AND OTHER IMPERFECTIONS.

A FLEXIBLE PLASTIC OR OTHER INSULATING MATERIAL IS TO BE MOUNTED WITH SHEET METAL SCREWS TO COVER SWITCH TERMINALS ON THE POLICE PANEL.

THE CABINET AND FAN HOUSING SHALL BE PRIME COATED AND SHALL BE FINISHED WITH TWO COATS OF ALUMINUM GRAY ENAMEL PAINT.

D. PAYMENT

PAYMENT FOR ITEM 625 "TRAFFIC SIGNAL CONTROLLER, BY TYPE", AS PLAN, SHALL BE MADE ON AN EACH BASIS, COMPLETELY INSTALLED IN PLACE, TESTED AND ACCEPTED, AND INCLUDING ALL INCIDENTALS NECESSARY.

GUARANTEES AND WARRANTIES

THE MANUFACTURER'S NORMAL WARRANTIES FOR TRAFFIC SIGNAL CONTROLLERS, ASSOCIATED CONTROL EQUIPMENT, LOOP DETECTOR AMPLIFIERS AND OTHER MANUFACTURER'S EQUIPMENT FOR WHICH GUARANTEES ARE NORMALLY PROVIDED SHALL BE ASSIGNED AND DELIVERED TO THE State.

THE CONTRACTOR SHALL INSTALL AND HANDLE ITEMS IN ACCORDANCE WITH THE MANUFACTURER'S RECOMMENDED PROCEDURES, PROVIDED SUCH PROCEDURES ARE NOT IN CONFLICT WITH THE PLANS AND SPECIFICATIONS.

COSTS FOR PROVISION AND PERFORMANCE OF GUARANTEES AND WARRANTIES HEREIN DESCRIBED SHALL BE INCIDENTAL TO AND INCLUDED IN THE UNIT PRICE(S) BID FOR THE VARIOUS TRAFFIC CONTROL ITEMS.

CONTROLLER SPECIFICATIONS

TRAFFIC MAINTENANCE NOTES

QUANTITY CALCULATIONS
MADE BY F.W.H. DATE 1-7-75
CHECKED BY D.S.P. DATE 1-8-75

FHWA REGION	STATE	PROJECT	
5	OHIO		

9
354

CUYAHOGA COUNTY
CUY-90-23.73
LAKE COUNTY
LAK-90-0.00

GENERAL PROVISION

The basic objective in providing for special materials and work methods in these plans is to make the planned I-90 construction occur with a minimum of hazard, delay, and inconvenience to the motorist using the highway. In general, the contractor shall conduct his operations so as to achieve this objective. The following special provisions are mandatory:

1.) A minimum of three lanes in each direction (unless otherwise specified in the plans) will be maintained at all times. The lanes will be twelve foot roadway sections with necessary restrictions at the structures.

A 35MPH speed limit will be imposed during the three lane operation. The 35 MPH R-10-24 signs shall be attached to steel drums every ¼ of a mile for the entire length of work.

3.) There shall be positive removal or obliteration of pavement markings which conflict with the temporary traffic patterns created by the proposed construction. The markings may be removed by grinding, sandblasting, chemical treatment, or by any other method approved by the Engineer. Upon removal, all stains shall be removed by use of kerosine, gasoline or other approved solvent. However, the appearance, texture, or strength of the pavement shall not be injured in any way.

The removal of existing pavement marking shall be done before opening the area to traffic.

Payment for the removal of the existing pavement marking shall include full compensation for all work, including materials, equipment, labor, incidentals and disposal of surplus materials in the lump sum price for Item 614, Maintaining Traffic.

4.) The Contractor shall notify the Engineer two (2) weeks prior to starting work on Stage I and two (2) weeks prior to advancing to each subsequent stage or phase, in order that the Engineer can coordinate with the District Traffic Engineer the detour signing to be performed by the State Forces.

5.) During the construction of all bridges on I-90, as specified in the plans, the Contractor shall not disrupt or impede the normal flow of traffic on the underpass roadways. If it is deemed necessary that additional area is needed to complete the widening and reconstruction of the E. 105th St. structure (Cuy-90-2200), the Contractor shall maintain a minimum of one (1) ten foot lane in each direction.

6. The construction necessary to complete the work will be done in four stages.

All work necessary within the limits of Stage II construction, as required by Item 625, "Conduit, Jacked - Under Pavement, as per plan," shown in the Lighting Plans, shall be done before completion of Stage II.

STAGE I

Complete Ramp 8 Improvements
Widen the structure over E. 105th Street.

Complete Phase I and Phase II construction in Euclid Spur.

Temporary pavement at approach and trailing ends of bridges as specified in the plans shall be provided.

Provide temporary pavement from Park Drive 5 to Ramp 7A (to accommodate a Southbound left turn movement) and from East 185th Street to Ramp 11 (to accommodate a Northbound left turn movement). All other on and off ramps to I-90 are to remain open during this stage.

STAGE II

The required work on the inside half of all structures will be performed and the concrete median barrier will be constructed. During this stage all off ramps and the following on ramps to I-90 will remain open:

1. East 72nd Street to I-90 E.B. (Ramp B-2)
2. Liberty Blvd. to I-90 W.B. E.B. (Ramps C-4 C-2)
3. Eddy Road to I-90 E.B. W.B. (Ramps 1&4)
4. Lakeshore Blvd. to I-90 W.B. (Ramp 1-A)
5. Reconstructed Ramp 8
6. East 185th Street to I-90 W.B. (Ramp 11)
7. Waterloo Rd. to I-90 W.B. (Ramp 4)

Traffic signals will be operated as flashers at the Eddy Rd. interchange.

The following on-ramps will be closed during Stage II:

1.	E. 72nd St. to I-90 W.B.	(Ramp B-4)
2.	South Waterloo to I-90 E.B.	(Ramp 5)
3.	E. 156th St. to I-90 W.B.	(Ramp 7)
4.	E. 185th St. to I-90 W.B.	(Ramp 13)
5.	Villa View Rd. to I-90 W.B.	(Ramp 14)
6.	South Waterloo Rd. to I-90 E.B.	(Ramp 15)
7.	North Marginal Rd. to I-90 W.B.	(Ramp 2E)
8.	South Marginal Rd. to I-90 E.B.	(Ramp 6E)
9.	North Marginal Rd. to I-90 W.B.	(Ramp 8E)
10.	Lakeland Blvd. to I-90 E.B.	(Ramp 14E)

STAGE III

The required work necessary to realign Ramps 1, 2 and 4 at the Eddy Rd. interchange shall be done during this stage. The traffic signals in the interchange shall continue to operate as flashers.

All remaining bridge repair work along with the remaining safety updating work will be performed during this stage. All off ramps and on ramps will remain either open or closed as designated in Stage II.

Whenever any part of the traveled surface is being worked upon or is otherwise not suitable for safe and convenient use by vehicles, traffic control devices sufficient to protect such area to assure safe and convenient passage of vehicular traffic shall be installed and maintained. Such traffic control devices and the manner in which they are used shall be in accordance with The Ohio Manual of Uniform Traffic Control Devices for Streets and Highways, current edition with latest revisions. In addition, drawings showing typical areas of traffic control devices for the closing and maintaining various pavement areas are provided in the plans. The methods shown in each situation shall constitute the minimum provisions for traffic control. Whenever the Engineer deems it necessary, especially where a grade, curve, or merge condition exists, he may direct for additional or alternative devices to be used.

STAGE IV

This stage shall involve all work necessary to complete the asphalt resurfacing as shown in the plans. See sheet 9A for details.

615 TEMPORARY PAVEMENT, CLASS A, AS PER PLAN

The class A temporary pavement shall be the flexible design in accordance with Section 615.05. The pavement shall remain in place and provisions of Section 615.08 are waived.

Special attention shall be given to Section 615.07 to insure satisfactory condition of the temporary pavement prior to the placement of the asphalt overlay. The temporary pavement at the E. 105th St. structure shall be left in a condition suitable for use as a roadway shoulder. When required the temporary pavement shall be put into proper condition by the Contractor to the satisfaction of the Engineer. Payment for all operations described above shall be included in the unit price bid for Item 615 Temporary Pavement Class A, as per plan.

ITEM SPECIAL - SPECIAL DUTY MUNICIPAL POLICE OFFICER

The Contractor shall provide the services of special duty municipal police officer(s) and patrol car(s) for the exclusive purpose of controlling through traffic on this project.

The patrol car(s) shall be equipped with two-way radios capable of communicating with other police cars and police headquarters and mars lights (red lights for use in emergencies only).

The Contractor shall make arrangements with appropriate local police departments for the scheduling and payment of this item.

The location and number of officers and cars to be provided at a given time shall be determined solely by the Engineer.

The following pay items and estimated quantities have been carried to General Summary:

Item Special	10,000 Hours	Special Duty Police Officer
Item Special	1,000 Days	Official Police Car

NOTE: "Item Special, Day, Official Police Car"' shall be paid for use of a car for any number of hours up to and including 24 hours within a calendar day.

TEMPORARY SIGNS AND SUPPORTS FOR MAINTAINING TRAFFIC

The following requirements shall be adhered to regarding materials and placement of signs to be furnished, installed, maintained, and subsequently removed by the contractor in accordance with the plans.

Signs shall be aluminum sheet or plywood type with reflective sheeting in accordance with Supplemental Specification 844. Sign Material shall conform with the following schedule:

Individual Sign Area	Material
less than 10 sq. ft.	0.060 Alum. Sheet
10-16 sq. ft.	0.080 Alum. Sheet
16-20 sq. ft.	0.100 Alum. Sheet
over 20 sq. ft.	¾ inch Plywood

The contractor shall have the option of furnishing extrusheet aluminum panels as a substitute for plywood.

All supports for ground mounted signs not erected on drums or overpass mounted shall be steel channel type, driven to a minimum depth of 5 feet. Signs shall have 1, 2, or 3 separate supports in accordance with the following schedule:

TOTAL SIGN ASSEMBLY AREA (Sq. Ft.)	SUPPORT TYPE SIGN LENGTH (Horiz.) 4 Ft. or Less	4-10 Ft.	11 Ft. or More
10 or Less	1-4 Lb. Post	2-3 Lb. Post	-
10-20	1-6 Lb. Beam	2-4 Lb. Post	-
21-40	-	2-6 Lb. Beam	3-6 Lb. Beam
41-75	-	-	3-6 Lb. Beam

Supports for ground mounted signs greater than 75 sq. ft. in area shall be as directed by the Engineer.

Mounting height and lateral placement of temporary signs shall be in accordance with Figures S-2 and S-3 (Pages 14 and 15) of the Ohio Manual of Uniform Traffic Control Devices.

Standards and sign layouts for temporary signs are available from the Office of Highway Design Services, 25 South Front Street, Columbus, Ohio 43215.

The contractor shall be responsible for removal of all temporary signs and supports when no longer needed, and he shall restore each sign site to its original condition.

All signs and supports furnished, erected, maintained, and removed by the contractor shall become the property of the contractor.

Basis of payment for the above described work shall be included in the Lump Sum Item of Work for Item 614, Maintaining Traffic.

FLASHING - ARROW

Whenever any part of the traveled surface is closed, the motorists shall be warned and diverted by the Contractor through the use of a flashing arrow, approximately 3 feet by 7 feet, in addition to those provisions set forth in THE OHIO MANUAL OF UNIFORM TRAFFIC CONTROL DEVICES for streets and highways and in these plans. The arrow shall consist of ten sealed beam yellow lights at least 5 inches in diameter and 35 watts. These lights shall be mounted in the shape of an arrow on a panel and shall be elevated to a minimum height of seven feet above the pavement. The lights shall flash either sequentially or simultaneously and shall be placed in a location, as directed by the Engineer, which will adequately warn the motoring public of the upcoming merger. The cost for this shall be included in the price bid for Item 614 Maintaining Traffic.

MADE D.S.P. DATE 8-7-74
TRACED G.F.L. DATE 8-8-74
CHECKED G.R.H. DATE 8-26-74
SCALE

Howard, Needles, Tammen & Bergendoff
CONSULTING ENGINEERS
CLEVELAND, OHIO

HNTB

TRAFFIC NOTES & DETAILS

FOR ASPHALTIC CONCRETE WORK

FHWA REGION	STATE	PROJECT	
5	OHIO		

9A
354

CUYAHOGA COUNTY
CUY-90-23.73
LAKE COUNTY
LAK-90-0.00

TRAFFIC CONTROL TIMING AND SEQUENCE OF OPERATIONS FOR ASPHALTIC CONCRETE WORK:

ALL ASPHALTIC CONCRETE OPERATIONS SHALL BE CONDUCTED IN A MANNER THAT WILL ASSURE MINIMUM DANGER AND INCONVENIENCE TO THE HIGHWAY USERS. ALL ASPHALTIC CONCRETE WORK ON ANY TRAVELED PORTION OF THE HIGHWAY FACILITY SHALL BE PERFORMED AT NIGHT BETWEEN THE HOURS OF 6:30 P.M. AND 6:30 A.M.

IN EITHER THE WESTBOUND OR EASTBOUND DIRECTION, ALL OF THE INTERMEDIATE LEVELING COURSE SHALL BE PLACED BEFORE WORK IS BEGUN ON THE SURFACE COURSE. THE PROCEDURE FOR INSTALLATION OF ANY LAYER ASPHALT SHALL BE SUCH THAT NO DISCONTINUITY IN THE ELEVATION OF THE TRAVELED SURFACE SHALL EXIST AT ANY TIME OTHER THAN DURING THE PERMITTED WORKING HOURS AND THEN ONLY WHEN SUCH PROPER TRAFFIC CONTROL DEVICES ARE IN PLACE AS WILL PREVENT SUCH A DISCONTINUITY BEING A DANGER TO HIGHWAY USERS.

TRAFFIC MUST BE MAINTAINED AT ALL TIMES IN BOTH DIRECTIONS; HOWEVER, EITHER THE RIGHT 2 OR LEFT 2 LANES IN EITHER DIRECTION MAY BE CLOSED ONLY DURING THE PERMITTED WORK HOURS TO ALLOW THE LAYING OF ASPHALTIC CONCRETE. TRAFFIC CONTROL FOR SUCH LANE CLOSINGS SHALL BE AS SHOWN ON THIS SHEET.

WHENEVER ANY PART OF THE TRAVELED SURFACE IS CLOSED, THE MOTORISTS SHALL BE WARNED AND DIVERTED BY THE CONTRACTOR THROUGH THE USE OF A FLASHING ARROW, IN ADDITION TO THOSE PROVISIONS SET FORTH IN THE OHIO MANUAL OF UNIFORM TRAFFIC CONTROL DEVICES FOR STREETS AND HIGHWAYS.

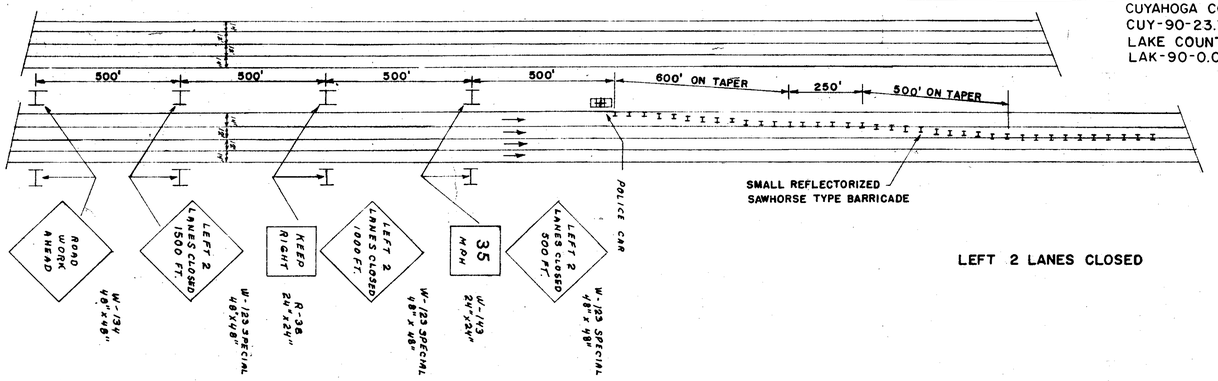

LEFT 2 LANES CLOSED

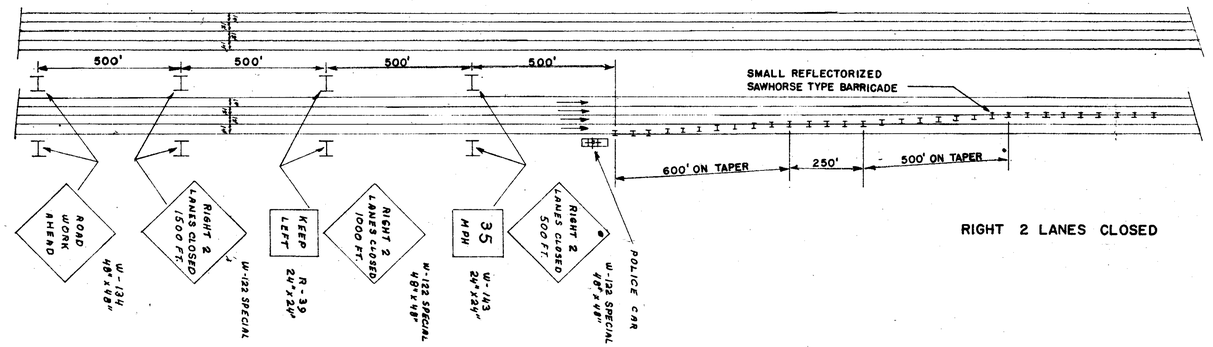

RIGHT 2 LANES CLOSED

LANE MARKING:

LANE MARKINGS SHALL BE PLACED AND MAINTAINED ON ANY SURFACE OPEN TO TRAFFIC, INCLUDING THE 402 INTERMEDIATE COURSE WHEN IT IS BEING USED TO CARRY TRAFFIC.

ON ANY SURFACE WHICH IS TO BE LATER COVERED WITH ASPHALTIC MATERIAL AS PART OF THIS PROJECT, THE RATE OF APPLICATION OF PAINT MAY BE HALF OF THAT SET OUT IN 621.05 HOWEVER, THE RATE APPLICATION OF GLASS BEADS REMAIN AT 6 POUNDS PER GALLON OF PAINT.

PAYMENT FOR THIS ITEM SHALL BE INCLUDED IN LUMP SUM BID FOR ITEM 614 MAINTAINING TRAFFIC RATHER THAN AS DESCRIBED IN 621.16.

BEFORE ANY PORTION OF THE FINAL 404 WEARING COURSE BEING PLACED AS PART OF THIS CONTRACT IS OPENED TO TRAFFIC, THE CONTRACTOR SHALL PERFORM EITHER OF THE FOLLOWING:

1) APPLY LANE MARKINGS TO THE LEFT OF PROPOSED LOCATIONS OF THE FINAL PAVEMENT MARKING ITEMS SHOWN ON SHEETS 18 THROUGH 58. THE RATE OF APPLICATION OF PAINT AND BEADS SHALL BE THE SAME AS THAT SPECIFIED ABOVE FOR THE 402 INTERMEDIATE COURSE. PAVEMENT SHALL BE INCLUDED IN THE LUMP SUM BID FOR ITEM 614, MAINTAINING TRAFFIC.

OR 2) IMMEDIATELY COMPLETE THE FINAL PAVEMENT MARKING ITEMS SHOWN ON SHEETS 18 THROUGH 58

TRAFFIC CONTROL MATERIALS:

SIGN:

SIGN DIMENSIONS AND SPECIFICATIONS, INCLUDING LETTER SIZE, SHALL BE AS PROVIDED IN THE OHIO MANUAL OF UNIFORM TRAFFIC CONTROL DEVICES.

ALL SIGNS SHALL HAVE A REFLECTORIZED BACKGROUND OF REFLECTIVE MATERIAL AS DESCRIBED ON PAGE 2-7,2-8 OF THE OHIO MANUAL OF UNIFORM TRAFFIC CONTROL DEVICES, CURRENT EDITION, LATEST REVISIONS.

BARRELS:

ALL BARRELS SHALL BE 55 GALLON STEEL DRUMS PAINTED WITH ORANGE ENAMEL. THESE SHALL BE SUBTANTIALLY FREE FROM RUST AND MAJOR DEFORMITIES, AND SHALL BE FILLED WITH SUFFICIENT GRANULAR MATERIAL TO INSURE STABILITY ORANGE WARNING SIGNS AND ORANGE DRUMS WITH WHITE STRIPES SHALL BE IN ACCORDANCE WITH SECTIONS 7F-7&8 OF THE OHIO MANUAL OF UNIFORM TRAFFIC CONTROL DEVICES, CURRENT EDITION, LATEST REVISIONS.

FLASHERS:

FLASHERS SHALL BE 12 VOLT BATTERY OPERATED MODELS WITH MINIMUM 7" DIAMETER AMBER LENSES. THE FLASHING CYCLE SHALL BE SUCH THAT THE ON TIME IS 25% OR MORE. THESE SHALL BE SINGLE FACED AND ERECTED WITH THAT FACE CLEARLY VISIBLE TO ONCOMING TRAFFIC. OPERATION SHALL BE EITHER CONTINUOUS OR SOLAR SWITCH CONTROLLED. FLASHERS SHALL BE IN ACCORDANCE WITH SECTIONS 7G-3,4&5 OF THE OHIO MANUAL OF UNIFORM TRAFFIC CONTROL DEVICES, CURRENT EDITION, LATEST REVISIONS.

SMALL BARRICADES:

"SAW HORSE" TYPE BARRICADES SHALL BE USED TO CLOSE LANES FOR ASPHALTIC CONCRETE REPAIRS. THESE SHALL BE OF EITHER WOOD OR METAL. THESE SHALL BE AT LEAST 36" HIGH AND 36" WIDE. NEAR THE TOP OF THE BARRICADE THERE SHALL BE A PANEL WITH ALTERNATE BLACK AND REFLECTORIZED WHITE 6" WIDE STRIPES. THIS PANEL SHALL BE AT LEAST 36" WIDE AND 12" HIGH. A SINGLE FACED FLASHER SHALL BE LOCATED AT THE TOP OF THE BARRICADE AT THE END NEAREST TO TRAFFIC. THE FLASH SHALL FACE ONCOMING TRAFFIC. THE BARRICADES SHALL BE OF SUFFICIENT STABILITY SO THAT WIND OR TRAFFIC AIR TURBULANCE WILL NOT UPSET THEM. BARRICADES SHALL BE IN ACCORDANCE WITH SECTIONS 7F-2,3&4 OF THE OHIO MANUAL OF UNIFORM TRAFFIC CONTROL DEVICES, CURRENT EDITION, LATEST REVISIONS.

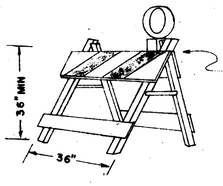

REFLECTORIZED SAWHORSE TYPE BARRICADE DETAIL

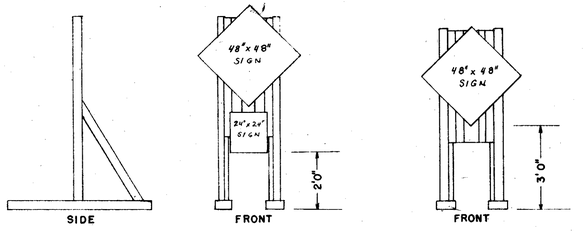

TYPICAL MOUNTING FOR ALL 2 SIGN ASSEMBLIES

TYPICAL MOUNTING FOR SINGLE SIGN ASSEMBLY

SIGN STANDARDS SHALL BE INSTALLED DURING WORKING HOURS ON BERM 4 FT. OFF EDGE OF PAVEMENT WHEN POSSIBLE, AND REMOVED FROM BERM IN THEIR ENTIRETY ALL OTHER TIMES.

10943

MADE D.S.P. DATE 8-15-74
TRACED B.B. DATE 8-16-74
CHECKED R.B. DATE 9-3-74
SCALE 1"=2'

Howard, Needles, Tammen & Bergendoff
CONSULTING ENGINEERS
CLEVELAND, OHIO

HNTB

SUB-SUMMARIES

QUANTITY CALCULATIONS
MADE BY M.E.E. DATE 1-16-75
CHECKED BY G.F.M. DATE 1-16-75

FHWA REGION	STATE	PROJECT	
5	OHIO		

10
354

CUYAHOGA COUNTY
CUY-90-23.73
LAKE COUNTY
LAK-90-0.00

GUARDRAIL SUMMARY – COST PARTICIPATION I & II

	Sheet No.	202 Guardrail Removed For Reuse or Storage PAINTED Lin. Ft. I	202 Guardrail Removed For Reuse or Storage PAINTED Lin. Ft. II	202 Guardrail Removed For Reuse or Storage Lin. Ft. I	202 Guardrail Removed For Reuse or Storage Lin. Ft. II	202 Guard Rail Barrier Design, Removed For Reuse or Storage Lin. Ft. I	202 Guard Rail Barrier Design, Removed For Reuse or Storage Lin. Ft. II	606 Guardrail Type 5 as per plan Lin. Ft. I	606 Guardrail Type 5 as per plan Lin. Ft. II	606 Guardrail Type 5 Rebuilt as per plan Each I	606 Guardrail Type 5 Rebuilt as per plan Each II	606 Guardrail Replacement Posts Each I	606 Anchor Assembly Each I	606 Anchor Assembly Each II	606 Anchor Assembly Barrier Design Each I	606 Bridge Terminal Assembly Type D Each I	606 Bridge Terminal Assembly Type E Each I	606 Bridge Terminal Assembly Type E Each II	606 Bridge Terminal Assembly Type F Each I	606 Bridge Terminal Assembly Type F Each II	606 Bridge Terminal Assembly Type G Each I	606 GUARD RAIL, TYPE 5, BARRIER DESIGN as per plan Lin. Ft. I
	19	16625				4621		1837.5					5				2					
	21	910		250		1800	1300	1659	96				5	2								
	23					2700																
	25	750	2369		25	2320	480	850	2439				3	5			2	2				
	27		1707.5		50		2752		1707.5		187.5			5			2		2			
	30		1316		50		2734		1316					2			2		2			
	32		300		25		3000		800					7								
	34		3621.5		37.5		2775		3596.5					14			2		2			
	37	446	2105.5			500	2077	446	1968		287.5			7			4		4			
	39	1958		62.5		3000		2112.5		20.5			6									
	42	942		125		2769		2343.5		225			13			2			2			
	44	2768		162.5		2791		3056.5		287.5			7			2			2			
	46	14445				3418		1644.5		355			4				2		2			
	48	3189		662.5		125		4871		706.95			30				9		9			
	51			1100		180		1626.5		734.85			13				10		8			25
	53			425		60		1200		292.7		1	10		1							10
	55			562.5				753		231.25			16								4	
	58							300		350			10									
	58			100				325		325			10									
TOTAL I		17,730				24,294		23,019		21,220.5		1	132		1	4	23		25		4	35
TOTAL II		11,607				15,118		11,923		475			42				12		10			
TOTAL		29,337				39,412		34,942		21,695.5		1	174		1	4	35		35		4	35

ROADWAY SUMMARY COST PARTICIPATION I, II & III

	SHEET NO.	202 CURB REMOVAL LIN. FT. I	202 CURB REMOVAL LIN. FT. II	202 CURB REMOVAL LIN. FT. III	203 EXCAVATION NOT INCLUDING EMBANKMENT CONSTRUCTION CU. YDS. I	203 EXCAVATION NOT INCLUDING EMBANKMENT CONSTRUCTION CU. YDS. II	203 EXCAVATION NOT INCLUDING EMBANKMENT CONSTRUCTION CU. YDS. III	203 EMBANKMENT CU. YDS. I	203 EMBANKMENT CU. YDS. II	203 EMBANKMENT CU. YDS. III	601 ROCK CHANNEL PROTECTION, AS PER PLAN CU. YDS. III	601 ROCK CHANNEL PROTECTION TYPE B, WITH BEDDING CU. YDS. III	601 PAVED GUTTER, TYPE 1-4 MODDIFIED, AS PER PLAN LIN. FT. III	612 4" CONCRETE MEDIAN SQ. YDS. II	612 Concrete Median SQ. YDS. II	612 Concrete Median As Per Plan SQ. YDS. II	659 SEEDING & MULCHING SQ. YDS. I	659 SEEDING & MULCHING SQ. YDS. II	659 SEEDING & MULCHING SQ. YDS. III	660 SODDING SQ. YDS.
	71	24,800	26,990		5,953	3,567														
	82			5,152						344										
	84	384			62			11									106			
	86	602			656			30									100			
	89				469	93		18									536	125		67
	90				265			41									240			
	91	299	1,269											59						
	91D					534.5			210											
	91E														358	207		7279		310
	104	559																		
	170						562			407									450	
	171						177			218									646	
	172						173			195									794	
	173						1,145			1099									833	
	174						24			9	19	7	86							
TOTAL	I	26,724			7,405			100									1032			67
TOTAL	II	28,259			9,005			210						59	358	207	7404			310
TOTAL	III	5,152			2,081			2,272	19	7	86						2,723			
TOTAL		60,135			18,491			2582	19	7	86	59	358	207			11,165			377

PAVEMENT SUMMARY COST PARTICIPATION I, II, III & IV

	SHEET NO.	202 PAVEMENT REMOVED SQ. YDS. I	202 PAVEMENT REMOVED SQ. YDS. II	202 PAVEMENT REMOVED SQ. YDS. III	202 PAVEMENT REMOVED SQ. YDS. IV	301 BITUM. AGG. BASE CU. YDS. I	301 BITUM. AGG. BASE CU. YDS. II	304 AGG. BASE CU. YDS. I	304 AGG. BASE CU. YDS. II	305 9" PORTLAND CEMENT CONCRETE BASE SQ. YDS. I	305 9" PORTLAND CEMENT CONCRETE BASE SQ. YDS. III	310 SUBBASE CU. YDS. I	310 SUBBASE CU. YDS. II	310 SUBBASE CU. YDS. III	310 SUBBASE CU. YDS. IV	402 ASPHALT CONCRETE, AC 20 CU. YDS. I	402 ASPHALT CONCRETE, AC 20 CU. YDS. II	402 ASPHALT CONCRETE, AC 20 CU. YDS. III	402 ASPHALT CONCRETE, AC 20 CU. YDS. IV	404 ASPHALT CONCRETE, AC 20 CU. YDS. I	404 ASPHALT CONCRETE, AC 20 CU. YDS. II	404 ASPHALT CONCRETE, AC 20 CU. YDS. III	404 ASPHALT CONCRETE, AC 20 CU. YDS. IV	407 TACK COAT GALS. I	407 TACK COAT GALS. II	407 TACK COAT GALS. III	407 TACK COAT GALS. IV	407 COVER AGGREGATE TONS I	407 COVER AGGREGATE TONS II	407 COVER AGGREGATE TONS III	407 COVER AGGREGATE TONS IV	409 SEAL COAT BITUMINOUS MATERIAL GALS. I	409 SEAL COAT BITUMINOUS MATERIAL GALS. II	409 SEAL COAT BITUMINOUS MATERIAL GALS. III	409 SEAL COAT BITUMINOUS MATERIAL GALS. IV	409 SEAL COAT COVER AGGREGATE CU. YDS. I	409 SEAL COAT COVER AGGREGATE CU. YDS. II	409 SEAL COAT COVER AGGREGATE CU. YDS. III	409 SEAL COAT COVER AGGREGATE CU. YDS. IV	609 CURB, TYPE 6 LIN. FT. I	609 CURB, TYPE 6 LIN. FT. II	622 CONCRETE BARRIER, TYPE A LIN. FT. I	622 CONCRETE BARRIER, TYPE A LIN. FT. II	622 CONCRETE BARRIER, As Per Plan TYPE A LIN. FT. I	622 CONCRETE BARRIER, As Per Plan TYPE B LIN. FT. I
	15																	8522	10411	6087	7436																						
	16																	11351	1736	8100	1241	27																						
	17																	2269	381	1621	398	5520	14	33045	17480			1157	612			59245	25720			1580	686								
	71	16800	13585			840	889	1593	1681																															11268	12778				
	82			585							1094			109				45				33				95			3.4			287				8									
	84	21								9		11				40		110		98				227				7.9				268				7				444						
	86					71		106		638		223				34				99				64				2.2				231				6				682						
	91					37	6	73	14			238	28			221			38	86	36			42	2			1.5	2.6			286	100			8	3			1144	94					
	104																	70		41		9																		477						
	69																																											1030	10.586
Total	I	16821				948		1772		647		472				295				16132				33378				1168.6				60030				1601				2747		11268		1030	10.586
Total	II	13585				895		1695				28								9111				17482				614.6				25820				689				94		12778			
Total	III	585								1094		109				22367				5589				95				3.4				287				8									
Total	IV															12566				14																									
TOTAL		30991				1843		3467		1741		609				35228				30846				50955				1786.6				86137				2298				2841		24046		1030	10.586

MADE M.E.E DATE 1-16-75
TRACED D.B.C DATE 1-16-75
CHECKED G.F.M DATE 1-16-75
SCALE

Howard, Needles, Tammen & Bergendoff
CONSULTING ENGINEERS
CLEVELAND OHIO

HNTB

Rev. 7-18-75

SUB-SUMMARIES

FHWA REGION	STATE	PROJECT	
5	OHIO		

10A
354

CUYAHOGA COUNTY
CUY-90-23.73
LAKE COUNTY
LAK-90-0.00

QUANTITY CALCULATIONS
MADE BY D.S.P. DATE 1-16-75
CHECKED BY G.F.M. DATE 1-17-75

FENCING SUMMARY COST PARTICITION I, II, III, IV

	SHEET NO.	607 TYPE CL, AS PER PLAN				607 TYPE 47 AS PER PLAN				202 FENCE REMOVED
		LIN. FT.				LIN. FT.				LIN. FT.
PARTICIPATION		I	II	III	IV	I	II	III	IV	II
	23			310						
	27				140					
	30				30					
	32				30					
	34				10					
	37	70	50							
	39			30						
	41			70						
	44			40						
	46			60						
	48			20				335		
	51					10		340		
	53					90		20		
	55							150		
	58							40		
	58							20		
	91D									1317
	91E		1378							
Total I		70				100				
Total II		1428								1317
Total III		530				925				
Total IV		210								
Total		2238				1025				1317

202 REMOVE CONCRETE MEDIAN COST PARTICIPATION I

SHEET NO.	STATION FROM	STATION TO		202 CONCRETE MEDIAN REMOVED
				LIN. FT.
18	252+58.8	252+98.8		40
18	10+00			12
20	65+50			12
22	100+50			12
22	115+65			12
24	127+75			12
TOTAL I				100
TOTAL				100

UNDERDRAIN SUMMARY COST PAPTICIPATION I, II

	SHEET NO.	603 TYPE F CONDUIT 6"		605 SHALLOW PIPE UNDERDRAIN 6"		605 DEEP UNDERDRAIN 6"
PARTICIPATION		I	II	I	II	II
	68	68	55	60		
	86	50		612		
	91			303		
	91		50		1711	122
Total I		118		975		
Total II		105		1711		122
Total		223		2686		122

DRAINAGE SUMMARY COST PARTICIPATION I, II & III

	SHEET NUMBER	202 Inlet Abandon	202 Inlet Removed	202 Manhole Removed	202 Pipe Removed 15" and under	202 Pipe Removed Over 15"	603 Type B Conduit 12"	603 Type B Conduit 15"	603 Type B Conduit 18"	603 Type B Conduit 21"	603 Type B Conduit 27"	604 Standard Number I-3A Median Inlet, as per plan	604 Standard Number I-3B Median Inlet, as per plan	604 Standard Number I-3 Inlet, Modified as per plan W = 30"	604 Standard Number I-3 Inlet, Modified as per plan W = 48"	604 Manhole Reconstructed to grade as per plan	604 Standard Number 1 Manhole, as per plan	604 Manhole Adusted to grade, as per plan	604 Standard Number I-3B Median Inlet, Modified as per plan	604 Standard Number I-3A Median Inlet	604 Standard No. 3A Catch Basin	604 Standard No. 6 Catch Basin	604 Standard No. 5 Catch Basin	604 Inlet Adjusted to Grade	604 Standard No. 2-A-6 PAVED SHOULDER INLET	604 Standard No. 3 Catch Basin	604 Manhole Reconstructed and Modified As Per Plan
		Each		Each		Each		Linear Feet		Linear Feet	Linear Feet	Linear Feet	Linear Feet	Linear Feet	Linear Feet	Each		Each		Each		Each		Each		Each		Each	
		I	II	I	II	I	II	I	II	I	I	II	III	I	II	I	II	I	II	I	I	II	I	II	I	II	I	II	II	III	III	II
	51												33															1	1	
	61	5		53		7				15	258					61	1				9				1							
	64	10			61	7	1		7	12	48	8			3	12	5	30	4			2	1	4	1	1		1						
	68	2	3	3	88	1	1	90	70			34			6					2						2	49						
	84	1		1							64																	1		1			
	86	4									21														3			4					
	91	3	2								15	10		40	50											3			1	1	1	1		
	91E		5									48												2		3			2		1			2
TOTAL I		25		57		15		90		27	406			40			5		65	1				10	3		1	3	5	2	1			
TOTAL II		10		149		2		77			100			50	3	6		30		4	1	6		3	7			49	5		2	1			2
TOTAL III											33																					1	1	
TOTALS		35		206		17		167		27	539			90	3	6	12	35	65	5	1	6		13	10		1	52	10	2	3	1	1	1	2

MADE D.S.P. DATE 1-16-75
TRACED B.B. DATE 1-16-75
CHECKED G.F.M. DATE 1-17-75
SCALE

Howard, Needles, Tammen & Bergendoff
CONSULTING ENGINEERS
CLEVELAND, OHIO

HNTB

GENERAL SUMMARY

QUANTITY CALCULATIONS
MADE BY D.S.P. DATE 1-20-75
CHECKED BY M.G.B. DATE 1-20-75

FHWA REGION	STATE	PROJECT	
5	OHIO		

11 / 354

CUYAHOGA COUNTY CUY-90-23.73 LAKE COUNTY LAK-90-0.00

TYPE CODE 6706

See Sh. No. 3 for cost participation.

SHEET NUMBER																						COST PARTICIPATION				TOTAL QUANT.	UNIT	ITEM	DESCRIPTION
4		5			10				10A				51	81	91D	91E	92		93		83	78								
I	II	I	II	III	I	II	III	IV	I	II	III	IV	III	III	II	II	I	II	I	II	I	I	II	I	II	III	IV	ok			
																					17									ROADWAY
										1317																				
					17,730	11,607																								
					24,294	15,118																								
					26,724	28,259	5152																							
									15	2																				
									25	10																				
									57	149																				
		200	200						90	77																				
		100	100						27																					
									100																					
					16,821	13,585	585								3163															
															192															
														1634																
					7405	9006	2081																							
					100	210	2272																							
																						16	12							
																						32	24							
					23019	11923																								
					35																									
					21,220.5	475																								
					131	42																								
					1																									
					4																									
					23	12																								
					25	10																								
					4																									
250	250				1																									
									70	1428	530	210																		
									100		925																			
																	1189	1189	5474	3567										
		82.	29.																											
																														PAVEMENT
					948	895									65															
					1772	1695									103															
					647		1094								453															
														1567															
														1634															
					472	28	109								26															
															770															
		250																												
															61															
					295		22,367	12,566																						
					16132	9111	5589	14								56														
					33387	17482	95									141														
					1168.6	614.6	3.4									4.94														
					60,030	25820	287									57														
					1601	689	8									2														
																4046														
													1017																	
																10														
					152	48																								
						207																								
						59																								
						358																								
		4110	1462																											
					11,268	12,778																								
					1030																									
					10,586																									
													203																	

COST PARTICIPATION I	II	III	IV	TOTAL QUANT. ok	UNIT	ITEM	DESCRIPTION
17				17	Each	202	Precast Traffic Dividers Removed for Reuse or Storage
	1,317			1,317	Lin.Ft.	202	Fence Removed
17,730	11,607			29,337	Lin.Ft.	202	Guard Rail Removed for Re-use or Storage
24,294	15,118			39,412	Lin.Ft.	202	Guard Rail, barrier design, removed for re-use or storage
26,724	28,259	5,152		60,135	Lin.Ft.	202	Curb Removed, as per plan
15	2			17	Each	202	Manhole Removed
25	10			35	Each	202	Inlet Abandoned
57	149			206	Each	202	Inlet Removed
290	277			567	Lin.Ft.	202	Pipe Removed, 15" and Under
127	100			227	Lin.Ft.	202	Pipe Removed Over 15"
100				100	Lin.Ft.	202	Concrete Median Removed
16,821	16,748	585		34,154	Sq.Yd.	202	Pavement Removed
	192			192	Sq.Ft.	202	Sidewalk Removed
	1634			1634	Sq.Yds.	202	Pavement Removed, As Per Plan
7,405	9,005	2,081		18,491	Cu.Yds.	203	Excavation Not Including Embankment Construction
100	210	2,272		2,582	Cu.Yds.	203	Embankment
16	12			28	Each	604	Reference Monument, Modified, As Per Plan
32	24			56	Each	604	Reference Monument
23,019	11,923			34,942	Lin.Ft.	606	Guard Rail, Type 5, As Per Plan
35				35	Lin.Ft.	606	Guard Rail, Type 5, Barrier Design, As Per Plan
21,220.5	475			21,695.5	Lin.Ft.	606	Guard Rail Rebuilt, Type 5, As Per Plan
131	42			173	Each	606	Anchor Assembly
1				1	Each	606	Anchor Assembly, Barrier Design
4				4	Each	606	Bridge Terminal Assembly, Type D
23	12			35	Each	606	Bridge Terminal Assembly, Type E
25	10			35	Each	606	Bridge Terminal Assembly, Type F
4				4	Each	606	Bridge Terminal Assembly, Type G
251	250			501	Each	606	Guard Rail Replacement Posts
70	1,428	530	210	2,238	Lin.Ft	607	Fence, Type CL, as per plan
100		925		1,025	Lin.Ft	607	Fence, Type 47, As Per Plan
6663	4756			11,419	Sq. Yd.	615	Temporary Pavement, Class A, as per plan
82	29			111	Ton	616	Calcium Chloride
							PAVEMENT
948	960			1,908	Cu.Yds.	301	Bituminous Aggregate Base, 702.01, AC-20 or 702.09, RT-11 or RT-12
1,772	1,798			3,570	Cu.Yds.	304	Aggregate Base
647	453	1,094		2,194	Sq.Yd.	305	9" Portland Cement Concrete Base
		1,567		1,567	Sq.Yd.	305	10" Portland Cement Concrete Base, as per plan
		1,634		1,634	Sq.Yd.	305	16" Portland Cement Concrete Base, as per plan
472	54	109		635	Cu.Yds.	310	Subbase
	770			770	Cu.Yds.	310	Subbase, Grading A, As Per Plan
		250		250	Cu.Yds.	Special	Removal and Replacement of Unstable Materials using 304 Aggregate Base.
	81			81	Cu.Yd.	Special	Drainage Connection
295		22,367	12,566	35,228	Cu.Yd.	402	Asphalt Concrete, AC-20
16,132	9,167	5,589	14	30,902	Cu.Yd.	404	Asphalt Concrete, AC-20
33,387	17,623	95		51,105	Gal.	407	Tack Coat: 702.02, RC-250; or 702.04, SS-1, SS-1H, MS-2 or RS-1
1168	620	3		1791	Ton	407	Cover Aggregate
60,030	25,877	287		86,194	Gal.	409	Seal Coat Bituminous Material; 702.02, MC-800 or MC-3000; or 702.03, CBAE-800; 702.04, RS-1, RS-2 or CRS-2; or 702.09, RT-9 or RT-10
1,601	691	8		2,300	Cu.Yd.	409	Seal Coat Cover Aggregate, No. 8
	4,046			4,046	Sq.Yd.	451	9" Reinforced Portland Cement Concrete Pavement
		1,017		1,017	Lin.Ft.	609	Asphalt Concrete Curb, SillType 1, AC-20
	10			10	Lin.Ft.	609	Curb, SillType 2-B
2,747	94			2,841	Lin.Ft.	609	Curb, SillType 6
	207			207	Sq.Yd.	612	Concrete Median, as per plan
	59			59	Sq.Yd.	612	4" Concrete Median
	358			358	Sq.Yd.	612	Concrete Median
4,110	1,462			5,572	Cu.Yd.	617	Compacted Aggregate, as per plan
11,268	12,778			24,046	Lin. Ft.	622	Concrete Barrier, Std. Type A
1,030				1,030	Lin.Ft.	622	Concrete Barrier, Std. Type A, as per plan
10,586				10,586	Lin. Ft.	622	Concrete Barrier, Std. Type B, as per plan
		203		203	Each	613	Precast Concrete Traffic Dividers

MADE D.S.P. DATE 1-20-75
TRACED M.E.E. DATE 1-17-75
CHECKED M.G.B. DATE 1-20-75
SCALE

Howard, Needles, Tammen & Bergendoff
CONSULTING ENGINEERS
CLEVELAND, OHIO

HNTB

Rev. 7-18-75

K&E 10-1253 7-74

GENERAL SUMMARY

QUANTITY CALCULATIONS
MADE BY MEE DATE 1-20-75
CHECKED BY DSP DATE 1-20-75

FHWA REGION	STATE	PROJECT	
5	OHIO		

11A 354

CUYAHOGA COUNTY CUY-90-23.73 LAKE COUNTY LAK-90-0.00

TYPE CODE 6706 (UNLESS NOTED)

SHEET NUMBER																										COST PARTICIPATION				TOTAL QUANT.	UNIT	ITEM	DESCRIPTION
3	4			5			6	9	10			10A			81A	171	172	173								I	II	III	IV				
	I	II	III	I	II	III			I	II	III	I	II	III	III	III	III	III															
						9600																						9600			9600	Lin. Ft.	SPECIAL	CLEAN EXISTING SEWERS
				100	100							406	100	33											506	200	33		739	Lin. Ft.	603	12" Conduit, Type B
				100	100							40	50												140	150			290	Lin. Ft.	603	15" Conduit, Type B
													3													3			3	Lin. Ft.	603	18" Conduit, Type B
													6													6			6	Lin. Ft.	603	21" Conduit, Type B
												12													12				12	Lin. Ft.	603	27" Conduit, Type B
				100	100							118	105												218	205			423	Lin. Ft.	603	6" Conduit, Type F
												10	3												10	3			13	Each	604	Standard No. 1 Manhole, as per plan
														1													1		1	Each	604	Standard No. 2-A-6 Paved Shoulder Inlet
														1													1		1	Each	604	Standard No. 3 Catch Basin
												5	5												5	5			10	Each	604	Standard No. 3A Catch Basin
												1	2												1	2			3	Each	604	Standard No. 5 Catch Basin
												2													2				2	Each	604	Standard No. 6 Catch Basin
												3	49												3	49			52	Each	604	Standard No. I-3A Median Inlet
												1													1				1	Each	604	Standard No. I-3B Median Inlet Modified, as per plan
												1	4												1	4			5	Each	604	Standard No. I-3 Median Inlet Modified, as per plan W=30"
													1													1			1	Each	604	Standard No. I-3 Median Inlet Modified, as per plan W=48"
													1													1			1	Each	604	Inlet Adjusted to Grade
												3	7												3	7			10	Each	604	Manhole Adjusted to Grade, as per plan
													6													6			6	Each	604	Manhole Reconstructed to Grade, as per plan
													2													2			2	Each	604	Manhole Reconstructed as Standard no. 5 Catch Basin
												975	1711												975	1711			2686	Lin. Ft.	605	6" Shallow Pipe Underdrains
													122													122			122	Lin. Ft.	605	6" Deep Pipe Underdrains
												5	30												5	30			35	Each	604	Standard No. I-3A Median Inlet, as per plan
												65													65				65	Each	604	Standard No. I-3B Median Inlet, as per plan
															330												330		330	Lin. Ft.	605	Longitudinal Aggregate Drain, as per plan
															100												100		100	Lin. Ft.	605	Transverse Aggregate Drain, as per plan
																																EROSION CONTROL Y005
											19																19		19	CUYD.	601	Rock Channel Protection, as per plan
											7																7		7	CUYD.	601	Rock Channel Protection, Type B, with bedding
											86																86		86	Lin. Ft.	601	Paved Gutter, Standard Type 1 - 4, Modified, as per plan
	0.09	0.67	0.85																						0.09	0.67	0.85		1.61	Ton	659	Commercial Fertilizer (12-12-12)
	0.49	3.99	1.23																						0.49	3.99	1.23		5.21	Ton	659	Agricultural Liming, as per plan
									1032	7404	2723														1032	7404	2723		11,159	Sq. Yd.	659	Seeding and Mulching
									67	310															67	310			377	Sq. Yd.	660	Sodding
																Lump	Lump	Lump									Lump		Lump	Lump	Special	Erosion Repair
																																GENERAL
								10,000																	6,500	3,500			10,000	Hours	SPECIAL	Special Duty Police Officer
								1,000																	650	350			1,000	Days	SPECIAL	Official Police Car
LUMP																									Lump	Lump	Lump	Lump	LUMP	Lump	619	Field Office (Part I & II)
							LUMP																		Lump	Lump	Lump	Lump	LUMP	Lump	623	Construction Layout Stakes (Part I & II)
								LUMP																	Lump	Lump	Lump	Lump	LUMP	Lump	614	Maintaining Traffic (Part I & II)
																																For Traffic Control Quantities, see Sheet 108
																																For Sign Lighting and Traffic Signalization Quantities, see Sh. 131 & 140
																																For Roadway Lighting Quantities, see Sheet 169
																																For Bridge CUY - 90 - 2035 Quantities, Sheet 181
																																For Bridge CUY - 90 - 2046 Quantities, Sheet 194
																																For Bridge CUY - 90 - 2200 Quantities, Sheet 208
																																For Bridge CUY - 90 - 2413 Quantities, Sheet 234
																																For Bridge CUY - 90 - 2465 Quantities, Sheet 240
																																For Bridge CUY - 90 - 2616 Quantities, Sheet 246
																																For Bridge CUY - 90 - 2639 Quantities, Sheet 254
																																For Bridge CUY - 90 - 2674 Quantities, Sheet 262
																																For Bridge CUY - 90 - 2754 Quantities, Sheet 268
																																For Bridge CUY - 90 - 2840 Quantities, Sheet 277
																																For Bridge CUY - 90 - 2910 Quantities, Sheet 284
																																For Bridge CUY - 90 - 2922 L and R Quantities Sheet 292
																																For Bridge CUY - 90 - 2956A Quantities, Sheet 296
																																For Bridge CUY - 90 - 2956B Quantities, Sheet 299
																																For Bridge CUY - 90 - 2969R Quantities, Sheet 304
																																For Bridge CUY - 90 - 2969L Quantities, Sheet 311
																																For Bridge CUY - 90 - 2989R Quantities, Sheet 318
																																For Bridge CUY - 90 - 2989L Quantities, Sheet 324
																																For Bridge LAK - 90 - 0009R Quantities, Sheet 330
																																For Bridge LAK - 90 - 0009L Quantities, Sheet 336

MADE MEE DATE 1-20-75
TRACED EAB DATE 1-20-75
CHECKED DSP DATE 1-20-75
SCALE

Howard, Needles, Tammen & Bergendoff
CONSULTING ENGINEERS
CLEVELAND, OHIO

HNTB

ASPHALT RESURFACING
STAGE IV
SCHEMATIC PLAN

FHWA REGION	STATE	PROJECT	
5	OHIO		

12
354

CUYAHOGA COUNTY
CUY-90-23.73
LAKE COUNTY
LAK-90-0.00

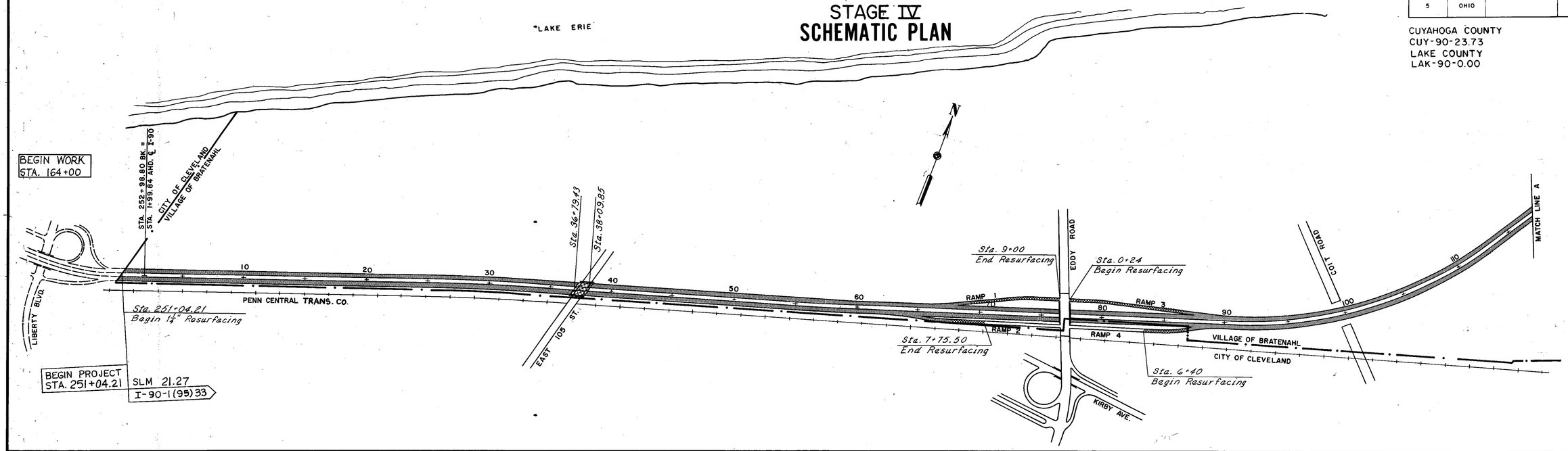

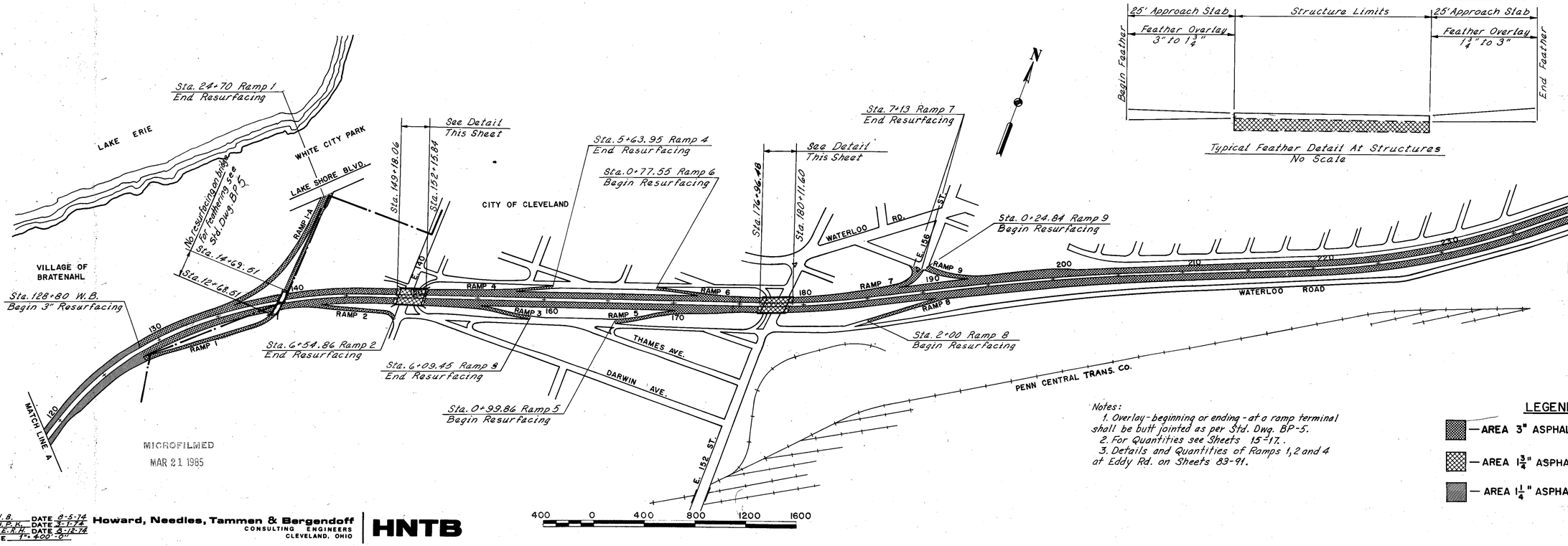

Typical Feather Detail At Structures
No Scale

Notes:
1. Overlay - beginning or ending - at a ramp terminal shall be butt jointed as per Std. Dwg. BP-5.
2. For Quantities see Sheets 15-17.
3. Details and Quantities of Ramps 1, 2 and 4 at Eddy Rd. on Sheets 83-91.

LEGEND
- AREA 3" ASPHALT RESURFACING
- AREA 1¾" ASPHALT RESURFACING
- AREA 1¼" ASPHALT RESURFACING

MADE H.B. DATE 8-5-74
TRACED J.P.K. DATE 8-7-74
CHECKED E.F.H. DATE 8-16-74
SCALE 1"=400'-0"

Howard, Needles, Tammen & Bergendoff
CONSULTING ENGINEERS
CLEVELAND, OHIO

HNTB

ASPHALT RESURFACING
STAGE IV
SCHEMATIC PLAN

FHWA REGION	STATE	PROJECT	
5	OHIO		

13
354

CUYAHOGA COUNTY
CUY-90-23.73
LAKE COUNTY
LAK-90-0.00

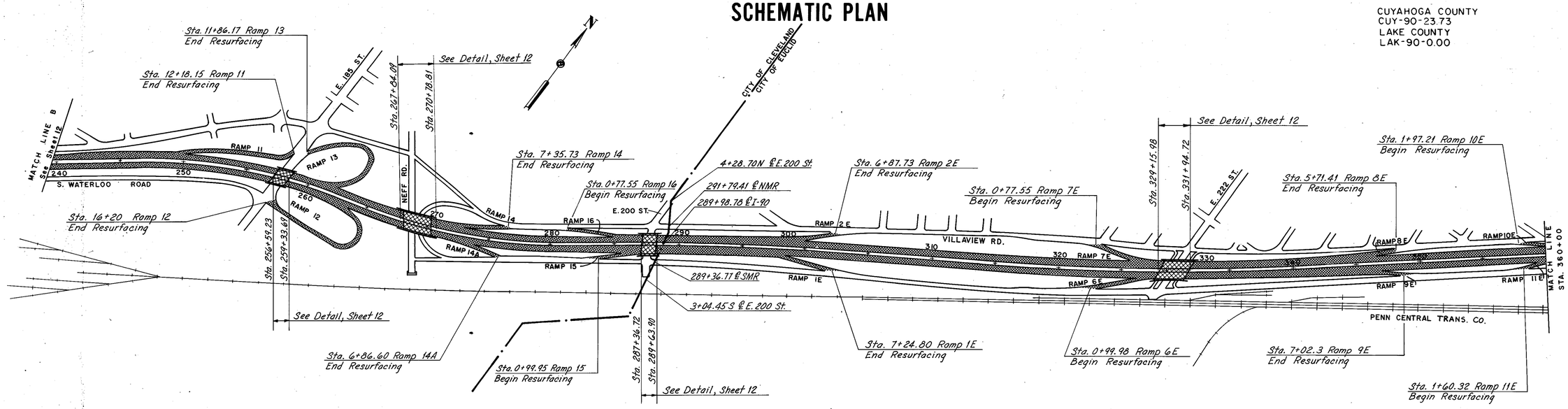

Notes:
1. Overlay - beginning or ending - at a ramp terminal shall be butt jointed as per Std. Dwg. BP-5.
2. For Quantities see Sheets 15-17.

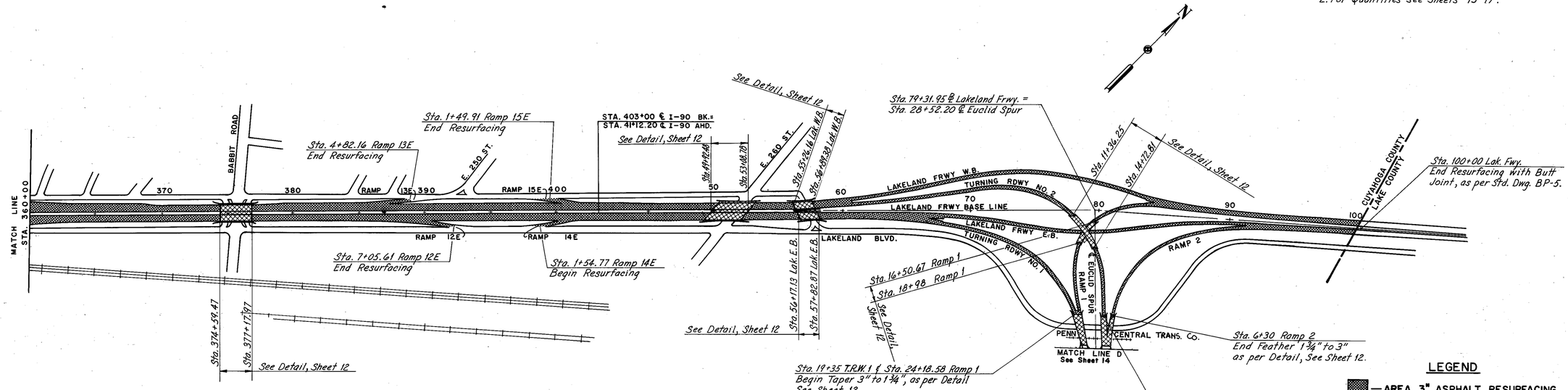

LEGEND
- AREA 3" ASPHALT RESURFACING
- AREA 1¾" ASPHALT RESURFACING
- AREA 1¼" ASPHALT RESURFACING

MADE H.B. DATE 4-5-74
TRACED J.P.K. DATE 6-21-74
CHECKED E.R.H. DATE 8-12-74
SCALE 1" = 400'

Howard, Needles, Tammen & Bergendoff
CONSULTING ENGINEERS
CLEVELAND, OHIO

HNTB

400 0 400 800 1200 1600

MICROFILMED
MAR 21 1985

ASPHALT RESURFACING
STAGE IV
SCHEMATIC PLAN

FHWA REGION	STATE	PROJECT	
5	OHIO		

14
354

CUYAHOGA COUNTY
CUY-90-23.73
LAKE COUNTY
LAK-90-0.00

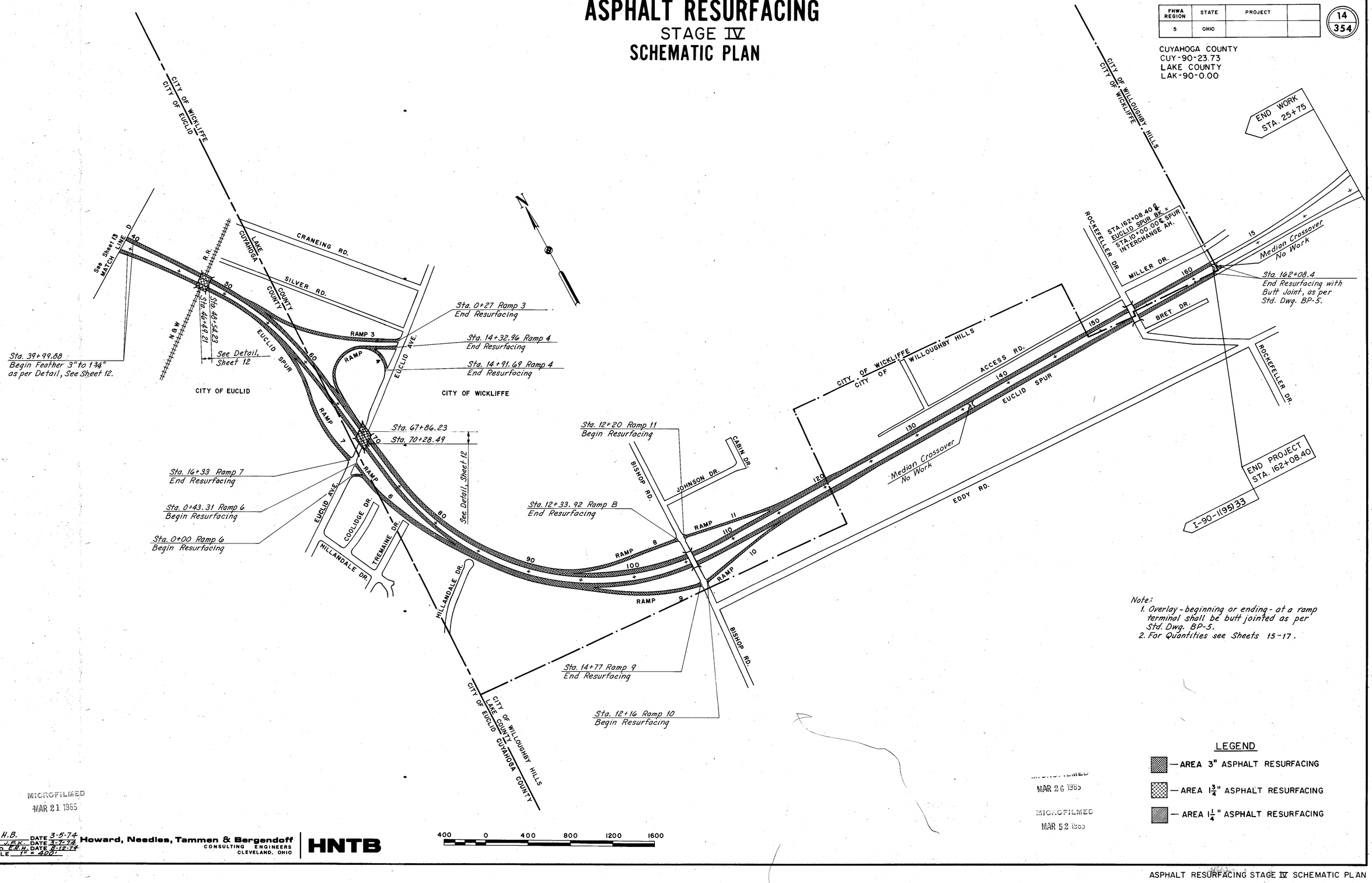

Note:
1. Overlay - beginning or ending - at a ramp terminal shall be butt jointed as per Std. Dwg. BP-5.
2. For Quantities see Sheets 15-17.

LEGEND
- AREA 3" ASPHALT RESURFACING
- AREA 1¾" ASPHALT RESURFACING
- AREA 1¼" ASPHALT RESURFACING

MICROFILMED
MAR 21 1985

MICROFILMED
MAR 26 1985

MICROFILMED
MAR 52 1985

MADE H.B. DATE 3-5-74
TRACED J.B.K. DATE 3-7-74
CHECKED E.R.H. DATE 3-12-74
SCALE 1" = 400'

Howard, Needles, Tammen & Bergendoff
CONSULTING ENGINEERS
CLEVELAND, OHIO

HNTB

400 0 400 800 1200 1600

COMPUTATIONS AND SUB-SUMMARIES

FHWA REGION	STATE	PROJECT	
5	OHIO		

15
354

CUYAHOGA COUNTY
CUY-90-23.73
LAKE COUNTY
LAK-90-0.00

QUANTITY CALCULATIONS
MADE BY H.B. DATE 7-2-74
CHECKED BY A.J.S DATE 8-30-74

ITEM 402 AND 404 COST PARTICIPATION I, II, III, & IV

Stations From	Stations To	Side	End Widths (ft.)	Surface Area (Sq. Yds.)	404 Volume (Cu. Yds.)		402 Volume (Cu. Yds.)	
128+50	128+92.54	Rt.I-90	48	226.88	7.878	I	11.029	III
128+92.54	129+00	Rt.	61.25	50.77	1.763	I	2.468	III
129+00	138+56.63	Rt.	66.75	7095.0	246.354	I	344.896	III
138+56.63	139+26.63	Rt.	65.875, 66.875	516.25	17.925	II	25.095	IV
139+26.63	139+80.05	Rt.	66.67	394.71	13.705	II	19.187	IV
139+80.05	140+50.05	Rt.	67.875, 75.875	559.02	19.410	II	27.175	IV
140+50.05	142+75	Rt.	76.75, 100.75	2218.26	77.022	II	107.832	IV
142+75	149+18.06	Rt.	66.75	4769.36	165.60	II	231.84	IV
152+15.84	152+35	Rt.	66.75	142.10	4.93	II	6.91	IV
152+35	154+60	Rt.	66.75, 78.75	1818.75	63.151	II	88.411	IV
154+60	156+53.06	Rt.	78.75, 101.75	1935.96	67.22	II	94.109	IV
156+53.06	170+51.7	Rt.	66.75	10,373.25	360.182	II	504.255	IV
170+51.7	173+50	Rt.	87.75, 78.75	2759.28	95.808	II	134.132	IV
173+50	176+50	Rt.	78.75, 66.75	2425	84.201	II	117.882	IV
176+50	176+96.48	Rt.	66.75	344.73	11.97	II	16.76	IV
180+11.6	190+03.5	Rt.	66.75	7356.59	255.44	II	357.61	IV
190+03.5	191+09.69	Rt.	76.75, 62.75	822.97	28.575	II	40.005	IV
191+09.69	192+69.03	Rt.	86.75, 78.75	1465.04	50.869	II	71.217	IV
192+69.03	194+45	Rt.	78.75	1539.74	53.463	II	74.848	IV
194+45	195+35	Rt.	78.2	782	27.153	II	38.013	IV
195+35	198+00	Rt.	78.75	2318.75	80.512	II	112.717	IV
198+00	201+50	Rt.	78.75, 66.75	2829.17	98.235	II	137.529	IV
128+80	132+00	Lt.	70	2488.89	86.420	I	120.988	III
132+00	136+42	Lt.	48	2357.33	81.852	I	114.593	III
136+42	138+56.63	Lt.	64.17, 65.15	1542	53.542	I	74.958	III
138+56.63	139+29.63	Lt.	64.275, 65.875	506.14	17.574	I	24.604	III
139+26.63	139+80.05	Lt.	65	385.81	13.396	I	18.755	III
139+80.05	140+50.05	Lt.	65.875	512.36	17.790	I	24.906	III
140+50.05	149+18.06	Lt.	66.75	6437.74	223.53	II	312.95	IV
152+15.84	152+50	Lt.	66.75	253.33	8.80	II	12.32	IV
152+50	155+50	Lt.	66.75, 78.75	2425	84.201	II	117.882	IV
155+50	157+94.34	Lt.	78.75, 88.75	2273.72	78.948	II	110.528	IV
157+94.34	159+03.5	Lt.	62.75, 76.75	821.73	28.532	II	39.945	IV
159+03.5	171+82.94	Lt.	66.75	9489.18	329.485	II	461.279	IV
171+82.94	174+75	Lt.	97.75, 78.75	2863.81	99.438	II	139.213	IV
174+75	176+96.48	Lt.	78.75, 66.75	1790.30	62.16	II	87.03	IV
180+11.6	180+50	Lt.	66.75	284.8	9.89	II	13.84	IV
180+50	183+50	Lt.	66.75, 78.75	2425	84.201	II	117.882	IV
183+50	188+25	Lt.	78.75, 92.75	4525.69	157.142	II	219.999	IV
188+25	189+13.5	Lt.	62.75, 76.75	685.88	23.815	II	33.341	IV
189+13.5	193+64.49	Lt.	66.75	3344.84	116.140	II	162.596	IV
193+64.49	194+45	Lt.	99.75, 90.75	852.06	29.585	II	41.42	IV
194+45	195+35	Lt.	90.2, 83.2	867	30.104	II	42.146	IV
195+35	196+19.3	Lt.	83.75, 82.75	779.78	27.076	II	37.906	IV
196+19.3	200+50	Lt.	82.75, 78.75	3864.33	134.178	II	187.849	IV
200+50	201+50	Lt.	78.75, 66.75	808.34	28.067	II	39.294	IV
201+50	208+27.79	Lt. Rt.	133.5	10,053.885	349.091	II	488.727	IV
208+27.79	208+72.21	Lt. Rt.	132.4	653.47	22.690	II	31.766	IV
208+72.21	225+77.79	Lt. Rt.	133.5	25,299.44	878.447	II	1229.826	IV

ITEM 402 AND 404 COST PARTICIPATION I, II, III, & IV

I-90 Stations From	I-90 Stations To	Side.	End Widths (Ft.)	Surface Area (Sq. Yds.)	404 Volume (Cu. Yds.)		402 Volume (Cu. Yds.)	
225+77.79	226+22.21	Lt.Rt.I-90	132.4	653.47	22.690	II	31.766	IV
226+22.21	230+77.79	Lt. Rt.	133.5	6,757.77	234.643	II	328.501	IV
230+77.79	231+22.21	Lt. Rt.	132.4	653.47	22.690	II	31.766	IV
231+22.21	235+75.08	Lt. Rt.	133.5	6717.57	233.247	II	326.546	IV
235+75.08	244+77.79	Rt.	66.75	6695.10	232.467	II	325.454	IV
244+77.79	245+22.21	Rt.	66.2	326.73	11.345	II	15.883	IV
245+22.21	256+59.23	Rt.	66.75	8432.90	292.81	II	409.93	IV
259+33.69	259+58	Rt.	66.75	180.30	6.26	II	8.76	IV
259+58	261+93.54	Rt.	66.75, 82.25	1949.75	67.699	II	94.779	IV
261+93.54	262+38.46	Rt.	81.7, 88.7	425.24	14.765	II	20.671	IV
262+38.46	263+00	Rt.	89.25, 97.75	639.33	22.199	II	31.078	IV
263+00	267+84.09	Rt.	66.75	3590.33	124.66	II	174.53	IV
270+78.81	273+27.54	Rt.	66.75, 78.75	2010.57	69.81	II	97.74	IV
273+27.54	273+72.46	Rt.	78.2, 85.2	407.77	14.159	II	19.822	IV
273+72.46	274+55	Rt.	85.75, 98.75	846.04	29.376	II	41.127	IV
274+55	284+50	Rt.	66.75	7379.58	256.234	II	358.727	IV
284+50	285+37	Rt.	76.75, 62.75	674.25	23.411	II	32.776	IV
285+37	287+36.72	Rt.	86.75, 78.75	1836.31	63.76	II	89.26	IV
235+75.08	240+75	Lt.	66.75, 78.75	4041.02	140.312	II	196.437	IV
240+75	244+77.79	Lt.	78.75	3524.41	122.375	II	171.324	IV
244+77.79	245+22.21	Lt.	78.2	385.96	13.401	II	18.762	IV
245+22.21	246+65.66	Lt.	78.75	1255.19	43.583	II	61.016	IV
246+65.66	248+25	Lt.	78.75, 86.75	1288.00	44.722	II	62.611	IV
248+25	249+31	Lt.	62.75, 76.75	821.5	28.507	II	39.909	IV
249+31	253+10	Lt.	66.75	2810.92	97.601	II	136.641	IV
253+10	256+10	Lt.	66.75, 78.75	2425	84.201	II	117.881	IV
256+10	256+59.23	Lt.	78.75	430.76	14.96	II	20.94	IV
259+33.69	261+93.54	Lt.	78.75, 84.75	2360.30	81.96	II	114.74	IV
261+93.54	262+10	Lt.	84.2, 86.2	155.82	5.410	II	7.575	IV
262+10	262+38.46	Lt.	62.2, 67.2	204.6	7.104	II	9.946	IV
262+38.46	262+66	Lt.	67.75, 76.75	221.08	7.676	II	10.747	IV
262+66	263+10	Lt.	66.75	326.33	11.331	II	15.863	IV
263+10	266+10	Lt.	66.75, 78.75	2425	84.201	II	117.881	IV
266+10	267+84.09	Lt.	78.75	1523.29	52.89	II	74.05	IV
270+78.81	272+54.61	Lt.	78.75, 86.75	1616.38	56.12	II	78.57	IV
272+54.61	273+27.54	Lt.	62.75, 69.75	536.85	18.641	II	26.097	IV
273+27.54	273+72.46	Lt.	69.2, 75.2	360.36	12.512	II	17.517	IV
273+72.46	273+81	Lt.	75.75, 76.75	72.35	2.512	II	3.517	IV
273+81	285+57.49	Lt.	66.75	8725.63	302.971	II	424.160	IV
285+57.49	287+36.72	Lt.	97.75, 78.75	1757.45	61.02	II	85.43	IV
289+63.9	289+98.78	Rt.	78.75, 79.28	288.89	10.63	II	14.89	IV
289+98.78	298+44.54	Rt.	79.28, 86.75	7801.15	270.871	I	379.220	III
298+44.54	298+89.46	Rt.	86.2, 90.2	440.22	15.285	I	21.399	III
298+89.46	300+00	Rt.	90.75, 97.75	1157.60	40.194	I	56.272	III
300+00	324+27.79	Rt.	66.75	18,006.1	625.211	I	875.296	III
324+27.79	324+72.2	Rt.	66.2	326.66	11.342	I	15.879	III
324+72.2	325+69	Rt.	66.75	717.93	24.928	I	34.899	III
325+69	326+75.57	Rt.	76.75, 62.75	825.92	28.678	I	40.149	III
326+75.57	328+34.91	Rt.	86.75, 78.75	1465.04	50.869	I	71.217	III
328+34.91	329+15.98	Rt.	78.75	709.36	24.63	I	34.48	III
331+94.72	333+75	Rt.	78.75	1577.45	54.77	I	76.68	III
333+75	337+25	Rt.	78.75, 66.75	3233.33	112.268	I	157.175	III
337+75	337+52.79	Rt.	66.75	206.11	7.157	I	10.019	III
337+52.79	337+97.21	Rt.	66.2	326.73	11.345	I	15.883	III
337+97.21	341+50	Rt.	66.75	2616.53	90.851	I	127.192	III
341+50	342+50	Rt.	66.75, 78.75	808.33	28.067	I	39.294	III

ITEM 402 AND 404 COST PARTICIPATION I, II, III, & IV

I-90 Stations From	I-90 Stations To	Side	End Widths (Ft.)	Surface Area (Sq. Yds.)	404 Volume (Cu. Yds.)		402 Volume (Cu. Yds)	
342+50	343+92.54	Rt. I-90	78.75, 83.75	1286.82	44.681	I	62.553	III
343+92.54	344+37.46	Rt.	83.2, 86.2	422.75	14.679	I	20.550	III
344+37.46	346+50	Rt.	86.75, 97.75	2178.54	75.643	I	105.901	III
346+50	352+78	Rt.	66.75	4657.67	161.724	I	226.413	III
352+78	353+22	Rt.	66.205	323.67	11.238	I	15.734	III
353+22	358+56	Rt.	66.75	3960.5	137.516	I	192.523	III
358+56	360+50	Rt.	76.75, 62.75	1503.5	52.205	I	73.086	III
360+50	362+47.75	Rt.	86.75, 79.75	1827.25	63.446	I	88.824	III
362+47.54	362+92.46	Rt.	79.2, 78.2	392.8	13.639	I	19.094	III
362+92.46	366+00	Rt.	78.75	2690.98	93.436	I	130.811	III
366+00	370+99.92	Rt.	78.75, 66.75	4041.02	140.312	I	196.437	III
370+99.92	374+59.47	Rt.	66.75	2666.66	92.59	I	129.63	III
377+17.97	384+25	Rt.	66.75	5243.81	182.08	I	254.91	III
384+25	385+25	Rt.	66.75, 78.75	808.33	28.067	I	39.294	III
385+25	388+50.54	Rt.	78.75, 94.75	2776.13	96.393	I	134.95	III
388+50.54	388+95.46	Rt.	94.2, 99.2	482.64	16.758	I	23.462	III
388+95.46	389+25	Rt.	99.75, 97.75	324.12	11.254	I	15.756	III
389+25	389+77.79	Rt.	66.75	391.52	13.594	I	19.032	III
389+77.79	390+22.21	Rt.	66.2	326.73	11.345	I	15.883	III
390+22.21	401+43	Rt.	66.75	8312.53	288.628	I	404.079	III
401+43	401+60.08	Rt.	76.75, 62.75	132.37	4.596	I	6.435	III
401+60.08	403+00	Rt.	86.75, 78.75	1286.49	44.67	I	62.537	III
289+63.9	289+98.78	Lt.	78.75	305.2	10.60	II	14.84	IV
289+98.78	298+44.54	Lt.	78.75	7400.40	256.956	I	359.742	III
298+44.54	298+89.46	Lt.	78.2, 83.2	402.78	13.985	I	19.58	III
298+89.46	299+50	Lt.	83.75, 86.75	573.45	19.911	I	27.876	III
299+50	300+72	Lt.	62.75, 76.75	945.5	32.83	I	45.962	III
300+72	324+27.79	Lt.	66.75	17,472.10	606.666	I	849.335	III
324+27.79	324+72.21	Lt.	66.2	330.41	11.472	I	16.061	III
324+72.21	326+84.29	Lt.	66.75	1572.93	54.615	I	76.461	III
326+84.29	329+00	Lt.	97.75, 78.75	2115.16	73.443	I	102.82	III
329+00	329+15.98	Lt.	78.75	139.82	4.86	I	6.80	III
331+94.72	332+50	Lt.	78.75	483.7	16.80	I	23.51	III
332+50	333+50	Lt.	78.75, 66.75	808.33	28.067	I	39.294	III
333+50	337+52.79	Lt.	66.75	2987.36	103.727	I	145.218	III
337+52.79	337+97.21	Lt.	66.2	326.73	11.345	I	15.883	III
337+97.21	338+50	Lt.	66.75	391.53	13.595	I	19.033	III
338+50	342+00	Lt.	66.75, 78.75	2829.17	98.234	I	137.528	III
342+00	343+94.54	Lt.	78.75	1702.23	59.105	I	82.747	III
343+94.54	344+37.46	Lt.	78.2	372.93	12.949	I	18.128	III
344+37.46	347+00	Lt.	78.75, 87.75	2428.50	84.322	I	118.051	III
347+00	349+11	Lt.	62.75, 76.75	1635.25	56.779	I	79.491	III
349+11	352+78	Lt.	66.75	2721.92	94.511	I	132.315	III
352+78	353+22	Lt.	66.205	323.67	11.238	I	15.734	III
353+22	360+50	Lt.	66.75	5399.33	187.476	I	262.466	III
360+50	362+47.54	Lt.	97.75, 90.75	2068.68	71.829	I	100.560	III
362+47.54	362+92.46	Lt.	90.2, 87.2	442.71	15.372	I	21.520	III
362+92.46	364+50	Lt.	87.75, 78.75	1457.25	50.599	I	70.838	III
364+50	365+50	Lt.	78.75, 66.75	808.33	28.067	I	39.294	III
365+50	374+59.47	Lt.	66.75	6745.24	234.21	I	327.89	III
377+17.97	377+25	Lt.	66.75	52.14	1.81	I	2.53	III
377+25	380+75	Lt.	66.75, 78.75	2425	84.201	I	117.881	III
380+75	384+10.07	Lt.	78.75	2931.86	101.801	I	142.521	III
384+10.07	385+75	Lt.	78.75, 87.75	1525.60	52.972	I	74.161	III
385+75	386+93	Lt.	62.75, 76.75	914.5	31.753	I	44.455	III
386+93	388+50.54	Lt.	66.75	1168.42	40.570	I	56.798	III
Cost Participation I Sub-Total					6087			
Cost Participation II Sub-Total					7436			
Cost Participation III Sub-Total							8522	
Cost Participation IV Sub-Total							10411	
Sheet 15 Sub-Total					13523		18933	

Continued on Sheet 16

MADE H.B. 7-2-74
TRACED A.A. DATE 7-16-74
CHECKED A.J.S DATE 8-30-74
SCALE None

Howard, Needles, Tammen & Bergendoff
CONSULTING ENGINEERS
CLEVELAND, OHIO
HNTB

COMPUTATIONS AND SUB-SUMMARIES

FHWA REGION	STATE	PROJECT	
5	OHIO		

16
354

CUYAHOGA COUNTY
CUY-90-23.73
LAKE COUNTY
LAK-90-0.00

QUANTITY CALCULATIONS
MADE BY H.B. DATE 7-2-74
CHECKED BY A.J.S. DATE 8-30-74

ITEM 402 AND 404 COST PARTICIPATION I & III

Stations From	Stations To	Side	End Widths (Ft.)	Surface Area (Sq. Yds.)	404 Volume (Cu. Yds.)		402 Volume (Cu. Yds.)	
398+50.54	398+95.46	Lt.	66,2	330.41	11.472	I	16.061	III
388+95.46	389+77.79	Lt.	66, 75	610.61	21.202	I	29.682	III
389+77.79	390+22.21	Lt.	66,2	326.73	11.345	I	15.883	III
390+22.21	401+75	Lt.	66, 75	8549.86	296.868	I	415.616	III
401+75	403+00	Lt. I-90	97.75, 90.75	1309.03	45.452	I	63.633	III
41+12.2	41+87.54	Lake, E.	78, 75	659.23	22.89	I	32.046	III
41+87.54	42+32.46	Lake, E.	78.2	390.3	13.552	I	18.973	III
42+32.46	44+87.2	Lake, E.	78.75	2228.98	77.395	I	108.353	III
44+87.2	47+87.2	Lake, E.	78.75, 66.75	2425	84.201	I	117.882	III
47+87.2	48+27.79	Lake, E.	66, 75	301.04	10.453	I	14.634	III
48+27.79	48+72.21	Lake, E.	66,2	326.73	11.345	I	15.883	III
48+72.21	49+92.48	Lake, E.	66.75	892.0	30.97	I	43.36	III
53+08.78	56+17.13	Lake, E.	66.75	2286.93	79.41	I	111.17	III
57+82.87	61+87.086	Lake, E.	63.62	2857.36	99.21	I	138.90	III
61+87.086	63+83	Lake, E.	62.67	1404.05	48.751	I	68.252	III
63+83	67+21.322	Lake, E.	67.95	3044.90	105.725	I	148.015	III
67+21.322	68+41.322	Lake, E.	42, 38.	533.33	18.518	I	25.926	III
68+41.322	89+44	Lake, E.	39	9,111.6	316.373	I	442.922	III
89+44	91+39.477	Lake, E.	49,30	857.93	29.789	I	41.705	III
91+39.477	94+01.774	Lake, E.	60,51	1617.5	56.163	I	78.628	III
94+01.774	100+00	Lake, E.	51	3389.95	117.706	I	164.788	III
41+12.2	41+87.54	Lake, W.	90.75, 83.75	730.38	25.360	I	35.504	III
41+87.54	42+32.46	Lake, W.	83.2, 71.2	380.32	13.205	I	18.488	III
42+32.46	43+87.2	Lake, W.	71.75, 78.75	1293.8	44.923	I	62.893	III
43+32.46	44+87.2	Lake, W.	78.75, 66.75	808.33	28.067	I	39.294	III
44+87.2	48+27.79	Lake, W.	66.75	2526.04	87.709	I	122.793	III
48+27.79	48+72.21	Lake, W.	66.2	326.73	11.345	I	15.883	III
48+72.21	49+92.48	Lake, W.	66.75	892.0	30.97	I	43.36	III
60+72	83+25	Lake, W.	39	9763	338.991	I	474.587	III
83+25	84+41.2	Lake, W.	39,45	542.27	18.829	I	26.360	III
84+41.2	88+97.4	Lake, W.	74,50	3142.71	109.121	I	152.77	III
88+97.4	100+00	Lake, W.	50	6125.55	212.691	I	297.768	III
5+31.093	6+22	TRW.1	45,41	435.33	15.116	I	21.162	III
6+22	7+50	TRW.1	41,38	561.78	19.506	I	27.309	III
7+50	19+35	TRW.1	38,39	5069.17	176.01	I	246.42	III
0+00	3+20.22	TRW.2	29	1031.82	35.827	I	50.158	III
6+36.01	11+36.25	TRW.2	39	2167.71	75.27	I	105.37	III
14+72.81	29+46	TRW.2	39	6383.82	221.66	I	310.32	III
29+46	31+88.651	TRW.2	48,35	1118.89	38.85	I	54.39	III
31+88.651	35+00	TRW.2	73,64	2369.71	82.281	I	115.193	III
35+00	35+62.69	TRW.2	64,62	438.83	15.23	I	21.33	III
37+26.08	40+02	TRW.2	66, 75	2046.41	71.06	I	66.48	III
Euclid Spur								
39+99.877	46+49.21	S.B.	51	3679.55	127.76	I	178.87	III
48+54.23	53+90	S.B.	51	3036.03	105.411	I	147.581	III
53+90	58+52.3	S.B.	50,73	3159.05	109.689	I	153.564	III
58+52.3	59+72	S.B.	42,39	551.95	19.165	I	26.831	III
59+72	67+86.23	S.B.	39	3528.33	122.51	I	171.52	III
70+28.49	82+67	S.B.	39	5366.88	186.35	I	260.89	III
82+67	84+33	S.B.	49,35	774.67	26.898	I	37.657	III
84+33	87+00	S.B.	71,63	1987.67	69.016	I	96.622	III
87+00	92+00	S.B.	63	3500	121.527	I	170.138	III
92+00	96+58.969	S.B.	63,85	3773.75	131.032	I	183.445	III
96+58.969	97+60	S.B.	54,51	589.35	20.463	I	28.649	III

ITEM 402 AND 404 COST PARTICIPATION I & III

Stations From	Stations To	Side	End Widths (Ft.)	Surface Area (Sq. Yds.)	404 Volume (Cu. Yds.)		402 Volume (Cu. Yds.)	
97+60	113+09.341	S.B.	51	8779.60	304.845	I	426.78	III
113+09.341	115+03.982	S.B.	60,46	1146.22	39.799	I	55.719	III
115+03.982	117+66.279	S.B.	70,63	1938.08	67.294	I	94.212	III
117+66.279	121+50	S.B.	63	2686.05	93.265	I	130.571	III
121+50	125+00	S.B.	63,51	2216.67	76.967	I	107.754	III
125+00	162+08.4	S.B.	51	21,014.27	729.657	I	1021.52	III
42+66.811	46+49.21	N.B.	51	2166.93	75.24	I	105.34	III
48+54.23	51+06.03	N.B.	51	1426.87	49.54	I	69.36	III
51+06.03	53+34.146	N.B.	51,59	1349.04	46.841	I	65.578	III
53+34.146	55+05.266	N.B.	35,49	1140.8	39.611	I	55.455	III
55+05.266	63+25	N.B.	39,39	3552.18	123.339	I	172.674	III
63+25	64+45.747	N.B.	39,43	550.07	19.100	I	26.739	III
64+45.747	67+86.23	N.B.	74,51	2364.47	82.10	I	114.94	III
70+28.49	92+00	N.B.	51	305.22	427.26	I	598.17	III
92+00	94+08.158	N.B.	51,72	1422.41	49.389	I	69.144	III
94+08.158	95+59	N.B.	47,62	905.05	31.425	I	43.995	III
95+59	114+29.863	N.B.	51	10,601.56	368.107	I	515.350	III
114+29.863	117+93.11	N.B.	82,63	2926.16	101.602	I	142.243	III
117+93.11	121+00	N.B.	63	2148.23	74.591	I	104.427	III
121+00	122+00	N.B.	63,51	633.33	21.990	I	30.787	III
122+00	162+08.4	N.B.	51	22,714.266	788.684	I	1104.159	III

ITEM 402 AND 404 COST PARTICIPATION I, II, III, & IV

Stations From	Stations To	Ramp	End Widths (Ft.)	Surface Area (Sq. Yds.)	404 Volume (Cu. Yds.)		402 Volume (Cu. Yds.)	
0+00	2+86.03	1	Planimeter	6966÷9=774	26.88	III		
0+00	2+86.03	1	Planimeter	1045÷9=116	4.03	I	5.64	III
2+86.03	3+85.19	1	Planimeter	335÷9=37	1.29	I	1.81	III
0+00	2+86.03	1	Planimeter	651÷9=72	2.50	II	3.50	IV
2+86.03	3+85.19	1	Planimeter	2677÷9=297	10.31	II	14.44	IV
0+00	4+59.58	1-A	Planimeter	13930÷9=1548	53.75	I	75.25	III
3+85.19	10+62.85	1	27	2033	70.59	II	98.83	IV
10+62.85	11+12.85	1	(27+30)÷2	158	5.49	II	7.68	IV
11+12.85	12+38.51	1	30	419	14.54	II	20.36	IV
12+38.51	12+68.51	1	30	100 583	1.74	II	1.42	IV
14+69.51	14+99.51	1	30	100 583	1.74	I	1.42	III
14+99.51	17+13	1	30	712	24.71	I	34.59	III
17+13	23+45	1	Planimeter	5723÷9=636	22.08	I	30.92	III
17+13	23+45	1	Planimeter	10512÷9=1168	40.56	II	56.78	IV
4+59.58	7+42.53	1-A	(27+33.79)÷2	956	33.19	I	46.47	III
7+42.53	7+92.53	1-A	(33.79+27)÷2	169	5.87	I	8.22	III
7+92.53	8+75	1-A	(27+28.97)÷2	256	8.89	I	12.44	III
8+75	9+00	1-A		77	2.67	I	16.19	III
9+00	9+59.58	1-A	(26.57+32)÷2	194	6.74	I	9.43	III
9+59.58	11+75	1-A	(32+28)÷2	718	24.93	I	34.90	III
11+75	15+93.01	1-A	28	1300	45.14	I	63.19	III
15+93.01	Lakeshore	1-A	Planimeter	359	12.47	I	17.45	III
23+45	Lakeshore	1	Planimeter	5323÷9=591	20.52	I	28.73	III

ITEM 402 AND 404 COST PARTICIPATION II & IV

Stations From	Stations To	Ramp	End Widths (FT.)	Surface Area (Sq. Yds.)	404 Volume (Cu. Yds.)		402 Volume (Cu. Yds.)	
0+00	1+00	2	33,27	333.33	11.574	II	16.204	IV
1+00	4+39.24	2	27	1017.72	35.337	II	49.472	IV
4+39.24	5+56.55	2	27,24	332.38	11.541	II	16.157	IV
5+56.55	6+00.09	2	24	116.1	4.031	II	5.643	IV
6+00.09	6+24.51	2	24,16	54.27	1.884	II	2.638	IV
6+24.51	6+54.86	2	16	53.95	1.873	II	2.622	IV
2+66.44	3+66.44	3	31,27	322.22	11.188	II	15.663	IV
3+66.44	5+51.24	3	27	554.4	19.25	II	26.95	IV
5+51.24	6+09.45	3	32,21	171.4	5.951	II	8.331	IV
1+58.59	2+58.59	4	24,26	277.78	9.645	II	13.503	IV
2+58.59	4+87.81	4	26,26	662.19	22.993	II	32.19	IV
4+87.81	5+69.95	4	26,27	232.73	8.081	II	11.313	IV
0+99.86	1+76	5	25,27	219.96	7.637	II	10.692	IV
1+76	4+04.92	5	27	686.76	23.846	II	33.384	IV
4+04.92	5+04.92	5	24	266.67	9.259	II	12.963	IV
0+77.55	1+43.77	6	22,27	180.27	6.259	II	8.763	IV
1+43.77	3+05.4	6	27	484.89	16.836	II	23.571	IV
3+05.4	4+05.4	6	27.31	322.22	11.188	II	15.663	IV
4+52.74	5+80	7	24	339.36	11.783	II	16.497	IV
5+80	5+95	7	24,16	33.33	1.157	II	1.620	IV
5+95	7+13	7R	16,18	222.88	7.739	II	10.834	IV
5+95	6+73.73	7L	0,28	122.47	4.252	II	5.95	IV
6+73.73	7+05.11	7L	28	97.63	3.39	II	4.746	IV
7+05.11	Calcutta	7L	0,28 in 40.52'	63.03	2.189	II	3.064	IV
4+64.56	6+63.76	8	24	531.2	531.165	II	743.631	IV
0+24.84	0+46.6	9R	8,11	22,97	.797	II	1.117	IV
0+24.84	0+74.84	9L	8,16	66.66	2.315	II	3.240	IV
0+46.6	0+74.84	9R	11	34.52	1.199	II	1.678	IV
0+74.84	2+31.48	9	27	469.92	16.316	II	22.843	IV
2+31.48	3+31.48	9	27.31	322.22	11.188	II	15.663	IV
2+58.89	3+58.89	11	24,27	283.33	9.838	II	13.773	IV
3+58.89	11+55.01	11	27	3348.36	116.261	II	162.766	IV
11+55.01	12+18.15	11	24,20	154.34	5.359	II	7.503	IV
11+55.01	12+18.15	11	Transition	4.17	.145	II	.203	IV
3+47.86	4+90.66	12	31,29	476	16.528	II	23.139	IV
4+90.66	10+02.13	12	29	1648.07	57.224	II	80.114	IV
10+02.13	13+00	12	29,53,95	1372.68	47.662	II	66.727	IV
13+00	14+00	12	53.95	599.44	20.814	II	29.139	IV
14+00	14+51.24	12	50.95,42.95	267.30	9.281	II	12.994	IV
Cost Participation I Sub-Total					8100			
Cost Participation II Sub-Total					1241			
Cost Participation III Sub-Total					27		11351	
Cost Participation IV Sub-Total							1736	
Sheet 16 Sub-Total					9368		13087	

Continued on Sheet 17

MADE H.B. DATE 7-2-74
TRACED A.B. DATE 7-16-74
CHECKED AJS DATE 8-30-74
SCALE None

Howard, Needles, Tammen & Bergendoff
CONSULTING ENGINEERS
CLEVELAND, OHIO
HNTB

COMPUTATIONS AND SUB-SUMMARIES

FHWA REGION	STATE	PROJECT	
5	OHIO		

17/354

CUYAHOGA COUNTY
CUY-90-23.73
LAKE COUNTY
LAK-90-0.00

QUANTITY CALCULATIONS
MADE BY H.B. DATE 7-2-74
CHECKED BY A.J.S. DATE 8-30-74

ITEM 402 AND 404 COST PARTICIPATION I, II, III, & IV

Stations From	Stations To	Ramp	End Widths (Ft.)	Surface Area (Sq. Yds.)	404 Volume (Cu. Yds.)		402 Volume (Cu. Yds.)	
14+00	14+51.24	12	Extra area	42.7	1.483	II	2.076	IV
14+00	14+51.24	12	Extra area	12.81	.445	II	.623	IV
14+51.24	16+20	12L	35,40	703.17	24.415	II	34.181	IV
14+51.24	15+08.69	12R	12,18	95.75	3.325	II	4.654	IV
0+55.15	2+02.51	12R	18	294.72	10.233	II	14.327	IV
2+50.77	3+50.77	13	24,27	283.33	9.838	II	13.773	IV
3+50.77	4+42.42	13	27,29	285.13	9.900	II	13.860	IV
4+42.42	7+92.28	13	29	1127.33	39.143	II	54.800	IV
7+92.28	8+38.93	13	29,27	145.13	5.039	II	7.055	IV
8+38.93	10+75	13	27	708.21	24.59	II	34.427	IV
10+75	11+86.17	13	16	197.64	6.862	II	9.607	IV
10+75	11+86.17	13	Tapers	26.39	.916	II	1.283	IV
1+87.08	2+87.08	14	24,26	277.78	9.645	II	13.503	IV
2+87.08	3+87.08	14	26,27	294.44	10.223	II	14.313	IV
3+87.08	7+35.73	14	27	1045.95	36.317	II	50.844	IV
3+78.76	4+78.76	14A	31,27	322.22	11.188	II	15.663	IV
4+78.76	6+86.6	14A	21,27	554.24	19.244	II	26.942	IV
0+99.95	1+87.71	15	23,27	243.78	8.465	II	11.85	IV
1+87.71	2+87.71	15	27,26	294.44	10.224	II	14.313	IV
2+87.71	3+87.71	15	26,24	277.78	9.645	II	13.503	IV
0+77.55	1+75	16	21,27	259.87	9.023	II	12.632	IV
1+75	2+79.79	16	27,31	337.66	11.723	II	16.414	IV
3+53.31	4+53.31	1E	31.27	322.22	11.188	I	15.663	III
4+53.31	6+24.8	1E	27	514.47	17.863	I	25.009	III
6+24.8	6+82.09	1E	27,25.85	168.21	5.841	I	8.177	III
6+24.8	6+82.09	1E	Taper	1.11	.039	I	0.054	III
6+82.09	7+24.8	1E	31.85,21	125.4	4.354	I	6.096	III
3+02.11	4+02.11	2E	24,25	272.22	9.452	I	13.233	III
4+02.11	5+02.11	2E	25,27	288.89	10.031	I	14.043	III
5+02.11	6+51.59	2E	27	448.44	15.571	I	21.799	III
6+51.59	6+87.73	2E	27,23	100.39	3.486	I	4.88	III
0+99.98	1+86.57	6E	23,27	240.53	8.352	I	11.692	III
1+86.57	2+62.36	6E	27	227.37	7.895	I	11.053	III
2+62.36	3+62.36	6E	27,25	288.89	10.031	I	14.043	III
3+62.36	4+62.36	6E	25,24	272.22	9.452	I	13.233	III
0+77.55	1+77.55	7E	21,27	266.67	9.259	I	12.963	III
1+77.55	3+36.61	7E	27	477.18	16.569	I	23.196	III
3+36.61	4+36.61	7E	27,31	322.22	11.188	I	15.663	III
2+68.4	3+68.4	8E	24	266.67	9.259	I	12.963	III
3+68.4	4+68.4	8E	24,27	283.33	9.838	I	13.773	III
4+68.4	5+04.86	8E	27	109.38	3.798	I	5.317	III
5+04.86	5+71.41	8E	27,21	177.47	6.162	I	8.627	III
3+99.67	4+99.67	9E	31,27	322.22	11.188	I	15.663	III
4+99.67	6+02.3	9E	27	307.89	10.691	I	14.967	III
6+02.3	7+02.3	9E	27,17	244.44	8.487	I	11.882	III
1+97.21	2+97.21	10E	19,24	238.89	8.295	I	11.613	III
2+97.21	3+30.94	10E	24,27	95.57	3.318	I	4.646	III
3+30.94	3+99.24	10E	27	204.9	7.115	I	9.960	III
3+99.24	4+99.24	10E	27,31	322.22	11.188	I	15.663	III
1+60.42	2+17.73	11E	21,27,85	155.53	5.40	I	7.56	III
2+17.73	2+60.32	11E	27.85,27	129.78	4.506	I	6.309	III
2+60.32	3+63.97	11E	27,24	293.68	10.197	I	14.276	III
3+63.97	4+63.97	11E	24	266.67	9.259	I	12.963	III
4+00.31	5+00.31	12E	31,27	322.22	11.188	I	15.663	III
5+00.31	6+31.49	12E	27	393.54	13.644	I	19.130	III

ITEM 402 AND 404 COST PARTICIPATION I & III

Stations From	Stations To	Ramp	End Widths (Ft.)	Surface Area (Sq. Yds.)	404 Volume (Cu. Yds.)		402 Volume (Cu. Yds.)	
6+31.49	7+05.61	12E	27,19	189.42	6.577	I	9.208	III
1+31.49	2+64.03	13E	26,28	300	10.417	I	14.583	III
2+64.03	3+64.03	13E	28,27	305.56	10.610	I	14.85	III
3+64.03	4+40.48	13E	27	229.35	7.963	I	11.149	III
4+40.48	4+82.16	13E	27,21	106.52	3.699	I	5.178	III
1+54.77	2+54.77	14E	25,27	288.89	10.031	I	14.043	III
2+54.77	2+95.36	14E	27	121.77	4.228	I	5.919	III
2+95.36	3+95.36	14E	27,25	288.89	10.031	I	14.043	III
3+95.36	4+95.36	14E	25,24	272.22	9.452	I	13.233	III
1+49.91	2+49.91	15E	19,27	255.56	8.874	I	12.423	III
2+49.91	3+54.81	15E	27	314.7	10.927	I	15.298	III
3+54.81	4+54.81	15E	27,21	266.67	9.259	I	12.963	III
11+60.2	12+75	1	29,22	325.27	11.294	I	15.812	III
12+75	16+50.67	1	22	918.30	31.89	I	44.64	III
18+78	23+83	1	22	1234.44	42.86	I	60.01	III
23+83	24+18.58	1	35,25	118.60	4.12	I	5.77	III
0+00	2+94.38	2	22,34	915.85	31.79	I	44.52	III
6+30	17+25	2	27	3285	114.06	I	159.69	III
17+25	19+76.128	2	27,25	725.48	25.190	I	35.266	III
0+28	1+50	3		372.49	12.934	I	18.107	III
1+50	11+50	3	22	2444.44	84.876	I	118.826	III
11+50	12+50.983	3	22,21	241.24	8.376	I	11.727	III
12+50.983	14+17.794	3	21,24	417.03	14.48	I	20.272	III
4+53.541	5+50	4	31,22	284.02	9.862	I	13.806	III
6+00	10+96.766	4	22	1214.32	42.164	I	59.029	III
10+96.766	13+91.686	4		715.2	24.833	I	34.766	III
13+91.686	14+91.69	4	19,17	200.01	6.945	I	9.723	III
Left Turn	Slot	4		749.4	26.021	I	36.429	III
0+00	1+91.744	6		594	20.625	I	28.875	III
0+43.744	1+91.744	6	4' berm	65.97	2.291	I	3.207	III
1+91.744	11+30	6	38	3961.53	137.522	I	192.573	III
11+30	11+93.419	6	39	274.82	9.542	I	13.359	III
11+93.419	13+50	6	39,38	669.82	23.257	I	32.560	III
13+50	14+50.421	6	38,36	618.4	21.472	I	30.061	III
4+58.635	5+58.635	7	31,22	294.44	10.224	I	14.313	III
5+58.635	15+37.88	7	22	2392.49	83.072	I	116.301	III
15+37.38	16+48.712	7		287.6	9.986	I	13.980	III
2+05.6	3+06	8	24,22.5	259.37	9.006	I	12.608	III
3+06	4+06	8	22.5,22	247.22	8.584	I	12.018	III
4+06	11+79.167	8	22	1889.96	65.623	I	91.872	III
11+79.167	12+45.92	8		185	6.424	I	8.993	III
4+64.385	5+65	9	31,22	296.25	10.287	I	14.401	III
5+65	13+75	9	22	1980	68.75	I	96.249	III
13+75	14+77	9		281.8	9.785	I	13.699	III
2+62.023	5+66.667	10	24,22	778.53	27.032	I	37.845	III
5+66.667	11+77.148	10	22	1492.29	51.815	I	72.541	III
11+77.148	12+16	10		140	4.861	I	6.806	III
3+26.31	4+62.31	11	31,22	294.44	10.223	I	14.313	III
4+62.31	11+25	11	22	1619.91	56.247	I	78.745	III
11+25	12+31.864	11		263.6	9.153	I	12.814	III

ITEM 402 AND 404 COST PARTICIPATION I, II, & III

I-90 Stations From	I-90 Stations To	Side	End Widths (Ft.)	Surface Area (Sq. Yds.)	404 Volume (Cu. Yds.)		402 Volume (Cu. Yds.)	
251+04.21	252+98.80	Lt.	58	1254	43.54	III		
1+99.84	35+79.43	Lt.	58	22424	778.61	III		
251+04.21	252+98.80	Rt.	58	1254	43.54	III		
1+99.84	36+79.43	Rt.	58	22424	778.61	III		
38+09.85	59+95	Rt.	58	14082	488.96	III		
38+09.85	67+07.75	Lt.	58	18675	648.44	III		
59+95	68+00	Rt.	48	4293	149.06	III		
68+00	76+98	Rt.	58	5787	200.94	III		
67+07.75	69+25	Lt.	48	1159	40.24	III		
69+25	85+52.63	Lt.	58	10489	364.20	III		
76+98	86+96	Rt.	(5.5+36.5)÷2	2328	80.83	III		
76+98	85+25.67	Rt.	(52.5+26.8)÷2	3646	126.60	II		
85+25.67	86+31.17	Rt.	(28+23.5)÷2	302	10.49	IV		
86+31.17	86+96	Rt.	(14.5+12)÷2	95	3.30	IV		
0+24	8+60	Ramp 3	24	2229	77.41	I	108.4	III
8+60	13+32.64	Ramp 3	Planimeter	1160	40.28	III		
85+52.63	90+12.32	Lt.	48	2452	85.14	III		
86+96	97+50	Rt.	48	5621	195.17	III		
90+12.32	124+00	Lt.	58	21832	758.06	III		
97+50	121+00	Rt.	58	15144	525.83	III		
121+00	122+75	Rt.	(58+70)÷2	1244	43.19	III		
122+75	125+99.60	Rt.	70	2525	87.67	III		
124+00	124+75	Lt.	(58+60.57)÷2	494	17.15	III		
124+75	127+50	Lt.	(60.57+70)÷2	1995	69.27	III		
127+50	128+80	Lt.	70	1011	35.10	III		
125+99.60	128+50	Rt.	48	1335	46.35	III		
Cost Participation I Sub-Total					1521			
Cost Participation II Sub-Total					398			
Cost Participation III Sub-Total					5520		2269	
Cost Participation IV Sub-Total					14		381	
Sheet 17 Sub-Total					7553		2650	

PAVEMENT QUANTITIES

ITEM	DESCRIPTION	COST PARTICIPATION I	II	TOTAL	UNIT
407	Tack Coat				
	330,454.09 Sq. Yd. x 0.1gal/Sq. Yd.	33,045			Gal.
	174,797.00 Sq. Yd. x 0.1gal/Sq. Yd.		17,480	50,525	Gal.
407	Cover Aggregate				
	330,454.09 Sq. Yd. x 7lbs/Sq.Yd.÷2000LBS.	1,157			Ton
	174,797.00 Sq. Yd. x 7lbs/Sq.Yd.÷2000LBS.		612	1769	Ton
409	Seal Coat Bituminous Material				
	197,484 Sq. Yd. x 0.3gal/Sq. Yd.	59245			Gal.
	85,735 Sq. Yd. x 0.3gal/Sq. Yd.		25720	84965	Gal.
409	Seal Coat Cover Aggregate No. 8				
	197,484 Sq. Yd. x 0.008 CuYd./Sq.Yd.	1580			Cu. Yd.
	85735 Sq. Yd. x 0.008 CuYd./Sq.Yd.		686	2266	Cu. Yd.

ITEM 402 - ASPHALT CONCRETE (CU.YDS)

Sheet No.	III	IV	Sht. Sub-Total
15	8522	10411	18933
16	11351	1736	13087
17	2269	381	2650
TOTAL	22142	12528	34670

ITEM 404 - ASPHALT CONCRETE (CU.YDS.)

Sheet No.	I	II	III	IV	Sht. Sub-Total
15	6087	7436			13523
16	8100	1241	27		9368
17	1621	398	5520	14	7553
TOTAL	15808	9075	5547	14	30444

MADE H.B. DATE 7-2-74
TRACED B.B. DATE 7-16-74
CHECKED A.J.S. DATE 8-30-74
SCALE None

Howard, Needles, Tammen & Bergendoff
CONSULTING ENGINEERS
CLEVELAND, OHIO

HNTB

Rev. 7-18-75

FHWA REGION	STATE	PROJECT	
5	OHIO		

18
354

CUYAHOGA COUNTY
CUY-90-23.73
LAKE COUNTY
LAK-90-0.00

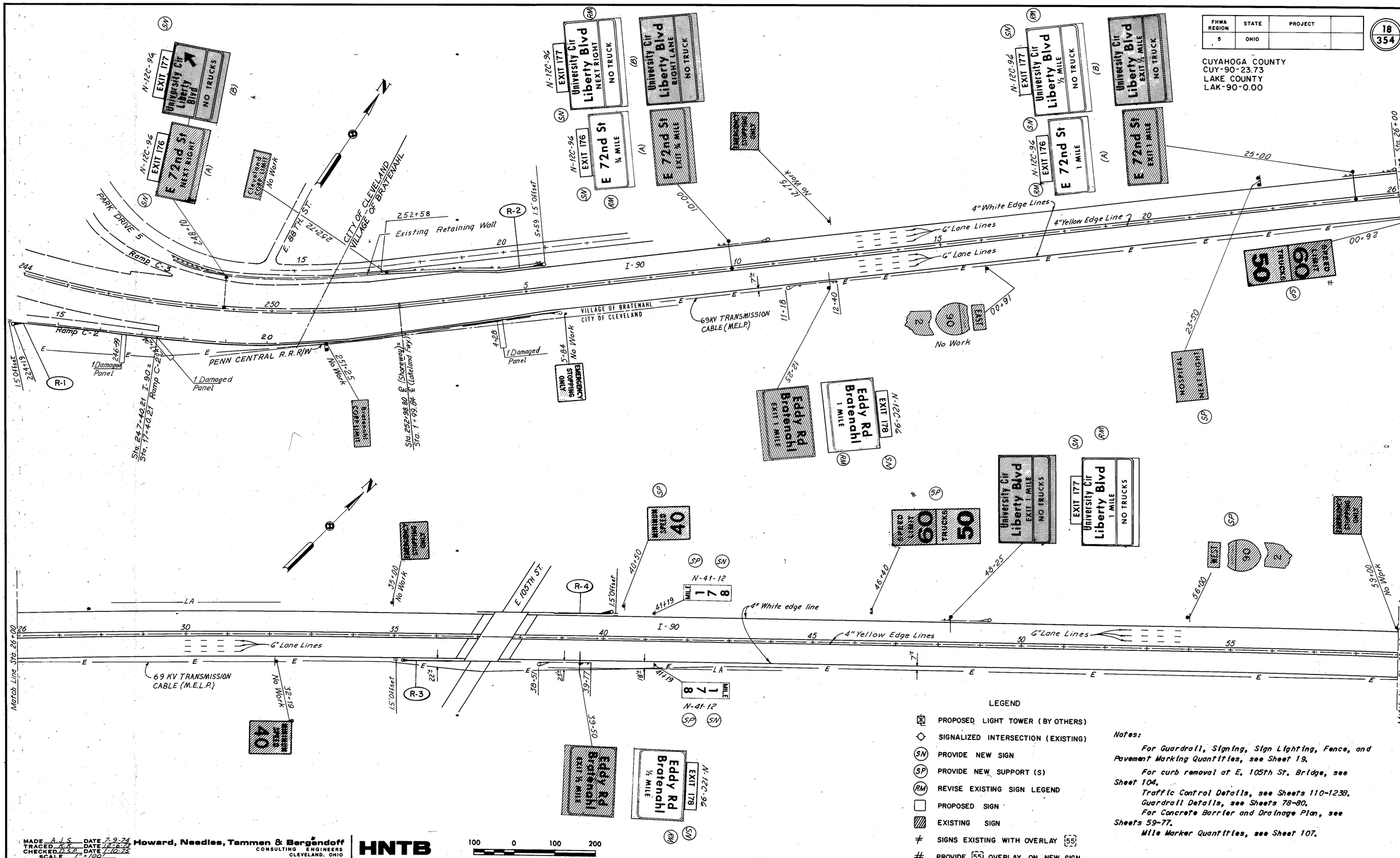

LEGEND

- PROPOSED LIGHT TOWER (BY OTHERS)
- SIGNALIZED INTERSECTION (EXISTING)
- (SN) PROVIDE NEW SIGN
- (SP) PROVIDE NEW SUPPORT (S)
- (RM) REVISE EXISTING SIGN LEGEND
- PROPOSED SIGN
- EXISTING SIGN
- ≠ SIGNS EXISTING WITH OVERLAY [55]
- # PROVIDE [55] OVERLAY ON NEW SIGN

Notes:

For Guardrail, Signing, Sign Lighting, Fence, and Pavement Marking Quantities, see Sheet 19.

For curb removal at E. 105th St. Bridge, see Sheet 104.

Traffic Control Details, see Sheets 110-123B.

Guardrail Details, see Sheets 78-80.

For Concrete Barrier and Drainage Plan, see Sheets 59-77.

Mile Marker Quantities, see Sheet 107.

MADE A.J.S. DATE 7-9-74
TRACED K.K. DATE 12-6-73
CHECKED D.S.P. DATE 1-10-75
SCALE 1" = 100'

Howard, Needles, Tammen & Bergendoff
CONSULTING ENGINEERS
CLEVELAND, OHIO

HNTB

100 0 100 200

STA. 244+00 TO 59+00

QUANTITIES

FHWA REGION	STATE	PROJECT	
5	OHIO		

19
354

CUYAHOGA COUNTY
CUY-90-23.73
LAKE COUNTY
LAK-90-0.00

QUANTITY CALCULATIONS

MADE BY H.B. DATE 7-11-74
CHECKED BY A.J.S. DATE 7-16-74

SIGNING COST PARTICIPATION I & III

SHEET NO.	SIGN NO.	STATION	CODE NO.	SIGN SIZE	DIMENSIONS SEE DETAIL 'A' SHEET NO. 19 (Lin. Ft.) A	B	C	D	E	EXIST. SIGNS RE-ERECTED Sq. Ft.	EXISTING SIGN REVISED, AS PER PLAN Each	844 SIGNS FLAT SHEET Sq. Ft.	844 SIGNS EXTRU. TYPE Sq. Ft.	844 CONC. GROUND MOUNTED SIGN Cu. Yd.	844 SUPPORTS GLB. BEAM AS PER PLAN Lin. Ft.	4 Lb POST Lin. Ft.	6 Lb BEAM Lin. Ft.	W8×17 Lin. Ft.	W10×21 Lin. Ft.	W12×31 Lin. Ft.	BREAK-AWAY CONN. Each	202 REMOVAL EXISTING SIGNS Each	REMOVAL EXISTING SUPP. Each	REMOVAL EXISTING INSTALL. Each	REMOVAL MAJOR INSTALL. Each	REMOVAL EXISTING O.H. SUPP. Each	620 DELIN. AS PER PLAN Each	REVISE EXISTING SIGN LEGEND, EXIT ACTION MESSAGE, AS PER PLAN Each	POLE MOUNTED SIGN ATTACHMENT, AS PER PLAN Each
										I			I			I	I						I						III	
		I-90																												
18		12+25 E.B.											-																	
			N-12C-96	8'-0"x2'-0"									16																1	
		26+00 E.B.	R-10-48	48"x60"	20	19				20							39						2							
			R-16-48	48"x48"						16																				
		39+50 E.B.																												
			N-12C-96	8'-0"x2'-0"									16																1	
	A	248+70 W.B.	N-12C-96	8'-0"x2'-0"									16																	
	B		N-12C-96	8'-0"x2'-0"									16																	
	A	10+00 W.B.																												
	A		N-12C-96	8'-0"x2'-0"									16																1	
	B		N-12C-96	8'-0"x2'-0"									16																1	
	A	25+00 W.B.	N-12C-96	8'-0"x2'-0"									16																1	
	B		N-12C-96	8'-0"x2'-0"									16																1	
		23+50 W.B.		8'-0"x4'-0"	16	17				32							33						4							
		40+50 W.B.	R-7-48	48"x60"	17.5	17				20						34.5							1							
		46+40 W.B.	R-10-48	48"x60"	19.5	18.5		15		20							38						2							
			R-16-48	48"x48"						16			-																	
		48+25 W.B.																												
			N-12C-96	8'-0"x2'-0"									16																1	
		56+00 W.B.	1M-40-36	36"x18"			18.5			4.5							18.5						1							
			M-5C-36-2	36"x36"						9																				
			M-2A-36	35"x36"						9																				
Cost Participation I TOTAL										146.5			144			34.5	128.5						10							
Cost Participation III TOTAL																												7		
TOTAL										146.5			144			34.5	128.5						10						7	

SIGN LIGHTING - COST PARTICIPATION I	
STATION	625 REVISE EXISTING SIGN SERVICE, AS PER PLAN
12+25 E.B.	1
39+50 E.B.	1
248+70 W.B.	1
10+00 W.B.	1
25+00 W.B.	1
48+25 W.B.	1
Total	6

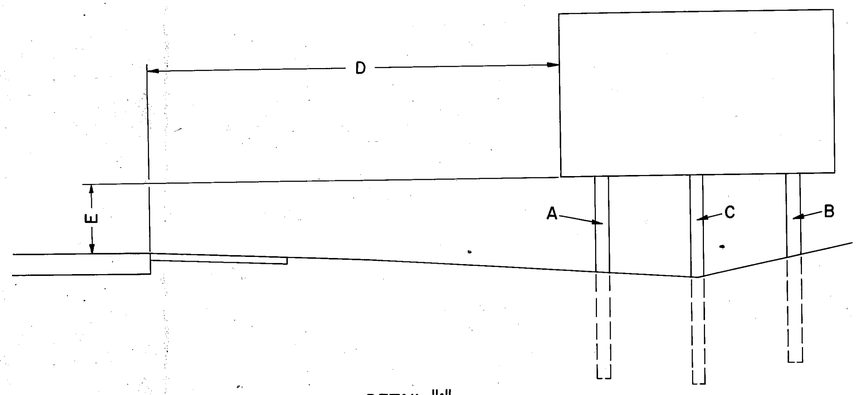

DETAIL "A"

Typical detail for Signs with offset greater than normal.

Notes:
For Mile Marker Detail, See Sheet 110
For Mile Marker Quantities, See Sheet 107

GUARD RAIL - COST PARTICIPATION I

REF. NO.	STATION FROM	STATION TO	SIDE	202 Painted Guardrail Removed For Reuse or Storage Lin. Ft.	202 GUARD RAIL, BARRIER, DESIGN, Removed For Reuse or Storage Lin. Ft.	606 Guardrail Type 5 as per plan Lin. Ft.	606 Anchor Assembly Each	606 Bridge Terminal Assembly Type E Each
R-1	244+19	5+82.5	Rt.	1262.5		1212.5	2	
R-2	252+58	5+59	Lt.	400		375	1	
R-3	35+17	36+67	Rt.			125	1	1
R-4	38+75	40+25	Lt.			125	1	1
E-1	2+00	37+05	℄		3505			
E-2	37+84	59+00	℄		1116			
	Cost Participation I Total			1662.5	4621	1837.5	5	2

PAVEMENT MARKINGS - COST PARTICIPATION III

ITEM	DESCRIPTION	QUANTITY	UNIT
621	6" Lone Lines		
	251+04 to 59+00		
	5895' x 2 x 3 ÷ 5280		
	Total	6.70	Miles
621	4" White Edge Lines		
	251+04 to 59+00		
	5895' x 2 ÷ 5280		
	Total	2.23	Miles
621	4" Yellow Edge Lines		
	251+04 to 59+00		
	5895' x 2 ÷ 5280		
	Total	2.23	Miles

MADE HB DATE 7-11-74
TRACED TS DATE 7-16-74
CHECKED AJS DATE 7-16-74
SCALE None

Howard, Needles, Tammen & Bergendoff
CONSULTING ENGINEERS
CLEVELAND, OHIO

HNTB

FHWA REGION	STATE	PROJECT	
5	OHIO		

20
354

CUYAHOGA COUNTY
CUY-90-23.73
LAKE COUNTY
LAK-90-0.00

LAKE SHORE BLVD
5W
0+30 W
4+50 W
0+50
0+25
4E
4+10 E
KEEP RIGHT
R-38R
Eddy Rd
Bratenahl
Sta. 7+75 Eddy Road =
Sta. 9+24.54 Ramp 1 =
Sta. 0+00 Ramp 3
90 (2) WEST
Downtown
No Work
8+84 Ramp 1
PREFERENTIAL USE LANES
8+50 No Work
W-6OC
7+25
7+50
See Ramp 1 Realignment details Sheets 83-84
0+75 Remove
RAMP 1
RAMP 3
Stop Line
0+60
1+30
2+15
3+05
Relocate Sign at 3+05 to 1+75, No Work at 2+15
5+00
N-122-96 EXIT 178
Eddy Rd Bratenahl
86+55
86+05
87+55
E-1
4" Yellow Edge Line
4" Lane Line
8" Channelizing Line
0+50
77+29
R-4
1.5' Offset
R-41A-36
WRONG WAY
KEEP RIGHT
R-37R
78+54
10+30
76+50
I-90
4" White Edge Lines
City of Cleveland
Village of Bratenahl
6" Lane Lines
Match Line Sta. 58+00 See Sheet 48
Match Line Sta. 80+00 See Sheet 22
15' Offset
R-1
R-2
R-3
69KV Transmission Cable. (M.E.L.P.)
See Ramp 2 Realignment Details, Sheets 85-86.
See Ramp 4 Realignment Details, Sheet 87-91.
R-26A-30
R-28A-30
8+48 Eddy Rd.
ONLY
(A)
(B)
Internally Illuminated For Support Details See Sheet 127
STOP HERE ON RED
13+28
13+50
13+35
EDDY RD.
Sta. 10+04.50 Eddy Rd. =
Sta. 0+00 Ramp 4
Sta. 10+01.74 Eddy Rd. =
Sta. 13+74.73 Ramp 2
10-52 Remove
0+60
9+85
9+10 Remove
9+36
9+70
WP-49R
W-49R
R-41B
R-41R
DO NOT ENTER
13+25
RAMP 5
RAMP 6
KIRBY AVE.
EDDY-HAZELDELL CONN.
EDDY-KIRBY CONN.
SILMOR AVE.
W-13
0+97
17+10
18+30
20+90
20+50
19+25
WEST 90 EAST
KEEP LEFT
KEEP RIGHT
SPEED LIMIT 30
JCT 90 2
EAST 90 (2) EAST Erie Pa
DO NOT BLOCK INTERSECTION
EAST 283 Lake Shore Blvd EXIT 1 MILE
EAST 283 Lake Shore Blvd 1 MILE EXIT 179
N-122-96
Eddy Rd Bratenahl EXIT 178
N-122-96
(4)
(2)
RP-38R
R-38R
KEEP RIGHT
100 0 100 200

Notes:
For Guardrail, Signing, Pavement Marking and Fence Quantities see Sheet 21.
Traffic Control Details, see Sheets 110-123B
Guardrail Details, see Sheets 78-80
For Concrete Barrier & Drainage Plan, see Sheets 59-77
For Curb Removal at Ramps 1, 2 & 4, see sheet 82.
For Pavement Marking Quantities for Ramps 1, 2 & 4, see sheets 84, 86 & 91 respectively.

LEGEND
- PROPOSED LIGHT TOWER (BY OTHERS)
- SIGNALIZED INTERSECTION (EXISTING)
- (SN) PROVIDE NEW SIGN
- (SP) PROVIDE NEW SUPPORT (S)
- (RM) REVISE EXISTING SIGN LEGEND
- PROPOSED SIGN
- EXISTING SIGN
- ≠ SIGNS EXISTING WITH OVERLAY [55]
- # PROVIDE [55] OVERLAY ON NEW SIGN

MADE HB DATE 7-18-74
TRACED FCO DATE 12-5-75
CHECKED DAP DATE 1-8-76
SCALE 1"=100'

Howard, Needles, Tammen & Bergendoff
CONSULTING ENGINEERS
CLEVELAND, OHIO

HNTB

STA. 59+00 TO STA. 90+00

SIGNING - COST PARTICIPATION I, II, III & IV

SHEET NO.	SIGN NO.	STATION	CODE NO.	SIGN SIZE	DIMENSIONS SEE DETAIL "A" SHEET NO. 19 (Lin. Ft.) A	B	C	D	E	EXIST. SIGNS RE-ERECTED Sq. Ft. I	IV	III	EXISTING SIGN REVISED, AS PER PLAN EACH	844 SIGNS FLAT SHEET Sq. FT. IV	II	III	I	EXTRU. TYPE Sq. Ft. - I	INTERNALLY ILLUMINATED Each III	844 SUPPORTS 6 LB. BEAM AS PER PLAN Lin. Ft. I	4 LB. POST Lin. Ft. I	III	IV	6 LB. BEAM Lin. Ft. I	II	III	W8×17 Lin. Ft.	W10×21 Lin. Ft.	W12×31 Lin. Ft.	BREAK-AWAY CONN. Each	202 REMOVAL EXISTING SIGNS Each III	IV	REMOVAL EXISTING SUPP. Each I	III	IV	REMOVAL EXISTING INSTALL. Each I	IV	III	REVISE EXISTING SIGN LEGEND, EXIT ACTION MESSAGE, AS PER PLAN Each I	POLE MOUNTED SIGN ATTACHMENT, AS PER PLAN Each III	I
20	A	65+50 E.B.																																						
	A		N-12C-96	8'-0"×2'-0"													16																				1		
	B		N-12C-96	8'-0"×2'-0"													16																						
		84+50 E.B.	W-49R-48	48"×48"			21.75							16									21.8															
			WP-49	24"×12"										2																								
		72+50 W.B.	W49R-48	48"×48"			21.75			16												21.8										1						
			WP-49	24"×12"						2																												
		86+55 W.B.	N-12C-96	8'-0"×2'-0"													16																					
		Ramp 1																																						
		0+75 Lt																																		1				
		7+25 Lt.	W-60C-36	36"×36"			16.5								9									16.5											1			
		Ramp 2																																						
		7+00 Rt.	W-47-48	48"×48"			22.25			16													22.3										1						
			WP-47-24	24"×18"						3																												
		11+65 Lt.	R-41A-36	36"×24"													6																				1	
		11+65 Rt.	R-41A-36	36"×24"													6																				1	
		13+28 Rt.	R-31-36	36"×54"													8.5														1						1	
		Ramp 3																																						
		0+50	R-41B-36	36"×36"			16.25			9									16.3														1					
			R-43R-36	36"×15"						3.8																												
			R-43L-36	36"×15"						3.8																												
		0+60	R-41B-36	36"×36"			16.25			9									16.3														1					
			R-43R-36	36"×15"						3.8																												
			R-43L-36	36"×15"						3.8																												
		1+50	D-4A	9'-0"×2'-0"	16	16				18							18							32									2					
		1+75	R-41A-36	36"×24"			14.5					7.5					6				14.5																
		2+15	R-41A-36	36"×24"													6																				1	
		5+00	W-47-48	48"×48"			22.25			16													22.3										1					
			WP-47-24	24"×18"						3																												
		Ramp 4																																						
		9+70																																		1				
		Eddy Rd.																																						
		0+25 ℄	R-38R-24	24"×30"			16								5							16																
			RP-38R	24"×18"											3																							
		7+45 ℄	R-37R-24	24"×30"			14.5								5							14.5																
		10+30 ℄	R-37R-24	24"×30"			14.5								5							14.5																
		10+52 Lt.																																		1				
		13+00 Lt.	R-41B-30	30"×30"			15.0							6.3									15								1		1					
			R-2-36	36"×36"×36"								3.9																											
		13+25 Lt.	R-41B-30	30"×30"			15.2							6.3									15															
		15+50 Rt.	W-13-30	30"×30"			15.5							6.3									15.5															
		17+70 ℄	R-37R-24	24"×30"			14.5							5									14.5															
		18+30 ℄	R-37R-24	24"×30"			14.5							5									14.5															
		20+50 Lt.	IM-17-24	24"×12"			16					2											16								1							
			M-5C-24.2	24"×24"								4																					1					
			M-2A-24	24"×24"								4																											
		20+90 ℄	R-38R-24	24"×30"			16								5									16															
			RP-38R	24"×18"											3																							
		Lake Shore Blvd.																																						
		4+10 E	IM-17-24	24"×12"			16						2										16										1					
			M-5C-24.2	24"×24"									4																									
			IM-21-20	20"×15"									2																									
		0+30 W	M-5C-24.2	24"×24"			13.25						4										13.3										1					
			TM-24-20	20"×15"									2																									
		0+50 W	M-5C-24.2	24"×24"			13.25						4										13.3										1					
			IM-24-20	20"×15"									2																									
		4+50 W	IM-17-24	24"×12"			16						2										16										1					
			IM-19-20	20"×15"									2																									
		Ramp 3																																						
		3+05	Special	3'-0"×2'-6"																																1				
		Eddy Rd.																																						
		8+48 (A)	R-26A-30	30" x 36"														1																				
		8+48 (B)	R-28A-30	30"×36"														1																				
Cost Participation I TOTAL										107.20				24.00	48.00			32.60	14.50	98.40										7	2		1			3
Cost Participation II TOTAL														18.00						21.80																
Cost Participation III TOTAL										35.50				53.50			2		103.60	16.50									2	4	1		1		
Cost Participation IV TOTAL										13.90				41.90					106.50										2	2	4				
TOTAL										156.60				137.4	48.00		2	32.60	224.6	106.70									4	11	7	1	1	3	

QUANTITY CALCULATIONS

MADE BY HB. DATE 7-18-74
CHECKED BY AJS DATE 7-19-74

FHWA REGION	STATE	PROJECT	
5	OHIO		

21
354

CUYAHOGA COUNTY
CUY-90-23.73
LAKE COUNTY
LAK-90-0.00

PAVEMENT MARKINGS COST PARTICIPATION III & IV

ITEM	DESCRIPTION	QUANTITY III	QUANTITY IV	UNIT
621	4" White Edge Line			
	59+00 Lt. to 67+07 Lt. ÷ 5280	0.15		Miles
	59+00 Rt. to 59+95 Rt. ÷ 5280	0.02		Miles
	68+17 Rt. to 77+05 Rt. ÷ 5280	0.17		Miles
	77+05 Rt. to 85+25 Rt. ÷ 5280		0.16	Miles
	68+00 Lt. to 84+50 Lt. ÷ 5280	0.31		Miles
	0+60 Lt. Ramp 3 to 90+00 Lt. ÷ 5280	0.25		Miles
	TOTAL III	0.90		Miles
	TOTAL IV		0.16	Miles
	TOTAL	1.06		Miles
621	4" Yellow Edge Line			
	0+35 Rt. Ramp 3 to 8+50 Rt. Ramp 3 ÷ 5280	0.15		Miles
	59+00 to 90+00 ÷ 5280 X 2	1.17		Miles
	TOTAL III	1.32		Miles
	TOTAL	1.32		Miles
621	8" White Channelizing Line	150		Lin.Ft.
	8+50 Ramp 3 to 10+00 Ramp 3	230		Lin.Ft.
	TOTAL III	380		Lin.Ft.
	TOTAL	380		Lin.Ft.
621	24" Broad Transverse Stripes			
	85+10 to 86+80	135		Lin.Ft.
	TOTAL III	135		Lin.Ft.
	TOTAL	135		Lin.Ft.
621	24" Stop Line			
	Ramp 3	30		Lin.Ft.
	TOTAL III	30		Lin.Ft.
	TOTAL	30		Lin.Ft.
621	4" Lane Line			
	0+40 to 5+00 Ramp 3	460		Lin.Ft.
	TOTAL III	460		Lin.Ft.
	TOTAL	460		Lin.Ft.
621	6" Lane Line			
	59+00 to 77+00 ÷ 5280	0.34		Miles
	77+00 to 87+00 ÷ 5280	0.09	0.09	Miles
	87+00 to 90+00 ÷ 5280	0.06		Miles
	TOTAL III	0.49		Miles
	TOTAL IV		0.09	Miles
	TOTAL	0.58		Miles
621	Lane Arrows			
	Ramp 3 & Eddy Rd.	8		Each
	TOTAL III	8		Each
	TOTAL	8		Each
621	Word "ONLY" As Per Plan	4		Each
	Ramp 3	4		Each
	TOTAL III	4		Each
	TOTAL			

SIGN LIGHTING - COST PARTICIPATION I

STATION	625 REVISE EXISTING SIGN SERVICE, AS PER PLAN
65+50 E.B.	1
86+55 W.B.	1
Ramp 2	
11+65	1
TOTAL	3

GUARD RAIL - COST PARTICIPATION I & II

REF. NO.	STATION FROM	TO	SIDE	202 Guardrail Removed For Reuse or Storage Lin. Ft. I	202 GUARDRAIL ANCHOR DESIGN Removed For Reuse or Storage Lin. Ft. II	202 Painted Guardrail Removed For Reuse or Storage Lin. Ft. I	606 Guardrail Type 5 as per plan Lin. Ft. II	606 Anchor Assembly Each I	Each II
R-1	60+50	66+00	Rt.	125		685	500	2	
R-2	68+40	77+90	Rt.	125		100	860		1
R-3	86+40	88+45	Rt.			125	94	1	1
R-4	76+02	78+52	Lt.				200	2	
E-1	59+00	90+00	℄		1800	1300			
	Cost Participation I Total			250	1800	910	1654	5	
	Cost Participation II Total				1300		96	2	
	Total			250	3100	910	1750	7	

MADE HB DATE 7-18-74
TRACED MET DATE 8-16-74
CHECKED AJS DATE 7-19-74
SCALE

Howard, Needles, Tammen & Bergendoff
CONSULTING ENGINEERS
CLEVELAND, OHIO

HNTB

Notes.
For Pole Mounting Bracket Detail, see Sheet 110.

FHWA REGION	STATE	PROJECT	
5	OHIO		

22
354

CUYAHOGA COUNTY
CUY-90-23.73
LAKE COUNTY
LAK-90-0.00

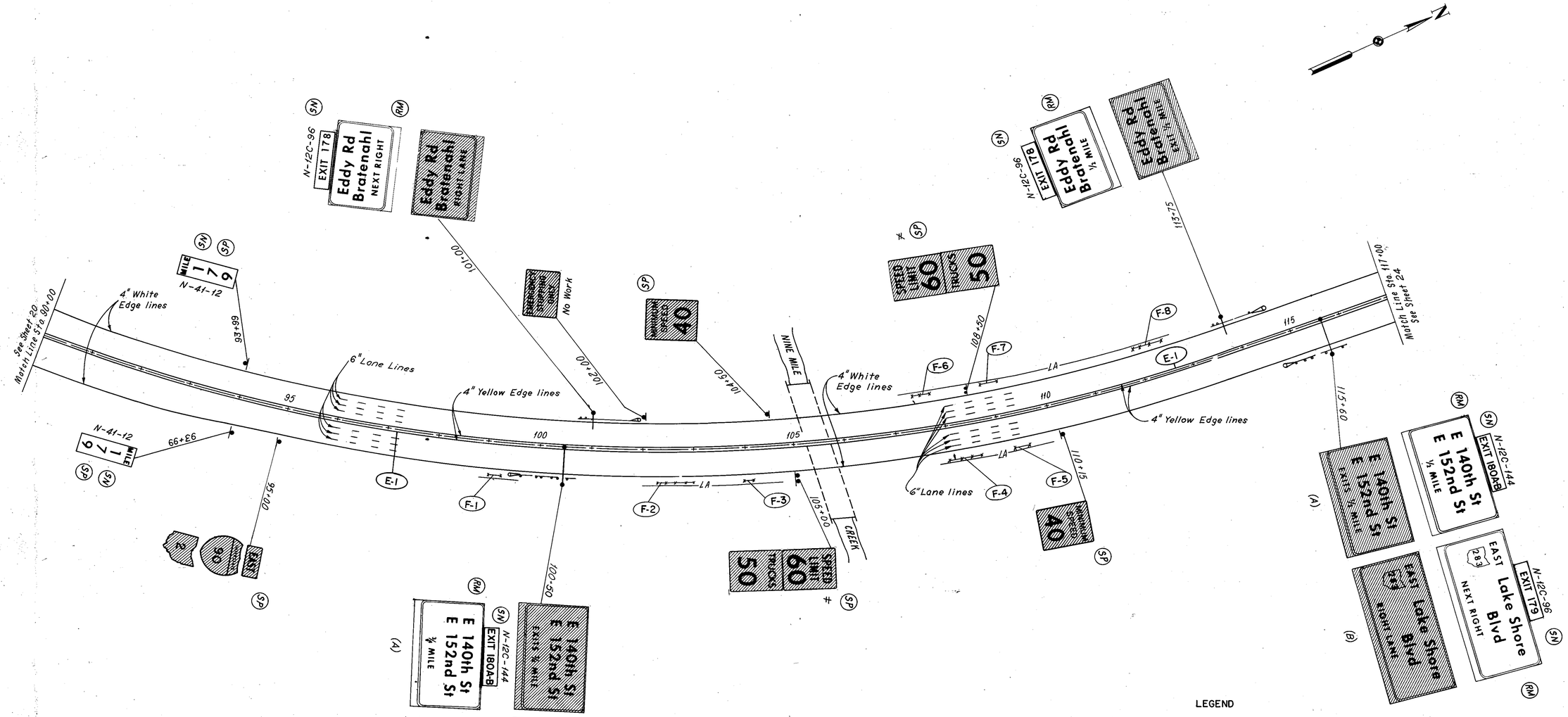

LEGEND

- PROPOSED LIGHT TOWER (BY OTHERS)
- SIGNALIZED INTERSECTION (EXISTING)
- (SN) PROVIDE NEW SIGN
- (SP) PROVIDE NEW SUPPORT (S)
- (RM) REVISE EXISTING SIGN LEGEND
- PROPOSED SIGN
- EXISTING SIGN
- ≠ SIGNS EXISTING WITH OVERLAY [55]
- # PROVIDE [55] OVERLAY ON NEW SIGN

Notes:

For Guardrail, Signing, Sign Lighting, Fence, and Pavement Marking Quantities, see Sheet 23.
For Concrete Barrier and Drainage Plan, see Sheets 59-77.
For Mile Marker Quantities, see Sheet 107.
Traffic Control Details, see Sheets 110-123B.
For Guardrail Details, see Sheets 78-80.

MADE H.B. DATE 7-1-14
TRACED F.C.G. DATE 1-17-73
CHECKED D.S.B. DATE 1-8-75
SCALE 1" = 100'

Howard, Needles, Tammen & Bergendoff
CONSULTING ENGINEERS
CLEVELAND, OHIO

HNTB

100 0 100 200

STA. 90+00 TO STA. 117+00

QUANTITIES

FHWA REGION	STATE	PROJECT	
5	OHIO		

23
354

CUYAHOGA COUNTY
CUY-90-23.73
LAKE COUNTY
LAK-90-0.00

QUANTITY CALCULATIONS
MADE BY H.B. DATE 7-12-74
CHECKED BY A.J.S. DATE 8-2-74

SIGNING - COST PARTICIPATION I & III

SHEET NO.	SIGN NO.	STATION	CODE NO.	SIGN SIZE	DIMENSIONS SEE DETAIL 'A' SHEET NO. 19 (Lin. Ft.) A	B	C	D	E	EXIST. SIGNS RE-ERECTED Sq. Ft.	EXISTING SIGN REVISED, AS PER PLAN Each	844 SIGNS FLAT SHEET Sq. Ft.	844 SIGNS EXTRU. TYPE Sq. Ft.	844 CONC. GROUND MOUNTED SIGN Cu. Yd.	844 SUPPORTS 6LB. BEAM AS PER PLAN Lin. Ft.	4 Lb POST Lin. Ft.	6 Lb BEAM Lin. Ft.	W8×17 Lin. Ft.	W10×21 Lin. Ft.	W12×31 Lin. Ft.	BREAK-AWAY CONN. Each	202 REMOVAL EXISTING SIGNS Each	REMOVAL EXISTING SUPP. Each	REMOVAL EXISTING INSTALL. Each	REMOVAL MAJOR INSTALL.	REMOVAL EXISTING O.H. SUPP. Each	620 DELIN. AS PER PLAN Each	REVISE EXISTING SIGN LEGEND, EXIT ACTION MESSAGE, AS PER PLAN Each	POLE MOUNTED SIGN ATTACHMENT, AS PER PLAN Each
										I			I			I	I						I	I				III	
22																												
	A	100+50 E.B.																									1	
	A		N-12C-144	12'-0"x2'-0"									24																
	B																										1	
	B		N-12C-96	8'-0"x2'-0"									16																
		95+00 E.B.	IM-39-36	36"x18"			20.5			4.5						20.5							1						
			M-5C-36-2	36"x36"						9																			
			M-2A-36	35"x36"						8.75																			
		110+15 E.B.	R-7-38	48"x60"	18	17.5				20					35.5							1						
		105+00 E.B.	R-10-48	48"x60"	21	21				20						42							2						
			R-16-48	48"x48"						16																			
	B	115+60 E.B.																									1	
	A																										1	
	A		N-12C-144	12'-0"x2'-0"									24																
	B		N-12C-96	8'-0"x2'-0"									16																
		101+00 W.B.	N-12C-96	8'-0"x2'-0"									16															1	
		104+50 W.B.	R-7-48	48"x60"	18	17.5				20					35.5							1						
		108+50 W.B.	R-10-48	48"x60"	20	21				20						41							2						
			R-16-48	48"x48"						16																			
		113+75 W.B.																									1	
			N-12C-96	8'-0"x2'-0"									16																
Cost Participation I Total										134.25			112			71	103.5					7						
Cost Participation III Total																											6	
TOTAL										134.25			112			71	103.5					7					6	

PAVEMENT MARKINGS COST PARTICIPATION III

ITEM	DESCRIPTION	QUANTITY	UNIT
621	6" White Lane Lines		
	Sta. 90+00 to Sta. 117+00		
	2700 x 3 x 2 = 16200		
	16200 ÷ 5280 =	3.07	Miles
621	4" White Edge Lines		
	Sta. 90+00 to Sta. 117+00		
	2700 x 2 = 5400		
	5400 ÷ 5280 =	1.02	Miles
621	4" Yellow Edge Lines		
	Sta. 90+00 to Sta. 117+00		
	2700 x 2 = 5400		
	5400 ÷ 5280 =	1.02	Miles

FENCE - COST PARTICIPATION III

REF. NO.	STATION FROM	STATION TO	SIDE	607 Type CL as per plan Lin. Ft.
F-1	99+10	99+30	Rt	20
F-2	102+30	103+00	Rt	70
F-3	104+00	104+10	Rt	10
F-4	108+00	108+60	Rt	60
F-5	109+20	109+50	Rt	30
F-6	107+50	107+80	Lt	30
F-7	108+80	109+10	Lt	30
F-8	112+00	112+60	Lt	60
Cost Participation III Total				310

GUARD RAIL - COST PARTICIPATION I

REF. NO.	STATION FROM	STATION TO	SIDE	202 GUARD RAIL, BARRIER DESIGN, Removed For Reuse or Storage Lin. Ft.
E-1	90+00	117+00	℄	2700
Cost Participation I Total				2700

SIGN LIGHTING - COST PARTICIPATION I

STATION	625 REVISE EXISTING SIGN SERVICE, AS PER PLAN
100+50 E.B.	1
115+60 E.B.	1
101+00 W.B.	1
113+75 W.B.	1
TOTAL	4

MADE H.B. DATE 7-12-74
TRACED K.O.J. DATE 7-13-74
CHECKED A.J.S. DATE 8-2-74
SCALE —

Howard, Needles, Tammen & Bergendoff
CONSULTING ENGINEERS
CLEVELAND, OHIO

HNTB

FHWA REGION	STATE	PROJECT	
5	OHIO		

24
354

CUYAHOGA COUNTY
CUY-90-23.73
LAKE COUNTY
LAK-90-0.00

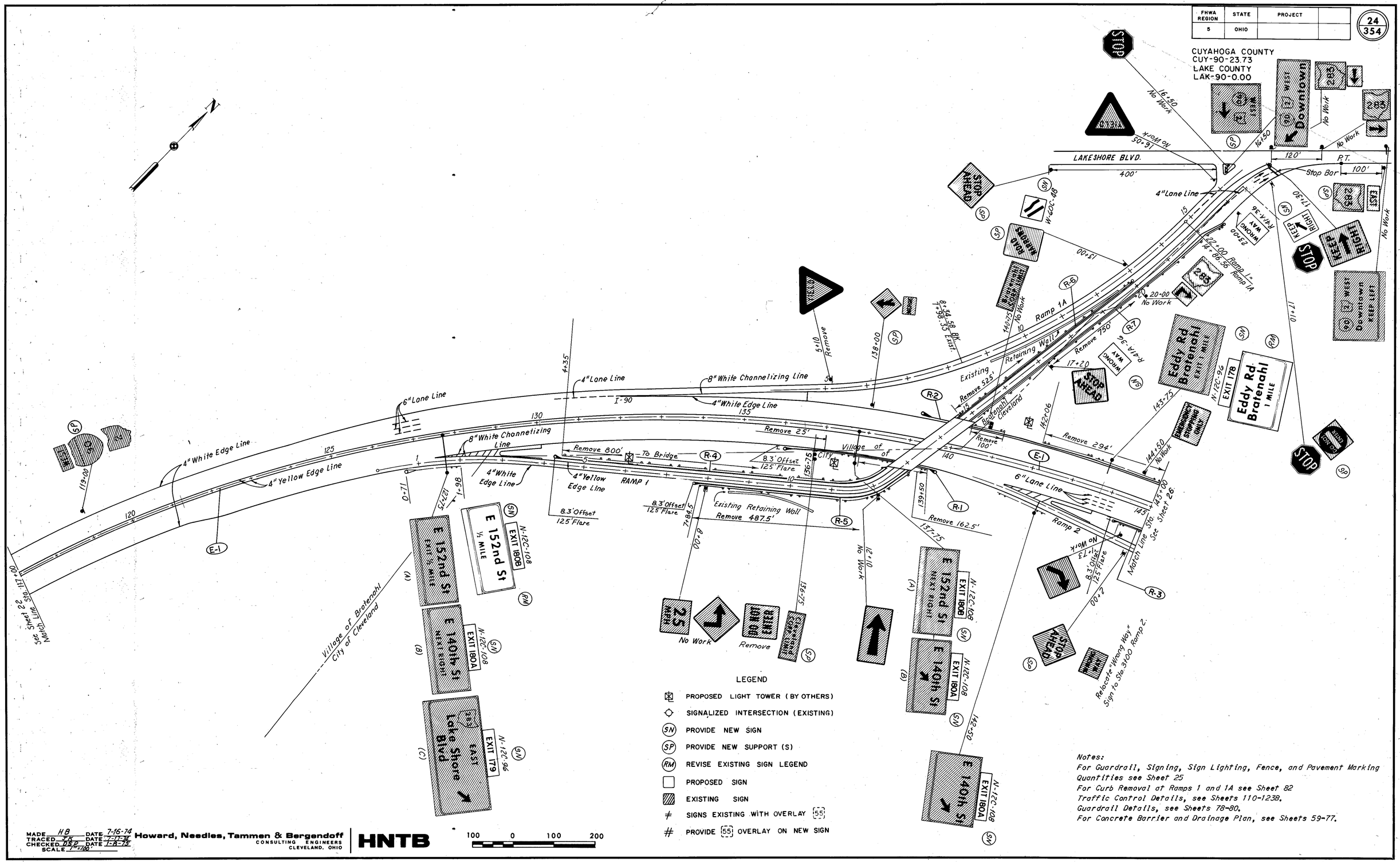

LEGEND

- PROPOSED LIGHT TOWER (BY OTHERS)
- SIGNALIZED INTERSECTION (EXISTING)
- (SN) PROVIDE NEW SIGN
- (SP) PROVIDE NEW SUPPORT (S)
- (RM) REVISE EXISTING SIGN LEGEND
- PROPOSED SIGN
- EXISTING SIGN
- ≠ SIGNS EXISTING WITH OVERLAY [55]
- # PROVIDE [55] OVERLAY ON NEW SIGN

Notes:
For Guardrail, Signing, Sign Lighting, Fence, and Pavement Marking Quantities see Sheet 25
For Curb Removal at Ramps 1 and 1A see Sheet 82
Traffic Control Details, see Sheets 110-123B.
Guardrail Details, see Sheets 78-80.
For Concrete Barrier and Drainage Plan, see Sheets 59-77.

MADE HB DATE 7-16-74
TRACED JK DATE 7-17-74
CHECKED DSP DATE 1-8-75
SCALE 1"=100'

Howard, Needles, Tammen & Bergendoff
CONSULTING ENGINEERS
CLEVELAND, OHIO

HNTB

100 0 100 200

STA. 117+00 TO STA. 145+00

QUANTITIES

FHWA REGION	STATE	PROJECT	
5	OHIO		

25
354

QUANTITY CALCULATIONS
MADE BY H.B. DATE 7-16-74
CHECKED BY A.J.S. DATE 8-1-74

CUYAHOGA COUNTY
CUY-90-23.73
LAKE COUNTY
LAK-90-0.00

SIGNING – COST PARTICIPATION I, II, III & IV

SHEET NO.	SIGN NO.	STATION	CODE NO.	SIGN SIZE	DIMENSIONS SEE DETAIL 'A' SHEET NO. 19 (Lin. Ft.) A	B	C	D	E	EXIST. SIGNS RE-ERECTED Sq. Ft. I	II	III	EXISTING SIGN REVISED, AS PER PLAN Each	844 SIGNS FLAT SHEET Sq. Ft. II	III	EXTRU. TYPE Sq. Ft. I	II	844 CONC. GROUND MOUNTED SIGN Cu. Yd.	844 SUPPORTS GLB. BEAM AS PER PLAN Lin. Ft.	4 Lb POST Lin. Ft. I	II	III	6 Lb BEAM Lin. Ft. III	202 REMOVAL EXISTING SIGNS Each III	IV	REMOVAL EXISTING SUPP. Each III	IV	REMOVAL EXISTING INSTALL. Each III	REVISE EXISTING SIGN LEGEND, EXIT ACTION MESSAGE, AS PER PLAN Each III	IV
24	A	127+75 E.B.																												1	
	A		N-12C-108	9'-0"x2'-0"												18															
	B		N-12C-108	9'-0"x2'-0"												18															
	C		N-12C-98	8'-0"x2'-0"												16															
		136+75 E.B.	G.K.	6'-0"x3'-0"	16	17					18										33						2				
	A	137+75 E.B.	N-12C-108	9'-0"x2'-0"												18															
	B		N-12C-108	9'-0"x2'-0"													18															
		142+50 E.B.	N-12C-108	9'-0"x2'-0"													18															
		119+00 W.B.	IM-40-36	36"x18"	19.5	19.5				4.5										35.5						2					
			M-5C-36-2	36"x36"						9																					
			M-2A-36	35"x36"						9																					
		143+75 W.B.																												1	
			N-12C-96	8'-0"x 2'-0"													16															
		138+00 W.B.	W-49-48	48"x48"			22.75			16										22.8						1					
			WP-49	24"x12"						2																					
		Ramp 1																													
		8+00 Rt.																									1				
		17+20	R-41A-36	36"x24"										6																	
		23+00 Rt.	R-41A-36	36"x24"			14							6							14										
		Ramp 1A																													
		5+10 Lt.																											1		
		13+00 Lt.	W-60-48	48"x48"			16.25								16					16.3					1		1				
		17+10 Rt.	R-1-48	48"x48"			16			13.3										16							1				
			R-41B-36	36"x36"						9																					
		17+30 Rt.	R-37R-48	24"x30"											5																
		16+50 Lt.		5'-0"x10'-0"	17	17						50											34		1		3				
				5'-0"x5'-0"								25																				
		Lakeshore Blvd.																													
		400' West	W-45-46	36"x36"			16.25					9									16.3						1				
		270' East	M-39-24	24"x12"			15					2									15						1				
			M-2-24	24"x24"								4																				
		Ramp 2																													
		2+00	W-45-48	48"x48"			20.75			16										20.8						1		1			
Cost Participation I TOTAL										62.8						70				90.6											
Cost Participation II TOTAL										34				12		52				67.8											
Cost Participation III TOTAL										90				21						31.3				34	1		9		1		1
Cost Participation IV TOTAL																									1		4				1
TOTALS										186.8				33		122				189.7				34	2		13		1		2

Note:
All pavement markings to be thermoplastic, unless noted to be painted.

GUARD RAIL-COST PARTICIPATION I&II

REF. NO.	STATION FROM	TO	SIDE	202 Guardrail Removed For Reuse or Storage Lin. Ft. II	202 GUARD RAIL BARRIER DESIGN, Removed For Reuse or Storage Lin. Ft. I	II	202 Painted Guardrail Removed For Reuse or Storage Lin. Ft. I	II	606 Guardrail Type 5 as per plan Lin. Ft. I	II	606 Anchor Assembly Each I	II	606 Bridge Terminal Assembly Type E Each II	606 Bridge Terminal Assembly Type F Each I
R-1	136+00	139+75	Rt.	25				162.5	50	162.5	1	1		
R-2	139+18.5	145+00	Lt.				25	369	100	456.5	1			
R-3	144+42.5	145+00	Rt.							32.5		1		
	Ramp 1													
R-4	4+35	12+35	Lt.					800		775		1	1	
R-5	7+72	12+72	Rt.					489.5		487.5		1	1	
R-6	14+71	19+96	Lt.				525		500		1			1
R-7	15+06	22+56	Rt.				200	550	200	525		1		1
E-1	117+00	145+00	℄		2320	480								
TOTAL PARTICIPATION I					2320		750		850		3			2
TOTAL PARTICIPATION II				25	480		2369		2439		5		2	
TOTALS				25	2800		3119		3289		8		2	2

PAVEMENT MARKINGS-COST PARTICIPATION

ITEM	DESCRIPTION	QUANTITY I		III	IV	UNIT
621	6" White Lane Lines					
	117+00 Rt. to 138+50 Rt. 3x2150=6450'			1.22		Miles
	138+50 Rt. to 145+00 Rt. 3x650 =1950'				.37	Mile
	117+00 Lt. to 139+96.60 Lt. 3x2296.6=6889.8'			1.30		Miles
	139+96.60 Lt. to 145+00 Lt. 3x503.4=1510.2'				.29	Mile
	Total III 13339.8 ÷ 5280			2.53		Miles
	Total IV 3460.2 ÷ 5280			0.66		Mile
621	4" Yellow Edge Lines					
	117+00 Rt. to 139+96.60 Rt. 2296.6'			.43		Mile
	139+96.60 Rt. to 145+00 Rt. 503.4'				.10	Mile
	117+00 Lt. to 139+96.60 Lt. 2296.6'			.43		Mile
	139+96.60 Lt. to 145+00 Lt. 503.4'				.10	Mile
	2+86 to 13+50 Ramp 1 1064'				.20	Mile
	13+50 to 24+30 Ramp 1 1080'			.20		Mile
	4+60 to 17+31 Ramp 1A 1271'			.24		Mile
	1+00 to 2+25 Ramp 2 125'				.02	
	Total III 6944.2 ÷ 5280			1.32		Miles
	Total IV 2135.8 ÷ 5280			.42		Mile
621	4" White Edge Lines					
	0+00 to 2+48 Ramp 1. 248'			.05		Mile
	2+48 to 13+50 Ramp 1 1102'				.21	Mile
	13+50 to 18+50 Ramp 1 500'			.09		Mile
	18+50 to 24+26 Rt. Ramp 1 576'				.11	Mile
	0+00 to 17+31 Lt. Ramp 1A 1731'			.33		Mile
	117+00 to 139+96.60 Lt. 2296.6'			.43		Mile
	139+96.60 to 145+00 Lt. 503.4'				.10	Mile
	117+00 to 125+99.60 Rt. 899.6'			.17		Mile
	129+92 to 139+96.60 Rt. 1004.6'			.19		Mile
	139+96.60 to 142+75 Rt. 278.4'				.05	Mile
	143+75 to 145+00 Rt. 125'				.02	Mile
	0+00 to 2+25 Rt. 225'				.04	Mile
	Total III 6679.8 ÷ 5280			1.27		Miles
	Total IV 2809.8 ÷ 5280			.53		Mile
621	8" White Channelizing Lines					
	127+40 to 129+92 Rt.			252		Lin. Ft.
	1+30 to 3+85 Lt. Ramp 1				255	Lin. Ft.
	141+50 to 143+75 Rt.				225	Lin. Ft.
	-1+10 to 1+00 Lt. Ramp 2				210	Lin. Ft.
	0+00 to 4+60 Rt. Ramp 1A			460		
	Total III			712		Lin. Ft.
	Total IV			690		Lin. Ft.
621	24" White Broad Transverse Lines					
	127+40 to 129+26 Rt.			207		Lin. Ft.
	141+50 to 143+20 Rt.				188	Lin. Ft.
	Total III			207		Lin. Ft.
	Total IV				188	Lin. Ft.
621	4" White Lane Lines					
	129+75 to 132+00 Lt. 225'			.04		Mile
	Total III 225 ÷ 5280			.04		Mile
621	Curb Marking (White - Painted)					
	3+25 to 5+25 Ramp 1A			200		Lin. Ft.
	Traffic Island Ramp 1A and Lakeshore			282		Lin. Ft.
	Total III			482		Lin. Ft.
621	Stop Line					
	Ramp 1 and Lakeshore Blvd.			40		Lin. Ft.
	Total III			40		Lin. Ft.
621	Lane Arrow					
	Ramp 1 Exit	2				Each
	Total I	2				Each

MADE H.B. DATE 7-16-74
TRACED H.B. DATE 7-16-74
CHECKED A.J.S. DATE 8-1-74
SCALE

Howard, Needles, Tammen & Bergendoff
CONSULTING ENGINEERS
CLEVELAND, OHIO
HNTB

FHWA REGION	STATE	PROJECT	
5	OHIO		

26
354

CUYAHOGA COUNTY
CUY-90-23.73
LAKE COUNTY
LAK-90-0.00

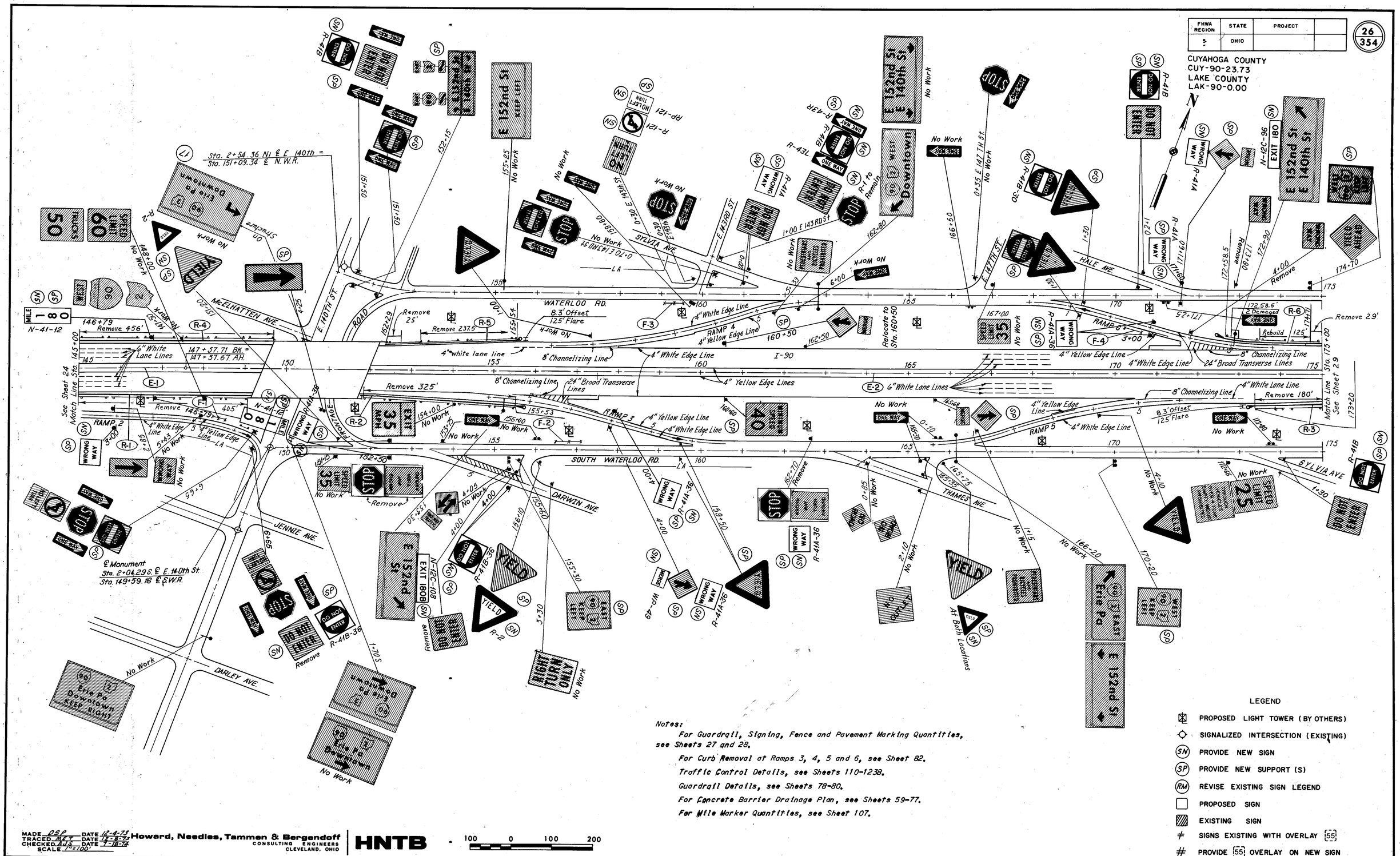

Notes:

For Guardrail, Signing, Fence and Pavement Marking Quantities, see Sheets 27 and 28.

For Curb Removal at Ramps 3, 4, 5 and 6, see Sheet 82.

Traffic Control Details, see Sheets 110-123B.

Guardrail Details, see Sheets 78-80.

For Concrete Barrier Drainage Plan, see Sheets 59-77.

For Mile Marker Quantities, see Sheet 107.

LEGEND

- PROPOSED LIGHT TOWER (BY OTHERS)
- SIGNALIZED INTERSECTION (EXISTING)
- (SN) PROVIDE NEW SIGN
- (SP) PROVIDE NEW SUPPORT (S)
- (RM) REVISE EXISTING SIGN LEGEND
- PROPOSED SIGN
- EXISTING SIGN
- ≠ SIGNS EXISTING WITH OVERLAY [55]
- # PROVIDE [55] OVERLAY ON NEW SIGN

MADE DSP DATE 12-4-73
TRACED MET DATE 12-8-73
CHECKED AJS DATE 7-18-74
SCALE 1"=100'

Howard, Needles, Tammen & Bergendoff
CONSULTING ENGINEERS
CLEVELAND, OHIO

HNTB

100 0 100 200

STA. 145+00 TO STA. 175+00

SIGNING COST PARTICIPATION II & IV

SHEET NO.	SIGN NO.	STATION	CODE NO.	SIGN SIZE	DIMENSIONS SEE DETAIL 'A' SHEET NO. 19 (Lin. Ft.) A	B	C	D	E	EXIST. SIGNS RE-ERECTED Sq. Ft. II	IV	EXISTING SIGN REVISED, AS PER PLAN Each	844 SIGNS FLAT SHEET Sq. Ft. II	IV	EXTRU. TYPE Sq. Ft II	844 CONC. GROUND MOUNTED SIGN Cu. Yd.	844 SUPPORTS GLB. BEAM AS PER PLAN Lin. Ft. II	4 Lb POST Lin. Ft. II	IV	6 Lb BEAM Lin. Ft. II	IV	W8×17 Lin. Ft.	W10×21 Lin. Ft.	W12×31 Lin. Ft.	BREAK-AWAY CONN. Each	202 REMOVAL EXISTING SIGNS Each IV	REMOVAL EXISTING SUPP. Each II	IV	REMOVAL EXISTING INSTALL. Each II	IV	REMOVAL MAJOR INSTALL. Each	REMOVAL EXISTING O.H. SUPP. Each	620 DELIN. AS PER PLAN Each	REVISE EXISTING SIGN LEGEND, EXIT ACTION MESSAGE, AS PER PLAN Each	POLE MOUNTED SIGN ATTACHMENT, AS PER PLAN Each
26																																		
	I-90																																	
		155+30 E.B.	N-12C-108	9'-0"x 2'-0"											18																			
		160+60 E.B.	R-7-48	48"x 60"						20										17						1								
		165+68 E.B.	W-49R-48	48"x 48"						16										22.5						1								
			WP-49	24"x 12"						2																								
		160+50 W.B.	W-49R-48	48"x 48"						16										22.5														
			WP-49	24"x 12"						2																								
		162+50 W.B.																									1							
		172+90 W.B.	N-12C-96	8'-0"x 2'-0"											16																			
	Ramp 2																																	
		3+00 Rt.	R-41A-36	36"x 24"						6								14																
		6+65 Lt.	R-1-48	48"x 48"						16							20.75									1								
			R-121-36	36"x 36"						9																								
			RP-121-24	24"x 18"						3																								
			R-41B-36	36"x 36"						9																								
			R-43R-36	36"x 15"						3.75																								
			R-43L-36	36"x 15"						3.75																								
		6+65 Rt.	R-1-48	48"x 48"						16							20.75									1								
			R-121-36	36"x 36"						9																								
			RP-121-24	24"x 18"						3																								
			R-41B-36	36"x 36"										9																				
			R-43R-36	36"x 15"						3.75																								
			R-43L-36	36"x 15"						3.75																								
			R-41-36	36"x 36"																						1								
	Ramp 3																																	
		4+00 Lt.	R-41A-36	36"x 24"									6					14																
		4+00 Rt.	R-41A-36	36"x 24"									6							23.25						1								
			WP-49	24"x 12"									2																					
			W-49R-48	48"x 48"						16																								
	South Waterloo Road																																	
		151+15 Rt.																								1								
		151+20 Lt.	R-2-48	48"x 48"x 48"										6.9					15.5											1				
		152+50 Lt.	R-41A-36	36"x 24"										6					14															
		152+50 Rt.	R-41A-36	36"x 24"										6					14															
		155+30 Rt.		5'-0"x 6'-0"	18	18					30										36						2							
		156+10 Rt.	R-2-48	48"x 48"x 48"										6.9					15.5											1				
		159+50 Lt.	R-2-48	48"x 48"x 48"							6.9								15.5								1							
		159+50 Rt.	R-2-48	48"x 48"x 48"							6.9								15.5								1							
		162+70 Lt.																												1				
			R-41A-36	36"x 24"										6					14															
		165+35 Rt.	R-2-48	48"x 48"x 48"										6.9					15.5											1				
		165+75 Rt.	R-2-48	48"x 48"x 48"										6.9					15.5											1				
		170+20 Rt.		5'-0"x 6'-0"	18	18					30										36						2							
	Darwin Ave.																																	
		4+00 Rt.	R-41B-36	36"x 36"										9					15															
		4+00 Lt.	R-41B-36	36"x 36"										9					15															
	Cost Participation II Total									158			14		34		41.5	28		85.25							1		1					
	Cost Participation IV Total										73.8			72.6					16.5		72					2		6		6				
	TOTAL									231.8			86.6		34		41.5		193		157.25					2	7		7					

FENCE-COST PARTICIPATION IV

REF. NO.	STATION FROM	TO	SIDE	607 Type CL as per plan Lin. Ft.
	Ramp 2			
F-1	5+50	5+80	Lt.	30
	South Waterloo Road			
F-2	156+50	157+10	Lt.	60
	Waterloo Road			
F-3	159+10	159+50	Rt.	40
	Ramp 6			
F-4	2+45	2+55	Rt.	10
	Total IV			140
	TOTAL			140

GUARD RAIL-COST PARTICIPATION II

REF. NO.	STATION FROM	TO	SIDE	202 Guardrail Removed For Reuse or Storage Lin. Ft.	202 GUARD RAIL, BARRIER DESIGN, Removed For Reuse or Storage Lin. Ft.	202 Painted Guardrail Removed For Reuse or Storage Lin. Ft.	606 Guardrail Type 5 as per plan Lin. Ft.	606 Guardrail Type 5 Rebuit as per plan Each	606 Anchor Assembly Each	606 Bridge Terminal Assembly Type E Each	606 Bridge Terminal Assembly Type F Each
R-1	145+00	149+05	Rt.			405	405			1	
R-2	151+78	155+78	Rt.			375	375		1		1
R-3	173+20	175+00	Rt.			180	155		1		
R-4	145+00	149+56	Lt.			456	456				1
R-5	152+29	155+41.5	Lt.	25		237.5	225	62.5	1	1	
R-6	172+33	175+00	Lt.	25		29	54	125	1		
E-1	145+00	149+43	℄		443						
E-2	151+91	175+00	℄		2309						
	Ramp 2										
R-7	5+79	6+41.5	Lt.			25	37.5		1		
	Cost Participation II Total			50	2752	1707.5	1707.5	187.5	5	2	2

MADE H.B. DATE 7-11-74
TRACED — DATE
CHECKED A.J.S. DATE 7-26-74
SCALE

Howard, Needles, Tammen & Bergendoff
CONSULTING ENGINEERS
CLEVELAND OHIO

HNTB

FHWA REGION	STATE	PROJECT	
5	OHIO		

27
354

CUYAHOGA COUNTY
CUY-90-23.73
LAKE COUNTY
LAK-90-0.00

QUANTITY CALCULATIONS

MADE BY H.B. DATE 7-17-74
CHECKED BY A.J.S. DATE 7-26-74

QUANTITIES

QUANTITY CALCULATIONS
MADE BY H.B. DATE 7-18-74
CHECKED BY A.V.S. DATE 7-26-74

FHWA REGION	STATE	PROJECT	
5	OHIO		

28
354

CUYAHOGA COUNTY
CU.-90-23.73
LAKE COUNTY
LAK-90-0.00

SIGNING - COST PARTICIPATION II & IV

SHEET NO.	SIGN NO.	STATION	CODE NO.	SIGN SIZE	DIMENSIONS SEE DETAIL "A" SHEET NO.19 (Lin. Ft.) A	B	C	D	E	EXIST. SIGNS RE-ERECTED Sq. Ft. II	IV	EXISTING SIGN REVISED, AS PER PLAN EACH	844 SIGNS FLAT SHEET SQ. FT. II	IV	EXTRU. TYPE Sq. Ft.	844 CONC. GROUND MOUNTED SIGN Cu. Yd.	844 SUPPORTS GLB. BEAM AS PER PLAN Lin. Ft. IV	4 LB. POST Lin. Ft. II	IV	6 LB. BEAM Lin. Ft. II	IV	W8x17 Lin. Ft.	W10x21 Lin. Ft.	W12x31 Lin. Ft.	BREAK-AWAY CONN. Each	202 REMOVAL EXISTING SIGNS Each IV	REMOVAL EXISTING SUPP. Each II	IV	REMOVAL EXISTING INSTALL. Each II	IV	REMOVAL MAJOR INSTALL. Each	REMOVAL EXISTING O.H. SUPP. Each	620 DELIN. AS PER PLAN Each	REVISE EXISTING SIGN LEGEND, EXIT ACTION MESSAGE, AS PER PLAN Each	POLE MOUNTED SIGN ATTACHMENT, AS PER PLAN Each
26										II	IV		II	IV			IV	II	IV	II	IV					IV	II	IV	II	IV					
		Sylvia Ave.																																	
		0+00 Lt.	R-41A-36	36"x24"										6					14																	
		0+00 Rt.	R-41A-36	36"x24"										6					14											1					
		1+30 Lt.	R-41B-36	36"x36"										9					15											1					
		1+30 Rt.	R-41B-36	36"x36"										9					15											1					
		Frontage Rd.																																	
		4+25	W-32-48	48"x24"							8								14										1						
		Waterloo Rd.																																	
		151+50 Lt.	R-41B-36	36"x36"										9				16.25										1		1					
			R-43R-36	36"x15"							3.75																									
			R-43L-36	36"x15"							3.75																									
		151+50 Rt.	R-41B-36	36"x36"							9							16.25											1						
			R-43R-36	36"x15"							3.75																									
			R-43L-36	36"x15"							3.75																									
		152+15 Rt.		9'-0"x4'-0"	16	16					36											32							2						
			IM-39-24	24"x12"							2																									
			M-5C-24-2	24"x24"							4																									
			IM-28-20	20"x15"							2.08																									
			M-39-24	24"x12"							2																									
			M-2A-24	21⅜"x22"							3.27																									
			M-28-20	20"x15"							2.08																									
		171+60 Lt.	R-41A-36	36"x24"										6					14											1					
		171+60 Rt.	R-41A-36	36"x24"										6								18.75								1					
			W-49R-48	48"x48"							16																									
			WP-49	24"x12"							2																									
		173+90 Lt.	R-41A-36																																	
		174+70 Lt.		5'-0"x6'-0"	18	18					30											36							2			1				
		Ramp 6																																	
		1+30 Lt.	R-2-48	48"x48"x48"						6.9																			1							
			R-41B-30	30"x30"									6.25						15.5																	
		1+30 Rt.	R-2-60	60"x60"x60"						10.8																			1							
			R-41B-30	30"x30"						6.25												16.5														
		3+00 Lt.	R-41A-36	36"x24"									6						14																	
		3+00 Rt.	R-41A-36	36"x24"									6						14																	
		4+00 Lt.	W-46-48																													1				
			R-41A-36																																	
		East 143th St.																																	
		0+30 Rt.	R-12I-36	36"x36"										9																						
			RP-12I-24	24"x18"										3																						
		1+00 Rt.	R-41B-36	36"x36"										9				16.25										1		1					
			R-43R-36	36"x15"										3.75																						
			R-43L-36	36"x15"										3.75																						
			R-1-30	30"x30"										6.25																						
		Hale Ave.																																	
		1+20 Lt.	R-41B-36	36"x36"										9						15																
		1+20 Rt.	R-41B-36	36"x36"										9						15																
Cost Participation II TOTAL										23.95			18.25					43.50	16.50								2								
Cost Participation IV TOTAL										131.43			103.75				48.75	132.50	86.75								10		2					
TOTALS										155.38			122.00				48.75	176.00	103.25							2	12		2					

PAVEMENT MARKINGS - COST PARTICIPATION II & IV

ITEM	DESCRIPTION	QUANTITY	UNIT
621	6" White Lane Lines		
	145+00 to 175+00 Lt. and Rt. 2x3x3000=18000		
	Total IV 18000 ÷ 5280	3.41	Miles
621	4" Yellow Edge Lines		
	145+00 to 175+00 Lt. and Rt. 2x3000 = 6000		
	2+25 to 6+54 Lt. Ramp 2 429		
	3+66 to 6+09 Lt. Ramp 3 243		
	2+60 to 5+64 Rt. Ramp 4 304		
	1+00 to 4+04 Lt. Ramp 5 304		
	0+78 to 3+05 Rt. Ramp 6 227		
	Total IV 7507 ÷ 5280	1.42	Miles
621	4" White Edge Lines		
	145+00 to 153+85 Rt. 885		
	157+53 to 172+11 Rt. 1458		
	172+11 to 175+00 Rt. 289		
	145+00 to 156+35 Lt. 1135		
	156+35 to 175+00 Lt. 1448		
	173+89 to 175+00 Lt. 111		
	2+25 to 5+57 Rt. Ramp 2 332		
	0+00 to 6+09 Rt. Ramp 3 609		
	0+00 to 5+64 Lt. Ramp 4 564		
	1+00 to 6+64 Rt. Ramp 5 564		
	0+78 to 4+05 Lt. Ramp 6 327		
	Total IV 7722 ÷ 5280	1.46	Miles
621	8" White Channelizing Lines		
	155+35 to 157+53 Rt. 218		
	170+83 to 173+00 Lt. 217		
	1+50 to 3+66 Lt. Ramp 3 216		
	0+00 to 1+60 Rt. Ramp 4 160		
	4+60 to 6+64 Lt. Ramp 5 204		
	3+05 to 5+10 Rt. Ramp 6 205		
	Total IV 1220	1220	Lin. Ft.
621	Broad Transverse Lines 24"		
	153+85 to 156+80 Rt. 332		
	171+83 to 173+89 Lt. 211		
	Total IV 543	543	Lin. Ft.
621	4" White Lane Lines		
	172+11 to 173+10 Rt. 101		
	155+35 to 156+35 Lt. 100		
	Total IV 201	201	Lin. Ft.
621	Curb Marking, White (Painted)		
	6+00 to 6+55 Lt. Ramp 2 55		
	4+39 to 6+68 Rt. Ramp 2 229		
	1+59 to 3+59 Lt. Ramp 4 200		
	3+05 to 4+60 Rt. Ramp 5 200		
	Total IV 684	684	Lin. Ft.
621	Lane Arrows		
	6+65 Ramp 2 1		
	5+80 Ramp 3 1		
	1+30 Ramp 6 1		
	Total II 3	3	Each

Note:
All pavement markings are thermoplastic unless noted to be painted.

MADE H.B. DATE 7-17-74
TRACED D.B.C. DATE 7-20-74
CHECKED A.V.S. DATE 7-26-74
SCALE

Howard, Needles, Tammen & Bergendoff
CONSULTING ENGINEERS
CLEVELAND, OHIO

HNTB

FHWA REGION	STATE	PROJECT	
5	OHIO		

29
354

CUYAHOGA COUNTY
CUY-90-23.73
LAKE COUNTY
LAK-90-0.00

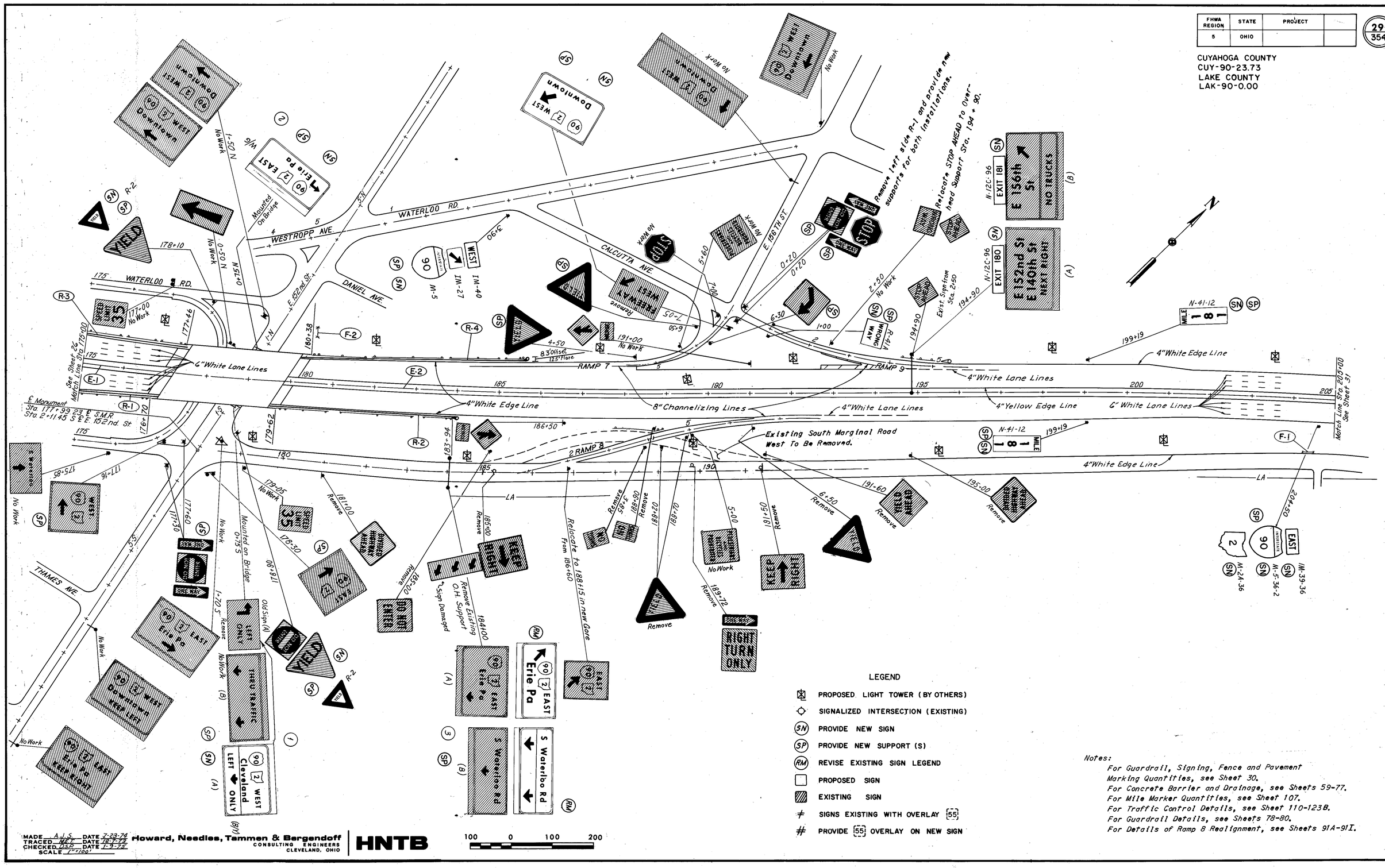
WATERLOO RD.
WESTROPP AVE.
DANIEL AVE.
CALCUTTA AVE.
E. 152nd St.
E. 156TH ST.
THAMES WE.
RAMP 7
RAMP 8
RAMP 9
Existing South Marginal Road West To Be Removed.
Mounted On Bridge
Remove
No Work
Relocate to 188+15 in new Gore
Remove Existing O.H. Support
Sign Damaged
Old Sign (A)
Old Sign (B)
Existing Sign from Sta. 2+50
Remove Left Side Of Sign
Remove Right Side Of Sign
Remove Sign
Remove Supports
Remove Sign Supports
Remove Sign Panel
Remove Sign Panel & Supports
Remove Sign & Supports
Remove Sign & Support
Remove Sign Panel & Support
Remove Sign Panel & Supports
Remove Sign Panel & Support
Remove Sign & Supports
Remove Sign

SIGNING - COST PARTICIPATION II & IV

SHEET NO.	SIGN NO.	STATION	CODE NO.	SIGN SIZE	DIMENSIONS SEE DETAIL "A" SHEET NO.19 (Lin. Ft.) A	B	C	D	E	EXIST. SIGNS RE-ERECTED Sq. Ft. II	IV	EXISTING SIGN REVISED, AS PER PLAN EACH II	IV	844 SIGNS FLAT SHEET Sq. Ft. II	IV	EXTRU. TYPE Sq. Ft. II	IV	844 SUPPORTS 6 LB. BEAM AS PER PLAN Lin. Ft. II	IV	4 LB. POST Lin. Ft. II	IV	6 LB. BEAM Lin. Ft. II	202 REMOVAL EXISTING SIGNS Each II	IV	REMOVAL EXISTING SUPP. Each II	IV	REMOVAL EXISTING INSTALL. Each II	IV	REVISE EXISTING SIGN LEGEND, EXIT ACTION MESSAGE, AS PER PLAN Each II	POLE MOUNTED SIGN ATTACHMENT, AS PER PLAN Each IV
29										16											40.5					1					
			WP-49	24"X12"						2																					
	A	194+90W.B.	N-12C-96	8'-0"X2'-0"												16															
	B	194+90W.B.	N-12C-96	8'-0"X2'-0"												16					-										
		194+90W.B.	W-45-48	48"X48"							16																				
		204+50E.B.	IM-39-36	36"X18"			19							9										19							
			M-5-36-2	36"X36"										6																	
			M-2A-36	35"X36"										9																	
		SOUTH WATERLOO RD.																													
		177+16Lt.		5'-0"X5'-0"	17	17					25										34				2						
		177+30Rt.	R-43L-36	36"X15"			15.75				3.75								15.75						1						
			R-43R-36	36"X15"							3.75																				
			R-41B-30	30"X30"							6.25																				
		177+60Lt.	R-43L-36	36"X15"			15.75				3.75								15.75						1						
			R-43R-36	36"X15"							3.75																				
			R-41B-30	30"X30"							6.25																				
		178+90 Lt.	R-41B-30	30"X30"			16.5				6.25										16.5				1						
			R-2-60	60"X60"X60"												10.8									1						
		178+30Rt.		5'-0"X5'-0"	17	17					25										34				2						
		179+00℄	R-38R-36	36"X30"			15.5							7.5							15.5										
			RP-38R	36"X18"										4.5																	
		181+00Rt.	R-26A-30	30"X36"			15.5							7.5							15.5								1		
		183+00Lt.	R-27A-30	30"X36"			15.5							7.5							15.5										
	③ A℄B	184+00																													2
		184+82	X-1	15"X15"			14							16							14										
		189+72 Lt.																											1		
		186+60Lt.																											1		
		188+15 Lt.		5'-0"X5'-0"	17	17					25										34										
		189+00	R-41B-36	36"X36"			16							9							16										
		189+61	R-38R-24	24"X30"			15.5							5							15.5										
			RP-38R-24	24"X18"										3																	
		191+50																											1		
		191+60																											1		
		195+00																											1		
		S. M. R. WEST																													
		188+90 Lt.																			-								1		
		189+20 Rt.																											1		
		189+70 Lt.																											1		
		185+00℄R																											2		
		RAMP 8																													
		3+85 Rt.																											1		
		6+50 Rt.																											1		
		WATERLOO RD																													
		178+10 Rt.	R-2-48	48"X48"X48"			14								6.9						14									1	
		3+90 Rt.	M-5-36-2	36"X36"			16.75								9						16.75										
			IM-27-20	20"X15"											2.9																
			IM-40-36	36"X18"											4.5																
		RAMP 7																													
		4+50 Lt.	R-2-60	60"X60"X60"			16.5				10.8										16.5				1						
		6+50 Lt.	R-2-48	48"X48"X48"			15.5				6.9										15.5				1						
		7+05 Rt.		10'-0"X4'-0"	17	17											40					34							1		
		6+30 Rt.	W-1-36	36"X36"			16.25				9										16.25				1						
		RAMP 9																													
		0+20 Lt.	R-43R-36	36"X15"			16.25				3.75							16.25							1	1					
			R-43L-36	36"X15"							3.75																				
			R-41B-36	36"X36"							9																				
		0+20 Rt.	R-43R-36	36"X15"			16.25				3.75							16.25							1						
			R-43L-36	36"X15"							3.75																				
			R-41B-36	36"X36"							9																				
			R-1-48	48"X48"							16																				
		1+00 Rt.	R-41A-36	36"X24"			14							6							14										
		1+00 Lt.	R-41A-36	36"X24"			14							6							14										
		2+50 Lt.																							1						
		EAST 152 ND. STREET																													
	①-A	0+75 S		8'-0"X5'-0"													40								1						
	②	0+75 N		10'-0"X4'-0"													40														
	S.W.R.	188+20 Lt.	R-120-36	36"x36"			16.5				9										-		16.5								
			R-120-24	24"x18"							3																				
Cost Participation Total II										93.6				74.10		32		32.50		242.75		35.5		6		13		2		
Cost Participation Total IV										99.75				34.1		120		31.50		149.25			4	7		2				1
Total										127.7				108.2		152		64.00		392.0		35.5	4	13		15		2		1

MADE HB DATE 7-22-74
TRACED ECG DATE 7-23-74
CHECKED AJS DATE 7-23-74
SCALE None

Howard, Needles, Tammen & Bergendoff
CONSULTING ENGINEERS
CLEVELAND, OHIO

HNTB

QUANTITIES

FHWA REGION	STATE	PROJECT	
5	OHIO		

30
354

CUYAHOGA COUNTY
CUY-90-23.73
LAKE COUNTY
LAK-90-0.00

PAVEMENT MARKINGS - COST PARTICIPATION

ITEM	DESCRIPTION	QUANTITY	UNIT
621	6" White Lane Lines		
	175+00 to 205+00 2x3x3000 ÷ 5280		
	Total IV	3.41	Miles
621	4" Yellow Edge Lines		
	175+00 to 205+00 ℄ (x2) 6000		
	0+20 to 3+30 Ramp 9 310		
	Total IV 6310 ÷ 5280	1.20	Miles
621	4" White Edge Lines		
	175+00 to 192+70 Rt. 1770		
	192+70 to 205+00 Rt. 1230		
	175+00 to 183+70 Lt. 870		
	183+70 to 192+70 Lt. 900		
	196+20 to 205+00 Lt. 880		
	0+00 to 6+00 Ramp 7 600		
	0+25 to 5+85 Ramp 9 560		
	Total IV 6810 ÷ 5280	1.29	Miles
621	8" White Channelizing Lines		
	192+64 to 195+40 Lt. 276		
	2+31 to 4+60 Rt. Ramp 9 229		
	0+00 to 4+98 Rt. Ramp 7 498		
	Total IV 1003	1003	Lin. Ft.
621	24" Broad Transverse Lines		
	193+34 to 195+40 Lt. 165		
	Total IV 165	165	Lin. Ft.
621	4" White Lane Lines		
	192+69 to 195+34 Rt. 265		
	194+90 to 198+54 Lt. 215		
	Total IV 480 ÷ 5280	0.09	Miles
621	24" Stop Line		
	0+21.6 Ramp 9 16		
	Total IV 16	16	Lin. Ft.
621	Curb Marking (White - Painted)		
	5+07 to 7+12 Rt. Ramp 7 205		
	5+80 to Calcutta ℄ Ramp 7 163		
	Traffic Island Ramp 7 106		
	0+21 to 0+46 Rt. Ramp 9 25		
	0+25 to 0+75 Lt. Ramp 9 50		
	2+31 to 3+31 Rt. Ramp 9 100		
	Total IV 649	649	Lin. Ft.
621	Lane Arrow		
	Ramp 9 Exit	3	Each
	Total II	3	Each

QUANTITY CALCULATIONS
MADE BY HB DATE 7-22-74
CHECKED BY AJS DATE 7-25-74

Note:
All Pavement Markings are Thermoplastic unless noted to be painted.

For Pole Mounting Bracket Detail, see Sheet 110.

Removal of Existing Overhead Sign Support at Sta. 184+00 S. Waterloo Rd. to be paid for under Cost Participation II at the unit price per each, Removal Existing O.H. Sign Support.

FENCE - COST PARTICIPATION IV

REF. NO.	STATION FROM	TO	SIDE	607 Type CL as per plan
	South Marginal Rd.			Lin. Ft.
F-1	204+25	204+35	Lt.	10
	I-90			
F-2	180+50		Lt.	20
Cost Participation IV Total				30

GUARD RAIL - COST PARTICIPATION II

REF. NO.	STATION FROM	TO	SIDE	202 Guardrail Removed For Reuse or Storage Lin. Ft.	202 GUARD RAIL, BARRIER DESIGN, Removed For Reuse or Storage Lin. Ft.	202 Painted Guardrail Removed For Reuse or Storage Lin. Ft.	606 Guardrail Type 5 as per plan Lin. Ft.	606 Anchor Assembly Each	606 Bridge Terminal Assembly Type E Each	606 Bridge Terminal Assembly Type F Each
R-1	175+00	176+70	Rt.			170	170		1	
R-2	179+62	183+99.5	Rt.			437.5	412.5	1		1
R-3	175+00	177+46	Lt.			246	246			1
R-4	180+38	185+50.5	Lt.	50		462.5	487.5	1	1	
	I-90									
E-1	175+00	177+21	℄		221					
E-2	179+87	205+00	℄		2513					
Cost Participation II Total				50	2734	1316	1316	2	2	2

FHWA REGION	STATE	PROJECT	
5	OHIO		

31, 354

CUYAHOGA COUNTY
CUY-90-23.73
LAKE COUNTY
LAK-90-0.00

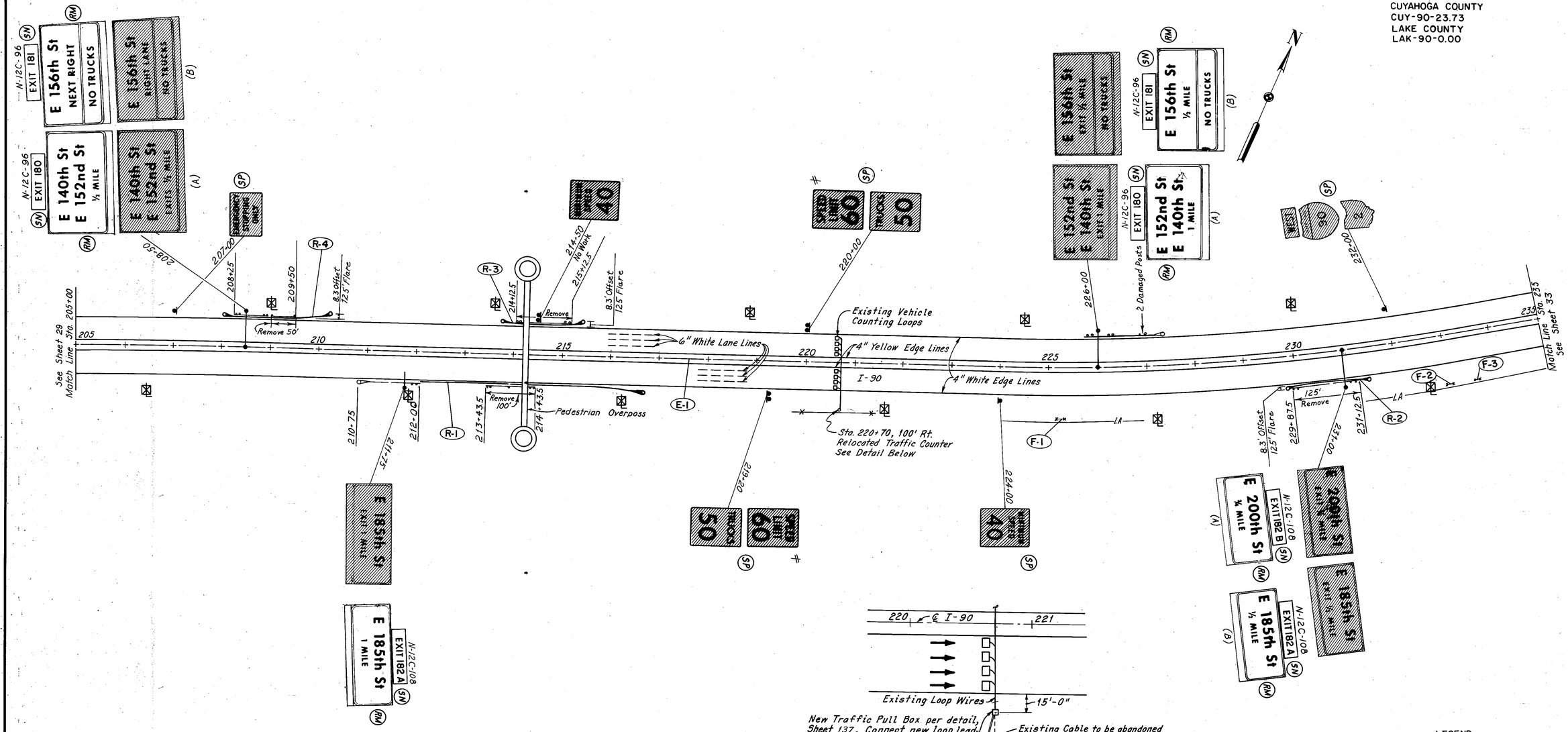

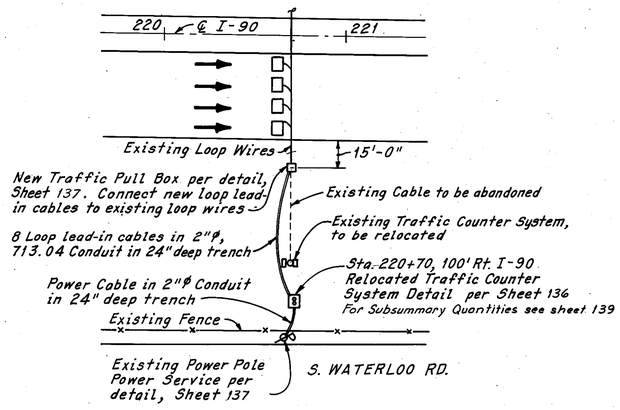

RELOCATED TRAFFIC COUNTER
Sta. 220+70
Scale: 1" = 40'

LEGEND

- PROPOSED LIGHT TOWER (BY OTHERS)
- SIGNALIZED INTERSECTION (EXISTING)
- (SN) PROVIDE NEW SIGN
- (SP) PROVIDE NEW SUPPORT (S)
- (RM) REVISE EXISTING SIGN LEGEND
- PROPOSED SIGN
- EXISTING SIGN
- ≠ SIGNS EXISTING WITH OVERLAY [55]
- # PROVIDE [55] OVERLAY ON NEW SIGN

Notes:
For Guardrail, Signing, Fence, and Pavement Marking Quantities, see Sheet 32.
Traffic Control Details, see Sheets 110-123B.
Guardrail Details, see Sheet 78-80
For Concrete Barrier and Drainage Plan, see Sheets 59-77.

MADE DSP DATE 12-1-73
TRACED JA DATE 12-5-73
CHECKED MEE DATE 1-11-74
SCALE 1"=100'

Howard, Needles, Tammen & Bergendoff
CONSULTING ENGINEERS
CLEVELAND, OHIO.

HNTB

100 0 100 200

STA. 205+00 TO STA. 235+00

QUANTITIES

FHWA REGION	STATE	PROJECT	
5	OHIO		

32
354

CUYAHOGA COUNTY
CUY-90-23.73
LAKE COUNTY
LAK-90-0.00

QUANTITY CALCULATIONS
MADE BY AJS DATE 7·10·74
CHECKED BY HB DATE 7·12·74

SIGNING COST PARTICIPATION II AND IV

SHEET NO.	SIGN NO.	STATION	CODE NO.	SIGN SIZE	DIMENSIONS SEE DETAIL 'A' SHEET NO. 19 (Lin. Ft.) A	B	C	D	E	EXIST. SIGNS RE-ERECTED Sq. Ft.	EXISTING SIGN REVISED, AS PER PLAN Each	844 SIGNS FLAT SHEET Sq. Ft.	844 SIGNS EXTRU. TYPE Sq. Ft	844 CONC. GROUND MOUNTED SIGN Cu. Yd.	844 SUPPORTS 6LB. BEAM AS PER PLAN Lin. Ft.	4 Lb POST Lin. Ft.	6 Lb BEAM Lin. Ft.	202 REMOVAL EXISTING SUPP. Each	REVISE EXISTING SIGN LEGEND, EXIT ACTION MESSAGE, AS PER PLAN Each
										II			II			II	II	II	IV
31		211+75EB																	1
			N-12C-108	9'-0"x 2'-0"									18						
		219+20EB	R-10-48	48"x 60"						20							39	2	
			R-16-48	48"x 48"						16									
		224+00EB	R-7A-48	48"x 60"	16	16.5				20						32.5		1	
	A	231+00EB																	1
	A		N-12C-108	9'-0"x 2'-0"									18						
	B																		1
	B		N-12C-108	9'-0"x 2'-0"									18						
	A	208+50WB																	1
	A		N-12C-96	8'-0"x 2'-0"									16						
	B																		1
	B		N-12C-96	8'-0"x 2'-0"									16						
		207+00WB	R-70-48	48"x 36"	15	16				12						31		1	
		220+00WB	R-10-48	48"x 60"	19	20				20							39	2	
			R-16-48	48"x 48"						16									
	A	226+00WB																	1
	A		N-12C-96	8'-0"x 2'-0"									16						
	B																		1
	B		N-12C-96	8'-0"x 2'-0"									16						
		232+00WB	IM-40-36	36"x 18"			19			4.5							19	1	
			M-5C-36-2	36"x 36"						15									
			M-2A-36							8.75									
Cost Participation II TOTAL										132.25			118			63.5	97	7	
Cost Participation IV TOTAL																			7
TOTAL										132.25			118			63.5	97	7	7

PAVEMENT MARKINGS - COST PARTICIPATION IV

ITEM	DESCRIPTION	QUANTITY	UNIT
621	6" White Lane Lines		
	205+00 to 235+00 (2x3x3000)		
	Total 18,000 ÷ 5280	3.41	Miles
621	4" Yellow edge lines		
	205+00 to 235+00 (2x3000)		
	Total 6000 ÷ 5280	1.14	Miles
621	4" White edge lines		
	205+00 to 235+00 (2x3000)		
	Total 6000 ÷ 5280	1.14	Miles

FENCE COST PARTICIPATION IV

REF. NO.	STATION FROM	TO	SIDE	607 Type CL as per Plan
				Lin. Ft.
F-1	225+20	225+30	Rt.	10
F-2	232+95	233+05	Rt.	10
F-3	233+45	233+55	Rt.	10
Cost Participation IV TOTAL				30
TOTAL				30

GUARD RAIL - COST PARTICIPATION II

SH. NO.	REF. NO.	STATION FROM	TO	SIDE	202 Guardrail Removed For Reuse or Storage	202 GUARD RAIL, BARRIER DESIGN, Removed For Reuse or Storage	202 Painted Guardrail Removed For Reuse or Storage	606 Guardrail Type 5 as per plan	606 Anchor Assembly
					Lin. Ft.	Lin. Ft.	Lin. Ft.	Lin. Ft.	Each
	R-1	212+00	216+00	Rt.			100	450	1
	R-2	229+75	231+50	Rt.			100	125	2
	R-3	213+75	215+50	Lt.			100	125	2
	R-4	207+97	210+22	Lt.	25			100	2
	E-1	205+00	235+00	℄		3000			
		TOTALS			25	3000	300	800	7

Note:
All Pavement Markings are Thermoplastic unless noted to be painted.

MADE AJS DATE 7.10.74
TRACED AJS DATE 7.10.74
CHECKED H.B. DATE 7.12.74
SCALE NONE

Howard, Needles, Tammen & Bergendoff
CONSULTING ENGINEERS
CLEVELAND, OHIO
HNTB

FHWA REGION	STATE	PROJECT	
5	OHIO		

33
354

CUYAHOGA COUNTY
CUY-90-23.73
LAKE COUNTY
LAK-90-0.00

See Sheet 31
Match Line Sta 235+00

I-90

4"White Edge Line
4"Yellow Edge Line
4"Lane Line
6"White Lane Line
8"Channelizing Line
Remove 37.5'
Remove 337.5'
Remove 100'
8.3' Offset 12.5' Flare
Pedestrian Overpass
S. WATERLOOROAD
Remove
RAMP 11
RAMP 12
RAMP 13
VILLA VIEW RD.
E. 185TH ST.
E Monument Sta.5+19.98 N.E. 185th = Sta. 260+87.51 E Villa View
E Monument Sta. 2+43.14 S. E. E. 185th St = Sta 4+99.14 E Waterloo Rd = Sta. 16+48.38 E Ramp 12
Remove exist. Gaurdrail, 650' sta. 4+50 to sta. 11+00
Remove exist. Gaurdrail 1062.5' 259.94 to 10+06.5'
Remove exist. Gaurdrail 612.5' 259+56 to 6+08.5'
Remove exist. Gaurdrail 1062.5' 257.35 to 7+56.5'
Remove exist. Gaurdrail 1062.5' 259.94 to 10+06.5'
Pedestrians and Bicycles Prohibited
No Work
No Left Turn
Left Turn Only
Do Not Enter
Yield
One Way
Crosswalk Lines
Downtown
Right Lane
Left Turn Only
Exit
Jct
Ramp 2
Ramp 3
Ramp 4
Ramp 5
Ramp 6
Ramp 7
Ramp 8
Ramp 9
Ramp 10
Ramp 11
Ramp 12
Ramp 13

E 156th St
1 MILE
NO TRUCKS
EXIT 181
N-12C-96

E 200th St
¾ MILE
EXIT 182B
N-12C-108

E 185th St
NEXT RIGHT
EXIT 182A
N-12C-108

E 222nd St
¾ MILE
EXIT 183
N-12C-96

LEGEND

- PROPOSED LIGHT TOWER (BY OTHERS)
- SIGNALIZED INTERSECTION (EXISTING)
- (SN) PROVIDE NEW SIGN
- (SP) PROVIDE NEW SUPPORT (S)
- (RM) REVISE EXISTING SIGN LEGEND-
- PROPOSED SIGN
- EXISTING SIGN
- ≠ SIGNS EXISTING WITH OVERLAY [55]
- # PROVIDE [55] OVERLAY ON NEW SIGN

Notes:

For Guardrail, Signing, Pavement Marking and Fence Quantities see Sheet 34.
Traffic Control Details, see Sheets 110-123B.
For Guardrail Details, see Sheets 78-80.
For Concrete Barrier and Drainage Plan, see Sheets 59-77.
For Mile Marker Details and Quantities, see Sheet 107.

MADE A.J.S. DATE 7-18-74
TRACED M.E.T. DATE 12-7-74
CHECKED H.B. DATE 7-1974
SCALE 1"= 100'-0"

Howard, Needles, Tammen & Bergendoff
CONSULTING ENGINEERS
CLEVELAND, OHIO

HNTB

100 0 100 200

STA 235+00 TO STA 265+00

SIGNING COST PARTICIPATION II & IV

SHEET NO.	SIGN NO.	STATION	CODE NO.	SIGN SIZE	DIMENSIONS SEE DETAIL 'A' SHEET NO. 19 [Lin. Ft.] A	B	C	D	E	EXIST. SIGNS RE-ERECTED Sq. Ft. II	IV	EXISTING SIGN REVISED, AS PER PLAN Each	844 SIGNS FLAT SHEET Sq. Ft. II	IV	EXTRU. TYPE Sq. Ft. II	IV	844 CONC. GROUND MOUNTED SIGN Cu. Yd.	844 SUPPORTS GLB. BEAM AS PER PLAN Lin. Ft. IV	4 Lb POST Lin. Ft. II	IV	6 Lb BEAM Lin. Ft. II	IV	W8×17 Lin. Ft.	W10×21 Lin. Ft.	W12×31 Lin. Ft.	BREAK-AWAY CONN. Each	202 REMOVAL EXISTING SIGNS Each IV	REMOVAL EXISTING SUPP. Each II	IV	REMOVAL EXISTING INSTALL. Each IV	REVISE EXISTING SIGN LEGEND, EXIT ACTION MESSAGE, AS PER PLAN Each II
33																														
	A	245+00EB																												
	A		N-12C-108	9'-0"x2'-0"											18															1
	B																													
	B		N-12C-108	9'-0"x2'-0"											18															1
	A	262+16EB																												
	A		N-12C-96	8'-0"x2'-0"											16															1
	B		N-12C-108	9'-0"x2'-0"											18															
	C		N-12C-108	9'-0"x2'-0"											18															
		250+00WB																												1
			N-12C-96	8'-0"x2'-0"											16															
		253+35W.B.	W-49R-48	48"x48"			21			16								21									1			
			WP-49	24"x12"						2																				
S. Waterloo Rd.																														
		0+60		5'-0"x5'-0"	17	17					25									34							2			
S. Waterloo Rd.																														
		1+55	R-31-30ModA	30"x24"			14				5									14							1			
E. 185th. St.																														
		3+80S	R-2-60	60"x60"x60"			16.75								10.8					16.75									1	
		3+40S	R-2-60	60"x60"x60"			16.75								10.8					16.75									1	
			R-41B-36	36"x36"											9															
		2+75S	R-41B-36	36"x36"			16.75								9				16.25								1		1	
			R-43R-36	36"x15"							3.75																			
			R-43L-36	36"x15"							3.75																			
		2+15S	R-41B-36	36"x36"			16.75								9				16.25								1		1	
			R-43R-36	36"x15"							3.75																			
			R-43L-36	36"x15"							3.75																			
		2+00S		5'-0"x5'-0"	17	17					25									34							2			
		1+30S	R-2-60	60"x60"x60"			16.75				10.8									16.75							1			
		1+00S	R-2-60	60"x60"x60"			16.75				10.8									16.75							1			
		1+85N	R-121-36	36"x36"			16.75								9							16.75							1	
			RP-121-24	24"x18"											3															
	(18)	8+12N	D-3	12'-0"x6'-6"													78													
		11+20N	M-5-24-2	24"x24"			18								4					18										
			IM-17-24	24"x12"											2															
Ramp 11																														
		1+50	R-2-48	48"x48"x48"			16			6.9									16							1				
Ramp 12																														
		13+80	R-41A-36				14.5			6									14.5							1				
		13+86	R-41A-36				14.5			6									14.5							1				
Cost Participation II TOTAL										36.9					104				32.5	45		21					4			4
Cost Participation IV TOTAL											91.6		66.6			78					16.7		16.75				2		9	3	
TOTAL										128.5			66.6		182			32.5	212		37.75					2	13		3	4

FENCE - COST PARTICIPATION IV

REF. NO.	STATION FROM	TO	SIDE	607 Type CL as per plan
				Lin. Ft.
	South Waterloo Rd.			
F-1	11+45	11+55	Lt.	10
Cost Participation IV Total				10

Note:
All Pavement Markings are Thermoplastic unless noted to be painted.

GUARD RAIL - COST PARTICIPATION II

REF. NO.	STATION FROM	TO	SIDE	202 Guardrail Removed For Reuse or Storage Lin. Ft.	202 Guard Rail, Barrier Design, Removed For Reuse or Storage Lin. Ft.	202 Painted Guardrail Removed For Reuse or Storage Lin. Ft.	606 Guardrail Type 5 as per plan Lin. Ft.	606 Anchor Assembly Each	606 Bridge Terminal Assembly Type E Each	606 Bridge Terminal Assembly Type F Each
R-1	243+81	247+31	Rt.			225	300	2		
R-2	254+86	256+36	Rt.			87.5	125	1	1	
R-3	258+94	Ramp No. 12 10+06.5	Rt.			1062.5	737.5	1		1
R-4	264+04.5	265+00	Rt.			92.5	67.5	1		
R-5	Ramp No. 12 4+69	7+56.5	Lt.			287.5	237.5	2		
R-6	263+08.5	265+00	Lt.			191.5	166.5	1		
R-7	259+56	Ramp No. 13 6+08.5	Lt.			587.5	587.5	1	1	
R-8	Ramp No. 13 4+50	11+00	Rt.			650	600	2		
R-9	249+48.5	257+11	Lt.	37.5		337.5	650	1		1
R-10	245+97	247+72	Lt.			100	125	2		
E-1	235+00	256+84	℄		2184					
E-2	259+02	265+00	℄		591					
Cost Participation II Total				37.5	2775	3621.5	3596.5	14	2	2

MADE AJS DATE 7-19-74
TRACED AJS DATE 7-19-74
CHECKED HB DATE 7-22-74
SCALE NONE

Howard, Needles, Tammen & Bergendoff
CONSULTING ENGINEERS
CLEVELAND, OHIO
HNTB

FHWA REGION	STATE	PROJECT	
5	OHIO		

34
354

QUANTITY CALCULATIONS
MADE BY AJS DATE 7-19-74
CHECKED BY HB DATE 7-22-74

CUYAHOGA COUNTY
CUY-90-23.73
LAKE COUNTY
LAK-90-0.00

PAVEMENT MARKINGS - COST PARTICIPATION II & IV

ITEM	DESCRIPTION		QUANTITY	UNIT
621	4" yellow edge lines			
	235+00 to 265+00 (x2) ℄	6000'		
	Ramp 12 Lt. 3+48 to 14+51	1103'		
	Ramp 13 Rt. 3+51 to 11+25	774'		
	Ramp 11 Rt. 2+59 to 11+72	913'		
	Total IV	8790 ÷ 5280	1.66	Miles
621	4" white edge lines			
	235+00 to 259+50 Rt.	2450'		
	264+00 to 265+00 Rt.	100'		
	235+00 to 246+66 Lt.	1166'		
	246+66 to 259+60 Lt.	1294'		
	259+60 to 265+00 Lt.	540'		
	Ramp 12 Rt. 0+00 to 14+51	1451'		
	Ramp 13 Lt. 0+00 to 11+25	1125'		
	Ramp 11 Lt. 0+00 to 12+10	1210'		
	Total IV	9336 ÷ 5280	1.77	Miles
621	6" lane lines			
	235+00 to 265+00 (2x3x3000 ÷ 5280)		3.41	Miles
621	4" lane lines			
	13+50 to 16+00 Ramp 12	250'		
	13+00 to 15+10 Ramp 12	210'		
	260+95 to 262+25 at Ramp 12	130'		
	258+60 to 261+10 at Ramp 13	250'		
	294+05 to 247+35 at Ramp 11	330'		
	Total IV	1170'	1170	Lin. Ft.
621	24" Broad Transverse Lines (Cost Participation IV)			
	262+25 to 263+25		165	Lin. Ft.
621	6" Crosswalk Lines			
	16+11 Ramp 12	40'		
	16+05 Ramp 12	40'		
	1+89 Const. Ramp 12	25'		
	1+95 Const. Ramp 12	25'		
	Total IV	130'	130	Lin. Ft.
621	24' Stop Line			
	16+00 Ramp 12	40'		
	Total IV	40'	40	Lin. Ft.
621	Lane Arrows (Cost Participation II)			
	Ramp 12 See Sheet 33	9		
	Total II	9	9	Each
621	Word "Only"			
	Ramp 12 See Sheet 33	6		
	Total IV	6	6	Each
621	8" Channelizing Line			
	2+65 to 4+48 Ramp 12 and 262+25 to 264+00	358		
	0+00 to 2+71 Ramp 13	271		
	0+00 to 1+95 Ramp 11	195		
	14+95 to 15+10 Rt. Ramp 12	30		
	Total IV	854	854	Lin. Ft.
621	Curb Marking, White (Paint)			
	1+60 to 3+60 Rt. Ramp 11	200		
	11+55 to 12+20 Rt. Ramp 11	65		
	11+55 to 12+65 Lt. Ramp 11	110		
	14+01 to 14+51 Rt. Ramp 12	50		
	14+26 to 16+11 Rt. Ramp 12	185		
	15+08 to 16+11 Lt. Ramp 12	103		
	0+55 to 2+02 Lt. Const. Ramp 12	147		
	0+00 to 2+02 Rt. Const. Ramp 12	202		
	2+51 to 4+42 Rt. Ramp 13	191		
	10+75 to 11+86 Lt. Ramp 13	111		
	11+00 to 11+86 Rt. Ramp 13	86		
	Total IV	1450	1450	Lin. Ft.

FHWA REGION	STATE	PROJECT	
5	OHIO		

35
354

CUYAHOGA COUNTY
CUY-90-23.73
LAKE COUNTY
LAK-90-0.00

℄ Monument
Sta. 4+99.81 N℄ Neff
Sta. 268+53.23 ℄ N.M.R.

E 185th St — Neff Rd

See Sheet 123

See Sheet 33
Match Line Sta. 265+00

See Sheet 123

Match Line Sta. 295+00
See Sheet 38

℄ Monument
Sta. 1+98.45 S℄ Neff
Sta. 269+54.47 ℄ S.W.R.

℄ Monument
Sta. 1+76.33 N℄ E 200th St.
Sta. 290+13.01 ℄ N.M.R.

℄ Monument
Sta. 1+70.69 S℄ E 200th St.
Sta. 288+59.87 ℄ S Waterloo Rd.

Relocate to 290+53

Relocate to 289+44

Relocate to 274+00

Remove at 273+90

Remove at 271+75

Remove at 279+50

Remove at 281+65

Remove at 283+60

Remove at 287+74

Remove at 288+25

Remove 271'

Remove 317'

Remove 187.5'

Remove

Relocate to 274+00

Remove at 273+90

Remove at 271+75

Remove at 279+50

Remove at 281+65

Remove at 283+60

Remove at 287+74

Remove at 288+25

Remove 271'

Remove 317'

Remove 187.5'

Remove

VILLA VIEW RD.

RAMP 14

RAMP 14A

RAMP 15

RAMP 16

280 SOUTH WATERLOO RD.

NEFF RD.

E 185th St

E 222nd St

E 200th St

ST CLAIR AVE

CHARDON RD.

EUCLID AVE

CLEVELAND EUCLID

I-90

Penn. Trans.

Central Co.

City of Euclid

Curb Marking

4" White Edge Lines

4" Yellow Edge Lines

4" Lane Lines

8" Channelizing Lines

24" Transverse Stripes

No Work

No Work 1:40

No Work 1:30

No Work 1:05

No Work 2:40

No Work 2:30

No Work 1:85 S

No Work 2:30 S

No Work 1:32.5

No Work 2:26

No Work 2:15

No Work 2:20

No Work 2:57.5

No Work 2:40 S

No Work 2:26 S

No Work 2:15 S

No Work 2:20 S

No Work 2:57.5 S

SIGNING COST PARTICIPATION II, III & IV

SHEET NO.	SIGN NO.	STATION	CODE NO.	SIGN SIZE	DIMENSIONS SEE DETAIL 'A' SHEET NO. 19 [Lin. Ft.] A	B	C	D	E	EXIST. SIGNS RE-ERECTED Sq. Ft. II	III	IV	844 SIGNS FLAT SHEET Sq. Ft. II	III	IV	EXTRU. TYPE Sq. Ft II	844 SUPPORTS GLB. BEAM AS 'PER PLAN Lin. Ft. IV	4 Lb POST Lin. Ft. II	III	IV	6 Lb BEAM Lin. Ft. II	IV	202 REMOVAL EXISTING SIGNS Each IV	REMOVAL EXISTING SUPP. Each II	III	IV	REMOVAL EXISTING INSTALL. Each III	IV	REMOVAL MAJOR INSTALL. Each IV	REVISE EXISTING SIGN LEGEND. EXIT ACTION MESSAGE. AS PER PLAN Each IV
35	A	273+50EB																							1							
	B		N-12C-96	8'-0"x2'-0"												16																1
	C		N-12C-96	8'0"x2'-0"												16																
		282+00EB	W-49R-48	48"x48"			15.5			16								15.5						1								
			WP-49	24"x12"						2																							
		289+44EB		6'-0"x3'-0"	15.5	16.5					18								32													
		289+95EB																				38.25										
		282+50WB	R-10A-48	48"x60"	19	19.25				20														2								
			R-16A-48	48"x48"						16																						
		286+60WB	N-12C-108	9'-0"x2'-0"												18																
		289+95WB																														
		290+53WB		6'-0"x3'-0"	15.5	16.5					18								32													
		Neff Rd																														
		2+30 S	W-60-36	36"x36"			16.25						9						16.25													
		3+00 N	W-60-36	36"x36"			16.25						9						16.25													
		4+35N		5'-0"x5'-0"	17	17					25								34							2						
		5+60N	D-4-2	9'-0"x4'-0"	16	16					36												32			2						
		South Waterloo Rd																														
		271+25	R-41B-36	36"x36"			15						9						15													
		276+90Lt	R-2-48	48"x48"x48"			15.5						6.9						15.5													
		276+90Rt	R-2-48	48"x48"x48"			15.5						6.9						15.5													
		286+00Lt	R-41A-36	36"x24"			14				6								14							1						
		286+00Rt	R-41A-36	36"x24"			14						.6						14													
		288+20Lt	R-41B-36	36"x36"			16.25						9						16.25							1			1			
			R-43L-36	36"x15"							3.75																					
			R-43R-36	36"x15"							3.75																					
		288+20Rt	R-41B-36	36"x36"			16.25						9						16.25							1			1			
			R-43L-36	36"x15"							3.75																					
			R-43R-36	36"x15"							3.75																					
		Villa View Rd																														
		268+90	R-41B-36	36"x36"			16.25						9						16.25							1			1			
			R-43L-36	36"x15"							3.75																					
			R-43R-36	36"x15"							3.75																					
		269+20	R-41B-36	36"x36"			16.25						9						16.25							1			1			
			R-43L-36	36"x15"							3.75																					
			R-43R-36	36"x15"							3.75																					
		270+50Lt	R-45-30	30"x36"			16.5				7.5										16.5							1				
			R-41A-36	36"x24"									6																				
		270+50Rt	R-41A-36	36"x24"			14						.6								14											
		273+80																													1	
		273+90																											1			
		274+00	D-4-2	9'-0"x4'-0"	16	16					36												32									
			IM-39-24	24"x12"							2																					
			M-5C-24-2	24"x24"							4																					
			IM-28-20	20"x15"							2.1																					
			M-39-24	24"x12"							2																					
			M-2A-24	21⅜"x22"							3.3																					
			M-28-20	20"x15"							2.1																					
		277+75Lt	R-41A-36	36"x24"																									1			
		284+60Lt	R-2-48	48"x48"x48"			15.5				6.9												15.5			1						
		284+60Rt	R-2-48	48"x48"x48"			15.5				6.9												15.5			1						
		290+50	R-41B-36	36"x36"			16.25				9								16.25							1						
			R-43L-36	36"x15"							3.75																					
			R-43R-36	36"x15"							3.75																					
		290+60	R-41B-36	36"x36"			16.25				9								16.25							1						
			R-43L-36	36"x15"							3.75																					
			R-43R-36	36"x15"							3.75																					
		290+90	R-2-60	60"x60"x60"			16.5				10.8												16.5			1						
			R-41B-30	30"x30"							6.25																					
		292+80Lt	R-41A-36	36"x24"			14			6										14						1						
		292+80Rt	R-41A-36	36"x24"			14					6								14												
		295+20Rt	W-78-30	30"x10"								2.1																				
		295+20Lt	W-78-30	30"x10"								2.1																				
		E. 200 St.																														
		2+40S	W-60-36	36"x36"			16.25						9								16.25								1			
		1+10 S	W-47-36	36"x36"			17				9										17						1					
			WP-47-24	24"x18"									3																				
		1+20N	WP-47-24	24"x18"									3																				
	(5)	0+80S		8'-0"x5'-0"																												1
	(6)	0+90N		8'-0"x5'-0"																												1
Cost Participation II TOTAL										54.00						50.00			15.50	38.25			3		1					
Cost Participation III TOTAL										24.00	10.20								60.00												
Cost Participation IV TOTAL										246.85	109.80						97.50		236.25	111.50	5	17	9								3
TOTAL										324.85	120.00					50.00	97.50		311.75	149.75	5	20	10								3

MADE A.J.S DATE 7-22-74
TRACED A.J.S DATE 7-22-74
CHECKED H.B DATE 7-23-74
SCALE

Howard, Needles, Tammen & Bergendoff
ENGINEERS
CLEVELAND OHIO

HNTB

QUANTITY CALCULATIONS

MADE BY A.J.S. DATE 7-22-74
CHECKED BY H.B. DATE 7-23-74

FHWA REGION	STATE	PROJECT	
5	OHIO		

CUYAHOGA COUNTY
CUY-90-23.73
LAKE COUNTY
LAK-90-0.00

36
354

PAVEMENT MARKINGS - COST PARTICIPATION II, III & IV

ITEM	DESCRIPTION		QUANTITY II	III	IV	UNIT
621	4" Yellow Edge Lines					
	265+00 to 289+99 (6x2)	4998'			.95	
	289+99 to 295+00	1002'		.19		
	4+80 to 6+87 Lt. Ramp 14A	207'			.04	
	1+00 to 2+89 Lt. Ramp 15	189'			.04	
	2+88 to 7+36 Rt. Ramp 14	448'			.08	
	0+78 to 2+88 Rt. Ramp 16	210'			.04	
	Total III	1002 ÷ 5280		.19		Miles
	Total IV	6052 ÷ 5280			1.15	Miles
	Total	7054 ÷ 5280			1.34	Miles
621	4" White Edge Lines					
	265+00 to 270+80 Rt.	580'			.11	
	215+55 to 289+99 Rt.	1444'			.27	
	289+99 to 295+00 Rt.	501'		.09		
	265+00 to 270+64 Lt.	584'			.11	
	270+64 to 284+58 Lt.	1394'			.26	
	287+55 to 289+99 Lt.	244'			.05	
	289+99 to 295+00 Lt.	501'		.09		
	0+00 to 6+87 Rt. Ramp 14A	687'			.13	
	1+00 to 5+22 Rt. Ramp 15	422'			.08	
	0+00 to 7+36 Lt. Ramp 14	736'			.14	
	0+78 to 5+76 Lt. Ramp 16	498'			.09	
	Total III	1002 ÷ 5280		.19		Miles
	Total IV	6569 ÷ 5280			1.24	Miles
	Total	7571 ÷ 5280			1.43	Miles
621	8" Channelizing Lines					
	273+70 to 275+55 at Ramp 14A	185'				
	2+90 to 4+80 Lt. Ramp 14A	190'				
	3+88 to 5+22 Lt. Ramp 15	134'				
	0+00 to 1+87 Rt. Ramp 14	187'				
	284+58 to 286+50 at Ramp 16	192'				
	2+80 to 4+80 Ramp 16	200'				
	Total IV	1088			1088	Lin. Ft.
621	24" Broad Transverse Lines					
	2+90 to 4+05 Ramp 14A	128'				
	3+55 to 4+80 Ramp 16	140'				
	Total IV	268'			268	Lin. Ft.
621	Curb Marking, White					
	1+88 to 3+88 Ramp 15	200'				
	1+87 to 3+87 Ramp 14	200'				
	Total IV	400			400	Lin. Ft.
621	6" Lane Lines					
	265+00 to 289+99 2499 x 6 = 14994				2.84	Miles
	289+99 to 295+00 501 x 6 = 3006			.57		Miles
	Total III			.57		Miles
	Total IV				2.84	Miles
	Total				3.41	Miles
621	4" Lane Lines					
	1+50 to 2+90 Ramp 14A	140'				
	286+72 to 289+97 Ramp 15	365'				
	268+37 to 270+64 Ramp 14	227'				
	287+55 to 290+75 Ramp 16	320'				
	Total IV	1052 ÷ 5280			0.20	Miles
621	Lane Arrows					
	5+90 Ramp 14A	1	1			
	1+00 Ramp 16	1	1			
	Total II	2		2		Each

Note:
All Pavement Markings are Thermoplastic unless noted to be painted.

QUANTITIES

QUANTITY CALCULATIONS
MADE BY AJS DATE 7-22-74
CHECKED BY HB DATE 7-23-74

FHWA REGION	STATE	PROJECT	
5	OHIO		

37
354

CUYAHOGA COUNTY
CUY-90-23.73
LAKE COUNTY
LAK-90-0.00

SIGNING COST PARTICIPATION II & IV

SHEET NO.	SIGN NO.	STATION	CODE NO.	SIGN SIZE	DIMENSIONS SEE DETAIL 'A' SHEET NO. 19 (Lin. Ft.) A	B	C	D	E	EXIST. SIGNS RE-ERECTED Sq. Ft.		EXISTING SIGN REVISED, AS PER PLAN Each	844 SIGNS FLAT SHEET Sq. Ft. II	IV	EXTRU. TYPE Sq. Ft. II	IV	844 CONC. GROUND MOUNTED SIGN Cu. Yd.	844 SUPPORTS 6LB. BEAM AS PER PLAN Lin. Ft.	4 Lb POST Lin. Ft. II	IV	6 Lb BEAM Lin. Ft. II	IV	W8×17 Lin. Ft.	W10×21 Lin. Ft.	W12×31 Lin. Ft.	BREAK-AWAY CONN. Each	202 REMOVAL EXISTING SIGNS Each II	REMOVAL EXISTING SUPP. Each II		REMOVAL EXISTING INSTALL. Each IV	REMOVAL MAJOR INSTALL. Each	REMOVAL EXISTING O.H. SUPP. Each	POLE MOUNTED SIGN ATTACHMENT, AS PER PLAN Each IV
35		Marginal Connector																															
		1+00	R-2-48	48"x48"x48"			15.5							6.9						15.5										1			
		Ramp 14A																															
		5+00 Lt.	R-41A-36	36"x 24"			15.0						6						15.0														
		5+00 Rt.	R-41A-36	36"x 24"			15.0						6	"					15.0														
		5+90 Lt.	R-41B-30	36"x 36"			16.0						9						16.0														
		5+90 Rt.	W-49R-48	48"x 48"			21.75			16												21.75							1				
			WP-49	24"x12"						2																							
			R-41B-30	30"x 30"						6.25																							
		Ramp 15																															
		4+15	R-2-60	60"x50"x60"			16.5			10.8										16.5									1				
		Ramp 16																															
		1+00 Rt.	R-41B-36	36"x 36"			15.0						9						15.0														
		1+90 Lt.	R-41B-36	36"x 36"										9															1				
		3+20 Lt.	R-41A-36	36"x 24"			15.0						6						15.0														
		3+20 Rt.	R-41A-36	36"x 24"			15.0						6						15.0														
		Ramp 14																															
		1+90	R-2-60	60"x60"x60"			16.5													16.5									1				
		I-90																															
		267+00 EB		10'x 4'	16.5	17.5										40						34											
		276+30 WB	W-49R-48	48"x 48"			22			16				"								22							1				
			WP-49	24"x12"						2																							
		284+00 EB	N-12C-96	8'x 2'												16																	1
Cost Participation II Total										53.05			42		16				124			43.75						1	4				
Cost Participation IV Total													15.9		40				15.5			34								1			1
Total										53.05			57.9		56				139.5			77.75						1	4	1			1

FENCE-COST PARTICIPATION I&II

REF. NO.	STATION FROM	TO	SIDE	607 Type CL as per plan I	II
	South Waterloo Rd.				
F-1	272+10	272+50	Lt.		40
	Villa View Rd.				
F-2	283+95	284+05	Rt.		10
F-3	294+00	294+70	Rt.	70	
Cost Participation I Total				70	
Cost Participation II Total				50	
Total				120	

GUARD RAIL-COST PARTICIPATION I&II

REF. NO.	STATION FROM	TO	SIDE	202 Guard Rail, Barrier Design, Removed For Reuse or Storage Lin. Ft. I	II	202 Painted Guardrail Removed For Reuse or Storage Lin. Ft. I	II	606 Guardrail Type 5 as per plan Lin. Ft. I	II	606 Guardrail Type 5 Rebuit as per plan Each II	606 Anchor Assembly Each II	606 Bridge Terminal Assembly Type E Each II	606 Bridge Terminal Assembly Type F Each II
R-1	289+74	295+00	Lt.			446	80	446	80			1	
R-2	265+00	269+17	Rt.				317		317			1	
	Ramp 14A												
R-3	0+11	3+23.5	Rt.				287.5		287.5		1		1
R-4	Ramp 15 2+26	287+26	Rt.				212.5		187.5	137.5	1	1	
R-5	289+27	292+52	Rt.				325		300		1		1
R-6	Ramp 16 2+32.5	287+74	Lt.				187.5		187.5	150	1		1
R-7	270+39	272+26.5	Lt.				187.5		125		1	1	
R-8	265+00	267+71	Lt.				271		271				1
E-2	270+54	287+62	℄		1708								
R-9	2+45	5+07.5	Lt.				237.5		212.5		2		
E-1	265+00	268+09	℄		309								
E-3	289+39	295+00	℄	500	60								
Cost Participation I Total				500		446		446					
Cost Participation II Total				2077		2105.5		1968		287.5	7	4	4
Total				2577		2551.5		2414		287.5	7	4	4

Note:
For Pole Mounting Bracket Detail, see Sheet 110

QUANTITY CALCULATIONS FOR PLAN SHEET 35.

MADE AJS DATE 7-22-74
TRACED AJS DATE 7-22-74
CHECKED HB DATE 7-23-74
SCALE None

Howard, Needles, Tammen & Bergendoff
CONSULTING ENGINEERS
CLEVELAND, OHIO
HNTB

FHWA REGION	STATE	PROJECT	
5	OHIO		

38
354

CUYAHOGA COUNTY
CUY-90-23.73
LAKE COUNTY
LAK-90-0.00

NORTH MARGINAL RD.
SOUTH MARGINAL RD.
I-90
RAMP 1E
RAMP 2E
RAMP 1A
RAMP 6E
RAMP 7E
E. 207TH ST.
E. 208 TH ST.
E. 210 TH ST.
E. 212 TH ST.
E. 214 TH ST.
E. 216 TH ST.
E. 218 TH. ST.
BORSE DR.

E 185th St
NEXT RIGHT
N-12C-108 EXIT 182A

E 185th St
RIGHT LANE
N-12C-108 EXIT 182A

E 200th St

(3) West Cleveland

E 185th St
EXIT ½ MILE
N-12C-108 EXIT 182A

E 185th St
½ MILE
N-12C-108 EXIT 182A

Babbitt Rd
EXIT 1 MILE
N-12C-108 EXIT 184A

Babbitt Rd
1 MILE
N-12C-108 EXIT 184A

E 222nd St
N-12C-108 EXIT 183

Babbitt Rd
EXIT ½ MILE
N-12C-108 EXIT 184A

Babbitt Rd
½ MILE
N-12C-108 EXIT 184A

E 260th ST
EXIT 1 MILE
N-12C-108 EXIT 185B

Babbitt Rd
RIGHT LANE
N-12C-108 EXIT 184A

Babbitt Rd
NEXT RIGHT
N-12C-108 EXIT 184A

E 222nd St

(3) East Erie Pa

Notes:
For Guardrail, Signing, Pavement Marking and Fence Quantities see Sheet 39.
For curb removal at Ramps 1E & 2E see Sheet 82.
Traffic Control Details, see Sheets 110-123B.
Guardrail Details, see Sheets 78-80
For Concrete Barrier & Drainage Plan, see Sheets 59-77

LEGEND
- PROPOSED LIGHT TOWER (BY OTHERS)
- SIGNALIZED INTERSECTION (EXISTING)
- (SN) PROVIDE NEW SIGN
- (SP) PROVIDE NEW SUPPORT (S)
- (RM) REVISE EXISTING SIGN LEGEND
- PROPOSED SIGN
- EXISTING SIGN
- ≠ SIGNS EXISTING WITH OVERLAY [55]
- # PROVIDE [55] OVERLAY ON NEW SIGN

MADE DSD DATE 12-4-74
TRACED MEF DATE 12-5-74
CHECKED MEE DATE 1-10-75
SCALE 1"=100'

Howard, Needles, Tammen & Bergendoff
CONSULTING ENGINEERS
CLEVELAND, OHIO

HNTB

100 0 100 200

STA. 295+00 TO STA. 325+00

QUANTITIES

QUANTITY CALCULATIONS
MADE BY AJS DATE 7-17-74
CHECKED BY HB DATE 7-23-74

FHWA REGION	STATE	PROJECT	
5	OHIO		

39
354

CUYAHOGA COUNTY
CUY-90-23.73
LAKE COUNTY
LAK-90-0.00

SIGNING COST PARTICIPATION I & III

SHEET NO.	SIGN NO.	STATION	CODE NO.	SIGN SIZE	DIMENSIONS SEE DETAIL 'A' SHEET NO. 19 [Lin. Ft.] A	B	C	D	E	EXIST. SIGNS RE-ERECTED Sq. Ft. I	III	844 SIGNS FLAT SHEET Sq. Ft. I	III	EXTRU. TYPE Sq. Ft. I	844 CONC. GROUND MOUNTED SIGN Cu. Yd.	844 SUPPORTS 6LB. BEAM AS PER PLAN Lin. Ft.	4 Lb POST Lin. Ft. I	III	6 Lb BEAM Lin. Ft. I	III	W8×17 Lin. Ft.	W10×21 Lin. Ft.	202 REMOVAL EXISTING SIGNS Each I	REMOVAL EXISTING SUPP. Each I	III	REMOVAL EXISTING INSTALL. Each III	REVISE EXISTING SIGN LEGEND, EXIT ACTION MESSAGE, AS PER PLAN Each I	POLE MOUNTED SIGN ATTACHMENT, AS PER PLAN Each III
38		I-90																									
		297+50 EB																						1			
		298+67 EB	W-97-48	48"x60"							20																1
	A																									1	
	A		N-12C-108	9'-0"x 2'-0"										18													
	B		N-12C-96	8'-0"x 2'-0"										16													
		308+50 EB	R-10-48	48"x60"	19	19.5				20									38.5				2				
			R-16-48	48"x48"						16																	
		311+50 EB	R-7-48	48"x60"	17.25	17.25				20							35						1				
		314+00 EB																								1	
			N-12C-108	9'-0"x 2'-0"										18													
		322+50 EB	W-49R-48	48"x48"						16									21.75								
			W-49	24"x12"						2																	
		323+20 EB																					1				
	A	324+50 EB																								1	
	A		N-12C-108	9'-0"x 2'-0"										18													
	B		N-12C-108	9'-0"x 2'-0"										18												1	
		301+50 WB	N-12C-108	9'-0"x 2'-0"										18												1	
		302+75 WB																					1				
		303+50 WB	W-49R-48	48"x48"						16									22.5								
			WP-49	24"x12"						2																	
		306+00 WB	R-7-48	48"x60"	17.25	18				20							35.25						1				
		307+00 WB	R-10-48	48"x60"	19.25	19.75				20									39				2				
			R-16-48	48"x48"						16																	
		313+75 WB																								1	
			N-12C-108	9'-0"x 2'-0"										18													
		South Marginal Road																									
		295+10	R-43R-36	36"x15"			13.25					3.75						13.25							1		
		300+00	W-49L-48	48"x48"								16								21.75					1		
			WP-49	24"x12"								2															
		305+00	R-41B-36	36"x36"			15					9						15									
		305+35	R-43R-36	36"x15"			13.25					3.75						13.25							1		
		306+60	R-41B-36	36"x36"								9						15							1		
		311+00	R-43R-36	36"x15"			13.25					3.75						13.25							1		
		North Marginal Road																									
		304+80	R-15B-30	30"x30"								6.25															1
		313+00		5'-0"x6'-0"	10	18					30									36				2			
		322+00	R-43R-72	72"x24"								12						28							1		
		326+50	W-49L-48	48"x48"								16								21.75				1			
			WP-49	24"x12"								2															
		Ramp 1E																									
		5+10 Rt.	R-41A-36	36"x24"								6					15										
		5+10 Lt.	R-41A-36	36"x24"						6							15						1				
		6+25 Rt.	R-2-60	60"x60"x60"						10.8							16.5				1	1					
			R-41B-36	36"x36"								9															
		Crose Drive																									
		0+35	R-1-30	30"x30"			14.5				6.25							14.5						1			
		Ramp 7E																									
		1+80 Lt.	R-2-60	60"x60"x60"			16.5			10.8							16.5				1	1					
			R-41B-36	36"x36"								9															
		1+80 Rt.	R-41B-36	36"x36"			15					9					15										
Cost Participation I Totals										175.6		33		124			148.25		121.75				2		11		6	
Cost Participation III Totals										56.25		83.5					112.25		79.50						5	6		2
Totals										231.85		116.5		124			260.5		201.25				2		16	6	6	2

Note:
All Pavement Markings are Thermoplastic unless noted to be painted.

For Pole Mounting Bracket Detail, see Sheet 110.

FENCE-COST PARTICIPATION III

REF. NO.	STATION FROM	TO	SIDE	607 Type CL as per plan Lin. Ft.	
	North Marginal Rd.				
F-1	325+95	326+05	Rt.	10	
F-2	322+50	322+70	Rt.	20	
Cost Participation III Total				30	

PAVEMENT MARKINGS-COST PARTICIPATION I & III

ITEM	DESCRIPTION		QUANTITY	UNIT
621	4" White Edge Lines			
	295+00 to 296+50 Lt. and Rt.	300'		
	301+00 to 325+00 Rt.	2400'		
	296+50 to 325+00 Rt.	2850'		
	0+00 to 7+25 Ramp 1E Rt.	725'		
	1+00 to 2+86 Ramp 6E Rt.	186'		
	0+78 to 2+51 Ramp 7E Rt.	173'		
	0+00 to 6+88 Ramp 2E Lt.	688'		
	Total III	7322' ÷ 5280	1.39	Miles
621	4" Yellow Edge Lines			
	295+00 to 325+00 Lt. and Rt.	6000'		
	4+00 to 7+25 Ramp 1E Lt.	325'		
	1+00 to 2+86 Ramp 6E Lt.	186'		
	0+78 to 2+51 Ramp 7E Rt.	173'		
	4+02 to 6+58 Ramp 2E Rt.	286'		
	Total III	6970' ÷ 5280	1.32	Miles
621	6" White Lane Lines			
	295+00 to 325+00 2x3x3000 = 18000'			
	295+00 to 298+65 at Ramp 1E	365'		
	294+75 to 298+25 at Ramp 2E	350'		
	Total III	18715' ÷ 5280	3.54	Miles
621	8" White Channelizing Lines			
	298+65 to 301+00 Rt.	235'		
	1+80 to 4+53 Ramp 1E	273'		
	1+75 to 3+02 Ramp 2E	127'		
	Total III	635'	635	Lin. Ft.
621	24" Broad Transverse Lines			
	298+65 to 300+50 at Ramp 1E			
	Total III		230	Lin. Ft.
621	Curb Marking, White			
	3+02 to 5+02 Ramp 2E	200'		
	2+62 to 2+86 Ramp 6E	24'		
	Total III	224'	224	Lin. Ft.
621	Lane Arrows			
	7+60 Ramp 1E	1		
	0+80 Ramp 7E	1		
	Total I	2	2	Each

GUARD RAIL-COST PARTICIPATION I

REF. NO.	STATION FROM	TO	SIDE	202 Guardrail Removed For Reuse or Storage Lin. Ft.	202 GUARD RAIL, Barrier Design, Removed For Reuse or Storage Lin. Ft.	202 Painted Guardrail Removed For Reuse or Storage Lin. Ft.	606 Guardrail Type 5 as per plan Lin. Ft.	606 Guardrail Type 5 Rebuit as per plan Each	606 Anchor Assembly Each
R-1	295+00	296+99	Lt.			200	175		1
	South Marginal Rd.								
R-2	296+18.5	302+56	Lt.			375	587.5		2
R-3	Ramp 1E 4+94	S. Marginal Rd 315+63	Lt.	62.5		1337.5	1350		2
	Ramp 6E								
R-4	2+40.5	2+86	Rt.			45.5		20.5	1
E-1	295+00	325+00	℄		3000				
	Cost Participation I Total			62.5	3000	1958	2112.5	20.5	6

MADE ATS DATE 7-17-74
TRACED ATS DATE 7-17-74
CHECKED HB DATE 7-23-74
SCALE None

Howard, Needles, Tammen & Bergendoff
CONSULTING ENGINEERS
CLEVELAND, OHIO

HNTB

QUANTITY CALCULATIONS FOR PLAN SHEET 38.

K&E 10-1253 1-73

FHWA REGION	STATE	PROJECT	
5	OHIO		

40
354

CUYAHOGA COUNTY
CUY-90-23.73
LAKE COUNTY
LAK-90-0.00

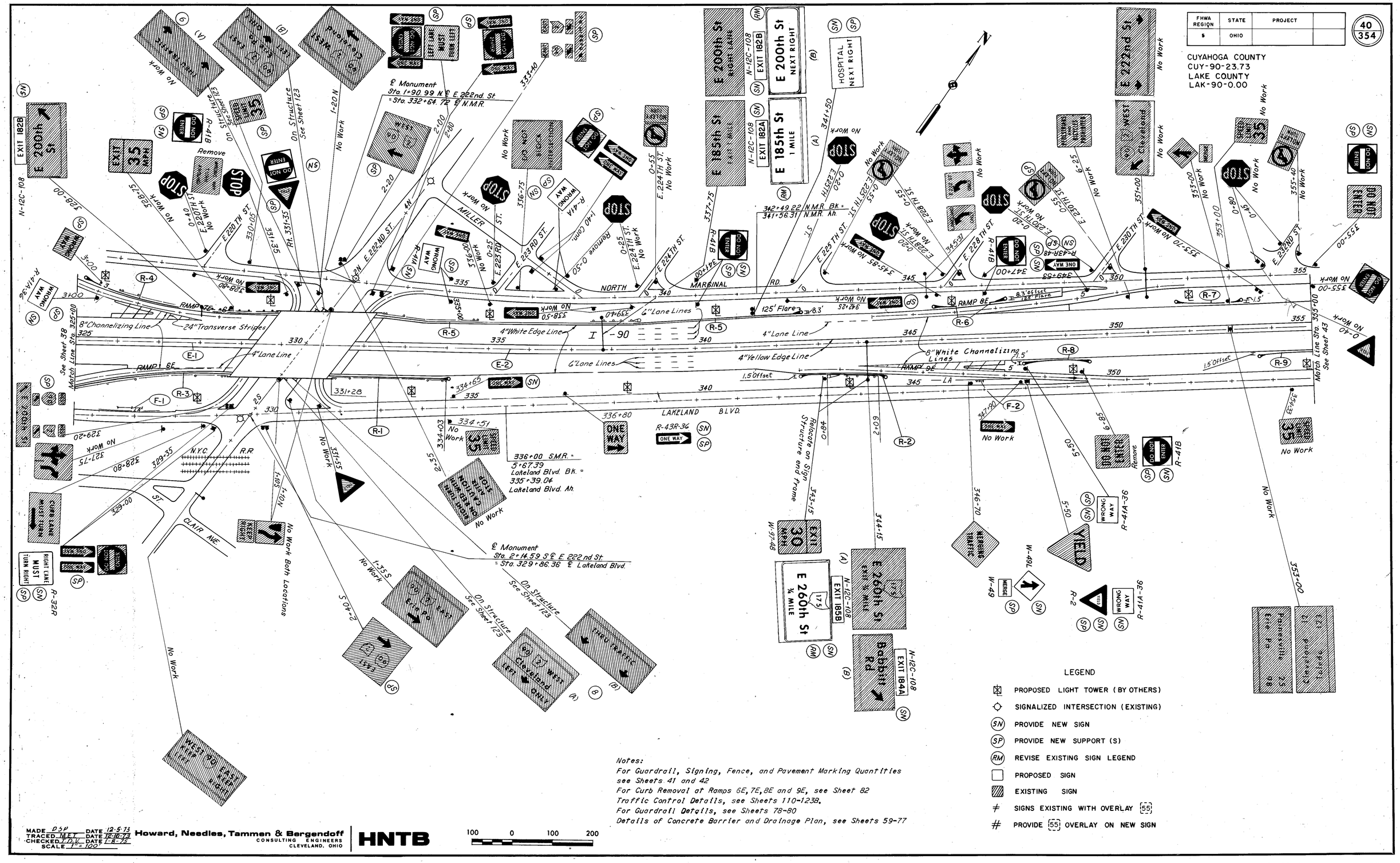
E 200th St
EXIT 182B
N-12C-108
E 185th St
1 MILE
EXIT 182A
E 200th St
RIGHT LANE
NEXT RIGHT
HOSPITAL
NEXT RIGHT
E 222nd St
No Work
I-90
MARGINAL RD.
NORTH
E. 224TH ST.
E. 223RD ST.
E. 220TH ST.
E. 228TH ST.
E. 230TH ST.
E. 225TH ST.
E. 222ND ST.
MILLER AVE.
LAKELAND BLVD.
CLAIR AVE.
N.Y.C. R.R.
RAMP 6E
RAMP 7E
RAMP 8E
RAMP 9E
8"Channelizing Line
24"Transverse Stripes
4"White Edge Line
4"Lane Line
6"Lane Lines
4"Yellow Edge Line
8"White Channelizing Lines
125' Flare
8.3' offset
1.5' Offset
Remove
No Work
ONE WAY
WRONG WAY
DO NOT ENTER
KEEP RIGHT
RIGHT LANE MUST TURN RIGHT
CURB LANE MUST TURN
KEEPING TRAFFIC
MERGE
YIELD
PEDESTRIANS ACROSS ROADWAY
EXIT 35 MPH
EXIT 30 MPH
E 260th St
¾ MILE
EXIT 185B
N-12C-108
E 260th St
EXIT ¾ MILE
Bobbitt Rd
EXIT 184A
N-12C-108
On Structure See Sheet 123
Match Line Sta. 325+00
See Sheet 38
Match Line Sta. 355+00
See Sheet 43
Pennsylvania R.R.
Erie R.R.
C.T.C. Tracks
Penn. Central
Conrail
Railroad Sign Structure and Frame
Monitor Traffic Signal Controller
Traffic Signal Controller
Remove 0-50
Remove 1-40 (Com.)
Remove 2-00
Remove 2-80
Remove 2-20
Remove 0-55
Remove 0-25
Remove 0-40
Remove 0-80
Remove 0-45
Remove 0-60
Remove 0-20
Remove 0-35
Remove 0-75
Remove 0-85
Remove 1-05
Remove 1-10
Remove 1-15
Remove 1-25
Remove 1-35
Remove 1-45
Remove 1-55
Remove 1-65
Remove 1-75
Remove 1-85
Remove 2-09
Remove 2-25
Remove 2-35
Remove 2-45
Remove 2-55
Remove 2-65
Remove 2-75
Remove 2-85
Remove 2-95
Remove 3-00
Remove 3-10
Remove 3-20
Remove 3-30
Remove 3-40
Remove 3-50
Remove 3-60
Remove 3-70
Remove 3-80
Remove 3-90
Remove 4-00
Remove 4-10
Remove 4-20
Remove 4-30
Remove 4-40
Remove 4-50
Remove 4-60
Remove 4-70
Remove 4-80
Remove 4-90
Remove 5-00
Remove 5-10
Remove 5-20
Remove 5-30
Remove 5-40
Remove 5-50
Remove 5-60
Remove 5-70
Remove 5-80
Remove 5-90
Remove

QUANTITIES

QUANTITY CALCULATIONS
MADE BY HB DATE 7-13-74
CHECKED BY AJS DATE 8-5-74

FHWA REGION	STATE	PROJECT	
5	OHIO		

41
354

CUYAHOGA COUNTY
CUY-90-23.73
LAKE COUNTY
LAK-90-0.00

SIGNING COST PARTICIPATION I & III

SHEET NO.	SIGN NO.	STATION	CODE NO.	SIGN SIZE	DIMENSIONS SEE DETAIL "A" SHEET NO. 19 (Lin. Ft.) A	B	C	D	E	EXIST. SIGNS RE-ERECTED Sq. Ft. I	III	EXISTING SIGN REVISED, AS PER PLAN EACH	844 SIGNS FLAT SHEET Sq. Ft. I	III	EXTRU. TYPE Sq. Ft. I	844 CONC. GROUND MOUNTED SIGN Cu. Yd.	844 SUPPORTS 6LB. BEAM AS PER PLAN Lin. Ft. III	4 LB. POST Lin. Ft. I	III	6 LB. BEAM Lin. Ft. III	W8x17 Lin. Ft.	W10x21 Lin. Ft.	W12x31 Lin. Ft.	BREAK-AWAY CONN. Each	202 REMOVAL EXISTING SIGNS Each III	REMOVAL EXISTING SUPP. Each I	III	REMOVAL EXISTING INSTALL. Each I	III	REMOVAL MAJOR INSTALL. Each	REMOVAL EXISTING O.H. SUPP. Each	620 DELIN. AS PER PLAN Each	REVISE EXISTING SIGN LEGEND, EXIT ACTION MESSAGE, AS PER PLAN Each III	POLE MOUNTED SIGN ATTACHMENT, AS PER PLAN Each III
40		343+15 E.B.																															
	A	344+13 E.B.																														1	
	A		N-12C-108	9'-0"x2'-0"											18																		
	B		N-12C-108	9'-0"x2'-0"											18																		
			W-97-48	48"x60						20																							1
		328+00 W.B.	N-12C-108	9'-0"x2'-0"											18																		
	A	337+75 W.B.																														1	
	A		N-12C-108	9'-0"x2'-0"											18																		
	B		N-12C-108	9'-0"x2'-0"											18																		
		341+50		10'-0"x4'-0"	17	18							40								35											1	
		Ramp 7E																															
		3+00 Rt.	R-41A-36	36"x24"			14						6						14														
		3+00 Lt.	R-41A-36	36"x24"			14			6									14					1									
		Ramp 9E																															
		5+50 Lt.	R-41A-36	36"x24"			15						6						15														
		5+50 Rt.	R-2-60	60"x60"x60			16.5							10.8					16.5					1	1								
			R-41A-36	36"x24"									6																				
		6+85 Lt.	R-41B-36	36"x36"			15							9						15													
		Lakeland Blvd.																															
		328+80 Rt.	R-32R-30	30"x30"			14.5							6.25						14.5													
		329+00 Rt.	R-41B-30	30"x30"			15.75				6.25							15.75							1								
			R-43L-36	36"x15"							3.75																						
			R-43R-36	36"x15"							3.75																						
		329+20 Lt.	D-4-A	9'-0"x2'-0"	14	14					18										28					2							
			IM-40-24	24"x12"							2																						
			M-5C-24-2	24"x24"							4																						
			IM-28-20	20"x15"							2.1																						
			M-40-24	24"x12"							2																						
			M-2A-24	21⅝"x22"							3.3																						
			M-28-20	20"x15"							2.1																						
		329+35 Lt.	R-41B-30	30"x30"			15.75				6.25							15.75							1								
			R-43L-36	36"x15"							3.75																						
			R-43R-36	36"x15"							3.75																						
		334+65 Lt.	R-43R-36	36"x15"										3.75											1								1
		336+80 Rt.	R-43R-36	36"x15"			13							3.75						13													
		346+70 Lt.	W-49-36	36"x36"			17.25							9						17.25													
			WP-49	24"x12"										2																			
		North Marginal Rd.																															
		330+05 Lt.	R-10-24	24"x30"			14.5							5						14.5													
		331+35 Lt.	R-41B-30	30"x30"			14.5							6.25						14.5													
		331+35 Rt.	R-2-36	36"x36"x36"							3.9															1							
			R-41B-30	30"x30"			14.75							6.25						14.75													
		349+53 Rt.	R-43R-48				13.5							6						13.5													
	Cost Participation I TOTAL									6			18		90				59.5					2								
	Cost Participation III TOTAL									84.9			108.05					31.5	117		63			2	5	7				3		2
			TOTAL							90.9			126.05		90			31.5	176.5		63			2	7	7				3		2

PAVEMENT MARKINGS - COST PARTICIPATION I & III

ITEM	DESCRIPTION	QUANTITY I	QUANTITY III	UNIT
621	6" White Lane Lines			
	325+00 to 355+00 2 x 3 x 3000 = 18,000			
	Total 18,000 ÷ 5,280		3.41	Miles
621	4" Yellow Edge Lines			
	325+00 to 355+00 ℄ (x2) 6,000			
	2+86 to 3+62 Lt. Ramp 6E 76			
	0+78 to 3+37 Rt. Ramp 7E 259			
	3+68 to 5+71 Rt. Ramp 8E 203			
	5+00 to 7+02 Lt. Ramp 9E 202			
	Total 6,740 ÷ 5,280		1.28	Miles
621	4" White Edge Lines			
	325+00 to 328+35 Rt. 335			
	328+35 to 342+50 Rt. 1,415			
	347+50 to 355+00 Rt. 750			
	325+00 to 325+84 Lt. 84			
	329+00 to 344+31 Lt. 1,531			
	344+31 to 355.00 Lt. 1,069			
	2+86 to 6+21 Rt. Ramp 6E 335			
	0+78 to 6+51 Lt. Ramp 7E 573			
	0+00 to 5+71 Lt. Ramp 8E 571			
	0+00 to 7+02 Rt. Ramp 9E 702			
	Total 7,365 ÷ 5,280		1.39	Miles
621	8" White Channelizing Lines			
	4+11 to 6+21 Lt. Ramp 6E 210			
	1+15 to 5+00 Lt. Ramp 9E 385			
	343+90 to 347+50 Rt. 360			
	4+35 to 5+51 Rt. Ramp 7E 216			
	325+84 to 328+25 Lt. 241	•		
	1+20 to 3+48 Rt. Ramp 8E 228			
	Total 1,640		1640	Lin. Ft.
621	24" Broad Transverse Lines			
	326+59 to 328+25 169			
	343+90 to 347+30 300			
	Total 469		469	Lin. Ft.
621	4" White Lane Line			
	328+34 to 331.04 Rt. 270			
	328+25 to 330.00 Lt. 175			
	343+15.5 to 344+31 Lt. 115.5			
	Total 560.5 ÷ 5280 =		0.11	Miles
621	Curb Marking, White (Painted)			
	2+62 to 4+11 Lt. Ramp 6E 149			
	3+48 to 5+50 Rt. Ramp 8E 202			
	5+05 to 5+71 Lt. Ramp 8E 66			
	5+88 to 7+02 Rt. Ramp 9E 114			
	Total 531		531	Lin. Ft.
621	Lane Arrows			
	Ramp 9-E	1		Each
	Total	1		Each

Note:
All Pavement Markings are Thermoplastic unless noted to be painted.
For Pole Mounting Bracket Detail, see Sheet 110.

FENCE - COST PARTICIPATION III 41

REF. NO.	STATION FROM	TO	SIDE	607 Type CL as per plan Lin. Ft.	
	Lakeland Blvd.				
F-1	326+60	327+20	Lt	60	
F-2	346+90	347+00	Lt	10	
Cost Participation III Total				70	

QUANTITY CALCULATIONS FOR PLAN SHEET 40.

MADE HB DATE 7-31-74
TRACED KB DATE 7-31-74
CHECKED AJS DATE 8-5-74
SCALE None

Howard, Needles, Tammen & Bergendoff
CONSULTING ENGINEERS
CLEVELAND, OHIO
HNTB

QUANTITIES

FHWA REGION	STATE	PROJECT	
5	OHIO		

42
354

CUYAHOGA COUNTY
CUY-90-23.73
LAKE COUNTY
LAK-90-0.00

SIGNING COST PARTICIPATION III

SHEET NO.	SIGN NO.	STATION	CODE NO.	SIGN SIZE	DIMENSIONS SEE DETAIL 'A' SHEET NO. 19 (Lin. Ft.) A	B	C	D	E	EXIST. SIGNS RE-ERECTED Sq. Ft.	EXISTING SIGN REVISED, AS PER PLAN Each	844 SIGNS FLAT SHEET Sq. Ft.	844 SIGNS EXTRU. TYPE Sq. Ft.	844 CONC. GROUND MOUNTED SIGN Cu. Yd.	844 SUPPORTS 6LB. BEAM AS PER PLAN Lin. Ft.	4 Lb POST Lin. Ft.	6 Lb BEAM Lin. Ft.	W8×17 Lin. Ft.	W10×21 Lin. Ft.	W12×31 Lin. Ft.	BREAK-AWAY CONN. Each	202 REMOVAL EXISTING SIGNS Each	202 REMOVAL EXISTING SUPP Each	202 REMOVAL EXISTING INSTALL. Each	202 REMOVAL MAJOR INSTALL. Each	202 REMOVAL EXISTING O.H. SUPP Each	620 DELIN. AS PER PLAN Each	REVISE EXISTING SIGN LEGEND, EXIT ACTION MESSAGE, AS PER PLAN Each	POLE MOUNTED SIGN ATTACHMENT, AS PER PLAN Each
40		North Marginal Rd. con't											-															
		333+40		9'-0"x2'-0"	14	14				18							28						2						
			IM-39-24	24"x 12"						2																			
			M-5C-24-2	24"x 24"						4																			
			IM-28-20	20"x 15"						2.1																			
			M-39-24	24"x 12"		"				2																			
			M-2A-24	21⅝"x22"						3.3																			
			M-28-20	20"x 15"						2.1																			
		335+00Lt.	R-41A-36	36"x 24"			14					6			14													
		335+00Rt.	R-41A-36	36"x 24"			14					6			14													
		341+00 Rt.	R-41B-36	36"x 36"			15					9			15													
		341+00Lt.	R-41B-36	36"x 36"			15					9			15													
		347+00Rt.	R-41B-36	36"x 36"			15					9			15													
		347+00Lt.	R-41B-36	36"x 36"			15					9			15													
		355+00Lt.	R-41B-36	36"x 36"			15					9			15													
		E. 222nd. St.											-															
		2+40 S		5'-0"x5'-0"	17	17				25					34							2						
		2+00N. Rt.	R-41B-30	30" x 30"			15.75			6.25					15.75							1						
			R-43R-36	36"x 15"						3.75																			
			R-43L-36	36"x 15"						3.75																			
			R-32L-30	30"x 30"						6.25																			
		2+20N Lt.		5'-0"x5'-0"	17	17				25					34							2						
		2+80 Rt.	R-41B-30	30"x 30"			15.75								15.75							1						
			R-43R-36	36"x 15"																									
			R-43L-36	36"x 15"																									
		Miller Connecter																											
		1+40 Lt.	R-41B-30	30"x 30"			15.75			6.25					15.75							1						
			R-43L-36	36"x 15"						3.75																			
			R-43R-36	36"x 15						3.75																			
		1+40 Rt.	R-41B-30	30"x 30"			15.75			6.25					15.75							1						
			R-43L-36	36"x 15"						3.75																			
			R-43R-36	36"x 15"						3.75			-																
		0+50 Lt.	R-41A-36	36"x 24"								6												1					
		0+50 Rt.	R-41A-36	36"x 24"			14					6			14													
		E. 230 St.																											
		0+55 Rt.	R-121-24	24"x 24"			14.5			4					14.5							1						
			RP-121-24	24"x 18"						3																			
Cost Participation III TOTAL										138		69			63	199.5	28					11	1					
TOTAL										138		69			63	199.5	28					11	1					

QUANTITY CALCULATIONS
MADE BY H.B. DATE 7-31-74
CHECKED BY AJS DATE 8-5-74

GUARD RAIL-COST PARTICIPATION I

REF. NO.	STATION FROM	STATION TO	SIDE	202 Guardrail Removed For Reuse or Storage Lin. Ft.	202 GUARD RAIL, Barrier Design, Removed For Reuse or Storage Lin. Ft.	202 Painted Guardrail Removed For Reuse or Storage Lin. Ft.	606 Guardrail Type 5 as per plan Lin. Ft.	606 Guardrail Type 5 Rebuit as per plan Each	606 Anchor Assembly Each	606 Bridge Terminal Assembly Type D Each	606 Bridge Terminal Assembly Type F Each
R-1	331+28	334+03	Rt.	62.5		212.5	250		1		1
R-2	Ramp 9E 0+09	Ramp 9E 2+34	Rt.	25			75		2		
R-3	Ramp 6E 2+86	328+67	Rt.			117	143	225		1	
R-4	Ramp 7E 2+50	329+87	Lt.			387.5	463		1		1
R-5	332+52	342+77	Lt.	37.5		225	912.5		1	1	
R-6	Ramp 8E 1+50	Ramp 8E 3+25	Lt.				125		2		
R-7	351+55	353+30	Lt.				125		2		
R-8	347+90	349+65	Rt.				125		2		
R-9	353+60	355+35	Rt.				125		2		
E-1	325+00	329+41	℄		441						
E-2	331+72	355+00	℄		2328						
TOTAL COST PARTICIPATION I				125	2769	942	2343.5	225	13	2	2
TOTAL				125	2769	942	2343.5	225	13	2	2

MADE H.B. DATE 7-31-74
TRACED H.B. DATE 7-31-74
CHECKED AJS DATE 8-9-74
SCALE None

Howard, Needles, Tammen & Bergendoff
CONSULTING ENGINEERS
CLEVELAND, OHIO

HNTB

FHWA REGION	STATE	PROJECT	
5	OHIO		

43
354

CUYAHOGA COUNTY
CUY-90-23.73
LAKE COUNTY
LAK-90-0.00

MILE 18.4
N-41-12

See Sheet 40
Match Line Sta. 355+00

Match Line Sta. 385+00
See Sheet No. 45

NORTH MARGINAL RD.
LAKELAND BLVD.
I-90
RAMP 10E
RAMP 11E
E 222nd St
E 200th St
E 236TH ST.
E 237TH ST.
E 239TH ST.
E 245TH ST.
VAN AVE.
BABBITT RD.
I-71
Penn Central R.R.

24" Broad Trasverse Lines
4" White Edge lines
4" Yellow Edge Lines
8" Channelizing Line
4" Lane Lines
4" White Lane Lines
6" Lane Lines
4" Lane Line
8" Channelizing Line

& Monument
Sta. 1+29.26 N. & Babbit Rd. =
Sta. 375+96.95 & N. Marg. Rd.

& Monument
Sta. 1+29.42 S & Babbit =
Sta. 375+80.49 & Ext. Lakeland Blvd.

LEGEND

- B/W BLACK ON WHITE PANEL
- PROPOSED LIGHT TOWER (BY OTHERS)
- SIGNALIZED INTERSECTION (EXISTING)
- (SN) PROVIDE NEW SIGN
- (SP) PROVIDE NEW SUPPORT (S)
- (RM) REVISE EXISTING SIGN LEGEND
- PROPOSED SIGN
- EXISTING SIGN
- ≠ SIGNS EXISTING WITH OVERLAY [55]
- # PROVIDE [55] OVERLAY ON NEW SIGN

Notes:

For Guardrail, Signing, Fence, and Pavement Marking Quantities, see Sheet 44

For Curb removal at Ramp 10E, see Sheet 82

For Traffic Control Details, see Sheets 110-123B

For Guardrail Details, see Sheets 78-90

For Concrete Barrier and Drainage Plan, see Sheets 59-77

For Mile Marker Quantities, see Sheet 107

MADE DSP DATE 12-3-77
TRACED MET DATE 12-8-77
CHECKED WEE DATE 1-14-78
SCALE 1"=100'

Howard, Needles, Tammen & Bergendoff
CONSULTING ENGINEERS
CLEVELAND, OHIO

HNTB

100 0 100 200

STA. 355+00 TO STA. 385+00

QUANTITIES

FHWA REGION	STATE	PROJECT	
5	OHIO		

44
354

CUYAHOGA COUNTY
CUY-90-23.73
LAKE COUNTY
LAK-90-0.00

2427

QUANTITY CALCULATIONS
MADE BY AJS DATE 8-1-74
CHECKED BY HB DATE 8-5-74

SIGNING COST PARTICIPATION I & III

SHEET NO.	SIGN NO.	STATION	CODE NO.	SIGN SIZE	DIMENSIONS SEE DETAIL 'A' SHEET NO. 19 (Lin. Ft.) A	B	C	D	E	EXIST. SIGNS RE-ERECTED Sq. Ft. I	III	844 SIGNS FLAT SHEET Sq. Ft. I	III	EXTRU. TYPE Sq. Ft. I	III	844 SUPPORTS 6LB. BEAM AS PER PLAN Lin. Ft. III	4 Lb POST Lin. Ft. I	III	6 Lb BEAM Lin. Ft. I	III	202 REMOVAL EXISTING SUPP. Each I	III	REMOVAL EXISTING INSTALL. Each III	REVISE EXISTING SIGN LEGEND, EXIT ACTION MESSAGE, AS PER PLAN Each I	POLE MOUNTED SIGN ATTACHMENT, AS PER PLAN Each III
43		I-90																							
		356+00 EB	W-49R-48	48"x48"			22.5			6									22.5		1				
			WP-49	24"x12"						2						•									
		373+75 EB	N-12C-108	9'-0"x2'-0"										18											
		357+00 WB																					1		
	A	362+70 WB	W-97-48	48"x60"						20															1
	A		N-12C-108	9'-0"x2'-0"										18										1	
	B		N-12C-96	8'-0"x2'-0"										16											
		374+00 WB	N-12C-96	8'-0"x2'-0"										16										1	
		Lakeland Blvd.																							
		373+00 Rt.	R-41A-36	36"x24"			14					6								14					
		North Marginal Road																							
		359+30	R-43R-72	72"x24"	14	14				12								28			2				
		360+80	W-49L-48	48"x48"			21.75					16								21.8			1		
			W-49	24"x12"								2													
		365+50		5'-0"x6'-0"	18	18				30										36		2			
		375+15	R-2-36	36"x36"x36"			14.5			3.9								14.5				1			
		376+67	IM-39-24	24"x12"	14	14				2						•				28		2			
			M-5C-24-2	24"x 24"						4															
			IM-28-20	24"x 15"						2.1															
			M-39-24	24"x12"						2															
			M-2A-24	21⅝"x22"						3.1															
			M-28-20	20"x15"						2.1															
			M-2A-24	21⅝"x22"						3.1															
			M-28-20	20"x15"						2.1															
				9'-0"x2'-0"						18															
		378+33 Rt.	R-41A-36	36"x 24"			14			6								14				1			
		378+33 Lt.	R-41A-36	36"x 24"			14					6						14							
		383+00		5'-0"x6'-0"	18	18				30										36		2			
		Babbit Road																							
(11)	A	0+75 N		12'-0"x5'-0"	Mounted on E.B. Bridge									60											
(11)	B		R-30A-48	48"x54"	Mounted on E.B. Bridge							18													
(11)	C		R-30A-48	48"x54"	Mounted on E.B. Bridge							18													
		0+95 N Lt.		5'-0"x5'-0"												•							1		
		1+15 N	R-43L-36	36"x 15"			15.75			3.75						15.8						1			
			R-43R-36	36"x 15"						3.75															
			R-41B-30	30"x30"						6.25															
		1+60 N	R-43L-36	36"x 15"			15.75			3.75						15.8						1			
			R-43R-36	36"x 15"						3.75															
			R-41B-36	30"x30"						6.25															
(9)	A	1+70 N		8'-0"x5'-0"										40											
		1+75 N		7'-0"x2'-0"	14	14				14								28			2				
(10)	A	0+75 S		12'-0"x5'-0"	Mounted on W.B. Bridge									60											
(10)	B		R-30A-48	48"x54"	Mounted on W.B. Bridge							18													
(10)	C		R-30A-48	48"x54"	Mounted on W.B Bridge							18													
		Ramp 11E																							
		1+75	R-158-30	30"x30"			14.5			6.25								14.5			1				
		Ivon Avenue																							
		0+50 Lt.	R-41A-36	36"x 24"			14					6						14				1			
		0+50 Rt.	R-41A-36	36"x 24"			14					6				•		14							
		1+00 Lt.	R-41B-30	30"x30"			14.5					6.3						14.5				1			
		1+00 Rt.	R-41B-30	30"x30"			14.5					6.3						14.5							
		Ramp 10E																							
		2+00 Rt.	R-41B-36	36"x36"			15					9						15							
		3+20 Lt.	R-2-60	60"x60"x60"			16.5			10.8								16.5			1				
			R-41B-36	36"x36"						9															
		3+65		36"x24			14			6								14			1				
		4+20 Lt.	R-41A-36				14					6						14							
		7+75																				1			
		E. 239th. Street																							
		0+35	R-121-24	24"x 24"			15.5					4						15.5							
			RP-121-24	24"x 18"								3													
Cost Participation I Total										70.05		15		68				74		22.5	4				
Cost Participation III Total										161.9		133.6		160		31.6		171		135.8	14		6	2	1
Total										231.95		148.6		228		31.6		245		158.3	18		6		1
																•								2	

PAVEMENT MARKINGS - COST PARTICIPATION I & III

ITEM	DESCRIPTION	QUANTITY	UNIT
621	4" White Edge Lines		
	355+00 to 303+01 Rt.	801'	
	363+11 to 385+00 Rt.	2199'	
	1+60 to 7+15 Ramp 11E	555'	
	355+00 to 359+50 Lt.	450'	
	364+50 to 385+00 Lt.	2050'	
	1+97 to 8+99 Ramp 10E	702'	
	Total (Cost Part. III)	6757' ÷ 5280	1.28 Miles
621	4" Yellow Edge Lines		
	355+00 to 385+00 Lt. and Rt.	6000'	
	1+60 to 3+64 Ramp 11E	204'	
	1+97 to 3+99 Ramp 10E	202'	
	Total (Cost Part. III)	6406' ÷ 5280	1.21 Miles
621	8" White Channelizing Lines		
	3+64 to 7+15 Lt. Ramp 11E	351'	
	359+96 to 363+36 Lt.	386'	
	3+99 to 7+85 Ramp 10E	386'	
	0+00 to 0+89 Ramp 13E	89	
	Total (Cost Part. III)	1212'	1212 Lin. Ft.
621	24" Broad Transverse Lines, White		
	359+60 to 365+64 (Cost Part. III)	427	427 Lin. Ft.
621	Curb Marking (white) (painted)		
	2+25 to 3+64 Ramp 11E (Cost Part. III)	139	139 Lin. Ft.
621	6" White Lane Lines (Cost Part. III)		
	355+00 to 385+00 Lt. and Rt. 24x3000 ÷ 5280	3.41	Miles
621	4" Lane Lines (white)		
	363+01 to 364+51 Rt.	150'	
	382+40 to 384+10 Lt.	170'	
	Total (Cost Part. III)	320 ÷ 5280	0.06 Miles
621	Lane Arrow		
	Ramp 10E Exit (Cost Part. I)	1	Each

GUARD RAIL - COST PARTICIPATION I

REF. NO.	STATION FROM	TO	SIDE	202 Guardrail Removed For Reuse or Storage Lin. Ft.	202 Guard Rail, Design 4 Barrier Removed For Reuse or Storage Lin. Ft.	202 Painted Guardrail Removed For Reuse or Storage Lin. Ft.	606 Guardrail Type 5 as per plan Lin. Ft.	606 Guardrail Type 5 Rebuit as per plan Lin. Ft.	606 Anchor Assembly Each	606 Bridge Terminal Assembly Type D Each	606 Bridge Terminal Assembly Type F Each
R-1	365+03.5	374+66	Rt.	162.5		800	937.5		1	1	
R-2	377+06	385+00	Rt.			793	794				1
R-3	377+10	385+10	Lt.			562.5	487.5	287.5	1	1	
R-4	368+59.5	374+72	Lt.			612.5	587.5		1		1
E-1	355+00	374+84	℄		1984						
E-2	376+93	385+00	℄		807						
R-5	357+15	358+90	Lt.				125		2		
	Ramp 11E										
R-6	3+35	5+10	Rt.				125		2		
	Cost Participation I Total			162.5	2791	2768	3056.5	287.5	7	2	2

FENCE - COST PARTICIPATION III

REF. NO.	STATION FROM	TO	SIDE	607 Type CL as per plan Lin. Ft.	
	Lakeland Blvd.				
F-1	355+00	355+20	Lt.	20	
F-2	Ramp 11E 1+00	1+20	Lt.	20	
Cost Participation III Total				40	

Note:
All Pavement Markings are Thermoplastic unless noted to be painted.

For Pole Mounting Bracket Detail, see Sheet 110.

MADE AJS DATE 8-1-74
TRACED AJS DATE 8-1-74
CHECKED HB DATE 8-5-74
SCALE None

Howard, Needles, Tammen & Bergendoff
CONSULTING ENGINEERS
CLEVELAND, OHIO

HNTB

FHWA REGION	STATE	PROJECT	
5	OHIO		

45
354

CUYAHOGA COUNTY
CUY-90-23.73
LAKE COUNTY
LAK-90-0.00

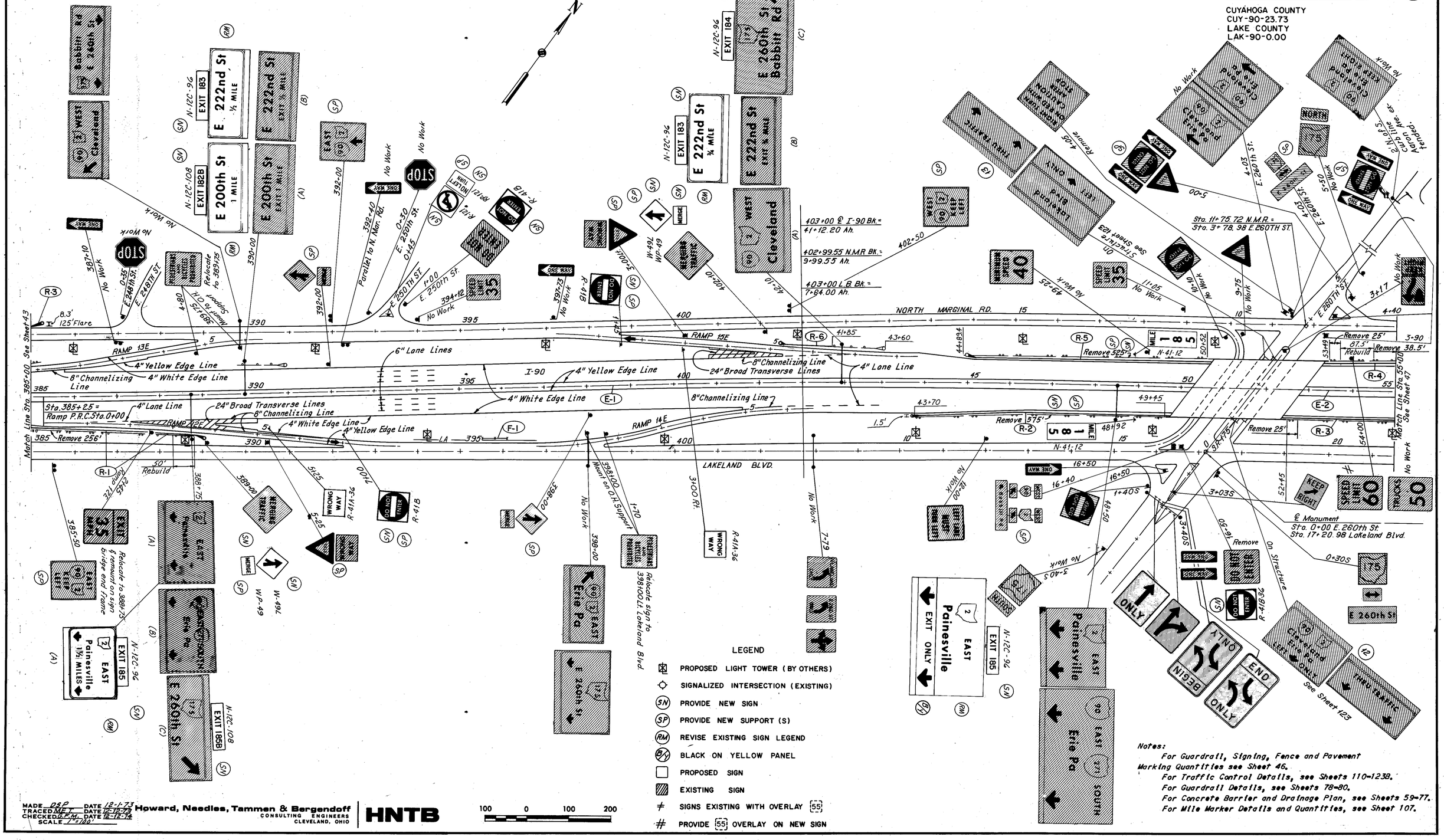

LEGEND

- PROPOSED LIGHT TOWER (BY OTHERS)
- SIGNALIZED INTERSECTION (EXISTING)
- (SN) PROVIDE NEW SIGN
- (SP) PROVIDE NEW SUPPORT (S)
- (RM) REVISE EXISTING SIGN LEGEND
- (B/Y) BLACK ON YELLOW PANEL
- PROPOSED SIGN
- EXISTING SIGN
- ≠ SIGNS EXISTING WITH OVERLAY [55]
- # PROVIDE [55] OVERLAY ON NEW SIGN

Notes:

For Guardrail, Signing, Fence and Pavement Marking Quantities see Sheet 46.
For Traffic Control Details, see Sheets 110-1238.
For Guardrail Details, see Sheets 78-80.
For Concrete Barrier and Drainage Plan, see Sheets 59-77.
For Mile Marker Details and Quantities, see Sheet 107.

MADE DSP DATE 12-1-75
TRACED MFT DATE 12-12-75
CHECKED R.F.M. DATE 12-12-75
SCALE 1"=100'

Howard, Needles, Tammen & Bergendoff
CONSULTING ENGINEERS
CLEVELAND, OHIO

HNTB

100 0 100 200

STA. 385+00 TO STA. 55+00

QUANTITIES

FHWA REGION	STATE	PROJECT	
5	OHIO		

46
354

CUYAHOGA COUNTY
CUY-90-23.73
LAKE COUNTY
LAK-90-0.00

SIGNING COST PARTICIPATION I & III

SHEET NO.	SIGN NO.	STATION	CODE NO.	SIGN SIZE	DIMENSIONS SEE DETAIL 'A' SHEET NO. 19, [Lin. Ft.] A	B	C	D	E	EXIST. SIGNS RE-ERECTED Sq. Ft. I	III	EXISTING SIGN REVISED, AS PER PLAN Each I	III	844 SIGNS - 844 SUPPORTS FLAT SHEET Sq. Ft. I	III	EXTRU. TYPE Sq. Ft. I	III	4 Lb POST Lin. Ft. I	III	6 Lb BEAM Lin. Ft. I	III	202 REMOVAL EXISTING SIGNS Each I	III	REMOVAL EXISTING SUPP. Each I	III	REMOVAL EXISTING INSTALL. Each I	III	REMOVAL MAJOR INSTALL. Each I	III	REVISE EXISTING SIGN LEGEND, EXIT ACTION MESSAGE, AS PER PLAN Each I	III	POLE MOUNTED SIGN ATTACHMENT, AS PER PLAN Each III
45																																			
	Lakeland Blvd.																																		
		385+50		5' x 6'	18'	18'					30										36				2										
		389+00	W-49L-36	36"x 36"			19.75'							9							19.3						1								
			WP-49	24"x 12"										2																					
		16+40	JM-40-24	24"x12"	14'	14'					2										28				2										
			M-5C-24-2	24"x 24"							4																									
			IM-28-20	20"x 15"							2.1																									
			M-40-24	24"x 12"							2																									
			M-2A-24	21⅜"x 22"							3.3																									
			M-28-20	20"x 15"							2.1																									
		16+50	R-41B-36	36"x 36"										9									1												
	I-90 Eastbound																																		
	(A)	388+75																																	
			N-12C-96	8'x 2'												16																	1		
	(C)		N-12C-96	9'x 2'												18																			
		398+00	W-49R-48	48"x 48"			22.25'			16										22.3				1										
			WP-49	24"x 12"						2																										
		48+50										1																								
			N-12C-96	8'x 2'												16																				
	I-90 Westbound																																		
	(A)	390+00	N-12C-108	9'x 2'												18																	1		
	(B)		N-12C-96	8'x 2'												16																	1		
		392+00	W-49R-48	48"x 48"						16										23				1										
			WP-49	24"x 12"						2																										
		42+10																															1		
	(B)		N-12C-96	8'x 2'												16																				
	(C)		N-12C-96	8'x 2'												16																				
	Ramp 12E																																		
		2+45		36"x 36"			15'				9														1										1
		5+25 Lt.	R-41A-36	36"x 24"			14'							6				14																
		5+25 Rt.	R-41A-36	36"x 24"			16.5'			6								16.5						1										
			R-2-60	60"x60"x60"						10.8																									
		7+00	R-41B-36	36"x 36"			15'							9				15																
	Ramp 13E																																		
		4+80	R-15B-30	30"x 30"							6.25														1										1
	Ramp 14E																																		
		1+70	R-15B-30	30"x 30"							6.25														1										1
	Ramp 15E																																		
		1+45	R-41B-36	36"x 36"			15'							9				15																
		3+00 Rt.	R-41A-36	36"x 24"			14'							6				14																
		3+00 Lt.	R-41A-36	36"x 24"			16.5'			6								16.5						1										
			R-2-60	60"x60"x60"						10.8																									
	North Marginal Road																																		
		392+00		5'x 5'	17'	17'					25										34				2										
		402+10					19.25														19.3						1								
			W-49L-36	36"x 36"										9																					
			WP-49	24"x 12"										2																					
		402+50		5'x 6'	18'	18'					30										36				2										
	East 250th. Street																																		
		0+45	R-12I-24	24"x 24"			15.5'							4				15.5																
			RP-12I-24	24"x 18"										3																					
		1+00	R-41B-30	30"x 30"										6.25									1												
	East 260th. Street																																		
		3+90	R-41B-36	36"x 36"			16.25				9							16.3							1										
			R-43R-36	36"x 15"							3.75																									
			R-43L-36	36"x 15"							3.75																									
		4+05																																		
		4+03	M-2-24	24"x 24"	14'	14'					4							28							1										
			M-25-20	20"x 15"							2.1																									
				8'x 2'							.16																									
		4+40	R-41B-36	36"x 36"			16.25				9							16.3							1										
			R-43R-36	36"x 15"							3.75																									
			R-43L-36	36"x 15"							3.75																									
		5+00	R-2-36	36"x36"x36"			16'				3.9							16							1										
			R-41B-30	30"x 30"							6.25																									
			R-43L-36	36"x 15"							3.75																									
			R-43R-36	36"x 15"							3.75																									
	Cost Participation I Total									69.6				30		116		91		45.3				4										
	Cost Participation III Total										194.75	1			44.25				92.1		172.6	2		15		3						4		3	
	TOTAL									264.35		1		74.25		116		183.1		217.9		2		19		3						4		3	

QUANTITY CALCULATIONS

MADE BY G.F.M. DATE 8-5-74
CHECKED BY A.J.S. DATE 8-6-74

FENCE - COST PARTICIPATION III

REF. NO.	STATION FROM	TO	SIDE	607 Type CL as per plan Lin. Ft.
	Lakeland Blvd.			
F-1	395+50	396+10	Lt.	60
TOTAL PARTICIPATION III				60

NOTES:

For Pole Mounting Bracket Detail, See Sheet 110.

All Pavement Markings are Thermoplastic unless noted to be painted.

PAVEMENT MARKINGS - COST PARTICIPATION I, III

ITEM	DESCRIPTION			QUANTITY	UNIT
621	4" Yellow Edge Lines				
	385+00 to 403+00 (x2) I=90		3600'		
	41+12.20 to 55+00 (x2) I=90		2776'		
	5+00 to 7+06 Lt.	Ramp 12E	206'		
	1+55 to 3+95 Lt.	Ramp 14E	240'		
	2+64 to 4+82 Rt.	Ramp 13E	218'		
	1+50 to 3+56 Rt.	Ramp 15E	206'		
	Total (Cost Part. III) 7246 ÷ 5280			1.37	Miles
621	4" White Edge Lines				
	390+25+402+50	I=90 E.B.	1135'		
	41+39.19 to 55+00	I=90 E.B.	1361'		
	385+00 to 400+75	I=90 W.B.	1575'		
	43+87.2 to 55+00	I=90 W.B.	1113'		
	385+00 to 385+25	I=90 W.B.	25'		
	0+00 to 7+06	Ramp 12E	706'		
	0+00 to 4+82	Ramp 13E	482'		
	1+55 to 6+61.23	Ramp 14E	443'		
	1+50 to 8+56	Ramp 15E	706'		
	Total (Cost Part. III) 7546 ÷ 5280			1.43	Miles
621	6" Lane Lines				
	385+00 to 403+00 (x6) I=90		10800'		
	41+12.20 to 55+00 (x6) I=90		8327'		
	Total (Cost Part. III) 19127 ÷ 5280			3.62	Miles
621	4" Lane Lines				
	6+60 to 7+58	Ramp 15E	98'		
	402+50 to 42+74	I=90 E.B.	212'		
	1+10 to 2+10	Ramp 12E	100'		
	Total (Cost Part. III)		410 ÷ 5280	0.08	Miles
621	8" Channelizing Lines				
	387+45 to 390+25	I=90 E.B.	280'		
	2+10 to 5+00	Ramp 12E	290'		
	0+00 to 2+07	Ramp 13E	207'		
	4+60 to 6+60	Ramp 14E	200'		
	3+55 to 6+60	Ramp 15E	305'		
	400+80 to 403+00	I=90 W.B.	220'		
	Total (Cost Part. III)		1502'	1502	Lin. Ft.
621	24" Broad Transverse Lines				
	0+00 to 4+00.31	Ramp 12-E	145'		
	4+54.81 to 7+36	Ramp 15-E	213'		
	Total (Cost Part. III)		358'	358	Lin. Ft.
621	Curb Marking, White (Painted)				
	2+07 to 3+64	Ramp 13E	157'		
	2+95 to 4+60	Ramp 14E	165'		
	Total (Cost Part. III)		322'	322	Lin. Ft.
621	Lane Arrows				
	Ramp 12E Exit			1	Each
	Ramp 15E Exit			1	Each
	Total (Cost Part. I)			2	Each

GUARD RAIL - COST PARTICIPATION I

REF. NO.	STATION FROM	TO	SIDE	202 Guard Rail, Barrier Design, Removed For Reuse or Storage Lin. Ft.	202 Painted Guardrail Removed For Reuse or Storage Lin. Ft.	606 Guardrail Type 5 as per plan Lin. Ft.	606 Guardrail Type 5 Rebuit as per plan Each	606 Anchor Assembly Each	606 Bridge Terminal Assembly Type E Each	606 Bridge Terminal Assembly Type F Each
R-1	385+00	389+00	Rt.		256	356	50	1		
R-2	43+70	49+45	Rt.		575	550		1	1	
R-3	52+45	55+00	Rt.		50	75	180			1
R-4	53+49	55+00	Lt.		38.5	63.5	87.5		1	
R-5	44+89.5	50+52	Lt.		525	500	37.5	1		1
R-6	Ramp 15E 5+15	43+35	Lt.			100		1		
E-1	385+00	50+15	℄	3203						
E-2	52+85	55+00	℄	215						
TOTAL PARTICIPATION I				3418	1444.5	1644.5	355	4	2	2

MADE G.F.M. DATE 8-5-74
TRACED G.F.M. DATE 8-5-74
CHECKED A.J.S. DATE 8-6-74
SCALE

Howard, Needles, Tammen & Bergendoff
CONSULTING ENGINEERS
CLEVELAND, OHIO

HNTB

FHWA REGION	STATE	PROJECT	
5	OHIO		

47
354

CUYAHOGA COUNTY
CUY-90-23.73
LAKE COUNTY
LAK-90-0.00

N-12C-108 EXIT 185A 175 E 260th St Babbitt Rd NEXT RIGHT (SN) (RM)

E 260th St Babbitt Rd RIGHT LANE 175

N-12C-96 EXIT 184 175 E 260th St Babbitt Rd ½ MILE (SN) (RM)

E 260th St Babbitt Rd ½ MILE 175

E 260th St Babbitt Rd ½ MILE 175

N-12C-96 EXIT 184 175 E 260th St Babbitt Rd ½ MILE (SN) (RM)

Euclid Ave ½ MILE (20) EXIT 186 N-321-N (RM) (SN)

Euclid Ave ½ MILE (20) EXIT 186 96-321-N (RM) (SN)

Euclid Ave (20) ½ MILE

Euclid Ave (20) ½ MILE

Euclid (20) ½ MILE

Euclid (20) ½ MILE

SIGNING COST PARTICIPATION I & III

SHEET NO.	SIGN NO.	STATION	CODE NO.	SIGN SIZE	DIMENSIONS SEE DETAIL "A" SHEET NO. 19 (Lin. Ft.) A	B	C	D	E	EXIST. SIGNS REJERECTED Sq. Ft. I	III	EXISTING SIGN REVISED, AS PER PLAN EACH III	844 SIGNS FLAT SHEET Sq. FT. III	EXTRU. TYPE Sq. Ft. I	844 CONC. GROUND MOUNTED SIGN Cu. Yd.	844 SUPPORTS 6LB. BEAM AS PER PLAN Lin. Ft.	4 LB. POST Lin. Ft. III	6 LB. BEAM Lin. Ft. I	III	W8x17 Lin. Ft.	W10x21 Lin. Ft.	W12x31 Lin. Ft.	BREAK-AWAY CONN. Each	202 REMOVAL EXISTING SIGNS Each	REMOVAL EXISTING SUPP. Each I	III	REMOVAL EXISTING INSTALL. Each III	REMOVAL MAJOR INSTALL. Each	REMOVAL EXISTING O.H. SUPP. Each III	620 DELIN. AS PER PLAN Each	REVISE EXISTING SIGN LEGEND, EXIT ACTION MESSAGE, AS PER PLAN Each III	POLE MOUNTED SIGN ATTACHMENT, AS PER PLAN Each III
49		Lakeland Freeway W.B.																													
		55+40	N-12C-108	9'-0"x2'-0"										18															1	
		65+50	W-49L-48	48"x48"			22.5			16								22.5						1							
			WP-49	24"x12"						2																					
		69+40	N-12C-96	8'-0"x2'-0"										16															1	
		79+00																									1				
		Turning Roadway No.1																													
	A	4+60	N-12C-96	8'-0"x2'-0"								1		16																	
			W-1-48	48"x48"									16																	1	
			W-143-24	24"x24"									4																	1	
		5+75																							1						
		11+50	N-12C-96	8'-0"x2'-0"										16															1	
		Turning Roadway No. 2																													
		24+10	N-12C-96	8'-0"x2'-0"										16															1	
		26+75	W-49R-48	48"x48"			23.5			16								23.5						1							
			WP-49	24"x12"						2																					
		Ramp 1																													
		13+00																							1						
		15+00	W-68-36	36"x36"			19				9								19												
		16+00	N-12C-96	8'-0"x2'-0"										16															1	
		Lakeland Blvd.																													
		24+10	R-2-36	36"x36"x36"			14.5				3.9						14.5								1						
		24+30	W-32-48	48"x24"			14				8						14								2						
		24+60	R-41B-30	30"x30"			14.5						6.25				14.5														
		30+00	W-1-30	30"x30"			18.5						6.25						18.5												
			W-143-18	18"x18"									2.25																		
Cost Participation I TOTAL										36								46					2							
Cost Participation III TOTAL										20.9		1	34.75	98			43	37.5					3	3		1		5	2	
TOTAL										56.9		1	34.75	98			43	83.5					5	3		1		5	2	

FENCE-COST PARTICIPATION III

REF. NO.	STATION FROM	TO	SIDE	607 Type CL as per plan Lin. Ft.	607 Type 47 as per plan Lin. Ft.
	Lakeland Blvd.				
F-1	26+50	26+70	Lt.	20	
	Turning Roadway #1				
F-2	21+50		Rt.		75
	Ramp 2				
F-3	3+40	3+90	Rt.		200
	Lakeland Blvd.				
F-4	51+00	51+50	Lt.		60
Cost Participation III Total				20	335

GUARD RAIL-COST PARTICIPATION I

REF. NO.	STATION FROM	TO	SIDE	202 Guardrail Removed For Reuse or Storage Lin. Ft.	202 GUARD RAIL, Barrier Design, Removed For Reuse or Storage Lin. Ft.	202 Painted Guardrail Removed For Reuse or Storage Lin. Ft.	606 Guardrail Type 5 as per plan Lin. Ft.	606 Guardrail Type 5 Rebuit as per plan Each	606 Anchor Assembly Each	606 Bridge Terminal Assembly Type E Each	606 Bridge Terminal Assembly Type F Each
R-1	55+00	56+65	Rt.	25		50	76	89		1	
R-2	58+15	T.R. No. 1 5+15.5	Rt.	50		437.5	750	62.5	2		1
	Turning Roadway No. 1										
R-4	10+17.5	19+31	Rt.	62.5			63.5	825	1	1	
R-5	9+85	18+60	Lt.	37.5			37.5	787.5	2		
	Turning Roadway No. 2										
R-6	6+36	11+31	Rt.	62.5			64.5	430.5		1	1
R-7	6+23	11+57	Lt.	37.5			359	175		1	1
R-8	14+39	29+65	Rt.	75			76	1425	1		1
R-9	14+82	26+95.5	Lt.	87.5			88.5	1100	1		1
	Interstate 90										
R-10	55+00	55+75	Lt.			74	75				1
R-11	56+67 W.B.	63+05.5 W.B.	Lt.			637.5	612.5		1	1	
R-12	57+03 W.B.	58+53 W.B.	Rt.			137.5	125		1	1	
R-13	67+98 W.B.	81+10.5 W.B.	Lt.			1312.5	1262.5		2		
R-14	84+75 W.B.	86+50 W.B.	Lt.			50	125		2		
R-15	65+22 E.B.	66+97 E.B.	Lt.			50	125		2		
R-16	77+62 E.B.	79+87 E.B.	Rt.			200	175		2		
R-17	77+69 E.B.	79+94 E.B.	Lt.			200	175		2		
R-18	82+75 E.B.	84+50 E.B.	Rt.			50	125		2		
	Ramp 1										
R-19	9+50	11+25	Lt.	50			125		2		
R-20	14+64	16+40	Lt.	85			26	125	1	1	
R-21	14+52.5	16+66	Rt.	50			51	137.5	1	1	
R-22	18+80	23+81	Rt.	62.5			38.5	437.5	1		1
R-23	22+30	24+31	Lt.	50			26	150	1	1	
	Ramp 2										
R-24	6+24	13+25	Rt.	125			126	550	1		1
R-25	6+22	14+60.5	Lt.	62.5			38.5	115	1		1
E-1	55+00	56+25	℄		125						
	Cost Participation I Total			862.5	125	3199	4871	7069.5	29	9	9

MADE GFM DATE 8-22-74
TRACED GFM DATE 8-22-74
CHECKED DSP DATE 8-22-74
SCALE

Howard, Needles, Tammen & Bergendoff
CONSULTING ENGINEERS
CLEVELAND, OHIO

HNTB

QUANTITY CALCULATIONS
MADE BY GFM DATE 8-22-74
CHECKED BY DSP DATE 8-22-74

FHWA REGION	STATE	PROJECT	
5	OHIO		

48/354

CUYAHOGA COUNTY
CUY-90-23.73
LAKE COUNTY
LAK-90-0.00

PAVEMENT MARKING - COST PARTICIPATION III

ITEM	DESCRIPTION	QUANTITY	UNIT
621	4" Yellow Edge Lines		
	55+00 to 86+00 Lt. Lkld. Frwy. E.B. 3100'		
	60+74.6 to 83+25 Rt. Lkld. Frwy. W.B. 2250'		
	6+50 to 19+58 Lt. T.R. No. 1 1308'		
	3+40 to 38+25 Lt. T.R. No. 2 3485'		
	9+31 to 27+24.98 Ramp 1 Lt. 1794'		
	6+00 to 15+00 Ramp 2 Lt. 900'		
	TOTAL 1/5280 x 12837'	2.43	Miles
621	4" White Edge Lines		
	55+00 to 61+87.1 Lkld. Frwy. E.B. Rt. 687'		
	68+41.3 to 86+00 Lkld. Frwy. E.B. Rt. 1759'		
	54+48 to 86+70 Lkld. Frwy. W.B. Lt. 3222'		
	0+00 to 22+43.9 T.R. No. 1 Rt. 2249'		
	5+75 to 34+60 T.R. No. 2 Rt. 2885'		
	12+75 to 25+68 Ramp 1 Rt. 1293'		
	3+40 to 15+00 Ramp 2 Rt. 1160'		
	TOTAL 1/5280 x 13250'	2.51	Miles
621	6" Lane Lines		
	55+00 to 61+87.1 (x3) Lkld. Frwy E.B. 2061'		
	61+87.1 to 86+00 Lkld. Frwy E.B. 2413'		
	54+48 to 58+05 (x3) Lkld. Frwy W.B. 1071'		
	58+05 to 86+70 Lkld. Frwy W.B. 2865'		
	0+00 to 20+84 T.R. No. 1 2084'		
	20+84 to 22+43.9 (x2) T.R. No. 1 320'		
	3+40 to 34+60 T.R. No. 2 3120'		
	TOTAL 1/5280 x 13934'	2.64	Miles
621	8" Channelizing Lines		
	64+84 to 68+41.3 Rt. Lkld. Frwy E.B. 357'		
	2+96 to 6+50 Lt. T.R. No. 1 354'		
	19+58 to 20+84 Lt. T.R. No. 1 126'		
	58+05 to 60+74.6 Rt. Lkld. Frwy W.B. 270'		
	83+25 to 87+17 Rt. Lkld. Frwy W.B. 392'		
	8+83 to 12+75 Rt. Ramp 1 392'		
	3+40 to 5+75 Rt. T.R. No. 2 235'		
	3+40 to 6+00 Lt. Ramp 2 260'		
	TOTAL 2386'	2386	Lin. Ft.
621	24" Bread Transverse Lines		
	64+84 to 67+21 Lkld. Frwy E.B. 189'		
	8+83 to 11+60 Ramp 1 142'		
	3+40 to 4+70 T.R. No. 2 130'		
	TOTAL 461	461	Lin. Ft.
621	Curb Marking		
	18+44.9 to 19+58 T.R. No. 1 113'		
	60+74.6 to 63+16 Lkld. Frwy W.B. 242'		
	83+25 to 84+41.2 Lkld. Frwy W.B. 116'		
	11+60.2 to 12+15 Ramp 1 115'		
	TOTAL 586'	586	Lin. Ft.

Note:
All Pavement Markings are Thermoplastic unless noted to be painted.

Rev. 7-18-75

FHWA REGION	STATE	PROJECT	
5	OHIO		

49
354

CUYAHOGA COUNTY
CUY-90-23.73
LAKE COUNTY
LAK-90-0.00

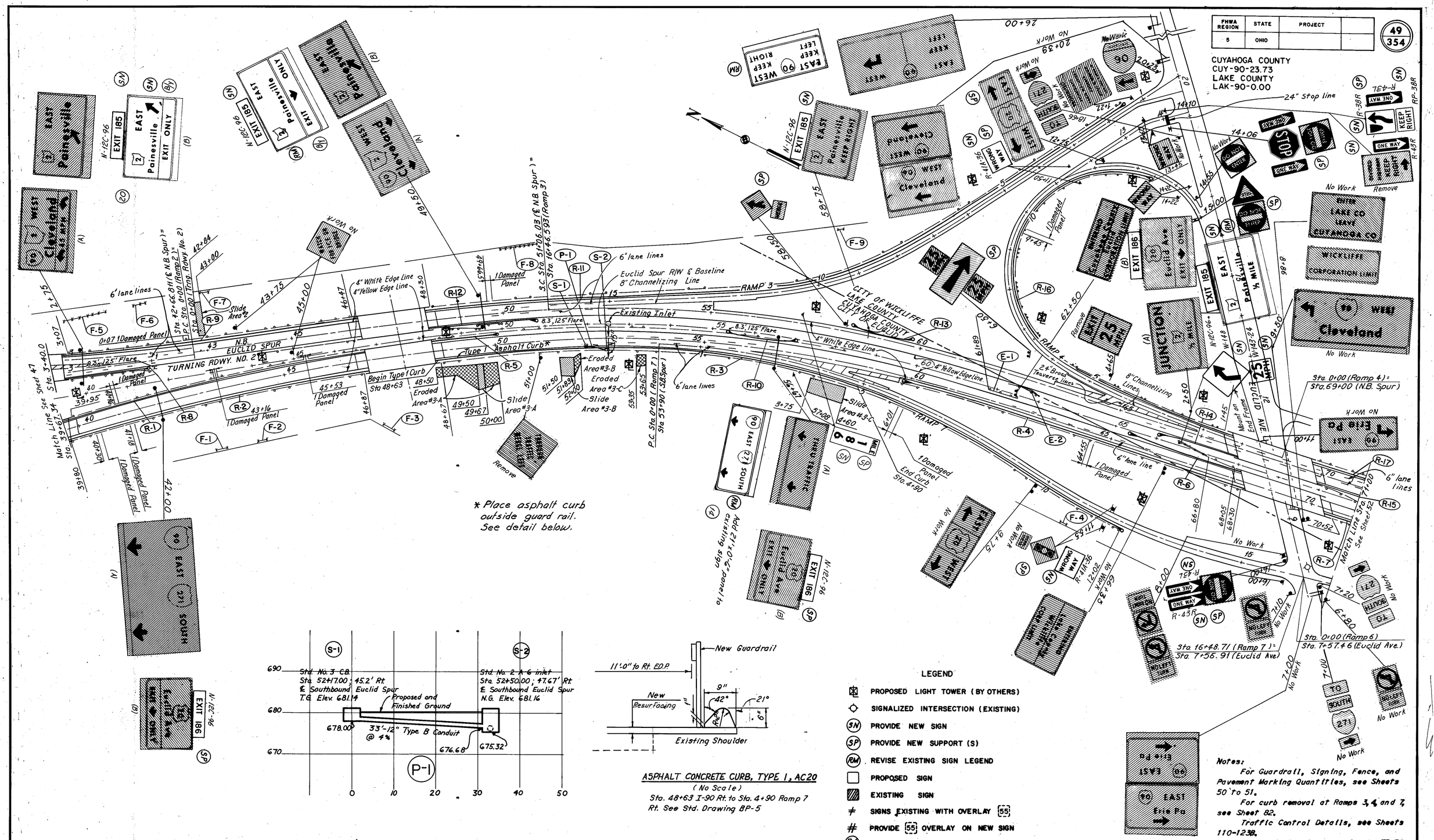

* Place asphalt curb outside guard rail. See detail below.

ASPHALT CONCRETE CURB, TYPE 1, AC20
(No Scale)
Sta. 48+63 I-90 Rt. to Sta. 4+90 Ramp 7 Rt. See Std. Drawing BP-5

LEGEND

- PROPOSED LIGHT TOWER (BY OTHERS)
- SIGNALIZED INTERSECTION (EXISTING)
- (SN) PROVIDE NEW SIGN
- (SP) PROVIDE NEW SUPPORT (S)
- (RM) REVISE EXISTING SIGN LEGEND
- PROPOSED SIGN
- EXISTING SIGN
- ≠ SIGNS EXISTING WITH OVERLAY [55]
- # PROVIDE [55] OVERLAY ON NEW SIGN
- (B/Y) BLACK ON YELLOW PANEL

Notes:

For Guardrail, Signing, Fence, and Pavement Marking Quantities, see Sheets 50 to 51.

For curb removal at Ramps 3, 4, and 7, see Sheet 82.

Traffic Control Details, see Sheets 110-123B.

Guardrail Details, see Sheets 70-80.

For Erosion and Slide Area Details, see cross-section Sheets 171-173

Rev. 7-18-75

MADE G.F.M. DATE 8-7-74
TRACED M.E.T. DATE 4-1-74
CHECKED A.J.S. DATE 8-8-74
SCALE 1"=100'

Howard, Needles, Tammen & Bergendoff
CONSULTING ENGINEERS
CLEVELAND, OHIO

HNTB

100 0 100 200

STA. 3+40 TO STA. 71+00

QUANTITIES

QUANTITY CALCULATIONS
MADE BY G.F.M. DATE 8-7-74
CHECKED BY A.J.S. DATE 8-8-74

FHWA REGION	STATE	PROJECT	
5	OHIO		

50
354

CUYAHOGA COUNTY
CUY-90-23.73
LAKE COUNTY
LAK-90-0.00

SIGNING COST PARTICIPATION I & III

SHEET NO.	SIGN NO.	STATION	CODE NO.	SIGN SIZE	DIMENSIONS SEE DETAIL 'A' SHEET NO. 19 (Lin. Ft.) A	B	C	D	E	EXIST. SIGNS RE-ERECTED Sq. Ft. I	III	EXISTING SIGN REVISED, AS PER PLAN Each III	844 SIGNS FLAT SHEET Sq. Ft. I	III	EXTRU. TYPE Sq. Ft. I	III	844 CONC. GROUND MOUNTED SIGN Cu. Yd. I	844 SUPPORTS 6LB. BEAM AS PER PLAN Lin. Ft. I	4 Lb POST Lin. Ft. I	III	6 Lb BEAM Lin. Ft. I	III	W8×17 Lin. Ft. I	BREAK-AWAY CONN. Each I	202 REMOVAL EXISTING SIGNS Each III	REMOVAL EXISTING SUPP. Each I	III	REMOVAL EXISTING INSTALL. Each I	REMOVAL MAJOR INSTALL. Each I	REVISE EXISTING SIGN LEGEND, EXIT ACTION MESSAGE, AS PER PLAN Each I	III	POLE MOUNTED SIGN ATTACHMENT, AS PER PLAN Each I
49	Euclid Spur E.B.																														
	B	42+00	N-12C-96	8'-0"x2'-0"											16																	
	(14) A	56+67		21'-0x 7'-0"								1																				
	(14) B	56+67	N-12C-96	8'-0"x2'-0"											16																	
Euclid Spur		W.B.																														
	B	49+50	N-12C-96	8'-0"x2'-0"								1			16																	
		58+50	W49R-48	48"x48"			21.75			16										21.75					1							
			WP-49	24"x12"						2																						
		62+50Lt.																									1					
		62+50Rt.		11'-0"x6'-0"	20	22.75				66							2.3					42.75	2									
Ramp 2																																
	(20) A	2+75		17'-0"x 9'-6"												161.5																
	(20) B	2+75	N-12C-96	8'-0"x2'-0"											16																	
Ramp 4																																
	A	2+50	N-12C-96	8'-0"x2'-0"											16														1			
	B	2+50	N-12C-96	8'-0"x2'-0"											16																	
		2+50	W-1-48	48"x48"											16																1	
		2+50	W-143-24	24"x24"											4																1	
		4+65																										1				
		6+50	W-143-24	24"x24"	17	17				4												34				2					
			W-32-96	8'-0"x4'-0"						32																						
			W-143-24	24"x24"						4																						
		11+50Lt.	R-41A-36	36"x24"											6				14													
		11+50Rt.	R-41A-36	36"x24"											6				14													
		12+25	D-2-72	6'-0"x2'-0"	14.5	14.5				12									29					2								
		15+00	R-2-48	48"x48"x48"			15.5			6.9									15.5					1								
			R-41B-36	36"x36"						9																						
Ramp 4A																																
		14+06Rt.	R-41B-36	36"x36"			17			9									17					1								
			R-1-48	48"x48"						16																						
			R-43R-36	36"x15"						3.75																						
			R-43L-36	36"x15"						3.75																						
		14+10 Lt.	R-38R	48"x60"									20						18.75							1	1					
			RP-38R	24"x18"									3																				
			R-43R-36	36"x15"									3.75																				
			R-43L-36	36"x15"									3.75																				
Ramp 7																																
		11+55 Lt.	W-47-46	36"x36"			17.25			9									17.25					1								
			WP-47-24	24"x18"						3																						
			R-41A-36	36"x24"									6																				
		11+55 Rt.	W-47-46	36"x36"			17.25			9									17.25					1								
			WP-47-24	24"x18"						3																						
			R-41A-36	36"x24"									6																				
		16+00 Lt.	R-41B-36	36"x36"			16.25			9									16.25													
			R-43R-36	36"x15"										3.75										1								
			R-43L-36	36"x15"										3.75																		
		16+00Rt.	R-41B-36	36"x36"			16.25			9									16.25					1								
			R-43R-36	36"x15"										3.75																		
			R-43L-36	36"x15"										3.75																		
Euclid Ave.																																
		26+00 Lt.		12'-0"x6'-6"																											1		
Euclid Spur		W.B.																														
		58+75	N-12C-96	8'-0"x2'-0"											16																	
Cost Participation I Total										226.4			42.50		144.00	2.3	68.25		107.00		55.75	42.75	2		12		1	1	1		2	
Cost Participation III Total												2	15.00		161.50									1					1			
			TOTAL							226.4		2	57.50		305.50	2.3	68.25		107.00		55.75	42.75	2	1	12		1	1	2		2	

PAVEMENT MARKINGS - COST PARTICIPATION I & III

ITEM	DESCRIPTION			QUANTITY	UNIT
621	4" Yellow Edge Lines				
	39+67.34 to 71+00	Euclid Spur E.B.	3133'		
	42+66.81 to 71+00	Euclid Spur W.B.	2833'		
	0+00 to 3+40	T.R. No. 2	340'		
	1+27 to 12+51	Ramp 3	1130'		
	5+50 to 20+97	Ramp 4	547'		
	12+04 to 13+56	Ramp 4	152'		
	10+97 to 13+17	Ramp 4A	220'		
	4+59 to 15+61	Ramp 7	1102'		
	Total III	9457 ÷ 5280		1.79	Miles
621	4" White Edge Lines				
	39+67.34 to 53+90	Euclid Spur E.B.	1423'		
	59+72 to 71+00	Euclid Spur E.B.	1128'		
	42+66.81 to 51+06.03	Euclid Spur W.B.	839'		
	52+50 to 63+25	Euclid Spur W.B.	1075'		
	69+00 to 71+00	Euclid Spur W.B.	200'		
	0+00 to 3+40	Ramp 2	340'		
	1+26.77 to 16+46.59	Ramp 3	1520'		
	0+00 to 14+92	Ramp 4	1492'		
	0+00 to 15+79	Ramp 7	1579'		
	Total III	9596 ÷ 5280		1.82	Miles
621	8" Channelizing Lines				
	56+05 to 59+72	Euclid Spur E.B.	367'		
	2+15 to 5+59	Ramp 7	344'		
	2+17 to 3+40	T.R. No. 2	123'		
	2+17 to 3+40	Ramp 2	123'		
	13+30 to 15+02	Ramp 3	172'		
	2+16 to 5+50	Ramp 4	334'		
	63+25 to 66+83	Euclid Spur W.B.	358'		
	Total III		1821'	1821	Lin. Ft.
621	24" Broad Transverse Lines				
	56+05 to 58+92	Euclid Spur E.B.	375'		
	64+86 to 66+83	Euclid Spur W.B.	253'		
	2+17 to 3+40	T.R. No. 2	70'		
	Total III		698'	698	Lin. Ft.
621	6" Lane Lines				
	39+67.34 to 56+05 (x2)	Euclid Spur E.B.	3275'		
	56+05 to 71+00	Euclid Spur E.B.	1495'		
	42+66.81 to 52+50 (x2)	Euclid Spur W.B.	1966'		
	52+50 to 66+83	Euclid Spur W.B.	1433'		
	66+83 to 71+00 (x2)	Euclid Spur W.B.	834'		
	0+00 to 2+17 (x2)	T.R. No. 2	434'		
	2+17 to 3+40	T.R. No. 2	123'		
	Total III	9561 ÷ 5280		1.81	Miles
621	Curb Marking, White (Painted)				
	11+00 to 13+30	Ramp 3	230'		
	0+27 to 1+50	Ramp 3	295'		
	15+37 to 16+49	Ramp 7	187'		
	Total III		712'	712	Lin. Ft.
621	24" Stop Line				
	14+27	Ramp 4A	24'		
	15+90	Ramp 7	24'		
	Total III		48'	48	Lin. Ft.
621	Lane Arrows				
	15+70	Ramp 7	1		
	14+55	Ramp 4	1		
	13+80	Ramp 4A	1		
	Total I		3	3	Each

Note:
All pavement markings to be thermoplastic, unless noted to be painted.
For Pole Mounting Bracket Detail see sheet 110.

MADE G.F.M. DATE 8-7-74
TRACED G.F.M. DATE 8-7-74
CHECKED A.J.S. DATE 8-8-74
SCALE

Howard, Needles, Tammen & Bergendoff
CONSULTING ENGINEERS
CLEVELAND, OHIO

HNTB

QUANTITIES

FHWA REGION	STATE	PROJECT	
5	OHIO		

51
354

CUYAHOGA COUNTY
CUY-90-23.73
LAKE COUNTY
LAK-90-0.00

QUANTITY CALCULATIONS
MADE BY G.F.M. DATE 8-7-74
CHECKED BY A.J.S. DATE 8-8-74

GUARD RAIL-COST PARTICIPATION I

REF. NO.	STATION FROM	STATION TO	SIDE	202 Guardrail Removed For Reuse or Storage	202 GUARD RAIL, Design, Barrier Removed For Reuse or Storage	606 Guardrail Type 5 as per plan	606 Guardrail Type 5 Rebuit as per plan	606 Anchor Assembly	606 Bridge Terminal Assembly Type E	606 Bridge Terminal Assembly Type F	606 Barrierrail Type 5 as per plan
				Lin. Ft.	Lin. Ft.	Lin. Ft.	Each	Each	Each	Each	Each
	Interstate 90										
R-1	39+96 E.B.	46+83.5 E.B.	Lt.	87.5		89.5	59.8		1	1	
R-2	39+80 E.B.	46+88 E.B.	Rt.	75		77	63.1		1	1	
R-3	48+66 E.B.	Ramp 7 12+27	Rt.	37.5		38.5	1687.5	1		1	
R-4	59+80 E.B.	68+31 E.B.	Rt.	62.5		38.5	787.5	1	1		
E-1	61+89 E.B.	62+39 E.B.	Lt.	50							
R-6	65+55 E.B.	68+06 E.B.	Lt.	25	100	226		1	1		
R-7	70+51 E.B.	71+00 E.B.	Rt.	25		26	23			1	
R-8	Turning Roadway No. 2 1+08	3+09	Lt.	150		126	50	1	1		
R-9	Ramp 2 3+08	I-90 46+46	Lt.	62.5		64.5	622.5		1	1	
R-10	55+51.5 E.B.	57+26.5 E.B.	Lt.	50		125		2			
R-11	I-90 48+29 W.B.	Ramp 3 1+47	Lt.	62.5		38.5	1711.5	1	1		
R-12	48+34 W.B.	50+84 W.B.	Rt.	125	75	225		1	1		
E-2	62+60 W.B.	63+35 W.B.	Rt.	75							
R-13	58+25 W.B.	60+00 W.B.	Lt.	50		125		2			
R-14	65+93 W.B.	67+93 W.B.	Rt.			175		1		1	
R-15	70+10 W.B.	71+00 W.B.	Rt.	75	15	87.5			1		25
R-16	Ramp 4 1+45	13+45	Rt.	62.5		63.5	1137.5	1		1	
R-17	69+75 W.B.	71+00 W.B.	Lt.	25		26	100		1		
R-5	48+64 E.B.	50+01.5 W.B.	Lt.			112.5		1		1	
	Cost Participation I Total			1100	190	1625.5	7348.5	13	10	8	25

ITEM 609 CURB COST PARTICIPATION III

STATION FROM	STATION TO	Asphalt Concrete Curb, Type 1, AC 20 Lin. Ft.
48+63 I-90	4+90 Ramp 7	1017
Cost Participation II Total		1017

DRAINAGE QUANTITIES COST PARTICIPATION III

REF. NO.	STATION FROM	STATION TO	SIDE	603 Type B Conduit 12"	604 Std. No. 3 Catch Basin	604 Std. No. 2-A-6 PAVED SHOULDER INLET
				Lin. Ft.	Each	Each
S-1	52+17	52+50	Rt.	33	1	1
S-2	52+50		Rt.			
Cost Participation III Total				33	1	1

FENCE-COST PART. I & III

REF. NO.	STATION FROM	STATION TO	SIDE	607 Type 47 as per plan Lin. Ft. I	607 Type 47 as per plan Lin. Ft. III
	Interstate 90				
F-1	43+00 E.B.	43+20 E.B.	Rt.		20
F-2	44+00 E.B.	44+20 E.B.	Rt.		20
F-3	47+10 E.B.	47+30 E.B.	Rt.		30
	Ramp 7				
F-4	10+70	10+80	Rt.	10	
	Ramp 2				
F-5	2+00	3+00	Rt.		100
F-6	1+00	1+40	Rt.		40
	Interstate 90				
F-7	43+00 W.B.	43+20 W.B.	Lt.		20
F-8	50+00 W.B.	51+00 W.B.	Lt.		100
	Ramp 3				
F-9	9+00	9+10	Rt.		10
Cost Participation I Total					10
Cost Participation III Total					340
Total					350

PRECAST CONCRETE TRAFFIC DIVIDERS- COST PARTICIPATION III

STATION FROM	STATION TO	QUANTITY EACH
8+20 Euc. Ave.	19+00 Euc. Ave.	181
19+38 Euc. Ave.	19+56 Euc. Ave.	4
15+66 Euc. Ave.	16+68 Euc. Ave.	18
Total		203

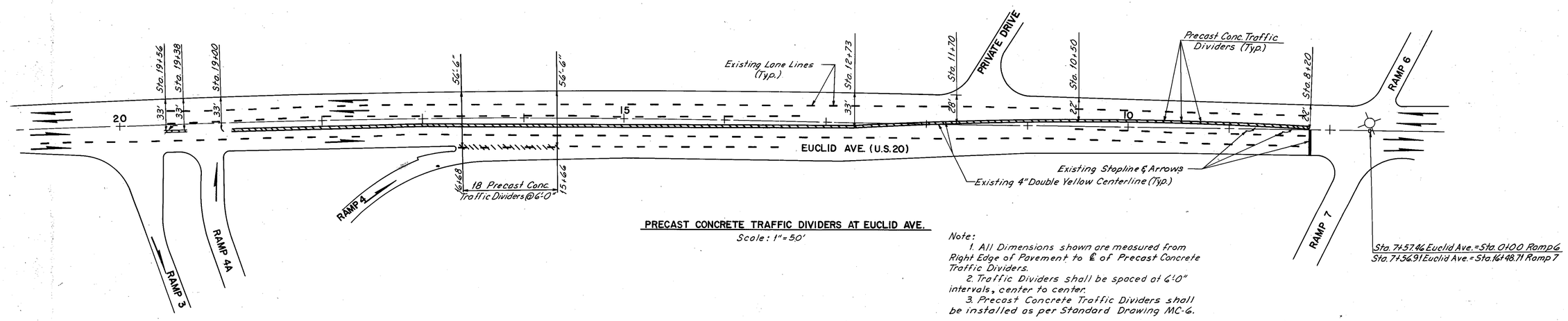

PRECAST CONCRETE TRAFFIC DIVIDERS AT EUCLID AVE.
Scale: 1"=50'

Note:
1. All Dimensions shown are measured from Right Edge of Pavement to ℄ of Precast Concrete Traffic Dividers.
2. Traffic Dividers shall be spaced at 6'-0" intervals, center to center.
3. Precast Concrete Traffic Dividers shall be installed as per Standard Drawing MC-6.

Sta. 7+57.46 Euclid Ave. = Sta. 0+00 Ramp 6
Sta. 7+56.91 Euclid Ave. = Sta. 16+48.71 Ramp 7

⊗ — Existing Signalized Intersection

MADE G.F.M. DATE 8-7-74
TRACED G.F.M. DATE 8-7-74
CHECKED A.J.S. DATE 8-8-74

Howard, Needles, Tammen & Bergendoff
ENGINEERS
N.Y. AND OHIO

HNTB

FHWA REGION	STATE	PROJECT	
5	OHIO		

52
354

CUYAHOGA COUNTY
CUY-90-23.73
LAKE COUNTY
LAK-90-0.00

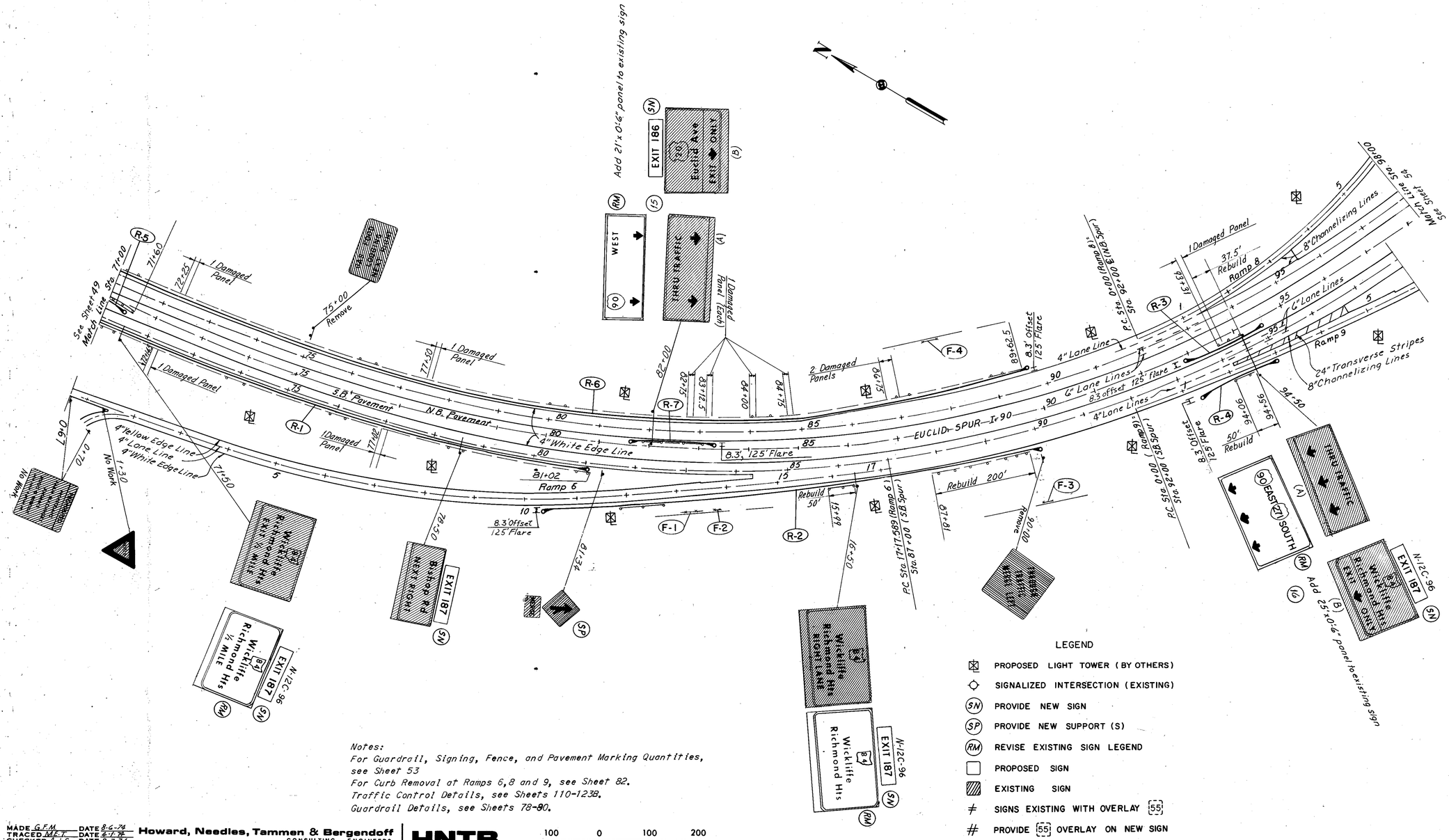

LEGEND

- PROPOSED LIGHT TOWER (BY OTHERS)
- SIGNALIZED INTERSECTION (EXISTING)
- (SN) PROVIDE NEW SIGN
- (SP) PROVIDE NEW SUPPORT (S)
- (RM) REVISE EXISTING SIGN LEGEND
- PROPOSED SIGN
- EXISTING SIGN
- ≠ SIGNS EXISTING WITH OVERLAY [55]
- # PROVIDE [55] OVERLAY ON NEW SIGN

Notes:
For Guardrail, Signing, Fence, and Pavement Marking Quantities, see Sheet 53
For Curb Removal at Ramps 6,8 and 9, see Sheet 82.
Traffic Control Details, see Sheets 110-1238.
Guardrail Details, see Sheets 78-80.

MADE G.F.M. DATE 8-6-74
TRACED M.E.T. DATE 8-7-74
CHECKED A.J.S. DATE 8-7-74
SCALE 1"=100'

Howard, Needles, Tammen & Bergendoff
CONSULTING ENGINEERS
CLEVELAND, OHIO

HNTB

100 0 100 200

STA. 71+00 TO STA. 98+00

QUANTITIES

QUANTITY CALCULATIONS
MADE BY GFM DATE 8-6-74
CHECKED BY AJS DATE 8-7-74

FHWA REGION	STATE	PROJECT	
5	OHIO		

53
354

CUYAHOGA COUNTY
CUY-90-23.73
LAKE COUNTY
LAK-90-0.00

SIGNING COST PARTICIPATION I & III

SHEET NO.	SIGN NO.	STATION	CODE NO.	SIGN SIZE	DIMENSIONS SEE DETAIL 'A' SHEET NO. 19 (Lin. Ft.) A	B	C	D	E	EXIST. SIGNS RE-ERECTED Sq. Ft. I	III	EXISTING SIGN REVISED, AS PER PLAN Each	844 SIGNS FLAT SHEET Sq. Ft.	EXTRU. TYPE Sq. Ft.	844 CONC. GROUND MOUNTED SIGN Cu. Yd.	844 SUPPORTS GLB. BEAM AS PER PLAN Lin. Ft.	4 Lb POST Lin. Ft.	6 Lb BEAM Lin. Ft.	W8×17 Lin. Ft.	W10×21 Lin. Ft.	W12×31 Lin. Ft.	BREAK-AWAY CONN. Each	202 REMOVAL EXISTING SUPP. Each	REMOVAL EXISTING INSTALL. Each	REMOVAL MAJOR INSTALL. Each	REVISE EXISTING SIGN LEGEND, EXIT ACTION MESSAGE, AS PER PLAN Each
52		Euclid Spur E.B.												I				I					I	III	III	III
		71+50	N-12C-96	8'x2'										16												
		78+50	N-12C-96	8'x2'										16												1
		81+34	W-49R-48	48"x48"		22.25				16								22.25					1			
			WP-49	24"x12"						2																
		90+00																						1		
		Euclid Spur W.B.																								
		75+00																							1	
	(15) A	82+00		21'x7'-0"								1														
	(15) B	82+00	N-12C-96	8'x2'										16												
		Ramp 6																								
		16+50	N-12C-96	8'x2'										16												1
		Ramp 9																								
	(16) A	94+50		25'x7'-0"								1														
	(16) B	94+50	N-12C-96	8'x2'										16												
Cost Participation I Total										18				80				22.25					1			
Cost Participation III Total												2												1	1	2
Total										18		2		80				22.25					1	1	1	2

FENCE-COST PARTICIPATION I&III

REF. NO.	STATION FROM	TO	SIDE	607 Type 47 as per plan Lin. Ft. I	III
	Ramp 6				
F-1	13+00	13+50	Rt.	50	
F-2	13+70	13+80	Rt.	10	
	Interstate 90				
F-3	89+80 E.B.	90+00 E.B.	Rt.		20
F-4	87+70 W.B.	88+00 W.B.	Lt.	30	
Cost Participation I Total				90	
Cost Participation III Total				20	
Total				110	

GUARD RAIL-COST PARTICIPATION I

REF. NO.	STATION FROM	TO	SIDE	202 Guardrail Removed For Reuse or Storage Lin. Ft.	202 GUARD RAIL, Barrier Design, Removed For Reuse or Storage Lin. Ft.	606 Guardrail Type 5 as per plan Lin. Ft.	606 Guardrail Type 5 Rebuit as per plan Each	202 Guardrail Replacement Posts Lin. Ft.	606 Anchor Assembly Each	606 Anchor Assembly Barrier Design Each	606 GUARD RAIL, Type 5, BARRIER DESIGN as per plan Each
	Interstate 90										
R-1	71+00 E.B.	81+02 E.B.	Rt.	50		25	952	1	1		
R-2	Ramp 6 10+36.5	90+06 E.B.	Rt.	87.5		687.5	250		2		
R-3	93+31 E.B.	95+06 E.B.	Lt.	12.5		87.5	37.5		2		
R-4	93+31 E.B.	95+06 E.B.	Rt.			75	50		2		
R-5	71+00 W.B.	71+35 W.B.	Rt.		60					1	10
R-6	71+00 W.B.	89+87.5 W.B.	Lt.	225		200	1637.5		1		
R-7	81+50 W.B.	83+25 W.B.	Rt.	50		125			2		
Cost Participation I Total				425	60	1200	2927	1	10	1	10

PAVEMENT MARKINGS-COST PARTICIPATION III

ITEM	DESCRIPTION			QUANTITY	UNIT
621	.4" Yellow Edge Lines				
	71+00 to 98+00 (x2)	Euclid Spur	5400'		
	0+43 to 13+50	Ramp 6	1307'		
	3+06 to 5+90	Ramp 8	284'		
	5+65 to 6+10	Ramp 9	45'		
	Total		7036'	1.33	Miles
621	4" White Edge Lines				
	71+00 to 85+75	Euclid Spur E.B.	1475'		
	87+00 to 92+00	Euclid Spur E.B.	500'		
	97+60 to 98+00	Euclid Spur E.B.	40'		
	71+00 to 92+00	Euclid Spur W.B.	2100'		
	94+20 to 98+00	Euclid Spur W.B.	380'		
	1+92 to 17+18	Ramp 6	1526'		
	0+00 to 5+90	Ramp 8	590'		
	0+00 to 6+10	Ramp 9	610'		
	Total		7221'	1.37	Miles
621	8" Channelizing Lines				
	13+65 to 15+92	Ramp 6	227'		
	1+00 to 2+58	Ramp 8	158'		
	2+20 to 5+05	Ramp 9	345'		
	94+17 to 97+60	Euclid Spur E.B.	343'		
	Total		1073'	1073	Lin. Ft.
621	24" Broad Transverse Lines				
	94+17 to 96+99	Euclid Spur E.B.	381'		
	Total		381'	381	Lin. Ft.
621	Curb Marking, White (Painted)				
	7+74 Euclid Ave. to 0+43	Ramp 6	31'		
	7+29 Euclid Ave. to 1+46	Ramp 6	117'		
	1+46 Ramp 6 to 1+63	Ramp 6A	6'		
	6+39 Euclid Ave. to 1+63	Ramp 6A	114'		
	5+75 Euclid Ave. to 2+06	Ramp 6A	206'		
	11+30 to 13+65	Ramp 6	235'		
	2+58 to 4+06	Ramp 8	148'		
	Total		857'	857	Lin. Ft.
621	6" Lane Lines				
	71+00 to 98+00 (x3)	Euclid Spur	8100'		
	85+75 to 98+00	Euclid Spur E.B.	1225'		
	Total		9325'	1.77	Miles
621	4" Lane Lines				
	1+92 to 17+18	Ramp 6	1526'		
	87+00 to 87+85	Euclid Spur E.B.	85'		
	0+10 to 2+20	Ramp 9	210'		
	89+50 to 93+00	Euclid Spur W.B.	350'		
	Total		2171'	2171	Lin. Ft.

Note:
All Pavement Markings are Thermoplastic unless noted to be painted.

QUANTITY CALCULATIONS FOR PLAN SHEET 52.

MADE GFM DATE 8-6-74
TRACED GFM DATE 8-6-74
CHECKED AJS DATE 8-7-74
SCALE NONE

Howard, Needles, Tammen & Bergendoff
CONSULTING ENGINEERS
CLEVELAND, OHIO

HNTB

FHWA REGION	STATE	PROJECT	
5	OHIO		

54
354

CUYAHOGA COUNTY
CUY-90-23.73
LAKE COUNTY
LAK-90-0.00

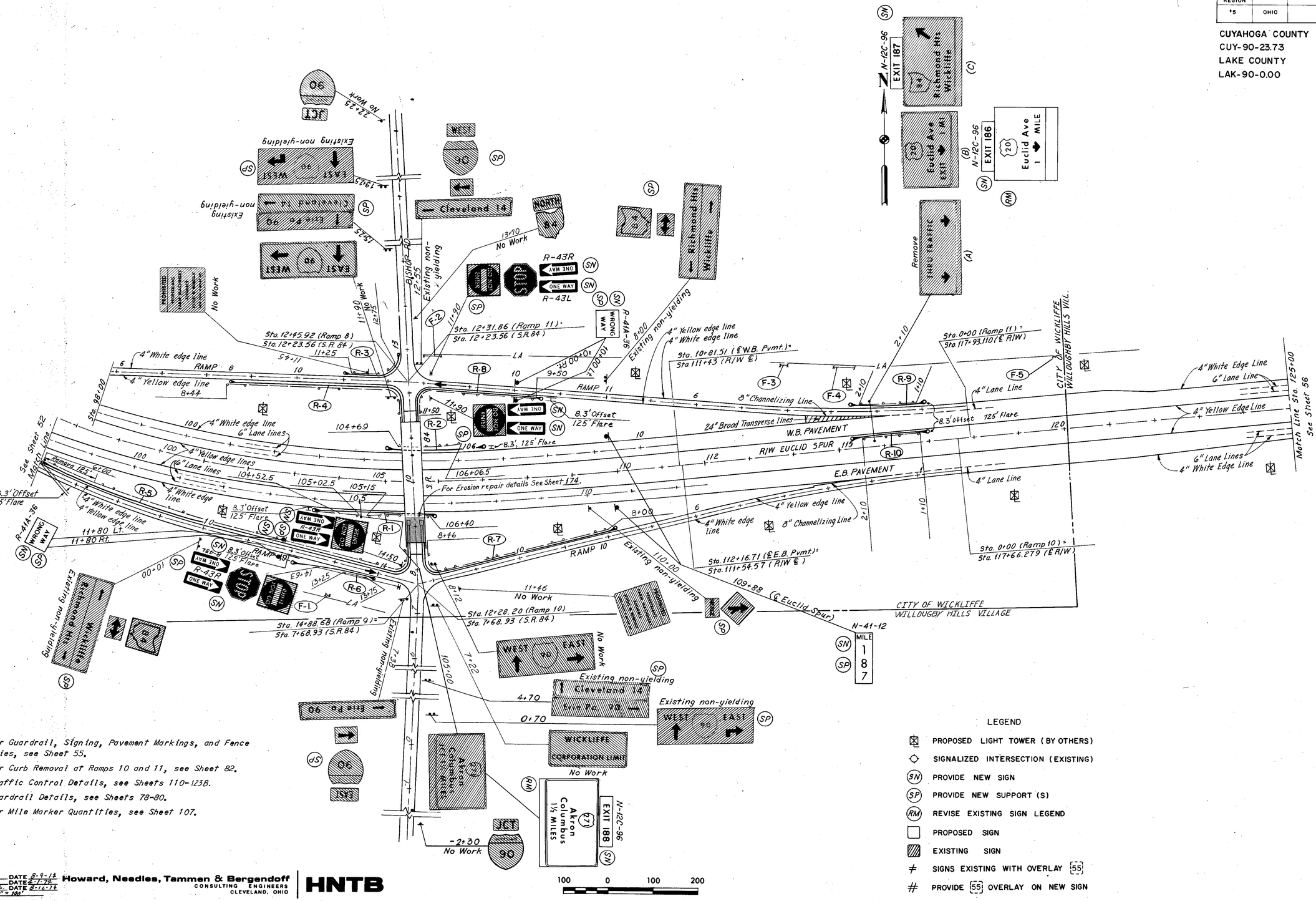

Notes:

For Guardrail, Signing, Pavement Markings, and Fence Quantities, see Sheet 55.

For Curb Removal at Ramps 10 and 11, see Sheet 82.

Traffic Control Details, see Sheets 110-123B.

Guardrail Details, see Sheets 78-80.

For Mile Marker Quantities, see Sheet 107.

LEGEND

- PROPOSED LIGHT TOWER (BY OTHERS)
- SIGNALIZED INTERSECTION (EXISTING)
- (SN) PROVIDE NEW SIGN
- (SP) PROVIDE NEW SUPPORT (S)
- (RM) REVISE EXISTING SIGN LEGEND
- PROPOSED SIGN
- EXISTING SIGN
- ≠ SIGNS EXISTING WITH OVERLAY [55]
- # PROVIDE [55] OVERLAY ON NEW SIGN

MADE C.F.M. DATE 8-9-13
TRACED M.E.T. DATE 8-7-13
CHECKED A.J.S. DATE 8-14-13
SCALE 1"=100'

Howard, Needles, Tammen & Bergendoff
CONSULTING ENGINEERS
CLEVELAND, OHIO

HNTB

STA. 98+00 TO STA. 125+00

QUANTITY CALCULATIONS

MADE BY G F M DATE 8-9-74

CHECKED BY AJS DATE 8-12-74

FHWA REGION	STATE	PROJECT	
5	OHIO		

55
354

CUYAHOGA COUNTY
CUY-90-23.73
LAKE COUNTY
LAK-90-0.00

SIGNING COST PARTICIPATION I & III

SHEET NO.	SIGN NO.	STATION	CODE NO.	SIGN SIZE	DIMENSIONS SEE DETAIL 'A' SHEET NO. 19 (Lin. Ft.) A	B	C	D	E	EXIST. SIGNS RE-ERECTED Sq. Ft. I	III	EXISTING SIGN REVISED, AS PER PLAN Each	844 SIGNS FLAT SHEET Sq. Ft. I	III	EXTRU. TYPE Sq. Ft. I	844 CONC. GROUND MOUNTED SIGN Cu. Yd.	844 SUPPORTS 6LB. BEAM AS PER PLAN Lin. Ft. I	4 Lb POST Lin. Ft. 1	III	6 Lb BEAM Lin. Ft. I	III	W8×17 Lin. Ft.	W10×21 Lin. Ft.	W12×31 Lin. Ft.	BREAK-AWAY CONN. Each	202 REMOVAL EXISTING SIGNS Each III	REMOVAL EXISTING SUPP. Each I	III	REVISE EXISTING SIGN LEGEND, EXIT ACTION MESSAGE, AS PER PLAN Each III
54	Euclid Spur E.B.																											
		110+00	W-49R-48	48" x 48"			22.25			16											22.25						1		
			WP-49	24" x 12"						2																			
Ramp 9																													
		10+00	M-2-36	36" x 36"	16.5	18				9											34.5						2		
			M-25-30	30" x 24"						5																			
			D-4-2	11' x 4'						44																			
		11+80 Lt.	R-41A-36	36" x 24"			15						6						15									
		11+80 Rt.	R-41A-36	36" x 24"			15						6						15									
		14+63	R-1-48	48" x 48"			17.25			13.25						17.25											1		
			R-41B-30	30" x 30"						6.25					•														
			R-43L-36	36" x 15"										3.75															
			R-43R-36	36" x 15"										3.75															
		14+50	R-41B-30	30" x 30"			15.75			6.25						15.75											1		
			R-43L-36	36" x 15"										3.75															
			R-43R-36	36" x 15"										3.75															
Ramp 11																													
	A	2+10																								1			
	B		N-12C-96	8' x 2'											16														1
	C		N-12C-96	8' x 2'											16														
		8+00	M-2-36	36" x 36"	16.5	18				9											34.5						2		
			M-25-30	30" x 24"						5																			
			D-4-2	11' x 4'						44																			
		10+00 Lt.	R-41A-36	36" x 24"			15						6						15									
		10+00 Rt.	R-41A-36	36" x 24"			15						6						15									
		11+90 Rt.	R-1-48	48" x 48"			17.25			13.25						17.25											1		
			R-41B-30	30" x 30"						6.25					•														
			R-43L-36	36" x 15"										3.75															
			R-43R-36	36" x 15"										3.75															
		11+90 Lt.	R-41B-30	30" x 30"			15.75			6.25						15.75											1		
			R-43L-36	36" x 15"										3.75															
			R-43R-36	36" x 15"										3.75															
Bishop Rd.																													
		0+70	D-3-24B	8' x 2' x 6"	14.5	16.5					20								3.1								2	
		4+70	D-4-2	10' x 4'	14	15.5					40										29.5						2		
		7+38	IM-39-24	24" x 12"	14	15					2										2.9						2		
			M-5C-24-2	24" x 24"							4																		
			IM-24-20	20" x 15"							21																		
			D-4-1	10' x 2'							20																		
		12+55	IM-40-24	24" x 12"	14	15					2										2.9						2		
			M-5C-24-2	24" x 24"							4																		
			IM-24-20	20" x 15"							21																		
			D-4-1	10' x 2'							20																		
		15+25	D-4-2	11' x 4'	16	18					44										3.4						2		
		19+25	D-3-24B	8' x 2' x 6"	14.5	16.5					20								3.1								2	
		Cost Participation I Total								185.5			24		32		66		60		91.25						9		
		Cost Participation III Total								180.2			30						62		121.5					1	12		1
				TOTAL						365.7			54		32		66		122		212.75					1	21		1

PAVEMENT MARKINGS - COST PARTICIPATION I & III

ITEM	DESCRIPTION			QUANTITY I	III	UNIT
621	4" Yellow Edge Lines					
	98+00 to 125+00 (x2)	Euclid Spur	5400'			
	5+90 to 11+79.2	Ramp 8	589'			
	6+10 to 13+74	Ramp 9	764'			
	3+30.7 to 11+77.1	Ramp 10	846'			
	4+62 to 11+25	Ramp 11	663'			
	Total		8262		1.56	Miles
621	4" White Edge Lines					
	98+00 to 116+00	Euclid Spur E.B.	1862'			
	117+66+3 to 125+00	Euclid Spur E.B.	734'			
	98+00 to 113+29.9	Euclid Spur W.B.	1468'			
	117+92.1 to 125+00	Euclid Spur W.B.	707'			
	5+90 to 11+79.2	Ramp 8	589'			
	6+10 to 14+23	Ramp 9	813'			
	0+00 to 11+77.2	Ramp 10	1177'			
	0+00 to 11+66	Ramp 11	1166'			
	Total		8516		1.61	Miles
621	8" Channelizing Lines					
	1+67 to 2+62	Ramp 10	164'			
	113+29.9 to 116+14	Euclid Spur W.B.	284'			
	1+77 to 4+62	Ramp 11	285'			
	Total		733'		733	Lin. Ft.
621	24" Broad Transverse Lines					
	113+90 to 116+14	Euclid Spur W.B.	355'		355	Lin. Ft.
621	Curb Marking, White (Painted)					
	11+79	Ramp 8 to 12+87 S.R. 84	82'			
	11+79	Ramp 8 to 11+89 S.R. 84	73'			
	13+74	Ramp 9 to 8+22 S.R. 84	115'			
	13+74	Ramp 9 to 7+28 S.R. 84	131'			
	3+31 to 5+67	Ramp 10	236'			
	11+17	Ramp 10 to 7+23 S.R. 84	68'			
	11+17	Ramp 11 to 8+17 S.R. 84	53'			
	11+25	Ramp 11 to 11+80 S.R. 84	111'			
	11+25	Ramp 11 to 12+75 S.R. 84	124'			
	Total		993		993	Lin. Ft.
621	6" Lane Lines					
	98+00 to 125+00 (x4)	Euclid Spur	10800'		2.05	Miles
621	4" Lane Lines					
	1+67	Ramp 10 to 118+75 Euclid Spur E.B.	275'			
	1+77	Ramp 11 to 118+58 Euclid Spur W.B.	242'			
	Total		517'		517	Lin. Ft.
621	Lane Arrows					
	Ramp 9		1			
	Ramp 11		1			
	Total			2		Each

Note:
All Pavement Markings are Thermoplastic unless noted to be painted.

FENCE - COST PARTICIPATION III

REF. NO.	STATION FROM	TO	SIDE	607 Type 47 as per plan
				Lin. Ft.
	Ramp 9			
F-1	13+00	13+10	Rt.	10
	Ramp 11			
F-2	11+00	11+60	Rt.	60
F-3	4+00	4+20	Rt.	20
F-4	3+00	3+50	Rt.	50
	Interstate 90			
F-5	119+95	120+05	Lt.	10
Cost Participation III Total				150

GUARD RAIL - COST PARTICIPATION I

SH. NO.	REF. NO.	STATION FROM	TO	SIDE	202 Guardrail Removed For Reuse or Storage	606 Guardrail Type 5 as per plan	606 Guardrail Type 5 Rebuit as per plan	606 Anchor Assembly	606 Bridge Terminal Assembly Type G
					Lin. Ft.	Lin. Ft.	Each	Each	Each
		Interstate 90							
	R-1	103+77.5 E.B.	106+90 E.B.	Rt.	50	112.5	150	2	
	R-2	104+31.5 W.B.	106+44 W.B.	Lt.	87.5	112.5	50	2	
	R-3	11+00 Ramp 8	12+75 S.R. 84	Lt.			112.5	2	
	R-4	8+44 Ramp 8	11+46 S.R. 84	Rt.	25	26	437.5	1	1
	R-5	6+00 Ramp 9	8+50 S.R. 84	Lt.	150	100	775	1	1
	R-6	12+00 Ramp 9	14+00	Rt.		100	50	2	
	R-7	8+00 Ramp 10	8+46 S.R. 84	Rt.	25	26	437.5	1	1
	R-8	9+25 Ramp 11	11+50 S.R. 84	Lt.	25	26	300	1	1
	R-9	0+85 Ramp 11	2+60	Rt.	100	125		2	
	R-10	0+85 Ramp 11	2+60	Lt.	100	125		2	
	Cost Participation I Total				562.5	753	2312.5	16	4

MADE GFM DATE 8-9-74
TRACED FOG DATE 8-12-74
CHECKED AJS DATE 8-12-74
SCALE NONE

Howard, Needles, Tammen & Bergendoff
CONSULTING ENGINEERS
CLEVELAND, OHIO

HNTB

FHWA REGION	STATE	PROJECT	
5	OHIO		

56
354

CUYAHOGA COUNTY
CUY-90-23.73
LAKE COUNTY
LAK-90-0.00

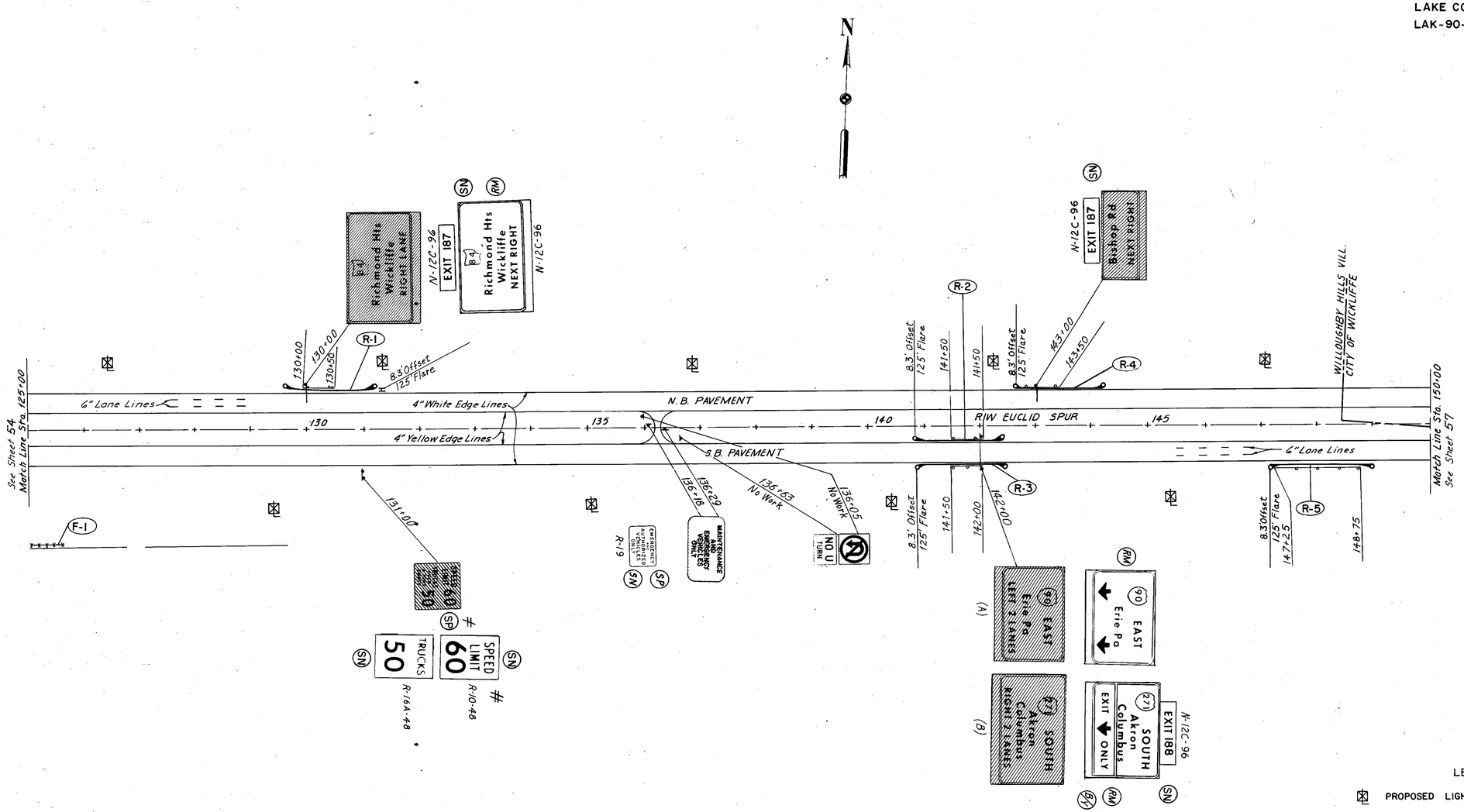

Notes:
For Guardrail, Signing, Fence, and Pavement Marking Quantities see Sheet 58
Traffic Control Details, see Sheets 110-123B.
Guardrail Details, see Sheets 78-80.

LEGEND

- PROPOSED LIGHT TOWER (BY OTHERS)
- SIGNALIZED INTERSECTION (EXISTING)
- (SN) PROVIDE NEW SIGN
- (SP) PROVIDE NEW SUPPORT (S)
- (RM) REVISE EXISTING SIGN LEGEND
- PROPOSED SIGN
- EXISTING SIGN
- ≠ SIGNS EXISTING WITH OVERLAY [55]
- # PROVIDE [55] OVERLAY ON NEW SIGN
- (B/Y) BLACK ON YELLOW PANEL

MADE DSP DATE 12-5-73
TRACED MLT DATE 3-7-74
CHECKED MEE DATE 1-10-75
SCALE 1"=100'

Howard, Needles, Tammen & Bergendoff
CONSULTING ENGINEERS
LAND, OHIO

HNTB

STA. 125+00 TO STA. 150+00

FHWA REGION	STATE	PROJECT	
5	OHIO		

57
354

CUYAHOGA COUNTY
CUY-90-23.73

LAKE COUNTY
LAK-90-0.00

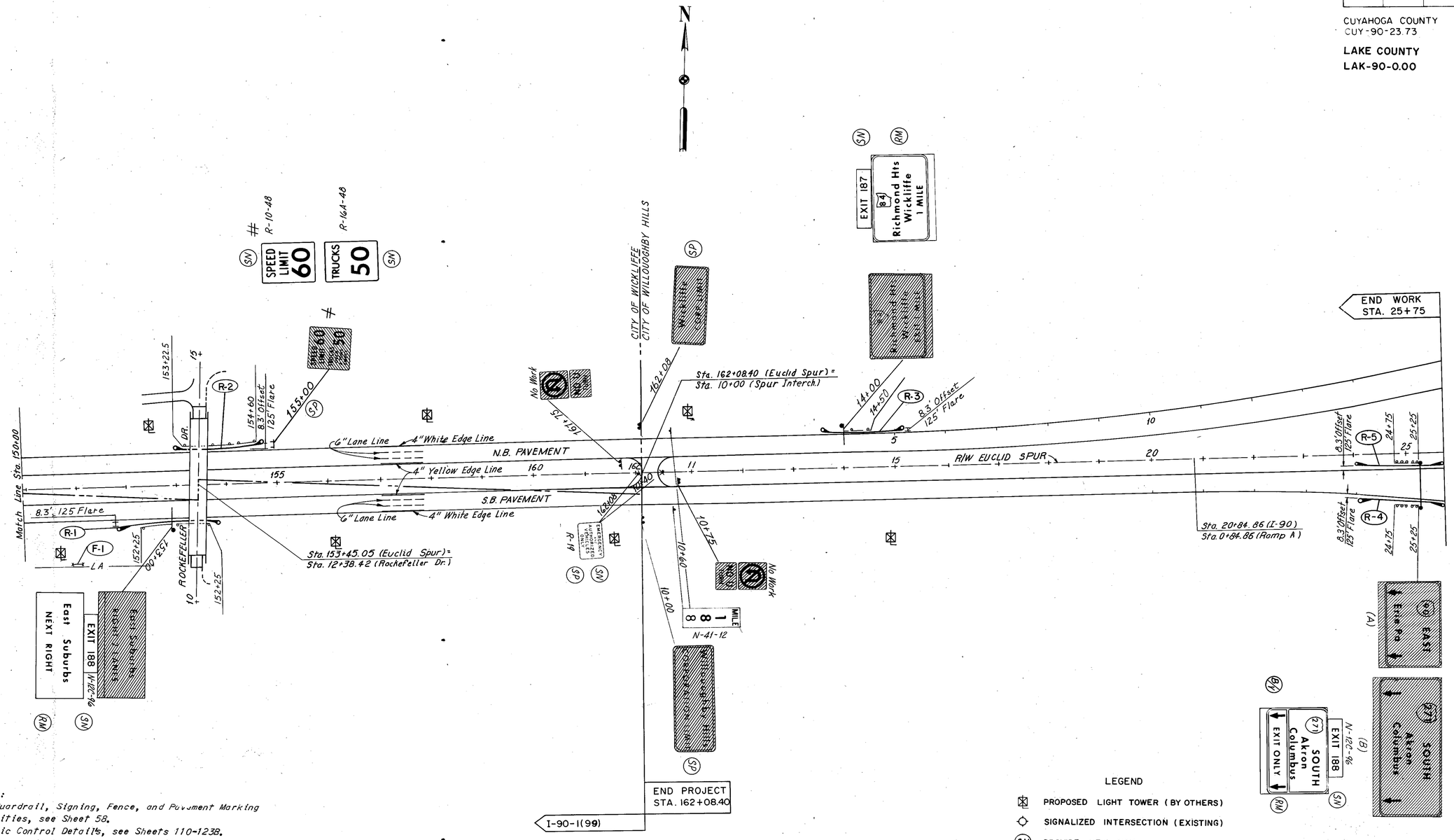

Notes:
For Guardrail, Signing, Fence, and Pavement Marking Quantities, see Sheet 58.
Traffic Control Details, see Sheets 110-123B.
For Guardrail Details, see Sheets 78-80.
For Mile Marker Quantities, see Sheet 107.

LEGEND

- PROPOSED LIGHT TOWER (BY OTHERS)
- SIGNALIZED INTERSECTION (EXISTING)
- (SN) PROVIDE NEW SIGN
- (SP) PROVIDE NEW SUPPORT (S)
- (RM) REVISE EXISTING SIGN LEGEND
- PROPOSED SIGN
- EXISTING SIGN
- ≠ SIGNS EXISTING WITH OVERLAY [55]
- # PROVIDE [55] OVERLAY ON NEW SIGN
- (B/Y) BLACK ON YELLOW PANEL

MADE DSP DATE 12-5-73
TRACED M.E.T. DATE 4-7-74
CHECKED MEE DATE 1-10-75
SCALE 1" = 100'

Howard, Needles, Tammen & Bergendoff
CONSULTING ENGINEERS
CLEVELAND, OHIO

HNTB

STA. 150+00 TO STA. 24+00

QUANTITIES

FHWA REGION	STATE	PROJECT	
5	OHIO		

58
354

CUYAHOGA COUNTY
CUY-90-23.73
LAKE COUNTY
LAK-90-0.00

QUANTITY CALCULATIONS
MADE BY G.F.M. DATE 8-7-74
CHECKED BY H.B. DATE 8-9-74

SIGNING COST PARTICIPATION I & III

SHEET NO.	SIGN NO.	STATION	CODE NO.	SIGN SIZE	DIMENSIONS SEE DETAIL 'A' SHEET NO. 19 (Lin. Ft.) A	B	C	D	E	EXIST. SIGNS RE-ERECTED Sq. Ft.	EXISTING SIGN REVISED, AS PER PLAN Each	844 SIGNS FLAT SHEET Sq. Ft.	844 SIGNS EXTRU. TYPE Sq. Ft.	844 CONC. GROUND MOUNTED SIGN Cu. Yd.	844 SUPPORTS 6LB. BEAM AS PER PLAN Lin. Ft.	4 Lb POST Lin. Ft.	6 Lb BEAM Lin. Ft.	W8×17 Lin. Ft.	W10×21 Lin. Ft.	W12×31 Lin. Ft.	BREAK AWAY CONN. Each	202 REMOVAL EXISTING SIGNS Each	REMOVAL EXISTING SUPP. Each	REMOVAL EXISTING INSTALL. Each	REMOVAL MAJOR INSTALL. Each	REMOVAL EXISTING O.H. SUPP. Each	620 DELIN. AS PER PLAN Each	REVISE EXISTING SIGN LEGEND, EXIT ACTION MESSAGE, AS PER PLAN Each
											III	III	I			III	I						I	III			III	III
56																											
		Euclid Spur E. B.																									
		131+00	R-10-48	48"x 60"	21	21						20	-				42							1				
			R-16A-48	48"x48"								16																
		136+29	R-19-24	24"x30"			12.5					5				12.5												
	B	142+00									1																	
	B		N-12C-96	8'-0"x2'-0"									16															
	A																										1	
		Euclid Spur W. B.																										
		130+00	N-12C-96	8'-0"x2'-0"									16															1
		136+18	R-19-24	24"x30"			12.5					5				12.5								1			2	
		143+00	N-12C-96	8'-0"x2'-0"									16															

See Table below for Totals

FENCE-COST PARTICIPATION III

REF. NO.	STATION FROM	TO	SIDE	607 Type 47 as per plan Lin. Ft.	
F-1	125+00	125+60	Rt	60	
Cost Participation III Total				60	

PAVEMENT MARKINGS-COST PARTICIPATION IV

ITEM	DESCRIPTION	QUANTITY	UNIT
621	4" Yellow Edge Lines		
	125+00 to 150+00 (x2) Euclid Spur		
	Total	0.95	Miles
621	4" White Edge Lines		
	125+00 to 150+00 (x2) Euclid Spur		
	Total	0.95	Miles
621	6" Lane Lines		
	125+00 to 150+00 (x4) Euclid Spur		
	Total	1.89	Miles

Note:
All Pavement Markings are Thermoplastic unless noted to be painted.

GUARD RAIL-COST PARTICIPATION I

REF. NO.	STATION FROM	TO	SIDE	606 Guardrail Type 5 as per plan Lin. Ft.	606 Guardrail Type 5 Rebuit as per plan Each	606 Anchor Assembly Each
	Interstate 90					
R-1	129+50 W.B.	131+25 W.B.	Lt	75	50	2
R-2	140+75 E.B.	142+50 E.B.	Lt	75	50	2
R-3	140+75 E.B.	142+50 E.B.	Rt	75	50	2
R-4	142+50 W.B.	144+25 W.B.	Lt	75	50	2
R-5	147+00 E.B.	149+00 E.B.	Rt		150	2
	Cost Participation I Total			300	350	10

QUANTITY CALCULATIONS FOR PLAN SHEET 56.

SIGNING COST PARTICIPATION I & III

SHEET NO.	SIGN NO.	STATION	CODE NO.	SIGN SIZE	DIMENSIONS SEE DETAIL 'A' SHEET NO. 19 (Lin. Ft.) A	B	C	D	E	EXIST. SIGNS RE-ERECTED Sq. Ft.	EXISTING SIGN REVISED, AS PER PLAN Each	844 SIGNS FLAT SHEET Sq. Ft.	844 SIGNS EXTRU. TYPE Sq. Ft	844 CONC. GROUND MOUNTED SIGN Cu. Yd.	844 SUPPORTS 6LB. BEAM AS PER PLAN Lin. Ft.	4 Lb POST Lin. Ft.	6 Lb BEAM Lin. Ft.	W8×17 Lin. Ft.	W10×21 Lin. Ft.	W12×31 Lin. Ft.	BREAK AWAY CONN. Each	202 REMOVAL EXISTING SUPP. Each	REMOVAL EXISTING INSTALL. Each	620 DELIN. AS PER PLAN Each	REVISE EXISTING SIGN LEGEND, EXIT ACTION MESSAGE, AS PER PLAN Each
										I	III	III	I			I	III					I	III	III	III
57																									
		Euclid Spur E. B.																							
		153+00	N-12C-96	8'-0"x2'-0"									16												1
		10+00		11"x3'	15.5	16.25				33							31.75					2			
		10+40	R-19-24	24"x30"			12.5					5				12.5								2	
	B	25+25									1														
	B		N-12C-96	8'-0"x2'-0"									16												
		Euclid Spur W. B.																							
		155+00	R-10-48	48"x 60"	21	21						20					42						1		
			R-16A-48	48"x 48"								16													
		162+08 Lt.		6'x3'	15.5	16				18			-			31.5						2			
		162+08 Rt.	R-19-24	24"x30"			12.5					5				12.5								2	
		14+00	N-12C-96	8'-0"x2'-0"								16													1
Cost Participation I TOTAL										51			80			31.5	115.75				4	1			
Cost Participation III TOTAL											2	108				50.0						3	8	4	
TOTAL										51	2	108	80			81.5	115.75				4	4	8	4	

FENCE-COST PARTICIPATION III

REF. NO.	STATION FROM	TO	SIDE	607 Type 47 as per plan Lin. Ft.	
F-1	151+00	151+20	Rt	20	
Cost Participation III Total				20	

GUARD RAIL-COST PARTICIPATION I

REF. NO.	STATION FROM	TO	SIDE	202 Guardrail Removed For Reuse or Storage Lin. Ft.	606 Guardrail Type 5 as per plan Lin. Ft.	606 Guardrail Type 5 Rebuit as per plan Each	606 Anchor Assembly Each
R-1	151+75	154+00	Rt		37.5	137.5	2
R-2	152+85	154+85	Lt		12.5	137.5	2
R-3	13+50	15+25	Lt		75	50	2
R-4	24+00	25+75	Rt	50	100		2
R-5	24+00	25+75	Lt	50	100		2
	Cost Participation I Total			100	325	325	10

PAVEMENT MARKINGS-COST PARTICIPATION III

ITEM	DESCRIPTION	QUANTITY	UNIT
621	4" Yellow Edge Lines		
	150+00 to 162+08.4 (x2) Euclid Spur		
	Total	0.46	Miles
621	4" White Edge Lines		
	150+00 to 162+08.4 (x2) Euclid Spur		
	Total	0.46	Miles
621	6" Lane Lines		
	150+00 to 162+08.4 (x4) Euclid Spur		
	Total	0.92	Miles

QUANTITY CALCULATIONS FOR PLAN SHEET 57.

Note:
All Pavement Markings are Thermoplastic unless noted to be painted.

MADE GFM DATE 8-8-74
TRACED TS DATE 7-15-74
CHECKED AJS DATE 8-9-74
SCALE None

Howard, Needles, Tammen & Bergendoff
CONSULTING ENGINEERS
CLEVELAND, OHIO

HNTB

9-Y R-9

FHWA REGION	STATE	PROJECT	
5	OHIO		

59
354

CUYAHOGA COUNTY
CUY-90-[redacted] 21.27
LAKE COUNTY
LAK-90-0.00

CONCRETE BARRIER AND DRAINAGE SCHEMATIC PLAN

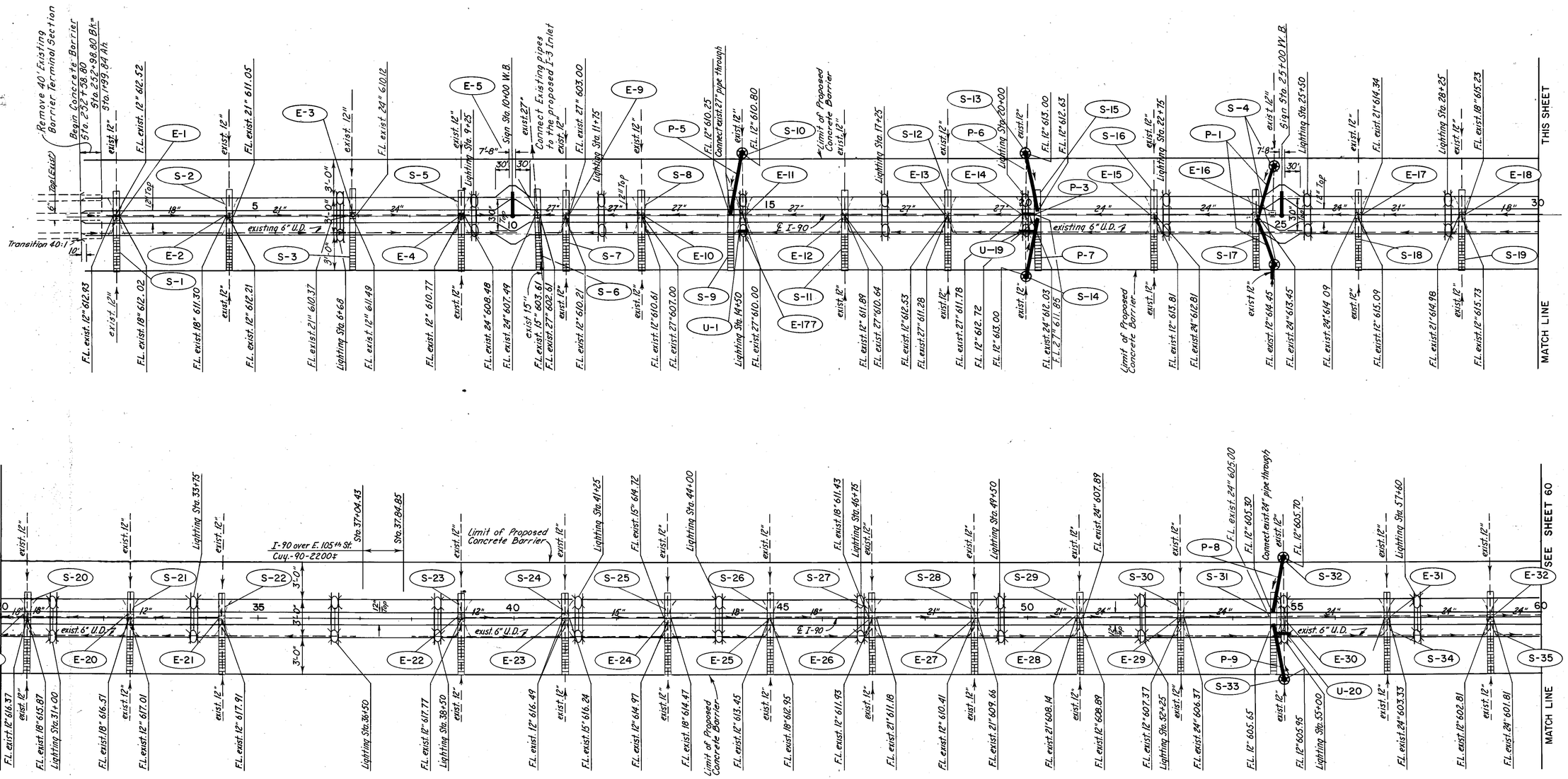

≠ See Bridge Plans for Concrete Barrier Quantities.

Note:
For Drainage Quantities see Sheets 61 & 68.
For Concrete Barrier Quantities see Sheet 69.
For Top of Cover Elevations of the Manholes and Normal Gutter Elevations of the I-3 Inlets see Sheet 75.
For Details of Concrete Barrier Median, see Sheets 72 and 73.

LONGITUDINAL 100 0 100 200
TRANSVERSE 4 0 4 8
SCALE IN FEET

EXISTING CONDITIONS LEGEND
- OVERHEAD SIGN SUPPORT
- DRAINAGE CONDUIT
- MANHOLE
- INLET

PROJECT IMPROVEMENTS LEGEND
- CONCRETE BARRIER MEDIAN
- MEDIAN INLET
- MEDIAN MOUNTED ROADWAY LIGHTS
- STORM SEWER
- MANHOLE

MADE E.P.S. DATE 8-12-74
TRACED D.A.L. DATE 9-10-74
CHECKED T.D.V. DATE 12-26-74
SCALE AS SHOWN

Howard, Needles, Tammen & Bergendoff
CONSULTING ENGINEERS
CLEVELAND, OHIO
HNTB

CONCRETE BARRIER AND DRAINAGE SCHEMATIC PLAN

FHWA REGION	STATE	PROJECT	
5	OHIO		

60
354

CUYAHOGA COUNTY
CUY-90-23.73
LAKE COUNTY
LAK-90-0.00

CONCRETE BARRIER AND DRAINAGE SCHEMATIC PLAN

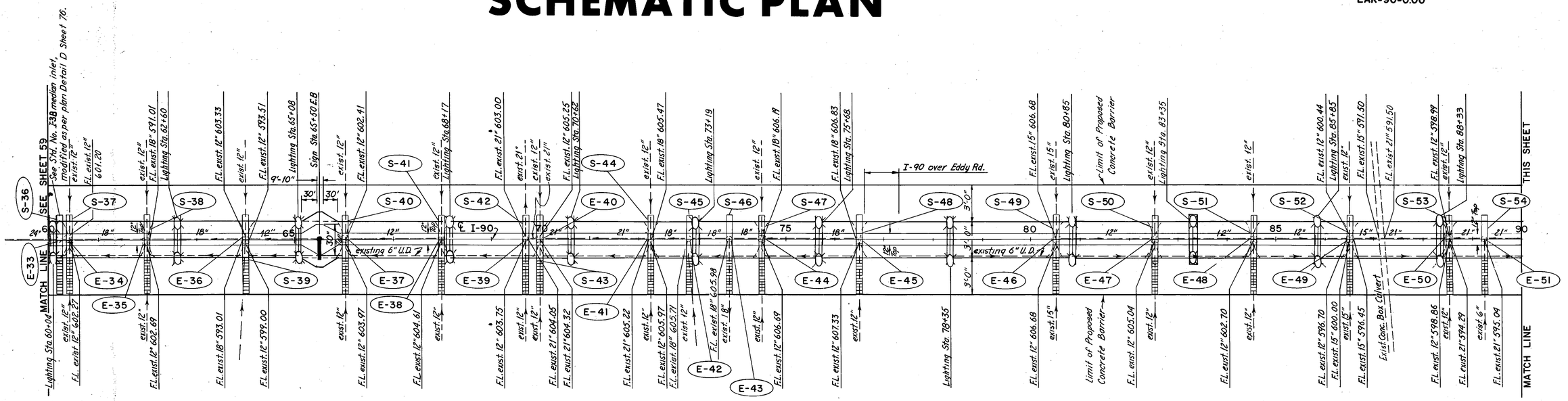

Note:
For Drainage Quantities see Sheets 61 & 68.
For Concrete Barrier Quantities see Sheet 69.
For Top of Cover Elevations of the Manholes and Normal Gutter Elevations of the I-3 Inlets see Sheet 75.
For Details of Concrete Barrier Median, see Sheets 72 and 73.

LONGITUDINAL 100 0 100 200
TRANSVERSE 4 0 4 8
SCALE IN FEET

EXISTING CONDITIONS LEGEND
- OVERHEAD SIGN SUPPORT
- DRAINAGE CONDUIT
- MANHOLE
- INLET

PROJECT IMPROVEMENTS LEGEND
- CONCRETE BARRIER MEDIAN
- MEDIAN INLET
- MEDIAN MOUNTED ROADWAY LIGHTS
- STORM SEWER
- MANHOLE

MADE E. P. S. DATE 8-12-74
TRACED D.A.L. DATE 9-10-74
CHECKED H. S. DATE 12-2-74
SCALE As Shown

Howard, Needles, Tammen & Bergendoff
CONSULTING ENGINEERS
CLEVELAND, OHIO

HNTB

DRAINAGE QUANTITIES

QUANTITY CALCULATIONS
MADE BY E.P.S. DATE 9-4-74
CHECKED BY A.H.S. DATE 12-6-74

FHWA REGION	STATE	PROJECT	
5	OHIO		

61
354

CUYAHOGA COUNTY
CUY-90-23.73
LAKE COUNTY
LAK-90-0.00

DRAINAGE

REF. NO.	STATION FROM	STATION TO	SIDE	202 Inlet Abandon	202 Inlet Removed	202 Manhole Removed	202 Pipe Removed over 15"	603 Type B Conduit 12"	604 ⊕Standard Number I-3B Median Inlet, as per plan	604 ∓Standard Number 1 Manhole, as per plan
				Each	Each	Each	Linear Feet	Linear Feet	Each	Each
S-1	2+25		℄						1	
E-1	2+25		℄		1					
S-2	4+50		℄						1	
E-2	4+50		℄		1					
S-3	6+55		℄						1	
E-3	6+75		℄		1					
S-5	9+08		℄						1	
E-4	9+08		℄		1					
E-5	10+44		℄			1				
S-6	10+44		℄						1	
S-7	11+08		℄						1	
E-9	11+08		℄		1					
S-8	12+50		℄						1	
E-10	12+50		℄		1					
S-9	14+30		℄						1	
P-5	14+30	14+50	Lt					20		
S-10	14+50		Lt							1
E-11	14+50		℄	1						
S-11	16+50		℄						1	
E-12	16+50		℄		1					
S-12	18+50		℄						1	
E-13	18+50		℄		1					
S-13	20+12		Lt							1
S-14	20+05		Rt							1
E-14	20+05		℄	1			15			
P-6	20+05	20+20	Lt					20		
P-7	20+05	20+20	Rt					20		
S-15	20+20		℄						1	
S-16	22+50		℄						1	
E-15	22+50		℄		1					
S-17	24+55		℄						1	
E-16	24+55		℄		1					
P-1	24+55	24+84	Lt					58		
S-4	24+84		Lt							2
S-18	26+50		℄						1	
E-17	26+50		℄		1					
S-19	28+84		℄						1	
E-18	28+84		℄		1					
S-20	30+50		℄						1	
E-19	30+50		℄		1					
S-21	32+50		℄						1	
E-20	32+50		℄		1					
S-22	34+32		℄						1	
E-21	34+32		℄		1					
	TOTAL			2	15	1	15	118	18	5

DRAINAGE

REF. NO.	STATION FROM	STATION TO	SIDE	202 Inlet Abandon	202 Inlet Removed	202 Manhole Removed	603 Type B Conduit 12"	604 ⊕Standard Number I-3B Median Inlet, as per plan	604 ⊕Standard Number I-3B Median Inlet, modified as per plan	604 ∓Standard Number 1 Manhole, as per plan
				Each	Each	Each	Linear Feet	Each	Each	Each
S-23	39+00		℄					1		
E-22	39+00		℄		1					
S-24	41+00		℄					1		
E-23	41+00		℄		1					
S-25	43+00		℄					1		
E-24	43+00		℄		1					
S-26	45+00		℄					1		
E-25	45+00		℄		1					
S-27	47+00		℄					1		
E-26	47+00		℄		1					
S-28	49+00		℄					1		
E-27	49+00		℄		1					
S-29	51+00		℄					1		
E-28	51+00		℄		1					
S-30	53+00		℄					1		
E-29	53+00		℄		1					
S-31	54+80		℄					1		
P-8	54+80	55+00	Lt				20			
P-9	54+80	55+00	Rt				20			
S-32	55+00		Lt							1
S-33	55+00		Rt							1
E-30	55+00		℄	1						
S-34	57+00		℄					1		
E-31	57+00		℄		1					
S-35	59+00		℄					1		
E-32	59+00		℄		1					
S-36	60+21		℄						1	
E-33	60+21		℄			1				
S-37	60+40		℄					1		
E-34	60+40		℄		1					
S-38	62+00		℄					1		
E-35	62+00		℄		1					
S-39	64+00		℄					1		
E-36	64+00		℄		1					
S-40	66+00		℄					1		
E-37	66+00		℄		1					
S-41	68+00		℄					1		
E-38	68+00		℄		1					
S-42	69+70		℄					1		
E-39	69+70		℄			1				
S-43	70+00		℄					1		
E-40	70+00		℄		1					
S-44	72+25		℄					1		
E-41	72+25		℄		1					
S-45	73+02		℄					1		
E-42	73+02		℄		1					
S-46	74+00		℄					1		
E-43	74+00		℄		1					
S-47	74+50		℄					1		
E-44	74+50		℄		1					
	TOTAL			1	20	2	40	22	1	2

DRAINAGE

REF. NO.	STATION FROM	STATION TO	SIDE	202 Inlet Removed	202 Inlet Abandon	202 Manhole Removed	603 Type B Conduit 12"	604 ⊕Standard Number I-3B Median Inlet, as per plan	604 ⊕Standard Number I-3 Median Inlet, modified as per plan W=30"	604 ∓Standard Number 1 Manhole, as per plan
				Each	Each	Each	Linear Feet	Each	Each	Each
S-48	76+50		℄					1		
E-45	76+50		℄	1						
S-49	80+50		℄					1		
E-46	80+50		℄	1						
S-50	82+50		℄					1		
E-47	82+50		℄	1						
S-51	84+50		℄					1		
E-48	84+50		℄	1						
S-52	86+50		℄					1		
E-49	86+50		℄	1						
S-53	88+50		℄					1		
E-50	88+50		℄	1						
S-54	89+25		℄					1		
E-51	89+25		℄			1				
S-55	90+50		℄					1		
E-52	90+50		℄	1						
S-56	92+25		℄					1		
E-53	92+25		℄	1						
S-57	94+25		℄					1		
E-54	94+25		℄	1						
S-58	96+25		℄					1		
E-55	96+25		℄	1						
S-59	97+50		℄					1		
E-56	97+50		℄			1				
S-60	98+25		℄					1		
E-57	98+25		℄	1						
S-61	100+25		℄						1	
E-58	100+25		℄	1						
S-62	104+50		℄					1		
E-59	104+50		℄	1						
S-63	106+75		℄					1		
E-60	106+75		℄	1						
S-64	109+00		℄					1		
E-61	109+00		℄	1						
S-65	111+25		℄					1		
E-62	111+25		℄	1						
S-66	113+50		℄					1		
E-63	113+50		℄	1						
S-67	115+00		℄					1		
P-10	115+00	115+50	Lt				50			
P-11	115+00	115+50	Rt				50			
S-68	115+50		Lt							1
S-69	115+50		Rt							1
E-64	115+50		℄	1						
E-65	117+62		Lt		1					
S-70	117+68		℄					1		
E-66	117+70		℄			1				
E-67	119+81		Lt		1					
S-71	119+87		℄					1		
E-68	119+87		℄			1				
	TOTAL			18	2	4	100	21	1	2

MADE E.P.S. DATE 9-4-74
TRACED E.P.S. DATE 9-14-74
CHECKED A.H.S. DATE 12-17-74
SCALE NONE

HOWARD, NEEDLES, TAMMEN & BERGENDOFF
CONSULTING ENGINEERS
CLEVELAND, OHIO
HNTB

Note:
For N.G. Elevations of I-3 inlets and T.C. Elevation of Manholes see Sheet 75.
All the quantities listed on this sheet are cost participation I.

⊕ Set median inlet to use existing pipes, and to outlet existing underdrains.

∓ Std. No. 1 Manholes are offset 7.17 ft. left or right from ℄, except the manholes (S-4), (S-68) and (S-69), which are 3.25 ft. left or right from ℄.

CONCRETE BARRIER AND DRAINAGE SCHEMATIC PLAN

FHWA REGION	STATE	PROJECT	
5	OHIO		

62
354

CUYAHOGA COUNTY
CUY-90-23.73
LAKE COUNTY
LAK-90-0.00

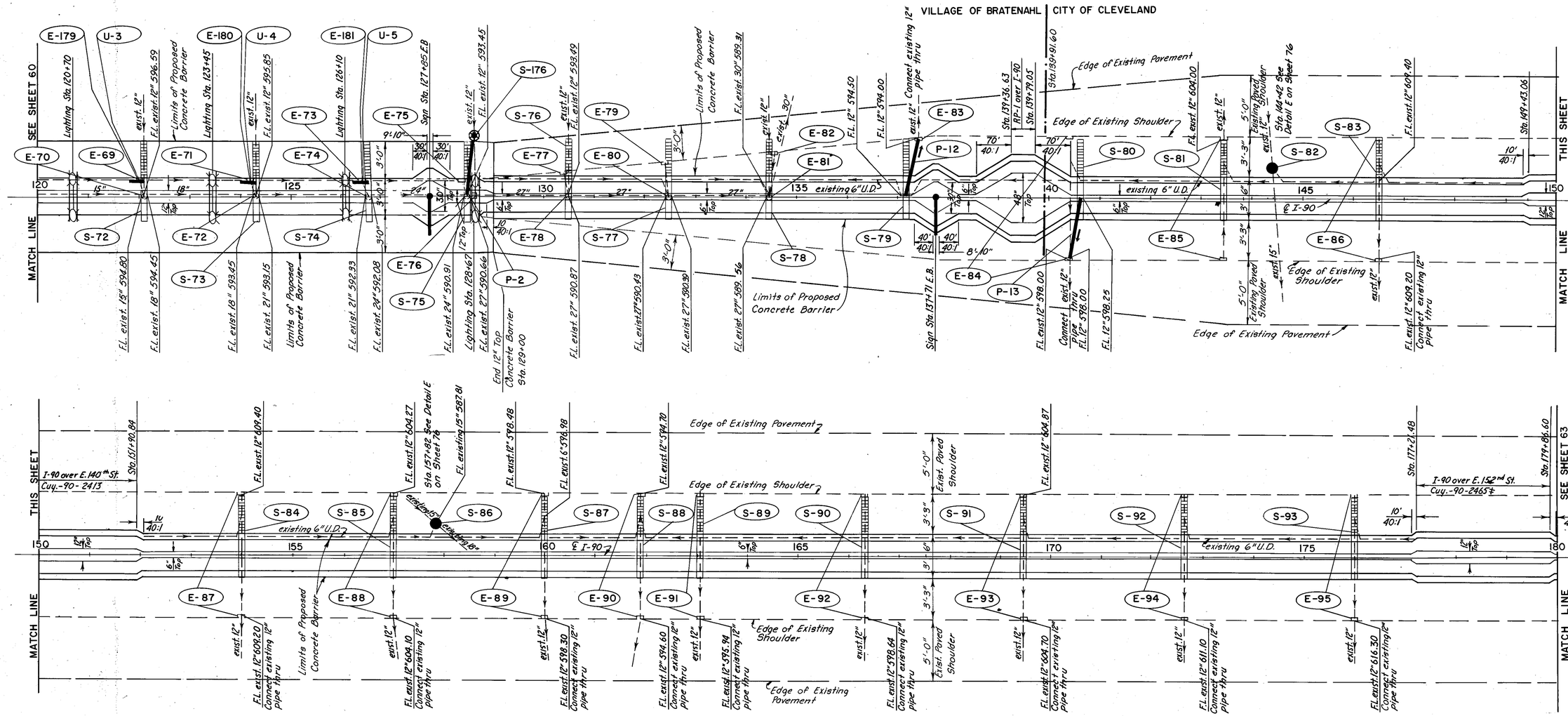

Note:
For Drainage Quantities see Sheets 64 & 68.
For Concrete Barrier Quantities see Sheets 69 & 70
For Top of Cover Elevations of the Manholes and Normal Gutter Elevations of the I-3 Inlets see Sheet 75
For Details of Concrete Barrier Median, see Sheets 72 and 73.

‡ See Bridge Plans for Concrete Barrier Quantities.

LONGITUDINAL 100 0 100 200
TRANSVERSE 4 0 4 8
SCALE IN FEET

EXISTING CONDITIONS LEGEND
- OVERHEAD SIGN SUPPORT
- DRAINAGE CONDUIT
- MANHOLE
- PAVEMENT EDGE
- PAVED SHOULDER
- INLET

PROJECT IMPROVEMENTS LEGEND
- CONCRETE BARRIER MEDIAN
- MEDIAN INLET
- MEDIAN MOUNTED ROADWAY LIGHTS
- STORM SEWER
- MANHOLE
- MANHOLE RECONSTRUCTED TO GRADE

MADE E.P.S. DATE 8-12-74
TRACED R.A.L. DATE 9-10-74
CHECKED A.R.S.+E.M. DATE 12-16-74
SCALE As SHOWN

Howard, Needles, Tammen & Bergendoff
CONSULTING ENGINEERS
CLEVELAND, OHIO

HNTB

CONCRETE BARRIER AND DRAINAGE SCHEMATIC PLAN

FHWA REGION	STATE	PROJECT	
5	OHIO		

63/354

CUYAHOGA COUNTY
CUY-90-23.73
LAKE COUNTY
LAK-90-0.00

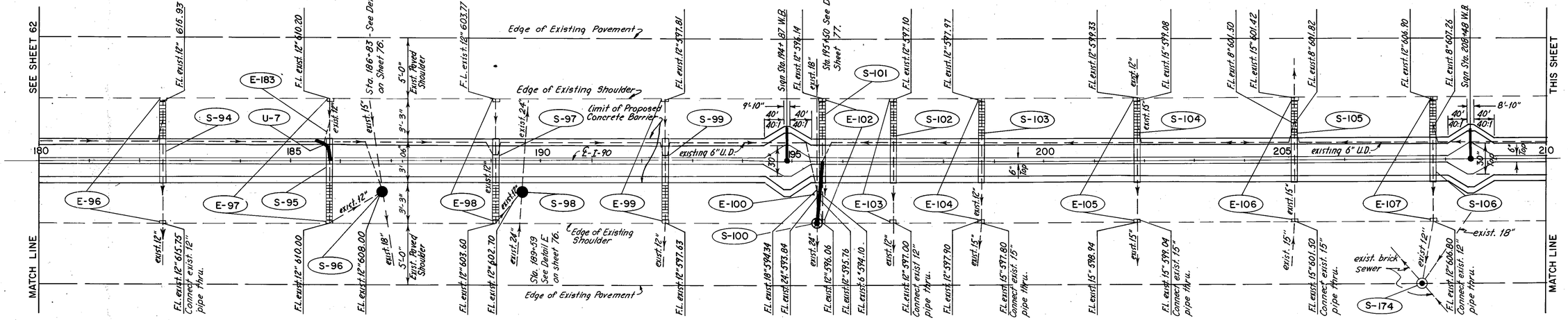

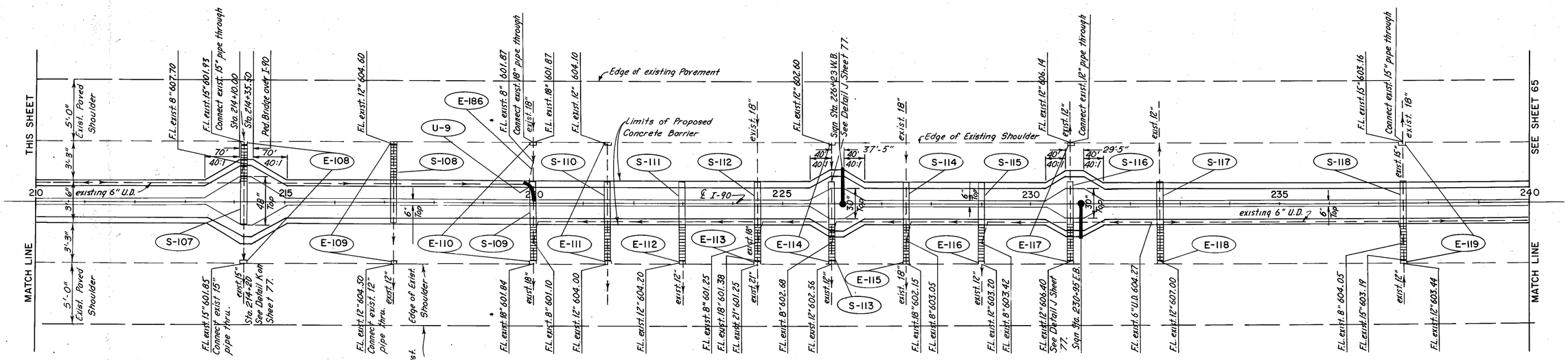

Note:
For Drainage Quantities see Sheets 64 & 68.
For Concrete Barrier Quantities see Sheet 70.
For Top of Cover Elevations of the Manholes and Normal Gutter Elevations of the I-3 Inlets see Sheet 75.
For Details of Concrete Barrier Median, see Sheets 72 and 73.

LONGITUDINAL 100 0 100 200
TRANSVERSE 4 0 4 8
SCALE IN FEET

EXISTING CONDITIONS LEGEND
- OVERHEAD SIGN SUPPORT
- DRAINAGE CONDUIT
- PAVEMENT EDGE
- PAVED SHOULDER
- INLET

PROJECT IMPROVEMENTS LEGEND
- CONCRETE BARRIER MEDIAN
- MEDIAN INLET
- MEDIAN MOUNTED ROADWAY LIGHTS
- STORM SEWER
- MANHOLE
- MANHOLE RECONSTRUCTED TO GRADE
- MANHOLE ADJUSTED TO GRADE

MADE E.P.S. DATE 6-12-74
TRACED D.B.L. DATE 7-10-74
CHECKED G.F.M. DATE 12-12-74
SCALE As Shown

Howard, Needles, Tammen & Bergendoff
CONSULTING ENGINEERS
CLEVELAND, OHIO

HNTB

DRAINAGE QUANTITIES

QUANTITY CALCULATIONS
MADE BY E.P.S. DATE 9-4-74
CHECKED BY A.H.S. DATE 12-3-74

FHWA REGION	STATE	PROJECT	
5	OHIO		

64
354

CUYAHOGA COUNTY
CUY-90-23.73
LAKE COUNTY
LAK-90-0.00

DRAINAGE - COST PARTICIPATION I & II

COST PARTICIPATION I

REF. NO.	STATION FROM	STATION TO	SIDE	202 Inlet Abandon	202 Inlet Removed	202 Manhole Removed	202 Pipe Removed Over 15"	603 Type B Conduit 12"	603 Type B Conduit 27"	604 ⊕ Standard Number I-3A Median Inlet as per plan	604 Manhole Reconstructed to grade as per plan	604 ⊕ Standard Number I-3B Median Inlet, as per plan	604 ‡ Standard Number 1 Manhole, as per plan
				Each	Each	Each	Linear Feet	Linear Feet	Linear Feet	Each	Each	Each	Each
E-69	122+02		Lt.	1									
S-72	122+08		℄									1	
E-70	122+08		℄			1							
E-71	124+22		Lt.	1									
S-73	124+25		℄									1	
E-72	124+25		℄			1							
E-73	126+56		Lt.	1									
S-74	126+65		℄									1	
E-74	126+65		℄			1							
S-75	128+50		℄									1	
P-2	128+40	128+62	℄						12				
E-75	128+53		Lt.	1									
S-176	128+53		Lt.										1
E-76	128+62		℄			1	12						
E-77	130+42		Lt.	1									
S-76	130+47		℄							1			
E-78	130+47		℄			1							
E-79	132+42		Lt.	1									
S-77	132+50		℄							1			
E-80	132+50		℄			1							
S-78	134+48		℄							1			
E-81	134+48		℄			1							
E-82	134+58		Lt.	1									
S-79	137+16		℄							1			
P-12	137+16		Lt.					24					
E-83	137+40		Lt.	1									
P-13	140+36	140+60	Rt.					24					
E-84	140+36		L&R	2									
S-80	140+60		℄							1			
S-81	143+45		℄							1			
E-85	143+45		L&R		2								
S-82	144+42		Lt.								1		
S-83	146+50		℄							1			
E-86	146+50		L&R		2								
S-84	154+00		℄							1			
E-87	154+00		L&R		2								
S-85	157+00		℄							1			
E-88	157+00		L&R		2								
S-86	157+82		Lt.								1		
S-87	160+00		℄							1			
E-89	160+00		L&R		2								
S-88	161+90		℄							1			
E-90	161+90		L&R		2								
S-89	163+07.5		℄							1			
E-91	163+07.5		L&R		2								
S-90	166+30		℄							1			
E-92	166+30		L&R		2								
S-91	169+45		℄							1			
E-93	169+45		L&R		2								
S-92	172+65		℄							1			
E-94	172+65		L&R		2								
S-93	176+00		℄							1			
E-95	176+00		L&R		2								
S-94	182+47		℄							1			
E-96	182+47		L&R		2								
COST PARTICIPATION I SUB-TOTAL				10		7	12	48	12	5		4	1
COST PARTICIPATION II SUB-TOTAL					24					12	2		
TOTAL				10	24	7	12	48	12	17	2	4	1

DRAINAGE - COST PARTICIPATION II

REF. NO.	STATION FROM	STATION TO	SIDE	202 Inlet Abandon	202 Inlet Removed	202 Manhole Removed	202 Pipe Removed 15" and under	603 Type B Conduit 12"	603 Type B Conduit 18"	604 ⊕ Standard Number I-3A Median Inlet as per plan	604 ⊕ Standard Number I-3 Median Inlet, modified as per plan, W=30"	604 ⊕ Standard Number I-3 Median Inlet, modified as per plan, W=48"	604 ‡ Standard Number 1 Manhole, as per plan	604 Manhole Reconstructed to grade, as per plan	604 * Manhole Adusted to grade, as per plan
				Each	Each	Each	Linear Feet	Linear Feet	Linear Feet	Each	Each	Each	Each	Each	Each
S-95	185+80		℄							1					
E-97	185+80		L&R		2										
S-96	186+83		Rt.											1	
S-97	189+10		℄							1					
E-98	189+10		L&R		2										
S-98	189+59		Rt.											1	
S-99	192+47		℄							1					
E-99	192+47		L&R		2										
P-14	195+50		Rt.						3						
S-100	195+50		Rt.										1		
E-100	195+50		Rt.			1									
P-15	195+50	195+58	Rt.					8							
E-101	195+50	195+58	Rt.				7								
S-101	195+58.3		℄							1					
E-102	195+58.3		L&R		2										
S-102	197+00		℄							1					
E-103	197+00		L&R		2										
S-103	198+75		℄							1					
E-104	198+75		L&R		2										
S-104	201+85		℄							1					
E-105	201+85		L&R		2										
S-105	205+00		℄							1					
E-106	205+00		L&R		2										
S-106	207+77		℄							1					
S-174	207+77		Rt.												1
E-107	207+77		L&R		2										
S-107	214+20		℄									1			
E-108	214+20		L&R		2										
S-108	217+20		℄							1					
E-109	217+20		L&R		2										
S-109	220+00		℄							1					
E-110	220+00		L&R		2										
S-110	221+50		℄							1					
E-111	221+50		L&R		2										
S-111	223+00		℄							1					
E-112	223+00		Rt.		1										
S-112	224+50		℄							1					
E-113	224+50		Rt.		1										
E-114	226+00		L&R		2										
S-113	226+00		℄								1				
S-114	227+50		℄							1					
E-115	227+50		Rt.		1										
S-115	229+00		℄							1					
E-116	229+00		Rt.		1										
S-116	230+80		℄								1				
E-117	230+80		L&R		2										
S-117	232+60		℄							1					
E-118	232+60		Rt.		1										
S-118	237+50		℄							1					
E-119	237+50		L&R		2										
COST PARTICIPATION II TOTAL					37	1	7	8	3	18	2	1	1	2	1

⊕ Set median inlet to use existing pipes, and to outlet existing underdrains into proposed median inlet.

‡ Std. No. 1 Manholes are offset 5 ft. left or right from ℄.

* Manhole is offset 14 ft. right from ℄

MADE E.P.S. DATE 9-4-74
TRACED E.P.S. DATE 9-18-74
CHECKED A.H.S. DATE 12-3-74
SCALE NONE

HOWARD, NEEDLES, TAMMEN & BERGENDOFF
CONSULTING ENGINEERS
CLEVELAND, OHIO
HNTB

K & E 10-1283 12-73

CONCRETE BARRIER AND DRAINAGE SCHEMATIC PLAN

FHWA REGION	STATE	PROJECT	
5	OHIO		

65
354

CUYAHOGA COUNTY
CUY-90-23.73
LAKE COUNTY
LAK-90-0.00

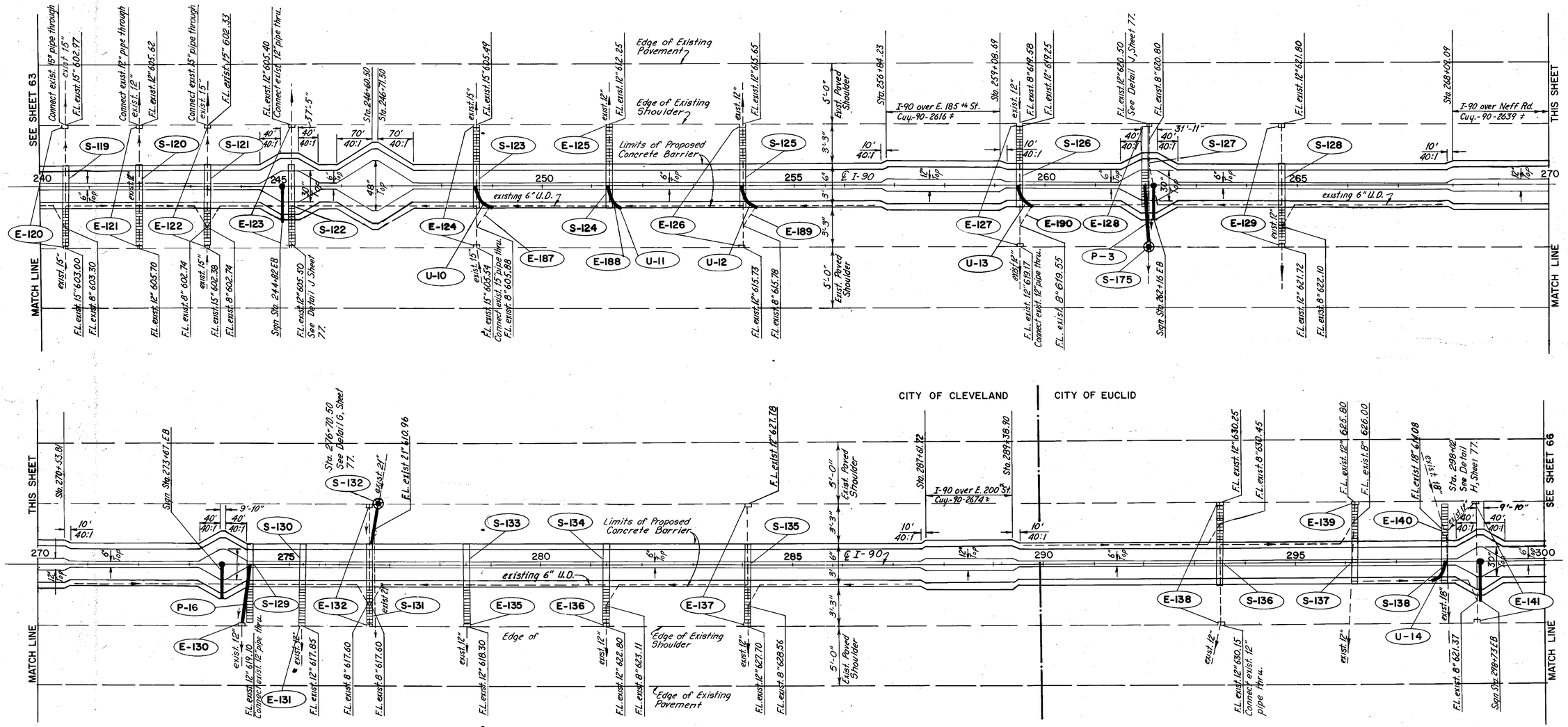

℄ See Bridge Plans for Concrete Barrier Quantities.

Note:
For Drainage Quantities see Sheet 68.
For Concrete Barrier Quantities see Sheets 70 & 71.
For Top of Cover Elevations of the Manholes and Normal Gutter Elevations of the I-3 Inlets see Sheet 75.
For Details of Concrete Barrier Median, see Sheets 72 and 73.

LONGITUDINAL 100 0 100 200
TRANSVERSE 4 0 4 8
SCALE IN FEET

EXISTING CONDITIONS LEGEND
- OVERHEAD SIGN SUPPORT
- DRAINAGE CONDUIT
- MANHOLE
- PAVEMENT EDGE
- PAVED SHOULDER
- INLET

PROJECT IMPROVEMENTS LEGEND
- CONCRETE BARRIER MEDIAN
- MEDIAN INLET
- MEDIAN MOUNTED ROADWAY LIGHTS
- STORM SEWER
- MANHOLE

MADE E.P.S. DATE 8-12-74
TRACED D.A.L. DATE 9-10-74
CHECKED D.F.M. DATE 12-17-74
SCALE 1" = 20'-0"

Howard, Needles, Tammen & Bergendoff
CONSULTING ENGINEERS
CLEVELAND, OHIO

HNTB

CONCRETE BARRIER AND DRAINAGE SCHEMATIC PLAN

CONCRETE BARRIER AND DRAINAGE SCHEMATIC PLAN

FHWA REGION	STATE	PROJECT	
5	OHIO		

66
354

CUYAHOGA COUNTY
CUY-90-23.73
LAKE COUNTY
LAK-90-0.00

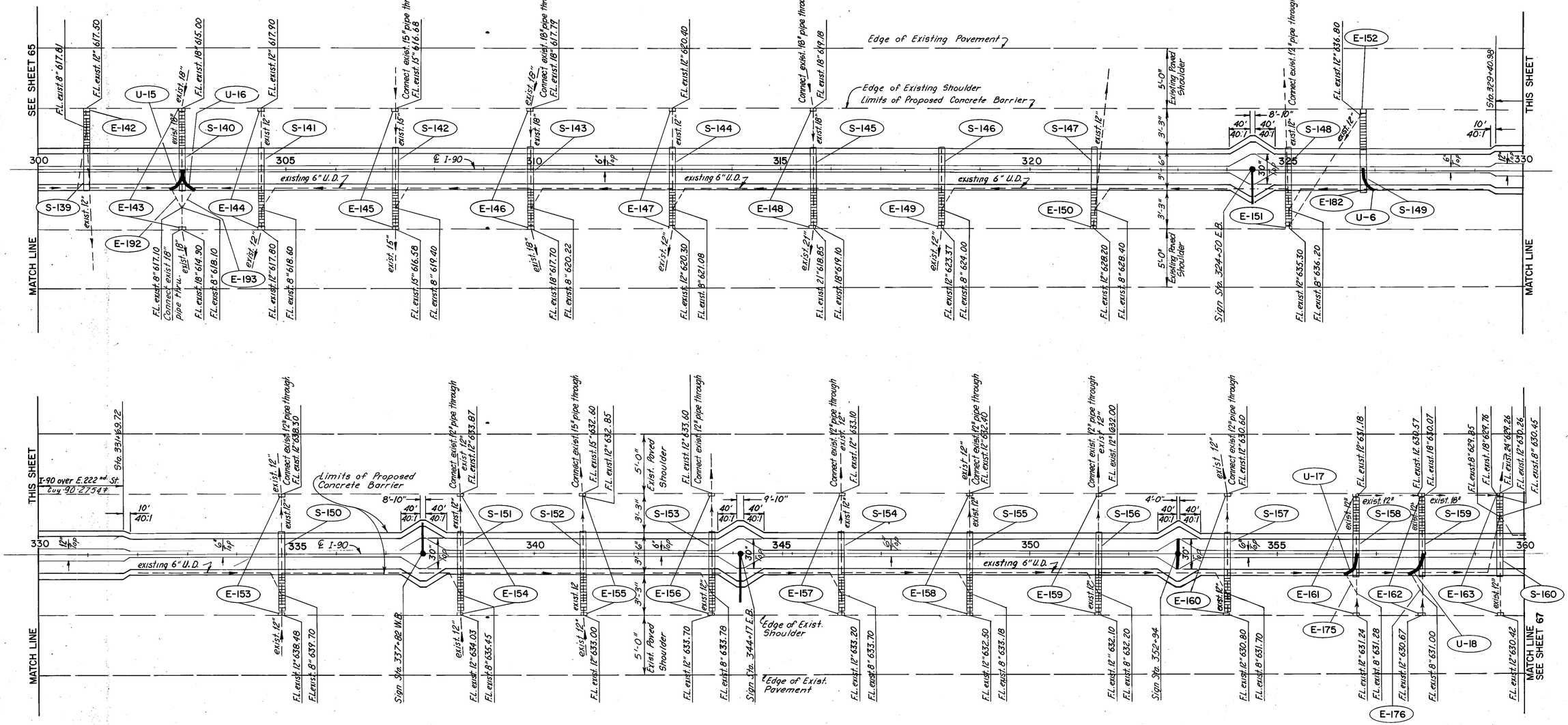

≠ See Bridge Plans for Concrete Barrier Quantities.

Note:
For Drainage Quantities see Sheet 68
For Concrete Barrier Quantities see Sheet 71
For Top of Cover Elevations of the Manholes and Normal Gutter Elevations of the I-3 Inlets see Sheet 75.
For Details of Concrete Barrier Median, see Sheets 72 and 73.

LONGITUDINAL 100 0 100 200
TRANSVERSE 4 0 4 8
SCALE IN FEET

EXISTING CONDITIONS LEGEND
- PAVEMENT EDGE
- PAVED SHOULDER
- OVERHEAD SIGN SUPPORT OR
- DRAINAGE CONDUIT
- INLET

PROJECT IMPROVEMENTS LEGEND
- CONCRETE BARRIER MEDIAN
- MEDIAN INLET
- MEDIAN MOUNTED ROADWAY LIGHTS
- STORM SEWER

MADE E.P.S. DATE 8-12-74
TRACED D.A.L. DATE 9-10-74
CHECKED T.D.V. DATE 12-26-74
SCALE as shown

Howard, Needles, Tammen & Bergendoff
CONSULTING ENGINEERS
CLEVELAND, OHIO

HNTB

FHWA REGION	STATE	PROJECT	
5	OHIO		

67
354

CUYAHOGA COUNTY
CUY-90-23.73
LAKE COUNTY
LAK-90-0.00

CONCRETE BARRIER AND DRAINAGE SCHEMATIC PLAN

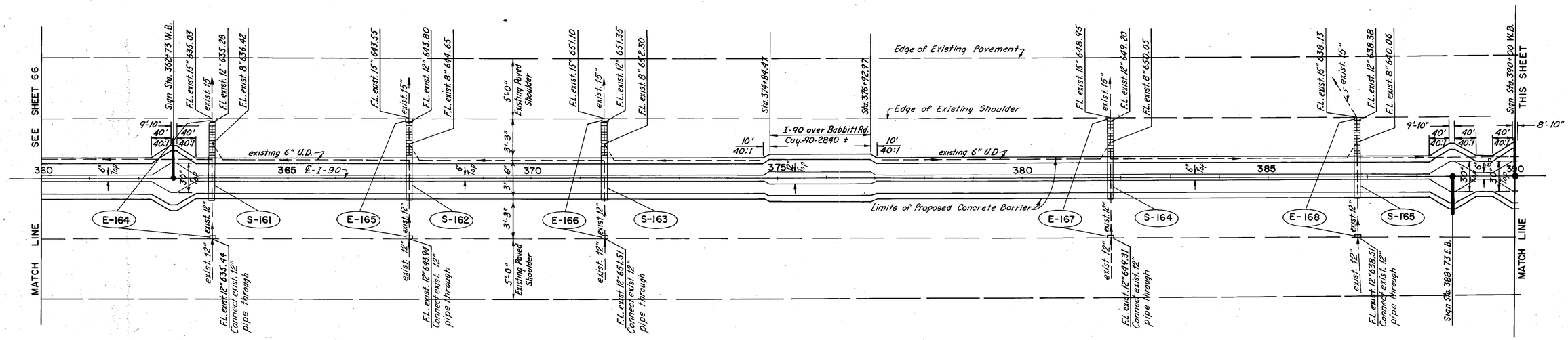

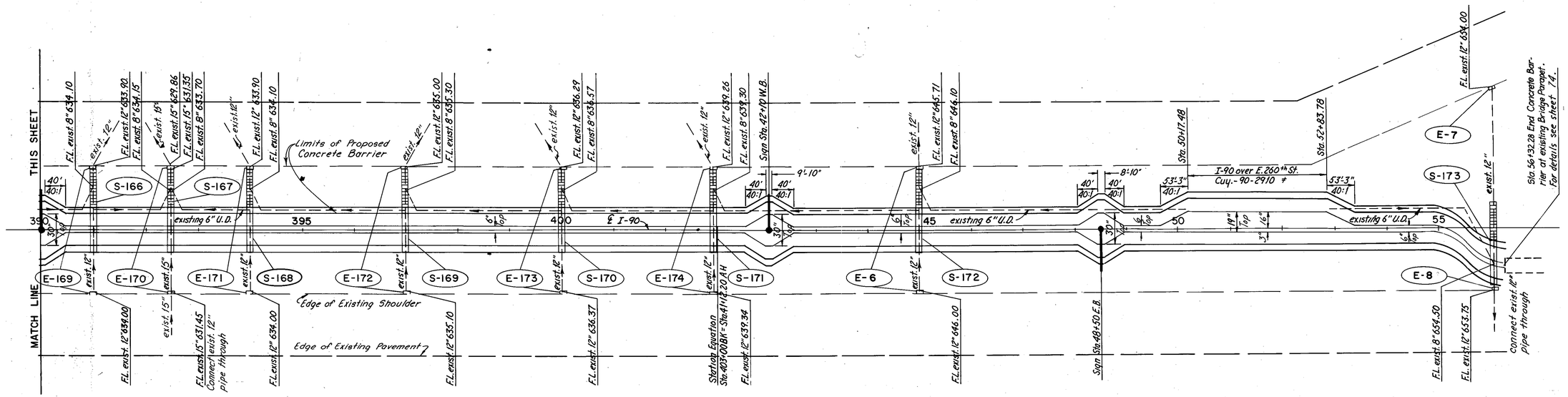

Note:
For Drainage Quantities see Sheet 68.
For Concrete Barrier Quantities see Sheet 71.
For Details of Concrete Barrier Median, see Sheets 72 and 73.

‡ See Bridge plans for Concrete Barrier Quantities

LONGITUDINAL 100 0 100 200
TRANSVERSE 4 0 4 8
SCALE IN FEET

EXISTING CONDITIONS LEGEND
- PAVEMENT EDGE
- PAVED SHOULDER
- OVERHEAD SIGN SUPPORT
- DRAINAGE CONDUIT
- INLET

PROJECT IMPROVEMENTS LEGEND
- CONCRETE BARRIER MEDIAN
- MEDIAN INLET
- MEDIAN MOUNTED ROADWAY LIGHTS

MADE E.P.S. DATE 8-12-74
TRACED D.A.L. DATE 9-10-74
CHECKED A.H.S. DATE 1-6-75
SCALE as shown

Howard, Needles, Tammen & Bergendoff
CONSULTING ENGINEERS
CLEVELAND, OHIO
HNTB

CONCRETE BARRIER AND DRAINAGE SCHEMATIC PLAN

DRAINAGE QUANTITIES

QUANTITY CALCULATIONS
MADE BY E.P.S. DATE 9-4-74
CHECKED BY G.F.M. DATE 12-10-74

FHWA REGION	STATE	PROJECT	
5	OHIO		

68
354

CUYAHOGA COUNTY
CUY-90-23.73
LAKE COUNTY
LAK-90-0.00

DRAINAGE-COST PARTICIPATION I & II

REF. NO.	STATION FROM	STATION TO	SIDE	202 Inlet Abandon Each I	202 Inlet Abandon Each II	202 Inlet Removed Each I	202 Inlet Removed Each II	202 Manhole Removed Each I	202 Manhole Removed Each II	202 Pipe Removed 15" and under Linear Feet I	202 Pipe Removed 15" and under Linear Feet II	603 Type B Conduit 12" Linear Feet I	603 Type B Conduit 12" Linear Feet II	603 Type B Conduit 21" Each I	603 Type B Conduit 21" Each II	604 ⊕Standard Number I-3A Median Inlet Each I	604 ⊕Standard Number I-3A Median Inlet Each II	604 ⊕Standard Number I-3 Median Inlet, modified as per plan, W=30" Each I	604 ⊕Standard Number I-3 Median Inlet, modified as per plan, W=30" Each II	604 ‡Standard Number 1 Manhole, as per plan Each I	604 ‡Standard Number 1 Manhole, as per plan Each II
S-119	240+50		℄														1				
E-120	240+50		Lt./Rt.				2														
S-120	242+00		℄														1				
E-121	242+00		Lt./Rt.				2														
S-121	243+34.3		℄														1				
E-122	243+34.3		Lt./Rt.				2														
E-123	245+05		Lt./Rt.				2														
S-122	245+05		℄																1		
S-123	248+72		℄														1				
E-124	248+72		Lt./Rt.				2														
S-124	251+35		℄														1				
E-125	251+35		Lt.				1														
S-125	254+00		℄														1				
E-126	254+00		Lt./Rt.				2														
S-126	259+50		℄														1				
E-127	259+50		Lt./Rt.				2														
S-127	261+99		℄																1		
P-3	261+99	262+05	Rt.									9									
E-128	262+05		Lt.		1																
S-175	262+06		Rt.																		1
S-128	264+70		℄														1				
E-129	264+70		Lt./Rt.				2														
P-16	274+22	274+22	Rt.									13									
E-130	274+10		Rt.		1																
S-129	274+22		℄														1				
S-130	275+25		℄														1				
E-131	275+25		Rt.				1														
S-131	276+59.5		℄														1				
E-132	276+59.5		Lt./Rt.				2														
P-4	276+59.5	276+70.5	Lt.									12									
E-133	276+59.5	276+70.5	Lt.								7										
E-134	276+70		Lt.						1												
S-132	276+70.5		Lt.																		1
P-17	276+70.0	276+70.5	Lt.											6							
S-133	278+50		℄														1				
E-135	278+50		Rt.				1														
S-134	281+30		℄														1				
E-136	281+30		Rt.				1														
S-135	284+10		℄														1				
E-137	284+10		Lt./Rt.				2														
S-136	293+50		℄													1					
E-138	293+50		Lt./Rt.			2															
S-137	296+20		℄													1					
E-139	296+20		Lt.			1															
S-138	298+02		℄													1					
E-140	298+02		Lt.					1													
E-141	298+62		Lt./Rt.	2																	
Cost Participation I Total					2		3		1								3				
Cost Participation II Total					2		24		1		7		34		6		14		2		2
Total					4		27		2		7		34		6		17		2		2

DRAINAGE-COST PARTICIPATION II

REF. NO.	STATION FROM	STATION TO	SIDE	202 Inlet Abandon Each	202 Inlet Removed Each	604 ⊕Standard Number I-3A Median Inlet Each
S-139	301+00		℄			1
E-142	301+00		Lt.		1	
S-140	302+91.7		℄			1
E-143	302+91.7		Lt./Rt.		2	
S-141	304+50		℄			1
E-144	304+50		Lt./Rt.		2	
S-142	307+20		℄			1
E-145	307+20		Lt./Rt.		2	
S-143	309+95		℄			1
E-146	309+95		Lt./Rt.		2	
S-144	312+80		℄			1
E-147	312+80		Lt./Rt.		2	
S-145	315+65		℄			1
E-148	315+65		Lt./Rt.		2	
S-146	318+25		℄			1
E-149	318+25		Rt.		1	
S-147	321+30		℄			1
E-150	321+30		Rt.		1	
S-148	325+25		℄			1
E-151	325+25		Rt.		1	
S-149	326+75		℄			1
E-152	326+75		Lt.	1		
S-150	334+90		℄			1
E-153	334+90		Lt./Rt.		2	
S-151	338+50		℄			1
E-154	338+50		Lt./Rt.		2	
S-152	341+00		℄			1
E-155	341+00		Lt./Rt.		2	
S-153	343+58		℄			1
E-156	343+58		Lt./Rt.		2	
S-154	346+20		℄			1
E-157	346+20		Lt./Rt.		2	
S-155	348+80		℄			1
E-158	348+80		Lt./Rt.		2	
S-156	351+40		℄			1
E-159	351+40		Lt./Rt.		2	
S-157	354+00		℄			1
E-160	354+00		Lt./Rt.		2	
S-158	356+60		℄			1
E-161	356+60		Lt./Rt.		2	
S-159	357+92.6		℄			1
E-162	357+92.6		Lt./Rt.		2	
S-160	359+50		℄			1
E-163	359+50		Lt./Rt.		2	
Cost Participation II Total				1	38	22

DRAINAGE-COST PARTICIPATION II

REF. NO.	STATION FROM	STATION TO	SIDE	202 Inlet Removed Each	604 ⊕Standard Number I-3A Median Inlet Each
S-161	363+50		℄		1
E-164	363+50		Lt./Rt.	2	
S-162	367+50		℄		1
E-165	367+50		Lt./Rt.	2	
S-163	371+50		℄		1
E-166	371+50		Lt./Rt.	2	
S-164	381+80		℄		1
E-167	381+80		Lt./Rt.	2	
S-165	386+80		℄		1
E-168	386+80		Lt./Rt.	2	
S-166	391+00		℄		1
E-169	391+00		Lt./Rt.	2	
S-167	392+48.3		℄		1
E-170	392+48.3		Lt./Rt.	2	
S-168	394+00		℄		1
E-171	394+00		Lt./Rt.	2	
S-169	397+00		℄		1
E-172	397+00		Lt./Rt.	2	
S-170	400+00		℄		1
E-173	400+00		Lt./Rt.	2	
S-171	402+92.7		℄		1
E-174	402+92.7		Lt./Rt.	2	
S-172	45+00		℄		1
E-6	45+00		Lt./Rt.	2	
E-7	56+10		Lt.	1	
S-173	56+14		℄		1
E-8	56+15		Rt.	1	
Cost Participation II Total				26	13

DRAINAGE-COST PARTICIPATION I & II

REF. NO.	STATION FROM	STATION TO	SIDE	202 Pipe Removed 15" and under Linear Feet I	202 Pipe Removed 15" and under Linear Feet II	603 Type F Conduit 707.01 6" Linear Feet I	603 Type F Conduit 707.01 6" Linear Feet II	605 Shallow Pipe Underdrain 6" Linear Feet I
U-1;E-177	14+30	14+50	Rt.	20				20
U-2;E-178	119+81	119+87	Lt.	6		6		
U-3;E-179	122+02	122+08	Lt.	6		6		
U-4;E-180	124+22	124+25	Lt.	3		3		
U-5;E-181	126+56	126+65	Lt.	9		9		
U-6;E-182	326+75	326+82	Lt.	7		7		
U-7;E-183	185+73	185+80	Lt.		7		7	
U-8;E-184	195+38	195+50	Lt.		11		13	
E-185	195+50	195+60	Lt.		10			
U-9;E-186	219+93	220+00	Lt.		7		7	
U-10;E-187	248+72	248+77	Rt.		7		7	
U-11;E-188	251+35	251+42	Rt.		7		7	
U-12;E-189	254+00	254+07	Rt.		7		7	
U-13;E-190	259+50	259+57	Rt.		7		7	
U-14;E-191	297+92	298+00	Rt.	11		9		
U-15;E-192	302+85	302+92	Rt.	7		7		
U-16;E-193	302+92	302+99	Rt.	7		7		
U-17;E-175	356+53	356+60	Rt.	7		7		
U-18;E-176	357+86	357+93	Rt.	7		7		
U-19	20+00	20+20	Lt.					20
U-20	54+80	55+00	Lt.					20
Cost Participation I				90		68		60
Cost Participation II				63		55		
Total				153		123		60

⊕ *Set median inlet to use existing outlet pipes, and outlet existing underdrains into proposed median inlet.*

‡ *Std. No. 1 Manholes are offset 5 ft. left or right from ℄.*

MADE E.P.S. DATE 9-4-74
TRACED E.P.S. DATE 9-12-74
CHECKED G.F.M. DATE 12-10-74
SCALE None

HOWARD, NEEDLES, TAMMEN & BERGENDOFF
CONSULTING ENGINEERS
CLEVELAND, OHIO
HNTB

CONCRETE BARRIER QUANTITIES

QUANTITY CALCULATIONS
MADE BY C.F.M. DATE 8-12-74
CHECKED BY T.D.V. DATE 12-17-74

FHWA REGION	STATE	PROJECT	
5	OHIO		

69
354

CUYAHOGA COUNTY
CUY-90-23.73
LAKE COUNTY
LAK-90-0.00

ITEM 622 CONCRETE BARRIER, AS PER PLAN

STATION FROM	STATION TO	TYPE B LENGTH (LIN. FT.)	REMARKS
252+58.80	252+68.80	10	
252+68.80	252+98.80	30	
1+99.84	2+15	15.16	
2+15	2+35		⊖
2+35	4+40	205	
4+40	4+60		⊖
4+60	6+45	185	
6+45	6+65		⊖
6+65	8+90	211	⊖⊖
8+90	9+10		⊖
9+10	9+66.17	42.17	⊖⊖
9+66.17	9+96.17	30	Sign Transition
9+96.17	10+03.83		Barrier Wall Assembly, Design 2
10+03.83	10+33.83	30	Sign Transition
10+33.83	10+90	36.17	Less 20' for I-3 Inlet 10+44
10+90	11+10		⊖
11+10	12+40	116	⊖⊖
12+40	12+60		⊖
12+60	14+20	160	
14+20	14+40		⊖
14+40	16+40	186	⊖⊖
16+40	16+60		⊖
16+60	18+40	166	⊖⊖
18+40	18+60		⊖
18+60	20+10	136	⊖⊖
20+10	20+30		⊖
20+30	22+40	210	
22+40	22+60		⊖
22+60	24+40	166	⊖⊖
24+40	24+60		⊖
24+60	24+66.17	6.17	
24+66.17	24+96.17	30	Sign Transition
24+96.17	25+03.83		Barrier Wall Assembly, Design 2
25+03.83	25+33.83	30	Sign Transition
25+33.83	26+40	92.17	⊖⊖
26+40	26+60		⊖
26+60	28+40	166	⊖⊖
28+40	28+60		⊖
28+60	30+40	180	
30+40	30+60		⊖
30+60	32+40	166	⊖⊖
32+40	32+60		⊖
32+60	34+22	148	⊖⊖
34+22	34+42		⊖
34+42	37+04.43	248.43	⊖⊖
37+04.43	37+84.85	--	I-90 Bridge over E.105th ≠
37+84.85	38+90	91.15	⊖⊖
38+90	39+10		⊖
39+10	40+90	180	
40+90	41+10		⊖
41+10	42+90	166	⊖⊖
42+90	43+10		⊖
43+10	44+90	166	⊖⊖
44+90	45+10		⊖
45+10	46+90	166	⊖⊖
46+90	47.10		⊖
	SUBTOTAL (A)	3587.27	

ITEM 622 CONCRETE BARRIER, AS PER PLAN

STATION FROM	STATION TO	TYPE B LENGTH (LIN. FT.)	REMARKS
47+10	48+90	180	
48+90	49+10		⊖
49+10	50+90	166	⊖⊖
50+90	51+10		⊖
51+10	52+90	166	⊖⊖
52+90	53+10		⊖
53+10	54+70	160	
54+70	54+90		⊖
54+90	56+90	186	⊖⊖
56+90	57+10		⊖
57+10	58+90	166	⊖⊖
58+90	59+10		⊖
59+10	60+30	86	⊖⊖ Less 20' for Inlet @ 60+10
60+30	60+50		⊖
60+50	61+90	140	
61+90	62+10		⊖
62+10	63+90	166	⊖⊖
63+90	64+10		⊖
64+10	65+15.08	91.08	⊖⊖
65+15.08	65+45.08	30	Sign Transition
65+45.08	65+54.92	--	Barrier Wall Assembly, Design 4
65+54.92	65+84.92	30	Sign Transition
65+84.92	65+90	5.08	
65+90	66+10		⊖
66+10	67+90	180	
67+90	68+10		⊖
68+10	69+90	146	⊖⊖ Less 20' for Inlet @ 69+70
69+90	70+10		⊖
70+10	72+15	191	⊖⊖
72+15	72+35		⊖
72+35	74+40	151	⊖⊖ Less 40' for 2 Inlets
74+40	74+60		⊖
74+60	76+40	166	⊖⊖
76+40	76+60		⊖
76+60	80+40	366	⊖⊖
80+40	80+60		⊖
80+60	82+40	166	⊖⊖
82+40	82+60		⊖
82+60	84+40	166	⊖⊖
84+40	84+60		⊖
84+60	86+40	166	⊖⊖
86+40	86+60		⊖
86+60	88+40	166	⊖⊖
88+40	88+60		⊖
88+60	90+40	160	Less 20' for Inlet @ 89+25
90+40	90+60		⊖
90+60	92+15	141	⊖⊖
92+15	92+35		⊖
92+35	94+15	166	⊖⊖
94+15	94+35		⊖
94+35	96+20	171	⊖⊖
96+20	96+40		⊖
96+40	98+15	155	Less 20' for Inlet @ 97+50
98+15	98+35		⊖
98+35	99+85	136	⊖⊖
99+85	100+15	30	Sign Transition
	SUBTOTAL (B)	4395.16	

ITEM 622 CONCRETE BARRIER, AS PER PLAN

STATION FROM	STATION TO	TYPE A LENGTH (LIN. FT.)	TYPE B LENGTH (LIN. FT.)	REMARKS
100+15	100+35			⊖
100+35	100+46.17		11.17	30" Top
100+46.17	100+53.83		--	Barrier Wall Assembly, Design 2
100+53.83	100+83.83		30	Sign Transition
100+83.83	104+40		328.17	28' Less for 2 Median Light Poles
104+40	104+60			⊖
104+60	106+65		205	
106+65	106+85			⊖
106+85	108+90		191	⊖⊖
108+90	109+10			⊖
109+10	111+15		191	⊖⊖
111+15	111+35			⊖
111+35	113+40		191	⊖⊖
113+40	113+60			⊖
113+60	114+90		130	
114+90	115+10			⊖
115+10	115+26.17		2.17	⊖⊖
115+26.17	115+56.17		30	Sign Transition
115+56.17	115+63.83		--	Barrier Wall Assembly, Design 2
115+63.83	115+93.83		30	Sign Transition
115+93.83	117+60		166.17	
117+60	117+80			⊖
117+80	119+80		186	⊖⊖
119+80	120+00			⊖
120+00	122+00		186	⊖⊖
122+00	122+20			⊖
122+20	124+20		186	⊖⊖
124+20	124+40			⊖
124+40	126+40		186	⊖⊖
126+40	126+60			⊖
126+60	127+40.08		80.08	
127+40.08	127+70.08		30	Sign Transition
127+70.08	127+79.91		--	Barrier Wall Assembly, Design 4
127+79.91	128+09.91		30	Sign Transition
128+09.91	128+40		30.09	
128+40	128+60			⊖
128+60	128+74		0	⊖⊖
128+74	128+84		10	Transition from Type B to Type A
128+84	130+40	156		
130+40	130+60			⊖
130+60	132+40.4	180.4		
132+40.4	132+60.4			⊖
132+60.4	134+38	177.6		
134+38	134+58			⊖
134+58	137+10	252		
137+10	137+30			⊖
137+30	137+30.58	0.58		
137+30.58	137+70.58	40		Sign Transition
137+70.58	137+79.42	--		Barrier Wall Assembly, Design 3
137+79.42	138+13.42	40		Sign Transition
138+13.42	138+58.63	43.21		
138+56.63	139+26.63	70		Transition from Type A to 48" Top
139+26.63	139+79.05	52.42		
139+79.05	139+96.60	17.55		Transition from 48" Top to Type A
	SUBTOTAL (C)	1029.76	2419.95	
	SUBTOTAL (B)		4395.16	
	SUBTOTAL (A)		3770.42	
* SHEET	69 TOTAL	1029.76▲	10,585.53	

⊖ 20' Barrier Section paid for under Item 604, I-3 Inlet.
⊖⊖ 14' Less for HL-17A Median Mounted Light Pole Section.
≠ See Bridge Plans for Concrete Barrier Quantities.
* Sheet 69 Totals for Concrete Barrier Types A & B are in the Cost Participation I.

▲ NOTE: CONCRETE BARRIER, TYPE A, AS PER PLAN VARIES IN WIDTH.

MADE GFM DATE 8-12-74
TRACED MET DATE 9-3-74
CHECKED R.J.S. DATE 12-16-74
SCALE None

Howard, Needles, Tammen & Bergendoff
CONSULTING ENGINEERS
CLEVELAND, OHIO

HNTB

CONCRETE BARRIER QUANTITIES

FHWA REGION	STATE	PROJECT	
5	OHIO		

70
354

QUANTITY CALCULATIONS
MADE BY GFM DATE 8-12-74
CHECKED BY T.D.V. DATE 12-17-74

CUYAHOGA COUNTY
CUY-90-23.73
LAKE COUNTY
LAK-90-0.00

ITEM 622 CONCRETE BARRIER

STATION FROM	STATION TO	TYPE A LENGTH (LIN. FT.)				REMARKS
139+96.60	140+49.05	52.45				Transition from 48" Top Type A
140+49.05	140+50	0.95				
140+50	140+70					⊖
140+70	143+35	265				
143+35	143+55					⊖
143+55	146+40	285				
146+40	146+60					⊖
146+60	149+33.060					
149+33.06	149+43.06	10				Transition from Type A to Type B
149+43.06	151+90.84	--				I-90 Bridge over E.140th St. ≠
151+90.84	152+00.84	10				Transition from Type B To Type A
152+00.84	153+90	189.16				
153+90	154+10					⊖
154+10	156+90	280				
156+90	157+10					⊖
157+10	159+90	280				
159+90	160+10					⊖
160+10	161+80	170				
161+80	162+00					⊖
162+00	162+97.5	97.5				
162+97.5	163+17.5					⊖
163+17.5	166+20	302.5				
166+20	166+40					⊖
166+40	169+35	295				
169+35	169+55					⊖
169+55	172+55	300				
172+55	172+75					⊖
172+75	175+90	315				
175+90	176+10					⊖
176+10	177+11.48	101.48				
177+11.48	177+21.48	10				Transition from Type A to Type B
177+21.48	179+86.60	--				I-90 Bridge over E.152 St. ≠
179+86.60	179+96.60	10				Transition from Type B To Type A
179+96.60	182+37	240.4				
182+37	182+57					⊖
182+57	185+70	313				
185+70	185+90					⊖
185+90	189+00	310				
189+00	189+20					⊖
189+20	192+37	317				
192+37	192+57					⊖
192+57	194+45.08	188.08				
194+45.08	194+85.08	40				Sign Transition
194+85.08	194+94.92	--				Barrier Wall Assembly, Design 4*
194+94.92	195+34.92	40				Sign Transition
195+34.92	195+50	15.08				
195+50	195+70					⊖
195+70	196+90	120				
196+90	197+10					⊖
197+10	198+65	155				
198+65	198+85					⊖
	SUBTOTAL (D)	4985.66				

ITEM 622 CONCRETE BARRIER

STATION FROM	STATION TO	TYPE A LENGTH (LIN. FT.)	TYPE A CONCRETE (CU. YDS.)	TYPE B LENGTH (LIN. FT.)	TYPE B CONCRETE (CU. YDS.)	REMARKS
198+85	201+75	290				
201+75	201+95					⊖
201+95	204+90	295				
204+90	205+10					⊖
205+10	207+67	257				
207+67	207+87					⊖
207+87	208+05.58	18.58				
208+05.58	208+45.58	40				Sign Transition
208+45.58	208+54.42	--				Barrier Wall Assembly, Design 3
208+54.42	208+94.42	40				Sign Transition
208+94.42	213+40	445.58				
213+40	214+10	70				Transition from Type A to 48" Top
214+10	214+30					⊖
214+30	214+35.50	5.50				Less 1 Cu. Yd. for Bridge Col.
214+35.50	215+05.50	70				Transition from 48" Top to Type A
215+05.50	217+10	204.50				
217+10	217+30					⊖
217+30	219+90	260				
219+90	220+10					⊖
220+10	221+40	130				
221+40	221+60					⊖
221+60	222+90	130				
222+90	223+10					⊖
223+10	224+40	130				
224+40	224+60					⊖
224+60	225+55.58	95.58				
225+55.58	225+95.58	40				Sign Transition
225+95.58	226+04.42	--				Barrier Wall Assembly, Design 3
226+04.42	226+05	0.58				30" Top
226+05	226+25					⊖
226+25	226+65	40				Sign Transition
226+65	227+40	75				
227+40	227+60					⊖
227+60	228+90	130				
228+90	229+10					⊖
229+10	230+30	120				
230+30	230+70	40				Sign Transition
230+70	230+90					⊖
230+90	230+95.58	5.58				30" Top
230+95.58	231+04.42	--				Barrier Wall Assembly, Design 3
231+04.42	231+44.42	40				Sign Transition
231+44.42	232+50	105.58				
232+50	232+70					⊖
232+70	237+40	470				
237+40	237+60					⊖
237+60	240+40	280				
240+40	240+60					⊖
240+60	241+90	130				
241+90	242+10					⊖
242+10	243+24.30	114.30				
243+24.30	243+44.30					⊖
243+44.30	244+55.58	111.28				
	SUBTOTAL (E)	4184.06				

ITEM 622 CONCRETE BARRIER

STATION FROM	STATION TO	TYPE A LENGTH (LIN. FT.)				REMARKS
244+55.58	244+95.58	40				Sign Transition
244+95.58	245+04.42	--				Barrier Wall Assembly, Design 3
245+04.42	245+05	0.58				30" Top
245+05	245+25					⊖
245+25	245+65	40				Sign Transition
245+65	245+90.50	25.50				
245+90.50	246+60.50	70				Transition from Type A To 48" Top
246+60.50	246+71.50	11				Less 1 Cu. Yd. for Bridge Column
246+71.50	247+41.50	70				Transition from 48" Top To Type A
247+41.50	248+62	120.50				
248+62	248+82					⊖
248+82	251+25	243				
251+25	251+45					⊖
251+45	253+90	245				
253+90	254+10					⊖
254+10	256+74.23	264.23				
256+74.23	256+84.23	10				Transition from Type A to Type B
256+84.23	259+08.69	--				I-90 Bridge over E.185 St. ≠
259+08.69	259+18.69	10				Transition from Type B to Type A
259+18.69	259+40	21.31				
259+40	259+60					⊖
259+60	261+50	190				
261+50	261+90	40				Sign Transition
261+90	262+10					⊖
262+10	262+11.08	1.08				30" Top
262+11.08	262+20.92	--				Barrier Wall Assembly, Design 4
262+20.92	262+60.92	40				Sign Transition
262+60.92	264+60	199.08				
264+60	264+80					⊖
264+80	267+99.09	319.09				
267+99.09	268+09.09	10				Transition from Type A to Type B
268+09.09	270+53.81					I-90 Bridge over Neff Rd. ≠
270+53.81	270+63.81	10				Transition from Type B to Type A
270+63.81	273+05.08	241.27				
273+05.08	273+45.08	40				Sign Transition
273+45.08	273+54.92	--				Barrier Wall Assembly, Design 4
273+54.92	273+94.92	40				Sign Transition
273+94.92	273+95	0.08				
273+95	274+15					⊖
274+15	275+15	100				
275+15	275+35					⊖
275+35	276+49.5	114.5				
276+49.5	276+69.5					⊖
276+69.5	278+40	170.5				
278+40	278+60					⊖
278+60	281+20	260				
281+20	281+40					⊖
281+40	284+00	260				
284+00	284+20					⊖
284+20	287+51.72	331.72				
287+51.72	287+61.72	10				Transition from Type A to Type B
287+51.72	289+38.90	--				I-90 Bridge over E.200 St. ≠
289+38.90	289+48.90	10				Transition from Type B to Type A
289+48.90	289+98.78	49.88				
	SUBTOTAL (F)	3608.32				
	SUBTOTAL (E)	4184.06				
	SUBTOTAL (D)	4985.66				
*SHEET TOTAL		12778.04				

⊖ — 20' Barrier Section paid for under Item 504, I-3 Inlet
≠ — See Bridge Plans for Concrete Barrier Quantities
* — Sheet 70 Totals for Concrete Barrier. Type A and Type B are all in the Cost Participation II.

MADE GFM DATE 8-12-74
TRACED MET DATE 9-3-74
CHECKED AJS DATE 12-16-74
SCALE None

Howard, Needles, Tammen & Bergendoff
CONSULTING ENGINEERS
CLEVELAND, OHIO

HNTB

CONCRETE BARRIER QUANTITIES

QUANTITY CALCULATIONS
MADE BY G.F.M. DATE 8-12-74
CHECKED BY T.D.V. DATE 1-2-75

FHWA REGION	STATE	PROJECT	
5	OHIO		

71
354

CUYAHOGA COUNTY
CUY-90-23.73
LAKE COUNTY
LAK-90-0.00

ITEM 622 CONCRETE BARRIER COST PART. I

STATION FROM	STATION TO	TYPE A LENGTH (LIN. FT.)				REMARKS
289+98.78	293+40	341.22				
293+40	293+60					⊖
293+60	296+10	250				
296+10	296+30					⊖
296+30	297+90	160				
297+90	298+10					⊖
298+10	298+22.08	12.08				
298+22.08	298+62.08	40				Sign Transition
298+62.08	298+71.92	--				Barrier Wall Assembly, Design 4
298+71.92	299+11.92	40				Sign Transition
299+11.92	300+90	178.08				
300+90	301+10					⊖
301+10	302+81.7	171.70				
302+81.7	303+01.7					⊖
303+01.7	304+40	138.30				
304+40	304+60					⊖
304+60	307+10	250				
307+10	307+30					⊖
307+30	309+85	255				
309+85	310+05					⊖
310+05	312+70	265				
312+70	312+90					⊖
312+90	315+55	265				
315+55	315+75					⊖
315+75	318+15	240				
318+15	318+35					⊖
318+35	321+25	290				
321+25	321+45					⊖
321+45	324+05.58	260.58				
324+05.58	324+45.58	40				Sign Transition
324+45.58	324+54.42	--				Barrier Wall Assembly, Design 3
324+54.42	324+94.42	40				Sign Transition
324+94.42	325+15	20.58				
325+15	325+35					⊖
325+35	326+65	130				
326+65	326+85					⊖
326+85	329+30.98	245.38				
329+30.98	329+40.98	10				Trans. from Type A to Type B
329+40.98	331+69.72	--				I-90 Bridge over E.222 St. #
331+69.72	331+79.72	10				Trans. from Type B to Type A
331+79.72	334+80	300.28				
334+80	335+00					⊖
335+00	337+30.58	230.58				
337+30.58	337+70.58	40				Sign Transition
337+70.58	337+79.42	--				Barrier Wall Assembly, Design 3
337+79.42	338+19.42	40				Sign Transition
338+19.42	338+40	20.58				
338+40	338+60					⊖
338+60	340+90	230				
340+90	341+10					⊖
341+10	343+48	238				
343+48	343+68					⊖
343+68	343+70.08	2.08				
343+70.08	344+10.08	40				Sign Transition
344+10.08	344+19.92	--				Barrier Wall Assembly, Design 4
	SUBTOTAL (G)	4794.44				

ITEM 622 CONCRETE BARRIER COST PART. I

STATION FROM	STATION TO	TYPE A LENGTH (LIN. FT.)				REMARKS
344+19.92	344+59.92	40				Sign Transition
344+59.92	346+10	150.08				
346+10	346+30					⊖
346+30	348+70	240				
348+70	348+90					⊖
348+90	351+30	240				
351+30	351+50					⊖
351+50	352+57.58	107.58				
352+57.58	352+97.58	40				Sign Transition
352+97.58	353+02.42	--				Barrier Wall Assembly, Design 5
353+02.42	353+42.42	40				Sign Transition
353+42.42	353+90	47.58				
353+90	354+10					⊖
354+10	356+50	240				
356+50	356+70					⊖
356+70	357+82.6	112.6				
357+82.6	358+02.6					⊖
358+02.6	359+40	137.4				
359+40	359+60					⊖
359+60	362+25.08	265.08				
362+25.08	362+65.08	40				Sign Transition
362+65.08	362+74.92	--				Barrier Wall Assembly, Design 4
362+74.92	363+14.92	40				Sign Transition
363+14.92	363+40	25.08				
363+40	363+60					⊖
363+60	367+40	380				
367+40	367+60					⊖
367+60	371+40	380				
371+40	371+60					⊖
371+60	374+74.47	314.47				
374+74.47	374+84.47	10				Trans. from Type A to Type B
374+84.47	376+92.97	--				I-90 Bridge over Babbit Rd. #
376+92.97	377+02.97	10				Trans. from Type B to Type A
377+02.97	381+70	467.03				
381+70	381+90					⊖
381+90	386+70	480				
386+70	386+90					⊖
386+90	388+28.08	138.08				
388+28.08	388+68.08	40				Sign Transition
388+68.08	388+77.92	--				Barrier Wall Assembly, Design 4
388+77.92	389+17.92	40				Sign Transition
389+17.92	389+55.58	37.66				
389+55.58	389+95.58	40				Sign Transition
389+95.58	390+04.42	--				Barrier Wall Assembly, Design 3
390+04.42	390+44.42	40				Sign Transition
390+44.42	390+90	45.58				
390+90	391+10					⊖
391+10	392+38.3	128.3				
392+38.3	392+58.3					⊖
392+58.3	393+90	131.7				
393+90	394+10					⊖
394+10	396+90	280				
396+90	397+10					⊖
397+10	399+90	280				
	SUBTOTAL (H)	5008.22				

ITEM 622 CONCRETE BARRIER COST PART. I & II

STATION FROM	STATION TO	TYPE A LENGTH (LIN. FT.)				REMARKS
399+90	400+10					⊖
400+10	402+82.70	272.70				
402+82.70	403+02.70					⊖
41+14.90	41+65.08	50.18				
41+65.08	42+05.08	40				Sign Transition
42+05.08	42+14.92	--				Barrier Wall Assembly
42+14.92	42+54.92	40				Sign Transition
42+54.92	44+90	235.08				
44+90	45+10					⊖
45+10	48+05.58	295.58				
48+05.58	48+45.58	40				Sign Transition
48+45.58	48+54.42	--				Barrier Wall Assembly, Design 3
48+54.42	48+94.42	40				Sign Transition
48+94.42	49+64.15	69.73				
49+64.15	50+17.48	53.33				Trans. from Type A to 19" Top
50+17.48	52+83.78	--				I-90 Bridge over E.260 St. #
52+83.78	53+37.11	53.33				Trans. from 19" Top to Type A
53+37.11	56+04	266.89				
56+04	56+24					⊖
56+24	56+24.12	0.12				
56+24.12	56+32.12	8				Trans. Sect. to Bridge Parapet
Cost Part. I	Subtotal (J)	1464.94				
Sheet 71	SUBTOTAL (J)	1464.94				
Sheet 71	SUBTOTAL (H)	5008.22				
Sheet 71	SUBTOTAL (G)	4794.44				
SHEET 71	TOTAL	11267.60		------		COST PARTICIPATION I
SHEET 70	TOTAL	12778.04		------		COST PARTICIPATION II
						COST PARTICIPATION I
TOTAL	I	11,268				
TOTAL	II	12,778		-------		
GRAND TOTAL		24,046				

⊖ - 20' Barrier Section paid for under Item 604, I-3 Inlet.

- See Bridge Plans for Concrete Barrier Quantities.

202 CURB REMOVED

LOCATION FROM	LOCATION TO	CALCULATION	COST PARTICIPATION I LIN. FT.	COST PARTICIPATION II LIN. FT.	TOTAL (IaII) LIN. FT.
134+00	139+96.60	596.60 x 2 Sides	1193		1193
139+96.60	289+98.78	15,002.18 x 2 Sides		30004	30004
289+98.78	402+99.55	11,300.77 x 2 Sides	22602		22602
41+12.20	56+32.12	1519.92 x 2 Sides	3040		3040
Deduct for Inlets & C. Basins		Both Sides	-628	-696	-1324
Deduct for Bridges		1159.26 x 2 Sides		-2318	-2318
" "	"	703.54 x 2 Sides	-1407		-1407
	TOTAL		24800	26990	51790

202 CONCRETE MEDIAN PAVEMENT REMOVED

LOCATION FROM	LOCATION TO	CALCULATION	COST PARTICIPATION I SY. YD.	COST PARTICIPATION II SY. YD.	TOTAL (IaII) SY. YD.
1+99.84	129+00	12,700.16' x 3' ÷ 9	4233		4233
129+00	134+00	500.00' x (3+7) ÷ 18	278		278
134+00	137+75	375.00' x (6+9) ÷ 18	312		312
137+75	139+96.60	221.60 x 9 ÷ 9	222		222
139+96.60	289+98.78	15,002.18 x 9 ÷ 9		15002	15,002
289+98.78	402+99.55	11,300.77 x 9 ÷ 9	11301		11301
41+12.20	52+83.78	1171.58 x 9 ÷ 9	1172		1172
52+83.78	56+32.12	348.34 x (9+13.49) ÷ 18	435		435
Deduct for Inlets & C. Basins		590.45 x 3 ÷ 9	-197		-197
" " " "		773.67 x 3 ÷ 9		-258	-258
" " " "		609.10 x 3.33 ÷ 9	-225		-225
Deduct for Bridges		80.42 x 3 ÷ 9	-27		-27
" " "		1159.26 x 9 ÷ 9		-1159	-1159
" " "		703.54 x 9 ÷ 9	-704		-704
	TOTAL		16,800	13,585	30,385

203 EXCAVATION NOT INCLUDING EMBANKMENT COSTRUCTION

LOCATION FROM	LOCATION TO	CALCULATION	COST PARTICIPATION I CU. YD.	COST PARTICIPATION II CU. YD.	TOTAL (IaII) CU. YD.
1+99.84	129+00	12,700.16' x 43" x 9 ÷ 27	2999		2999
122+00	134+00	500' x 16" x 1/2 (3+7') ÷ 27	62		62
134+00	139+96.60	596.6' x 16" x 1/2 (6+9) ÷ 27	138		138
139+96.60	289+98.78	1502.18' x 16" x 9' ÷ 27		4167	4167
289+98.78	403+00	11,301.22' x 16" x 9' ÷ 27	3139		3139
41+12.20	56+32.12	1519.92' x 16" x 9' ÷ 27	422		422
Deduct for Bridges:					
Cost Participation I		783.96 x 19" x 9' ÷ 27	-218		-218
Cost Participation II		1159.92' x 16" x 9' ÷ 27		-322	-322
Deduct for Inlets:					
Cost Participation I		106 inlets @ 180 Sq. Ft. x 20" ÷ 27	-589		-589
Cost Participation II		50 inlets @ 180 Sq. Ft. x 16" ÷ 27		-278	-278
	TOTAL		5953	3567	9520

301 BITUMINOUS AGGREGATE BASE

LOCATION FROM	LOCATION TO	CALCULATION	COST PARTICIPATION I CU. YD.	COST PARTICIPATION II CU. YD.	TOTAL (IaII) CU. YD.
129+00	137+75	875.00' x (0+1.875) ÷ 54	30		30
137+75	139+96.60	221.60 x 1.875" ÷ 27	15		15
139+96.60	289+98.78	15,002.18 x 1.875" ÷ 27		1042	1042
289+98.78	402+99.55	11,300.77 x 1.875" ÷ 27	785		785
41+12.20	52+83.78	1171.58 x 1.875" ÷ 27	81		81
52+83.78	56+32.12	348.34 x (1.875+4.5) ÷ 54	41		41
Deduct for Inlets & C. Basins		4 x 20' x (0+1.875) ÷ 54	-3		-3
" " " "		50 x 20' x 1.875" ÷ 27		-69	-69
" " " "		38 x 20' x 1.875 ÷ 27	-53		-53
" " " "		1 x 20' x (1.875 + 4.5) ÷ 54	-2		-2
Minus Bridges		1159.26' x 1.875" ÷ 27		-80	-80
" " "		703.54' x 1.875" ÷ 27	-48		-48
Minus Sign Supports		64.88' x 1.875 ÷ 27		-4	-4
" " "		89.34 x 1.875 ÷ 27	-6		-6
	TOTAL		840	889	1729

304 AGGREGATE BASE

LOCATION FROM	LOCATION TO	CALCULATION	COST PARTICIPATION I CU. YD.	COST PARTICIPATION II CU. YD.	TOTAL (IaII) CU. YD.
129+00	137+75	875.00 x (0.42+3.55) ÷ 54	64		64
137+75	139+96.60	221.60' x 3.55" ÷ 27	29		29
139+96.60	289+98.78	15,002.18 x 3.55" ÷ 27		1972	1972
289+98.78	402+99.55	11,300.77 x 3.55" ÷ 27	1486		1486
41+12.20	52+83.78	1171.58 x 3.55" ÷ 27	154		154
52+83.78	56+32.12	348.34 x (3.55" + 7.93) ÷ 54	74		74
Deduct for Inlets & C. Basins		4 x 20' x (0.42+3.55) ÷ 54	-6		-6
" " " "		50 x 20' x 3.55" ÷ 27		-131	-131
" " " "		38 x 20' x 3.55" ÷ 27	-100		-100
" " " "		1 x 20' x (3.55" + 7.93) ÷ 54	-4		-4
Minus Bridges		1159.26 x 3.55		-152	-152
" " "		703.54 x 3.55 ÷ 27	-92		-92
Minus Signs Support		64.88 x 3.55 ÷ 27		-8	-8
" " "		89.34 x 3.55 ÷ 27	-12		-12
	TOTAL		1593	1681	3274

MADE G.F.M. DATE 8-14-74
TRACED M.K.T. DATE 9-6-74
CHECKED T.D.V. DATE 1-2-75
SCALE None

Howard, Needles, Tammen & Bergendoff
CONSULTING ENGINEERS
CLEVELAND, OHIO

HNTB

CONCRETE BARRIER MEDIAN DETAILS

FHWA REGION	STATE	PROJECT	
5	OHIO		

72
354

CUYAHOGA COUNTY
CUY-90-23.73
LAKE COUNTY
LAK-90-0.00

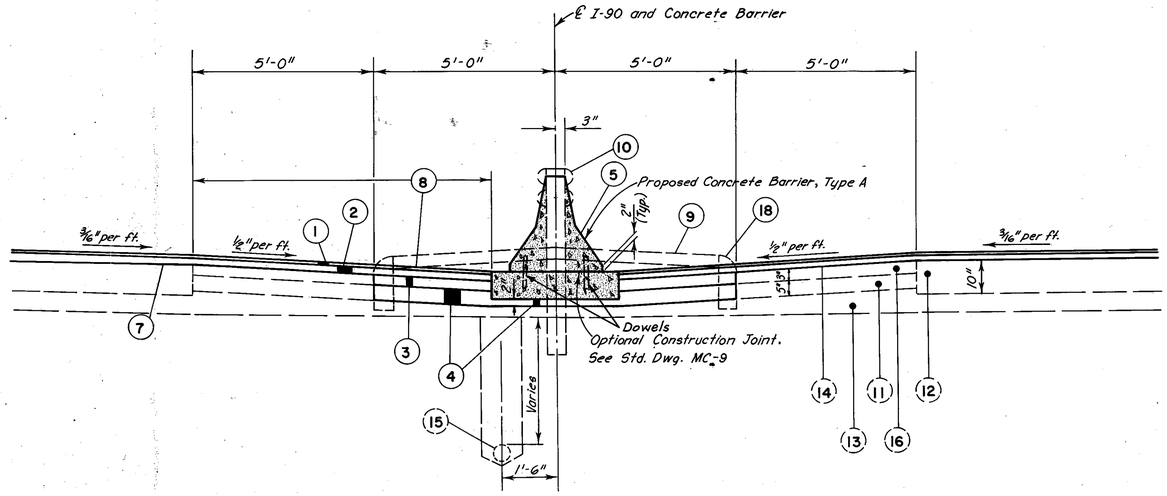

NORMAL SECTION

WESTBOUND

Sta.143+50 to Sta.149+18.06
Sta.152+15.84 to Sta.176+96.48
Sta.180+11.60 to Sta.204+00
Sta.204+00 to Sta. 219+75
Sta.236+50 to Sta. 246+25
Sta.284+00 to Sta. 287+36.71
Sta.289+63.89 to Sta.291+50
Sta.304+25 to Sta.315+50
Sta.328+75 to Sta.329+15.98
Sta.331+97.46 to Sta.374+59.74
Sta.377+17.97 to Sta.403+00
Sta.41+12.20 to Sta.49+92.48
*Sta. 53+08.78 to Sta.54+84.20
**Sta.54+84.20 to Sta.56+32.28

NORMAL SECTION

EASTBOUND

Sta.143+50 to Sta.149+18.06
Sta.152+15.84 to Sta.176+96.48
Sta.180+11.60 to Sta. 204+00
Sta. 204+00 to Sta. 220+75
Sta. 236+50 to Sta. 246+25
Sta. 284+25 to Sta. 287+36.71
Sta. 289+63.89 to Sta.291+50
Sta. 304+50 to Sta. 315+50
Sta. 328+50 to Sta. 329+15.98
Sta 331+97.46 to Sta. 374+59.47
Sta. 377+17.97 to Sta. 403+00
Sta. 41+12.20 to Sta. 49+92.48
Sta. 53+08.78 to Sta. 54+84.20
Sta.54+84.20 to Sta.56+32.28

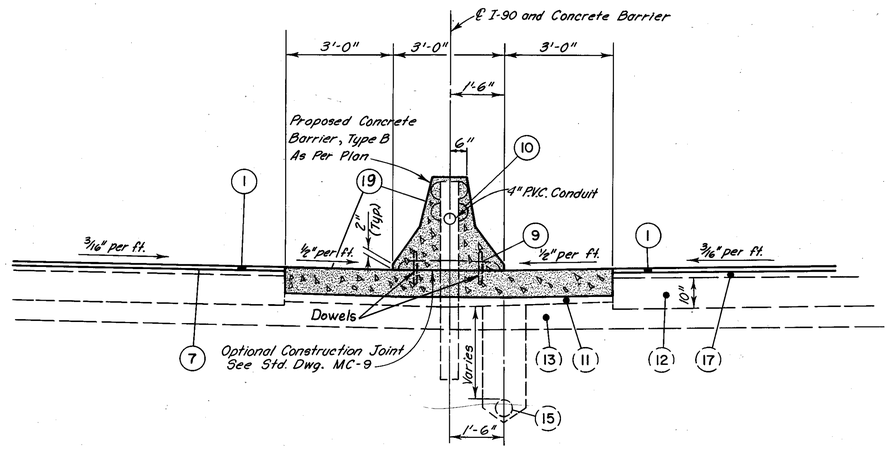

NORMAL SECTION

Sta. 3+75 to Sta. 88+50

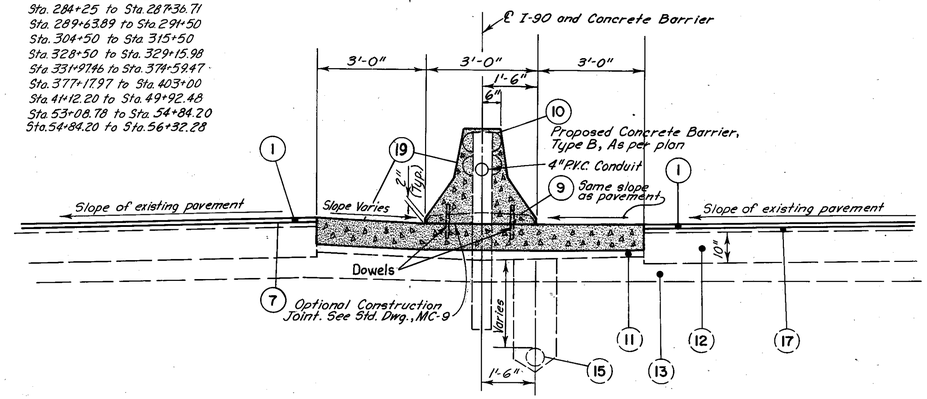

SUPERELEVATED SECTION
FWY. CURVE TO LEFT

Sta. 90+57.88 to Sta.113+44.53

SUPERELEVATION TRANSITION

Sta.252+58.80 to Sta. 252+98.80
Sta. 1+99.84 to Sta. 3+75
Sta. 88+50 to Sta. 90+52.88
Sta. 113+44.53 to Sta. 117+04.19

Median width from Sta. 53+08 to Sta. 56+17.13 Varies. Shoulders shall be sloped towards the top of the Concrete Barrier Base for positive drainage.

***For details of concrete barrier median between these station, see Sheet 74.*

LEGEND

PROPOSED

(1) Item 404 1½" Asphalt Concrete, AC-20
(2) Item 402 1¾" Asphalt Concrete, AC-20
(3) Item 301 Bituminous Aggregate Base: 702.01, AC-20; or 702.09, RT-11 or RT-12.
(4) Item 304 Aggregate Base
(5) Item 622 Concrete Barrier, Type A
(7) Item 407; Tack Coat, 702.02, RC-250; or 702.04, SS-1, SS-1H, MS-2 or RS-1 with Cover Aggregate.
(8) Item 409, Seal Coat Bituminous Material, 702.02, MC-800 or MC-3000; 702.03, CBAE-800; 702.04, RS-1, RS-2 or CRS-2; or 702.09, RT-9 or RT-10 Applied at the rate of 0.30 Gal. per Sq.Yd. Cover Aggregate No.8 at the rate of 0.008 Cu.Yds. per Sq.Yd.
(9) Item 202 Concrete Median Removed
(10) Item 202 Guard rail, barrier design, removed for re-use or storage
(18) Item 202 Curb Removed
(19) Item 622 Concrete Barrier, Type B, as per plan

EXISTING

(11) Stabilized Crushed Aggregate Shoulders
(12) Portland Cement Concrete Pavement
(13) Subbase
(14) Surface Treatment
(15) Underdrain
(16) Waterproofed Aggregate Base
(17) Asphalt Overlay

MADE G.F.M. DATE 7-22-74
TRACED J.B. DATE 12-16-74
CHECKED T.D.V. DATE 12-17-74
SCALE 1/2" = 1'-0"

Howard, Needles, Tammen & Bergendoff
CONSULTING ENGINEERS
CLEVELAND, OHIO

HNTB

SCALE ½"=1'-0"

CONCRETE BARRIER MEDIAN DETAIL

FHWA REGION	STATE	PROJECT	
5	OHIO		

73
354

CUYAHOGA COUNTY
CUY-90-23.73
LAKE COUNTY
LAK-90-0.00

CONCRETE BARRIER MEDIAN DETAILS

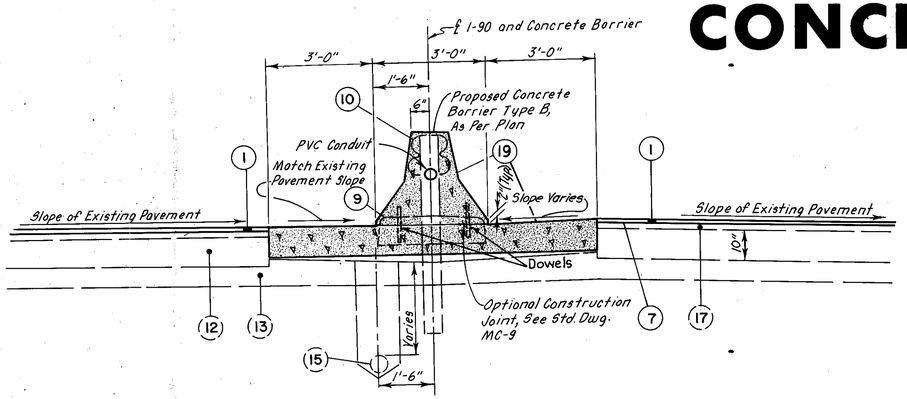

SUPERELEVATED SECTION
FWY. CURVE TO RIGHT

Sta. 117+04.19 to Sta. 129+00

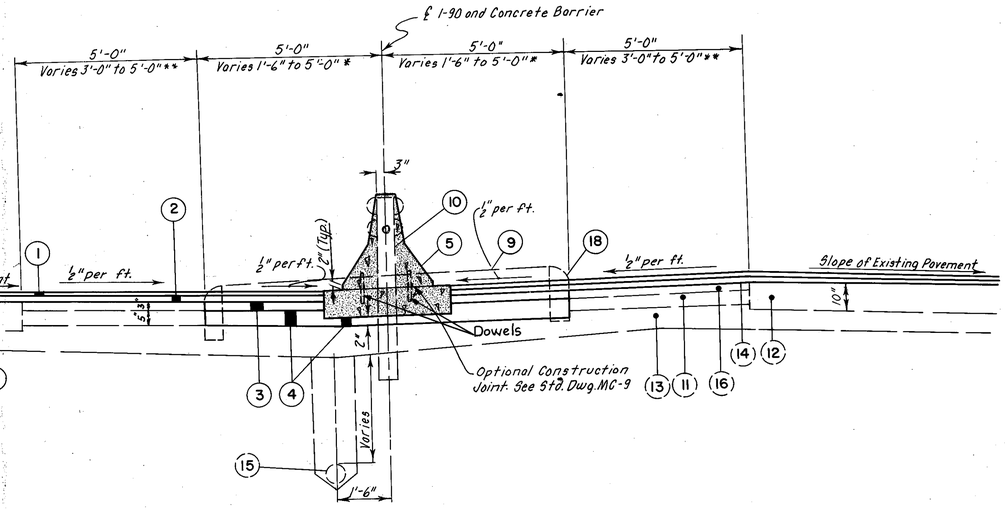

WESTBOUND SUPERELEVATION
* Sta 129+00 to Sta. 137+75
** Sta. 137+75 to Sta. 142+75
Sta. 142+75 to Sta. 143+50
Sta. 252+25 to Sta. 256+59.23
Sta. 295+00 to Sta. 301+00

WESTBOUND TRANSITION
Sta. 143+50 to Sta. 149+00
Sta. 246+25 to Sta. 252+25
Sta. 259+33.69 to Sta. 264+25
Sta. 291+50 to Sta. 295+00
Sta. 301+00 to Sta. 304+25

SUPERELEVATED SECTION
FWY. CURVE TO RIGHT

EASTBOUND SUPERELEVATION
* Sta. 129+00 to Sta. 137+75
** Sta. 137+75 to Sta. 142+75
Sta. 142+75 to Sta. 143+50
Sta. 252+25 to Sta. 256+59.23
Sta. 259+33.69 to Sta. 259+50
Sta. 295+00 to Sta. 301+00

EASTBOUND TRANSITION
Sta. 143+50 to Sta. 149+00
Sta. 246+25 to Sta. 252+25
Sta. 259+50 to Sta. 264+00
Sta. 291+50 to Sta. 295+00
Sta. 301+00 to Sta. 304+50

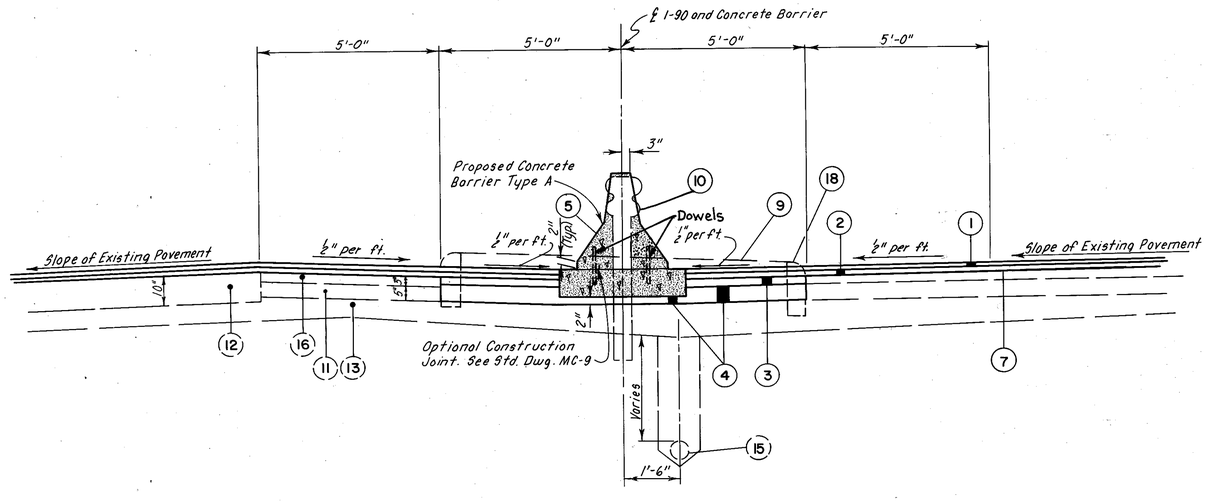

WESTBOUND SUPERELEVATION
Sta. 225+50 to Sta. 231+50
Sta. 274+25 to Sta. 279+75
Sta. 319+00 to Sta. 324+75

WESTBOUND TRANSITION
Sta. 219+75 to Sta. 225+50
Sta. 231+50 to Sta. 236+50
Sta. 264+25 to Sta. 267+84.09
Sta. 270+78.81 to Sta. 274+25
Sta. 279+75 to Sta. 284+00
Sta. 315+50 to Sta. 319+00
Sta. 324+75 to Sta. 328+75

SUPERELEVATED SECTION
FWY. CURVE TO LEFT

EASTBOUND SUPELEVATION
Sta. 225+00 to Sta. 231+75
Sta. 274+25 to Sta. 279+75
Sta. 319+00 to Sta. 325+00

EASTBOUND TRANSITION
Sta. 220+75 to Sta. 225+00
Sta. 231+75 to Sta. 236+50
Sta. 264+00 to Sta. 267+84.09
Sta. 270+78.81 to Sta. 274+25
Sta. 279+75 to Sta. 284+25
Sta. 315+50 to Sta. 319+00
Sta. 325+00 to Sta. 328+50

LEGEND

PROPOSED

(19) Item 622 Concrete Barrier, Type B, as per plan
(1) Item 404 1 1/4" Asphalt Concrete, AC-20.
(2) Item 402 1 3/4" Asphalt Concrete, AC-20
(3) Item 301 Bituminous Aggregate Base: 702.01, AC-20; or 702.09, RT-11 or RT-12.
(4) Item 304 Aggregate Base
(5) Item 622 Concrete Barrier, Type A
(7) Item 407; Tack Coat, 702.02, RC-250; or 702.04, SS-1, SS-1H, MS-2 or RS-1 with Cover Aggregate.
(8) Item 409, Seal Coat Bituminous Material, 702.02, MC-800 or MC-3000; 702.03, CBAE-800; 702.04, RS-1, RS-2 or CRS-2; or 702.09, RT-9 or RT-10. Applied at the rate of 0.30 Gal. per Sq.Yd. Covet. Aggregate No.8 at the rate of 0.008 Cu.Yds. per Sq.Yd.
(9) Item 202 Concrete Median Removed
(10) Item 202 Guard rail, barrier design, removed for re-use or storage
(18) Item 202 Curb Removed

EXISTING

(11) Stabilized Crushed Aggregate Shoulders
(12) Portland Cement Concrete Pavement
(13) Subbase
(14) Surface Treatment
(15) Underdrain
(16) Waterproofed Aggregate Base
(17) Asphalt Overlay

SCALE 1/2"=1'-0"

MADE GEM DATE 7-22-76
TRACED TDT DATE 7-23-76
CHECKED TDT DATE 12-14-76
SCALE 1/2"=1'-0"

Howard, Needles, Tammen & Bergendoff
CONSULTING ENGINEERS
CLEVELAND, OHIO

HNTB

CONCRETE BARRIER MEDIAN DETAILS

FHWA REGION	STATE	PROJECT	
5	OHIO		

74
354

CUYAHOGA COUNTY
CUY-90-23.73
LAKE COUNTY
LAK-90-0.00

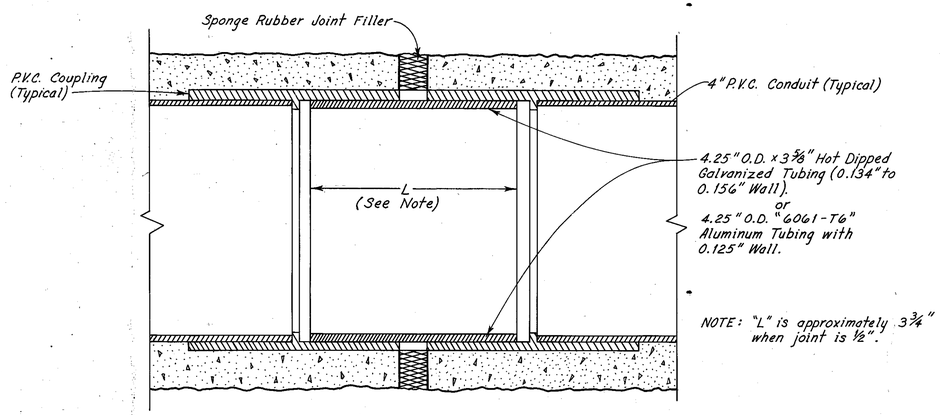

4" P.V.C. COUPLING AT CONSTRUCTION JOINT IN CONCRETE BARRIER MEDIAN
No Scale

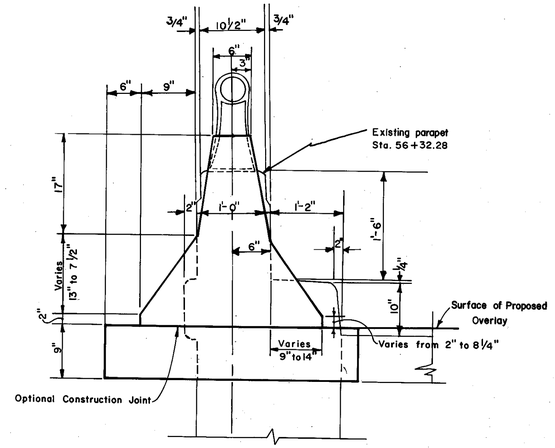

TYPICAL SECTION CONCRETE BARRIER TRANSITION SECTION
Scale: 1" = 1'-0"

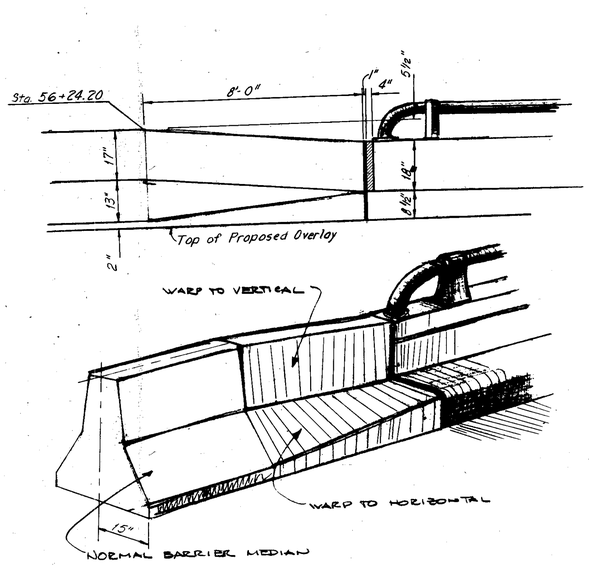

8' Concrete Barrier Transition Section
No Scale:

▨ - For details of 4" Concrete Section, see bridge CUY-90-2922R details.

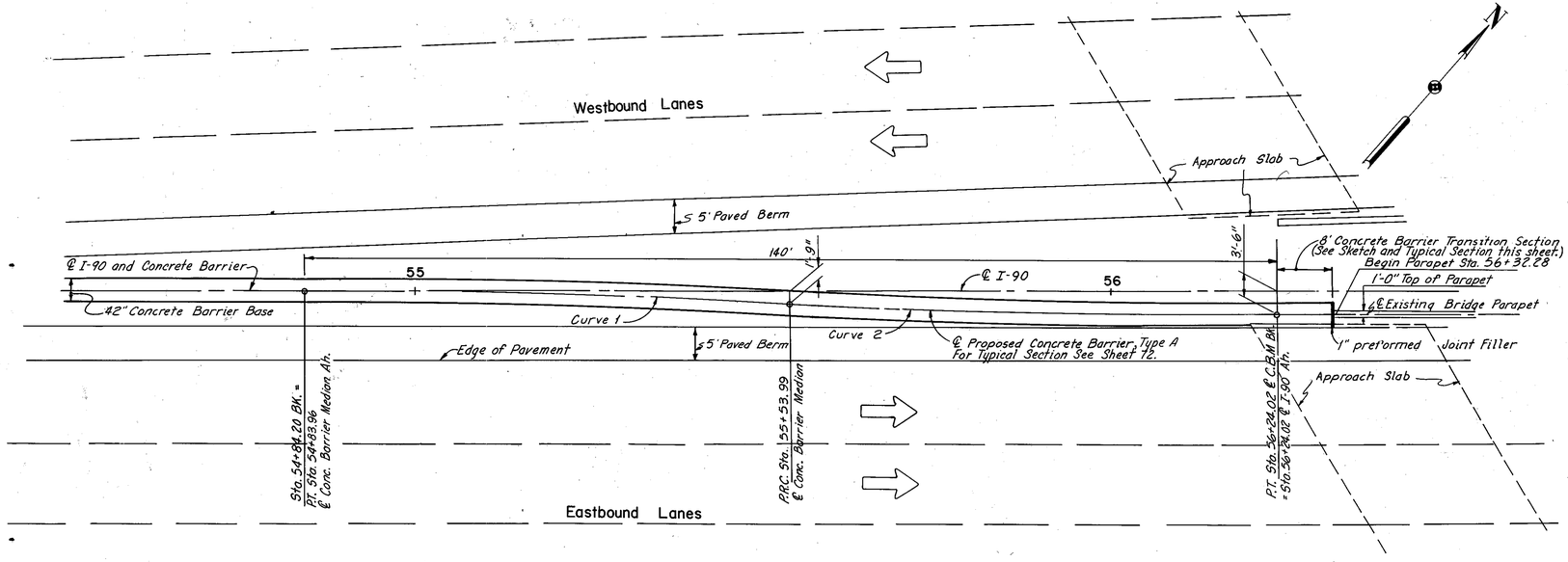

CONCRETE BARRIER TERMINAL DETAIL
AT I-90 EASTBOUND BRIDGE OVER LAKELAND BLVD.
Scale: 1" = 10'

CURVES 1 & 2 DATA
$D_c = 4°05'24.4"$
$R = 1400.84$
$\Delta = 2°51'51.1"$
$T = 35.02'$
$L = 70.03'$
$Ch = 70.02'$
$E = 0.44'$

MADE G.F.M. DATE 8-12-74
TRACED M.G.T. DATE 8-14-74
CHECKED T.D.V. DATE 12-30-74
SCALE As Shown

Howard, Needles, Tammen & Bergendoff
CONSULTING ENGINEERS
CLEVELAND, OHIO

HNTB

K & E 10 1283 7-74

DRAINAGE DETAILS

FHWA REGION	STATE	PROJECT	
5	OHIO		

75
354

CUYAHOGA COUNTY
CUY-90-23.73
LAKE COUNTY
LAK-90-0.00

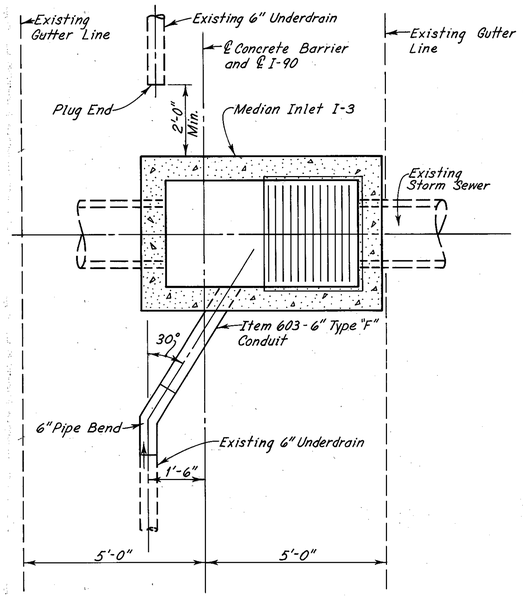

UNDERDRAIN OUTLET — DETAIL A
Scale : ½" = 1'-0"

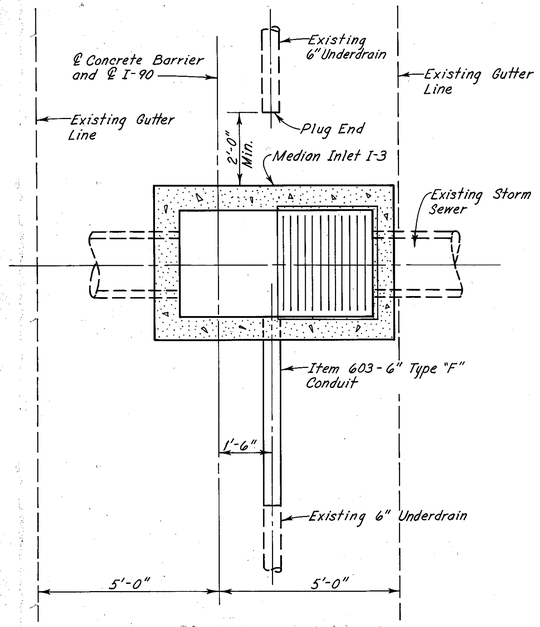

UNDERDRAIN OUTLET — DETAIL B
Scale : ½" = 1'-0"

Ref. No.	Station	N.G. Elev.	T.C. Elev.
S-1	2+25	618.16	
S-2	4+50	617.44	
S-3	6+55	616.78	
S-4	24+84		619.91 618.91
S-5	9+08	615.97	
S-6	10+44	615.54	
S-7	11+08	615.44	
S-8	12+50	615.84	
S-9	14+30	616.42	
S-10	14+50		616.60
S-11	16+50	617.12	
S-12	18+50	617.76	
S-13	20+12		618.40
S-14	20+05		618.38
S-15	20+20	619.30	
S-16	22+50	619.04	
S-17	24+55	619.20	
S-18	26+50	620.32	
S-19	28+84	621.07	
S-20	30+50	621.60	
S-21	32+50	622.24	
S-22	34+32	622.82	
S-23	39+00	623.00	
S-24	41+00	621.72	
S-25	43+00	620.20	
S-26	45+00	618.68	
S-27	47+00	617.16	
S-28	49+00	615.64	
S-29	51+00	614.12	
S-30	53+00	612.60	
S-31	54+80	611.23	
S-32	55+00		611.20
S-33	55+00		611.20
S-34	57+00	609.56	
S-35	59+00	608.04	
S-36	60+21	607.51	
S-37	60+40	607.50	
S-38	62+00	607.92	
S-39	64+00	608.56	
S-40	66+00	609.20	
S-41	68+00	609.84	
S-42	69+70	610.42	
S-43	70+00	610.48	
S-44	72+25	611.20	
S-45	73+02	611.45	
S-46	74+00	611.76	
S-47	74+50	611.92	
S-48	76+50	612.56	
S-49	80+50	612.29	
S-50	82+50	610.65	
S-51	84+50	608.28	
S-52	86+50	606.00	
S-53	88+50	604.60	
S-54	89+25	604.33	
S-55	90+50	604.19	
S-56	92+25	604.65	
S-57	94+25	605.71	
S-58	96+25	606.79	

Ref. No.	Station	N.G. Elev.	T.C. Elev.
S-59	97+50	607.47	
S-60	98+25	607.87	
S-61	100+25	608.95	
S-62	104+50	608.90	
S-63	106+75	608.00	
S-64	109+00	607.10	
S-65	111+25	606.20	
S-66	113+50	605.30	
S-67	115+00	604.70	
S-68	115+50		604.57
S-69	115+50		604.57
S-70	117+68	603.63	
S-71	119+87	602.75	
S-72	122+08	601.87	
S-73	124+25	601.00	
S-74	126+65	600.04	
S-75	128+50	599.30	
S-76	130+47	598.37	
S-77	132+50	597.52	
S-78	134+48	596.92	
S-79	137+16	597.88	
S-80	140+60	602.25	
S-81	143+45	607.86	
S-82	144+42		609.85
S-83	146+50	613.15	
S-84	154+00	613.28	
S-85	157+00	608.16	
S-86	157+82		606.63
S-87	160+00	602.37	
S-88	161+90	600.35	
S-89	163+07.5	600.01	
S-90	166+30	602.61	
S-91	169+45	608.76	
S-92	172+65	615.16	
S-93	176+00	620.36	
S-94	182+47	619.85	
S-95	185+80	614.26	
S-96	186+83		612.25
S-97	189+10	607.66	
S-98	189+59		606.73
S-99	192+47	601.85	
S-100	195+50		600.18
S-101	195+58.3	600.02	
S-102	197+00	600.40	
S-103	198+75	601.86	
S-104	201+85	604.96	
S-105	205+00	608.11	
S-106	207+77	610.84	
S-107	214+20	611.34	
S-108	217+20	608.59	
S-109	220+00	607.60	
S-110	221+50	607.86	
S-111	223+00	608.23	
S-112	224+50	608.61	
S-113	226+00	609.03	
S-114	227+50	609.36	
S-115	229+00	609.73	
S-116	230+80	610.22	
S-117	232+60	610.63	

Ref. No.	Station	N.G. Elev.	T.C. Elev.
S-118	237+50	610.36	
S-119	240+50	609.61	
S-120	242+00	609.23	
S-121	243+34.3	609.05	
S-122	245+05	609.40	
S-123	248.72	612.20	
S-124	251+35	615.91	
S-125	254+00	619.37	
S-126	259+50	622.14	
S-127	261+99	624.42	
S-128	264+70	625.70	
S-129	274+22	622.67	
S-130	275+25	621.74	
S-131	276+59.5	621.29	
S-132	276+70.5		621.45
S-133	278+50	622.20	
S-134	281+30	626.70	
S-135	284+10	632.11	
S-136	293+50	634.14	
S-137	296+20	629.70	
S-138	298+02	626.08	
S-139	301+00	622.19	
S-140	302+91.7	621.48	
S-141	304+50	621.84	
S-142	307+20	622.65	
S-143	309+95	623.47	
S-144	312+80	624.33	
S-145	315+65	625.20	
S-146	318+25	627.25	
S-147	321+30	632.09	
S-148	325+25	639.91	
S-149	326+75	642.25	
S-150	334+90	643.51	
S-151	338+50	639.14	
S-152	341+00	637.99	
S-153	343+58	637.47	
S-154	346+20	636.95	
S-155	348+80	636.43	
S-156	351+40	635.91	
S-157	354+00	635.39	
S-158	356+60	634.87	
S-159	357+92.6	634.66	
S-160	359+50	635.11	
S-161	363+50	640.35	
S-162	367+50	648.35	
S-163	371+50	655.97	
S-164	381+80	653.74	
S-165	386+80	643.75	
S-166	391+00	637.81	
S-167	392+48.3	637.37	
S-168	394+00	637.78	
S-169	397+00	639.00	
S-170	400+00	640.26	
S-171	402+92.7	642.98	
S-172	45+00	650.01	
S-173	96+14	658.32	
S-174	207+77		611.23
S-175	262+05		624.08
S-176	128+53		599.51

MADE EDS & GFM DATE 12-11-74
TRACED J.M. DATE 12-19-74
CHECKED AHS & MEE DATE 12-20-74
SCALE As Shown

Howard, Needles, Tammen & Bergendoff
CONSULTING ENGINEERS
CLEVELAND, OHIO

HNTB

DRAINAGE DETAILS

FHWA REGION	STATE	PROJECT	
5	OHIO		

76
354

CUYAHOGA COUNTY
CUY-90-23.73
LAKE COUNTY
LAK-90-0.00

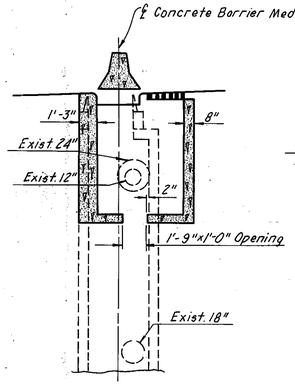

VIEW LOOKING EAST
Scale: 1"=5'-0"
(Box Culvert Not Shown)

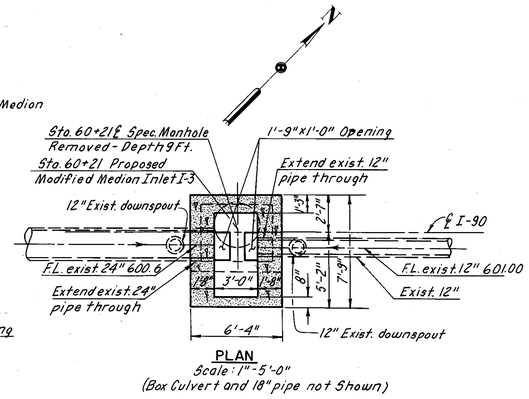

PLAN
Scale: 1"=5'-0"
(Box Culvert and 18" pipe not Shown)

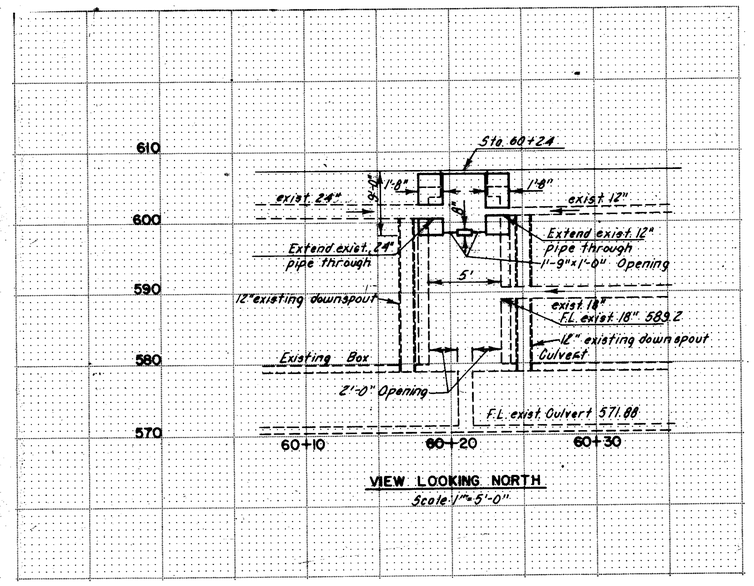

VIEW LOOKING NORTH
Scale 1"=5'-0"

STD. NO. I-3B MEDIAN INLET, MODIFIED, AS PER PLAN - DETAIL D

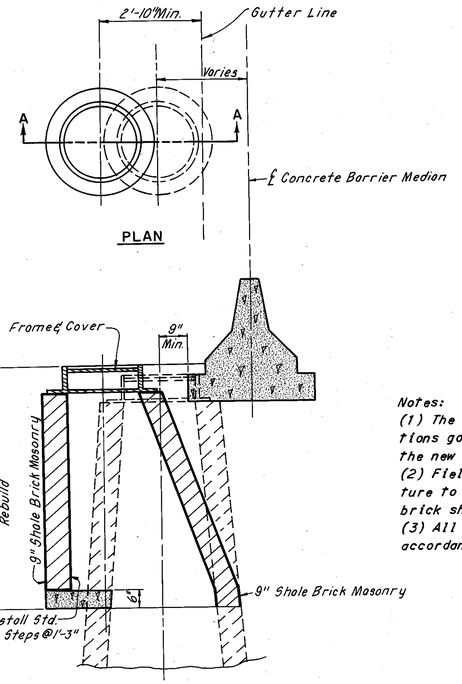

PLAN

SECTION A-A

MANHOLE RECONSTRUCTED TO GRADE, AS PER PLAN - DETAIL E
Scale ½"=1'-0"

Notes:
(1) The Engineer shall investigate the field conditions governing the existing Manhole with respect to the new elevation of pavement at the median barrier.
(2) Field conditions will govern the amount of structure to be demolished and rebuilt. Corbelling of the brick shall not exceed 1¼ inches for each course.
(3) All notes and details not shown shall be in accordance with Standard No. 1 Manhole.

MADE EPS DATE 8-27-74
TRACED ECB DATE 9-2-74
CHECKED AHS DATE 12-11-74
SCALE AS SHOWN

Howard, Needles, Tammen & Bergendoff
CONSULTING ENGINEERS
CLEVELAND, OHIO

HNTB

DRAINAGE DETAILS

QUANTITY CALCULATIONS
MADE BY E.P.S. DATE 8-27-74
CHECKED BY G.F.M. DATE 10-15-74

FHWA REGION	STATE	PROJECT	
5	OHIO		

77
354

CUYAHOGA COUNTY
CUY-90-23.73
LAKE COUNTY
LAK-90-0.00

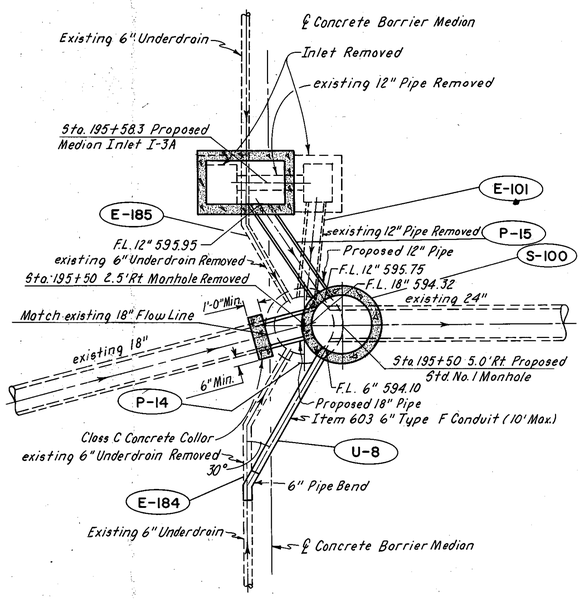

DETAIL — F
Scale : 1" = 5'-0"

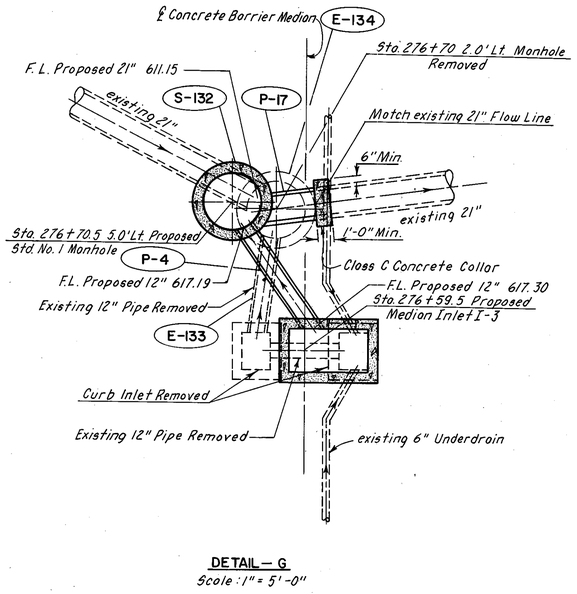

DETAIL — G
Scale : 1" = 5'-0"

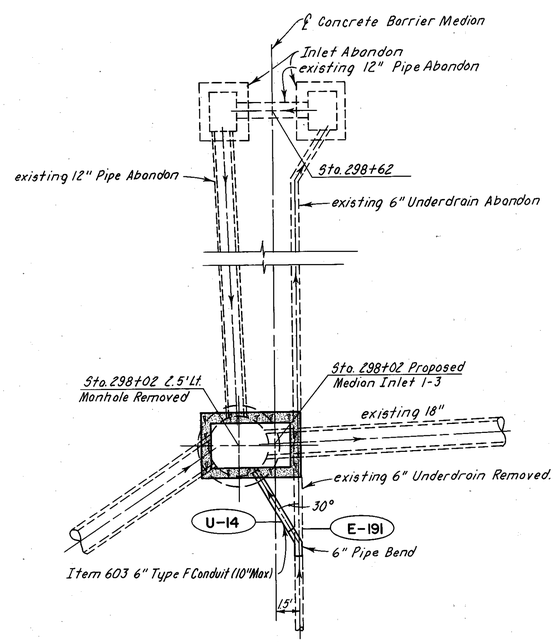

DETAIL — H
Scale : 1" = 5'-0"

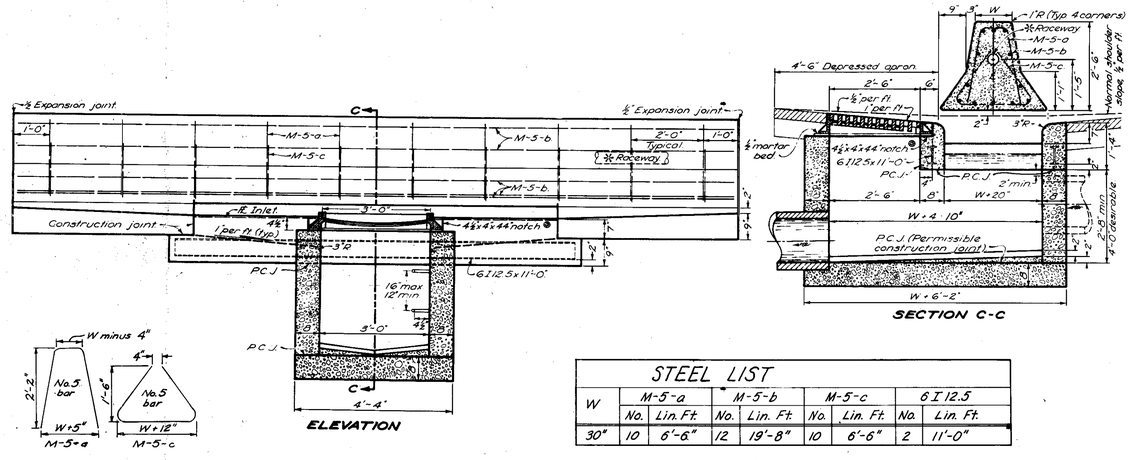

STEEL LIST								
W	M-5-a		M-5-b		M-5-c		6 I 12.5	
	No.	Lin. Ft.	No.	Lin. Ft.	No.	Lin. Ft.	No.	Lin. Ft.
30"	10	6'-6"	12	19'-8"	10	6'-6"	2	11'-0"

STANDARD NO. I-3 MEDIAN INLET. MODIFIED AS PER PLAN. W = 30" — DETAIL J

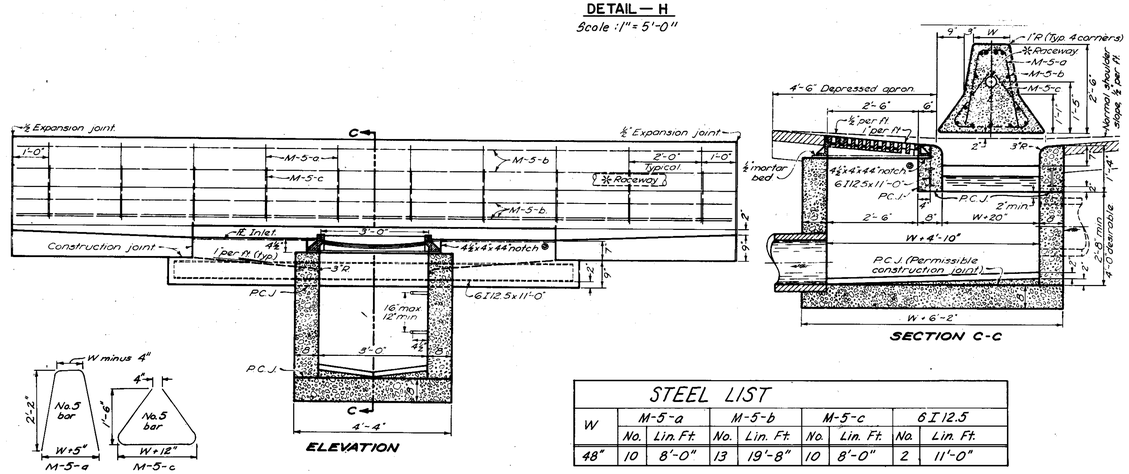

STEEL LIST								
W	M-5-a		M-5-b		M-5-c		6 I 12.5	
	No.	Lin. Ft.	No.	Lin. Ft.	No.	Lin. Ft.	No.	Lin. Ft.
48"	10	8'-0"	13	19'-8"	10	8'-0"	2	11'-0"

STANDARD NO. I-3 MEDIAN INLET, MODIFIED AS PER PLAN, W = 48" — DETAIL K

MADE EPS DATE 8-27-74
TRACED WET DATE 9-3-74
CHECKED GFM DATE 10-15-74
SCALE AS SHOWN

Howard, Needles, Tammen & Bergendoff
CONSULTING ENGINEERS
CLEVELAND, OHIO

HNTB

MISCELLANEOUS DETAILS

FHWA REGION	STATE	PROJECT	
5	OHIO		

78
354

CUYAHOGA COUNTY
CUY-90-23.73
LAKE COUNTY
LAK-90-0.00

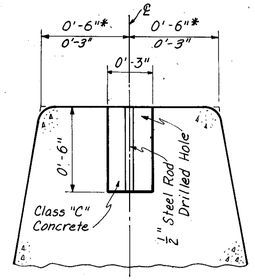

Note: Cost of furnishing and placing steel rod and Class "C" concrete included in price bid for 604 ... Reference Monument Modified, as per plan.

REFERENCE
MONUMENT MODIFIED, AS PER PLAN

REFERENCE MONUMENT, MODIFIED AS PER PLAN			
STATION	604 Ref. Monument Mod. As Per Plan	604 Reference Monument	Cost Part.
PC * Sta. 1+99.84	1	2	I
PC * Sta. 90+52.88	1	2	I
PT * Sta. 113+44.54	1	2	I
PC * Sta. 117+04.19	1	2	I
PCC Sta. 129+00.00	1	2	I
C.S. Sta. 144+91.00	1	2	II
ST Sta. 148+91.00	1	2	II
PC Sta. 174+24.68	1	2	II
PT Sta. 189+18.61	1	2	II
PC Sta. 197+58.01	1	2	II
PT Sta. 209+69.62	1	2	II
PC Sta. 223+65.99	1	2	II
PT Sta. 233+49.82	1	2	II
PC Sta. 250+24.76	1	2	II
PT Sta. 260+76.82	1	2	II
PC Sta. 270+80.44	1	2	II
PT Sta. 281+19.13	1	2	II
PC Sta. 293+98.41	1	2	I
PT Sta. 301+98.41	1	2	I
PC Sta. 317+97.18	1	2	I
PT Sta. 325+97.18	1	2	I
PC Sta. 334+79.17	1	2	I
PT Sta. 341+56.31	1	2	I
PC Sta. 383+30.21	1	2	I
PT Sta. 389+03.32	1	2	I
PC Sta. 399+57.16	1	2	I
PT Sta. 41+69.35	1	2	I
PT Sta. 45+69.35	1	2	I
TOTAL I	16	32	
TOTAL II	12	24	
TOTALS	28	56	

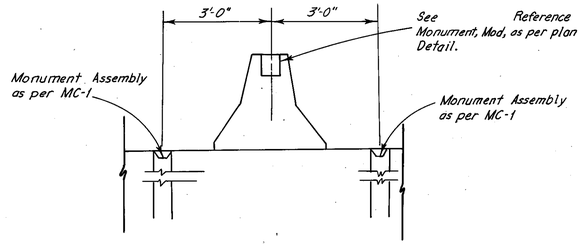

REFERENCE MONUMENT DETAIL
(No Scale)

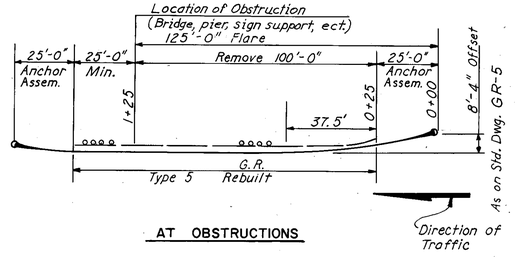

AT OBSTRUCTIONS

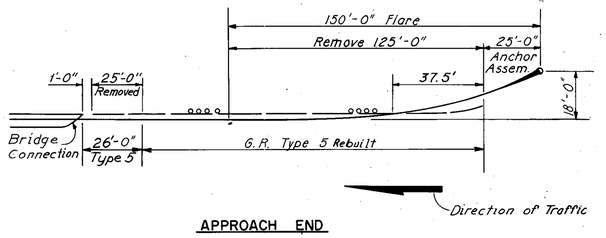

APPROACH END

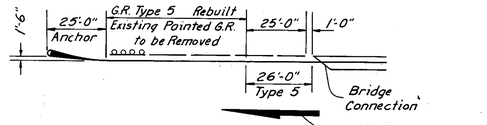

TRAILING END

TYPICAL GUARD RAIL UPDATING DETAILS

MADE M.B.T. DATE 9-5-74
TRACED J.R.K. DATE 9-6-74
CHECKED A.J.S. DATE 9-6-74
SCALE

Howard, Needles, Tammen & Bergendoff
CONSULTING ENGINEERS
CLEVELAND, OHIO

HNTB

FHWA REGION	STATE	PROJECT	
5	OHIO		

79
354

CUYAHOGA COUNTY
CUY-90-23.73
LAKE COUNTY
LAK-90-0.00

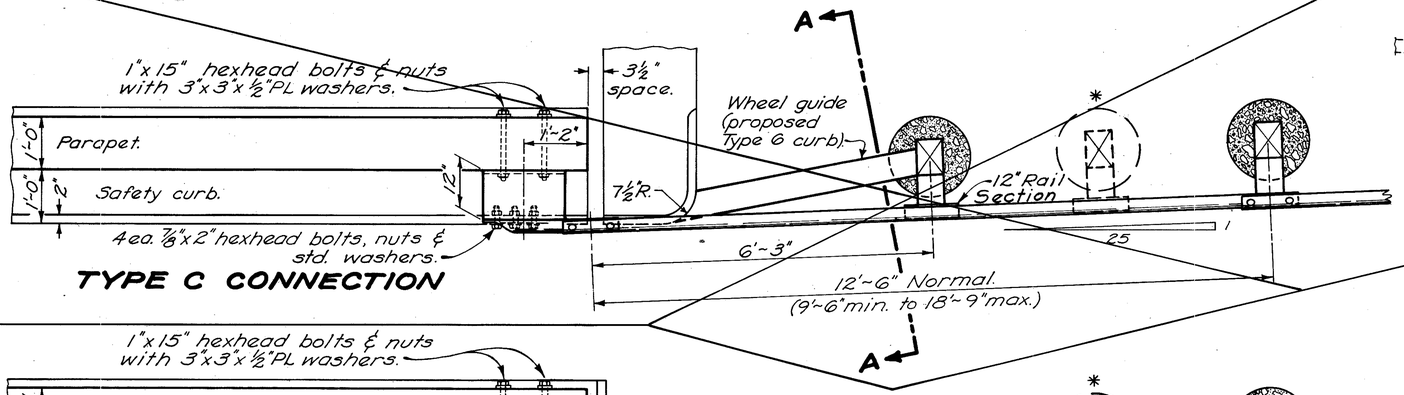

TYPE C CONNECTION

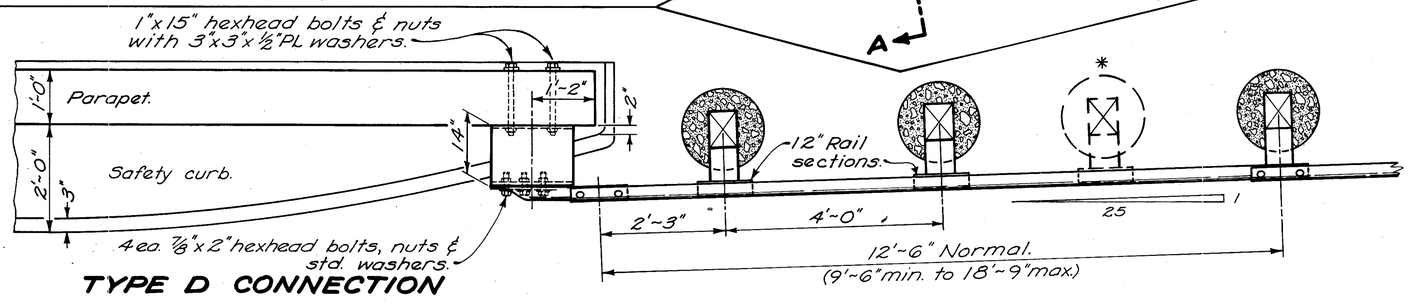

TYPE D CONNECTION

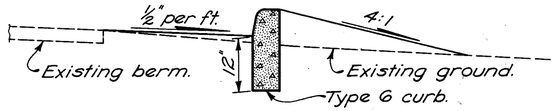

SECTION A-A

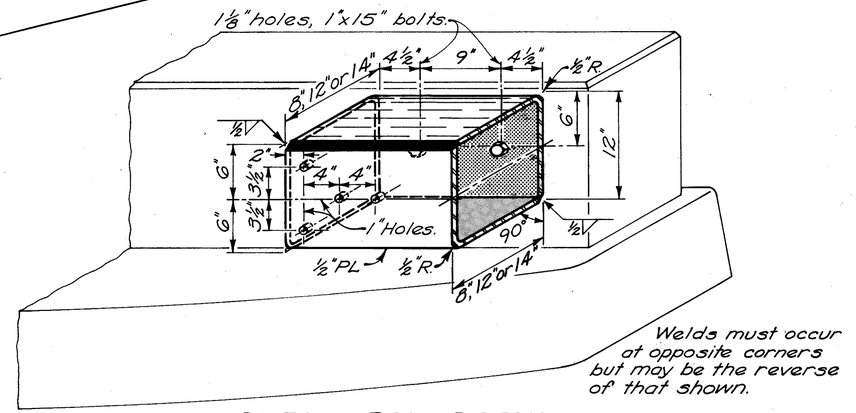

Welds must occur at opposite corners but may be the reverse of that shown.

STEEL BOX DETAIL

A galv. steel box of the appropriate size (see connection type) shall be used on all approaches.

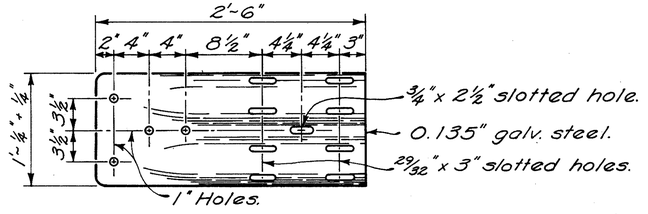

SPECIAL END SHOE

APPROACH ENDS

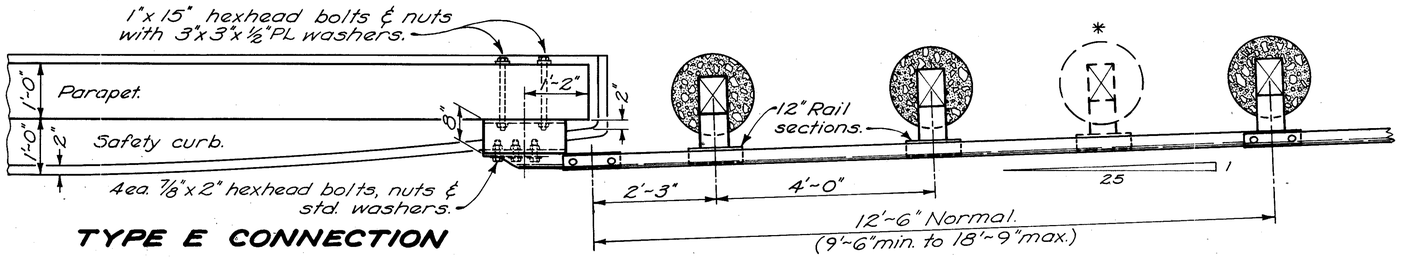

TYPE E CONNECTION

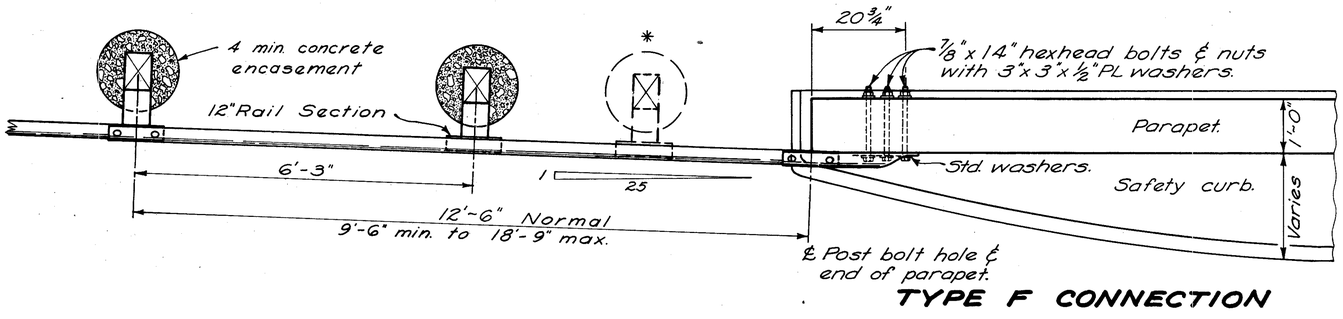

TYPE F CONNECTION

TRAILING END

NOTES

GENERAL: This drawing shall govern where a conflict arises. For details not shown, see Standard Drawings GR-2B & GR-4.

All steel parts shall be galvanized in accordance with 710.06 or 710.10, whichever may apply.

ANCHORS: Self-drilling anchors (of the appropriate size) may be substituted for the 1" and ⅞" hexhead bolts shown in the parapets. Anchors may be of the snap-off chuck-end type or of the flush-end type conforming to Federal Specification No. FF-S-325, Group III, Type 1(a) or (c), or Type 2.

Bolts for use with the self-drilling anchors shall be ⅞"x 1½" or 1"x 2" as required.

***POSTS:** Place one additional encased post halfway between adjacent posts, or post and parapet, when panel length exceeds 12'-6".

All posts shall be 6"x 8" wood or W6 x 15.5 steel.

GUARDRAIL TERMINATION, as directed by the Engineer. To avoid locating new posts of the adjacent run of guardrail in or near old backfilled post holes or to close existing gaps between rail and parapet, the 12'-6" normal rail section may vary as dimensioned. The horizontal dimensions (1'-2" or 20¾") of the end shoe location may be increased to avoid existing parapet steel.

PAYMENT: Price bid for bridge terminal assemblies shall include the additional cost, in excess of normal guardrail cost, for steel posts, concrete encasement, steel boxes, special end shoes, self-drilling anchors, curbing and embankment.

Connections shall be paid for as 606 Bridge terminal assembly, Type ——.

DATE
6-8-70
1-1-71
12-15-71
7-24-72

GUARDRAIL CONNECTIONS TO EXISTING BRIDGES

FHWA REGION	STATE	PROJECT	
5	OHIO		

80
354

CUYAHOGA COUNTY
CUY-90-23.73
LAKE COUNTY
LAK-90-0.00

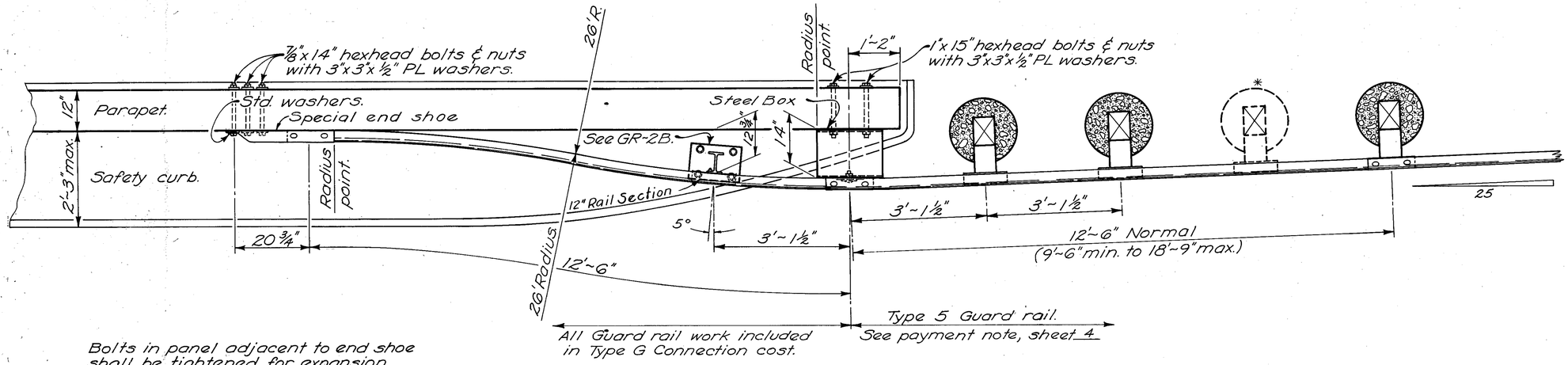

Bolts in panel adjacent to end shoe shall be tightened for expansion, as per section 606.05.

TYPE G CONNECTION

(2-Way Cross Road)

See sheet 79 for pertinent notes including ✱POSTS note.

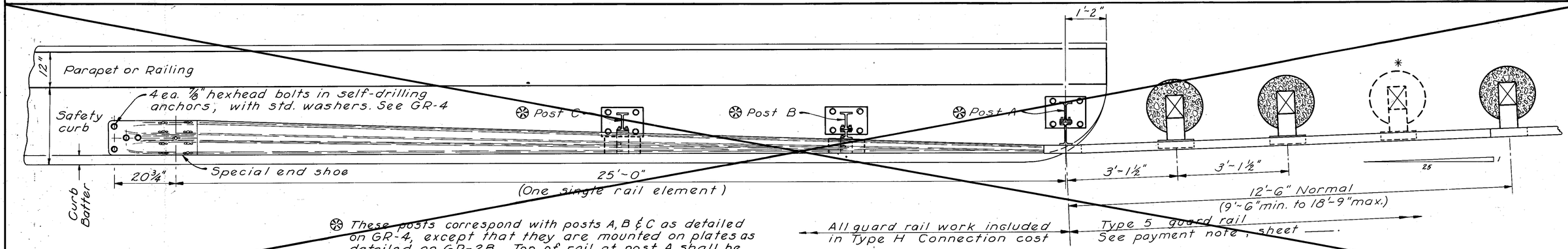

⊛ These posts correspond with posts A, B & C as detailed on GR-4, except that they are mounted on plates as detailed on GR-2B. Top of rail at post A shall be 27"± above bridge deck.

All guard rail work included in Type H Connection cost

TYPE H CONNECTION

DATE
7-24-72

GUARDRAIL CONNECTIONS TO EXISTING BRIDGES

305 PAVEMENT REPLACEMENT DETAILS

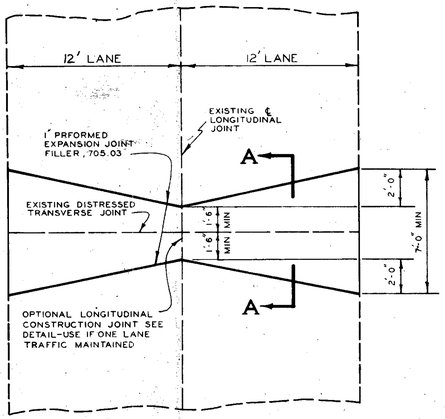

TWO LANE REPLACEMENT

305 PAVEMENT REPLACEMENT			
Station (℄ I-90)	Lane No.	Two Lane Replacement Each	Single Lane Replacement Each
129+85	5℄6	1	
199+70	1℄2	1	
227+50	1		1
Additional *		3	1
TOTALS		5	2

* *Additional locations as required and determined by the Engineer.*

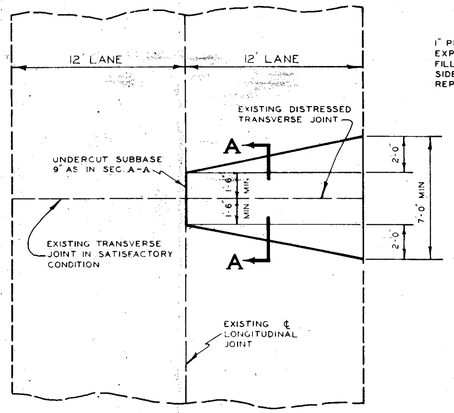

SINGLE LANE REPLACEMENT

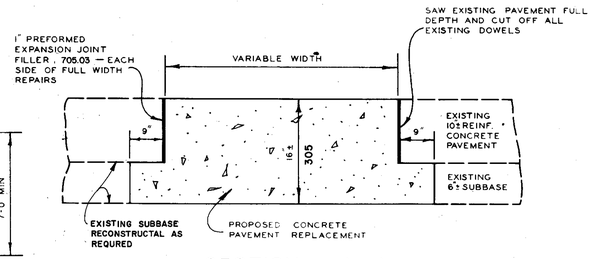

SECTION A-A

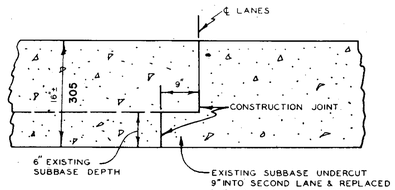

OPTIONAL LONGITUDINAL CONSTRUCTION JOINT FOR FULL WIDTH REPLACEMENT WHERE ONE LANE OF TRAFFIC MAINTAINED

SEE SHEET No 5 FOR GENERAL NOTES PERTAINING TO PAVEMENT REMOVAL AND REPLACEMENT

THIS WORK IS FOR THE REPAIRING OF DETERIORATED TRANSVERSE PAVEMENT JOINTS AND OTHER SMALL DETERIORATED AREAS. THE LOCATION AND SIZES OF THE REPAIRS SHALL BE THE DIRECTION OF THE ENGINEER. THE FOLLOWING ESTIMATED QUANTITIES ARE PROVIDED FOR THIS PAVEMENT REPAIR WORK.

5 HALF WIDTH REPAIRS - 11 S. Y. EACH (AVE. AREA) = 55 S. Y.
2 SINGLE LANE REPAIRS - 6 S. Y. EACH (AVE. AREA) = 22 S. Y.
TOTAL 67 S. Y.

ITEM 202 PAVEMENT REMOVED AS PER PLAN 67 S. Y. COST PARTICIPATION III
ITEM 305 16" PORTLAND CEMENT CONCRETE BASE, AS PER PLAN 67 S. Y. COST PARTICIPATION III

THE COST OF RESHAPING, RECONSTRUCTING AND RECOMPACTING OF THE EXISTING SUBBASE NECESSARY SHALL BE INCLUDED IN THE UNIT PRICE BID FOR 305 PORTLAND CEMENT CONCRETE BASE, AS PER PLAN

MADE G.F.M. DATE 10-9-74
TRACED G.F.M. DATE 10-9-74
CHECKED D.S.P. DATE 10-16-74
SCALE —

Howard, Needles, Tammen & Bergendoff
CONSULTING ENGINEERS
CLEVELAND, OHIO

HNTB

305 PAVEMENT REPLACEMENT DETAILS

FHWA REGION	STATE	PROJECT	
5	OHIO		

81
354

CUYAHOGA COUNTY
CUY-90-23.73
LAKE COUNTY
LAK-90-0.00

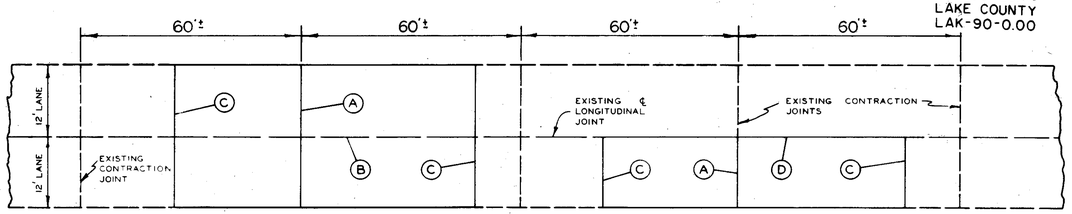

TYPICAL TWO LANE REPLACEMENT

TYPICAL ONE LANE REPLACEMENT

Ⓐ STANDARD CONTRACTION JOINT AS PER STD. DRWG. BP-4 — LOCATE ON STRAIGHT LINE EXTENSION OF EXISTING JOINT FOR SINGLE LANE PAVEMENT

Ⓑ LONGITUDINAL JOINT — LONGITUDINAL CONSTRUCTION JOINT AS PER BP-3 OPTIONAL IF ONE LANE TRAFFIC IS TO BE MAINTAINED

Ⓒ EXPANSION JOINT USING 705.03

Ⓓ EXPANSION BOLT JOINT AS PER BP-3

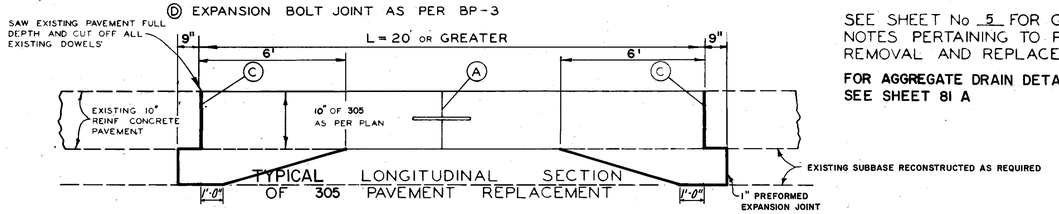

TYPICAL LONGITUDINAL SECTION OF 305 PAVEMENT REPLACEMENT

SEE SHEET No 5 FOR GENERAL NOTES PERTAINING TO PAVEMENT REMOVAL AND REPLACEMENT

FOR AGGREGATE DRAIN DETAILS SEE SHEET 81 A

THIS WORK IS FOR THE REPAIRING OF THE LARGER SIZE DETERIORATED PAVEMENT AREAS OF EITHER SINGLE OR TWO LANE WIDTHS. THE LOCATIONS AND SIZES OF THESE REPAIRS SHALL BE AT THE DIRECTION OF THE ENGINEER. THE FOLLOWING ESTIMATED QUANTITIES ARE PROVIDED FOR THIS PAVEMENT REPLACEMENT WORK:

ITEM 202 PAVEMENT REMOVED, AS PER PLAN 1567 SQ. YDS. COST PARTICIPATION III
ITEM 305 10" PORTLAND CEMENT CONCRETE BASE, AS PER PLAN 1567 SQ. YDS. COST PARTICIPATION III

THE COST OF RESHAPING, RECONSTRUCTING AND RECOMPACTING OF THE EXISTING SUBBASE NECESSARY SHALL BE INCLUDED IN THE UNIT PRICE BID FOR 305 PORTLAND CEMENT CONCRETE BASE, AS PER PLAN

LANE NUMBERING SCHEME FOR PAVEMENT REPLACEMENT QUANTITIES

(No Scale)

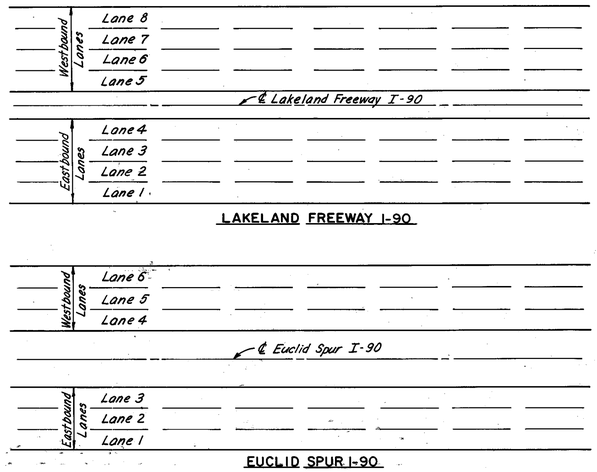

QUANTITY CALCULATIONS

MADE BY G.F.M. DATE 10-9-74
CHECKED BY D.S.P. DATE 10-16-74

305 PAVEMENT REPLACEMENT			
Station	Lane No.	202 Pavement Removed, as per Plan Sq. Yds.	305 Portland Cement Conc. Base as per Plan Sq. Yds.
℄ I-90:			
129+85	7℄8	80	80
199+40	3℄4	80	80
199+70	3℄4	80	80
199+90	7℄8	80	80
200+20	7℄8	80	80
200+50	5℄6	80	80
237+50	1	40	40
237+80	1	40	40
371+50	1℄2	80	80
371+80	1℄2	80	80
℄ Euclid Spur:			
85+00	5℄6	80	80
85+30	5℄6	80	80
85+80	5℄6	80	80
85+90	5℄6	80	80
℄ Ramp 8: (Bishop Rd.)			
		27	27
Additional *		500	500
TOTALS		1567	1567

* *Additional locations as required and determined by the engineer.*

LONGITUDINAL & TRANSVERSE AGGREGATE DRAIN DETAILS

FED. RD. DIVISION	STATE	PROJECT		81A 354
2	OHIO			

CUYAHOGA COUNTY
CUY-90-23.73
LAKE COUNTY
LAK-90-0.00

For Full Width 305 Replacement, the Spacing of the Transverse Drains on the Inside Berm shall be the same as for the Outside Berm.

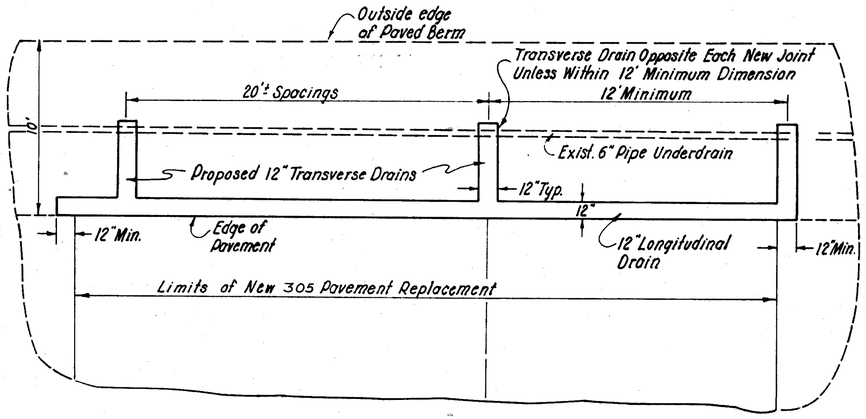

TYPICAL LONGITUDINAL AND TRANSVERSE AGGREGATE DRAIN DETAILS WITH 305 PAVEMENT REPLACEMENTS

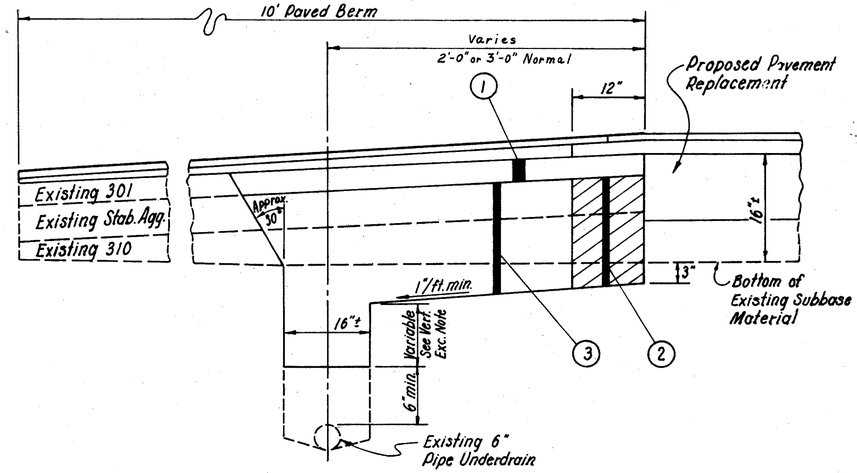

TRANSVERSE DRAIN DETAIL FOR OUTSIDE BERM

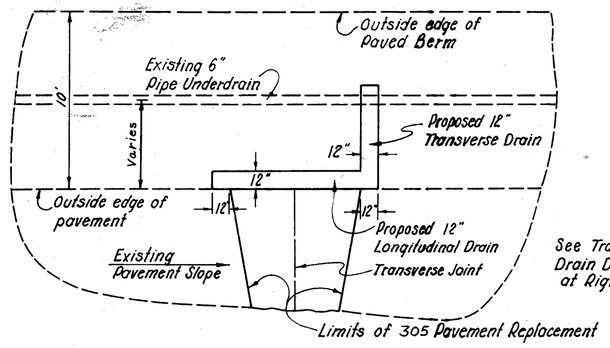

OUTSIDE PAVEMENT EDGE

See Transverse Drain Details at Right

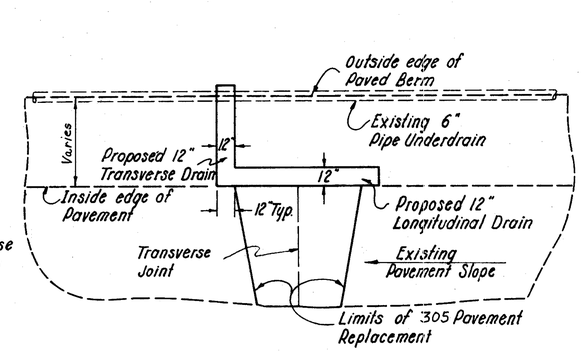

INSIDE PAVEMENT EDGE

TYPICAL LONGITUDINAL AND TRANSVERSE AGGREGATE DRAIN DETAILS WITH 305 PAVEMENT REPLACEMENTS

NOTES

LONGITUDINAL AGGREGATE DRAINS SHALL BE CONSTRUCTED CONTINUOUSLY ALONG THE PAVEMENT EDGES FOR THE FULL LENGTH OF 305 PAVEMENT REPLACEMENTS (SEE SHEET 81 FOR DETAILS). TRANSVERSE AGGREGATE DRAINS SHALL BE CONSTRUCTED AT 20 FEET MAXIMUM SPACING ALONG THE LENGTH OF THE PAVEMENT REPLACEMENTS OR AS DIRECTED BY THE ENGINEER.

THE VERTICAL LIMIT OF EXCAVATION SHALL BE TO SIX (6) INCHES ABOVE THE TOP OF THE EXISTING PIPE UNDERDRAIN OR TO THE TOP OF VERTICAL LIMIT OF THE EXISTING NO. 8 AGGREGATE UNDER DRAIN TRENCH BACKFILL POSITIVE DRAINAGE MUST BE SECURED. ANY TILE BROKEN OR DAMAGED AS A RESULT OF THIS OPERATION SHALL BE REPLACED BY THE CONTRACTOR AT HIS EXPENSE.

THE UNIT PRICE BID FOR ITEMS 605 LONGITUDINAL OR TRANSVERSE AGGREGATE DRAINS, AS PER PLAN, SHALL INCLUDE THE REMOVING AND DISPOSING OF EXISTING BERM MATERIALS, THE FURNISHING, PLACING AND COMPACTING OF THE NO. 8 AGGREGATE, FURNISHING, PLACING AND COMPACTING OF THE 402 ASPHALT CONCRETE AND ALL INCIDENTAL REQUIREMENTS NECESSARY TO COMPLETE THESE ITEMS.

THE 402 ASPHALT CONCRETE SHALL BE PLACED AND COMPACTED ON THE BERMS AS DIRECTED BY THE ENGINEER FOR THE AGGREGATE DRAIN ESTIMATED QUANTITIES.

ESTIMATED QUANTITIES	
ITEM 605 LONGITUDINAL AGGREGATE DRAINS, AS PER PLAN	
7 x 9' (AV. LENGTH)	= 63 Lin. Ft.
15 x 12' (AV. LENGTH)	= 180
ADDITIONAL*	= 87
TOTAL	330 Lin. Ft.
	COST PARTICIPATION III
ITEM 605 TRANSVERSE AGGREGATE DRAINS, AS PER PLAN	
22 x 3' (AV. LENGTH)	= 66 Lin. Ft.
ADDITIONAL*	= 34
TOTAL	100 Lin. Ft.
	COST PARTICIPATION III
* SEE NOTE SHEET 81	

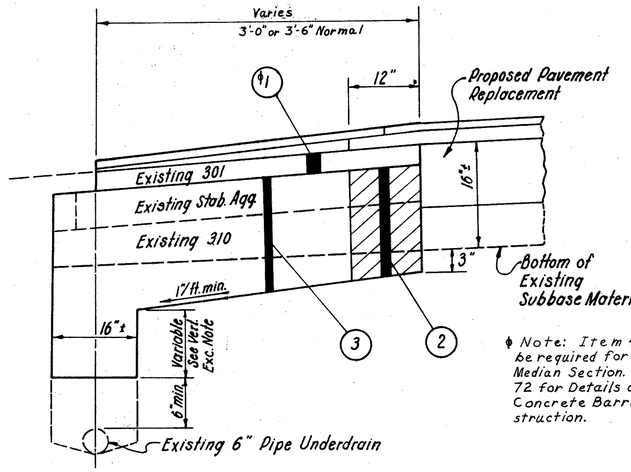

TRANSVERSE DRAIN DETAIL FOR MEDIAN BERM

♦ Note: Item 402 will not be required for the 9' width Median Section. See Sheet 72 for Details of Proposed Concrete Barrier Construction.

(1) 402 3" Asphalt Concrete, AC-20
(2) 605 Longitudinal Aggregate Drain, As Per Plan, Using No. 8 Aggregate
(3) 605 Transverse Aggregate Drain, As Per Plan, Using No. 8 Aggregate

ISLAND AND CURB REMOVAL AND PAVEMENT REPLACEMENT

QUANTITY CALCULATIONS
MADE BY A.J.S. DATE 8-19-74
CHECKED BY H.B. DATE 8-27-74

FHWA REGION	STATE	PROJECT	
5	OHIO		

82
354

CUYAHOGA COUNTY
CUY-90-23.73
LAKE COUNTY
LAK-90-0.00

QUANTITIES FOR COST PARTICIPATION III

SH. NO.	STATION FROM	STATION TO	SIDE	Reference Ramp	203 Excavation not including Embankment Construction* Cu. Yds.	202 Curb Removed Lin. Ft.	310 Subbase Grading A as per plan Cu. Yds.	305 9" Portland Cement Concrete Base Sq. Yds.	402 Asphalt Concrete, AC-20 Cu. Yds.	404 Asphalt Concrete, AC 20 Cu. Yds.	407 Tack Coat 0.1 gallons per Square Yard Gal.	409 Seal Coat Bit Material 0.3 gallons per Square Yard Gal.	407 Cover Aggregate Tons	409 Seal Coat Cover Aggregate Number 8 .008 Cubic Yards per Sq. Yd. Cu. Yds.	202 Pavement Removed Sq. Yds.
24	128+92	129+90	Rt.	1	14.0	200	4.4	39.6		1.4	4.0	11.9	0.1	0.3	24.5
24	142+75	143+75	Rt.	2	18.7	200	5.8	52.4	2.6	1.8	5.2	15.7	0.2	0.4	32.5
26	156+53	157+53	Rt.	3	11.0	200	3.5	31.4	1.5	1.1	3.1	9.4	0.1	0.2	18.8
33	263+00	264+00	Rt.	12	11.5	202	3.6	32.6	1.6	1.1	3.3	9.8	0.1	0.3	20.2
35	274+55	275+55	Rt.	14-A	10.6	202	3.4	30.2	1.5	1.0	3.0	9.1	0.1	0.2	18.8
38	300+00	301+00	Rt.	1-E	20.6	206	6.4	57.9	2.8	2.0	5.8	17.4	0.2	0.5	36.1
40	346+50	347+50	Rt.	9-E	33.0	200	10.2	92.1	4.5	3.2	9.2	27.6	0.3	0.7	57.0
45	389+25	390+25	Rt.	12-E	21.1	200	6.6	59.0	2.9	2.0	5.9	17.7	0.2	0.5	36.8
47	5+31	6+50	Lt.	TRW-1	23.2	239	9.0	54.0	2.6	1.9	5.4	16.2	0.2	0.4	27.4
49	58+52	59+72	Rt.	7	16.8	220	5.3	47.4	2.3	1.6	4.7	14.2	0.2	0.4	29.6
52	96+59	97+60	Rt.	9	16.8	202	5.3	47.4	2.3	1.6	4.7	14.2	0.2	0.4	29.6
26	170+83	171+83	Lt.	6	9.4	200	3.0	26.8	1.3	0.9	2.7	8.0	0.1	0.2	16.6
29	192+64	193+64	Lt.	9	11.9	200	3.8	33.8	1.6	1.2	3.4	10.1	0.1	0.3	20.9
35	284+57	285+57	Lt.	16	14.3	200	4.5	40.4	2.0	1.4	4.0	12.1	0.1	0.3	25.2
40	325+84	326+84	Lt.	7-E	12.8	207	4.0	36.1	1.8	1.2	3.6	10.8	0.1	0.3	22.4
43	359+50	360+50	Lt.	10-E	37.2	200	11.5	103.8	5.0	3.6	10.4	31.1	0.4	0.8	64.2
45	400+75	401+75	Lt.	15-E	28.8	200	8.9	80.4	3.9	2.8	8.0	24.3	0.3	0.6	49.8
49	63+25	64+46	Lt.	4	15.9	224	5.0	45.1	2.2	1.6	4.5	13.5	0.2	0.4	27.4
54	113+30	114+30	Lt.	11	15.9	200	5.0	45.1	2.2	1.6	4.5	13.5	0.2	0.4	27.4
		TOTALS			343.5	3902	109.2	955.5	44.6	33.0	95.4	286.6	3.4	7.6	585.2

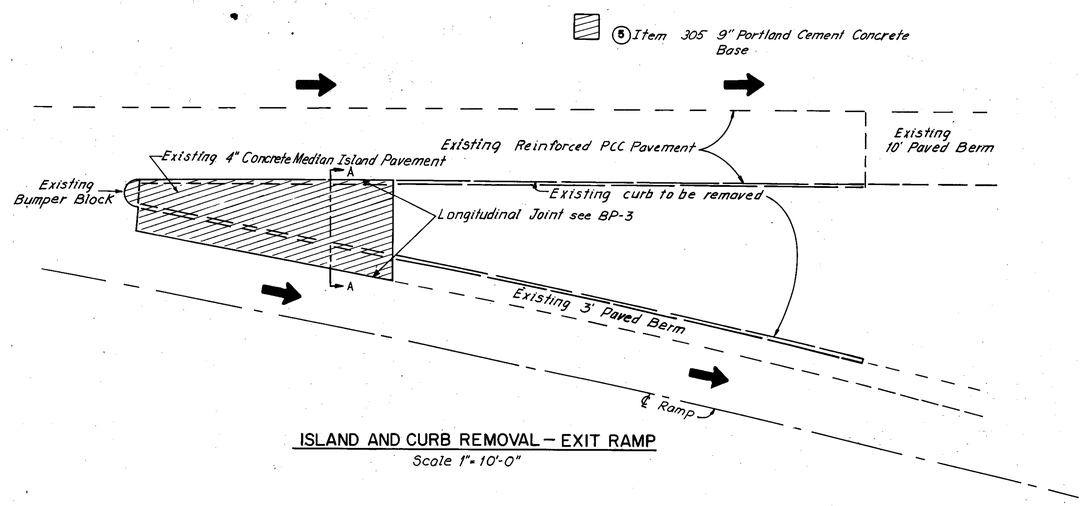

ISLAND AND CURB REMOVAL – EXIT RAMP
Scale 1"=10'-0"

QUANTITIES FOR COST PARTICIPATION III

SH. NO.	STATION FROM	STATION TO	SIDE	Reference Ramp	202 Curb Removed Lin. Ft.	305 9" Portland Cement Concrete Base Sq. Yds.
26	4+66	5+05	Rt.	5	39	4.3
35	3+59	3+88	Rt.	15	29	3.2
40	4+24	4+62	Rt.	6-E	38	4.2
43	3+97	4+64	Rt.	11-E	67	7.4
45	4+65	4+95	Rt.	14-E	30	3.3
52	13+65	14+50	Rt.	6	85	9.4
54	2+62	3+38	Rt.	10	77	8.6
26	1+59	1+97	Lt.	4	38	4.2
29	4+53	5+07	Lt.	7	54	6.0
33	1+59	1+96	Lt.	11	37	4.1
33	2+51	2+78	Lt.	13	27	3.0
35	1+87	2+32	Lt.	14	45	5.0
38	3+02	3+52	Lt.	2-E	50	5.6
40	2+68	3+42	Lt.	8-E	74	8.2
45	1+64	1+97	Lt.	13-E	33	3.7
49	13+50	14+18	Lt.	3	68	7.5
52	2+06	2+58	Lt.	8	52	5.8
20	3+40	11+28	Rt.	1	212	23.6
20	8+53	9+83	Lt.	4	130	14.4
22	2+60	3+25	Rt.	1A	65	7.2
	TOTALS				1250	138.7

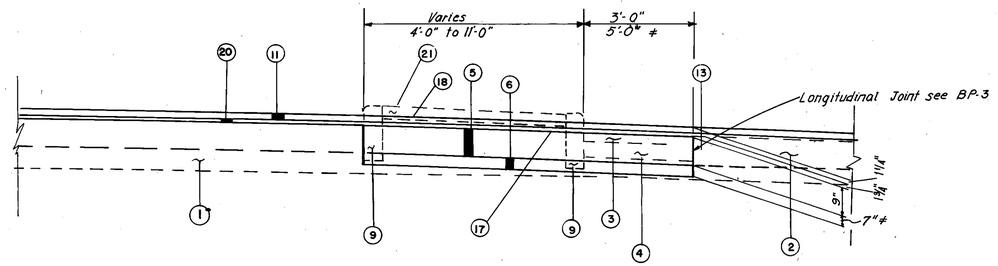

SECTION A–A
Scale 1/2"=1'-0"

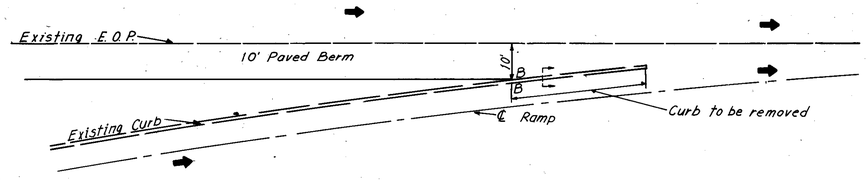

CURB REMOVAL – ENTRANCE RAMP
Scale: 1"=20'-0"

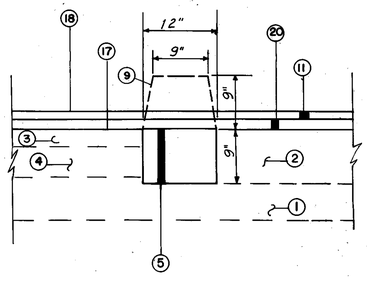

SECTION B–B
Scale 1"=1'-0"

ISLAND AND CURB REMOVAL

≠ Dimensions For Turning Roadway No.1 only.

LEGEND

(1) Existing Subbase
(2) Existing Reinforced Concrete Pavement
(3) Existing Waterproofed Aggregate Base Course (3" min. design thickness)
(4) Existing Pourous Base Course (5" design thickness)
(5) Item 305, 9" Portland Cement Concrete Base
(6) Item 310, Subbase Grading A, as per plan.
(9) Existing Sandstone or Concrete Curb
(11) Item 404, Asphalt Concrete, AC-20
(17) Item 407, Tack Coat: 702.02, RC-250, or 702.04, SS-1, SS-1h, MS-2 or RS-1, Applied at the rate of 0.1 gal. per sq. yds.
(18) Item 409, Seal Coat Bituminous Material: 702.02, MC-800 or MC-3000; 702.03, CBAE-800; or 702.04, RS-1, RS-2 or CRS-2; or 702.09, RT-9 or RT-10. Applied at rate of .30 gal. per sq. yds. Cover Aggregate No. 8 at the rate of .008 cu. yds. per sq. yds.
(20) Item 402, Asphalt Concrete, AC-20.
(21) Existing Concrete Median Pavement Island.

MADE A.J.S. DATE 8-19-74
TRACED C.F.J. DATE 8-29-74
CHECKED H.B. DATE 8-27-74
SCALE

Howard, Needles, Tammen & Bergendoff
CONSULTING ENGINEERS
CLEVELAND, OHIO

HNTB

RAMP 1 REALIGNMENT

EDDY ROAD

FHWA REGION	STATE	PROJECT	
5	OHIO		

83/354

CUYAHOGA COUNTY
CUY-90-23.73
LAKE COUNTY
LAK-90-0.00

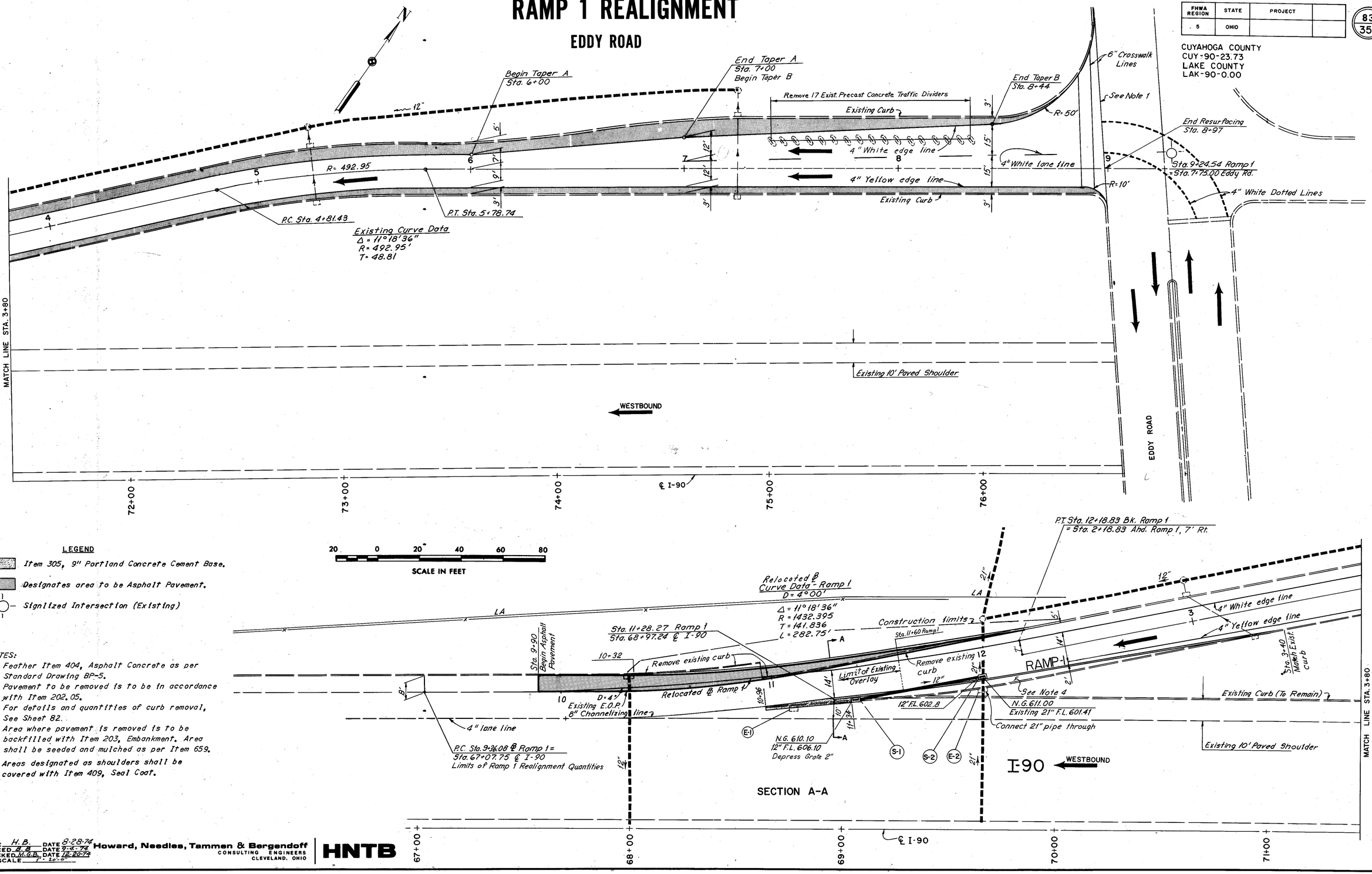

LEGEND

- Item 305, 9" Portland Concrete Cement Base.
- Designates area to be Asphalt Pavement.
- Signalized Intersection (Existing)

NOTES:

1. Feather Item 404, Asphalt Concrete as per Standard Drawing BP-5.
2. Pavement to be removed is to be in accordance with Item 202.05.
3. For details and quantities of curb removal, See Sheet 82.
4. Area where pavement is removed is to be backfilled with Item 203, Embankment. Area shall be seeded and mulched as per Item 659.
5. Areas designated as shoulders shall be covered with Item 409, Seal Coat.

SCALE IN FEET
20 0 20 40 60 80

MADE H.B. DATE 8-28-74
TRACED B.B DATE 9-6-74
CHECKED M.G.B. DATE 12-20-74
SCALE 1" = 20'-0"

Howard, Needles, Tammen & Bergendoff
CONSULTING ENGINEERS
CLEVELAND, OHIO

HNTB

FHWA REGION	STATE	PROJECT	
5	OHIO		

83A
354

QUANTITY CALCULATIONS
MADE BY M.E.E. DATE 12-30-74
CHECKED BY M.G.B. DATE 1-13-75

CUYAHOGA COUNTY
CUY-90-23.73
LAKE COUNTY
LAK-90-0.00

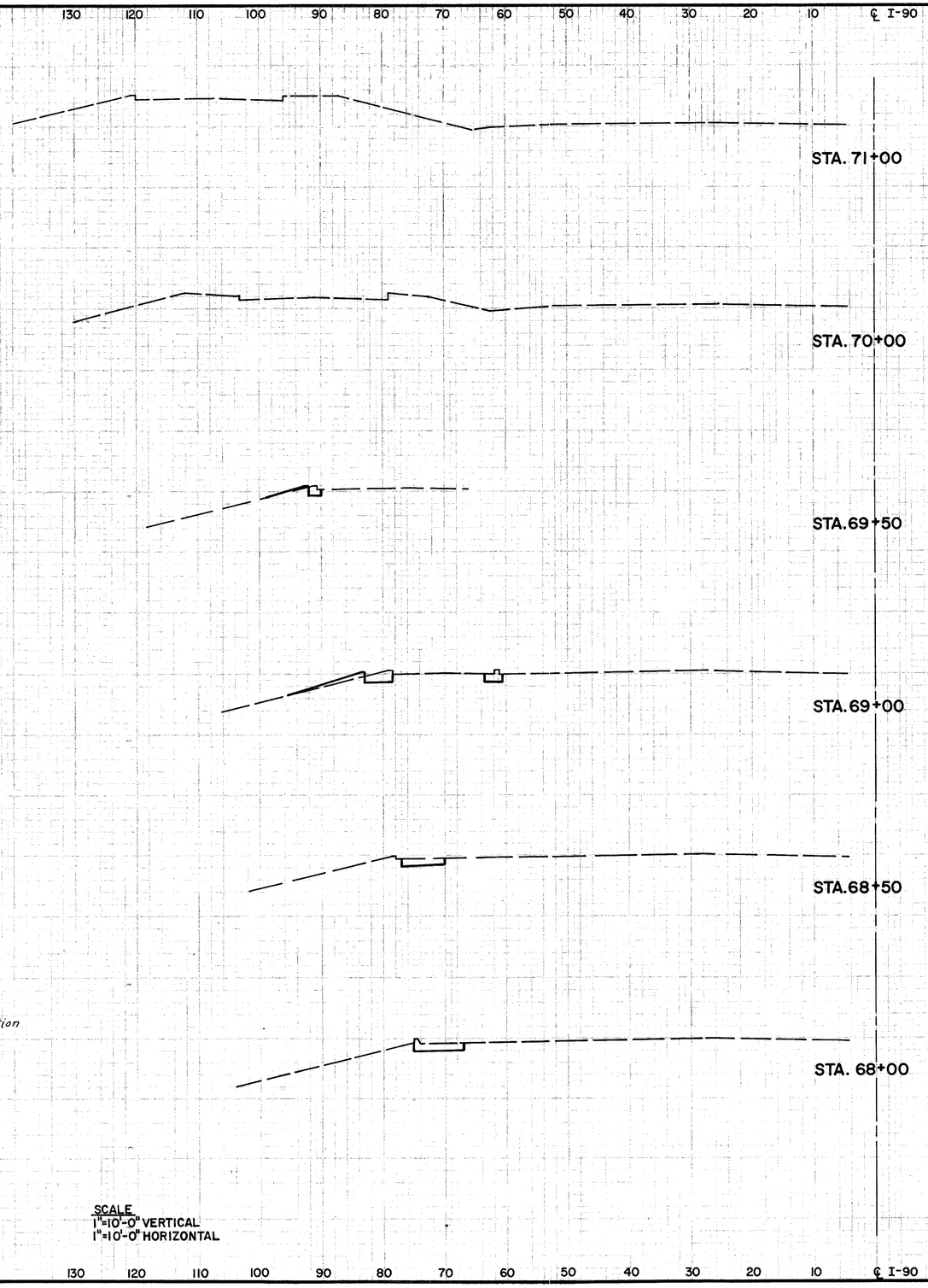

Excavation (0+2.50)x½x50÷27 = 2.31 cu. yd.
Embankment (0+1.50)x½x50÷27 = 1.39 cu. yd.
Seeding & Mulching (0+7)x½x50÷9 = 19.44 sq. yd.

Excavation [(2.50+5.50)+(3+0)]x½x50÷27 = 10.19 cu. yd.
Embankment (1.50+4.50)x½x50÷27 = 5.56 cu. yd.
Seeding & Mulching (7+12)x½x50÷9 = 52.78 sq. yd.

Excavation [(9+5.50)+(3+0)]x½x50÷27 = 16.20 cu. yd.
Embankment (4.50+0)x½x50÷27 = 4.17 cu. yd.
Seeding & Mulching (12+0)x½x50÷9 = 33.33 sq. yd.

Excavation (9+10)x½x50÷27 = 17.59 cu. yd.

Excavation 10x41÷27 = 15.19 cu. yd.

QUANTITIES Cost Part. I

	Item	Quantity	Unit
*	203 Excavation	61.48	Cu. Yd.
	203 Embankment	11.12	Cu. Yd.
	659 Seeding & Mulching	105.55	Sq. Yd.

* Excavation, not including Embankment Construction

SCALE
1"=10'-0" VERTICAL
1"=10'-0" HORIZONTAL

12-20-74 MEE
12-20-74 MEE
12-20-74 MEE
1-13-75 M.G.B.

HOWARD, NEEDLES, TAMMEN & BERGENDOFF
CONSULTING ENGINEERS
CLEVELAND, OHIO
HNTB

127 B DRAFTEX

EDDY RD.-RAMP I STA. 68+00 TO STA. 71+00

RAMP 1 REALIGNMENT

EDDY ROAD

FHWA REGION	STATE	PROJECT	
5	OHIO		

84/354

CUYAHOGA COUNTY LAKE COUNTY
CUY-90-~~23.76~~ 21.27 LAK-90-0.00

QUANTITY CALCULATIONS
MADE BY MEE DATE 12-11-74
CHECKED BY MGB DATE 12-12-74

202 CURB REMOVAL (SANDSTONE) — COST PART. I

STATION From	STATION To	CALCULATION	QUANTITY
10+32 Lt.	2+37 Lt.		205
10+96 Rt.	3+90 Rt.		244
	Total		384 L.F.

202 PAVEMENT REMOVAL — COST PART. I

STATION From	STATION To	CALCULATION	QUANTITY
9+90	11+15 Lt.	Planimeter 185.3 ÷ 9	20.6 S.Y.

203 EXCAVATION — COST PART. I

STATION From	STATION To	CALCULATION	QUANTITY
TOTAL		See Sheet 83A	61.5 C.Y.

203 EMBANKMENT — COST PART. I

STATION From	STATION To	CALCULATION	QUANTITY
TOTAL		See Sheet 83A	11.1 C.Y.

305 9" PORTLAND CEMENT CONCRETE BASE - COST PART. I

STATION From	STATION To	CALCULATION	QUANTITY
10+96 Rt.	11+34 Rt.	2' x 40' ÷ 9	8.89 S.Y.

310 SUBBASE — COST PART. I

STATION From	STATION To	CALCULATION	QUANTITY
9+90	10+32 Lt.	8 x 42	333 S.F.
10+32	12+19 Lt.	½ (8+0) x 187	748 S.F.
10+96	11+34 Rt.	2 x 38	76 S.F.
TOTAL AREA			1160 S.F.
TOTAL VOLUME		1160 x .25' ÷ 27	10.7 C.Y.

402 ASPHALT CONCRETE

STATION From	STATION To	CALCULATION	COST PART.	QUANTITY
11+60	2+37	77' (17+21) ½ (7.75/12) ÷ 27	III	7.90 C.Y.
2+37	8+97	See 404 Table		
		18881.5 sq. ft. (1.75/12) ÷ 27	III	101.98 C.Y.
9+90 Lt.	12+19 Lt.	See 310 Table		
		1084 x 1 ÷ 27	I	40.15 C.Y.
Subtotal		Participation I		40.15
Subtotal		Participation III		109.88
TOTAL				150 C.Y.

407 COVER AGGREGATE — COST PART. I

STATION From	STATION To	CALCULATION	QUANTITY
See 407 Table		2269.34 s.y. (7 lbs/S.Y.) ÷ 2000 lbs/Ton	7.94 Tons

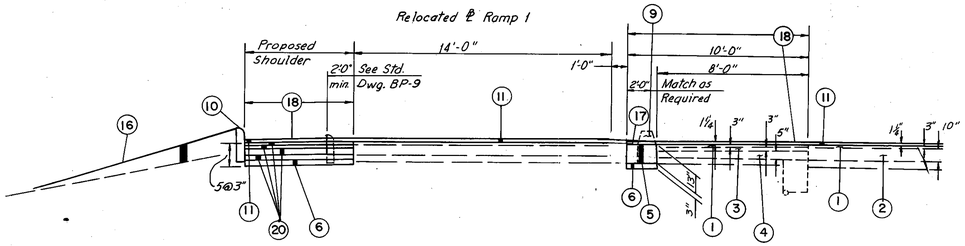

SECTION A-A
Scale ¼" = 1'-0"

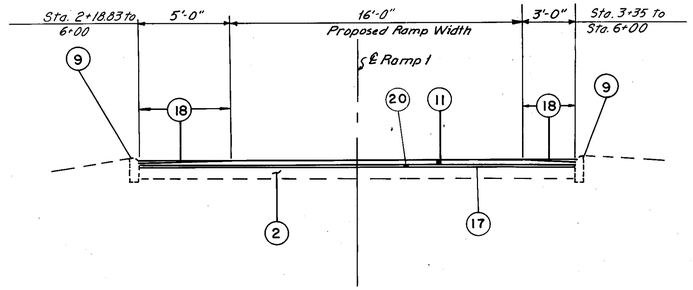

RAMP 1 TYPICAL
Scale ¼" = 1'-0"

404 1-1/4" ASPHALT CONCRETE — COST PART. I

STATION From	STATION To	CALCULATION	QUANTITY
9+36.08	10+30	20 x 93.92	1878.4 S.F.
10+30	11+28	(20+28) ÷ 2 x 98	2352.0 S.F.
11+28	2+37	[(18+21) ÷ 2] x 109	2125.5 S.F.
2+37	3+40	(21+24) ÷ 2 x 103	2317.5 S.F.
3+40	6+00	24 x 260	6240 S.F.
6+00	7+00	(22+35) ÷ 2 x 100	2850 S.F.
7+00	8+40	(35+36) ÷ 2 x 140	5112 S.F.
8+40	9+00	(36+60) ÷ 2 x 60	2362 S.F.
68+96	69+25	29 x 10	290 S.F.
TOTAL		25,527.4 x 1.23/1 ÷ 27	98.49 C.Y.

407 TACK COAT — COST PART I

STATION From	STATION To	CALCULATION	QUANTITY
11+60	8+97	See 402 Table	2206.5 S.Y.
10+96	11+34 Rt.	See 310 Table	8.84 S.Y.
TOTAL		2269.34 s.y. x .1 Gal/S.Y.	2269 Gal.

409 COVER AGRREGATE — COST PART. I

STATION From	STATION To	CALCULATION	QUANTITY
See 409 Table		894.36 s.y. x .008 C.Y/S.Y.	7.15 C.Y.

409 SEAL COAT — COST PART. I

STATION From	STATION To	CALCULATION	QUANTITY
9+96.08	10+00 Lt.	(8 x 63.92) ÷ 9 S.F/S.Y.	56.82 S.Y.
10+00	11+28 Lt.	[(8+5) ½ x 128] ÷ 9	92.44 S.Y.
11+28	6+00 Lt.	5 x 472 ÷ 9	262.22 S.Y.
6+00	7+00 Lt.	[(5+9) ½ x 100] ÷ 9	77.78 S.Y.
7+00	8+44 Lt.	[(9+3) ½ x 144] ÷ 9	96.00 S.Y.
8+44	8+97 Lt.	[Planimeter (22 s.f.)] ÷ 9	2.44 S.Y.
10+30	11+28 Rt.	[(0+10) ½ x 98] ÷ 9	54.44 S.Y.
11+28	2+37 Rt.	10 x 29 ÷ 9	32.22
2+37	8+97 Rt.	(3' x 6600') ÷ 9	220.00 S.Y.
TOTAL		894.36 s.y. x 3 Gal/S.Y.	268.31 Gal.

609 CURB, TYPE 6 — COST PART. I

STATION From	STATION To	CALCULATION	QUANTITY (Lin. Ft.)
2+28 Rt.	3+40 Rt.	211.73 Lin. ft.	211.73
10+32 Lt.	2+37 Lt.	232.00 Lin. ft.	232.00
	Total		443.73

LEGEND

(1) Existing Asphalt Overlay
(2) Existing 10" Reinforced Concrete Pavement
(3) Existing Waterproofed Aggregate Base Course (3" min. design thickness)
(4) Existing Pourous Base Course (5" design thickness)
(5) Item 305, 9" Portland Cement Concrete Base
(6) Item 310, Subbase (3" min. thickness)

- COST PART. I

STATION From	STATION To	CALCULATION	QUANTITY
			L.F.

621 PAVEMENT MARKINGS — COST PART. I

STATION From	STATION To	CALCULATION	QUANTITY
4" White Dotted lane line			
Ramp 1	Eddy. Rd.	139 Lin. Ft.	139 Lin. Ft.
4" White edge lines			
9+36	8+30	914 Lin. ft. ÷ 5280	
	Total		0.17 Miles
4" Yellow edge lines			
2+37	8+80	643 Lin. ft. ÷ 5280	
	Total		0.12 Miles
8" Channelizing line			
10+08	11+28	108 Lin. ft.	
	Total		108 Lin. Ft.
Curb Marking, White (painted)			
11+28 Rt.	2+28 Rt.	100 Lin. ft.	
	Total		100 Lin Ft.
4" White lane line			
7+00	8+80	180 Lin. ft.	
7+23	10+08	285 Lin. ft.	
	Total		465 Lin. Ft.
Crosswalk lines 6"			
8+90		130 Lin. ft.	
	Total		130 Lin. Ft.

659 SEEDING AND MULCHING - COST PART. I

STATION From	STATION To	CALCULATION	QUANTITY
TOTAL		See Sheet 83-A	106 S.Y.

DRAINAGE - COST PART. I

REF.	STATION	202 ABANDON INLET Each	604 STD. CB-3A CATCH BASIN Each	603 TYPE B CONDUIT 12" Lin. Ft.	604 STD. CB-6 CATCH BASIN Each
S-1	11+30			60	1
E-2	11+95	1			
S-2	11+95		1	4	
E-1	68+75	1			
	Total	2	1	64	1

LEGEND

(9) Existing Sandstone Curb
(10) Item 609, Curb, Type 6
(11) Item 404, 1¼" Asphalt Concrete, AC-20
(16) Item 659, Seeding and Mulching
(17) Item 407; Tack Coat, 702.02, RC-250; or 702.04, SS-1, SS-1H, MS-2 or RS-1 with Cover Aggregate.
(18) Item 409, Seal Coat
Bituminous Material, 702.02, MC-800 or MC-3000; 702.03, CBAE-800; 702.04, RS-1, RS-2 or CRS-2; or 702.09, RT-9 or RT-10. Applied at the rate of 0.30 Gal. per Sq.Yd. Cover Aggregate No.8 at the rate of 0.008 Cu.Yds. per Sq.Yd.
(20) Item 402, Asphalt Concrete, AC-20

MADE H.B. DATE 8-23-74
TRACED M.E.T DATE 12-13-74
CHECKED M.E.E DATE 1-4-75
SCALE 1/4" = 1'

Howard, Needles, Tammen & Bergendoff
CONSULTING ENGINEERS
CLEVELAND, OHIO

HNTB

Rev. 7-18-75

RAMP 2 REALIGNMENT

EDDY ROAD

FHWA REGION	STATE	PROJECT	
5	OHIO		

85
354

CUYAHOGA COUNTY
CUY-90-23.73
LAKE COUNTY
LAK-90-0.00

CURVE DATA ℄ EXISTING I-90
D = 0°15'00"
Δ = 1°41'36"
T = 338.69'
L = 677.33'
Ch = 677.31'
R = 22,918.32'
E = 2.50'

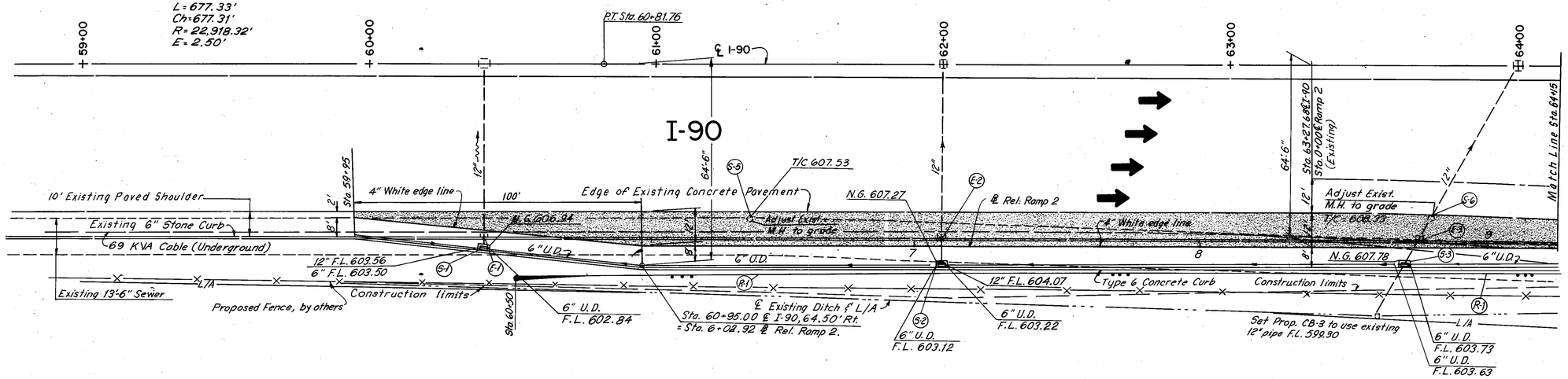

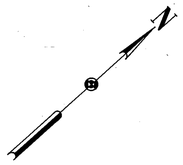

CURVE DATA - Relocated Right Edge of Pavement Ramp 2
D = 4°
Δ = 7°25'31"
T = 92.95'
L = 185.63'
R = 1432.39'
E = 3.01'

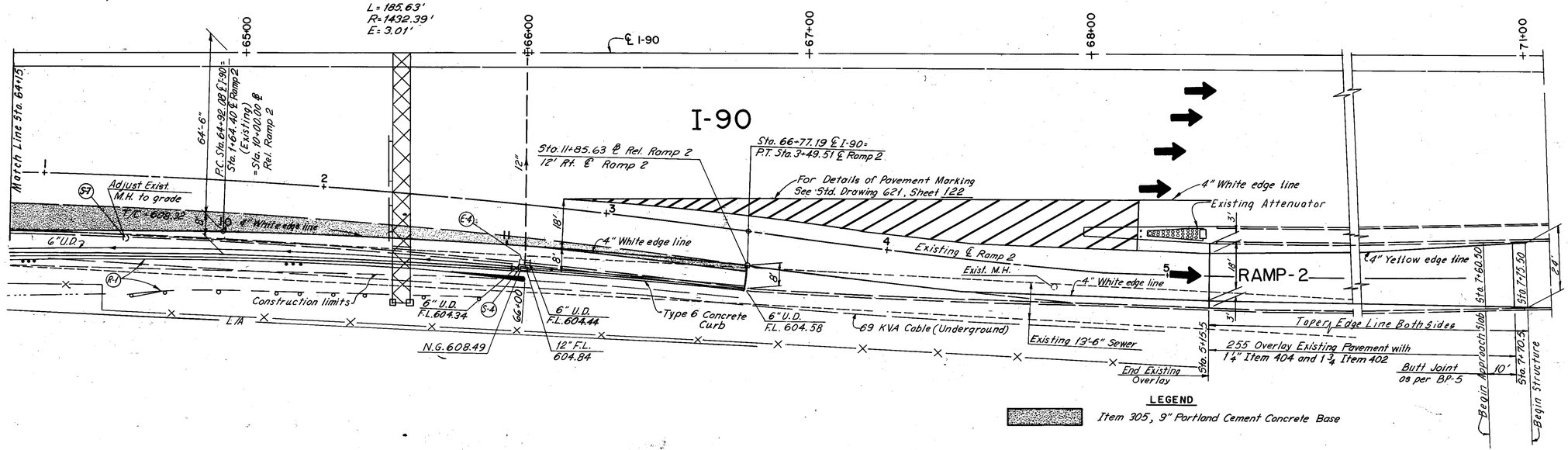

Notes:
1. Connect existing pipes through abandoned catch basins E-1, E-2, E-3 and E-4.
2. Remove existing stone curb between Sta. 59+95 to Sta. 66+77
3. For R-1 guard rail quantites, See Sheet 21 .
4. For Typical Sections, See Sheet 86 .
5. For Quantites, See Sheet 86 .
6. All shoulder areas which are adjacent to an asphalt surface shall be covered with Item 409, Seal Coat.

LEGEND
Item 305, 9" Portland Cement Concrete Base

SCALE IN FEET
20 0 20 40 60 80

MADE DSP DATE 7-8-74
TRACED FLE DATE 7-9-74
CHECKED H.B DATE 8-15-74
SCALE 1"=20'

Howard, Needles, Tammen & Bergendoff
CONSULTING ENGINEERS
CLEVELAND, OHIO

HNTB

QUANTITY CALCULATIONS
MADE BY M.G.B. DATE 12-30-74
CHECKED BY M.E.E. DATE 1-13-75

FHWA REGION	STATE	PROJECT	
5	OHIO		

85A
354

CUYAHOGA COUNTY
CUY-90-23.73
LAKE COUNTY
LAK.-90-0.00

12-1-74
12-17-74
1-13-75

M.G.B.
M.G.B.
M.E.E.

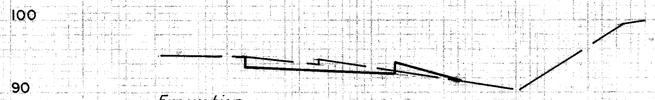

Excavation
$\left(\frac{24+28}{2}\right)$ 100 ÷ 27 = 96 Cu. Yds.

Embankment
$\left(\frac{0+8}{2}\right)$ 100 ÷ 27 = 15 Cu. Yds.

S & M
$\left(\frac{0+9}{2}\right)$ 100 ÷ 9 = 50 Sq. Yds.

STA. 63+00
C-24 F-8 S&M-9

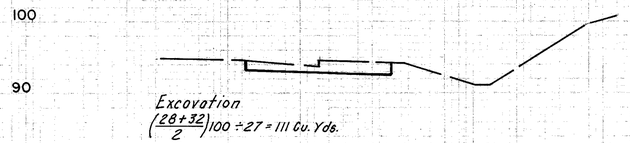

Excavation
$\left(\frac{28+32}{2}\right)$ 100 ÷ 27 = 111 Cu. Yds.

STA. 62+00
C-28 F-0 S&M-0

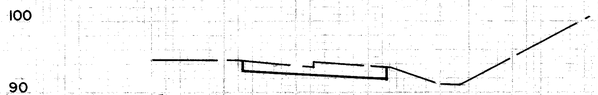

Excavation
$\left(\frac{32+10}{2}\right)$ 105 ÷ 27 = 82 Cu. Yds.

STA. 61+00
C-32 F-0 S&M-0

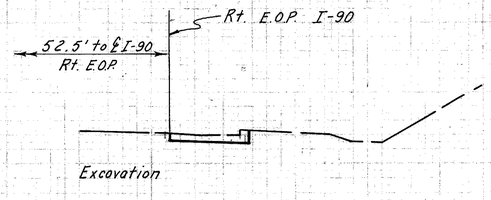

Excavation

STA. 59+95
BEGIN WORK
C-10 F-0 S&M-0

QUANTITIES-COST PART I			
Item	Description	Quantity	Unit
203	Excavation, not including Embankment Construction	656	Cu. Yds.
203	Embankment	30	Cu. Yds.
659	Seeding & Mulching	100	Sq. Yds.

Temporary bench mark at Sta. 68+41, S.E. corner of Attenuator Backstop Elev. 100.0

SCALE
1"=10'-0" VERTICAL
1"=10'-0" HORIZONTAL

Excavation
$\left(\frac{14+6}{2}\right)$ 177 ÷ 27 = 66 Cu. Yds.

STA. 67+77
END WORK
C-6 F-0 S&M-0

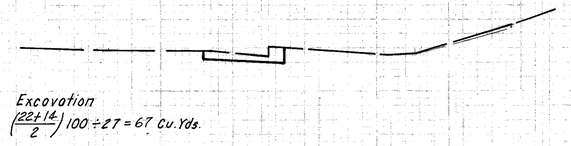

Excavation
$\left(\frac{22+14}{2}\right)$ 100 ÷ 27 = 67 Cu. Yds.

STA. 66+00
C-14 F-0 S&M-0

Excavation
$\left(\frac{40+22}{2}\right)$ 100 ÷ 27 = 115 Cu. Yds.

STA. 65+00
C-22 F-0 S&M-0

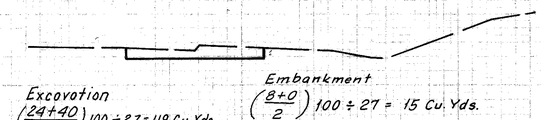

Excavation
$\left(\frac{24+40}{2}\right)$ 100 ÷ 27 = 119 Cu. Yds.

Embankment
$\left(\frac{8+0}{2}\right)$ 100 ÷ 27 = 15 Cu. Yds.

S & M
$\left(\frac{9+0}{2}\right)$ 100 ÷ 9 = 50 Sq. Yds.

STA. 64+00
C-40 F-0 S&M-0

HOWARD, NEEDLES, TAMMEN & BERGENDOFF
CONSULTING ENGINEERS
CLEVELAND, OHIO
HNTB

127 B DRAFTEX

RAMP 2 REALIGNMENT

EDDY ROAD

QUANTITY CALCULATIONS
MADE BY D.S.P. DATE 8-15-74
CHECKED BY M.G.B. DATE 12-9-74

FHWA REGION	STATE	PROJECT	
5	OHIO		

86
354

CUYAHOGA COUNTY
CUY-90-23.73
LAKE COUNTY
LAK-90-0.00

202 CURB REMOVAL (SANDSTONE)—COST PART. I			
STATION		CALCULATION	QUANTITY
From	To		
59+95	66+77	682 lin. Ft.	682 L.F.

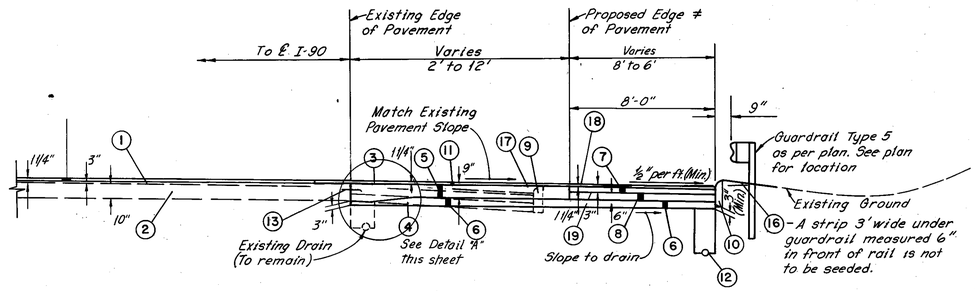

TYPICAL SECTION
Scale: ¼" = 1'-0"
Sta. 59+95 to Sta. 66+77

LEGEND

(1) Existing Asphalt Overlay
(2) Existing 10" Reinforced Concrete Pavement
(3) Existing Waterproofed Aggregate Base Course (3" min. design thickness)
(4) Existing Pourous Base Course (5" design thickness)
(5) Item 305, 9" Portland Cement Concrete Base
(6) Item 310, Subbase (3" min. thickness)
(7) Item 301, Bituminous Aggregate Base
(8) Item 304, Aggregate Base

LEGEND

(9) Existing Sandstone Curb
(10) Item 609, Curb, Type 6
(11) Item 404, 1¼" Asphalt Concrete, AC20
(12) Item 605, Shallow Pipe Underdrain
(13) Expansion Bolt, Joint
(16) Item 659, Seeding and Mulching
(17) Item 407, Tack Coat, 702.02, RC-250; or 702.04, SS-1, SS-1H, MS-2 or RS-1 with Cover Aggregate.

(18) Item 409, Seal Coat
Bituminous Material, 702.02, MC-800 or MC-3000; 702.03, CBAE-800; 702.04, RS-1, RS-2 or CRS-2; or 702.09, RT-9 or RT-10.
Applied at the rate of 0.30 Gal. per Sq.Yd. Cover Aggregate No.8 at the rate of 0.008 Cu.Yds. per Sq.Yd,

≠ Proposed edge of pavement to meet existing edge of pavement at sta. 66+77

Note:
For Items 203 Embankment
203 Excavation, not including Embankment Construction
659 Seeding & Mulching
Quantities, See Sheet 85A.

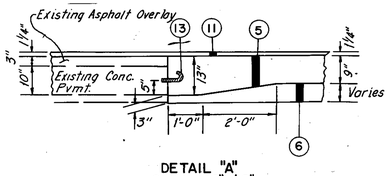

DETAIL "A"
Scale: = 1/2" = 1'-0"

305 9" PORTLAND CEMENT CONCRETE BASE—COST PART. I			
STATION		CALCULATION	QUANTITY
From	To		
59+95	60+95	½ (2'+12') 100'	700.0 S.F.
60+95	63+27.68	½ 12'(232.68')	2792.16 S.F.
0+00	3+49.51	planimeter	2253 S.F.
TOTAL		⅓ (5745.16 S.F.)	638.35 S.Y.

DRAINAGE - COST PART. I				
STATION		603 TYPE F 6" CONDUIT 707.01	605 6" SHALLOW PIPE UNDERDRAIN	
From	To	Lin. Ft.	Lin. Ft.	
59+95	60+40	10	35	
60+45	61+95	10	140	
62+00	63+60	10	150	
63+65	65+95	10	220	
66+00	66+77	10	67	
Total		50	612	

609 CURB, TYPE 6—COST PART. I			
STATION		CALCULATION	QUANTITY (Lin. Ft)
From	To		
59+95	66+77	682 lin. Ft.	682

621 PAVEMENT MARKINGS—COST PART. I			
STATION		CALCULATION	QUANTITY
From	To		
4" White edge lines			
59+95	64+92.08	497 Lin. ft.	
0+00 R2	7+75.5 R2	776 lin. ft.	
	Total	1273 Lin. Ft ÷ 5280 lin. ft/mile	0.24 miles
4" Yellow edge line			
3+25 R2	7+75.5 R2	451 lin. ft.	
	Total	451 lin. ft ÷ 5280 lin. ft/mile	0.09 miles
8" Channelizing line			
66+13	68+17	204' + 205'	
	Total		409 Lin. Ft.
24" Broad Transverse Stripes			
66+13	68+17		
	Total		391 L.F.

301 BITUMINOUS AGGREGATE—COST PART. I			
STATION		CALCULATION	QUANTITY
From	To		
59+95	66+77.19	See Item 407 Calculations	
TOTAL		5745.16" x .25 ÷ 27	70.93 C.Y.

304 AGGREGATE BASE—COST PART. I			
STATION		CALCULATION	QUANTITY
From	To		
59+95	66+77.19	See Item 407 Calculations	
TOTAL		5745.16" x .5 ÷ 27	106.39 C.Y.

310 SUBBASE COST PART. I			
STATION		CALCULATION	QUANTITY
From	To		
59+95	66+77.19	682.19'(1.08") ⅓	27.29 C.Y.
59+95	60+95	½ (7'+17') 100'(.58') ⅓	25.78 C.Y.
60+95	63+27.68	17'(232.68')(.58') ⅓	84.97 C.Y.
0+00	3+49.51	48/9 (2253"+ 2280"+ 451.57" less 3'+349.51')	84.55 C.Y.
TOTAL			222.59 C.Y.

402 1-3/4" ASPHALT CONCRETE—COST PART. I			
STATION		CALCULATION	QUANTITY
From	To		
5+15.5	7+75.5	260'(24')(1.75"/36) ⅓	33.70 C.Y.

404 1-1/4" ASPHALT CONCRETE—COST PART. I			
STATION		CALCULATION	QUANTITY
From	To		
59+95	60+95	½ (10'+20') 100	1500 S.F.
60+95	64+92.08	20'(379.08')	7941.6 S.F.
64+92.08	66+77.19	185.11'(20+32/2) - ℄L[(185.63x1432.32)-(185.5x1429.39)]	4534.06 S.F.
66+77.19	68+00	½ (33+38') 122.81'	4359.76 S.F.
68+00	68+39.5	39.5(28+30/2)	1145.5 S.F.
68+39.5	68+53.85	14.35'(24')	344.4 S.F.
5+28.09	7+75.50	247.41'(24')	5937.84 S.F.
TOTAL		25,763.16"(1/9) (1.25"/36)	99.39 C.Y.

407 TACK COAT—COST PART. I			
STATION		CALCULATION	QUANTITY
From	To		
See Item 305		5745.16"(1/3)(.1 gal/SY)	63.84 gal.

407 COVER AGGREGATE COST PART. I			
STATION		CALCULATION	QUANTITY
From	To		
TOTAL		(5745.16 S.F. ÷ 9 S.F/S.Y.) x 1 Ton/2000 Lbs. x 71 lbs/SY.	2.23 Tons

409 SEAL COAT—COST PART. I			
STATION		CALCULATION	QUANTITY
From	To		
59+95	66+77.19 Rt.	682.19'x 8'	5457.52 S.F.
3+49.51	4+29 Rt	½ (8'+3') 79.49'	437.20 S.F.
4+29	5+15.5 Rt.	3'x 86.5'	259.5 S.F.
5+15.5	7+75.5 Rt.	½ (3'+0) 255'	382.5 S.F.
5+15.5	7+75.5 Lt.	½ (3'+0) 255'	382.5 S.F.
TOTAL		⅓ (6919.22")1.3 gal/SY	230.64 Gal.

409 COVER AGGREGATE—COST PART. I			
STATION		CALCULATION	QUANTITY
From	To		
TOTAL		6919.22/9 x .008 CY/S.Y.	6.15 C.Y.

DRAINAGE-COST PART I					
REF.	STATION	202 INLET ABANDON	604 STD. NO. 3A CATCH BASIN	603 TYPE B CONDUIT 12"	604 M.H. ADJUSTED TO GRADE AS PER PLAN
		Each	Each	Lin. Ft.	Each
E-1	60+40	1			
S-1	60+40		1	6	
E-2	62+00	1			
S-2	62+00		1	12	
E-3	63+70	1			
S-3	63+62		1		
E-4	66+00	1			
S-4	66+00		1	3	
S-5	61+32				1
S-6	63+75				1
S-7	64+57				1
	Total	4	4	21	3

MADE D.S.P. DATE 8-15-74
TRACED B.B. DATE 8-16-74
CHECKED H.B. DATE 9-3-74
SCALE 1:1

Howard, Needles, Tammen & Bergendoff
CONSULTING ENGINEERS
CLEVELAND, OHIO

HNTB

RAMP 4 REALIGNMENT

EDDY ROAD

FHWA REGION	STATE	PROJECT	
5	OHIO		

87/354

CUYAHOGA COUNTY
CUY-90-23.73
LAKE COUNTY
LAK-90-0.00

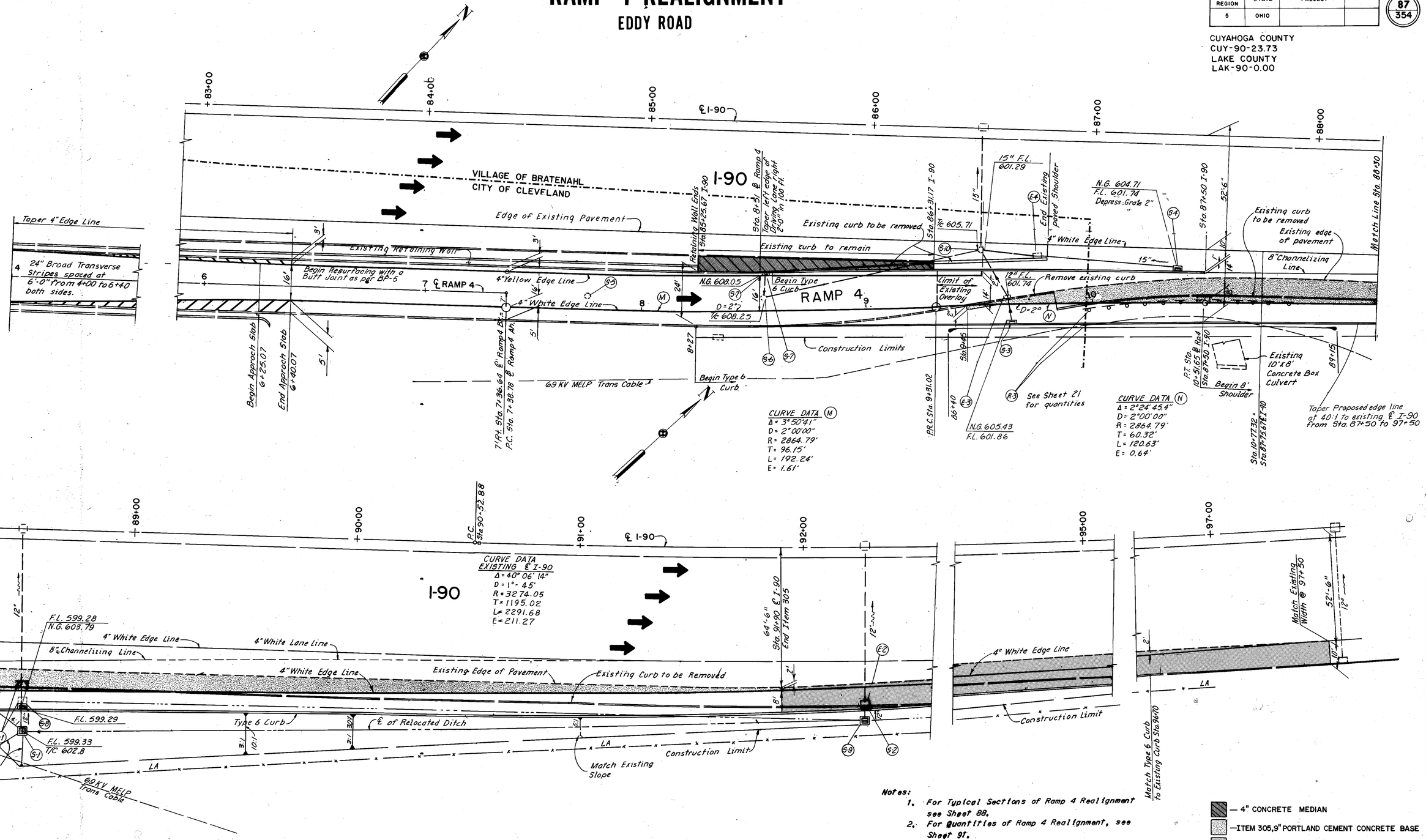

Notes:

1. For Typical Sections of Ramp 4 Realignment see Sheet 88.
2. For Quantities of Ramp 4 Realignment, see Sheet 91.
3. All shoulders adjacent to asphalt pavement shall be covered with Item 409, Seal Coat.
4. All drainage facilities abandoned shall have existing pipes connected through.

— 4" CONCRETE MEDIAN
— ITEM 305,9" PORTLAND CEMENT CONCRETE BASE
— ASPHALT WIDENING (FULL DEPTH)

20 0 20 40 60 80
SCALE IN FEET

MADE DSP DATE 7-8-74
TRACED FCC DATE 7-10-74
CHECKED M.E.B. DATE 12-18-74
SCALE 1"=20'

Howard, Needles, Tammen & Bergendoff
CONSULTING ENGINEERS
CLEVELAND, OHIO

HNTB

Rev. 7-18-75

RAMP 4 REALIGNMENT

EDDY ROAD

FHWA REGION	STATE	PROJECT	
5	OHIO		

88/354

CUYAHOGA COUNTY
CUY-90-23.73
LAKE COUNTY
LAK-90-0.00

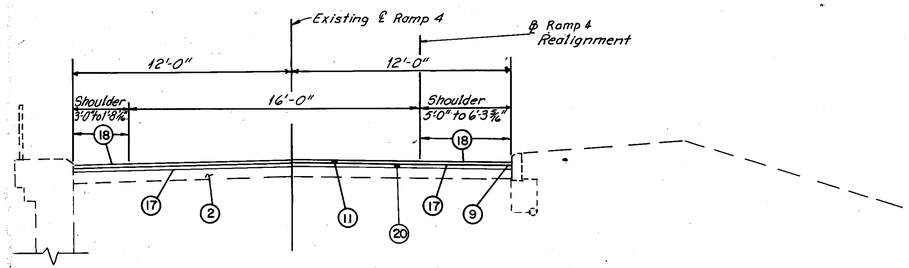

TYPICAL SECTION
Scale: ¼" = 1'-0"
Sta. 6+40.07 ℄ Ramp 4 to Sta. 8+27.14 ℄ Ramp 4

Note: Typical Sections are intended to show general roadway and pavement features only. For details see Plan sheets and Cross-Section Sheets.

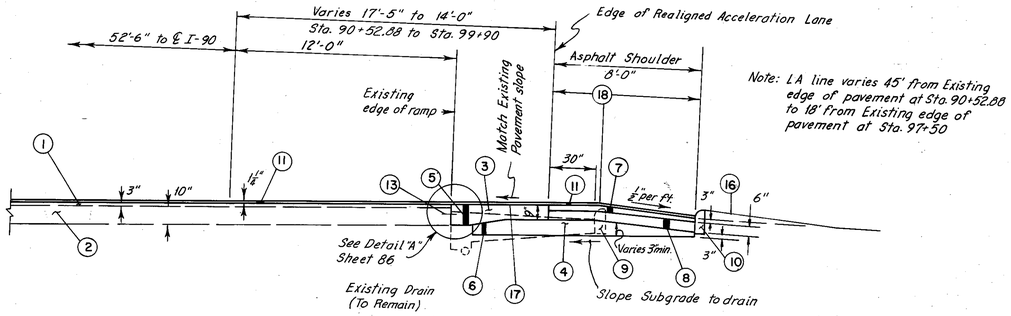

SUPERELEVATED SECTION
Scale: ½" = 1'-0"
Sta. 90+52.88 to Sta. 91+90 ℄ I-90

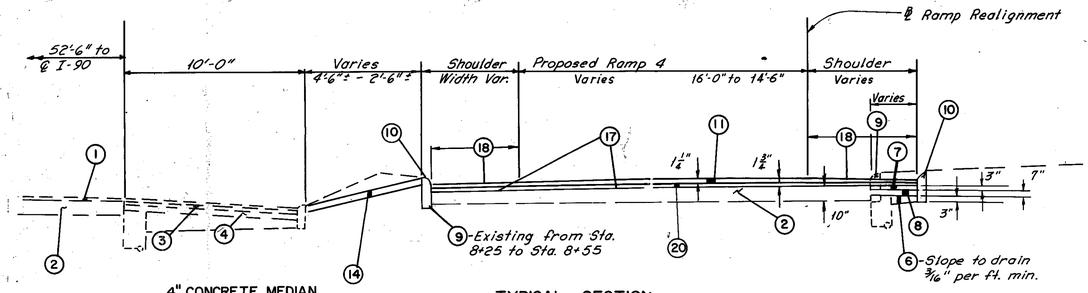

4" CONCRETE MEDIAN
Sta. 85+25.67 ℄ I-90 to Sta. 86+31.17 ℄ I-90

TYPICAL SECTION
Sta. 8+27.14 ℄ Ramp 4 to Sta. 9+32.14 ℄ Ramp 4

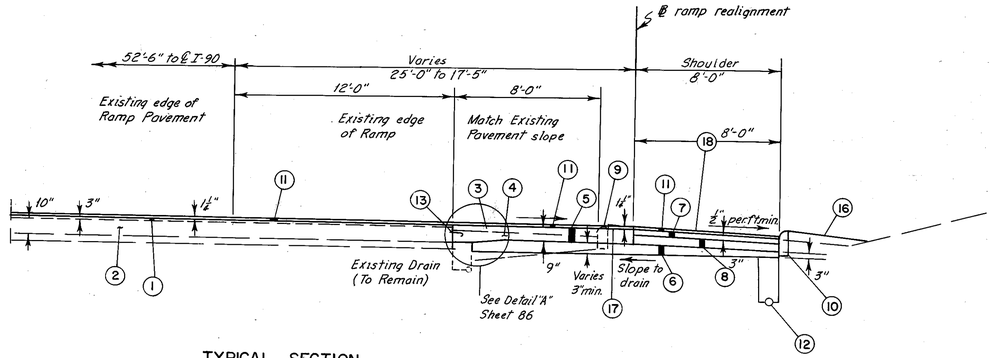

TYPICAL SECTION
Scale: ¼" = 1'-0"
Sta. 87+50 to Sta. 88+50 (Normal Section) ℄ I-90
Sta. 88+50 to Sta. 90+52.88 (Superelevation Transition Section) ℄ I-90

LEGEND

(1) Existing Asphalt Overlay
(2) Existing 10" Reinforced Concrete Pavement
(3) Existing Waterproofed Aggregate Base Course (3" min. design thickness)
(4) Existing Pourous Base Course (5" design thickness)
(5) Item 305, 9" Portland Cement Concrete Base
(6) Item 310, Subbase (3" min. thickness)
(7) Item 301, Bituminous Aggregate Base
(8) Item 304, Aggregate Base

≠ Proposed edge of pavement to meet existing edge of pavement at sta. 66+77

LEGEND

(9) Existing Sandstone Curb
(10) Item 609, Curb, Type 6
(11) Item 404, 1¼" Asphalt Concrete, AC-20
(12) Item 605, Shallow Pipe Underdrain
(13) Expansion Bolt Joint
(14) Item 612, 4" Concrete Median
(16) Item 659, Seeding and Mulching
(17) Item 407; Tack Coat, 702.02, RC-250; or 702.04, SS-1, SS-1H, MS-2 or RS-1 with Cover Aggregate.
(18) Item 409, Seal Coat
Bituminous Material, 702.02, MC-800 or MC-3000; 702.03, CBAE-800; or 702.04, RS-1, RS-2 or CRS-2; or 702.09, RT-9 or RT-10. Applied at the rate of 0.30 Gal. per Sq.Yd. Cover Aggregate No.8 at the rate of 0.008 Cu.Yds. per Sq.Yd,
(20) Item 402, 1¾" Asphalt Concrete, AC 20

MADE DSP DATE 8-28-74
TRACED AA DATE 8-27-74
CHECKED HB DATE 8-29-74
SCALE 1"=4'

Howard, Needles, Tammen & Bergendoff
CONSULTING ENGINEERS
CLEVELAND, OHIO

HNTB

QUANTITIES
MADE BY D.S.P. DATE 10-3-74
CHECKED BY M.G.B. DATE 10-9-74

FHWA REGION	STATE	PROJECT	
5	OHIO		

89 / 354

CUYAHOGA COUNTY
CUY-90-23.73
LAKE COUNTY
LAK-90-0.00

0 10 20 30 40 50 60 70 80 90 100

52'-6" to ℄ I-90 Rt. E.O.P.

110
100
90

elev. 98.1

STA. 87+50
C-26 F-7 S&M-14

Excavation	Embankment	Seeding & Mulching
$50\times(\frac{25+26}{2})\div 27 = 47$ Cu. Yds.	$50\times(\frac{0+7}{2})\div 27 = 6$ Cu. Yds.	$50\times(\frac{7+14}{2})\div 9 = 58$ Sq. Yds.

℄ Ramp 4

elev. 98.5

STA. 87+00
C-25 F-0 S&M-7 Cost Part II

Excavation	Seeding & Mulching
$50\times(\frac{30+25}{2})\div 27 = 51$ Cu. Yds.	$50\times(\frac{12+7}{2})\div 9 = 53$ Sq. Yds.

℄ Ramp 4

elev. 98.9

STA. 86+50
C-30 F-0 S&M-12 Cost Part II

Excavation	Seeding & Mulching
$50\times(\frac{8+30}{2})\div 27 = 35$ Cu. Yd.	$50\times(\frac{7+12}{2})\div 9 = 53$ Sq. Yds.

℄ Ramp 4

elev. 99.4

STA. 86+00
C-8 F-0 S&M-7 Cost Part. II

Excavation	Seeding & Mulching
$50\times(\frac{0+28}{2})\div 27 = 7$ Cu. Yds.	$50\times(\frac{0+7}{2})\div 9 = 185$ Sq. Yds.

℄ Ramp 4

elev 100.0

STA. 85+50
C-0 F-0 S&M-0 Cost Part II

QUANTITIES Cost Part I-II

	Quantity	Unit
Item 203 Excavation	4691 931I	C.y.
Item 203 Embankment	18 I	C.y.
Item 659 Seeding & Mulching	536I 125II	S.y.
Item 660 Sodding	67 I.	S.y.

Temporary Bench Mark
Sta. 85+50, Rt. E.O.P.
Elev. 100.0

0 10 20 30 40 50 60 70 80 90 100

52'-6" to ℄ I-90 Rt E.O.P.

SCALE
1"=10'-0" VERTICAL
1"=10'-0" HORIZONTAL

52'-6" to ℄ I-90 Rt. E.O.P.

0 10 20 30 40 50 60

RW Fence

100
90

STA. 90+00
C-30 F-0 S&M-14

Excavation	Seeding & Mulching
$50\times(\frac{54+30}{2})\div 27 = 53$ Cu Yds.	$50\times(\frac{17+14}{2})\div 9 = 66$ Sq. Yds.

RW Fence

STA. 89+50
C-34 F-0 S&M-17

Excavation	Seeding & Mulching
$50\times(\frac{68+34}{2})\div 27 = 94$ Cu Yds.	$50\times(\frac{20+12}{2})\div 9 = 103$ Sq. Yds.

RW Fence

STA. 89+00
C-68 F-0 S&M-20

Excavation	Seeding & Mulching
$50\times(\frac{72+68}{2})\div 27 = 130$ Cu Yds.	$50\times(\frac{25+20}{2})\div 9 = 125$ Sq. Yds.

RW Fence

Proposed Std. No.5 Catch Basin

92.5
92.2
12" Type B Conduit

STA. 88+50
C-72 F-0 S&M-25

Sodding
Sta 88+50 to Sta 90+00
$(150'\times 4')\div 9 = 67$ Sq. Yds.

Abandon Curb Inlet and Ditch Inlet at this station and connect pipes through

Excavation	Embankment	Seeding & Mulching
$50\times(\frac{20+72}{2})\div 27 = 91$ Cu Yds.	$50\times(\frac{3+0}{2})\div 27 = 3$ Cu Yds.	$50\times(\frac{10+25}{2})\div 9 = 97$ Sq. Yds.

STA 88+00
C-26 F-3 S&M-10

Excavation	Embankment	Seeding & Mulching
$50\times(\frac{20+28}{2})\div 27 = 48$ Cu Yds.	$50\times(\frac{7+3}{2})\div 27 = 9$ Cu Yds.	$50\times(\frac{8+12}{2})\div 9 = 67$ Sq. Yds.

0 10 20 30 40 50 60 70 80 90 100

52'6" to ℄ I-90 Rt. E.O.P.

HOWARD, NEEDLES, TAMMEN & BERGENDOFF
CONSULTING ENGINEERS
CLEVELAND, OHIO
HNTB

127 B DRAFTEX

RAMP-4-EDDY RD. STA. 85+50 TO STA. 90+00

QUANTITIES
MADE BY D.S.P. DATE 10-3-74
CHECKED BY M.G.B. DATE 10-9-74

FHWA REGION	STATE	PROJECT	
5	OHIO		

90
354

CUYAHOGA COUNTY
CUY-90-23.73
LAKE COUNTY
LAK-90-0.00

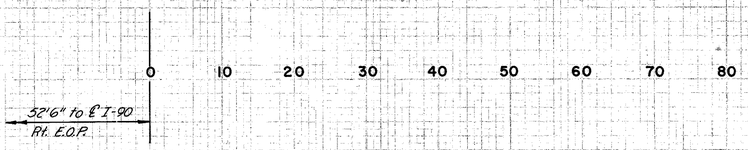

Excavation $100 \times (\frac{6+3}{2}) \div 27 = 17$ c.y.
Embankment $100 \times (\frac{0+5}{2}) \div 27 = 9$ c.y.
Seeding & Mulching $100 \times (\frac{0+7}{2}) \div 9 = 39$ s.y.

STA. 94+00
C-6 F-0 S&M-0

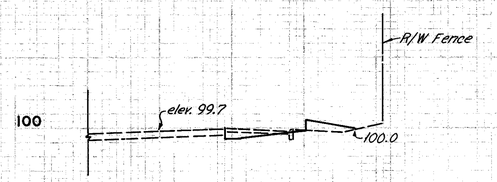

Excavation $100 \times (\frac{6+3}{2}) \div 27 = 17$ c.y.
Embankment $100 \times (\frac{3+5}{2}) \div 27 = 15$ c.y.
Seeding & Mulching $100 \times (7) \div 9 = 78$ s.y.

STA. 93+00
C-3 F-5 S&M-7

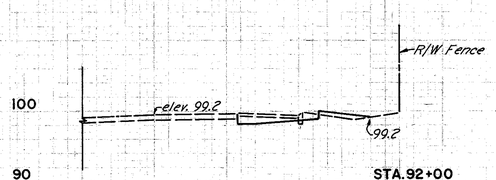

Excavation $100 \times (\frac{8+6}{2}) \div 27 = 26$ c.y.
Embankment $100 \times (3) \div 27 = 11$ c.y.
Seeding & Mulching $100 \times (\frac{5+7}{2}) \div 9 = 67$ s.y.

STA. 92+00
C-6 F-3 S&M-7

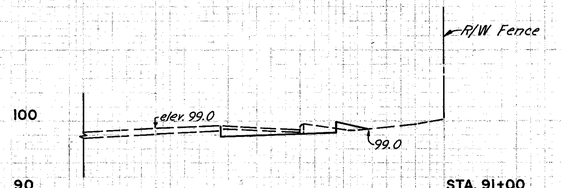

STA. 91+00
C-8 F-3 S&M-5

Excavation $100 \times (\frac{30+8}{2}) \div 27 = 70$ c.y.
Embankment $100 \times (\frac{0+3}{2}) \div 27 = 5$ c.y.
Seeding & Mulching $100 \times (\frac{12+3}{2}) \div 9 = 106$ s.y.

QUANTITIES

	Quantity	Unit
Item 203 Excavation	265 I	c.y.
Item 203 Embankment	41 I	c.y.
Item 659 Seeding & Mulching	290 I	s.y.

Temporary bench mark
Sta. 85+50, Rt. E.O.P.
Elev. 100.0

SCALE
1"=10'-0" VERTICAL
1"=10'-0" HORIZONTAL

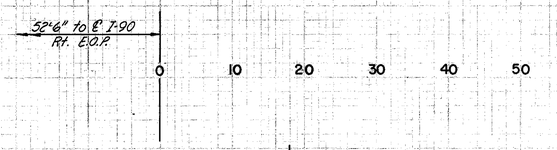

Excavation $100 \times (\frac{10+2}{2}) \div 27 = 35$ c.y.

STA. 97+50
END WORK
C-9 F-0 S&M-0

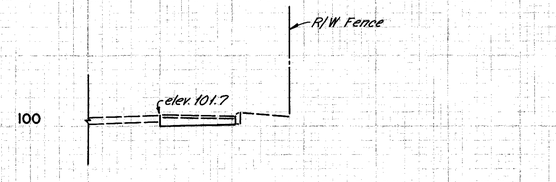

Excavation $100 \times (\frac{10+12}{2}) \div 27 = 41$ c.y.

STA. 97+00
C-10 F-0 S&M-0

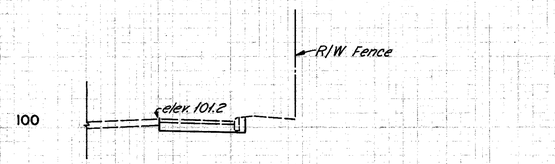

Excavation $100 \times (\frac{7+12}{2}) \div 27 = 35$ c.y.

STA. 96+00
C-12 F-0 S&M-0

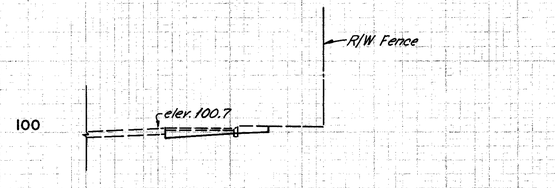

Excavation $100 \times (\frac{7+6}{2}) \div 27 = 24$ c.y.

STA. 95+00
C-7 F-0 S&M-0

10-3-74 DSP
10-3-74 DSP
10-3-74 MGB

ORIGINAL

HOWARD, NEEDLES, TAMMEN & BERGENDOFF
CONSULTING ENGINEERS
CLEVELAND, OHIO
HNTB

127 B DRAFTEX

RAMP-4-EDDY RD. STA. 91+00 TO STA. 97+50

RAMP 4 REALIGNMENT

EDDY ROAD

QUANTITY CALCULATIONS
MADE BY M.G.B. DATE 12-10-74
CHECKED BY M.E.E. DATE 12-13-74

FHWA REGION	STATE	PROJECT	
5	OHIO		

91
354

CUYAHOGA COUNTY
CUY-90-23.73
LAKE COUNTY
LAK-90-0.00

202 CURB REMOVAL

STATION From	STATION To	CALCULATION	QUANTITY	COST PART.
8+58	9+82 Lt.		124 Lin. Ft.	II
8+27	9+99.5 Rt.		176 Lin. Ft.	II
9+99.5	96+70 Rt.		1269 Lin. Ft.	I
SUBTOTAL I			299 Lin. Ft.	I
SUBTOTAL II			1269 Lin. Ft.	II
TOTAL			1568 Lin. Ft.	

301 BITUMINOUS AGGREGATE BASE

STATION From	STATION To	CALCULATION	QUANTITY	COST PART.
8+27	9+99.5	Planimeter = 693" 693"(25)$\frac{1}{27}$	6.42 C.Y.	II
9+99.5	91+90	(492.15 x 8)(.25)$\frac{1}{27}$	36.46 C.Y.	I
TOTAL			42.88 C.Y.	

304 AGGREGATE BASE

STATION From	STATION To	CALCULATION	QUANTITY	COST PART.
8+27	9+45	Planimeter = 230" 230"(.58')$\frac{1}{27}$	4.94 C.Y.	II
9+45	9+99.5	Planimeter = 463" 463"(.5')$\frac{1}{27}$	8.57 C.Y.	II
9+99.5	91+90	3937 "	72.91 C.Y.	I
SUBTOTAL II			1351 C.Y.	II
SUBTOTAL I			72.91 C.Y.	I
TOTAL			86.42	

305 9" PORTLAND CEMENT CONCRETE BASE

STATION From	STATION To	CALCULATION	QUANTITY	COST PART.
9+95	9+99.5	Planimeter 216"	216 S.F.	II
9+99.5	88+30	Planimeter 1419"	1419 S.F.	I
88+30	91+90	$\frac{1}{2}$(11.0+2.0) 360'	2340 S.F.	I
TOTAL I		(1419"+2340")=$\frac{1}{9}$(3759)	417.67 S.Y.	I
TOTAL II		216" ($\frac{1}{9}$	24.0 S.Y.	II
TOTAL			441.67 S.Y.	

310 SUBBASE

STATION From	STATION To	CALCULATION	QUANTITY	COST PART.
8+27	9+99.5	(0+10.18") $\frac{1}{2}$ (147.5')	750.78 C.F.	II
9+99.5	10+52	(10.18"+12.13 ") $\frac{1}{2}$ (52.5')	585.64 C.F.	I
87+50	90+53	(12.13"+5.53") $\frac{1}{2}$ (303')	2675.49 C.F.	I
90+53	92+50	(5.53"+3.63") $\frac{1}{2}$ (197)	902.26 C.F.	I
92+50	95+50	(3.63"+5.21") $\frac{1}{2}$ (300)	1326.00 C.F.	I
95+50	96+70	(5.21"+4.24") $\frac{1}{2}$ (120)	567.00 C.F.	I
96+70	97+50	(4.24"+4.83") $\frac{1}{2}$ (80)	362.80 C.F.	I
SUBTOTAL I		6419.19 c.f. ($\frac{1}{27}$)	237.75 C.Y.	I
SUBTOTAL II		750.78 c.f. ($\frac{1}{27}$)	27.81 C.Y.	II
TOTAL			265.56 C.Y.	

402 ASPHALT CONCRETE

STATION From	STATION To	CALCULATION	QUANTITY	COST PART.
6+40 ℄	7+36.64 ℄	($\frac{175}{36}$)($\frac{1}{12}$) 96.64'x24'	231936 S.F.	IV
7+38.78 ℄	9+32.14 ℄	($\frac{175}{36}$)($\frac{1}{12}$)93.36'x24'	1640.64 S.F.	IV
91+90	92+50	$\frac{1}{2}$(10'+8.5') 60'	555 S.F.	I
92+50	95+50	$\frac{1}{2}$ (8.5'+13.0')300'	3225 S.F.	I
95+50	96+70	$\frac{1}{2}$ (13'+10') 120'	1380 S.F.	I
96+70	97+50	10'x80'	800 S.F.	I
TOTAL I		5960"($\frac{1}{27}$	220.74 C.Y.	I
TOTAL IV		6960"($\frac{1}{36}$ mm/in)($\frac{1}{12}$ Ft.²/Yd.²)	37.39 C.Y.	IV
TOTAL			258.33 C.Y.	

404 1-1/4" ASPHALT CONCRETE

STATION From	STATION To	CALCULATION	QUANTITY	COST PART.
6+40 ℄	9+32.14 ℄	(From 402 Table)	6960 S.F.	II
9+32.14	9+99.5	24'(67.36')	1616.64 S.F.	II
9+99.5	10+51.65	$\frac{1}{2}$ (34+32)(52.15')	1720.95 S.F.	I
87+50	96+70	$\frac{1}{2}$ (33+10) 920'	19,780 S.F.	I
96+70	97+50	10(80)	800 S.F.	I
86+13.17	86+96	64.83'(13+11) $\frac{1}{2}$	777.96 S.F.	II
TOTAL I		(19,780"+800"+1720.95")or $\frac{22301}{9}$ ($\frac{1.25}{36}$)	86.04	I
TOTAL II		(6960"+1616.64+777.96")or $\frac{9354.6}{9}$ $\frac{1.25}{36}$	36.09 C.Y.	II
TOTAL			122.13 C.Y.	

407 TACK COAT

STATION From	STATION To	CALCULATION	QUANTITY	COST PART.
6+40	8+25	(185'x24') ÷ 9 x .1 Gal/S.Y.	49.3 Gal.	II
8+27	9+30	(105' x(24+16)$\frac{1}{2}$ ÷ 9 x1 Gal/S.Y.	23.3 Gal.	II
From 305 Table		24.0 s.y. x .1 Gal./S.Y.	2.4 Gal.	II
From 305 Table		417.67 s.y. x.1 Gal/S.Y.	41.77 Gal.	I
TOTAL			116.77 Gal.	

407 COVER AGGREGATE

STATION From	STATION To	CALCULATION	QUANTITY	COST PART.
SUBTOTAL		417.67 x 71lbs./s.y. ÷ $\frac{2000 \text{ LBS.}}{1 \text{ TON}}$	1.46 Tons	I
SUBTOTAL		750.67 S.Y. x 71lbs./s.y. x $\frac{1 \text{ TON}}{2000 \text{ LBS.}}$	2.63 Tons	II
TOTAL			4.09 Tons	

409 SEAL COAT

STATION From	STATION To	CALCULATION	QUANTITY	COST PART.
6+40.07 ℄	7+36.64 Rt.	5'(96.57')	482.85 S.F.	II
6+40.07 ℄	7+36.64 Lt.	3'(96.57')	289.71 S.F.	II
7+38.78 ℄	9+52 Lt.	Planimeter	323 S.F.	II
7+38.78 ℄	9+99.5 Rt.	Planimeter	1896 S.F.	II
9+99.5	10+51.65 Rt.	Planimeter	489 S.F.	I
87+50	96+70 Rt.	8'(920')	7360 S.F.	I
96+70	97+50 Rt.	$\frac{1}{2}$(8'x10')80'	720 S.F.	I
SUBTOTAL I		8569"($\frac{1}{9}$ Gal/S.F.)	285.63 Gal.	I
SUBTOTAL II		2991.21"($\frac{3}{9}$ Gal/S.Y.	99.71 Gal.	II
TOTAL			385.34 Gal.	

409 COVER AGGREGATE

STATION From	STATION To	CALCULATION	QUANTITY	COST PART.
		Areas From 409 Seal Coat		
		2991.21 s.f. ÷ 9 s.f./s.y. x .008 c.y. /s.y.	2.66 C.Y.	II
		8569 s.f. ÷ 9 s.f./s.y. x .008 cy/s.y.	7.62 C.Y.	I
TOTAL			10.28 C.Y.	

605 6" SHALLOW PIPE UNDERDRAIN — COST PART. I

STATION From	STATION To	CALCULATION	QUANTITY (Lin.Ft)
87+50	90+53		303
	Total		303

609 CONCRETE CURB

STATION From	STATION To	CALCULATION	QUANTITY	COST PART.
8+58 Lt.	9+52 Lt.	Type 6	94 Lin. Ft.	II
8+27 Rt.	9+99.5	Type 6	172.5 Lin. Ft.	I
9+99.5 Rt.	96+70 Rt.	Type 6	972 Lin. Ft.	I
TOTAL Type 6			1238.5 Lin. Ft.	
TOTAL				

612 4" CONCRETE MEDIAN — COST PART. II

STATION From	STATION To	CALCULATION	QUANTITY (Sq.Yd.)
8+25	9+30.5	105.5 x ½ x (7+3) ÷ 9	58.6
	Total		58.6

621 PAVEMENT MARKINGS

STATION From	STATION To	CALCULATION	QUANTITY	COST PART.
24" Broad Stripes				
4+00 Rt.	6+40 Rt.		283 Lin.Ft.	II
4+00 Lt.	6+40 Lt.		168 Lin.Ft.	II
TOTAL			451 Lin.Ft	II
4" Yellow edge line				
4+00 Lt.	9+16	516 Lin. Ft. ÷ 5280 Lin. Ft./Mi.	0.10 Mi.	II
4" White edge line				
4+00 ℄ Rt.	9+99.5 ℄ Rt.		598 Lin.Ft.	II
9+95.5 Rt.	97+50 Rt.		1054 Lin.Ft.	I
85+25 Rt.	86+96		171 Lin.Ft.	II
86+96 Rt.	89+10 Rt.		214 Lin.Ft.	I
SUBTOTAL I		(1054+214) ÷ 5280 Ft./Mi.	0.24 Mi.	I
SUBTOTAL II		(598'+171') ÷ 5280 Ft./Mi.	0.15 Mi.	II
TOTAL			0.39 Mi.	
4" White lane line				
89+10 Rt.	91+50	260' ÷ 5280 Ft./Mi.	0.5 Mi.	I
8" Channelizing line				
87+50 Rt.	89+10		160 Lin.Ft.	I
Curb Marking, White (Painted)				
10+51.65 Rt.	9+51.65		100 Lin.Ft.	I

DRAINAGE

REF. NO.	STATION	202 INLET ABANDON	604 CATCH BASIN STD. NO. 3A	604 CATCH BASIN STD. NO. 6	604 STD. NO.5 CATCH BASIN	603 TYPE B CONDUIT 12"	603 TYPE B CONDUIT 15"	604 M.H. ADJUSTED TO GRADE AS PER PLAN	604 INLET ADJUSTED TO GRADE	COST PART.
		Each	Each	Each	Each	Lin. Ft.		Each	Each	
E-1	88+50	2								I
S-1	88+50				1	10				I
E-2	92+25	1								I
S-2	92+25		1			5				I
E-3	86+60	1								II
S-3	86+60		1			10				II
E-4	86+75	1								II
S-4	87+40			1			40			I
S-4							50			II
S-5	7+75							1		II
S-6	8+55							1		II
S-7	8+55								1	II
S-8	88+50		1							II
S-9	92+25				1					II
S-10	86+50							1		
SUBTOTAL I		3		1	1	15	40			
SUBTOTAL II		2	3		1	10	50	3	1	
TOTAL		5	3	1	2	25	90	3	1	

MADE M.G.B. DATE 12-10-74
TRACED M.E.T DATE 12-12-74
CHECKED M.E.E. DATE 12-13-74
SCALE

Howard, Needles, Tammen & Bergendoff
CONSULTING ENGINEERS
CLEVELAND, OHIO

HNTB

Rev. 7-18-75

TYPICAL SECTIONS

TYPE 451

FHWA REGION	STATE	PROJECT	
5	OHIO		

91 A
354

CUYAHOGA COUNTY
CUY-90-23.73
LAKE COUNTY
LAK-90-0.00

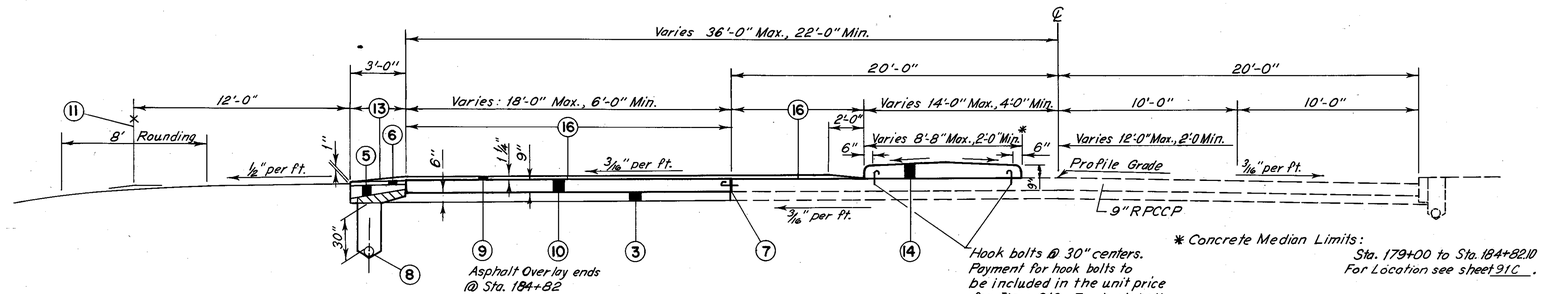

SOUTH WATERLOO ROAD
STA. 179+05.00 TO STA. 183+32.10
Scale: 1/4" = 1'-0"

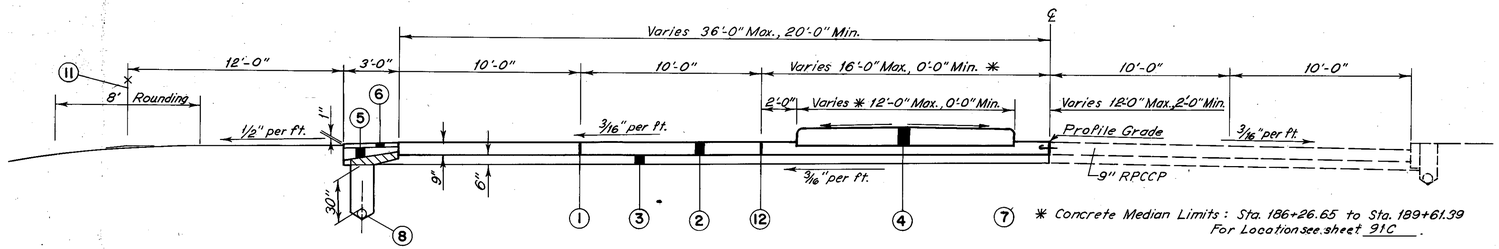

SOUTH WATERLOO ROAD
STA. 183+32.10 TO STA. 193+25.00
Scale: 1/4" = 1'-0"

Note:
Typical Sections are intended to show general roadway and pavement features only. For details see Plan Sheets and Cross-Sections.

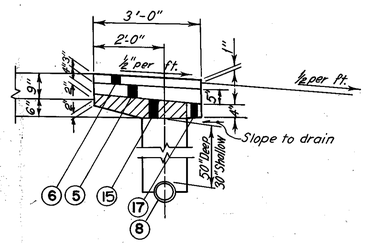

SHOULDER DETAIL
Scale: 1/2" = 1'-0"

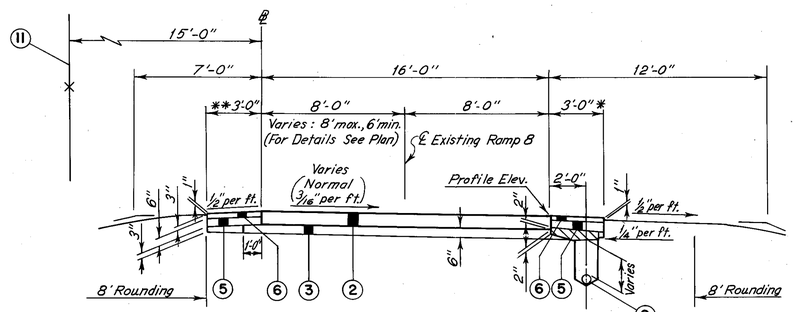

RAMP 8
STA. 2+76.33 ℄ RAMP 8 TO STA. 6+00.00 ℄ RAMP 8
Scale: 1/4" = 1'-0"

LEGEND

1. Standard Longitudinal Joint
2. ITEM 451 - 9" Reinforced Portland Cement Concrete Pavement
3. ITEM 310 - 6" Subbase, Grading A, As Per Plan
4. ITEM 612 - Concrete Median
5. ITEM 304 - Aggregate Base
6. Item 301 Bituminous Aggregate Base: 702.01, AC-20; or 702.09 RT-11 or RT-12
7. Expansion Bolt Joint
8. ITEM 605 - 6" Pipe Underdrain
9. ITEM 404 - 1 1/4" Asphalt Concrete, AC-20
10. ITEM 305 - 9" Portland Cement Concrete Base
11. ITEM 607 - Fence, Type CL, 710.05, As ~~Per~~ Plan
12. Standard Key Joint with Tie Bars
13. Item 409 Seal Coat Bituminous Material, 702.02, MC-800 or MC-3000; 702.03, CBAE-800; 702.04, RS-1, RS-2 or CRS-2; or 702.09, RT-9 or RT-10. Applied at the rate of 0.30 Gal. per Sq. Yds. Cover Aggregate No. 8 at the rate of 0.008 Cu. Yds. per Sq. Yd.
14. ITEM 612 - Concrete Median, As Per Plan
15. ITEM Special - Drainage Connection, See Note in Proposal.
16. Item 407 Tack Coat: 702.02, RC-250; or 702.04, SS-1, SS-1H, MS-2 or RS-1 with Cover Aggregate
17. ITEM 310 - Subbase

MADE J.N.S. DATE 11-7-74
TRACED J.P.K. DATE 12-16-74
CHECKED M.G.B. DATE 12-18-74
SCALE SHOWN

Howard, Needles, Tammen & Bergendoff
CONSULTING ENGINEERS
CLEVELAND OHIO

HNTB

RAMP 8 IMPROVEMENT

FHWA REGION	STATE	PROJECT	
5	OHIO		

91 B
354

CUYAHOGA COUNTY
CUY-90-23.73
LAKE COUNTY
LAK-90-0.00

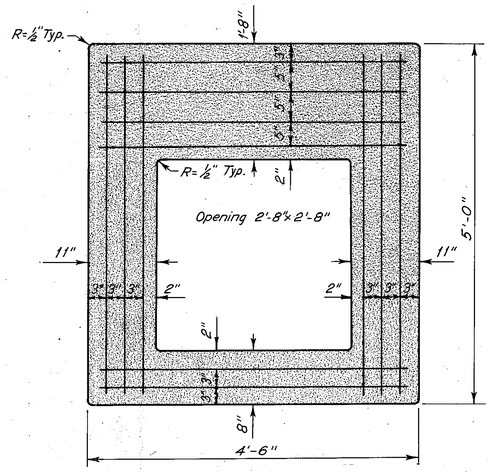

REINFORCED CONCRETE SLAB DETAIL
Scale: 1"= 1'-0"

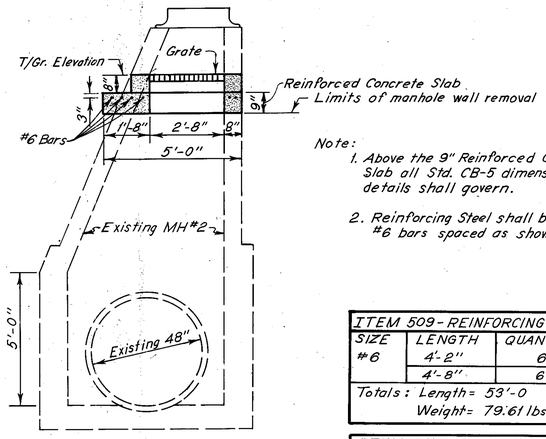

Note:
1. Above the 9" Reinforced Concrete Slab all Std. CB-5 dimensions and details shall govern.
2. Reinforcing Steel shall be straight #6 bars spaced as shown.

ITEM 509- REINFORCING STEEL *		
SIZE	LENGTH	QUANTITY
#6	4'-2"	6
	4'-8"	6
Totals: Length= 53'-0 Weight= 79.61 lbs.		

ITEM 511- R.P.C. CONCRETE *	
$\frac{9}{32}$" [(4.5'x5.0')-(2.8")^2] 1/9	0.43 C.Y.
TOTAL	0.43 C.Y.

* Quantities shown are for estimating purposes only.

MH, RECONSTRUCTED AS STD. NO. 5 CATCH BASIN
Scale: $\frac{3}{8}$"=1'-0"

PAVEMENT ELEVATIONS – SOUTH WATERLOO ROAD

LEFT EDGE OF PAVEMENT ELEVATIONS	OFFSET FROM ℄ (FT.) LEFT	GRADE	EXISTING ℄ ELEVATIONS	STATION
No	Work	-1.58%	604.59	179+00
604.10	26.00	PVC	604.51	+05
603.87	↑	PVI(+3)=604.12	604.28	+25
603.82	↑		604.23	+50
603.84	↑	PVT	604.25	+55
603.95	↑	+0.529%	604.36	+75
604.08	↓	↑	604.49	180+00
604.21	26.00	↑	604.62	+25
604.34	26.60	↑	604.75	+50
604.45	27.43	↑	604.88	+75
604.58	28.26	↑	605.02	181+00
604.70	29.10	↑	605.15	+25
604.81	29.93	↑	605.28	+50
604.93	30.76	↑	605.41	+75
605.08	31.60	↑	605.55	182+00
605.17	32.43	↑	605.68	+25
605.29	33.26	↑	605.81	+50
605.41	34.10	↑	605.94	+75
605.54	34.93	↑	606.08	183+00
605.65	35.76	↑	606.21	+25
605.78	36.00	↑	606.34	+50
605.91	↑	↑	606.47	+75
606.05	↑	↑	606.61	184+00
606.18	↑	↑	606.74	+25
606.31	↑	↑	606.87	+50
606.44	↑	↑	607.00	+75
606.58	↑	↑	607.14	185+00
606.71	↑	↑	607.87	+25
606.84	↑	↑	607.40	+50
606.97	↑	↑	607.53	+75
607.10	↑	↑	607.66	186+00
607.21	↑	↑	607.79	+25
607.35	↑	↑	607.93	+50
607.48	↑	↑	608.06	+75
607.61	↑	↑	608.19	187+00
607.74	↑	↑	608.32	+25
607.87	36.00	↑	608.46	+50
608.04	35.47	↑	608.59	+75
608.18	34.64	↑	608.72	188+00
608.32	33.81	↑	608.85	+25
608.48	32.97	↑	608.99	+50
608.62	32.14	↑	609.12	+75
608.76	31.30	↑	609.25	189+00
608.90	30.47	↑	609.38	+25
609.06	29.64	↑	609.52	+50
609.20	28.81	↑	609.65	+75
609.34	27.97	↑	609.78	190+00
609.49	27.14	↑	609.91	+25
609.63	26.30	↑	610.04	+50
609.77	25.47	↑	610.17	+75
609.93	24.64	↑	610.31	191+00
610.07	23.81	↑	610.44	+25
610.21	22.97	↓	610.57	+50
610.35	22.14	+0.529%	610.70	+75
610.51	21.30	PVC	610.84	192+00
610.61	20.47	↑	610.93	+25
610.64	20.00	PVI=611.10	610.95	+50
610.59	↑	↑	610.90	+75
610.47	↓	PVT	610.78	193+00
610.31	20.00	-0.64%	610.62	+25

PAVEMENT ELEVATIONS – RAMP 8

STATION	LEFT EDGE OF PAVEMENT ELEVATIONS	CROSS SLOPE (Ft/Ft)–	PAVEMENT WIDTH FT	RIGHT EDGE OF PAVEMENT ELEVATIONS	GRADE
2+00 B	607.52	.01625 Lt		Profile Grade	
2+25	607.55	↑			
2+50	607.58	↑			
2+75	607.61	.01625 Lt			
2+76.33	607.61	.01583 Lt	16	607.87	+0.0402%
3+00	607.75	.00829 Lt	↑	607.88	↑
3+25	607.88	.00032 Lt	↑	607.89	↑
3+50	608.02	.00764 Rt	↑	607.90	↑
3+75	608.16	.0156 Rt	↑	607.91	↑
4+00 B	608.17	↑	↑	607.92	↑
4+00 ℄	608.17	↑	↑	607.92	PVC
4+25	608.14	↑	↑	607.89	↑
4+50	608.00	.0156 Rt	↑	607.75	↑
4+75	607.83	.01625 Rt	↑	607.57	↑
5+00	607.54	↑	16	607.28	PVI=607.96
5+25	607.16	↑	15.29	606.91	↑
5+50	606.68	↑	14.46	606.45	↑
5+75	606.16	↑	15.63	605.91	↑
6+00 ℄	605.53	.01625 Rt	15.28	605.28	PVRC*
	↓				

* Local Tangent Grade = -2.678%

MADE M.G.B. DATE 12-18-74
TRACED J.P.K. DATE 12-20-74
CHECKED D.S.P. DATE 1-22-75
SCALE As Noted

Howard, Needles, Tammen & Bergendoff
CONSULTING ENGINEERS
CLEVELAND, OHIO

HNTB

PAVEMENT ELEVATIONS & DRAINAGE DETAILS

RAMP 8 IMPROVEMENT

FHWA REGION	STATE	PROJECT	
5	OHIO		

91 C 354

CUYAHOGA COUNTY
CUY-90-23.73
LAKE COUNTY
LAK-90-0.00

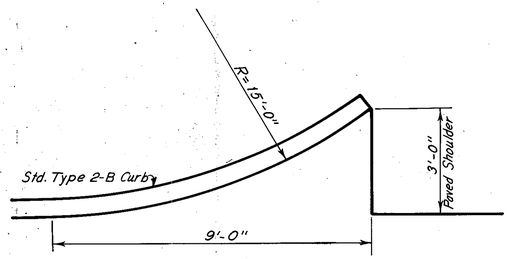

CURB FLARE DETAIL
Scale: 1"=1'-0"

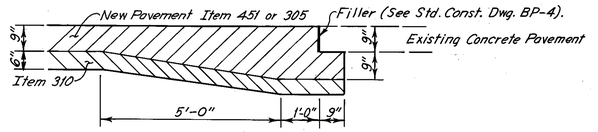

THICKENED EDGE EXPANSION JOINT, AS PER PLAN
Scale 1/2"=1'-0"

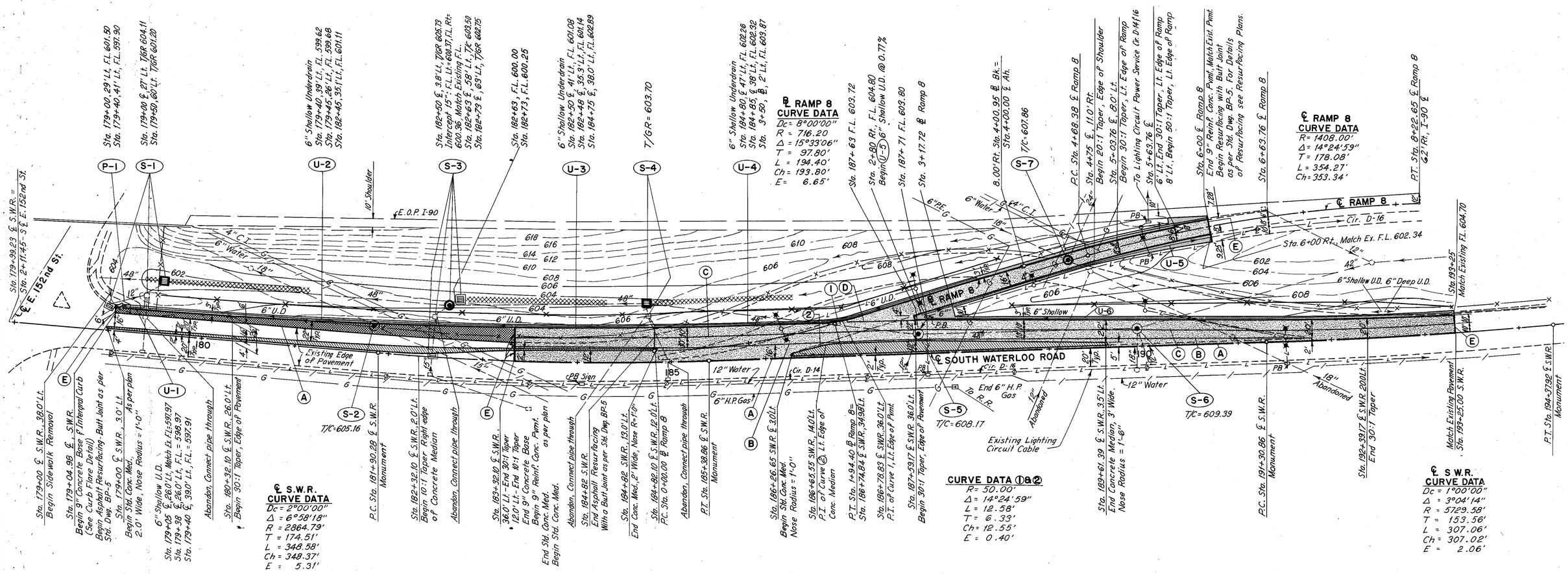

50 0 50 100 150 200
SCALE IN FEET

NOTES:

1. Concrete Median Begin and End Stations shall be considered to mean the radius point of the nose.
2. For pavement elevations see sheet 91B.
3. LIGHTING— The Contractor shall provide temporary lighting as noted on sheet 143 to maintain existing circuits D14 and D16 on South Waterloo Rd. For lighting removal quantities see sheet 169.
4. Utility information shown is general in nature. For more information contact the local utility companies.
5. For Typical Sections see sheet 91A.
6. For Quantities see sheets 91D & E.
7. Payment for joints shall be included with the cost per bid item 305 or 451.
8. For Traffic Control Details see sheet 91F.
9. For Cross-Sections, see sheets 91G-I.
10. Transverse joints, unless otherwise noted, shall be as per Std. Dwg. BP-4. Existing transverse joints shall be matched but the joint spacing shall not exceed that listed in Std. Dwg. BP-4.

LEGEND

- ITEM 451-9" Reinforced Concrete Pavement
- ITEM 305-9" Concrete Base
- ITEM 608- Concrete Median
- Asphalt Shoulder
- ITEM 660- Sodding
- Existing Lighting to remain.
- Existing Lighting to be removed
- Manhole Reconstructed to Grade
- Manhole Adjusted to Grade
- Catch Basin No. 5
- Manhole Reconstructed and Modified
- Catch Basin No. 3-A
- PB□ Lighting Pullbox
- (A) Expansion Bolt Joint
- (B) Key Joint with Tie Bars
- (C) Sawed Joint with Tie Bars
- (D) Key Joint without Tie Bars
- (E) Thickened Edge Expansion Joint, As Per Plan

MADE M.G.B. DATE 1-7-76
TRACED J.P.K. DATE 1-14-76
CHECKED D.S.P. DATE 1-20-76
SCALE 1"=50'-0"

Howard, Needles, Tammen & Bergendoff
CONSULTING ENGINEERS
CLEVELAND OHIO

HNTB

Rev. 7-18-75

SOUTH WATERLOO ROAD & RAMP 8

RAMP 8 IMPROVEMENT

FHWA REGION	STATE	PROJECT	
5	OHIO		

91 D 354

CUYAHOGA COUNTY
CUY-90-23.73
LAKE COUNTY
LAK-90-0.00

QUANTITY CALCULATIONS

MADE BY M.G.B. DATE 1-9-75
CHECKED BY M.E.E. DATE 1-9-75

ITEM 202 – FENCE REMOVED – COST PART. II

STATION From	STATION To	CALCULATION	QUANTITY Lin. Ft.
179+47 SMR		New 41' Lt. Corner Post (Old was 27' Lt.	14.0
179+47 SMR	181+90 Lt.		243.0
181+90 SMR	183+80 Lt.		174.0
183+80 SMR	185+99 Lt.		222.0
185+99 SMR	189+01 Lt.		308.0
189+73 SMR	193+25 Lt.		356.0
TOTAL			1317.0

ITEM 202 – PAVEMENT REMOVAL – COST PART. II

STATION From	STATION To	CALCULATION	QUANTITY
S.W.R.			
179+05	179+69 Lt.	Planimeter - 20 S.F.	
183+32	193+25 Lt.	includes W.B. - S.W.R. & Ramp 8 Intersection	
		Planimeter - 27,923 S.F.	
Rp. 8 @ S.WR.	6+00 Rp. 8	Planimeter - 7725 S.F.	
TOTAL		35,668 S.F. ($\frac{1}{9}$)	3963.11 S.Y.

ITEM 202 – SIDEWALK REMOVAL – COST PART. II

STATION From	STATION To	CALCULATION	QUANTITY
179+00 SWR	179+34 Lt.	Planimeter	192 S.F.
TOTAL			192 S.F.

ITEM 203 – EMBANKMENT – COST PART. II

STATION From	STATION To	CALCULATION	QUANTITY
From Cross-Section Sheet 91G			169 C.Y.
From Cross-Section Sheet 91H			41 C.Y.
From Cross-Section Sheet 91I			0 C.Y.
TOTAL			210 C.Y.

ITEM 203 – EXCAVATION, NOT INCLUDING EMBANKMENT CONSTRUCTION – COST PART II

STATION From	STATION To	CALCULATION	QUANTITY
From Cross-Section Sheet 91G			829 C.Y.
From Cross-Section Sheet 91H			2381 C.Y.
From Cross-Section Sheet 91I			3126 C.Y.
Sub-Total			6336 C.Y.
Less Volume of Pvmt. Removal		$(35,668^{sf} \times \frac{8''}{12}) \frac{1}{27}$	991 C.Y.
TOTAL			5345 C.Y.

ITEM 301 – BITUMINOUS AGGREGATE BASE – COST PART. II

STATION From	STATION To	CALCULATION	QUANTITY
S.W.R.			
179+14	186+78.83 Lt.	$3'(.25')(764.83') \frac{1}{27}$	21.25 C.Y.
188+05	193+25 Lt.	$3'(.25')(520') \frac{1}{27}$	14.44 C.Y.
Ramp 8			
1+98.53	5+03.76 Lt.	$3'(.25')(305.23) \frac{1}{27}$	8.48 C.Y.
5+03.76	5+63.76 Lt.	$\frac{1}{2}(3'+2')(.25')(60') \frac{1}{27}$	1.39 C.Y.
2+76.32	3+17.72 Rt.	$\frac{1}{2}(4'+16')(.25')(41.40') \frac{1}{27}$	3.83 C.Y.
3+17.72	4+75 Rt.	$3'(.25')(157.28') \frac{1}{27}$	4.37 C.Y.
4+75	6+00 Rt.	$\frac{1}{2}(3+9.25').25'(125') \frac{1}{27}$	7.09 C.Y.
I-90			
190+03.5	190+70.5 Rt.	$\frac{1}{2}(10'+2')(67')(.25') \frac{1}{27}$	3.72 C.Y.
TOTAL			64.57 C.Y.

ITEM SPECIAL – DRAINAGE CONNECTION TYPE E – COST PART. II

STATION From	STATION To	CALCULATION	QUANTITY
S.W.R.			
179+14	186+78.83 Lt.	$\frac{1}{36}[\frac{4'+6.5'}{2}(17') + \frac{6.5'+5'}{2}(15')](764.83') \frac{1}{3}$	34.52 C.Y.
187+63	193+25 Lt.	$0.1354 S.Y.(562') \frac{1}{3}$	25.37 C.Y.
Ramp 8			
1+98.53	3+50 Lt.	$0.1354 S.Y.(151.47') \frac{1}{3}$	6.84 C.Y.
2+80	6+00 Rt.	$0.1354 S.Y.(320') \frac{1}{3}$	14.44 C.Y.
TOTAL			81.17 C.Y.

ITEM 304 – AGGREGATE BASE – COST PART. II

STATION From	STATION To	CALCULATION	QUANTITY
S.W.R.			
179+14	186+78.83 Lt.	$3'(\frac{4'+5''}{2+12})(764.83') \frac{1}{27}$	31.87 C.Y.
187+66.07	193+25.00 Lt.	$3'(\frac{4'+\frac{5}{12}'}{2+\frac{1}{12}'})(558.93') \frac{1}{27}$	23.29 C.Y.
Ramp 8			
1+98.53	3+50.00 Lt.	$3'(\frac{4'+5''}{2+12})(151.47') \frac{1}{27}$	6.31 C.Y.
3+50.00	5+03.76 Lt.	$3'(.5')(153.76') \frac{1}{27}$	8.54 C.Y.
5+03.76	5+63.76 Lt.	$\frac{1}{2}(3'+2')(.5')(60') \frac{1}{27}$	2.78 C.Y.
2+76.32	2+83.22 Rt.	$\frac{1}{2}(4'+6')(\frac{4'+5''}{2+12})(6.9') \frac{1}{27}$	0.48 C.Y.
2+83.22	3+17.72 Rt.	$3'(\frac{4'+5''}{2+12})(34.50') \frac{1}{27} + \frac{1}{2}(0+10)(\frac{5}{12}')(34.50') \frac{1}{27}$	4.10 C.Y.
3+17.72	4+75.00 Rt.	$3'(\frac{4'+5''}{2+12})(157.28') \frac{1}{27}$	6.55 C.Y.
4+75	6+00 Rt.	$3'(\frac{4'+5''}{2+12})(125') \frac{1}{27} + \frac{1}{2}(0+6.25)(\frac{5}{12}')(125') \frac{1}{27}$	11.24 C.Y.
I-90			
190+03.5	190+70.5 Rt.	$\frac{1}{2}(10'+2')(67')(.5') \frac{1}{27}$	7.44 C.Y.
TOTAL			102.60 C.Y.

ITEM 305 – 9" PORTLAND CEMENT CONCRETE BASE – COST PART. II

STATION From	STATION To	CALCULATION	QUANTITY
179+04.98	180+32.10 SWR	$(6'+127.12 \div 9) + [\frac{1}{2}(3')(9') \div 9]$	86.25 S.Y.
180+32.10	183+32.10 SWR	$\frac{1}{2}(6'+16') 300' \div 9$	366.67 S.Y.
TOTAL			452.92 S.Y.

ITEM 310 – SUBBASE – COST PART. II

STATION From	STATION To	CALCULATION	QUANTITY
S.W.R.			
179+14	186+78.83 Lt.	$[\frac{1}{2}(5'+4') 4'(\frac{1}{36})](764.83') \frac{1}{3}$	3.54 C.Y.
187+63	193+25 Lt.	$0.01389 S.Y.(562') \frac{1}{3}$	2.60 C.Y.
Ramp 8			
1+98.53	3+50 Lt.	$0.01389 S.Y.(151.47') \frac{1}{3}$	0.70 C.Y.
2+80	4+75 Rt.	$0.01389 S.Y.(195') \frac{1}{3}$	0.90 C.Y.
4+75	6+00 Rt.	$\frac{1}{2}(.01389 S.Y. + [\frac{1}{3}(\frac{4'+12''}{12})6.625'(\frac{1}{36})(125')] \frac{1}{3}$	5.40 C.Y.
3+50	5+03.76 Lt.	$[\frac{1}{2}(6''+3'')24'(\frac{1}{324})](153.76') \frac{1}{3}$	4.27 C.Y.
5+03.76	5+63.76 Lt.	$\frac{1}{2}(.08333 S.Y. + [\frac{1}{3}(6''+4.5'')12''(\frac{1}{36})])60'(\frac{1}{3})$	1.32 C.Y.
I-90			
190+03.5	190+70.5 Rt.	$\frac{1}{2}(10'+2')(67')(.5') \frac{1}{27}$	7.44 C.Y.
TOTAL			26.17 C.Y.

ITEM 310 – SUBBASE, GRADING A, AS PER PLAN – COST PART. II

STATION From	STATION To	CALCULATION	QUANTITY
		Note: Surface Areas From Item 451	Cu. Yds.
S.W.R.			
179+04.98	183+32.10	$452.92 S.Y.(\frac{6''}{36}) + [\frac{11''}{12}(\frac{4'+0}{2+12})\frac{1}{3}](427.12') \frac{1}{3}$	79.22
183+32.10	186+78.83	$\frac{1}{3}[346.73' \; [.026 S.Y. + 36'(6'')\frac{1}{324}]$	234.18
186+78.83	187+59.17	$\frac{1}{3}(80.34')(36')(6'') \frac{1}{36}$	53.56
187+59.17	187+63.	$\frac{1}{3}(3.83')(37'+36.9') \frac{1}{2}(\frac{6''}{36})$	.2.62
187+63.	192+39.17	$\frac{1}{3}(476.17')[\frac{1}{3}(\frac{33\frac{1}{2}'+20}{2})(\frac{1}{36}) + .026 S.Y.]$	250.63
192+39.17	193+25.00	$190.73 S.Y.(\frac{6''}{36}) + .026 S.Y.(\frac{86.83'}{3})$	32.54
Ramp 8			
1+98.53	2+76.33	$86.81 S.Y.(\frac{6''}{36}) + 77.80'(\frac{1}{3})(.026 S.Y.)$	15.15
2+76.33	2+80	$\frac{1}{3}(17'x3.67')(\frac{6''}{36}) + \frac{1}{3}(3.67')(.026 S.Y.)$	1.19
2+80	3+50	$\frac{1}{3}(16'x70')(\frac{6''}{36}) + 2(.026 S.Y.)(70') \frac{1}{3}$	21.96
3+50	5+03.76	$\frac{1}{3}(153.76'x17')(\frac{6''}{36}) + (.026 S.Y.)(153.76') \frac{1}{3}$	49.75
5+03.76	5+63.76	$\frac{1}{3}(60')(\frac{17+14}{2})(\frac{6''}{36}) + (.026 S.Y.)(60') \frac{1}{3}$	18.30
5+63.76	6+00	$\frac{1}{3}(36.24'x16')(\frac{6''}{36}) + (.026 S.Y.)(36.24') \frac{1}{3}$	11.05
TOTAL			770.15

MADE M.G.B. DATE 1-9-75
TRACED M.E.E. DATE 1-13-75
CHECKED M.E.E. DATE 1-9-75
SCALE

Howard, Needles, Tammen & Bergendoff
CONSULTING ENGINEERS
CLEVELAND, OHIO

HNTB

RAMP 8 IMPROVEMENT

QUANTITY CALCULATIONS
MADE BY M.G.B. DATE 12-21-74
CHECKED BY A.J.S. DATE 1-8-75

FHWA REGION	STATE	PROJECT	
5	OHIO		

CUYAHOGA COUNTY
CUY-90-23.73
LAKE COUNTY
LAK-90-0.00

91 E 354

ASPHALT QUANTITIES - COST PART. II

STATION From	STATION To	CALCULATION	QUANTITY
ITEM 404 - 1½" ASPHALT CONCRETE			
179+05	179+14 SWR Lt.	$(\frac{1.5}{12}')\frac{1}{2}(22'+25')(9')\frac{1}{27}$	0.82 Cu.Yds.
179+14	184+82 SWR Lt.	$(\frac{1.5}{12}')\ 25'(568')\frac{1}{27}$	54.78 Cu.Yds.
TOTAL			55.60 Cu.Yds.
ITEM 407 - TACK COAT			
179+05	184+82 SWR	$22'(577')\frac{1}{9}(.1\frac{GAL}{S.Y.})$	141.04 Gal.
TOTAL			141.04 Gal.
ITEM 407 - COVER AGGREGATE			
179+05	184+82 SWR	$22'(577')\frac{1}{9}(7\frac{LBS.}{S.Y.})\frac{1}{2000}$	4.94 Tons
TOTAL			4.94 Tons
ITEM 409 - SEAL COAT			
179+14	184+82 SWR	$3'(568')\frac{1}{9}(.3\frac{GAL.}{S.Y.})$	56.80 Gal.
TOTAL			56.80 Gal.
ITEM 409 - COVER AGGREGATE			
179+14	184+82 SWR	$3'(568')\frac{1}{9}(.008\frac{CY}{S.Y.})$	1.52 Cu.Yds.
TOTAL			1.52 Cu.Yds.

ITEM 451 - 9" REINFORCED PORTLAND CEMENT CONCRETE PAVEMENT - COST PART. II

STATION From	STATION To	CALCULATION	QUANTITY
S.W.R.			
183+32.10	187+59.17	$36' \times 427.07' \div 9$	1708.28 S.Y.
187+59.17	192+39.17	$\frac{1}{2}(36'+20')480' \div 9$	1493.33 S.Y.
192+39.17	195+25.00	$20' \times 85.83' \div 9$	190.73 S.Y.
Ramp 8			
1+98.53 ℄	2+76.33	See Calculations below	86.81 S.Y.
2+76.33	5+03.76	$16' \times 227.43' \div 9$	404.32 S.Y.
5+03.76	5+63.76	$\frac{1}{2}(16'+14')60' \div 9$	100.00 S.Y.
5+63.76	6+00.00	$\frac{1}{2}(16'+15.28')36.24' \div 9$	62.98 S.Y.
TOTAL			4046.45 S.Y.

ITEM 607 - FENCE, TYPE CL.,710.05, AS PER PLAN - COST PART. II

STATION From	STATION To	CALCULATION	QUANTITY Lin.Ft.
179+47 SMR	186+79 Lt.	Varies 41 to 51	732
1+99 SMR	3+80 Lt.	15' Lt. ℄	181
188+60 SMR	192+39 Lt.	Varies 47.6 to 41	379
192+39 SMR	193+25 Lt.	Varies 41 to 27	86
TOTAL			1378

ITEM 612 - CONCRETE MEDIAN - COST PART. II

STATION From	STATION To	CALCULATION	QUANTITY Sq. Yds.
SOUTH WATERLOO RD.			
183+32.10	184+82.	$[2'(149.9')+\frac{1}{2}\pi(1^2)]\frac{1}{9}$	33.49
186+26.65	186+65.55	$[\frac{1}{2}\pi(1^2)+\frac{1}{2}(2'+12')(38.9')]\frac{1}{9}$	30.43
186+65.55	187+59.17	$12' \times 93.62' \times \frac{1}{9}$	124.83
187+59.17	189+61.39	$[\frac{1}{2}(12'+3')(202.22')+\frac{1}{2}\pi(1.5^2)]\frac{1}{9}$	168.91
TOTAL			357.64

ITEM 612 - CONCRETE MEDIAN AS PER PLAN - COST PART. II

STATION From	STATION To	CALCULATION	QUANTITY Sq. Yds.
SOUTH WATERLOO RD.			
179+00	180+32.10	$[\frac{1}{2}\pi(1^2)+2'(132.1')]\frac{1}{9}$	29.53
180+32.10	182+32.10	$[\frac{1}{2}(2'+8.67')200']\frac{1}{9}$	118.56
182+32.10	183+32.10	$[\frac{1}{2}(8.67'+2')100']\frac{1}{9}$	59.28
TOTAL			207.37

ITEM 609 - CURBING - COST PART. II

	STATION FROM	STATION TO	SIDE	Std, Type 2-B (Integral)		
S.W.R.	179+05	197+14	Lt.	9.65		
Rp. 8	4+50	5+64	8' Lt.			
Rp. 8	5+64	6+00	8' Lt.			
	TOTAL			9.65		

Item 451-9" RPCCP Calculations
1+98.53 ℄ to 2+76.33 ℄

$$A=\frac{\left(\frac{77 \times 50^\circ \times 14.416^\circ}{360^\circ}-\frac{50^\circ \sin 14.416^\circ}{2}\right)+(2 \times 16' \times 62.24')+(5.56' \times 16')+(2 \times 4' \times 15.56')}{9}$$

$= 86.81$ Sq. Yds.

ITEM 659 - SEEDING & MULCHING - COST PART. II

STATION From	STATION To	CALCULATION	QUANTITY
S.W.R.			
179+05	180+00	$\frac{1}{9}$ (4443.75" Planimeter)	493.8 S.Y.
180+00	181+00	$\frac{1}{9}$ (4700" Planimeter)	522.2 S.Y.
181+00	182+00	$\frac{1}{9}$ (5331.25" Planimeter)	592.4 S.Y.
182+00	183+00	$\frac{1}{2}(48+42)\frac{100}{9}$	500.0 S.Y.
183+00	184+00	$\frac{1}{2}(42+45)\frac{100}{9}$	483.3 S.Y.
184+00	185+00	$\frac{1}{2}(45+44)\frac{100}{9}$	550.0 S.Y.
185+00	186+00	$\frac{1}{2}(44+40)\frac{100}{9}$	466.7 S.Y.
186+00	187+00	$\frac{1}{2}(40+48)\frac{100}{9}$	488.9 S.Y.
187+00	188+00	$\frac{1}{2}(48+44)\frac{100}{9}$	511.1 S.Y.
188+00	189+00	$\frac{1}{2}(44+35)\frac{100}{9}+\frac{1}{9}$(2612.5" Planimeter)	729.2 S.Y.
189+00	190+00	$\frac{1}{9}$(1881.25" + 5281.25") Planimeter	795.8 S.Y.
190+00	191+00	$\frac{1}{9}$(343.75" + 5768.75") Planimeter	6792 S.Y.
191+00	192+00	$\frac{1}{9}$ (2375" Planimeter)	263.9 S.Y.
192+00	193+25	$\frac{1}{9}$ (1818.75" Planimeter)	202.1 S.Y.
TOTAL			7278.6 S.Y.

ITEM 660 - SODDING, AS PER PLAN - COST PART. II

STATION From	STATION To	CALCULATION	QUANTITY
179+30	179+45 Lt.	$15' \times 6' \div 9$	10 S.Y.
179+50	181+00 Lt.	$150' \times 6' \div 9$	100 S.Y.
182+75	184+25 Lt.	$150' \times 6' \div 9$	100 S.Y.
184+75	186+25 Lt.	$150' \times 6' \div 9$	100 S.Y.
TOTAL			310 S.Y.

DRAINAGE - COST PARTICIPATION II

REF. NO.	STATION FROM	STATION TO	SIDE	202 Inlet Abandon	603 Type F Conduit 707.01 6"	603 Type B Conduit 12"	604 Std. No.3-A Catch Basin	604 Std. No. 5 Catch Basin	604 Manhole Adusted to grade, as per plan	604 Manhole Reconstructed to grade as per plan	604 Manhole Reconstructed and Modified As Per Plan	605 Shallow Underdrain 6"	605 Deep Underdrain 6"
	FROM	TO		Each	Linear Feet	Linear Feet	Each	Each	Each	Each	Each	Linear Ft.	Linear Ft.
S-1	179+00 SWR	179+50	Lt.	2		38	1				1		
S-2	181+83 SWR		Lt.						1				
S-3	182+50 SWR	182+73	Lt.	1		10	1	1		1			
S-4	184+74 SWR		Lt.	2							1		
S-5	187+63 SWR		Lt.						1				
S-6	189+95 SWR		Lt.						1				
S-7	4+52 Rp. 8		℄							1			
U-1	179+05 SWR	179+40	Lt.		10								42
U-2	179+40 SWR	182+45	Lt.		10							302	
U-3	182+50 SWR	184+75	Lt.		10							229	
U-4	184+80 SWR	3+50 Rp. 8	Lt.		10							350	
U-5	2+80 Rp. 8	6+00	Rt.									320	
U-6	187+63 SWR	193+25	Lt.		10							510	80
	TOTAL			5	50	48	2	1	3	2	2	1711	122

MADE M.G.B. DATE 12-24-74
TRACED M.E.T. DATE 1-16-75
CHECKED A.J.S. DATE 1-8-75
SCALE

Howard, Needles, Tammen & Bergendoff
CONSULTING ENGINEERS
CLEVELAND, OHIO

HNTB

Rev. 7-18-75

QUANTITIES

RAMP 8 IMPROVEMENT

FHWA REGION	STATE	PROJECT	
5	OHIO		

91F 354

CUYAHOGA COUNTY
CUY-90-23.73
LAKE COUNTY
LAK-90-0.00

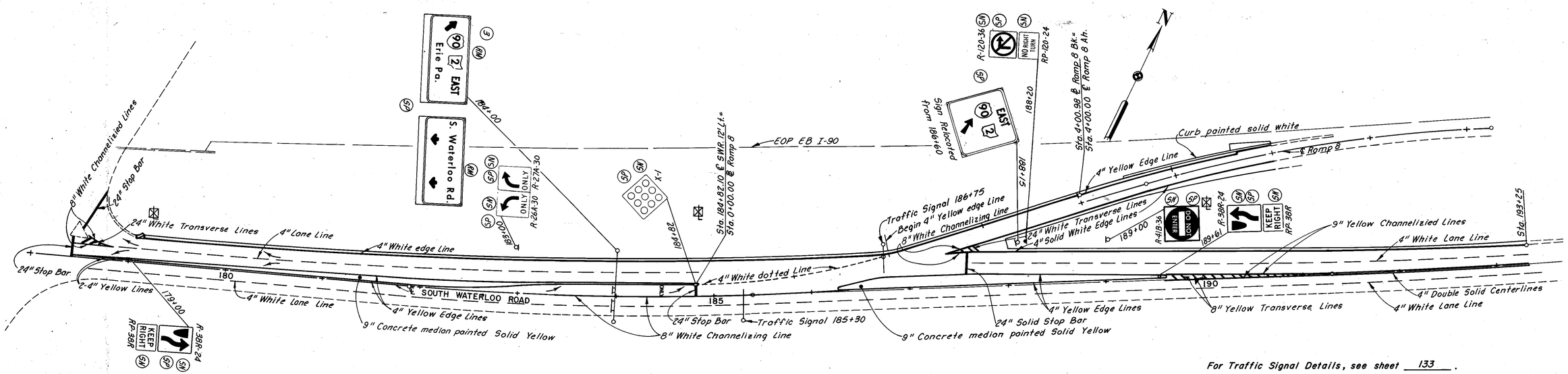

50 0 50 100 150 200
SCALE IN FEET

For Traffic Signal Details, see sheet 133 .
For Signing Details, see sheets 110-116 .
For Existing Signs and sign quantities, see sheets 29 & 30.

Note:
All Pavement Markings are Thermoplastic unless noted to be painted.

PAVEMENT MARKINGS - COST PARTICIPATION II				
ITEM	DESCRIPTION		QUANTITY	UNIT
621	4" Solid Yellow Edge Lines			
	Sta. 178+43 SWR Lt. = 184+82 Lt.	1282		
	Sta. 186+36 SWR Lt. = 189+62 Lt.	624		
	2+00 Rp. 8 ℄ - 5+64	364		
	Total	2270 ÷ 5280	0.43	Miles
621	4" Solid White Edge Lines			
	179+05 SWR Lt. = 186+75	770		
	187+80 SWR Lt. = 193+25	545		
	3+00 Ramp 8 Rt. = 6+00	300		
	Total	1615 ÷ 5280	0.31	Miles
621	4" Broken White Lane Lines			
	178+90 SWR Lt. = 184+82	592		
	178+90 SWR Rt. = 193+25	1435		
	187+59 SWR Lt. = 193+25	566		
	Total	2593 ÷ 5280	0.491	Miles
621	4" Dotted White Lane Lines			
	0+00 Ramp 8 ℄ = 2+00	200		
	Total	200 ÷ 5280	0.04	Miles
621	4" Double, Solid Yellow Center Lines			
	190+70 SWR ℄ = 193+25	255		
	Total	255 ÷ 5280	0.05	Miles
621	9" Solid Yellow Channelizing Lines			
	189+62 SWR to 190+70	216		
	Total	216	216	Lin. Ft.
621	24" Solid White Broad Transverse Lines			
	178+43 SWR Lt. to 178+90	16		
	2+35 Ramp 8 Rt. to 3+00	20		
	Total	36	36	Lin. Ft.

PAVEMENT MARKINGS - COST PARTICIPATION II				
ITEM	DESCRIPTION		QUANTITY	UNIT
621	8" Solid Yellow Broad Transverse Lines			
	189+62 SWR ℄ to 190+70	25		
	Total	25	25	Lin. Ft.
621	8" Solid White Channelizing Lines			
	178+43 SWR Lt. = 178+90	94		
	183+32 SWR ℄ = 186+26 ℄	294		
	2+55 Ramp 8 Rt. = 3+00	90		
	Total	478 ÷ 5280	0.09	Miles
621	24" Stop Lines			
	Sta. 178+43 SWR Lt.	20		
	Sta. 178+52 SWR to Sta. 178+76 Lt.	55		
	Sta. 0+00 Ramp 8 Rt.	12		
	Sta. 187+59 SWR Lt.	22		
	Total	109	109	Lin. Ft.
621	Curb Marking - White			
	4+50 Ramp 8 Lt. to 6+00	150		
	Total	150 ÷ 5280	0.03	Miles
621	Island Marking - Yellow (Areas from MC-6 Median Qtys.)			
	179+00 to 184+82 [2167.64 +9"(1½)2(586')](face)		3046.64	
	186+26.65 to 189+61.39 [2917.50 +9"(1½)2(340')](face)		3427.50	
	Total		6474.14	Sq. Ft.
621	Lane Arrows	Each		
	178+93 Lt. SWR	1		
	179+00 Lt. SWR	1		
	180+45 Lt. SWR	2		
	183+42 Lt. SWR	1		
	184+65 Lt. SWR	1		
	Total	6	6	Each
621	Word "only"			
	184+50 Lt. SWR	1		
	Total	1	1	Each

LEGEND

- PROPOSED LIGHT TOWER (BY OTHERS)
- (SN) PROVIDE NEW SIGN
- (SP) PROVIDE NEW SUPPORT (S)
- (RM) REVISE EXISTING SIGN LEGEND
- PROPOSED SIGN

MADE J.N.S. DATE 11-14-74
TRACED B.B. DATE 1-16-75
CHECKED M.G.B. DATE 1-3-75
SCALE 1"=50'

Howard, Needles, Tammen & Bergendoff
CONSULTING ENGINEERS
CLEVELAND OHIO

HNTB

FED. RD. DIVISION	STATE	PROJECT	
5	OHIO		

916
354

CUYAHOGA COUNTY
CUY-90-23.73
LAKE COUNTY
LAK-90-0.00

QUANTITY CALCULATIONS
MADE BY M.G.B. DATE 1-6-75
CHECKED BY A.J.S. DATE 1-8-75

M.G.B. 1-6-75
M.G.B. 1-7-75
A.J.S. 1-8-75

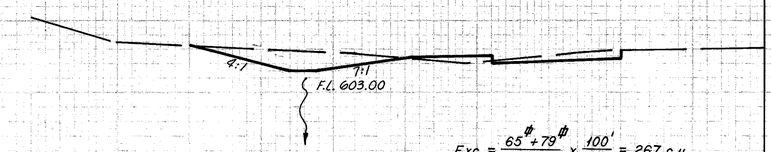

$Exc. = \frac{65^{\phi} + 79^{\phi}}{2} \times \frac{100'}{27} = 267$ c.y.

$Emb. = \frac{12^{\phi} + 10^{\phi}}{2} \times \frac{100'}{27} = 41$ c.y.

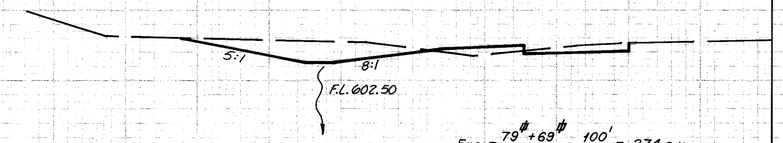

$Exc. = \frac{79^{\phi} + 69^{\phi}}{2} \times \frac{100'}{27} = 274$ c.y.

$Emb. = \frac{12^{\phi} + 13^{\phi}}{2} \times \frac{100'}{27} = 46$ c.y.

$Exc. = \frac{69^{\phi} + 41^{\phi}}{2} \times \frac{100'}{27} = 204$ c.y.

$Emb. = \frac{13^{\phi} + 16^{\phi}}{2} \times \frac{100'}{27} = 54$ c.y.

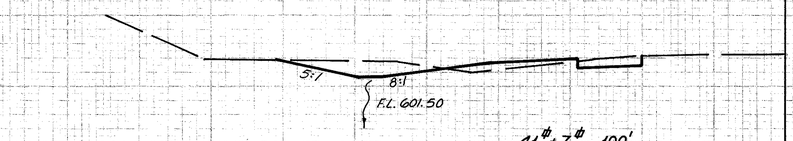

$Exc. = \frac{41^{\phi} + 7^{\phi}}{2} \times \frac{100'}{27} = 84$ c.y.

$Emb. = \frac{16^{\phi} + 0^{\phi}}{2} \times \frac{100'}{27} = 28$ c.y.

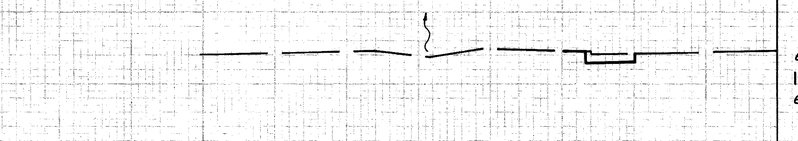

	EARTHWORK			
	END AREA		VOLUME	
	EXC.	EMB.	EXC.	EMB.
606.08				
183+00	65	10		
606.08				
			267	41
605.55				
182+00	79	12		
605.55				
			274	46
605.02				
181+00	69	13		
605.02				
			204	54
604.49				
180+00	41	16		
604.49				
			84	28
604.51				
179+05	7	0		
604.51				

QUANTITIES Cost Part II

ITEM	DESCRIPTION	QUANTITY	UNITS
203	Excavation, not including embankment construction	829	Cu. Yds.
203	Embankment	169	Cu. Yds.

SCALE
1"=10'-0" VERTICAL
1"=10'-0" HORIZONTAL

HOWARD, NEEDLES, TAMMEN & BERGENDOFF
CONSULTING ENGINEERS
KANSAS CITY CLEVELAND NEW YORK

260 240 220 200 180 160 140 120 100 80 60 40 20 0

SOUTH WATERLOO ROAD STA. 179+00 LEFT HALF TO STA. 183+00

FED. RD. DIVISION	STATE	PROJECT	
5	OHIO		

91H
354

CUYAHOGA COUNTY
CUY-90-23.73
LAKE COUNTY
LAK-90-0.00

QUANTITY CALCULATIONS

MADE BY M.G.B. DATE 1-6-75
CHECKED BY A.J.S. DATE 1-8-75

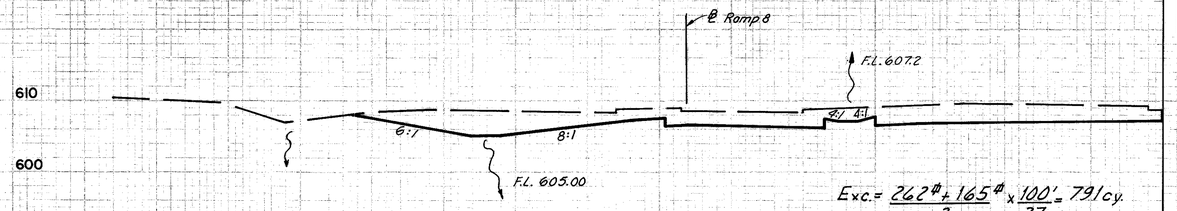

Exc. = $\frac{262^{\#} + 165^{\#}}{2} \times \frac{100'}{27}$ = 791 cy.

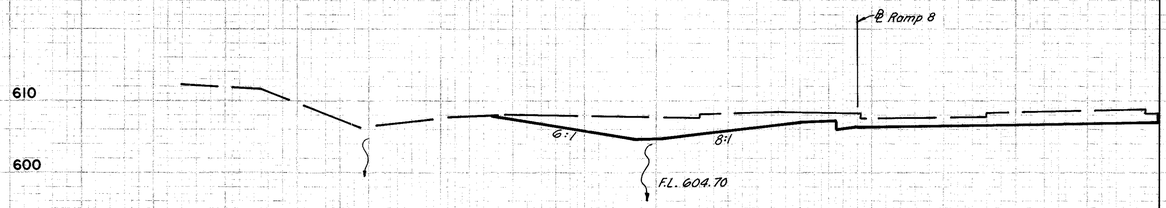

Exc. = $\frac{165^{\#} + 122^{\#}}{2} \times \frac{100'}{27}$ = 532 cy.

Exc. = $\frac{122^{\#} + 90^{\#}}{2} \times \frac{100'}{27}$ = 393 cy

Emb = $\frac{0 + 2^{\#}}{2} \times \frac{100'}{27}$ = 4 cy

Exc. = $\frac{90^{\#} + 102^{\#}}{2} \times \frac{100'}{27}$ = 356 cy

Emb = $\frac{2^{\#} + 4^{\#}}{2} \times \frac{100}{27}$ = 11 cy

Exc. = $\frac{102^{\#} + 65^{\#}}{2} \times \frac{100'}{27}$ = 309 cy.

Emb = $\frac{10^{\#} + 4^{\#}}{2} \times \frac{100}{27}$ = 26 cy.

STA.		EARTHWORK END AREA EXC.	EARTHWORK END AREA EMB.	EARTHWORK VOLUME EXC.	EARTHWORK VOLUME EMB.
608.74					
188+00		262	0		
608.72					
				791	0
608.19					
187+00		165	0		
608.19					
				532	0
607.66					
186+00		122	0		
607.66					
				393	4
607.14					
185+00		90	2		
607.14					
				356	11
606.60					
184+00		102	4		
606.60					
				309	26
183+00		65	10		

QUANTITIES Cost Part II			
ITEM	DESCRIPTION	QUANTITY	UNITS
203	Excavation, not incl. emb.	2381	Cu. Yds.
203	Embankment	41	Cu. Yds.

SCALE
1"=10'-0" VERTICAL
1"=10'-0" HORIZONTAL

M.G.B. 10-30-74
M.G.B. 12-31-74
M.G.B. 1-6-75
A.J.S. 1-8-75

HOWARD, NEEDLES, TAMMEN & BERGENDOFF
CONSULTING ENGINEERS
KANSAS CITY CLEVELAND NEW YORK

260 240 220 200 180 160 140 120 100 80 60 40 20 0

SOUTH WATERLOO ROAD STA. 184+00 LEFT HALF TO STA. 188+00

FED. RD. DIVISION	STATE	PROJECT	
5	OHIO		

91I
354

CUYAHOGA COUNTY
CUY-90-23.73
LAKE COUNTY
LAK-90-0.00

QUANTITY CALCULATIONS
MADE BY M.G.B. DATE 1-6-75
CHECKED BY A.J.S. DATE 1-8-75

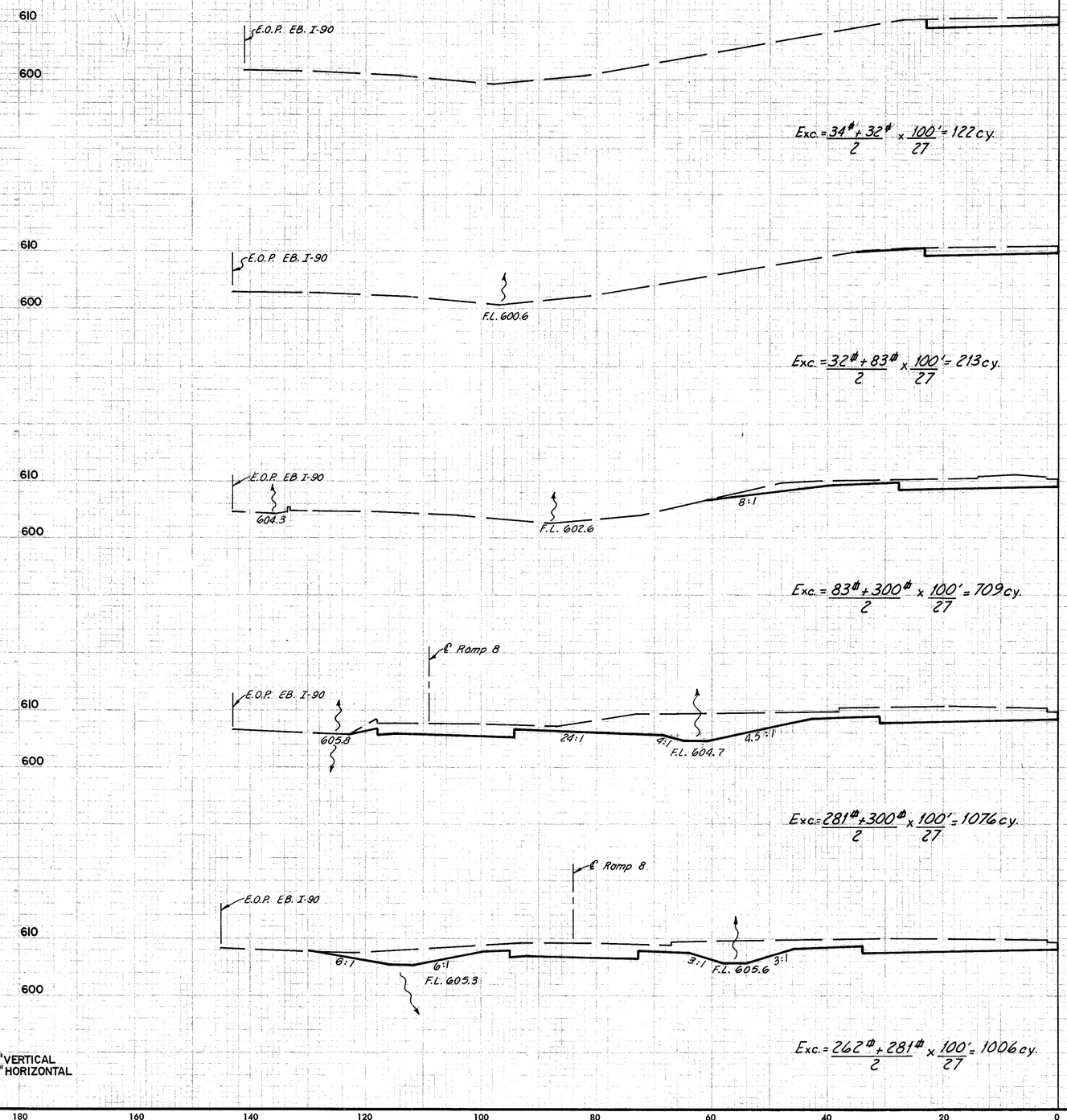

EARTHWORK			
END AREA		VOLUME	
EXC.	EMB.	EXC.	EMB.
34	0		
		122	0
32	0		
		213	0
83	0		
		709	0
300	0		
		1076	0
281	0		
		1006	0
262	0		

QUANTITIES Cost Part II			
ITEM	DESCRIPTION	QUANTITY	UNITS
203	Excavtion, not incl. emb.	3126	Cu. Yds.

SCALE
1"=10'-0" VERTICAL
1"=10'-0" HORIZONTAL

HOWARD, NEEDLES, TAMMEN & BERGENDOFF
CONSULTING ENGINEERS
KANSAS CITY CLEVELAND NEW YORK

260 240 220 200 180 160 140 120 100 80 60 40 20 0

LEFT HALF
SOUTH WATERLOO ROAD STA. 189+00 TO STA. 193+00

M.G.B. 12-30-74
M.G.B. 1-2-75
M.G.B. 1-6-75
A.J.S. 1-8-75

TRAFFIC MAINTENANCE PLAN
STAGE I

FHWA REGION	STATE	PROJECT	
5	OHIO		

92/354

CUYAHOGA COUNTY
CUY-90-23.73
LAKE COUNTY
LAK-90-0.00

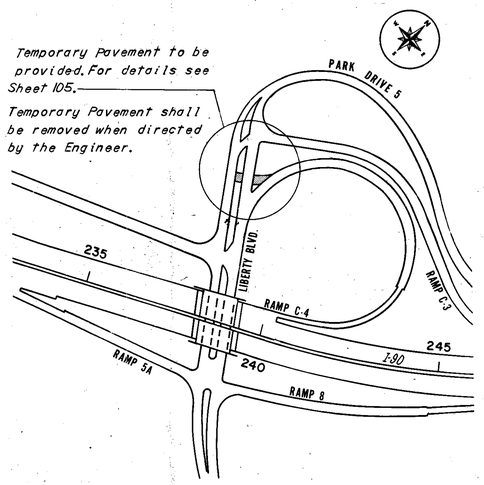

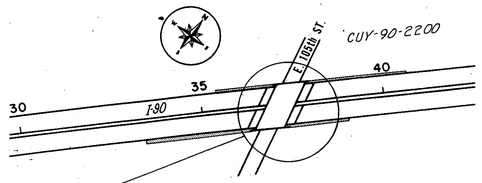

For Details of E. 105th St. Three Stage Construction see Sheets 1 of 27 to 27 of 27. The First Stage of E. 105th St. Construction shall be completed during Stage I of the Traffic Maintenance Plan.

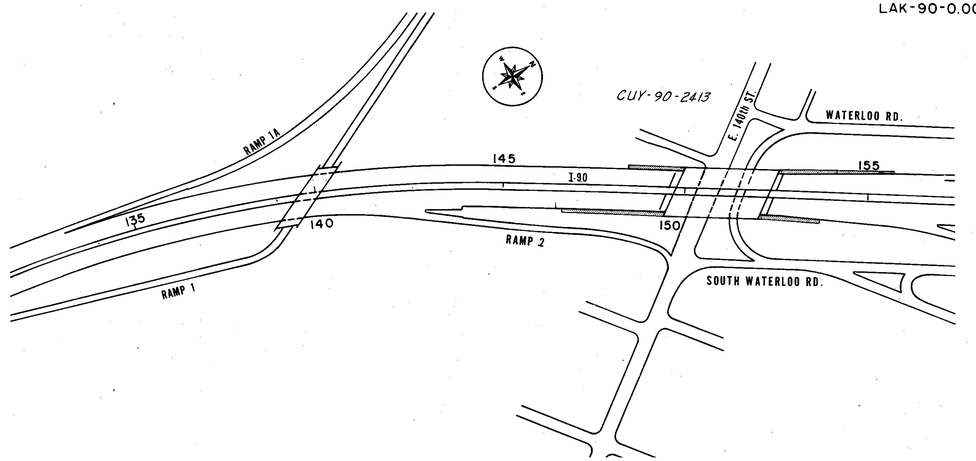

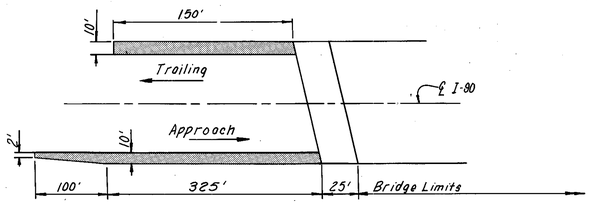

TYPICAL TEMPORARY PAVEMENT PLAN
No Scale

615 TEMPORARY PAVEMENT, CLASS A, AS PER PLAN
QUANTITY CALCULATION

APPROACH $2 \times [(325 \times 10) + (100 \times (\frac{10+25}{2}))] \div 9 = 856$ sq. yds.

TRAILING $2 \times [150 \times 10] \div 9 = 333$ sq. yds.

LOCATION	CALCULATION	QUANTITY	COST PART.
CUY-90-2200	[856+333]	1189 sq. yds.	I
CUY-90-2413	[856+333]	1189 sq. yds.	II
Total		2378 sq. yds.	

Notes:
1. *This stage shall include the special conditions as set forth in the General Provisions on Sheet 9 and the providing of Class A Temporary Pavement at the locations shown on the plan.*
2. *Traffic shall be maintained as per the Ohio Manual of Uniform Traffic Control Devices for Streets and Highways, current edition with latest revisions.*

MADE DSP DATE 8-9-74
TRACED FRE DATE 8-11-74
CHECKED RFM DATE 4-28-75
SCALE 1"=200'

Howard, Needles, Tammen & Bergendoff
CONSULTING ENGINEERS
CLEVELAND, OHIO

HNTB

200 0 200 400 600 800
SCALE IN FEET

LEGEND

STAGE I CONSTRUCTION ZONE

Rev. 7-18-75

TRAFFIC MAINTENANCE PLAN
STAGE I

FHWA REGION	STATE	PROJECT	
5	OHIO		

93
354

CUYAHOGA COUNTY
CUY-90-23.73
LAKE COUNTY
LAK-90-0.00

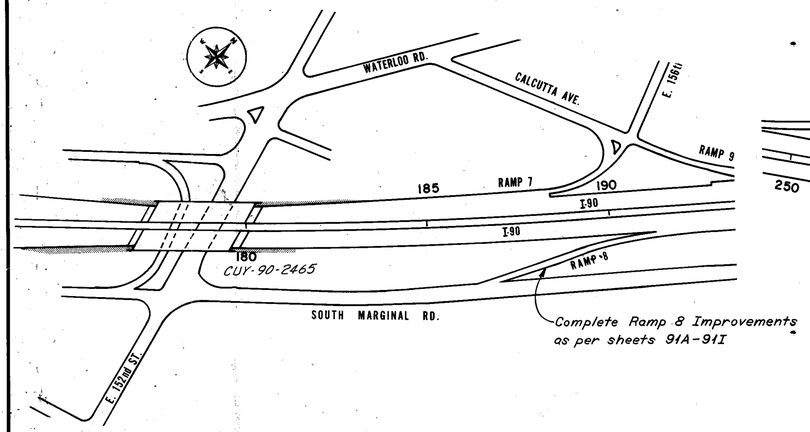

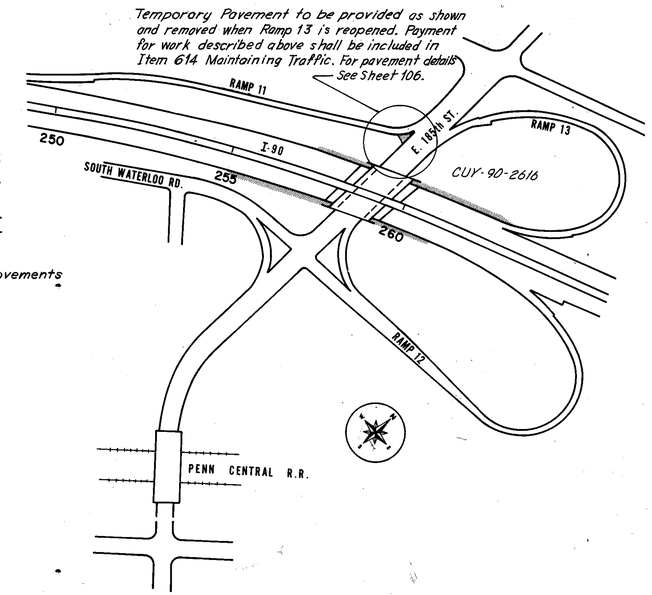

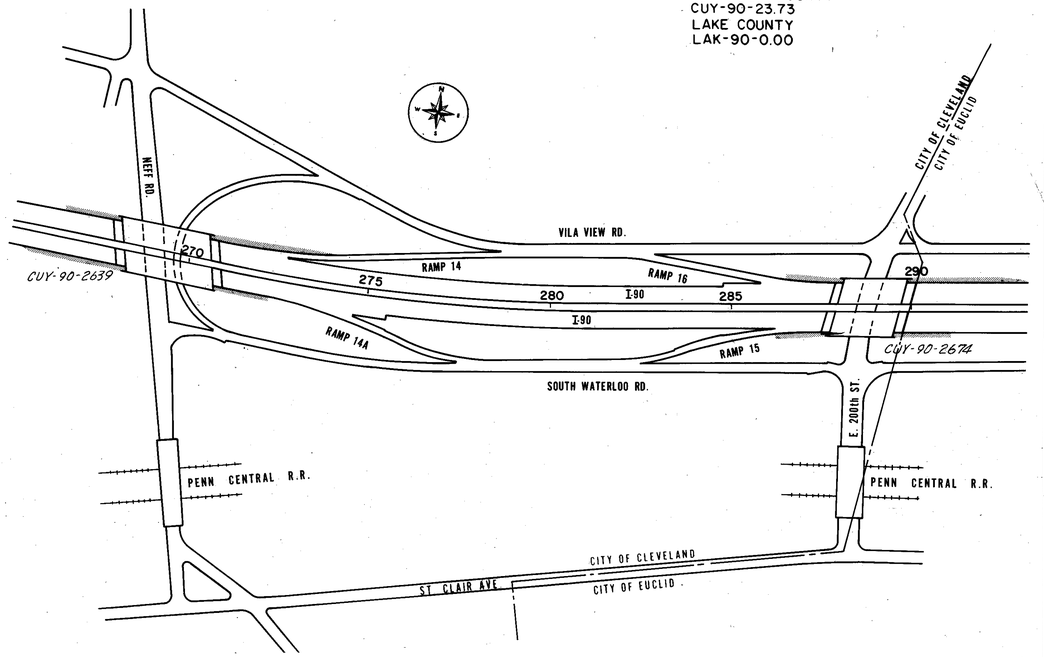

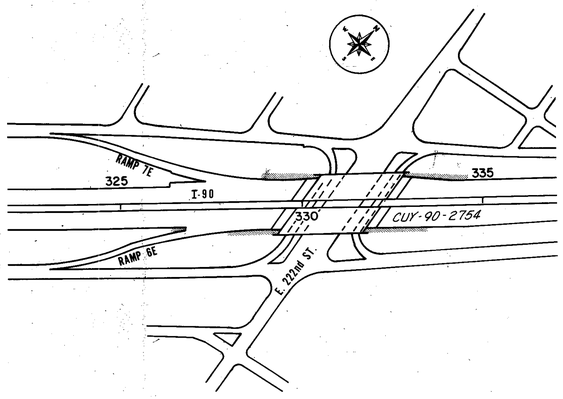

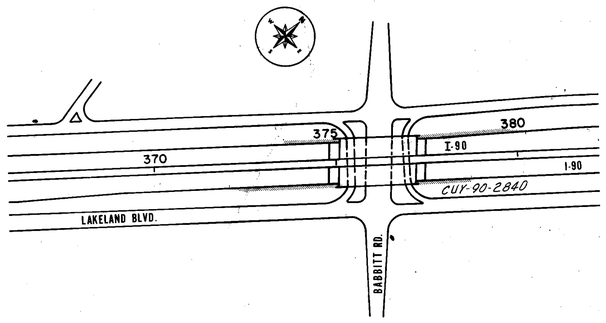

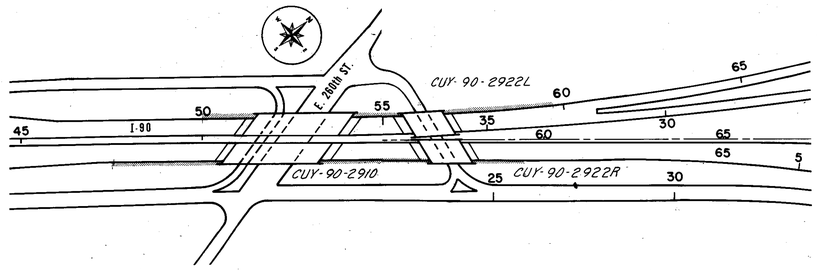

615 TEMPORARY PAVEMENT, CLASS A, AS PER PLAN

LOCATION	CALCULATION	QUANTITY	COST PART.
CUY-90-2465	(856 + 333)	1189 sq. yds.	II
CUY-90-2616	(856 + 333)	1189 sq. yds.	II
CUY-90-2639	(856 + 333)	1189 sq. yds.	II
CUY-90-2674	(856 + 333)	1189 sq. yds.	I
CUY-90-2754	(856 + 333)	1189 sq. yds.	I
CUY-90-2840	(856 + 333)	1189 sq. yds.	I
CUY-90-2910	½(856 + 333)	595 sq. yds.	I
CUY-90-2910/2922L	(225 x 10) ÷ 9	250 sq. yds.	I
CUY-90-2910/2922R	(420 x 10) ÷ 9	467 sq. yds.	I
CUY-90-2922L	428	428 sq. yds.	I
CUY-90-2922R	167	167 sq. yds.	I
Total I		5474 sq. yds.	I
Total II		3567 sq. yds.	II
TOTAL		9041 sq. yds.	

Note:
1. The notes on Sheet 92 shall apply equally to this sheet.

200 0 200 400 600 800
SCALE IN FEET

LEGEND
STAGE I CONSTRUCTION ZONE

MADE DBP DATE 8-9-74
TRACED FGG DATE 10-11-74
CHECKED BTM DATE 12-27-74
SCALE 1"=200'

Howard, Needles, Tammen & Bergendoff
CONSULTING ENGINEERS
CLEVELAND, OHIO

HNTB

Rev 7-18-75

TRAFFIC MAINTENANCE PLAN

TRAFFIC MAINTENANCE PLAN

EUCLID SPUR
STAGE I
PHASE I

FHWA REGION	STATE	PROJECT	
5	OHIO		

94
354

CUYAHOGA COUNTY
CUY-90-23.73
LAKE COUNTY
LAK-90-0.00

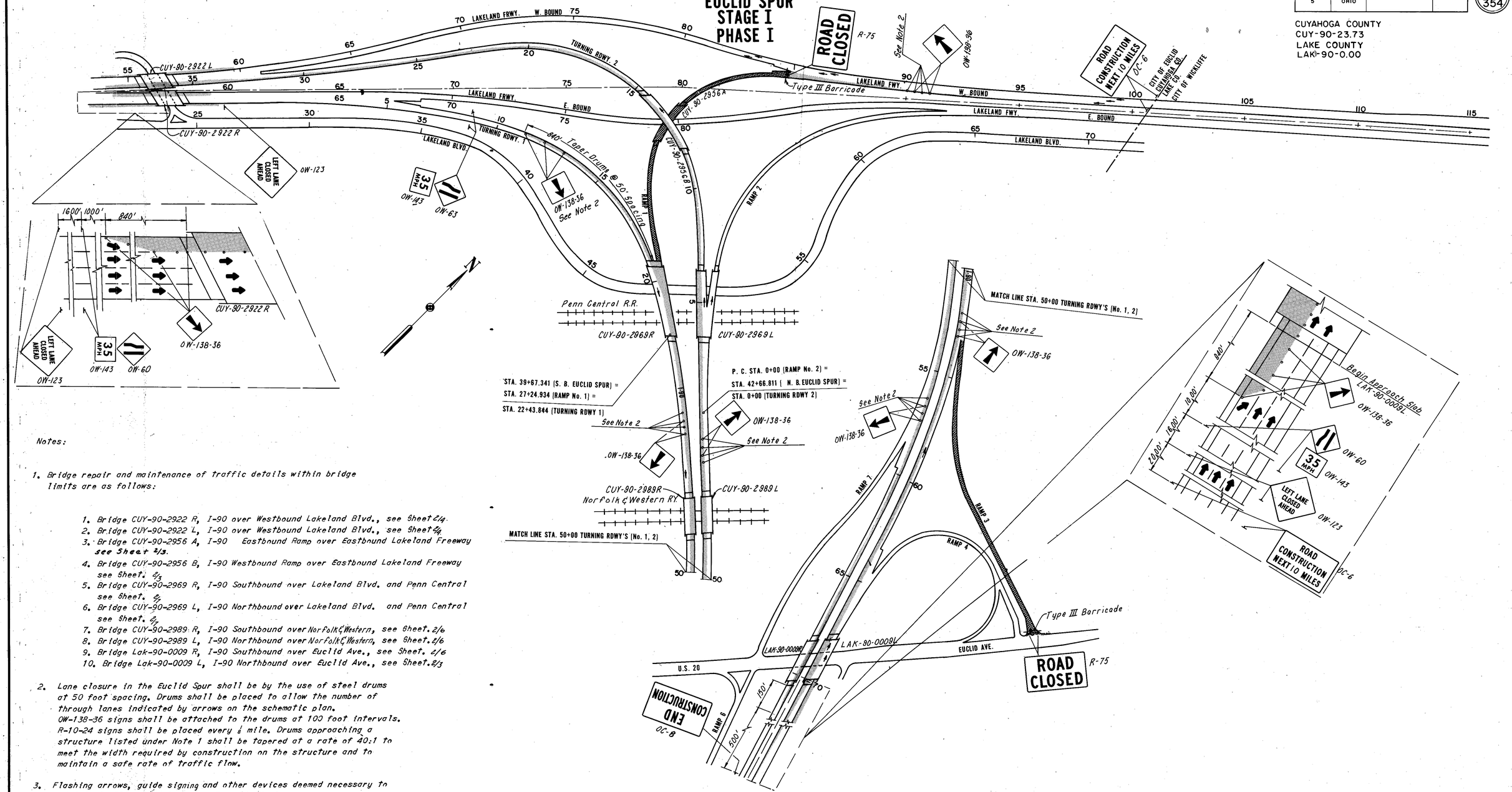

Notes:

1. Bridge repair and maintenance of traffic details within bridge limits are as follows:

   1. Bridge CUY-90-2922 R, I-90 over Westbound Lakeland Blvd., see Sheet 2/4.
   2. Bridge CUY-90-2922 L, I-90 over Westbound Lakeland Blvd., see Sheet 2/4.
   3. Bridge CUY-90-2956 A, I-90 Eastbound Ramp over Eastbound Lakeland Freeway see Sheet 2/3.
   4. Bridge CUY-90-2956 B, I-90 Westbound Ramp over Eastbound Lakeland Freeway see Sheet 2/3.
   5. Bridge CUY-90-2969 R, I-90 Southbound over Lakeland Blvd. and Penn Central see Sheet 2/7.
   6. Bridge CUY-90-2969 L, I-90 Northbound over Lakeland Blvd. and Penn Central see Sheet 2/7.
   7. Bridge CUY-90-2989 R, I-90 Southbound over Norfolk & Western, see Sheet 2/6
   8. Bridge CUY-90-2989 L, I-90 Northbound over Norfolk & Western, see Sheet 2/6
   9. Bridge Lak-90-0009 R, I-90 Southbound over Euclid Ave., see Sheet 2/6
   10. Bridge Lak-90-0009 L, I-90 Northbound over Euclid Ave., see Sheet 2/3

2. Lane closure in the Euclid Spur shall be by the use of steel drums at 50 foot spacing. Drums shall be placed to allow the number of through lanes indicated by arrows on the schematic plan. OW-138-36 signs shall be attached to the drums at 100 foot intervals. R-10-24 signs shall be placed every ¼ mile. Drums approaching a structure listed under Note 1 shall be tapered at a rate of 40:1 to meet the width required by construction on the structure and to maintain a safe rate of traffic flow.

3. Flashing arrows, guide signing and other devices deemed necessary to maintain traffic shall be used as directed by the Engineer.

4. Provide temporary pavement, Class A, as noted on plan. For typical details see Sheet 92. Temporary Pavement at CUY-90-2922 R&L provided as part of Stage 1 Construction.

MADE DSP DATE 8/9/74
TRACED FGG DATE 8/10/74
CHECKED GFM DATE 8/30/74
SCALE 1"=600'

Howard, Needles, Tammen & Bergendoff
CONSULTING ENGINEERS
CLEVELAND, OHIO

HNTB

200 0 200 400 600 800
SCALE IN FEET

LEGEND

- PROPOSED SIGN (X-O)
- STAGE I CONSTRUCTION ZONE
- NO ACCESS

TRAFFIC MAINTENANCE PLAN

EUCLID SPUR
STAGE I
PHASE II

FHWA REGION	STATE	PROJECT	
5	OHIO		

95/354

CUYAHOGA COUNTY
CUY-90-23.73
LAKE COUNTY
LAK-90-0.00

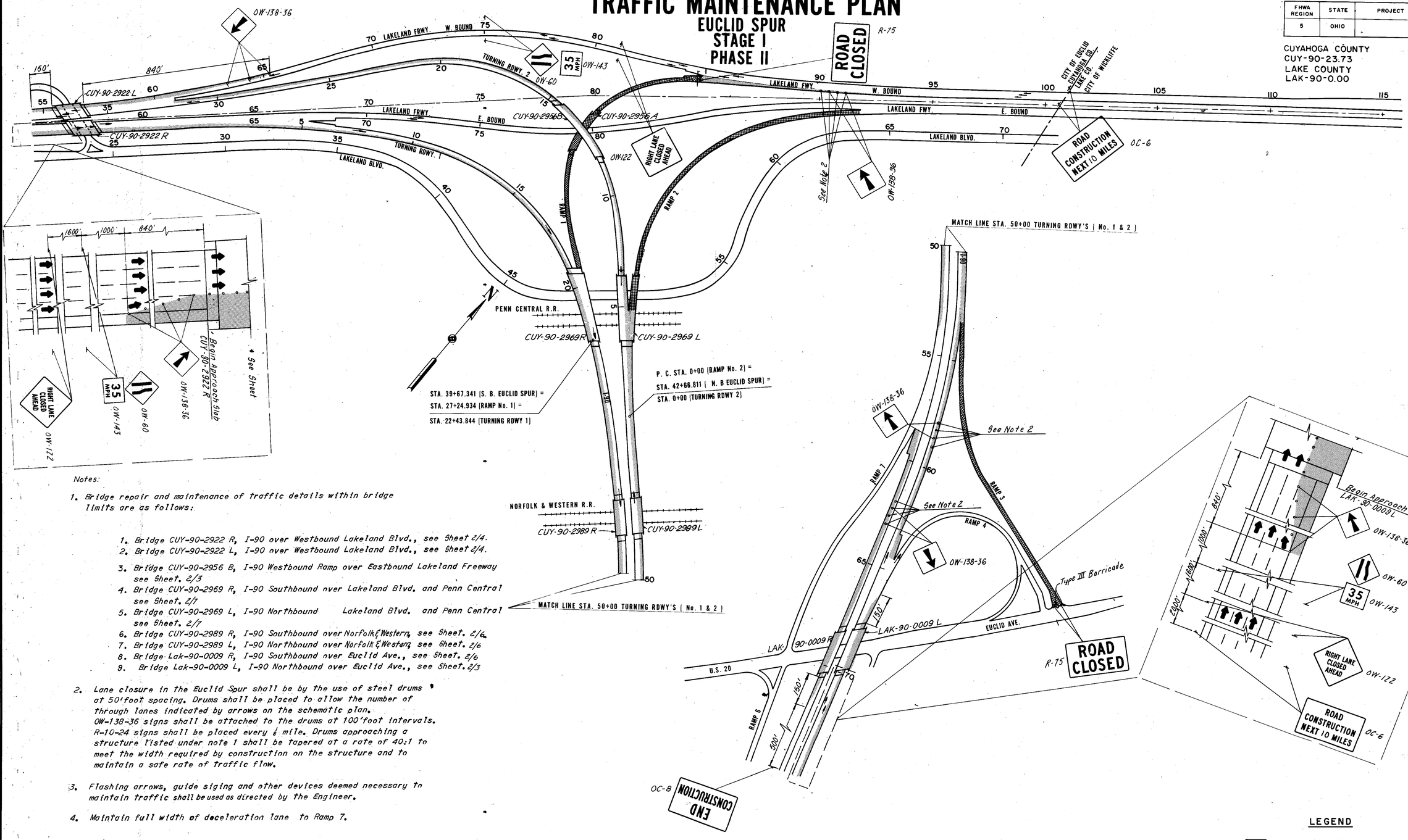

Notes:

1. Bridge repair and maintenance of traffic details within bridge limits are as follows:

   1. Bridge CUY-90-2922 R, I-90 over Westbound Lakeland Blvd., see Sheet 2/4.
   2. Bridge CUY-90-2922 L, I-90 over Westbound Lakeland Blvd., see Sheet 2/4.
   3. Bridge CUY-90-2956 B, I-90 Westbound Ramp over Eastbound Lakeland Freeway see Sheet. 2/3
   4. Bridge CUY-90-2969 R, I-90 Southbound over Lakeland Blvd. and Penn Central see Sheet. 2/7
   5. Bridge CUY-90-2969 L, I-90 Northbound Lakeland Blvd. and Penn Central see Sheet. 2/7
   6. Bridge CUY-90-2989 R, I-90 Southbound over Norfolk & Western, see Sheet. 2/6.
   7. Bridge CUY-90-2989 L, I-90 Northbound over Norfolk & Western, see Sheet. 2/6
   8. Bridge Lak-90-0009 R, I-90 Southbound over Euclid Ave., see Sheet. 2/6
   9. Bridge Lak-90-0009 L, I-90 Northbound over Euclid Ave., see Sheet. 2/3

2. Lane closure in the Euclid Spur shall be by the use of steel drums at 50'foot spacing. Drums shall be placed to allow the number of through lanes indicated by arrows on the schematic plan. OW-138-36 signs shall be attached to the drums at 100'foot intervals. R-10-24 signs shall be placed every ¼ mile. Drums approaching a structure listed under note 1 shall be tapered at a rate of 40:1 to meet the width required by construction on the structure and to maintain a safe rate of traffic flow.

3. Flashing arrows, guide siging and other devices deemed necessary to maintain traffic shall be used as directed by the Engineer.

4. Maintain full width of deceleration lane to Ramp 7.

LEGEND

- PROPOSED SIGN (X-0)
- STAGE II CONSTRUCTION ZONE
- NO ACCESS

200 0 200 400 600 800
SCALE IN FEET

MADE DSD DATE 2/9/74
TRACED FJG DATE 2/14/74
CHECKED DFM DATE 2/20/74
SCALE 1"=200'

Howard, Needles, Tammen & Bergendoff
CONSULTING ENGINEERS
CLEVELAND, OHIO
HNTB

TRAFFIC MAINTENANCE PLAN
STAGE II

FHWA REGION	STATE	PROJECT	
5	OHIO		

96
354

CUYAHOGA COUNTY
CUY-90-23.73
LAKE COUNTY
LAK-90-0.00

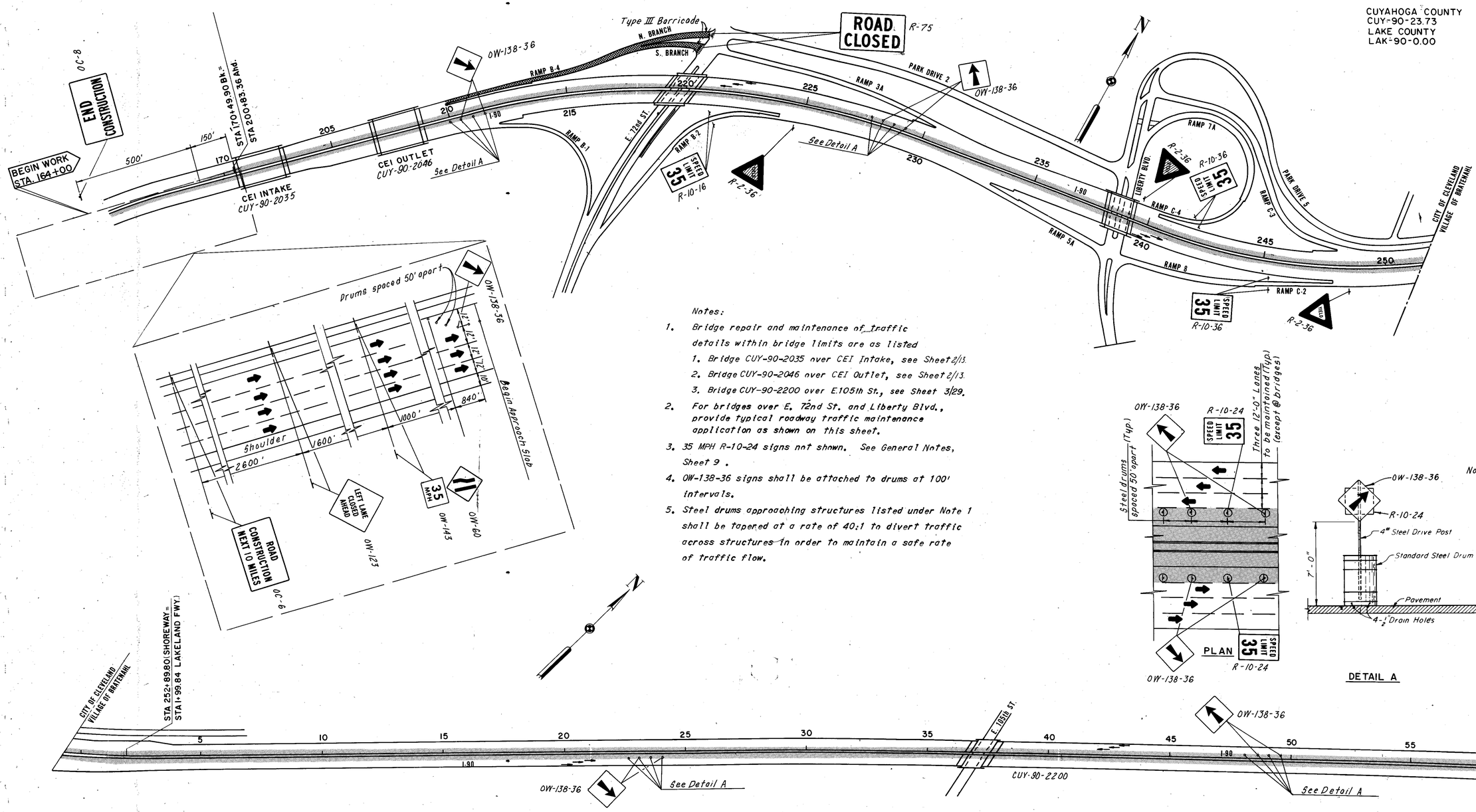

Notes:

1. Bridge repair and maintenance of traffic details within bridge limits are as listed
   1. Bridge CUY-90-2035 over CEI Intake, see Sheet 2/13.
   2. Bridge CUY-90-2046 over CEI Outlet, see Sheet 2/13.
   3. Bridge CUY-90-2200 over E.105th St., see Sheet 3/29.
2. For bridges over E. 72nd St. and Liberty Blvd., provide typical roadway traffic maintenance application as shown on this sheet.
3. 35 MPH R-10-24 signs not shown. See General Notes, Sheet 9.
4. OW-138-36 signs shall be attached to drums at 100' intervals.
5. Steel drums approaching structures listed under Note 1 shall be tapered at a rate of 40:1 to divert traffic across structures in order to maintain a safe rate of traffic flow.

Note:
R-10-24 Signs located every ⅛ mile.
OW-138-36 Signs located every 100 feet.

LEGEND

- EXISTING SIGN
- PROPOSED SIGN
- STAGE II CONSTRUCTION ZONE
- NO ACCESS

200 0 200 400 600 800
SCALE IN FEET

MADE DGP DATE 8-9-74
TRACED FGG DATE 8-12-74
CHECKED GFM DATE 8-15-74
SCALE 1" = 200'

HOWARD, NEEDLES, TAMMEN & BERGENDOFF
CONSULTING ENGINEERS
CLEVELAND, OHIO
HNTB

TRAFFIC MAINTENANCE PLAN

TRAFFIC MAINTENANCE PLAN
STAGE II

FHWA REGION	STATE	PROJECT	
5	OHIO		

97
354

CUYAHOGA COUNTY
CUY-90-23.73
LAKE COUNTY
LAK-90-0.00

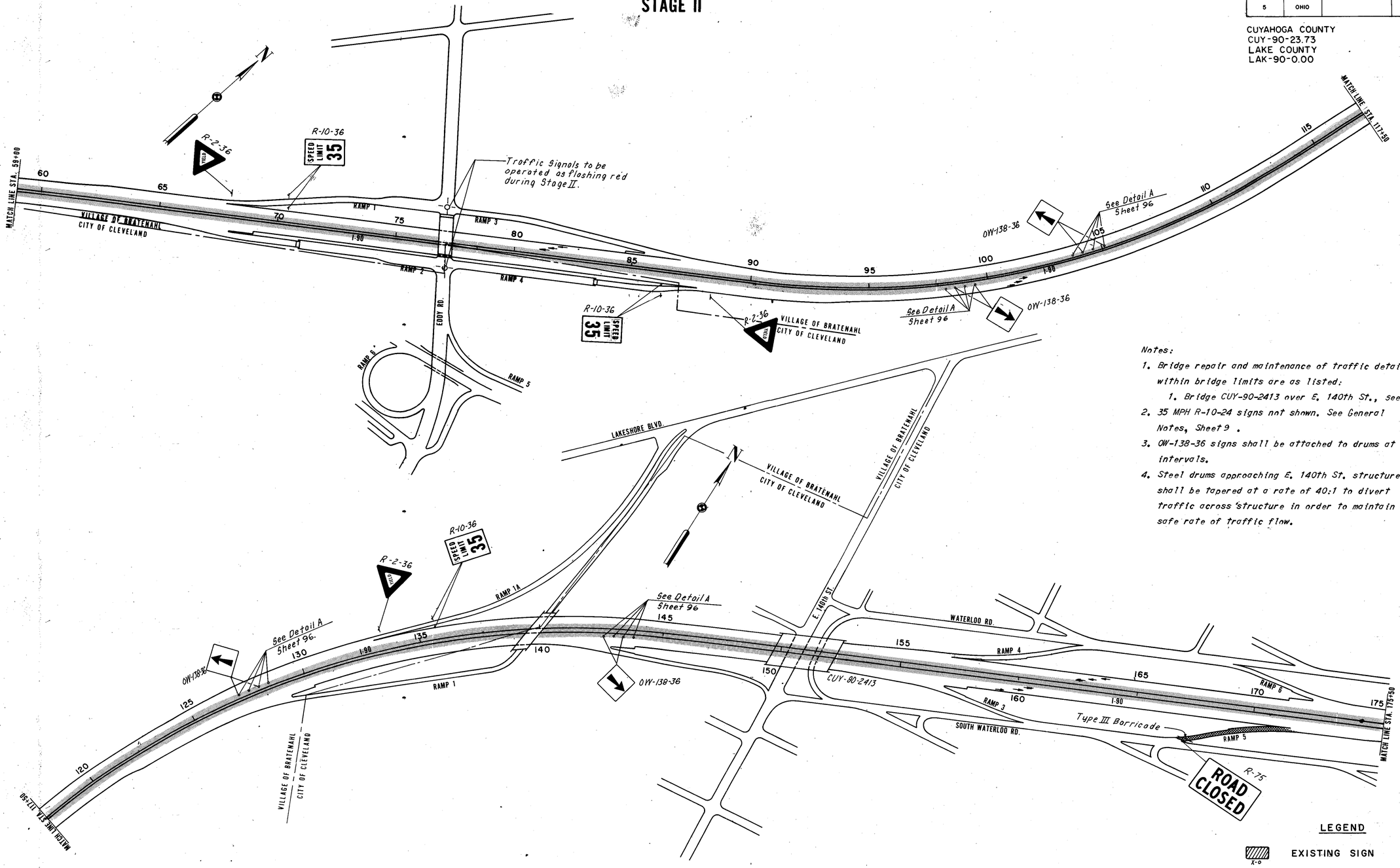

Notes:

1. Bridge repair and maintenance of traffic details within bridge limits are as listed:
   1. Bridge CUY-90-2413 over E. 140th St., see Sheet 2/6.
2. 35 MPH R-10-24 signs not shown. See General Notes, Sheet 9 .
3. OW-138-36 signs shall be attached to drums at 100' intervals.
4. Steel drums approaching E. 140th St. structure shall be tapered at a rate of 40:1 to divert traffic across structure in order to maintain a safe rate of traffic flow.

LEGEND

- EXISTING SIGN (X-O)
- PROPOSED SIGN (X-O)
- STAGE II CONSTRUCTION ZONE
- NO ACCESS

200 0 200 400 600 800
SCALE IN FEET

MADE DSP DATE 6-8-74
TRACED JAK DATE 6-9-74
CHECKED RTM DATE 6-27-74
SCALE 1" = 200'

Howard, Needles, Tammen & Bergendoff
CONSULTING ENGINEERS
CLEVELAND, OHIO

HNTB

TRAFFIC MAINTENANCE PLAN

TRAFFIC MAINTENANCE PLAN
STAGE II

FHWA REGION	STATE	PROJECT	
5	OHIO		

98
354

CUYAHOGA COUNTY
CUY-90-23.73
LAKE COUNTY
LAK-90-0.00

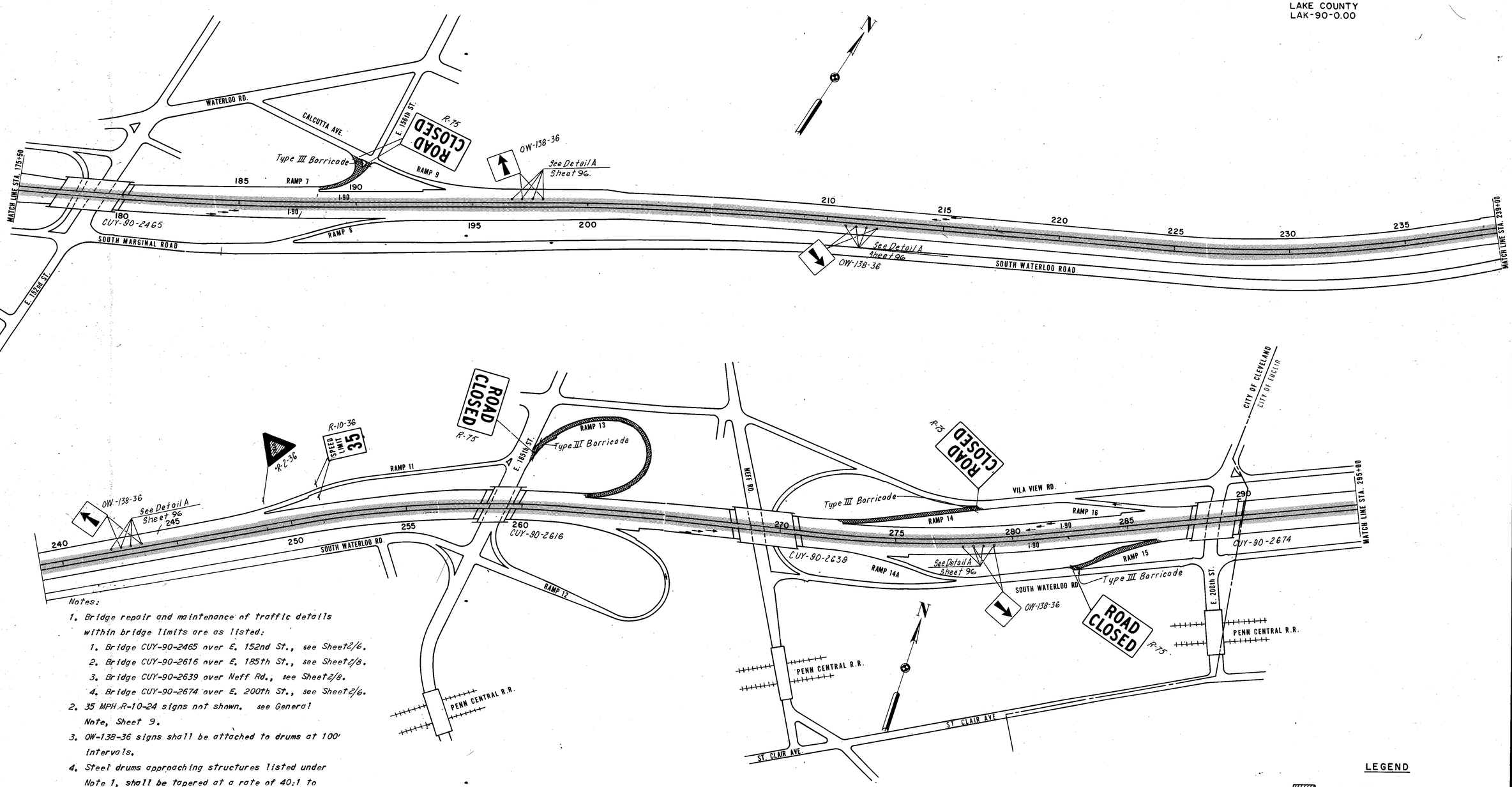

Notes:

1. Bridge repair and maintenance of traffic details within bridge limits are as listed:
   1. Bridge CUY-90-2465 over E. 152nd St., see Sheet 2/6.
   2. Bridge CUY-90-2616 over E. 185th St., see Sheet 2/8.
   3. Bridge CUY-90-2639 over Neff Rd., see Sheet 2/8.
   4. Bridge CUY-90-2674 over E. 200th St., see Sheet 2/6.
2. 35 MPH R-10-24 signs not shown. see General Note, Sheet 9.
3. OW-138-36 signs shall be attached to drums at 100' intervals.
4. Steel drums approaching structures listed under Note 1, shall be tapered at a rate of 40:1 to divert traffic across structure in order to maintain a safe rate of traffic flow.

LEGEND

- EXISTING SIGN
- PROPOSED SIGN
- STAGE II CONSTRUCTION ZONE
- NO ACCESS

200 0 200 400 600 800
SCALE IN FEET

MADE DSP DATE 4-8-74
TRACED FAG DATE 4-10-74
CHECKED GPM DATE 4-12-74
SCALE 1"=200'

Howard, Needles, Tammen & Bergendoff
CONSULTING ENGINEERS
CLEVELAND, OHIO

HNTB

TRAFFIC MAINTENANCE PLAN
STAGE II

FHWA REGION	STATE	PROJECT	
5	OHIO		

99
354

CUYAHOGA COUNTY
CUY-90-23.73
LAKE COUNTY
LAK-90-0.00

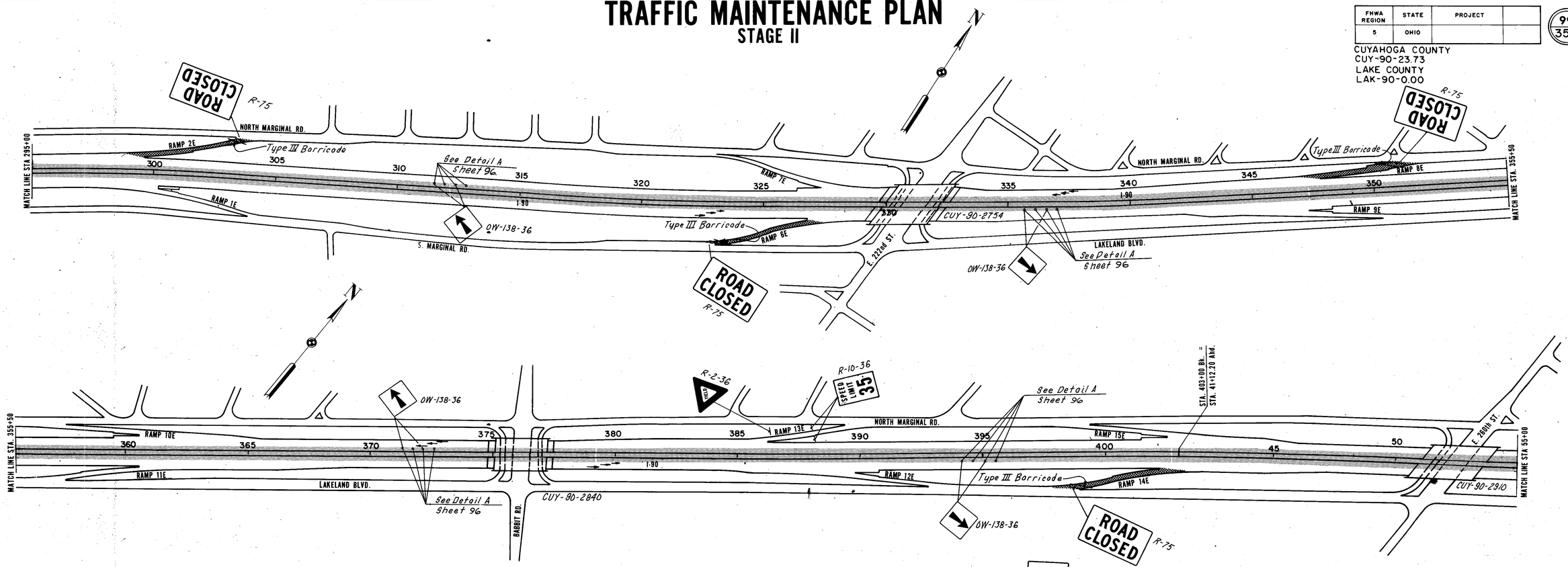

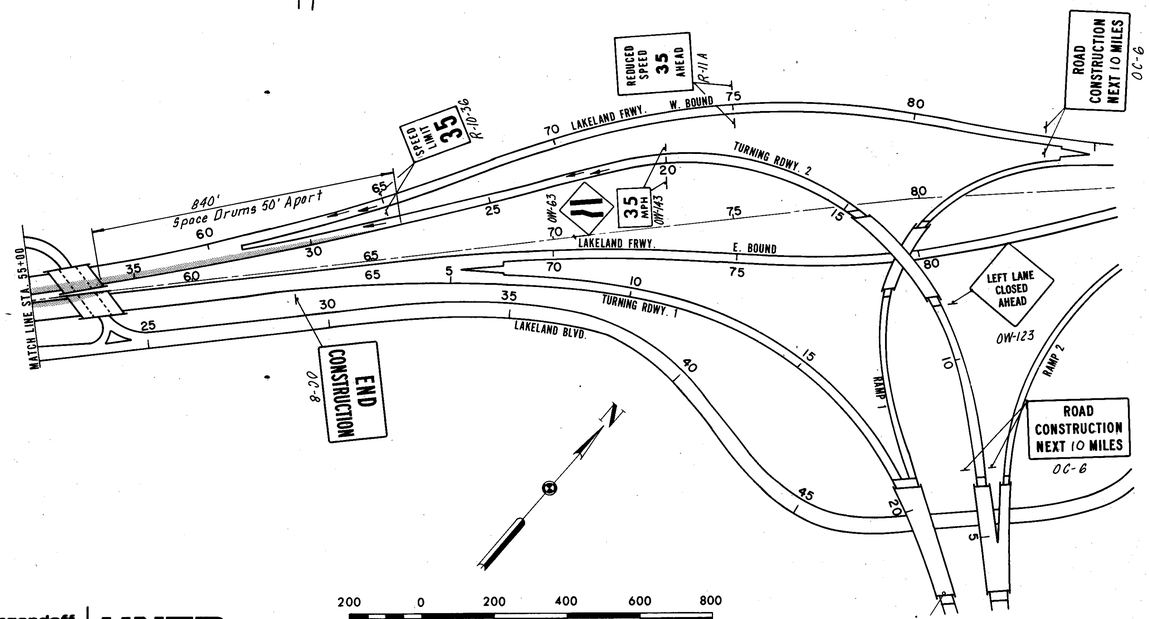

Notes:

1. Bridge repair and maintenenance of traffic details within bridge limits areas listed:
   1. Bridge CUY-90-2754 over E.222nd St. see Sheet 2/9.
   2. Bridge CUY-90-2840 over Babbitt Rd. see Sheet 2/7.
   3. Bridge CUY-90-2910 over E. 260th St. see sheet 2/8.
2. 35 MPH R-10-24 signs not shown. See General Note Sheet 9.
3. OW-138-36 signs shall be attached to drums at 100' intervals
4. Steel drums approaching structures listed under Note 1 shall be tapered at a rate of 40:1 to divert traffic across structure in order to maintain a safe rate of traffic flow.

LEGEND

- EXISTING SIGN
- PROPOSED SIGN
- STAGE II CONSTRUCTION ZONE
- NO ACCESS

MADE DSP DATE 8-6-74
TRACED FDG DATE 8-12-74
CHECKED GFM DATE 8-13-74
SCALE 1"=200'

Howard, Needles, Tammen & Bergendoff
CONSULTING ENGINEERS
CLEVELAND, OHIO

HNTB

TRAFFIC MAINTENANCE PLAN

TRAFFIC MAINTENANCE PLAN
STAGE III

FHWA REGION	STATE	PROJECT	
5	OHIO		

100
354

CUYAHOGA COUNTY
CUY-90-23.73
LAKE COUNTY
LAK-90-0.00

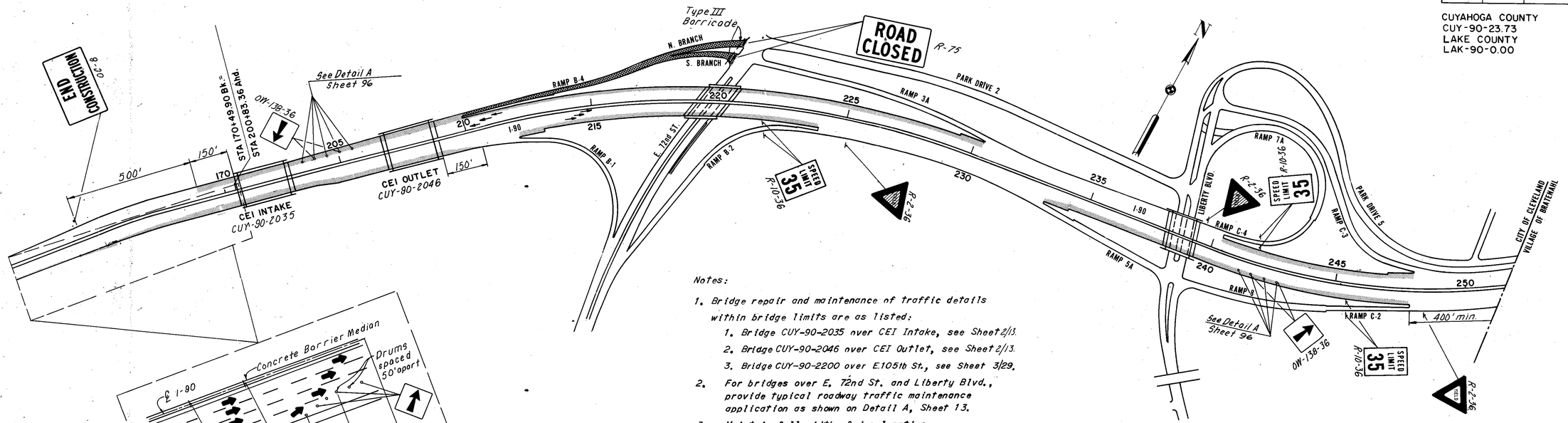

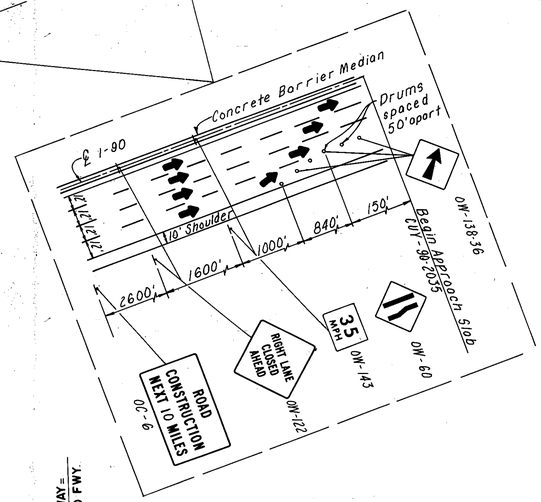

Notes:

1. Bridge repair and maintenance of traffic details within bridge limits are as listed:
   1. Bridge CUY-90-2035 over CEI Intake, see Sheet 2/13.
   2. Bridge CUY-90-2046 over CEI Outlet, see Sheet 2/13.
   3. Bridge CUY-90-2200 over E.105th St., see Sheet 3/29.
2. For bridges over E. 72nd St. and Liberty Blvd., provide typical roadway traffic maintenance application as shown on Detail A, Sheet 13.
3. Maintain full width of deceleration lanes, unles otherwise noted.
4. 35 MPH R-10-24 signs not shown. See General Notes, Sheet 9.
5. OW-138-36 signs shall be attached to drums at 100' intervals.
6. Steel drums approaching structures listed under Note 1 shall be tapered at a rate of 40:1 to divert traffic across structure in order to maintain a safe rate of traffic flow.

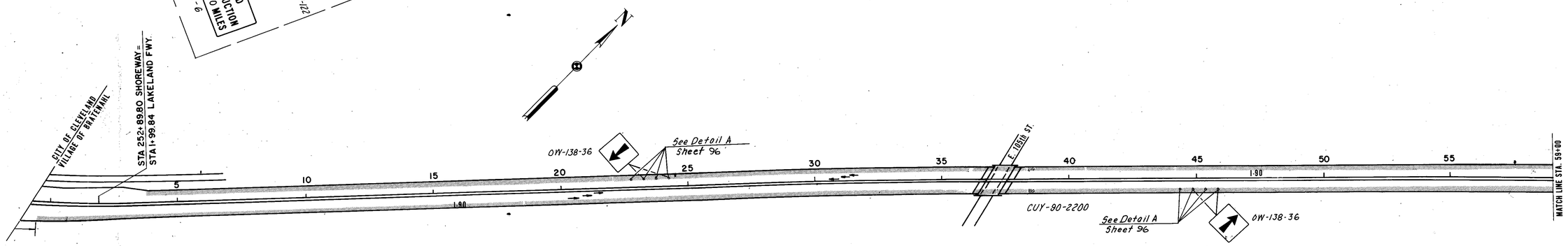

LEGEND

- EXISTING SIGN
- PROPOSED SIGN
- STAGE III CONSTRUCTION ZONE
- NO ACCESS

MADE D&P DATE 8-9-74
TRACED FDA DATE 8-12-74
CHECKED EPM DATE 8-29-74
SCALE 1" = 200'

Howard, Needles, Tammen & Bergendoff
CONSULTING ENGINEERS
CLEVELAND, OHIO

HNTB

200 0 200 400 600 800
SCALE IN FEET

TRAFFIC MAINTENANCE PLAN

TRAFFIC MAINTENANCE PLAN
STAGE III

FHWA REGION	STATE	PROJECT	
5	OHIO		

101
354

CUYAHOGA COUNTY
CUY-90-23.73
LAKE COUNTY
LAK-90-0.00

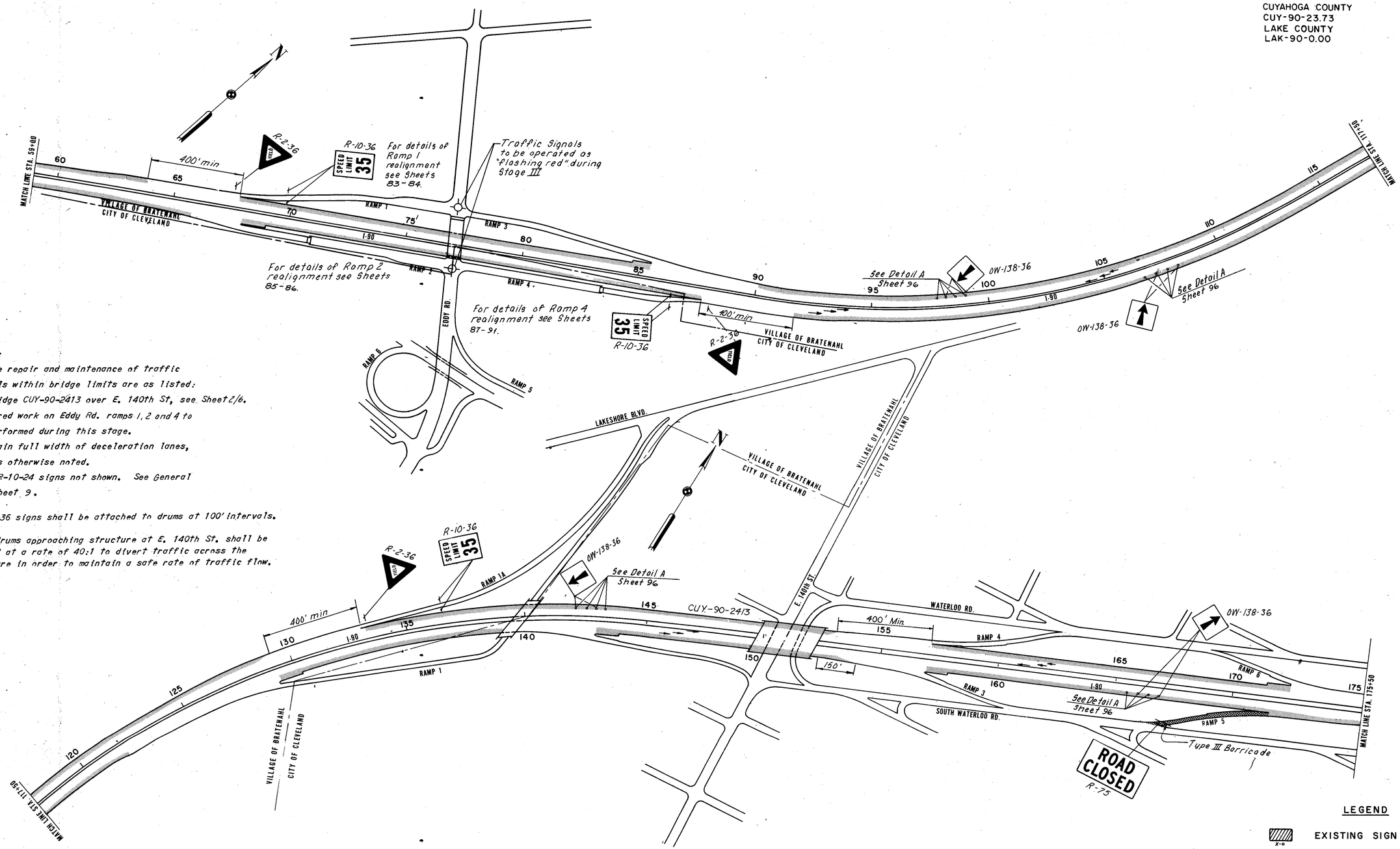

Notes:

1. Bridge repair and maintenance of traffic details within bridge limits are as listed:
   1. Bridge CUY-90-2413 over E. 140th St, see Sheet 2/6.
2. Required work on Eddy Rd. ramps 1, 2 and 4 to be performed during this stage.
3. Maintain full width of deceleration lanes, unless otherwise noted.
4. 35 MPH R-10-24 signs not shown. See General Notes, Sheet 9.
5. OW-138-36 signs shall be attached to drums at 100' intervals.
6. Steel drums approaching structure at E. 140th St. shall be tapered at a rate of 40:1 to divert traffic across the structure in order to maintain a safe rate of traffic flow.

LEGEND

- EXISTING SIGN
- PROPOSED SIGN
- STAGE III CONSTRUCTION ZONE
- NO ACCESS

MADE DSP — DATE 8-9-74
TRACED TR — DATE 8-10-74
CHECKED GTM — DATE 8-29-74
SCALE 1"=200'

Howard, Needles, Tammen & Bergendoff
CONSULTING ENGINEERS
CLEVELAND, OHIO

HNTB

200 0 200 400 600 800
SCALE IN FEET

TRAFFIC MAINTENANCE PLAN
STAGE III

FHWA REGION	STATE	PROJECT	
5	OHIO		

102
354

CUYAHOGA COUNTY
CUY-90-23.73
LAKE COUNTY
LAK-90-0.00

Notes:

1. Bridge repair and maintenance of traffic details within bridge limits are as follows:
   1. Bridge CUY-90-2465 over E. 152nd St., see Sheet 2/6.
   2. Bridge CUY-90-2616 over E. 185. St., see Sheet 2/8.
   3. Bridge CUY-90-2639 over Neff Rd., see Sheet 2/8.
   4. Bridge CUY-90-2674 over E. 200th St., see Sheet 2/6.
2. Maintain full width of declaration lanes unless otherwise noted.
3. 35 MPH R-10-24 signs not shown. See General Notes, Sheet 9.
4. OW-138-36 signs shall be attached to drums at 100' intervals.
5. Steel drums approaching structures listed under Note 1 shall be tapered at a rate of 40:1 to divert traffic across structures in order to maintain a safe rate of traffic flow.

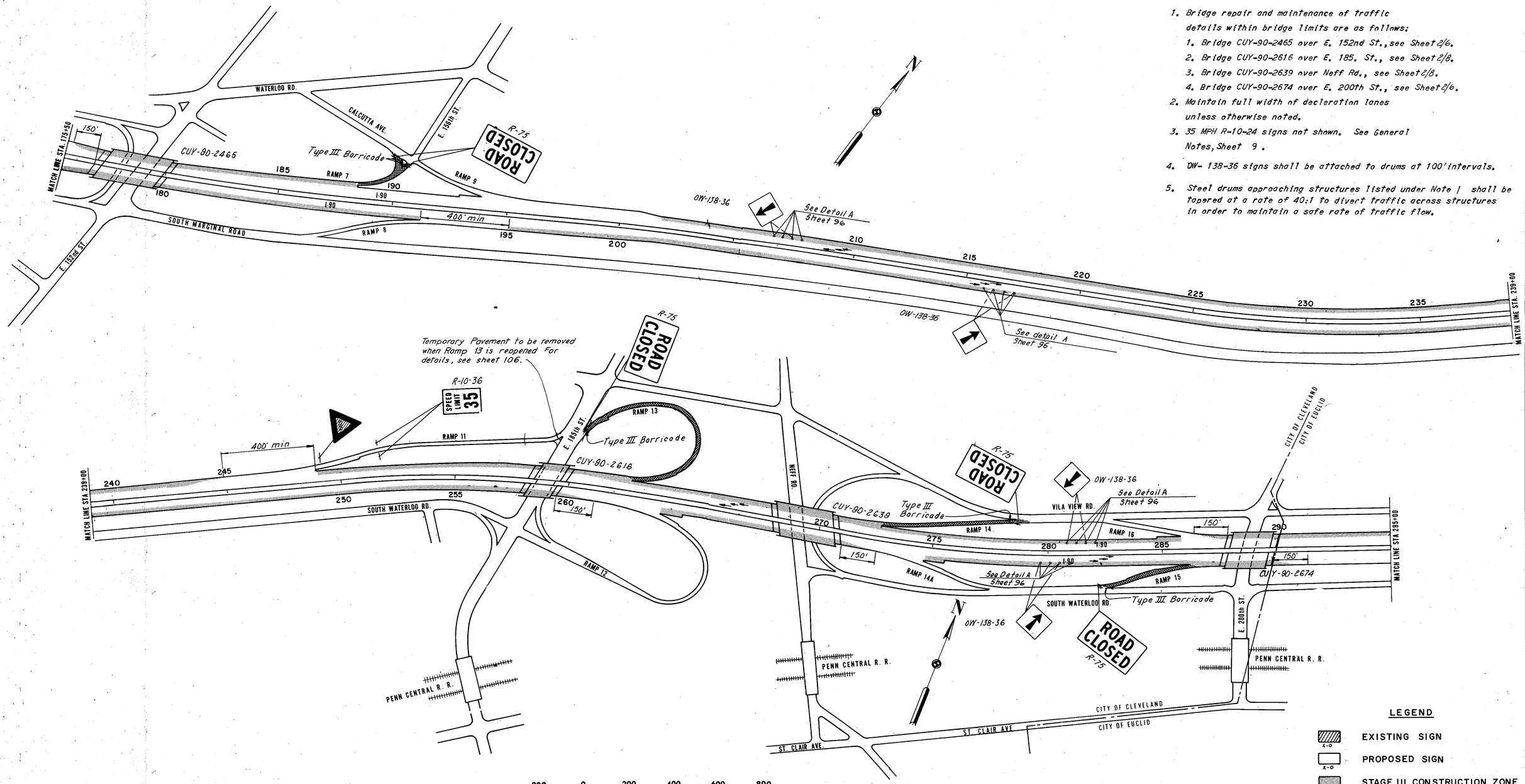

LEGEND

- EXISTING SIGN (X-O)
- PROPOSED SIGN (X-O)
- STAGE III CONSTRUCTION ZONE
- NO ACCESS

MADE DSP DATE 8-9-74
TRACED FCR DATE 8-14-74
CHECKED RFM DATE 8-15-74
SCALE 1"=200'

Howard, Needles, Tammen & Bergendoff
CONSULTING ENGINEERS
CLEVELAND, OHIO

HNTB

200 0 200 400 600 800
SCALE IN FEET

TRAFFIC MAINTENANCE PLAN
STAGE III

FHWA REGION	STATE	PROJECT	
5	OHIO		

103
354

CUYAHOGA COUNTY
CUY-90-23.73
LAKE COUNTY
LAK-90-0.00

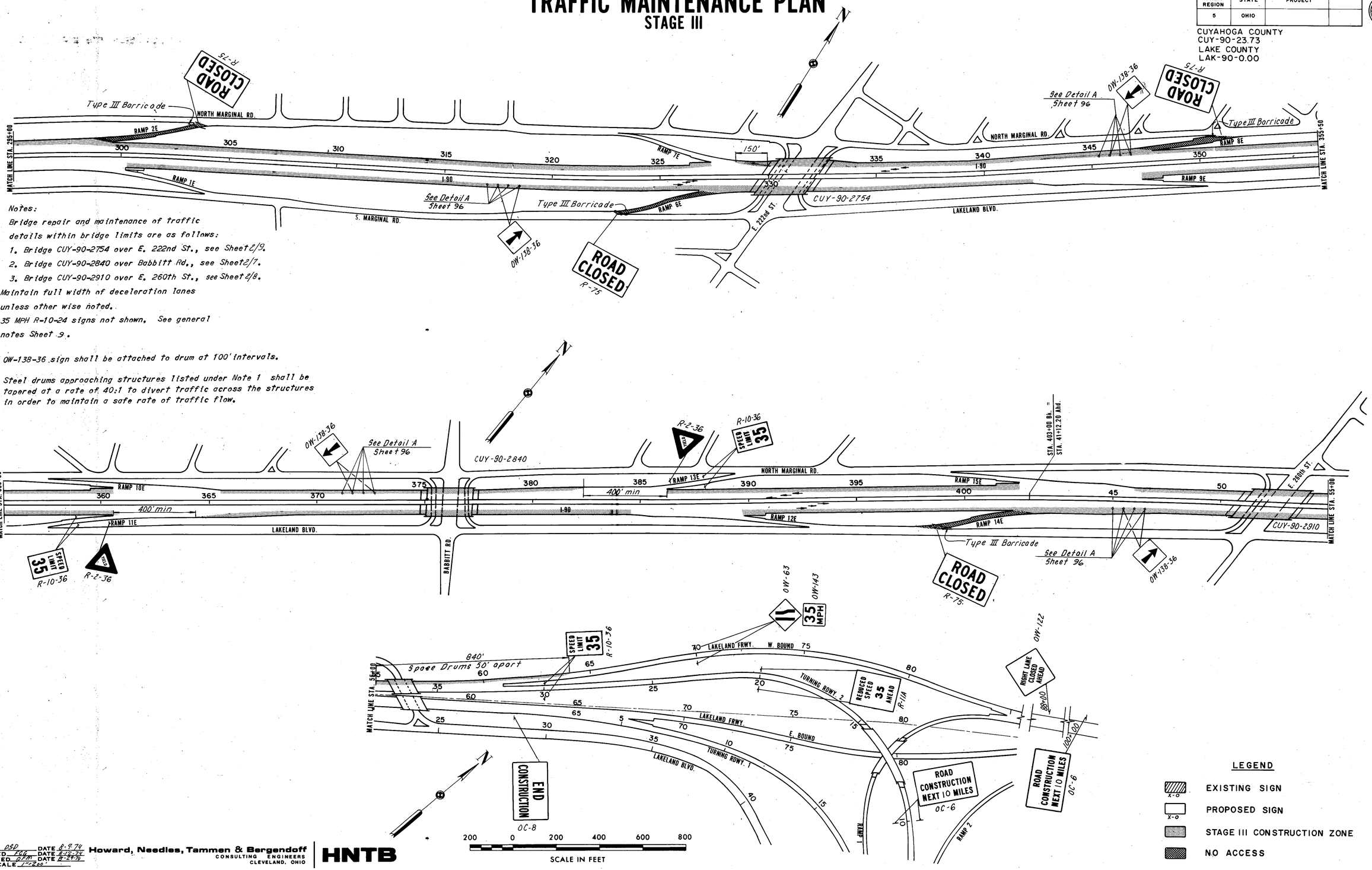

Notes:

1. Bridge repair and maintenance of traffic details within bridge limits are as follows:
   1. Bridge CUY-90-2754 over E. 222nd St., see Sheet 2/9.
   2. Bridge CUY-90-2840 over Babbitt Rd., see Sheet 2/7.
   3. Bridge CUY-90-2910 over E. 260th St., see Sheet 2/8.
2. Maintain full width of deceleration lanes unless other wise noted.
3. 35 MPH R-10-24 signs not shown. See general notes Sheet 9.
4. OW-138-36 sign shall be attached to drum at 100' intervals.
5. Steel drums approaching structures listed under Note 1 shall be tapered at a rate of 40:1 to divert traffic across the structures in order to maintain a safe rate of traffic flow.

LEGEND

- EXISTING SIGN
- PROPOSED SIGN
- STAGE III CONSTRUCTION ZONE
- NO ACCESS

MADE DSD DATE 8-9-74
TRACED FCG DATE 8-12-74
CHECKED DFM DATE 8-29-74
SCALE 1"=200'

Howard, Needles, Tammen & Bergendoff
CONSULTING ENGINEERS
CLEVELAND, OHIO

HNTB

TRAFFIC MAINTENANCE PLAN

TEMPORARY PAVEMENT I-90 & E-105th ST.

FHWA REGION	STATE	PROJECT	
5	OHIO		

104
354

CUYAHOGA COUNTY
CUY-90-23.73
LAKE COUNTY
LAK-90-0.00

QUANTITY CALCULATIONS
MADE BY H.B. DATE 8-8-74
CHECKED BY G.F.M. DATE 10-10-74

ASPHALT CONCRETE COST PART. I & III						
Station		Side	402 Asphalt Concrete 1 3/4" III	402 III	404 Asphalt Concrete 1 1/4" III	404 I
From	To		Cubic Yards		Cubic Yards	
32+16	36+46	Rt.	4.6	20.8	3.3	14.9
35+61	37+08	Lt.	1.6	8.1	1.2	5.8
37+79	39+29	Rt.	1.6	8.1	1.2	5.8
38+44	42+74	Lt.	4.6	20.8	3.3	14.9
Total III			12.4	57.8	9.0	
Total I						41.4
Total			70.2		50.4	

Note:
Quantity calculation for Temporary Pavement, class A, as per plan on Sheet 92.

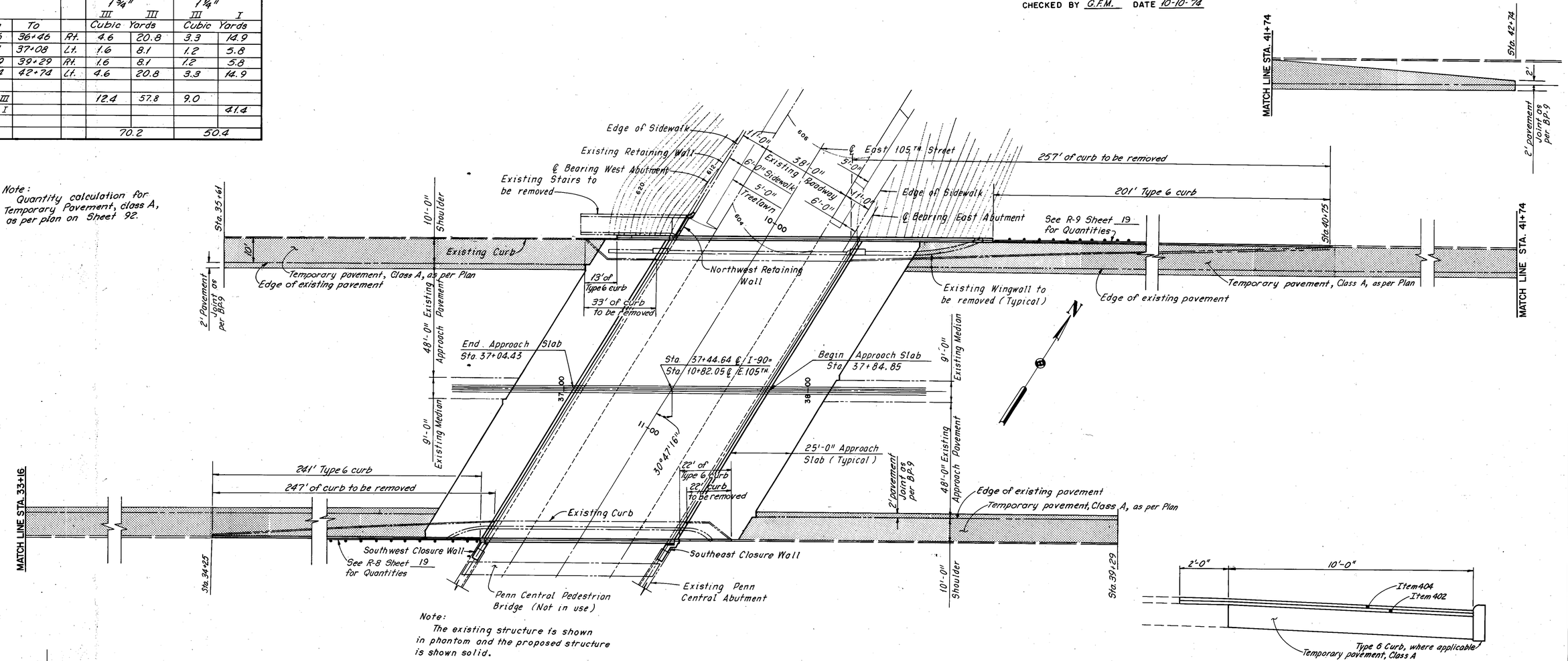

Note:
The existing structure is shown in phantom and the proposed structure is shown solid.

PLAN

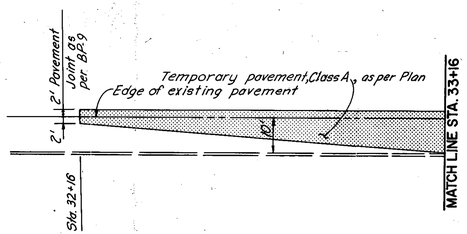

TYPICAL SECTION
No Scale

609 CURB, TYPE 6 COST PARTICIPATION I			
STATION		CALCULATION	QUANTITY (Lin. Ft.)
From	To		
34+25	36+66	241 Lin. Ft.	241
37+48	37+70	22 Lin Ft.	22
37+08	37+21	13 Lin Ft.	13
38+74	40+75	201 Lin. Ft	201
	Total		477

202 CURB REMOVED COST PARTICIPATION I			
STATION		CALCULATION	QUANTITY (Lin. Ft.)
From	To		
38+18	40+75	257 Lin. Ft.	257
34+25	36+72	247 Lin. Ft.	247
37+08	37+38	33 Lin Ft.	33
37+51	37+69	22 Lin Ft.	22
	Total		559

MADE H.B. DATE 8-8-74
TRACED B.B. DATE 8-19-74
CHECKED G.F.M. DATE 8-16-74
SCALE 1" = 20'

Howard, Needles, Tammen & Bergendoff
CONSULTING ENGINEERS
CLEVELAND, OHIO

HNTB

TEMPORARY PAVEMENT

LIBERTY BLVD.

FHWA REGION	STATE	PROJECT	
5	OHIO		

105
354

CUYAHOGA COUNTY
CUY-90-23.73
LAKE COUNTY
LAK-90-0.00

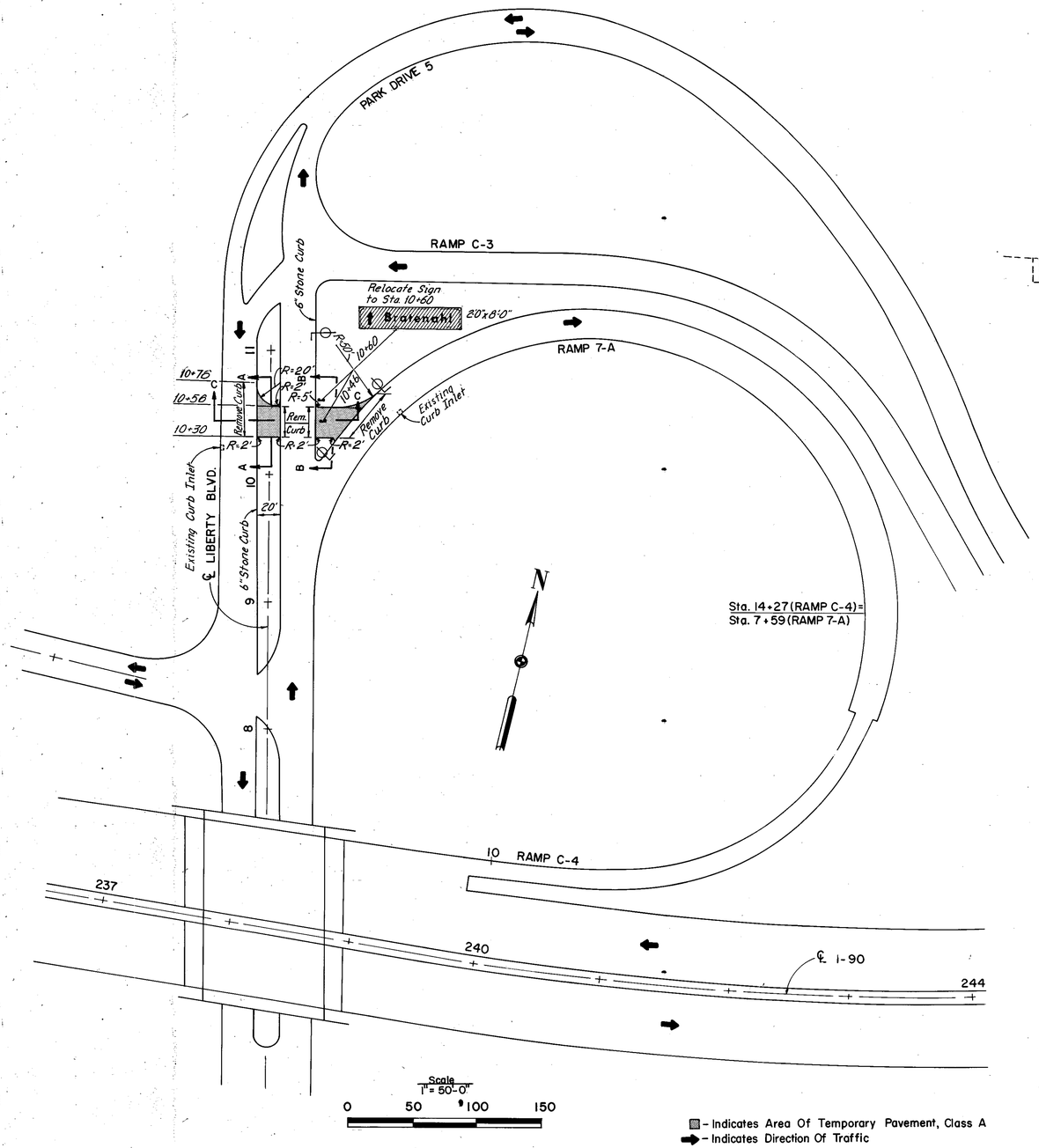

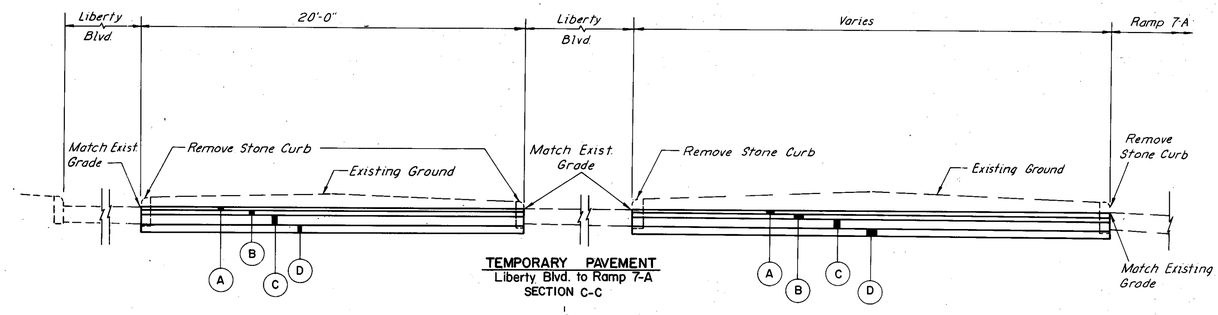

TEMPORARY PAVEMENT
Liberty Blvd. to Ramp 7-A
SECTION C-C

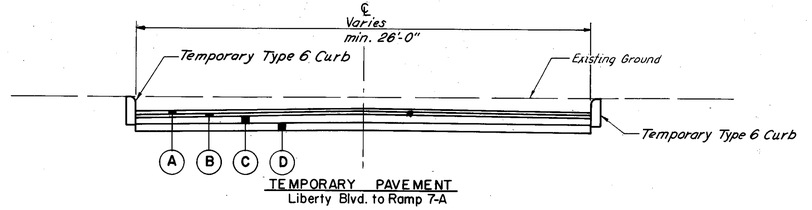

TEMPORARY PAVEMENT
Liberty Blvd. to Ramp 7-A

SECTION A-A
SECTION B-B

Scale
1/4" = 1'-0"

LEGEND

- (A) 404 1¼" Asphalt concrete (Item 402.02 composition may be used)
- (B) 402 1¾" Asphalt concrete
- (C) 301 7" Bituminous aggregate base (Item 402 Asphalt concrete may be used)
- (D) 304 4" Aggregate Base
- ℄ Existing Light Pole
- ▨ Existing Sign

Note:

1. Slope temporary pavement section to drain into existing facilities.
2. Temporary signing for maintaining traffic during the period of time the temporary pavement is in use shall be in accordance with the Ohio Manual of Uniform Traffic Control Devices for Streets and Highways, current edition with latest revisions, and as directed by the Engineer. Payment shall be included in 614 Maintenance of Traffic.
3. The Contractor may provide Rigid or Flexible temorary pavement.
4. Existing Sandstone Curb which is removed and found suitable for re-use by the Engineer shall be placed in storage until it is to be reinstalled.
5. After Ramp B-4 is reopened to traffic and the Contractor has removed the temporary pavement and curb, he shall replace all curb and median removed during construction of the temporary connection.
6. Payment for all labor, materials, and other costs incurred in performing the work described including removal and replacement of existing curbs shall be included in the unit price bid for Item 614 Maintaining Traffic.

MADE D.S.P. DATE 7-24-74
TRACED MEF DATE 8-2-74
CHECKED E.F.M. DATE 8-26-74
SCALE As Noted

Howard, Needles, Tammen & Bergendoff
CONSULTING ENGINEERS
CLEVELAND, OHIO

HNTB

TEMPORARY PAVEMENT

E. 185th St.

FHWA REGION	STATE	PROJECT	
5	OHIO		

106
354

CUYAHOGA COUNTY
CUY-90-23.73
LAKE COUNTY
LAK-90-0.00

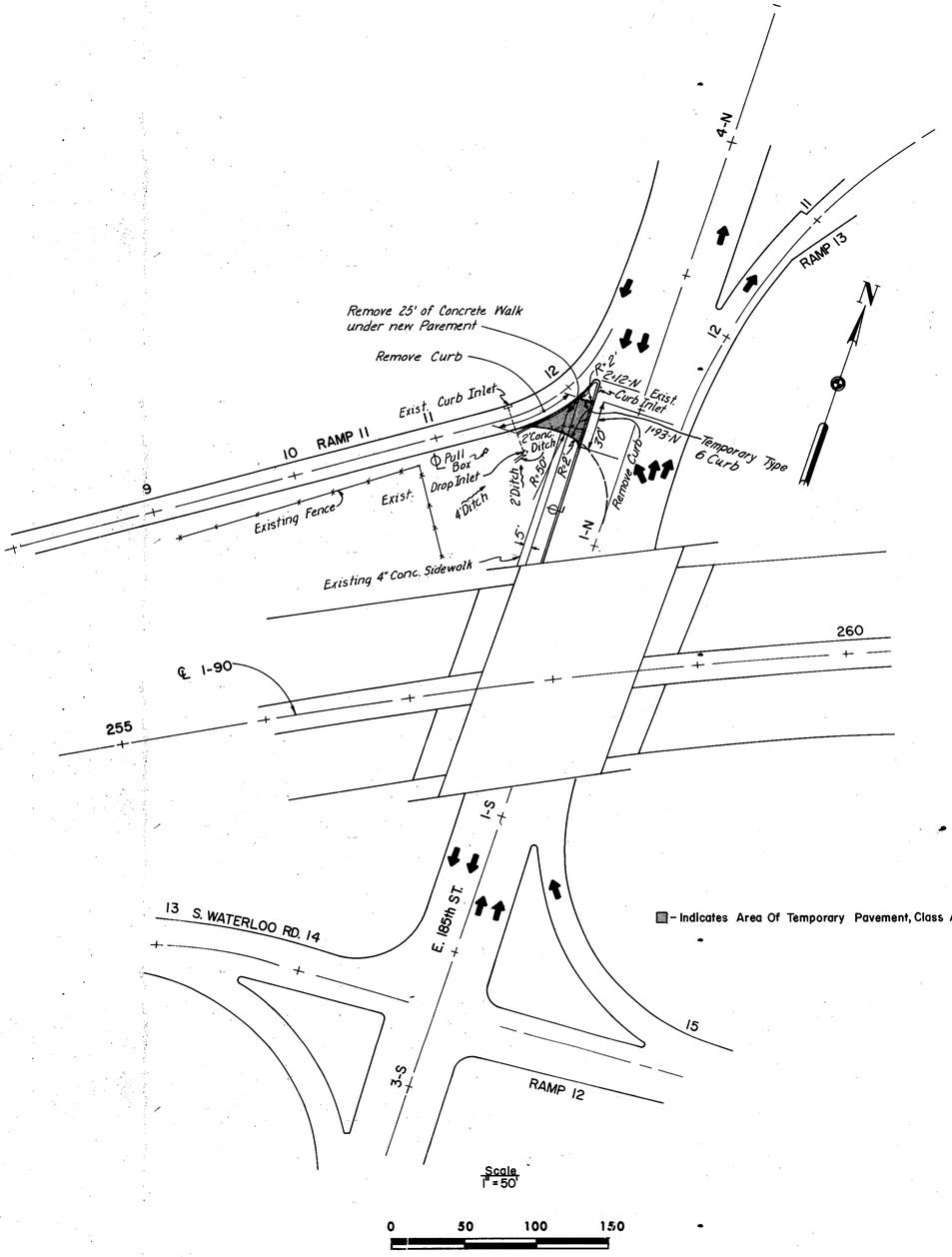

▩ - Indicates Area Of Temporary Pavement, Class A

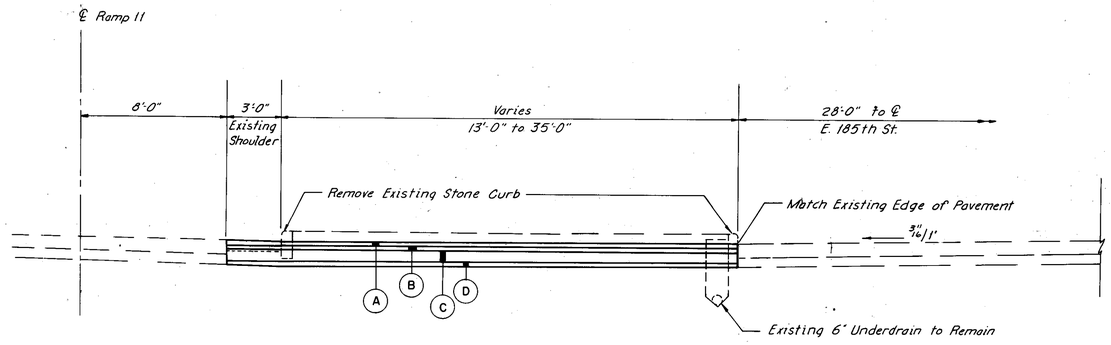

TEMPORARY PAVEMENT
E. 185th St. to Ramp 11
Scale
1/4" = 1'-0"

LEGEND

- (A) 404 1¼" Asphalt concrete (Item 402.02 composition may be used)
- (B) 402 1¾" Asphalt concrete
- (C) 301 7" Bituminous aggregate base (Item 402 Asphalt concrete may be used)
- (D) 304 4" Aggregate Base
- ℄ Existing Light Pole

Note:

1. Slope temporary pavement section to drain into existing facilities.
2. Temporary signing for maintaining traffic during the period of time the temporary pavement is in use, shall be in accordance with the Ohio Manual of Uniform Traffic Control Devices for Streets and Highways, current edition with latest revisions, and as directed by the Engineer.
3. The Contractor may provide Rigid or Flexible temporary pavement.
4. Existing Sandstone Curb which is removed and found suitable for re-use by the Engineer shall be placed in storage until it is to be reinstalled.
5. After Ramp 13 is reopened to traffic and the Contractor has removed the temporary pavement and curb, he shall replace all curb and walk removed during construction of the temporary connection.
6. Payment for all labor, materials, and other costs incurred in performing the work described including removal and replacement of existing curbs and sidewalk, shall be included in the unit price bid for Item 614 Maintaining Traffic.

MADE D.S.P. DATE 7-24-74
TRACED N.E.T. DATE 8-1-74
CHECKED G.F.M. DATE 8-21-74
SCALE As Noted

Howard, Needles, Tammen & Bergendoff
CONSULTING ENGINEERS
CLEVELAND, OHIO

HNTB

SUB-SUMMARIES

QUANTITY CALCULATIONS
MADE BY M.G.B. DATE 1-16-75
CHECKED BY G.F.M. DATE 1-17-75

FHWA REGION	STATE	PROJECT	
5	OHIO		

107
354

CUYAHOGA COUNTY
CUY-90-23.73
LAKE COUNTY
LAK-90-0.00

SIGNING SUB-SUMMARY COST PARTICIPATION I, II, III & IV

SHEET NO.	COST PARTICIPATION	EXIST. SIGNS RE-ERECTED	EXISTING SIGN REVISED, AS PER PLAN	844		INTERNALLY ILLUMINATED	844 CONC. GROUND MOUNTED SIGN	844 SUPPORTS							202					620	REVISE EXISTING SIGN LEGEND, EXIT ACTION MESSAGE, AS PER PLAN	POLE MOUNTED SIGN ATTACHMENT, AS PER PLAN
				FLAT SHEET	EXTRU. TYPE			6LB. BEAM AS PER PLAN	4 Lb POST	6 Lb BEAM	W8×17	W10×21	W12×31	BREAK AWAY CONN.	REMOVAL EXISTING SIGNS	REMOVAL EXISTING SUPP.	REMOVAL EXISTING INSTALL.	REMOVAL MAJOR INSTALL.	REMOVAL EXISTING O.H. SUPP.	DELIN. AS PER PLAN		
		Sq. Ft.	Each	Sq. Ft.	Sq. Ft.	Each	Cu. Yd.	Lin. Ft.	Lin. Ft.	Lin. Ft.	Lin. Ft.	Lin. Ft.	Lin. Ft.	Each	Each	Each	Each	Each	Each	Each	Each	Each
19	I	146.5			144				34.5	128.5						10						
	III																				7	
21	I II	107.2		24.0 18.0	48.0			32.6	14.5	98.4 21.8						7	2				1	3
	III IV	35.5 13.90		53.5 41.9		2			103.6 106.5	16.5					2 2	4 2	1 4					1
23	I	134.25			112				71	103.5						7					6	
	III																					
25	I	62.8			70				90.6													
	II	34		12	52				67.8													
	III	90	1	21					31.3	34					1	9	1					
	IV		1												1	4						
27	II	158		14	34			41.5	28	85.25						1	1					
	IV	73.8		72.6					165	72					2	6	6					
28	II	23.95		18.25					43.50	16.50						2						
	IV	131.43		103.75				48.75	132.50	86.75					2	10	9					
30	II	118.7		93.60	32			32.50	242.75	35.5						6	13				2	
	IV	99.75		34.10	120			31.50	149.25						4	7	2					1
32	II	132.25			118				63.5	97												
	IV																				7	
34	II	36.9			104				45	21						4					4	
	IV	91.6		66.6	78			32.5	167	16.75					2	9	3					
36	II	54.0			50				15.50	38.25						3	1					
	III	24.0		10.2					60.00													
	IV	246.85		109.8				97.5	236.25	111.50					5	17	9				3	
37	II	53.05		42	16				124	43.75					1	4						
	IV			15.9	40				15.5	34							1					1
39	I	175.6		33	124				148.25	121.75					2	11					6	
	III	56.25		83.5					112.25	79.50						5	6					
41	I	6		18	90				59.5							2						
	III	84.9		108.05				31.5	117	63					2	5	7				3	2
42	III	138		69				63	199.5	28						11	1					
44	I	70.05		15	68				74	22.5						4					2	
	III	161.90		133.6	160			31.6	171	135.8						14	6					
46	I	69.6		30	116				91	45.3						4						
	III	194.75	1	44.25					92.1	172.6					1	15	3				4	3
48	I	36								46						2						
	III	20.9	1	34.75	98				43	37.5						3	3		1		5	2
50	I	226.4		42.5	144.0		2.3	68.25	107.0	55.75	42.75			2		12	1	1			1	2
	III		2	15.0	161.5										1						1	
53	I	18			80					22.25						1						
	III		2														1	1			2	
55	I	185.5		24	32			66	60	91.25						9						
	III	180.2		30					62	121.50					1	12					1	
58	I	51			80				31.5	115.75						4	1					
	III		2	108					50.0								3			8	4	
TOTAL I		1288.90		186.50	1108.00		2.3	166.85	781.85	805.65	42.75			2	2	71	4	1			10	5
TOTAL II		580.95		197.85	406.00			74.00	630.05	359.05					1	20	15				6	
TOTAL III		986.40	9	710.85	419.50	2		126.10	1,041.75	688.40					8	78	32	1	1	8	33	8
TOTAL IV		657.33	1	444.65	238.00			210.25	972.00	270.59					16	55	34				10	2
TOTALS		3513.58	10	1539.85	2171.50	2	2.3	577.20	3425.65	2123.69	42.75			2	27	224	85	2	1	8	59	15

MILE MARKER QUANTITIES

MILE NO.	STATION	SIDE	ITEM 844			
			SIGN FLAT SHEET N-41-12 1'x4'		GROUND MOUNTED SUPPORT, 2 LBS. PER FOOT	
			COST PARTICIPATION		COST PARTICIPATION	
			I	II	I	II
			SQ. FT.	SQ. FT.	LIN. FT.	LIN. FT.
178	41+19	Lt. ℄ Rt.	8		24	
179	93+99	Lt. ℄ Rt.	8		24	
180	146+79	Lt. ℄ Rt.		8		24
181	199+59	Lt. ℄ Rt.		8		24
182	252+39	Lt. ℄ Rt.		8		24
183	305+19	Lt. ℄ Rt.	8		24	
184	357+99	Lt. ℄ Rt.	8		24	
185	48+92	Lt. ℄ Rt.	8		24	
186	57+08	Lt. ℄ Rt.	8		24	
187	109+88	Lt. ℄ Rt.	8		24	
188	10+60	Lt. ℄ Rt.	8		24	
Cost Participation I Total			64		192	
Cost Participation II Total			24		72	
TOTALS			88		264	

MADE M.G.B. DATE 1-16-75
TRACED D.C. DATE 1-16-75
CHECKED G.F.M. DATE 1-17-75
SCALE

Howard, Needles, Tammen & Bergendoff
CONSULTING ENGINEERS
CLEVELAND, OHIO

HNTB

SUB-SUMMARIES

QUANTITY CALCULATIONS
MADE BY H.B. DATE 8-16-74
CHECKED BY G.F.M. DATE 8-29-74

FHWA REGION	STATE	PROJECT	
5	OHIO		

107 A 354

CUYAHOGA COUNTY
CUY-90-23.73
LAKE COUNTY
LAK-90-0.00

ITEM 621 – PAVEMENT MARKING SUB-SUMMARY COST PARTICIPATION I, II, III & IV

SHEET NO.	621 Lane Lines 4"				621 Lane Lines 6"		621 Dotted Lane Lines 4"		621 Edge Lines 4" (white)				621 Edge Lines 4" (yellow)				621 Channelizing Lines 8" (white)				621 Channelizing Lines 9" (yellow)	621 Broad Transverse Lines 24" (white)				621 Broad Transverse Lines 8" (yellow)	621 Curb Marking (white)				621 Lane Arrows			621 Crosswalk Lines 6"		621 Stop Line 24"			621 Word "ONLY" on Pavement as per plan			621 Centerlines: Solid Double	621 Island Marking (yellow)
	Miles				Miles		Lin. Ft.		Miles				Miles				Lin. Ft.				Lin. Ft.	Lin. Ft.				Lin. Ft.	Lin. Ft.				Each			Lin. Ft.		Lin. Ft.			Each			Miles	Sq. Ft.
	I	II	III	IV	III	IV	I	II	I	II	III	IV	I	II	III	IV	I	II	III	IV	II	I	II	III	IV	II	I	II	III	IV	I	II	III	I	IV	II	III	IV	II	III	IV	II	II
19					6.7						2.23				2.23																												
21			0.09		0.49	0.09					0.90	0.16			1.32			380						135								8				30			4			
23					3.07						1.02				1.02																												
25			0.04		2.53	0.66					1.27	0.53			1.32	0.42		712	690					207	188				482		2						40						
28				0.04		3.41						1.46				1.42			1220						543					684		3											
30				0.09		3.41						1.29				1.20			1003						165					649		3						16					
32						3.41						1.14				1.14																											
34				0.22		3.41						1.17				1.16			854						165					1450		9						40			6		
36				0.20	0.57	2.84					0.19	1.24			0.19	1.15			1088						268					400		2											
39					3.54						1.39				1.32			635						230					224		2											
41				0.11	3.41						1.39				1.28			1640						469					531		1											
44			0.06		3.41						1.28				1.21			1212						427					139		1											
46			0.08		3.42						1.43				1.37			1502						358					322		2											
48					2.64						2.51				2.43			2386						461					586														
50					1.81						1.82				1.79			1821						698					712				3				48					
53			0.41		1.77						1.37				1.33			1073						381					857														
55			0.10		2.05						1.61				1.56			733						355					993		2											
58					0.92	1.89					0.46	0.95			0.46	0.95																											
84	0.09						1.39		0.17				0.12				108										100								130								
86									0.24				0.09				409					391																				
91	0.50								0.24	0.15					0.10		160							451			100																
91F		0.49					200			0.31					0.43			478			216			36			25		150			6					109			1		0.05	6474.14
Total I	0.59						139		0.65				0.21				268					391					200				10			130								
Total II	0.49						200		0.46				0.53				478				216	487				25	150				23					109			1		0.05	6474.14
Total III	0.78				36.53				18.87				18.83				12,094					3,721					4,846				11					118			4			
Total IV	0.46				19.12				8.54				7.94				4,855					5,050					3,183							130		56			6			
Total	2.52				55.65		339		28.52				27.51				17,695				216	9,649				25	8,379				44			260		283			11		0.05	6474.14

SIGN LIGHTING – COST PARTICIPATION I		
Sheet No.	625 REVISE EXISTING SIGN SERVICE, AS PER PLAN	
	I	
19	6	
21	3	
23	4	
TOTAL I	13	
TOTAL	13	

BARRIER WALL ASSEMBLY FOR SIGN SUPPORTS

STATION	SHEET NO.	844 Design 2 As Per Plan Each I	844 Design 3 Each I	844 Design 3 Each II	844 Design 4 Each I	844 Design 4 Each II	844 Design 4 As Per Plan Each I	844 Design 5 Each I
10+00	59	1						
25+00	59	1						
65+50	60						1	
100+50	60	1						
115+60	60	1						
127+75	62						1	
137+90	62		1					
194+90	63			1				
208+50	63		1					
226+00	63		1					
231+00	63		1					
245+00	65					1		
262+16	65					1		
273+50	65							
298+67	65				1			
324+50	66		1					
337+75	66		1					
344+15	66				1			
353+60	66							1
362+70	68				1			
388+73	68				1			
390+00	68		1					
42+10	68				1			
48+50	68	1						
TOTAL I		4	5	5	5	5	2	1
TOTAL II			4	4	3	3		1
TOTAL		4	9	9	8	8	2	1

MADE H.B. DATE 8-16-74
TRACED H.B. DATE 8-16-74
CHECKED G.F.M. DATE 8-29-74
SCALE

Howard, Needles, Tammen & Bergendoff
CONSULTING ENGINEERS
CLEVELAND, OHIO

HNTB

K & E 10-1253 7-74

R-9

9-Y

GENERAL SUMMARY

QUANTITY CALCULATIONS
MADE BY M.E.E. DATE 1-20-75
CHECKED BY D.S.P. DATE 1-20-75

FHWA REGION	STATE	PROJECT	
5	OHIO		

108
354

TYPE CODE 6706

CUYAHOGA COUNTY CUY-90-~~23.73~~ 21.37
LAKE COUNTY LAK-90-0.00

SHEET NUMBER 107 I	107 II	107 III	107 IV	107A I	107A II	107A III	107A IV	123 III	123 IV	123A SIGN NO.	123A 1A IV	123A 2 IV	123A 3 II	123A 10 III	123A 11 III	123B 18 IV	123B 20 III	COST PARTICIPATION I	II	III	IV	TOTAL QUANT.	UNIT	ITEM	DESCRIPTION
																									TRAFFIC CONTROL
																									SIGNING
2	1	8	16															2	1	8	16	27	Each	202	Removal of Existing Sign Faces
71	20	78	55															71	20	78	55	224	Each	202	Removal of Existing Supports
4	15	32	34															4	15	32	34	85	Each	202	Removal of Existing Sign Installations, as per plan
1		1																1		1		2	Each	202	Removal of Existing Major Sign Installation, as per plan
	1	1																	1	1		2	Each	202	Removal of Existing Overhead Support
		8																		8		8	Each	620	Delinea tor, Type D, Post Mounted, as per plan
				13														13				13	Each	625	Revise Existing Sign Service, as per plan
		9	1																	9	1	10	Each	844	Existing Sign Revised, as per plan
10	6	33	10															10	6	33	10	59	Each	844	Revise Existing Sign Legend, Exit Action Message, as per plan
1289	581	1239	657															1289	581	1239	657	3766	Sq. Ft.	844	Existing Sign Reerected
5		8	2															5		8	2	15	Each	844	Pole Mounted Sign Attachment, as per plan
250	222	711	445															250	222	711	445	1628	Sq. Ft.	844	Sign, Flat Sheet Type, as per plan
1108	406	558	238															1108	406	558	238	2310	Sq. Ft.	844	Sign, Extru Sheet Type, as per plan
2.3																		23				2.3	Cu. Yd.	844	Concrete for Ground Mounted Sign Support Foundations
													8.5			3.1			8.5		3.1	11.6	Cu. Yd.	844	Concrete for Overhead Sign Support Foundations
											1	1									2	2	Each	844	Structural Sign Support 18.26, Design No. 6
														3	3					6		6	Each	844	Structural Sign Support SPL-816
													1						1			1	Each	844	Overhead Sign Support No. 7.4, Design No. 1 Mod.
																1					1	1	Each	844	Overhead Sign Support 12.30, Design No. 4 Mod.
192	72																	192	72			264	Lin.Ft.	844	Steel Drive Post 2 lbs. per foot, Driven
782	630	1042	972															782	630	1042	972	3426	Lin. Ft.	844	Steel Drive Post 4 lbs. per foot, Driven
806	359	688	271															806	359	688	271	2124	Lin.Ft.	844	Structural Support 6 lbs. Beam, Driven
167	74	126	210															167	74	126	210	577	Lin.Ft.	844	Structural Support 6 lbs. Beam, as per plan, Driven
43																		43				43	Lin.Ft.	844	Structural Support Steel Beam, W8 x 17
2																		2				2	Each	844	Breakaway Beam Connection
																	31.5			31.5		31.5	Lin. Ft.	844	Backbracing, No. 2 Post
				4														4				4	Each	844	Barrier Wall Assembly for Sign Supports, Design 2, as per plan
				5	4													5	4			9	Each	844	Barrier Wall Assembly for Sign Supports, Design 3
				5	3													5	3			8	Each	844	Barrier Wall Assembly for Sign Supports, Design 4
				2														2				2	Each	844	Barrier Wall Assembly for Sign Supports, Design 4, as per plan
				1														1				1	Each	844	Barrier Wall Assembly for Sign Supports, Design 5
								8	6											8	6	14	Each	844	Repair Structure Mounted Sign Supports, as per plan
	2																			2		2	Each	844	Internally Illuminated Sign, 30" x 36"
																									PAVEMENT MARKINGS
				0.86	0.99	37.70	16.48											0.86	0.99	37.70	16.48	56.03	Miles	621	Edge Lines, Thermoplastic
						36.53	19.12													36.53	19.12	55.65	Miles	621	Lane Lines, 6", Thermoplastic
				0.62	0.53	0.78	0.66											0.62	0.53	0.78	0.66	2.59	Miles	621	Lane Lines, 4", Thermoplastic
				268	478	12,094	4855											268	478	12,094	4,855	17,695	Lin. Ft.	621	Channelizing Lines 8", Thermoplastic
					109	118	56												109	118	56	283	Lin.Ft.	621	Stop Lines, 24", Thermoplastic
				130			130											130			130	260	Lin.Ft.	621	Crosswalk Lines, 6", Thermoplastic
				391	487	3721	5050											391	487	3721	5050	9649	Lin.Ft.	621	Broad Transverse Lines, 24", Thermoplastic
				200	150	4846	3183											200	150	4846	3183	8379	Lin.Ft.	621	Curb Marking
				10	23	11												10	23	11		44	Each	621	Lane Arrows, Thermoplastic
					1	4	6												1	4	6	11	Each	621	Word on Pavement, as per plan, Thermoplastic
					25														25			25	Lin.Ft.	621	Broad Transverse Lines: 8", Thermoplastic
					6474														6474			6474	Sq. Ft.	621	Island Marking
					0.05														0.05			0.05	MILES	621	Center lines, Thermoplastic
					216														216			216	Lin.Ft.	621	Channelizing Lines: 9", Thermoplastic
																									SIGN LIGHTING AND TRAFFIC SIGNALIZATION
																									For Sign Lighting and Traffic Signalization see Sheets 131 & 140

MADE M.E.E. DATE 1-20-75
TRACED D.B.C. DATE 1-20-75
CHECKED D.S.P. DATE 1-20-75
SCALE

Howard, Needles, Tammen & Bergendoff
CONSULTING ENGINEERS
CLEVELAND, OHIO

HNTB

FHWA REGION	STATE	PROJECT	
5	OHIO		

109
354

CUYAHOGA COUNTY
CUY-90-23.73
LAKE COUNTY
LAK-90-0.00

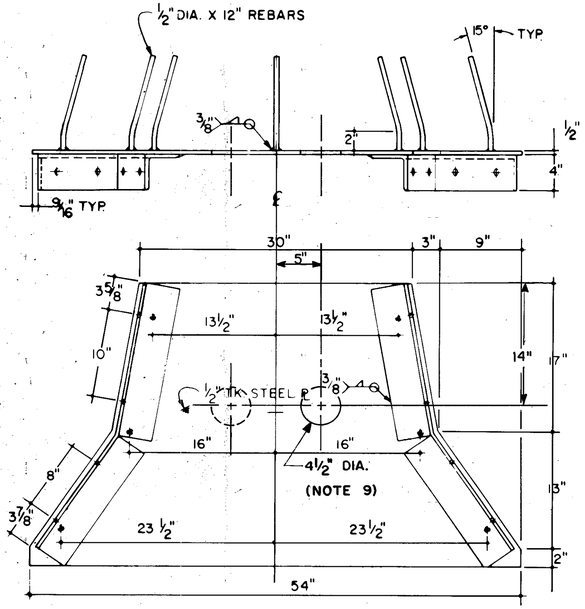

END BULKHEAD

SCALE: 1½" = 1'0"

DESIGN	"D"	WALL ℄ LENGTH
1	3'-10"	7'-1"
2	4'-5"	7'-8"
3	5'-7"	8'-10"
4	6'-7"	9'-10"
5	*	4'-0"

CHART "A"

* SEE NOTE 8

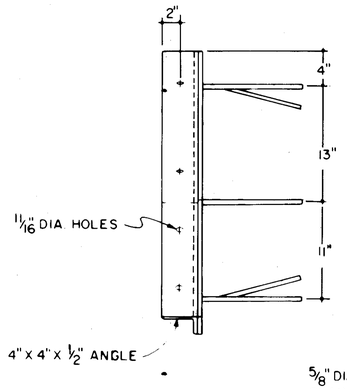

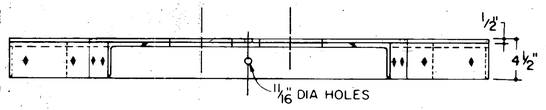

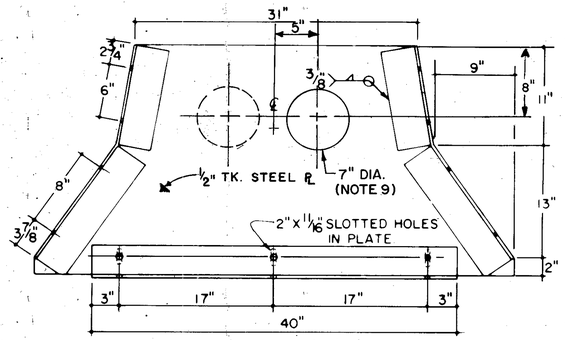

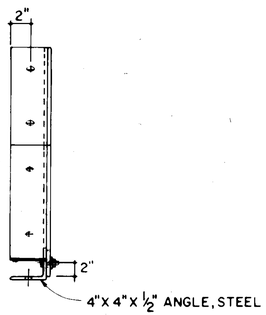

CENTER BULKHEAD

SCALE: 1½" = 1'0"

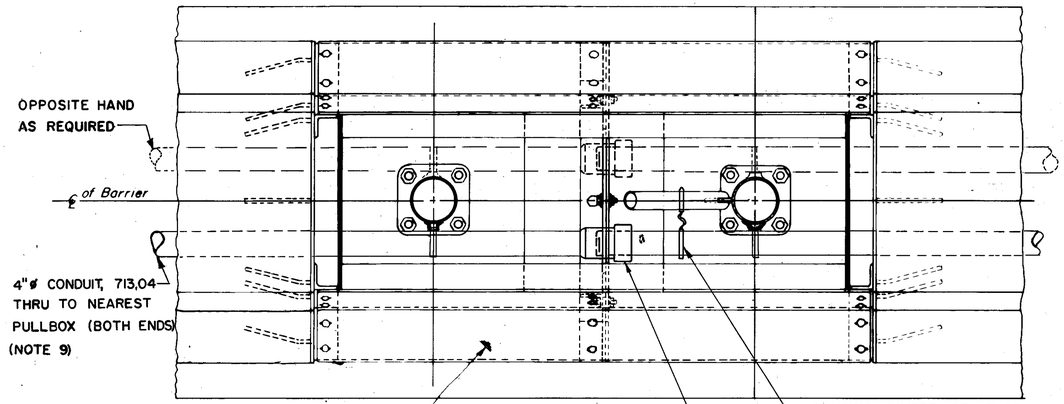

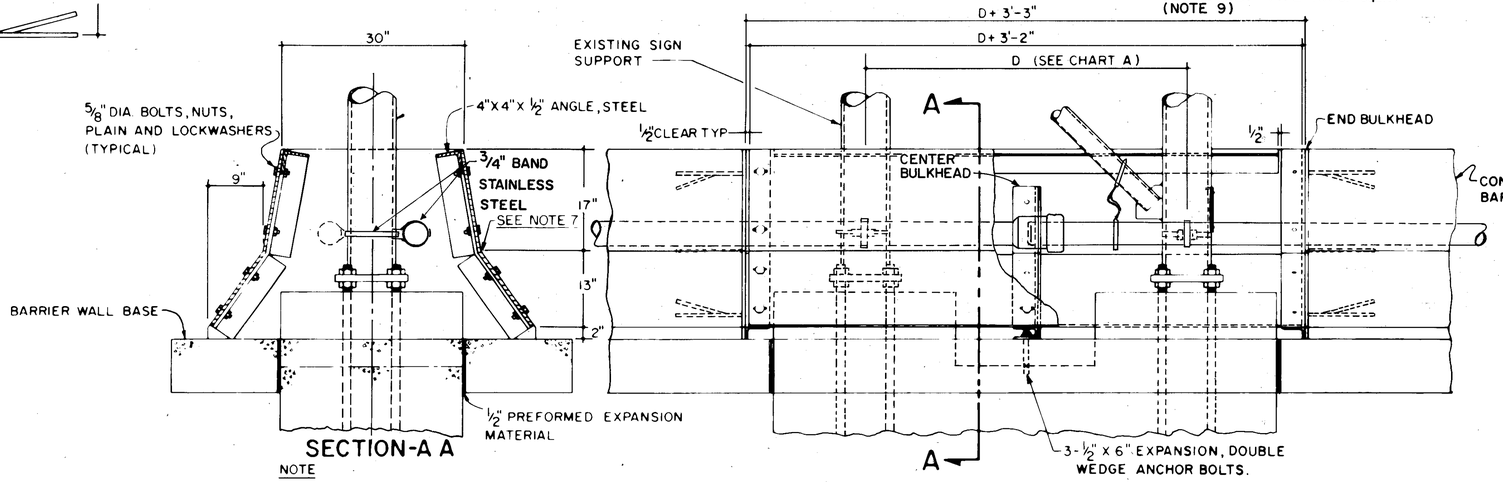

SECTION-A A

NOTE

1 ALL STEEL PARTS SHALL BE GALVANIZED AFTER FABRICATION AS PER ASTM A-123

2 ALL 5/8" BOLTS, NUTS, PLAIN WASHERS AND LOCKWASHERS SHALL BE GALVANIZED

3 REINFORCING BARS SHALL BE ASTM A-615, GRADE 40

4 AFTER FABRICATION AND GALVANIZING THE PARTS SHALL BE SHOP ASSEMBLED AND SHIPPED TO THE JOB SITE AS A UNIT

5 INSTALLATION REMOVE ONE WALL PLATE, PLACE THE UNIT AROUND THE SIGN SUPPORT, BOLT THE CENTER BULKHEAD TO BARRIER WALL BASE AND REINSTALL WALL PLATE, FORM CONCRETE BARRIER UP TO THE END BULKHEADS.

6 PLATES AND ANGLES SHALL BE ASTM A-36 STEEL

7 EACH WALL PLATE MAY BE MADE FROM A SINGLE PIECE AND FORMED ON A PRESS BRAKE OR TWO PIECES WELDED USING A 100% PENETRATION BUTT JOINT WELD.

8 FOR CANTILEVER, CENTER MOUNT AND BUTTERFLY TYPE SIGN SUPPORTS USE A WALL PLATE LENGTH OF 4'-0" AND ELIMINATE CENTER BULKHEAD.

9. INSTALLATION OF ELECTRICAL CONDUIT, INCLUDING ALL LABOR, MATERIAL, AND INCIDENTALS SHALL BE INCLUDED IN THE UNIT BID PRICE, PER EACH ITEM 816-"BARRIER WALL ASSEMBLY FOR SIGN SUPPORTS, DESIGN _____; AS PER PLAN."

MADE EEJ DATE 9-6-74
TRACED FAK DATE 9-11-74
CHECKED EEJ DATE 9-13-74
SCALE AS SHOWN

Howard, Needles, Tammen & Bergendoff
CONSULTING ENGINEERS
CLEVELAND, OHIO

HNTB

BARRIER WALL ASSEMBLY FOR SIGN SUPPORTS

FHWA REGION	STATE	PROJECT	
5	OHIO		

110
354

CUYAHOGA COUNTY
CUY-90-23.73
LAKE COUNTY
LAK-90-0.00

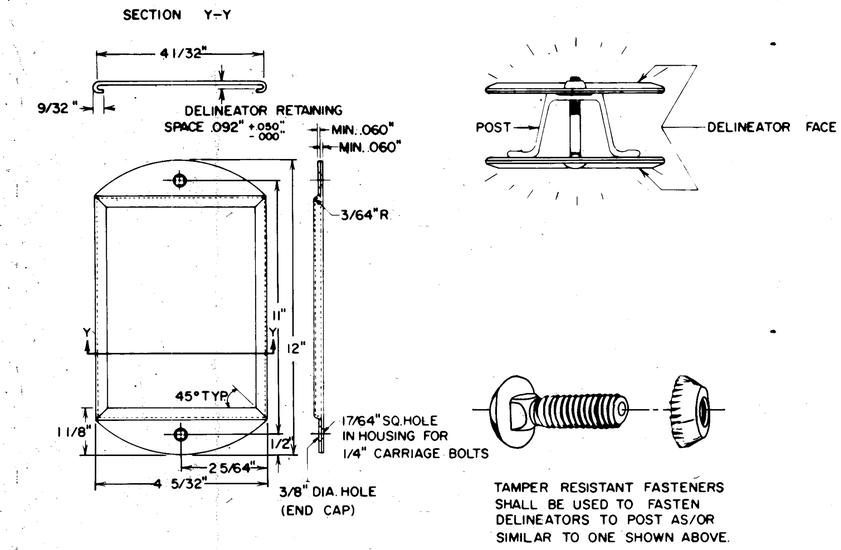

TAMPER RESISTANT FASTENERS SHALL BE USED TO FASTEN DELINEATORS TO POST AS/OR SIMILAR TO ONE SHOWN ABOVE.

"D" YELLOW DELINEATOR DETAILS

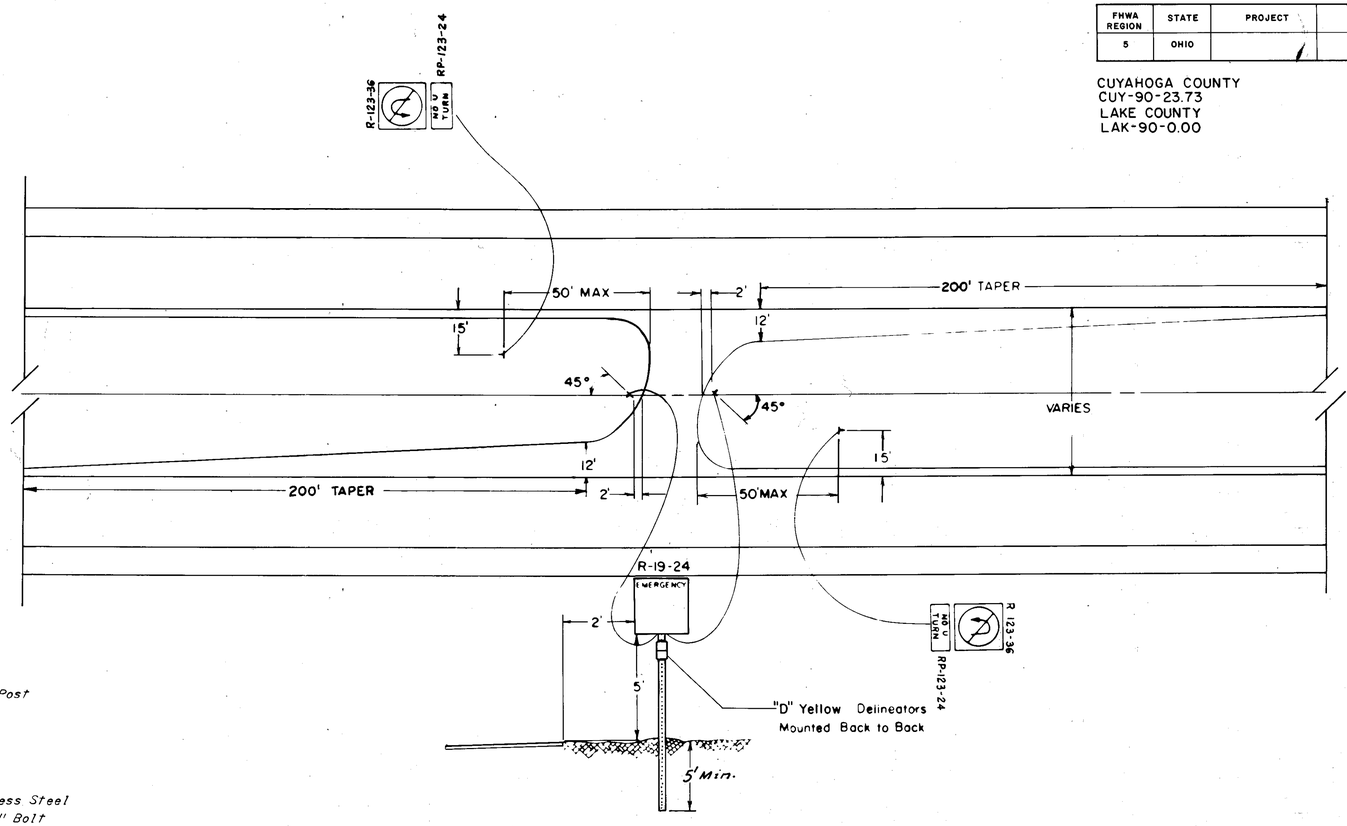

TYPICAL MEDIAN CROSSOVER SIGN PLACEMENT

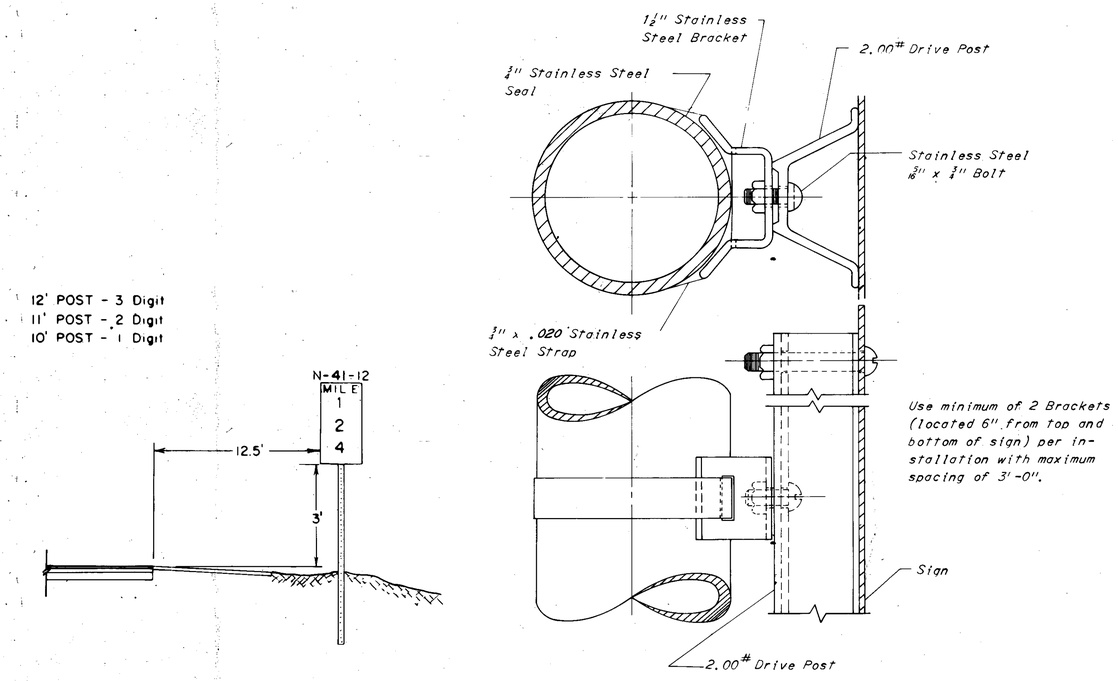

MILE MARKER PLACEMENT

POLE MOUNTED SIGNS—ATTACHMENT DETAIL

(No Scale)

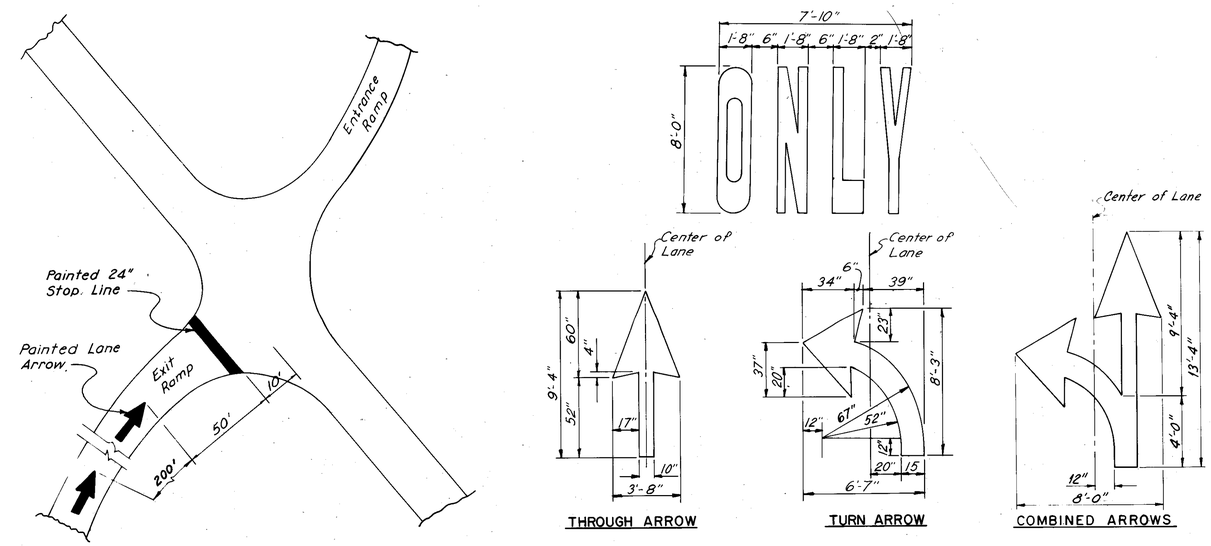

THROUGH ARROW

TURN ARROW

COMBINED ARROWS

DETAILS OF PAVEMENT MARKING ARROWS AND WORDS

No Scale

MADE JAG DATE 1-13-75
TRACED AJT DATE 1-14-75
CHECKED D.S.P. DATE 1-15-75
SCALE —

Howard, Needles, Tammen & Bergendoff
INSURANCE ENGINEERS
CLEVELAND OHIO

HNTB

CROSSOVER, MILE MARKER & DELINEATOR DETAILS

FED. RD. DIVISION	STATE	PROJECT	
5	OHIO		

111
354

CUYAHOGA COUNTY
CUY-90-23.73
LAKE COUNTY
LAK -90-0.00

12" EXTRUSHEET PANEL

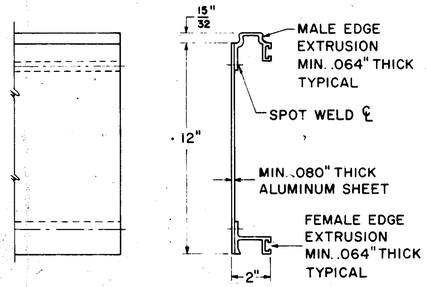

FRONT VIEW SIDE VIEW

18" EXTRUSHEET PANEL

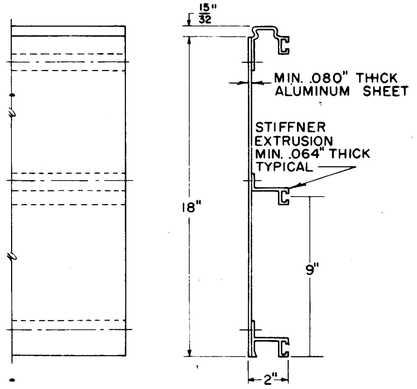

FRONT VIEW SIDE VIEW

24" EXTRUSHEET PANEL

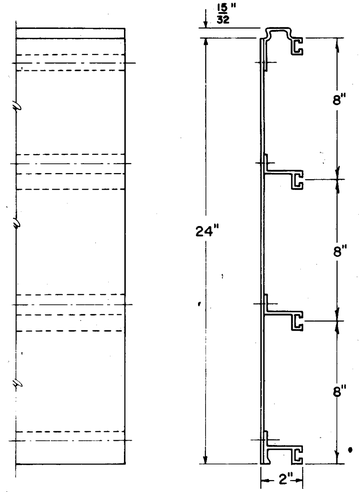

FRONT VIEW SIDE VIEW

NOTES:

EXTRUSHEET PANELS SHALL BE ALUMINUM; SPOT WELDING AND ALL MATERIALS SHALL CONFORM WITH SUPPLEMENTAL SPECIFICATION NO. 815

COMBINATIONS OF 12", 18", AND 24" PANELS ARE USED TO ATTAIN REQUIRED SIGN HEIGHT.

INDIVIDUAL PANELS SHALL BE THE SAME LENGTH AS THE HORIZONTAL LENGTH OF SIGN WITH NO SPLICES.

PANELS SHALL BE INTERLOCKED AND ERECTED WITH THE MALE EXTRUSION LOCATED AT THE TOP EDGE OF THE SIGN.

EXTRUSHEET PANELS SHALL BE FASTENED TO EACH VERTICAL SUPPORT MEMBER WITH MOUNTING CLIPS; ALTERNATELY AT EACH HORIZONTAL EXTRUSION; BOTH SIDES AT EACH JOINT; AND ON BOTH SIDES AT TOP AND BOTTOM EDGE OF SIGN.

THE PANELS SHALL BE DESIGNED TO WITHSTAND A WIND LOAD OF 35 POUNDS PER SQUARE FOOT, IN ACCORDANCE WITH THE A.A.S.H.O. SPECIFICATION FOR DESIGN AND CONSTRUCTION OF STRUCTURAL SUPPORTS FOR HIGHWAY SIGNS.

THE MAXIMUM SIGN LENGTH FOR TWO SUPPORTS IS 19'-0".
THE MAXIMUM SIGN LENGTH FOR THREE SUPPORTS IS 29'-0".

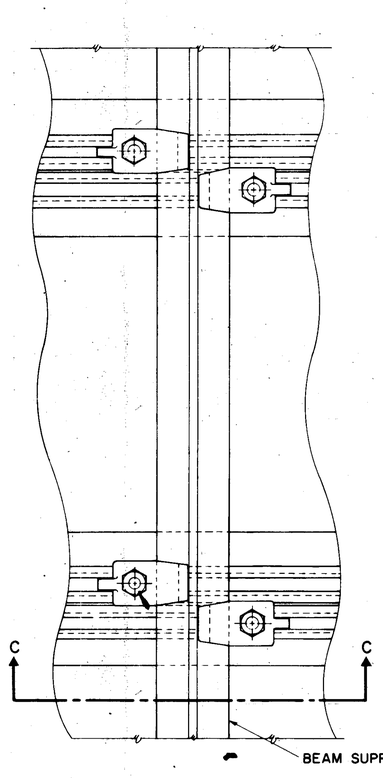

SECTION A-A

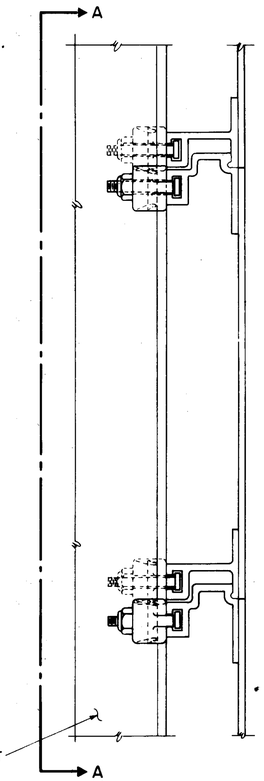

SECTION B-B

GENERAL ARRANGEMENT

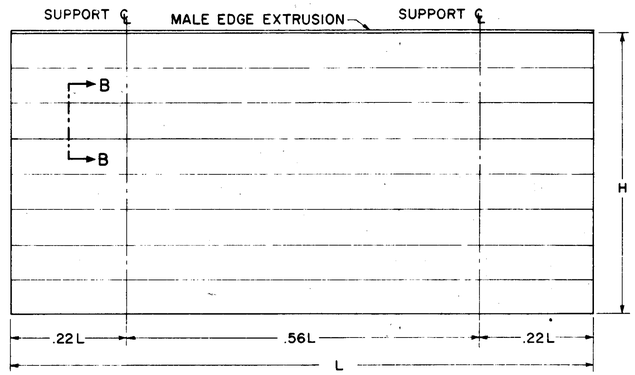

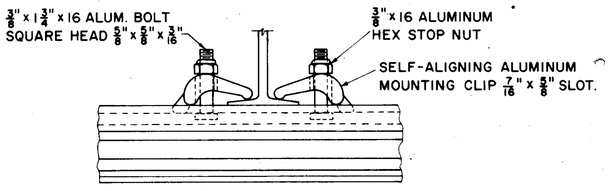

SECTION C-C

CLIP DETAIL

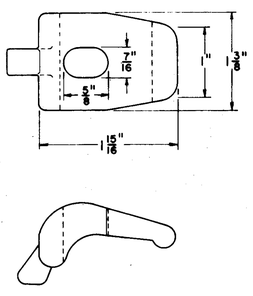

SPOT WELDS

PANEL SIZE	MAXIMUM SPOT WELD SPACING	
	CENTER TO CENTER	BETWN ROWS
12 INCH	4 INCH	10 INCH
18 & 24 INCH	4 INCH	8 INCH

BUREAU OF TRAFFIC
OHIO DEPARTMENT OF HIGHWAYS

ALUMINUM EXTRUSHEET PANEL SIGN

ECD 1

DATE
9-25-63
5-19-64
10-21-65
5-24-67

APPROVED Fred C. Gaskey
ENGINEER OF TRAFFIC

FED. RD. DIVISION	STATE	PROJECT	
5	OHIO		

112
354

CUYAHOGA COUNTY
CUY-90-23.73
LAKE COUNTY
LAK -90-0.00

12" BOLTED-EXTRUSHEET PANEL

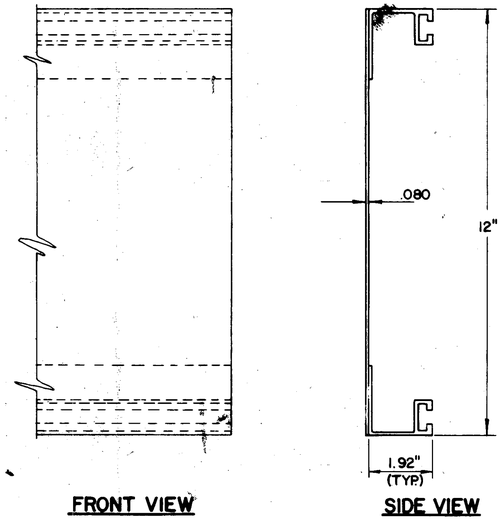

FRONT VIEW SIDE VIEW

18" BOLTED-EXTRUSHEET PANEL

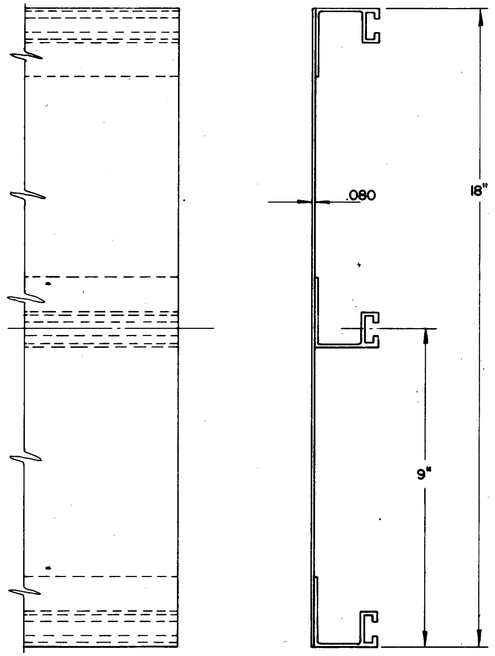

FRONT VIEW SIDE VIEW

24" BOLTED-EXTRUSHEET PANEL

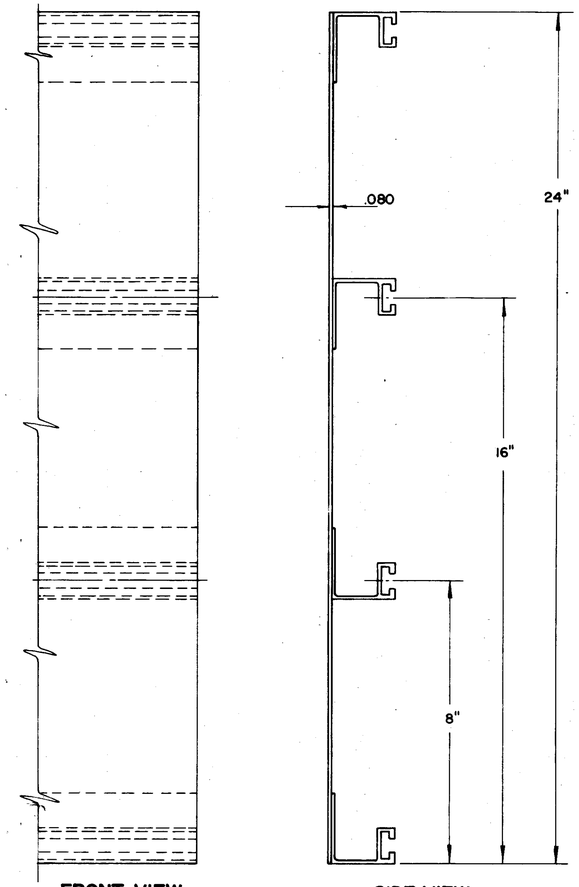

FRONT VIEW SIDE VIEW

NOTES

EXTRU-SHEET PANELS SHALL BE ALUMINUM; SPOT WELDING, MATERIALS AND HARDWARE SHALL CONFORM WITH SPECIFICATION NO. 815

COMBINATIONS OF 12", 18" AND 24" PANELS ARE TO BE USED TO ATTAIN REQUIRED SIGN HEIGHT.

INDIVIDUAL PANELS SHALL BE THE SAME LENGTH AS THE HORIZONTAL LENGTH OF SIGN, WITH NO SPLICES.

THE PANELS SHALL BE ERECTED HORIZONTALLY AND BOLTED ON 24" CENTERS.

THE PANELS SHALL BE FASTENED TO EACH VERTICAL SUPPORT MEMBER WITH MOUNTING CLIPS; ALTERNATELY - AT EACH HORIZONTAL EXTRUSION, BOTH SIDES AT EACH JOINT, AND BOTH SIDES AT TOP AND BOTTOM EDGES OF SIGN.

THE PANELS SHALL BE DESIGNED IN ACCORDANCE WITH THE A.A.S.H.O SPECIFICATION FOR THE DESIGN AND CONSTRUCTION OF STRUCTURAL SUPPORTS FOR HIGHWAY SIGNS, BASE ON A WIND LOAD OF 35#/SQ.FT.

THE MAXIMUM SIGN LENGTH FOR TWO SUPPORTS IS 19'-0".
THE MAXIMUM SIGN LENGTH FOR THREE SUPPORTS IS 29'-0".

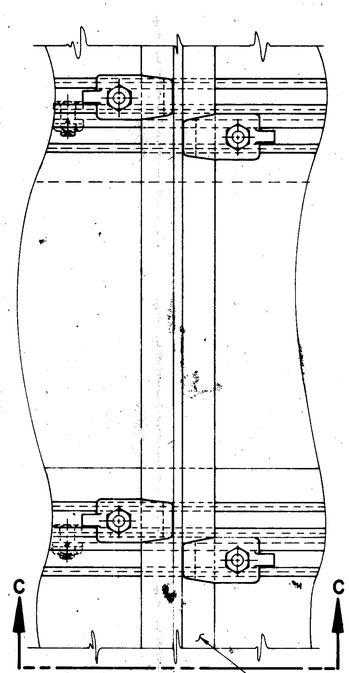

SECTION A-A

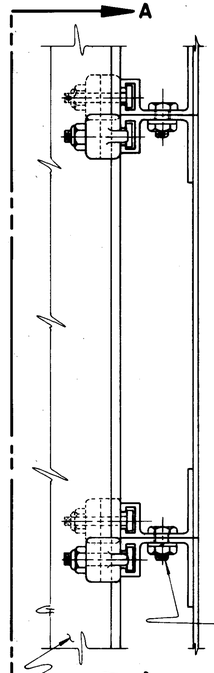

SECTION B-B

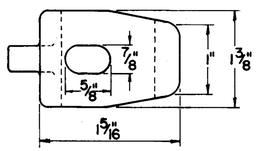

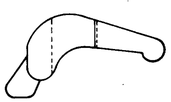

CLIP DETAIL

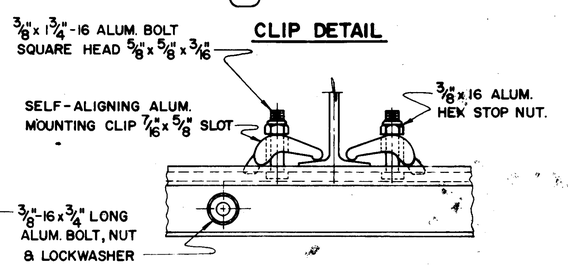

SECTION C-C

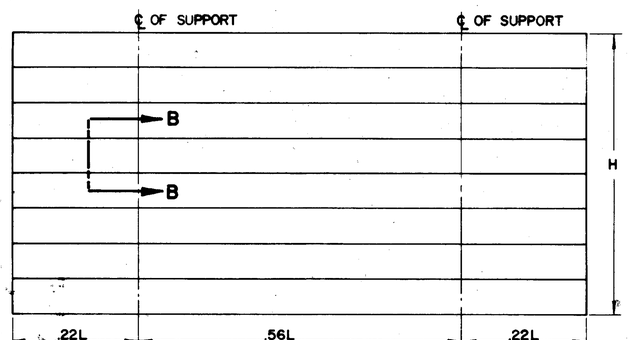

GENERAL ARRANGEMENT

SPOT WELDS

PANEL SIZE	MAXIMUM SPOT WELD SPACING	
	CENTER TO CENTER	BETWN ROWS
12 INCH	4 INCH	10 INCH
18 & 24 INCH	4 INCH	8 INCH

BUREAU OF TRAFFIC
OHIO DEPARTMENT OF HIGHWAYS

ALUMINUM BOLTED EXTRUSHEET PANEL SIGN	ECD 2	DATE 10-14-65

APPROVED [illegible] C. Talbot
[illegible] OF TRAFFIC

ALUMINUM BOLTED-EXTRUSHEET PANEL SIGN

112

FED. RD. DIVISION	STATE	PROJECT	
5	OHIO		

113
354

CUYAHOGA COUNTY
CUY-90-23.73
LAKE COUNTY
LAK -90-0.00

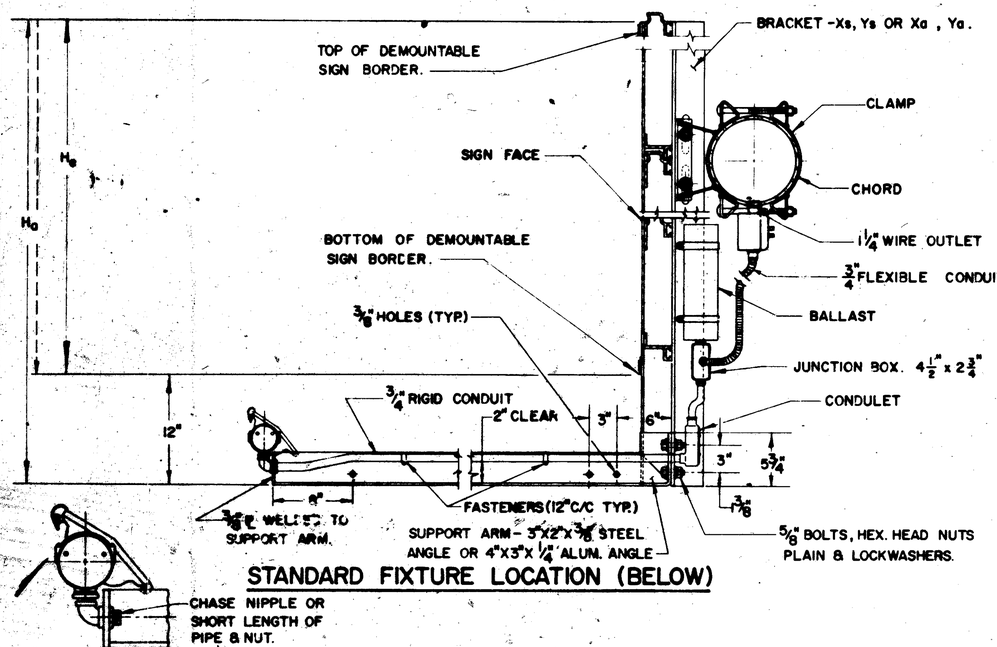

STANDARD FIXTURE LOCATION (BELOW)

FIXTURE CONNECTION WHERE WIRING CONDUIT IS NOT NEEDED.

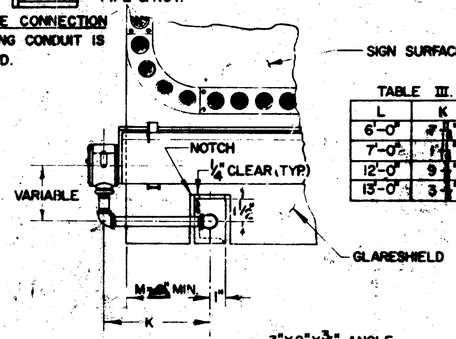

TABLE III.

L	K
6'-0"	4⅞"
7'-0"	5⅞"
12'-0"	9⅞"
13'-0"	10⅞"

ALTERNATE FIXTURE CONNECTIONS FOR SIGN 6', 7', 12' & 13' IN LENGTH.

DETAIL A.

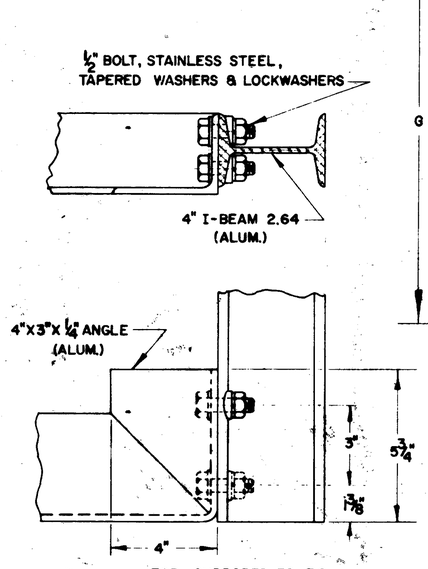

FOR SUPPORTS 7.2-7.6

DETAIL B.

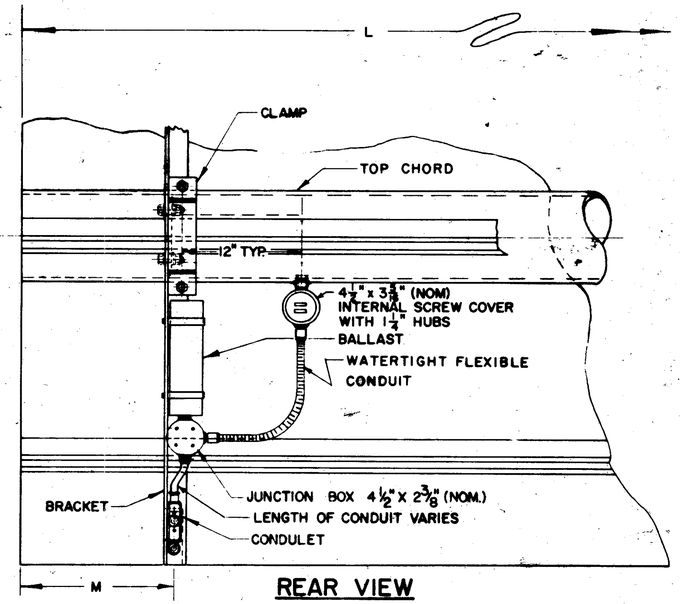

REAR VIEW

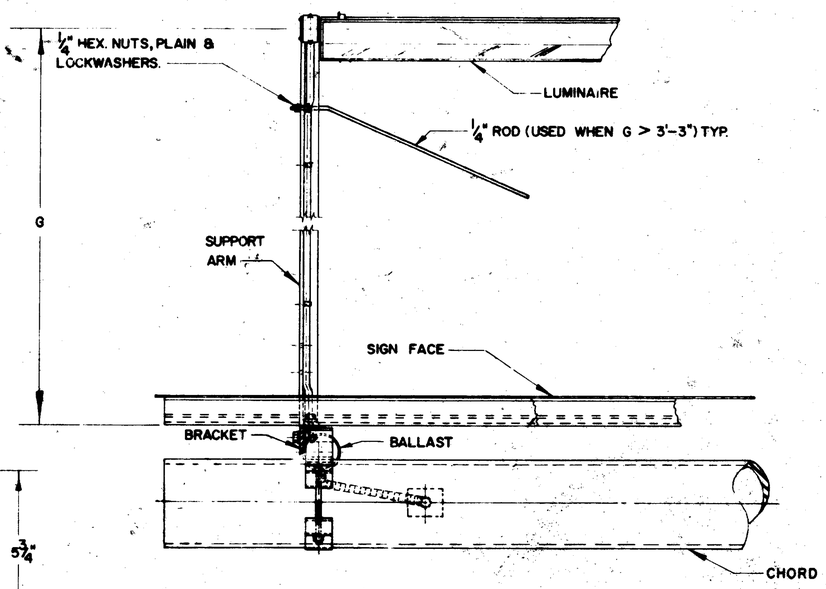

TOP VIEW

FABRICATION — ALL STRUCTURAL COMPONENTS SHOWN ON THIS SHEET SHALL CONFORM TO SUPPLEMENT SPECIFICATIONS 816.

MATERIALS — THE MATERIALS USED IN THE COMPONENTS SHOWN ON THIS SHEET SHALL BE IN CONFORMANCE WITH THE MATERIALS USED IN THE SIGN SUPPORT

TABLE I

"L" SIGN LENGTH A	"L" SIGN LENGTH B	NUMBER OF FIXTURES 75	NUMBER OF FIXTURES 99	"M" EDGE DISTANCE A LT.	"M" EDGE DISTANCE A RT.	"M" EDGE DISTANCE B LT.	"M" EDGE DISTANCE B RT.	NO. BALLAST
6'-0"	7'-0"	1	-	6"	6"	6"	6"	1
8'-0"	9'-0"	1	-	10 3/16"	10 1/16"	16 3/16"	16 1/16"	1
10'-0"	11'-0"	-	1	10 3/16"	10 1/16"	16 3/16"	16 1/16"	1
12'-0"	13'-0"	2	-	6"	6	6	6	1
14'-0"	15'-0"	2	-	8 3/16"	8 1/16"	14 3/16"	14 1/16"	1
16'-0"	17'-0"	1	1	8 3/16"	8 1/16"	14 3/16"	14 1/16"	1
18'-0"	19'-0"	-	2	8 3/16"	8 1/16"	14 3/16"	14 1/16"	1
20'-0"	21'-0"	3	-	7"	6 15/16"	13	12 15/16"	2
22'-0"	23'-0"	2	1	7"	6 15/16"	13	12 15/16"	2
24'-0"	25'-0"	1	2	7"	6 15/16"	13	12 15/16"	2
26'-0"	27'-0"	-	3	7"	6 15/16"	13	12 15/16"	2

Sn= Nominal Fixture Length, 72" & 96" respectively.
Sa= Actual Fixture Length, for mounting purposes, 75-3/8" and 99-3/8" respectively. (Slight variation for different manufacturers.)
M= Distance from edge of sign to ℄ of notch, min. 6". When the length of the sign minus 1'-0" is less than the sum of the actual fixture lengths, an offset "K" is used. For additional details see detail A and table III.

TABLE II

MAX. BRACKET SPACING FOR EXTERNALLY ILLUMINATED SIGNS

ACTUAL SIGN HEIGHT "Ha"	SUPPORT TYPES: 9.12, 11.08, 13.2, 7.2 — SINGLE TUBE DOUBLE TUBE LESS 36" C/C	9.24, 10.48, 12.24, 14.5, 15.8, 7.2 to 7.6 — DOUBLE TUBE C/C 36"-42"	C/C 48"-54"	C/C 60"-72"
	MAXIMUM BRACKET SPACING			
to 5'-0"	6'-4" with X, 8'-4" with Y	8'-4" with X	8'-4" with X	8'-4" with X
5'-6" to 8'-0"	6'-4" with Y	4'-2" with X, 6'-4" with Y	6'-4" with X, 8'-4" with Y	8'-4" with X
8'-6" to 10'-0"	3'-2" with X, 4'-2" with Y	6'-4" with Y	6'-4" with Y	8'-4" with Y
10'-6" to 12'-0"	———	4'-2" with Y	6'-4" with Y	6'-4" with Y
12'-6" to 14'-0"	———	3'-2" with Y	3'-2" with Y	4'-2" with Y

Ha= ACTUAL SIGN HEIGHT
He= EFFECTIVE SIGN HEIGHT
BRACKET SIZE: Xs = 3½" X 2½" X 5/16" — L @ 6.1 LB. STEEL; Ys = 4" X 3 1/16" X ¼" — Z @ 6.2 LB. STEEL } 9.12, 10.48, 11.08, 12.24, 14.5 & 15.8
Xa = 3" X 2 1/16" X ¼" — Z @ 2.33 LB. ALUM.; Ya = 4" X 2 21/32" X 3/16" — I @ 2.64 LB. ALUM. } 7.2 Thru 7.6

WHEN MAX. ALLOWABLE SPACING IS LESS THAN ACTUAL FIXTURE LENGTHS, Sa, ADDITIONAL STANDARD BRACKETS MUST BE FURNISHED, EQUAL IN HEIGHT TO "Ha".

SUPPORTS 7.2 THROUGH 7.6 SHALL HAVE AN ALUMINUM FIXTURE ARM, 4"X3"X¼" ANGLE. SEE DETAIL B. BOLTS AND ACCESSORIES SHALL BE STAINLESS STEEL.

BUREAU OF TRAFFIC
OHIO DEPARTMENT OF HIGHWAYS

STRUCTURAL DETAILS FOR EXTERNALLY ILLUMINATED SIGNS — EI-1

APPROVED Jack C. Trubee
ENGINEER OF TRAFFIC

CUYAHOGA COUNTY
CUY-90-23.73
LAKE COUNTY
LAK -90-0.00

FED. RD. DIVISION	STATE	PROJECT	
5	OHIO		

114
354

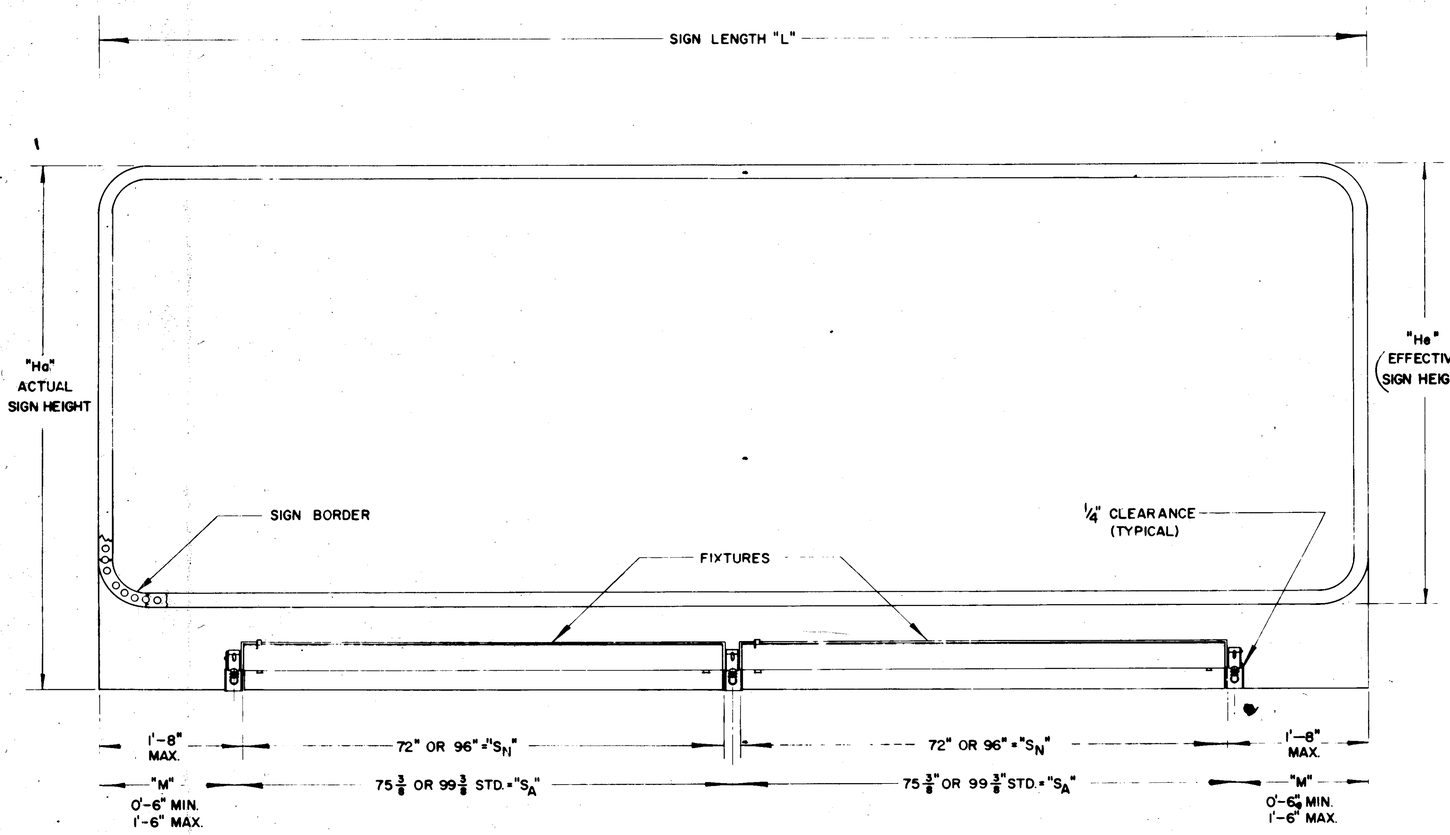

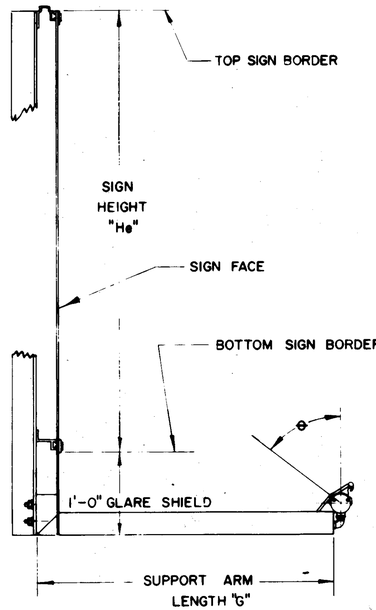

SIGN LIGHTING NOTES

SIGN ILLUMINATION

SIGN ILLUMINATION SHALL BE BY ATTACHED FLUORESCENT FIXTURES AS SHOWN ON ILLUMINATED SIGN DETAIL SHEETS.

LAMPS

LAMPS SHALL BE TYPE F72 OR F96-T12/CW/HO AS MANUFACTURED BY WESTINGHOUSE, GENERAL ELECTRIC OR APPROVED EQUAL FOR SIGNS TO A MAXIMUM HEIGHT OF 6'-6". LAMP TYPE SHALL BE F72 OR F96-T12/CW/SHO AS MANUFACTURED BY WESTINGHOUSE, F72 OR F96-T12/CW/1500 AS MANUFACTURED BY GENERAL ELECTRIC OR APPROVED EQUAL FOR SIGNS THAT ARE 7'-0" OR GREATER IN HEIGHT.

LAMP FIXTURES

LIGHTING FIXTURES SHALL BE CONSTRUCTED OF CORROSION RESISTANT MATERIALS OR WITH HIGH QUALITY CORROSION RESISTANT FINISH. ALL FIXTURES SHALL BE SPECIFICALLY DESIGNED FOR OUTDOOR SIGN LIGHTING SERVICE. MAJOR COMPONENTS SHALL INCLUDE WEATHERPROOF CAST ALUMINUM MOUNTING HUBS DESIGNED TO SECURELY LOCK THE FIXTURES AT ANY ANGLE THROUGH 360 DEGREES. INDICATORS IN 10 DEGREE INCREMENTS SHALL BE STAMPED OR CAST INTO THE HUB TO FACILITATE PROPER AIMING OF THE FIXTURE. FINAL ADJUSTMENT OF FIXTURE SHALL BE DONE AT NIGHT UNDER THE PROJECT ENGINEER'S DIRECTION.

THE BODY DESIGN OF THE FIXTURE SHALL PROVIDE AN ASYMMETRIC SPECULAR ALZAK REFLECTOR TO GIVE A HIGH LEVEL OF UNIFORM ILLUMINATION AND SHALL PROVIDE A WIREWAY FROM END TO END. WHEN ADJACENT FIXTURES ARE WIRED TOGETHER THROUGH THE WIREWAY, WIRE BETWEEN FIXTURES SHALL BE ENTIRELY ENCLOSED.

EXTERIOR FINISH OF THE FIXTURE BODY SHALL BE INTERSTATE GREEN COLOR, HEAT RESISTANT BAKED ENAMEL AS # 8950 UNIVERSAL PAINT AND VARNISH INC., OR MIDWESTERN COLOR WORKS, OR APPROVED EQUAL. REFLECTOR, LAMP AND SOCKETS SHALL BE PROTECTED BY A HINGED DOOR OF CLEAR ACRYLIC PLASTIC WITH ALUMINUM OR STAINLESS STEEL FRAME AND NEOPRENE GASKETING.

BALLASTS

BALLASTS FOR FIXTURES SHALL BE WEATHER-PROOF OUTDOOR TYPE FOR A 120 VOLT 60 CYCLE SYSTEM AND SHALL PROVIDE LAMP STARTING AT AN AMBIENT TEMPERATURE OF -20°F. BALLASTS SHALL BE MOUNTED ON SIGN BRACKET ONLY. WIRING SHALL BE ACCOMPLISHED IN SUCH A MANNER THAT THE SIGN MAY BE REMOVED WITHOUT DISTURBING THE ELECTRICAL WIRING.

EFFECTIVE SIGN HEIGHT "H"	SUPPORT ARM LENGTH "G"	APPROX. AIMING ANGLE ⊖
3'-0" to 5'-0"	2'-9"	25°
5'-0" to 6'-6"	3'-3"	25°
7'-0" to 10'-0"	4'-3"	17°
10'-6" to 13'-0"	5'-9"	23°

"L" SIGN LENGTH	NO. OF FIXTURES			He=3'-0" to 6'-6" LAMP=T12/cw/ho			He=7'-0" to 13'-0" LAMP=T12/cw/sho		
	72	96		BALLAST NO.	BALLAST TYPE	WATTAGE PER SIGN	BALLAST NO.	BALLAST TYPE	WATTAGE PER SIGN
6'-0" to 7'-0"	1			1	A	190	1	C	250
8'-0" to 9'-0"	1			1	A	190	1	C	250
10'-0" to 11'-0"			1	1	A	190	1	C	250
12'-0" to 13'-0"	2			1	B	250	1	D	425
14'-0" to 15'-0"	2			1	B	250	1	D	425
16'-0" to 17'-0"	1	1		1	B	250	1	D	425
18'-0" to 19'-0"			2	1	B	250	1	D	425
20'-0" to 21'-0"	3			2	A & B	440	2	C & D	675
22'-0" to 23'-0"	2	1		2	A & B	440	2	C & D	675
24'-0" to 25'-0"	1	2		2	A & B	440	2	C & D	675
26'-0" to 27'-0"			3	2	A & B	440	2	C & D	675

BALLASTS

TYPE	MANUFACTURERS G.E.	MANUFACTURERS JEFFERSON	WATTAGE
A	GG 3583	257-321	190
B	GG 3535	257-331	250
C	GG 3585	257-361	250
D	GG 3588	257-371	425

BALLASTS SHALL BE GENERAL ELECTRIC, JEFFERSON AS SPECIFIED ABOVE OR EQUAL.

TRANSFORMERS

TYPE	MANUFACTURERS G.E.	MANUFACTURERS JEFFERSON	OUTPUT K.V.A.	SWITCH TRANSFORMER ENCLOSURE
I	9T51Y7	211-041	.25	Y
II	9T51Y8	211-051	.50	Y
III	9T51Y9	211-061	.75	Y
IV	9T51Y10	211-071	1.00	Z
V	9T51Y11	211-081	1.50	Z
VI	9T51Y12	211-091	2.00	Z
VII	9T51Y13	211-2102	3.00	Z

BUREAU OF TRAFFIC
OHIO DEPARTMENT OF HIGHWAYS

ELECTRICAL DETAILS FOR EXTERNALLY ILLUMINATED SIGNS

EI-2

DATE
10-31-63
5-6-64
10-29-64
23-29-67
1-4-72

APPROVED Fred C Hartle
ENGINEER OF TRAFFIC

FED. RD. DIVISION	STATE	PROJECT	
5	OHIO		

115
354

CUYAHOGA COUNTY
CUY-90-23.73
LAKE COUNTY
LAK -90-0.00

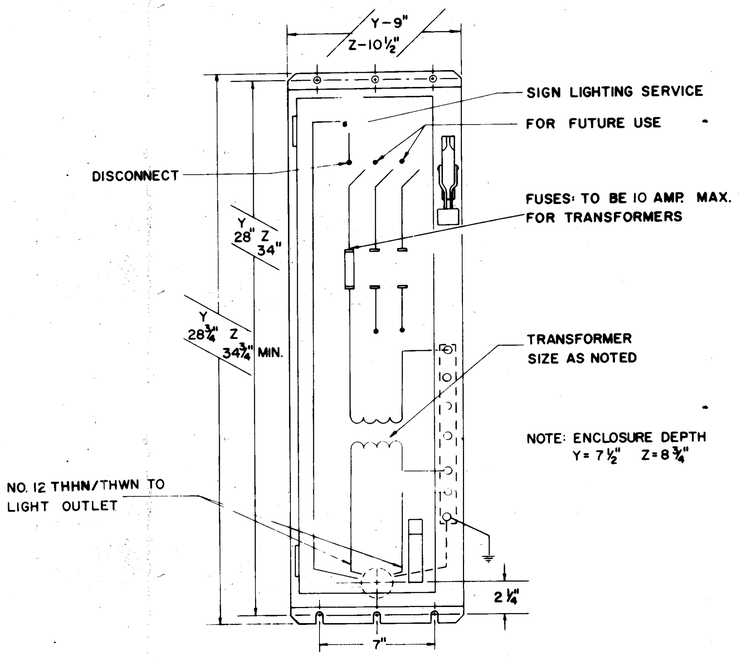

TYPICAL ENCLOSURE DETAIL

480 VOLT SIGN LIGHTING SERVICE

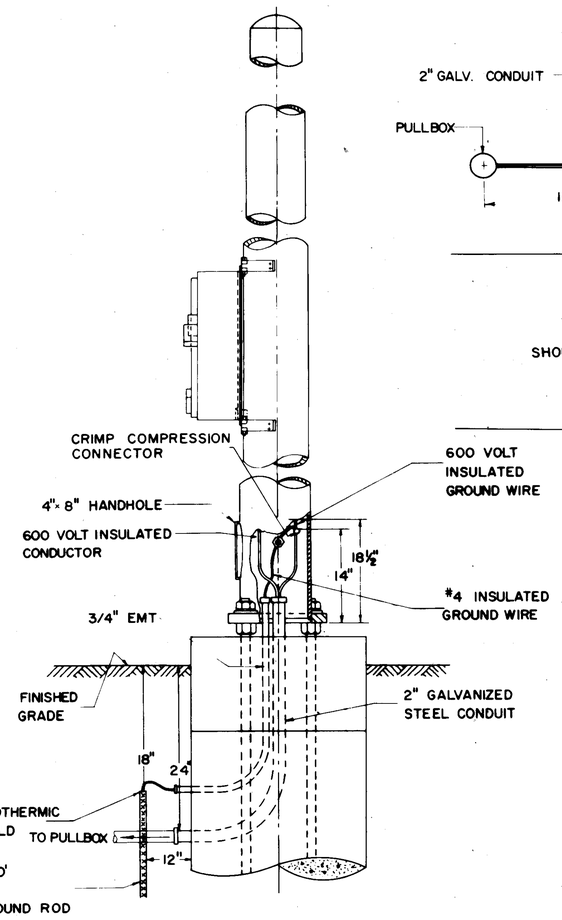

SIGN SUPPORT DETAIL FOR ILLUMINATED SIGNS

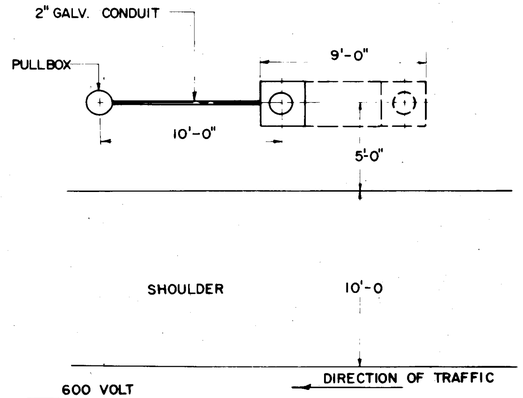

PULLBOX LOCATION

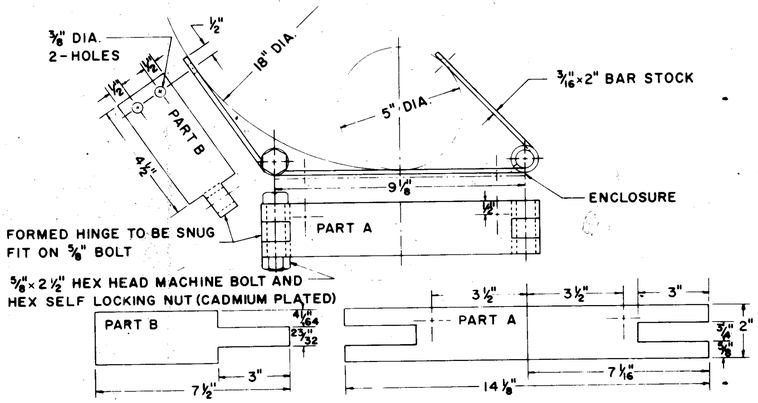

ENCLOSURE MOUNTING BRACKET

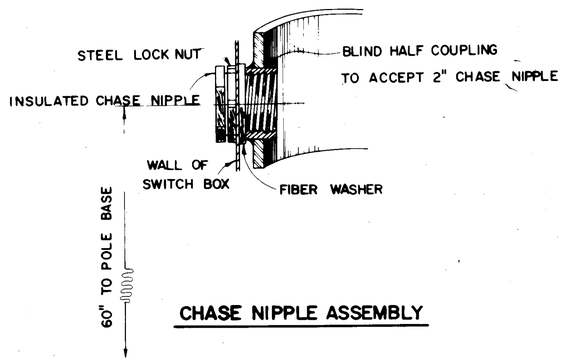

CHASE NIPPLE ASSEMBLY

NOTES

GENERAL

DETAILS OF THIS SHEET SHALL APPLY TO EACH OVERHEAD SIGN STRUCTURE TO SUPPORT EXTERNALLY ILLUMINATED SIGNS.

SERVICE

ELECTRIC SERVICE SHALL ENTER THROUGH A 2" GALVANIZED RIGID STEEL CONDUIT INSTALLED IN STRUCTURE FOUNDATION AS PER DETAIL. SIGN SERVICE OR CIRCUITRY SHALL BE CONTROLLED AS REQUIRED BY THE SYSTEM DESIGN AT THE PRIMARY SOURCE.

SERVICE CONDUCTORS SHALL BE THE SIZE AND TYPE AS SPECIFIED.

COMBINATION SWITCH AND TRANSFORMER

(TYPE Y OR Z ENCLOSURE REQUIRED AS PER SCHEDULE ON THIS SHEET)

THIS COMBINATION SHALL BE A 30 OR 60 AMPERE 600 VOLT SWITCH WITH A .25 TO 3.0 KVA TRANSFORMER. THE COMBINATION AND ENCLOSURE SHALL BE AS SQUARE D CLASS 9421, COLUMBUS ELECTRIC WORKS CLASS 101, PANALS INCORPORATED—CLASS 9400, OR APPROVED EQUAL.

TRANSFORMER

THE TRANSFORMER SHALL BE DRY TYPE SINGLE PHASE 240/480 VOLT PRIMARY 120/240 VOLT SECONDARY, THE TYPE AND CAPACITY AS SPECIFIED IN DETAILED SCHEDULE ON THIS SHEET.

ENCLOSURE

THE ENCLOSURE SHALL BE NEMA #4 WATER TIGHT .063 GAGE STAINLESS STEEL ASTA 302-303. A DISCONNECT HANDLE SHALL BE FLANGE MOUNTED AND CAPABLE OF BEING LOCKED IN EITHER POSITION. THE ENCLOSURE SHALL BE EQUIPPED WITH A DOOR LOCKING MECHANISM WITH A DEFEATER THAT NECESSITATES TWO HANDS TO OPERATE MECHANISM WITH THE SWITCH IN OFF POSITION. SPACE FOR A 2" INSULATED CHASE NIPPLE SHALL BE PROVIDED APPROXIMATELY 2¼" ABOVE THE CENTER LINE OF THE LOWER MOUNTING SLOT. THIS ENCLOSURE AND STRUCTURE SHALL BE FIELD DRILLED AND TAPPED FOR THE REQUIRED NIPPLE AS SHOWN ON THE DETAIL ON THIS SHEET.

THIS ENCLOSURE SHALL BE FLANGE MOUNTED ON BRACKETS WITH 5/16-18×¾" HEX HEAD CADMIUM PLATED MACHINE BOLTS. ENCLOSURES SHALL BE TYPE Y OR Z AS SPECIFIED AND DIMENSIONED ON THIS SHEET.

ENCLOSURE MOUNTING BRACKET

THE ENCLOSURE MOUNTING BRACKET SHALL BE FABRICATED THEN GALVANIZED BEFORE ASSEMBLY. THE BRACKET SHALL BE FIELD MOUNTED WITH 5/16" HEX HEAD SELF TAPPING CADMIUM PLATED SCREWS. THE SIGN SUPPORT SHALL BE FIELD DRILLED, AS PER DETAIL.

WIRE AND CABLE

ALL WIRE AND CABLE SHALL BE 600 VOLT AND CONFORM TO SECTION 713.02

GROUNDING

EACH SIGN SUPPORT OR STRUCTURE SHALL BE GROUNDED WITH A #4 INSULATED CONDUCTOR. THE GROUNDING CONDUCTOR SHALL BE CONNECTED TO THE SWITCH THEN TO THE COMPRESSION CONNECTOR IN THE SIGN SUPPORT THEN TO A 1"×10' GROUND ROD. GROUND CONDUCTOR SHALL BE EXOTHERMICALLY WELDED TO GROUND ROD AND THEN TAPED WITH PLASTIC ELECTRICAL TAPE AT EACH EXPOSED PORTION OF CONDUCTOR. THE WELDED CONNECTION AND TAPED PORTION SHALL BE PAINTED 2 COATS OF INSULATING ENAMEL.

TRANSFORMERS

TYPE	MANUFACTURERS G.E.	MANUFACTURERS JEFFERSON	OUTPUT K.V.A.	SWITCH TRANSFORMER ENCLOSURE
I	9T51Y7	211 - 041	.25	Y
II	9T51Y8	211 - 051	.50	Y
III	9T51Y9	211 - 061	.75	Y
IV	9T51Y10	211 - 071	1.00	Z
V	9T51Y11	211 - 081	1.50	Z
VI	9T51Y12	211 - 091	2.00	Z
VII	9T51Y13	211-2102	3.00	Z

BUREAU OF TRAFFIC
OHIO DEPARTMENT OF HIGHWAYS

ELECTRICAL SIGN SERVICE DETAILS 480 VOLT SYSTEM

ES-3A

DATE 6-18-64 9-15 7-31-70 2-03-72

APPROVED _____
ENGINEER OF TRAFFIC

115

FED. RD. DIVISION	STATE	PROJECT	
5	OHIO		

116
354

CUYAHOGA COUNTY
CUY-90-23.73
LAKE COUNTY
LAK -90-0.00

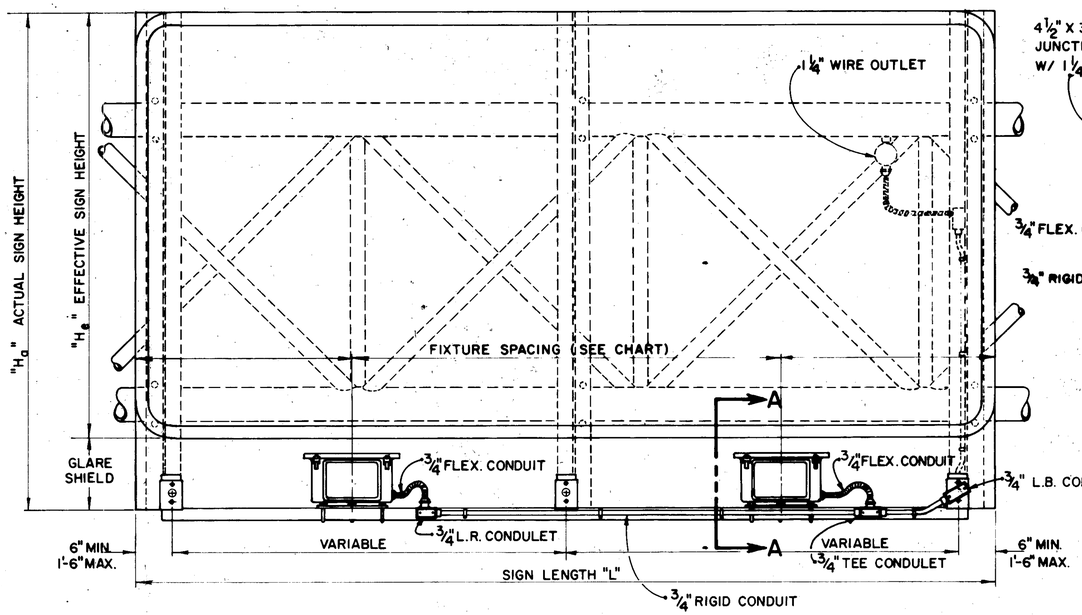

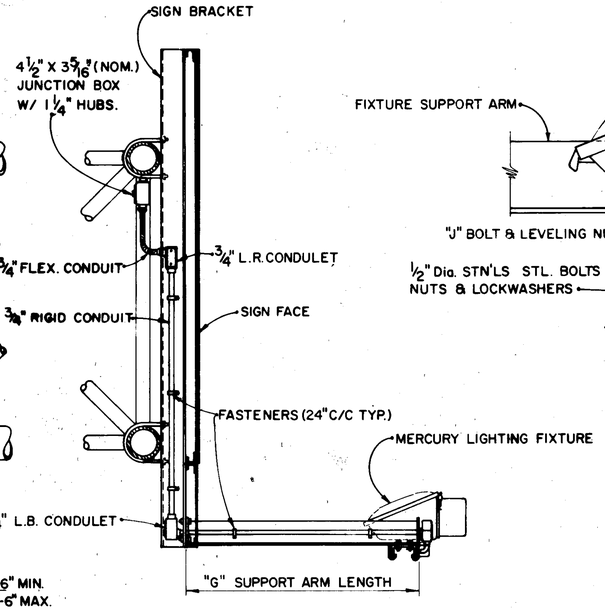

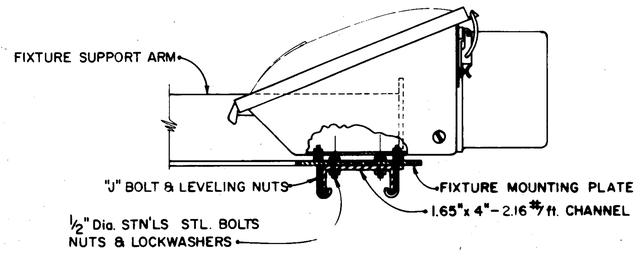

SECTION A-A

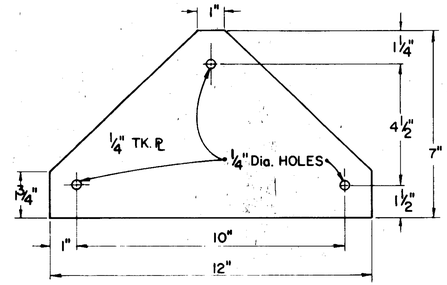

SIGN LENGTH "L"	NO. OF FIXTURES	LIGHT FIXTURE SPACING						SUPPORT ARM SPACING					NO. OF SIGN BRACKETS
4'-0"	1	2'-0"	2'-0"					6"	36"	6"			2
5'-0"	1	2'-6"	2'-6"					6"	48"	6"			2
6'-0"	1	3'-0"	3'-0"					6"	60"	6"			2
7'-0"	1	3'-6"	3'-6"					6"	72"	6"			2
8'-0"	1	4'-0"	4'-0"					10⅜"	75⅜"	10¼"			2
9'-0"	1	4'-6"	4'-6"					16⅜"	75⅜"	16¼"			2
10'-0"	1	5'-0"	5'-0"					10⅜"	99⅜"	10¼"			2
11'-0"	1	5'-6"	5'-6"					16⅜"	99⅜"	16¼"			2
12'-0"	2	3'-0"	6'-0"	3'-0"				6"	66"	66"	6"		3
13'-0"	2	3'-6"	6'-0"	3'-6"				6"	72"	72"	6"		3
14'-0"	2	4'-0"	6'-0"	4'-0"				8⅝"	75⅜"	75⅜"	8⅝"		3
15'-0"	2	4'-6"	6'-0"	4'-6"				14⅝"	75⅜"	75⅜"	14⅝"		3
16'-0"	2	4'-0"	8'-0"	4'-0"				8⅝"	75⅜"	99⅜"	8⅝"		3
17'-0"	2	4'-6"	8'-0"	4'-6"				14⅝"	75⅜"	99⅜"	14⅝"		3
18'-0"	2	4'-0"	10'-0"	4'-0"				8⅝"	99⅜"	99⅜"	8⅝"		3
19'-0"	2	4'-6"	10'-0"	4'-6"				14⅝"	99⅜"	99⅜"	14⅝"		3
20'-0"	3	4'-0"	6'-0"	6'-0"	4'-0"			7"	75⅜"	75⅜"	75⅜"	6⅞"	4
21'-0"	3	4'-6"	6'-0"	6'-0"	4'-6"			13"	75⅜"	75⅜"	75⅜"	12⅞"	4
22'-0"	3	4'-0"	7'-0"	7'-0"	4'-0"			7"	75⅜"	75⅜"	99⅜"	6⅞"	4
23'-0"	3	4'-6"	7'-0"	7'-0"	4'-6"			13"	75⅜"	75⅜"	99⅜"	12⅞"	4
24'-0"	3	4'-0	8'-0"	8'-0	4'-0"			7"	75⅜"	99⅜"	99⅜"	6⅞"	4
25'-0"	3	4'-6"	8'-0"	8'-0"	4'-6			13"	75⅜"	99⅜"	99⅜"	12⅞"	4
26'-0"	4	4'-0"	6'-0"	6'-0"	6'-0"	4'-0"		7"	99⅜"	99⅜"	99⅜"	6⅞"	4
27'-0"	4	4'-6"	6'-0"	6'-0"	6'-0"	4'-6"		13"	99⅜"	99⅜"	99⅜"	12⅞"	4

EFFECTIVE SIGN HEIGHT "H"	SUPPORT ARM LENGTH "G"	APPROX. AIMING ANGLE	LAMP WATTS	ANSI LAMP CODE	BALLAST TYPE
3'-0" to 5'-0"	2'-9"	0°	100	H38-4HT	CMRI-100-(a)
5'-1" to 6'-6"	3"-3"	0°	175	H39-22KB	CMRI-175-(a)
6'-7" to 10'-0"	4'-3"	2°	175	H39-22KB	CMRI-175-(a)
10'-1" to 13'-0"	5'-9"	8°	250	H37-5KB	CMRI-250-(a)
13'-1" to 15'-0"	7'-3"	8°	250	H37-5KB	CMRI-250-(a)

(a) = OPERATING VOLTAGE (120V., 208V., 240V., 277V., OR 480V.)

FIXTURE MOUNTING PLATE

(ALUMINUM)

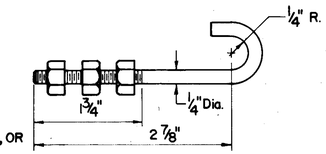

"J" BOLT

(STAINLESS STEEL BOLT, NUTS & LOCKWASHERS)

BUREAU OF DESIGN SERVICES
OHIO DEPARTMENT OF HIGHWAYS

MERCURY VAPOR SIGN LIGHTING DETAILS

STANDARD CONSTRUCTION DRAWING

DATE 4-13-72

APPROVED _____
ENGINEER OF DESIGN SERVICES

BRUNING 44-560 10943

FED. RD. DIVISION	STATE	PROJECT	
5	OHIO		

117
354

CUYAHOGA COUNTY
CUY-90-23.73
LAKE COUNTY
LAK -90-0.00

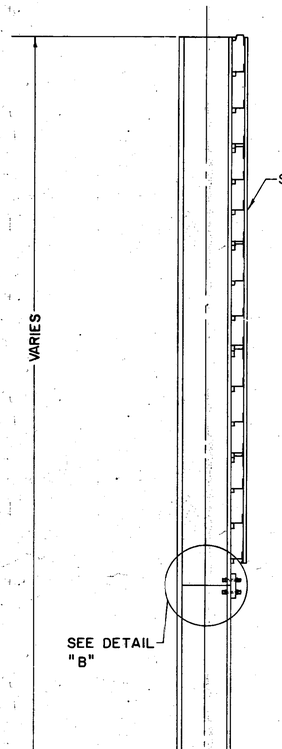

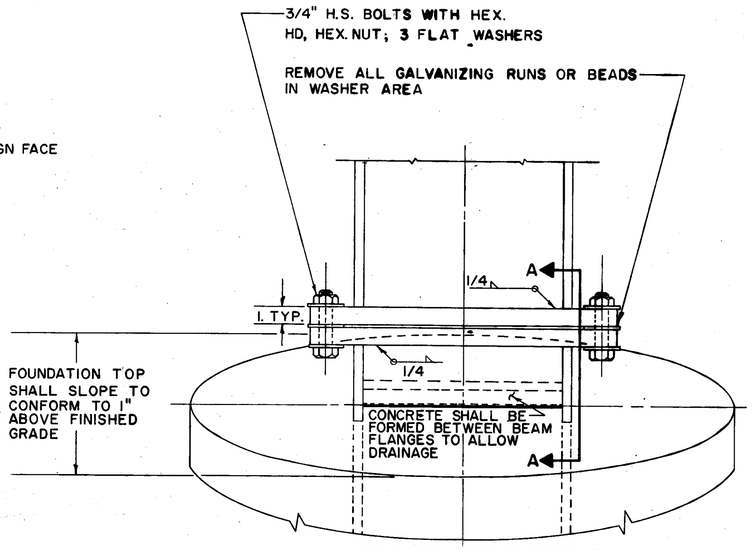

BOLTING PROCEDURE

1. ASSEMBLE POST TO STUB W/BOLTS & ONE FLAT WASHER ON EACH BOLT BETWEEN PLATES.
2. TIGHTEN ALL BOLTS THE MAXIMUM POSSIBLE W/12" TO 15" WRENCH TO BED & TO CLEAN BOLT THREADS. LOOSEN EACH BOLT IN TURN & RETIGHTEN BOLTS IN A SYSTEMATIC ORDER TO THE PRESCRIBED TORQUE OF 750 IN. LBS.
3. BURR THREADS AT JUNCTION W/NUT USING A CENTER PUNCH TO PREVENT NUT LOOSENING.

NOTE: TIGHTEN THE H.S. BOLTS IN THE BASE CONNECTION ONLY TO GIVEN TORQUE DO NOT OVER TIGHTEN

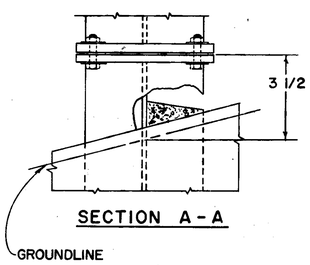

SECTION A-A

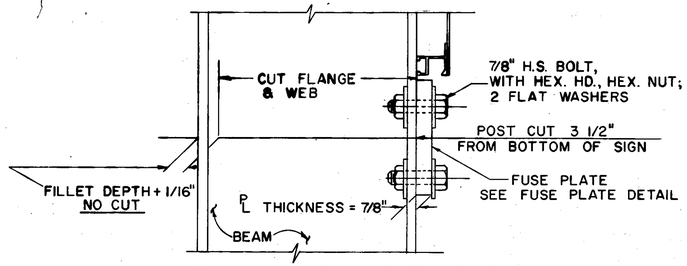

FABRICATOR NOTE: ALL FRICTION FUSE BOLTS SHALL BE TIGHTENED IN THE SHOP FOLLOWING A METHOD APPROVED BY THE ENGINEER. TIGHTENING SHALL BE TO SUCH A DEGREE AS TO OBTAIN MINIMUM RESIDUAL TENSION IN EACH BOLT OF 36,050 LBS.

NOTE: INSTALL FUSE PLATE WITH NOTCHES TOWARD BASE

DETAIL "B"

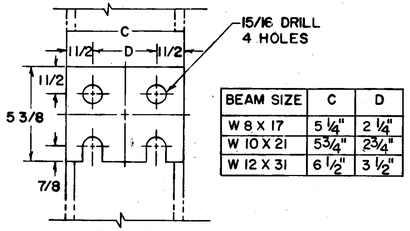

BEAM SIZE	C	D
W 8 X 17	5 1/4"	2 1/4"
W 10 X 21	5 3/4"	2 3/4"
W 12 X 31	6 1/2"	3 1/2"

FUSE PLATE DETAIL

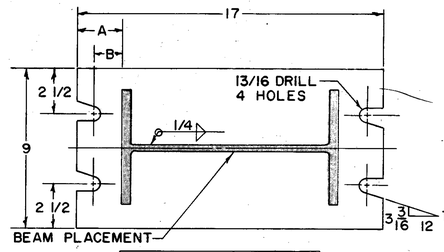

BEAM SIZE	A	B
W 8 X 17	4 1/2"	3 5/8"
W 10 X 21	3 1/2"	2 5/8"
W 12 X 31	2 1/2"	1 5/8"

BASE PLATE DETAIL
(TOP VIEW)

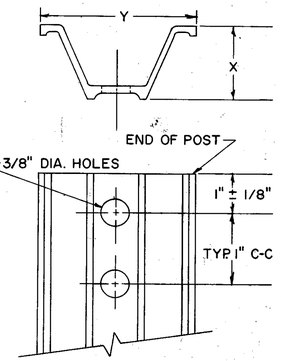

WEIGHT PER FOOT	X ± 3/32"	Y ± 1/8"
2.00 #	1 15/32"	3 1/16"
3.00 #	1 7/8"	3 1/2"
4.00 #	2"	3 5/8"

DRIVE POST DETAIL

BREAKAWAY SIGN SUPPORT BASE PLATE ORIENTATION

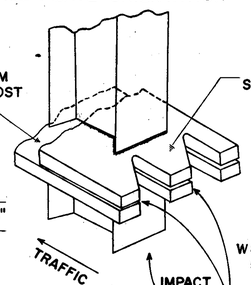

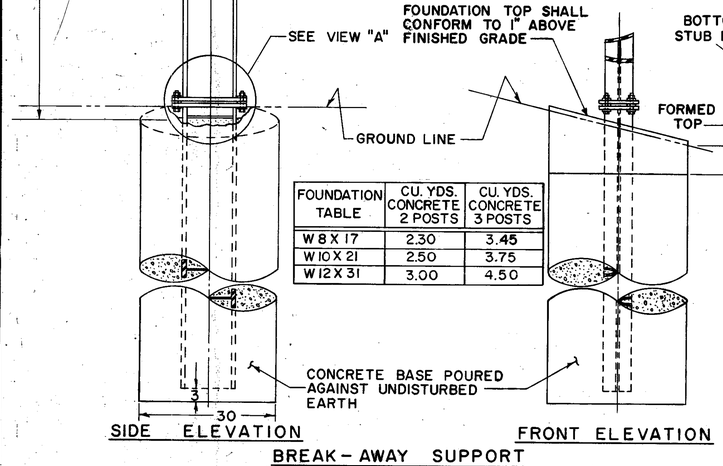

FOUNDATION TABLE	CU. YDS. CONCRETE 2 POSTS	CU. YDS. CONCRETE 3 POSTS
W 8 X 17	2.30	3.45
W 10 X 21	2.50	3.75
W 12 X 31	3.00	4.50

BREAK-AWAY SUPPORT

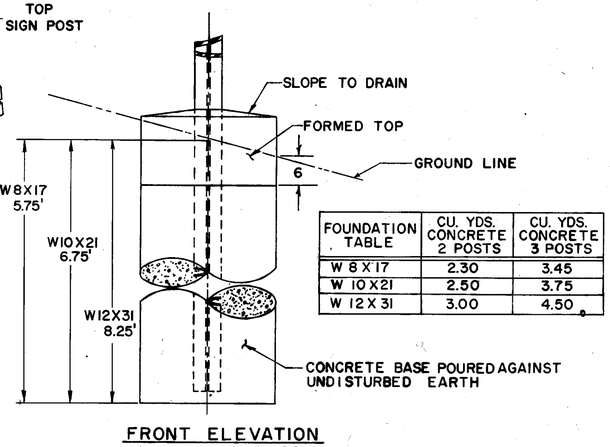

FOUNDATION TABLE	CU. YDS. CONCRETE 2 POSTS	CU. YDS. CONCRETE 3 POSTS
W 8 X 17	2.30	3.45
W 10 X 21	2.50	3.75
W 12 X 31	3.00	4.50

FRONT ELEVATION
STANDARD SUPPORT

STRUCTURAL SUPPORTS

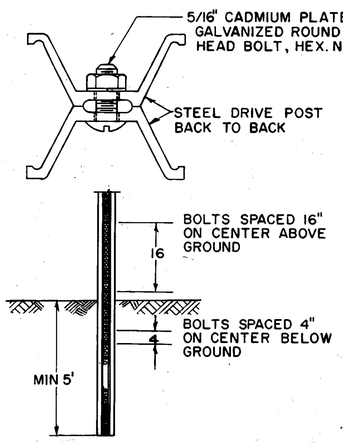

6# BEAM DETAIL

NOTES: ALL MATERIALS SHALL CONFORM TO THE STATE OF OHIO, CONSTRUCTION & MATERIALS SPECIFICATIONS OR AS OTHERWISE SPECIFIED

1) 511 FOUNDATIONS
2) 711.01 STRUCTURAL STEEL SHAPES & PLATES
3) 711.09 H.S. STEEL BOLTS, NUTS & WASHERS

ALL DIMENSIONS IN INCHES UNLESS OTERWISE SHOWN

BUREAU OF TRAFFIC
OHIO DEPARTMENT OF HIGHWAYS

GROUND MOUNTED SIGN SUPPORTS

GMSS

APPROVED _____ ENGINEER OF TRAFFIC

DATE
5-10-68
7-12-68
5-23-69
9-16-69
12-20-71

FED. RD. DIVISION	STATE	PROJECT	
5	OHIO		

118
354

CUYAHOGA COUNTY
CUY-90-23.73
LAKE COUNTY
LAK -90-0.00

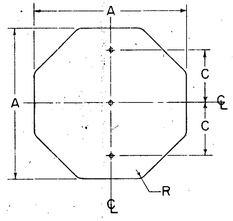

A	C	R	GAUGE
30	8	1 1/2	.080
36	8	1 1/2	.080

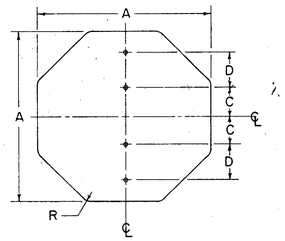

A	C	D	R	GAUGE
48	8	10	1 1/2	.100

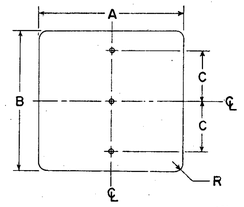

A	B	C	R	GAUGE
24	30	8	1 1/2	.063
24	48	15	1 1/2	.100
30	36	11	1 1/2	.080
30	42	12	1 1/2	.080
36	36	11	1 1/2	.080
36	42	15	1 1/2	.080
36	48	15	1 1/2	.080
48	24	10	3	.100
48	36	13	3	.100

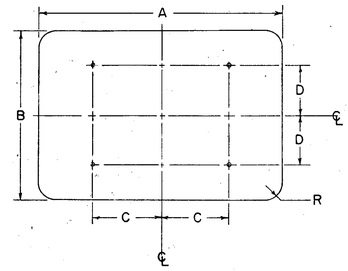

A	B	C	D	R	GAUGE
48	48	22	16	3	.100
48	60	22	22	3	.100

SPEED LIMIT SIGNS ON TWO SUPPORTS

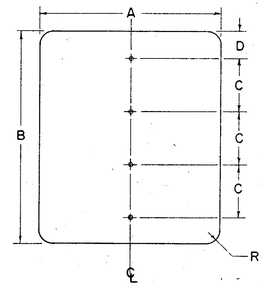

A	B	C	D	R	GAUGE
48	48	12	6	3	.100
48	60	15	7 1/2	3	.100

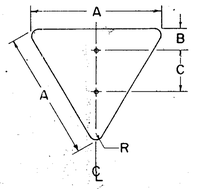

A	B	C	R	GAUGE
36	3	16	2 1/2	.080

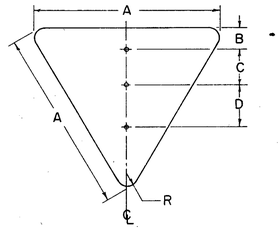

A	B	C	D	R	GAUGE
48	4	10	15	3	.100
60	5	10	15	4	.100

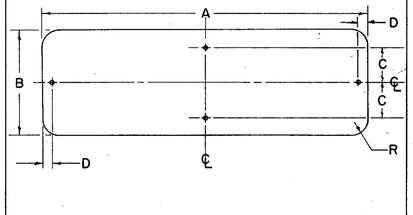

A	B	C	D	R	GAUGE
36	12	4	1	1 1/2	.080
72	12	—	16	1 1/2	.100
60	12	—	13	1 1/2	.100

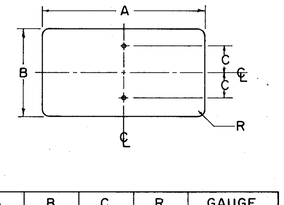

A	B	C	R	GAUGE
12	6	1 1/2	1 1/2	.063
20	15	6	1 1/2	.063
24	12	4 1/2	1 1/2	.063
24	18	7 1/2	1 1/2	.063
8	26	8	1	.063
36	18	7 1/2	1 1/2	.080

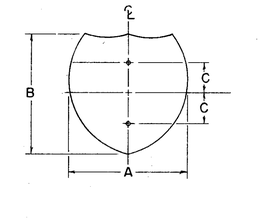

A	B	C	GAUGE
24	24	8	.063
30	24	8	.080

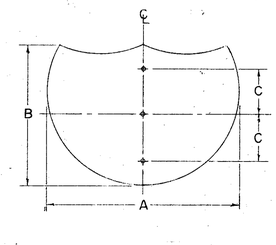

A	B	C	GAUGE
36	36	11	.080
48	36	11	.100

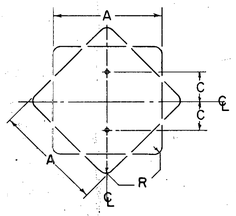

A	C	R	GAUGE
18	7 1/2	1 1/2	.063
24	8	1 1/2	.063
30	8	1 1/2	.080

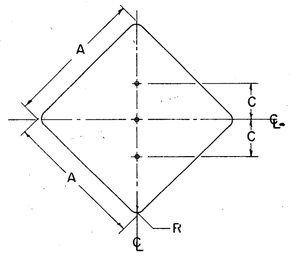

A	C	R	GAUGE
36	12	1 1/2	.080
48	14	3	.100

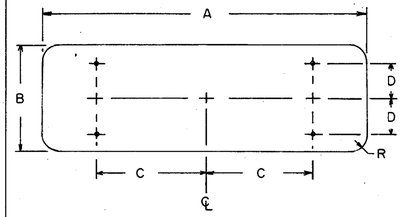

A	B	C	D	R	GAUGE
72	18	20	6	1 1/2	.100
72	24	20	8	1 1/2	.100
60	30	17	10	1 1/2	.100
96	18	27	6	1 1/2	.100

Location of holes on "Demountable Shields" (attached to guide signs)

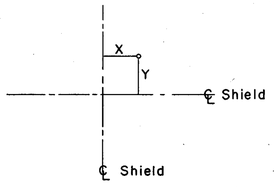

SIZE	NO. HOLES	X	Y
(26) 24X24	4	7	7
30X24	4	8	8
(39) 36X36	4	10	10
		0	10
48X36	6	15	10

For notes on fastening see drawing for miscellaneous "Signing Items" sheet.

NOTES:

ALL DIMENSIONS ARE IN INCHES UNLESS OTHERWISE SHOWN.

MATERIAL

FLAT SIGN BLANKS SHALL BE FURNISHED IN ALUMINUM ALLOY 6061-T6, (ASTM-B209, GS11A-T6) WITH MILL FINISH.

BOLT HOLES

THE BOLT HOLES SHALL BE 3/8" IN DIAMETER, AND MAY BE DRILLED, BLANKED OR PUNCHED TO FINISHED SIZE.

BUREAU OF TRAFFIC
OHIO DEPARTMENT OF HIGHWAYS

SIGN BLANK DETAILS

SBD

DATE
4-14-67
5-10-68
10-1-68
5-27-69
6-18-69

APPROVED _____
ENGINEER OF TRAFFIC

FED. NO. DIVISION	STATE	PROJECT	
5	OHIO		

119
354

CUYAHOGA COUNTY
CUY-90-23.73
LAKE COUNTY
LAK -90-0.00

NOTES

MATERIALS

ALL SIGN MATERIALS SHALL BE IN ACCORDANCE WITH SUPPLEMENT SPECIFICATION 815.

ALL STRUCTURAL MATERIALS SHALL BE IN ACCORDANCE WITH SUPPLEMENT SPECIFICATION 816.

FOR SPECIFICATIONS FOR THE 2" & 1¾" SQUARE STEEL POST SEE GENERAL NOTES, SHEET NO. 7.

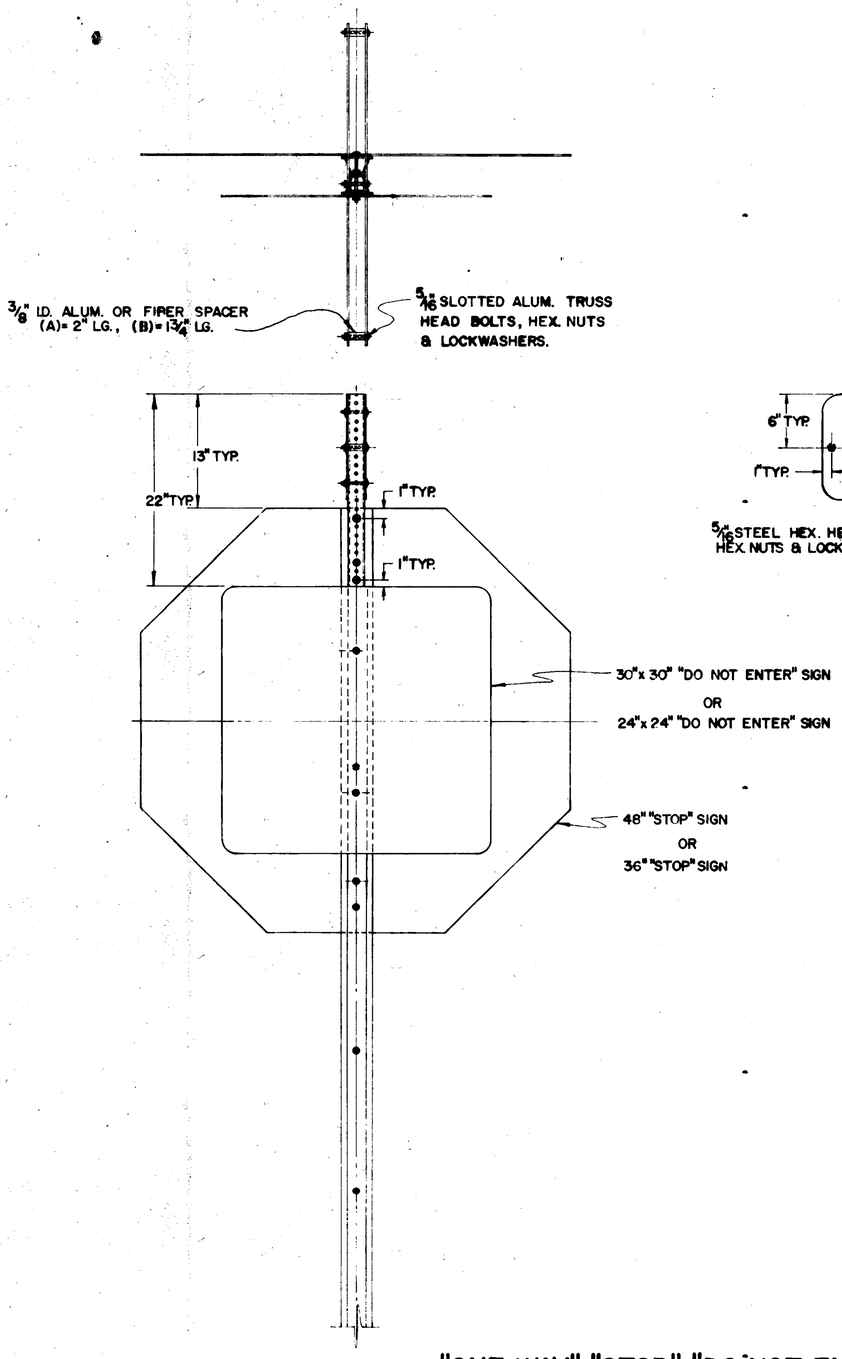

"ONE WAY", "STOP", "DO NOT ENTER", SIGN INSTALLATION

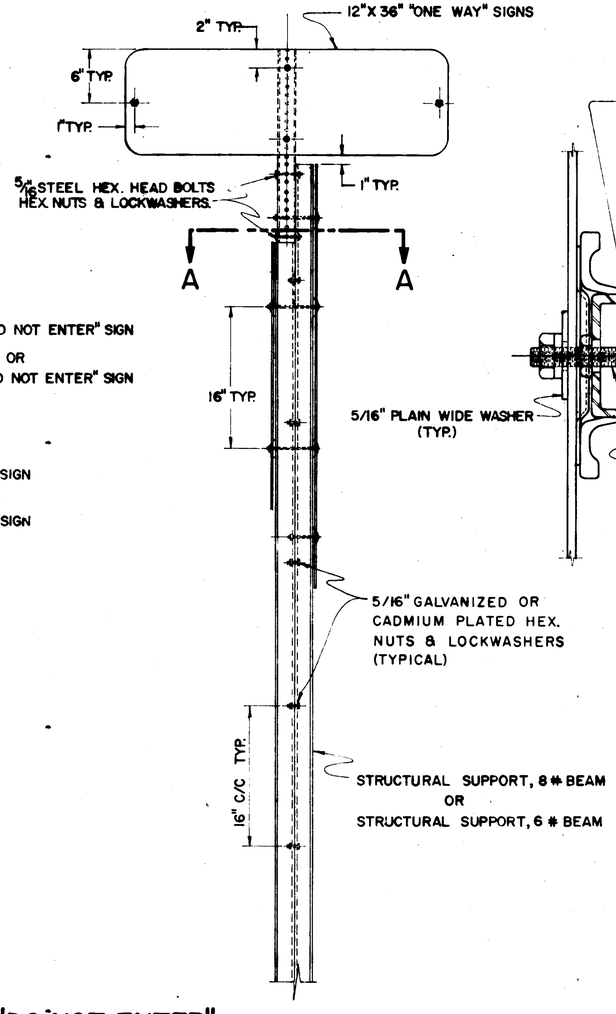

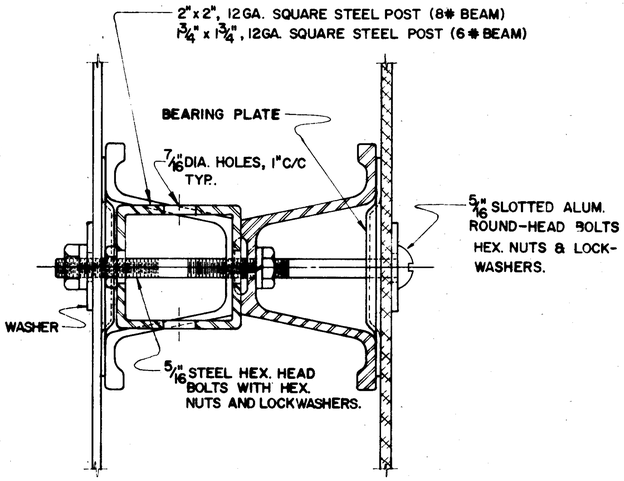

SECTION A-A

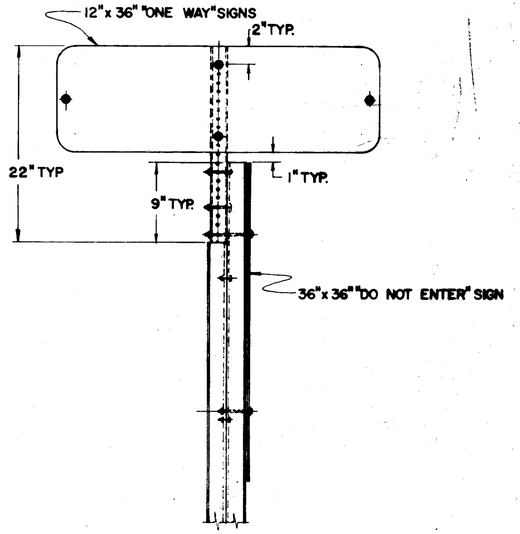

"ONE WAY", "DO NOT ENTER" SIGN INSTALLATION

BUREAU OF TRAFFIC OHIO DEPARTMENT OF HIGHWAYS		
SPECIAL "ONE WAY" SIGN SUPPORT DETAILS	SOW	DATE 2-7-66 4-18-67
APPROVED _____ ENGINEER OF TRAFFIC		

FED. RD. DIVISION	STATE	PROJ.	
5	OHIO		

120
354

CUYAHOGA COUNTY
CUY-90-23.73
LAKE COUNTY
LAK -90-0.00

NOTES

1. THE NEAR EDGE OF ALL MAIN LINE SIGNS, EXCEPT GORE INSTALLATIONS, SHALL BE LOCATED TWO FEET (2') BACK OF GUARD RAIL FACE. THIS DIMENSION SHALL BE DETERMINED BY ROADWAY TYPICAL SECTION & USED WHETHER OR NOT GUARD RAIL IS PRESENT.

ON RAMPS THE NEAR EDGE OF SIGNS SHALL BE LOCATED TWO FEET (2') BACK OF GUARD RAIL FACE. THIS DIMENSION WILL BE DETERMINED AND USED AS FOR MAIN LINE ABOVE.

ON APPROACHES THE NEAR EDGE OF SIGNS SHALL BE

(A) TWO FOOT (2') BEHIND EXISTING GUARD RAIL

(B) TWO FEET (2') FROM THE EDGE OF PAVED OR TRAVELED SHOULDER WITH A MINIMUM OF 6' FROM EDGE OF ROADWAY PAVEMENT.

2. POSTS PLACED IN CONCRETE MEDIANS SHALL BE INSTALLED BY DRIVING THROUGH A 6" SLEEVE OR CORE DRILLED HOLE. THE HOLE SHALL BE FILLED WITH ASPHALTIC CONCRETE AFTER THE POST IS IN THE PROPER POSITION.

3. HORIZONTAL BACK BRACING SHALL ALWAYS BE MOUNTED ON THE FRONT FLANGE OF THE SUPPORT EXCEPT WHERE SIGNS ARE MOUNTED BACK TO BACK. BACK BRACING SHALL NEVER EXTEND ABOVE TOP EDGE OF UPPERMOST SIGN PLATE AND SHALL BE ATTACHED TO SUPPORTS USING 5/16" GALVANIZED STEEL BOLTS.

4. SCREWS, NUTS, AND WASHERS FOR SIGN ERECTION SHALL BE ALUMINUM EXCEPT AS NOTED ABOVE. 5/16" TRUSS HEAD SLOTTED MACHINE SCREWS WITH HEX. NUTS PLAIN AND LOCKWASHERS SHALL BE USED. PLAIN WASHERS SHALL BE 5/16" "WIDE", USED ON SIGN FACE ONLY

5. SIGN INSTALLATIONS SHALL BE PLACED SO THAT SUPPORTS ARE NOT PLACED IN DRAINAGE DITCHES.

6. HORIZONTAL CLEARANCES SHOWN PERTAIN TO NON-CURBED SECTIONS. SECTIONS WITH UNMOUNTABLE CURB SHALL HAVE A HORIZONTAL CLEARANCE OF 2'-0" MINIMUM FROM THE CURB FACE TO THE SIGN EDGE.

7. VERTICAL AND HORIZONTAL CLEARANCE BETWEEN SIGNS ON ONE ASSEMBLY SHALL BE A MAXIMUM OF 2" AND A MINIMUM OF 1".

8. GALVANIZED STEEL BEARING PLATES SHALL BE INCLUDED BETWEEN ALL SHEET ALUMINUM SIGNS ATTACHED TO VERTICAL SUPPORTS AT EACH SIGN BOLT LOCATION.

9. SOIL PLATES SHALL BE ATTACHED TO ALL 6 LB. BEAMS BETWEEN POSTS AS DETAILED ON THIS SHEET, EXCEPT WHERE BEAMS ARE PLACED IN CONCRETE MEDIANS AS COVERED IN NOTE 2.

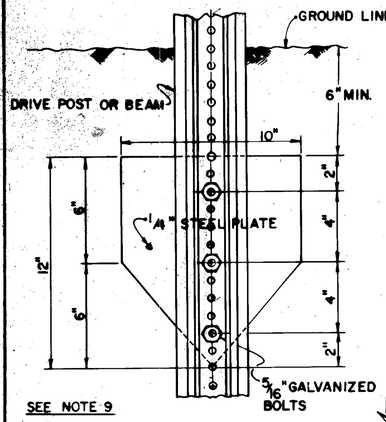

SOIL PLATE DETAIL

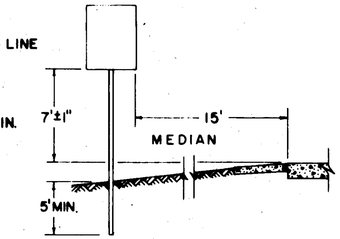

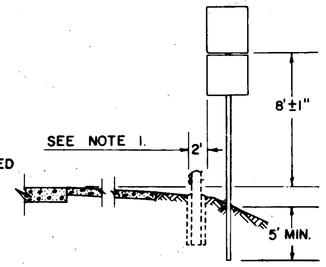

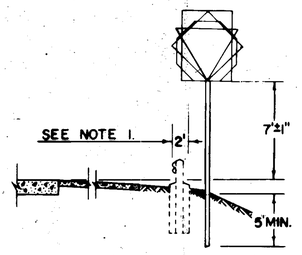

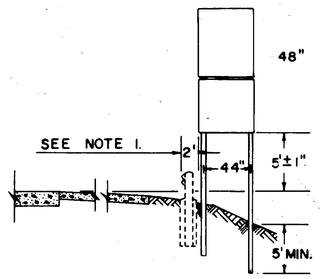

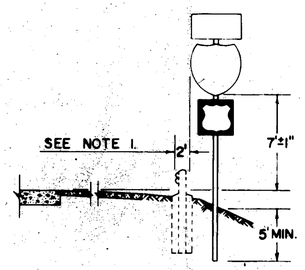

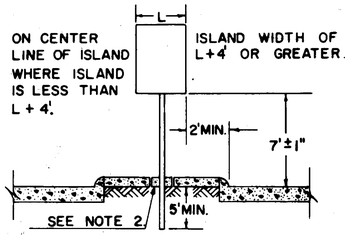

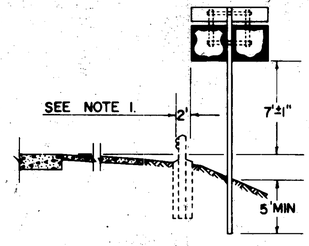

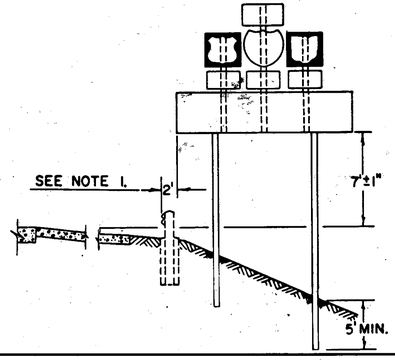

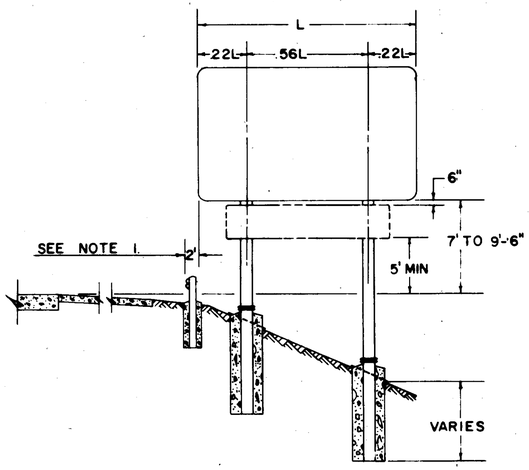

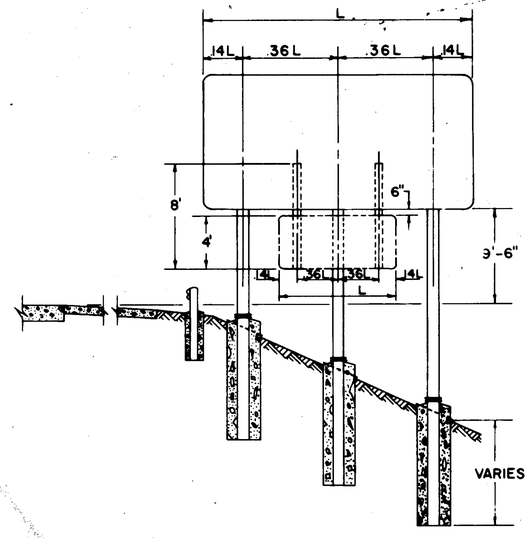

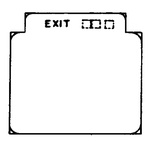

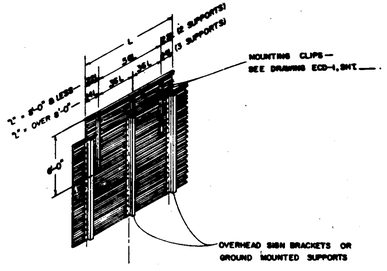

"EXIT" SIGN ATTACHMENT DETAIL

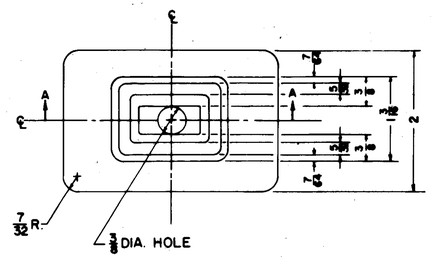

SECTION AA

NOTE:
THE PLATE IS SYMMETRICAL ABOUT EITHER CENTERLINE.
METAL SHALL BE 16 GAUGE STEEL.
ALL DIMENSIONS ARE IN INCHES.

BEARING PLATE DETAIL

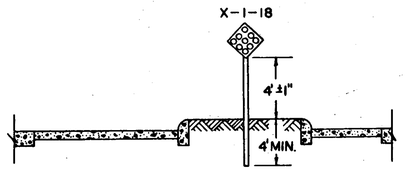

SIGN SUPPORT SPACING

L=FT	2 SUPPORTS .22	2 SUPPORTS .56	3 SUPPORTS .14	3 SUPPORTS .36	L=FT	2 SUPPORTS .22	2 SUPPORTS .56	3 SUPPORTS .14	3 SUPPORTS .36
5.0	1.10	2.80	0.70	1.80	17.0	3.74	9.52	2.38	6.12
6.0	1.32	3.36	0.84	2.16	18.0	3.96	10.08	2.52	6.48
7.0	1.54	3.92	0.98	2.52	19.0	4.18	10.64	2.66	6.84
8.0	1.76	4.48	1.12	2.88	20.0			2.80	7.20
9.0	1.98	5.04	1.26	3.24	21.0			2.94	7.56
10.0	2.20	5.60	1.40	3.60	22.0			3.08	7.92
11.0	2.42	6.16	1.54	3.96	23.0			3.22	8.28
12.0	2.64	6.72	1.68	4.32	24.0			3.36	8.64
13.0	2.86	7.28	1.82	4.68	25.0			3.50	9.00
14.0	3.08	7.84	1.96	5.04	26.0			3.64	9.36
15.0	3.30	8.40	2.10	5.40	27.0			3.78	9.72
16.0	3.52	8.96	2.24	5.76	28.0			3.92	10.08

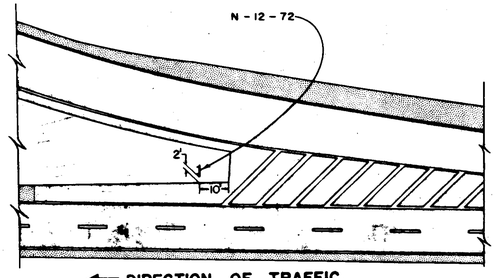

DIRECTION OF TRAFFIC

BUREAU OF TRAFFIC
OHIO DEPARTMENT OF HIGHWAYS

TYPICAL PLACEMENT OF SIGNS

TPS-1

DATE
9-27-67
7-12-68
5-13-69
3-5-71
12-21-71
3-7-72

APPROVED _____
ENGINEER OF TRAFFIC

FED. RD. DIVISION	STATE	PROJECT	
5	OHIO		

121
354

CUYAHOGA COUNTY
CUY-90-23.73
LAKE COUNTY
LAK -90-0.00

ENTRANCE TERMINAL - PARALLEL ACCELERATION LANE

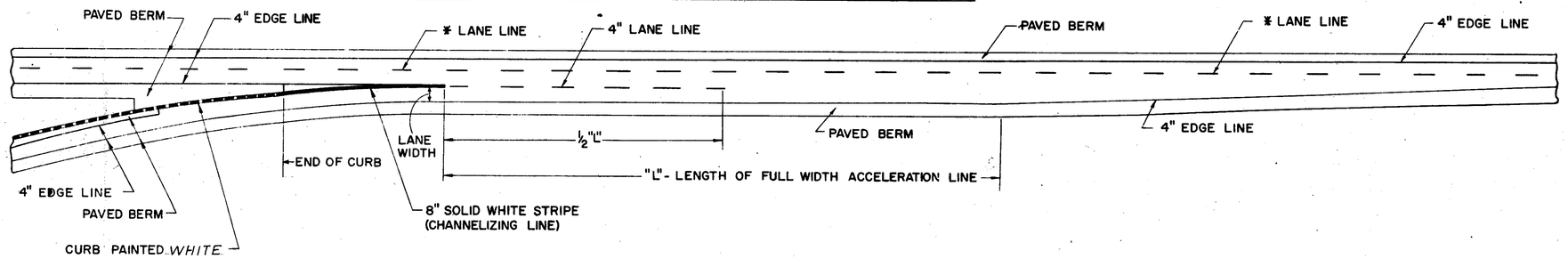

ENTRANCE TERMINAL - TAPERED ACCELERATION LANE

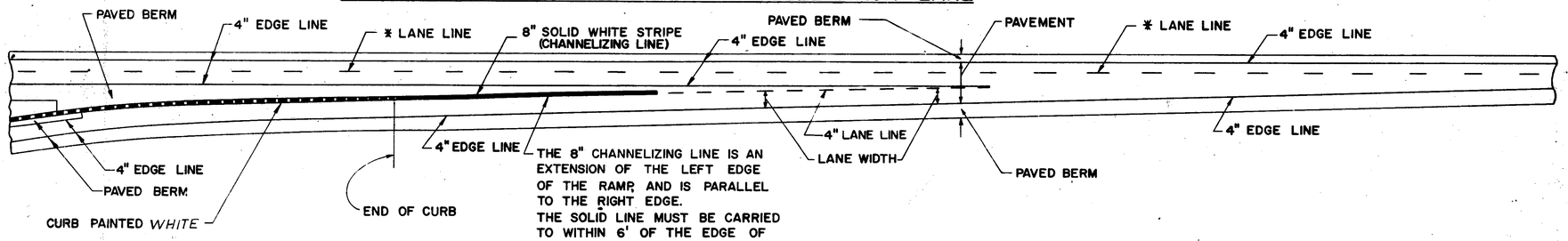

THE 8" CHANNELIZING LINE IS AN EXTENSION OF THE LEFT EDGE OF THE RAMP, AND IS PARALLEL TO THE RIGHT EDGE. THE SOLID LINE MUST BE CARRIED TO WITHIN 6' OF THE EDGE OF THE THROUGH LANE, OR TO THE END OF THE RAMP CURVE IF CLOSER. THE 4" DASHED LINE SHOULD CONTINUE TO THE EDGE OF THE THROUGH LANE.

CURBED EXIT TERMINAL - PARALLEL DECELERATION LANE

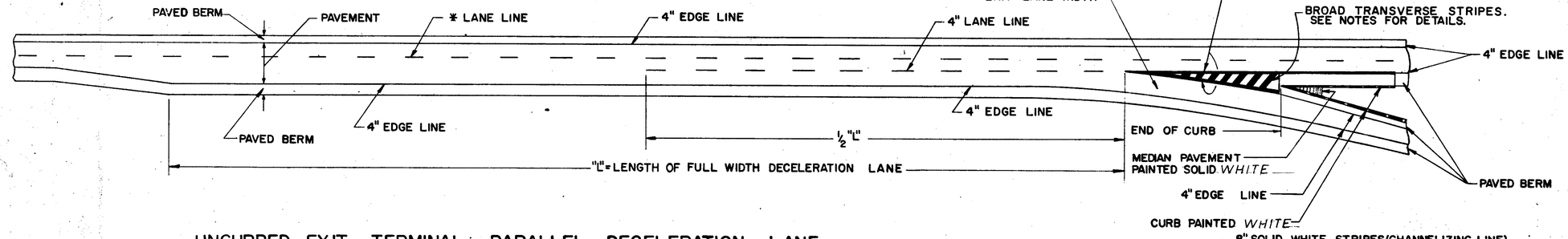

UNCURBED EXIT TERMINAL - PARALLEL DECELERATION LANE

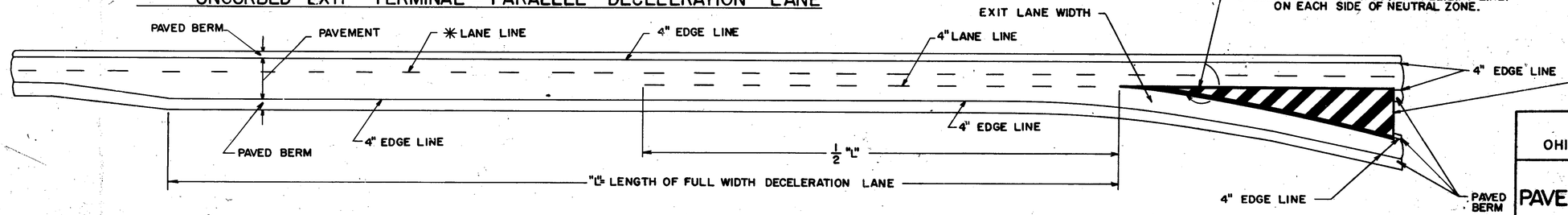

NOTES

DIAGONAL STRIPES AT EXIT RAMPS SHALL BE 24" BROAD TRANSVERSE STRIPES, 621.11, WITH A 6' SPACE BETWEEN STRIPES.

* 6" LANE LINE ON INTERSTATE HIGHWAYS ONLY.
4" LANE LINE ON ALL OTHER HIGHWAYS.

BUREAU OF TRAFFIC
OHIO DEPARTMENT OF HIGHWAYS

PAVEMENT MARKING | 621 | DATE 7-17-61, 4-6-62, 5-24-65, 9-[illegible]-67, 4-17-68, 1-11-72

APPROVED Robert E. Lower
ENGINEER OF TRAFFIC

FED. RD. DIVISION	STATE	PROJECT	
5	OHIO		

122
354

CUYAHOGA COUNTY
CUY-90-23.73
LAKE COUNTY
LAK -90-0.00

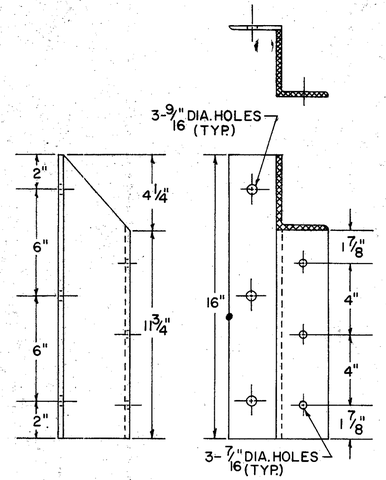

"Z" BAR-A
(4"x3 1/16"x 1/4" @ 2.85 LB.)

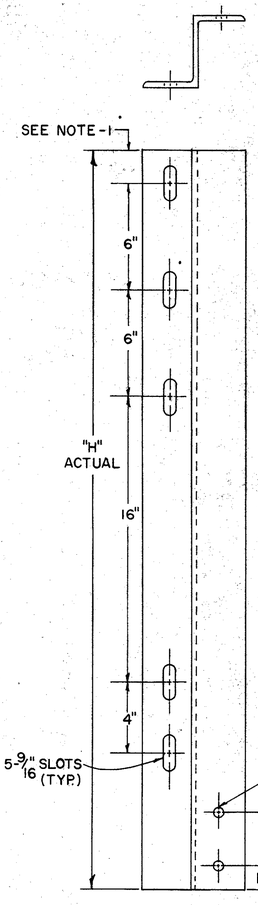

"Z" BAR-C
(4"x3 1/16"x 1/4" @ 2.85 LB.)

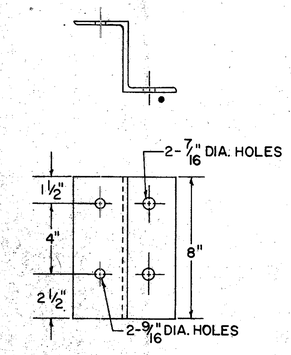

"Z" BAR-B
(4"x3 1/16"x 1/4" @ 2.85 LB.)

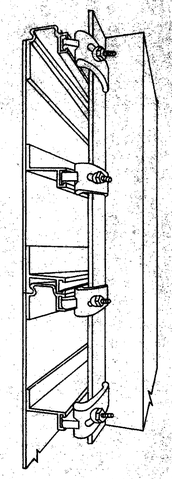

CLAMP ASSEMBLY

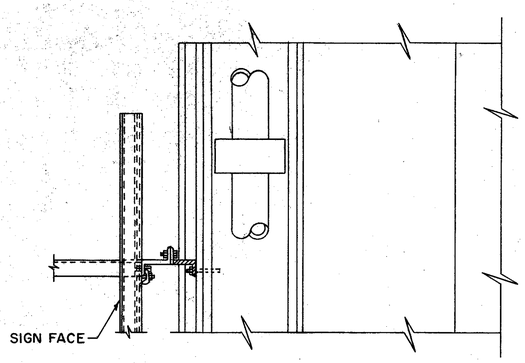

TOP VIEW

NOTES

ALL STRUCTURAL SHAPES TO BE ALUMINUM, EXCEPT AS NOTED.

EXPANSION BOLTS TO BE GALVANIZED STEEL.

(1.) THIS DIMENSION VARIES FOR SIGNS OVER 4'-6" ON SLAB TYPE BRIDGES AND SIGNS OVER 5'-6" ON STEEL GIRDER TYPE BRIDGES.

(2.) FOR ELECTRICAL DETAIL SEE DRAWINGS,
EI-1 PAGE 113.
EI-2 PAGE 114.

(3.) ALL MATERIALS SHALL CONFORM TO THE STATE OF OHIO, CONSTRUCTION & MATERIALS SPECIFICATIONS, AND THE SUPPLEMENTAL SPECIFICATIONS 816, OR AS OTHER-WISE SPECIFIED.

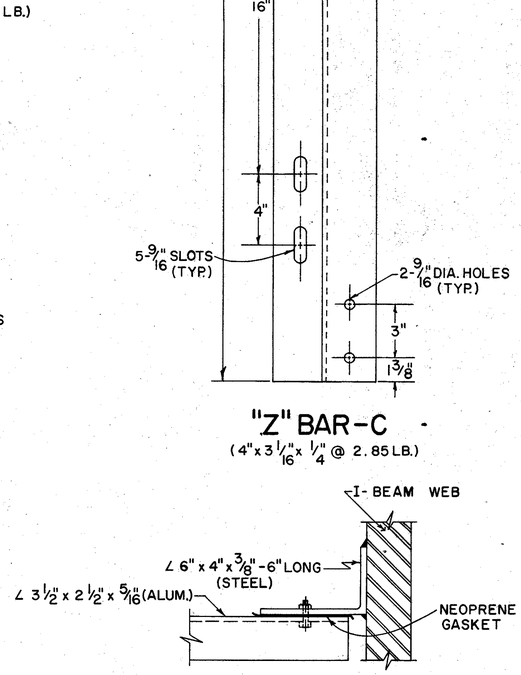

SECTION A-A

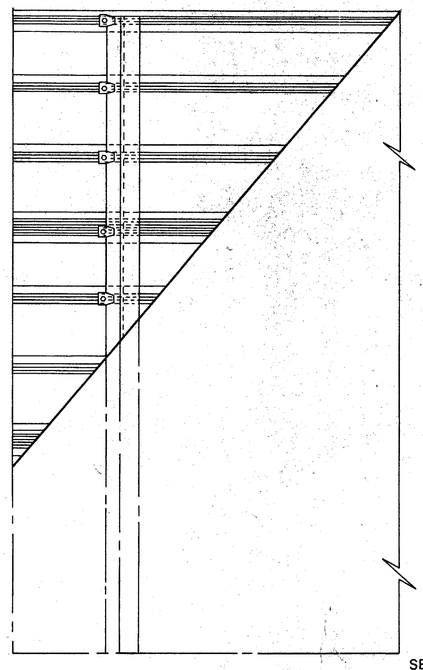

SECTION B-B

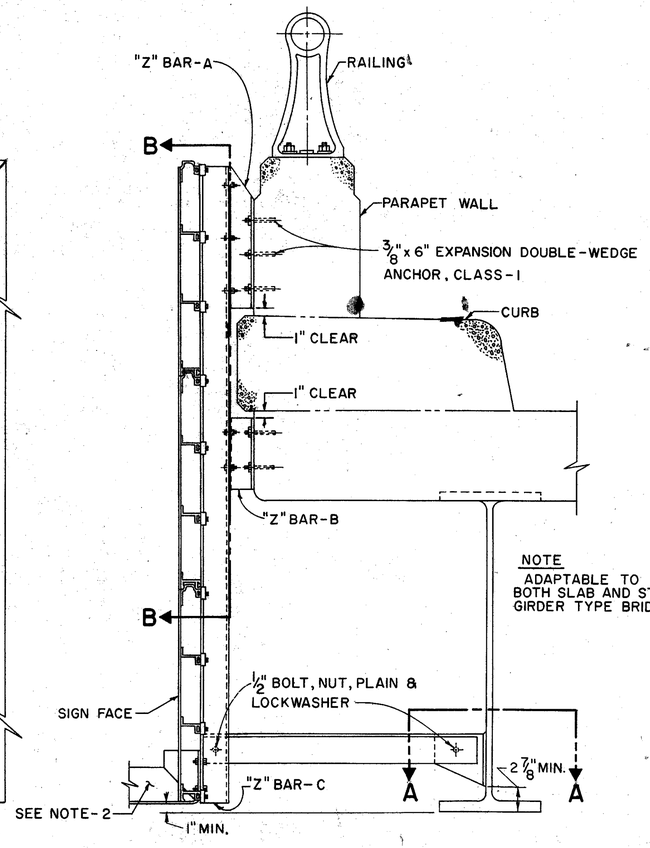

SIDE VIEW BRIDGE MOUNT

BUREAU OF TRAFFIC
OHIO DEPARTMENT OF HIGHWAYS

SPECIAL SIGN SUPPORT

SPL-816

DATE
1-24-68
4-24-69

APPROVED _____
ENGINEER OF TRAFFIC

BRIDGE MOUNTED SIGN SUPPORT REPAIR DETAILS

FHWA REGION	STATE	PROJECT	
5	OHIO		

123
354

CUYAHOGA COUNTY
CUY-90-23.73
LAKE COUNTY
LAK-90-0.00

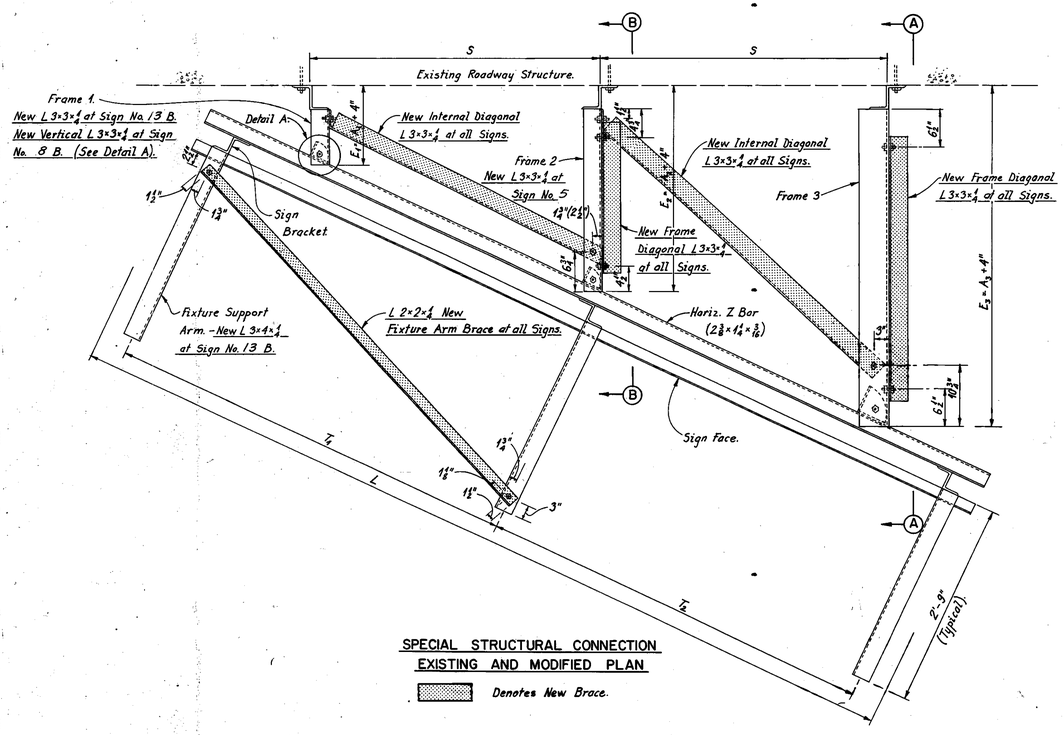

SPECIAL STRUCTURAL CONNECTION
EXISTING AND MODIFIED PLAN

Denotes New Brace.

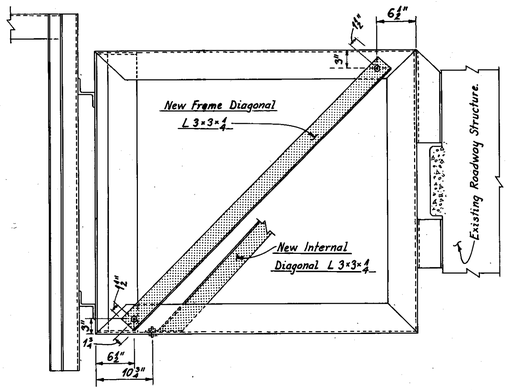

SECTION A–A

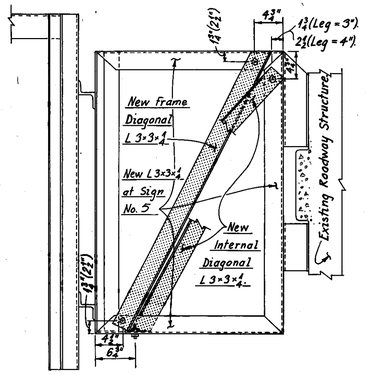

SECTION B–B

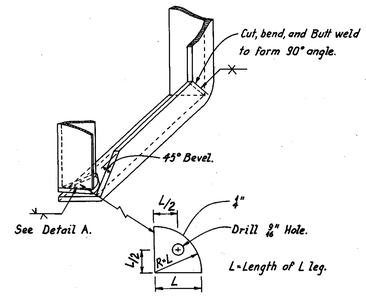

EXISTING VIEW
(FRAMING DETAIL)

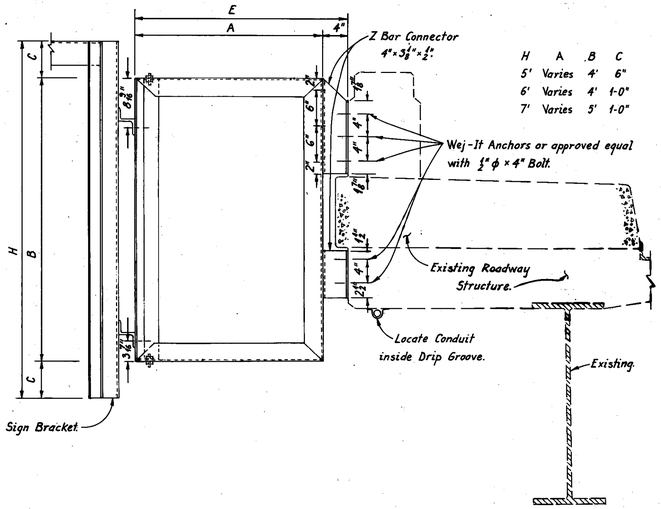

H	A	B	C
5'	Varies	4'	6"
6'	Varies	4'	1-0"
7'	Varies	5'	1-0"

EXISTING TYPICAL SECTION

ORIGINAL DESIGN DIMENSIONS AND NEW ANGLES.

SIGN NO.	L	H	A_1	A_2	A_3	S	FRAME 1 L SIZE	NEW FRAME 1 L SIZE	FRAME 2 L SIZE	NEW FRAME 2 L SIZE	FRAME 3 L SIZE	NEW INTERNAL DIAGONAL L SIZE	NEW FRAME DIAGONAL L SIZE	BRACE ON FIXTURE ARM L SIZE	T_1	T_2	
17	9'	6'	9"	28.3"		6'	3×3×$\frac{5}{16}$		3×3×$\frac{5}{16}$			3×3×¼	3×3×¼	2×2×¼	6.29'	-	IV
4	10'	5'	9"	28.3"		6'	3×3×$\frac{5}{16}$		3×3×$\frac{5}{16}$			3×3×¼	3×3×¼	2×2×¼	8.29'	-	IV
6	8'	6'	9"	28.3"		6'	3×3×$\frac{5}{16}$		3×3×$\frac{5}{16}$			3×3×¼	3×3×¼	2×2×¼	6.29'	-	IV
7	8'	6'	9"	28.3"		6'	3×3×$\frac{5}{16}$		3×3×$\frac{5}{16}$			3×3×¼	3×3×¼	2×2×¼	6.29'	-	IV
5	8'	6'	9"	42.6"		6'	3×3×$\frac{5}{16}$		3×3×$\frac{5}{16}$	3×3×¼		3×3×¼	3×3×¼	2×2×¼	6.29'	-	IV
8A	8'	6'	9"	53.4"		6'	3×3×$\frac{5}{16}$		4×4×¼			3×3×¼	3×3×¼	2×2×¼	6.29'	-	III
9A	8'	6'	9"	53.4"		6'	3×3×$\frac{5}{16}$		4×4×¼			3×3×¼	3×3×¼	2×2×¼	6.29'	-	III
12A	8'	7'	9"	53.4"		6'	3×3×$\frac{5}{16}$		4×4×¼			3×3×¼	3×3×¼	2×2×¼	6.29'	-	III
13A	8'	6'	9"	53.4"		6'	3×3×$\frac{5}{16}$		4×4×¼			3×3×¼	3×3×¼	2×2×¼	6.29'	-	III
18	12'	5'	9"	31.4"	53.8"	4'	3×3×$\frac{5}{16}$		3×3×$\frac{5}{16}$		5×5×$\frac{5}{16}$	3×3×¼	3×3×¼	2×2×¼	5.5'	5.5'	IV
8B	12'	5'	9"	42.6"	76.2"	4'	3×3×$\frac{5}{16}$	3×3×¼	3×3×$\frac{5}{16}$		5×5×$\frac{5}{16}$	3×3×¼	3×3×¼	2×2×¼	5.5'	5.5'	III
9B	12'	5'	9"	42.6"	76.2"	4'	3×3×$\frac{5}{16}$		3×3×$\frac{5}{16}$		5×5×$\frac{5}{16}$	3×3×¼	3×3×¼	2×2×¼	5.5'	5.5'	III
12B	12'	5'	9"	42.6"	76.2"	4'	3×3×$\frac{5}{16}$		3×3×$\frac{5}{16}$		5×5×$\frac{5}{16}$	3×3×¼	3×3×¼	2×2×¼	5.5'	5.5'	III
13B	12'	5'	9"	42.6"	76.2"	4'	3×3×$\frac{5}{16}$	3×3×¼	3×3×$\frac{5}{16}$		5×5×$\frac{5}{16}$	3×3×¼	3×3×¼	2×2×¼	5.5'	5.5'	III
Cost Participation III Total																	8
Cost Participation IV Total																	6
Totals																	14

NOTE:
Replace one fixture arm at Sign 13B as shown in Special Structural Connection Existing and Modified Plan.

PROPOSED WORK

1. Install frame and internal diagonals as required on all sign supports.
2. Install new fixture arm braces as required on all sign supports.
3. Replace fixture support arm on Sign No. 13B.
4. Replace Frame 2 on Sign No. 5.
5. Replace Frame 1 on Sign No. 13 B.
6. Replace vertical angle in Frame 1 on Sign No. 8B.
7. Verify security of all bolts on sign, sign structure and diagonals, and tighten as required.

Notes:
1. For Sign Locations, see Signing Plans, Sheets 18-58.
2. All members shall be 6061-T6 Aluminum, unless otherwise noted.
3. For details of Fixture Support Arm, see Ohio Standard Drawing EI-1, Revised 3-29-67. Sht 113
4. All labor, materials and incidentals required to complete the repair of existing Structure Mounted Sign Supports shall be included in the unit price per each, "Repair Structure Mounted Sign Supports, as per plan".

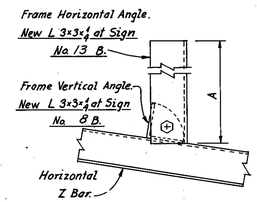

DETAIL A

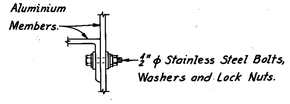

MODIFIED BOLTED CONNECTIONS

MADE A.N. DATE 12-20-74
TRACED A.N. DATE 12-20-74
CHECKED W.E.B. DATE 12-24-74
SCALE

Howard, Needles, Tammen & Bergendoff
CONSULTING ENGINEERS
CLEVELAND, OHIO

HNTB

SIGN SUPPORT DETAILS

FHWA REGION	STATE	PROJECT	
5	OHIO		

123A
354

CUYAHOGA COUNTY
CUY-90-23.73
LAKE COUNTY
LAK-90-0.00

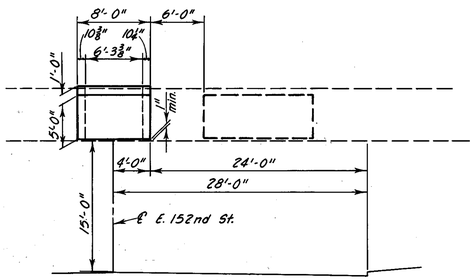

SIGN NO. 1A
East 152nd Street (On Structure)
18.26 Design 6

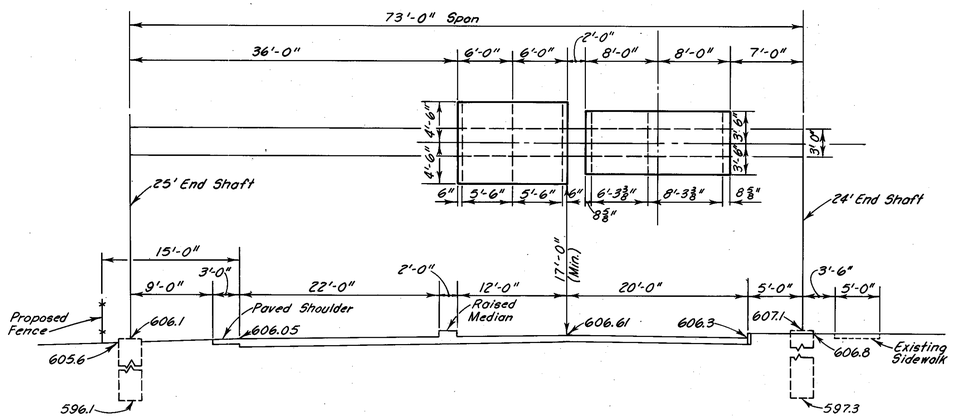

SIGN NO.3
Sta. 184+00 South Waterloo Road
7.4 Design No. 1 Mod.

Note:
The Contractor shall be aware of the existence of a 12" water line and electrical conduit between the existing curb and sidewalk. Care shall be taken in removing the existing foundation and placing the new foundation, so as not to disrupt these lines.

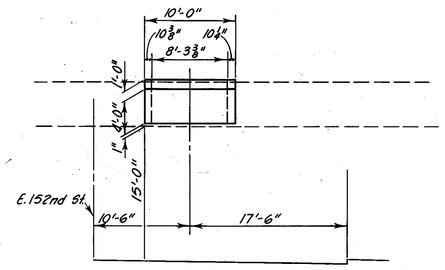

SIGN NO. 2
East 152nd Street (On Structure)
18.26 Design 6

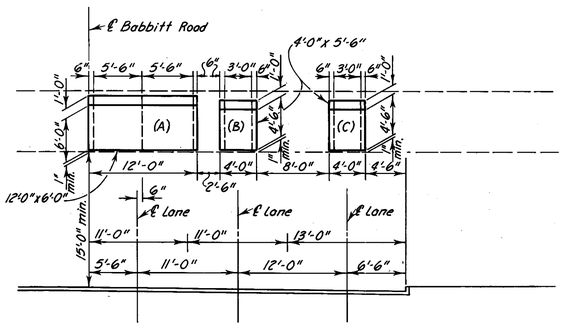

SIGN NO.10
SPL- 816
Babbitt Road (On Structure)

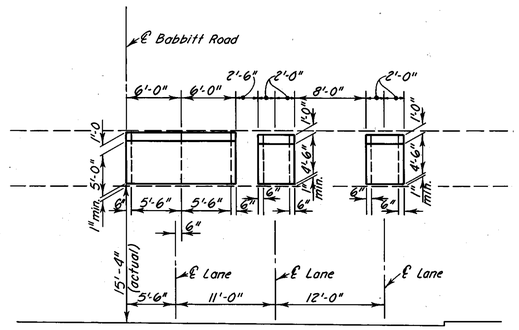

SIGN NO.11
SPL- 816
Babbitt Road (On Structure)

MADE A.J.S. DATE 12-23-74
TRACED S.S. DATE 1-6-75
CHECKED D.S.P. DATE 1-30-75
SCALE 1/8"=1'-0"

Howard, Needles, Tammen & Bergendoff
CONSULTING ENGINEERS
CLEVELAND, OHIO

HNTB

SIGN SUPPORT DETAILS

FHWA REGION	STATE	PROJECT	
5	OHIO		

123B
354

CUYAHOGA COUNTY
CUY-90-23.73
LAKE COUNTY
LAK-90-0.00

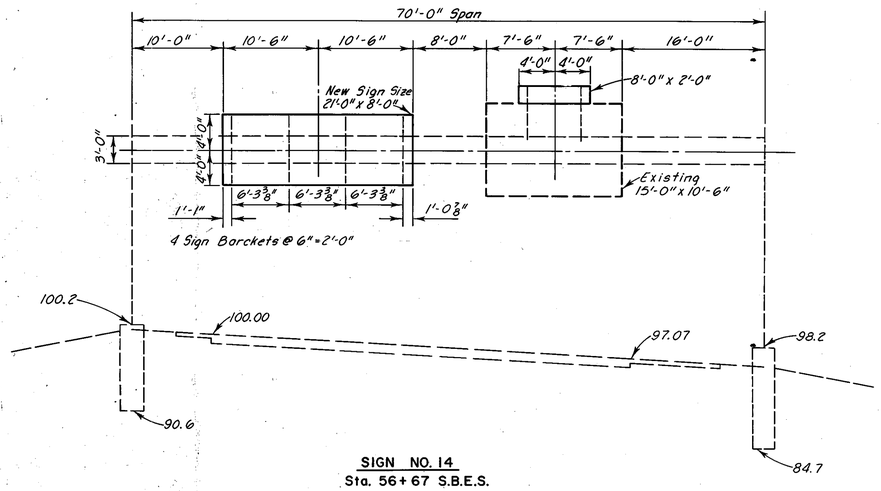

SIGN NO. 14
Sta. 56+67 S.B.E.S.
Existing 7.4 Design 1 Modified

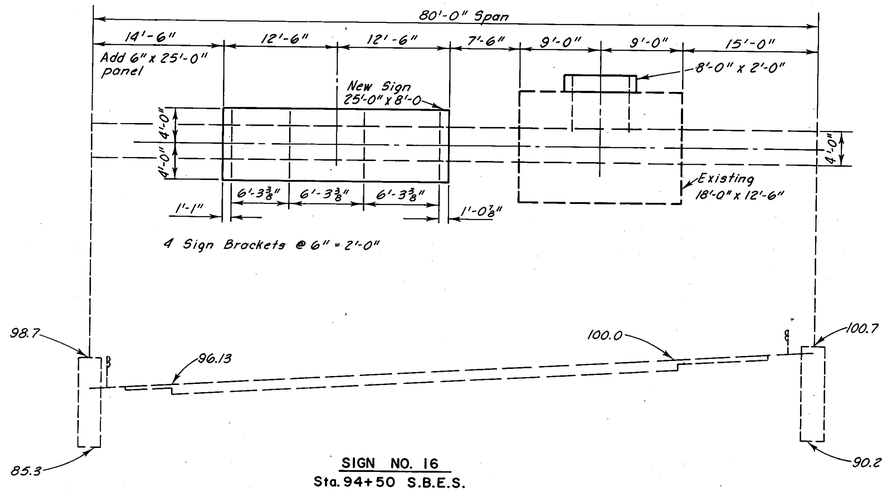

SIGN NO. 16
Sta. 94+50 S.B.E.S.
Existing 7.5 Design 2 Modified

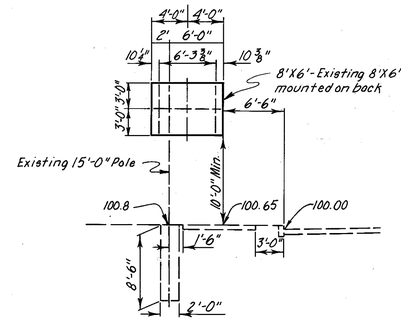

SIGN NO. 19A
Sta. 1+70N Babbitt Rd.
Existing 9.2 Design NO. 1 Mod.

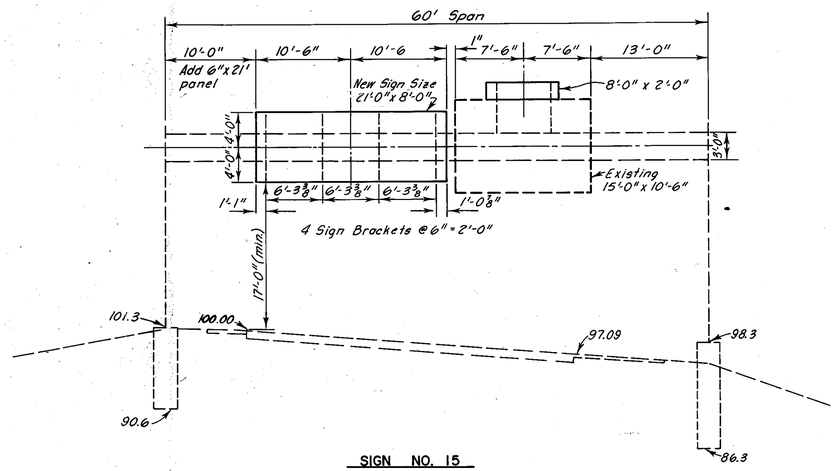

SIGN NO. 15
Sta. 82+00 W.B.E.S.
Existing 7.4 Design 1 Modified

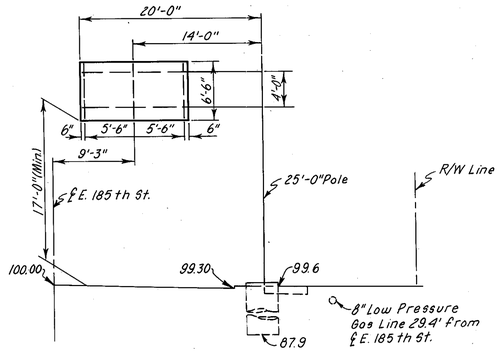

SIGN NO. 18
Sta. 8+12 E.185th St.
12.30 Design 4 Mod.

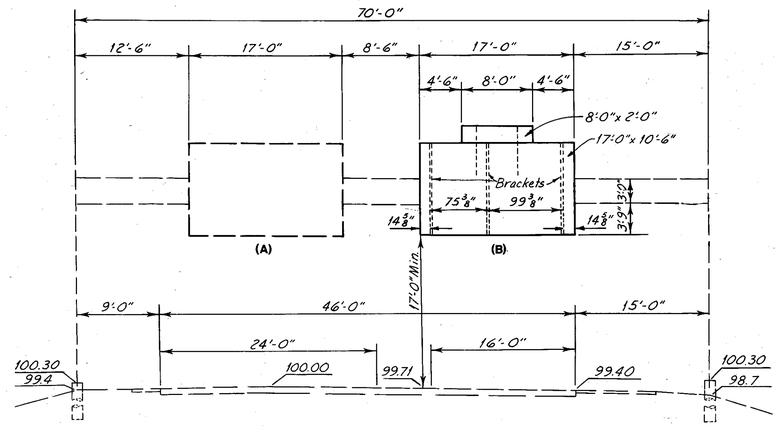

SIGN NO. 20
Sta. 2+75 Ramp 2
Existing 7.4 Design 1 Modified

NOTE: Sidewalk removal is incidental to the cost of the Support.

MADE A.J.S. DATE 1-9-75
TRACED B.B. DATE 1-10-75
CHECKED D.S.P. DATE 1-11-75
SCALE 3/8" = 1'-0"

Howard, Needles, Tammen & Bergendoff
CONSULTING ENGINEERS
CLEVELAND OHIO

HNTB

FHWA REGION	STATE	PROJECT	
5	OHIO		

124
354

CUYAHOGA COUNTY
CUY-90-23.73
LAKE COUNTY
LAK-90-0.00

SIGN LIGHTING NOTES

SPECIFICATIONS

All construction methods, materials and workmanship shall conform to the State of Ohio, Department of Transportation, Construction and Material Specifications, dated January 1,1975, except as modified or supplemented herein.

Reference shall be made to applicable Standard Construction Drawings and Supplemental Specifications listed on the Cover Sheet of these plans.

Hereinafter, where Items 625 and 713 appear in the plans, notes, and quantities, these items shall be construed to refer to Items S625 and S713 of the Supplemental Specifications, dated January 11,1974.

ELECTRICAL MATERIALS - GENERAL

Materials to be furnished may be specified in the plans by giving manufacturer's catalogue numbers or types. This is for descriptive purposes only and the Contractor may assume that approved equal material may be furnished.

CONDUIT ON STRUCTURES AND STRUCTURE GROUNDING

Expansion fittings for conduit on structures shall be Oz-Gedney Type AX, Crouse-Hinds Type XJ-4, or equal as approved by the Engineer, as indicated in the plans.

SIGNS REWIRED, COMPLETE

This Item shall consist of the repair of the electrical sign lighting system for each illuminated sign.

Work shall include installation of light fixtures and ballasts, and furnishing and installation of all rigid and flexible conduit, condulets, junction boxes, cable, fasteners, hardware, and all other items required to energize and repair the existing sign lighting system.

The cost of furnishing and installing cable, cable grips, cable splice units, and necessary fasteners from the disconnect switch to the signs (or between signs) within sign support members shall be included in this item of work.

Basis of payment shall be at the contract unit price per each sign rewired which price shall include all labor, materials, tools, equipment, and other incidentals to provide a complete and accepted item of work.

Furnishing of Light fixtures and Ballasts shall be paid for under a separate pay item.

SPAN WIRE SIGN SUPPORTS , AS PER PLAN

Supplementing 844.08(3) of the Specifications, the Contractor shall erect combination traffic and roadway lighting strain poles at the location shown on Sheet 125 and as detailed in the plans. Light bracket arm andluminaire are included in the Roadway Lighting Quantities.

This item of work includes erection of combination strain poles, structural steel supports, span wire clamps and clevis assemblies, messenger and teather wire, grips, clamp, span wire hanger, hanger braces, and other incidentals as may be required to complete the item of work.

Basis of payment shall be at the unit bid price per each, Item 844, "Span Wire Sign Supports , As per plan," in place, complete, tested and accepted.

SIGN SERVICE, SPECIAL

This item shall consist of all cable and other equipment necessary to provide a complete electrical service for the Span Wire Sign Support, as shown on Sheet 125 .

Sign service shall be routed from existing traffic signal controller, through existing crossunders; to the pull box at station 8+15 Eddy Rd., underground to the bridge abutment, up the face of the abutment to the bottom of the parapet, along the bottom of the parapet to the signal and light pole switch enclosure.

The sign service special shall include trenching, conduit, fittings, back fillings, cable, conduit clamps, and entry into pull box. The conduit shall be 2"0 in size and comply with S713.04. It shall be attached to the abutment or parapet with 0.02-inch thick by $\frac{3}{4}$-inch wide conduit clamps and $\frac{3}{8}$ concrete anchors, spaced at intervals of not more than five feet.

Cable for sign service special shall be No. 10 AWG rated for 600 volts and shall conform to S713.02.

Basis of payment shall be at the unit bid price per each, Item 844, "Sign Service, Special, As per Plan," complete, in place, tested and accepted, including all labor, materials and incidentals to complete the item of work.

MADE WGP DATE 1-15-75
TRACED WGP DATE 1-16-75
CHECKED EFJ DATE 1-17-75
SCALE

Howard, Needles, Tammen & Bergendoff
CONSULTING ENGINEERS
CLEVELAND, OHIO

HNTB

SIGN LIGHTING

FHWA REGION	STATE	PROJECT	
5	OHIO		

125
354

CUYAHOGA COUNTY
CUY-90-23.73
LAKE COUNTY
LAK-90-0.00

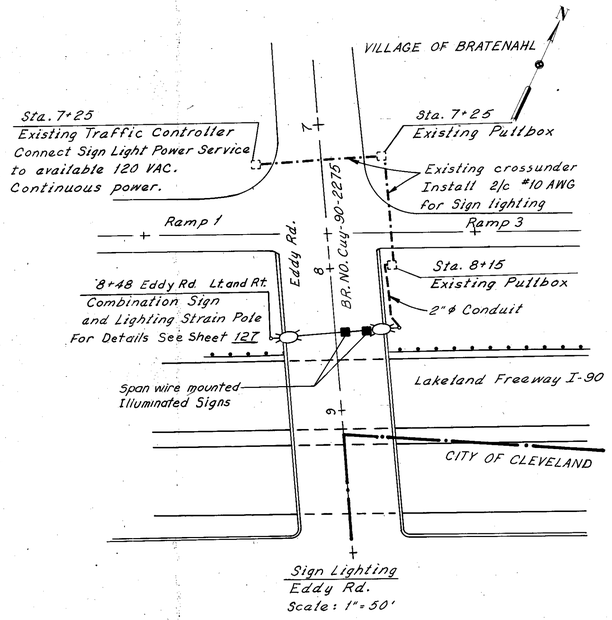

Sign Lighting
Eddy Rd.
Scale: 1"=50'

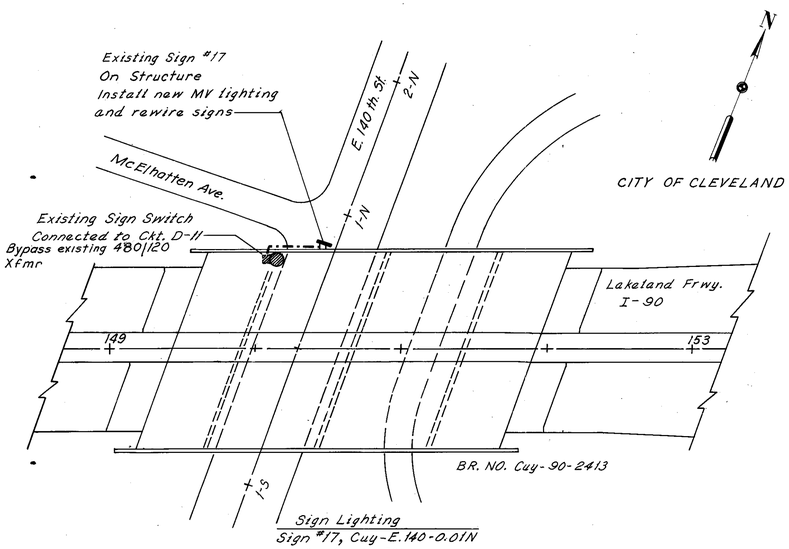

Sign Lighting
Sign #17, Cuy-E.140-0.01N
Scale: 1"=50'

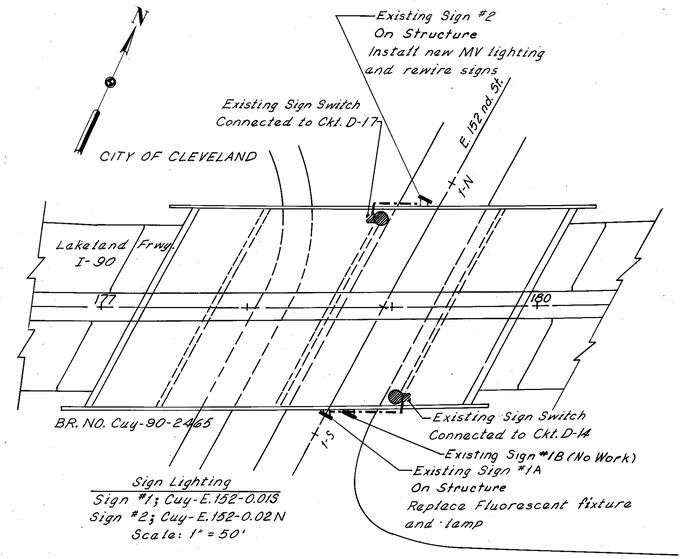

Sign Lighting
Sign #1; Cuy-E.152-0.01S
Sign #2; Cuy-E.152-0.02N
Scale: 1" = 50'

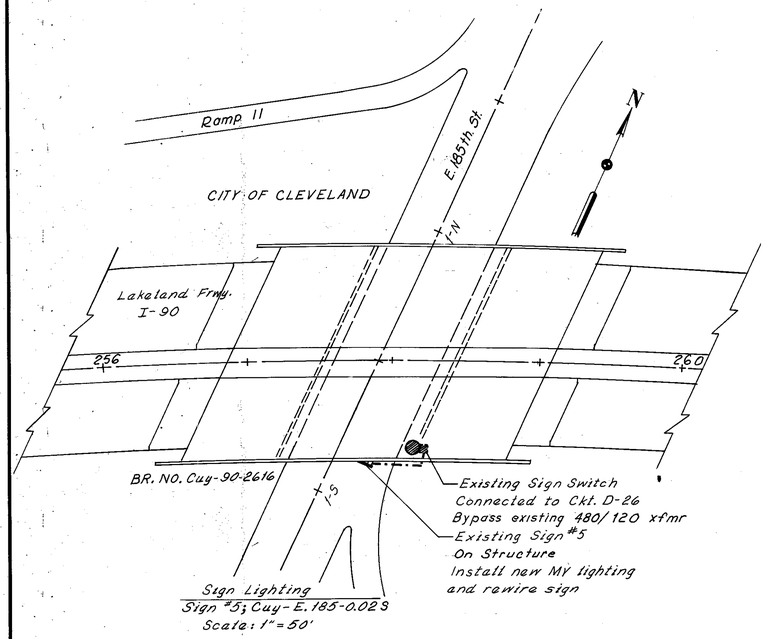

Sign Lighting
Sign #5; Cuy-E.185-0.02S
Scale: 1"=50'

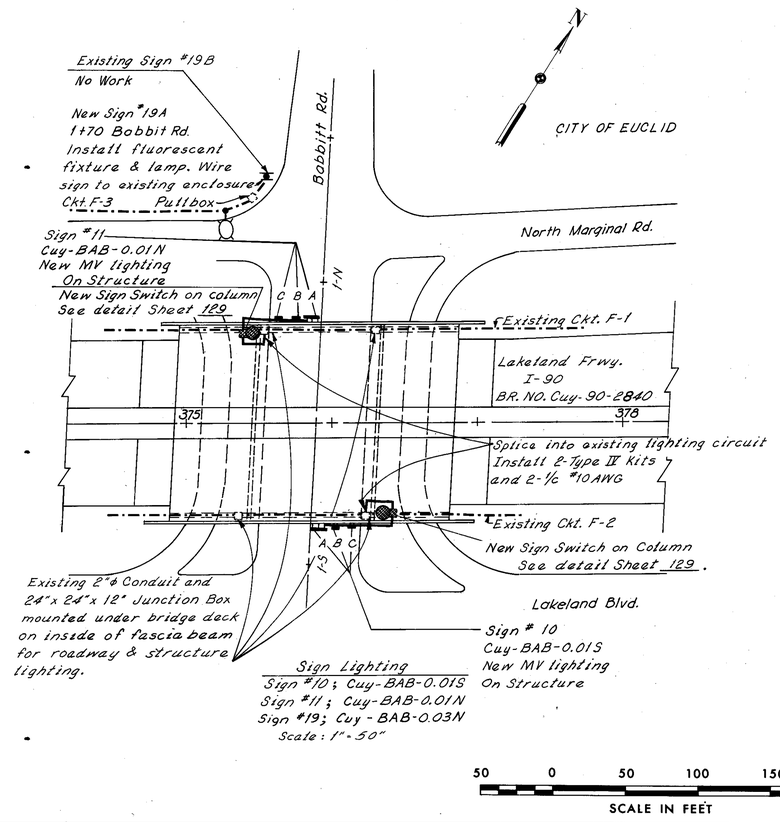

Sign Lighting
Sign #10; Cuy-BAB-0.01S
Sign #11; Cuy-BAB-0.01N
Sign #19; Cuy-BAB-0.03N
Scale: 1"=50"

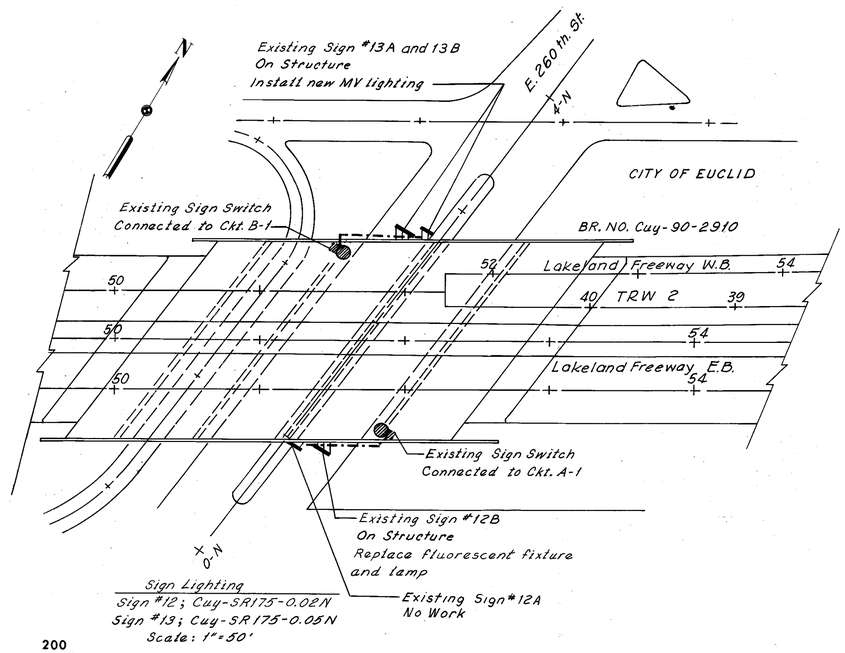

Sign Lighting
Sign #12; Cuy-SR175-0.02N
Sign #13; Cuy-SR175-0.05N
Scale: 1"=50'

50 0 50 100 150 200
SCALE IN FEET

MADE WGP DATE 1-5-75
TRACED JAK DATE 1-10-75
CHECKED EFJ DATE 1-11-75
SCALE 1"=50'

Howard, Needles, Tammen & Bergendoff
CONSULTING ENGINEERS
CLEVELAND OHIO

HNTB

SIGN LIGHTING

FHWA REGION	STATE	PROJECT	
5	OHIO		

126
354

CUYAHOGA COUNTY
CUY-90-23.73
LAKE COUNTY
LAK-90-0.00

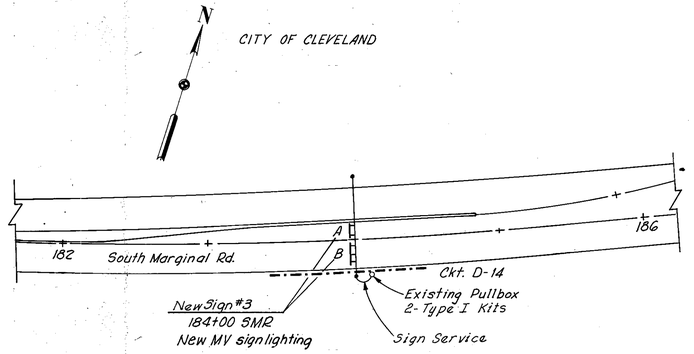

Sign Lighting
Sign #3; CUY-SMR-24.24
Scale 1"=50'

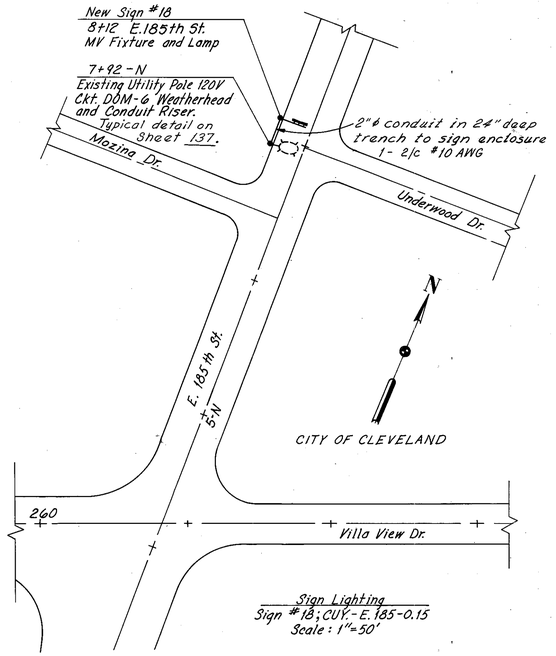

Sign Lighting
Sign #18; CUY.-E.185-0.15
Scale: 1"=50'

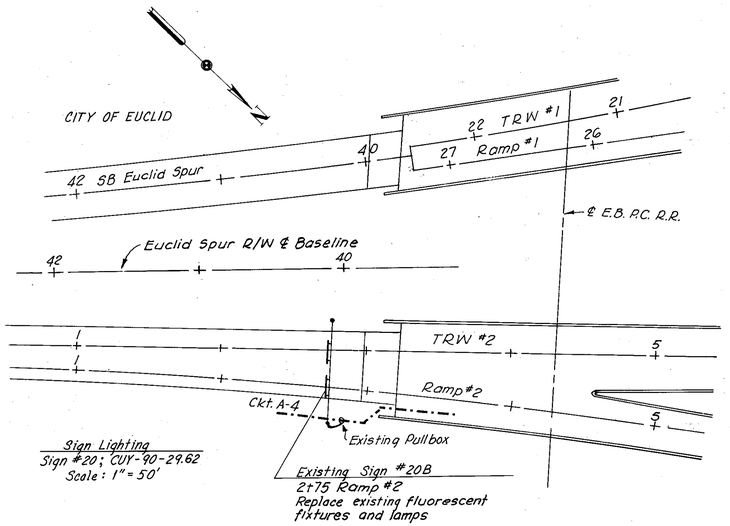

Sign Lighting
Sign #20; CUY-90-29.62
Scale: 1"= 50'

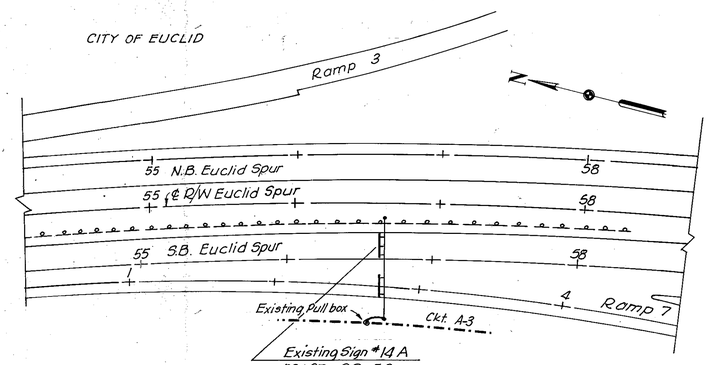

Existing Sign #14A
5G+67 S.B. E.S.
Replace existing fluor-
escent fixtures and lamps

Sign Lighting
Sign #14 Cuy-90-29.98
Scale 1"=50'

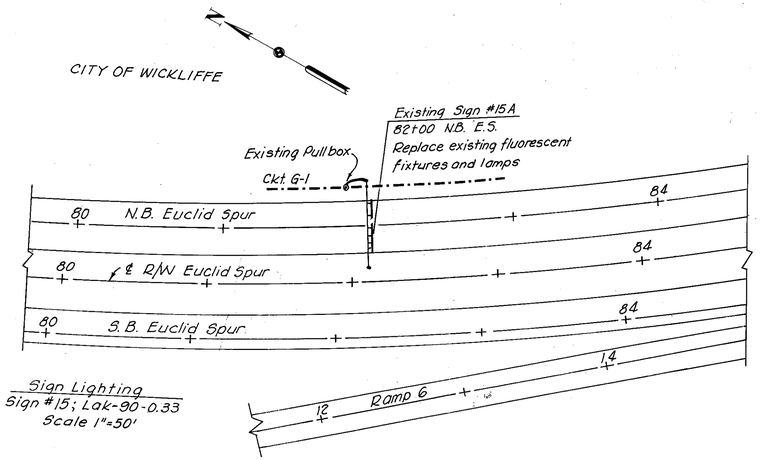

Sign Lighting
Sign #15; Lak-90-0.33
Scale 1"=50'

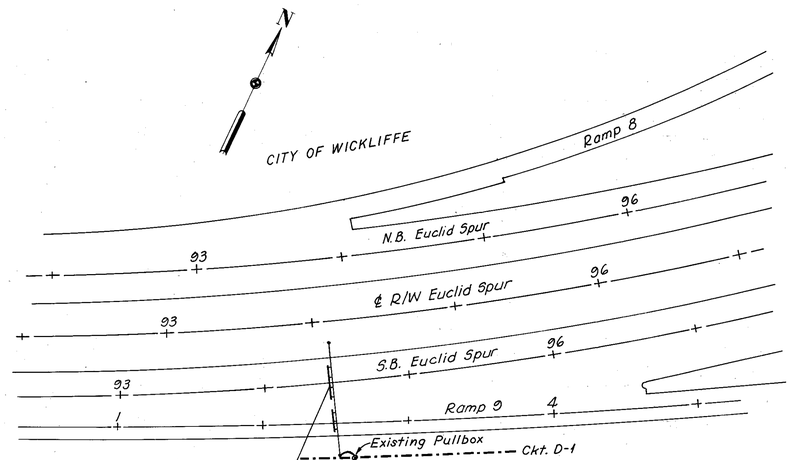

Sign Lighting
Sign #16; LAK-90-0.57
Scale: 1"= 50'

Existing Sign #16A
94+50 SB. E.S.
Replace existing fluorescent
fixtures and lamps

MADE W.K.G. DATE 1-18-75
TRACED E.R.H. DATE 1-18-75
CHECKED E.E.H. DATE 1-20-75
SCALE 1"= 50'

Howard, Needles, Tammen & Bergendoff
CONSULTING ENGINEERS
CLEVELAND OHIO

HNTB

50 0 50 100 150 200
SCALE IN FEET

SIGN LIGHTING DETAILS

FHWA REGION	STATE	PROJECT	
5	OHIO		

127
354

CUYAHOGA COUNTY
CUY-90-23.73
LAKE COUNTY
LAK-90-0.00

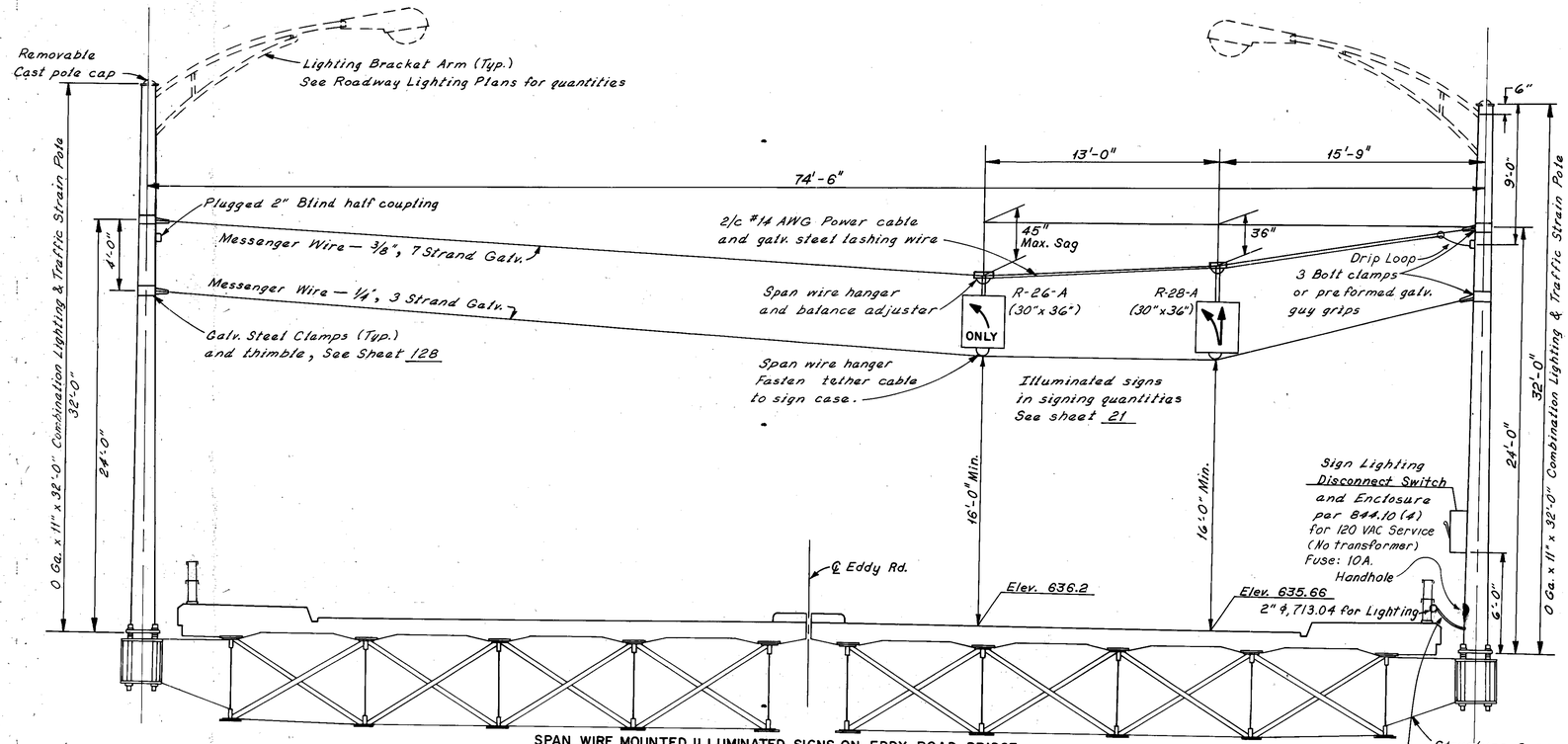

SPAN WIRE MOUNTED ILLUMINATED SIGNS ON EDDY ROAD BRIDGE
Scale 1/4" = 1'-0"

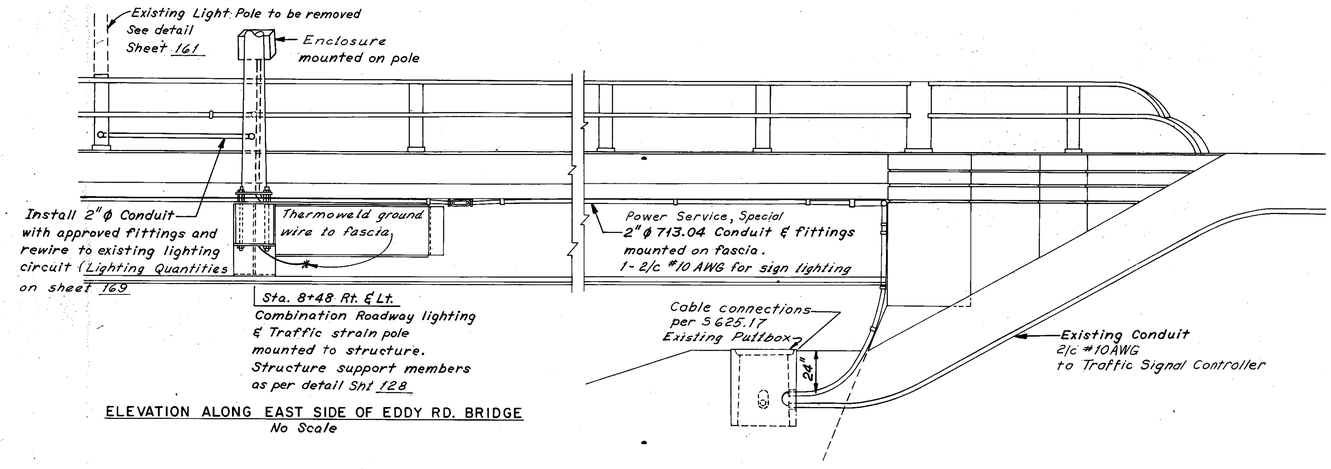

ELEVATION ALONG EAST SIDE OF EDDY RD. BRIDGE
No Scale

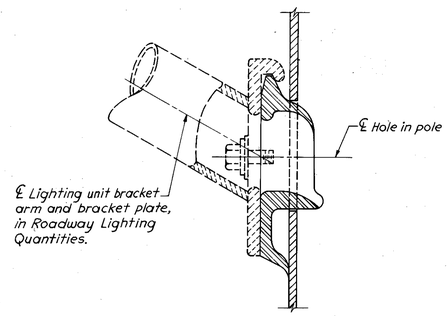

SECTION A-A
(Top Truss)

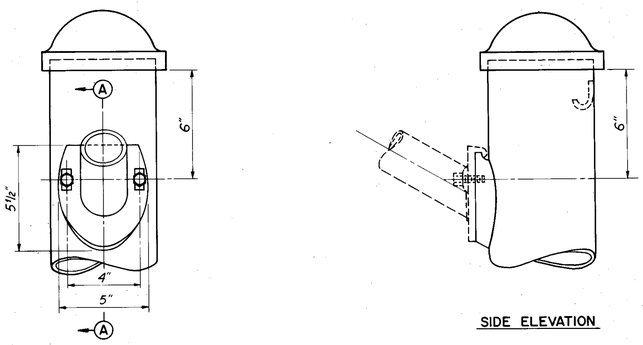

FRONT ELEVATION

SIDE ELEVATION

LIGHTING UNIT BRACKET ARM ATTACHMENT TO TRAFFIC STRAIN POLE
Scale: 3"=1'-0"

MADE WGP DATE 1-16-75
TRACED TS DATE 1-17-75
CHECKED RFJ DATE 1-17-75
SCALE: As shown

Howard, Needles, Tammen & Bergendoff
CONSULTING ENGINEERS
CLEVELAND OHIO

HNTB

SIGN LIGHTING DETAILS

FHWA REGION	STATE	PROJECT	
5	OHIO		

128/354

CUYAHOGA COUNTY
CUY-90-23.73
LAKE COUNTY
LAK-90-0.00

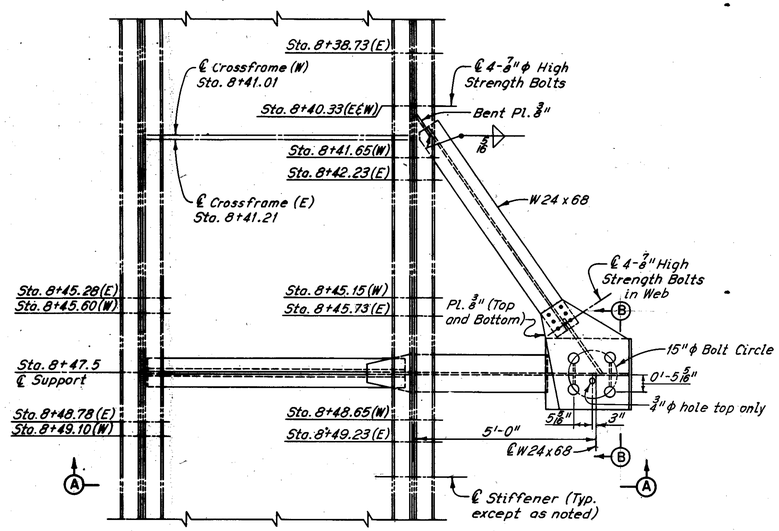

PART PLAN
Scale: ½"=1'-0"

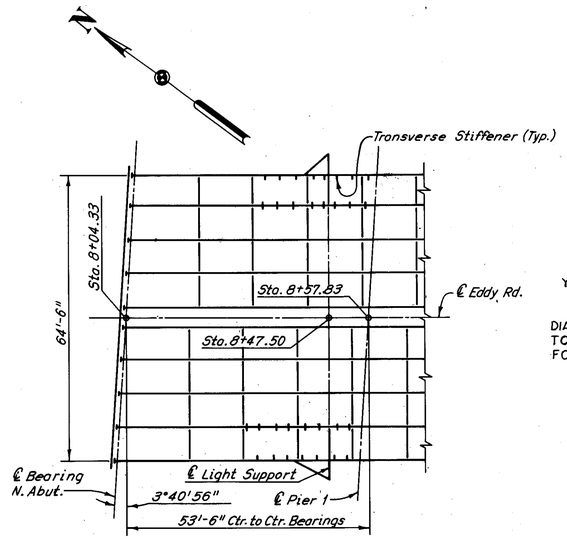

PART FRAMING PLAN

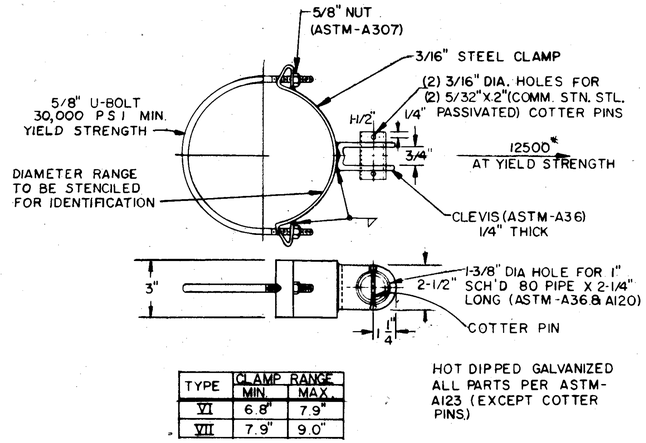

TYPE	CLAMP RANGE MIN.	MAX.
VI	6.8"	7.9"
VII	7.9"	9.0"

HOT DIPPED GALVANIZED ALL PARTS PER ASTM-A123 (EXCEPT COTTER PINS.)

SPAN WIRE CLAMP DETAILS

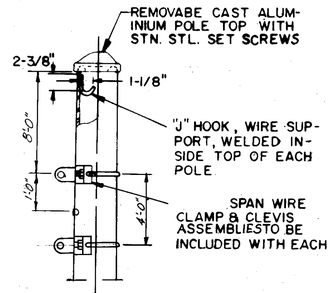

POLE TOP DETAILS

Notes:
All moteriol sholl be ASTM designotion A36 except as noted.
Anchor bolts sholl have a minimum yield strength of 55,000 psi and a minimum ultimate strength of 90,000 psi.
Bolts, nuts and washers sholl be galvanized in accordance with the Specifications for Zinc (Hot Galvanized) Coatings on Products Fabricated from Rolled, Pressed, and Forged Steel Shapes, Plates, Bars, and Strips, (ASTM A123).
Anchor bolts sholl be tightened to a snug fit.
All ⅞" high strength bolts sholl be ASTM designation A-325.
Support structure except for anchor bolts shall be painted in accordance with Item 514.

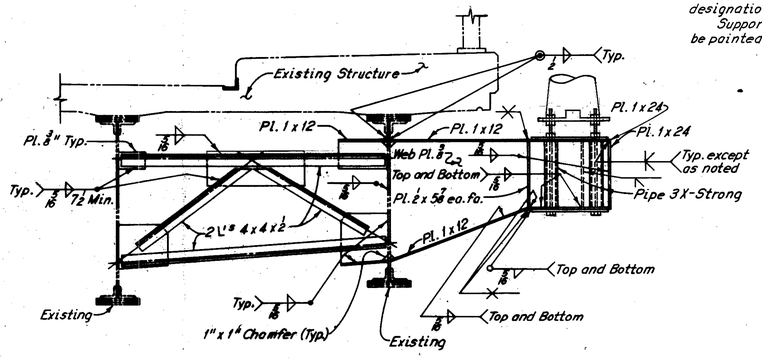

SECTION A-A
Scale: ½"=1'-0"

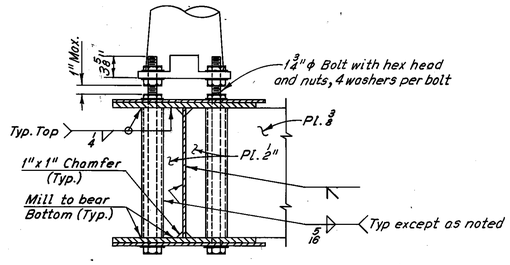

SECTION B-B
Scale: 1"=1'-0"

TYPICAL CABLE STRAIN RELIEF & ENTRANCE CAP DETAILS

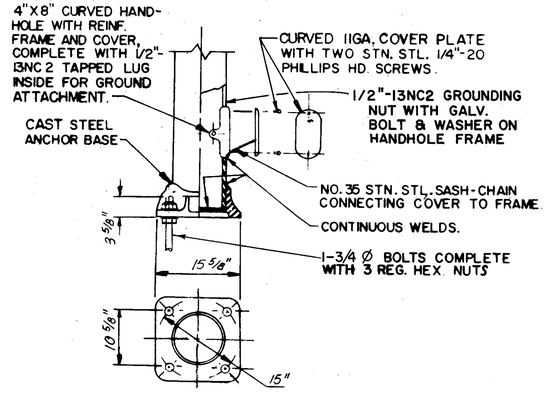

TYPICAL HANDHOLE & ANCHOR BASE DETAILS

EDDY RD. BRIDGE SIGNAL STRAIN POLE SUPPORT DETAILS

SCALE: As shown

MADE W.G.P. & J.A.B. DATE 1-17-75
TRACED [illegible] DATE 1-20-75
CHECKED [illegible] DATE 1-22-75
SCALE As shown

Howard, Needles, Tammen & Bergendoff
CONSULTING ENGINEERS
CLEVELAND, OHIO

HNTB

FHWA REGION	STATE	PROJECT	
5	OHIO		

129
354

CUYAHOGA COUNTY
CUY-90-23.73
LAKE COUNTY
LAK-90-0.00

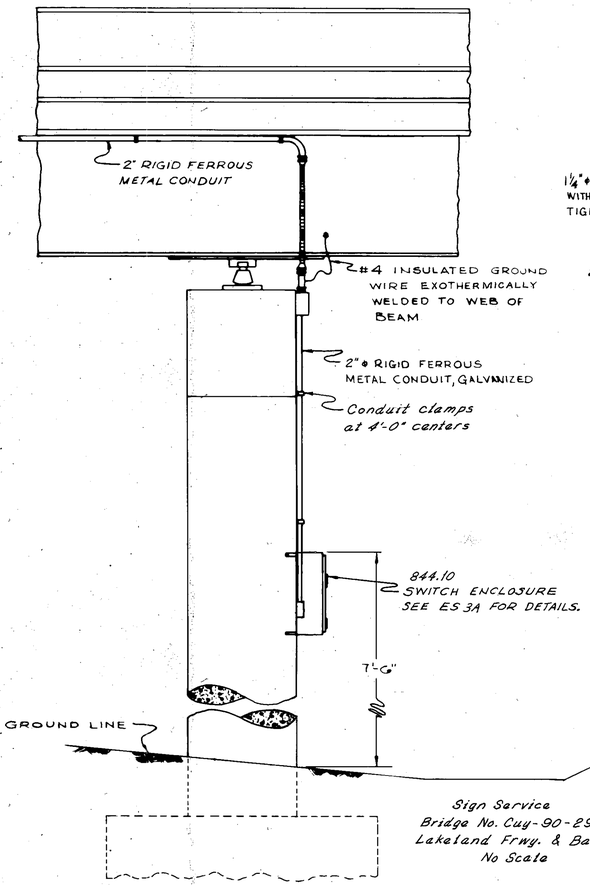

Sign Service
Bridge No. Cuy-90-2940
Lakeland Frwy. & Babbit Rd.
No Scale

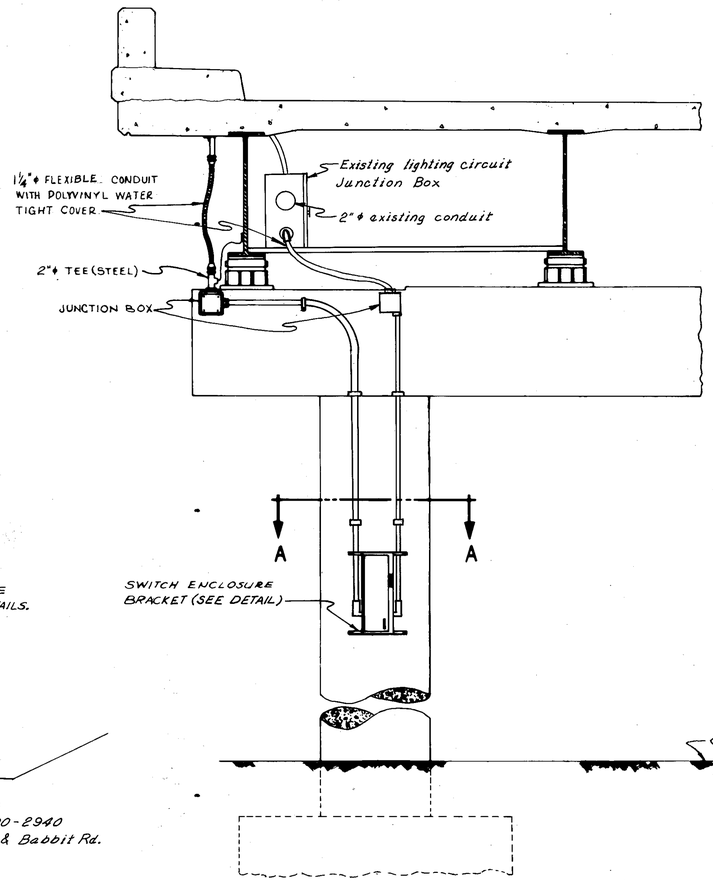

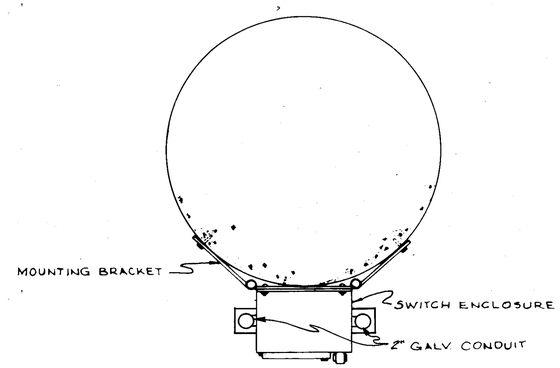

SECTION A-A

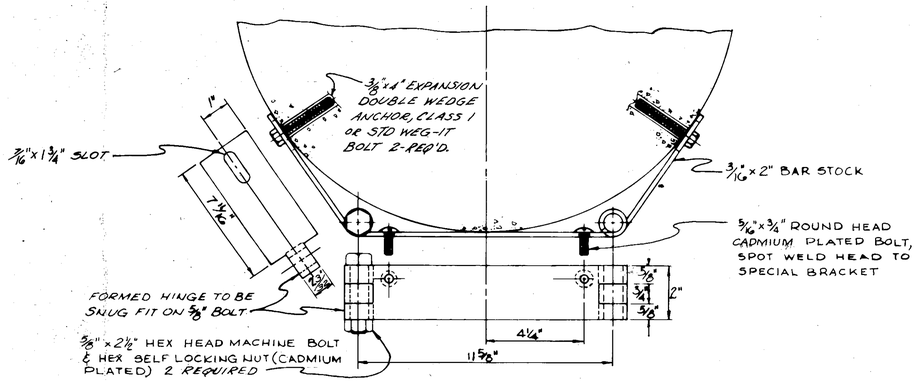

ENCLOSURE MOUNTING BRACKET

MADE EFJ DATE 1-17-75
TRACED TAK DATE 1-20-76
CHECKED EFJ DATE 1-20-76
SCALE As Shown

Howard, Needles, Tammen & Bergendoff
CONSULTING ENGINEERS
CLEVELAND, OHIO

HNTB

SIGN LIGHTING - MISCELLANEOUS DETAILS

SIGN LIGHTING SUB-SUMMARIES

QUANTITY CALCULATIONS
MADE BY WGP DATE 1-20-75
CHECKED BY EFJ DATE 1-22-75

FHWA REGION	STATE	PROJECT	
5	OHIO		

130
354

CUYAHOGA COUNTY
CUY-90-23.73
LAKE COUNTY
LAK-90-0.00

SHEET NO.	LOCATION	STATION	SIGN NO.	SIGN DESIGNATION	EFFECTIVE SIGN SIZE	WATTAGE PER SIGN	COST PARTICIPATION	844 72" Fluorescent Fixture with HO Lamp EACH	844 Ballast Type A 190 Watt EACH	844 Ballast Type B 250 Watt EACH	844 Mercury Vapor Sign Lighting Luminaire w 100 Watt Lamp EACH	844 Mercury Vapor Sign Lighting Luminaire w 175 Watt Lamp EACH	844 Ballast Type CMRT-100-480 EACH	844 Ballast Type CMRT-100-240 EACH	844 Ballast Type CMRT-175-480 EACH	844 Ballast Type CMRT-175-120 EACH	844 Sign Service Complete EACH	844 Signs Wired Complete EACH	844 Signs Rewired Complete, As per plan EACH	844 Signs Wired Complete Overpass Structure Mounted EACH	844 Disconnect Switch with Enclosure, Size Y EACH	844 Switch Enclosure Mounting Bracket EACH	844 Sign Service Special, As per plan EACH	844 Span Wire Sign Supports Span 74.5', Structure Mounted, As Per Plan EACH	625 Power Cable 2/C - No. 14 AWG, RHW LIN. FT.	625 Connector Kit Type I EACH	625 Connector Kit Type IV EACH	625 Weatherhead and Conduit Riser EACH	625 Ground Rod EACH
125	Eddy Rd.	8 + 48		CUY-EDDY-0.16	36"X30"	375	III														1	1	1	1	50				
125	E. 140th	On Structure	17	CUY-E. 140-0.01N	9'X5'	100	III				1		1						1										
125	E. 152nd	On Structure	1A	CUY-E. 152-0.01S	8'X5'	190	IV	1	1										1										
			1B		12'X4'	250																							
125	E. 152nd	On Structure	2	CUY-E. 152-0.02N	10'X4'	100	IV				1			1					1										
126	S. Waterloo Rd.	184 + 00	3A	CUY-SMR-24.24	12'X8'	350	IV					2			2		1	1			1	1				2			
			3B		16'X6'	350	IV					2			2			1											
125	E. 185th	On Structure	5	CUY-E. 185-0.02S	8'X5'	100	IV				1		1						1										
126	E. 185th	8 + 12	18	CUY-E. 185-0.15N	12'X5'-6"	350	IV					2				2	1	1			1	1						1	2
125	Babbit Rd.	On Structure	10A	CUY-BAB-0.01S	12'X5'	200	III				2		2				1			1	1	1				2		
			10B		4'X4'-6"	100	III				1		1							1									
			10C		4'X4'-6"	100	III				1		1							1									
125	Babbit Rd.	On Structure	11A	CUY-BAB-0.01N	12'X5"	200	III				2		2				1			1	1	1				2		
			11B		4"X4'-6"	100	III				1		1							1									
			11C		4'X4'-6"	100	III				1		1							1									
125	Babbit Rd.	1 + 70	19A	CUY-BAB-0.03	8'X5'	190	III	1	1									1											
			19B		8'X5'	190																							
125	E. 260th	On Structure	12A	CUY-SR 175-0.02N	8'X6'	190																							
			12B		12'X4'	250	III	1		1										1									
125	E. 260th	On Structure	13A	CUY-SR 175-0.05N	8'X5'	100	III				1		1							1									
			13B		12'X4'	200	III				2		2							1									
	TOTAL	SHT. 130					III	2	1	1	11		11				2	2	3	6	3	3	1	1	50		4		
	TOTAL	SHT. 130					IV	1	1		3	6	2	1	4	2	2	2	4		2	2				2		1	2
	TOTAL	SHT. 130																											

MADE WGP DATE 1-20-75
TRACED FGG DATE 1-20-75
CHECKED EFJ DATE 1-22-75
SCALE

Howard, Needles, Tammen & Bergendoff
CONSULTING ENGINEERS
CLEVELAND, OHIO

HNTB

Rev. 7-18-75

SIGN LIGHTING SUB-SUMMARIES

QUANTITY CALCULATIONS
MADE BY WGP DATE 1-20-75
CHECKED BY EFJ DATE 1-22-75

FHWA REGION	STATE	PROJECT	
5	OHIO		

130A / 354

CUYAHOGA COUNTY
CUY-90-23.73
LAKE COUNTY
LAK-90-0.00

SHEET	LOCATION	STATION	SIGN NO.	SIGN DESIGNATION	EFFECTIVE SIGN SIZE	WATTAGE PER SIGN	Cost Participation	844 72" Fluorescent Fixture with SHO Lamp	844 96" Fluorescent Fixture with SHO Lamp	844 Ballast Type C 250 Watt	844 Ballast Type D 425 Watt	844 Signs Rewired Complete, As per plan
								EACH	EACH	EACH	EACH	EACH
126	Ramp No. 2	2 + 75	20A	Cuy-90-	17'x 8'-6"	425						
			20B		17'x 0'-6"	425	I	1	1		1	1
126	SBES	56 + 67	14A	Cuy-90-	21'x 8'-6"	675	I	3		1	1	1
			14B		15'x 0'-6"	425						
126	NBES	82 + 00	15A	Lak-90-	21'x 8'-6"	675	I	3		1	1	1
			15B		15'x 8'-6"	425						
126	SBES	94 + 50	16A	Lak-90-	25'x 8'-6"	675	I	1	2	1	1	1
			16B		18'x 11'-6"	425						
	TOTAL	SHEET 130A					I	8	3	3	4	4

MADE WGP DATE 1-20-75
TRACED EGG DATE 1-20-75
CHECKED EFJ DATE 1-22-75
SCALE

Howard, Needles, Tammen & Bergendoff
CONSULTING ENGINEERS
CLEVELAND, OHIO

HNTB

K & E 10-1253 7-74

GENERAL SUMMARY

QUANTITY CALCULATIONS
MADE BY WGP DATE 1-17-75
CHECKED BY EFJ DATE 1-22-75

FHWA REGION	STATE	PROJECT	
5	OHIO		

131
354

CUYAHOGA COUNTY CUY-90-23.73
LAKE COUNTY LAK-90-0.00

SHEET NUMBER 130 III	SHEET NUMBER 130 II	SHEET NUMBER 130A I	COST PARTICIPATION I	II	III	IV	TOTAL QUANT.	UNIT	ITEM	DESCRIPTION
										SIGN LIGHTING Type Code 6706
2	1				2	1	3	Each	844	72" Fluorescent Fixture with HO Lamp
		8	8				8	Each	844	72" Fluorescent Fixture with SHO Lamp
		3	3				3	Each	844	96" Fluorescent Fixture with SHO Lamp
1	1				1	1	2	Each	844	Ballast Type A
1					1	-	1	Each	844	Ballast Type B
		3	3				3	Each	844	Ballast Type C
		4	4				4	Each	844	Ballast Type D
11	3				11	3	14	Each	844	Mercury Vapor Sign Lighting Luminaire w/ 100 Watt Lamp
	6					6	6	Each	844	Mercury Vapor Sign Lighting Luminaire w/ 175 Watt Lamp
11	2				11	2	13	Each	844	Ballast Type CMRI-100-480
	1					1	1	Each	844	Ballast Type CMRI-100-240
	4					4	4	Each	844	Ballast Type CMRI-175-480
	2					2	2	Each	844	Ballast Type CMRI-175-120
1					1		1	Each	844	Sign Service Special, As per plan
2	2				2	2	4	Each	844	Sign Service Complete
2	2				2	2	4	Each	844	Signs Wired Complete
3	4	4	4		3	4	11	Each	844	Signs Rewired Complete, As per plan
6					6		6	Each	844	Signs Wired Complete Overpass Structure Mounted
3	2				3	2	5	Each	844	Disconnect Switch with enclosure, Size Y
3"	2				3	2	5	Each	844	Switch Enclosure Mounting Bracket
1					1		1	Each	844	Span Wire Sign Supports Span 74.5'; Structure Mounted, As per plan
50					50		50	Lin. Ft.	625	Power Cable 2/C - No. 14 AWG, RHW
	2					2	2	Each	625	Connector Kit Type I
4					4		4	Each	625	Connector Kit Type IV
	1					1	1	Each	625	Weatherhead and Conduit Riser
	2					2	2	Each	625	Ground Rod

MADE WGP DATE 1-17-75
TRACED JAC DATE 1-17-75
CHECKED EFJ DATE 1-22-75
SCALE

Howard, Needles, Tammen & Bergendoff
CONSULTING ENGINEERS
CLEVELAND, OHIO

HNTB

Rev. 7-18-75

TRAFFIC SIGNAL NOTES

FHWA REGION	STATE	PROJECT	
5	OHIO		

132
354

CUYAHOGA COUNTY
CUY-90-23.73
LAKE COUNTY
LAK-90-0.00

PLAN SPECIFICATION REFERENCES

References to Item 625 and 713 in these plans shall be considered to read as respective references to Items S625 and S713.

GENERAL

The Contractor shall furnish all labor, materials, and equipment necessary so that the Traffic Control System installation will be complete, tested, accepted and ready for service prior to the completion date of the project.

Any items of labor, materials, and equipment required, but not shown as a separate pay item in the proposal shall be furnished and installed as incidental to the contract.

Prior to beginning construction, the Contractor shall contact all utilities having installations in the area to secure and affirm data on utility locations. These agencies and utilities shall be notified at least 24 hours prior to any excavation in areas containing their installations.

The Contractor shall install the power to the controller cabinet and provide 120/240 volts, 20A Amp service as required. The Contractor shall be responsible for arranging and providing the power in the manner shown in the plans through the Cleveland Electric Illuminating Company. The cost of obtaining the power shall be included in the bid price for Item 842 - "Power Service."

TRAFFIC COUNTING SYSTEM, RELOCATED

The contractor shall remove and relocate the existing traffic counting system control center shown in the plans on Sheet 31 and as described below.

The contractor shall notify the Engineer thirty (30) days prior to commencing work on this item. The Engineer shall immediately notify the ODOT Central Office, Bureau of Transportation Technical Services, who will remove the counting system components, and the Cleveland Electric Illuminating Company, who will disconnect the power service and remove the meter.

The contractor shall perform the work, as detailed on Sheet 136 of the plans, in no more than five (5) continuous working days. The Bureau of Transportation Technical Services will re-install the counting system components and make all electrical connections.

During trenching operations, the contractor is responsible for making his own determinations as to the type and location of underground utilities in order to avoid damage thereto. The contractor shall install new loop lead-in cable from the loop-wire splice junction to the control cabinet as specified in Supplemental Specification 842. The foundation shall be as detailed and in accordance with 842.20.

Basis of payment shall be measured as a lump sum for the item of work as specified "Item 625 - Traffic Counting System, Relocated" complete and in place, including all labor, material and incidentals necessary to remove and dispose of the existing equipment pole and foundation and relocate and place the two (2) existing control center cabinets; provide electrical service, foundation and pull boxes of the type detailed in the plans, conduit, wire, cable and incidental items as may be required to complete the item of work.

PULL BOXES - CONCRETE, AS PER PLAN

Concrete pull boxes shall be provided where shown on the layouts. The construction of boxes, drains, reinforcing mesh, slots, handles, covers and openings shall be as shown in the details. Boxes may be precast or cast-in-place. The walls shall be composed of monolithic concrete as shown. All entering conduit sleeves shall be cast or grouted in place. All pull boxes shall have french drains. Reinforcing steel of No. 4 (or $\frac{1}{2}$") rods at 6" centers each way shall conform to requirements of the Standard Modifications. Boxes shall be Class C concrete using No. 4 aggregate mixed and placed in conformance with Section 499 of the Standard Specifications, and shall be modified as required. Covers shall be seated with less than 0.5-inch total clearance each way.

In lieu of pertinent details shown on the drawings, the tops of pull boxes shall not exceed 1-inch above the surrounding ground elevation at the high point of the surrounding ground.

Basis of payment shall be at the unit price bid per each, Item 625 - "Pullbox, Concrete, As per plan", complete, in place, with all materials, labor, and incidentals, installed, tested and accepted.

CONDUIT JACKED UNDER PAVEMENT, AS PER PLAN

This item shall consist of installing conduit of the size or sizes indicated under existing pavement and contiguous shoulders by an approved method such as "drilling" or "jacking".

The Contractor shall place the conduit with the least amount of disturbance to the existing pavement, subbase, berm pavement, or shoulders of the roadway. All push pits or any necessary excavations shall be backfilled and restored in accordance with 625.01.

Measurement of the conduit shall be the actual amount of lineal feet installed under pavement and shoulders, measured in place, as accepted by the Engineer. The unit price bid for Item 625 "Conduit Jacked Under Pavement, As per plan" shall be full compensation for excavation, drilling or jacking, backfilling, compaction, restoration, and all labor, material, equipment, and incidentals necessary to complete the work as specified.

MADE E.F.V. DATE 1-14-75
TRACED R.D.J. DATE 1-16-75
CHECKED E.F.V. DATE 1-17-75
SCALE

Howard, Needles, Tammen & Bergendoff
CONSULTING ENGINEERS
CLEVELAND, OHIO

HNTB

TRAFFIC SIGNAL PLAN

FHWA REGION	STATE	PROJECT	
5	OHIO		

133
354

CUYAHOGA COUNTY
CUY-90-23.73
LAKE COUNTY
LAK-90-0.00

SIGNAL HEAD ARRANGEMENT

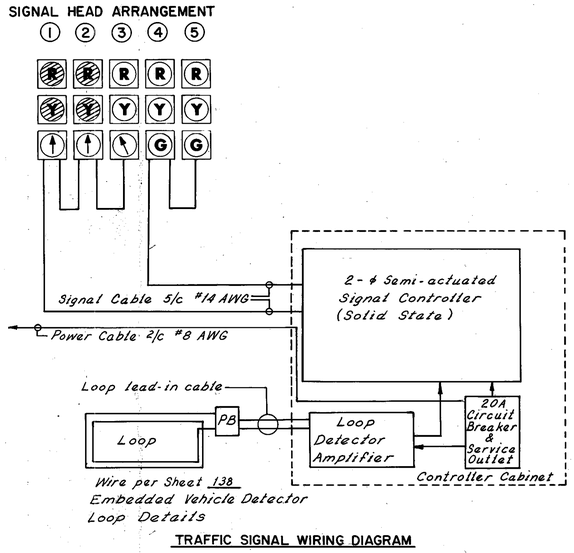

TRAFFIC SIGNAL WIRING DIAGRAM

SIGNAL DISPLAY					
NO.	1	2	3	4	5
TYPE	A	A	B	C	C
	R Y G	R Y G	R Y G	R Y G	R Y G
ϕI	↑	↑	↖	R	R
ϕII	↑	↑	R	G	G

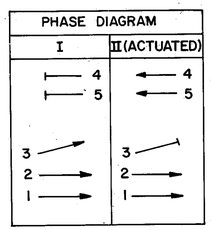

SIGNAL TIMING CHART							
PHASE	INITIAL	VEHICLE	MAX.	Y-CLR	R-CLR	PED.	P-CLR
I	40		40	3	3		
II	10	3	30	3	3		

Note: Time interval shown are estimates only and may be changed as directed by the Engineers.

TRAFFIC SIGNAL TYPES

- 8" (No Bulbs)
- 12"

A — 3 Section, 1 Way w/Arrow
B — 3 Section, 1 Way w/ Arrow (Optically Programmed)
C — 3 Section, 1 Way

CITY OF CLEVELAND

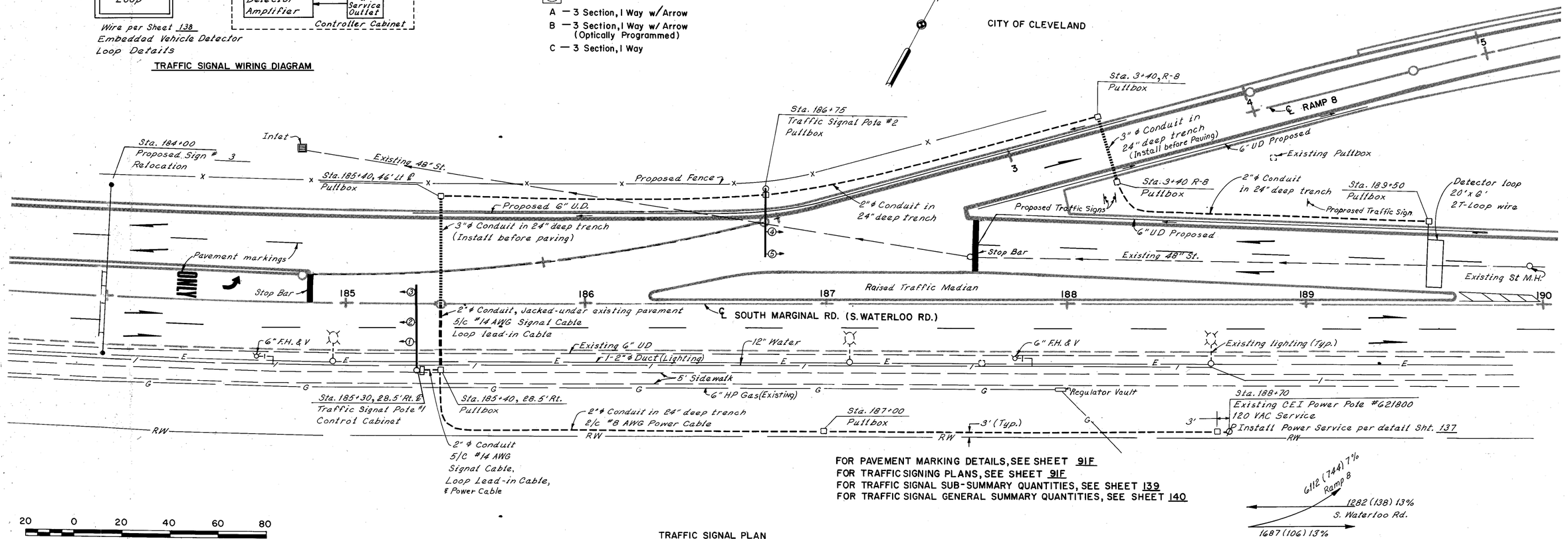

FOR PAVEMENT MARKING DETAILS, SEE SHEET 91F
FOR TRAFFIC SIGNING PLANS, SEE SHEET 91F
FOR TRAFFIC SIGNAL SUB-SUMMARY QUANTITIES, SEE SHEET 139
FOR TRAFFIC SIGNAL GENERAL SUMMARY QUANTITIES, SEE SHEET 140

20 0 20 40 60 80
SCALE IN FEET

TRAFFIC SIGNAL PLAN
S. WATERLOO RD & RAMP 8
SCALE: 1" = 20'

MADE EAH DATE 1-15-75
TRACED TAK DATE 1-17-75
CHECKED EFJ DATE 1-17-75
SCALE As shown

Howard, Needles, Tammen & Bergendoff
CONSULTING ENGINEERS
CLEVELAND, OHIO

HNTB

TRAFFIC SIGNAL DETAILS

FHWA REGION	STATE	PROJECT	
5	OHIO		

134
354

CUYAHOGA COUNTY
CUY-90-23.73
LAKE COUNTY
LAK-90-0.00

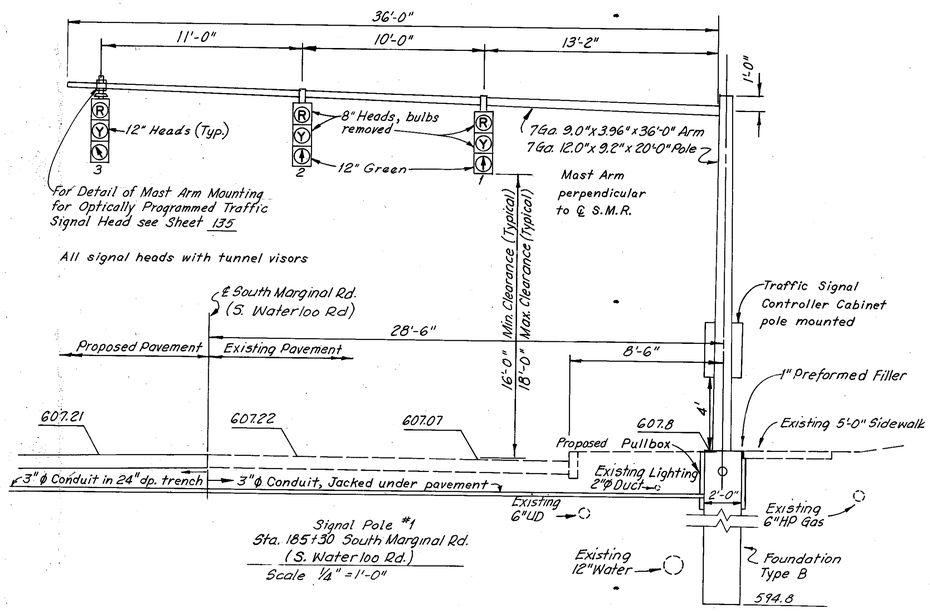

Signal Pole #1
Sta. 185+30 South Marginal Rd.
(S. Waterloo Rd.)
Scale 1/4" = 1'-0"

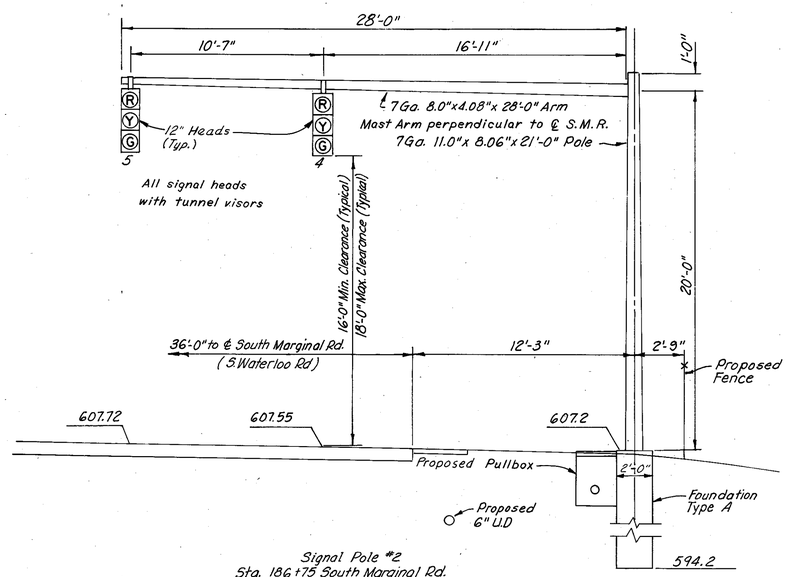

Signal Pole #2
Sta. 186+75 South Marginal Rd.
(S. Waterloo Rd)
Scale: 1/4" = 1'-0"

TRAFFIC SIGNAL POLE DATA

POLE LOCATION	OFFSET	POLE			LUMINAIRE BRACKET ARM	MAST ARM									Orientation Angle	FOUNDATION
		GA.	DIAM.	LENGTH		GA.	DIAM.	LENGTH	1st OFFSET	TYPE OF SIGNAL HEAD	2nd OFFSET	TYPE OF SIGNAL HEAD	3rd OFFSET	TYPE OF SIGNAL HEAD	ARM	TYPE
Sta. 185+30 ℄ South Marginal Rd.	28.5' Rt.	7	12.0"x9.2"	20'-0"	—	7	9.0"x3.96"	36'-0"	13'-2"	A	10'-0"	A	11'-0"	B	90°	B
Sta. 186+75 ℄ South Marginal Rd.	48.25' Lt.	7	11.0"x8.06"	21'-0"	—	7	8.0"x4.08"	28'-0"	16'-11"	C	10'-7"	C	—	—	90°	A

Note
Signal head type "A"; 2-8" and 1-12" heads
Signal head type "B"; 3-12" programmed heads
Signal head type "C"; 3-12" heads

Foundation Type ; See Sheet 135

MADE ERH DATE 1-13-75
TRACED TAK DATE 1-16-75
CHECKED EFJ DATE 1-17-75
SCALE 1/4" = 1'-0"

Howard, Needles, Tammen & Bergendoff
CONSULTING ENGINEERS
CLEVELAND OHIO

HNTB

TRAFFIC SIGNAL DETAILS

FHWA REGION	STATE	PROJECT	
5	OHIO		

135
354

CUYAHOGA COUNTY
CUY-90-23.73
LAKE COUNTY
LAK-90-0.00

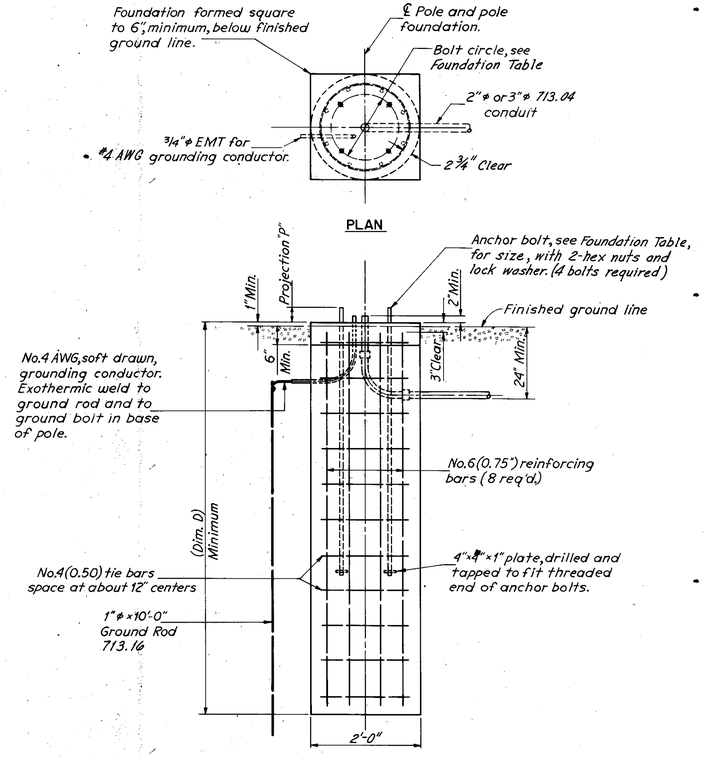

POLE FOUNDATION
No Scale

FOUNDATION TABLE						
POLE BASE SIZE	FOUNDATION TYPE	CONC. CU. YDS.	BOLT CIRCLE	ANCHOR BOLT SIZE	PROJECTION "P"	DIM. "D"
7Ga. 11"	A	1.5	15"	1½" x 60"	5"	13'-0"
7Ga. 12"	B	1.5	16"	1½" x 60"	5"	13'-0"

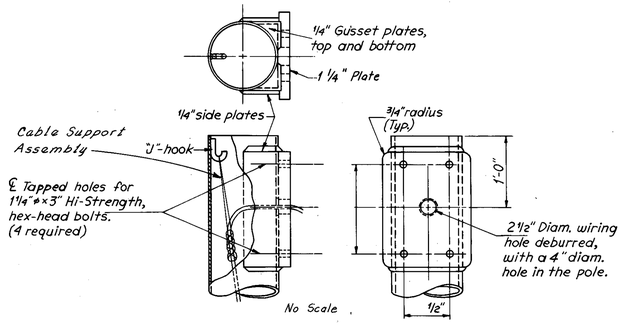

TRAFFIC SIGNAL MAST ARM ATTACHMENT PLATE AND CABLE SUPPORT ASSEMBLY
No Scale

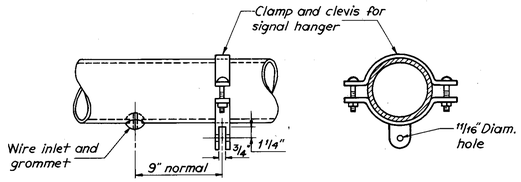

TYPICAL SIGNAL HANGER
No scale

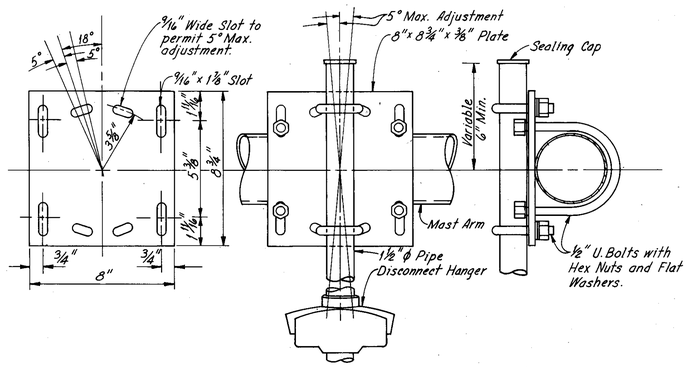

MAST ARM MOUNTING FOR OPTICALLY PROGRAMMED TRAFFIC SIGNAL HEAD
No Scale

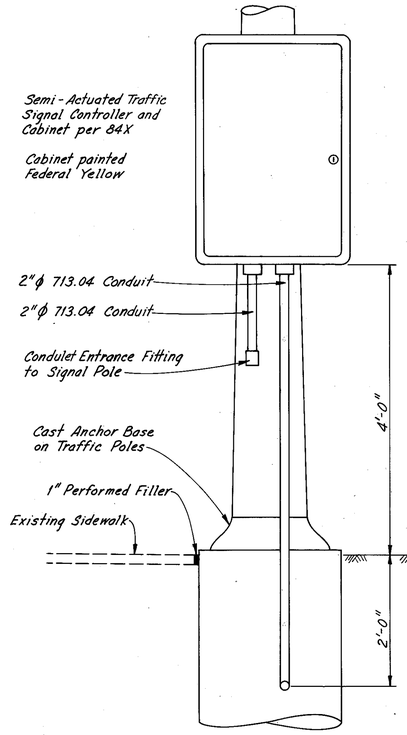

TRAFFIC SIGNAL CONTROLLER CABINET
No Scale

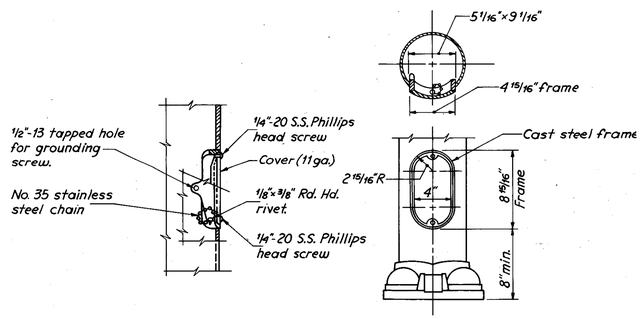

4X8 CURVED HANDHOLE FRAME AND COVER DETAIL
No Scale

MADE E.P.H. DATE 1-14-15
TRACED T.A.K. DATE 1-14-15
CHECKED E.F.J. DATE 1-17-15
SCALE As Shown

Howard, Needles, Tammen & Bergendoff
CONSULTING ENGINEERS
CLEVELAND, OHIO

HNTB

TRAFFIC COUNTING SYSTEM DETAILS

FHWA REGION	STATE	PROJECT	
5	OHIO		

136
354

CUYAHOGA COUNTY
CUY-90-23.73
LAKE COUNTY
LAK-90-0.00

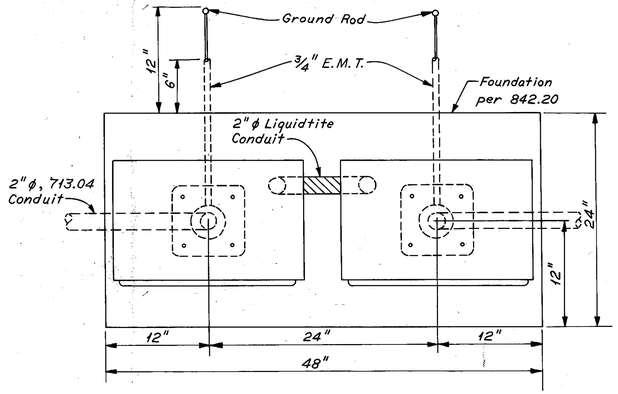

FOUNDATION DETAIL
Scale 1½" = 1'-0"

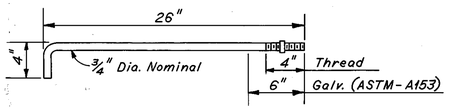

TYPICAL 3/4" x 30" ANCHOR BOLT
No Scale

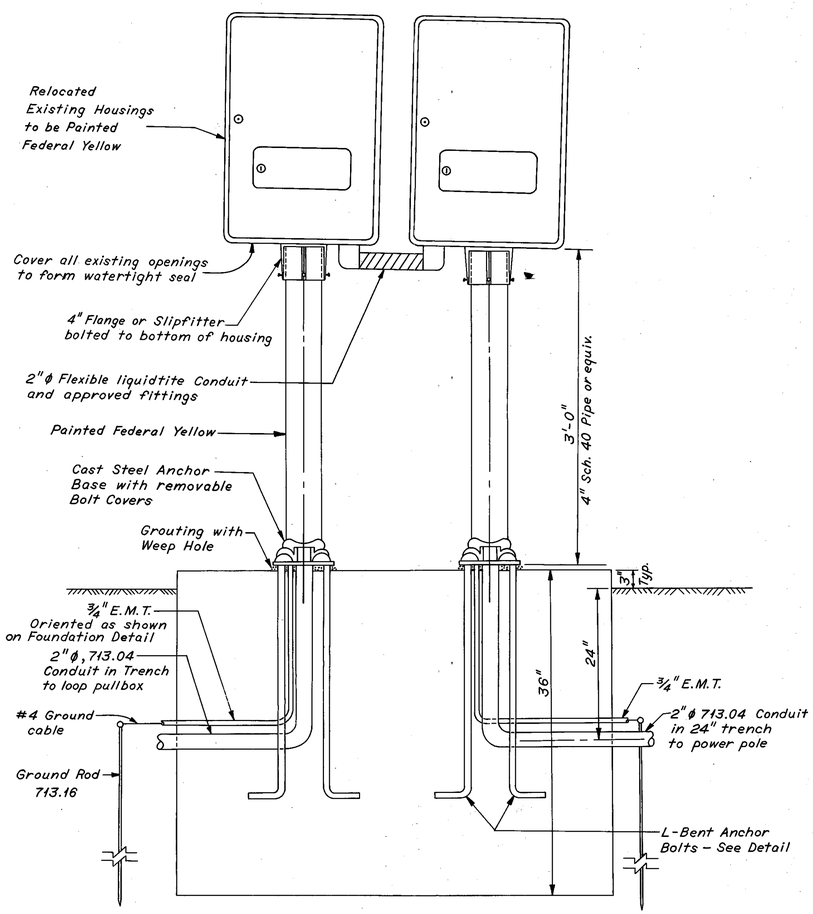

TRAFFIC COUNTING SYSTEM
CONTROL CABINET INSTALLATION
Scale 1½" = 1'-0"

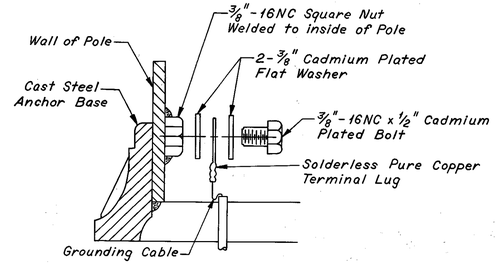

TYPICAL GROUNDING CABLE CONNECTION
No Scale

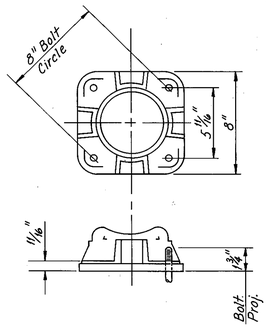

TYPICAL CAST ANCHOR BASE
No Scale

MADE EFJ DATE 1-15-75
TRACED TS DATE 1-18-75
CHECKED EFJ DATE 1-17-75
SCALE As Shown

Howard, Needles, Tammen & Bergendoff
CONSULTING ENGINEERS
CLEVELAND, OHIO

HNTB

FHWA REGION	STATE	PROJECT	
5	OHIO		

137
354

CUYAHOGA COUNTY
CUY-90-23.73
LAKE COUNTY
LAK-90-0.00

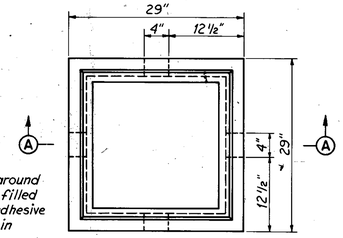

PLAN

Note:
The 1/4" opening around the cover shall be filled with a lubricant adhesive filler as specified in Item 705.11.

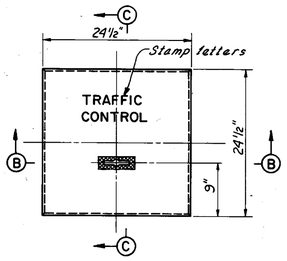

PLAN

COVER DETAIL
Scale 1"=1'-0"

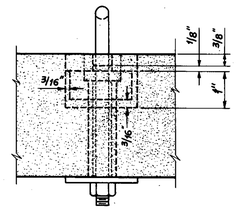

SECTION E-E

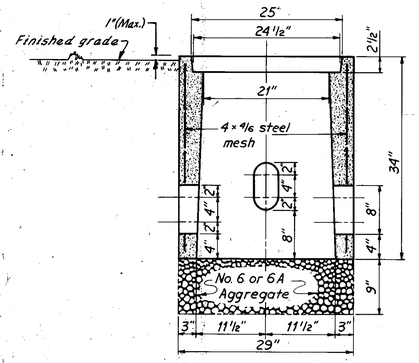

SECTION A-A

Note:
4 x 4/6 steel mesh reinforcing to be used in box and cover. All reinforcing to be covered by a minimum of 1" of concrete.
All conduit entrance holes shall be oval shaped.

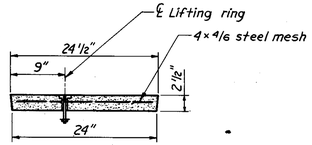

SECTION C-C

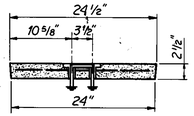

SECTION B-B

TRAFFIC SIGNAL PULL BOX DETAIL
Scale 1"=1'-0"

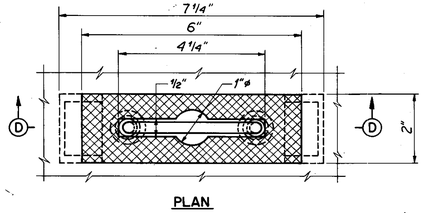

PLAN

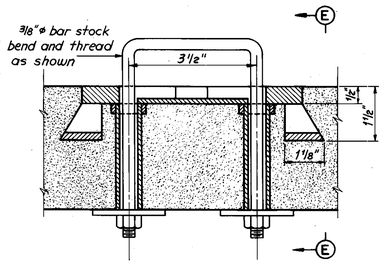

SECTION D-D

PULL BOX COVER
LIFTING RING DETAIL
Scale: 1/2"=1'-0"

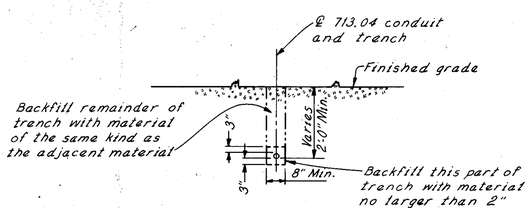

LOOP LEAD-IN CABLE CONDUIT TRENCH
Scale: 3/8"=1'-0"

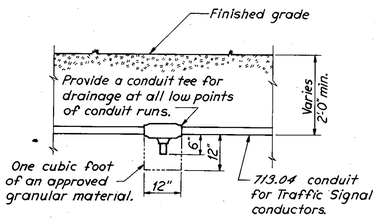

CONDUIT DRAIN
FOR TRAFFIC SIGNAL CONDUIT
No scale

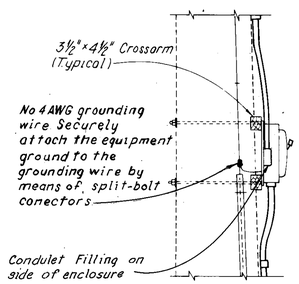

SECTION F-F

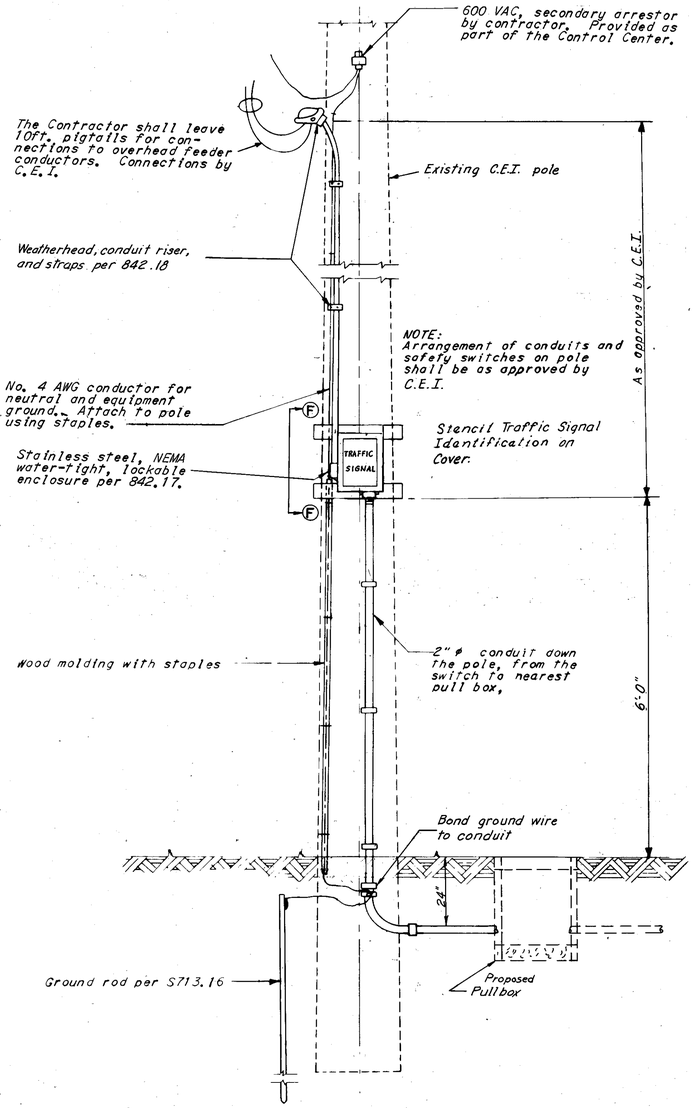

TRAFFIC SIGNAL POWER SERVICE
No Scale

MADE E.F.V. DATE 1-14-75
TRACED M.A.K. DATE 1-16-75
CHECKED E.F.J. DATE 1-16-75
SCALE As Shown

Howard, Needles, Tammen & Bergendoff
CONSULTING ENGINEERS
CLEVELAND, OHIO

HNTB

MISCELLANEOUS DETAILS

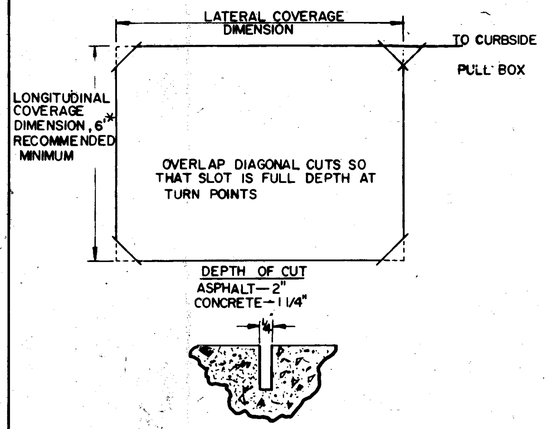

FIGURE 1
TYPICAL LOOP SLOT CONSTRUCTION

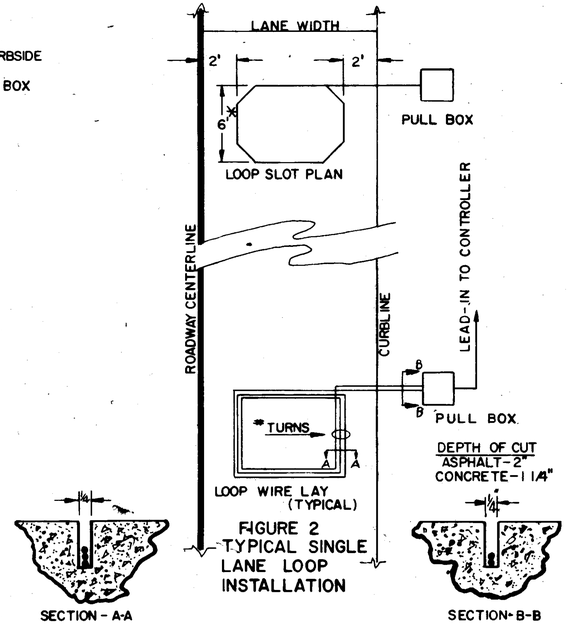

FIGURE 2
TYPICAL SINGLE LANE LOOP INSTALLATION

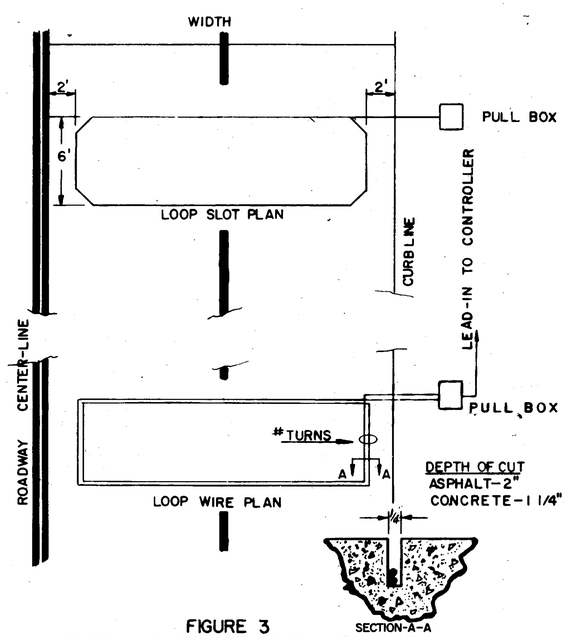

FIGURE 3
TYPICAL TWO LANE LOOP INSTALLATION

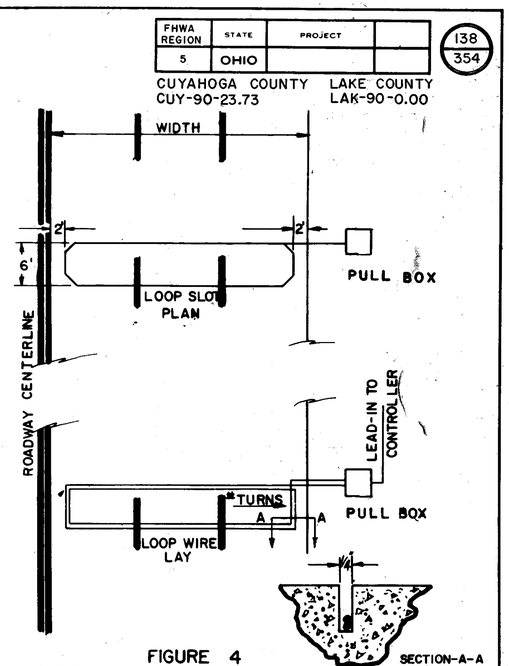

FIGURE 4
TYPICAL THREE LANE LOOP INSTALLATION

TABLE-1 ROADWAY LOOP CONSTRUCTION

LOOP PERIMETER	NO. OF TURNS
UP TO 40 FEET	3
40 TO 160 FEET	2
160 AND UP	1

MAINTAIN 6' MINIMUM DIMENSION IN DIRECTION OF TRAVEL.

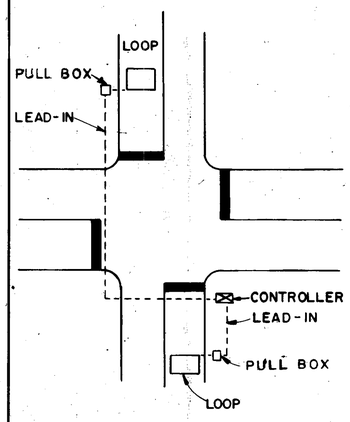

FIGURE 5
TYPICAL LEAD-IN DETAIL

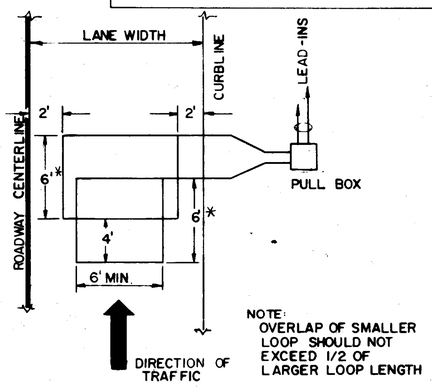

FIGURE 6
TYPICAL DIRECTIONAL DETECTION LOOP INSTALLATION (OVERLAPPED)

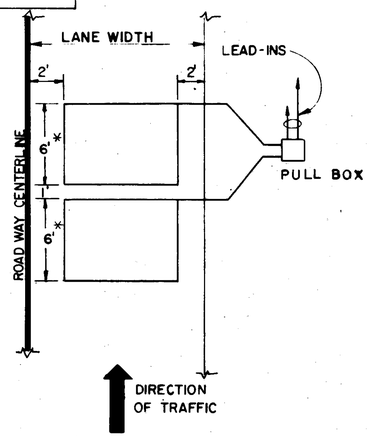

FIGURE 7
TYPICAL DIRECTIONAL DETECTION LOOP INSTALLATION (ADJACENT)

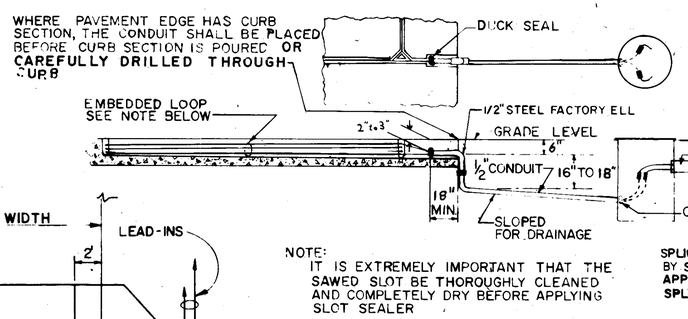

FIGURE 8
INTERFACE BETWEEN EMBEDDED LOOP AND ROAD SIDE PULL BOX

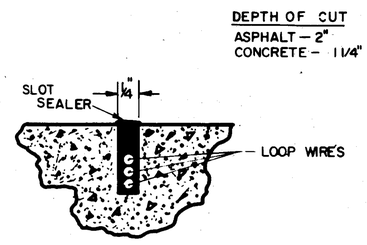

FIGURE 9
TYPICAL SLOT SEALING DETAIL

ROADWAY LOOP INSTALLATION

THE ROADWAY WIRE LOOP IS POSITIONED IN THE PAVEMENT IN A SAWED SLOT THAT OUTLINES THE REQUIRED DETECTION AREA. THE SLOT **SHALL** BE 1/4" WIDE AND FROM 1 1/4" **OR** 2" DEEP. RIGHT ANGLE TURNS **SHALL** BE CHAMFERED TO PREVENT SHARP BENDS OF WIRE (SEE FIG. 1). THE SLOT MUST BE BRUSHED AND BLOWN CLEAN OF ALL LOOSE MATERIAL. THE LOOP WIRE MUST BE CAREFULLY PUSHED INTO THE SLOT WITH A BLUNT STICK TO AVOID DAMAGING ITS **INSULATION**. RESISTANCE OF THE WIRE LOOP TO GROUND **SHOULD** BE CHECKED AFTER THE WIRE IS PLACED IN THE SLOT, BOTH BEFORE AND AFTER THE SLOT IS SEALED. THIS IS ESPECIALLY IMPORTANT IF THE ROADWAY WIRE LOOP IS SPLICED TO LEAD-IN CABLE AT CURBSIDE JUNCTION BOX. A RESISTANCE OF LESS THAN 10 MEGOHMS INDICATES A FAULTY SPLICE OR WIRE INSTALLATION WHICH MUST BE CORRECTED BEFORE THE ROADWAY LOOP IS SEALED IN PLACE.

INSTALLATIONS IN NEW ASPHALT PAVEMENT SHALL BE MADE IN THE SUBBASE PRIOR TO PLACING THE TOP COURSE.

SEALING

A FLEXIBLE EMBEDDING SEALANT NO. 491-H.P. MANUFACTURED BY EUCLID CHEMICAL CO. OF CLEVELAND, OHIO OR *E-707* MANUFACTURED BY *THE BONDO CORP OF NORTHFORD*, CONNECTICUT OR **EQUIVALENT**. SHALL BE MIXED ACCORDING TO DIRECTIONS, POURED INTO THE SAW SLOTS AND LEFT UNDISTURBED UNTIL CURED INTO A SOLID MASS.

* DIMENSIONS

IN CASES WHERE THE LATERAL DIMENSION WOULD BE LESS THAN EIGHT (8) FEET, THE LONGITUDINAL DIMENSION SHALL BE INCREASED TO OBTAIN A MINIMUM AREA OF 48 S.F.

BUREAU OF TRAFFIC
OHIO DEPARTMENT OF HIGHWAYS

EMBEDDED VEHICLE DETECTOR LOOP DETAILS

Rev 11-3-67
Rev 6-1-71
Rev 2-3-72

APPROVED _____
ENGINEER OF TRAFFIC

TRAFFIC SIGNAL SUB-SUMMARY

QUANTITY CALCULATIONS
MADE BY ERH DATE 1-13-75
CHECKED BY EEJ DATE 1-17-75

FHWA REGION	STATE	PROJECT	
5	OHIO		

139/354

CUYAHOGA COUNTY
CUY-90-23.73
LAKE COUNTY
LAK-90-0.00

TRAFFIC SIGNAL SUB-SUMMARY

REFERENCE NUMBER	STATION FROM	STATION TO	SIDE	625 Traffic Counting System, Relocated (Lump)	625 Conduit 2"ψ, 713.04 (Lin.Ft.)	625 Conduit 3"ψ, 713.04 (Lin.Ft.)	625 Conduit 3"ψ, 713.04 Jacked-under pavement, As per plan (Lin.Ft.)	625 Pull Box, Concrete As per plan (Each)	625 Ground Rod 713.16 (Each)	625 Trench, 24" Deep (Lin.Ft.)	842 Vehicular Signal Head 3 Section, 12" Lens, 1-way, 842.08 (Each)	842 Vehicular Signal Head 3 Section, 2-8" Lens, 1-12" Lens, one way, 842.08 (Each)	842 Optically Programmed Vehicular Signal Head 3 Section, 842.08 (Each)	842 Covering of Traffic Signals. 842.10 (Each)	842 Loop Detector Amplifier 842.12 (Each)	842 Loop Detector Pavement Cutting. 842.14 (Lin.Ft.)	842 Loop Detector Wire 842.16 (Lin.Ft.)	842 Loop Detector Lead-in Cable 842.16 (Lin.Ft.)	842 Signal Cable 1/5 Conductor #14 AWG 842.16 (Lin.Ft.)	842 Power Cable 1/2 Conductor #8 AWG 842.16 (Lin.Ft.)	842 Power Service 842.17 (Each)		842 Cable Support Assembly 842.19 (Each)	842 Concrete for Anchor Base Foundations 842.20 (Cu.Yd.)	842 Signal Pole 842.21 7 Ga.x12.0'x20'-0" with Mast Arm 7 Ga.x9.0'x36.0'' (Each)	842 Signal Pole 842.21 7 Ga.x10'x21'-0" with Mast Arm 7 Ga.x30'x28'-0" (Each)	842 Semi-Traffic Actuated Controller, 2 Phase, Solid State, with Cabinet (Each)
		Sheet 133																									
1	185+30	185+40	Rt.		20				1	10		2	1	3	1			20	95	20			1	1.5	1		1
2	185+40		Lt&Rt			45	30	1		45								85	85								
3	185+40	186+75	Lt.		135			1		135								145	145								
4	186+75	3+40 R-8	Lt.		145			1	1	145	2			2				155	65			1	1.5		1		
5	3+40 R-8		Lt&Rt			30		1		30								40									
6	3+40 R-8	189+50	Lt&Rt		140			1		140								150									
7	189+50		Lt.					1								55	130										
8	185+40	189+70	Rt.		350			2	1	350										380	1						
9	220+70 I-90	(Sht 31)		Lump (III)																							
	TOTAL			Lump	790	75	30	8	3	855	2	2	1	5	1	55	130	595	390	400	1		2	3.0	1	1	1

All quantities are Cost Participation Type II (Normal, Cleveland) except as noted. (III) - Type III (100% State)
All stations are South Marginal Road unless otherwise designated.

MADE ERH DATE 1-13-75
TRACED TRE DATE 1-17-75
CHECKED EEJ DATE 1-17-75
SCALE As shown

Howard, Needles, Tammen & Bergendoff
CONSULTING ENGINEERS
CLEVELAND, OHIO

HNTB

K & E 10 1283 7-74

GENERAL SUMMARY

QUANTITY CALCULATIONS
MADE BY E.F.J. DATE 1-18-75
CHECKED BY E.R.H. DATE 1-20-75

FHWA REGION	STATE	PROJECT	
5	OHIO		

140
354

CUYAHOGA COUNTY CUY-90-23.73
LAKE COUNTY LAK-90-0.00

SHEET NUMBER III	SHEET NUMBER II	COST PARTICIPATION I	II	III	IV	TOTAL QUANT.	UNIT	ITEM	DESCRIPTION
									TRAFFIC SIGNALS Type Code 6706
Lump				Lump		Lump	Lump	625	Traffic Counting System, As per plan
	790		790			790	Lin.Ft.	625	Conduit 2", 713.04
	75		75			75	Lin.Ft.	625	Conduit 3", 713.04
	30		30			30	Lin.Ft.	625	Conduit 3", 713.04 Jacked under existing pavement, As per plan
	8		8			8	Each	625	Pull Box, Concrete, As per plan
	3		3			3	Each	625	Ground Rod
	855		855			855	Lin.Ft.	625	Trench
	2		2			2	Each	842	Vehicular Signal Head, 3 section, 12 inch lens, one way
	1		1			1	Each	842	Vehicular Signal Head, 3 section, 2 - 8 inch lens, 1 -12 inch lens, one way
	2		2			2	Each	842	Optically Programmed Signal Head, 3 section, 12-inch lens, one way
	5		5			5	Each	842	Covering of Traffic Signals
	1		1			1	Each	842	Loop Detector Amplifier
	55		55			55	Lin.Ft.	842	Loop Detector Pavement Cutting
	130		130			130	Lin.Ft.	842	Loop Detector Wire
	595		595			595	Lin.Ft.	842	Loop Detector Lead-in Cable
	390		390			390	Lin.Ft.	842	Signal Cable, 5 - Conductor, No. 14 AWG
	400		400			400	Lin.Ft.	842	Power Cable, 2 - Conductor, No. 8 AWG
	1		1			1	Each	842	Power Service
	2		2			2	Each	842	Cable Support Assembly
	3.0		3.0			3.0	Cu.Yd.	842	Concrete for Anchor Base Foundations
	1		1			1	Each	842	Signal Pole, 7 Ga. x 11.0" x 21'-0" with Mast Arm, 7 Ga. x 8.0" x 28'10"
	1		1			1	Each	842	Signal Pole, 7 Ga. x 12.0" x 20'-0" with Mast Arm, 7 Ga. x 9.0" x 36'-0"
	1		1			1	Each	842	Semi-Traffic Actuated Controller 2 Phase, Solid State, with Cabinet

MADE E.F.J. DATE 1-18-75
TRACED D.D.J. DATE 1-19-75
CHECKED E.R.H. DATE 1-20-75
SCALE

Howard, Needles, Tammen & Bergendoff
CONSULTING ENGINEERS
CLEVELAND, OHIO

HNTB

B-9

9-Y

LIGHTING PLANS
SCHEMATIC PLAN

FHWA REGION	STATE	PROJECT	
5	OHIO		

141
354

CUYAHOGA COUNTY
CUY-90-~~23.73~~ 21.27
LAKE COUNTY
LAK-90-0.00

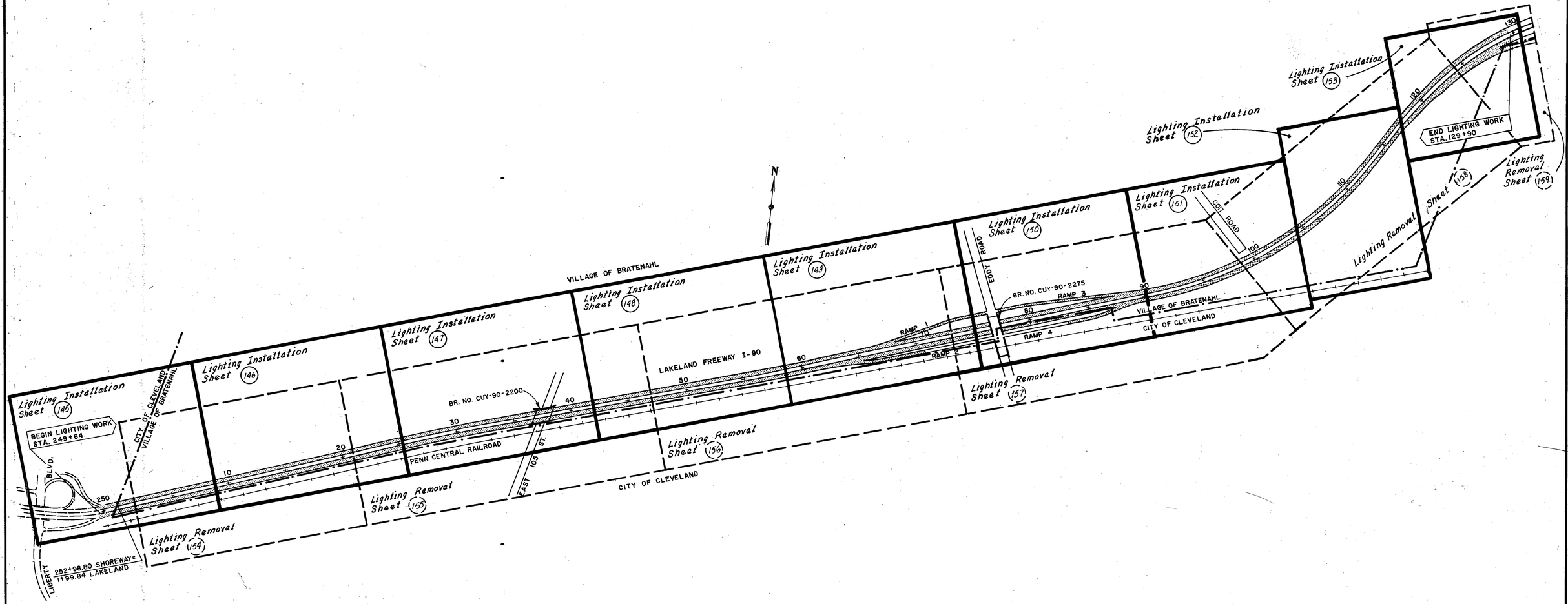

LIGHTING PLANS	SHEET NOS.
Specifications & Std. Drawings	1
Schematic Plan	141
Notes and Legend	142-143
Circuit Layout Map	144
Installation Plans	145-153
Removal Plans	154-159
Lighting Details	160-164
Sub-Summary Quantities	165-168
General Summary Quantities	169

MADE W.G.P. DATE 2-22-74
TRACED P.K. DATE 2-24-74
CHECKED P.H. DATE 12-11-74
SCALE 1"=400'-0"

Howard, Needles, Tammen & Bergendoff
CONSULTING ENGINEERS
CLEVELAND, OHIO

HNTB

400 0 400 800 1200 1600
SCALE IN FEET

LIGHTING SCHEMATIC PLAN

FHWA REGION	STATE	PROJECT	
5	OHIO		

142
354

CUYAHOGA COUNTY
CUY-90-23.73
LAKE COUNTY
LAK-90-0.00

LIGHTING NOTES

SPECIFICATIONS

These notes are supplemental to Items 625 and 713 of the State of Ohio Department of Transportation Construction and Material Specifications.

Reference shall be made to Standard Construction Drawings listed on the title sheet of these plans.

PLAN SPECIFICATION REFERENCES

References to Item 625 and 713 in these plans shall be considered to read as respective references to Items S625 and S713.

GENERAL

The power supplying agency for this project is:

City of Cleveland
Department of Public Utilities
Municipal Electric Light and Power (M.E.L.P.)
1201 Lakeside Avenue
Cleveland, Ohio 44114

The Contractor will not be required to furnish or install the primary distribution lines, transformers, transformer poles, meters, meter mounts, or the primary switching. The Contractor shall provide connection to branch circuits and grounds as herein after specified.

The project has been designed on the basis of 5% maximum voltage drop permissible on branch circuits. The project will receive 480-volt controlled secondary service from M.E.L.P.

This project has been designed on the basis of full lighting with an illumination of 1.2 ft-cd average initial with a maximum uniformity ratio of 4.0 to 1.

MAINTAINING EXISTING LIGHTING

Contractor shall maintain existing roadway and sign lighting circuit(s) in continuous operating condition until the new lighting system is installed and approved and High Voltage Test 839 is accomplished. Subject to the approval of the Engineer, the existing circuit(s) may be disconnected and the new roadway and sign lighting circuit(s) activated.

Basis of payment shall be at the lump sum bid price for Item 625 "Maintaining Existing Lighting" which shall be full compensation for furnishing all labor, materials and incidentals necessary to complete the item of work.

REMOVAL of EXISTING LIGHT POLE and FOUNDATION

Supplementing Item 202 of the Specifications, the Contractor shall remove existing roadway lighting units, pole and foundation, as described in the plans.

The Contractor shall carefully remove, pack, and deliver to the District Lighting Engineer at the location specified by the Engineer, the lamp and luminaire assembly from each light pole unit, all transformer bases and connector kits, and certain poles, bracket arms and other items deemed salvageable by the Engineer. All remaining items removed shall become the property of the Contractor. Circuit cable and pull boxes shall be abandoned in place. Foundations to be removed may either be removed completely, or by sawing the foundations at least one foot below grade.

Upon removal of the light pole foundation, the Contractor shall splice the existing duct - cable, and/or conduit from which District personnel have removed the circuit cable, to provide a continuous raceway for future roadway lighting usage.

Duct splices shall be made using a PVC coupling with heat-shrinkable tubing over the coupling to provide a water-tight seal around the splice. Where the duct goes into a pull box, the duct shall be capped.

The Contractor shall restore the disturbed areas to conform with the adjacent area. Use of fill material shall be of a type approved by the Engineer, compacted to prevent future settling, and finished to grade. The Contractor shall be responsible and liable to the affected utility company for damage to utility lines and facilities due to removal operations.

Basis of payment shall be at the unit bid price per each, Item 202 "Removal of Existing Light Pole and Foundation As per plan," including all labor, equipment, materials, and incidentals to complete the item of work.

REMOVAL OF EXISTING LIGHT POLE ON STRUCTURE

Supplementing Item 202 of the Specifications, the Contractor shall remove existing lighting units on structure where described in the plans.

This item of work shall consist of removing the existing light pole from the structure's integral railing. The luminaire and lamp assembly shall be retained for reinstallation on the proposed new lighting unit, and all other materials shall be disposed. The bar ring and existing cap plate shall be removed from the rail post by a clean saw-cut, and a new cap plate shall be cleaned, de-burred, and a prime and final coat of paint applied to color match the continuous structure railing. Pole and bracket cable shall be removed leading to the splice junction in the pullbox.

Basis of payment shall be at the unit bid price per each, Item 202 "Removal of Existing Light Pole on Structure, As Per Plan," including all labor, equipment, materials, and incidentals to complete the item of work, complete and accepted.

LUMINAIRES

Supplementing 625.07 and 713.11 of the Specifications.

1000-watt horizontal style luminaires shall have an integral 400-watt auto-regulator ballast rated at 480-volts, and designed for use with 400-watt Metal Halide Lamps rated at 34,000 lumens.

The luminaires shall be General Electric M-1000, Westinghouse OV-50, McGraw Edison "Unistyle" 1000, or equal approved by the Engineer.

Luminaires shall be positioned perpendicular to the main line roadway.

LAMPS

Supplementing 625.08, and 713.14 Metal Halide Lamps shall be of the type indicated in the plans and shall be General Electric "Multi-Vapor", Westinghouse Metal Halide, Sylvania "Metal Arc"' or equal as approved by the Engineer.

CONNECTOR KITS

At the option of the Contractor, Type IX cable connections may be substituted where Type II or III cable connections are specified in hand holes or transformer bases of light poles.

Type I through Type VII cable connections in pull boxes, junction boxes, and other enclosures below ground may be accomplished by the use of either of the following:

1. A sleeve or tee cable connector conforming to the general requirements of Style "S" or "H" , or other connecting device approved by the Engineer. The connector shall be installed in accordance with the manufacturer's directions and the connection shall be sealed and waterproofed with a hi-dielectric compound such as "Aqua Seal" as manufactured by Kearney, or equal approved by the Engineer. The sealing material shall be applied in accordance with the manufacturer's directions to make a watertight connection. Connections not accomplished in-line or in tee form shall be additionally protected by use of a hi-dielectric PVC, or other approved material, boot with an approved fastening device.
2. A preassembled kit, as manufactured by Joy or Bussman, or approved equal, with a waterproof or water-tight rating acceptable to the Engineer.

RESTORATION OF ELECTRICAL SERVICE FOR ILLUMINATED SIGNS

The Contractor shall provide and install new connector kits of the type specified in pull boxes adjacent to existing illuminated sign structures and reconnect electrical service to the illuminated sign. He shall demonstrate to the Engineer that power service has been restored to the sign. If repair or replacement of the sign power service cable is required, it shall be accomplished by supplemental agreement.

Basis of payment for "Restoration of Electrical Service for Illuminated Signs" shall be included in the unit bid price of Item 625- "Connector Kits, By Type", and is considered to be incidental to the scope of work.

REINSTALLATION OF EXISTING LIGHTING UNIT

The contractor shall reassemble and install existing lighting units on the combination support poles where shown in the plans, including conduit and fittings as shown on Sheets 127 and 161.

Basis of payment shall be at the unit bid price per each. Item 625, "Reinstallation of Existing Lighting Unit, As Per Plan," installed, complete, and accepted, including all labor, materials, and equipment.

LIGHT POLE UPGRADING

General. The Engineer shall check and ascertain that no light pole located behind rigid guard rail is upgraded in accordance with these details unless the face of rail in its planned location will be less than twenty-four (24) inches from the nearest face of the undisturbed pole in its existing location.

Even though light pole upgrading is directed, the Engineer shall further verify the actual need for each bid item at each pole location, and payment shall only be made for installations as directed and as determined by final measurement.

Requirements. This work shall consist of the following items:

1. Repairing, where directed, an existing concrete light pole foundation by furnishing and installing a steel bearing plate including four steel nuts with washers, as shown on the plans and in accordance with applicable sections of 519.06.
2. Furnishing and installing the following:
   (a) A type AT-X light pole transformer base conforming to 713.01, the plans, and the plan data tabulated for ordering the AT-X base. This item shall include four steel nuts with washers to connect the AT-X base to the existing anchor bolts and four steel bolts, of the size shown on the plans, with steel nuts and galvanized clips or washers with nuts to connect the existing pole to the AT-X base.
   (b) Light pole wiring extension Kits A, B, and C with all component items shown on the plans. In lieu of furnishing and placing cable extension Kits A and B, as detailed, the Contractor may, at his option, furnish and install all new No. 10 AWG pole and bracket cable in each light pole to be upgraded. Payment for one Kit A and one Kit B will be allowed for each pole so rewired.
   (c) One each, 713.15 Type II and Type III cable connector kits, where same are not included in the existing pole wiring system.
   (d) One each ground rod where directed by the Engineer as a maintenance replacement or required to secure an acceptable ground test as hereinafter specified.
3. Electrical testing as follows:
   (a) A ground test as described in 625.22 except that the ground wire connecting each existing and/or newly installed ground rod to a light pole shall be included in the ground test.
   (b) A performance test requiring the contractor to energize and manually operate, for a minimum period of one hour, each circuit of the roadway lighting system affected by this work. The Contractor shall make a visual check to determine that only those lights required to be energized by the circuit are operating. The Contractor shall record each fault and the method of correction performed. After correction of a fault, a restart of the interrupted test shall be required.
   (c) In addition to the requirements of Paragraph 4(c) of 713.01, cast aluminum transformer bases as specified shall not, while mounting a full-sized pole, produce a change in impacting weight momentum greater than 400 pound-seconds when tested in the laboratory with a ballistic pendulum or equivalent, or greater than 1100 pound-seconds when tested in the field under full-scale vehicular impact. Certification of this test requirement shall be furnished to the laboratory in accordance with the requirements of 713.00.

Payment. The unit price bid for each light pole foundation repaired and for each transformer base, wiring extension kit, connector kit, and ground rod furnished and installed shall include payment for all testing, equipment, labor, materials and component parts necessary to complete the work as specified.

Estimated Quantities For 4-inch Shallow Pipe Underdrains

An estimated quantity of 100 lin. ft. of 605, 4-inch shallow pipe underdrains is provided in the lighting general summary for use as directed by the Engineer in providing positive drainage for pull boxes in fill areas. It is intended that all pull boxes in these areas be provided with such drainage, provided the length of underdrain necessary to obtain a satisfactory outfall does not exceed 20 feet approximately. A perforated PVC pipe or conduit material approved by the Engineer may be used in the construction of this item.

MADE EFJ DATE 8-5-74
TRACED EFJ DATE 8-8-74
CHECKED EFJ DATE 8-22-74
SCALE None

Howard, Needles, Tammen & Bergendoff
CONSULTING ENGINEERS
CLEVELAND, OHIO

HNTB

FHWA REGION	STATE	PROJECT	
5	OHIO		

143
354

CUYAHOGA COUNTY
CUY-90-23.73
LAKE COUNTY
LAK-90-0.00

LIGHTING NOTES

POLYVINYL-CHLORIDE (PVC) PLASTIC CONDUIT

This specification covers polyvinyl chloride (PVC) conduits for either direct burial in earth or for encasement in concrete and shall be of the size and type specified.

Detail Requirements. Conduit furnished under this specification shall comply with one of the following:

(a) Conduit conforming to NEMA Standards Publication No. TC1 with the exceptions that
  (1) conduit and conduit fittings composed of styrene polymers or copolymers shall not be acceptable, and
  (2) the physical requirements, TC1-3.03 Deflection Temperature and TC1-3.04 Tensile Properties, and the test methods, TC1-4.05 Deflection Temperatures and TC1-4.06 Tensile Properties, shall not be required.

(b) Conduit conforming to NEMA Standards Publication No. TC6 with the exception that conduit and conduit fittings composed of acrylonitrile-butadiene-styrene (ABS) shall not be acceptable.

For any given installation, the mixed use of the conduits described in (a) and (b) shall be prohibited.

CONDUIT ON STRUCTURES AND STRUCTURE GROUNDING

Expansion fittings for conduit on structures shall be OZ-Gedney Type AX, Crouse-Hinds Type XJ-4, or equal as approved by the Engineer, as indicated in the plans.

Each expansion fitting shall have a copper external bonding jumper to assure electrical continuity of the grounding system.

The structure grounds and expansion joints in the plans should not be considered complete in number or more than approximate in location.

CONDUIT JACKED UNDER PAVEMENT, AS PER PLAN

This item shall consist of installing conduit of the size or sizes indicated under existing pavement and contiguous shoulders by an approved method such as "drilling" or "jacking".

This item of work shall be accomplished and completed during Roadway Operations Stage II as defined on Sheets 9, 96 and 97.

Unless otherwise directed by the Engineer, the push pits shall be located in the closed median lane during Stage II. The Contractor shall place the conduit with the least amount of disturbance to existing pavement, subbase, berm pavement or shoulders of the roadway, and to prevent damage to the existing utilities in the median area and the 69 KV Transmission line ducts in the berm area.

All push pits or necessary excavations shall be backfilled and restored in accordance with 625.01 and all pavement sections removed shall be repaired and replaced in the manner described on Sheet 81.

Measurement of the conduit shall be the actual amount of lineal feet installed under pavement and shoulders, measured in place, as accepted by the Engineer. The unit price bid for Item 625 "Conduit Jacked Under Pavement, as per plan" shall be full compensation for excavation, drilling or jacking, backfilling, compaction, restoration of pavement and all labor, material, equipment, and incidentals necessary to complete the work as specified.

PULL BOX

Supplementing S713.09(3), covers for circular pullboxes shall be precast, steel reinforced concrete and of the size and dimensions detailed in the plans, with two (2) No. 4 Ga. galvanized steel lifting eyes recessed flush with the top of the cover. The cover shall be constructed with 4 x 4/6 reinforcing mesh and Class "C" concrete with No. 4 aggregate conforming to Item 499 of the Specifications.

Payment for "Pull Box Covers" shall be included in the unit price bid for Item 625-"Pull Box, Circular, By size."

STANDARD CONSTRUCTION DRAWING HL-3

(1) Pole base details shown on Standard Construction Drawing HL-3 are essentially for galvanized steel poles. For aluminum designs, or other permitted steel material designs, variations from these details will be permitted as approved by the Engineer.

TEMPORARY LIGHTING, AS PER PLAN

This item shall consist of maintaining existing lighting and or providing lighting for temporary roadways as further described herein and in the plans on sheet 91C.

Existing lighting on all existing roadways remaining open to traffic through the project area shall be maintained. Should the Contractor require the removal of lighting from an existing roadway, the Contractor shall then be responsible for adequate temporary lighting of that portion of the existing roadway affected by the removal of the existing lighting.

Temporary lighting providing an average initial intensity of 1.2 footcandles shall be installed before opening.

Where temporary lighting is to be installed, and a detailed layout is not shown in the plans, the Contractor shall submit four (4) sets of the proposed detailed plans to the Engineer for review and approval. These plans shall show location of poles, length of bracket arms, type and size of luminaires and lamps, mounting height, and other pertinent information.

Wood poles with overhead wiring may be used. All luminaires shall be fused. All materials necessary to complete the temporary lighting shall be furnished by the Contractor and the temporary lighting installations shall be removed and disposed of by the Contractor when no longer needed.

Reconditioned or approved used materials may be furnished for temporary lighting. Temporary overhead construction shall not be less than Grade A for strength requirement as defined by the National Electric Safety Code and the installation consistent with good and proper electrical practices. Mounting height for temporary luminaires shall not be less than 27 feet and minimum overhead conductor clearance shall be 20 feet.

The Contractor shall obtain power service from existing lighting circuits. Splices made to obtain power shall conform to S713.15. The Contractor will pay for installation, removal, and maintenance of any temporary lighting required.

The lump sum bid price for "Item 625 - Temporary Lighting, As Per Plan," shall include payment for all labor, equipment, materials, and incidentals necessary to provide the temporary lighting as specified.

LIGHT POLE IDENTIFICATION

Supplementing S625.23 of the Specifications, the Contractor shall apply new light pole circuit identification numbers to existing light poles to remain in place as located and shown in the plans.

Existing light pole circuit identification numbers shall be obliterated by removing all adhesive labels or painting-over stencilled symbols with a clean and uniform rectangular coat of a green base paint conforming to 708.10 of the Specifications.

New light pole circuit identification numbers shall be of the type as described in S713.18 of the Specifications and placed as detailed in the Standard Construction Drawing HL-2 and S625.23.

Basis of payment for removing, finishing, and placing light pole circuit identification numbers on existing light poles shall be included in the unit bid price for light pole upgrading and considered incidental to the scope of work where light pole upgrading is not required.

CONTROL CENTERS

The Contractor shall furnish and install control center, located as per plans, to serve roadway lighting circuits. The control centers shall include the control equipment, mounted as shown on lighting plan sheets, and as specified.

The Contractor shall provide electrical service from the Power Company service pole to the Lighting Control Center D, installed in the manner shown in the plans. This item of work shall include furnishing, and installing the conduit risers, weatherhead, arrestor, and ground rod at the service pole, trench and conduit to the Control Center, all wiring of the size indicated in the plans and all other materials and incidentals as may be required to complete the item of work.

Basis of payment shall be at the lump sum bid price for Item 625 - "Control Center D" complete, in place, with all materials, labor, and incidentals, installed, tested, and accepted.

At existing Control Center M, disconnecting circuits M-45 and 46, and connecting circuits M95 and 96, shall be included in the unit bid price for "Distribution Cable, By Type" including all labor, materials and incidentals as may be required to complete the item of work, installed, tested and accepted.

LEGEND

- Existing 250 W Luminaire
- Existing 400 W Luminaire
- Existing 700 W Luminaire
- Existing 1000 W Luminaire

Station — Ckt. No.-Lamp No. A = North Side B = South Side
- Median Mounted Light Pole, Reference A
  Light Pole Design A68847.25D
  50 ft. Mounting Height with 6 ft. Duplex Bracket Arms
  1000 W Mercury Luminaire, ANSI-IES Type III-MC, with 400 W ballast for Metal Halide lamp
  400 W Metal Halide lamp
  Special 14 ft. Concrete Barrier Section for Light Pole Foundation, Modified, As per plan

Station — Ckt. No.-Lamp No. 400-II-AT 12B50
- Ground Mounted Light Pole, Reference B
  Light Pole Design AT12B50
  50 ft. Mounting Height with 12 ft. Bracket Arm
  Type AT-C Transformer Base per HL-3
  Foundation per HL-1
  1000 W Mercury Luminaire ANSI-IES Type II-MC, with 400 W ballast for Metal Halide lamp
  400 W Metal Halide lamp

Station — Ckt. No.-Lamp No. Upgrading
- Light Pole Upgrading, As per plan, Reference C
  Type AT-X Transformer Base, per Sheet 164

Station — Ckt. No.-Lamp No.
- Structure Mounted Light Unit, Reference D
  33 ft. Mounting Height with 10 ft. Bracket Arm
  Mounted on Traffic Strain Pole
  Existing 400 W. luminaire and lamp

- Pullbox, Concrete, Existing
- Pullbox, Median Barrier, 18" or 36", size per plan
- Pullbox, 18" Circular, 713.09, 18" or 24", size per plan

- 4 — Duct Cable, 1¼" ϕ, w/2-#4 AWG in 24" deep Trench
- Conduit, 2" ϕ, 713.04
- 44 — Conduit, 2" ϕ, 713.04, w/4-#4 AWG, in 24" deep Trench
- 4 — Conduit, 3" ϕ, 713.04, w/2-#4 AWG, Jacked-under Pavement
- 44 — Conduit, 3" ϕ, 713.04, w/4-#4 AWG, Jacked-under Pavement
- 4 — Conduit, 4" ϕ, PVC, w/2-#4 AWG in Barrier
- 44 — Conduit, 4" ϕ, PVC, w/4-#4 AWG in Barrier
- 0 — Conduit, 4" ϕ, PVC, w/2-#1/0 AWG in Barrier
- 00 — Conduit, 4" ϕ, PVC, w/4-#1/0 AWG in Barrier

- B — Structure Grounding
- F — Fence Grounding
- E — Expansion Fitting, on Structure

839 - HIGH VOLTAGE DIRECT CURRENT TEST

A high voltage direct current test, as described in Supplemental Specification 839, shall be performed on all distribution cable and duct-cable systems installed on this project. The test shall not be performed until after all new construction, such as guard rail, fence, delineator posts, sign supports, etc., in the immediate vicinity of the location of the cable run being tested, has been completed.

Basis of payment for the performance of Item 839 "High Voltage Direct Current Test" shall be paid at the lump sum price bid, which shall be full compensation for furnishing all labor, equipment, and incidentals necessary to complete the item of work.

STANDARD CONSTRUCTION DRAWING HL-15

(2) Weephole diameters of 1/8 inch shown on this drawing shall be increased to 1/4 inch.

MADE EFJ DATE 8-6-74
TRACED ES DATE 8-9-74
CHECKED EFJ DATE 8-23-74
SCALE None

Howard, Needles, Tammen & Bergendoff
CONSULTING ENGINEERS
CLEVELAND, OHIO

HNTB

CIRCUIT LAYOUT MAP

FHWA REGION	STATE	PROJECT	
5	OHIO		

144
354

CUYAHOGA COUNTY
CUY-90-23.73
LAKE COUNTY
LAK-90-0.00

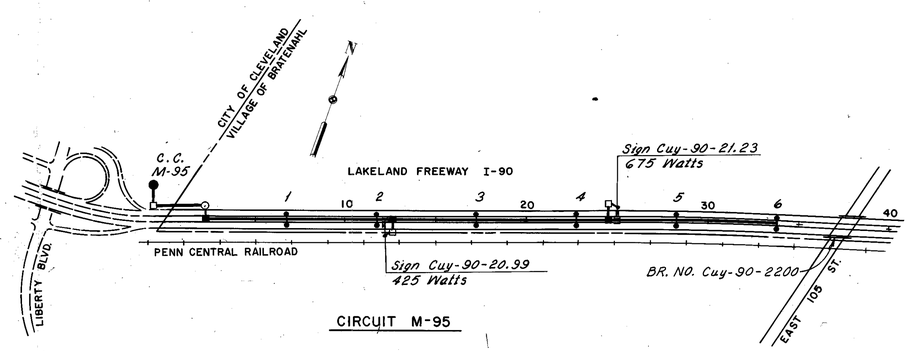

CIRCUIT M-95

12 - 400 Watt lamps @ 1.0 A.	=	12.0 A
1 - 675 Watt sign @ 1.4 A.	=	1.4 A
1 - 425 Watt Sign @ 0.9 A.	=	0.9 A
480 VAC Sec. - Connected load	=	14.3 A (6.86 KVA)
Max. Voltage Drop (#4 AWG)	=	3.6%

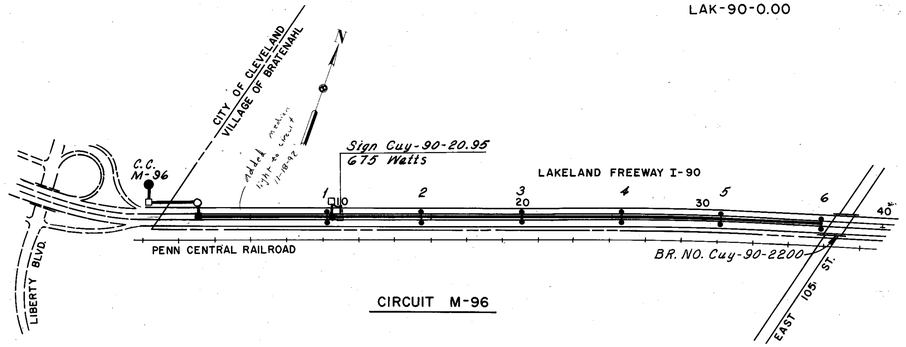

CIRCUIT M-96

12 - 400 Watt lamps @ 1.0 A.	=	12.0 A
1 - 675 Watt sign @ 1.4 A.	=	1.4 A
480 VAC Sec. - Connected load	=	13.4 A (6.43 KVA)
Max. Voltage Drop (#4 AWG)	=	3.6%

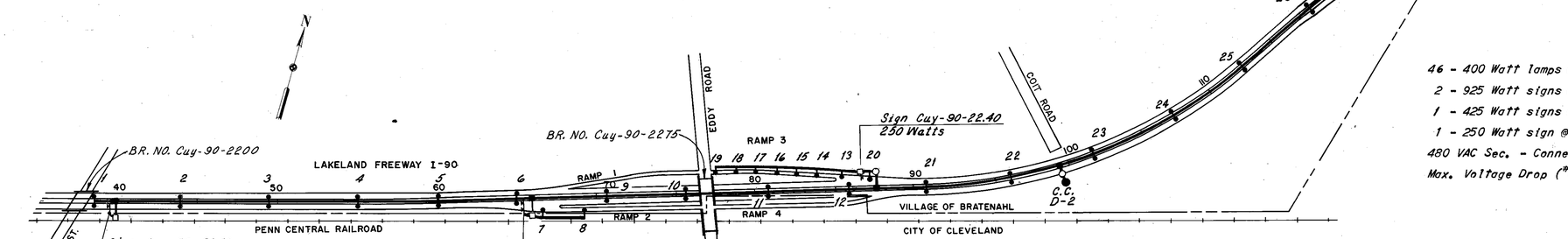

CIRCUIT D-2

46 - 400 Watt lamps @ 1.0 A.	=	46.0 A
2 - 925 Watt signs @ 1.9 A.	=	3.8 A
1 - 425 Watt signs @ 0.9 A.	=	0.9 A
1 - 250 Watt sign @ 0.5 A.	=	0.5 A
480 VAC Sec. - Connected load	=	51.2 A (24.58 KVA)
Max. Voltage Drop (#0 AWG)	=	4.75 %

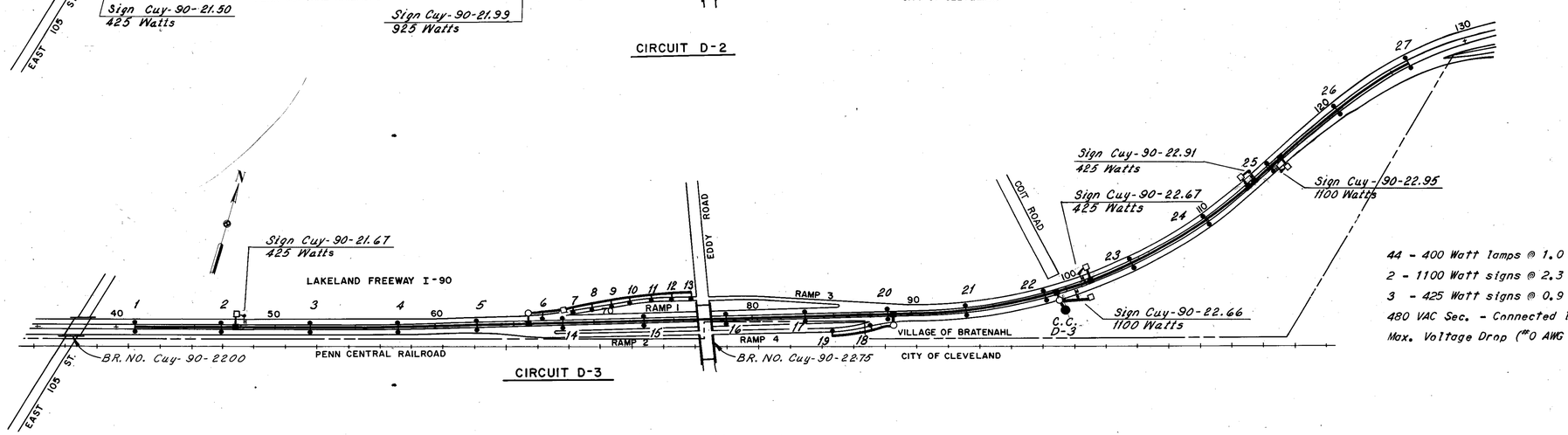

CIRCUIT D-3

44 - 400 Watt lamps @ 1.0 A.	=	44.0 A
2 - 1100 Watt signs @ 2.3 A.	=	4.6 A
3 - 425 Watt signs @ 0.9 A.	=	2.7 A
480 VAC Sec. - Connected load	=	51.3 A (24.62 KVA)
Max. Voltage Drop (#0 AWG)	=	4.39 %

MADE W.G.P. DATE 7-5-74
TRACED TAK DATE 7-10-74
CHECKED E.F.J. DATE 7-26-74
SCALE 1"=400'-0"

Howard, Needles, Tammen & Bergendoff
CONSULTING ENGINEERS
CLEVELAND, OHIO

HNTB

400 0 400 800 1200 1600
SCALE IN FEET

FHWA REGION	STATE	PROJECT	
5	OHIO		

145
354

CUYAHOGA COUNTY
CUY-90-23.73
LAKE COUNTY
LAK-90-0.00

LIGHTING PLAN

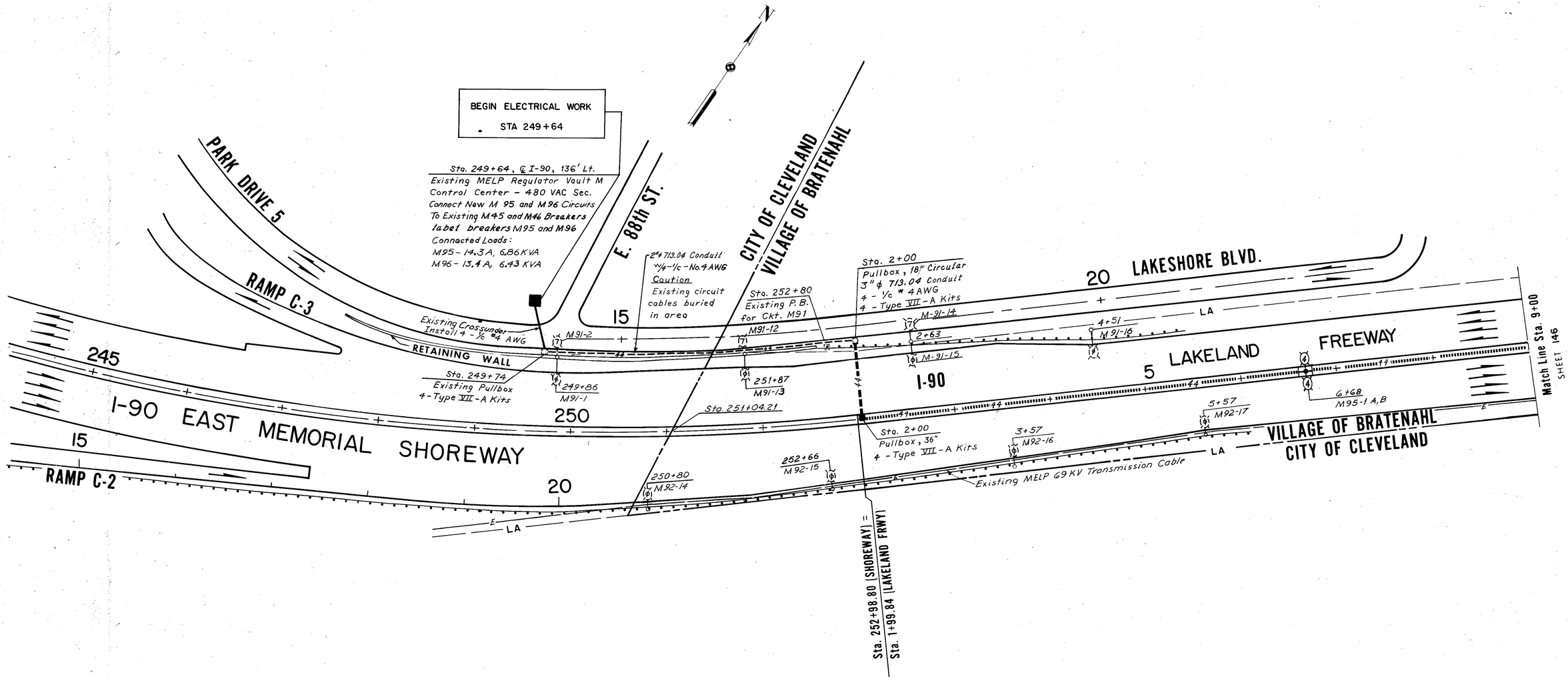

FOR LEGEND SEE SHEET 143
FOR QUANTITIES SEE SHEET 165

MADE EFJ DATE 7-15-74
TRACED EJS DATE 7-23-74
CHECKED EFJ DATE 7-30-74
SCALE 1" = 30'

Howard, Needles, Tammen & Bergendoff
CONSULTING ENGINEERS
CLEVELAND, OHIO

HNTB

LIGHTING PLAN STA. 249+64 TO 9+00

FHWA REGION	STATE	PROJECT	
5	OHIO		

146
354

CUYAHOGA COUNTY
CUY-90-23.73
LAKE COUNTY
LAK-90-0.00

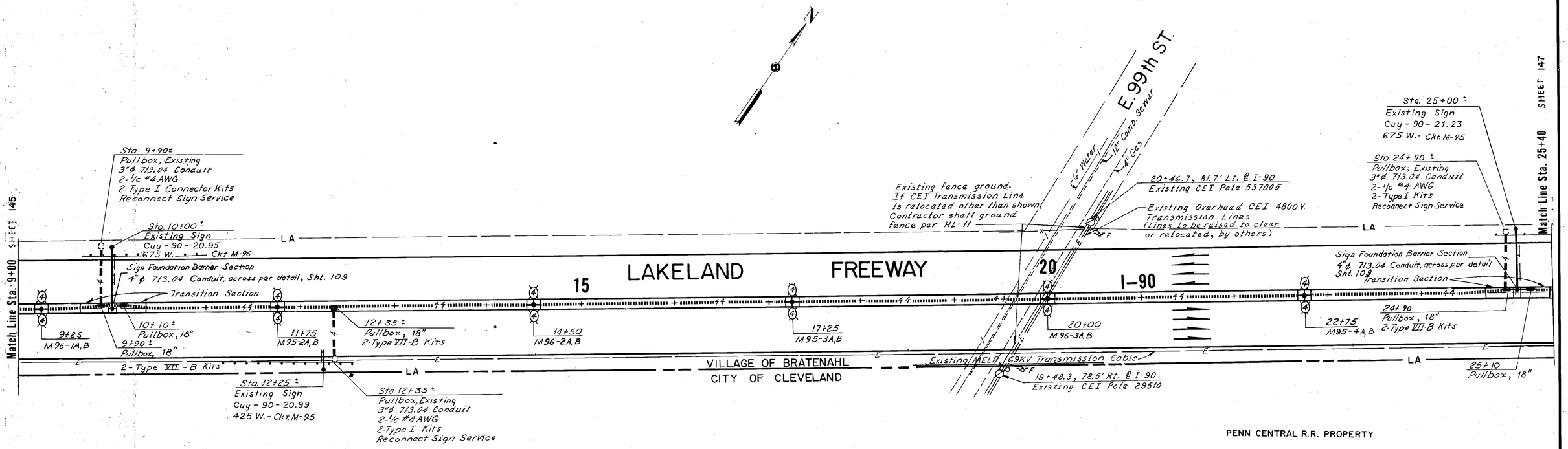

PENN CENTRAL R.R. PROPERTY

FOR LEGEND SEE SHEET 143

FOR QUANTITIES SEE SHEET 165

MADE EFJ DATE 7/15/74
TRACED EJ DATE 7/23/74
CHECKED EFJ DATE 7/30/74
SCALE 1" = 50'

Howard, Needles, Tammen & Bergendoff
CONSULTING ENGINEERS
CLEVELAND, OHIO

HNTB

50 0 50 100 150 200
SCALE IN FEET

Rev. 7-18-75

LIGHTING PLAN STA. 9+00 TO 25+40

FHWA REGION	STATE	PROJECT	
5	OHIO		

147
354

CUYAHOGA COUNTY
CUY-90-23.73
LAKE COUNTY
LAK-90-0.00

Match Line Sta. 25+40 SHEET 146

Match Line Sta 42+00 SHEET 148

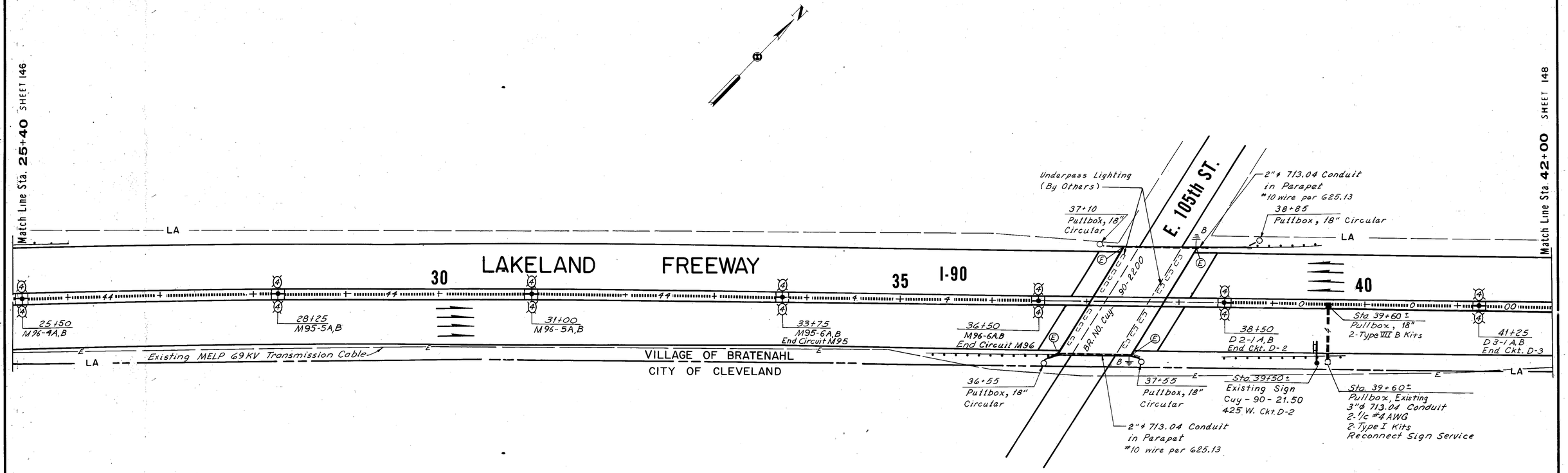

FOR LEGEND SEE SHEET 143

FOR QUANTITIES SEE SHEET 165

MADE EFJ DATE 7/15/74
TRACED E.S. DATE 7/22/74
CHECKED E.F.J. DATE 7/30/74
SCALE 1"=50'

Howard, Needles, Tammen & Bergendoff
CONSULTING ENGINEERS
CLEVELAND, OHIO

HNTB

50 0 50 100 150 200
SCALE IN FEET

Rev. 7-18-75

LIGHTING PLAN STA. 25+40 TO 42+00

FHWA REGION	STATE	PROJECT	
5	OHIO		

148
354

CUYAHOGA COUNTY
CUY-90-23.73
LAKE COUNTY
LAK-90-0.00

Match Line Sta: 42+00 SHEET 147

SHEET 149 Match Line Sta. 58+50

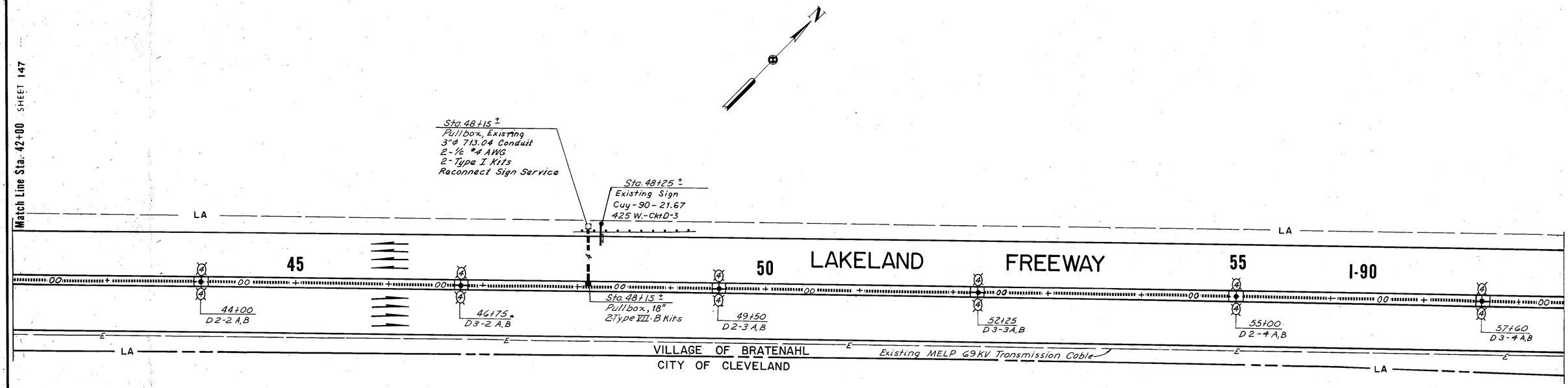

FOR LEGEND SEE SHEET 143

FOR QUANTITIES SEE SHEET 165

50 0 50 100 150 200
SCALE IN FEET

MADE E.F.J. DATE 7/15/74
TRACED E.S. DATE 7/31/74
CHECKED E.F.J. DATE 7/31 74
SCALE 1"= 50'

Howard, Needles, Tammen & Bergendoff
CONSULTING ENGINEERS
CLEVELAND, OHIO

HNTB

LIGHTING PLAN STA. 42+00 TO 58+50

FHWA REGION	STATE	PROJECT	
5	OHIO		

149
354

CUYAHOGA COUNTY
CUY-90-23.73
LAKE COUNTY
LAK-90-0.00

Match Line Sta. 58+50 SHEET 148

Match Line Sta. 75+00 SHEET 150

Match Line Sta 7+00

Match Line Sta 11+50

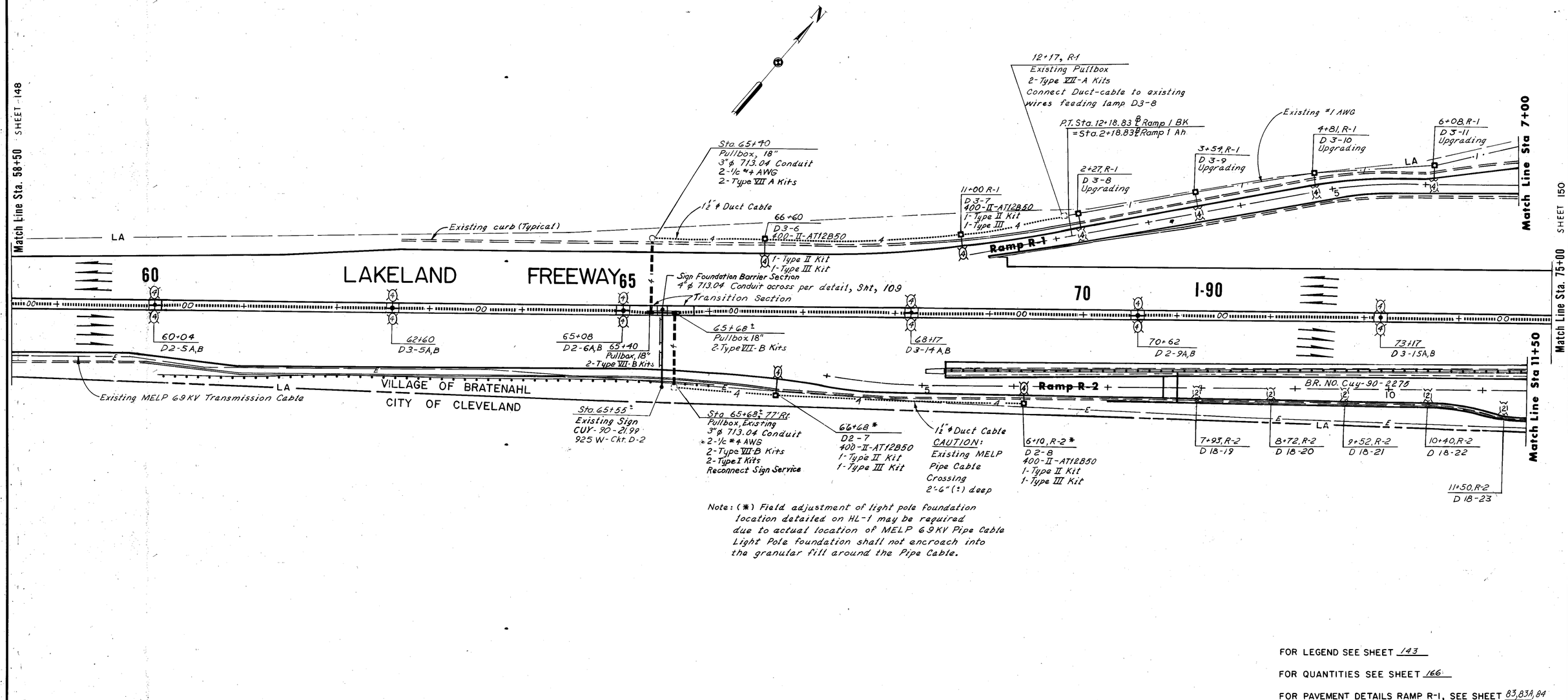

Note: (*) Field adjustment of light pole foundation location detailed on HL-1 may be required due to actual location of MELP 6.9KV Pipe Cable Light Pole foundation shall not encroach into the granular fill around the Pipe Cable.

FOR LEGEND SEE SHEET 143

FOR QUANTITIES SEE SHEET 166

FOR PAVEMENT DETAILS RAMP R-1, SEE SHEET 83, 83A, 84

FOR PAVEMENT DETAILS RAMP R-2, SEE SHEET 85, 85A, 86

50 0 50 100 150 200
SCALE IN FEET

MADE E.F.J. DATE 7/15/74
TRACED E.S. DATE 7/31/74
CHECKED E.F.J. DATE 8/1/74
SCALE 1"=50'

Howard, Needles, Tammen & Bergendoff
CONSULTING ENGINEERS
CLEVELAND, OHIO

HNTB

LIGHTING PLAN STA. 58+50 TO 75+00

FHWA REGION	STATE	PROJECT	
5	OHIO		

150
354

CUYAHOGA COUNTY
CUY-90-23.73
LAKE COUNTY
LAK-90-0.00

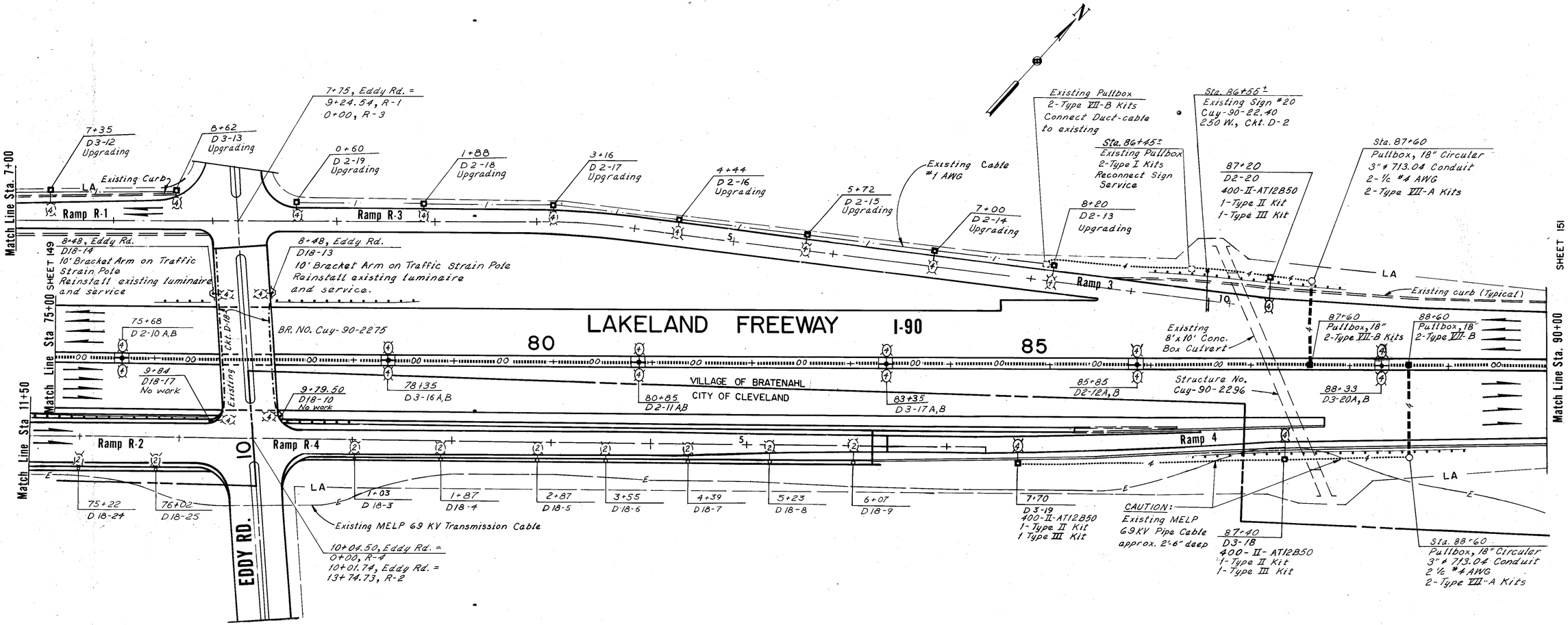

FOR LEGEND SEE SHEET 143

FOR QUANTITIES SEE SHEET 166

FOR PAVEMENT DETAILS RAMP R-4, SEE SHEET 87-91

50 0 50 100 150 200
SCALE IN FEET

MADE EFJ DATE 7/11/74
TRACED E.S. DATE 8/1/74
CHECKED EFJ DATE 8/21/74
SCALE 1"= 50'

Howard, Needles, Tammen & Bergendoff
CONSULTING ENGINEERS
CLEVELAND, OHIO

HNTB

LIGHTING PLAN STA. 75+00 TO 90+00

FHWA REGION	STATE	PROJECT	
5	OHIO		

151
354

CUYAHOGA COUNTY
CUY-90-23.73
LAKE COUNTY
LAK-90-0.00

VILLAGE OF BRATENAHL

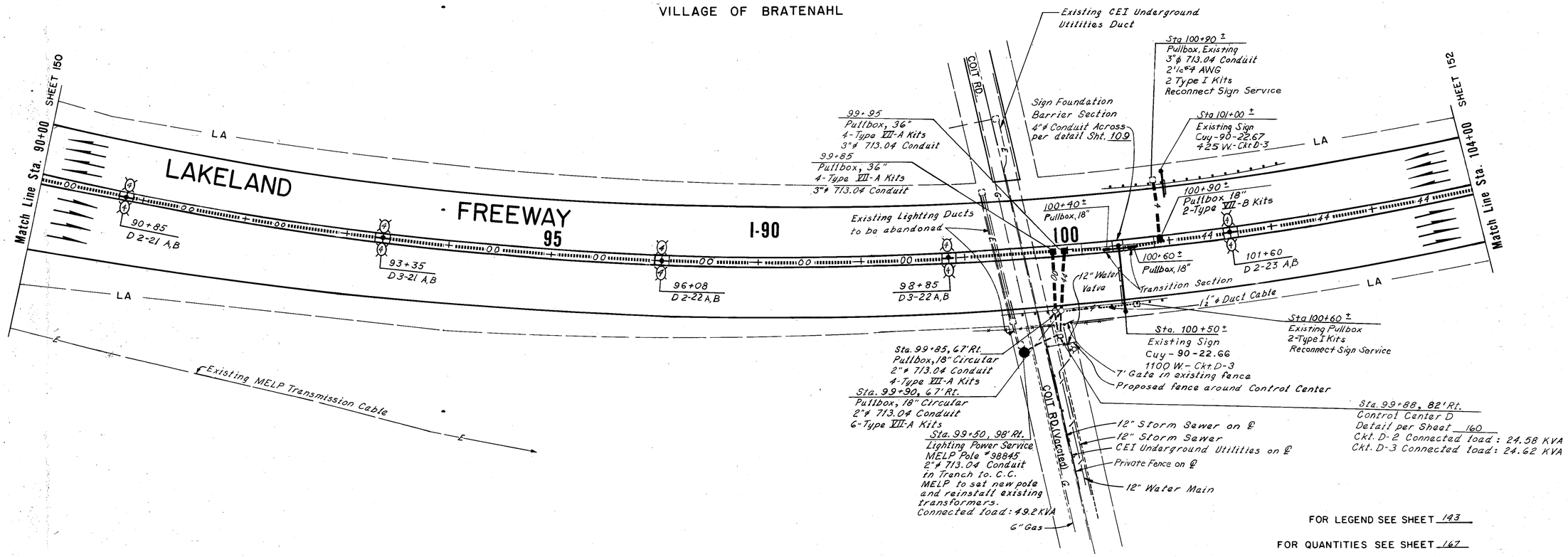

FOR LEGEND SEE SHEET 143

FOR QUANTITIES SEE SHEET 167

50 0 50 100 150 200
SCALE IN FEET

MADE EFu DATE 7/11/14
TRACED EG DATE 8/11/14
CHECKED EG DATE 8/13/14
SCALE 1"= 50'

Howard, Needles, Tammen & Bergendoff
CONSULTING ENGINEERS
CLEVELAND, OHIO

HNTB

LIGHTING PLAN STA. 90+00 TO 104+00

FHWA REGION	STATE	PROJECT	
5	OHIO		

152
354

CUYAHOGA COUNTY
CUY-90-23.73
LAKE COUNTY
LAK-90-0.00

VILLAGE OF BRATENAHL

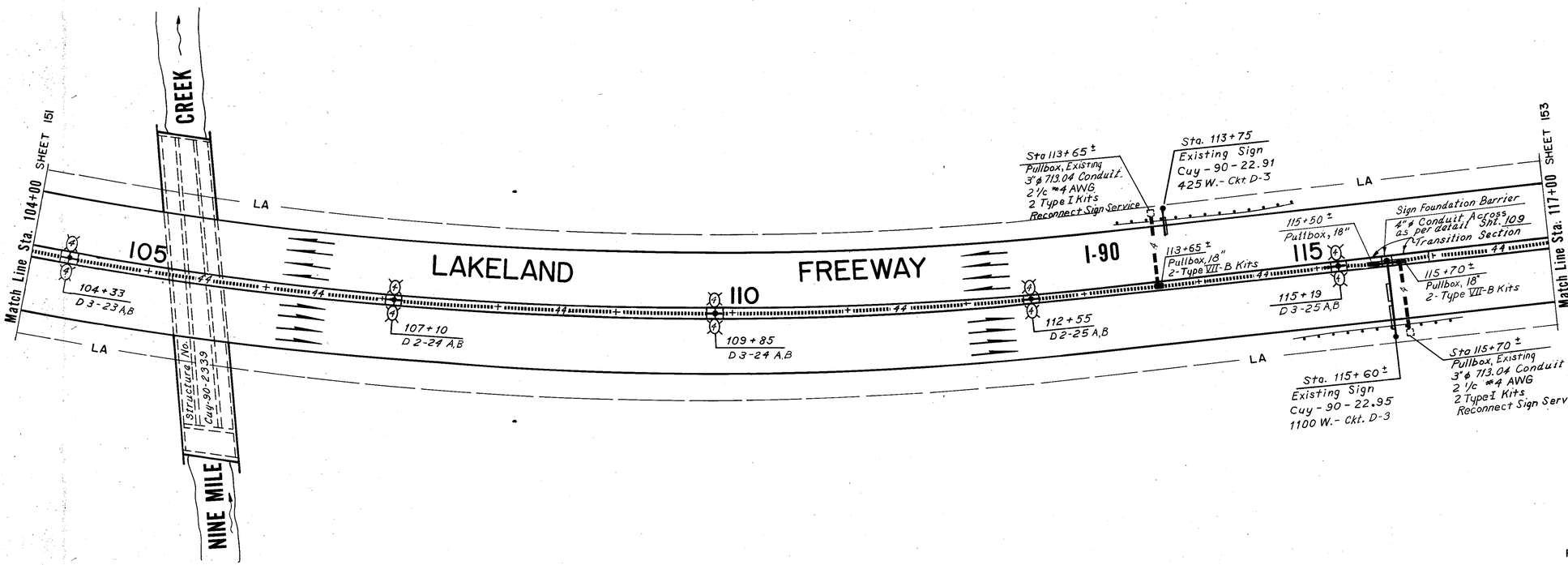

FOR LEGEND SEE SHEET 143

FOR QUANTITIES SEE SHEET 167

MADE FFJ DATE 7/27/74
TRACED EB DATE 8/5/74
CHECKED EFJ DATE 8/6/74
SCALE 1"=50'

Howard, Needles, Tammen & Bergendoff
CONSULTING ENGINEERS
CLEVELAND, OHIO

HNTB

50 0 50 100 150 200
SCALE IN FEET

LIGHTING PLAN STA. 104+00 TO 117+00

FHWA REGION	STATE	PROJECT	
5	OHIO		

153
354

CUYAHOGA COUNTY
CUY-90-23.73
LAKE COUNTY
LAK-90-0.00

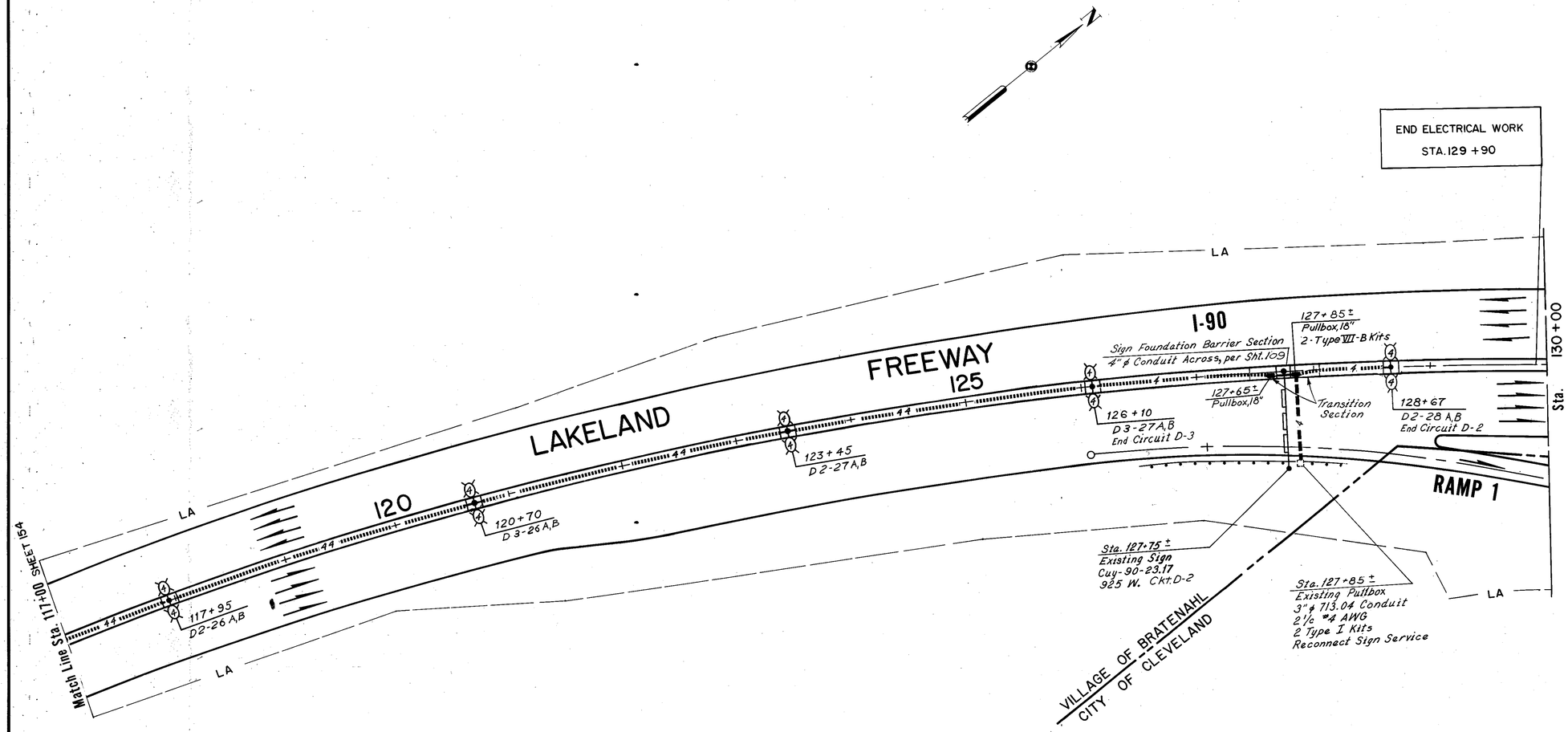

FOR LEGEND SEE SHEET 143

FOR QUANTITIES SEE SHEET 167

50 0 50 100 150 200
SCALE IN FEET

MADE EFJ DATE 7/25/14
TRACED AS DATE 8/6/14
CHECKED EFJ DATE 8/6/14
SCALE 1"=50'

Howard, Needles, Tammen & Bergendoff
CONSULTING ENGINEERS
CLEVELAND, OHIO

HNTB

LIGHTING PLAN STA. 117+00 TO 130+00

LIGHTING REMOVAL PLAN

FHWA REGION	STATE	PROJECT	
5	OHIO		

154
354

CUYAHOGA COUNTY
CUY-90-23.73
LAKE COUNTY
LAK-90-0.00

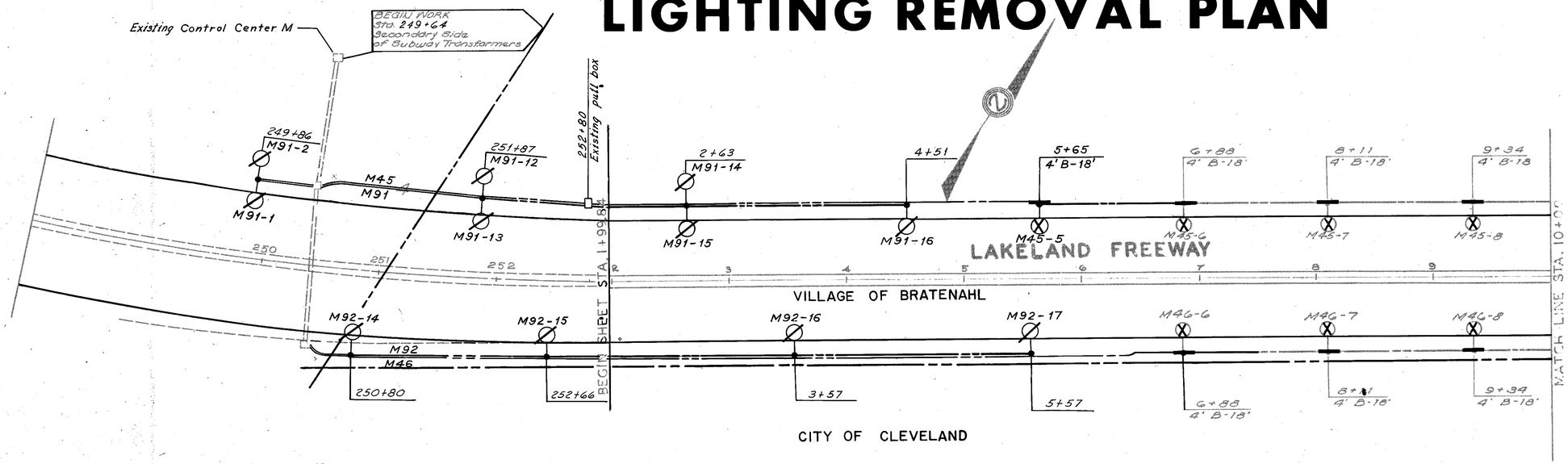

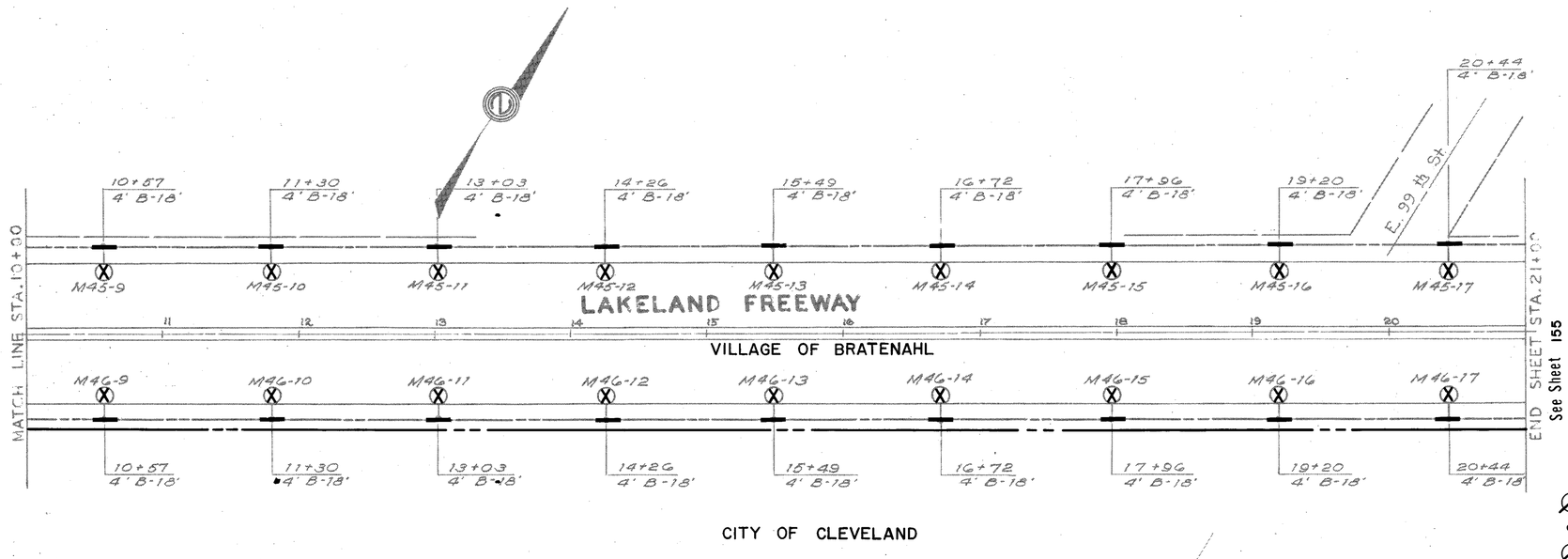

LEGEND

- Two-single conductor No.4 cables-Direct Burial
- Two-single conductor No.1 cables-Direct Burial
- Two-single conductor No.2 cables-Direct Burial
- 2" Type I Fibre conduit-concrete encased two-single conductor No.4 cables.
- 2" Type I Fibre conduit-concrete encased two-single conductor No.2 cables.
- 3" Galv. Steel Pipe conduit-Jacked under pavement
- Standard pull box
- Double pull box
- Service pole
- Existing light pole-New 250 W, Type III Mercury Luminaire.
- Conduit Marker

LIGHTING UNIT KEY

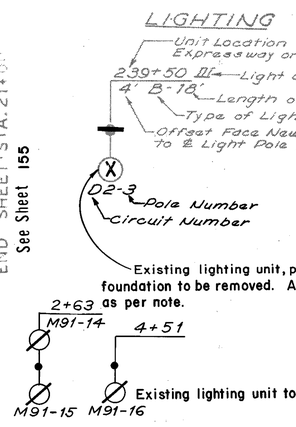

FOR QUANTITIES SEE SHEET 168

LIGHTING REMOVAL

MADE EFJ DATE 6-17-74
TRACED TS DATE 6-19-74
CHECKED EFJ DATE 8-9-74
SCALE 1"=50'

HOWARD, NEEDLES, TAMMEN & BERGENDOFF
CONSULTING ENGINEERS
CLEVELAND, OHIO

HNTB

50 0 50 100 150 200
SCALE IN FEET

LAKELAND FREEWAY LIGHTING PLAN STA.1+99.84 TO STA.21+00

FHWA REGION	STATE	PROJECT	
5	OHIO		

155
354

CUYAHOGA COUNTY
CUY-90-23.73
LAKE COUNTY
LAK-90-0.00

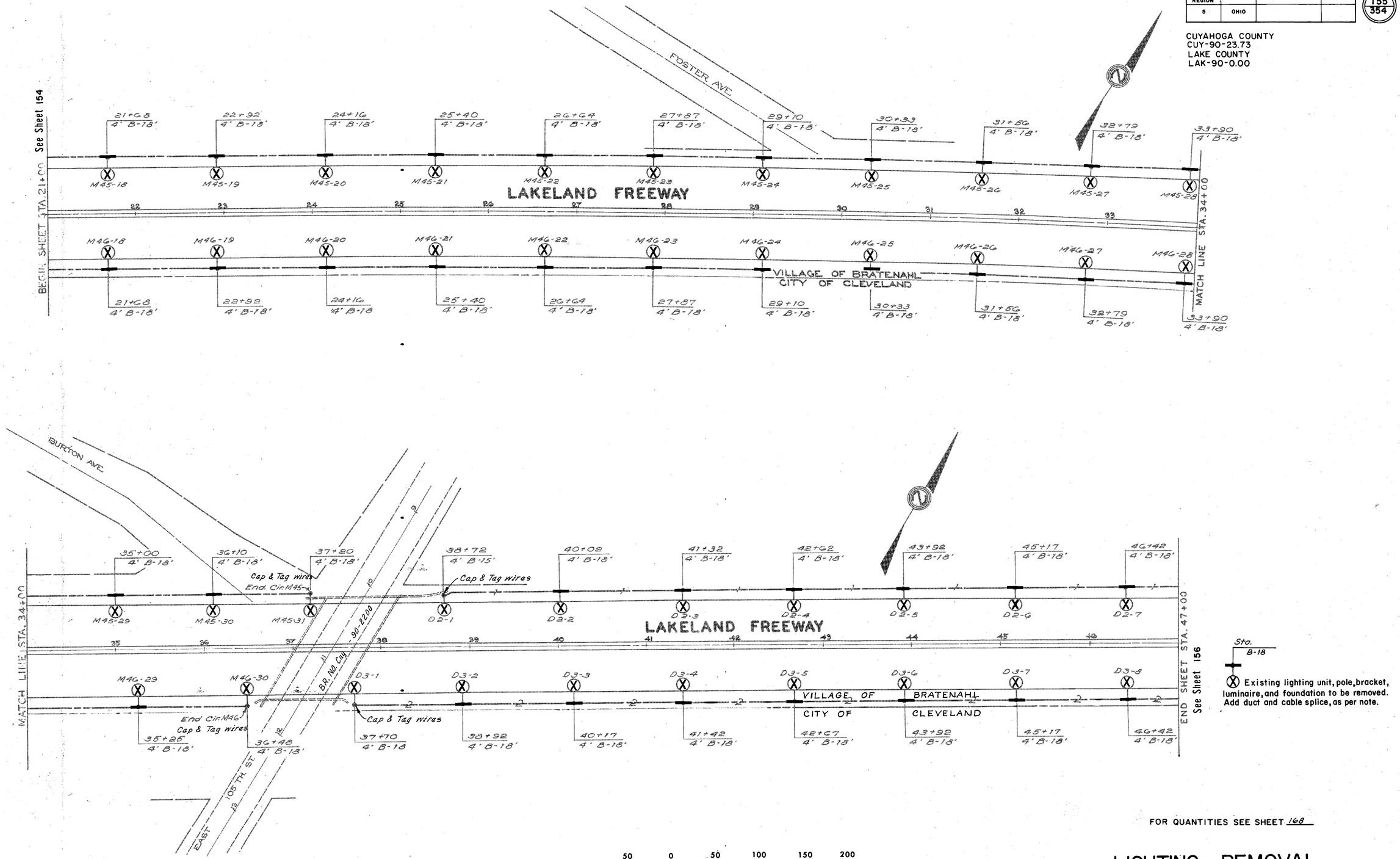

FOR QUANTITIES SEE SHEET 168

MADE E.F.J. DATE 6-17-74
TRACED T.S. DATE 6-19-74
CHECKED E.F.J. DATE 8-9-74
SCALE 1" = 50'

HOWARD, NEEDLES, TAMMEN & BERGENDOFF
CONSULTING ENGINEERS
CLEVELAND, OHIO

HNTB

LIGHTING REMOVAL

LAKELAND FREEWAY LIGHTING PLAN STA. 21+00 TO STA. 47+00

FHWA REGION	STATE	PROJECT	
5	OHIO		

156
354

CUYAHOGA COUNTY
CUY-90-23.73
LAKE COUNTY
LAK-90-0.00

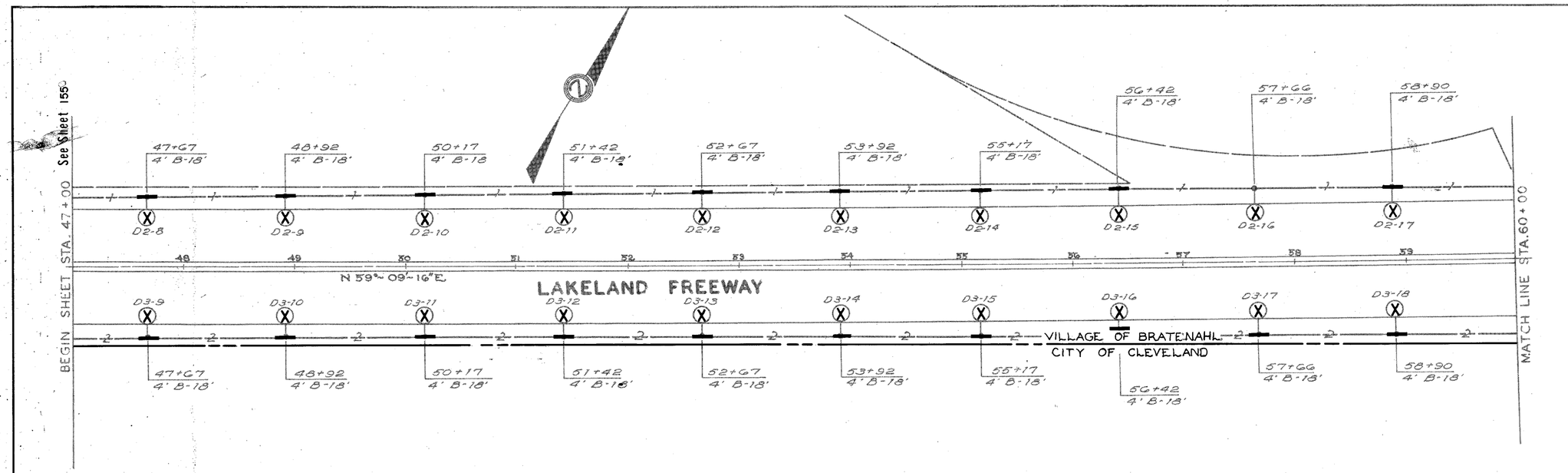

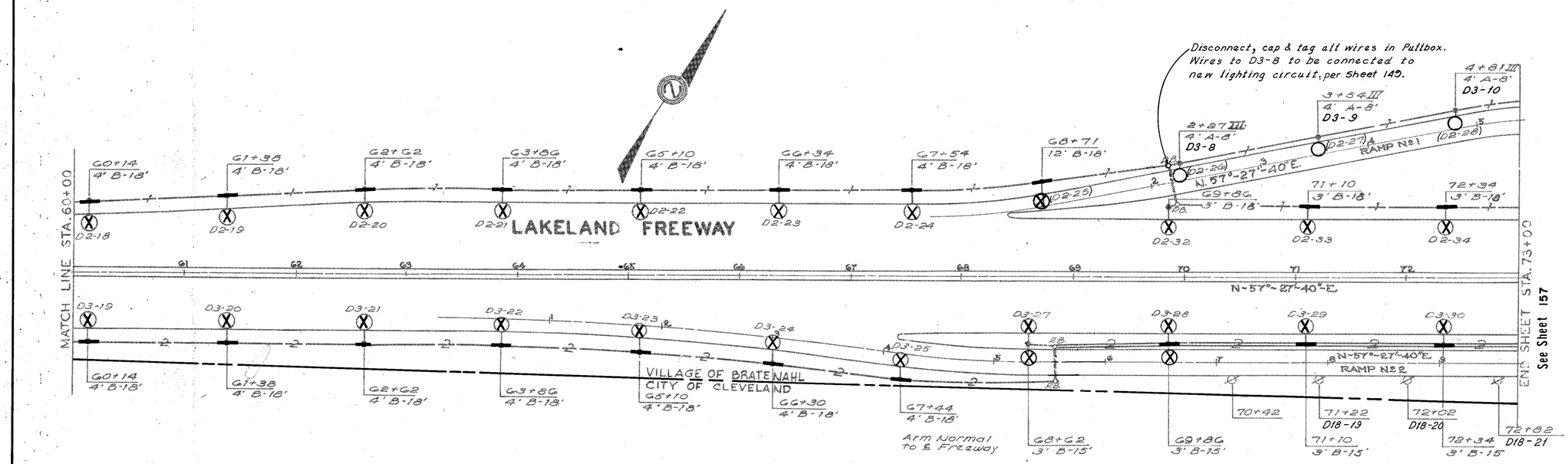

Existing luminaire
No work

Sta.
B-18

Existing lighting unit, pole, bracket, luminaire, and foundation to be removed. Add duct and cable splice, as per note.

Sta.
B-18
D3-6 — New Ckt. No.
(D3-27) — Old Ckt. No.
Existing lighting unit to be upgraded and renumbered per Sheet 149.

Note: Sta. 2+29 (Ramp No. 1) & Sta. 68+83 (Freeway) - 33 Lin. Ft. - 3" Galvinized Steel Pipe Conduit Jacked under Ramp.

FOR QUANTITIES SEE SHEET 168

LIGHTING REMOVAL

MADE EFJ DATE 6-17-14
TRACED ZS DATE 6-30-14
CHECKED EFJ DATE 6-30-14
SCALE 1" = 50'

HOWARD, NEEDLES, TAMMEN & BERGENDOFF
CONSULTING ENGINEERS
CLEVELAND, OHIO
HNTB

50 0 50 100 150 200
SCALE IN FEET

LAKELAND FREEWAY LIGHTING PLAN STA. 47+00 TO STA. 73+00

FHWA REGION	STATE	PROJECT	
5	OHIO		

157
354

CUYAHOGA COUNTY
CUY-90-23.73
LAKE COUNTY
LAK-90-0.00

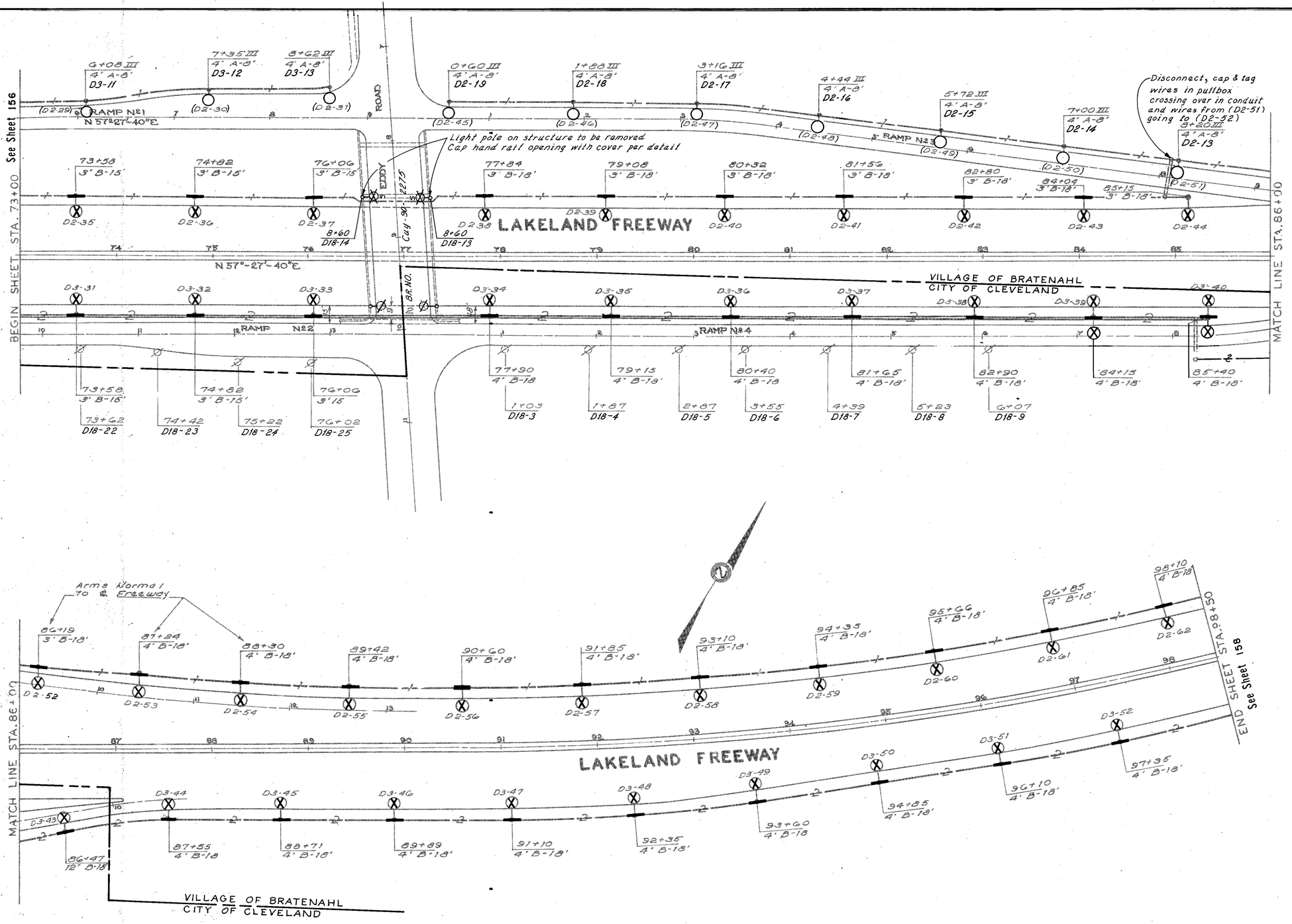

Existing luminaire
No work

Sta.
B 18

Existing lighting unit, pole, bracket, luminaire, and foundation to be removed. Add duct and cable splice, as per note.

Sta.
B-18
D2-19 — New Ckt. No.
(D2-45) — Old Ckt. No.
Existing lighting unit to be upgraded and renumbered per Sheet 149 & 150.

Sta.
Existing lighting unit on structure to be removed. Luminaires and lamps to be reinstalled on new combination traffic pole.

FOR QUANTITIES SEE SHEET 168

MADE EFJ DATE 6-18-74
TRACED TS DATE 6-20-74
CHECKED EFJ DATE 6-21-74
SCALE 1"=80'

HOWARD, NEEDLES, TAMMEN & BERGENDOFF
CONSULTING ENGINEERS
CLEVELAND, OHIO
HNTB

50 0 50 100 150 200
SCALE IN FEET

LIGHTING REMOVAL

LAKELAND FREEWAY LIGHTING PLAN STA. 73+00 TO STA. 98+50

FHWA REGION	STATE	PROJECT	
5	OHIO		

158
354

CUYAHOGA COUNTY
CUY-90-23.73
LAKE COUNTY
LAK-90-0.00

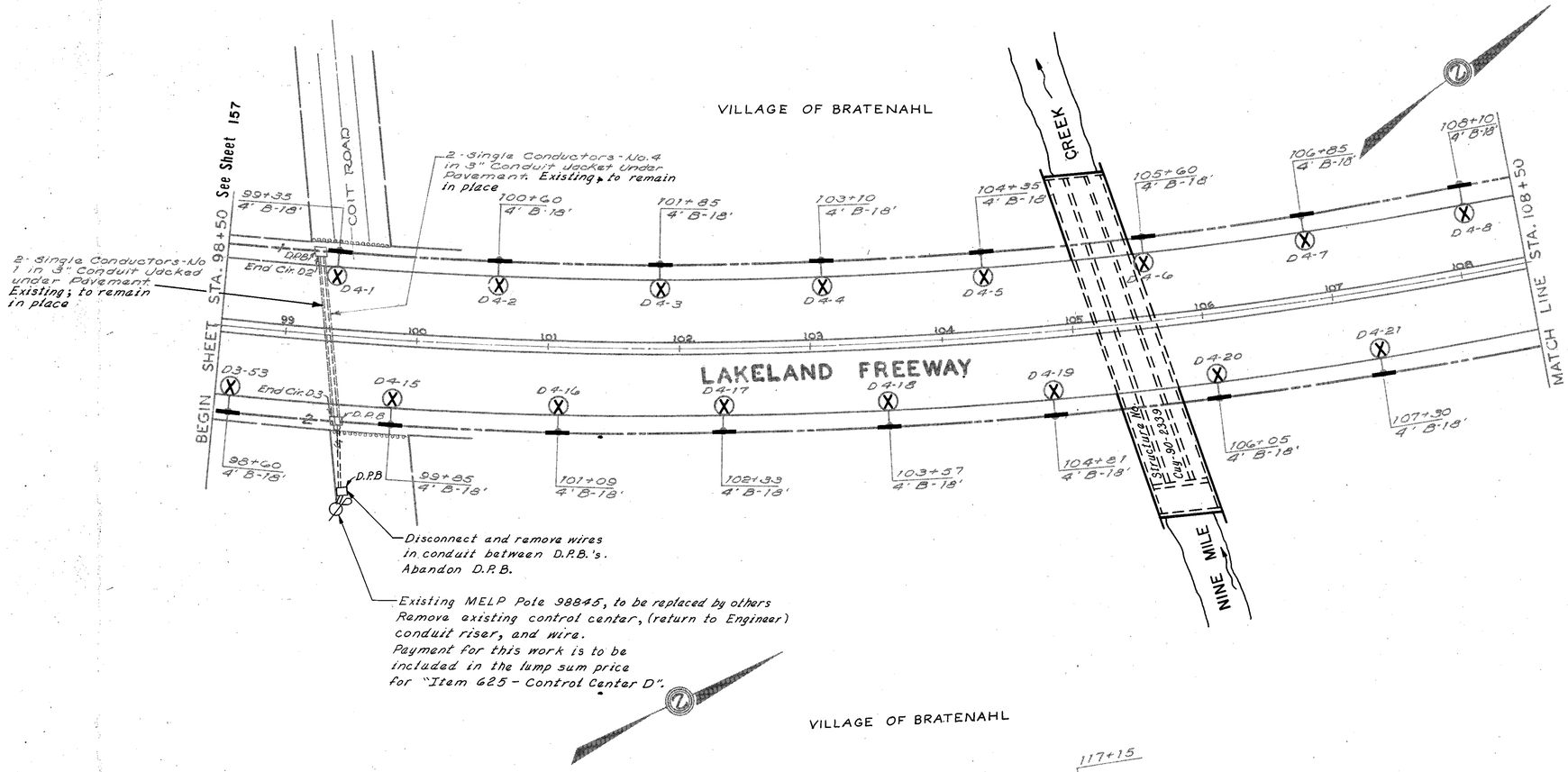

FOR QUANTITIES SEE SHEET 168

50 0 50 100 150 200
SCALE IN FEET

MADE EEJ DATE 6-18-74
TRACED TS DATE 6-20-74
CHECKED EEJ DATE 6-3-74
SCALE 1"=50'

HOWARD, NEEDLES, TAMMEN & BERGENDOFF
CONSULTING ENGINEERS
CLEVELAND, OHIO
HNTB

LIGHTING REMOVAL

LAKELAND FREEWAY LIGHTING PLAN STA. 98+50 TO STA. 117+00

FHWA REGION	STATE	PROJECT	
5	OHIO		

159
354

CUYAHOGA COUNTY
CUY-90-23.73
LAKE COUNTY
LAK-90-0.00

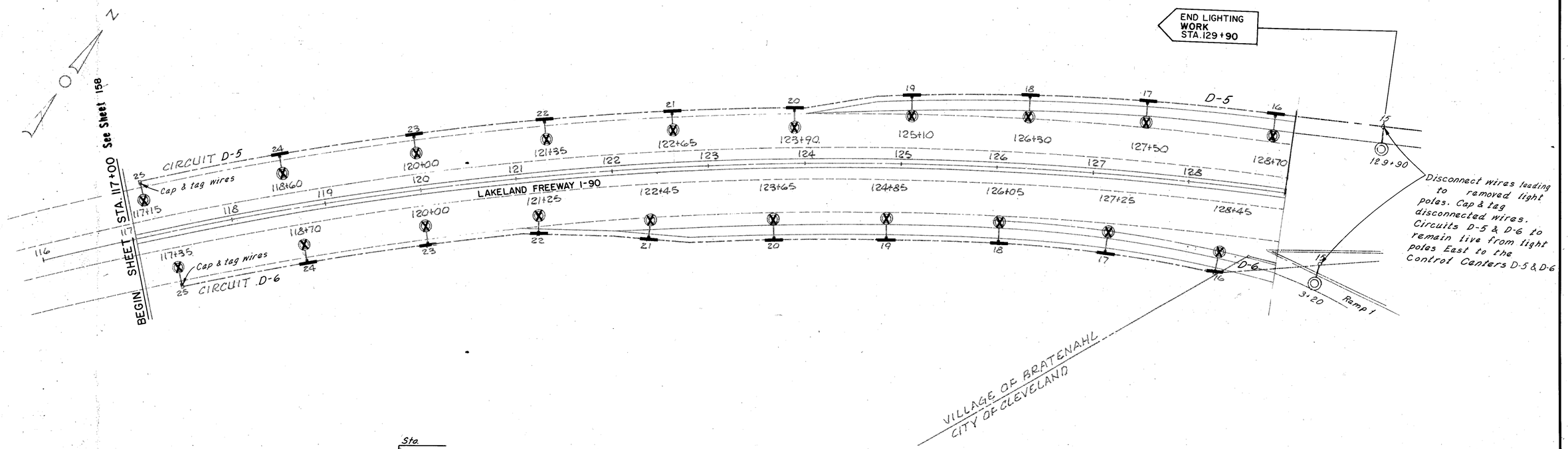

Sta.

⊗ Existing lighting unit, pole, bracket, luminaire, and foundation to be removed. Add duct and cable splice, as per note.

FOR QUANTITIES SEE SHEET 168

MADE WPG DATE 7-12-74
TRACED TAK DATE 7-16-74
CHECKED EFL DATE 7-31-74
SCALE 1"=50'-0"

Howard, Needles, Tammen & Bergendoff
CONSULTING ENGINEERS
CLEVELAND, OHIO

HNTB

50 0 50 100 150 200
SCALE IN FEET

LIGHTING REMOVAL

LAKELAND FREEWAY LIGHTING PLAN STA. 117+00 TO STA. 130+00

FHWA REGION	STATE	PROJECT	
5	OHIO		

160
354

CUYAHOGA COUNTY
CUY-90-23.73
LAKE COUNTY
LAK-90-0.00

LIGHTING DETAILS

CONTROL CENTER DATA

CENTER	LOCATION		CONNECTED LOAD KVA	SECONDARY CONDUCTORS AWG	SAFETY SWITCH	CIRCUIT NO.	FIXTURE TYPE				CIRCUIT CONDUCTORS AWG	CIRCUIT FUSES AMP.
	STATION	SIDE					LAMP NOS.	400W. Met. Hal.	SIGN NOS.	SIGN WATTS		
D-2	99+87 ℄ I-90	82' Rt.	24.58	1/0	S-60	1	1-22	34	17,19,20	1600	1/0	50
						2	23-28	12	26	925	4	25
						3					Spare	
D-3	99+89 ℄ I-90	82' Rt.	24.62	1/0	S-60	1	1-22	34	18	425	1/0	50
						2	23-27	10	23-25	1950	4	25
						3			22	1100	4	25
M-95	249+64 ℄ M.S.	136' Lt.	6.86	Existing	Existing	1	1-6	12	14,15	1100	4	25
						2						
						3						
M-96	249+64 ℄ M.S.	136' Lt.	6.43	Existing	Existing	1	1-6	12	13	675	4	25
						2						
						3						
						1						
						2						
						3						

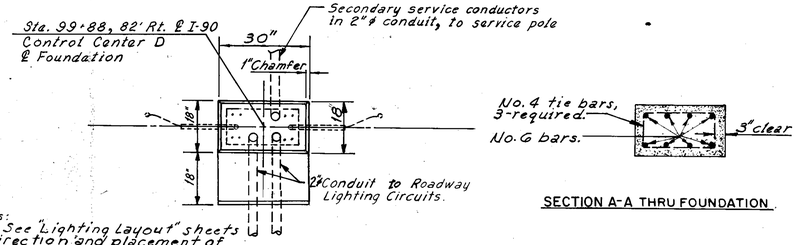

SECTION A-A THRU FOUNDATION

Notes:
See "Lighting Layout" sheets for direction and placement of conduits out of foundation.
Spacing and placement of anchor bolts in foundation is dependent upon the enclosure manufacturers dimensions.
Enclosure dimensions are inside measurements.

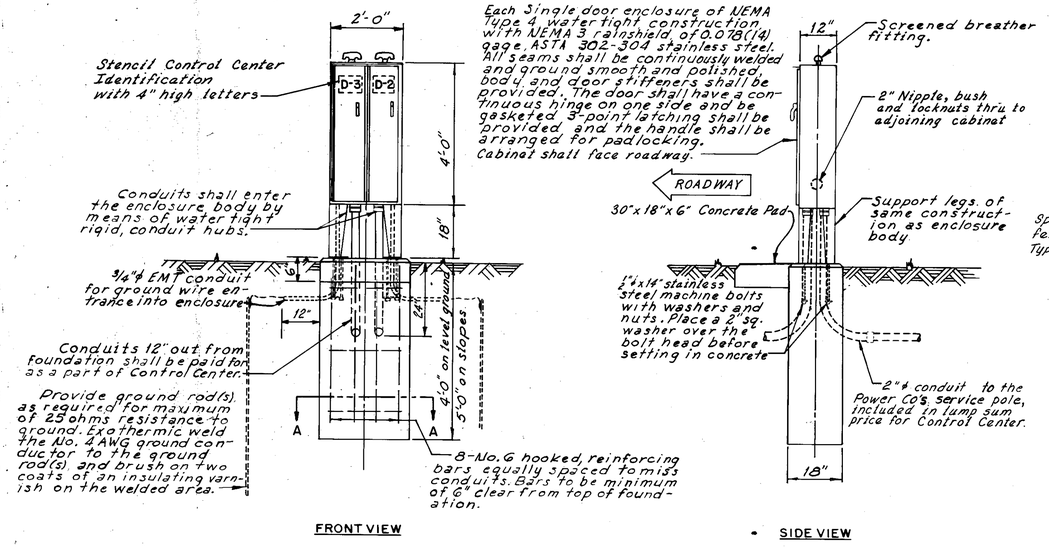

FRONT VIEW

Each Single door enclosure of NEMA Type 4 water tight construction with NEMA 3 rainshield, of 0.078(14) gage. ASTA 302-304 stainless steel. All seams shall be continuously welded and ground smooth and polished. Body and door stiffeners shall be provided. The door shall have a continuous hinge on one side and be gasketed. 3-point latching shall be provided, and the handle shall be arranged for padlocking. Cabinet shall face roadway.

SIDE VIEW

CONTROL CENTER DETAILS
Scale: 1/2"=1'-0"

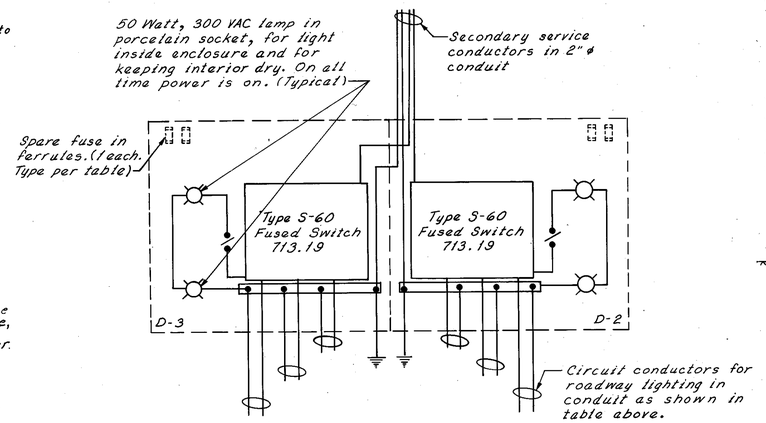

TYPICAL WIRING DIAGRAM

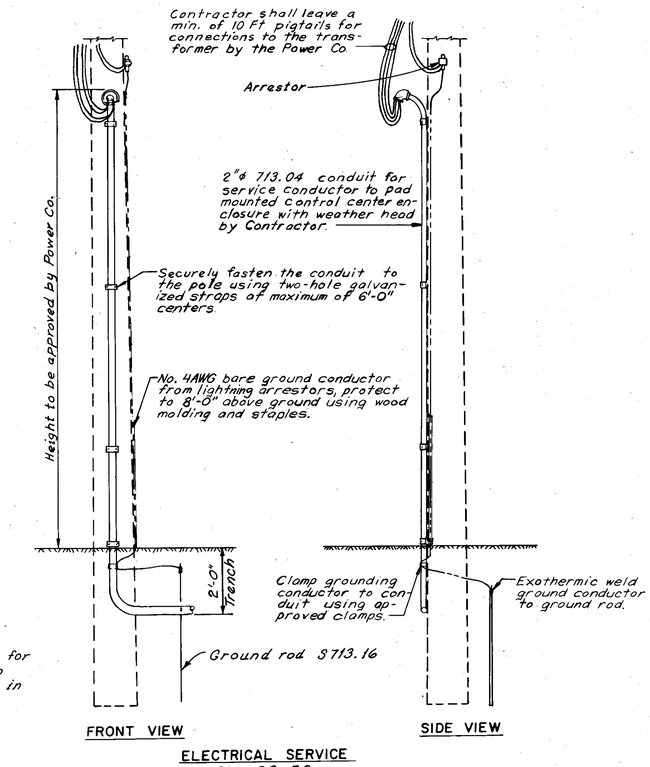

FRONT VIEW

SIDE VIEW

ELECTRICAL SERVICE
Sta. 99+50

MADE EGJ DATE 8-7-74
TRACED TAK DATE 8-8-74
CHECKED EGJ DATE 8-22-74
SCALE as shown

Howard, Needles, Tammen & Bergendoff
CONSULTING ENGINEERS
CLEVELAND, OHIO

HNTB

LIGHTING DETAILS

FHWA REGION	STATE	PROJECT	
5	OHIO		

161
354

CUYAHOGA COUNTY
CUY-90-23.73
LAKE COUNTY
LAK-90-0.00

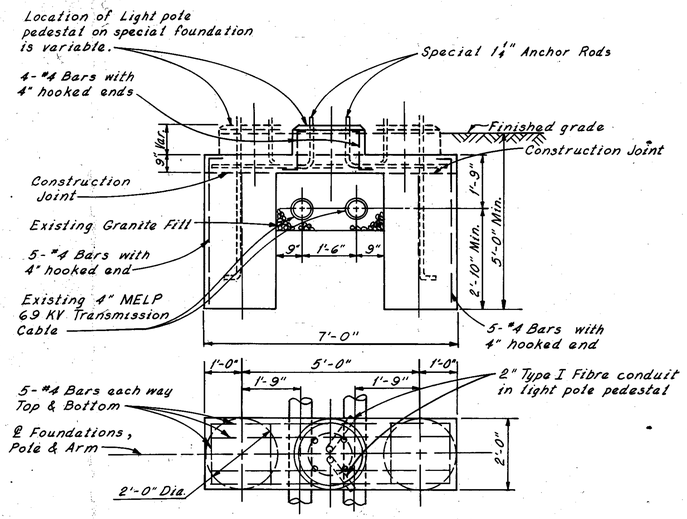

SPECIAL LIGHT POLE FOUNDATION
(TO BE REMOVED)
(Existing where foundation is in conflict with Underground Transmission Cable)
Scale: ½"=1'-0"

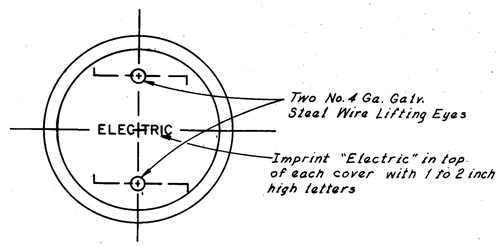

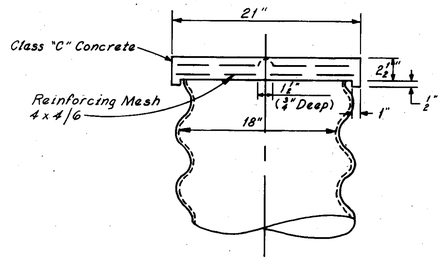

PULL BOX COVER DETAIL
Scale: 1½"=1'-0"

LIGHT POLE DATA

REFERENCE LETTER	DESIGN NUMBER	FOUNDATION ANCHOR BOLTS SIZE DIAM. x LENGTH	FOUNDATION ANCHOR BOLTS BOLT CIRCLE DIAMETER	TRANSFORMER BASE STYLE
A	AGBB47.25D*	1¼" x 42"	—	—
B	AT12B50	1" x 40"	17¼"	AT-C

*D - indicates with base plate as shown on Sheet 163.

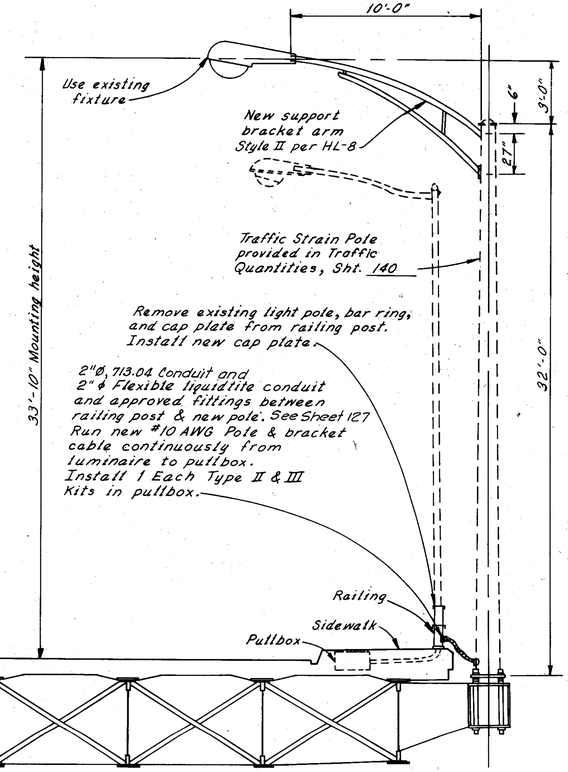

ELEVATION VIEW
COMBINATION SIGN & LIGHTING SUPPORT
STA. 8+48 EDDY RD.
Scale: ¼"=1'-0"

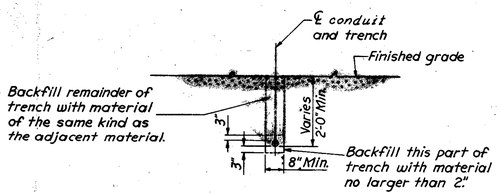

CONDUIT TRENCH
Scale: ⅜"=1'-0"

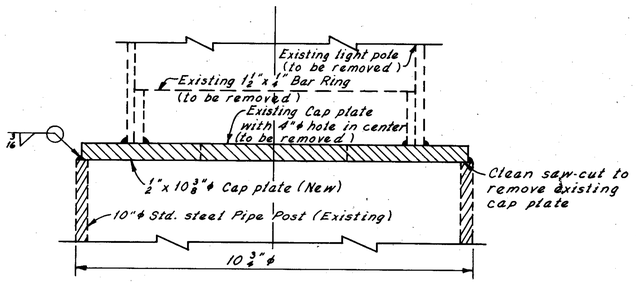

LAMP STANDARD BASE
EXISTING ON HANDRAIL
TO BE REMOVED AND CAPPED
No Scale

MADE EFJ DATE 8-5-74
TRACED TAK DATE 8-13-74
CHECKED EFJ DATE 8-13-74
SCALE as shown

Howard, Needles, Tammen & Bergendoff
CONSULTING ENGINEERS
CLEVELAND, OHIO

HNTB

FOUNDATION DETAILS - MEDIAN MOUNTED LIGHT POLES

(SHEET 1 of 2)

FHWA REGION	STATE	PROJECT	
5	OHIO		

162
354

CUYAHOGA COUNTY
CUY-90-23.73
LAKE COUNTY
LAK-90-0.00

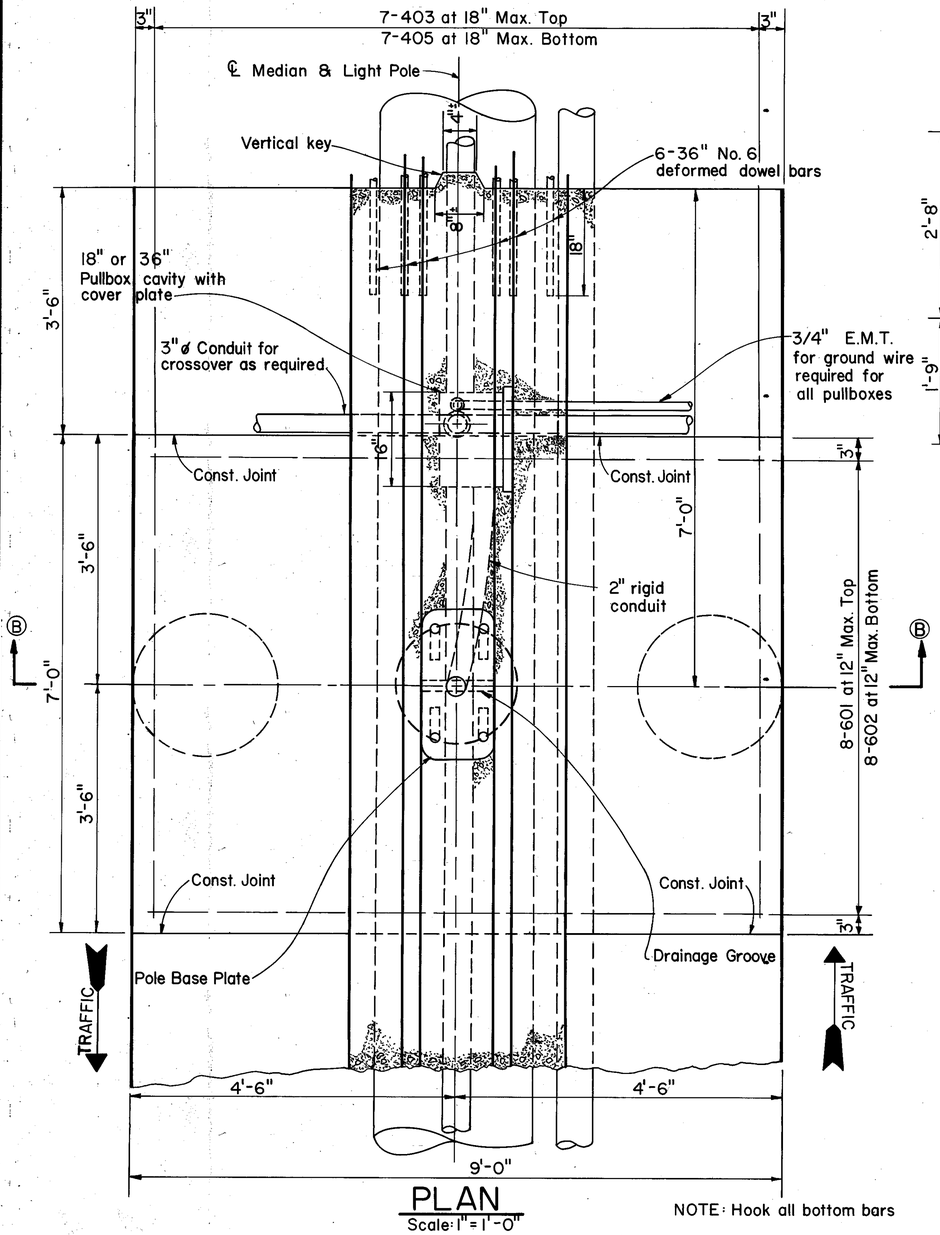

PLAN

Scale: 1" = 1'-0"

NOTE: Hook all bottom bars

NOTE: For Reinforcing Steel Quantities See Sheet 163

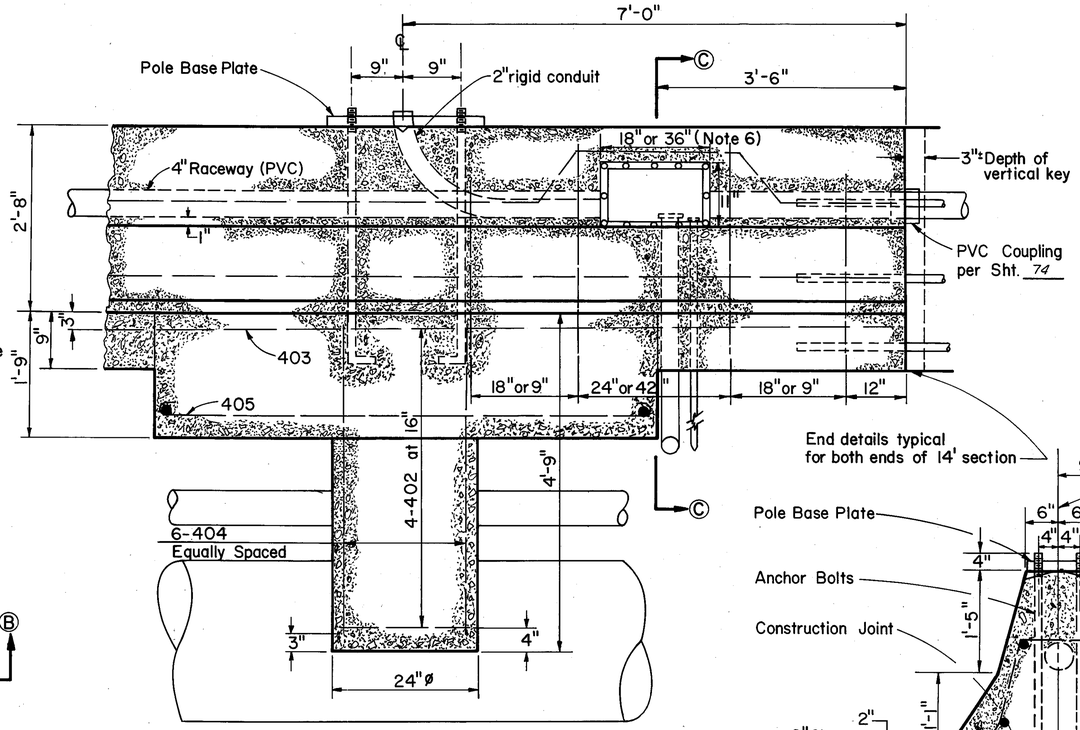

ELEVATION

Scale: 1" = 1'-0"

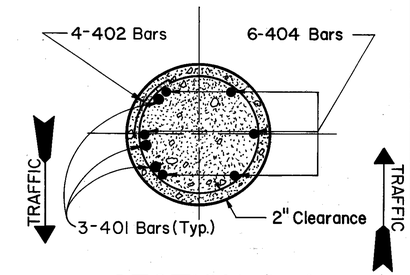

SECTION A-A

Scale: 1" = 1'-0"

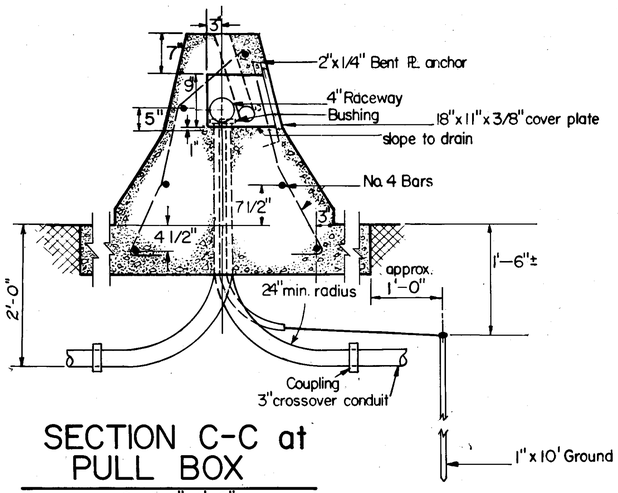

SECTION C-C at PULL BOX

Scale: 1" = 1'-0"

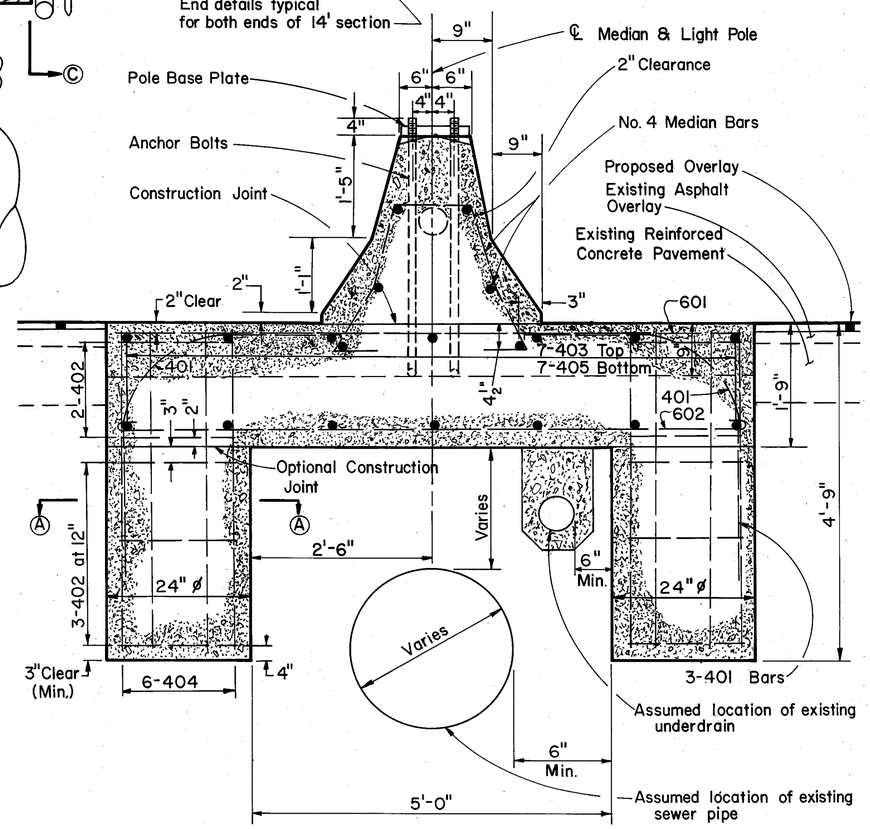

SECTION B-B at POLE

Scale: 1" = 1'-0"

MADE ESH DATE 8-28-74
TRACED JAK DATE 9-6-74
CHECKED EEJ DATE 9-11-74
SCALE 1"=1'-0"

Howard, Needles, Tammen & Bergendoff
CONSULTING ENGINEERS
CLEVELAND, OHIO

HNTB

FOUNDATION DETAILS - MEDIAN MOUNTED LIGHT POLES

(SHEET 2 of 2)

FHWA REGION	STATE	PROJECT	
5	OHIO		

163
354

CUYAHOGA COUNTY
CUY-90-23.73
LAKE COUNTY
LAK-90-0.00

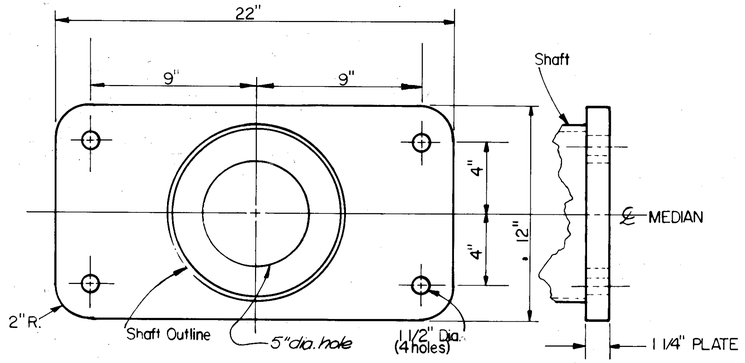

DETAIL OF POLE BASE PLATE

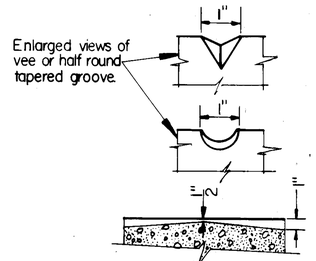

DETAIL OF TAPERED DRAINAGE GROOVE

NOTES

1. ANCHOR BOLTS
   Anchor bolts shall be 1 1/4" dia. x 42" long including 4" L-bend.
2. CONSTRUCTION
   Concrete on the top of foundation shall be finished smooth and level with drainage grooves as shown. Care shall be taken in leveling so that a minimum of shimming is required to plumb pole. Special care shall be taken to prevent damage to pipes. Caissons and slab shall be placed in well-compacted, undisturbed soil. Handhole and pullbox shall be oriented per HL-2.
3. RACEWAY
   4" raceway in the median barrier shall consist of Polyvinyl Chloride material. Payment for furnishing and placing the raceway material shall be included on the unit prices bid for the 622 Concrete Barrier and for 625 Foundation items. A 4" PVC coupling shall be installed at the construction joints as shown in detail on Sheet 14 of the plans.
4. FOUNDATION AND PULLBOX
   Construction of the special barrier section for median light pole support shall conform to the requirements of 625 and 622. The unit price bid for each "Item 625, Special 14-foot Concrete Barrier Section for Light Pole Foundation, as per plan" shall be full compensation for excavation, forming and placing the barrier section as detailed, reinforcing, keying and doweling into adjacent standard barrier sections, furnishing and placing anchor bolts, conduit ells, and pullbox frame & cover, and all labor, material, equipment, and incidentals necessary to complete the work as specified.
5. PULLBOX WITHOUT FOUNDATION
   Where a pullbox is specified in a standard barrier section not modified for light pole support, the unit price bid for each "Item 625, Special Median Barrier Pullbox, as per plan" shall be full compensation for forming the pullbox cavity, furnishing and placing the cover frame, cover plate, and conduit ells, and all labor, material, equipment, and incidentals necessary to complete the work as specified.
6. PULLBOX LENGTH
   Pullboxes associated with light poles shall be 18" in length except those combinations associated with light and crossover shall be similar except 36" in length. Pullboxes associated with crossovers shall be 18" or 36" size as shown in the plans.

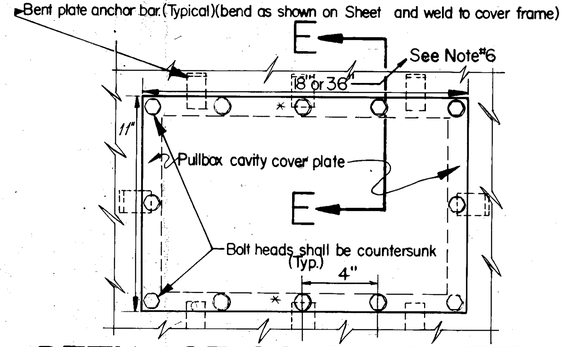

DETAIL OF COVER PLATE FOR PULLBOX CAVITY.

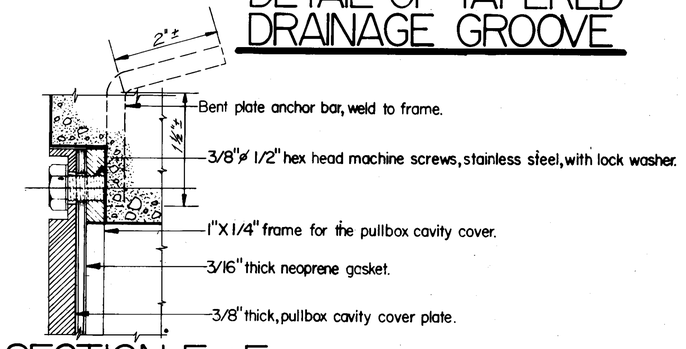

SECTION E—E

Scale: Full

NOTE:
The pullbox cavity cover plate and frame shall be hot dip galvanized after all fabrication is finished, in accordance with requirements of ASTM A 123.

* NOTE:
When 36" long cover plate is used locate 2 additional plate anchor bars as shown.

REINFORCING STEEL QUANTITIES

MARK	NO.	LENGTH	TYPE	SER. INCR.	WEIGHT (LBS)
401	6	36'-0"	111		24
402	10	65'-0"	119		43
403	7	45'-0"	Str.		30
404	12	51'-0"	Str.		34
405	7	52'-6"	100		35
601	8	68'-0"	Str.		102
602	8	78'-8"	100		118

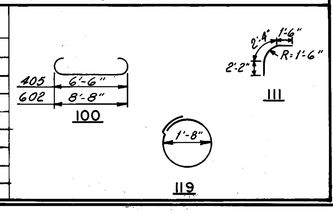

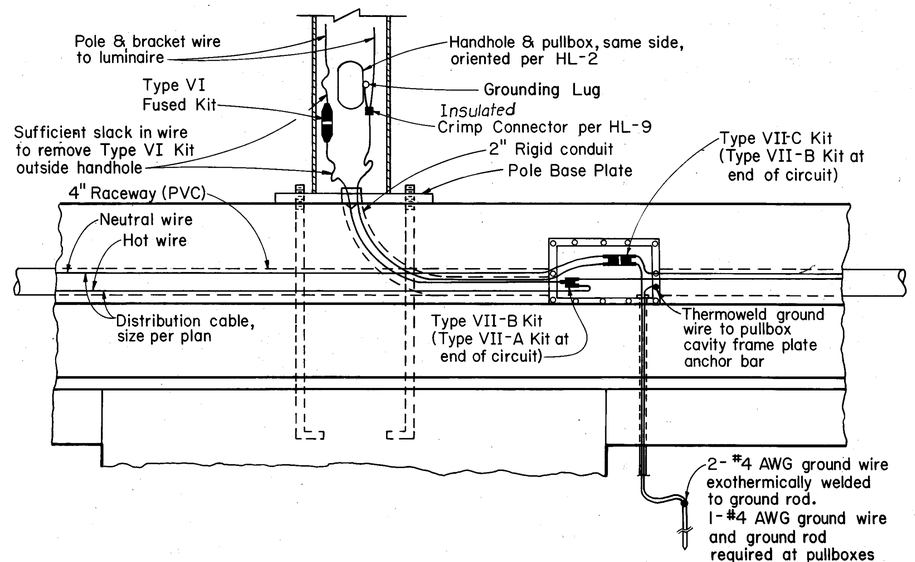

TYPICAL WIRING DIAGRAM

MADE ESH DATE 8-26-74
TRACED MK DATE 9-6-74
CHECKED EJ DATE 9-11-74
SCALE As Shown

Howard, Needles, Tammen & Bergendoff
CONSULTING ENGINEERS
CLEVELAND, OHIO

HNTB

LIGHT POLE UPGRADING DETAILS

CUYAHOGA COUNTY
CUY-90-23.73
LAKE COUNTY
LAK-90-0.00

FHWA REGION	STATE	PROJECT	
5	OHIO		

164
354

EXTENSION KIT FOR MODIFYING EXISTING WIRING WHERE "AT-X" BASE IS BEING ADDED

A

Fits between line end and load end of 713.15 Type II Kit

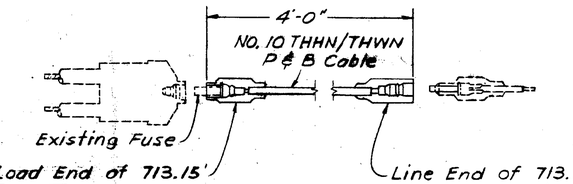

B

Fits between line end and load end of 713.15 Type III Kit

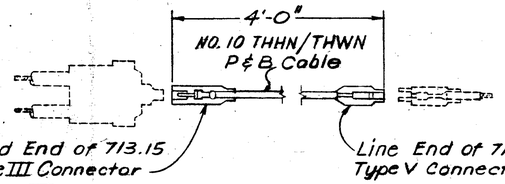

NOTE: A and B will provide enough slack to enable bringing connectors outside of base, without unplugging to change fuses.

C

GROUND CABLE EXTENSION

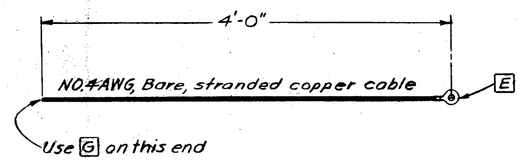

D Tin plated silicon bronze slug for use with A

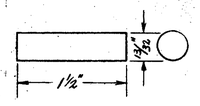

E Straight ring tongue terminal. Two required. One for C and one for ground cable from ground rod.

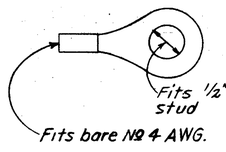

F Stainless Steel Hex Head Cap Screw 1/2"-13×1"

G Compression Connector (Select one)

C OR H

Type "C" Type "H"

To connect C and Grounding Cable from ground rod to B

MADE E.F.J. DATE 8/5/74
TRACED E.S. DATE 8/6/74
CHECKED E.F.J. DATE 8/7/74
SCALE as shown

HOWARD, NEEDLES, TAMMEN & BERGENDOFF
CONSULTING ENGINEERS
HNTB

PROCEDURE FOR INSTALLING BREAKAWAY "AT-X" TRANSFORMER BASES ON EXISTING PROJECTS

REPAIR OF DAMAGED FOUNDATION

FOUNDATION

Where field inspection reveals that top of the existing light pole foundation has disintegrated, proceed as follow:

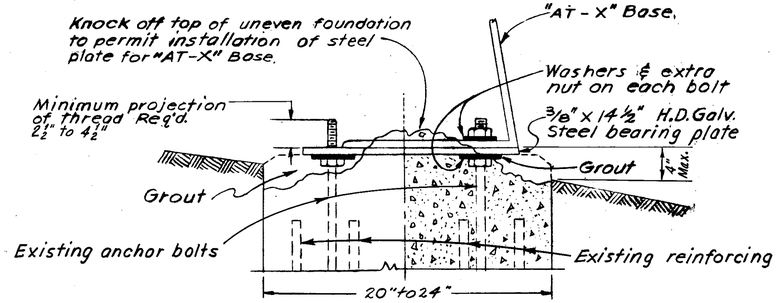

METHOD OF INSTALLING EXTENSION KITS A AND B

1. Prior to detaching pole from anchor bolts, pull load end connectors from line end connectors as shown:

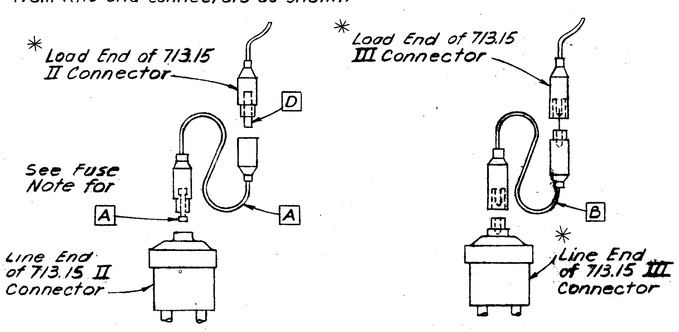

2. After installing "AT-X" Base and light pole, plug in Extension Kits as shown:

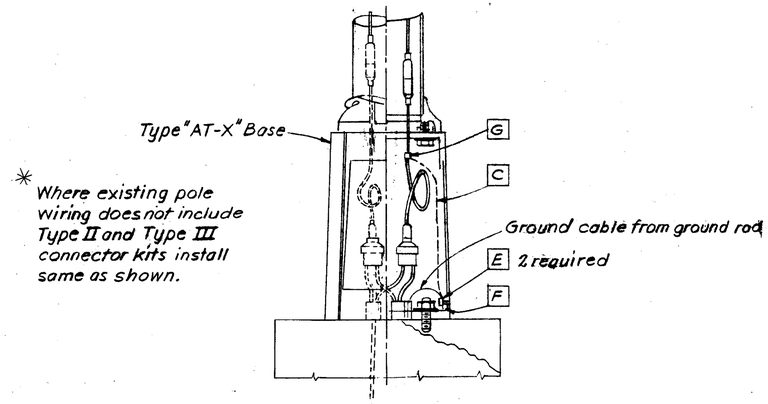

* Where existing pole wiring does not include Type II and Type III connector kits install same as shown.

FRANGIBLE ALUMINUM TRANSFORMER BASE TYPE "AT-X" — Adaptor Plates Not Required.

DATA NECESSARY FOR ORDERING FRANGIBLE BASES

REF. LETTER	EXISTING FOUNDATION ANCHOR BOLT CIRCLE	EXISTING ANCHOR BOLT DIAMETER	EXISTING SHAFT DIAMETER		EXISTING SHAFT LENGTH	EXISTING ARM LENGTH	MANUFACT'RS POLE DESIGN NUMBER
			TOP	BOTTOM			
C	12 1/2" Dia.	1 1/4" x 60"	5.08"	9"	28'-0"	8'-0"	U.M. T0161-Y45
Ref.	Cuy-2-20.53	Plans					

FLOW OF TRAFFIC

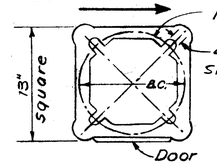

Top Plan for Transformer Base

For Poles having 10 1/2" thru 13" Bolt Circles.

4-1 1/8" slots

Must be machined out when 1 1/4" Anchor Bolts are used and may have to be lengthened by machining.

AT-X base is usable within the range of pole sizes tabulated below:

BOTTOM SHAFT DIAM.	BOLT CIRCLES
7.5"	10.5"
8.0	11.0"
8.5"	11.5"
9.0"	12.5"
9.5"	* 13.0"

* With special machining

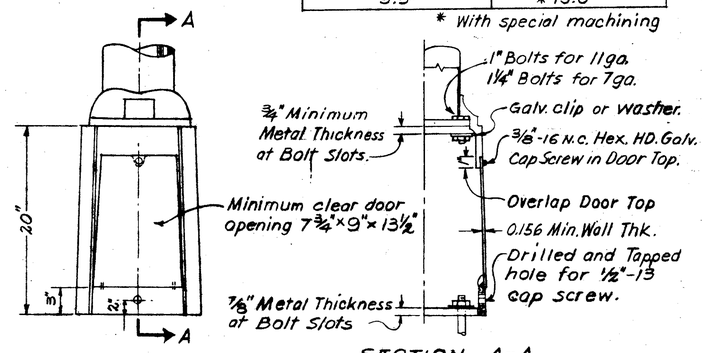

SECTION A-A

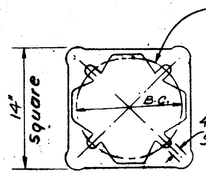

Bottom Plan of Transformer Base

For Foundations having 10 1/2" thru 13" Bolt Circles.

NOTE: This base shall be capable of resisting a bend moment of 34,000 ft. lbs. applied at a distance of 20 feet above the top of the base without collapsing or rupturing.

Must be machined out when 1 1/4" Anchor Bolts are used and may have to be lengthened by machining.

NOTE: Poles having bolt circles larger than 13" will require Type "AT-C" Transformer Base.

QUANTITY CALCULATIONS

MADE BY E.F.J. DATE 12-13-74

CHECKED BY E.R.H. DATE 12-16-74

FHWA REGION	STATE	PROJECT	
5	OHIO		

165
354

CUYAHOGA COUNTY
CUY-90-23.73
LAKE COUNTY
LAK-90-0.00

LIGHTING QUANTITIES SUB-SUMMARIES

	REFERENCE	STATION	STATION	SIDE	625 Light Pole, Ref. A Design A6B847.25D Median Mounted			625 Special 14ft. Concrete Barrier Section For Light Pole Foundation Modified. As per plan	839 High Voltage Direct Current Test	625 Maintain Existing Lighting	625 Luminaire Type III 1000 W w/400 W. Ballast S713.11, As per plan	625 Lamp 400 W Metal Halide S713.14	625 Pole and Bracket Cable No. 10 AWG S713.02		625 Distribution Cable No. 4 AWG, 600V S713.02	625 Distribution Cable No. 6 AWG, 600 V. S713.02	625 Pullbox, 18" Circular S713.09 As Per Plan	625 Special Median Barrier Pullbox, 18" As Per Plan	625 Special Median Barrier Pullbox, 36" As Per Plan	625 Conduit 2" ϕ S713.04	625 Conduit, 3" ϕ S713.04 Jacked-Under Pavement As per plan	625 Ground Rod S713.16	625 Trench 24" Deep	625 Connector Kit Type E S713.15		625 Connector Kit Type VII S713.15	625 Connector Kit Type VII A S713.15	625 Connector Kit Type VII B S713.15	625 Connector Kit Type VII-C S713.15	625 Structure Grounding System S713.17
					Each			Each	Lump	Lump	Each	Each	Lin. Ft.		Lin. Ft.	Lin. Ft.	Each	Each	Each	Lin. Ft.	Lin. Ft.	Each	Lin. Ft.	Each		Each	Each	Each	Each	Each
1																														
2		249+64 EMS	249+74 EMS	Lt.											280															
3		249+74 EMS	2+00	Lt.											1340				325				325				4			
4		2+00		℄/Lt											380		1			85							4			
5		2+00	6+68	℄											1920				1			1					4			
6		6+68	9+00	℄	1			1			2	2	135		950											1		1	1	
		TOTAL	SHT 145		1			1	Lump	Lump	2	2	135		4870		1		1	325	85	2	325			1	12	1	1	
7		9+00	9+25	℄											120															
8		9+25	9+90	℄	1			1			2	2	135		280							1				1		1	1	
9		9+90		℄/Lt											150			1		65		1		2				2		
10		9+90	11+75	℄											780			1				1								
11		11+75	12+35	℄	1			1			2	2	135		260							1				1		1	1	
12		12+35		℄/Rp											150			1		65		1		2				2		
13		12+35	14+50	℄											900															
14		14+50	17+25	℄	1			1			2	2	135		1140							1				1		1	1	
15		17+25	20+00	℄	1			1			2	2	135		1140							3				1		1	1	
16		20+00	22+75	℄	1			1			2	2	135		1140							1				1		1	1	
17		22+75	24+90	℄	1			1			2	2	135		880							1				1		1	1	
18		24+90		℄/Lt											150			1		65		1		2				2		
19		24+90	25+40	℄											210			1				1								
		TOTAL	SHT 146		6			6			12	12	810		7300			5		195		13		6		6		12	6	
20		25+40	25+50	℄											50															
21		25+50	28+25	℄	1			1			2	2	135		1140							1				1		1	1	
22		28+25	31+00	℄	1			1			2	2	135		1140							1				1		1	1	
23		31+00	33+75	℄	1			1			2	2	135		1140							1				1		1	1	
24		33+75	36+50	℄	1			1			2	2	135		570							1				1	1	1		
25		36+50	38+85	Lt/Rt	1			1			2	2	135				4		300 Ⓢ			1				1	1	1		1 Ⓢ
26		38+50	39+60	℄	1			1			2	2	135			230						1				1	1	1		
27		39+60		℄/Rp											150			1		65		1		2				2		
28		39+60	41+25	℄												340														
29		41+25	42+00	℄	1			1			2	2	135			320						1				1	1	1		
		TOTAL	SHT 147		7			7			14	14	945		4190	890	4	1	300 Ⓢ	65		8		2		7	4	9	3	1 Ⓢ
30		42+00	44+00	℄												820														
31		44+00	46+75	℄	1			1			2	2	135			1140						1				1		1	1	
32		46+75	48+15	℄	1			1			2	2	135			580						1				1		1	1	
33		48+15		℄/Lt											150			1		65		1		2				2		
34		48+15	49+50	℄												560														
35		49+50	52+25	℄	1			1			2	2	135			1140						1				1		1	1	
36		52+25	55+00	℄	1			1			2	2	135			1140						1				1		1	1	
37		55+00	57+60	℄	1			1			2	2	135			1080						1				1		1	1	
38		57+60	58+50	℄	1			1			2	2	135			380						1				1		1	1	
		TOTAL	SHT 148		6			6			12	12	810		150	6840		1		65		7		2		6		8	6	

All Stations are Lakeland Freeway I-90 unless otherwise designated
All Quantities are Cost Participation Type I (Normal)
Ⓢ = Structure Mounted quantities BR. NO. Cuy-90-2200

MADE WGP DATE 8-6-74
TRACED TAK DATE 8-14-74
CHECKED EFJ DATE 12-13-74
SCALE

Howard, Needles, Tammen & Bergendoff
CONSULTING ENGINEERS
CLEVELAND, OHIO

HNTB

QUANTITY CALCULATIONS

MADE BY E.F.J. DATE 12-13-74

CHECKED BY E.R.H. DATE 12-27-74

FHWA REGION	STATE	PROJECT	
5	OHIO		

166
354

CUYAHOGA COUNTY
CUY-90-23.73
LAKE COUNTY
LAK-90-0.00

LIGHTING QUANTITIES SUB—SUMMARIES

REFERENCE NO.	STATION	STATION	SIDE	625 Light Pole Ref. A Design A8SA1.25D Median Mounted Each	625 Light Pole Ref. B Design A7A1.25D Each	625 Special 14 ft. Concrete Barrier Section For Light Pole Foundation Modified. As per plan Each	625 Light Pole Foundation 24"x24"x10' Each	625 Luminaire Type II 1000 W. w/400 W. Ballast S713.11, As per plan Each	625 Luminaire Type III, 1000 W. w/400 W. Ballast S713.11, As per plan Each	625 Lamp, 400W. Metal Halide S713.14 Each	625 Pole and Bracket Cable No. 10 AWG S713.02 Lin.Ft.	625 1¼" Duct Cable w/2 No.4 AWG, S713.03. Lin.Ft.	625 Distribution Cable No. 4 AWG, 600V. S713.02 Lin.Ft.	625 Distribution Cable No. 0 AWG, 600V. S713.02 Lin.Ft.	625 Pullbox 18" Circular S713.09, As per plan Each	625 Special Median Barrier Pullbox, 18" As Per. Plan Each	625 Transformer Base Type AT-X Ref. C Each	625 Conduit, 3" ϕ S713.04 Jacked-under pavement As per plan Lin.Ft.	625 Ground Rod Each	625 Trench 24" Deep Lin.Ft.	625 Connector Kit Type I S713.15 Each	625 Connector Kit Type II S713.15 Each	625 Connector Kit Type III S713.15 Each	625 Connector Kit Type VI S713.15 Each	625 Connector Kit Type VII-A S713.15 Each	625 Connector Kit Type VII-B S713.15 Each	625 Connector Kit Type VII-C S713.15 Each	625 Wiring Extension Kit A Wiring Extension Kit B Wiring Extension Kit C Each	625 Repair of Existing Light Pole Foundation Each	625 Light Pole Bracket Arm 10 ft., Style II Each	625 Reinstall Existing Lighting Unit, As per plan Each
39	58+50	60+04	℄										640																		
40	60+04	62+60	℄	1		1			2	2	135		1060						1				1				1	1			
41	62+60	65+08	℄	1		1			2	2	135		1040						1				1				1	1			
42	65+08	65+40	℄	1		1			2	2	135		150						1				1				1	1			
43	65+40		℄/Lt.											180		1		80	1								2				
44	65+40	66+60	Lt.									130			1				1	120						2					
45	66+60	11+00 R-1	Lt.		1		1	1		1	120	220							1	210		1	1								
46	11+00 R-1	12+17 R-1	Lt.		1		1	1		1	120	125							1	115		1	1			2					
47	2+27 R-1		Lt.														1					1	1						1 1 1	1	
48	3+54 R-1		Lt.														1					1	1						1 1 1	1	
49	4+81 R-1		Lt.														1					1	1						1 1 1	1	
50	6+08 R-1		Lt.														1					1	1						1 1 1	1	
51	65+40	65+68	℄										130																		
52	65+68	66+68	℄/Rt.											190		1		85	1								2				
53	65+68		Rt.		1		1	1		1	120	120							1	110	2	1	1				2				
54	66+68	6+10 R-2	Rt.		1		1	1		1	120	280							1	270		1	1								
55	65+68	68+17	℄										1040																		
56	68+17	70+62	℄	1		1			2	2	135		1020						1					1			1	1			
57	70+62	73+17	℄	1		1			2	2	135		1060						1					1			1	1			
58	73+17	75+00	℄	1		1			2	2	135		750						1					1			1	1			
	TOTAL	SHT. 149		6	4	6	4	4	12	16	1290	875	370	6890	1	2	4	165	12	825	2	8	8	6	4	12	6	4 4 4	4		
59A	8+48	Eddy Rd.	Rt.								110 (III)											1 (III)	1 (III)							1 (III)	1 (III)
59B	8+48	Eddy Rd.	Lt.								110 (III)											1 (III)	1 (III)							1 (III)	1 (III)
59C	75+00	75+68	℄										290																		
60	75+68	78+35	℄	1		1			2	2	135		1110						1					1			1	1			
61	78+35	80+85	℄	1		1			2	2	135		1040						1					1			1	1			
62	80+85	83+35	℄	1		1			2	2	135		1040						1					1			1	1			
63	83+35	85+85	℄	1		1			2	2	135		1040						1					1			1	1			
64	85+85	87+60	℄	1		1			2	2	135		720						1					1			1	1			
65	87+60		℄/Lt.											190		1	1	85	1							2	2				
66	87+60	87+20	Lt.		1		1	1		1	120	50							1	40		1	1								
67	87+20	86+45	Lt.									90								80	2										
68	86+45	8+20 R-3	Lt.									150					1			140		1	1				2		1 1 1	1	
69	7+00 R-3		Lt.														1					1	1						1 1 1	1	
70	5+72 R-3		Lt.														1					1	1						1 1 1	1	
71	4+44 R-3		Lt.														1					1	1						1 1 1	1	
72	3+16 R-3		Lt.														1					1	1						1 1 1	1	
73	1+88 R-3		Lt.														1					1	1						1 1 1	1	
74	0+60 R-3		Lt.														1					1	1						1 1 1	1	
75	87+60	88+33	℄										310																		
76	88+33	88+60	℄	1		1			2	2	135		130						1					1			1	1			
77	88+60		Rt.											220		1		100	1							2	2				
78	88+60	87+40	Rt.									130			1					120											
79	87+40	7+70 R-4	Rt.		1		1	1		1	120	280 (II)							1	270 (II)		1	1								
80	7+70 R-4		Rt.		1 (II)		1 (II)	1 (II)		1 (II)	120 (II)								1 (II)			1 (II)	1 (II)								
81	88+60	90+00	℄										580																		
82	7+35 R-1		Lt.														1					1	1						1 1 1	1	
83	8+62 R-1		Lt.														1					1	1						1 1 1	1	
	TOTAL (I)	SHT. 150		6	2	6	2	2	12	14	1050	320	410	6260	2	2	9	185	10	380	2	11	11	6	4	12	6	9 9 9	9		
	TOTAL (II)	SHT. 150			1		1	1		1	120	280							1	270		1	1								
	TOTAL (III)	SHT. 150									220											2	2							2	2
	TOTAL	SHT. 150		6	3	6	3	3	12	15	1390	600	410	6260	2	2	9	185	11	650	2	14	14	6	4	12	6	9 9 9	9	2	2

MADE WGP DATE 8-6-74
TRACED ZJK DATE 8-13-74
CHECKED EFJ DATE 12-13-74
SCALE None

Howard, Needles, Tammen & Bergendoff
CONSULTING ENGINEERS
CLEVELAND, OHIO

HNTB

All stations are Lakeland Freeway I-90 unless otherwise designated
All quantities are Cost Participation Type I (Normal) except as noted
Quantities designated (II) or (III) are Cost Participation Type II (Normal, Cleveland) or Type III (100% State)

Type (III) Quantities are structure mounted BR. NO. Cuy-90-2275

QUANTITY CALCULATIONS
MADE BY E.F.J. DATE 12-13-74
CHECKED BY E.R.H. DATE 12-20-74

FHWA REGION	STATE	PROJECT	
5	OHIO		

167
354

CUYAHOGA COUNTY
CUY-90-23.73
LAKE COUNTY
LAK-90-0.00

LIGHTING QUANTITIES SUB-SUMMARIES

REFERENCE NO.	STATION	STATION	SIDE	625 Light Pole, Ref. A Design A6B847.25D Median Mounted Each	625 Special 14ft. Concrete Barrier Section For Light Pole Foundation Modified, As per plan Each	625 Luminaire Type III 1000 W. w/400 W. Ballast S713.11 Each	625 Lamp 400 W. Metal Halide S713.14 Each	625 Pole and Bracket Cable No. 10 AWG S713.02 Lin. Ft.	625 1½" ϕ Duct Cable w/2-No. 4 AWG S713.03 Lin. Ft.	625 Distribution Cable No. 4 AWG, 600 V. S713.02 Lin. Ft.	625 Distribution Cable No. 0 AWG, 600 V. S713.02 Lin. Ft.	625 Special Median Barrier Pullbox, 18" As Per Plan Each	625 Special Median Barrier Pullbox, 36" As Per Plan Each	625 Pullbox, 18" Circular S713.09 As Per Plan Each	625 Conduit 2" ϕ S713.04 Lin. Ft.	625 Conduit 3" ϕ S713.04 Jacked under pavement As per plan Lin. Ft.	625 Ground Rod S713.16 Each	625 Trench 24" Deep Lin. Ft.	625 Connector Kit Type I S713.15 Each	625 Connector Kit Type VI S713.15 Each	625 Connector Kit Type VII-A S713.15 Each	625 Connector Kit Type VII-B S713.15 Each	625 Connector Kit Type VII-C S713.15 Each		625 Control Center-D As per plan Lump				
82	90+00	90+85	℄								340																			
83	90+85	93+35	℄	1	1	2	2	135			1040						1			1		1	1							
84	93+35	96+08	℄	1	1	2	2	135			1130						1			1		1	1							
85	96+08	98+85	℄	1	1	2	2	135			1150						1			1		1	1							
86	98+85	99+85	℄	1	1	2	2	135			440						1			1		1	1							
87	99+85		℄/Rt								300		1			65	1				4									
88	99+85	CC-D	Rt								120			1	20			20			4									
89	CC-D	99+90	Rt							180					20			20										Lump		
90	99+90	100+60	Rt						80					1				80	2		2									
91	99+90	99+95	℄/Rt							300						65					4									
92	99+95	100+90	℄							420		2	1				3				4									
93	100+90		℄/Lt							150		1				65	1		2					2						
94	100+90	101+60	℄							330																				
95	101+60	104+00	℄	1	1	2	2	135		1000										1		1	1							
	TOTAL	SHT. 151		5	5	10	10	675	80	2380	4520	3	2	2	40	195	10	120	4	5	18	7	5		Lump					
96	104+00	104+33	℄							150																				
97	104+33	107+10	℄	1	1	2	2	135		1150							1			1		1	1							
98	107+10	109+85	℄	1	1	2	2	135		1140							1			1		1	1							
99	109+85	112+55	℄	1	1	2	2	135		1120							1			1		1	1							
100	112+55	113+65	℄	1	1	2	2	135		460							1			1		1	1							
101	113+65		℄/Lt							150		1				65	1		2			2								
102	113+65	115+19	℄							640																				
103	115+19	115+70	℄	1	1	2	2	135		220							2			1		1	1							
104	115+70		℄/Rt							150		1				65	1		2			2								
105	115+70	117+00	℄							560																				
	TOTAL	SHT. 152		5	5	10	10	675		5740		2				130	8		4	5		9	5							
106	117+00	117+95	℄	1	1	2	2	135		400							1			1		1	1							
107	117+95	120+70	℄	1	1	2	2	135		1140							1			1		1	1							
108	120+70	123+45	℄	1	1	2	2	135		1140							1			1		1	1							
109	123+45	126+10	℄	1	1	2	2	135		1100							1			1	1	1	1							
110	126+10	127+85	℄							370		1					1													
111	127+85		℄/Rt							170		1				85	1		2			2								
112	127+85	128+67	℄	1	1	2	2	135		180							1			1	1	1								
	TOTAL	SHT. 153		5	5	10	10	675		4500		2				85	7		2	5	2	7	3							

MADE WGP DATE 8-6-74
TRACED TAK DATE 9-13-74
CHECKED EFJ DATE 12-13-74
SCALE None

Howard, Needles, Tammen & Bergendoff
CONSULTING ENGINEERS
CLEVELAND, OHIO

HNTB

All stations are Lakeland Freeway I-90 unless otherwise designated
All quantities are Cost Participation Type I (Normal)

LIGHTING QUANTITIES SUB SUMMARIES

FHWA REGION	STATE	PROJECT	
5	OHIO		

168
354

CUYAHOGA COUNTY
CUY-90-23.73
LAKE COUNTY
LAK-90-0.00

QUANTITY CALCULATIONS
MADE BY WGP DATE 8-5-74
CHECKED BY E.F.J DATE 12-13-74

STATION	SIDE	202 Existing Lighting Unit, Pole, Bracket, Luminaire, and Foundation To Be Removed, As per plan. Each
5+65	Lt	1
6+88	Lt/Rt	2
8+11	Lt/Rt	2
9+34	Lt/Rt	2
10+57	Lt/Rt	2
11+30	Lt/Rt	2
13+03	Lt/Rt	2
14+26	Lt/Rt	2
15+49	Lt/Rt	2
16+72	Lt/Rt	2
17+96	Lt/Rt	2
19+20	Lt/Rt	2
20+44	Lt/Rt	2
TOTAL SHT.	154	25
21+68	Lt/Rt	2
22+92	1	2
24+16	Lt/Rt	2
25+40	Lt/Rt	2
26+64	Lt/Rt	2
27+87	Lt/Rt	2
29+10	Lt/Rt	2
30+33	Lt/Rt	2
31+56	Lt/Rt	2
32+79	Lt/Rt	2
33+90	Lt/Rt	2
35+00	Lt	1
35+25	Rt	1
36+10	Lt	1
36+48	Rt	1
37+20	Lt	1
37+70	Rt	1
38+72	Lt	1
38+92	Rt	1
40+02	Lt	1
40+17	Rt	1
41+32	Lt	1
41+42	Rt	1
42+62	Lt	1
42+67	Rt	1
43+92	Lt/Rt	2
45+17	Lt/Rt	2
46+42	Lt/Rt	2
TOTAL SHT	155	42

STATION	SIDE	202 Existing Lighting Unit Pole, Bracket, Luminaire and Foundation To Be Removed, As per plan. Each
47+67	Lt/Rt	2
48+92	Lt/Rt	2
50+17	Lt/Rt	2
51+42	Lt/Rt	2
52+67	Lt/Rt	2
53+92	Lt/Rt	2
55+17	Lt/Rt	2
56+42	Lt/Rt	2
57+66	Lt/Rt	2
58+90	Lt/Rt	2
60+14	Lt/Rt	2
61+38	Lt/Rt	2
62+62	Lt/Rt	2
63+86	Lt/Rt	2
65+10	Lt/Rt	2
66+30	Rt	1
66+34	Lt	1
67+44	Rt	1
67+54	Lt	1
68+62, 68+71	Lt/Rt	3
69+86	Lt/Rt	3
71+10	Lt/Rt	2
72+34	Lt/Rt	2
TOTAL SHT	156	44

STATION	SIDE	202 Existing Lighting Unit, Pole, Bracket, Luminaire, and Foundation To Be Removed, As per plan. Each	202 Removal of Existing Lighting Unit on Structure, As per plan. Each
73+58-74+82	Lt/Rt	4	
76+06	Lt/Rt	2	
77+84	Lt	1	
77+90	Rt	1	
79+08	Lt	1	
79+15	Rt	1	
80+32	Lt	1	
80+40	Rt	1	
81+56	Lt	1	
81+65	Rt	1	
82+80	Lt	1	
82+90	Rt	1	
84+04	Lt	1	
84+15	Rt	1	
85+15	Lt	1	
85+40	Rt	1	
86+19	Lt	1	
86+47	Rt	1	
87+24	Lt	1	
87+55	Rt	1	
88+30	Lt	1	
88+71	Rt	1	
89+42	Lt	1	
89+89	Rt	1	
90+60	Lt	1	
91+10	Rt	1	
91+85	Lt	1	
92+35	Rt	1	
93+10	Lt	1	
93+60	Rt	1	
94+35	Lt	1	
94+85	Rt	1	
95+66	Lt	1	
96+10	Rt	1	
96+85	Lt	1	
97+35	Rt	1	
98+10	Lt	1	
8+60 Eddy Rd.	Lt/Rt		2 (II)
TOTAL SHT	157	43	2 (II)

STATION	SIDE	202 Existing Lighting Unit, Pole, Bracket, Luminaire, and Foundation To Be Removed, As per plan. Each
98+60	Rt	1
99+35	Lt	1
99+85	Rt	1
100+60	Lt	1
101+09	Rt	1
101+85	Lt	1
102+33	Rt	1
103+10	Lt	1
103+57	Rt	1
104+35	Lt	1
104+81	Rt	1
105+60	Lt	1
106+05	Rt	1
106+85	Lt	1
107+30	Rt	1
108+10	Lt	1
108+55	Rt	1
109+35	Lt	1
109+80	Rt	1
110+60	Lt	1
111+05	Rt	1
111+85	Lt	1
112+30	Rt	1
113+10	Lt	1
113+55	Rt	1
114+40	Lt	1
114+80	Rt	1
115+75	Lt	1
116+05	Rt	1
TOTAL SHT	158	29

STATION	SIDE	202 Existing Lighting Unit, Pole, Bracket, Luminaire, and, Foundation To Be Removed, As per plan. Each
117+15	Lt	1
117+35	Rt	1
118+60	Lt	1
118+70	Rt	1
120+00	Lt/Rt	2
121+25	Rt	1
121+35	Lt	1
122+45	Rt	1
122+65	Lt	1
123+65	Rt	1
123+90	Lt	1
124+85	Rt	1
125+10	Lt	1
126+05	Rt	1
126+30	Lt	1
127+25	Rt	1
127+50	Lt	1
128+45	Rt	1
128+70	Lt	1
TOTAL SHT	159	20

All stations are Lakeland Freeway I-90 unless otherwise designated.
All quantities are Cost Participation Type I (Normal) except as noted.
Quantities designated II or III, are Cost Participation Type II (Normal, Cleveland) or Type III (100% State).
Type III Quantities are structure mounted BR. NO. Cuy-90-2275.

MADE E.F.J DATE 8/6/74
TRACED E.S DATE 8/6/74
CHECKED E.F.J DATE 8/11/74
SCALE

Howard, Needles, Tammen & Bergendoff
CONSULTING ENGINEERS
CLEVELAND, OHIO

HNTB

GENERAL SUMMARY

QUANTITY CALCULATIONS
MADE BY WGP DATE 1-14-75
CHECKED BY ERH DATE 1-15-75

FHWA REGION	STATE	PROJECT	
5	OHIO		

169
354

CUYAHOGA COUNTY LAKE COUNTY
CUY-90-23.73 LAK-90-0.00

| Structure No. | SHEET NUMBER | | |

FHWA REGION	STATE	PROJECT	
5	OHIO		

170
354

CUYAHOGA COUNTY
CUY-90-23.73
LAKE COUNTY
LAK-90-0.00

QUANTITY CALCULATIONS

MADE BY M.E.E. DATE 1-8-75
CHECKED BY M.G.B DATE 1-13-75

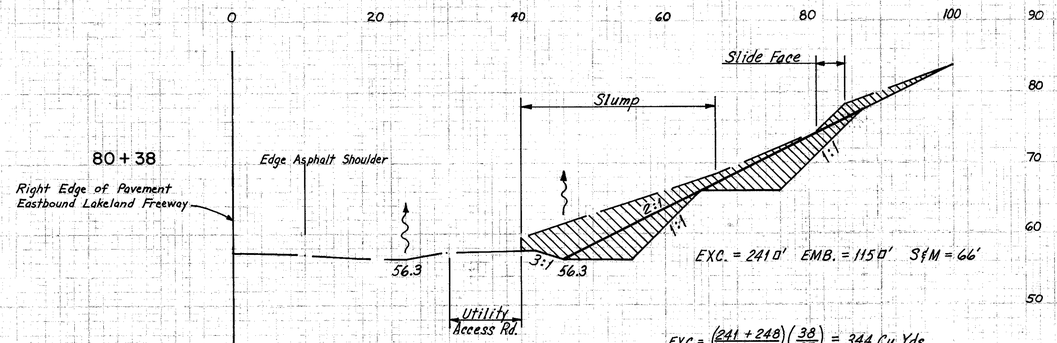

EXC. = 241 □' EMB. = 115 □' S&M = 66'

$EXC. = \left(\frac{241+248}{2}\right)\left(\frac{38}{27}\right) = 344$ Cu. Yds.

SEEDING & MULCHING $= \left(\frac{66+55}{2}\right)\left(\frac{38}{9}\right) = 255$ Sq. Yds.

$EMB. = \left(\frac{115+239}{2}\right)\left(\frac{38}{27}\right) = 249$ Cu. Yds.

STATIONS		659 Seeding & Mulching	203 Excavation *	203 Embankment
From	To	Sq. Yds.	Cu. Yds.	Cu. Yds.
79+75 Rt.	80+00	92	117	115
80+00	80+38	255	344	249
80+38	80+58	103	101	43
TOTAL		450	562	407

QUANTITIES Cost Part III

* not including embankment construction.

SLIDE AREA #1

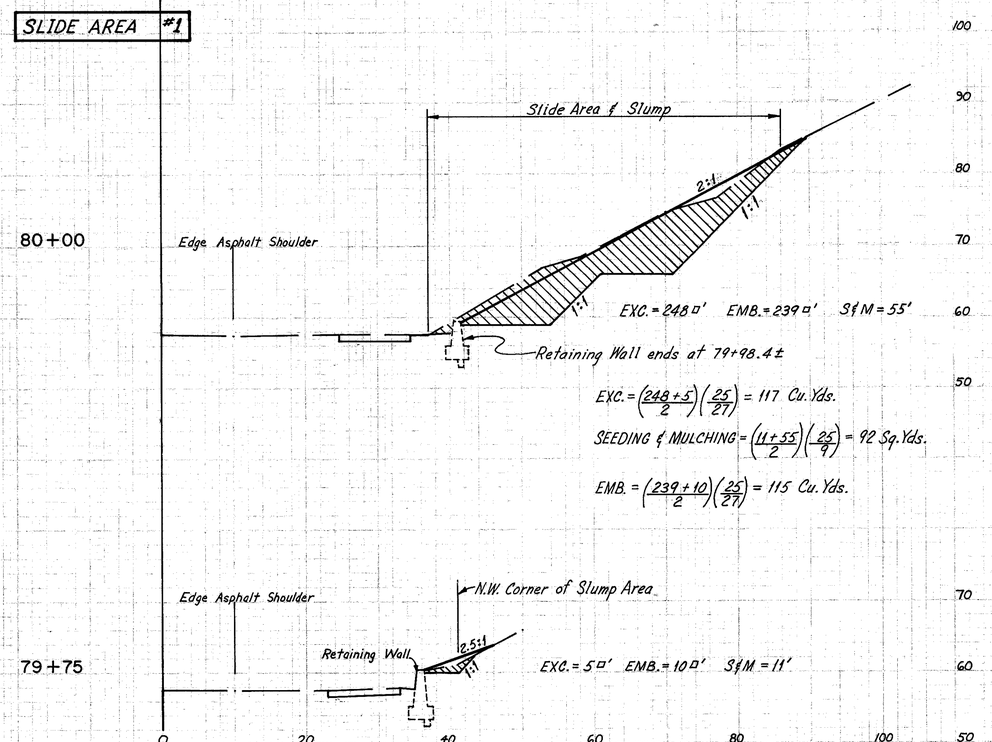

EXC. = 248 □' EMB. = 239 □' S&M = 55'

$EXC. = \left(\frac{248+5}{2}\right)\left(\frac{25}{27}\right) = 117$ Cu. Yds.

SEEDING & MULCHING $= \left(\frac{11+55}{2}\right)\left(\frac{25}{9}\right) = 92$ Sq. Yds.

$EMB. = \left(\frac{239+10}{2}\right)\left(\frac{25}{27}\right) = 115$ Cu. Yds.

EXC. = 5 □' EMB. = 10 □' S&M = 11'

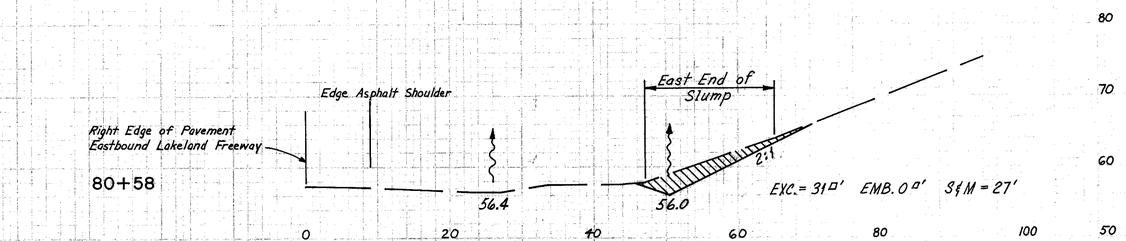

EXC. = 31 □' EMB. 0 □' S&M = 27'

$EXC. = \left(\frac{31+241}{2}\right)\left(\frac{20}{27}\right) = 101$ Cu. Yds.

SEEDING & MULCHING $= \left(\frac{27+66}{2}\right)\left(\frac{20}{9}\right) = 103$ Sq. Yds.

$EMB. = \left(\frac{115+0}{2}\right)\left(\frac{20}{27}\right) = 43$ Cu. Yds.

EXCAVATION

Temporary Bench Mark at Station 10+50,
Right Edge of Pavement Turning Roadway No. 2.
Elev. = 100.0

SCALE
1"=10'-0" VERTICAL
1"=10'-0" HORIZONTAL

11-12-74 H.C.
11-13-74 M.G.B.
1-8-75 M.E.E.
1-13-75 M.G.B.

HOWARD, NEEDLES, TAMMEN & BERGENDOFF
CONSULTING ENGINEERS
CLEVELAND, OHIO
HNTB

127 B DRAFTEX

EASTBOUND LAKELAND FREEWAY STA. 79+75 TO STA. 80+

FHWA REGION	STATE	PROJECT	
5	OHIO		

171
354

CUYAHOGA COUNTY
CUY-90-23.73
LAKE COUNTY
LAK.-90-0.00

QUANTITY CALCULATIONS
MADE BY M.E.E. DATE 1-8-75
CHECKED BY M.G.B. DATE 1-13-75

43+00

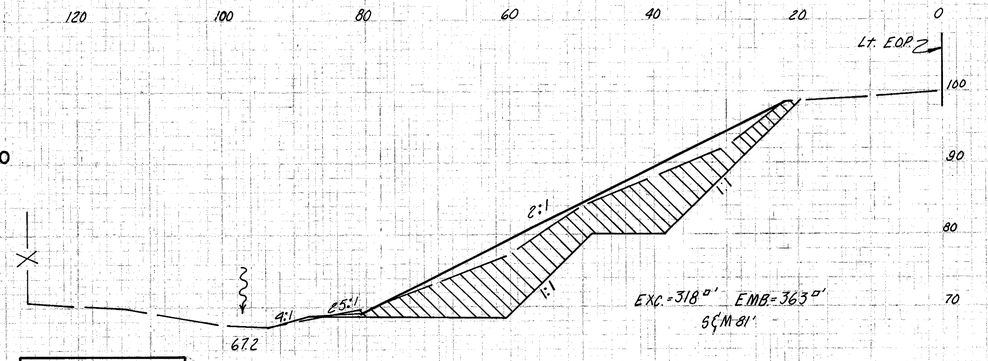

EXC.=318 c.y. EMB=363 c.y.
S℄M 81'

SLIDE AREA #2

Exc.=((318+280)/2)(16/27)=177 Cu. Yds.
Seeding & Mulching=((81+81)/2)(16/9)=144 Sq. Yds.
Emb.=((363+373)/2)(16/27)=218 Cu. Yds.

42+84

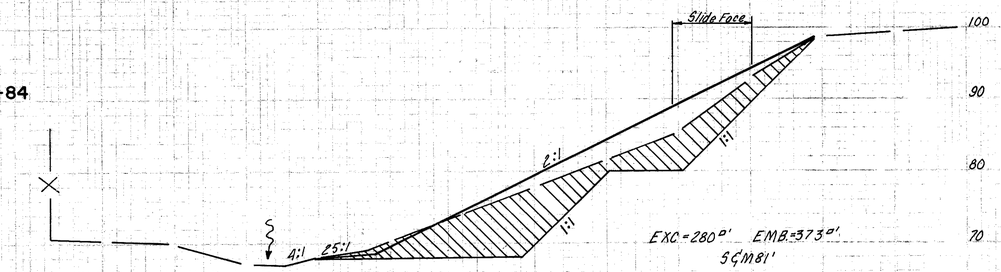

EXC.=280 c.y. EMB=373 c.y.
S℄M 81'

QUANTITIES Cost Part III

Station		659	203	203	Special
		Seeding & Mulching	Excavation not inc. Embankment Construction	Embankment	Erosion Repair
From	To	Sq. Yds.	Cu. Yds.	Cu. Yds.	Lump
℄ Turning Roadway #2					
10+50 Rt.	11+40 Rt.*	502			Lump
℄ N.B. Euclid Spur					
42+84 Lt.	43+00	144	177	218	
TOTAL		646	177	218	Lump

*For T. Rdwy. #2 S&M and Erosion Repair Area, See Eroded Area #1, Sheet 47.

For Location of Slide Area #2 see Sheet 49.

11-6-74 M.G.B.
11-8-74 M.E.E.
1-8-75 M.E.E.
1-13-75 M.G.B.

42+70

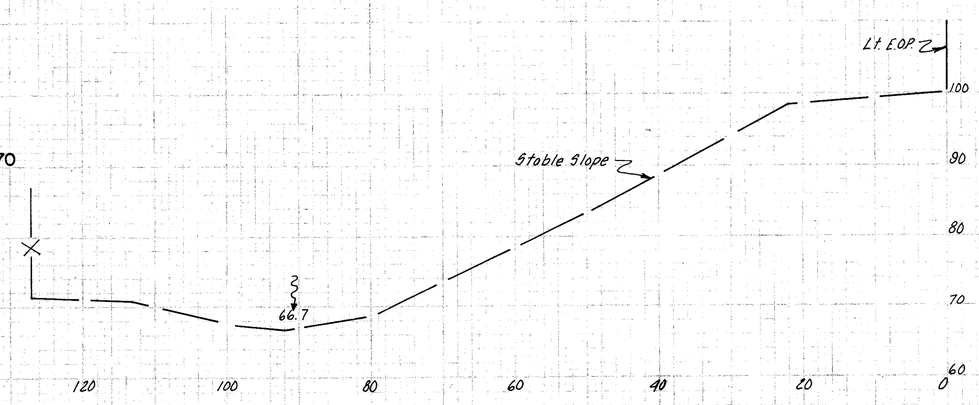

43+25

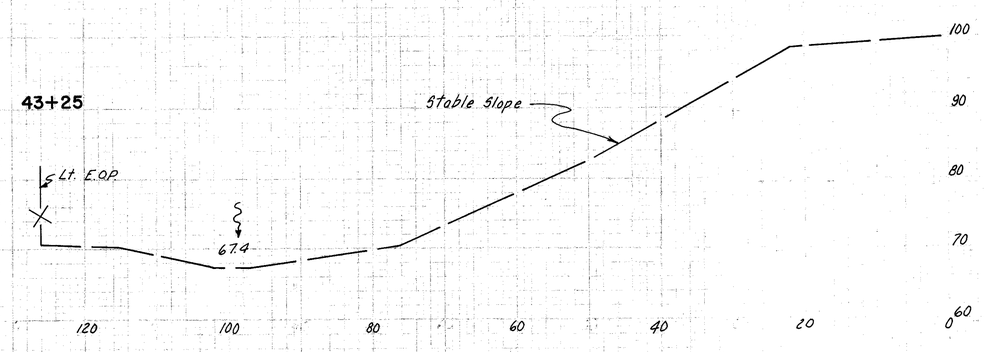

SCALE
1"=10'-0" VERTICAL
1"=10'-0" HORIZONTAL

Excavation

HOWARD, NEEDLES, TAMMEN & BERGENDOFF
CONSULTING ENGINEERS
CLEVELAND, OHIO
HNTB

127 B DRAFTEX

N.B. EUCLID SPUR STA. 42+70 TO STA. 43

FHWA REGION	STATE	PROJECT	
5	OHIO		

172
354

CUYAHOGA COUNTY
CUY-90-23.73
LAKE COUNTY
LAK-90-0.00

QUANTITY CALCULATIONS

MADE BY M.E.E. DATE 1-8-75
CHECKED BY M.G.B. DATE 1-13-75

H.G. 11-7-75
M.G.B. 1-9-75
M.E.E. 1-9-75
M.G.B. 1-13-75

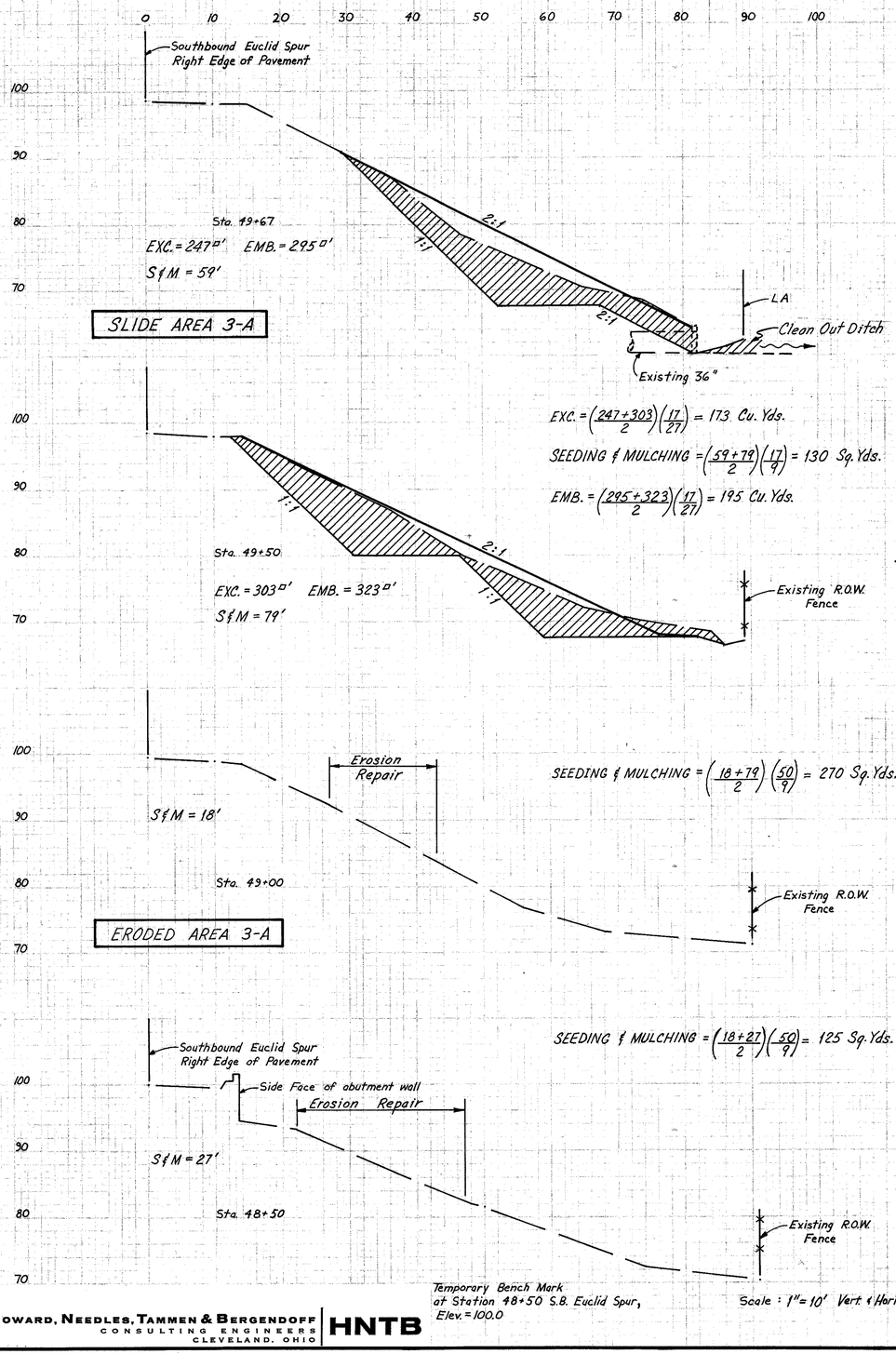

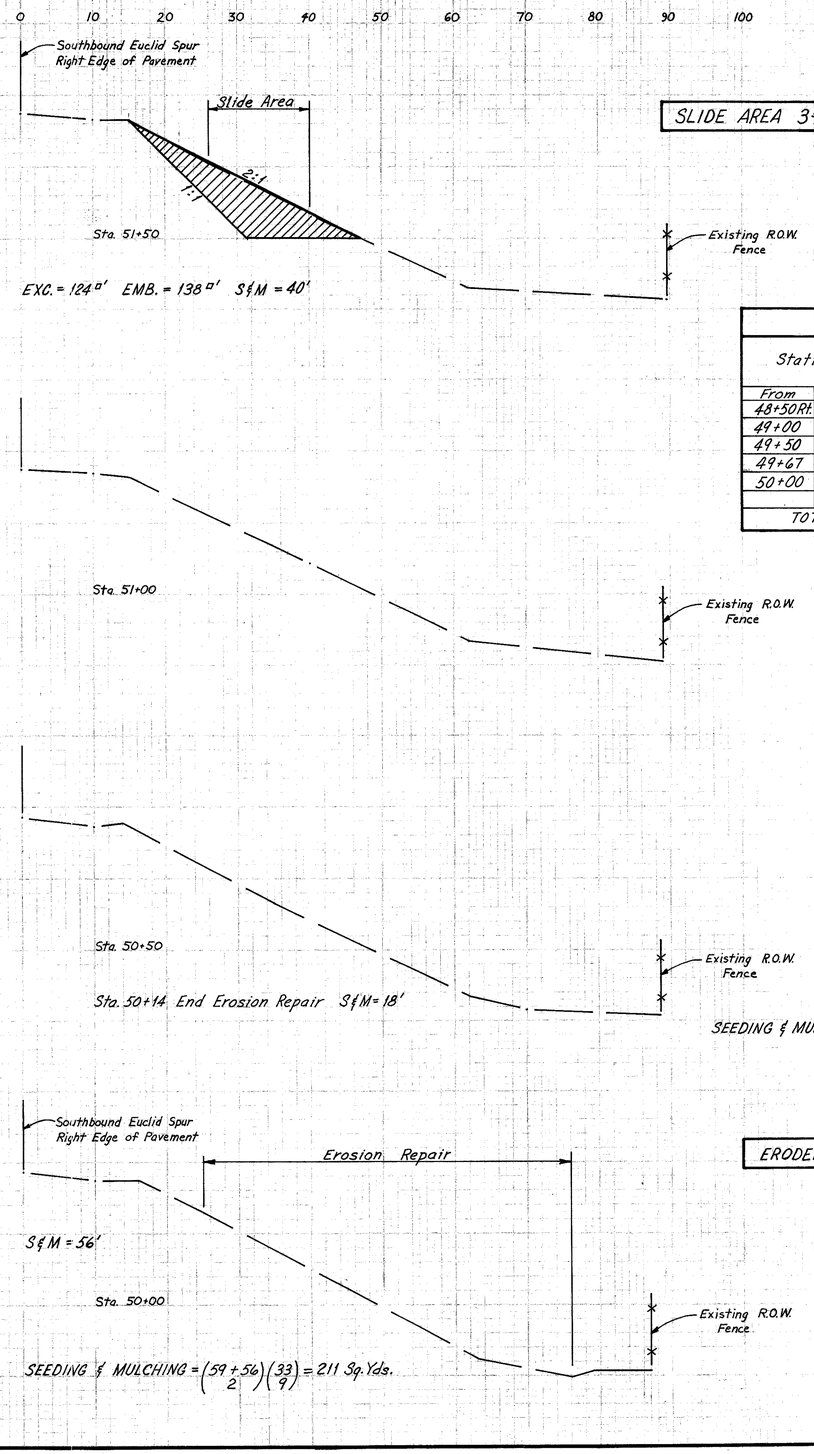

QUANTITIES—PARTICIPATION III

Station		659 Seeding & Mulching	203 Excavation	203 Embankment	SPECIAL Erosion Repair
From	To	Sq. Yds.	Cu. Yds.	Cu. Yds.	
48+50 Rt.	49+00	125			Lump
49+00	49+50	270			Lump
49+50	49+67	130	173	195	
49+67	50+00	211			Lump
50+00	50+14±	58			Lump
TOTAL		794	173	195	Lump

ERODED AREA 3-A

EXCAVATION

NOTES:
For Details & Payment for Erosion Repair, see general note, Sheet 4.
For Location of Eroded Areas & Slide Areas, see Sheet 49.

HOWARD, NEEDLES, TAMMEN & BERGENDOFF
CONSULTING ENGINEERS
CLEVELAND, OHIO
HNTB

127 B DRAFTEX

FHWA REGION	STATE	PROJECT	
5	OHIO		

173
354

CUYAHOGA COUNTY
CUY-90-23.73
LAKE COUNTY
LAK-90-0.00

QUANTITY CALCULATIONS
MADE BY M.E.E. DATE 1-9-75
CHECKED BY M.G.B. DATE 1-13-75

QUANTITY - PARTICIPATION III					
Station		659 Seeding and Mulching	203 Exc. not incl. Emb. Constr.	203 Embankment	Special Erosion Repair
From	to	Sq. Yds.	Cu. Yds.	Cu. Yds.	
℄S.B. Euclid Spur					
51+50 Rt.	51+83	193	349		
51+83	52+00	85			Lump
53+35	53+65	83			Lump
℄ Ramp 7					
3+75	4+60	472	796	727	
TOTAL		833	1145	1099	Lump

ERODED AREA 3-C

Sta. 53+35 Right to Sta. 53+65 Right by 25' wide
S & M = 25' Seeding & Mulching = 30'(25') / 9 = 83 Sq. Yds.

ERODED AREA 3-B

Erosion Repair

S & M = 25'-0"

52+00

Existing R.O.W. Fence

Seeding & Mulching = $\left(\frac{65'+25'}{2}\right)\frac{17'}{9}$ = 85 Sq. Yds.

SLIDE AREA 3-B

Exc. = 447 cu. yds. Emb. = 471 cu. yds.
S & M = 65'

51+83

Southbound Euclid Spur
Right Edge of Pavement

Existing R.O.W. Fence

2:1
1:1
25:1

Exc. = $\left(\frac{447+124}{2}\right)\left(\frac{33}{7}\right)$ = 349 cu. yds.
Seeding & Mulching = $\left(\frac{65+40}{2}\right)\left(\frac{33}{9}\right)$ = 193 sq. yds.
Emb. = $\left(\frac{471+138}{2}\right)\left(\frac{33}{27}\right)$ = 372 cu. yds.

Scale
Vert. 1" = 10'
Hor. 1" = 10'

Sta. 5+00
Ramp 7

Existing R.O.W. Fence

Sta. 4+71
Ramp 7

SLIDE AREA 3-C

Exc. = 253 cu. yds. Emb. = 231 cu. yds.
S & M = 50'

Sta. 4+00
Ramp 7

Existing R.O.W. Fence

Sta. 3+75 to Sta. 4+60
Exc. = (253 x 85) ÷ 27 = 796 cu. yds.
Seeding & Mulching = (50x85) ÷ 9 = 472 sq. yds.
Emb. = (231 x 85) ÷ 27 = 727 cu. yds.

Sta. 3+00
Ramp 7

Existing R.O.W. Fence

Excavation

Right Edge of Pavement

Temporary Bench Mark at Sta. 48+50, Rt. E.O.P. S.B. Euclid Spur
Elev. = 100.0

For Details and Payment for Erosion Repair See general note, Sheet 4

For Location of Eroded and Slide Areas, See Sheet 49

11-1-74 H.C.A.
1-8-75 M.E.E.
1-9-75 M.E.E.
1-9-75 M.G.B.

HOWARD, NEEDLES, TAMMEN & BERGENDOFF
CONSULTING ENGINEERS
CLEVELAND, OHIO
HNTB

127 B DRAFTEX

S.B. EUCLID SPUR STA. 51+83 TO STA. 52+6
RAMP 7 STA. 3+00 TO STA. 5+0

FHWA REGION	STATE	PROJECT	
5	OHIO		

174
354

CUYAHOGA COUNTY
CUY-90-23.73
LAKE COUNTY
LAK-90-0.00

ESTIMATED QUANTITIES - COST PARTICIPATION III

ITEM	DESCRIPTION	QUANTITY	UNIT
203	Excavation not including Embankment Construction	24	Cu. Yds.
203	Embankment	9	Cu. Yds.
601	Rock Channel Protection, As Per Plan	19	Cu.Yds.
601	Rock Channel Protection, Type B, with Bedding (8'x6'x2') x2 ÷ 27 = 7 Cu. Yds.	7	Cu. Yds.
601	Paved Gutter, Standard Type 1-4, Modified, As Per Plan		
	East Gutter		
	Sta. 8+63.0 to Sta. 9+07 (℄ Bishop Rd.) = 44 Ft.		
	West Gutter		
	Sta. 8+64.5 to Sta. 9+07 (℄ Bishop Rd.) = 42 Ft.		
	TOTAL	86	Lin. Ft.

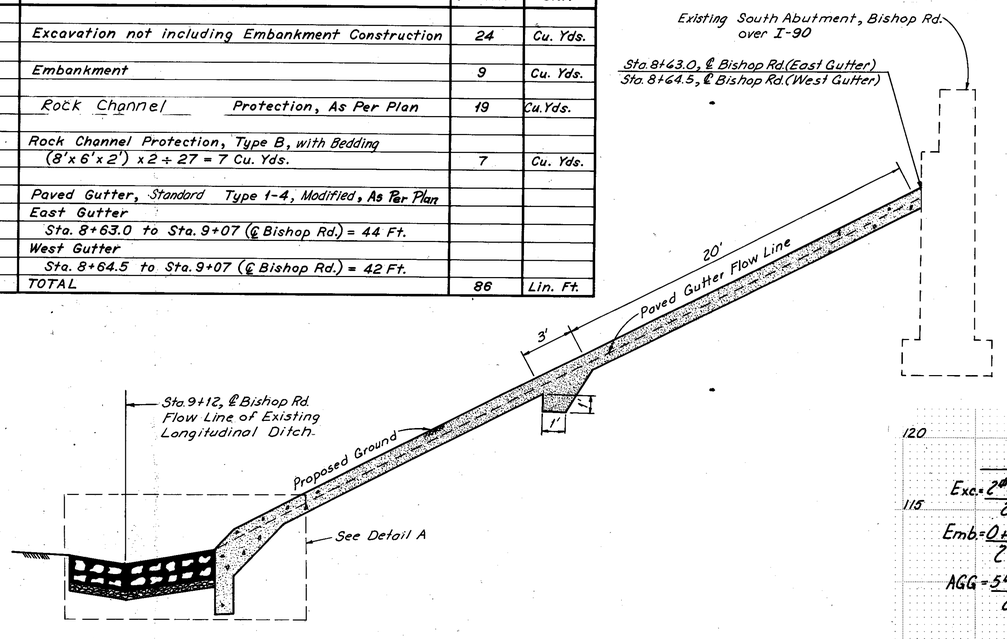

TYPICAL ELEVATION OF PAVED GUTTER SLOPE PROTECTION

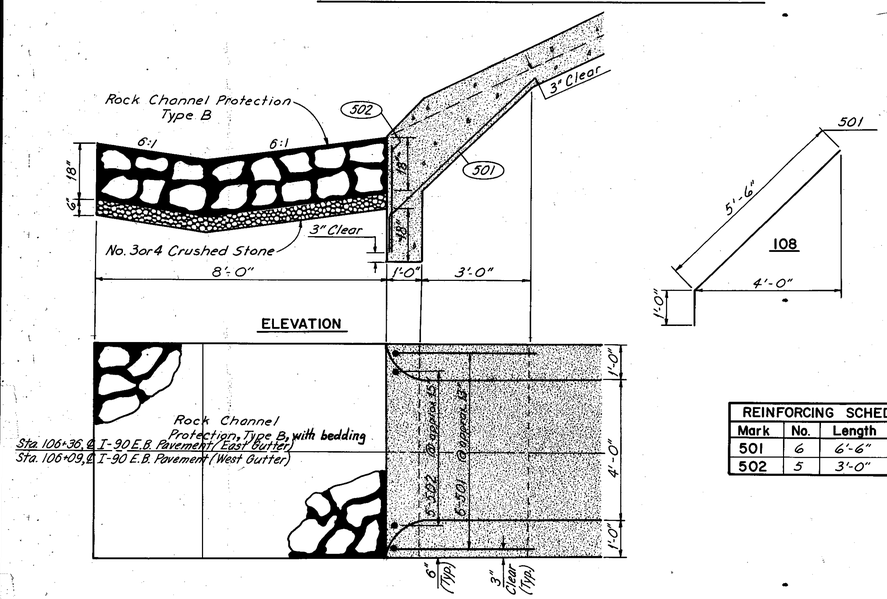

REINFORCING SCHEDULE			
Mark	No.	Length	Type
501	6	6'-6"	108
502	5	3'-0"	Str.

DETAIL A
EROSION CONTROL TREATMENT AT TOE OF SLOPE
Scale : 1/2" = 1'-0"

MADE G.F.M. DATE 1-10-75
TRACED G.F.M. DATE 1-15-75
CHECKED M.G.B. DATE 1-14-75
SCALE As Shown

Howard, Needles, Tammen & Bergendoff
CONSULTING ENGINEERS
CLEVELAND, OHIO

HNTB

QUANTITY CALCULATIONS
MADE BY G.F.M. DATE 1-10-75
CHECKED BY M.G.B. DATE 1-14-75

Temporary Bench Work = Right Edge of Pavement, Sta. 106+00, ℄ I-90 E.B. Pavement. Elevation = 100.0

Scale:
Horizontal: 1"=5'-0"
Vertical: 1"=5'-0"

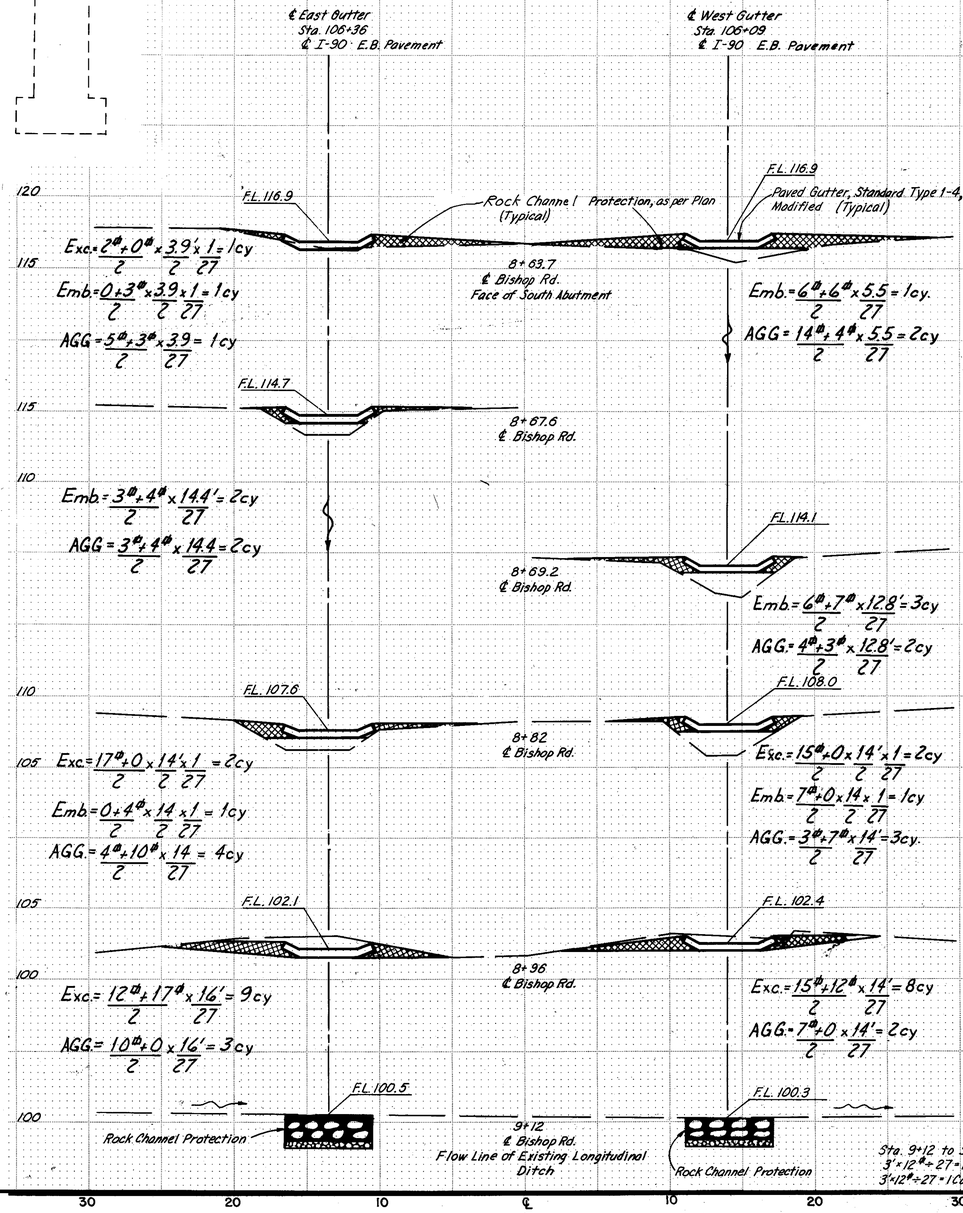

Exc. = (2# + 0#)/2 x 3.9'/27 x 1 = 1cy
Emb. = (0 + 3#)/2 x 3.9/27 x 1 = 1cy
AGG = 5#/2 x 3.9/27 = 1cy

Emb. = (6# + 6#)/2 x 5.5/27 = 1cy.
AGG = 14#/2 x 4#/2 x 5.5/27 = 2cy

Emb. = 3#/2 + 4#/2 x 14.4'/27 = 2cy
AGG = 3#/2 + 4#/2 x 14.4/27 = 2cy

Emb. = 6#/2 + 7#/2 x 12.8'/27 = 3cy
AGG. = 4#/2 + 3#/2 x 12.8'/27 = 2cy

Exc. = 17#/2 + 0 x 14'/2 x 1/27 = 2cy
Emb. = 0 + 4#/2 x 14/2 x 1/27 = 1cy
AGG. = 4#/2 + 10#/2 x 14/27 = 4cy

Exc. = 15#/2 + 0 x 14'/2 x 1/27 = 2cy
Emb. = 7#/2 + 0 x 14/2 x 1/27 = 1cy
AGG. = 3#/2 + 7#/2 x 14'/27 = 3cy.

Exc. = 12#/2 + 17#/2 x 16'/27 = 9cy
AGG. = 10#/2 + 0 x 16'/27 = 3cy

Exc. = 15#/2 + 12#/2 x 14'/27 = 8cy
AGG. = 7#/2 + 0 x 14'/27 = 2cy

Sta. 9+12 to Sta. 9+15
3'x12#/2÷27 = 1 Cu.Yd. Exc. (Lt.)
3'x12#/2÷27 = 1 Cu.Yd. Exc. (Rt.)

CRUSHED AGGREGATE		EARTHWORK EAST GUTTER				EARTHWORK WEST GUTTER			
END AREA	VOLUME	END AREA EXC.	END AREA EMB.	VOLUME EXC.	VOLUME EMB.	END AREA EXC.	END AREA EMB.	VOLUME EXC.	VOLUME EMB.
	5 Lt. 14 Rt.	2	0			0	6		
	1 Lt. 2 Rt.			1	1				
	3 Lt.	0	3					0	1
	4 Rt.			0	2	0	6		
	2 Lt. 2 Rt.							0	3
	4 Lt. 3 Rt.	0	4			0	7		
	4 Lt. 3 Rt.			2	1			2	1
	10 Lt. 7 Rt.	17	0			15	0		
	3 Lt. 2 Rt.			9	0			8	0
	0 Lt. 0 Rt.	12	0			12	0		
				1	0			1	0

EROSION CONTROL - I-90 AT BISHOP ROAD

R-9

9-Y

GENERAL NOTES - STRUCTURES OVER 20-FT SPAN

FHWA REGION	STATE	PROJECT	
5	OHIO		

175
354

CUYAHOGA COUNTY
CUY-90-~~23.73~~ 21.27
LAKE COUNTY
LAK-90-0.00

1. PROPOSED WORK

The proposed work is shown on the "Site Plan" of the bridge.

2. DESIGN SPECIFICATIONS

Standard Specifications for Highway Bridges adopted by the American Association of State Highway Officials, dated 1973, and the Ohio "Supplement" to these specifications.

The classes of concrete and the grades of structural steel and reinforcing steel, together with the working stresses for each are as follows:

Concrete Class C - Unit Stress 1200 psi for superstructure
Unit Stress 1333 psi for substructure
Structural Steel - ASTM A36 - Unit Stress 20,000 psi

Reinforcing Steel - ASTM A615, A616, A617 - Unit Stress 20,000 psi

3. SUPPLEMENTAL SPECIFICATIONS

Reference shall be made to Supplemental Specifications 836 dated 3-12-15 and 837 dated 12-7-72.

4. REFERENCE DRAWINGS

Reference shall be made to the Ohio Standard Drawings SD-1-69 dated 6-12-69 (Sheet 1 of 4), AS-1-72 dated 6-30-72 (Sheets 1 and 2), AR-1-57 dated 4-2-62, MC-7 dated 3-1-66, RB-1-55 revised 9-6-73 and HL-5 revised 9-6-73.

5. PLANS OF EXISTING BRIDGES

Construction plans for the existing bridges are on file at the Ohio Department of Transportation, District 12 Office, 10100 Broadway Avenue, Garfield Heights, Ohio and are available for reference.

6. DIMENSIONS

Dimensions given are measured horizontally and at 60°F unless otherwise noted. Dimensions given for existing structures are from the original construction plans unless otherwise indicated as field measurements. Some variation from plan dimensions is expected. Any additional cost resulting from variation from plan dimensions shall be the responsibility of the Contractor and no additional payment will be awarded by the State.

7. CONSTRUCTION SEQUENCE

All work affecting traffic flow shall be performed in accordance with stage construction sequence shown in the plans.

8. REMOVAL

A. General

Structural steel designated by the Plans for removal may be removed by methods of the Contractor's selection and as approved by the Engineer.

When so directed by the Engineer, the Contractor shall wet down concrete thoroughly during removal operations to prevent spread of dust. All necessary labor and material shall be provided by the Contractor and included with Item 202, Portions of Structures Removed, for payment, except as specifically noted otherwise

B. Concrete Removal

Concrete shall be removed by means of approved pneumatic hammers employing pointed and blunt chisel edged tools. The maximum weight of pavement breakers, if used, shall not exceed 35 pounds.

The outline of the areas of the deck slab to be removed, if greater than 1 inch deep, shall first be cut to a depth of ¾ of an inch with an approved power saw prior to the use of pneumatic hammers.

Existing reinforcing steel shall not be cut flush at all locations but shall be cut as indicated in the plans or as directed by the Engineer to serve as dowels or principal reinforcement in the rebuilt structure. Care shall be taken to preserve the bond of such dowels or principal reinforcement in the existing concrete. These bars shall be cleaned of all concrete fragments and foreign matter. Pneumatic hammers shall not be placed in direct contact with the bars; hand tools shall be employed for final cleaning. Damaged areas of reinforcement that are to remain shall be cut and stress transfer accomplished by either a lapped or mechanical splice. Other existing reinforcement within the removal limits shall be removed and disposed of.

C. Disposal of Removed Material

All concrete, reinforcing steel, asphalt, etc., removed from the structure and not reused shall, unless otherwise specified, become the property of the Contractor and shall be removed by him from the site.

Under no circumstances shall the material be permitted to remain on the premises, right of way or streets pending disposal of same or for any other purposes, unless otherwise specified by the Engineer.

9. BONDING NEW CONCRETE TO EXISTING CONCRETE

Except at the interface between the deck and concrete barrier median and at the interface between existing concrete and latex modified concrete, Polysulfide-Epoxy Resin adhesive shall be used for bonding new concrete to existing concrete at all locations where new concrete or pneumatically placed mortar is placed in contact with existing concrete. The adhesive shall be Thiobond No. 100 as manufactured by Steelcoat Mfg. Company, St. Louis, Mo., Ceilcoat 348 Adhesive, as manufactured by the Ceilcoat Company, Berea, Ohio, Resiweld R-7680-G as manufactured by the H.B. Fuller Company or adhesive meeting the requirements of AASHO M-235-73 I. In the event of application at less than 60°F or more than 104°F, it may be necessary to obtain a slightly modified material depending on the recommendations of the manufacturer.

Preparation of the surface of the existing concrete shall be in accordance with the manufacturer's recommendation. Just prior to application the prepared surface shall be washed with water to remove all dust. When the surface is dry unless otherwise specified by the manufacturer, the adhesive shall be applied by thorough brushing onto the surface to a thickness of not less than 15 mils with the coverage averaging at least one gallon per 100 Sq. ft. While the adhesive is tacky, the fresh concrete shall be placed against it. If the adhesive sets and is no longer tacky, a second coat shall be applied. The adhesive shall be thoroughly mixed and health precautions observed, all in accordance with the manufacturer's recommendation.

No separate payment will be made for bonding new concrete to old using Polysulfide-Epoxy Resin Adhesive, but this work shall be included in the pertinent repair item. This work shall include all labor, material and cleaning and preparing of the existing surface. If sandblasting the existing surface is necessary, this work shall also be included.

10. REINFORCING STEEL

All bars are designated on the plans by bar numbers. The bar size is indicated by the first digit.

All bar dimensions are given out to out.

The clear distance between reinforcing steel and face of concrete shall be 2" unless otherwise noted on the plans.

11. PAINTING STRUCTURAL STEEL

All new structural steel, except the 1-¼" galvanized structural tubing and the deck drainage pipes shall be painted in accordance with Item 514, Field Painting of New Structural Steel.

Existing structural steel, as noted on the "Site Plan", shall be painted in accordance with Supplemental Specification 837, Maintenance Painting of Existing Structures.

12. PATCHING CONCRETE DECK SLABS

A. Description

This item consists of the removal of all asphalt, all loose and disintegrated concrete, preparation of the surface, furnishing and placing of reinforcing steel, coating of the surface with polysulphide-epoxy resin adhesive and the placing of concrete patches, including curing of same. All operations as described herein shall be done in accordance with the requirements of the applicable item of the State of Ohio Department of Highways Construction and Material Specifications.

B. Material

Concrete:

The concrete shall be an air entrained high early strength concrete consisting of 1 part Portland Cement, meeting the requirements of 701.05; 1½ parts No.8 coarse aggregate, meeting the requirements of 703.02, and 1½ parts silica sand, meeting the requirements of 703.02, sufficient water, approximately 3½ to 4 gallons per bag shall be added to produce a concrete which is uniformly consistent and as dry as practical to place. The maximum allowable slump shall be 2 inches with a maximum allowable water-cement ratio of 0.40. The air content shall be adjusted with an air-entraining agent to maintain the entrained air at 8± 2%.
The materials shall be mixed at the site, ready-mixed concrete shall not be permitted.

C. Determination of Unsound Deck Area

The deck surfaces of each bridge, except Br. No. CUY-90-2035, Br. No. CUY-90-2046, Br. No. CUY-90-2200 and Br. No. CUY-90-2465 will be sounded by the Engineer to determine areas of deck deterioration. Prior to sounding and as directed by the Engineer all asphalt shall be removed and disposed of by the Contractor from the concrete decks. The Engineer will sound the decks and mark removal areas. The Contractor shall remove all unsound concrete at the areas marked and clear the debris from the deck. After the deck is cleared, the Engineer will re-sound the deck and mark any areas of deterioration previously not detected or that were fractured during the removal operation. The Contractor shall remove the concrete from these designated areas and clear the debris from the deck.

D. Removal of Disintegrated Concrete

In addition to the requirements indicated elsewhere in the General Notes, all loose and disintegrated concrete shall be removed from the areas to be repaired in such a manner and to such an extent as to expose a sound concrete surface. In these areas sound concrete shall be removed for a depth of not less than ¼" and not more than 1 inch beyond the disintegrated concrete except where the disintegrated concrete exceeds 4½". If the disintegrated concrete exceeds 4½" the removal shall be full depth. All work shall be done in such a manner as to not damage or shatter the concrete that is to remain. The depth of a patch shall not be less than ¾ of an inch. Square or preferably slightly undercut shoulders shall be made at the edges of all patches by sawing to a depth of 1".

NOTE: Reference to "CD" sheets shall be the structure common detail on sheets 339 thru 348; "R" sheets shall be the reinforcement details on sheets 349 thru 354

MICROFILMED
MAR 21 1985

HOWARD, NEEDLES, TAMMEN & BERGENDOFF
CONSULTING ENGINEERS
KANSAS CITY CLEVELAND NEW YORK

GENERAL NOTES

CUYAHOGA COUNTY OHIO

DRAWN	TRACED	CHECKED	REVIEWED	REVISED
K.B.	C.P.	C.A.B.	CAB	7-18-75
DATE 10-5-74	DATE 11-25-74	DATE 1-6-75	DATE 12-20-74	SHEET GN1

GENERAL NOTES - STRUCTURES OVER 20-FT SPAN

FHWA REGION	STATE	PROJECT	
5	OHIO		

176
354

CUYAHOGA COUNTY
CUY-90-23.73
LAKE COUNTY
LAK-90-0.00

12. PATCHING CONCRETE DECK SLABS (Cont'd.)

E. Preparation of Surface

After all disintegrated and loose concrete has been removed, the area to be patched shall be properly shaped. Damaged or removed reinforcement shall be repaired or replaced. The surface of the area to be patched shall be thoroughly cleaned of all dirt, dust, or other foreign materials by the use of water, air under pressure, or any other method that produces satisfactory results. The surface shall be thoroughly drenched with clean water.

Unless otherwise specified by the manufacturer the surface shall be dry prior to the application of the epoxy bonding agent.

F. Patching

Patches shall be made with concrete. Greater care and attention to details will be required in all operations than is generally required in the placing of concrete in large quantities.

G. Curing

Immediately after the free surface water has evaporated the concrete patch shall be covered with wet plastic coated burlap blankets 705.06. They shall be applied according to Section 511.14 and let cure for not less than 72 hours or as directed by the Engineer before opening to traffic. The concrete patch shall cure for a minimum of 72 hours before waterproofing. Surface texture according to 511.16 need not be provided.

H. Method of Measurement

The quantity shall be actual area in square yards of the exposed top surfaces only of all completed patches, irrespective of the thickness of the patch.

I. Basis of Payment

The yardage measured as provided above shall be paid for at the contract unit price bid for Item Special, Patching Concrete Deck Slab, which price shall be payment in full for the removal of asphalt; all loose, disintegrated and sound concrete as required; preparation of the surface; furnishing and placing of reinforcing steel; coating the surface with polysulfide-epoxy resin adhesive and placing concrete patches, including curing of same.

13. CONCRETE COATING

The concrete portions of the bridge shall be coated with a cement-epoxy coating in the areas indicated on the plans.

The coating shall be a two component epoxy blended with portland cement and a coloring agent. The coating shall be non fungus nutrient, shall withstand freeze-thaw cycles and shall not retain moisture or act as a moisture barrier. The manufacturer of the coating must be able to cite structures which have been successfully coated with the material for a period of at least two years. The coating shall, after 380 hours of exposure to concentrated ultra-violet and infra-red light in accordance with ASTM Designation E42, show no evidence of blistering, chalking, checking, cracking or flaking when evaluated in accordance with ASTM Publication D822. A concrete substrate shall be a light-gray as approved by the Director.

The surface to be coated shall be cleaned of efflorescense, dirt, oil, soot, loose material and any other material which would prevent a sound bond to the concrete. Cleaning shall be done by sandblasting. Any additional surface preparation requirements of the manufacturer of the coating must also be performed.

Prior to applying the coating, the substrate shall be examined by a qualified representative of the manufacturer of the coating. Before coating may begin, the representative shall certify to the Engineer in writing that the surface is properly prepared to receive the coating. In the event a primer is required, it shall be applied by the Contractor at no extra cost.

Mixing, application and curing shall be performed strictly according to the manufacturer's instructions. One coat will be required, coverage shall be in the range of 150-200 sq. ft. per gallon of unthinned material. Application shall be by spray or roller. Prior to final acceptance, all damaged areas of the coating shall be repaired.

MICROFILMED
MAR 21 1985

Precautions must be taken to prevent the coating from contacting parts of the structure not to be coated, persons and property using the bridge, and persons and property adjacent to the bridge. If damage occurs from drifting spray, spray application shall be discontinued.

The work of coating the bridge with cement-epoxy film will be measured by the area of surface coated using plan quantities and will be paid for at the contract unit price bid per square foot for Item Special, Concrete Coating. The cost of furnishing all labor, materials and equipment, sandblasting and any other cleaning and preparing required, primer if required, and of protecting persons and property from spray and drippings, shall be included in this price.

14. PRESSURE RELIEF JOINT

The pressure relief joint shall be outlined by full depth sawing. All loose and broken material shall be removed and disposed of as per Item 202.02. Adequate protection against damaging the abutting pavement shall be taken. Care shall be taken during the removal operation to prevent undermining of the adjacent slabs. The subbase shall be shaped and recompacted as directed by and to the satisfaction of the Engineer prior to placing the asphalt concrete in the joint. The joint shall be filled with 402, 405, or 404 material in three equal lifts. The first and second lift shall be compacted with a vibrator compactor or other equal equipment. The top lift shall be compacted with a rubber tired roller. All compacting shall be to the satisfaction of the Engineer. The asphalt concrete in these joints shall be finished at least flush but not more than $\frac{1}{4}$ inch above the surface of the existing pavement.

Payment for all removal, disposal, shaping, replacement and compaction shall be paid for at the contract unit price bid for Item Special, Pressure Relief Joint.

15. THREADED SLEEVE ANCHORS

The $\frac{3}{4}$" ϕ self drilling threaded sleeve anchors that anchor the new median reinforcement to the existing deck shall be capable of developing a pull-out resistance of not less than 17,500 lbs. Samples shall be provided for laboratory testing, and in addition, the Contractor shall perform non-destructive field pullout tests at six (6) locations designated by the Engineer, stressing each such anchor to not less than 12,000 lbs. The costs of such samples and tests shall be included in the unit price bid for Item Special, Threaded Sleeve Anchors.

16. CONCRETE REPAIR (ITEM 519, ITEM 520 AND ITEM SPECIAL, REPAIR OF CRACKS)

Concrete in some areas of the structures has deteriorated by spalling, cracking, leaching and general breakdown resulting from faulty drainage and from honeycombed porous areas. A careful detailed visual inspection has been made of all the exposed concrete surfaces in each structure. Based on this inspection quantity estimates have been made for the areas of the structures which will require repair operations.

The Contractor shall provide all necessary equipment prior to beginning of work, to permit examination of the existing structures. The Contractor's Superintendent shall accompany the Engineer at this time in making a detailed examination of the repairs to be made. The equipment shall be furnished for whatever length of time it may be necessary to conduct this examination. No separate payment shall be made to the Contractor to cover any costs of this examination. Because complete inspection to determine the depths of the deteriorated and spalled concrete can only be made as work progresses and certain parts become accessible for inspection, special inspection of uncovered areas will be made from time to time as the work progresses. The Contractor shall cut out and remove all concrete as directed by the Engineer, and shall provide whatever is necessary in the way of platforms or staging to facilitate additional inspection as concrete is cut out. Based on such additional inspections the Engineer will determine the additional concrete to be removed over and above that indicated by the plans, if any, the number and lengths of corroded or misplaced reinforcing bars to be cut out, and the amount of new reinforcing steel to be placed.

MICROFILMED
MAR 21 1985

For the repair work involved, the plans are indicative only of the type of repairs contemplated. The extent of the work which will be necessary to remove and restore all deteriorated concrete parts cannot be accurately determined by a visual inspection. The accompanying plans show only repairs considered necessary based on inspections which have been made. As the work of removing deteriorated concrete progresses, conditions may be disclosed wherein the concrete cannot be restored by methods shown on the plans. In such cases, additional plans will be prepared by the Engineer and the Contractor shall proceed with all work as directed.

Payment for this work shall be included in the unit prices bid for Item 519, Item 520, and Item Special, Repair of Cracks.

17. ELASTOMERIC COMPRESSION SEALS IN STRUCTURAL STEEL JOINTS

A. Description

These provisions are for the production, fabrication and installation control of elastomeric compression seals in structural steel joints.

B. Qualification

Each lot of compression seals, adhesives and metal surface primers furnished under these provisions shall be identified as specified, shall be products which have been tested by the Manufacturer or a Commercial Laboratory, and shall comply with these provisions.

C. Certification

Certified copies of the qualification test results for the adhesive and compression seals, indicating that the tested materials comply with these provisions, shall be submitted to the Testing Laboratory for approval. Sampling, if requested, will be in accordance with 106.03, except that where compression seals are prefabricated according to plan requirements, seal samples shall be made available prior to fabrication. From each lot and each project seal samples shall be one piece two feet long. Adhesive samples shall be one pint.

D. Acceptance

Material acceptance will be based upon laboratory evaluation of certified test results submitted, upon laboratory test of sampled material, or upon the evaluation of both certificates and tested samples.

E. Composition

Compression seals of the size, shape and tolerances shown on the plans shall be composed of an extruded vulcanized elastomeric virgin polychloroprene material. The adhesive shall be a one-part moisture curing polyurethane and hydrocarbon mixture. The metal surface primer shall be Industrial Wash Primer P60G2 as manufactured by the Sherwin Williams Company of Cleveland, Ohio; Chemglaze Wash Primer 9924 as manufactured by the Hughson Chemical Company of Erie, Pennsylvania; or an approved equivalent.

MICROFILMED
MAR 26 1985

HOWARD, NEEDLES, TAMMEN & BERGENDOFF
CONSULTING ENGINEERS
KANSAS CITY CLEVELAND NEW YORK

GENERAL NOTES

CUYAHOGA COUNTY OHIO

DRAWN C.K.B.	TRACED C.P.	CHECKED C.J.S.	REVIEWED C.J.S.	REVISED 7-18-75
DATE 10-6-74	DATE 11-26-74	DATE 1-8-75	DATE 12-20-74	SHEET GN 2

GENERAL NOTES - STRUCTURES OVER 20-FT SPAN

FHWA REGION	STATE	PROJECT	
5	OHIO		

177
354

CUYAHOGA COUNTY
CUY-90-23.73
LAKE COUNTY
LAK-90-0.00

17. ELASTOMERIC COMPRESSION SEALS IN STRUCTURAL STEEL JOINTS (Cont'd.)

F. Requirements

Except as provided herein, compression seals, adhesives and primers shall conform to the pertinent provisions of AASHTO M220.

(a) Compression seals shall be resilient and shall not soften excessively or become brittle between the temperatures of -30°F. and 160°F. They shall be furnished in one continuous piece or be pre-fabricated in the shop to fit the structural joint described in the plans. Cutting or stretching of the compression seals in the field to correct a misfit with the structural steel will not be permitted. Therefore, where prefabrication is necessary, the seal dimensions shall be qualified by templates which match the joint, or by preliminary shop assembly of the seal with the actual structural joint.

The seal fabricator shall also furnish seal end closures permanently fastened or vulcanized to the ends of all deck joint seals. These closures shall be designed to prevent the entrance into the seals of precipitation, surface drainage or roadway debris. Such closures shall not detrimentally affect the compressive behavior of the seals or the integrity of the joint. Provisions shall also be made in the closure design to ventilate all seal compartments to insure that air pressure equilibrium is maintained throughout all compression-exponsion cycles.

The adequacy of the closure devices shall be established by test. A sample compression seal with a closure device attached to each end shall be capable of withstanding 500 cycles (40% compression ± 20% compression-expansion) at room temperature (70° ± 10°F) within a 24 hour period without visible distress to the seal or the closure devices.

Sharp changes in the alignment of deck joints or of the compression seals within such joints shall be made by miter cutting and adhesive bonding. Generally, such splices shall be made in the shop. However, field splices shall be made where specified on the plans or where directed by the Engineer.

At each roadway seal miter splice, several inches of internal webbing on each side of the splice shall be removed and replaced with a single snug fitting piece of closed cell foam reinforcement. Foam inserts and the adhesive used for bonding the inserts and the seal elements together shall be as recommended by the seal manufacturer for this purpose.

Provisions shall be made to ventilate seal sections which are located between foam reinforced splices. All chambers of the seal shall be ventilated through a bottom opening located at the lowermost point of the joint seal.

The splicing adhesive and the closed cell foam shall be compatible with the other materials specified herein, and they shall be compounded to furnish similar resistance and durability characteristics.

After completion, splices shall have no visible offset on exterior surfaces, and after installation, there shall be no evidence of bond failure at the splices.

(b) Adhesives shall be stored at temperatures between 50° to 80°F. and shall be used within 270 days after the date of its manufacture. The adhesive shall be homogeneous and conform to the following physical properties:

Average weight per gallon	8.00 lbs. ± 10%
Solids content	72-74% by wt.
The adhesive shall remain fluid from	5° to 120°F.
Film Strength (ASTM D -412)	1,200 psi
Elongation, min. at break	350%
Stromer viscosity (77°F. 500 grm wt. at 200 rpm)	300 to 4,200 cps

(c) Primers shall not be applied to steel surfaces which will be heated to a temperature in excess of 300°F. Consequently, where heat generating operations are required adjacent to bonded areas, the primer application shall be delayed until such work is completed unless the primed area can be maintained at lesser temperatures by the use of approved cooling procedures.

(d) The primer solvents and the solvents specified as cleaning agents in these provisions are volitile, combustible and, in some instances, irritating to the skin. Containers shall be kept tightly closed and away from heat and open flames. During application, all flames, welding and smoking shall be prohibited. Prolonged breathing of vapors and contact with the skin shall be avoided. In confined areas, ventilation shall be provided during application and drying.

MICROFILMED
MAR 21 1985

G. Preparation

Prior to installing compression seals in structural steel joints, steel and seal surfaces which are to be bonded together shall be carefully and thoroughly cleaned to remove all rust, mill scale, dirt, and other contaminants which would be detrimental to bonding.

The bare steel surfaces shall be prepared to Grade SA 3, ASTM D-2200; galvonized steel surfaces shall be lightly sanded. Immediately after mechanical preparation the fresh surfaces shall be wiped with methyl ethyl ketone, toluene, or other suitable solvent to remove all contaminant traces. They then should be coated with primer. Cleaned and uncoated steel surfaces should not be allowed to become wet. They are highly sensitive to moisture and any corrosion may make them unsuitable for coating. It is essential, therefore, that the primer be applied before the cleaned surfaces can be dulled by oxidation, a process which can occur very quickly in humid weather.

The primer shall be applied only to clean dry surfaces. Thickness of primer shall be approximately 1.0 mil wet film, 0.40 mil dry film. Care shall be taken to insure that the complete bonding area plus at least ½ inch width of adjacent metal surface area shall be primed for field adhesion. Steel shall be maintained dry and at a temperature of 50°F. or above during seal installation.

To improve adhesion, the glossy seal surfaces which are to be bonded shall first be cleaned with solvent using clean, disposable cloths and then buffed with belt sanders, wire brushes or grinders. Cleaning and buffing may be done in the shop provided that the cleaned seals are carefully wrapped to protect them from contamination prior to installation.

H. Installation

Seal installation preferably shall follow the priming operation as soon as practicable, but not sooner than two hours after primer application nor later than one week. Just prior to seal installation, the bonding surfaces of the seal and the primed steel shall be wiped with methyl ethyl ketone, toluene or other suitable solvent. If the primed steel surface has become contaminated with construction materials or other dirt and debris which cannot be removed without damage to the primer, the contaminated primer shall be removed and the steel surface cleaned and reprimed as originally specified.

To clean and dry primed steel surfaces, adhesive shall be applied to a thickness of 1/32 (-0, + 1/32) inch. Then the clean and dry elastomeric seal shall be compressed sufficiently so that it can be inserted and allowed to expand within the joint and against the adhesive coated sides. Care shall be taken to see that the clean and dry sides of the compression seal are not contaminated during installation. After installation, a small bead of adhesive, approximately ¼ inch in diameter, shall be applied along the top edge where the seal touches the sides of the joint.

Adhesives shall be applied only to dry surfaces and only during periods when the temperature is 50°F. or higher. Since the adhesive is moisture curing, the completed installation need not be protected from precipitation.

The joint seal shall be installed with equipment designed specifically for the installation of elastomeric joint seals. This equipment shall not elongate the seal longitudinally, cause structural damage to the seal, nor twist, distort, or cause other malformations in the completed seal. Equipment that does not provide a properly installed seal shall not be used.

Portions of the steel joint not encased in concrete, not in contact with a compression seal, and not covered by adhesives shall be cleaned and painted in conformance with 514. Unless separately itemized, cleaning and painting shall be included with this item for payment.

I. Measurement

Payment for accepted quantities shall be based upon the actual number of linear feet of compression seals complete and in place. This payment shall include the cost of furnishing, cleaning and placing the compression seals, primers and adhesives and all labor, materials and equipment necessary to modify the existing end dam as shown in the plans including removal and replacement of the existing asphalt wearing surface to 1'-0" from the existing end dam and painting of the new end dam structural steel.

J. Payment

Payment will be made at the contract unit price for Item 516, 2 - ⅝" Preformed Elastic Joint Sealer, Including Specials.

18. ARMORED COMPOSITE BRIDGE ROADWAY SLAB

A. Description

This item consists of the furnishing, fabricating, preparing, erecting, welding, placing, mechanical finishing, and painting armored composite steel and concrete bridge roadway slab as specified. Materials or details not covered shall conform to pertinent sections of the Specifications. The depth of the steel grid units shall be 3-½".

The section modulus of the composite steel and concrete slab, computed by transformed section method, shall at least equal 2.31 inches cubed per foot of width.

B. Steel Grid Units

Steel grid units shall be the concrete filled type. They shall consist of main elements and transverse elements. Where specified, end dams or end finishes shall be provided. The main elements and transverse elements shall be copper bearing steel conforming to 711.01. If the bottom flanges of the main elements are not in contact, metal form strips shall be provided. Main elements shall extend the full nominal depth of the grid, shall be continuous over supports and shall be spaced, center to center, not more than 4".

Upper transverse elements shall have their tops approximately flush with the tops of the main elements and shall be spaced center to center not more than 4". Lower transverse elements shall be placed as close to the bottom of the slab as possible, consistent with sufficient embedment in mortar.

The minimum clear distance between elements shall be 2 inches and the minimum thickness of elements shall be ⅜ in. Metal form strips shall be No. 20 gauge or thicker, of such width and fit as to make reasonable mortar-tight joints, and of a length to provide a lap of about one inch on the members supporting the grid. All the steel parts shall be commercially straight.

The parts shall be assembled into grid units. Where the longitudinal and transverse elements intersect they shall be electropressure or electric arc welded in such a manner that any reduction in the cross-section of the elements due to cutting of the transverse elements will be restored by welded connections. The metal form strips shall be tack welded or otherwise tightly fastened in place.

Steel grid units that are so rigid that they will not readily follow the required roadway crown or bridge camber shall be crowned or cambered in the shop.

C. Concrete

Concrete shall be Class C except that the coarse aggregate shall be No. 67 or 7. Slump shall not exceed 2 inches.

HOWARD, NEEDLES, TAMMEN & BERGENDOFF
CONSULTING ENGINEERS
KANSAS CITY CLEVELAND NEW YORK

GENERAL NOTES

CUYAHOGA COUNTY OHIO

DRAWN	TRACED	CHECKED	REVIEWED	REVISED
C.K.B.	C.P.	C.A.B.	CAB	
DATE 10-67A	DATE 11-26-74	DATE 1-9-75	DATE 12-20-74	SHEET GN3

GENERAL NOTES - STRUCTURES OVER 20-FT SPAN

FHWA REGION	STATE	PROJECT	
5	OHIO		

178
354

CUYAHOGA COUNTY
CUY-90-23.73
LAKE COUNTY
LAK-90-0.00

18. ARMORED COMPOSITE BRIDGE ROADWAY SLAB (Cont'd.)

D. Erection

Steel grid units shall be placed and welded to supporting beam by $\frac{1}{4}$ inch fillet welds 2$\frac{1}{2}$ inches long to alternate I-beams, not closer than two inches from the edge of the flange of the supporting beams. Transverse members of adjacent units shall be connected by welding. All field welding shall be done by the electric arc process. In erecting the steel grid units, care shall be excercised to place each unit in the proper position, measuring in all cases from some fixed point, to avoid cumulative error. During welding of grid units to supporting members, the grid shall be held in firm bearing on the supports.

E. Placing Concrete

Concrete shall be placed, finished, and cured in accordance with 511 except as provided herein.

If, during the 24 hours immediately preceding the placing of concrete, the air temperature has been at 32°F or below, the steel shall be thoroughly heated.

The concrete shall be finished flush with the top of the steel grid by means of a mechanical floor finisher approved by the Engineer. All concrete shall be well vibrated and in complete contact with the steel.

The concrete shall be cured in accordance with 511.14 Method (a). No load shall be applied on the slab during the curing period.

F. Painting Steel

All exposed steel shall be painted in accordance with Item 514. Surfaces in contact with concrete shall not be painted.

G. Method Of Measurement

The quantity shall be the actual number of square feet of armored composite bridge roadway slab.

H. Basis Of Payment

Payment for accepted quantities, complete in place, will be made at contract unit price per square foot bid for Item Special, Armored Composite Bridge Roadway Slab.

19. REPAIR APPROACH SLABS

Repair of existing approach slabs shall be in accordance with General Note No. 12, Patching Concrete Deck Slabs.

20. CORRECT APPROACH SLAB SETTLEMENT

The Contractor shall apply the following surface treatment to the approach slabs:

1.) Item 407, Tack Coat, at 0.1 gal. per sq. yd.

2.) Variable thickness of Item 403, Asphalt Concrete (AC-20).

When this work is complete the profile shall be 1$\frac{3}{4}$" below the final profile at the bridge and 3" below the final profile at the roadway end of the approach slab. All localized irregularities shall be eliminated and the final cross slope shall generally match the existing.

Correcting approach slab settlement will be paid for at the contract lump sum bid for Item Special, Correct Approach Slab Settlement. This price shall be payment in full for all material, equipment and labor necessary to complete this work.

21. RAISING EXISTING END DAMS

A. Existing Backwall to Remain in Place

The Contractor shall furnish and weld the specified bars to the existing end dam plate or angle in accordance with the details shown on Sheet CD-6.

B. Existing Backwall Replaced

The Contractor shall furnish and weld 2" x 1$\frac{1}{2}$" bar to the existing end dam angle in accordance with the details shown on Sheet CD-6.

Raising the existing end dams will be measured in place by length in linear feet, and shall be paid for at the contract unit price bid Item Special, Raising Existing End Dams. This price shall be payment in full for all material, equipment and labor to complete this work.

22. ASPHALT COVER OVER BERM

The Contractor shall remove 6 inches of existing earth, place a three inch aggregate base meeting the requirements of 304.02 and a three inch layer of asphalt concrete meeting the requirements of 402.02.

Asphalt cover over berms will be measured in place by area in square yards, and shall be paid for at the contract unit price bid for Item Special, Asphalt Cover Over Berms. This price shall be payment in full for all material, equipment and labor necessary to complete this work.

23. DOWEL HOLES

A separate payment item is not provided for drilling dowel holes into existing concrete or for placing grout into the holes to hold the dowels in place. This work shall be in accordance with Item 510 except that non-shrinking grout shall be used and shall be included with Item 511 for payment.

24. REPAIR OF CONCRETE SLOPE PROTECTION

The Contractor shall remove sections of severly cracked slope protection and replace with concrete slope protection meeting the requirements of 601.06. If required, earth fill shall be added to bring the underlying or adjacent embankment to the proper grade.

Repair of concrete slope protection will be measured in place by area in square yard, and shall be paid for at the contract unit price bid for Item Special, Repair of Concrete Slope Protection. This price shall be payment in full for all material, equipment and labor necessary to complete this work.

25. CLEANOUT BRIDGE DRAINAGE SYSTEMS AND REMOVE DEBRIS FROM BRIDGE SEATS

The cleanout shall consist of removing all dirt and debris from curb areas, scuppers, vertical pipe downspouts, horizontal pipe collectors and abutment bridge seats.

After the dirt and debris are removed, the entire drainage system shall be flushed with clear water to the satisfaction of the Engineer.

Cleanout of bridge drainage systems and removal of debris from the bridge seats will be paid for at the lump sum bid for Item Special, Cleanout Bridge Drainage Systems and Remove Debris from Bridge Seats. This price shall be payment in full for all material, equipment and labor necessary to complete this work.

26. REPAIR OF CRUSHED AGGREGATE SLOPE PROTECTION

The Contractor shall fill localized depressions in the end slope with material meeting the requirements of 601.05 so that the surface is flush with the embankment slopes.

Placing crushed aggregate slope protection will be measured in place by area in square yards, and shall be paid for at the contract unit price bid for Item Special, Repair of Crushed Aggregate Slope Protection. This price shall be payment in full for all material, equipment and labor necessary to complete this work.

27. REPAIR EXISTING END CROSSFRAMES

Damaged end crossframes shall be repaired at locations indicated in the Plans by methods approved by and to the satisfaction of the Engineer and shall be paid for at the contract lump sum price bid for Item Special, Repair Existing End Crossframes. This price shall be payment in full for all material, equipment and labor necessary to complete this work.

28. RESET RAILING POST AND REPLACE MISSING RAILING

The damaged bridge railing including posts shall be repaired at locations indicated in the Plans by replacement in kind in accordance with Ohio Standard Drawing AR-1-57 and shall be paid for at the contract lump sum price bid for Item Special, Reset Railing Post and Replace Missing Railing. This price which includes resetting railing posts shall be payment in full for all material, equipment and labor necessary to complete this work.

29. REPAIRS OF CRACKS

Repair of cracks shall be in accordance with Sheet CD-7 of the Plans and shall be paid for at the contract unit price bid for Item Special, Repair of Cracks. This price shall be payment in full for all material, equipment and labor necessary to complete this work.

30. RESET BEARINGS

Resetting of bearings shall be accomplished in accordance with Sheet CD-3 of the Plans and shall be paid for at the contract unit price bid for Item Special, Reset Bearings. This price shall be payment in full for all material, equipment and labor necessary to complete this work.

31. SHIM BEARINGS (WHERE RESETTING IS NOT REQUIRED)

Shimming of bearings (where resetting is not required) shall be accomplished in accordance with Sheet CD-3 of the Plans and shall be paid for at the contract unit price bid for Item Special, Shim Bearings (where resetting is not required). This price shall be payment in full for all material, equipment and labor necessary to complete this work.

32. SUBDRAINAGE FOR WEARING COURSE, AS PER PLAN

Subdrainage for wearing course shall be provided in accordance with Sheet CD-7 of the Plans and shall be paid for at the contract unit price bid for Item 518, Subdrainage for Wearing Course, As Per Plan. This price shall be payment in full for all material, equipment and labor necessary to complete this work.

33. SA

w
u

ly
ly
pic
surf
of
mem
proje site sn

The accepte
contract un of
full compensati

Payment will

—
s

MICROFILMED
MAR 21 1985

Rev. 7-18-75

HOWARD, NEEDLES, TAMMEN & BERGENDOFF
CONSULTING ENGINEERS
KANSAS CITY CLEVELAND NEW YORK

GENERAL NOTES

CUYAHOGA COUNTY OHIO

DRAWN C.K.B	TRACED C.P.	CHECKED C.A.B.	REVIEWED CAB	REVISED
DATE 12-27-74	DATE 12-4-74	DATE 1-9-75	DATE 12-20-74	SHEET GN4

GENERAL NOTES - STRUCTURES OVER 20-FT SPAN

FHWA REGION	STATE	PROJECT	
5	OHIO		

179
354

CUYAHOGA COUNTY
CUY-90-23.73
LAKE COUNTY
LAK-90-0.00

34. LATEX MODIFIED CONCRETE REPAIRS (Br. No. CUY-90-2465)

A. Description

This work shall consist of repairing concrete bridge decks by resurfacing with latex modified concrete and determining unsound deck concrete, and removing and cleaning of the existing surface to the extent it is completely free of unsound concrete, bituminous or epoxy patches, and other materials detrimental to achieving bond at the time of resurfacing.

This work shall be done in accordance with these specifications and in reasonably close conformity with grades, thickness, and cross-section shown on the plan or established by the Engineer.

B. Surface Preparation

The deck surface of the bridge will be sounded by the Engineer with metal rods to determine areas of deck deterioration. Prior to sounding and as directed by the Engineer all asphalt shall be removed and disposed of by the Contractor from the concrete deck. The Engineer will sound the deck and mark removal areas. The Contractor shall remove all unsound concrete at the areas marked and clear the debris from the deck. After the deck is cleared, the Engineer will re-sound the deck and mark any areas of deterioration previously not detected or that were fractured during the removal operation. The Contractor shall remove the concrete from these designated areas and clear the debris from the deck.

In addition to the requirements indicated elsewhere in the General Notes, all loose and disintegrated concrete shall be removed from the areas to be repaired in such a manner and to such an extent as to expose a sound concrete surface. Sound concrete shall be removed for a depth of not less than 1" and not more than 1 inch beyond the disintegrated concrete, except where the disintegrated concrete exceeds 4¾". If the disintegrated concrete exceeds 4¾" the removal shall be full depth. All work shall be done in such a manner as to not damage or shatter the concrete that is to remain.

Prior to applying the latex modified concrete wearing course, the concrete surface to be covered shall be machine-scarified to ¼ inch minimum depth.

Forty-eight hours of good curing shall have elapsed prior to scarifying or chipping on adjacent concrete within six feet of latex modified concrete.

Areas from which unsound concrete has been removed shall be kept free of slurry produced by wet sawing or wet scarifying by planning the work so that this slurry will drain away from the complete areas of preparation. All such slurry shall be removed from prepared areas before resurfacing. Before placement begins, and within 24 hours, the entire surface shall be thoroughly cleaned by sand blasting. The edge of previously placed lanes of overlayment shall be sand blasted to remove the trowel cut surfacing and promote bond. If necessary to remove rust, oil, or other foreign materials detrimental to achieving bond, detergent cleaning followed by sand blasting and air blast cleaning will be required. Immediately prior to placement of latex modified concrete, the clean surface shall be thoroughly wetted with clean water for a period of not less than one hour. Any standing water in depressions, holes or areas of concrete removal shall be blown out with compressed air.

Damaged or removed reinforcement shall be repaired or replaced (See Sheet CD-7). Where the bond between existing concrete and reinforcing steel has been destroyed, or where more than half the diameter of the steel is exposed, the concrete adjacent to the bar shall be removed to a depth that will permit modified concrete to bond to the entire periphery of the bar so exposed.

C. Materials

The materials used in producing latex modified concrete shall meet the requirements of Ohio Department of Transportation Construction and Material Specifications.

1. Portland cement shall by Type I, 701.04 or, if required by weather conditions, Type III, 701.05, at the direction of the latex manufacturer.
2. Fine aggregate shall be sand conforming to 703.02 of the C.M.S.
3. Coarse aggregate shall be size No.8 limestone meeting the requirements of Section 703.02 of the C.M.S.
4. The latex modifier shall conform to the requirements of Dow Chemical Company, Modifier A, or approved equal.
5. Water shall conform to the requirements of Section 499.02 of the C.M.S. and the storage and handling of all materials shall be in accordance with the C.M.S. and the latex manufacturer's requirements. The latex modified concrete shall be designed by the Engineer and meet the following requirements:

Material or Property	Latex Modified Concrete
Average thickness	1" and greater
Cement content, sacks/cu.yd.	7.0
Latex emulsion admixture, gal./sack	3.5
**Water, gal. per sack	2.5
Air content, % of plastic mix	5±2
*Slump, inches	4-6
Percent fine aggregate as percent of total agg., by weight	50-55
***Weight ratio of cement; sand; coarse aggregate dry basis	1:2.5:2.0
Aggregate, specific gravity	2.65

*The slump shall be measured 4 to 5 minutes after discharge from the mixer. During this waiting period, it shall be deposited on the deck and not be disturbed.

**The net water added shall be adjusted to control the slump within the prescribed limits and should produce net water cement ratio of 0.35-0.40 by weight.

***The dry weight ratios are approximate and should produce good workability but due to gradation changes may be adjusted within the limits by the Engineer. The sand ratio may be increased by as much as 0.2 if the coarse aggregate is reduced by an equivalent volume.

D. Equipment

All equipment for the deck preparation, mixing, placing, and finishing of latex modified concrete shall be approved by the Engineer prior to start of any work.

Surface preparation equipment shall be of the following types:

1. Sawing equipment capable of sawing concrete to the specified depth.
2. Power-operated mechanical scarifier capable of removing not less than ¼ inch from the old surface.
3. Sand blasting equipment capable of removing rust scale from reinforcing bars and of removing small chips of concrete partially loosened by the scarifying or chipping operation.
4. Power driven hand tools for removal of unsound concrete subject to the following restrictions:
   (a) Pneumatic hammers heavier than nominal 30 pound class shall not be used, unless approved by the Engineer. No hammers heavier than 60 pounds shall be used, in any case.
   (b) Triple-headed tampers fitted with star drills shall be not less than 2 inches diameter in the tamper sockets.

Proportioning and mixing equipment shall be self-contained, mobile, continuous mixing subject to the following:

1. The mixer shall be self-propelled and be capable of carrying sufficient unmixed dry, bulk cement, sand, coarse aggregate, latex modifier, and water to produce on the site not less than six cubic yards of concrete.
2. The mixer shall be capable of positive measurement of cement being introduced into the mix. A recording meter visible at all times and equiped with a ticket printout shall indicate this quantity.
3. Mixers shall be calibrated to accurately proportion the specified mix. Certification of the calibration by approved testing authority will be accepted as evidence of this accuracy if the yeild is shown to be true within a tolerance of 1.0% according to the following test:
   With the cement meter set on zero and all controls set for the desired mix, activate the mixer discharging mixed material into a one quarter cubic yard container - 36" x 36" x 9". When the container is level-struck full, making provision for settling the material into all corners, the cement meter must show a discharge of 1¾ bags of cement for latex modified concrete, (7 bags/cu. yd.)
4. The mixer shall provide positive control of the flow of water and latex emulsion into the mixing chamber. Water flow shall be indicated by flow meter and be readily adjustable to provide for minor variations in aggregate moisture.
5. The mixer shall be capable of being calibrated to automatically proportion and blend all components of the indicated composition on continuous or intermittent basis as required by the finishing operation, and shall discharge mixed material through a conventional chute directly in front of the finishing machine.
6. The mixer shall be capable of spraying water over the entire placement width as it moves ahead to insure that the surface to be overlaid is wetted to receive the modified material.

Placing and finishing equipment shall include hand tools for placement and brushing-in freshly mixed modified concrete and for distributing it to approximately the correct level for striking-off with the screed. Approved hand operated vibrators and screeds shall be used to place and finish small areas of work.

An approved finishing machine complying with the following requirements shall be used for finishing all large areas of work.

The finishing machine shall be self-propelled and capable of forward and reverse movement under positive control. Provision shall be made for raising all screeds to clear the screeded surface for travelling reverse.

A Gomaco C450 or equivalent self-propelled finishing machine with one or more rotating rollers, augers, and 1500 to 2500 v.p.m. vibratory pans may be used.

Any modification shall be subject to approval by the Engineer.

MICROFILMED
MAR 21 1985

HOWARD, NEEDLES, TAMMEN & BERGENDOFF
CONSULTING ENGINEERS
KANSAS CITY CLEVELAND NEW YORK

GENERAL NOTES

CUYAHOGA COUNTY OHIO

DRAWN C.K.B.	TRACED C.P.	CHECKED C.L.B.	REVIEWED CAB	REVISED
DATE 1-3-75	DATE 1-9-75	DATE 1-10-75	DATE 12-2014	SHEET GN 5

GENERAL NOTES - STRUCTURES OVER 20-FT SPAN

FHWA REGION	STATE	PROJECT	
5	OHIO		

180
354

CUYAHOGA COUNTY
CUY-90-23.73
LAKE COUNTY
LAK-90-0.00

34. LATEX MODIFIED CONCRETE REPAIRS (Br. No. CUY-90-2465) (Continued)

The machine may be of the vibrating screed type designed to consolidate the modified composition by vibration. Vibration frequency shall be variable with positive control between 3000 and 11000 v.p.m. The bottom face of the screeds shall be not less than four inches wide and be metal covered. The screed shall be provided with positive control of the vertical position.

Screed rails shall be of $\frac{1}{2}$ inch steel bars stock not less than two inches wide, drilled and counter-sunk for attachment to the prepared surface. Travel rails for the Gomaco C450 or equivalent shall be 2"x2" perforated steel bar stock, two inch pipe rail or approved equal. A suitable portable lightweight or wheeled work bridge shall be required and used behind the finishing operation.

E. Proportioning and Mixing of Modified Compositions

The operations of proportioning and mixing modified materials shall comply with the following requirements:

Mixers shall be clean and the ingredients accurately proportioned.

Modified concrete materials shall be mixed at the site in accordance with the specified requirements for the equipment used. The modified concrete as discharged from the mixer shall be uniform in composition and consistency. Mixing capability shall be such that finishing operations can proceed at a steady pace with final finishing completed before the formation of the plastic surface film.

Screed rails shall be placed and fastened in position to insure finishing the new surface to the required profile. Anchorage for supporting rails shall provide horizontal and vertical stability.

Screed rails shall not be treated with parting compound to facilitate their removal.

All surfaces shall be completely cleaned as approved by the Engineer prior to placing mixtures.

The modified mixture shall be brushed onto the wetted, prepared surface. Care shall be excercised to insure that all vertical as well as horizontal surfaces receive a thorough, even coating and that the rate of progress is limited so that the brushed material does not become dry before it is covered with additional material as required for the final grade. Material used for brushing which has had the mortar used up, shall be disposed of.

The mixture shall be placed and struck-off to approximately $\frac{1}{4}$ inch above final grade. It shall then be consolidated and finished at final grade with the vibrating devices. Spud vibration will be required in deep pockets, edges and adjacent to joint bulkheads. Hand finishing with a float may be required along the edge of the pour or on small areas of repair. Edge tooling is required at joints, except next to metal expansion dams, curbs, and previously placed lanes.

When a tight, uniform surface has been achieved, it shall be texturized by a burlap or broom drag before the plastic film forms on the surface.

Screed rails and/or construction bulkheads shall be separated from the newly placed material by passing a pointing trowel along their inside face. Metal expansion dams shall not be separated from the overlayment. Care shall be excercised to insure that this trowel cut is made for the entire depth and length of rails after the mixture has stiffened sufficiently.

The surface shall be promptly covered with a single layer of clean, wet burlap as soon as the surface will support it without deformation.

Within one hour of covering with wet burlap, a layer of four mil, polyethylene film shall be placed on the wet burlap and the surface cured for 24 hours. The curing material shall then be removed for an additional 72 hours air cure. Wet burlap-polyethylene sheets may be substituted for the polyethylene film with the approval of the Engineer, but shall not replace the initial wet burlap.

A representative of the manufacturer shall be present during the proportioning, mixing, placing and finishing of the concrete. Operations and procedures which are considered by this representive as being detrimental to the integrity and durability of the concrete will not be permitted. Surface smoothness shall conform to the requirements of 451.12. No vehicular traffic shall be permitted on the latex concrete surface until 96 hours after placement.

F. Limitations of Operations

The construction of the latex modified concrete mixture overlay shall be performed during good weather conditions. The mixture shall be placed when the atmospheric temperature is between 55° and 75°F., when the wind velocity is low, when the relative humidity is normal or high, and when hot conditions or rain are not expected. In all instances the mixture shall be placed when the temperature is above 45°F. and is predicted to be above 45°F. for at least eight hours after the mixture is placed. The mixture shall not be placed when the temperature is 85°F. or higher, when the wind velocity is high, when the relative humidity is extremently low, when rain is expected within the working period, nor when any other atmospheric conditions cause difficulty in the satisfactory finishing and curing of the overlay. This may require nighttime work or other limited work periods.

The number of mixers, finishers required and other pertinent details shall be determined in a pre-pour meeting on the project at least three days prior to any deck pour. The Superintendent in charge of the pour and Project Engineer shall attend.

The construction dam or bulkhead shall be installed in case of major delay in the placement operation exceeding one hour in duration. During minor delays of one hour or less the end of the placement shall be protected from drying with several layers of wet burlap.

Adequate precautions shall be taken to protect freshly placed modified material from sudden or unexpected rain. All placing operations shall stop when it starts to rain. The Engineer may order removal of any material damaged by rainfall.

The Contractor shall provide sufficient mixer capacity to sustain a continuous pouring operation. A minimum of two mixers will be required for any pour over six cubic yards. For larger pours additional mixers may be necessary.

G. Method of Measurement

1. Item Special, Surface Preparation will be computed in square yards from measurements of areas so prepared and accepted.
2. Item Special, Latex Modified Portland Cement Concrete shall be computed in cubic yards of materials mixed and placed. Mater ticket printout of continuous mixers so equipped and properly calibrated will be accepted for this calculation. No deduction will be made for coarse aggregate thrown out due to brushing operations.
3. Item Special, Finishing and Curing will be computed in square yards from measurements of the areas so finished and cured.

H. Basis of Payment

The quantities measured as provided above will be paid for at the contract unit price for the pay items, which items shall be full compensation for all material, equipment and labor necessary to complete the work indicated by this General Note, including incidentals.

35. ASPHALT WEARING SURFACE ON APPROACH SLABS

All approach slabs shall be overlayed with an asphalt wearing surface.

For new approach slabs, the surface treatment shall be as specified in the approach slab details in the Plans.

For existing approach slabs, the Contractor shall apply the following surface treatments to the approach slabs and adjacent shoulder areas:

1. Item 407, Tack Coat, of 0.1 gal. per sq. yd.
2. Variable thickness of Item 402, Asphalt Concrete(AC-20)
3. Item 404, 1½" Asphalt Concrete (AC-20)

The final profile shall be 1¾" above the existing profile at the bridge and 3" above the existing profile at the roadway end of the approach slab.

36. MEDIAN FENCE REBUILT

When so required by the Plans, the existing chain link fence salvaged under Item 202, Portions of Structures Removed, shall be rebuilt at the locations specified as directed by the Engineer. Fence materials and posts shall be obtained from Item 202, but any fence or component parts which are damaged or are otherwise unsatisfactory for reuse shall be replaced in kind by the Contractor at no additional cost. The Contractor shall furnish and install galvanized base plate replacements in kind as directed by the Engineer and furnish additional bolts, clips or incidental hardware as may be necessary to complete the chain link fence rebuilt.

The salvaged fence posts rebuilt and the galvanized surface of the base plate damaged by the fillet welding shall be cleaned, spot primed and given two coats of aluminum paint in accordance with Item 514.

The chain link fence rebuilt in the median shall be paid for at the contract unit price bid per linear foot, bid for Item Special, Median Fence Rebuilt, which price and payment shall constitute full compensation for re-erecting all materials, tools, equipment and incidental hardware necessary to complete this item.

37. END OF WINGWALL MODIFICATION

The end of the wingwalls shall be modified at the locations and as indicated in the Plans. Payment shall be at the contract lump sum price bid for Item Special, End of Wingwall Modification. This price shall be payment in full for all material, equipment and labor necessary to complete this work.

MICROFILMED
MAR 21 1985

HOWARD, NEEDLES, TAMMEN & BERGENDOFF
CONSULTING ENGINEERS
KANSAS CITY CLEVELAND NEW YORK

GENERAL NOTES

CUYAHOGA COUNTY OHIO

DRAWN	TRACED	CHECKED	REVIEWED	REVISED
C.K.B.	C.P.	L.J.B.	D.A.B.	
DATE 1-3-75	DATE 1-9-75	DATE 1-10-75	DATE 12-20-74	SHEET GNG

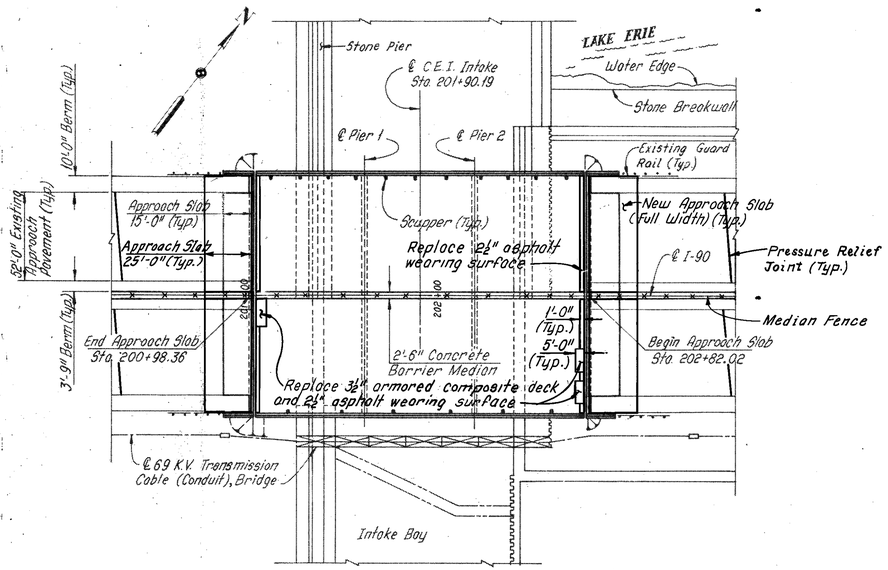

PLAN

40 0 40 80

SCALE IN FEET

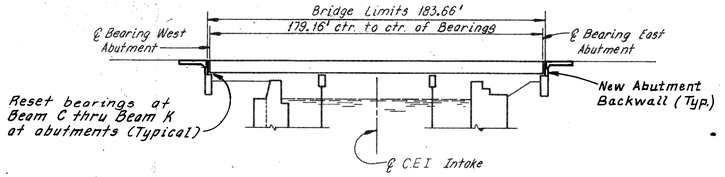

ELEVATION

40 0 40 80

SCALE IN FEET

EXISTING STRUCTURE	
TYPE:	Continuous Steel Beams with Reinforced Concrete Deck and Capped Pile Abutments and Piers.
SPAN:	59'-7", 60'-0" and 59'-7".
ROADWAY:	135'-6" Face to Face of Parapets with a 2'-6" Barrier Median.
LOADING:	HS 20-44 and Interstate Alternate Loading.
SKEW:	None
WEARING SURFACE:	2½" Bituminous Concrete.
APPROACH SLAB:	15'-0" Long.
ALIGNMENT:	Tangent.

MODIFIED STRUCTURE	
TYPE:	Continuous Steel Beam with Reinforced Concrete Deck and Capped Pile Abutments and Piers.
SPAN:	59'-7", 60'-0" and 59'-7".
ROADWAY:	135'-6" Face to Face of Parapets with a 2'-6" Barrier Median.
LOADING:	HS 20-44 and Interstate Alternate Loading.
SKEW:	None.
WEARING SURFACE:	2½" Bituminous Concrete
APPROACH SLABS:	AS-1-72. (25'-0" Long).
ALIGNMENT:	Tangent

FHWA REGION	STATE	PROJECT	
5	OHIO		

181
354

CUYAHOGA COUNTY
CUY-90-23.73
LAKE COUNTY
LAK-90-0.00

PROPOSED WORK

1. Install pressure relief joints in approach roadway pavement, see Sheet CD-9.
2. Replace portions of the east and west abutment backwalls, see Sheets 3/13 thru 6/13.
3. Reset abutment bearings, see Sheets 4/13, 5/13 and 11/13.
4. Replace approach slabs, see Sheet 13/13.
5. Replace end diaphragms between Beam L and Beam X at both abutments, see Sheet 10/13.
6. Replace 5'-0"± of 3½" armored composite bridge deck and 5'-0"± of 2½" asphalt wearing surface between Beam K and Beam N at the west end of the deck and between Beam R and Beam U and between Beam W and Beam Y at the east end of the deck, see Sheet 10/13.
7. Replace 1'-0" of the 2½" asphalt wearing surface at the west and east ends of the deck, full width, see Sheets 10/13 and 12/13.
8. Clean out drainage system and remove debris from abutment bridge seat.
9. Paint all structural steel.

Note:
Roman numerals II and III denote cost participation breakdown. For description, see Roadway Plans, Sheet 3/354.

TYPE CODE X031

ESTIMATED QUANTITIES

ITEM	TOTAL	UNIT	DESCRIPTION BRIDGE REPAIRS	SUPER-STRUCTURE	WEST ABUT	EAST ABUT	WINGWALLS NE	WINGWALLS SE	WINGWALLS NW	WINGWALLS SW	APPROACH SLABS	CON. SLOPE PRO. WEST	CON. SLOPE PRO. EAST	GENERAL	Participation II Fed., State & Cleveland	Participation III 100% State
*202	Lump Sum	Lump Sum	Portions of Structures Removed	III L.S.	III L.S.	III L.S.	-	-	-	-	III L.S.	-	-	-		Lump
402	25	Cu. Yd.	Asphalt Concrete, AC-20.	-	-	-	-	-	-	-	II 25	-	-	-	25	
404	27	Cu. Yd.	Asphalt Concrete, AC-20	II 2	-	-	-	-	-	-	II 25	-	-	-	27	
407	73	Gallon	Tack Coat: 702.02, RC-250; or 702.01, SS-1, SS-1H, MS-2 or RS-1	-	-	-	-	-	-	-	II 73	-	-	-	73	
503	Lump Sum	Lump Sum	Cofferdams, Cribs and Sheeting	-	-	-	-	-	-	-	-	-	-	III L.S.		Lump
509	9988	Pounds	Reinforcing Steel	-	III 4994	II 4994	-	-	-	-	-	-	-	-		9988
511	64	Cu. Yd.	Class "C" Concrete, Substructure	-	III 32	II 32	-	-	-	-	-	-	-	-		64
512	8	Lin. Ft.	Premolded Sealing Strip	-	II 4	II 4	-	-	-	-	-	-	-	-		8
513	1086	Pounds	Structural Steel (ASTM A36)	III 1086	-	-	-	-	-	-	-	-	-	-		1086
514	1086	Pounds	Field Painting of New Structural Steel	III 1086	-	-	-	-	-	-	-	-	-	-		1086
516	270	Lin. Ft.	2⅝" Preformed Elastic Joint Sealer,													270
			Including Specials	III 270	-	-	-	-	-	-	-	-	-	-		
516	28	Sq. Ft.	1" Preformed Expansion Joint Filler	-	III 14	III 14	-	-	-	-	-	-	-	-		28
518	50	Cu. Yd.	Porous Backfill	-	III 25	II 25	-	-	-	-	-	-	-	-		50
611	745	Sq. Yd.	Reinforced Concrete Approach Slabs T=15"	-	-	-	-	-	-	-	III 745	-	-	-		745
837	Lump Sum	Lump Sum	Surface Preparation	III L.S.	-	-	-	-	-	-	-	-	-	-		Lump
837	Lump Sum	Lump Sum	Spot Prime Painting	II L.S.	-	-	-	-	-	-	-	-	-	-		Lump
837	Lump Sum	Lump Sum	Complete Coat Prime Painting	III L.S.	-	-	-	-	-	-	-	-	-	-		Lump
837	Lump Sum	Lump Sum	Two Complete Coats Finish Painting	III L.S.	-	-	-	-	-	-	-	-	-	-		Lump
Special	Lump Sum	Lump Sum	Cleanout Bridge Drainage Systems and Remove Debris from Bridge Seats	III L.S.	III L.S.	III L.S.	-	-	-	-	-	-	-	-		Lump
Special	16	Sq. Yd.	Membrane Waterproofing (Hot Applied Liquid) (See Proposal Note)	II 16	-	-	-	-	-	-	-	-	-	-	16	
Special	16	Each	Reset Bearings	-	III 8	III 8	-	-	-	-	-	-	-	-		16
Special	208	Lin. Ft.	Pressure Relief Joint	-	-	-	-	-	-	-	-	-	-	III 208		208
Special	203	Sq. Ft.	Armored Composite Bridge Roadway Slab	III 203	-	-	-	-	-	-	-	-	-	-		203
622	50	Lin. Ft.	Barrier Median At Approach Slab, As Per Plan	-	-	-	-	-	-	-	-	-	-	III 50		50
Special	50	Lin. Ft.	Median Fence Rebuilt	-	-	-	-	-	-	-	-	-	-	III 50		50

*SUPERSTRUCTURE - Includes approximately 11,100 Pounds (23 Sq. Yds.) of 3½" armored composite bridge deck, 16 Sq. Yds. of bituminous surface and 3 Tons of steel in the end dams and end diaphragms.

*SUBSTRUCTURE - Includes approximately 66 Cu. Yds. of concrete in the abutment backwalls.

*APPROACH SLABS - Includes approximately 745 Sq. Yds. of existing reinforced concrete approach slabs, approach roadway, paved berms and all necessary excavation or backfill to provide the proper cross section for the new approach slabs. Also includes approximately 50 Lin. Ft. of concrete barrier median and attached fence. The fence shall be salvaged for reinstallation.

Rev. 7-18-75

HOWARD, NEEDLES, TAMMEN & BERGENDOFF
CONSULTING ENGINEERS
KANSAS CITY CLEVELAND NEW YORK

SITE PLAN
I-90 OVER C.E.I. INTAKE

BR.NO.CUY-90-2035 STA. 200+98.36 STA. 202+82.02

CUYAHOGA COUNTY OHIO

DRAWN	TRACED	CHECKED	REVIEWED	REVISED
BMP	BMP	WEB	CAB &	
DATE 9-28-73	DATE 9-28-73	DATE 10-25-74	DATE 12-20-74	SHEET 1/13

FHWA REGION	STATE	PROJECT	
5	OHIO		

182
354

CUYAHOGA COUNTY
CUY-90-23.73
LAKE COUNTY
LAK-90-0.00

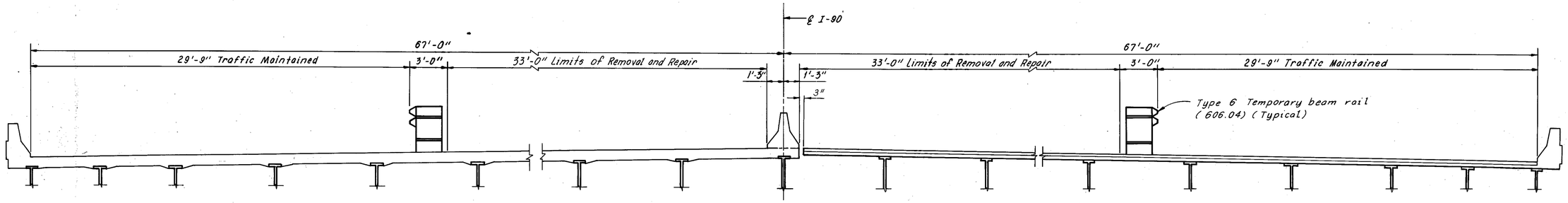

SECOND STAGE CONSTRUCTION

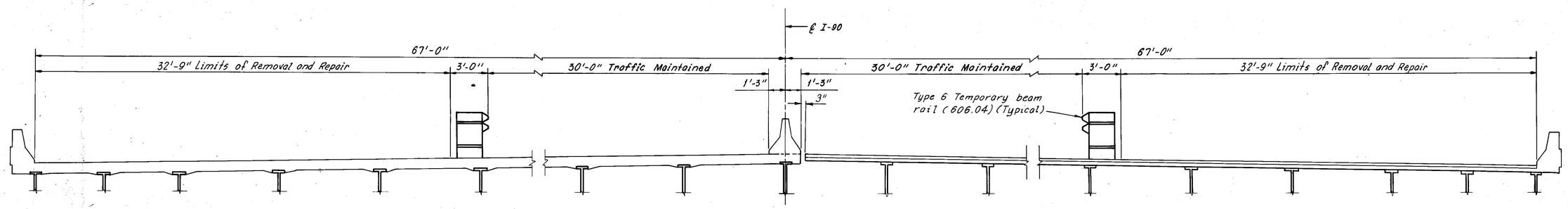

THIRD STAGE CONSTRUCTION

Notes:
The stage construction cross-sections apply within the bridge and approach slab limits. All repair work shall be co-ordinated with the stage construction as shown.
For maintenance of traffic notes, see Roadway Plans.
For shoring required at approach slabs, see Sheet CD-2.

MICROFILMED
MAR 21 1985

HOWARD, NEEDLES, TAMMEN & BERGENDOFF
CONSULTING ENGINEERS
KANSAS CITY CLEVELAND NEW YORK

MAINTENANCE OF TRAFFIC

I-90 OVER C.E.I. INTAKE

BR.NO.CUY-90-2035 STA. 200+98.36
STA. 202+82.02

CUYAHOGA COUNTY OHIO

DRAWN JLR	TRACED JLR	CHECKED ML	REVIEWED GAG	REVISED
DATE 1-6-74	DATE 1-7-74	DATE 4-16-74	DATE 12-20-74	SHEET 2 /13

FHWA REGION	STATE	PROJECT	
5	OHIO		

183
354

CUYAHOGA COUNTY
CUY-90-23.73
LAKE COUNTY
LAK-90-0.00

Note: Backwall elevations are given at the top of the 7x4x½ angle of the end dam.

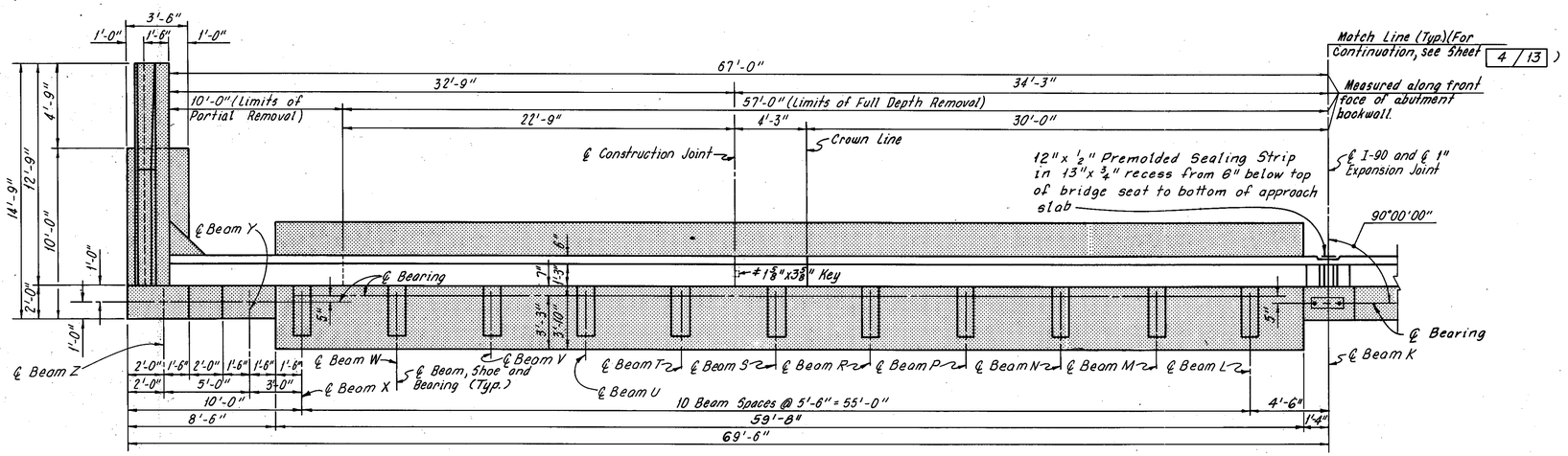

Stop 8" below top of backwall.

MODIFIED PART PLAN

SUGGESTED BACKWALL REPLACEMENT PROCEDURE:

1. Remove the portions of the backwall, including reinforcement, except as noted, within the limits of stage construction.
2. Modify and repair the existing end dam and end diaphragms within the limits of stage construction.
3. Replace the backwall within the limits of stage construction using the superstructure and dam to set the new backwall.
4. Install the 2⅜" preformed elastic joint sealer.

Note: All reinforcing bar marks shall be prefixed BW.

Weld to threaded insert.
Thread one end for connection to threaded insert.

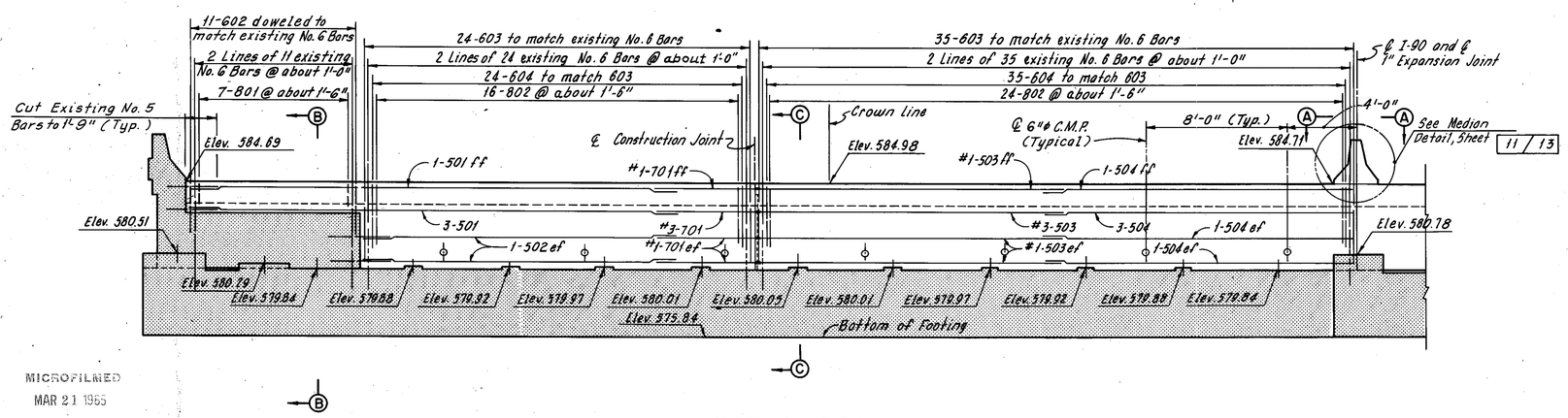

MODIFIED PART ELEVATION

Notes:

Indicates existing portions of abutment to remain.

For View A-A and Existing and Modified Sections B-B and C-C, see Sheet 11/13.

For stage construction sequence, see Maintenance Of Traffic, Sheet 2/13.

For shoring required at approach slabs, see Sheet CD-2.

For expansion joint modification at the median and curbs, see Sheet 7/13.

For Reinforcement Schedule, see Sheet R-1.

The following abbreviations are used:

ef = each face
ff = far face
Typ. = Typical
Elev. = Elevation

MICROFILMED
MAR 21 1985

HOWARD, NEEDLES, TAMMEN & BERGENDOFF
CONSULTING ENGINEERS
KANSAS CITY CLEVELAND NEW YORK

WEST ABUTMENT

I-90 OVER C.E.I. INTAKE

BR.NO.CUY-90-2035 STA.200+98.36 STA.202+82.02

CUYAHOGA COUNTY OHIO

DRAWN	TRACED	CHECKED	REVIEWED	REVISED
BMP	J.R.	W.E.B.	CAB	
DATE 3-28-74	DATE 5-13-74	DATE 10-7-74	DATE 12-20-74	SHEET 3/13

FHWA REGION	STATE	PROJECT	
5	OHIO		

184
354

CUYAHOGA COUNTY
CUY-90-23.73
LAKE COUNTY
LAK-90-0.00

Note: Backwall elevations are given at the top of the 7x4x½ angle of the end dam.

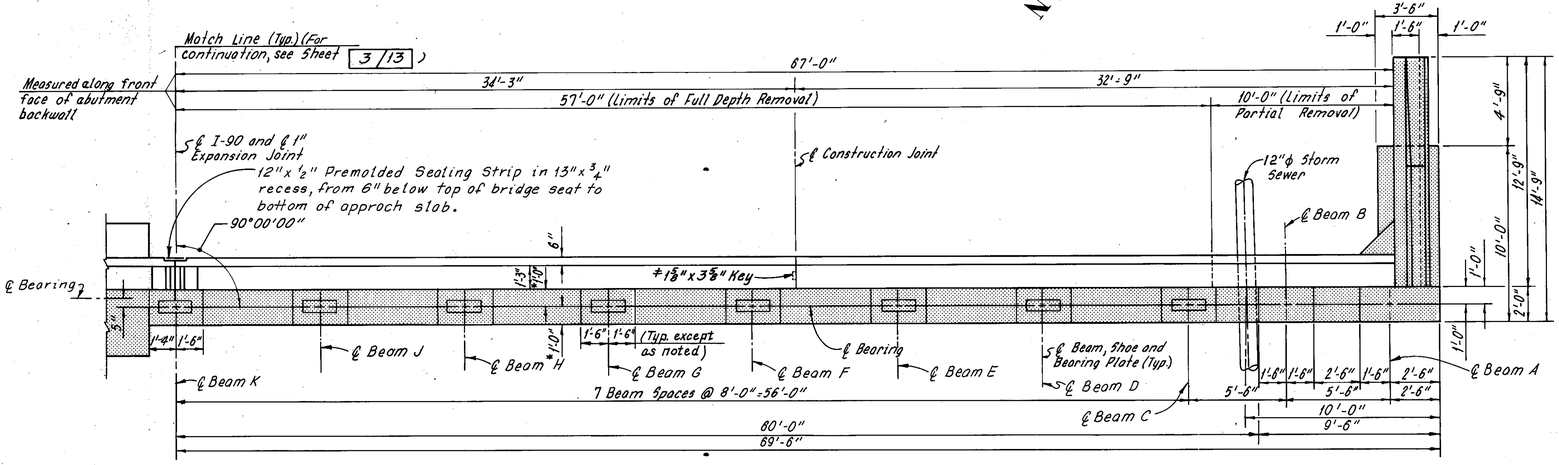

MODIFIED PART PLAN

≠ Stop 8" below top of backwall.

Note: All reinforcing bar marks shall be prefixed BW.

Note:
Reset bearings at Beam C thru Beam K.

* Plan Dimension, the actual dimensions shall be those which result when the bearings are set in their final position.
# Weld to threaded insert.
Thread one end for connection to threaded insert.

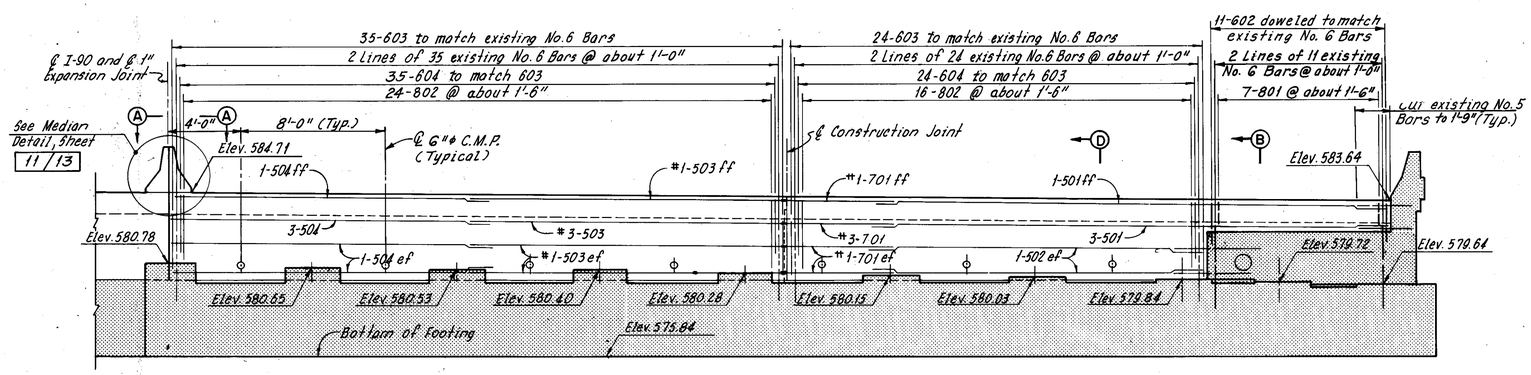

MODIFIED PART ELEVATION

MICROFILMED
MAR 21 1985

SUGGESTED BACKWALL REPLACEMENT PROCEDURE:

1. Bridge the backwall with an adequate steel plate within the area of maintained traffic. Provide bituminous wearing surface cover, as directed by the Engineer, to permit and maintain safe passage of vehicular traffic. The steel plate and bituminous cover shall be included with Item 614, Maintaining Traffic, for payment (see Roadway Plans).
2. Raise the entire superstructure (all beams simultaneously) until there is no contact between the superstructure and backwall end dam angles. All material, labor and equipment required to accomplish the above shall be included with Item 202, Portions of Structures Removed, for payment.
3. Remove approximately 1 foot of the top of the backwall.
4. Reset bearings.
5. Release jacks.
6. Remove the remaining portions of the backwall, including reinforcement, except as noted, within the limits of stage construction.
7. Modify the existing end dam within the limits of stage construction.
8. Replace the backwall within the limits of the stage construction using the superstructure end dam to set the new backwall.
9. Install the 2⅝" preformed elastic joint sealer.

Notes:
[ ] Indicates existing portions of abutment to remain.
For View A-A and Existing and Modified Sections B-B and D-D, see Sheet 11/13.
For stage construction sequence, see Maintenance Of Traffic, Sheet 2/13.
For resetting bearing details, see Sheet CD-3
For shoring required at approach slabs, see Sheet CD-2.
For Reinforcement Schedule, see Sheet R-1
The following abbreviations are used:
ef = each face
ff = far face
Typ. = Typical
Elev. = Elevation

HOWARD, NEEDLES, TAMMEN & BERGENDOFF
CONSULTING ENGINEERS
KANSAS CITY CLEVELAND NEW YORK

WEST ABUTMENT

I-90 OVER C.E.I. INTAKE

BR.NO.CUY-90-2035 STA.200+98.36
STA.202+82.02

CUYAHOGA COUNTY OHIO

DRAWN BMP	TRACED J.L.R.	CHECKED W.E.A.	REVIEWED CAO	REVISED
DATE 3-28-74	DATE 5-13-74	DATE 10-7-74	DATE 12-20-74	SHEET 4/13

FHWA REGION	STATE	PROJECT	
5	OHIO		

185
354

CUYAHOGA COUNTY
CUY-90-23.73
LAKE COUNTY
LAK-90-0.00

Note: Backwall elevations are given at the top of the 7x4x$\frac{1}{2}$ angle of the end dam.

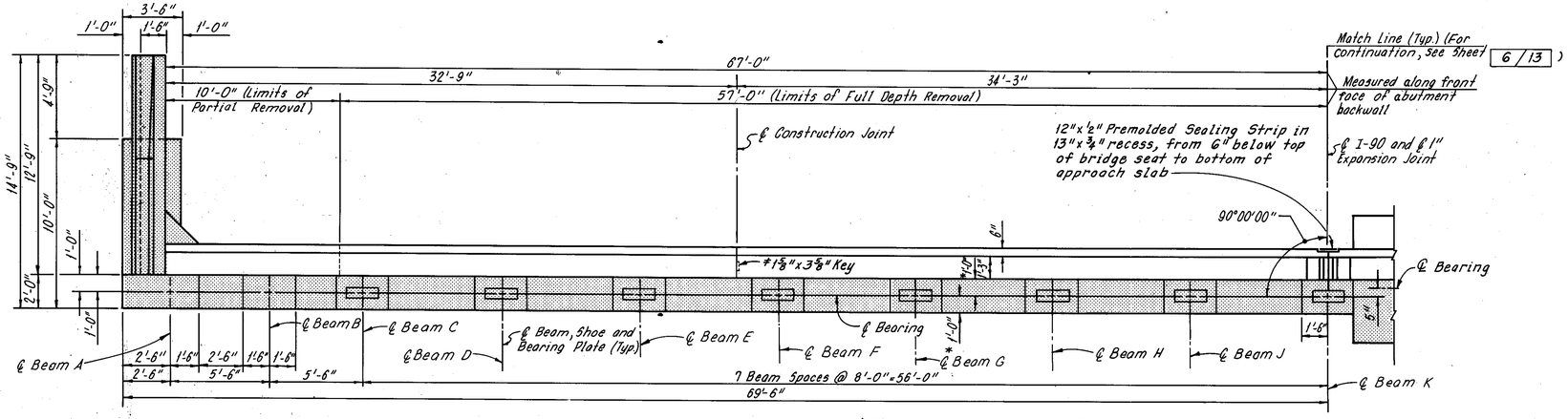

#Stop 8" below top of backwall.

MODIFIED PART PLAN

SUGGESTED BACKWALL REPLACEMENT PROCEDURE:

1. Bridge the backwall with an adequate steel plate within the area of maintained traffic. Provide bituminous wearing surface cover, as directed by the Engineer, to permit and maintain safe passage of vehicular traffic. The steel plate and bituminous cover shall be included with Item 614, Maintaining Traffic, for payment (see Roadway Plans).
2. Raise the entire superstructure (all beams simultaneously) until there is no contact between the superstructure and backwall end dam angles. All material, labor and equipment required to accomplish the above shall be included with Item 202, Portions of Structures Removed, for payment.
3. Remove approximately 1 foot of the top of the backwall.
4. Reset bearings.
5. Release jacks.
6. Remove the remaining portions of the backwall, including reinforcement, except as noted, within the limits of stage construction.
7. Modify the existing end dam within the limits of stage construction.
8. Replace the backwall within the limits of the stage construction using the superstructure end dam to set the new backwall.
9. Install the 2$\frac{1}{2}$" preformed elastic joint sealer.

Note: All reinforcing bar marks shall be prefixed BE.

Note:
Reset bearings at Beam C thru Beam K.

* Plan Dimensions, the actual dimensions shall be those which result when the bearings are set in their final position.

Weld to threaded insert.
Thread one end for connection to threaded insert.

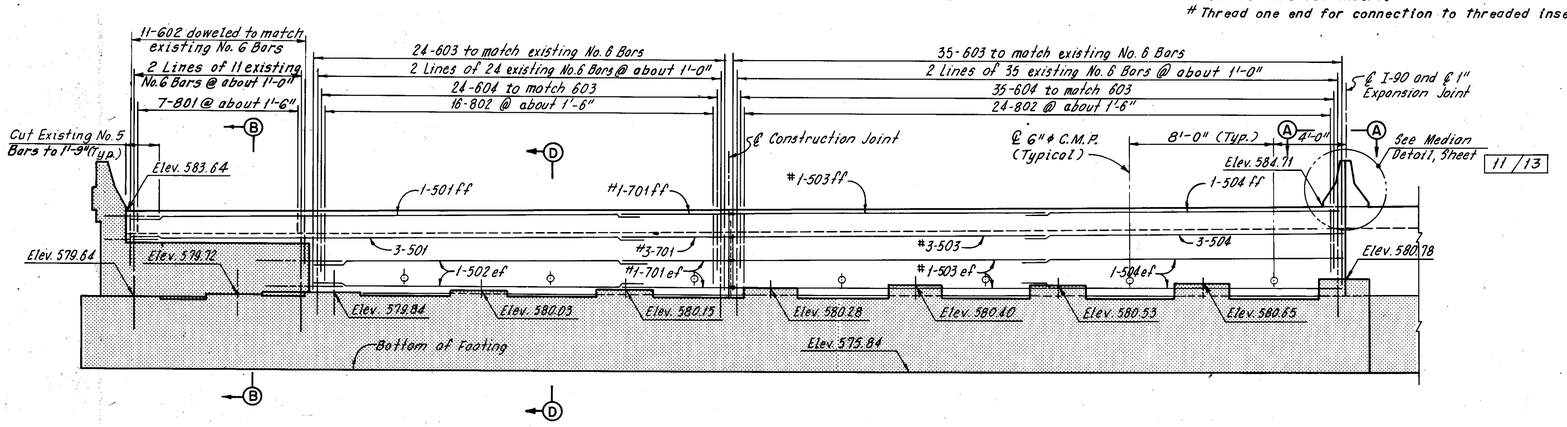

MODIFIED PART ELEVATION

Notes:
Shaded Indicates existing portions of abutment to remain.
For View A-A and Existing and Modified Sections B-B and D-D, see Sheet 11/13.
For stage construction sequence, see Maintenance Of Traffic, Sheet 2/13.
For shoring required at approach slabs, see Sheet CD-2.
For resetting bearing details, see Sheet CD-3.
For expansion joint modification at the median and curbs, see Sheet 7/13.
For Reinforcement Schedule, see Sheet R-1.
The following abbreviations are used:
ef = each face
ff = far face
Typ. = Typical
Elev. = Elevation

MICROFILMED
MAR 21 1985

MICROFILMED
MAR 21 1985

HOWARD, NEEDLES, TAMMEN & BERGENDOFF
CONSULTING ENGINEERS
KANSAS CITY CLEVELAND NEW YORK

EAST ABUTMENT
I-90 OVER C.E.I. INTAKE

BR.NO.CUY-90-2035
STA. 200+98.36
STA. 200+82.02

CUYAHOGA COUNTY OHIO

DRAWN	TRACED	CHECKED	REVIEWED	REVISED
BMP	JLR	WEB	CAB	
DATE 3-29-74	DATE 5-14-74	DATE 10-7-74	DATE 12-20-74	SHEET 5/13

FHWA REGION	STATE	PROJECT	
5	OHIO		

186
354

CUYAHOGA COUNTY
CUY-90-23.73
LAKE COUNTY
LAK-90-0.00

Note: Backwall elevations are given at the top of the 7x4x½ angle of the end dam.

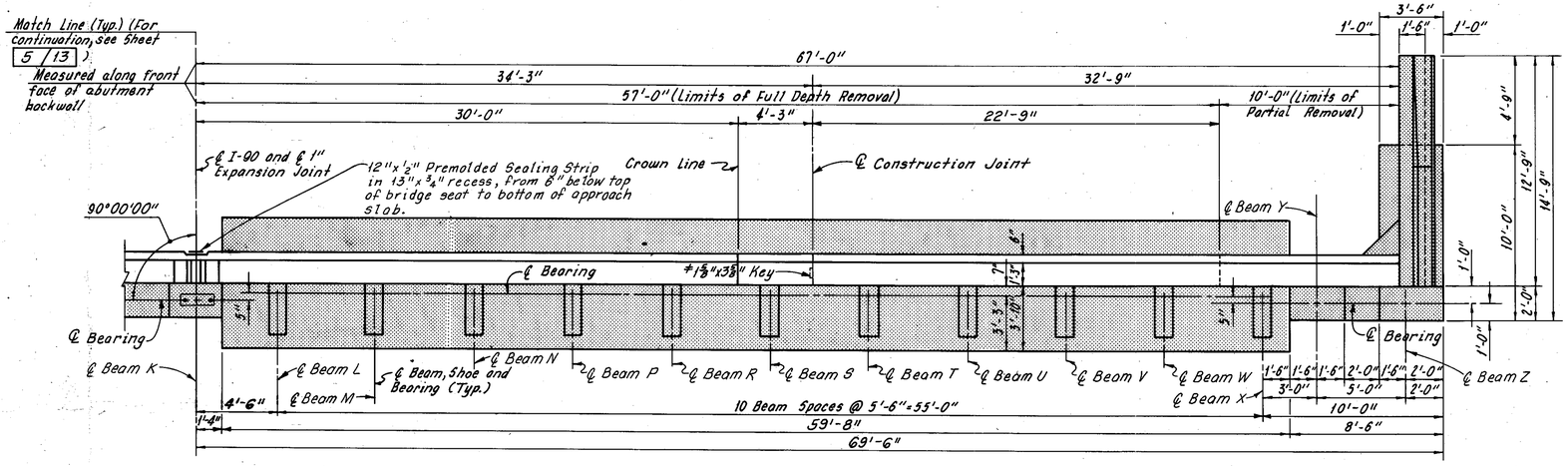

Stop 8" below top of backwall.

MODIFIED PART PLAN

SUGGESTED BACKWALL REPLACEMENT PROCEDURE:

1. Remove the portions of the backwall, including reinforcement, except as noted, within the limits of stage construction.
2. Modify and repair the existing end dam and end diaphragms within the limits of stage construction.
3. Replace the backwall within the limits of stage construction using the superstructure end dam to set the new backwall.
4. Install the 2⅜" preformed elastic joint sealer.

Weld to threaded insert.
Thread one end for connection to threaded insert.

Note: All reinforcing bar marks shall be prefixed BE.

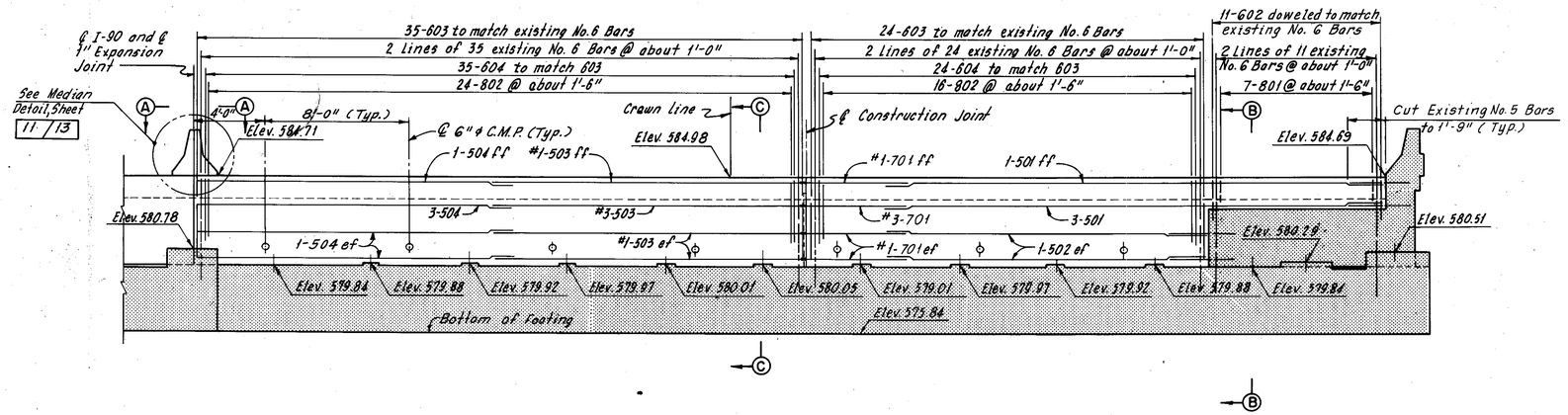

MODIFIED PART ELEVATION

Notes:

Shaded Indicates existing portions of abutment to remain.

For View A-A and Existing and Modified Sections B-B and C-C, see Sheet 11/13.

For stage construction sequence, see Maintenance Of Traffic, Sheet 2/13.

For shoring required at approach slabs, see Sheet CD-2.

For expansion joint modification at the median and curbs, see Sheet 7/13.

For Reinforcement Schedule, see Sheet R-1.

The following abbreviations are used:

ef = each face
ff = far face
Typ. = Typical
Elev. = Elevation

HOWARD, NEEDLES, TAMMEN & BERGENDOFF
CONSULTING ENGINEERS
KANSAS CITY CLEVELAND NEW YORK

EAST ABUTMENT

I-90 OVER C.E.I. INTAKE

BR.NO. CUY-90-2035 STA. 200+98.36 BACK
STA. 200+82.02 AHEAD

CUYAHOGA COUNTY OHIO

DRAWN BMP	TRACED JLP	CHECKED WEB	REVIEWED CAG	REVISED
DATE 3-29-74	DATE 5-14-74	DATE 10-7-74	DATE 12-20-74	SHEET 6/13

FHWA REGION	STATE	PROJECT	
5	OHIO		

187
354

CUYAHOGA COUNTY
CUY-90-23.73
LAKE COUNTY
LAK-90-0.00

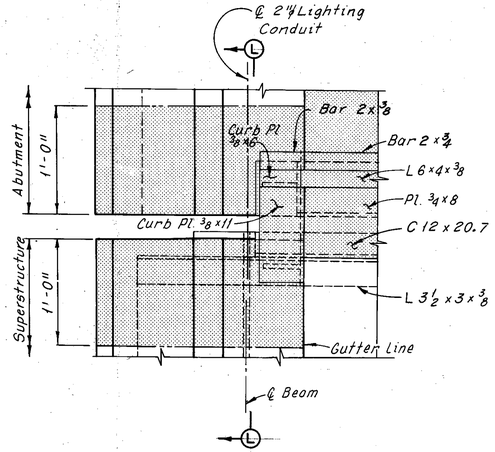

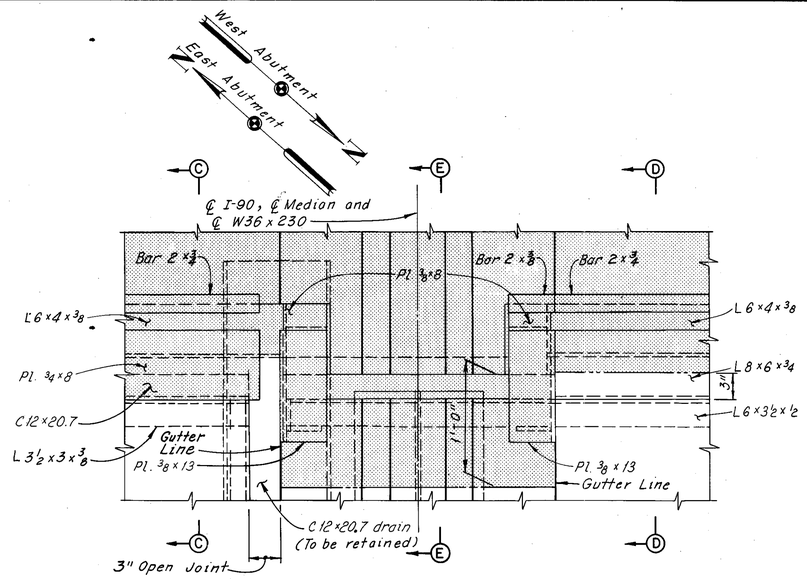

EXISTING PLAN
(Anchor Plates not shown)
(Plan at West Abutment shown, Plan at East Abutment similar).
▨ denotes limits of removal.

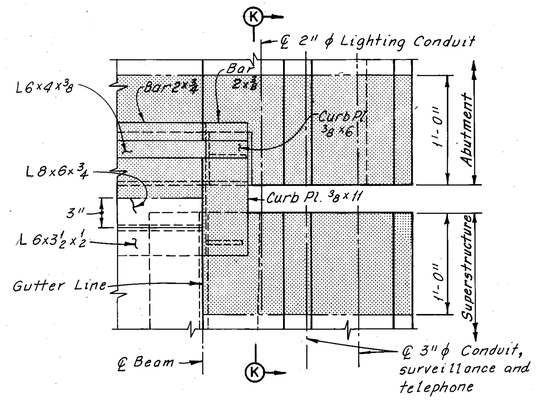

Notes:

The Contractor shall temporarily relocate and then reinstall the affected 2"ϕ lighting conduits (Owned by the State of Ohio) and the 3"ϕ surveillance and telephone conduits (Owned by the City of Cleveland). Expansion couplings shall be provided, as required, in the reinstallation.

If necessary to disrupt services, the Contractor shall arrange his work in such a manner, satisfactory to the owner, that any inconvenience would be held to a minimum.

All material, labor and equipment necessary to complete this work shall be included in the contract lump sum price bid for Item 202, Portions of Structures Removed, for payment.

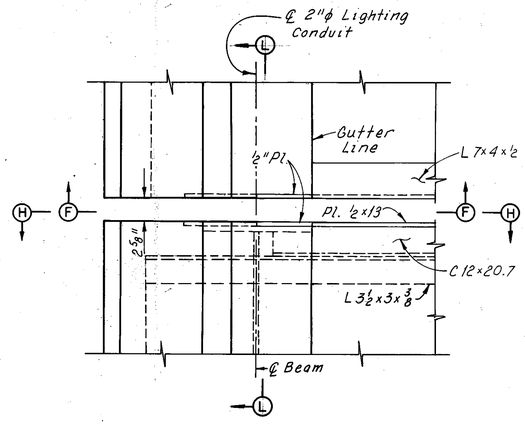

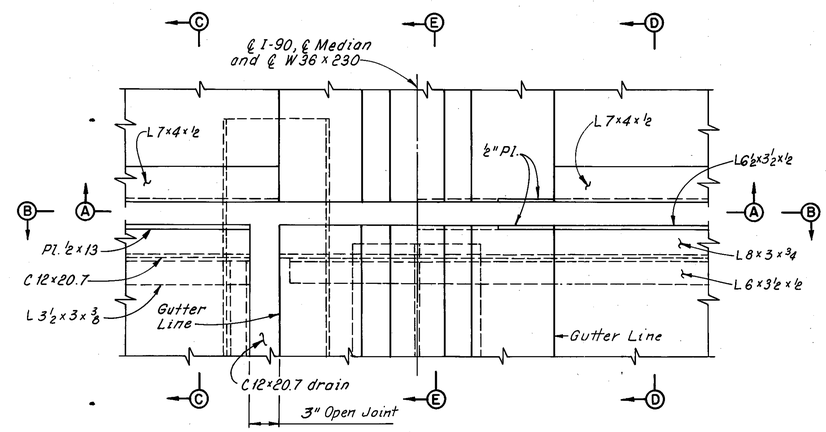

MODIFIED PLAN
(Preformed elastic joint sealer, Anchor studs and support bars not shown)

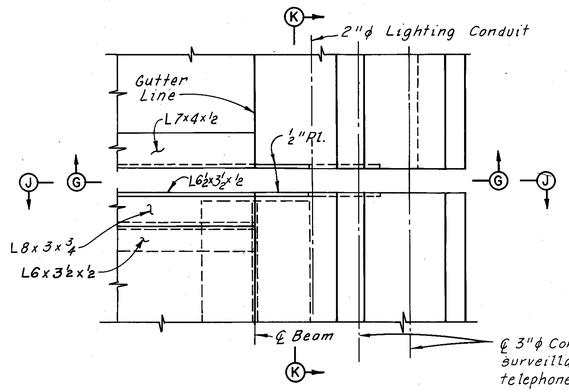

Notes:

For Sections A-A, B-B, E-E, F-F, G-G, H-H and J-J, see Sheet 8/13.
For Sections K-K and L-L, see Sheet 9/13.
For Sections C-C and D-D, see Sheet 11/13.
For barrier median and barrier curb details, see Sheet 9/13.

MAR 22 1976

HOWARD, NEEDLES, TAMMEN & BERGENDOFF
CONSULTING ENGINEERS
KANSAS CITY CLEVELAND NEW YORK

EXISTING AND MODIFIED PART PLAN AT END DAMS
I-90 OVER C.E.I. INTAKE

BR.NO.CUY-90-2035
STA. 200+98.36
STA. 202+82.02

CUYAHOGA COUNTY OHIO

DRAWN SJS	TRACED SJS	CHECKED W.E.B.	REVIEWED CAB	REVISED
DATE 8-5-74	DATE 8-6-74	DATE 10-8-74	DATE 12-20-74	SHEET 7/13.

FHWA REGION	STATE	PROJECT	
5	OHIO		

CUYAHOGA COUNTY
CUY-90-23.73
LAKE COUNTY
LAK-90-0.00

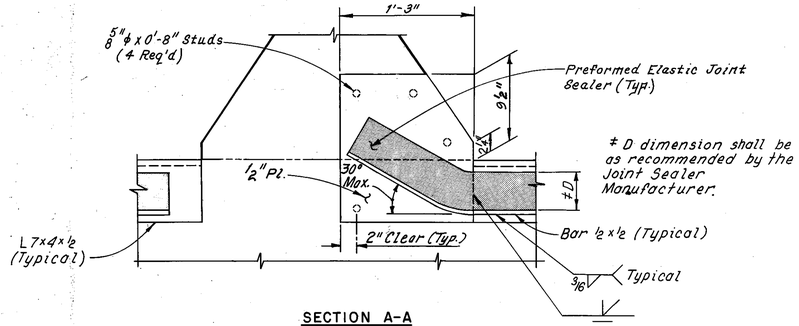

SECTION A-A

* D dimension shall be as recommended by the Joint Sealer Manufacturer.

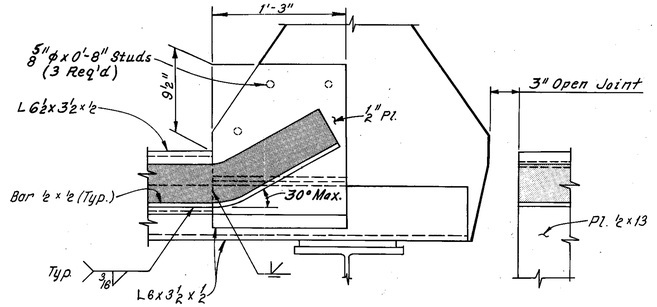

SECTION B-B
(For details not shown see Section A-A)

Note:
The webbing shall be removed from the preformed elastic joint sealer and replaced with closed cell foam in that portion which extends from the gutter line under the barrier median and barrier curb. Holes for the conduits shall be field cut after the joint sealer is in place.

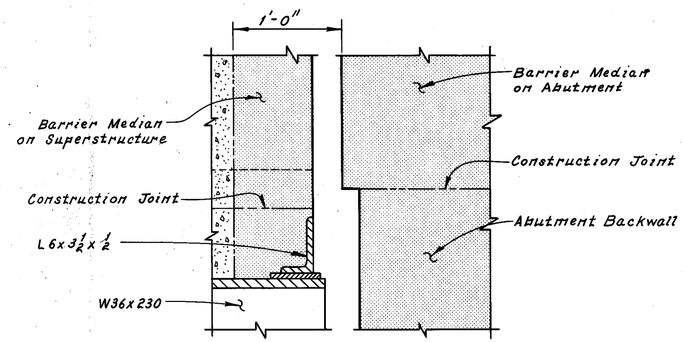

EXISTING SECTION E-E
(Reinforcement not shown)
▨ denotes limits of concrete removal.

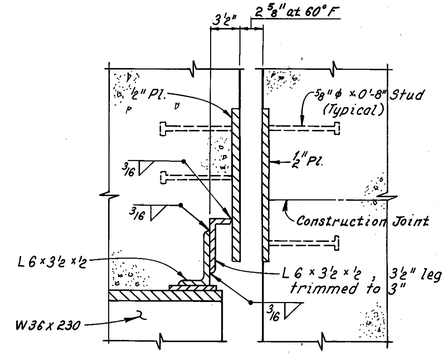

MODIFIED SECTION E-E
(Preformed Elastic Joint Sealer, support bars, and reinforcement not shown.)

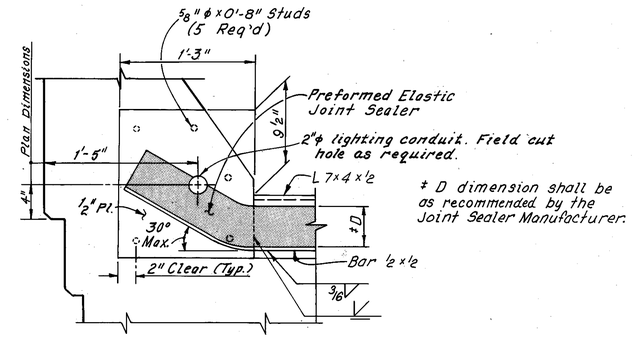

* D dimension shall be as recommended by the Joint Sealer Manufacturer.

SECTION F-F

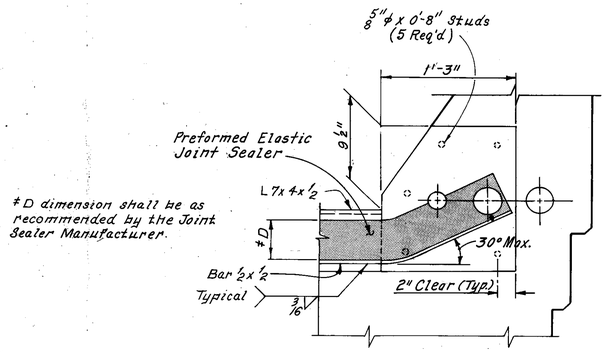

* D dimension shall be as recommended by the Joint Sealer Manufacturer.

SECTION G-G
(For details not shown see Section J-J)

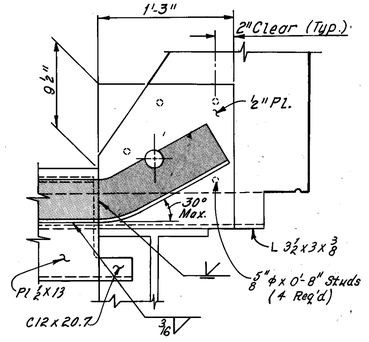

SECTION H-H
(For details not shown see Section F-F)

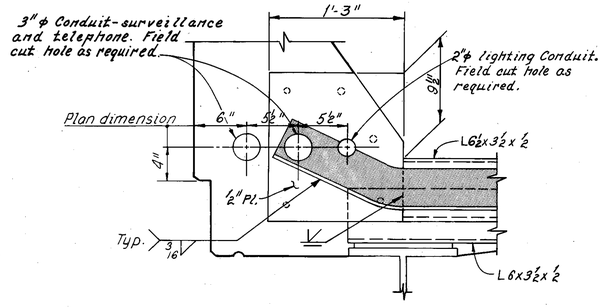

SECTION J-J
(For details not shown see Section G-G)

Notes:
For location of Sections A-A, B-B, E-E, F-F, G-G, H-H and J-J, see Sheet 7/13.
For barrier median and barrier curb details, see Sheet 9/13.
For preformed elastic joint sealer details, see Sheet 9/13.
▬ denotes preformed elastic joint sealer, except as noted.

HOWARD, NEEDLES, TAMMEN & BERGENDOFF
CONSULTING ENGINEERS
KANSAS CITY CLEVELAND NEW YORK

TYPICAL SECTIONS AT END DAMS

I-90 OVER C.E.I. INTAKE

BR. NO. CUY-90-2035 STA. 200+98.36
STA. 202+82.02

CUYAHOGA COUNTY OHIO

DRAWN	TRACED	CHECKED	REVIEWED	REVISED
S.J.S	S.J.S	W.E.B.	CAB	
DATE 8-6-74	DATE 8-8-74	DATE 10-9-74	DATE 12-20-74	SHEET 8/13

FHWA REGION	STATE	PROJECT	
5	OHIO		

189
354

CUYAHOGA COUNTY
CUY-90-23.73
LAKE COUNTY
LAK-90-0.00

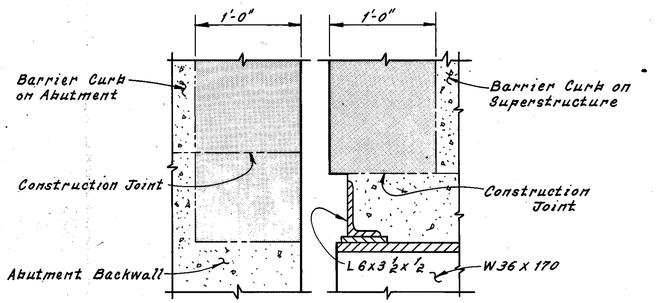

EXISTING SECTION K-K
(Reinforcement not shown)
denotes limits of concrete removal.

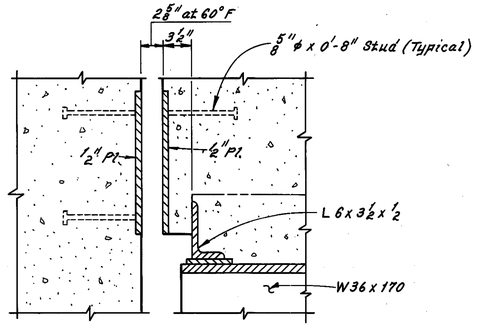

MODIFIED SECTION K-K
(Preformed Elastic Joint Sealer, support bars and reinforcement not shown.)

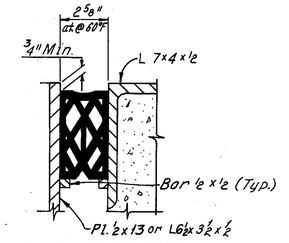

PREFORMED ELASTIC JOINT SEALER

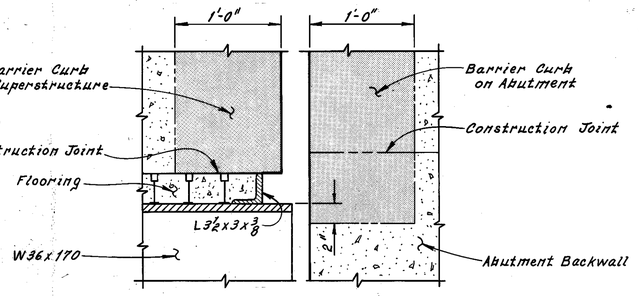

EXISTING SECTION L-L
(Reinforcement not shown)
denotes limits of concrete removal.

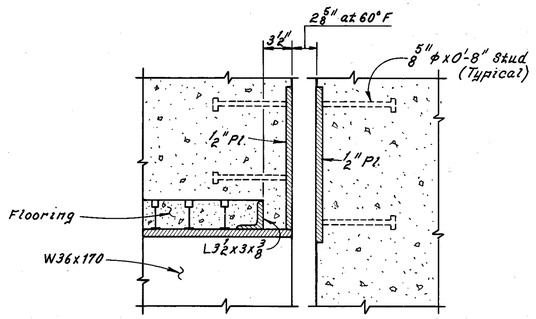

MODIFIED SECTION L-L
(Preformed Elastic Joint Sealer, support bars and reinforcement not shown.)

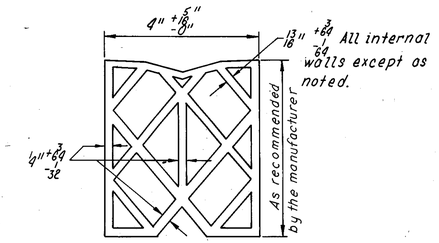

PREFORMED ELASTIC JOINT SEALER

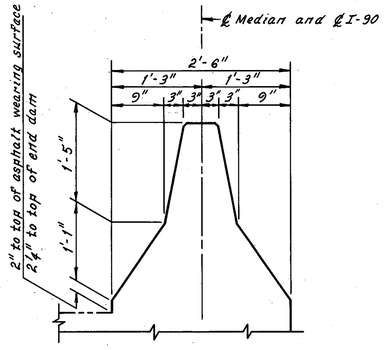

BARRIER MEDIAN DETAIL

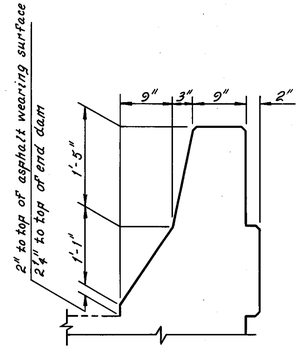

BARRIER CURB DETAIL

Note:
For location of Sections K-K and L-L, see Sheet 7/13.

MICROFILMED
MAR 21 1985

HOWARD, NEEDLES, TAMMEN & BERGENDOFF
CONSULTING ENGINEERS
KANSAS CITY CLEVELAND NEW YORK

TYPICAL SECTIONS AT END DAMS

I-90 OVER C.E.I. INTAKE

BR. NO. CUY-90-2035 STA. 200+98.36
STA. 202+82.02

CUYAHOGA COUNTY OHIO

DRAWN SJS	TRACED HBB	CHECKED WEB	REVIEWED DAB	REVISED
DATE 8-7-74	DATE 9-17-74	DATE 10-9-74	DATE 12-20-74	SHEET 9/13

FHWA REGION	STATE	PROJECT	
5	OHIO		

190
354

CUYAHOGA COUNTY
CUY-90-23.73
LAKE COUNTY
LAK-90-0.00

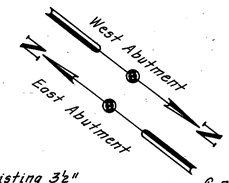

Note:
Replace the armored composite bridge deck between Beam K and Beam N at the West Abutment and between Beam R and Beam U and between Beam W and Beam Y at the East Abutment. For beam designations, see Sheets 3/13 thru 6/13.

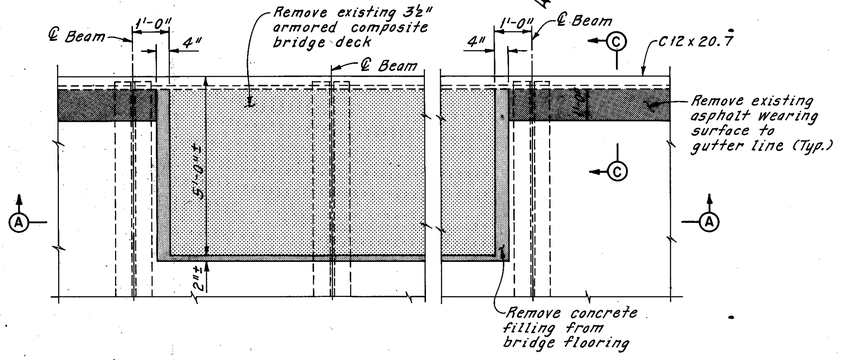

EXISTING PART PLAN
(Abutment not shown)

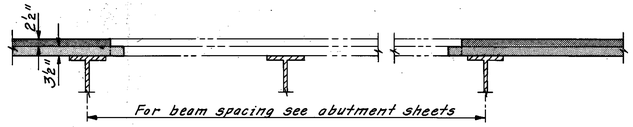

EXISTING SECTION A-A

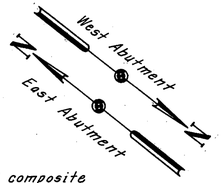

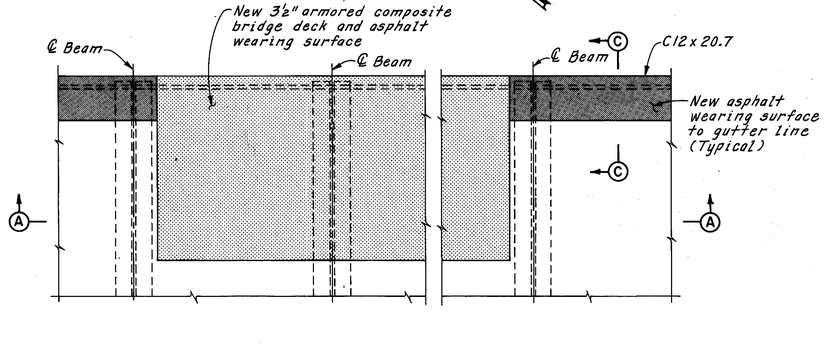

MODIFIED PART PLAN
(Abutment not shown)

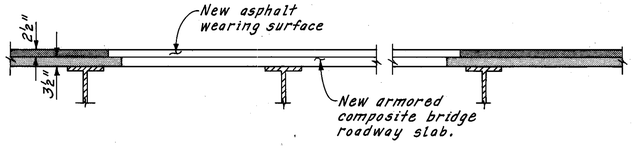

MODIFIED SECTION A-A

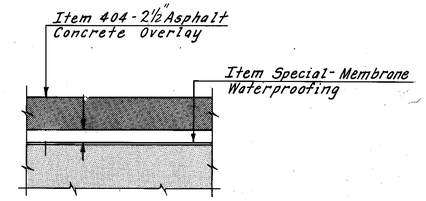

ASPHALT WEARING SURFACE
REPLACEMENT DETAIL

Note:
Optional intermediate splices shall be made 1'-0" from ℄ Beams.

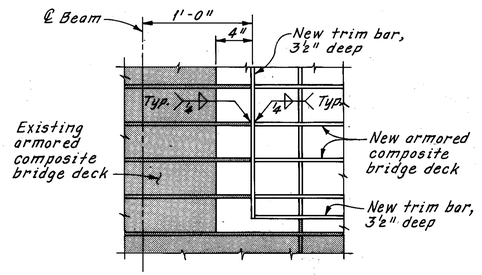

BRIDGE DECK ERECTION DETAIL

ARMORED COMPOSITE BRIDGE DECK REPLACEMENT DETAILS

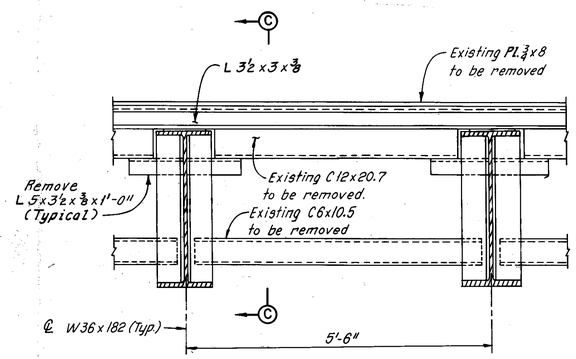

EXISTING END DIAPHRAGM

Note:
Replace end diaphragms between Beam L and Beam X at West and East Abutments. For beam designations, see Sheets 3/13 thru 6/13.

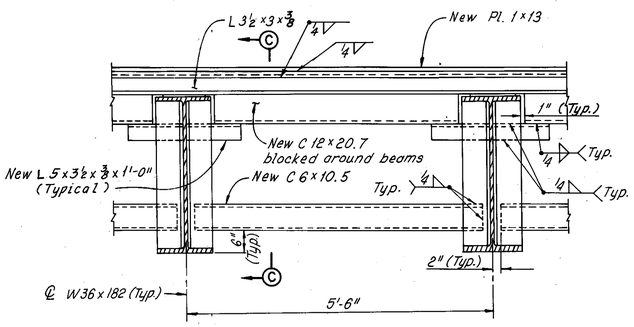

MODIFIED END DIAPHRAGM

Note:
For Existing and Modified Section C-C, see Sheet 11/13.

MICROFILMED
MAR 21 1985

END DIAPHRAGM REPAIR DETAILS

Rev. 7-18-75

HOWARD, NEEDLES, TAMMEN & BERGENDOFF
CONSULTING ENGINEERS
KANSAS CITY CLEVELAND NEW YORK

SUPERSTRUCTURE DETAILS

I-90 OVER C.E.I. INTAKE

BR. NO. CUY-90-2035 STA. 200+98.36
STA. 202+82.02

CUYAHOGA COUNTY OHIO

DRAWN CKB	TRACED WEB	CHECKED WEB	REVIEWED CAB	REVISED
DATE 9-1674	DATE 9-1974	DATE 10-9-74	DATE 12-2074	SHEET 10/13

K & E 10-1253 12-73

FHWA REGION	STATE	PROJECT	
5	OHIO		

1.91
354

CUYAHOGA COUNTY
CUY-90-23.73
LAKE COUNTY
LAK-90-0.00

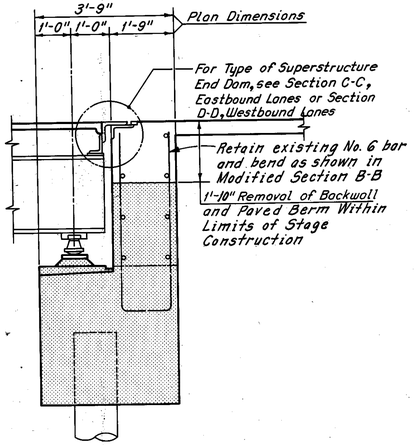

EXISTING SECTION B-B

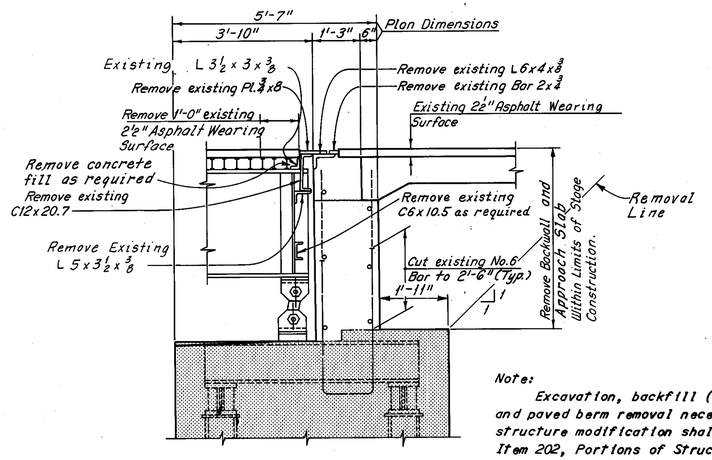

EXISTING SECTION C-C

Note:
Excavation, backfill (except Porous Backfill) and paved berm removal necessary to accomplish structure modification shall be included with Item 202, Portions of Structures Removed, for payment. Backfill shall be in accordance with Item 203.

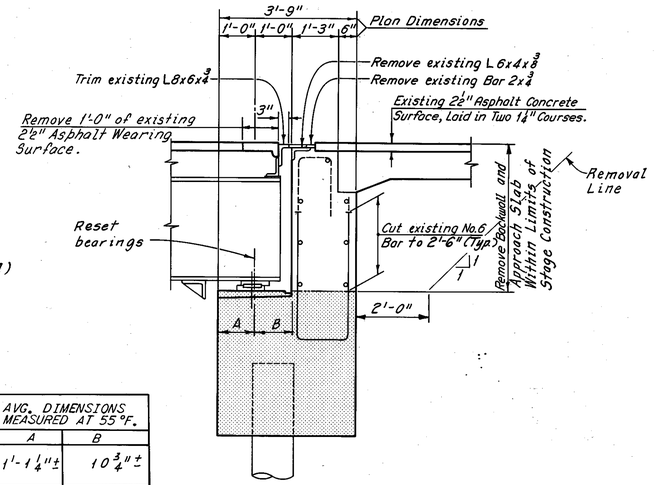

EXISTING SECTION D-D

LOCATION	AVG. DIMENSIONS MEASURED AT 55°F.	
	A	B
East Abutment	1'-1 1/4" ±	10 3/4" ±
West Abutment	1'-1 3/8" ±	10 5/8" ±

MODIFIED SECTION B-B

MODIFIED SECTION C-C

MODIFIED SECTION D-D

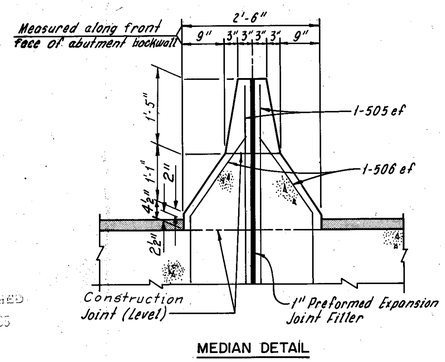

MEDIAN DETAIL

Note:
For Reinforcement Schedule, see Sheet R-1.

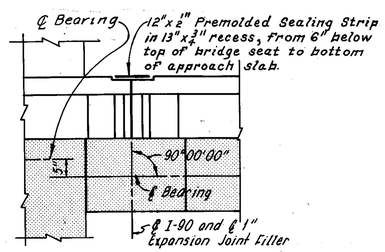

VIEW A-A
(West Abutment Shown, East Abutment Similar)

Notes:
Indicates existing portions of abutment to remain.
For resetting bearing details, see Sheet CD-3.
For location of View A-A and Section B-B, see Sheets 3/13 thru 6/13.
For locations of Section C-C, see Sheets 3/13, 6/13, 7/13, and 10/13.
For locations of Section D-D, see Sheets 4/13, 5/13, and 7/13.
The 6"ϕ C.M.P. (707.01) shall be included with Item 518, Porous Backfill, for payment. For location, see Sheets 3/13 thru 6/13.
The following abbreviation is used:
Typ. = Typical

HOWARD, NEEDLES, TAMMEN & BERGENDOFF
CONSULTING ENGINEERS
KANSAS CITY CLEVELAND NEW YORK

TYPICAL SECTIONS AND DETAILS

I-90 OVER C.E.I. INTAKE

BR.NO.CUY-90-2035 STA. 200+98.36
STA. 202+82.02

CUYAHOGA COUNTY OHIO

DRAWN	TRACED	CHECKED	REVIEWED	REVISED
BMP DATE 3-28-74	DLR DATE 3-27-74	WEB DATE 10-9-74	CAB DATE 12-20-74	SHEET 11/13

RECEIVED
MAR 21 1975

FHWA REGION	STATE	PROJECT	
5	OHIO		

192
354

CUYAHOGA COUNTY
CUY-90-23.73
LAKE COUNTY
LAK-90-0.00

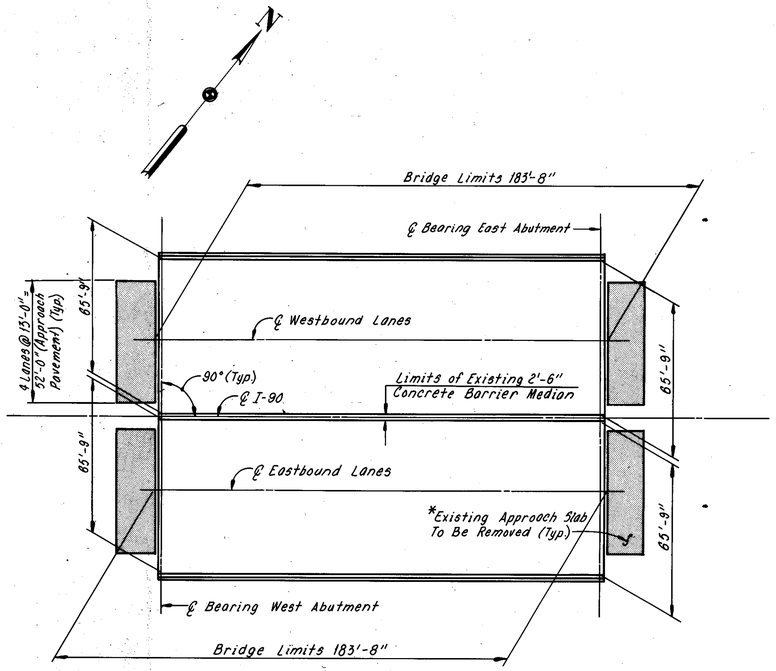

EXISTING PLAN

30 0 30 60
SCALE IN FEET

*Includes removal of paved berms and all necessary excavation or backfill to provide the proper cross section for the new approach slab.

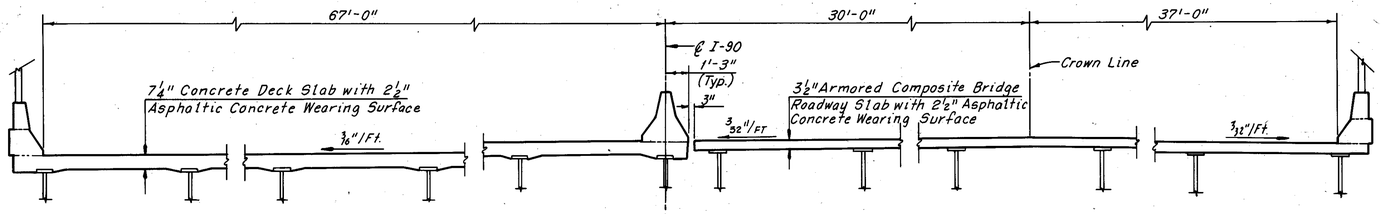

EXISTING TYPICAL SECTION

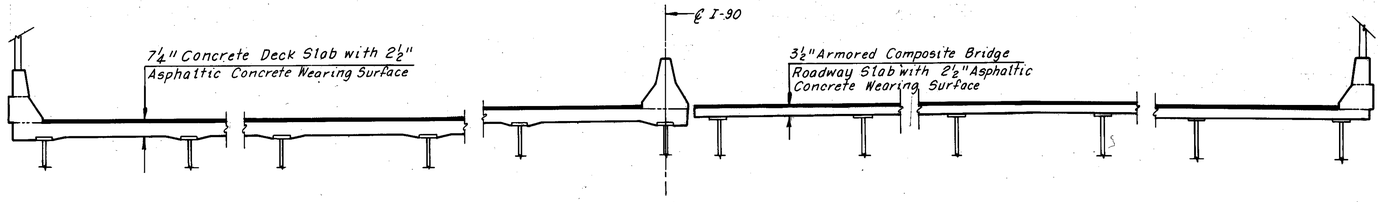

MODIFIED TYPICAL SECTION

MICROFILMED
MAR 21 1985

HOWARD, NEEDLES, TAMMEN & BERGENDOFF
CONSULTING ENGINEERS
KANSAS CITY CLEVELAND NEW YORK

EXISTING AND MODIFIED DECK PLAN AND TYPICAL SECTION

I-90 OVER C.E.I. INTAKE

BR. NO. CUY-90-2035 STA. 200+98.36
STA. 200+82.02

CUYAHOGA COUNTY OHIO

DRAWN	TRACED	CHECKED	REVIEWED	REVISED
BMP	TLR	WEB	CAB	
DATE 10-3-73	DATE 10-4-73	DATE 10-8-74	DATE 12-20-74	SHEET 12 13

FHWA REGION	STATE	PROJECT	
5	OHIO		

193
354

CUYAHOGA COUNTY
CUY-90-23.73
LAKE COUNTY
LAK-90-0.00

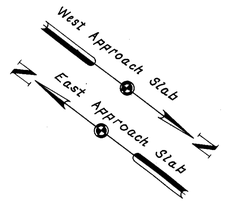

Note:
The jacking holes as called for on Ohio Standard Drawing AS-1-72 are not required.

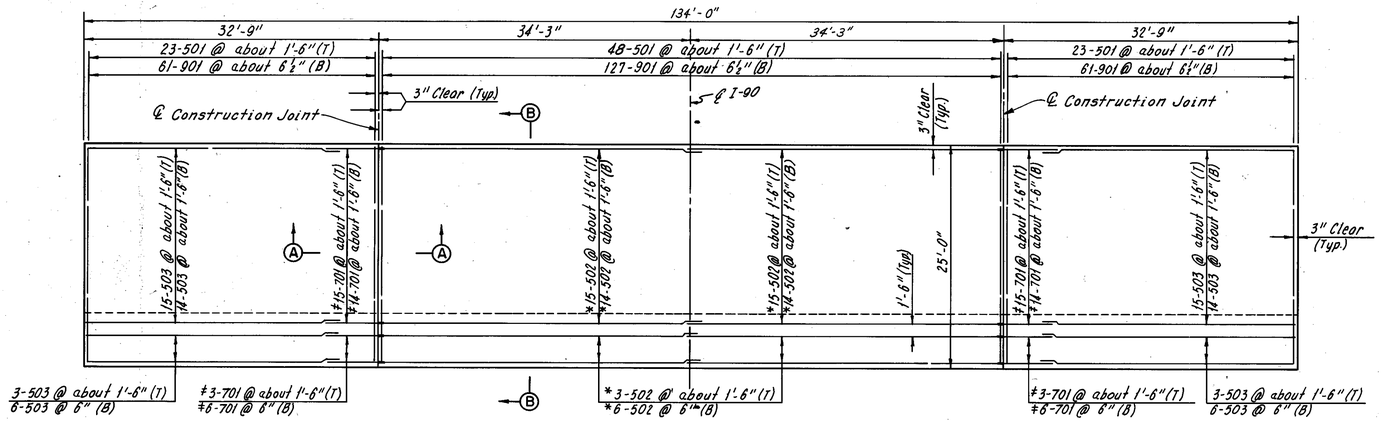

APPROACH SLAB PLAN

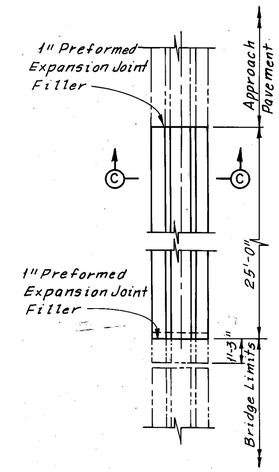

BARRIER MEDIAN AT APPROACH SLAB

REINFORCEMENT SCHEDULE

MARK	NO.	LENGTH	TYPE	SER. INCR.
BBS501	188	24'-6"	Str.	
*BBS502	152	35'-0"	Str.	
BBS503	152	29'-0"	Str.	
‡BBS701	152	6'-0"	Str.	
BBS901	498	25'-9"	101	

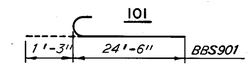

Note: All reinforcing bar marks shall be prefixed BBS.

Notes:
* Weld to threaded insert.
‡ Thread one end for connection to threaded inserts.

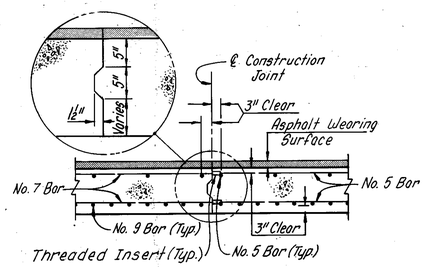

SECTION A-A

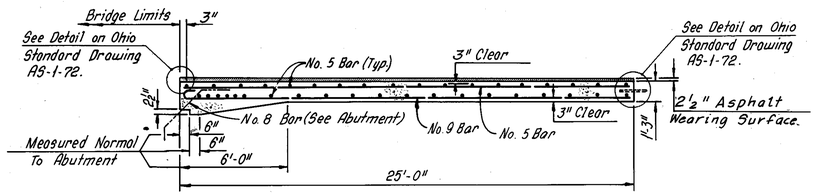

SECTION B-B

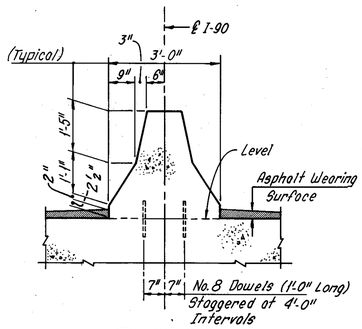

SECTION C-C

Notes:
For stage construction sequence, see Maintenance Of Traffic, Sheet 2 /13 .
For normal cross slopes, see Existing Typical Section, Sheet 12 /13 .
The concrete barrier median on the approach slabs including 1" preformed expansion joint filler and No. 8 dowel bars shall be included with Item 622, Barrier Median At Approach Slab, As Per Plan, for payment.
The following abbreviations are used:
T = Top
B = Bottom
Typ. = Typical
For additional notes and details, see Ohio Standard Drawing AS-1-72.

Note:
The asphalt wearing surface on the approach slab shall consist of the following:
1. Item 407, Tack Coat at 0.1 gal. per sq. yd.
2. Item 402, 1¼" Asphalt Concrete (AC-20)
3. Item 404, 1¼" Asphalt Concrete (AC-20)

Note:
Welding shall conform to AWS D12.1-61 of the American Welding Society and 513.17 of the Construction and Material Specifications.

Both the welded and threaded connections shall be capable of developing 125 percent of the yield strength of the number 5 bars. Random samples to be submitted for testing.

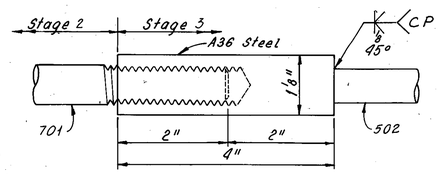

THREADED INSERT DETAIL

(Threads are to be Unified Standard Series for Basic Major Diameter of ¾").

...OPPLEMENT
MAR 21 1985

HOWARD, NEEDLES, TAMMEN & BERGENDOFF
CONSULTING ENGINEERS
KANSAS CITY CLEVELAND NEW YORK

APPROACH SLABS
I-90 OVER C.E.I. INTAKE

BR.NO.CUY-90-2035 STA.200+98.36
STA.200+82.02

CUYAHOGA COUNTY OHIO

DRAWN	TRACED	CHECKED	REVIEWED	REVISED
BMP	J.L.R.	WEB	CAB	
DATE 3-20-74	DATE 5-15-74	DATE 10-7-74	DATE 10-20-74	SHEET 13/13

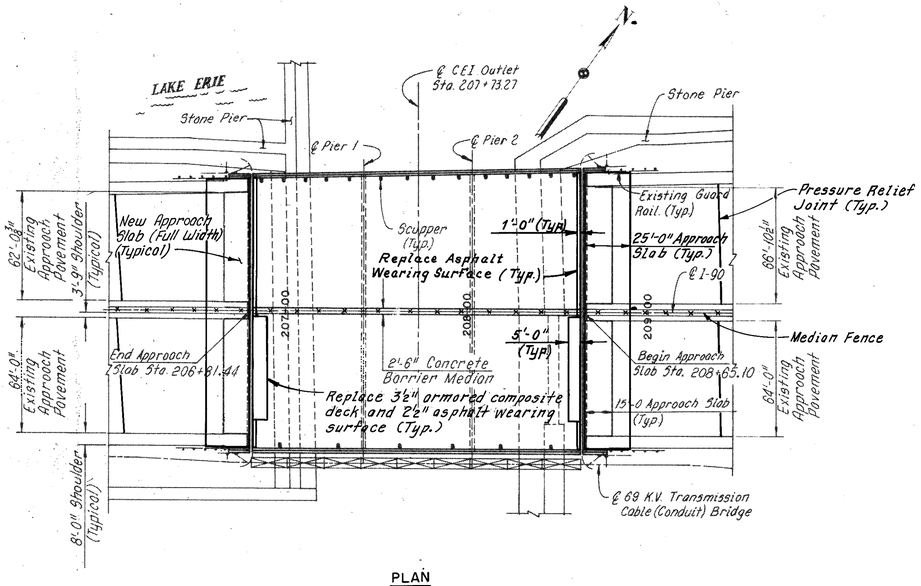

PLAN

40 0 40 80

SCALE IN FEET

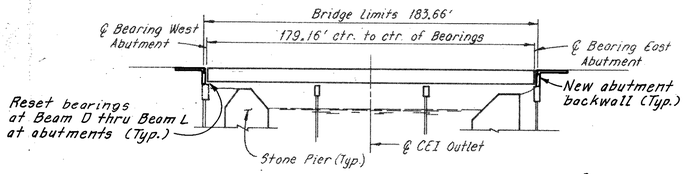

ELEVATION

40 0 40 80

SCALE IN FEET

EXISTING STRUCTURE	
TYPE:	Continuous Steel Beams with Concrete Deck and Capped Pile Abutments and Piers.
SPAN:	59'-7", 60'-0" and 59'-7".
ROADWAY:	Eastbound 77'-6", Westbound Varies 75'-7¼" to 80'-3⅜", Face to Face of Parapets with a 2'-6" Concrete Barrier Median.
LOADING:	HS 20-44 and Interstate Alternate Loading.
SKEW:	None
WEARING SURFACE:	2½" Bituminous Concrete.
APPROACH SLABS:	AS-1-67 (15'-0" Long).
ALIGNMENT:	Tangent

MODIFIED STRUCTURE	
TYPE:	Continuous Steel Beams with Concrete Deck and Capped Pile Abutments and Piers.
SPAN:	59'-7", 60'-0" and 59'-7".
ROADWAY:	Eastbound 77'-6", Westbound Varies 75'-7¼" to 80'-3⅜", Face to Face of Parapets with a 2'-6" Concrete Barrier Median.
LOADING:	HS 20-44 and Interstate Alternate Loading.
SKEW:	None.
WEARING SURFACE:	2½" Bituminous Concrete.
APPROACH SLABS:	AS-1-72 (25'-0" Long).
ALIGNMENT:	Tangent.

MICROFILMED
MAR 21 1985

PROPOSED WORK

1. Install pressure relief joints in approach roadway pavement, see Sheet CD-9.
2. Replace portions of the east and west abutment backwalls, see Sheets 3/13 thru 6/13.
3. Reset abutment bearings, see Sheets 4/13, 5/13 and 11/13.
4. Replace approach slabs, see Sheets 13/13.
5. Replace end diaphragms between Beam M and Beam Y at both abutments, see Sheet 10/13.
6. Replace 5'-0"± of 3½" armored composite bridge deck and 5'-0"± of 2½" asphalt wearing surface between Beam L and Beam Y at the west end of the deck and between Beam L and Beam Y at the east end of the deck, see Sheet 10/13.
7. Replace 1'-0" of the 2½" asphalt wearing surface at the west and east ends of the deck, full width, see Sheets 10/13 and 12/13.
8. Clean out drainage system and remove debris from abutment bridge seat.
9. Paint all structural steel.

FHWA REGION	STATE	PROJECT	
5	OHIO		

194
354

CUYAHOGA COUNTY
CUY-90-23.73
LAKE COUNTY
LAK-90-0.00

Note:
Roman numerals II and III denote cost participation breakdown. For description, see Roadway Plans, Sheet 3-354.

TYPE CODE X031

ESTIMATED QUANTITIES

ITEM	TOTAL	UNIT	DESCRIPTION BRIDGE REPAIRS	SUPER-STRUCTURE	WEST ABUT	EAST ABUT	WINGWALLS NE	WINGWALLS SE	WINGWALLS NW	WINGWALLS SW	APPROACH SLABS	CON. SLOPE PRO. WEST	CON. SLOPE PRO. EAST	GENERAL	Participation II Fed., State & Cleve.	Participation III 100% State
*202	Lump Sum	Lump Sum	Portions of Structures Removed	III L.S.	III L.S.	III L.S.	-	-	-	-	III L.S.	-	-	-		Lump
402	29	Cu. Yd.	Asphalt Concrete (AC-20)	-	-	-	-	-	-	-	II 29	-	-	-	2.9	
404	3.3	Cu. Yd.	Asphalt Concrete (AC-20)	II 4	-	-	-	-	-	-	II 29	-	-	-	3.3	
407	84	Gallon	Tack Coat: 1102.02, RC-250; or 1102.04, SS-1, SS-1H, MS-2 or RS-1	-	-	-	-	-	-	-	II 84	-	-	-	84	
503	Lump Sum	Lump Sum	Cofferdams, Cribs and Sheeting	-	-	-	-	-	-	-	-	-	-	III L.S.		Lump
509	10,727	Pounds	Reinforcing Steel	-	III 5322	III 5405	-	-	-	-	-	-	-	-		10,727
511	68	Cu. Yd.	Class "C" Concrete, Substructure	-	III 34	III 34	-	-	-	-	-	-	-	-		68
512	8	Lin. Ft.	Premolded Sealing Strip	-	III 4	III 4	-	-	-	-	-	-	-	-		8
513	1086	Pounds	Structural Steel (ASTM A36)	III 1086	-	-	-	-	-	-	-	-	-	-		1086
514	1086	Pounds	Field Painting of New Structural Steel	III 1086	-	-	-	-	-	-	-	-	-	-		1086
516	313	Lin. Ft.	2⅜" Preformed Elastic Joint Sealer, Including Specials	III 313	-	-	-	-	-	-	-	-	-	-		313
516	28	Sq. Ft.	1" Preformed Expansion Joint Filler	-	III 14	III 14	-	-	-	-	-	-	-	-		28
518	50	Cu. Yd.	Porous Backfill	-	III 25	III 25	-	-	-	-	-	-	-	-		50
611	858	Sq. Yd.	Reinforced Concrete Approach Slabs T= 15"	-	-	-	-	-	-	-	III 858	-	-	-		858
837	Lump Sum	Lump Sum	Surface Preparation	III L.S.	-	-	-	-	-	-	-	-	-	-		Lump
837	Lump Sum	Lump Sum	Spot Prime Painting	III L.S.	-	-	-	-	-	-	-	-	-	-		Lump
837	Lump Sum	Lump Sum	Complete Coat Prime Painting	III L.S.	-	-	-	-	-	-	-	-	-	-		Lump
837	Lump Sum	Lump Sum	Two Complete Coats Finish Painting	III L.S.	-	-	-	-	-	-	-	-	-	-		Lump
Special	Lump Sum	Lump Sum	Cleanout Bridge Drainage Systems and Remove Debris from Bridge Seats	III L.S.	III L.S.	III L.S.	-	-	-	-	-	-	-	-		Lump
Special	50	Sq. Yd.	Membrane Waterproofing (Hot Applied Liquid) (See Proposal Note)	II 50	-	-	-	-	-	-	-	-	-	-	50	
Special	16	Each	Reset Bearings	-	III 8	III 8	-	-	-	-	-	-	-	-		16
Special	257	Lin. Ft.	Pressure Relief Joint	-	-	-	-	-	-	-	-	-	-	III 257		257
Special	595	Sq. Ft.	Armored Composite Bridge Roadway Slab	III 595	-	-	-	-	-	-	-	-	-	-		595
622	50	Lin. Ft.	Barrier Median At Approach Slab, As Per Plan	-	-	-	-	-	-	-	-	-	-	III 50		50
Special	50	Lin. Ft.	Median Fence Rebuilt	-	-	-	-	-	-	-	-	-	-	III 50		50

*SUPERSTRUCTURE - Includes approximately 32,500 Pounds (594 Sq. Yds.) of concrete filled I-Beam Weld deck, 50 Sq. Yds. of bituminous surface, and 3 Tons of steel in the end dam and end diaphragms.

*SUBSTRUCTURE - Includes approximately 70 Cu. Yds. of concrete in the abutment backwalls.

*APPROACH SLABS - Includes approximately 858 Sq. Yds. of existing reinforced concrete approach slabs, approach roadway, paved berms and all necessary excavation or backfill to provide the proper cross section for the new approach slabs. Also includes approximately 50 Lin. Ft. of concrete barrier median and attached fence. The fence shall be salvaged for reinstallation.

Rev. 7-18-75

HOWARD, NEEDLES, TAMMEN & BERGENDOFF
CONSULTING ENGINEERS
KANSAS CITY CLEVELAND NEW YORK

SITE PLAN

I-90 OVER C.E.I. OUTLET

BR. NO. CUY-90-2046 STA. 206+81.44 STA. 208+65.10

CUYAHOGA COUNTY OHIO

DRAWN	TRACED	CHECKED	REVIEWED	REVISED
BMP DATE 9-26-73	BMP DATE 9-26-73	WEB DATE 10-25-74	CAB DATE 12-20-74	SHEET 1/13

FHWA REGION	STATE	PROJECT	
5	OHIO		

195
354

CUYAHOGA COUNTY
CUY-90-23.73
LAKE COUNTY
LAK-90-0.00

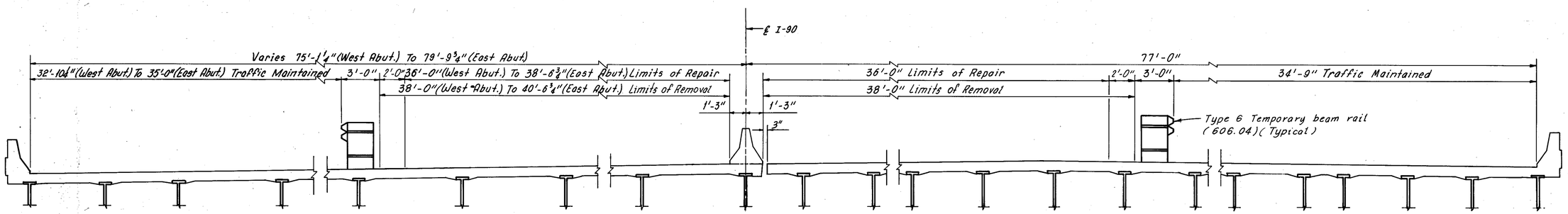

SECOND STAGE CONSTRUCTION

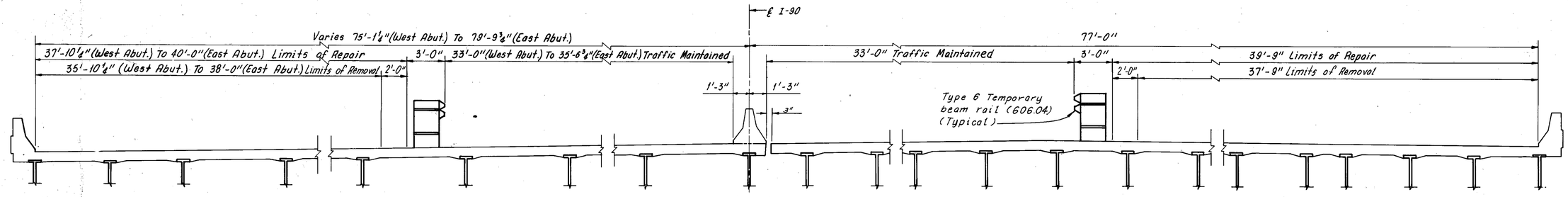

THIRD STAGE CONSTRUCTION

Notes:

The stage construction cross-sections apply within the bridge and approach slab limits. All repair work shall be co-ordinated with the stage construction as shown.

For maintenance of traffic notes, see Roadway Plans.

For shoring required at approach slabs, see Sheet CD-1 .

MICROFILMED
MAR 21 1985

HOWARD, NEEDLES, TAMMEN & BERGENDOFF
CONSULTING ENGINEERS
KANSAS CITY CLEVELAND NEW YORK

MAINTENANCE OF TRAFFIC

I-90 OVER C.E.I. OUTLET

BR.NO.CUY-90-2046 STA.206+81.44
STA.208+65.10

CUYAHOGA COUNTY OHIO

DRAWN JLR	TRACED JLR	CHECKED ML	REVIEWED EAG	REVISED
DATE 1-8-74	DATE 1-10-74	DATE 4-29-74	DATE 12-20-74	SHEET 2 /13

FHWA REGION	STATE	PROJECT	
5	OHIO		

196
354

CUYAHOGA COUNTY
CUY-90-23.73
LAKE COUNTY
LAK-90-0.00

Note: Backwall elevations are given at the top of the 7x4x½ angle of the end dam.

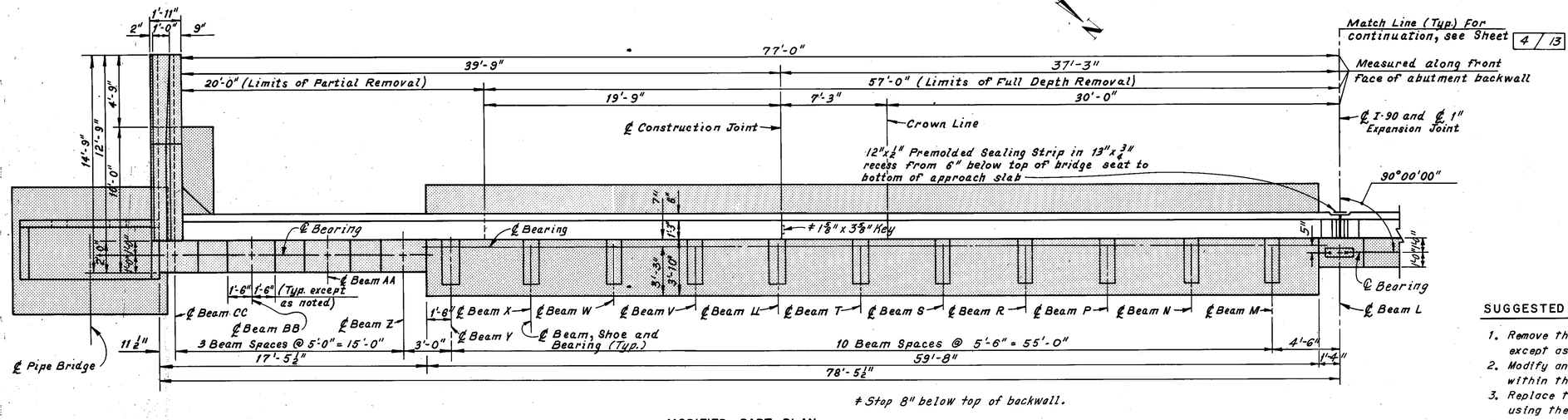

≠ Stop 8" below top of backwall.

MODIFIED PART PLAN

Note: All reinforcing bar marks shall be prefixed CW.

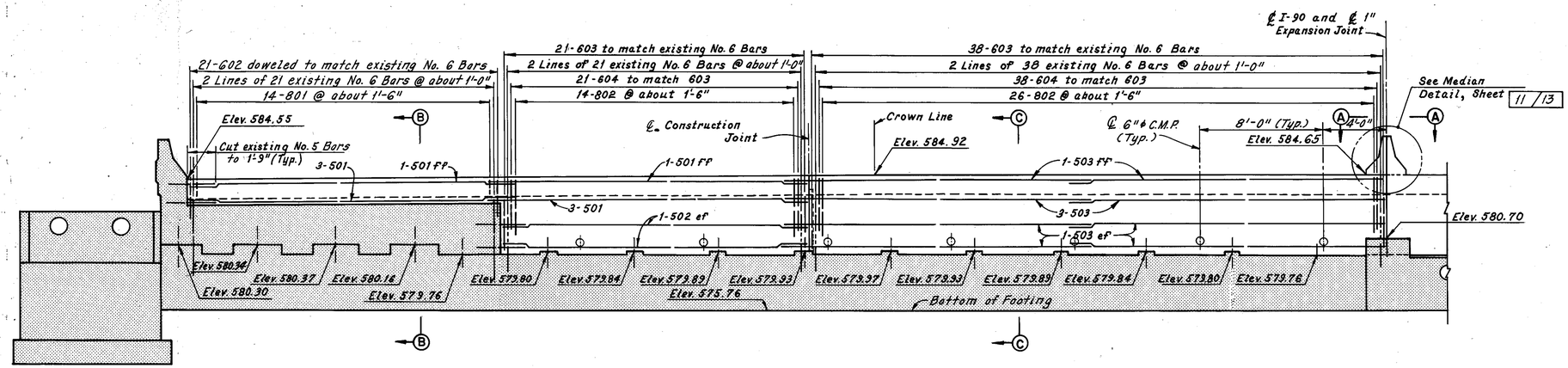

MODIFIED PART ELEVATION

SUGGESTED BACKWALL REPLACEMENT PROCEDURE:

1. Remove the portions of the backwall, including reinforcement, except as noted, within the limits of stage construction.
2. Modify and repair the existing end dam and end diaphragms within the limits of stage construction.
3. Replace the backwall within the limits of stage construction using the superstructure end dam to set the new backwall.
4. Install the 2⅜" preformed elastic joint sealer.

Notes:

▨ Indicates existing portions of abutment to remain.

For View A-A and Existing and Modified Sections B-B and C-C, see Sheet 11 / 13.

For stage construction sequence, see Maintenance Of Traffic, Sheet 2 / 13.

For shoring required at approach slabs, see Sheet CD-1.

For expansion joint modification at the median and curbs, see Sheet 7 / 13.

For Reinforcement Schedule, see Sheet R-1.

The following abbreviations are used:

ef = each face
ff = far face
Typ. = Typical
Elev. = Elevation

MICROFILMED
MAR 21 1985

HOWARD, NEEDLES, TAMMEN & BERGENDOFF
CONSULTING ENGINEERS
KANSAS CITY CLEVELAND NEW YORK

WEST ABUTMENT

I-90 OVER C.E.I. OUTLET

BR. NO. CUY-90-2046 STA. 206+81.44
STA. 208+65.10

CUYAHOGA COUNTY OHIO

DRAWN	TRACED	CHECKED	REVIEWED	REVISED
BMP	WBB	WEB	CAB	
DATE 6-25-74	DATE 7-1-74	DATE 10-11-74	DATE 12-20-74	SHEET 3 / 13

FHWA REGION	STATE	PROJECT	
5	OHIO		

197
354

CUYAHOGA COUNTY
CUY-90-23.73
LAKE COUNTY
LAK-90-0.00

Note: Backwall elevations are given at the top of the 7x4x½ angle of the end dam.

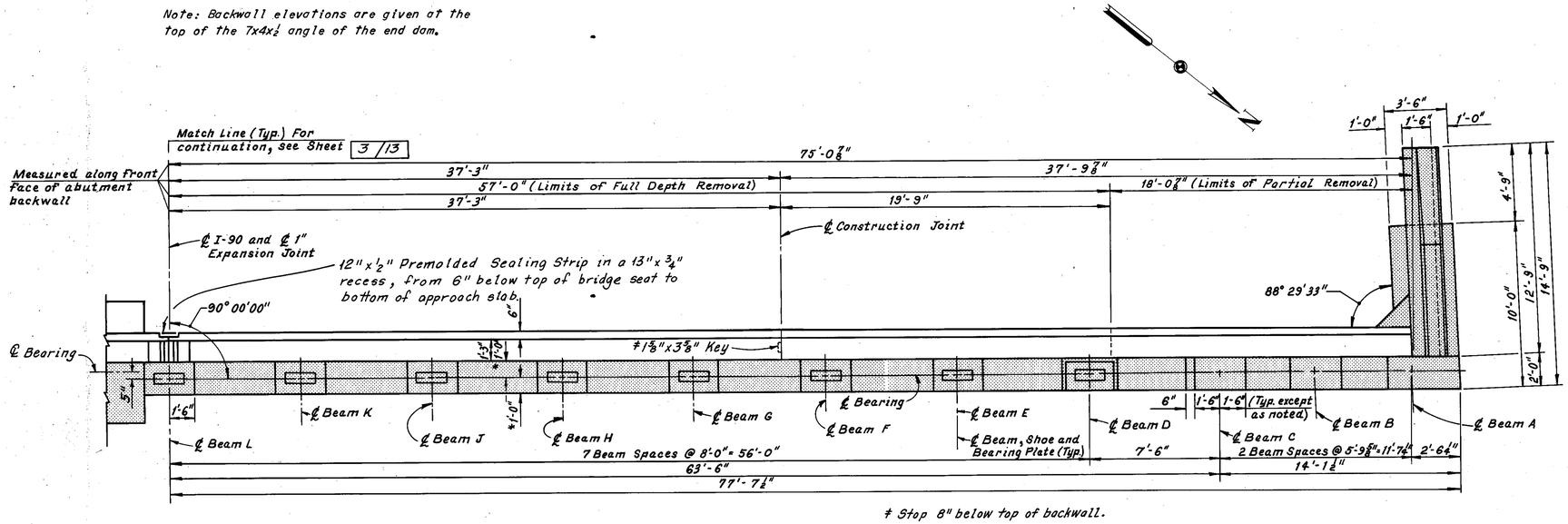

≠ Stop 8" below top of backwall.

MODIFIED PART PLAN

Note: All reinforcing bar marks shall be prefixed CW.

Note:
Reset bearings at Beam D thru Beam L.

* Plan Dimension, the actual dimensions shall be those which result when the bearings are set in their final position.

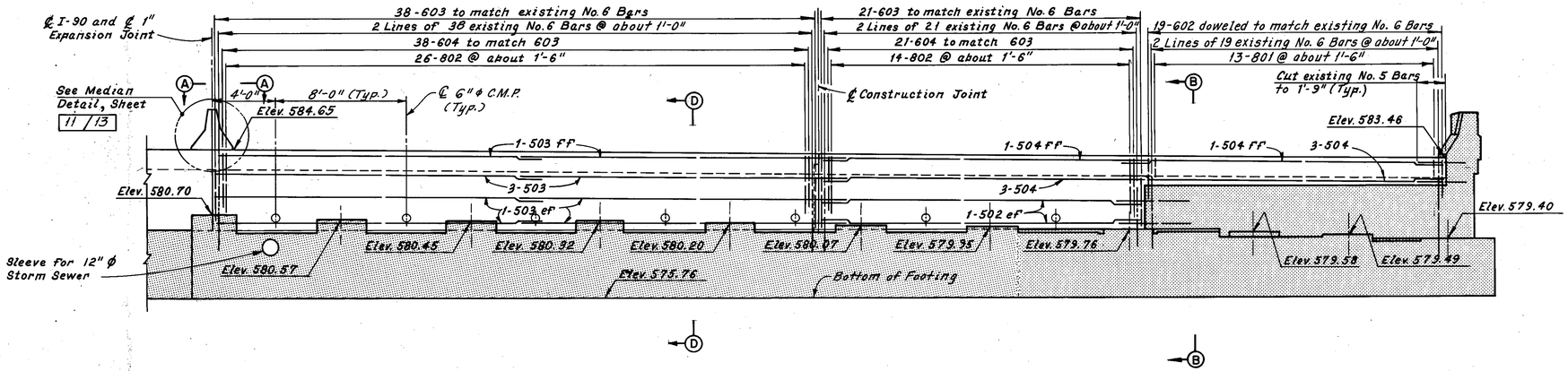

MODIFIED PART ELEVATION

SUGGESTED BACKWALL REPLACEMENT PROCEDURE:

1. Bridge the backwall with an adequate steel plate within the area of maintained traffic. Provide bituminous wearing surface cover, as directed by the Engineer, to permit and maintain safe passage of vehicular traffic. The steel plate and bituminous cover shall be included with Item 614, Maintaining Traffic, for payment (see Roadway Plans).
2. Raise the entire superstructure (all beams simultaneously) until there is no contact between the superstructure and backwall end dam angles. All material, labor and equipment required to accomplish the above shall be included with Item 202, Portions of Structures Removed, for payment.
3. Remove approximately 1 foot of the top of the backwall.
4. Reset bearings.
5. Release jacks.
6. Remove the remaining portions of the backwall, including reinforcement, except as noted, within the limits of stage construction.
7. Modify the existing end dam within the limits of stage construction.
8. Replace the backwall within the limits of the stage construction using the superstructure end dam to set the new backwall.
9. Install the 2½" preformed elastic joint sealer.

Notes:
Indicates existing portions of abutment to remain.
For View A-A and Existing and Modified Sections B-B and D-D, see Sheet 11/13.
For stage construction sequence, see Maintenance Of Traffic, Sheet 2/13.
For resetting bearing details, see Sheet CD-3.
For shoring required at approach slabs, see Sheet CD-1.
For expansion joint modification at the median and curbs, see Sheet 7/13.
For Reinforcement Schedule, see Sheet R-1.
The following abbreviations are used:
ef = each face
ff = far face
Typ. = Typical
Elev. = Elevation

HOWARD, NEEDLES, TAMMEN & BERGENDOFF
CONSULTING ENGINEERS
KANSAS CITY CLEVELAND NEW YORK

WEST ABUTMENT

I-90 OVER C.E.I. OUTLET

BR. NO. CUY-90-2046 STA. 206+81.44
STA. 208+65.10

CUYAHOGA COUNTY OHIO

DRAWN BMP	TRACED WBB	CHECKED WEB	REVIEWED CAB	REVISED
DATE 6-28-74	DATE 7-1-74	DATE 10-11-74	DATE 12-20-74	SHEET 4/13

MICROFILMED
MAR 21 1985

FHWA REGION	STATE	PROJECT	
5	OHIO		

198
354

CUYAHOGA COUNTY
CUY-90-23.73
LAKE COUNTY
LAK-90-0.00

Note: Backwall elevations are given at the top of the 7x4x½ angle of the end dam.

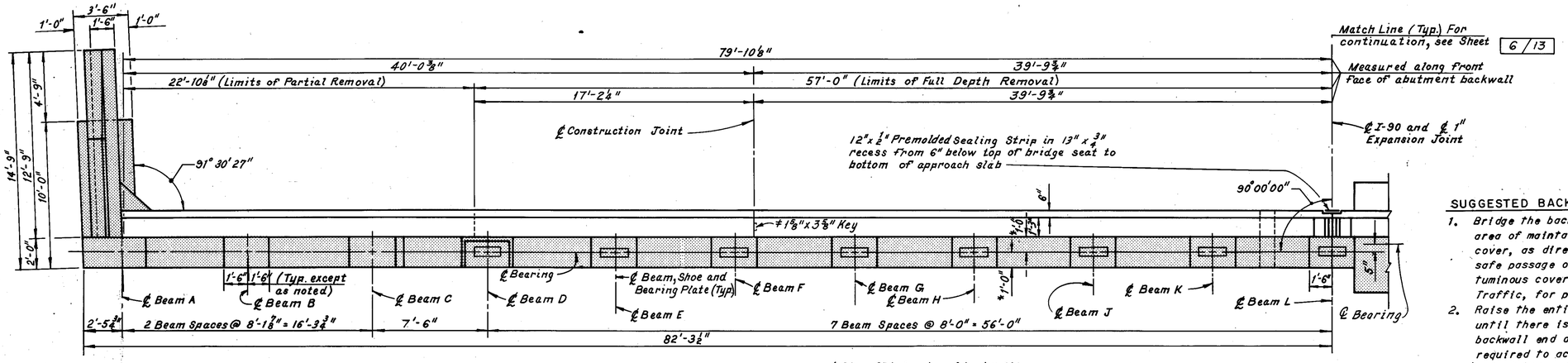

≠ Stop 8" below top of backwall.

MODIFIED PART PLAN

Note: All reinforcing bar marks shall be prefixed CE.

Note:
Reset bearings of Beam D thru Beam L.

* Plan Dimension, the actual dimensions shall be those which result when the bearings are set in their final position.

SUGGESTED BACKWALL REPLACEMENT PROCEDURE:

1. Bridge the backwall with an adequate steel plate within the area of maintained traffic. Provide bituminous wearing surface cover, as directed by the Engineer, to permit and maintain safe passage of vehicular traffic. The steel plate and bituminous cover shall be included with Item 614, Maintaining Traffic, for payment (see Roadway Plans).
2. Raise the entire superstructure (all beams simultaneously) until there is no contact between the superstructure and backwall end dam angles. All material, labor and equipment required to accomplish the above shall be included with Item 202, Portions of Structures Removed, for payment.
3. Remove approximately 1 foot of the top of the backwall.
4. Reset bearings.
5. Release jacks.
6. Remove the remaining portions of the backwall, including reinforcement, except as noted, within the limits of stage construction.
7. Modify the existing end dam within the limits of stage construction.
8. Replace the backwall within the limits of the stage construction using the superstructure end dam to set the new backwall.
9. Install the 2½" preformed elastic joint sealer.

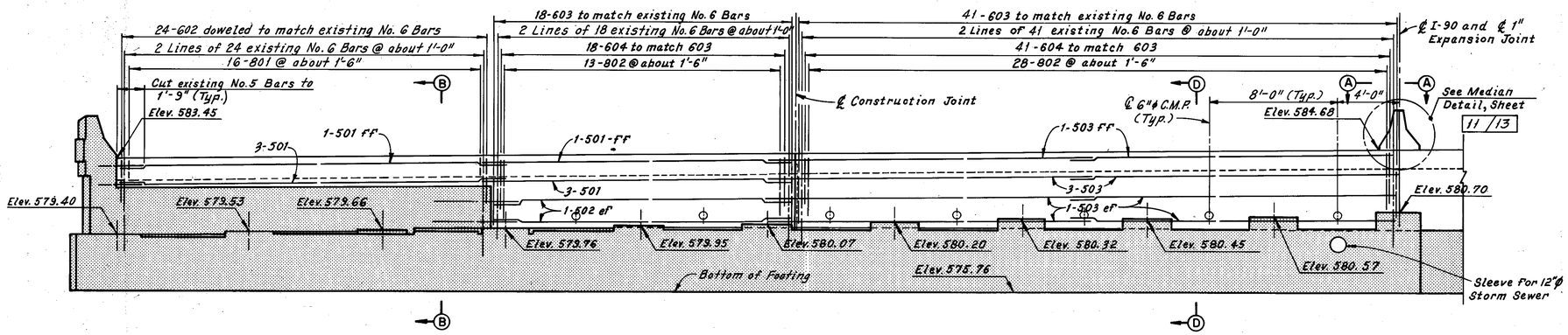

MODIFIED PART ELEVATION

Notes:
Indicates existing portions of abutment to remain.
For View A-A and Existing and Modified Sections B-B and D-D, see Sheet 11/13.
For stage construction sequence, see Maintenance Of Traffic, Sheet 2/13.
For resetting bearing details, see Sheet CD-3.
For shoring required at approach slabs, see Sheet CD-1.
For expansion joint modification at the median and curbs, see Sheet 7/13.
For Reinforcement Schedule, see Sheet R-1.
The following abbreviations are used:
ef = each face
ff = far face
Typ. = Typical
Elev. = Elevation

MICROFILMED
MAR 21 1985

HOWARD, NEEDLES, TAMMEN & BERGENDOFF
CONSULTING ENGINEERS
KANSAS CITY CLEVELAND NEW YORK

EAST ABUTMENT

I-90 OVER C.E.I. OUTLET

BR. NO. CUY-90-2046 STA. 206+81.44
STA. 208+65.10

CUYAHOGA COUNTY OHIO

DRAWN BMP	TRACED WEB	CHECKED WEB	REVIEWED DAG	REVISED
DATE 6-27-74	DATE 7-2-74	DATE 10-11-74	DATE 12-20-74	SHEET 5/13

FHWA REGION	STATE	PROJECT	
5	OHIO		

199
354

CUYAHOGA COUNTY
CUY-90-23.73
LAKE COUNTY
LAK-90-0.00

Note: Backwall elevations are given at the top of the 7x4x½ angle of the end dam.

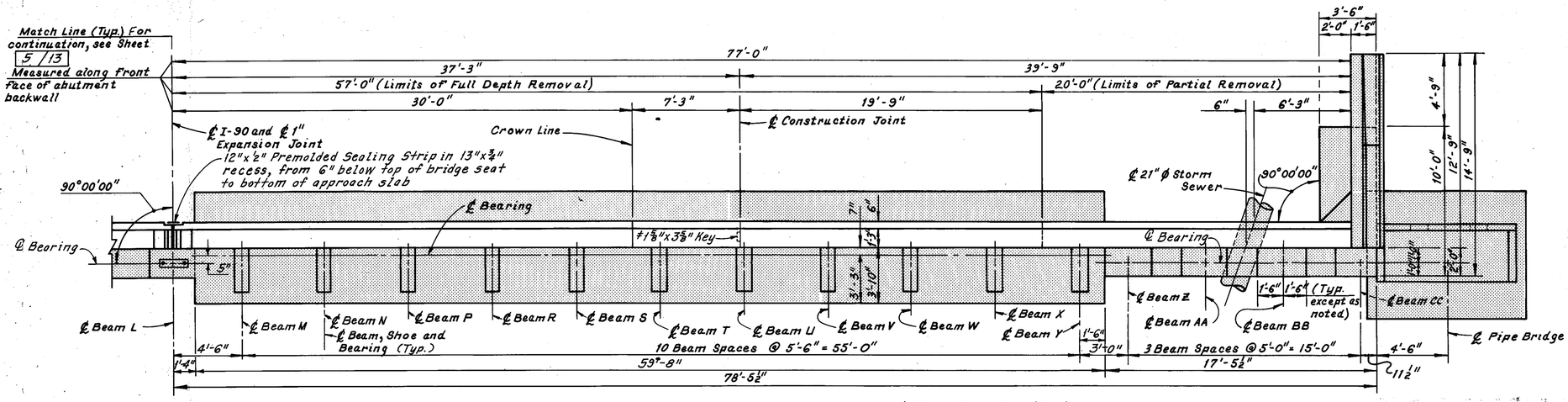

≠ Stop 8" below top of backwall.

MODIFIED PART PLAN

SUGGESTED BACKWALL REPLACEMENT PROCEDURE:

1. Remove the portions of the backwall, including reinforcement, except as noted, within the limits of stage construction.
2. Modify and repair the existing end dam and end diaphragms within the limits of stage construction.
3. Replace the backwall within the limits of stage construction using the superstructure end dam to set the new backwall.
4. Install the 2⅜" preformed elastic joint sealer.

Note: All reinforcing bar marks shall be prefixed CE.

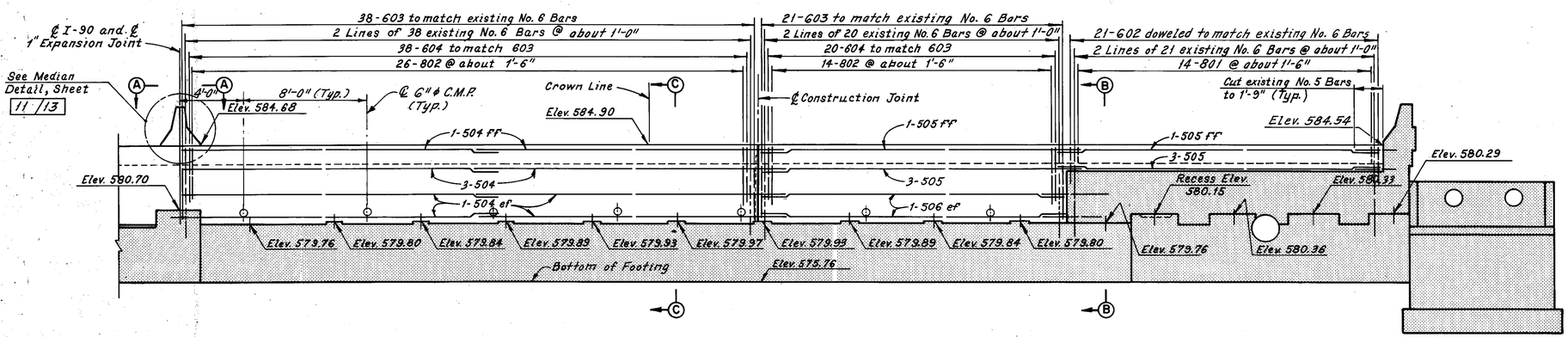

MODIFIED PART ELEVATION

Notes:

▨ Indicates existing portions of abutment to remain.

For View A-A and Existing and Modified Sections B-B and C-C, see Sheet 11/13.

For stage construction sequence, see Maintenance Of Traffic, Sheet 2/13.

For shoring required at approach slabs, see Sheet CD-1.

For expansion joint modification at the median and curbs, see Sheet 7/13.

For Reinforcement Schedule, see Sheet R-1.

The following abbreviations are used:

ef = each face
ff = far face
Typ. = Typical
Elev. = Elevation

MICROFILMED
MAR 21 1985

HOWARD, NEEDLES, TAMMEN & BERGENDOFF
CONSULTING ENGINEERS
KANSAS CITY CLEVELAND NEW YORK

EAST ABUTMENT

I-90 OVER C.E.I. OUTLET

BR. NO. CUY-90-2046 STA. 206+81.44
STA. 208+65.10

CUYAHOGA COUNTY OHIO

DRAWN BMP	TRACED HBB	CHECKED HEB	REVIEWED CAS	REVISED
DATE 6-29-11	DATE 7-9-14	DATE 10-11-74	DATE 12-20-74	SHEET 6/13

FHWA REGION	STATE	PROJECT	
5	OHIO		

208
354

CUYAHOGA COUNTY
CUY-90-23.73
LAKE COUNTY
LAK-90-0.00

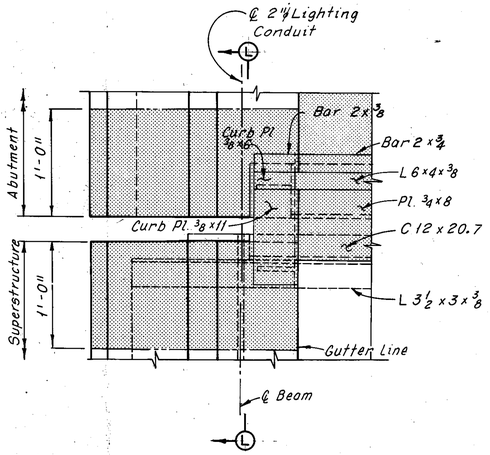

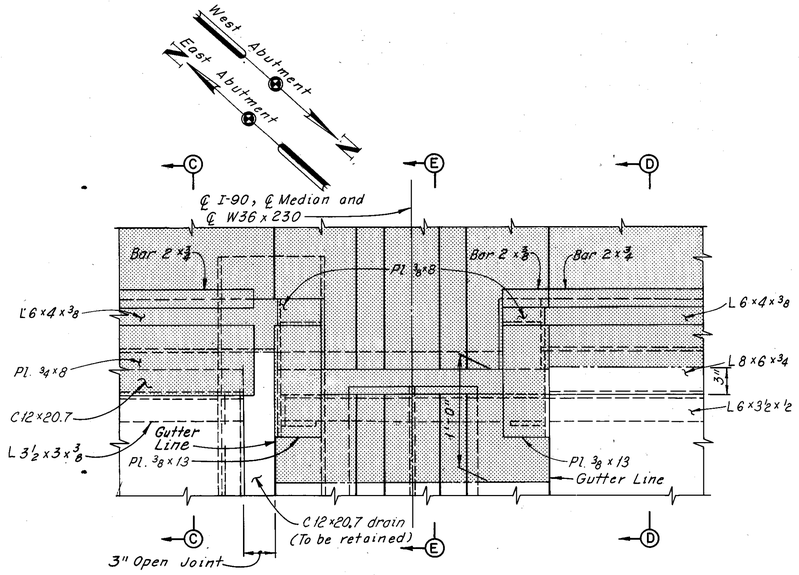

EXISTING PLAN
(Anchor Plates not shown)
(Plan at West Abutment shown, Plan at East Abutment similar).
▭ denotes limits of removal.

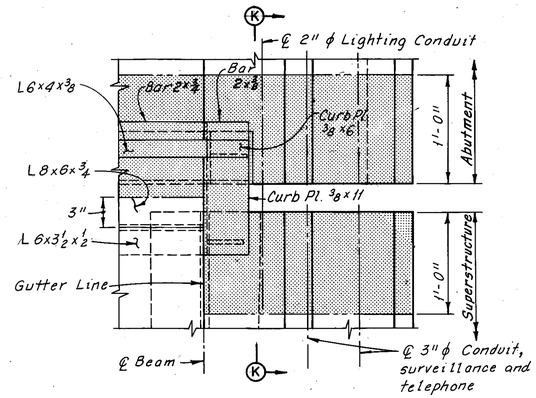

Notes:

The Contractor shall temporarily relocate and then reinstall the affected 2"ϕ lighting conduits (Owned by the State of Ohio) and the 3"ϕ surveillance and telephone conduits (Owned by the City of Cleveland). Expansion couplings shall be provided, as required, in the reinstallation.

If necessary to disrupt services, the Contractor shall arrange his work in such a manner, satisfactory to the owner, that any inconvenience would be held to a minimum.

All material, labor and equipment necessary to complete this work shall be included in the contract lump sum price bid for Item 202, Portions of Structures Removed, for payment.

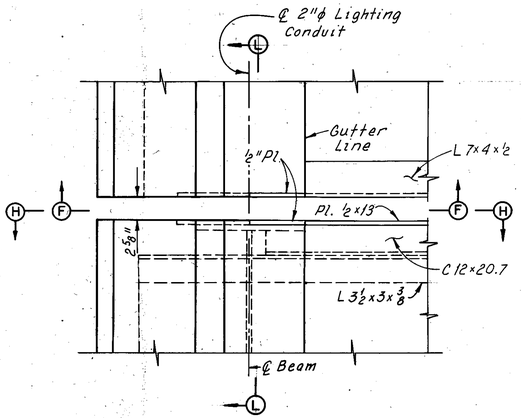

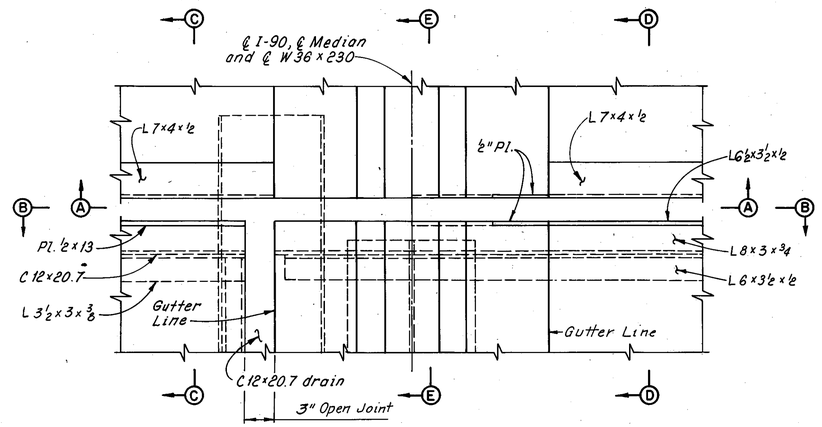

MODIFIED PLAN
(Preformed elastic joint sealer, Anchor studs and support bars not shown)

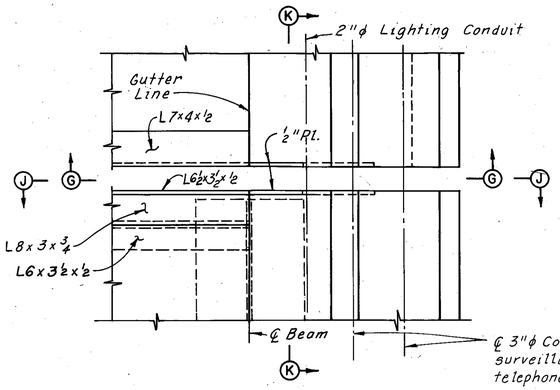

Notes:

For Sections A-A, B-B, E-E, F-F, G-G, H-H and J-J, see Sheet 8/13.
For Sections K-K and L-L, see Sheet 9/13.
For Sections C-C and D-D, see Sheet 11/13.
For barrier median and barrier curb details, see Sheet 9/13.

RECEIVED
MAR 21 1975

HOWARD, NEEDLES, TAMMEN & BERGENDOFF
CONSULTING ENGINEERS
KANSAS CITY CLEVELAND NEW YORK

EXISTING AND MODIFIED PART PLAN AT END DAMS
I-90 OVER C.E.I. OUTLET

BR.NO.CUY-90-2046 STA. 206+81.44 STA. 208+65.10

CUYAHOGA COUNTY OHIO

DRAWN S.J.S	TRACED S.J.S	CHECKED W.E.B	REVIEWED C.A.B	REVISED
DATE 8-5-74	DATE 8-6-74	DATE 10-8-74	DATE 12-20-74	SHEET 7/13

FHWA REGION	STATE	PROJECT	
5	OHIO		

201
354

CUYAHOGA COUNTY
CUY-90-23.73
LAKE COUNTY
LAK-90-0.00

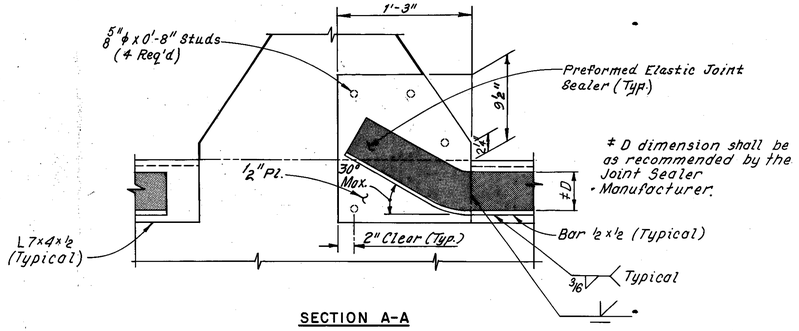

SECTION A-A

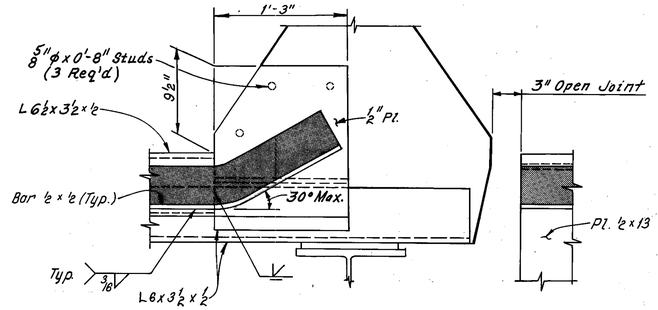

SECTION B-B
(For details not shown see Section A-A)

Note:
The webbing shall be removed from the preformed elastic joint sealer and replaced with closed cell foam in that portion which extends from the gutter line under the barrier median and barrier curb. Holes for the conduits shall be field cut after the joint sealer is in place.

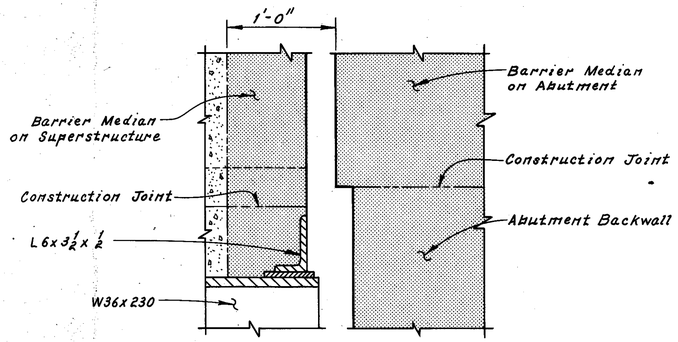

EXISTING SECTION E-E
(Reinforcement not shown)
denotes limits of concrete removal.

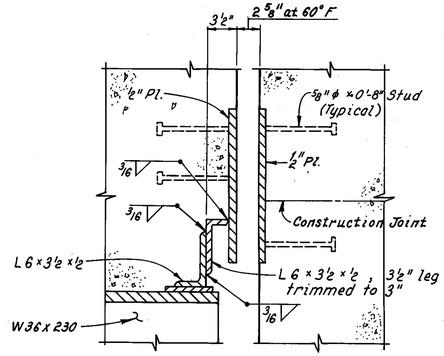

MODIFIED SECTION E-E
(Preformed Elastic Joint Sealer, support bars, and reinforcement not shown.)

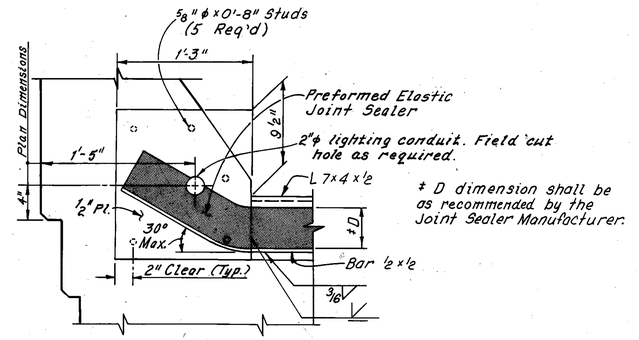

SECTION F-F

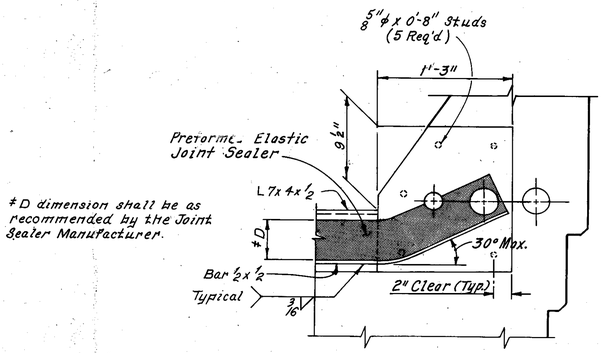

SECTION G-G
(For details not shown see Section J-J)

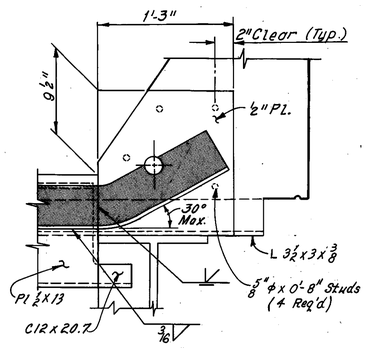

SECTION H-H
(For details not shown see Section F-F)

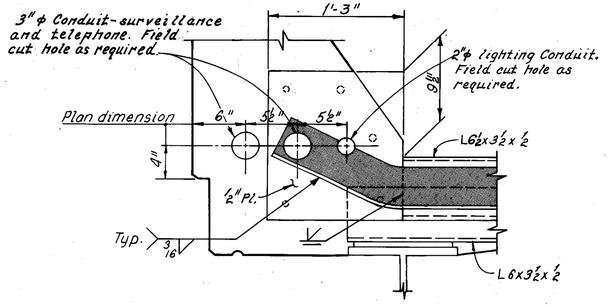

SECTION J-J
(For details not shown see Section G-G)

Notes:
For location of Sections A-A, B-B, E-E, F-F, G-G, H-H and J-J, see Sheet 7/13.
For barrier median and barrier curb details, see Sheet 9/13.
For preformed elastic joint sealer details, see Sheet 9/13.
denotes preformed elastic joint sealer, except as noted.

MICROFILMED
MAR 21 1985

HOWARD, NEEDLES, TAMMEN & BERGENDOFF
CONSULTING ENGINEERS
KANSAS CITY CLEVELAND NEW YORK

TYPICAL SECTIONS AT END DAMS

I-90 OVER C.E.I. OUTLET

BR. NO. CUY-90-2046 STA. 206+81.44
STA. 208+65.10

CUYAHOGA COUNTY OHIO

DRAWN S.J.S.	TRACED S.J.S.	CHECKED W.E.B.	REVIEWED CAB	REVISED
DATE 8-6-74	DATE 8-8-74	DATE 10-9-74	DATE 12-20-74	SHEET 8/13

FHWA REGION	STATE	PROJECT	
5	OHIO		

202
354

CUYAHOGA COUNTY
CUY-90-23.73
LAKE COUNTY
LAK-90-0.00

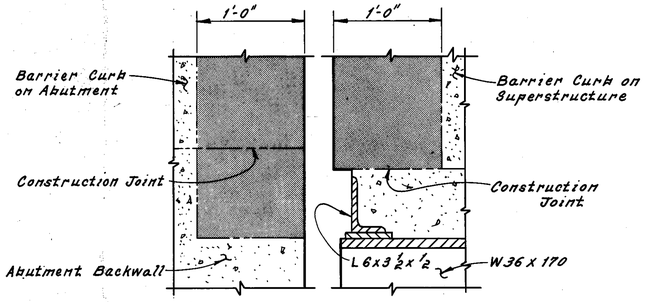

EXISTING SECTION K-K
(Reinforcement not shown)
denotes limits of concrete removal.

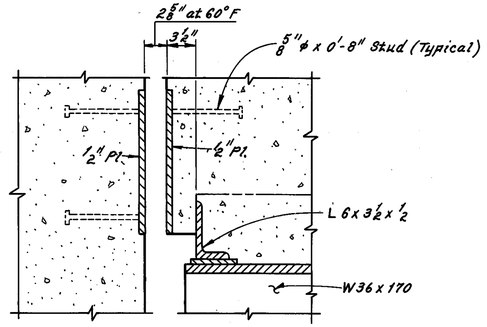

MODIFIED SECTION K-K
(Preformed Elastic Joint Sealer, support bars and reinforcement not shown.)

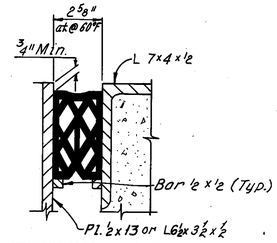

PREFORMED ELASTIC JOINT SEALER

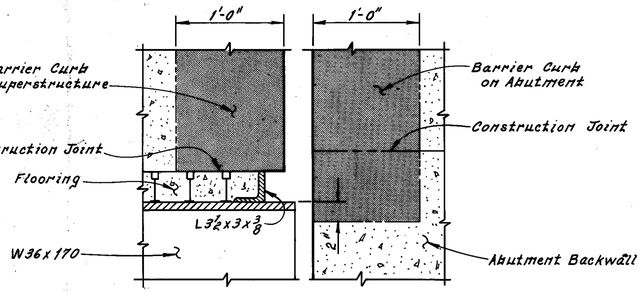

EXISTING SECTION L-L
(Reinforcement not shown)
denotes limits of concrete removal.

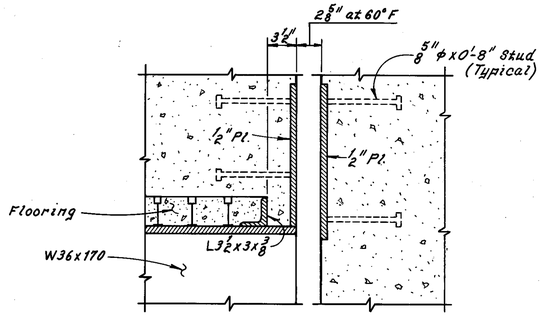

MODIFIED SECTION L-L
(Preformed Elastic Joint Sealer, support bars and reinforcement not shown.)

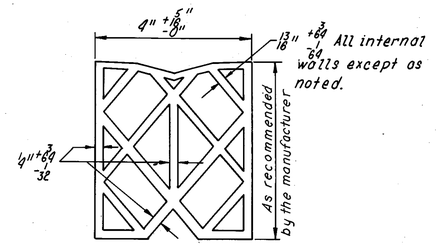

PREFORMED ELASTIC JOINT SEALER

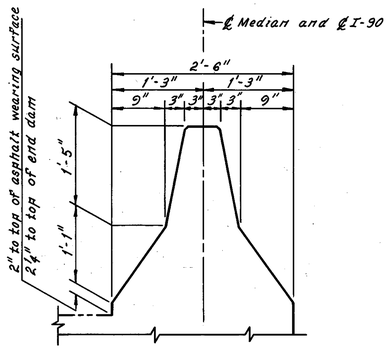

BARRIER MEDIAN DETAIL

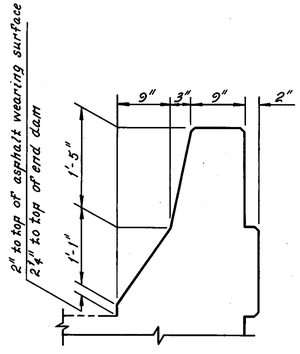

BARRIER CURB DETAIL

Note:
For location of Sections K-K and L-L, see Sheet 7/13.

MICROFILMED
MAR 21 1975

HOWARD, NEEDLES, TAMMEN & BERGENDOFF
CONSULTING ENGINEERS
KANSAS CITY CLEVELAND NEW YORK

TYPICAL SECTIONS AT END DAMS

I-90 OVER C.E.I. OUTLET

BR. NO. CUY-90-2046 STA. 206+81.44
STA. 208+65.10

CUYAHOGA COUNTY OHIO

DRAWN S.J.S	TRACED H.B.B	CHECKED W.E.B	REVIEWED C.A.B	REVISED
DATE 8-7-74	DATE 9-17-74	DATE 10-9-74	DATE 12-20-74	SHEET 9/13

FHWA REGION	STATE	PROJECT	
5	OHIO		

203
354

CUYAHOGA COUNTY
CUY-90-23.73
LAKE COUNTY
LAK-90-0.00

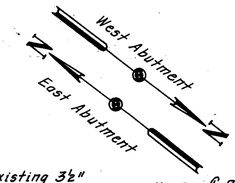

Note:
Replace the armored composite bridge deck between Beam L and Beam Y at the West and East Abutments. For beam designations, see Sheets 3/13 thru 6/13.

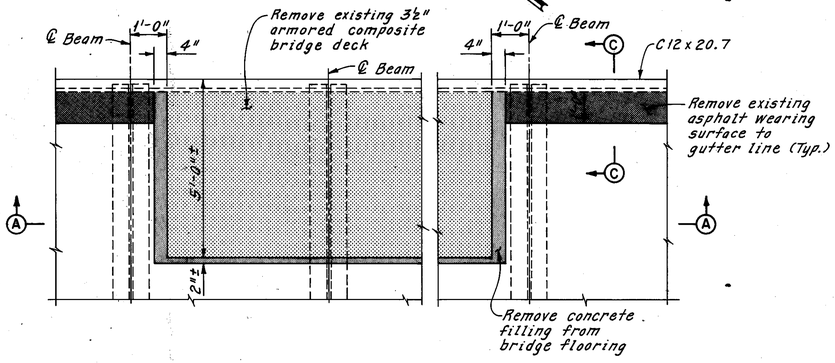

EXISTING PART PLAN
(Abutment not shown)

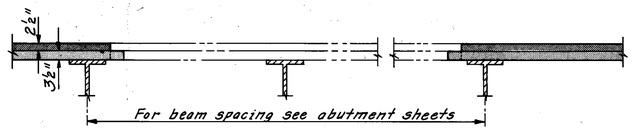

EXISTING SECTION A-A

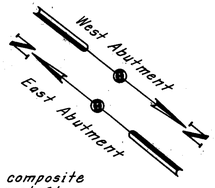

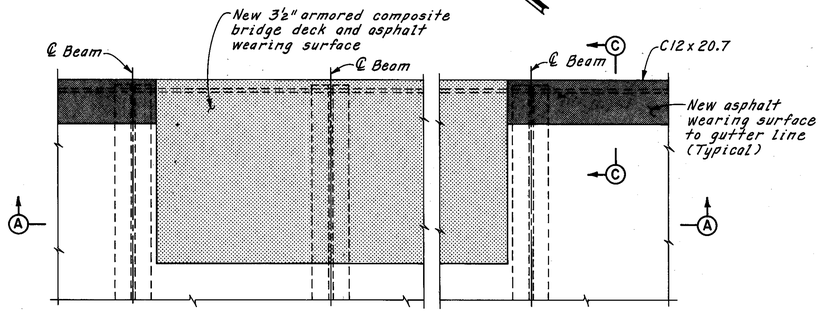

MODIFIED PART PLAN
(Abutment not shown)

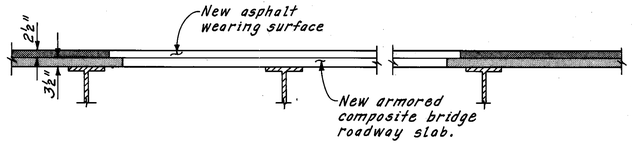

MODIFIED SECTION A-A

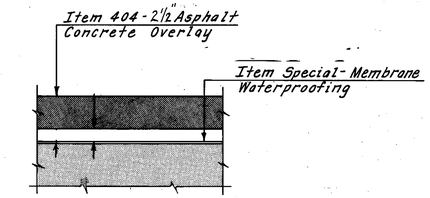

ASPHALT WEARING SURFACE
REPLACEMENT DETAIL

Note:
Optional intermediate splices shall be made 1'-0" from ℄ Beams.

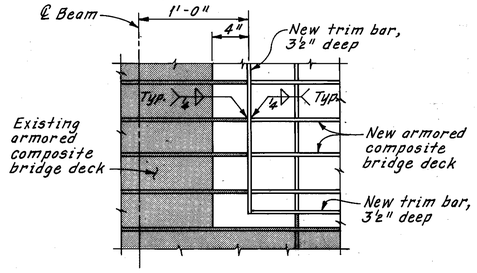

BRIDGE DECK ERECTION DETAIL

ARMORED COMPOSITE BRIDGE DECK REPLACEMENT DETAILS

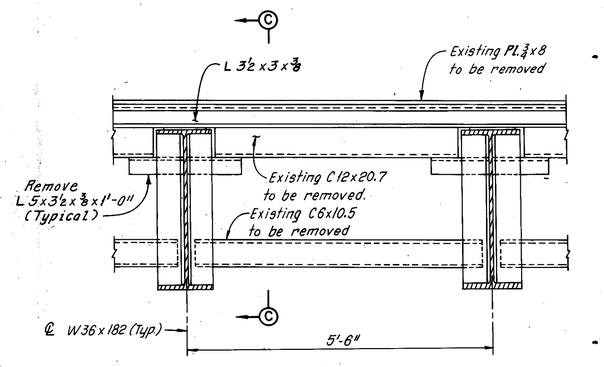

EXISTING END DIAPHRAGM

Note:
Replace end diaphragms between Beam M and Beam Y at West and East Abutments. For beam designations, see Sheets 3/13 thru 6/13.

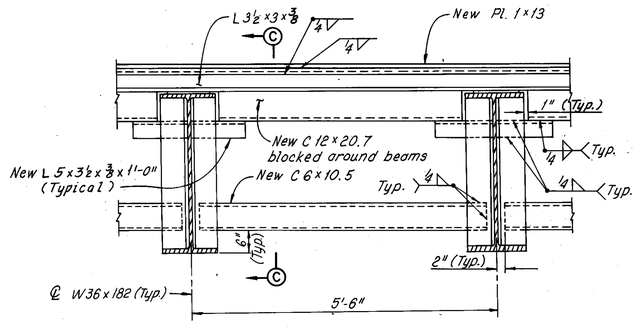

MODIFIED END DIAPHRAGM

Note:
For Existing and Modified Section C-C, see Sheet 11/13.

END DIAPHRAGM REPAIR DETAILS

RECEIVED
MAR 21 1975

HOWARD, NEEDLES, TAMMEN & BERGENDOFF
CONSULTING ENGINEERS
KANSAS CITY CLEVELAND NEW YORK

SUPERSTRUCTURE DETAILS

I-90 OVER C.E.I. OUTLET

BR. NO. CUY-90-2046 STA. 206+81.44
STA. 208+65.10

CUYAHOGA COUNTY OHIO

DRAWN CKB	TRACED WEB	CHECKED WEB	REVIEWED CAB	REVISED
DATE 9-1674	DATE 9-19-74	DATE 10-9-74	DATE 12-20-74	SHEET 10/13

Rev. 7-18-75

FHWA REGION	STATE	PROJECT	
5	OHIO		

204
354

CUYAHOGA COUNTY
CUY-90-23.73
LAKE COUNTY
LAK-90-0.00

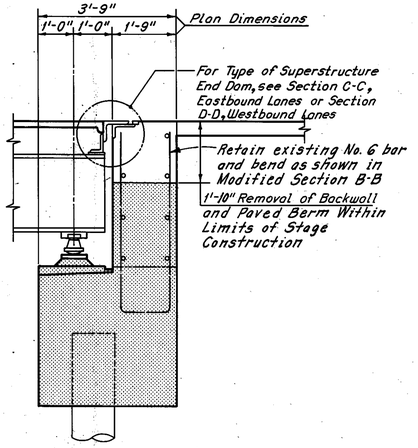

EXISTING SECTION B-B

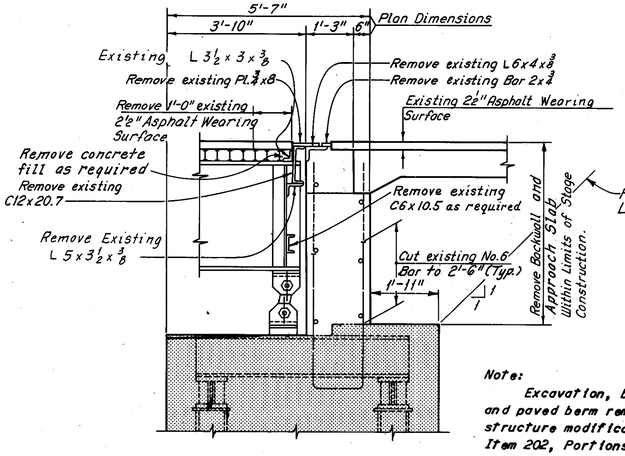

EXISTING SECTION C-C

Note:
Excavation, backfill (except Porous Backfill) and paved berm removal necessary to accomplish structure modification shall be included with Item 202, Portions of Structures Removed, for payment. Backfill shall be in accordance with Item 203.

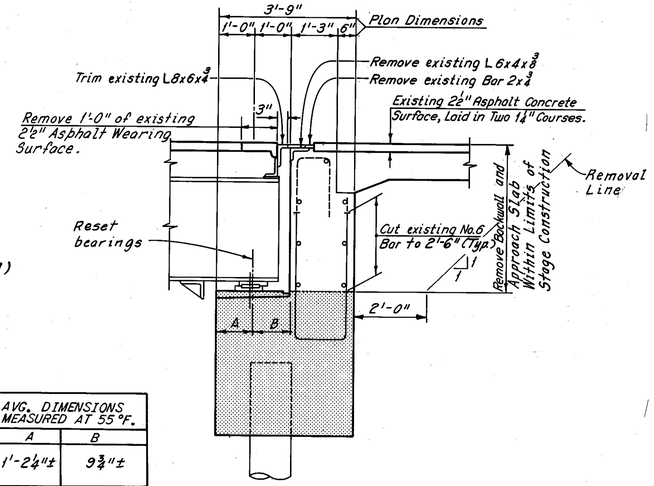

EXISTING SECTION D-D

LOCATION	AVG. DIMENSIONS MEASURED AT 55°F.	
	A	B
East Abutment	1'-2¼"±	9¾"±
West Abutment	1'-0½"±	11½"±

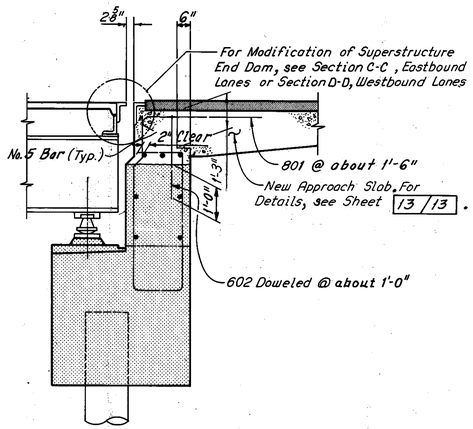

MODIFIED SECTION B-B

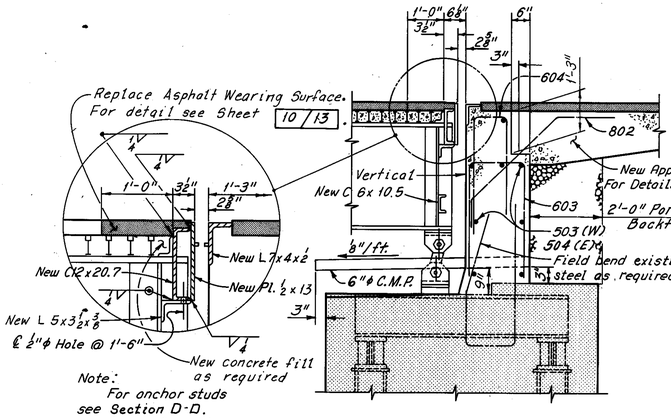

Note:
For onchor studs see Section D-D.
For preformed elastic joint sealer detail, see Sheet 9/13.

MODIFIED SECTION C-C

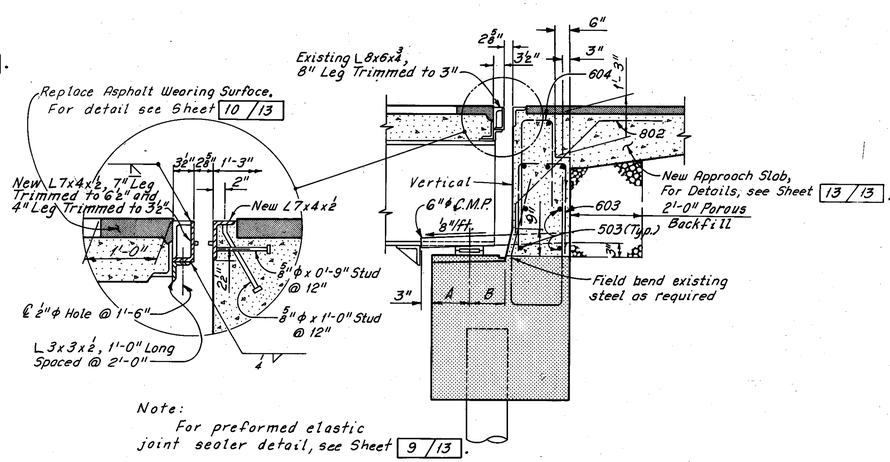

Note:
For preformed elastic joint sealer detail, see Sheet 9/13.

MODIFIED SECTION D-D

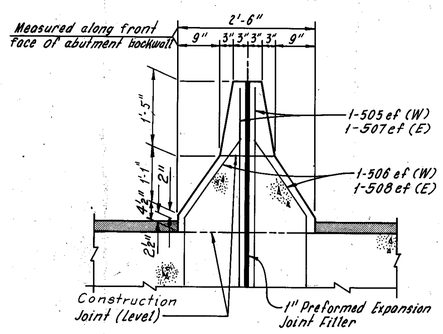

MEDIAN DETAIL

Note:
For Reinforcement Schedule, see Sheet R-1.

MICROFILMED
MAR 21 1985

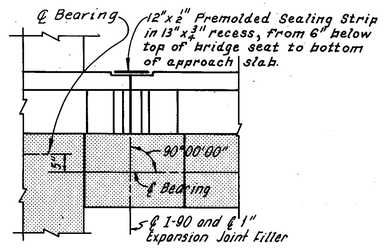

VIEW A-A
(West Abutment Shown, East Abutment Similar)

Notes:
Indicates existing portions of abutment to remain.
For resetting bearing details, see Sheet CD-3.
For location of View A-A and Section B-B, see Sheets 3/13 thru 6/13.
For locations of Section C-C, see Sheets 3/13, 6/13, 7/13, and 10/13.
For locations of Section D-D, see Sheets 4/13, 5/13, and 7/13.
The 6"ϕ C.M.P. (707.01) shall be included with Item 518, Porous Backfill, for payment. For location, see Sheets 3/13 thru 6/13.
The following abbreviations are used:
Typ. = Typical W = West E = East

HOWARD, NEEDLES, TAMMEN & BERGENDOFF
CONSULTING ENGINEERS
KANSAS CITY CLEVELAND NEW YORK

TYPICAL SECTIONS AND DETAILS

I-90 OVER C.E.I. OUTLET

BR. NO. CUY-90-2046 STA. 206+81.44
STA. 208+65.10

CUYAHOGA COUNTY OHIO

DRAWN	TRACED	CHECKED	REVIEWED	REVISED
B.M.P.	D.L.R.	WEB	CAB	
DATE 3-28-74	DATE 3-29-74	DATE 10-9-74	DATE 10-20-74	SHEET 11/13

FHWA REGION	STATE	PROJECT	
5	OHIO		

205
354

CUYAHOGA COUNTY
CUY-90-23.73
LAKE COUNTY
LAK-90-0.00

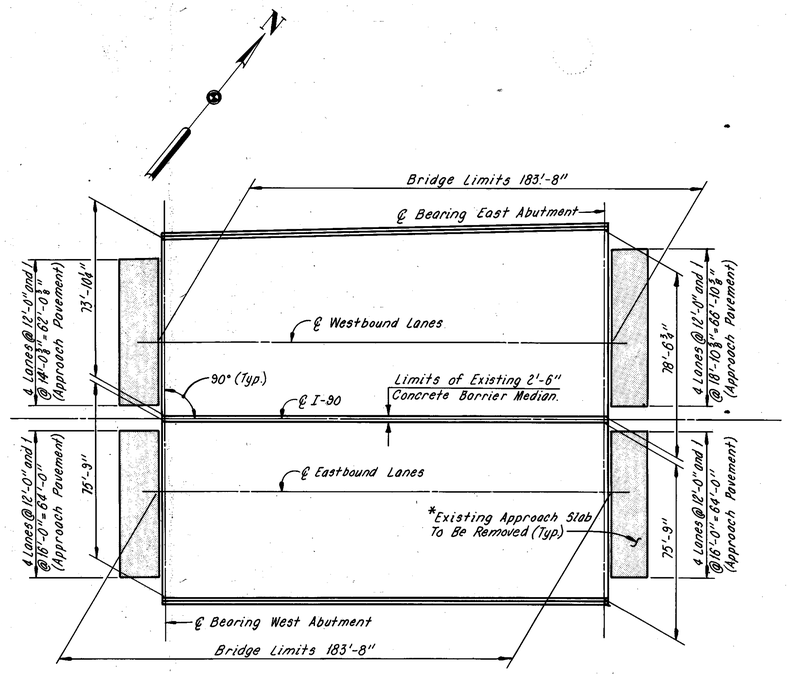

EXISTING PLAN

30 0 30 60
SCALE IN FEET

*Includes removal of paved berms and all necessary excavation or backfill to provide the proper cross section for the new approach slab.

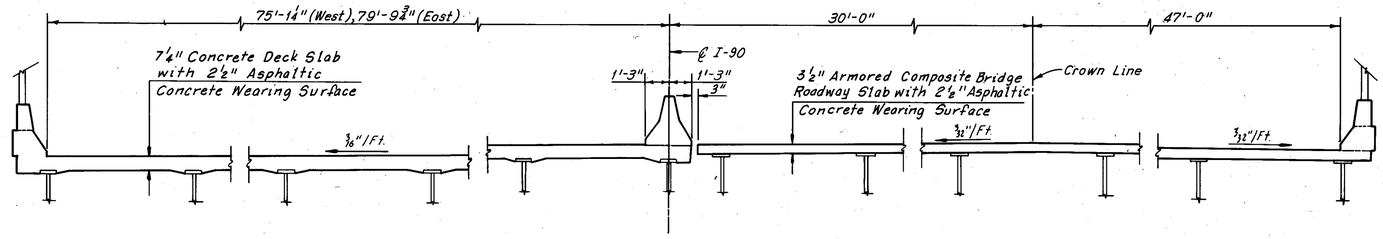

EXISTING TYPICAL SECTION

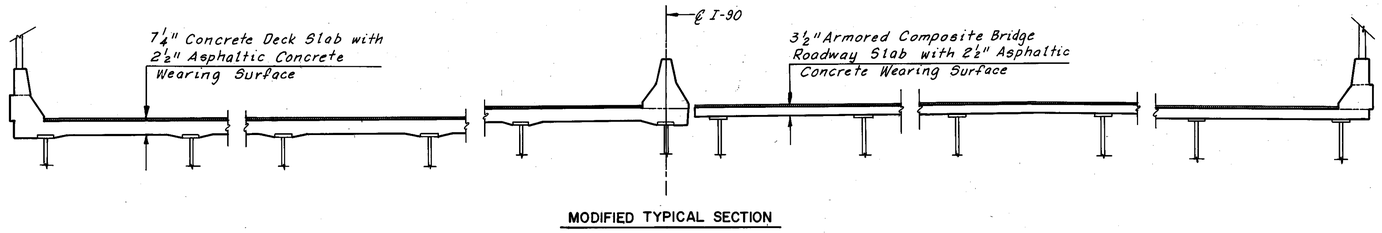

MODIFIED TYPICAL SECTION

MICROFILMED
MAR 21 1985

MICROFILMED
MAR 21 1985

HOWARD, NEEDLES, TAMMEN & BERGENDOFF
CONSULTING ENGINEERS
KANSAS CITY CLEVELAND NEW YORK

EXISTING AND MODIFIED DECK PLAN AND TYPICAL SECTION

I-90 OVER C.E.I. OUTLET

BR. NO. CUY-90-2046 STA. 206+81.44 STA. 208+65.10

CUYAHOGA COUNTY OHIO

DRAWN BMP	TRACED JLR	CHECKED WEB	REVIEWED CAB	REVISED
DATE 10-4-73	DATE 10-5-73	DATE 10-21-74	DATE 12-20-74	SHEET 12/13

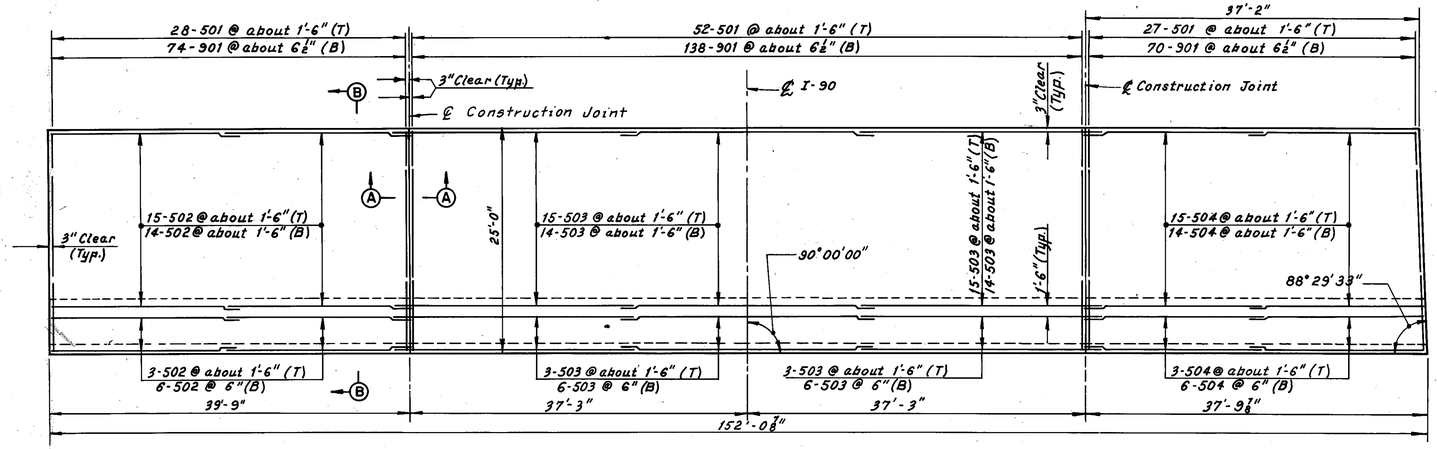

WEST APPROACH SLAB PLAN

Note: All reinforcing bar marks shall be prefixed CCS.

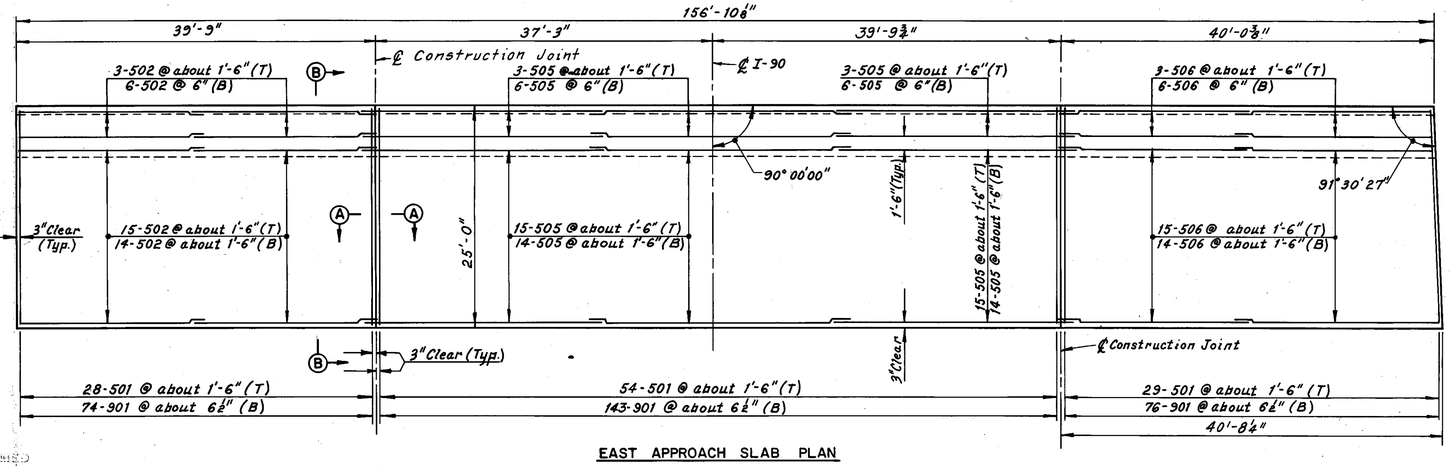

EAST APPROACH SLAB PLAN

Note:
The asphalt wearing surface on the approach slab shall consist of the following:
1. Item 407, Tack Coat at 0.1 gal. per sq. yd.
2. Item 402, 1½" Asphalt Concrete (AC-20)
3. Item 404, 1½" Asphalt Concrete (AC-20)

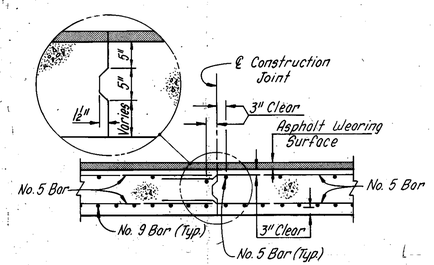

SECTION A-A

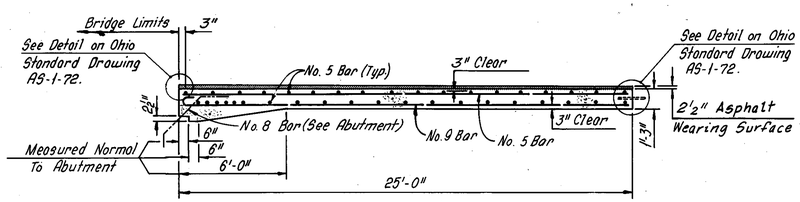

SECTION B-B

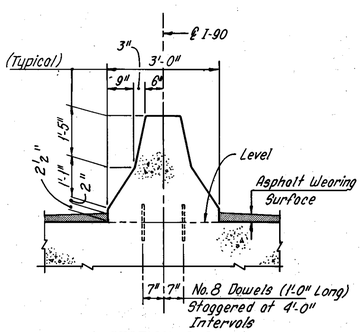

SECTION C-C

Note:
The jacking holes as called for on Ohio Standard Drawing AS-1-72 are not required.

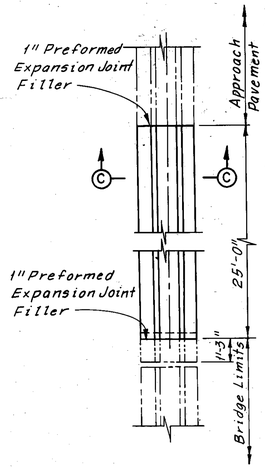

BARRIER MEDIAN AT APPROACH SLAB

FHWA REGION	STATE	PROJECT	
5	OHIO		

206
354

CUYAHOGA COUNTY
CUY-90-23.73
LAKE COUNTY
LAK-90-0.00

REINFORCEMENT SCHEDULE

MARK	NO.	LENGTH	TYPE	SER. INCR.
CCS 501	218	24'-6"	Str.	
CCS 502	152	20'-6"	Str.	
CCS 503	114	27'-0"	Str.	
CCS 504	76	19'-6"	Str.	
CCS 505	114	28'-0"	Str.	
CCS 506	76	21'-6"	Str.	
CCS 901	575	25'-9"	101	

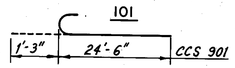

Notes:
For stage construction sequence, see Maintenance Of Traffic, Sheet 2/13.
For normal cross slopes, see Existing Typical Section, Sheet 12/13.

The concrete barrier median on the approach slabs including 1" preformed expansion joint filler and No. 8 dowel bars shall be included with Item 622 , Barrier Median At Approach Slab, As Per Plan, for payment.

The following abbreviations are used:
T = Top
B = Bottom
Typ. = Typical
For additional notes and details, see Ohio Standard Drawing AS-1-72.

MICROFILMED
MAR 21 1995

MICROFILMED
MAR 21 1995

HOWARD, NEEDLES, TAMMEN & BERGENDOFF
CONSULTING ENGINEERS
KANSAS CITY CLEVELAND NEW YORK

APPROACH SLABS

I-90 OVER C.E.I. OUTLET

BR. NO. CUY-90-2046 STA. 206+81.44
STA. 208+65.10

CUYAHOGA COUNTY OHIO

DRAWN BMP	TRACED HBB	CHECKED WLB	REVIEWED CAB	REVISED
DATE 6-26-14	DATE 7-10-14	DATE 10-21-14	DATE 12-20-14	SHEET 13/13

FHWA REGION	STATE	PROJECT	
5	OHIO		

207
354

CUYAHOGA COUNTY
CUY-90-23.73
LAKE COUNTY
LAK-90-0.00

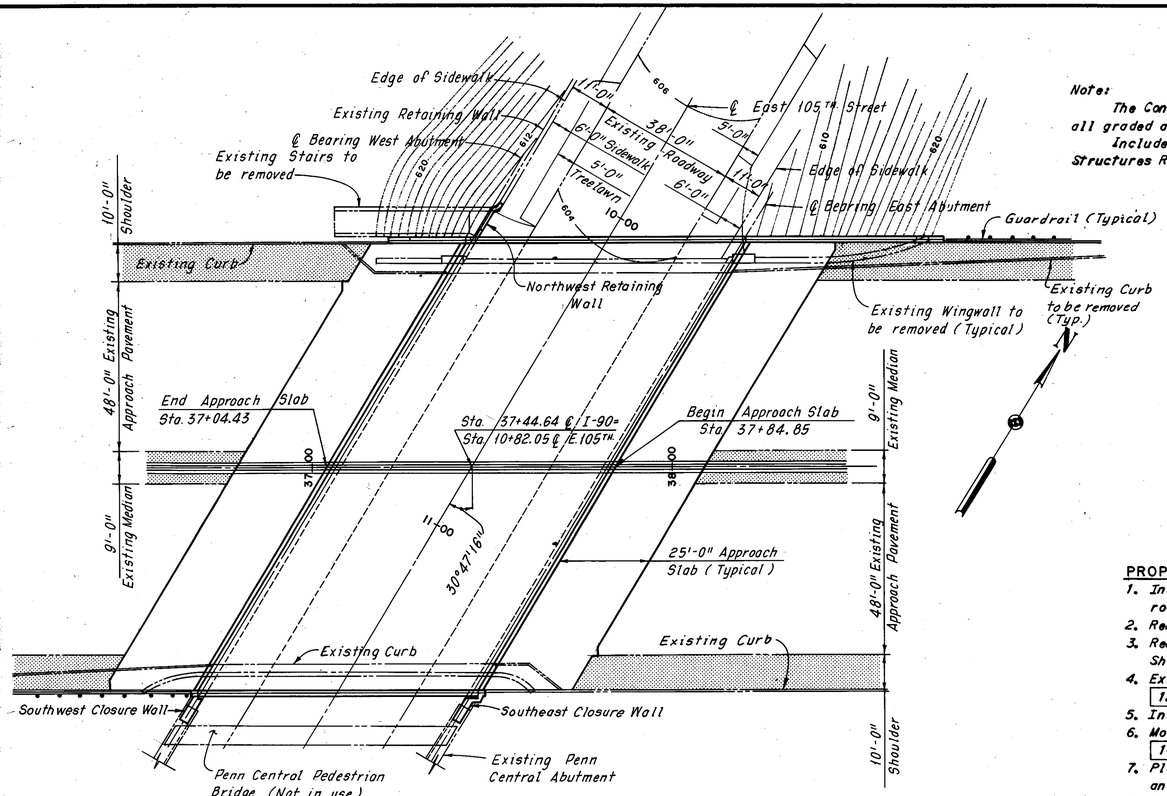

Note:
The existing structure is shown in phantom and the proposed structure is shown solid.

PLAN

20 0 20 40
SCALE IN FEET

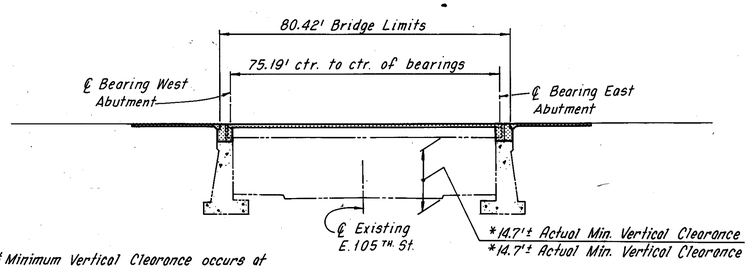

* Minimum Vertical Clearance occurs at the East Gutter of East 105th Street and the outside edge of the North exterior beam (both existing and widened structure).

ELEVATION
(denotes new construction)

Note:
The Contractor shall seed and mulch all graded areas in accordance with Item 659. Include with Item 202, Portions of Structures Removed, for payment.

PROPOSED WORK

1. Install pressure relief joints in the approach roadway, see Sheet CD-9 .
2. Remove bridge deck and approach slabs.
3. Remove portions of the existing abutments, see Sheets 5/27 , 6/27 and 23/27 .
4. Extend substructure, see Sheets 7/27 thru 12/27 and 24/27 .
5. Install new beams, see Sheet 15/27 .
6. Modify abutment beam seats, see Sheets 13/27 , 14/27 and 23/27 .
7. Place new deck, see Sheets 16/27 thru 23/27 and 25/27 .
8. Replace approach slabs, see Sheets 26/27 and 27/27 .
9. Place asphalt wearing surface, see Sheet 18/27 .
10. Paint all structural steel.
11. Repair minor abutment deterioration, see Sheets 5/27 and 6/27 .
12. Apply concrete coating to the abutments, see Sheets 5/27 and 6/27 .

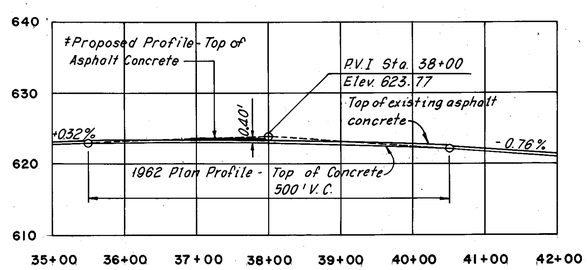

PROFILE -I 90

* The Proposed Profile-Top of Asphalt Concrete is 0.40' above the 1962 Plan Profile-Top of Concrete. All deck elevations are in accordance with this Proposed Profile. The approach slabs shall be warped from end to end to match the proposed top of asphalt concrete of the approach roadway as shown in the Plans.

EXISTING STRUCTURE

TYPE:	Steel Beam with Concrete Deck and Concrete Abutments.
SPAN:	75.19' center to center of bearings (Plan dimension)
ROADWAY:	109' Face to face of curbs plus two 3'-0" Sidewalks, providing 8 - 12' Lanes with 9'-0" Median and 2' Marginals.
LOADING:	S-20-46.
SKEW:	30°47'16" Left Forward.
WEARING SURFACE:	Asphalt Concrete.
APPROACH SLABS:	AS-1-54 (25'-0" long).

PROPOSED STRUCTURE

TYPE:	Steel Beam with Concrete Deck on Existing Concrete Abutments.
SPAN:	75.19' center to center of bearings. (Plan Dimension)
ROADWAY:	126'-6" Face to face of Parapet with a 3'-0" Barrier Median.
LOADING:	HS-20-44 , adequate for A.A.S.H.O. Alternate Loading.
SKEW:	30°47'16" Left Forward.
WEARING SURFACE:	1 3/4" Asphalt.
ALIGNMENT:	Tangent.
APPROACH SLAB:	AS-1-72 (25'-0" long).
SUPERELEVATION:	1/2 in./ft.

FOUNDATION DATA

The replaced portions of the abutments and the wingwalls are founded on HP 10x42 steel piles with an allowable design load of 25 tons and an estimated average pay length of 30 feet.

The northwest retaining wall is founded on a spread footing with an allowable design load of 1500 pounds per sq. ft..

Notes:
Dimensions and stations shown on this Site Plan are in accordance with existing plans. Field survey indicates that some variation from these dimensions can be expected.

MICROFILMED
MAR 21 1985

MICROFILMED
MAR 21 1985

HOWARD, NEEDLES, TAMMEN & BERGENDOFF
CONSULTING ENGINEERS
KANSAS CITY CLEVELAND NEW YORK

SITE PLAN
I-90 OVER EAST 105TH STREET

BR.NO.CUY-90-22 00 STA. 37+04.43
STA. 37+84.85

CUYAHOGA COUNTY OHIO

DRAWN	TRACED	CHECKED	REVIEWED	REVISED
CHB	AJT	BP	EAB	
DATE 5-16-73	DATE 4-27-73	DATE 12-5-74	DATE 12-20-74	SHEET 1/27

FHWA REGION	STATE	PROJECT	
5	OHIO		

208
354

CUYAHOGA COUNTY
CUY-90-23.73
LAKE COUNTY
LAK-90-0.00

TYPE CODE X231

ESTIMATED QUANTITIES

ITEM	TOTAL	UNIT	DESCRIPTION (Bridge Repair)	ABUTMENTS I	ABUTMENTS III	SUPERSTRUCTURE I	SUPERSTRUCTURE III	APPROACH SLABS I	APPROACH SLABS III	GENERAL I	GENERAL III	Participation Fed. & State I	Participation 100% State III
202	Lump Sum	Lump Sum	Portions of Structures Removed	L.S.	L.S.	L.S.	L.S.	L.S.	L.S.	L.S.	L.S.	Lump	Lump
202	2,271	Sq. Yd.	Wearing Course Removed	-	-	-	1,704	-	567	-	-		2271
404	101	Cu. Yd.	Asphalt Concrete (AC-20)	-	-	5	63	3	30	-	-	8	93
407	68	Gallons	Tack Coat: 702.02, RC-250; or 702.04, SS-1, SS-1H, MS-2 or RS-1	-	-	-	-	5	63	-	-	5	63
503	Lump Sum	Lump Sum	Cofferdams, Cribs And Sheeting	-	-	-	-	-	-	L.S.		Lump	
505	Lump Sum	Lump Sum	Test Pile	-	-	-	-	-	-	L.S.	-	Lump	
507	1,350	Lin. Ft.	Steel Piles, HP10x42	1,350	-	-	-	-	-	-	-	1350	
509	129,149	Lbs.	Reinforcing Steel	28,621	-	8,004	92,042	-	-	482	-	37,107	92,042
511	451	Cu. Yd.	Class C Concrete, Superstructure	-	-	73	378	-	-	-	-	73	378
511	77	Cu. Yd.	Class C Concrete, Footings	72	-	-	-	-	-	5	-	77	
511	247	Cu. Yd.	Class C Concrete, Abutments Above Footings	213	34	-	-	-	-	-	-	213	34
511	4	Cu. Yd.	Class C Concrete, Retaining Walls	-	-	-	-	-	-	4	-	4	
512	109	Sq. Yd.	Type B Waterproofing	-	-	-	-	-	-	14	95	14	95
512	36	Lin. Ft.	Premolded Sealing Strip	-	-	-	-	-	-	36	-	36	
513	38,545	Lbs.	New Structural Steel (ASTM A36)	-	-	37,855	690	-	-	-	-	37,855	690
514	34,653	Lbs.	Field Painting Of New Structural Steel	-	-	34,653	-	-	-	-	-	34,653	
516	776	Sq. Ft.	1" Preformed Expansion Joint Filler	-	-	-	-	-	-	196	580	196	580
516	603	Sq. Ft	1/4" Preformed Expansion Joint Filler	-	-	-	-	-	-	66	537	66	537
518	140	Cu. Yd.	Porous Backfill	-	-	-	-	-	-	64	76	64	76
518	86	Lin. Ft.	8" ϕ Preforated Vitrified Clay Sewer Pipe (706.08)	-	-	-	-	-	-	86	-	86	
519	40	Sq. Ft.	Patching Concrete Structures	-	40	-	-	-	-	-	-		40
520	26	Sq. Ft.	Pneumatically Placed Mortar	-	26	-	-	-	-	-	-		26
611	695	Sq. Yd.	Reinforced Concrete Approach Slabs T=15"	-	-	-	-	56	639	-	-	56	639
837	Lump Sum	Lump Sum	Surface Preparation	-	-	-	L.S.	-	-	-	-		Lump
837	Lump Sum	Lump Sum	Spot Prime Painting	-	-	-	L.S.	-	-	-	-		Lump
837	Lump Sum	Lump Sum	Complete Coat Prime Painting	-	-	-	L.S.	-	-	-	-		Lump
837	Lump Sum	Lump Sum	Two Complete Coats Finish Painting	-	-	-	L.S.	-	-	-	-		Lump
Special	1,090	Sq. Yd.	Membrane Waterproofing (Hot Applied Liquid) (See Proposal Note)	-	-	-	-	-	-	87	1,003	87	1003
Special	5,767	Sq. Ft.	Concrete Coating	-	-	-	-	-	-	522	5,245	522	5,245
Special	139	Each	Threaded Sleeve Anchors	-	-	-	-	-	-	139	-	139	
Special	44	Lin. Ft.	Repair Of Cracks	-	44	-	-	-	-	-	-		44
Special	193	Lin. Ft.	Pressure Relief Joint	-	-	-	-	-	-	-	193		193
				-	-			-	-	-	-		

Notes:

Removal of Portions of Structures will include approximately 229 Cu. Yds. of superstructure concrete, 510 Cu. Yds. of substructure concrete, 80 Lin. Ft. of guardrail including posts, nuts, and plates, 1725 Lin. Ft. of timber piling and approximately 695 Sq. Yds. of existing reinforced concrete approach slabs, paved berms and all necessary excavation or backfill to provide the proper cross section for the new approach slabs.

Sidewalks adjacent to East 105th Street that are removed or damaged during the proposed structure modifications shall be replaced or repaired under the direction of the Engineer. This work shall be included with Item 202, Portions of Structures Removed, for payment.

Excavation, backfill (except Porous Backfill), grading and approach curb removal necessary to accomplish structure modification shall be included with Item 202, Portions of Structures Removed, for payment. Backfill shall be in accordance with Item 203.

Item 518, Subdrainage For Wearing Surface Course, shall not be required on this structure.

Existing reinforcing steel that is to remain in the proposed altered structure shall be carefully handled so as not to damage the bond with the existing structure. Where existing bars are to be bent, heat may be used to aid in the operation.

Piles shall be driven to a minimum bearing capacity of 25 tons per pile for the abutments and wingwalls.

Temporary shoring will be required under that portion of the bridge deck adjacent to Beams C, F, W and Z where traffic is maintained during stage construction. This shoring shall assure that sufficient support of the deck is maintained at the abovementioned beam supports. The Contractor shall submit shoring plans to the Director for approval. This shoring shall be included with Item 202, Portions of Structures Removed, for payment.

Note:

Roman numerals I and III denote cost participation breakdown. For description, see Roadway Plans, Sheet 3-354.

MICROFILMED
MAR 21 1985

Rev. 7-18-75

HOWARD, NEEDLES, TAMMEN & BERGENDOFF
CONSULTING ENGINEERS
KANSAS CITY CLEVELAND NEW YORK

ESTIMATED QUANTITIES

I-90 OVER EAST 105th STREET

BR. NO. CUY-90-2200 STA. 37+04.43
STA. 37+84.85

CUYAHOGA COUNTY OHIO

DRAWN	TRACED	CHECKED	REVIEWED	REVISED
RAS	AJT	JAB	CAB	
DATE 12-1874	DATE 12-21-74	DATE 12-1974	DATE 12-20-74	SHEET 2 27

FHWA REGION	STATE	PROJECT	
5	OHIO		

209
354

CUYAHOGA COUNTY
CUY-90-23.73
LAKE COUNTY
LAK-90-0.00

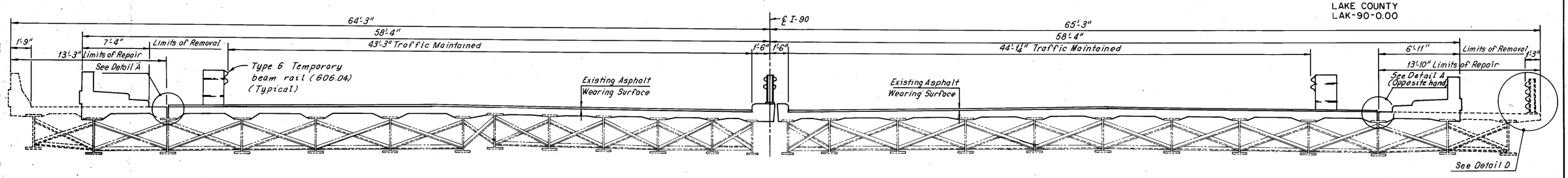

FIRST STAGE CONSTRUCTION

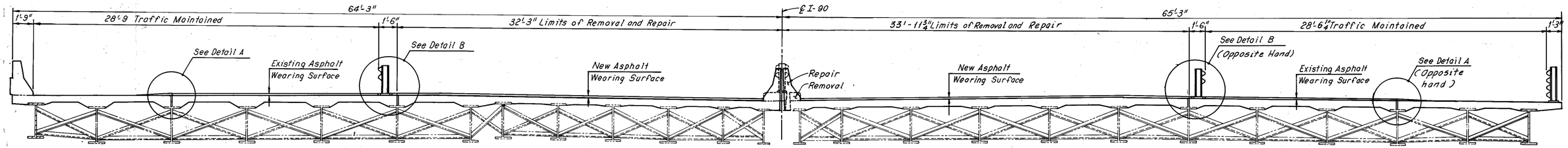

SECOND STAGE CONSTRUCTION

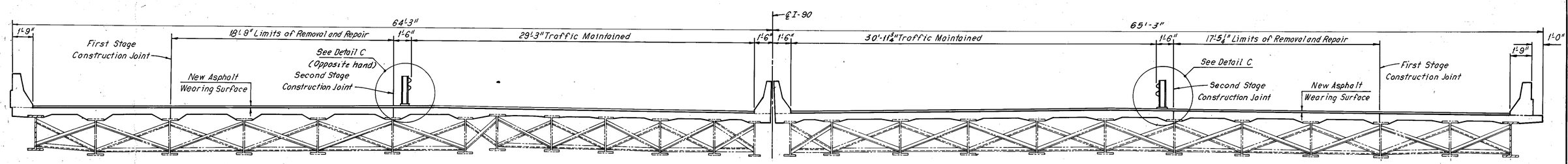

THIRD STAGE CONSTRUCTION

Notes:

The stage construction cross-sections apply within the bridge and approach slab limits. All repair work shall be co-ordinated with the stage construction as shown.

For maintenance of traffic notes, see Roadway Plans.

For shoring required at approach slabs, see Sheet CD-2 .

For Details A, B, C, and D and base plate details, see Sheet 4/27 .

MICROFILMED
MAR 21 1980

HOWARD, NEEDLES, TAMMEN & BERGENDOFF
CONSULTING ENGINEERS
KANSAS CITY CLEVELAND NEW YORK

MAINTENANCE OF TRAFFIC

I-90 OVER EAST 105th. STREET

BR. NO. CUY-90-2200 STA. 37+04.43
STA. 37+84.85

CUYAHOGA COUNTY OHIO

DRAWN	TRACED	CHECKED	REVIEWED	REVISED
BMP	RCK	WB.	CAB	
DATE 5-8-74	DATE 5-8-74	DATE 11-8-74	DATE 12-20-74	SHEET 3/27

FHWA REGION	STATE	PROJECT	
5	OHIO		

210
354

CUYAHOGA COUNTY
CUY-90-23.73
LAKE COUNTY
LAK-90-0.00

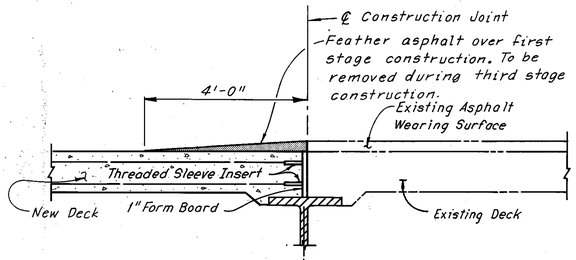

DETAIL A

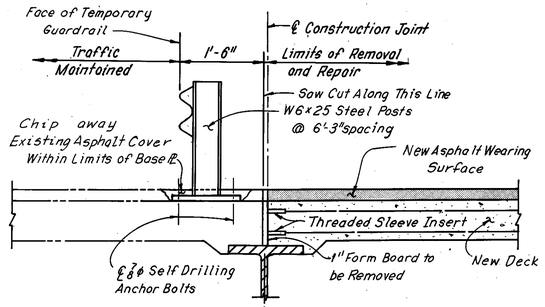

DETAIL B

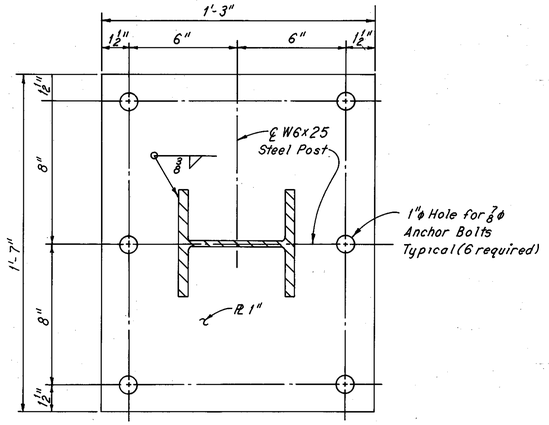

TYPICAL BASE PLATE DETAIL

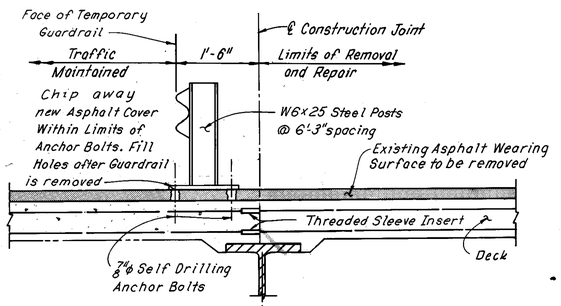

DETAIL C

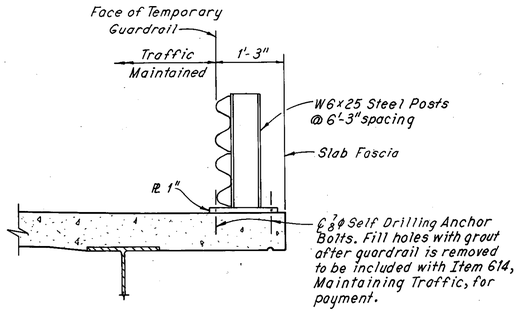

DETAIL D
(Deck reinforcement not shown)

Note:
For notes, see Sheet 3/27

MICROFILMED
MAR 21 1985

MICROFILMED
MAR 21 1985

Note: In lieu of Temporary Beam Rail Type 6 the Contractor shall install W6x25 Steel Posts at 6'-3" spacing with deep beam guard rail attached as shown in Details B, C and D. All material (Including incidentals), equipment and labor to complete this work shall be included in the contract lump sum price bid for Item 614, Maintaining Traffic, for payment. (See Roadway Plans)

HOWARD, NEEDLES, TAMMEN & BERGENDOFF
CONSULTING ENGINEERS
KANSAS CITY CLEVELAND NEW YORK

MAINTENANCE OF TRAFFIC DETAILS
I-90 OVER EAST 105th STREET

BR.NO.CUY-90-2200 STA.37+04.43 STA.37+84.85

CUYAHOGA COUNTY OHIO

DRAWN RCK	TRACED RCK	CHECKED WD	REVIEWED CAB	REVISED
DATE 7-26-74	DATE 7-29-74	DATE 11-6-74	DATE 12-20-74	SHEET 4/27

FHWA REGION	STATE	PROJECT	
5	OHIO		

211
354

CUYAHOGA COUNTY
CUY-90-23.73
LAKE COUNTY
LAK-90-0.00

ESTIMATED REPAIR QUANTITIES		
Item 519	Item 520	Repair of Cracks
Sq. Ft.	Sq. Ft.	Lin. Ft.
4	26	5

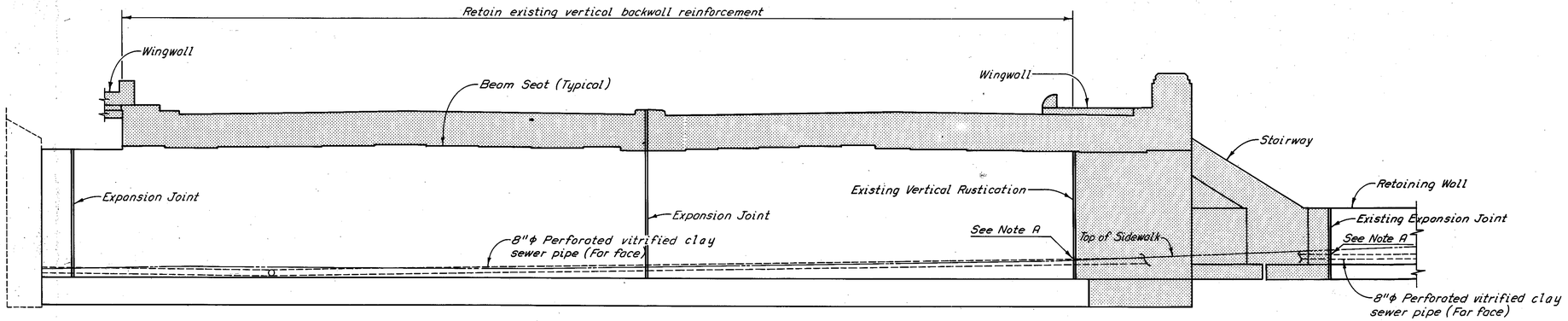

ELEVATION
denotes limits of removal (Piles not shown)

Note A:
The Contractor shall use precautions necessary to insure that the sewer pipe is not damaged during the removal stage in order to permit connection of sewer pipe from the new construction.

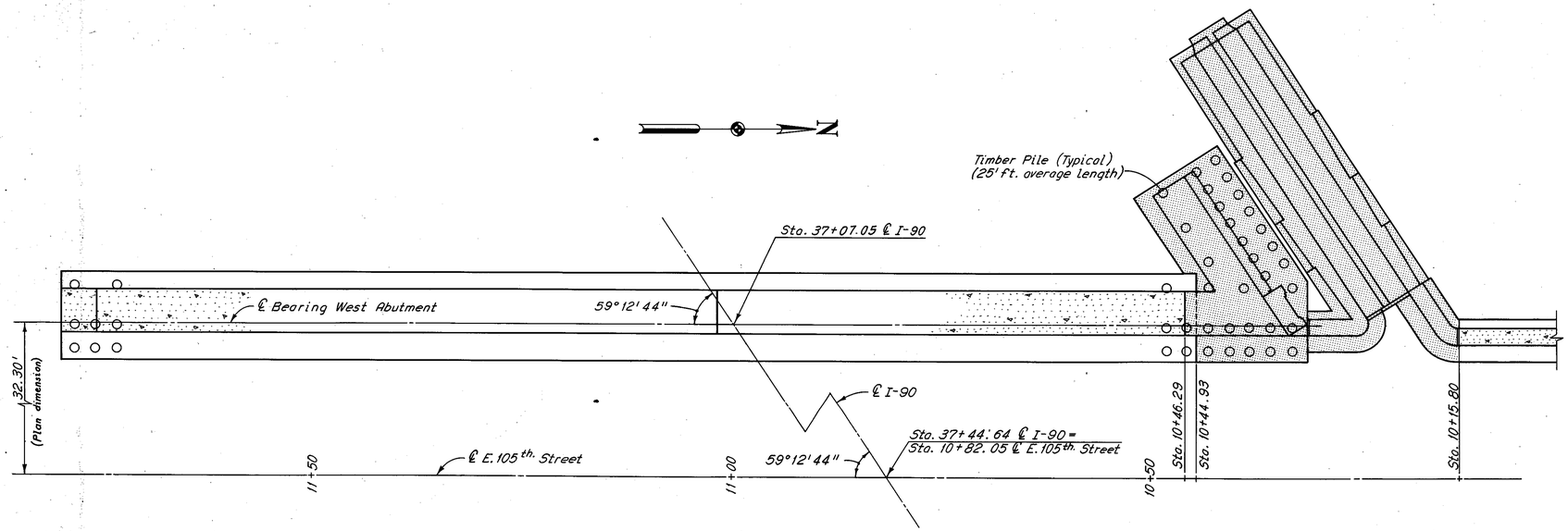

FOOTING PLAN
denotes limits of removal

Notes:
For typical section through abutment backwall after removal, see Sheet 23/27 .
For shoring required at approach slabs, see Sheet CD-2 .
Removal will require temporary shoring at Beams B and C. This shoring shall be included with Item 202, Portions of Structures Removed, for payment.
After all new construction and repairs to the abutment are completed, the exposed west face of the abutment from the existing retaining wall to the Penn Central Bridge abutment shall be coated with a cement-epoxy coating.

HOWARD, NEEDLES, TAMMEN & BERGENDOFF
CONSULTING ENGINEERS
KANSAS CITY CLEVELAND NEW YORK

WEST ABUTMENT REMOVAL PLAN

I-90 OVER EAST 105 TH. STREET

BR. NO. CUY-90-2200 STA. 37+04.43
STA. 37+84.85

CUYAHOGA COUNTY OHIO

DRAWN	TRACED	CHECKED	REVIEWED	REVISED
C.K.B.	D.L.P.	B.P.	E.A.B.	
DATE 6-29-74	DATE 7-2-74	DATE 11-7-74	DATE 12-20-74	SHEET 5/27

FHWA REGION	STATE	PROJECT	
5	OHIO		

212
354

CUYAHOGA COUNTY
CUY-90-23.73
LAKE COUNTY
LAK-90-0.00

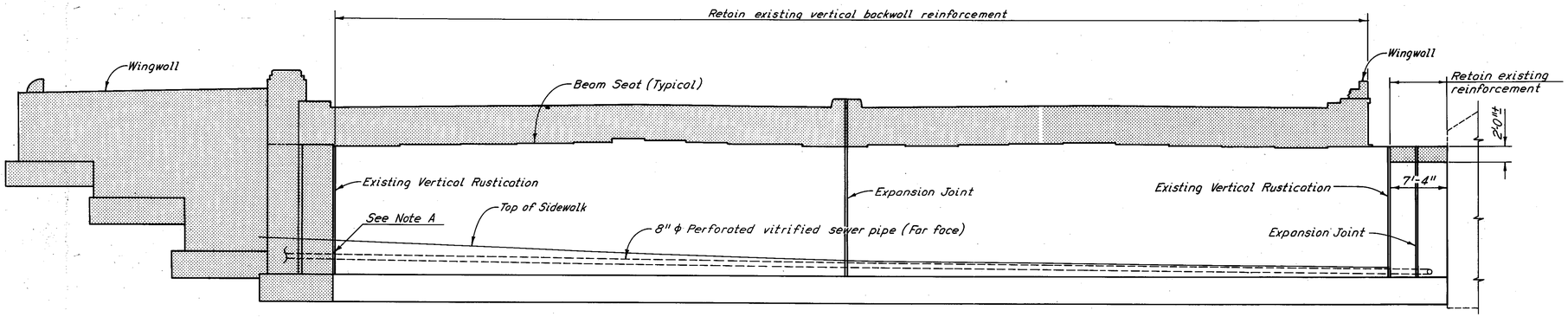

ELEVATION
denotes limits of removal
(Piles not shown)

Note A:
The Contractor shall use precautions necessary to insure that the sewer pipe is not damaged during the removal stage in order to permit connection of sewer pipe from the new construction.

ESTIMATED REPAIR QUANTITIES		
Item 519	Item 520	Repair of Cracks
Sq. Ft.	Sq. Ft.	Lin. Ft.
36	—	39

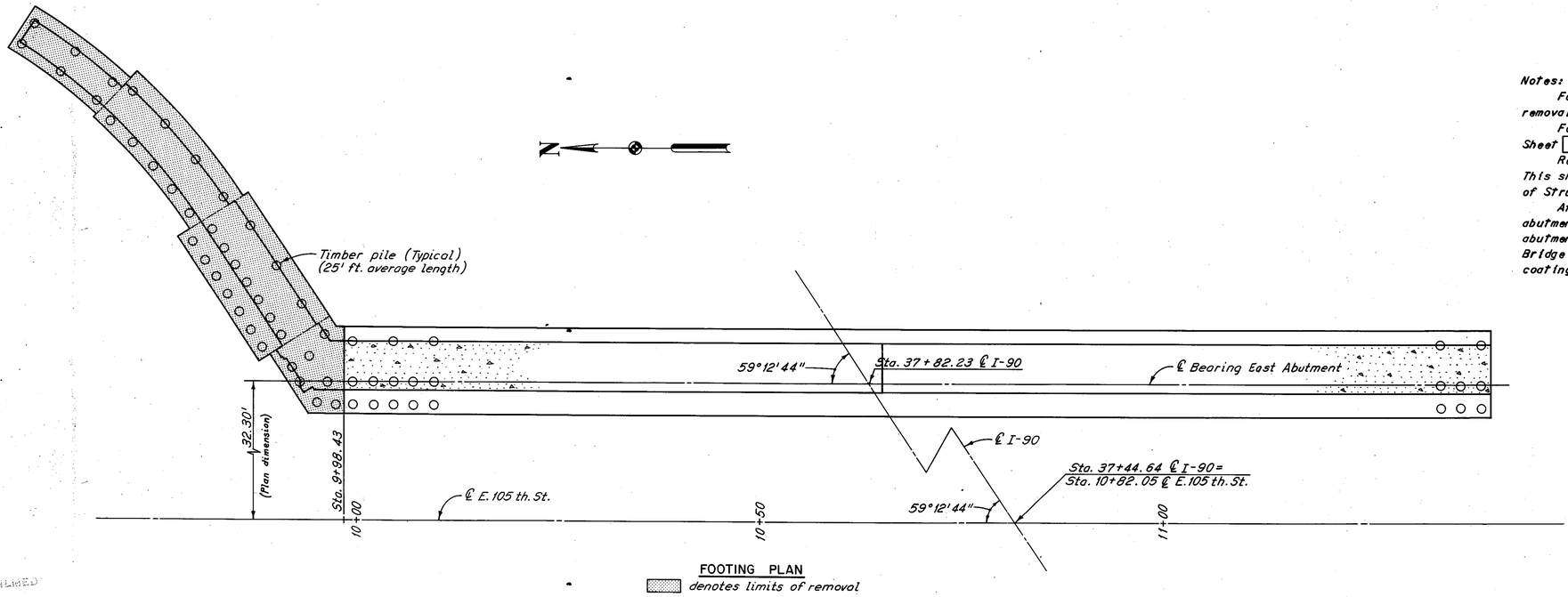

FOOTING PLAN
denotes limits of removal

Notes:
For typical section through abutment backwall after removal, see Sheet 23/27.
For shoring required at approach slabs, see Sheet CD-2.
Removal will require temporary shoring at Beam C. This shoring shall be included with Item 202, Portions of Structures Removed, for payment.
After all new construction and repairs to the abutment are completed, the exposed east face of the abutment from the northeast corner to the Penn Central Bridge abutment shall be coated with a cement-epoxy coating.

MICROFILMED
MAR 21 1985

HOWARD, NEEDLES, TAMMEN & BERGENDOFF
CONSULTING ENGINEERS
KANSAS CITY CLEVELAND NEW YORK

EAST ABUTMENT REMOVAL PLAN

I-90 OVER EAST 105 TH. STREET

BR. NO. CUY-90-2200 STA. 37+04.43
STA. 37+84.85

CUYAHOGA COUNTY OHIO

DRAWN C.K.B	TRACED D.L.F	CHECKED B.P	REVIEWED C.A.B	REVISED
DATE 5-29-74	DATE 7-1-74	DATE 11-7-74	DATE 12-20-74	SHEET 6/27

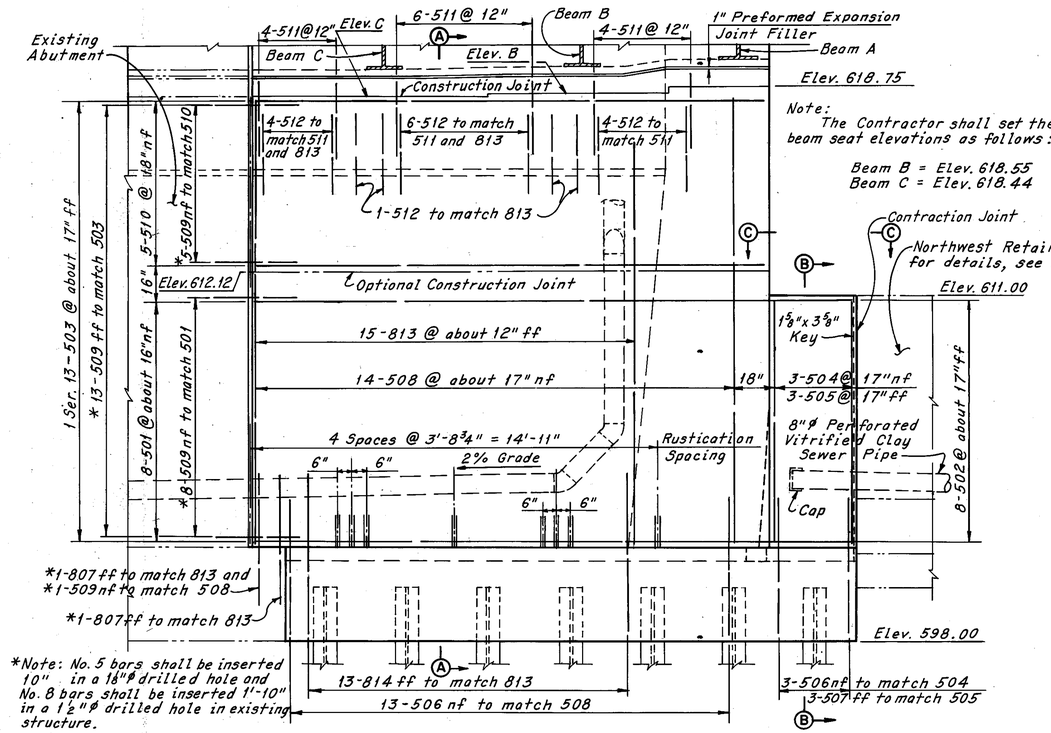

ELEVATION

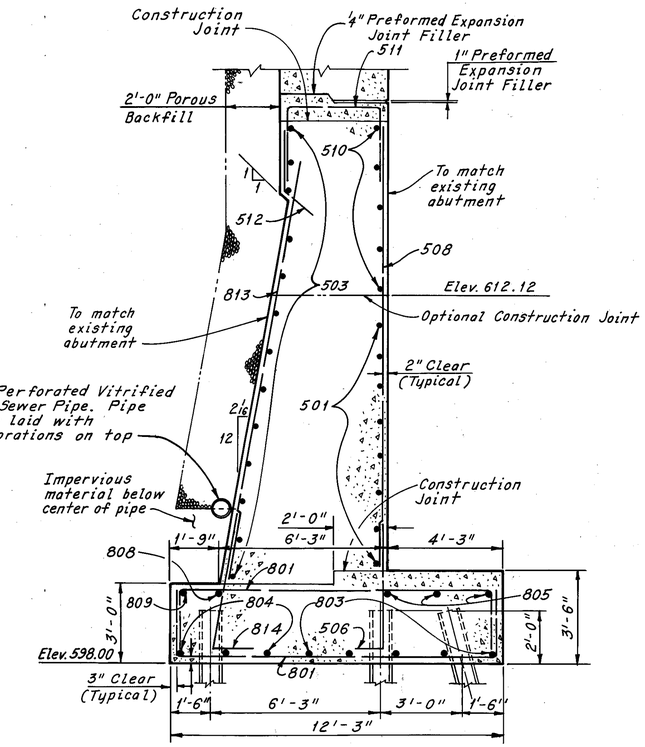

SECTION A-A

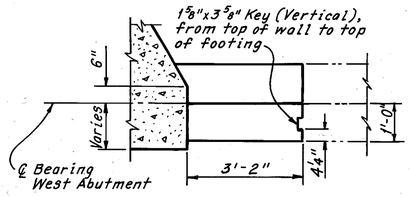

VIEW C-C

(Reinforcement not shown)

FHWA REGION	STATE	PROJECT	
5	OHIO		

213/354

CUYAHOGA COUNTY
CUY-90-23.73
LAKE COUNTY
LAK-90-0.00

Note:
All reinforcing bar marks shall be prefixed DAW.

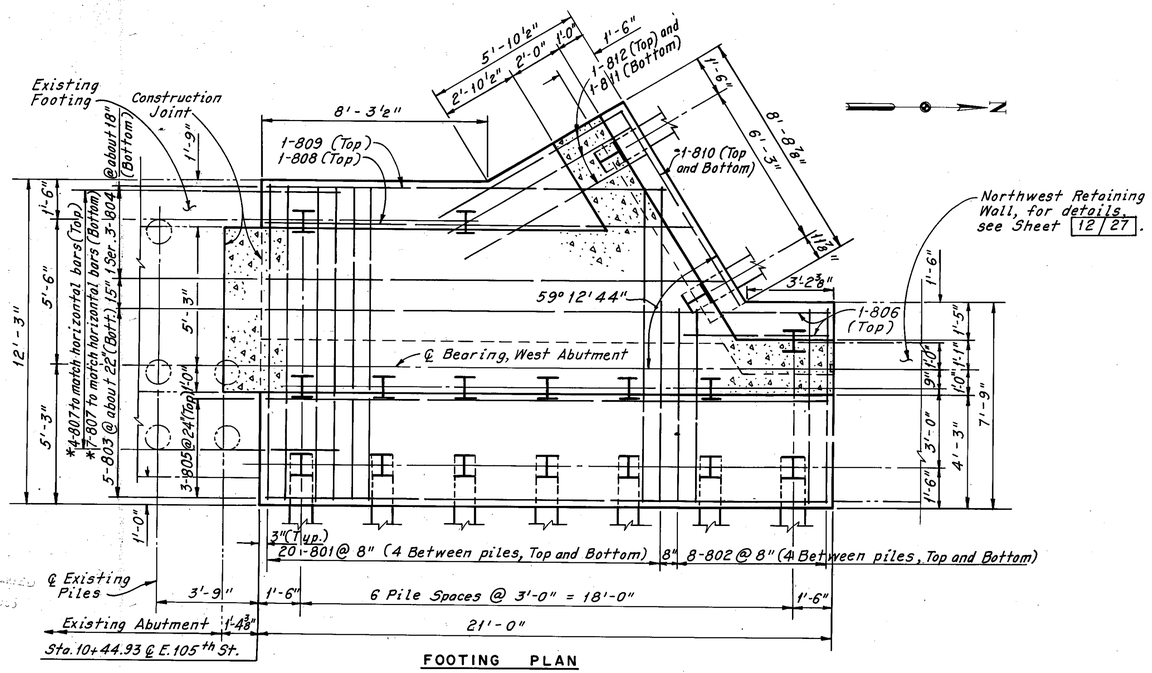

FOOTING PLAN

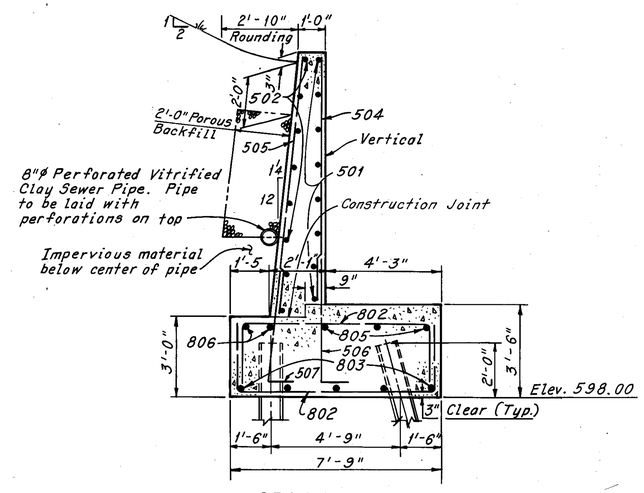

SECTION B-B

Notes:
All piles are HP10x42.
All battered piles shall be inclined 3 in 12 in the direction shown.
For Rustication Details see Sheet 8/27.
For Reinforcement Schedule, see Sheet R-2.
The following abbreviations are used:
nf = near face
ff = far face
Typ. = Typical
For existing abutment footing plan, see Sheet 5/27.

HOWARD, NEEDLES, TAMMEN & BERGENDOFF
CONSULTING ENGINEERS
KANSAS CITY CLEVELAND NEW YORK

WEST ABUTMENT EXTENSION

I-90 OVER EAST 105th STREET

BR. NO. CUY-90-2200 STA. 37+04.43
STA. 37+84.85

CUYAHOGA COUNTY OHIO

DRAWN C.E.P.	TRACED C.E.P.	CHECKED B.P.	REVIEWED CAB	REVISED
DATE 8-1-74	DATE 8-5-74	DATE 10-28-74	DATE 12-20-74	SHEET 7/27

RECOMMENDED MAR 21 1975

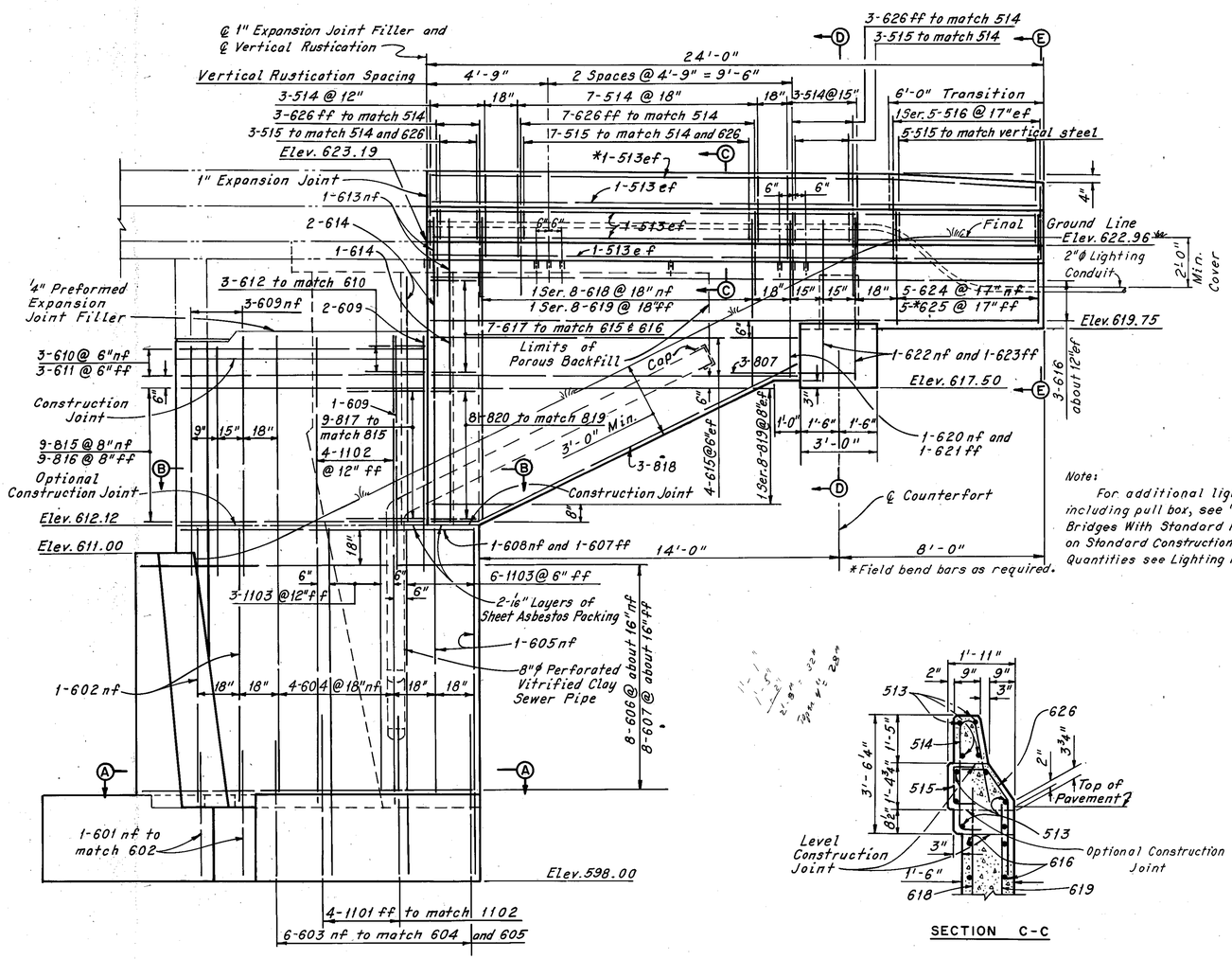

ELEVATION
(Piles Not Shown)

Note: All reinforcing bar marks shall be prefixed DAW.

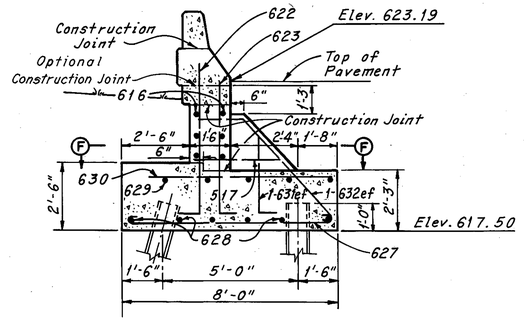

SECTION D-D

Note: For additional lighting conduit details including pull box, see "Conduit Details For Bridges With Standard Roadway Railing" on Standard Construction Drawing HL-5. For Quantities see Lighting Plans.

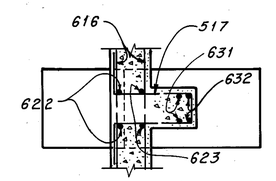

SECTION F-F

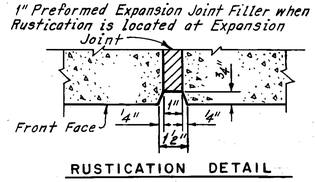

RUSTICATION DETAIL

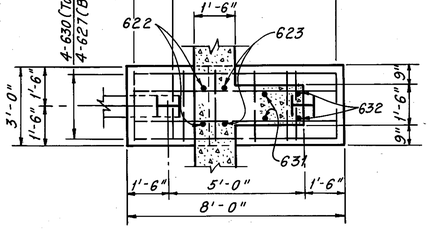

FOOTING PLAN

SECTION C-C

Notes:
For details of West Abutment Extension, see Sheet 7/27.
Sheet Asbestos Packing (711.22) and Tar Paper shall be included with "Item 511, Class C Concrete, Abutments Above Footing" for payment.
For Reinforcement Schedule, see Sheet R-2.
The following abbreviations are used:
nf = near face
ff = far face
ef = each face
For additional notes see Sheet 7/27.

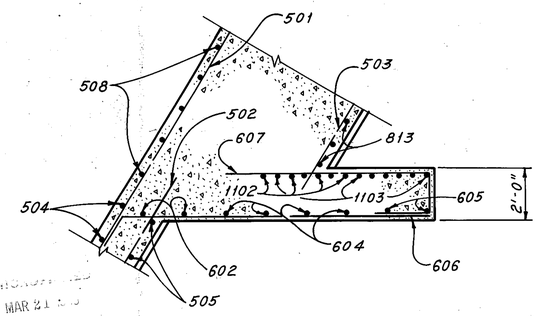

SECTION A-A

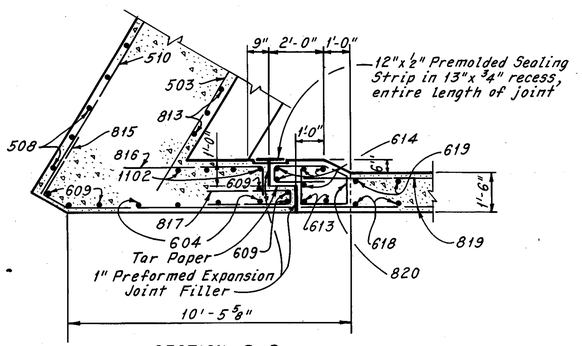

SECTION B-B

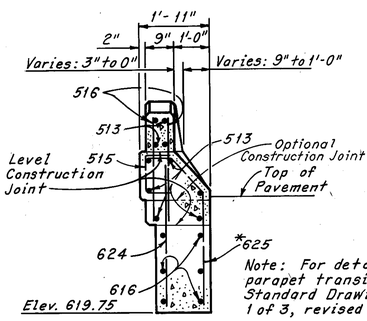

SECTION E-E

Note: For details of curb and parapet transition, see Ohio Standard Drawing BR-1-67, Sheets 1 of 3, revised 10-15-71.

FHWA REGION	STATE	PROJECT	
5	OHIO		

214
354

CUYAHOGA COUNTY
CUY-90-23.73
LAKE COUNTY
LAK-90-0.00

HOWARD, NEEDLES, TAMMEN & BERGENDOFF
CONSULTING ENGINEERS
KANSAS CITY CLEVELAND NEW YORK

NORTHWEST WINGWALL

I-90 OVER EAST 105th STREET

BR. NO. CUY-90-2200 STA. 37+04.43
STA. 37+84.85

CUYAHOGA COUNTY OHIO

DRAWN C.E.P.	TRACED C.E.P.	CHECKED D.P.	REVIEWED J.A.B.	REVISED
DATE 8-7-74	DATE 8-12-74	DATE 10-28-74	DATE 12-20-74	SHEET 8/27

MAR 21

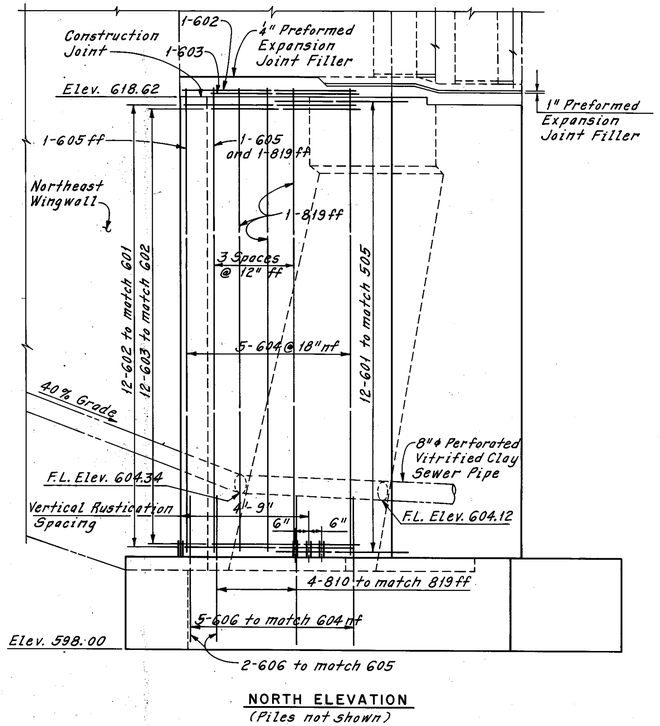

NORTH ELEVATION
(Piles not shown)

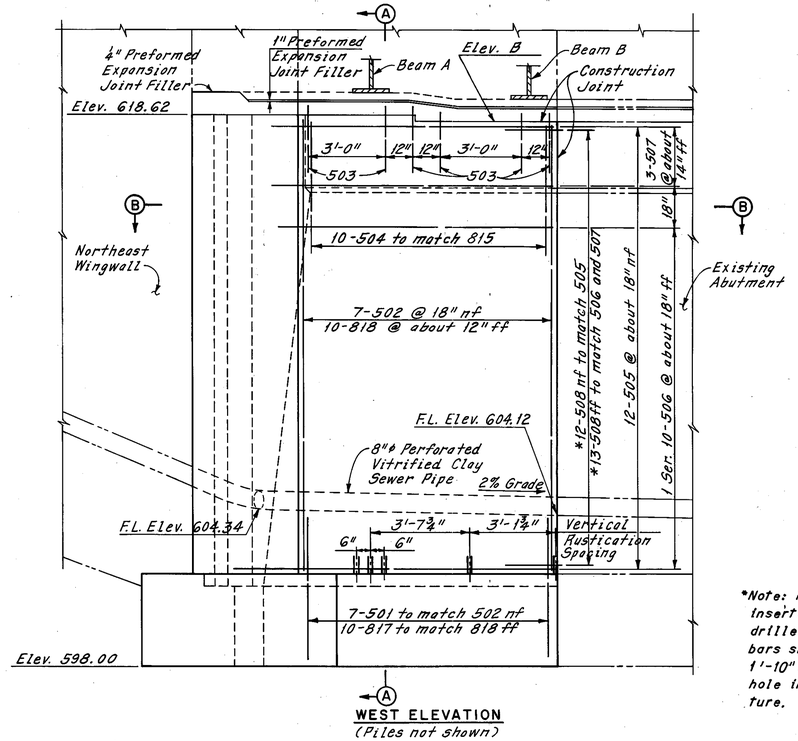

WEST ELEVATION
(Piles not shown)

*Note: No. 5 bars shall be inserted 10" in a 1¼"ϕ drilled hole and No. 8 bars shall be inserted 1'-10" in a 1¾"ϕ drilled hole in existing structure.

Note: All reinforcing bar marks shall be prefixed DAE.

FHWA REGION	STATE	PROJECT	
5	OHIO		

215/354

CUYAHOGA COUNTY
CUY-90-23.73
LAKE COUNTY
LAK-90-0.00

Note:
The Contractor shall set the beam seat elevation (Elev. B) at Elev. 618.47.

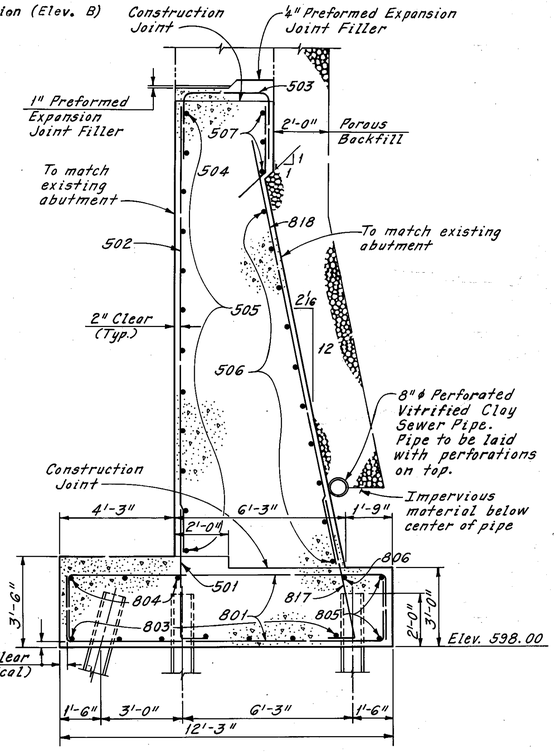

SECTION A-A

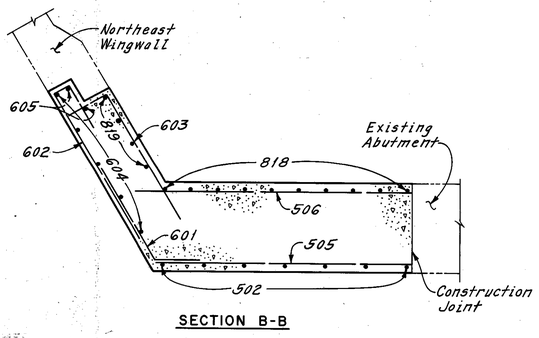

SECTION B-B

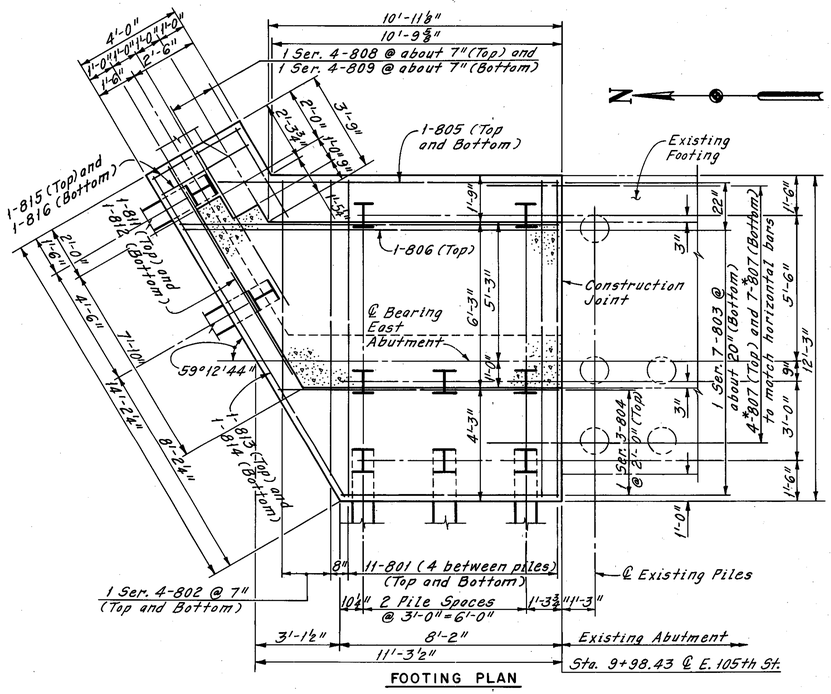

FOOTING PLAN

Notes:
All piles are HP10x42.
All battered piles shall be inclined 3 in 12 in the direction shown.
For details of Northeast Wingwall, see Sheets 10/27 and 11/27.
For Rustication Detail, see Sheet 8/27.
For Reinforcement Schedule, see Sheet R-2.
For existing abutment footing plan, see Sheet 6/27.
The following abbreviations are used:

nf = near face	F.L. = Flow Line
ff = for face	Elev. = Elevation
Typ. = Typical	

RECEIVED
MAR 21 1975

HOWARD, NEEDLES, TAMMEN & BERGENDOFF
CONSULTING ENGINEERS
KANSAS CITY CLEVELAND NEW YORK

EAST ABUTMENT EXTENSION

I-90 OVER EAST 105th STREET

BR. NO. CUY-90-2200 STA. 37+04.43
STA. 37+84.85

CUYAHOGA COUNTY OHIO

DRAWN	TRACED	CHECKED	REVIEWED	REVISED
WEB	WEB	RMP	CAB	
DATE 7-24-74	DATE 8-1-74	DATE 10-22-74	DATE 12-20-74	SHEET 9/27

FHWA REGION	STATE	PROJECT	
5	OHIO		

216
354

CUYAHOGA COUNTY
CUY-90-23.73
LAKE COUNTY
LAK-90-0.00

Note: All reinforcing bar marks shall be prefixed DWE.

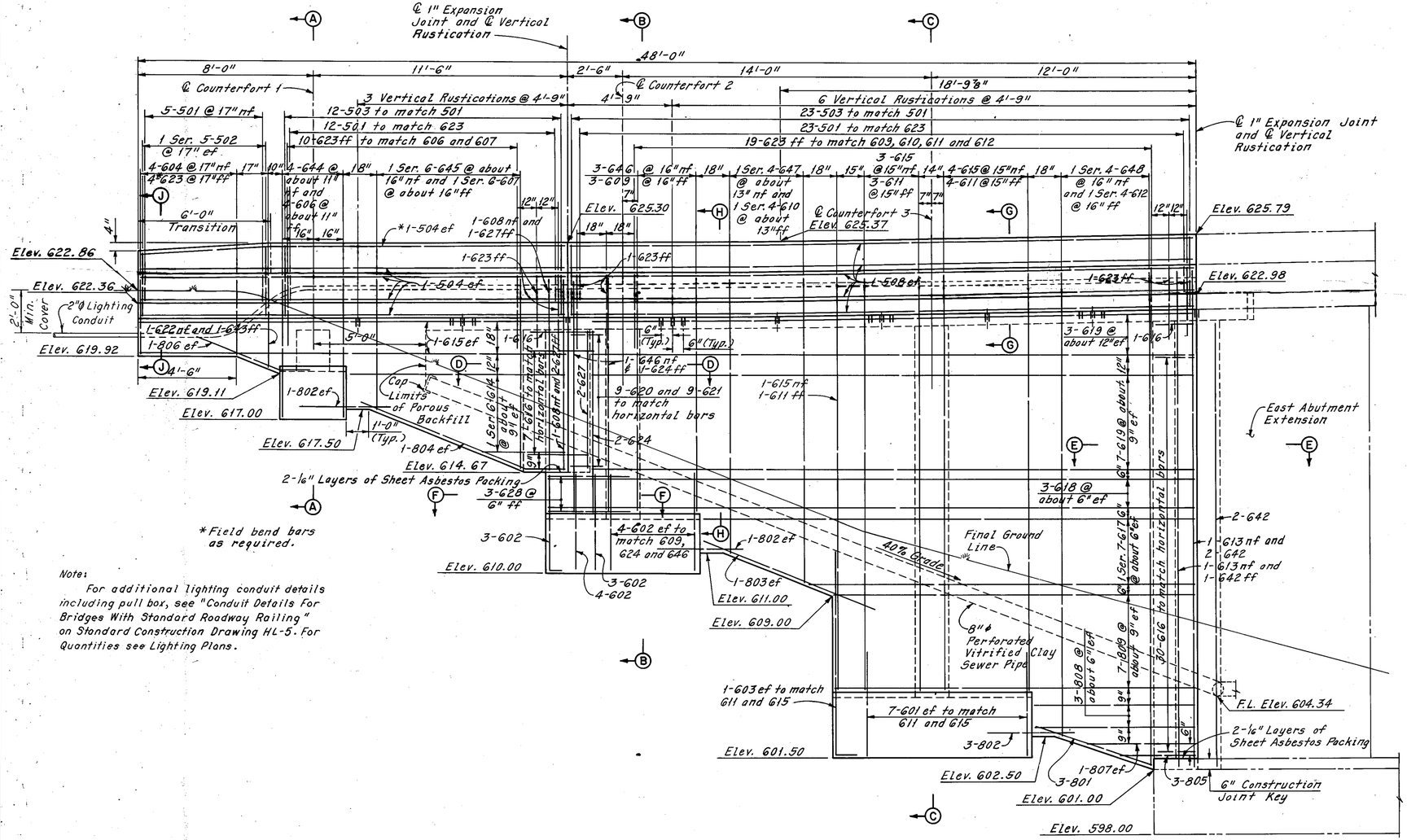

ELEVATION
(Piles not shown)

*Field bend bars as required.

Note:
For additional lighting conduit details including pull box, see "Conduit Details For Bridges With Standard Roadway Railing" on Standard Construction Drawing HL-5. For Quantities see Lighting Plans.

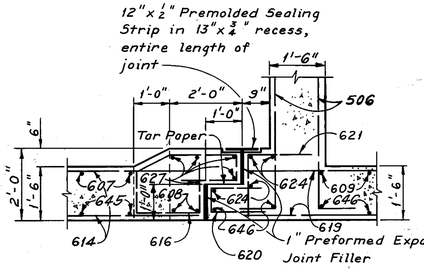

SECTION D-D

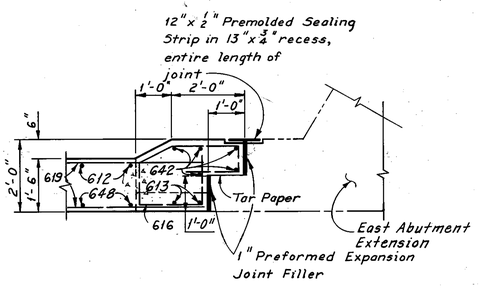

SECTION E-E

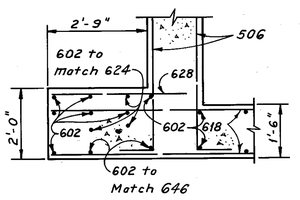

SECTION F-F

Notes:
For Sections A-A, B-B, C-C, G-G, H-H and J-J, see Sheet 11/27.
For details of East Abutment Extension, see Sheet 9/27.
Sheet Asbestos Packing (711.22) and Tar Paper shall be included with "Item 511, Class C Concrete, Abutments Above Footing" for payment.
The following abbreviations are used:

nf = near face	Typ. = Typical
ff = far face	Elev. = Elevation
ef = each face	F.L. = Flow Line

For Rusticotion Detail, see Sheet 8/27.
For Reinforcement Schedule, see Sheet R-3.

HOWARD, NEEDLES, TAMMEN & BERGENDOFF
CONSULTING ENGINEERS
KANSAS CITY CLEVELAND NEW YORK

NORTHEAST WINGWALL

I-90 OVER EAST 105th STREET

BR. NO. CUY-90-2200 STA. 37+04.43 STA. 37+84.85

CUYAHOGA COUNTY OHIO

DRAWN WEB	TRACED LKW	CHECKED RMA	REVIEWED CAB	REVISED
DATE 7-1-74	DATE 7-23-74	DATE 10-22-74	DATE 12-20-74	SHEET 10/27

FHWA REGION	STATE	PROJECT	
5	OHIO		

217
354

CUYAHOGA COUNTY
CUY-90-23.73
LAKE COUNTY
LAK-90-0.00

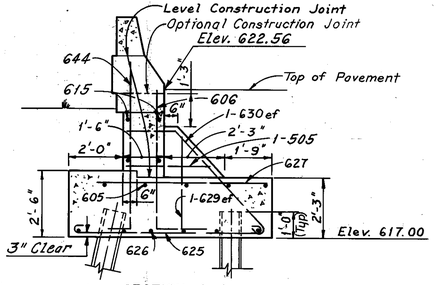

SECTION A-A
(Curb and Parapet Reinforcement not shown)

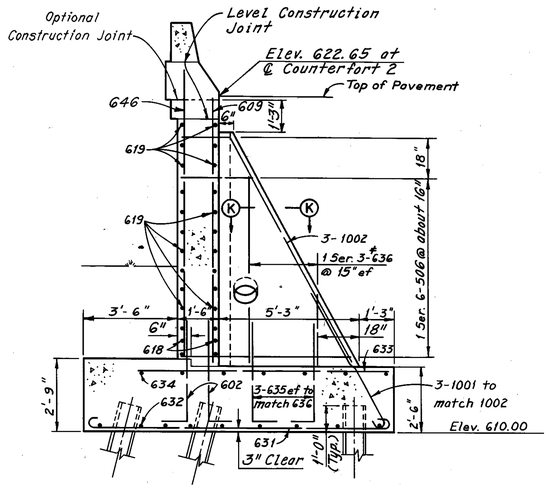

SECTION B-B
(Curb and Parapet Reinforcement not shown)

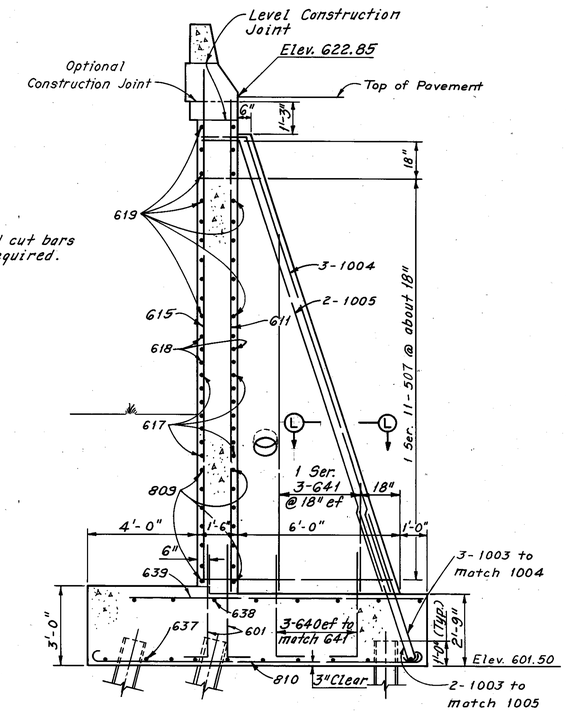

*Field cut bars as required.

SECTION C-C
(Curb and Parapet Reinforcement not shown)

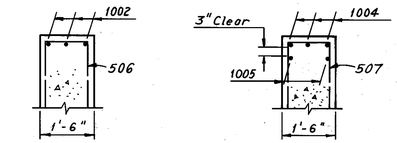

SECTION K-K

SECTION L-L

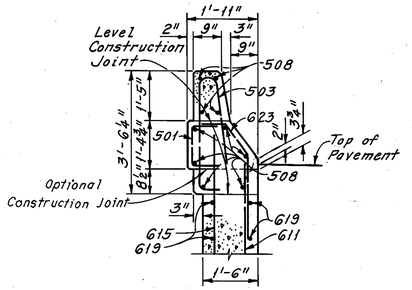

SECTION G-G

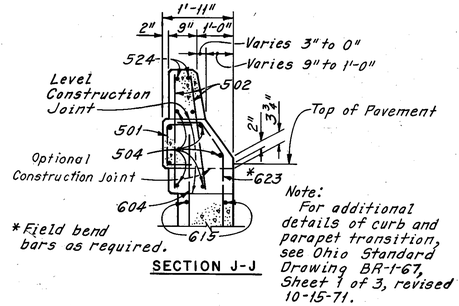

*Field bend bars as required.

SECTION J-J

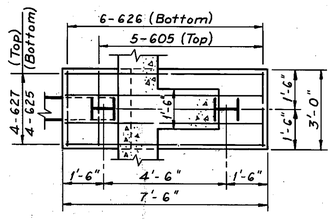

FOOTING PLAN
(Counterfort 1)

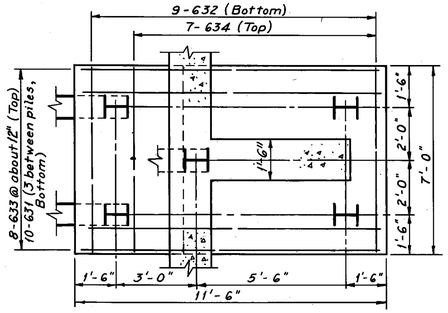

FOOTING PLAN
(Counterfort 2)

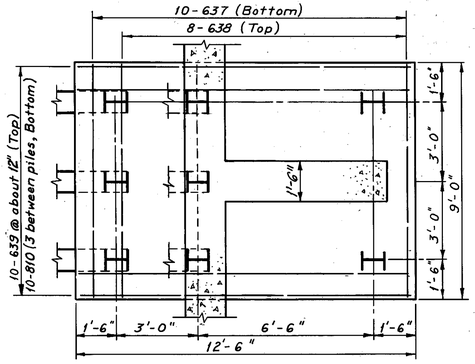

FOOTING PLAN
(Counterfort 3)

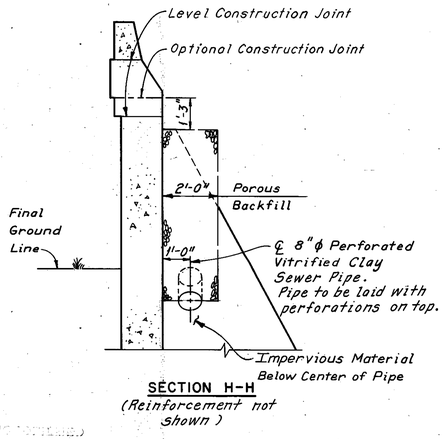

SECTION H-H
(Reinforcement not Shown)

Note: All reinforcing bar marks shall be prefixed DWE.

Notes:

For location of Section A-A, B-B, C-C, G-G, H-H and J-J, see Sheet 10/27.

All piles are HP10x42.

All battered piles shall be inclined 3 in 12 in the direction shown.

The following abbreviations are used:
ef = each face Typ. = Typical
Elev. = Elevation

For Reinforcement Schedule, see Sheet R-3.

HOWARD, NEEDLES, TAMMEN & BERGENDOFF
CONSULTING ENGINEERS
KANSAS CITY CLEVELAND NEW YORK

NORTHEAST WINGWALL DETAILS

I-90 OVER EAST 105th STREET

BR. NO. CUY-90-2200 STA. 37+04.43
STA. 37+84.85

CUYAHOGA COUNTY OHIO

DRAWN	TRACED	CHECKED	REVIEWED	REVISED
WEB	LKW	BMP	CAB	
DATE 7-1-74	DATE 7-23-74	DATE 10-22-74	DATE 12-20-74	SHEET 11/27

FHWA REGION	STATE	PROJECT	
5	OHIO		

218
354

CUYAHOGA COUNTY
CUY-90-23.73
LAKE COUNTY
LAK-90-0.00

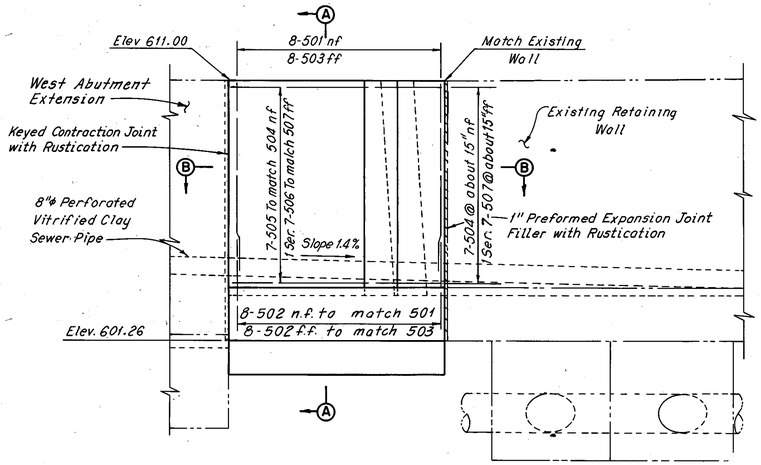

ELEVATION

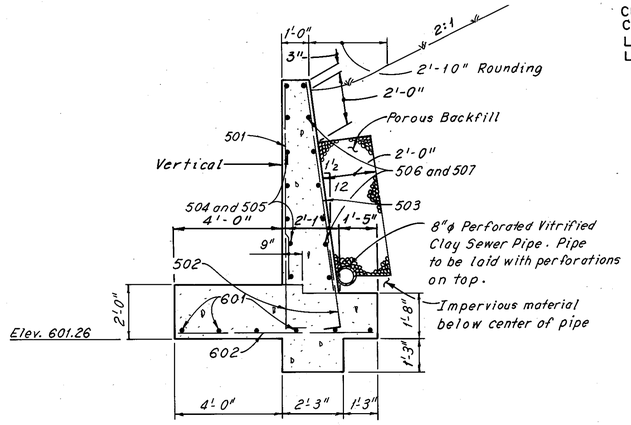

SECTION A-A

Note:
All reinforcing bar marks shall be prefixed DRW.

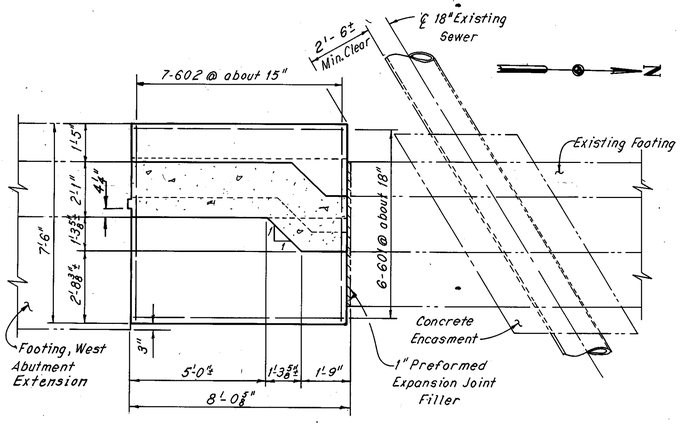

FOOTING PLAN

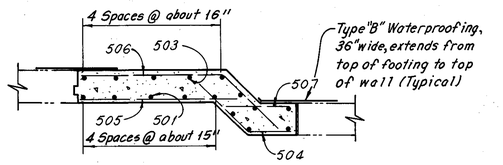

SECTION B-B

Notes:
For Reinforcement Schedule see Sheet A-3.
For Rustication Details, see Sheet 8|27.
The following abbreviations are used:
nf = near face
ff = far face
Min. = Minimum

HOWARD, NEEDLES, TAMMEN & BERGENDOFF
CONSULTING ENGINEERS
KANSAS CITY CLEVELAND NEW YORK

NORTHWEST RETAINING WALL

I-90 OVER EAST 105th STREET

BR. NO. CUY-90-2200 STA. 37+04.43
STA. 37+84.85

CUYAHOGA COUNTY OHIO

DRAWN	TRACED	CHECKED	REVIEWED	REVISED
RAS	RCK	BP	CAB	
DATE 7-24-74	DATE 7-26-74	DATE 11-7-74	DATE 12-20-74	SHEET 12|27

MICROFILMED
MAR 22 1985

FHWA REGION	STATE	PROJECT	
5	OHIO		

219
354

CUYAHOGA COUNTY
CUY-90-23.73
LAKE COUNTY
LAK-90-0.00

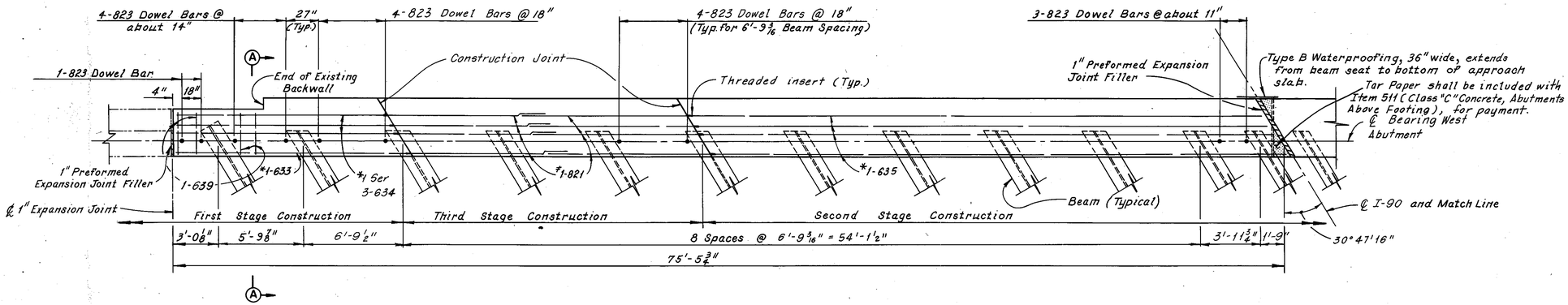

PART PLAN

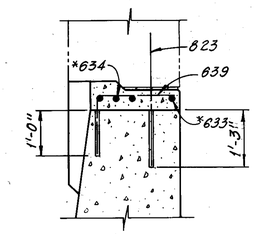

SECTION A-A

* Weld to threaded insert.
≠ Thread one end for connection to threaded insert.

Note:
639 bars shall be inserted 1'-0" in a 1¼" ϕ drilled hole and the 823 bars shall be inserted 1'-3" in a 1½" ϕ drilled hole in the existing structure.

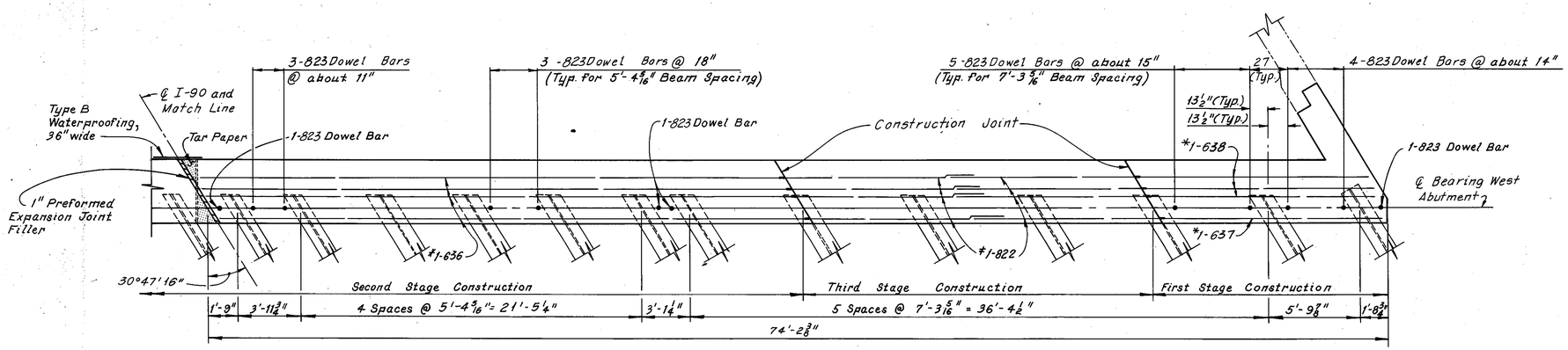

PART PLAN

Notes:
For typical section through abutment backwall, see Sheet 23/27.
For Reinforcement Schedule, see Sheet R-2.
The following abbreviation is used:
Typ. = Typical

Note:
All reinforcing bar marks shall be prefixed DAW.

MICROFILMED
MAR 22 [illegible]

HOWARD, NEEDLES, TAMMEN & BERGENDOFF
CONSULTING ENGINEERS
KANSAS CITY CLEVELAND NEW YORK

WEST ABUTMENT DETAILS

I-90 OVER EAST 105th STREET

BR. NO. CUY-90-2200 STA. 37+04.43
STA. 37+84.85

CUYAHOGA COUNTY OHIO

DRAWN R.A.S.	TRACED A.J.T.	CHECKED D.P.	REVIEWED CAB	REVISED
DATE 7-26-74	DATE 8-6-74	DATE 10-30-74	DATE 12-20-74	SHEET 13/27

FHWA REGION	STATE	PROJECT	
5	OHIO		

220
354

CUYAHOGA COUNTY
CUY-90-23.73
LAKE COUNTY
LAK-90-0.00

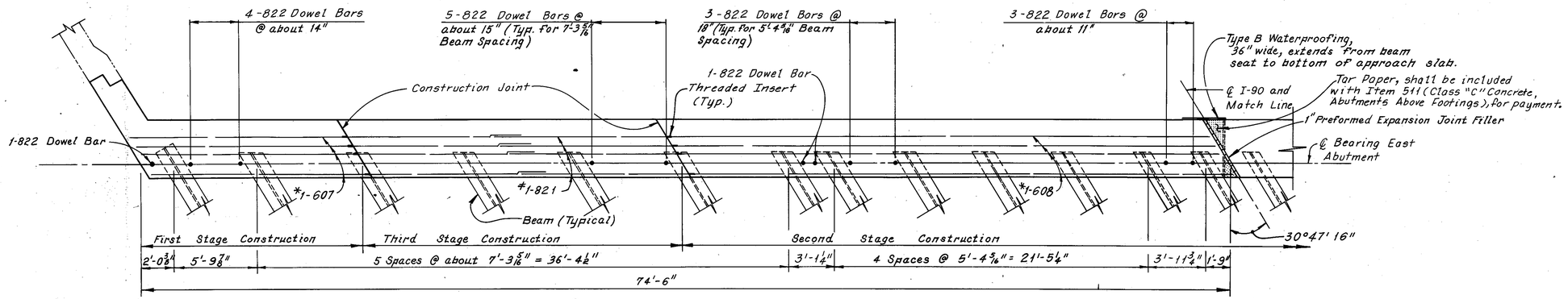

PART PLAN

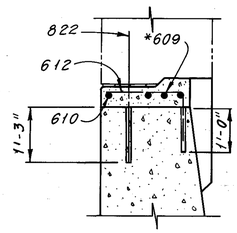

SECTION A-A

* Weld to threaded insert.
≠ Thread one end for connection to threaded insert.

Note:
612 bars shall be inserted 1'-0" in a 1¼" ϕ drilled hole and the 822 bars shall be inserted 1'-3" in a 1½" ϕ drilled hole in the existing structure.

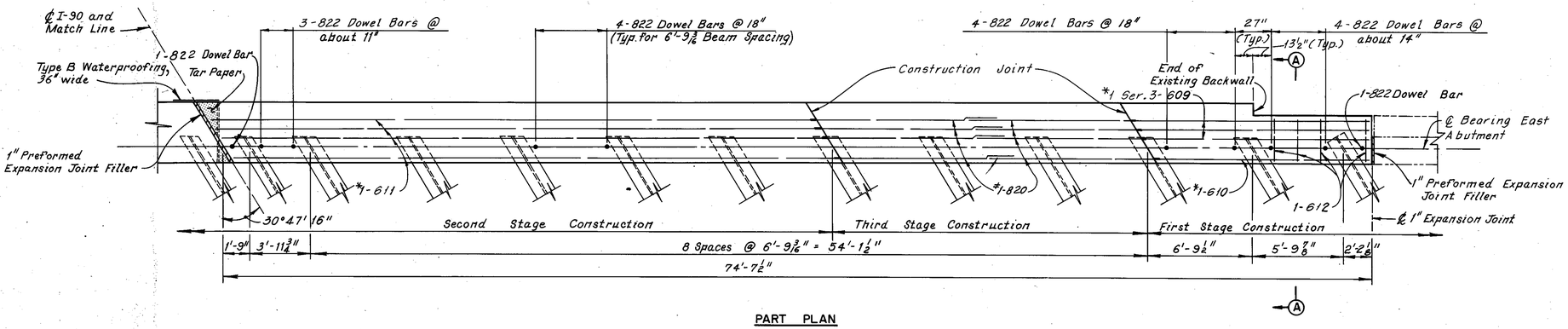

PART PLAN

Note:
All reinforcing bar marks shall be prefixed DAE.

Notes:
For typical section through abutment backwall, see Sheet 23/27.
For Reinforcement Schedule, see Sheet R-2.
The following abbreviation is used:
Typ. = Typical

HOWARD, NEEDLES, TAMMEN & BERGENDOFF
CONSULTING ENGINEERS
KANSAS CITY CLEVELAND NEW YORK

EAST ABUTMENT DETAILS

I-90 OVER EAST 105th STREET

BR. NO. CUY-90-2200 STA. 37+04.43
STA. 37+84.85

CUYAHOGA COUNTY OHIO

DRAWN R.A.S.	TRACED A.J.T.	CHECKED B.P.	REVIEWED D.A.B.	REVISED
DATE 7-18-74	DATE 8-5-74	DATE 10-30-74	DATE 12-20-74	SHEET 14/27

RECEIVED
MAR 28 1975

FHWA REGION	STATE	PROJECT	
5	OHIO		

221
354

CUYAHOGA COUNTY
CUY-90-23.73
LAKE COUNTY
LAK-90-0.00

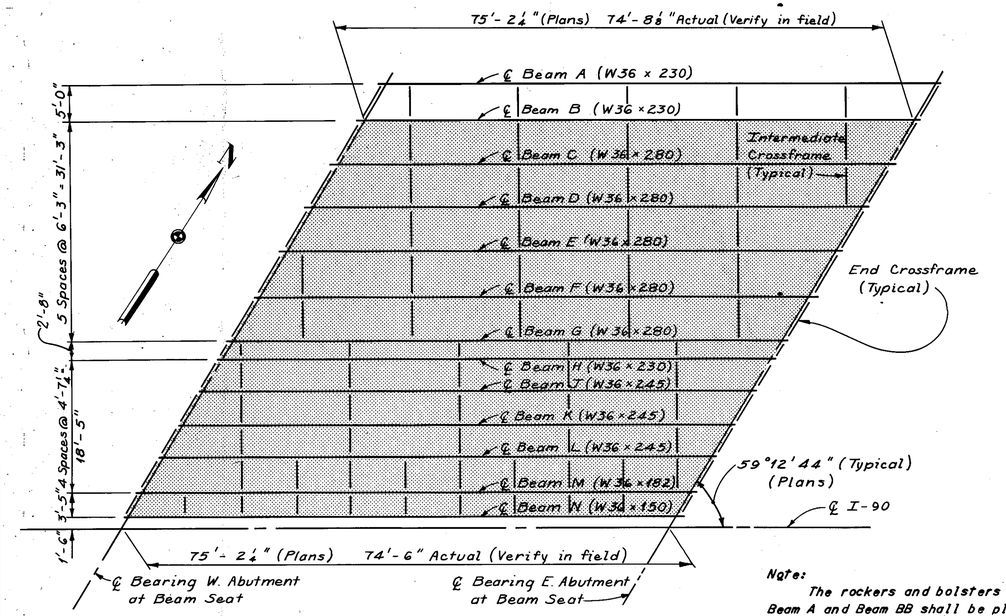

FRAMING PLAN — WESTBOUND LANES
(▭ denotes existing Framing Plan)

Note:
The rockers and bolsters for Beam A and Beam BB shall be placed along the ℄ Bearing (Plan dimension) and the ℄ Beam. For layout of the ℄ Bearing of the abutments, see Sheets 5/27 *and* 6/27 .

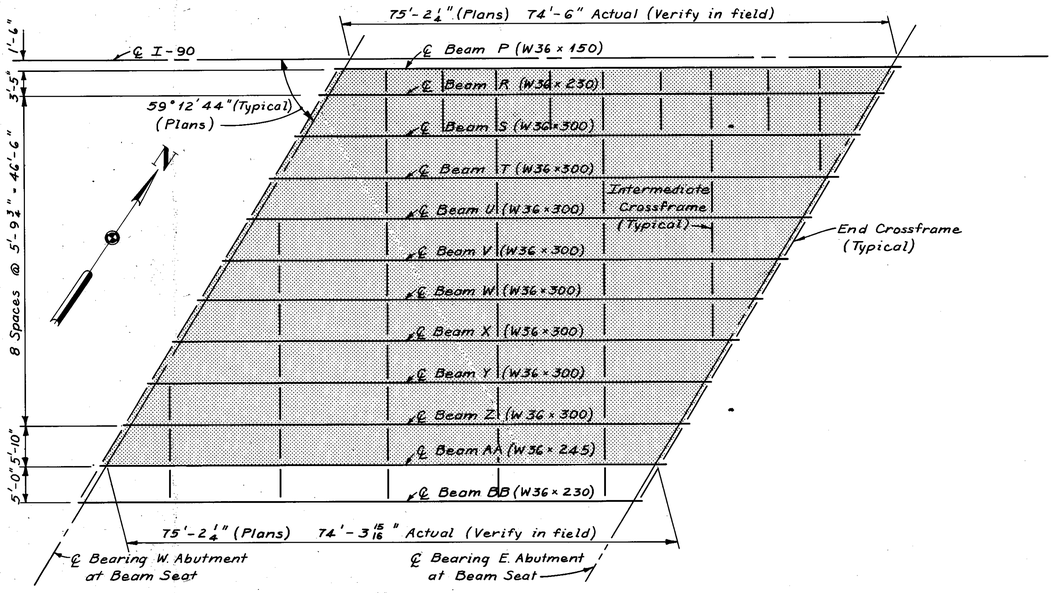

FRAMING PLAN — EASTBOUND LANES
(▭ denotes existing Framing Plan)

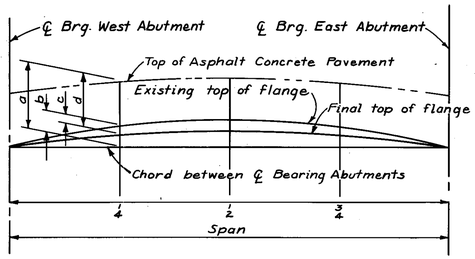

SCREED SETTING DIAGRAM

HAUNCH TABLE

BEAM	DIMENSION	SPAN: ℄ Bearing W. Abutment	¼	½	¾	℄ Bearing E. Abutment
A	a	9 1/2"	9 5/16"	9 11/16"	9 3/8"	9 1/2"
	c	0	13/16"	1 1/8"	13/16"	0
B	a	13 15/16"	13 15/16"	13 15/16"	13 11/16"	13 5/16"
	c	0	13/16"	1 3/16"	13/16"	0
C	a	14 3/16"	14 1/16"	14 1/16"	13 11/16"	13 5/16"
	c	0	3/4"	1"	3/4"	0
D	a	14 1/16"	14 1/16"	14"	13 7/16"	13 11/16"
	c	0	3/4"	1"	3/4"	0
E	a	14 3/16"	14 3/16"	14 1/16"	13 15/16"	13 11/16"
	c	0	3/4"	1"	3/4"	0
F	a	14 1/16"	14 1/16"	14 1/16"	14 1/16"	13 13/16"
	c	0	3/4"	1"	3/4"	0
G	a	13 3/16"	13 1/16"	13 3/16"	13"	12 15/16"
	c	0	1/2"	3/4"	1/2"	0
H	a	10 3/16"	10 1/16"	9 15/16"	9 3/16"	9 1/16"
	c	0	1/2"	11/16"	1/2"	0
J	a	10 1/16"	10 1/16"	10"	10"	9 3/16"
	c	0	9/16"	13/16"	9/16"	0
K	a	10 7/16"	10 7/16"	10 9/16"	10 7/16"	10 9/16"
	c	0	9/16"	13/16"	9/16"	0
L	a	10 9/16"	10 9/16"	10 5/16"	10 7/16"	10 3/16"
	c	0	9/16"	15/16"	9/16"	0
M	a	10 3/16"	10 1/16"	10 7/16"	10 5/16"	10 5/16"
	c	0	5/16"	1 1/16"	5/16"	0
N	a	10 15/16"	10 5/16"	10 3/16"	10 1/16"	10 3/16"
	c	0	7/16"	1 1/16"	7/16"	0
P	a	10 11/16"	10 3/16"	10 7/16"	10 15/16"	10 11/16"
	c	0	7/16"	1 5/16"	7/16"	0
R	a	10 15/16"	10 15/16"	10 7/16"	10 3/16"	10 9/16"
	c	0	5/16"	7/16"	5/16"	0
S	a	10 13/16"	10 7/16"	10 15/16"	10 7/16"	10 11/16"
	c	0	9/16"	15/16"	9/16"	0
T	a	10 15/16"	10 7/16"	10 15/16"	10 7/16"	10 13/16"
	c	0	9/16"	13/16"	9/16"	0
U	a	10 1/16"	10 1/16"	10 3/16"	10 5/16"	10 7/16"
	c	0	9/16"	15/16"	9/16"	0
V	a	10 11/16"	10 11/16"	10 3/16"	10 5/16"	10 3/16"
	c	0	9/16"	13/16"	9/16"	0
W	a	10 15/16"	10 15/16"	10 7/16"	10 3/16"	10 7/16"
	c	0	9/16"	13/16"	9/16"	0
X	a	10 11/16"	10 15/16"	10 15/16"	10 15/16"	10 15/16"
	c	0	9/16"	13/16"	9/16"	0
Y	a	10 15/16"	10 15/16"	10 7/16"	10 3/16"	10 9/16"
	c	0	9/16"	15/16"	9/16"	0
Z	a	10 15/16"	10 7/16"	10 3/16"	10 9/16"	10 5/16"
	c	0	5/16"	15/16"	15/16"	0
AA	a	10 11/16"	10 5/16"	10 3/16"	10 1/16"	10 3/16"
	c	0	11/16"	1"	11/16"	0
BB	a	9 1/2"	9 11/16"	9 3/16"	9 1/16"	9 1/16"
	c	0	13/16"	1 1/8"	13/16"	0

Notes
Dimension c is the amount of dead load deflection.
Haunch d=a-b+c
The Contractor shall determine b in the field.
The screeds used to strike off the surface of the concrete shall be set d-1.75" above the beam flange.

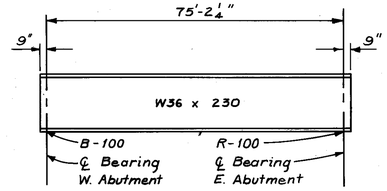

TYPICAL BEAM ELEVATION
BEAM A AND BEAM BB

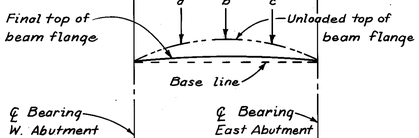

		a	b	c
Beam A	Deflection due to Steel	1/4"	3/8"	1/4"
	Remaining Dead Load Deflection	13/16"	1 1/8"	13/16"
	Adjustment required for Vertical Curve	1/8"	1/8"	1/16"
	Required Shop Camber	1 5/16"	1 5/8"	1 1/8"
Beam BB	Deflection due to Steel	1/4"	3/8"	1/4"
	Remaining Dead Load Deflection	13/16"	1 1/8"	13/16"
	Adjustment required for Vertical Curve	3/16"	1/4"	3/16"
	Required Shop Camber	1 1/4"	1 3/4"	1 1/4"

CAMBER DIAGRAM

Notes
For details of Rockers and Bolsters see Ohio Standard Drawing RB-1-55
For Intermediate and End Crossframe Details, see Sheet 23/27 .

HOWARD, NEEDLES, TAMMEN & BERGENDOFF
CONSULTING ENGINEERS
KANSAS CITY CLEVELAND NEW YORK

FRAMING PLANS, BEAM ELEVATIONS AND HAUNCH TABLE

I-90 OVER EAST 105 TH. STREET

BR.NO.CUY-90-2200 STA. 37+04.43
STA. 37+84.85

CUYAHOGA COUNTY OHIO

DRAWN C.K.B	TRACED D.K.M.	CHECKED B.P.	REVIEWED C.A.B.	REVISED
DATE 6-24-74	DATE 6-25-74	DATE 8-19-74	DATE 12-20-74	SHEET 15/27

FHWA REGION	STATE	PROJECT	
5	OHIO		

222
354

CUYAHOGA COUNTY
CUY-90-23.73
LAKE COUNTY
LAK-90-0.00

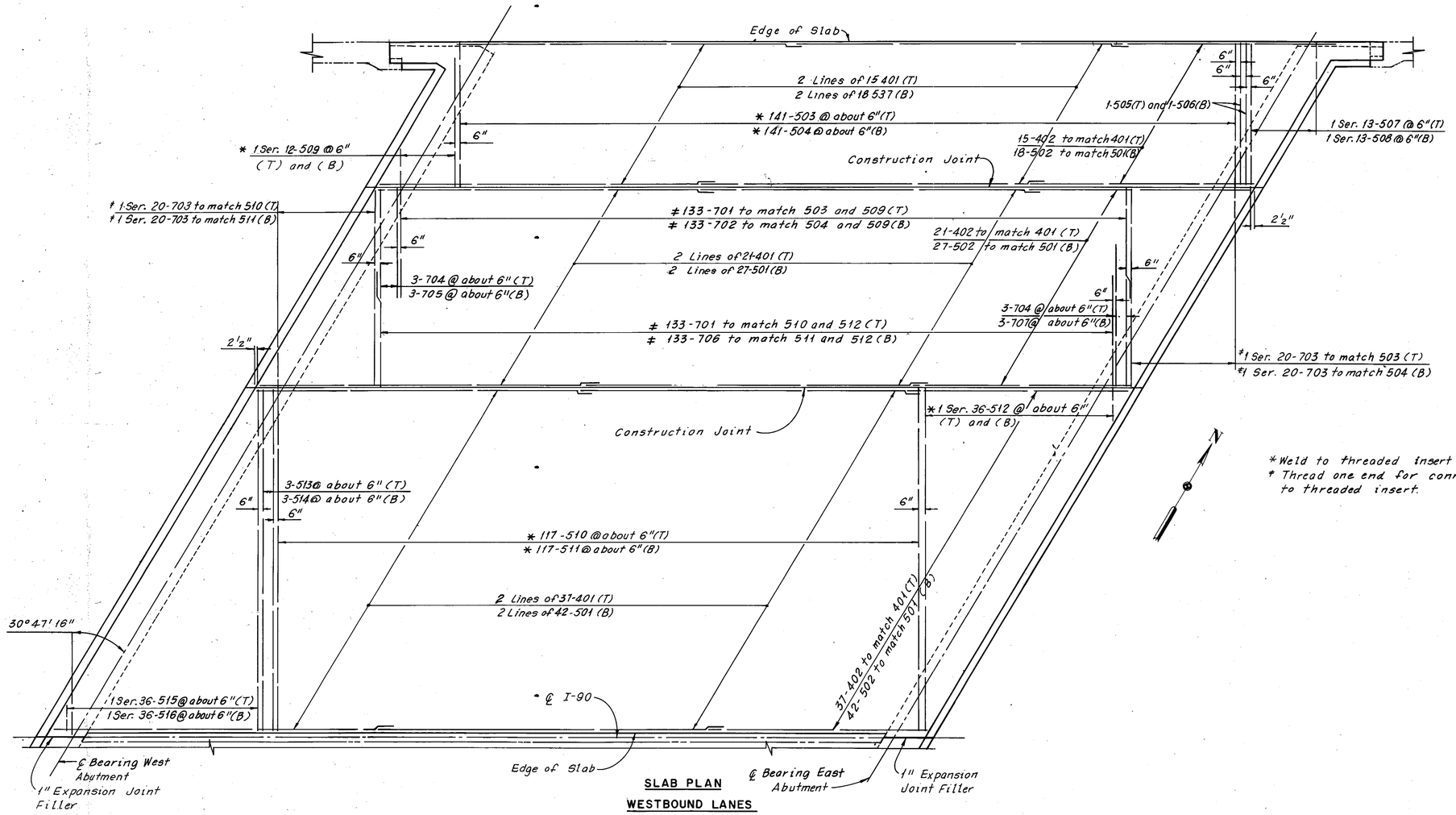

SLAB PLAN
WESTBOUND LANES

* Weld to threaded insert
* Thread one end for connection to threaded insert.

Notes:
For placement of longitudinal reinforcement, see Typical Cross Section, Sheet 18/27.
For Reinforcement Schedule, see Sheet R-3.
The following abbreviations are used:
T = Top
B = Bottom

Note: All reinforcing bar marks shall be prefixed D55.

HOWARD, NEEDLES, TAMMEN & BERGENDOFF
CONSULTING ENGINEERS
KANSAS CITY CLEVELAND NEW YORK

SLAB PLAN
WESTBOUND LANES
I-90 OVER EAST 105th STREET

BR. NO. CUY-90-2200 STA. 37+04.43
STA. 37+84.85

CUYAHOGA COUNTY OHIO

DRAWN R.A.S.	TRACED RCK	CHECKED BP	REVIEWED EAB	REVISED
DATE 6-27-74	DATE 7-1-74	DATE 8-21-74	DATE 12-20-74	SHEET 16/27

FHWA REGION	STATE	PROJECT	
5	OHIO		

223
354

CUYAHOGA COUNTY
CUY-90-23.73
LAKE COUNTY
LAK-90-0.00

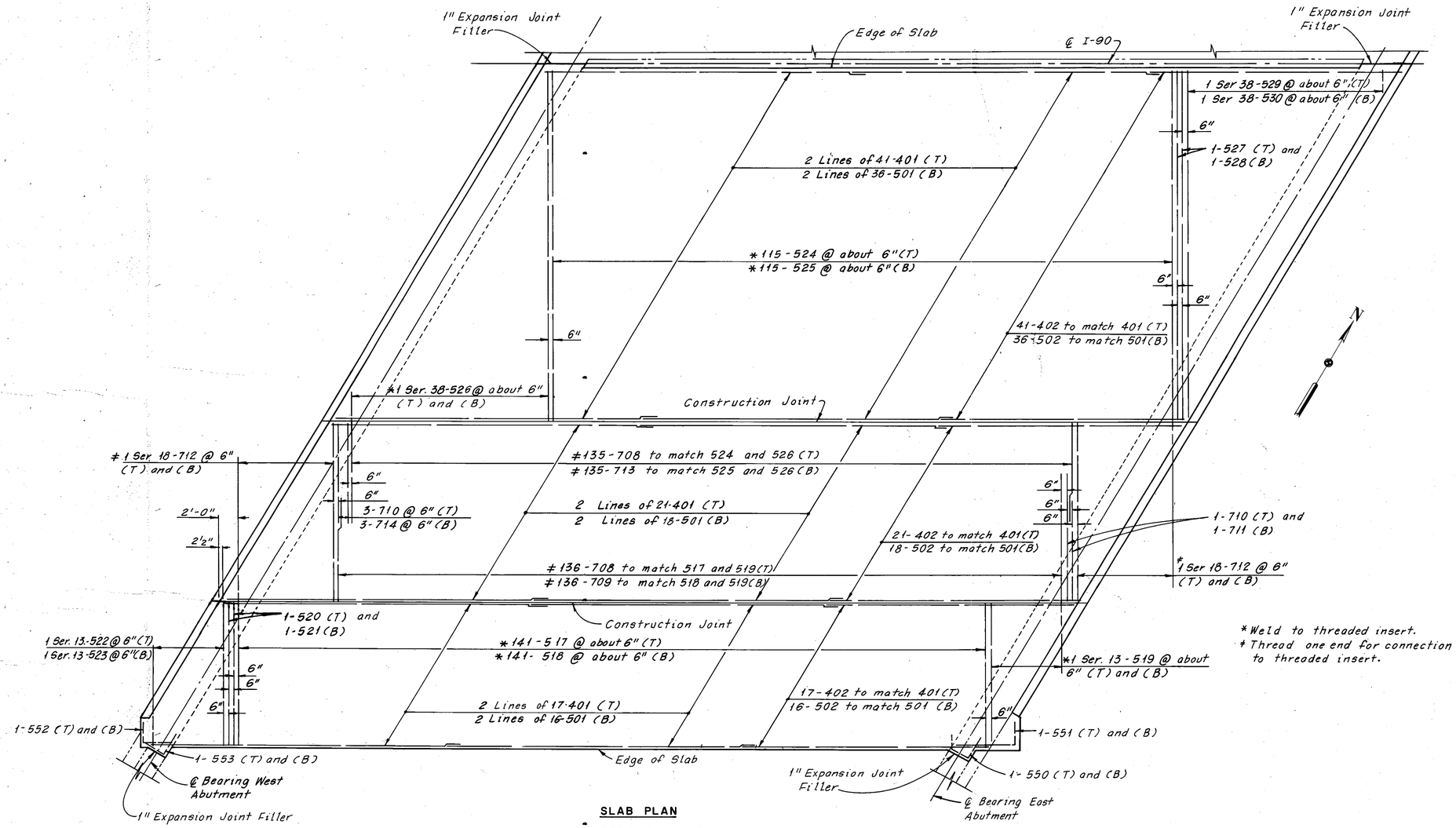

SLAB PLAN
EASTBOUND LANES

*Weld to threaded insert.
#Thread one end for connection to threaded insert.

Notes:
For placement of longitudinal reinforcement, see Typical Cross Section, Sheet 18/27.
For placement of reinforcement in parapet extension areas, see Sheet 25/27.
For Reinforcement Schedule, see Sheet R-3.
The following abbreviations are used:
T = Top
B = Bottom

Note: All reinforcing bar marks shall be prefixed D55.

MAR 93

HOWARD, NEEDLES, TAMMEN & BERGENDOFF
CONSULTING ENGINEERS
KANSAS CITY CLEVELAND NEW YORK

SLAB PLAN
EASTBOUND LANES
I-90 OVER EAST 105th STREET

BR. NO. CUY-90-2200 STA. 37+04.43
STA. 37+84.85

CUYAHOGA COUNTY OHIO

DRAWN R.A.S.	TRACED A.J.T	CHECKED B.P.	REVIEWED CAB	REVISED
DATE 7-3-74	DATE 7-8-74	DATE 8-21-74	DATE 12-20-74	SHEET 17/27

FHWA REGION	STATE	PROJECT	
5	OHIO		

224
354

CUYAHOGA COUNTY
CUY-90-23.73
LAKE COUNTY
LAK-90-0.00

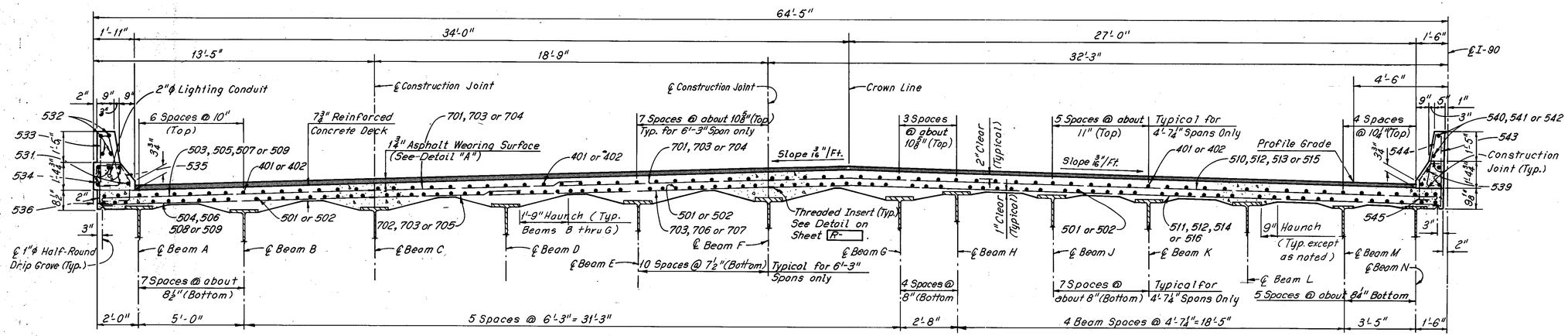

TYPICAL CROSS SECTION WESTBOUND LANES

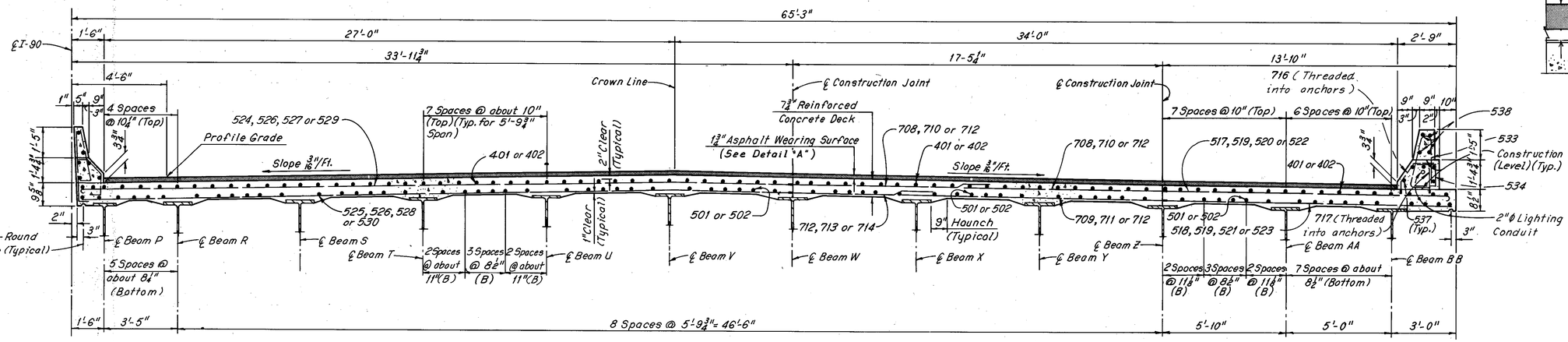

TYPICAL CROSS SECTION EASTBOUND LANES

Note: All reinforcing bar marks shall be prefixed DSS.

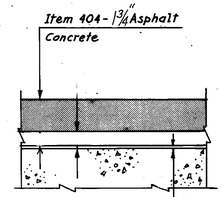

DETAIL "A"

Notes:
For curb and parapet details, see Sheet 19/27.
For Reinforcement Schedule, see Sheet R-3.

TOP OF ASPHALT CONCRETE ELEVATIONS — WESTBOUND LANES

BEAMS	℄ BEARING W. ABUTMENT	0.25	0.50	0.75	℄ BEARING E. ABUTMENT
A	623.43	623.41	623.38	623.34	623.30
B	623.51	623.49	623.46	623.43	623.38
C	623.62	623.60	623.57	623.53	623.49
D	623.72	623.70	623.67	623.64	623.60
E	623.82	623.80	623.77	623.74	623.70
F	623.92	623.90	623.88	623.85	623.81
G	623.94	623.92	623.90	623.87	623.84
H	623.90	623.88	623.86	623.83	623.80
J	623.83	623.81	623.79	623.77	623.73
K	623.76	623.74	623.73	623.70	623.67
L	623.68	623.67	623.66	623.63	623.60
M	623.61	623.60	623.59	623.56	623.53
N	623.56	623.55	623.54	623.51	623.48

TOP OF ASPHALT CONCRETE ELEVATIONS — EASTBOUND LANES

BEAMS	℄ BEARING W. ABUTMENT	0.25	0.50	0.75	℄ BEARING E. ABUTMENT
P	623.56	623.55	623.54	623.52	623.49
R	623.61	623.61	623.59	623.57	623.54
S	623.71	623.70	623.69	623.67	623.64
T	623.80	623.79	623.78	623.76	623.74
U	623.89	623.88	623.87	623.86	623.83
V	623.98	623.98	623.97	623.95	623.93
W	623.90	623.90	623.89	623.88	623.85
X	623.80	623.81	623.80	623.79	623.77
Y	623.71	623.72	623.71	623.70	623.68
Z	623.62	623.63	623.62	623.61	623.59
A A	623.53	623.53	623.53	623.52	623.51
B B	623.45	623.46	623.46	623.45	623.43

TOP OF PORTLAND CONCRETE DECK ELEVATIONS

Gutter	℄ BEARING W. ABUTMENT	0.25	0.50	0.75	℄ BEARING E. ABUTMENT
Westbound Lanes					
North	623.28	623.33	623.32	623.26	623.14
South	623.41	623.47	623.49	623.43	623.33
Eastbound Lanes					
North	623.41	623.47	623.49	623.44	623.34
South	623.29	623.37	623.39	623.36	623.28

Note:
The elevations shown at North Gutter and South Gutter are those which are required before concrete is placed. Proper allowance has been made for the dead load deflections caused by the weight of the concrete and surface course.

Rev. 7-18-75

HOWARD, NEEDLES, TAMMEN & BERGENDOFF
CONSULTING ENGINEERS
KANSAS CITY CLEVELAND NEW YORK

TYPICAL CROSS SECTIONS AND PAVEMENT ELEVATIONS
I-90 OVER EAST 105th STREET

BR. NO. CUY-90-2200 STA. 37+04.43
STA. 37+84.85

CUYAHOGA COUNTY OHIO

DRAWN RAS	TRACED RCK	CHECKED BP	REVIEWED CAB	REVISED
DATE 6-12-74	DATE 6-28-74	DATE 8-21-74	DATE 12-20-74	SHEET 18/27

FHWA REGION	STATE	PROJECT	
5	OHIO		

225/354

CUYAHOGA COUNTY
CUY-90-23.73
LAKE COUNTY
LAK-90-0.00

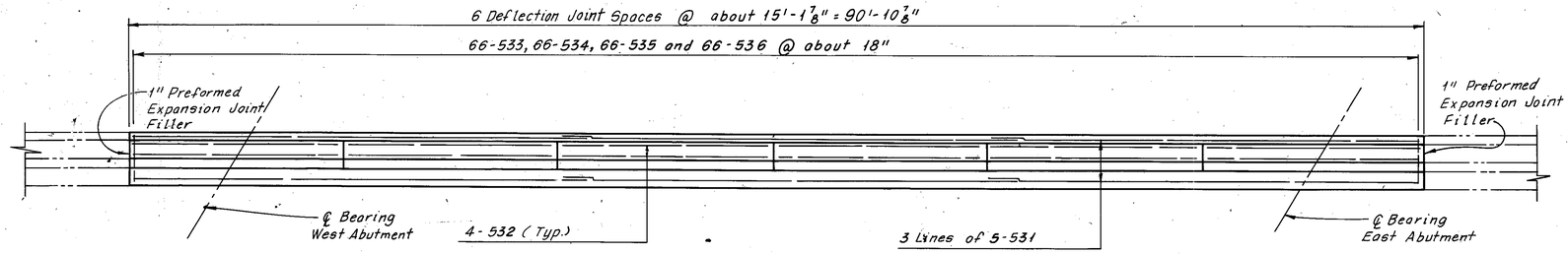

NORTH CURB AND PARAPET PLAN

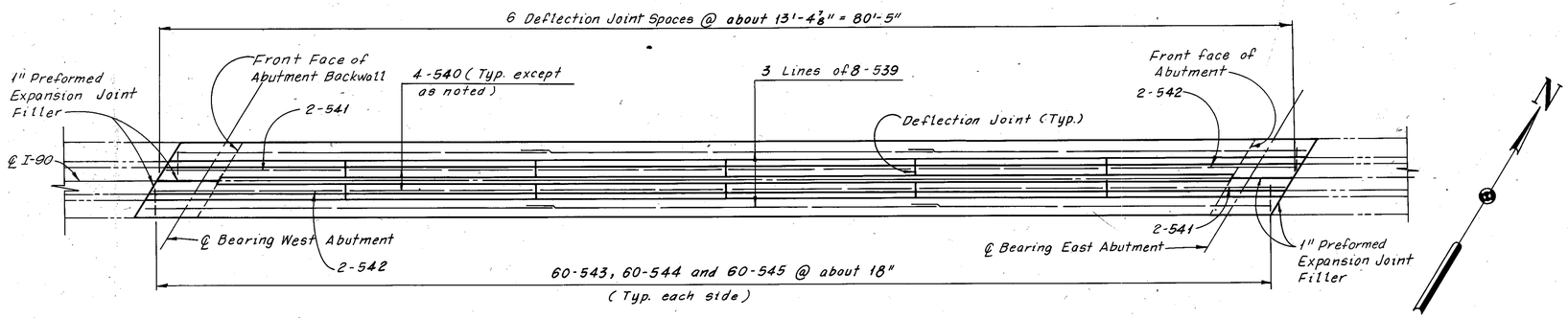

MEDIAN CURB AND PARAPET PLAN

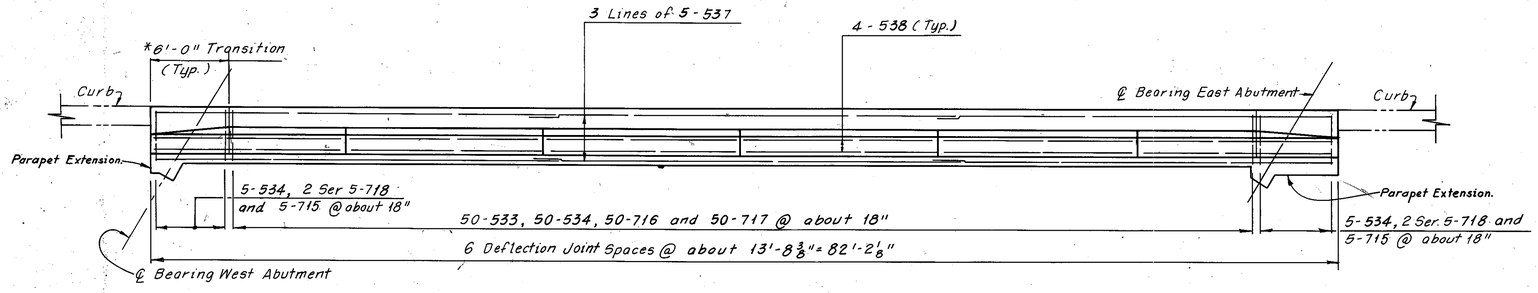

* Note:
For curb and parapet transitions see "Part Plan - Parapet on Wingwall" on Ohio Standard Drawing BR-1-67, Sheet 1 of 3.

SOUTH CURB AND PARAPET PLAN

Note: All reinforcing bar marks shall be prefixed D55.

Notes:
The deflection joints in the concrete barrier curb parapets shall be ¼" gray cellular polyvinyl chloride (PVC) sponge or ¼" gray sponge rubber. If rubber is used, it shall meet the requirements of AASHO M-153. The deflection joint shall extend from the top of parapet to the first construction joint and is included with Item 511, for payment. Above the upper construction joint the median shall be placed in alternate sections by the use of bulkheads. Closing sections shall be placed after removal of bulkheads and after placement of expansion joint filler. Exposed edges of the filler shall be flush with the surface of concrete and shall be free of mortar.

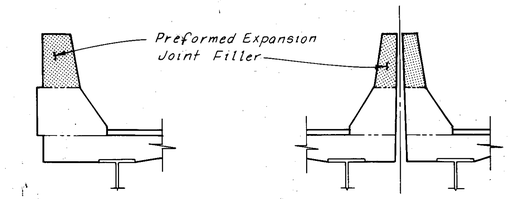

EXTERIOR CURBS MEDIAN CURB

SECTION THRU DEFLECTION JOINT

Notes:
For placement of curb and parapet reinforcement, see Typical Cross Sections, Sheet 18/27.
For Reinforcement Schedule, see Sheet R-3.
For parapet extension details, see Sheets 24/27 *and* 25/27

HOWARD, NEEDLES, TAMMEN & BERGENDOFF
CONSULTING ENGINEERS
KANSAS CITY CLEVELAND NEW YORK

CURB AND PARAPET DETAILS

I-90 OVER EAST 105th STREET

BR.NO.CUY-90-2200 STA.37+04.43
STA.37+84.85

CUYAHOGA COUNTY OHIO

DRAWN RAS	TRACED AJT	CHECKED BP	REVIEWED CAB	REVISED
DATE 6-10-74	DATE 7-17-74	DATE 8-26-74	DATE 12-20-74	SHEET 19/27

R-10

R-7

FHWA REGION	STATE	PROJECT	
5	OHIO		

226
354

CUYAHOGA COUNTY
CUY-90-~~23.75~~ 21.27
LAKE COUNTY
LAK-90-0.00

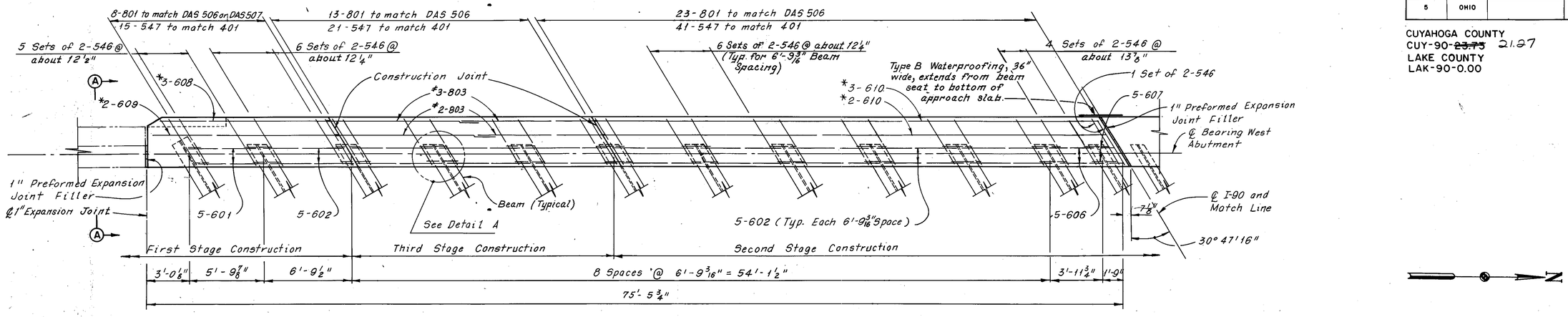

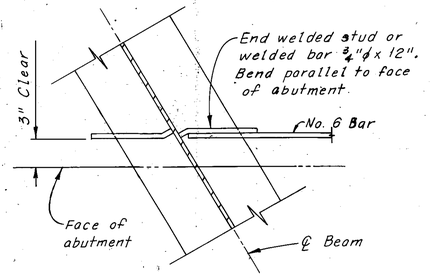

DETAIL A
(Typical for all beams)

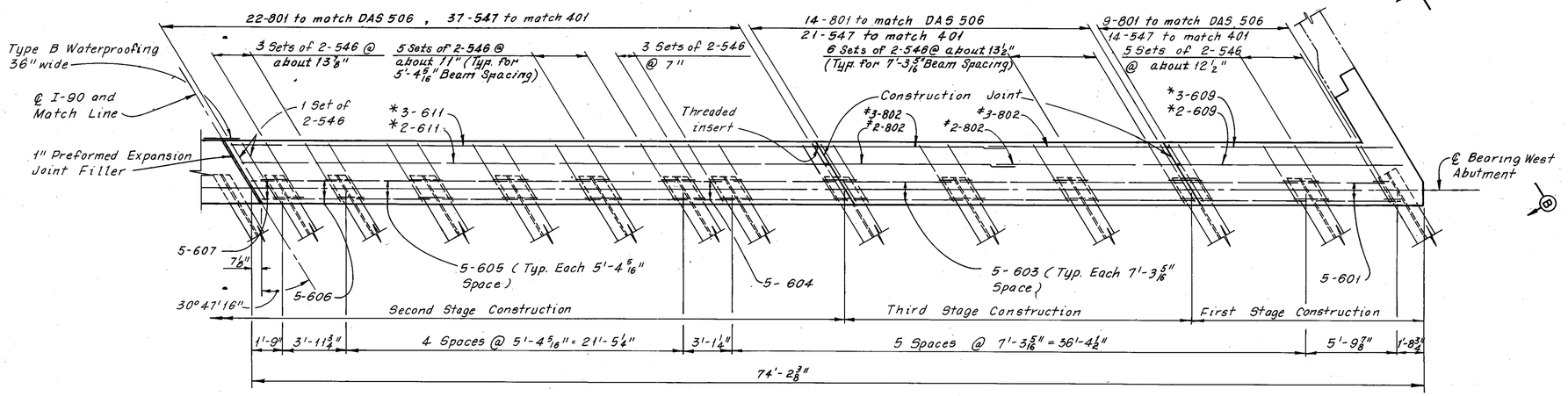

SECTION THRU SUPERSTRUCTURE CROSSBEAM

* Weld to threaded insert.
≠ Thread one end for connection to threaded insert.

Note: All reinforcing bar marks shall be prefixed DSS.

Notes:
For Elevations A-A and B-B, see Sheet 22/27.
For Reinforcement Schedule, see Sheet R-3.
For placement of reinforcement, see Sheet 23/27.
The following abbreviation is used:
Typ. = Typical

HOWARD, NEEDLES, TAMMEN & BERGENDOFF
CONSULTING ENGINEERS
KANSAS CITY CLEVELAND NEW YORK

SUPERSTRUCTURE DETAILS AT WEST ABUTMENT

I-90 OVER EAST 105th STREET

BR. NO. CUY-90-2200 STA. 37+04.43
STA. 37+84.85

CUYAHOGA COUNTY OHIO

DRAWN RAS	TRACED AJT	CHECKED BP	REVIEWED CAB	REVISED
DATE 7.9.74	DATE 7-10-74	DATE 10-10-74	DATE 12-20-74	SHEET 20/27

FHWA REGION	STATE	PROJECT	
5	OHIO		

227
354

CUYAHOGA COUNTY
CUY-90-23.73
LAK-90-0.00

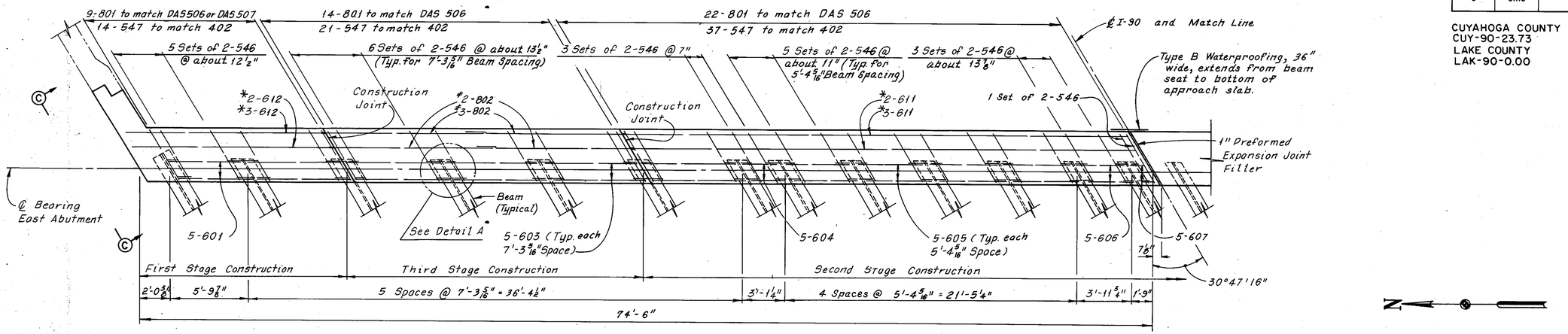

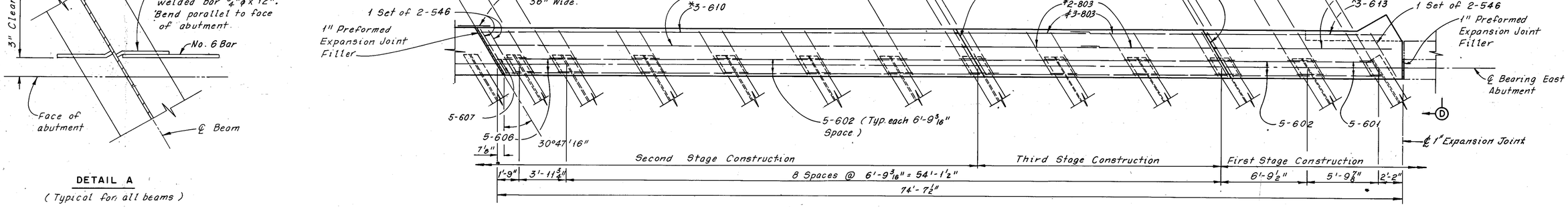

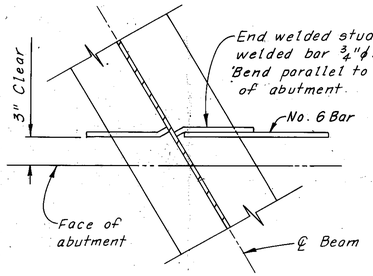

DETAIL A
(Typical for all beams)

SECTION THRU SUPERSTRUCTURE CROSSBEAM

*Weld to threaded insert.
≠Thread one end for connection to threaded insert.

Note: All reinforcing bar marks shall be prefixed DSS.

Notes:
For Elevations A-A and B-B, see Sheet 22/27.
For Reinforcement Schedule, see Sheet R-3.
For placement of reinforcement, see Sheet 23/27.
The following abbreviation is used:
Typ. = Typical

MICROFILMED
MAR 26 1975

MICROFILMED
MAR 26 1975

HOWARD, NEEDLES, TAMMEN & BERGENDOFF
CONSULTING ENGINEERS
KANSAS CITY CLEVELAND NEW YORK

SUPERSTRUCTURE DETAILS AT EAST ABUTMENT
I-90 OVER EAST 105th STREET

BR. NO. CUY-90-2200 STA. 37+04.43
STA. 37+84.85

CUYAHOGA COUNTY OHIO

DRAWN RJS	TRACED AJT	CHECKED BP	REVIEWED DAB	REVISED
DATE 7-10-74	DATE 7-11-74	DATE 10-24-74	DATE 12-20-74	SHEET 21/27

FHWA REGION	STATE	PROJECT	
5	OHIO		

228
354

CUYAHOGA COUNTY
CUY-90-23.73
LAKE COUNTY
LAK-90-0.00

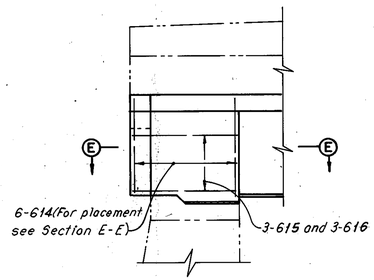

ELEVATION A-A

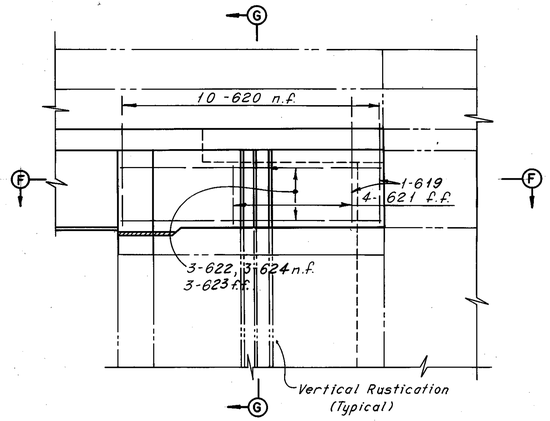

ELEVATION B-B

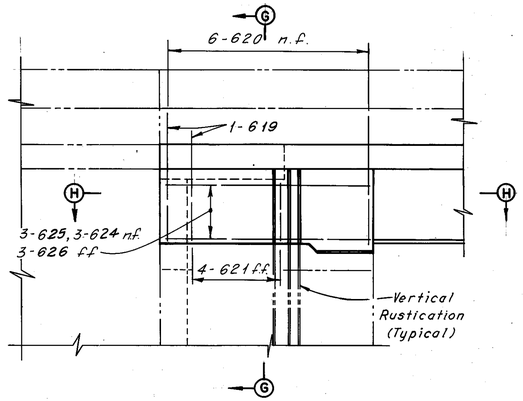

ELEVATION C-C

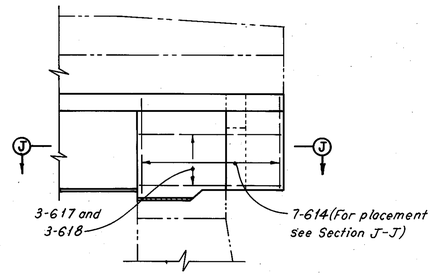

ELEVATION D-D

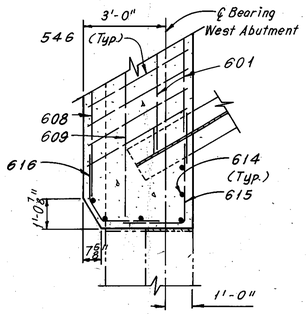

SECTION E-E

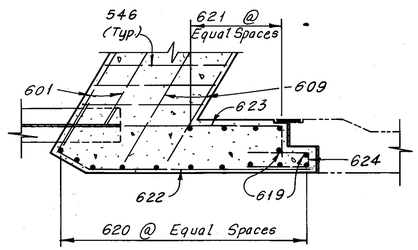

SECTION F-F

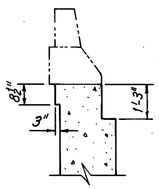

SECTION G-G
(Reinforcement not shown)

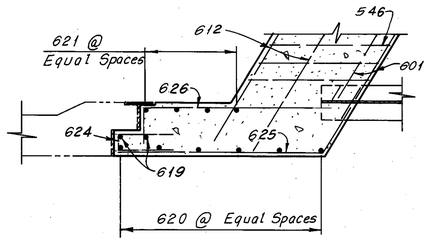

SECTION H-H

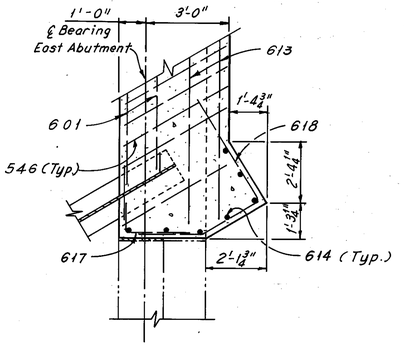

SECTION J-J

Note:
All reinforcing bar marks shall be prefixed DSS.

MICROFILMED
MAR 22 1955

Notes:
For location of Elevations A-A and B-B, see Sheet 20 27 .
For location of Elevations C-C and D-D, see Sheet 21 27 .
The following abbreviations are used:
n.f. = near face
f.f. = far face
Typ. = Typical
For Reinforcement Schedule, see Sheet R-3 .
For Vertical Rustication Detail, see Sheet 8 27 .

HOWARD, NEEDLES, TAMMEN & BERGENDOFF
CONSULTING ENGINEERS
KANSAS CITY CLEVELAND NEW YORK

SUPERSTRUCTURE CROSSBEAM DETAILS
I-90 OVER EAST 105th STREET

BR. NO. CUY-90-2200 STA. 37+04.43
STA. 37+84.85

CUYAHOGA COUNTY OHIO

DRAWN R.A.S.	TRACED A.J.T.	CHECKED D.P.	REVIEWED C.A.B.	REVISED
DATE 6-20-74	DATE 7-23-74	DATE 10-15-74	DATE 12-20-74	SHEET 22 27

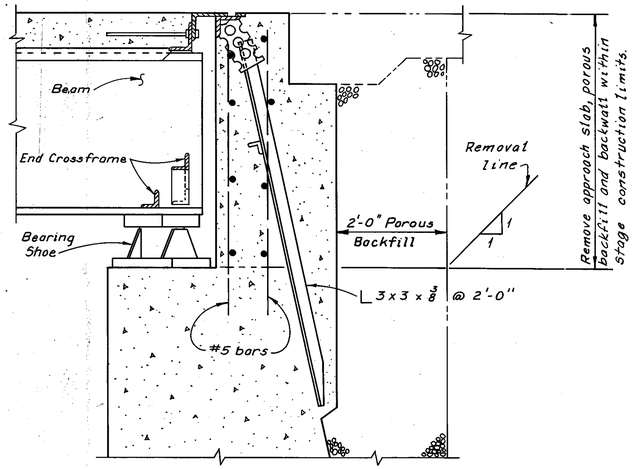

TYPICAL EXISTING PART SECTION THRU ABUTMENT BACKWALL

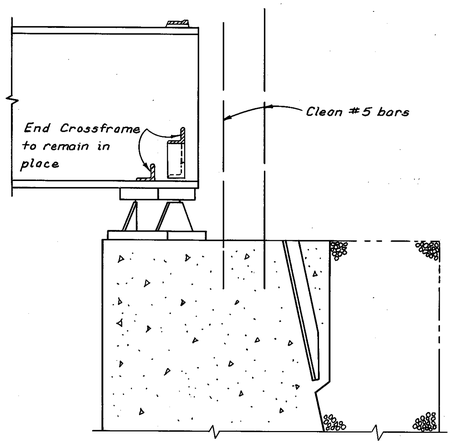

TYPICAL PART SECTION THRU ABUTMENT BACKWALL AFTER REMOVAL

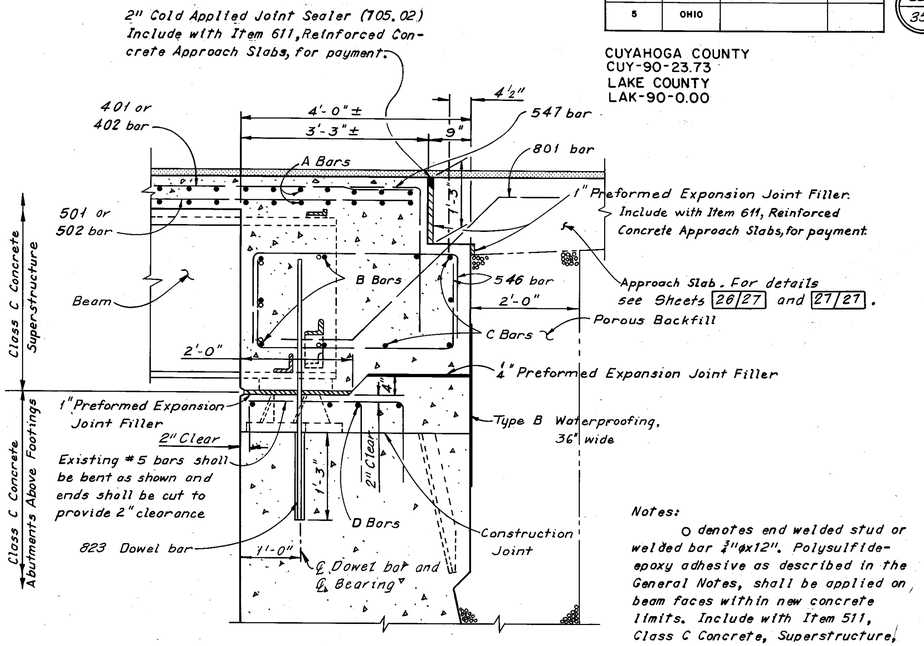

TYPICAL MODIFIED PART SECTION THRU ABUTMENT BACKWALL

Notes:

O denotes end welded stud or welded bar ¾"ø x 12". Polysulfide-epoxy adhesive as described in the General Notes, shall be applied on beam faces within new concrete limits. Include with Item 511, Class C Concrete, Superstructure, for payment.

For bar marks of A Bars, see Sheets 16/27 and 17/27.

For bar marks of B Bars and C Bars, see Sheets 20/27 and 21/27.

For bar marks of D Bars, see Sheets 13/27 and 14/27.

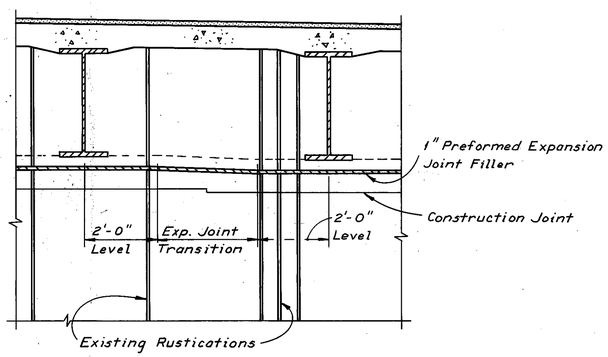

TYPICAL ELEVATION OF SUPERSTRUCTURE CROSSBEAM

(For Rustication Details, see Sheet 8/27).

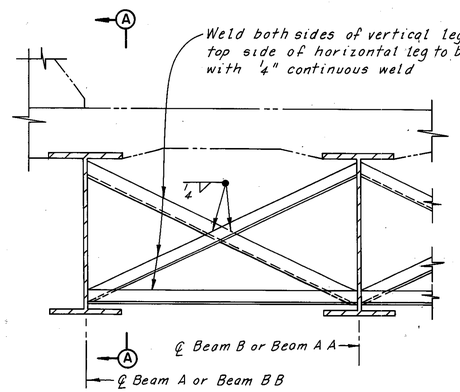

INTERMEDIATE AND END CROSSFRAMES

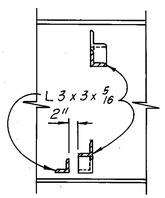

SECTION A-A

FHWA REGION	STATE	PROJECT	
5	OHIO		

229/354

CUYAHOGA COUNTY
CUY-90-23.73
LAKE COUNTY
LAK-90-0.00

RECEIVED
MAR 22 1976

HOWARD, NEEDLES, TAMMEN & BERGENDOFF
CONSULTING ENGINEERS
KANSAS CITY CLEVELAND NEW YORK

SUPERSTRUCTURE DETAILS

I-90 OVER EAST 105th STREET

BR. NO. CUY-90-2200 STA. 37+04.43
STA. 37+84.85

CUYAHOGA COUNTY OHIO

DRAWN CKB	TRACED LKW	CHECKED BP	REVIEWED CAB	REVISED
DATE 7-17-74	DATE 7-19-74	DATE 10-15-74	DATE 12-20-74	SHEET 23/27

FHWA REGION	STATE	PROJECT	
5	OHIO		

230
354

CUYAHOGA COUNTY
CUY-90-23.73
LAKE COUNTY
LAK-90-0.00

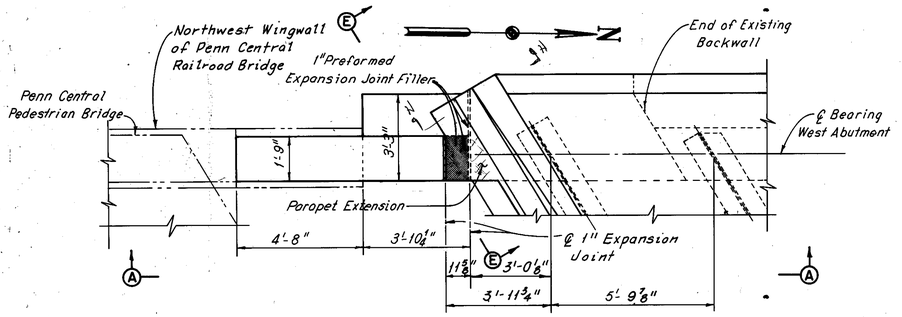

PLAN–SOUTHWEST CLOSURE WALL

Note:
All reinforcing bar marks shall be prefixed DAW.

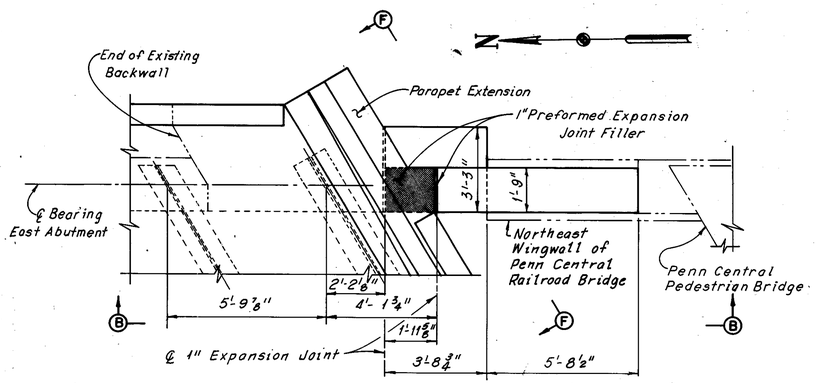

PLAN–SOUTHEAST CLOSURE WALL

Note:
All reinforcing bar marks shall be prefixed DAE.

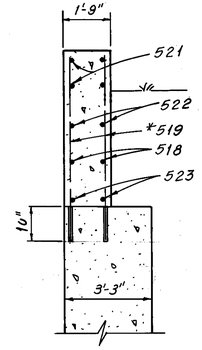

SECTION C–C

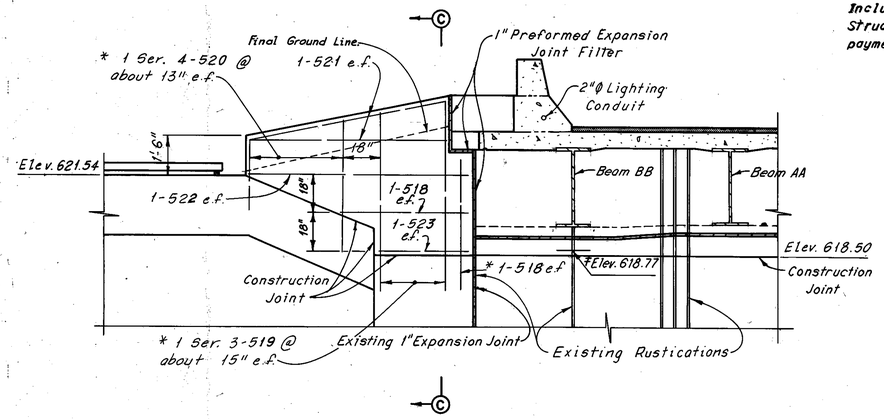

ELEVATION A–A

≠ Provide steel shims under new bearings to bring the bottom of the bearings to the elevations shown. Include with Item 513, New Structural Steel (ASTM A36), for payment.

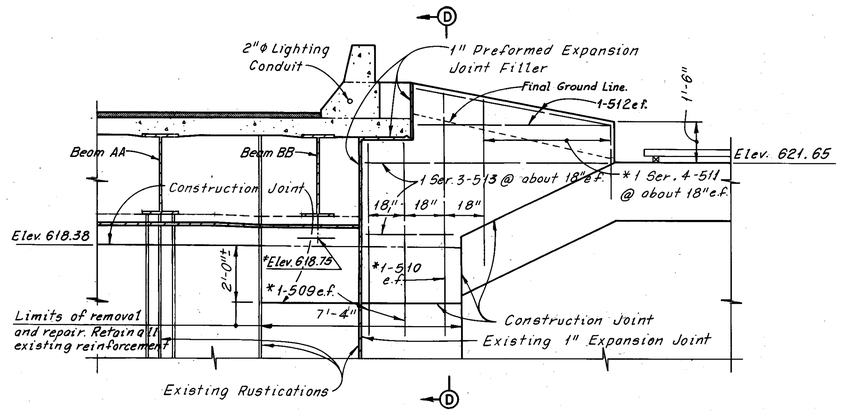

ELEVATION B–B
(Existing reinforcement not shown).

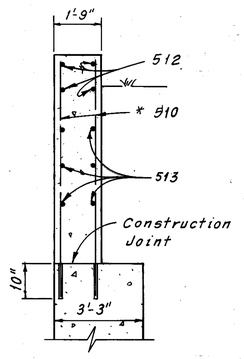

SECTION D–D
(Existing Reinforcement not shown).

*Note:
Dowel Bars shall be inserted 10" in a 1⅛"℄ drilled hole in the existing structure.

Notes:
For Elevations E-E and F-F, see Sheet 25/27.
For Reinforcement Schedule, see Sheet R-2.

APPROVED
MAR 22 1974

HOWARD, NEEDLES, TAMMEN & BERGENDOFF
CONSULTING ENGINEERS
KANSAS CITY CLEVELAND NEW YORK

SOUTHWEST AND SOUTHEAST CLOSURE WALL DETAILS
I-90 OVER EAST 105th STREET

BR. NO. CUY-90-2200 STA. 37+04.43
STA. 37+84.85

CUYAHOGA COUNTY OHIO

DRAWN R.A.S.	TRACED A.J.T.	CHECKED B.P.	REVIEWED C.A.B.	REVISED
DATE 7-11-74	DATE 7-16-74	DATE 11-1-74	DATE 12-20-74	SHEET 24/27

FHWA REGION	STATE	PROJECT	
5	OHIO		

231
354

CUYAHOGA COUNTY
CUY-90-23.73
LAKE COUNTY
LAK-90-0.00

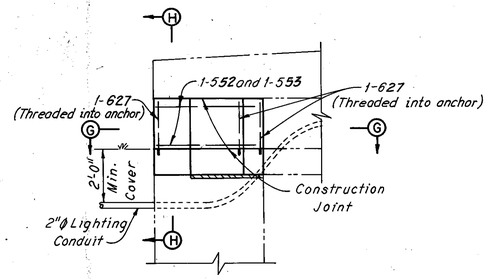

ELEVATION E-E

(Slab and parapet reinforcement not shown).

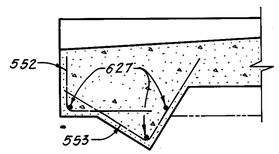

SECTION G-G

(Slab and parapet reinforcement not shown).

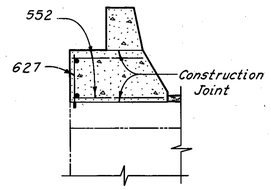

SECTION H-H

(Slab and parapet reinforcement not shown).

Note:
For additional lighting conduit details including pull box, see "Conduit Details For Bridges With Standard Roadway Railing" on Standard Construction Drawing HL-5. For Quantities see Lighting Plans.

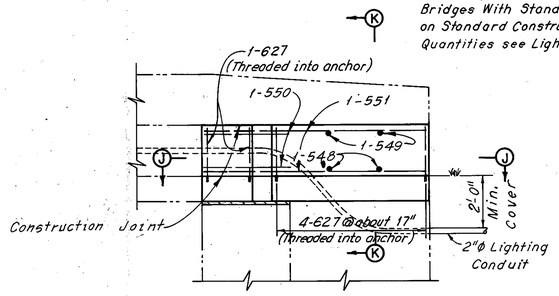

ELEVATION F-F

(Slab and parapet reinforcement not shown).

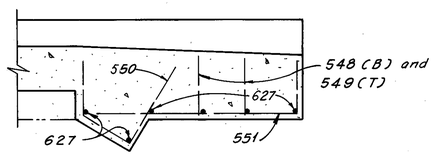

SECTION J-J

(Slab and parapet reinforcement not shown).

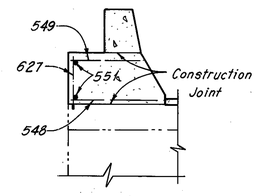

SECTION K-K

(Slab and parapet reinforcement not shown).

Notes:
For location of Elevations E-E and F-F, see Sheet 24/27 .
For Reinforcement Schedule, see Sheet R-3 .
For additional slab reinforcement, see Sheet 17/27.
For additional parapet details, see Sheet 19/27 .

Note: All reinforcing bars marks shall be prefixed DSS.

RECEIVED
MAR 22 1976

HOWARD, NEEDLES, TAMMEN & BERGENDOFF
CONSULTING ENGINEERS
KANSAS CITY CLEVELAND NEW YORK

PARAPET EXTENSION DETAILS

I-90 OVER EAST 105th STREET

BR. NO. CUY-90-2200 STA. 37+04.43
STA. 37+84.85

CUYAHOGA COUNTY OHIO

DRAWN R.A.S.	TRACED R.C.K.	CHECKED GP	REVIEWED CAB	REVISED
DATE 5-20-74	DATE 6-22-74	DATE 11-4-74	DATE 12-20-74	SHEET 25/27

FHWA REGION	STATE	PROJECT	
5	OHIO		

232
354

CUYAHOGA COUNTY
CUY-90-23.73
LAKE COUNTY
LAK-90-0.00

REINFORCEMENT SCHEDULE

MARK	NO.	LENGTH	TYPE	SER. INCR.
*501	2	11'-10"	108	
*502	36	12'-3"	Str.	
*503	38	30'-0"	Str.	
504	38	30'-0"	Str.	
*505	38	19'-9"	Str.	
*506	37	12'-9"	Str.	
*507	1	12'-9"	104	
508	1	23'-6"	Str.	
509	1	24'-3"	Str.	
510	86	24'-6"	Str.	
511	1	24'-0"	Str.	
ǂ 701	76	11'-6"	Str.	
ǂ 702	76	12'-3"	Str.	
901	271	25'-9"	101	
902	1 Ser. 4	24'-9" 25'-6"	101	3
903	1	25'-3"	101	
904	2	71'-7"	104	

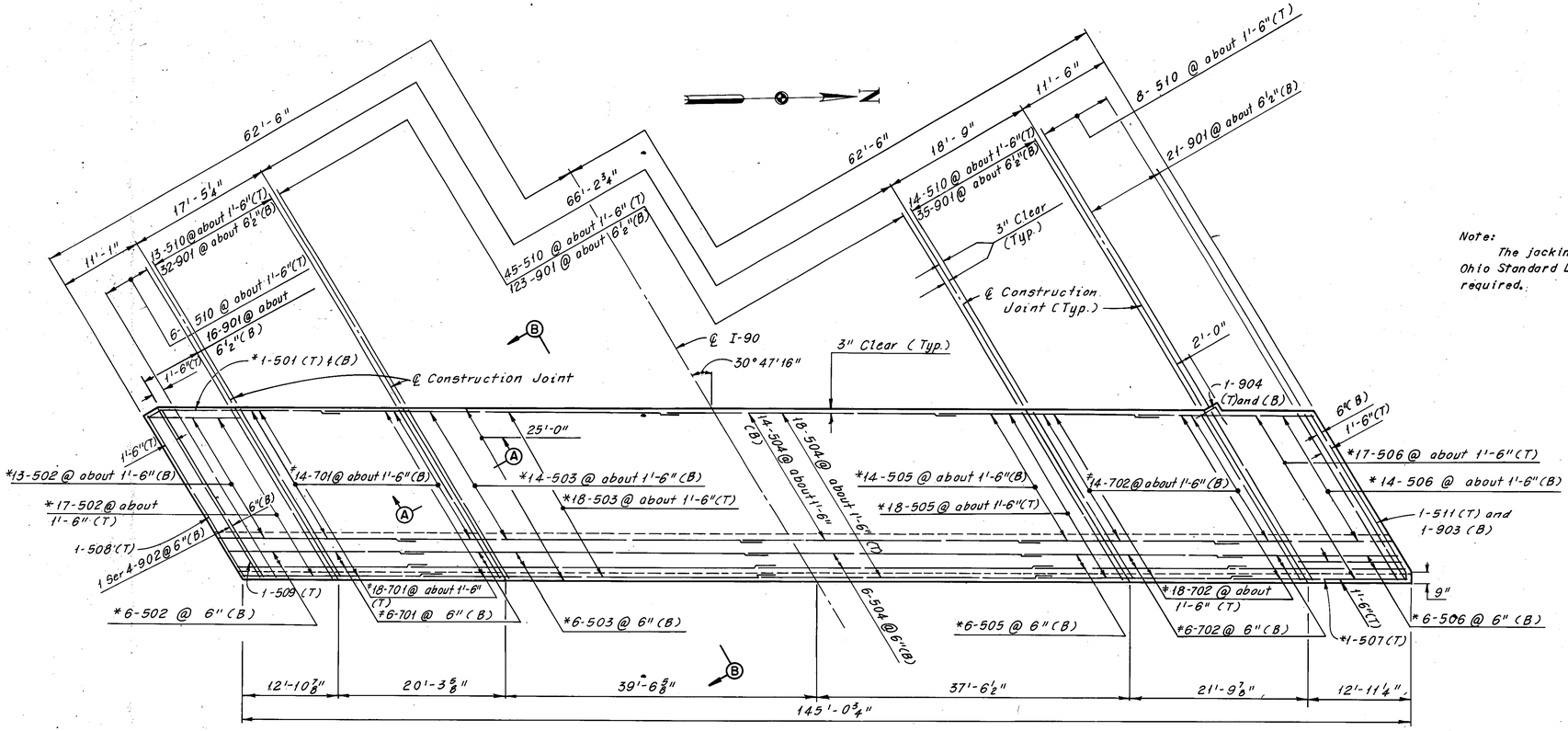

APPROACH SLAB PLAN

Note:
The jacking holes as called for on Ohio Standard Drawing AS-1-72 are not required.

101

15"	24'-6"	DAS 901
15"	23'-6" to 24'-3"	DAS 902
15"	24'-0"	DAS 903

104

Weld threaded insert to DAS 507 only

6"	3'-5"	
	4'-5"	DAS 904
	12'-4"	DAS 507

108

1'-8"	DAS 501
10'-6"	

* Weld to threaded insert.
ǂ Thread one end for connection to threaded insert.

Note: All reinforcing bar marks shall be prefixed D A S.

Note:
The asphalt wearing surface on the approach slab shall consist of the following:
1. Item 407, Tack Coat, at 0.1 gal. per sq.yd.
2. Item 404, 1¾" Asphalt Concrete (AC-20)

Notes:
For stage construction sequence, see Maintenance Of Traffic, Sheet 3 27.
For normal cross slopes, see Typical Section, Sheet 18 27.
For details of median barrier, see Roadway Plans.
The following abbreviations are used:
T = Top
B = Bottom
Typ. = Typical
For additional notes and details, see Ohio Standard Drawing AS-1-72.

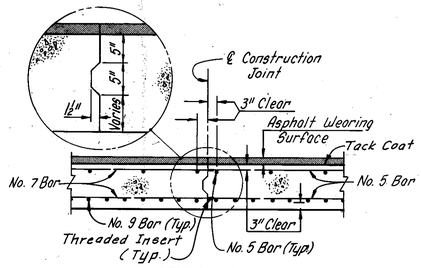

SECTION A-A

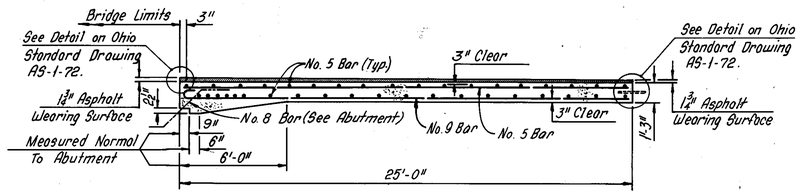

SECTION B-B

Note:
Both the welded and threaded connection shall be capable of developing 125 percent of the yield strength of the number 5 bars.
Random samples shall be submitted for testing.

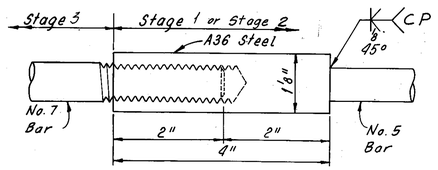

THREADED INSERT DETAIL

(Threads are to be Unified Standard Series for Basic Major Diameter of ¾".)

Note:
Welding shall conform to AWS D12.1-61 of the American Welding Society and 513.17 of the Construction and Material Specifications.

HOWARD, NEEDLES, TAMMEN & BERGENDOFF
CONSULTING ENGINEERS
KANSAS CITY CLEVELAND NEW YORK

WEST APPROACH SLAB

I-90 OVER EAST 105th STREET

BR. NO. CUY-90-2200 STA. 37+04.43
STA. 37+84.85

CUYAHOGA COUNTY OHIO

DRAWN AJT	TRACED AJT	CHECKED BP	REVIEWED CAB	REVISED
DATE 6-26-74	DATE 6-27-74	DATE 11-5-74	DATE 12-20-74	SHEET 26 27

FHWA REGION	STATE	PROJECT	
5	OHIO		

233
354

CUYAHOGA COUNTY
CUY-90-23.73
LAKE COUNTY
LAK-90-0.00

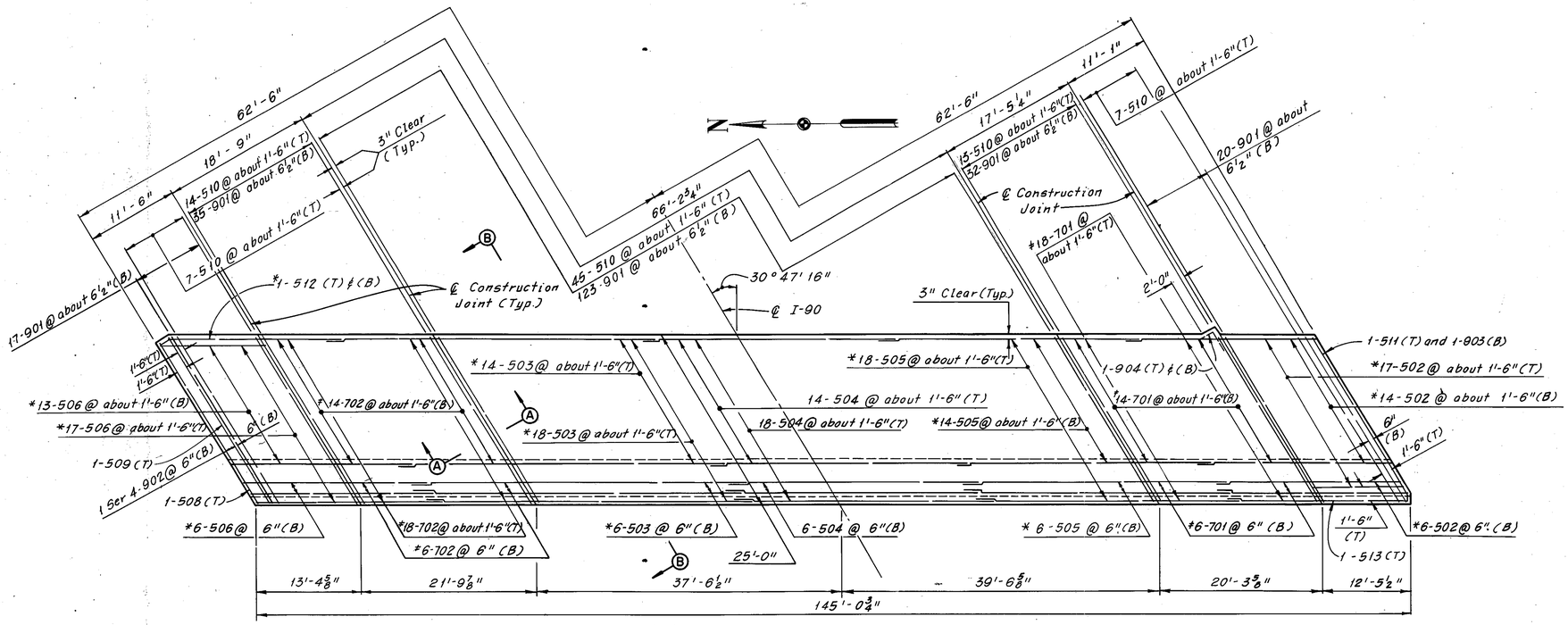

APPROACH SLAB PLAN

REINFORCEMENT SCHEDULE				
MARK	NO.	LENGTH	TYPE	SER. INCR.
DAS*502	37	12'-3"	Str.	
DAS*503	38	30'-0"	Str.	
DAS504	38	30'-0"	Str.	
DAS*505	38	19'-9"	Str.	
DAS*506	36	12'-9"	Str.	
DAS 508	1	23'-6"	Str.	
DAS 509	1	24'-3"	Str.	
DAS 510	86	24'-6"	Str.	
DAS 511	1	24'-0"	Str.	
DAS*512	2	12'-4"	108	
DAS*513	1	12'-2"	104	
DAS*701	76	11'-6"	Str.	
DAS*702	76	12'-3"	Str.	
DAS 901	227	25'-9"	101	
DAS 902	1 Ser 4	24'-9" to 25'-6"	101	3"
DAS 903	1	25'-3"	101	
DAS 904	2	7'-7"	104	

101

15"	24'-6"	DAS 901
15"	23'-6" to 24'-3"	DAS 902
15"	25'-3"	DAS 903

108

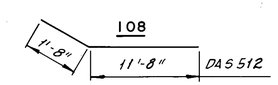

104

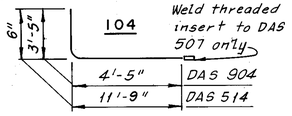

Weld threaded insert to DAS 507 only

* Weld to threaded insert.
‡ Thread one end for connection to threaded insert.

Note: All reinforcing bar marks shall be prefixed DAS.

Note:
The jacking holes as called for on Ohio Standard Drawing AS-1-72 are not required.

Notes:
For stage construction sequence, see Maintenance Of Traffic, Sheet 3 27.
For normal cross slopes, see Typical Section, Sheet 18 27.
For details of median barrier, see Roadway Plans.
The following abbreviations are used:
T = Top
B = Bottom
Typ. = Typical
For additional notes and details, see Ohio Standard Drawing AS-1-72.

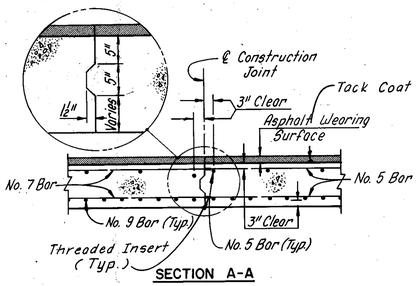

SECTION A-A

Note:
The asphalt wearing surface on the approach slab shall consist of the following:
1. Item 407, Tack Coat, at 0.1 gal. per sq.yd.
2. Item 404, 1¾" Asphalt Concrete (AC-20)

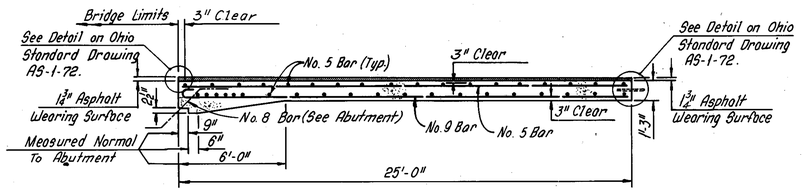

SECTION B-B

Note:
Both the welded and threaded connections shall be capable of developing 125 percent of the yield strength of the number 5 bars.
Random samples to be submitted for testing.

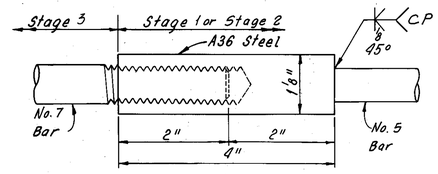

THREADED INSERT DETAIL

(Threads are to be Unified Standard Series for Basic Major Diameter of ¾".)

Note:
Welding shall conform to AWS D12.1-61 of the American Welding Society and 513.17 of the Construction and Material Specifications.

HOWARD, NEEDLES, TAMMEN & BERGENDOFF
CONSULTING ENGINEERS
KANSAS CITY CLEVELAND NEW YORK

EAST APPROACH SLAB

I-90 OVER EAST 105th STREET

BR.NO.CUY-90-2200 STA. 37+04.43
STA. 37+84.85

CUYAHOGA COUNTY OHIO

DRAWN AJT	TRACED AJT	CHECKED Bp	REVIEWED CAB	REVISED
DATE 6-26-74	DATE 6-27-74	DATE 11-6-74	DATE	SHEET 27 27

FHWA REGION	STATE	PROJECT	
5	OHIO		

234
354

CUYAHOGA COUNTY
CUY-90-23.73
LAKE COUNTY
LAK-90-0.00

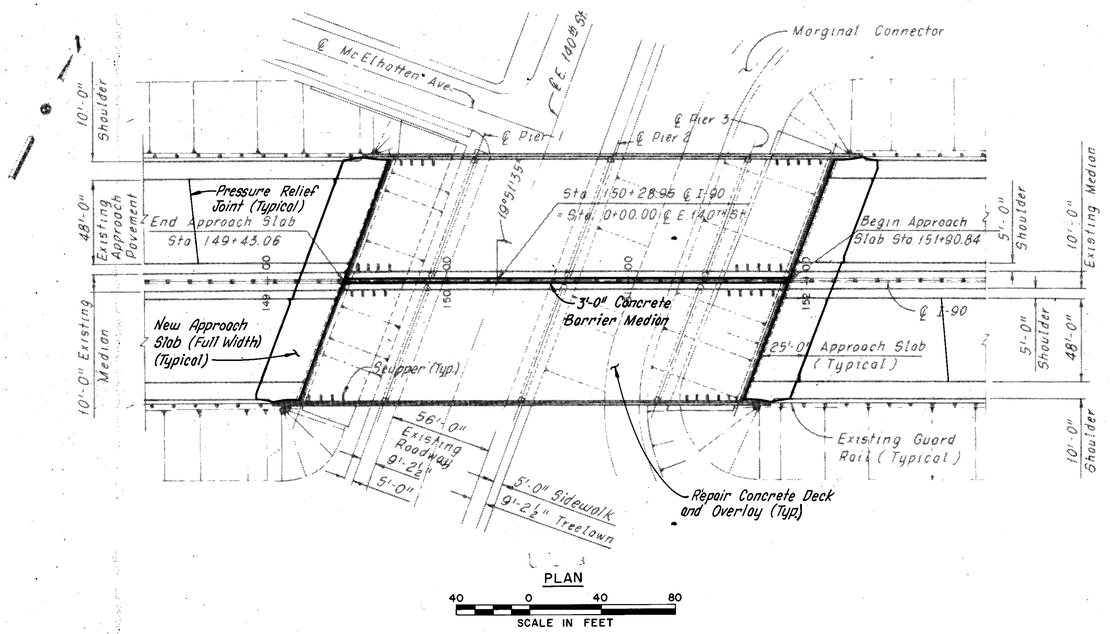

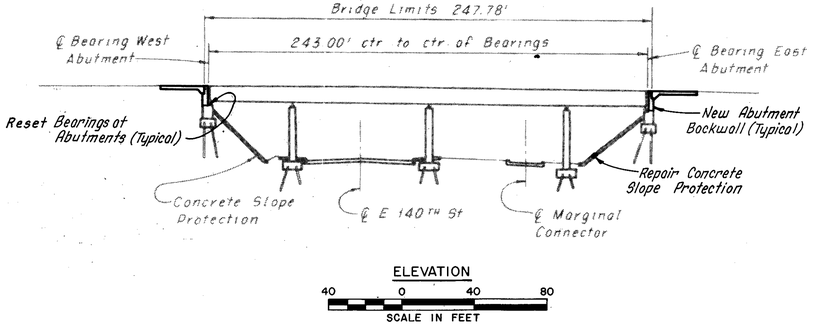

PROPOSED WORK:

1. Install pressure relief joints in approach roadway pavement, see Sheet CD-9.
2. Replace both abutment backwalls, see Sheets 3/6 and 4/6.
3. Reset abutment bearings, see Sheets 3/6 and 4/6.
4. Replace approach slabs, see Sheet 6/6.
5. Replace deep beam barrier median with concrete barrier median, see Sheet 5/6.
6. Repair concrete deck and place asphalt wearing surface, see Sheet 5/6.
7. Clean out bridge drainage system and remove debris from abutment bridge seat.
8. Paint all structural steel.
9. Repair minor abutment deterioration.
10. Repair minor wingwall deterioration.
11. Repair concrete slope protection.

Note:
Roman numerals II and III denote cost participation breakdown. For description, see Roadway Plans, Sheet 3-354.

TYPE CODE X231

ESTIMATED QUANTITIES

ITEM	TOTAL	UNIT	DESCRIPTION BRIDGE REPAIR	SUPER-STRUCTURE	WEST ABUT	EAST ABUT	WINGWALLS NE	WINGWALLS SE	WINGWALLS NW	WINGWALLS SW	APPROACH SLABS	CON. SLOPE PRO. WEST	CON. SLOPE PRO. EAST	GENERAL	Participation II Fed., State & Cleveland	Participation III 100% State
*202	Lump Sum	Lump Sum	Portions of Structures Removed	II L.S.	III L.S.	III L.S.	-	-	-	-	III L.S.	-	-	-	Lump	Lump
402	37	Cu. Yd.	Asphalt Concrete (AC-20)	-	-	-	-	-	-	-	II 37	-	-	-	37	
404	206	Cu. Yd.	Asphalt Concrete (AC-20)	II 179	-	-	-	-	-	-	II 27	-	-	-	206	
407	77	Gallons	Tack Coat: 702.01, RC-250 or 702.04, SS-1, SS-1H, MS-2 or RS-1	-	-	-	-	-	-	-	II 77	-	-	-	77	
503	Lump Sum	Lump Sum	Cofferdams, Cribs and Sheeting	-	-	-	-	-	-	-	-	-	-	III L.S.		Lump
509	21,038	Pounds	Reinforcing Steel	II 8,698	III 6169	III 6169	-	-	-	-	-	-	-	-	8,698	12,338
511	43	Cu. Yd.	Class "C" Concrete, Superstructure	II 43	-	-	-	-	-	-	-	-	-	-	43	
511	86	Cu. Yd.	Class "C" Concrete, Substructure	-	III 43	III 43	-	-	-	-	-	-	-	-		86
512	22	Lin. Ft.	Premolded Sealing Strip	-	III 11	III 11	-	-	-	-	-	-	-	-		22
513	12,478	Pounds	Structural Steel (ASTM A 36)	II 12,478	-	-	-	-	-	-	-	-	-	-	12,478	
514	12,478	Pounds	Field Painting of New Structural Steel	II 12,478	-	-	-	-	-	-	-	-	-	-	12,478	
516	28	Sq. Ft.	1" Preformed Expansion Joint Filler	-	III 14	III 14	-	-	-	-	-	-	-	-		28
518	74	Cu. Yd.	Porous Backfill	-	III 37	III 37	-	-	-	-	-	-	-	-		74
518	977	Lin. Ft.	Subdrainage For Wearing Course, As Per Plan	II 977	-	-	-	-	-	-	-	-	-	-	977	
519	5	Sq. Ft.	Patching Concrete Structures	-	-	-	-	III 2	-	-	-	-	III 3	-		5
520	1	Sq. Ft.	Pneumatically Placed Mortar	-	-	-	-	-	III 1	-	-	-	-	-		1
611	765	Sq. Yd.	Reinforced Concrete Approach Slabs T=15"	-	-	-	-	-	-	-	III 765	-	-	-		765
837	Lump Sum	Lump Sum	Surface Preparation	III L.S.	-	-	-	-	-	-	-	-	-	-		Lump
837	Lump Sum	Lump Sum	Spot Prime Painting	III L.S.	-	-	-	-	-	-	-	-	-	-		Lump
837	Lump Sum	Lump Sum	Complete Coat Prime Painting	III L.S.												Lump
837	Lump Sum	Lump Sum	Two Complete Coats Finish Painting	III L.S.	-	-	-	-	-	-	-	-	-	-		Lump
Special	744	Sq. Yd.	Patching Concrete Deck Slab	III 744	-	-	-	-	-	-	-	-	-	-		744
Special	3663	Sq. Yd.	Membrane Waterproofing, Hot Applied Liquid (See Proposal Note)	II 3663	-	-	-	-	-	-	-	-	-	-	3663	
					-	-	-	-	-	-	-	-	-	-	51	
Special	15	Lin. Ft.	Repair of Cracks	-	III 3	III 3	III 5	III 4	-	-	-	-	-	-		15
Special	286	Lin. Ft.	Raising Existing End Dams	-	II 143	II 143	-	-	-	-	-	-	-	-	286	
Special	32	Each	Reset Bearings	-	III 16	III 16	-	-	-	-	-	-	-	-		32
Special	502	Each	Threaded Sleeve Anchors	II 502	-	-	-	-	-	-	-	-	-	-	502	
Special	194	Lin. Ft.	Pressure Relief Joint	-	-	-	-	-	-	-	-	-	-	III 194		194
Special	Lump Sum	Lump Sum	Cleanout Bridge Drainage Systems and Remove Debris From Bridge Seats	III L.S.	III L.S.	III L.S.	-	-	-	-	-	-	-	-		Lump

EXISTING STRUCTURE	
TYPE:	Continuous Steel Beam with Reinforced Concrete Deck, Piers and Abutments.
SPAN:	45'-6", 76'-0", 76'-0" and 45'-6"
ROADWAY:	140'-0" face to face of parapets.
LOADING:	CF-2000-57 (Adequate for AASHO Alternate Loading).
SKEW:	19°58'35" Left Forward.
WEARING SURFACE:	1" Monolithic Concrete.
APPROACH SLABS:	AS-1-54 (25'-0" Long).
ALIGNMENT:	Tangent.

MODIFIED STRUCTURE	
TYPE:	Continuous Steel Beam with Reinforced Concrete Deck, Piers and Abutments.
SPANS:	45'-6", 76'-0", 76'-0" and 45'-6".
ROADWAY:	140'-0" face to face of parapets with a 3'-0" Barrier Median.
LOADING:	*CF-2000-57 (Adequate for AASHO Alternate Loading).
SKEW:	19°58'35" Left Forward.
WEARING SURFACE:	1¾" Asphalt.
APPROACH SLABS:	AS-1-72 (25'-0" Long).
ALIGNMENT:	Tangent.

* Median Beams Adequate for HS-20 Loading.

*SUPERSTRUCTURE - Includes approximately 55 Cu. Yds. of concrete in the existing 10'-0" median, and approximately 248 Lin. Ft. of guardrail including posts, nuts, plates and portions of bulb angle gutter.
*SUBSTRUCTURE - Includes approximately 86 Cu. Yds. of concrete in the existing abutment backwalls.
*APPROACH SLABS - Includes approximately 765 Sq. Yds. of existing reinforced concrete approach slabs, paved berms and all necessary excavation or backfill to provide the proper cross section for the new approach slabs.

Note: The gap between the front face of the abutment and the edge of the slope protection shall be filled with joint sealer meeting the requirements of 705.02. All material and labor required to complete this repair shall be included with Item 519, Patching Concrete Structures, for payment. The approximate quantity is 304 Lin. Ft.

Rev. 7-18-75

MICROFILMED
MAR 22 1995

HOWARD, NEEDLES, TAMMEN & BERGENDOFF
CONSULTING ENGINEERS
KANSAS CITY CLEVELAND NEW YORK

SITE PLAN

I-90 OVER EAST 140th. STREET

BR.NO.CUY-90-2413 STA. 149+43.06
STA. 151+90.84

CUYAHOGA COUNTY OHIO

DRAWN	TRACED	CHECKED	REVIEWED	REVISED
A.J.T.	A.J.T.	TAW	SAB	
DATE 7-24-73	DATE 7-24-73	DATE 2-19-74	DATE 12-20-74	SHEET 1/6

FHWA REGION	STATE	PROJECT	
5	OHIO		

235
354

CUYAHOGA COUNTY
CUY-90-23.73
LAKE COUNTY
LAK-90-0.00

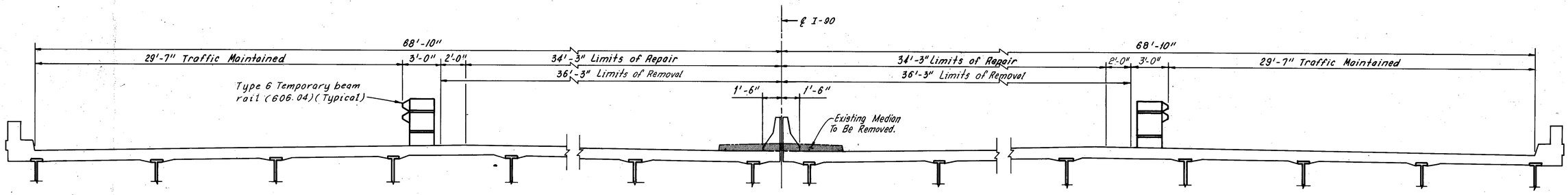

SECOND STAGE CONSTRUCTION

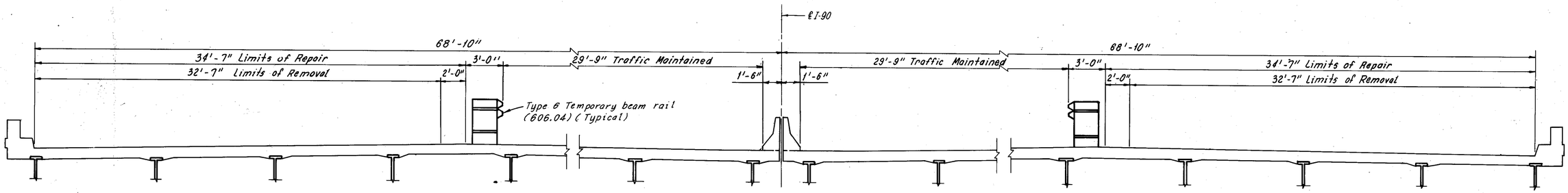

THIRD STAGE CONSTRUCTION

Notes:

The stage construction cross-sections apply within the bridge and approach slab limits. All repair work shall be co-ordinated with the stage construction as shown.

For maintenance of traffic notes, see Roadway Plans.

For shoring required at approach slabs, see Sheet CD-1 .

ARCHIVED
MAR 22 1999

HOWARD, NEEDLES, TAMMEN & BERGENDOFF
CONSULTING ENGINEERS
KANSAS CITY CLEVELAND NEW YORK

MAINTENANCE OF TRAFFIC

I-90 OVER EAST 140th. STREET

BR.NO.CUY-90-2413 STA. 149+43.06
STA. 151+90.84

CUYAHOGA COUNTY OHIO

DRAWN JLR	TRACED JLR	CHECKED ML	REVIEWED EAB	REVISED
DATE 1-14-74	DATE 1-16-74	DATE 5-18-74	DATE 12-20-74	SHEET 2/6

FHWA REGION	STATE	PROJECT	
5	OHIO		Rev.

236
354

CUYAHOGA COUNTY
CUY-90-23.73
LAKE COUNTY
LAK-90-0.00

BACKWALL REPLACEMENT PROCEDURE:

1. Bridge the backwall with an adequate steel plate within the area of maintained traffic. Provide bituminous wearing surface cover, as directed by the Engineer, to permit and maintain safe passage of vehicular traffic. The steel plate and bituminous cover shall be included with Item 614, Maintaining Traffic, for payment (see Roadway Plans)
2. Raise the entire superstructure (all beams simultaneously) until there is no contact between the superstructure and backwall end dam angles. All material, labor and equipment required to accomplish the above shall be included with Item 202, Portions of Structures Removed, for payment.
3. Remove approximately 1 foot of the top of the backwall.
4. Reset bearings.
5. Release jacks.
6. Remove the remaining portions of the backwall, including reinforcement, except as noted, within the limits of stage construction.
7. Replace the backwall within the limits of the stage construction using the existing superstructure end dam angle to set the new backwall. In setting the top of backwall end dam angle, care shall be exercised to insure proper seating of the superstructure and expansion joint.

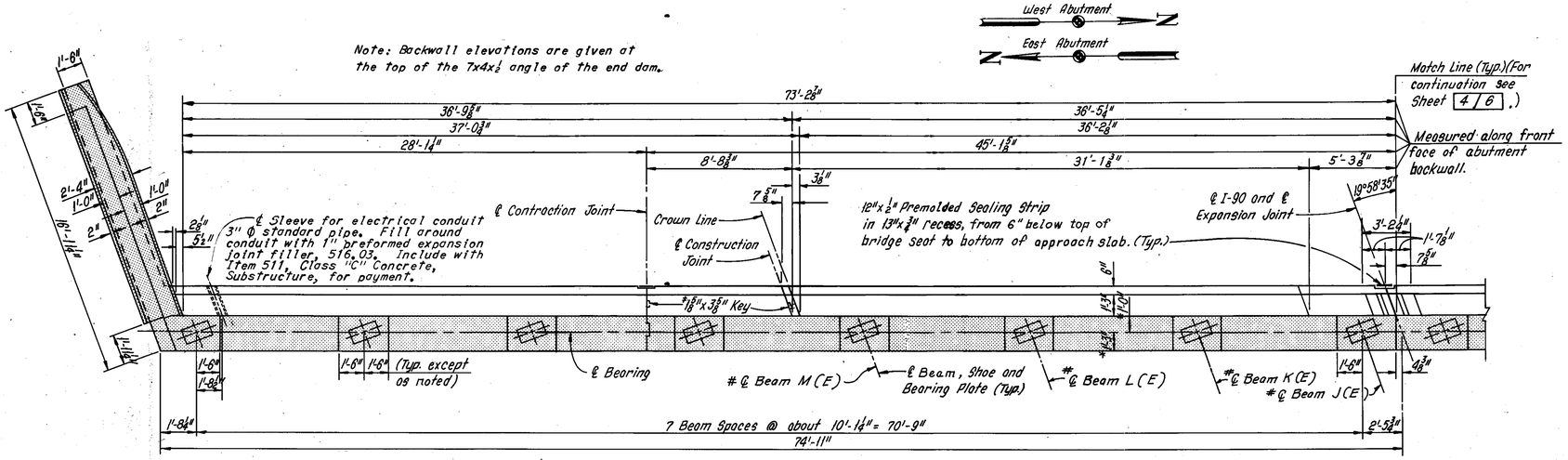

Note: All reinforcing bar marks shall be prefixed as follows:
West Abutment: EW
East Abutment: EE

MODIFIED PART PLAN

* Plan dimension, the actual dimensions shall be those which result when the end dam components are extended from their existing position and when the bearings are set in their final position.
' Stop 8" below top of backwall.
Shims under the bearings of Beams J, K, L and M at the East Abutment shall be removed, to be included with Item Special, 'Reset Bearings, for payment.

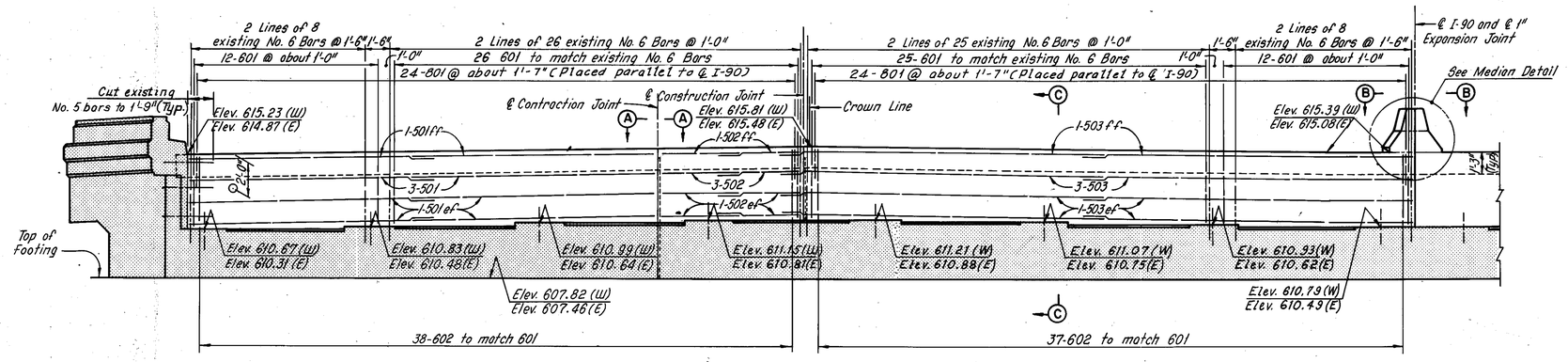

MODIFIED PART ELEVATION

Notes:
Shaded Indicates existing portions of abutment to remain.
For Existing and Modifted Section C-C, see Sheet 4 6 .
For stage construction sequence, see Maintenance Of Traffic, Sheet 2 6 .
For shoring required at approach slabs, see Sheet CD-1 .
For resetting bearing details, see Sheet CD-3 .
For expansion joint modification at the median, see Sheets CD-4 and CD-5 .
For Reinforcement Schedule, see Sheet R-4 .
The following abbreviations are used:
ef = each face
ff = far face
E = East Abutment
W = West Abutment
Typ. = Typical

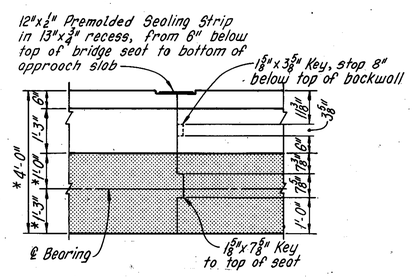

VIEW A-A

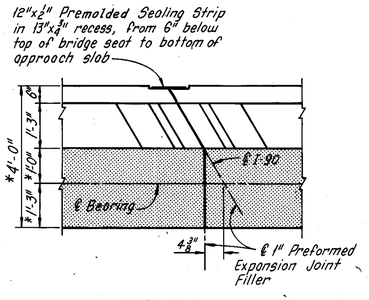

VIEW B-B

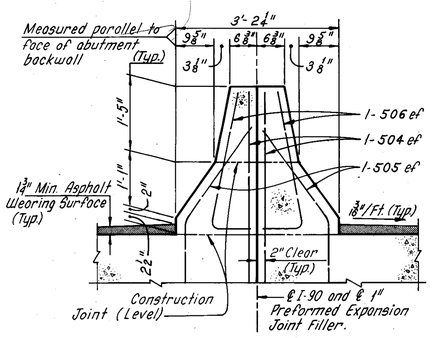

MEDIAN DETAIL

MAR 23 1976

HOWARD, NEEDLES, TAMMEN & BERGENDOFF
CONSULTING ENGINEERS
KANSAS CITY CLEVELAND NEW YORK

WEST AND EAST ABUTMENT

I-90 OVER EAST 140th. STREET

BR.NO.CUY-90-2413 STA. 149+43.06
STA. 151+90.84

CUYAHOGA COUNTY OHIO

DRAWN BMP	TRACED BMP	CHECKED JAW	REVIEWED CAB	REVISED
DATE 1-4-74	DATE 1-11-74	DATE 2-13-74	DATE 12-20-74	SHEET 3/6

FHWA REGION	STATE	PROJECT	
5	OHIO		

237
354

CUYAHOGA COUNTY
CUY-90-23.73
LAKE COUNTY
LAK-90-0.00

Note:
Backwall elevations are given at the top of the 7x4x½ angle of the end dam.

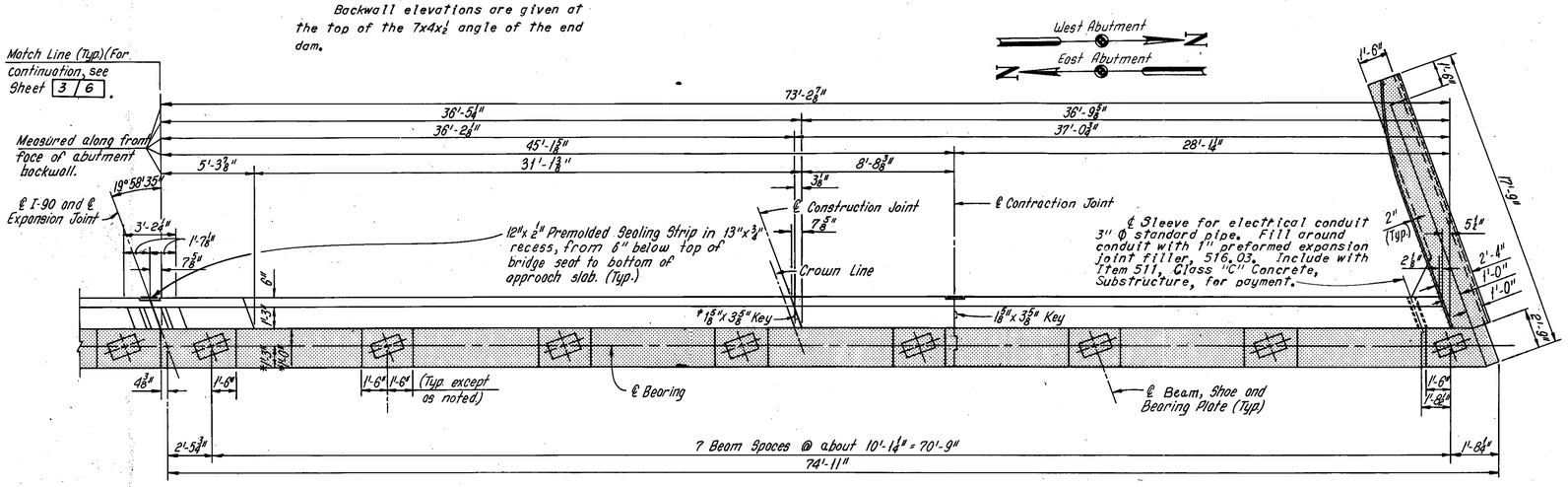

Note: All reinforcing bar marks shall be prefixed as follows:
East Abutment: EW
West Abutment: EE

MODIFIED PART PLAN

* The actual dimensions shall be those which result when the end dam components are extended from their existing position and when the bearings are set in their final position.
‡ Stop 8" below top of backwall.

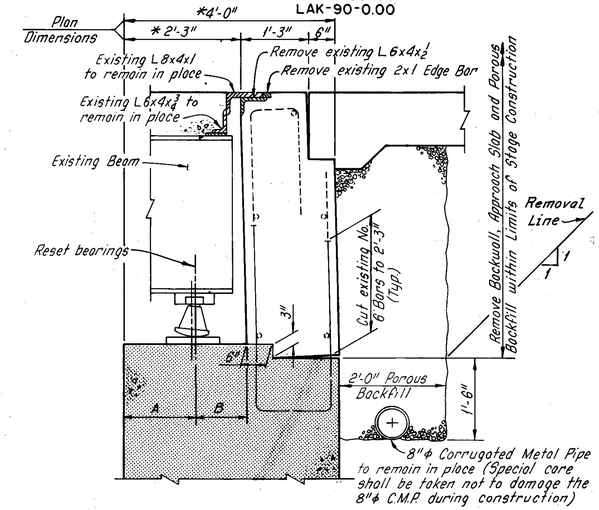

EXISTING SECTION C-C

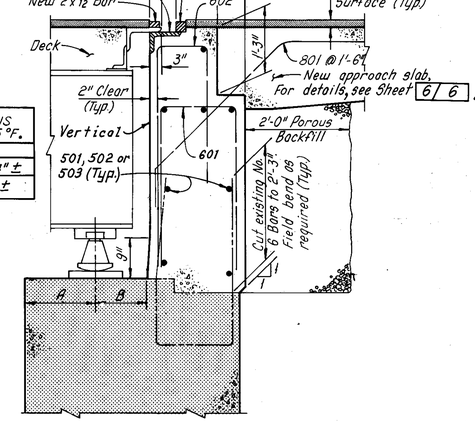

LOCATION	AVG. DIMENSIONS MEASURED AT 55°F.	
	A	B
E Abutment	1'-5¾"±	9¼"±
W Abutment	1'-4"±	11"±

MODIFIED SECTION C-C

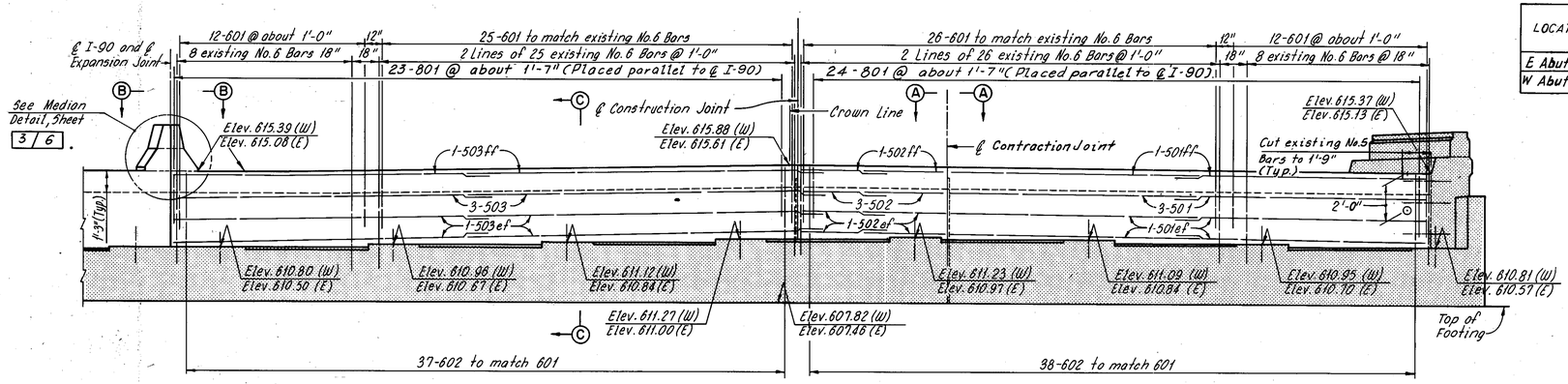

MODIFIED PART ELEVATION

Notes:
For Views A-A and B-B, see Sheet
For Backwall Replacement Procedure, see Sheet 3/6.
Excavation, backfill (except Porous Backfill) and paved berm removal necessary to accomplish structure modification shall be included with Item 202, Portions of Structures Removed, for payment. Backfill shall be in accordance with Item 203.
For details of raising the expansion joint, see Sheet CD-6.
For details of backwall expansion joint angle not shown, see Ohio Standard Drawing SD-1-69, Sheet 1 of 4.
For additional notes, see Sheet 3/6.

HOWARD, NEEDLES, TAMMEN & BERGENDOFF
CONSULTING ENGINEERS
KANSAS CITY CLEVELAND NEW YORK

WEST AND EAST ABUTMENT

I-90 OVER EAST 140th. STREET

BR.NO.CUY-90-2413 STA. 149+43.06
STA. 151+90.84

CUYAHOGA COUNTY OHIO

DRAWN BMP	TRACED BMP	CHECKED JAW	REVIEWED CAS	REVISED
DATE 1-15-74	DATE 1-15-74	DATE 2-13-74	DATE 12-20-74	SHEET 4/6

MICROFILMED
MAR 22 1985

FHWA REGION	STATE	PROJECT	
5	OHIO		

238
354

CUYAHOGA COUNTY
CUY-90-23.73
LAKE COUNTY
LAK-90-0.00

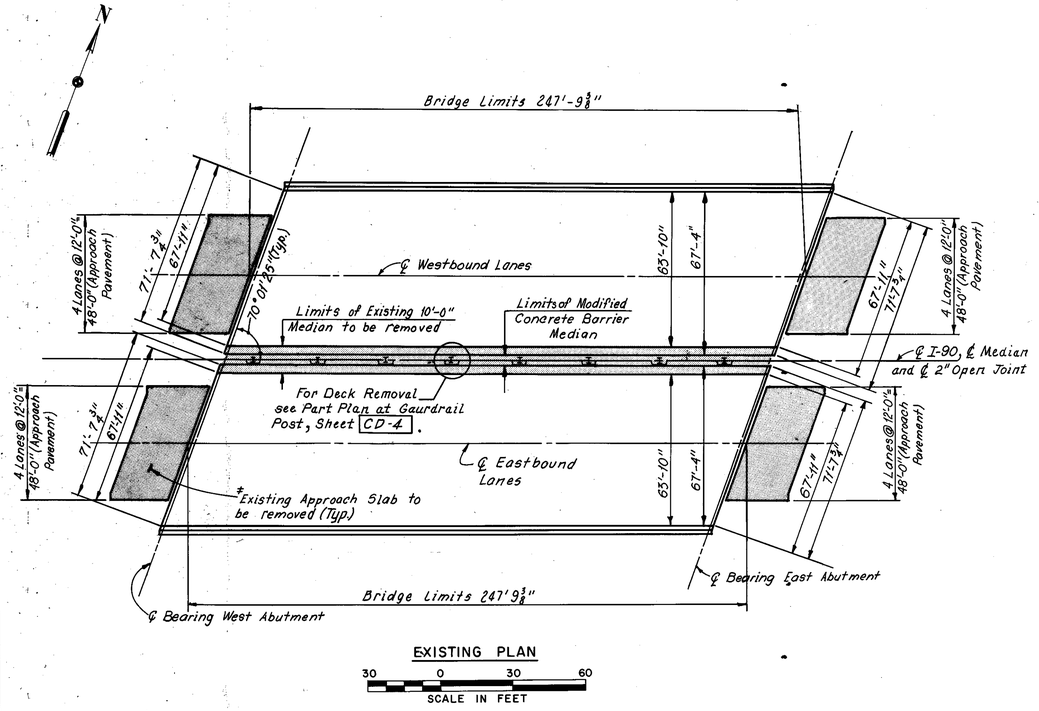

EXISTING PLAN

30 0 30 60
SCALE IN FEET

‡Includes removal of paved berms and all necessary excavation or backfill to provide the proper cross section for the new approach slab.

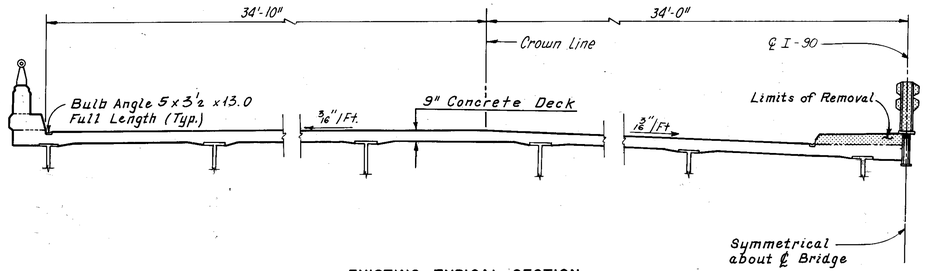

EXISTING TYPICAL SECTION

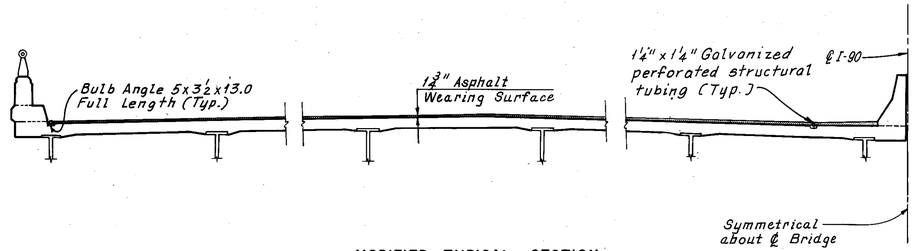

MODIFIED TYPICAL SECTION

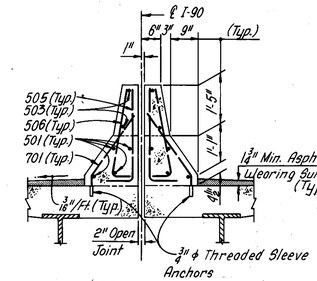

SECTION A-A

NOTE: All reinforcing bar marks shall be prefixed EM.

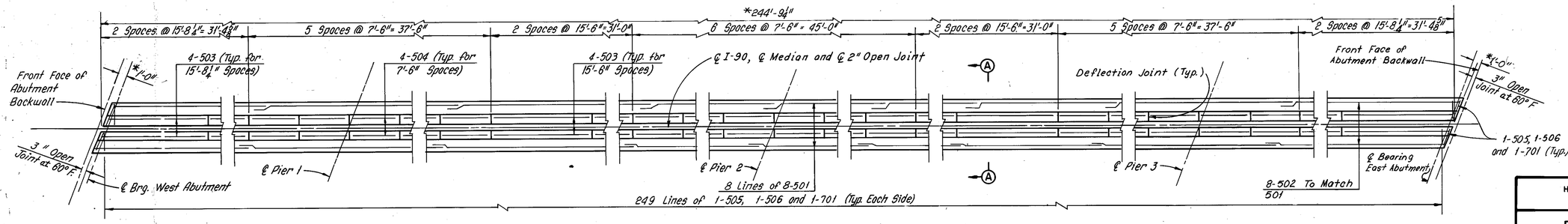

CONCRETE BARRIER MEDIAN PLAN

* Plan Dimension, the actual dimensions shall be those which result when the end dam components are extended from their existing position and when the bearings are set in their final position.

RECEIVED
MAR 22 1974

Notes:
For placement of threaded sleeve anchors, see Sheet CD-9.
For median modification, see Sheet CD-4 and CD-5.
For reinforcement schedule, see Sheet R-4.
For deck repair and asphalt wearing surface course details, see Sheet CD-7.
For deflection joint details, see Sheet CD-9.
The following abbreviation is used:
Typ. = Typical

HOWARD, NEEDLES, TAMMEN & BERGENDOFF
CONSULTING ENGINEERS
KANSAS CITY CLEVELAND NEW YORK

EXISTING AND MODIFIED DECK PLAN AND TYPICAL SECTION

I-90 OVER EAST 140th. STREET

BR.NO.CUY-90-2413 STA.149+43.06 STA.151+90.84

CUYAHOGA COUNTY OHIO

DRAWN	TRACED	CHECKED	REVIEWED	REVISED
BMP	JLR	JAN	SAB	
DATE 1-30-73	DATE 1-31-73	DATE 2-13-74	DATE 12-20-74	SHEET 5/6

FHWA REGION	STATE	PROJECT	
5	OHIO	"	

239
354

CUYAHOGA COUNTY
CUY-90-23.73
LAKE COUNTY
LAK-90-0.00

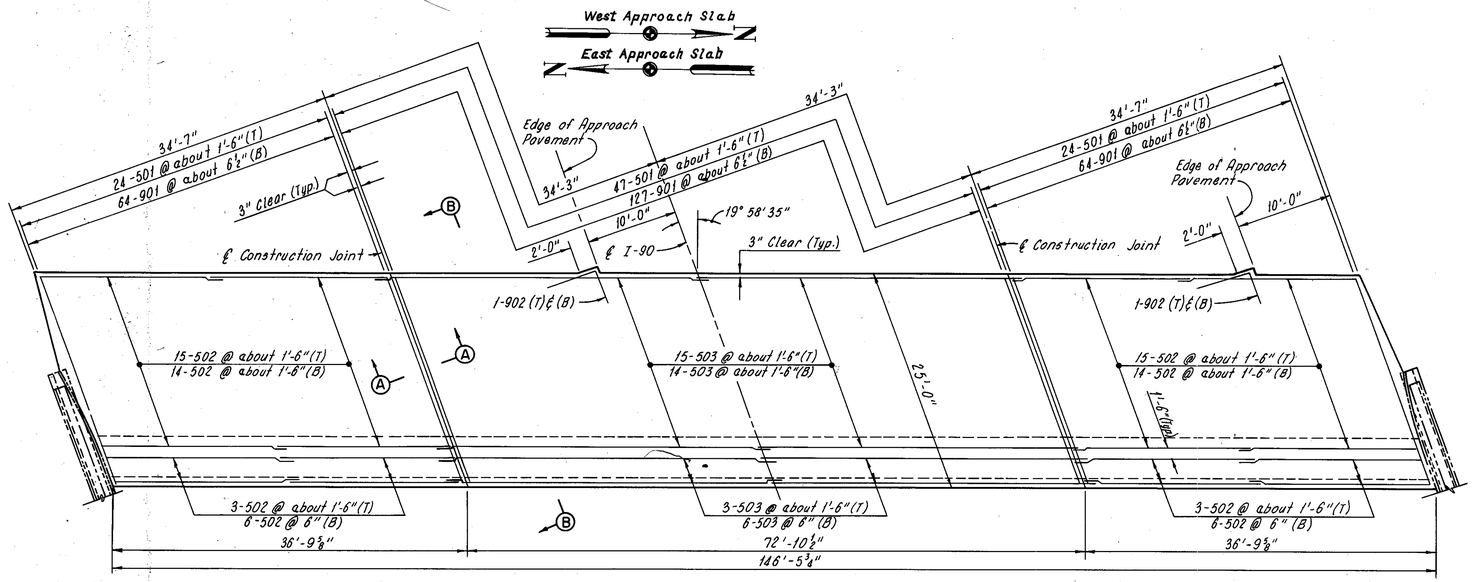

APPROACH SLAB PLAN

(West Approach Slab shown, East Approach Slab similar, except opposite hand).

Note:
The jacking holes as called for on Ohio Standard Drawing AS-1-72 are not required.

REINFORCEMENT SCHEDULE

MARK	NO.	LENGTH	TYPE	SER. INCR.
EES501	190	24'-6"	Str.	
EES502	304	19'-8"	Str.	
EES503	152	39'-3"	Str.	
EES901	510	25'-9"	101	
EES902	8	9'-9"	104	

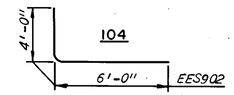

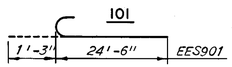

Note:
The asphalt wearing surface on the approach slab shall consist of the following:
1. Item 407, Tack Coat at 0.1 gal. per sq. yd.
2. Item 402, 1½" Asphalt Concrete (AC-20)
3. Item 404, 1½" Asphalt Concrete (AC-20)

Notes:
For stage construction sequence, see Maintenance Of Traffic, Sheet 2 6.
For normal cross slopes, see Existing Typical Section, Sheet 5 6.
For details of median barrier transition, see Roadway Plans.
The following abbreviations are used:
T = Top
B = Bottom
Typ. = Typical
For additional notes and details, see Ohio Standard Drawing AS-1-72.

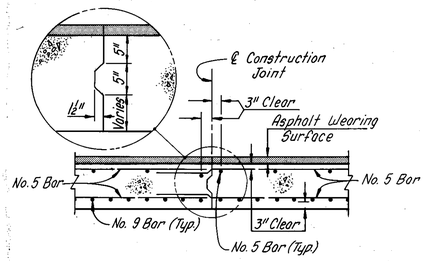

SECTION A-A

Note: All reinforcing bar marks shall be prefixed EES.

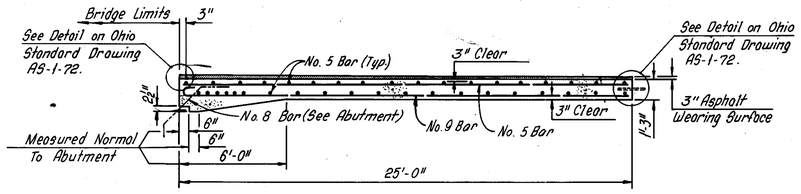

SECTION B-B

RECEIVED
MAR 22 1974

HOWARD, NEEDLES, TAMMEN & BERGENDOFF
CONSULTING ENGINEERS
KANSAS CITY CLEVELAND NEW YORK

APPROACH SLABS

I-90 OVER EAST 140th. STREET

BR.NO.CUY-90-2413
STA. 149+43.06
STA. 151+90.84

CUYAHOGA COUNTY OHIO

DRAWN	TRACED	CHECKED	REVIEWED	REVISED
BMP	BMP	JAW	CAB	
DATE 4-18-74	DATE 4-19-74	DATE 5-15-74	DATE 12-20-74	SHEET 6/6

FHWA REGION	STATE	PROJECT	
5	OHIO		

240
354

CUYAHOGA COUNTY
CUY-90-23.73
LAKE COUNTY
LAK-90-0.00

MISCELLANEOUS
MAR 22 '00

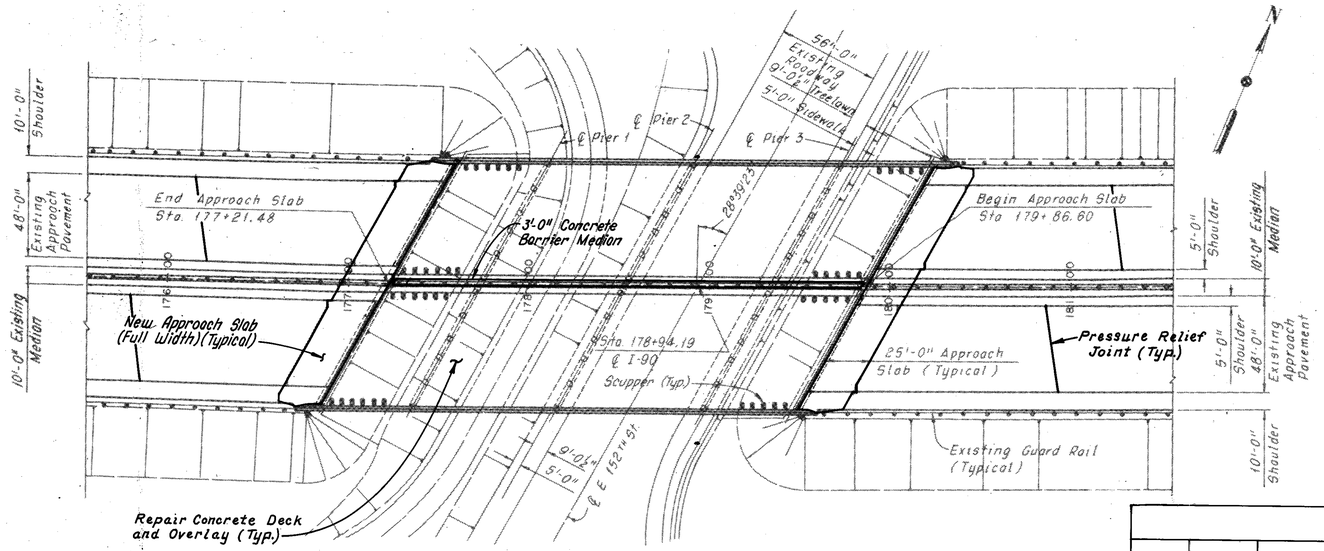

PLAN

40 0 40 80
SCALE IN FEET

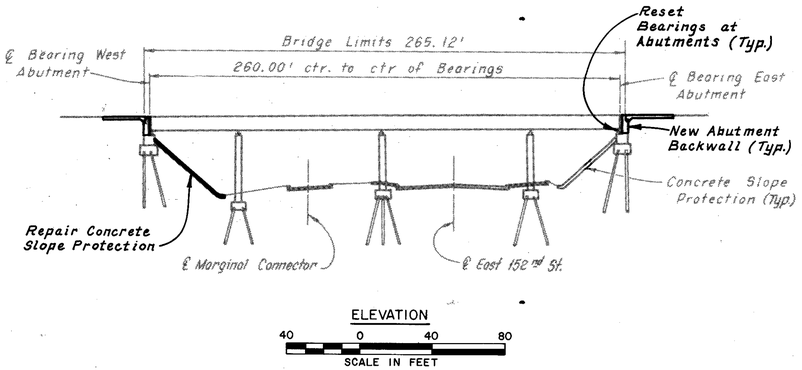

ELEVATION

40 0 40 80
SCALE IN FEET

PROPOSED WORK:

1. Install pressure relief joints in approach roadway pavement, see Sheet CD/9.
2. Replace both abutment backwalls, see Sheets 3/6 and 4/6.
3. Reset abutment bearings, see Sheets 3/6 and 4/6.
4. Replace approach slabs, see Sheet 6/6.
5. Replace missing northeast and southwest curb plate, see Sheet CD/10.
6. Replace deep beam barrier median with concrete barrier median, see Sheet 5/6.
7. Repair concrete deck and place latex modified concrete, see Sheet 5/6.
8. Clean out bridge drainage system and remove debris from abutment bridge seat.
9. Paint all structural steel.
10. Repair minor abutment deterioration.
11. Repair minor wingwall deterioration.
12. Repair concrete slope protection.

Note:
Roman numerals II and III denote cost participation breakdown. For description, see Roadway Plans, Sheet 3-354.

TYPE CODE X231

ESTIMATED QUANTITIES

ITEM	TOTAL	UNIT	DESCRIPTION BRIDGE REPAIR	SUPER-STRUCTURE	WEST ABUT	EAST ABUT	WINGWALLS NE	WINGWALLS SE	WINGWALLS NW	WINGWALLS SW	APPROACH SLABS	CON. SLOPE PRO. WEST	CON. SLOPE PRO. EAST	GENERAL	Participation II Fed, State & Cleveland	Participation III 100% State
*202	Lump Sum	Lump Sum	Portions of Structures Removed	II L.S.	III L.S.	III L.S.	-	-	-	-	III L.S.	-	-	-	Lump	Lump
402	38	Cu. Yds.	Asphalt Concrete (AC-20)	-	-	-	-	-	-	-	II 38	-	-	-	38	
404	27	Cu. Yd.	Asphalt Concrete (AC-20)	-	-	-	-	-	-	-	II 27	-	-	-	27	
407	77	Gallons	Tack Coat: 702.02, RC-250 or 702.04, SS-1, SS-1H, MS-2 or RS-1	-	-	-	-	-	-	-	II 77	-	-	-	77	
503	Lump Sum	Lump Sum	Cofferdams, Cribs and Sheeting	-	-	-	-	-	-	-	-	-	-	III L.S.		Lump
509	22,606	Pounds	Reinforcing Steel	II 9,604	III 6491	III 6511	-	-	-	-	-	-	-	-	9604	13,002
511	47	Cu. Yd.	Class "C" Concrete, Superstructure	II 47	-	-	-	-	-	-	-	-	-	-	47	
511	88	Cu. Yd.	Class "C" Concrete, Substructure	-	III 44	III 44	-	-	-	-	-	-	-	-		88
512	24	Lin. Ft.	Premolded Sealing Strip	-	III 12	III 12	-	-	-	-	-	-	-	-		24
513	11,688	Pounds	Structural Steel (ASTM A36)	II 139	III 5748	III 5801	-	-	-	-	-	-	-	-	139	11,549
514	11,688	Pounds	Field Painting of New Structural Steel	II 139	III 5748	III 5801	-	-	-	-	-	-	-	-	139	11,549
516	18	Sq. Ft.	1" Preformed Expansion Joint Filler	-	III 9	III 9	-	-	-	-	-	-	-	-		18
518	78	Cu. Yd.	Porous Backfill	-	III 39	III 39	-	-	-	-	-	-	-	-		78
519	4	Sq. Ft.	Patching Concrete Structures	-	-	-	III 2	-	-	III 2	-	-	-	-		4
611	770	Sq. Yd.	Reinforced Concrete Approach Slabs T=15"	-	-	-	-	-	-	-	III 770	-	-	-		770
837	Lump Sum	Lump Sum	Surface Preparation	III L.S.	—	—	—	—	—	—	—	—	—	—		Lump
837	Lump Sum	Lump Sum	Spot Prime Painting	III L.S.	—	—	—	—	—	—	—	—	—	—		Lump
837	Lump Sum	Lump Sum	Complete Coat Prime Painting	III L.S.	-	-	-	-	-	-	-	-	-	-		Lump
837	Lump Sum	Lump Sum	Two Complete Coats Finish Painting	III L.S.	—	—	—	—	—	—	—	—	—	—		Lump
Special	3,924	Sq. Yd.	Surface Preparation	II 3,924	-	-	-	-	-	-	-	-	-	-	3,924	
Special	92	Cu. Yd.	Latex Modified Portland Cement Concrete	II 92	-	-	-	-	-	-	-	-	-	-	92	
Special	3,924	Sq. Yd.	Finishing and Curing	II 3,924	-	-	-	-	-	-	-	-	-	-	3,924	
Special	25	Lin. Ft.	Repair of Cracks	-	III 5	III 15	-	-	III 5	-	-	-	-	-		25
Special	307	Lin. Ft.	Raising Existing End Dams	-	II 153	II 154	-	-	-	-	-	-	-	-	307	
Special	32	Each	Reset Bearings	-	III 16	III 16	-	-	-	-	-	-	-	-		32
Special	562	Each	Threaded Sleeve Anchors	II 562	-	-	-	-	-	-	-	-	-	-	562	
Special	193	Lin. Ft.	Pressure Relief Joint	-	-	-	-	-	-	-	-	-	-	III 193		193
Special	Lump Sum	Lump Sum	Cleanout Bridge Drainage Systems and Remove Debris From Bridge Seats	III L.S.	III L.S.	III L.S.	-	-	-	-	-	-	-	-		Lump
Special	53	Sq. Yd.	Repair of Concrete Slope Protection	-	-	-	-	-	-	-	-	III 53	-	-		53

*SUPERSTRUCTURE - Includes approximately 59 Cu. Yds. of concrete in the existing 10'-0" median, and approximately 262 Lin. Ft. of guardrail including posts, nuts, plates and portions of bulb angle gutter.
*SUBSTRUCTURE - Includes approximately 90 Cu. Yds. of concrete in the existing abutment backwalls.
*APPROACH SLABS - Includes approximately 770 Sq. Yds. of existing reinforced concrete approach slabs, paved berms and all necessary excavation or backfill to provide proper cross section for the new approach slabs.
Note: The gap between the front face of the abutment and the edge of the slope protection shall be filled with joint sealer meeting the requirements of 705.02. All material and labor required to complete this repair shall be included with Item Special, Repair of Concrete Slope Protection, for payment. The approximate quantity is 161 Lin. Ft.

EXISTING STRUCTURE

TYPE:	Continous Steel Beam with Reinforced Concrete Deck, Piers and Abutments.
SPAN:	49'-0", 81'-0", 81'-0" and 49'-0".
ROADWAY:	140'-0" face to face of parapets.
LOADING:	CF-2000-57 (Adequate for AASHO Alternate Loading).
SKEW:	28°39'23"
WEARING SURFACE:	1" Monolithic Concrete.
APPROACH SLABS:	AS-1-54-(25'-0" Long).
ALIGNMENT:	0°28'00" L.C.

MODIFIED STRUCTURE

TYPE:	Continuous Steel Beam with Reinforced Concrete Deck, Piers and Abutments.
SPANS:	49'-0", 81'-0", 81'-0" and 49'-0".
ROADWAY:	140'-0" face to face of parapets with a 3'-0" Barrier Median.
LOADING:	*CF-2000-57 (Adequate for AASHO Alternate Loading).
SKEW:	28°39'23"
WEARING SURFACE:	1" Latex Modified Concrete
APPROACH SLABS:	AS-1-72 (25'-0" Long).
ALIGNMENT:	0°28'00" L.C.

* Median Beams Adequate for HS-20 Loading

HOWARD, NEEDLES, TAMMEN & BERGENDOFF
CONSULTING ENGINEERS
KANSAS CITY CLEVELAND NEW YORK

SITE PLAN
I-90 OVER EAST 152nd. STREET

BR.NO.CUY-90-2465 STA. 177+21.48 STA. 179+86.60

CUYAHOGA COUNTY OHIO

DRAWN	TRACED	CHECKED	REVIEWED	REVISED
BMP	BMP	RCK	CAB	
DATE 8-2-73	DATE 8-2-73	DATE 12-6-74	DATE 12-20-74	SHEET 1/6

FHWA REGION	STATE	PROJECT	
5	OHIO		

241
354

CUYAHOGA COUNTY
CUY-90-23.73
LAKE COUNTY
LAK-90-0.00

MICROFILMED
MAR 22 1976

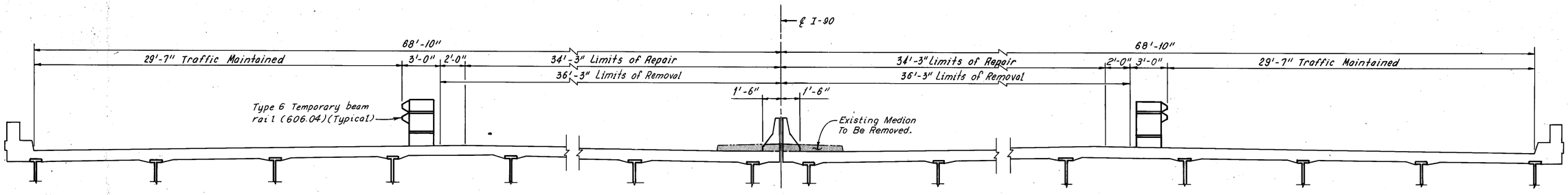

SECOND STAGE CONSTRUCTION

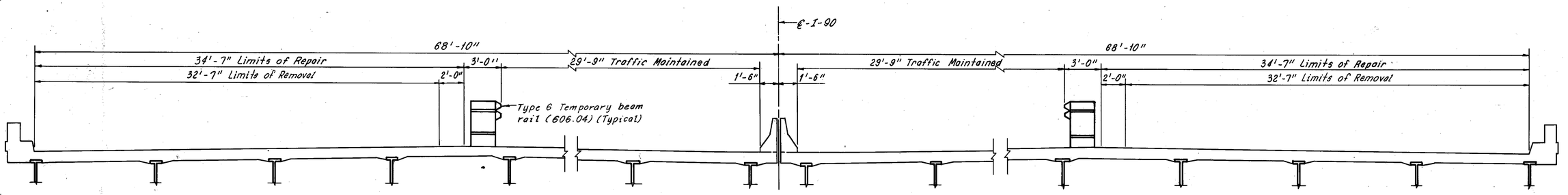

THIRD STAGE CONSTRUCTION

Notes:

The stage construction cross-sections apply within the bridge and approach slab limits. All repair work shall be co-ordinated with the stage construction as shown.

For maintenance of traffic notes, see Roadway Plans.

For shoring required at approach slabs, see Sheet CD 1 .

HOWARD, NEEDLES, TAMMEN & BERGENDOFF
CONSULTING ENGINEERS
KANSAS CITY CLEVELAND NEW YORK

MAINTENANCE OF TRAFFIC

I-90 OVER EAST 152nd. STREET

BR.NO.CUY-90-2465 STA. 177+21.48
STA. 179+86.60

CUYAHOGA COUNTY OHIO

DRAWN JLR	TRACED JLR	CHECKED ML	REVIEWED CAG	REVISED
DATE 1-17-74	DATE 1-21-74	DATE 4-25-74	DATE 12-20-74	SHEET 2/6

FHWA REGION	STATE	PROJECT	
5	OHIO		

242
354

CUYAHOGA COUNTY
CUY-90-23.73
LAKE COUNTY
LAK-90-0.00

MAR 22 1974

Note:
Backwall elevations are given at the top of the 7x4x½ angle of the end dam.

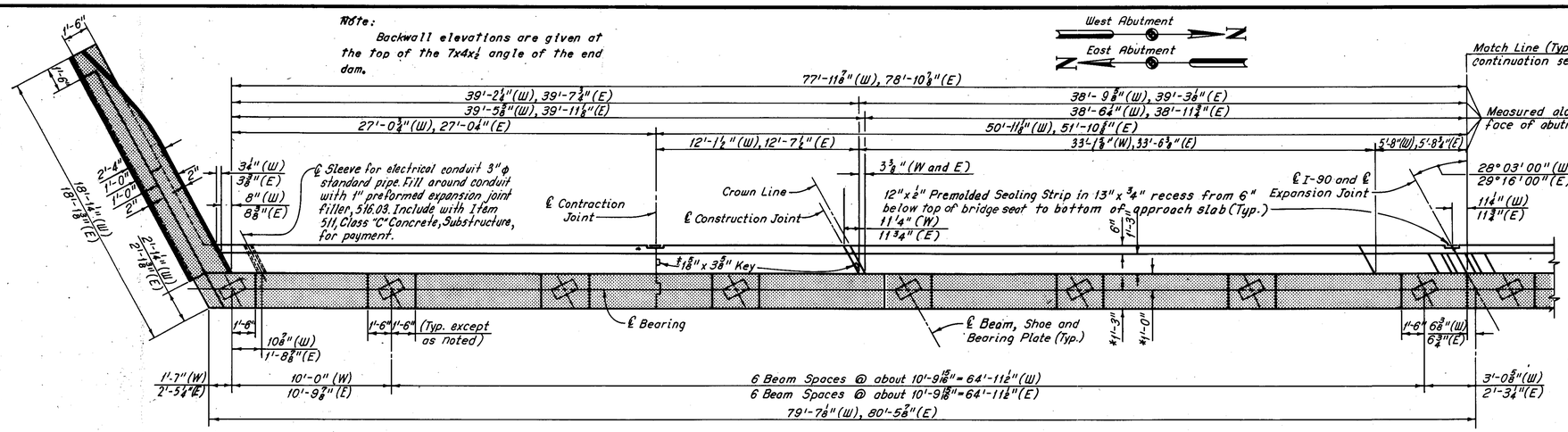

Note: All reinforcing bar marks shall be prefixed as follows:
East Abutment: FE
West Abutment: FW

MODIFIED PART PLAN

* Plan Dimension, the actual dimensions shall be those which result when the end dam components are extended from their existing position and when the bearings are set in their final position.
* Stop 8" below top of backwall.

BACKWALL REPLACEMENT PROCEDURE:

1. Bridge the backwall with an adequate steel plate within the area of maintained traffic. Provide bituminous wearing surface cover, as directed by the Engineer, to permit and maintain safe passage of vehicular traffic. The steel plate and bituminous cover shall be included with Item 614, Maintaining Traffic, for payment (see Roadway Plans)
2. Raise the entire superstructure (all beams simultaneously) until there is no contact between the superstructure and backwall end dam angles. All material, labor and equipment required to accomplish the above shall be included with Item 202, Portions of Structures Removed, for payment.
3. Remove approximately 1 foot of the top of the backwall.
4. Reset bearings.
5. Release jacks.
6. Remove the remaining portions of the backwall, including reinforcement, except as noted, within the limits of stage construction.
7. Replace the backwall within the limits of the stage construction using the existing superstructure end dam angle to set the new backwall. In setting the top of backwall end dam angle, care shall be exercised to insure proper seating of the superstructure and expansion joint.

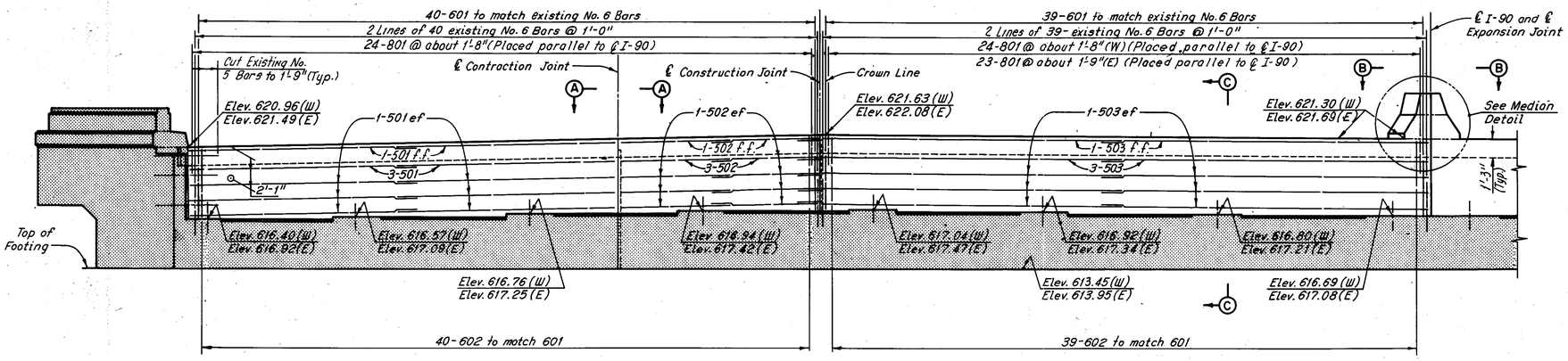

MODIFIED PART ELEVATION

Notes:
Indicates existing portions of abutment to remain.
For Existing and Modified Section C-C, see Sheet 4 6.
For stage construction sequence, see Maintenance of Traffic, Sheet 2 6.
For shoring required at approach slabs, see Sheet CD 1.
For resetting bearing details, see Sheet CD 3.
For expansion joint modification at the median, see Sheets CD 4 and CD 5.
For Reinforcement Schedule, see Sheet R-4.
The following abbreviations are used:
ef = each face
ff = far face
E = East Abutment
W = West Abutment
Typ. = Typical

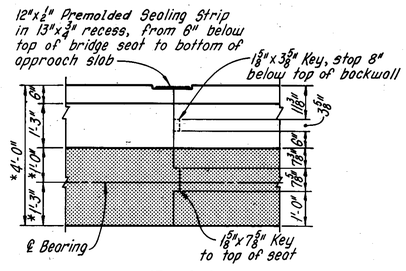

VIEW A-A

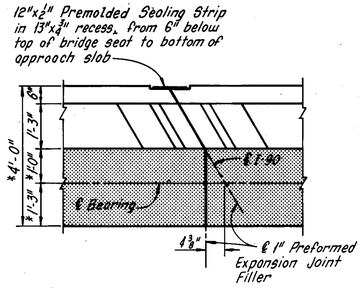

VIEW B-B

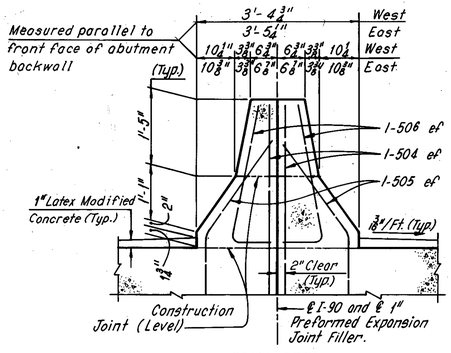

MEDIAN DETAIL

HOWARD, NEEDLES, TAMMEN & BERGENDOFF
CONSULTING ENGINEERS
KANSAS CITY CLEVELAND NEW YORK

WEST AND EAST ABUTMENT

I-90 OVER EAST 152nd. STREET

BR.NO.CUY-90-2465
STA. 177+21.48
STA. 179+86.60

CUYAHOGA COUNTY OHIO

DRAWN	TRACED	CHECKED	REVIEWED	REVISED
BMP	DLR	JDB	JAS	
DATE 1-31-74	DATE 1-11-74	DATE 2-19-74	DATE 12-20-74	SHEET 3/6

FHWA REGION	STATE	PROJECT	
5	OHIO		

243
354

CUYAHOGA COUNTY
CUY-90-23.73
LAKE COUNTY
LAK-90-0.00

MAR 22 1974

Note:
Backwall elevations are given at the top of the 7x4x½ angle of the end dam.

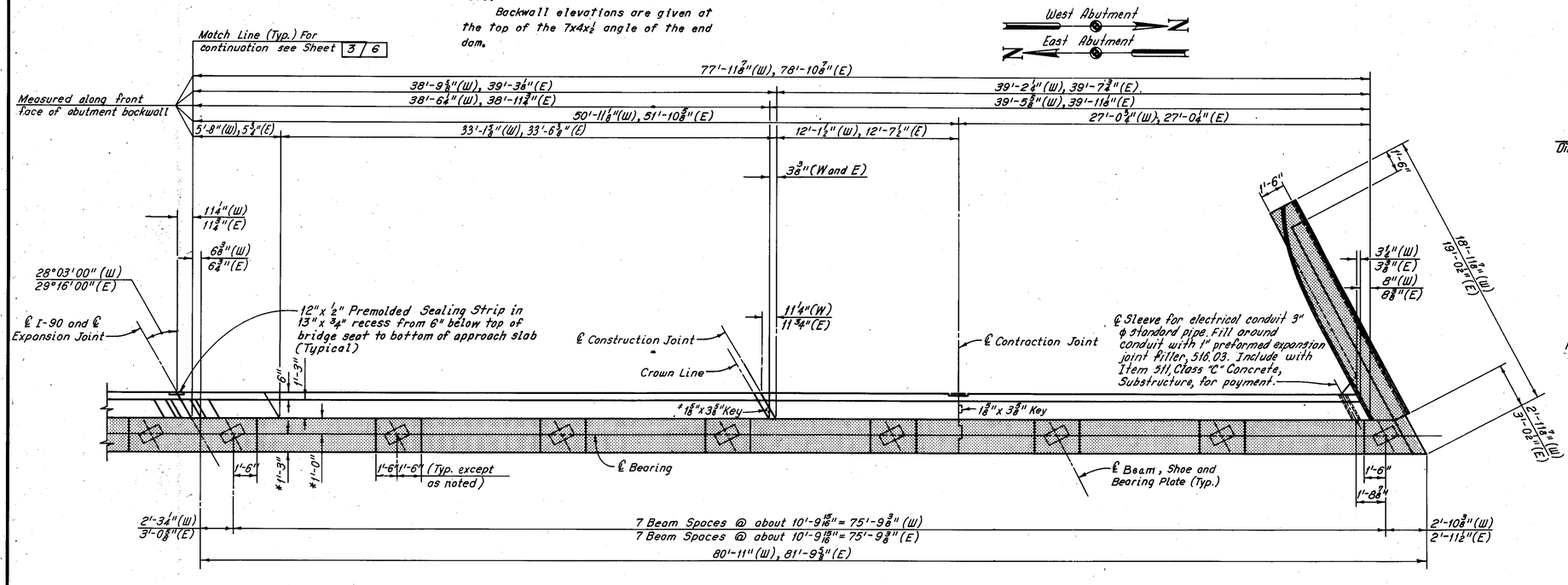

MODIFIED PART PLAN

* Plan Dimension, the actual dimensions shall be those which result when the end dam components are extended from their existing position and when the bearings are set in their final position.
* Stop 8" below top of backwall.

Note: All reinforcing bar marks shall be prefixed as follows:
East Abutment: FE
West Abutment: FW

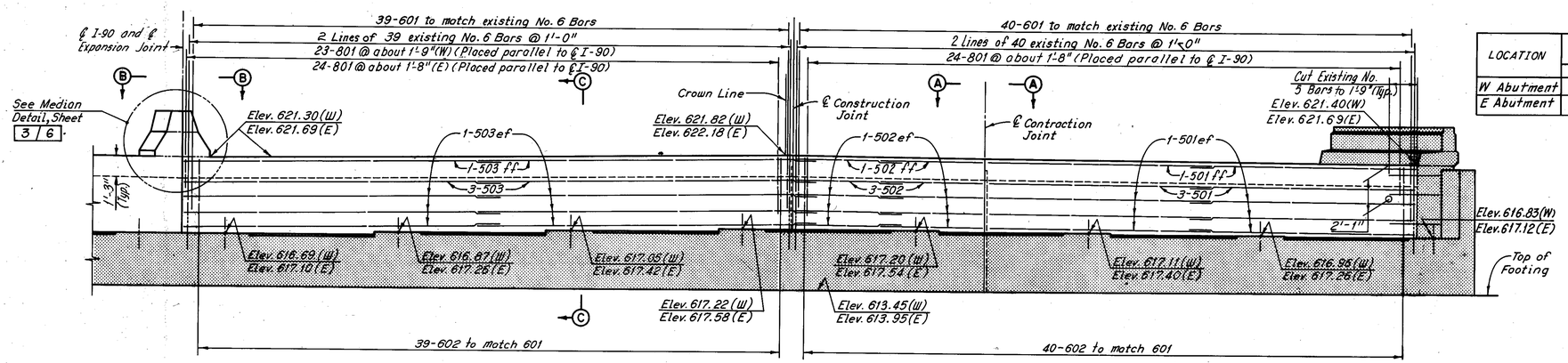

MODIFIED PART ELEVATION

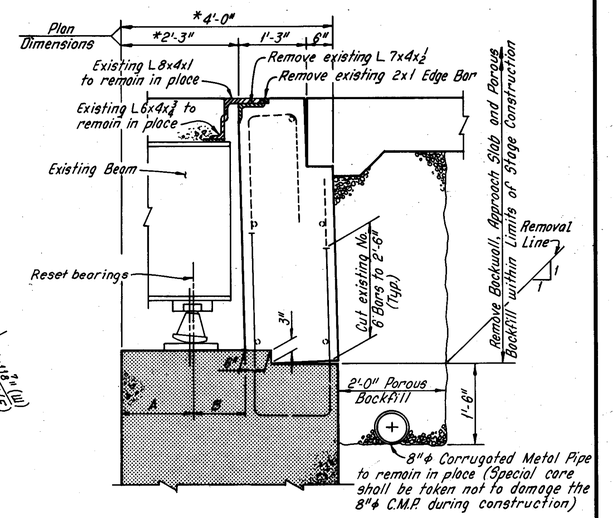

EXISTING SECTION C-C

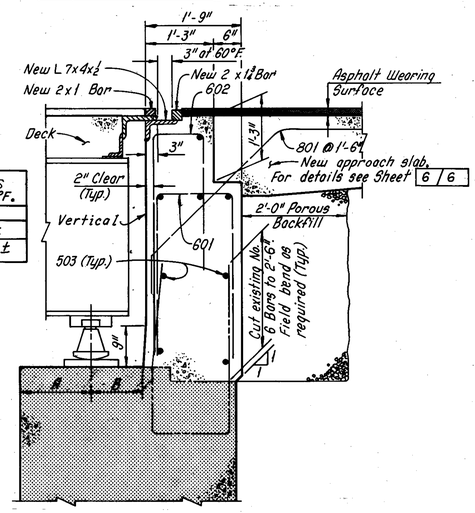

LOCATION	AVG. DIMENSIONS MEASURED AT 55°F.	
	A	B
W Abutment	1'-4"±	11"±
E Abutment	1'-3⅜"±	11⅜"±

MODIFIED SECTION C-C

Note:
For Views A-A and B-B, see Sheet 3/6.
For Backwall Replacement Procedure, see Sheet 3/6.
Excavation, backfill (except Porous Backfill) and paved berm removal necessary to accomplish structure modification shall be included with Item 202, Portions of Structures Removed, for payment. Backfill shall be in accordance with Item 203.
For details of raising the expansion joint, see Sheet CD/6.
For details of backwall expansion joint angle not shown, see Ohio Standard Drawing SD-1-69, Sheet 1 of 4.
For additional notes, see Sheet 3/6.

HOWARD, NEEDLES, TAMMEN & BERGENDOFF
CONSULTING ENGINEERS
KANSAS CITY CLEVELAND NEW YORK

WEST AND EAST ABUTMENT

I-90 OVER EAST 152nd. STREET

BR.NO.CUY-90-2465 STA.177+21.48 STA.179+86.60

CUYAHOGA COUNTY OHIO

DRAWN B.M.A.	TRACED D.L.R.	CHECKED JW	REVIEWED LAG	REVISED
DATE 1-31-74	DATE 1-11-74	DATE 2-20-74	DATE 12-20-74	SHEET 4/6

FHWA REGION	STATE	PROJECT	
5	OHIO		

244
354

CUYAHOGA COUNTY
CUY-90-23.73
LAKE COUNTY
LAK-90-0.00

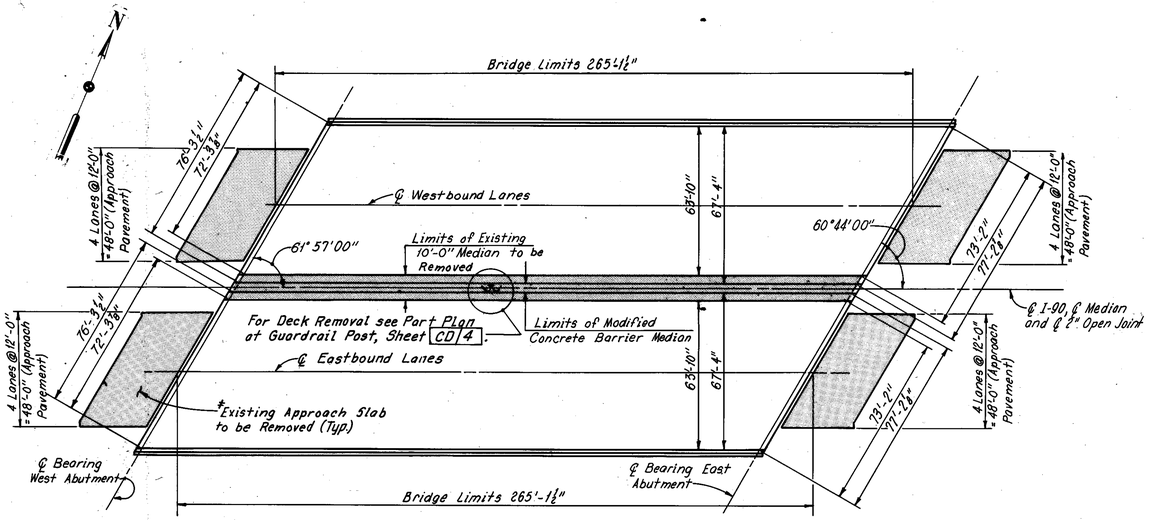

EXISTING PLAN

30 0 30 60
SCALE IN FEET

Includes removal of paved berms and all necessary excavation or backfill to provide the proper cross section for the new approach slab.

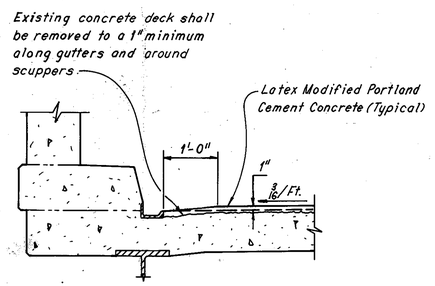

TYPICAL SECTION AT CURB

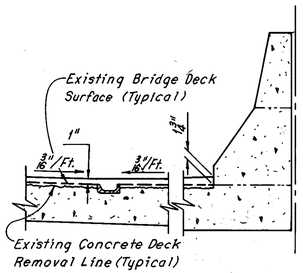

TYPICAL SECTION AT MEDIAN

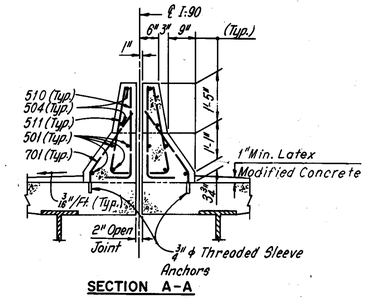

SECTION A-A

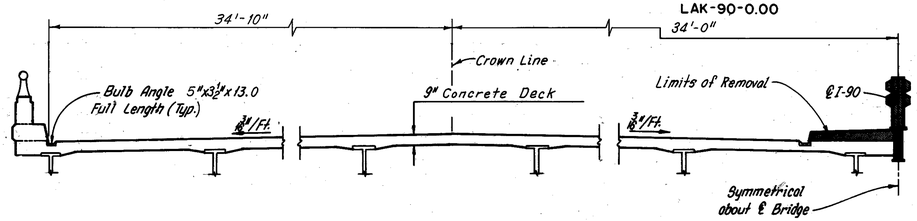

EXISTING TYPICAL SECTION

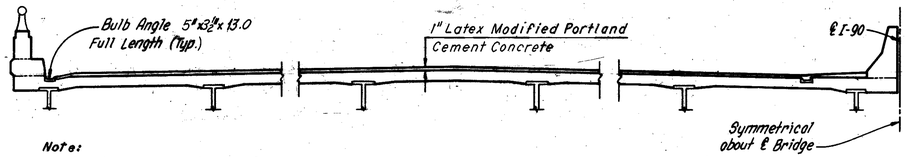

Note:
The latex concrete overlay shall be tapered in a distance of 1'-0" from the proposed roadway surface to the top of the structural steel around the periphery of all scuppers.

MODIFIED TYPICAL SECTION

WEARING SURFACE TREATMENT

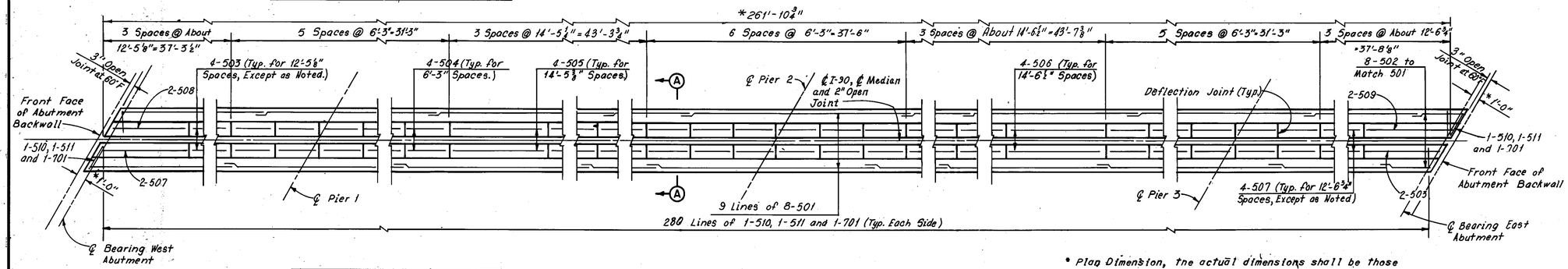

CONCRETE BARRIER MEDIAN PLAN

NOTE: All reinforcing bar marks shall be prefixed F.M.

* Plan Dimension, the actual dimensions shall be those which result when the end dam components are extended from their existing position and when the bearings are set in their final position.

Notes:
For placement of threaded sleeve anchors, see Sheet CD 9.
For median modification, see Sheet CD 4 and CD 5.
For reinforcement schedule, see Sheet R-4.
For deflection joint details, see Sheet CD 9.
The following abbreviation is used:
Typ. = Typical

HOWARD, NEEDLES, TAMMEN & BERGENDOFF
CONSULTING ENGINEERS
KANSAS CITY CLEVELAND NEW YORK

EXISTING AND MODIFIED DECK PLAN AND TYPICAL SECTION

I-90 OVER EAST 152nd. STREET

BR.NO.CUY-90-2465 STA. 177+21.48
STA. 179+86.60

CUYAHOGA COUNTY OHIO

DRAWN BMP	TRACED JLR	CHECKED MM	REVIEWED DAB	REVISED
DATE 7-30-73	DATE 7-31-73	DATE 2-25-74	DATE 12-20-74	SHEET 5/6

FHWA REGION	STATE	PROJECT	
5	OHIO		

245
354

CUYAHOGA COUNTY
CUY-90-23.73
LAKE COUNTY
LAK-90-0.00

MAR 22 1974

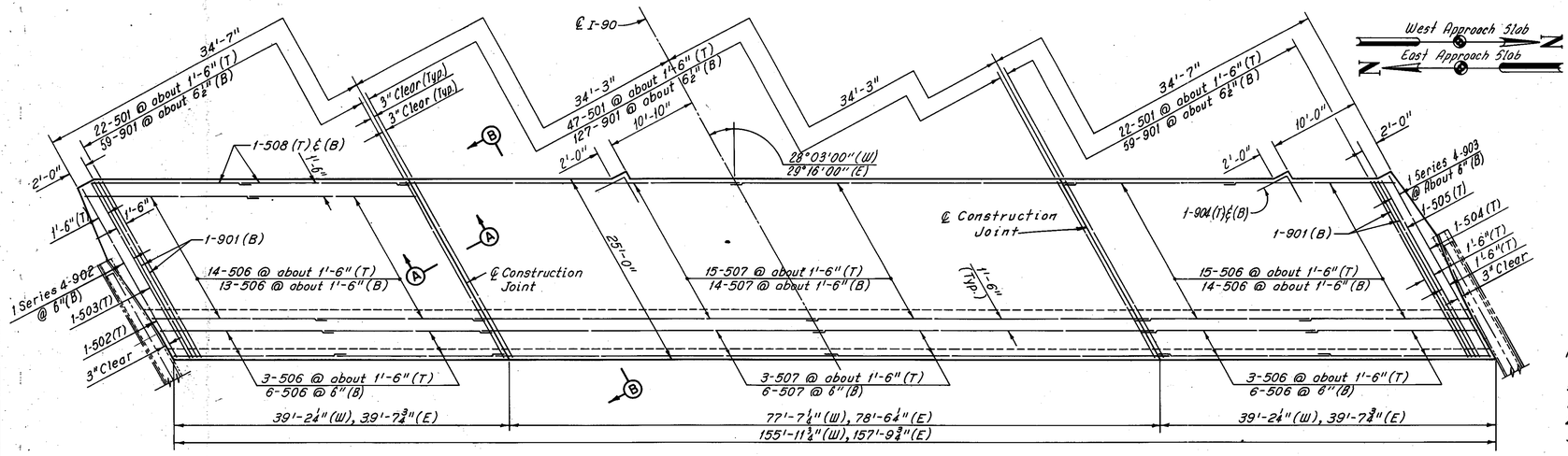

APPROACH SLAB PLAN

Note: All reinforcing bar marks shall be prefixed FFS.

Note:
The jacking holes as called for on Ohio Standard Drawing AS-1-72 are not required.

REINFORCEMENT SCHEDULE

MARK	NO.	LENGTH	TYPE	SER. INCR.
FFS501	182	24'-6"	Str.	
FFS502	2	23'-9"	Str.	
FFS503	2	24'-3"	Str.	
FFS504	2	25'-3"	Str.	
FFS505	2	24'-9"	Str.	
FFS506	296	18'-9"	Str.	
FFS507	152	40'-9"	Str.	
FFS508	8	19'-9"	Str.	
FFS901	490	25'-9"	101	
FFS902	2 Ser. 4	25'-0" to 25'-6"	101	2"
FFS903	2 Ser. 4	25'-9" to 26'-3"	101	2"
FFS904	8	7'-9"	104	

Note:
The asphalt wearing surface on the approach slab shall consist of the following:
1. Item 407, Tack Coat at 0.1 gal. per sq. yd.
2. Item 402, 1 3/4" Asphalt Concrete (AC-20)
3. Item 404, 1 1/4" Asphalt Concrete (AC-20)

101

1'-3"	24'-6"	FFS901
1'-3"	23'-9" to 24'-3"	FFS902
1'-3"	24'-6" to 25'-0"	FFS903

104

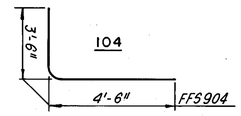

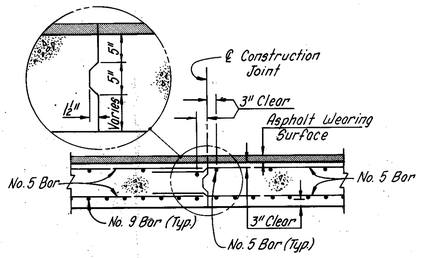

SECTION A-A

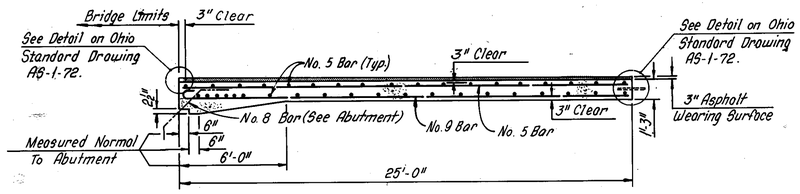

SECTION B-B

Notes:
For stage construction sequence, see Maintenance Of Traffic, Sheet 2 6.
For normal cross slopes, see Existing Typical Section, Sheet 5 6.
For details of median barrier transition, see Roadway Plans.
The following abbreviations are used:
T = Top
B = Bottom
Typ. = Typical
For additional notes and details, see Ohio Standard Drawing AS-1-72.

HOWARD, NEEDLES, TAMMEN & BERGENDOFF
CONSULTING ENGINEERS
KANSAS CITY CLEVELAND NEW YORK

APPROACH SLABS

I-90 OVER EAST 152nd. STREET

BR.NO.CUY-90-2465 STA. 177+21.48 STA. 179+86.60

CUYAHOGA COUNTY OHIO

DRAWN B.M.P.	TRACED D.L.R.	CHECKED JW	REVIEWED GAB	REVISED
DATE 2-1-74	DATE 2-13-74	DATE 2-25-74	DATE 12-20-74	SHEET 6/6

FHWA REGION	STATE	PROJECT	
5	OHIO		

246
354

CUYAHOGA COUNTY
CUY-90-23.73
LAKE COUNTY
LAK-90-0.00

FILED - Cuyahoga
MAR 22 1...

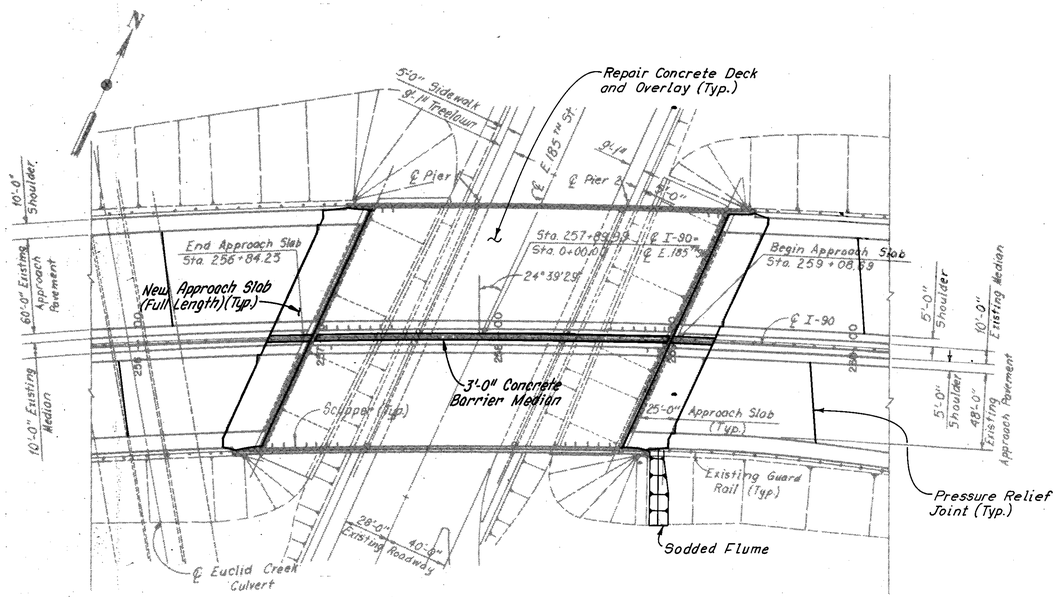

PLAN
40 0 40 80
SCALE IN FEET

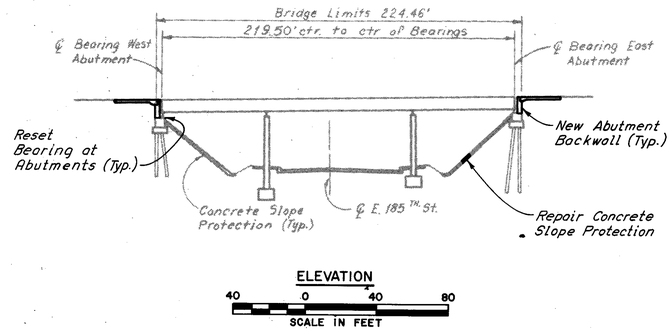

ELEVATION
40 0 40 80
SCALE IN FEET

PROPOSED WORK:

1. Install pressure relief joints in approach roadway pavement, see Sheet CD-9.
2. Replace both abutment backwalls, see Sheets 3/8, 4/8, 5/8, and 6/8.
3. Reset abutment bearings, see Sheets 3/8 and 5/8.
4. Replace approach slabs, see Sheet 8/8.
5. Replace deep beam barrier median with concrete barrier median, see Sheet 7/8.
6. Repair concrete deck and place asphalt wearing surface, see Sheet 7/8.
7. Clean out bridge drainage system and remove debris from abutment bridge seat.
8. Trim wingwall parapets.
9. Replace southwest curb plate, see Sheet CD-10.
10. Paint all structural steel.
11. Repair minor abutment deterioration.
12. Repair minor wingwall deterioration.
13. Repair concrete slope protection.
14. Divert roadway runoff at end of southeast wingwall, see Sheet CD-9.

Note:
Roman numerals II and III denote cost participation breakdown. For description, see Roadway Plans, Sheet 3-354.

TYPE CODE X231

ESTIMATED QUANTITIES

ITEM	TOTAL	UNIT	DESCRIPTION BRIDGE REPAIR	SUPER-STRUCTURE	WEST ABUT	EAST ABUT	WINGWALLS NE	WINGWALLS SE	WINGWALLS NW	WINGWALLS SW	APPROACH SLABS	CON. SLOPE PRO. WEST	CON. SLOPE PRO. EAST	GENERAL	Participation II Fed., State & Cleveland	Participation III 100% State
*202	Lump Sum	Lump Sum	Portions of Structures Removed	II L.S.	III L.S.	III L.S.	-	-	-	-	III L.S.	-	-	-	Lump	Lump
402	40	Cu. Yd.	Asphalt Concrete (AC-20)	-	-	-	-	-	-	-	II 40	-	-	-	40	
404	206	Cu. Yd.	Asphalt Concrete (AC-20)	II 177	-	-	-	-	-	-	II 29	-	-	-	206	
407	83	Gallons	Tack Coat: 702.03, RC-250; or 702.04, SS-1, SS-1h, MS-2, or ES-1	-	-	-	-	-	-	-	II 83	-	-	-	83	
503	Lump Sum	Lump Sum	Cofferdams, Cribs and Sheeting	-	-	-	-	-	-	-	-	-	-	III L.S.		Lump
509	21,770	Pounds	Reinforcing Steel	II 8,168	III 6846	III 6,756	-	-	-	-	-	-	-	-	8,168	13,602
511	40	Cu. Yd.	Class "C" Concrete, Superstructure	II 40	-	-	-	-	-	-	-	-	-	-	40	
511	96	Cu. Yd.	Class "C" Concrete, Substructure	-	III 48	III 48	-	-	-	-	-	-	-	-		96
512	30	Lin. Ft.	Premolded Sealing Strip	-	III 15	III 15	-	-	-	-	-	-	-	-		30
513	14,030	Pounds	Structural Steel (ASTM A36)	II 734	III 6,648	III 6,648	-	-	-	-	-	-	-	-	734	13,296
514	14,030	Pounds	Field Painting of New Structural Steel	II 734	III 6,648	III 6,648	-	-	-	-	-	-	-	-	734	13,296
516	30	Sq. Ft.	1" Preformed Expansion Joint Filler	-	III 15	III 15	-	-	-	-	-	-	-	-		30
518	84	Cu. Yd.	Porous Backfill	-	III 42	III 42	-	-	-	-	-	-	-	-		84
518	884	Lin. Ft.	Subdrainage For Wearing Course, As Per Plan	II 884	-	-	-	-	-	-	-	-	-	-	884	
519	4	Sq. Ft.	Patching Concrete Structures	-	-	-	-	III 3	III 1	-	-	-	-	-		4
520	3	Sq. Ft.	Pneumatically Placed Mortar	-	-	-	-	III 3	-	-	-	-	-	-		3
611	831	Sq. Yd.	Reinforced Concrete Approach Slabs T=15"	-	-	-	-	-	-	-	III 831	-	-	-		831
659	4	Sq. Yd.	Seeding and Mulching	-	-	-	-	II 4	-	-	-	-	-	-		4
660	44	Sq. Yd.	Sodding	-	-	-	-	III 44	-	-	-	-	-	-		44
837	Lump Sum	Lump Sum	Surface Preparation	III L.S.	-	-	-	-	-	-	-	-	-	-		Lump
837	Lump Sum	Lump Sum	Spot Prime Painting	III L.S.	-	-	-	-	-	-	-	-	-	-		Lump
837	Lump Sum	Lump Sum	Complete Coat Prime Painting	III L.S.	-	-	-	-	-	-	-	-	-	-		Lump
837	Lump Sum	Lump Sum	Two Complete Coats Finish Painting	III L.S.	-	-	-	-	-	-	-	-	-	-		Lump
Special	732	Sq. Yd.	Patching Concrete Deck Slab	III 732	-	-	-	-	-	-	-	-	-	-		732
Special	3,634	Sq. Yd.	Membrane Waterproofing, Hot Applied -	II 3,634	-	-	-	-	-	-	-	-	-	-	3,634	
			Liquid (See Proposal Note)	II 51	-	-	-	-	-	-	-	-	-	-	51	
Special	49	Lin. Ft.	Repair of Cracks	-	III 15	III 21	-	III 8	-	III 5	-	-	-	-		49
Special	324	Lin. Ft.	Raising Existing End Dams	-	II 164	II 160	-	-	-	-	-	-	-	-	324	
Special	38	Each	Reset Bearings	-	III 19	III 19	-	-	-	-	-	-	-	-		38
Special	484	Each	Threaded Sleeve Anchors	II 484	-	-	-	-	-	-	-	-	-	-	484	
Special	218	Lin. Ft.	Pressure Relief Joint	-	-	-	-	-	-	-	-	-	-	III 218		218
Special	Lump Sum	Lump Sum	Cleanout Bridge Drainage Systems and Remove Debris From Bridge Seats	III L.S.	III L.S.	III L.S.	-	-	-	-	-	-	-	-		Lump
Special	22	Sq. Yd.	Repair of Concrete Slope Protection	-	-	-	-	-	-	-	-	-	III 22	-		22

EXISTING STRUCTURE

TYPE:	Continuous Steel Beam with Reinforced Concrete Deck, Piers and Abutments.
SPANS:	64'-0", 91'-6" and 64'-0"
ROADWAY:	152'-0" Face to Face of Parapets.
LOADING:	CF-2000-57 (Adequate for AASHO Alternate Loading).
SKEW:	24°39'29"
WEARING SURFACE:	1" Monolithic Concrete.
APPROACH SLABS:	AS-1-54 (25'-0" Long).
ALIGNMENT:	1°20'00" R.C.
SUPERELEVATION:	0.0316 Feet Per Feet.

MODIFIED STRUCTURE

TYPE:	Continuous Steel Beam with Reinforced Concrete Deck, Piers and Abutments.
SPANS:	64'-0", 91'-6" and 64'-0".
ROADWAY:	152'-0" Face to Face of Parapets with a 3'-0" Barrier Median.
LOADING:	*CF-2000-57 (Adequate for AASHO Alternate Loading).
SKEW:	24°39'29"
WEARING SURFACE:	1½" Asphalt.
APPROACH SLABS:	AS-1-72 (25'-0" Long).
ALIGNMENT:	1°20'00" R.C.
SUPERELEVATION:	0.0316 Feet Per Feet.

* Median Beams Adequate for HS-20 Loading

*SUPERSTRUCTURE - Includes approximately 50 Cu. Yds. of concrete in the existing 10'-0" median, and approximately 224 Lin. Ft. of guardrail including posts, nuts, plates and portions of bulb angle gutter.

*SUBSTRUCTURE - Includes approximately 95 Cu. Yds. of concrete in the existing abutment backwalls.

*APPROACH SLABS - Includes approximately 831 Sq. Yds. of existing reinforced concrete approach slabs, paved berms and all necessary excavation or backfill to provide the proper cross section for the new approach slabs.

TRIM WINGWALL PARAPETS - Trim the northwest and southeast wingwall parapets and curbs at the front face of backwall, for Details, see Sheet CD-8.

Note: The gap between the front face of the abutment and the edge of the slope protection shall be filled with joint sealer meeting the requirements of 705.02. All material and labor required to complete this repair shall be included with Item Special, Repair of Concrete Slope Protection, for payment. The approximate quantity is 340 Lin. Ft.

Rev. 7-18-75

HOWARD, NEEDLES, TAMMEN & BERGENDOFF
CONSULTING ENGINEERS
KANSAS CITY CLEVELAND NEW YORK

SITE PLAN
I-90 OVER EAST 185th. STREET

BR.NO.CUY-90-2616 STA. 256+84.23 STA. 259+08.69

CUYAHOGA COUNTY OHIO

DRAWN	TRACED	CHECKED	REVIEWED	REVISED
BMP	JLR	WHL	DJG	
DATE 8-6-73	DATE 8-6-73	DATE 9-30-74	DATE 12-20-74	SHEET 1/8

FHWA REGION	STATE	PROJECT	
5	OHIO		

247
354

CUYAHOGA COUNTY
CUY-90-23.73
LAKE COUNTY
LAK-90-0.00

MAR 8 2 1975

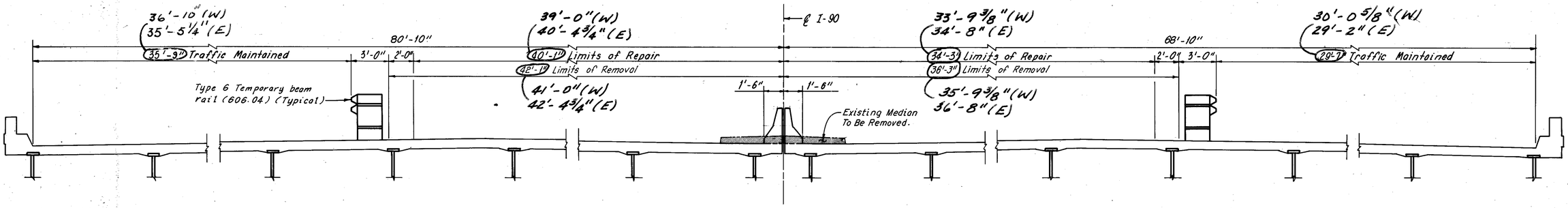

SECOND STAGE CONSTRUCTION

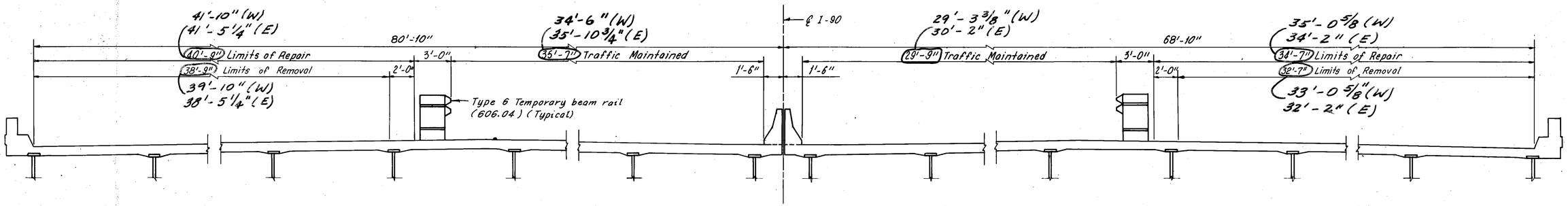

THIRD STAGE CONSTRUCTION

"W" indicates measurement along approach slab at west abutment.

"E" indicates measurement along approach slab at east abutment.

Notes:

The stage construction cross-sections apply within the bridge and approach slab limits. All repair work shall be co-ordinated with the stage construction as shown.

For maintenance of traffic notes, see Roadway Plans.

For shoring required at approach slabs, see Sheet CD-1

HOWARD, NEEDLES, TAMMEN & BERGENDOFF
CONSULTING ENGINEERS
KANSAS CITY CLEVELAND NEW YORK

MAINTENANCE OF TRAFFIC

I-90 OVER EAST 185th. STREET

BR.NO.CUY-90-2616 STA. 256+84.23 STA. 259+08.69

CUYAHOGA COUNTY OHIO

DRAWN JLR.	TRACED JLR.	CHECKED ML	REVIEWED [illegible]	REVISED 7-14-76
DATE 2-4-74	DATE 2-4-74	DATE 4-16-74	DATE 12-20-74	SHEET 2/8

FHWA REGION	STATE	PROJECT	
5	OHIO		

248
354

CUYAHOGA COUNTY
CUY-90-23.73
LAKE COUNTY
LAK-90-0.00

MAR 23 1976

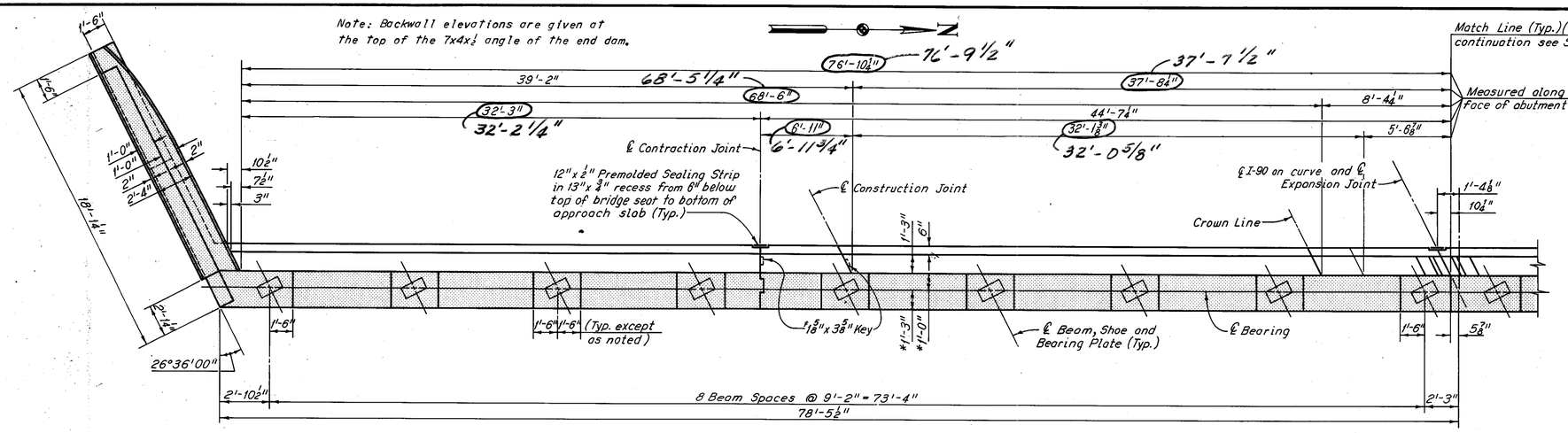

Note: All reinforcing bar marks shall be prefixed GW.

MODIFIED PART PLAN

* Plan Dimension, the actual dimensions shall be those which result when the end dam components are extended from their existing position and when the bearings are set in their final position.
' Stop 8" below top of backwall.

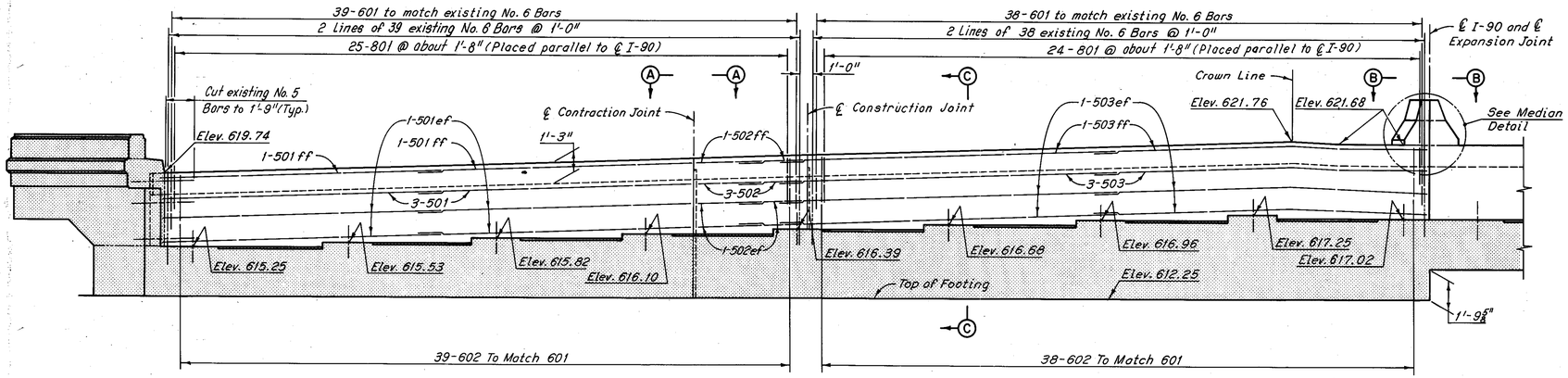

MODIFIED PART ELEVATION

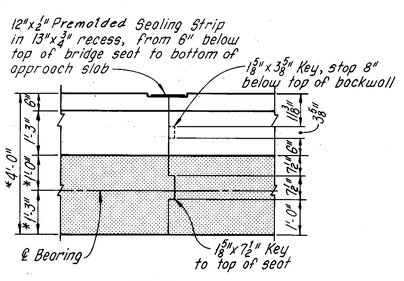

VIEW A-A

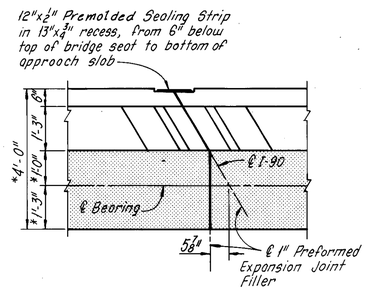

VIEW B-B

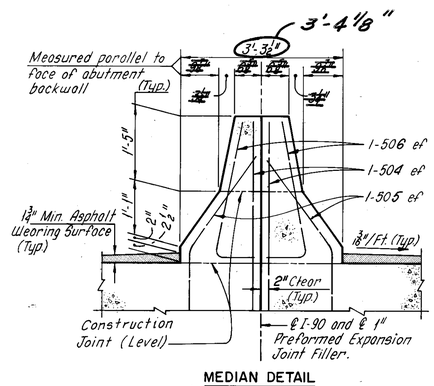

MEDIAN DETAIL

BACKWALL REPLACEMENT PROCEDURE:

1. Bridge the backwall with an adequate steel plate within the area of maintained traffic. Provide bituminous wearing surface cover, as directed by the Engineer, to permit and maintain safe passage of vehicular traffic. The steel plate and bituminous cover shall be included with Item 614, Maintaining Traffic, for payment (see Roadway Plans).
2. Raise the entire superstructure (all beams simultaneously) until there is no contact between the superstructure and backwall end dam angles. All material, labor and equipment required to accomplish the above shall be included with Item 202, Portions of Structures Removed, for payment.
3. Remove approximately 1 foot of the top of the backwall.
4. Reset bearings.
5. Release jacks.
6. Remove the remaining portions of the backwall, including reinforcement, except as noted, within the limits of the stage construction.
7. Replace the backwall within the limits of the stage construction using the existing superstructure end dam angle to set the new backwall. In setting the top of backwall end dam angle, care shall be exercised to insure proper seating of the superstructure and expansion joint.

Notes:

Indicates existing portions of abutment to remain.

For Existing and Modified Section C-C, see Sheet 4/8.

For stage construction sequence, see Maintenance Of Traffic, Sheet 2/8.

For shoring required at approach slabs, see Sheets CD-1.

For resetting bearing details, see Sheet CD-3.

For expansion joint modification at the median, see Sheets CD-4 and CD-5.

For Reinforcement Schedule, see Sheet R-4.

The following abbreviations are used:

ef = each face
ff = far face
Typ. = Typical

HOWARD, NEEDLES, TAMMEN & BERGENDOFF
CONSULTING ENGINEERS
KANSAS CITY CLEVELAND NEW YORK

WEST ABUTMENT

I-90 OVER EAST 185 th. STREET

BR.NO.CUY-90-2616 STA. 256+84.23
STA. 259+08.69

CUYAHOGA COUNTY OHIO

DRAWN BMP.	TRACED DLR	CHECKED WHL	REVIEWED EAB	REVISED 7-14-76
DATE 2-4-74	DATE 2-5-74	DATE 9-17-74	DATE 12-20-74	SHEET 3/8

FHWA REGION	STATE	PROJECT	
5	OHIO		

249
354

CUYAHOGA COUNTY
CUY-90-23.73.
LAKE COUNTY
LAK-90-0.00

Note: Backwall elevations are given at the top of the 7x4x½ angle of the end dam.

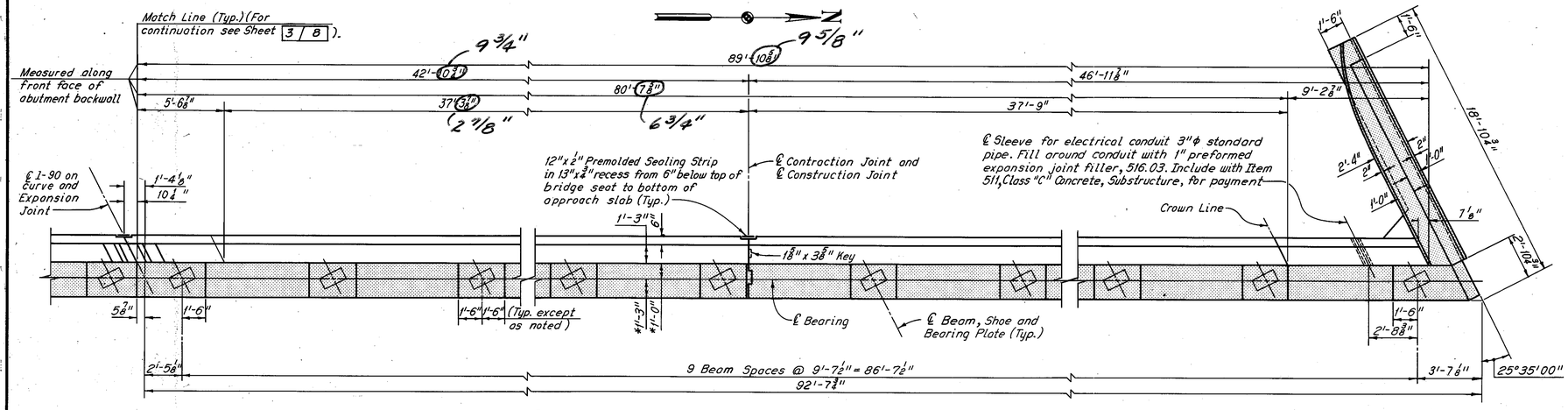

MODIFIED PART PLAN

* Plan Dimension, the actual dimensions shall be those which result when the end dam components are extended from their existing position and when the bearings are set in their final position.

Note: All reinforcing bar marks shall be prefixed GW.

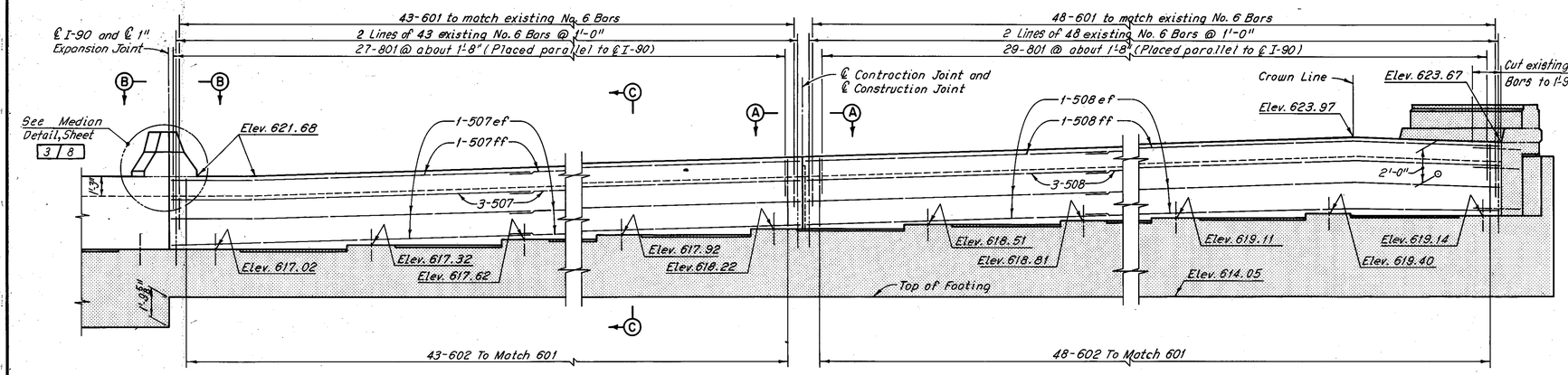

MODIFIED PART ELEVATION

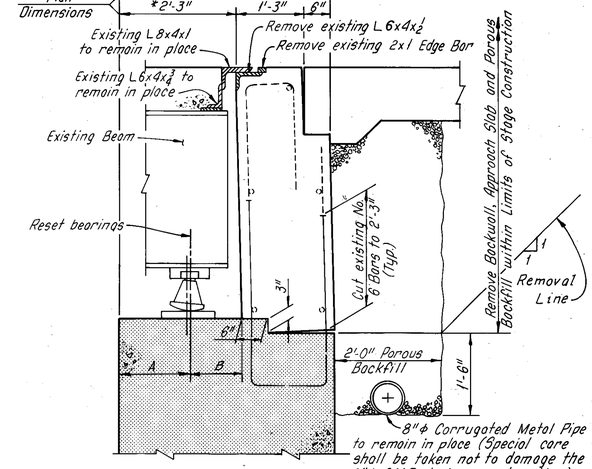

EXISTING SECTION C-C

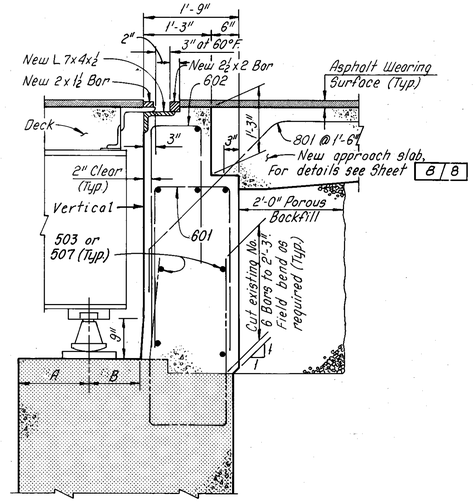

MODIFIED SECTION C-C

LOCATION	AVG. DIMENSIONS MEASURED AT 55 °F.	
	A	B
West Abutment	1'-2 1/2" ±	1'-0 1/2" ±

Notes:

For Views A-A and B-B, see Sheet 3 / 8.

For Backwall Replacement Procedure, see Sheet 3 / 8.

Excavation, backfill (except Porous Backfill) and paved berm removal necessary to accomplish structure modification shall be included with Item 202, Portions of Structures Removed, for payment. Backfill shall be in accordance with Item 203.

For details of raising the expansion joint, see Sheet CD-6.

For details of backwall expansion joint angle not shown, see Ohio Standard Drawing SD-1-69, Sheet 1 of 4.

For additional notes, see Sheet 3 / 8.

HOWARD, NEEDLES, TAMMEN & BERGENDOFF
CONSULTING ENGINEERS
KANSAS CITY CLEVELAND NEW YORK

WEST ABUTMENT

I-90 OVER EAST 185th. STREET

BR.NO.CUY-90-2616 STA. 256+84.23
STA. 259+08.69

CUYAHOGA COUNTY OHIO

DRAWN	S.M.P.	TRACED	D.L.R.	CHECKED	WHL	REVIEWED	CAB	REVISED	7-14-76
DATE	2-4-74	DATE	2-27-74	DATE	9-16-74	DATE	12-20-74	SHEET	4 / 8

FHWA REGION	STATE	PROJECT	
5	OHIO		

250
354

CUYAHOGA COUNTY
CUY-90-23.73
LAKE COUNTY
LAK-90-0.00

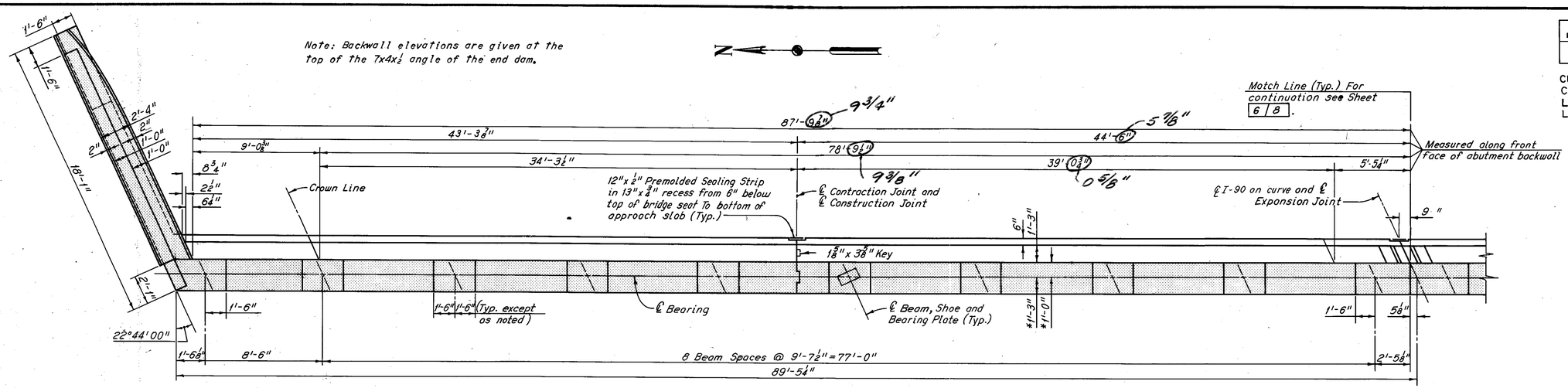

Note: All reinforcing bar marks shall be prefixed GE.

MODIFIED PART PLAN

* Plan Dimension, the actual dimensions shall be those which result when the end dam components are extended from their existing position and when the bearings are set in their final position.

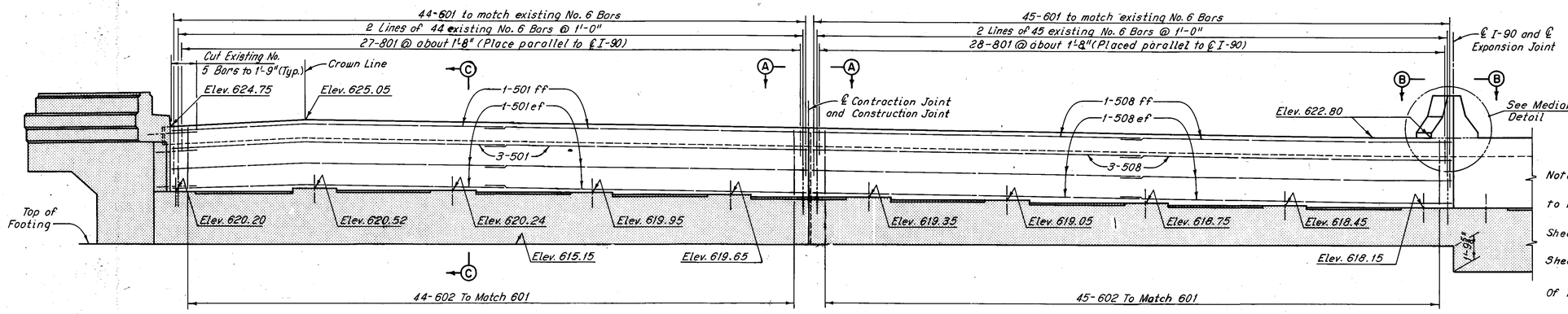

MODIFIED PART ELEVATION

Notes:

Indicates existing portions of abutment to remain.

For Existing and Modified Section C-C, see Sheet 6/8.

For Backwall Replacement Procedure, see Sheet 3/8.

For stage construction sequence, see Maintenance Of Traffic, Sheet 2/8.

For shoring required at approach slabs, see Sheet CD-1.

For resetting bearing details, see Sheet CD-3

For expansion joint modification at the median, see Sheets CD-4 and CD-5.

For Reinforcement Schedule, see Sheet R-4.

The following abbreviations are used:

ef = each face
ff = far face
Typ. = Typical

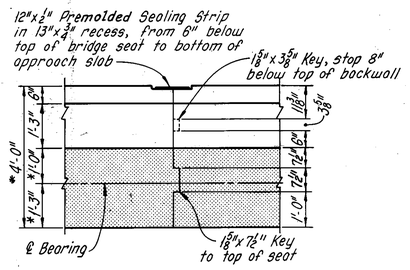

VIEW A-A

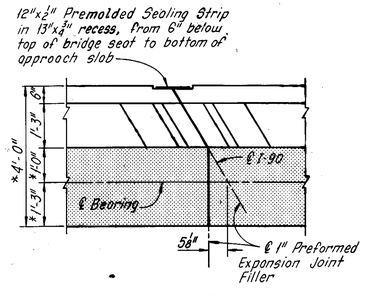

VIEW B-B

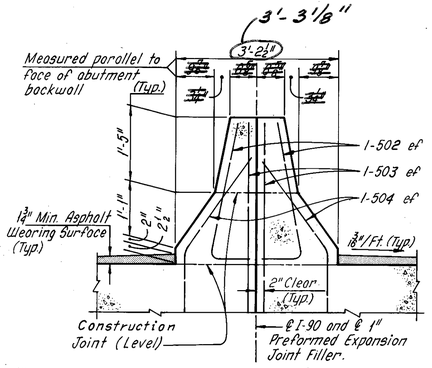

MEDIAN DETAIL

HOWARD, NEEDLES, TAMMEN & BERGENDOFF
CONSULTING ENGINEERS
KANSAS CITY CLEVELAND NEW YORK

EAST ABUTMENT

I-90 OVER EAST 185 th. STREET

BR.NO.CUY-90-2616 · STA. 256+84.23
STA. 259+08.69

CUYAHOGA COUNTY OHIO

DRAWN B.M.P.	TRACED D.L.R.	CHECKED W.H.L.	REVIEWED CAB	REVISED 7-14-76
DATE 2-6-74	DATE 2-20-74	DATE 9-24-74	DATE 12-20-74	SHEET 5/8

FHWA REGION	STATE	PROJECT	
5	OHIO		

251
354

CUYAHOGA COUNTY
CUY-90-23.73
LAKE COUNTY
LAK-90-0.00

Note: Backwall elevations are given at the top of the 7x4x½ angle of the end dam.

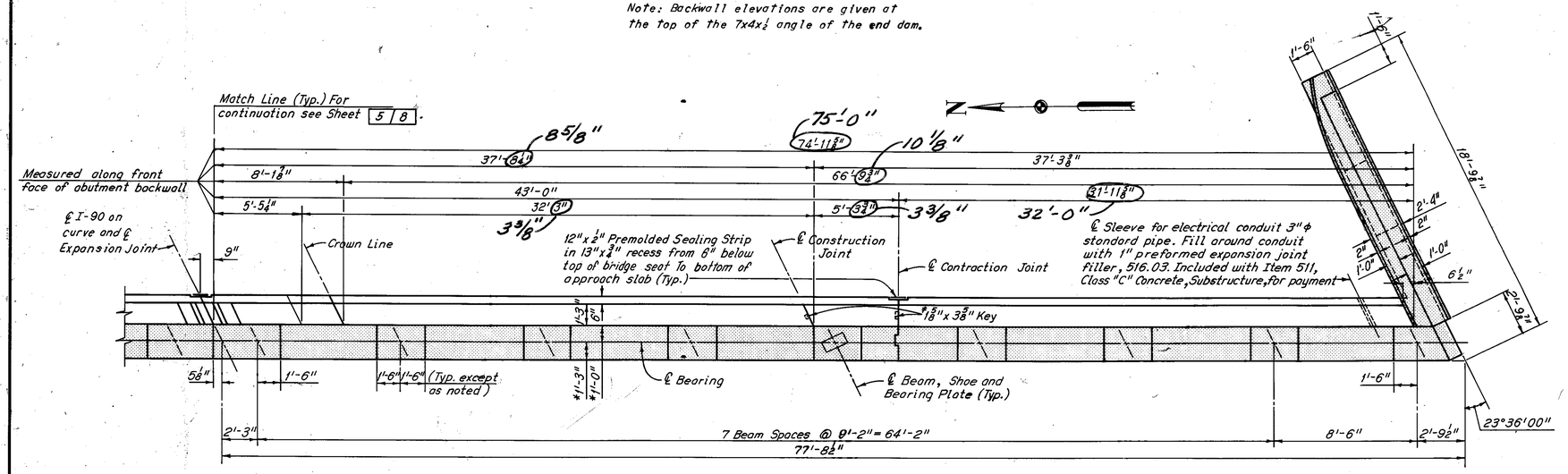

MODIFIED PART PLAN

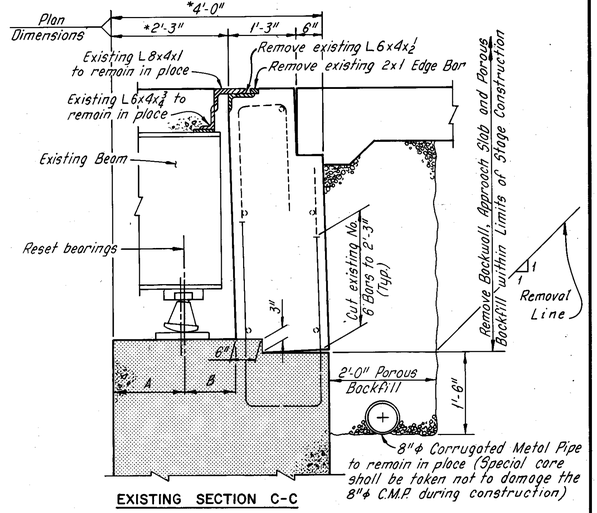

EXISTING SECTION C-C

* Plan Dimension, the actual dimensions shall be those which result when the end dam components are extended from their existing position and when the bearings are set in their final position.
* Stop 8" below top of backwall.

Note: All reinforcing bar marks shall be prefixed GE.

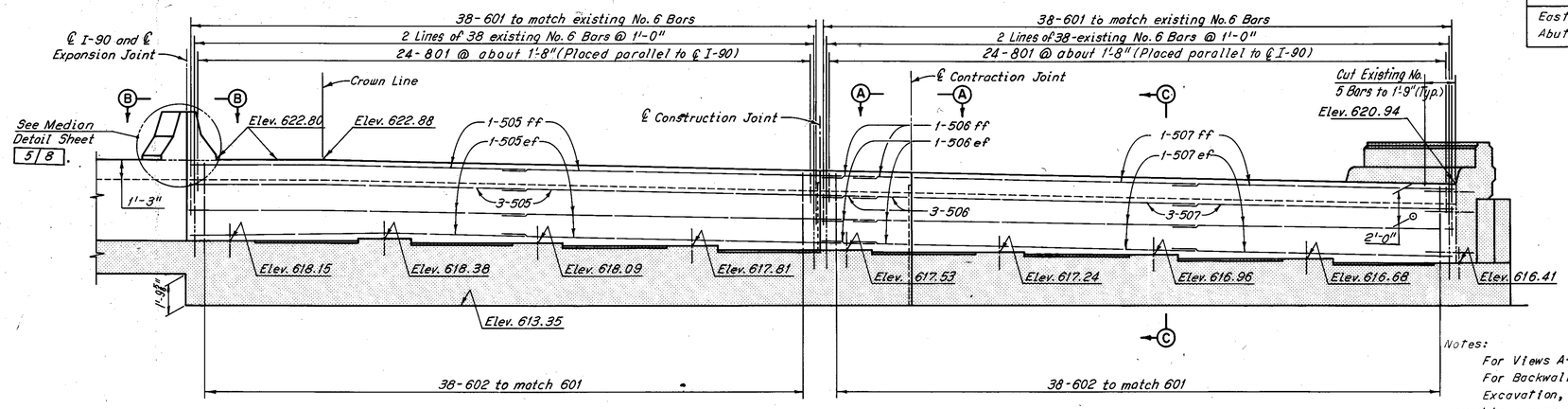

MODIFIED PART ELEVATION

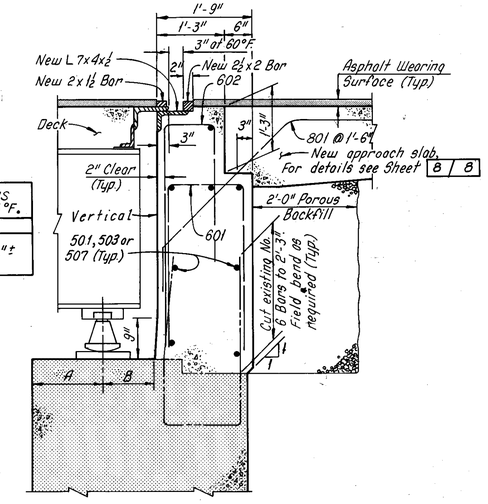

LOCATION	AVG. DIMENSIONS MEASURED AT 55 °F.	
	A	B
East Abutment	1'-6¼"	8¾"±

MODIFIED SECTION C-C

Notes:
For Views A-A and B-B, see Sheet 5 8.
For Backwall Replacement Procedure, see Sheet 3 8.
Excavation, backfill (except Porous Backfill) and paved berm removal necessary to accomplish structure modification shall be included with Item 202, Portions of Structures Removed, for payment. Backfill shall be in accordance with Item 203.
For details of raising the expansion joint, see Sheet CD-6.
For details of backwall expansion joint angle not shown, see Ohio Standard Drawing SD-1-69, Sheet 1 of 4.
For additional notes, see Sheet 5 8.

HOWARD, NEEDLES, TAMMEN & BERGENDOFF
CONSULTING ENGINEERS
KANSAS CITY CLEVELAND NEW YORK

EAST ABUTMENT

I-90 OVER EAST 185 th. STREET

BR.NO.CUY-90-2616
STA. 256+84.23
STA. 259+08.69

CUYAHOGA COUNTY OHIO

DRAWN B.M.P.	TRACED D.L.F.	CHECKED W.H.L.	REVIEWED D.A.B.	REVISED 7-14-76
DATE 2-6-74	DATE 2-20-74	DATE 9-24-74	DATE 12-20-74	SHEET 6/8

FHWA REGION	STATE	PROJECT	
5	OHIO		

252
354

CUYAHOGA COUNTY
CUY-90-23.73
LAKE COUNTY
LAK-90-0.00

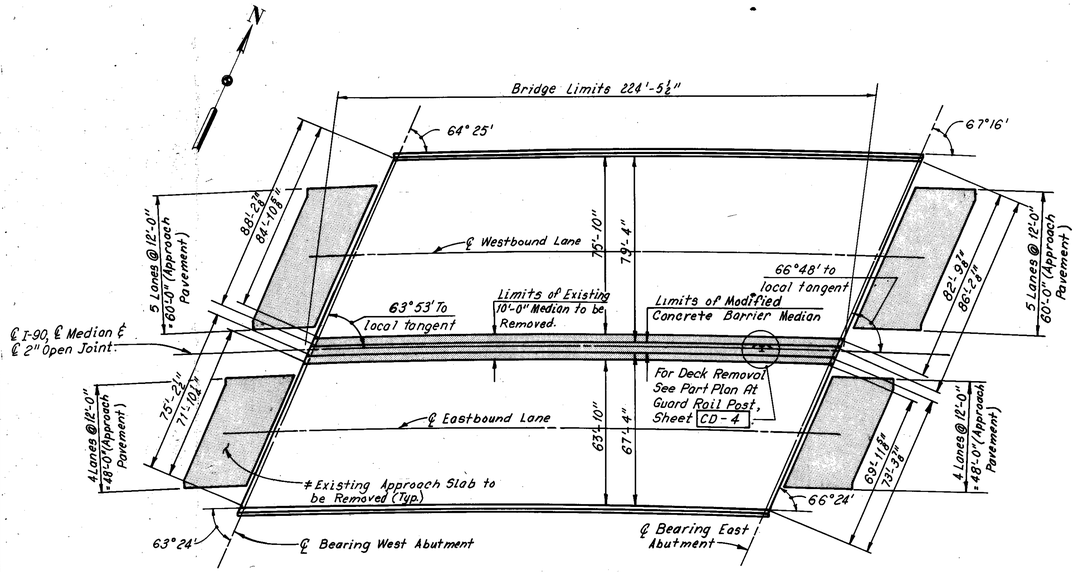

EXISTING PLAN

30 0 30 60
SCALE IN FEET

*Includes removal of paved berms and all necessary excavation or backfill to provide the proper cross section for the new approach slab.

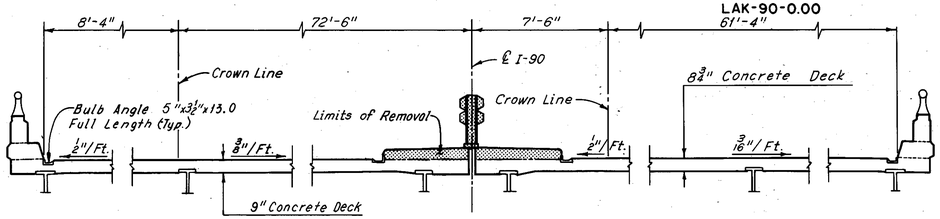

EXISTING TYPICAL SECTION

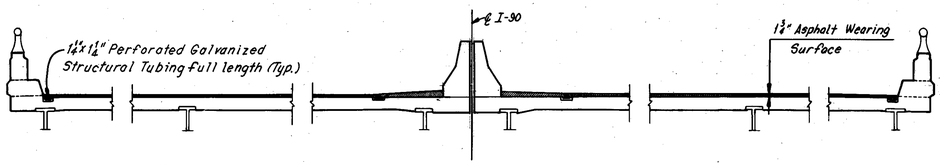

MODIFIED TYPICAL SECTION

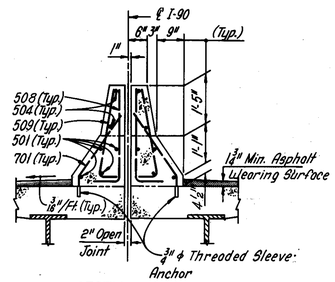

SECTION A-A

NOTE: All reinforcing bar marks shall be prefixed G.M.

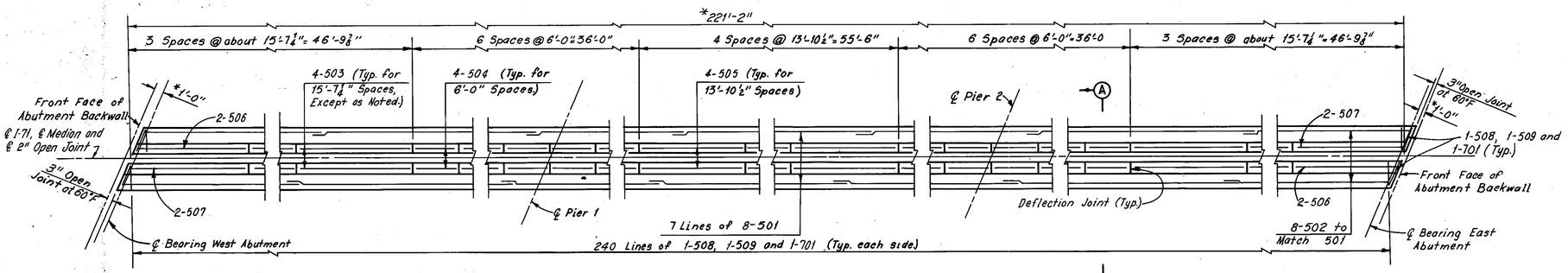

CONCRETE BARRIER MEDIAN PLAN

*Plan Dimension, the actual dimensions shall be those which result when the end dam components are extended from their existing position and when the bearings are set in their final position.

Notes:

For spaceing of threaded sleeve anchors, see Sheet CD-9.

For median modfication, see Sheets CD-4 and CD-5.

For reinforcement schedule, see Sheet R-4.

For deck repair and asphalt wearing surface course details, see Sheet CD-7.

For deflection joint details, see Sheet CD-9.

The following abbreviation is used:

Typ. = Typical

HOWARD, NEEDLES, TAMMEN & BERGENDOFF
CONSULTING ENGINEERS
KANSAS CITY CLEVELAND NEW YORK

EXISTING AND MODIFIED DECK PLAN AND TYPICAL SECTION

I-90 OVER EAST 185th. STREET

BR.NO.CUY-90-2616 STA.256+84.23 STA.259+08.69

CUYAHOGA COUNTY OHIO

DRAWN BMP	TRACED JLR	CHECKED WHL	REVIEWED CAB	REVISED
DATE 7-31-13	DATE 7-31-13	DATE 9-26-14	DATE 12-20-14	SHEET 7/8

FHWA REGION	STATE	PROJECT	
5	OHIO		

253
354

CUYAHOGA COUNTY
CUY-90-23.73
LAKE COUNTY
LAK-90-0.00

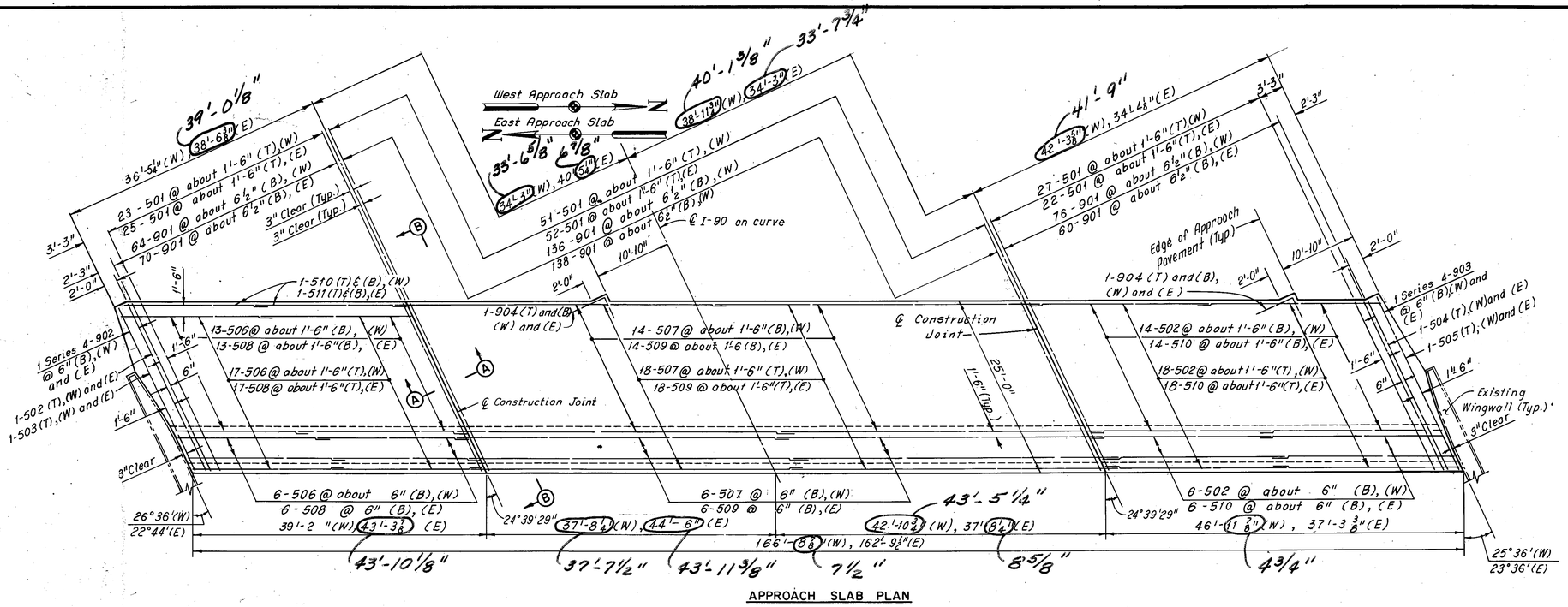

APPROACH SLAB PLAN

REINFORCEMENT SCHEDULE				
MARK	NO.	LENGTH	TYPE	SER. INCR.
GGS501	198	24'-6"	Str.	
GGS502	78	24'-3"	Str.	
GGS503	2	23'-9"	Str.	
GGS504	2	24'-9"	Str.	
GGS505	2	25'-3"	Str.	
GGS506	72	20'-9"	Str.	
GGS507	76	42'-0"	Str.	
GGS508	72	22'-9"	Str.	
GGS509	76	43'-9"	Str.	
GGS510	80	19'-9"	Str.	
GGS511	4	21'-3"	Str.	
GGS901	544	25'-9"	101	
GGS902	2 Ser 4	25'-0" 25'-8"	101	2"
GGS903	2 Ser 4	25'-0" 25'-8"	101	2"
GGS904	8	7'-9"	104	

24'-9"
22'-0"
43'-3"
23'-6"
20'-6"
22'-6"

101

1'-3"	24'-6"	GGS901
1'-3"	23'-9" to 24'-3"	GGS902
1'-3"	24'-9" to 25'-3"	GGS903

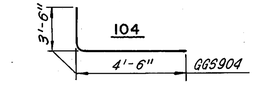

Note: All reinforcing bar marks shall be prefixed GGS.

Note:
The jacking holes as called for on Ohio Standard Drawing AS-1-72 are not required.

Note:
The asphalt wearing surface on the approach slab shall consist of the following:
1. Item 407, Tack Coat at 0.1 gal. per sq. yd.
2. Item 402, 1 3/4" Asphalt Concrete (AC-20)
3. Item 404, 1 1/4" Asphalt Concrete (AC-20)

Notes:
For stage construction sequence, see Maintenance Of Traffic, Sheet 2 | 8.
For normal cross slopes, see Existing Typical Section, Sheet 7 | 8.
For details of median barrier transition, see Roadway Plans.
The following abbreviations are used:
T = Top W = West Approach Slab
B = Bottom E = East Approach Slab
Typ. = Typical
For additional notes and details, see Ohio Standard Drawing AS-1-72.

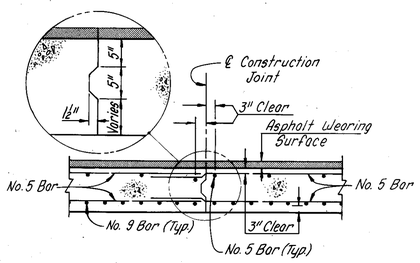

SECTION A-A

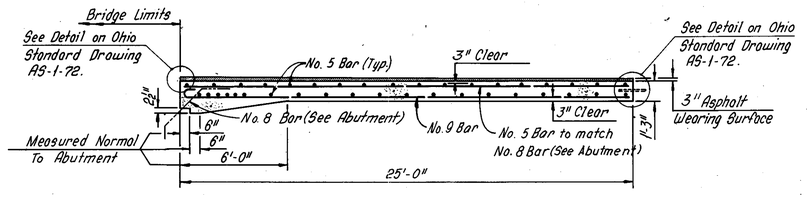

SECTION B-B

HOWARD, NEEDLES, TAMMEN & BERGENDOFF
CONSULTING ENGINEERS
KANSAS CITY CLEVELAND NEW YORK

APPROACH SLABS

I-90 OVER EAST 185th. STREET

BR. NO. CUY-90-2616 STA. 256+84.23
STA. 259+08.69

CUYAHOGA COUNTY OHIO

DRAWN	TRACED	CHECKED	REVIEWED	REVISED
S.M.P.	D.L.P.	W.H.L.	E.A.B.	7-14-76
DATE 2-7-74	DATE 3-1-74	DATE 9-25-74	DATE 12-20-74	SHEET 5	8

FHWA REGION	STATE	PROJECT	
5	OHIO		

254
354

CUYAHOGA COUNTY
CUY-90-23.73
LAKE COUNTY
LAK-90-0.00

MICROFILMED
MAR 22

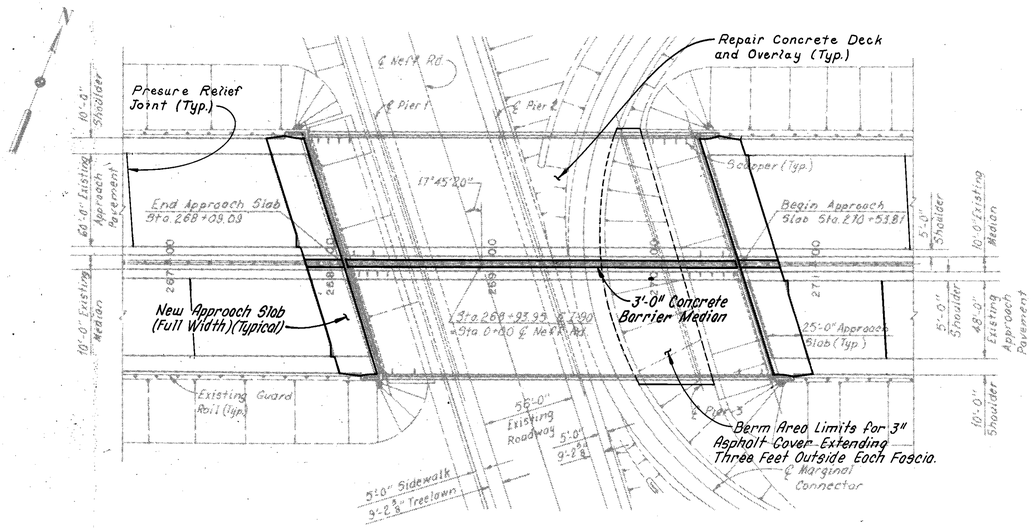

PLAN
40 0 40 80
SCALE IN FEET

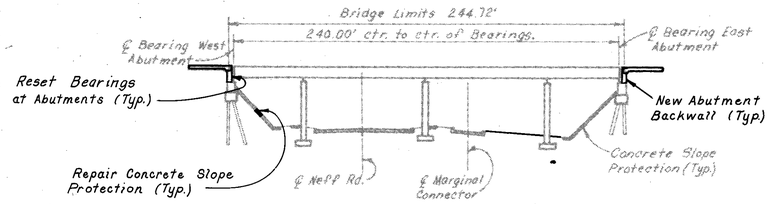

ELEVATION
40 0 40 80
SCALE IN FEET

PROPOSED WORK:

1. Install pressure relief joints in approach roadway pavement, see Sheet CD-9.
2. Replace both abutment backwalls, see Sheets 3/8, 4/8, 5/8 and 6/8.
3. Reset abutment bearings, see Sheets 4/8 and 6/8.
4. Trim wingwall parapet.
5. Replace approach slabs, see Sheet 8/8.
6. Replace deep beam barrier median with concrete barrier median, see Sheet 7/8.
7. Repair concrete deck and place asphalt wearing surface, see Sheet 7/8.
8. Clean out bridge drainage system and remove debris from bridge seat.
9. Paint all structural steel.
10. Repair minor abutment deterioration.
11. Repair minor wingwall deterioration.
12. Repair concrete slope protection.
13. Provide asphalt cover for berm area underneath the east end of the bridge.

Note:
Roman numerals II and III denote cost participation breakdown. For description, see Roadway Plans, Sheet 3-354.

TYPE CODE X231

ESTIMATED QUANTITIES

ITEM	TOTAL	UNIT	DESCRIPTION BRIDGE REPAIR	SUPER-STRUCTURE	WEST ABUT	EAST ABUT	WINGWALLS NE	WINGWALLS SE	WINGWALLS NW	WINGWALLS SW	APPROACH SLABS	CON. SLOPE PRO. WEST	CON. SLOPE PRO. EAST	GENERAL	Participation II Fed, State & Cleveland	Participation III 100% State
*202	Lump Sum	Lump Sum	Portions of Structures Removed	II L.S.	III L.S.	III L.S.	-	-	-	-	III L.S.	-	-	-	Lump	Lump
402	40	Cu. Yd.	Asphalt Concrete (AC-20)	-	-	-	-	-	-	-	II 40	-	-	-	40	
404	222	Cu. Yd.	Asphalt Concrete (AC-20)	II 193	-	-	-	-	-	-	II 29	-	-	-	222	
407	83	Gallons	Tack Coat: 702.02, RC-250; or 702.04, SS-1, SS-1h, MS-2 or RS-1	-	-	-	-	-	-	-	II 83	-	-	-	83	
503	Lump Sum	Lump Sum	Cofferdams, Cribs and Sheeting	-	-	-	-	-	-	-	-	-	-	III L.S.		Lump
509	22,075	Pounds	Reinforcing Steel	II 9,148	III 6471	III 6456	-	-	-	-	-	-	-	-	9,148	12,927
511	43	Cu. Yd.	Class "C" Concrete, Superstructure	II 43	-	-	-	-	-	-	-	-	-	-	43	
511	92	Cu. Yd.	Class "C" Concrete, Substructure	-	III 46	III 46	-	-	-	-	-	-	-	-		92
512	38	Lin. Ft.	Premolded Sealing Strip	-	III 19	III 19	-	-	-	-	-	-	-	-		38
513	13,346	Pounds	Structurol Steel (ASTM A36)	II 660	III 6343	III 6343	-	-	-	-	-	-	-	-	660	12,686
514	13,346	Pounds	Field Painting of New Structural Steel	II 660	III 6343	III 6343	-	-	-	-	-	-	-	-	660	12,686
516	28	Sq. Ft.	1" Preformed Expansion Joint Filler	-	III 14	III 14	-	-	-	-	-	-	-	-		28
518	80	Cu. Yd.	Porous Backfill	-	III 40	III 40	-	-	-	-	-	-	-	-		80
518	965	Lin. Ft.	Subdrainage For Wearing Course,												965	
			As Per Plan	II 965	-	-	-	-	-	-	-	-	-	-		
519	29	Sq. Ft.	Patching Concrete Structures	-	-	III 25	-	-	III 3	III 1	-	-	-	-		29
520	7	Sq. Ft.	Pneumatically Placed Mortar	-	III 4	III 3	-	-	-	-	-	-	-	-		7
611	832	Sq. Yd.	Reinforced Concrete Approach Slabs T=15"	-	-	-	-	-	-	-	III 832	-	-	-		832
837	Lump Sum	Lump Sum	Surface Preparation	III L.S.	-	-	-	-	-	-	-	-	-	-		Lump
837	Lump Sum	Lump Sum	Spot Prime Painting	III L.S.	-	-	-	-	-	-	-	-	-	-		Lump
837	Lump Sum	Lump Sum	Complete Coat Prime Painting	III L.S.	-	-	-	-	-	-	-	-	-	-		Lump
837	Lump Sum	Lump Sum	Two Complete Coats Finish Painting	III L.S.	-	-	-	-	-	-	-	-	-	-		Lump
Special	23	Sq. Yd.	Patching Concrete Deck Slab	II 23	-	-	-	-	-	-	-	-	-	-		23
Special	3,940	Sq. Yd.	Membrane Waterproofing Hot Applied Liquid (See Proposal Note)	II 3,940	-	-	-	-	-	-	-	-	-	-	3940	
Special	22	Lin. Ft.	Repair of Cracks	-	III 3	III 5	-	III 9	III 5	-	-	-	-	-		22
Special	308	Lin. Ft.	Raising Existing End Dams	-	II 154	II 154	-	-	-	-	-	-	-	-	308	
Special	34	Each	Reset Bearings	-	III 17	II 17	-	-	-	-	-	-	-	-		34
Special	540	Each	Threaded Sleeve Anchors	II 540	-	-	-	-	-	-	-	-	-	-	540	
Special	218	Lin. Ft.	Pressure Relief Joint	-	-	-	-	-	-	-	-	-	-	III 218		218
Special	Lump Sum	Lump Sum	Cleanout Bridge Drainage Systems and Remove Debris From Bridge Seats	III L.S.	II L.S.	III L.S.	-	-	-	-	-	-	-	-		Lump
Special	34	Sq. Yd.	Repair of Concrete Slope Protection	-	-	-	-	-	-	-	-	-	III 34	-		34
Special	725	Sq. Yd.	Asphalt Cover Over Berm	-	-	-	-	-	-	-	-	-	-	III 725		725

EXISTING STRUCTURE	
TYPE:	Continuous Steel Beam with Reinforced Concrete Deck, Piers and Abutments.
SPAN:	45'-0", 75'-0", 75'-0" and 45'-0".
ROADWAY:	152'-0" Face to Face of Parapets.
LOADING:	CF-2000-57 (Adequate for AASHO Alternate Loading).
SKEW:	17°45'20" Right Forward.
WEARING SURFACE:	1" Monolithic Concrete.
APPROACH SLABS:	AS-1-54 (25'-0" Long).
ALIGNMENT:	Tangent
SUPERELEVATION:	0.0156 Feet Per Feet.

MODIFIED STRUCTURE	
TYPE:	Continuous Steel Beam with Reinforced Concrete Deck, Piers and Abutments.
SPAN:	45'-0", 75'-0", 75'-0" and 45'-0".
ROADWAY:	152'-0" Face to Face of Parapets with a 3'-0" Barrier Median.
LOADING:	*CF-2000-57 (Adequate for AASHO Alternate Loading).
SKEW:	17°45'20" Right Forward
WEARING SURFACE:	1 3/4" Asphalt.
APPROACH SLABS:	AS-1-72 (25'-0" Long).
ALIGNMENT:	Tangent.
SUPERELEVATION:	0.0156 Feet Per Feet.

* Median Beams Adequate For HS-20 Loading.

*SUPERSTRUCTURE - Includes approximately 54 Cu. Yds. of concrete in the existing 10'-0" median, and approximately 244 Lin. Ft. of guardrail including posts, nuts, plates and portions of bulb angle gutter.
*SUBSTRUCTURE - Includes approximately 94 Cu. Yds. of concrete in the existing abutment backwalls.
*APPROACH SLABS - Includes approximately 832 Sq. Yds. of existing reinforced concrete approach slabs, paved berms and all necessary excavation or backfill to provide proper cross section for the new approach slabs.
Note: The gap between the front face of the abutment and the edge of the slope protection shall be filled with joint sealer meeting the requirements of 705.02. All material and labor required to complete this repair shall be included with Item Special, Repair of Concrete Slope Protection, for payment. The approximate quantity is 322 Lin. Ft.
TRIM WINGWALL PARAPET - Trim the southwest wingwall parapet and curb at the front face of backwall, see Sheet CD/8.

Rev. 7-18-75

HOWARD, NEEDLES, TAMMEN & BERGENDOFF
CONSULTING ENGINEERS
KANSAS CITY CLEVELAND NEW YORK

SITE PLAN
I-90 OVER NEFF ROAD

BR. NO. CUY-90-2639
STA. 268+09.09
STA. 270+53.81

CUYAHOGA COUNTY OHIO

DRAWN	TRACED	CHECKED	REVIEWED	REVISED
B/MP	JLR	EE	CAB	
DATE 8-8-73	DATE 8-9-73	DATE 7-9-74	DATE 12-20-74	SHEET 1/8

FHWA REGION	STATE	PROJECT	
5	OHIO		

255
354

CUYAHOGA COUNTY
CUY-90-23.73
LAKE COUNTY
LAK-90-0.00

MAR 22 1976

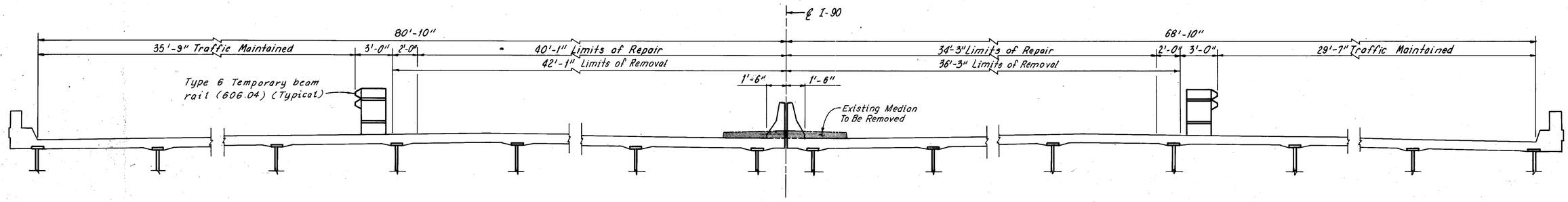

SECOND STAGE CONSTRUCTION

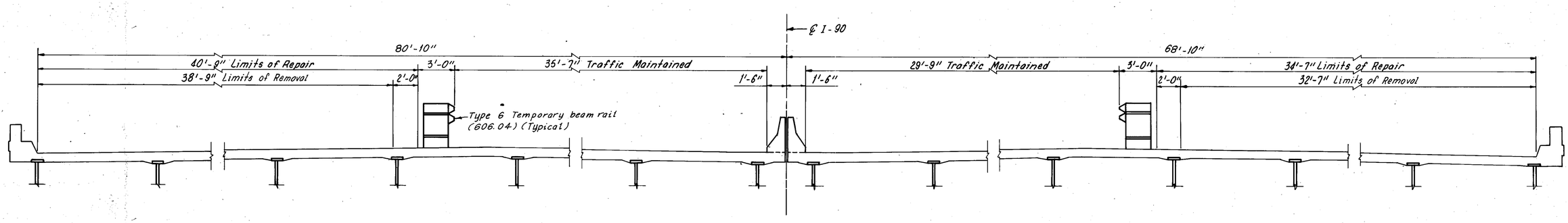

THIRD STAGE CONSTRUCTION

Notes:

The stage construction cross-sections apply within the bridge and approach slab limits. All repair work shall be co-ordinated with the stage construction as shown.

For maintenance of traffic notes, see Roadway Plans.

For shoring required at approach slabs, see Sheet CD-1

HOWARD, NEEDLES, TAMMEN & BERGENDOFF
CONSULTING ENGINEERS
KANSAS CITY CLEVELAND NEW YORK

MAINTENANCE OF TRAFFIC

I-90 OVER NEFF ROAD

BR.NO. CUY-90-2639 STA. 268+09.09
STA. 270+53.81

CUYAHOGA COUNTY OHIO

DRAWN JLR	TRACED JLR	CHECKED ML	REVIEWED CAB	REVISED
DATE 1-22-74	DATE 1-24-74	DATE 5-18-74	DATE 12-20-74	SHEET 2/8

FHWA REGION	STATE	PROJECT	
5	OHIO		

256
354

CUYAHOGA COUNTY
CUY-90-23.73
LAKE COUNTY
LAK-90-0.00

Note: Backwall elevations are given at the top of the 7x4x½ angle of the end dam.

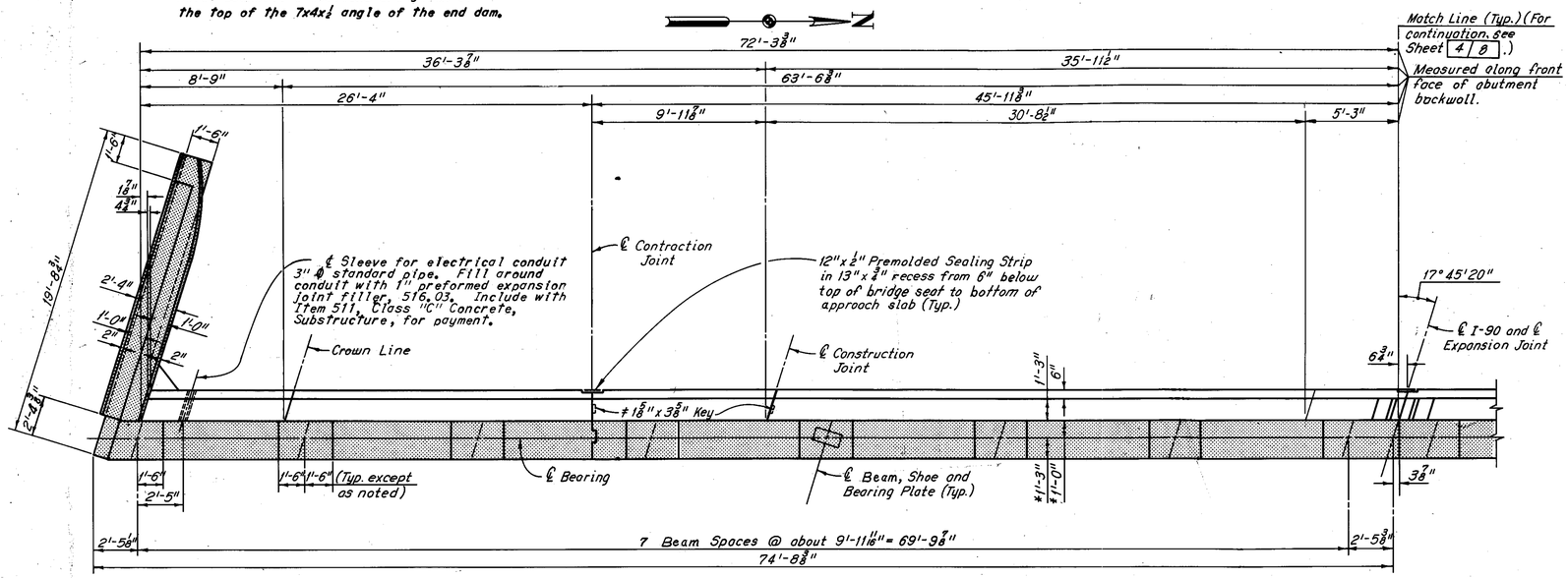

MODIFIED PART PLAN

Note: All reinforcing bar marks shall be prefixed HW.

* Plan Dimension, the actual dimensions shall be those which result when the end dam components are extended from their existing position and when the bearings are set in their final position.
≠ Stop 8" below top of backwall.

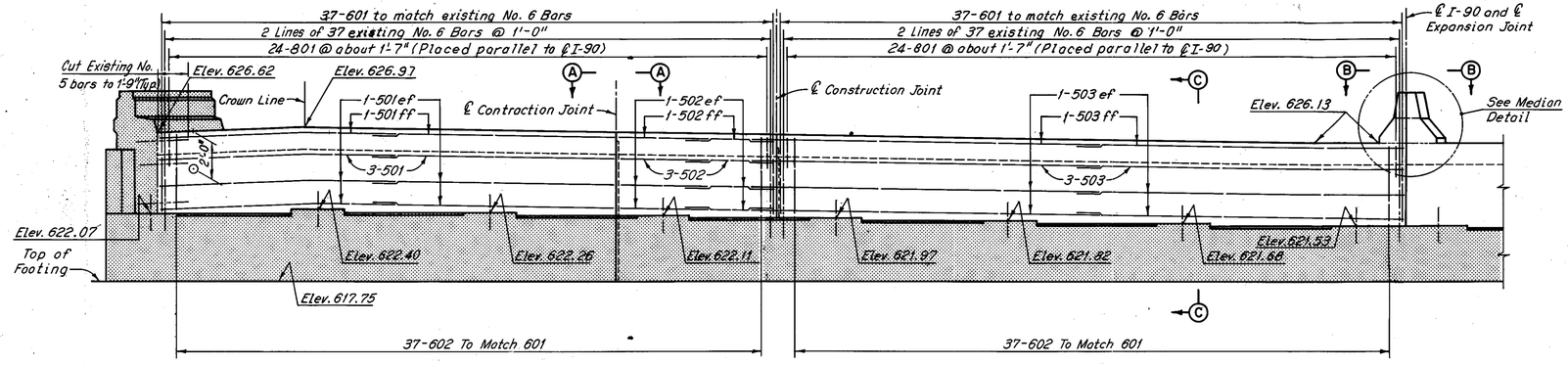

MODIFIED PART ELEVATION

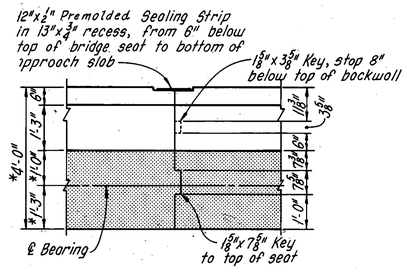

VIEW A-A

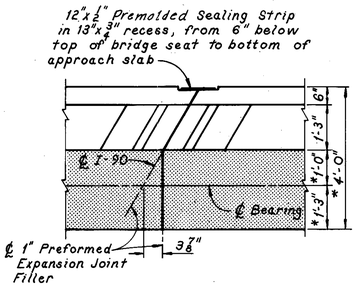

VIEW B-B

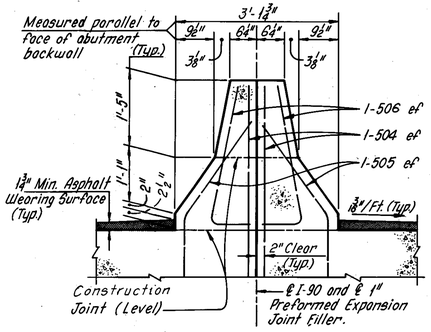

MEDIAN DETAIL

Notes:
Shaded Indicates existing portions of abutment to remain.
For Existing and Modified Section C-C, see Sheet 4/8.
For stage construction sequence, see Maintenance Of Traffic, Sheet 2/8.
For shoring required at approach slabs, see Sheet CD-1.
For resetting bearing details, see Sheet CD-3
For expansion joint modification at the median, see Sheets CD-4 and CD-5.
For Reinforcement Schedule, see Sheet R-5.
The following abbreviations are used:
ef = each face
ff = far face
E = East Abutment
W = West Abutment
Typ. = Typical

BACKWALL REPLACEMENT PROCEDURE:

1. Bridge the backwall with an adequate steel plate within the area of maintained traffic. Provide bituminous wearing surface cover, as directed by the Engineer, to permit and maintain safe passage of vehicular traffic. The steel plate and bituminous cover shall be included with Item 614, Maintaining Traffic, for payment (see Roadway Plans)
2. Raise the entire superstructure (all beams simultaneously) until there is no contact between the superstructure and backwall end dam angles. All material, labor and equipment required to accomplish the above shall be included with Item 202, Portions of Structures Removed, for payment.
3. Remove approximately 1 foot of the top of the backwall.
4. Reset bearings.
5. Release jacks.
6. Remove the remaining portions of the backwall, including reinforcement, except as noted, within the limits of stage construction.
7. Replace the backwall within the limits of the stage construction using the existing superstructure end dam angle to set the new backwall. In setting the top of backwall end dam angle, care shall be exercised to insure proper seating of the superstructure and expansion joint.

HOWARD, NEEDLES, TAMMEN & BERGENDOFF
CONSULTING ENGINEERS
KANSAS CITY CLEVELAND NEW YORK

WEST ABUTMENT

I-90 OVER NEFF ROAD

BR.NO.CUY-90-2639 STA. 268+09.09
STA. 270+53.81

CUYAHOGA COUNTY OHIO

DRAWN B.M.P.	TRACED D.L.A.	CHECKED L.E.E.	REVIEWED C.A.B.	REVISED
DATE 2-8-74	DATE 3-8-74	DATE 7-9-74	DATE 12-20-74	SHEET 3/8

FHWA REGION	STATE	PROJECT	
5	OHIO		

257
354

CUYAHOGA COUNTY
CUY-90-23.73
LAKE COUNTY
LAK-90-0.00

Note: Backwall elevations are given at the top of the 7x4x½ angle of the end dam.

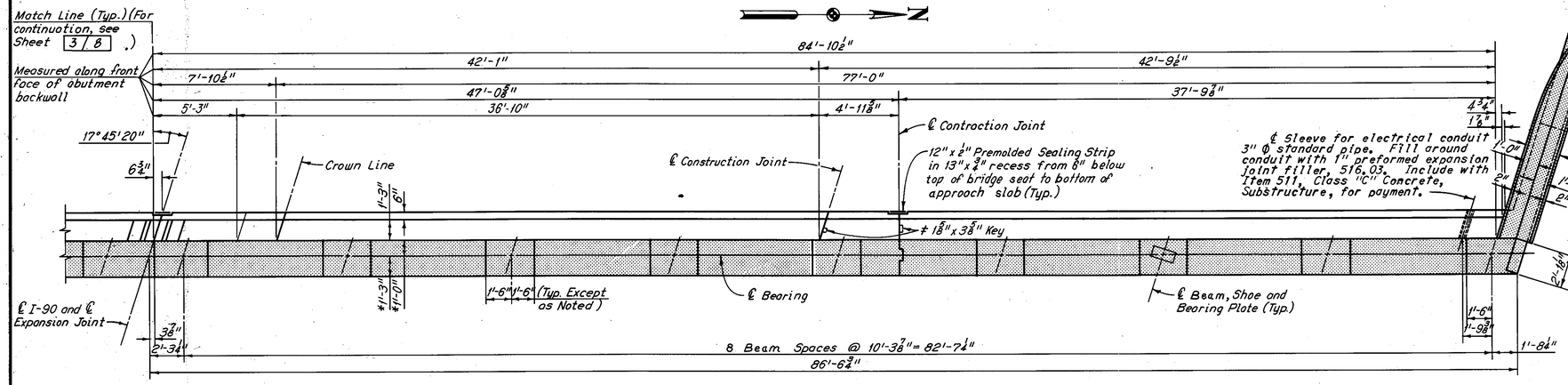

MODIFIED PART PLAN

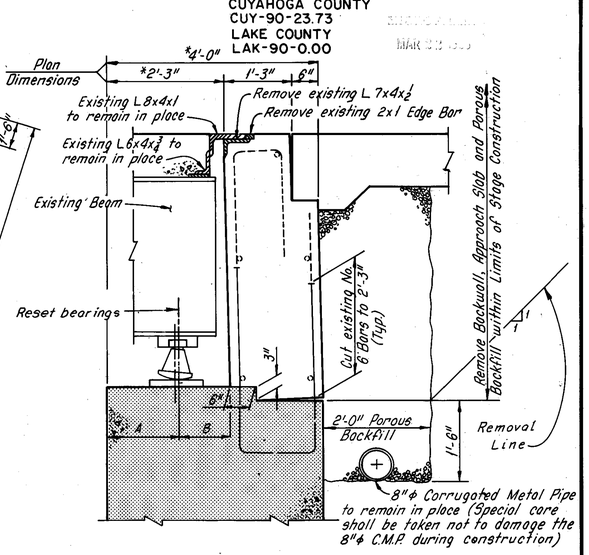

EXISTING SECTION C-C

Note: All reinforcing bar marks shall be prefixed HW.

* Plan Dimension, the actual dimensions shall be those which result when the end dam components are extended from their existing position and when the bearings are set in their final position.
± Stop 8" below top of backwall.

LOCATION	AVG. DIMENSIONS MEASURED AT 55 °F.	
	A	B
West Abutment	1'-6⅞" ±	8⅛" ±

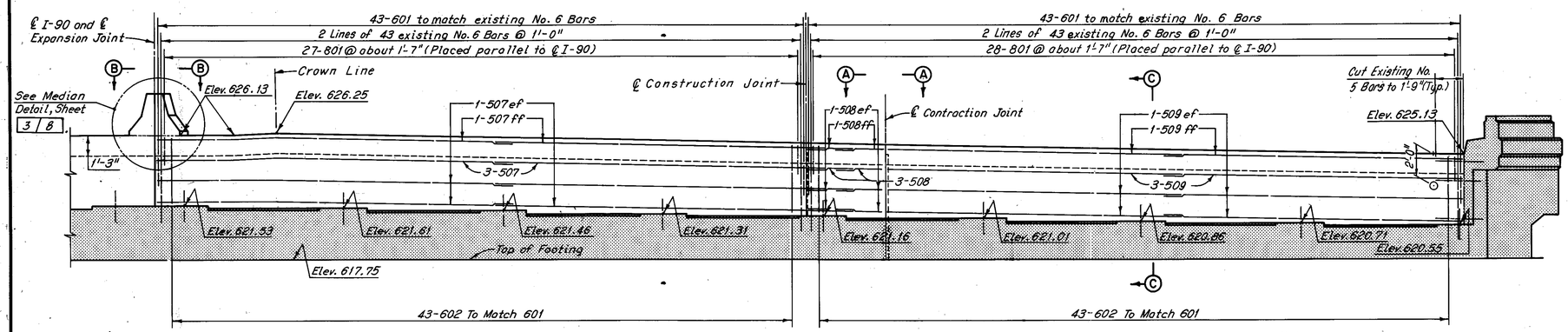

MODIFIED PART ELEVATION

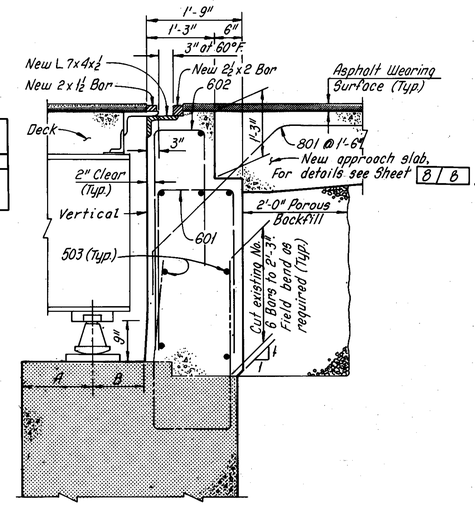

MODIFIED SECTION C-C

Notes:
For Views A-A and B-B, see Sheet 3/8.
For Backwall Replacement Procedure, see Sheet 3/8.
Excavation and backfilling (except Porous Backfill) necessary to accomplish structure modification shall be included with Item 202, Portions of Structure Removed, for payment. Backfill shall be in accordance with Item 203.
For details of raising the expansion joint, see Sheet CD-6.
For details of backwall expansion joint angle not shown, see Ohio Standard Drawing SD-1-69, Sheet 1 of 4.
For additional notes, see Sheet 3/8.

HOWARD, NEEDLES, TAMMEN & BERGENDOFF
CONSULTING ENGINEERS
KANSAS CITY CLEVELAND NEW YORK

WEST ABUTMENT

I-90 OVER NEFF ROAD

BR. NO. CUY-90-2639 STA. 268+09.09
STA. 270+53.81

CUYAHOGA COUNTY OHIO

DRAWN B.M.P.	TRACED D.L.A.	CHECKED L.E.	REVIEWED C.A.B.	REVISED
DATE 2-11-74	DATE 3-12-74	DATE 7-9-74	DATE 12-20-74	SHEET 4/8

FHWA REGION	STATE	PROJECT	
5	OHIO		

258
354

CUYAHOGA COUNTY
CUY-90-23.73
LAKE COUNTY
LAK-90-0.00

Note: Backwall elevations are given at the top of the 7x4x½ angle of the end dam.

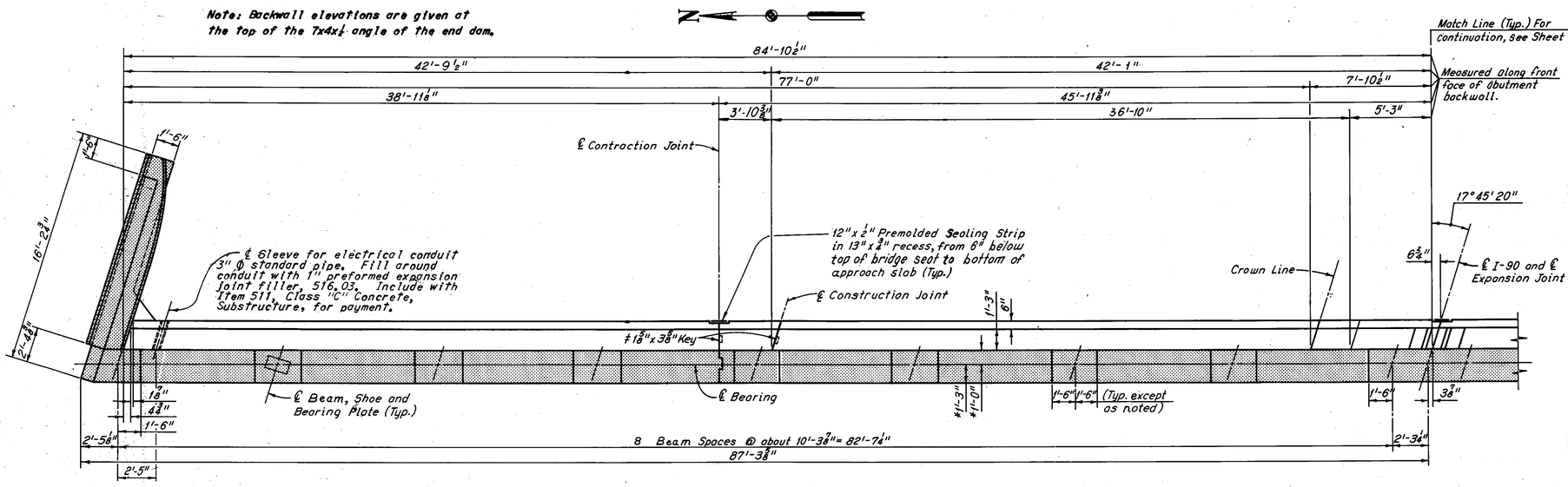

MODIFIED PART ELEVATION

Note: All reinforcing bar marks shall be prefixed HE.

** Plan Dimension, the actual dimensions shall be those which result when the end dam components are extended from their existing position and when the bearings are set in their final position.*
‡ Stop 8" below top of backwall.

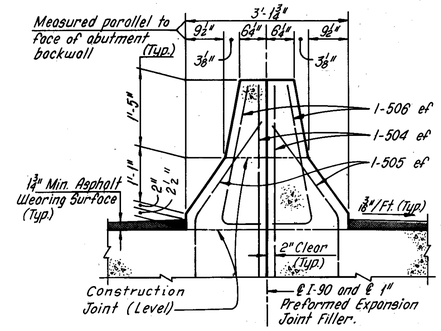

MEDIAN DETAIL

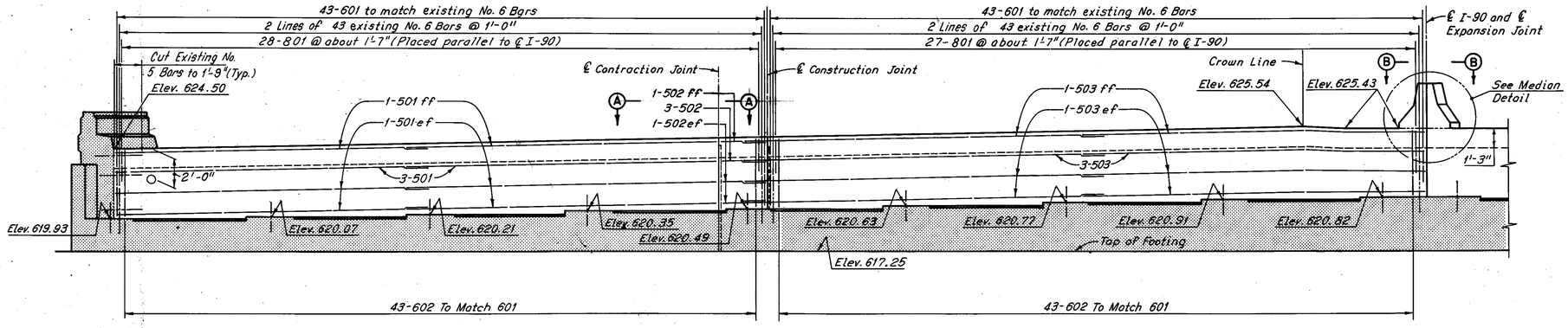

MODIFIED PART ELEVATION

BACKWALL REPLACEMENT PROCEDURE:

1. Bridge the backwall with an adequate steel plate within the area of maintained traffic. Provide bituminous wearing surface cover, as directed by the Engineer, to permit and maintain safe passage of vehicular traffic. The steel plate and bituminous cover shall be included with Item 614, Maintaining Traffic, for payment (see Roadway Plans).
2. Raise the entire superstructure (all beams simultaneously) until there is no contact between the superstructure and backwall end dam angles. All material, labor and equipment required to accomplish the above shall be included with Item 202, Portions of Structures Removed, for payment.
3. Remove approximately 1 foot of the top of the backwall.
4. Reset bearings.
5. Release jacks.
6. Remove the remaining portions of the backwall, including reinforcement, except as noted, within the limits of stage construction.
7. Replace the backwall within the limits of the stage construction using the existing superstructure end dam angle to set the new backwall. In setting the top of backwall end dam angle, care shall be exercised to insure proper seating of the superstructure and expansion joint.

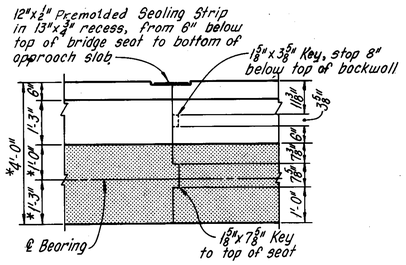

VIEW A-A

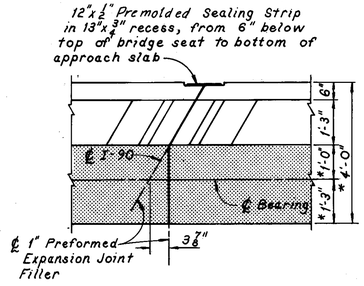

VIEW B-B

Notes:

Indicates existing portions of abutment to remain.

For Existing and Modified Section C-C, see Sheet 6/8.

For stage construction sequence, see Maintenance Of Traffic, Sheet 2/8.

For shoring required at approach slabs, see Sheet CD-1

For resetting bearing details, see Sheet CD-3.

For expansion joint modification at the median, see Sheets CD-4 and CD-5.

For Reinforcement Schedule, see Sheet R-5.

The following abbreviations are used:

ef = each face
ff = far face
E = East Abutment
W = West Abutment
Typ. = Typical

HOWARD, NEEDLES, TAMMEN & BERGENDOFF
CONSULTING ENGINEERS
KANSAS CITY CLEVELAND NEW YORK

EAST ABUTMENT

I-90 OVER NEFF ROAD

BR.NO.CUY-90-2639 STA. 268+09.09
STA. 270+53.81

CUYAHOGA COUNTY OHIO

DRAWN B.M.P.	TRACED D.L.R.	CHECKED L.E.E.	REVIEWED C.A.B.	REVISED
DATE 2-18-74	DATE 3-4-74	DATE 7-9-74	DATE 12-20-74	SHEET 5/8

FHWA REGION	STATE	PROJECT	
5	OHIO		

259
354

CUYAHOGA COUNTY
CUY-90-23.73
LAKE COUNTY
LAK-90-0.00

Note: Backwall elevations are given at the top of the 7x4x½ angle of the end dam.

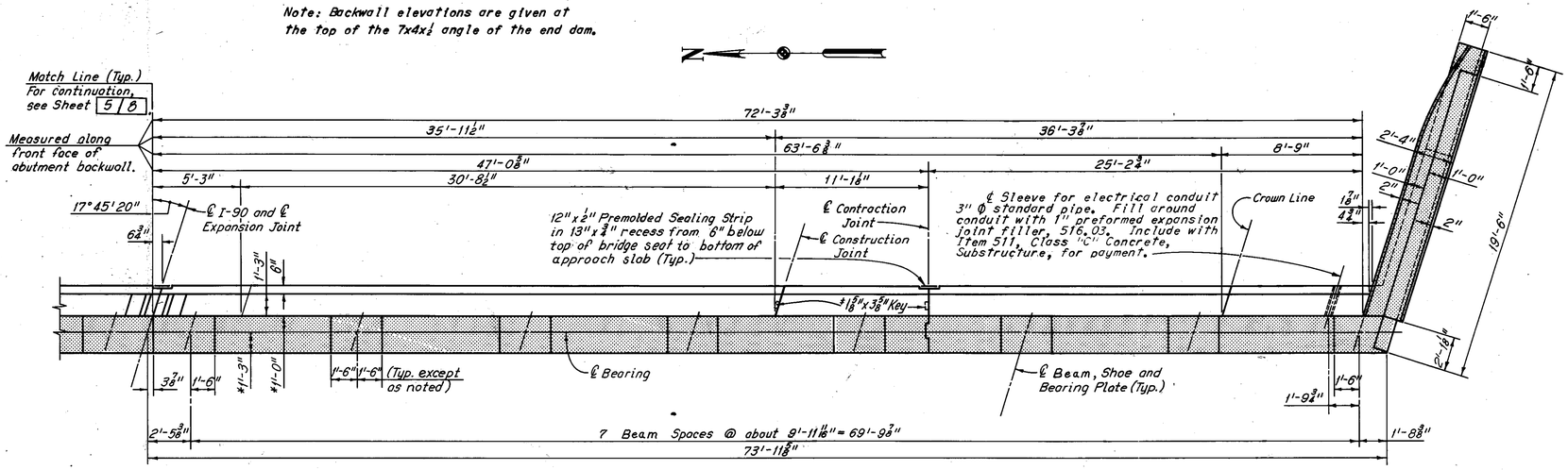

MODIFIED PART PLAN

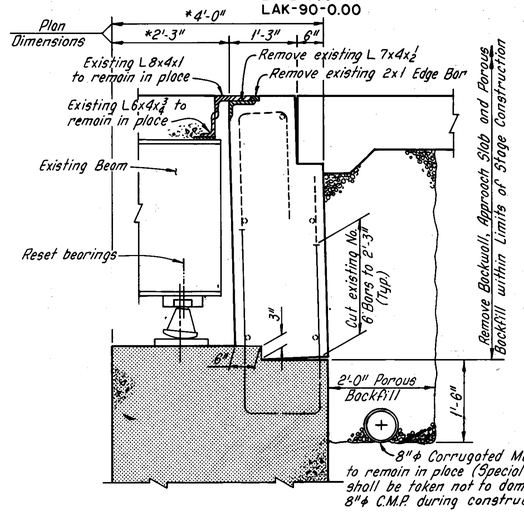

EXISTING SECTION C-C

Note: All reinforcing bar marks shall be prefixed HE.

* Plan Dimension, the actual dimensions shall be those which result when the end dam components are extended from their existing position and when the bearings are set in their final position.
# Stop 8" below top of backwall.

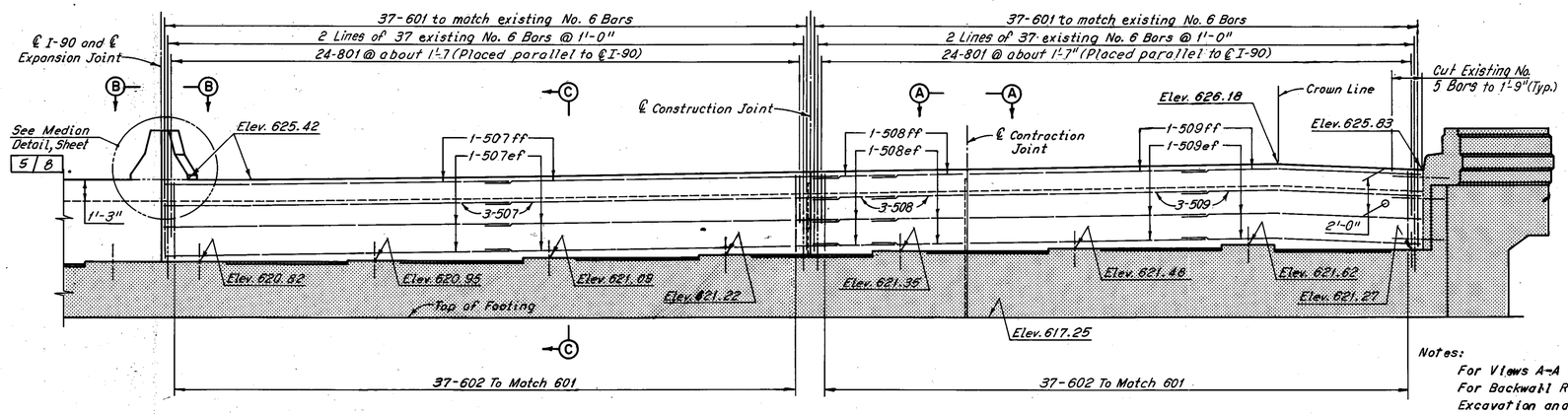

MODIFIED PART ELEVATION

LOCATION	AVG. DIMENSIONS MEASURED AT 55°F.	
	A	B
East Abutment	1'-4⅜"±	10⅝"±

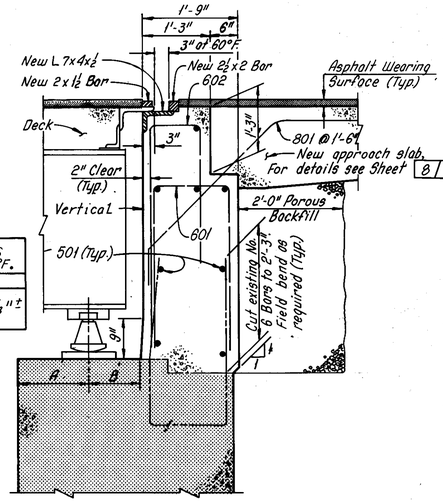

MODIFIED SECTION C-C

Notes:
For Views A-A and B-B, see Sheet 5 B.
For Backwall Replacement Procedure, see Sheet 5 B.
Excavation and backfilling (except Porous Backfill) necessary to accomplish structure modification shall be included with Item 202, Portions of Structure Removed, for payment. Backfill shall be in accordance with Item 203.
For details of raising the expansion joint, see Sheet CD-6.
For details of backwall expansion joint angle not shown, see Ohio Standard Drawing SD-1-69, Sheet 1 of 4.
For additional notes, see Sheet 5 B.

HOWARD, NEEDLES, TAMMEN & BERGENDOFF
CONSULTING ENGINEERS
KANSAS CITY CLEVELAND NEW YORK

EAST ABUTMENT

I-90 OVER NEFF ROAD

BR.NO.CUY-90-2639 STA. 268+09.09
STA. 270+53.81

CUYAHOGA COUNTY OHIO

DRAWN B.M.P.	TRACED D.L.R.	CHECKED L.E.C.	REVIEWED C.A.B.	REVISED
DATE 2-19-74	DATE 3-6-74	DATE 7-9-74	DATE 12-20-74	SHEET 6/8

FHWA REGION	STATE	PROJECT	
5	OHIO		

260
354

CUYAHOGA COUNTY
CUY-90-23.73
LAKE COUNTY
LAK-90-0.00

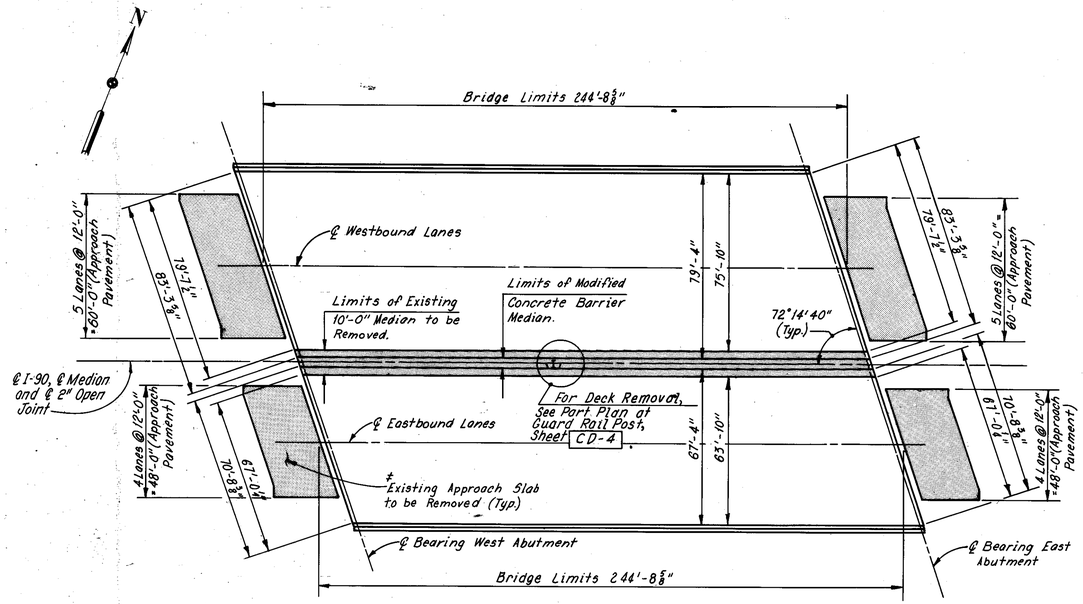

EXISTING PLAN

30 0 30 60
SCALE IN FEET

‡Includes removal of paved berms and all necessary excavation or backfill to provide the proper cross section for the new approach slab.

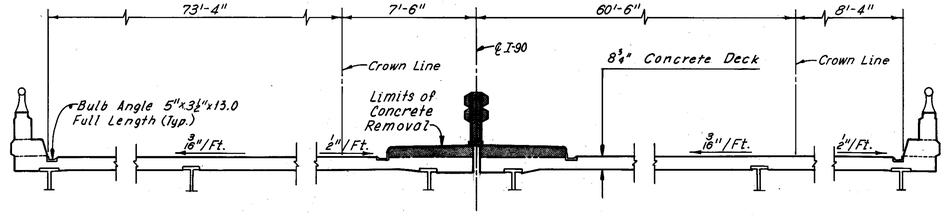

EXISTING TYPICAL SECTION

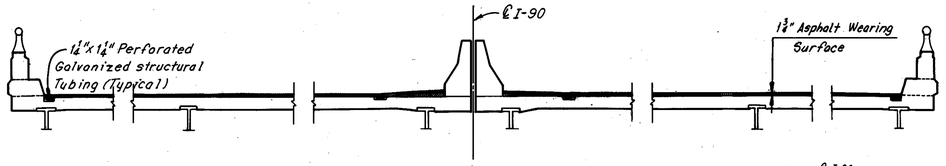

MODIFIED TYPICAL SECTION

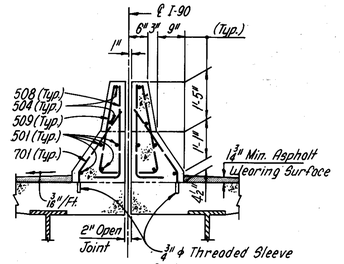

SECTION A-A

Notes:
For placement of threaded sleeve anchors, see Sheet CD-9.
For median modification, see Sheets CD-4 and CD-5.
For reinforcement schedule, see Sheet R-5.
For deck repair and asphalt wearing surface course details, see Sheet CD-7.
For deflection joint details, see Sheet CD-9.
The following abbreviation is used:
Typ. = Typical

NOTE: All reinforcing bar marks shall be prefixed HM.

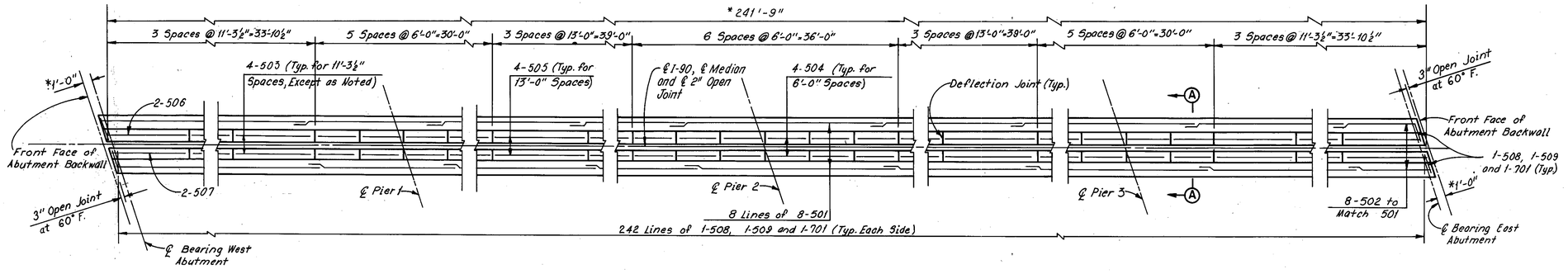

CONCRETE BARRIER MEDIAN PLAN

*Note: Plan Dimension. The Actual Dimension shall be that which results when the end dam components are extended from their existing position and when the end bearings are set in their final position.

HOWARD, NEEDLES, TAMMEN & BERGENDOFF
CONSULTING ENGINEERS
KANSAS CITY CLEVELAND NEW YORK

EXISTING AND MODIFIED DECK PLAN AND TYPICAL SECTION

I-90 OVER NEFF ROAD

BR.NO.CUY-90-2639 STA. 268+09.09
STA. 270+53.81

CUYAHOGA COUNTY OHIO

DRAWN BMP	TRACED JLR	CHECKED LEE	REVIEWED CAB	REVISED
DATE 8-6-75	DATE 8-8-75	DATE 7-9-76	DATE 12-20-76	SHEET 7/8

FHWA REGION	STATE	PROJECT	
5	OHIO		

261
354

CUYAHOGA COUNTY
CUY-90-23.73
LAKE COUNTY
LAK-90-0.00

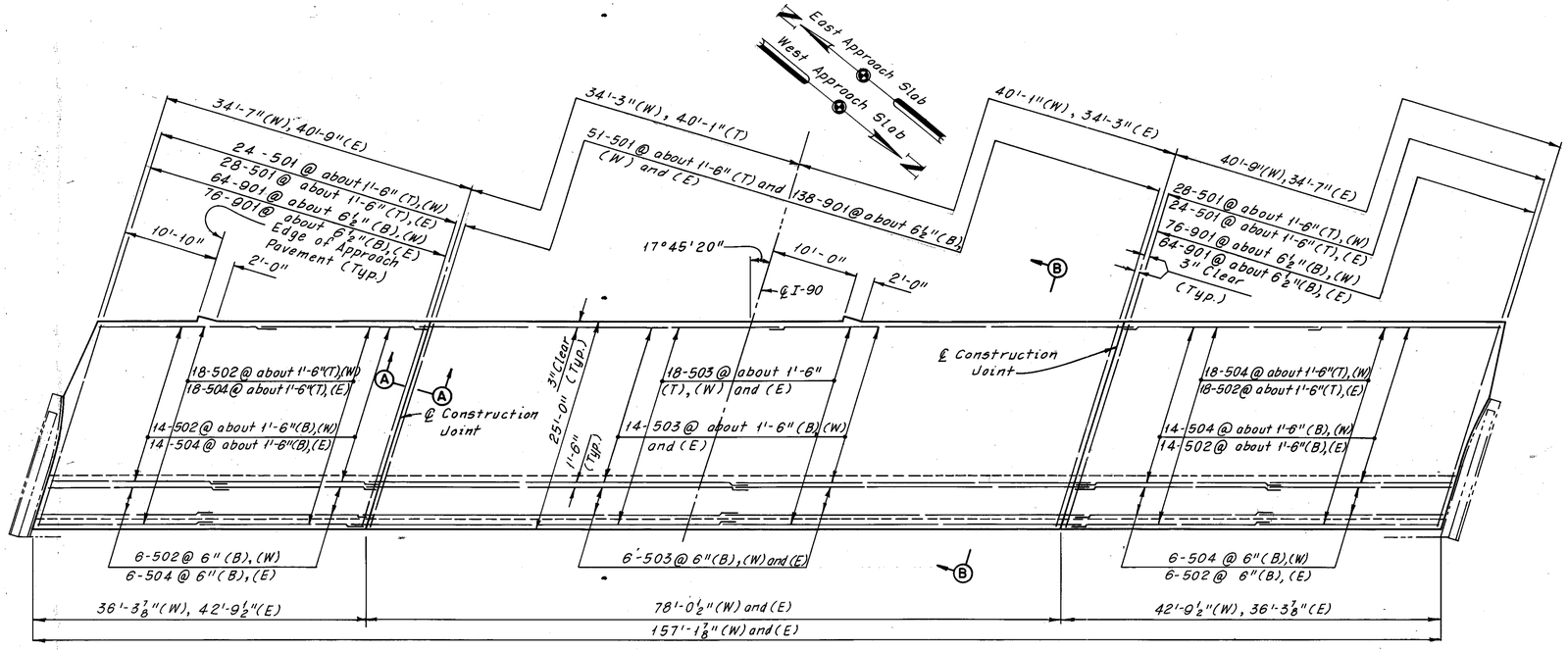

APPROACH SLAB PLAN

REINFORCEMENT SCHEDULE				
MARK	NO.	LENGTH	TYPE	SER. INCR.
HHS501	206	24'-6"	Str.	
HHS502	152	19'-3"	Str.	
HHS503	152	41'-3"	Str.	
HHS504	152	22'-6"	Str.	
HHS901	556	25'-9"	101	

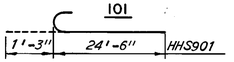

Note: All reinforcing bar marks shall be prefixed HHS.

Note:
The jacking holes as called for on Ohio Standard Drawing AS-1-72 are not required.

Note:
The asphalt wearing surface on the approach slab shall consist of the following:
1. Item 407, Tack Coat at 0.1 gal. per sq. yd.
2. Item 402, 1¾" Asphalt Concrete (AC-20)
3. Item 404, 1¼" Asphalt Concrete (AC-20)

Notes:
For stage construction sequence, see Maintenance Of Traffic, Sheet 2/8.
For normal cross slopes, see Existing Typical Section, Sheet 7/8.
For details of median barrier transition, see Roadway Plans.
The following abbreviations are used:
T = Top W = West Approach Slab
B = Bottom E = East Approach Slab
Typ. = Typical
For additional notes and details, see Ohio Standard Drawing AS-1-72.

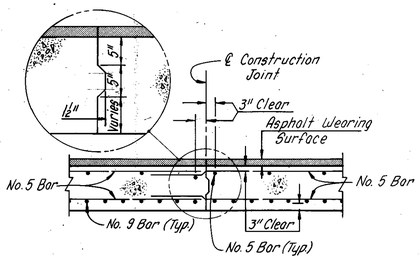

SECTION A-A

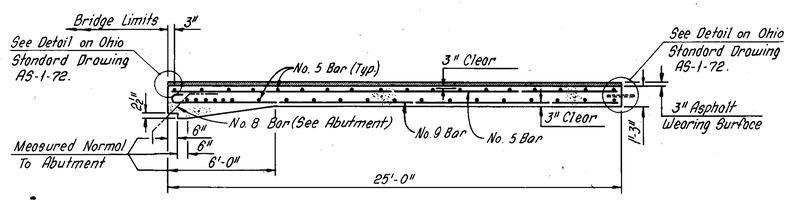

SECTION B-B

HOWARD, NEEDLES, TAMMEN & BERGENDOFF
CONSULTING ENGINEERS
KANSAS CITY CLEVELAND NEW YORK

APPROACH SLABS

I-90 OVER NEFF ROAD

BR. NO. CUY-90-2639 STA. 268+09.09
STA. 270+53.81

CUYAHOGA COUNTY OHIO

DRAWN B.M.A	TRACED A.J.T	CHECKED L.L	REVIEWED CAB	REVISED
DATE 2-12-74	DATE 3-8-74	DATE 7-9-74	DATE 12-20-74	SHEET 8/8

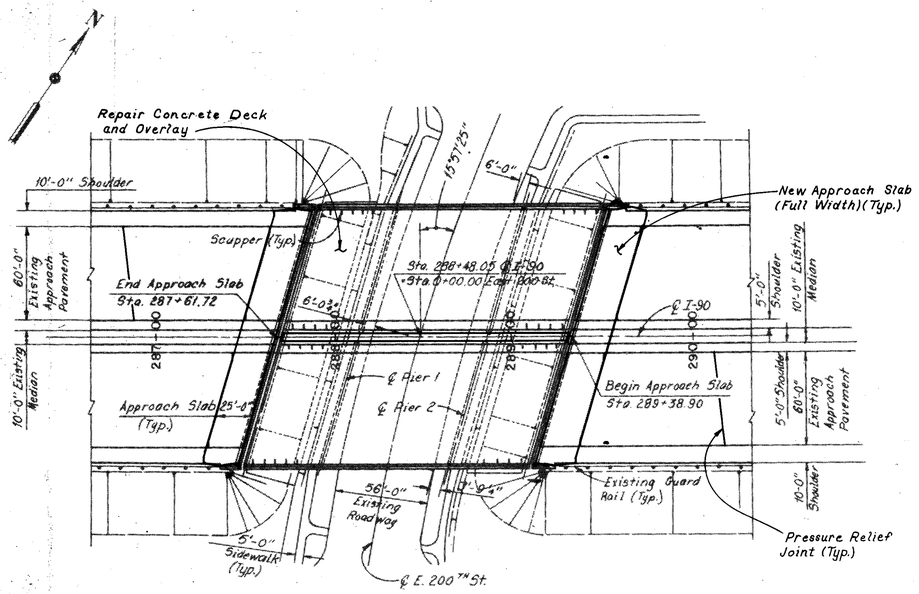

PLAN

40 0 40 80

SCALE IN FEET

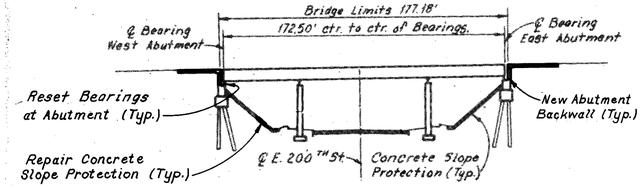

ELEVATION

40 0 40 80

SCALE IN FEET

PROPOSED WORK:

1. Install pressure relief joints in approach roadway pavement, see Sheet CD-9 .
2. Replace both abutment backwalls, see Sheets 3/6 and 4/6 .
3. Reset abutment bearings, see Sheets 3/6 and 4/6 .
4. Trim wingwall parapet.
5. Repair minor curb and parapet deterioration.
6. Replace approach slabs, see Sheet 6/6 .
7. Replace deep beam barrier median with concrete barrier median, see Sheet 5/6 .
8. Repair concrete deck and place asphalt wearing surface, see Sheet 5/6 .
9. Clean out bridge drainage system and remove debris from abutment bridge seat.
10. Paint all structural steel.
11. Repair minor abutment deterioration.
12. Repair minor wingwall deterioration.
13. Repair concrete slope protection.

FHWA REGION	STATE	PROJECT	
5	OHIO		

262/354

CUYAHOGA COUNTY
CUY-90-23.73
LAKE COUNTY
LAK-90-0.00

RECEIVED MAR 22 '75

Note:
Roman numerals II and III denote cost participation breakdown. For description, see Roadway Plans, Sheet 3-354.

TYPE CODE X231

ESTIMATED QUANTITIES

ITEM	TOTAL	UNIT	DESCRIPTION BRIDGE REPAIR	SUPER-STRUCTURE	WEST ABUT	EAST ABUT	WINGWALLS NE	WINGWALLS SE	WINGWALLS NW	WINGWALLS SW	APPROACH SLABS	CON. SLOPE PRO. WEST	CON. SLOPE PRO. EAST	GENERAL	Participation II Fed., State & Cleveland	Participation III 100% State
*202	Lump Sum	Lump Sum	Portions of Structures Removed	II Lump Sum	III L.S.	III L.S.	-	-	-	-	III L.S.	-	-	-	Lump	Lump
402	44	Cu. Yd.	Asphalt Concrete (AC-20)	-	-	-	-	-	-	-	II 44	-	-	-	44	
404	182	Cu. Yd.	Asphalt Concrete (AC-20)	II 151	-	-	-	-	-	-	II 31	-	-	-	182	182
407	90	Gallons	Tack Coat: 702.03, RC-250 or 702.04, SS-1, SS-1H, MS-2 or RS-1	-	-	-	-	-	-	-	II 90	-	-	-	90	
503	Lump Sum	Lump Sum	Cofferdams, Cribs and Sheeting	-	-	-	-	-	-	-	-	-	-	III L.S.		Lump
509	20,298	Pounds	Reinforcing Steel	II 6,436	III 6,931	III 6,931	-	-	-	-	-	-	-	-	6,436	13,862
511	31	Cu. Yd.	Class "C" Concrete, Superstructure	II 31	-	-	-	-	-	-	-	-	-	-	31	
511	98	Cu. Yd.	Class "C" Concrete, Substructure	-	III 49	III 49	-	-	-	-	-	-	-	-		98
512	54	Lin. Ft.	Premolded Sealing Strip	-	III 27	III 27	-	-	-	-	-	-	-	-		54
513	14,239	Pounds	Structural Steel (ASTM A36)	II 651	III 6794	III 6794	-	-	-	-	-	-	-	-	651	13,588
514	14,239	Pounds	Field Painting of New Structural Steel	II 651	III 6794	III 6794	-	-	-	-	-	-	-	-	651	13,588
516	30	Sq. Ft.	1" Preformed Expansion Joint Filler	-	III 15	III 15	-	-	-	-	-	-	-	-		30
518	86	Cu. Yd.	Porous Backfill	-	III 43	III 43	-	-	-	-	-	-	-	-		86
518	695	Lin. Ft.	Subdrainage For Wearing Course, As Per Plan	II 695	-	-	-	-	-	-	-	-	-	-	695	
519	11	Sq. Ft.	Patching Concrete Structures	-	-	-	-	-	III 6	-	-	III 5	-	-		11
520	40	Sq. Ft.	Pneumatically Placed Mortar	III 2	III 35	III 2	III 1	-	-	-	-	-	-	-		40
611	898	Sq. Yd.	Reinforced Concrete Approach Slabs T=15"	-	-	-	-	-	-	-	III 898	-	-	-		898
837	Lump Sum	Lump Sum	Surface Preparation	III Lump Sum	-	-	-	-	-	-	-	-	-	-		Lump
837	Lump Sum	Lump Sum	Spot Prime Painting	III Lump Sum	-	-	-	-	-	-	-	-	-	-		Lump
837	Lump Sum	Lump Sum	Complete Coat Prime Painting	III Lump Sum	-	-	-	-	-	-	-	-	-	-		Lump
837	Lump Sum	Lump Sum	Two Complete Coats Finish Painting	III Lump Sum	-	-	-	-	-	-	-	-	-	-		Lump
Special	89	Sq. Yd.	Patching Concrete Deck Slab	III 89	-	-	-	-	-	-	-	-	-	-		89
Special	3,099	Sq. Yd.	Membrane Waterproofing Hot Applied Liquid (See Proposal Note)	II 3,099	-	-	-	-	-	-	-	-	-	-	3,099	
Special	13	Lin. Ft.	Repair of Cracks	-	III 8	III 5	-	-	-	-	-	-	-	-		13
Special	330	Lin. Ft.	Raising Existing End Dams	-	III 165	II 165	-	-	-	-	-	-	-	-	330	
Special	36	Each	Reset Bearings	-	III 18	III 18	-	-	-	-	-	-	-	-		36
Special	378	Each	Threaded Sleeve Anchors	II 378	-	-	-	-	-	-	-	-	-	-	378	
Special	241	Lin. Ft.	Pressure Relief Joint	-	-	-	-	-	-	-	-	-	-	III 241		241
Special	Lump Sum	Lump Sum	Cleanout Bridge Drainage Systems and Remove Debris From Bridge Seats	III Lump Sum	III L.S.	III L.S.	-	-	-	-	-	-	-	-		Lump
Special	9	Sq. Yd.	Repair of Concrete Slope Protection	-	-	-	-	-	-	-	-	-	III 9	-		9

*SUPERSTRUCTURE - Includes approximately 39 Cu. Yds. of concrete in the existing 10'-0" median, and approximately 177 Lin. Ft. of guardrail including posts, nuts, plates and portions of bulb angle gutter.
*SUBSTRUCTURE - Includes approximately 98 Cu. Yds. of concrete in the existing abutment backwalls.
*APPROACH SLABS - Includes approximately 898 Sq. Yds. of existing reinforced concrete approach slabs, paved berms and all necessary excavation or backfill to provide proper cross section for the new approach slabs.
TRIM WINGWALL PARAPETS - Trim all wingwall parapets and curbs at the front face of backwall, see Sheet CD-8 .

EXISTING STRUCTURE	
TYPE:	Continuous Steel Beam with Reinforced Concrete Deck, Piers and Abutments.
SPANS:	47'-0", 78'-6", and 47'-0".
ROADWAY:	164'-0" Face to Face of Parapets.
LOADING:	CF-2000-57 (Adequate for AASHO Alternate Loading).
SKEW:	15°57'25" Left Forward.
WEARING SURFACE:	1" Monolithic Concrete.
APPROACH SLABS:	AS-1-54 (25'-0" Long).
ALIGNMENT:	Tangent.

MODIFIED STRUCTURE	
TYPE:	Continuous Steel Beam with Reinforced Concrete Deck, Piers and Abutments.
SPANS:	47'-0", 78'-6" and 47'-0".
ROADWAY:	164'-0" Face to Face of Parapets with a 3'-0" Barrier Median.
LOADING:	CF-2000-57 (Adequate for AASHO Alternate Loading).
SKEW:	15°57'25" Left Forward.
WEARING SURFACE:	1 3/4" Asphalt.
APPROACH SLABS:	AS-1-72 (25'-0" Long).
ALIGNMENT:	Tangent.

Note: the gap between the front face of the west abutment and the edge of the slope protection shall be filled with joint sealer meeting the requirements of 705.02. All material and labor required to complete this repair shall be included with Item Special, Repair of Concrete Slope Protection, for payment. The approximate quantity is 172 Lin. Ft..

Rev. 7-18-75

HOWARD, NEEDLES, TAMMEN & BERGENDOFF
CONSULTING ENGINEERS
KANSAS CITY CLEVELAND NEW YORK

SITE PLAN
I-90 OVER EAST 200th. STREET

BR.NO.CUY-90-2674
STA. 287+61.72
STA. 289+38.90

CUYAHOGA COUNTY OHIO

DRAWN	TRACED	CHECKED	REVIEWED	REVISED
BMP	JLR	EE	CAB	
DATE 8-13-73	DATE 8-14-73	DATE 7-15-74	DATE 12-20-74	SHEET 1/6

FHWA REGION	STATE	PROJECT	
5	OHIO		

263
354

CUYAHOGA COUNTY
CUY-90-23.73
LAKE COUNTY
LAK-90-0.00

MICROFILMED
MAR 22 1976

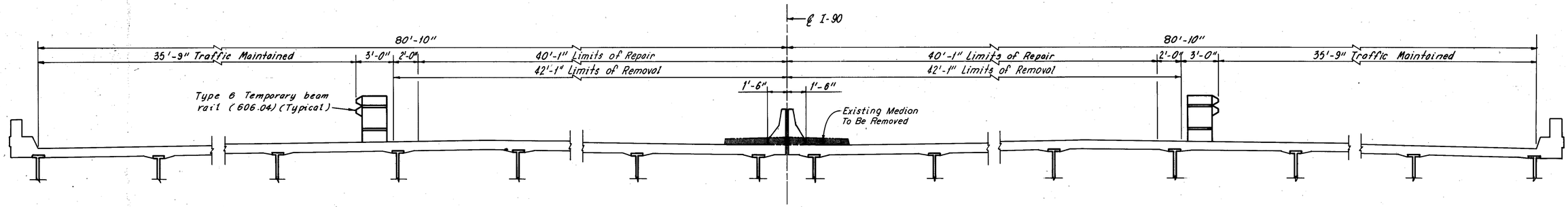

SECOND STAGE CONSTRUCTION

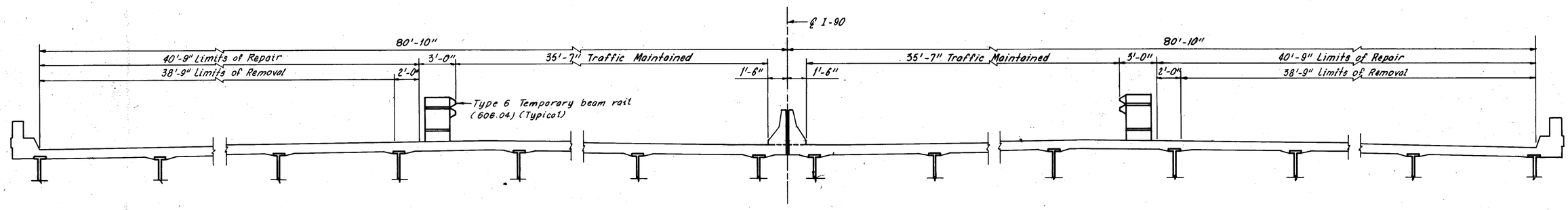

THIRD STAGE CONSTRUCTION

Notes:

The stage construction cross-sections apply within the bridge and approach slab limits. All repair work shall be co-ordinated with the stage construction as shown.

For maintenance of traffic notes, see Roadway Plans.

For shoring required at approach slabs, see Sheet CD-1 .

HOWARD, NEEDLES, TAMMEN & BERGENDOFF
CONSULTING ENGINEERS
KANSAS CITY CLEVELAND NEW YORK

MAINTENANCE OF TRAFFIC

I-90 OVER EAST 200th. STREET

BR.NO.CUY-90-2674 STA. 287+61.72
STA. 289+38.90

CUYAHOGA COUNTY OHIO

DRAWN	TRACED	CHECKED	REVIEWED	REVISED
BMP	J.L.P.	M.L.	226	
DATE 1-4-74	DATE 1-11-74	DATE 1-16-74	DATE 12-20-74	SHEET 2/6

Note: Backwall elevations are given at the top of the 7x4x½ angle of the end dam.

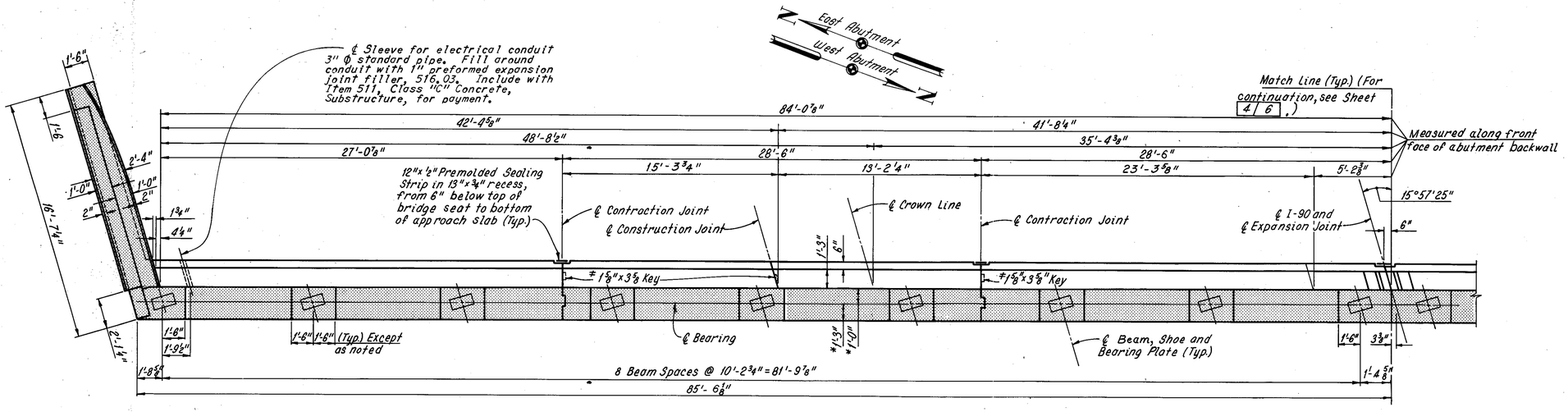

MODIFIED PART PLAN

Note: All reinforcing bar marks shall be prefixed as follows:
West Abutment: JW
East Abutment: JE

* Plan Dimension, the actual dimensions shall be those which result when the end dam components are extended from their existing position and when the bearings are set in their final position.
± Stop 8" below top of backwall.

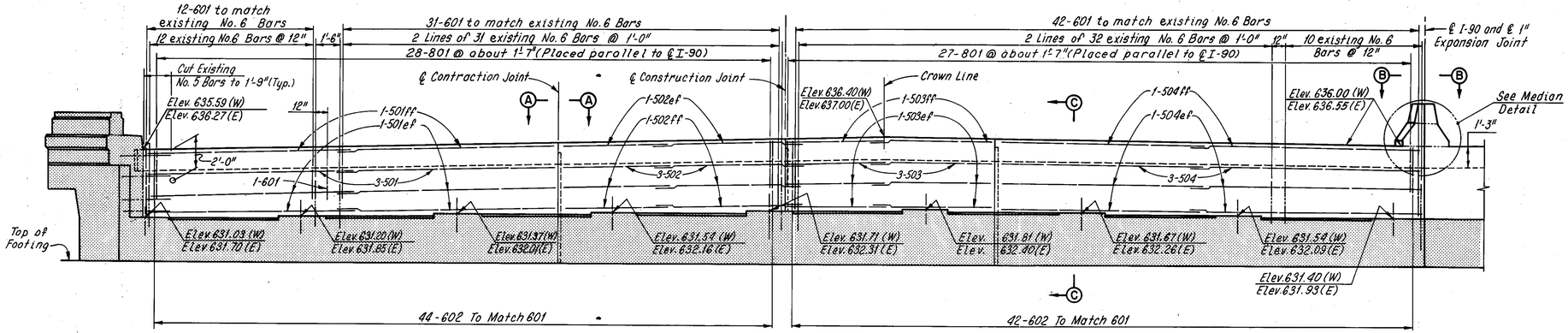

MODIFIED PART ELEVATION

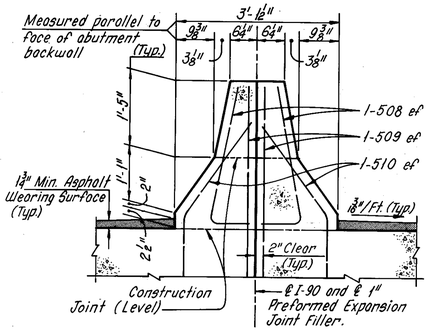

MEDIAN DETAIL

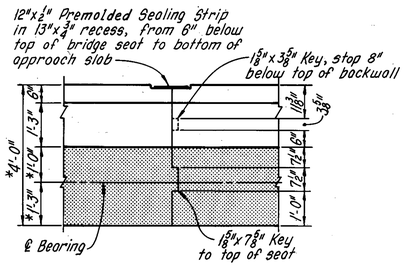

VIEW A-A

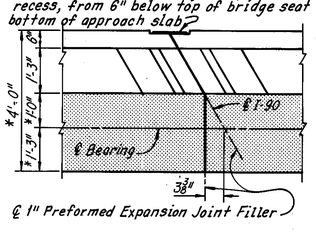

VIEW B-B

Notes:
Indicates existing portions of abutment to remain.
For Existing and Modified Section C-C, see Sheet 4 6 .
For stage construction sequence, see Maintenance Of Traffic, Sheet 2 6 .
For shoring required at approach slabs, see Sheet CD-1 .
For resetting bearing details, see Sheet CD-3 .
For expansion joint modification at the median, see Sheets CD-4 and CD-5 .
For Reinforcement Schedule, see Sheet R-5 .
The following abbreviations are used:
ef = each face E = East Abutment
ff = for face W = West Abutment
Typ. = Typical

BACKWALL REPLACEMENT PROCEDURE:

1. Bridge the backwall with an adequate steel plate within the area of maintained traffic. Provide bituminous wearing surface cover, as directed by the Engineer, to permit and maintain safe passage of vehicular traffic. The steel plate and bituminous cover shall be included with Item 614, Maintaining Traffic, for payment (see Roadway Plans).
2. Raise the entire superstructure (all beams simultaneously) until there is no contact between the superstructure and backwall end dam angles. All material, labor and equipment required to accomplish the above shall be included with Item 202, Portions of Structures Removed, for payment.
3. Remove approximately 1 foot of the top of the backwall.
4. Reset bearings.
5. Release jacks.
6. Remove the remaining portions of the backwall, including reinforcement, except as noted, within the limits of the stage construction.
7. Replace the backwall within the limits of the stage construction using the existing superstructure end dam angle to set the new backwall. In setting the top of backwall end dam angle, care shall be exercised to insure proper seating of the superstructure and expansion joint.

FHWA REGION	STATE	PROJECT	
5	OHIO		

264
354

CUYAHOGA COUNTY
CUY-90-23.73
LAKE COUNTY
LAK-90-0.00

HOWARD, NEEDLES, TAMMEN & BERGENDOFF
CONSULTING ENGINEERS
KANSAS CITY CLEVELAND NEW YORK

WEST AND EAST ABUTMENT

I-90 OVER EAST 200th. STREET

BR. NO. CUY-90-2674 STA. 287+61.72
STA. 289+38.90

CUYAHOGA COUNTY OHIO

DRAWN MHL	TRACED S.J.S.	CHECKED L.E.F.	REVIEWED C.A.B.	REVISED
DATE 5-10-74	DATE 3-28-74	DATE 7-15-74	DATE 12-20-74	SHEET 3/6

FHWA REGION	STATE	PROJECT	
5	OHIO		

265
354

CUYAHOGA COUNTY
CUY-90-23.73
LAKE COUNTY
LAK-90-0.00

Note: Backwall elevations are given at the top of the L 7x4x½ of the end dam.

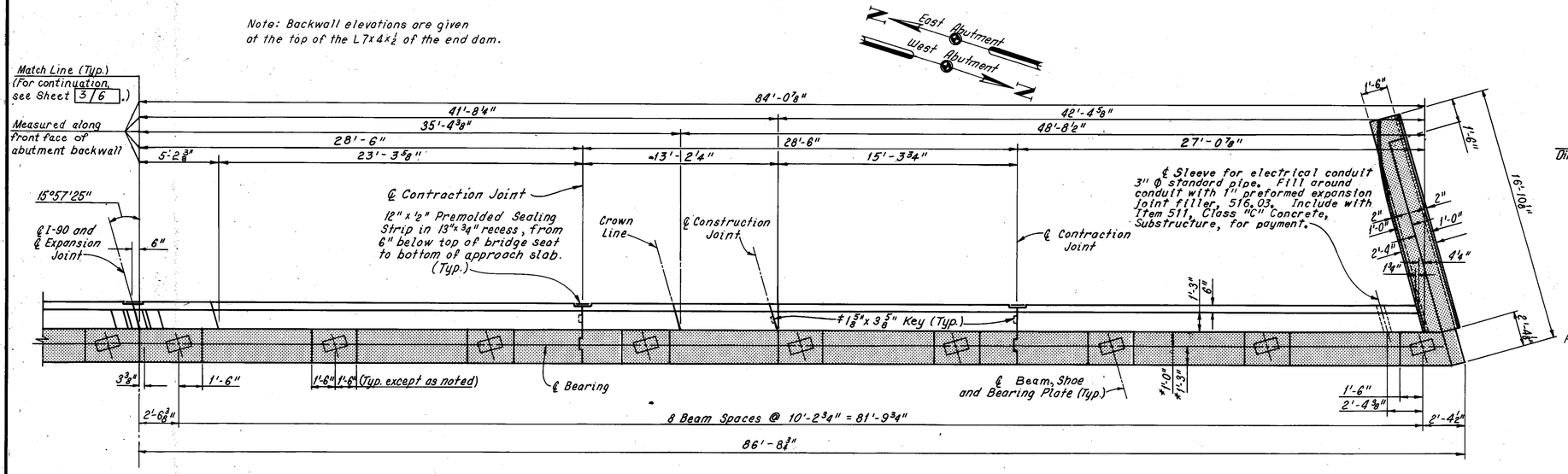

MODIFIED PART PLAN

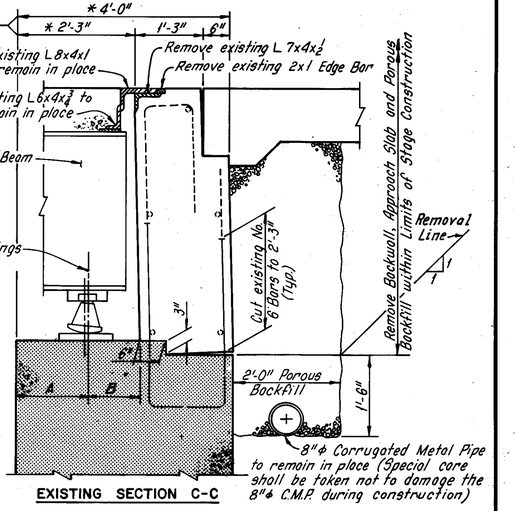

EXISTING SECTION C-C

Note: All reinforcing bar marks shall be prefixed as follows:
West Abutment: JW
East Abutment: JE

* Plan Dimension, the actual dimensions shall be those which result when the end dam components are extended from their existing position and when the bearings are set in their final position.
# Stop 8" below top of backwall.
** 3" ϕ Sleeve to be placed as shown in the west abutment backwall only.

LOCATION	AVG. DIMENSIONS MEASURED AT 55°F.	
	A	B
W Abutment	1'-6 4"±	8 ¾"±
E Abutment	1'-5 2"±	9 ½"±

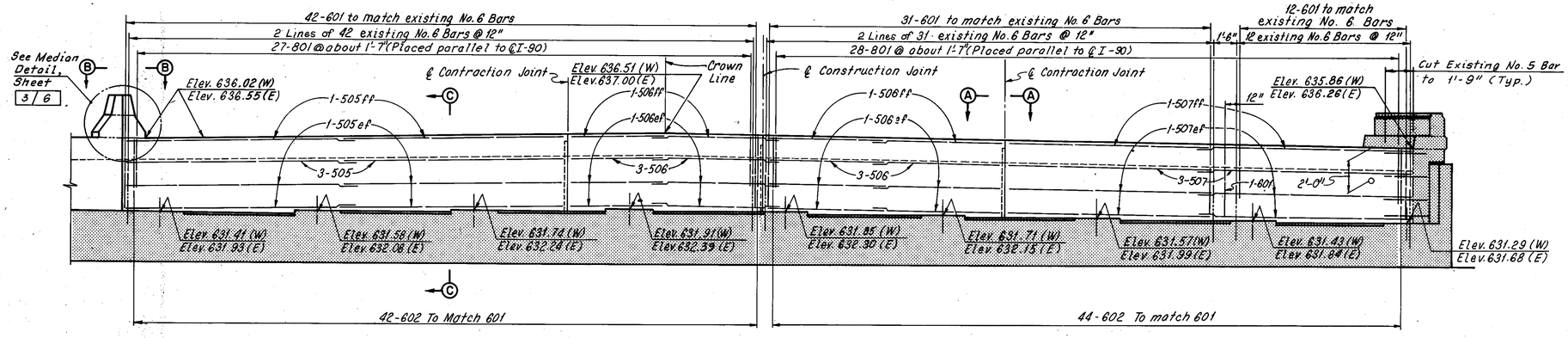

MODIFIED PART ELEVATION

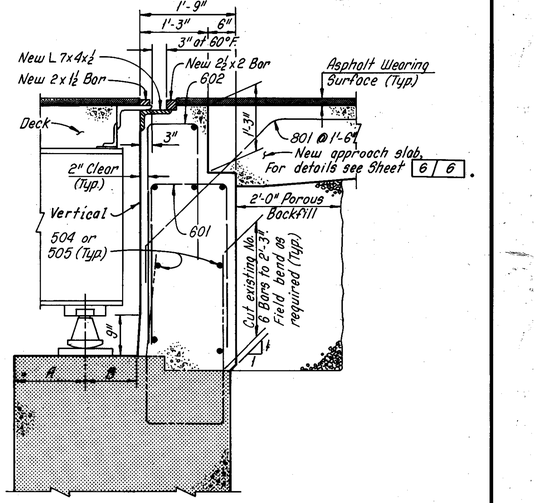

MODIFIED SECTION C-C

Notes:
For Views A-A and B-B, see Sheet 3/6.
For Backwall Replacement Procedure, see Sheet 3/6.
Excavation, backfill (except Porous Backfill) and paved berm removal necessary to accomplish structure modification shall be included with Item 202, Portions of Structures Removed, for payment. Backfill shall be in accordance with Item 203.
For details of raising the expansion joint, see Sheet CD-6.
For details of backwall expansion joint angle not shown, see Ohio Standard Drawing SD-1-69, Sheet 1 of 4.
For additional notes, see Sheet 3/6.

HOWARD, NEEDLES, TAMMEN & BERGENDOFF
CONSULTING ENGINEERS
KANSAS CITY CLEVELAND NEW YORK

WEST AND EAST ABUTMENT

I-90 OVER EAST 200th. STREET

BR.NO.CUY-90-2674 STA.287+61.72
STA.289+38.90

CUYAHOGA COUNTY OHIO

DRAWN ML	TRACED SJS	CHECKED LE	REVIEWED CAB	REVISED
DATE 3-25-74	DATE 3-28-74	DATE 7-15-74	DATE 12-20-74	SHEET 4/6

FHWA REGION	STATE	PROJECT	
5	OHIO		

266
354

CUYAHOGA COUNTY
CUY-90-23.73
LAKE COUNTY
LAK-90-0.00

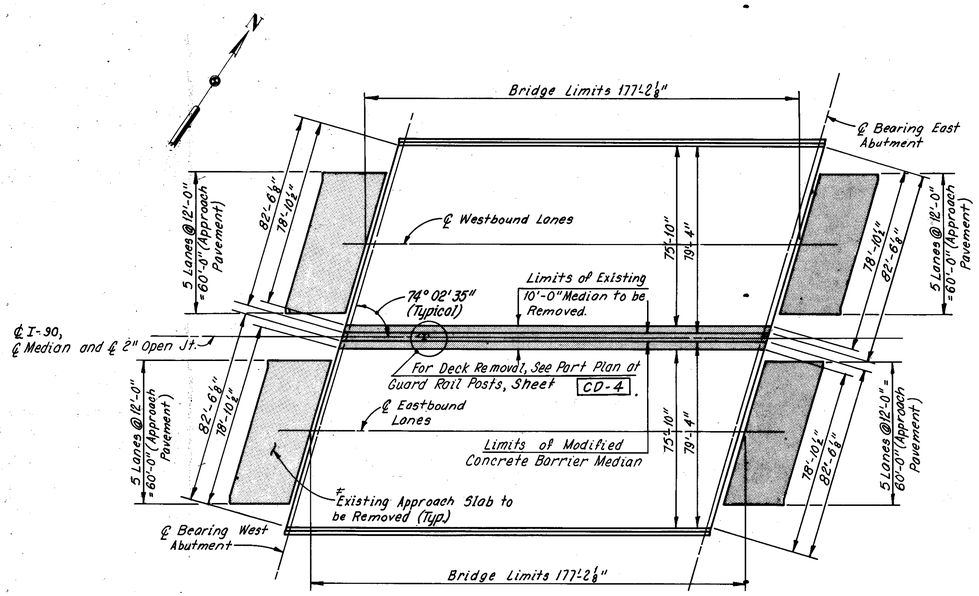

EXISTING PLAN

30 0 30 60
SCALE IN FEET

*Includes removal of paved berms and all necessary excavation or backfill to provide the proper cross section for the new approach slab.

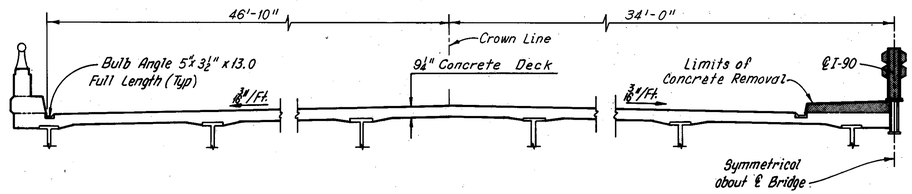

EXISTING TYPICAL SECTION

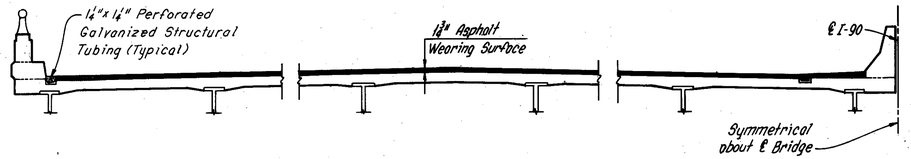

MODIFIED TYPICAL SECTION

NOTE: All reinforcing bar marks shall be prefixed JM.

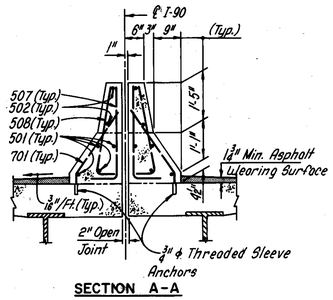

SECTION A-A

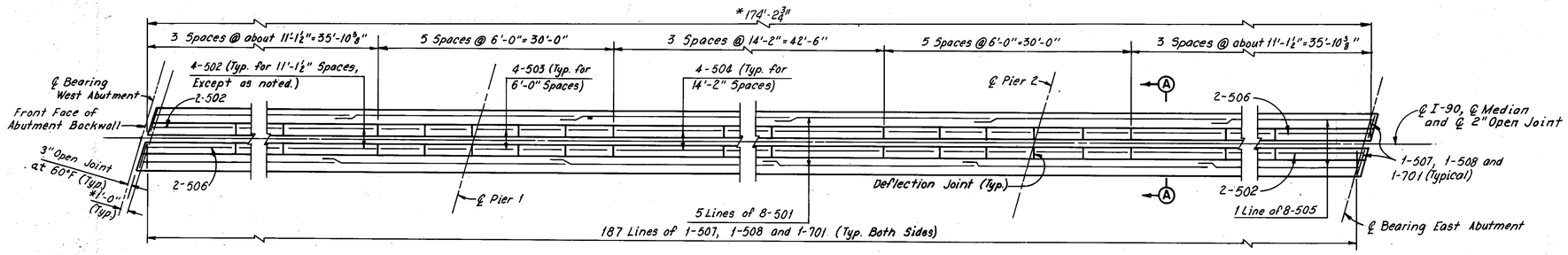

CONCRETE BARRIER MEDIAN PLAN

*Note: Plan Dimension. The Actual Dimension shall be that which results when the end dam components are extended from their existing position and when the end bearings are set in their final position.

Notes:
For placement of threaded sleeve anchors, see Sheet CD-9.
For median modification, see Sheets CD-4 and CD-5.
For reinforcement schedule, see Sheet R-5.
For deck repair and asphalt wearing surface course details, see Sheet CD-7.
For deflection joint details, see Sheet CD-9.
The following abbreviation is used:
Typ. = Typical

HOWARD, NEEDLES, TAMMEN & BERGENDOFF
CONSULTING ENGINEERS
KANSAS CITY CLEVELAND NEW YORK

EXISTING AND MODIFIED DECK PLAN AND TYPICAL SECTION

I-90 OVER E. 200th STREET

BR. NO. CUY-90-2674 STA. 287+61.72 STA. 289+38.90

CUYAHOGA COUNTY OHIO

DRAWN BMP	TRACED JR	CHECKED LE	REVIEWED JAE	REVISED
DATE 8-9-73	DATE 8-10-73	DATE 1-15-74	DATE 12-20-74	SHEET 5/6

FHWA REGION	STATE	PROJECT	
5	OHIO		

267
354

CUYAHOGA COUNTY
CUY-90-23.73
LAKE COUNTY
LAK-90-0.00

MICROFILMED
MAR 22 19..

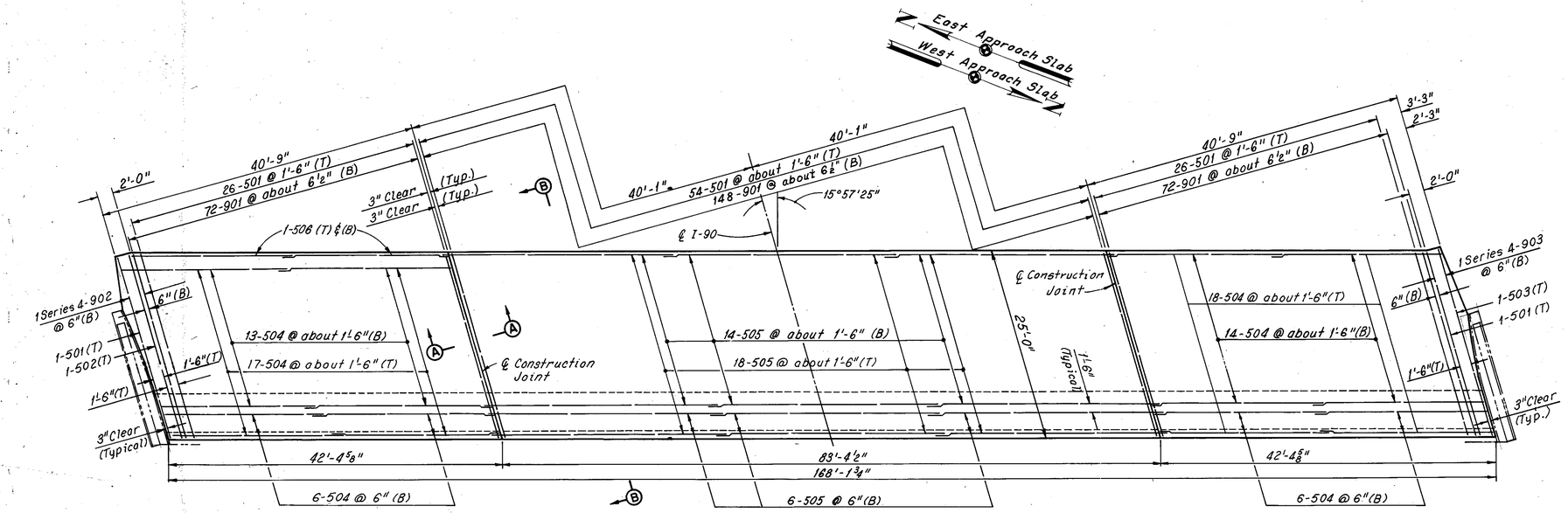

APPROACH SLAB PLAN

Note: All reinforcing bar marks shall be prefixed JJS.

Note:
The jacking holes as called for on Ohio Standard Drawing AS-1-72 are not required.

Note:
The asphalt wearing surface on the approach slab shall consist of the following:
1. Item 407, Tack Coat at 0.1 gal. per sq. yd.
2. Item 402, 1¾" Asphalt Concrete (AC-20)
3. Item 404, 1¼" Asphalt Concrete (AC-20)

REINFORCEMENT SCHEDULE				
MARK	NO.	LENGTH	TYPE	SER. INCR.
JJS501	216	24'-6"	Str.	
JJS502	2	24'-0"	Str.	
JJS503	2	25'-0"	Str.	
JJS504	296	22'-3"	Str.	
JJS505	228	30'-3"	Str.	
JJS506	8	20'-9"	Str.	
JJS901	584	25'-9"	101	
JJS902	2 Ser 4	24'-0" 24'-6"	101	2"
JJS903	2 Ser 4	24'-6" 25'-0"	101	2"

101

1'-3"	24'-6"	JJS901
1'-3"	25'-3" to 25'-9"	JJS902
1'-3"	25'-9" to 26'-3"	JJS903

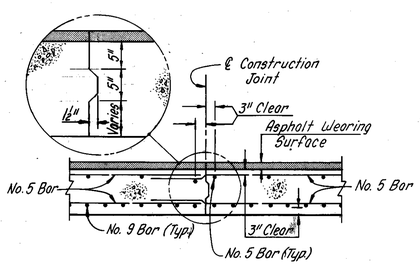

SECTION A-A

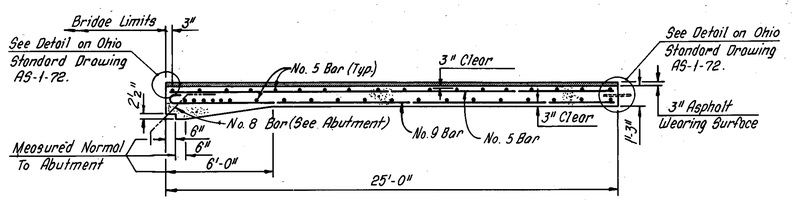

SECTION B-B

Notes:
For stage construction sequence, see Maintenance Of Traffic, Sheet 2/6.
For normal cross slopes, see Existing Typical Section, Sheet 5/6.
For details of median barrier transition, see Roadway Plans.
The following abbreviations are used:
T = Top
B = Bottom
Typ. = Typical
For additional notes and details, see Ohio Standard Drawing AS-1-72.

HOWARD, NEEDLES, TAMMEN & BERGENDOFF
CONSULTING ENGINEERS
KANSAS CITY CLEVELAND NEW YORK

APPROACH SLABS

I-90 OVER EAST 200th. STREET

BR. NO. CUY-90-2674 STA. 287+61.72 STA. 289+38.90

CUYAHOGA COUNTY OHIO

DRAWN ML	TRACED SJS	CHECKED LEE	REVIEWED CAB	REVISED
DATE 3-24-74	DATE 3-28-74	DATE 7-15-74	DATE 12-20-74	SHEET 6/6

FHWA REGION	STATE	PROJECT	
5	OHIO		

268
354

CUYAHOGA COUNTY
CUY-90-23.73
LAKE COUNTY
LAK-90-0.00

MICROFILMED
MAR 22 1955

PROPOSED WORK

1. Install pressure relief joints in approach roadway pavement, see Sheet CD-9.
2. Replace west abutment backwall, see Sheets 3/9 and 4/9.
3. Replace portions of east abutment backwall, see Sheets 5/9 and 6/9.
4. Reset abutment bearings, see Sheets 3/9, 4/9, 5/9 and 6/9.
5. Replace approach slabs, see Sheet 9/9.
6. Replace deep beam barrier median with concrete barrier median, see Sheet 8/9.
7. Repair concrete deck and place asphalt wearing surface, see Sheet 8/9.
8. Trim wingwall parapet.
9. Replace the southwest and northeast curb plates, see Sheet CD-10.
10. Paint all structural steel.
11. Clean out bridge drainage system and remove debris from abutment bridge seat.
12. Repair minor abutment deterioration.
13. Repair minor wingwall deterioration.
14. Divert roadway runoff at end of northwest and southeast wingwalls, see Sheet CD-9.
15. Provide weepholes with sleeves at abutments, see Sheet CD-9.
16. Apply concrete coating.

Note:
Roman numerals I and III denote cost participation breakdown. For description, see Roadway Plans, Sheet 3-354.

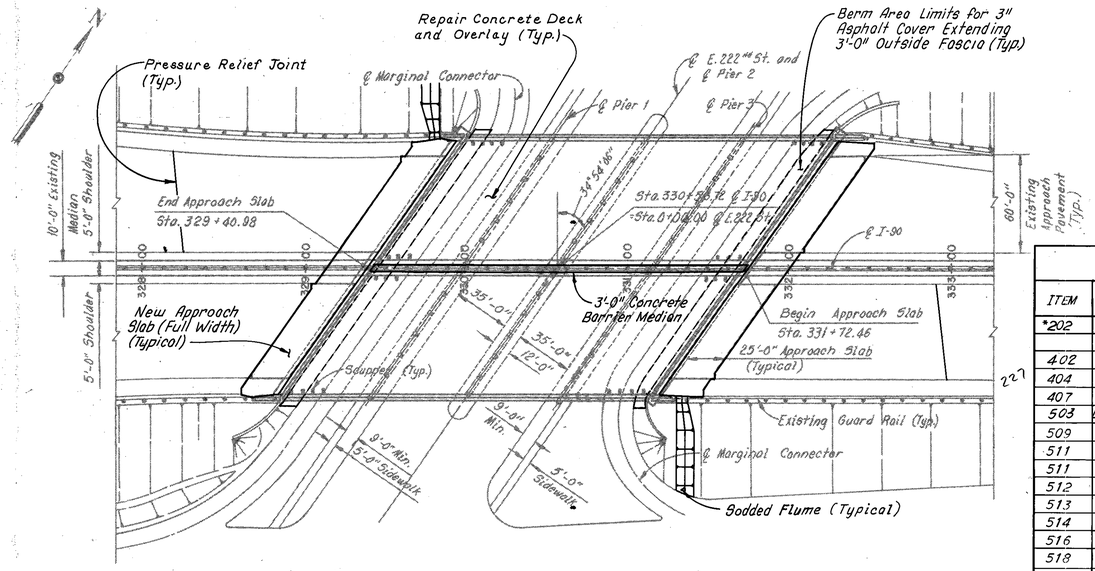

PLAN
40 0 40 80
SCALE IN FEET

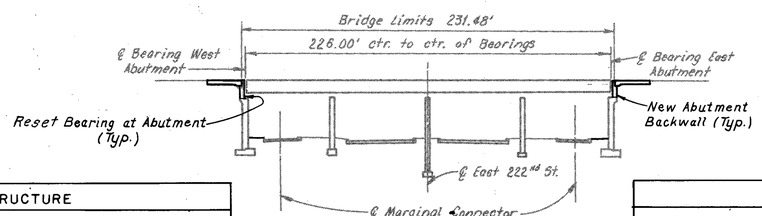

ELEVATION
40 0 40 80
SCALE IN FEET

TYPE CODE X231

ESTIMATED QUANTITIES

ITEM	TOTAL	UNIT	DESCRIPTION BRIDGE REPAIR	SUPER-STRUCTURE	WEST ABUT	EAST ABUT	*RETAINING WALLS AND # WINGWALLS NE	SE	NW	SW	APPROACH SLABS	CON. SLOPE PRO. WEST	EAST	GENERAL	Participation I Fed. & State	III 100% State
*202	Lump Sum	Lump Sum	Portions of Structures Removed	I Lump Sum	III L.S.	III L.S.	-	-	-	-	III Lump Sum	-	-	-	Lump	Lump
402	43	Cu. Yd.	Asphalt Concrete (AC-20)	- 196	-	-	-	-	-	-	I 43	-	-	-	43	
404	227	Cu. Yd.	Asphalt Concrete (AC-20)	I 196	-	-	-	-	-	-	I 31	-	-	-	227	
407	89	Gallons	Tack Coat: 702.03, RC-2 or 3, or 702.04, SS-1, SS-1H, MS-2 or 2S-1	-	-	-	-	-	-	-	I 89	-	-	-	89	
503	Lump Sum	Lump Sum	Cofferdams, Cribs and Sheeting	-	-	-	-	-	-	-	-	-	-	III L.S.		Lump
509	18,849	Pounds	Reinforcing Steel	I 8,519	III 7,546	III 2,784	-	-	-	-	-	-	-	-	8,519	10,330
511	41	Cu. Yd.	Class "C" Concrete, Superstructure	I 41	-	-	-	-	-	-	-	-	-	-	41	
511	86	Cu. Yd.	Class "C" Concrete, Substructure	-	III 60	III 26	-	-	-	-	-	-	-	-		86
512	73	Lin. Ft.	Premolded Sealing Strip	-	III 36	III 37	-	-	-	-	-	-	-	-		73
513	16,487	Pounds	Structural Steel (ASTM A36)	I 785	III 7,851	III 7,851	-	-	-	-	-	-	-	-	785	15,702
514	16,487	Pounds	Field Painting of New Structural Steel	I 785	III 7,851	III 7,851	-	-	-	-	-	-	-	-	785	15,702
516	32	Sq. Ft.	1" Preformed Expansion Joint Filler	-	III 16	III 16	-	-	-	-	-	-	-	-		32
518	65	Cu. Yd.	Porous Backfill	-	III 53	III 12	-	-	-	-	-	-	-	-		65
518	910	Lin. Ft.	Subdrainage For Wearing Course, As Per Plan	I 910	-	-	-	-	-	-	-	-	-	-	910	
519	1	Sq. Ft.	Patching Concrete Structures	-	-	-	-	-	-	III 1	-	-	-	-		1
520	14	Sq. Ft.	Pneumatically Placed Mortar	-	III 14	-	-	-	-	-	-	-	-	-		14
611	891	Sq. Yd.	Reinforced Concrete Approach Slabs T=15"	-	-	-	-	-	-	-	III 891	-	-	-		891
659	4	Sq. Yd.	Seeding and Mulching	-	-	-	-	III 4	-	-	-	-	-	-		4
660	130	Sq. Yd.	Sodding	-	-	-	-	III 65	III 65	-	-	-	-	-		130
837	Lump Sum	Lump Sum	Surface Preparation	III L.S.	-	-	-	-	-	-	-	-	-	-		Lump
837	Lump Sum	Lump Sum	Spot Prime Painting	III L.S.	-	-	-	-	-	-	-	-	-	-		Lump
837	Lump Sum	Lump Sum	Complete Coat Prime Painting	III L.S.	-	-	-	-	-	-	-	-	-	-		Lump
837	Lump Sum	Lump Sum	Two Complete Coats Finish Painting	III L.S.	-	-	-	-	-	-	-	-	-	-		Lump
Special	76	Sq. Yd.	Patching Concrete Deck Slab	III 76	-	-	-	-	-	-	-	-	-	-		76
Special	3,986	Sq. Yd.	Membrane Waterproofing Hot Applied Liquid (See Proposal Note)	I 3,986	-	-	-	-	-	-	-	-	-	-	3,986	
Special	74	Lin. Ft.	Repair of Cracks	-	III 34	III 40	-	-	-	-	-	-	-	-		74
Special	384	Lin. Ft.	Raising Existing End Dams	-	I 192	I 192	-	-	-	-	-	-	-	-	384	
Special	32	Each	Reset Bearings	-	III 18	III 14	-	-	-	-	-	-	-	-		32
Special	500	Each	Threaded Sleeve Anchors	I 500	-	-	-	-	-	-	-	-	-	-	500	
Special	241	Lin. Ft.	Pressure Relief Joint	-	-	-	-	-	-	-	-	-	-	III 241		241
Special	Lump Sum	Lump Sum	Cleanout Bridge Drainage Systems and Remove Debris From Bridge Seats	III L.S.	III L.S.	III L.S.	-	-	-	-	-	-	-	-		Lump
Special	416	Sq. Yd.	Asphalt Cover Over Berm	-	-	-	-	-	III -	-	-	-	-	III 416		416
Special	8,654	Sq. Ft.	Concrete Coating	-	III 5,474	III 3,486	III 438 / 154	III 153 / 179	III 2,298 / 486	III 331 / 216	-	-	-	-		8,654

*SUPERSTRUCTURE - Includes approximately 51 Cu. Yds. of concrete in the existing 10'-0" median, and approximately 231 Lin. Ft. of guardrail including posts, nuts, plates and portions of bulb angle gutter.

* SUBSTRUCTURE - Includes approximately 86 Cu. Yds. of concrete in the existing abutment backwalls.

* APPROACH SLABS - Includes approximately 891 Sq. Yds. of existing reinforced concrete approach slabs, paved berms and all necessary excavation or backfill to provide proper cross section for the new approach slabs.

TRIM WINGWALL PARAPET - Trim the northeast wingwall parapet and curb at the front face of the backwall, for details, see Sheet CD-8.

CONCRETE COATING - Coat the exposed surfaces of the abutments, wingwalls and adjacent retaining walls with a cement epoxy coating.

EXISTING STRUCTURE

TYPE:	Continuous Steel Beam with Reinforced Concrete Deck, Piers and Abutments.
SPANS:	53'-6", 59'-6", 59'-6" and 53'-6".
ROADWAY:	164'-0" Face to Face of Parapets.
LOADING:	CF-2000-57 (Adequate for AASHO Alternate Loading).
SKEW:	34°54'06" L.F.
WEARING SURFACE:	1" Monolithic Concrete.
APPROACH SLAB:	AS-1-54 (25'-0" Long).
ALIGNMENT:	Tangent.

MODIFIED STRUCTURE

TYPE:	Continuous Steel Beam with Reinforced Concrete Deck, Piers and Abutments.
SPANS:	53'-6", 59'-6", 59'-6" and 53'-6".
ROADWAY:	164'-0" Face to Face of Parapets with a 3'-0" Concrete Barrier Median.
LOADING:	*CF-2000-57 (Adequate for AASHO Alternate Loading).
SKEW:	34°54'06" L.F.
WEARING SURFACE:	1½" Asphalt.
APPROACH SLAB:	AS-1-72 (25'-0" Long).
ALIGNMENT:	Tangent.

* Median Beams Adequate for HS-20 Loading

Rev. 7-18-75

HOWARD, NEEDLES, TAMMEN & BERGENDOFF
CONSULTING ENGINEERS
KANSAS CITY CLEVELAND NEW YORK

SITE PLAN
I-90 OVER EAST 222nd. STREET

BR.NO. CUY-90-2754 STA. 329+40.98 STA. 331+72.46

CUYAHOGA COUNTY OHIO

DRAWN	TRACED	CHECKED	REVIEWED	REVISED
BMP	JLR	Lee	CAB	
DATE 8-20-73	DATE 8-24-73	DATE 7-30-74	DATE 12-20-74	SHEET 1/9

FHWA REGION	STATE	PROJECT	
5	OHIO		

269
354

CUYAHOGA COUNTY
CUY-90-23.73
LAKE COUNTY
LAK-90-0.00

MICROFILMED
MAR 22 1976

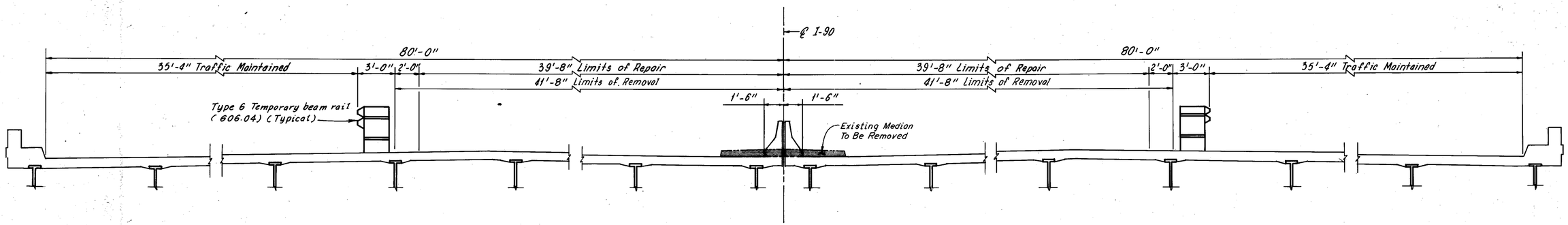

SECOND STAGE CONSTRUCTION

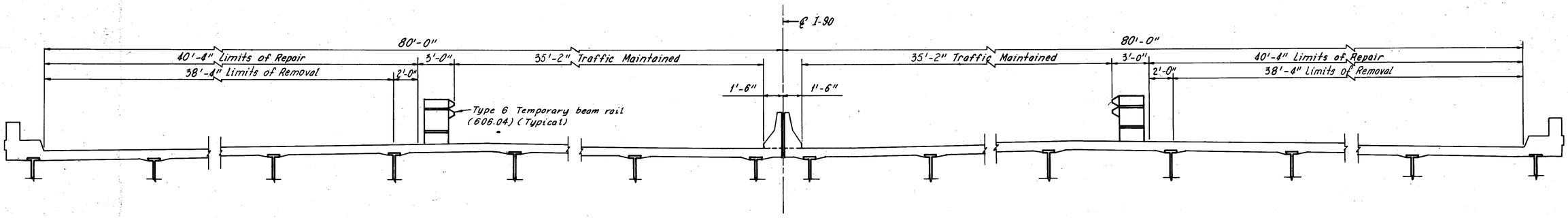

THIRD STAGE CONSTRUCTION

Notes:

The stage construction cross-sections apply within the bridge and approach slab limits. All repair work shall be co-ordinated with the stage construction as shown.

For maintenance of traffic notes, see Roadway Plans.

For shoring required at approach slabs, see Sheet CD-1 .

HOWARD, NEEDLES, TAMMEN & BERGENDOFF
CONSULTING ENGINEERS
KANSAS CITY CLEVELAND NEW YORK

MAINTENANCE OF TRAFFIC

I-90 OVER EAST 222nd. STREET

BR.NO.CUY-90-2754 STA. 329+40 98
STA. 331+72.46

CUYAHOGA COUNTY OHIO

DRAWN	TRACED	CHECKED	REVIEWED	REVISED
JLR	JLR	ML	CAB	
DATE 2-7-74	DATE 2-8-74	DATE 4-16-74	DATE 12-20-74	SHEET 2/9

FHWA REGION	STATE	PROJECT	
5	OHIO		

270
354

CUYAHOGA COUNTY
CUY-90-23.73
LAKE COUNTY
LAK-90-0.00

Note: Backwall elevations are given at the top of the 7x4x½ angle of the end dam.

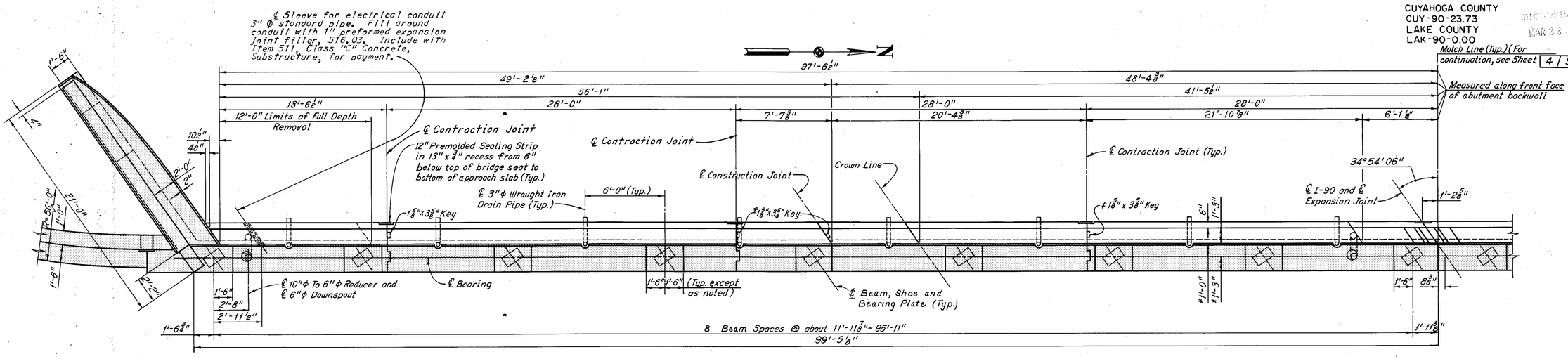

MODIFIED PART PLAN

Note: All reinforcing bar marks shall be prefixed KW.

* Plan Dimension, the actual dimensions shall be those which result when the end dam components are extended from their existing position and when the bearings are set in their final position.
* Stop 8" below top of backwall.

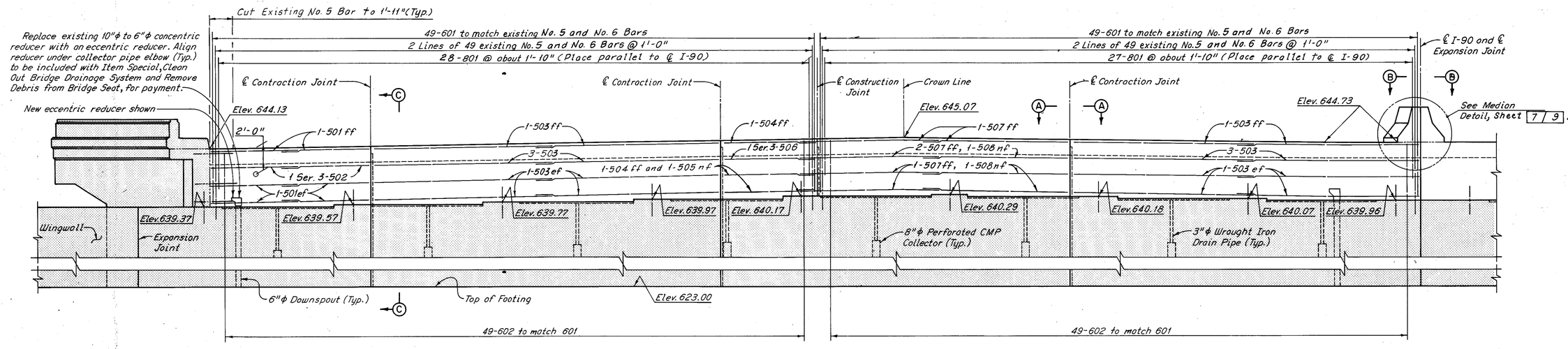

MODIFIED PART ELEVATION

Notes:
- ▭ Indicates existing portions of abutment to remain.
- For Views A-A and B-B, see Sheet 7 / 9.
- For Existing and Modified Section C-C, see Sheet 7 / 9.
- For Backwall Replacement Procedure, see Br. No. CUY-90-2639, Sheet 3 / 8.
- For stage construction sequence, see Maintenance Of Traffic, Sheet 2 / 9.
- For shoring required at approach slabs, see Sheet CD-1.
- For resetting bearing details, see Sheet CD-3.
- For expansion joint modification at the median, see Sheets CD-4 and CD-5.
- For Reinforcement Schedule, see Sheet R-5.
- The following abbreviations are used:
  - ef = each face
  - nf = near face
  - ff = far face
  - Typ = Typical

HOWARD, NEEDLES, TAMMEN & BERGENDOFF
CONSULTING ENGINEERS
KANSAS CITY CLEVELAND NEW YORK

WEST ABUTMENT

I-90 OVER EAST 222 nd. STREET

BR. NO. CUY-90-2754 STA. 329+40.98
STA. 331+72.46

CUYAHOGA COUNTY OHIO

DRAWN B.M.P.	TRACED D.L.R.	CHECKED Lee	REVIEWED CAB	REVISED
DATE 4-17-74	DATE 5-10-74	DATE 11-8-74	DATE 12-20-74	SHEET 3/9

FHWA REGION	STATE	PROJECT	
5	OHIO		

271
354

CUYAHOGA COUNTY
CUY-90-23.73
LAKE COUNTY
LAK-90-0.00

MICROFILMED
MAR 22 [illegible]

Note: Backwall elevations are given at the top of the 7x4x½ angle of the end dam.

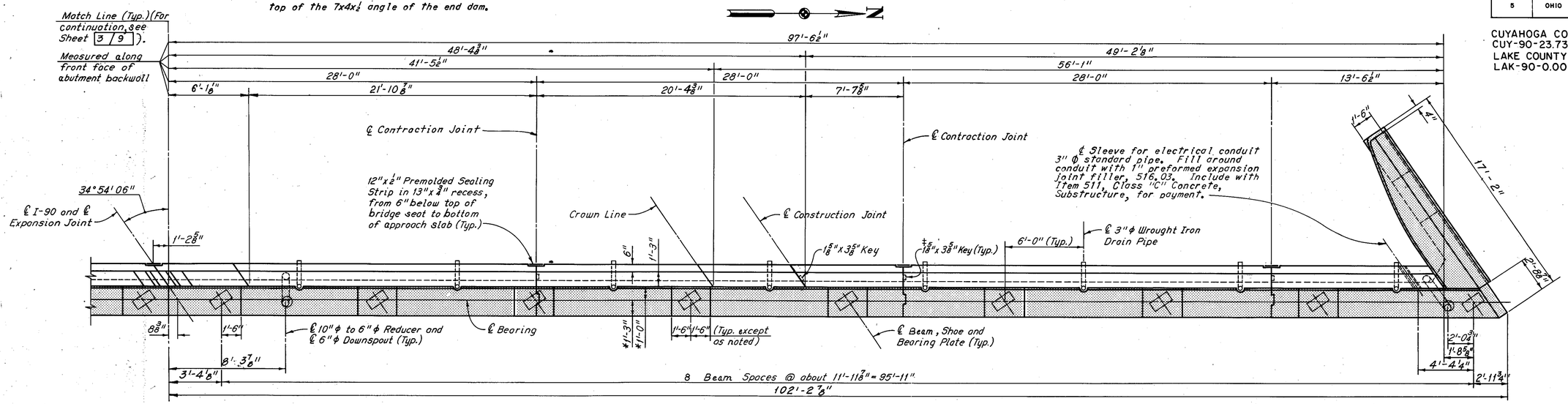

MODIFIED PART PLAN

Note: All reinforcing bar marks shall be prefixed KW.

* Plan Dimension, the actual dimensions shall be those which result when the end dam components are extended from their existing position and when the bearings are set in their final position.
‡ Stop 8" below top of backwall.

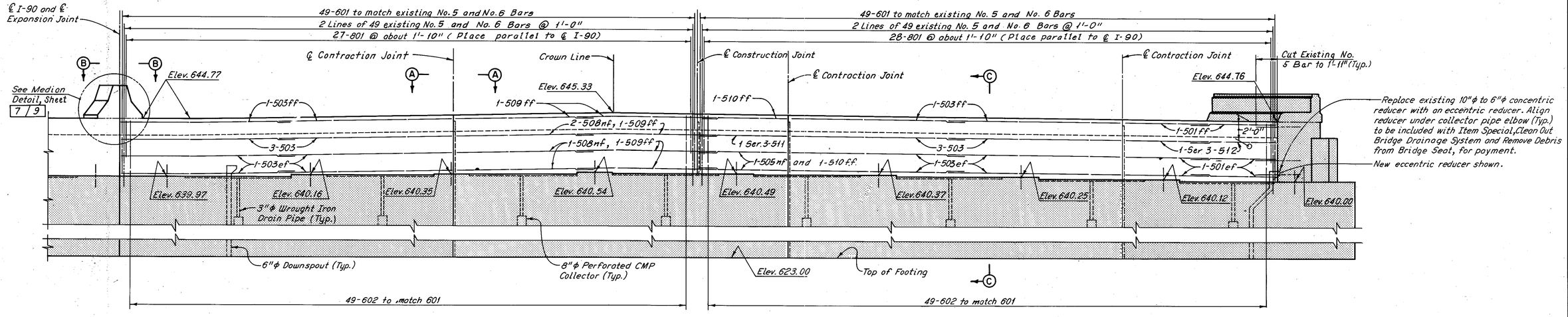

MODIFIED PART ELEVATION

Notes:
Shaded box Indicates existing portions of abutment to remain.
For Views A-A and B-B, see Sheet 7/9.
For Existing and Modified Section C-C, see Sheet 7/9.
For Backwall Replacement Procedure, see Br.No. CUY-90-2639, Sheet 3/8
For stage construction sequence, see Maintenance Of Traffic, Sheet 2/9.
For shoring required at approach slabs, see Sheet CD-1.
For resetting bearing details, see Sheet CD-3.
For expansion joint modification at the median, see Sheets CD-4 and CD-5.
For Reinforcement Schedule, see Sheet R-5.
The following abbreviations are used:
ef = each face
nf = near face
ff = far face
Typ = Typical

HOWARD, NEEDLES, TAMMEN & BERGENDOFF
CONSULTING ENGINEERS
KANSAS CITY CLEVELAND NEW YORK

WEST ABUTMENT

I-90 OVER EAST 222 nd. STREET

BR.NO.CUY-90-2754 STA. 329+40.98
STA. 331+72.46

CUYAHOGA COUNTY OHIO

DRAWN B.M.P.	TRACED D.L.R.	CHECKED Lee	REVIEWED CAB	REVISED
DATE 4-19-74	DATE 5-10-74	DATE 11-8-74	DATE 12-20-74	SHEET 4/9

K & E-19-1253.12-73

FHWA REGION	STATE	PROJECT	
5	OHIO		

272
354

CUYAHOGA COUNTY
CUY-90-23.73
LAKE COUNTY
LAK-90-0.00

Note: Backwall elevations are given at the top of the 7x4x½ angle of the end dam.

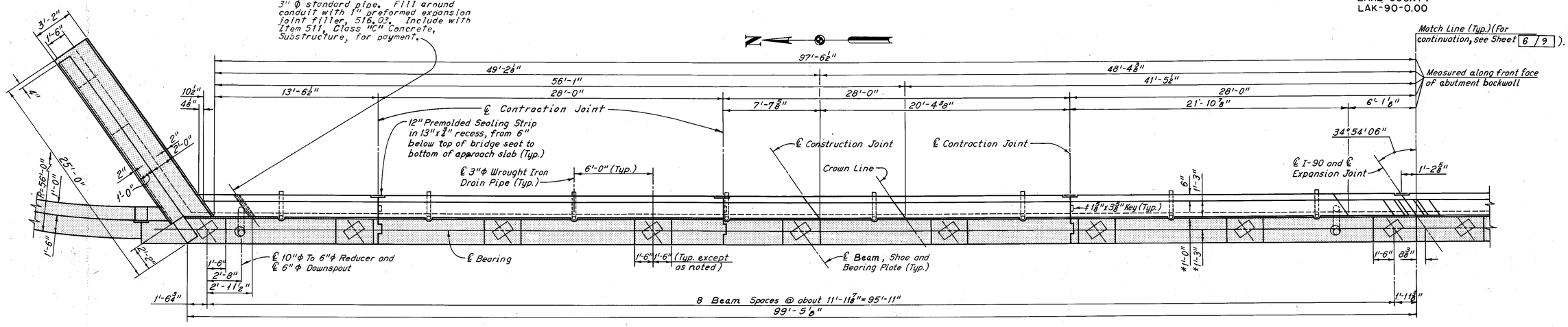

MODIFIED PART PLAN

Note: All reinforcing bar marks shall be prefixed KE.

* Plan Dimension, the actual dimensions shall be those which result when the end dam components are extended from their existing position and when the bearings are set in their final position.
‡ Stop 8" below top of backwall.

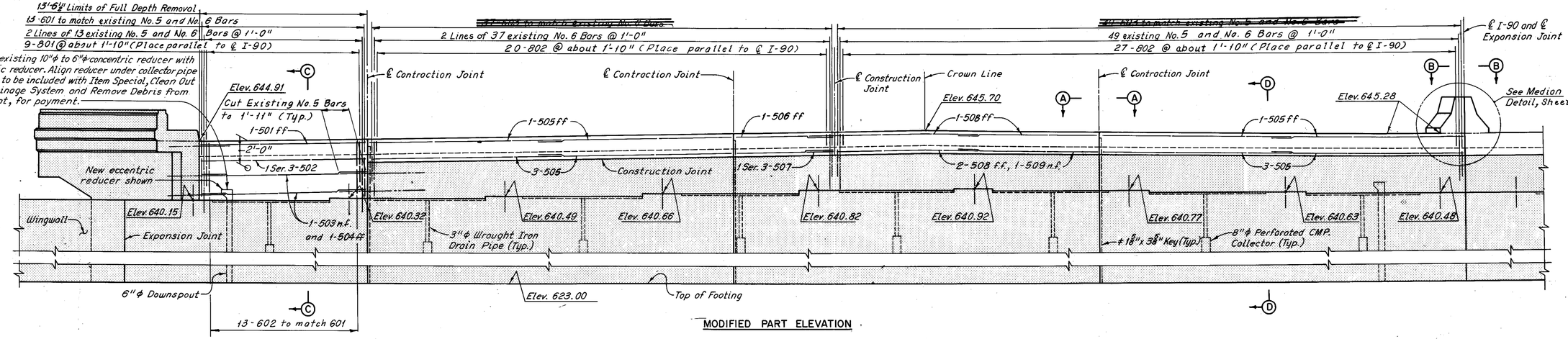

MODIFIED PART ELEVATION

Notes:
[ ] Indicates existing portions of abutment to remain.
For Views A-A and B-B, see Sheet 7/9.
For Existing and Modified Sections C-C and D-D, see Sheet 7/9.
For Backwall Replacement Procedure, see Br. No. CUY-90-2639, Sheet 3/8.
For stage construction sequence, see Maintenance Of Traffic, Sheet 2/9.
For shoring required at approach slabs, see Sheet CD-1
For resetting bearing details, see Sheet CD-3.
For expansion joint modification at the median, see Sheets CD-4 and CD-5.
For Reinforcement Schedule, see Sheet R-5.
The following abbreviations are used:
ef = each face
nf = near face
ff = far face
Typ. = Typical

HOWARD, NEEDLES, TAMMEN & BERGENDOFF
CONSULTING ENGINEERS
KANSAS CITY CLEVELAND NEW YORK

EAST ABUTMENT

I-90 OVER EAST 222 nd. STREET

BR. NO. CUY-90-2754 STA. 329+40.98
STA. 331+72.46

CUYAHOGA COUNTY OHIO

DRAWN B.M.P.	TRACED D.L.R.	CHECKED	REVIEWED CAB	REVISED 2-2-76
DATE 4-17-74	DATE 5-10-74	DATE 11-8-74	DATE 12-20-74	SHEET 5/9

FHWA REGION	STATE	PROJECT	
5	OHIO		

273
354

CUYAHOGA COUNTY
CUY-90-23.73
LAKE COUNTY
LAK-90-0.00

Note: Backwall elevations are given at the top of the 7x4x½ angle of the end dam.

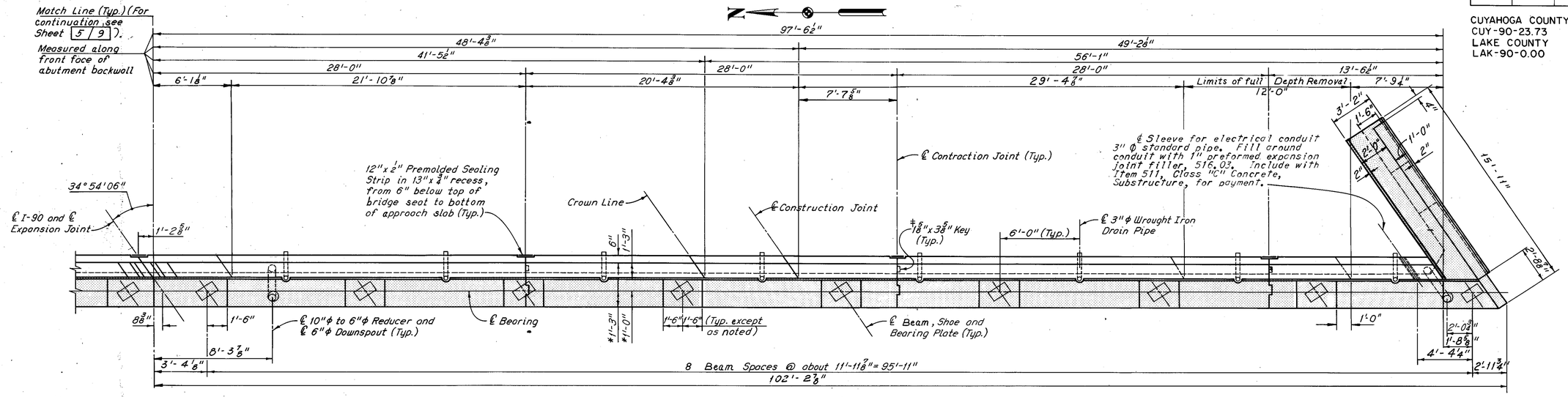

MODIFIED PART PLAN

Note: All reinforcing bar marks shall be prefixed KE.

* Plan Dimension, the actual dimensions shall be those which result when the end dam components are extended from their existing position and when the bearings are set in their final position.
‡ Stop 8" below top of backwall.

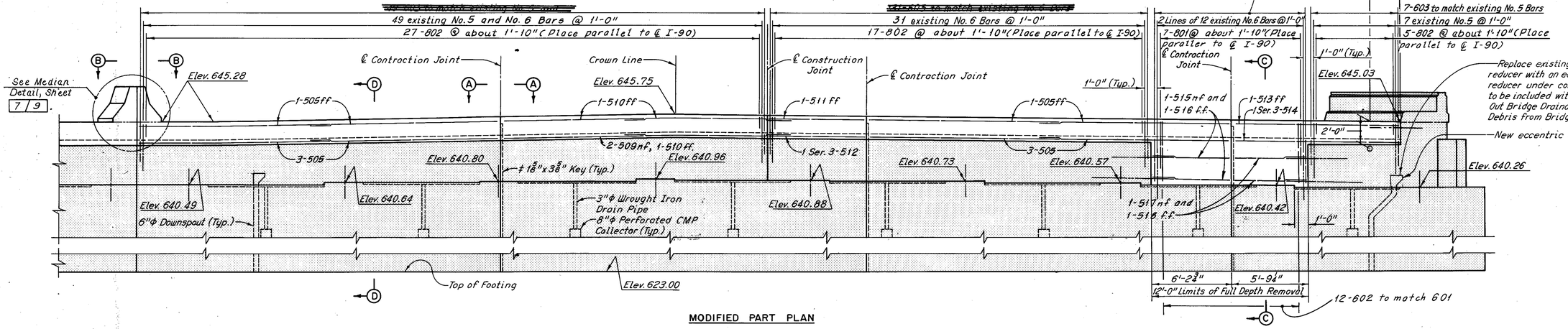

MODIFIED PART PLAN

Notes:
Indicates existing portions of abutment to remain.
For Views A-A and B-B, see Sheet 7/9.
For Existing and Modified Section C-C and D-D, see Sheet 7/9.
For Backwall Replacement Procedure, see Br. No. CUY-90-2639, Sheet 3/8.
For stage construction sequence, see Maintenance Of Traffic, Sheet 2/9.
For shoring required at approach slabs, see Sheet CD-1.
For resetting bearing details, see Sheet CD-3.
For expansion joint modification at the median, see Sheets CD-4 CD-5.
For Reinforcement Schedule, see Sheet R-5
The following abbreviations are used:
ef = each face
ff = far face
Typ. = Typical

HOWARD, NEEDLES, TAMMEN & BERGENDOFF
CONSULTING ENGINEERS
KANSAS CITY CLEVELAND NEW YORK

EAST ABUTMENT

I-90 OVER EAST 222 nd. STREET

BR. NO. CUY-90-2754 STA. 329+40.98
STA. 331+72.46

CUYAHOGA COUNTY OHIO

DRAWN B.M.C.	TRACED D.L.A.	CHECKED Lee	REVIEWED CAB	REVISED 2-2-76
DATE 4-17-74	DATE 5-10-74	DATE 11-8-74	DATE 12-20-74	SHEET 6/9

FHWA REGION	STATE	PROJECT	
5	OHIO		

274
354

CUYAHOGA COUNTY
CUY-90-23.73
LAKE COUNTY
LAK-90-0.00

RECEIVED
MAR 28 1975

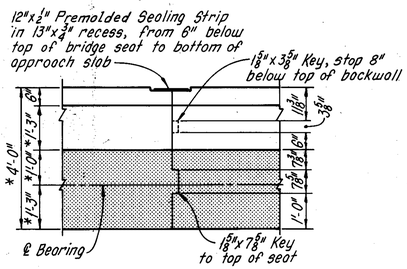

VIEW A-A

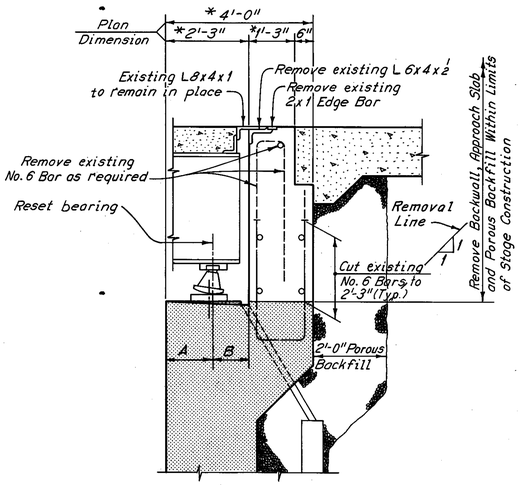

EXISTING SECTION C-C

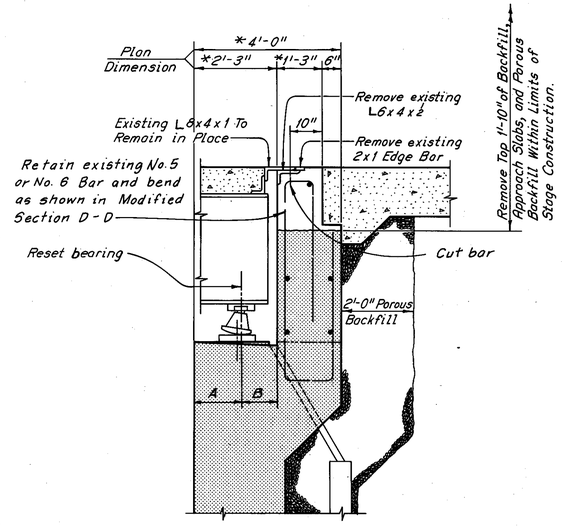

EXISTING SECTION D-D

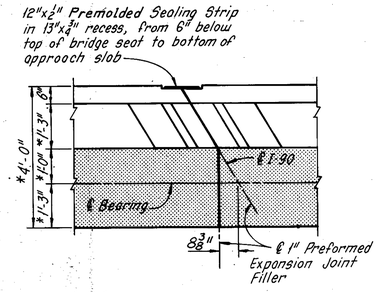

VIEW B-B

* Plan Dimension, the actual dimensions shall be those which result when the end dam components are extended from their existing position and when the bearings are set in their final position.

LOCATION	Average Dimension Measured at 55° F.	
	A	B
East Abutment	1'-5"±	10"±
West Abutment	1'-5"±	10"±

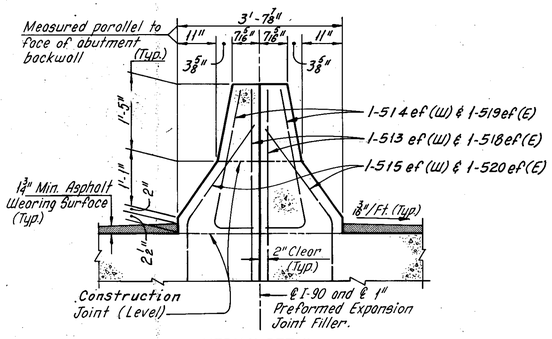

MEDIAN DETAIL

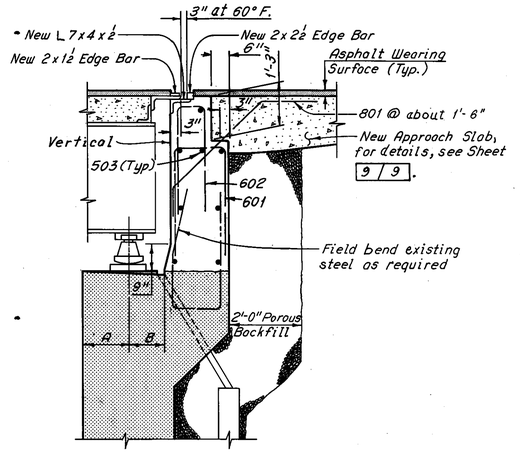

MODIFIED SECTION C-C

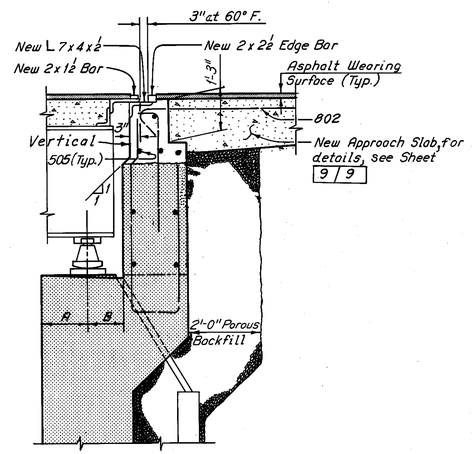

MODIFIED SECTION D-D

Notes:

Shaded indicates existing portions of abutment to remain.

For location of Views A-A and B-B, see Sheets 3 9 thru 6 9.

For location of Median Detail, see Sheets 3 9 thru 6 9.

Excavation, backfill (except Porous Backfill) and paved berm removal necessary to accomplish structure modification shall be included with Item 202, Portions of Structures Removed, for payment. Backfill shall be in accordance with Item 203.

For details of raising the expansion joint, see Sheet CD-6.

For details of backwall expansion joint angle not shown, see Ohio Standard Drawing SD-1-69, Sheet 1 of 4.

For additional notes, see Sheet 6 9.

The following abbreviations are used:

ef = each face W = West Abutment
E = East Abutment Typ = Typical

HOWARD, NEEDLES, TAMMEN & BERGENDOFF
CONSULTING ENGINEERS
KANSAS CITY CLEVELAND NEW YORK

ABUTMENT DETAILS AND SECTIONS

I-90 OVER EAST 222 nd. STREET

BR. NO. CUY-90-2754 STA. 329+40.98
STA. 331+72.46

CUYAHOGA COUNTY OHIO

DRAWN	TRACED	CHECKED	REVIEWED	REVISED
R.M.F.	D.L.R.	Lee	CAB	
DATE 3-13-74	DATE 4-2-74	DATE 11-8-74	DATE 12-20-74	SHEET 7/9

FHWA REGION	STATE	PROJECT	
5	OHIO		

275
354

CUYAHOGA COUNTY
CUY-90-23.73
LAKE COUNTY
LAK-90-0.00

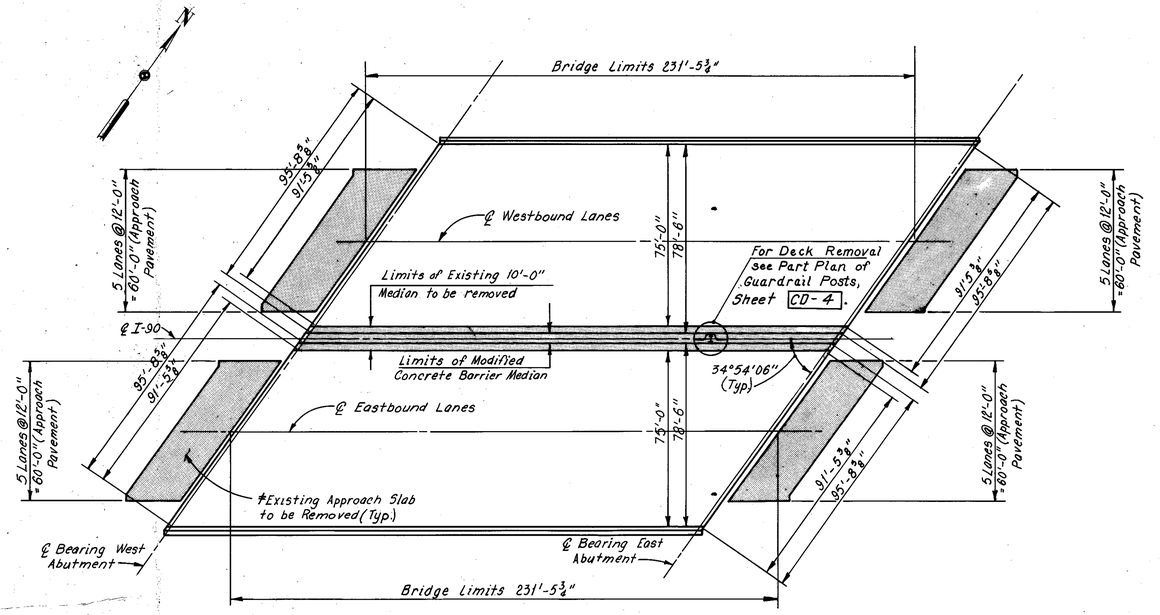

EXISTING PLAN

30 0 30 60
SCALE IN FEET

*Includes removal of paved berms and all necessary excavation or backfill to provide the proper cross section for the new approach slab.

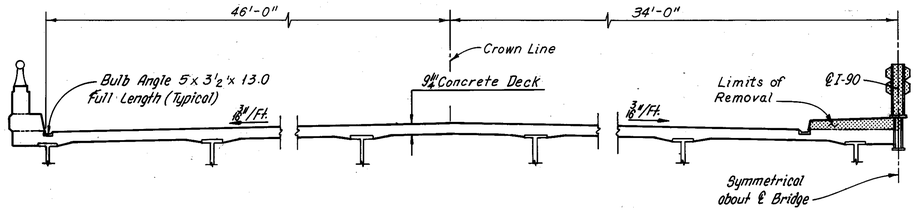

EXISTING TYPICAL SECTION

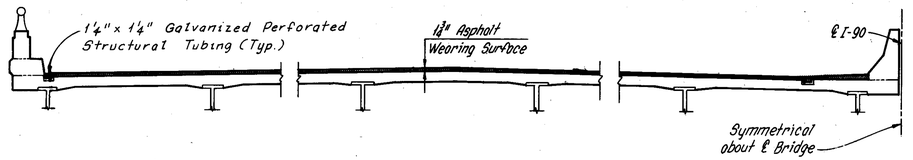

MODIFIED TYPICAL SECTION

NOTE: All reinforcing bar marks shall be prefixed: KM

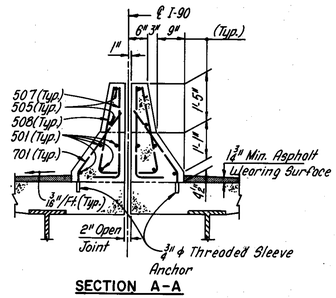

SECTION A-A

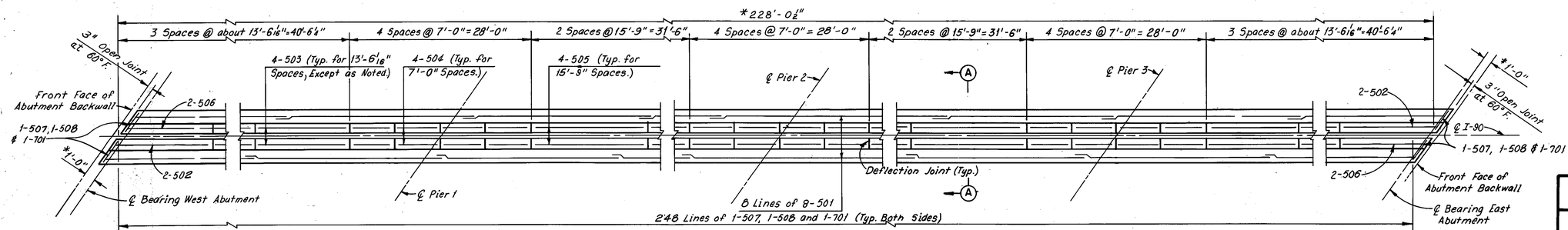

CONCRETE BARRIER MEDIAN PLAN

* Plan Dimension, the actual dimensions shall be those which result when the end dam components are extended from their existing position and when the bearings are set in their final position.

Notes:

For placement of threaded sleeve anchors, see Sheet CD-9.

For median modification, see Sheets CD-4 and CD-5.

For reinforcement schedule, see Sheet R-5.

For deck repair and asphalt wearing surface course details, see Sheet CD-7.

For deflection joint details see Sheet CD-9.

The following abbreviation is used:

Typ. = Typical

HOWARD, NEEDLES, TAMMEN & BERGENDOFF
CONSULTING ENGINEERS
KANSAS CITY CLEVELAND NEW YORK

EXISTING AND MODIFIED DECK PLAN AND TYPICAL SECTION

I-90 OVER EAST 222nd. STREET

BR.NO.CUY-90-2754 STA. 329+40.98
STA. 331+72.46

CUYAHOGA COUNTY OHIO

DRAWN BP	TRACED JLR	CHECKED Lee	REVIEWED CAB	REVISED
DATE 8-10-73	DATE 8-10-73	DATE 11-1-74	DATE 12-20-74	SHEET 8/9

FHWA REGION	STATE	PROJECT	
5	OHIO		

276
354

CUYAHOGA COUNTY
CUY-90-23.73
LAKE COUNTY
LAK-90-0.00

MAR 8 2 19..

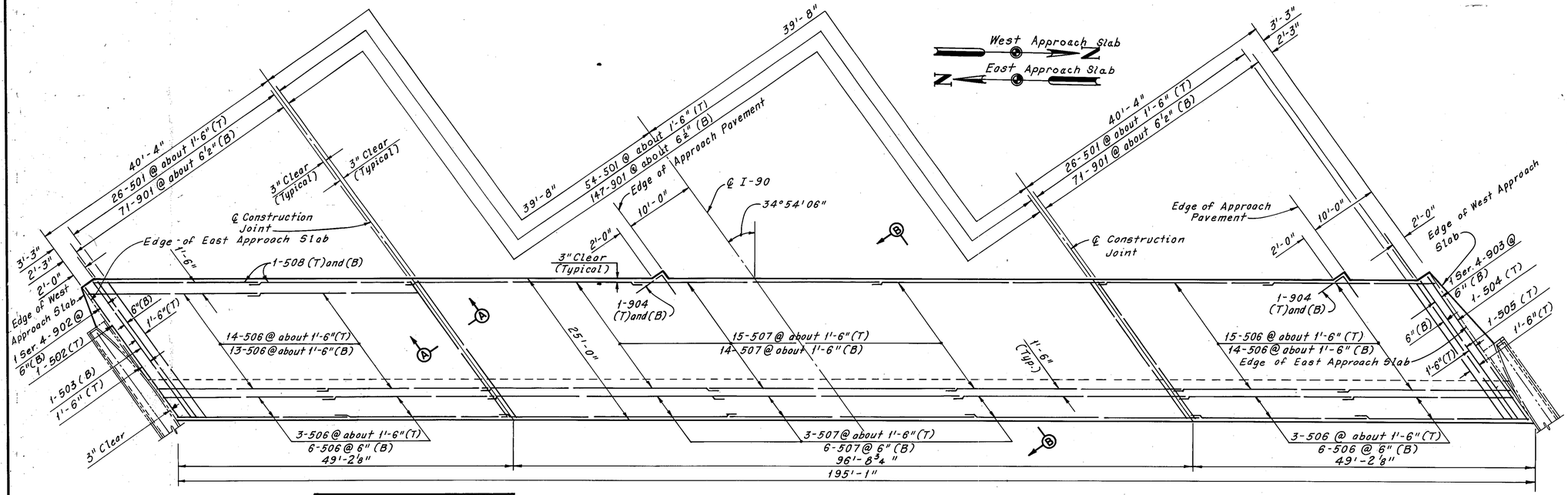

Note:
All reinforcing bar marks shall be prefixed KKS.

APPROACH SLAB PLAN

REINFORCEMENT SCHEDULE

MARK	NO.	LENGTH	TYPE	SER. INCR.
KKS501	212	24'-6"	Str.	
KKS502	2	23'-3"	Str.	
KKS503	2	24'-3"	Str.	
KKS504	2	25'-9"	Str.	
KKS505	2	24'-9"	Str.	
KKS506	296	26'-3"	Str.	
KKS507	228	35'-3"	Str.	
KKS508	8	23'-3"	Str.	
KKS901	578	25'-9"	101	
KKS902	2 Ser 4	24'-6" 25'-6"	101	4"
KKS903	2 Ser 4	26'-0" 27'-0"	101	4"
KKS904	4	7'-6"	104	

101

1'-3"	24'-6"	KKS901
1'-3"	23'-3" to 24'-3"	KKS902
1'-3"	24'-9" to 25'-9"	KKS903

104

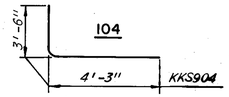

Note:
The jacking holes as called for on Ohio Standard Drawing AS-1-72 are not required.

Note:
The asphalt wearing surface on the approach slab shall consist of the following:
1. Item 407, Tack Coat at 0.1 gal. per sq. yd.
2. Item 402, 1¾" Asphalt Concrete (AC-20)
3. Item 404, 1¼" Asphalt Concrete (AC-20)

Notes:
For stage construction sequence, see Maintenance Of Traffic, Sheet 2 9.
For normal cross slopes, see Existing Typical Section, Sheet 8 9.
For details of median barrier transition, see Roadway Plans.
The following abbreviations are used:
T = Top
B = Bottom
Typ. = Typical
For additional notes and details, see Ohio Standard Drawing AS-1-72.

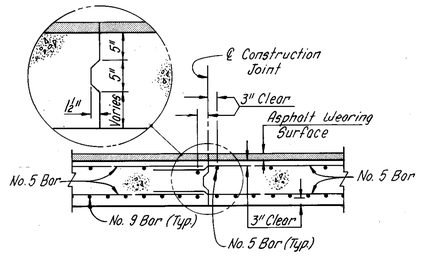

SECTION A-A

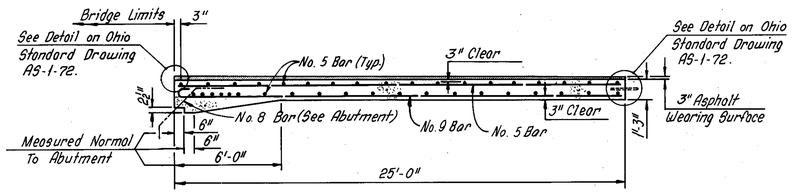

SECTION B-B

HOWARD, NEEDLES, TAMMEN & BERGENDOFF
CONSULTING ENGINEERS
KANSAS CITY CLEVELAND NEW YORK

APPROACH SLABS

I-90 OVER EAST 222 nd. STREET

BR. NO. CUY-90-2754 STA. 329+40.98
STA. 331+72.46

CUYAHOGA COUNTY OHIO

DRAWN	TRACED	CHECKED	REVIEWED	REVISED
BMP	BMP	LLC	CAB	
DATE 5-13-74	DATE 5-14-74	DATE 10 2974	DATE 12-20-74	SHEET 9/9

FHWA REGION	STATE	PROJECT	
5	OHIO		

277
354

CUYAHOGA COUNTY
CUY-90-23.73
LAKE COUNTY
LAK-90-0.00

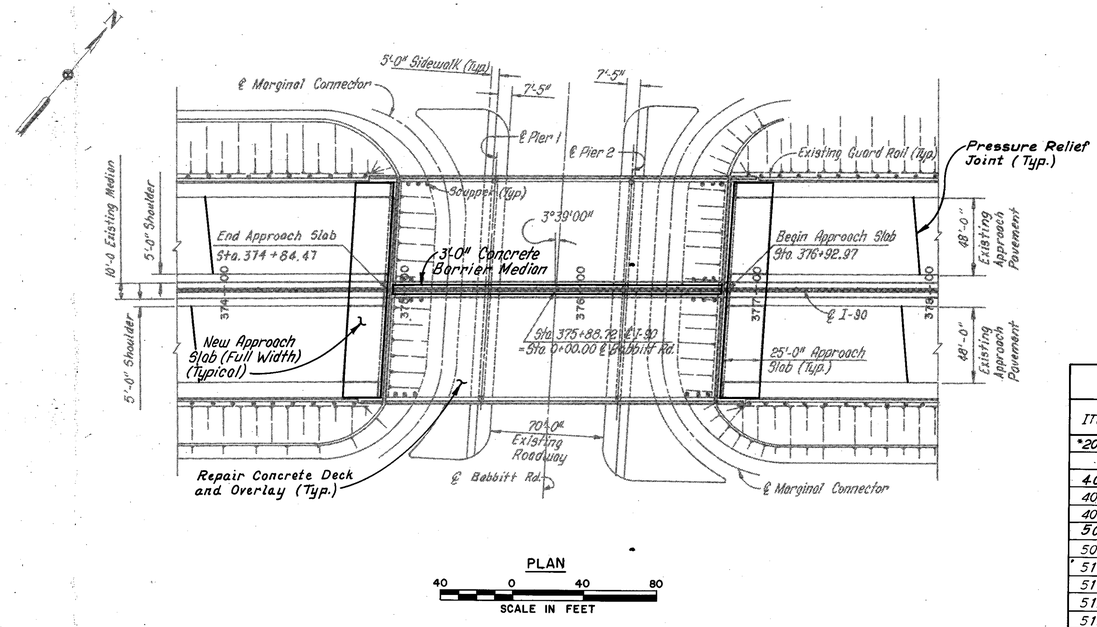

PLAN
40 0 40 80
SCALE IN FEET

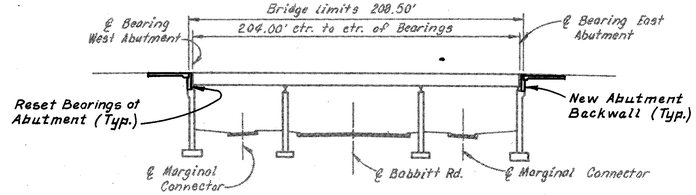

ELEVATION
40 0 40 80
SCALE IN FEET

PROPOSED WORK:

1. Install pressure relief joints in approach roadway pavement, see Sheet CD-9.
2. Replace both abutment backwalls, see Sheets 3/7 and 4/7.
3. Reset abutment bearings see Sheets 3/7 and 4/7.
4. Replace approach slabs, see Sheet 7/7.
5. Replace deep beam barrier median with concrete barrier median, see Sheets 3/7 and 4/7.
6. Repair concrete deck and place asphalt wearing surface, see Sheet 6/7.
7. Trim wingwall parapets.
8. Repair minor curb and parapet deterioration.
9. Paint all structural steel.
10. Clean out bridge drainage system and remove debris from abutment bridge seat.
11. Repair end crossframes, see Sheet 5/7.
12. Repair minor abutment deterioration.
13. Repair minor retaining wall deterioration.
14. Repair concrete slope protection.
15. Provide weepholes with sleeves at abutments, see Sheet CD-9.
16. Apply concrete coating.

Note:
Roman numerals I and III denote cost participation breakdown. For description, see Roadway Plans, Sheet 3-354.

TYPE CODE X231

ESTIMATED QUANTITIES

ITEM	TOTAL	UNIT	DESCRIPTION BRIDGE REPAIR	SUPER-STRUCTURE	WEST ABUT	EAST ABUT	*Wingwall & *retaining NE	SE	NW	SW	APPROACH SLABS	CON. SLOPE PRO. WEST	EAST	GENERAL	Participation I Fed. & State	Participation III 100% State
*202	Lump Sum	Lump Sum	Portions of Structures Removed	I Lump Sum	III L.S.	III L.S.	-	-	-	-	-	-	-	-	Lump	Lump
402	37	Cu. Yd.	Asphalt Concrete (AC-20)	-	-	-	-	-	-	-	I 37	-	-	-	37	
404	176	Cu. Yd.	Asphalt Concrete (AC-20)	I 149	-	-	-	-	-	-	I 27	-	-	-	176	
407	76	Gallons	Tack Coat: 703.03, RC-250; or 702.04, SS-1, SS-1h, HFE-90, HFE-150	-	-	-	-	-	-	-	I 76	-	-	-	76	
503	Lump Sum	Lump Sum	Cofferdams, Cribs and Sheeting	-	-	-	-	-	-	-	-	-	-	Lump III		Lump
509	18,947	Pounds	Reinforcing Steel	I 7,707	III 5,620	III 5,620	-	-	-	-	-	-	-	-	7,707	11,240
511	36	Cu. Yd.	Class "C" Concrete, Superstructure	I 36	-	-	-	-	-	-	-	-	-	-	36	
511	78	Cu. Yd.	Class "C" Concrete, Substructure	-	III 39	III 39	-	-	-	-	-	-	-	-		78
512	40	Lin. Ft.	Premolded Sealing Strip	-	III 20	III 20	-	-	-	-	-	-	-	-		40
513	11,631	Pounds	Structural Steel (ASTM A36)	I 643	III 5,494	III 5,494	-	-	-	-	-	-	-	-	643	10,988
514	11,631	Pounds	Field Painting of New Structural Steel	I 643	III 5,494	III 5,494	-	-	-	-	-	-	-	-	643	10,988
516	26	Sq. Ft.	1" Preformed Expansion Joint Filler	-	III 13	III 13	-	-	-	-	-	-	-	-		26
518	70	Cu. Yd.	Porous Backfill	-	III 35	III 35	-	-	-	-	-	-	-	-		70
518	821	Lin. Ft.	Subdrainage For Wearing Course,												821	
			As Per Plan	I 821	-	-	-	-	-	-	-	-	-	-		
519	7	Sq. Ft.	Patching Concrete Structures	-	-	-	-	III #6	III #1	-	-	-	-	-		7
520	27	Sq. Ft.	Pneumatically Placed Mortar	III 7	III 20	-	-	-	-	-	-	-	-	-		27
611	756	Sq. Yd.	Reinforced Concrete Approach Slabs T=15"	-	-	-	-	-	-	-	III 756	-	-	-		756
837	Lump Sum	Lump Sum	Surface Preparation	III Lump Sum	-	-	-	-	-	-	-	-	-	-		Lump
837	Lump Sum	Lump Sum	Spot Prime Painting	III Lump Sum	-	-	-	-	-	-	-	-	-	-		Lump
837	Lump Sum	Lump Sum	Complete Coat Prime Painting	III Lump Sum	-	-	-	-	-	-	-	-	-	-		Lump
837	Lump Sum	Lump Sum	Two Complete Coats Finish Painting	III Lump Sum	-	-	-	-	-	-	-	-	-	-		Lump
Special	1,480	Sq. Yd.	Patching Concrete Deck Slab	III 1,480	-	-	-	-	-	-	-	-	-	-		1,480
Special	3,039	Sq. Yd.	Membrane Waterproofing Hot Applied Liquid (See Proposal Note)	I 3,039	-	-	-	-	-	-	-	-	-	-	3,039	
Special	45	Lin. Ft.	Repair of Cracks	-	III 45	-	-	-	-	-	-	-	-	-		45
Special	268	Lin. Ft.	Raising Existing End Dams	-	I 134	I 134	-	-	-	-	-	-	-	-	268	
Special	32	Each	Reset Bearings	-	III 16	III 16	-	-	-	-	-	-	-	-		32
Special	460	Each	Threaded Sleeve Anchors	I 460	-	-	-	-	-	-	-	-	-	-	460	
Special	194	Lin. Ft.	Pressure Relief Joint	-	-	-	-	-	-	-	-	-	-	III 194		194
Special	Lump Sum	Lump Sum	Cleanout Bridge Drainage Systems and Remove Debris From Bridge Seats	III Lump Sum	III L.S.	III L.S.	-	-	III -	-	-	-	-	-		Lump
Special	7,583	Sq. Ft.	Concrete Coating	-	III 2,404	III 2,404	#108 & 554	#121 & 554	#121 & 652	#121 & 647	-	-	-	-		7,583
Special	Lump Sum	Lump Sum	Repair of End Crossframe	III Lump Sum	-	-	-	-	-	-	-	-	-	-		Lump

EXISTING STRUCTURE

TYPE:	Continuous Steel Beam with Reinforced Concrete Deck, Piers and Abutments.
SPANS:	59'-6", 85'-0" and 59'-6".
ROADWAY:	140'-0" Face to Face of Parapets.
LOADING:	CF-2000-57 (Adequate for AASHO Alternate Loading).
SKEW:	3°39'00" L.F.
WEARING SURFACE:	1" Monolithic Concrete.
APPROACH SLAB:	AS-1-54 (25'-0" Long).
ALIGNMENT:	Tangent.

MODIFIED STRUCTURE

TYPE:	Continuous Steel Beam with Reinforced Concrete Deck, Piers and Abutments.
SPANS:	59'-6", 85'-0" and 59'-6".
ROADWAY:	140'-0" Face to Face of Parapets with a 31'-0" Concrete Barrier Median.
LOADING:	*CF-2000-57 (Adequate for AASHO Alternate Loading).
SKEW:	3°39'00" L.F.
WEARING SURFACE:	1¾" Asphalt.
APPROACH SLAB:	AS-1-72 (25'-0" Long).
ALIGNMENT:	Tangent.

* Median Beams Adequate for HS-20 Loading.

*SUPERSTRUCTURE - Includes approximately 46 Cu. Yds. of concrete in the existing 10'-0" median, and approximately 204 Lin. Ft. of guardrail including posts, nuts, plates and portions of bulb angle gutter.

* SUBSTRUCTURE - Includes approximately 80 Cu. Yds. of concrete in the existing abutment backwalls.

* APPROACH SLABS - Includes approximately 756 Sq. Yds. of existing reinforced concrete approach slabs, paved berms and all necessary excavation or backfill to provide proper cross section for the new approach slabs.

TRIM WINGWALL PARAPET - Trim the northwest wingwall parapet and curb at the front face of the backwall, for details, see Sheet CD-8.

CONCRETE COATING - Coat the exposed surfaces of the abutments, wingwalls and adjacent retaining walls with a cement-epoxy coating.

Rev. 7-18-75

HOWARD, NEEDLES, TAMMEN & BERGENDOFF
CONSULTING ENGINEERS
KANSAS CITY CLEVELAND NEW YORK

SITE PLAN

I-90 OVER BABBITT ROAD

BR. NO. CUY-90-2840 STA. 374+84.47
STA. 376+92.97

CUYAHOGA COUNTY OHIO

DRAWN	TRACED	CHECKED	REVIEWED	REVISED
B.M.P.	S.J.S. DCH	C.E.P.	C.A.C.	
DATE 3-20-74	DATE 5-30-74	DATE 8-28-74	DATE 12-20-74	SHEET 1/7

FHWA REGION	STATE	PROJECT	
5	OHIO		

278
354

CUYAHOGA COUNTY
CUY-90-23.73
LAKE COUNTY
LAK-90-0.00

MAR 22 1974

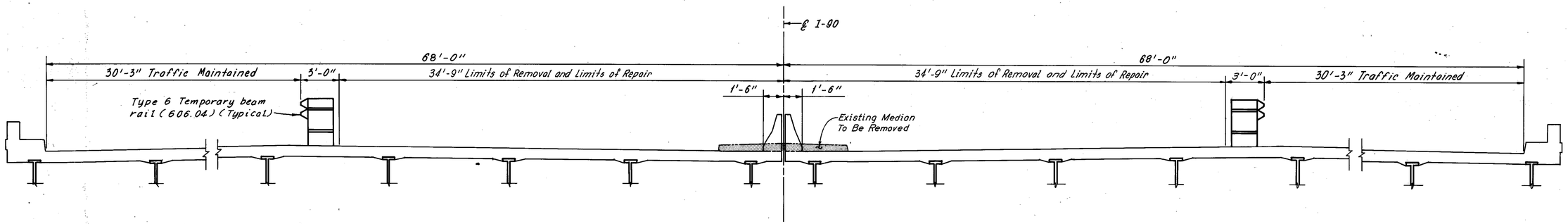

SECOND STAGE CONSTRUCTION

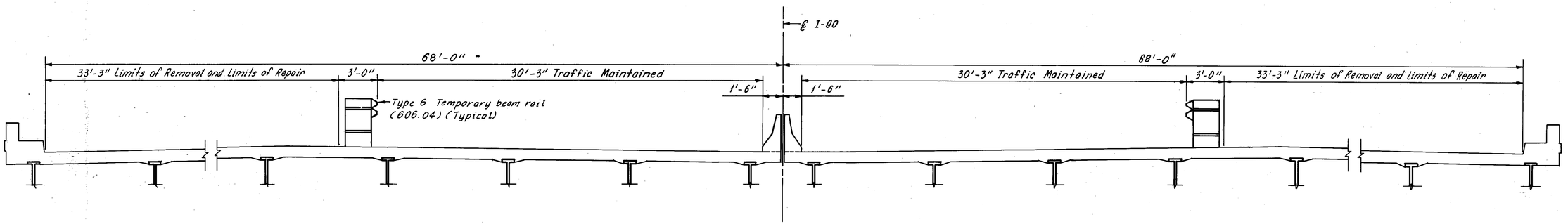

THIRD STAGE CONSTRUCTION

Notes:

The stage construction cross-sections apply within the bridge and approach slab limits. All repair work shall be co-ordinated with the stage construction as shown.

For maintenance of traffic notes, see Roadway Plans.

For shoring required at approach slabs, see Sheet CD-2 .

HOWARD, NEEDLES, TAMMEN & BERGENDOFF
CONSULTING ENGINEERS
KANSAS CITY CLEVELAND NEW YORK

MAINTENANCE OF TRAFFIC

I-90 OVER BABBITT ROAD

BR.NO.CUY-90-2840 STA. 374+84.47
STA. 376+92.97

CUYAHOGA COUNTY OHIO

DRAWN BMP	TRACED JLP	CHECKED ML	REVIEWED CAB	REVISED
DATE 1-4-74	DATE 1-11-74	DATE 1-16-74	DATE 12-20-74	SHEET 2/7

FHWA REGION	STATE	PROJECT	
5	OHIO		

279
354

CUYAHOGA COUNTY
CUY-90-23.73
LAKE COUNTY
LAK-90-0.00

MAR 22

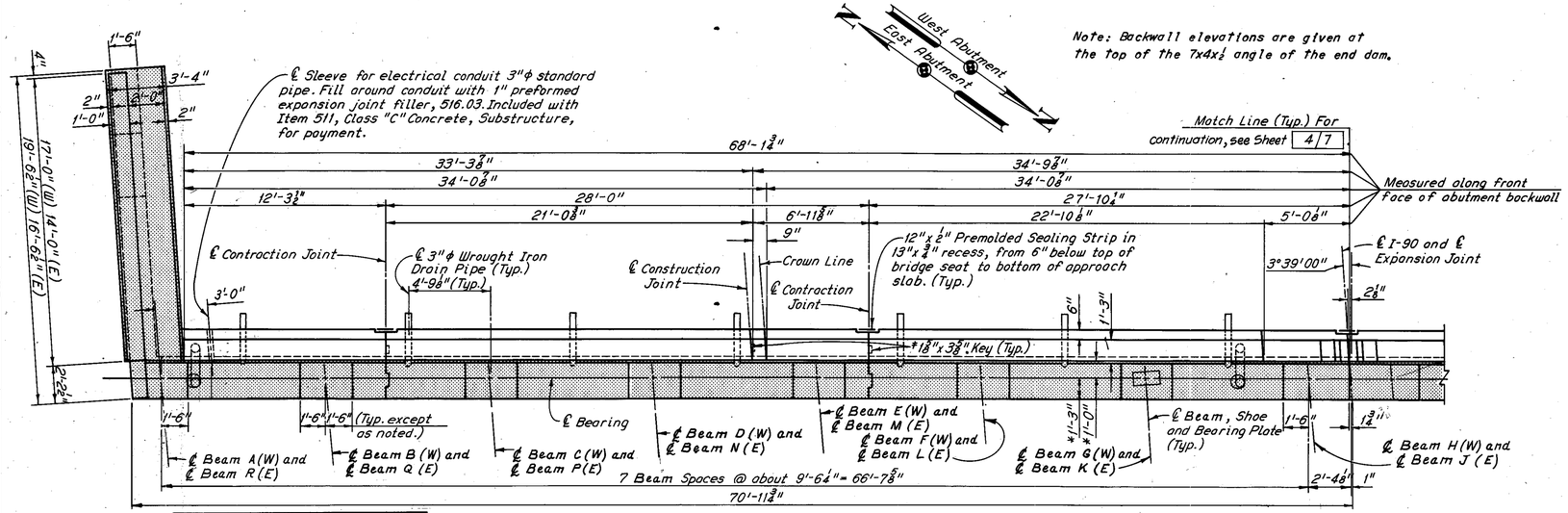

Note: All reinforcing bar marks shall be prefixed as follows:
West Abutment - LW
East Abutment - LE

MODIFIED PART PLAN

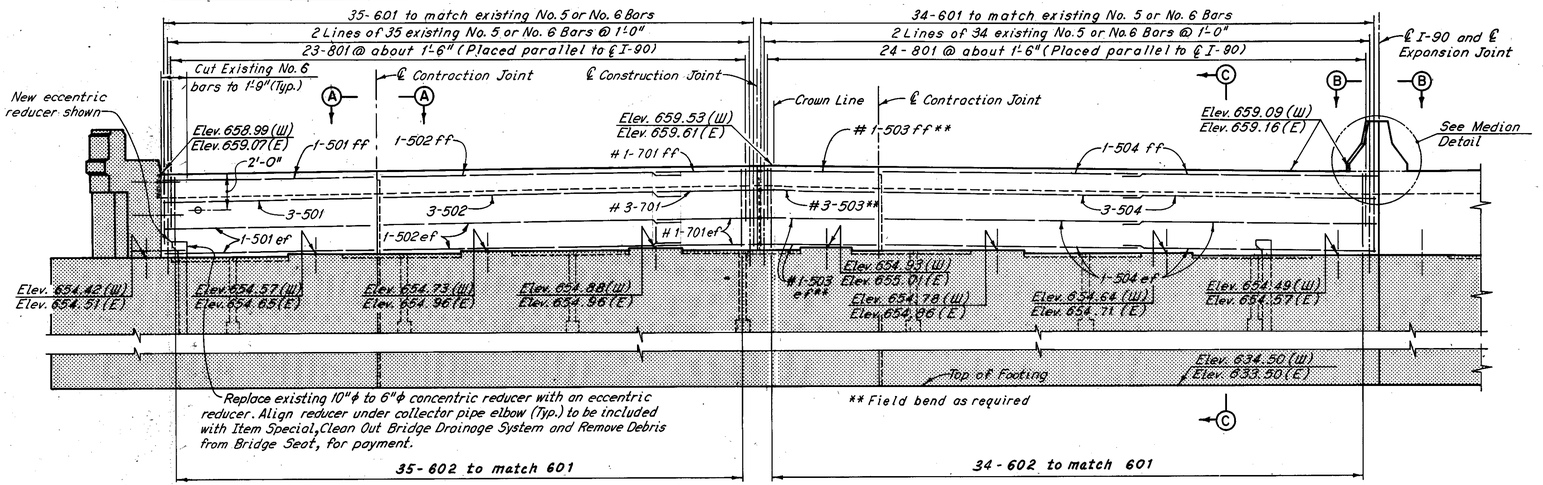

BACKWALL REPLACEMENT PROCEDURE:

1. Bridge the backwall with an adequate steel plate within the area of maintained traffic. Provide bituminous wearing surface cover, as directed by the Engineer, to permit and maintain safe passage of vehicular traffic. The steel plate and bituminous cover shall be included with Item 614, Maintaining Traffic, for payment (see Roadway Plans)
2. Raise the entire superstructure (all beams simultaneously) until there is no contact between the superstructure and backwall end dam angles. All material, labor and equipment required to accomplish the above shall be included with Item 202, Portions of Structures Removed, for payment.
3. Remove approximately 1 foot of the top of the backwall.
4. Reset bearings.
5. Release jacks.
6. Remove the remaining portions of the backwall, including reinforcement, except as noted, within the limits of stage construction.
7. Replace the backwall within the limits of the stage construction using the existing superstructure end dam angle to set the new backwall. In setting the top of backwall end dam angle, care shall be exercised to insure proper seating of the superstructure and expansion joint.

* Plan Dimension, the actual dimensions shall be those which result when the end dam components are extended from their existing position and when the bearings are set in their final position.
\# Thread one end for connection to threaded insert.
\# Weld to threaded insert.
† Stop 8" below top of backwall.

Notes:
Indicates existing portions of abutment to remain.
For Existing and Modified Section C-C, see Sheet 4/7.
For stage construction sequence, see Maintenance Of Traffic, Sheet 2/7.
For shoring required at approach slabs, see Sheet CD-2.
For resetting bearing details, see Sheet CD-3
For expansion joint modification at the median, see Sheets CD-4 and CD-5.
For Reinforcement Schedule, see Sheet R-6.
The following abbreviations are used:
ef = each face
ff = far face
E = East Abutment
W = West Abutment
Typ. = Typical

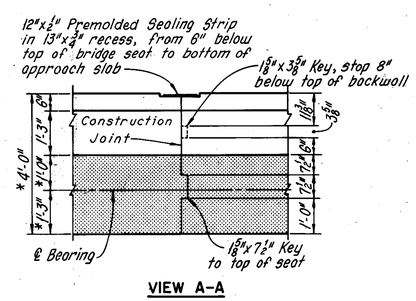

VIEW A-A

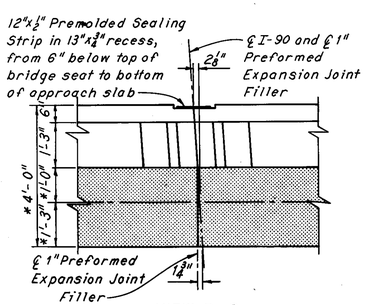

VIEW B-B

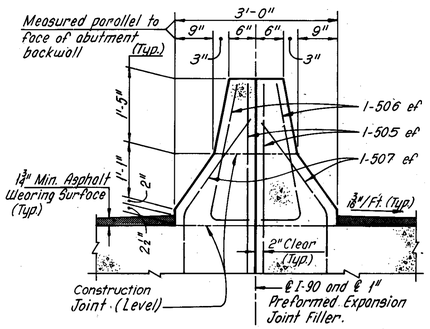

MEDIAN DETAIL

HOWARD, NEEDLES, TAMMEN & BERGENDOFF
CONSULTING ENGINEERS
KANSAS CITY CLEVELAND NEW YORK

WEST AND EAST ABUTMENTS

I-90 OVER BABBITT ROAD

BR. NO. CUY-90-2840 STA. 374+84.47 STA. 376+92.97

CUYAHOGA COUNTY OHIO

DRAWN	TRACED	CHECKED	REVIEWED	REVISED
B.MA	S.J.S	C.L.P	CAB	
DATE 3-20-74	DATE 5-30-74	DATE 8-28-74	DATE 12-20-74	SHEET 3/7

FHWA REGION	STATE	PROJECT	
5	OHIO		

280
354

CUYAHOGA COUNTY
CUY-90-23.73
LAKE COUNTY
LAK-90-0.00

Note: Backwall elevations are given at the top of the 7x4x½ angle of the end dam.

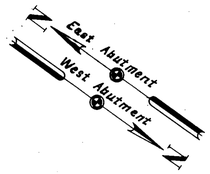

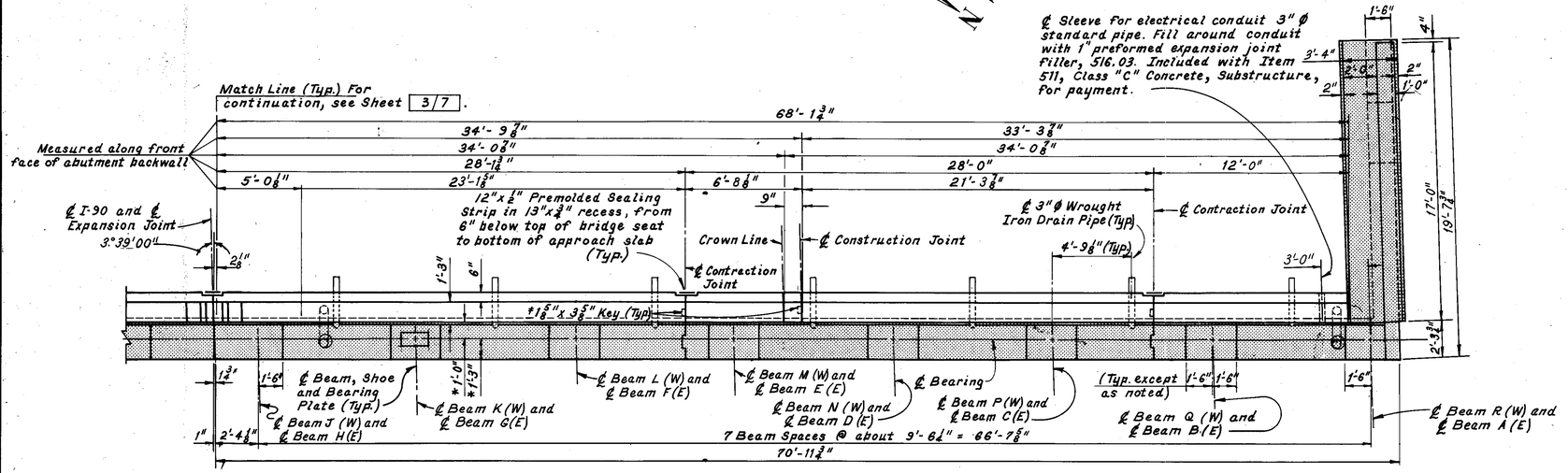

MODIFIED PART PLAN

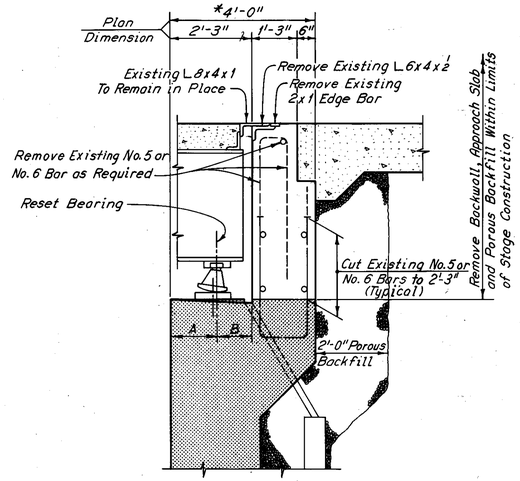

EXISTING SECTION C-C

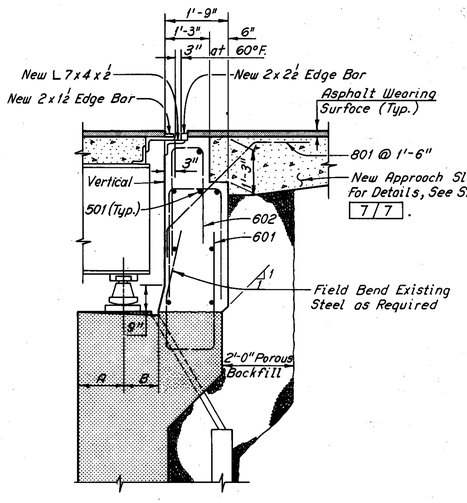

MODIFIED SECTION C-C

Note: All reinforcing bar marks shall be prefixed as follows:
West Abutment - LW
East Abutment - LE

* Plan Dimension, the actual dimensions shall be those which result when the end dam components are extended from their existing position and when the bearings are set in their final position.
† Stop 8" below top of backwall.

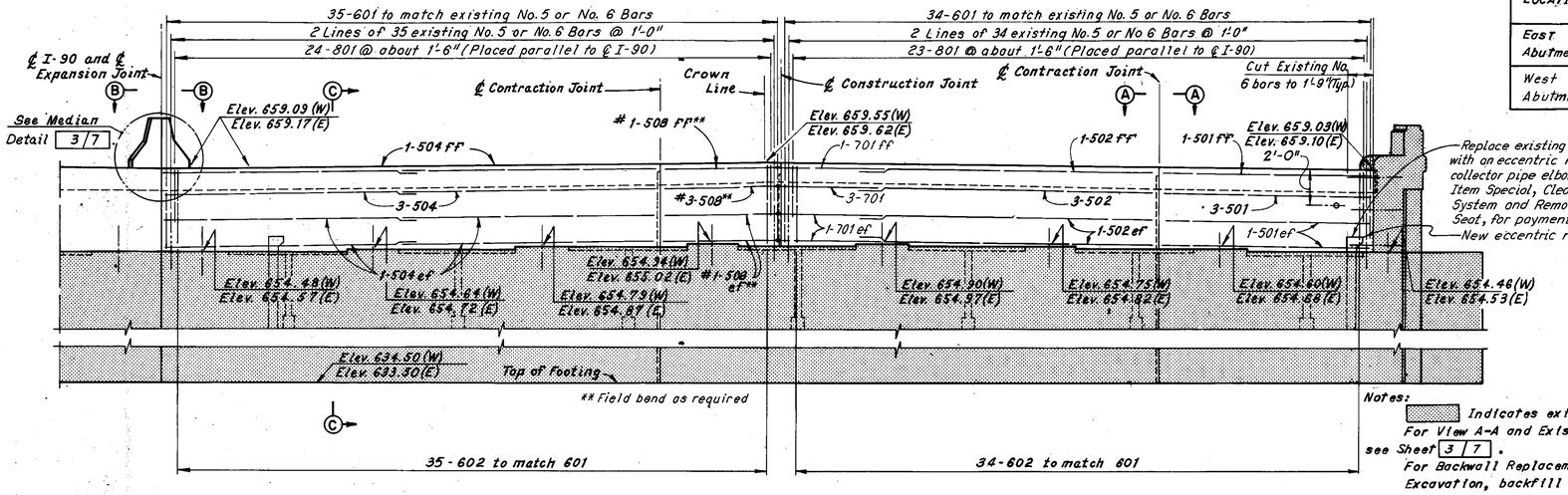

MODIFIED PART ELEVATION

LOCATION	AVG. DIMENSIONS MEASURED AT 55°F.	
	A	B
East Abutment	1'-5"±	10"±
West Abutment	1'-5"±	10"±

Replace existing 10"ϕ to 6"ϕ concentric reducer with an eccentric reducer. Align reducer under collector pipe elbow (Typ.) to be included with Item Special, Clean Out Bridge Drainage System and Remove Debris from Bridge Seat, for payment.
New eccentric reducer shown.

Notes:
Indicates existing portions of abutment to remain.
For View A-A and Existing and Modified Sections B-B and C-C, see Sheet 3/7.
For Backwall Replacement Procedure, see Sheet 3/7.
Excavation, backfill (except Porous Backfill) and paved berm removal necessary to accomplish structure modification shall be included with Item 202, Portions of Structures Removed, for payment. Backfill shall be in accordance with Item 203.
For details of raising the expansion joint, see Sheet CD-6.
For details of backwall expansion joint angle not shown, see Ohio Standard Drawing SD-1-69, Sheet 1 of 4.
For additional notes, see Sheet 3/7.

HOWARD, NEEDLES, TAMMEN & BERGENDOFF
CONSULTING ENGINEERS
KANSAS CITY CLEVELAND NEW YORK

WEST AND EAST ABUTMENTS

I-90 OVER BABBITT ROAD

BR. NO. CUY-90-2840
STA. 374+84.47
STA. 376+92.97

CUYAHOGA COUNTY OHIO

DRAWN	TRACED	CHECKED	REVIEWED	REVISED
BMP	HBB	CEA	DAB	
DATE 3-20-74	DATE 6-20-74	DATE 8-28-74	DATE 12-20-74	SHEET 4/7

FHWA REGION	STATE	PROJECT	
5	OHIO		

281
354

CUYAHOGA COUNTY
CUY-90-23.73
LAKE COUNTY
LAK-90-0.00

MAR 25

Notes: End crossframe shall be repaired after the backwall has been replaced.

For additional notes and details, see Ohio Standard Drawing SD-1-69, Sheet 1 of 4.

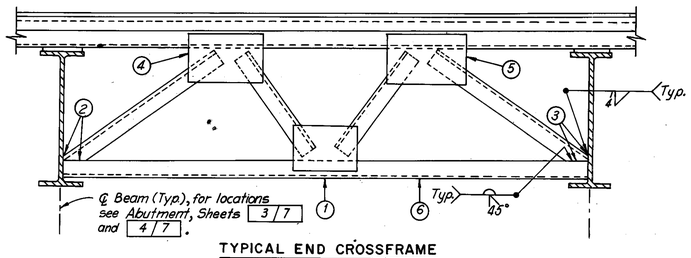

TYPICAL END CROSSFRAME

W. ABUT BEAMS	TYPE OF REPAIR
J-K	1 and 3
K-L	1,2,3 and 5
L-M	2,3,4,5 and 6
M-N	2,3,4,5 and 6
N-P	2,3,4,5 and 6
P-Q	2,3,4,5 and 6

TYPE OF REPAIR	
1	Straighten horizontal angle
2	Reweld angles
3	Reweld angles
4	Straighten gusset plate
5	Straighten gusset plate
6	Remove and replace horizontal angle

E. ABUT BEAMS	TYPE OF REPAIR
Q-P	1 and 3
P-N	2, 3 and 6
N-M	1 and 2

HOWARD, NEEDLES, TAMMEN & BERGENDOFF
CONSULTING ENGINEERS
KANSAS CITY CLEVELAND NEW YORK

END CROSSFRAME REPAIR

I-90 OVER BABBITT ROAD

BR.NO. CUY-90-2840 STA. 374 + 84.47
STA. 376 + 92.97

CUYAHOGA COUNTY OHIO

DRAWN BMD	TRACED RCK	CHECKED CLP	REVIEWED CAE	REVISED
DATE 2-21-74	DATE 7-18-74	DATE 8-28-74	DATE 12.20.74	SHEET 5/7

FHWA REGION	STATE	PROJECT	
5	OHIO		

282
354

CUYAHOGA COUNTY
CUY-90-~~23.73~~ 21.27
LAKE COUNTY
LAK-90-0.00

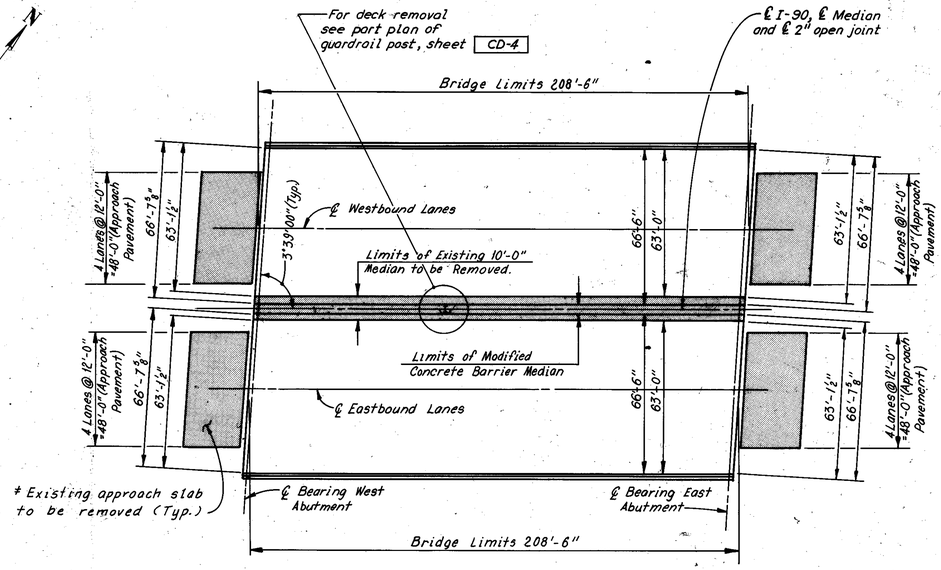

EXISTING PLAN

30 0 30 60
SCALE IN FEET

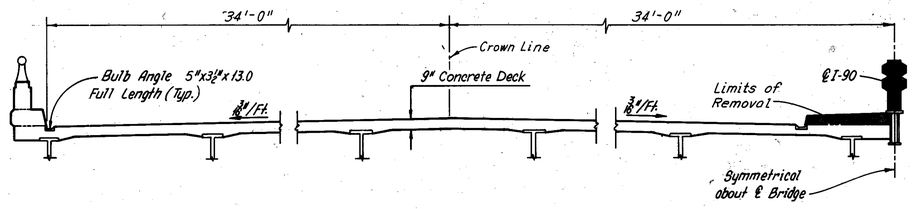

EXISTING TYPICAL SECTION

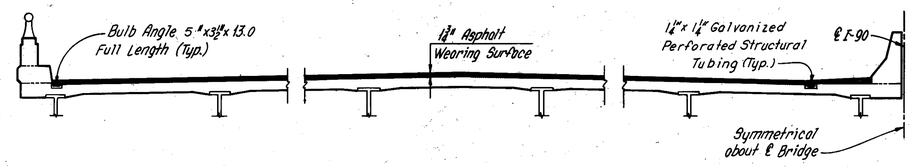

MODIFIED TYPICAL SECTION

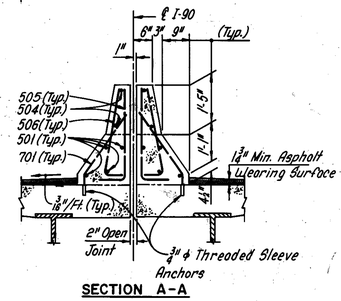

SECTION A-A

*Includes removal of paved berms and all necessary excavation or backfill to provide the proper cross section for the new approach slab.

NOTE: All reinforcing bar marks shall be prefixed LM.

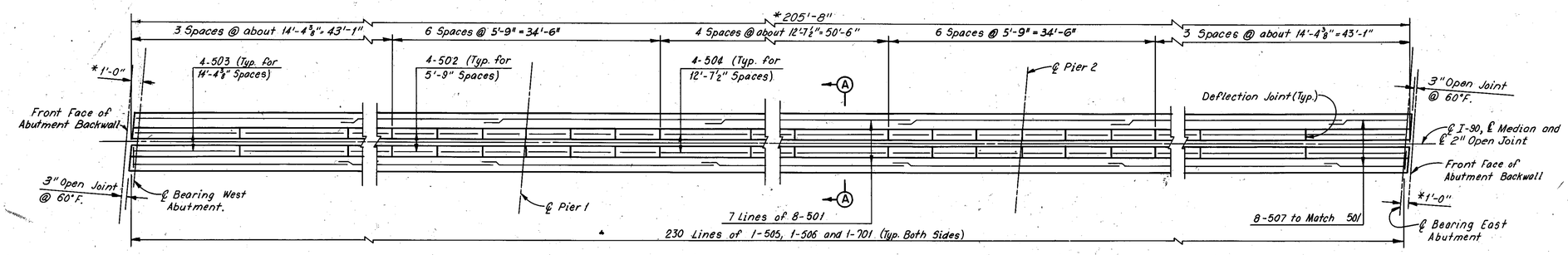

CONCRETE BARRIER MEDIAN PLAN

* Plan Dimension, the actual dimensions shall be those which result when the end dam components are extended from their existing position and when the bearings are set in their final position.

Notes:
For placement of threaded sleeve anchors, see Sheet CD-9.
For median modification, see Sheets CD-4 and CD-5.
For reinforcement schedule, see Sheet R-6.
For deck repair and asphalt wearing surface course details, see Sheet CD-7.
For deflection joint details, see Sheet CD-9.
The following abbreviation is used:
Typ. = Typical

HOWARD, NEEDLES, TAMMEN & BERGENDOFF
CONSULTING ENGINEERS
KANSAS CITY CLEVELAND NEW YORK

EXISTING AND MODIFIED DECK PLAN AND TYPICAL SECTION

I-90 OVER BABBITT ROAD

BR.NO.CUY-90-2840 STA. 374+84.47
STA. 376+92.97

CUYAHOGA COUNTY OHIO

DRAWN B.M.P.	TRACED J.L.R.	CHECKED C.E.P.	REVIEWED C.A.B.	REVISED
DATE 8-20-73	DATE 8-23-73	DATE 8-29-74	DATE 12-20-74	SHEET 6/7

R-10

L-7

FHWA REGION	STATE	PROJECT	
5	OHIO		

283
354

CUYAHOGA COUNTY
CUY-90-~~23.75~~ 21.27
LAKE COUNTY
LAK-90-0.00

MAR 22 [illegible]

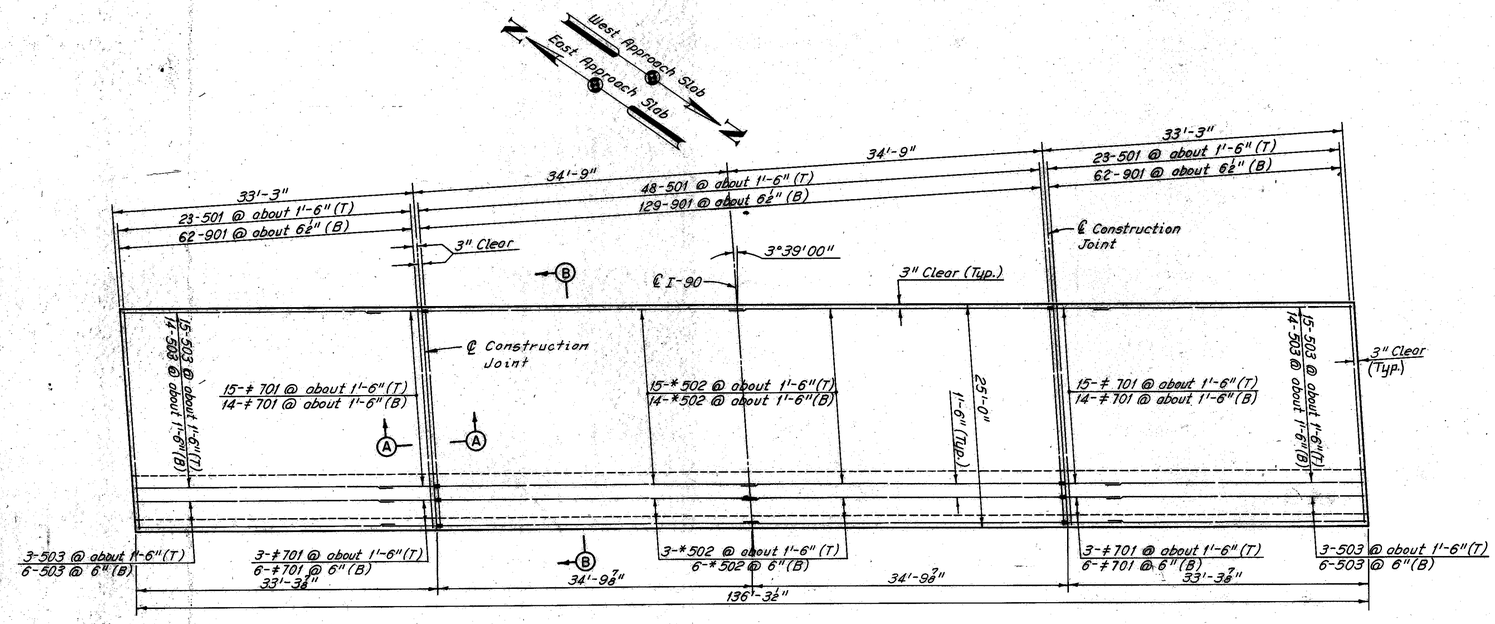

APPROACH SLAB PLAN

Note:
Welding shall conform to AWS D12.1-61 of the American Welding Society and 513.17 of the Construction and Material Specifications.

EAST AND WEST APPROACH SLAB REINFORCEMENT SCHEDULE				
MARK	NO.	LENGTH	TYPE	SER. INCR.
LLS501	188	24'-6"	Str.	
LLS502*	152	35'-3"	Str.	
LLS503	152	29'-6"	Str.	
LLS701‡	152	6'-0"	Str.	
LLS901	506	25'-9"	101	

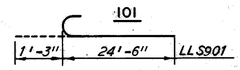

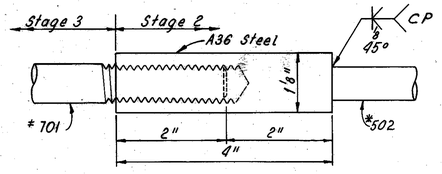

THREADED INSERT DETAIL
(Threads are to be Unified Standard Series for Basic Major Diameter of ¾")

Note: All reinforcing bar marks shall be prefixed LLS.

*Weld to threaded insert.
‡Thread one end for connection to threaded insert.

Notes:
For stage construction sequence, see Maintenance Of Traffic, Sheet 2/7.
For normal cross slopes, see Existing Typical Section, Sheet 6/7.
For details of median barrier transition, see Roadway Plans.
The following abbreviations are used:
T = Top
B = Bottom
Typ. = Typical
For additional notes and details, see Ohio Standard Drawing AS-1-72.

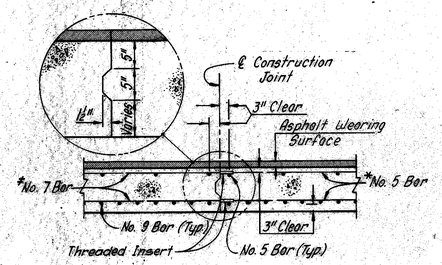

SECTION A-A

Note:
The jacking holes as called for on Ohio Standard Drawing AS-1-72 are not required.

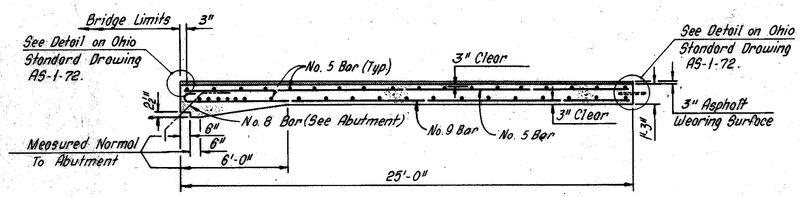

SECTION B-B

Note:
Both the welded and threaded connections shall be capable of developing 125 percent of the yield strength of the number 5 bars.
Random samples to be submitted for testing.

Note:
The asphalt wearing surface on the approach slab shall consist of the following:
1. Item 407, Tack Coat at 0.1 gal. per sq. yd.
2. Item 402, 1¾" Asphalt Concrete (AC-20)
3. Item 404, 1¼" Asphalt Concrete (AC-20)

HOWARD, NEEDLES, TAMMEN & BERGENDOFF
CONSULTING ENGINEERS
KANSAS CITY CLEVELAND NEW YORK

APPROACH SLABS

I-90 OVER BABBITT ROAD

BR. NO. CUY-90-2840 STA. 374+84.47
STA. 376+92.97

CUYAHOGA COUNTY OHIO

DRAWN	TRACED	CHECKED	REVIEWED	REVISED
B.M.P.	D.L.P.	C.E.A.	CAB	
DATE 3-21-74	DATE 6-3-74	DATE 8-30-74	DATE 12-20-74	SHEET 7/7

FHWA REGION	STATE	PROJECT	
5	OHIO		

284
354

CUYAHOGA COUNTY
CUY-90-23.73
LAKE COUNTY
LAK-90-0.00

MICROFILMED
MAR 22 1985

PROPOSED WORK:

1. Install pressure relief joints in approach roadway pavement, see Sheet CD-9.
2. Trim expansion joints, see Sheet CD-8.
3. Replace portions of the west abutment backwall, see Sheets 3/8 and 4/8.
4. Shim bearings, see Sheets 3/8 and 4/8.
5. Reset bearings, see Sheet CD-3.
6. Replace portions of approach slab, see Sheet 5/8.
7. Replace deep beam barrier median with concrete barrier median, see Sheets 3/8 and 4/8.
8. Repair concrete deck and place asphalt wearing surface, see Sheet 8/8.
9. Clean out bridge drainage system and remove debris from abutment bridge seat.
10. Repair approach slabs.
11. Correct approach slab settlement and overlay.
12. Repair minor curb and parapet deterioration.
13. Paint all structural steel.
14. Repair minor abutment deterioration.
15. Repair minor wingwall deterioration.
16. Repair concrete slope protection.

Note:
Roman numerals I and III denote cost participation breakdown. For description, see Roadway Plans, Sheet 3-354.

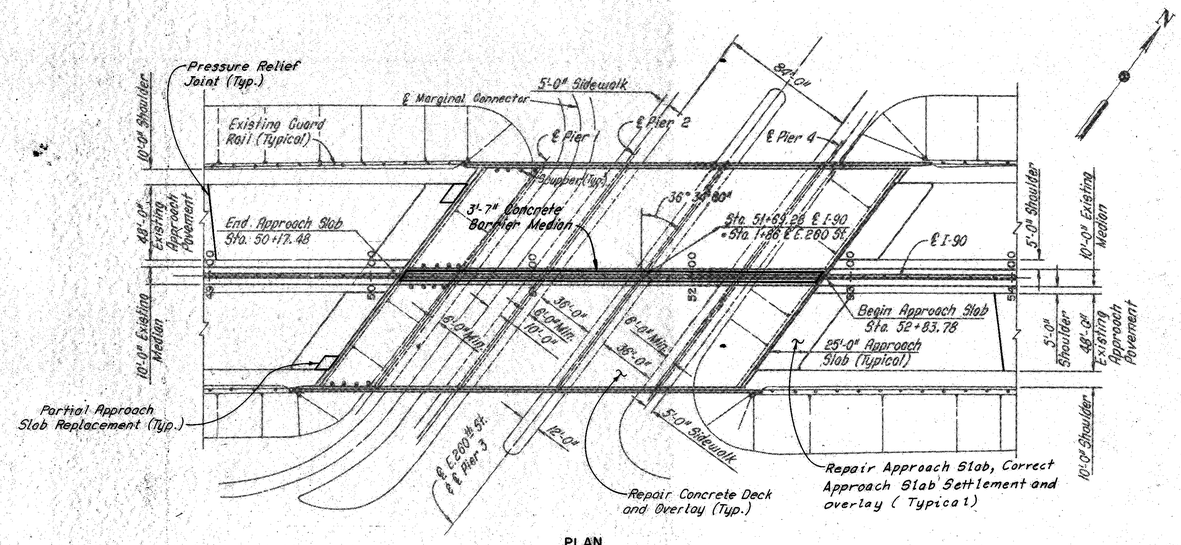

PLAN
40 0 40 80
SCALE IN FEET

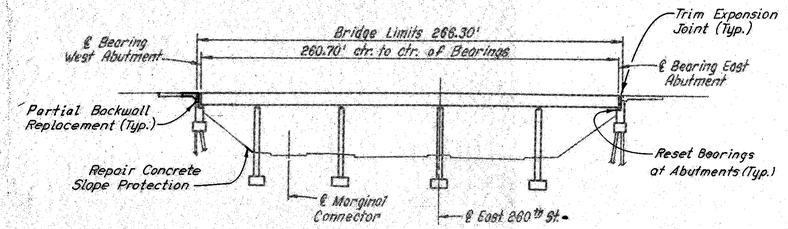

ELEVATION
40 0 40 80
SCALE IN FEET

EXISTING STRUCTURE	
TYPE:	Continuous Steel Beam with Reinforced Concrete Deck, Piers and Abutments.
SPANS:	35'-0", 52'-3⅜", 61'-8⅜", 61'-8⅜" and 50'-0".
ROADWAY:	Varies 139'-8" to 140'-1¼" Face to Face of Parapets.
LOADING:	CF-2000-57 (Adequate for AASHO Alternate Loading).
SKEW:	36°34'00" L.F.
WEARING SURFACE:	1" Monolithic Concrete.
APPROACH SLAB:	AS-1-54 (25'-0" Long).
ALIGNMENT:	Tangent and 0°28' Curve.

MODIFIED STRUCTURE	
TYPE:	Continuous Steel Beam with Reinforced Concrete Deck, Piers and Abutments.
SPANS:	35'-0", 52'-3⅜", 61'-8⅜", 61'-8⅜" and 50'-0".
ROADWAY:	Varies 139'-8" to 140'-1¼" Face to Face of Parapet with a 3'-7" Concrete Barrier Median
LOADING:	*CF-2000-57 (Adequate for AASHO Alternate Loading).
SKEW:	36°34'00" L.F.
WEARING SURFACE:	1¾" Asphalt
APPROACH SLAB:	AS-1-54 (25'-0" Long).
ALIGNMENT:	Tangent and 0°28' Curve.

* Median Beams Adequate for HS-20 Loading

TYPE CODE X231

ESTIMATED QUANTITIES

ITEM	TOTAL	UNIT	DESCRIPTION BRIDGE REPAIR	SUPER-STRUCTURE	WEST ABUT	EAST ABUT	WINGWALLS NE	WINGWALLS SE	WINGWALLS NW	WINGWALLS SW	APPROACH SLABS	CON. SLOPE PRO. WEST	CON. SLOPE PRO. EAST	GENERAL	Participation I Fed. & State	Participation III 100% State
*202	Lump Sum	Lump Sum	Portions of Structures Removed	I Lump Sum	III L.S.	III L.S.	-	-	-	-	III Lump Sum	-	-	-	Lump	Lump
402	22	Cu. Yd.	Asphalt Concrete (AC-20)	-	-	-	-	-	-	-	I 22	-	-	-	22	
404	216	Cu. Yd.	Asphalt Concrete (AC-20)	I 192	-	-	-	-	-	-	I 24	-	-	-	216	
407	70	Gallons	Tack Coat: 702.02, RC-250; or 702.04, SS-1, SS-1H, MS-2 or RS-1	-	-	-	-	-	-	-	I 70	-	-	-	70	
503	Lump Sum	Lump Sum	Cofferdams, Cribs and Sheeting	-	-	-	-	-	-	-	-	-	-	III Lump Sum		Lump
509	10,459	Pounds	Reinforcing Steel	I 9,704	III 695	III 60	-	-	-	-	-	-	-	-	9,704	755
511	47	Cu. Yd.	Class "C" Concrete, Superstructure	I 47	-	-	-	-	-	-	-	-	-	-	47	
511	8	Cu. Yd.	Class "C" Concrete, Substructure	-	III 7	III 1	-	-	-	-	-	-	-	-		8
513	1,711	Pounds	Structural Steel (ASTM A36)	I 1,711			-	-	-	-	-	-	-	-	1,711	
514	1,711	Pounds	Field Painting of New Structural Steel	I 1,711			-	-	-	-	-	-	-	-	1,711	
516	10	Sq. Ft.	1" Preformed Expansion Joint Filler	-	III 5	III 5	-	-	-	-	-	-	-	-		10
518	7	Cu. Yd.	Porous Backfill	-	III 7		-	-	-	-	-	-	-	-		7
518	1,049	Lin. Ft.	Subdrainage For Wearing Course, As Per Plan	I 1,049	-	-	-	-	-	-	-	-	-	-	1,049	
520	27	Sq. Ft.	Pneumatically Placed Mortar	III 15	III 10	III 2	-	-	-	-	-	-	-	-		27
611	15	Sq. Yd.	Reinforced Concrete Approach Slabs T=13"	-	-	-	-	-	-	-	III 15	-	-	-		15
837	Lump Sum	Lump Sum	Surface Preparation	III Lump Sum	-	-	-	-	-	-	-	-	-	-		Lump
837	Lump Sum	Lump Sum	Spot Prime Painting	III Lump Sum	-	-	-	-	-	-	-	-	-	-		Lump
837	Lump Sum	Lump Sum	Complete Coat Prime Painting	III Lump Sum	-	-	-	-	-	-	-	-	-	-		Lump
837	Lump Sum	Lump Sum	Two Complete Coats Finish Painting	III Lump Sum												Lump
Special	723	Sq. Yd.	Patching Concrete Deck Slab	III 718	-	-	-	-	-	-	III 5	-	-	-		723
Special	3,952	Sq. Yd.	Membrane Waterproofing Hot Applied Liquid (See Proposal Note)	I 3,952	-	-	-	-	-	-	-	-	-	-	3,952	
Special	152	Lin. Ft.	Repair of Cracks	-	-	III 2	-	-	-	-	III 150	-	-	-		152
Special	637	Lin. Ft.	Raising Existing End Dams	-	I 318	I 319	-	-	-	-	-	-	-	-	637	
Special	36	Each	Reset Bearings	-	III 18	III 18	-	-	-	-	-	-	-	-		36
Special	580	Each	Threaded Sleeve Anchors	I 580	-	-	-	-	-	-	-	-	-	-	580	
Special	193	Lin. Ft.	Pressure Relief Joint	-	-	-	-	-	-	-	-	-	-	III 193		193
Special	Lump Sum	Lump Sum	Cleanout Bridge Drainage Systems and Remove Debris From Bridge Seats	III Lump Sum	III L.S.	III L.S.	-	-	-	-	-	-	-	-		Lump
Special	5	Sq. Yd.	Repair of Concrete Slope Protection	-	-	-	-	-	-	-	-	III 5	-	-		5
Special	Lump Sum	Lump Sum	Correct Approach Slab Settlement	-	-	-	-	-	-	-	III Lump Sum	-	-	-		Lump

*SUPERSTRUCTURE - Includes approximately 56 Cu. Yds. of concrete in the existing 10'-0" median, and approximately 268 Lin. Ft. of guardrail including posts, nuts, plates and portions of bulb angle gutter.

*SUBSTRUCTURE - Includes approximately 7 Cu. Yds. of concrete in the existing abutment backwalls.

*APPROACH SLABS - Includes approximately 15 Sq. Yds. of existing reinforced concrete approach slabs.

Note: The gap between the front face of the abutment and edge of the slope protection shall be filled with joint sealer meeting the requirements of 705.02. All material and labor required to complete this repair shall be included with Item 519, Patching Concrete Structures, for payment. The approximate quantity is 352 Lin. Ft.

Rev. 7-18-75

HOWARD, NEEDLES, TAMMEN & BERGENDOFF
CONSULTING ENGINEERS
KANSAS CITY CLEVELAND NEW YORK

SITE PLAN
I-90 OVER EAST 260 th. STREET (S.R. 175)

BR. NO. CUY-90-2910
STA. 50+17.48
STA. 52+83.78

CUYAHOGA COUNTY OHIO

DRAWN	TRACED	CHECKED	REVIEWED	REVISED
P.C.K.	J.L.P.	GP	CHB	
DATE 8-30-73	DATE 8-31-73	DATE 10-17-74	DATE 12-20-74	SHEET 1/8

FHWA REGION	STATE	PROJECT	
5	OHIO		

285
354

CUYAHOGA COUNTY
CUY-90-23.73
LAKE COUNTY
LAK-90-0.00

MICROFILMED
MAR 22 1985

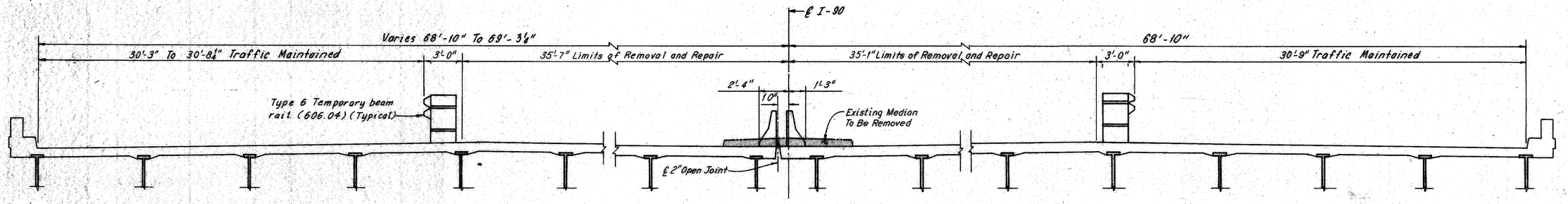

SECOND STAGE CONSTRUCTION

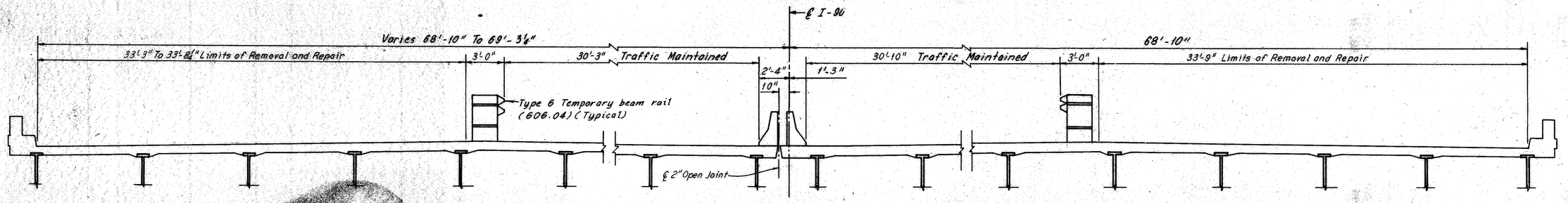

THIRD STAGE CONSTRUCTION

Notes:

The stage construction cross-sections apply within the bridge and approach slab limits. All repair work shall be co-ordinated with the stage construction as shown.

For maintenance of traffic notes, see Roadway Plans.

HOWARD, NEEDLES, TAMMEN & BERGENDOFF
CONSULTING ENGINEERS
KANSAS CITY CLEVELAND NEW YORK

MAINTENANCE OF TRAFFIC

I-90 OVER EAST 260th. STREET (S.R. 175)

BR. NO. CUY-90-2910 STA. 50+17.48
STA. 52+83.78

CUYAHOGA COUNTY OHIO

DRAWN	TRACED	CHECKED	REVIEWED	REVISED
JLR	JLR	ML	CAB	
DATE 3-8-74	DATE 3-8-74	DATE 6-26-74	DATE 12-20-74	SHEET 2/8

FHWA REGION	STATE	PROJECT	
5	OHIO		

286
354

CUYAHOGA COUNTY
CUY-90-23.73
LAKE COUNTY
LAK-90-0.00

MICROFILMED
MAR 22 1985

Note: Backwall elevations are given at the top of the 6x4x½ angle of the end dam.

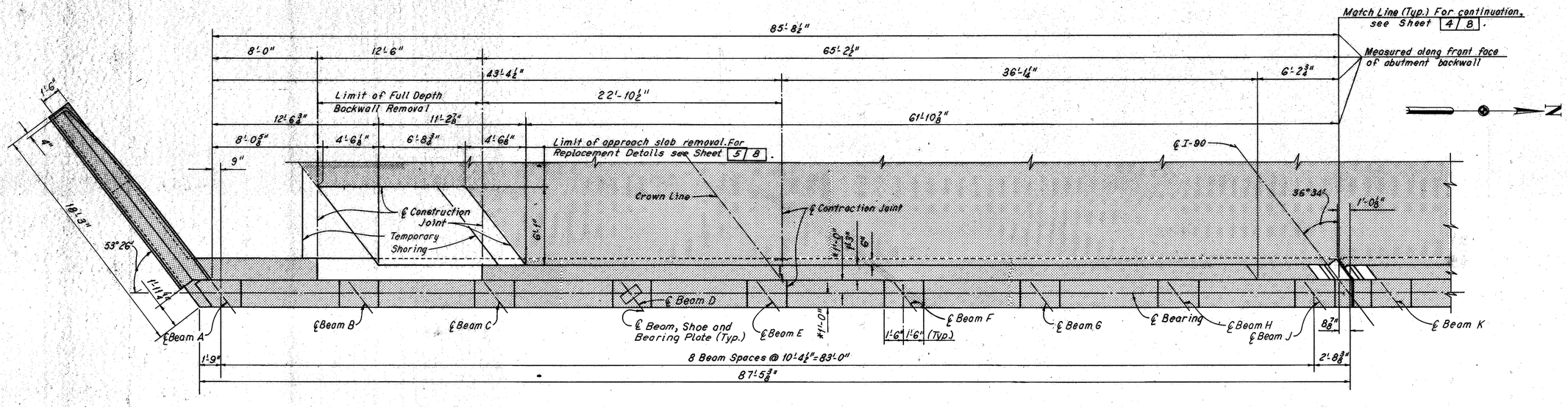

MODIFIED PART PLAN

Note: Shim bearings at beams Cond F.

Note: All reinforcing bar marks shall be prefixed MW.

* Plan Dimension, the actual dimensions shall be those which result when the end dam components are extended from their existing position and when the bearings are set in their final position.

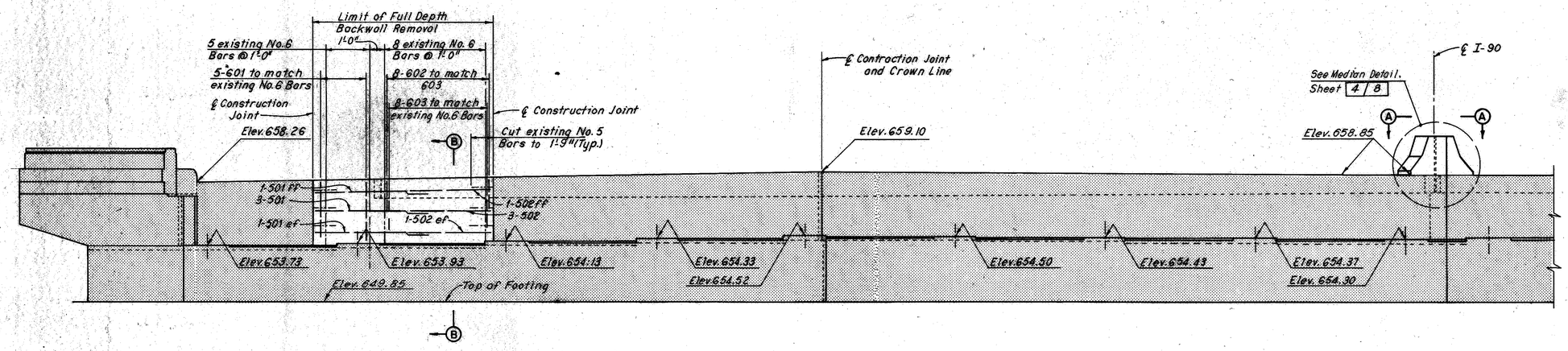

MODIFIED PART ELEVATION

Notes:

Indicates existing structure to be retained.

For View A-A, see Sheet 4/8.

For Existing and Modified Section B-B, see Sheet 5/8

For stage construction sequence, see Maintenance Of Traffic, Sheet 2/8.

For West Abutment and Approach Slab Replacement Details, see Sheet 5/8.

For resetting bearing details, see Sheet CD-3.

For expansion joint modification at the median, see Sheets 6/8 and 7/8.

For Reinforcement Schedule, see Sheet R-6.

The following abbreviations are used:

ef = each face
ff = far face
Typ. = Typical

HOWARD, NEEDLES, TAMMEN & BERGENDOFF
CONSULTING ENGINEERS
KANSAS CITY CLEVELAND NEW YORK

WEST ABUTMENT

I-90 OVER EAST 260th. STREET (S.R.175)

BR. NO. CUY-90-2910 STA. 50+17.48
STA. 52+83.78

CUYAHOGA COUNTY OHIO

DRAWN	TRACED	CHECKED	REVIEWED	REVISED
R.C.K.	R.C.K.	C.P.	GAB	
DATE 4-2-74	DATE 4-21-74	DATE 10-8-74	DATE 10-30-74	SHEET 3/8

FHWA REGION	STATE	PROJECT	
5	OHIO		

287
354

CUYAHOGA COUNTY
CUY-90-23.73
LAKE COUNTY
LAK-90-0.00

MICROFILMED
MAR 22 1985

Match Line (Typical) For continuation, see Sheet 3 8.

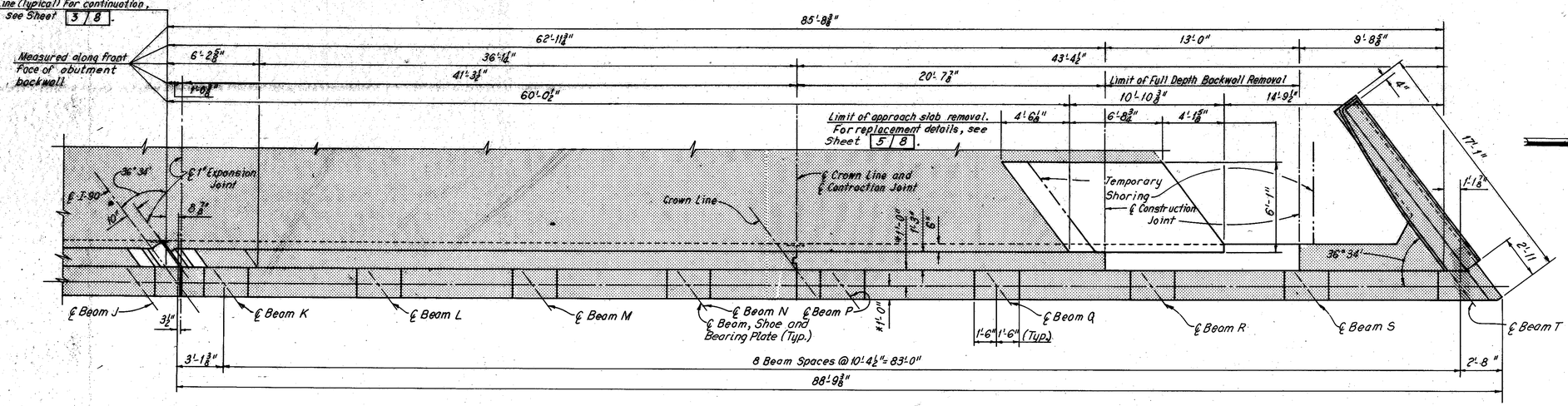

Note: Backwall elevations are given at the top of the 6x4x½ angle of the end dam.

MODIFIED PART PLAN

Note: All reinforcing bar marks shall be prefixed MW.

Note: Shim bearings at West Abutment beams L, N and S. Shim bearings at East Abutment beams M and R.

* Plan Dimension, the actual dimensions shall be those which result when the end dam components are extended from their existing position and when the bearings are set in their final position.

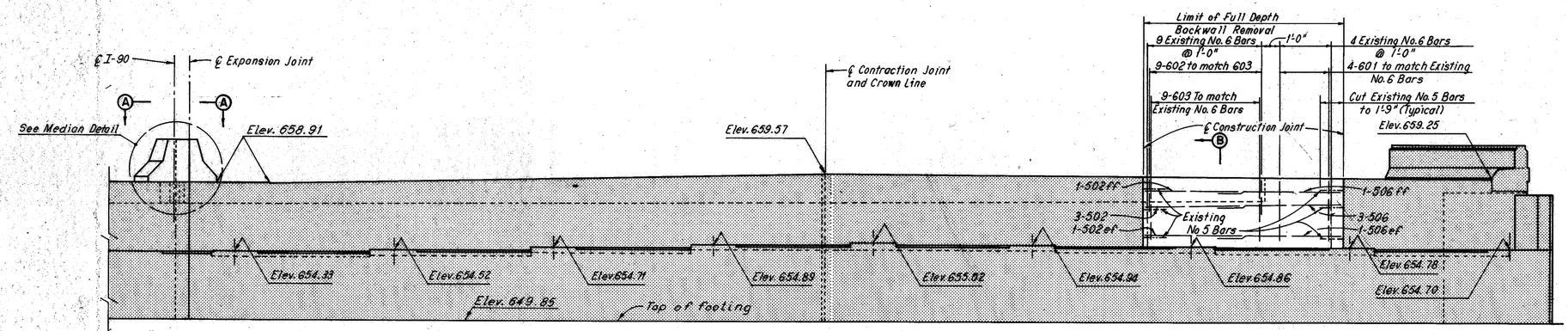

MODIFIED PART ELEVATION

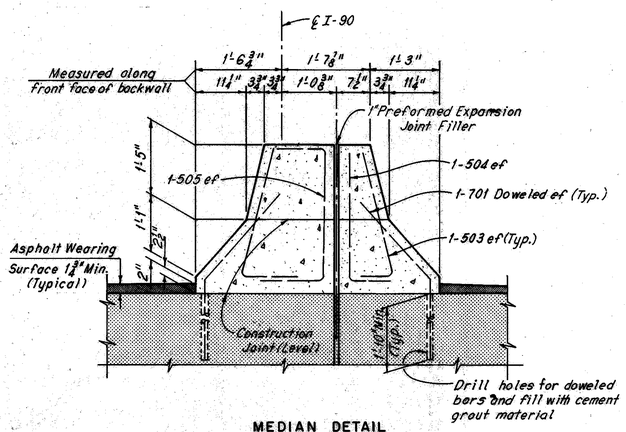

MEDIAN DETAIL
(West Abutment shown, East Abutment similar except opposite hand)

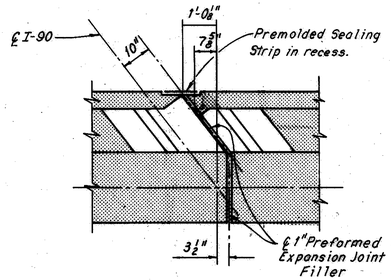

VIEW A-A

Notes:

Indicates existing structure to be retained.

For Existing and Modified Section B-B, see Sheet 5 8.

For stage construction sequence, see Maintenance Of Traffic, Sheet 2 8.

For West Abutment and Approach Slab Replacement Details, see Sheet 5 8.

For resetting bearing details, see Sheet CD-1.

For expansion joint modification at the median, see Sheets 6 8 and 7 8.

For Reinforcement Schedule, see Sheet R-6.

The following abbreviations are used:
ef = each face
ff = far face
Typ. = Typical

HOWARD, NEEDLES, TAMMEN & BERGENDOFF
CONSULTING ENGINEERS
KANSAS CITY CLEVELAND NEW YORK

WEST ABUTMENT

I-90 OVER EAST 260th. STREET (S.R. 175)

BR. NO. CUY-90-2910 STA. 50+17.48
STA. 52+83.78

CUYAHOGA COUNTY OHIO

DRAWN	TRACED	CHECKED	REVIEWED	REVISED
RCK	RCK	CJP	EAB	
DATE 4-2-74	DATE 4-24-74	DATE 10-9-74	DATE 12-20-74	SHEET 4 8

FHWA REGION	STATE	PROJECT	
5	OHIO		

288
354

CUYAHOGA COUNTY
CUY-90-23.73
LAKE COUNTY
LAK-90-0.00

MICROFILMED
MAR 22 1985

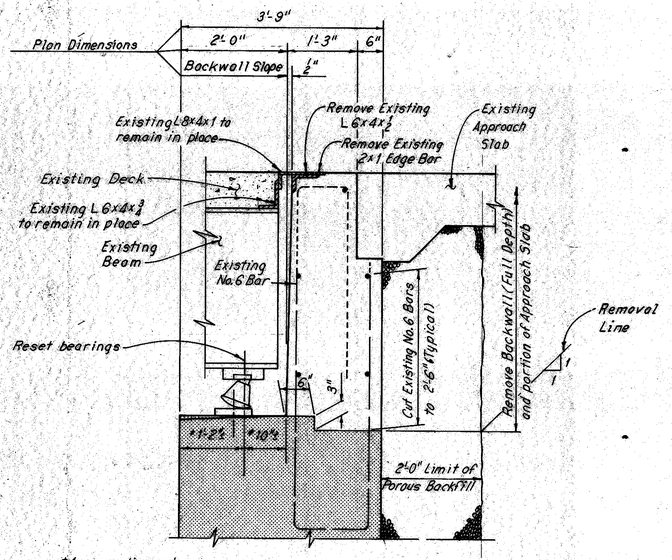

*Average dimension measured at 55°F.

EXISTING SECTION B-B

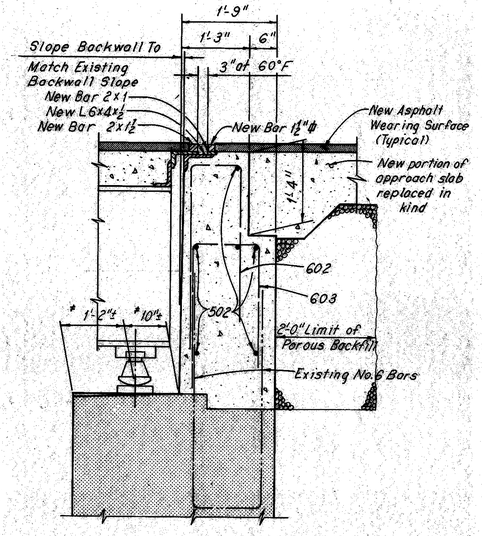

MODIFIED SECTION B-B

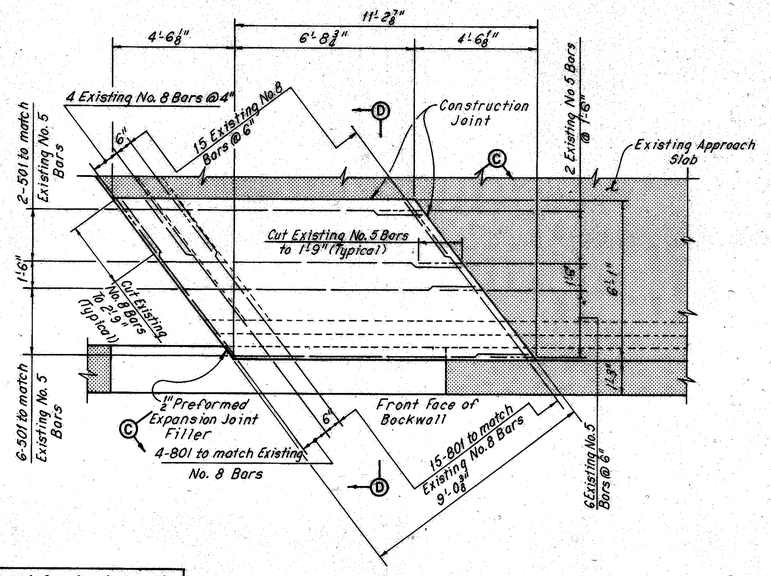

APPROACH SLAB PLAN
South End

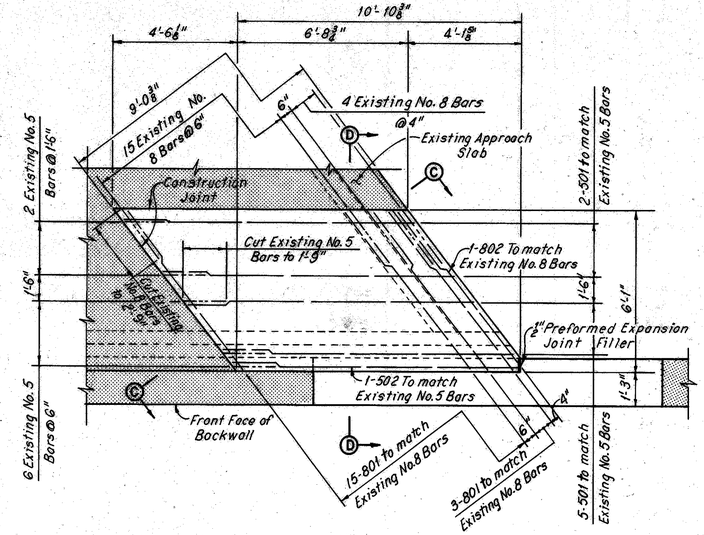

APPROACH SLAB PLAN
North End

Note: All reinforcing bar marks shall be prefixed as follows:
West Abutment: MW
Approach Slab: MMS

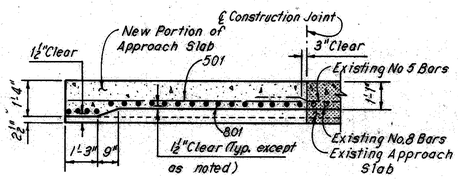

SECTION C-C
(North End shown
South End opposite hand)

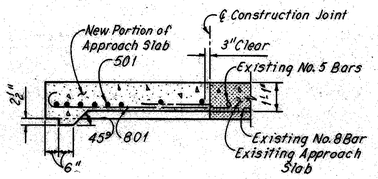

SECTION D-D
(South End shown
North End opposite hand)

Notes:

Excavation, backfill (except Porous Backfill) and paved berm removal necessary to accomplish structure modification shall be included with Item 202, Portions of Structures Removed, for payment. Backfill shall be in accordance with Item 203.

For details of raising the expansion joint, see Sheet CD-6.

For details of backwall expansion joint angle not shown, see Ohio Standard Drawing SD-1-69, Sheet 1 of 4.

For additional notes, see Sheet 4/8.

REINFORCEMENT SCHEDULE

MARK	NO.	LENGTH	TYPE	SER. INCR.
MMS501	15	10'-9"	Str.	
MMS502	1	10'-3"	Str.	
MMS801	37	8'-1"	101	
MMS802	1	7'-10"	101	

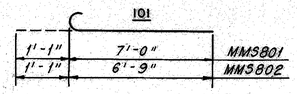

HOWARD, NEEDLES, TAMMEN & BERGENDOFF
CONSULTING ENGINEERS
KANSAS CITY CLEVELAND NEW YORK

WEST ABUTMENT AND APPROACH SLAB REPLACEMENT DETAILS

I-90 OVER EAST 260th. STREET (S.R. 175)

BR. NO. CUY-90-2910 STA. 50+17.48
STA. 52+83.78

CUYAHOGA COUNTY OHIO

DRAWN R.C.K.	TRACED R.C.K.	CHECKED C.P.	REVIEWED CAB	REVISED
DATE 1-2-74	DATE 4-24-74	DATE 10-11-74	DATE 11-20-74	SHEET 5/8

FHWA REGION	STATE	PROJECT	
5	OHIO		

289
354

CUYAHOGA COUNTY
CUY-90-23.73
LAKE COUNTY
LAK-90-0.00

MICROFILMED
MAR 22 1990

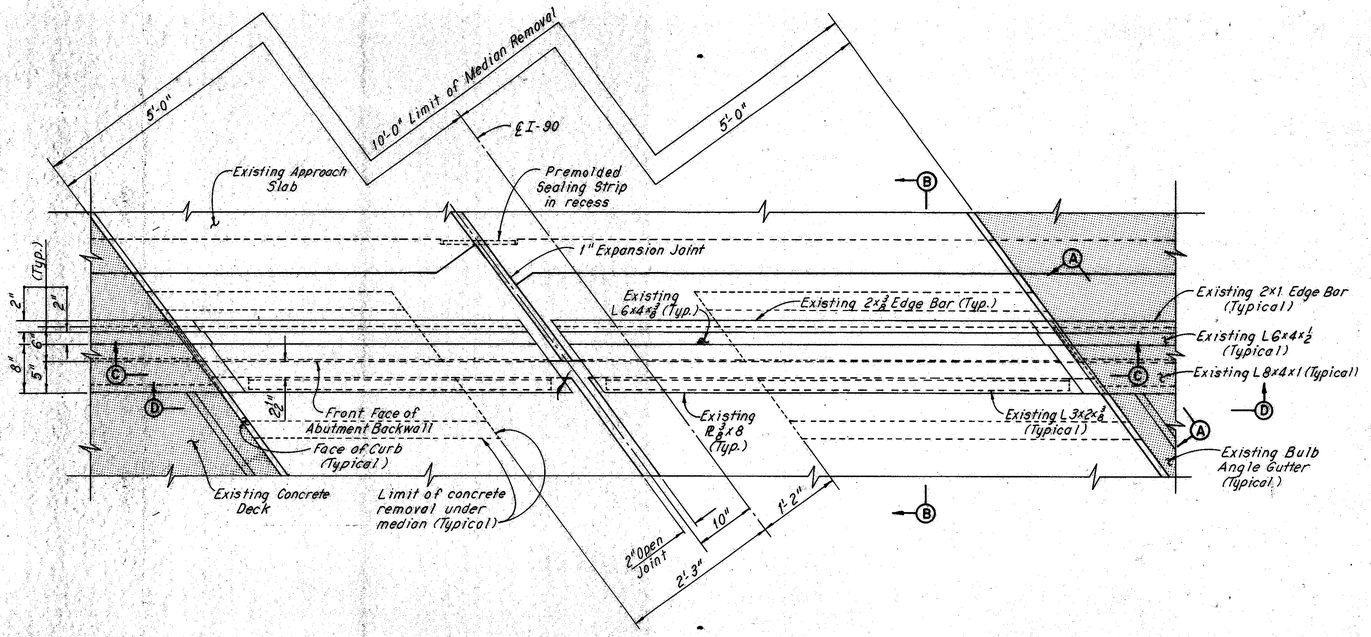

MEDIAN PLAN AT END DAM
(East End Dam shown West End Dam similar except opposite hand)

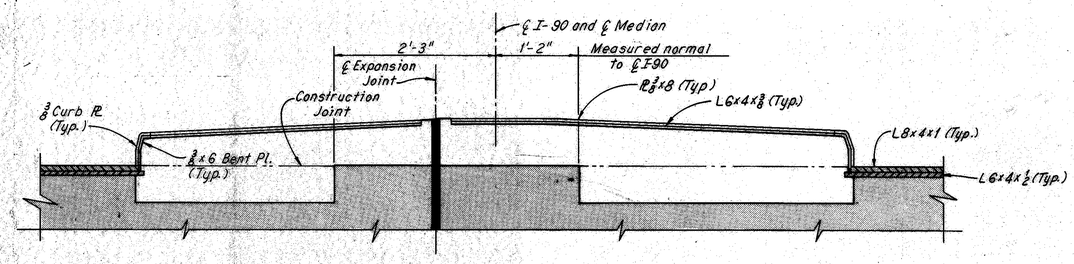

SECTION C-C
(Reinforcement not shown)

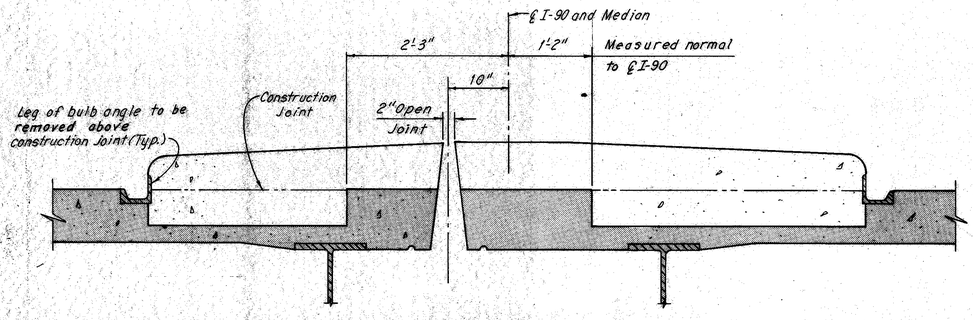

SECTION D-D
(Reinforcement not shown)

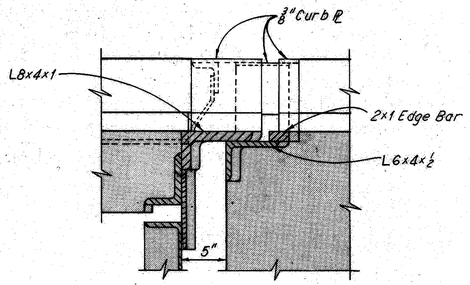

SECTION A-A
(Anchors and reinforcement not shown)

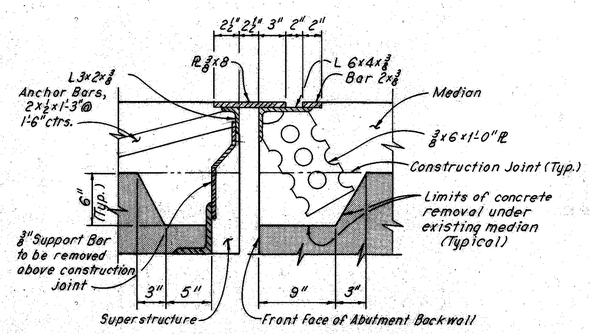

SECTION B-B
(Reinforcement not shown)

Notes:

Indicates portions of structure to remain.

Remove guardrail, posts, nuts, plates, joint sealer and anchor bolts above the construction joint. Include with Item 202, Portions of Structures Removed, for payment.

Remove the existing median above the construction joint.

Remove vertical leg of bulb angle gutter above the construction joint. Include with Item 202, Portions of Structures Removed, for payment.

For Modified Plan and Sections at Median, see Sheet 7/8 .

HOWARD, NEEDLES, TAMMEN & BERGENDOFF
CONSULTING ENGINEERS
KANSAS CITY CLEVELAND NEW YORK

EXISTING PLAN AND SECTIONS AT MEDIAN

I-90 OVER EAST 260th. STREET (S.R.175)

BR.NO.CUY-90-2910 STA.50+17.48
STA.52+83.78

CUYAHOGA COUNTY OHIO

DRAWN	TRACED	CHECKED	REVIEWED	REVISED
RCK	RCK	C.P.	CAB	
DATE 9-1974	DATE 9-26-74	DATE 10-14-74	DATE 12-20-74	SHEET 6/8

FHWA REGION	STATE	PROJECT	
5	OHIO		

290
354

CUYAHOGA COUNTY
CUY-90-23.73
LAKE COUNTY
LAK-90-0.00

MICROFILMED
MAR 22 19[illegible]

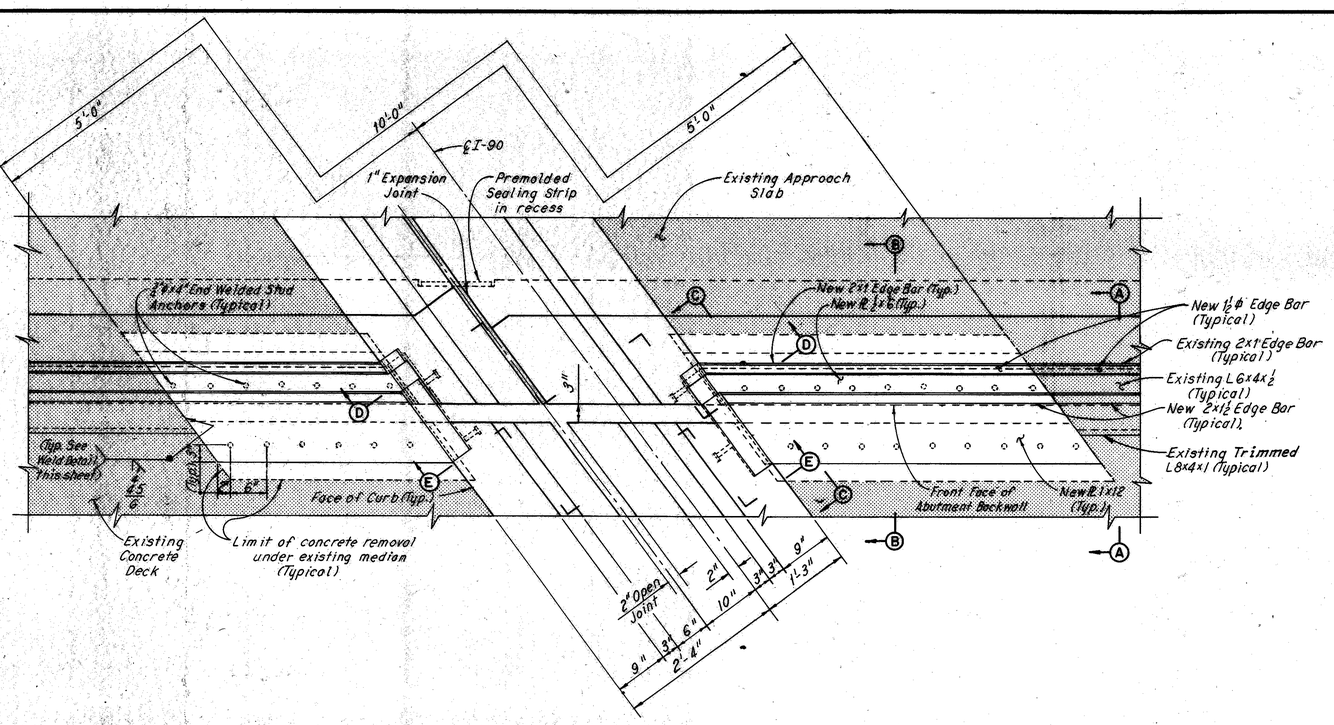

MEDIAN PLAN AT END DAM
(East Abutment shown West Abutment similar except opposite hand)

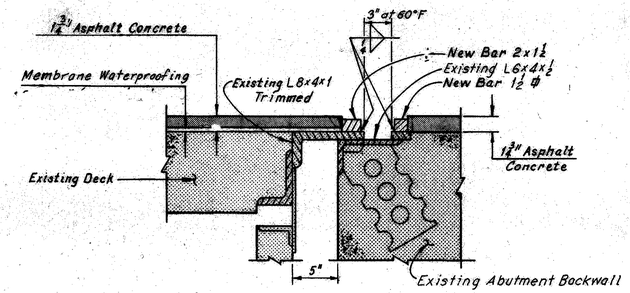

SECTION A-A
(Reinforcement not shown)

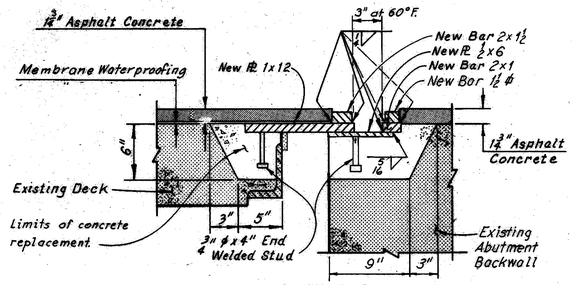

SECTION B-B
(Reinforcement not shown)

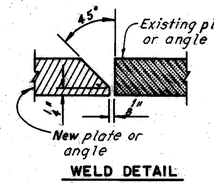

WELD DETAIL

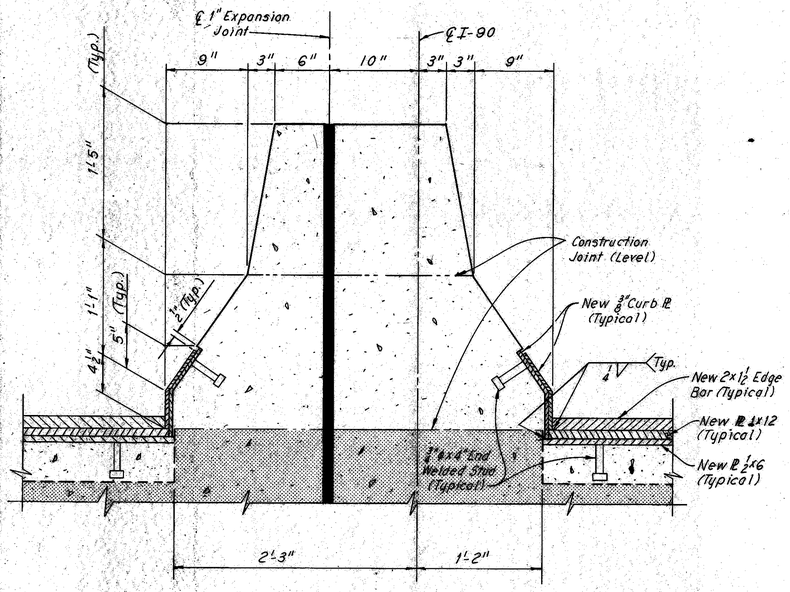

SECTION D-D
(Asphalt Wearing Surface and Reinforcement not shown)

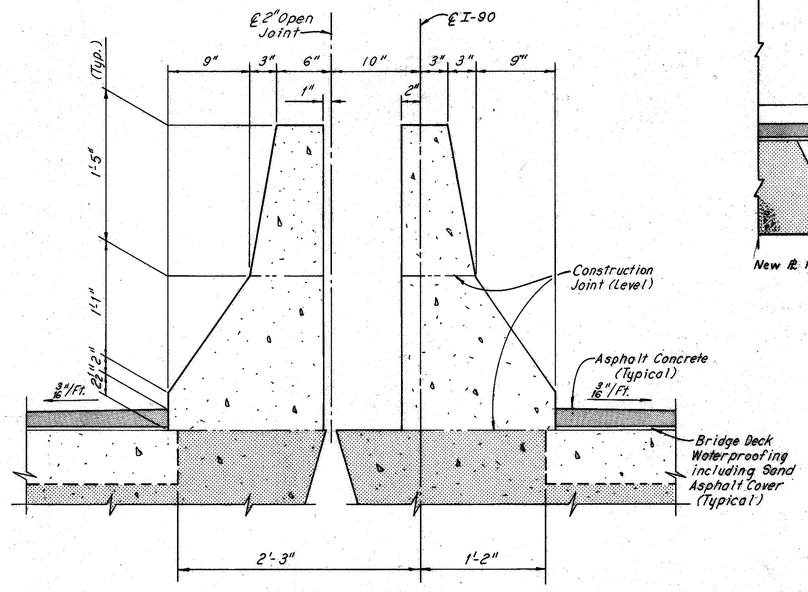

SECTION E-E
(Reinforcement not shown)

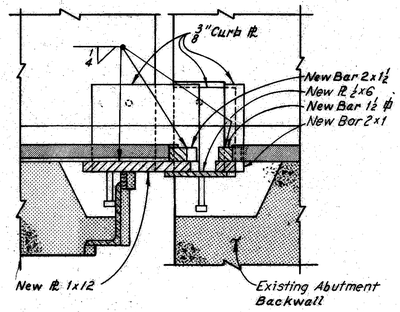

SECTION C-C
(Reinforcement not shown)

Notes:
Indicates existing construction to remain.
For details of barrier median on approach slabs see Roadway Plans.
For Existing Plan and Sections at Median see Sheet 6 8.

Rev. 7-18-75

HOWARD, NEEDLES, TAMMEN & BERGENDOFF
CONSULTING ENGINEERS
KANSAS CITY CLEVELAND NEW YORK

MODIFIED PLAN AND SECTIONS AT MEDIAN

I-90 OVER EAST 260th. STREET (S.R. 175)

BR. NO. CUY-90-2910 STA. 50+17.48
STA. 52+83.78

CUYAHOGA COUNTY OHIO

DRAWN RCK	TRACED RCK	CHECKED C.P.	REVIEWED CAB	REVISED
DATE 9-20-74	DATE 9-25-74	DATE 10-14-74	DATE 12-20-74	SHEET 7 8

FHWA REGION	STATE	PROJECT	
5	OHIO		

291
354

CUYAHOGA COUNTY
CUY-90-23.73
LAKE COUNTY
LAK-90-0.00

MICROFILMED
MAR 22 1985

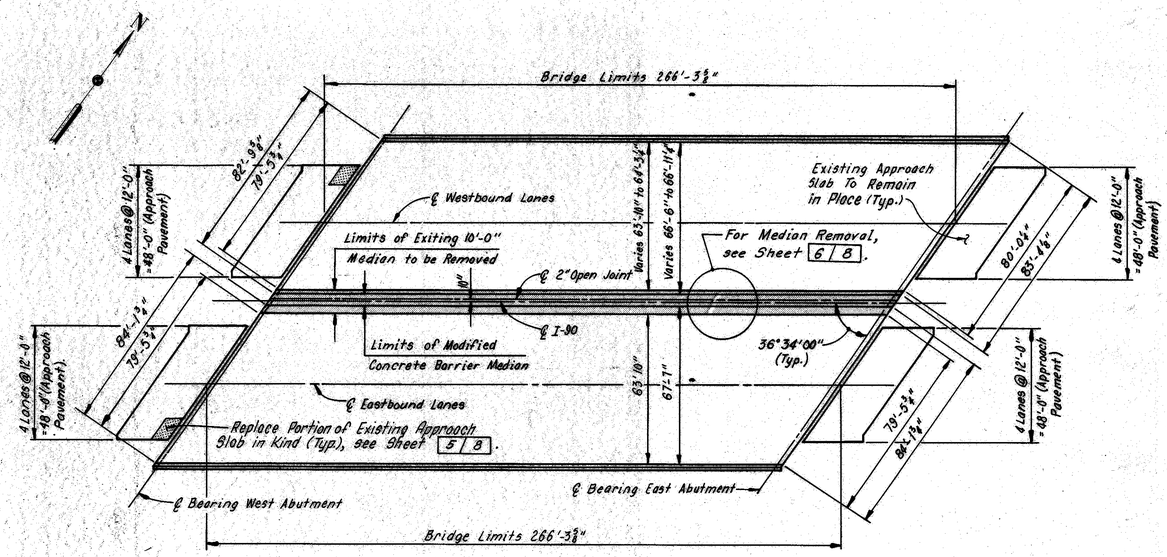

EXISTING PLAN

30 0 30 60
SCALE IN FEET

NOTE: All reinforcing bar marks shall be prefixed MM.

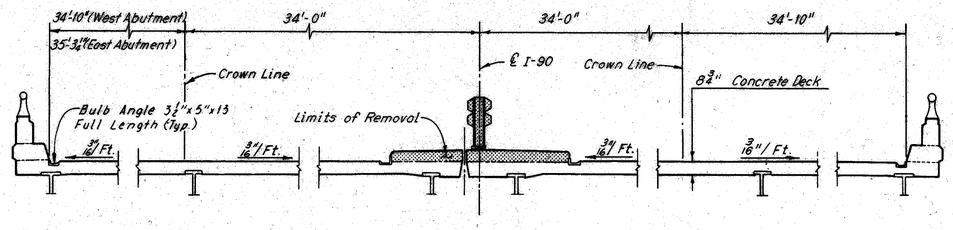

EXISTING TYPICAL SECTION

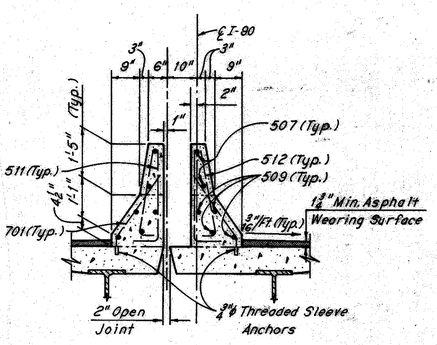

SECTION A-A

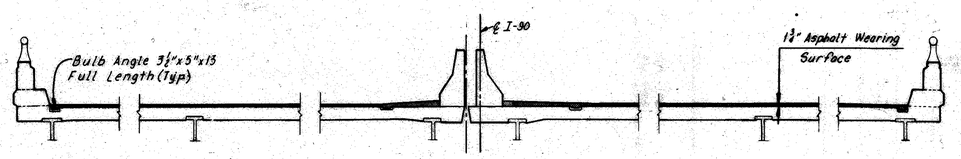

MODIFIED TYPICAL SECTION

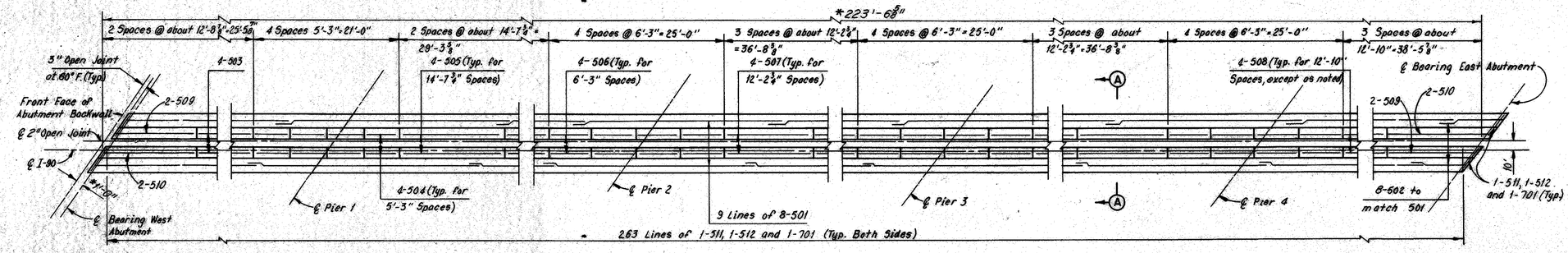

CONCRETE BARRIER MEDIAN PLAN

* Plan Dimension, the actual dimensions shall be those which result when the end dam components are extended from their existing position and when the bearings are set in their final position.

Notes:

For placement of threaded sleeve anchors, see Sheet CD-9.

For median modification, see Sheets 6 | 8 and 7 | 8.

For reinforcement schedule, see Sheet R-6

For deck repair and asphalt wearing surface course details, see Sheet CD-7

For deflection joint details, see Sheet CD-9

The following abbreviation is used:

Typ. = Typical

HOWARD, NEEDLES, TAMMEN & BERGENDOFF
CONSULTING ENGINEERS
KANSAS CITY CLEVELAND NEW YORK

EXISTING & MODIFIED DECK PLAN & TYPICAL SECTION

I-90 OVER EAST 260th. STREET (S.R. 175)
BR. NO. CUY-90-2910 STA. 50+17.48
STA. 52+83.78

CUYAHOGA COUNTY OHIO

DRAWN BMP	TRACED JLR	CHECKED CP	REVIEWED CAB	REVISED
DATE 8-20-73	DATE 8-29-73	DATE 10-15-74	DATE 12-20-74	SHEET 8	8

FHWA REGION	STATE	PROJECT	
5	OHIO		

292
354

CUYAHOGA COUNTY
CUY-90-23.73
LAKE COUNTY
LAK-90-0.00

MICROFILMED
MAR 22 1983

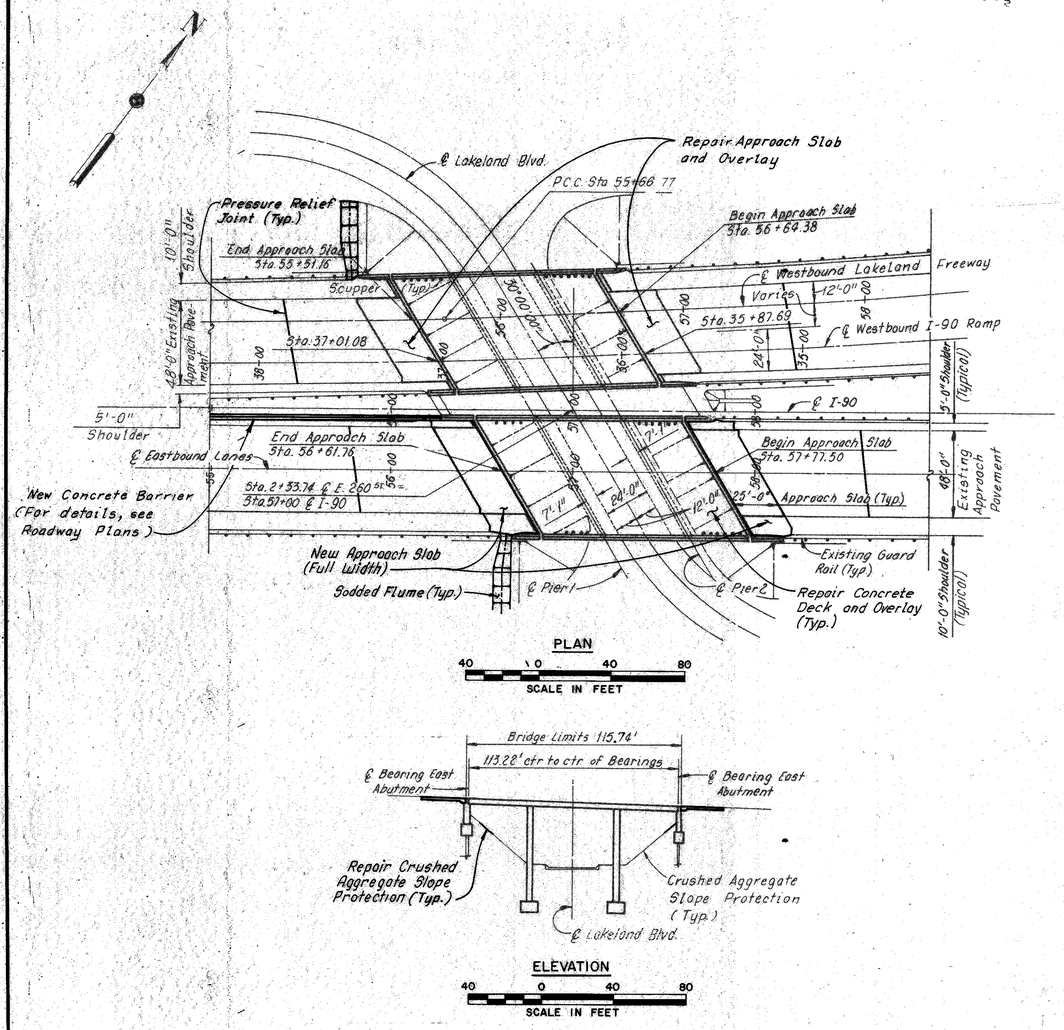

PLAN

40 0 40 80
SCALE IN FEET

ELEVATION

40 0 40 80
SCALE IN FEET

PROPOSED WORK:

1. Install pressure relief joints in the approach roadway pavements, see Sheet CD-9.
2. Replace both approach slabs on the eastbound bridge, see Sheet 4/4.
3. Repair concrete deck and place asphalt wearing surface, see Sheet 3/4.
4. Clean out bridge drainage system and remove debris from abutment bridge seat.
5. Repair both approach slabs on the westbound bridge and overlay.
6. Seal approach slab joints on the westbound bridge.
7. Repair minor curb and parapet deterioration.
8. Repair minor abutment deterioration.
9. Repair minor wingwall deterioration.
10. Repair minor pier deterioration.
11. Repair crushed aggregate slope protection.
12. Divert roadway runoff at the northwest wingwall of the westbound bridge and at the southwest wingwall of the eastbound bridge, see Sheet CD-9.
13. Modify end of Northwest Wingwall of the Eastbound Bridge, see Sheet 3/4.

Note:
Roman numerals I and III denote cost participation breakdown. For description, see Roadway Plans, Sheet 3-354.

TYPE CODE X220

ESTIMATED QUANTITIES

ITEM	TOTAL	UNIT	DESCRIPTION BRIDGE REPAIR	SUPER-STRUCTURE	WEST ABUT	EAST ABUT	WINGWALLS NE	WINGWALLS SE	WINGWALLS NW	WINGWALLS SW	APPROACH SLABS	C. A. SLOPE PRO. WEST	C. A. SLOPE PRO. EAST	GENERAL	Participation I Fed. & State	Participation III 100% State
*202	Lump Sum	Lump Sum	Portions of Structures Removed	III Lump Sum	III L.S.	III L.S.	-	-	-	-	III Lump Sum	-	-	-		Lump
402	23	Cu. Yd.	Asphalt Concrete (AC-20)	-	-	-	-	-	-	-	I #11/#12	-	-	-	23	
404	104	Cu. Yd.	Asphalt Concrete (AC-20)	I #39/#40	-	-	-	-	-	-	I #12/#13	-	-	-	104	
407	73	Gallons	Tack Coat: 702.01, EC-250, or 702.04, SS-1, SS-1H, MS-2 or ES-1	-	-	-	-	-	-	-	I #36/#37	-	-	-	73	
520	87	Sq. Ft.	Pneumatically Placed Mortar	III #70/#9	III #6	-	-	-	-	III #1/#1	-	-	-	-		87
611	364	Sq. Yd.	Reinforced Concrete Approach Slabs T=15"	-	-	-	-	-	-	-	III #364	-	-	-		364
659	11	Sq. Yd.	Seeding and Mulching	-	-	-	-	-	III #5	III #6	-	-	-	-		11
660	72	Sq. Yd.	Sodding	-	-	-	-	-	III #36	III #36	-	-	-	-		72
Special	10	Sq. Yd.	Patching Concrete Deck Slab	III #8/#1	-	-	-	-	-	-	III #1	-	-	-		10
Special	1,607	Sq. Yd.	Membrane Waterproofing Hot Applied Liquid (See Proposal Note)	I #788/#819	-	-	-	-	-	-	-	-	-	-	1,607	
Special	144	Lin. Ft.	Repair of Cracks	-	-	III #6	-	III #5	III #4	-	III #125	-	-	-		144
Special	194	Lin. Ft.	Pressure Relief Joint	-	-	-	-	-	-	-	-	-	-	III #97/#97		194
Special	Lump Sum	Lump Sum	Cleanout Bridge Drainage Systems and Remove Debris From Bridge Seats	III Lump Sum	III L.S.	III L.S.	-	-	-	-	-	-	-	-		Lump
Special	41	Sq. Yd.	Repair of Crushed Aggregate Slope Protection	-	-	-	-	-	-	-	-	III #2	III #39	-		41
Special	Lump Sum	Lump Sum	End of Wingwall Modification	-	-	-	-	-	III L.S.	-	-	-	-	-		Lump

# Indicates quantities for eastbound lanes.
# Indicates quantities for westbound lanes.

*APPROACH SLABS - Includes approximately 364 Sq. Yds. of existing reinforced concrete approach slabs, paved berms and all necessary excavation or backfill to provide proper cross section for the new approach slabs.

REPAIR MINOR PIER DETERIORATION - Repair approximately 18 Sq. Ft. of spall on Pier 2, to be included with Item 520, Pneumatically Placed Mortar, for payment.

SEAL APPROACH SLAB JOINTS - Seal approach slab joints with cold applied joint sealer (705.02) to be included with Item 611, Reinforced Concrete Approach Slabs, for payment.

EXISTING STRUCTURE

TYPE:	Continuous Reinforced Concrete Slab with Reinforced Concrete Piers and Abutments.
SPANS:	33'-3", 47'-6" and 33'-3".
ROADWAY:	Eastbound 66'-0" Face to Face of Parapets Westbound Varies.
LOADING:	CF-2000-57 (Adequate for AASHO Alternate Loading).
SKEW:	30° 00' 00" Right Forward.
WEARING SURFACE:	1" Monolithic Concrete.
APPROACH SLABS:	AS-1-54 (25'-0" Long).
ALIGNMENT:	Eastbound Tangent and Westbound 0° 28' 00" and 1° 00' Curve Left.
SUPERELEVATION:	Westbound Variable.

MODIFIED STRUCTURE

TYPE:	Continuous Reinforced Concrete Slab with Reinforced Concrete Piers and Abutments.
SPANS:	33'-3", 47'-6" and 33'-3".
ROADWAY:	Eastbound 66'-0" Face to Face of Parapets Westbound Varies.
LOADING:	CF-2000-57 (Adequate for AASHO Alternate Loading).
SKEW:	30° 00' 00" Right Forward.
WEARING SURFACE:	1¾" Asphalt.
APPROACH SLABS	AS-1-72 (25'-0" Long), Br. No. CUY-90-2922R. AS-1-54 (25'-0" Long), Br. No. CUY-90-2922L.
ALIGNMENT:	Eastbound Tangent and Westbound 0°28'00" and 1°00' Curve Left.
SUPERELEVATION:	Westbound Variable.

Rev. 7-18-75

HOWARD, NEEDLES, TAMMEN & BERGENDOFF
CONSULTING ENGINEERS
KANSAS CITY CLEVELAND NEW YORK

SITE PLAN

I-90 OVER WESTBOUND LANES
LAKELAND BOULEVARD

BR. NO. CUY-90-2922 L&R STA. 56+42.13
STA. 57+57.87

CUYAHOGA COUNTY OHIO

DRAWN	TRACED	CHECKED	REVIEWED	REVISED
T.L.A.	T.L.A.	R.C.K.	C.A.B.	
DATE 9-27-73	DATE 9-27-73	DATE 9-30-74	DATE 12-10-74	SHEET 1/4

FHWA REGION	STATE	PROJECT	
5	OHIO		

293
354

CUYAHOGA COUNTY
CUY-90-23.73
LAKE COUNTY
LAK-90-0.00

MICROFILMED
MAR 22 1995

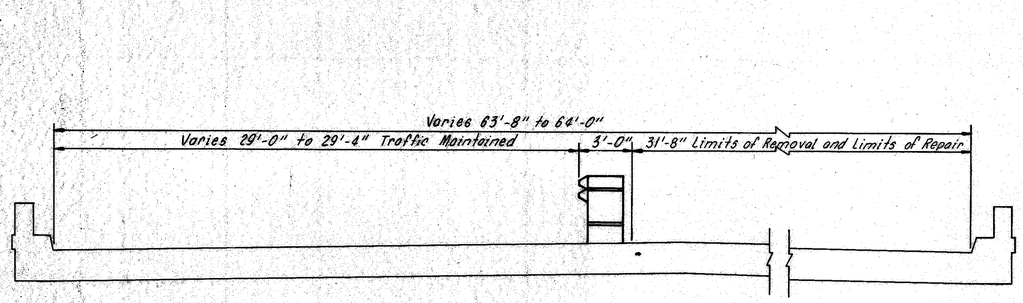

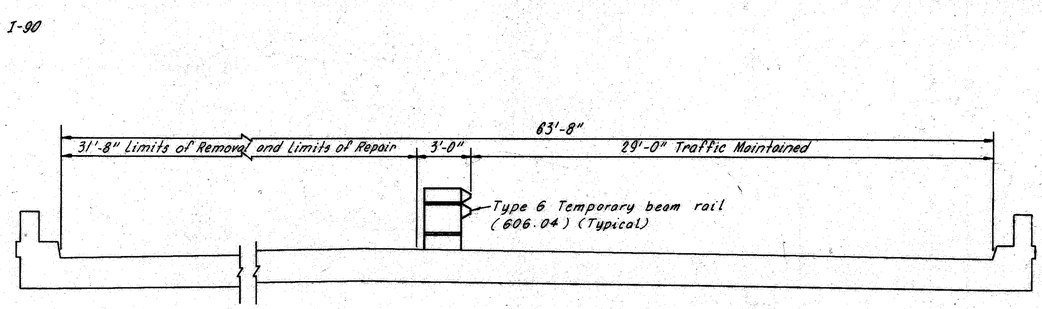

FIRST STAGE CONSTRUCTION

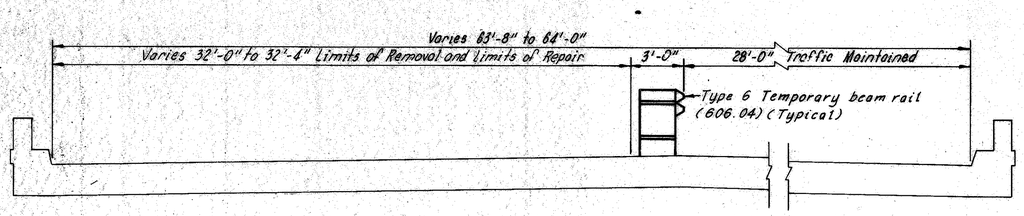

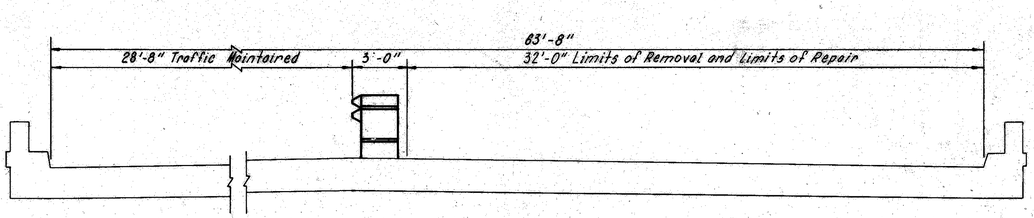

SECOND STAGE CONSTRUCTION

Notes:

The stage construction cross-sections apply within the bridge and approach slab limits. All repair work shall be co-ordinated with the stage construction as shown.

For maintenance of traffic notes, see Roadway Plans.

HOWARD, NEEDLES, TAMMEN & BERGENDOFF
CONSULTING ENGINEERS
KANSAS CITY CLEVELAND NEW YORK

MAINTENANCE OF TRAFFIC
I-90 OVER WESTBOUND LANES
LAKELAND BOULEVARD

BR. NO. CUY-90-2922 L&R STA. 56+42.13
STA. 57+57.87

CUYAHOGA COUNTY OHIO

DRAWN	TRACED	CHECKED	REVIEWER	REVISED
JLR	JLR	ML	CAB	
DATE 3-11-74	DATE 3-11-74	DATE 4-26-74	DATE 12-20-74	SHEET 2/4

FHWA REGION	STATE	PROJECT	
5	OHIO		

294
354

CUYAHOGA COUNTY
CUY-90-23.73
LAKE COUNTY
LAK-90-0.00

MAR 22 1985

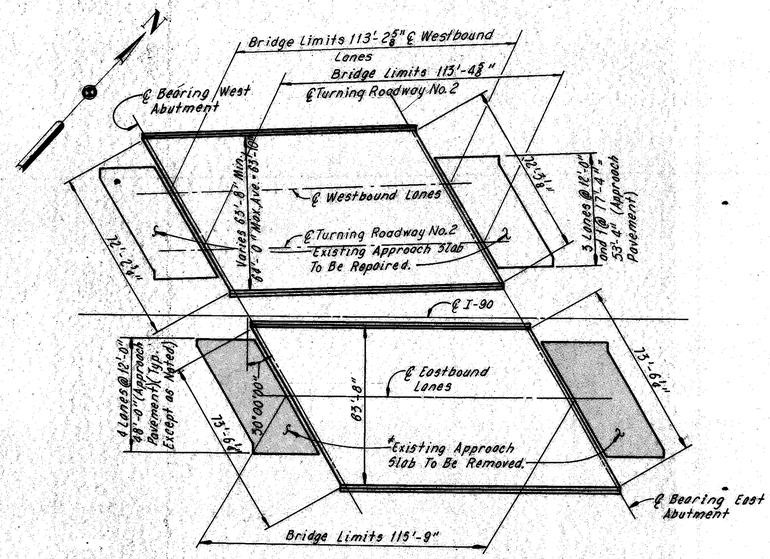

EXISTING PLAN

30 0 30 60
SCALE IN FEET

*Includes removal of paved berms and all necessary excavation or backfill to provide the proper cross section for the new approach slab.

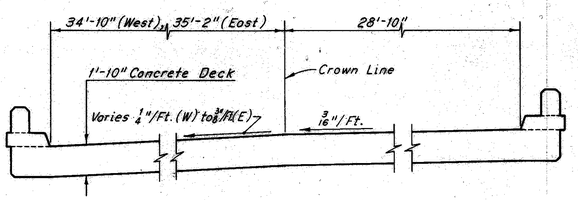

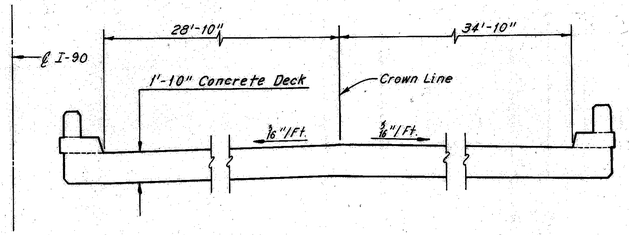

EXISTING TYPICAL SECTION

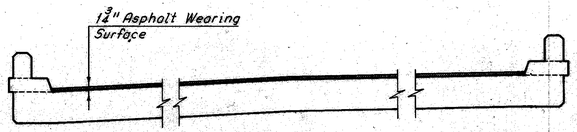

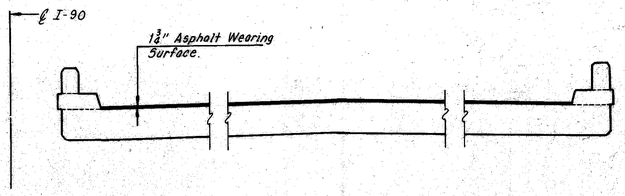

MODIFIED TYPICAL SECTION

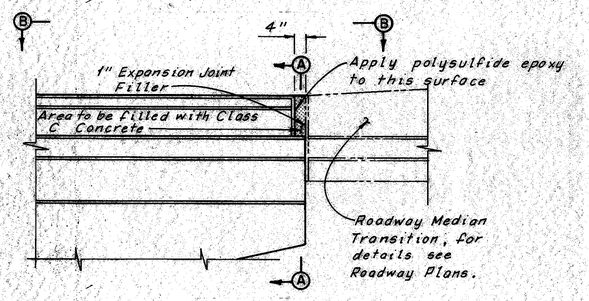

VIEW E-E

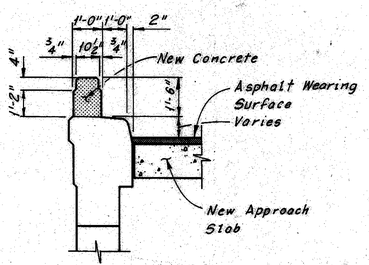

SECTION A-A

END OF WINGWALL MODIFICATION
(Northwest Wingwall, Eastbound Bridge)

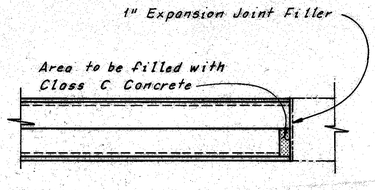

VIEW B-B

Note:
For location of View E-E, see Sheet 4/4.
For deck repair and asphalt wearing surface course details, see Sheet CD-7.
The following abbreviation is used:
Typ. = Typical
W = West
E = East

HOWARD, NEEDLES, TAMMEN & BERGENDOFF
CONSULTING ENGINEERS
KANSAS CITY CLEVELAND NEW YORK

EXISTING AND MODIFIED DECK PLAN AND TYPICAL SECTION

I-90 OVER WESTBOUND LANES
LAKELAND BOULEVARD

BR. NO. CUY-90-2922 L&R STA. 56+42.13
STA. 57+57.87

CUYAHOGA COUNTY OHIO

DRAWN G.M.P.	TRACED J.L.R.	CHECKED R.C.A.	REVIEWED C.A.E.	REVISED
DATE 9-5-73	DATE 9-5-73	DATE 9-30-74	DATE 10-20-74	SHEET 3/4

FHWA REGION	STATE	PROJECT	
5	OHIO		

295/354

CUYAHOGA COUNTY
CUY-90-23.73
LAKE COUNTY
LAK-90-0.00

MICROFILMED
MAR 22 1965

Note:
The jacking holes as called for on Ohio Standard Drawing AS-1-72 are not required.

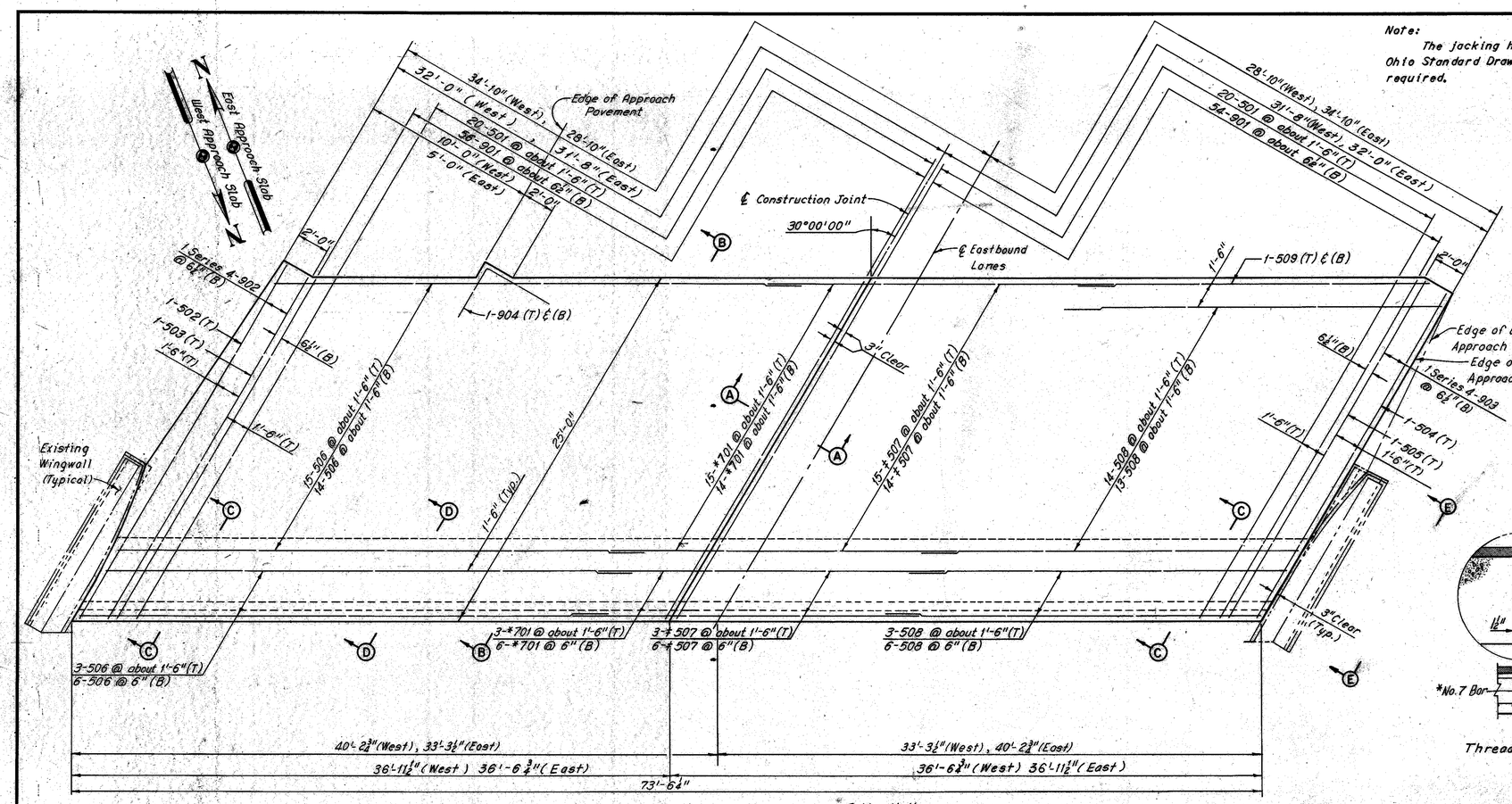

APPROACH SLAB PLAN
(West Shown, East Similar)

101

1'-3"	24'-6"	NNS901
1'-3"	24'-9" to 25'-6"	NNS902
1'-3"	23'-6" to 24'-6"	NNS903

104

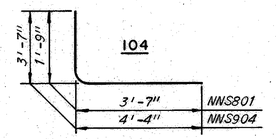

108

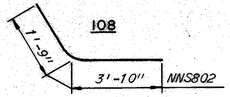

REINFORCEMENT SCHEDULE

MARK	NO.	LENGTH	TYPE	SER. INCR.
NNS501	80	24'-6"	Str.	
NNS502	2	25'-6"	Str.	
NNS503	2	24'-9"	Str.	
NNS504	2	23'-6"	Str.	
NNS505	2	24'-3"	Str.	
NNS506	76	31'-0"	Str.	
#NNS507	76	18'-0"	Str.	
NNS508	72	20'-9"	Str.	
NNS509	4	17'-9"	Str.	
*NNS701	76	8'-6"	Str.	
NNS901	218	25'-9"	101	
NNS902	2 Ser 4	26'-0" 25'-9"	101	3"
NNS903	2 Ser 4	24'-9" 25'-9"	101	4"
NNS904	4	7'-8"	104	

*Thread one end for connection to threaded insert.
Weld to threaded insert.

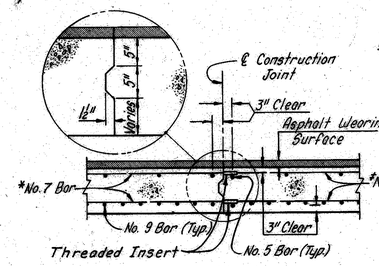

SECTION A-A

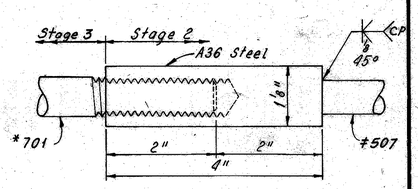

THREADED INSERT DETAIL

(Threads are to be Unified Standard Series for Basic Major Diameter of ¾")

Note:
Welding shall conform to AWS D12.1-61 of the American Welding Society and 513.17 of the Construction and Material Specifications.

Note: All reinforcing bar marks shall be prefixed NNS.

Note:
The asphalt wearing surface on the approach slab shall consist of the following:
1. Item 407, Tack Coat, at 0.1 gal. per sq. yd.
2. Variable thickness of Item 402, Asphalt Concrete (AC-20).
3. Item 404, 1½" Asphalt Concrete (AC-20)

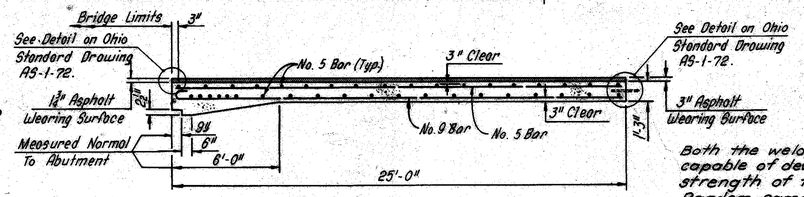

SECTION B-B

Note
Both the welded and threaded connections shall be capable of developing 125 percent of the yield strength of the number 5 bars. Random samples to be submitted for testing.

Notes:
For View E-E, see Sheet 3/4.
For stage construction sequence, see Maintenance Of Traffic, Sheet 2/4.
For normal cross slopes, see Existing Typical Section, Sheet 3/4.
The following abbreviations are used:
T = Top
B = Bottom
Typ. = Typical
For additional notes and details, see Ohio Standard Drawing AS-1-72.

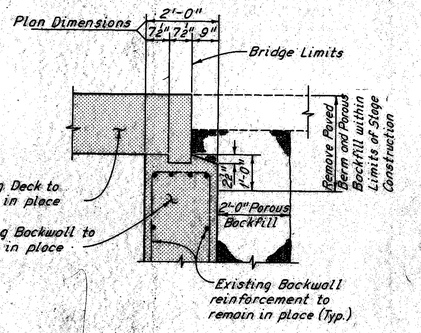

EXISTING SECTION C-C

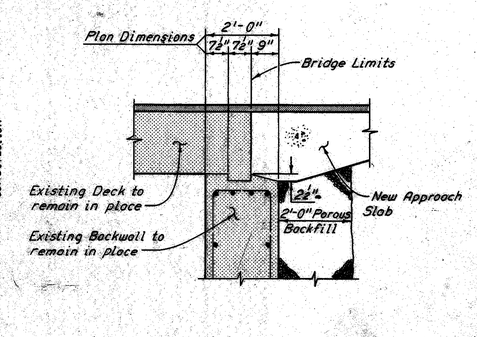

MODIFIED SECTION C-C

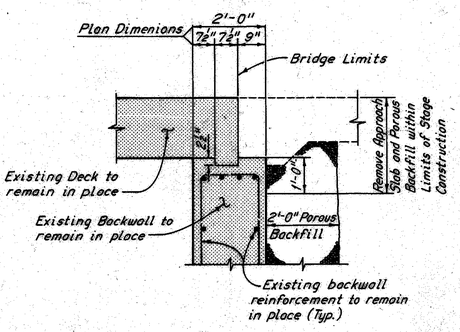

EXISTING SECTION D-D

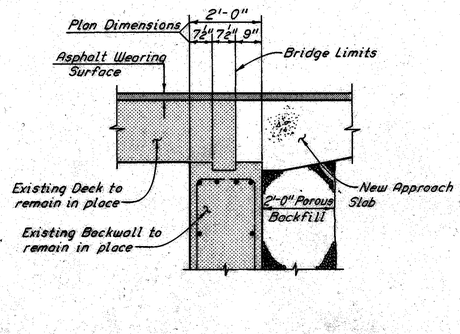

MODIFIED SECTION D-D

HOWARD, NEEDLES, TAMMEN & BERGENDOFF
CONSULTING ENGINEERS
KANSAS CITY CLEVELAND NEW YORK

APPROACH SLABS

I-90 OVER WESTBOUND LANES
LAKELAND BOULEVARD

BR. NO. CUY-90-2922 R STA. 56+42.13
STA. 57+57.87

CUYAHOGA COUNTY OHIO

DRAWN	TRACED	CHECKED	REVIEWED	REVISED
B.M.P.	D.L.R.	R.C.A.	CAB	
DATE 3-29-74	DATE 5-21-74	DATE 9-30-74	DATE 10-20-74	SHEET 4/4

FHWA. REGION	STATE	PROJECT	
5	OHIO		

296
354

CUYAHOGA COUNTY
CUY-90-23.73
LAKE COUNTY
LAK-90-0.00

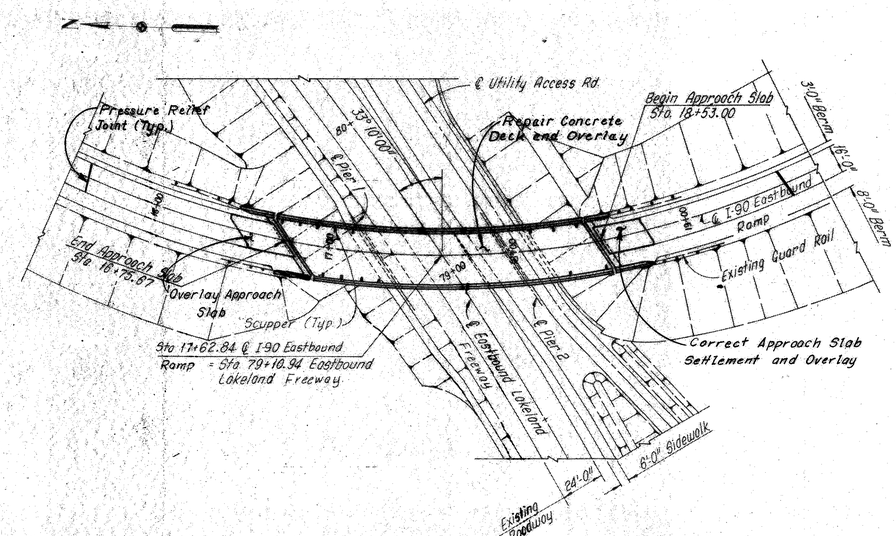

PLAN
40 0 40 80
SCALE IN FEET

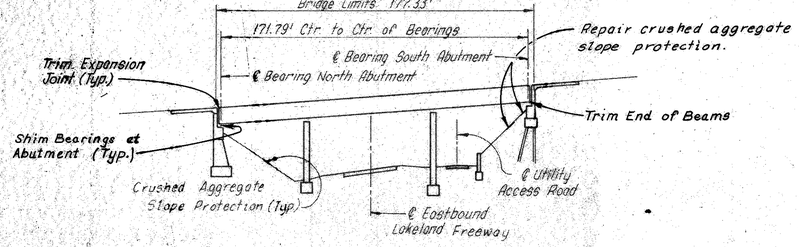

ELEVATION
40 0 40 80
SCALE IN FEET

PROPOSED WORK:

1. Install pressure relief joints in approach roadway pavement, see Sheet CD-9.
2. Shim bearings, see Sheet 2 / 3.
3. Repair concrete deck and place asphalt wearing surface, see Sheet 2 / 3.
4. Clean out bridge drainage system and remove debris from abutment bridge seat.
5. Correct approach slab settlement and overlay at South Abutment and overlay approach slab at North Abutment.
6. Seal both approach slab joints.
7. Repair minor curb and parapet deterioration.
8. Trim end of beam at south abutment, see Sheet 2 / 3.
9. Modify deck drainage system, see Sheet 3 / 3.
10. Paint all structural steel.
11. Repair minor wingwall deterioration.
12. Repair crushed aggregate slope protection.

Note:
Roman numerals I and III denote cost participation breakdown. For description, see Roadway Plans, Sheet 3-354.

TYPE CODE X231

ESTIMATED QUANTITIES

ITEM	TOTAL	UNIT	DESCRIPTION BRIDGE REPAIR	SUPER-STRUCTURE	North ABUT	South ABUT	WINGWALLS NE	WINGWALLS SE	WINGWALLS NW	WINGWALLS SW	APPROACH SLABS	C.A. SLOPE PRO. North	C.A. SLOPE PRO. South	GENERAL	Participation I Fed. & State	Participation III 100% State
402	5	Cu. Yds.	Asphalt Concrete (AC-20)	-	-	-	-	-	-	-	I 5	-	-	-	5	
404	33	Cu. Yd.	Asphalt Concrete (AC-20)	I 28	-	-	-	-	-	-	I 5	-	-	-	33	
407	15	Gallons	Tack Coat: 702.03, AC-20; or 702.04, SS-1, SS-1H, MS-2, or RS-1	-	-	-	-	-	-	-	I 15	-	-	-	15	
518	349	Lin. Ft.	Subdrainage For Wearing Course,											-	349	
			As Per Plan	I 349	-	-	-	-	-	-	-	-	-	-		
518	100	Lin. Ft.	8" ϕ Pipe, Horizontal Conductors Including		-	-		-	-	-	-	-	-	-		100
			Supports.	III 100	-	-	-	-	-	-	-	-	-	-		
518	50	Lin. Ft.	8" ϕ Pipe, Downspouts Including Supports											III 50		50
520	67	Sq. Ft.	Pneumatically Placed Mortar	III 65	-	-	III 2	-	-	-	-	-	-	-		67
837	Lump Sum	Lump Sum	Surface Preparation	III L.S.	-	-	-	-	-	-	-	-	-	-		Lump
837	Lump Sum	Lump Sum	Spot Prime Painting	III L.S.	-	-	-	-	-	-	-	-	-	-		Lump
837	Lump Sum	Lump Sum	Complete Coat Prime Painting	III L.S.	-	-	-	-	-	-	-	-	-	-		Lump
837	Lump Sum	Lump Sum	Two Complete Coats Finish Painting	III L.S.	-	-	-	-	-	-	-	-	-	-		Lump
Special	65	Sq. Yd.	Patching Concrete Deck Slab	III 65	-	-	-	-	-	-	-	-	-	-		65
Special	555	Sq. Yd.	Membrane Waterproofing Hot Applied Liquid (See Proposal Note)	I 555	-	-	-	-	-	-	-	-	-	-	555	
Special	22	Lin. Ft.	Repair of Cracks	-	-	III 4	III 8	III 4	-	II 6	-	-	-	-	8	22
Special	70	Lin. Ft.	Raising Existing End Dams	-	I 39	I 31	-	-	-	-	-	-	-	-	70	
Special	Lump Sum	Lump Sum	Correct Approach Slab Settlement	-	-	-	-	-	-	-	III L.S.	-	-	-		Lump
Special	33	Lin. Ft.	Pressure Relief Joint	-	-	-	-	-	-	-	-	-	-	III 33		33
Special	Lump Sum	Lump Sum	Cleanout Bridge Drainage Systems and Remove Debris From Bridge Seats	III L.S.	III L.S.	III L.S.	-	-	-	-	-	-	-	-		Lump
Special	14	Sq. Yd.	Repair of Crushed Aggregate Slope Protection	-	-	-	-	-	-	-	-	-	-	III 14		14
Special	7	Each	Shim Bearings (Where resetting is not required)	-	III 3	III 4	-	-	-	-	-	-	-	-		7

SEAL APPROACH SLAB JOINTS - Seal both approach slab joints with cold applied joint sealer (705.02) to be included with Item Special, Correct Approach Slab Settlement, for payment.

EXISTING STRUCTURE

TYPE:	Continuous Steel Beam with Reinforced Concrete Deck, Piers and Abutments.
SPAN:	49'-0", 70'-0" and 53'-0".
ROADWAY:	31'-0" face to face of parapets.
LOADING:	CF-2000-57 (Adequate for AASHO Alternate Loading).
SKEW:	33°10'00" Right Forward.
WEARING SURFACE:	1" Monolithic Concrete.
APPROACH SLABS:	AS-1-54 (25'-0" Long)
ALIGNMENT:	12°00'00" Curve Left.
SUPERELEVATION:	0.0833 ft. per ft.

MODIFIED STRUCTURE

TYPE:	Continuous Steel Beam with Reinforced Concrete Deck, Piers and Abutments.
SPAN:	49'-0", 70'-0" and 53'-0".
ROADWAY:	31'-0" Face to Face of Parapets.
LOADING:	CF-2000-57 (Adequate for AASHO Alternate Loading).
SKEW:	33°10'00" Right Forward.
WEARING SURFACE:	1¾" Asphalt.
APPROACH SLABS:	AS-1-54 (25'-0" Long)
ALIGNMENT:	12°00'00" Curve Left.
SUPERELEVATION:	0.0833 ft. per ft.

Rev 7-18-75

HOWARD, NEEDLES, TAMMEN & BERGENDOFF
CONSULTING ENGINEERS
KANSAS CITY CLEVELAND NEW YORK

SITE PLAN

I-90 EASTBOUND RAMP OVER EASTBOUND LAKELAND FREEWAY

BR. NO. CUY-90-2956 A STA. 16+75.67
STA. 18+53.00

CUYAHOGA COUNTY OHIO

DRAWN	TRACED	CHECKED	REVIEWED	REVISED
BMP	BMP	RCL	CAB	
DATE 10-1-73	DATE 10-1-73	DATE 10-7-74	DATE 12-20-74	SHEET 1 / 3

FHWA REGION	STATE	PROJECT	
5	OHIO		

297
354

CUYAHOGA COUNTY
CUY-90-23.73
LAKE COUNTY
LAK-90-0.00

MICROFILMED
MAR 22 1985

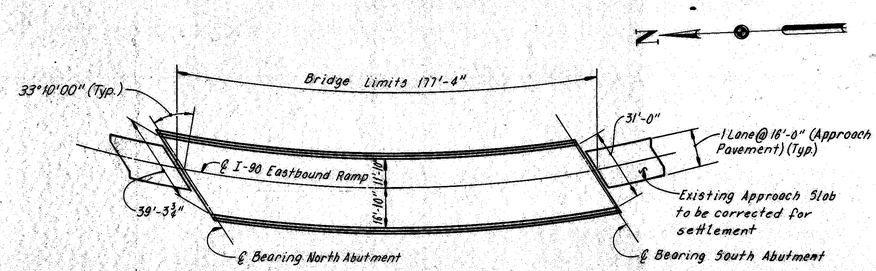

EXISTING PLAN

30 0 30 60
SCALE IN FEET

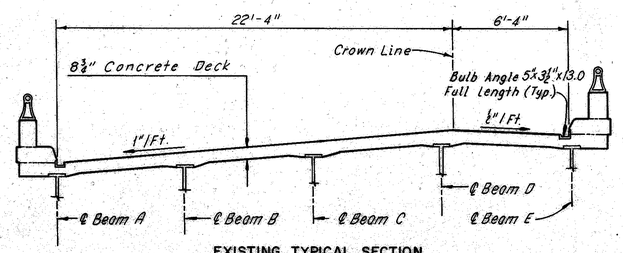

EXISTING TYPICAL SECTION

Note:
Shim bearings at Beams B, C and D, at the North abutment. Shim bearings B, C, D and E at the South abutment, see Sheet CD-3 .
Trim end of all beams at the South Abutment, see Sheet CD-9 .

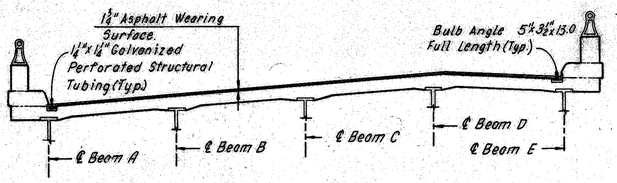

MODIFIED TYPICAL SECTION

Note:
For deck repair and ashpalt wearing surface course details, see Sheet CD-7 .
For details of raising the expansion joint, see Sheet CD-6 .
The following abbreviation is used:
Typ. = Typical

HOWARD, NEEDLES, TAMMEN & BERGENDOFF
CONSULTING ENGINEERS
KANSAS CITY CLEVELAND NEW YORK

EXISTING AND MODIFIED DECK PLAN AND TYPICAL SECTION

I-90 EASTBOUND RAMP OVER EASTBOUND LAKELAND FREEWAY

BR.NO.CUY-90-2956A STA. 16+75.67
STA. 18+53.00

CUYAHOGA COUNTY OHIO

DRAWN A.J.T	TRACED J.L.R	CHECKED R.C.E	REVIEWED CAB	REVISED
DATE 10-10-73	DATE 10-11-73	DATE 10-7-74	DATE 12-20-74	SHEET 2/3

FHWA REGION	STATE	PROJECT	
5	OHIO		

298
354

CUYAHOGA COUNTY
CUY-90-23.73
LAKE COUNTY
LAK-90-0.00

MICROFILMED
MAR 22 1985

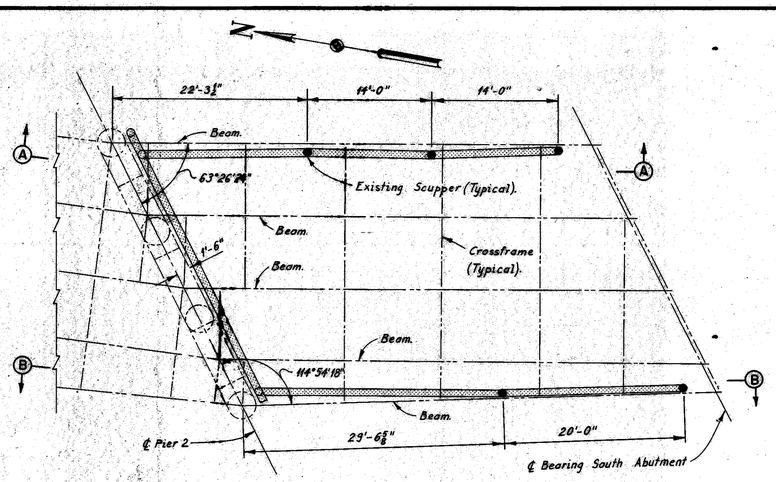

PART FRAMING PLAN

▒ Denotes new drainage system.

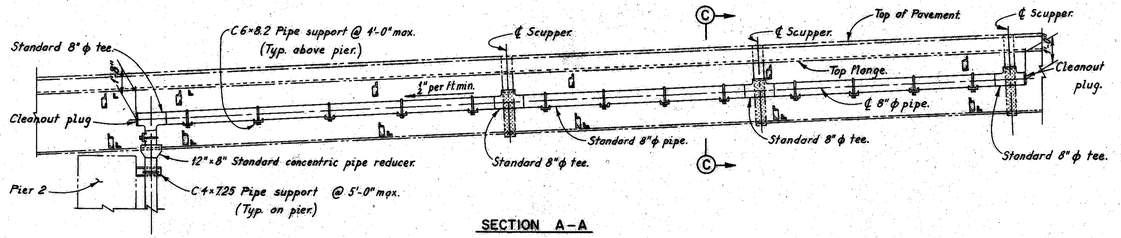

SECTION A-A

▒ Denotes scupper downspout removal.

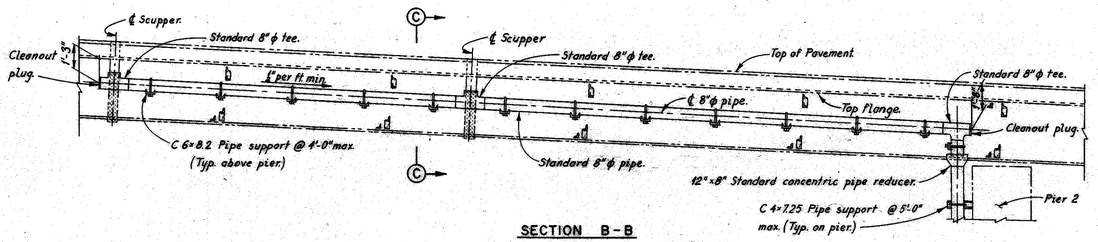

SECTION B-B

▒ Denotes scupper downspout removal.

Note:
The Contractor shall make all necessary field measurements prior to fabrication of the modified deck drainage system. This work shall be included with Item 518, 8"ϕ Pipe, Horizontal Conductors Including Supports, for payment.

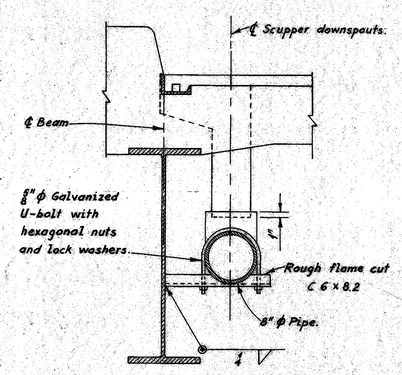

SECTION C-C

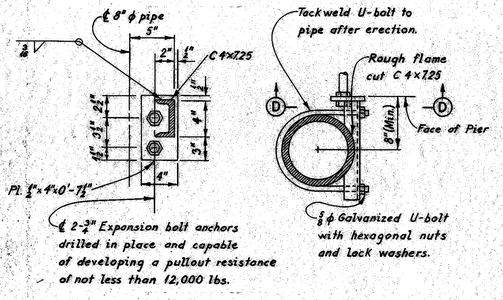

SECTION D-D PLAN

PIPE SUPPORT DETAIL
ON PIERS

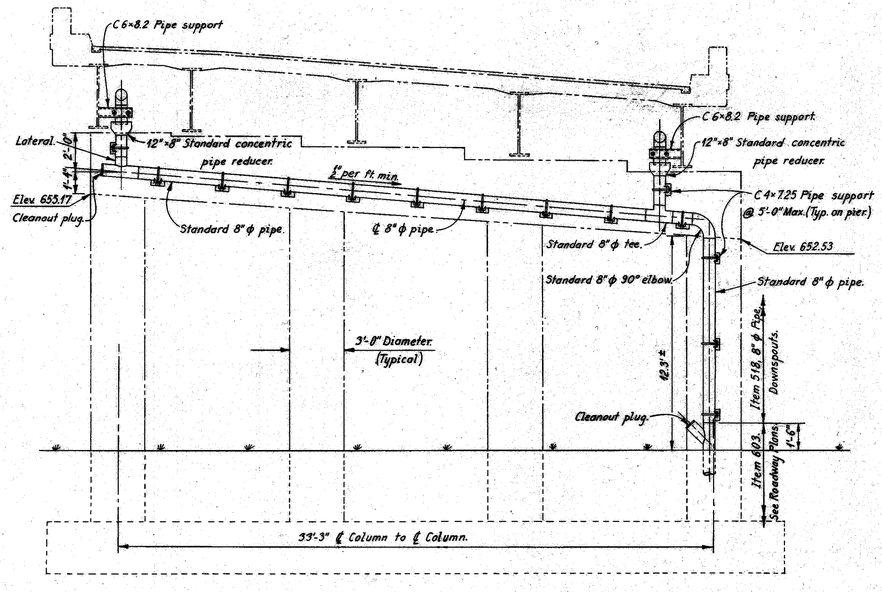

PIER 2 ELEVATION
(Looking North).

Notes:
The 8"ϕ pipes shall be alloy steel pipe, 707.11, hot-dip galvanized steel pipe or plastic pipe, 711.29. For steel pipes the joints shall be made by welding or by the use of a clamp-type coupling with a ring gasket. All welding shall be done before galvanizing. Straps or clamps for attaching pipes shall be alloy steel or hot-dip galvanized steel. The bolts shall be galvanized as called for in ASTM A-153.

The 8"ϕ pipe attached to superstructure including fittings, supports and accessories shall be paid for at the unit price bid for "Item 518, 8"ϕ Pipe, Horizontal Conductors Including Supports".

The 8"ϕ pipe attached to substructure, including fittings, supports and accessories shall be paid for at the unit price bid for "Item 518, 8"ϕ Pipe, Downspouts Including Supports".

Standard 12"×8"ϕ reducers and 8"ϕ elbows, tees, crosses, and laterals shall be used in all cases.

Removal of existing scupper downspouts shall be included with Item 202, Removal of Portions of Structures, for payment.

For details of underground storm sewers see Roadway Plans.

HOWARD, NEEDLES, TAMMEN & BERGENDOFF
CONSULTING ENGINEERS
KANSAS CITY CLEVELAND NEW YORK

DECK DRAINAGE MODIFICATION

I-90 EASTBOUND RAMP OVER EASTBOUND LAKELAND FREEWAY

BR. NO. CUY-90-2956 A. STA. 16+75.67
STA. 18+53.00

CUYAHOGA COUNTY OHIO

DRAWN A.M.	TRACED A.M.	CHECKED	REVIEWED	REVISED
DATE 11-8-74	DATE 11-8-74	DATE 11-27-74	DATE 12-20-74	SHEET 3/3

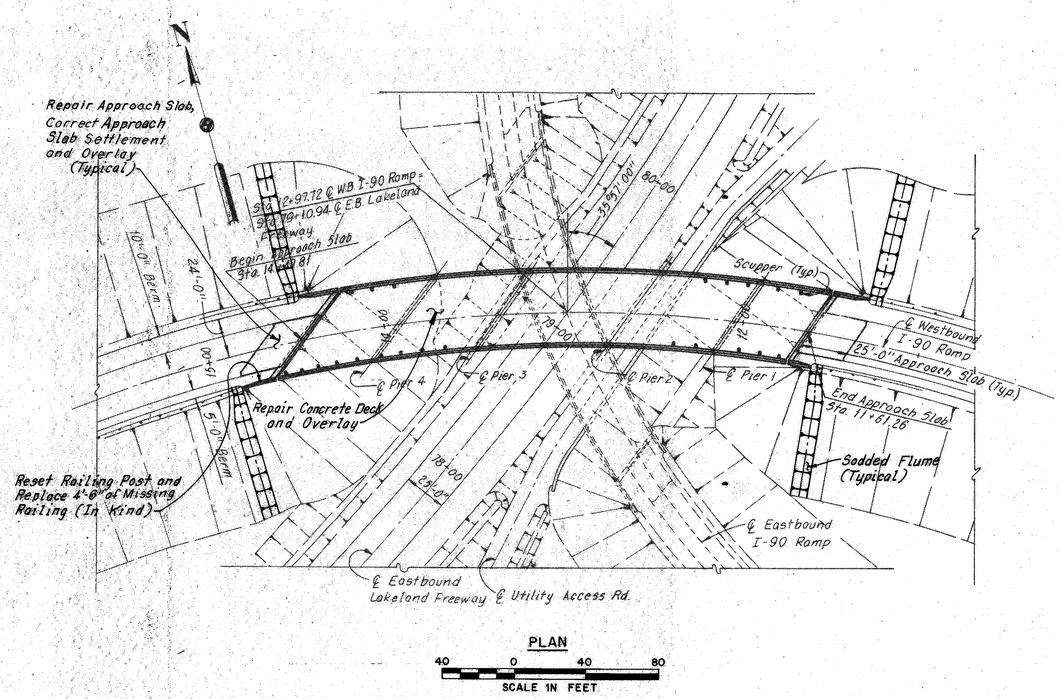

PLAN

40 0 40 80

SCALE IN FEET

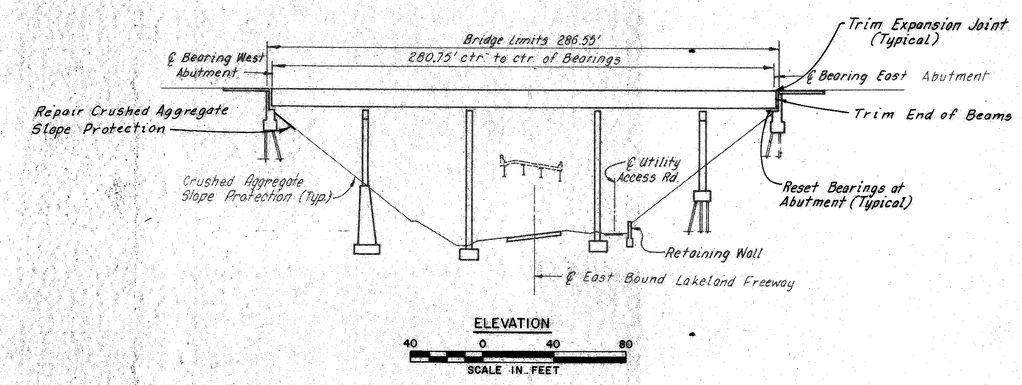

ELEVATION

40 0 40 80

SCALE IN FEET

EXISTING STRUCTURE	
TYPE:	Continuous Steel Beam with Reinforced Concrete Deck, Piers and Abutments.
SPAN:	40'-0", 58'-0", 72'-4½", 58'-0" and 52'-0".
ROADWAY:	42'-0" Face to Face of Parapets.
LOADING:	CF-2000-57 (Adequate for AASHO Alternate Loading).
SKEW:	35° 56' 45" Left Forward.
WEARING SURFACE:	1" Monolithic Concrete.
APPROACH SLABS:	AS-1-54 (25'-0" Long).
ALIGNMENT:	7° 30' Curve Left.
SUPERELEVATION:	0.083 Feet per Foot.

MODIFIED STRUCTURE	
TYPE:	Continuous Steel Beam with Reinforced Concrete Deck, Piers and Abutments.
SPAN:	40'-0", 58'-0", 72'-4½", 58'-0" and 52'-0".
ROADWAY:	42'-0" Face to Face of Parapets
LOADING:	CF-2000-57 (Adequate for AASHO Alternate Loading).
SKEW:	35° 56' 45" Left Forward.
WEARING SURFACE:	1¾" Asphalt.
APPROACH SLABS:	AS-1-54 (25'-0" Long).
ALIGNMENT:	7° 30' Curve Left.
SUPERELEVATION:	0.083 Feet per Foot.

PROPOSED WORK:

1. Install pressure relief joints in approach roadway pavement, see Sheet CD-9.
2. Trim expansion joints, see Sheet CD-8.
3. Shim abutment bearing, see Sheet 3/3.
4. Reset abutment bearings, see Sheet CD-3.
5. Repair concrete deck and place asphalt wearing surface, see Sheet 3/5.
6. Clean out bridge drainage system and remove debris from abutment bridge seat.
7. Repair approach slabs.
8. Correct approach slab settlement and place asphalt wearing surface.
9. Seal both approach slab joints.
10. Repair minor curb and parapet deterioration.
11. Modify deck drainage system, see Sheet 4/5 and 5/5.
12. Paint all structural steel.
13. Trim end of beams, see Sheet 3/5.
14. Repair minor abutment deterioration.
15. Repair minor wingwall deterioration.
16. Reset railing posts and replace missing railing.
17. Repair crushed aggregate slope protection.
18. Divert roadway runoff at all wingwalls, see Sheet CD-9.

FHWA REGION	STATE	PROJECT	
5	OHIO		

299
354

CUYAHOGA COUNTY
CUY-90-23.73
LAKE COUNTY
LAK-90-0.00

MICROFILMED
MAR 22 1985

Note:
Roman numerals I and III denote cost participation breakdown. For description, see Roadway Plans, Sheet 3-354.

TYPE CODE X231

ESTIMATED QUANTITIES

ITEM	TOTAL	UNIT	DESCRIPTION BRIDGE REPAIR	SUPER-STRUCTURE	WEST ABUT	EAST ABUT	WINGWALLS NE	WINGWALLS SE	WINGWALLS NW	WINGWALLS SW	APPROACH SLABS	C.A SLOPE PRO. WEST	C.A SLOPE PRO. EAST	GENERAL	Participation I Fed. & State	Participation III 100% State
402	8	Cu. Yd.	Asphalt Concrete (AC-20)	-	-	-	-	-	-	-	I 8	-	-	-	8	
404	71	Cu. Yd.	Asphalt Concrete (AC-20)	I 62	-	-	-	-	-	-	I 9	-	-	-		71
407	24	Gallons	Tack Coat. (SS-1H, MS-2 or RS-1)	-	-	-	-	-	-	-	I 24	-	-	-	24	
518	570	Lin. Ft.	Subdrainage For Wearing Course, As Per Plan	I 570	-	-	-	-	-	-	-	-	-	-	570	
518	213	Lin. Ft.	8" ϕ Pipe, Horizontal Conductors Including Supports	III 213	-	-	-	-	-	-	-	-	-	-		213
518	83	Lin. Ft.	8" ϕ Pipe, Downspouts Including Supports	-	-	-	-	-	-	-	-	-	-	III 83		83
519	12	Sq. Ft.	Patching Concrete Structures	-	-	-	-	-	-	-	III 12	-	-	-		12
520	51	Sq. Ft.	Pneumatically Placed Mortar	III 45	-	III 2	III 3	-	-	III 1	-	-	-	-		51
659	18	Sq. Yd.	Seeding and Mulching	-	-	-	III 3	III 5	III 4	III 6	-	-	-	-		18
660	288	Sq. Yd.	Sodding	-	-	-	III 72	III 72	III 72	III 72	-	-	-	-		288
837	Lump Sum	Lump Sum	Surface Preparation	III L.S.	-	-	-	-	-	-	-	-	-	-		Lump
837	Lump Sum	Lump Sum	Spot Prime Painting	III L.S.	-	-	-	-	-	-	-	-	-	-		Lump
837	Lump Sum	Lump Sum	Complete Coat Prime Painting	III L.S.	-	-	-	-	-	-	-	-	-	-		Lump
837	LumpSum	LumpSum	Two Complete Coats Finish Painting	III L.S.	-	-	-	-	-	-	-	-	-	-		Lump
Special	34	Sq. Yd.	Patching Concrete Deck Slab	III 34	-	-	-	-	-	-	-	-	-	-		34
Special	1,249	Sq. Yd.	Membrane Waterproofing Hot Applied Liquid (See Proposal Note)	I 1,249	-	-	-	-	-	-	-	-	-	-	1,249	
Special	20	Lin. Ft.	Repair of Cracks	-	III 12	III 2	III 1	-	-	III 5	-	-	-	-		20
Special	103	Lin. Ft.	Raising Existing End Dams	-	I 58	I 45	-	-	-	-	-	-	-	-	103	
Special	12	Each	Reset Bearings	-	III 6	III 6	-	-	-	-	-	-	-	-		12
Special	49	Lin. Ft.	Pressure Relief Joint	-	-	-	-	-	-	-	-	-	-	III 49		49
Special	Lump Sum	Lump Sum	Cleanout Bridge Drainage Systems and Remove Debris From Bridge Seats	III L.S.	III L.S.	III L.S.	-	-	-	-	-	-	-	-		Lump
Special	30	Sq. Yd.	Repair of Crushed Aggregate Slope Protection	-	-	-	-	-	-	-	-	III 30	-	-		30
Special	Lump Sum	Lump Sum	Correct Approach Slab Settlement	-	-	-	-	-	-	-	III L.S.	-	-	-		Lump
Special	Lump Sum	Lump Sum	Reset railing posts and replace missing railing (Replacement in kind)	-	-	-	-	-	-	III L.S.	-	-	-	-		Lump

SEAL APPROACH SLAB JOINTS - Seal both approach slab joints with cold applied joint sealer (705.02) to be included with Item Special, Correct Approach Slab Settlement, for payment.

Rev. 7-18-75

HOWARD, NEEDLES, TAMMEN & BERGENDOFF
CONSULTING ENGINEERS
KANSAS CITY CLEVELAND NEW YORK

SITE PLAN
WESTBOUND I-90 OVER EASTBOUND LAKELAND FREEWAY
BR. NO. CUY-90-2956 B STA. 11+61.26 STA. 14+47.81
CUYAHOGA COUNTY OHIO

DRAWN	TRACED	CHECKED	REVIEWED	REVISED
JLR	JLR	ϕ	CAB	
DATE 9-26-74	DATE 9-26-74	DATE 10-21-74	DATE 11-20-74	SHEET 1/5

MICROFILMED
MAR 22 1985

FHWA REGION	STATE	PROJECT	
5	OHIO		

300
354

CUYAHOGA COUNTY
CUY-90-23.73
LAKE COUNTY
LAK-90-0.00

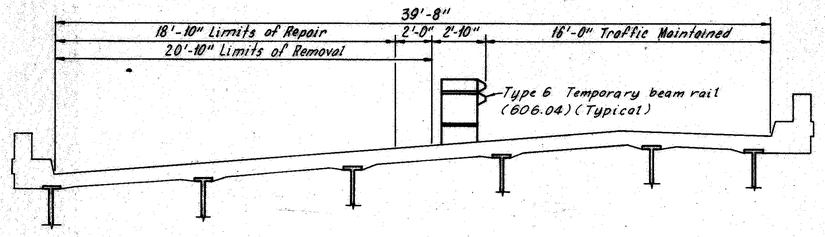

FIRST STAGE CONSTRUCTION

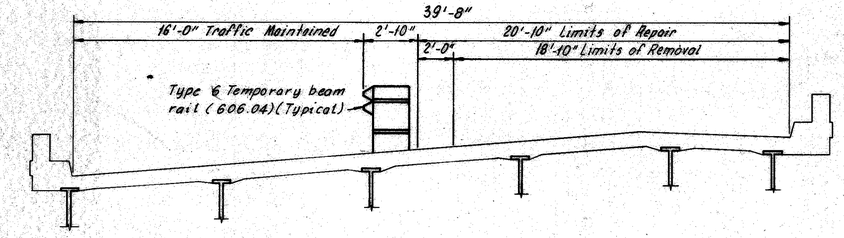

SECOND STAGE CONSTRUCTION

Notes:

The stage construction cross-sections apply within the bridge and approach slab limits. All repair work shall be co-ordinated with the stage construction as shown.

For maintenance of traffic notes, see Roadway Plans.

HOWARD, NEEDLES, TAMMEN & BERGENDOFF
CONSULTING ENGINEERS
KANSAS CITY CLEVELAND NEW YORK

MAINTENANCE OF TRAFFIC

WESTBOUND I-90 OVER EASTBOUND
LAKELAND FREEWAY

BR. NO. CUY-90-2956 B STA. 11+61.26
STA. 14+47.81

CUYAHOGA COUNTY OHIO

DRAWN	TRACED	CHECKED	REVIEWED	REVISED
JLR	JLR	ML	SAG	
DATE 3-28-74	DATE 4-1-74	DATE 4-26-74	DATE 12-20-74	SHEET 2 / 5

MICROFILMED
MAR 22 1985

FHWA REGION	STATE	PROJECT	
5	OHIO		

CUYAHOGA COUNTY
CUY-90-23.73
LAKE COUNTY
LAK-90-0.00

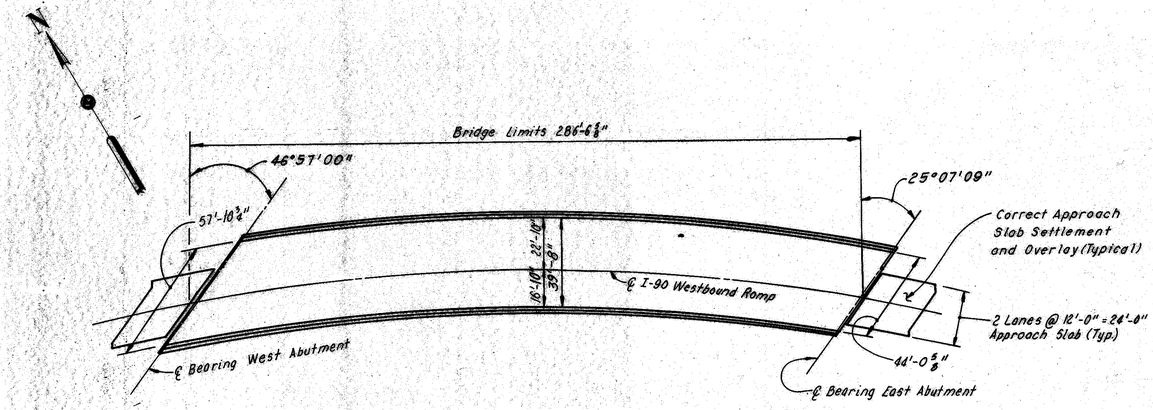

EXISTING PLAN

30 0 30 60
SCALE IN FEET

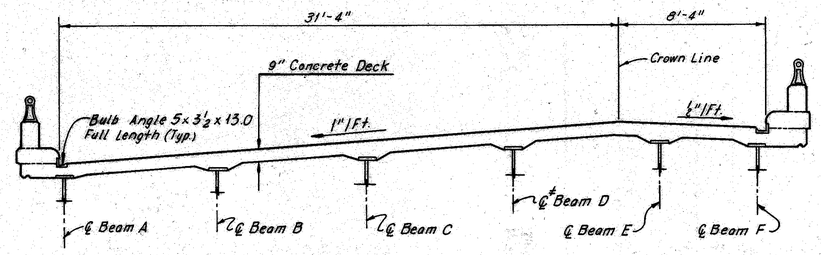

EXISTING TYPICAL SECTION

† Shim bearing at Beam D, West Abutment. For details, see Sheet CD-3.

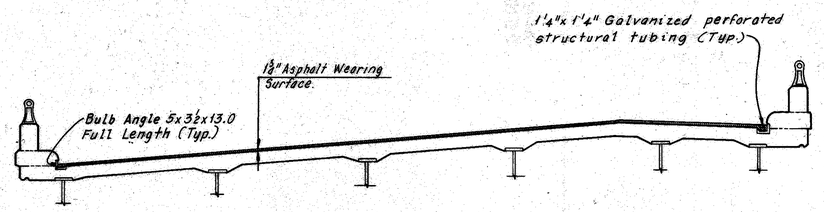

MODIFIED TYPICAL SECTION

Notes:
For deck repair and asphalt wearing surface course details, see Sheet CD-7.
Trim the end of all beams at the East Abutment, see Sheet CD-9.
For details of raising the expansion joint, see Sheet CD-6.
The following abbreviation is used:
Typ. = Typical

HOWARD, NEEDLES, TAMMEN & BERGENDOFF
CONSULTING ENGINEERS
KANSAS CITY CLEVELAND NEW YORK

EXISTING AND MODIFIED DECK PLAN AND TYPICAL SECTION

WESTBOUND I-90 OVER EASTBOUND LAKELAND FREEWAY

BR. NO. CUY-90-2956 B STA. 11+61.26 STA. 14+47.81

CUYAHOGA COUNTY OHIO

DRAWN BMP	TRACED JLR	CHECKED LP	REVIEWED CAB	REVISED
DATE 10-7-75	DATE 10-8-75	DATE 10-15-75	DATE 12-20-74	SHEET 3 / 5

MICROFILMED
MAR 22 1985

FHWA REGION	STATE	PROJECT	
5	OHIO		

302
354

CUYAHOGA COUNTY
CUY-90-23.73
LAKE COUNTY
LAK-90-0.00

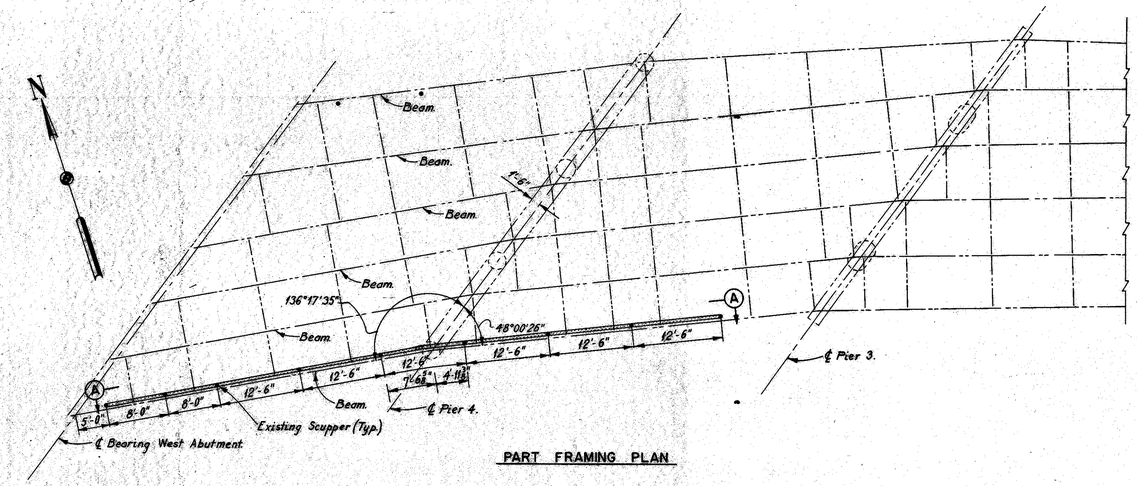

PART FRAMING PLAN

Denotes new drainage system.

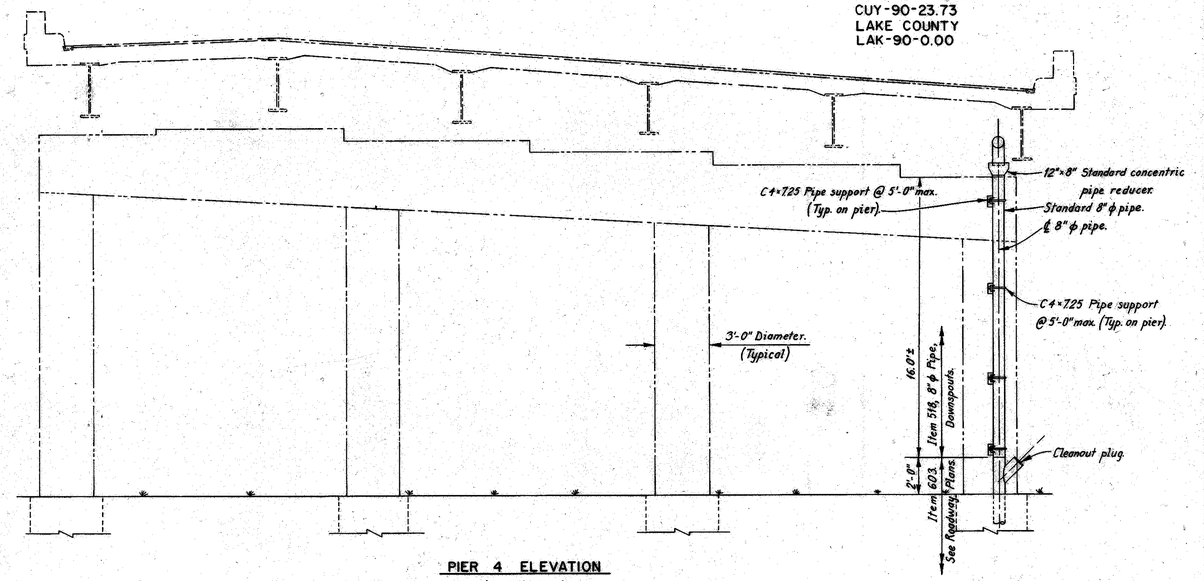

PIER 4 ELEVATION
(Looking East).

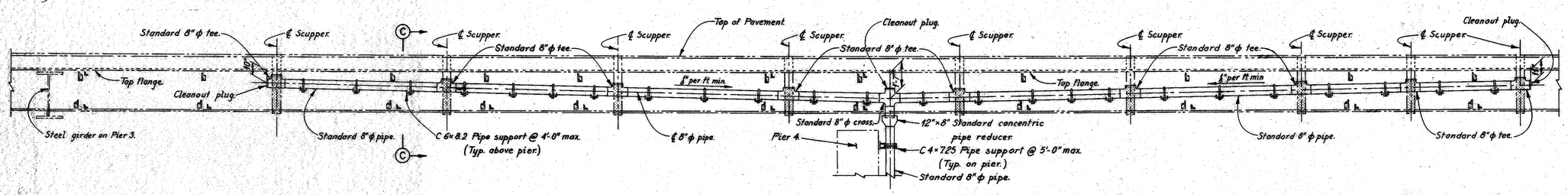

SECTION A-A

Denotes scupper downspout removal.

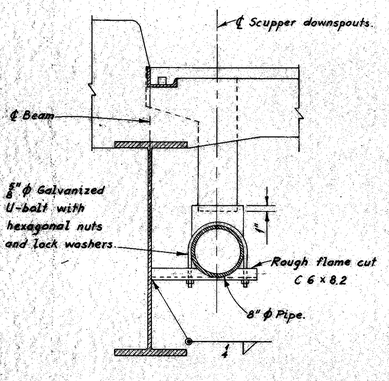

SECTION C-C

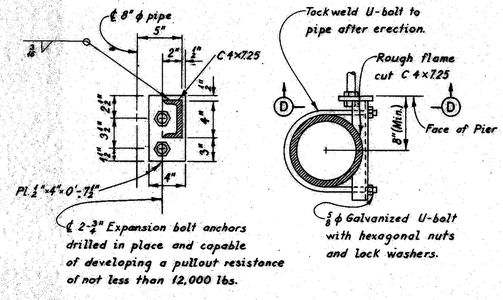

SECTION D-D PLAN

PIPE SUPPORT DETAIL ON PIERS

Notes:

The 8"ϕ pipes shall be alloy steel pipe, 707.11, hot-dip galvanized steel pipe or plastic pipe, 711.29. For steel pipes the joints shall be made by welding or by the use of a clamp-type coupling with a ring gasket. All welding shall be done before galvanizing. Straps or clamps for attaching pipes shall be alloy steel or hot-dip galvanized steel. The bolts shall be galvanized as called for in ASTM A-153.

The 8"ϕ pipe attached to superstructure including fittings, supports and accessories shall be paid for at the unit price bid for "Item 518, 8"ϕ Pipe, Horizontal Conductors Including Supports".

The 8"ϕ pipe attached to substructure, including fittings, supports and accessories shall be paid for at the unit price bid for "Item 518, 8"ϕ Pipe, Downspouts Including Supports".

Standard 12"×8"ϕ reducers and 8"ϕ elbows, tees, crosses, and laterals shall be used in all cases.

Removal of existing scupper downspouts shall be included with Item 202, Removal of Portions of Structures, for payment.

For details of underground storm sewers see Roadway Plans.

Note:

The Contractor shall make all necessary field measurements prior to fabrication of the modified deck drainage system. This work shall be included with Item 518, 8"ϕ Pipe, Horizontal Conductors Including Supports, for payment.

HOWARD, NEEDLES, TAMMEN & BERGENDOFF
CONSULTING ENGINEERS
KANSAS CITY CLEVELAND NEW YORK

DECK DRAINAGE MODIFICATION

WESTBOUND I-90 OVER EASTBOUND LAKELAND FREEWAY

BR. NO. CUY-90-2956 B STA. 11+61.26
STA. 14+47.81

CUYAHOGA COUNTY OHIO

DRAWN A.N.	TRACED A.N.	CHECKED	REVIEWED	REVISED
DATE 11-8-74	DATE 11-8-74	DATE 11-12-74	DATE 12-20-74	SHEET 4/5

MICROFILMED
MAR 22 1988

FHWA REGION	STATE	PROJECT	
5	OHIO		

303
354

CUYAHOGA COUNTY
CUY-90-23.73
LAKE COUNTY
LAK-90-0.00

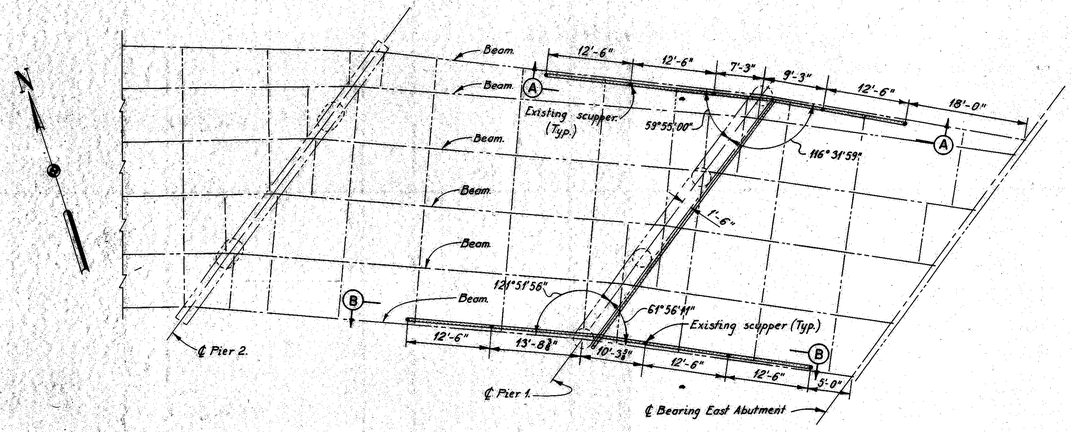

PART FRAMING PLAN

Denotes new drainage system.

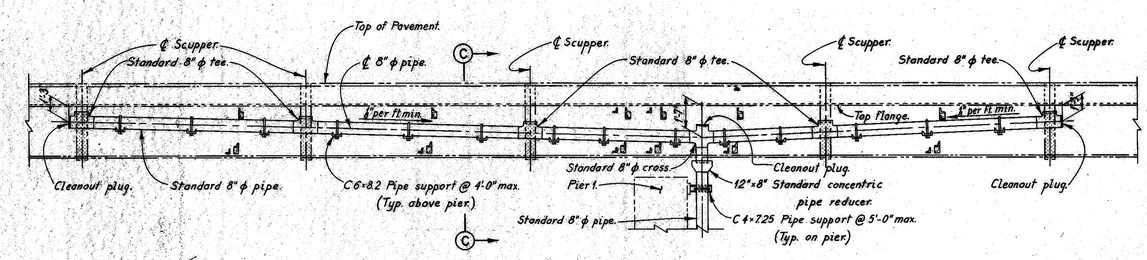

SECTION A – A

Denotes scupper downspout removal.

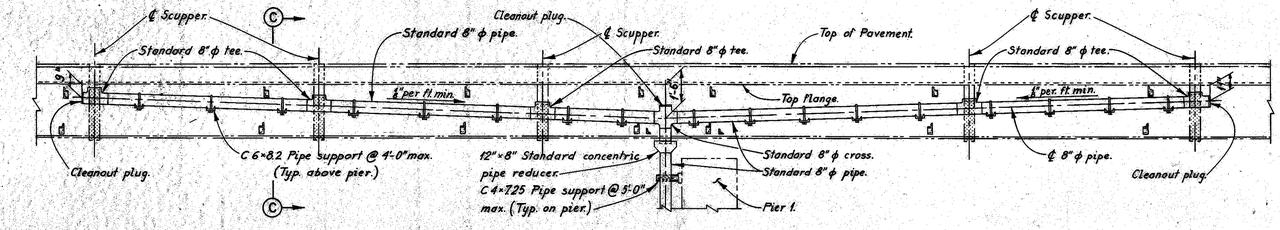

SECTION B – B

Denotes scupper downspout removal.

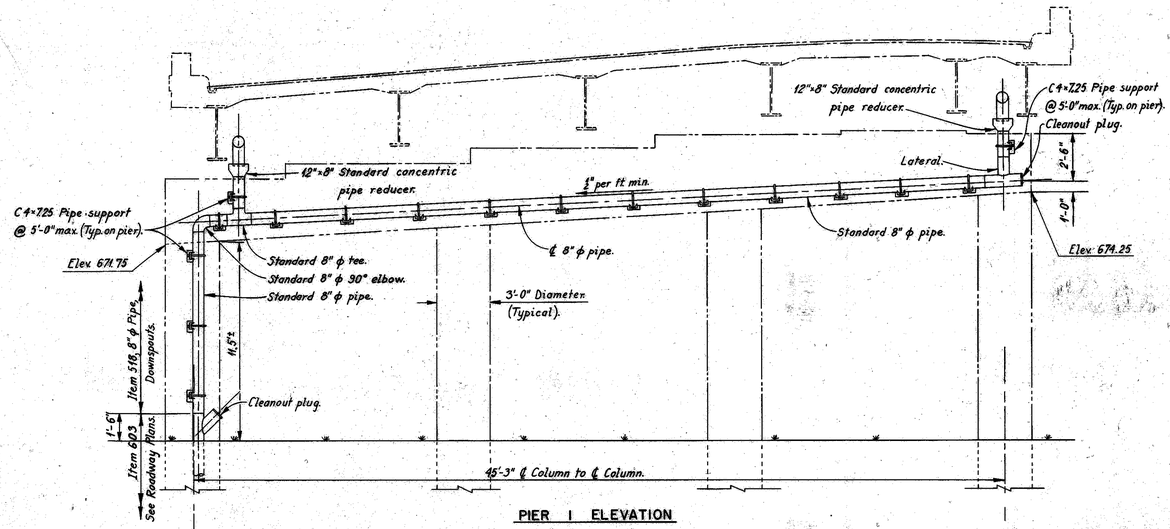

PIER I ELEVATION
(Looking West).

Note:
For Section C-C and additional notes see Sheet 4/5.

HOWARD, NEEDLES, TAMMEN & BERGENDOFF
CONSULTING ENGINEERS
KANSAS CITY CLEVELAND NEW YORK

DECK DRAINAGE MODIFICATION

WESTBOUND I-90 OVER EASTBOUND LAKELAND FREEWAY

BR. NO. CUY-90-2956 B STA. 11+61.26
STA. 14+47.81

CUYAHOGA COUNTY, OHIO

DRAWN A.N.	TRACED A.N.	CHECKED WEG	REVIEWED CAB	REVISED
DATE 11-8-74	DATE 11-8-74	DATE 11-20-74	DATE 12-20-74	SHEET 5/5

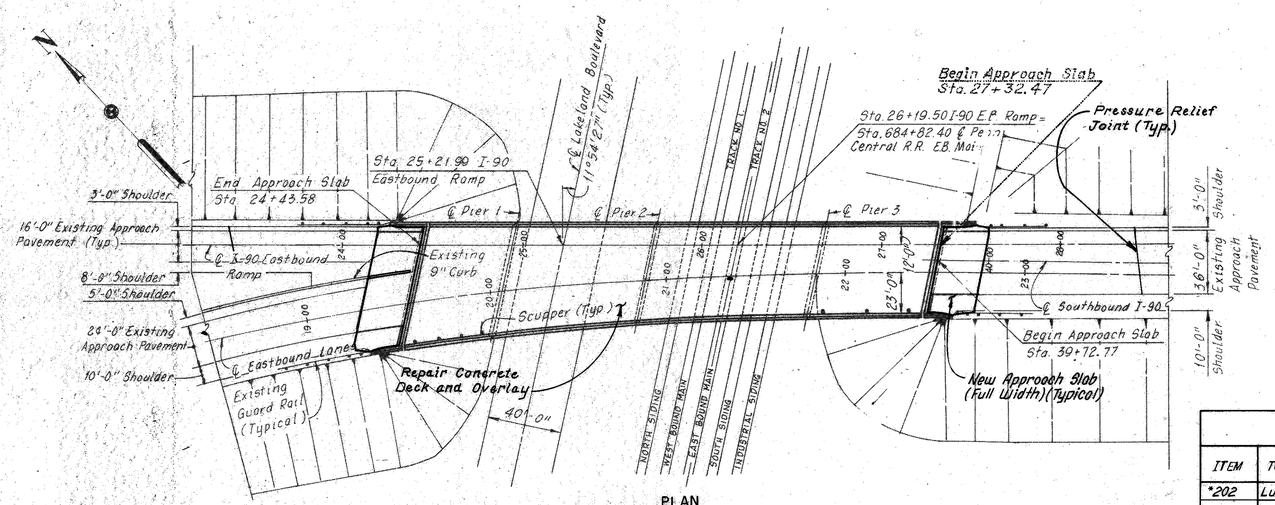

PLAN

40 0 40 80

SCALE IN FEET

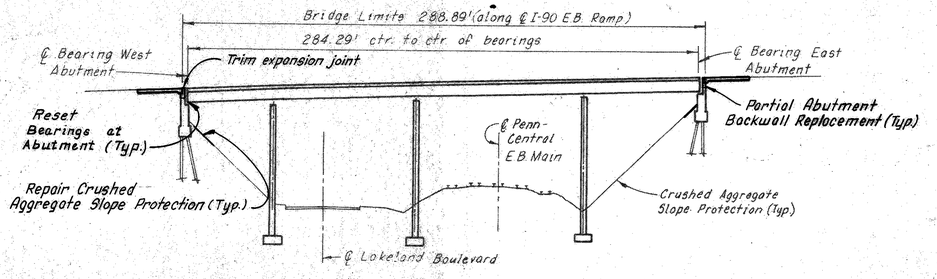

ELEVATION

40 0 40 80

SCALE IN FEET

EXISTING STRUCTURE	
TYPE:	Continuous Steel Beam with Reinforced Concrete Deck, Piers and Abutments.
SPAN:	48'-0", 78'-10⅜", 93'-5½" and 64'-0".
ROADWAY:	Varies, 53'-11⅜" to 71'-5⅜".
LOADING:	CF-2000-57 (Adequate for AASHO Alternate Loading).
SKEW:	11° 54' 27" Left Forward (From ℄ Ramp No. 1)
WEARING SURFACE:	1" Monolithic Concrete.
APPROACH SLABS:	AS-1-54 (25'-0" Long).
ALIGNMENT:	Ramp No. 1 Tangent, Roadway No. 1 Spiral.
SUPERELEVATION:	Varies.

MODIFIED STRUCTURE	
TYPE:	Continuous Steel Beam with Reinforced Concrete Deck, Piers and Abutments.
SPANS:	48'-0", 78'-10⅜", 93'-5½" and 64'-0".
ROADWAY:	Varies, 53'-11⅜" to 71'-5⅜".
LOADING:	CF-2000-57 (Adequate For AASHO Alternate Loading).
SKEW:	11° 54' 27" Left Forward (From ℄ Ramp No. 1)
WEARING SURFACE:	1½" Asphalt.
APPROACH SLABS:	AS-1-72 (25'-0" Long).
ALIGNMENT:	Ramp No. 1 Tangent, Roadway No. 1 Spiral.
SUPERELEVATION:	Varies.

PROPOSED WORK:

1. Install pressure relief joints in approach roadway pavement, see Sheet CD-9.
2. Trim expansion joint at west abutment, see Sheet CD-8.
3. Replace portions of both abutment backwalls, see Sheets 3/7 and 4/7.
4. Shim abutment bearings, see Sheets 3/7 and 4/7.
5. Reset abutment bearings, see Sheets 3/7 and 4/7.
6. Replace approach slabs, see Sheet 7/7.
7. Repair concrete deck and place asphalt wearing surface, see Sheet 6/7.
8. Clean out bridge drainage system and remove debris from abutment bridge seat.
9. Repair minor curb and parapet deterioration.
10. Paint all structural steel.
11. Trim end of Beams, see Sheet 3/7.
12. Repair minor abutment deterioration.
13. Repair minor wingwall deterioration.
14. Repair crushed aggregate slope protection.

FHWA REGION	STATE	PROJECT	
5	OHIO		

304/354

CUYAHOGA COUNTY
CUY-90-23.73
LAKE COUNTY
LAK-90-0.00

MICROFILMED
MAR 22 1985

Note: Roman numerals I and III denote cost participation breakdown. For description, see Roadway Plans, Sheet 3-354.

TYPE CODE X531

ESTIMATED QUANTITIES

ITEM	TOTAL	UNIT	DESCRIPTION BRIDGE REPAIR	SUPER-STRUCTURE	WEST ABUT	EAST ABUT	WINGWALLS NE	WINGWALLS SE	WINGWALLS NW	WINGWALLS SW	APPROACH SLABS	C.A. SLOPE PRO. WEST	C.A. SLOPE PRO. EAST	GENERAL	Participation I Fed. & State	Participation III 100 % State
*202	Lump Sum	Lump Sum	Portions of Structures Removed	-	III L.S.	III L.S.	-	-	-	-	III L.S.	-	-	-		Lump
402	11	Cu. Yd.	Asphalt Concrete (AC-20)	-	-	-	-	-	-	-	I 11	-	-	-	11	
404	106	Cu. Yd.	Asphalt Concrete (AC-20)	I 94	-	-	-	-	-	-	I 12	-	-	-	106	
407	34	Gallons	Tack Coat: 702.02, RC-250; or 702.04, SS-1,	-	-	-	-	-	-	-	I 34	-	-	-	34	
509	849	Pounds	Reinforcing Steel	-	III 77	III 772	-	-	-	-	-	-	-	-		849
511	8	Cu. Yd.	Class "C" Concrete, Substructure	-	III 3	III 5										8
513	2,119	Pounds	Structural Steel (ASTM A36)	-	-	III 2,119	-	-	-	-	-	-	-	-		2,119
514	2,119	Pounds	Field Painting of New Structural Steel	-	-	III 2,119										2,119
518	3	Cu. Yd.	Porous Backfill	-	III 1	III 2	-	-	-	-	-	-	-	-		3
518	292	Lin. Ft.	Subdrainage For Wearing Course, As Per Plan	I 292	-	-	-	-	-	-	-	-	-	-	292	
520	32	Sq. Ft.	Pneumatically Placed Mortar	III 20	III 5	-	III 4	III 1	-	III 2	-	-	-	-		32
611	340	Sq. Yd.	Reinforced Concrete Approach Slabs T= 15"	-	-	-	-	-	-	-	III 340	-	-	-		340
837	Lump Sum	Lump Sum	Surface Preparation	III L.S.	-	-	-	-	-	-	-	-	-	-		Lump
837	Lump Sum	Lump Sum	Spot Prime Painting	III L.S.	-	-	-	-	-	-	-	-	-	-		Lump
837	Lump Sum	Lump Sum	Complete Coat Prime Painting	III L.S.	-	-	-	-	-	-	-	-	-	-		Lump
837	Lump Sum	Lump Sum	Two Complete Coats Finish Painting	III L.S.	-	-	-	-	-	-	-	-	-	-		Lump
Special	47	Sq. Yd.	Patching Concrete Deck Slab	III 47	-	-	-	-	-	-	-	-	-	-		47
Special	1,923	Sq. Yd.	Membrane Waterproofing Hot Applied Liquid (See Proposal Note)	I 1,923	-	-	-	-	-	-	-	-	-	-	1,923	
Special	93	Lin. Ft.	Repair of Cracks	-	III 40	III 40	-	III 6	III 7	-	-	-	-	-		93
Special	123	Lin. Ft.	Raising Existing End Dams	-	I 71	I 52	-	-	-	-	-	-	-	-	123	
Special	16	Each	Reset Bearings	-	III 9	III 7	-	-	-	-	-	-	-	-		16
Special	8	Each	Shim Bearings	-	III 2	III 6	-	-	-	-	-	-	-	-		8
Special	78	Lin. Ft.	Pressure Relief Joint	-	-	-	-	-	-	-	-	-	-	III 78		78
Special	Lump Sum	Lump Sum	Cleanout Bridge Drainage Systems and Remove Debris From Bridge Seats	III L.S.	III L.S.	III L.S.	-	-	-	-	-	-	-	-		Lump
Special	18	Sq. Yd.	Repair of Crushed Aggregate Slope Protection	-	-	-	-	-	-	-	-	III 7	III 11	-		18

*SUBSTRUCTURE - Includes approximately 8 Cu. Yds. of concrete in the existing abutment backwalls.
*APPROACH SLABS - Includes approximately 340 Sq. Yds. of existing reinforced concrete approach slabs, paved berms and all necessary excavation or backfill to provide the proper cross section for the new approach slabs.

Rev. 7-18-75

HOWARD, NEEDLES, TAMMEN & BERGENDOFF
CONSULTING ENGINEERS
KANSAS CITY CLEVELAND NEW YORK

SITE PLAN

SOUTHBOUND I-90 OVER LAKELAND BOULEVARD AND PENN CENTRAL

BR. NO. CUY-90-2969R STA. 24+43.56
STA. 39+72.77

CUYAHOGA COUNTY OHIO

DRAWN	TRACED	CHECKED	REVIEWED	REVISED
JLR	JLR	RCK	EAB	
DATE 4-1-74	DATE 4-2-74	DATE 10-30-74	DATE 12-20-74	SHEET 1/7

FHWA REGION	STATE	PROJECT	
5	OHIO		

305
354

CUYAHOGA COUNTY
CUY-90-23.73
LAKE COUNTY
LAK-90-0.00

MICROFILMED
MAR 22 1985

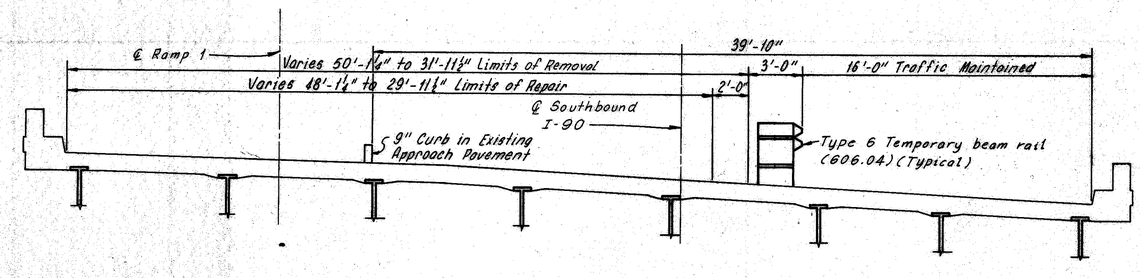

FIRST STAGE CONSTRUCTION

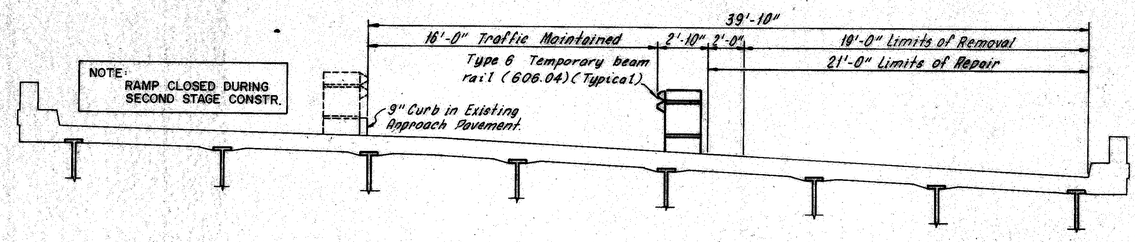

SECOND STAGE CONSTRUCTION

Notes:

The stage construction cross-sections apply within the bridge and approach slab limits. All repair work shall be co-ordinated with the stage construction as shown.

For maintenance of traffic notes, see Roadway Plans.

HOWARD, NEEDLES, TAMMEN & BERGENDOFF
CONSULTING ENGINEERS
KANSAS CITY CLEVELAND NEW YORK

MAINTENANCE OF TRAFFIC

SOUTHBOUND I-90 OVER LAKELAND BOULEVARD AND PENN CENTRAL

BR. NO. CUY-90-2969R STA. 24+43.58
STA. 39+72.77

CUYAHOGA COUNTY OHIO

DRAWN JLR	TRACED JLR	CHECKED ML	REVIEWED DWG	REVISED
DATE 4-1-74	DATE 4-2-74	DATE 4-29-74	DATE 12-20-74	SHEET 2 OF 7

FHWA REGION	STATE	PROJECT	
5	OHIO		

306
354

CUYAHOGA COUNTY
CUY-90-23.73
LAKE COUNTY
LAK-90-0.00

MICROFILMED
MAR 22 1985

Note: Backwall elevations are given at the top of the 6x4x½ angle of the end dam.

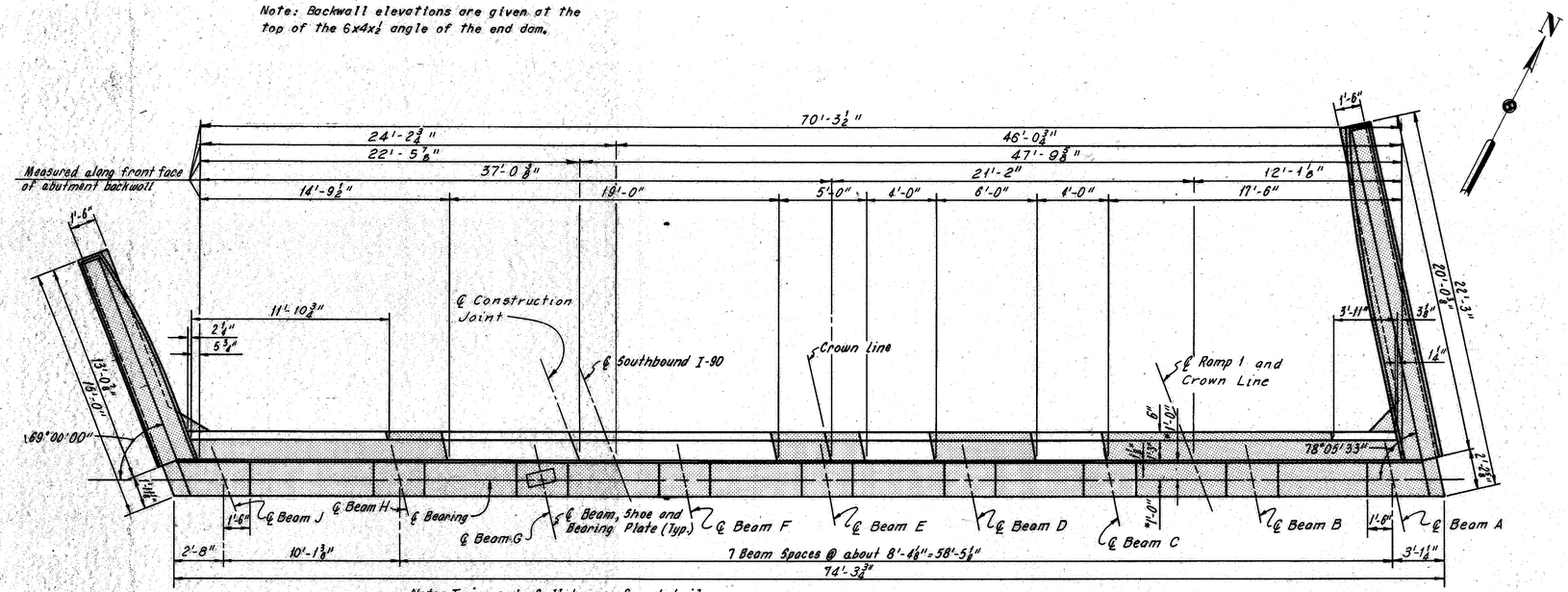

Notes: Trim end of all beams, for details, see Sheet CD-9.
Shim bearings at Beams G and F, see Sheet CD-3.

MODIFIED PLAN

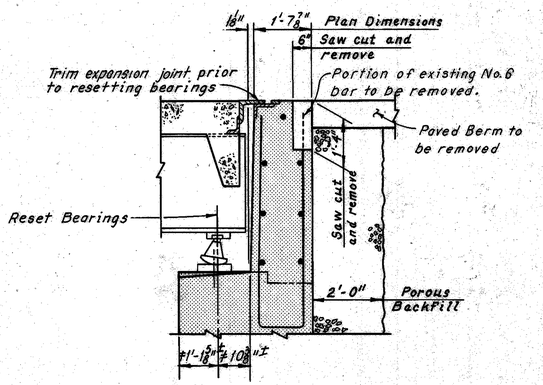

EXISTING SECTION A-A

Note: All reinforcing bar marks shall be prefixed RW.

* Plan Dimension, the actual dimensions shall be those which result when the bearings are set in thier final position.

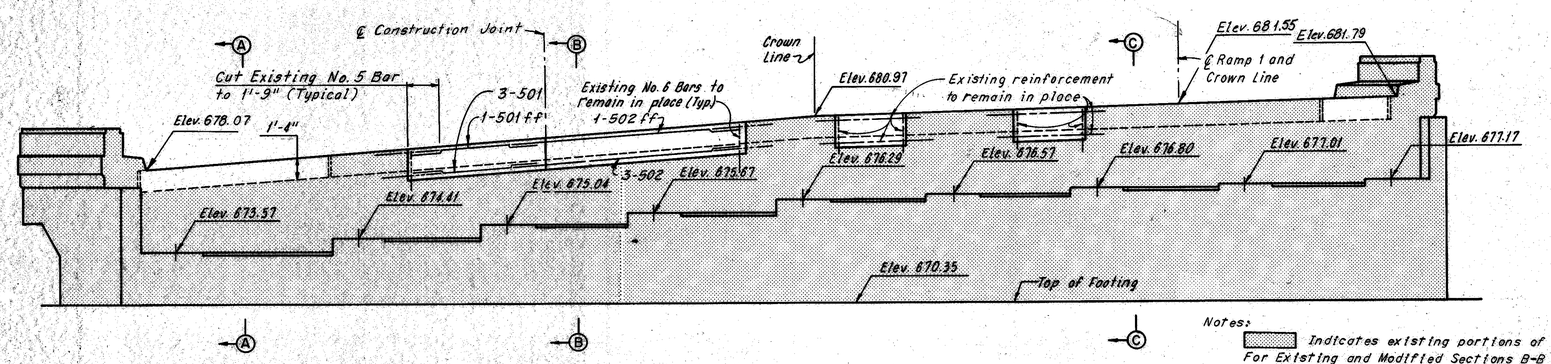

MODIFIED ELEVATION

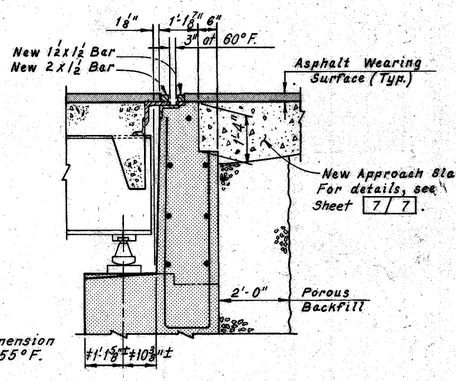

\+ Average dimension measured at 55°F.

MODIFIED SECTION A-A

Notes:
- Indicates existing portions of abutment to remain.
- For Existing and Modified Sections B-B and C-C, see Sheet 5/7.
- For stage construction sequence, see Maintenance Of Traffic, Sheet 2/7.
- For shoring required at approach slabs, see Sheet CD-1.
- Excavation, backfill (except Porous Backfill) and paved berm removal necessary to accomplish structure modification shall be included with Item 202, Portion of Structures Removed, for payment. Backfill shall be in accordance with Item 203.
- For resetting bearing details, see Sheet CD-3.
- For Trim Expansion Joint Detail, see Sheet CD-8.
- For details of raising the expansion joint, see Sheet CD-6.
- For Reinforcement Schedule, see Sheet R-6.
- The following abbreviations are used:
  - ff = far face
  - Typ. = Typical

HOWARD, NEEDLES, TAMMEN & BERGENDOFF
CONSULTING ENGINEERS
KANSAS CITY CLEVELAND NEW YORK

WEST ABUTMENT

SOUTHBOUND I-90 OVER LAKELAND BOULEVARD AND PENN CENTRAL

BR. NO. CUY-90-2969 R STA. 24+43.58
STA. 39+72.77

CUYAHOGA COUNTY OHIO

DRAWN	TRACED	CHECKED	REVIEWED	REVISED
DMP	JLR	RCA	CAB	
DATE 4-14-14	DATE 4-18-14	DATE 10-28-14	DATE 12-20-14	SHEET 3/7

FHWA REGION	STATE	PROJECT	
5	OHIO		

307
354

CUYAHOGA COUNTY
CUY-90-23.73
LAKE COUNTY
LAK-90-0.00

MICROFILMED
MAR 22 1985

* Plan Dimension, the actual dimensions shall be those which result when the bearings are set in thier final position.

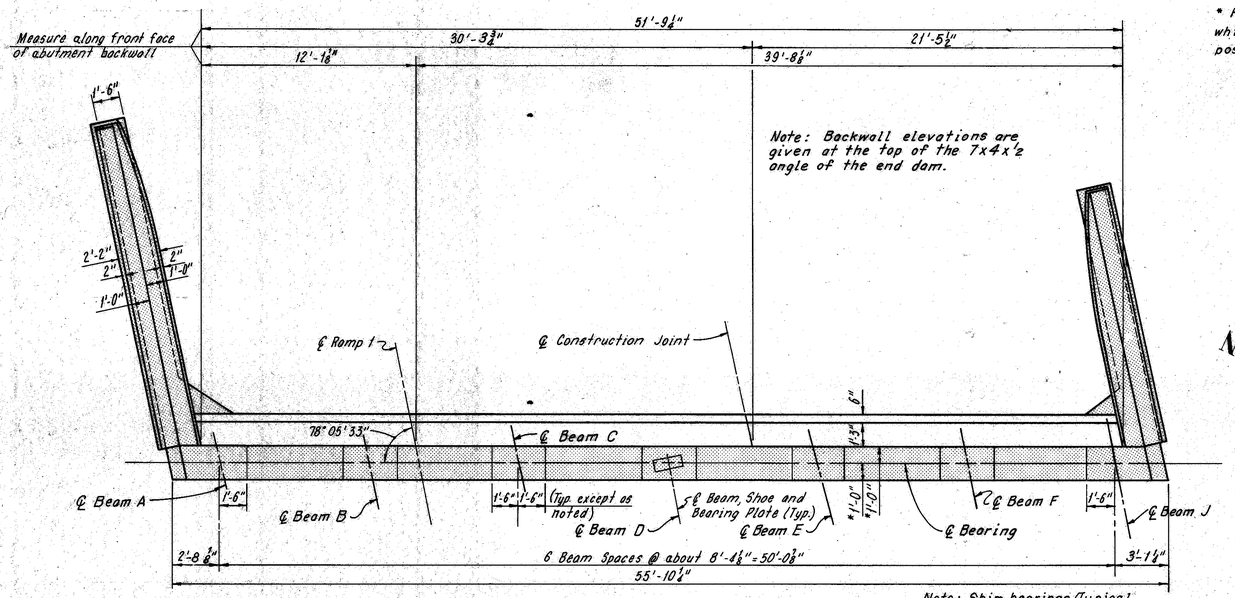

MODIFIED PLAN

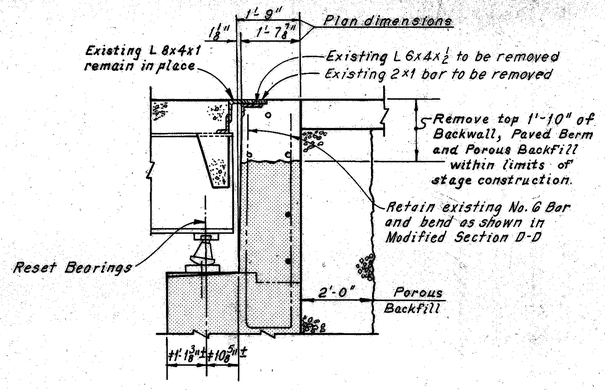

EXISTING SECTION D-D

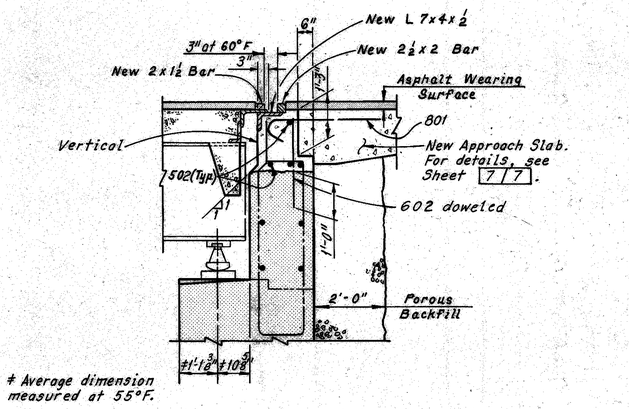

\# Average dimension measured at 55°F.

MODIFIED SECTION D-D

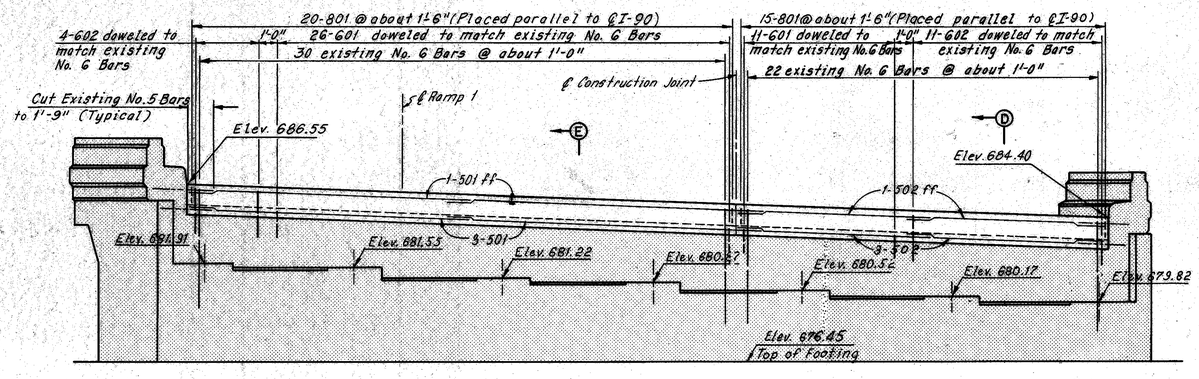

MODIFIED ELEVATION

Note: All reinforcing bar marks shall be prefixed RE.

Notes:

Indicates existing portions of abutment to remain.

For Existing and Modified Section E-E, see Sheet 5/7.

For stage construction sequence, see Maintenance Of Traffic, Sheet 2/7.

For shoring required at approach slabs, see Sheet CD-1.

Excavation, backfill (except Porous Backfill) and paved berm removal necessary to accomplish structure modification shall be included with Item 202, Portion of Structures Removed, for payment. Backfill shall be in accordance with Item 203.

For details of backwall expansion joint not shown, see Ohio Standard Drawing SD-1-69, Sheet 1 of 4.

For resetting bearing details, see Sheet CD-3

For details of raising the expansion joint, see Sheet CD-6

For Reinforcement Schedule, see Sheet R-6.

The following abbreviations are used:

ff = far face

Typ. = Typical

HOWARD, NEEDLES, TAMMEN & BERGENDOFF
CONSULTING ENGINEERS
KANSAS CITY CLEVELAND NEW YORK

EAST ABUTMENT

SOUTHBOUND I-90 OVER LAKELAND BOULEVARD AND PENN CENTRAL

BR. NO. CUY-90-2969 R STA. 24+43.58 STA. 39+72.77

CUYAHOGA COUNTY OHIO

DRAWN BMP	TRACED JLR	CHECKED RCK	REVIEWED CAB	REVISED
DATE 4-14-74	DATE 4-18-74	DATE 10-28-74	DATE 12-20-74	SHEET 4/7

FHWA REGION	STATE	PROJECT	
5	OHIO		

308
354

CUYAHOGA COUNTY
CUY-90-23.73
LAKE COUNTY
LAK-90-0.00

MICROFILMED
MAR 22 1985

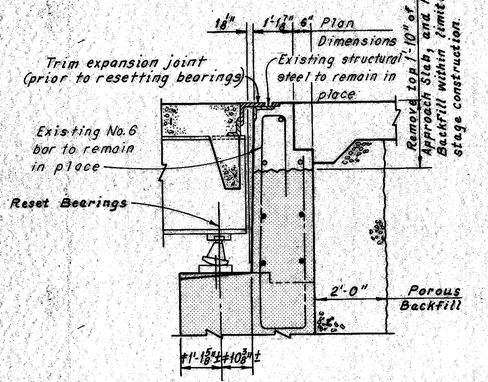

EXISTING SECTION B-B

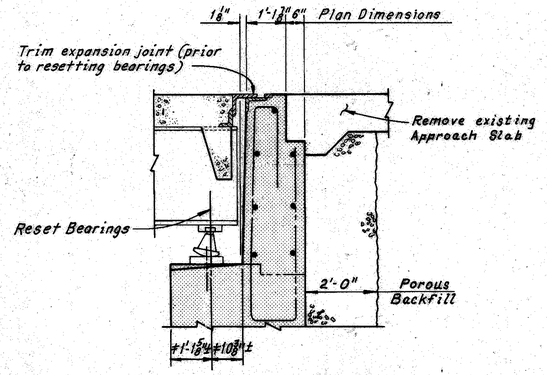

EXISTING SECTION C-C

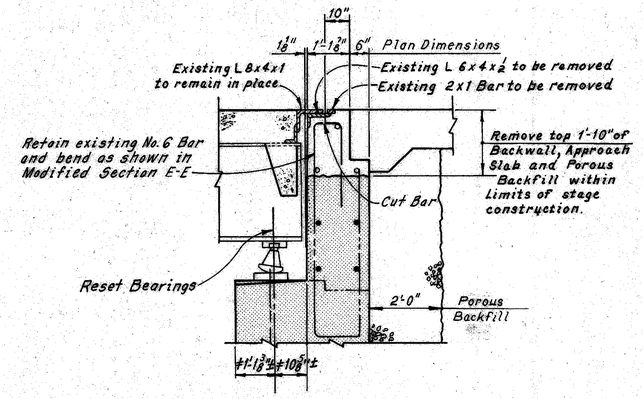

EXISTING SECTION E-E

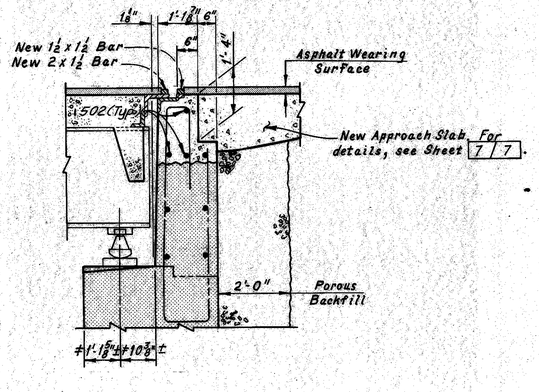

MODIFIED SECTION B-B

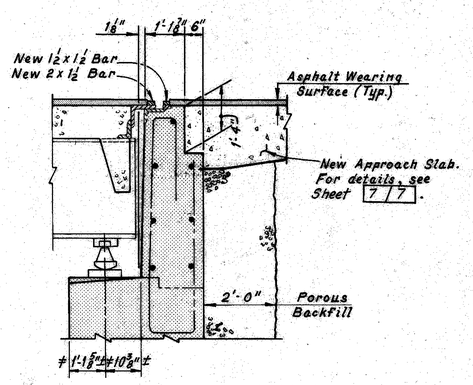

MODIFIED SECTION C-C

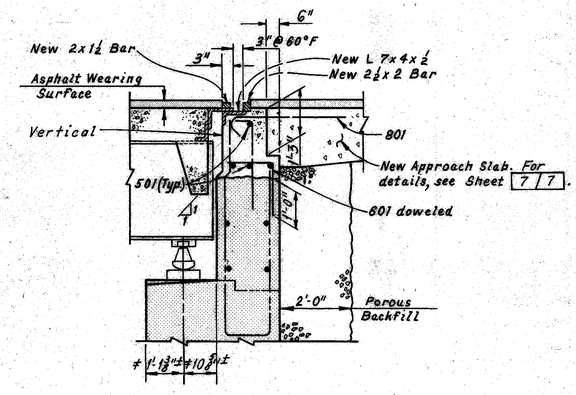

MODIFIED SECTION E-E

≠ Average dimension measured at 55°F.

Notes:
For Existing and Modified Section A-A, see Sheet 3/7.
For location of Existing and Modified Sections B-B and C-C, see Sheet 3/7.
For Existing and Modified Section D-D, see Sheet 4/7.
For location of Existing and Modified Section E-E, see Sheet 4/7.
For additional notes, see Sheets 3/7 and 4/7.

HOWARD, NEEDLES, TAMMEN & BERGENDOFF
CONSULTING ENGINEERS
KANSAS CITY CLEVELAND NEW YORK

EXISTING AND MODIFIED TYPICAL CROSS SECTIONS

SOUTHBOUND I-90 OVER LAKELAND BOULEVARD AND PENN CENTRAL

BR. NO. CUY-90-2969R STA. 24+43.58
STA. 39+72.77

CUYAHOGA COUNTY OHIO

DRAWN BMP	TRACED KBB	CHECKED RCK	REVIEWED EAS	REVISED
DATE 4-14-74	DATE 6-29-74	DATE 10-29-74	DATE 12-20-74	SHEET 5/7

FHWA REGION	STATE	PROJECT	
5	OHIO		

309
354

CUYAHOGA COUNTY
CUY-90-23.73
LAKE COUNTY
LAK-90-0.00

MICROFILMED
MAR 22 1985

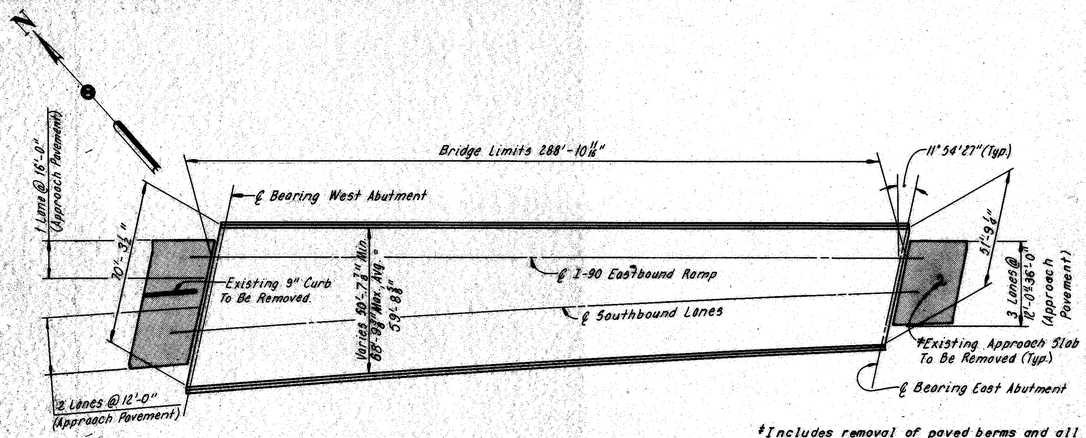

EXISTING PLAN

30 0 30 60
SCALE IN FEET

†Includes removal of paved berms and all necessary excavation or backfill to provide the proper cross section for the new approach slab.

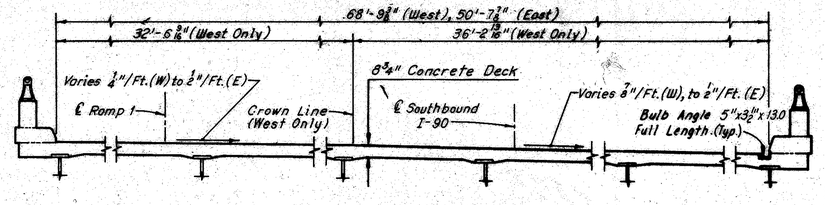

EXISTING TYPICAL SECTION

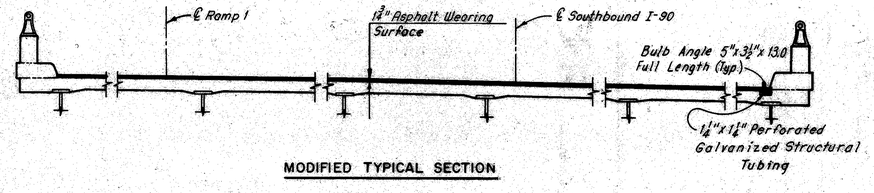

MODIFIED TYPICAL SECTION

Notes:
For deck repair and asphalt wearing surface course details, see Sheet CD-7.
The following abbreviations are used:
Typ. = Typical
E = East
W = West

HOWARD, NEEDLES, TAMMEN & BERGENDOFF
CONSULTING ENGINEERS
KANSAS CITY CLEVELAND NEW YORK

EXISTING AND MODIFIED DECK PLAN AND TYPICAL SECTION

SOUTHBOUND I-90 OVER LAKELAND BOULEVARD AND PENN CENTRAL

BR. NO. CUY-90-2969R STA. 24+43.58
STA. 39+72.77

CUYAHOGA COUNTY OHIO

DRAWN	TRACED	CHECKED	REVIEWED	REVISED
BMP	JLP	RCA	CAB	
DATE 4-16-74	DATE 4-18-74	DATE 10-30-74	DATE 12-20-74	SHEET 6/7

FHWA REGION	STATE	PROJECT	
5	OHIO		

310
354

CUYAHOGA COUNTY
CUY-90-23.73
LAKE COUNTY
LAK-90-0.00

MICROFILMED
MAR 22 1985

Note:
The jacking holes as called for on Ohio Standard Drawing AS-1-72 are not required.

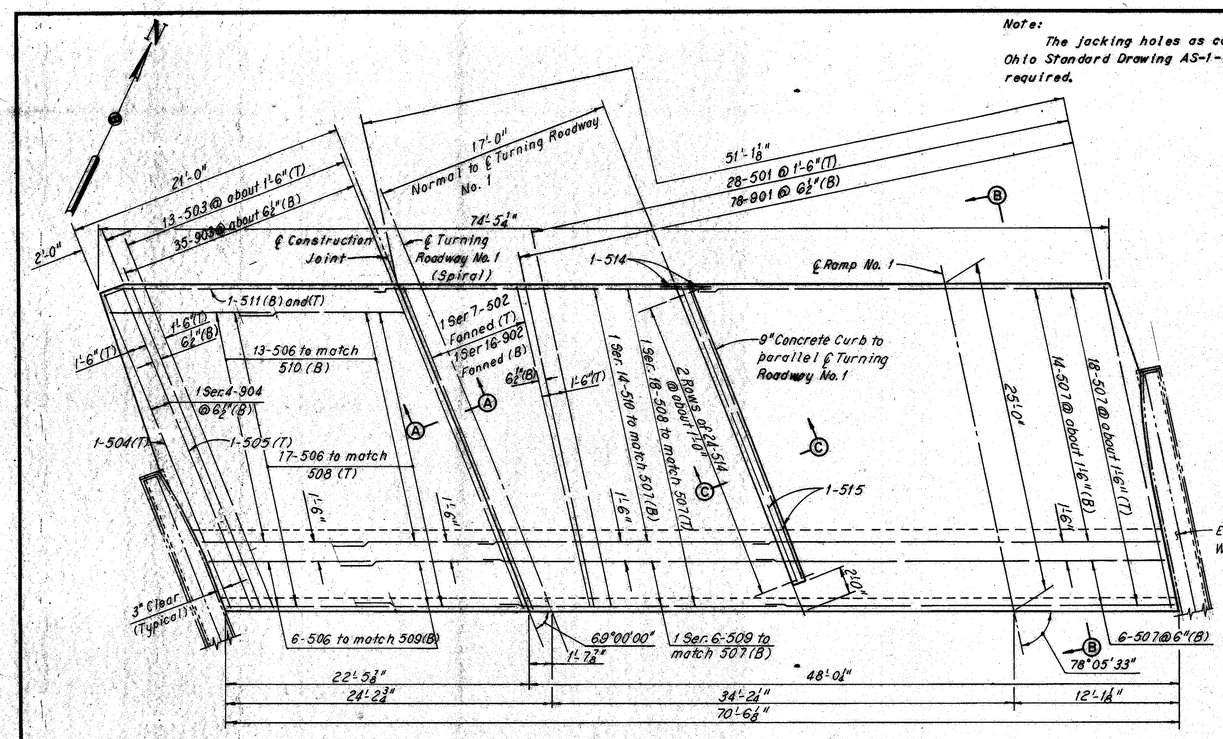

WEST APPROACH SLAB PLAN

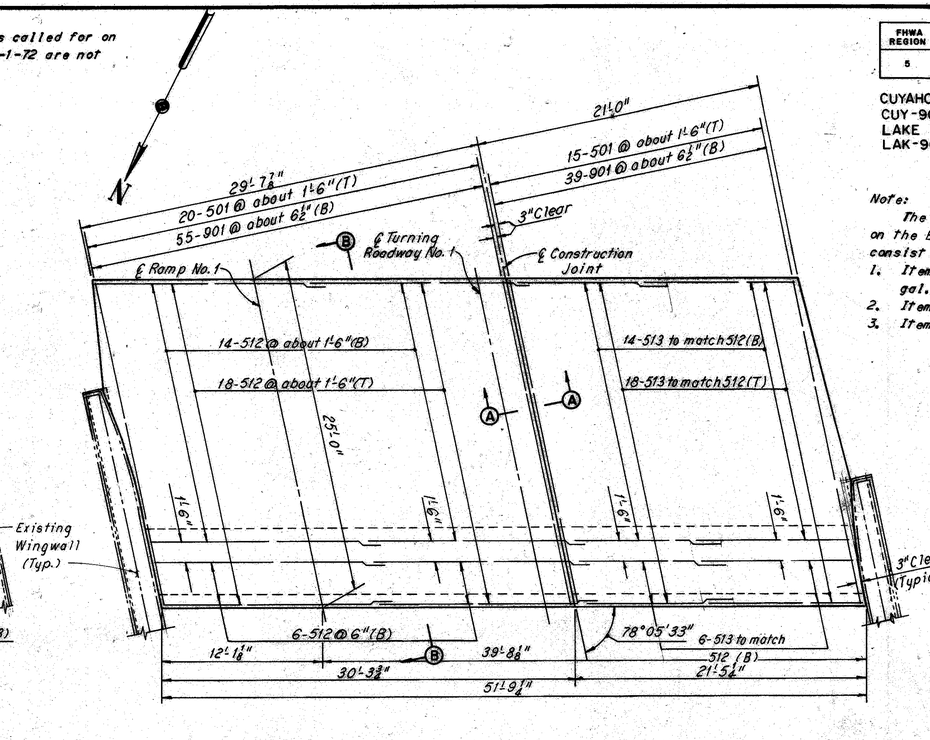

EAST APPROACH SLAB PLAN

Note:
The asphalt wearing surface on the East Approach Slab shall consist of the following:
1. Item 407, Tack Coat, at 0.1 gal. per sq. yd.
2. Item 402, 1¾" Asphalt Concrete (AC-20)
3. Item 404, 1¼" Asphalt Concrete (AC-20)

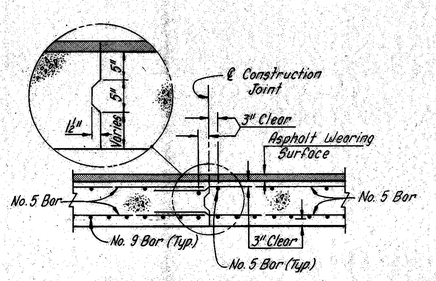

SECTION A-A

Note: All reinforcing bar marks shall be prefixed RRS.

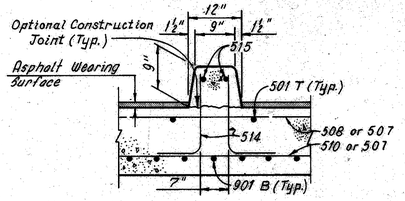

SECTION C-C

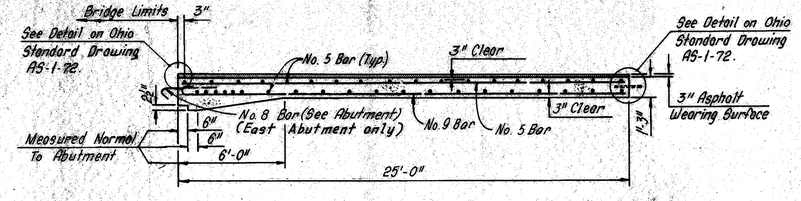

SECTION B-B

REINFORCEMENT SCHEDULE				
MARK	NO.	LENGTH	TYPE	SER. INCR.
RRS 501	63	24'-6"	Str.	
RRS 502	1 Ser. 7	24'-6"/25'-6"	Str.	2"
RRS 503	13	25'-6"	Str.	
RRS 504	1	24'-9"	Str.	
RRS 505	1	25'-3"	Str.	
RRS 506	72	12'-3"	Str.	
RRS 507	38	30'-0"	Str.	
RRS 508	1 Ser. 18	21'-9"/26'-0"	Str.	3"
RRS 509	1 Ser. 6	21'-0"/22'-0"	Str.	2½"
RRS 510	1 Ser. 14	22'-3"/26'-0"	Str.	3½"
RRS 511	2	22'-2"	108	
RRS 512	76	17'-3"	Str.	
RRS 513	76	11'-9"	Str.	
RRS 514	50	2'-2"	104	
RRS 515	2	23'-9"	Str.	
RRS 901	172	25'-9"	101	
RRS 902	1 Ser. 16	25'-9"/26'-9"	101	½"
RRS 903	35	26'-9"	101	
RRS 904	1 Ser. 4	26'-0"/26'-6"	101	2"

101

1'-3"	24'-6"	RRS 901
1'-3"	24'-6 / 25'-6"	RRS 902
1'-3"	25'-6"	RRS 903
1'-3"	24'-9" / 25'-3"	RRS 904

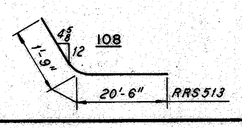

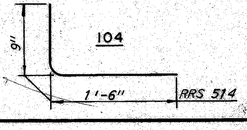

Notes:
For stage construction sequence, see Maintenance Of Traffic, Sheet 27.
For normal cross slopes, see Existing Typical Section, Sheet 67.
The following abbreviations are used:
T = Top
B = Bottom
Typ. = Typical
Ser. = Series
For additional notes and details, see Ohio Standard Drawing AS-1-72.

Note:
The asphalt wearing surface on the West Approach Slab shall consist of the following:
1. Item 407, Tack Coat, at 0.1 gal. per sq. yd.
2. Variable thickness of Item 402, Asphalt Concrete (AC-20)
3. Item 404, 1¼" Asphalt Concrete (AC-20)

HOWARD, NEEDLES, TAMMEN & BERGENDOFF
CONSULTING ENGINEERS
KANSAS CITY CLEVELAND NEW YORK

APPROACH SLABS

SOUTHBOUND I-90 OVER LAKELAND BOULEVARD AND PENN CENTRAL

BR. NO. CUY-90-2969R STA. 24+43.58
STA. 39+72.77

CUYAHOGA COUNTY OHIO

DRAWN	TRACED	CHECKED	REVIEWED	REVISED
RCK	RCK	WH	CAB	
DATE 10-16-74	DATE 10-22-74	DATE 11-15-74	DATE 12-20-74	SHEET 7/7

MICROFILMED
MAR 22 1983

FHWA REGION	STATE	PROJECT	
5	OHIO		

311
354

CUYAHOGA COUNTY
CUY-90-23.73
LAKE COUNTY
LAK-90-0.00

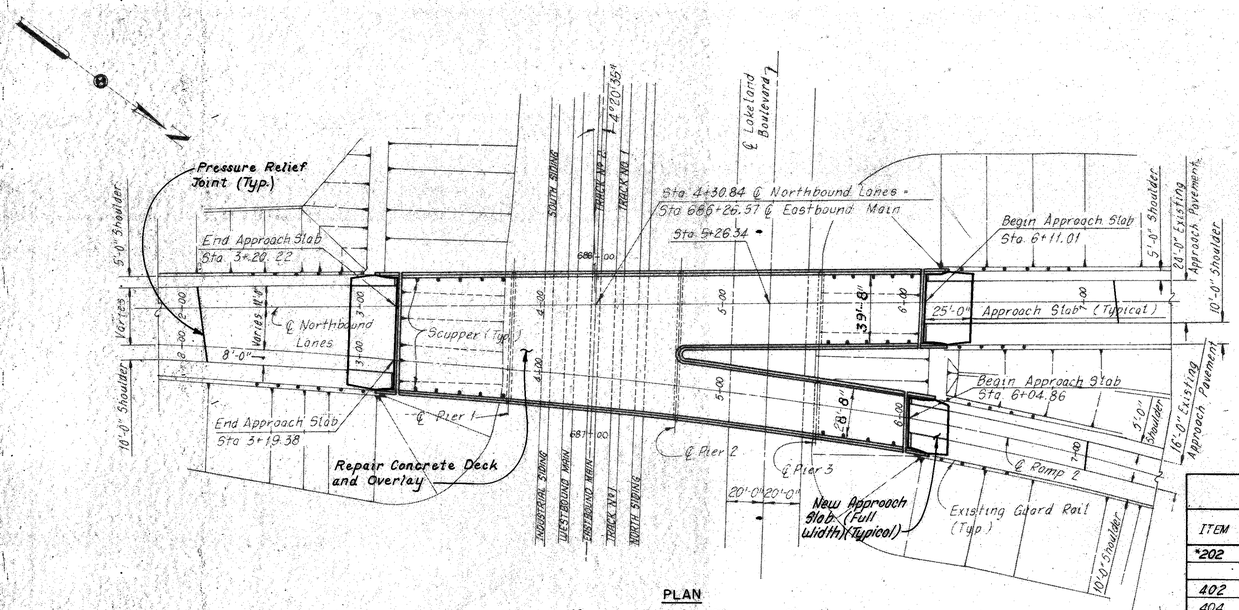

PLAN

40 0 40 80
SCALE IN FEET

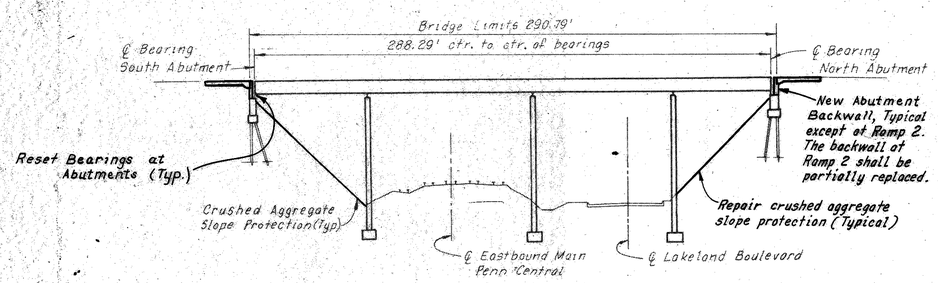

ELEVATION

40 0 40 80
SCALE IN FEET

PROPOSED WORK:

1. Install pressure relief joints in approach roadway pavement, see Sheet CD-9.
2. Replace entire north and south abutment backwalls, see Sheets 3/7 and 4/7.
3. Replace portions of ramp abutment backwall, see Sheet 5/7.
4. Reset abutment bearings, see Sheet 3/7.
5. Replace approach slabs, see Sheet 7/7.
6. Repair concrete deck and place asphalt wearing surface, see Sheet 6/7.
7. Clean out bridge drainage system and remove debris from bridge seat.
8. Trim wingwall parapets.
9. Repair minor curb and parapet deterioration.
10. Trim end of beams, see Sheet 5/7.
11. Paint all structural steel.
12. Repair minor abutment deterioration.
13. Repair minor wingwall deterioration.
14. Repair crushed aggregate slope protection.

Note:
Roman numerals I and III denote cost participation breakdown. For description, see Roadway Plans, Sheet 3-354.

TYPE CODE X551

ESTIMATED QUANTITIES

ITEM	TOTAL	UNIT	DESCRIPTION BRIDGE REPAIR	SUPER-STRUCTURE	North ABUT	South ABUT	Ramp 2 ABUT	WINGWALLS NE	WINGWALLS SE	WINGWALLS NW	WINGWALLS SW	APPROACH SLABS	R.A. SLOPE PRO. North	R.A. SLOPE PRO. South	GENERAL	Participation I Fed. & State	Participation III 100% State
*202	Lump Sum	Lump Sum	Portions of Structures Removed	-	III L.S.	III L.S.	III L.S.	-	-	-	-	III L.S.	-	-	-		Lump
402	18	Cu. Yd.	Asphalt Concrete (AC-20)	-	-	-	-	-	-	-	-	I 18	-	-	-	18	
404	122	Cu. Yd.	Asphalt Concrete (AC-20)	I 109	-	-	-	-	-	-	-	I 13	-	-	-	122	
407	38	Gallons	Tack Coat: 702.04, AC-20S; 702.09, SS-1, SS-1H, MS-2 or RS-1	-	-	-	-	-	-	-	-	I 38	-	-	-	38	
503	Lump Sum	Lump Sum	Cofferdams, Cribs and Sheeting	-	-	-	-	-	-	-	-	-	-	-	III L.S.		Lump
509	4,920	Pounds	Reinforcing Steel	-	II 1,561	II 2453	II 906	-	-	-	-	-	-	-	-		4,920
511	37	Cu. Yd.	Class "C" Concrete, Substructure	-	III 18	II 12	III 7	-	-	-	-	-	-	-	-		37
513	5,410	Pounds	Structural Steel (ASTM A36)	-	II 2589	II 1,627	II 1194	-	-	-	-	-	-	-	-		5,410
514	5,410	Pounds	Field Painting of new Structural Steel	-	II 2589	II 1,627	II 1194	-	-	-	-	-	-	-	-		5,410
518	31	Cu. Yd.	Porous Backfill	-	III 16	II 10	III 5	-	-	-	-	-	-	-	-		31
518	758	Lin. Ft.	Subdrainage For Wearing Course, As Per Plan	I 758	-	-	-	-	-	-	-	-	-	-	-	758	
520	80	Sq. Ft.	Pneumatically Placed Mortar	III 75	-	-	-	-	-	-	III 5	-	-	-	-		80
611	378	Sq. Yd.	Reinforced Concrete Approach Slabs T=15"	-	-	-	-	-	-	-	-	III 378	-	-	-		378
837	Lump Sum	Lump Sum	Surface Preparation	III L.S.	-	-	-	-	-	-	-	-	-	-	-		Lump
837	Lump Sum	Lump Sum	Spot Prime Painting	III L.S.	-	-	-	-	-	-	-	-	-	-	-		Lump
837	Lump Sum	Lump Sum	Complete Coat Prime Painting	III L.S.	-	-	-	-	-	-	-	-	-	-	-		Lump
837	Lump Sum	Lump Sum	Two Complete Coats Finish Painting	III L.S.	-	-	-	-	-	-	-	-	-	-	-		Lump
Special	87	Sq. Yd.	Patching Concrete Deck Slab	III 87	-	-	-	-	-	-	-	-	-	-	-		87
Special	2,215	Sq. Yd.	Membrane Waterproofing, Hot Applied Liquid (See Proposal Note)	I 2,215	-	-	-	-	-	-	-	-	-	-	-	2215	
Special	60	Lin. Ft.	Repair of Cracks	-	III 20	III 10	III 10	-	-	-	III 20	-	-	-	-		60
Special	132	Lin. Ft.	Raising Existing End Dams	-	I 63	I 40	I 29	-	-	-	-	-	-	-	-	132	
Special	22	Each	Reset Bearings	-	III 6	III 11	III 5	-	-	-	-	-	-	-	-		22
Special	90	Lin. Ft.	Pressure Relief Joint	-	-	-	-	-	-	-	-	-	-	-	III 90		90
Special	Lump Sum	Lump Sum	Cleanout Bridge Drainage Systems and Remove Debris From Bridge Seats	III L.S.	III L.S.	III L.S.	III L.S.	-	-	-	-	-	-	-	-		Lump
Special	1,339	Sq. Yd.	Repair of Crushed Aggregate Slope Protection	-	-	-	-	-	-	-	-	III 833	III 506	-	-		1,339

EXISTING STRUCTURE

TYPE:	Continuous Steel Beam with Reinforced Concrete Deck, Piers and Abutments.
SPANS:	62'-8", 91'-6", 77'-3" and 54'-10⅜" Along ℄ Northbound Lanes.
ROADWAY:	Varies.
LOADING:	CF-2000-57 (Adequate for AASHO Alternate Loading).
SKEW:	4° 20' 35" Left Forward on ℄ Survey
WEARING SURFACE:	1" Monolithic Concrete.
APPROACH SLABS:	AS-1-54 (25'-0" Long).
ALIGNMENT:	Northbound Lanes Tangent, Ramp 2 Curve and Spiral.
SUPERELEVATION:	Varies.

MODIFIED STRUCTURE

TYPE:	Continuous Steel Beam with Reinforced Concrete Deck, Piers and Abutments.
SPANS:	62'-8", 91'-6", 77'-3" and 54'-10⅜" Along ℄ Northbound Lanes.
ROADWAY:	Varies.
LOADING:	CF-2000-57 (Adequate for AASHO Alternate Loading).
SKEW:	4° 20' 35" Left Forward on ℄ Survey
WEARING SURFACE:	1¾" Asphalt.
APPROACH SLABS:	AS-1-72 (25'-0" Long).
ALIGNMENT:	Northbound Lanes Tangent, Ramp 2 Curve and Spiral.
SUPERELEVATION:	Varies.

* SUBSTRUCTURE - Includes approximately 37 Cu. Yds. of concrete in the existing abutment backwalls.

* APPROACH SLABS - Includes approximately 378 Sq. Yds. of existing reinforced concrete approach slabs, paved berms and all necessary excavation or backfill to provide proper cross section for new approach slabs.

TRIM WINGWALL PARAPET - Trim all wingwall parapets and curbs at the front face of the backwall, for details, see Sheet CD-8.

Rev. 7-18-75

HOWARD, NEEDLES, TAMMEN & BERGENDOFF
CONSULTING ENGINEERS
KANSAS CITY CLEVELAND NEW YORK

SITE PLAN

NORTHBOUND I-90 OVER
LAKELAND BOULEVARD AND PENN CENTRAL

BR. NO. CUY-90-2969L STA. 3+20.22
STA. 6+11.01

CUYAHOGA COUNTY OHIO

DRAWN	TRACED	CHECKED	REVIEWED	REVISED
J.L.R.	J.L.R.	C.P.	CAB	
DATE 10-8-73	DATE 10-8-73	DATE 10-25-74	DATE 12-20-74	SHEET 1/7

MICROFILMED
MAR 22 1965

FHWA REGION	STATE	PROJECT	
5	OHIO		

312
354

CUYAHOGA COUNTY
CUY-90-23.73
LAKE COUNTY
LAK-90-0.00

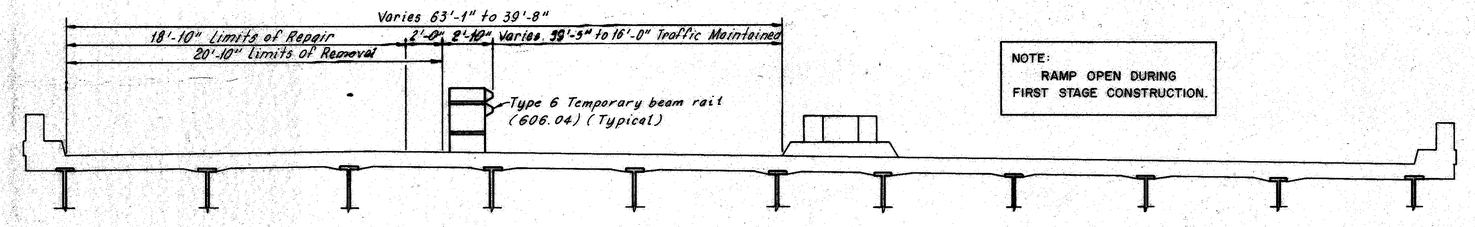

NOTE:
RAMP OPEN DURING
FIRST STAGE CONSTRUCTION.

FIRST STAGE CONSTRUCTION

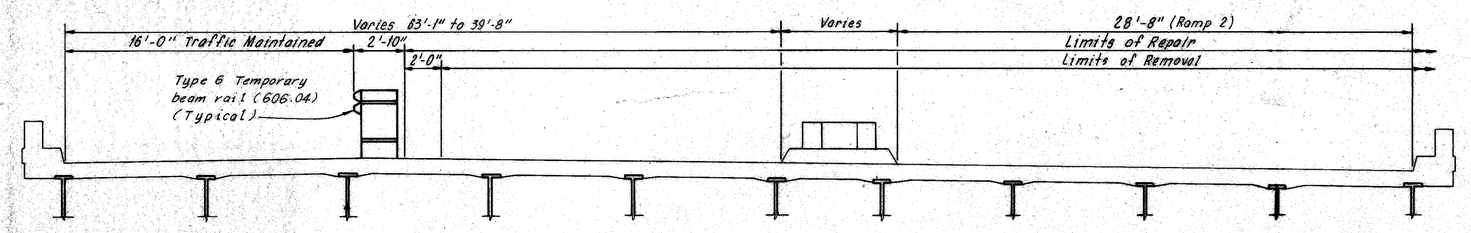

SECOND STAGE CONSTRUCTION

Notes:

The stage construction cross-sections apply within the bridge and approach slab limits. All repair work shall be co-ordinated with the stage construction as shown.

For maintenance of traffic notes, see Roadway Plans.

For shoring required at approach slabs, see Sheet CD-1.

HOWARD, NEEDLES, TAMMEN & BERGENDOFF
CONSULTING ENGINEERS
KANSAS CITY CLEVELAND NEW YORK

MAINTENANCE OF TRAFFIC
NORTHBOUND I-90 OVER LAKELAND BOULEVARD AND PENN CENTRAL

BR.NO.CUY-90-2969L STA. 3+20.22
STA. 6+11.01

CUYAHOGA COUNTY OHIO

DRAWN	TRACED	CHECKED	REVIEWED	REVISED
JLR	JLR	ML	CAB	
DATE 4-8-74	DATE 4-8-74	DATE 4-26-74	DATE 12-20-74	SHEET 2/7

MICROFILMED
MAR 22 1985

FHWA REGION	STATE	PROJECT	
5	OHIO		

313
354

CUYAHOGA COUNTY
CUY-90-23.73
LAKE COUNTY
LAK-90-0.00

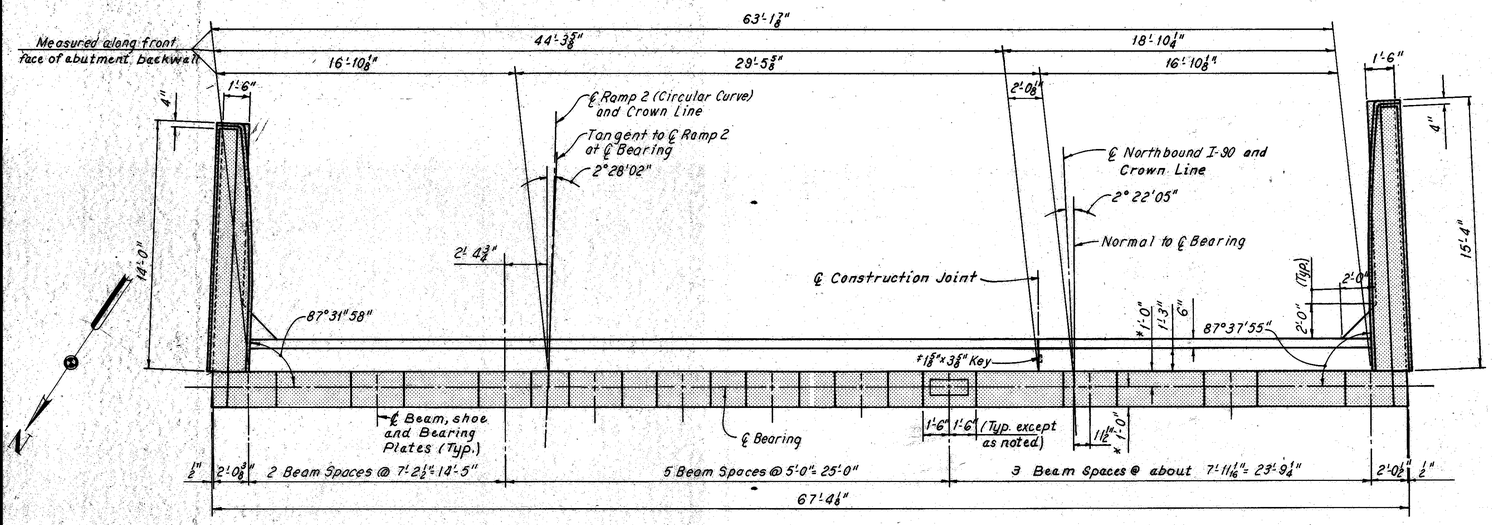

MODIFIED PLAN

Note: All reinforcing bar marks shall be prefixed 55.

Note: Backwall elevations are given at the top of the 7"x4"x½" angle of the end dam.

* Plan Dimension, the actual dimensions shall be those which result when the end dam components are extended from their existing position and when the bearings are set in their final position.
‡ Stop 8" below top of backwall.

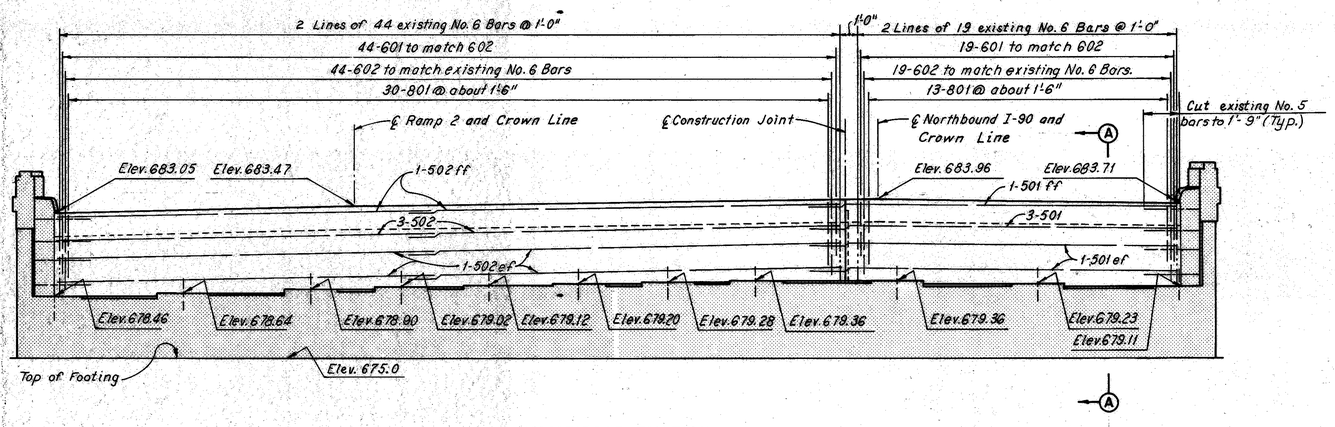

MODIFIED ELEVATION

Notes:
Indicates existing portions of abutment to remain.
For Existing and Modified Section A-A, see Sheet 4 / 7.
For stage construction sequence, see Maintenance Of Traffic, Sheet 2 / 7.
For shoring required at approach slabs, see Sheet CD-1.
For resetting bearing details, see Sheet CD-3.
For Reinforcement Schedule, see Sheet R-6.
The following abbreviations are used:
ef = each face
ff = far face
Typ. = Typical

BACKWALL REPLACEMENT PROCEDURE:

1. Bridge the backwall with an adequate steel plate within the area of maintained traffic. Provide bituminous wearing surface cover, as directed by the Engineer, to permit and maintain safe passage of vehicular traffic. The steel plate and bituminous cover shall be included with Item 614, Maintaining Traffic, for payment (see Roadway Plans)
2. Raise the entire superstructure (all beams simultaneously) until there is no contact between the superstructure and backwall end dam angles. All material, labor and equipment required to accomplish the above shall be included with Item 202, Portions of Structures Removed, for payment.
3. Remove approximately 1 foot of the top of the backwall.
4. Reset bearings.
5. Release jacks.
6. Remove the remaining portions of the backwall, including reinforcement, except as noted, within the limits of stage construction.
7. Replace the backwall within the limits of the stage construction using the existing superstructure end dam angle to set the new backwall. In setting the top of backwall end dam angle, care shall be exercised to insure proper seating of the superstructure and expansion joint.

HOWARD, NEEDLES, TAMMEN & BERGENDOFF
CONSULTING ENGINEERS
KANSAS CITY CLEVELAND NEW YORK

SOUTH ABUTMENT

NORTHBOUND I-90 OVER LAKELAND BOULEVARD AND PENN CENTRAL
BR. NO. CUY-90-2969L STA. 3+20.22
STA. 6+11.01

CUYAHOGA COUNTY OHIO

DRAWN	TRACED	CHECKED	REVIEWED	REVISED
R.C.K.	R.C.K.	C.P.	D.A.B.	
DATE 4-8-74	DATE 5-6-74	DATE 10-22-74	DATE 12-20-74	SHEET 3/7

Note: Backwall elevations are given at the top of the 7x4x½ angle of the end dam.

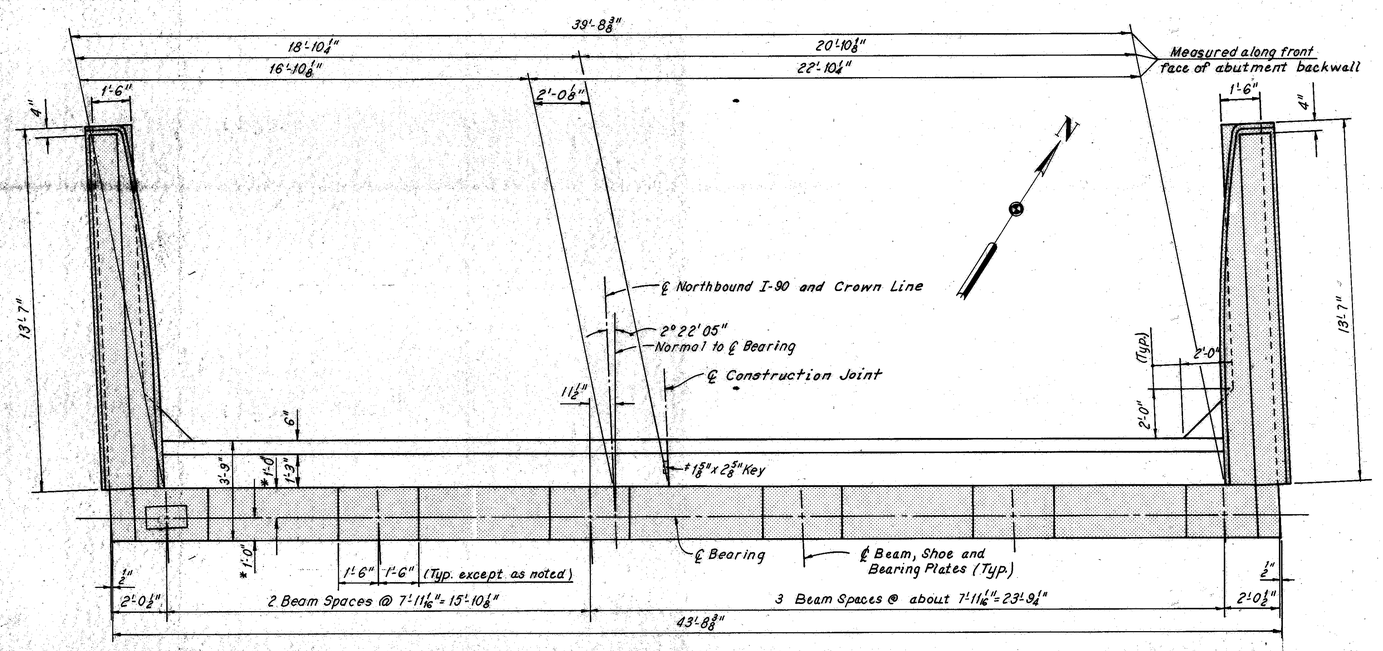

MODIFIED PLAN

Note: All reinforcing bar marks shall be prefixed 9N.

* Plan Dimension, the actual dimensions shall be those which result when the end dam components are extended from their existing position and when the bearings are set in their final position.
† Stop 8" below top of backwall.

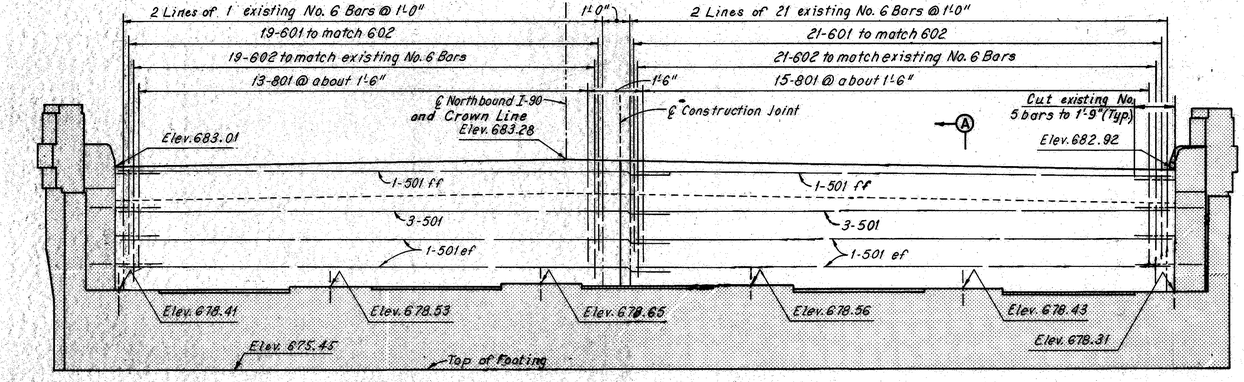

MODIFIED ELEVATION

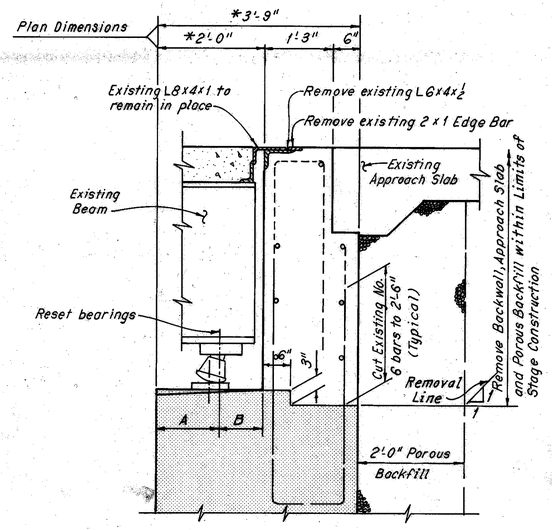

EXISTING SECTION A-A

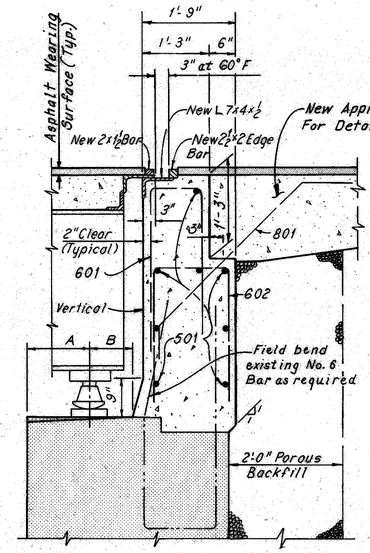

MODIFIED SECTION A-A

LOCATION	AVG. DIMENSIONS MEASURED AT 55°F.	
	A	B
North Abutment	1'-2¼"±	9¾"±
South Abutment	1'-2⅜"±	9⅝"±

Notes:

For Backwall Replacement Procedure, see Sheet 3/7.
Excavation, backfill (except Porous Backfill) and paved berm removal necessary to accomplish structure modification shall be included with Item 202, Portions of Structures Removed, for payment. Backfill shall be in accordance with Item 203.
For details of raising the expansion joint, see Sheet CD-6.
For details of backwall expansion joint angle not shown, see Ohio Standard Drawing SD-1-69, Sheet 1 of 4.
For additional notes, see Sheet 3/7.

FHWA REGION	STATE	PROJECT	
5	OHIO		

314
354

CUYAHOGA COUNTY
CUY-90-23.73
LAKE COUNTY
LAK-90-0.00

HOWARD, NEEDLES, TAMMEN & BERGENDOFF
CONSULTING ENGINEERS
KANSAS CITY CLEVELAND NEW YORK

NORTH ABUTMENT

NORTHBOUND I-90 OVER LAKELAND BOULEVARD AND PENN CENTRAL
BR.NO.CUY-90-2969L STA. 3+20.22
STA. 6+11.01

CUYAHOGA COUNTY OHIO

DRAWN	TRACED	CHECKED	REVIEWED	REVISED
R.C.K.	R.C.K.	C.A.B.	C.A.B.	
DATE 4-8-74	DATE 5-6-74	DATE 10-22-74	DATE 12-20-74	SHEET 4/7

FHWA REGION	STATE	PROJECT	
5	OHIO		

315
354

CUYAHOGA COUNTY
CUY-90-23.73
LAKE COUNTY
LAK-90-0.00

MICROFILMED
MAR 22 1985

Note: Backwall elevations are given at the top of the 7x4x½ angle of the end dam.

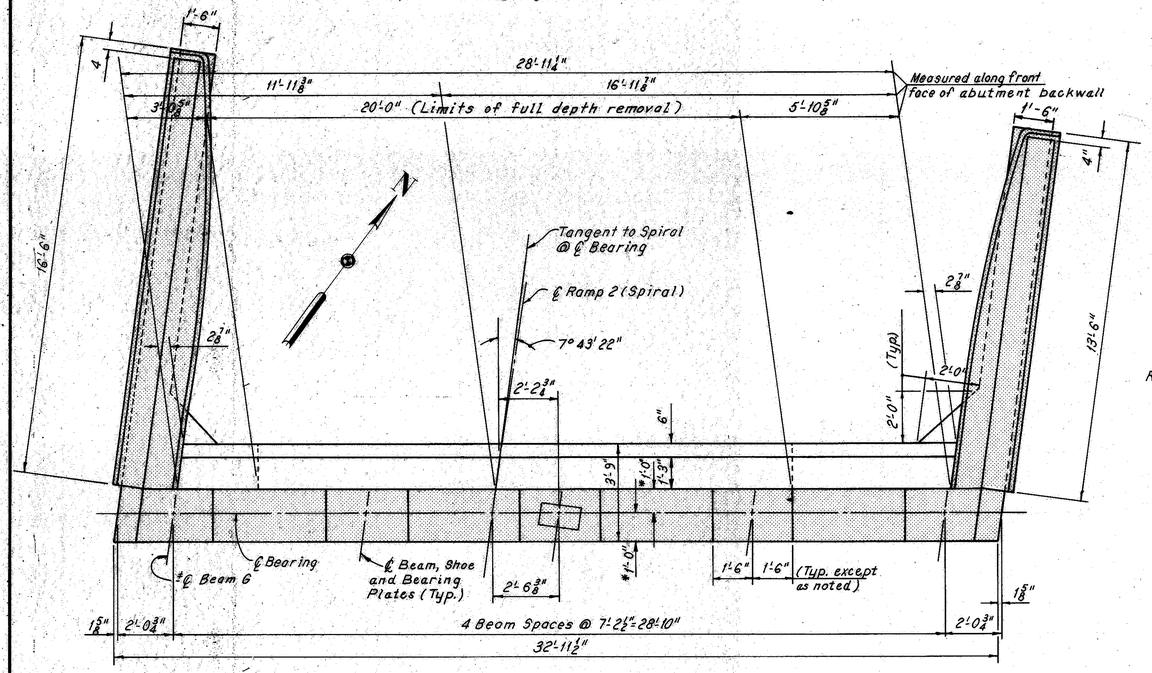

MODIFIED PLAN

Note: All reinforcing bar marks shall be prefixed SR.

* Plan Dimension, the actual dimensions shall be those which result when the end dam components are extended from their existing position and when the bearings are set in their final position.

* Trim end of all beams, see Sheet CD-9.

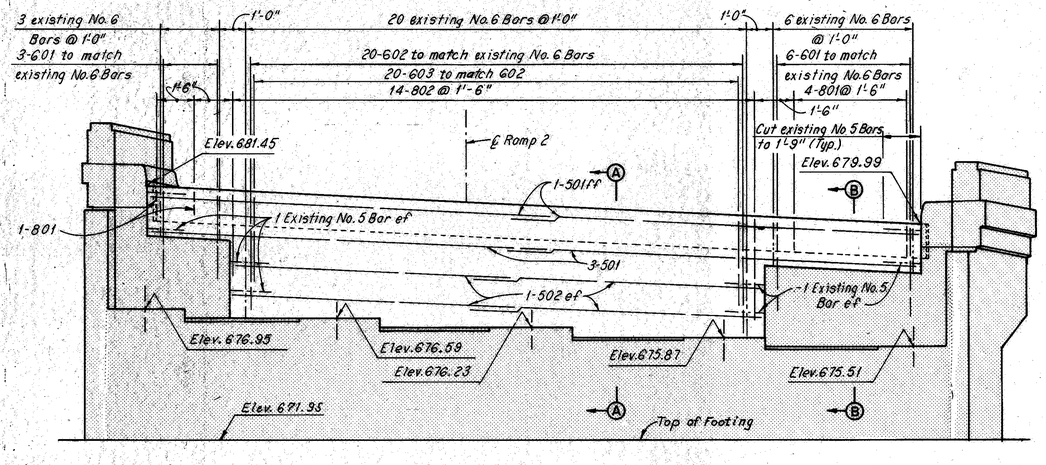

MODIFIED ELEVATION

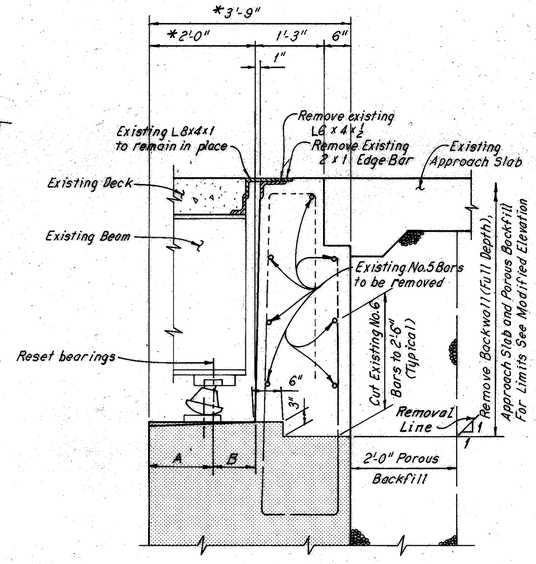

EXISTING SECTION A-A

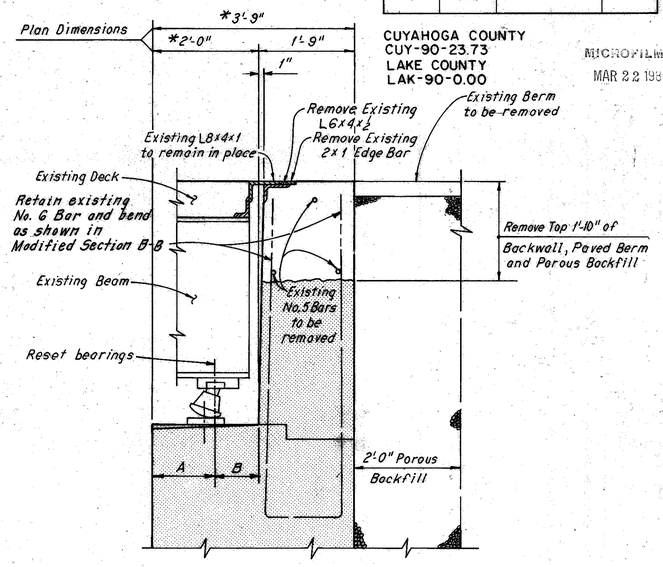

EXISTING SECTION B-B

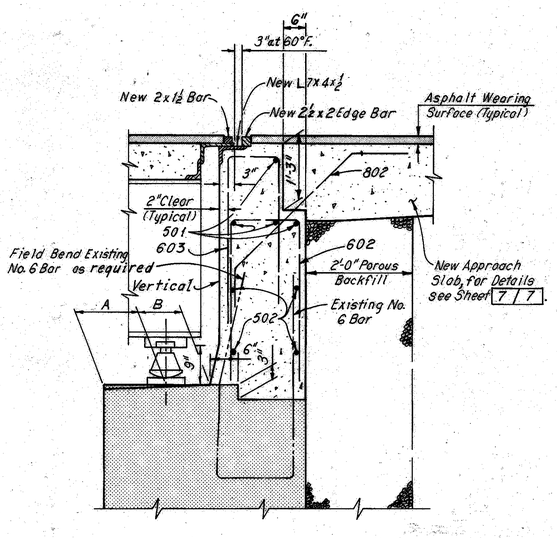

MODIFIED SECTION A-A

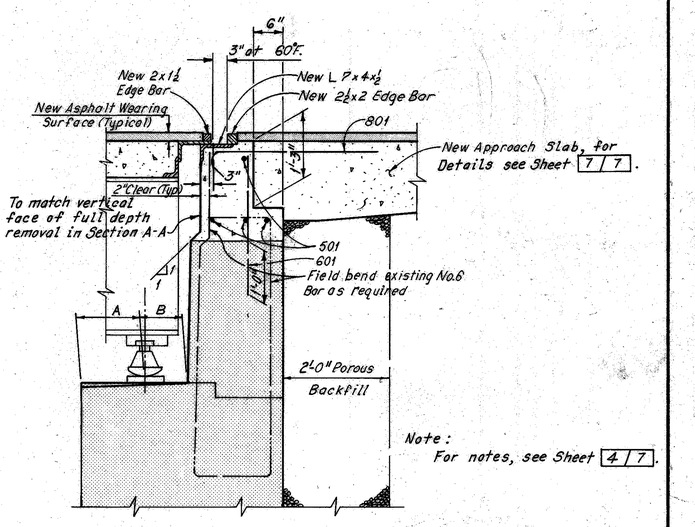

MODIFIED SECTION B-B

Note:
For notes, see Sheet 4 7.

LOCATION	AVG. DIMENSION	
	A	B
North Abutment Ramp 2	1'-1$\frac{3}{16}$"t	10$\frac{1}{4}$"t

HOWARD, NEEDLES, TAMMEN & BERGENDOFF
CONSULTING ENGINEERS
KANSAS CITY CLEVELAND NEW YORK

NORTH ABUTMENT
RAMP 2

NORTHBOUND I-90 OVER LAKELAND BOULEVARD AND PENN CENTRAL
BR. NO. CUY-90-2969L STA. 3+20.22
STA. 6+11.01

CUYAHOGA COUNTY OHIO

DRAWN	TRACED	CHECKED	REVIEWED	REVISED
R.C.K.	R.C.K.	C.P.	CAB	
DATE 4-8-74	DATE 5-6-74	DATE 10-23-74	DATE 10-20-74	SHEET 5/7

FHWA REGION	STATE	PROJECT	
5	OHIO		

316
354

CUYAHOGA COUNTY
CUY-90-23.73
LAKE COUNTY
LAK-90-0.00

RECEIVED
MAR 22 1995

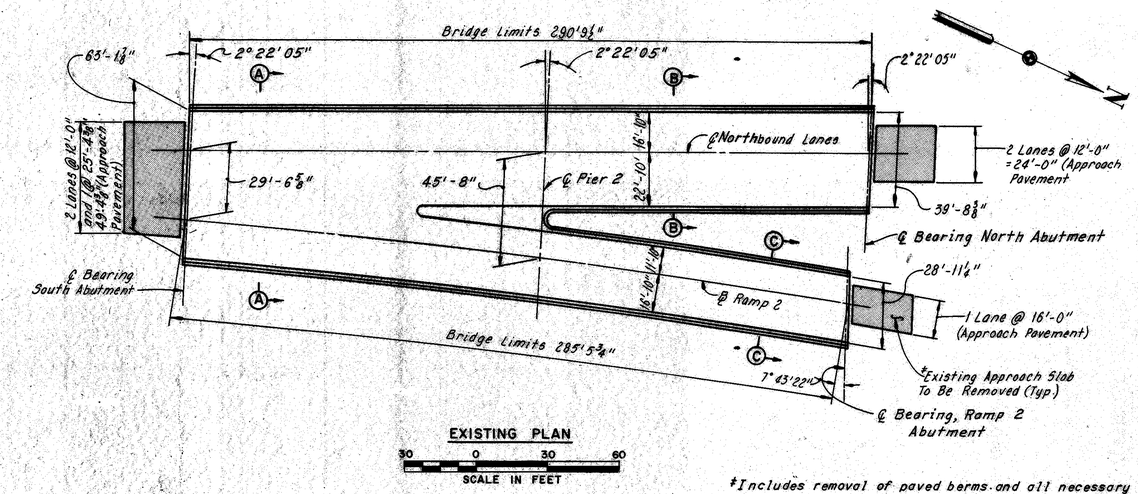

EXISTING PLAN

‡Includes removal of paved berms and all necessary excavation or backfill to provide the proper cross section for the new approach slab.

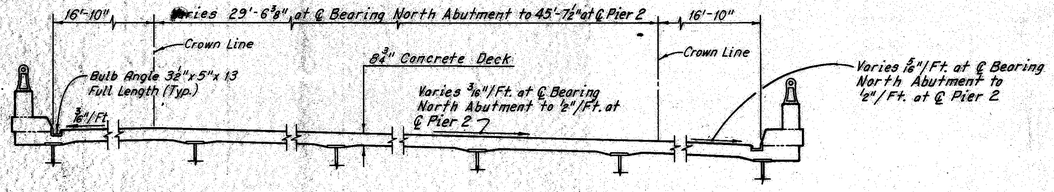

EXISTING TYPICAL SECTION A-A
(Rearward of ℄ Pier 2)

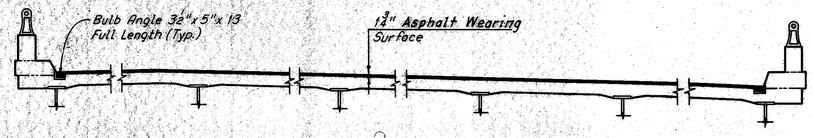

MODIFIED TYPICAL SECTION A-A

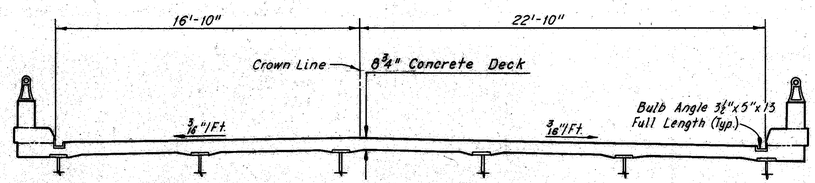

EXISTING TYPICAL SECTION B-B
(Forward of ℄ Pier 2)

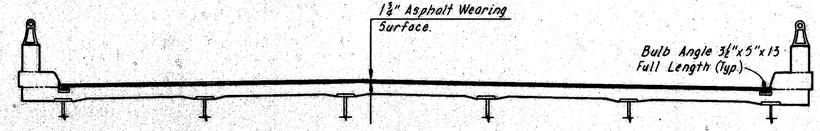

MODIFIED TYPICAL SECTION B-B

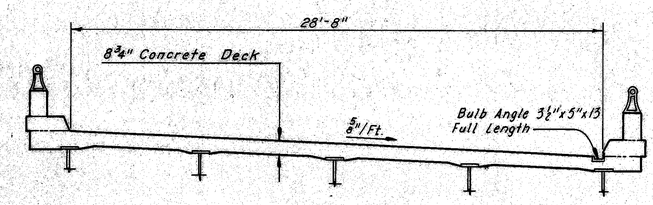

EXISTING TYPICAL SECTION C-C
(Forward of ℄ Pier 2)

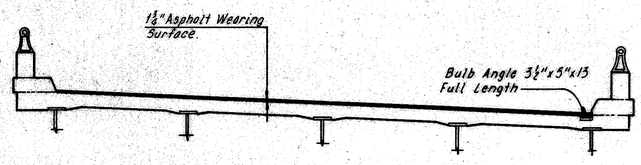

MODIFIED TYPICAL SECTION C-C

Notes:
For deck repair and asphalt wearing surface course details, see Sheet CD 1.7 .
The following abbreviation is used:
Typ. = Typical

HOWARD, NEEDLES, TAMMEN & BERGENDOFF
CONSULTING ENGINEERS
KANSAS CITY CLEVELAND NEW YORK

EXISTING AND MODIFIED DECK PLAN AND TYPICAL SECTION

NORTHBOUND I-90 OVER
LAKELAND BOULEVARD AND PENN CENTRAL

BR. NO. CUY-90-2969L STA. 3+20.22
STA. 6+11.01

CUYAHOGA COUNTY OHIO

DRAWN AJT	TRACED JLR	CHECKED QP	REVIEWED CAB	REVISED
DATE 10-8-73	DATE 10-9-73	DATE 10-23-74	DATE 12-20-74	SHEET 6/7

FHWA REGION	STATE	PROJECT	
5	OHIO		

347
354

CUYAHOGA COUNTY
CUY-90-23.73
LAKE COUNTY
LAK-90-0.00

MICROFILMED
MAR 22 1965

Note:
The jacking holes as called for on Ohio Standard Drawing AS-1-72 are not required.

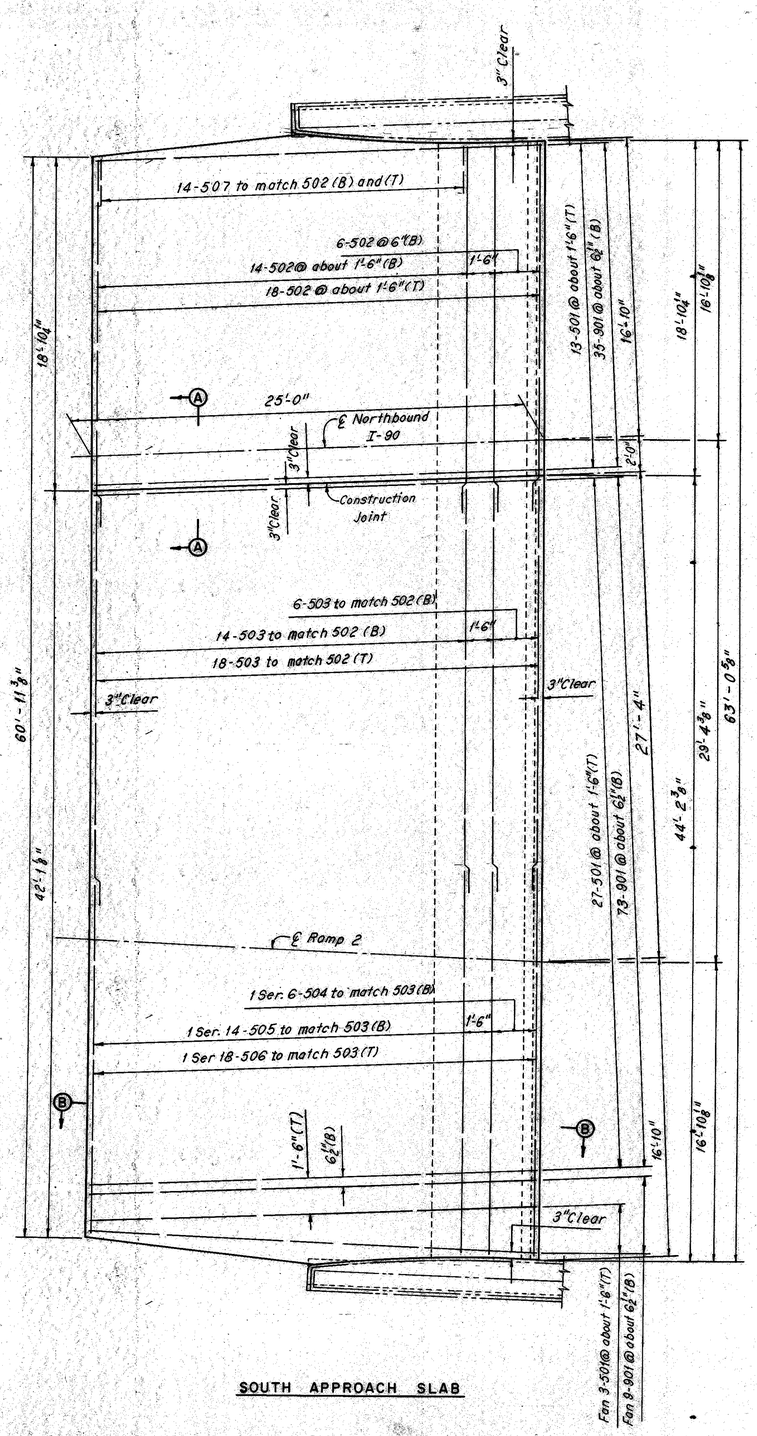

SOUTH APPROACH SLAB

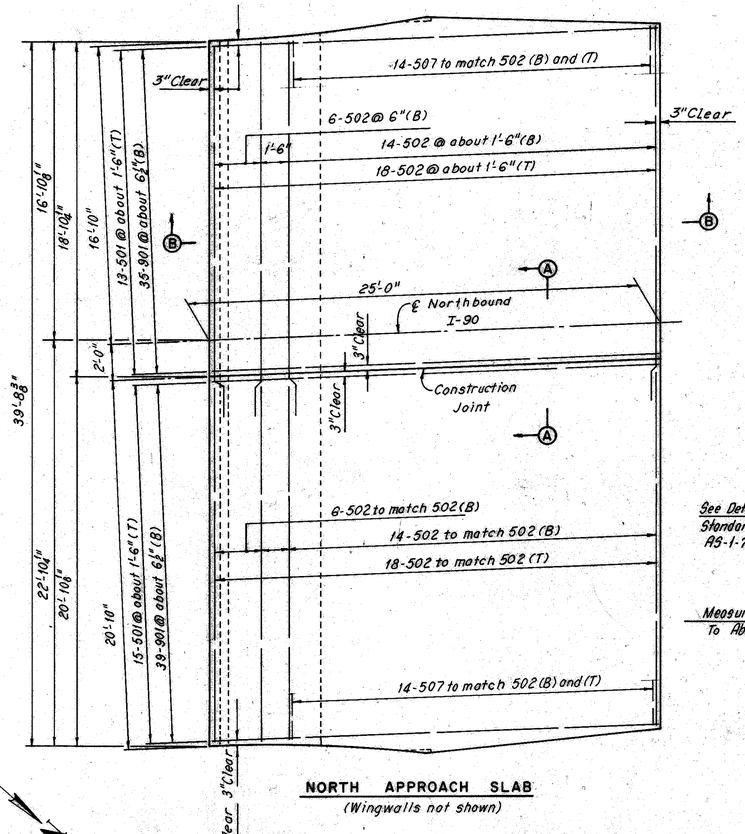

NORTH APPROACH SLAB
(Wingwalls not shown)

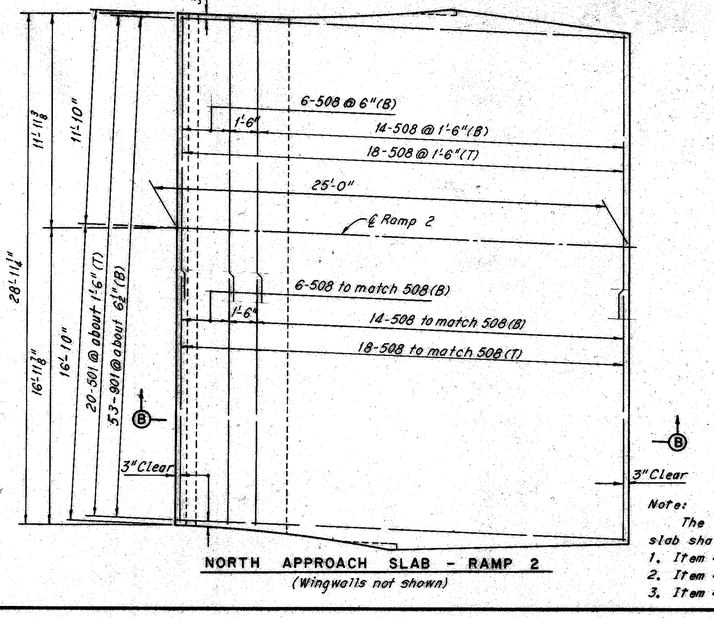

NORTH APPROACH SLAB - RAMP 2
(Wingwalls not shown)

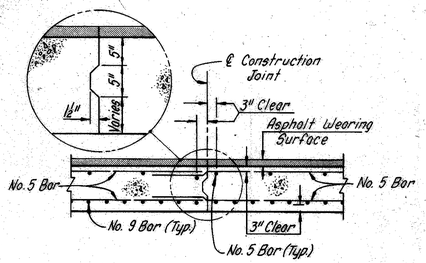

SECTION A-A

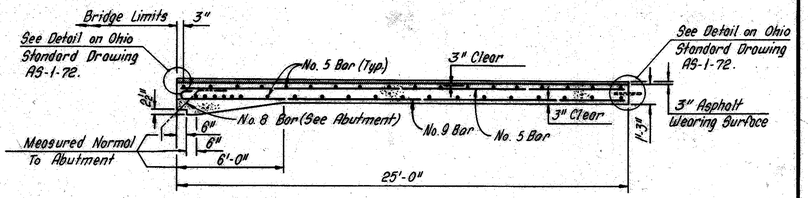

SECTION B-B

Notes:
For stage construction sequence, see Maintenance Of Traffic, Sheet 2 / 7.
For normal cross slopes, see Existing Typical Section, Sheet 6 / 7.
The following abbreviations are used:
T = Top
B = Bottom
Typ. = Typical
For additional notes and details, see Ohio Standard Drawing AS-1-72.

Note: All reinforcing bar marks shall be prefixed SSS.

REINFORCEMENT SCHEDULE

MARK	NO.	LENGTH	TYPE	SER. INCR.
SSS501	91	24'-6"	Str.	
SSS502	114	20'-6"	Str.	
SSS503	38	22'-9"	Str.	
SSS504	1 Ser. 6	22'-6" 22'-9"	Str.	3/8"
SSS505	1 Ser. 14	21'-8" 23'-0"	Str.	1 3/8"
SSS506	1 Ser. 18	21'-6" 23'-6"	Str.	1 1/8"
SSS507	84	2'-6"	Str.	
SSS508	76	15'-9"	Str.	
SSS901	244	25'-9"	101	

101

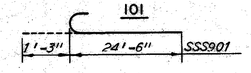

Note:
The asphalt wearing surface on the approach slab shall consist of the following:
1. Item 407 Tack Coat at 0.1 gal. per sq. yd.
2. Item 402, 1½" Asphalt Concrete (AC20).
3. Item 404, 1½" Asphalt Concrete (AC20).

HOWARD, NEEDLES, TAMMEN & BERGENDOFF
CONSULTING ENGINEERS
KANSAS CITY CLEVELAND NEW YORK

APPROACH SLABS

NORTHBOUND I-90 OVER LAKELAND BOULEVARD AND PENN CENTRAL
BR. NO. CUY-90-2969L
STA. 3+20.22
STA. 6+11.01

CUYAHOGA COUNTY OHIO

DRAWN	TRACED	CHECKED	REVIEWED	REVISED
RCK	RCK	C.P.	CAB	
DATE 4-8-74	DATE 5-8-74	DATE 10-28-74	DATE 12-20-74	SHEET 7/7

MICROFILMED
MAR 22 1985

FHWA REGION	STATE	PROJECT	
5	OHIO		

318
354

CUYAHOGA COUNTY
CUY-90-23.73
LAKE COUNTY
LAK-90-0.00

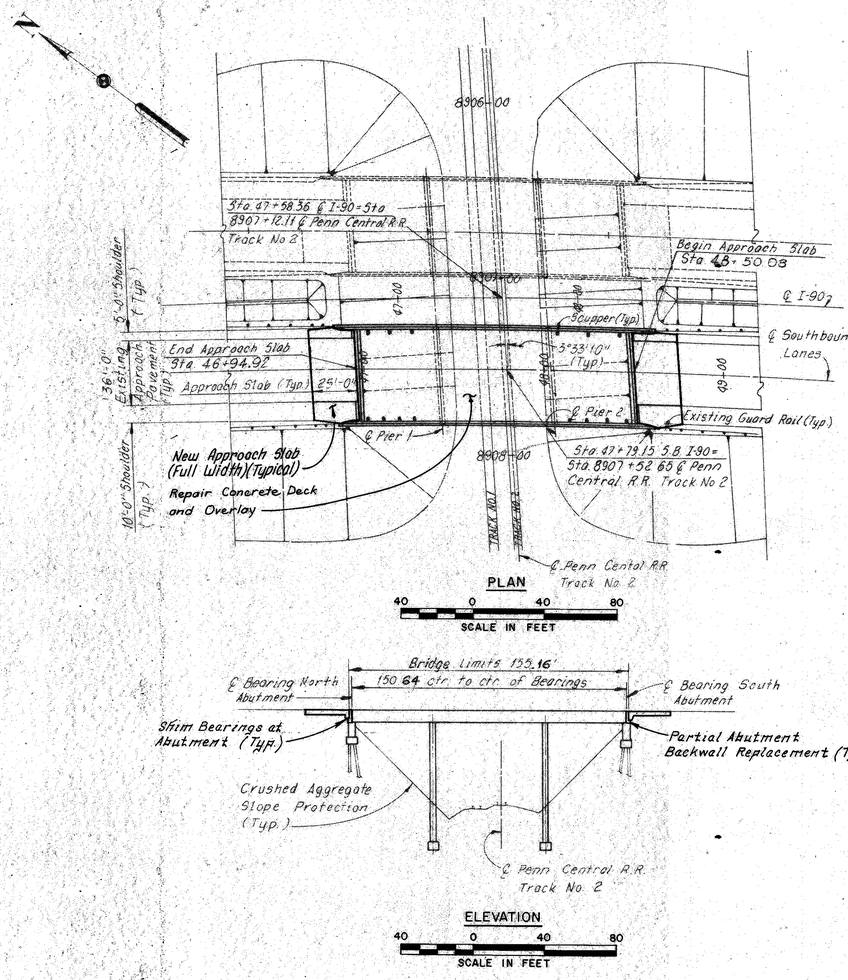

PROPOSED WORK:

1. Install pressure relief joints in approach roadway pavement, see Sheet CD-9.
2. Replace portions of both abutment backwalls, see Sheets 3/6 and 4/6.
3. Shim abutment bearings, see Sheets 3/6 and 4/6.
4. Replace approach slabs, see Sheet 6/6.
5. Repair concrete deck and place asphalt wearing surface, see Sheet 5/6.
6. Clean out bridge drainage system and remove debris from abutment bridge seat.
7. Repair minor curb and parapet deterioration.
8. Paint all structural steel.
9. Repair minor abutment deterioration.
10. Repair minor wingwall deterioration.

Note:
Roman numerals I and III denote cost participation breakdown. For description, see Roadway Plans, Sheet 3-354.

TYPE CODE X131

ESTIMATED QUANTITIES

ITEM	TOTAL	UNIT	DESCRIPTION BRIDGE REPAIR	SUPER-STRUCTURE	NORTH ABUT	SOUTH ABUT	WINGWALLS NE	WINGWALLS SE	WINGWALLS NW	WINGWALLS SW	APPROACH SLABS	C.A. SLOPE PRO. North	C.A. SLOPE PRO. South	GENERAL	Participation I Fed. & State	Participation III 100% State
*202	Lump Sum	Lump Sum	Portions of Structures Removed	-	III L.S.	III L.S.	-	-	-	-	III Lump Sum	-	-	-		Lump
402	9	Cu. Yd.	Asphalt Concrete (AC-20)	-	-	-	-	-	-	-	I 9	-	-	-	9	
404	113	Cu. Yd.	Asphalt Concrete (AC-20)	I 103	-	-	-	-	-	-	I 10	-	-	-	113	
407	29	Gallons	Tack Coat: 702.02 RC-250; or 702.04, SS-1, SS-1H, MS-2 or RS-1	-	-	-	-	-	-	-	I 29	-	-	-	29	
509	233	Pounds	Reinforcing Steel	-	III 87	III 146	-	-	-	-	-	-	-	-		233
511	7	Cu. Yd.	Class "C" Concrete, Substructure	-	III 3	III 4	-	-	-	-	-	-	-	-		7
513	1,564	Pounds	Structural Steel	-	III 598	III 966	-	-	-	-	-	-	-	-		1,564
514	1,564	Pounds	Field Painting of New Structural Steel	-	III 598	III 966	-	-	-	-	-	-	-	-		1,564
518	3	Cu.Yd.	Porous Backfill	-	III 1	III 2	-	-	-	-	-	-	-	-		3
518	152	Lin.Ft.	Subdrainage For Wearing Course, As Per Plan	I 152	-	-	-	-	-	-	-	-	-	-	152	
520	3	Sq. Ft.	Pneumatically Placed Mortar	-	III 2	-	III 1	-	-	-	-	-	-	-		3
611	287	Sq. Yd.	Reinforced Concrete Approach Slabs T=15"	-	-	-	-	-	-	-	III 287	-	-	-		287
837	Lump Sum	Lump Sum	Surface Preparation	III Lump Sum	-	-	-	-	-	-	-	-	-	-		Lump
837	Lump Sum	Lump Sum	Spot Prime Painting	III Lump Sum	-	-	-	-	-	-	-	-	-	-		Lump
837	Lump Sum	Lump Sum	Complete Coat Prime Painting	III Lump Sum	-	-	-	-	-	-	-	-	-	-		Lump
837	Lump Sum	Lump Sum	Two Complete Coats Finish Painting	III Lump Sum	-	-	-	-	-	-	-	-	-	-		Lump
Special	13	Sq. Yd.	Patching Concrete Deck Slab	III 13	-	-	-	-	-	-	-	-	-	-		13
Special	881	Sq. Yd.	Membrane Waterproofing Membrane Liquid (See Proposal Note)	I 881	-	-	-	-	-	-	-	-	-	-	881	
Special	19	Lin. Ft.	Repair of Cracks	-	III 9	III 10	-	-	-	-	-	-	-	-		19
Special	104	Lin. Ft.	Raising Existing End Dams	-	I 52	I 52	-	-	-	-	-	-	-	-	104	
Special	10	Each	Shim Bearings (Where Resetting Is Not Required)	-	III 5	III 5	-	-	-	-	-	-	-	-		10
Special	73	Lin. Ft.	Pressure Relief Joint	-	-	-	-	-	-	-	-	-	-	III 73		73
Special	Lump Sum	Lump Sum	Cleanout Bridge Drainage Systems and Remove Debris From Bridge Seats	III Lump Sum	III L.S.	III L.S.	-	-	-	-	-	-	-	-		Lump

*SUBSTRUCTURE - Includes approximately 7 Cu. Yds. of concrete in the existing abutment backwalls.
*APPROACH SLABS - Includes approximately 287 Sq. Yds. of existing reinforced concrete approach slabs, paved berms and all necessary excavation or backfill to provide the proper cross section for the new approach slabs.

EXISTING STRUCTURE

TYPE:	Continuous Steel Beam with Reinforced Concrete Deck, Piers and Abutments.
SPAN:	44'-0", 62'-6¼" and 44'-0".
ROADWAY:	54'-0" Face to Face of Parapets.
LOADING:	CF-2000-57 (Adequate for AASHO Alternate Loading).
SKEW:	3° 33' 10" Right Forward at ℄ I-90.
WEARING SURFACE:	1" Monolithic Concrete.
APPROACH SLABS:	AS-1-54 (25'-0" Long).
ALIGNMENT:	1° 15' Curve Right.
SUPERELEVATION:	Varies.

MODIFIED STRUCTURE

TYPE:	Continuous Steel Beam with Reinforced Concrete Deck, Piers and Abutments.
SPAN:	44'-0", 62'-6¼" and 44'-0".
ROADWAY:	54'-0" Face to Face of Parapets.
LOADING:	CF-2000-57 (Adequate for AASHO Alternate Loading).
SKEW:	3° 33' 10" Right Forward at ℄ I-90.
WEARING SURFACE:	1¾" Asphalt.
APPROACH SLABS:	AS-1-72 (25'-0" Long).
ALIGNMENT:	1° 15' Curve Right.
SUPERELEVATION:	Varies.

Rev. 7-18-75

HOWARD, NEEDLES, TAMMEN & BERGENDOFF
CONSULTING ENGINEERS
KANSAS CITY CLEVELAND NEW YORK

SITE PLAN

SOUTHBOUND I-90 OVER PENN CENTRAL

BR. NO. CUY-90-2989 R. STA. 46+94.92
STA. 48+50.08

CUYAHOGA COUNTY OHIO

DRAWN	TRACED	CHECKED	REVIEWED	REVISED
J.L.R.	J.L.R.	W.H.L.	C.R.S.	
DATE 10-1-75	DATE 10-1-75	DATE 11-13-75	DATE 12-20-76	SHEET 1/6

MICROFILMED
MAR 22 1985

FHWA REGION	STATE	PROJECT	
5	OHIO		

319
354

CUYAHOGA COUNTY
CUY-90-23.73
LAKE COUNTY
LAK-90-0.00

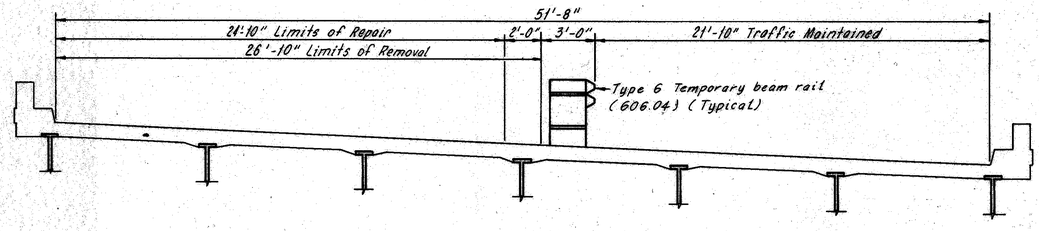

FIRST STAGE CONSTRUCTION

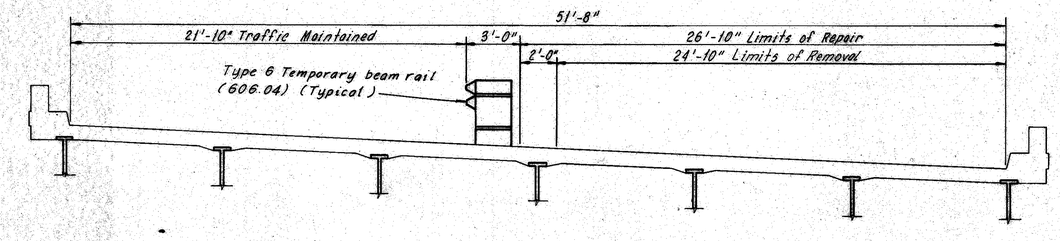

SECOND STAGE CONSTRUCTION

Notes:

The stage construction cross-sections apply within the bridge and approach slab limits. All repair work shall be co-ordinated with the stage construction as shown.

For maintenance of traffic notes, see Roadway Plans.

HOWARD, NEEDLES, TAMMEN & BERGENDOFF
CONSULTING ENGINEERS
KANSAS CITY CLEVELAND NEW YORK

MAINTENANCE OF TRAFFIC

SOUTHBOUND I-90 OVER PENN CENTRAL

BR. NO. CUY-90-2989 R. STA. 46+94.92
STA. 48+50.08

CUYAHOGA COUNTY OHIO

DRAWN	TRACED	CHECKED	REVIEWED	REVISED
JLR	JLR	MC	CAB	
DATE 4-10-74	DATE 4-10-74	DATE 4-16-74	DATE 12-20-74	SHEET 2/6

K&E 10-1293 12-73

MICROFILMED
MAR 22 1965

FHWA REGION	STATE	PROJECT	
5	OHIO		

320
354

CUYAHOGA COUNTY
CUY-90-23.73
LAKE COUNTY
LAK-90-0.00

Note: Backwall elevations are given at the top of the 2 x 1 edge bar.

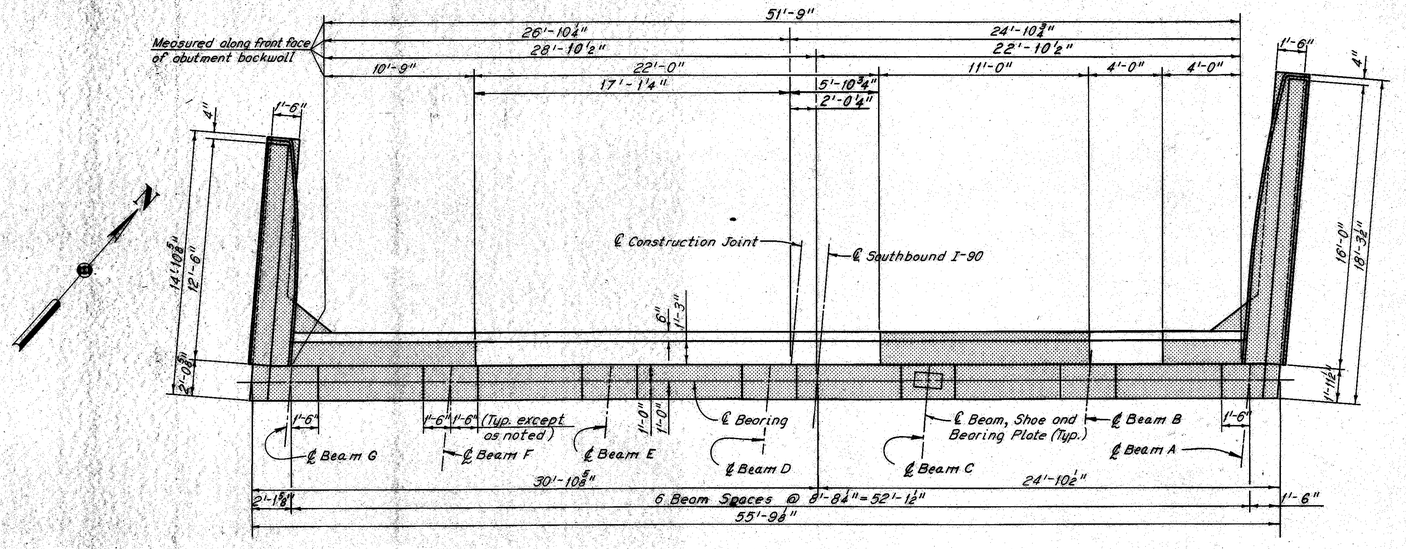

MODIFIED PLAN

Note: All reinforcing bar marks shall be prefixed TN.

Shim the bearings at Beams B thru F, see Sheet CD-3.

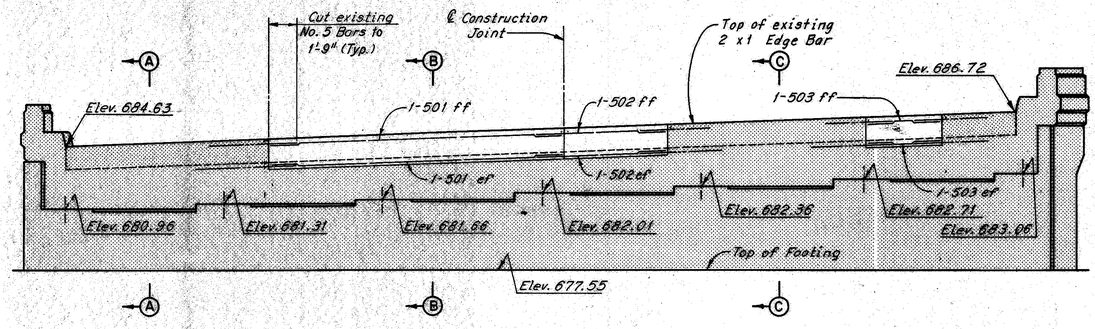

MODIFIED ELEVATION

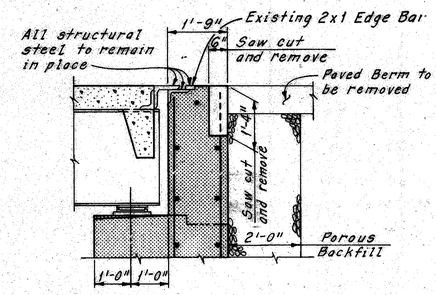

EXISTING SECTION A-A

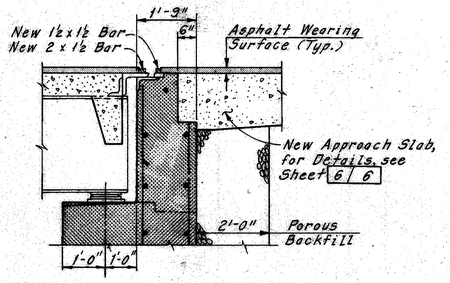

MODIFIED SECTION A-A

Notes:

[ ] Indicates existing portions of abutment to remain.

For Existing and Modified Sections B-B and C-C, see Sheet 4/6.

For stage construction sequence, see Maintenance Of Traffic, Sheet 2/6.

Excavation, backfill (except Porous Backfill), and paved berm removal necessary to accomplish structure modification shall be included with Item 202, Portions of Structures Removed, for payment. Backfill shall be in accordance with Item 203.

For Reinforcement Schedule, see Sheet R-6.

For details of raising the expansion joint, see Sheet CD-6.

The following abbreviations are used:

ef = each face
ff = for face
Typ. = Typical

HOWARD, NEEDLES, TAMMEN & BERGENDOFF
CONSULTING ENGINEERS
KANSAS CITY CLEVELAND NEW YORK

NORTH ABUTMENT

SOUTHBOUND I-90 OVER PENN CENTRAL

BR. NO. CUY-90-2989 R. STA. 46+94.92
STA. 48+50.08

CUYAHOGA COUNTY OHIO

DRAWN	TRACED	CHECKED	REVIEWED	REVISED
BR	DLR	WHL	BAS	
DATE 5-1-74	DATE 6-11-74	DATE 10-25-74	DATE 12-20-74	SHEET 3/6

MICROFILMED
MAR 22 1985

FHWA REGION	STATE	PROJECT	
5	OHIO		

CUYAHOGA COUNTY
CUY-90-23.73
LAKE COUNTY
LAK-90-0.00

Note: Backwall elevations are given at the top of the 2x1 edge bar

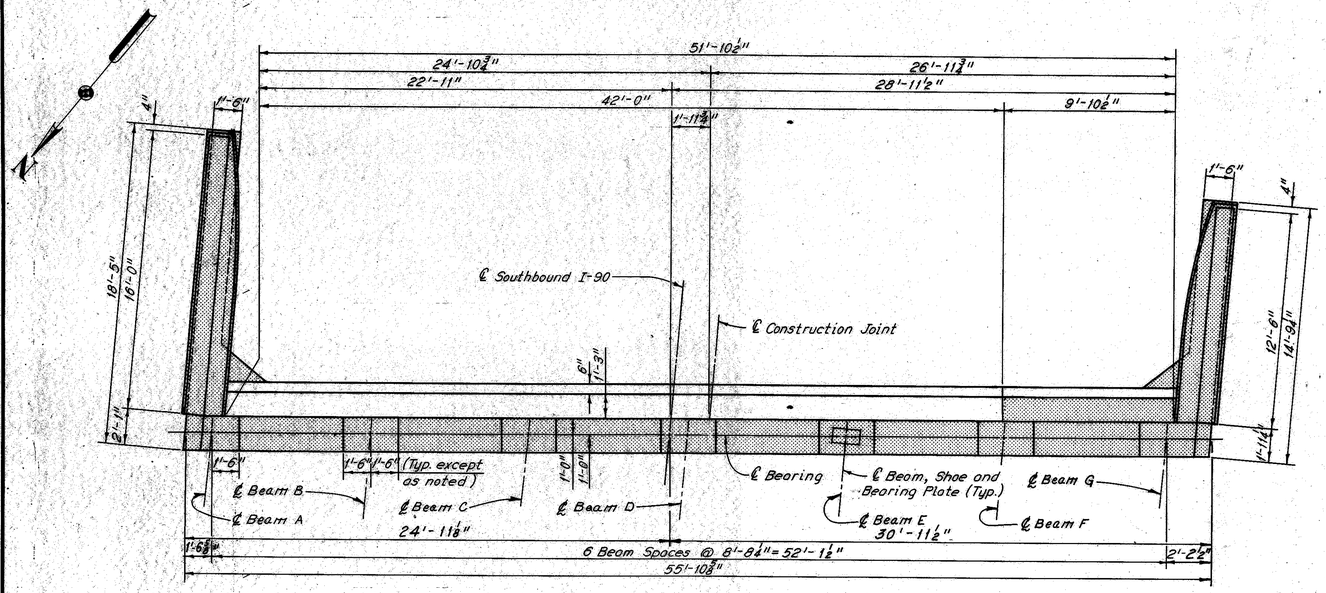

MODIFIED PLAN

Shim the bearings at Beams B thru F, see Sheet CD-3.

Note: All reinforcing bar marks shall be prefixed TS.

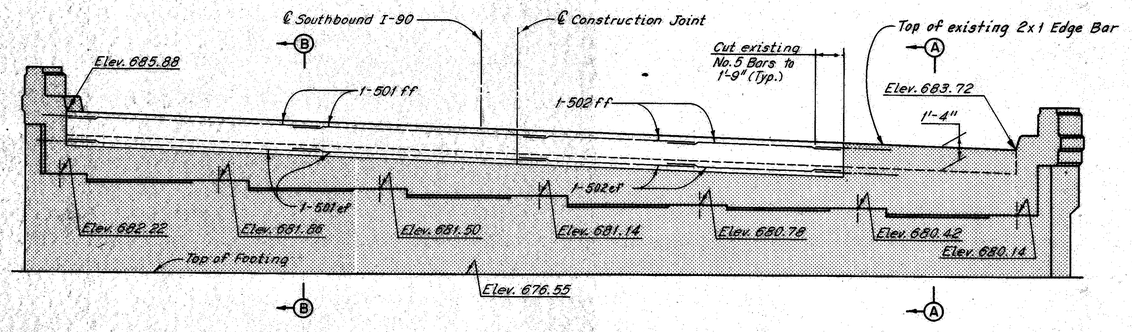

MODIFIED ELEVATION

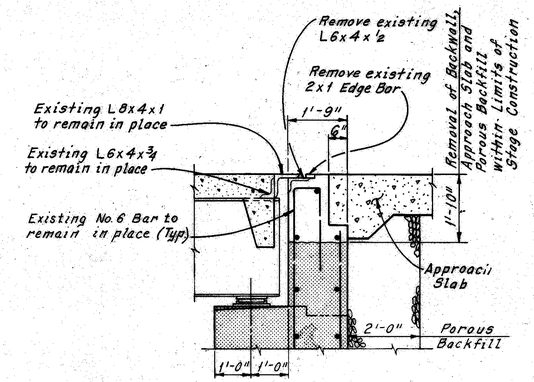

EXISTING SECTION B-B

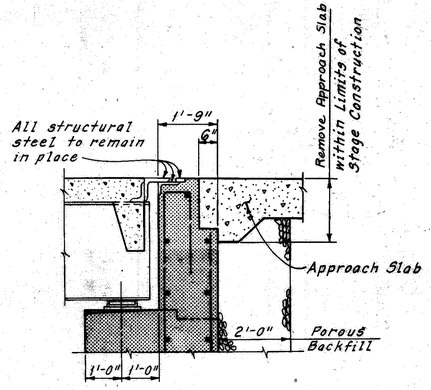

EXISTING SECTION C-C

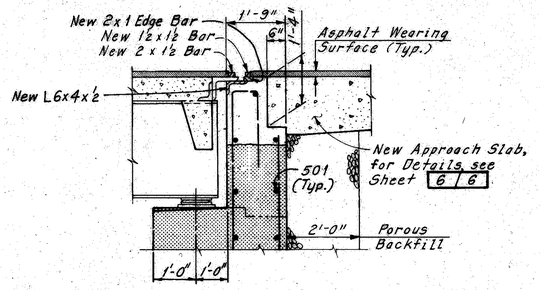

MODIFIED SECTION B-B

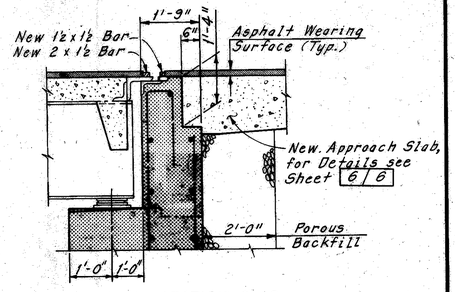

MODIFIED SECTION C-C

Notes:

Indicates existing portions of abutment to remain.

For Existing and Modified Section A-A, see Sheet 3/6.

For location of Section C-C, see Sheet 3/6.

For stage construction sequence, see Maintenance Of Traffic, Sheet 2/6.

Excavation, backfill (except Porous Backfill), and paved berm removal necessary to accomplish structure modification shall be included with Item 202, Portions of Structures Removed, for payment. Backfill shall be in accordance with Item 203.

For details of raising the expansion joint, see Sheet CD-6.

For details of backwall expansion joint angle not shown, see Ohio Standard Drawing SD-1-69, Sheet 1 of 4.

For Reinforcement Schedule, see Sheet R-6.

The following abbreviations are used:

ef = each face
ff = for face
Typ. = Typical

HOWARD, NEEDLES, TAMMEN & BERGENDOFF
CONSULTING ENGINEERS
KANSAS CITY CLEVELAND NEW YORK

SOUTH ABUTMENT

SOUTHBOUND I-90 OVER PENN CENTRAL

BR. NO. CUY-90-2989 R. STA. 46+94.92
STA. 48+50.08

CUYAHOGA COUNTY OHIO

DRAWN	TRACED	CHECKED	REVIEWED	REVISED
B.A.P.	D.L.P.	W.H.L.	C.A.B.	
DATE 5-1-74	DATE 6-11-74	DATE 10-24-74	DATE 11-20-74	SHEET 4/6

FHWA REGION	STATE	PROJECT	
5	OHIO		

322
354

INCORPORATED
MAR 22 1965

CUYAHOGA COUNTY
CUY-90-23.73
LAKE COUNTY
LAK-90-0.00

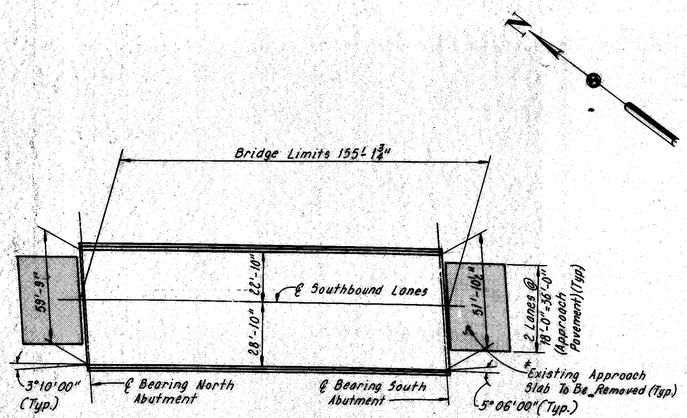

EXISTING PLAN

30 0 30 60
SCALE IN FEET

†Includes removal of paved berms and all necessary excavation or backfill to provide the proper cross section for the new approach slab.

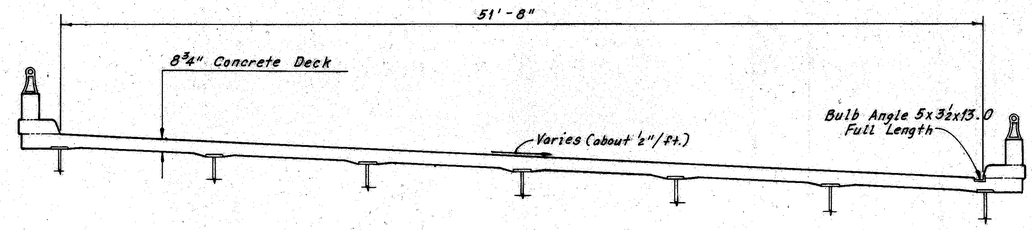

EXISTING TYPICAL SECTION

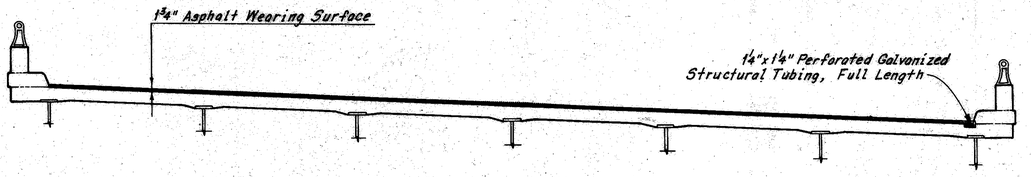

MODIFIED TYPICAL SECTION

Notes:
For deck repair and asphalt wearing surface course details, see Sheet CD-7.
The following abbreviation is used:
Typ. = Typical

HOWARD, NEEDLES, TAMMEN & BERGENDOFF
CONSULTING ENGINEERS
KANSAS CITY CLEVELAND NEW YORK

EXISTING & MODIFIED DECK PLAN & TYPICAL SECTION

SOUTHBOUND I-90 OVER PENN CENTRAL

BR. NO. CUY-90-2989 R STA. 46+94.92
STA. 48+50.08

CUYAHOGA COUNTY OHIO

DRAWN AJT	TRACED JLP	CHECKED W.M.L.	REVIEWED CAE	REVISED
DATE 10-8-73	DATE 10-9-73	DATE 10-24-74	DATE 12-20-74	SHEET 5/6

MICROFILMED
MAR 22 1985

FHWA REGION	STATE	PROJECT	
5	OHIO		

323
354

CUYAHOGA COUNTY
CUY-90-23.73
LAKE COUNTY
LAK-90-0.00

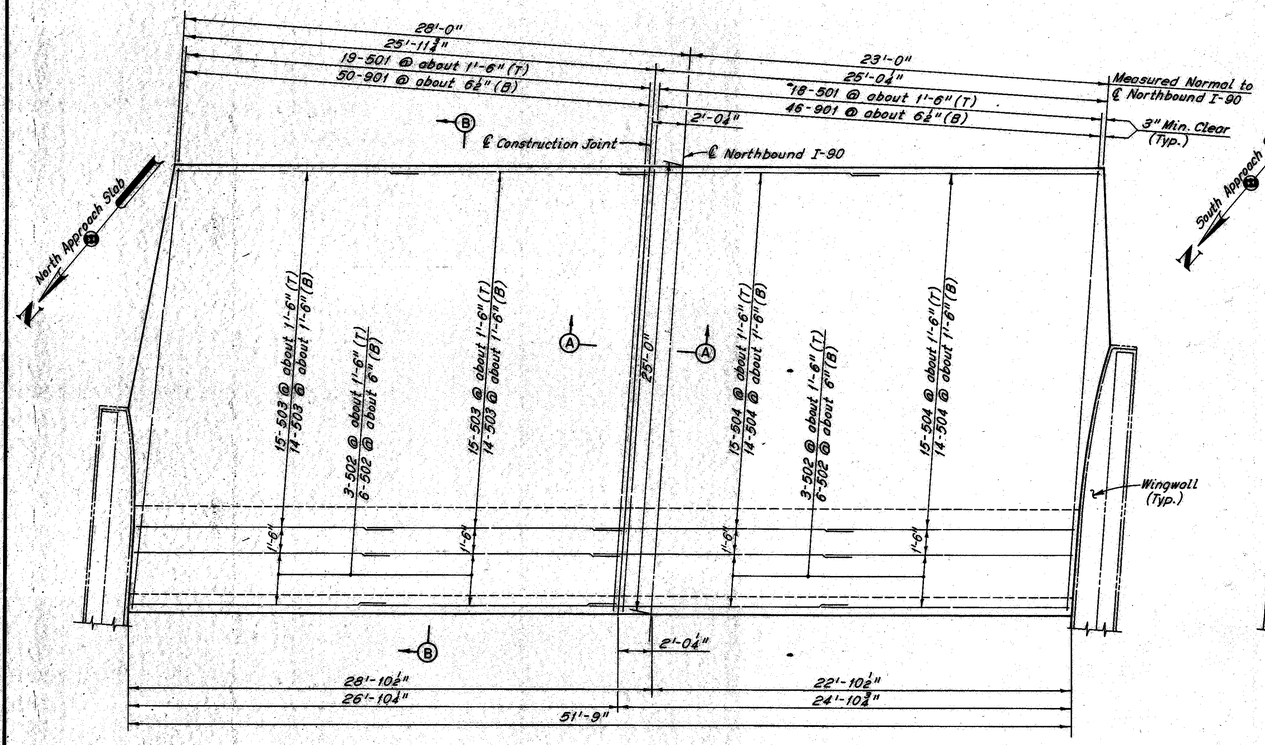

NORTH APPROACH SLAB PLAN

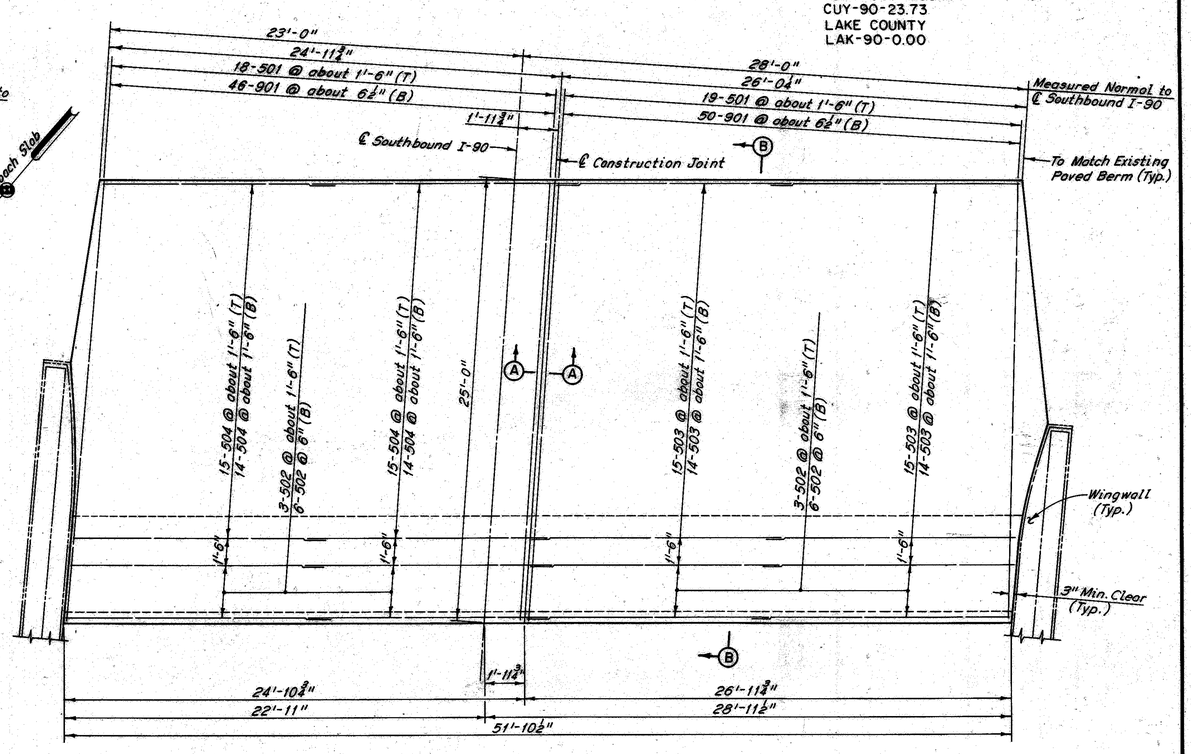

SOUTH APPROACH SLAB PLAN

Note: All reinforcing bar marks shall be prefixed TTS.

REINFORCEMENT SCHEDULE				
MARK	NO.	LENGTH	TYPE	SER. INCR.
TTS 501	74	24'-6"	STR.	
TTS 502	72	14'-0"	STR.	
TTS 503	116	14'-6"	STR.	
TTS 504	116	14'-3"	STR.	
TTS 901	192	25'-9"	101	

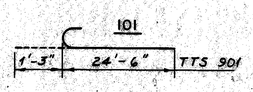

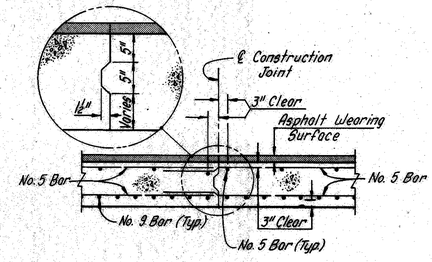

SECTION A-A

Note:
The jacking holes as called for on Ohio Standard Drawing AS-1-72 are not required.

Note:
The asphalt wearing surface on the approach slab shall consist of the following:
1. Item 407, Tack Coat, at 0.1 gal. per sq.yd.
2. Variable thickness of Item 402, Asphalt Concrete (AC-20).
3. Item 404, 1¼" Asphalt Concrete (AC-20).

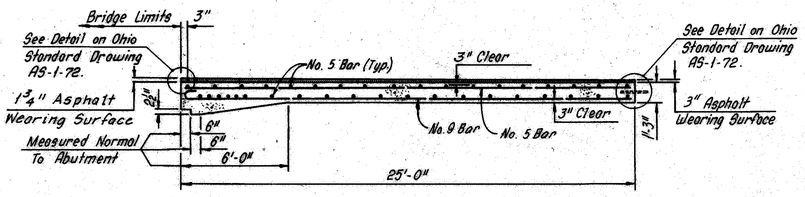

SECTION B-B

Notes:
For stage construction sequence, see Maintenance Of Traffic, Sheet 2 6.
For normal cross slopes, see Existing Typical Section, Sheet 5 6.
The following abbreviations are used:
T = Top
B = Bottom
Typ. = Typical
For additional notes and details, see Ohio Standard Drawing AS-1-72.

HOWARD, NEEDLES, TAMMEN & BERGENDOFF
CONSULTING ENGINEERS
KANSAS CITY CLEVELAND NEW YORK

APPROACH SLABS

SOUTHBOUND I-90 OVER PENN CENTRAL

BR. NO. CUY-90-2989 R. STA. 46+94.92
STA. 48+50.08

CUYAHOGA COUNTY OHIO

DRAWN B.P.	TRACED D.L.R.	CHECKED W.H.	REVIEWED CAB	REVISED
DATE 5-1-74	DATE 6-11-74	DATE 11-12-74	DATE 12-20-74	SHEET 6/6

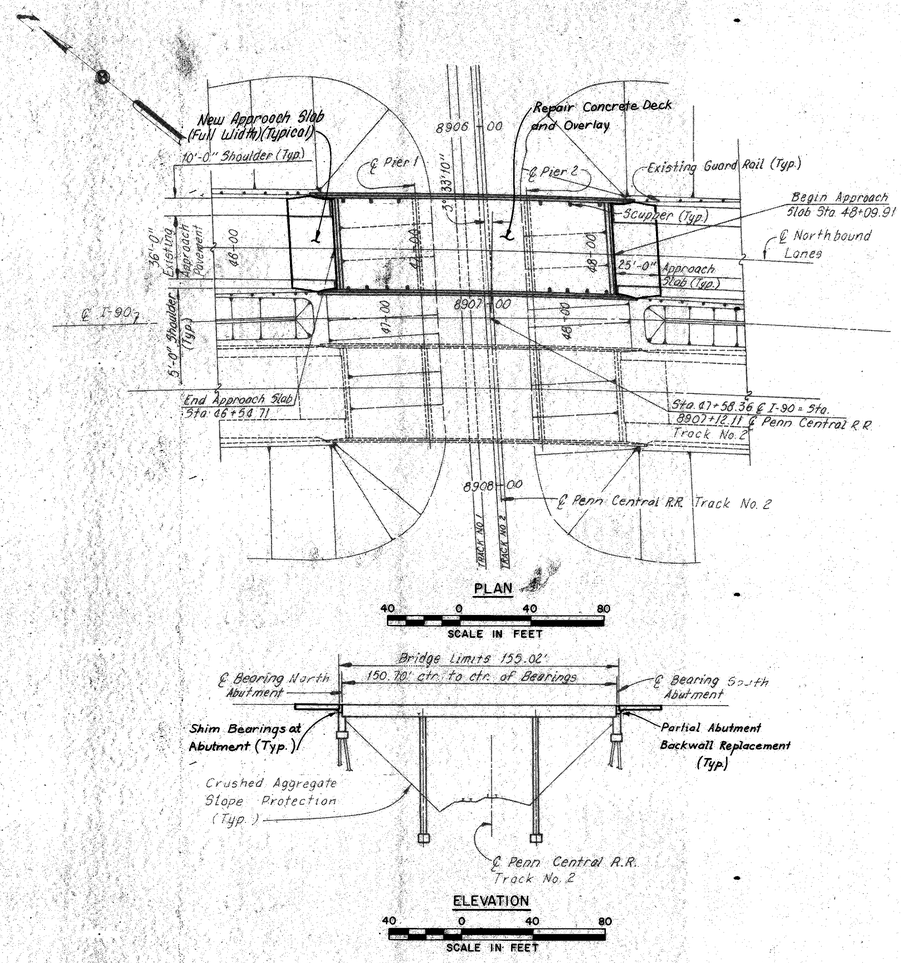

MICROFILMED
MAR 22 1983

FHWA REGION	STATE	PROJECT	
5	OHIO		

324
354

CUYAHOGA COUNTY
CUY-90-23.73
LAKE COUNTY
LAK-90-0.00

PROPOSED WORK:

1. Install pressure relief joints in approach roadway pavement, see Sheet CD-9.
2. Replace portions of both abutment backwalls, see Sheets 3/6 and 4/6.
3. Shim abutment bearings, see Sheets 3/6 and 4/6.
4. Replace both approach slabs, see Sheet 6/6.
5. Repair concrete deck and place asphalt wearing surface, see Sheet 5/6.
6. Clean out bridge drainage system and remove debris from abutment bridge seat.
7. Trim all wingwall parapets, see Sheet CD-8.
8. Repair northwest curb plates, see Sheet CD-10.
9. Repair minor curb and parapet deterioration.
10. Paint all structural steel.
11. Repair minor abutment deterioration.

Note:
Roman numerals I and III denote cost participation breakdown. For description, see Roadway Plans, Sheet 3-354.

TYPE CODE X131

ESTIMATED QUANTITIES

ITEM	TOTAL	UNIT	DESCRIPTION BRIDGE REPAIR	SUPER-STRUCTURE	NORTH ABUT	SOUTH ABUT	WINGWALLS NE	WINGWALLS SE	WINGWALLS NW	WINGWALLS SW	APPROACH SLABS	C.A. SLOPE PRO. North	C.A. SLOPE PRO. South	GENERAL	Participation I Fed. & State	Participation III 100% State
*202	Lump Sum	Lump Sum	Portions of Structures Removed	-	III L.S.	III L.S.	-	-	-	-	III Lump Sum	-	-	-		Lump
402	14	Cu. Yd.	Asphalt Concrete (AC-20)	-	-	-	-	-	-	-	I 14	-	-	-	14	
404	53	Cu. Yd.	Asphalt Concrete (AC-20)	I 43	-	-	-	-	-	-	I 10	-	-	-	53	
407	29	Gallons	Tack Coat: 702.02, RC-250; or 702.04, SS-1, SS-1H, MS-2 or RS-1	-	-	-	-	-	-	-	I 29	-	-	-	29	
509	1,200	Pounds	Reinforcing Steel	-	III 600	III 600	-	-	-	-	-	-	-	-		1,200
511	10	Cu. Yd.	Class "C" Concrete, Substructure	-	III 5	III 5	-	-	-	-	-	-	-	-		10
513	3,972	Pounds	Structural Steel (ASTM A36)	-	III 1,986	III 1,986	-	-	-	-	-	-	-	-		3,972
514	3,972	Pounds	Field Painting of New Structural Steel	-	III 1,986	III 1,986	-	-	-	-	-	-	-	-		3,972
518	4	Cu. Yd.	Porous Backfill	-	III 2	III 2	-	-	-	-	-	-	-	-		4
518	304	Lin. Ft.	Subdrainage For Wearing Course, As Per Plan	I 304	-	-	-	-	-	-	-	-	-	-	304	
520	43	Sq. Ft.	Pneumatically Placed Mortar	III 41	-	-	-	-	-	III 2	-	-	-	-		43
611	291	Sq. Yd.	Reinforced Concrete Approach Slabs T=15"	-	-	-	-	-	-	-	III 291	-	-	-		291
837	Lump Sum	Lump Sum	Surface Preparation	III Lump Sum	-	-	-	-	-	-	-	-	-	-		Lump
837	Lump Sum	Lump Sum	Spot Prime Painting	III Lump Sum	-	-	-	-	-	-	-	-	-	-		Lump
837	Lump Sum	Lump Sum	Complete Coat Prime Painting	III Lump Sum	-	-	-	-	-	-	-	-	-	-		Lump
837	Lump Sum	Lump Sum	Two Complete Coats Finish Painting	III Lump Sum												Lump
Special	19	Sq. Yd.	Patching Concrete Deck Slab	III 19	-	-	-	-	-	-	-	-	-	-		19
Special	877	Sq. Yd.	Membrane Waterproofing (Not Applied to Liquid (See Proposal Note))	I 877	-	-	-	-	-	-	-	-	-	-	877	
Special	20	Lin. Ft.	Repair of Cracks	-	III 10	III 10	-	-	-	-	-	-	-	-		20
Special	104	Lin. Ft.	Raising Existing End Dams	-	I 52	I 52	-	-	-	-	-	-	-	-	104	
Special	13	Each	Shim Bearings (Where Resetting Is Not Required)	-	III 6	III 7	-	-	-	-	-	-	-	-		13
Special	73	Lin. Ft.	Pressure Relief Joint	-	-	-	-	-	-	-	-	-	-	III 73		73
Special	Lump Sum	Lump Sum	Cleanout Bridge Drainage Systems and Remove Debris From Bridge Seats	III Lump Sum	III L.S.	III L.S.	-	-	-	-	-	-	-	-		Lump

*SUBSTRUCTURE - Includes approximately 10 Cu. Yds. of concrete in the existing abutment backwalls.
*APPROACH SLABS - Includes approximately 291 Sq. Yds. of existing reinforced concrete approach slabs, paved berms and all necessary excavation or backfill to provide the proper cross section for the new approach slabs.

EXISTING STRUCTURE

TYPE:	Continuous Steel Beam with Reinforced Concrete Deck, Piers and Abutments.
SPAN:	44'-0", 62'-6⅜", and 44'-0".
ROADWAY:	54'-0" Face to Face of Parapets.
LOADING:	CF-2000-57 (Adequate for AASHO Alternate Loading).
SKEW:	3°33'10" Right Forward.
WEARING SURFACE:	1" Monolithic Concrete.
APPROACH SLABS:	AS-1-54 (25'-0" Long).
ALIGNMENT:	Spiral Transition Curve.
SUPERELEVATION:	Varies.

MODIFIED STRUCTURE

TYPE:	Continuous Steel Beam with Reinforced Concrete Deck, Piers and Abutments.
SPAN:	44'-0", 62'-6⅜" and 44'-0".
ROADWAY:	54'-0" Face to Face of Parapets.
LOADING:	CF-2000-57 (Adequate for AASHO Alternate Loading).
SKEW:	3°33'10" Right Forward.
WEARING SURFACE:	1½" Asphalt.
APPROACH SLABS:	AS-1-72 (25'-0" Long).
ALIGNMENT:	Spiral Transition Curve.
SUPERELEVATION:	Varies.

Rev. 7-18-75

HOWARD, NEEDLES, TAMMEN & BERGENDOFF
CONSULTING ENGINEERS
KANSAS CITY CLEVELAND NEW YORK

SITE PLAN

NORTHBOUND - I-90 OVER PENN CENTRAL

BR. NO. CUY-90-2989 L. STA. 46 + 54.71
STA. 48 + 09.91

CUYAHOGA COUNTY OHIO

DRAWN	TRACED	CHECKED	REVIEWED	REVISED
J.L.R.	J.L.R.	C.P.	J.A.G.	
DATE 10-1-73	DATE 10-1-73	DATE 10-27-74	DATE 12-20-74	SHEET 1/6

MICROFILMED
MAR 22 1985

FHWA REGION	STATE	PROJECT	
5	OHIO		

CUYAHOGA COUNTY
CUY-90-23.73
LAKE COUNTY
LAK-90-0.00

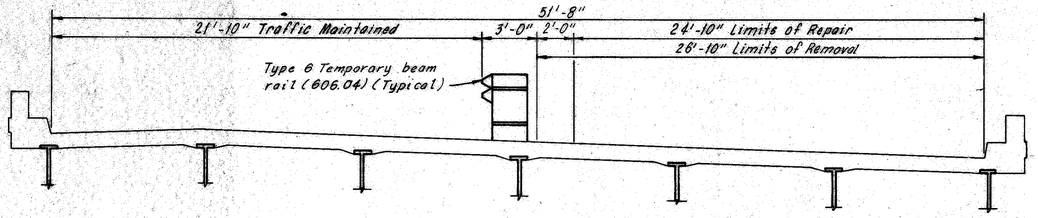

FIRST STAGE CONSTRUCTION

SECOND STAGE CONSTRUCTION

Notes:

The stage construction cross-sections apply within the bridge and approach slab limits. All repair work shall be co-ordinated with the stage construction as shown.

For maintenance of traffic notes, see Roadway Plans.

HOWARD, NEEDLES, TAMMEN & BERGENDOFF
CONSULTING ENGINEERS
KANSAS CITY CLEVELAND NEW YORK

MAINTENANCE OF TRAFFIC

NORTHBOUND I-90 OVER PENN CENTRAL

BR.NO.CUY-90-2989 L STA.46+54.71
STA.48+09.91

CUYAHOGA COUNTY OHIO

DRAWN JLR	TRACED JLR	CHECKED ML	REVIEWED GAB	REVISED
DATE 4-11-74	DATE 4-11-74	DATE 4-16-74	DATE 12-20-74	SHEET 2/6

MICROFILMED
MAR 22 1985

FHWA REGION	STATE	PROJECT	
5	OHIO		

326
354

CUYAHOGA COUNTY
CUY-90-23.73
LAKE COUNTY
LAK-90-0.00

Note: Backwall elevations are given at the top of the 7x4x½ angle of the end dam.

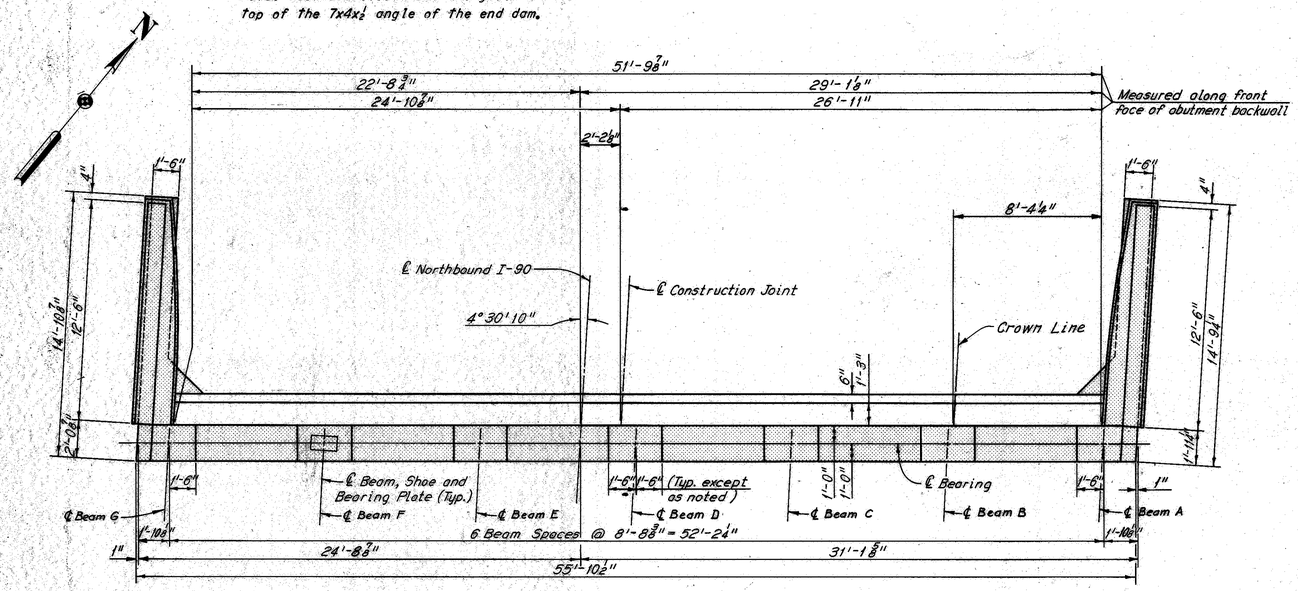

MODIFIED PLAN

Note: All reinforcing bar marks shall be prefixed UN.

Note:
Shim the bearings at Beams A thru F, see Sheet CD-3

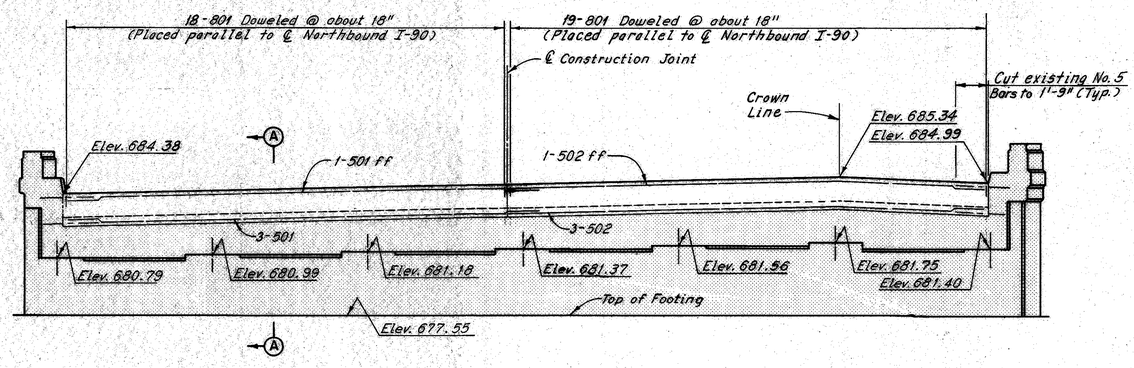

MODIFIED ELEVATION

BACKWALL REPLACEMENT PROCEDURE:

1. Bridge the backwall with an adequate steel plate within the area of maintained traffic. Provide bituminous wearing surface cover, as directed by the Engineer, to permit and maintain safe passage of vehicular traffic. The steel plate and bituminous cover shall be included with Item 614, Maintaining Traffic, for payment (see Roadway Plans)
2. Raise the entire superstructure (all beams simultaneously) until there is no contact between the superstructure and backwall and dam angles. All material, labor and equipment required to accomplish the above shall be included with Item 202, Portions of Structures Removed, for payment.
3. Remove approximately 1'-10" of the top of the backwall.
4. Shim bearings.
5. Release jacks.
6. Remove the remaining portions of the backwall, including reinforcement, except as noted, within the limits of stage construction.
7. Replace the backwall within the limits of the stage construction using the existing superstructure end dam angle to set the new backwall. In setting the top of backwall end dam angle, care shall be exercised to insure proper seating of the superstructure and expansion joint.

Notes:
Indicates existing portions of abutment to remain.
For Existing and Modified Section A-A, see Sheet 4/6.
For stage construction sequence, see Maintenance Of Traffic, Sheet 2/6.
For shoring required at approach slabs, see Sheet CD-1.
For Reinforcement Schedule, see Sheet R-6.
The following abbreviations are used:
ff = far face Elev. = Elevation
Typ. = Typical
For additional notes, see Sheet 4/6.

HOWARD, NEEDLES, TAMMEN & BERGENDOFF
CONSULTING ENGINEERS
KANSAS CITY CLEVELAND NEW YORK

NORTH ABUTMENT

NORTHBOUND I-90 OVER PENN CENTRAL

BR. NO. CUY-90-2989 L STA. 46+54.71
STA. 48+09.91

CUYAHOGA COUNTY OHIO

DRAWN	TRACED	CHECKED	REVIEWED	REVISED
W.E.B.	D.L.R.	C.P.	CAB	
DATE 5-10-74	DATE 6-5-74	DATE 10-30-74	DATE 12-20-74	SHEET 3/6

FHWA REGION	STATE	PROJECT	
5	OHIO		

327
354

MICROFILMED
MAR 22 1976

CUYAHOGA COUNTY
CUY-90-23.73
LAKE COUNTY
LAK-90-0.00

Note: Backwall elevations are given at the top of the 7x4x½ angle of the end dam.

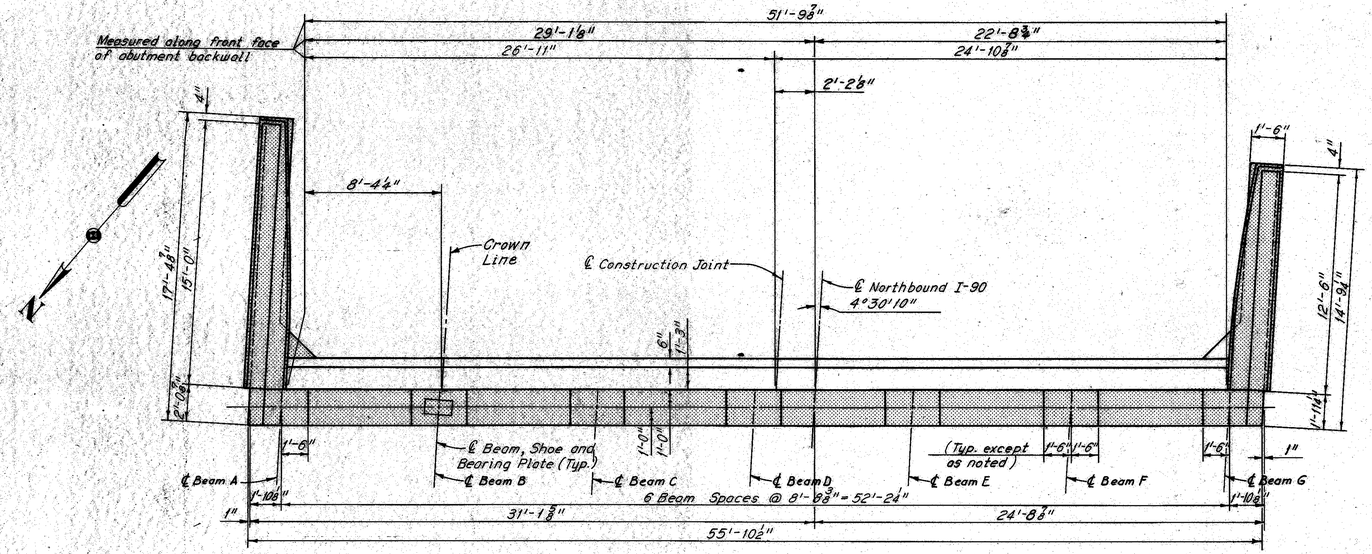

MODIFIED PLAN

Note: All reinforcing bar marks shall be prefixed US.

Note:
Shim all bearings, see Sheet CD-3.

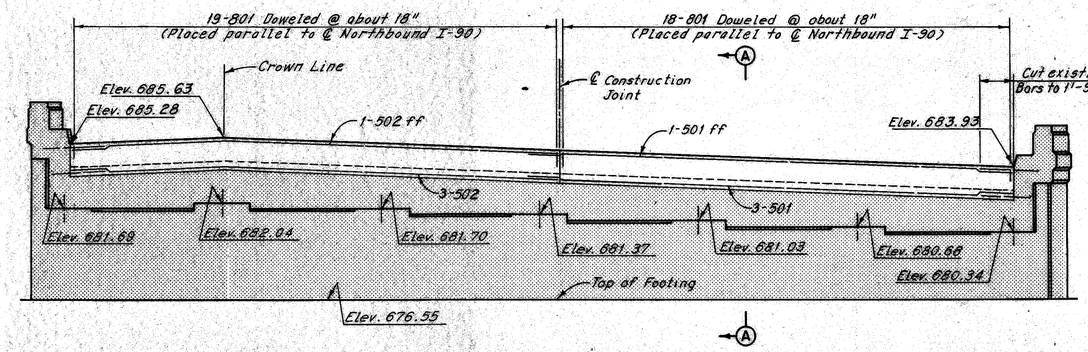

MODIFIED ELEVATION

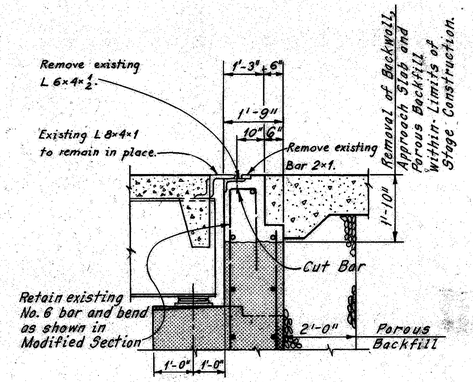

EXISTING SECTION A-A

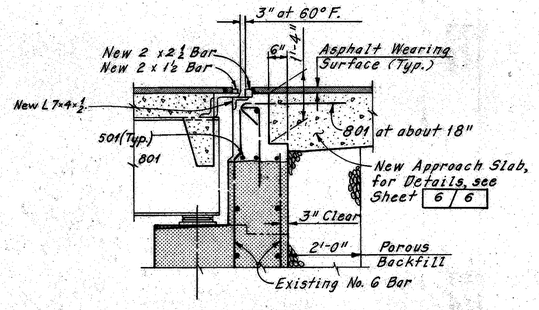

MODIFIED SECTION A-A

Notes:
For Backwall Replacement Procedure, see Sheet 3/6.
Excavation, backfill (except Porous Backfill), and paved berm removal necessary to accomplish structure modification shall be included with Item 202, Portions of Structures Removed, for payment. Backfill shall be in accordance with Item 203.
For details of raising the expansion joint, see Sheet CD-6.
For details of backwall expansion joint angle not shown, see Ohio Standard Drawing SD-1-69, Sheet 1 of 4.
For additional notes, see Sheet 3/6.

HOWARD, NEEDLES, TAMMEN & BERGENDOFF
CONSULTING ENGINEERS
KANSAS CITY CLEVELAND NEW YORK

SOUTH ABUTMENT

NORTHBOUND I-90 OVER PENN CENTRAL

BR. NO. CUY-90-2989 L STA. 46+54.71
STA. 48+09.91

CUYAHOGA COUNTY OHIO

DRAWN	TRACED	CHECKED	REVIEWED	REVISED
W.E.B.	D.L.R.	C.P.	C.A.B.	
DATE 5-8-74	DATE 6-5-74	DATE 10-30-74	DATE 12-20-74	SHEET 4/6

MICROFILMED
MAR 22 1985

FHWA REGION	STATE	PROJECT	
5	OHIO		

328/354

CUYAHOGA COUNTY
CUY-90-23.73
LAKE COUNTY
LAK-90-0.00

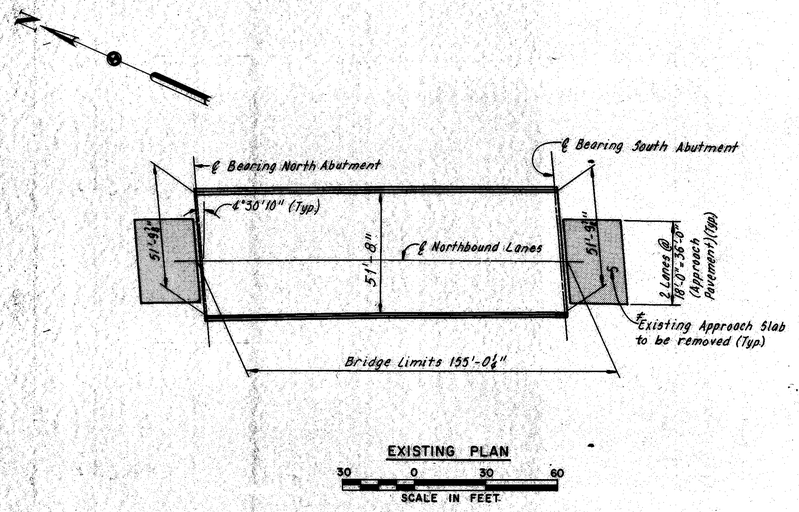

EXISTING PLAN

30 0 30 60
SCALE IN FEET

*Includes removal of paved berms and all necessary excavation or backfill to provide the proper cross section for the new approach slab.

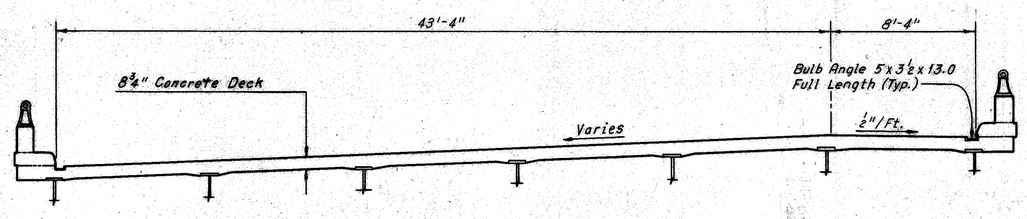

EXISTING TYPICAL SECTION

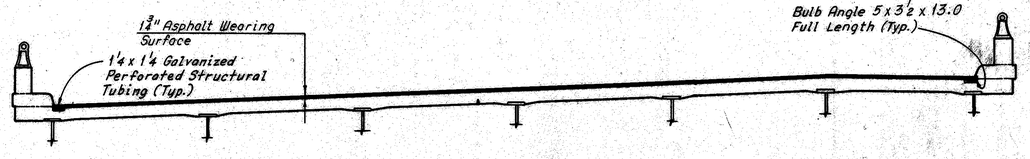

MODIFIED TYPICAL SECTION

Notes:
For deck repair and asphalt wearing surface course details, see Sheet CD-7.
The following abbreviation is used:
Typ. = Typical

HOWARD, NEEDLES, TAMMEN & BERGENDOFF
CONSULTING ENGINEERS
KANSAS CITY CLEVELAND NEW YORK

EXISTING AND MODIFIED DECK PLAN AND TYPICAL SECTION

NORTHBOUND I 90 OVER PENN CENTRAL
BR.NO.CUY-90-2989 L STA. 46+54.71
STA. 48+09.91

CUYAHOGA COUNTY OHIO

DRAWN AJT	TRACED JLR	CHECKED C.P.	REVIEWED CAB	REVISED
DATE 10-8-73	DATE 10-9-75	DATE 12-17-74	DATE 12-20-74	SHEET 5/6

MICROFILMED
MAR 22 1985

FHWA REGION	STATE	PROJECT	
5	OHIO		

329
354

CUYAHOGA COUNTY
CUY-90-23.73
LAKE COUNTY
LAK-90-0.00

Note:
The jacking holes as called for on Ohio Standard Drawing AS-1-72 are not required.

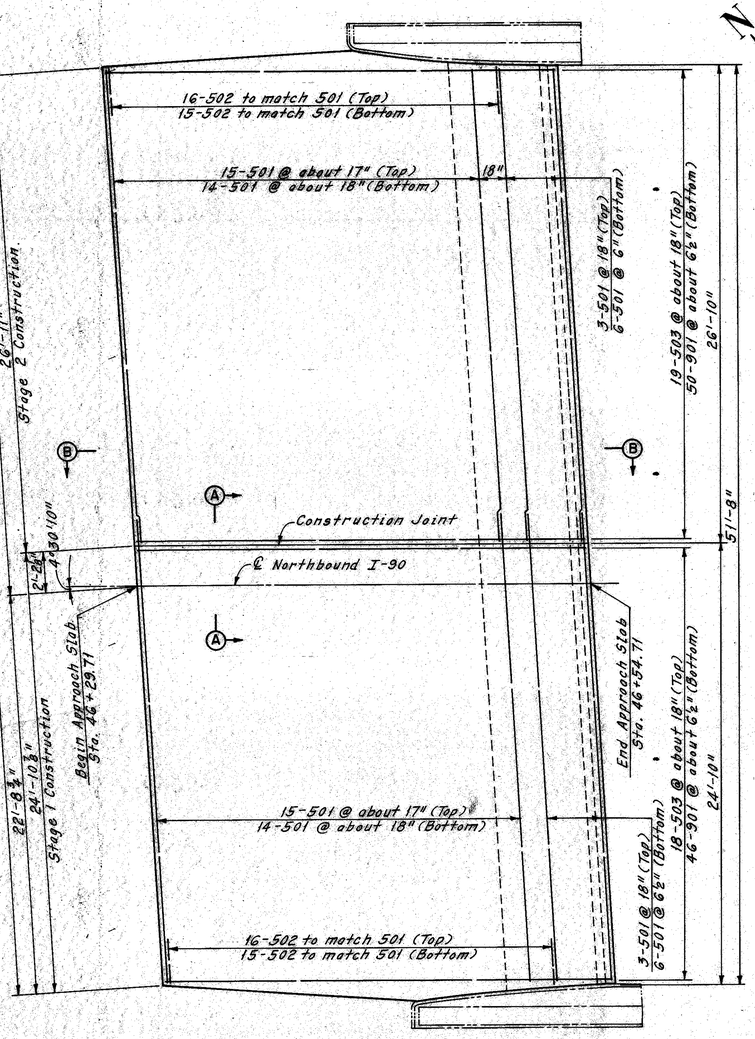

NORTH APPROACH SLAB

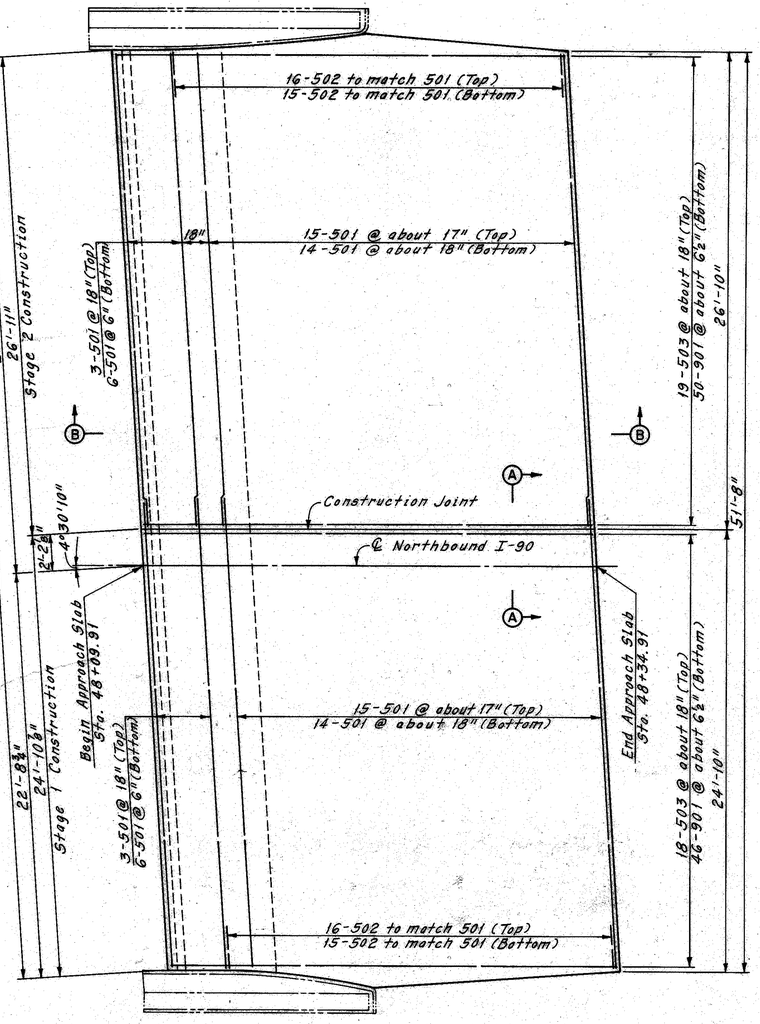

SOUTH APPROACH SLAB

REINFORCEMENT SCHEDULE				
MARK	NO.	LENGTH	TYPE	SER. INCR.
UUS501	152	26'-6"	Str.	
UUS502	124	2'-6"	Str.	
UUS503	74	24'-6"	Str.	
UUS901	192	25'-9"	101	

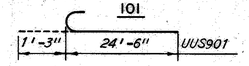

Notes:
For stage construction sequence, see Maintenance Of Traffic, Sheet 2 6 .
For normal cross slopes, see Existing Typical Section, Sheet 5 6 .
The following abbreviations are used:
T = Top
B = Bottom
Typ. = Typical
For additional notes and details, see Ohio Standard Drawing AS-1-72.

Note:
The asphalt wearing surface on the approach slab shall consist of the following:
1. Item 407, Tack Coat at 0.1 gal. per sq. yd.
2. Item 402, 1½" Asphalt Concrete (AC-20).
3. Item 404, 1½" Asphalt Concrete (AC-20).

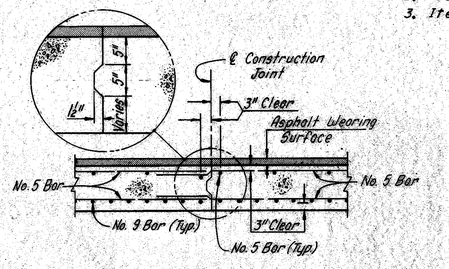

SECTION A-A

Note: All reinforcing bar marks shall be prefixed UUS.

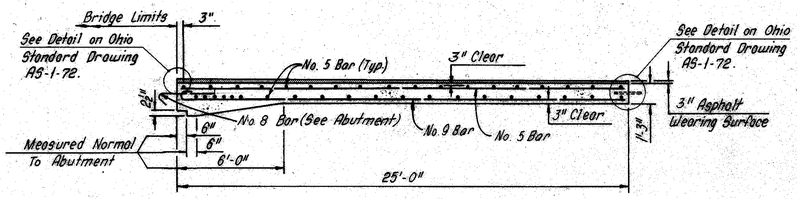

SECTION B-B

HOWARD, NEEDLES, TAMMEN & BERGENDOFF
CONSULTING ENGINEERS
KANSAS CITY CLEVELAND NEW YORK

APPROACH SLABS

NORTHBOUND I-90 OVER PENN CENTRAL

BR. NO. CUY-90-2989L STA. 46+54.71
STA. 48+09.91

CUYAHOGA COUNTY OHIO

DRAWN	TRACED	CHECKED	REVIEWED	REVISED
W.E.B.	W.E.B.	C.P.	S.A.S.	
DATE 5-8-74	DATE 5-11-74	DATE 11-14-74	DATE 12-20-74	SHEET 6/6

MICROFILMED
MAR 22 1983

FHWA REGION	STATE	PROJECT	
5	OHIO		

330
354

CUYAHOGA COUNTY
CUY-90-23.73
LAKE COUNTY
LAK-90-0.00

Note:
Roman numerals I and III denote cost participation breakdown. For description, see Roadway Plans, Sheet 3-354.

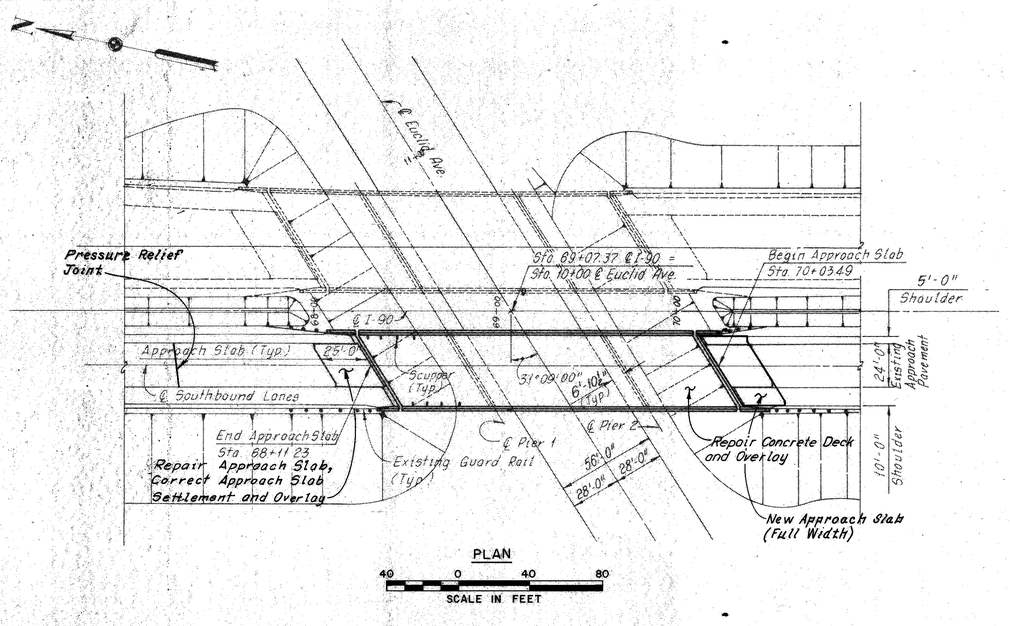

PLAN
40 0 40 80
SCALE IN FEET

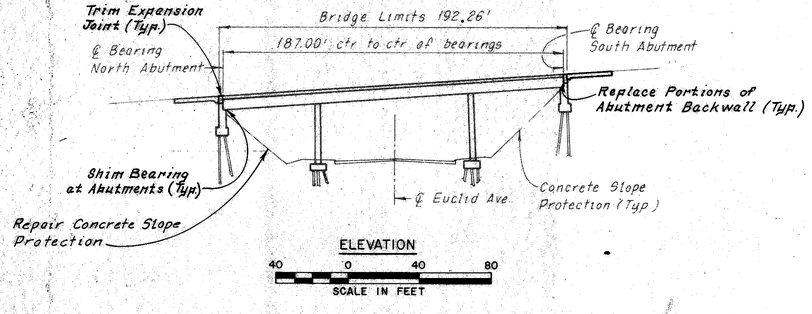

ELEVATION
40 0 40 80
SCALE IN FEET

PROPOSED WORK:

1. Install pressure relief joints in approach roadway pavement, see Sheet CD-9.
2. Trim expansion joint, see Sheets 3/6 and 4/6.
3. Replace portions of abutment backwalls, see Sheets 3/6 and 4/6.
4. Shim abutment bearings, see Sheets 3/6 and 4/6.
5. Replace south approach slab, see Sheet 6/6.
6. Repair concrete deck and place asphalt wearing surface, see Sheet 5/6.
7. Clean out bridge drainage system and remove debris from abutment bridge seat.
8. Repair north approach slab.
9. Correct north approach slab settlement and overlay.
10. Repair minor curb and parapet deterioration.
11. Repair minor abutment deterioration.
12. Repair minor wingwall deterioration.
13. Repair minor pier deterioration.
14. Repair concrete slope protection.

TYPE CODE X231

ESTIMATED QUANTITIES

ITEM	TOTAL	UNIT	DESCRIPTION BRIDGE REPAIR	SUPER-STRUCTURE	NORTH ABUT	SOUTH ABUT	WINGWALLS NE	WINGWALLS SE	WINGWALLS NW	WINGWALLS SW	APPROACH SLABS	CON. SLOPE PRO. NORTH	CON. SLOPE PRO. SOUTH	GENERAL	Participation I Fed. & State	Participation III 100% State
*202	Lump Sum	Lump Sum	Portions of Structures Removed	-	III L.S.	III L.S.	-	-	-	-	III Lump Sum	-	-	-		Lump
402	7	Cu. Yd.	Asphalt Concrete (AC-20)	-	-	-	-	-	-	-	I 7	-	-	-	7	
404	49	Cu. Yd.	Asphalt Concrete (AC-20)	I 41	-	-	-	-	-	-	I 8	-	-	-	49	
407	22	Gallons	Tack Coat: 702.07, RC-250; or 702.04, SS-1, SS-1H, MS-2 or RS-1	-	-	-	-	-	-	-	I 22	-	-	-	22	
509	59	Pounds	Reinforcing Steel	-	-	III 59	-	-	-	-	-	-	-	-		59
511	3	Cu. Yd.	Class "C" Concrete, Substructure	-	III 1	III 2	-	-	-	-	-	-	-	-		3
513	462	Pounds	Structural Steel (ASTM A36)	-	-	III 462	-	-	-	-	-	-	-	-		462
514	462	Pounds	Field Painting of New Structural Steel	-	-	III 462	-	-	-	-	-	-	-	-		462
518	1	Cu. Yd.	Porous Backfill	-	-	III 1	-	-	-	-	-	-	-	-		1
518	377	Lin. Ft.	Subdrainage for Wearing Course, As Per Plan	I 377	-	-	-	-	-	-	-	-	-	-	377	
520	43	Sq. Ft.	Pneumatically Placed Mortar	III 40	-	-		-	III 1	III 2	-	-	-	-		43
611	112	Sq. Yd.	Reinforced Concrete Approach Slabs T=15"	-	-	-	-	-	-	-	III 112	-	-	-		112
Special	169	Sq. Yd.	Patching Concrete Deck Slab	III 169	-	-	-	-	-	-	III 1	-	-	-		169
Special	835	Sq. Yd.	Membrane Waterproofing (Hot Applied - Liquid (See Proposal Note)	I 835	-	-	-	-	-	-	-	-	-	-	835	
Special	129	Lin. Ft.	Repair of Cracks	-	III 14	III 8	-	-	-	-	III 7	III 60	III 40	-		129
Special	186	Lin. Ft.	Raising Existing End Dams	-	I 93	I 93	-	-	-	-	-	-	-	-	186	
Special	9	Each	Shim Bearings (Where Resetting Is Not Required)	-	III 3	III 6	-	-	-	-	-	-	-	-		9
Special	49	Lin. Ft.	Pressure Relief Joint	-	-	-	-	-	-	-	-	-	-	III 49		49
Special	Lump Sum	Lump Sum	Cleanout Bridge Drainage Systems and Remove Debris From Bridge Seats	III Lump Sum	III L.S.	III L.S.	-	-	-	-	-	-	-	-		Lump
Special	5	Sq. Yd.	Repair of Concrete Slope Protection	-	-	-	-	-	-	-	-	III 5	-	-		5
Special	Lump Sum	Lump Sum	Correct Approach Slab Settlement	-	-	-	-	-	-	-	III Lump Sum	-	-	-		Lump

*SUBSTRUCTURE - Includes approximately 3 Cu. Yds. of concrete in the existing abutment backwalls.
*APPROACH SLABS - Includes approximately 112 Sq. Yds. of existing reinforced concrete approach slabs, paved berms and all necessary excavation or backfill to provide proper cross section for the new approach slab.
REPAIR MINOR PIER DETERIORATION - Repair approximately 5 Sq. Ft. of spall on Pier 2, to be included with Item 520, Pneumatically Placed Mortar, for payment.

EXISTING STRUCTURE

TYPE:	Continuous Steel Beam with Reinforced Concrete Slab, Piers and Abutments.
SPANS:	51'-0", 85'-0" and 51'-0".
ROADWAY:	42'-0" Face to Face of Parapets.
LOADING:	CF-2000-57 (Adequate for AASHO Alternate Loading).
SKEW:	31° 09' 00" Right Forward.
WEARING SURFACE:	1" Monolithic Concrete.
APPROACH SLABS:	AS-1-54 (25'-0" Long).
ALIGNMENT:	Tangent.
SUPERELEVATION:	Varies.

MODIFIED STRUCTURE

TYPE:	Continuous Steel Beam with Reinforced Concrete Deck, Piers and Abutments.
SPANS:	51'-0", 85'-0" and 51'-0".
ROADWAY:	42'-0" Face to Face of Parapets.
LOADING:	CF-2000-57 (Adequate for AASHO Alternate Loading).
SKEW:	31° 09' 00" Right Forward.
WEARING SURFACE:	1½" Asphalt.
APPROACH SLABS:	North: AS-1-54 (25'-0" Long) South: AS-1-72 (25'-0" Long)
ALIGNMENT:	Tangent.
SUPERELEVATION:	Varies.

Rev. 7-18-75

HOWARD, NEEDLES, TAMMEN & BERGENDOFF
CONSULTING ENGINEERS
KANSAS CITY CLEVELAND NEW YORK

SITE PLAN

SOUTHBOUND I-90 OVER EUCLID AVE.

BR. NO. LAK-90-0009R. STA. 68+11.23 STA. 70+03.49

LAKE COUNTY OHIO

DRAWN JLR	TRACED JLR	CHECKED RCK	REVIEWED CAB	REVISED
DATE 10-2-73	DATE 10-2-73	DATE 10-4-74	DATE 12-20-74	SHEET 1/6

MICROFILMED
MAR 22 1974

FHWA REGION	STATE	PROJECT	
5	OHIO		

331
354

CUYAHOGA COUNTY
CUY-90-23.73
LAKE COUNTY
LAK-90-0.00

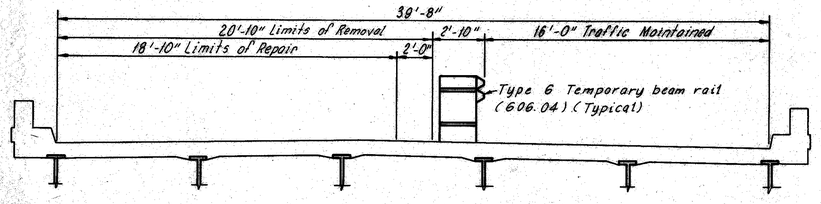

FIRST STAGE CONSTRUCTION

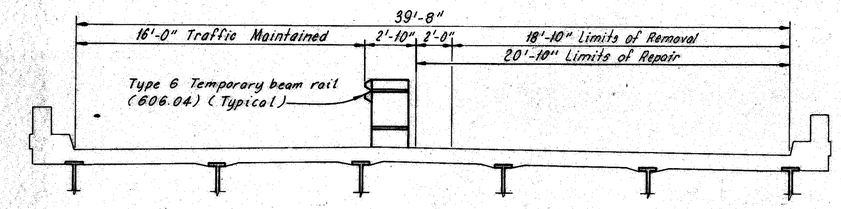

SECOND STAGE CONSTRUCTION

Notes:

The stage construction cross-sections apply within the bridge and approach slab limits. All repair work shall be co-ordinated with the stage construction as shown.

For maintenance of traffic notes, see Roadway Plans.

HOWARD, NEEDLES, TAMMEN & BERGENDOFF
CONSULTING ENGINEERS
KANSAS CITY CLEVELAND NEW YORK

MAINTENANCE OF TRAFFIC

SOUTHBOUND I-90 OVER EUCLID AVE.

BR.NO.LAK-90-0009R STA. 68+11.23
STA. 70+03.49

LAKE COUNTY OHIO

DRAWN JLR	TRACED JLR	CHECKED [illegible]	REVIEWED CAB	REVISED
DATE 4-8-74	DATE 4-8-74	DATE 4-29-74	DATE 12-20-74	SHEET 2/6

MICROFILMED
MAR 22 1985

FHWA REGION	STATE	PROJECT	
5	OHIO		

332
354

CUYAHOGA COUNTY
CUY-90-23.73
LAKE COUNTY
LAK-90-0.00

Note: Backwall elevations are given at the top of the 6 x 4 x $\frac{3}{8}$ support angle of the end dam.

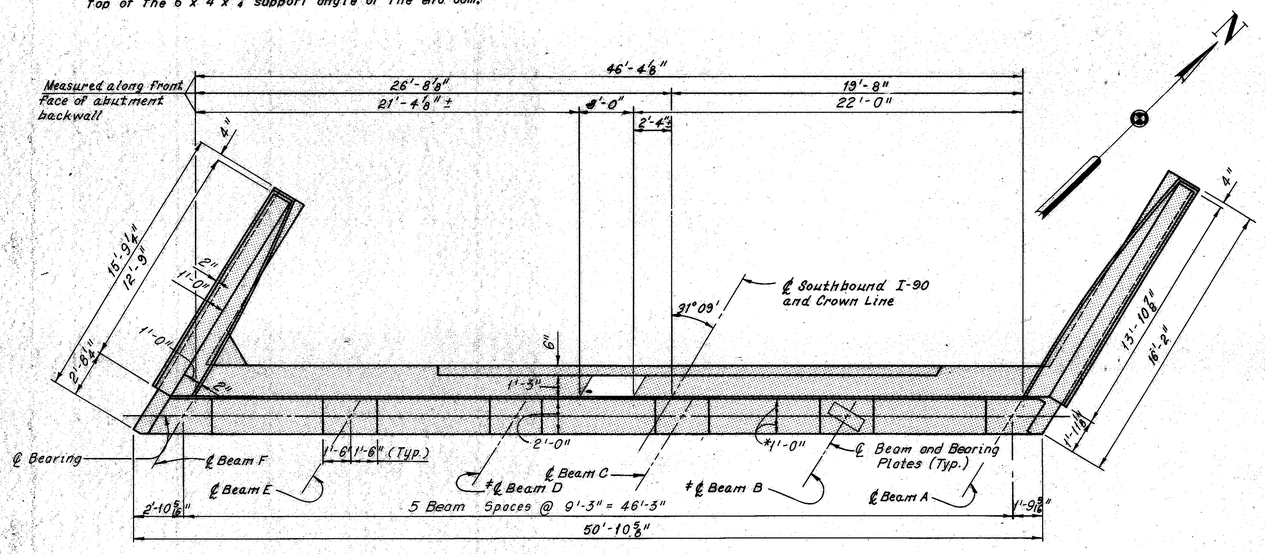

Note: Shim bearings at Beams A, B and D, see Sheet CD-3.

MODIFIED PLAN

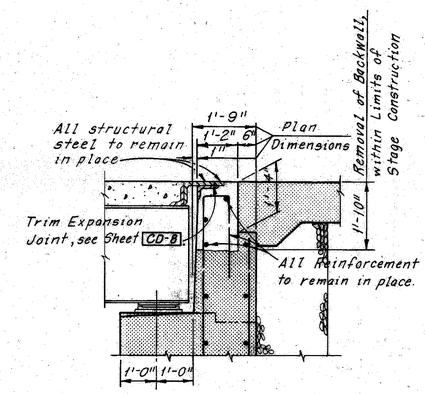

EXISTING SECTION A-A

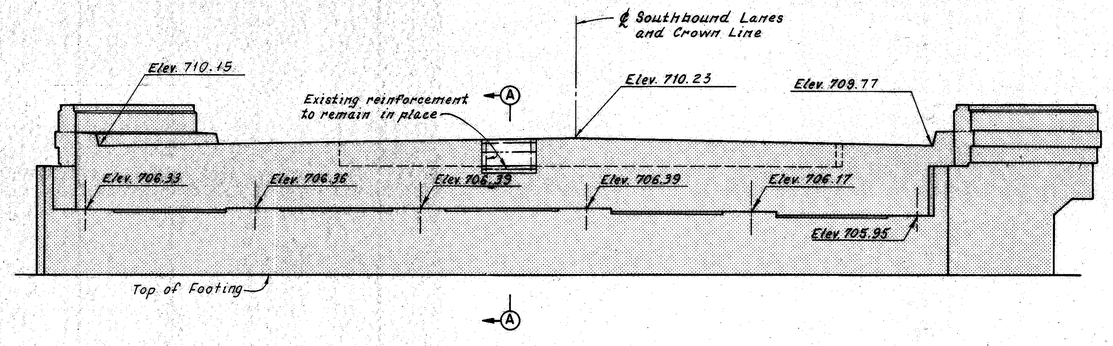

MODIFIED ELEVATION

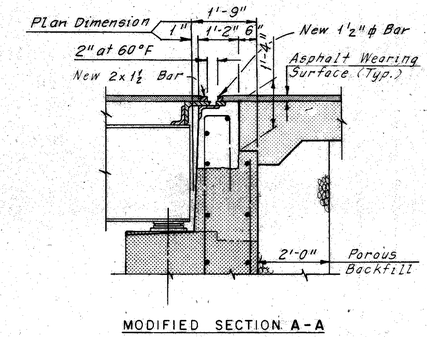

MODIFIED SECTION A-A

Note: All reinforcing bar marks shall be prefixed VN.

Notes:
Indicates portions of existing structure to remain.
For stage construction sequence, see Maintenance Of Traffic, Sheet 2/6.
For details of raising the expansion joint, see Sheet CD-6.
For Reinforcement Schedule, see Sheet R-6.
The following abbreviations are used:
Typ. = Typical

HOWARD, NEEDLES, TAMMEN & BERGENDOFF
CONSULTING ENGINEERS
KANSAS CITY CLEVELAND NEW YORK

NORTH ABUTMENT

SOUTHBOUND I-90 OVER EUCLID AVE.

BR.NO.LAK-90-0009R STA. 68+11.23
STA. 70+03.49

LAKE COUNTY OHIO

DRAWN AJT	TRACED AJT	CHECKED RLK	REVIEWED CAB	REVISED
DATE 5-13-74	DATE 5-24-74	DATE 10-1-74	DATE 12-20-74	SHEET 3/6

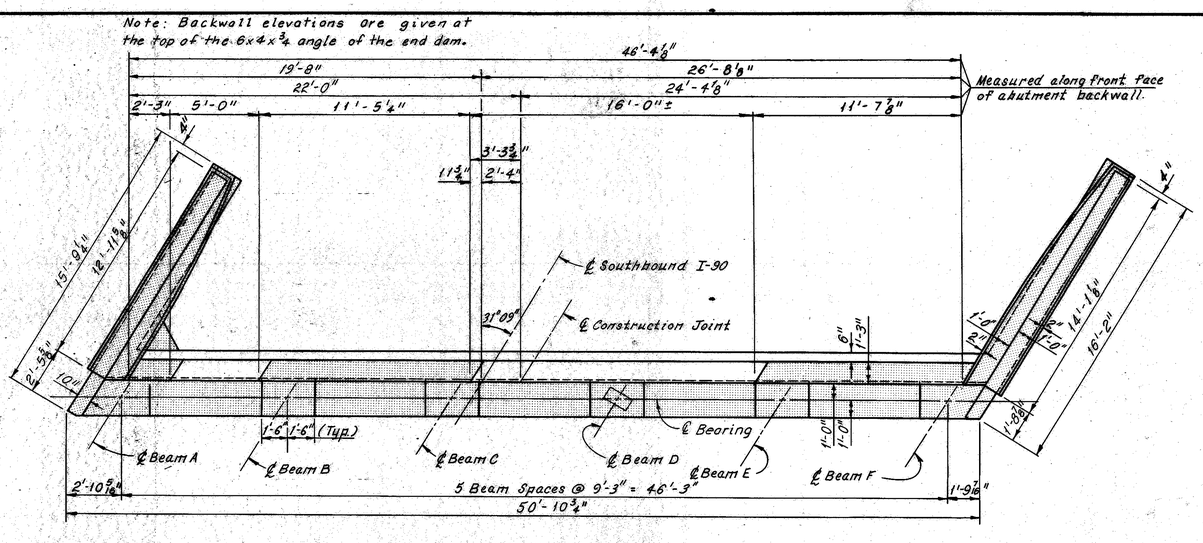

MODIFIED PLAN

Note: All reinforcing bar marks shall be prefixed VS.

Note: Shim all bearings, see Sheet CD-3.

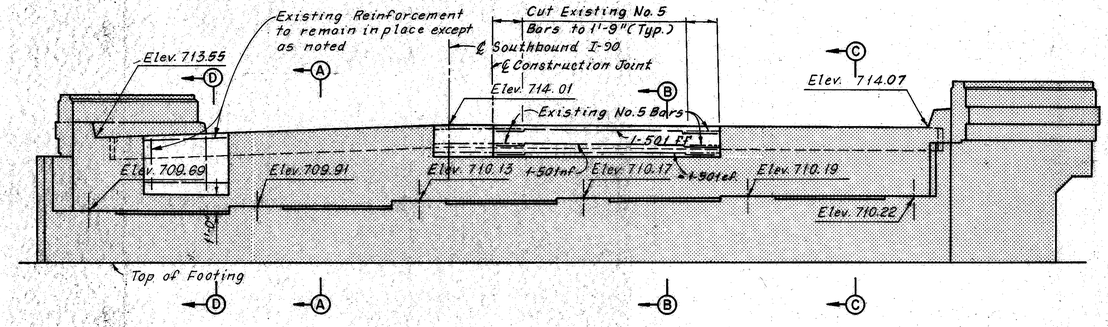

MODIFIED ELEVATION

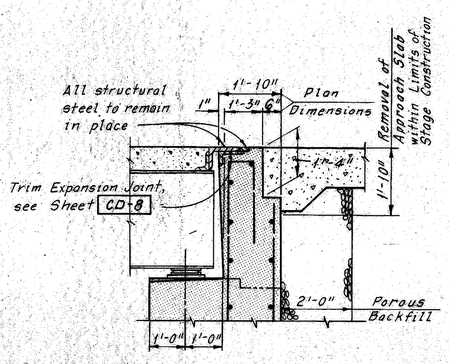

EXISTING SECTION A-A

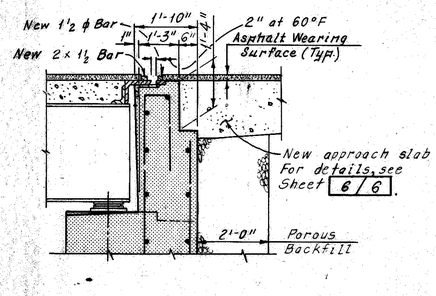

MODIFIED SECTION A-A

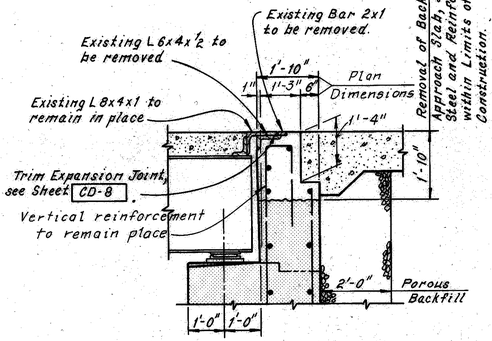

EXISTING SECTION B-B

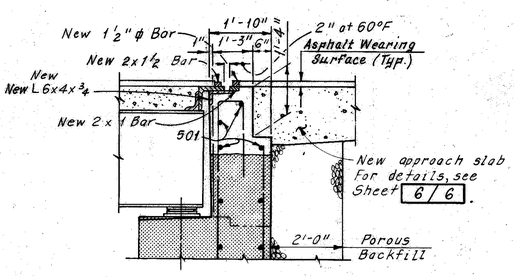

MODIFIED SECTION B-B

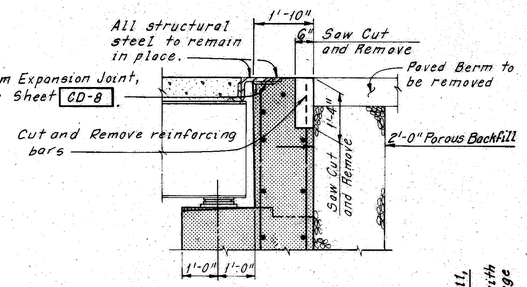

EXISTING SECTION C-C

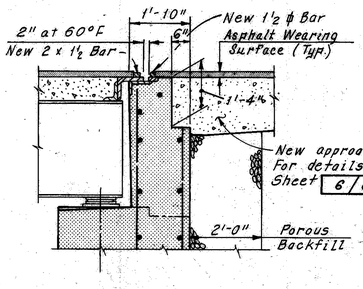

MODIFIED SECTION C-C

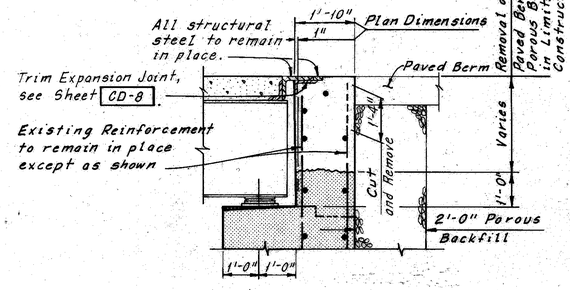

EXISTING SECTION D-D

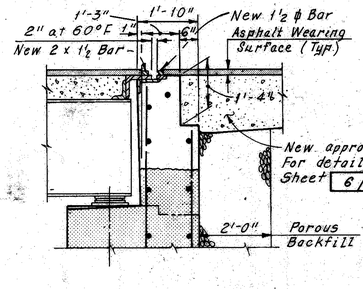

MODIFIED SECTION D-D

Notes:

Indicates portions of existing structure to remain.

For stage construction sequence, see Maintenance Of Traffic, Sheet 2/6.

Excavation, backfill (except Porous Backfill) and paved berm removal necessary to accomplish structure modification shall be included with Item 202, Portions of Structures Removed, for payment. Backfill shall be in accordance with Item 203.

For details of raising the expansion joint, see Sheet CD-6.

For details of backwall expansion joint angle not shown, see Ohio Standard Drawing SD-1-69, Sheet 1 of 4.

For Reinforcement Schedule, see Sheet R-6.

The following abbreviations are used:

ff = far face ef = each face
nf = near face
Typ. = Typical

MICROFILMED MAR 22 19[illegible]

FHWA REGION	STATE	PROJECT	
5	OHIO		

333
354

CUYAHOGA COUNTY
CUY-90-23.73
LAKE COUNTY
LAK-90-0.00

HOWARD, NEEDLES, TAMMEN & BERGENDOFF
CONSULTING ENGINEERS
KANSAS CITY CLEVELAND NEW YORK

SOUTH ABUTMENT

SOUTHBOUND I-90 OVER EUCLID AVE.

BR.NO.LAK-90-0009R. STA. 68+11.23
STA. 70+03.49

LAKE COUNTY OHIO

DRAWN	TRACED	CHECKED	REVIEWED	REVISED
AJT	AJT	CCL	CAB	
DATE 5-13-74	DATE 5-24-74	DATE 10-3-74	DATE 12-20-74	SHEET 4/6

MICROFILMED
MAR 22 1985

FHWA REGION	STATE	PROJECT	
5	OHIO		

334
354

CUYAHOGA COUNTY
CUY-90-23.73
LAKE COUNTY
LAK-90-0.00

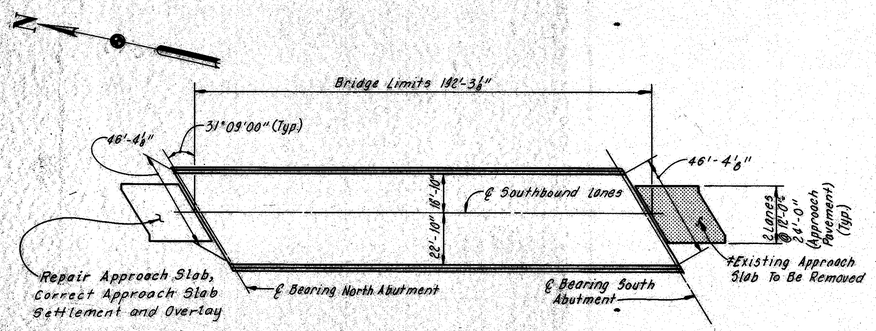

EXISTING PLAN

30 0 30 60
SCALE IN FEET

*Includes removal of paved berms and all necessary excavation or backfill to provide the proper cross section for the new approach slab.

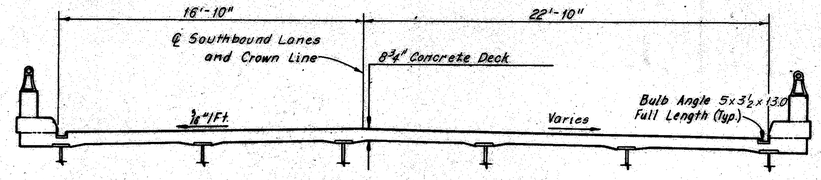

EXISTING TYPICAL SECTION

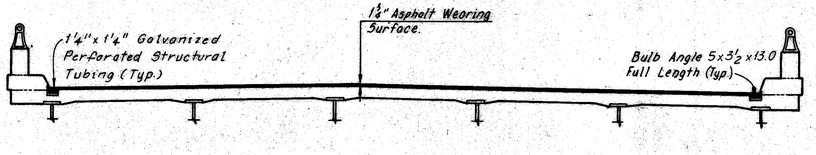

MODIFIED TYPICAL SECTION

Notes:
For deck repair and asphalt wearing surface course details, see Sheet CD-7.
The following abbreviation is used:
Typ. = Typical

HOWARD, NEEDLES, TAMMEN & BERGENDOFF
CONSULTING ENGINEERS
KANSAS CITY CLEVELAND NEW YORK

EXISTING AND MODIFIED DECK PLAN AND TYPICAL SECTION

SOUTHBOUND I-90 OVER EUCLID AVE.

BR.NO.LAK-90-0009R. STA. 68+11.23
STA. 70+03.49

LAKE COUNTY OHIO

DRAWN BMP	TRACED JLR	CHECKED RCK	REVIEWED CAB	REVISED
DATE 10-9-75	DATE 10-10-75	DATE 10-3-74	DATE 12-20-74	SHEET 5/6

MICROFILMED
MAR 22 1985

FHWA REGION	STATE	PROJECT	
5	OHIO		

335
354

CUYAHOGA COUNTY
CUY-90-23.73
LAKE COUNTY
LAK-90-0.00

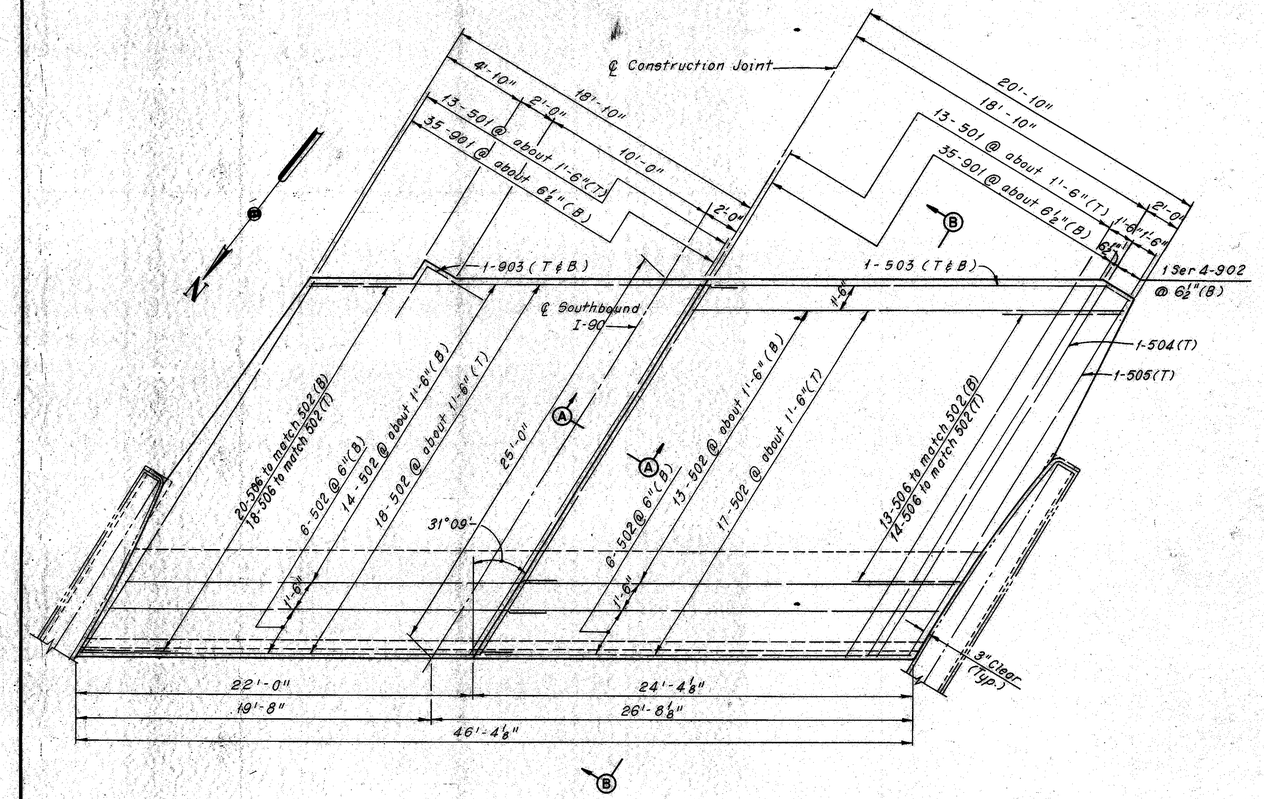

APPROACH SLAB PLAN

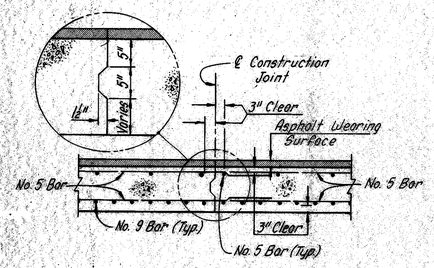

SECTION A-A

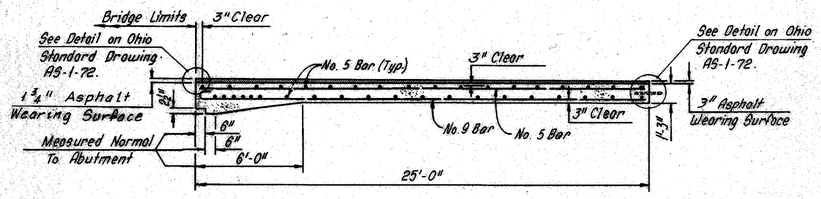

SECTION B-B

Note:
The jacking holes as called for on Ohio Standard Drawing AS-1-72 are not required.

Note: All reinforcing bar marks shall be prefixed VVS.

Note:
The asphalt wearing surface on the approach slab shall consist of the following:
1. Item 407, Tack Coat, at 0.1 gal. per sq.yd.
2. Variable thickness of Item 402, Asphalt Concrete (AC-20).
3. Item 404, 1¼" Asphalt Concrete (AC-20).

Notes:
For stage construction sequence, see Maintenance Of Traffic, Sheet 2 6 .
For normal cross slopes, see Existing Typical Section, Sheet 5 6 .
For details of median barrier transition, see Roadway Plans.
The following abbreviations are used:
T = Top
B = Bottom
Typ. = Typical
For additional notes and details, see Ohio Standard Drawing AS-1-72.

REINFORCEMENT SCHEDULE

MARK	NO.	LENGTH	TYPE	SER. INCR.
VVS501	26	24'-6"	Str.	
VVS502	74	23'-9"	Str.	
VVS503	2	23'-4"	108.	
VVS504	1	24'-3"	Str.	
VVS505	1	23'-6"	Str.	
VVS506	65	2'-6"	Str.	
VVS901	70	25'-9"	101	
VVS902	1 Ser. 4	24'-0" 25'-0"	101	4"
VVS903	2	8'-4"	104	

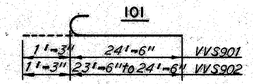

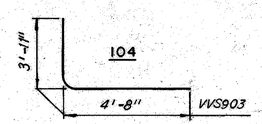

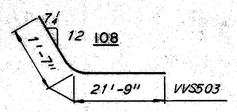

HOWARD, NEEDLES, TAMMEN & BERGENDOFF
CONSULTING ENGINEERS
KANSAS CITY CLEVELAND NEW YORK

SOUTH APPROACH SLAB

SOUTHBOUND I-90 OVER EUCLID AVE.

BR.NO.LAK-90-0009R. STA. 68+11.23
STA. 70+03.49

LAKE COUNTY OHIO

DRAWN	TRACED	CHECKED	REVIEWED	REVISED
RCK	AJT	BMP	GAB	
DATE 5-3-74	DATE 5-28-74	DATE 10/8/74	DATE 12-20-74	SHEET 6/6

FHWA REGION	STATE	PROJECT	
5	OHIO		

336
354

CUYAHOGA COUNTY
CUY-90-23.73
LAKE COUNTY
LAK-90-0.00

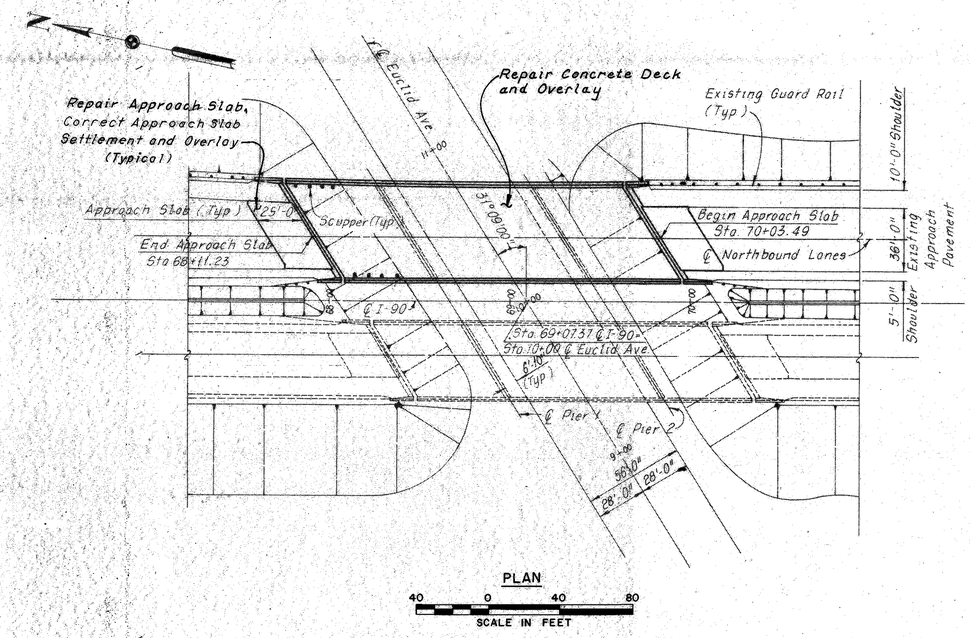

PLAN
40 0 40 80
SCALE IN FEET

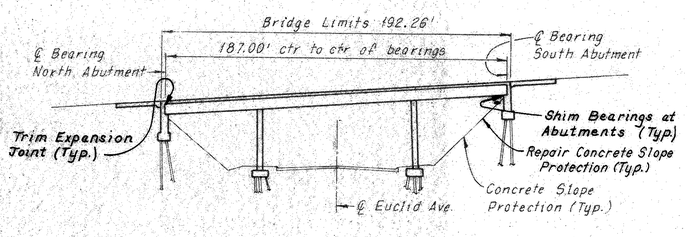

ELEVATION
40 0 40 80
SCALE IN FEET

PROPOSED WORK:

1. Install pressure relief joints in approach roadway pavement, see Sheet CD-9.
2. Trim expansion joints, see Sheet CD-8.
3. Shim abutment bearings, see Sheet 3/3.
4. Repair concrete deck and place asphalt wearing surface see Sheet 3/3.
5. Repair approach slabs.
6. Correct approach slab settlement and overlay.
7. Repair minor curb and parapet deterioration.
8. Repair minor abutment deterioration.
9. Repair minor wingwall deterioration.
10. Repair concrete slope protection deterioration.

Note:
Roman numerals I and III denote cost participation breakdown.. For description, see Roadway Plans, Sheet 3-354.

TYPE CODE X231

ESTIMATED QUANTITIES

ITEM	TOTAL	UNIT	DESCRIPTION BRIDGE REPAIR	SUPER-STRUCTURE	North ABUT	South ABUT	WINGWALLS NE	WINGWALLS SE	WINGWALLS NW	WINGWALLS SW	APPROACH SLABS	CON. SLOPE PRO. North	CON. SLOPE PRO. South	GENERAL	Participation I Fed. & State	Participation III 100% State
402	9	Cu. Yd.	Asphalt Concrete (AC-20)	-	-	-	-	-	-	-	I 9	-	-	-	9	
404	65	Cu. Yd.	Asphalt Concrete (AC-20)	I 55	-	-	-	-	-	-	I 10	-	-	-	65	
407	29	Gallons	Tack Coat: 703.02, RC-250; or 702.04, SS-1, SS-1H, MS-2 or RS-1	-	-	-	-	-	-	-	I 29	-	-	-	29	
518	378	Lin. Ft.	Subdrainage For Wearing Course,													
			As Per Plan	I 378	-	-	-	-	-	-	-	-	-	-	378	
520	54	Sq. Ft.	Pneumatically Placed Mortar	III 40	III 1	III 4	III 3	III 4	-	III 2	-	-	-	-		54
Special	423	Sq. Yd.	Patching Concrete Deck Slab	III 423	-	-	-	-	-	-	-	-	-	-		423
Special	1,118	Sq. Yd.	Membrane Waterproofing Hot Applied Liquid (See Proposal Note)	I 1,118	-	-	-	-	-	-	-	-	-	-	1,118	
Special	150	Lin. Ft.	Repair of Cracks	-	III 10	III 10	-	-	-	-	III 75	III 25	III 30	-		150
Special	124	Lin. Ft.	Raising Existing End Dams	-	I 63	I 61	-	-	-	-	-	-	-	-	124	
Special	14	Each	Shim Bearings (Where resetting is not required)	-	III 7	III 7	-	-	-	-	-	-	-	-		14
Special	80	Lin. Ft.	Pressure Relief Joint	-	-	-	-	-	-	-	-	-	-	III 80		80
Special	Lump Sum	Lump Sum	Cleanout Bridge Drainage Systems and Remove Debris From Bridge Seats	III Lump Sum	III L.S.	III L.S.	-	-	-	-	-	-	-	-		Lump
Special	Lump Sum	Lump Sum	Correct Approach Slab Settlement	-	-	-	-	-	-	-	III Lump Sum	-	-	-		Lump

EXISTING STRUCTURE	
TYPE:	Continuous Steel Beam with Reinforced Concrete Deck, Piers and Abutments.
SPANS:	51'-0" 85'-0" and 51'-0".
ROADWAY:	Varies.
LOADING:	CF-2000-57 (Adequate for AASHO Alternate Loading).
SKEW:	31° 09' 00" Right Forward.
WEARING SURFACE:	1" Monolithic Concrete.
APPROACH SLABS:	AS-1-54 (25'-0" Long).
ALIGNMENT:	Tangent.
SUPERELEVATION:	Varies

MODIFIED STRUCTURE	
TYPE:	Continuous Steel Beam with Reinforced Concrete Deck, Piers and Abutments.
SPANS:	51'-0" 85'-0" and 51'-0".
ROADWAY:	Varies.
LOADING:	CF-2000-57 (Adequate for AASHO Alternate Loading).
SKEW:	31° 09' 00" Right Forward.
WEARING SURFACE:	12" Asphalt.
APPROACH SLABS:	AS-1-54 (25'-0" Long).
ALIGNMENT:	Tangent.
SUPERELEVATION:	Varies.

Rev. 7-18-75

HOWARD, NEEDLES, TAMMEN & BERGENDOFF
CONSULTING ENGINEERS
KANSAS CITY CLEVELAND NEW YORK

SITE PLAN

NORTHBOUND I-90 OVER EUCLID AVE.

BR.NO.LAK-90-0009L STA. 68+11.23
STA. 70+03.49

LAKE COUNTY OHIO

DRAWN	TRACED	CHECKED	REVIEWED	REVISED
J.L.R.	J.L.R.	E.C.K.	CAB	
DATE 10-2-73	DATE 10-2-73	DATE 10-7-74	DATE 12-20-74	SHEET 1/3

FHWA REGION	STATE	PROJECT	
5	OHIO		

337
354

CUYAHOGA COUNTY
CUY-90-23.73
LAKE COUNTY
LAK-90-0.00

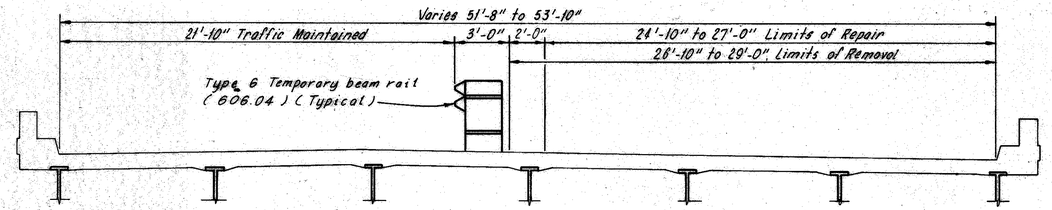

FIRST STAGE CONSTRUCTION

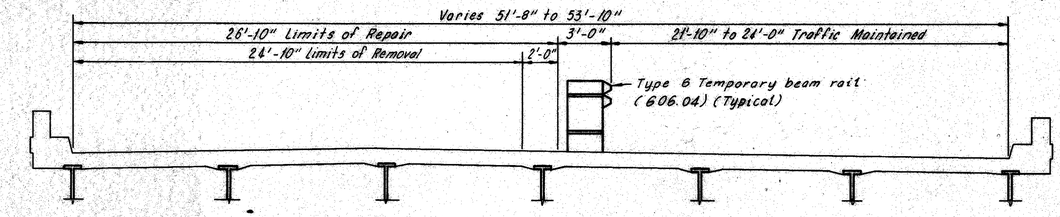

SECOND STAGE CONSTRUCTION

Notes:

The stage construction cross-sections apply within the bridge and approach slab limits. All repair work shall be co-ordinated with the stage construction as shown.

For maintenance of traffic notes, see Roadway Plans.

HOWARD, NEEDLES, TAMMEN & BERGENDOFF
CONSULTING ENGINEERS
KANSAS CITY CLEVELAND NEW YORK

MAINTENANCE OF TRAFFIC

NORTHBOUND I-90 OVER EUCLID AVE.

BR.NO.LAK-90-0009L STA.68+11.23
STA.70+03.49

LAKE COUNTY OHIO

DRAWN	TRACED	CHECKED	REVIEWED	REVISED
DATE 4-9-74	DATE 4-9-74	DATE 4-29-74	DATE 12-20-74	SHEET 2/3

FHWA REGION	STATE	PROJECT	
5	OHIO		

338
354

CUYAHOGA COUNTY
CUY-90-23.73
LAKE COUNTY
LAK-90-0.00

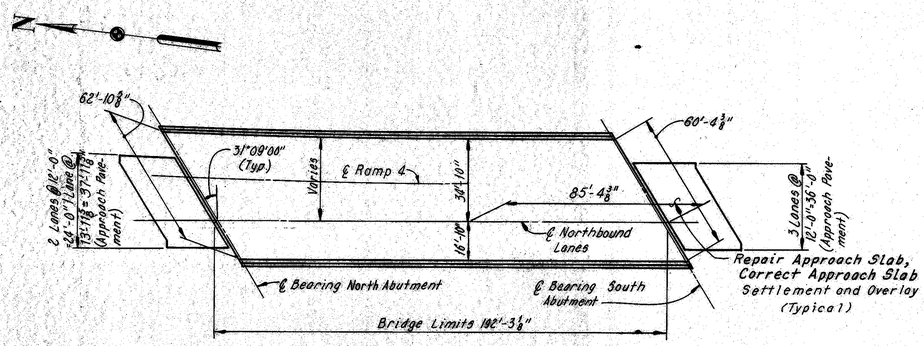

EXISTING PLAN

30 0 30 60
SCALE IN FEET

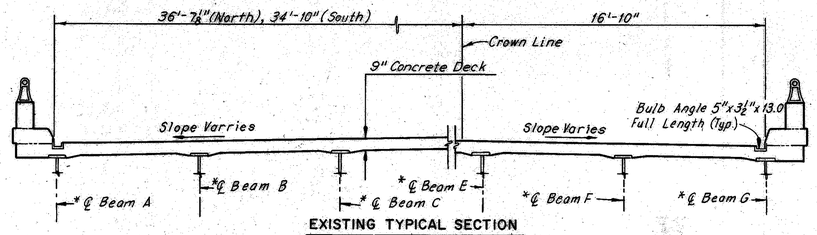

EXISTING TYPICAL SECTION

*Note: Reset and shim all bearings at both abutments.

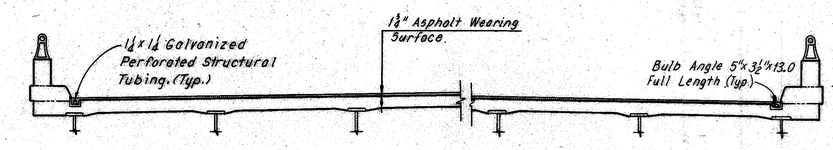

MODIFIED TYPICAL SECTION

Notes:
For deck repair and ashalt wearing surface course details, see Sheet CD-7.
For details of raising the expansion joint, see Sheet CD-6.
The following abbreviation is used:
Typ. = Typical

MICROFILMED
MAR 22 1985

HOWARD, NEEDLES, TAMMEN & BERGENDOFF
CONSULTING ENGINEERS
KANSAS CITY CLEVELAND NEW YORK

EXISTING AND MODIFIED
DECK PLAN AND TYPICAL SECTION
NORTHBOUND I-90 OVER EUCLID AVE.

BR. NO. LAK-90-0009L STA. 68+11.23
STA. 70+03.49

LAKE COUNTY OHIO

DRAWN AJT	TRACED JLR	CHECKED R.C.K.	REVIEWED CAB	REVISED
DATE 10-10-73	DATE 10-11-73	DATE 10-7-74	DATE 12-20-74	SHEET 3/3

FHWA REGION	STATE	PROJECT	
5	OHIO		

339
354

CUYAHOGA COUNTY
CUY-90-23.73
LAKE COUNTY
LAK-90-0.00

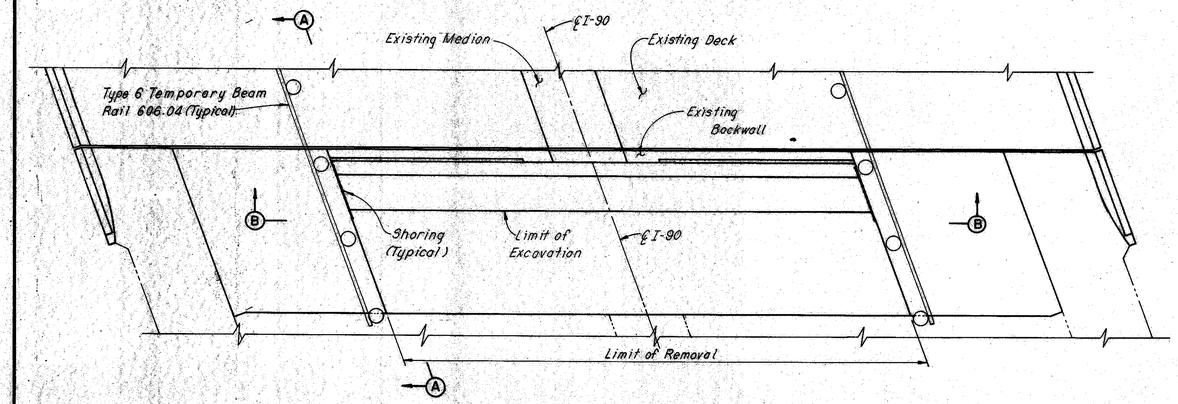

PLAN
(Approach slab removed excavation complete)

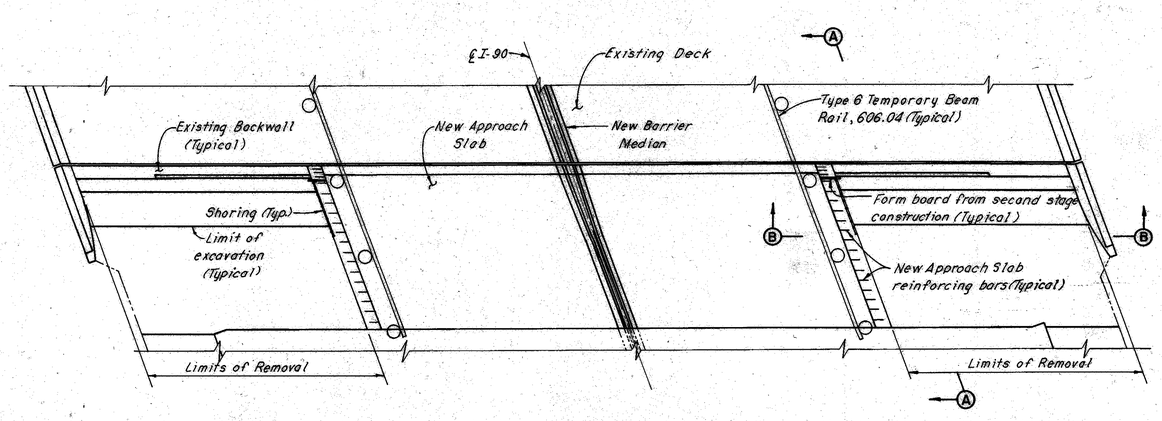

PLAN
(Approach slab removed excavation complete)

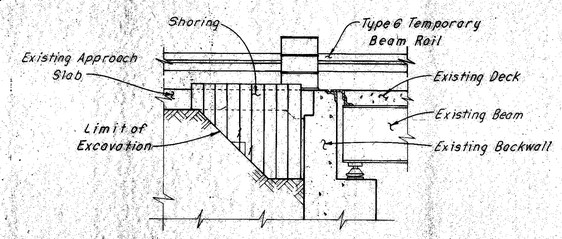

SECTION A–A
(Reinforcement not shown)

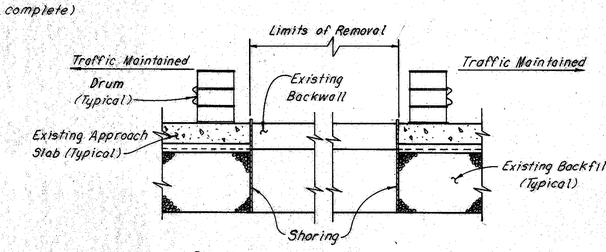

SECTION B–B
(Approach Slab reinforcement not shown)

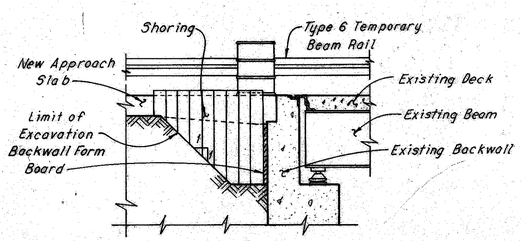

SECTION A–A
(Reinforcement not shown)

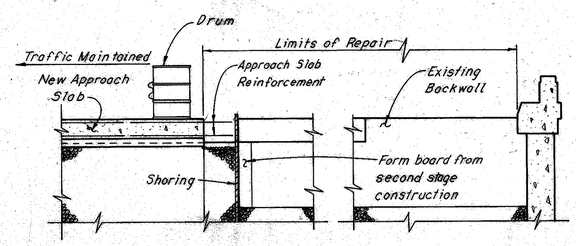

SECTION B–B

SECOND STAGE CONSTRUCTION
For Bridges: Cuy.-90-2046, Cuy.-90-2413, Cuy.-90-2465, Cuy.-90-2616, Cuy.-90-2639, Cuy.-90-2674 and Cuy.-90-2754

FIRST STAGE CONSTRUCTION
For Bridge Cuy.-90-2969 L

THIRD STAGE CONSTRUCTION
For Bridges: Cuy.-90-2046, Cuy.-90-2413, Cuy.-90-2465, Cuy.-90-2616, Cuy.-90-2639 Cuy.-90-2674 and Cuy.-90-2754

SECOND STAGE CONSTRUCTION
For Bridge Cuy.-90-2969 L

MICROFILMED
MAR 26 1975

HOWARD, NEEDLES, TAMMEN & BERGENDOFF
CONSULTING ENGINEERS
KANSAS CITY CLEVELAND NEW YORK

SHORING AT APPROACH SLABS
(REINFORCEMENT LAPPED AT SPLICES)

OHIO

DRAWN RCK	TRACED RCK	CHECKED	REVIEWED	REVISED
DATE 7-8-74	DATE 9-13-74	DATE 10-21-74	DATE 12-20-74	SHEET CD-1

FHWA REGION	STATE	PROJECT	
5	OHIO		

340
354

CUYAHOGA COUNTY
CUY-90-23.73
LAKE COUNTY
LAK-90-0.00

MICROFILMED
MAR 22 1985

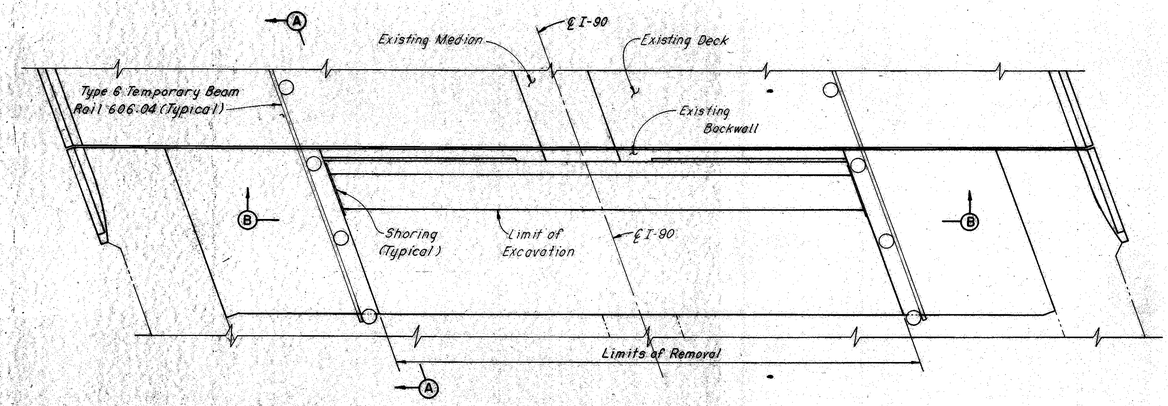

PLAN
(Approach slab removed excavation complete)

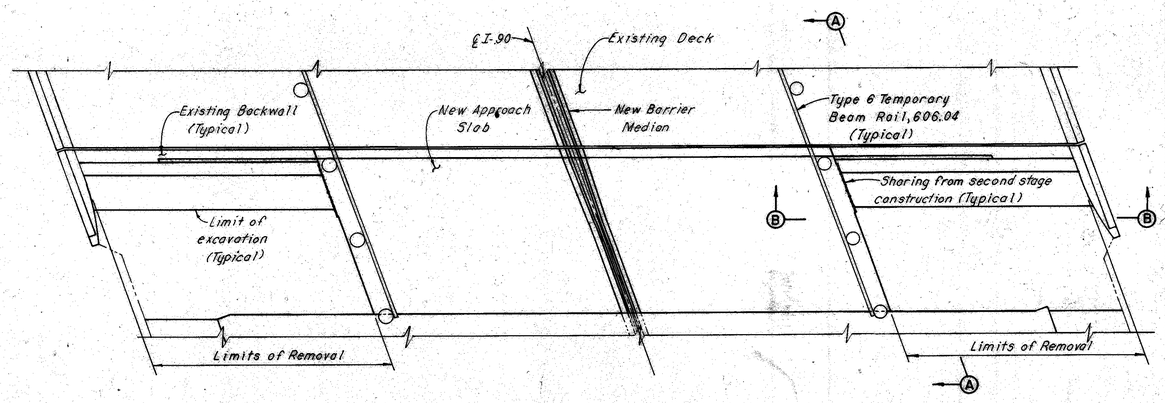

PLAN
(Approach slab removed excavation complete)

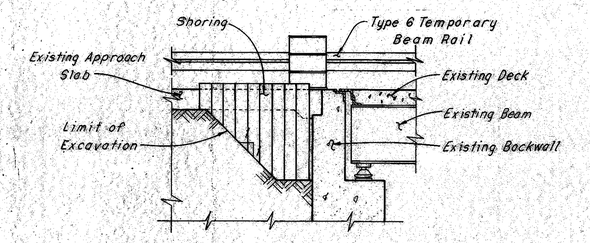

SECTION A–A
(Reinforcement not shown)

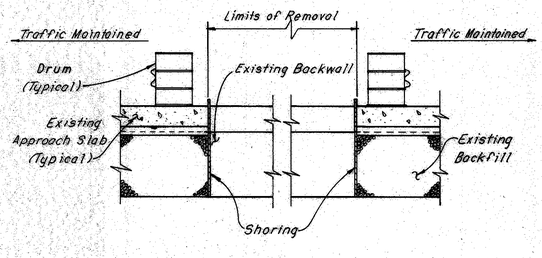

SECTION B–B
(Approach slab reinforcement not shown)

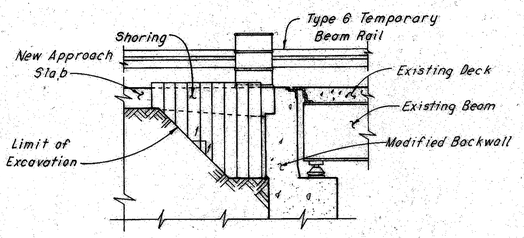

SECTION A–A
(Reinforcement not shown)

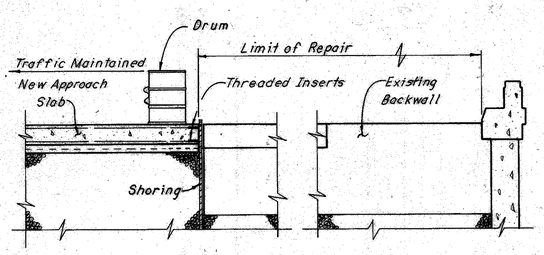

SECTION B–B

SECOND STAGE CONSTRUCTION

For Bridges: Cuy.-90-2035, Cuy.-90-2200 and Cuy.-90-2840

THIRD STAGE CONSTRUCTION

For Bridges: Cuy.-90-2035, Cuy.-90-2200 and Cuy.-90-2840

HOWARD, NEEDLES, TAMMEN & BERGENDOFF
CONSULTING ENGINEERS
KANSAS CITY CLEVELAND NEW YORK

SHORING AT APPROACH SLABS (REINFORCEMENT SPLICED WITH THREADED INSERTS)

OHIO

DRAWN	TRACED	CHECKED	REVIEWED	REVISED
RCK	REX		CAB	
DATE 9-9-74	DATE 9-13-74	DATE 10-21-74	DATE 12-20-74	SHEET CD-2

FHWA REGION	STATE	PROJECT	
5	OHIO		

341
354

CUYAHOGA COUNTY
CUY-90-23.73
LAKE COUNTY
LAK-90-0.00

MICROFILMED
MAR 22 1985

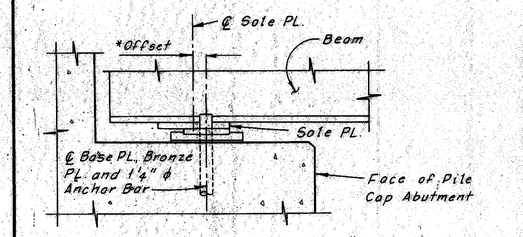

EXISTING SIDE ELEVATION

*Reset bearing only if offset is greater than 1¼"

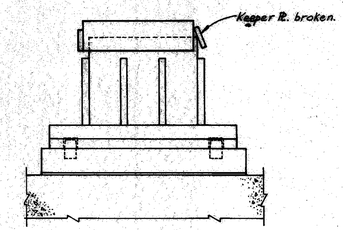

EXISTING FRONT ELEVATION

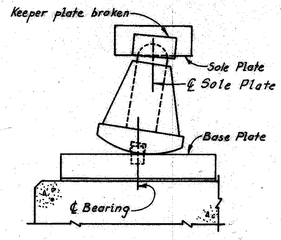

EXISTING SIDE ELEVATION

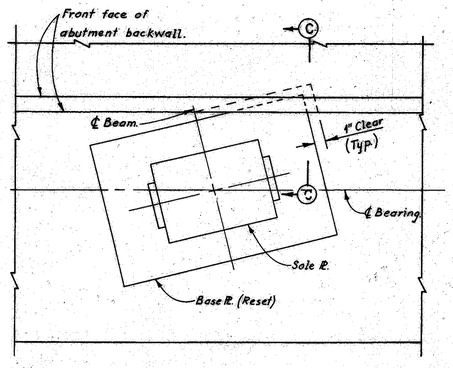

SECTION B-B
(Notching Backwall).

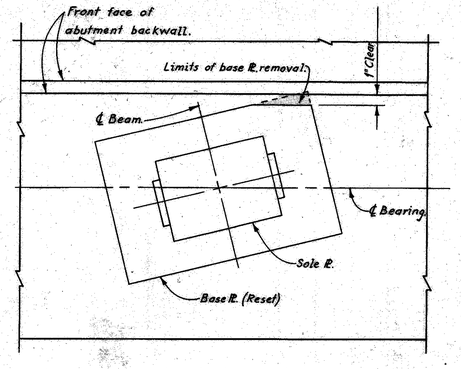

SECTION B-B
(Trimming Base Plate)

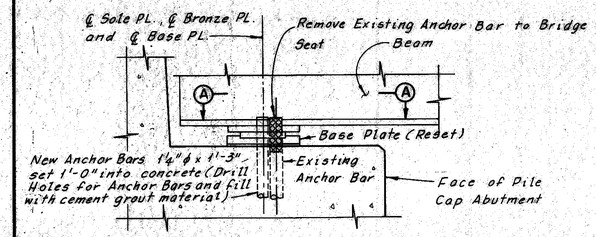

MODIFIED SIDE ELEVATION

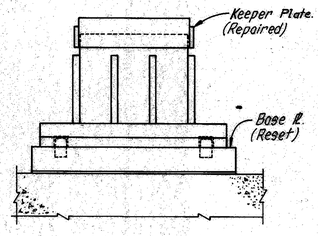

MODIFIED FRONT ELEVATION

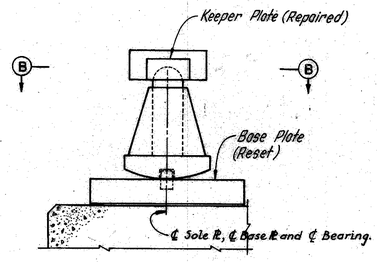

MODIFIED SIDE ELEVATION

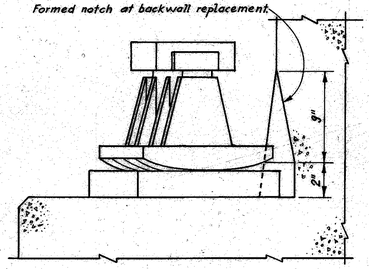

SECTION C-C

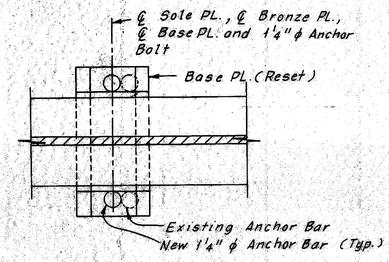

SECTION A-A

ANCHORED BEARINGS
(Br. No. CUY-90-2035 and Br. No. CUY-90-2046)

NON-ANCHORED BEARINGS

RESET BEARINGS

PROCEDURE FOR RESETTING BEARINGS

At Locations Of Complete Backwall Replacement

1. *Raise the entire superstructure at the abutment (all beams simultaneously) until there is no contact between the sole plate and the bearing.*
2. *Reset the rocker and base plate or base plate only in final position, by centering the base plate under the sole plate both in the longitudinal and transverse direction.*
3. *Reweld keeper plate to sole plate as required with a $\frac{5}{16}$" fillet weld (See Site Plan for locations).*

At Locations Where Abutment End Dam Is Retained

1. *Raise the entire superstructure at the abutment (all beams simultaneously) until there is no contact between the sole plate and the bearing.*
2. *Reset the rocker and base plate or base plate only in final position, by centering the base plate under the sole plate both in the longitudinal and transverse direction.*
3. *Provide shims under the base plate as required so that after the superstructure is released (all beams simultaneously) firm contact between the rocker and sole plate is established (See Site Plan for locations).*
4. *Reweld keeper plate to sole plate as required with a $\frac{5}{16}$" fillet weld (See Site Plan for locations).*

PROCEDURE FOR SHIMMING BEARINGS

(At Locations Where Bearings Do Not Require Resetting)

1. *Same as above.*
2. *Same as 3 above.*

MICROFILMED
MAR 26 1985

HOWARD, NEEDLES, TAMMEN & BERGENDOFF
CONSULTING ENGINEERS
KANSAS CITY CLEVELAND NEW YORK

BEARING DETAILS

CUYAHOGA COUNTY OHIO

DRAWN BP	TRACED BP	CHECKED WHL	REVIEWED CAB	REVISED
DATE 10-31-73	DATE 10-31-73	DATE 10-22-74	DATE 12-20-74	SHEET CD-3

FHWA REGION	STATE	PROJECT	
5	OHIO		

342
354

CUYAHOGA COUNTY
CUY-90-23.73
LAKE COUNTY
LAK-90-0.00

MICROFILMED
MAR 22 1985

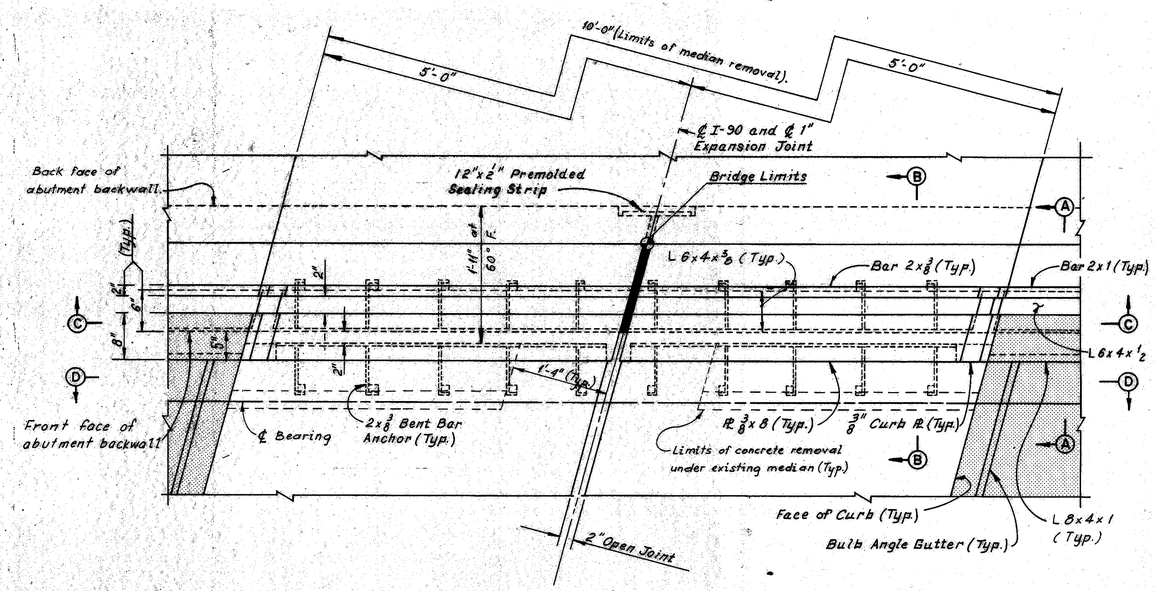

MEDIAN PLAN AT END DAM

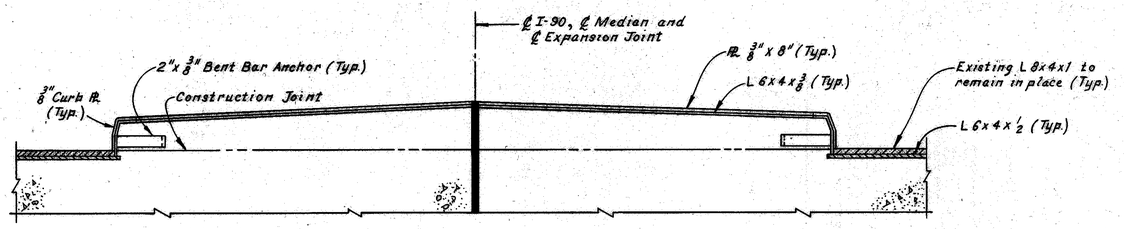

SECTION C-C

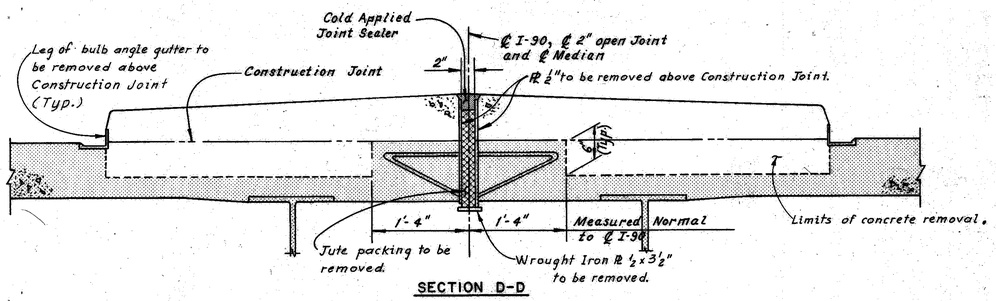

SECTION D-D

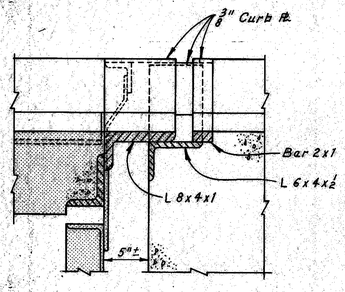

SECTION A-A

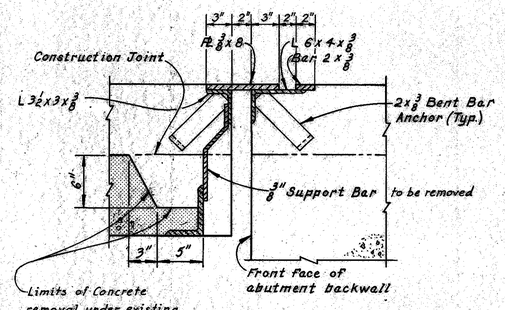

SECTION B-B

Saw cut existing concrete slab along this line at guardrail posts. Include with Item 202, Portions of Structures Removed, for payment.

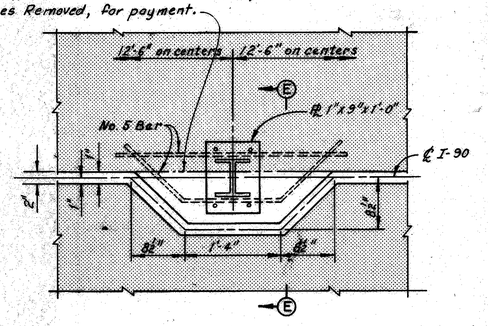

PART PLAN AT GUARDRAIL POST
(Guardrail not shown)

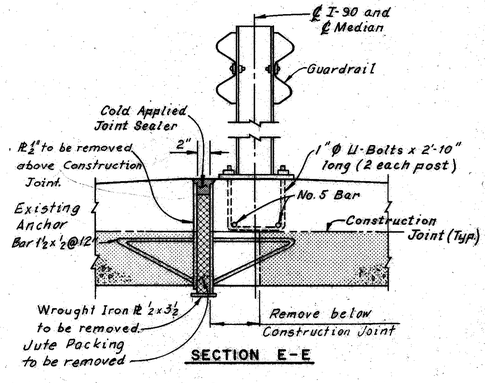

SECTION E-E

Notes:

Indicates portions of structure to remain.

Remove guardrail, posts, nuts, plates, joint sealer and anchor bolts above the construction joint. Include with Item 202, Portions of Structures Removed, for payment.

Remove the existing median above the construction joint.

Remove vertical leg of bulb angle gutter above the construction joint. Include with Item 202, Portions of Structures Removed, for payment.

HOWARD, NEEDLES, TAMMEN & BERGENDOFF
CONSULTING ENGINEERS
KANSAS CITY CLEVELAND NEW YORK

EXISTING PLAN AND SECTIONS AT MEDIAN

CUYAHOGA COUNTY OHIO

DRAWN BMP	TRACED HBB	CHECKED WHL	REVIEWED CAB	REVISED
DATE 7-2-74	DATE 7-15-74	DATE 10-7-74	DATE 12-20-74	SHEET CD-4

FHWA REGION	STATE	PROJECT	
5	OHIO		

343
354

CUYAHOGA COUNTY
CUY-90-23.73
LAKE COUNTY
LAK-90-0.00

MICROFILMED
MAR 22 1985

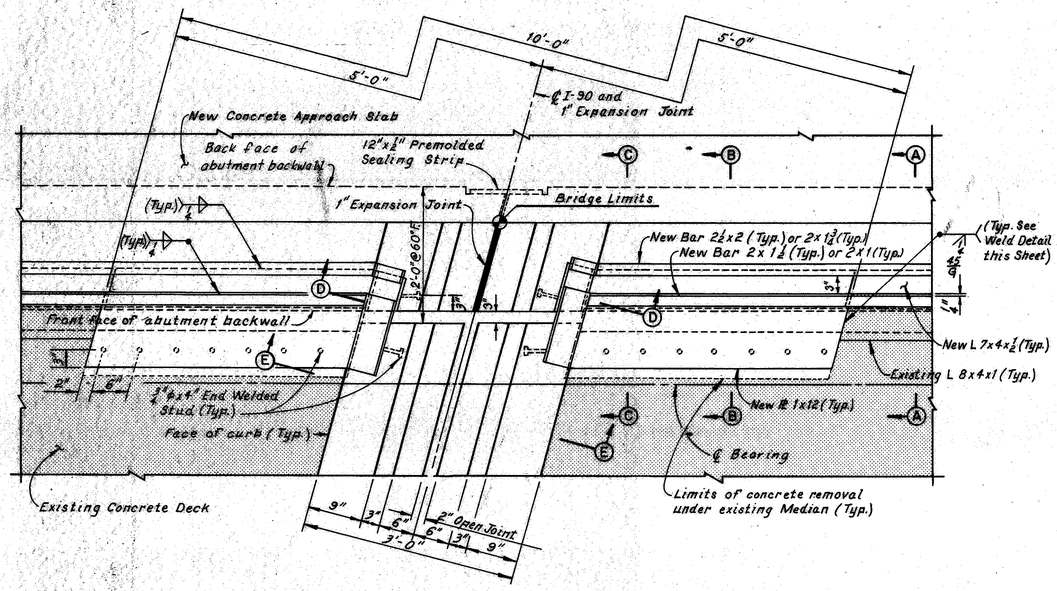

MEDIAN PLAN AT END DAM

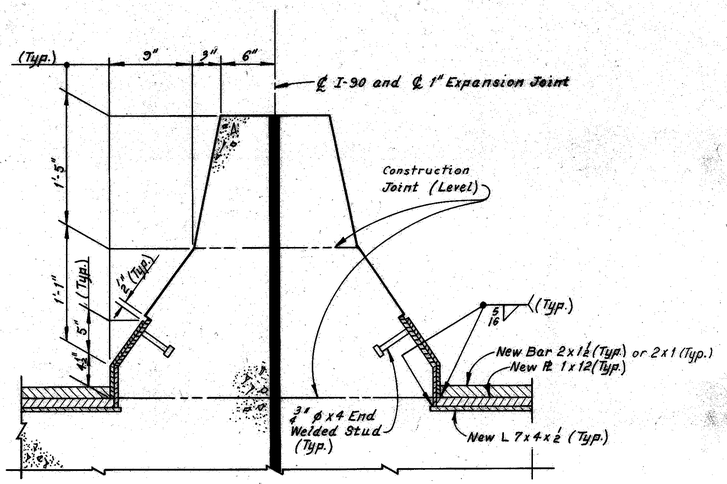

SECTION D-D
(Asphalt Wearing Surface and Reinforcement not Shown)

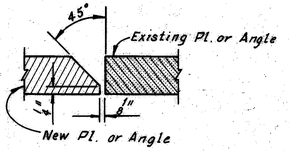

WELD DETAIL

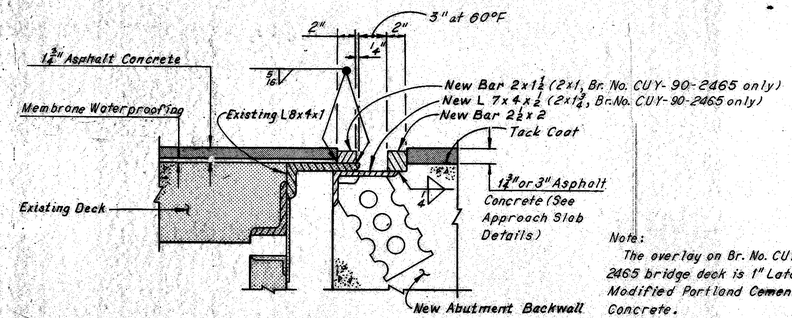

SECTION A-A

Note:
The overlay on Br. No. CUY-90-2465 bridge deck is 1" Latex Modified Portland Cement Concrete.

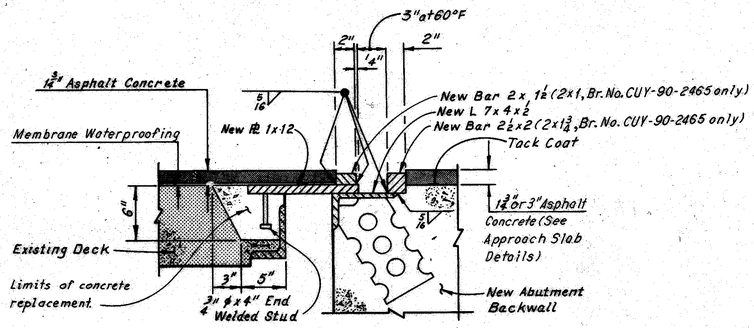

SECTION B-B

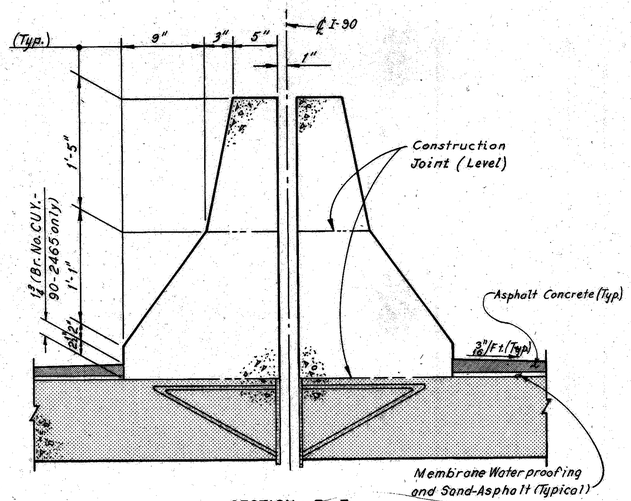

SECTION E-E
(Reinforcement not Shown)

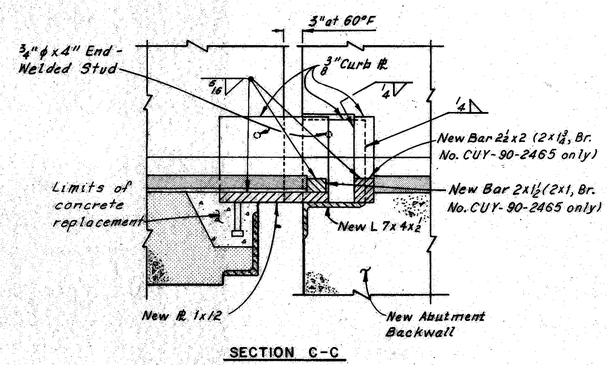

SECTION C-C

Notes:
Indicates existing portions of structure to remain.
For details of barrier median on approach slabs see Roadway Plans.
For additional details of the backwall expansion joint angle not shown see Ohio Standard Drawing SD-1-69, Sheet 1 of 4.

Rev. 7-18-75

HOWARD, NEEDLES, TAMMEN & BERGENDOFF
CONSULTING ENGINEERS
KANSAS CITY CLEVELAND NEW YORK

MODIFIED PLAN AND SECTIONS AT MEDIAN

CUYAHOGA COUNTY OHIO

DRAWN DMP	TRACED HBB	CHECKED WL	REVIEWED CAB	REVISED
DATE 4-8-74	DATE 7-16-74	DATE 10-7-74	DATE 12-20-74	SHEET CD-5

FHWA REGION	STATE	PROJECT	
5	OHIO		

344
354

CUYAHOGA COUNTY
CUY-90-23.73
LAKE COUNTY
LAK-90-0.00

MICROFILMED
MAR 23 1965

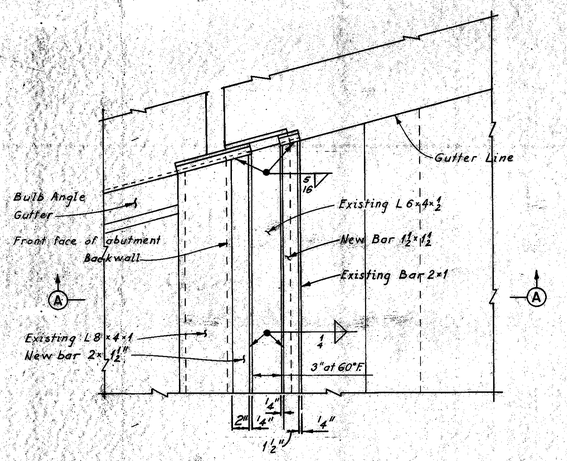

MODIFIED PART PLAN

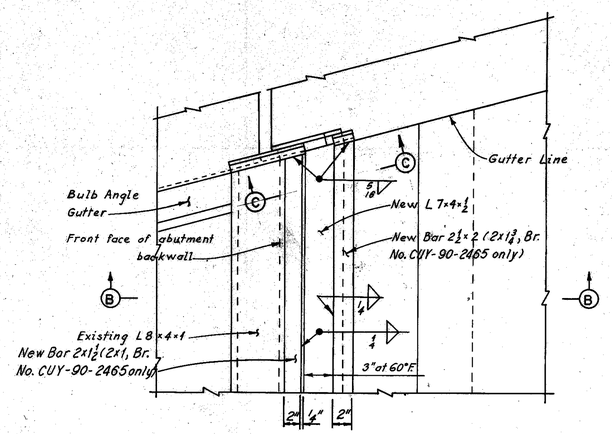

MODIFIED PART PLAN

Note:
The curb plate modifications shown are typical except at the following locations:
BR. NO. CUY-90-2465, Southwest and Northeast
BR. NO. CUY-90-2616, Southwest
BR. NO. CUY-90-2754, Southwest and Northeast
BR. NO. CUY-90-2989, Northwest
For curb plate repair details at these locations, see Sheet CD-10.

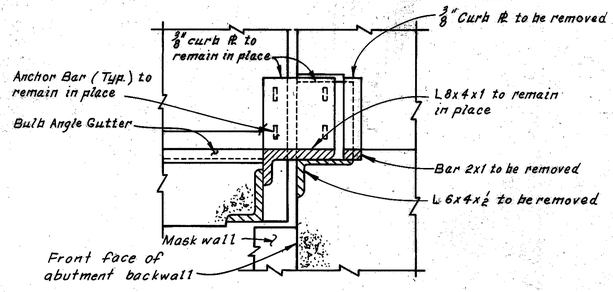

EXISTING SECTION C-C

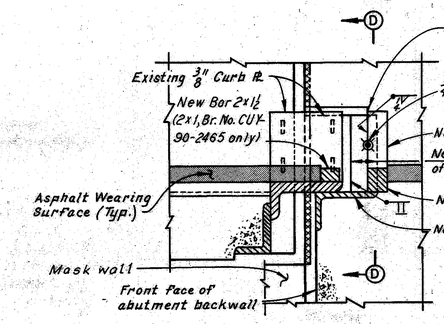

MODIFIED SECTION C-C

Note:
▨ Denotes limits of removal for trimming the wing-wall where indicated in the plans. For additional details, see Sheet CD-8.

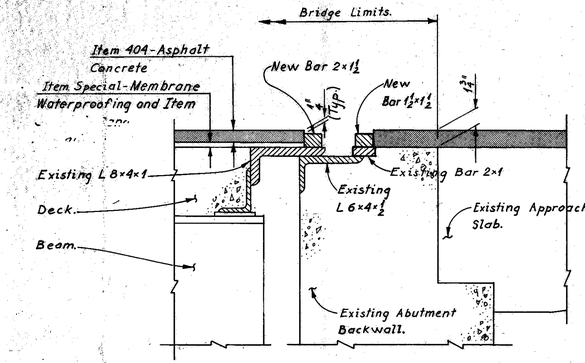

SECTION A-A

EXISTING BACKWALL TO REMAIN IN PLACE

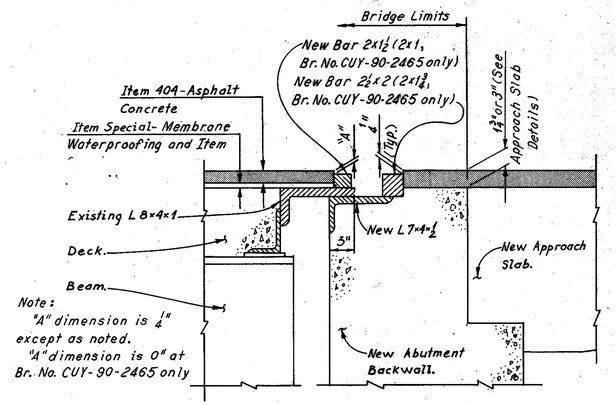

Note:
"A" dimension is ¼" except as noted.
"A" dimension is 0" at Br. No. CUY-90-2465 only

SECTION B-B

Note:
For additional details of backwall expansion joint angle not shown, see Ohio Standard Drawing SD-1-69, Sheet 1 of 4.

Note:
The overlay on Br. No. CUY-90-2465 bridge deck is 1" Latex Modified Portland Cement Concrete.

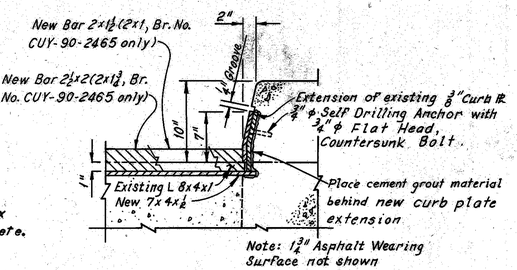

SECTION D-D

Note:
Concrete and steel removal for these repairs shall be included with Item 202, Portions of Structures Removed, for payment.

EXISTING BACKWALL REPLACED

HOWARD, NEEDLES, TAMMEN & BERGENDOFF
CONSULTING ENGINEERS
KANSAS CITY CLEVELAND NEW YORK

RAISING EXPANSION JOINTS

CUYAHOGA COUNTY OHIO

DRAWN BMP	TRACED HBS	CHECKED NR	REVIEWED CAB	REVISED
DATE 7-9-74	DATE 7-18-74	DATE 10-8-74	DATE 12-20-74	SHEET CD-6

Rev. 7-18-75

FHWA REGION	STATE	PROJECT	
5	OHIO		

345
354

CUYAHOGA COUNTY
CUY-90-23.73
LAKE COUNTY
LAK-90-0.00

MICROFILMED
MAR 22 1985

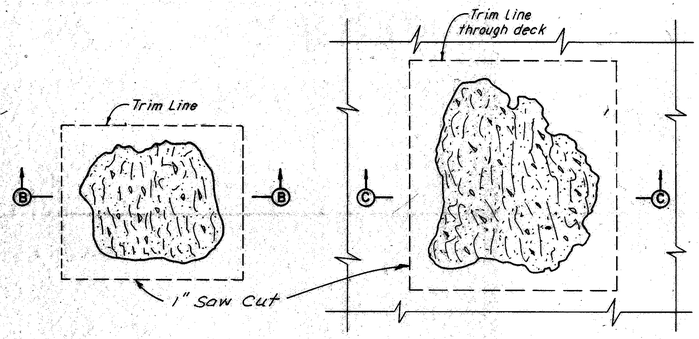

CONCRETE SPALL
LESS THAN FULL DEPTH

CONCRETE SPALL
FULL DEPTH (5" AND OVER)

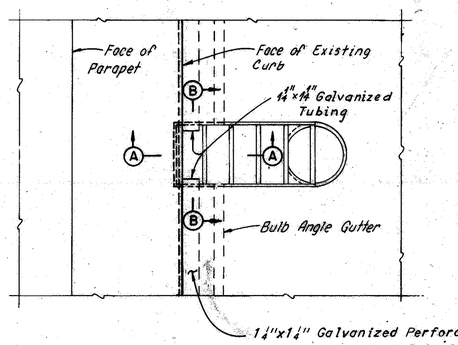

PLAN

Note:
The asphalt wearing course shall be formed to a vertical surface around the periphery of all scuppers.

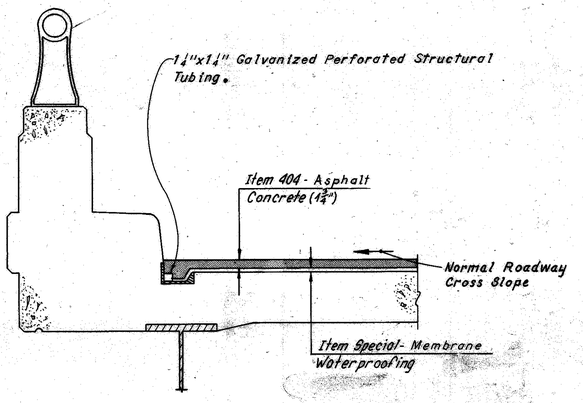

TYPICAL SECTION AT CURB

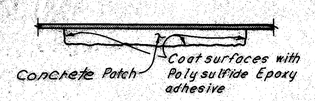

SECTION B-B

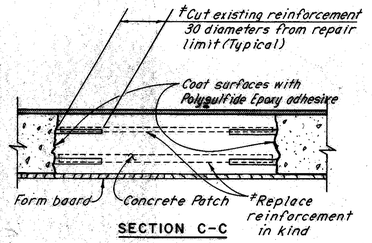

SECTION C-C

† The necessity of replacement of reinforcement shall be determined by the Engineer.

PATCHING CONCRETE DECK

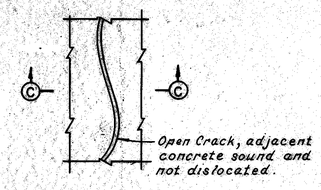

OPEN CRACK

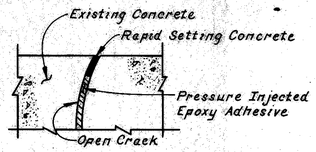

MODIFIED SECTION C-C

REPAIR OF CONCRETE CRACKS

Cracks in existing concrete shall be structurally repaired by the pressure injection of epoxy resin bonding compound. The method of repair shall consist of temporarily sealing the surface of the crack except for occasional openings, injecting the epoxy through the opening so as to completely fill the crack, and then removing the temporary seal. The method shall not deface the surface of the concrete.

The epoxy shall be 100% solids material and shall develop the strength of the concrete. In general, the repair procedure shall be similar to the method used by the Structural Concrete Bonding Division of the Adhesive Engineering Company, 1411 Industrial Road, San Carlos, California.

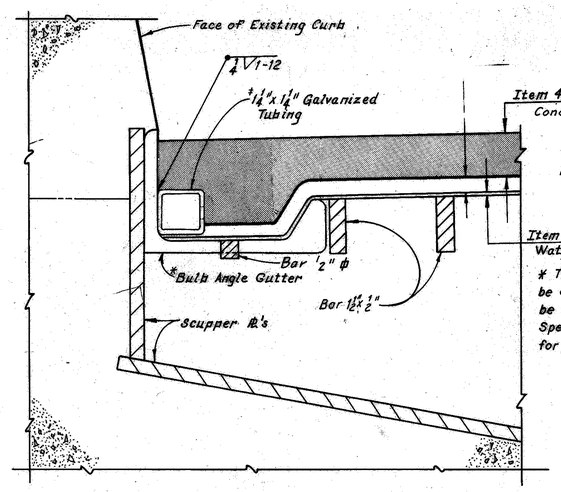

SECTION A-A

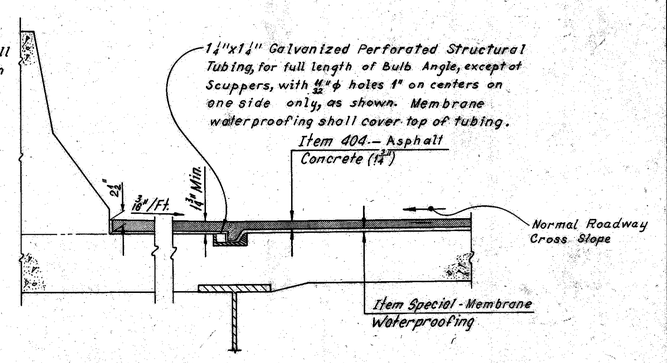

TYPICAL SECTION AT MEDIAN

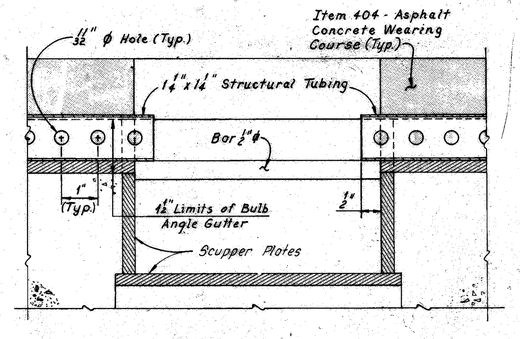

SECTION B-B

SUBDRAINAGE FOR WEARING COURSE

(Subdrainage for wearing course at outside curb shown, subdrainage at median similar.)

WEARING SURFACE TREATMENT

HOWARD, NEEDLES, TAMMEN & BERGENDOFF
CONSULTING ENGINEERS
KANSAS CITY CLEVELAND NEW YORK

ASPHALT WEARING COURSE AND CONCRETE REPAIR DETAILS

CUYAHOGA COUNTY OHIO

DRAWN BJP	TRACED HBB	CHECKED WHL	REVIEWED CAB	REVISED 7-18-75
DATE 6.9.74	DATE 7.20.74	DATE 10.8.74	DATE 12.20.74	SHEET CD-7

FHWA REGION	STATE	PROJECT	
5	OHIO		

346
354

CUYAHOGA COUNTY
CUY-90-23.73
LAKE COUNTY
LAK-90-0.00

MICROFILMED
MAR 22 1985

PROCEDURE FOR TRIMMING EXPANSION JOINTS

1. Install pressure relief joints prior to performing this work (See Detail, CD-9).
2. Trim superstructure angle and curb plate maintaining a 2" nominal dimension between the backwall edge bar and modified angle or plate (See Detail). Special care shall be taken by the Contractor so as not to damage any portion of the end dam members.
3. Where surface roughness results from trimming, the Contractor shall grind those areas as directed by the Engineer.

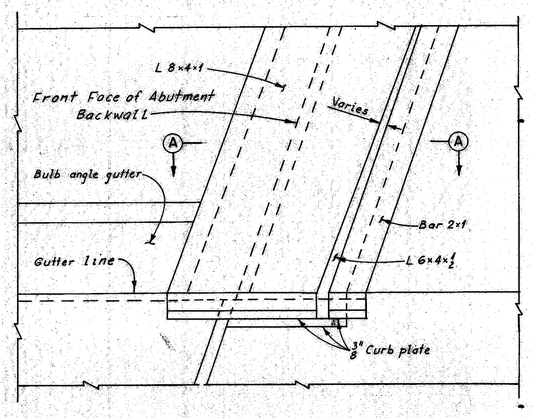

EXISTING PLAN

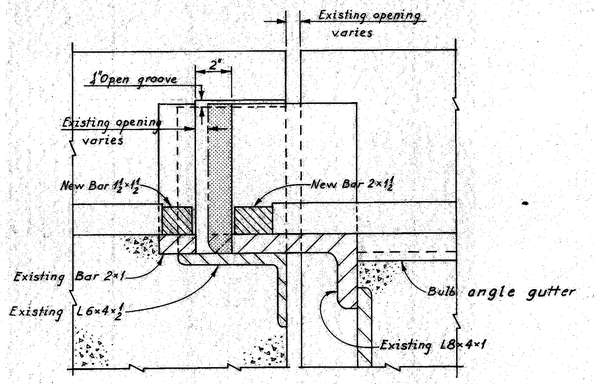

EXISTING AND MODIFIED SECTION A–A

TRIM EXPANSION JOINT

(Steel removal required for this repair including surface grinding shall be included with Item 202, Portions of Structures Removed, for payment)

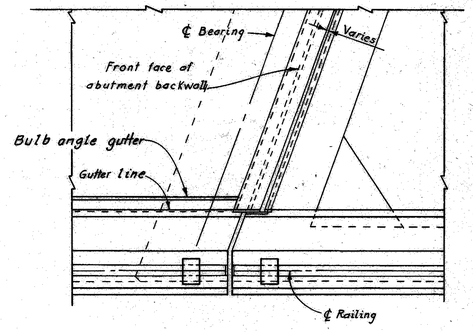

EXISTING TYPICAL SECTION

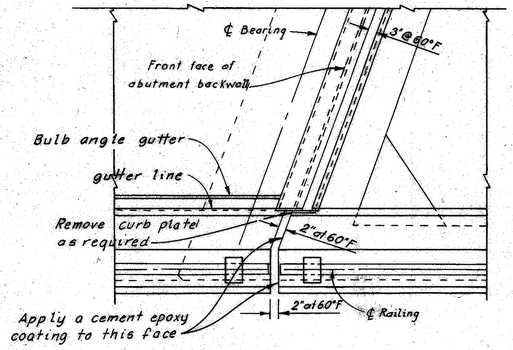

MODIFIED TYPICAL SECTION

Note:
For additional details, see "Raising Expansion Joints, Existing Backwall Replaced", Sheet CD-6 .

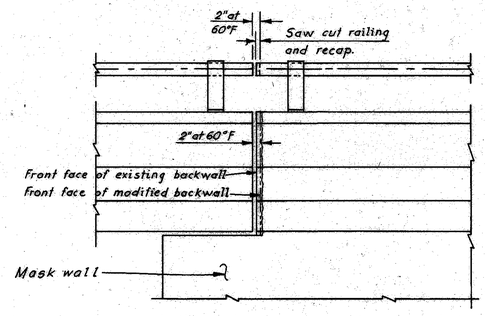

ELEVATION

TRIM WINGWALL

(Concrete and curb plate removal, railing modifications and cement epoxy coating required for this repair shall be included with Item 202, Portions of Structures Removed, for payment).

HOWARD, NEEDLES, TAMMEN & BERGENDOFF
CONSULTING ENGINEERS
KANSAS CITY CLEVELAND NEW YORK

MISCELLANEOUS

REPAIR DETAILS

CUYAHOGA COUNTY OHIO

DRAWN BMP	TRACED HBB	CHECKED WHL	REVIEWED CAG	REVISED
DATE 7.3.74	DATE 7.18.74	DATE 10.6.74	DATE 12.20.74	SHEET CD-8

FHWA REGION	STATE	PROJECT	
5	OHIO		

347
354

CUYAHOGA COUNTY
CUY-90-23.73
LAKE COUNTY
LAK-90-0.00

MICROFILMED
MAR 22 1985

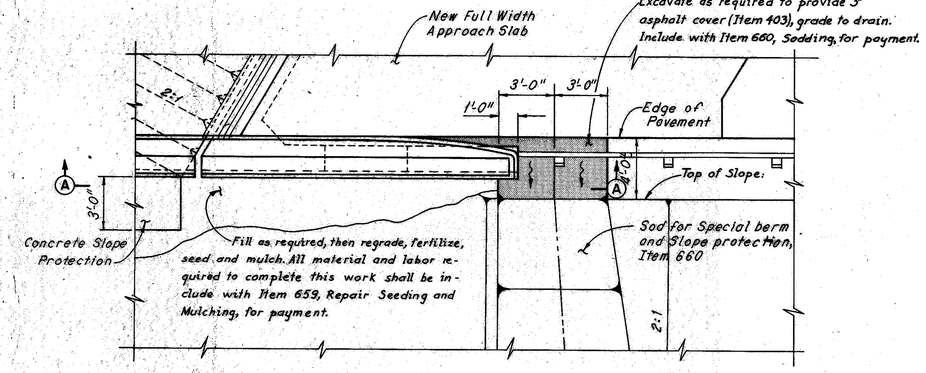

PART PLAN

Note:
For additional notes and Details see Ohio Standard Construction Drawing MC-7.

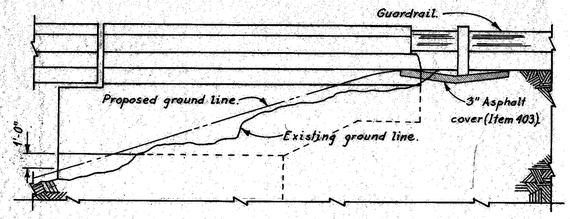

SECTION A-A

DIVERT ROADWAY RUNOFF

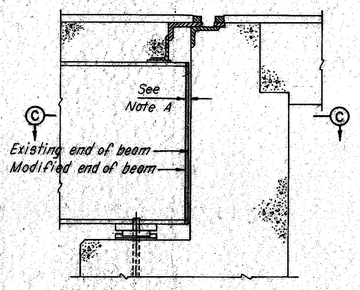

ELEVATION

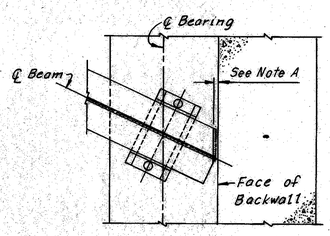

SECTION C-C

TRIM END OF BEAM

Note A
Ends of beams are to be cut to provide 3" clear between the backwall and to the end of the beam, or to the downward leg of the main angle of the end dam, whichever is less. Where existing clearance is 2½" minimum, trimming the beam ends will not be required. (All equipment and labor required to accomplish this work shall be included with Item 202, Portions of Structures Removed, for payment.)

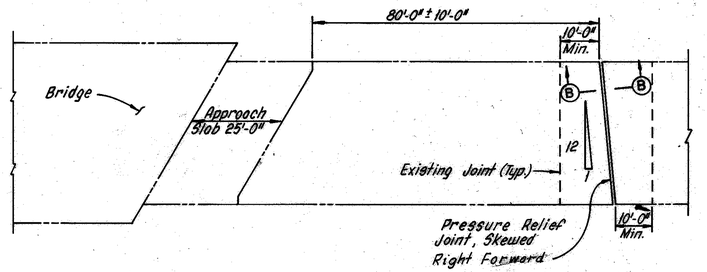

PLAN

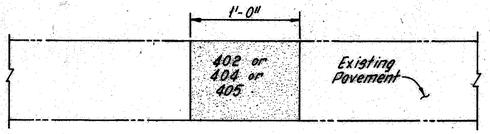

SECTION B-B

PRESSURE RELIEF JOINT

(Install in all approach roadways)

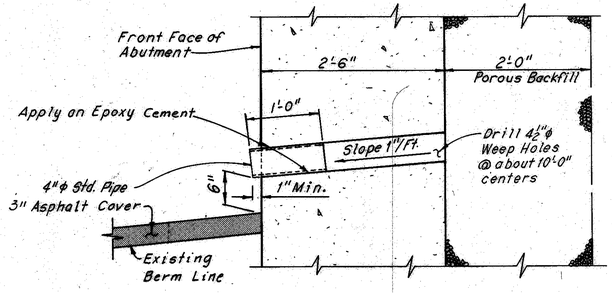

WEEP HOLE

(All material, equipment and labor required to accomplish this work shall be included with Item 202, Portions of Structures Removed, for payment.)

Note:
The deflection joints in the new concrete barrier median shall be 1" gray cellular polyvinyl chloride (PVC) sponge or 1" gray sponge rubber. If rubber is used it shall meet the requirements of AASHO M-153. The deflection joint shall extend from the top of parapet to the first construction joint and is included with Item 511, for payment. Above the upper construction joint the median shall be placed in alternate sections by the use of bulkheads. Closing sections shall be placed after removal of bulkheads and after placement of expansion joint filler. Exposed edges of the filler shall be flush with the surface of concrete and shall be free of mortar.

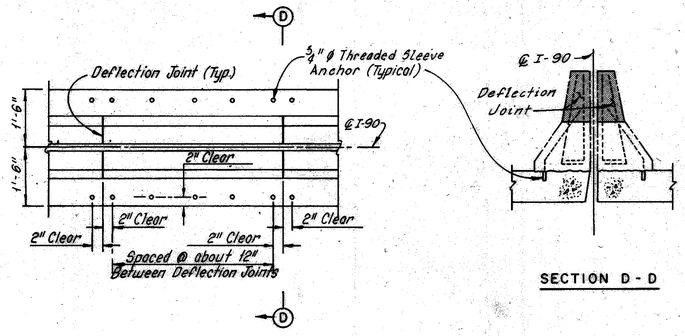

SECTION D-D

THREADED SLEEVE ANCHOR SPACING

MICROFILMED
MAR 26 1985

HOWARD, NEEDLES, TAMMEN & BERGENDOFF
CONSULTING ENGINEERS
KANSAS CITY CLEVELAND NEW YORK

MISCELLANEOUS

REPAIR DETAILS

CUYAHOGA COUNTY OHIO

DRAWN	TRACED	CHECKED	REVIEWED	REVISED
BMP	BMP	MWL	CAB	
DATE 6-13-74	DATE 6-13-74	DATE 10-17-74	DATE 12-20-74	SHEET CD-9

FHWA REGION	STATE	PROJECT	
5	OHIO		

348
354

MICROFILMED
MAR 22 1985

CUYAHOGA COUNTY
CUY-90-23.73
LAKE COUNTY
LAK-90-0.00

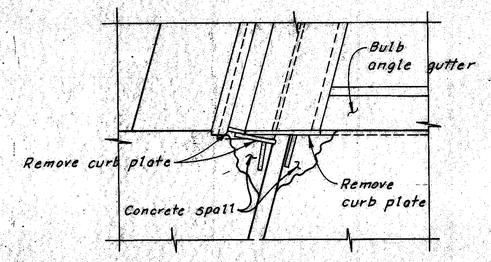

EXISTING PLAN

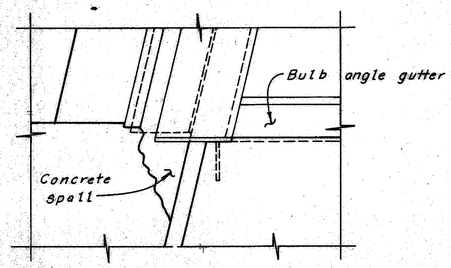

EXISTING PLAN

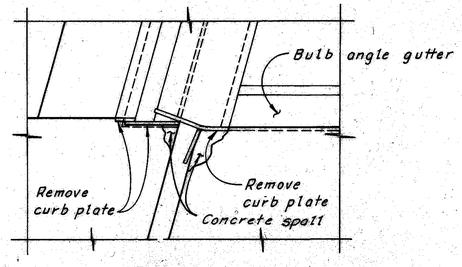

EXISTING PLAN

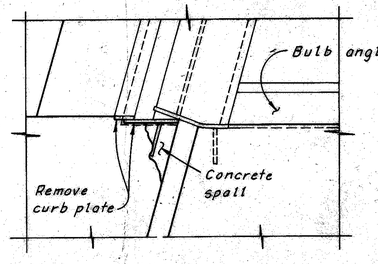

EXISTING PLAN

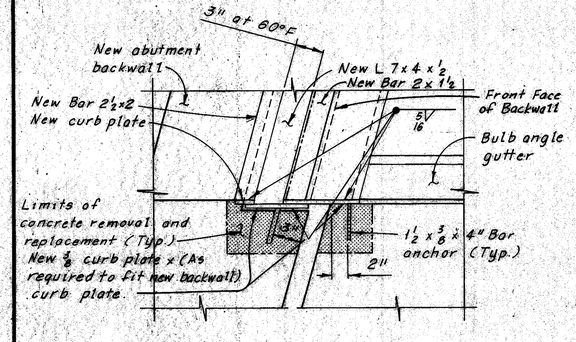

MODIFIED PLAN

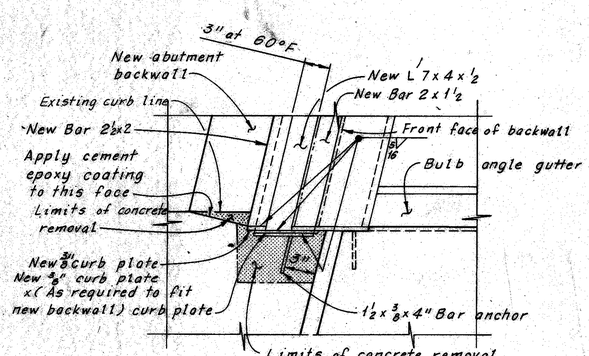

MODIFIED PLAN

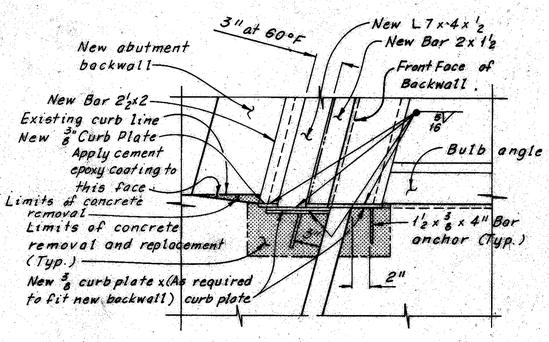

MODIFIED PLAN

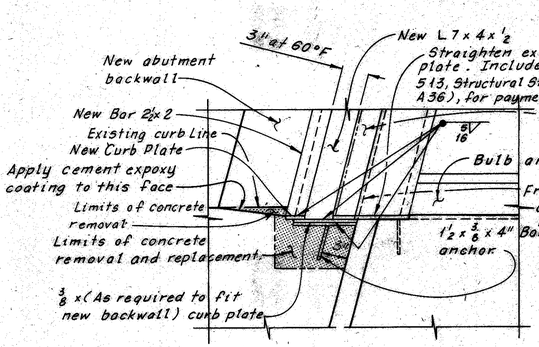

MODIFIED PLAN

REPAIR PROCEDURE

1. Remove all existing curb plates.
2. Remove concrete curb within limits required to set anchors of new curb plates.
3. Align and weld new curb plates to end dam components (after backwall has been replaced) using a ⅜" fillet weld.
4. Replace curb concrete.

TYPE A
(Br. No. Cuy-90-2465, Southwest)

REPAIR PROCEDURE

1. Remove concrete curb within limits required to set anchors of new curb plates.
2. Align and weld new curb plates to end dam components (after backwall has been replaced) using a ⅜" fillet weld.
3. Replace curb concrete.
4. Apply a cement epoxy coating as shown.

TYPE B
(Br. No. Cuy-90-2465, Northeast)

REPAIR PROCEDURE

1. Remove all existing curb plates.
2. Remove concrete curb within limits required to set anchors of new curb plates.
3. Align and weld new curb plates to end dam components (after backwall has been replaced) using a ⅜" fillet weld.
4. Replace curb concrete.
5. Apply a cement epoxy coating as shown.

TYPE C
(Br. No. Cuy-90-2616, Southwest)

REPAIR PROCEDURE

1. Remove concrete curb within limits required to set anchors of new curb plates.
2. Straight curb plate as required to bring into alignment, reweld using a ⅜" fillet weld.
3. Align and weld new curb plates to end dam components (after backwall has been replaced) using a ⅜" fillet weld.
4. Replace curb concrete.
5. Apply a cement epoxy coating as shown.

TYPE D
(Br. No. Cuy-90-2754, Southwest and Northeast) (Br. No. Cuy-90-2989, Northwest)

Notes:

Concrete and steel removal and cement epoxy coating for these repairs shall be included with Item 202, Portions of Structures Removed, for payment.

Replacement of curb concrete shall be included with Item 519, Patching Concrete Structures, for payment.

For dimension of curb plate height, see Section D-D Sheet CD-9.

For additional details of curb plates not shown, see Ohio Standard Drawing SD-1-69, Sheet 1 of 4.

MICROFILMED
MAR 26 1985

HOWARD, NEEDLES, TAMMEN & BERGENDOFF
CONSULTING ENGINEERS
KANSAS CITY CLEVELAND NEW YORK

REPAIR CURB PLATES

CUYAHOGA COUNTY OHIO

DRAWN	TRACED	CHECKED	REVIEWED	REVISED
BHD	AJT	WHL	CAB	
DATE 9-1974	DATE 9-23-74	DATE 10-18-74	DATE 12-20-74	SHEET CD-10

MARK	NO.	LENGTH	TYPE	SER. INCR.	WEIGHT (LBS.)
BR. NO. CUY-90-1599					
ABUTMENT 1B					
AE601	84	3'-3"	104		410
AE602	2	24'-3"	Str.		73
AE603	2	28'-6"	Str.		86
AE604	2	12'-0"	Str.*		36
AE801	1	14'-6"	Str.#		39
AE802	1	15'-0"	Str.#		40
THREADED	INSERTS				
	2		2		3
		TOTAL WEIGHT =			687
BR. NO. CUY-90-2035					
EAST ABUTMENT					
BE501	8	29'-6"	Str.		241
BE502	8	19'-0"	Str.		159
BE503	16	18'-0"	Str.*		300
BE504	16	18'-0"	Str.		300
BE505	4	4'-3"	Str.		18
BE506	4	3'-6"	108		15
BE701	16	6'-0"	Str.#		196
BE801	14	4'-4"	163		162
BE802	80	5'-4"	147		1,139
THREADED	INSERTS				
	16		1		18
		TOTAL WEIGHT =			4,994
WEST ABUTMENT					
BW501	8	29'-0"	Str.		241
BW502	8	19'-0"	Str.		159
BW503	16	18'-0"	Str.*		300
BW504	16	18'-0"	Str.		300
BW505	4	4'-3"	Str.		18
BW506	4	3'-6"	108		15
BW602	22	21'-6"	Str.		83
BW603	118	6'-10"	105		1,211
BW604	118	6'-8"	126		1,152
BW701	16	6'-0"	Str.#		196
BW801	14	4'-4"	163		162
BW802	80	5'-4"	147		1,139
THREADED	INSERTS				
	16		1		18
		TOTAL WEIGHT =			4,994

MARK	NO.	LENGTH	TYPE	SER. INCR.	WEIGHT (LBS.)
BR. NO. CUY-90-2046					
EAST ABUTMENT					
CE501	8	20'-9"	Str.		173
CE502	4	16'-9"	Str.		70
CE503	16	21'-6"	Str.		359
CE504	16	20'-3"	Str.		338
CE505	8	20'-6"	Str.		171
CE506	4	19'-6"	Str.		81
CE507	4	4'-3"	Str.		18
CE508	4	3'-6"	108		15
CE602	45	2'-6"	Str.		169
CE603	118	7'-8"	105		1,359
CE604	118	6'-6"	126		1,152
CE801	30	4'-4"	163		347
CE802	81	5'-4"	147		1,153
		TOTAL WEIGHT =			5,405
WEST ABUTMENT					
CW501	8	20'-9"	Str.		173
CW502	8	19'-6"	Str.		163
CW503	32	20'-3"	Str.		676
CW504	8	19'-9"	Str.		165
CW505	4	4'-3"	Str.		18
CW506	4	3'-6"	108		15
CW602	40	2'-6"	Str.		150
CW603	118	7'-8"	105		1,359
CW604	118	6'-6"	126		1,152
CW801	27	4'-4"	163		312
CW802	80	5'-4"	147		1,139
		TOTAL WEIGHT =			5,322

MICROFILMED
MAR 22 1985

FHWA REGION	STATE	PROJECT	
5	OHIO		

(349)
(354)

CUYAHOGA COUNTY
CUY-90-23.73
LAKE COUNTY
LAK-90-0.00

BENDING DIAGRAMS

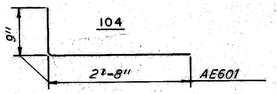

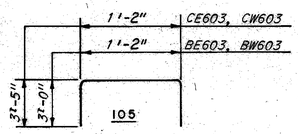

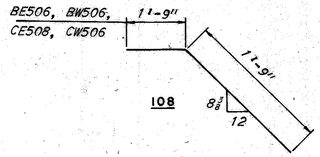

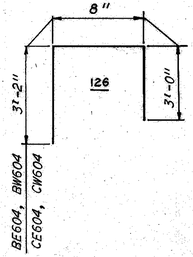

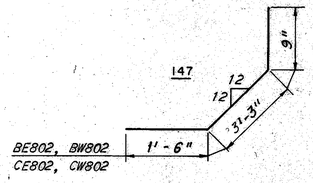

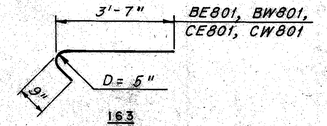

* Weld to Threaded Inserts.
\# Thread one end for connection to Threaded Insert.

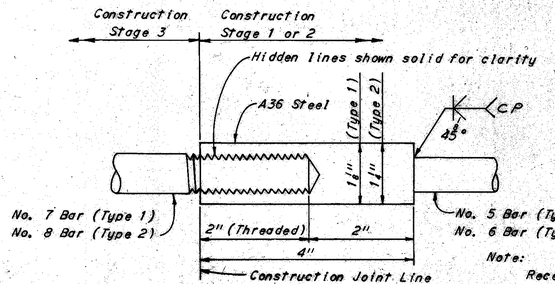

THREADED INSERT DETAIL

(Threads are to be Unified Standard Series for Basic Major Diameter of 3/4" for Type 1 and 1" for Type 2)

Note:
Recess Plugs are to be provided during Construction Stages 1 and 2.

Note:
Welding shall conform to AWS D12.1-61 of the American Welding Society and 513.17 of the Construction and Material Specifications.

Both the welded and threaded connection shall be capable of developing 125 percent of the yield strength of the smaller bar connected. Random samples to be submitted for testing.

Note:
Br. No. CUY-90-1599 is not included in this Contract.

HOWARD, NEEDLES, TAMMEN & BERGENDOFF
CONSULTING ENGINEERS
KANSAS CITY CLEVELAND NEW YORK

REINFORCEMENT SCHEDULE

BR. NO. CUY.-90-1599
90-2035
90-2046

CUYAHOGA COUNTY OHIO

DRAWN C.P.	TRACED C.P.	CHECKED B.P.	REVIEWED C.A.B.	REVISED
DATE 12-3-74	DATE 12-4-74	DATE 12-5-74	DATE 12-20-74	SHEET R-1

MARK	NO.	LENGTH	TYPE	SER. INCR.	WEIGHT (LBS.)
WEST ABUTMENT, NORTHWEST WINGWALL AND SOUTHWEST CLOSURE WALL					
DAW501	8	22'-0"	Str.		184
DAW502	8	4'-9"	Str.		40
DAW503	1Ser. 13	15'-3" 16'-6"	Str.	1¼"	215
DAW504	3	9'-3"	Str.		29
DAW505	3	9'-9"	Str.		31
DAW506	16	5'-11½"	104		99
DAW507	3	5'-5"	148		17
DAW508	14	16'-9"	Str.		245
DAW509	27	3'-3"	Str.		92
DAW510	5	18'-9"	Str.		98
DAW511	14	8'-11"	105		130
DAW512	18	3'-7"	108		67
DAW513	10	23'-9"	Str.		248
DAW514	13	6'-1"	161		82
DAW515	18	2'-1"	105		39
DAW516	2Ser. 5	2'-9" 3'-3"	Str.	1½"	31
DAW517	1	9'-10"	155		10
DAW518	4	4'-9"	Str.		20
DAW519	2Ser. 3	6'-3" 6'-9"	Str.	3"	41
DAW520	2Ser. 4	2'-2" 4'-2"	Str.	8"	26
DAW521	4	7'-3"	Str.		30
DAW522	2	8'-0"	Str.		17
DAW523	2	3'-6"	Str.		7
DAW601	2	5'-6"	104		17
DAW602	2	10'-9"	Str.		32
DAW603	6	6'-0"	104		54
DAW604	4	17'-9"	Str.		107
DAW605	2	10'-3"	Str.		31
DAW606	8	13'-4"	108		160
DAW607	9	10'-9"	126		145
DAW608	1	13'-1"	124		20
DAW609	6	9'-3"	Str.		83
DAW610	3	11'-1"	124		50
DAW611	3	6'-3"	104		28
DAW612	3	4'-2"	105		19
DAW613	2	11'-9"	Str.		35
DAW614	5	11'-0"	Str.		83
DAW615	8	14'-3"	Str.		171
DAW616	6	23'-9"	Str.		214
DAW617	7	8'-6"	135		89
DAW618	1Ser. 8	6'-6" 11'-9"	Str.	9"	110
DAW619	1Ser. 8	5'-9" 14'-0"	Str.	9"	101
DAW620	1	6'-0"	Str.		9
DAW621	1	5'-3"	Str.		8
DAW622	2	6'-8"	104		20
DAW623	2	5'-11"	104		18
DAW624	5	4'-0"	Str.		30
DAW625	5	4'-11"	162		37
DAW626	13	4'-0"	162		78
DAW627	4	8'-10"	100		53
DAW628	6	3'-10"	100		35
DAW629	5	2'-6"	Str.		19
DAW630	4	6'-9"	Str.		41
DAW631	2	3'-8"	104		11
DAW632	2	7'-3"	107		22
DAW633	1	15'-6"	Str.*		23
DAW634	1Ser. 3	14'-3" 14'-9"	Str.*	3"	65
DAW635	4	39'-0"	Str.*		234
DAW636	4	37'-0"	Str.*		222
DAW637	1	13'-9"	Str.*		21
DAW638	3	14'-6"	Str.*		65
DAW639	4	4'-2"	104		25
DAW801	40	16'-5"	105		1,753
DAW802	16	11'-11"	105		509
DAW803	5	21'-7"	101		288
DAW804	1Ser. 3	15'-10" 17'-7"	101	10½"	134
DAW805	3	20'-6"	Str.		164
DAW806	2	5'-3"	Str.		28
DAW807	16	5'-0"	Str.		214
DAW808	1	15'-9"	Str.		42
DAW809	1	14'-9"	Str.		39
DAW810	2	12'-11"	105		69

MARK	NO.	LENGTH	TYPE	SER. INCR.	WEIGHT (LBS.)
DAW811	3	8'-10"	101		71
DAW812	3	7'-9"	Str.		62
DAW813	15	16'-3"	Str.		651
DAW814	13	6'-5"	148		223
DAW815	9	11'-8"	124		280
DAW816	9	6'-3"	104		150
DAW817	9	5'-4"	105		128
DAW818	3	15'-7"	108		125
DAW819	2Ser. 8	3'-0" 12'-3"	Str.	1'-4⅛"	328
DAW820	8	8'-6"	135		182
DAW821	8	11'-6"	Str.*		251
DAW822	8	12'-6"	Str.*		267
DAW823	93	5'-0"	Str.		1,242
DAW1101	4	7'-2"	104		152
DAW1102	4	18'-3"	Str.		388
DAW1103	9	13'-9"	Str.		657
THREADED INSERTS					
	16		2		22
		TOTAL WEIGHT =			12,802
EAST ABUTMENT AND SOUTHEAST CLOSURE WALL					
DAE501	7	5'-11"	104		43
DAE502	7	16'-6"	Str.		120
DAE503	6	8'-11"	105		56
DAE504	10	3'-7"	108		37
DAE505	12	9'-3"	Str.		116
DAE506	1Ser. 10	10'-3" 12'-0"	Str.	2⅝"	116
DAE507	3	10'-6"	Str.		33
DAE508	25	3'-3"	Str.		85
DAE509	4	6'-9"	Str.		28
DAE510	2	8'-6"	Str.		18
DAE511	2Ser. 4	2'-3" 5'-6"	Str.	1'-1"	32
DAE512	4	7'-0"	Str.		29
DAE513	2Ser. 3	3'-3" 5'-0"	Str.	2'-10½"	38
DAE601	12	5'-11"	108		107
DAE602	13	8'-1"	126		158
DAE603	13	6'-10"	104		133
DAE604	5	17'-3"	Str.		130
DAE605	2	18'-0"	Str.		54
DAE606	7	6'-4"	104		67
DAE607	4	14'-6"	Str.*		87
DAE608	4	37'-0"	Str.*		222
DAE609	1Ser. 3	14'-6" 15'-0"	Str.*	3"	66
DAE610	1	13'-9"	Str.*		21
DAE611	4	39'-0"	Str.*		234
DAE612	4	4'-2"	104		25
DAE801	22	16'-5"	105		964
DAE802	2Ser. 4	12'-8" 15'-8"	105	1'-0"	303
DAE803	1Ser. 7	10'-1" 14'-10"	101	1'-0"	233
DAE804	1Ser. 3	7'-5" 10'-3"	Str.	1'-1½"	72
DAE805	2	12'-6"	Str.		67
DAE806	1	14'-0"	Str.		37
DAE807	11	5'-0"	Str.		147
DAE808	1Ser. 4	3'-9" 6'-9"	Str.	1'-0"	56
DAE809	1Ser. 4	4'-10" 7'-10"	101	1'-0"	68
DAE810	4	6'-4"	104		68
DAE811	1	9'-0"	Str.		24
DAE812	1	10'-1"	101		27
DAE813	1	13'-9"	Str.		37
DAE814	1	15'-11"	100		42
DAE815	2	3'-6"	Str.		19
DAE816	2	5'-8"	100		30
DAE817	10	6'-5"	148		171
DAE818	10	16'-3"	Str.		434
DAE819	4	18'-0"	Str.		192
DAE820	8	11'-9"	Str.*		251
DAE821	8	12'-6"	Str.*		267
DAE822	92	5'-0"	Str.		1,228
THREADED INSERTS					
	16		2		22
		TOTAL WEIGHT =			6,814

BENDING DIAGRAMS

100

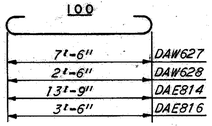

101

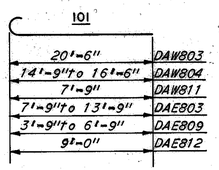

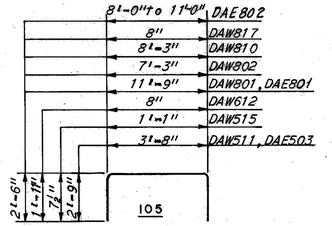

104

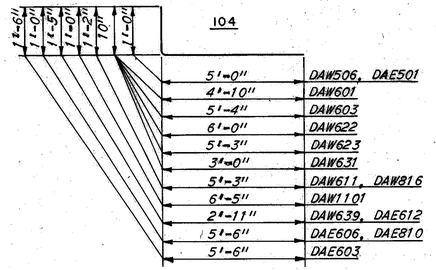

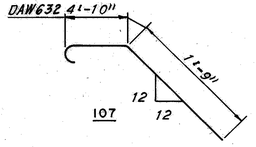

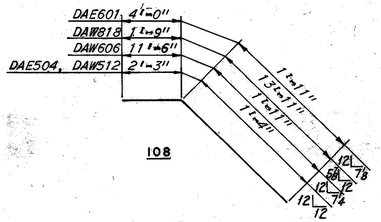

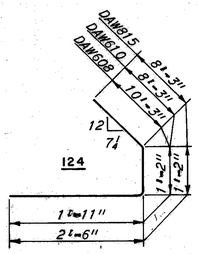

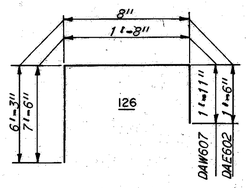

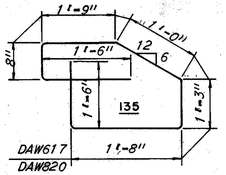

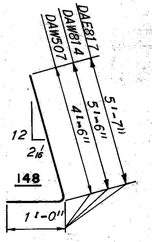

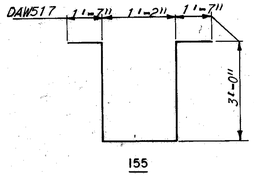

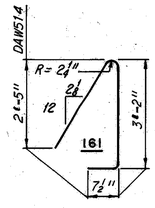

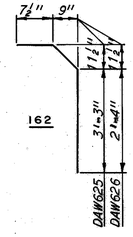

*Weld to Threaded Inserts.
‡Thread one end for connection to Threaded Insert.

Note:
For Threaded Insert Detail, see Sheet R-1.

MICROFILMED
MAR 22 1985

FHWA REGION	STATE	PROJECT	
5	OHIO		

350
354

CUYAHOGA COUNTY
CUY-90-23.73
LAKE COUNTY
LAK-90-0.00

HOWARD, NEEDLES, TAMMEN & BERGENDOFF
CONSULTING ENGINEERS
KANSAS CITY CLEVELAND NEW YORK

REINFORCEMENT SCHEDULE

BR. NO. CUY-90-2200

CUYAHOGA COUNTY OHIO

DRAWN	TRACED	CHECKED	REVIEWED	REVISED
WEB	MS	BP	CAB	
DATE 12-9-74	DATE 12-18-74	DATE 12-20-74	DATE 12-20-74	SHEET R-2

MARK	NO.	LENGTH	TYPE	SER. INCR.	WEIGHT (LBS.)
NORTHEAST WINGWALL					
DWE501	40	2'-1"	105		87
DWE502	2Ser. 5	2'-3" 3'-9"	Str.	1½"	31
DWE503	35	6'-1"	161		222
DWE504	10	19'-3"	Str.		201
DWE505	1	8'-8"	155		9
DWE506	1Ser. 6	7'-10" 16'-6"	155	8⅜"	71
DWE507	1Ser. 11	7'-2" 16'-8"	155	11⅜"	137
DWE508	10	28'-3"	Str.		295
DWE601	14	5'-7"	104		117
DWE602	18	5'-0"	104		135
DWE603	2	10'-2"	104		31
DWE604	4	3'-3"	Str.		20
DWE605	5	2'-9"	Str.		21
DWE606	4	5'-11"	104		36
DWE607	1Ser. 6	5'-0" 7'-9"	Str.	6⅜"	57
DWE608	2	8'-9"	Str.		26
DWE609	3	9'-6"	Str.		43
DWE610	1Ser. 4	11'-6" 15'-0"	Str.	6"	74
DWE611	8	18'-3"	Str.		219
DWE612	1Ser. 4	20'-3" 21'-9"	Str.	6"	126
DWE613	2	22'-9"	Str.		68
DWE614	2Ser. 6	3'-9" 9'-9"	Str.	1'-2⅜"	122
DWE615	12	19'-3"	Str.		347
DWE616	39	8'-6"	135		498
DWE617	2Ser. 7	17'-6" 20'-3"	Str.	9½"	418
DWE618	6	29'-3"	Str.		264
DWE619	20	27'-3"	Str.		819
DWE620	9	3'-4"	105		45
DWE621	9	3'-3"	104		44
DWE622	1	4'-0"	Str.		6
DWE623	39	4'-2"	162		244
DWE624	4	8'-0"	Str.		48
DWE625	4	8'-7"	100		52
DWE626	6	4'-1"	100		37
DWE627	9	6'-3"	Str.		84
DWE628	3	3'-9"	Str.		17
DWE629	2	4'-2"	104		13
DWE630	2	7'-4"	107		22
DWE631	10	12'-7"	100		189
DWE632	9	8'-1"	100		109
DWE633	8	9'-3"	Str.		111
DWE634	7	6'-9"	Str.		71
DWE635	6	5'-0"	104		45
DWE636	2Ser. 3	2'-6" 6'-9"	Str.	2'-1½"	42
DWE637	10	10'-1"	100		151
DWE638	8	8'-9"	Str.		105
DWE639	10	10'-9"	Str.		161
DWE640	6	5'-3"	104		47
DWE641	2Ser. 3	3'-9" 13'-9"	Str.	5'-0"	79
DWE642	5	20'-6"	Str.		154
DWE643	1	4'-11"	162		7
DWE644	4	6'-11"	104		42
DWE645	1Ser. 6	6'-0" 8'-9"	Str.	6⅝"	66
DWE646	5	10'-6"	Str.		79
DWE647	1Ser. 4	12'-6" 14'-9"	Str.	6"	80
DWE648	1Ser. 4	21'-3" 23'-6"	Str.	7"	133
DWE801	3	5'-6"	Str.		44
DWE802	7	4'-3"	Str.		79
DWE803	2	8'-6"	Str.		45
DWE804	2	9'-9"	108		52
DWE805	3	3'-6"	Str.		28
DWE806	2	5'-6"	108		29
DWE807	2	5'-0"	Str.		27
DWE808	6	7'-3"	Str.		116
DWE809	14	16'-3"	Str.		607
DWE810	10	14'-5"	100		385
DWE1001	3	7'-4"	101		95
DWE1002	3	11'-4"	108		146
DWE1003	5	7'-5"	101		160
DWE1004	3	19'-5"	108		251
DWE1005	2	19'-0"	108		164
		TOTAL WEIGHT =			9,005

MARK	NO.	LENGTH	TYPE	SER. INCR.	WEIGHT (LBS.)
NORTHWEST RETAINING WALL					
DRW501	8	7'-6"	Str.		63
DRW502	16	3'-9"	104		63
DRW503	8	7'-9"	Str.		65
DRW504	7	4'-4"	108		32
DRW505	7	6'-0"	Str.		44
DRW506	1Ser. 7	7'-10" 8'-4"	108	1"	59
DRW507	1Ser. 7	1'-8" 2'-2"	Str.	1"	14
DRW601	6	7'-6"	Str.		68
DRW602	7	7'-0"	Str.		74
		TOTAL WEIGHT =			482
SUPERSTRUCTURE					
DSS401	304	30'-0"	Str.		6,092
DSS402	152	22'-9"	Str.		2,310
DSS501	314	30'-0"	Str.		9,825
DSS502	157	23'-3"	Str.		3,907
DSS503	141	13'-4"	101*		1,961
DSS504	141	12'-9"	Str.*		1,875
DSS505	2	13'-6"	101		28
DSS506	2	13'-0"	Str.		27
DSS507	1Ser. 13	3'-6" 18'-6"	101	10"	115
DSS508	1Ser. 13	3'-0" 18'-0"	Str.	10"	108
DSS509	2Ser. 12	2'-3" 18'-0"	Str.*	10"	185
DSS510	117	32'-4"	101*		3,946
DSS511	117	31'-9"	Str.*		3,874
DSS512	2Ser. 36	2'-9" 31'-9"	Str.*	10"	1,295
DSS513	3	32'-4"	101		101
DSS514	3	31'-9"	Str.		99
DSS515	1Ser. 36	3'-4" 32'-4"	101	10"	670
DSS516	1Ser. 36	2'-3" 31'-9"	Str.	10"	648
DSS517	141	13'-10"	101*		2,034
DSS518	141	13'-3"	Str.*		1,949
DSS519	2Ser. 13	2'-10" 18'-0"	Str.*	10"	201
DSS520	2	14'-1"	101		29
DSS521	2	13'-6"	Str.		28
DSS522	1Ser. 13	3'-3" 14'-1"	101	10"	118
DSS523	1Ser. 13	2'-8" 18'-6"	Str.	10"	110
DSS524	115	34'-1"	101*		4,088
DSS525	115	33'-6"	Str.*		4,018
DSS526	2Ser. 38	2'-9" 33'-6"	Str.*	10"	1,437
DSS527	2	34'-1"	101		71
DSS528	2	33'-6"	Str.		70
DSS529	1Ser. 38	3'-3" 34'-1"	101	10"	740
DSS530	1Ser. 38	2'-9" 33'-6"	Str.	10"	718
DSS531	15	31'-3"	Str.		489
DSS532	24	14'-9"	Str.		369
DSS533	116	5'-6"	160		665
DSS534	126	2'-0"	105		263
DSS535	66	3'-0"	142		207
DSS536	66	2'-0"	104		138
DSS537	15	28'-6"	Str.		446
DSS538	24	13'-3"	Str.		332
DSS539	24	27'-9"	Str.		695
DSS540	16	13'-0"	Str.		217
DSS541	4	12'-9"	Str.		53
DSS542	4	13'-3"	Str.		55
DSS543	120	31'-10"	104		480
DSS544	120	3'-1"	148		386
DSS545	120	3'-0"	142		375
DSS546	510	7'-2"	105		3,812
DSS547	298	4'-2"	104		1,295
DSS548	2	2'-3"	Str.		5
DSS549	2	1'-9"	Str.		4
DSS550	4	5'-2"	124		22
DSS551	4	6'-10"	104		29
DSS552	4	4'-1"	104		17
DSS553	4	4'-10"	104		20

MARK	NO.	LENGTH	TYPE	SER. INCR.	WEIGHT (LBS.)
BR. NO. CUY-90-2413					
EAST ABUTMENT					
EE501	32	15'-0"	Str.		501
EE502	32	5'-3"	Str.		175
EE503	32	20'-0"	Str.		667
EE504	4	4'-3"	Str.		18
EE505	4	3'-5"	108		14
EE506	4	3'-1"	148		13
EE601	150	7'-1"	105		1,596
EE602	150	7'-8"	126		1,727
EE801	95	5'-9"	147		1,458
TOTAL WEIGHT =					6,169
WEST ABUTMENT					
EW501	32	15'-0"	Str.		501
EW502	32	5'-3"	Str.		175
EW503	32	20'-0"	Str.		667
EW504	4	4'-3"	Str.		18
EW505	4	3'-5"	108		14
EW506	4	3'-1"	148		13
EW601	150	7'-1"	105		1,596
EW602	150	7'-8"	126		1,727
EW801	95	5'-9"	147		1,458
TOTAL WEIGHT =					6,169
BARRIER MEDIAN					
EM501	64	30'-0"	Str.		2,003
EM502	8	14'-9"	Str.		123
EM503	32	15'-3"	Str.		509
EM504	64	7'-3"	Str.		484
EM505	502	3'-0"	104		1,571
EM506	502	3'-1"	148		1,614
**EM701	502	2'-4"	108		2,394
TOTAL WEIGHT =					8,698
BR. NO. CUY-90-2465					
EAST ABUTMENT					
FE501	40	14'-9"	Str.		615
FE502	40	7'-0"	Str.		292
FE503	40	21'-6"	Str.		897
FE504	4	4'-3"	Str.		18
FE505	4	3'-5"	108		14
FE506	4	3'-1"	148		13
FE601	158	7'-1"	105		1,681
FE602	158	6'-5"	126		1,523
FE801	95	5'-9"	147		1,458
TOTAL WEIGHT =					6,511

MARK	NO.	LENGTH	TYPE	SER. INCR.	WEIGHT (LBS.)
WEST ABUTMENT					
FW501	40	14'-9"	Str.		615
FW502	40	6'-9"	Str.		282
FW503	40	21'-3"	Str.		887
FW504	4	4'-3"	Str.		18
FW505	4	3'-5"	108		14
FW506	4	3'-1"	148		13
FW601	158	7'-1"	105		1,681
FW602	158	6'-5"	126		1,523
FW801	95	5'-9"	147		1,458
TOTAL WEIGHT =					6,491
BARRIER MEDIAN					
FM501	72	30'-0"	Str.		2,253
FM502	8	5'-9"	Str.		48
FM503	10	12'-0"	Str.		125
FM504	64	6'-0"	Str.		401
FM505	12	14'-0"	Str.		175
FM506	12	14'-3"	Str.		178
FM507	10	12'-3"	Str.		128
FM508	2	11'-9"	Str.		25
FM509	2	12'-6"	Str.		26
FM510	562	3'-0"	104		1,758
FM511	562	3'-1"	148		1,807
**FM701	562	2'-4"	108		2,680
TOTAL WEIGHT =					9,604
BR. NO. CUY-90-2616					
EAST ABUTMENT					
GE501	16	22'-6"	Str.		375
GE502	4	3'-1"	148		13
GE503	4	4'-3"	Str.		18
GE504	4	3'-5"	108		14
GE505	16	20'-6"	Str.		342
GE506	16	3'-6"	Str.		58
GE507	16	19'-6"	Str.		325
GE508	16	23'-0"	Str.		384
GE601	165	7'-1"	105		1,755
GE602	165	7'-2"	126		1,776
GE801	103	6'-2"	147		1,696
TOTAL WEIGHT =					6,756
WEST ABUTMENT					
GW501	16	17'-3"	Str.		288
GW502	16	4'-3"	Str.		71
GW503	16	20'-6"	Str.		342
GW504	4	4'-3"	Str.		18
GW505	4	3'-5"	108		14
GW506	4	3'-1"	148		13
GW507	16	22'-3"	Str.		371
GW508	16	24'-3"	Str.		405
GW601	168	7'-1"	105		1,787
GW602	168	7'-2"	126		1,808
GW801	105	6'-2"	147		1,729
TOTAL WEIGHT =					6,846
BARRIER MEDIAN					
GM501	56	30'-0"	Str.		1,752
GM502	8	22'-0"	Str.		184
GM503	16	15'-3"	Str.		254
GM504	48	5'-9"	Str.		288
GM505	16	13'-6"	Str.		225
GM506	4	15'-0"	Str.		63
GM507	4	15'-6"	Str.		66
GM508	484	3'-1"	104		1,556
GM509	484	2'-11"	148		1,472
**GM701	484	2'-4"	108		2,308
TOTAL WEIGHT =					8,168

BENDING DIAGRAMS

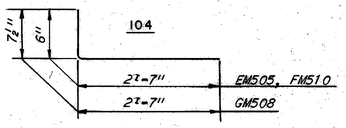

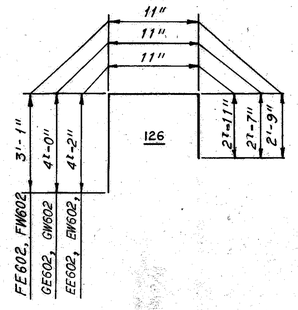

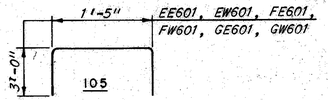

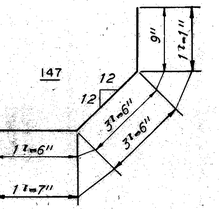

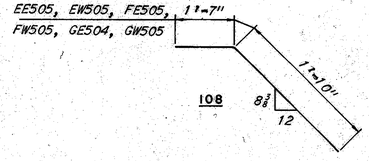

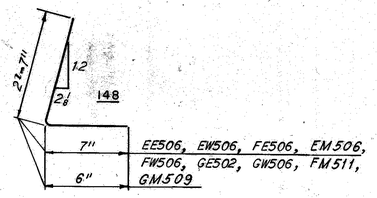

**3/4" Thread for 1 1/4" in length at one end.

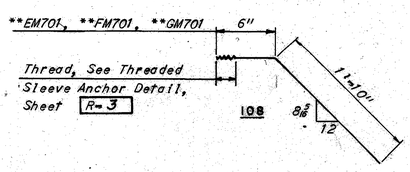

FHWA REGION	STATE	PROJECT	
5	OHIO		

352
354

CUYAHOGA COUNTY
CUY-90-23.73
LAKE COUNTY
LAK-90-0.00

HOWARD, NEEDLES, TAMMEN & BERGENDOFF
CONSULTING ENGINEERS
KANSAS CITY CLEVELAND NEW YORK

REINFORCEMENT SCHEDULE

BR. NO. CUY.-90-2413
90-2465
90-2616

CUYAHOGA COUNTY OHIO

DRAWN	TRACED	CHECKED	REVIEWED	REVISED
C.P.	C.P.	G.P.	GAB	-
DATE 12-9-74	DATE 12-10-74	DATE 12-24-74	DATE 12-27-74	SHEET R-4

MICROFILMED
MAR 22 1985

MARK	NO.	LENGTH	TYPE	SER. INCR.	WEIGHT (LBS.)
BR. NO. CUY-90-2639					
EAST ABUTMENT					
HE501	16	20'-3"	Str.		338
HE502	8	3'-9"	Str.		31
HE503	16	22'-9"	Str.		380
HE504	4	4'-3"	Str.		18
HE505	4	3'-9"	108		16
HE506	4	3'-3"	148		14
HE507	16	19'-6"	Str.		320
HE508	16	6'-3"	Str.		104
HE509	16	13'-6"	Str.		225
HE601	160	7'-1"	105		1,702
HE602	160	7'-2"	126		1,722
HE801	103	5'-9"	147		1,581
		TOTAL WEIGHT =			6,456
WEST ABUTMENT					
HW501	16	14'-0"	Str.		234
HW502	16	6'-0"	Str.		100
HW503	16	19'-6"	Str.		325
HW504	4	4'-3"	Str.		18
HW505	4	3'-9"	108		16
HW506	4	3'-3"	148		14
HW507	16	22'-6"	Str.		375
HW508	16	3'-3"	Str.		54
HW509	16	19'-9"	Str.		330
HW601	160	7'-1"	105		1,702
HW602	160	7'-2"	126		1,722
HE801	103	5'-9"	147		1,581
		TOTAL WEIGHT =			6,471
BARRIER MEDIAN					
HM501	64	30'-0"	Str.		2,003
HM502	8	14'-0"	Str.		117
HM503	16	11'-0"	Str.		184
HM504	64	5'-9"	Str.		384
HM505	24	12'-9"	Str.		319
HM506	4	11'-3"	Str.		47
HM507	4	10'-9"	Str.		45
HM508	540	3'-1"	104		1,737
HM509	540	3'-1"	148		1,737
** HM701	540	2'-4"	108		2,575
		TOTAL WEIGHT =			9,148
BR. NO. CUY-90-2674					
EAST ABUTMENT					
JE501	16	14'-3"	Str.		238
JE502	16	9'-0"	Str.		150
JE503	16	7'-3"	Str.		121
JE504	16	14'-9"	Str.		246
JE505	16	15'-0"	Str.		250
JE506	32	8'-3"	Str.		275
JE507	16	14'-0"	Str.		234
JE508	4	3'-3"	148		14
JE509	4	4'-3"	Str.		18
JE510	4	3'-8"	108		15

MARK	NO.	LENGTH	TYPE	SER. INCR.	WEIGHT (LBS.)
JE601	172	7'-1"	105		1,830
JE602	172	7'-2"	126		1,851
JE801	110	5'-9"	147		1,689
		TOTAL WEIGHT =			6,931
WEST ABUTMENT					
JW501	16	14'-3"	Str.		238
JW502	16	9'-0"	Str.		150
JW503	16	7'-3"	Str.		121
JW504	16	14'-9"	Str.		246
JW505	16	15'-0"	Str.		250
JW506	32	8'-3"	Str.		275
JW507	16	14'-0"	Str.		234
JW508	4	3'-3"	148		14
JW509	4	4'-3"	Str.		18
JW510	4	3'-8"	108		15
JW601	172	7'-1"	105		1,830
JW602	172	7'-2"	126		1,851
JW801	110	5'-9"	147		1,689
		TOTAL WEIGHT =			6,931
BARRIER MEDIAN					
JM501	40	30'-0"	Str.		1,252
JM502	20	10'-9"	Str.		224
JM503	40	5'-9"	Str.		240
JM504	12	13'-9"	Str.		172
JM505	8	32"-0"	Str.		267
JM506	4	11'-0"	Str.		46
JM507	378	3'-1"	104		1,216
JM508	378	3'-1"	148		1,216
**JM701	378	2'-4"	108		1,803
		TOTAL WEIGHT =			6,436
BR. NO. CUY-90-2754					
EAST ABUTMENT					
KE501	1	14'-0"	Str.		15
KE502	1 Ser. 3	13'-3" 14'-3"	Str.	6"	43
KE503	2	13'-6"	Str.		28
KE504	2	14'-3"	Str.		30
KE505	32	14'-9"	Str.		492
KE506	1	6'-6"	Str.		7
KE507	1 Ser. 3	6'-0" 7'-0"	Str.	6"	20
KE508	6	12'-6"	Str.		78
KE509	6	12'-0"	Str.		75
KE510	4	11'-6"	Str.		48
KE511	1	8'-0"	Str.		8
KE512	1 Ser. 3	7'-3" 8'-6"	Str.	7½"	25
KE513	1	12'-3"	Str.		13
KE514	1 Ser. 3	11'-0" 12'-0"	Str.	6"	39
KE515	2	6'-0"	Str.		13
KE516	2	7'-3"	Str.		15
KE517	2	5'-6"	Str.		11
KE518	6	4'-3"	Str.		27
KE519	4	3'-2"	148		13
KE520	4	4'-0"	108		17
KE601	25	6'-10"	105		257
KE602	25	6'-11"	126		260

MARK	NO.	LENGTH	TYPE	SER. INCR.	WEIGHT (LBS.)
KE801	16	5'-9"	147		246
KE802	96	3'-11"	163		1,004
		TOTAL WEIGHT =			2,784
WEST ABUTMENT					
KW501	20	7'-9"	Str.		162
KW502	2 Ser. 3	7'-6" 8'-0"	Str.	3"	48
KW503	64	14'-9"	Str.		985
KW504	3	6'-6"	Str.		20
KW505	4	7'-3"	Str.		30
KW506	1 Ser. 3	6'-3" 7'-3"	Str.	6"	21
KW507	10	12'-6"	Str.		130
KW508	14	12'-0"	Str.		175
KW509	8	11'-6"	Str.		96
KW510	3	8'-0"	Str.		25
KW511	1 Ser. 3	7'-3" 8'-6"	Str.	7½"	25
KW512	2 Ser. 3	6'-9" 7'-3"	Str.	3"	44
KW513	4	4'-3"	Str.		18
KW514	4	3'-2"	148		13
KW515	4	4'-0"	108		17
KW601	196	6'-10"	105		2,012
KW602	196	6'-11"	126		2,036
KW801	110	5'-9"	147		1,689
		TOTAL WEIGHT =			7,546
BARRIER MEDIAN					
KM501	64	30'-0"	Str.		2,003
KM502	4	13'-6"	Str.		56
KM503	16	13'-3"	Str.		221
KM504	48	6'-6"	Str.		325
KM505	16	15'-6"	Str.		259
KM506	4	13'-0"	Str.		54
KM507	500	3'-1"	104		1,608
KM508	500	3'-1"	148		1,608
**KM701	500	2'-4"	108		2,385
		TOTAL WEIGHT =			8,519

FHWA REGION	STATE	PROJECT	
5	OHIO		

353
354

CUYAHOGA COUNTY
CUY-90-23.73
LAKE COUNTY
LAK-90-0.00

BENDING DIAGRAMS

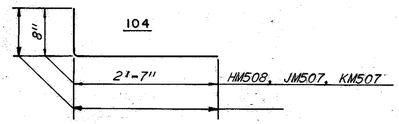

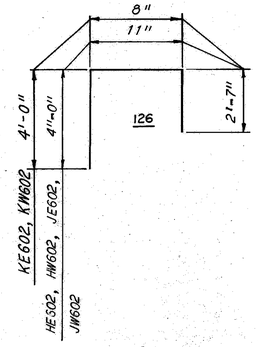

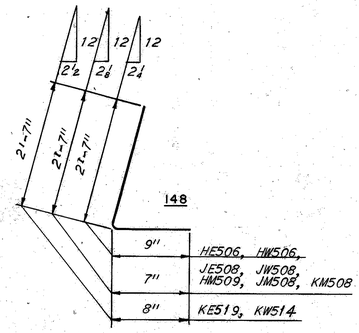

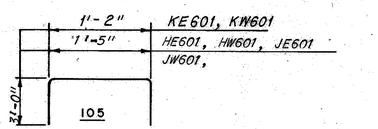

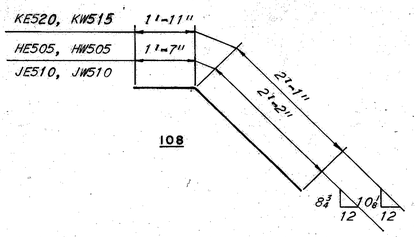

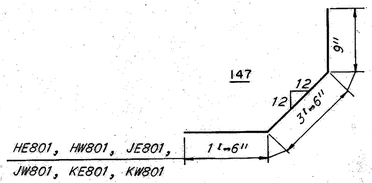

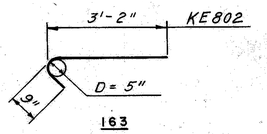

**Thread for 1¼" in length at one end.

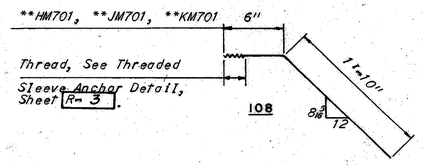

MICROFILMED
MAR 22 1985

HOWARD, NEEDLES, TAMMEN & BERGENDOFF
CONSULTING ENGINEERS
KANSAS CITY CLEVELAND NEW YORK

REINFORCEMENT SCHEDULE

BR. NO. CUY.-90-2639
90-2674
90-2754

CUYAHOGA COUNTY OHIO

DRAWN C.P.	TRACED M.S.	CHECKED B.P.	REVIEWED CAB	REVISED
DATE 12-9-74	DATE 12-10-74	DATE 12-23-74	DATE 12-30-74	SHEET R-5

MARK	NO.	LENGTH	TYPE	SER. INCR.	WEIGHT (LBS.)
BR. NO. CUY-90-2840					
EAST ABUTMENT					
LE501	16	11'-9"	Str.		196
LE502	16	17'-6"	Str.		292
LE503	8	6'-6"	Str.*		54
LE504	32	14'-9"	Str.		492
LE505	4	4'-3"	Str.		18
LE506	4	3'-1"	148		13
LE507	4	3'-5"	108		14
LE508	8	6'-2"	Str.*		51
LE601	138	7'-1"	105		1,468
LE602	138	6'-7"	126		1,365
LE701	16	6'-0"	Str.#		196
LE801	94	5'-9"	147		1,443
THREADED INSERTS					
	16		1		18
		TOTAL WEIGHT =			5,620
WEST ABUTMENT					
LW501	16	11'-9"	Str.		196
LW502	16	17'-6"	Str.		292
LW503	8	6'-6"	Str.*		54
LW504	32	14'-9"	Str.		492
LW505	4	4'-3"	Str.		18
LW506	4	3'-1"	148		13
LW507	4	3'-5"	108		14
LW508	8	6'-2"	Str.*		51
LW601	138	7'-1"	105		1,468
LW602	138	6'-7"	126		1,365
LW701	16	6'-0"	Str.#		196
LW801	94	5'-9"	147		1,443
THREADED INSERTS					
	16		1		18
		TOTAL WEIGHT =			5,620
BARRIER MEDIAN					
LM501	56	30'-0"	Str.		1,752
LM502	8	6'-6"	Str.		275
LM503	8	14'-0"	Str.		350
LM504	16	12'-3"	Str.		204
LM505	460	2'-11"	104		1,399
LM506	460	3'-1"	148		1,479
LM507	8	6'-6"	Str.		54
LM701	460	2'-4"	108**		2,194
		TOTAL WEIGHT =			7,707

MARK	NO.	LENGTH	TYPE	SER. INCR.	WEIGHT (LBS.)
BR. NO. CUY-90-2910					
EAST ABUTMENT					
ME503	4	3'-1"	148		13
ME504	2	3'-0"	104		7
ME505	2	4'-4"	105		8
ME701	4	3'-11"	108		32
		TOTAL WEIGHT =			60
WEST ABUTMENT					
MW501	6	7'-9"	Str.		48
MW502	12	6'-3"	Str.		78
MW503	4	3'-1"	148		13
MW504	2	3'-0"	104		7
MW505	2	4'-1"	105		8
MW506	6	8'-0"	Str.		50
MW601	9	9'-1"	105		123
MW602	17	6'-9"	126		172
MW603	17	6'-5"	105		164
MW701	4	3'-11"	108		32
		TOTAL WEIGHT =			695
BARRIER MEDIAN					
MM501	72	30'-0"	Str.		2,253
MM502	8	5'-6"	Str.		46
MM503	12	12'-6"	Str.		156
MM504	16	5'-0"	Str.		83
MM505	8	14'-3"	Str.		119
MM506	48	6'-0"	Str.		300
MM507	24	12'-0"	Str.		300
MM508	2	11'-6"	Str.		24
MM509	2	13'-3"	Str.		28
MM510	580	2'-11"	104		1,764
MM511	580	3'-1"	148		1,865
MM701	580	2'-4"	108**		2,766
		TOTAL WEIGHT =			9,704
BR. NO. CUY-90-2969R					
EAST ABUTMENT					
RE501	8	16'-9"	Str.		140
RE502	8	11'-3"	Str.		94
RE601	37	2'-1"	104		116
RE602	15	2'-6"	Str.		56
RE801	35	3'-11"	163		368
		TOTAL WEIGHT =			772
WEST ABUTMENT					
RW501	4	7'-6"	Str.		31
RW502	4	11'-0"	Str.		46
		TOTAL WEIGHT =			77

MARK	NO.	LENGTH	TYPE	SER. INCR.	WEIGHT (LBS.)
BR. NO. CUY-90-2969L					
NORTH - ABUTMENT					
SN501	16	20'-6"	Str.		342
SN601	40	6'-5"	126		386
SN602	40	6'-11"	105		416
SN801	28	5'-7"	147		417
		TOTAL WEIGHT =			1,561
NORTH ABUTMENT - RAMP 2					
SR501	8	15'-3"	Str.		127
SR502	8	10'-9"	Str.		90
SR601	9	2'-6"	Str.		34
SR602	20	6'-10"	105		205
SR603	20	6'-3"	126		188
SR801	6	3'-11"	163		63
SR802	14	5'-4"	147		199
		TOTAL WEIGHT =			906
SOUTH ABUTMENT					
SS501	8	20'-6"	Str.		171
SS502	16	22'-9"	Str.		380
SS601	63	6'-5"	126		607
SS602	63	6'-11"	105		654
SS801	43	5'-7"	147		641
		TOTAL WEIGHT =			2,453
BR. NO. CUY-90-2989R					
NORTH ABUTMENT					
TN501	3	16'-9"	Str.		52
TN502	3	7'-9"	Str.		24
TN503	3	3'-6"	Str.		11
		TOTAL WEIGHT =			87
SOUTH ABUTMENT					
TS501	6	14'-0"	Str.		88
TS502	6	9'-3"	Str.		58
		TOTAL WEIGHT =			146

MARK	NO.	LENGTH	TYPE	SER. INCR.	WEIGHT (LBS.)
BR. NO. CUY-90-2989L					
NORTH ABUTMENT					
UN501	4	24'-6"	Str.		102
UN502	4	26'-6"	Str.		111
UN801	37	3'-11"	163		387
		TOTAL WEIGHT =			600
SOUTH ABUTMENT					
US501	4	24'-6"	Str.		102
US502	4	26'-6"	Str.		111
US801	37	3'-11"	163		387
		TOTAL WEIGHT =			600
BR. NO. LAK-90-0009R					
SOUTH ABUTMENT					
VS501	4	14'-3"	Str.		59
		TOTAL WEIGHT =			59

**Thread for 1½" in length at one end.

BENDING DIAGRAMS

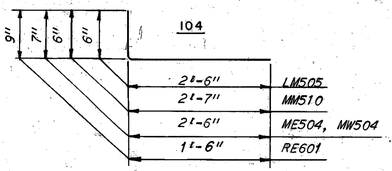

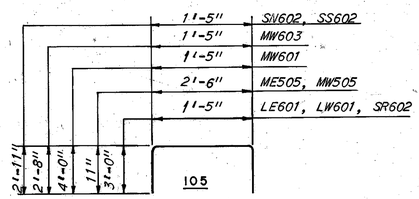

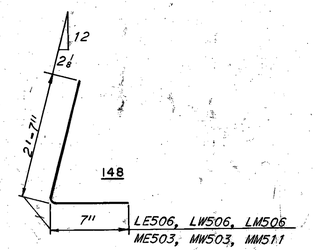

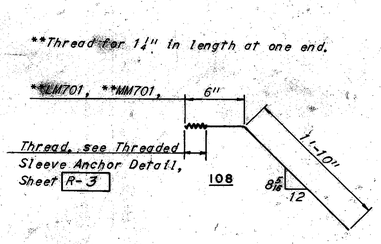

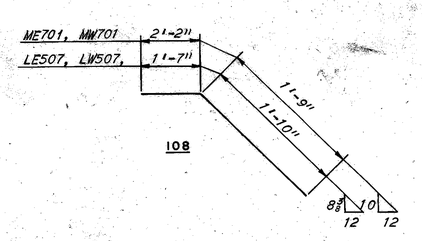

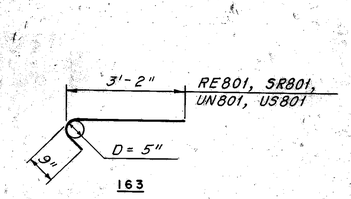

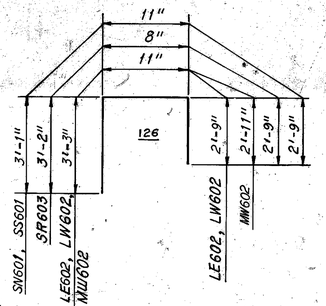

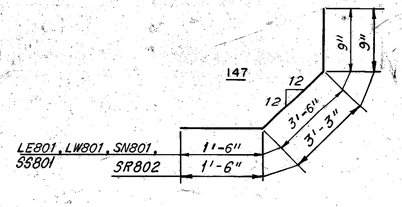

* Weld to Threaded Inserts.
\# Thread one end for connection to Threaded Insert.

Note:
For Threaded Insert Detail, see Sheet R-1.

MICROFILMED
MAR 22 1985

FHWA REGION	STATE	PROJECT	
5	OHIO		

354
354

CUYAHOGA COUNTY
CUY-90-23.73
LAKE COUNTY
LAK-90-0.00

HOWARD, NEEDLES, TAMMEN & BERGENDOFF
CONSULTING ENGINEERS
KANSAS CITY CLEVELAND NEW YORK

REINFORCEMENT SCHEDULE

BR. NO. CUY-90-2840
90-2910
90-2969R
90-2969L
BR. NO. CUY-90-2989R
90-2989L
BR. NO. LAK-90-0009R
CUYAHOGA & LAKE COUNTY
OHIO

DRAWN	TRACED	CHECKED	REVIEWED	REVISED
C.P.	M.S.	B.P.	CAB	
DATE 12-18-74	DATE 12-17-74	DATE 12-23-74	DATE 12-20-74	SHEET R-6