STATE OF OHIO
DEPARTMENT OF TRANSPORTATION
CUYAHOGA COUNTY
CUY–77–1.89
PROJECT: 080211

NOISE BARRIER WALL
GENERAL NOTES AND INFORMATION

1. MATERIALS AND WORKMANSHIP SHALL BE IN ACCORDANCE WITH STANDARDS SPECIFIED ON O.D.O.T. APPROVED DRAWINGS AND CONTRACT SPECIAL PROVISIONS.
2. THE DESIGN OF ALL ELEMENTS AND COMPONENTS IS IN ACCORDANCE WITH ACI AND AASHTO SPECIFICATIONS.
3. STRUCTURAL PRECAST CONCRETE PER CMS 499, CLASS C, SHALL HAVE A 28 DAY COMPRESSIVE STRENGTH OF 5000 PSI.
4. SOUND ABSORPTIVE FACING (RUBBER/CEMENT) SHALL HAVE A 28 DAY COMPRESSIVE STRENGTH OF 500 PSI.
5. ALL WELDED WIRE FABRIC SHALL CONFORM TO ASTM A185 OR A497 AND BE FABRICATED FROM WIRE MEETING ASTM A82, AND BE EPOXY COATED PER CMS 709.14.
6. ALL REBAR TO CONFORM TO ASTM A615, GRADE 60. REINFORCING STEEL SHALL BE DETAILED TO CRSI STANDARDS AND BE EPOXY COATED PER CMS 709.14.
7. GALVANIZING STEEL IN ACCORDANCE WITH CMS 711.02.
8. NEOPRENE BEARING PADS TO BE 1/4" THICK MIN. AND CONFORM TO CMS 711.21.
9. RUBBER ABSORPTIVE CONCRETE FACING TESTED IN ACCORDANCE WITH ASTM C423, ASTM C666, ASTM C672, AND ASTM E84.
10. THE ROADWAY SIDE OF THE NOISE BARRIER SHALL BE AN ABSORPTIVE FORMLINED BRICK PATTERN USING ARCHITECTURAL POLYMERS 18TH CENTURY BRICK LINER #104.
11. THE RESIDENTIAL SIDE OF THE NOISE BARRIER SHALL BE A STAMPED DRY STACK FINISH WITH A TEXTURE DEPTH OF APPROX. 3/4 INCH.
12. THE ROADWAY SIDE OF THE NOISE WALL PANELS SHALL BE SEALED/COATED TO A COLOR OF RED BRICK MEETING FEDERAL COLOR #595B–20109.
13. THE RESIDENTIAL SIDE OF THE NOISE WALL PANELS ON WALLS 1 THRU 8 SHALL BE SEALED/COATED TO A COLOR OF BEIGE MEETING FEDERAL COLOR #595B–33564.
    THE RESIDENTIAL SIDE OF THE NOISE WALL PANELS ON WALLS 9 THRU 10 SHALL BE SEALED/COATED TO A COLOR OF BEIGE MEETING FEDERAL COLOR #595B–36440.
14. THE POSTS, POST CAPS, AND PANEL CAPS SHALL BE SEALED/COATED TO A COLOR OF LIGHT GRAY MEETING FEDERAL COLOR #595B–25630.
15. THE ICONS SHALL BE SEALED/COATED TO A COLOR OF LIGHT GRAY MEETING COLOR #595B–25630. THE RAISED SURFACE OF THE ICONS SHALL BE SEALED/COATED TO A COLOR OF MEDIUM GRAY MEETING FEDERAL COLOR #595B–36440.

INDEX OF DRAWINGS

	DRAWING NO.:	SHEET NO.:
GENERAL NOTES	080211NOTES	1
PRECAST TOP PANELS	080211TPANEL	2
PRECAST BOTTOM PANELS	080211BPANEL	3
PRECAST 12 X 16 P1 POST	08021112161POST	4
PRECAST 12 X 20 P2 POST	08021112202POST	5
PRECAST 12 X 20 P2C POST	08021112202CPOST	6
PRECAST POST CAP & MISC.	080211CAP	7
MISC. DETAILS	080211MISC	8
ICON DETAILS	080211ICONS	9
WALL 1 PROFILE	080211W1	10–11
WALL 2 PROFILE	080211W2	12–17
WALL 3 PROFILE	080211W3	18–20
WALL 4 PROFILE	080211W4	21–28
WALL 5 PROFILE	080211W5	29–31
WALL 6 PROFILE	080211W6	32
WALL 7 PROFILE	080211W7	33–38
WALL 8 PROFILE	080211W8	39–45
WALL 9 PROFILE	080211W9	46
WALL 10 PROFILE	080211W10	47–52

NOISE BARRIER GENERAL NOTES		
O.D.O.T. PROJ. 080211 – CUYAHOGA COUNTY		
DRAWN BY: BK	SCALE:	DRAWING NO.:
DATE: 1–19–09	REV:	080211NOTES
MACK INDUSTRIES OF PA., INC. 2207 SODOM HUTCHINGS RD., VIENNA, OHIO 44473 (330) 638–7680		SHEET NO.: 1 OF

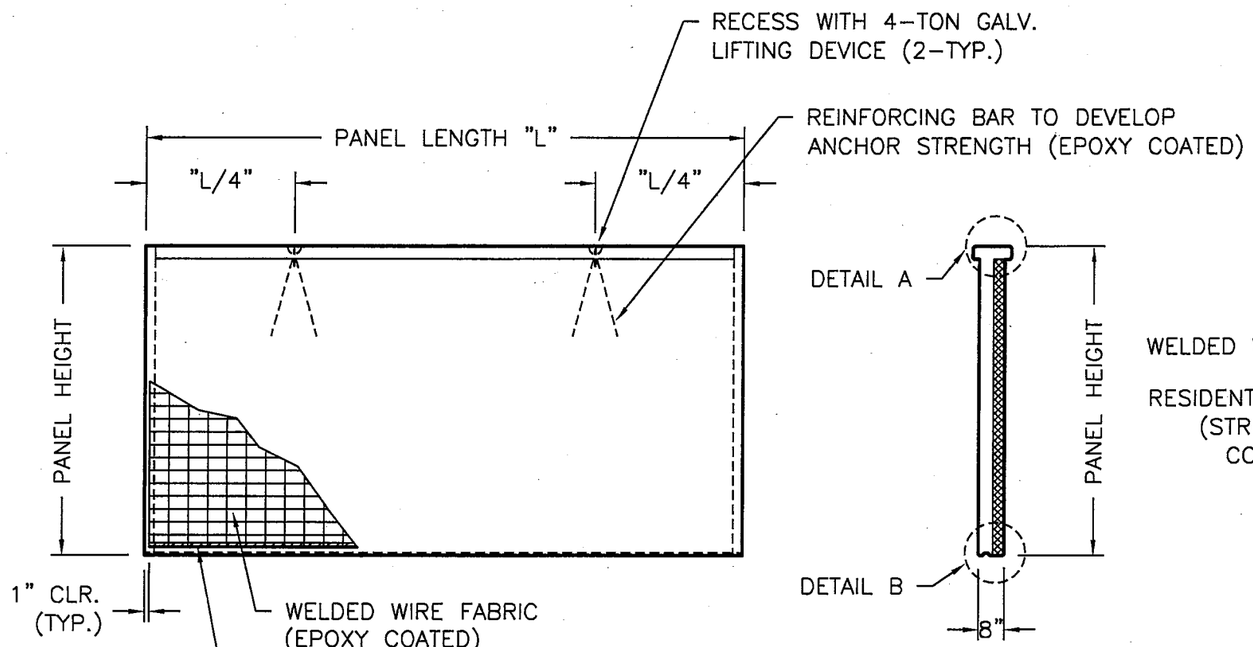

FRONT VIEW

END VIEW

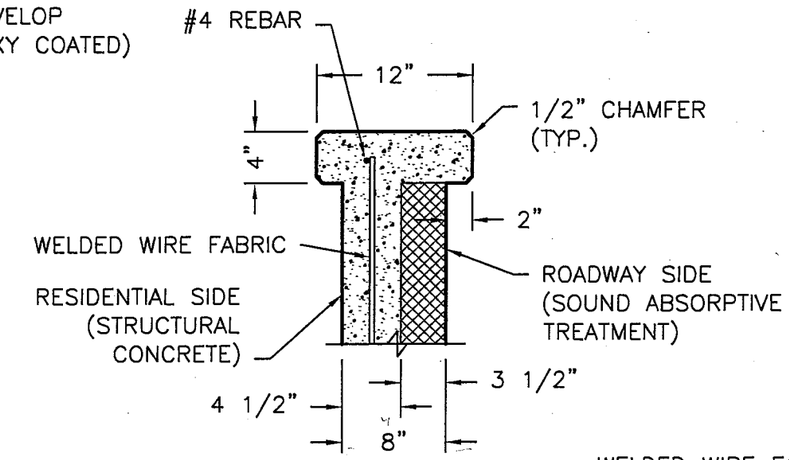

DETAIL A

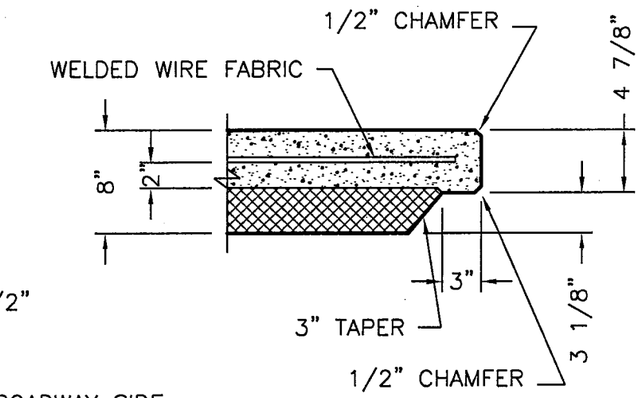

DETAIL C

INTEGRAL CAP NOT SHOWN

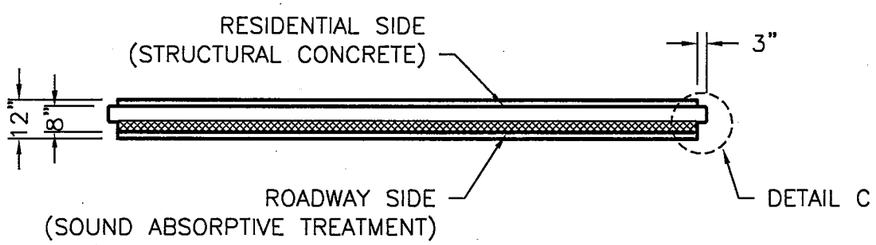

SIDE VIEW

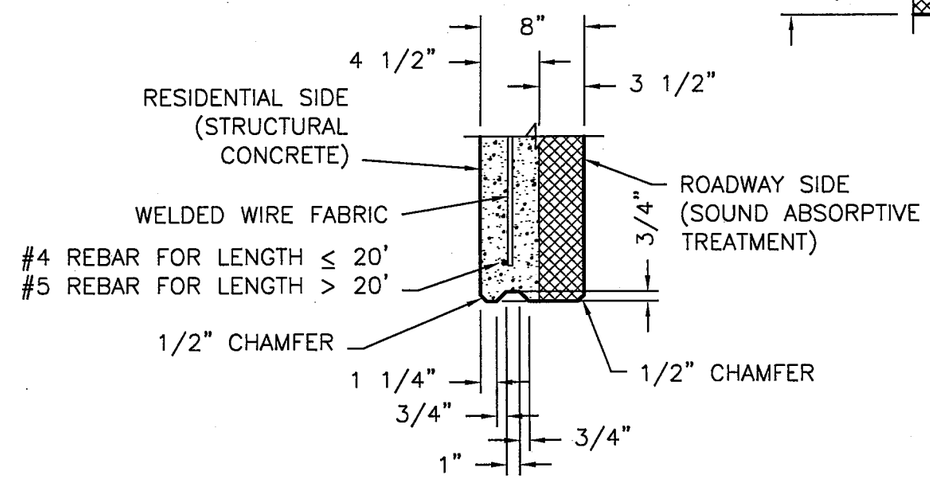

DETAIL B

WELDED WIRE FABRIC REINFORCING:

USE 4" X 6" D9.5/D4 FOR PANELS GREATER THAN 16' C-C THRU 24' C-C

USE 4" X 6" D4/D4 FOR PANELS 16' C-C OR LESS

THIS DRAWING IS THE PROPERTY OF MACK INDUSTRIES, INC., AND IT OR THE TECHNOLOGY CONTAINED HEREIN MAY NOT BE REPRODUCED NOR USED EXCEPT AS ORIGINALLY INTENDED WITHOUT THE EXPRESSED CONSENT OF MACK INDUSTRIES, INC.

NOISE BARRIER PRECAST TOP PANELS		
O.D.O.T. PROJ. 080211 – CUYAHOGA COUNTY		
DRAWN BY: BK	SCALE: NTS	DRAWING NO.:
DATE: 1-19-09	REV:	080211TPANEL
MACK INDUSTRIES OF PA., INC. 2207 SODOM HUTCHINGS RD., VIENNA, OHIO 44473 (330) 638-7680		SHEET NO.: 2 OF

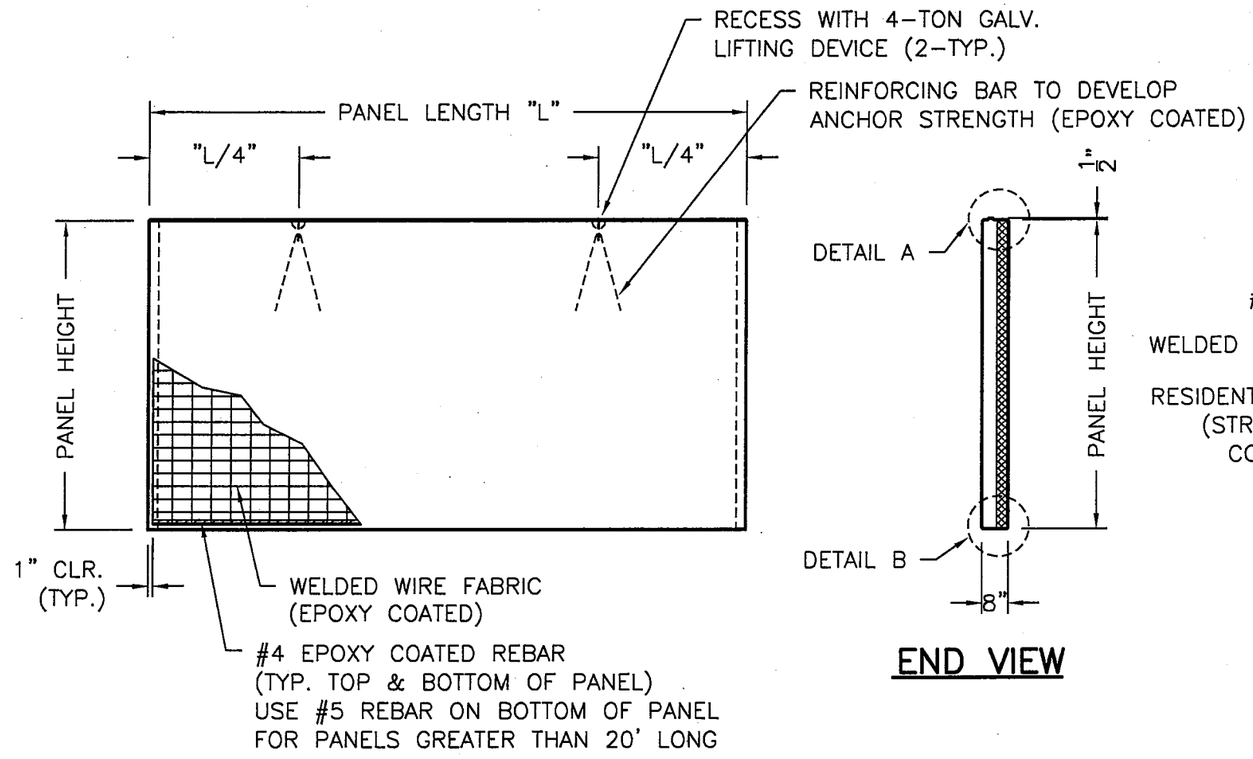

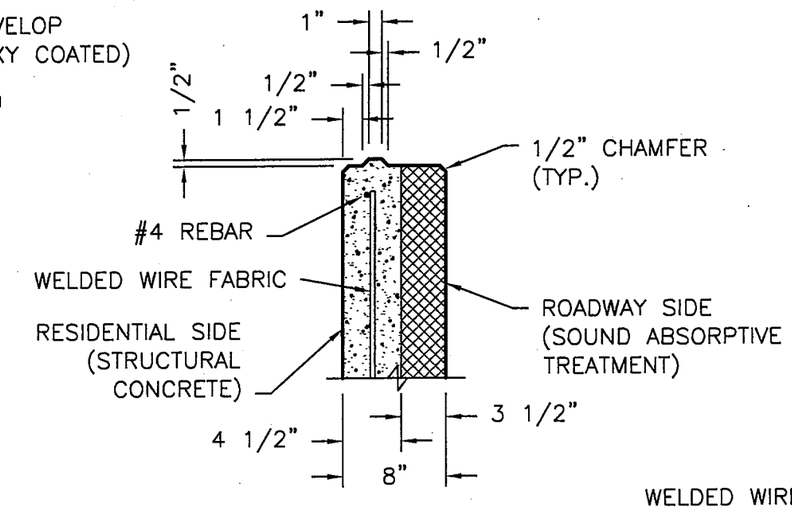

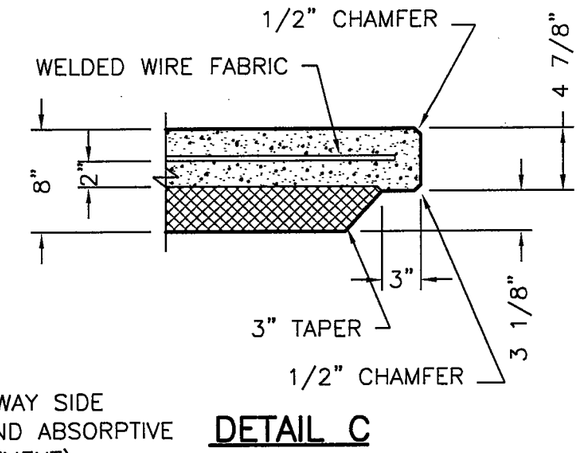

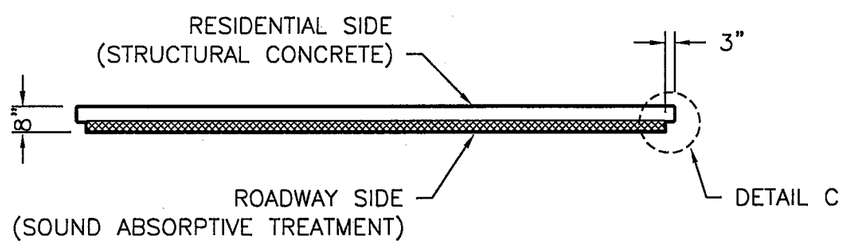

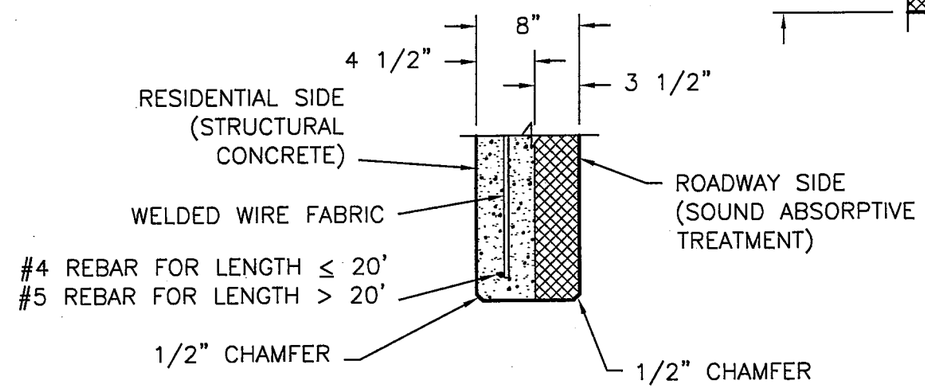

WELDED WIRE FABRIC REINFORCING:

USE 4" X 6" D9.5/D4 FOR PANELS GREATER THAN 16' C-C THRU 24' C-C

USE 4" X 6" D4/D4 FOR PANELS 16' C-C OR LESS

THIS DRAWING IS THE PROPERTY OF MACK INDUSTRIES, INC., AND IT OR THE TECHNOLOGY CONTAINED HEREIN MAY NOT BE REPRODUCED NOR USED EXCEPT AS ORIGINALLY INTENDED WITHOUT THE EXPRESSED CONSENT OF MACK INDUSTRIES, INC.

NOISE BARRIER PRECAST BOTTOM PANELS		
O.D.O.T. PROJ. 080211 – CUYAHOGA COUNTY		
DRAWN BY: BK	SCALE: NTS	DRAWING NO.: 080211BPANEL
DATE: 1-19-09	REV:	
MACK INDUSTRIES OF PA., INC. 2207 SODOM HUTCHINGS RD., VIENNA, OHIO 44473 (330) 638-7680		SHEET NO.: 3 OF

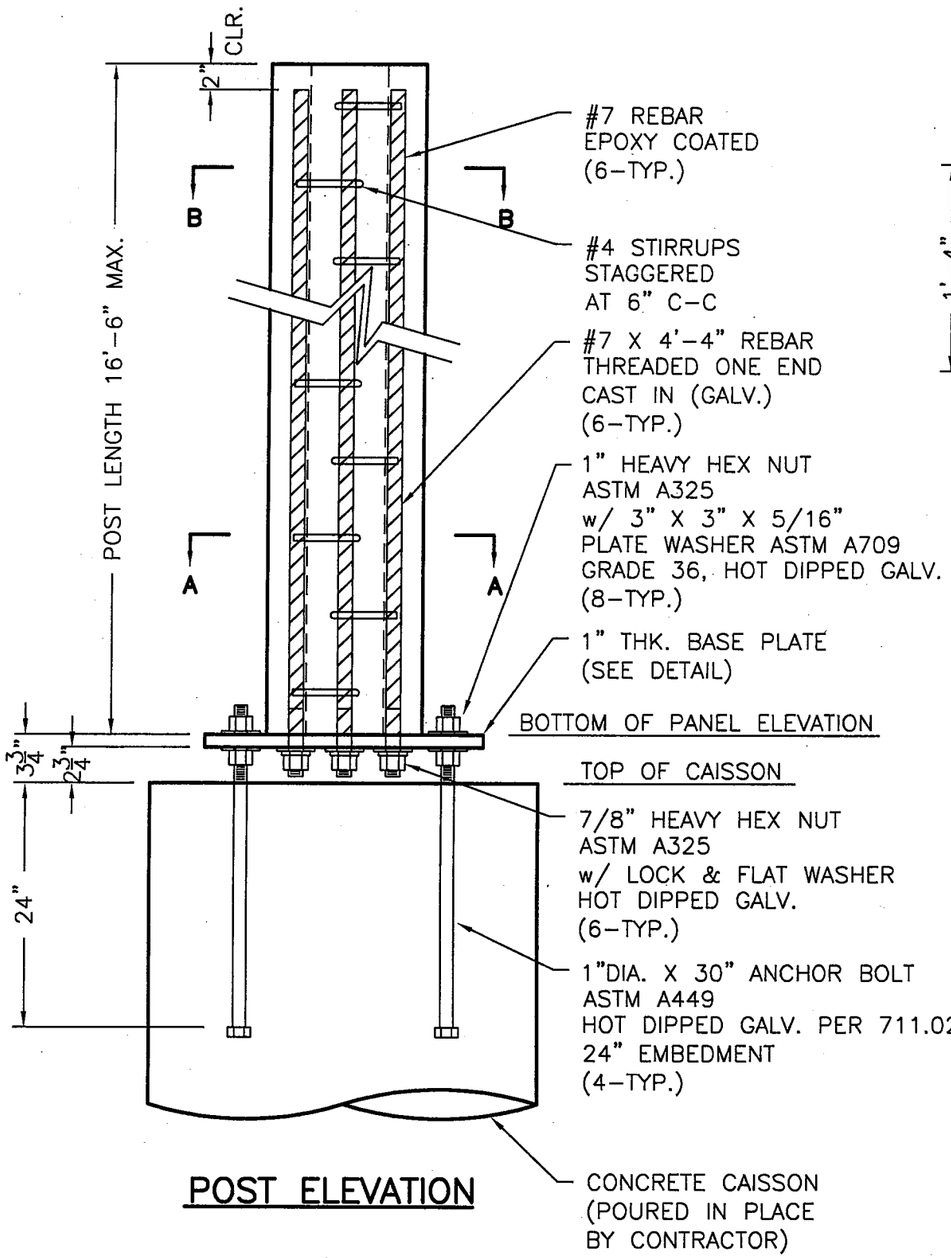

POST ELEVATION

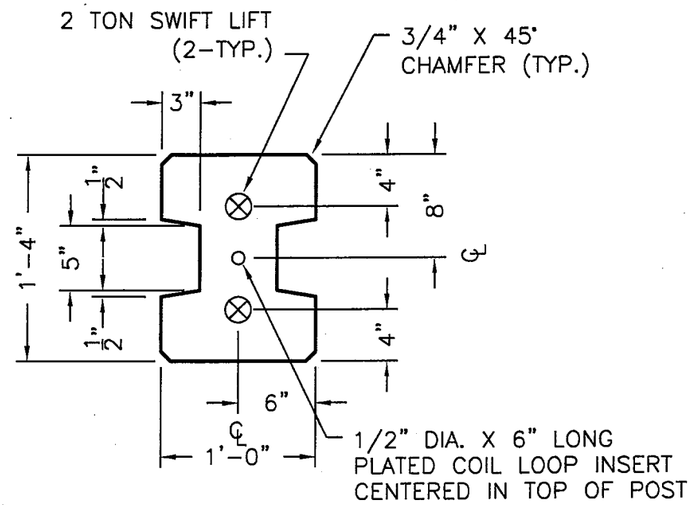

TOP VIEW

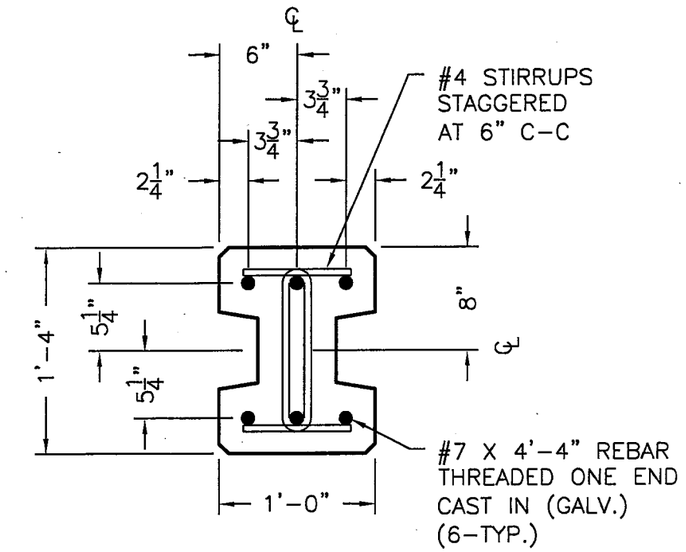

SECTION A-A

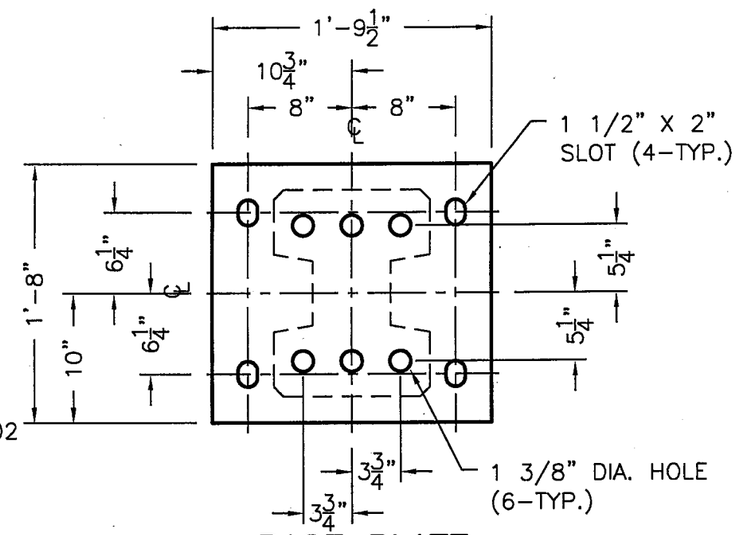

BASE PLATE

(FOR 12" X 16" POST)
1" THICK, PER CMS 711.01,
ASTM A709 GRADE 50,
HOT-DIPPED GALVANIZED PER CMS 711.02

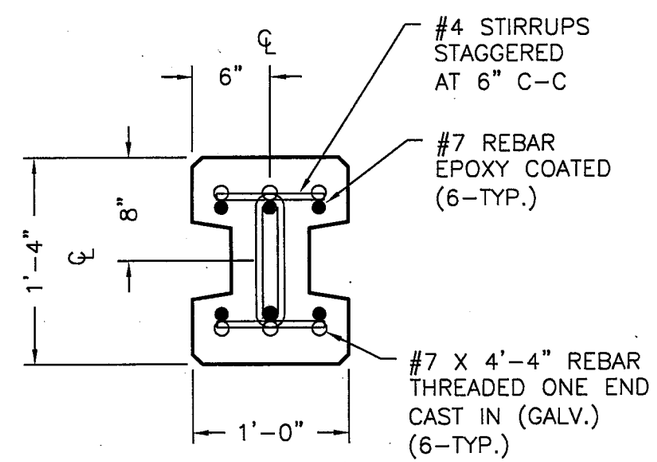

SECTION B-B

THIS DESIGN TO BE USED FOR PROJECTS THAT HAVE PANELS 16' C-C OR LESS AND FOR POST HEIGHTS 16'-6" OR LESS

THIS DRAWING IS THE PROPERTY OF MACK INDUSTRIES, INC., AND IT OR THE TECHNOLOGY CONTAINED HEREIN MAY NOT BE REPRODUCED NOR USED EXCEPT AS ORIGINALLY INTENDED WITHOUT THE EXPRESSED CONSENT OF MACK INDUSTRIES, INC.

NOISE BARRIER PRECAST 12" X 16" (P1) POST DETAILS		
O.D.O.T. PROJ. 080211 – CUYAHOGA COUNTY		
DRAWN BY: BK	SCALE: 1/16"=1'-0"	DRAWING NO.:
DATE: 1-19-09	REV:	08021112161POST
MACK INDUSTRIES OF PA., INC. 2207 SODOM HUTCHINGS RD., VIENNA, OHIO 44473 (330) 638-7680		SHEET NO.: 4 OF

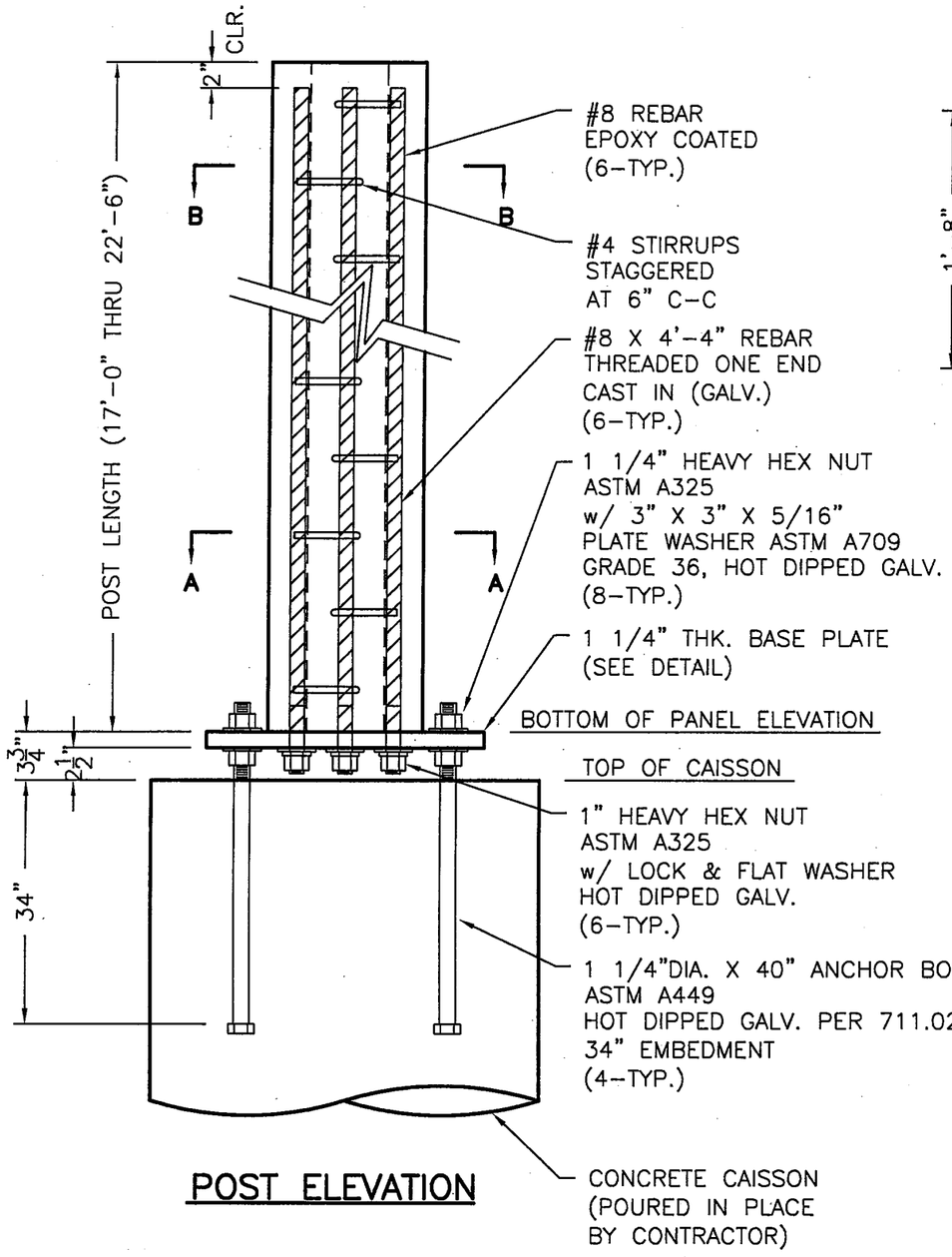

POST ELEVATION

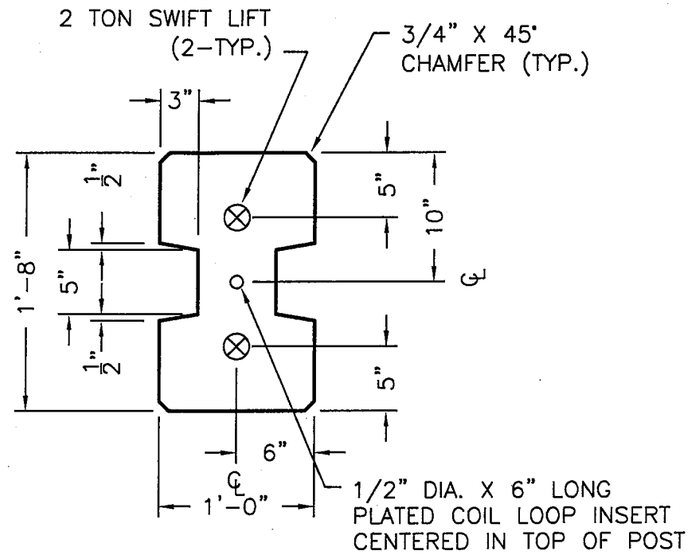

TOP VIEW

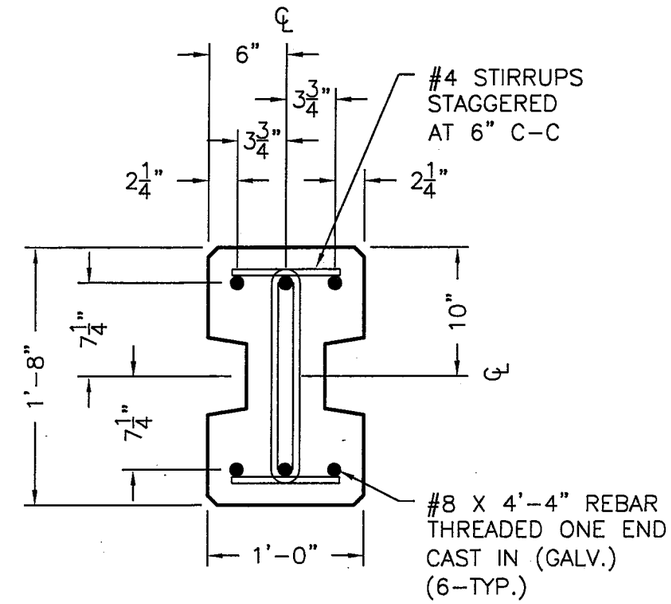

SECTION A-A

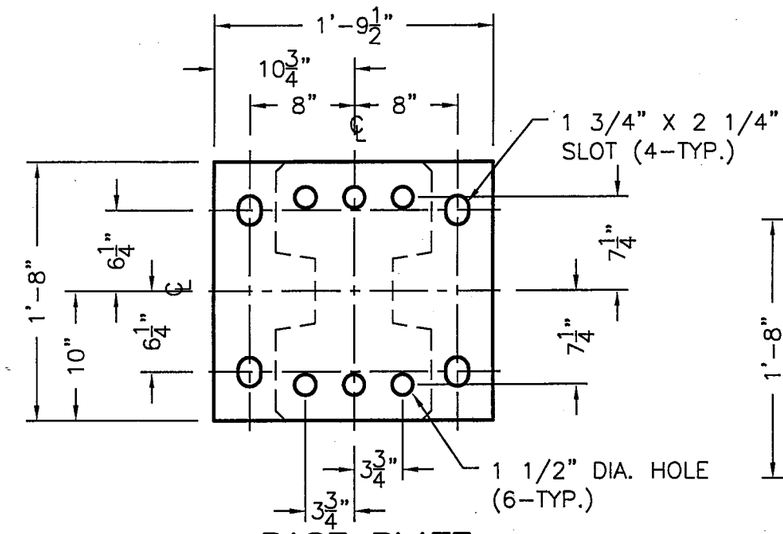

BASE PLATE

(FOR 12" X 20" POST)
1 1/4" THICK, PER CMS 711.01,
ASTM A709 GRADE 50,
HOT-DIPPED GALVANIZED PER CMS 711.02

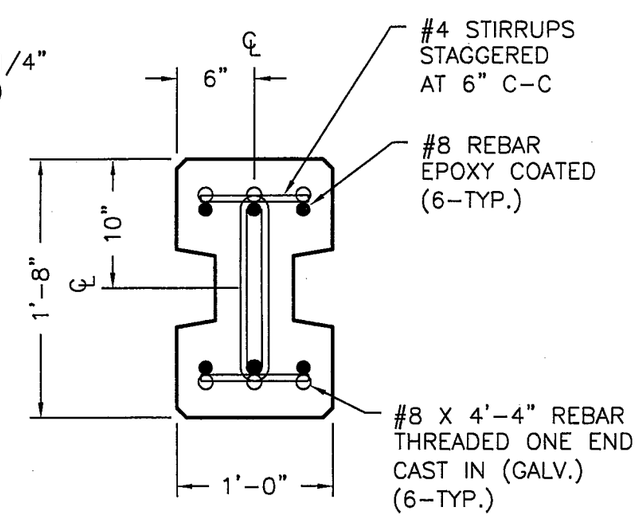

SECTION B-B

THIS DESIGN TO BE USED FOR PROJECTS THAT HAVE PANELS 16' C-C OR LESS AND FOR POST HEIGHTS 17'-0" THRU 22'-6"

THIS DRAWING IS THE PROPERTY OF MACK INDUSTRIES, INC., AND IT OR THE TECHNOLOGY CONTAINED HEREIN MAY NOT BE REPRODUCED NOR USED EXCEPT AS ORIGINALLY INTENDED WITHOUT THE EXPRESSED CONSENT OF MACK INDUSTRIES, INC.

NOISE BARRIER
PRECAST 12" X 20" (P2) POST DETAILS
O.D.O.T. PROJ. 080211 – CUYAHOGA COUNTY

DRAWN BY: BK	SCALE: 1/16"=1'-0"	DRAWING NO.:
DATE: 1-19-07	REV:	08021112202POST
MACK INDUSTRIES OF PA., INC. 2207 SODOM HUTCHINGS RD., VIENNA, OHIO 44473 (330) 638-7680		SHEET NO.: 5 OF

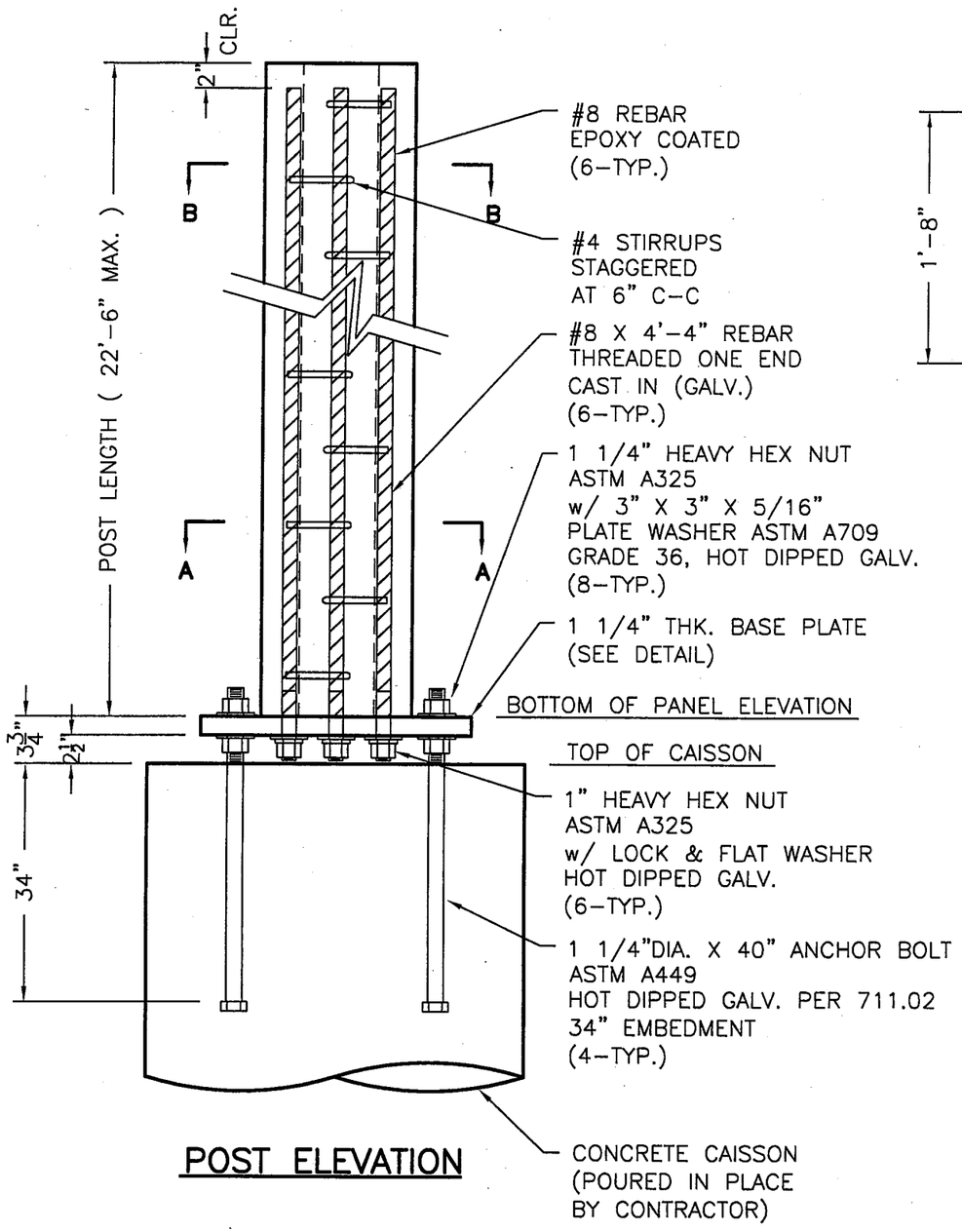

POST ELEVATION

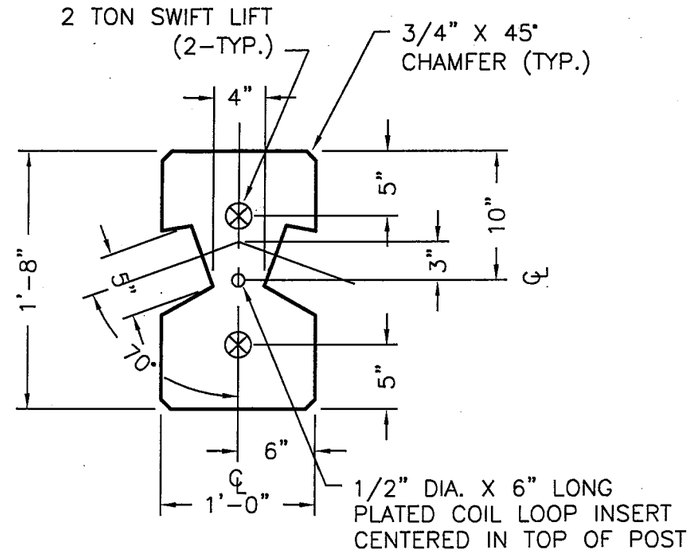

TOP VIEW

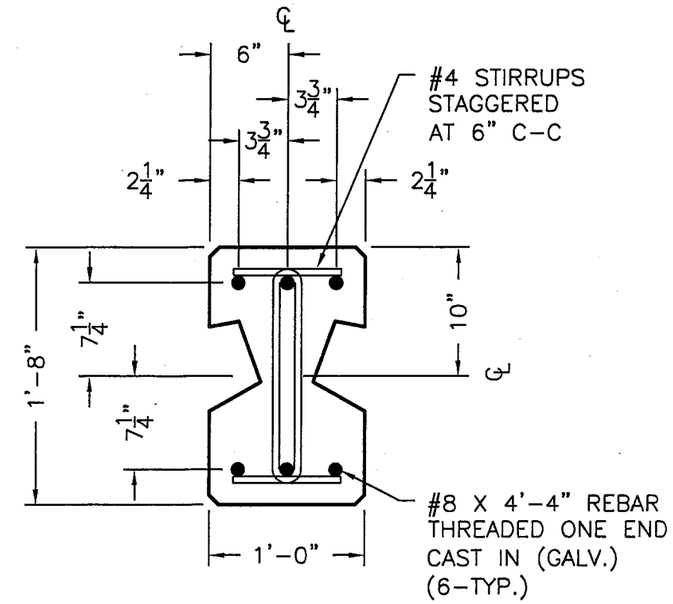

SECTION A-A

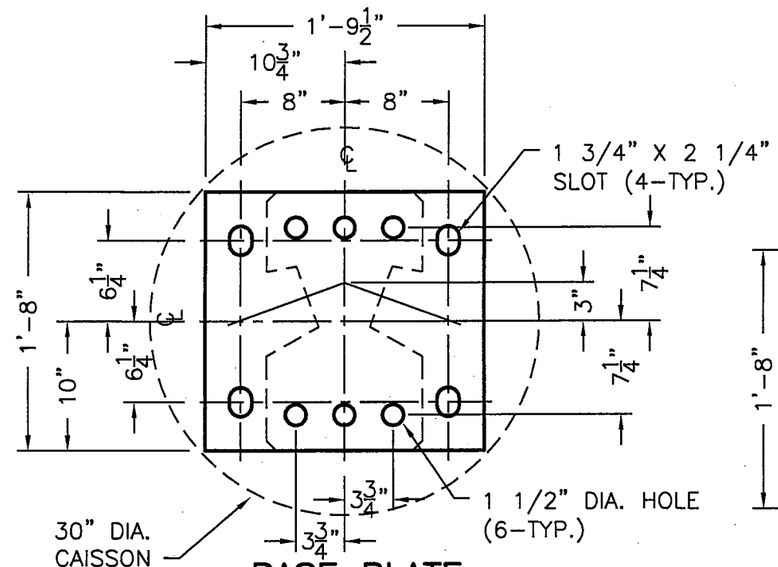

BASE PLATE

(FOR 12" X 20" POST)
1 1/4" THICK, PER CMS 711.01,
ASTM A709 GRADE 50,
HOT-DIPPED GALVANIZED PER CMS 711.02

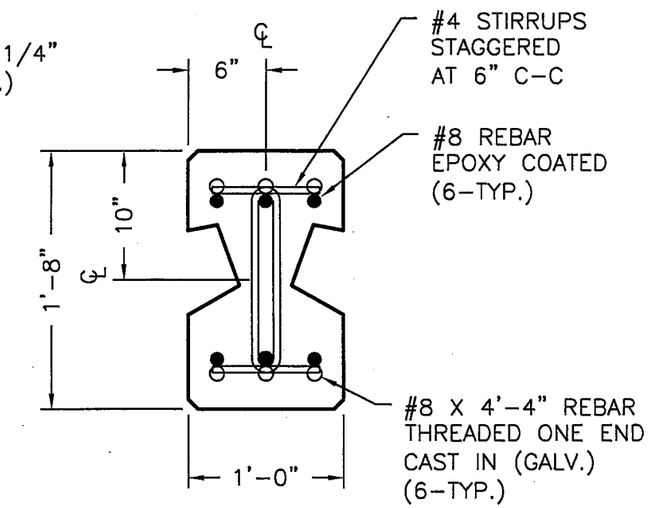

SECTION B-B

THIS DESIGN TO BE USED FOR PROJECTS THAT HAVE ADJACENT PANELS FORMING LESS THAN A 150° ANGLE

NOTE: THE CENTER OF THE CAISSON TO BE 3" FROM PLAN POINT OF INTERSECTION FOR ADJACENT PANELS.

CENTERLINE OF POST TO BE ORIENTATED ON CAISSON TO SYMMETRICALLY DIVIDE ANGLE OF ADJACENT PANELS.

THIS DRAWING IS THE PROPERTY OF MACK INDUSTRIES, INC., AND IT OR THE TECHNOLOGY CONTAINED HEREIN MAY NOT BE REPRODUCED NOR USED EXCEPT AS ORIGINALLY INTENDED WITHOUT THE EXPRESSED CONSENT OF MACK INDUSTRIES, INC.

NOISE BARRIER
PRECAST 12" X 20" (P2C) DEFLECTION POST DETAILS
O.D.O.T. PROJ. 080211 – CUYAHOGA COUNTY

DRAWN BY:	BK	SCALE:	1/16"=1'-0"	DRAWING NO.:
DATE:	1-19-09	REV:		08021112202CPOST

MACK INDUSTRIES OF PA., INC.
2207 SODOM HUTCHINGS RD., VIENNA, OHIO 44473 (330) 638-7680

SHEET NO.: 6 OF

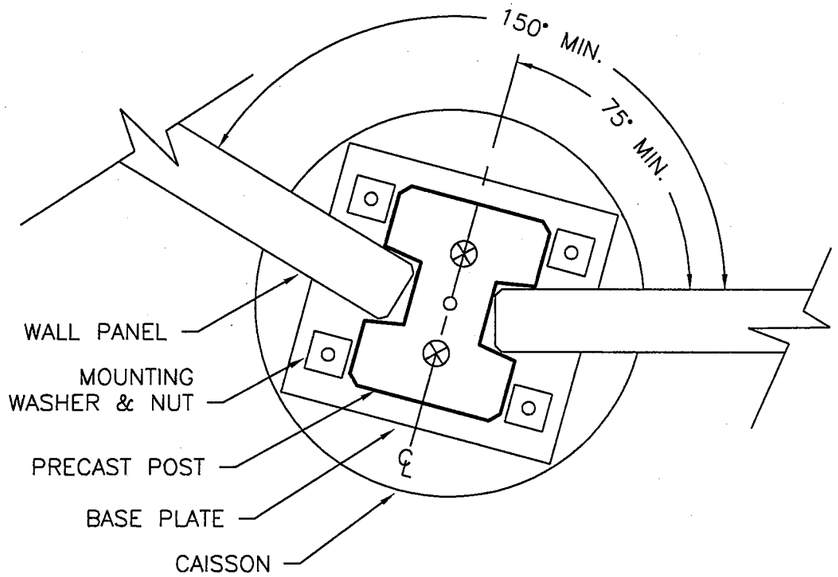

PLAN VIEW

NOTE: CENTERLINE OF POST TO BE ORIENTATED ON CAISSON TO SYMMETRICALLY DIVIDE ANGLE OF ADJACENT WALL PANELS.

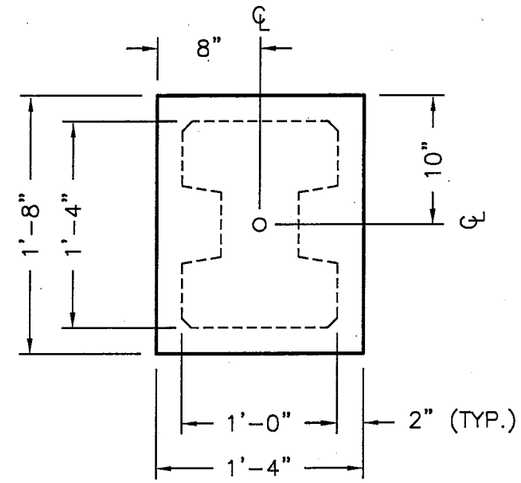

P1 POST CAP 12" X 16"

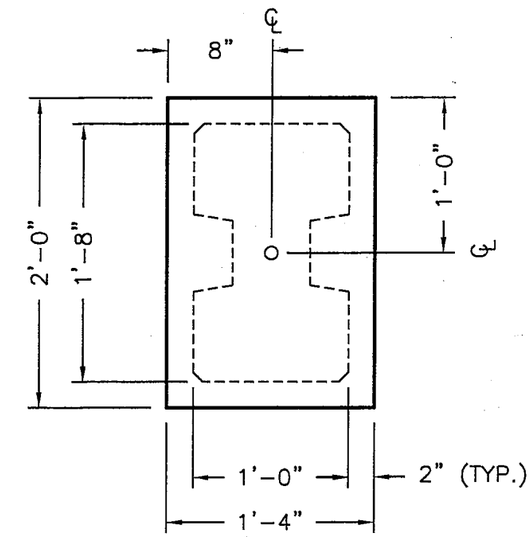

P2 & P2C POST CAP 12" X 20"

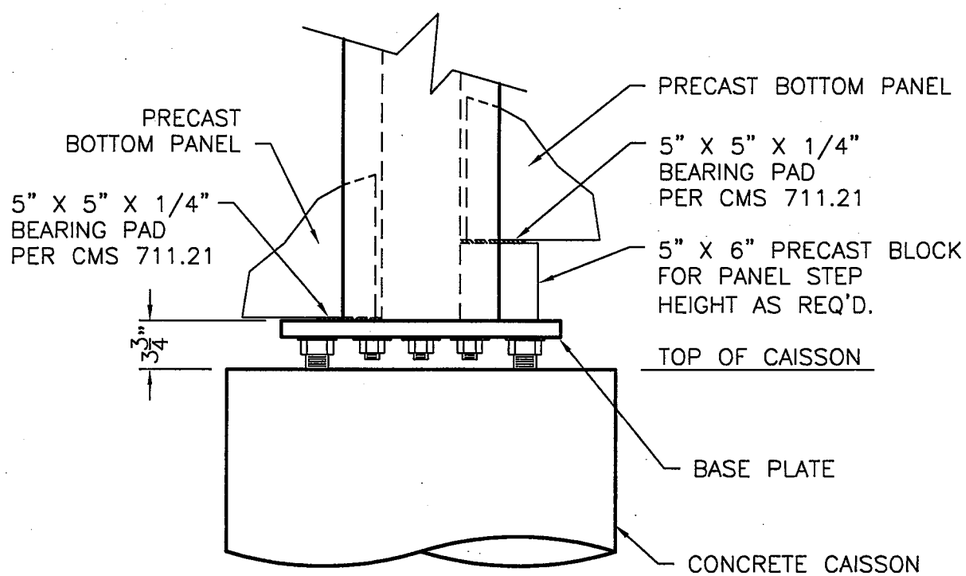

PANEL SEAT DETAIL

NOTE: SEE POST DRAWINGS FOR ANCHOR BOLT DETAILS

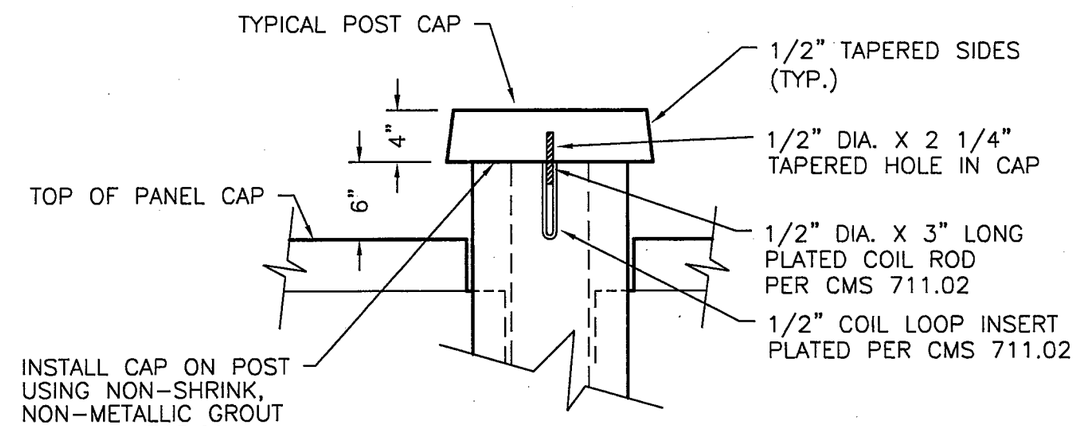

POST CAP DETAIL

THIS DRAWING IS THE PROPERTY OF MACK INDUSTRIES, INC., AND IT OR THE TECHNOLOGY CONTAINED HEREIN MAY NOT BE REPRODUCED NOR USED EXCEPT AS ORIGINALLY INTENDED WITHOUT THE EXPRESSED CONSENT OF MACK INDUSTRIES, INC.

NOISE BARRIER PRECAST POST CAP & MISC. DETAILS		
O.D.O.T. PROJ. 080211 – CUYAHOGA COUNTY		
DRAWN BY: BK	SCALE: 1/16"=1'-0"	DRAWING NO.:
DATE: 1-19-09	REV:	080211CAP
MACK INDUSTRIES OF PA., INC. 2207 SODOM HUTCHINGS RD., VIENNA, OHIO 44473 (330) 638-7680		SHEET NO.: 7 OF

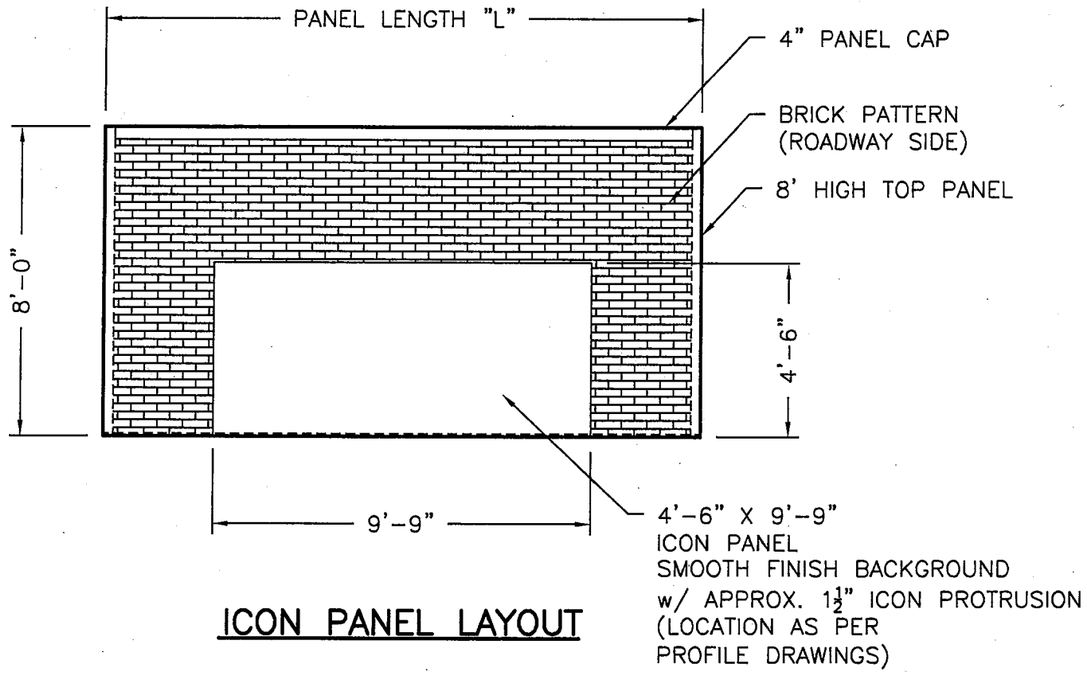

ICON PANEL LAYOUT

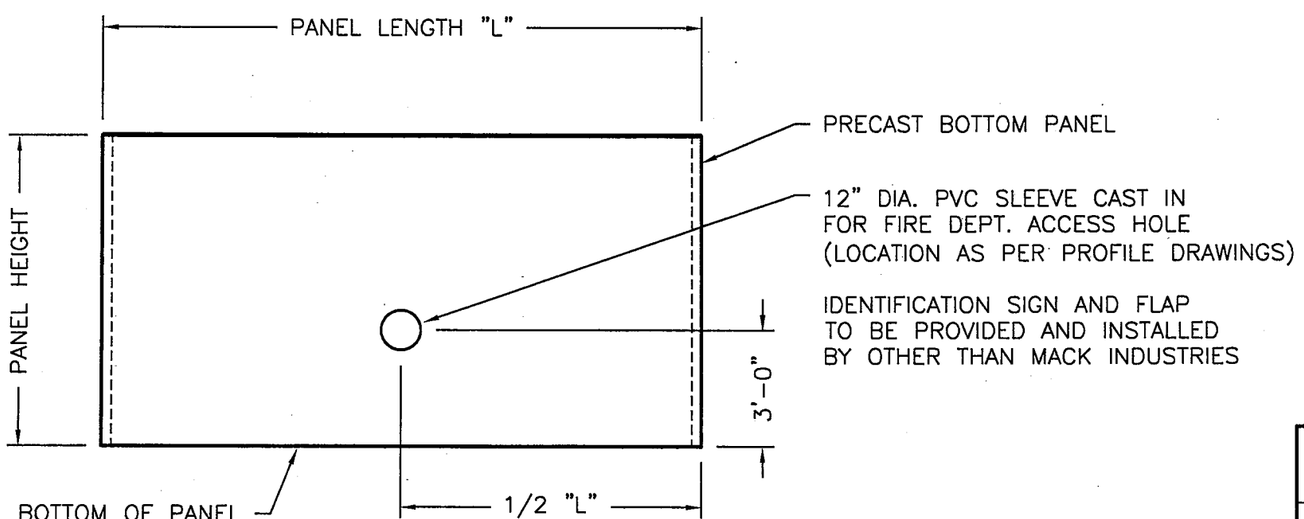

FIRE ACCESS HOLE DETAIL

POST DESIGNATION KEY

57
P1-16.5

- 57 — POST NUMBER
- P1 — POST TYPE (SEE SHEETS 4, 5, & 6)
- 16.5 — POST LENGTH (IN FEET)

PANEL DESIGNATION KEY

T16-8

- T — PANEL TYPE T=TOP B=BOTTOM
- 16 — POST SPACING
- 8 — PANEL HEIGHTH

THIS DRAWING IS THE PROPERTY OF MACK INDUSTRIES, INC., AND IT OR THE TECHNOLOGY CONTAINED HEREIN MAY NOT BE REPRODUCED NOR USED EXCEPT AS ORIGINALLY INTENDED WITHOUT THE EXPRESSED CONSENT OF MACK INDUSTRIES, INC.

NOISE BARRIER MISC. DETAILS		
O.D.O.T. PROJ. 080211 – CUYAHOGA COUNTY		
DRAWN BY: BK	SCALE: NTS	DRAWING NO.:
DATE: 1-20-09	REV:	080211MISC
MACK INDUSTRIES OF PA., INC. 2207 SODOM HUTCHINGS RD., VIENNA, OHIO 44473 (330) 638-7680		SHEET NO.: 8 OF

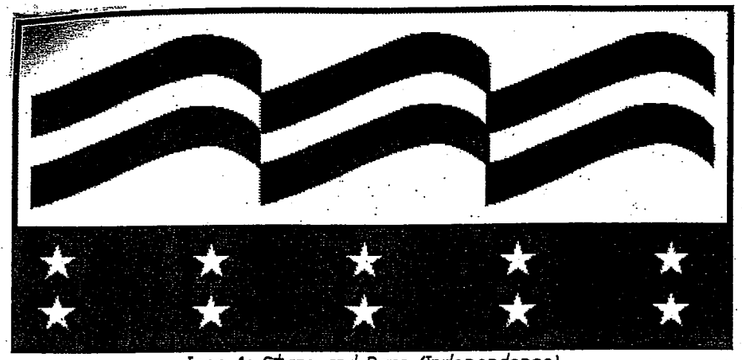

Icon A: Stars and Bars (Independence)

INDEPENDENCE

Icon D: Independence

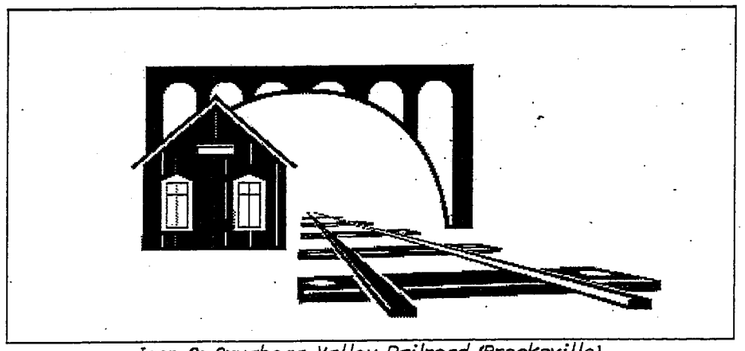

Icon G: Cuyahoga Valley Railroad (Brecksville)

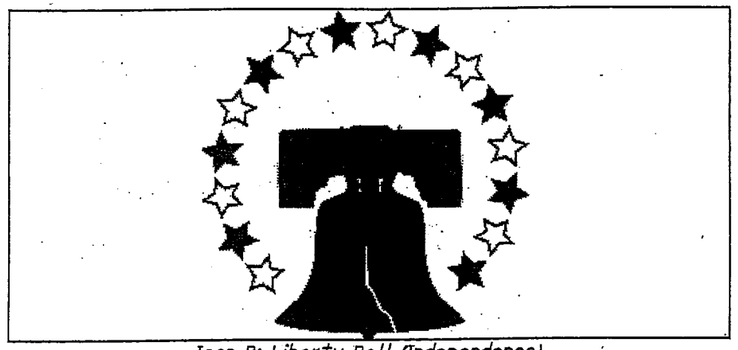

Icon B: Liberty Bell (Independence)

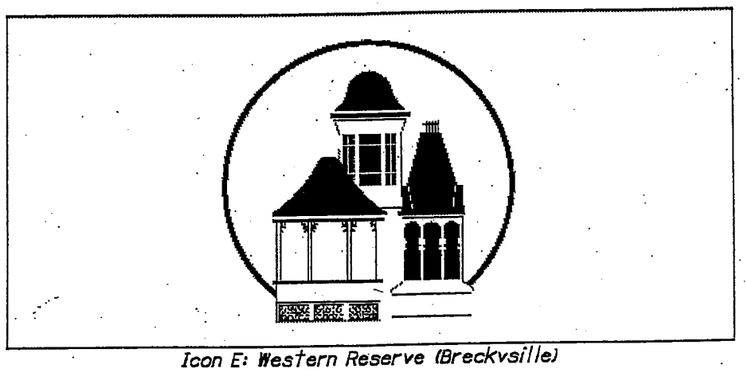

Icon E: Western Reserve (Breckvsille)

BRECKSVILLE

Icon H: Brecsville

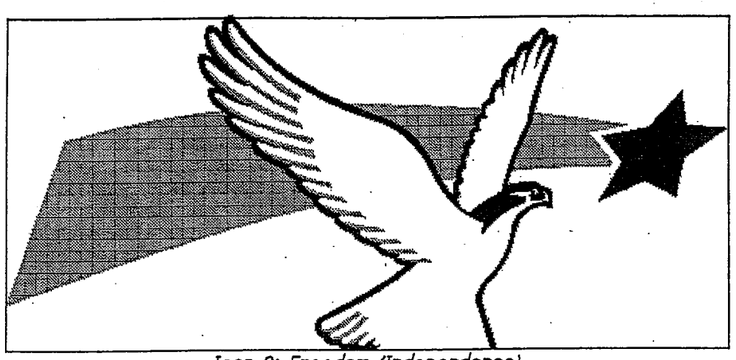

Icon C: Freedom (Independence)

Icon F: Town Hall (Brecsville)

BROADVIEW HEIGHTS

Icon J: Broadview Heights

THIS DRAWING IS THE PROPERTY OF MACK INDUSTRIES, INC., AND IT OR THE TECHNOLOGY CONTAINED HEREIN MAY NOT BE REPRODUCED NOR USED EXCEPT AS ORIGINALLY INTENDED WITHOUT THE EXPRESSED CONSENT OF MACK INDUSTRIES, INC.

NOISE BARRIER
ICON DETAILS

O.D.O.T. PROJ. 080211 – CUYAHOGA COUNTY

DRAWN BY: BK	SCALE: 1/16"=1'-0"	DRAWING NO.:
DATE: 1-20-09	REV:	080211ICONS
MACK INDUSTRIES OF PA., INC. 2207 SODOM HUTCHINGS RD., VIENNA, OHIO 44473 (330) 638-7680		SHEET NO.: 9 OF

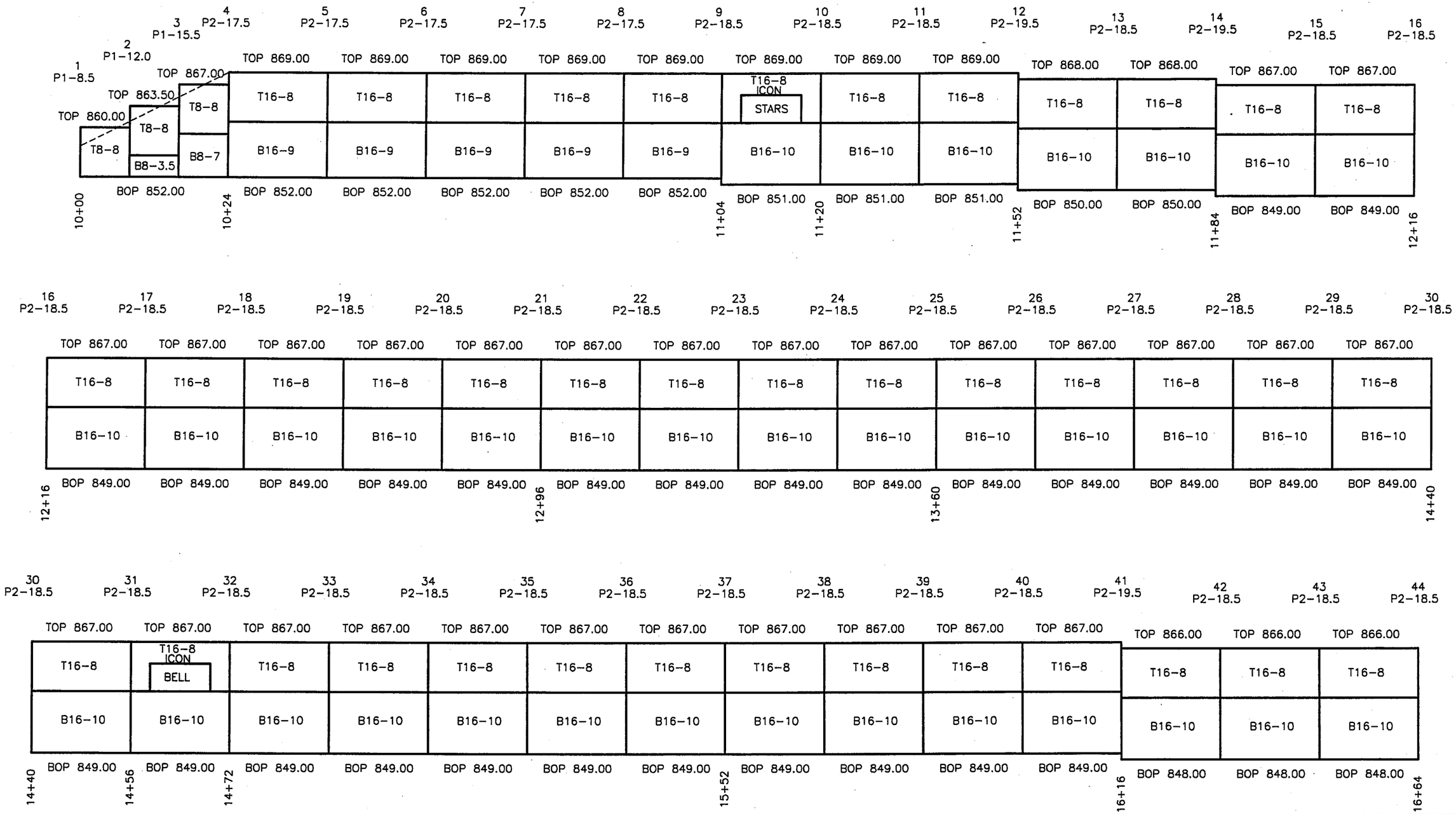

NOISE BARRIER #1 – STA. 10+00 TO STA. 16+64
ROADWAY SIDE VIEW

O.D.O.T. PROJ. 080211 – CUYAHOGA COUNTY

DRAWN BY: BK	SCALE: 1/16"=1'-0"	DRAWING NO.:
DATE: 12-18-08	REV:	080211W1
MACK INDUSTRIES OF PA., INC. 2207 SODOM HUTCHINGS RD., VIENNA, OHIO 44473 (330) 638-7680		SHEET NO.: 10 OF

THIS DRAWING IS THE PROPERTY OF MACK INDUSTRIES, INC., AND IT OR THE TECHNOLOGY CONTAINED HEREIN MAY NOT BE REPRODUCED NOR USED EXCEPT AS ORIGINALLY INTENDED WITHOUT THE EXPRESSED CONSENT OF MACK INDUSTRIES, INC.

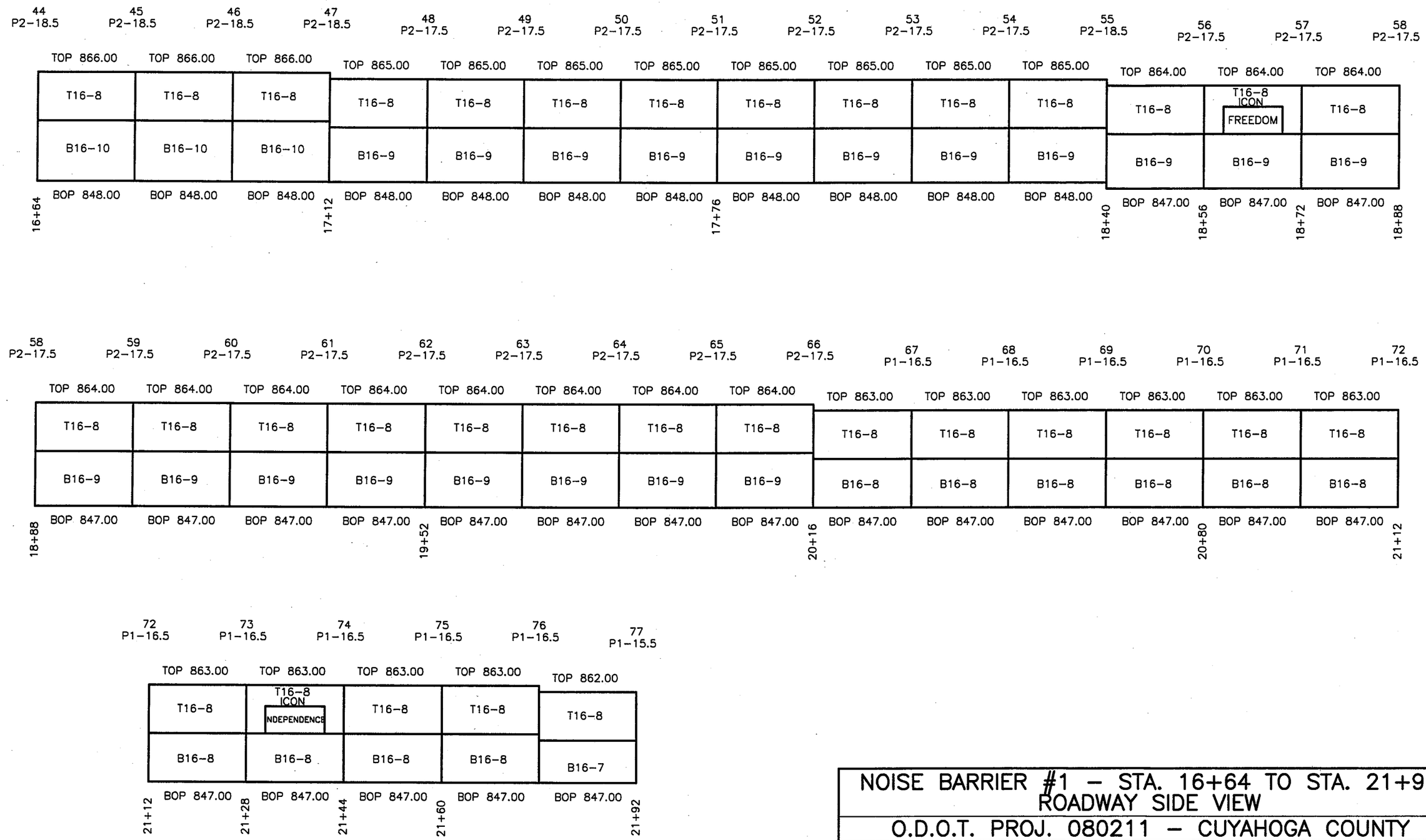

NOISE BARRIER #1 – STA. 16+64 TO STA. 21+92
ROADWAY SIDE VIEW

O.D.O.T. PROJ. 080211 – CUYAHOGA COUNTY

DRAWN BY: BK	SCALE: 1/16"=1'-0"	DRAWING NO.:
DATE: 12-18-08	REV:	080211W1
MACK INDUSTRIES OF PA., INC. 2207 SODOM HUTCHINGS RD., VIENNA, OHIO 44473 (330) 638-7680		SHEET NO.: 11 OF

THIS DRAWING IS THE PROPERTY OF MACK INDUSTRIES, INC., AND IT OR THE TECHNOLOGY CONTAINED HEREIN MAY NOT BE REPRODUCED NOR USED EXCEPT AS ORIGINALLY INTENDED WITHOUT THE EXPRESSED CONSENT OF MACK INDUSTRIES, INC.

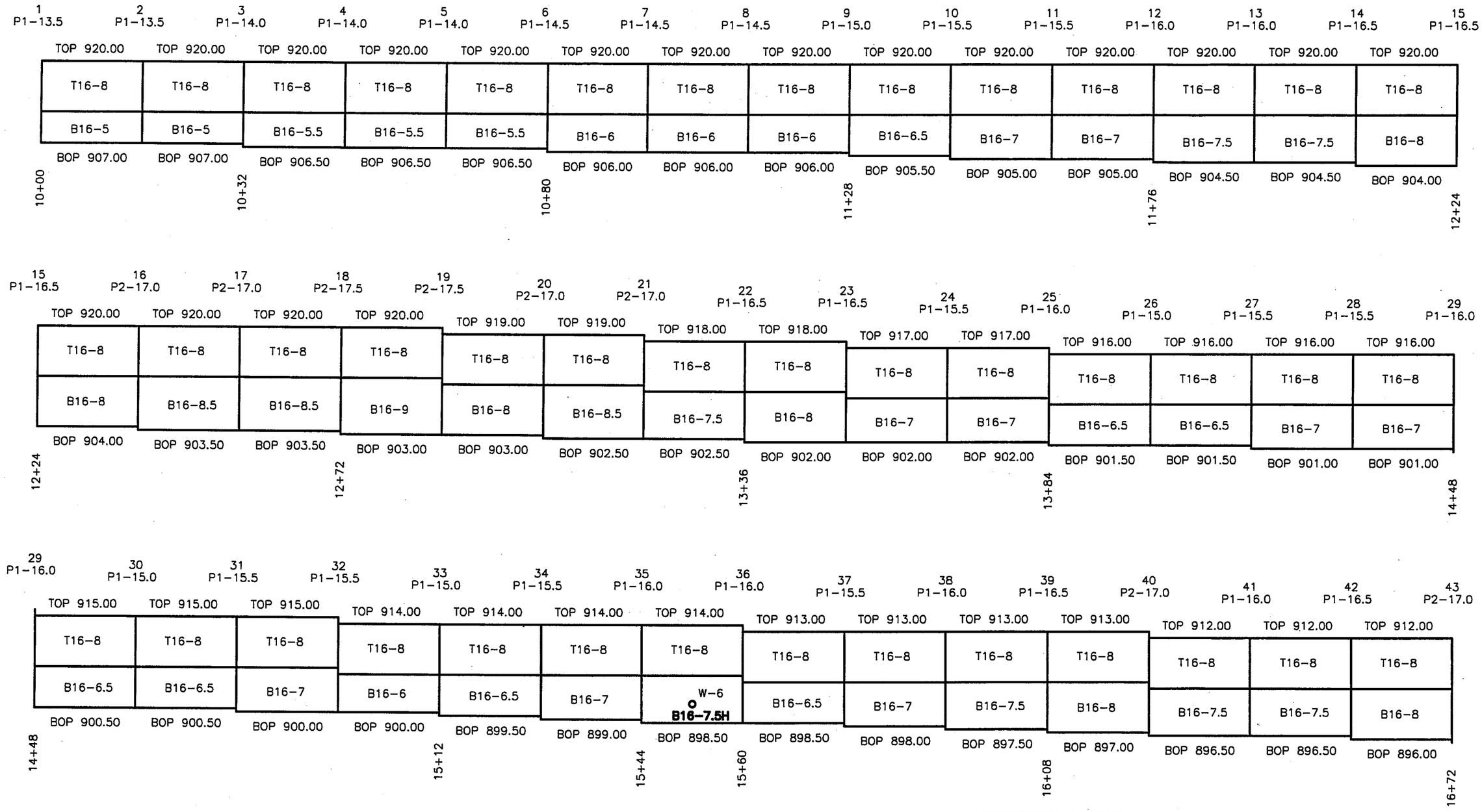

NOISE BARRIER #2 – STA. 10+00 TO STA. 16+72
ROADWAY SIDE VIEW

O.D.O.T. PROJ. 080211 – CUYAHOGA COUNTY

DRAWN BY: BK	SCALE: 1/16"=1'-0"	DRAWING NO.:
DATE: 1-16-09	REV:	080211W2
MACK INDUSTRIES OF PA., INC. 2207 SODOM HUTCHINGS RD., VIENNA, OHIO 44473 (330) 638-7680		SHEET NO.: 12 OF

THIS DRAWING IS THE PROPERTY OF MACK INDUSTRIES, INC., AND IT OR THE TECHNOLOGY CONTAINED HEREIN MAY NOT BE REPRODUCED NOR USED EXCEPT AS ORIGINALLY INTENDED WITHOUT THE EXPRESSED CONSENT OF MACK INDUSTRIES, INC.

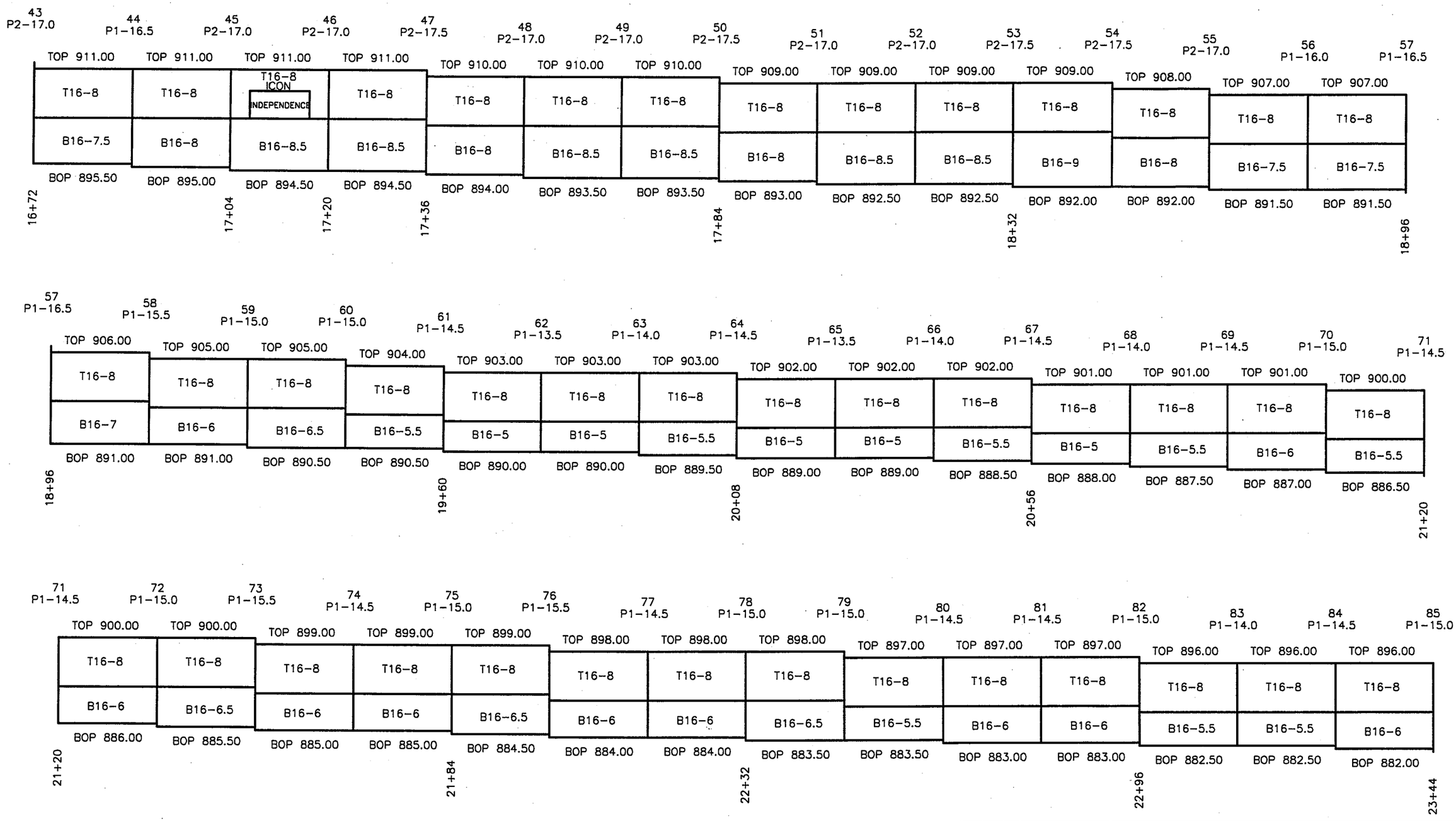

NOISE BARRIER #2 – STA. 16+72 TO STA. 23+44 ROADWAY SIDE VIEW		
O.D.O.T. PROJ. 080211 – CUYAHOGA COUNTY		
DRAWN BY: BK	SCALE: 1/16"=1'-0"	DRAWING NO.:
DATE: 1-16-09	REV:	080211W2
MACK INDUSTRIES OF PA., INC. 2207 SODOM HUTCHINGS RD., VIENNA, OHIO 44473 (330) 638-7680		SHEET NO.: 13 OF

THIS DRAWING IS THE PROPERTY OF MACK INDUSTRIES, INC., AND IT OR THE TECHNOLOGY CONTAINED HEREIN MAY NOT BE REPRODUCED NOR USED EXCEPT AS ORIGINALLY INTENDED WITHOUT THE EXPRESSED CONSENT OF MACK INDUSTRIES, INC.

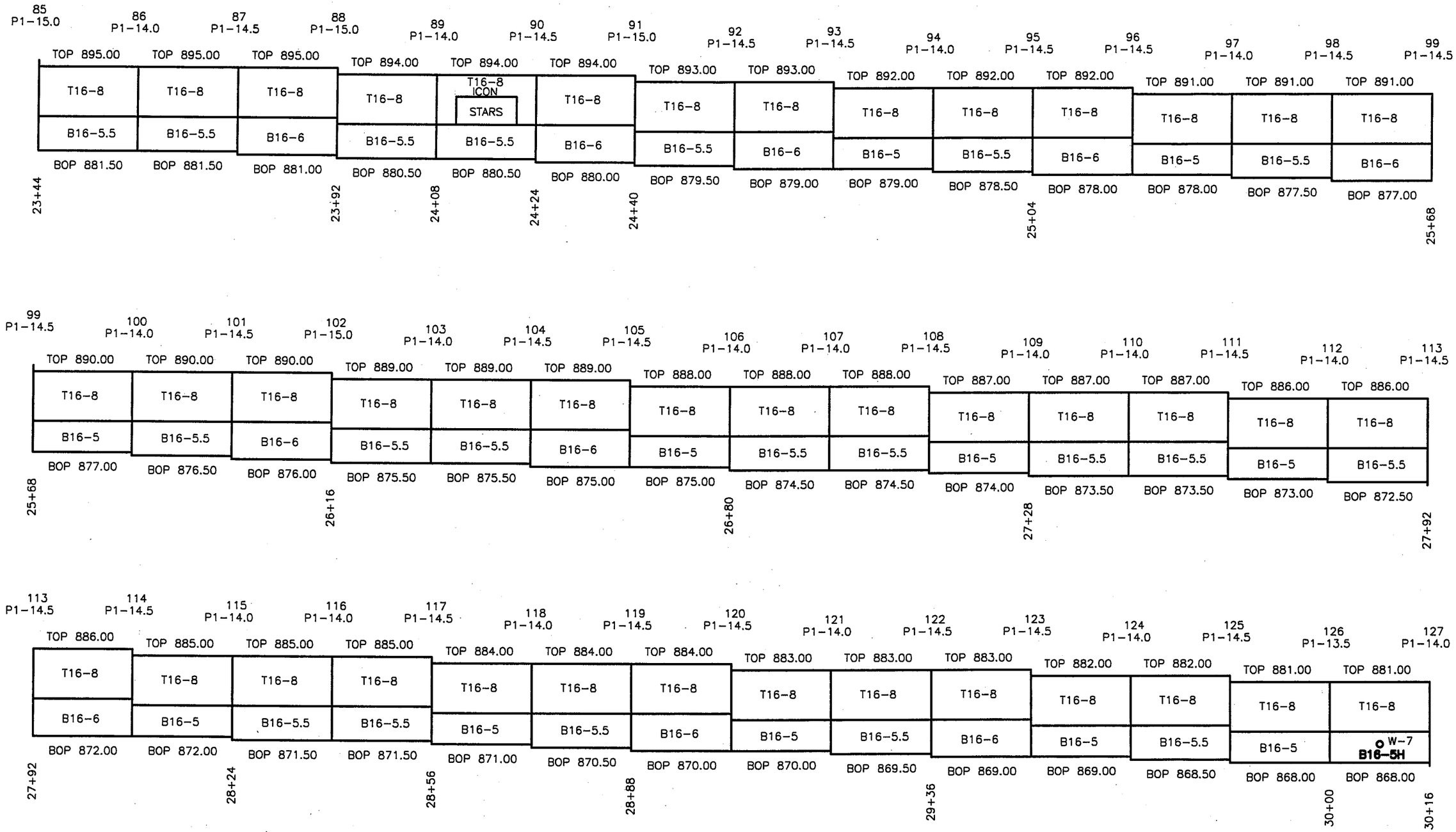

NOISE BARRIER #2 – STA. 23+44 TO STA. 30+16
ROADWAY SIDE VIEW

O.D.O.T. PROJ. 080211 – CUYAHOGA COUNTY

DRAWN BY: BK	SCALE: 1/16"=1'-0"	DRAWING NO.:
DATE: 1-16-09	REV:	080211W2
MACK INDUSTRIES OF PA., INC. 2207 SODOM HUTCHINGS RD., VIENNA, OHIO 44473 (330) 638-7680		SHEET NO.: 14 OF

THIS DRAWING IS THE PROPERTY OF MACK INDUSTRIES, INC., AND IT OR THE TECHNOLOGY CONTAINED HEREIN MAY NOT BE REPRODUCED NOR USED EXCEPT AS ORIGINALLY INTENDED WITHOUT THE EXPRESSED CONSENT OF MACK INDUSTRIES, INC.

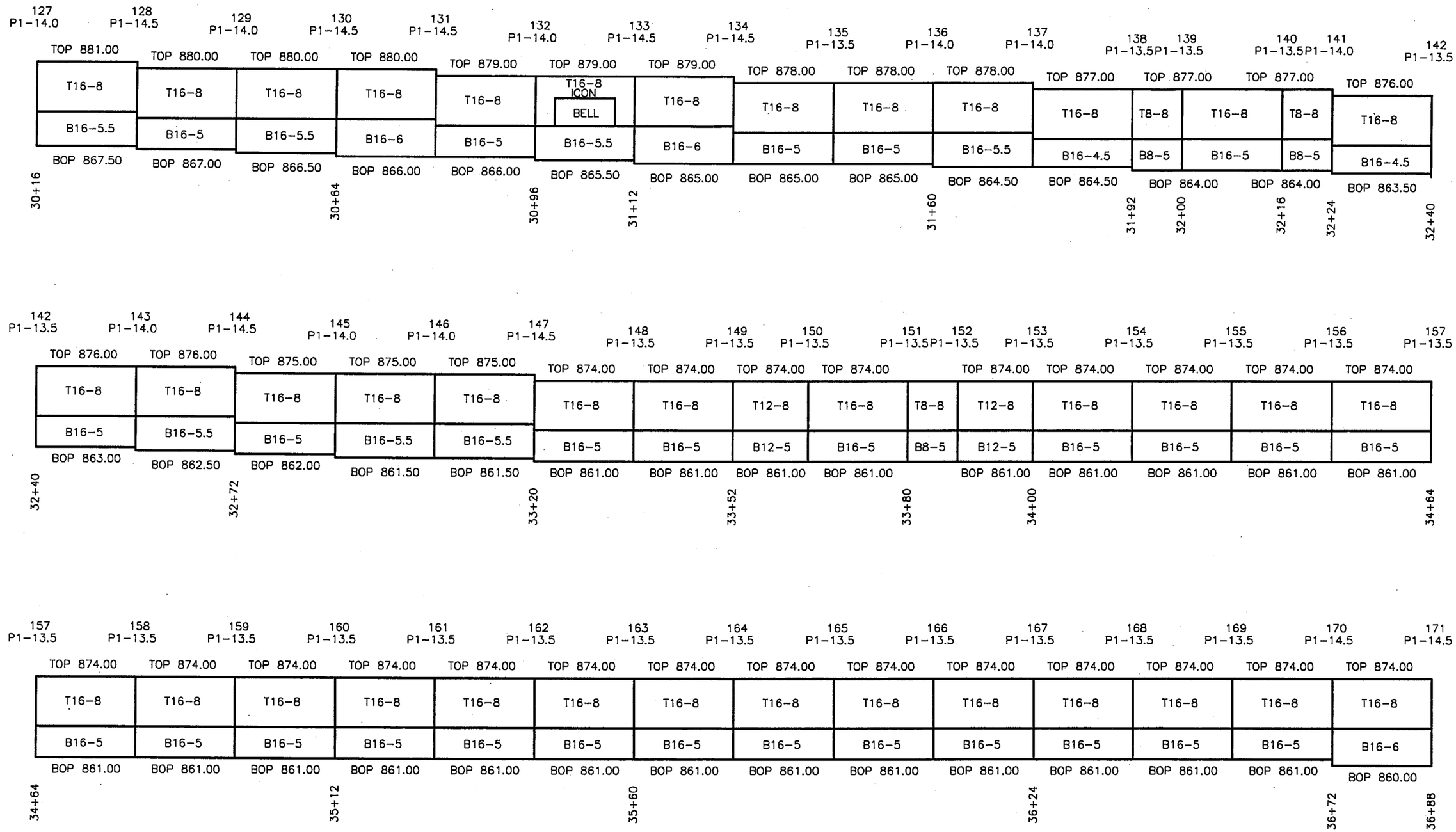

NOISE BARRIER #2 – STA. 30+16 TO STA. 36+88
ROADWAY SIDE VIEW

O.D.O.T. PROJ. 080211 – CUYAHOGA COUNTY

DRAWN BY: BK	SCALE: 1/16"=1'-0"	DRAWING NO.: 080211W2
DATE: 1-16-09	REV:	
MACK INDUSTRIES OF PA., INC. 2207 SODOM HUTCHINGS RD., VIENNA, OHIO 44473 (330) 638-7680		SHEET NO.: 15 OF

THIS DRAWING IS THE PROPERTY OF MACK INDUSTRIES, INC., AND IT OR THE TECHNOLOGY CONTAINED HEREIN MAY NOT BE REPRODUCED NOR USED EXCEPT AS ORIGINALLY INTENDED WITHOUT THE EXPRESSED CONSENT OF MACK INDUSTRIES, INC.

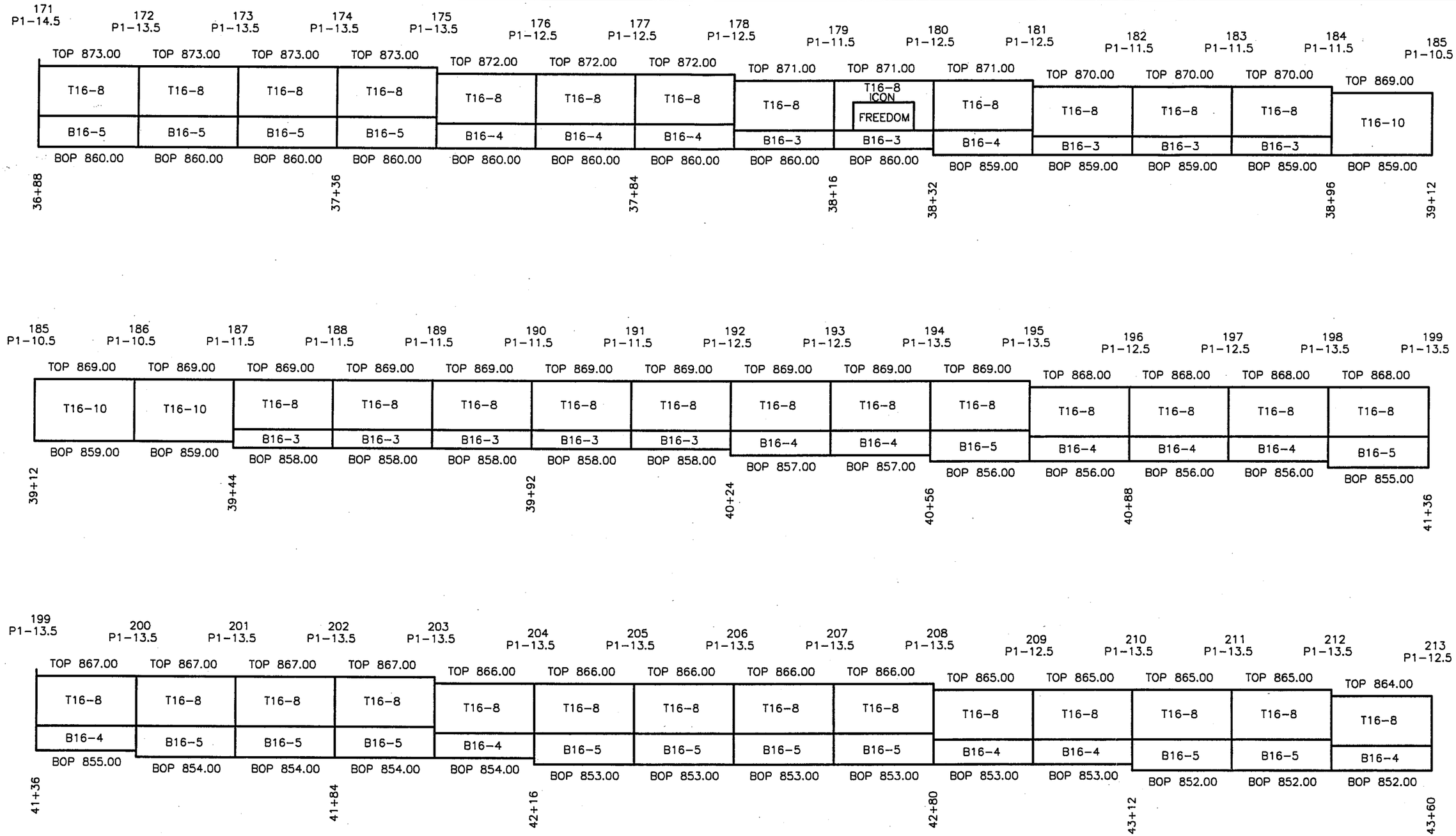

NOISE BARRIER #2 – STA. 36+88 TO STA. 43+60
ROADWAY SIDE VIEW

O.D.O.T. PROJ. 080211 – CUYAHOGA COUNTY

DRAWN BY: BK	SCALE: 1/16"=1'-0"	DRAWING NO.:
DATE: 1-16-09	REV:	080211W2
MACK INDUSTRIES OF PA., INC. 2207 SODOM HUTCHINGS RD., VIENNA, OHIO 44473 (330) 638-7680		SHEET NO.: 16 OF

THIS DRAWING IS THE PROPERTY OF MACK INDUSTRIES, INC., AND IT OR THE TECHNOLOGY CONTAINED HEREIN MAY NOT BE REPRODUCED NOR USED EXCEPT AS ORIGINALLY INTENDED WITHOUT THE EXPRESSED CONSENT OF MACK INDUSTRIES, INC.

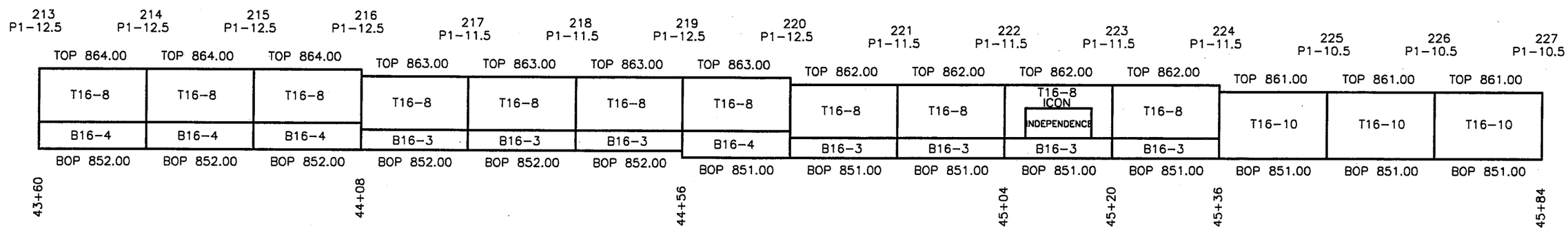

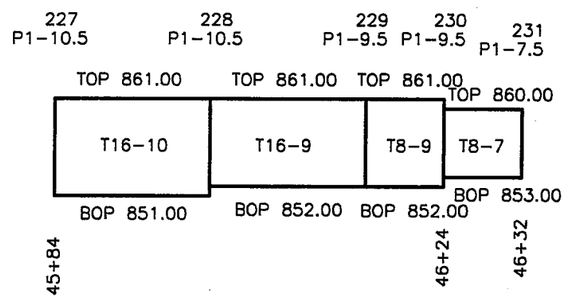

NOISE BARRIER #2 – STA. 43+60 TO STA. 46+32
ROADWAY SIDE VIEW

O.D.O.T. PROJ. 080211 – CUYAHOGA COUNTY

DRAWN BY: BK	SCALE: 1/16"=1'-0"	DRAWING NO.:
DATE: 1-16-09	REV:	080211W2
MACK INDUSTRIES OF PA., INC. 2207 SODOM HUTCHINGS RD., VIENNA, OHIO 44473 (330) 638-7680		SHEET NO.: 17 OF

THIS DRAWING IS THE PROPERTY OF MACK INDUSTRIES, INC., AND IT OR THE TECHNOLOGY CONTAINED HEREIN MAY NOT BE REPRODUCED NOR USED EXCEPT AS ORIGINALLY INTENDED WITHOUT THE EXPRESSED CONSENT OF MACK INDUSTRIES, INC.

(NO POST #1)

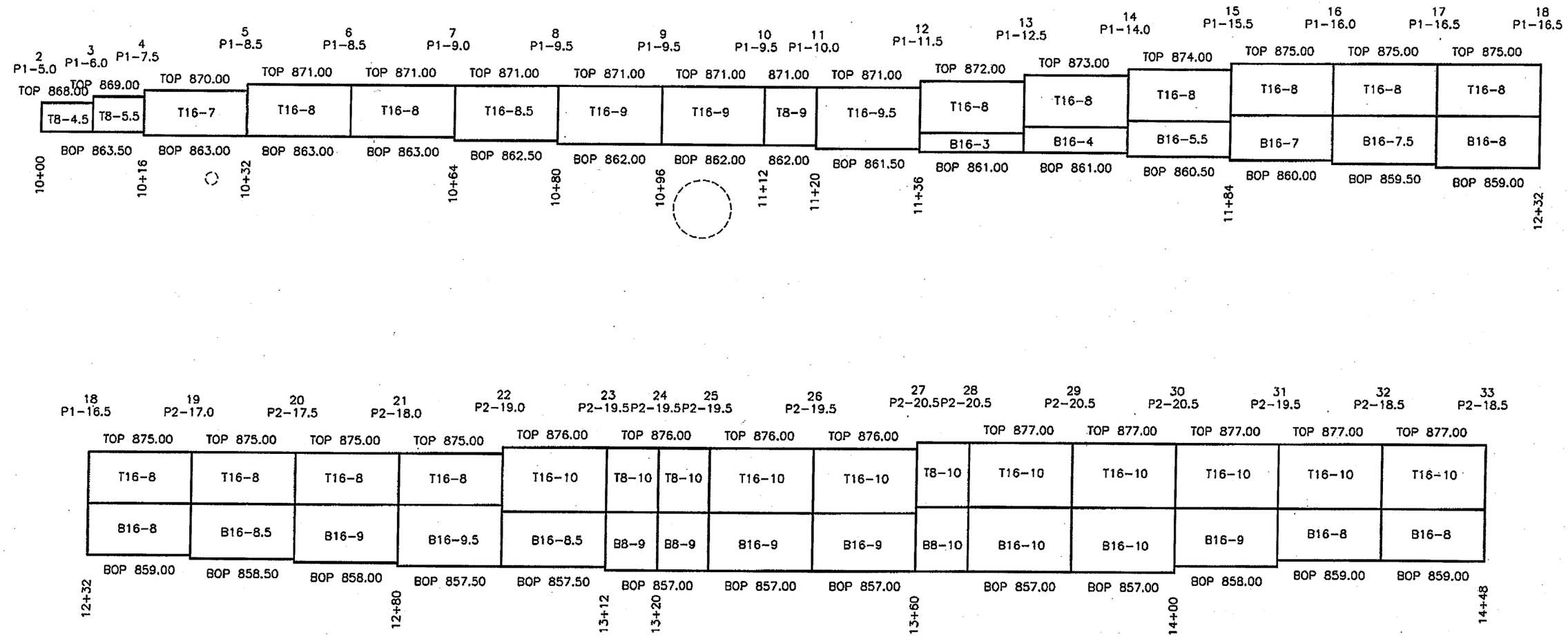

NOISE BARRIER #3 – STA. 10+00 TO STA. 14+48 RESIDENCE SIDE VIEW		
O.D.O.T. PROJ. 080211 – CUYAHOGA COUNTY		
DRAWN BY: BK	SCALE: 1/16"=1'-0"	DRAWING NO.:
DATE: 12-18-08	REV: 1-26-09 BK	080211W3
MACK INDUSTRIES OF PA., INC. 2207 SODOM HUTCHINGS RD., VIENNA, OHIO 44473 (330) 638-7680		SHEET NO.: 18 OF

THIS DRAWING IS THE PROPERTY OF MACK INDUSTRIES, INC., AND IT OR THE TECHNOLOGY CONTAINED HEREIN MAY NOT BE REPRODUCED NOR USED EXCEPT AS ORIGINALLY INTENDED WITHOUT THE EXPRESSED CONSENT OF MACK INDUSTRIES, INC.

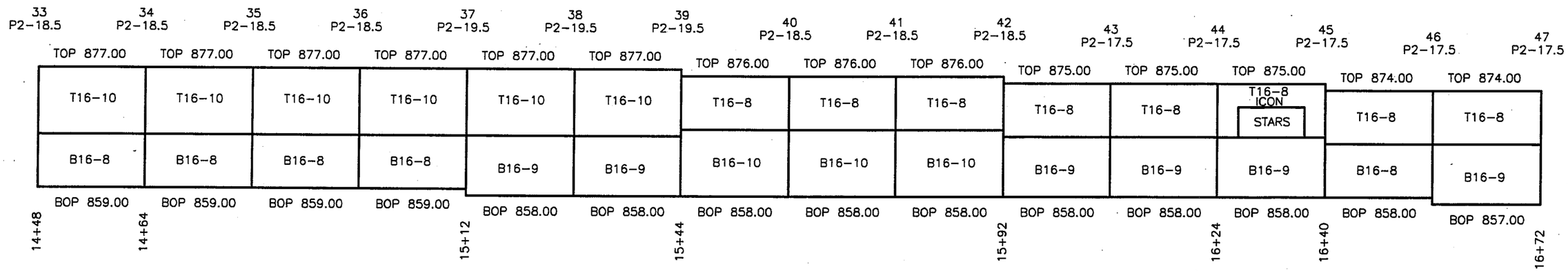

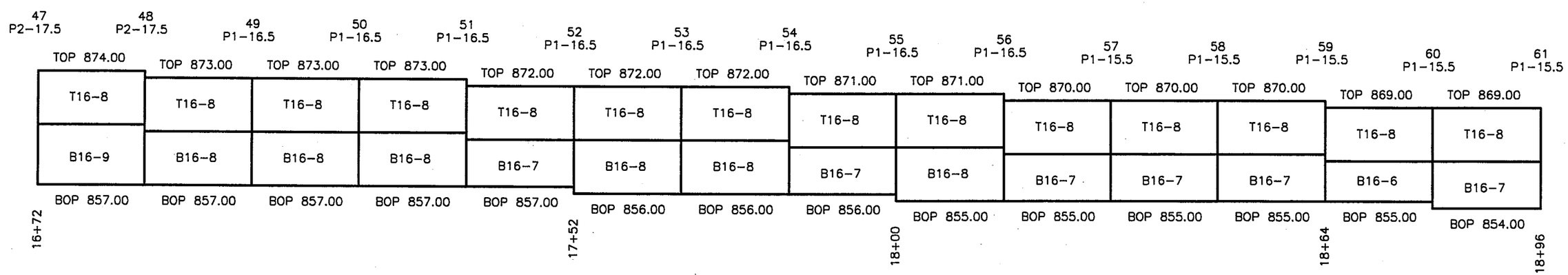

NOISE BARRIER #3 – STA. 14+48 TO STA. 18+96
RESIDENCE SIDE VIEW

O.D.O.T. PROJ. 080211 – CUYAHOGA COUNTY

DRAWN BY: BK	SCALE: 1/16"=1'-0"	DRAWING NO.:
DATE: 12-18-08	REV:	080211W3
MACK INDUSTRIES OF PA., INC. 2207 SODOM HUTCHINGS RD., VIENNA, OHIO 44473 (330) 638-7680		SHEET NO.: 19 OF

THIS DRAWING IS THE PROPERTY OF MACK INDUSTRIES, INC., AND IT OR THE TECHNOLOGY CONTAINED HEREIN MAY NOT BE REPRODUCED NOR USED EXCEPT AS ORIGINALLY INTENDED WITHOUT THE EXPRESSED CONSENT OF MACK INDUSTRIES, INC.

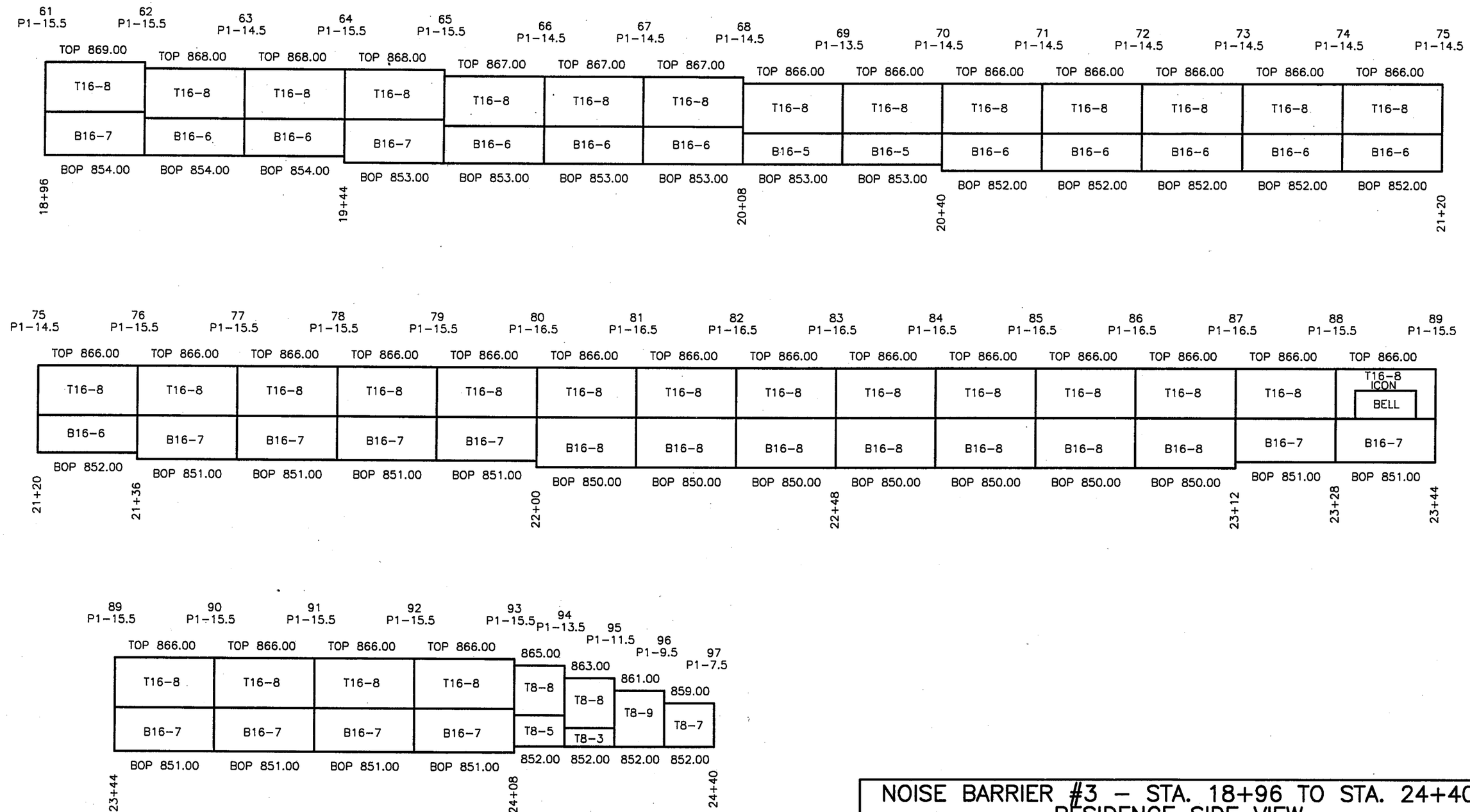

NOISE BARRIER #3 – STA. 18+96 TO STA. 24+40
RESIDENCE SIDE VIEW

O.D.O.T. PROJ. 080211 – CUYAHOGA COUNTY

DRAWN BY: BK	SCALE: 1/16"=1'-0"	DRAWING NO.:
DATE: 12-18-08	REV:	080211W3
MACK INDUSTRIES OF PA., INC. 2207 SODOM HUTCHINGS RD., VIENNA, OHIO 44473 (330) 638-7680		SHEET NO.: 20 OF

THIS DRAWING IS THE PROPERTY OF MACK INDUSTRIES, INC., AND IT OR THE TECHNOLOGY CONTAINED HEREIN MAY NOT BE REPRODUCED NOR USED EXCEPT AS ORIGINALLY INTENDED WITHOUT THE EXPRESSED CONSENT OF MACK INDUSTRIES, INC.

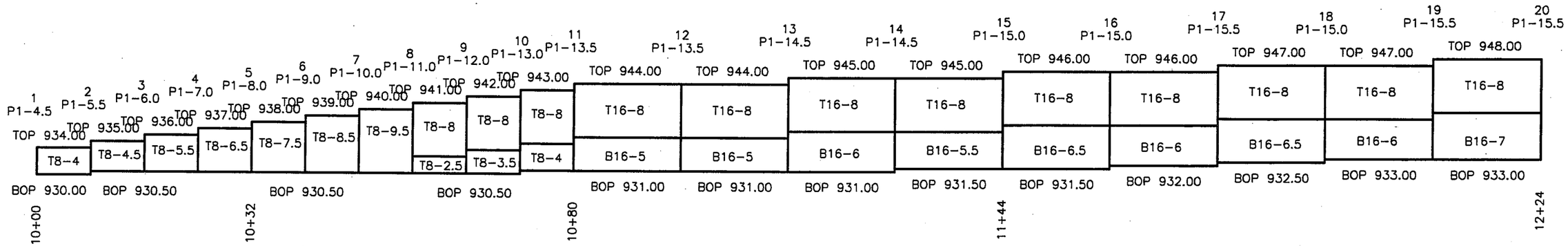

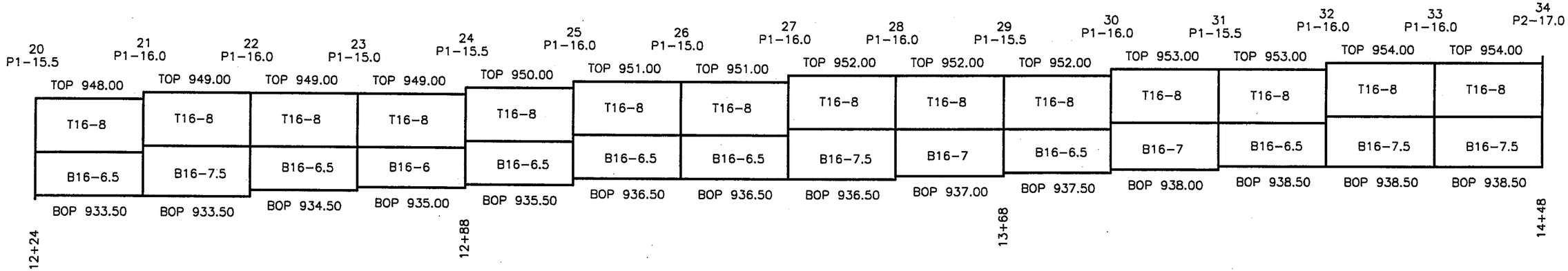

NOISE BARRIER #5 – STA. 10+00 TO STA. 14+48
RESIDENCE SIDE VIEW

O.D.O.T. PROJ. 080211 – CUYAHOGA COUNTY

DRAWN BY: BK	SCALE: 1/16"=1'-0"	DRAWING NO.:
DATE: 12-18-08	REV:	080211W5
MACK INDUSTRIES OF PA., INC. 2207 SODOM HUTCHINGS RD., VIENNA, OHIO 44473 (330) 638-7680		SHEET NO.: 29 OF

THIS DRAWING IS THE PROPERTY OF MACK INDUSTRIES, INC., AND IT OR THE TECHNOLOGY CONTAINED HEREIN MAY NOT BE REPRODUCED NOR USED EXCEPT AS ORIGINALLY INTENDED WITHOUT THE EXPRESSED CONSENT OF MACK INDUSTRIES, INC.

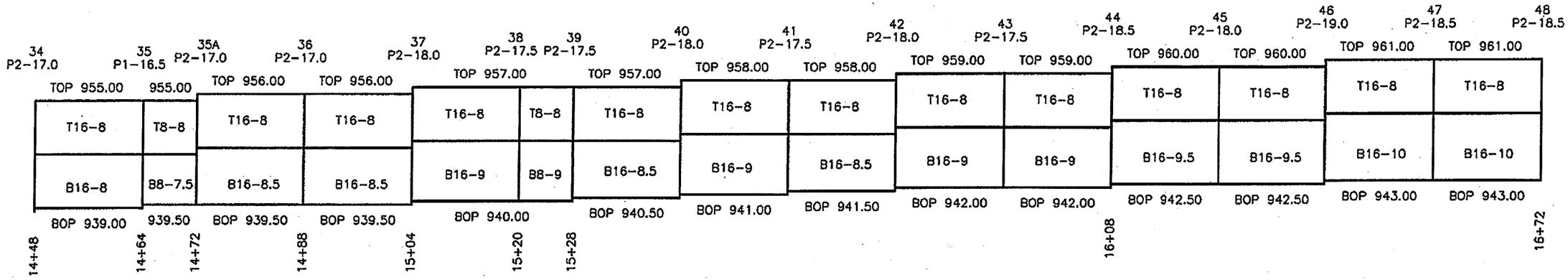

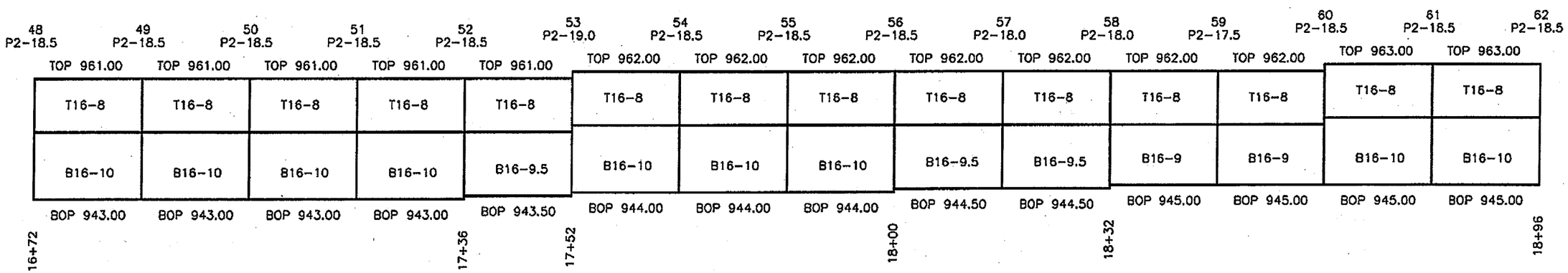

NOISE BARRIER #5 – STA. 14+48 TO STA. 18+96
RESIDENCE SIDE VIEW

O.D.O.T. PROJ. 080211 – CUYAHOGA COUNTY

DRAWN BY: BK	SCALE: 1/16"=1'-0"	DRAWING NO.:
DATE: 12-18-08	REV: 1-26-09 BK	080211W5
MACK INDUSTRIES OF PA., INC. 2207 SODOM HUTCHINGS RD., VIENNA, OHIO 44473 (330) 638-7680		SHEET NO.: 30 OF

THIS DRAWING IS THE PROPERTY OF MACK INDUSTRIES, INC., AND IT OR THE TECHNOLOGY CONTAINED HEREIN MAY NOT BE REPRODUCED NOR USED EXCEPT AS ORIGINALLY INTENDED WITHOUT THE EXPRESSED CONSENT OF MACK INDUSTRIES, INC.

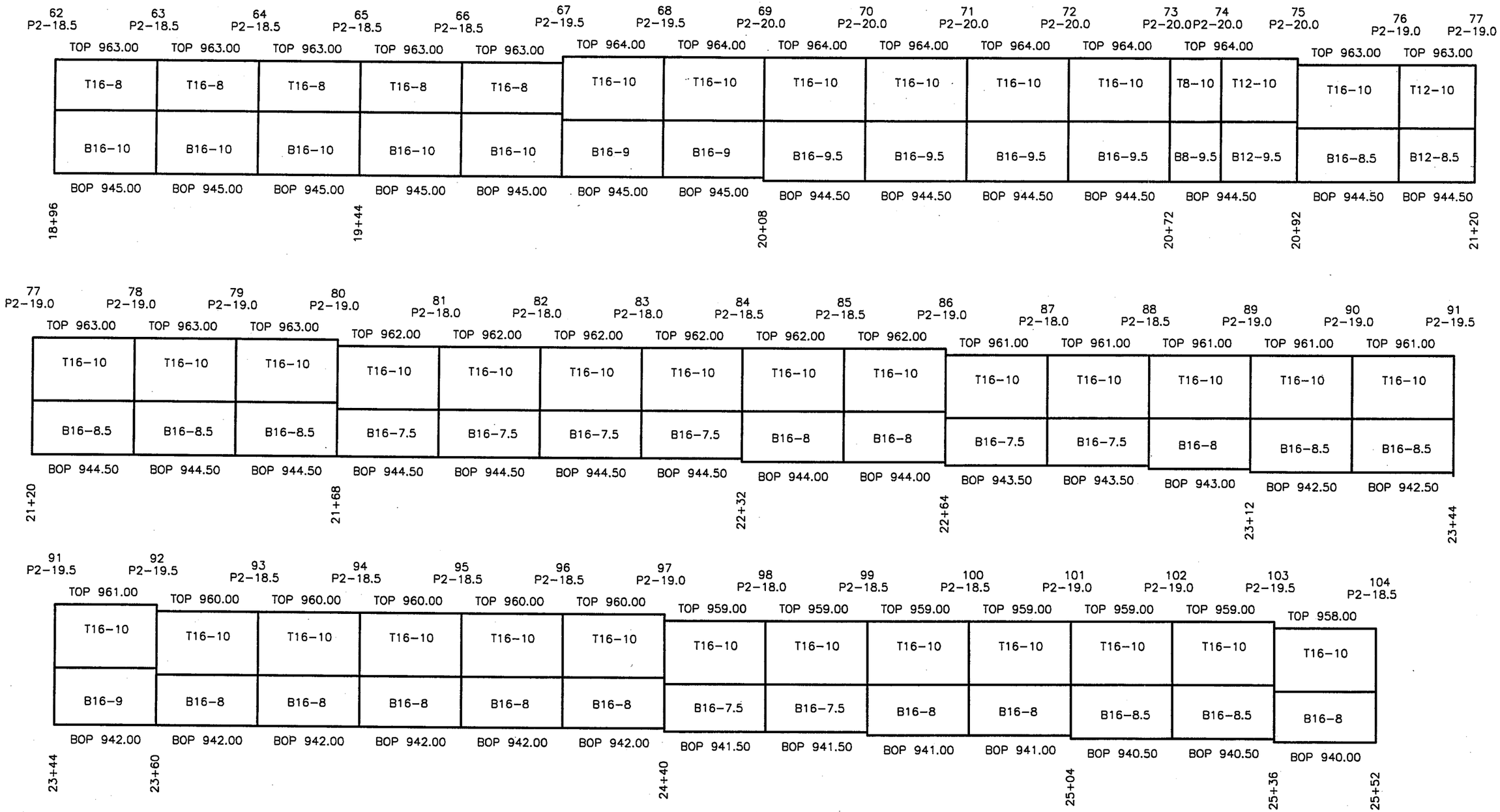

NOISE BARRIER #5 – STA. 18+96 TO STA. 25+52
RESIDENCE SIDE VIEW

O.D.O.T. PROJ. 080211 – CUYAHOGA COUNTY

DRAWN BY: BK	SCALE: 1/16"=1'-0"	DRAWING NO.:
DATE: 12-18-08	REV:	080211W5
MACK INDUSTRIES OF PA., INC.		SHEET NO.:
2207 SODOM HUTCHINGS RD., VIENNA, OHIO 44473 (330) 638-7680		31 OF

THIS DRAWING IS THE PROPERTY OF MACK INDUSTRIES, INC., AND IT OR THE TECHNOLOGY CONTAINED HEREIN MAY NOT BE REPRODUCED NOR USED EXCEPT AS ORIGINALLY INTENDED WITHOUT THE EXPRESSED CONSENT OF MACK INDUSTRIES, INC.

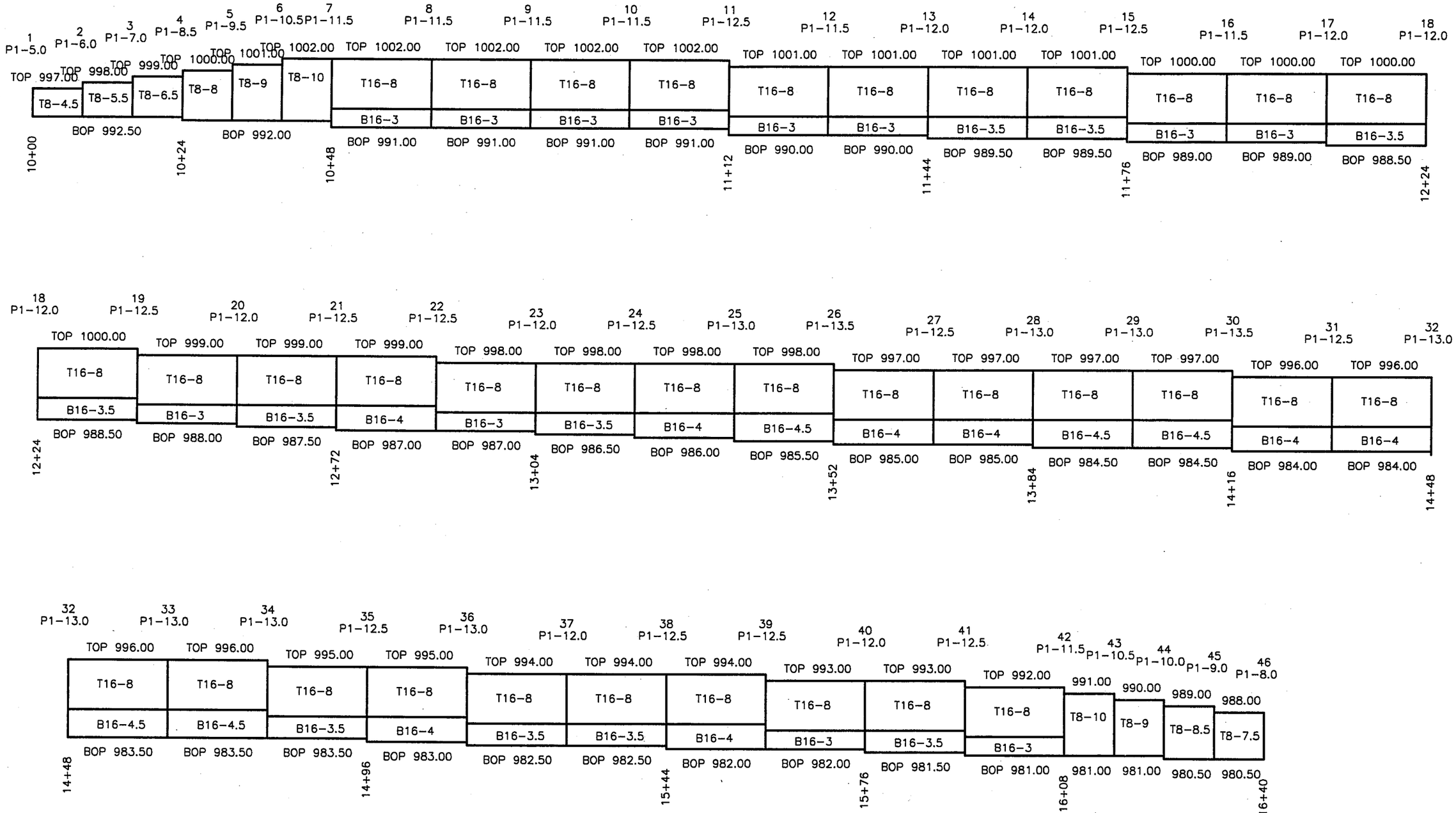

NOISE BARRIER #6 – STA. 10+00 TO STA. 16+40
ROADWAY SIDE VIEW

O.D.O.T. PROJ. 080211 – CUYAHOGA COUNTY

DRAWN BY: BK	SCALE: 1/16"=1'-0"	DRAWING NO.:
DATE: 1-19-09	REV:	080211W6
MACK INDUSTRIES OF PA., INC. 2207 SODOM HUTCHINGS RD., VIENNA, OHIO 44473 (330) 638-7680		SHEET NO.: 32 OF

THIS DRAWING IS THE PROPERTY OF MACK INDUSTRIES, INC., AND IT OR THE TECHNOLOGY CONTAINED HEREIN MAY NOT BE REPRODUCED NOR USED EXCEPT AS ORIGINALLY INTENDED WITHOUT THE EXPRESSED CONSENT OF MACK INDUSTRIES, INC.