FED. RD. DIVISION	STATE	PROJECT	
2	OHIO	I-77-4(14)145	

1/258

STATE OF OHIO
DEPARTMENT OF HIGHWAYS
SUM-77-31.08
CUY-77-0.00

SUMMIT COUNTY-RICHFIELD TWP
CUYAHOGA COUNTY-
CITY OF BRECKSVILLE

CONVENTIONAL SIGNS

PROPERTY LINE
EXISTING RIGHT OF WAY
LIMITED ACCESS LINE — L A
LIMITS ACCESS RIGHT OF WAY — LA&R/W
RIGHT OF WAY LINE — R/W
TEMPORARY RIGHT OF WAY — T
WARRANTY DEED — WD
SLOPE EASEMENT LINE — SL
CHANNEL EASEMENT — X X
CENTER LINE
PARTICIPATION LINE — P
ORIGINAL TOWNSHIP LOT LINE
FENCE LINE — X X
GUARD RAIL(EXISTING)
GUARD RAIL(PROPOSED)
RAILROAD
POWER POLES
TELEPHONE POLES
POWER AND TELEPHONE POLES
LIGHT POLES
TREES (EXISTING)
WATER LINE — W
GAS LINE — G
TELEPHONE CONDUIT — T
SEWER(EXISTING) — S
OIL LINE — O
ELECTRICAL TOWER
FIRE HYDRANT
MANHOLE(SEWER)
CATCH BASIN OR INLET

INDEX OF SHEETS

Title Sheet	1	Cross-Sections, I- 77	61-102
Schematic Plan & Design Designation	2-3	Cross-Sections, Ramp B-1	103-104
Typical Sections	4-10	Cross-Sections, Ramp B-2	105-106
Superelevation Tables	11-12	Cross-Sections, Service Road	107-110
General Notes	13-14	Cross-Sections, Snowville Road	111-113
Computations and Sub-Summaries	15-20	Cross-Sections, Miller Road	114-118
General Summary	21-23	Cross-Sections, Highland Drive	119-122
Plan-Profile I-77	24-43	Cross-Sections, Brecksville Parkway	123-126
Plan - Ramp B-1	44	Crossover Details	127
Plan - Ramp B-2	45	Ramp Terminal Details	128
Profiles - Ramps B-1 and B-2	46	Pavement Marking Details	129-130
Temporary Road - Ohio Turnpike	47-47A	Delineator Details	131
Plan-Profile - Serivce Road	48-49	Miscellaneous Details	132-137
Plan-Profile - Snowville Road	50-51	Waterwork	138-154 Sheet 153 Not Used
Plan-Profile - Miller Road	52-54	Structures - 20' Span and Under	155-174
Plan-Profile - Highland Drive	55-56	Structures - Over 20' Span	175-224
Plan-Profile - Brecksville Parkway	57-58	Signing Plans	225-230
Driveway Profiles	59-60	Center Line Survey Plat	231-233
		Right of Way Plans	234-258

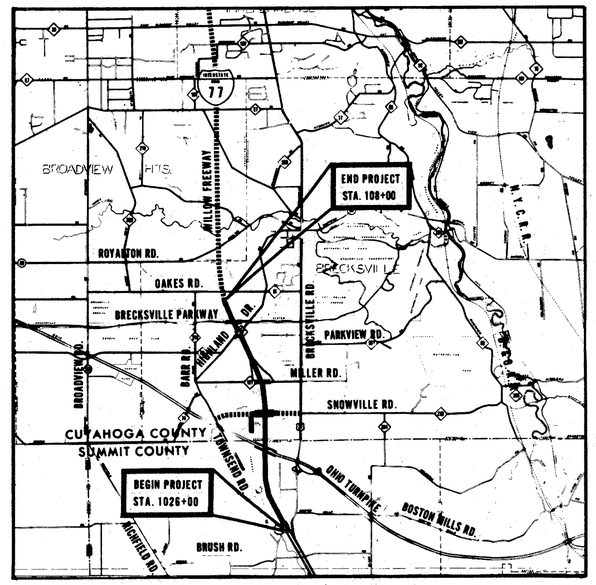

N

DELIVERY POINT B.&O. R.R.
PENINSULA, OHIO

LOCATION MAP

AVERAGE HAUL 6 MILES

SCALE

0 1000 5000 10000 FEET
0.5 0 1 2 MILE

PORTION TO BE IMPROVED
STATE ROADS
OTHER ROADS

LIMITED ACCESS

THIS IMPROVEMENT IS ESPECIALLY DESIGNED FOR THROUGH TRAFFIC AND HAS BEEN DECLARED A LIMITED ACCESS HIGHWAY BY ACTION OF THE DIRECTOR OF HIGHWAYS IN ACCORDANCE WITH THE PROVISIONS OF SECTION 5511.02, REVISED CODE OF OHIO.

CUYAHOGA COUNTY
CUY -77-0.00
SUMMIT COUNTY
SUM-77-31.08

I-77-4(14)145
1965 SPECIFICATIONS

THE STANDARD SPECIFICATIONS OF THE STATE OF OHIO, DEPARTMENT OF HIGHWAYS, INCLUDING CHANGES AND SUPPLEMENTAL SPECIFICATIONS LISTED IN THE PROPOSAL SHALL GOVERN THIS IMPROVEMENT.

THE RIGHT OF WAY FOR THIS IMPROVEMENT WILL BE PROVIDED BY THE STATE OF OHIO

I HEREBY APPROVE THESE PLANS AND DECLARE THAT THE MAKING OF THIS IMPROVEMENT WILL NOT REQUIRE THE CLOSING OF THE HIGHWAY TO TRAFFIC AND THAT PROVISIONS FOR THE MAINTENANCE AND SAFETY OF TRAFFIC WILL BE AS SET FORTH ON THE PLANS AND ESTIMATES.

APPROVED DATE 10-18-65 — Charles M. Yurisek — DIVISION DEPUTY DIRECTOR
APPROVED DATE 12-4-65 — C. H. Waters — ENGINEER OF BRIDGES
APPROVED DATE 12-17-65 — R.N. Ricketts — ENGINEER OF LOCATION AND DESIGN
APPROVED DATE 12-17-66 — R. E. Shultz — DEPUTY DIRECTOR OF DESIGN AND CONSTRUCTION
APPROVED DATE 12-28-65 — T. H. Bonnell — DEPUTY DIRECTOR OF RIGHT OF WAY
APPROVED DATE 12-28-65 — J. W. Wilson — DEPUTY DIRECTOR OF PLANNING AND PROGRAMMING
APPROVED DATE ____ — FIRST ASSISTANT DIRECTOR
APPROVED DATE 12-28-65 — P. E. Masheter — DIRECTOR OF HIGHWAYS

PREPARED AND RECOMMENDED BY

HOWARD NEEDLES TAMMEN & BERGENDOFF — **H.G. SOURS**
CONSULTING ENGINEERS — **ASSOCIATE**
KANSAS CITY CLEVELAND NEW YORK — **COLUMBUS**

STATE OF OHIO — CARL L. ERB, Jr. 18348 — REGISTERED PROFESSIONAL ENGINEER

Carl L. Erb
C. L. ERB

00329

FILE NO.		
	SUMMIT COUNTY	SUM-77-31.08
	CUYAHOGA COUNTY	CUY-77-0.00
	DATE OF LETTING _____, 1965	
	CONTRACT NO. _____	

SUPPLEMENTAL SPECIFICATIONS

NUMBER	DATE	NUMBER	DATE
801	9-2-65	806	9-2-65
808	7-14-65	816	8-6-65
811	3-29-65		
825	4-22-65		

LINE DATA

BEGIN PROJECT — STA. 1026+00.00
EQUATION STA. 1035+06.73 — BACK = STA. 1035+00.00 AHEAD
EQUATION STA. 1097+64.03 — BACK = STA. 0+00.00 AHEAD

END PROJECT — STA. 108+00.00
NET LENGTH OF PROJECT = 17,970.76 L.F. or 3.403 MILES

ADD FOR APPROACHES
STA. 1023+80.00 to STA. 1026+00.00 = 220.00 L.F.
STA. 108+00.00 to STA. 109+00.00 = 100.00 L.F.
OHIO TURNPIKE STA. 3+71 to STA. 27+65.84 = 2,394.84 L.F.
SERVICE ROAD STA. 0+12.00 to STA. 15+45.00 = 1,533.00 L.F.
SNOWVILLE ROAD STA. 66+00.00 to STA. 80+89.52 = 1,489.52 L.F.
MILLER ROAD STA. 61+00.00 to STA. 85+00.00 = 2,400.00 L.F.
HIGHLAND DRIVE STA. 11+15.00 to STA. 28+00.00 = 1,685.00 L.F.
BRECKSVILLE PARKWAY STA. 14+50.00 to STA. 29+10.00 = 1,460.00 L.F.

NET LENGTH OF WORK = 29,253.12 L.F. or 5.540 MILES

STANDARD DRAWING

NUMBER	DATE	NUMBER	DATE
BP-1	6-1-65	MC-5	6-1-65
BP-2	6-1-65	GR 2-A	9-1-65
F-1	6-1-65	GR-6	6-1-65
F-2	6-1-65	MC-6	6-1-65
F-3	6-1-65	BP-3	6-1-65
FACI-1	6-1-65	MC-1	6-1-65
FACI-2	6-1-65	BP-5	6-1-65
MC-3	6-1-65	BP-4	6-1-65
HW-E	6-1-65	AS-1-54	8-10-65
HW 1	6-1-65	RB-1-55	2-2-59
HW 2	6-1-65	AR-1-57	4-2-62
HW 3	6-1-65	BR-1-65	2-1-65
MC-4	6-1-65	Sheets 1 2 of 2	
C.B. 2-2-A & B	6-1-65	SD-1-63	11-12-63
C.B. 3-A	6-1-65	Sh. 2, 3 & 4 of 4	
C.B. 4	6-1-65	SD-2-64	11-25-64
C.B. 5	6-1-65	SP-53	6-30-61
C.B. 8	6-1-65	GR-1	6-1-65
M.H. 1	6-1-65	L-1	6-1-65
BP-7	6-1-65	MH-1A	6-1-65

MICROFILMED
FEB 12 1985

DEPARTMENT OF COMMERCE
BUREAU OF PUBLIC ROADS

APPROVED

DIVISION ENGINEER — DATE

FED. RD. DIVISION	STATE	PROJECT	
2	OHIO		

2 / 258

CUYAHOGA COUNTY
CUY-77-0.00
SUMMIT COUNTY
SUM.-77-31.08

SCHEMATIC PLAN

LEGEND
Initial Construction
Future Construction

℄ CURVE DATA.
P.I. = Sta. 1057+87.76
Δ = 20° 20' 48"
D = 1° 28' 00"
R = 3906.53'
T = 701.02'
L = 1,387.27'
E = 63.24'

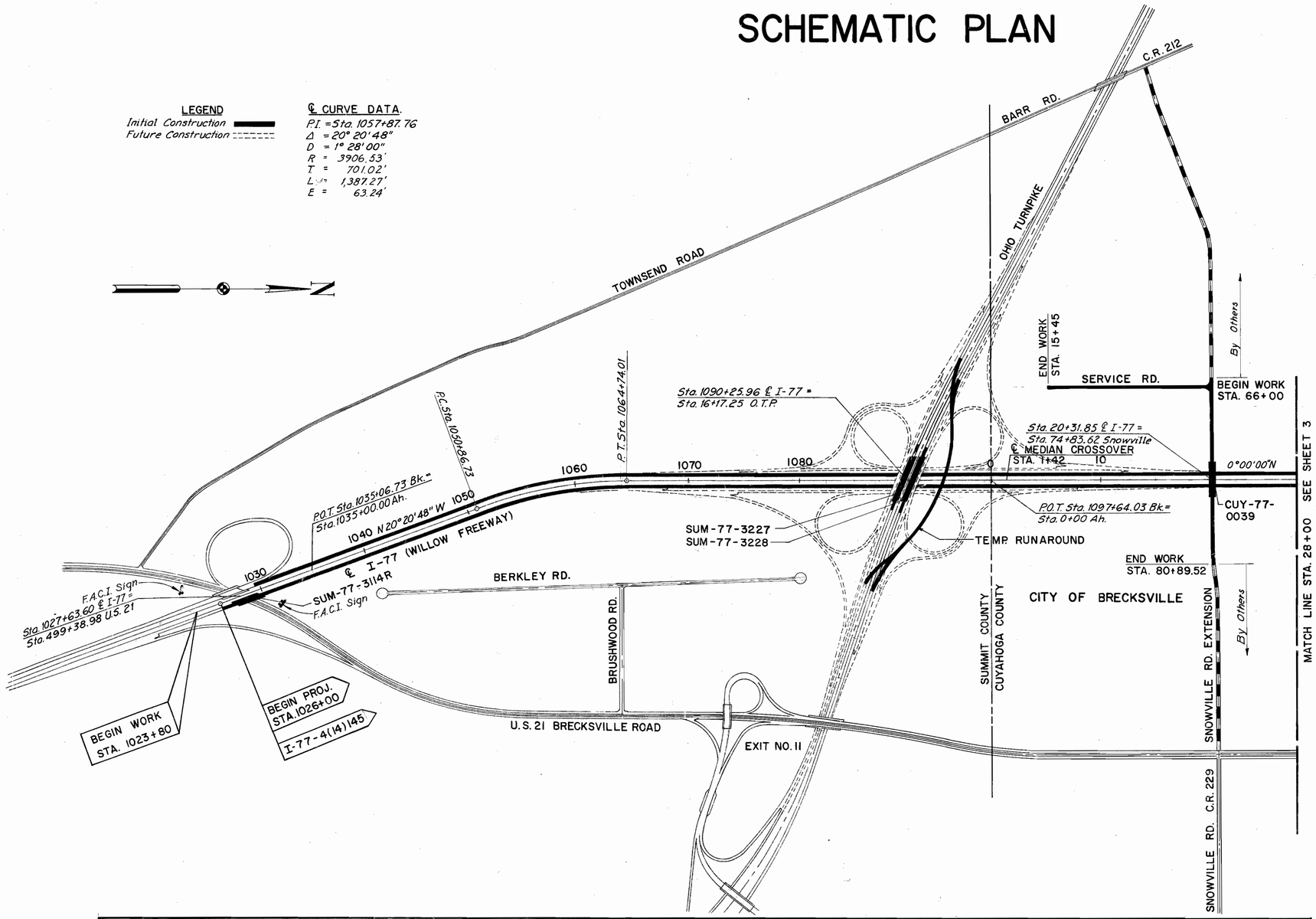

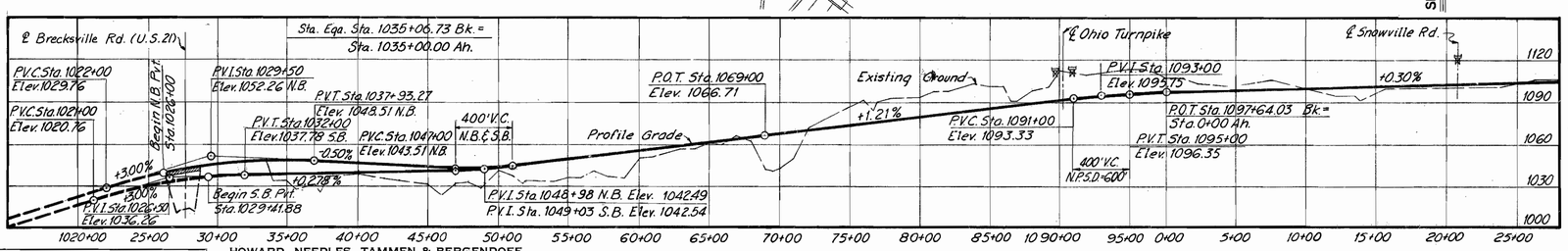

PROPOSED STRUCTURE SUM-77-3114R.
TYPE: Continuous steel beam with reinforced concrete deck and substructure
SPANS: 65'-0", 86'-0" and 60'-0"
ROADWAY: 40'-0" f/f parapets
LOAD FREQUENCY: CF 2000 (57) Adequate for A.A.S.H.O. Alternate loading.
SKEW: 42° 11' 30" Right - Forward
WEARING SURFACE: 1" Monolithic Concrete
APPROACH SLABS: AS-1-54 (25' Long)
ALIGNMENT: Tangent

PROPOSED STRUCTURE SUM-77-3227
PROPOSED STRUCTURE SUM-77-3228
TYPE: Continuous steel beam with reinforced concrete deck and substructure.
SPANS: 70'-8 13/16", 88'-1 1/4", 87'-10 5/8" and 70'-1 3/8" measured along ℄ Ohio Turnpike.
ROADWAY: 34'-0" f/f parapets
LOAD FREQUENCY: CF 2000 (57) Adequate for A.A.S.H.O. Alternate loading
SKEW: 22° 11' 14" Right-Forward
WEARING SURFACE: 1" Monolithic Concrete
APPROACH SLABS: AS-1-54 (25' Long)
ALIGNMENT: 0° 30' 00" Curve left on ℄ Ohio Turnpike.

MICROFILMED
FEB 12 1985

PROPOSED STRUCTURE CUY-77-0039
TYPE: Continuous steel beam with reinforced concrete deck and substructure.
SPANS: 57'-3", 2@ 81'-9", 57'-3"
ROADWAY: 28'-0" curb/curb with two 4'-0" sidewalks.
LOAD FREQUENCY: CF 400 (57)
SKEW: None
WEARING SURFACE: 1" Monolithic Concrete
APPROACH SLABS: AS-1-54 (25' Long)
ALIGNMENT: Tangent

Design Designation (1986)	South of Miller Rd.	North of Miller Rd.
Current A.D.T.	0	0
Design Year (1986) A.D.T.	24,300	28,700
D.H.V.	2,328	2,750
D (directional distribution)	62%	62%
T (percent trucks)	4%	4%
V. (design speed)	60	60

MADE J.E.N. DATE 6-7-65 TRACED DATE
CHECKED E.G.E. DATE 6-8-65 SCALE 1" = 500' Horiz. 1" = 50' Vert.

HOWARD, NEEDLES, TAMMEN & BERGENDOFF
CONSULTING ENGINEERS
KANSAS CITY CLEVELAND NEW YORK

FED. RD. DIVISION	STATE	PROJECT	
2	OHIO		

194 / 258

SUMMIT COUNTY SUM - 77-31.08

CUYAHOGA COUNTY CUY - 77-0.00

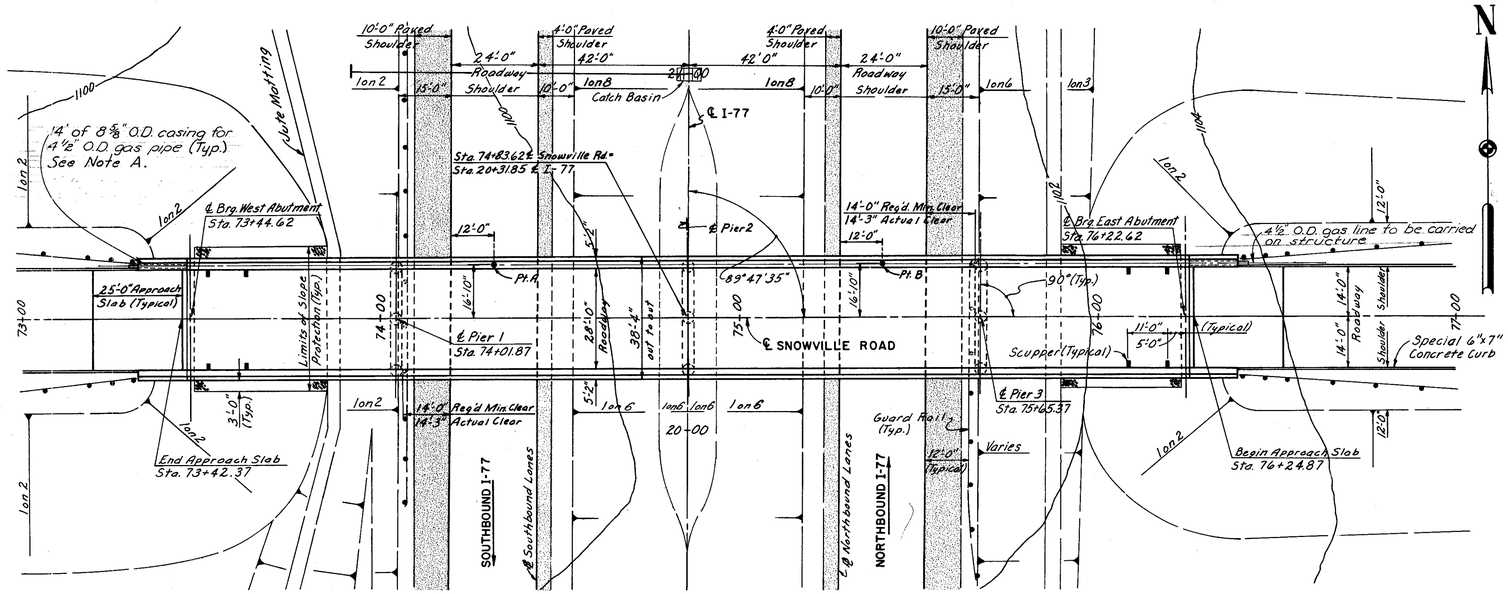

PLAN
Scale: 1" = 20'

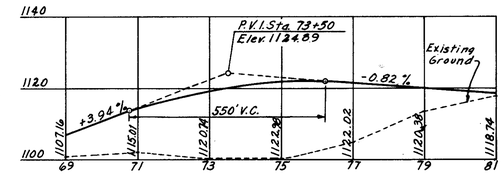

PROFILE - SNOWVILLE ROAD
Scale: Horz. 1" = 200'
Vert. 1" = 20'

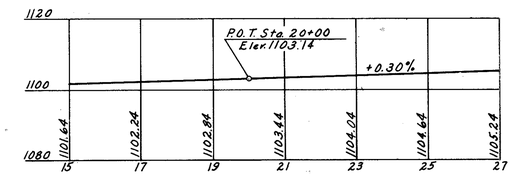

PROFILE - I-77
Scale: Horz. 1" = 200'
Vert. 1" = 20'

PROPOSED STRUCTURE
TYPE: Continuous steel beam with reinforced concrete deck and substructure
SPANS: 57'-3" 2 @ 81'-9", 57'-3"
ROADWAY: 28'-0" curb/curb with two 4'-0" sidewalks
LOAD FREQUENCY: CF400(57)
SKEW: None
WEARING SURFACE: 1" Monolithic Concrete
APPROACH SLABS: AS-1-54 (25' Long)
ALIGNMENT: Tangent

TRAFFIC DATA:
1986-4000 A.D.T. (Total both ways)

Note A: Casing to have 0.188 wall thickness and weigh 16.9 lbs. per ft. Casing to be furnished and installed by the bridge contractor; paid for by The East Ohio Gas Company.

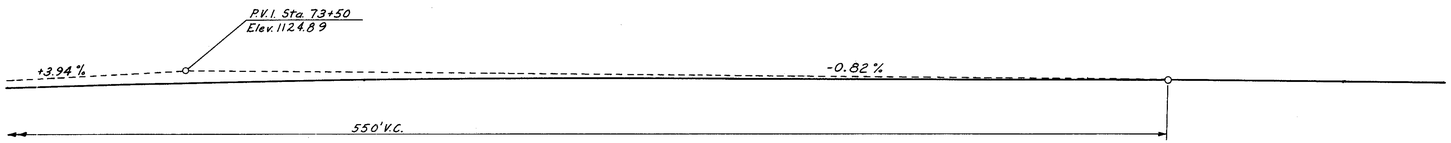

PROFILE

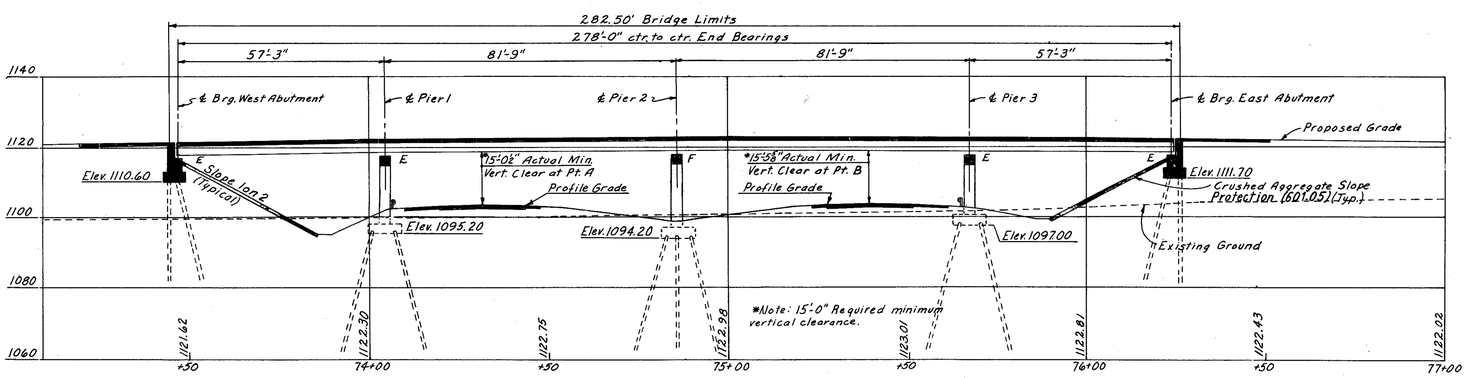

ELEVATION

ESTIMATED QUANTITIES									
				CUY-77-0039 H.N.T.B. BRIDGE NO. 3					
ITEM	TOTAL	UNIT	DESCRIPTION	ABUT-MENTS	PIERS	SUPER-STRUCTURE	GENERAL		
503	425	Cu. Yd.	Unclassified Excavation	210	215				
505	Lump Sum	Lump Sum	First Test Pile				Lump Sum		
507	2645	Lin. Ft.	12" ϕ C.I.P. Reinforced Concrete Piles	740	1905				
509	120,742	Pounds	Reinforcing Steel	12,649	26,760	90,333			
511	386	Cu. Yd.	Class "C" Concrete, Superstructure			386			
511	78	Cu. Yd.	Class "C" Concrete, Pier Caps and Columns		78				
511	86	Cu. Yd.	Class "E" Concrete, Abutment (Above Footing)	86					
511	139	Cu. Yd.	Class "E" Concrete, Footings	60	79				
* 513	322,870	Pounds	Structural Steel			322,870			
* 514	322,870	Pounds	Field Painting of Structural Steel			322,870			
517	610.50	Lin. Ft.	Bridge Railing, Type 2	51.67		558.83			
825	1,425	Sq. Yd.	Concrete Surface Treatment			1,425			
518	26	Cu. Yd.	Porous Backfill	26					
518	8	Each	Scuppers, Including Supports			8			
518	28	Lin. Ft.	6" Helical C.M.P. (Section 707.06) Non-Perforated	28					
518	60	Lin. Ft.	6" Perforated Helical C.M.P. (Section 707.06) Including Specials	60					
601	391	Sq. Yd.	Crushed Aggregate Slope Protection				391		
808	386	Each	Water-Reducing, Set-Retarding Admixture			386			

* Includes 853 pounds required for installation of 4 1/2" O.D. gas line to be paid for by The East Ohio Gas Company. (Includes angle supports & pipe casings).

Note: All piles shall be 12" ϕ C.I.P. Reinforced Concrete with estimated average vertical lengths as follows:

West Abutment	28'
Pier 1	34'
Pier 2	31'
Pier 3	34'
East Abutment	29'

MICROFILMED
FEB 12 1985

H.N.T.B. BR. NO. 3

HOWARD, NEEDLES, TAMMEN & BERGENDOFF
CONSULTING ENGINEERS
KANSAS CITY CLEVELAND NEW YORK

SITE PLAN

I-77 UNDER SNOWVILLE ROAD

BR. NO. CUY-77-0039 STA. 73+42.37 TO STA. 76+24.87

CUYAHOGA CO. OHIO

DRAWN	TRACED	CHECKED	REVIEWED	REVISED
DATE 5-7-65	DATE	DATE 4-2-65	DATE 9-1-65	SHEET 194

FED. RD. DIVISION	STATE	PROJECT	
2	OHIO		

195 / 258

SUMMIT COUNTY SUM - 77-31.08

CUYAHOGA COUNTY CUY - 77-0.00

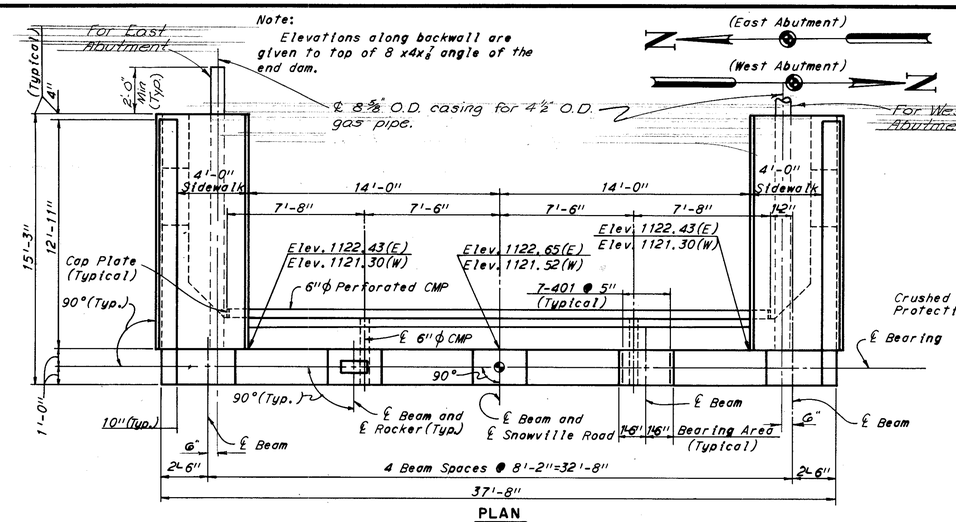

PLAN

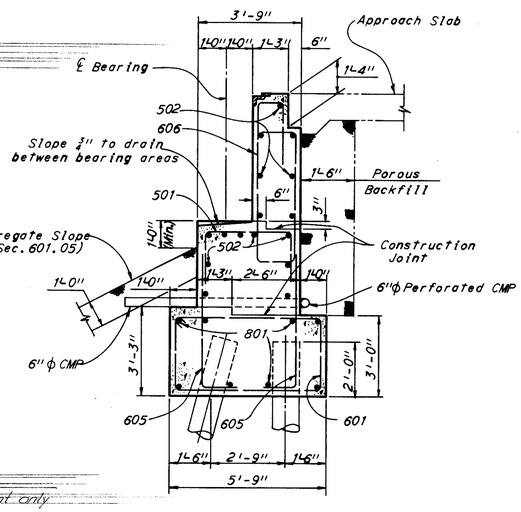

SECTION A-A

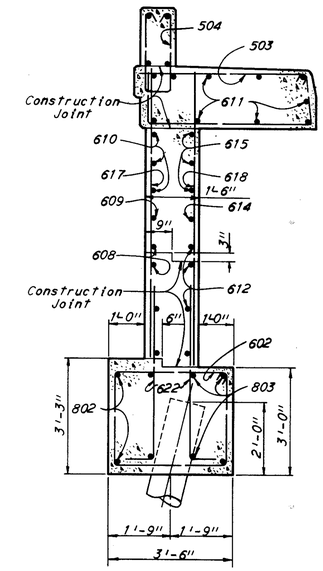

SECTION B-B

(Railing not shown)

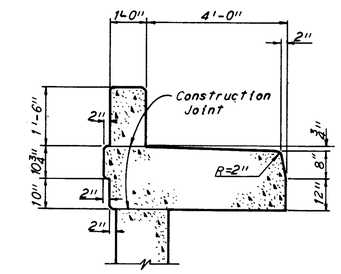

TYPICAL PARAPET AND CURB DETAIL

(Type 2 railing and reinforcement not shown)

Note: All reinforcing bar marks shall be prefixed AW for the West Abutment and AE for the East Abutment.

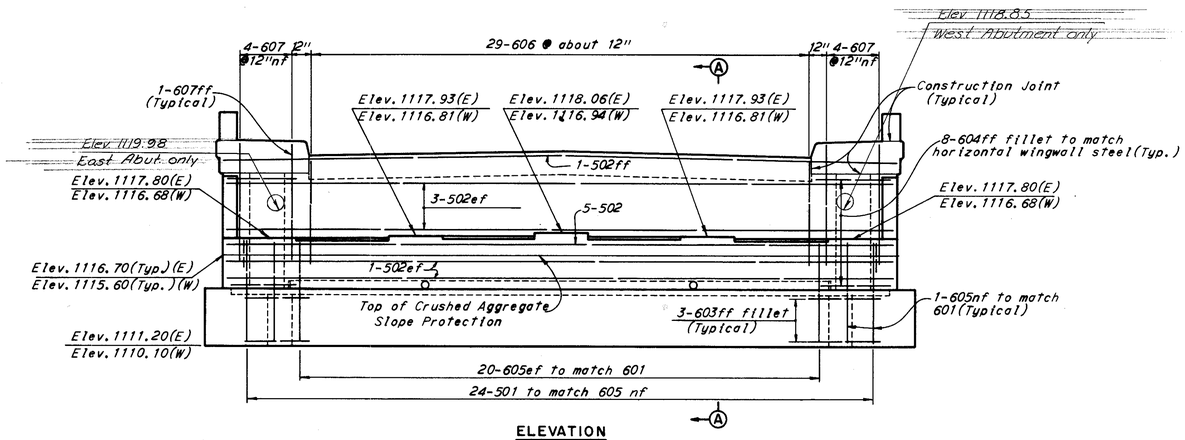

ELEVATION

(Piles not shown)

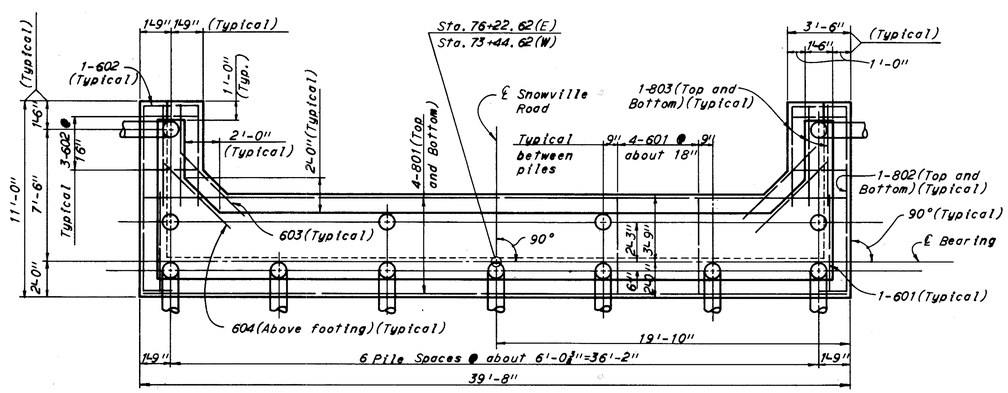

FOOTING PLAN

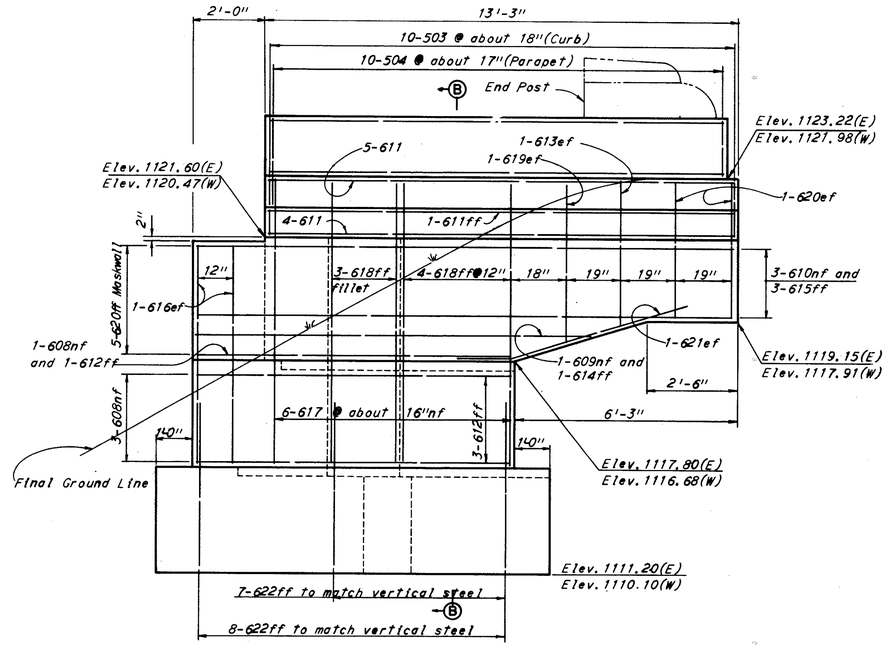

TYPICAL WINGWALL ELEVATION

(Piles not shown)

Notes:

Dimensions and reinforcement are the same for both Abutments except where noted as follows:

(W) = West Abutment
(E) = East Abutment

All piles shall be 12"φ C.I.P. Reinforced Concrete.

All battered piles shall be inclined 3 in 12 in direction shown.

Backfill shall be placed and compacted prior to construction of sidewalk.

For longitudinal reinforcement in the parapets, railing post spacing and end post details see Sheet 224 .

For roadway end dam details see Ohio Standard Drawing SD-1-63, sheets 2 and 4 of 4.

The following abbreviations are used.

nf = near face
ff = far face
ef = each face

MICROFILMED
FEB 12 1985

H.N.T.B. BR. NO. 3

HOWARD, NEEDLES, TAMMEN & BERGENDOFF
CONSULTING ENGINEERS
KANSAS CITY CLEVELAND NEW YORK

ABUTMENTS

I-77 UNDER SNOWVILLE ROAD

BR. NO. CUY-77-0039 STA. 73+42.37 TO STA. 76+24.87

CUYAHOGA CO. OHIO

DRAWN WJD DATE 4-8-65	TRACED C.P. DATE 4-8-65	CHECKED T.L.S. DATE 4-12-65	REVIEWED WJK DATE 9-1-65	REVISED	SHEET 195

FED. RD. DIVISION	STATE	PROJECT	
2	OHIO		

196
258

SUMMIT COUNTY SUM-77-31.08

CUYAHOGA COUNTY CUY-77-0.00

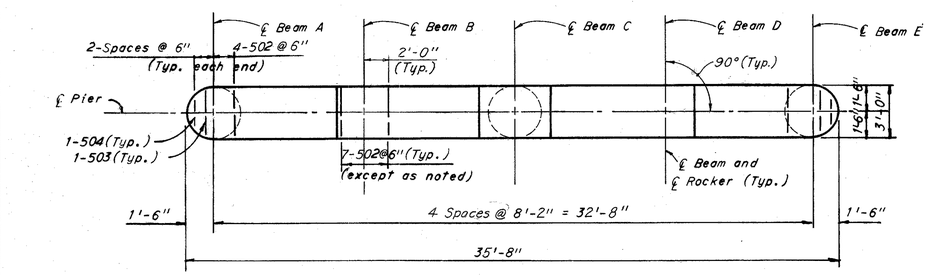

PLAN

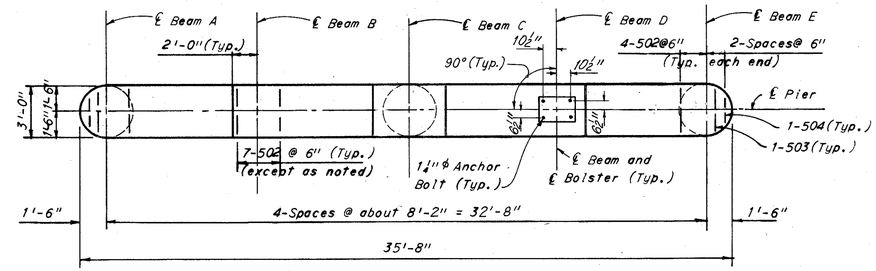

Note: Special care shall be taken when placing reinforcement so as not to interfere with anchor bolt setting.

PLAN

Note: All reinforcing bar marks shall be prefixed as follows:

Pier 1	PA
Pier 2	PB
Pier 3	PC

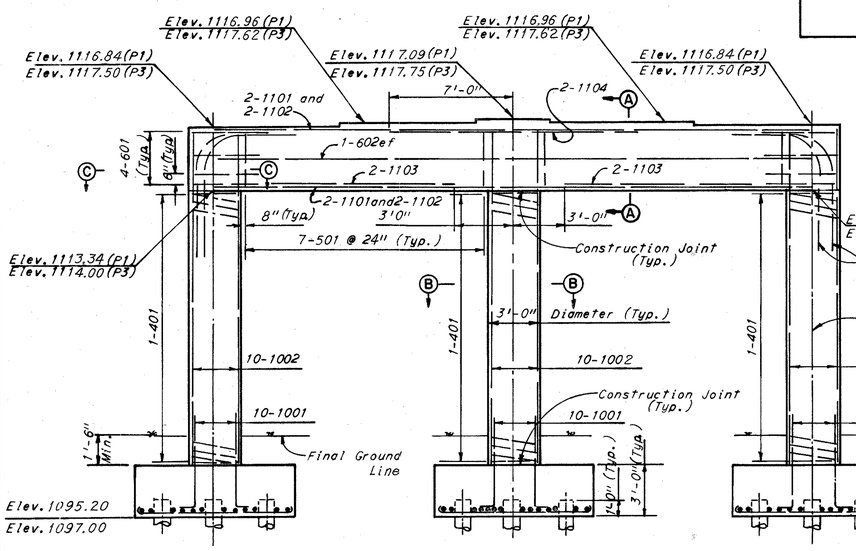

ELEVATION

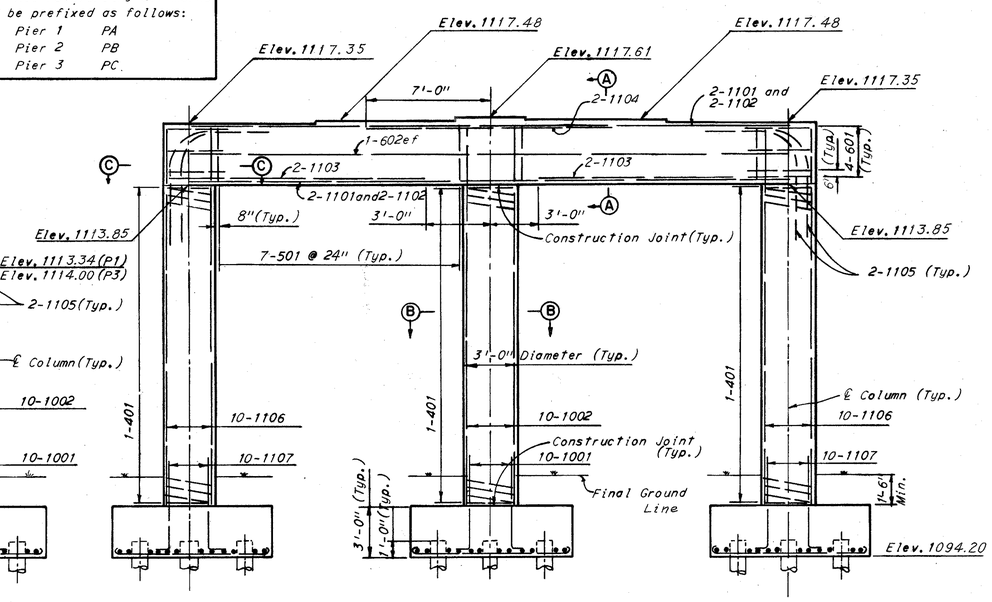

ELEVATION

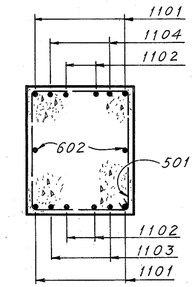

SECTION A-A

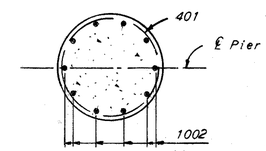

SECTION B-B

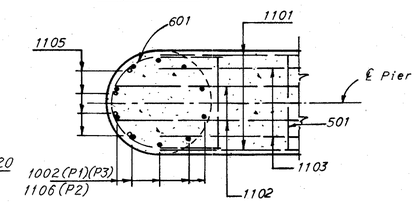

SECTION C-C

Notes:
For anchor bolt details see Ohio Standard Drawing RB-1-55.
All piles shall be 12" ϕ C.I.P. Reinforced Concrete.
All battered piles shall be inclined 3 in 12 in direction shown.
Pile layout dimensions are measured along bottom of footing.

The following abbreviations are used:

P_1	= Pier 1	P_2	= Pier 2
P_3	= Pier 3	ef	= each face

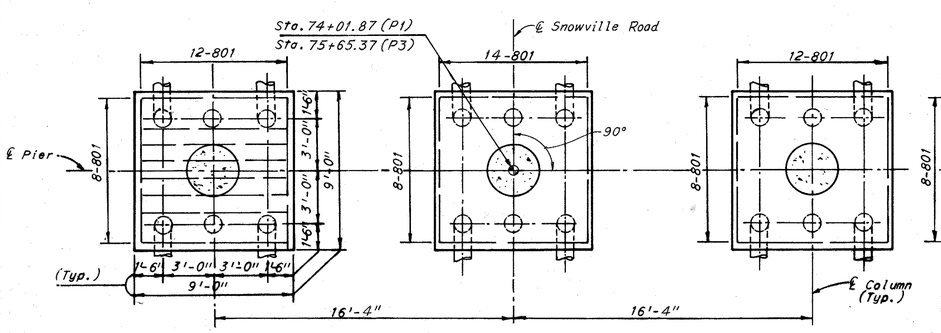

FOOTING PLAN
(PIERS 1 AND 3)

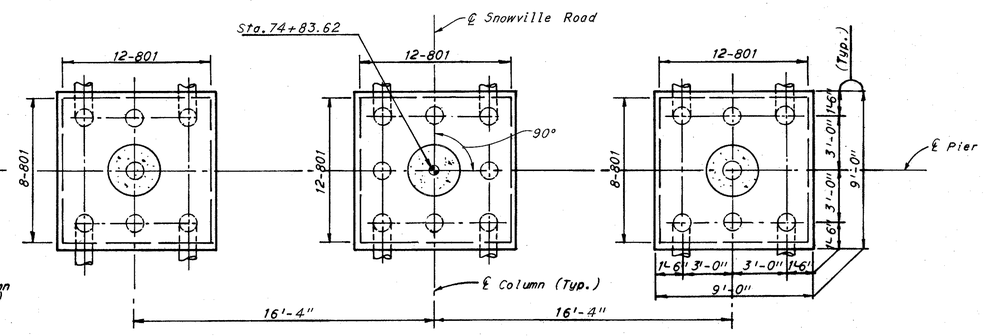

FOOTING PLAN
(PIER 2)

MICROFILMED
FEB 12 1985

H.N.T.B. BRIDGE NO. 3

HOWARD, NEEDLES, TAMMEN & BERGENDOFF
CONSULTING ENGINEERS
KANSAS CITY CLEVELAND NEW YORK

PIERS

I-77 UNDER SNOWVILLE ROAD

BR. NO. CUY-77-0039 STA. 73+42.37 TO STA. 76+24.87

CUYAHOGA COUNTY OHIO

DRAWN J.D.	TRACED	CHECKED JEN	REVIEWED WCF	REVISED
DATE 3-24-65	DATE	DATE 4-12-65	DATE 9-1-65	SHEET 196

FED. RD. DIVISION	STATE	PROJECT	
2	OHIO		

SUMMIT COUNTY
SUM - 77 - 31.08

CUYAHOGA COUNTY
CUY - 77 - 0.00

TOP OF PAVEMENT ELEVATIONS

BEAM	SPAN I				SPAN 2				SPAN 3				SPAN 4				BEAM
	℄ BRG. W. ABUT.	a	b	c	℄ PIER 1	a	b	c	℄ PIER 2	a	b	c	℄ PIER 3	a	b	c	℄ BRG. E. ABUT.	
A	1121.28	1121.50	1121.70	1121.89	1122.06	1122.26	1122.44	1122.57	1122.67	1122.74	1122.77	1122.76	1122.72	1122.66	1122.59	1122.50	1122.40	A
B	1121.40	1121.63	1121.83	1122.01	1122.18	1122.39	1122.56	1122.70	1122.80	1122.87	1122.89	1122.89	1122.84	1122.79	1122.72	1122.63	1122.53	B
C	1121.53	1121.75	1121.96	1122.14	1122.31	1122.52	1122.69	1122.83	1122.93	1122.99	1123.02	1123.01	1122.97	1122.92	1122.85	1122.76	1122.65	C
D	1121.40	1121.63	1121.83	1122.01	1122.18	1122.39	1122.56	1122.70	1122.80	1122.87	1122.89	1122.89	1122.84	1122.79	1122.72	1122.63	1122.53	D
E	1121.28	1121.50	1121.70	1121.89	1122.06	1122.26	1122.44	1122.57	1122.67	1122.74	1122.77	1122.76	1122.72	1122.66	1122.59	1122.50	1122.40	E

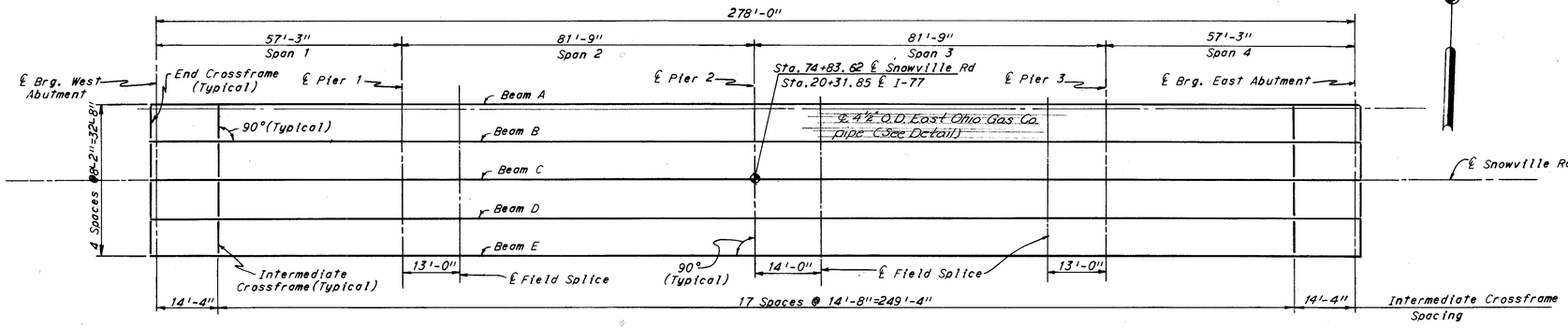

FRAMING PLAN

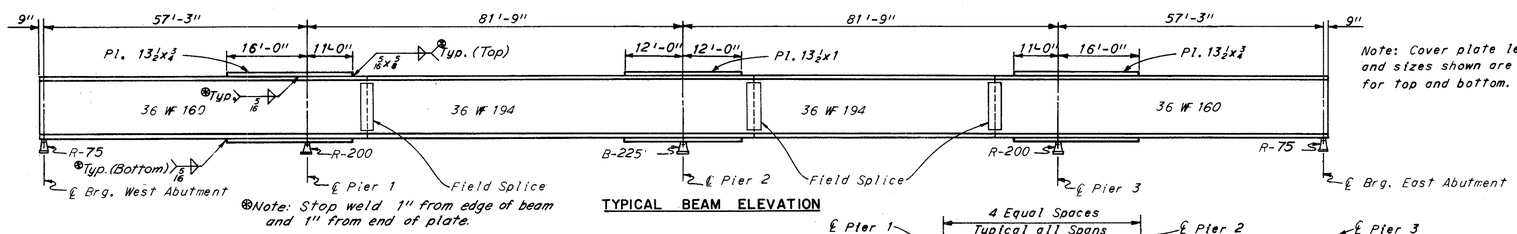

Note: Cover plate lengths and sizes shown are typical for top and bottom.

⊛Note: Stop weld 1" from edge of beam and 1" from end of plate.

TYPICAL BEAM ELEVATION

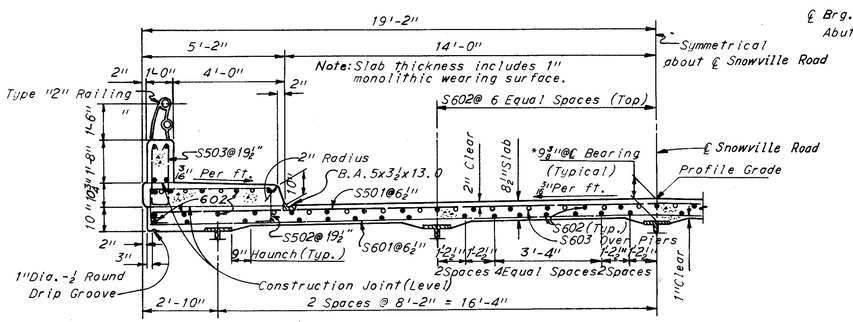

*Note: For beams A and E this dimension is measured from extended top of pavement to top of beam.

TYPICAL BRIDGE SECTION

Note: A typical haunch width of 9" shall be used for computing quantity of concrete. However, the haunch width may vary between 6" and 12" provided that the slope shall be not more than 1:4 for a haunch less than 9" in width.

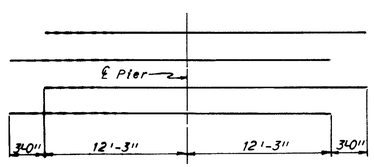

DIAGRAM SHOWING PLACEMENT OF S603 BARS OVER PIERS

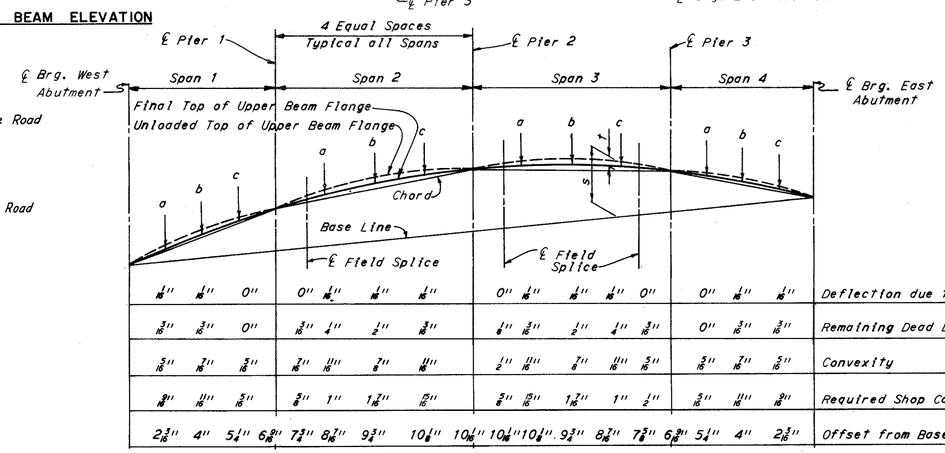

Note: Dimensions are typical for all beams.

CAMBER DIAGRAM

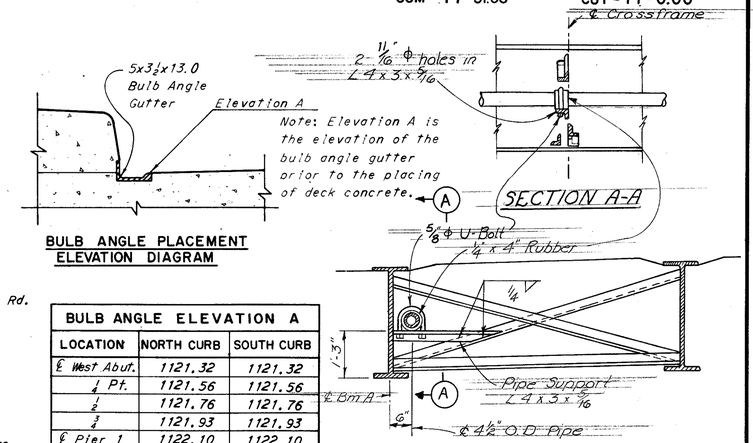

BULB ANGLE PLACEMENT ELEVATION DIAGRAM

PIPE SUPPORT DETAIL FOR EAST OHIO GAS PIPE

BULB ANGLE ELEVATION A		
LOCATION	NORTH CURB	SOUTH CURB
℄ West Abut.	1121.32	1121.32
¼ Pt.	1121.56	1121.56
½	1121.76	1121.76
¾	1121.93	1121.93
℄ Pier 1	1122.10	1122.10
¼	1122.33	1122.33
½	1122.52	1122.52
¾	1122.63	1122.63
℄ Pier 2	1122.71	1122.71
¼	1122.80	1122.80
½	1122.85	1122.85
¾	1122.83	1122.83
℄ Pier 3	1122.76	1122.76
¼	1122.70	1122.70
½	1122.65	1122.65
¾	1122.56	1122.56
℄ East Abut.	1122.44	1122.44

Notes:
Weld both sides of vertical leg and top side of horizontal leg to Beam with ¼" continuous fillet weld. Typical for all pipe support angles @ intermediate crossframe between Beams A and B. 4½" O.D. gas pipe, 5/8" Φ U-Bolt, washers, nuts and ¼ x 4" rubber to be furnished and installed by The East Ohio Gas Company.

Notes:
For railing post spacing, parapet joint spacing and longitudinal reinforcement in the parapet see Sheet 224.
For additional details of railing, see Ohio Standard Drawing BR-1-65, sheet 1 of 2.
For details of Rockers and Bolsters, see Ohio Standard Drawing RB-1-55.
For details of sidewalk end dam, end crossframes and roadway end dam, see Ohio Standard Drawing SD-1-63, sheets 2 of 4 and 4 of 4. The supporting angle shown in the "Roadway End Dam Data" table shall be increased from 6x4x3/8 to 8x4x7/8.
For details of beam field splices see Sheet 223.
For Intermediate Crossframe Detail see Sheet 222.
For optional transverse slab construction joint see Sheet 222.
For location of scuppers see Sheet 194.
For drainage details see Sheet 222.

H.N.T.B. BR. NO. 3

HOWARD, NEEDLES, TAMMEN & BERGENDOFF
CONSULTING ENGINEERS
KANSAS CITY CLEVELAND NEW YORK

SUPERSTRUCTURE

I-77 UNDER SNOWVILLE ROAD

BR. NO. CUY-77-0039 STA. 73+42.37 TO STA. 76+24.87

CUYAHOGA CO. OHIO

DRAWN LJG	TRACED	CHECKED TLS	REVIEWED WA	REVISED
DATE 4-12-65	DATE	DATE 4-14-65	DATE 9-1-65	SHEET 197

MICROFILMED
FEB 12 1965

FED. RD. DIVISION	STATE	PROJECT	
2	OHIO		

198
258

SUMMIT COUNTY SUM - 77 - 31.08

CUYAHOGA COUNTY CUY - 77 - 0.00

MARK	NO.	LENGTH	TYPE	SER. INCR.	WEIGHT (LBS.)
EAST ABUTMENT					
AE401	35	3'-5"	105		80
AE501	24	6'-10"	105		164
AE502	16	37'-3"	Str.		622
AE503	20	12'-2"	154		254
AE504	20	5'-7"	110		113
AE601	26	16'-9"	109		654
AE602	8	12'-3"	109		147
AE603	6	5'-3"	Str.		47
AE604	16	6'-0"	Str.		144
AE605	44	6'-10"	104		452
AE606	29	16'-5"	112		715
AE607	10	7'-0"	Str.		105
AE608	8	8'-6"	Str.		102
AE609	2	10'-9"	Str.		32
AE610	6	14'-9"	Str.		133
AE611	20	12'-9"	Str.		383
AE612	8	4'-9"	Str.		57
AE613	4	4'-0"	Str.		24
AE614	2	6'-9"	Str.		20
AE615	6	11'-0"	Str.		99
AE616	8	6'-6"	Str.		78
AE617	12	8'-6"	Str.		153
AE618	14	8'-9"	Str.		184
AE619	4	4'-6"	Str.		27
AE620	18	3'-6"	Str.		95
AE621	4	7'-7"	108		46
AE622	30	5'-8"	104		255
AE801	8	39'-3"	Str.		838
AE802	4	13'-0"	104		139
AE803	12	5'-3"	Str.		168
		TOTAL WEIGHT		=	6,330
WEST ABUTMENT					
AW401	35	3'-5"	105		80
AW501	24	6'-10"	105		164
AW502	16	37'-3"	Str.		622
AW503	20	12'-2"	154		254
AW504	20	5'-7"	110		113
AW601	26	16'-9"	109		654
AW602	8	12'-3"	109		147
AW603	6	5'-3"	Str.		47
AW604	16	6'-0"	Str.		144
AW605	44	6'-10"	104		452
AW606	29	16'-5"	112		715
AW607	10	7'-0"	Str.		105
AW608	8	8'-6"	Str.		102
AW609	2	10'-9"	Str.		32
AW610	6	14'-9"	Str.		133
AW611	20	12'-9"	Str.		383
AW612	8	4'-9"	Str.		57
AW613	4	3'-9"	Str.		23
AW614	2	6'-9"	Str.		20
AW615	6	11'-0"	Str.		99
AW616	8	6'-3"	Str.		75
AW617	12	8'-3"	Str.		149
AW618	14	8'-6"	Str.		179
AW619	4	4'-6"	Str.		27
AW620	18	3'-6"	Str.		95
AW621	4	7'-11"	108		48
AW622	30	5'-8"	104		255
AW801	8	39'-3"	Str.		838
AW802	4	13'-0"	104		139
AW803	12	5'-3"	Str.		168
		TOTAL WEIGHT		=	6,319
PIER 1					
PA401	3	15'-2"	150		835
PA501	14	12'-2"	109		178
PA502	29	4'-7"	105		139
PA503	2	4'-5"	105		9
PA504	2	3'-9"	105		8
PA601	8	7'-11"	144		95
PA602	2	32'-6"	Str.		98
PA801	62	10'-10"	100		1,793
PA1001	30	6'-10"	104		882
PA1002	30	18'-3"	Str.		2,356
PA1101	4	32'-6"	Str.		691
PA1102	4	35'-0"	Str.		744
PA1103	4	13'-3"	Str.		281
PA1104	2	14'-0"	Str.		149
PA1105	8	9'-10"	123		418
		TOTAL WEIGHT		=	8,676
PIER 2					
PB401	3	16'-8"	150		912
PB501	14	12'-2"	109		178
PB502	29	4'-7"	105		139
PB503	2	4'-5"	105		9
PB504	2	3'-9"	105		8
PB601	8	7'-11"	144		95
PB602	2	32'-6"	Str.		98
PB801	64	10'-10"	100		1,851
PB1001	10	6'-10"	104		294
PB1002	10	20'-0"	Str.		861
PB1101	4	32'-6"	Str.		691
PB1102	4	35'-0"	Str.		744
PB1103	4	13'-3"	Str.		281
PB1104	2	14'-0"	Str.		149
PB1105	8	9'-10"	123		418
PB1106	20	19'-9"	Str.		2,099
PB1107	20	7'-3"	104		770
		TOTAL WEIGHT		=	9,597
PIER 3					
PC401	3	13'-11"	150		775
PC501	14	12'-2"	109		178
PC502	29	4'-7"	105		139
PC503	2	4'-5"	105		9
PC504	2	3'-9"	105		8
PC601	8	7'-11"	144		95
PC602	2	32'-6"	Str.		98
PC801	62	10'-10"	100		1,793
PC1001	30	6'-10"	104		882
PC1002	30	17'-3"	Str.		2,227
PC1101	4	32'-6"	Str.		691
PC1102	4	35'-0"	Str.		744
PC1103	4	13'-3"	Str.		281
PC1104	2	14'-0"	Str.		149
PC1105	8	9'-10"	123		418
		TOTAL WEIGHT		=	8,487
SUPERSTRUCTURE					
S501	516	38'-10"	100		20,900
S502	374	8'-0"	156		3,121
S503	374	5'-7"	110		2,178
S601	516	37'-6"	Str.		29,064
S602	568	36'-9"	Str.		31,353
S603	90	27'-6"	Str.		3,717
		TOTAL WEIGHT		=	90,333

BENDING DIAGRAMS

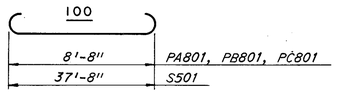

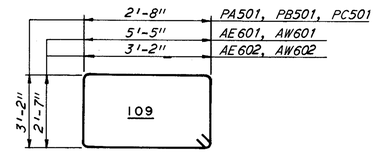

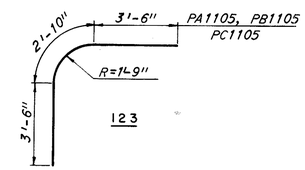

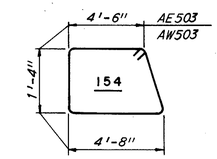

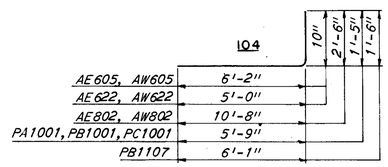

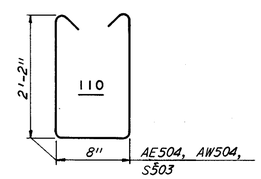

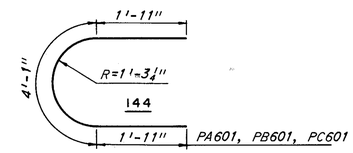

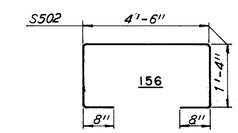

For Replacement Reinforcement Schedule and Spiral Reinforcement Note see Sheet 181 .

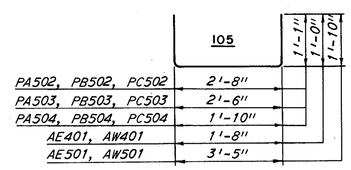

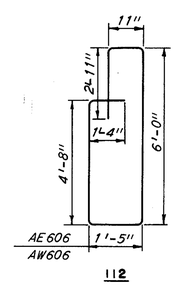

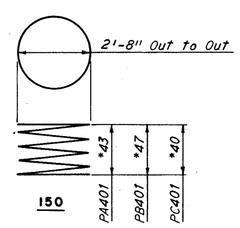

*Number of turns at 4½" pitch including 1½ turns at each end.

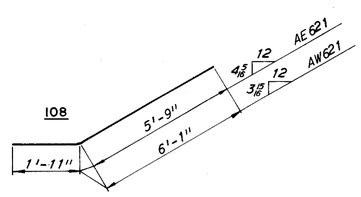

MICROFILMED
FEB 12 1985

H.N.T.B. BR. NO. 3

HOWARD, NEEDLES, TAMMEN & BERGENDOFF
CONSULTING ENGINEERS
KANSAS CITY CLEVELAND NEW YORK

REINFORCEMENT SCHEDULE

I-77 UNDER SNOWVILLE ROAD

BR. NO. CUY-77-0039 STA. 73+42.37 TO STA. 76+24.87

CUYAHOGA CO. OHIO

DRAWN J.M.C.	TRACED	CHECKED HB	REVIEWED WJA	REVISED
DATE 4-26-65	DATE	DATE 4-26-65	DATE 9-1-65	SHEET 198

FED. RD. DIVISION	STATE	PROJECT	
2	OHIO		

221
258

SUMMIT COUNTY SUM - 77-31.08

CUYAHOGA COUNTY CUY - 77-0.00

EAST ABUTMENT

MARK	NO.	LENGTH	TYPE	SER. INCR.	WEIGHT (LBS.)
AE401	35	3'-5"	105		80
AE501	31	7'-8"	105		248
AE502	2	24'-3"	Str.		51
AE503	11	22'-3"	Str.		255
AE504	1-Ser. 5	22'-3" 24'-3"	Str.	6"	121
AE505	9	21'-0"	Str.		197
AE506	4	23'-3"	Str.		97
AE507	4	21'-9"	Str.		90
AE508	1	15'-6"	Str.		16
AE509	1	6'-0"	Str.		6
AE510	2	11'-0"	Str.		23
AE511	2	12'-3"	Str.		26
AE512	2-Ser. 3	7'-8" 8'-4"	154	4"	50
AE513	11	8'-4"	154		96
AE514	23	5'-7"	110		134
AE515	2-Ser. 3	5'-0" 7'-0"	154	1'-0"	38
AE601	33	16'-9"	109		830
AE602	11	12'-3"	109		202
AE603	3	5'-3"	Str.		24
AE604	3	7'-6"	Str.		34
AE605	8	6'-3"	Str.		75
AE606	8	8'-0"	Str.		96
AE607	64	6'-6"	104		625
AE608	5	9'-6"	Str.		71
AE609	10	20'-1"	109		302
AE610	10	18'-5"	109		277
AE611	23	19'-3"	112		665
AE612	34	5'-7"	104		285
AE613	13	9'-9"	Str.		190
AE614	9	8'-0"	Str.		108
AE615	3	11'-7"	124		52
AE616	4	4'-0"	Str.		24
AE617	12	3'-6"	Str.		63
AE618	4-Ser. 3	4'-3" 5'-9"	Str.	9"	90
AE619	1	9'-3"	Str.		14
AE620	1	11'-3"	Str.		17
AE621	1	6'-0"	Str.		9
AE622	3	17'-0"	Str.		77
AE623	3	12'-0"	Str.		54
AE624	4	8'-8"	108		52
AE625	5	3'-9"	Str.		28
AE626	3	14'-9"	Str.		66
AE627	2	13'-6"	Str.		41
AE628	2	14'-0"	Str.		42
AE629	3	12'-6"	108		56
AE630	4	6'-3"	Str.		38
AE631	1	10'-9"	Str.		16
AE632	1	12'-9"	Str.		19
AE633	1	8'-9"	Str.		13
AE634	3	18'-6"	Str.		83
AE635	3	14'-6"	Str.		65
AE636	5	3'-6"	Str.		26
AE637	3	16'-9"	Str.		75
AE638	2	15'-6"	Str.		47
AE639	2	17'-6"	Str.		53
AE640	9	10'-0"	Str.		135
AE641	7	8'-3"	Str.		87
AE801	16	25'-9"	Str.		1,100
AE802	6	4'-9"	Str.		76
AE803	6	7'-6"	Str.		120
AE804	2	15'-4"	124		82
AE805	2	14'-8"	108		78
		TOTAL WEIGHT =			8,110

WEST ABUTMENT

MARK	NO.	LENGTH	TYPE	SER. INCR.	WEIGHT (LBS.)
AW401	35	3'-5"	105		80
AW501	31	7'-8"	105		248
AW502	2	24'-3"	Str.		51
AW503	10	22'-3"	Str.		232
AW504	1-Ser. 5	22'-3" 24'-3"	Str.	6"	121
AW505	10	21'-0"	Str.		219
AW506	4	23'-3"	Str.		97
AW507	4	21'-9"	Str.		90
AW508	1	15'-6"	Str.		16
AW509	1	5'-9"	Str.		6
AW510	2	11'-0"	Str.		23
AW511	2	12'-3"	Str.		26
AW512	2-Ser. 3	7'-8" 8'-4"	154	4"	50
AW513	11	8'-4"	154		96
AW514	23	5'-7"	110		134
AW515	2-Ser. 3	5'-0" 7'-0"	154	1'-0"	38
AW601	33	16'-9"	109		830
AW602	11	12'-3"	109		202
AW603	3	5'-3"	Str.		24
AW604	3	7'-6"	Str.		34
AW605	8	6'-3"	Str.		75
AW606	8	8'-0"	Str.		96
AW607	64	6'-6"	104		625
AW608	6	9'-6"	Str.		86
AW609	9	20'-1"	109		271
AW610	9	18'-5"	109		249
AW611	23	19'-3"	112		665
AW612	34	5'-7"	104		285
AW613	22	9'-6"	Str.		314
AW614	16	7'-9"	Str.		186
AW615	3	11'-7"	124		52
AW616	4	4'-0"	Str.		24
AW617	12	3'-6"	Str.		63
AW618	4-Ser. 3	4'-3" 5'-9"	Str.	9"	90
AW619	1	9'-3"	Str.		14
AW620	1	11'-3"	Str.		17
AW621	1	6'-0"	Str.		9
AW622	3	17'-0"	Str.		77
AW623	3	12'-0"	Str.		54
AW624	4	8'-8"	108		52
AW625	5	3'-9"	Str.		28
AW626	3	14'-9"	Str.		66
AW627	2	13'-6"	Str.		41
AW628	2	14'-0"	Str.		42
AW629	3	12'-6"	108		56
AW630	4	6'-3"	Str.		38
AW631	1	10'-9"	Str.		16
AW632	1	12'-9"	Str.		19
AW633	1	8'-9"	Str.		13
AW634	3	18'-6"	Str.		83
AW635	3	14'-6"	Str.		65
AW636	5	3'-6"	Str.		26
AW637	3	16'-9"	Str.		75
AW638	2	15'-6"	Str.		47
AW639	2	17'-6"	Str.		53
AW801	16	25'-9"	Str.		1,100
AW802	6	4'-9"	Str.		76
AW803	6	7'-6"	Str.		120
AW804	2	15'-4"	124		82
AW805	2	14'-8"	108		78
		TOTAL WEIGHT =			8,045

PIER I

MARK	NO.	LENGTH	TYPE	SER. INCR.	WEIGHT (LBS.)
PA401	3	13'-6"	150		756
PA501	20	12'-2"	109		254
PA502	29	4'-7"	105		139
PA503	2	4'-5"	105		9
PA504	2	3'-9"	105		8
PA601	8	7'-11"	144		95
PA602	2	41'-3"	Str.		124
PA801	64	10'-10"	100		1,851
PA1001	10	7'-0"	104		301
PA1002	10	17'-0"	Str.		732
PA1101	24	7'-5"	104		946
PA1102	24	16'-6"	Str.		2,104
PA1103	9	18'-0"	Str.		861
PA1104	4	40'-3"	Str.		855
PA1105	4	41'-3"	Str.		877
PA1106	2	14'-0"	Str.		149
PA1107	4	10'-9"	Str.		228
PA1108	8	10'-10"	123		460
		TOTAL WEIGHT =			10,749

PIER 2

MARK	NO.	LENGTH	TYPE	SER. INCR.	WEIGHT (LBS.)
PB401	3	17'-0"	150		933
PB501	20	12'-2"	109		254
PB502	29	4'-7"	105		139
PB503	2	4'-5"	105		9
PB504	2	3'-9"	105		8
PB601	8	7'-11"	144		95
PB602	2	41'-3"	Str.		124
PB801	72	10'-10"	100		2,083
PB1101	38	7'-5"	104		1,497
PB1102	38	20'-0"	Str.		4,038
PB1103	9	18'-0"	Str.		861
PB1104	4	40'-3"	Str.		855
PB1105	4	41'-3"	Str.		877
PB1106	2	14'-0"	Str.		149
PB1107	8	10'-9"	Str.		457
PB1108	8	10'-10"	123		460
		TOTAL WEIGHT =			12,839

PIER 3

MARK	NO.	LENGTH	TYPE	SER. INCR.	WEIGHT (LBS.)
PC401	3	13'-6"	150		756
PC501	20	12'-2"	108		254
PC502	29	4'-7"	105		139
PC503	2	4'-5"	105		9
PC504	2	3'-9"	105		8
PC601	8	7'-11"	144		95
PC602	2	41'-3"	Str.		124
PC801	64	10'-10"	100		1,851
PC1001	10	7'-0"	104		301
PC1002	10	16'-9"	Str.		721
PC1101	24	7'-5"	104		946
PC1102	24	16'-6"	Str.		2,104
PC1103	9	18'-0"	Str.		861
PC1104	4	40'-3"	Str.		855
PC1105	4	41'-3"	Str.		877
PC1106	2	14'-0"	Str.		149
PC1107	4	10'-9"	Str.		228
PC1108	8	10'-10"	123		460
		TOTAL WEIGHT =			10,738

SUPERSTRUCTURE

MARK	NO.	LENGTH	TYPE	SER. INCR.	WEIGHT (LBS.)
S501	518	43'-4"	100		23,412
S502	2-Ser. 32	5'-4" 40'-7"	101	1'-1 5/16"	1,532
S503	2-Ser. 4	3'-1" 4'-7"	101	6"	32
S504	4	6'-1"	156		25
S505	4	24'-7"	101		103
S506	400	1'-9"	104		730
S507	400	6'-0"	156		2,503
S508	400	5.-7"	110		2,329
S601	656	39'-0"	Str.		38,427
S602	102	30'-0"	Str.		4,596
S603	518	42'-0"	Str.		32,678
S604	2-Ser. 32	4'-9" 40'-0"	Str.	1'-1 5/16"	2,151
S605	2-Ser. 4	2'-6" 4'-0"	Str.	6"	39
S606	12	7'-1"	109		128
S607	6	15'-8"	156		141
		TOTAL WEIGHT =			108,826

BENDING DIAGRAMS

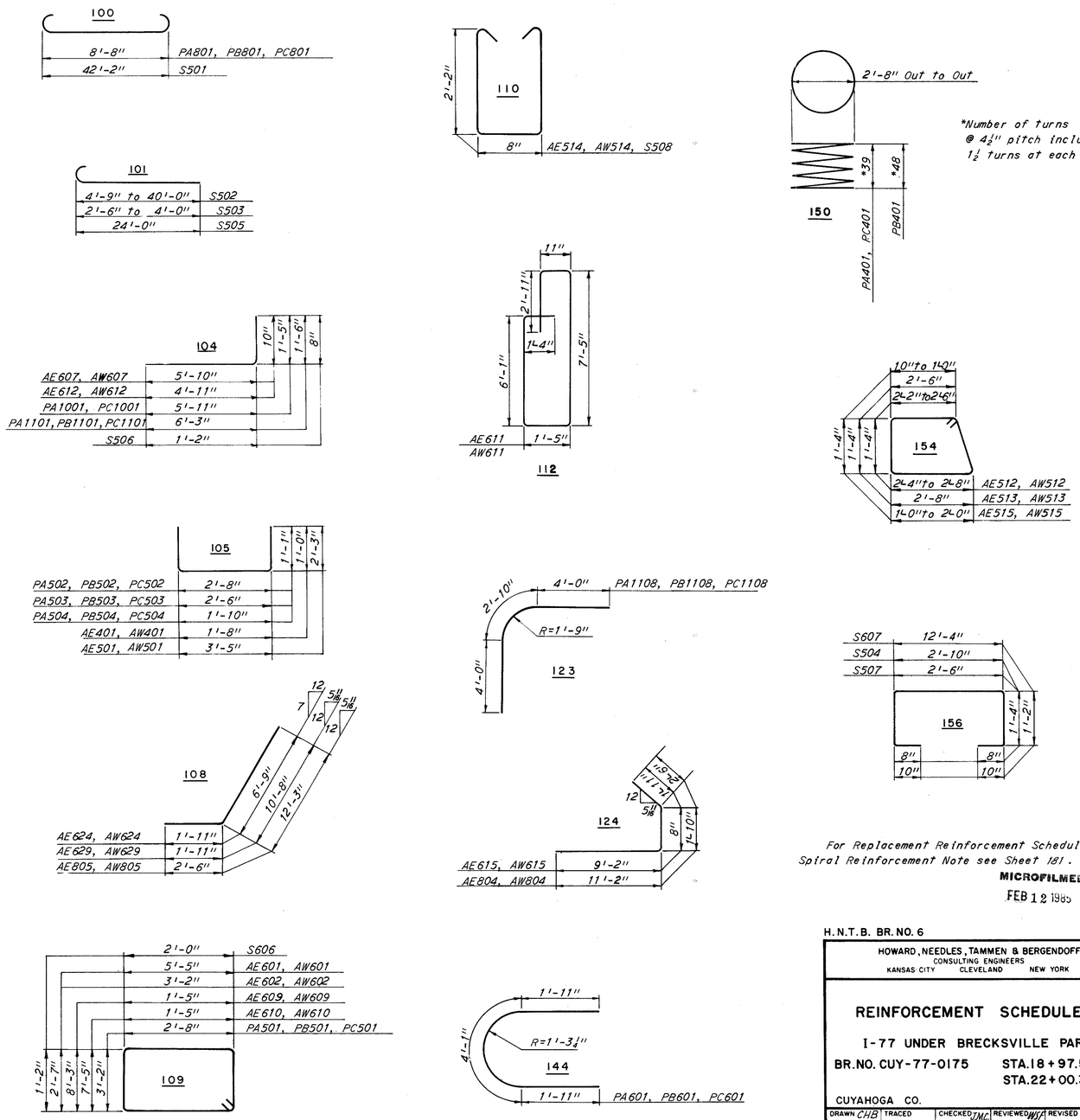

For Replacement Reinforcement Schedule and Spiral Reinforcement Note see Sheet 181.

MICROFILMED
FEB 12 1985

H.N.T.B. BR. NO. 6

HOWARD, NEEDLES, TAMMEN & BERGENDOFF
CONSULTING ENGINEERS
KANSAS CITY CLEVELAND NEW YORK

REINFORCEMENT SCHEDULE

I-77 UNDER BRECKSVILLE PARKWAY

BR. NO. CUY-77-0175 STA. 18+97.54 TO STA. 22+00.36

CUYAHOGA CO. OHIO

DRAWN CHB	TRACED	CHECKED JMC	REVIEWED WSF	REVISED
DATE 4-26-65	DATE	DATE 4-26-65	DATE 9-1-65	SHEET 221

FED. RD. DIVISION	STATE	PROJECT	
2	OHIO		

222
258

SUMMIT COUNTY
SUM - 77-31.08

CUYAHOGA COUNTY
CUY - 77-0.00

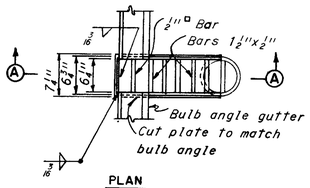

PLAN

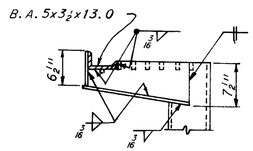

ELEVATION

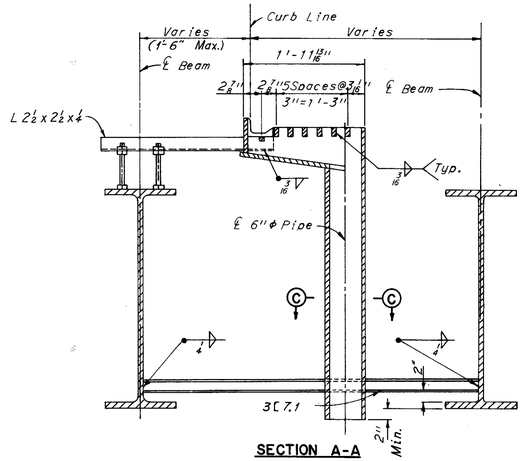

SECTION A-A

(Westbound Lanes and Eastbound Lanes
Br.No.2 at Piers 2 and East End Br.No.5)

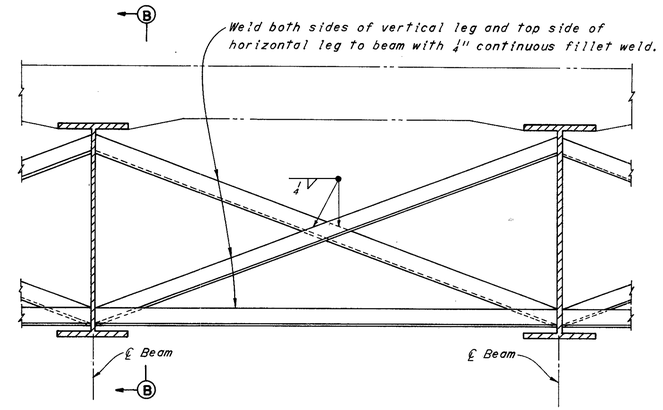

INTERMEDIATE CROSSFRAME
(Bridges 1, 2, 3, 4 and 5)

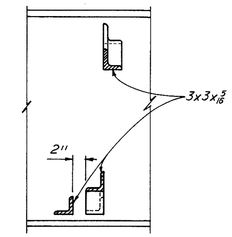

SECTION B-B

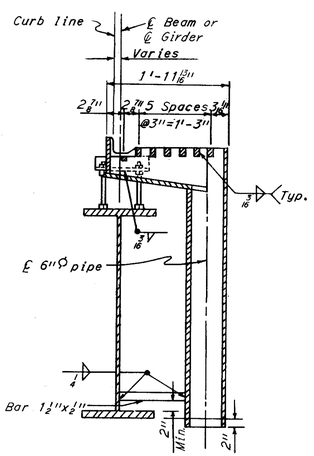

SECTION A-A

(Br.No.1, Westbound and Eastbound Lanes
Br.No.2 at the West Abutments and Br.No.6)

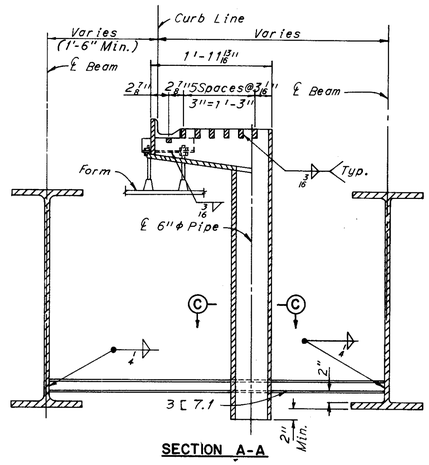

SECTION A-A

(Br.No.3, Br.No.4 and West
End Br.No.5)

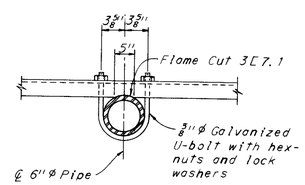

SECTION C-C

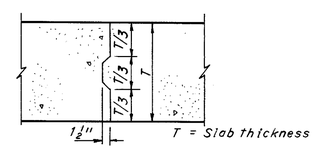

OPTIONAL TRANSVERSE SLAB
CONSTRUCTION JOINT

SCUPPER DETAILS

Note: Scuppers are to be made from 3/8" steel plate except as shown.

Notes:

For scupper locations see Site Plans.

For Scupper Details not shown and Gutter Support details see Ohio Standard Drawing SD-1-63, sheet 3 of 4.

Bulb angle and supports are included for payment with "Item 513, Structural Steel."

Joints in bulb angle gutters, preferably at intervals of not less than 25 feet, are to be butt joints with milled ends. Support angles shall be placed 6" to 9" on each side of the joint.

Scuppers, including two support angles 2 1/2x2 1/2x1/4, pipes, supports and accessories shall be included for payment with "Item 518, Scuppers."

MICROFILMED
FEB 12 1985

H.N.T.B. BR. NOS. 1, 2, 3, 4, 5 & 6

HOWARD, NEEDLES, TAMMEN & BERGENDOFF
CONSULTING ENGINEERS
KANSAS CITY CLEVELAND NEW YORK

SUPERSTRUCTURE AND DRAINAGE DETAILS

SUMMIT COUNTY &
CUYAHOGA COUNTY OHIO

DRAWN T.L.S.	TRACED	CHECKED	REVIEWED	REVISED
DATE 4-23-65	DATE	DATE 5-12-65	DATE 9-1-65	SHEET 222

FED. RD. DIVISION	STATE	PROJECT	
2	OHIO		

223
258

SUMMIT COUNTY SUM - 77-31.08

CUYAHOGA COUNTY CUY - 77-0.00

DETAILS OF 36 WF BEAM SPLICES

BEAM 36WF TO BEAM 36WF	WEB SPLICE				FLANGE SPLICE												
		*WEB PLATES	WEB BOLTS	FILL PLS.	*FLANGE PLATES			*FILL PLATES				FLANGE BOLTS					
						Outside	Inside		Thickness(in.)					Dimensions (inches)			
	Type	2 Required	No.	2	Type	2 Required	2 Required	Type	X	Y	Z	No.	Spa. N	Pitch	A	B	C
135 to 135	B	13 1/2 x 3/8 x 2'-7"	40	-	C	11 x 3/8 x 2'-4 1/2"	4 1/2 x 1/2 x 2'-4 1/2"	-	-	-	-	32	3	3 1/2	2 1/4	-	6 1/2
135 to 150	B	13 1/2 x 3/8 x 2'-7"	40	-	C	11 x 3/8 x 2'-4 1/2"	4 1/2 x 1/2 x 2'-4 1/2"	C	1/8	1/8	5/16	32	3	3 1/2	2 1/4	-	6 1/2
135 to 160	B	13 1/2 x 3/8 x 2'-7"	40	-	C	11 x 3/8 x 2'-4 1/2"	4 1/2 x 1/2 x 2'-4 1/2"	C	1/4	1/4	7/16	32	3	3 1/2	2 1/4	-	6 1/2
135 to 170	B	13 1/2 x 3/8 x 2'-7"	40	1/16	C	11 x 3/8 x 2'-4 1/2"	4 1/2 x 1/2 x 2'-4 1/2"	C	5/16	5/16	5/8	32	3	3 1/2	2 1/4	-	6 1/2
135 to 182	B	13 1/2 x 3/8 x 2'-7"	40	1/16	C	11 x 3/8 x 2'-4 1/2"	4 1/2 x 1/2 x 2'-4 1/2"	C	3/8	3/8	3/4	32	3	3 1/2	2 1/4	-	6 1/2
135 to 194	B	13 1/2 x 3/8 x 2'-7"	40	1/16	C	11 x 3/8 x 2'-4 1/2"	4 1/2 x 1/2 x 2'-4 1/2"	C	7/16	7/16	13/16	32	3	3 1/2	2 1/4	-	6 1/2
135 to 230	B	13 1/2 x 3/8 x 2'-7"	40	1/16	B	11 x 3/8 x 2'-4 1/2"	4 1/2 x 1/2 x 2'-4 1/2"	A	7/16	7/16	5/8	32	3	3 1/2	2 1/4	-	6 1/2
135 to 245	B	13 1/2 x 3/8 x 2'-7"	40	1/8	B	11 x 3/8 x 2'-4 1/2"	4 1/2 x 1/2 x 2'-4 1/2"	A	9/16	9/16	1/2	32	3	3 1/2	2 1/4	-	6 1/2
135 to 260	B	13 1/2 x 3/8 x 2'-7"	40	1/8	B	11 x 3/8 x 2'-4 1/2"	4 1/2 x 1/2 x 2'-4 1/2"	C	5/8	1/16	11/16	32	3	3 1/2	2 1/4	-	6 1/2
135 to 280	B	13 1/2 x 3/8 x 2'-7"	40	1/8	B	11 1/8 x 2'-4 1/2"	4 1/2 x 1/2 x 2'-4 1/2"	C	3/4	3/16	13/16	32	3	3 1/2	2 1/4	-	6 1/2
150 to 150	B	13 1/2 x 3/8 x 2'-7"	40	-	C	11 x 7/16 x 2'-4 1/2"	4 1/2 x 3/8 x 2'-4 1/2"	-	-	-	-	32	3	3 1/2	2 1/4	-	6 1/2
150 to 160	B	13 1/2 x 3/8 x 2'-7"	40	-	C	11 x 7/16 x 2'-4 1/2"	4 1/2 x 3/8 x 2'-4 1/2"	C	1/16	1/16	3/16	32	3	3 1/2	2 1/4	-	6 1/2
150 to 170	B	13 1/2 x 3/8 x 2'-7"	40	-	C	11 x 7/16 x 2'-4 1/2"	4 1/2 x 3/8 x 2'-4 1/2"	C	3/16	3/16	5/16	32	3	3 1/2	2 1/4	-	6 1/2
150 to 182	B	13 1/2 x 3/8 x 2'-7"	40	1/16	C	11 x 7/16 x 2'-4 1/2"	4 1/2 x 3/8 x 2'-4 1/2"	C	1/4	1/4	1/2	32	3	3 1/2	2 1/4	-	6 1/2
150 to 194	B	13 1/2 x 3/8 x 2'-7"	40	1/16	C	11 x 7/16 x 2'-4 1/2"	4 1/2 x 3/8 x 2'-4 1/2"	C	5/16	5/16	5/8	32	3	3 1/2	2 1/4	-	6 1/2
150 to 230	B	13 1/2 x 3/8 x 2'-7"	40	1/16	B	11 x 7/16 x 2'-4 1/2"	4 1/2 x 3/8 x 2'-4 1/2"	A	5/16	1/4	9/16	32	3	3 1/2	2 1/4	-	6 1/2
150 to 245	B	13 1/2 x 3/8 x 2'-7"	40	1/16	B	11 x 7/16 x 2'-4 1/2"	4 1/2 x 3/8 x 2'-4 1/2"	A	7/16	3/16	1/4	32	3	3 1/2	2 1/4	-	6 1/2
150 to 260	B	13 1/2 x 3/8 x 2'-7"	40	1/8	B	11 x 7/16 x 2'-4 1/2"	4 1/2 x 3/8 x 2'-4 1/2"	A	1/2	1/8	3/8	32	3	3 1/2	2 1/4	-	6 1/2
150 to 280	B	13 1/2 x 3/8 x 2'-7"	40	1/8	B	11 x 7/16 x 2'-4 1/2"	4 1/2 x 3/8 x 2'-4 1/2"	C	5/8	-	11/16	32	3	3 1/2	2 1/4	-	6 1/2
150 to 300	B	13 1/2 x 3/8 x 2'-7"	40	3/16	B	11 x 7/16 x 2'-4 1/2"	4 1/2 x 3/8 x 2'-4 1/2"	C	3/4	1/8	7/8	32	3	3 1/2	2 1/4	-	6 1/2
160 to 160	A	19 1/2 x 3/8 x 2'-7"	48	-	C	11 x 1/2 x 2'-4 1/2"	4 1/2 x 3/8 x 2'-4 1/2"	-	-	-	-	32	3	3 1/2	2 1/4	-	6 1/2
160 to 170	A	19 1/2 x 3/8 x 2'-7"	48	-	C	11 x 1/2 x 2'-4 1/2"	4 1/2 x 3/8 x 2'-4 1/2"	C	1/16	1/16	3/16	32	3	3 1/2	2 1/4	-	6 1/2
160 to 182	A	19 1/2 x 3/8 x 2'-7"	48	1/16	C	11 x 1/2 x 2'-4 1/2"	4 1/2 x 3/8 x 2'-4 1/2"	C	3/16	3/16	5/16	32	3	3 1/2	2 1/4	-	6 1/2
160 to 194	A	19 1/2 x 3/8 x 2'-7"	48	1/16	C	11 x 1/2 x 2'-4 1/2"	4 1/2 x 3/8 x 2'-4 1/2"	C	1/4	1/4	1/2	32	3	3 1/2	2 1/4	-	6 1/2
160 to 230	A	19 1/2 x 3/8 x 2'-7"	48	1/16	B	11 x 1/2 x 2'-4 1/2"	4 1/2 x 3/8 x 2'-4 1/2"	B	1/4	3/8	3/8	32	3	3 1/2	2 1/4	-	6 1/2
160 to 245	A	19 1/2 x 3/8 x 2'-7"	48	1/16	B	11 x 1/2 x 2'-4 1/2"	4 1/2 x 3/8 x 2'-4 1/2"	A	5/16	1/4	1/16	32	3	3 1/2	2 1/4	-	6 1/2
160 to 260	A	19 1/2 x 3/8 x 2'-7"	48	1/8	B	11 x 1/2 x 2'-4 1/2"	4 1/2 x 3/8 x 2'-4 1/2"	A	7/16	3/16	1/4	32	3	3 1/2	2 1/4	-	6 1/2
160 to 280	A	19 1/2 x 3/8 x 2'-7"	48	1/8	B	11 x 1/2 x 2'-4 1/2"	4 1/2 x 3/8 x 2'-4 1/2"	A	9/16	1/16	1/2	32	3	3 1/2	2 1/4	-	6 1/2
160 to 300	A	19 1/2 x 3/8 x 2'-7"	48	1/8	B	11 x 1/2 x 2'-4 1/2"	4 1/2 x 3/8 x 2'-4 1/2"	C	11/16	1/16	3/8	32	3	3 1/2	2 1/4	-	6 1/2
170 to 170	A	19 1/2 x 3/8 x 2'-7"	48	-	C	11 x 1/2 x 2'-11 1/2"	4 1/2 x 5/8 x 2'-11 1/2"	-	-	-	-	40	4	3 1/2	2 1/4	-	6 1/2
170 to 182	A	19 1/2 x 3/8 x 2'-7"	48	-	C	11 x 1/2 x 2'-11 1/2"	4 1/2 x 5/8 x 2'-11 1/2"	C	1/16	1/16	3/16	40	4	3 1/2	2 1/4	-	6 1/2
170 to 194	A	19 1/2 x 3/8 x 2'-7"	48	1/16	C	11 x 1/2 x 2'-11 1/2"	4 1/2 x 5/8 x 2'-11 1/2"	C	3/16	3/16	5/16	40	4	3 1/2	2 1/4	-	6 1/2
170 to 230	A	19 1/2 x 3/8 x 2'-7"	48	1/16	B	11 x 1/2 x 2'-11 1/2"	4 1/2 x 5/8 x 2'-11 1/2"	B	3/16	1/8	1/4	40	4	3 1/2	2 1/4	-	6 1/2
170 to 245	A	19 1/2 x 3/8 x 2'-7"	48	1/16	B	11 x 1/2 x 2'-11 1/2"	4 1/2 x 5/8 x 2'-11 1/2"	B	1/4	3/8	1/8	40	4	3 1/2	2 1/4	-	6 1/2
170 to 260	A	19 1/2 x 3/8 x 2'-7"	48	1/16	B	11 x 1/2 x 2'-11 1/2"	4 1/2 x 5/8 x 2'-11 1/2"	A	5/16	1/4	1/16	40	4	3 1/2	2 1/4	-	6 1/2
170 to 280	A	19 1/2 x 3/8 x 2'-7"	48	1/8	B	11 x 1/2 x 2'-11 1/2"	4 1/2 x 5/8 x 2'-11 1/2"	A	1/2	1/8	3/16	40	4	3 1/2	2 1/4	-	6 1/2
170 to 300	A	19 1/2 x 3/8 x 2'-7"	48	1/8	B	11 x 1/2 x 2'-11 1/2"	4 1/2 x 5/8 x 2'-11 1/2"	A	9/16	-	9/16	40	4	3 1/2	2 1/4	-	6 1/2
182 to 182	A	19 1/2 x 3/8 x 2'-7"	48	-	C	11 x 9/16 x 2'-11 1/2"	4 1/2 x 11/16 x 2'-11 1/2"	-	-	-	-	40	4	3 1/2	2 1/4	-	6 1/2
182 to 194	A	19 1/2 x 3/8 x 2'-7"	48	-	C	11 x 9/16 x 2'-11 1/2"	4 1/2 x 11/16 x 2'-11 1/2"	C	1/16	1/16	3/16	40	4	3 1/2	2 1/4	-	6 1/2
182 to 230	A	19 1/2 x 3/8 x 2'-7"	48	-	B	11 x 9/16 x 2'-11 1/2"	4 1/2 x 11/16 x 2'-11 1/2"	B	1/16	1/2	7/16	40	4	3 1/2	2 1/4	-	6 1/2
182 to 245	A	19 1/2 x 3/8 x 2'-7"	48	1/16	B	11 x 9/16 x 2'-11 1/2"	4 1/2 x 11/16 x 2'-11 1/2"	B	3/16	1/16	1/4	40	4	3 1/2	2 1/4	-	6 1/2
182 to 260	A	19 1/2 x 3/8 x 2'-7"	48	1/16	B	11 x 9/16 x 2'-11 1/2"	4 1/2 x 11/16 x 2'-11 1/2"	B	1/4	5/16	1/16	40	4	3 1/2	2 1/4	-	6 1/2
182 to 280	A	19 1/2 x 3/8 x 2'-7"	48	1/16	B	11 x 9/16 x 2'-11 1/2"	4 1/2 x 11/16 x 2'-11 1/2"	A	3/8	3/16	3/16	40	4	3 1/2	2 1/4	-	6 1/2
182 to 300	A	19 1/2 x 3/8 x 2'-7"	48	1/8	B	11 x 9/16 x 2'-11 1/2"	4 1/2 x 11/16 x 2'-11 1/2"	A	1/2	1/8	3/8	40	4	3 1/2	2 1/4	-	6 1/2
194 to 194	A	19 1/2 x 7/16 x 2'-7"	54	-	C	11 x 5/8 x 2'-11 1/2"	4 1/2 x 3/4 x 2'-11 1/2"	-	-	-	-	40	4	3 1/2	2 1/4	-	6 1/2
194 to 230	A	19 1/2 x 7/16 x 2'-7"	54	-	B	11 x 5/8 x 2'-11 1/2"	4 1/2 x 3/4 X 2'-11 1/2"	B	-	5/8	5/8	40	4	3 1/2	2 1/4	-	6 1/2
194 to 245	A	19 1/2 x 7/16 x 2'-7"	54	-	B	11 x 5/8 x 2'-11 1/2"	4 1/2 x 3/4 x 2'-11 1/2"	B	1/16	1/2	7/16	40	4	3 1/2	2 1/4	-	6 1/2
194 to 260	A	19 1/2 x 7/16 x 2'-7"	54	1/16	B	11 x 5/8 x 2'-11 1/2"	4 1/2 x 3/4 x 2'-11 1/2"	B	3/16	3/16	1/4	40	4	3 1/2	2 1/4	-	6 1/2
194 to 280	A	19 1/2 x 7/16 x 2'-7"	54	1/16	B	11 x 5/8 x 2'-11 1/2"	4 1/2 x 3/4 x 2'-11 1/2"	A	5/16	5/16	-	40	4	3 1/2	2 1/4	-	6 1/2
194 to 300	A	19 1/2 x 7/16 x 2'-7"	54	1/16	B	11 x 5/8 x 2'-11 1/2"	4 1/2 x 3/4 x 2'-11 1/2"	A	7/16	3/16	1/4	40	4	3 1/2	2 1/4	-	6 1/2
230 to 230	A	19 1/2 x 1/2 x 2'-7"	54	-	A	16 x 3/8 x 5'-0"	6 1/2 x 5/8 x 5'-0"	-	-	-	-	64	7	3 3/4	1 3/4	3	6 1/2
230 to 245	A	19 1/2 x 1/2 x 2'-7"	54	-	A	16 x 3/8 x 5'-0"	6 1/2 x 5/8 x 5'-0"	C	1/16	1/16	3/16	64	7	3 3/4	1 3/4	3	6 1/2
230 to 260	A	19 1/2 x 1/2 x 2'-7"	54	1/16	A	16 x 3/8 x 5'-0"	6 1/2 x 5/8 x 5'-0"	C	3/16	3/16	1/8	64	7	3 3/4	1 3/4	3	6 1/2
230 to 280	A	19 1/2 x 1/2 x 2'-7"	54	1/16	A	16 x 3/8 x 5'-0"	6 1/2 x 5/8 x 5'-0"	C	1/8	5/16	5/8	64	7	3 3/4	1 3/4	3	6 1/2
230 to 300	A	19 1/2 x 1/2 x 2'-7"	54	1/16	A	16 x 3/8 x 5'-0"	6 1/2 x 5/8 x 5'-0"	C	3/16	3/16	13/16	64	7	3 3/4	1 3/4	3	6 1/2
245 to 245	A	19 1/2 x 9/16 x 2'-7"	54	-	A	16 x 3/8 x 5'-0"	6 1/2 x 11/16 x 5'-0"	-	-	-	-	64	7	3 3/4	1 3/4	3	6 1/2
245 to 260	A	19 1/2 x 9/16 x 2'-7"	54	-	A	16 x 3/8 x 5'-0"	6 1/2 x 11/16 x 5'-0"	C	1/16	1/16	3/16	64	7	3 3/4	1 3/4	3	6 1/2
245 to 280	A	19 1/2 x 9/16 x 2'-7"	54	1/16	A	16 x 3/8 x 5'-0"	6 1/2 x 11/16 x 5'-0"	C	1/4	1/4	7/16	64	7	3 3/4	1 3/4	3	6 1/2
245 to 300	A	19 1/2 x 9/16 x 2'-7"	54	1/16	A	16 x 3/8 x 5'-0"	6 1/2 x 11/16 x 5'-0"	C	5/16	5/16	11/16	64	7	3 3/4	1 3/4	3	6 1/2
260 to 260	A	19 1/2 x 9/16 x 2'-7"	60	-	A	16 x 5/8 x 5'-0"	6 1/2 x 3/4 x 5'-0"	-	-	-	-	64	7	3 3/4	1 3/4	3	6 1/2
260 to 280	A	19 1/2 x 9/16 x 2'-7"	60	-	A	16 x 5/8 x 5'-0"	6 1/2 x 3/4 x 5'-0"	C	1/8	1/8	1/4	64	7	3 3/4	1 3/4	3	6 1/2
260 to 300	A	19 1/2 x 9/16 x 2'-7"	60	1/16	A	16 x 5/8 x 5'-0"	6 1/2 x 3/4 x 5'-0"	C	1/4	1/4	1/2	64	7	3 3/4	1 3/4	3	6 1/2
280 to 280	A	19 1/2 x 9/16 x 2'-7"	60	-	A	16 x 11/16 x 6'-3"	6 1/2 x 13/16 x 6'-3"	-	-	-	-	80	9	3 3/4	1 3/4	3	6 1/2
280 to 300	A	19 1/2 x 9/16 x 2'-7"	60	-	A	16 x 11/16 x 6'-3"	6 1/2 x 13/16 x 6'-3"	C	1/8	1/8	1/4	80	9	3 3/4	1 3/4	3	6 1/2
300 to 300	A	19 1/2 x 9/16 x 2'-7"	60	-	A	16 x 3/4 x 6'-3"	6 1/2 x 7/8 x 6'-3"	-	-	-	-	80	9	3 3/4	1 3/4	3	6 1/2

FILLS are based on the nominal member sizes being spliced; however, in the final shop assembly, fills shall be furnished to the nearest 1/16 inch in thickness based on the actual measured sizes of the members being spliced. Drawing together of splice plates over material that varies by more than 1/16 inch in thickness at the centerline of the splice will not be permitted.

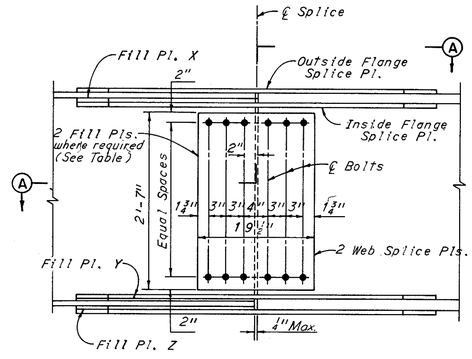

BEAM SPLICE DETAIL 1
FLANGE SPLICE TYPE A
FLANGE FILL PLATES TYPE A
WEB SPLICE TYPE A

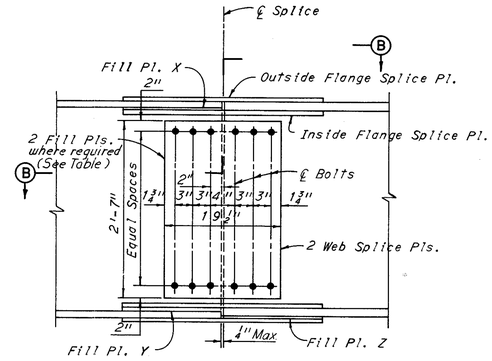

BEAM SPLICE DETAIL 2
FLANGE SPLICE TYPE B
FLANGE FILL PLATE TYPE B
WEB SPLICE TYPE A

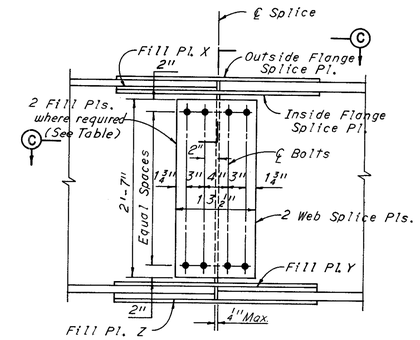

BEAM SPLICE DETAIL 3
FLANGE SPLICE TYPE C
FLANGE FILL PLATES TYPE C
WEB SPLICE TYPE B

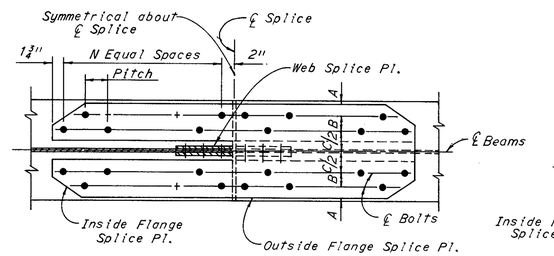

SECTION A-A

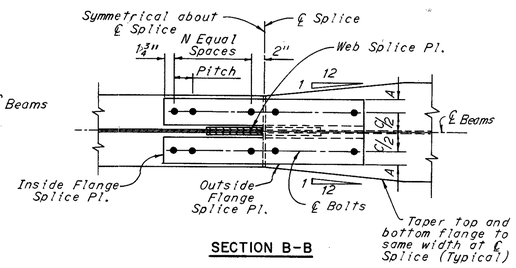

SECTION B-B

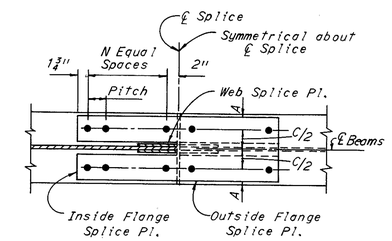

SECTION C-C

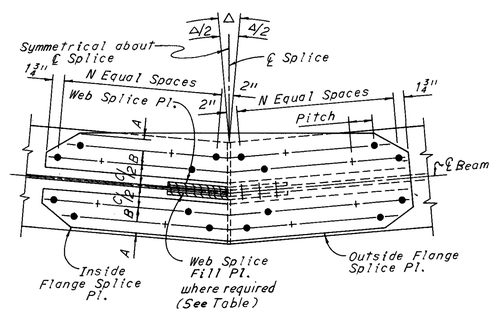

SECTION A-A
(Showing Beam Splice at Bend Point)

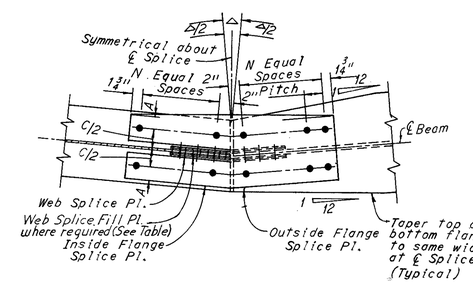

SECTION B-B
(Showing Beam Splice at Bend Point)

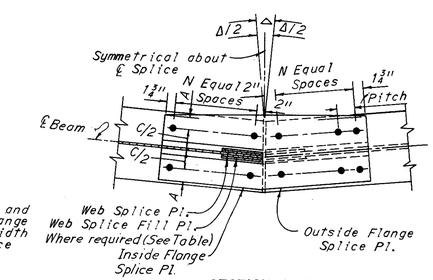

SECTION C-C
(Showing Beam Splice at Bend Point)

Note: All splices shall be made with 1" ϕ High Strength Bolts. Bolts shall be placed with their heads on the outside face of the exterior girders and on the bottoms of flange plates.

*Beam Splice located at Bend Point
The beams change direction at the centerline of field splice. Specially cut flange splice plates and bent web splice plates will be required. The top splice plate on the top flange and the bottom splice plate on the bottom flange shall be cut without re-entrant corners.

MICROFILMED
FEB 12 1985

H.N.T.B. BR. NOS. 1, 2, 3, 4 & 5

HOWARD, NEEDLES, TAMMEN & BERGENDOFF
CONSULTING ENGINEERS
KANSAS CITY CLEVELAND NEW YORK

BEAM FIELD SPLICE DETAILS

SUMMIT COUNTY & CUYAHOGA COUNTY OHIO

DRAWN J.K.H.	TRACED	CHECKED G.A.B.	REVIEWED	REVISED	
DATE 10-5-64	DATE	DATE 10-20-64	DATE 9-1-65		SHEET 223

FED. RD. DIVISION	STATE	PROJECT	
2	OHIO		

224
258

SUMMIT COUNTY
SUM - 77-31.08

CUYAHOGA COUNTY
CUY - 77-0.00

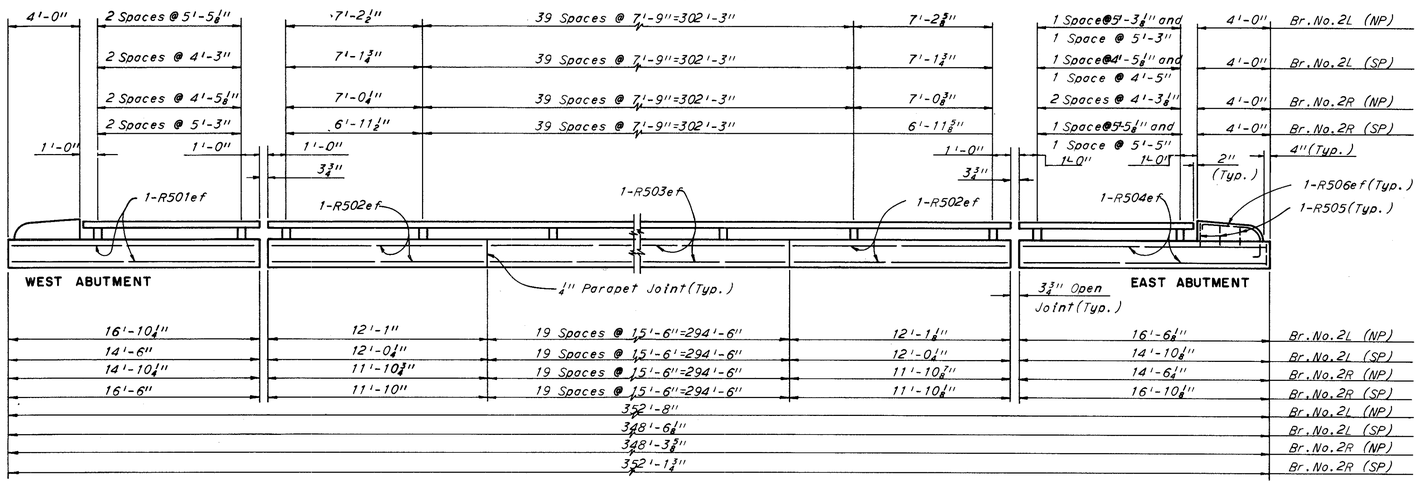

TYPE 1 RAILING - BRIDGE NO. 2L AND 2R

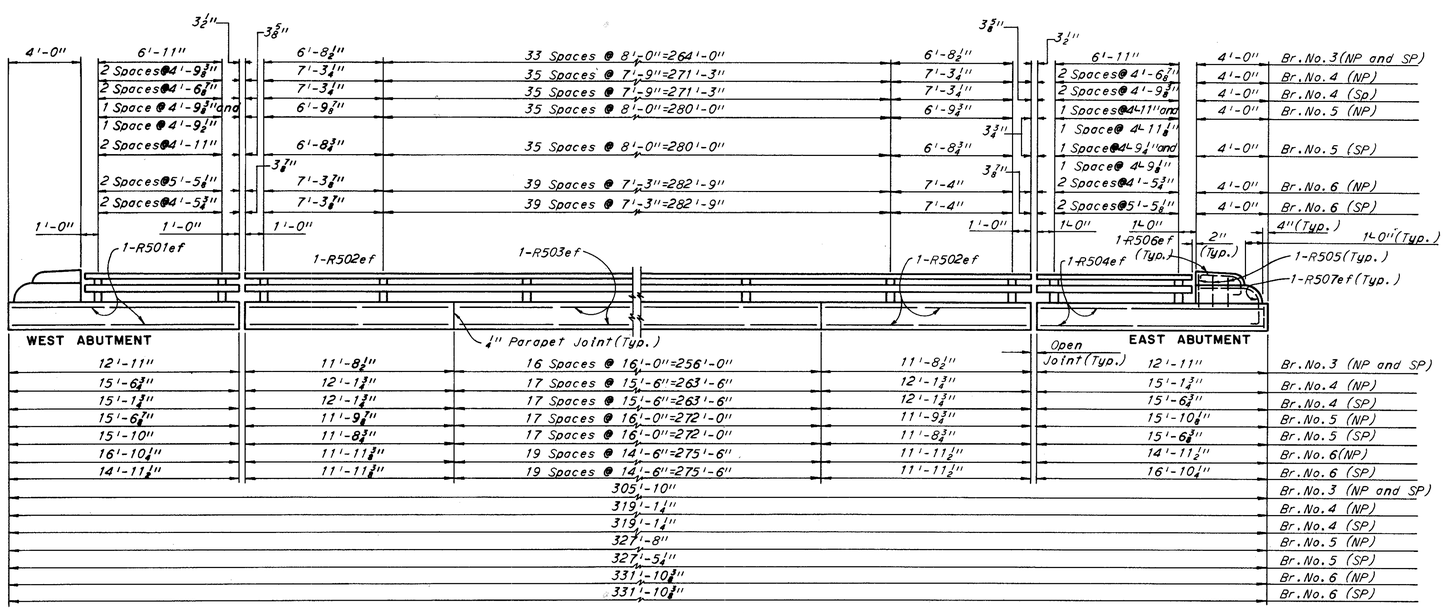

TYPE 2 RAILING - BRIDGE NO. 3, 4, 5 AND 6

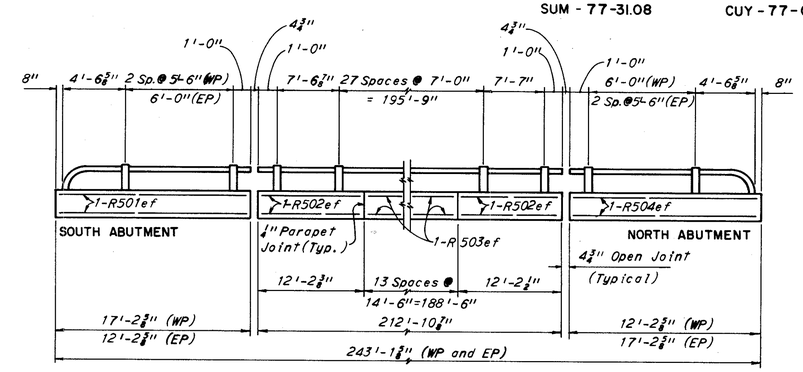

TYPE A RAILING - BRIDGE NO. 1

BENDING DIAGRAMS

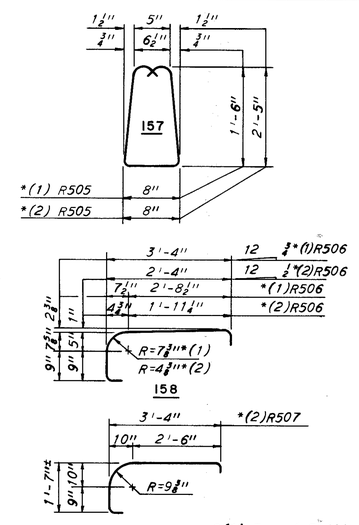

RAILING NOTE:

Payment for railing shall be made at the contract unit price bid for "Item 517." Pay length shall be the overall length of the parapets and shall include cost of anchor bolts, set screws, nuts, shims, etc., necessary to complete the installation of railing. Concrete expansion joint material and longitudinal reinforcing steel in the parapets shall be included with "Item 517" for payment. All other reinforcing steel in the parapets shall be included with "Item 509" for payment.

For additional details and notes see Ohio Standard Drawing BR-1-65, sheets 1 and 2 of 2, and superseded Ohio Standard Drawing AR-1-57.

The following abbreviations are used:

NP = North Parapet
SP = South Parapet
WP = West Parapet
EP = East Parapet
ef = each face

REINFORCEMENT SCHEDULE

Mark	TYPE A RAILING						TYPE 1 RAILING												TYPE 2 RAILING																	
	BRIDGE NO. 1						BRIDGE NO. 2L						BRIDGE NO. 2R						BRIDGE NO. 3			BRIDGE NO. 4						BRIDGE NO. 5						BRIDGE NO. 6					
	West Parapet			East Parapet			North Parapet			South Parapet			North Parapet			South Parapet			N and S Parapets			North Parapet			South Parapet			North Parapet			South Parapet			North Parapet			South Parapet		
	No.	Length	Type	No.	Length	Type	No.	Length	Type	No.	Length	Type	No.	Length	Type	No.	Length	Type	No.	Length	Type	No.	Length	Type	No.	Length	Type	No.	Length	Type	No.	Length	Type	No.	Length	Type	No.	Length	Type
R501	4	16'-9"	Str.	4	11'-9"	Str.	4	16'-6"	Str.	4	14'-0"	Str.	4	14'-6"	Str.	4	16'-0"	Str.	8	12'-6"	Str.	4	15'-0"	Str.	4	14'-9"	Str.	4	15'-0"	Str.	4	15'-6"	Str.	4	16'-6"	Str.	4	14'-6"	Str.
R502	8	11'-9"	Str.	8	11'-9"	Str.	8	11'-9"	Str.	8	11'-6"	Str.	8	11'-6"	Str.	8	11'-6"	Str.	16	11'-3"	Str.	8	11'-9"	Str.	8	11'-9"	Str.	8	11'-3"	Str.	8	11'-3"	Str.	8	11'-6"	Str.	8	11'-6"	Str.
R503	52	14'-0"	Str.	52	14'-0"	Str.	76	15'-0"	Str.	76	15'-0"	Str.	76	15'-0"	Str.	76	15'-0"	Str.	128	15'-6"	Str.	68	15'-0"	Str.	68	15'-0"	Str.	68	15'-6"	Str.	68	15'-6"	Str.	76	14'-0"	Str.	76	14'-0"	Str.
R504	4	11'-9"	Str.	4	16'-9"	Str.	4	16'-0"	Str.	4	14'-6"	Str.	4	14'-0"	Str.	4	16'-6"	Str.	8	12'-6"	Str.	4	14'-9"	Str.	4	15'-0"	Str.	4	15'-0"	Str.	4	15'-0"	Str.	4	14'-6"	Str.	4	16'-6"	Str.
R505							6	4'-2"	157	6	4'-2"	157	6	4'-2"	157	6	4'-2"	157	12	6'-1"	157	6	6'-1"	157	6	6'-1"	157	6	6'-1"	157	6	6'-1"	157	6	6'-1"	157	6	6'-1"	157
R506							4	5'-4"	158	4	5'-4"	158	4	5'-4"	158	4	5'-4"	158	8	4'-2"	158	4	4'-2"	158	4	4'-2"	158	4	4'-2"	158	4	4'-2"	158	4	4'-2"	158	4	4'-2"	158
R507																			8	5'-5"	159	4	5'-5"	159	4	5'-5"	159	4	5'-5"	159	4	5'-5"	159	4	5'-5"	159	4	5'-5"	159

MICROFILMED
FEB 12 1965

H.N.T.B. BR. NOS. 1, 2, 3, 4, 5 & 6

HOWARD, NEEDLES, TAMMEN & BERGENDOFF
CONSULTING ENGINEERS
KANSAS CITY CLEVELAND NEW YORK

RAILING DETAILS

SUMMIT COUNTY &
CUYAHOGA COUNTY OHIO

DRAWN	TRACED	CHECKED	REVIEWED	REVISED
DATE 4-23-65	DATE 4-23-65	DATE 4-27-65	DATE 9-1-65	SHEET 224