L-N

MICROFILMED MAY 2 1984
MICROFILMED MAR 21 1984

FED. RD. DIVISION	STATE	PROJECT	
2	OHIO	I-77-5(7)149	

1/316

STATE OF OHIO
DEPARTMENT OF HIGHWAYS
CUY-77-2.04

CUYAHOGA COUNTY
CUY.-77-2.04

LIMITED ACCESS

THIS IMPROVEMENT IS ESPECIALLY DESIGNED FOR THROUGH TRAFFIC AND HAS BEEN DECLARED A LIMITED ACCESS HIGHWAY OR FREEWAY BY ACTION OF THE DIRECTOR OF HIGHWAYS IN ACCORDANCE WITH THE PROVISIONS OF SECTION 5511.02 OF THE REVISED CODE OF OHIO.

CONVENTIONAL SIGNS

PROPERTY LINE
EXISTING RIGHT OF WAY
LIMITED ACCESS LINE — L A
RIGHT OF WAY LINE — R/W
TEMPORARY RIGHT OF WAY — T
CENTER LINE
CHANNEL EASEMENT — X X
FENCE LINE — x x
GUARD RAIL(EXISTING)
GUARD RAIL(PROPOSED)
RAILROAD
POWER POLES
TELEPHONE POLES
POWER AND TELEPHONE POLES
LIGHT POLES
TREES (EXISTING)
WATER LINE — / /
GAS LINE — G G G
TELEPHONE CONDUIT — T T T
SEWER(EXISTING)
ELECTRICAL TRANSMISSION LINE — P P P
ELECTRICAL TOWER
FIRE HYDRANT
MANHOLE (STORM)
MANHOLE (TELEPHONE)
CATCH BASIN OR INLET
MANHOLE (SANITARY)
SUBDIVISION LINE
SUBLOT LINE OR EXISTING EASEMENT
ORIGINAL TOWNSHIP LOT LINE

CUYAHOGA COUNTY
CITY OF BRECKSVILLE
CITY OF BROADVIEW HTS.

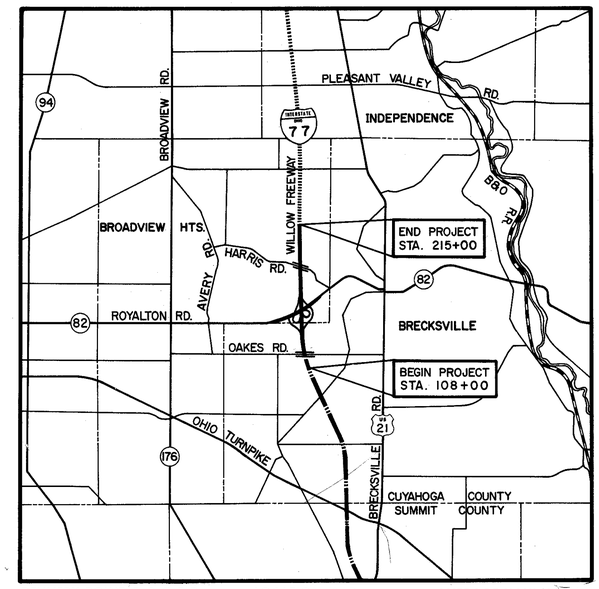

DELIVERY POINT B & O R.R.
PENINSULA, OHIO

LOCATION MAP

AVERAGE HAUL 8 MILES

Revised Sheets Nos. 238,239,240, and 241 C.E.H. 9-22-66

N

I-77-5(7)149
1965 SPECIFICATIONS

THE STANDARD SPECIFICATIONS OF THE STATE OF OHIO, DEPARTMENT OF HIGHWAYS, INCLUDING CHANGES AND SUPPLEMENTAL SPECIFICATIONS LISTED IN THE PROPOSAL SHALL GOVERN THIS IMPROVEMENT.

THE RIGHT OF WAY FOR THIS IMPROVEMENT WILL BE PROVIDED BY THE STATE OF OHIO.

I HEREBY APPROVE THESE PLANS AND DECLARE THAT THE MAKING OF THIS IMPROVEMENT WILL NOT REQUIRE THE CLOSING OF THE HIGHWAY TO TRAFFIC AND THAT PROVISIONS FOR THE MAINTENANCE AND SAFETY OF TRAFFIC WILL BE AS SET FORTH ON THE PLANS AND ESTIMATES.

APPROVED DATE 6-20-66 — Charles M. Yurick — DIVISION DEPUTY DIRECTOR
APPROVED DATE 7-21-66 — C. H. Altvater — ENGINEER OF BRIDGES
APPROVED DATE 7-21-66 — R. D. Pickett — ENGINEER OF LOCATION AND DESIGN
APPROVED DATE 7-21-66 — R. E. Shultz — DEPUTY DIRECTOR OF DESIGN AND CONSTRUCTION
APPROVED DATE 7-28-66 — T. H. Brand — DEPUTY DIRECTOR OF RIGHT OF WAY
NCAR HRYR 7-21-66 APPROVED DATE 7-27-66 — R. W. Wilson — DEPUTY DIRECTOR OF PLANNING AND PROGRAMMING
APPROVED DATE ____ — FIRST ASSISTANT DIRECTOR
APPROVED DATE 7/28/66 — R. E. Mashuta — DIRECTOR OF HIGHWAYS

INDEX OF SHEETS

Title Sheet	1
Schematic Plan and Design Designation	2
Schematic Geometric Plan	3-4
Typical Sections	5-9
Superelevation Tables	10
General Notes	11-12
Computations and Sub-Summaries	13-20
General Summary	21-24
Plan-Profile, I-77	25-37
Plan, Ramps C-1 and C-3	38
Plan, Ramps C-2 and C-4	39
Plan, Ramp C-5	40
Plan, Ramp C-6	41
Profiles, Ramps	42-47
Plan-Profile, Oakes Road	48
Plan-Profile, Relocated Royalton Road	49-52
Plan-Profile, Harris Road	53
Temporary Road - Oakes Road	54
Royalton Road Connections	55
Driveway Profiles	56-59
Interchange Cross-Section Layout	60
Cross-Sections, I-77	61-156
Cross-Sections, Ramps	157-175
Cross-Sections, Oakes Road	176
Cross-Sections, Relocated Royalton Road	177-186, 186-A
Cross-Sections, Harris Road	187-188
Crossover Details	189
Ramp Terminal Details	190-192
Miscellaneous Details	193-196
Structures - 20' Span and Under	197-208
Storm Sewer Profiles	209-210
Sanitary Sewer Details and Profiles	211-215
Traffic Control Plans 216-219, 219A,	220-230, 230A, 230B, 231-235
Lighting Plans	236-243 (244 not used)
Waterwork Plans	245-262 (263 not used)
Structures - Over 20' Span	264-298
Right of Way Plans	299-316

SUPPLEMENTAL SPECIFICATIONS

NUMBER	DATE	NUMBER	DATE
801	9-2-65	815	8-6-65
808	2-7-66	806	3-3-66
811	3-29-65		
816	8-6-65		
1001	3-21-66		

UNDER CONSTRUCTION
PORTION TO BE IMPROVED
STATE ROADS
OTHER ROADS
FUTURE CONSTRUCTION

SCALE
PLAN — 1"=20'&50'
PROFILE — HOR 1"=50' & 100'
PROFILE — VERT 1"=5', 10' & 20'
CROSS SECTIONS — 1"=10'

SCALE .5 0 1 2 3 4 MILES

LINE DATA

BEGIN PROJECT STA. 108+00.00
END PROJECT STA. 215+00.00
NET LENGTH OF PROJECT = 10,700.00 L.F. or 2.026 MILES

ADD FOR APPROACHES
ADDITIONAL WORK STA. 215+00.00 TO STA. 216+00.00 = 100.00 L.F.
OAKES ROAD STA. 95+85.00 TO STA. 103+02.50 = 717.50 L.F.
RELOCATED ROYALTON ROAD STA. 185+00.00 TO STA. 232+00.00 = 4,700.00 L.F.
HARRIS ROAD STA. 22+25.00 TO STA. 30+90.00 = 865.00 L.F.

NET LENGTH OF WORK = 17062.50 L.F. or 3.235 MILES

STANDARD DRAWINGS

NUMBER	DATE	NUMBER	DATE	NUMBER	DATE
BP-1	6-1-65	CB-2-3℄2-4	6-1-65	L-1	6-1-65
BP-2	6-1-65	CB-2-5℄2-6	6-1-65	MC-7	3-1-66
BP-3	6-1-65	CB-3A	6-1-65	BP-6	6-1-65
BP-4	6-1-65	CB-4	6-1-65	HL-2	11-1-65
BP-5	6-1-65	CB-5	6-1-65	HL-3	11-1-65
BP-7	1-1-66	MH-1	6-1-65		
F-1	6-1-65	MH-1A	8-1-66		
F-2	6-1-65	MH-2	6-1-65		
F-3	6-1-65	HW-E	6-1-65		
FACI-1	6-1-65	HW-1	6-1-65		
FACI-2	6-1-65	HW-2	6-1-65		
GR-1	6-1-65	HW-3	6-1-65		
GR-2A	9-1-65	SP-53	6-30-61		
GR-6	6-1-65	AS-1-54	8-10-65		
MC-1	6-1-65	BR-1-65	11-24-65		
MC-3	5-1-66	Sh. 1 & 2 of 2			
MC-4	6-1-65	RB-1-55	2-2-59		
MC-5	6-1-65	SD-1-65	11-8-65		
MC-6	6-1-65	Sh. 1 & 2 of 3			
CB-2-2-A℄B	6-1-65				
CB-6	6-1-65	GR-5B	6-1-65		
HL-1	11-1-65	HL-4	1-1-66		

PREPARED AND RECOMMENDED BY

HOWARD NEEDLES TAMMEN & BERGENDOFF
CONSULTING ENGINEERS
KANSAS CITY CLEVELAND NEW YORK

Carl L. Erb
C. L. ERB 00330

STATE OF OHIO CARL L. ERB, Jr. 18348 REGISTERED PROFESSIONAL ENGINEER

H.G. SOURS
ASSOCIATE
COLUMBUS

FILE NO.	CUYAHOGA COUNTY	CUY-77-2.04
	DATE OF LETTING	1966
	CONTRACT NO.	

DEPARTMENT OF COMMERCE
BUREAU OF PUBLIC ROADS

APPROVED

DIVISION ENGINEER — DATE

MICROFILMED
MAY 2 1967

SCHEMATIC PLAN

FED. RD. DIVISION	STATE	PROJECT	
2	OHIO		

2
3/6

CUYAHOGA COUNTY
CUY.-77-2.04

PROPOSED STRUCTURES CUY.-77-0282 L&R

TYPE: Continuous welded steel girder with reinforced concrete deck and substructure.
SPANS: 83'-0" and 69'-6"
ROADWAY: Br. No. 8L: 50'-0" face to face parapets. Br. No. 8R: Width Varies
LOAD FREQUENCY: CF 2000(57) Adequate for A.A.S.H.O. Alternate loading
SKEW: 26°02'57" Right Forward
WEARING SURFACE: 1" Monolithic Concrete.
APPROACH SLABS: AS-1-54 (25' Long)
ALIGNMENT: Tangent

PROPOSED STRUCTURE CUY.-77-0345

TYPE: Continuous welded steel girder with reinforced concrete deck and substructure.
SPANS: 59'-6", 84'-9", 90'-3" and 72'-3"
ROADWAY: 28'-0" curb to curb with two 4'-0" sidewalks
LOAD FREQUENCY: CF130(57)
SKEW: 15°49'41" Right Forward
WEARING SURFACE: 1" Monolithic Concrete
APPROACH SLABS: AS-1-54(20' Long)
ALIGNMENT: Tangent

℄ I-77 CURVE DATA
P.I. Sta. 117+14.03
Δ = 28°00'40"
D = 1°28'00"
T = 974.41'
L = 1909.85'
R = 3906.53'
E = 119.70'

℄ Relocated Royalton Road CURVE DATA
P.I. Sta. 197+57.24
Δ = 8°46'18"
D = 0°30'00"
T = 878.89'
L = 1754.34'
R = 11,459.16'
E = 33.65'

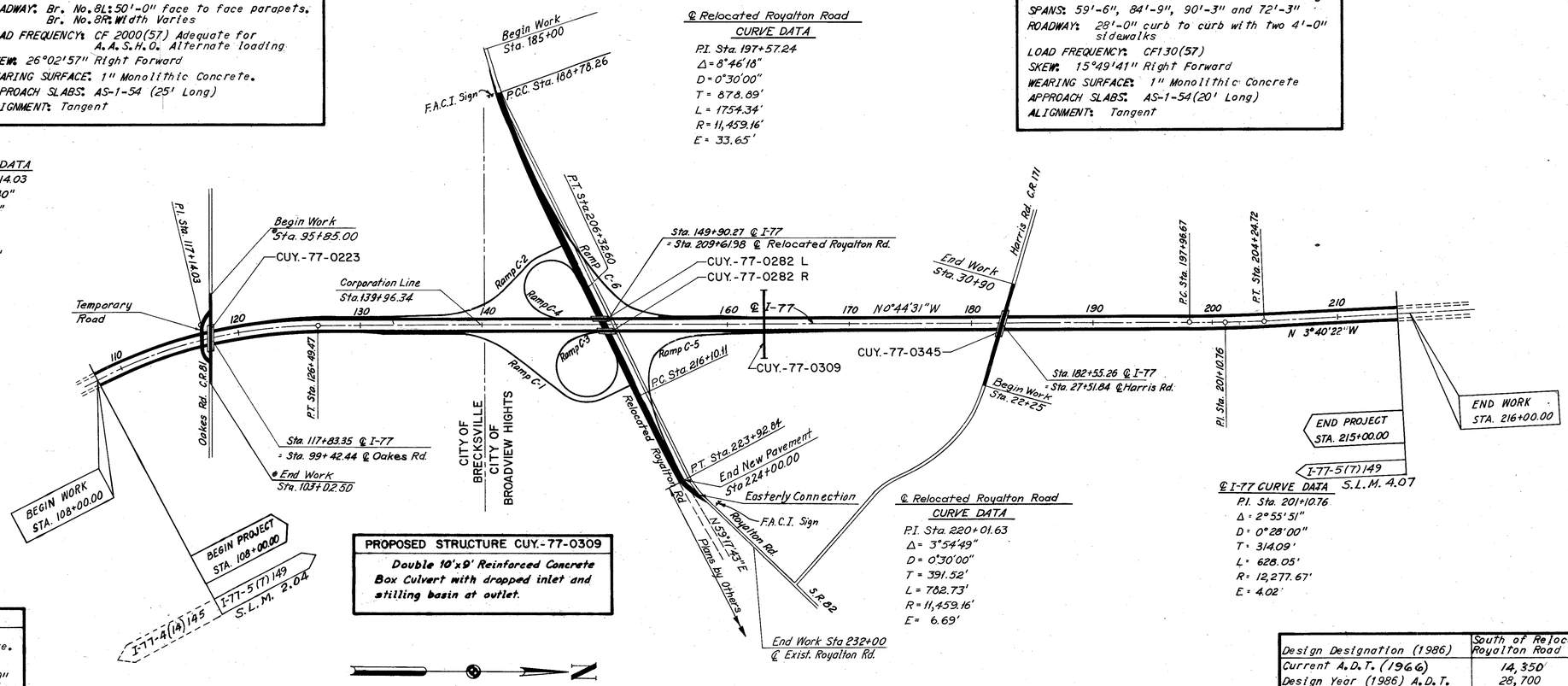

℄ Relocated Royalton Road CURVE DATA
P.I. Sta. 220+01.63
Δ = 3°54'49"
D = 0°30'00"
T = 391.52'
L = 782.73'
R = 11,459.16'
E = 6.69'

℄ I-77 CURVE DATA
P.I. Sta. 201+10.76
Δ = 2°55'51"
D = 0°28'00"
T = 314.09'
L = 628.05'
R = 12,277.67'
E = 4.02'

PROPOSED STRUCTURE CUY.-77-0309

Double 10'x9' Reinforced Concrete Box Culvert with dropped inlet and stilling basin at outlet.

PROPOSED STRUCTURE CUY.-77-0223

TYPE: Continuous steel beam with reinforced concrete deck and substructure.
SPANS: 59'-0", 84'-0", 84'-0" and 59'-0"
ROADWAY: 28'-0" curb/curb with two 4'-0" sidewalks
LOAD FREQUENCY: CF400(57)
SKEW: 13°10'01" Right Forward
WEARING SURFACE: 1" Monolithic Concrete
APPROACH SLABS: AS-1-54(25' Long)
ALIGNMENT: Tangent

Design Designation (1986)	South of Relocated Royalton Road	North of Relocated Royalton Road
Current A.D.T. (1966)	14,350	24,792
Design Year (1986) A.D.T.	28,700	49,584
D.H.V.	2,750	4,740
D. (directional distribution)	56% - 44%	56% - 44%
T. (percent B & C Trucks)	6%	6%
V. (design speed)	70 m.p.h.	60 m.p.h.

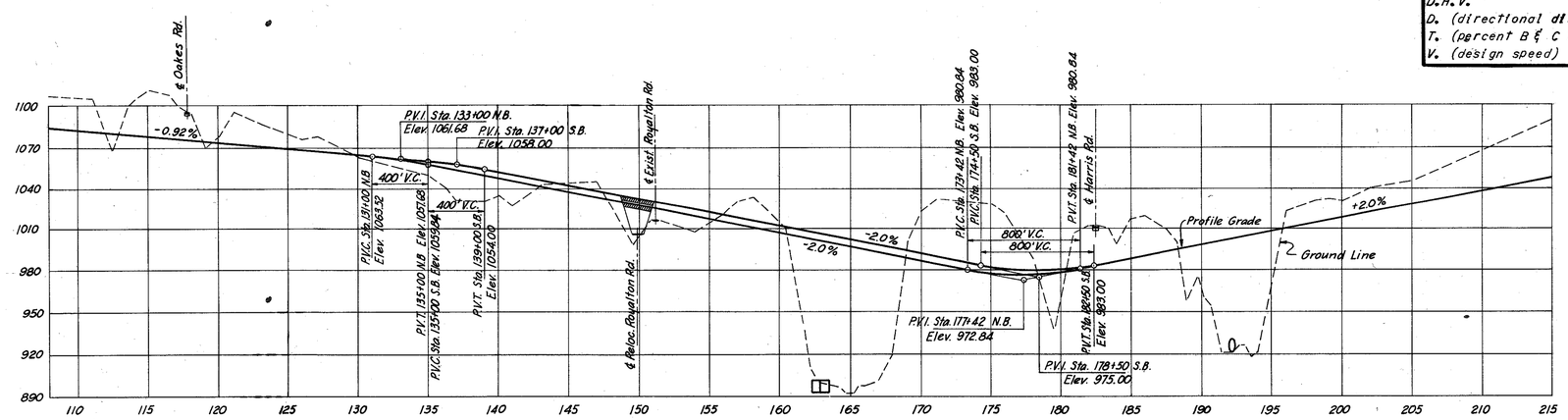

SCALE 1"=500'
MADE HRH DATE 4-14-65
TRCD. DATE
CKD. PPP DATE 4-15-65

HOWARD, NEEDLES, TAMMEN & BERGENDOFF
CONSULTING ENGINEERS
KANSAS CITY CLEVELAND NEW YORK

MICROFILMED
MAY 2 1984

FED. RD. DIVISION	STATE	PROJECT	
2	OHIO		

265/316

CUYAHOGA COUNTY
CUY-77-2.04

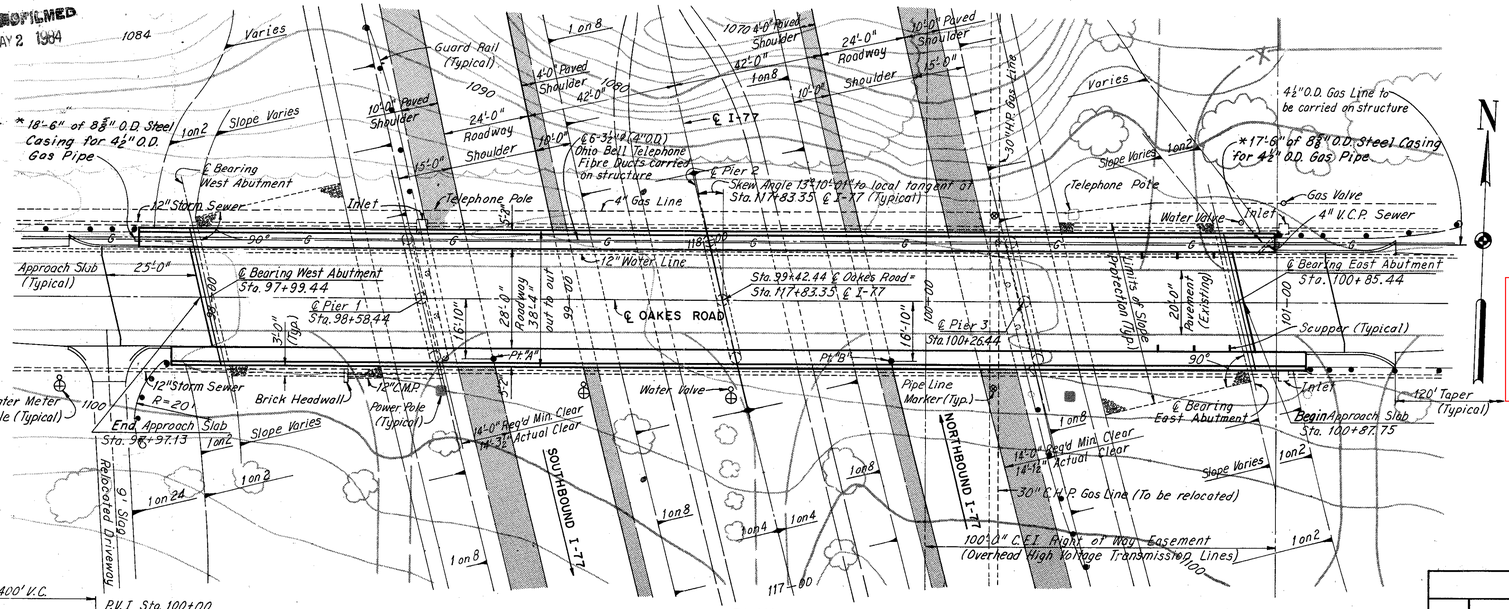

PLAN
Scale: 1" = 20'-0"

CURVE DATA - ℄ I-77

P.I. Sta. 117+14.03
Δ = 28°00'40"
D = 1° 28'00" Right
R = 3,906.53
T = 974.41
L = 1,909.85
E = 119.70

PROPOSED STRUCTURE

TYPE: Continuous steel beam with reinforced concrete deck and substructure.
SPANS: 59'-0", 84'-0", 84'-0" and 59'-0"
ROADWAY: 28'-0" curb/curb with two 4'-0" sidewalks
LOAD FREQUENCY: CF400(57)
SKEW: 13°10'01" Right Forward
WEARING SURFACE: 1" Monolithic Concrete
APPROACH SLABS: AS-1-54 (25' Long)
ALIGNMENT: Tangent

Note:
* 8⅝" O.D. pipe casing to be furnished by The East Ohio Gas Co. and installed by the bridge contractor. The bridge contractor shall notify The East Ohio Gas Co. about seven days in advance of his need for installation.

TRAFFIC DATA:
1986 - 5,732 A.D.T. (Total both ways)

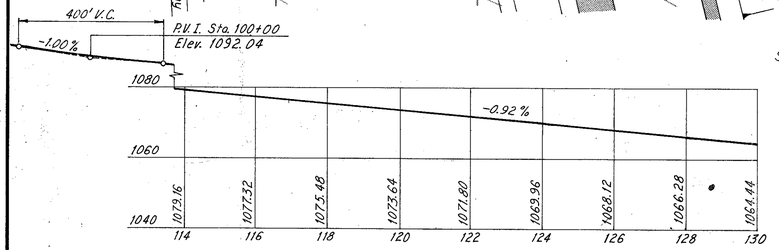

PROFILE I-77
Scale: 1" = 200' Hor.
1" = 20' Vert.

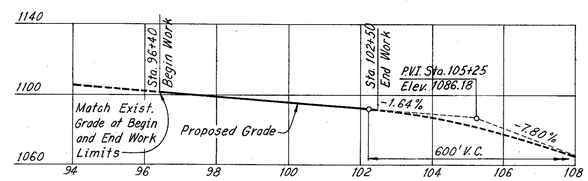

PROFILE OAKES ROAD
Scale: 1" = 200' Hor.
1" = 40' Vert.

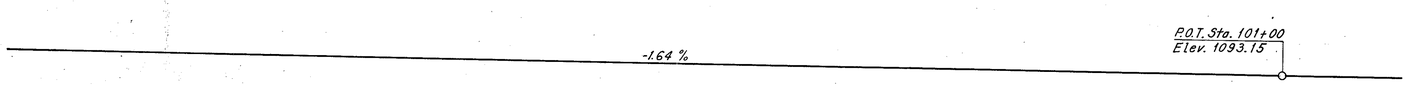

PROFILE

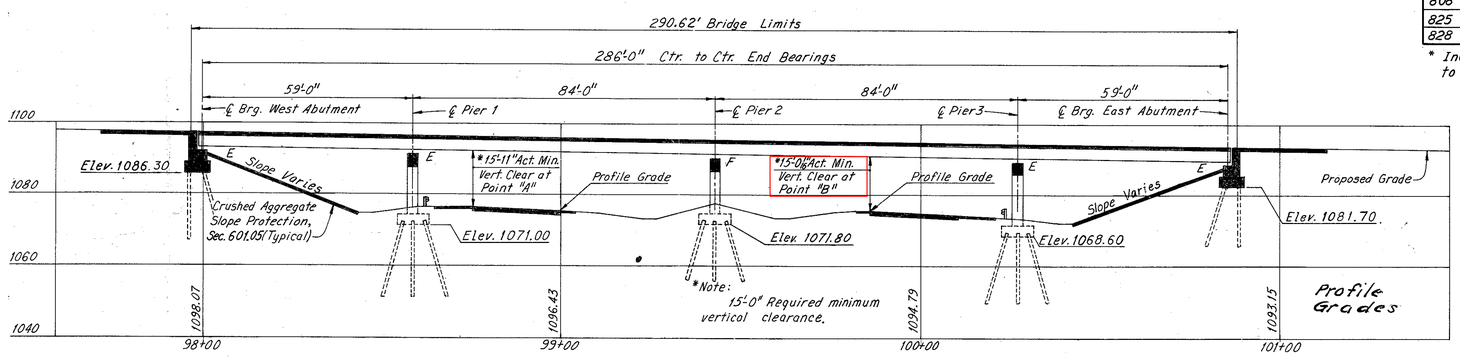

ELEVATION

ESTIMATED QUANTITIES

CUY-77-0223 H.N.T.B. BRIDGE NO. 7

ITEM	TOTAL	UNIT	DESCRIPTION	ABUTMENTS	PIERS	SUPERSTRUCTURE	GENERAL		
503	420	Cu. Yd.	Unclassified Excavation	230	190				
505		Lump Sum	First Test Pile				Lump Sum		
507	1,570	Lin. Ft.	12" ø C.I.P. Reinforced Concrete Piles	470	1,100				
509	135,433	Pounds	Reinforcing Steel	13,776	26,488	93,689			
511	398	Cu. Yd.	Class "C" Concrete, Superstructure			398			
511	74	Cu. Yd.	Class "C" Concrete, Pier Caps and Columns		74				
511	106	Cu. Yd.	Class "E" Concrete, Abutment (above footing)	106					
511	149	Cu. Yd.	Class "E" Concrete, Footings	70	79				
513	323,200*	Pounds	Structural Steel			323,200*			
514	323,200*	Pounds	Field Painting of Structural Steel			323,200*			
517	636.76	Lin. Ft.	Bridge Railing Type 2	61.85		574.91			
518	27	Cu. Yd.	Porous Backfill	27					
518	48	Lin. Ft.	6" Helical C.M.P. (Section 707.06)						
			Non-Perforated	48					
518	63	Lin. Ft.	6" Perforated Helical C.M.P. (Section						
			707.06) Including Specials	63					
518	6	Each	Scuppers, Including Supports			6			
601	492	Sq. Yd.	Crushed Aggregate Slope Protection				495		
808	398	Units	Water Reducing, Set-Retarding Admixture			398			
825	1,425	Sq. Yd.	Concrete Surface Treatment				1,425		
828	58	Lin. Ft.	Joint Sealer			58			

* Includes 423 pounds of structural steel to be paid for by East Ohio Gas Co.

Note:
All piles are 12" ø Reinforced Concrete with estimated average vertical lengths as follows:

West Abutment	18'
Pier 1	19'
Pier 2	17'
Pier 3	19'
East Abutment	18'

H.N.T.B. BR. NO. 7

HOWARD, NEEDLES, TAMMEN & BERGENDOFF
CONSULTING ENGINEERS
KANSAS CITY CLEVELAND NEW YORK

SITE PLAN
I-77 UNDER OAKES ROAD
BR. NO. CUY-77-0223 **STA. 97+97.13 TO STA. 100+87.75**

CUYAHOGA CO. OHIO

DRAWN	TRACED	CHECKED	SUBMITTED	REVISED
DATE 6-21-65	DATE	DATE 7-1-65	DATE 5-5-66	SHEET 265

MICROFILMED
MAY 2 1984

FED. RD. DIVISION	STATE	PROJECT	
2	OHIO		

266
316

CUYAHOGA COUNTY
CUY-77-2.04

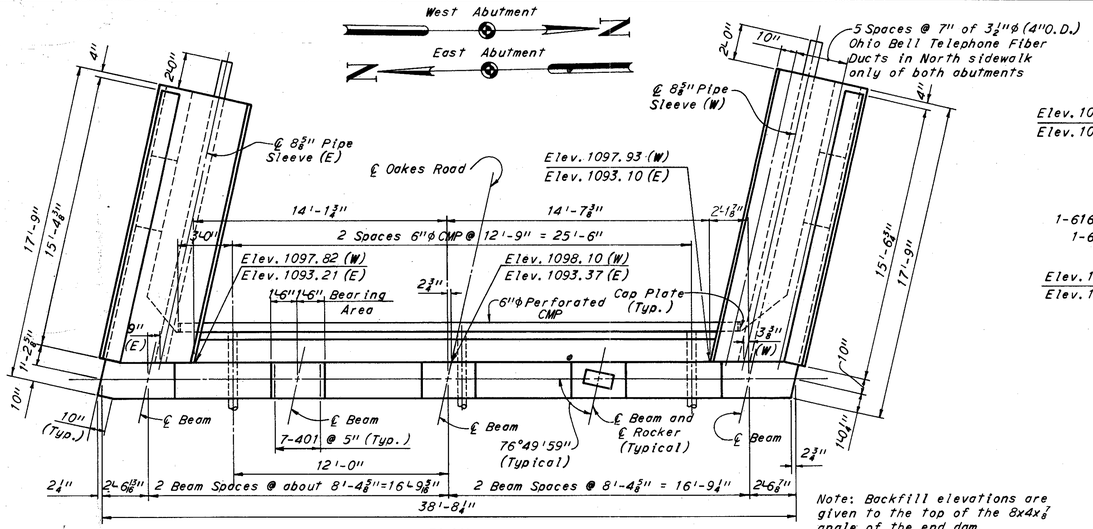

PLAN

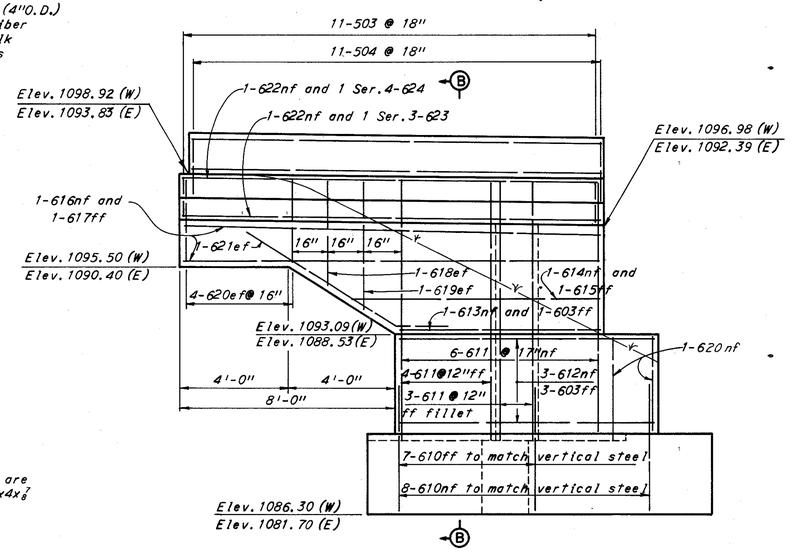

SOUTHWEST AND NORTHEAST WINGWALLS

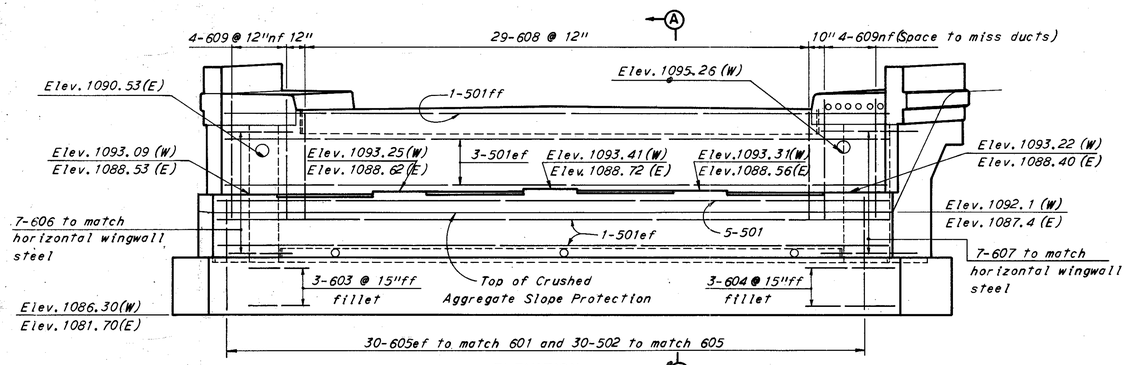

ELEVATION

(Piles and Type 2 Railing not shown. West Abutment shown.)

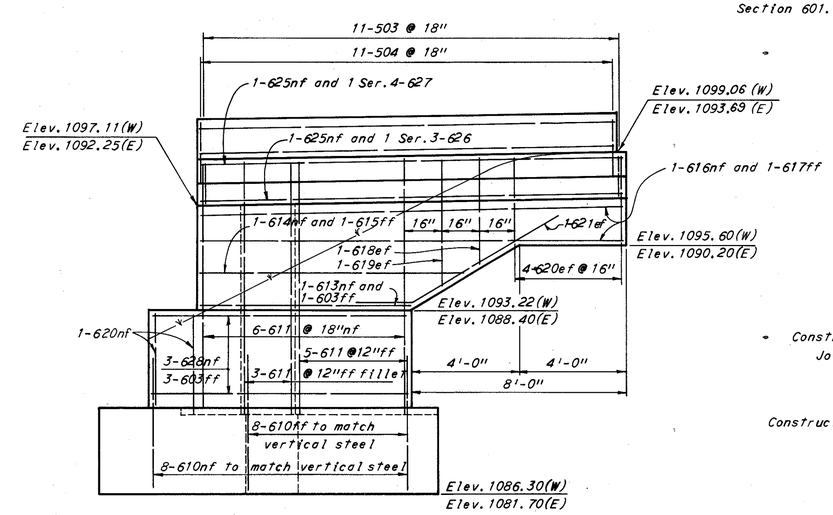

NORTHWEST AND SOUTHEAST WINGWALLS

(Northwest Wingwall shown. Piles not shown.)

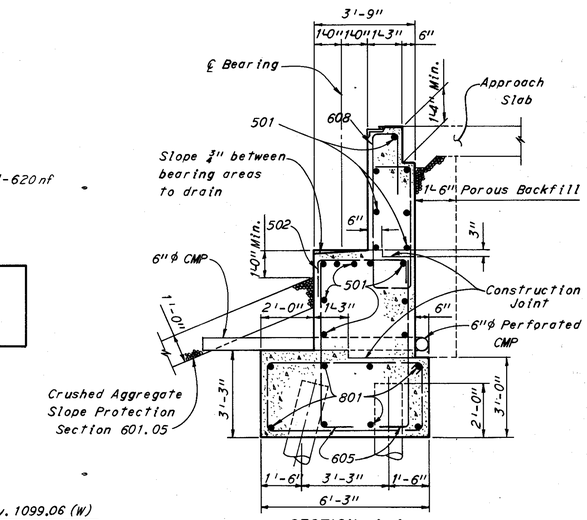

SECTION A-A

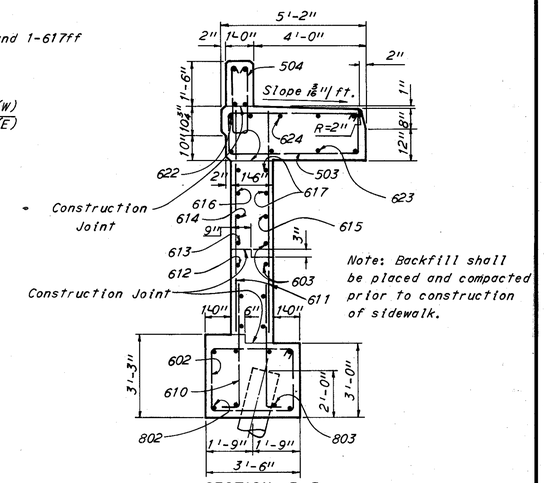

SECTION B-B

Note: Backfill shall be placed and compacted prior to construction of sidewalk.

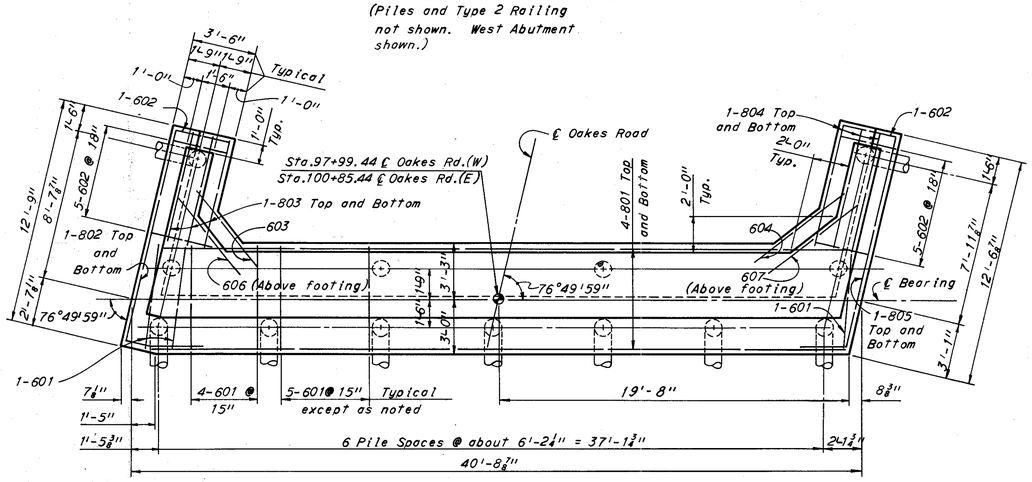

FOOTING PLAN

Note: All reinforcing bar marks shall be prefixed as follows:
AW = West Abutment
AE = East Abutment

Notes:

All piles are 12"φ C.I.P. reinforced concrete.

All battered piles shall be inclined 3 in 12 in the direction shown.

For longitudinal reinforcement in the parapets, railing post spacing and end post details see sheet 298.

For roadway end dam and sidewalk end dam details see Ohio Standard Drawing SD-1-65, sheets 1 and 2 of 3.

The following abbreviations are used:
nf = near face E = East Abutment
ff = far face W = West Abutment
ef = each face

H.N.T.B. BR. NO. 7

HOWARD, NEEDLES, TAMMEN & BERGENDOFF
CONSULTING ENGINEERS
KANSAS CITY CLEVELAND NEW YORK

ABUTMENTS

I-77 UNDER OAKES ROAD

BR. NO. CUY-77-0223 STA. 97+97.13 TO STA. 100+87.75

CUYAHOGA CO. OHIO

DRAWN S.A.S.	TRACED	CHECKED CHG	REVIEWED WF	REVISED	
DATE 6-30-65	DATE	DATE 7-1-65	DATE 5-5-66		SHEET 266

MAY 2 1984

FED. RD. DIVISION	STATE	PROJECT	
2	OHIO		

267
316

CUYAHOGA COUNTY
CUY-77-2.04

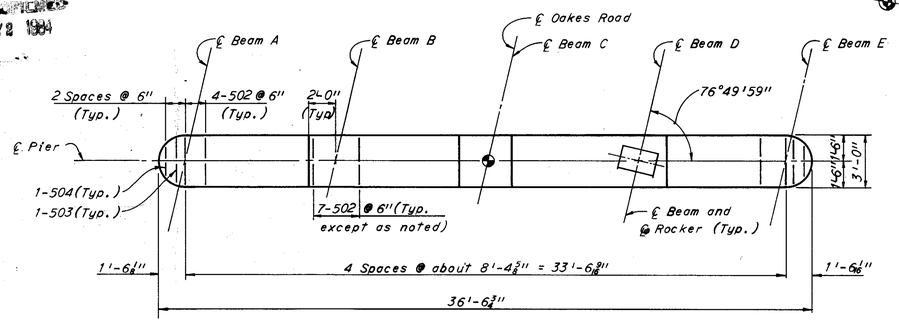

PLAN

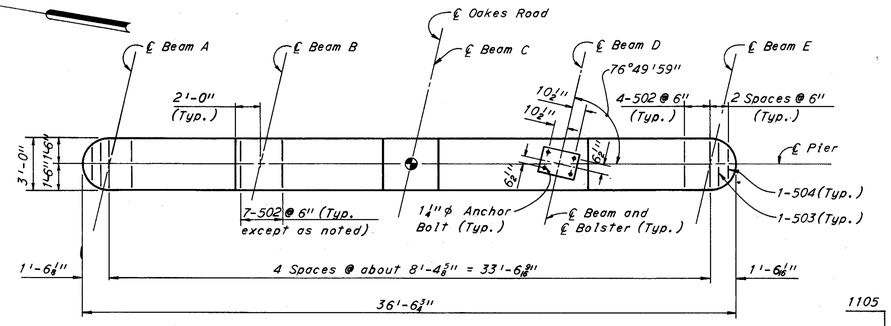

PLAN

Note: Special care shall be taken when placing reinforcement so as not to interfere with anchor bolt setting.

Note: All reinforcing bar marks shall be prefixed as follows:
Pier 1 = PA
Pier 2 = PB
Pier 3 = PC

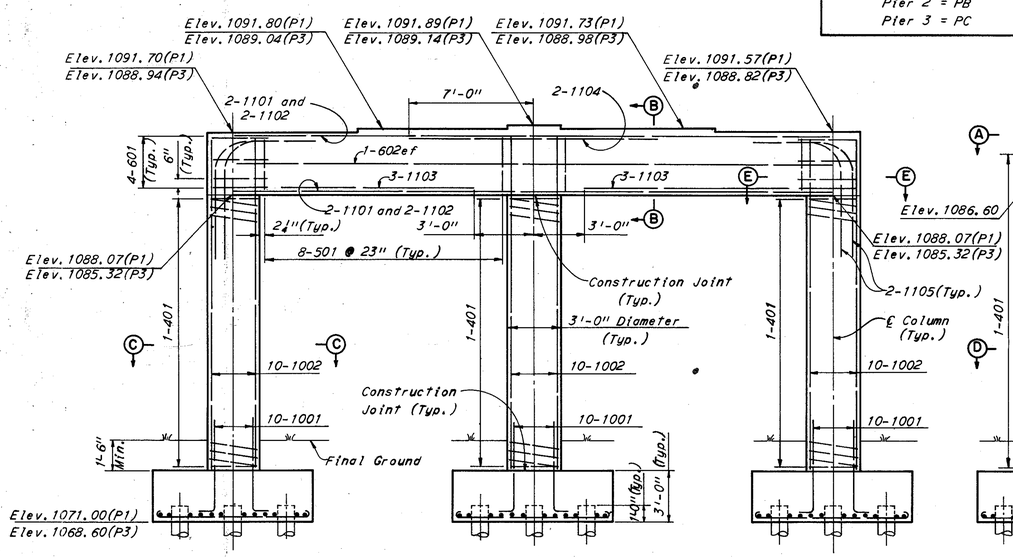

ELEVATION

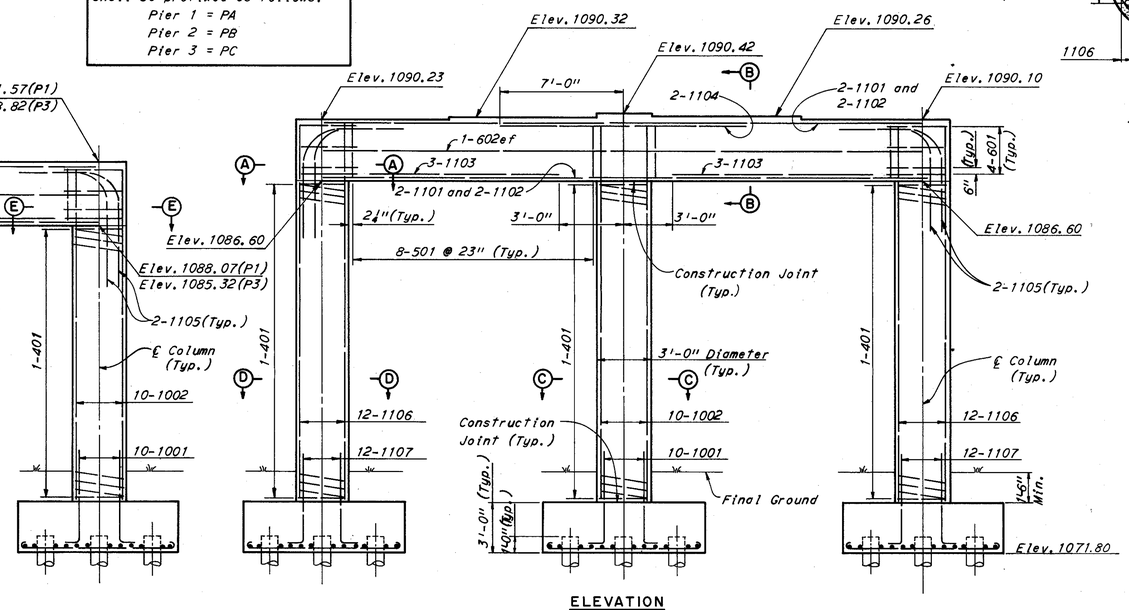

ELEVATION

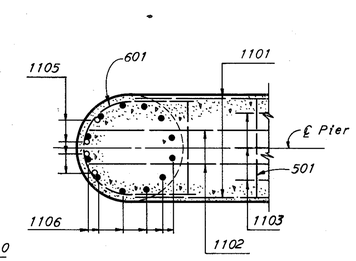

SECTION A-A

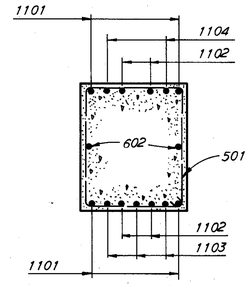

SECTION B-B

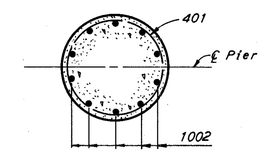

SECTION C-C

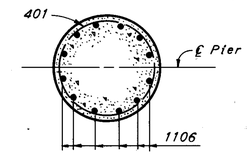

SECTION D-D

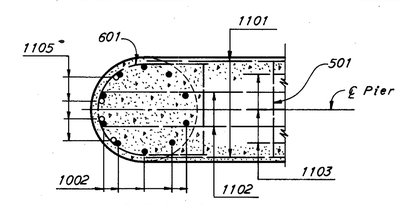

SECTION E-E

Notes:

For anchor bolt details see Ohio Standard Drawing RB-1-55.

All piles are 12" ϕ C.I.P. Reinforced Concrete.

All battered piles shall be inclined 3 in 12 in the direction shown.

Pile layout dimensions are measured along bottom of footing.

The following abbreviations are used:
P1 = Pier 1 P2 = Pier 2
P3 = Pier 3 ef = each face

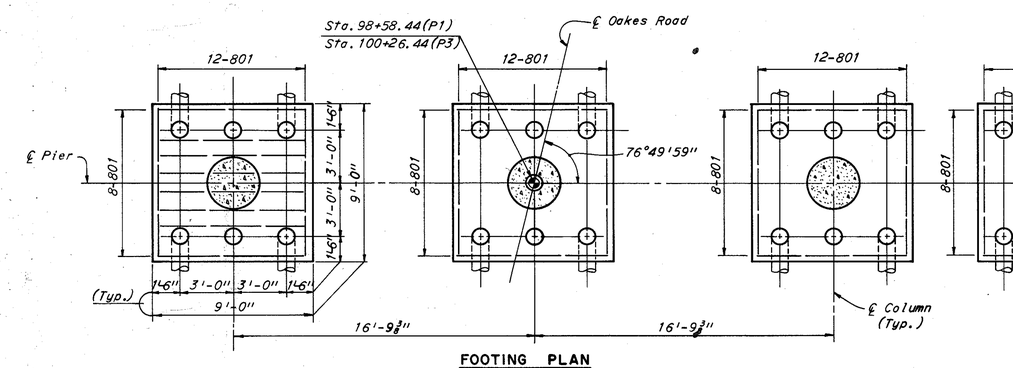

FOOTING PLAN
(PIERS 1 AND 3)

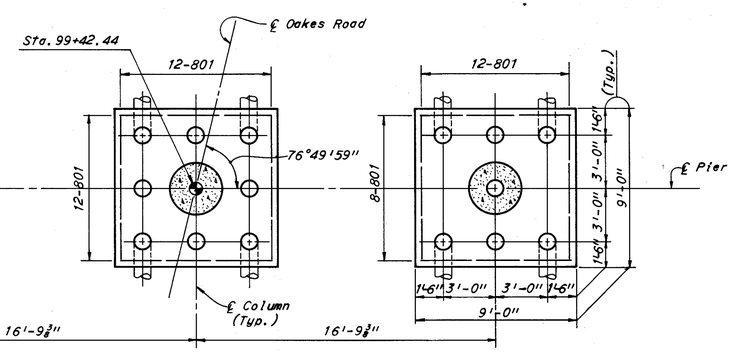

FOOTING PLAN
(PIER 2)

H.N.T.B. BR. NO. 7

HOWARD, NEEDLES, TAMMEN & BERGENDOFF
CONSULTING ENGINEERS
KANSAS CITY CLEVELAND NEW YORK

PIERS

I-77 UNDER OAKES ROAD

BR. NO. CUY-77-0223 STA. 97+97.13 TO STA. 100+87.75

CUYAHOGA CO. OHIO

DRAWN S.A.S.	TRACED	CHECKED C.H.B.	REVIEWED W.F.	REVISED
DATE 6-30-65	DATE	DATE 7-1-65	DATE 5-5-66	SHEET 267

MICROFILMED
MAY 2 1984

FED. RD. DIVISION	STATE	PROJECT	
2	OHIO		

268
316

CUYAHOGA COUNTY
CUY-77-2.04

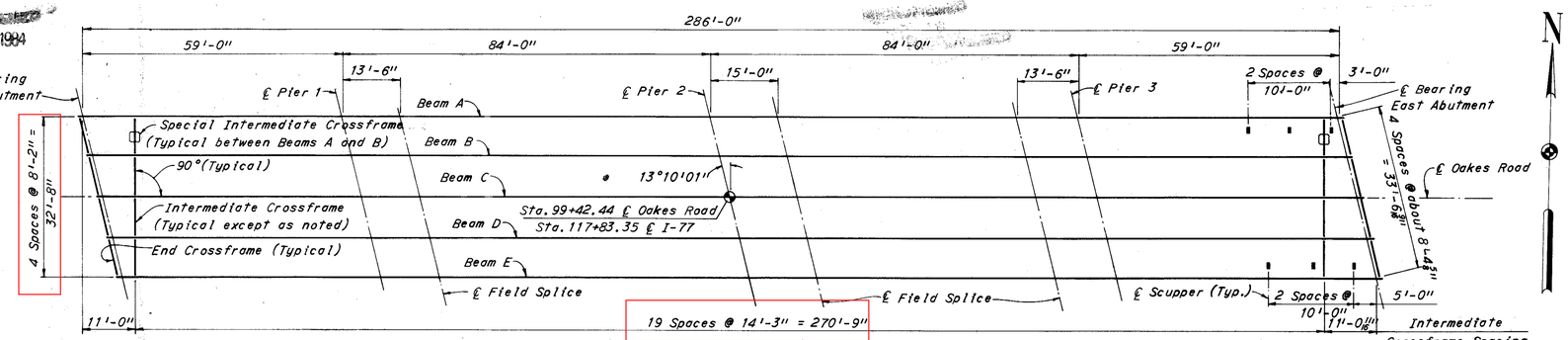

FRAMING PLAN

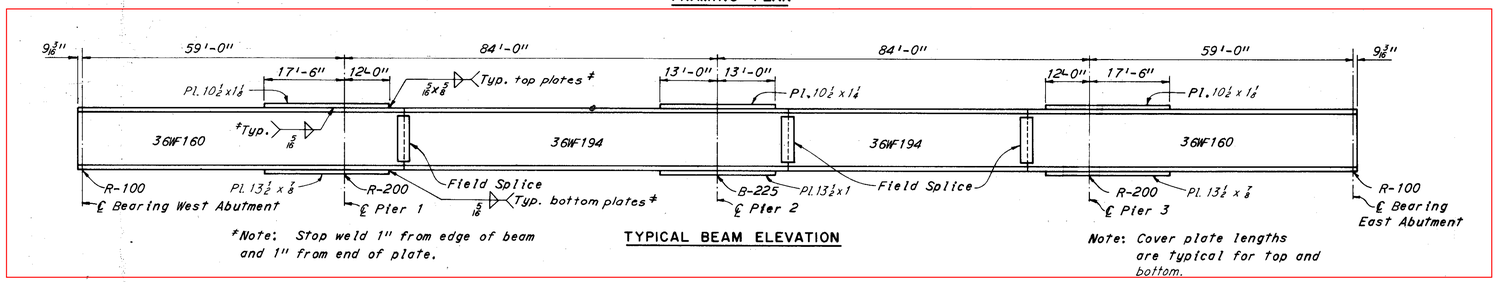

*Note: Stop weld 1" from edge of beam and 1" from end of plate.

TYPICAL BEAM ELEVATION

Note: Cover plate lengths are typical for top and bottom.

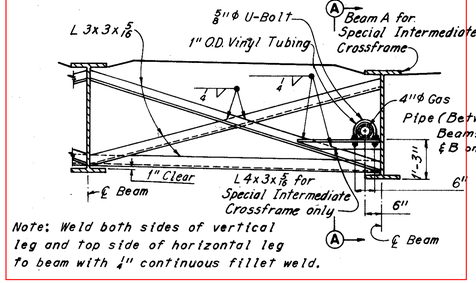

Note: Weld both sides of vertical leg and top side of horizontal leg to beam with 1/4" continuous fillet weld.

TYPICAL INTERMEDIATE CROSSFRAME

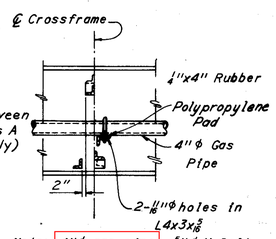

Note: 4"φ gas pipe, 5/8"φ U-Bolt, washers, nuts, vinyl tubing, and polypropylene pad to be furnished and installed by The East Ohio Gas Company.

SECTION A-A

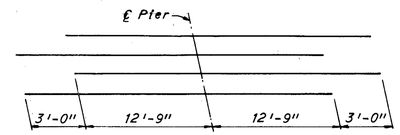

DIAGRAM SHOWING PLACEMENT OF S603 BARS OVER PIERS

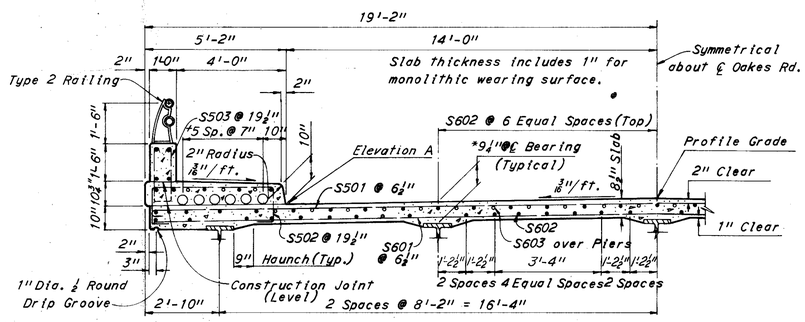

Note: All transverse bars shall be placed parallel to ℄ bearings of piers and abutments. Spacings are given along ℄ Oakes Road.

TYPICAL BRIDGE SECTION

* Note: At beams A and E this dimension is measured from extended top of pavement to top of beam.

+Note: 6-3 1/2"φ (4" O.D.) Ohio Bell Telephone Fiber Ducts in North sidewalk only. (By Others)

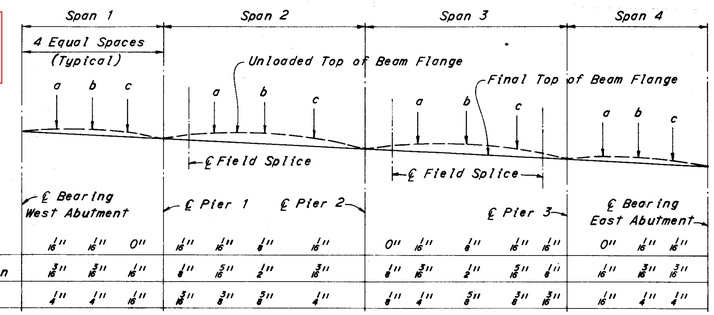

Deflection due to Steel	1/16"	1/16"	0"	1/16"	1/16"	1/8"	1/16"	0"	1/16"	1/8"	1/16"	1/16"	0"	1/16"	1/16"
Remaining Dead Load Deflection	3/16"	3/16"	1/16"	1/8"	5/16"	1/4"	3/16"	1/8"	3/16"	1/4"	5/16"	1/8"	1/16"	3/16"	3/16"
Required Shop Camber	1/4"	1/4"	1/16"	3/16"	3/8"	5/8"	1/4"	1/8"	1/4"	5/8"	3/8"	3/16"	1/16"	1/4"	1/4"

CAMBER DIAGRAM

*Note: Dimensions are typical for all beams.

Note: A typical haunch width of 9" shall be used for computing quantity of concrete However, the haunch width may vary between 6" and 12" provided that the slope shall be not more than 1:4 for a haunch less than 9" in width.

Notes:

For railing post spacing, parapet joint spacing and longitudinal reinforcement in the parapet, see Sheet 298.

For details of Rockers and Bolsters see Ohio Standard Drawing RB-1-55.

For details of end crossframes, roadway end dam and sidewalk end dam see Ohio Standard Drawing SD-1-65, sheets 1 and 2 of 3. The supporting angle shown in the "Roadway End Dams Data" table shall be increased from 6x4x3/8 to 7x4x3/8. Provide openings for 6-4" O.D. Ohio Bell Telephone Fiber Ducts in sidewalk end dam on North side of bridge.

For details of beam field splices see Sheet 269.

For drainage details see Sheet 297.

For details of optional transverse slab construction joint see Sheet 297.

TOP OF PAVEMENT ELEVATIONS

BEAM	SPAN 1				SPAN 2				SPAN 3				SPAN 4				BEAM
	℄ BRG. W. ABUT.	a	b	c	℄ PIER 1	a	b	c	℄ PIER 2	a	b	c	℄ PIER 3	a	b	c	℄ BRG. E. ABUT.	
A	1097.89	1097.64	1097.40	1097.16	1096.92	1096.57	1096.23	1095.89	1095.54	1095.20	1094.85	1094.51	1094.16	1093.92	1093.68	1093.44	1093.20	A
B	1097.98	1097.74	1097.50	1097.26	1097.01	1096.67	1096.33	1095.98	1095.64	1095.29	1094.95	1094.60	1094.26	1094.02	1093.78	1093.53	1093.29	B
C	1098.08	1097.84	1097.60	1097.35	1097.11	1096.77	1096.42	1096.08	1095.73	1095.39	1095.05	1094.70	1094.36	1094.11	1093.87	1093.63	1093.39	C
D	1097.92	1097.68	1097.44	1097.19	1096.95	1096.61	1096.26	1095.92	1095.57	1095.23	1094.89	1094.54	1094.20	1093.95	1093.71	1093.47	1093.23	D
E	1097.76	1097.52	1097.28	1097.03	1096.79	1096.45	1096.10	1095.76	1095.42	1095.07	1094.73	1094.38	1094.04	1093.80	1093.55	1093.31	1093.07	E
ELEVATION A																		
NORTH CURB	1097.92	1097.68	1097.44	1097.19	1096.95	1096.62	1096.30	1095.93	1095.57	1095.24	1094.92	1094.56	1094.19	1093.95	1093.72	1093.48	1093.23	NORTH CURB
SOUTH CURB	1097.81	1097.58	1097.34	1097.08	1096.84	1096.52	1096.19	1095.82	1095.46	1095.13	1094.82	1094.45	1094.09	1093.85	1093.61	1093.37	1093.12	SOUTH CURB

Note:
Elevation A is the theoretical top of pavement elevation prior to placing of deck concrete.

H.N.T.B. BR. NO. 7

HOWARD, NEEDLES, TAMMEN & BERGENDOFF
CONSULTING ENGINEERS
KANSAS CITY CLEVELAND NEW YORK

SUPERSTRUCTURE

I-77 UNDER OAKES ROAD

BR. NO. CUY-77-0223 STA. 97+97.13 TO STA. 100+87.75

CUYAHOGA CO. OHIO

DRAWN CHB	TRACED	CHECKED SAS	REVIEWED WF	REVISED
DATE 5-24-65	DATE	DATE 6-1-65	DATE 5-5-66	SHEET 268

FED. RD. DIVISION	STATE	PROJECT	
2	OHIO		

269
316

SUMMIT COUNTY SUM - 77-2.04

CUYAHOGA COUNTY CUY - 77-0.00

MAY 3 1984

DETAILS OF 36 WF BEAM SPLICES

BEAM 36WF TO BEAM 36WF	WEB SPLICE				FLANGE SPLICE													
		*WEB PLATES	WEB BOLTS	FILL PLS.	*FLANGE PLATES			*FILL PLATES				FLANGE BOLTS						
						Outside	Inside		Thickness(in.)					Dimensions (inches)				
	Type	2 Required	No.	2	Type	2 Required	2 Required	Type	X	Y	Z	No.	Spa. N	Pitch	A	B	C
135 to 135	B	13 1/2 x 5/8 x 2'-7"	40	-	C	11 x 3/8 x 2'-4 1/2"	4 1/2 x 1/2 x 2'-4 1/2"	-	-	-	-	32	3	3 1/2	2 1/4	-	6 1/2
135 to 150	B	13 1/2 x 5/8 x 2'-7"	40	-	C	11 x 3/8 x 2'-4 1/2"	4 1/2 x 1/2 x 2'-4 1/2"	C	1/8	1/8	5/16	32	3	3 1/2	2 1/4	-	6 1/2
135 to 160	B	13 1/2 x 5/8 x 2'-7"	40	-	C	11 x 3/8 x 2'-4 1/2"	4 1/2 x 1/2 x 2'-4 1/2"	C	1/4	1/4	7/16	32	3	3 1/2	2 1/4	-	6 1/2
135 to 170	B	13 1/2 x 5/8 x 2'-7"	40	1/16	C	11 x 3/8 x 2'-4 1/2"	4 1/2 x 1/2 x 2'-4 1/2"	C	5/16	5/16	5/8	32	3	3 1/2	2 1/4	-	6 1/2
135 to 182	B	13 1/2 x 5/8 x 2'-7"	40	1/8	C	11 x 3/8 x 2'-4 1/2"	4 1/2 x 1/2 x 2'-4 1/2"	C	3/8	3/8	3/4	32	3	3 1/2	2 1/4	-	6 1/2
135 to 194	B	13 1/2 x 3/8 x 2'-7"	40	1/16	C	11 x 3/8 x 2'-4 1/2"	4 1/2 x 1/2 x 2'-4 1/2"	C	7/16	7/16	15/16	32	3	3 1/2	2 1/4	-	6 1/2
135 to 230	B	13 1/2 x 5/8 x 2'-7"	40	1/16	B	11 x 3/8 x 2'-4 1/2"	4 1/2 x 1/2 x 2'-4 1/2"	A	3/16	3/8	5/16	32	3	3 1/2	2 1/4	-	6 1/2
135 to 245	B	13 1/2 x 5/8 x 2'-7"	40	1/8	B	11 x 3/8 x 2'-4 1/2"	4 1/2 x 1/2 x 2'-4 1/2"	A	9/16	5/16	1/2	32	3	3 1/2	2 1/4	-	6 1/2
135 to 260	B	13 1/2 x 5/8 x 2'-7"	40	1/8	B	11 x 3/8 x 2'-4 1/2"	4 1/2 x 1/2 x 2'-4 1/2"	C	3/8	1/16	11/16	32	3	3 1/2	2 1/4	-	6 1/2
135 to 280	B	13 1/2 x 5/8 x 2'-7"	40	1/8	B	11 3/8 x 2'-4 1/2"	4 1/2 x 1/2 x 2'-4 1/2"	C	3/4	5/16	13/16	32	3	3 1/2	2 1/4	-	6 1/2
150 to 150	B	13 1/2 x 5/8 x 2'-7"	40	-	C	11 x 3/8 x 2'-4 1/2"	4 1/2 x 3/8 x 2'-4 1/2"	-	-	-	-	32	3	3 1/2	2 1/4	-	6 1/2
150 to 160	B	13 1/2 x 5/8 x 2'-7"	40	-	C	11 x 3/8 x 2'-4 1/2"	4 1/2 x 3/8 x 2'-4 1/2"	C	1/16	1/16	3/16	32	3	3 1/2	2 1/4	-	6 1/2
150 to 170	B	13 1/2 x 5/8 x 2'-7"	40	-	C	11 x 7/16 x 2'-4 1/2"	4 1/2 x 3/8 x 2'-4 1/2"	C	3/16	3/16	5/16	32	3	3 1/2	2 1/4	-	6 1/2
150 to 182	B	13 1/2 x 5/8 x 2'-7"	40	1/16	C	11 x 7/16 x 2'-4 1/2"	4 1/2 x 3/8 x 2'-4 1/2"	C	1/4	1/4	1/2	32	3	3 1/2	2 1/4	-	6 1/2
150 to 194	B	13 1/2 x 5/8 x 2'-7"	40	1/16	C	11 x 7/16 x 2'-4 1/2"	4 1/2 x 3/8 x 2'-4 1/2"	C	3/16	5/16	9/16	32	3	3 1/2	2 1/4	-	6 1/2
150 to 230	B	13 1/2 x 5/8 x 2'-7"	40	1/16	B	11 x 7/16 x 2'-4 1/2"	4 1/2 x 3/8 x 2'-4 1/2"	A	5/16	1/4	1/16	32	3	3 1/2	2 1/4	-	6 1/2
150 to 245	B	13 1/2 x 5/8 x 2'-7"	40	1/16	B	11 x 7/16 x 2'-4 1/2"	4 1/2 x 3/8 x 2'-4 1/2"	A	7/16	3/16	1/4	32	3	3 1/2	2 1/4	-	6 1/2
150 to 260	B	13 1/2 x 5/8 x 2'-7"	40	1/8	B	11 x 7/16 x 2'-4 1/2"	4 1/2 x 3/8 x 2'-4 1/2"	A	1/2	1/8	3/8	32	3	3 1/2	2 1/4	-	6 1/2
150 to 280	B	13 1/2 x 5/8 x 2'-7"	40	1/8	B	11 x 7/16 x 2'-4 1/2"	4 1/2 x 3/8 x 2'-4 1/2"	C	5/8	-	11/16	32	3	3 1/2	2 1/4	-	6 1/2
150 to 300	B	13 1/2 x 5/8 x 2'-7"	40	3/16	B	11 x 7/16 x 2'-4 1/2"	4 1/2 x 3/8 x 2'-4 1/2"	C	3/4	1/8	1/8	32	3	3 1/2	2 1/4	-	6 1/2
160 to 160	A	19 1/2 x 5/8 x 2'-7"	48	-	C	11 x 1/2 x 2'-4 1/2"	4 1/2 x 5/8 x 2'-4 1/2"	-	-	-	-	32	3	3 1/2	2 1/4	-	6 1/2
160 to 170	A	19 1/2 x 5/8 x 2'-7"	48	-	C	11 x 1/2 x 2'-4 1/2"	4 1/2 x 5/8 x 2'-4 1/2"	C	1/16	1/16	3/16	32	3	3 1/2	2 1/4	-	6 1/2
160 to 182	A	19 1/2 x 5/8 x 2'-7"	48	1/16	C	11 x 1/2 x 2'-4 1/2"	4 1/2 x 5/8 x 2'-4 1/2"	C	3/16	3/16	5/16	32	3	3 1/2	2 1/4	-	6 1/2
160 to 194	A	19 1/2 x 5/8 x 2'-7"	48	1/16	C	11 x 1/2 x 2'-4 1/2"	4 1/2 x 5/8 x 2'-4 1/2"	C	1/4	1/4	1/2	32	3	3 1/2	2 1/4	-	6 1/2
160 to 230	A	19 1/2 x 5/8 x 2'-7"	48	1/16	B	11 x 1/2 x 2'-4 1/2"	4 1/2 x 5/8 x 2'-4 1/2"	B	9/16	3/8	1/8	32	3	3 1/2	2 1/4	-	6 1/2
160 to 245	A	19 1/2 x 5/8 x 2'-7"	48	1/16	B	11 x 1/2 x 2'-4 1/2"	4 1/2 x 5/8 x 2'-4 1/2"	A	5/16	7/16	1/4	32	3	3 1/2	2 1/4	-	6 1/2
160 to 260	A	19 1/2 x 5/8 x 2'-7"	48	1/8	B	11 x 1/2 x 2'-4 1/2"	4 1/2 x 5/8 x 2'-4 1/2"	A	7/16	3/16	1/4	32	3	3 1/2	2 1/4	-	6 1/2
160 to 280	A	19 1/2 x 3/8 x 2'-7"	48	1/8	B	11 x 1/2 x 2'-4 1/2"	4 1/2 x 5/8 x 2'-4 1/2"	A	9/16	1/16	1/2	32	3	3 1/2	2 1/4	-	6 1/2
160 to 300	A	19 1/2 x 5/8 x 2'-7"	48	1/8	B	11 x 1/2 x 2'-4 1/2"	4 1/2 x 5/8 x 2'-4 1/2"	C	11/16	1/16	1/2	32	3	3 1/2	2 1/4	-	6 1/2
170 to 170	A	19 1/2 x 5/8 x 2'-7"	48	-	C	11 x 1/2 x 2'-11 1/2"	4 1/2 x 5/8 x 2'-11 1/2"	-	-	-	-	40	4	3 1/2	2 1/4	-	6 1/2
170 to 182	A	19 1/2 x 5/8 x 2'-7"	48	-	C	11 x 1/2 x 2'-11 1/2"	4 1/2 x 5/8 x 2'-11 1/2"	C	1/16	1/16	3/16	40	4	3 1/2	2 1/4	-	6 1/2
170 to 194	A	19 1/2 x 5/8 x 2'-7"	48	1/16	C	11 x 1/2 x 2'-11 1/2"	4 1/2 x 5/8 x 2'-11 1/2"	C	3/16	3/16	5/16	40	4	3 1/2	2 1/4	-	6 1/2
170 to 230	A	19 1/2 x 5/8 x 2'-7"	48	1/16	B	11 x 1/2 x 2'-11 1/2"	4 1/2 x 5/8 x 2'-11 1/2"	B	1/16	1/16	1/4	40	4	3 1/2	2 1/4	-	6 1/2
170 to 245	A	19 1/2 x 5/8 x 2'-7"	48	1/16	B	11 x 1/2 x 2'-11 1/2"	4 1/2 x 5/8 x 2'-11 1/2"	B	1/4	3/8	1/8	40	4	3 1/2	2 1/4	-	6 1/2
170 to 260	A	19 1/2 x 5/8 x 2'-7"	48	1/16	B	11 x 1/2 x 2'-11 1/2"	4 1/2 x 5/8 x 2'-11 1/2"	A	5/16	1/4	1/16	40	4	3 1/2	2 1/4	-	6 1/2
170 to 280	A	19 1/2 x 5/8 x 2'-7"	48	1/8	B	11 x 1/2 x 2'-11 1/2"	4 1/2 x 5/8 x 2'-11 1/2"	A	1/2	1/8	3/8	40	4	3 1/2	2 1/4	-	6 1/2
170 to 300	A	19 1/2 x 5/8 x 2'-7"	48	1/8	B	11 x 1/2 x 2'-11 1/2"	4 1/2 x 5/8 x 2'-11 1/2"	A	9/16	-	9/16	40	4	3 1/2	2 1/4	-	6 1/2
182 to 182	A	19 1/2 x 5/8 x 2'-7"	48	-	C	11 x 3/8 x 2'-11 1/2"	4 1/2 x 11/16 x 2'-11 1/2"	-	-	-	-	40	4	3 1/2	2 1/4	-	6 1/2
182 to 194	A	19 1/2 x 5/8 x 2'-7"	48	-	C	11 x 3/8 x 2'-11 1/2"	4 1/2 x 11/16 x 2'-11 1/2"	C	1/16	1/16	3/16	40	4	3 1/2	2 1/4	-	6 1/2
182 to 230	A	19 1/2 x 5/8 x 2'-7"	48	-	B	11 x 3/8 x 2'-11 1/2"	4 1/2 x 11/16 x 2'-11 1/2"	B	1/16	1/2	1/16	40	4	3 1/2	2 1/4	-	6 1/2
182 to 245	A	19 1/2 x 5/8 x 2'-7"	48	1/16	B	11 x 3/8 x 2'-11 1/2"	4 1/2 x 11/16 x 2'-11 1/2"	B	9/16	7/16	1/4	40	4	3 1/2	2 1/4	-	6 1/2
182 to 260	A	19 1/2 x 3/8 x 2'-7"	48	1/16	B	11 x 3/8 x 2'-11 1/2"	4 1/2 x 11/16 x 2'-11 1/2"	B	1/4	5/16	5/16	40	4	3 1/2	2 1/4	-	6 1/2
182 to 280	A	19 1/2 x 5/8 x 2'-7"	48	1/16	B	11 x 3/8 x 2'-11 1/2"	4 1/2 x 11/16 x 2'-11 1/2"	A	5/8	3/16	3/8	40	4	3 1/2	2 1/4	-	6 1/2
182 to 300	A	19 1/2 x 5/8 x 2'-7"	48	1/8	B	11 x 3/8 x 2'-11 1/2"	4 1/2 x 11/16 x 2'-11 1/2"	A	1/2	1/8	3/8	40	4	3 1/2	2 1/4	-	6 1/2
194 to 194	A	19 1/2 x 5/8 x 2'-7"	54	-	C	11 x 5/8 x 2'-11 1/2"	4 1/2 x 3/4 x 2'-11 1/2"	-	-	-	-	40	4	3 1/2	2 1/4	-	6 1/2
194 to 230	A	19 1/2 x 5/8 x 2'-7"	54	-	B	11 x 5/8 x 2'-11 1/2"	4 1/2 x 3/4 x 2'-11 1/2"	B	-	5/8	5/8	40	4	3 1/2	2 1/4	-	6 1/2
194 to 245	A	19 1/2 x 5/8 x 2'-7"	54	-	B	11 x 5/8 x 2'-11 1/2"	4 1/2 x 3/4 x 2'-11 1/2"	B	1/16	1/2	7/16	40	4	3 1/2	2 1/4	-	6 1/2
194 to 260	A	19 1/2 x 5/8 x 2'-7"	54	1/16	B	11 x 5/8 x 2'-11 1/2"	4 1/2 x 3/4 x 2'-11 1/2"	B	3/16	7/16	1/4	40	4	3 1/2	2 1/4	-	6 1/2
194 to 280	A	19 1/2 x 7/8 x 2'-7"	54	1/16	B	11 x 5/8 x 2'-11 1/2"	4 1/2 x 3/4 x 2'-11 1/2"	A	5/16	5/16	-	40	4	3 1/2	2 1/4	-	6 1/2
194 to 300	A	19 1/2 x 7/8 x 2'-7"	54	1/16	B	11 x 5/8 x 2'-11 1/2"	4 1/2 x 3/4 x 2'-11 1/2"	A	3/16	3/16	1/4	40	4	3 1/2	2 1/4	-	6 1/2
230 to 230	A	19 1/2 x 5/8 x 2'-7"	54	-	A	16 x 3/8 x 5'-0"	6 1/2 x 5/8 x 5'-0"	-	-	-	-	64	7	3 3/4	1 3/4	3	6 1/2
230 to 245	A	19 1/2 x 5/8 x 2'-7"	54	-	A	16 x 3/8 x 5'-0"	6 1/2 x 5/8 x 5'-0"	C	1/16	1/16	3/16	64	7	3 3/4	1 3/4	3	6 1/2
230 to 260	A	19 1/2 x 5/8 x 2'-7"	54	1/16	A	16 x 3/8 x 5'-0"	6 1/2 x 5/8 x 5'-0"	C	3/16	1/16	1/8	64	7	3 3/4	1 3/4	3	6 1/2
230 to 280	A	19 1/2 x 5/8 x 2'-7"	54	1/16	A	16 x 3/8 x 5'-0"	6 1/2 x 5/8 x 5'-0"	C	3/16	3/16	1/8	64	7	3 3/4	1 3/4	3	6 1/2
230 to 300	A	19 1/2 x 5/8 x 2'-7"	54	1/16	A	16 x 3/8 x 5'-0"	6 1/2 x 5/8 x 5'-0"	C	1/16	1/16	13/16	64	7	3 3/4	1 3/4	3	6 1/2
245 to 245	A	19 1/2 x 5/8 x 2'-7"	54	-	A	16 x 3/8 x 5'-0"	6 1/2 x 11/16 x 5'-0"	-	-	-	-	64	7	3 3/4	1 3/4	3	6 1/2
245 to 260	A	19 1/2 x 7/8 x 2'-7"	54	-	A	16 x 3/8 x 5'-0"	6 1/2 x 11/16 x 5'-0"	C	1/16	1/16	3/16	64	7	3 3/4	1 3/4	3	6 1/2
245 to 280	A	19 1/2 x 5/8 x 2'-7"	54	1/16	A	16 x 3/8 x 5'-0"	6 1/2 x 11/16 x 5'-0"	C	1/4	1/4	1/16	64	7	3 3/4	1 3/4	3	6 1/2
245 to 300	A	19 1/2 x 5/8 x 2'-7"	54	1/16	A	16 x 3/8 x 5'-0"	6 1/2 x 11/16 x 5'-0"	C	5/16	3/16	11/16	64	7	3 3/4	1 3/4	3	6 1/2
260 to 260	A	19 1/2 x 7/8 x 2'-7"	60	-	A	16 x 3/8 x 5'-0"	6 1/2 x 3/4 x 5'-0"	-	-	-	-	64	7	3 3/4	1 3/4	3	6 1/2
260 to 280	A	19 1/2 x 7/8 x 2'-7"	60	-	A	16 x 3/8 x 5'-0"	6 1/2 x 3/4 x 5'-0"	C	1/8	1/8	1/4	64	7	3 3/4	1 3/4	3	6 1/2
260 to 300	A	19 1/2 x 5/8 x 2'-7"	60	1/16	A	16 x 3/8 x 5'-0"	6 1/2 x 3/4 x 5'-0"	C	1/4	1/4	1/2	64	7	3 3/4	1 3/4	3	6 1/2
280 to 280	A	19 1/2 x 7/8 x 2'-7"	60	-	A	16 x 11/16 x 6'-3"	6 1/2 x 13/16 x 6'-3"	-	-	-	-	80	9	3 3/4	1 3/4	3	6 1/2
280 to 300	A	19 1/2 x 7/8 x 2'-7"	60	-	A	16 x 11/16 x 6'-3"	6 1/2 x 13/16 x 6'-3"	C	1/8	1/8	1/4	80	9	3 3/4	1 3/4	3	6 1/2
300 to 300	A	19 1/2 x 7/8 x 2'-7"	60	-	A	16 x 3/4 x 6'-3"	6 1/2 x 3/4 x 6'-3"	-	-	-	-	80	9	3 3/4	1 3/4	3	6 1/2

*FILLS are based on the nominal member sizes being spliced; however, in the final shop assembly, fills shall be furnished to the nearest 1/16 inch in thickness based on the actual measured sizes of the members being spliced. Drawing together of splice plates over material that varies by more than 1/16 inch in thickness at the centerline of the splice will not be permitted.

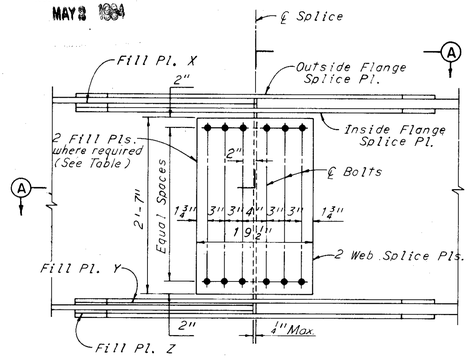

BEAM SPLICE DETAIL 1
FLANGE SPLICE TYPE A
FLANGE FILL PLATES TYPE A
WEB SPLICE TYPE A

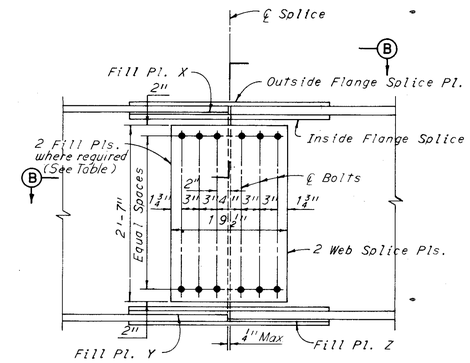

BEAM SPLICE DETAIL 2
FLANGE SPLICE TYPE B
FLANGE FILL PLATE TYPE B
WEB SPLICE TYPE A

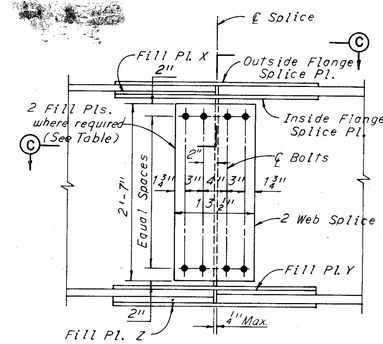

BEAM SPLICE DETAIL 3
FLANGE SPLICE TYPE C
FLANGE FILL PLATES TYPE C
WEB SPLICE TYPE B

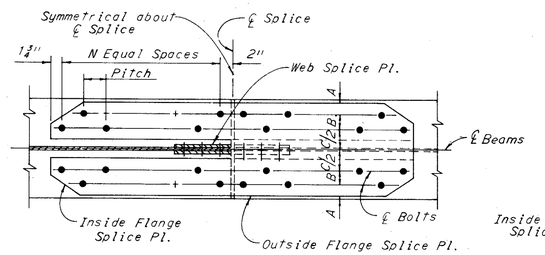

SECTION A-A

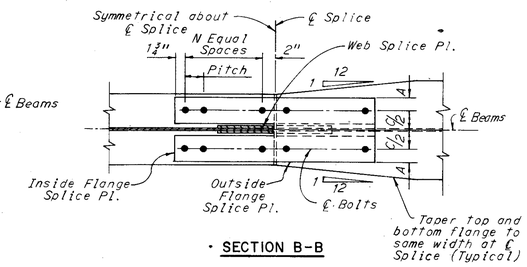

SECTION B-B

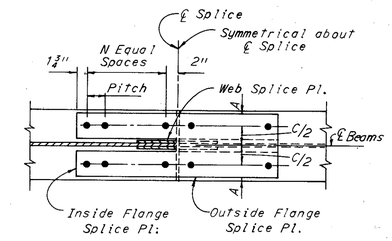

SECTION C-C

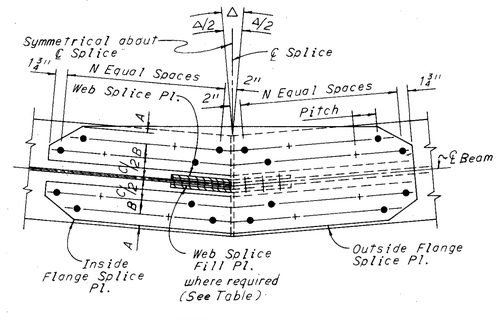

SECTION A-A
(Showing Beam Splice at Bend Point)

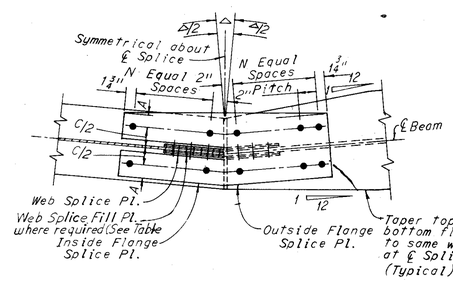

SECTION B-B
(Showing Beam Splice at Bend Point)

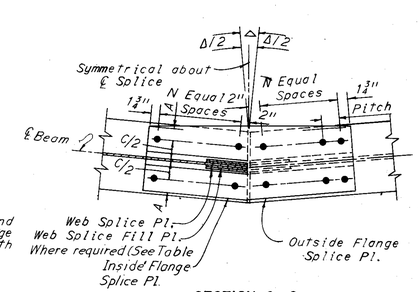

SECTION C-C
(Showing Beam Splice at Bend Point)

Note: All splices shall be made with 1" ϕ High Strength Bolts. Bolts shall be placed with their heads on the outside face of the exterior girders and on the bottoms of flange plates.

*Beam Splice located at Bend Point
The beams change direction at the centerline of field splice. Specially cut flange splice plates and bent web splice plates will be required. The top splice plate on the top flange and the bottom splice plate on the bottom flange shall be cut without re-entrant corners.

H.N.T.B. BR. NO. 7

HOWARD, NEEDLES, TAMMEN & BERGENDOFF
CONSULTING ENGINEERS
KANSAS CITY CLEVELAND NEW YORK

BEAM FIELD SPLICE DETAILS

CUYAHOGA COUNTY OHIO

DRAWN J.K.H.	TRACED	CHECKED C.A.B.	REVIEWED W.F.	REVISED
DATE 10-5-64	DATE	DATE 10-20-64	DATE 5-5-66	SHEET 269

MARK	NO.	LENGTH	TYPE	SER. INCR.	WEIGHT (LBS.)
WEST ABUTMENT					
AW401	35	3'-5"	105		80
AW501	16	37'-9"	Str.		630
AW502	30	6'-10"	105		214
AW503	22	12'-2"	109		279
AW504	22	5'-7"	110		128
AW601	32	17'-9"	109		853
AW602	12	12'-3"	109		221
AW603	11	5'-6"	Str.		91
AW604	3	6'-6"	Str.		29
AW605	60	6'-8"	104		601
AW606	7	5'-9"	Str.		60
AW607	7	6'-9"	Str.		71
AW608	29	17'-3"	112		751
AW609	8	7'-0"	Str.		84
AW610	31	5'-7"	104		260
AW611	27	9'-0"	Str.		365
AW612	3	11'-8"	124		53
AW613	2	7'-6"	Str.		23
AW614	2	9'-3"	Str.		28
AW615	2	8'-3"	Str.		25
AW616	4	15'-3"	Str.		92
AW617	4	13'-6"	Str.		81
AW618	4	3'-9"	Str.		23
AW619	4	4'-6"	Str.		27
AW620	20	3'-3"	Str.		98
AW621	4	8'-4"	108		50
AW622	2	15'-3"	Str.		46
AW623	1 Ser. 3	14'-3" / 15'-3"	Str.	6"	66
AW624	1 Ser. 4	14'-3" / 15'-3"	Str.	4"	89
AW625	2	15'-6"	Str.		47
AW626	1 Ser. 3	15'-6" / 16'-6"	Str.	6"	72
AW627	1 Ser. 4	15'-6" / 16'-6"	Str.	4"	96
AW628	3	11'-3"	108		51
AW801	8	38'-9"	Str.		828
AW802	2	16'-7"	124		89
AW803	6	6'-3"	Str.		100
AW804	6	7'-0"	Str.		112
AW805	2	14'-1"	108		75
		TOTAL WEIGHT =			6,888
EAST ABUTMENT					
AE401	35	3'-5"	105		80
AE501	16	37'-9"	Str.		630
AE502	30	6'-10"	105		214
AE503	22	12'-2"	109		279
AE504	22	5'-7"	110		128
AE601	32	17'-9"	109		853
AE602	12	12'-3"	109		221
AE603	11	5'-6"	Str.		91
AE604	3	6'-6"	Str.		29
AE605	60	6'-8"	104		601
AE606	7	5'-9"	Str.		60
AE607	7	6'-9"	Str.		71
AE608	29	17'-3"	112		751
AE609	8	7'-0"	Str.		84
AE610	31	5'-7"	104		260
AE611	27	9'-0"	Str.		365
AE612	3	11'-8"	124		53
AE613	2	7'-6"	Str.		23
AE614	2	9'-3"	Str.		28
AE615	2	8'-3"	Str.		25
AE616	4	15'-3"	Str.		92
AE617	4	13'-6"	Str.		81
AE618	4	3'-9"	Str.		23
AE619	4	4'-6"	Str.		27
AE620	20	3'-3"	Str.		98
AE621	4	8'-4"	108		50
AE622	2	15'-3"	Str.		46
AE623	1 Ser. 3	14'-3" / 15'-3"	Str.	6"	66
AE624	1 Ser. 4	14'-3" / 15'-3"	Str.	4"	89
AE625	2	15'-6"	Str.		47
AE626	1 Ser. 3	15'-6" / 16'-6"	Str.	6"	72
AE627	1 Ser. 4	15'-6" / 16'-6"	Str.	4"	96
AE628	3	11'-3"	108		51

MARK	NO	LENGTH	TYPE	SER. INCR.	WEIGHT (LBS.)
AE801	8	38'-9"	Str.		828
AE802	2	16'-7"	124		89
AE803	6	6'-3"	Str.		100
AE804	6	7'-0"	Str.		112
AE805	2	14'-1"	108		75
		TOTAL WEIGHT =			6,888
PIER 1					
PA401	3	14'-1"	150		793
PA501	16	12'-2"	109		203
PA502	29	4'-7"	105		139
PA503	2	4'-5"	105		9
PA504	2	3'-9"	105		8
PA601	8	7'-11"	144		95
PA602	2	33'-6"	Str.		101
PA801	60	10'-10"	100		1,735
PA1001	30	7'-1"	104		914
PA1002	30	17'-3"	Str.		2,227
PA1101	4	33'-6"	Str.		712
PA1102	4	34'-6"	Str.		733
PA1103	6	10'-9"	Str.		343
PA1104	2	14'-0"	Str.		149
PA1105	8	10'-10"	123		460
		TOTAL WEIGHT =			8,621
PIER 2					
PB401	3	11'-10"	150		675
PB501	16	12'-2"	109		203
PB502	29	4'-7"	105		139
PB503	2	4'-5"	105		9
PB504	2	3'-9"	105		8
PB601	8	7'-11"	144		95
PB602	2	33'-6"	Str.		101
PB801	64	10'-10"	100		1,891
PB1001	10	7'-1"	104		305
PB1002	10	15'-0"	Str.		645
PB1101	4	33'-6"	Str.		712
PB1102	4	34'-6"	Str.		733
PB1103	6	10'-9"	Str.		343
PB1104	2	14'-0"	Str.		149
PB1105	8	10'-10"	123		460
PB1106	24	15'-0"	Str.		1,913
PB1107	24	7'-6"	104		956
		TOTAL WEIGHT =			9,297
PIER 3					
PC401	3	13'-9"	150		774
PC501	16	12'-2"	109		203
PC502	29	4'-7"	105		139
PC503	2	4'-5"	105		9
PC504	2	3'-9"	105		8
PC601	8	7'-11"	144		95
PC602	2	33'-6"	Str.		101
PC801	60	10'-10"	100		1,735
PC1001	30	7'-1"	104		914
PC1002	30	17'-0"	Str.		2,195
PC1101	4	33'-6"	Str.		712
PC1102	4	34'-6"	Str.		733
PC1103	6	10'-9"	Str.		343
PC1104	2	14'-0"	Str.		149
PC1105	8	10'-10"	123		460
		TOTAL WEIGHT =			8,570

MARK	NO.	LENGTH	TYPE	SER INCR.	WEIGHT (LBS.)
SUPERSTRUCTURE					
S501	531	39'-10"	100		22,061
S502	356	7'-8"	156		2,847
S503	356	5'-7"	110		2,073
S601	531	38'-9"	Str.		30,906
S602	568	37'-9"	Str.		32,206
S603	84	28'-6"	Str.		3,596
		TOTAL WEIGHT =			93,689

SPIRAL REINFORCEMENT NOTE:

The "Length" shown in the reinforcement schedule for the spiral bars is the distance from the top of the footing to the bottom of the pier cap.

Four steel channels, tee or angle spacers, weighing approximately 0.68 lbs. per linear foot of spacer, shall be provided for each spiral unit. They shall be equally spaced along the periphery of the coil. The number of pounds of these spacers, based on 0.68 lbs. per linear foot will be paid for as reinforcing steel and is included in the tabulated quantity of spiral bars.

Spiral reinforcing bars shall not have deformations but shall in other respects conform to Item 509.

FED. RD. DIVISION	STATE	PROJECT	
2	OHIO		

270 / 316

CUYAHOGA COUNTY
CUY-77-2.04

MAY 2, 1967

BENDING DIAGRAMS

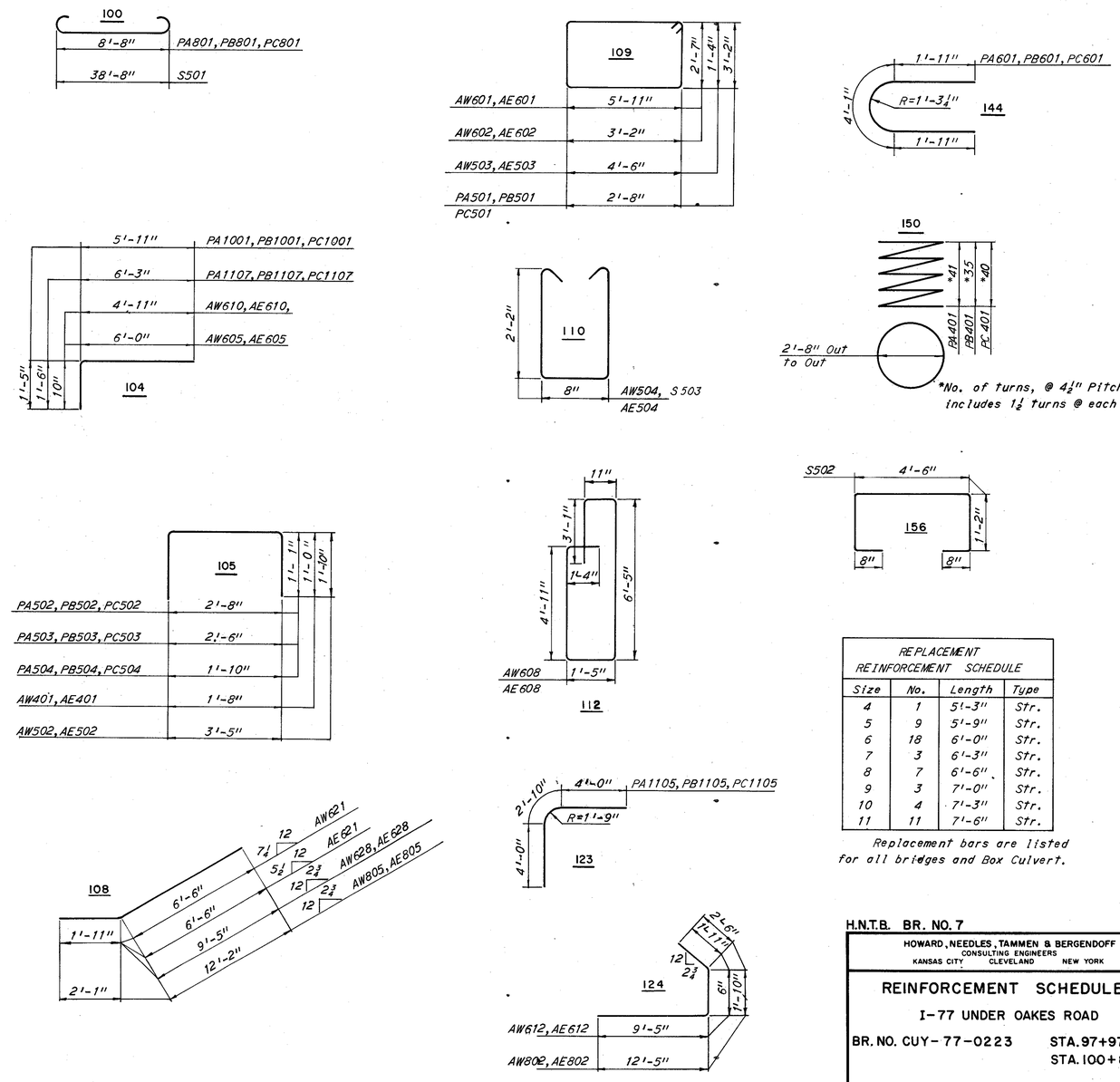

REPLACEMENT REINFORCEMENT SCHEDULE			
Size	No.	Length	Type
4	1	5'-3"	Str.
5	9	5'-9"	Str.
6	18	6'-0"	Str.
7	3	6'-3"	Str.
8	7	6'-6"	Str.
9	3	7'-0"	Str.
10	4	7'-3"	Str.
11	11	7'-6"	Str.

Replacement bars are listed for all bridges and Box Culvert.

H.N.T.B. BR. NO. 7

HOWARD, NEEDLES, TAMMEN & BERGENDOFF
CONSULTING ENGINEERS
KANSAS CITY CLEVELAND NEW YORK

REINFORCEMENT SCHEDULE

I-77 UNDER OAKES ROAD

BR. NO. CUY-77-0223 STA. 97+97.13 TO STA. 100+87.75

CUYAHOGA CO. OHIO

DRAWN C.P.	TRACED	CHECKED CHB	REVIEWED WC	REVISED
DATE 6-28-65	DATE	DATE 6-29-65	DATE 5-5-66	SHEET 270

MAY 4 1964

FED. RD. DIVISION	STATE	PROJECT	
2	OHIO		

297 / 316

CUYAHOGA COUNTY
CUY-77-2.04

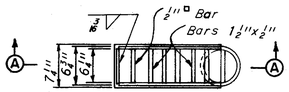

PLAN

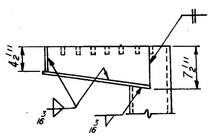

ELEVATION

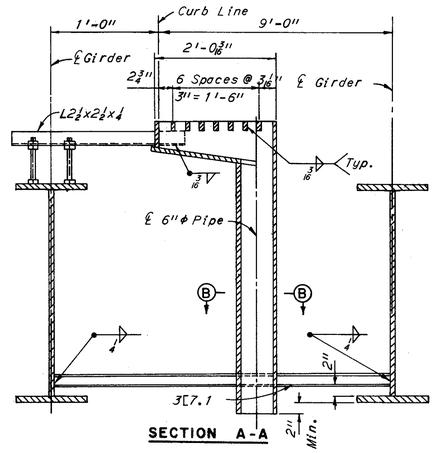

SECTION A-A

Br. No. 10

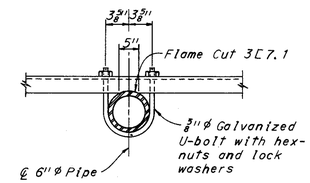

SECTION B-B

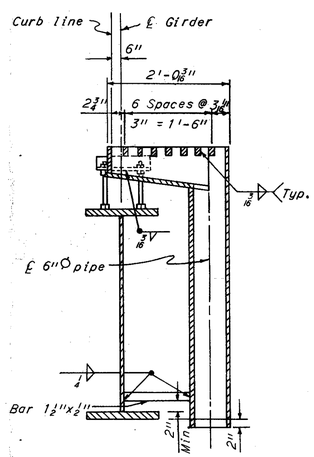

SECTION A-A

Br. No. 8

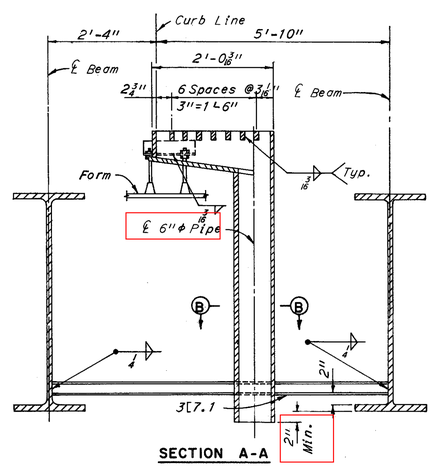

SECTION A-A

Br. No. 7

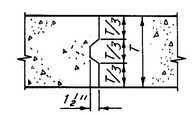

T = Slab Thickness

OPTIONAL TRANSVERSE SLAB CONSTRUCTION JOINT

Notes:
For scupper locations see Framing Plans.
For Scupper Details not shown see Ohio Standard Drawing SD-1-65, sheet 2 of 3.
Scuppers, including two support angles 2 1/2x2 1/2x1/4, pipe, supports and accessories shall be included for payment with "Item 518, Scuppers."

SCUPPER DETAILS

Note. Scuppers are to be made from 3/8" steel plate except as shown.

H.N.T.B. BR. NOS. 7, 8 & 10

HOWARD, NEEDLES, TAMMEN & BERGENDOFF
CONSULTING ENGINEERS
KANSAS CITY CLEVELAND NEW YORK

SUPERSTRUCTURE AND DRAINAGE DETAILS

CUYAHOGA COUNTY OHIO

DRAWN L.J.G.	TRACED	CHECKED JMC	REVIEWED WF	REVISED
DATE 8-16-65	DATE	DATE 8-25-65	DATE 5-5-66	SHEET 297

MICROFILMED
MAY 4 1984

FED. RD. DIVISION	STATE	PROJECT	
2	OHIO		

298
316

CUYAHOGA COUNTY
CUY-77-2.04

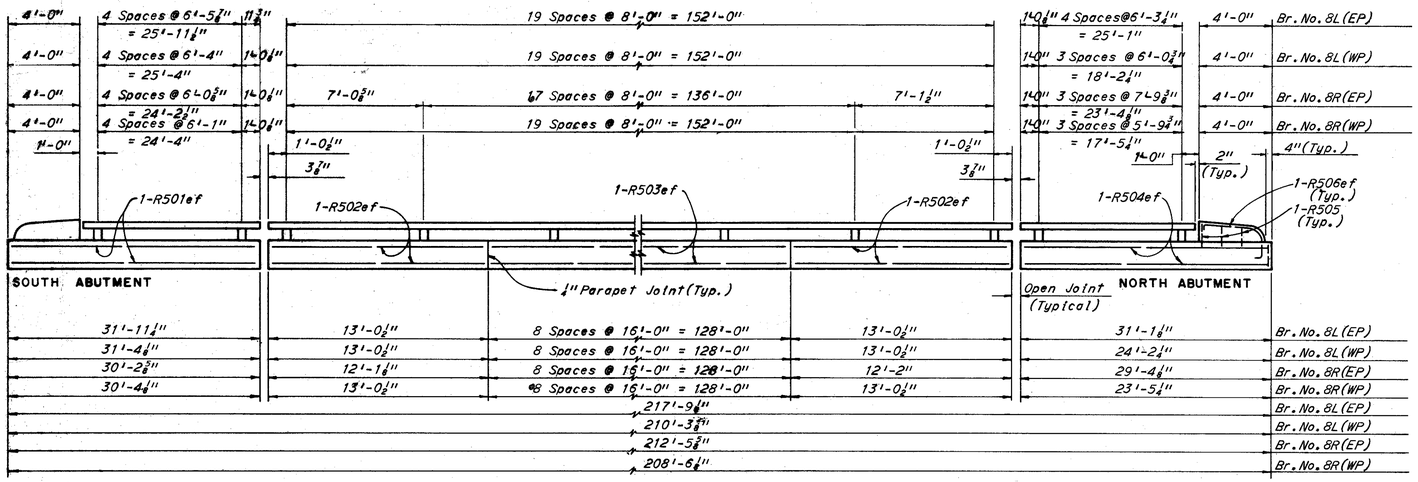

TYPE 1 RAILING - BRIDGE NO. 8L AND 8R

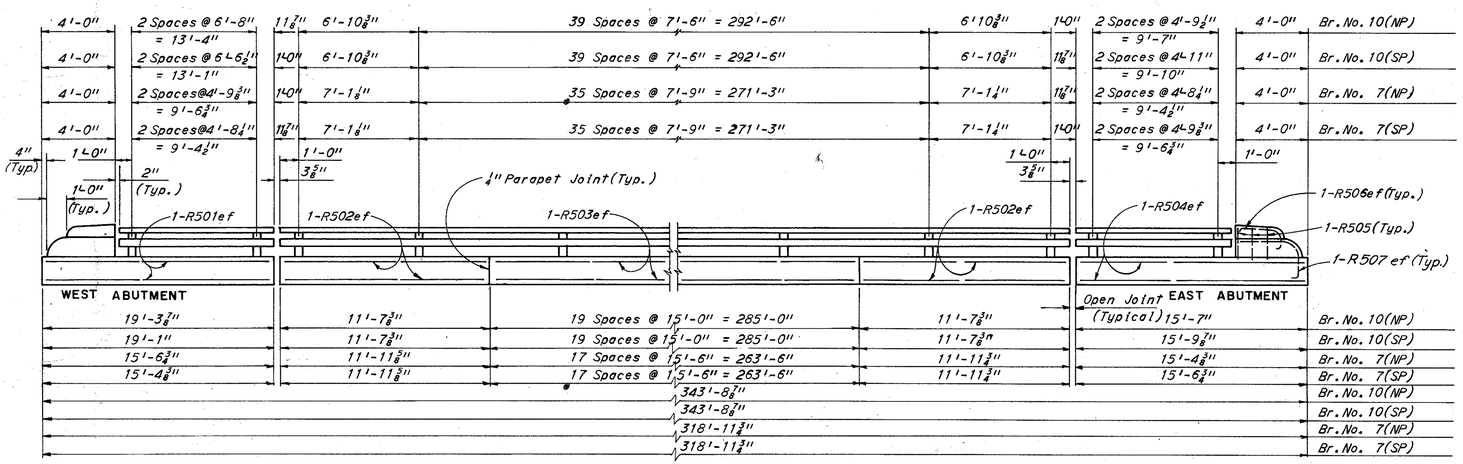

TYPE 2 RAILING - BRIDGES NO. 7 AND 10

BENDING DIAGRAMS

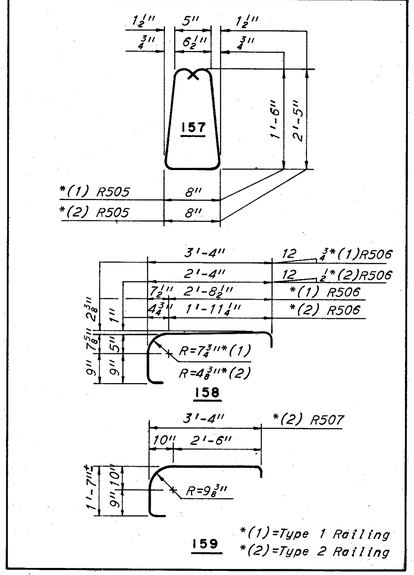

RAILING NOTE:

Payment for railing shall be made at the contract unit price bid for "Item 517." Pay length shall be the overall length of the parapets and shall include cost of anchor bolts, set screws, nuts, shims, etc., necessary to complete the installation of railing. Concrete expansion joint material and longitudinal reinforcing steel in the parapets shall be included with "Item 517" for payment. All other reinforcing steel in the parapets shall be included with "Item 509" for payment.

For additional details and notes see Ohio Standard Drawing BR-1-65, sheets 1 and 2 of 2.

The following abbreviations are used:

NP = North Parapet
SP = South Parapet
WP = West Parapet
EP = East Parapet
ef = each face

REINFORCEMENT SCHEDULE

Mark	TYPE 2 RAILING BRIDGE NO. 7						TYPE 1 RAILING BRIDGE NO. 8L						TYPE 1 RAILING BRIDGE NO. 8R						TYPE 2 RAILING BRIDGE NO. 10					
	North Parapet			South Parapet			East Parapet			West Parapet			East Parapet			West Parapet			North Parapet			South Parapet		
	No.	Length	Type	No.	Length	Type	No.	Length	Type	No.	Length	Type	No.	Length	Type	No.	Length	Type	No.	Length	Type	No.	Length	Type
R501	4	15'-3"	Str.	4	15'-0"	Str.	4	31'-6"	Str.	4	31'-0"	Str.	4	29'-9"	Str.	4	30'-0"	Str.	4	19'-0"	Str.	4	18'-9"	Str.
R502	8	11'-6"	Str.	8	11'-6"	Str.	8	12'-6"	Str.	8	12'-6"	Str.	8	11'-9"	Str.	8	12'-6"	Str.	8	11'-3"	Str.	8	11'-3"	Str.
R503	68	15'-0"	Str.	68	15'-0"	Str.	32	15'-6"	Str.	32	15'-6"	Str.	32	15'-6"	Str.	32	15'-6"	Str.	76	14'-9"	Str.	76	14'-9"	Str.
R504	4	15'-0"	Str.	4	15'-3"	Str.	4	30'-9"	Str.	4	23'-9"	Str.	4	29'-0"	Str.	4	23'-0"	Str.	4	15'-3"	Str.	4	15'-6"	Str.
R505	6	6'-1"	157	6	6'-1"	157	6	4'-2"	157	6	4'-2"	157	6	4'-2"	157	6	4'-2"	157	6	6'-1"	157	6	6'-1"	157
R506	4	4'-2"	158	4	4'-2"	158	4	5'-4"	158	4	5'-4"	158	4	5'-4"	158	4	5'-4"	158	4	4'-2"	158	4	4'-2"	158
R507	4	5'-5"	159	4	5'-5"	159													4	5'-5"	159	4	5'-5"	159

H.N.T.B. BR. NOS. 7,8 & 10

HOWARD, NEEDLES, TAMMEN & BERGENDOFF
CONSULTING ENGINEERS
KANSAS CITY CLEVELAND NEW YORK

RAILINGS

CUYAHOGA COUNTY OHIO

DRAWN V.J.D. DATE 8-31-65	TRACED DATE	CHECKED JEN DATE 9-7-65	REVIEWED WC DATE 5-5-66	REVISED	SHEET 298