N-12

FED. RD. DIVISION	STATE	PROJECT	
2	OHIO	I-77-5(9)153	

1 / 347

CUYAHOGA COUNTY
CUY. -77-6.45

STATE OF OHIO
DEPARTMENT OF HIGHWAYS
CUY-77-6.45

CUYAHOGA COUNTY
CITY OF INDEPENDENCE

LIMITED ACCESS

THIS IMPROVEMENT IS ESPECIALLY DESIGNED FOR THROUGH TRAFFIC AND HAS BEEN DECLARED A LIMITED ACCESS HIGHWAY OR FREEWAY BY ACTION OF THE DIRECTOR OF HIGHWAYS IN ACCORDANCE WITH THE PROVISIONS OF SECTION 5511.02, REVISED CODE OF OHIO.

I-77-5 (9) 153
1967 SPECIFICATIONS

THE STANDARD SPECIFICATIONS OF THE STATE OF OHIO, DEPARTMENT OF HIGHWAYS, INCLUDING CHANGES AND SUPPLEMENTAL SPECIFICATIONS LISTED IN THE PROPOSAL SHALL GOVERN THIS IMPROVEMENT.

THE RIGHT OF WAY FOR THIS IMPROVEMENT WILL BE PROVIDED BY THE STATE OF OHIO.

I HEREBY APPROVE THESE PLANS AND DECLARE THAT THE MAKING OF THIS IMPROVEMENT WILL NOT REQUIRE THE CLOSING OF THE HIGHWAY TO TRAFFIC AND THAT PROVISIONS FOR THE MAINTENANCE AND SAFETY OF TRAFFIC WILL BE AS SET FORTH ON THE PLANS AND ESTIMATES.

APPROVED DATE 10-20-67 — Charles M. Zurick — DIVISION DEPUTY DIRECTOR

APPROVED DATE 11-3-67 — C. H. Altwater — ENGINEER OF BRIDGES

APPROVED DATE 11-6-67 — R. E. Bathen — ENGINEER OF LOCATION AND DESIGN

APPROVED DATE 11-6-67 — R. E. Shultz — DEPUTY DIRECTOR OF DESIGN AND CONSTRUCTION

APPROVED DATE 11-20-67 — D. H. Brand — DEPUTY DIRECTOR OF RIGHT OF WAY

APPROVED DATE 11-20-67 — Thomas M. Major — DEPUTY DIRECTOR OF PLANNING AND PROGRAMMING

APPROVED DATE 11-20-67 — F. W. Wilson — FIRST ASSISTANT DIRECTOR

APPROVED DATE 11-20-67 — P. E. Masheter — DIRECTOR OF HIGHWAYS

CONVENTIONAL SIGNS

PROPERTY LINE — R
EXISTING RIGHT OF WAY
SUBDIVISION LINE
SUBLOT LINE OR EXISTING EASEMENT — Z — Z
ORIGINAL TOWNSHIP LOT LINE
CORPORATION LINE
LIMITED ACCESS LINE — LA
RIGHT OF WAY LINE — R/W
TEMPORARY RIGHT OF WAY — T
SEWER EASEMENT LINE — S — S
SLOPE EASEMENT LINE — SL — SL
CHANNEL EASEMENT — X — X
PARTICIPATION LINE — P — P — P
CENTER LINE
FENCE LINE — x — x
GUARD RAIL (EXISTING)
GUARD RAIL (PROPOSED)
RAILROAD
POWER POLES
TELEPHONE POLES
POWER AND TELEPHONE POLES
LIGHT POLES
TREES (EXISTING)
ELECTRICAL TOWER
WATER LINE — / — /
GAS LINE — G — G
TELEPHONE CONDUIT — T — T
SEWER (EXISTING) — S — S
OIL LINE — o — o
FIRE HYDRANT (EXISTING)
FIRE HYDRANT (PROPOSED)
MANHOLE (EXISTING)
MANHOLE (PROPOSED STORM)
MANHOLE (PROPOSED SANITARY)
CATCH BASIN OR INLET (EXISTING)
CATCH BASIN OR INLET (PROPOSED)

INDEX OF SHEETS

Title Sheet	1	Cross Section Layout	76
Schematic Plan	2,3	Cross Sections, I-77	77-132
Design Designation	3A	Cross Sections, Ramps	133-170
Schematic Geometric Plan and Tables	4-6	Cross Sections, Crossroads	171-178
Typical Sections	7-16	Cross Sections, Frontage Road	178A,B,C,D,E
Superelevation Tables	17	Crossover	179
General Notes	18,19,21	Terminal Details	180-186
Piezometers and Settlement Platforms	20	Miscellaneous Details	187-193,193A,193B,193C
Quantity Calculations	21-28	Structures-20' Span and Under	194-198,198A
General Summary	29-32,32A	Storm Sewer Profiles	199-203
Plan Profile, I-77	33-46	Sanitary Sewer Profiles	204
Plan Profile, Crossroads	47-56,56A,56B	Traffic Control Plans	205-241
Ramp Details	57-61	Lighting Plans	242-251
Ramp Profiles	62-71	Waterwork Plans	53-56,252-270
Intersection Details	72,72A	Structures-Over 20' Span	271-327
Driveway Profiles	73,73A,74,75,75A	Right of Way Plans	328-347A

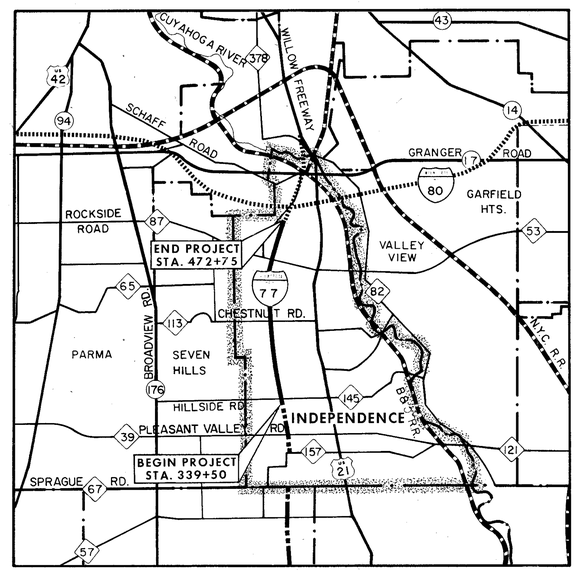

DELIVERY POINT-INDEPENDENCE VIA B & O R.R. — LOCATION MAP — AVERAGE HAUL 2 MILES

SCALE .5 0 1 2 3 MI.

PORTION TO BE IMPROVED
STATE ROADS
OTHER ROADS
FUTURE CONSTRUCTION
UNDER CONSTRUCTION
COUNTY ROADS

SCALE
PLAN 1"=20',50' — PROFILE HOR 1"=20',100'
CROSS SECTIONS 1"=10' — PROFILE VERT 1"=5',10',20'

SUPPLEMENTAL SPECIFICATIONS

NUMBER	DATE	NUMBER	DATE
801	1-1-67	825	1-1-67
806	1-1-67	828	1-1-67
808	1-13-67		
811	1-1-67	1001	3-21-66
815	1-1-67	832	5-25-67
816	8-6-65	931	5-25-67

LINE DATA

BEGIN PROJECT	Sta. 339+50.00
END PROJECT	Sta. 472+75.00
NET LENGTH OF PROJECT	13,325 L.F. or 2.524 Miles
ADD FOR APPROACHES	Sta. 338+56.50 to Sta. 339+50.00 — 93.5 L.F. Sta. 472+75.00 to Sta. 473+50.00 — 75 L.F.
HILLSIDE ROAD	Sta. 85+00.00 to Sta. 99+00.00 = 1,400 L.F.
CHESTNUT ROAD	Sta. 83+50.00 to Sta. 92+25.00 = 875 L.F.
ROCKSIDE ROAD	Sta. 102+70.00 to Sta. 132+40.00 = 2,970 L.F.
FRONTAGE ROAD	Sta. 0+54 to Sta. 17+25 = 1,671 L.F.
NET LENGTH OF WORK	20,409.5 L.F. or 3.865 Miles

STANDARD DRAWINGS

NUMBER	DATE	NUMBER	DATE
BP-1	6-1-65	HL-1	11-1-65
BP-2	1-10-67	HL-2	11-1-65
BP-3	1-10-67	HL-3	11-1-65
BP-4	1-10-67	HL-4	1-1-66
BP-5	6-1-65	HW-3	6-1-65
BP-6	6-1-65	HW-E	6-1-65
BP-7	1-1-66	F-6	10-1-66
CB-2-2-A & B	6-1-65	I-2A	6-1-65
CB-2-3 & 2-4	6-1-65	L-1	6-1-65
CB-3-A	6-1-65	MC-1	10-1-67
CB-4	6-1-65	MC-3	5-1-66
CB-5	6-1-65	MC-4	6-1-65
CB-6	6-1-65	MC-5	6-1-65
F-1	6-1-65	MC-6	6-1-65
F-3	10-1-66	MC-7	3-1-66
F-5	10-1-66	MH-1	6-1-65
FAC1-1	9-15-67	MH-1A	8-1-66
FAC1-2	6-1-65	CB-B	6-1-65
GR-1	1-1-67	AS-1-54	9-10-65
GR-2	1-1-67	BR-1-65 (1 & 2)	11-24-65
GR-2B	2-15-68	RB-1-55	2-2-59
GR-5B	6-1-65	SD-1-65 (1,2 & 3)	11-8-65
GR-6	6-1-65	SP-53	6-30-61

Sheet No. 310, 311, & 314 revised 12-20-68 EBL
Sheet No. 294 revised 5-23-69 EBL

PREPARED AND RECOMMENDED BY

HOWARD NEEDLES TAMMEN & BERGENDOFF — H.G. SOURS
CONSULTING ENGINEERS — ASSOCIATE
KANSAS CITY CLEVELAND NEW YORK — COLUMBUS

Carl L. Erb
CARL L. ERB 00332

STATE OF OHIO — CARL L. ERB, Jr. 18348 — REGISTERED PROFESSIONAL ENGINEER

FILE NO.	CUYAHOGA COUNTY	CUY.—77—6.45
	DATE OF LETTING	196
	CONTRACT NO.	

DEPARTMENT OF TRANSPORTATION
FEDERAL HIGHWAY ADMINISTRATION
BUREAU OF PUBLIC ROADS

APPROVED

DIVISION ENGINEER — DATE

Rev. 3-29-68 — Rev. 11-20-67

FED. RD. DIVISION	STATE	PROJECT	
2	OHIO		

3
347

CUYAHOGA COUNTY
CUY. - 77 - 6.45

SCHEMATIC PLAN

PROPOSED STRUCTURES CUY-77-0837 L & R	
TYPE	Welded steel girder with reinforced concrete deck and substructure.
SPANS	40'-0 7/8", 6'-0 1/8" Cantilever, 80'-3", 5'-11 3/8" Cantilever and 39'-11 3/8" (Measured along ℄ I-77)
ROADWAY Br. 19L	Varies
Br. 19R	53'-0" Face to face parapets with 1'-0" curbs.
LOAD FREQUENCY	CF 2000 (57) Adequate for A.A.S.H.O. Alternate loading
SKEW	5°20'54" Left Forward
WEARING SURFACE	1" Monolithic Concrete
APPROACH SLABS	AS-1-54 (25' long)
ALIGNMENT	1°28'00" Right
SUPERELEVATION	0.048 ft. per ft.

PROPOSED STRUCTURE RAMP F-3	
TYPE	Welded steel girder with reinforced concrete deck and substructure.
SPANS	38'-1 1/2", 6'-0 1/8" Cantilever, 83'-6 1/8", 5'-11 7/8" Cantilever, and 37'-10 7/8" (Measured along ℄ Ramp F-3)
ROADWAY	28'-0" Face to face parapets with 1'-0" curbs.
LOAD FREQUENCY	CF 2000 (57) Adequate for A.A.S.H.O. Alternate loading
SKEW	6°50'15" Left Forward
WEARING SURFACE	1" Monolithic Concrete.
APPROACH SLABS	AS-1-54 (25' long)
ALIGNMENT	2°00'00" Right
SUPERELEVATION	0.033 ft. per ft.

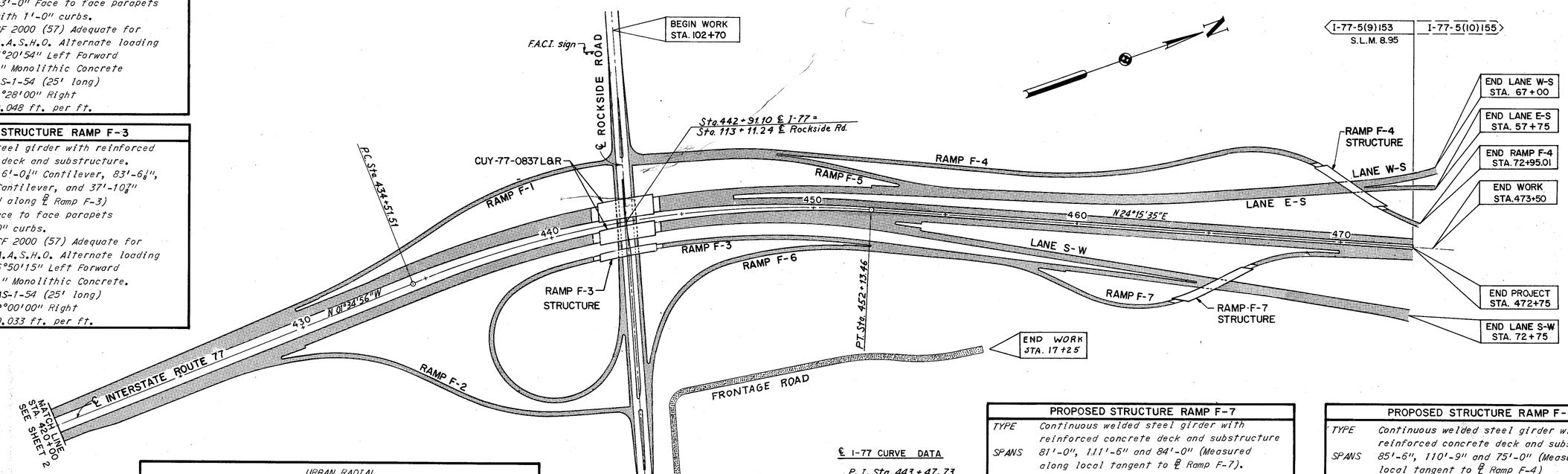

URBAN RADIAL		
Design Designation (1986)	South of Rockside Road	North of Rockside Road
Current A.D.T. (1966)		
Design Year (1986) A.D.T	62,936	37,986
D.H.V.	5,855	3,543
D. (directional distribution)	62% - 38%	62% - 38%
T. (percent B C Trucks)	3%	3%
V. (design speed)	60 mph	60 mph

℄ I-77 CURVE DATA
P.I. Sta. 443+47.73
= 25°50'31"
D = 1°28'00"
R = 3,906.53'
T = 896.22'
L = 1,761.95
E = 101.49'

PROPOSED STRUCTURE RAMP F-7	
TYPE	Continuous welded steel girder with reinforced concrete deck and substructure
SPANS	81'-0", 111'-6" and 84'-0" (Measured along local tangent to ℄ Ramp F-7).
ROADWAY	28'-0" Face to face parapets.
LOAD FREQUENCY	CF 2000(57) Adequate for A.A.S.H.O. Alternate Loading
SKEW	54°19'45" Right Forward
WEARING SURFACE	1" Monolithic Concrete
APPROACH SLABS	AS-1-54 (25' long)
ALIGNMENT	11°30'00" Left, tangent and 11°00'00" Right
SUPERELEVATION	-0.083 ft. per ft. to +0.040 ft. per ft.

PROPOSED STRUCTURE RAMP F-4	
TYPE	Continuous welded steel girder with reinforced concrete deck and substructure
SPANS	85'-6", 110'-9" and 75'-0" (Measured along local tangent to ℄ Ramp F-4)
ROADWAY	28'-0" Face to face parapets.
LOAD FREQUENCY	CF 2000(57) Adequate for A.A.S.H.O. Alternate Loading
SKEW	52°37'15" Left Forward
WEARING SURFACE	1" Monolithic Concrete
APPROACH SLABS	AS-1-54 (25' long)
ALIGNMENT	11°00'00" Right, tangent and 8°00'00" Left
SUPERELEVATION	-0.083 ft. per ft. to +0.60 ft. per ft.

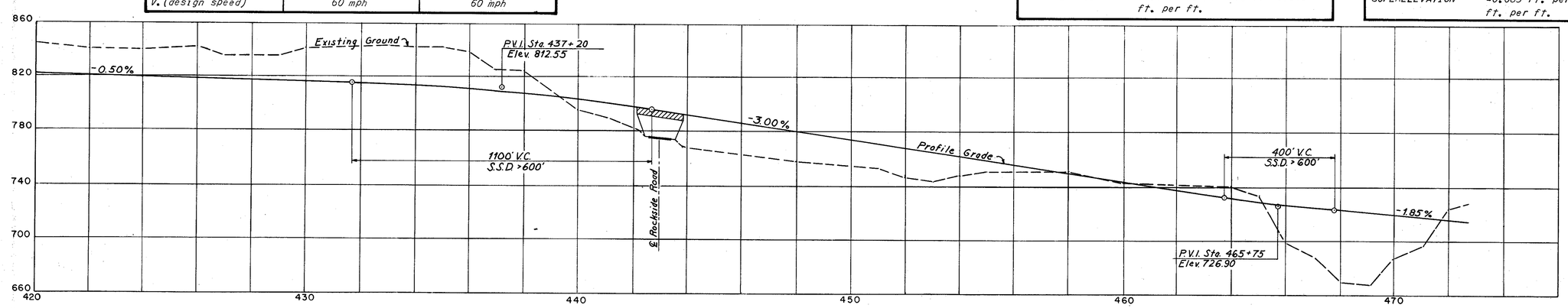

SCALE 1" = 200'
MADE DAG DATE 7-27-66
TRCD. ____ DATE ____
CKD R.J.T. DATE 9-28-67

HOWARD, NEEDLES, TAMMEN & BERGENDOFF
CONSULTING ENGINEERS
KANSAS CITY CLEVELAND NEW YORK

FED. RD. DIVISION	STATE	PROJECT	
2	OHIO		

308
347

CUYAHOGA COUNTY
CUY - 77 - 6.45

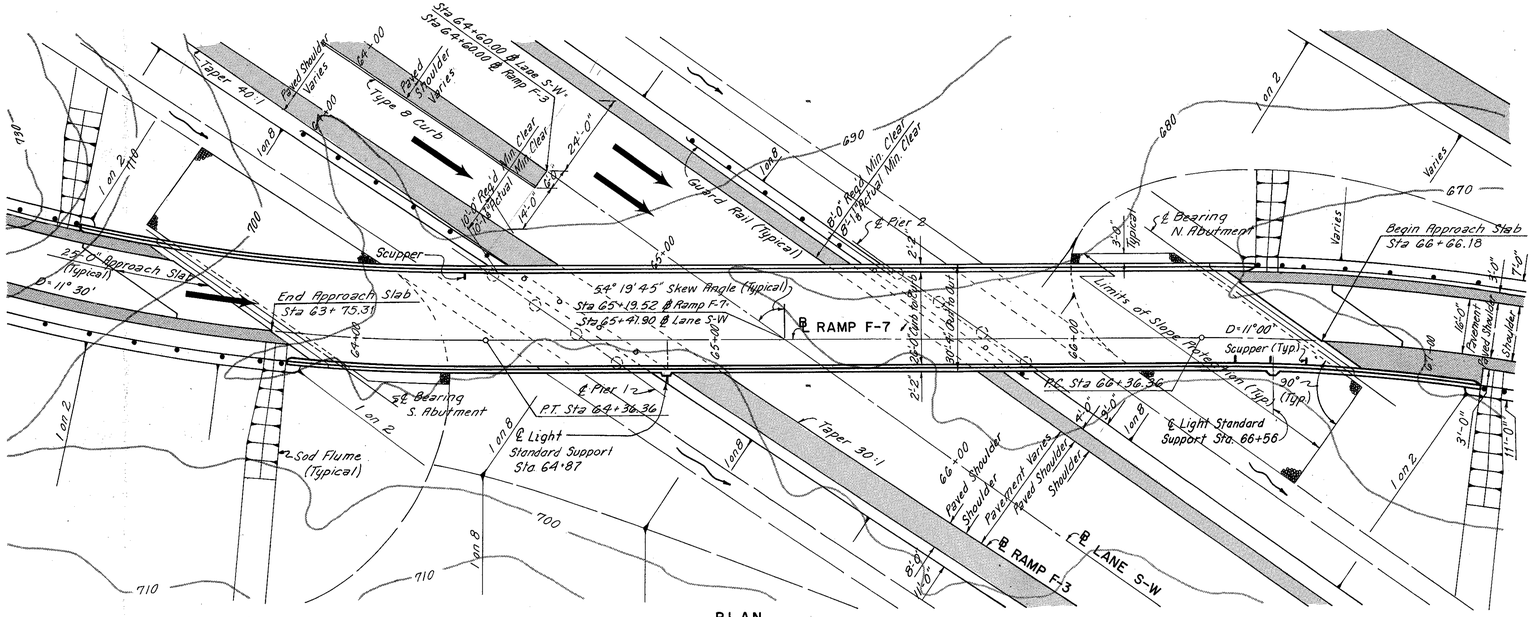

Note: For Light Standard Support details see sheet 327.

PLAN
Scale: 1" = 20'

PROPOSED STRUCTURE

TYPE:	Continuous welded steel girder with reinforced concrete deck and substructure
SPANS:	81'-0", 111'-6" and 84'-0" (Measured along local tangent to ℄ Ramp F-7.)
ROADWAY:	28'-0" Face to face parapets.
LOAD FREQUENCY:	CF2000 (57) Adequate for A.A.S.H.O. alternate loading.
SKEW:	54°19'45" Right Forward
WEARING SURFACE:	1" Monolithic Concrete
APPROACH SLABS:	AS-1-54 (25' long)
ALIGNMENT:	11°30'00" Left, tangent and 11°00'00" Right
SUPERELEVATION:	-0.083 ft./ft. to +0.040 ft./ft.

TRAFFIC DATA: (Ramp F-7)

1986 - 3,758 A.D.T.
432 D.D.H.V.

FOOTING DATA:

All piers and abutments are founded on spread footings with a maximum bearing pressure of 2.5 tons per sq. ft.

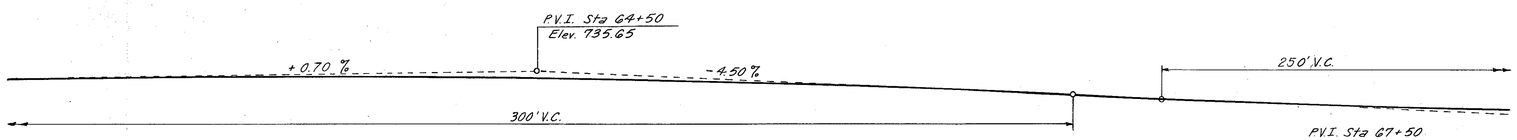

PROFILE

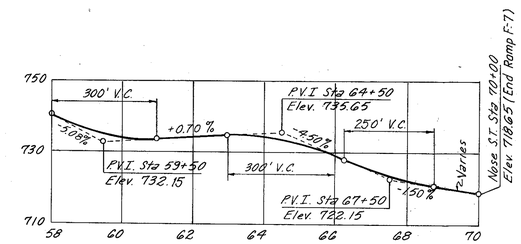

PROFILE - RAMP F-7
Scale: Hor. 1" = 200'
Vert. 1" = 20'

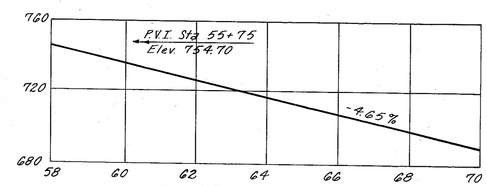

PROFILE - LANE S-W
Scale: Hor. 1" = 200'
Vert. 1" = 40'

* Note
15'-0" Required minimum vertical clearance. Minimum vertical clearance occurs at the south edge of pavement of Ramp F-3 and the outside edge of the west exterior girder of Br. No. 20.

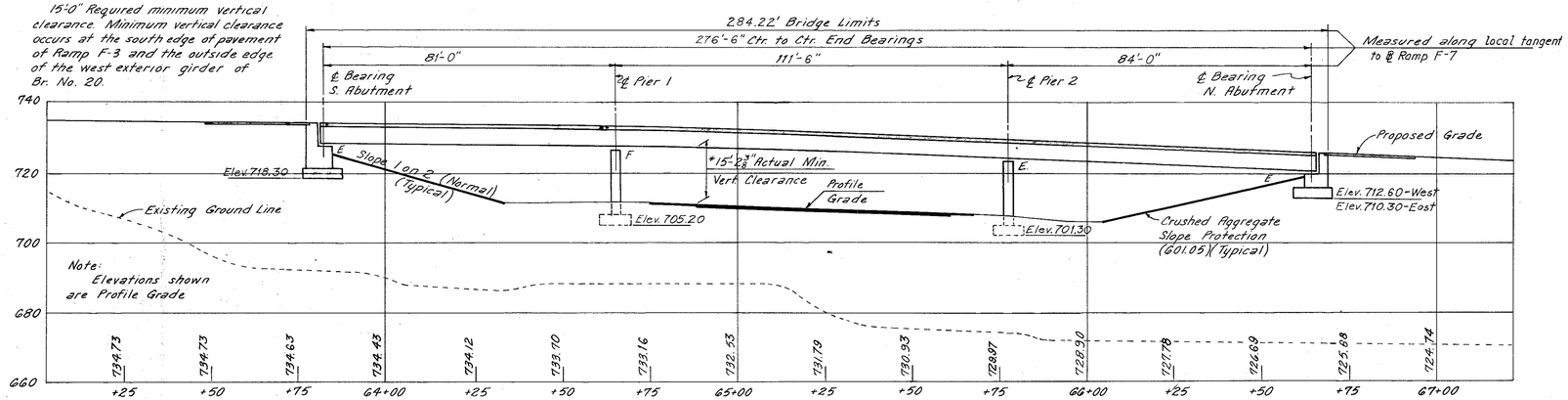

ELEVATION
Scale: 1" = 20'

CURVE DATA - ℄ RAMP F-7

P.I. Sta. 62+28.35	P.I. Sta. 67+18.86
Δ = 51°38'58"	Δ = 18°00'00"
D_c = 11°30'00" Left	D_c = 11°00'00" Right
R = 498.22'	R = 520.87'
T = 241.12'	T = 82.50'
L = 449.13'	L = 163.64'
E = 55.28'	E = 6.52'

H.N.T.B. BR. NO. 20

HOWARD, NEEDLES, TAMMEN & BERGENDOFF
CONSULTING ENGINEERS
KANSAS CITY CLEVELAND NEW YORK

SITE PLAN

RAMP F-7 OVER LANE S-W

STA. 63+75.31 TO
STA. 66+66.18

CUYAHOGA COUNTY OHIO

DRAWN CHB	TRACED	CHECKED LJG	REVIEWED WF	REVISED
DATE 3-10-67	DATE	DATE 3-13-67	DATE 4-14-67	SHEET 308

FED. RD. DIVISION	STATE	PROJECT	
2	OHIO		

309 / 347

CUYAHOGA COUNTY
CUY - 77 - 6.45

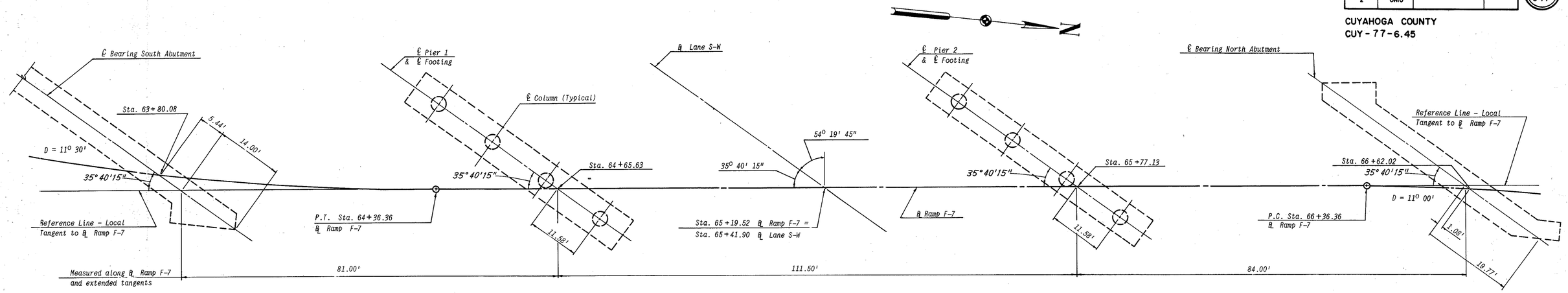

SUBSTRUCTURE LAYOUT DIAGRAM

Scale 1" = 10'

ESTIMATED QUANTITIES

ITEM	TOTAL	UNIT	DESCRIPTION	ABUTMENTS	PIERS	SUPERSTRUCTURE	GENERAL	H.N.T.B. BRIDGE NO. 20	
503	625	Cu. Yd.	Unclassified Excavation	404	221				
509	118,124	Pounds	Reinforcing Steel	16,724	19,912	81,488			
511	293	Cu. Yds.	Class "C" Concrete, Superstructure			293			
511	39	Cu. Yds.	Class "C" Concrete, Pier Columns		39				
511	208	Cu. Yds.	Class "E" Concrete, Abutments (Above Footing)	208					
511	160	Cu. Yds.	Class "E" Concrete, Footings	69	91				
512	33	Lin. Ft.	Premolded Sealing Strip	33					
513	305,000	Pounds	Structural Steel			305,000			
516	17	Sq. Ft.	1" Preformed Expansion Joint Filler (AASHO Specs. M-153)	17					
517	662.39	Lin. Ft.	Railing (Type 1)	84.56		577.83			
518	76	Cu. Yds.	Porous Backfill	76					
518	4	Each	Scuppers, Including Supports (Special)			4			
518	106	Lin. Ft.	6" Helical C.M.P. (Section 707.06) Non-Perforated	106					
518	98	Lin. Ft.	6" Perforated Helical C.M.P. (Section 707.06) including Specials	98					
601	680	Sq. Yds.	Crushed Aggregate Slope Protection	680					
625			See Summary of Electrical Equipment, Sheet 244						
808	293	Units	Water-Reducing, Set-Retarding Admixture			293			
825	1169	Sq. Yds.	Concrete Surface Treatment	70		1099			
828	104	Lin. Ft.	Joint Sealer			104			
832	305,000	Pounds	Field Painting of Structural Steel			305,000			

H.N.T.B. BR. NO. 20

HOWARD, NEEDLES, TAMMEN & BERGENDOFF
CONSULTING ENGINEERS
KANSAS CITY CLEVELAND NEW YORK

SUBSTRUCTURE LAYOUT & ESTIMATED QUANTITIES

RAMP F-7 OVER LANE S-W

STA. 63+75.31 TO
STA. 66+66.18

CUYAHOGA COUNTY OHIO

DRAWN K.T.B. DATE 1-9-67	TRACED D.J. DATE 1-12-67	CHECKED D.S.B. DATE 1-26-67	REVIEWED WF DATE 9-14-67	REVISED
				SHEET 309

FED. RD. DIVISION	STATE	PROJECT	
2	OHIO		

310
347

CUYAHOGA COUNTY
CUY - 77 - 6.45

NOTE: Elevations along backwall are given to top of 8 x 4 x 1 angle of end dam. Curb transition the same for both wingwalls.

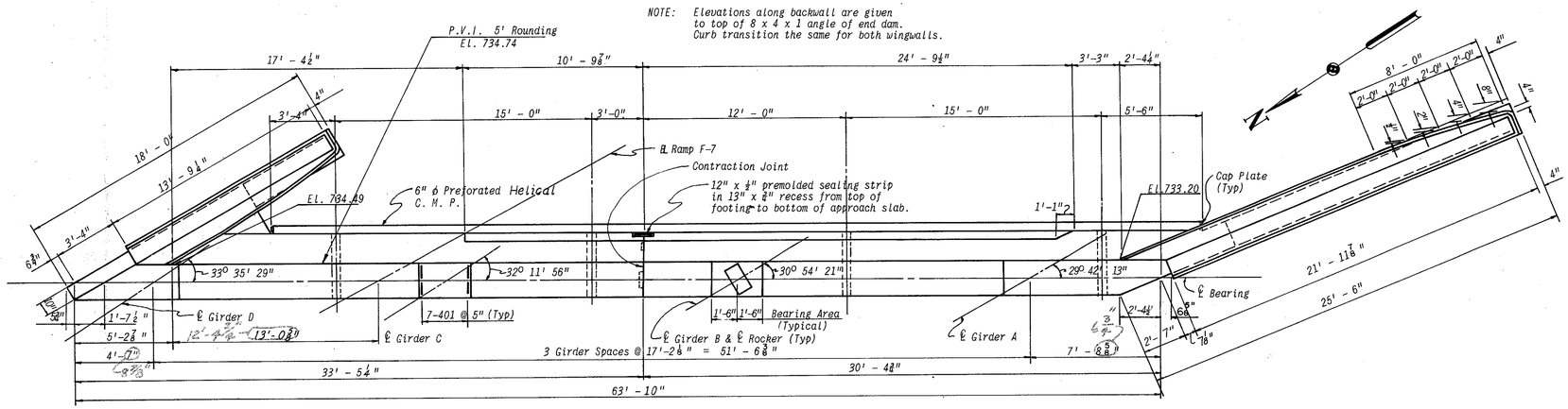

PLAN

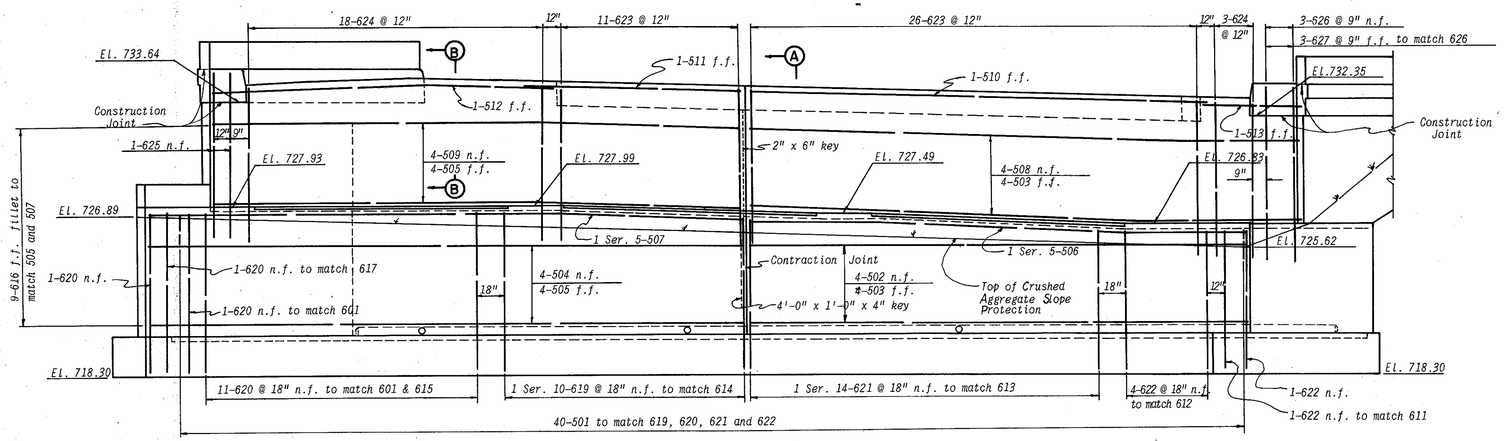

NOTE:
All reinforcing bar marks shall be prefixed A A.

ELEVATION

(Type 1 Railing Not Shown)

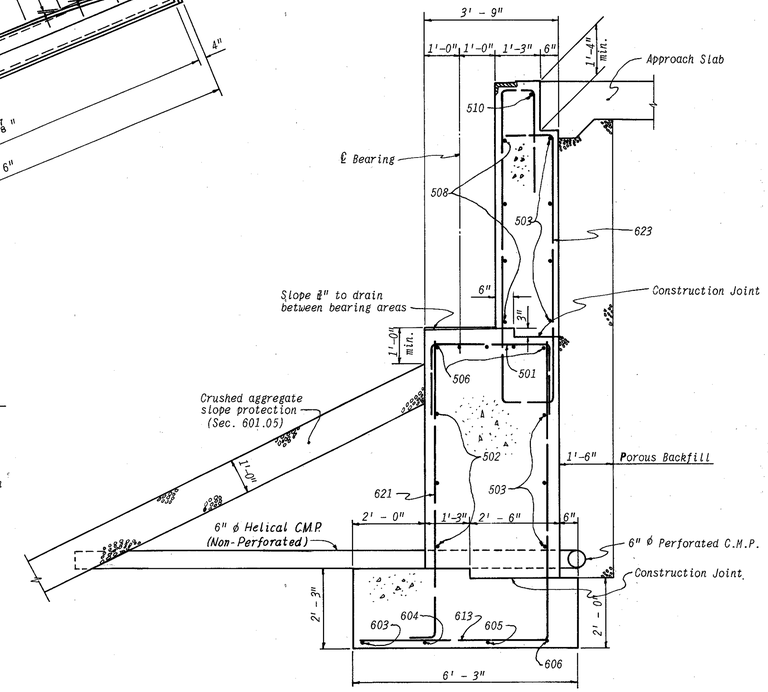

SECTION A-A

NOTES:
For Wingwall details see Sheet 312.
For roadway end dam details see Ohio Standard Drawing SD-1-65 Sheet 1 of 3
The following abbreviations are used:
n.f. = near face
f.f. = far face
For Substructure Layout Diagram, see Sheet 309.

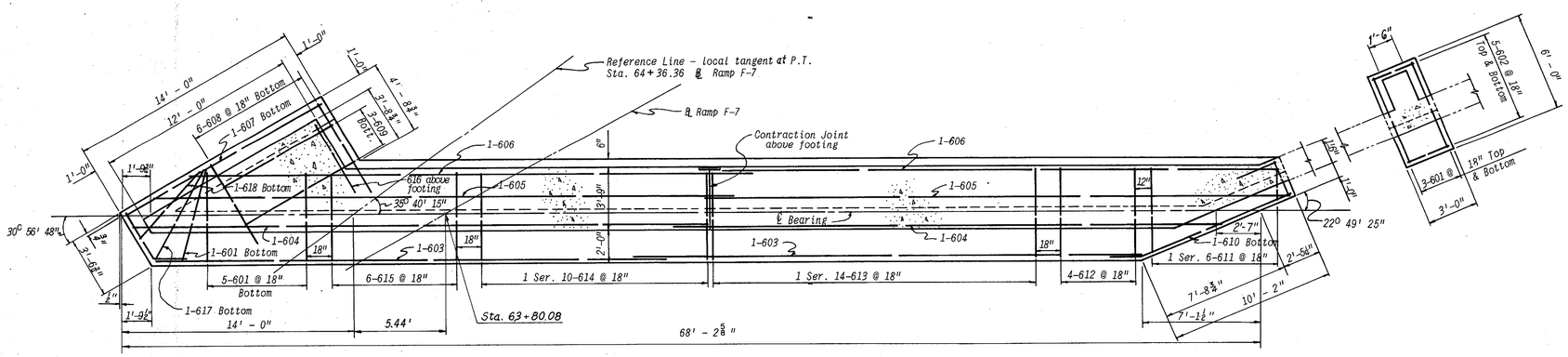

FOOTING PLAN

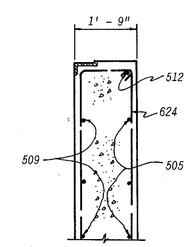

PART SECTION B-B

H.N.T.B. BR. NO. 20

HOWARD, NEEDLES, TAMMEN & BERGENDOFF
CONSULTING ENGINEERS
KANSAS CITY CLEVELAND NEW YORK

SOUTH ABUTMENT

RAMP F-7 OVER LANE S-W

STA. 63+75.31 TO
STA. 66+66.18

CUYAHOGA COUNTY OHIO

DRAWN R.S.	TRACED D.J.	CHECKED D.S.B.	REVIEWED WF	REVISED 12-20-68
DATE 12-28-66	DATE 12-29-66	DATE 12-29-66	DATE 9-14-67	SHEET 310

FED. RD. DIVISION	STATE	PROJECT	
2	OHIO		

311 / 347

CUYAHOGA COUNTY
CUY - 77 - 6.45

NOTE: Elevations along backwall are given to top of 8 x 4 x 1 angle at end dam.
Curb transitions the same for both wingwalls.

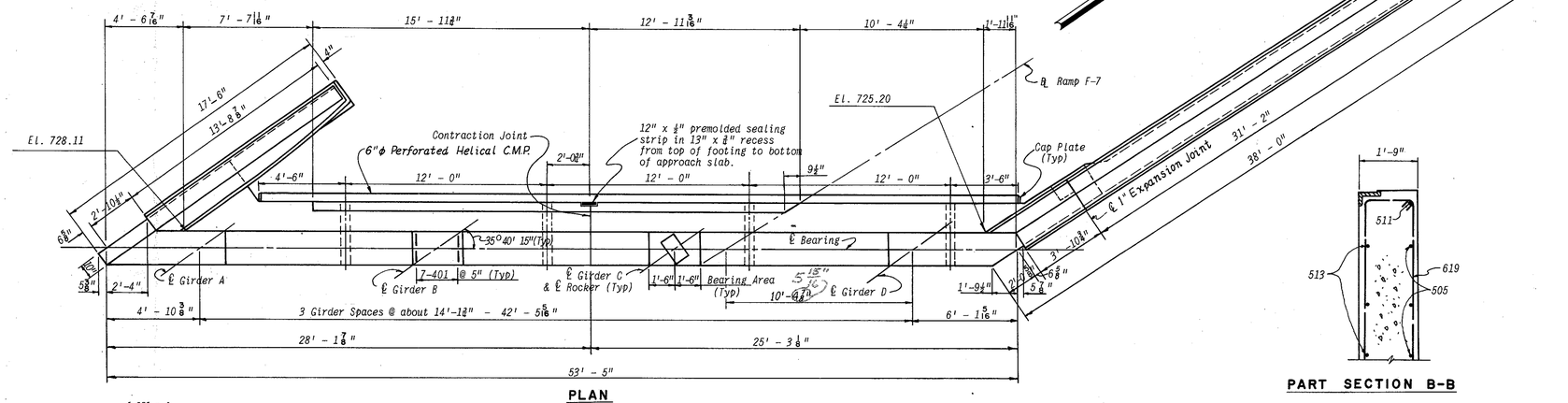

PLAN

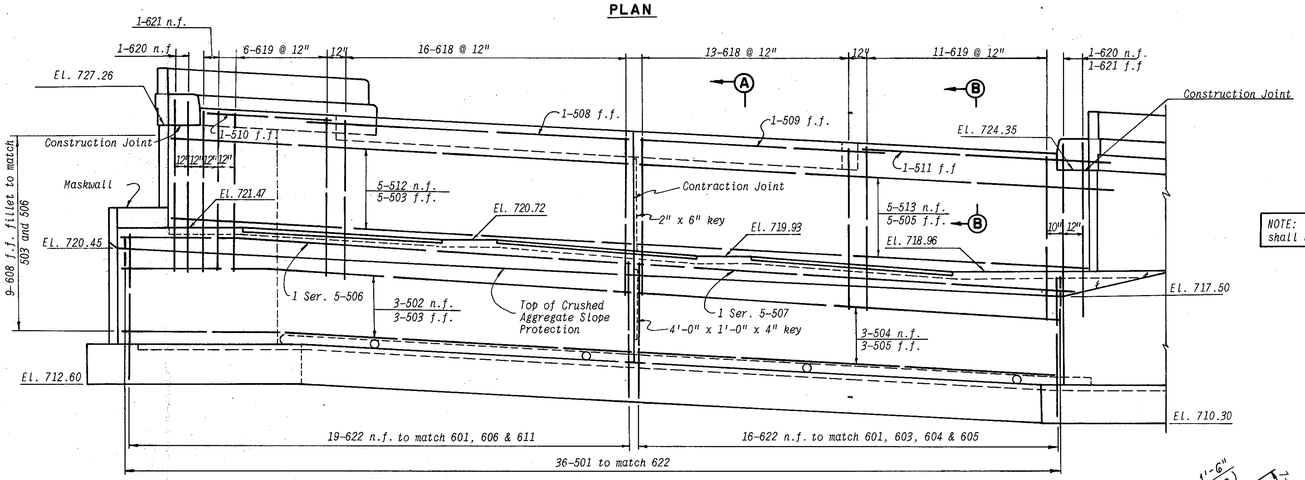

ELEVATION

(Type 1 Railing Not Shown)

NOTE: All reinforcing bar marks shall be prefixed AB.

PART SECTION B-B

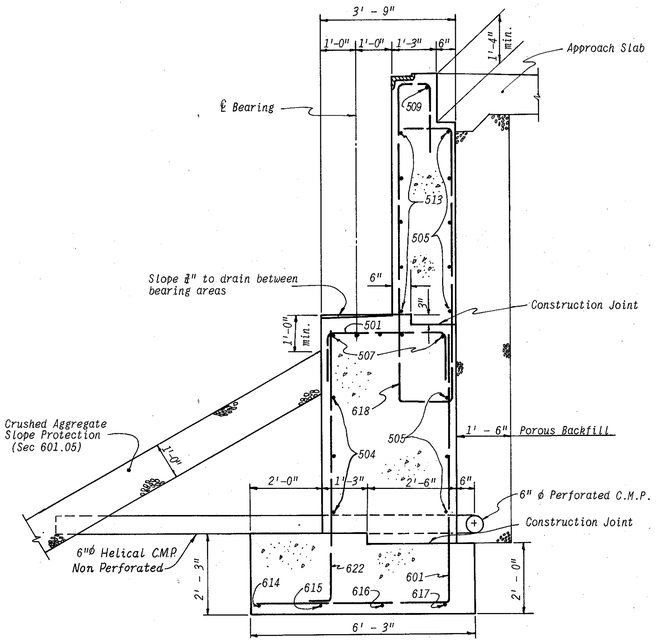

SECTION A-A

NOTES:
For Wingwall details see Sheet 312.
For roadway end dam details see Ohio Standard Drawing SD-1-65 Sheet 1 of 3.
The following abbreviations are used:
n.f. = near face
f.f. = far face
e.f. = each face
For Substructure Layout Diagram, see Sheet 309.

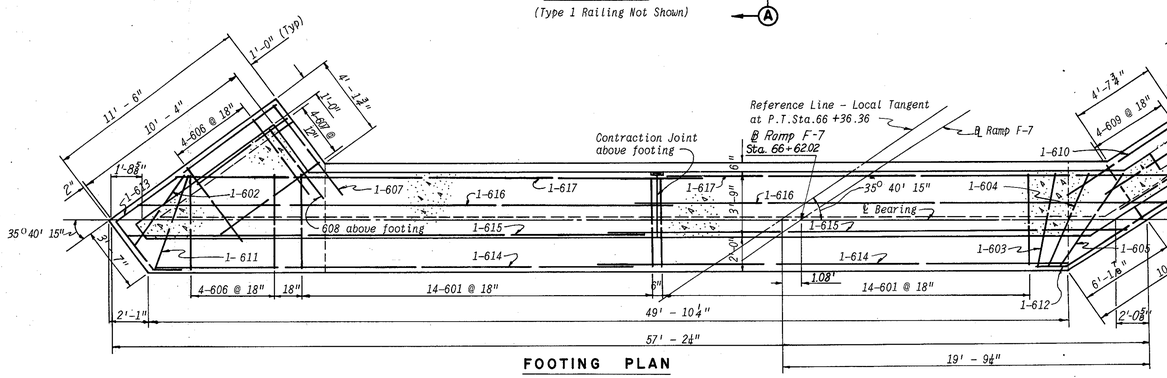

FOOTING PLAN

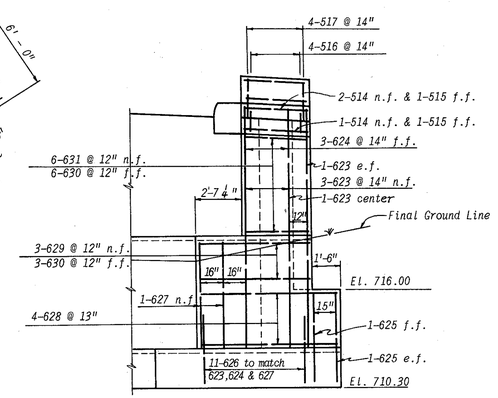

NORTH-EAST BUTTRESS

H.N.T.B. BR. NO. 20

HOWARD, NEEDLES, TAMMEN & BERGENDOFF
CONSULTING ENGINEERS
KANSAS CITY CLEVELAND NEW YORK

NORTH ABUTMENT

RAMP F-7 OVER LANE S-W

STA. 63+75.31 TO STA. 66+66.18

CUYAHOGA COUNTY OHIO

DRAWN J.B.C.	TRACED D.J.	CHECKED D.S.B.	REVIEWED WHF	REVISED 12-20-68
DATE 12-6-66	DATE 12-19-66	DATE 12-22-66	DATE 9-15-67	SHEET 311

FED. RD. DIVISION	STATE	PROJECT	
2	OHIO		

312 / 347

CUYAHOGA COUNTY
CUY-77-6.45

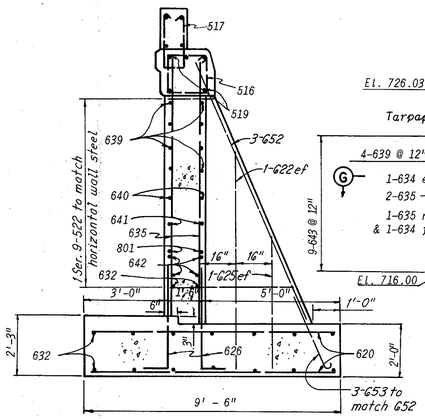

SECTION A-A

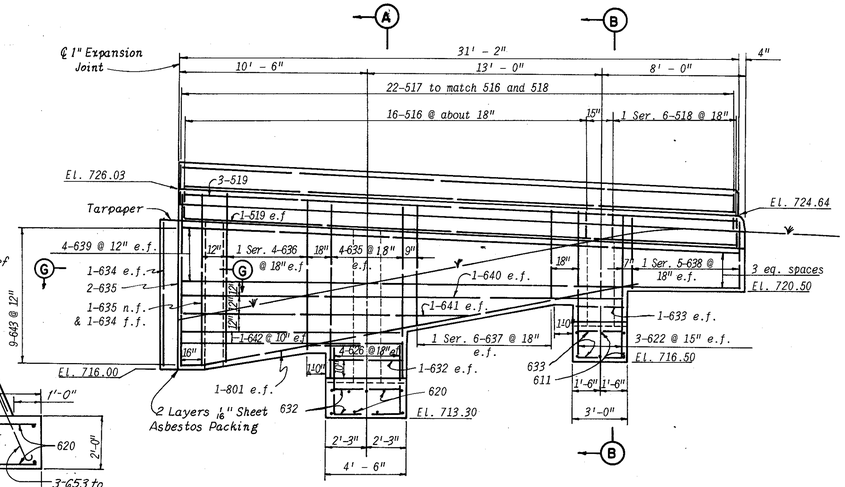

NORTH EAST WINGWALL

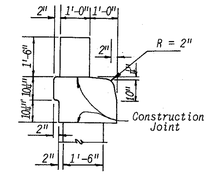

TYPICAL CURB DETAIL

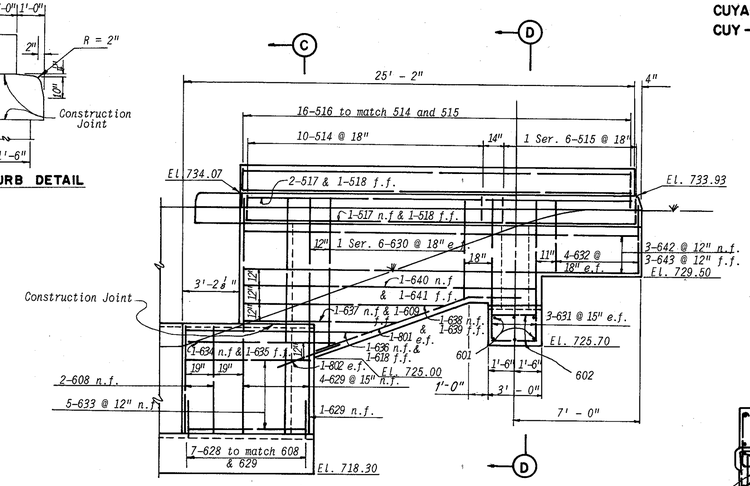

SOUTH WEST WINGWALL

NOTE: All reinforcing bar marks shall be prefixed as follows:
South Wingwalls - AA
North Wingwalls - AB

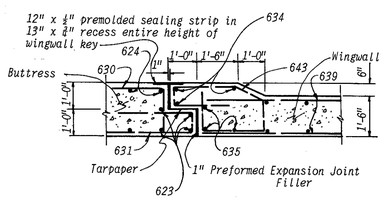

SECTION G-G

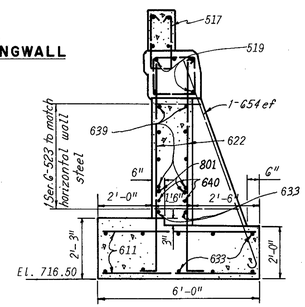

SECTION B-B

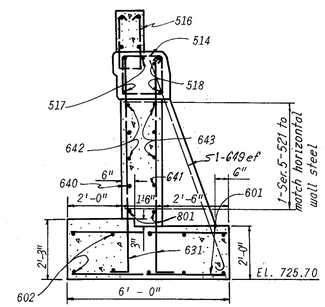

SECTION D-D

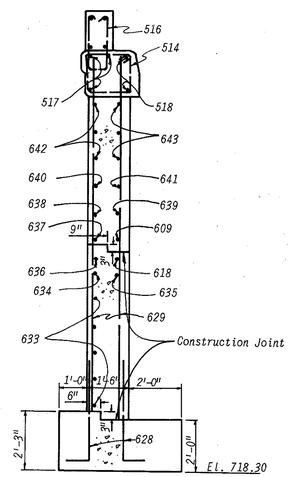

SECTION C-C

NOTE:
For longitudinal reinforcement in parapets, railing post spacing and end post details, see Sheet 326.
The following abbreviations are used:
n.f. = near face
f.f. = far face
e.f. = each face
eq. = equal.
Tarpaper and sheet asbestos packing to be included with Item 511 for payment.

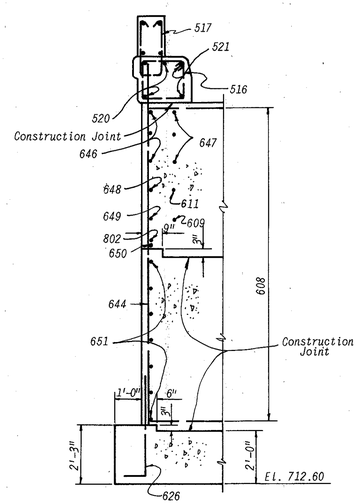

SECTION E-E

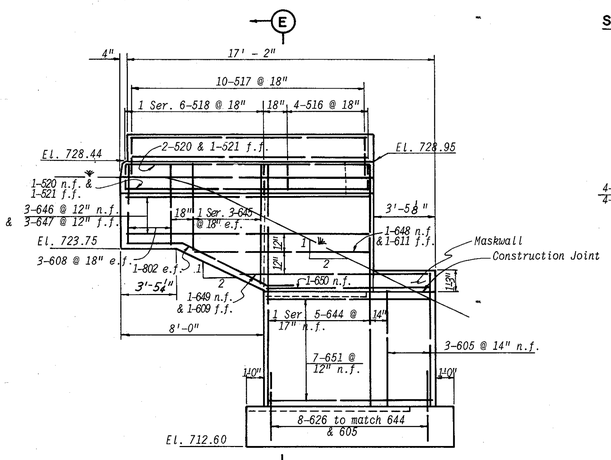

NORTH WEST WINGWALL

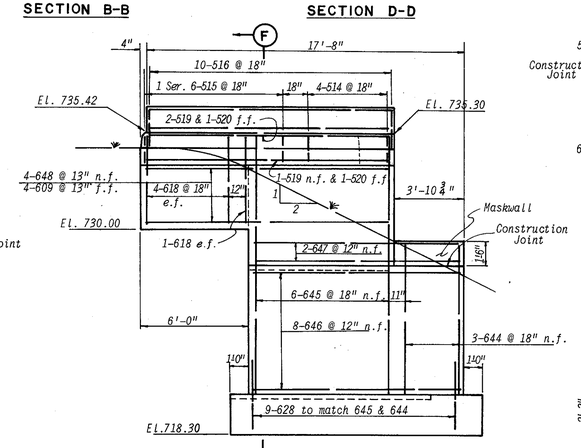

SOUTH EAST WINGWALL

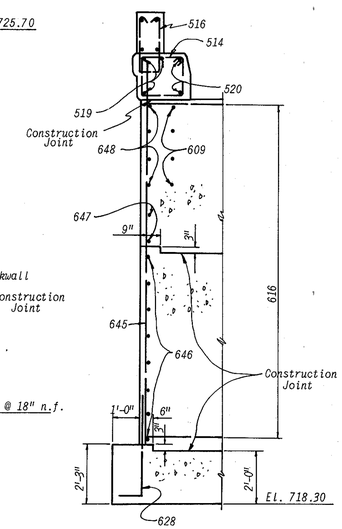

SECTION F-F

H.N.T.B. BR. NO. 20

HOWARD, NEEDLES, TAMMEN & BERGENDOFF
CONSULTING ENGINEERS
KANSAS CITY CLEVELAND NEW YORK

WINGWALLS

RAMP F-7 OVER LANE S-W

STA. 63+75.31 TO
STA. 66+66.18

CUYAHOGA COUNTY OHIO

DRAWN J.B.C. DATE 12-19-66	TRACED D.J. DATE 12-21-66	CHECKED D.S.B. DATE 12-29-66	REVIEWED W/F DATE 9-15-67	REVISED
				SHEET 312

FED. RD. DIVISION	STATE	PROJECT	
2	OHIO		

313
347

CUYAHOGA COUNTY
CUY - 77 - 6.45

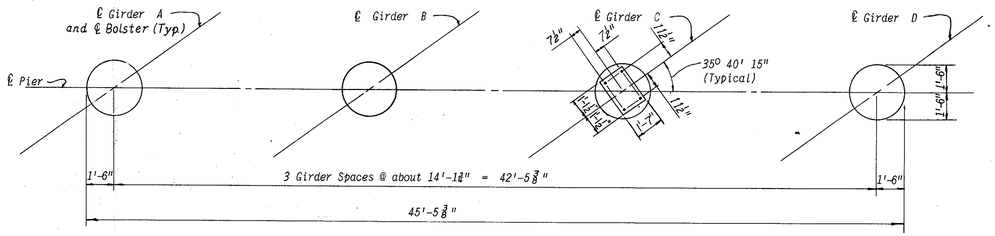

NOTE: Special care shall be taken when placing reinforcement so as not to interfere with anchor bolt setting.

PLAN

NOTE: All reinforcing bar marks shall be prefixed as follows:
Pier 1 – PA Pier 2 – PB

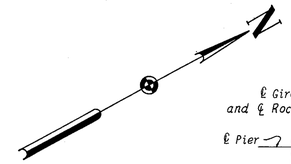

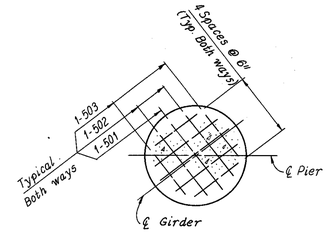

SECTION B-B

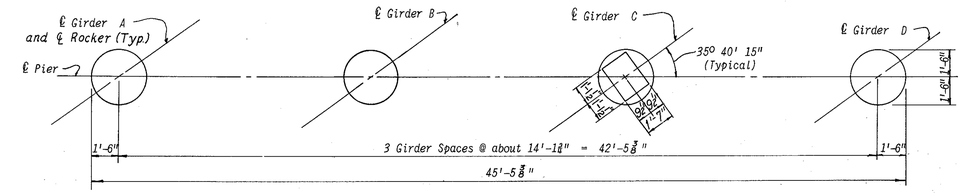

PLAN

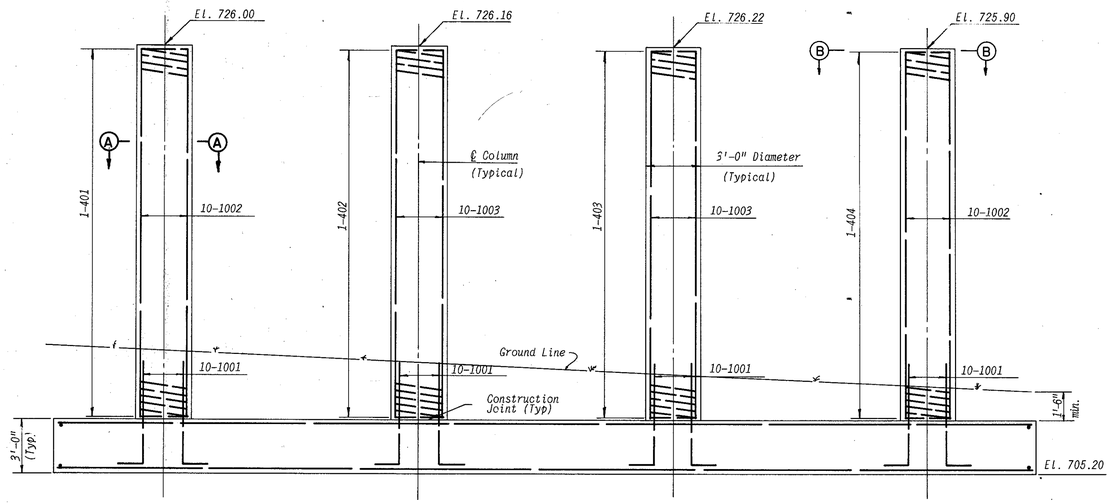

ELEVATION

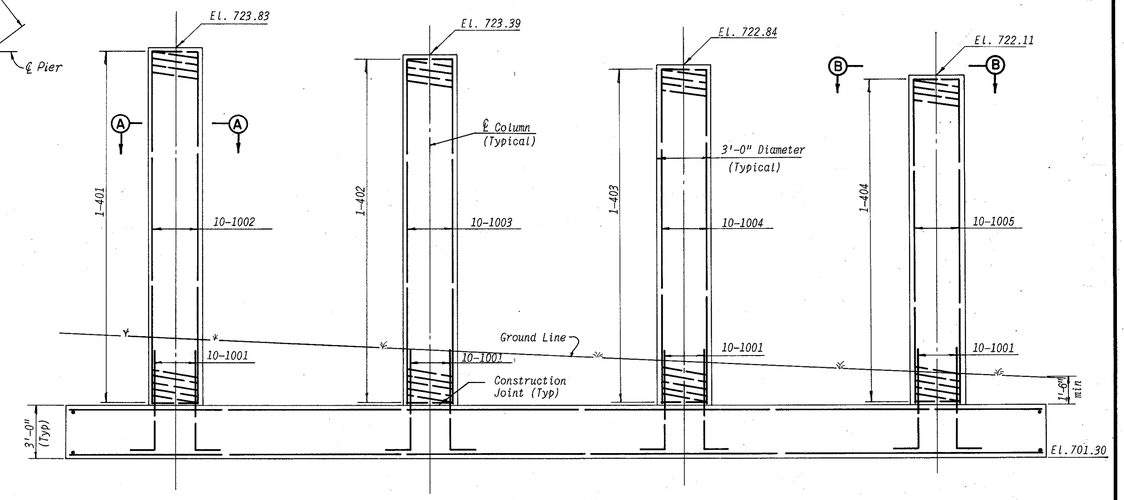

ELEVATION

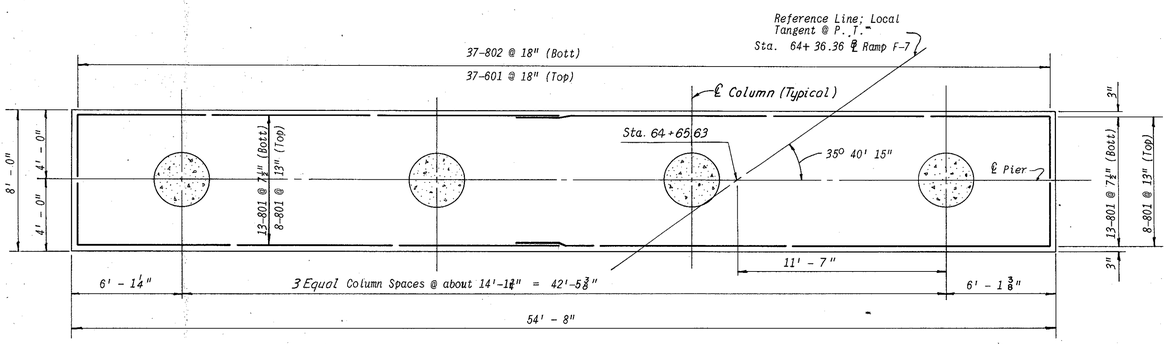

FOOTING PLAN

PIER 1

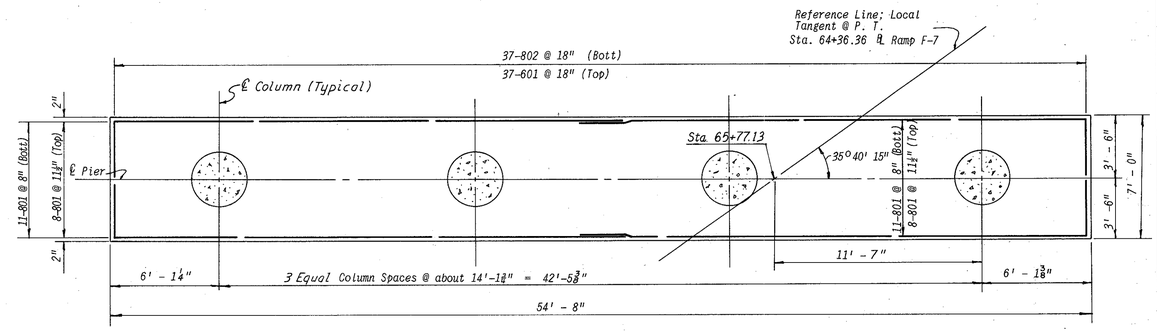

FOOTING PLAN

PIER 2

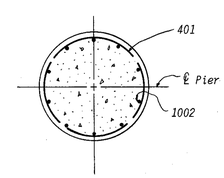

SECTION A-A

NOTE:

For anchor bolt details see Ohio Standard Drawing RB-1-55

For Substructure Layout Diagram see Sheet 309.

H.N.T.B. BR. NO. 20

HOWARD, NEEDLES, TAMMEN & BERGENDOFF
CONSULTING ENGINEERS
KANSAS CITY CLEVELAND NEW YORK

PIERS

RAMP F-7 OVER LANE S-W

STA. 63+75.31 TO STA. 66+66.18

CUYAHOGA COUNTY OHIO

DRAWN J.B.C.	TRACED D.J.	CHECKED R.S.	REVIEWED WF	REVISED
DATE 12-15-66	DATE 12-16-66	DATE 12-16-66	DATE 9-14-67	SHEET 313

FED. RD. DIVISION	STATE	PROJECT	
2	OHIO		

314 / 347

CUYAHOGA COUNTY
CUY - 77 - 6.45

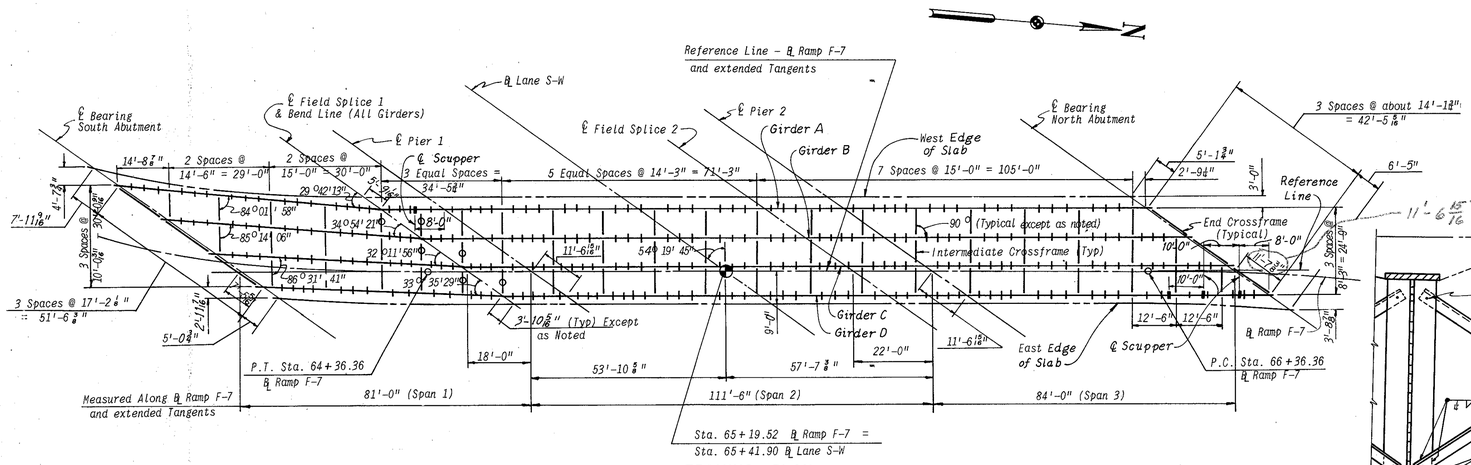

FRAMING PLAN

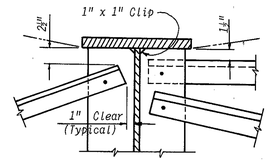

DETAIL 'A'

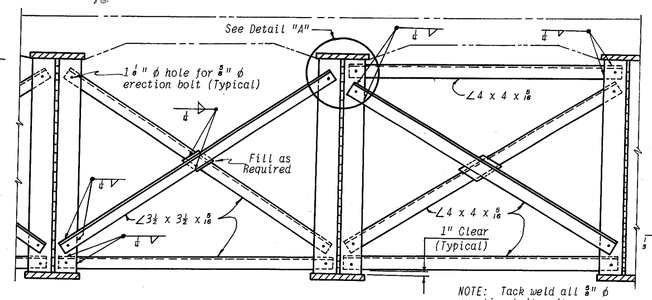

INTERMEDIATE

BEND POINT

TYPICAL CROSSFRAME

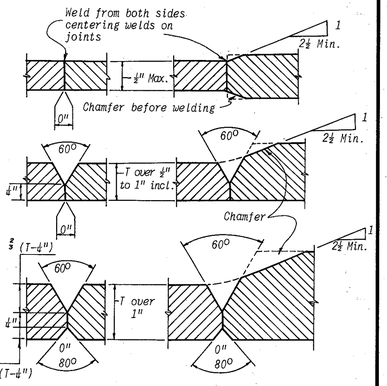

NOTE:
All of the above full penetration welds shall be back-gouged and welded after welding far side.
Butt welds on girder flange plates shall be ground flush, the finish grinding being parallel to the direction of stress.

GIRDER SHOP WELDING DETAILS

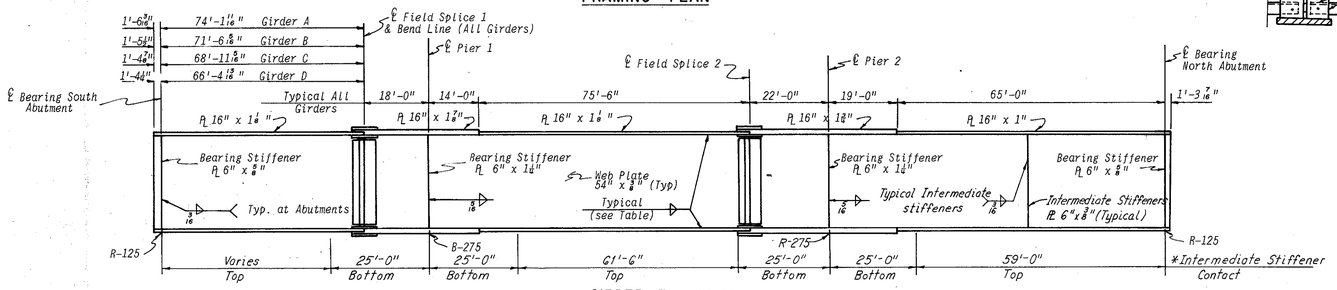

GIRDER ELEVATION

NOTE: Plate sizes and lengths are typical top and bottom.

*Intermediate Stiffeners to have Contact bearing with top or bottom flange as indicated.

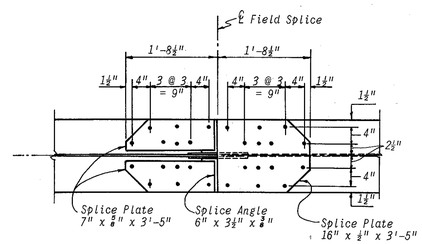

SECTION A-A

Note: Specially cut flange splice plates and bent web splice plates will be required at Field Splice 1. Flange splice plates shall be cut without re-entrant corners.

GIRDER NOTES :

The girder shall be fabricated to compensate for the effects of dead load deflections, vertical curvature and superelevation and under full dead load shall parallel the profiles formed by the top of pavement elevations directly over the girders.

Top and bottom flange plates are to be the same and shall be spliced at points shown on the girder elevation.

The web plates may be shop spliced as required by available plate lengths.

The locations of shop web splices and the locations and details of any additional shop flange splices shall be submitted to the Director for approval prior to ordering of materials.

Intermediate stiffeners shall be placed as shown on framing plan equally spaced between crossframes, or crossframes and bearing stiffeners, or cross-frames and field splices. Stiffeners shall be placed in pairs and shall have contact bearing with the flange as indicated in the girder elevations.

Bearing stiffeners at piers and abutments shall be placed in pairs on all girders.

Intermediate stiffeners and bearing stiffeners at piers shall be normal to girder flange.

Bearing stiffeners at abutments shall be vertical.

All girder field splices shall be made with 1" diameter high strength steel bolts. The bolts shall be placed with their heads on the outside face of the exterior girders and on the bottom of all flange plates.

For details of Rockers and Bolsters see Ohio Standard Drawing RB-1-55.

The Contractor shall submit to the Director for approval three prints showing his proposed erection procedure.

For Roadway End Dam and Curb Plate details see Ohio Standard Drawing SD-1-65, Sheets 1 and 2 of 2.

The supporting angle shown in the "Roadway End Dam Table" shall be increased from 6x4x3/8 to 8x4x3/8 and the main angle shall be 8x4x1.

For Optional Transverse Slab Construction Joint see Sheet 327.

For Scupper details see Sheet 327.

For End Crossframe details see Ohio Standard Drawing SD-1-65, Sheet 1 of 3, detail of End Crossframe girder spacing 12'-0" to 16'-0" (Modified for 17'-28" spacing).

WELD SIZE WEB TO FLANGE	
Flange Plate Thickness	Fillet Weld Size
1" and 1 1/8"	5/16"
1 3/8" and 1 7/8"	3/8"

ϕ Denotes Bend Line Crossframe

Denotes Intermediate Stiffener

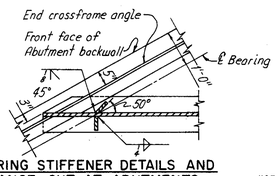

BEARING STIFFENER DETAILS AND FLANGE CUT AT ABUTMENTS

VERTICAL OFFSETS		
Girder	℄ Pier 1	℄ Pier 2
A	1'-5 11/16"	1'-4 9/16"
B	1'-4 1/16"	1'-3 1/8"
C	1'-3 11/16"	1'-1 1/4"
D	1'-3 3/16"	1'-0 5/8"

NOTE:
Vertical offsets are measured from the Base Line to the Unloaded Top of Girder Web.

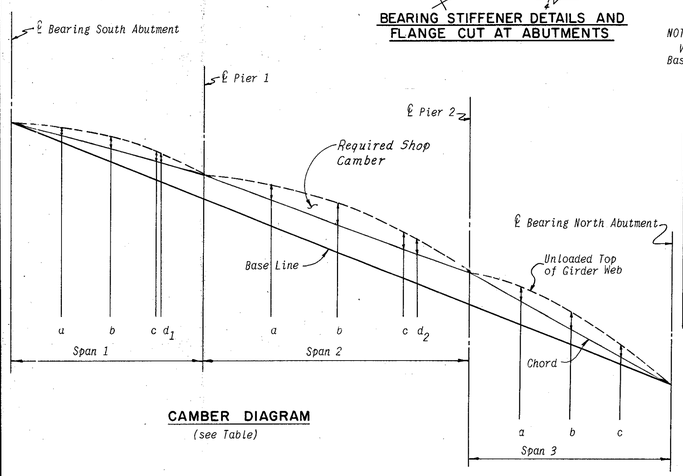

CAMBER DIAGRAM
(see Table)

DEAD LOAD DEFLECTION AND CAMBER

Girder	Span 1 ¼ Point a S	R	C	T	½ Point b S	R	C	T	¾ Point c S	R	C	T	Field Splice 1 d1 S	R	C	T
A	1 1/8"	7 11/16"	3 11/4"	5 5/16"	1 1/8"	1 11/16"	7 7/16"	9 1/16"	1 1/16"	3 11/16"	1 1/2"	3 3/4"	0"	1 1/8"	3 11/16"	5 11/16"
B	1 1/8"	7 7/16"	3 11/4"	5 9/16"	1 1/8"	1 1/2"	7 7/16"	9 1/16"	1 1/8"	3 11/16"	1 1/2"	3 3/4"	0"	1 1/8"	3 11/16"	5 11/16"
C	1 1/16"	3 11/8"	1"	3 7/16"	1 1/8"	3 11/16"	13 3/16"	5 5/16"	1 1/8"	5 11/16"	1 5/8"	5 11/16"	0"	1 1/8"	5 11/16"	5 11/16"
D	1 1/16"	3 11/8"	1 3/4"	5 3/16"	1 1/8"	3 11/8"	2 5/16"	5 5/16"	1 1/8"	2 11/16"	1 7/16"	3 11/8"	0"	1 1/8"	4"	5 11/16"

Girder	Span 2 ¼ Point a S	R	C	T	½ Point b S	R	C	T	¾ Point c S	R	C	T	Field Splice 2 d2 S	R	C	T
A	1 5/16"	5 7/16"	2 5/16"	3 3/16"	1 1/8"	5 11/16"	3 3/16"	4"	1 5/16"	3 11/16"	2 7/16"	2 5/8"	1 1/4"	3 11/16"	2 5/16"	2 5/8"
B	1 5/16"	5 7/16"	2 5/16"	3 3/16"	1 1/8"	5 11/16"	3 1/4"	4"	1 5/16"	3 11/16"	2 5/16"	2 5/8"	1 1/4"	3 11/16"	2 5/16"	2 5/8"
C	1 5/16"	5 7/16"	2 5/16"	3 3/16"	1 1/8"	5 11/16"	3 1/4"	4"	1 1/8"	5 11/16"	2 7/16"	2 5/8"	1 1/4"	3 11/16"	2 5/16"	2 5/8"
D	1 5/16"	5 7/16"	2 5/16"	3 3/16"	1 1/8"	5 11/16"	3 1/4"	4"	1 1/8"	5 11/16"	2 7/16"	2 5/8"	1 1/4"	3 11/16"	2 5/16"	2 5/8"

Girder	Span 3 ¼ Point a S	R	C	T	½ Point b S	R	C	T	¾ Point c S	R	C	T
A	0"	1 1/8"	1 5/16"	5 11/16"	1 1/8"	7 11/16"	5 11/16"	7 11/16"	1 1/8"	5 11/16"	3 11/8"	9 11/16"	1"
B	0"	1 1/8"	8"	3 1/4"	1 1/8"	3 11/4"	1 1/8"	11 11/16"	1 1/8"	3 1/4"	1 1/8"	3 11/16"
C	0"	1 1/8"	7/16"	1 1/16"	1 1/8"	3 11/8"	1 1/4"	11 5/16"	1 1/8"	3 11/8"	1 1/4"	13 11/16"
D	0"	1 1/8"	7/16"	1 1/16"	1 1/8"	3 11/8"	7/16"	5 11/16"	1 1/8"	3 11/4"	3 11/8"	3 11/8"

NOTE: The ¼, ½, and ¾ point of the spans are indicated by a, b, and c respectively. The centerlines of Field Splice 1 and Field Splice 2 are indicated by d_1 and d_2 respectively.

NOTES: Deflection and Concavities are given to the nearest 1/16 inch.
The following abbreviations are used:
S = Dead Load Deflection due to the weight of the steel
R = Remaining Dead Load Deflection
C = Concavity (neg.) or Convexity (pos.)
T = Required Shop Camber

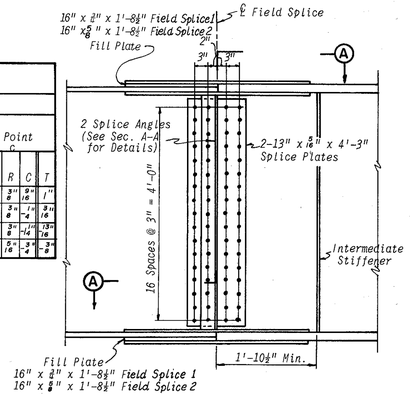

TYPICAL WEB SPLICE

H.N.T.B. BR. NO. 20

HOWARD, NEEDLES, TAMMEN & BERGENDOFF
CONSULTING ENGINEERS
KANSAS CITY CLEVELAND NEW YORK

FRAMING PLAN

RAMP F-7 OVER LANE S-W

STA. 63+75.31 TO STA. 66+66.18

CUYAHOGA COUNTY OHIO

DRAWN K.T.B. DATE 12-7-66	TRACED D.J. DATE 12-20-66	CHECKED D.S.B. DATE 1-9-67	REVIEWED W DATE 9-15-67	REVISED 12-20-68 SHEET 314

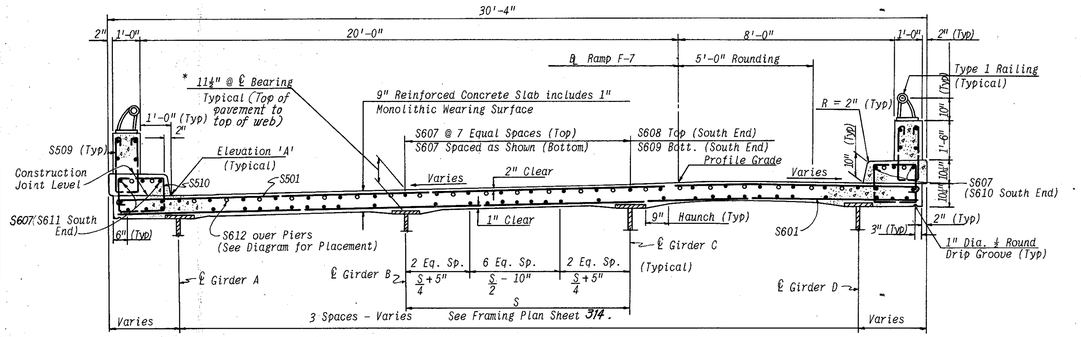

TYPICAL CROSS SECTION

NOTE:
A typical haunch width of 9" shall be used for computing quantity of concrete. However, the haunch width may vary between 6" and 12" provided that the slope shall not be more than 1:4 for a haunch less than 9" in width.

* NOTE:
When ℄ Girder A is under safety curb this distance is measured from extended top of pavement to the top of the girder web.

TOP OF PAVEMENT ELEVATIONS

Girder	A	B	C	D
℄ Brg. S. Abut.	733.40	734.06	734.56	734.50
a	733.41	733.94	734.35	734.29
b	733.40	733.81	734.12	733.96
c	733.34	733.63	733.81	733.54
℄ Pier 1	733.16	733.32	733.38	733.06
a	732.81	732.83	732.74	732.31
b	732.33	732.20	731.96	731.43
c	731.72	731.43	731.04	730.41
℄ Pier 2	730.98	730.54	729.99	729.26
a	730.33	729.77	729.11	728.31
b	729.60	728.93	728.18	727.34
c	728.81	728.07	727.26	726.39
℄ Brg. N. Abut.	728.03	727.28	726.49	725.52

ELEVATION 'A'

	WEST CURB	EAST CURB
℄ Brg. S. Abut.	733.28	734.47
¼	733.43	734.25
½	733.45	733.94
¾	733.33	733.52
℄ Pier 1	733.13	733.04
.1	733.02	732.76
.2	732.90	732.47
.3	732.76	732.16
.4	732.59	731.82
.5	732.40	731.45
.6	732.17	731.06
.7	731.91	730.64
.8	731.64	730.19
.9	731.34	729.72
℄ Pier 2	731.02	729.18
¼	730.40	728.26
½	729.71	727.29
¾	728.93	726.31
℄ Brg. N. Abut.	728.13	725.36

NOTE:
Elevation 'A' at the face of the curbs is that which is required before concrete is placed. Proper allowance has been made for the Dead Load Deflection caused by the weight of the concrete.

HORIZONTAL OFFSETS

	Girder A to West Edge of Slab	Girder D to East Edge of Slab
℄ Brg. S. Abut.	3'-4 1/8"	2'-7 1/8"
¼	2'-0 7/8"	2'-3 1/16"
½	1'-10 15/16"	3'-1 15/16"
¾	2'-10 3/8"	2'-4 3/8"
℄ Pier 1	3'-0"	2'-3"
¼	↓	↓
½		
¾		
℄ Pier 2		
¼		
½		2'-3"
¾		2'-4 3/4"
℄ Brg. N. Abut.	3'-0"	3'-4 3/8"

NOTE:
Horizontal offsets are given at ℄ Bearings and at ¼ points between ℄ Bearings and are perpendicular to ℄ Girders.

FED. RD. DIVISION	STATE	PROJECT	
2	OHIO		

315 / 347

CUYAHOGA COUNTY
CUY - 77 - 6.45

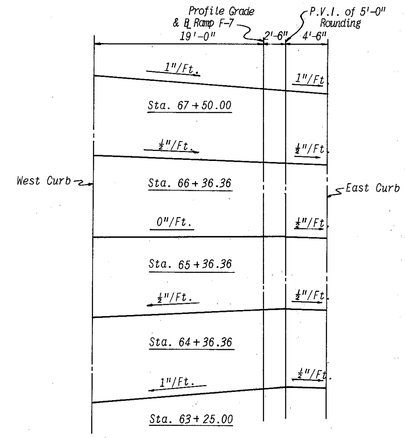

SUPERELEVATION TRANSITION DIAGRAM

NOTE:
Rate of Transition between stations above is uniform.

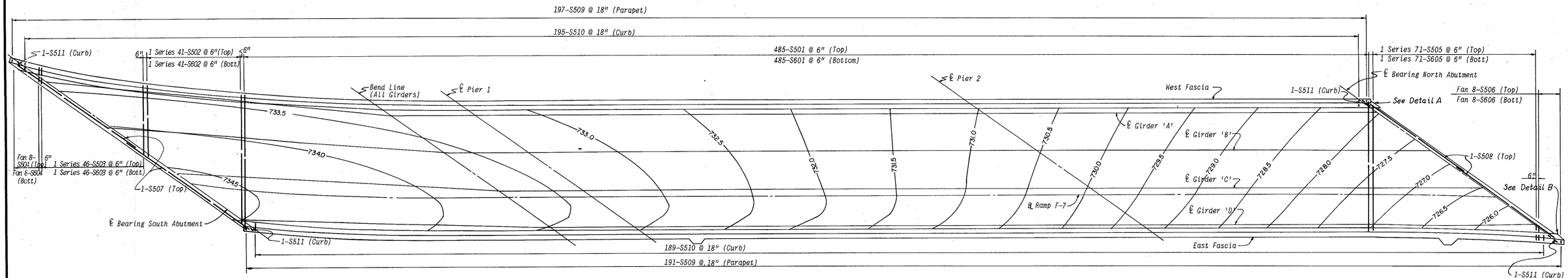

DECK PLAN SHOWING TOP OF PAVEMENT CONTOURS & REINFORCEMENT

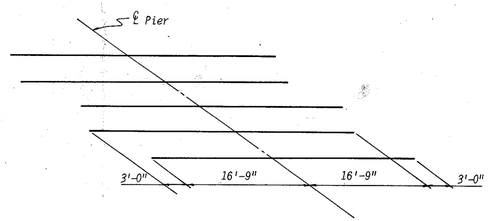

PLACEMENT OF S612 BARS OVER PIERS

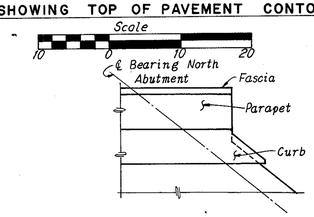

DETAIL A

Southeast corner similar.

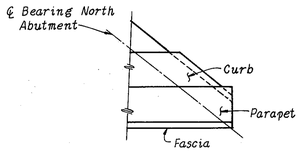

DETAIL B

Southwest corner similar.

H.N.T.B. BR. NO. 20

HOWARD, NEEDLES, TAMMEN & BERGENDOFF
CONSULTING ENGINEERS
KANSAS CITY CLEVELAND NEW YORK

DECK REINFORCEMENT AND TYPICAL SECTION

RAMP F-7 OVER LANE S-W

STA. 63+75.31 TO
STA. 66+66.18

CUYAHOGA COUNTY OHIO

DRAWN D.S.B.	TRACED D.J.	CHECKED J.B.C.	REVIEWED W	REVISED
DATE 1-4-67	DATE 1-6-67	DATE 1-8-67	DATE 2-15-67	SHEET 315

FED. RD. DIVISION	STATE	PROJECT	
2	OHIO		

316 / 347

CUYAHOGA COUNTY
CUY-77-6.45

MARK	NO.	LENGTH	TYPE	SER. INC.	WEIGHT (LBS.)
PIER NO.1					
PA401	1	17'-7"	150		324
PA402	1	17'-9"	150		324
PA403	1	17'-10"	150		330
PA404	1	17'-6"	150		323
PA501	8	4'-7"	105		38
PA502	16	4'-5"	105		76
PA503	16	3'-9"	105		62
PA601	37	7'-6"	Str.		417
PA801	42	28'-6"	Str.		3196
PA802	37	7'-6"	Str.		741
PA1001	40	7'-0"	104		1205
PA1002	20	17'-6"	Str.		1506
PA1003	20	17'-9"	Str.		1528
		Total Weight	=		10,070
PIER NO.2					
PB401	1	19'-4"	150		356
PB402	1	18'-11"	150		344
PB403	1	18'-5"	150		337
PB404	1	17'-8"	150		324
PB501	8	4'-7"	105		38
PB502	16	4'-5"	105		76
PB503	16	3'-9"	105		62
PB601	37	6'-6"	Str.		361
PB801	38	28'-6"	Str.		2891
PB802	37	6'-6"	Str.		642
PB1001	40	7'-0"	104		1205
PB1002	10	19'-9"	Str.		828
PB1003	10	19'-0"	Str.		818
PB1004	10	18'-6"	Str.		796
PB1005	10	17'-9"	Str.		764
		Total Weight	=		9,842
SOUTH ABUTMENT					
AA401	28	3'-5"	105		64
AA501	40	7'-0"	105		292
AA502	4	27'-9"	Str.		116
AA503	8	33'-6"	Str.		280
AA504	4	33'-0"	Str.		138
AA505	8	23'-3"	Str.		194
AA506	1 Ser. 5	27'-9" / 33'-6"	Str.	1 5/64"	160
AA507	1 Ser. 5	27'-3" / 33'-0"	Str.	1 5/64"	157
AA508	4	32'-0"	Str.		134
AA509	4	29'-9"	Str.		124
AA510	1	26'-0"	Str.		27
AA511	1	12'-0"	Str.		13
AA512	1	15'-0"	Str.		16
AA513	1	9'-0"	Str.		9
AA514	14	6'-4"	109		92
AA515	2 Ser. 6	5'-0" / 6'-4"	109	3 3/16"	71
AA516	26	5'-7"	110		151
AA517	3	22'-0"	Str.		69
AA518	2	24'-0"	Str.		50
AA519	3	13'-9"	Str.		43
AA520	2	12'-3"	Str.		26
AA521	1 Ser. 5	5'-2" / 7'-8"	155	7 1/2"	33
AA601	12	5'-6"	Str.		99
AA602	10	2'-6"	Str.		38
AA603	2	30'-6"	Str.		92
AA604	2	33'-3"	Str.		100
AA605	2	35'-0"	Str.		105
AA606	2	33'-9"	Str.		101
AA607	1	18'-5"	124		28
AA608	8	5'-9"	Str.		69
AA609	8	7'-6"	Str.		90
AA610	1	15'-3"	149		23
AA611	1 Ser. 6	9'-8" / 12'-7"	104	7 5/8"	99
AA612	4	12'-11"	104		78
AA613	1 Ser. 14	12'-11" / 13'-9"	104	3/4"	280
AA614	1 Ser. 10	13'-9" / 14'-1"	104	7/16"	209
AA615	6	14'-1"	104		127
AA616	9	5'-3"	Str.		71
AA617	1	6'-0"	Str.		9
AA618	12	5'-0"	Str.		90
AA619	1 Ser. 10	9'-3" / 9'-7"	104	7/16"	141
AA620	14	9'-7"	104		201
AA621	1 Ser. 14	8'-6" / 9'-3"	104	3/8"	186
AA622	6	8'-5"	104		76
AA623	37	21'-11"	112		1218
AA624	21	20'-9"	109		654
AA625	2	9'-3"	Str.		28
AA626	3	10'-6	Str.		47
AA627	3	11'-3"	126		51
AA628	16	4'-7"	104		110
AA629	5	13'-0"	Str.		98
AA630	2 Ser. 6	5'-9" / 8'-3"	Str.	6"	126
AA631	6	8'-6"	104		77
AA632	8	4'-0"	Str.		48
AA633	5	12'-4"	149		93
AA634	1	10'-8"	108		16
AA635	1	4'-3"	Str.		6
AA636	1	12'-4"	108		19
AA637	1	10'-9"	104		16
AA638	1	14'-2"	104		21
AA639	1	10'-9"	Str.		16
AA640	1	18'-3"	104		27
AA641	1	15'-3"	Str.		23
AA642	3	23'-9"	104		107
AA643	3	20'-9"	Str.		93
AA644	3	8'-0"	Str.		36
AA645	6	14'-6"	Str.		131
AA646	8	13'-11"	124		167
AA647	2	15'-4"	126		46
AA648	4	16'-0"	124		96
AA649	2	9'-0"	101		27
AA801	2	12'-0"	108		64
AA802	2	4'-6"	Str.		24
		Total Weight	=		8,056
NORTH ABUTMENT					
AB401	28	3'-5"	105		64
AB501	36	7'-0"	105		263
AB502	3	28'-0"	Str.		88
AB503	8	21'-3"	Str.		177
AB504	3	23'-3"	Str.		73
AB505	8	27'-3"	Str.		227
AB506	1 Ser. 5	24'-0" / 28'-0"	Str.	1'-0"	136
AB507	1 Ser. 5	23'-3" / 27'-3"	Str.	1'-0"	132
AB508	1	17'-6"	Str.		18
AB509	1	13'-3"	Str.		14
AB510	1	7'-0"	Str.		7
AB511	1	14'-0"	Str.		15
AB512	5	25'-3"	Str.		132
AB513	5	26'-3"	Str.		137
AB514	3	3'-6"	Str.		11
AB515	2	5'-0"	Str.		10
AB516	24	6'-4"	109		159
AB517	36	5'-7"	110		210
AB518	2 Ser. 6	5'-0" / 6'-4"	109	3 3/16"	70
AB519	5	31'-0"	Str.		162
AB520	3	13'-9"	Str.		43
AB521	2	12'-3"	Str.		26
AB522	1 Ser. 9	5'-0" / 11'-0"	155	9"	75
AB523	1 Ser. 6	5'-2" / 8'-0"	155	6 13/16"	41
AB601	28	13'-2"	104		554
AB602	1	4'-9"	Str		7
AB603	1	13'-4"	104		20
AB604	1	13'-7"	104		20
AB605	4	7'-9"	Str.		47
AB606	8	5'-3"	Str.		63
AB607	7	6'-3"	Str.		66
AB608	15	4'-6"	Str.		101
AB609	5	3'-6"	Str.		26
AB610	1	7'-3"	Str.		11
AB611	7	5'-6"	Str.		58
AB612	1	11'-10"	108		18
AB613	1	15'-9"	124		24
AB614	2	25'-9"	Str.		77
AB615	2	27'-9"	Str.		83
AB616	2	29'-3"	Str.		88
AB617	2	29'-6"	Str.		89
AB618	29	21'-11"	112		955
AB619	17	20'-8"	109		528
AB620	12	9'-0"	Str.		162
AB621	4	8'-3"	Str.		50
AB622	43	8'-8"	104		560
AB623	6	13'-3"	Str.		119
AB624	3	11'-6"	Str.		55
AB625	5	5'-11"	104		44
AB626	27	4'-7"	104		186
AB627	2	6'-0"	Str.		18
AB628	4	16'-1"	149		97
AB629	3	10'-8"	149		48
AB630	9	4'-3"	104		57
AB631	6	7'-11"	127		71
AB632	16	4'-0"	Str.		96
AB633	12	2'-6"	Str.		45
AB634	3	8'-0"	Str.		36
AB635	11	9'-9"	Str.		161
AB636	2 Ser. 4	8'-3" / 9'-3"	Str.	4"	105
AB637	2 Ser. 6	5'-0" / 6'-9"	Str.	4 3/16"	106
AB638	2 Ser. 5	3'-9" / 4'-0"	Str.	1/4"	58
AB639	8	31'-3"	Str.		376
AB640	2	24'-9"	Str.		74
AB641	2	17'-6"	Str.		53
AB642	4	12'-6"	Str.		75
AB643	9	10'-7"	135		143
AB644	1 Ser. 5	13'-9" / 14'-0"	Str.	3/4"	104
AB645	2 Ser. 3	5'-3" / 6'-9"	Str.	9"	54
AB646	3	15'-11"	124		72
AB647	3	9'-6"	Str.		43
AB648	1	11'-11"	124		18
AB649	1	16'-1"	126		24
AB650	1	14'-1"	126		21
AB651	7	11'-5"	124		120
AB652	3	10'-6"	Str.		47
AB653	3	4'-8"	101		21
AB654	2	9'-0"	101		27
AB801	2	26'-3"	108		140
AB802	2	10'-8"	118		57
		Total Weight	=		8,668
SUPERSTRUCTURE					
S501	485	30'-10"	100		15,596
S502	1 Ser. 41	15'-10" / 28'-10"	101	3 7/8"	951
S503	1 Ser. 46	4'-4" / 15'-7"	101	3"	478
S504	8	4'-1"	101		34
S505	1 Ser. 71	5'-1" / 28'-10"	101	4 1/16"	1,256
S506	8	4'-10"	101		40
S507	2	31'-9"	Str.		66
S508	2	26'-9"	Str.		56
S509	388	5'-3"	110		2,125
S510	384	5'-0"	156		2,003
S511	4	6'-0"	156		25
S601	485	29'-9"	Str.		21,672
S602	1 Ser. 41	15'-3" / 28'-3"	Str.	3 7/8"	1,339
S603	1 Ser. 46	3'-9" / 15'-0"	Str.	3"	648
S604	8	3'-6"	Str.		42
S605	1 Ser. 71	4'-6" / 28'-3"	Str.	4 1/16"	1,746
S606	8	4'-3"	Str.		51
S607	650	30'-0"	Str.		29,289
S608	1 Ser. 26	5'-3" / 13'-0"	Str.	4 1/16"	371
S609	1 Ser. 33	5'-3" / 13'-9"	Str.	3 3/16"	471
S610	3	5'-3"	Str.		24
S611	3	13'-9"	Str.		62
S612	50	36'-6"	Str.		2,741
	2-Light Standard Support				402
		Total Weight	=		81,488

BENDING DIAGRAMS

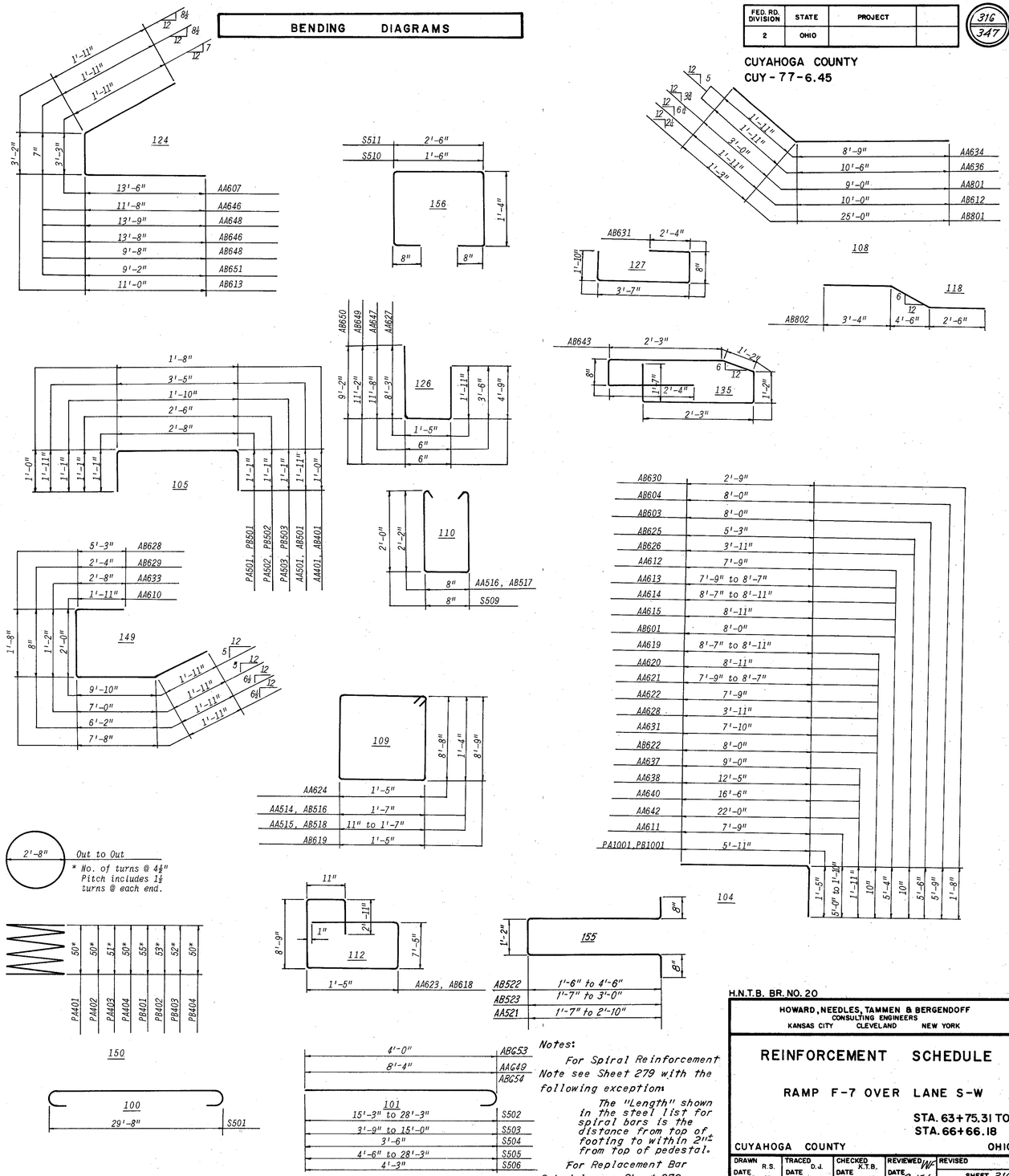

Notes:

For Spiral Reinforcement Note see Sheet 279 with the following exception:

The "Length" shown in the steel list for spiral bars is the distance from top of footing to within 2"± from top of pedestal.

For Replacement Bar Schedule see Sheet 279.

H.N.T.B. BR. NO. 20

HOWARD, NEEDLES, TAMMEN & BERGENDOFF
CONSULTING ENGINEERS
KANSAS CITY CLEVELAND NEW YORK

REINFORCEMENT SCHEDULE

RAMP F-7 OVER LANE S-W

STA. 63+75.31 TO STA. 66+66.18

CUYAHOGA COUNTY OHIO

DRAWN R.S. DATE 1-23-67	TRACED D.J. DATE 1-27-67	CHECKED K.T.B. DATE 1-31-67	REVIEWED W DATE 7-15-67	REVISED

SHEET 316

FED. RD. DIVISION	STATE	PROJECT	
2	OHIO		

327 / 347

CUYAHOGA COUNTY
CUY-77-6.45

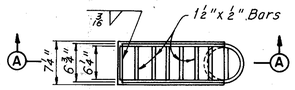

PLAN

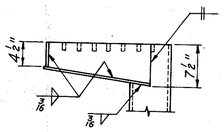

ELEVATION

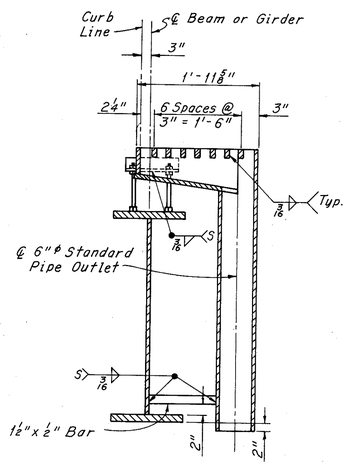

SECTION A-A
(Brs. 17L, 17R, 19L, 19R & 19A)

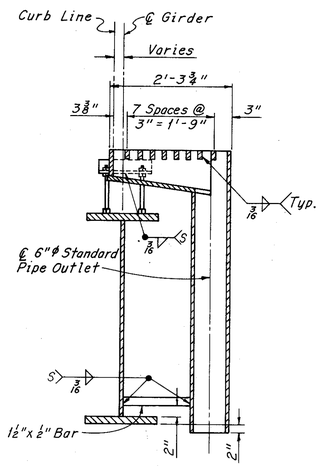

SECTION A-A
(Bridges 20 and 21)

SPECIAL SCUPPER DETAILS

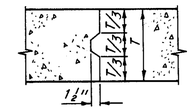

T = Slab Thickness

OPTIONAL TRANSVERSE SLAB CONSTRUCTION JOINT

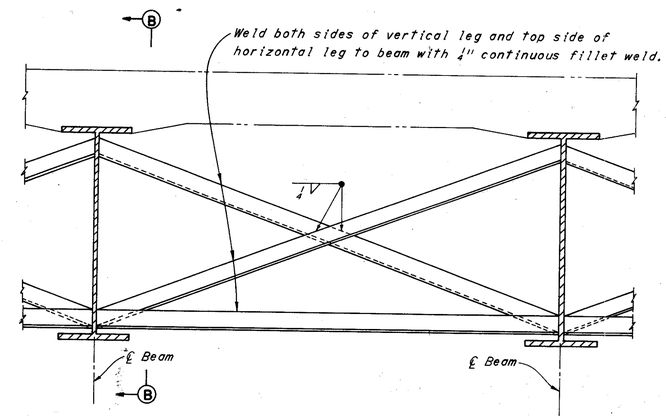

INTERMEDIATE CROSSFRAME

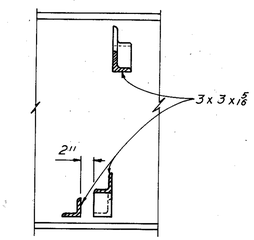

SECTION B-B

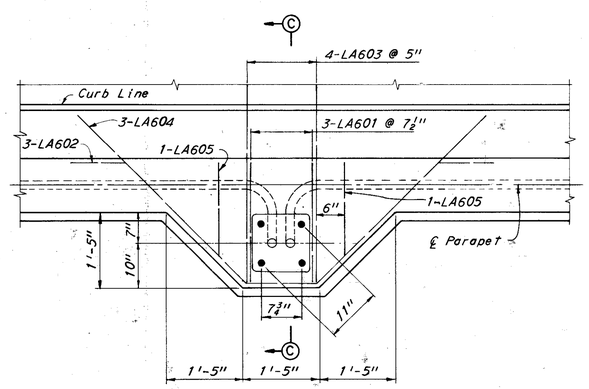

LIGHT STANDARD SUPPORT PLAN

Note:
o denotes normal longitudinal reinforcement.

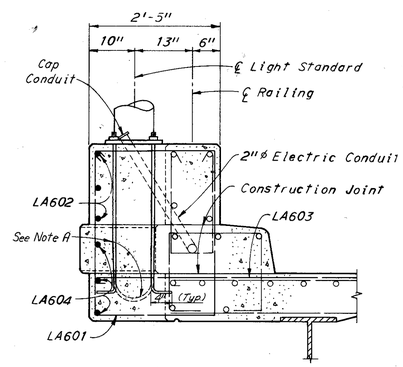

SECTION C-C

Note A:
Bridge No. 19 L & R
¼" ϕ Hot-dip galvanized U-bolt 79½" long with hex nuts and washers. Extend U-bolt a minimum of 3⅜" above top of concrete.
Bridges Nos. 19A, 20 & 21
1" ϕ Hot-dip galvanized anchor bolt 40" long with hex nut and washer. Extend bolts a minimum of 2⅜" above top of concrete.
Include U-bolts and anchor bolts with "Item 625" for payment.

LIGHTING DETAILS

BENDING DIAGRAMS

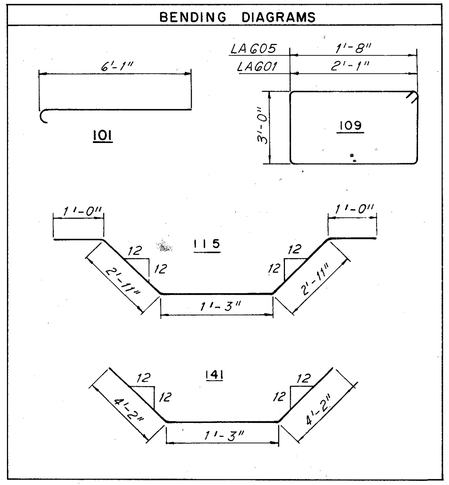

REINFORCEMENT SCHEDULE					
MARK	NO.	LENGTH	TYPE	SER. INCR.	WEIGHT (LBS.)
LIGHT STANDARD SUPPORT					
LA601	3	10'-11"	109		49
LA602	3	8'-9"	115		39
LA603	4	6'-9"	101		41
LA604	3	9'-5"	141		42
LA605	2	10'-1"	109		30
1	Support	Total Weight		=	201

Notes:

For Light Standard Locations see Framing Plans.

Reinforcement for light standard supports is included for payment with slab reinforcement.

Concrete for light standard supports above the parapet joint is included for payment with Item 517, "Aluminum Railing."

For location of conduits in structures, additional lighting details and summary of Item 625, "Electrical Equipment," See Lighting Plans.

H.N.T.B. BR. NOS. 17L, 17R, 18, 19L, 19R, 19A, 20, & 21

HOWARD, NEEDLES, TAMMEN & BERGENDOFF
CONSULTING ENGINEERS
KANSAS CITY CLEVELAND NEW YORK

MISCELLANEOUS SUPERSTRUCTURE DETAILS

CUYAHOGA COUNTY OHIO

DRAWN CHB	TRACED	CHECKED LJG	REVIEWED WF	REVISED
DATE 8-31-67	DATE	DATE 8-31-67	DATE 9-15-67	SHEET 327