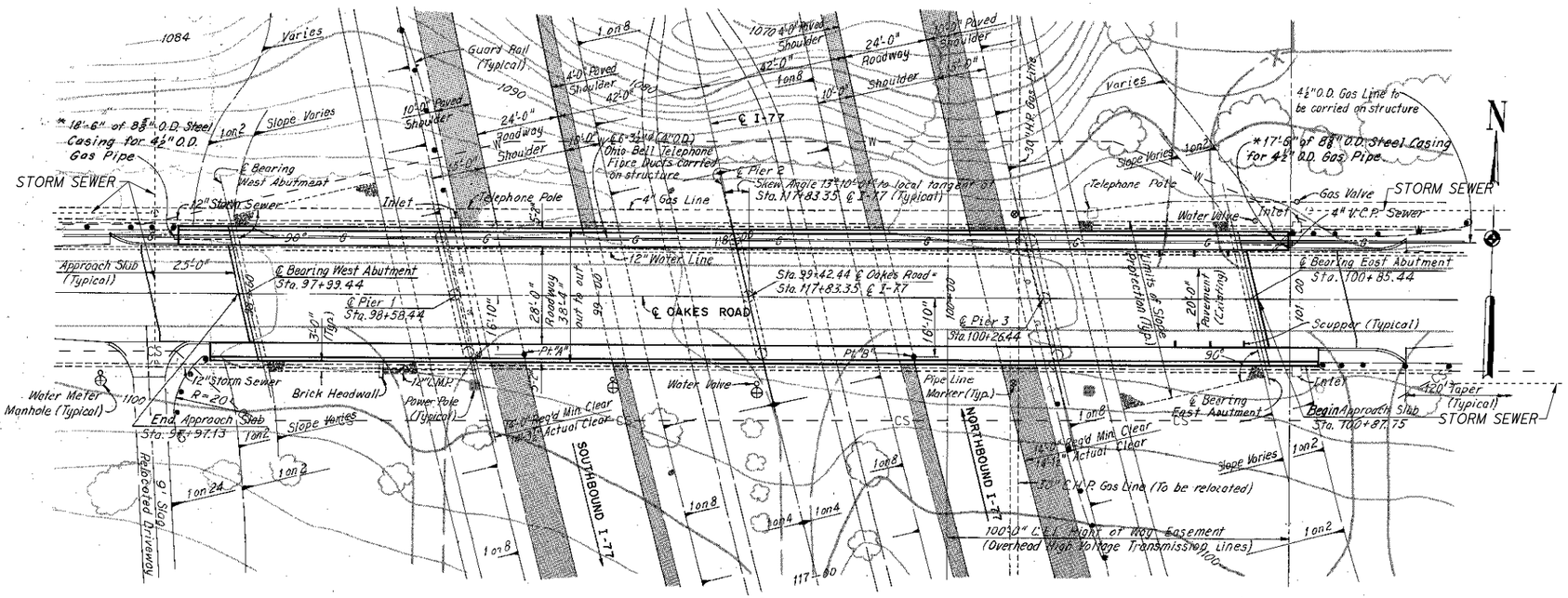

PLAN

Scale: 1" = 20'-0"

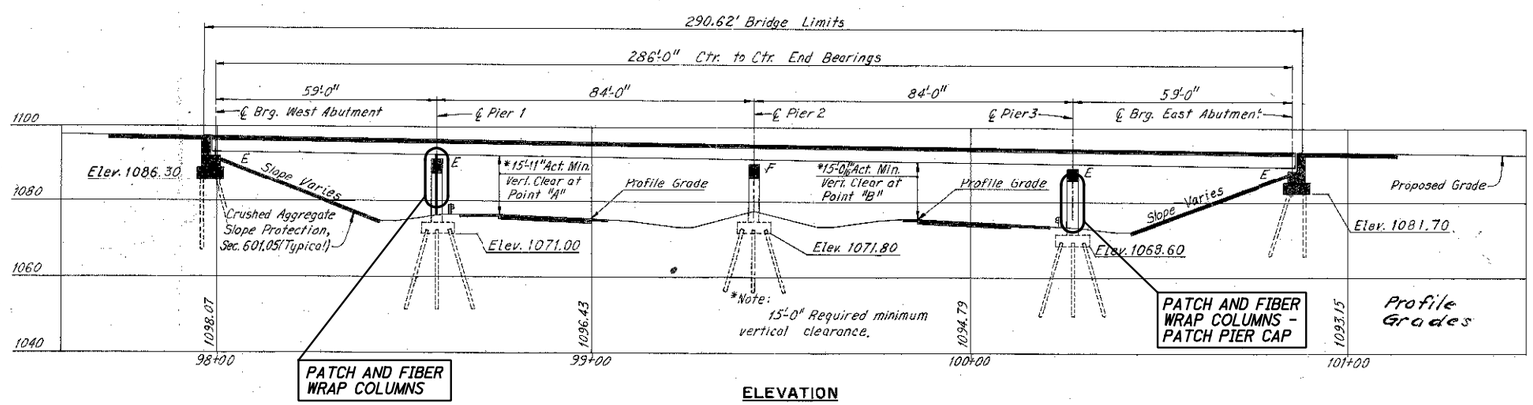

ELEVATION

NOTES:

1. DETAILS ON THIS SHEET ARE TAKEN FROM EXISTING PLANS AND SHOULD BE USED FOR INFORMATIONAL PURPOSES ONLY.
2. PERFORM ONLY THE WORK AS INDICATED IN THE STRUCTURE DATA TABLE, FRAMED TEXT, AND/OR DESCRIBED IN THE GENERAL NOTES.
3. FOR ESTIMATED QUANTITIES SEE SHEET 3/4.

RICHLAND ENGINEERING LIMITED
29 NORTH PARK STREET
MANSFIELD, OHIO 44902

DESIGNED	DRAWN	REVIEWED	DATE
BLN	JLS	DLR	01/2021
CHECKED	REVISED	STRUCTURE FILE NUMBER	
dht		1805762	

GENERAL PLAN - LOCATION 5
BRIDGE NO. CUY-77-0223
OAKES ROAD OVER IR 77

CUY-BH-FY2021(B) MISC
PID No. 109131

F:\2019\119034 VAR-Dist 12 Cuyahoga Co. Bridge Rehab Designs\ProjectData\109131\Design\Structures\CUY077_0223CV\Sheets\077_0223GP001.dgn 3/23/2021 2:38:42 PM rbrokaw

REFER TO STANDARD BRIDGE DRAWINGS:

NONE

REFER TO SUPPLEMENTAL SPECIFICATIONS:

SS844 (DATED 4-20-2018)

EXISTING STRUCTURE VERIFICATION

DETAILS AND DIMENSIONS SHOWN ON THESE PLANS PERTAINING TO THE EXISTING STRUCTURE HAVE BEEN OBTAINED FROM PLANS OF THE EXISTING STRUCTURE AND FROM FIELD OBSERVATIONS AND MEASUREMENTS. CONSEQUENTLY, THEY ARE INDICATIVE OF THE EXISTING STRUCTURE AND THE PROPOSED WORK BUT THEY SHALL BE CONSIDERED TENTATIVE AND APPROXIMATE. THE CONTRACTOR IS REFERRED TO SECTIONS 102.05 AND 105.02 OF THE 2019 CONSTRUCTION AND MATERIAL SPECIFICATIONS.

BASE CONTRACT BID PRICES UPON A RECOGNITION OF THE UNCERTAINTIES DESCRIBED ABOVE AND UPON A PRE-BID EXAMINATION OF THE EXISTING STRUCTURE BY THE CONTRACTOR. HOWEVER, THE DEPARTMENT WILL PAY FOR ALL PROJECT WORK BASED UPON ACTUAL DETAILS AND DIMENSIONS THAT HAVE BEEN VERIFIED IN THE FIELD.

THE EXISTING STRUCTURE PLANS MAY BE REVIEWED AT THE:
OHIO DEPARTMENT OF TRANSPORTATION
DISTRICT 12 OFFICE
5500 TRANSPORTATION BOULEVARD
GARFIELD HEIGHTS, OH 44125

EXISTING PLANS ARE ALSO AVAILABLE THROUGH THE FOLLOWING ODOT WEBSITE:
HTTP://WWW.DOT.STATE.OH.US/DIVISIONS/CONTRACTADMIN/CONTRACTS/PAGES/DESIGNFILES.ASPX

DESCRIPTION OF WORK:

1. PATCH AND FIBER WRAP DESIGNATED PIER COLUMNS.

2. PATCH AND SEAL DESIGNATED CAP LOCATIONS.

ITEM 512 - SEALING OF CONCRETE SURFACES (EPOXY-URETHANE), AS PER PLAN

SEAL THE PIER 1, 2, AND 3 CAPS AND THE PIER 2 COLUMNS. REMOVE DEBRIS AND CLEAN SURFACES OF ABUTMENT WALLS AND SEATS PER 512.03 E AND F. THE EPOXY-URETHANE SHALL BE LIGHT NEUTRAL COLOR MEETING FEDERAL COLOR STANDARD NO. 17778, OR CLOSELY MATCH THE SEALER COLOR OF THE EXISTING SUPERSTRUCTURE CONCRETE. SEALING OF THE FIBER WRAPPED AREAS SHALL BE INCLUDED FOR PAYMENT WITH ITEM SPECIAL - COMPOSITE FIBER WRAP SYSTEM.

ALL EQUIPMENT, LABOR, MATERIALS AND INCIDENTALS REQUIRED TO SEAL ALL OF THE AREAS DETAILED IN THE PLANS SHALL BE PAID UNDER ITEM 512 - SEALING OF CONCRETE SURFACES (EPOXY-URETHANE), AS PER PLAN.

ITEM 512 - REMOVAL OF EXISTING COATINGS FROM CONCRETE SURFACES, AS PER PLAN

THIS ITEM IS INCLUDED FOR THE REMOVAL OF EXISTING COATINGS FROM EXISTING CONCRETE SURFACES TO BE SEALED. AREAS OF CONCRETE REQUIRING PATCHES SHALL NOT BE INCLUDED IN THIS ITEM.

ITEM 519 - PATCHING CONCRETE STRUCTURE, AS PER PLAN

PRIOR TO THE SURFACE CLEANING SPECIFIED IN 519.04 AND WITHIN 24 HOURS OF PLACING PATCHING MATERIAL, BLAST CLEAN ALL SURFACES TO BE PATCHED, INCLUDING THE EXPOSED REINFORCING STEEL. ACCEPTABLE METHODS INCLUDE HIGH PRESSURE WATER BLASTING WITH OR WITHOUT ABRASIVES IN THE WATER, ABRASIVE BLASTING WITH CONTAINMENT, OR VACUUM ABRASIVE BLASTING. WHERE APPLICABLE, THE CONTRACTOR SHALL ENSURE ANY EXISTING UNDERPASS LIGHTING, BRIDGE RAIL OR ANY OTHER BRIDGE COMPONENTS ARE PROTECTED DURING THE PATCHING OPERATIONS.

SPECIFIC PATCHING LOCATIONS SHALL BE DETERMINED BY THE ENGINEER IN ACCORDANCE WITH ITEM 519 UNLESS IDENTIFIED IN THE PLANS. IF EXISTING UTILITIES ARE LOCATED WITHIN THE SPECIFIED PATCHING AREAS, THE COST FOR REMOVAL AND REINSTALLING THE UTILITIES SHALL BE INCLUDED IN THIS ITEM. ALL EQUIPMENT, LABOR, MATERIALS AND INCIDENTALS REQUIRED TO PERFORM THE ABOVE DESCRIBED WORK SHALL BE INCLUDED FOR PAYMENT AT THE SQUARE FOOT CONTRACT PRICE FOR ITEM 519 - PATCHING CONCRETE STRUCTURE, AS PER PLAN.

ITEM 844 - CONCRETE PATCHING WITH GALVANIC ANODE PROTECTION, AS PER PLAN

REPAIR WORK SHALL BE PER SUPPLEMENTAL SPECIFICATION 844. THE MINIMUM SPACING OF 100 GRAM ZINC ANODE SHALL BE 18" OR EQUIVALENT TOTAL ZINC CONTENT PER AREA. THIS ITEM SHALL BE PER ITEM 844 - CONCRETE PATCHING WITH GALVANIC ANODE PROTECTION, AS PER PLAN AND INCLUDE ALL REQUIRED PATCHING AND PROTECTION WORK TO MAKE THE PIER COLUMNS READY FOR THE COMPOSITE FIBER WRAP SYSTEM.

ITEM SPECIAL - COMPOSITE FIBER WRAP SYSTEM

DESCRIPTION: THIS WORK SHALL CONSIST OF PROVIDING AND INSTALLING A FIBER WRAP INCLUDING PREPARATION, WRAPPING THE PIER, AND ALL INCIDENTALS NECESSARY TO COMPLETE THIS WORK. THE INSTALLATION SHALL BE PER THE MANUFACTURER'S REQUIREMENTS.

MATERIALS: SUPPLIERS SHALL HAVE A MINIMUM OF 10 INSTALLATIONS AND FURNISH CERTIFIED TEST REPORTS INCLUDING 1000 HOUR TESTS FOR 140 °F WATER, SALT WATER, ALKALINE SOIL, OZONE AND EFFERVESCENCE IN ADDITION TO THE REQUIREMENTS LISTED BELOW.

THE FABRIC FOR THE COMPOSITE CASING SHALL BE CONTINUOUS FILAMENT WOVEN FABRIC. PRIMARY FIBERS FOR THE FABRIC SHALL BE (E) ELECTRICAL GLASS FIBERS. THE FIBER SHALL HAVE A MINIMUM NOMINAL THICKNESS OF 0.05 INCHES.

THE MINIMUM WEIGHT OF THE FABRIC SHALL BE 27.0 OUNCES PER SQUARE YARD.

THE EPOXY SHALL BE SUPPLIED BY THE MANUFACTURER TO MEET THE COMPOSITE STRENGTH GIVEN BELOW. POLYESTER RESIN SHALL NOT BE ALLOWED AS A SUBSTITUTE FOR EPOXY RESIN.

THE COMPOSITE OF THE FIBER WRAPPED COLUMN CASING SYSTEM SHALL CONFORM TO THE FOLLOWING REQUIREMENTS:

PROPERTY	REQUIREMENTS	ASTM TEST METHOD
ULTIMATE TENSILE STRENGTH, PSI MIN. IN PRIMARY FIBER DIRECTION	60,000 PSI	D3039, AVERAGE OF 7, 1" BY 10" NORMALIZED TO 0.80" THICK 0.01" PER MINUTE TESTING SPEED
ULTIMATE TENSILE STRENGTH, PSI MIN. IN ORTHOGONAL FIBER DIRECTION	3,000 PSI	D3039, AVERAGE OF 7, 1" BY 10" NORMALIZED TO 0.80" THICK 0.01" PER MINUTE TESTING SPEED
TENSILE STRENGTH (MIN. AFTER TEST) 1000 HOURS EXPOSURE TO 100% HUMIDITY	60,000 PSI	C581
TENSILE STRENGTH (MIN. AFTER TEST) 1000 HOURS EXPOSURE TO OZONE	60,000 PSI	D1149 EXCEPT NOT UNDER STRESS DURING OZONE EXPOSURE
TENSILE STRENGTH (MIN. AFTER TEST) 1000 HOURS EXPOSURE TO ALKALI	60,000 PSI	D3038 USING SOIL BURIAL - WATER CONTENT OF 73% ± 3%
TENSILE STRENGTH (MIN. AFTER TEST) 1000 HOURS EXPOSURE TO SALT WATER	60,000 PSI	C581 AND D1141 OMITTING ADDITION OF HEAVY METAL REAGENTS
TENSILE STRENGTH (MIN. AFTER TEST) 1000 HOURS EXPOSURE @ 140 DEGREES F	60,000 PSI	D3045
TENSILE STRENGTH (MIN. AFTER TEST) ULTRAVIOLET (UV) EXPOSURE	60,000 PSI	G154 USING FS40 UV-B BULBS FOR A MIN. 40 CYCLES. THE CYCLE SHALL BE 4 HOURS OF CONDENSATE EXPOSURE AT 40 DEGREES C.
ELONGATION: PERCENT, MIN. PERCENT, MAX.	 1.7 % 5.0 %	
TENSILE MODULUS, PSI MIN. OF PRIMARY FIBERS	3,000,000	D3039
VISUAL EFFECTS	ACCEPTANCE LEVEL III	D2563
COEFFECIENT OF THERMAL EXPANSION IN THE PRIMARY DIRECTION	4,300,000 PPM/DEG. F (+15%)	D696

SURFACE PREPARATION: THE SURFACE TO RECEIVE THE COMPOSITE WRAP SHALL BE FREE FROM FINS, SHARP EDGES, AND PROTRUSIONS THAT WILL CAUSE VOIDS BEHIND THE CASING OR THAT, IN THE OPINION OF THE ENGINEER, WILL DAMAGE THE FIBER. IF FIBERS ARE TO WRAP AROUND CORNERS OF RECTANGLE CROSS-SECTIONS, THE CORNERS SHALL BE ROUNDED TO A 1/2 INCH RADIUS. THIS WILL HELP PREVENT STRESS CONCENTRATIONS IN THE FIBER WRAP AND VOIDS BETWEEN THE FIBER WRAP AND THE CONCRETE. IN ADDITION, THE SURFACE SHALL BE SMOOTH AND FREE OF VOIDS OR UNDULATIONS THAT WOULD PREVENT FULL CONTACT BETWEEN THE CONCRETE AND THE FIBER WRAP. THE REMOVAL OF THE EXISTING COATING FROM THE CONCRETE SURFACES IS INCLUDED WITH THE SURFACE PREPARATION FOR THE COMPOSITE FIBER WRAP SYSTEM AND WILL NOT BE PAID SEPARATELY UNDER ITEM 512.

COMPOSITE APPLICATION: THE AMBIENT TEMPERATURE AND THE TEMPERATURE OF THE EPOXY RESIN COMPONENTS SHALL BE BETWEEN 55 DEG. F AND 95 DEG. F AT THE TIME OF MIXING. THE COMPOSITE SHALL BE APPLIED WHEN THE RELATIVE HUMIDITY IS LESS THAN 85% AND THE SURFACE TEMPERATURE IS MORE THAN 5 DEG. F ABOVE THE DEW POINT. APPLICATION SHALL BEGIN WITHIN ONE HOUR AFTER THE BATCH HAS BEEN MIXED. A MANUFACTURER REPRESENTATIVE SHALL BE ON SITE FOR THE FIRST APPLICATION OF THE COMPOSITE FIBER WRAP SYSTEM TO APPROVE THE CONTRACTOR'S APPLICATION PROCESS. THIS REQUIREMENT MAY BE WAIVED WITH WRITTEN APPROVAL FROM THE ENGINEER.

THE COMPONENTS OF THE EPOXY RESIN SHALL BE MIXED WITH A MECHANICAL MIXER AND APPLIED UNIFORMLY TO THE FIBER AT A RATE THAT SHALL INSURE COMPLETE SATURATION OF THE FABRIC.

THE FABRIC/EPOXY COMPOSITE SHALL BE APPLIED TO THE SURFACE OF THE COLUMN BY WRAPPING METHODS THAT PRODUCE A UNIFORM FORCE THAT IS DISTRIBUTED ACROSS THE ENTIRE WIDTH OF THE FABRIC. THE PRIMARY FIBERS OF THE FABRIC SHALL NOT DEVIATE FROM A HORIZONTAL LINE MORE THAN 1/2 INCH PER FOOT. ENTRAPPED AIR SHALL BE RELEASED OR ROLLED OUT BEFORE THE EPOXY SETS.

SUCCESSIVE LAYERS OF COMPOSITE MATERIALS SHALL BE PLACED BEFORE POLYMERIZATION OF THE PREVIOUS LAYER OF EPOXY IS TOO DRY TO ACHIEVE ADEQUATE BOND BETWEEN LAYERS. IF POLYMERIZATION DOES OCCUR BETWEEN LAYERS THE SURFACE MUST BE ROUGHENED USING A LIGHT ABRASIVE THAT WILL NOT DAMAGE THE FIBER.

THE FINAL LAYER OF EPOXY SHALL BE APPLIED TO THE FINAL LAYER OF FABRIC, WITH CARE TAKEN TO ENSURE COATING OF ALL EDGES AND SEAMS. SPACES BETWEEN THE BANDS OF FABRIC SHALL BE FILLED WITH EPOXY THICKENED AS DIRECTED BY THE MANUFACTURER.

A FINAL INSPECTION SHALL BE PERFORMED ON ALL FIBER WRAPPED COLUMNS AFTER THE EPOXY SETS YET PRIOR TO THE APPLICATION OF THE URETHANE TOP COAT. ALL DEFECTS (INCLUDING BUBBLES, DELAMINATIONS AND FABRIC TEARS) MORE THAN 1 SQUARE INCH OF THE SURFACE AREA, OR AS SPECIFIED BY THE PROJECT ENGINEER, SHALL BE REPAIRED AS SUCH.

1. SMALL DEFECTS (ON THE ORDER OF 6" DIAMETER) SHALL BE INJECTED OR BACK FILLED WITH EPOXY.
2. BUBBLES LESS THAN 12" DIAMETER SHALL BE REPAIRED BY INJECTING WITH EPOXY. TWO HOLES SHALL BE DRILLED INTO THE BUBBLE TO ALLOW INJECTION OF THE EPOXY AND ESCAPE OF ENTRAPPED AIR.
3. BUBBLES, DELAMINATIONS AND FABRIC TEARS GREATER THAN 12" IN DIAMETER SHALL BE REPAIRED BY REMOVING AND REAPPLYING THE REQUIRED NUMBER OF LAYERS OF THE COMPOSITE AND THE REQUIRED FINISH COATING. ALL REPAIRS SHALL BE APPROVED BY THE PROJECT ENGINEER.

COATING SYSTEM APPLICATION: A FINAL URETHANE COATING IS REQUIRED TO PROTECT THE FIBERS FROM THE ELEMENTS, SPECIFICALLY UV RADIATION, AND TO GIVE THE FINAL AESTHETIC EFFECT.

AFTER 96 HOURS FROM THE FINAL APPLICATION OF EPOXY, IF THE FINAL EPOXY COAT IS COMPLETELY POLYMERIZED, THE EXTERIOR SURFACES OF THE COMPOSITE WRAP SHALL BE CLEANED AND ROUGHENED BY A LIGHT ABRASIVE. CARE SHOULD BE TAKEN DURING THE ROUGHENING PROCESS SO THAT THE FIBERS ARE NOT DAMAGED. ALL CLEANED AND ROUGHENED SURFACES SHALL BE DRY BEFORE APPLYING THE URETHANE COATING.

MEASUREMENT AND PAYMENT: THE DEPARTMENT WILL PAY FOR THIS ITEM PER SQUARE FOOT OF FIBER WRAP MATERIAL INSTALLED AND ACCEPTED TO COMPLETE THE PROPOSED WORK. THE BID PRICE SHALL INCLUDE ALL LABOR, MATERIALS AND EQUIPMENT NECESSARY TO PROVIDE AND INSTALL A FIBER WRAP COLUMN CASING SYSTEM USING HIGH STRENGTH, HYBRID FIBER/EPOXY COMPOSITES FIELD APPLIED TO THE COLUMN, INCLUDING ERECTION OF SCAFFOLDING, CLEANING, SURFACE PREPARATION, WRAPPING THE COLUMN, URETHANE SEALER, AND ALL INCIDENTALS NECESSARY TO COMPLETE THE INSTALLATION PER THE MANUFACTURER'S REQUIREMENTS. PAYMENT FOR ALL OF THE ABOVE SHALL BE AT THE UNIT PRICE BID PER SQUARE FOOT FOR ITEM SPECIAL - COMPOSITE FIBER WRAP SYSTEM.

RICHLAND ENGINEERING LIMITED
29 NORTH PARK STREET
MANSFIELD, OHIO 44902

DESIGNED	DRAWN	REVIEWED	DATE
BLN	JLS	DLR	01/2021
CHECKED	REVISED	STRUCTURE FILE NUMBER	
dht		1805762	

GENERAL NOTES - LOCATION 5
BRIDGE NO. CUY-77-0223
OAKES ROAD OVER IR 77

CUY-BH-FY2021(B) MISC
PID No. 109131

F:\2019\119034 VAR-Dist 12 Cuyahoga Co. Bridge Rehab Designs\ProjectData\109131\Design\Structures\CUY077_0223C\Sheets\077_0223GN001.dgn 2/15/2021 10:05:55 AM jsmith

ESTIMATED QUANTITIES

CALCULATED JLS DATED 12/20
CHECKED dhf DATED 10/20

ITEM	ITEM EXT.	TOTAL	UNIT	DESCRIPTION	PIERS	GEN'L	REF. SHEET
512	10101	153	SY	SEALING OF CONCRETE SURFACES (EPOXY-URETHANE), AS PER PLAN	153		2/4
512	74001	152	SY	REMOVAL OF EXISTING COATINGS FROM CONCRETE SURFACES, AS PER PLAN	152		2/4
SPECIAL	51900100	1604	SF	COMPOSITE FIBER WRAP SYSTEM	1604		2/4
519	11101	7	SF	PATCHING CONCRETE STRUCTURE, AS PER PLAN	7		2/4
844	10001	212	SF	CONCRETE PATCHING WITH GALVANIC ANODE PROTECTION, AS PER PLAN	212		2/4

RICHLAND ENGINEERING LIMITED
29 NORTH PARK STREET
MANSFIELD, OHIO 44902

REVIEWED DLR DATE 01/2021
STRUCTURE FILE NUMBER 1805762
DRAWN JLS REVISED
DESIGNED BLN CHECKED dhf

ESTIMATED QUANTITIES - LOCATION 5
BRIDGE NO. CUY-77-0223
OAKES ROAD OVER IR 77

CUY-BH-FY2021(B) MISC
PID No. 109131

F:\2019\119034 VAR-Dist 12 Cuyahoga Co. Bridge Rehab Designs\ProjectData\109131\Design\Structures\CUY077_0223C\Sheets\077_0223EQ001.dgn 1/29/2021 1:16:22 PM dhelman

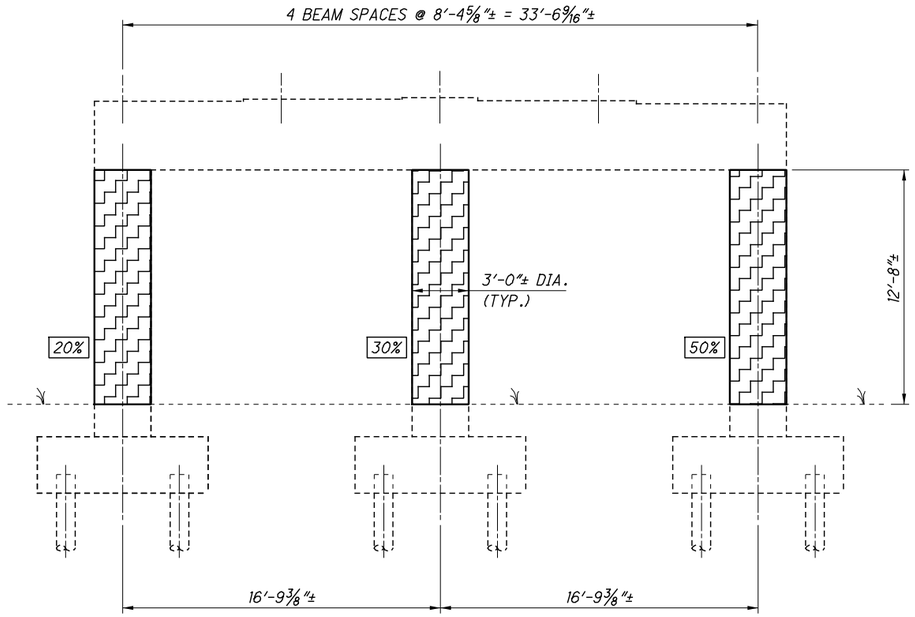

PIER 1 ELEVATION

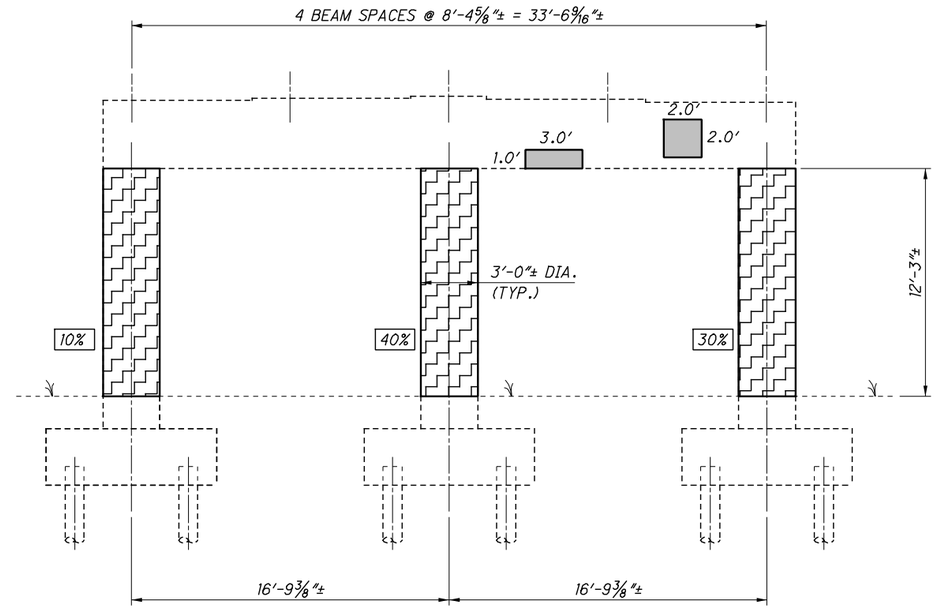

PIER 3 ELEVATION

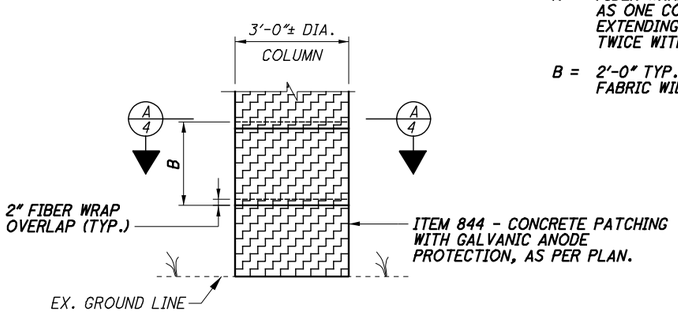

A = FIBER WRAP SHALL BE INSTALLED AS ONE CONTINUOUS WRAP, EXTENDING AROUND THE COLUMN TWICE WITH A MINIMUM 1'-0" LAP

B = 2'-0" TYP. FABRIC WIDTH

PIER COLUMN FIBER WRAP DETAIL

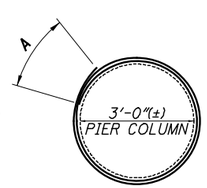

SECTION A-A

LEGEND

INDICATES CONCRETE PIER COLUMN REPAIR PER ITEM SPECIAL - STRUCTURES, COMPOSITE FIBER WRAP SYSTEM AND ITEM 844 - CONCRETE PATCHING WITH GALVANIC ANODE PROTECTION, AS PER PLAN.

30% INDICATES THE APPROXIMATE PERCENTAGE OF COLUMN PATCHING REQUIRED PRIOR TO FIBER WRAPPING.

INDICATES AREAS OF CONCRETE PATCHING PER ITEM 519 - PATCHING CONCRETE STRUCTURE, AS PER PLAN. TOTAL AREA THIS SHEET = 7 S.F.

NOTES:

1. DETAILS ON THIS SHEET ARE TAKEN FROM EXISTING PLANS AND SHOULD BE USED FOR INFORMATIONAL PURPOSES ONLY.
2. PERFORM ONLY THE WORK AS INDICATED IN THE STRUCTURE DATA TABLE, FRAMED TEXT, AND/OR DESCRIBED IN THE GENERAL NOTES.
3. MATERIALS SHOWN ARE EXISTING UNLESS OTHERWISE NOTED.
4. FOR ESTIMATED QUANTITIES SEE SHEET 3/4.

RICHLAND ENGINEERING LIMITED
29 NORTH PARK STREET
MANSFIELD, OHIO 44902

DESIGNED	DRAWN	REVIEWED	DATE
BLN	JLS	DLR	01/2021
CHECKED	REVISED	STRUCTURE FILE NUMBER	
dht		1805762	

PIER REPAIR DETAILS - LOCATION 5
BRIDGE NO. CUY-77-0223
OAKES ROAD OVER IR 77

CUY-BH-FY2021(B) MISC
PID No. 109131

F:\2019\119034 VAR-Dist 12 Cuyahoga Co. Bridge Rehab Designs\ProjectData\109131\Design\Structures\CUY077_0223C\Sheets\077_0223P001.dgn 2/10/2021 3:17:40 PM jsmith

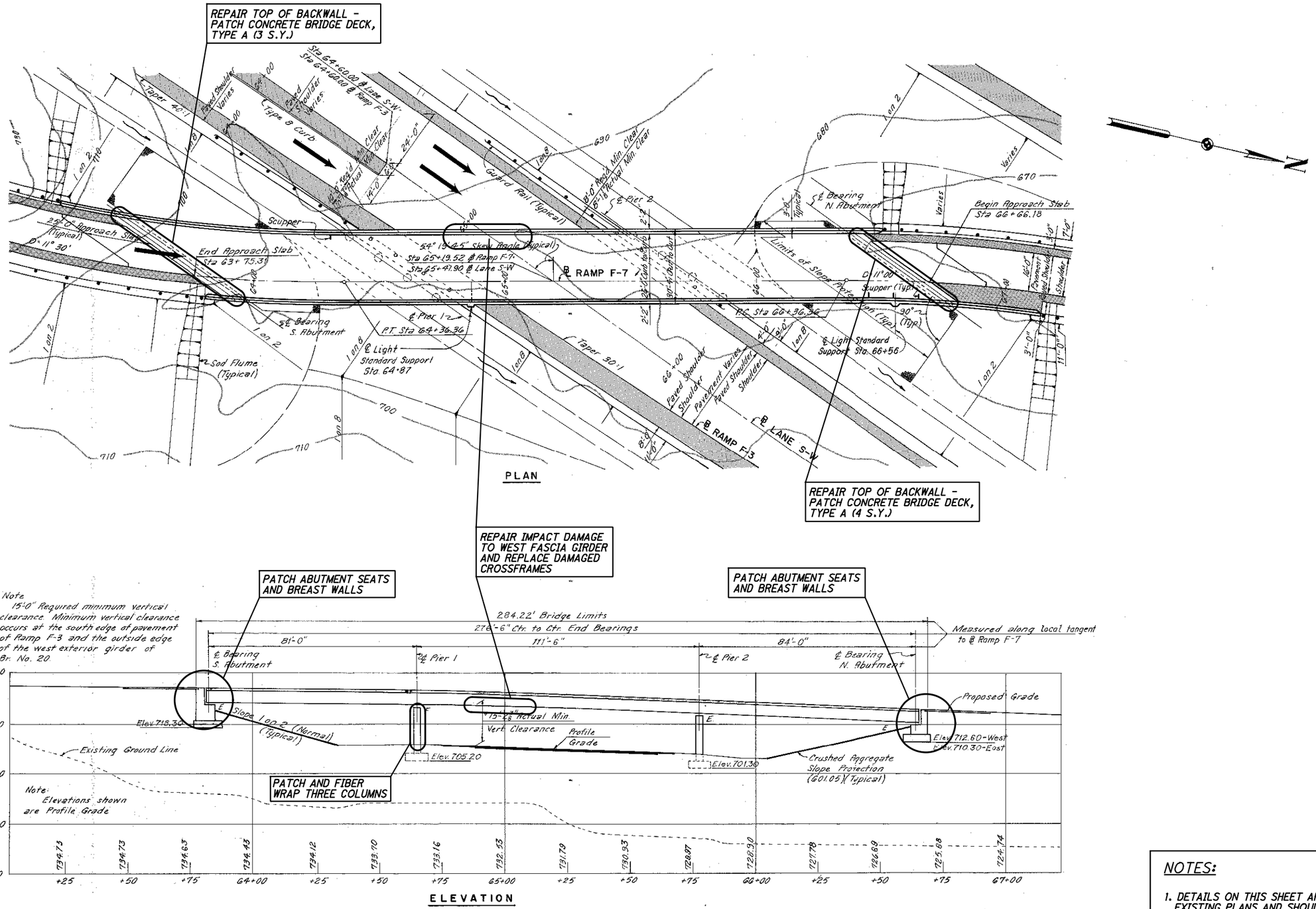

NOTES:

1. DETAILS ON THIS SHEET ARE TAKEN FROM EXISTING PLANS AND SHOULD BE USED FOR INFORMATIONAL PURPOSES ONLY.
2. PERFORM ONLY THE WORK AS INDICATED IN THE STRUCTURE DATA TABLE, FRAMED TEXT, AND/OR DESCRIBED IN THE GENERAL NOTES.
3. FOR ESTIMATED QUANTITIES SEE SHEET 4/9.

RICHLAND ENGINEERING LIMITED
29 NORTH PARK STREET
MANSFIELD, OHIO 44902

DESIGNED	DRAWN	REVIEWED	DATE
BLN	JLS	DLR	01/2021
CHECKED	REVISED	STRUCTURE FILE NUMBER	
RWC		1806297	

GENERAL PLAN - LOCATION 6
BRIDGE NO. CUY-77-0881
IR 77 RAMP OVER IR 480 RAMP

CUY-BH-FY2021(B) MISC
PID No. 109131

F:\2019\119034 VAR-Dist 12 Cuyahoga Co. Bridge Rehab Designs\ProjectData\109131\Design\Structures\CUY077_0881C\Sheets\077_0881GP001.dgn 2/10/2021 3:18:42 PM jsmith

REFER TO THE FOLLOWING SUPPLEMENTAL SPECIFICATIONS

SS844 (DATED 4-20-2018)

SS849 (DATED 1-18-2013)

DESIGN DATA

CONCRETE CLASS QC2 - COMPRESSIVE STRENGTH 4.5 KSI (BACKWALL)

STRUCTURAL STEEL - ASTM A709 GRADE 50 YIELD STRENGTH 50 KSI

EXISTING STRUCTURE VERIFICATION

DETAILS AND DIMENSIONS SHOWN ON THESE PLANS PERTAINING TO THE EXISTING STRUCTURE HAVE BEEN OBTAINED FROM PLANS OF THE EXISTING STRUCTURE AND FROM FIELD OBSERVATIONS AND MEASUREMENTS. CONSEQUENTLY, THEY ARE INDICATIVE OF THE EXISTING STRUCTURE AND THE PROPOSED WORK BUT THEY SHALL BE CONSIDERED TENTATIVE AND APPROXIMATE. THE CONTRACTOR IS REFERRED TO SECTIONS 102.05 AND 105.02 OF THE 2019 CONSTRUCTION AND MATERIAL SPECIFICATIONS.

BASE CONTRACT BID PRICES UPON A RECOGNITION OF THE UNCERTAINTIES DESCRIBED ABOVE AND UPON A PRE-BID EXAMINATION OF THE EXISTING STRUCTURE BY THE CONTRACTOR. HOWEVER, THE DEPARTMENT WILL PAY FOR ALL PROJECT WORK BASED UPON ACTUAL DETAILS AND DIMENSIONS THAT HAVE BEEN VERIFIED IN THE FIELD.

THE EXISTING STRUCTURE PLANS MAY BE REVIEWED AT THE:
OHIO DEPARTMENT OF TRANSPORTATION
DISTRICT 12 OFFICE
5500 TRANSPORTATION BOULEVARD
GARFIELD HEIGHTS, OH 44125

EXISTING PLANS ARE ALSO AVAILABLE THROUGH THE FOLLOWING ODOT WEBSITE:
HTTP://WWW.DOT.STATE.OH.US/DIVISIONS/CONTRACTADMIN/CONTRACTS/PAGES/DESIGNFILES.ASPX

DESCRIPTION OF WORK:

1. PATCH AND FIBER WRAP DESIGNATED COLUMNS.

2. REMOVE AND REPLACE DAMAGED BACKWALL CONCRETE.

3. PATCH ABUTMENT SEATS, FACE OF BACKWALLS AND BREASTWALLS.

4. PATCH LOCATIONS OF DECK NEAR JOINTS.

5. REPAIR AND HEAT STRAIGHTEN GIRDER FLANGE AND STIFFENERS.

6. REPLACE DESIGNATED DAMAGED CROSS FRAMES.

7. FIELD PAINTING OF DAMAGED STEEL REPAIR AREAS.

8. SEAL ABUTMENT AND WINGWALL SURFACES. SEAL PIER 2 COLUMNS AND ONE COLUMN ON PIER 1.

ITEM 202 - PORTIONS OF STRUCTURE REMOVED, OVER 20 FOOT SPAN, AS PER PLAN

THIS ITEM SHALL INCLUDE THE ELEMENTS INDICATED IN THE PLANS AND GENERAL NOTES; AND ELEMENTS THAT ARE NOT SEPARATELY LISTED FOR PAYMENT. ITEMS TO BE REMOVED INCLUDE ALL EXISTING MATERIALS BEING REPLACED BY NEW CONSTRUCTION AND MISCELLANEOUS ITEMS THAT ARE NOT SHOWN TO BE INCORPORATED INTO THE FINAL CONSTRUCTION AND ARE DIRECTED TO BE REMOVED BY THE ENGINEER. THE USE OF EXPLOSIVES, HEADACHE BALLS AND/OR HOE-RAMS WILL NOT BE PERMITTED. THE METHOD OF REMOVAL AND THE WEIGHT OF HAMMER SHALL BE APPROVED BY THE ENGINEER. PERFORM ALL WORK IN A MANNER THAT WILL NOT CUT, ELONGATE OR DAMAGE THE EXISTING REINFORCING STEEL TO BE PRESERVED. CHIPPING HAMMERS SHALL NOT BE HEAVIER THAN THE NOMINAL 90-POUND CLASS. PNEUMATIC HAMMERS SHALL NOT BE PLACED IN DIRECT CONTACT WITH REINFORCING STEEL THAT IS TO BE RETAINED IN THE REBUILT STRUCTURE. SUBMIT CONSTRUCTION PLANS ACCORDING TO CMS 501.05.

CUT LINE CONSTRUCTION JOINT PREPARATION

SAW CUT BOUNDARIES OF PROPOSED CONCRETE REMOVALS 1 INCH DEEP. REMOVE CONCRETE TO A ROUGH SURFACE. LEAVE THE EXISTING REINFORCING STEEL IN PLACE. INSTALL DOWEL BARS IF SPECIFIED. THOROUGHLY CLEAN THE JOINT SURFACE AND EXPOSED REINFORCEMENT OF ALL DIRT, DUST, RUST OR OTHER FOREIGN MATERIAL BY THE USE OF WATER, AIR UNDER PRESSURE, OR OTHER METHODS THAT PRODUCE SATISFACTORY RESULTS. EXISTING REINFORCING STEEL DOES NOT HAVE TO HAVE A BRIGHT STEEL FINISH, BUT REMOVE ALL PACK AND LOOSE RUST. THOROUGHLY DRENCH EXISTING CONCRETE SURFACES WITH CLEAN WATER AND ALLOW TO DRY TO A DAMP CONDITION BEFORE PLACING CONCRETE.

ITEM 512 - REMOVAL OF EXISTING COATINGS FROM CONCRETE SURFACES, AS PER PLAN

THIS ITEM IS INCLUDED FOR THE REMOVAL OF EXISTING COATINGS FROM EXISTING CONCRETE SURFACES TO BE SEALED. AREAS OF CONCRETE REQUIRING PATCHES SHALL NOT BE INCLUDED IN THIS ITEM.

ITEM 512 - SEALING OF CONCRETE SURFACES (EPOXY-URETHANE), AS PER PLAN

SEAL ALL ABUTMENT CONCRETE SURFACE AREAS (INCLUDING BACKWALLS, SEATS, BREASTWALLS & WINGWALLS) PER PLAN DETAILS. REMOVE DEBRIS AND CLEAN SURFACES OF WALLS AND SEATS PER 512.03 E & F. ALSO SEAL THE PIER 1 COLUMN NOT BEING FIBER WRAPPED, AND ALL PIER 2 COLUMNS. THE EPOXY-URETHANE SHALL BE LIGHT NEUTRAL COLOR MEETING FEDERAL COLOR STANDARD NO. 17778, OR CLOSELY MATCH THE SEALER COLOR OF THE EXISTING CONCRETE (LIGHT GRAY TYPICAL COLOR). SEALING OF THE FIBER WRAPPED AREAS SHALL BE INCLUDED FOR PAYMENT UNDER ITEM SPECIAL - STRUCTURES, COMPOSITE FIBER WRAP SYSTEM.

ALL EQUIPMENT, LABOR, MATERIALS AND INCIDENTALS REQUIRED TO SEAL ALL OF THE AREAS DETAILED IN THE PLANS SHALL BE PAID UNDER ITEM 512 - SEALING OF CONCRETE SURFACES (EPOXY-URETHANE), AS PER PLAN.

ITEM 519 - PATCHING CONCRETE STRUCTURE, AS PER PLAN

PRIOR TO THE SURFACE CLEANING SPECIFIED IN 519.04 AND WITHIN 24 HOURS OF PLACING PATCHING MATERIAL, BLAST CLEAN ALL SURFACES TO BE PATCHED, INCLUDING THE EXPOSED REINFORCING STEEL. ACCEPTABLE METHODS INCLUDE HIGH PRESSURE WATER BLASTING WITH OR WITHOUT ABRASIVES IN THE WATER, ABRASIVE BLASTING WITH CONTAINMENT, OR VACUUM ABRASIVE BLASTING. WHERE APPLICABLE, THE CONTRACTOR SHALL ENSURE ANY EXISTING BRIDGE RAIL OR ANY OTHER BRIDGE COMPONENTS ARE PROTECTED DURING THE PATCHING OPERATIONS.

SPECIFIC PATCHING LOCATIONS SHALL BE DETERMINED BY THE ENGINEER IN ACCORDANCE WITH ITEM 519 UNLESS IDENTIFIED IN THE PLANS. IF EXISTING UTILITIES ARE LOCATED WITHIN THE SPECIFIED PATCHING AREAS, THE COST FOR REMOVAL AND REINSTALLING THE UTILITIES SHALL BE INCLUDED IN THIS ITEM. ALL EQUIPMENT, LABOR, MATERIALS AND INCIDENTALS REQUIRED TO PERFORM THE ABOVE DESCRIBED WORK SHALL BE INCLUDED FOR PAYMENT AT THE SQUARE FOOT CONTRACT PRICE FOR ITEM 519 - PATCHING CONCRETE STRUCTURE, AS PER PLAN.

ITEM 519 - PATCHING CONCRETE BRIDGE DECK - TYPE A

A. DESCRIPTION:

THIS ITEM SHALL CONSIST OF FURNISHING THE NECESSARY LABOR, MATERIALS AND EQUIPMENT TO REPAIR CONCRETE BRIDGE DECKS, INCLUDING THE REMOVAL OF ALL LOOSE AND UNSOUND CONCRETE, BITUMINOUS PATCHES, SURFACE PREPARATION, BONDING COAT AND THE MIXING, PLACING, FINISHING AND CURING OF THE MORTAR OR CONCRETE PATCHES.

B. MATERIALS:

MATERIALS SHALL CONFORM TO THE FOLLOWING REQUIREMENTS:

FINE AGGREGATE (NATURAL SAND) 703.02
COARSE AGGREGATE (NO. 8) 703.02
PORTLAND CEMENT 701.05
QUICK SETTING CONCRETE MORTAR, TYPE 1 OR 2 .....705.21
AIR-ENTRAINING ADMIXTURE 705.10
CURING MATERIALS - TYPE A OR B PATCHES 705.07
CURING MATERIALS - TYPE C PATCHES .....MFGR'S RECOMMENDATIONS

C. REMOVAL OF UNSOUND CONCRETE:

THE ENGINEER SHALL SOUND AND OUTLINE THE AREAS TO BE REMOVED PER DIRECTION OF THE ENGINEER. SOUNDING MAY HAVE TO BE DELAYED UNTIL THE DECK IS SUFFICIENTLY DRY TO PERMIT DETECTION OF ALL AREAS OF DELAMINATION. THE PERIMETER OF ALL REMOVAL AREAS SHALL BE SAWED TO A DEPTH OF 1 INCH TO PRODUCE A VERTICAL OR SLIGHTLY UNDERCUT FACE. ADDITIONAL SAWCUTS MAY BE REQUIRED TO FACILITATE REMOVAL. ALL UNSOUND CONCRETE INCLUDING ALL PATCHES OTHER THAN SOUND PORTLAND CEMENT CONCRETE, AND ALL LOOSE AND DISINTEGRATED CONCRETE SHALL BE REMOVED. THE UNSOUND CONCRETE MAY BE REMOVED BY CHIPPING OR HAND DRESSING. CHIPPING HAMMERS SHALL NOT BE HEAVIER THAN THE NOMINAL 35 POUND CLASS AND SHALL BE OPERATED AT AN ANGLE OF LESS THAN 45 DEGREES MEASURED FROM THE SURFACE OF THE DECK. CONCRETE SHALL BE REMOVED IN A MANNER THAT PREVENTS CUTTING, ELONGATING OR DAMAGING REINFORCING STEEL. WHERE THE BOND BETWEEN CONCRETE AND A PRIMARY REINFORCING BAR HAS BEEN DESTROYED, OR WHERE MORE THAN ONE HALF OF THE PERIPHERY OF SUCH A BAR HAS BEEN EXPOSED, THE ADJACENT CONCRETE SHALL BE REMOVED TO A DEPTH THAT WILL PROVIDE A MINIMUM ¾ INCH CLEARANCE AROUND THE BAR EXCEPT WHERE OTHER REINFORCING BARS MAKE THIS IMPRACTICABLE. REINFORCMENT WHICH HAS BECOME LOOSE SHALL BE ADEQUATELY SUPPORTED AND TIED BACK INTO PLACE. AFTER COMPLETION OF THE SECONDARY REMOVAL OPERATIONS, THE ENGINEER WILL RE-SOUND THE DECK TO ENSURE THAT ONLY SOUND CONCRETE REMAINS. MINIMIZE CONSTRUCTION JOINTS. CONSTRUCTION JOINTS SHALL ONLY BE PLACED ON THE PERIMETER OF THE REMOVAL AREAS.

D. SURFACE PREPARATION:

CLEANING SHALL CLOSELY PRECEDE APPLICATION OF THE BONDING GROUT AND/OR THE PATCHING MATERIAL. THE SURFACE TO BE PATCHED AND THE EXPOSED REINFORCING STEEL SHALL BE THOROUGHLY CLEANED BY SANDBLASTING FOLLOWED BY AN AIR BLAST. IT MAY BE NECESSARY TO USE HAND TOOLS TO REMOVE SCALE FROM THE REINFORCING STEEL. FOR TYPE A AND TYPE B PATCHES AND TYPE C PATCHES WHICH DO NOT USE WATER AS THE ACTIVATOR, THE PREPARED SURFACE SHALL BE SURFACE DRY. FOR TYPE C PATCHES WHICH REQUIRE WATER AS THE ACTIVATOR, THE PREPARED SURFACE SHALL BE LEFT IN THE CONDITION AS RECOMMENDED BY THE MANUFACTURER. ANY ADDITIONAL SURFACE PREPARATION SHALL BE IN ACCORDANCE WITH THE MANUFACTURER'S RECOMMENDATIONS FOR THE PATCHING MATERIAL WHICH IS USED.

E. BONDING GROUT:

THE GROUT FOR BONDING TYPE A PATCHES SHALL CONSIST OF EQUAL PARTS BY VOLUME OF PORTLAND CEMENT AND SAND, MIXED WITH SUFFICIENT WATER TO FORM A STIFF SLURRY. THE CONSISTENCY OF THIS SLURRY SHALL BE SUCH THAT IT CAN BE APPLIED WITH A STIFF BRUSH OR BROOM TO THE EXISTING SURFACE IN A THIN, UNIFORM COATING. THE COATING OF GROUT SHALL BE SCRUBBED ONTO THE DRY SURFACE IMMEDIATELY BEFORE PLACING THE CONCRETE. CARE SHALL BE EXERCISED TO ENSURE THAT NO EXCESS GROUT IS PERMITTED TO COLLECT IN LOW SPOTS. IN NO CASE SHALL THE GROUT BE PERMITTED TO DRY BEFORE PLACING THE NEW CONCRETE. THINNED GROUT SHALL BE PAINTED OVER ALL JOINTS BETWEEN THE NEW AND EXISTING CONCRETE IMMEDIATELY AFTER THE FINISHING HAS BEEN COMPLETED. TYPE B AND TYPE C PATCHES SHALL BE BONDED ACCORDING TO THE MANUFACTURER'S RECOMMENDATIONS.

F. PATCHING:

THE MORTAR OR CONCRETE SHALL BE PLACED AS TYPE A, B, OR C.

1. TYPE A - THE MIXTURE SHALL CONSIST OF 1 PART HIGH-EARLY-STRENGTH PORTLAND CEMENT, 1½ PARTS FINE AGGREGATE AND 1½ PARTS COARSE AGGREGATE BY VOLUME. SUFFICIENT AIR-ENTRAINING AGENT SHALL BE ADDED TO MAINTAIN AN AIR CONTENT OF 8 PLUS OR MINUS 2 PERCENT. THE SLUMP SHALL BE THE MINIMUM PRACTICAL FOR PLACING AND IN NO CASE SHALL IT EXCEED 2 INCHES. THE MATERIALS SHALL BE MIXED AT THE SITE. READY-MIXED CONCRETE SHALL NOT BE PERMITTED. THE MIX SHALL BE PLACED IN THE AREA TO BE PATCHED WHILE THE BONDING GROUT IS STILL WET, SLIGHTLY OVERFILLED AND STRUCK OFF WITH A VIBRATING SCREED DRAWN SLOWLY ACROSS THE AREA. HAND FINISHING WITH A WOOD FLOAT MAY BE REQUIRED TO PRODUCE A TIGHT, UNIFORM SURFACE.

2. TYPE B - PATCHING MATERIAL SHALL BE MADE USING QUICK SETTING CONCRETE MORTAR, TYPE 1 OR 2, 705.21, AND SUITABLE FOR TRAFFIC AFTER OVERNIGHT CLOSURES WITH LIMITED CURING TIME. THE MORTAR SHALL BE MIXED AND PLACED AS PER MANUFACTURER'S RECOMMENDATIONS. COARSE AGGREGATE MAY BE ADDED IN ACCORDANCE WITH THE MANUFACTURER'S INSTRUCTIONS WHEN THE DEPTH OF THE PATCH EXCEEDS 1 INCH.

3. TYPE C - PATCHING MATERIAL SHALL BE MADE USING A BLEND OF 705.21 TYPE 2 MATERIAL AND SELECTED AGGREGATES WITH AN ACTIVATOR. THESE MATERIALS SHALL BE MIXED AND PLACED AS PER MANUFACTURER'S RECOMMENDATIONS. COARSE AGGREGATE MAY BE ADDED IN ACCORDANCE WITH THE MANUFACTURER'S INSTRUCTIONS WHEN THE DEPTH OF THE PATCH EXCEEDS 1 INCH.

G. CURING:

TYPE A PATCHES SHALL BE CURED IN ACCORDANCE WITH SECTION 511.14, METHOD (A), FOR NOT LESS THAN 24 HOURS IF MEMBRANE WATERPROOFING IS TO BE APPLIED IMMEDIATELY. IF NOT, METHOD (A) SHALL BE USED FOR 48 HOURS, AFTER WHICH THE MEMBRANE CURING MATERIAL SHALL BE APPLIED AT A RATE OF NOT LESS THAN ONE GALLON PER 200 SQUARE FEET. MEMBRANE CURING MATERIAL SHALL BE REMOVED PRIOR TO PLACING WATERPROOFING. TYPE B AND TYPE C PATCHES SHALL BE CURED IN ACCORDANCE WITH THE MANUFACTURER'S RECOMMENDATIONS.

H. METHOD OF MEASUREMENT:

THE QUANTIITY SHALL BE THE ACTUAL AREA IN SQUARE YARDS OF THE EXPOSED SURFACE OF ALL PATCHES, IRRESPECTIVE OF THE DEPTH OF THE PATCH, COMPLETE, IN PLACE AND ACCEPTED.

I. BASIS OF PAYMENT:

PAYMENT SHALL BE MADE AT THE CONTRACT PRICE BID FOR:

ITEM	UNIT	DESCRIPTION
519	SQUARE YARD	PATCHING CONCRETE BRIDGE DECK, TYPE A

RICHLAND ENGINEERING LIMITED
29 NORTH PARK STREET
MANSFIELD, OHIO 44902

DESIGNED	DRAWN	REVIEWED	DATE
BLN	JLS	DLR	01/2021
CHECKED	REVISED	STRUCTURE FILE NUMBER	
RWC		1806297	

GENERAL NOTES - 1 - LOCATION 6
BRIDGE NO. CUY-77-0881
IR 77 RAMP OVER IR 480 RAMP

CUY-BH-FY2021(B) MISC
PID No. 109131

F:\2019\119034 VAR-Dist 12 Cuyahoga Co. Bridge Rehab Designs\ProjectData\109131\Design\Structures\CUY077_0881C\Sheets\077_0881GN001.dgn 2/17/2021 11:54:04 AM jsmith

ITEM 844 - CONCRETE PATCHING WITH GALVANIC ANODE PROTECTION, AS PER PLAN

REPAIR WORK SHALL BE PER SUPPLEMENTAL SPECIFICATION 844. THE MINIMUM SPACING OF 100 GRAM ZINC ANODE SHALL BE 18" OR EQUIVALENT TOTAL ZINC CONTENT PER AREA. THIS ITEM SHALL BE PER ITEM 844 - CONCRETE PATCHING WITH GALVANIC ANODE PROTECTION, AS PER PLAN AND INCLUDE ALL REQUIRED PATCHING AND PROTECTION WORK TO MAKE THE PIER COLUMNS READY FOR THE COMPOSITE FIBER WRAP SYSTEM.

ITEM SPECIAL - COMPOSITE FIBER WRAP SYSTEM

DESCRIPTION: THIS WORK SHALL CONSIST OF PROVIDING AND INSTALLING A FIBER WRAP INCLUDING PREPARATION, WRAPPING THE PIER, AND ALL INCIDENTALS NECESSARY TO COMPLETE THIS WORK. THE INSTALLATION SHALL BE PER THE MANUFACTURER'S REQUIREMENTS.

MATERIALS: SUPPLIERS SHALL HAVE A MINIMUM OF 10 INSTALLATIONS AND FURNISH CERTIFIED TEST REPORTS INCLUDING 1000 HOUR TESTS FOR 140 °F WATER, SALT WATER, ALKALINE SOIL, OZONE AND EFFERVESCENCE IN ADDITION TO THE REQUIREMENTS LISTED BELOW.

THE FABRIC FOR THE COMPOSITE CASING SHALL BE CONTINUOUS FILAMENT WOVEN FABRIC. PRIMARY FIBERS FOR THE FABRIC SHALL BE (E) ELECTRICAL GLASS FIBERS. THE FIBER SHALL HAVE A MINIMUM NOMINAL THICKNESS OF 0.05 INCHES.

THE MINIMUM WEIGHT OF THE FABRIC SHALL BE 27.0 OUNCES PER SQUARE YARD.

THE EPOXY SHALL BE SUPPLIED BY THE MANUFACTURER TO MEET THE COMPOSITE STRENGTH GIVEN BELOW. POLYESTER RESIN SHALL NOT BE ALLOWED AS A SUBSTITUTE FOR EPOXY RESIN.

THE COMPOSITE OF THE FIBER WRAPPED COLUMN CASING SYSTEM SHALL CONFORM TO THE FOLLOWING REQUIREMENTS:

PROPERTY	REQUIREMENTS	ASTM TEST METHOD
ULTIMATE TENSILE STRENGTH, PSI MIN. IN PRIMARY FIBER DIRECTION	60,000 PSI	D3039, AVERAGE OF 7, 1" BY 10" NORMALIZED TO 0.80" THICK 0.01" PER MINUTE TESTING SPEED
ULTIMATE TENSILE STRENGTH, PSI MIN. IN ORTHOGONAL FIBER DIRECTION	3,000 PSI	D3039, AVERAGE OF 7, 1" BY 10" NORMALIZED TO 0.80" THICK 0.01" PER MINUTE TESTING SPEED
TENSILE STRENGTH (MIN. AFTER TEST) 1000 HOURS EXPOSURE TO 100% HUMIDITY	60,000 PSI	C581
TENSILE STRENGTH (MIN. AFTER TEST) 1000 HOURS EXPOSURE TO OZONE	60,000 PSI	D1149 EXCEPT NOT UNDER STRESS DURING OZONE EXPOSURE
TENSILE STRENGTH (MIN. AFTER TEST) 1000 HOURS EXPOSURE TO ALKALI	60,000 PSI	D3038 USING SOIL BURIAL - WATER CONTENT OF 73% ± 3%
TENSILE STRENGTH (MIN. AFTER TEST) 1000 HOURS EXPOSURE TO SALT WATER	60,000 PSI	C581 AND D1141 OMITTING ADDITION OF HEAVY METAL REAGENTS
TENSILE STRENGTH (MIN. AFTER TEST) 1000 HOURS EXPOSURE @ 140 DEGREES F	60,000 PSI	D3045
TENSILE STRENGTH (MIN. AFTER TEST) ULTRAVIOLET (UV) EXPOSURE	60,000 PSI	G154 USING FS40 UV-B BULBS FOR A MIN. 40 CYCLES. THE CYCLE SHALL BE 4 HOURS OF CONDENSATE EXPOSURE AT 40 DEGREES C.
ELONGATION: PERCENT, MIN. PERCENT, MAX.	 1.7 % 5.0 %	
TENSILE MODULUS, PSI MIN. OF PRIMARY FIBERS	3,000,000	D3039
VISUAL EFFECTS	ACCEPTANCE LEVEL III	D2563
COEFFECIENT OF THERMAL EXPANSION IN THE PRIMARY DIRECTION	4,300,000 PPM/DEG. F (+15%)	D696

SURFACE PREPARATION: THE SURFACE TO RECEIVE THE COMPOSITE WRAP SHALL BE FREE FROM FINS, SHARP EDGES, AND PROTRUSIONS THAT WILL CAUSE VOIDS BEHIND THE CASING OR THAT, IN THE OPINION OF THE ENGINEER, WILL DAMAGE THE FIBER. IF FIBERS ARE TO WRAP AROUND CORNERS OF RECTANGLE CROSS-SECTIONS, THE CORNERS SHALL BE ROUNDED TO A 1/2 INCH RADIUS. THIS WILL HELP PREVENT STRESS CONCENTRATIONS IN THE FIBER WRAP AND VOIDS BETWEEN THE FIBER WRAP AND THE CONCRETE. IN ADDITION, THE SURFACE SHALL BE SMOOTH AND FREE OF VOIDS OR UNDULATIONS THAT WOULD PREVENT FULL CONTACT BETWEEN THE CONCRETE AND THE FIBER WRAP. THE REMOVAL OF THE EXISTING COATING FROM THE CONCRETE SURFACES IS INCLUDED WITH THE SURFACE PREPARATION FOR THE COMPOSITE FIBER WRAP SYSTEM AND WILL NOT BE PAID SEPARATELY UNDER ITEM 512.

COMPOSITE APPLICATION: THE AMBIENT TEMPERATURE AND THE TEMPERATURE OF THE EPOXY RESIN COMPONENTS SHALL BE BETWEEN 55 DEG. F AND 95 DEG. F AT THE TIME OF MIXING. THE COMPOSITE SHALL BE APPLIED WHEN THE RELATIVE HUMIDITY IS LESS THAN 85% AND THE SURFACE TEMPERATURE IS MORE THAN 5 DEG. F ABOVE THE DEW POINT. APPLICATION SHALL BEGIN WITHIN ONE HOUR AFTER THE BATCH HAS BEEN MIXED. A MANUFACTURER REPRESENTATIVE SHALL BE ON SITE FOR THE FIRST APPLICATION OF THE COMPOSITE FIBER WRAP SYSTEM TO APPROVE THE CONTRACTOR'S APPLICATION PROCESS. THIS REQUIREMENT MAY BE WAIVED WITH WRITTEN APPROVAL FROM THE ENGINEER.

THE COMPONENTS OF THE EPOXY RESIN SHALL BE MIXED WITH A MECHANICAL MIXER AND APPLIED UNIFORMLY TO THE FIBER AT A RATE THAT SHALL INSURE COMPLETE SATURATION OF THE FABRIC.

THE FABRIC/EPOXY COMPOSITE SHALL BE APPLIED TO THE SURFACE OF THE COLUMN BY WRAPPING METHODS THAT PRODUCE A UNIFORM FORCE THAT IS DISTRIBUTED ACROSS THE ENTIRE WIDTH OF THE FABRIC. THE PRIMARY FIBERS OF THE FABRIC SHALL NOT DEVIATE FROM A HORIZONTAL LINE MORE THAN 1/2 INCH PER FOOT. ENTRAPPED AIR SHALL BE RELEASED OR ROLLED OUT BEFORE THE EPOXY SETS.

SUCCESSIVE LAYERS OF COMPOSITE MATERIALS SHALL BE PLACED BEFORE POLYMERIZATION OF THE PREVIOUS LAYER OF EPOXY IS TOO DRY TO ACHIEVE ADEQUATE BOND BETWEEN LAYERS. IF POLYMERIZATION DOES OCCUR BETWEEN LAYERS THE SURFACE MUST BE ROUGHENED USING A LIGHT ABRASIVE THAT WILL NOT DAMAGE THE FIBER.

THE FINAL LAYER OF EPOXY SHALL BE APPLIED TO THE FINAL LAYER OF FABRIC, WITH CARE TAKEN TO ENSURE COATING OF ALL EDGES AND SEAMS. SPACES BETWEEN THE BANDS OF FABRIC SHALL BE FILLED WITH EPOXY THICKENED AS DIRECTED BY THE MANUFACTURER.

A FINAL INSPECTION SHALL BE PERFORMED ON ALL FIBER WRAPPED COLUMNS AFTER THE EPOXY SETS YET PRIOR TO THE APPLICATION OF THE URETHANE TOP COAT. ALL DEFECTS (INCLUDING BUBBLES, DELAMINATIONS AND FABRIC TEARS) MORE THAN 1 SQUARE INCH OF THE SURFACE AREA, OR AS SPECIFIED BY THE PROJECT ENGINEER, SHALL BE REPAIRED AS SUCH.

1. SMALL DEFECTS (ON THE ORDER OF 6" DIAMETER) SHALL BE INJECTED OR BACK FILLED WITH EPOXY.
2. BUBBLES LESS THAN 12" DIAMETER SHALL BE REPAIRED BY INJECTING WITH EPOXY. TWO HOLES SHALL BE DRILLED INTO THE BUBBLE TO ALLOW INJECTION OF THE EPOXY AND ESCAPE OF ENTRAPPED AIR.
3. BUBBLES, DELAMINATIONS AND FABRIC TEARS GREATER THAN 12" IN DIAMETER SHALL BE REPAIRED BY REMOVING AND REAPPLYING THE REQUIRED NUMBER OF LAYERS OF THE COMPOSITE AND THE REQUIRED FINISH COATING. ALL REPAIRS SHALL BE APPROVED BY THE PROJECT ENGINEER.

COATING SYSTEM APPLICATION: A FINAL URETHANE COATING IS REQUIRED TO PROTECT THE FIBERS FROM THE ELEMENTS, SPECIFICALLY UV RADIATION, AND TO GIVE THE FINAL AESTHETIC EFFECT.

AFTER 96 HOURS FROM THE FINAL APPLICATION OF EPOXY, IF THE FINAL EPOXY COAT IS COMPLETELY POLYMERIZED, THE EXTERIOR SURFACES OF THE COMPOSITE WRAP SHALL BE CLEANED AND ROUGHENED BY A LIGHT ABRASIVE. CARE SHOULD BE TAKEN DURING THE ROUGHENING PROCESS SO THAT THE FIBERS ARE NOT DAMAGED. ALL CLEANED AND ROUGHENED SURFACES SHALL BE DRY BEFORE APPLYING THE URETHANE COATING.

MEASUREMENT AND PAYMENT: THE DEPARTMENT WILL PAY FOR THIS ITEM PER SQUARE FOOT OF FIBER WRAP MATERIAL INSTALLED AND ACCEPTED TO COMPLETE THE PROPOSED WORK. THE BID PRICE SHALL INCLUDE ALL LABOR, MATERIALS AND EQUIPMENT NECESSARY TO PROVIDE AND INSTALL A FIBER WRAP COLUMN CASING SYSTEM USING HIGH STRENGTH, HYBRID FIBER/EPOXY COMPOSITES FIELD APPLIED TO THE COLUMN, INCLUDING ERECTION OF SCAFFOLDING, CLEANING, SURFACE PREPARATION, WRAPPING THE COLUMN, URETHANE SEALER, AND ALL INCIDENTALS NECESSARY TO COMPLETE THE INSTALLATION PER THE MANUFACTURER'S REQUIREMENTS. PAYMENT FOR ALL OF THE ABOVE SHALL BE AT THE UNIT PRICE BID PER SQUARE FOOT FOR ITEM SPECIAL - COMPOSITE FIBER WRAP SYSTEM.

RICHLAND ENGINEERING LIMITED
29 NORTH PARK STREET
MANSFIELD, OHIO 44902

DESIGNED	DRAWN	REVIEWED	DATE
BLN	JLS	DLR	01/2021
CHECKED	REVISED	STRUCTURE FILE NUMBER	
RWC		1806297	

GENERAL NOTES - 2 - LOCATION 6
BRIDGE NO. CUY-77-0881
IR 77 RAMP OVER IR 480 RAMP

CUY-BH-FY2021(B) MISC
PID No. 109131

F:\2019\119034 VAR-Dist 12 Cuyahoga Co. Bridge Rehab Designs\ProjectData\109131\Design\Structures\CUY077_0881C\Sheets\077_0881GN001.dgn 1/29/2021 1:20:14 PM dhelman

ESTIMATED QUANTITIES

CALCULATED JLS DATED 12/20
CHECKED RWC DATED 10/20

ITEM	ITEM EXT.	TOTAL	UNIT	DESCRIPTION	SUPER.	PIERS	ABUTS.	GEN'L	REF. SHEET /
202	11203	LS		PORTIONS OF STRUCTURE REMOVED, OVER 20 FOOT SPAN, AS PER PLAN				LS	2/9
511	34410	3	CY	CLASS QC2 CONCRETE, SUPERSTRUCTURE			3		
512	10101	248	SY	SEALING OF CONCRETE SURFACES (EPOXY-URETHANE), AS PER PLAN		88	160		2/9
512	74001	241	SY	REMOVAL OF EXISTING COATINGS FROM CONCRETE SURFACES, AS PER PLAN		88	153		2/9
513	90000	741	LB	STRUCTURAL STEEL, MISC.: DAMAGED CROSSFRAME REPLACEMENT	741				8/9 9/9
514	21000	LS		FIELD PAINTING OF DAMAGED STRUCTURAL STEEL				LS	
SPECIAL	51900100	1166	SF	COMPOSITE FIBER WRAP SYSTEM		1166			3/9
519	11101	67	SF	PATCHING CONCRETE STRUCTURE, AS PER PLAN			67		2/9
519	12200	7	SY	PATCHING CONCRETE BRIDGE DECK, TYPE A	7				2/9
844	10001	34	SF	CONCRETE PATCHING WITH GALVANIC ANODE PROTECTION, AS PER PLAN		34			3/9
849	10000	LS		DAMAGE ASSESSMENT				LS	
849	10500	LS		SURFACE PREPARATION				LS	
849	10600	5	HOUR	REPAIRING DAMAGED MEMBERS BY GRINDING	5				
849	10700	LS		STRAIGHTENING DAMAGED MEMBERS				LS	

RICHLAND ENGINEERING LIMITED
29 NORTH PARK STREET
MANSFIELD, OHIO 44902

DESIGNED BLN | DRAWN JLS | REVIEWED DLR | DATE 01/2021
CHECKED RWC | REVISED | STRUCTURE FILE NUMBER 1806297

ESTIMATED QUANTITIES - LOCATION 6
BRIDGE NO. CUY-77-0881
IR 77 RAMP OVER IR 480 RAMP

CUY-BH-FY2021(B) MISC
PID No. 109131

F:\2019\119034 VAR-Dist 12 Cuyahoga Co. Bridge Rehab Designs\ProjectData\109131\Design\Structures\CUY077_0881C\Sheets\077_0881EQ001.dgn 2/10/2021 3:28:03 PM jsmith

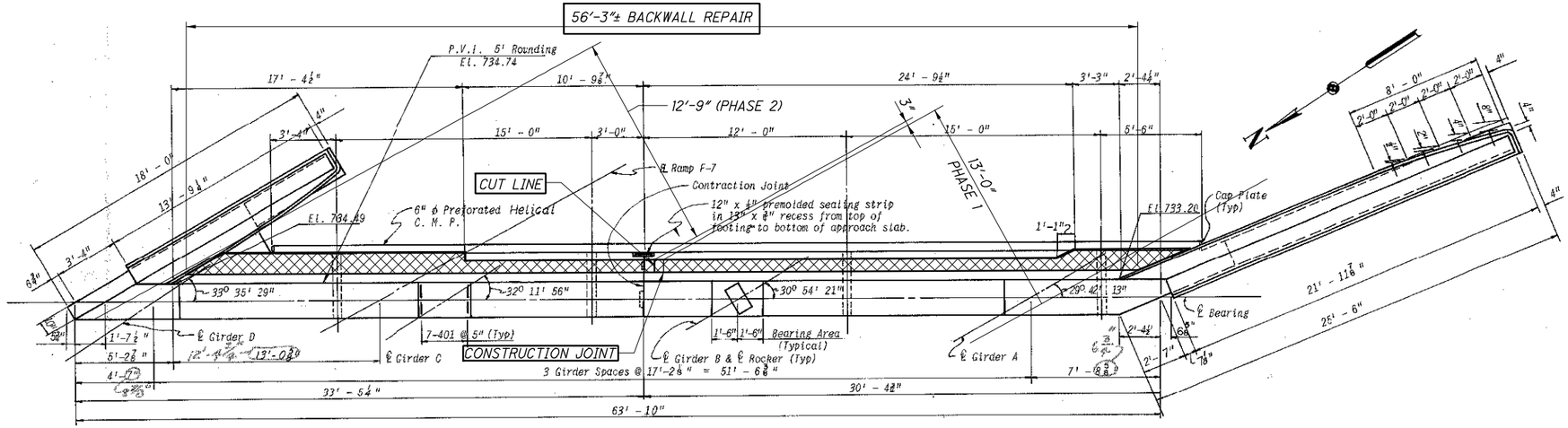

PLAN

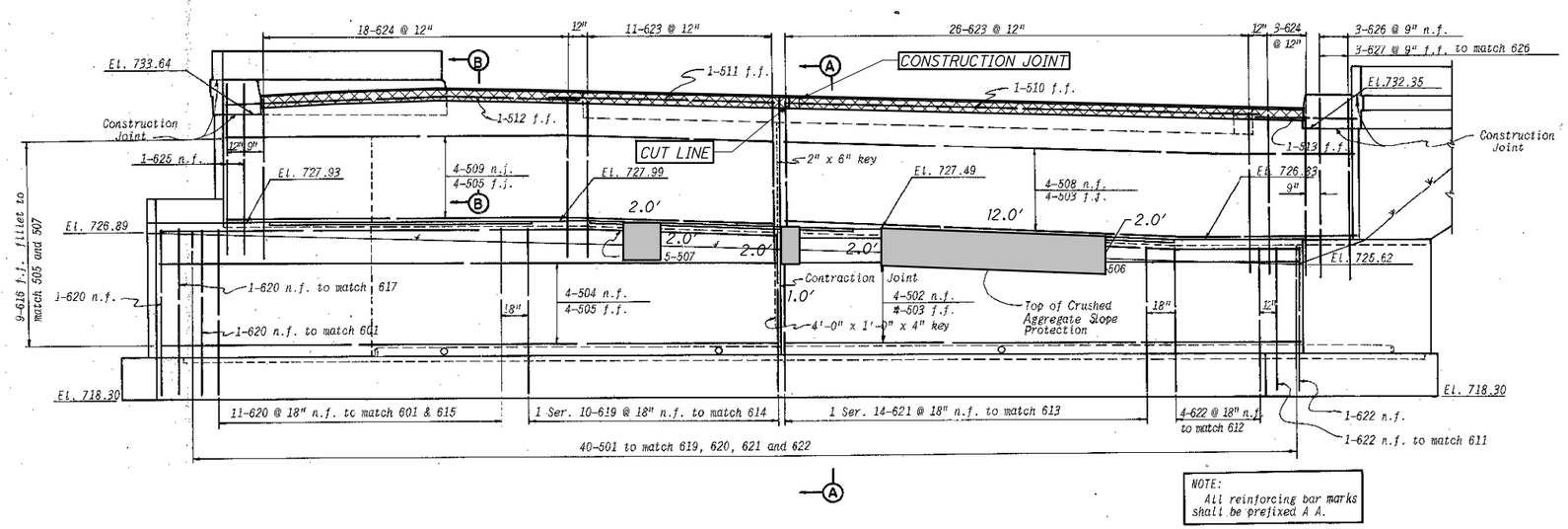

NOTE:
All reinforcing bar marks shall be prefixed A A.

ELEVATION

(Type 1 Railing Not Shown)

LEGEND

INDICATES CONCRETE TO BE REMOVED PER ITEM 202 - PORTIONS OF STRUCTURE REMOVED, OVER 20 FOOT SPAN, AS PER PLAN, AND REPLACED PER ITEM 511 - CLASS QC2 CONCRETE, SUPERSTRUCTURE.

INDICATES AREAS OF CONCRETE PATCHING PER ITEM 519 - PATCHING CONCRETE STRUCTURE, AS PER PLAN. TOTAL AREA THIS SHEET = 30 S.F.

NOTES

SECTIONS A-A & B-B: SEE SHEET 6/9.

DETAILS ON THIS SHEET ARE TAKEN FROM EXISTING PLANS AND SHOULD BE USED FOR INFORMATIONAL PURPOSES ONLY.

RICHLAND ENGINEERING LIMITED
29 NORTH PARK STREET
MANSFIELD, OHIO 44902

DESIGNED	DRAWN	REVIEWED	DATE
BLN	JLS	DLR	01/2021
CHECKED	REVISED	STRUCTURE FILE NUMBER	
RWC		1806297	

REAR ABUTMENT REMOVAL - LOCATION 6
BRIDGE NO. CUY-77-0881
IR 77 RAMP OVER IR 480 RAMP

CUY-BH-FY2021(B) MISC
PID No. 109131

F:\2019\119034 VAR-Dist 12 Cuyahoga Co. Bridge Rehab Designs\ProjectData\109131\Design\Structures\CUY077_0881C\Sheets\077_0881AR001.dgn 2/10/2021 3:30:17 PM jsmith

NOTE: Elevations along backwall are given to top of 8 x 4 x 1 angle at end dam.
Curb transitions the same for both wingwalls.

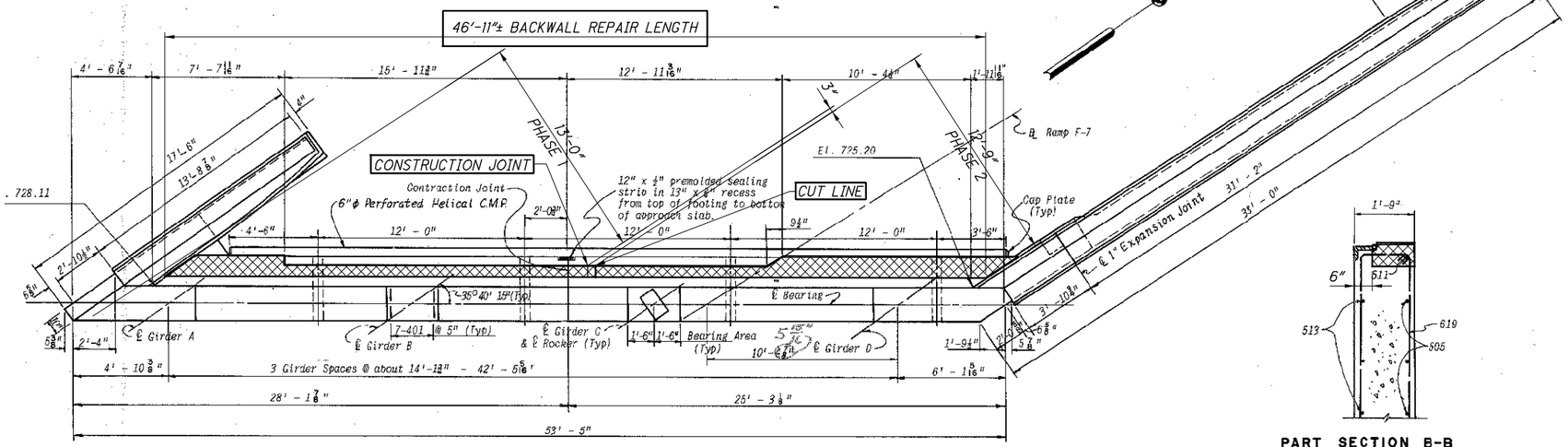

PLAN

PART SECTION B-B

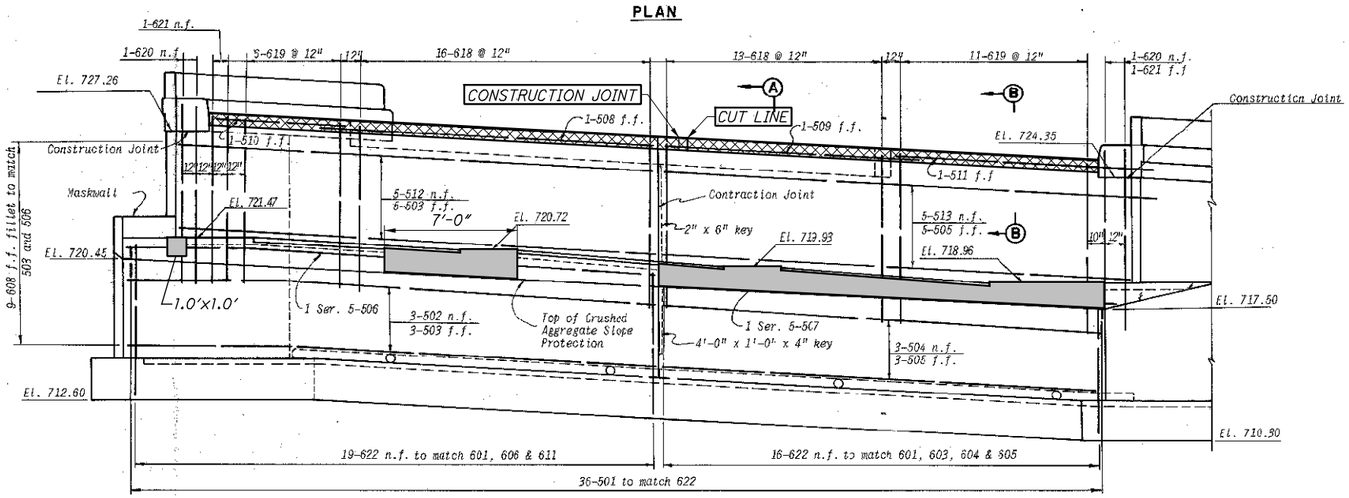

ELEVATION

(Type 1 Railing Not Shown)

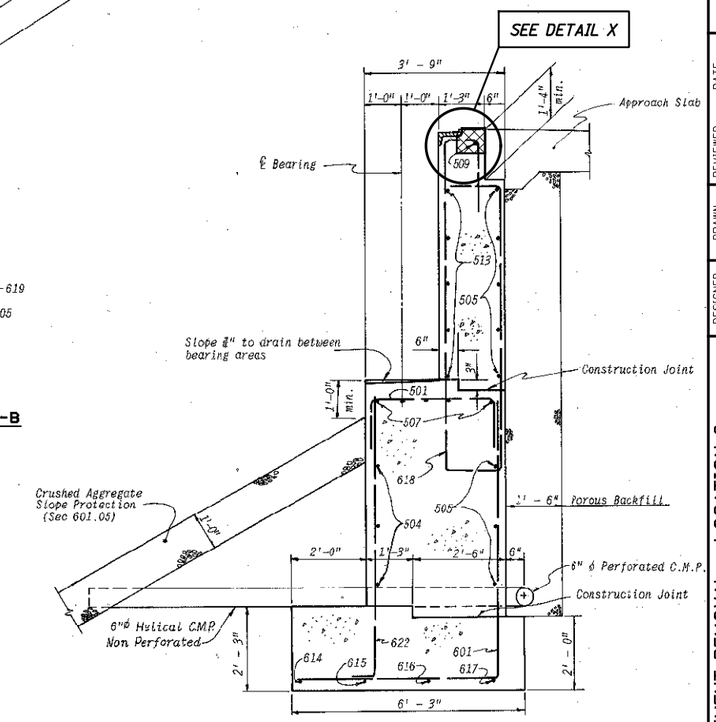

SECTION A-A

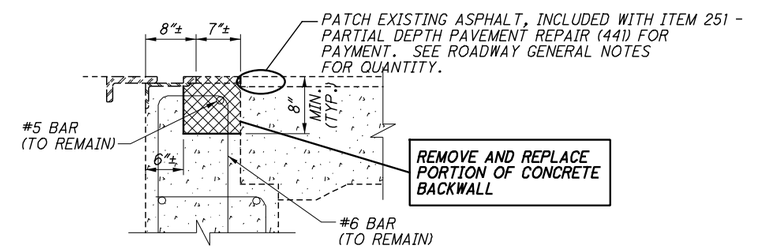

DETAIL X

LEGEND

INDICATES CONCRETE TO BE REMOVED PER ITEM 202 - PORTIONS OF STRUCTURE REMOVED, OVER 20 FOOT SPAN, AS PER PLAN, AND REPLACED PER ITEM 511 - CLASS QC2 CONCRETE, SUPERSTRUCTURE.

INDICATES AREAS OF CONCRETE PATCHING PER ITEM 519 - PATCHING CONCRETE STRUCTURE, AS PER PLAN. TOTAL AREA THIS SHEET = 37 S.F.

NOTES

DETAILS ON THIS SHEET ARE TAKEN FROM EXISTING PLANS AND SHOULD BE USED FOR INFORMATIONAL PURPOSES ONLY.

RICHLAND ENGINEERING LIMITED
29 NORTH PARK STREET
MANSFIELD, OHIO 44902

DESIGNED	DRAWN	REVIEWED	DATE
BLN	JLS	DLR	01/2021
CHECKED	REVISED	STRUCTURE FILE NUMBER	
RWC		1806297	

FORWARD ABUTMENT REMOVAL - LOCATION 6
BRIDGE NO. CUY-77-0881
IR 77 RAMP OVER IR 480 RAMP

CUY-BH-FY2021(B) MISC
PID No. 109131

F:\2019\119034 VAR-Dist 12 Cuyahoga Co. Bridge Rehab Designs\ProjectData\10913\Design\Structures\CUY077_0881C\Sheets\077_0881AF001.dgn 6/3/2021 7:32:54 AM rbrokaw

F:\2019\119034 VAR-Dist 12 Cuyahoga Co. Bridge Rehab Designs\ProjectData\109131\Design\Structures\CUY077_0881C\Sheets\077_0881P1001.dgn 2/10/2021 3:32:38 PM jsmith

* - DELAMINATION

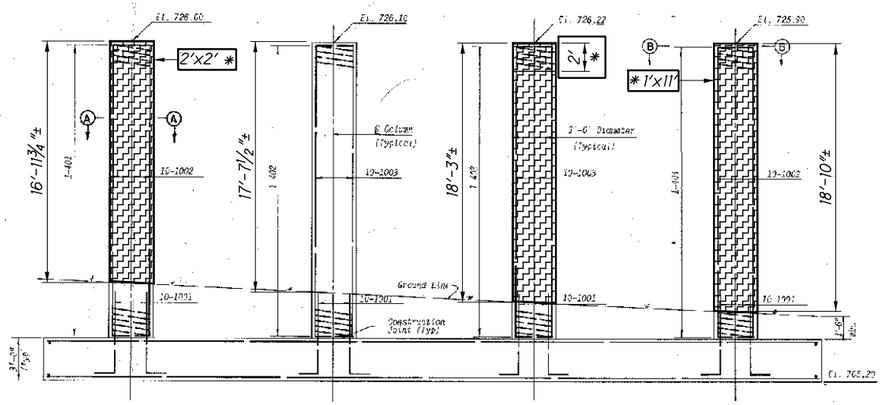

PIER 1 ELEVATION

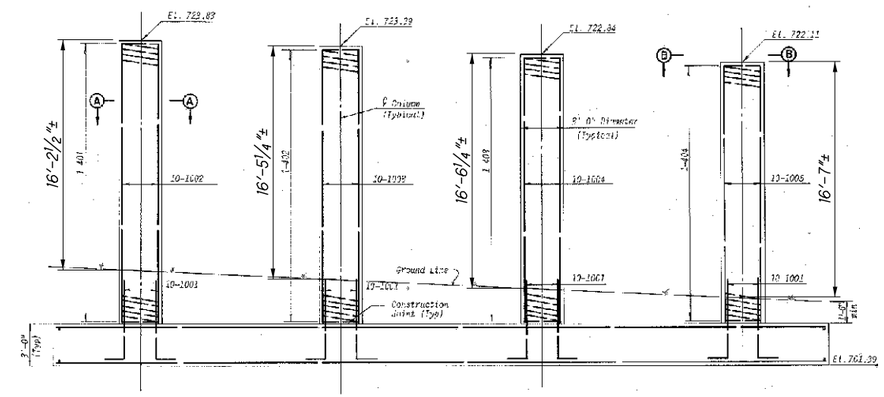

PIER 2 ELEVATION

LEGEND

INDICATES CONCRETE PIER COLUMN REPAIR PER ITEM SPECIAL - STRUCTURES, COMPOSITE FIBER WRAP SYSTEM AND ITEM 844 - CONCRETE PATCHING WITH GALVANIC ANODE PROTECTION, AS PER PLAN. APPROXIMATE AREA OF PATCHING FOR PIER 1 COLUMNS IS 34 S.F.

ALL COLUMNS NOT BEING FIBER WRAPPED WILL BE SEALED USING EPOXY-URETHANE PER ITEM 512 - SEALING OF CONCRETE SURFACES (EPOXY-URETHANE), AS PER PLAN AND ITEM 512 - REMOVAL OF EXISTING COATINGS FROM CONCRETE SURFACES, AS PER PLAN.

A = FIBER WRAP SHALL BE INSTALLED AS ONE CONTINUOUS WRAP, EXTENDING AROUND THE COLUMN TWICE WITH A MINIMUM 1'-0" LAP

B = 2'-0" TYP. FABRIC WIDTH

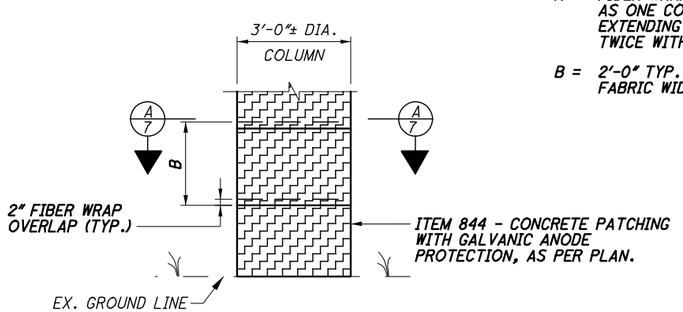

PIER COLUMN FIBER WRAP DETAIL

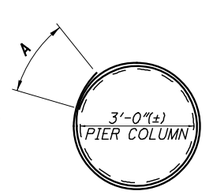

SECTION A-A

NOTES:

1. DETAILS ON THIS SHEET ARE TAKEN FROM EXISTING PLANS AND SHOULD BE USED FOR INFORMATIONAL PURPOSES ONLY.
2. PERFORM ONLY THE WORK AS INDICATED IN THE STRUCTURE DATA TABLE, FRAMED TEXT, AND/OR DESCRIBED IN THE GENERAL NOTES.
3. MATERIALS SHOWN ARE EXISTING UNLESS OTHERWISE NOTED.
4. FOR ESTIMATED QUANTITIES SEE SHEET 4/9.

RICHLAND ENGINEERING LIMITED
29 NORTH PARK STREET
MANSFIELD, OHIO 44902

DESIGNED	DRAWN	REVIEWED	DATE
BLN	JLS	DLR	01/2021
CHECKED	REVISED	STRUCTURE FILE NUMBER	
RWC		1806297	

PIER REPAIR DETAILS - LOCATION 6
BRIDGE NO. CUY-77-0881
IR 77 RAMP OVER IR 480 RAMP

CUY-BH-FY2021(B) MISC
PID No. 109131

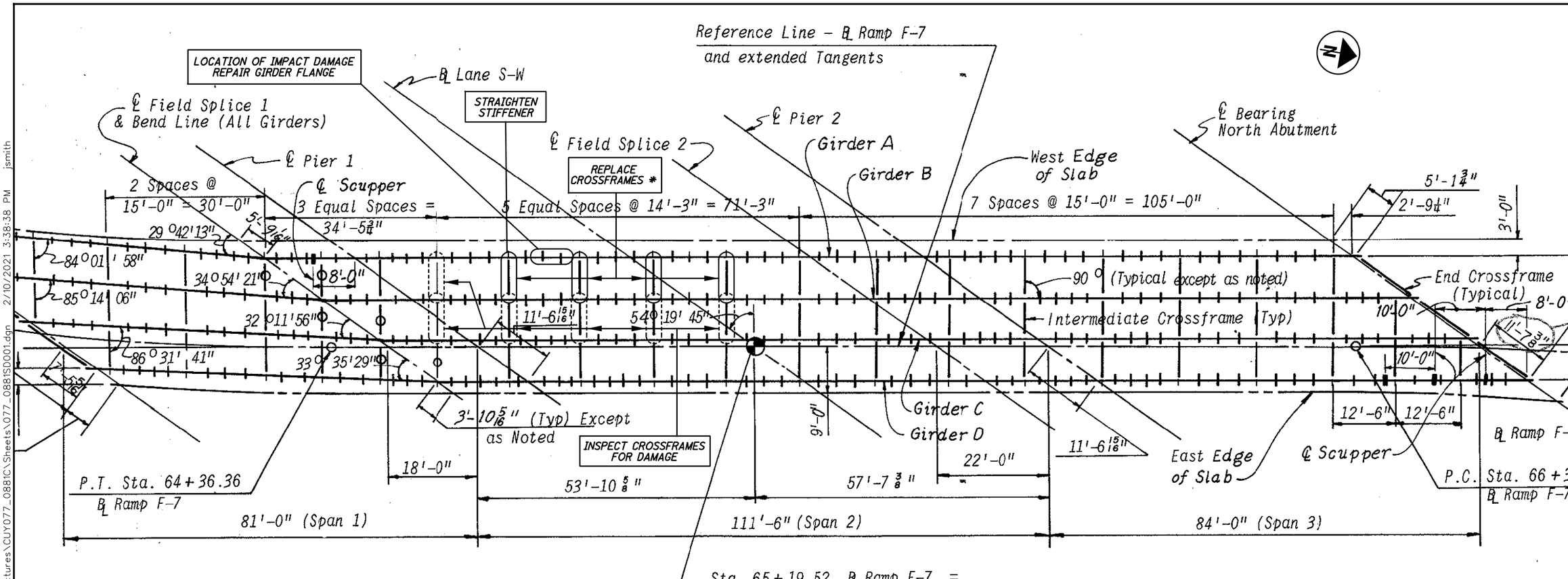

FRAMING PLAN

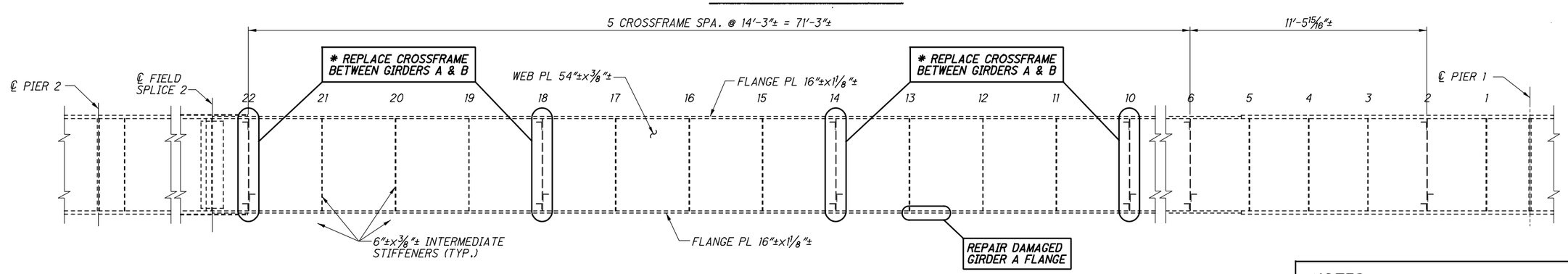

WEST FASCIA GIRDER (GIRDER A) ELEVATION

(LOOKING EAST)

- INDICATES CROSSFRAME TO BE REPLACED

- INDICATES CROSSFRAME TO BE INSPECTED FOR DAMAGE AND REPAIRED AS NEEDED. TO BE PAID UNDER ITEM 849 - DAMAGE ASSESSMENT.

* PER ITEM 513 - STRUCTURAL STEEL, MISC.: DAMAGED CROSSFRAME REPLACEMENT.

NOTES:

1. DETAILS ON THIS SHEET ARE TAKEN FROM EXISTING PLANS AND SHOULD BE USED FOR INFORMATIONAL PURPOSES ONLY.
2. PERFORM ONLY THE WORK AS INDICATED IN THE STRUCTURE DATA TABLE, FRAMED TEXT, AND/OR DESCRIBED IN THE GENERAL NOTES.
3. MATERIALS SHOWN ARE EXISTING UNLESS OTHERWISE NOTED.
4. SEE TYPICAL CROSSFRAME DETAIL ON SHEET 9/9.

RICHLAND ENGINEERING LIMITED
29 NORTH PARK STREET
MANSFIELD, OHIO 44902

DESIGNED	DRAWN	REVIEWED	DATE
BLN	JLS	DLR	01/2021
CHECKED	REVISED	STRUCTURE FILE NUMBER	
RWC		1806297	

WEST GIRDER REPAIR - LOCATION 6
BRIDGE NO. CUY-77-0881
IR 77 RAMP OVER IR 480 RAMP

CUY-BH-FY2021(B) MISC
PID No. 109131

F:\2019\119034 VAR-Dist 12 Cuyahoga Co. Bridge Rehab Designs\ProjectData\109131\Design\Structures\CUY077_0881C\Sheets\077_0881SD001.dgn 2/10/2021 3:38:38 PM jsmith

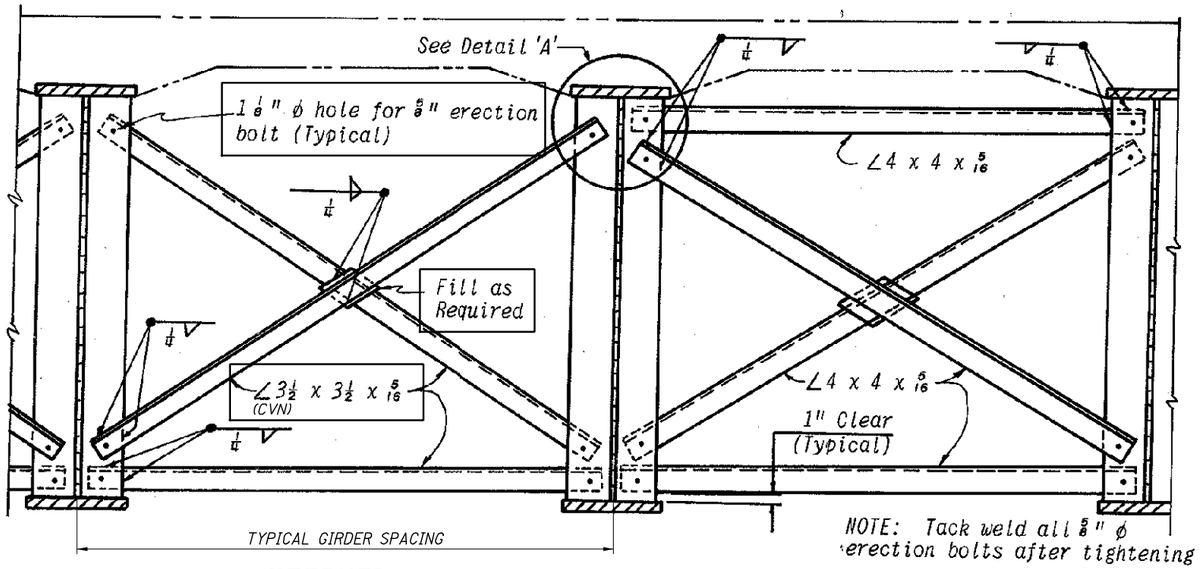

INTERMEDIATE **BEND POINT**

TYPICAL CROSSFRAME

CROSSFRAMES OR CROSSFRAME MEMBERS TO BE REPLACED SHALL BE REPLACED IN KIND ACCORDING TO THE DETAILS SHOWN ABOVE. EXISTING STIFFENERS TO REMAIN.

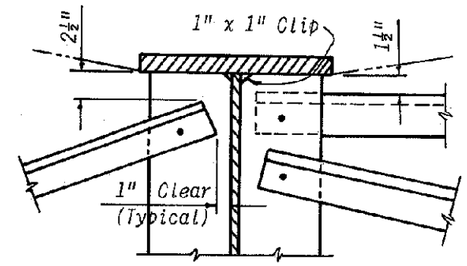

DETAIL 'A'

NOTES:

1. DETAILS ON THIS SHEET ARE TAKEN FROM EXISTING PLANS AND SHOULD BE USED FOR INFORMATIONAL PURPOSES ONLY.
2. PERFORM ONLY THE WORK AS INDICATED IN THE STRUCTURE DATA TABLE, FRAMED TEXT, AND/OR DESCRIBED IN THE GENERAL NOTES.
3. MATERIALS SHOWN ARE EXISTING UNLESS OTHERWISE NOTED.
4. CVN: WHERE A SHAPE OR PLATE IS DESIGNATED (CVN), FURNISH MATERIAL THAT MEETS THE MINIMUM NOTCH TOUGHNESS REQUIREMENTS OF C&MS 711.01.
5. FOR CROSSFRAME REPLACEMENT LOCATIONS SEE SHEET 8/9.

RICHLAND ENGINEERING LIMITED
29 NORTH PARK STREET
MANSFIELD, OHIO 44902

DESIGNED	DRAWN	REVIEWED	DATE
BLN	JLS	DLR	01/2021
CHECKED	REVISED	STRUCTURE FILE NUMBER	
RWC		1806297	

CROSSFRAME REPLACEMENT - LOCATION 6
BRIDGE NO. CUY-77-0881
IR 77 RAMP OVER IR 480 RAMP

CUY-BH-FY2021(B) MISC
PID No. 109131

F:\2019\119034 VAR-Dist 12 Cuyahoga Co. Bridge Rehab Designs\ProjectData\109131\Design\Structures\CUY077_0881C\Sheets\077_0881SD002.dgn 2/10/2021 3:41:03 PM jsmith