STATE OF OHIO
DEPARTMENT OF TRANSPORTATION
CUY-IR-480-06.12 DECK

CITY OF FAIRVIEW PARK
CUYAHOGA COUNTY

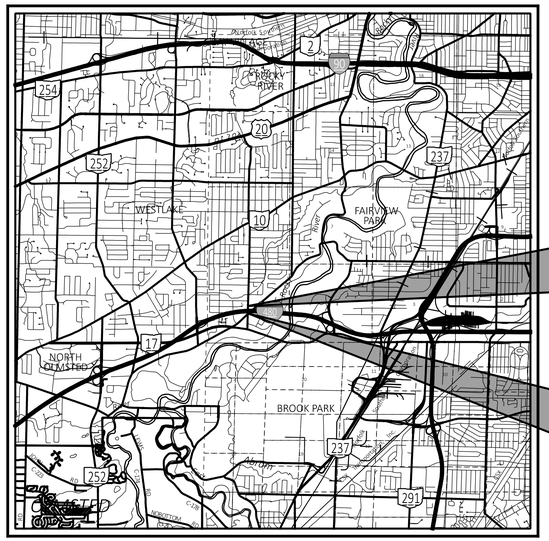

LOCATION MAP

LATITUDE: 41°25'29" N LONGITUDE: 81°51'53" W

PORTION TO BE IMPROVED
INTERSTATE HIGHWAY
FEDERAL ROUTES
STATE ROUTES
COUNTY & TOWNSHIP ROADS
OTHER ROADS

INDEX OF SHEETS:

TITLE SHEET	*P.1*
SCHEMATIC PLAN	*P.2*
TYPICAL SECTIONS	*P.3-P.4*
GENERAL NOTES	*P.5-P.6*
MAINTENANCE OF TRAFFIC	*P.7-P.20A*
GENERAL SUMMARY	*P.21-P.22A*
ROADWAY SUBSUMMARY	*P.23*
PAVEMENT SUBSUMMARY	*P.24*
DRIVE SUBSUMMARY	*P.25*
PLAN AND PROFILE	*P.26*
CROSS SECTIONS - W. 220TH ST.	*P.27-P.30*
INTERSECTION DETAIL	*P.31*
PAVEMENT JOINT DETAILS	*P.32*
DRIVE DETAILS	*P.33*
SIGNING AND PAVEMENT MARKING	*P.34-P.36*
TRAFFIC SIGNAL PLAN	*P.37-P.41*
LIGHTING PLANS	*P.42-P.47*
STRUCTURES OVER 20' SPAN :	
CUY-480-06.12	*P.48-P.86*
RIGHT-OF-WAY PLANS	*RW.1-RW.3*

FEDERAL PROJECT NUMBER

E250004

RAILROAD INVOLVEMENT

NONE

PROJECT DESCRIPTION

THIS PROJECT CONSISTS OF REPLACING THE EXISTING CUY-480-06.12 BRIDGE DECK AND INCREASING THE IR 480 VERTICAL CLEARANCE. THE PROJECT ALSO INCLUDES MINOR ROADWAY WORK TO ACCOUNT FOR THE NEW BRIDGE PROFILE AND DRAINAGE, LIGHTING AND UTILITY IMPROVEMENTS WITHIN THE WORK AREA.

EARTH DISTURBED AREAS

PROJECT EARTH DISTURBED AREA:	*0.32 ACRES*
ESTIMATED CONTRACTOR EARTH DISTURBED AREA:	*0.04 ACRES*
NOTICE OF INTENT EARTH DISTURBED AREA:	*0.36 (NOI NOT REQUIRED)*

2023 SPECIFICATIONS

THE STANDARD SPECIFICATIONS OF THE STATE OF OHIO, DEPARTMENT OF TRANSPORTATION, INCLUDING SUPPLEMENTAL SPECIFICATIONS LISTED IN THE PLANS AND CHANGES LISTED IN THE PROPOSAL SHALL GOVERN THIS IMPROVEMENT.

DESIGN DESIGNATION - WEST 220TH ST

CURRENT ADT (2026)	*6,700*
DESIGN YEAR ADT (2046)	*7,000*
DESIGN HOURLY VOLUME (2043)	*780*
DIRECTIONAL DISTRIBUTION	*51%*
TRUCKS (24 HOUR B&C)	*4%*
DESIGN SPEED	*35 MPH*
LEGAL SPEED	*35 MPH*
DESIGN FUNCTIONAL CLASSIFICATION:	
07 LOCAL ROADS (URBAN)	
NHS PROJECT	*NO*

DESIGN DESIGNATION - I-480

CURRENT ADT (2026)	*115,500*
DESIGN YEAR ADT (2046)	*121,300*
DESIGN HOURLY VOLUME (2043)	*12,130*
DIRECTIONAL DISTRIBUTION	*63%*
TRUCKS (24 HOUR B&C)	*6%*
DESIGN SPEED	*70 MPH*
LEGAL SPEED	*60 MPH*
DESIGN FUNCTIONAL CLASSIFICATION:	
01 INTERSTATE (URBAN)	
NHS PROJECT	*YES*

DESIGN EXCEPTIONS

NONE REQUIRED

ADA DESIGN WAIVERS

NONE REQUIRED

I HEREBY APPROVE THESE PLANS AND DECLARE THAT THE MAKING OF THIS IMPROVEMENT WILL NOT REQUIRE THE CLOSING TO TRAFFIC OF IR-480 AND THAT PROVISIONS FOR THE MAINTENANCE AND SAFETY OF TRAFFIC WILL BE AS SET FORTH ON THE PLANS AND ESTIMATES.

John Picuri, P.E., P.S.
District 12 Deputy Director

Pamela Boratyn
Director, Department of Transportation

UNDERGROUND UTILITIES
Contact Two Working Days Before You Dig
OHIO811.org Before You Dig
OHIO811. 8-1-1. or 1-800-362-2764
(Non members must be called directly)

PLAN PREPARED BY:
ms consultants, inc.
ENGINEERS, ARCHITECTS & PLANNERS
333 EAST FEDERAL STREET
YOUNGSTOWN, OHIO 44503-1821
PHONE (330) 774-5321

Lanham ENGINEERING LLC

STANDARD CONSTRUCTION DRAWINGS

BP-2.1	*1/21/22*	*EXJ-6-17*	*1/19/24*	*HL-10.11*	*7/17/26*	*MT-095.30*	*7/17/26*	*MT-105.10*	*1/17/20*	*SS800*	*7/17/26*
BP-2.2	*1/16/26*			*HL-10.12*	*1/16/26*	*MT-095.31*	*7/17/26*	*MT-110.10*	*7/19/13*	*SS813*	*7/21/23*
BP-2.4	*7/19/13*	*GSD-1-19*	*7/19/24*	*HL-10.13*	*7/17/26*	*MT-095.32*	*7/17/26*			*SS821*	*4/20/12*
BP-2.5	*1/16/26*			*HL-20.14*	*7/17/26*	*MT-095.41*	*7/17/26*	*TC-71.10*	*7/17/26*	*SS832*	*7/17/26*
RD-4.1	*7/17/26*	*PCB-91*	*7/17/20*	*HL-30.11*	*7/17/26*	*MT-095.45*	*7/21/23*	*TC-74.10*	*1/16/26*	*SS913*	*4/16/21*
RD-5.1	*7/17/26*			*HL-30.21*	*4/17/20*	*MT-095.50*	*7/17/26*	*TC-83.30*	*1/16/26*	*SS921*	*7/19/24*
RD-7.1	*7/17/26*	*RM-4.2*	*7/17/26*	*HL-30.22*	*1/17/25*	*MT-095.60*	*4/19/19*	*TC-85.10*	*1/16/26*	*SS987*	*1/16/09*
				HL-30.31	*7/17/26*	*MT-095.61*	*4/19/19*				
CB-3A	*7/17/26*	*SICD-1-21*	*1/19/24*	*HL-30.41*	*7/17/26*	*MT-097.10*	*7/18/25*				
		SICD-2-14	*1/15/21*	*HL-50.21*	*1/16/26*	*MT-097.12*	*1/16/26*				
DM-1.2	*1/17/25*			*HL-60.11*	*7/21/17*	*MT-099.20*	*7/17/26*				
		TVPF-1-18	*1/17/25*	*HL-60.12*	*1/16/26*	*MT-099.60*	*7/17/26*				
AS-1-15	*1/20/23*	*VPF-1-24*	*7/17/26*			*MT-101.60*	*1/17/25*				
AS-2-15	*7/21/23*					*MT-101.70*	*7/19/24*				
						MT-101.75	*7/21/23*				
BR-2-15	*7/19/24*					*MT-101.90*	*7/17/20*				

SUPPLEMENTAL SPECIFICATIONS

SPECIAL PROVISIONS

ASBESTOS SURVEY
2/22/23

ENGINEER'S SEAL	*ENGINEER'S SEAL*
ALL EXCEPT LIGHTING	*LIGHTING*
STATE OF OHIO · JONATHAN DAVID HREN · E-69952 · REGISTERED PROFESSIONAL ENGINEER	STATE OF OHIO · DAVID ADDISON · E-81845 · REGISTERED PROFESSIONAL ENGINEER

TITLE SHEET

DESIGN AGENCY
ms consultants, inc.

DESIGNER TSB
REVIEWER JDK 07/22/26
PROJECT ID 115826
SHEET P:1 TOTAL 86

CUY-IR-480-06.12 DECK

MODEL: Sheet_SurvF1 PAPERSIZE: 34x22 (in.) DATE: 11/10/2026 TIME: 8:35:16 AM USER: jkuczynski
N:\01160\08398-001158826\400-Engineering\Roadway\Sheets\115826_GT001.dgn

ITEM 614, MAINTAINING TRAFFIC

THE CONTRACTOR SHALL MAINTAIN TRAFFIC AT ALL TIMES ON THE PROJECT IN ACCORDANCE WITH THE OHIO MANUAL OF UNIFORM TRAFFIC CONTROL DEVICES FOR STREETS AND HIGHWAYS, CURRENT EDITION, LATEST REVISION, C&MS ITEM 614 - MAINTAINING TRAFFIC, AND AS DESCRIBED BELOW:

ALL SIGNS, SIGN SUPPORTS, DRUMS, PORTABLE BARRIER AND INCIDENTALS FOR TRAFFIC CONTROL SHALL BE FURNISHED, ERECTED, MAINTAINED, AND REMOVED BY THE CONTRACTOR IN CONFORMANCE WITH THE MOST RECENT REVISION, CURRENT EDITION OF THE OHIO MANUAL OF UNIFORM TRAFFIC CONTROL DEVICES FOR STREETS AND HIGHWAYS (OMUTCD). ALL SIGNS USED FOR THE MAINTENANCE OF TRAFFIC SHALL BE IN NEW OR LIKE NEW CONDITION. DEVICES USED TO MAINTAIN TRAFFIC SHALL BE REMOVED IMMEDIATELY AFTER THE TERMINATION OF SAID WORK. PAYMENT SHALL BE INCLUDED IN THE LUMP SUM BID ITEM FOR ITEM 614 - MAINTAINING TRAFFIC.

TIME LIMITATION ON A DETOUR (MASTICK ROAD)

A MINIMUM OF ONE LANE OF TRAFFIC IN EACH DIRECTION SHALL BE MAINTAINED AT ALL TIMES, EXCEPT WHEN MASTICK ROAD MAY BE DETOURED AS SHOWN ON SHEETS P.12 AND P.16. EACH DETOUR PERIOD SHALL NOT EXCEED 21 CONSECUTIVE CALENDAR DAYS AND A DISINCENTIVE SHALL BE ASSESSED IN THE AMOUNT OF $8,000 PER DAY FOR EACH CALENDAR DAY THE ROAD REMAINS CLOSED TO TRAFFIC BEYOND THE SPECIFIED LIMIT.

NOTICE OF CLOSURE SIGN

NOTICE OF CLOSURE SIGNS (W20-H13) SHALL BE ERECTED BY THE CONTRACTOR PRIOR TO THE SCHEDULED ROAD OR RAMP CLOSURE IN ACCORDANCE WITH THE NOTICE OF CLOSURE TIME TABLE BELOW.

THE SIGNS SHALL BE ERECTED ON THE RIGHT-HAND SIDE OF THE ROAD/RAMP FACING TRAFFIC. THEY SHALL BE PLACED SO AS NOT TO INTERFERE WITH THE VISIBILITY OF ANY OTHER TRAFFIC CONTROL SIGNS. ON ROADWAYS, THEY SHOULD BE ERECTED AT OR NEAR THE POINT OF CLOSURE. THE SIGNS MAY BE ERECTED ANYWHERE ON RAMPS AS LONG AS THEY ARE VISIBLE TO THE MOTORISTS USING THE RAMP. ON ENTRANCE RAMPS, THE SIGN SHALL BE ERECTED WELL IN ADVANCE OF THE MERGE AREA TO AVOID DISTRACTING MOTORISTS.

NOTICE OF CLOSURE SIGN TIME TABLE		
ITEM	DURATION OF CLOSURE	SIGN DISPLAYED TO PUBLIC
RAMP & ROAD CLOSURES	≥ 2 WEEKS	14 CALENDAR DAYS PRIOR TO CLOSURE
	> 12 HOURS & < 2 WEEKS	7 CALENDAR DAYS PRIOR TO CLOSURE
	≤ 12 HOURS	2 BUSINESS DAYS PRIOR TO CLOSURE

THE SIGN SHALL DISPLAY THE DATE OF THE CLOSURE IN MMM-DD FORMAT AND THE NUMBER OF DAYS OF THE CLOSURE. THE LAST LINE OF THE W20-H13 SIGN LISTS A PHONE NUMBER WHICH A MOTORIST MAY CALL FOR ADDITIONAL INFORMATION. THIS IS TO BE A SPECIFIC OFFICE WITHIN THE DISTRICT RATHER THAN THE GENERAL SWITCHBOARD NUMBER.

LANES OPEN DURING HOLIDAYS OR SPECIAL EVENTS (I-480)

NO WORK SHALL BE PERFORMED AND ALL EXISTING LANES SHALL BE OPEN TO TRAFFIC DURING THE FOLLOWING DESIGNATED HOLIDAYS OR SPECIAL EVENTS:

NEW YEAR'S	GENERAL/REGULAR ELECTION DAY (NOV)
MEMORIAL DAY	THANKSGIVING
FOURTH OF JULY	CHRISTMAS
LABOR DAY	

THE PERIOD OF TIME THAT THE LANES ARE TO BE OPEN DEPENDS ON THE DAY OF THE WEEK ON WHICH THE HOLIDAY OR SPECIAL EVEN FALLS. THE FOLLOWING SCHEDULE SHALL BE USED TO DETERMINE THIS PERIOD:

DAY OF HOLIDAY OR SPECIAL EVENT	TIME ALL LANED MUST BE OPEN TO TRAFFIC
SUNDAY	12:00N FRI. THROUGH 6:00AM MON.
MONDAY	12:00N FRI. THROUGH 6:00AM TUE.
TUESDAY	12:00N MON. THROUGH 6:00AM WED.
TUESDAY (GEN./REG. ELECTION)	5:00AM TUE. THROUGH 12:00AM WED.
WEDNESDAY	12:00N TUE. THROUGH 6:00AM THUR.
THURSDAY	12:00N WED. THROUGH 6:00AM FRI.
THURSDAY (THANKSGIVING ONLY)	6:00AM WED. THROUGH 6:00AM MON.
FRIDAY	12:00N THUR. THROUGH 6:00AM MON.
SATURDAY	12:00N FRI. THROUGH 6:00AM MON.

DURING THE SAME PERIODS, MAINTAIN PEDESTRIAN ACCESS IF PEDESTRIAN ACCESS WAS PRESENT PRIOR TO CONSTRUCTION.

SHOULD THE CONTRACTOR FAIL TO MEET ANY OF THESE REQUIREMENTS, THE CONTRACTOR SHALL BE ASSESSED A DISINCENTIVE PER THE LANE VALUE CONTRACT (PN 127).

LANE VALUE CONTRACT (PN 127)

THE CONTRACTOR SHALL BE ASSESSED DISINCENTIVES AS DESIGNATED IN THE LANE VALUE CONTRACT TABLE FOR EACH UNIT OF TIME THE DESCRIBED CRITICAL LANE/RAMP IS RESTRICTED FROM FULL USE BY THE TRAVELING PUBLIC WITHIN THE RESTRICTED TIME PERIOD. THE LANE VALUE CONTRACT TABLE IS LOCATED BELOW. THE DISINCENTIVES WILL BE ASSESSED FOR ALL RESTRICTIONS OF THE CRITICAL WORK.

CRITICAL WORK IS SHOWN IN THE LANE VALUE CONTRACT TABLE.

CRITICAL WORK IS DEFINED AS HAVING THE DESIGNATED SECTIONS OPEN TO UNRESTRICTED TRAFFIC AS SHOWN IN THE TABLE, OR THE ENTIRE PROJECT IF NOT OTHERWISE LISTED.

UNRESTRICTED TRAFFIC IS DEFINED AS ALL TRAFFIC LANES BEING AVAILABLE FOR USE WITH SPECIFIED STRIPING AND SAFETY FEATURES IN PLACE.

LANE VALUE CONTRACT TABLE

Description of Critical Lane/Ramp to be Maintained	Restricted Time Period	Time Unit	Disincentive (per time unit per lane)
IR-480			
Clague Rd to I-71 Exit Ramp	As Per the Permitted Lane Closure Schedule	Each Minute	$260

SEQUENCE OF CONSTRUCTION

PHASE 1A (SEE SHEETS P.12 - P.15)

1. SHIFT NORTHBOUND AND SOUTHBOUND W. 220TH ST. TO THE WEST SIDE OF THE BRIDGE.
2. CLOSE AND DETOUR EB MASTICK ROAD AND SHIFT THE WB MASTICK ROAD LANE TO THE SOUTH SIDE OF MASTICK ROAD EAST OF W. 220TH STREET.
3. RESTRICT WESTBOUND RIGHT TURNS TO NORTHBOUND W. 220TH ST. AND DETOUR.
4. INSTALL TEMPORARY ADA COMPLIANT RAMPS ON THE MASTICK ROAD BRIDGE OVER I-480 TO PROVIDE PEDESTRIAN ACCOMMODATIONS ACROSS MASTICK ROAD.
5. PERFORM DECK REPLACEMENT ACTIVITIES ON THE EAST SIDE OF THE BRIDGE, INCLUDING APPROACH SLABS, SIDEWALK WIDENING, AND ROADWAY APPROACH WORK.
6. FOR CONSTRUCTION ACTIVITIES THAT WILL IMPACT LANES OF I-480, UTILIZE SHORT TERM LANE OR SHOULDER CLOSURES IN ACCORDANCE WITH MT-095.30 AND MT-095.45 IN ACCORDANCE WITH THE PERMITTED LANE CLOSURE SCHEDULE.
7. SHORT-TERM SINGLE LANE CLOSURES OF W. 220TH STREET NORTH OF MASTICK ROAD USING FLAGGING OPERATIONS IN ACCORDANCE WITH MT-97.10 SHALL BE PERMITTED EXCEPT FOR 6:30 AM TO 9:00 AM AND 3:00 PM TO 6:00 PM WEEKDAYS. UTILIZE LEOS WHEN DIRECTING A SINGLE ALTERNATING LANE OF TRAFFIC THROUGH THE SIGNALIZED INTERSECTION.

PHASE 1B (SEE SHEETS P.16 - P.17)

1. MAINTAIN W. 220TH STREET TRAFFIC AS SHOWN IN PHASE 1A.
2. MAINTAIN THE TEMPORARY PEDESTRIAN CROSSING ON MASTICK ROAD AS SHOWN IN PHASE 1A.
3. CLOSE AND DETOUR MASTICK ROAD EAST OF W. 220TH STREET. THIS CLOSURE SHALL OCCUR BETWEEN JUNE 5TH, 2027 AND AUGUST 19TH, 2027.
4. CONSTRUCT THE INTERSECTION PAVEMENT AND RELIEF JOINTS ON THE EAST SIDE OF THE MASTICK RD. AND W. 220TH ST. INTERSECTION.
5. CONSTRUCT THE SIGNAL CONDUIT CROSSING MASTICK ROAD AND SUB-PHASE CONSTRUCTION OF THE RAMP AND SIDEWALK ON THE SOUTHEAST CORNER TO OCCUR AFTER THE RAMP AND WALK ON THE NORTHEAST CORNER ARE COMPLETE. PROVIDE PEDESTRIAN DETOUR METHODS ACCORDING TO MT-110.10 BY PROVIDING A DIVERSION AROUND THE WORK ZONE OR REOPENING THE NORTH LEG TO ALLOW PEDESTRIAN ACCESS TO MASTICK ROAD.

PHASE 2 (SEE SHEETS P.18 - P.20)

1. CLOSE AND DETOUR SOUTHBOUND W. 220TH STREET AND RE-OPEN MASTICK ROAD.
2. MAINTAIN NORTHBOUND W. 220TH ST. TRAFFIC ON THE NEWLY CONSTRUCTED EAST SIDE OF THE BRIDGE.
3. PERFORM DECK REPLACEMENT ACTIVITIES ON THE WEST SIDE OF THE BRIDGE, INCLUDING SIDEWALK WIDENING, APPROACH SLABS, AND ROADWAY APPROACH WORK.
4. FOR CONSTRUCTION ACTIVITIES THAT WILL IMPACT LANES OF I-480, UTILIZE SHORT TERM LANE OR SHOULDER CLOSURES IN ACCORDANCE WITH MT-095.30 AND MT-095.45 IN ACCORDANCE WITH THE PERMITTED LANE CLOSURE SCHEDULE.

PHASE 3 (SEE SHEET P.20A)

THIS PHASE OF WORK IS INDEPENDENT OF THE OVERALL SEQUENCE OF CONSTRUCTION AND SHALL BE IMPLEMENTED AT ANY TIME DURING THE PROJECT WHEN A SHORING TOWER AND JACKING OF PIER 2 IS REQUIRED.

1. CLOSE THE WESTBOUND MEDIAN SHOULDER AND PLACE PORTABLE BARRIER.
2. NARROW THE EASTBOUND LANES FROM 12' TO 11' SHIFTING THE LANES TOWARDS THE SOUTH AND PLACE PORTABLE BARRIER ALONG THE MEDIAN SHOULDER TO CREATE A PROTECTED AREA FOR THE SHORING TOWER.
3. CLOSE LANES IN ACCORDANCE WITH THE PLCS FOR EQUIPMENT AND MATERIAL DELIVERY WHEN JACKING THE BRIDGE.

PHASE 4 (NO PLAN SHEETS PROVIDED)

1. REMOVE ALL MOT DEVICES, PLACE FINAL PAVEMENT MARKINGS USING SINGLE LANE CLOSURES. PLACE LANES INTO THEIR FINAL CONFIGURATION.

PRIVATE DRIVEWAY ACCESS

AT PRIVATE DRIVES WITHIN THE WORK AREA, ACCESS TO THE HOMES SHALL BE MAINTAINED. IT MAY BE NECESSARY TO WORK AROUND THE DRIVES AS MUCH AS POSSIBLE AND TO PROVIDE TEMPORARY ACCESS TO THE DRIVES OR PROPERTY WHEN NORMAL ACCESS CANNOT BE PROVIDED. ACCESS IS DEFINED AS 12' IN WIDTH COMPRISED OF GRANULAR OR OTHER MATERIAL SUFFICIENT TO SUPPORT TRAFFIC. IF DRIVE ACCESS CANNOT BE PROVIDED, THE CONTRACTOR MAY PROVIDE A SUITABLE, SAFE PARKING AREA WITHIN THE WORK ZONE WITH A PEDESTRIAN CONNECTION TO THE UNDISTURBED PORTION OF DRIVE.

WHEN THE CONTRACTOR IS DISTURBING A DRIVEWAY, A 24-HOUR ADVANCE WRITTEN NOTICE MUST BE GIVEN TO THE RESIDENT/OWNER THAT ACCESS MAY BE RESTRICTED OR ALTERED FOR A LIMITED AMOUNT OF TIME TO COMPLETE THE DRIVE WORK WITH SUFFICIENT TIME FOR CONCRETE STRENGTH GAIN. THE CONTRACTOR WILL BE REQUIRED TO FULLY INFORM THE RESIDENT/OWNER OF ANY DRIVE ACCESS CHANGE PRIOR TO CONSTRUCTION, INCLUDING THE POSSIBLE NEED FOR ON-STREET PARKING, AND THE DURATION OF THE ALTERATIONS. THE CONTRACTOR SHALL TAKE SPECIAL CARE TO COORDINATE THIS WORK AND ANY ACCESS ISSUES WITH THE PROPERTY OWNERS.

METHOD OF PAYMENT

ALL WORK AND TRAFFIC CONTROL DEVICES SHALL BE IN ACCORDANCE WITH C&MS 614 AND OTHER APPLICABLE PORTIONS OF THE SPECIFICATIONS, AS WELL AS THE OHIO MANUAL OF UNIFORM TRAFFIC CONTROL DEVICES. PAYMENT FOR ALL LABOR, EQUIPMENT AND MATERIALS SHALL BE INCLUDED IN THE LUMP SUM CONTRACT PRICE FOR ITEM 614, MAINTAINING TRAFFIC, UNLESS SEPARATELY ITEMIZED IN THE PLAN.

ITEM 614, MAINTAINING TRAFFIC	LUMP SUM
ITEM 614, DETOUR SIGNING	LUMP SUM

DUST CONTROL

THE CONTRACTOR SHALL FURNISH AND APPLY WATER FOR DUST CONTROL AS DIRECTED BY THE ENGINEER. THE FOLLOWING ESTIMATED QUANTITIES HAVE BEEN INCLUDED FOR DUST CONTROL PURPOSES:

ITEM 616, WATER	2 M. GAL.

MAINTENANCE OF TRAFFIC GENERAL NOTES

CUY-IR-480-06.12 DECK

MODEL: Sheet_SurvFt PAPERSIZE: 34x22 (in.) DATE: 11/10/2026 TIME: 1:23:08 PM USER: jlacher
\\msconsultants.com\files\Production\0116\008398-00\115826\400-Engineering\MOT\Sheets\115826_MN001.dgn

DESIGN AGENCY
ms consultants, inc.

DESIGNER KJF

REVIEWER KWR 07/22/26

PROJECT ID 115826

SHEET P.7 TOTAL 86

MAINTENANCE OF TRAFFIC SIGNAL/INTERSECTION CONTROL BEACON INSTALLATION

THE CONTRACTOR SHALL BE RESPONSIBLE FOR MAINTAINING TRAFFIC SIGNAL AND INTERSECTION CONTROL BEACON INSTALLATIONS WITHIN THE PROJECT UNDER THE FOLLOWING CONDITIONS:

1. EXISTING SIGNAL/INTERSECTION CONTROL BEACON INSTALLATIONS WHICH THE PLANS REQUIRE THE CONTRACTOR TO ADJUST, MODIFY, ADD ONTO OR REMOVE, OR WHICH THE CONTRACTOR ACTUALLY ADJUSTS, MODIFIES OR OTHERWISE DISTURBS. THE CONTRACTOR SHALL BE RESPONSIBLE FOR THE ENTIRE INSTALLATION (AT AN INTERSECTION) FROM THE TIME HIS OPERATIONS FIRST DISTURB THE INSTALLATION UNTIL THE INSTALLATION HAS BEEN SUBSEQUENTLY REMOVED OR MODIFIED AND THE WORK IS ACCEPTED.

2. NEW OR REUSED SIGNAL/INTERSECTION CONTROL BEACON INSTALLATIONS OR DEVICES, INSTALLED BY THE CONTRACTOR. THE CONTRACTOR SHALL BE RESPONSIBLE FOR MAINTENANCE OF THESE FROM THE TIME OF INSTALLATION UNTIL THE WORK IS ACCEPTED.

THE CONTRACTOR SHALL CORRECT AS QUICKLY AS POSSIBLE ALL OUTAGES OR MALFUNCTIONS. HE SHALL PROVIDE THE MAINTAINING AGENCY AND THE ENGINEER SUCH ADDRESSES AND PHONE NUMBERS WHERE HIS MAINTENANCE FORCES CAN BE CONTACTED. THE CONTRACTOR SHALL PROVIDE ONE OR MORE PERSONS TO RECEIVE ALL CALLS AND DISPATCH THE NECESSARY MAINTENANCE FORCES TO CORRECT OUTAGES. SUCH A PERSON OR PERSONS MAY BE USED TO PERFORM OTHER DUTIES AS LONG AS PROMPT ATTENTION IS GIVEN TO THESE CALLS AND A PERSON IS READILY AVAILABLE CONTINUOUSLY 24 HOURS A DAY, 7 DAYS A WEEK. ALL LAMP OUTAGES, CABLE OUTAGES, ELECTRICAL FAILURES, EQUIPMENT MALFUNCTIONS AND MISALIGNED SIGNAL HEADS SHALL BE CORRECTED TO THE SATISFACTION OF THE ENGINEER WITH THE SIGNAL BACK TO SERVICE WITHIN TWO HOURS AFTER THE CONTRACTOR HAS BEEN NOTIFIED OF THE OUTAGE.

IN THE EVENT NEW SIGNALS ARE DAMAGED PRIOR TO ACCEPTANCE, ALL DAMAGED EQUIPMENT EXCEPT POLES AND CONTROL EQUIPMENT SHALL BE REPLACED BY THE CONTRACTOR TO THE SATISFACTION OF THE ENGINEER WITH THE SIGNAL BACK IN SERVICE WITHIN 8 HOURS AFTER THE CONTRACTOR'S NOTIFICATION OF THE OUTAGE. THE CONTRACTOR SHALL ARRANGE FOR FULL TRAFFIC CONTROL UNTIL THE SIGNAL IS BACK IN OPERATION.

IF POLES AND/OR CONTROL EQUIPMENT ARE DAMAGED AND MUST BE REPLACED, THE CONTRACTOR SHALL MAKE TEMPORARY REPAIRS AS NECESSARY TO BRING THE SIGNAL BACK INTO FULL OPERATION WITHIN THE ALLOWED 8-HOUR PERIOD, AND SHALL MAKE PERMANENT REPAIRS OR REPLACEMENT AS SOON THEREAFTER AS POSSIBLE.

NONE OF THE ABOVE SHALL BE CONSTRUED AS COLLECTIVE OR CONSECUTIVE OUTAGE TIME PERIODS AT ANY ONE LOCATION. THAT IS, WHERE MORE THAN ONE OUTAGE OCCURS AT ANY ONE LOCATION THEN THE ALLOTTED TIME LIMIT SHALL BE FOR THE WORST SINGLE OUTAGE.

WHERE OUTAGES ARE THE DIRECT RESULT OF A VEHICLE ACCIDENT THE RESPONSE OF THE CONTRACTOR SHALL BE AS OUTLINED ABOVE. THE CONTRACTOR SHALL BE RESPONSIBLE FOR COLLECTION OF ANY COMPENSATION FOR THIS WORK FROM THOSE PARTIES RESPONSIBLE FOR THE DAMAGE.

WHERE THE CONTRACTOR HAS FAILED TO, OR CANNOT RESPOND TO, AN OUTAGE OR SIGNAL EQUIPMENT MALFUNCTION, AT THESE LOCATIONS WITHIN HIS RESPONSIBILITY, WITHIN PERIODS AS SPECIFIED ABOVE, THE ENGINEER MAY INVOKE THE PROVISIONS OF SECTION 105.15 AND ANY SUBSEQUENT BILLINGS TO THE STATE OR THE CITY OF FAIRVIEW PARK FOR POLICE SERVICES AND MAINTENANCE SERVICES BY CITY FORCES SHALL BE DEDUCTED FROM MONIES DUE OR TO BECOME DUE THE CONTRACTOR IN ACCORDANCE WITH PROVISIONS OF SECTION 105.15.

THE CONTRACTOR SHALL PROVIDE THE MAINTENANCE SERVICE ENTIRELY WITH HIS FORCES OR HE MAY CHOOSE TO ENTER INTO A COOPERATIVE UNDERSTANDING WITH THE LOCAL MAINTAINING AGENCY TO PROVIDE THE MAINTENANCE. THE CONTRACTOR SHALL INFORM THE ENGINEER, IN WRITING, OF THE MAINTENANCE METHOD SELECTED.

THE CONTRACTOR SHALL BE RESPONSIBLE FOR ANY DAMAGE TO ANY TRAFFIC SIGNAL COMPONENTS REQUIRED TO BE HANDLED DURING THE RELOCATION OF POLES AND REVISIONS TO THE SIGNAL SYSTEM. WHEN A TRAFFIC SIGNAL MUST BE TAKEN OUT OF SERVICE BY THE CONTRACTOR, DUE TO CONST-RUCTION PROCEDURES, THIS OUTAGE SHALL NOT EXCEED 6 HOURS AND SHALL NOT INCLUDE THE HOURS OF 6AM-9AM AND 3PM-6PM. ANY SIGNALIZED INTERSECTION, WHERE THE SIGNAL IS OUT OF SERVICE DUE TO CONSTRUCTION PROCEDURES, OR DUE TO AN OUTAGE OR MALFUNCTION OF EQUIPMENT AS DESCRIBED ABOVE, SHALL BE PROTECTED, BY THE CONTRACTOR, BY THE INSTALLATION OF TEMPORARY "STOP" SIGNS, EXCEPT FOR THE FOLLOWING INTERSECTIONS WHICH SHALL BE PROTECTED BY OFF-DUTY CITY OF FAIRVIEW POLICE, HIRED BY THE CONTRACTOR:

1. W. 220TH STREET AT MASTICK ROAD

ANY VEHICULAR TRAFFIC SIGNAL HEAD, EITHER NEW OR EXISTING WHICH WILL BE OUT OF OPERATION SHALL BE COVERED IN THE MANNER DESCRIBED IN 632.25.

THE CONTRACTOR SHALL MAINTAIN COMPLETE RECORDS OF MALFUNCTIONS INCLUDING:

1. TIME OF NOTIFICATION OF MALFUNCTION;

2. TIME OF WORK CREWS ARRIVAL TO CORRECT THE MALFUNCTION;

3. ACTIONS TAKEN TO CORRECT THE MALFUNCTION, INCLUDING A LIST OF PARTS REPAIRED OR REPLACED;

4. A DIAGNOSIS OF REASON FOR THE MALFUNCTION AND PROBABILITY OF REOCCURRENCE;

5. TIME OF COMPLETION OF THE REPAIR AND SYSTEM RESTORED TO FULL SERVICE.

A COPY OF THESE RECORDS SHALL BE PROVIDED TO THE ENGINEER WITHIN THREE (3) WORKING DAYS FOLLOWING COMPLETION OF EACH REPAIR.

ALL COSTS RESULTING FROM THE ABOVE REQUIREMENTS SHALL BE CONSIDERED TO BE INCLUDED IN THE LUMP SUM PRICE BID FOR ITEM 614, MAINTAINING TRAFFIC.

DELINEATION OF PORTABLE AND PERMANENT BARRIER

BARRIER REFLECTORS AND OBJECT MARKERS SHALL BE INSTALLED ON ALL PORTABLE BARRIER (PB) USED FOR TRAFFIC CONTROL; AND, ON PERMANENT CONCRETE BARRIER (INCLUDING BRIDGE PARAPETS) LOCATED WITHIN 5 FEET OF THE EDGE OF THE ADJACENT TRAVEL LANE.

BARRIER REFLECTORS SHALL CONFORM TO C&MS 626, EXCEPT THAT THE SPACING SHALL BE AS PER TRAFFIC SCD MT-101.70. OBJECT MARKERS AND THEIR INSTALLATION SHALL CONFORM TO C&MS 614.03 AND SCD MT-101.70. WHEN THE PB CONTAINS GLARE SCREEN, ONE SET OF THREE VERTICAL STRIPES OF SHEETING SHALL BE CONSIDERED EQUIVALENT TO AN OBJECT MARKER, ONE-WAY.

INCREASED BARRIER DELINEATION, AS SPECIFIED HEREIN, SHALL BE INSTALLED ON ALL PB AND PERMANENT CONCRETE BARRIER LOCATED WITHIN 5 FEET OF THE EDGE OF THE TRAVELED LANE UNDER EITHER OF THE FOLLOWING CONDITIONS: ALONG TAPERS AND TRANSITION AREAS; OR ALONG CURVES (OUTSIDE ONLY) WITH DEGREE OF CURVATURE GREATER THAN OR EQUAL TO 3 DEGREES.

THE INCREASED BARRIER DELINEATION SHALL CONSIST OF EITHER DELINEATION PANELS OR THE TRIPLE STACKING OF WORK ZONE BARRIER REFLECTORS.

DELINEATION PANELS SHALL CONSIST OF PANELS OF DELINEATION, APPROXIMATELY 34 INCHES LONG AND 6 INCHES WIDE AND SHALL BE "CRIMPED." PANELS SHALL BE INSTALLED AND SPACED PER TRAFFIC SCD MT-101.70.

TRIPLE-STACKED BARRIER REFLECTORS SHALL CONSIST OF ALIGNING THREE BARRIER REFLECTORS VERTICALLY, AT LOCATIONS WHERE A SINGLE BARRIER REFLECTOR WOULD BE OTHERWISE ATTACHED. THERE SHALL BE NO OPEN SPACE BETWEEN THE ADJACENT BARRIER REFLECTORS. THE TRIPLE-STACKED BARRIER REFLECTORS SHALL CONFORM TO C&MS 626, EXCEPT THAT THEY SHALL BE SPACED AND ALIGNED PER TRAFFIC SCD MT-101.70.

THE FOLLOWING BID ITEMS HAVE BEEN QUANTIFIED IN THE MOT SUBSUMMARY SHEETS:

ITEM 614, INCREASED BARRIER DELINEATION
ITEM 614, BARRIER REFLECTOR, TYPE 1, (ONE WAY)
ITEM 614, BARRIER REFLECTOR, TYPE 1, (BIDIRECTIONAL)
ITEM 614, OBJECT MARKER, ONE WAY
ITEM 614, OBJECT MARKER, TWO WAY

PAYMENT SHALL BE FULL COMPENSATION FOR ALL MATERIAL, LABOR, INCIDENTALS AND EQUIPMENT NECESSARY FOR FURNISHING, INSTALLING, MAINTAINING AND REMOVING EACH OF THE ABOVE ITEMS.

TEMPORARY ADA PEDESTRIAN CROSSING

THE CONTRACTOR SHALL SUPPLY AND INSTALL TWO (2) ADA COMPLIANT TEMPORARY RAMPS ACROSS MASTICK ROAD AS SHOWN IN THE PLANS. THIS WORK SHALL INCLUDE BUT IS NOT LIMITED TO INSTALLING AND MAINTAINING TWO (2) ADA COMPLIANT TEMPORARY RAMPS, REMOVING EXISTING FENCING TO PROVIDE ACCESS TO THE RAMPS, MAINTAINING THE RAMPS DURING CONSTRUCTION, AND REMOVING THE RAMPS AND RESTORING THE SITE TO ITS ORIGINAL, PRE-CONSTRUCTION CONDITION UPON COMPLETION OF THE PROJECT.

PAYMENT SHALL BE FULL COMPENSATION FOR ALL MATERIAL, LABOR, INCIDENTALS AND EQUIPMENT NECESSARY FOR FURNISHING, INSTALLING, MAINTAINING AND REMOVING THE TEMPORARY ADA RAMPS. ALL COSTS RESULTING FROM THE ABOVE REQUIREMENTS SHALL BE CONSIDERED TO BE INCLUDED IN THE LUMP SUM PRICE BID FOR ITEM 614, MAINTAINING TRAFFIC.

ITEM 614, WORK ZONE IMPACT ATTENUATOR FOR 24" WIDE HAZARDS (UNIDIRECTIONAL/BIDIRECTIONAL)

THIS ITEM SHALL CONSIST OF FURNISHING AND INSTALLING A NON-GATING IMPACT ATTENUATOR. FURNISH AN IMPACT ATTENUATOR FROM THE OFFICE OF ROADWAY ENGINEERING'S APPROVED LIST FOR WORK ZONE IMPACT ATTENUATORS, FROM THE ROADWAY STANDARDS APPROVED PRODUCTS WEB PAGE.

INSTALLATION SHALL BE AT THE LOCATIONS SPECIFIED IN THE PLANS IN ACCORDANCE WITH THE MANUFACTURER'S SPECIFICATIONS.

THE CONTRACTOR SHALL REPAIR OR REPLACE A DAMAGED UNIT WITHIN 24 HOURS OF A DAMAGING IMPACT.

WHEN BIDIRECTIONAL DESIGNS ARE SPECIFIED, THE CONTRACTOR SHALL SUPPLY APPROPRIATE TRANSITIONS.

WHEN GATING IMPACT ATTENUATORS ARE DESIRED, THE CONTRACTOR SHALL SUBMIT DOCUMENTATION TO THE ENGINEER FOR ACCEPTANCE.

THE COST FOR THE ADDITIONAL BARRIER REQUIRED FOR A GATING IMPACT ATTENUATOR SHALL BE INCLUDED IN THE COST OF THE GATING IMPACT ATTENUATOR.

PAYMENT FOR THE ABOVE WORK SHALL BE MADE AT THE UNIT PRICE BID AND SHALL INCLUDE ALL LABOR, TOOLS, EQUIPMENT AND MATERIALS NECESSARY TO CONSTRUCT AND MAINTAIN A COMPLETE AND FUNCTIONAL IMPACT ATTENUATOR SYSTEM, INCLUDING ALL RELATED BACKUPS, TRANSITIONS, LEVELING PADS, HARDWARE AND GRADING, NOT SEPARATELY SPECIFIED, AS REQUIRED BY THE MANUFACTURER.

MODEL: Sheet_SurvFt PAPERSIZE: 34x22 (in.) DATE: 11/9/2026 TIME: 9:40:07 AM USER: kfomich
N:\01\60\08398-00\115826\400-Engineering\MOT\Sheets\115826_MN002.dgn

DESIGN AGENCY
ms consultants. inc.
DESIGNER KJF
REVIEWER KWR 07/22/26
PROJECT ID 115826
SHEET P.8 TOTAL 86

ITEM 614, LAW ENFORCEMENT OFFICER (WITH PATROL CAR) FOR ASSISTANCE DURING CONSTRUCTION OPERATIONS

USE OF LAW ENFORCEMENT OFFICERS (LEOS) BY CONTRACTORS OTHER THAN THE USES SPECIFIED BELOW WILL NOT BE PERMITTED AT PROJECT COST. LEOS SHOULD NOT BE USED WHERE THE OMUTCD INTENDS THAT FLAGGERS BE USED.

IN ADDITION TO THE REQUIREMENTS OF C&MS 614 AND THE OMUTCD, A UNIFORMED LEO WITH AN OFFICIAL PATROL CAR (CAR WITH TOP-MOUNTED EMERGENCY FLASHING LIGHTS AND COMPLETE MARKINGS OF THE APPROPRIATE LAW ENFORCEMENT AGENCY) SHALL BE PROVIDED FOR THE FOLLOWING TRAFFIC CONTROL TASKS:

- *DURING THE ENTIRE ADVANCE PREPARATION AND CLOSURE SEQUENCE WHERE COMPLETE BLOCKAGE OF TRAFFIC IS REQUIRED.*
- *DURING A TRAFFIC SIGNAL INSTALLATION WHEN IMPACTING THE NORMAL FUNCTION OF THE SIGNAL OR THE FLOW OF TRAFFIC, OR WHEN TRAFFIC NEEDS TO BE DIRECTED THROUGH AN ENERGIZED TRAFFIC SIGNAL CONTRARY TO THE SIGNAL DISPLAY (E.G., DIRECTING MOTORISTS THROUGH A RED LIGHT).*

IN ADDITION TO THE REQUIREMENT OF C&MS 614 AND THE OMUTCD, A UNIFORMED LEO WITH AN OFFICIAL PATROL CAR (CAR WITH TOP-MOUNTED EMERGENCY FLASHING LIGHTS AND COMPLETE MARKINGS OF THE APPROPRIATE LAW ENFORCEMENT AGENCY) SHOULD BE PROVIDED FOR THE FOLLOWING TRAFFIC CONTROL TASKS AS APPROVED BY THE ENGINEER:

- *FOR LANE CLOSURES ON I-480: DURING INITIAL SET-UP PERIODS, TEAR DOWN PERIODS, SUBSTANTIAL SHIFTS OF A CLOSURE POINT OR WHEN NEW LANE CLOSURE ARRANGEMENTS ARE INITIATED FOR LONG-TERM LANE CLOSURES/SHIFTS (FOR THE FIRST AND LAST DAY OF MAJOR CHANGES IN TRAFFIC CONTROL SETUP).*

IN GENERAL, LEOS SHOULD BE POSITIONED IN ADVANCE OF AND ON THE SAME SIDE AS THE LANE RESTRICTION (OR AT THE POINT OF ROAD CLOSURE), AND TO MANUALLY CONTROL TRAFFIC MOVEMENTS THROUGH SIGNALIZED INTERSECTIONS IN WORK ZONES.

LEOS SHOULD NOT FORGO THEIR TRAFFIC CONTROL RESPONSIBILITIES TO APPREHEND MOTORISTS FOR ROUTINE TRAFFIC VIOLATIONS. HOWEVER, IF A MOTORIST'S ACTIONS ARE CONSIDERED TO BE RECKLESS, THEN PURSUIT OF THE MOTORIST IS APPROPRIATE.

THE LEOS WORK AT THE DIRECTION OF THE CONTRACTOR. THE CONTRACTOR IS RESPONSIBLE FOR SECURING THE SERVICES OF THE LEOS WITH THE APPROPRIATE AGENCIES AND COMMUNICATING THE INTENTIONS OF THE PLANS WITH RESPECT TO DUTIES OF THE LEOS. THE ENGINEER SHALL HAVE FINAL CONTROL OVER THE LEOS' DUTIES AND PLACEMENT, AND WILL RESOLVE ANY ISSUES THAT MAY ARISE BETWEEN THE TWO PARTIES.

ENSURE PROVIDED LEOS HAVE BEEN TRAINED APPROPRIATE TO THE JOB DECISIONS THEY ARE REQUIRED TO MAKE WHILE ON THE PROJECT, IN ACCORDANCE WITH C&MS 614.03.

THE LEO SHALL REPORT IN TO THE CONTRACTOR PRIOR TO THE START OF THE SHIFT, IN ORDER TO RECEIVE INSTRUCTIONS REGARDING SPECIFIC WORK ASSIGNMENTS DURING HIS/HER SHIFT. THE LEO IS EXPECTED TO STAY AT THE PROJECT SITE FOR THE ENTIRE DURATION OF HIS/HER SHIFT. THE LEO SHALL REPORT TO THE CONTRACTOR AT THE END OF HIS/HER SHIFT. SHOULD IT BE NECESSARY TO LEAVE THE PROJECT SITE, THE LEO SHALL NOTIFY THE ENGINEER. THE CONTRACTOR SHALL PROVIDE THE LEO WITH A TWO-WAY COMMUNICATION DEVICE THAT SHALL BE RETURNED TO THE CONTRACTOR AT THE END OF HIS/HER SHIFT.

LEOS (WITH PATROL CAR) REQUIRED BY THE TRAFFIC MAINTENANCE TASKS ABOVE SHALL BE PAID FOR ON A UNIT PRICE (HOURLY) BASIS UNDER ITEM 614, LAW ENFORCEMENT OFFICER (WITH PATROL CAR) FOR ASSISTANCE. THE FOLLOWING ESTIMATED QUANTITIES HAVE BEEN CARRIED TO THE GENERAL SUMMARY.

ITEM 614, LAW ENFORCEMENT OFFICER WITH PATROL CAR FOR ASSISTANCE 688 HOURS

THE HOURS PAID SHALL INCLUDE ANY MINIMUM SHOW-UP TIME REQUIRED BY THE LAW ENFORCEMENT AGENCY INVOLVED.

ANY ADDITIONAL COSTS (ADMINISTRATIVE OR OTHERWISE) INCURRED BY THE CONTRACTOR TO OBTAIN THE SERVICES OF A LEO ARE INCLUDED WITH THE BID UNIT PRICE FOR ITEM 614, LAW ENFORCEMENT OFFICER WITH PATROL CAR FOR ASSISTANCE.

NOTIFICATION OF TRAFFIC RESTRICTIONS

THROUGHOUT THE DURATION OF THE PROJECT, THE CONTRACTOR SHALL NOTIFY THE PROJECT ENGINEER IN WRITING OF ALL TRAFFIC RESTRICTIONS AND UPCOMING MAINTENANCE OF TRAFFIC CHANGES. THE CONTRACTOR SHALL ENSURE THE WRITTEN NOTIFICATION IS SUBMITTED IN A TIMELY MANNER TO ALLOW THE PROJECT ENGINEER TO MEET THE REQUIRED TIME FRAMES SET FORTH IN THE TABLE BELOW TO INFORM THE SPECIAL HAULING PERMITS SECTION (HAULING.PERMITS@DOT.OHIO.GOV) AND THE DISTRICT PUBLIC INFORMATION OFFICE (PIO). THIS NOTIFICATION SHALL BE RECEIVED BY THE PROJECT ENGINEER PRIOR TO THE PHYSICAL SETUP OF ANY APPLICABLE SIGNS OR MESSAGE BOARDS.

INFORMATION SHOULD INCLUDE, BUT IS NOT LIMITED TO, ALL CONSTRUCTION ACTIVITIES THAT IMPACT OR INTERFERE WITH TRAFFIC AND SHALL LIST THE SPECIFIC LOCATION, TYPE OF WORK, ROAD STATUS, DATE AND TIME OF RESTRICTION, DURATION OF RESTRICTION, NUMBER OF LANES MAINTAINED, NUMBER OF LANES CLOSED, MINIMUM VERTICAL CLEARANCE, MINIMUM WIDTH OF DRIVABLE PAVEMENT, DETOUR ROUTES, IF APPLICABLE, AND ANY OTHER INFORMATION REQUESTED BY THE PROJECT ENGINEER.

NOTIFICATION OF TRAFFIC RESTRICTIONS TIME TABLE

ITEM	*DURATION OF CLOSURE*	*NOTICE DUE TO PERMITS & PIO*
RAMP & ROAD CLOSURES	*≥ 2 WEEKS*	*21 CALENDAR DAYS PRIOR TO CLOSURE*
	> 12 HOURS & < 2 WEEKS	*14 CALENDAR DAYS PRIOR TO CLOSURE*
	≤ 12 HOURS	*4 BUSINESS DAYS PRIOR TO CLOSURE*
LANE CLOSURES & RESTRICTIONS	*≥ 2 WEEKS*	*14 CALENDAR DAYS PRIOR TO CLOSURE*
	< 2 WEEKS	*5 BUSINESS DAYS PRIOR TO CLOSURE*
START OF CONSTRUCTION & TRAFFIC PATTERN CHANGES	*N/A*	*14 CALENDAR DAYS PRIOR TO IMPLEMENTATION*

ITEM 614, WORK ZONE RAISED PAVEMENT MARKER, AS PER PLAN

WORK ZONE RAISED PAVEMENT MARKERS, AS PER PLAN, AND THEIR INSTALLATION SHALL CONFORM TO C&MS 614 OR C&MS 621 AS SPECIFIED HEREIN.

- *RAISED PAVEMENT MARKERS IN USE DURING THE SNOW-PLOWING SEASON SHALL CONFORM TO 621.*
- *RAISED PAVEMENT MARKERS IN USE DURING THE NON-SNOW-PLOW SEASON SHALL CONFORM TO EITHER 614 OR TO 621.*

THE SNOW-PLOWING SEASON SHALL RUN FROM OCTOBER 15TH THROUGH APRIL 1ST.

IF PROJECT DELAYS, NOT THE FAULT OF ODOT, CAUSE THE WORK TO EXTEND INTO THE SNOW-PLOWING SEASON, THE CONTRACTOR SHALL BE RESPONSIBLE FOR REPLACING WORK ZONE RAISED PAVEMENT MARKERS (WZRPMS) CONFORMING TO C&MS 614, WITH RAISED PAVEMENT MARKERS CONFORMING TO 621, AS DETERMINED BY THE ENGINEER, AT THE CONTRACTOR'S EXPENSE.

THIS ITEM SHALL INCLUDE PURCHASE, INSTALLATION AND REMOVAL OF ITEM 614 WORK ZONE RAISED PAVEMENT MARKER, AS PER PLAN, INCLUDING FILLING OF ANY DEPRESSIONS CREATED IN THE PAVEMENT AS PER C&MS 621.08.

THE FOLLOWING BID ITEMS HAVE BEEN QUANTIFIED IN THE MAINTENANCE OF TRAFFIC SUBSUMMARY AND CARRIED TO THE GENERAL SUMMARY:

ITEM 614, WORK ZONE RAISED PAVEMENT MARKER, AS PER PLAN

MAINTENANCE OF TRAFFIC GENERAL NOTES

MODEL: Sheet_SurvFt PAPERSIZE: 34x22 (in.) DATE: 11/9/2026 TIME: 9:40:09 AM USER: kfomich
N:\01\60\08398-00\115826\400-Engineering\MOT\Sheets\115826_MN003.dgn

DESIGN AGENCY
ms consultants. inc.

DESIGNER
KJF

REVIEWER
KWR 07/22/26

PROJECT ID
115826

REF NO.	SHEET NO.	LOCATION	STATION TO STATION					607 TEMPORARY VANDAL FENCE, TYPE A (FT)	614 INCREASED BARRIER DELINEATION (FT)	614 WORK ZONE IMPACT ATTENUATOR, 24" WIDE HAZARDS, (UNIDIRECTIONAL) (EACH)	614 WORK ZONE IMPACT ATTENUATOR, 24" WIDE HAZARDS, (BIDIRECTIONAL) (EACH)	614 WATER-FILLED LONGITUDINAL BARRIER NCHRP 350 TL-2 (FT)	614 WORK ZONE RAISED PAVEMENT MARKER, AS PER PLAN (EACH)	614 BARRIER REFLECTOR, TYPE 1, (ONE WAY) (EACH)	614 BARRIER REFLECTOR, TYPE 1, (BIDIRECTIONAL) (EACH)	614 OBJECT MARKER, ONE WAY (EACH)	614 OBJECT MARKER, TWO WAY (EACH)	614 WORK ZONE LANE LINE, CLASS I, 6", 807 PAINT (FT/MILE)	614 WORK ZONE CENTER LINE, CLASS I, DOUBLE YELLOW (FT/MILE)	614 WORK ZONE CENTER LINE, CLASS I, SOLID/DASHED (FT/MILE)	614 WORK ZONE EDGE LINE, CLASS I, 4", WHITE (FT/MILE)	614 WORK ZONE EDGE LINE, CLASS I, 4", YELLOW (FT/MILE)	614 WORK ZONE EDGE LINE, CLASS I, 6", 807 PAINT, YELLOW (FT/MILE)	614 WORK ZONE CHANNELIZING LINE, CLASS I, 12", 807 PAINT (FT)	614 WORK ZONE STOP LINE, CLASS I (FT)	614 WORK ZONE CROSSWALK LINE, CLASS I, 12" (FT)	614 WORK ZONE ARROW, CLASS I (EACH)	622 PORTABLE BARRIER, UNANCHORED (FT)	622 PORTABLE BARRIER, ANCHORED (FT)
WE1	P.14	W. 220TH ST.	2+23.00	RT	TO	11+50.00	LT												927									
DY1	P.14	W. 220TH ST.	4+37.00	LT	TO	5+60.00	LT										123											
DY2	P.14	W. 220TH ST.	8+58.00	LT	TO	11+50.00	LT										292											
	P.14	W. 220TH ST.	8+30.00	LT	TO	11+50.00	LT				1				7		7											320
	P.14	W. 220TH ST.	8+64.00	LT	TO	11+50.00	LT	286																				
	P.14	MASTICK RD.	21+88.00	LT	TO	23+10.00	LT			1	1				3		3											122
SL1	P.14	MASTICK RD.	22+08.00	RT																			11					
WE2	P.14	MASTICK RD.	22+08.00	RT	TO	25+97.00	LT												389									
YE1	P.14	MASTICK RD.	23+81.00	RT	TO	25+97.00	CL													216								
	P.14	MASTICK RD.	24+28.00	LT/RT	TO	24+86.00	LT/RT					116													34			
XW1	P.14	MASTICK RD.	24+86.00	LT/RT	TO	24+92.00	LT/RT																					
	P.14	MASTICK RD.	24+92.00	LT/RT	TO	25+50.00	LT/RT					116																
DY3, WE3	P.15	W. 220TH ST.	11+50.00	LT	TO	15+72.00	RT												422		422							
	P.15	W. 220TH ST.	11+50.00	LT	TO	11+86.00	LT				1				1		1											36
	P.15	W. 220TH ST.	11+50.00	LT	TO	11+62.00	LT	12																				
	P.17	W. 220TH ST.	7+62.00	RT	TO	8+63.00	LT								2		2											101
DY4	P.17	MASTICK RD.	22+56.00	CL	TO	23+81.00	CL												125									
WE4	P.17	MASTICK RD.	23+81.00	LT	TO	24+64.00	LT														83							
WE5	P.17	MASTICK RD.	25+14.00	RT	TO	25+97.00	RT														83							
CL1	P.19	W. 220TH ST.	4+36.00	CL	TO	5+60.00	CL												124									
DY5	P.19	W. 220TH ST.	5+60.00	CL	TO	6+10.00	LT										50											
A1	P.19	W. 220TH ST.	6+32.00	LT																						1		
A2	P.19	W. 220TH ST.	6+91.00	LT																						1		
	P.19	W. 220TH ST.	8+57.00	RT	TO	11+50.00	RT				1				5		5										293	
	P.19	W. 220TH ST.	8+64.00	RT	TO	11+50.00	RT	286																				
YE2	P.19	W. 220TH ST.	8+86.00	RT	TO	11+50.00	RT													264								
XW2	P.19	MASTICK RD.	21+97.00	LT/RT	TO	22+08.00	LT/RT																		146			
DY6	P.19	MASTICK RD.	22+82.00	CL	TO	24+47.00	CL										165											
	P.20	W. 220TH ST.	11+50.00	RT	TO	11+63.00	RT	13																				
	P.20	W. 220TH ST.	11+50.00	RT	TO	11+73.00	RT								1		1										23	
YE3	P.20	W. 220TH ST.	11+50.00	RT	TO	13+00.00	RT													150								
CL2	P.20	W. 220TH ST.	13+00.00	LT	TO	13+98.00	LT												98									
CL3	P.20	W. 220TH ST.	13+00.00	RT	TO	15+72.00	RT												272									
CH1	P.20A	IR-480	410+51.00	RT	TO	418+91.00	RT						129									2520						
YE4	P.20A	IR-480	413+51.00	RT	TO	427+10.00	RT						86								1359							
LL1	P.20A	IR-480	418+91.00	RT	TO	421+70.00	RT						6					837										
CH2	P.20A	IR-480	421+70.00	RT	TO	430+10.00	RT						129									2520						
	P.20A	IR-480	421+86.00	RT	TO	424+70.00	RT		284	1						6												284
	P.20A	IR-480	422+30.00	LT	TO	424+96.00	LT			1				6		6												266
TOTALS THIS SHEET																	837	1177	494	1904	630	1359						
TOTALS CARRIED TO GENERAL SUMMARY								597	284	3	4	232	350	6	19	12	19	0.16	0.32		0.48		0.26	5040	11	180	2	316	1129

CUY-IR-480-06.12 DECK

MAINTENANCE OF TRAFFIC SUBSUMMARY

DESIGN AGENCY
ms consultants, inc.

DESIGNER
KJF

REVIEWER
JML 07/22/26

PROJECT ID
115826

SHEET P.10 TOTAL 86

MODEL: Sheet_SurvF1 PAPERSIZE: 34x22 (in.) DATE: 11/9/2026 TIME: 9:40:12 AM USER: kfomich
N:\01160\08398-00\115826\400-Engineering\MOT\Sheets\115826_MS001.dgn

LEGEND

K	WORK ZONE SIGN	WE	WORK ZONE EDGE LINE, WHITE
	TYPE 3 BARRICADE W/ SIGN	YE	WORK ZONE EDGE LINE, YELLOW
	TYPE 3 BARRICADE	DY	WORK ZONE CENTER LINE, DOUBLE YELLOW
	PORTABLE/WATER-FILLED BARRIER	SL	WORK ZONE STOP LINE
	WORK ZONE IMPACT ATTENUATOR	XW	WORK ZONE CROSSWALK LINE
	WORK ZONE	CL	WORK ZONE CENTER LINE, SOLID/DASHED
	TEMPORARY DETECTION ZONE	LL	WORK ZONE LANE LINE, TYPE 807
	TRAFFIC FLOW ARROW	CH	WORK ZONE CHANNELIZING LINE, TYPE 807
	DRUMS	YE	WORK ZONE EDGE LINE, YELLOW, TYPE 807
	TYPE 'A' WARNING LIGHT		

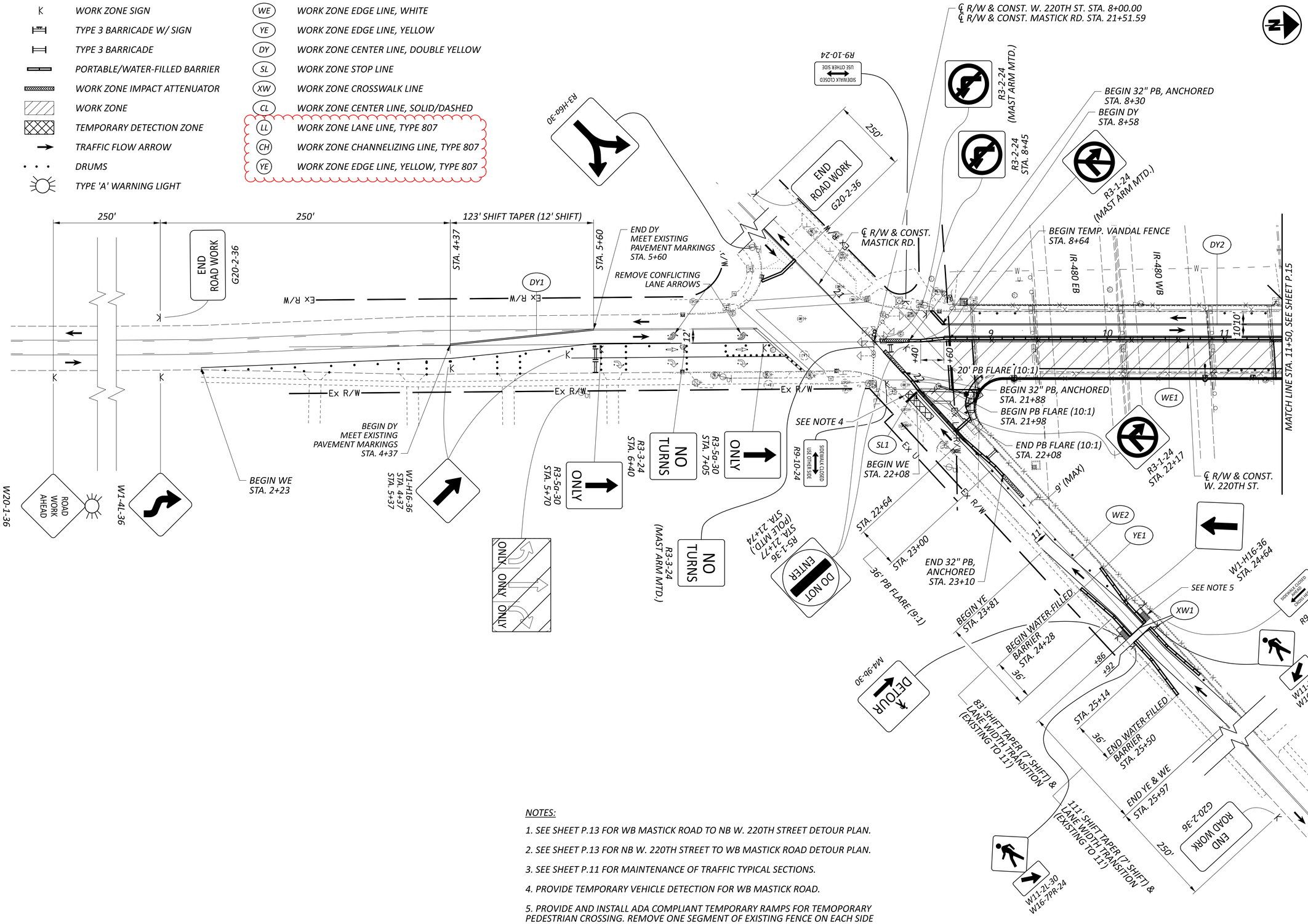

NOTES:

1. SEE SHEET P.13 FOR WB MASTICK ROAD TO NB W. 220TH STREET DETOUR PLAN.
2. SEE SHEET P.13 FOR NB W. 220TH STREET TO WB MASTICK ROAD DETOUR PLAN.
3. SEE SHEET P.11 FOR MAINTENANCE OF TRAFFIC TYPICAL SECTIONS.
4. PROVIDE TEMPORARY VEHICLE DETECTION FOR WB MASTICK ROAD.
5. PROVIDE AND INSTALL ADA COMPLIANT TEMPORARY RAMPS FOR TEMOPORARY PEDESTRIAN CROSSING. REMOVE ONE SEGMENT OF EXISTING FENCE ON EACH SIDE TO ALLOW ACCESS TO TEMPORARY RAMP.

HORIZONTAL SCALE IN FEET
0 20 40 80

MAINTENANCE OF TRAFFIC - PHASE 1A
W. 220TH STREET STA. 1+50 TO STA. 11+50

CUY-IR-480-06.12 DECK

MODEL: Sheet PAPERSIZE: 34x22 (in.) DATE: 11/9/2026 TIME: 9:40:27 AM USER: kfomich
N:\01\60\08398-00\115826\400-Engineering\MOT\Sheets\115826_MP101.dgn

DESIGN AGENCY
ms consultants, inc.

DESIGNER	KJF
REVIEWER	KWR 07/22/26
PROJECT ID	115826
SHEET	P.14
TOTAL	86

MAINTENANCE OF TRAFFIC - PHASE 3
IR-480 STA. 480+50 TO STA. 433+50

HORIZONTAL SCALE IN FEET
0 25 50 100

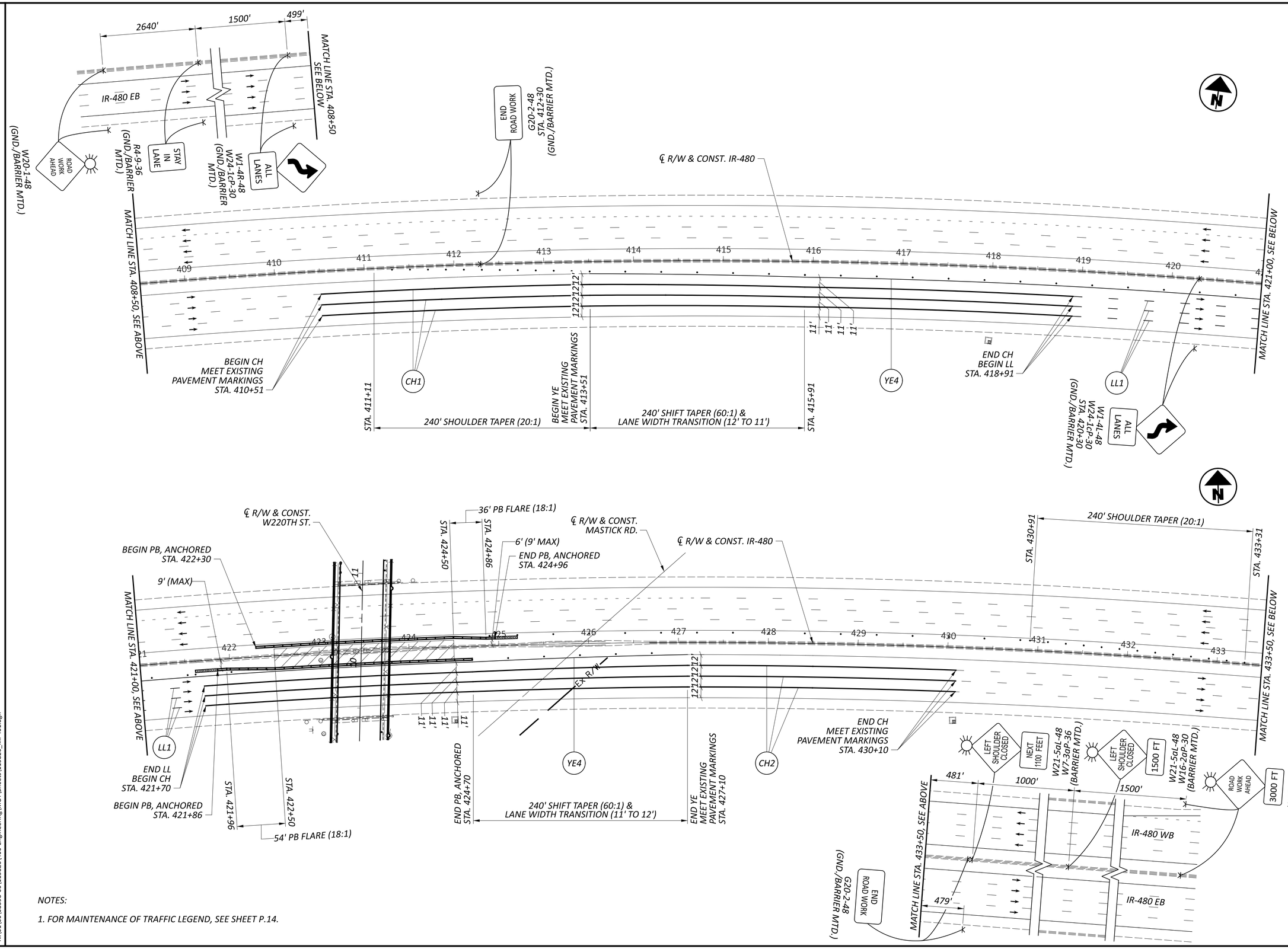

NOTES:

1. FOR MAINTENANCE OF TRAFFIC LEGEND, SEE SHEET P.14.

DESIGN AGENCY
ms consultants, inc.

DESIGNER	KJF
REVIEWER	JML 11/05/26
PROJECT ID	115826
SHEET	P.20A
TOTAL	86

CUY-IR-480-06.12 DECK

MODEL: 115826_MP401 PAPERSIZE: 34x22 (in.) DATE: 11/9/2026 TIME: 11:57:08 AM USER: kfomich
N:\01\60\08398-00\115826\400-Engineering\MOT\Sheets\115826_MP401.dgn

SHEET NUMBER											PART.			ITEM	ITEM EXT	GRAND TOTAL	UNIT	DESCRIPTION	SEE SHEET NO.
P.7	P.9	P.10	P.34	P.39	P.42	P.43	P.44				01/BRO	02/IMS	03/IMS						
																		LIGHTING (CONT.)	
							4				4			625	27507	4	EACH	LUMINAIRE, TEARDROP, SOLID STATE (LED), AS PER PLAN, TEARDROP, 3000K, BLACK FINISH, AS PER PLAN	P.43
							115				115			625	29002	115	FT	TRENCH, 24" DEEP	
							5				5			625	29900	5	EACH	JUNCTION BOX	
							1				1			625	30510	1	EACH	PULL BOX, 725.06, SIZE 4	
							1				1			625	30530	1	EACH	PULL BOX, 725.06, SIZE 18	
							1				1			625	33000	1	EACH	STRUCTURE GROUNDING SYSTEM	
							1				1			625	34001	1	EACH	POWER SERVICE, AS PER PLAN	P.42
							115				115			625	36010	115	FT	UNDERGROUND WARNING MARKING TAPE, LIGHTING	
					LS						LS			SPECIAL	62540000	LS		MAINTAIN EXISTING LIGHTING	P.42
						1					1			625	98000	1	EACH	LIGHTING, MISC.: TEST EXISITING CIRCUIT	P.43
																		TRAFFIC CONTROL	
			0.11								0.11			646	10000	0.11	MILE	EDGE LINE, 4"	
			0.28								0.28			646	10200	0.28	MILE	CENTER LINE	
			463								463			646	10300	463	FT	CHANNELIZING LINE, 8"	
			43								43			646	10400	43	FT	STOP LINE	
			273								273			646	10510	273	FT	CROSSWALK LINE, 12"	
			194								194			646	10600	194	FT	TRANSVERSE/DIAGONAL LINE	
			8								8			646	20300	8	EACH	LANE ARROW	
			0.26								0.26			807	12010	0.26	MILE	WET REFLECTIVE EPOXY PAVEMENT MARKING, EDGE LINE, 6"	
			1.11								1.11			807	12110	1.11	MILE	WET REFLECTIVE EPOXY PAVEMENT MARKING, LANE LINE, 6"	
																		TRAFFIC SIGNALS	
				25							25			625	25400	25	FT	CONDUIT, 2", 725.04	
				280							280			625	25410	280	FT	CONDUIT, 2", 725.052	
				72							72			625	25600	72	FT	CONDUIT, 4", 725.04	
				106							106			625	29000	106	FT	TRENCH	
				3							3			625	30700	3	EACH	PULL BOX, 725.08, 18"	
				2							2			625	32000	2	EACH	GROUND ROD	
				106							106			625	36010	106	FT	UNDERGROUND WARNING MARKING TAPE	
				3							3			632	20731	3	EACH	PEDESTRIAN SIGNAL HEAD (LED), TYPE D2, COUNTDOWN, AS PER PLAN	P.37
				3							3			632	26000	3	EACH	PEDESTRIAN PUSHBUTTON	
				733							733			632	40500	733	FT	SIGNAL CABLE, 5 CONDUCTOR, NO. 14 AWG	
				2							2			632	64020	2	EACH	PEDESTAL FOUNDATION	
				712							712			632	65200	712	FT	LOOP DETECTOR LEAD-IN CABLE	
				1							1			632	80700	1	EACH	SIGNAL SUPPORT, MISC.:GALVANIZED STEEL POLE REPAIR	P.38
				2							2			632	89920	2	EACH	PEDESTAL, 10.7' TALL, TRANSFORMER BASE	
				1							1			632	90100	1	EACH	REMOVAL OF TRAFFIC SIGNAL INSTALLATION	
																		STRUCTURE REPAIRS (CUY-00480-06.1220) SEE SHEET P.53 FOR QUAMTITIES	
																		MAINTENANCE OF TRAFFIC	
		597									597			607	39992	597	FT	TEMPORARY VANDAL FENCE, TYPE A	
	688										688			614	11110	688	HOUR	LAW ENFORCEMENT OFFICER WITH PATROL CAR FOR ASSISTANCE	
		284									284			614	11630	284	FT	INCREASED BARRIER DELINEATION	
		3									3			614	12380	3	EACH	WORK ZONE IMPACT ATTENUATOR, 24" WIDE HAZARDS, (UNIDIRECTIONAL)	
		4									4			614	12384	4	EACH	WORK ZONE IMPACT ATTENUATOR, 24" WIDE HAZARDS, (BIDIRECTIONAL)	
	LS										LS			614	12420	LS		DETOUR SIGNING	
		232									232			614	12424	232	FT	WATER-FILLED LONGITUDINAL BARRIER NCHRP 350 TL-2	
		350									350			614	12801	350	EACH	WORK ZONE RAISED PAVEMENT MARKER, AS PER PLAN	P.9
		19									19			614	13310	19	EACH	BARRIER REFLECTOR, TYPE 1, (BIDIRECTIONAL)	
		6									6			614	13310	6	EACH	BARRIER REFLECTOR, TYPE 1, (ONE WAY)	
		12									12			614	13350	12	EACH	OBJECT MARKER, ONE WAY	
		19									19			614	13360	19	EACH	OBJECT MARKER, TWO WAY	
		0.16									0.16			614	20056	0.16	MILE	WORK ZONE LANE LINE, CLASS I, 6", 807 PAINT	
		0.32									0.32			614	21000	0.32	MILE	WORK ZONE CENTER LINE, CLASS I	
		0.48									0.48			614	22000	0.48	MILE	WORK ZONE EDGE LINE, CLASS I, 4"	

GENERAL SUMMARY

CUY-IR-480-06.12 DECK

MODEL: Sheet_SurvFt PAPERSIZE: 34x22 (in.) DATE: 11/10/2026 TIME: 11:22:03 AM USER: jkuczynski
N:\01\60\08398-00\115826\400-Engineering\Roadway\Sheets\115826_GG002.dgn

DESIGN AGENCY
ms consultants, inc.

DESIGNER TSB

REVIEWER JDK 07/22/26

PROJECT ID 115826

SHEET P.22 TOTAL 86

SHEET NUMBER											PART.			ITEM	ITEM EXT	GRAND TOTAL	UNIT	DESCRIPTION	SEE SHEET NO.
P.6	P.7	P.10									01/BRO	02/IMS	03/IMS						
																		MAINTENANCE OF TRAFFIC (CONT.)	
		0.26									0.26			614	22056	0.26	MILE	WORK ZONE EDGE LINE, CLASS I, 6", 807 PAINT	
		5,040									5,040			614	23110	5,040	FT	WORK ZONE CHANNELIZING LINE, CLASS I, 12", 807 PAINT	
		11									11			614	26000	11	FT	WORK ZONE STOP LINE, CLASS I	
		180									180			614	27010	180	FT	WORK ZONE CROSSWALK LINE, CLASS I, 12"	
		2									2			614	30000	2	EACH	WORK ZONE ARROW, CLASS I	
	2										2			616	10000	2	MGAL	WATER	
		316									316			622	41100	316	FT	PORTABLE BARRIER, UNANCHORED	
		1,129									1,129			622	41110	1,129	FT	PORTABLE BARRIER, ANCHORED	
																		INCIDENTALS	
	LS										LS			614	11000	LS		MAINTAINING TRAFFIC	
11											11			619	16021	11	MNTH	FIELD OFFICE, TYPE C, AS PER PLAN	P.6
LS											LS			623	10001	LS		CONSTRUCTION LAYOUT STAKES AND SURVEYING, AS PER PLAN	P.6
											LS			624	10000	LS		MOBILIZATION	

GENERAL SUMMARY

CUY-IR-480-06.12 DECK

MODEL: Sheet_SurvFt PAPERSIZE: 34x22 (in.) DATE: 11/10/2026 TIME: 8:45:09 AM USER: jkuczynski
N:\01\60\08398-00\115826\400-Engineering\Roadway\Sheets\115826_GG003.dgn

DESIGN AGENCY
ms consultants, inc.

DESIGNER
TSB

REVIEWER
JDK 07/22/26

PROJECT ID
115826

SHEET P.22A | TOTAL 86

REF NO.	SHEET NO.	LOCATION	STATION TO STATION				646 EDGE LINE, 4", WHITE FT/MILE	646 CENTER LINE, DOUBLE SOLID FT/MILE	646 CENTER LINE, PASS PROHIBITED RIGHT FT/MILE	646 CENTER LINE, PASS PROHIBITED LEFT FT/MILE	646 CHANNELIZING LINE, 8" FT	646 STOP LINE FT	646 CROSSWALK LINE, 12" FT	646 TRANSVERSE/DIAGONAL LINE, WHITE FT	646 LANE ARROW EACH	807 WET REFLECTIVE EPOXY PAVEMENT MARKING, EDGE LINE, 6", YELLOW FT/MILE	807 WET REFLECTIVE EPOXY PAVEMENT MARKING, LANE LINE, 6" FT/MILE
CL1	P.35	W. 220TH ST.	4+37.00 CL	TO	5+60.00 CL					123							
CH1	P.35	W. 220TH ST.	5+41.00 RT	TO	7+23.00 RT						182						
DY1	P.35	W. 220TH ST.	5+60.00 CL	TO	6+10.00 LT			50									
A1	P.35	W. 220TH ST.	6+32.00 LT/RT												2		
A2	P.35	W. 220TH ST.	6+91.00 LT/RT												2		
XW1	P.35	W. 220TH ST.	8+40.00 LT/RT	TO	8+49.00 LT/RT								178				
SL1	P.35	W. 220TH ST.	8+50.00 LT									14					
CH2	P.35	W. 220TH ST.	8+50.00 LT	TO	10+00.00 LT						150						
SL2	P.35	W. 220TH ST.	8+65.00 LT									12					
DY2	P.35	W. 220TH ST.	8+65.00 CL	TO	10+00.00 CL			135									
A3	P.35	W. 220TH ST.	8+75.00 LT												1		
WE1, TW1	P.35	W. 220TH ST.	8+83.00 RT	TO	10+00.00 RT		128							96			
A4	P.35	W. 220TH ST.	9+41.00 LT												1		
XW2	P.35	MASTICK RD.	22+13.00 LT/RT	TO	22+24.00 LT/RT								95				
SL3	P.35	MASTICK RD.	22+56.00 LT									17					
DY3	P.35	MASTICK RD.	22+56.00 CL	TO	SEE PLAN SHEET			340									
CH3	P.36	W. 220TH ST.	10+00.00 LT	TO	11+31.00 LT						131						
DY4	P.36	W. 220TH ST.	10+00.00 CL	TO	11+79.00 CL			179									
WE2, TW2	P.36	W. 220TH ST.	10+00.00 RT	TO	14+64.00 RT		464							98			
A5	P.36	W. 220TH ST.	10+07.00 LT												1		
A6	P.36	W. 220TH ST.	10+73.00 LT												1		
DY5	P.36	W. 220TH ST.	11+31.00 CL	TO	11+79.00 LT			50									
CR1	P.36	W. 220TH ST.	11+79.00 LT	TO	13+98.00 LT				219								
CL2	P.36	W. 220TH ST.	11+79.00 RT	TO	15+72.00 RT					393							
LL1	P.36A	IR-480	410+51.00 RT	TO	430+10.00 RT												5877
YE1	P.36A	IR-480	413+51.00 RT	TO	427+10.00 RT											1359	
TOTALS THIS SHEET							592	754	219	516						1359	5877
TOTALS CARRIED TO GENERAL SUMMARY							0.11		0.28		463	43	273	194	8	0.26	1.11

PAVEMENT MARKING SUBSUMMARY

CUY-IR-480-06.12 DECK

MODEL: Sheet_SurvFt PAPERSIZE: 34x22 (in.) DATE: 11/10/2026 TIME: 11:12:13 AM USER: klomich
N:\01\60\08398-00\115826\400-Engineering\Traffic\Sheets\115826_TS001.dgn

DESIGN AGENCY
ms consultants, inc.

DESIGNER
KJF

REVIEWER
JML 07/22/26

PROJECT ID
115826

SHEET P.34 TOTAL 86

LEGEND

- (A) ITEM 646 - LANE ARROW
- (CH) ITEM 646 - CHANNELIZING LINE, 8"
- (DY) ITEM 646 - CENTER LINE, DOUBLE SOLID
- (CL) ITEM 646 - CENTERLINE, PASS PROHIBITED LEFT
- (CR) ITEM 646 - CENTER LINE, PASS PROHIBITED RIGHT
- (WE) ITEM 646 - EDGE LINE, 4", WHITE
- (YE) ITEM 807 - EDGE LINE, 6", YELLOW
- (LL) ITEM 807 - LANE LINE, 6"
- (TW) ITEM 646 - TRANSVERSE LINE, WHITE
- (XW) ITEM 646 - CROSSWALK LINE, 12"
- (SL) ITEM 646 - STOP LINE
- EXISTING SIGN TO REMAIN
- TRAFFIC FLOW ARROW

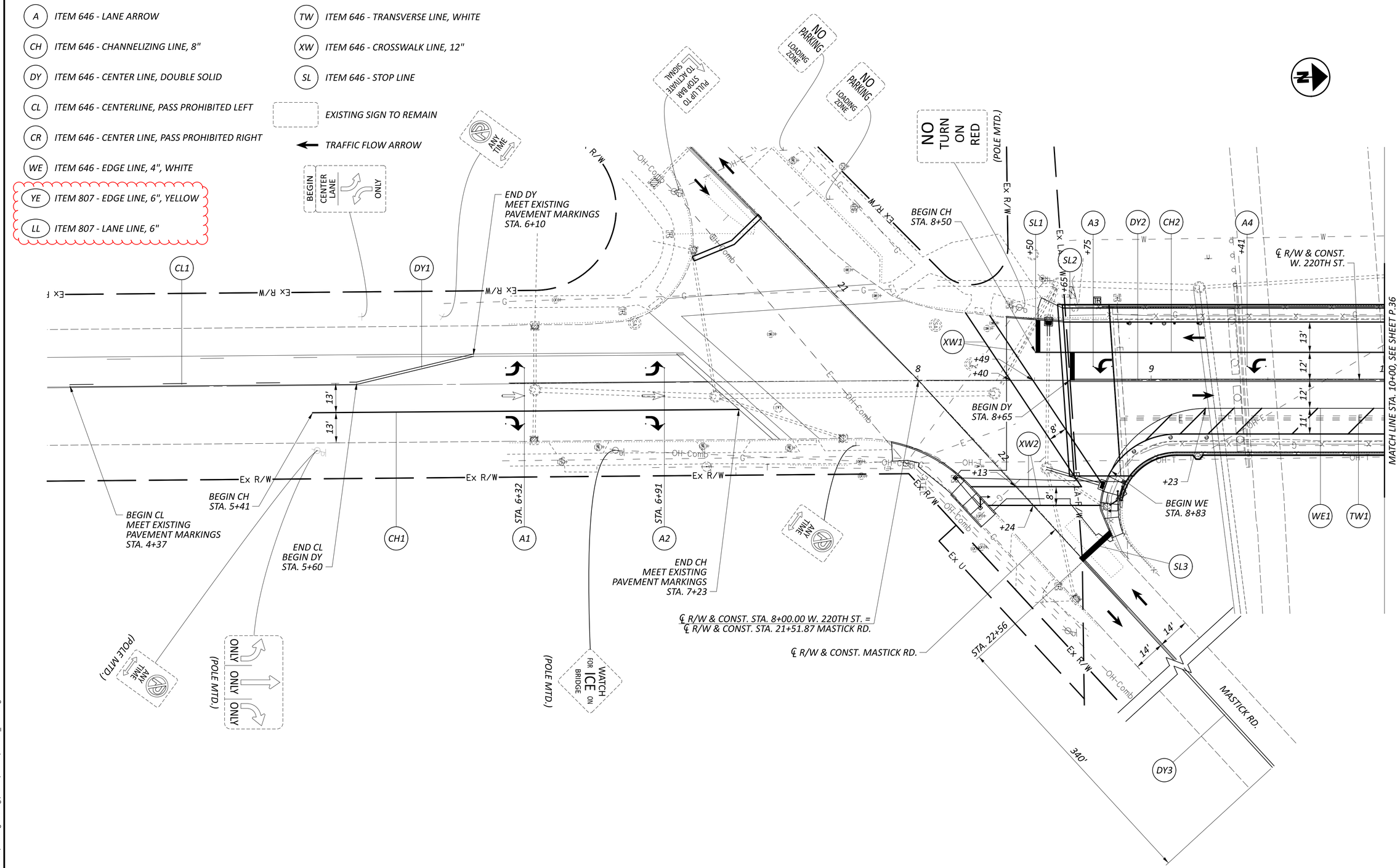

HORIZONTAL SCALE IN FEET
0 10 20 40

SIGNING AND PAVEMENT MARKING PLAN
W. 220TH ST. - BEGIN WORK TO STA. 10+00

CUY-IR-480-06.12 DECK

MODEL: 115826_TP102 PAPERSIZE: 34x22 (in.) DATE: 11/9/2026 TIME: 10:15:49 AM USER: kfomich
N:\01\60\08398-00\115826\400-Engineering\Traffic\Sheets\115826_TP102.dgn

DESIGN AGENCY
ms consultants, inc.

DESIGNER	KJF
REVIEWER	KWR 07/22/26
PROJECT ID	115826
SHEET	P.35
TOTAL	86

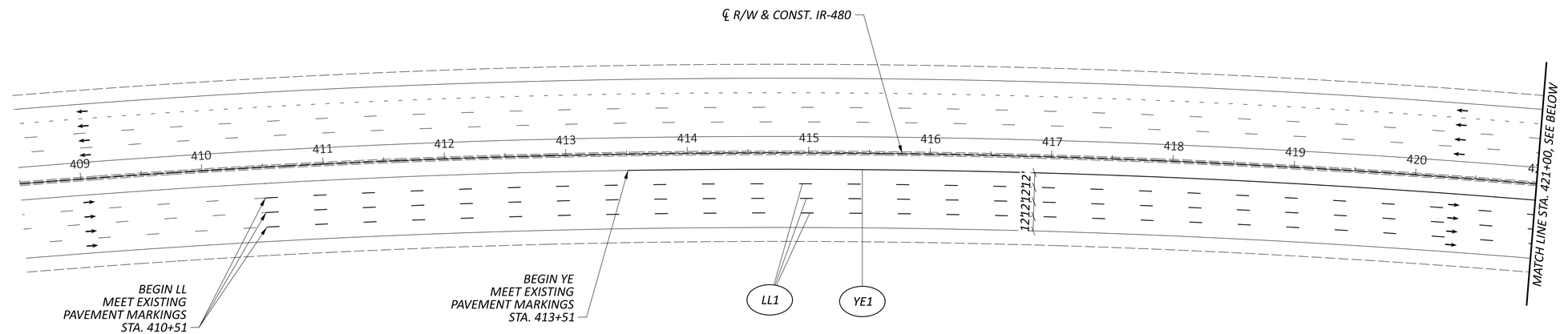

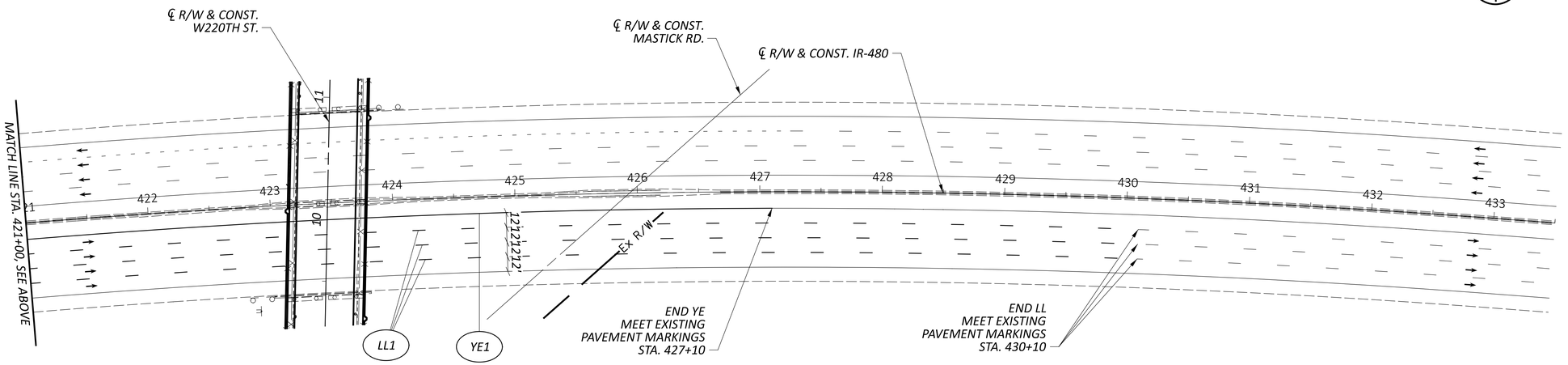

NOTES:

1. FOR PAVEMENT MARKING LEGEND, SEE SHEET P.35.

HORIZONTAL
SCALE IN FEET
0 50 100
25

PAVEMENT MARKING PLAN
IR-480 - STA. 480+50 TO STA. 433+50

DESIGN AGENCY
ms consultants, inc.

DESIGNER
KJF

REVIEWER
JML 11/05/26

PROJECT ID
115826

SHEET P.36A TOTAL 86

CUY-IR-480-06.12 DECK

MODEL: 115826_TP201 PAPERSIZE: 34x22 (in.) DATE: 11/9/2026 TIME: 10:16:09 AM USER: kfomich
N:\01\60\08398-00\115826\400-Engineering\Traffic\Sheets\115826_TP201.dgn

REFER TO THE FOLLOWING STANDARD DRAWINGS:

AS-1-15	REVISED	01-20-2023
AS-2-15	REVISED	07-21-2023
BR-2-15	REVISED	07-19-2024
EXJ-6-17	REVISED	01-19-2024
GSD-1-19	REVISED	07-19-2024
HL-20.14	REVISED	07-17-2026
HL-30.31	REVISED	07-17-2026
HL-50.21	REVISED	01-16-2026
PCB-91	REVISED	07-17-2020
RM-4.2	REVISED	07-17-2026
SICD-1-21	REVISED	01-19-2024
SICD-2-14	REVISED	01-15-2021
TC-83.20	REVISED	01-16-2026
TVPF-1-18	REVISED	01-17-2025
VPF-1-24	REVISED	07-17-2026

AND TO THE FOLLOWING SUPPLEMENTAL SPECIFICATIONS:

SS 800	DATED	07-17-2026

DESIGN SPECIFICATIONS

THIS STRUCTURE CONFORMS TO THE 9TH EDITION OF THE "LRFD BRIDGE DESIGN SPECIFICATIONS" ADOPTED BY THE AMERICAN ASSOCIATION OF STATE HIGHWAY AND TRANSPORTATION OFFICIALS, 2020 AND THE ODOT BRIDGE DESIGN MANUAL, 2020.

LRFD LOAD MODIFIERS

OPERATIONAL IMPORTANCE: A LOAD MODIFIER OF 1.0 HAS BEEN ASSUMED FOR THE DESIGN OF THIS STRUCTURE IN ACCORDANCE WITH THE AASHTO LRFD BRIDGE DESIGN SPECIFICATIONS, ARTICLE 1.3.5 AND THE ODOT BRIDGE DESIGN MANUAL.

DESIGN LOADING

DESIGN LOADING: HL93

FUTURE WEARING SURFACE (FWS) OF 0.060 KIPS/SQ. FT.

DESIGN STRESSES

CONCRETE CLASS QC2
COMPRESSIVE STRENGTH 4.5 KSI (SUPERSTRUCTURE)

CONCRETE CLASS QC1
COMPRESSIVE STRENGTH 4.0 KSI (SUBSTRUCTURE)

EPOXY COATED STEEL REINFORCEMENT - MINIMUM YIELD STRENGTH 60 KSI

STRUCTURAL STEEL - ASTM A709 GRADE 50 - YIELD STRENGTH 50 KSI

MONOLITHIC WEARING SURFACE

MONOLITHIC WEARING SURFACE IS ASSUMED, FOR DESIGN PURPOSES, TO BE 1 INCH

EXISTING STRUCTURE VERIFICATION

DETAILS AND DIMENSIONS SHOWN ON THESE PLANS PERTAINING TO THE EXISTING STRUCTURE HAVE BEEN OBTAINED FROM PLANS OF THE EXISTING STRUCTURE AND FROM FIELD OBSERVATIONS AND MEASUREMENTS. CONSEQUENTLY, THEY ARE INDICATIVE OF THE EXISTING STRUCTURE AND THE PROPOSED WORK BUT THEY SHALL BE CONSIDERED TENTATIVE AND APPROXIMATE. THE CONTRACTOR IS REFERRED TO C&MS SECTIONS 102.05, 105.02 AND 513.04.

BASE CONTRACT BID PRICES UPON A RECOGNITION OF THE UNCERTAINTIES DESCRIBED ABOVE AND UPON A PREBID EXAMINATION OF THE EXISTING STRUCTURE. HOWEVER, THE DEPARTMENT WILL PAY FOR ALL WORK BASED UPON ACTUAL DETAILS AND DIMENSIONS THAT HAVE BEEN VERIFIED IN THE FIELD.

INSPECTION OF EXISTING STRUCTURAL STEEL:

THE ENGINEER WILL VISUALLY INSPECT ALL EXISTING BUTT-WELDED SPLICES AND/OR TOP FLANGE COVER PLATE FILLET WELDS TO ENSURE THE WELDS, PLATES AND BEAMS OR GIRDERS ARE FREE OF DEFECTS AND CRACKS. IF NECESSARY, REMOVE ALL DECK SLAB HAUNCH FORMS IMMEDIATELY ADJACENT TO SUCH WELDS THAT MAY INTERFERE WITH THE ENGINEER'S INSPECTION. THE INSPECTION WILL NOT TAKE PLACE UNTIL THE TOP FLANGES ARE CLEANED ACCORDING TO C&MS 511.07, BUT IT WILL BE DONE BEFORE THE DECK SLAB REINFORCEMENT IS INSTALLED. THE DEPARTMENT WILL PAY FOR THE COST ASSOCIATED WITH THIS INSPECTION WITH ITEM 511 - CLASS QC2 CONCRETE WITH QC/QA, BRIDGE DECK, AS PER PLAN. THE ENGINEER WILL REPORT ALL CRACKS FOUND TO THE OFFICE OF CONSTRUCTION ADMINISTRATION, BRIDGE CONSTRUCTION SPECIALIST, ALONG WITH SPECIFIC INFORMATION ON LOCATION OF THE CRACKS, LENGTH, AND DEPTH SO AN EVALUATION AND REPAIR OR REPLACEMENT RECOMMENDATION CAN BE MADE.

DECK PLACEMENT DESIGN ASSUMPTIONS:

THE FOLLOWING ASSUMPTIONS OF CONSTRUCTION MEANS AND METHODS WERE MADE FOR THE ANALYSIS AND DESIGN OF THE SUPERSTRUCTURE. THE CONTRACTOR IS RESPONSIBLE FOR THE DESIGN OF THE FALSEWORK SUPPORT SYSTEM WITHIN THESE PARAMETERS AND WILL ASSUME RESPONSIBILITY FOR SUPERSTRUCTURE ANALYSIS FOR DEVIATION FROM THESE DESIGN ASSUMPTIONS.

AN EIGHT WHEEL FINISHING MACHINE WITH A MAXIMUM WHEEL LOAD OF 2.2 KIPS.

A MINIMUM OUT-TO-OUT WHEEL SPACING AT EACH END OF THE MACHINE OF 103".

A MAXIMUM SPACING OF OVERHANG FALSEWORK BRACKETS OF 48 IN.

A MAXIMUM DISTANCE FROM THE CENTERLINE OF THE FASCIA GIRDER TO THE FACE OF THE SAFETY HANDRAIL OF 65".

ITEM 202, PORTIONS OF STRUCTURE REMOVED, OVER 20 FOOT SPAN, AS PER PLAN

THIS ITEM SHALL INCLUDE THE ELEMENTS INDICATED IN THE PLANS AND GENERAL NOTES AND THAT ARE NOT SEPARATELY LISTED FOR PAYMENT, EXCEPT FOR WEARING COURSE REMOVAL. ITEMS TO BE REMOVED INCLUDE ALL EXISTING MATERIALS BEING REPLACED BY NEW CONSTRUCTION AND MISCELLANEOUS ITEMS THAT ARE NOT SHOWN TO BE INCORPORATED INTO THE FINAL CONSTRUCTION AND ARE DIRECTED TO BE REMOVED BY THE ENGINEER. THE DEPARTMENT WILL NOT PERMIT THE USE OF EXPLOSIVES, HEADACHE BALLS AND/OR HOE-RAMS. DO NOT BEGIN WORK UNTIL THE ENGINEER ACCEPTS THE METHOD OF REMOVAL AND THE WEIGHT OF HAMMER SHALL BE APPROVED BY THE ENGINEER. PERFORM ALL WORK IN A MANNER THAT WILL NOT CUT, ELONGATE OR DAMAGE THE EXISTING CONCRETE REINFORCEMENT TO BE PRESERVED. CHIPPING HAMMERS SHALL NOT BE HEAVIER THAN THE NOMINAL 90-POUND CLASS. PNEUMATIC HAMMERS SHALL NOT BE PLACED IN DIRECT CONTACT WITH CONCRETE REINFORCEMENT THAT IS TO BE RETAINED IN THE REBUILT STRUCTURE. SUBMIT CONSTRUCTION PLANS ACCORDING TO C&MS 501.05.

DECK REMOVAL: THIS WORK CONSISTS OF THE REMOVAL OF CONCRETE DECKS INCLUDING SIDEWALKS, CONCRETE BRIDGE RAILINGS, METAL RAILINGS, DECK JOINTS AND OTHER APPURTENANCES FROM STEEL SUPPORTING SYSTEMS (BEAMS, GIRDERS, CROSS-FRAMES, ETC.). THE PROVISIONS OF ITEM 202 APPLY EXCEPT AS SPECIFIED BY THE FOLLOWING NOTES. PERFORM WORK CAREFULLY DURING DECK REMOVALS TO PROTECT PORTIONS OF SUCH SYSTEMS THAT ARE TO BE SALVAGED AND INCORPORATED INTO THE PROPOSED STRUCTURE. THE DEPARTMENT WILL NOT PERMIT THE USE OF EXPLOSIVES, HEADACHE BALLS AND/OR HOE RAM TYPE OF EQUIPMENT. SUBMIT CONSTRUCTION PLANS ACCORDING TO C&MS 501.05.

PROTECTION OF STEEL SUPPORT SYSTEMS: BEFORE DECK SLAB CUTTING BEGINS, DRAW THE OUTLINE OF PRIMARY STEEL MEMBERS IN CONTACT WITH THE BOTTOM OF THE DECK ON THE SURFACE OF DECK. DRILL SMALL DIAMETER PILOT HOLES 2 INCHES OUTSIDE THESE LINES TO CONFIRM THE LOCATION OF FLANGE EDGES. DECK CUTS OVER OR WITHIN 2 INCHES OF FLANGE EDGES SHALL NOT EXTEND LOWER THAN THE BOTTOM LAYER OF CONCRETE REINFORCEMENT IN THE DECK SLAB. CUTS MADE OUTSIDE 2 INCHES OF FLANGE EDGES MAY EXTEND THE FULL DEPTH OF THE DECK. PERFORM WORK CAREFULLY DURING CUTTING OF THE DECK SLAB TO AVOID DAMAGING STEEL MEMBERS THAT ARE TO BE INCORPORATED INTO THE PROPOSED STRUCTURE. REPLACE OR REPAIR STEEL MEMBERS DAMAGED BY THE DECK SLAB CUTTING OPERATIONS AT NO COST TO THE PROJECT. AT LEAST 7 DAYS BEFORE PERFORMING REPAIR WORK, SUBMIT A PROPOSED REPAIR PLAN, DEVELOPED BY AN OHIO REGISTERED PROFESSIONAL ENGINEER TO THE ENGINEER. OBTAIN THE ENGINEER'S APPROVAL BEFORE PERFORMING REPAIR.

DECK REMOVAL METHODS: THE CONTRACTOR MAY REMOVE CONCRETE BY CUTTING AND BY MEANS OF HAND OPERATED PNEUMATIC HAMMERS EMPLOYING POINTED OR BLUNTED CHISEL TYPE TOOLS. FOR REMOVALS OVER STRUCTURAL MEMBERS (PRESTRESSED BOX BEAM, I-BEAM, STEEL BEAM STEEL GIRDER, ETC.), THE CONTRACTOR MAY USE A HAMMER HEAVIER THAN 35 POUNDS BUT NOT TO EXCEED 90 POUNDS UNLESS APPROVED BY THE ENGINEER. REMOVAL METHODS OVER STRUCTURAL MEMBERS SHALL ENSURE ADEQUATE DEPTH CONTROL AND PREVENT NICKING OR GOUGING THE PRIMARY STRUCTURAL MEMBERS. DUE TO THE POSSIBLE PRESENCE OF ATTACHMENTS (E.G., FINISHING MACHINE, SCUPPER AND FORM SUPPORTS, ETC.) TO EXISTING STRUCTURAL MEMBERS, PERFORM WORK CAREFULLY DURING DECK REMOVAL TO AVOID DAMAGING STRUCTURAL MEMBERS THAT ARE TO REMAIN. REPLACE OR REPAIR STRUCTURAL MEMBERS DAMAGED BY THE REMOVAL OPERATIONS AT NO COST TO THE PROJECT. AT LEAST 7 DAYS BEFORE PERFORMING REPAIR WORK, SUBMIT A PROPOSED REPAIR PLAN, DEVELOPED BY AN OHIO REGISTERED PROFESSIONAL ENGINEER TO THE ENGINEER. OBTAIN THE ENGINEER'S APPROVAL BEFORE PERFORMING REPAIR.

EXISTING WELDED ATTACHMENTS: REMOVE EXISTING WELDED ATTACHMENTS (E.G., FINISHING MACHINE AND FORM SUPPORTS; AND SUPPORTS FOR SCUPPERS AND BULB ANGLES WHICH ARE TO BE REMOVED) LOCATED IN THE DESIGNATED TENSION PORTIONS OF THE TOP FLANGES OF EXISTING STEEL MEMBERS AND GRIND THE FLANGE SURFACES SMOOTH. CAREFULLY GRIND PARALLEL TO THE FLANGES.

ITEM 202, PORTIONS OF STRUCTURE REMOVED, OVER 20 FOOT SPAN, AS PER PLAN (CONTINUED)

CUT LINE CONSTRUCTION JOINT PREPARATION: SAW CUT BOUNDARIES OF PROPOSED CONCRETE REMOVALS 1 INCH DEEP. REMOVE CONCRETE TO A ROUGH SURFACE. LEAVE THE EXISTING CONCRETE REINFORCEMENT, IF REQUIRED IN THE PLANS, IN PLACE. INSTALL DOWEL BARS IF SPECIFIED. PRIOR TO CONCRETE PLACEMENT ABRASIVELY CLEAN JOINT SURFACES AND EXISTING EXPOSED REINFORCEMENT TO REMOVE LOOSE AND DISINTEGRATED CONCRETE AND LOOSE RUST. THOROUGHLY CLEAN THE JOINT SURFACE AND EXPOSED REINFORCEMENT OF ALL DIRT, DUST, RUST OR OTHER FOREIGN MATERIAL BY THE USE OF WATER, AIR UNDER PRESSURE, OR OTHER METHODS THAT PRODUCE SATISFACTORY RESULTS. EXISTING STEEL REINFORCEMENT DOES NOT HAVE TO HAVE A BRIGHT STEEL FINISH BUT REMOVE ALL PACK AND LOOSE RUST. THOROUGHLY DRENCH EXISTING CONCRETE SURFACES WITH CLEAN WATER AND ALLOW TO DRY TO A DAMP CONDITION BEFORE PLACING CONCRETE.

SUBSTRUCTURE CONCRETE REMOVAL: REMOVE CONCRETE BY MEANS OF APPROVED PNEUMATIC HAMMERS EMPLOYING POINTED AND BLUNT CHISEL TOOLS. THE DEPARTMENT WILL NOT PERMIT HYDRAULIC HOE-RAM TYPE HAMMERS. THE WEIGHT OF THE HAMMER SHALL NOT BE MORE THAN 35 POUNDS FOR REMOVAL WITHIN 18 INCHES OF PORTIONS TO BE PRESERVED. OUTSIDE THE 18-IN LIMIT, THE CONTRACTOR MAY USE HAMMERS NOT EXCEEDING 90 POUNDS UPON THE APPROVAL OF THE ENGINEER. DO NOT PLACE PNEUMATIC HAMMERS IN DIRECT CONTACT WITH CONCRETE REINFORCEMENT THAT IS TO BE RETAINED IN THE REBUILT STRUCTURE.

MEASUREMENT & PAYMENT: THE DEPARTMENT WILL MEASURE THE QUANTITY OF REMOVALS ON A LUMP SUM BASIS. THE DEPARTMENT WILL PAY FOR THE ACCEPTED QUANTITIES OF REMOVALS AT THE CONTRACT PRICE FOR ITEM 202, PORTIONS OF STRUCTURE REMOVED, OVER 20 FOOT SPAN, AS PER PLAN.

ITEM 202, VANDAL PROTECTION FENCE REMOVED FOR STORAGE

THE EXISTING VANDAL FENCE AND ALL FENCE COMPONENTS ON TOP OF THE PARAPETS SHALL BE CAREFULLY REMOVED FOR ODOT'S FUTURE USE ON ANOTHER PROJECT. AFTER REMOVAL THE FENCE SHALL BE INSPECTED BY THE ENGINEER BEFORE DELIVERY TO ODOT'S MAINTENANCE GARAGE. THE FENCE SHALL BE DELIVERED TO:

ODOT DISTRICT 12
MAINTENANCE GARAGE
25500 ST CLAIR AVENUE
EUCLID, OH 44117

PAYMENT SHALL BE AT THE UNIT PRICE BID PER LINEAR FOOT FOR ITEM 202, VANDAL PROTECTION FENCE REMOVED FOR STORAGE, WHICH SHALL INCLUDE ALL LABOR, EQUIPMENT, MATERIALS, AND INCIDENTALS NECESSARY TO COMPLETE THE ABOVE WORK.

ITEM 503, COFFERDAMS AND EXCAVATION BRACING, AS PER PLAN

THE DESIGN SHOWN ON THE PLANS FOR TEMPORARY SUPPORT OF EXCAVATION IS ONE REPRESENTATIVE DESIGN THAT MAY BE USED TO CONSTRUCT THE PROJECT. THE CONTRACTOR MAY CONSTRUCT THE DESIGN SHOWN ON THE PLANS OR PREPARE AN ALTERNATE DESIGN TO SUPPORT THE SIDES OF EXCAVATION. IF CONSTRUCTING AN ALTERNATE DESIGN FOR TEMPORARY SUPPORT OF EXCAVATION, PREPARE AND PROVIDE PLANS IN ACCORDANCE WITH C&MS 501.05. THE DEPARTMENT WILL PAY FOR THE TEMPORARY SUPPORT OF EXCAVATION AT THE CONTRACT LUMP SUM PRICE FOR COFFERDAMS AND EXCAVATION BRACING, AS PER PLAN. THE DEPARTMENT WILL NOT MAKE ADDITIONAL PAYMENT FOR PROVIDING AN ALTERNATE DESIGN.

THE EXCAVATION BRACING SHALL MEET THE FOLLOWING REQUIREMENTS:

		R.A.	REAR RIGHT WINGWALL	F.A.
BEGIN	STATION	8+70	8+70	11+43
	OFFSET	0.5' LT.	0.5' LT.	0.5' LT.
	TOP ELEVATION	758.1	757.8	755.5
	BOT. ELEVATION	734.0	734.0	731.5
END	STATION	8+83	8+83	11+56
	OFFSET	0.5' LT.	0.5' LT.	0.5' LT.
	TOP ELEVATION	758.0	757.8	755.4
	BOT. ELEVATION	734.0	734.0	731.5
DESIGN EXCAVATION DEPTH (FT.)		9.1	9.0	9.1
MINIMUM SECTION MODULUS (cu. in./ft.)		11.0	11.0	11.0

MATERIAL FOR EXCAVATION BRACING SHALL BE ASTM A572, GRADE 50 STEEL, MINIMUM YIELD 50 KSI.

ITEM 510, DOWEL HOLES WITH NONSHRINK, NONMETALLIC GROUT, AS PER PLAN

PRIOR TO DRILLING DOWEL HOLES, LOCATE ALL EXISTING REINFORCING STEEL WITH AID OF A REINFORCING STEEL BAR LOCATOR (PACHOMETER). IF AN EXISTING BAR IS ENCOUNTERED AT THE SAME LOCATION AS A PROPOSED DOWEL HOLE, MOVE THE DOWEL HOLE TO EITHER SIDE OF THE EXISTING BAR.

ALL WORK AND EQUIPMENT REQUIRED FOR LOCATING EXISTING BARS SHALL BE INCLUDED FOR PAYMENT UNDER ITEM 510, DOWEL HOLES WITH NONSHRINK, NONMETALLIC GROUT, AS PER PLAN.

ITEM 511, CONCRETE, MISC.: PARAPET LETTERING

THIS ITEM INCLUDES THE CONSTRUCTION OF THE "FAIRVIEW PARK" PARAPET LETTERING AS SHOWN ON THE PLANS.

LETTERS USING TIMES NEW ROMAN FONT SHALL BE CAST INTO PARAPET CONCRETE AT AN EMBEDMENT DEPTH OF 2 INCHES AND SHALL BE LOCATED AS SHOWN ON OUTSIDE FACE OF WESTERN PARAPET. THE MATERIAL USED TO FORM THE LETTERS INTO THE CONCRETE SHALL BE APPROVED BY THE ENGINEER. THE COLOR OF THE NON-EPOXY SEALER APPLIED TO THE DEPRESSED SURFACES OF THE LETTERS SHALL BE BLACK. ALL REMAINING PARAPET SURFACES SHALL BE SEALED WITH EPOXY-URETHANE, INCLUDED WITH ITEM 512 FOR PAYMENT. THE CONTRACTOR SHALL CREATE A MOCKUP TEST POUR OF THE PROPOSED LETTERING AND SEALING PATTERN USING APPROVED FORMLINERS AND SEALING MATERIAL. THE MOCKUP SHALL BE APPROVED BY THE CITY OF FAIRVIEW PARK.

USE THE FOLLOWING INFORMATION FOR THIS PROCESS:

CITY OF FAIRVIEW PARK
20777 LORAIN ROAD
FAIRVIEW PARK, OHIO 44126
ATTN: BRYAN HITCH, SERVICE DIRECTOR
BRYAN.HITCH@FAIRVIEWPARK.ORG
440-356-4412

ALL COSTS ASSOCIATED WITH FORMING AND CONSTRUCTING THE PARAPET LETTERING, MOCK UP, AND NON-EPOXY SEALER IS TO BE INCLUDED WITH ITEM 511, CONCRETE, MISC.: PARAPET LETTERING FOR PAYMENT.

ITEM 512, SEALING OF CONCRETE SURFACES

SEAL THE CONCRETE SURAFCES AS DETAILED ON THE PLAN SHEETS. THE COLOR OF THE NON-EPOXY SHALL BE CLEAR. THE FINISH COLOR OF THE EPOXY-URETHANE SHALL BE FEDERAL COLOR NUMBER 595B-37722 (ODOT BUFF), EXCEPT THE AREA THAT IS FORMLINED SHALL HAVE THE FINISH COLOR MATCHING FEDERAL COLOR NUMBER 595B-26521 (TAN, SEMIGLOSS).

ITEM 513, STRUCTURAL STEEL, MISC.: ANGLES, CHANNELS, & PLATES

PERFORM WORK FOR FIELD FABRICATED MEMBERS ACCORDING TO ITEM 513, EXCEPT AS MODIFIED HEREIN. THE DEPARTMENT WILL NOT REQUIRE THE CONTRACTOR PERFORMING FIELD FABRICATION TO BE PRE-QUALIFIED AS SPECIFIED IN S1078. SUBMIT A WRITTEN LETTER OF MATERIAL ACCEPTANCE IN ACCORDANCE WITH C&MS 501.06, TO THE ENGINEER. PROVIDE THE ENGINEER "AS-BUILT" DRAWINGS ACCORDING TO C&MS 513.06. C&MS 501.04.A SHALL APPLY.

THE FOLLOWING MEMBERS ARE INCLUDED IN THIS ITEM: NEW INTERMEDIATE CROSSFRAME ANGLES, NEW CONNECTION PLATES, NEW FILL PLATES, AND NEW GAS LINE SUPPORT CHANNELS. APPLY A SHOP-APPLIED PRIME COAT TO ALL NEW STRUCTURAL STEEL IN ACCORDANCE WITH ITEM 514. THE COST SHALL BE INCIDENTAL TO ITEM 513, STRUCTURAL STEEL, MISC.: ANGLES, CHANNELS, & PLATES.

GENERAL NOTES (1 OF 3)
BRIDGE NO. CUY-00480-06.120
WEST 220TH ST. OVER I-480

SFN 1814168
DESIGN AGENCY
ms consultants, inc.
DESIGNER JSE | CHECKER SJR
REVIEWER JDH 07/22/26
PROJECT ID 115826
SUBSET 3 | TOTAL 39
SHEET P.50 | TOTAL 86

CUY-IR-480-06.12 DECK

MODEL: Sheet_SurvFt PAPERSIZE: 34x22 (in.) DATE: 11/10/2026 TIME: 9:45:20 AM USER: jelias
N:\01\60\08398-00\115826\400-Engineering\Structures\SFN_1814168\Sheets\115826_SFN_1814168_SN001.dgn

ITEM 514 SURFACE PREPARATION OF EXISTING STRUCTURAL STEEL, AS PER PLAN
ITEM 514 FIELD PAINTING OF EXISTING STRUCTURAL STEEL, PRIME COAT, AS PER PLAN
ITEM 514 FIELD PAINTING STRUCTURAL STEEL, INTERMEDIATE COAT, AS PER PLAN
ITEM 514 FIELD PAINTING STRUCTURAL STEEL, FINISH COAT, AS PER PLAN

PREPARE THE SURFACE AND PAINT ALL THREE COATS ON THE LAST 10 FEET OF EACH BEAM/GIRDER END ADJACENT TO THE ABUTMENTS, INCLUDING ALL CROSSFRAMES AND OTHER STEEL FRAMING WITHIN THESE LIMITS. PREPARE THE SURFACE AND PAINT ALL THREE COATS ON THE FULL LENGTH OF BEAM/GIRDER FLANGE EDGES PREVIOUSLY EMBEDDED IN EXISTING DECK HAUNCHES. THE USE OF WIRE WHEELS, ROLLERS, AND/OR BRUSHES WILL BE PERMITTED FOR THE HAND PAINTING OF BEAM/GIRDER FLANGE EDGES.

PAINT THE INTERMEDIATE AND FINISH COAT FOR ALL NEW STRUCTURAL STEEL MEMBERS INCLUDING THE INTERMEDIATE CROSSFRAMES.

THE PRIME COAT SHALL BE 708.01. THE FINISH COAT COLOR SHALL ATTEMPT TO MATCH THE EXISTING PAINT COLOR.

ITEM 516, STRUCTURAL JOINT OR JOINT SEALER, MISC.: COMPRESSED FOAM EXPANSION JOINT SEAL

THIS ITEM CONSISTS OF INSTALLING A COMPRESSED FOAM EXPANSION JOINT SEAL AT THE LOCATIONS DETAILED IN THE PLANS. FURNISH A COMPRESSED FOAM EXPANSION JOINT SEAL SIZED FOR THE NOMINAL JOINT OPENING SHOWN IN THE PLANS SUCH AS METAZEAL BY CHASE CORPORATION, EMSEAL 25V BY EMSEAL JOINT SYSTEMS, LTD., OR EQUAL AS APPROVED BY THE ENGINEER.

PAYMENT FOR ALL EQUIPMENT, LABOR, MATERIALS AND OTHER INCIDENTALS NECESSARY TO COMPLETE THE WORK AS DETAILED IN THE PLANS WILL BE MADE UNDER ITEM 516, STRUCTURAL JOINT OR JOINT SEALER, MISC.: COMPRESSED FOAM EXPANSION JOINT SEAL.

ITEM 516, JACKING AND TEMPORARY SUPPORT OF SUPERSTRUCTURE, AS PER PLAN

THIS WORK CONSISTS OF RAISING OR RE-POSITIONING EXISTING STRUCTURES TO THE DIMENSIONS AND REQUIREMENTS DEFINED IN THE PROJECT PLANS. SUBMIT CONSTRUCTION PLANS IN ACCORDANCE WITH C&MS 501.05. THE BRIDGE BEARINGS SHALL BE FULLY SEATED AT ALL CONTACT AREAS. IF FULL SEATING IS NOT ATTAINED, SUBMIT A REPAIR PLAN TO THE ENGINEER. THE DEPARTMENT WILL NOT PAY FOR THE REPAIR COSTS TO ENSURE FULL SEATING ON BEARINGS.

JACKING AND RE-SETTING OF FRAMING SYSTEM

TO ACCOMMODATE MINIMUM HAUNCH REQUIREMENTS AND THE WB I-480 REQUIRED MINIMUM VERTICAL CLEARANCE, THE FRAMING SYSTEM SHALL BE JACKED, REPOSITIONED AND TEMPORARILY SUPPORTED IN PHASES PER CMS 501.05.B.5. THE CONTRACTOR SHALL PROVIDE A JACKING PLAN THAT ENSURES THAT THE DIFFERENTIAL DEFLECTION BETWEEN ADJACENT SUBSTRUCTURES DOES NOT EXCEED 1 INCH. THE ACTUAL PROPOSED BOTTOM OF BEAM ELEVATIONS SHALL BE THE PROPOSED SEAT ELEVATIONS PLUS THE PROPOSED BEARING HEIGHTS.THE FOLLOWING SCHEMATIC DIAGRAM IS SHOWN TO APPROXIMATE THE VERTICAL DIMENSIONS REQUIRED FOR ADJUSTMENT AT EACH SUPPORT:

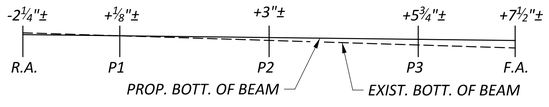

THE DEPARTMENT WILL MEASURE THIS WORK ON A LUMP SUM BASIS. THE DEPARTMENT WILL PAY FOR THE ACCEPTED QUANTITIES AT THE CONTRACT PRICE FOR ITEM 516, JACKING AND TEMPORARY SUPPORT OF SUPERSTRUCTURE, AS PER PLAN.

ITEM 519, PATCHING CONCRETE STRUCTURES, AS PER PLAN:

PRIOR TO THE SURFACE CLEANING SPECIFIED IN C&MS 519.04 AND WITHIN 24 HOURS OF PLACING PATCHING MATERIAL, BLAST CLEAN ALL SURFACES TO BE PATCHED INCLUDING THE EXPOSED STEEL REINFORCEMENT. ACCEPTABLE METHODS INCLUDE HIGH-PRESSURE WATER BLASTING WITH OR WITHOUT ABRASIVES IN THE WATER, ABRASIVE BLASTING WITH CONTAINMENT, OR VACUUM ABRASIVE BLASTING.

A CONTINGENCY QUANTITY OF 100 SF HAS BEEN INCLUDED IN THE ESTIMATED QUANTITIES TO BE USED AS DIRECTED BY THE ENGINEER.

ITEM SPECIAL, STRUCTURES: GROUT AND SEAL TEMPORARY VANDAL PROTECTION ANCHOR HOLES

AFTER PHASE 2 CONSTRUCTION AND REMOVAL OF THE TEMPORARY VANDAL PROTECTION FENCE FROM THE PHASE 1 DECK AND APPROACH SLABS, REMOVE THE ANCHORS AND FILL HOLES WITH NONSHRINK, NONMETALLIC GROUT PER CMS 705.20 AND PLACE A 1'-0" DIAMETER AREA OF HMWM CENTERED ON EACH HOLE. ALLOW 4 HOURS FOR THE GROUT TO CURE BEFORE APPLYING THE HMWM. PAYMENT FOR THE DESCRIBED LABOR AND MATERIALS SHALL BE MADE AT THE CONTRACT PRICE BID FOR ITEM SPECIAL, STRUCTURES: GROUT AND SEAL TEMPORARY VANDAL PROTECTION ANCHOR HOLES.

ITEM SPECIAL, FORM LINER:

THIS ITEM SHALL INCLUDE THE FURNISHING OF ALL MATERIALS AND THE NECESSARY LABOR TO PROVIDE A REUSABLE ARCHITECTURAL TREATMENT ON THE INSIDE FACE OF BRIDGE AND APPROACH SLAB PARAPET RAILINGS.

ALL WORK SHALL CONFORM TO THE APPLICABLE PROVISIONS OF ITEM 511 EXCEPT AS MODIFIED AND ADDED HEREIN.

ARCHITECTURAL TREATMENT OF CONCRETE PARAPETS SHALL BE AS FOLLOWS:

GENERAL: THE WORK SHALL INCLUDE:

1. *CONSTRUCTION OF TEXTURED CONCRETE SURFACES USING FORM LINERS DESIGNED TO DUPLICATE CLOSELY THE APPEARANCE OF NATURAL STONE.*
2. *DESIGN AND PATTERN OF THE CONCRETE SURFACES SHALL FOLLOW THE MANUFACTURER'S STANDARD DRAWING SELECTED.*
3. *PATTERN SHALL BE: CUSTOM ROCK #1203, NEW ENGLAND DRYSTACK; GREENSTREAK #330, ASHLAR STONE; ARCHITECTURAL POLYMERS #911, LARGE STONE DRYSTACK; OR APPROVED EQUAL.*
4. *SHOP DRAWINGS: PLAN, ELEVATION, AND DETAILS TO SHOW OVERALL PATTERN, JOINT LOCATIONS, FORM TIE LOCATIONS, AND END, EDGE AND OTHER SPECIAL CONSIDERATIONS.*
5. *SAMPLES: FORM TIES, SAMPLE AND DESCRIPTION, SHOWING METHOD OF SEPARATION WHEN FORMS ARE REMOVED.*
6. *MANUFACTURER OF FORM LINERS MUST HAVE A MINIMUM FIVE YEARS EXPERIENCE MAKING CUSTOM FORM LINERS AND COLOR STAINS TO CREATE FORMED CONCRETE SURFACES TO MATCH NATURAL STONE SHAPES AND SURFACE TEXTURES.*
7. *PRE-INSTALLATION MEETING: SCHEDULE CONFERENCE WITH MANUFACTURER'S REPRESENTATIVE TO ASSURE UNDERSTANDING OF FORM LINER USE, REQUIREMENTS FOR CONSTRUCTION OF MOCK-UP, AND TO COORDINATE THE WORK.*

PRODUCTS:

FORM LINERS AS MANUFACTURED BY:

1. *CUSTOM ROCK FORMLINER*
   2020 WEST 7TH STREET
   ST. PAUL, MN 55116
   (615) 699-1345
   WWW.CUSTOMROCK.COM

   ARCHITECTURAL POLYMERS
   1220 LITTLE GAP ROAD
   PALMERTON, PA 18071
   (610) 824-3322
   WWW.APFORMLINER.COM

   GREENSTREAK
   3400 TREE COURT INDUSTRIAL BLVD.
   ST. LOUIS, MO 63122-6614
   (636) 225-9400
   WWW.GREENSTREAK.COM
2. *RELEASE AGENT: COMPATIBLE WITH FORM LINER. CONSULT MANUFACTURER.*
3. *FORM TIES: DESIGNED TO SEPARATE AT LEAST 1 INCH BACK FROM FINISHED SURFACE, LEAVING ONLY A NEAT HOLE THAT CAN BE PLUGGED WITH PATCHING MATERIAL.*

ITEM SPECIAL, FORM LINER (CONTINUED):

EXECUTION:

1. *FORMED CONCRETE CONSTRUCTION: INSTALLER SHALL HAVE A MINIMUM FIVE YEARS OF EXPERIENCE WITH VERTICALLY FORMED ARCHITECTURAL CONCRETE. INSTALLER SHALL BE TRAINED IN MANUFACTURER'S SPECIAL TECHNIQUES IN ORDER TO ACHIEVE REALISTIC SURFACES.*
2. *FORM LINER PREPARATION: CLEAN AND MAKE FREE OF BUILDUP PRIOR TO EACH POUR. INSPECT FOR BLEMISHES OR TEARS. REPAIR IF NEEDED FOLLOWING MANUFACTURER'S RECOMMENDATIONS.*
3. *FORM LINER ATTACHMENT: PLACE ADJACENT LINERS WITH LESS THAN ¼ INCH SEPARATION BETWEEN LINERS. ATTACH LINERS TO FORM SECURELY, FOLLOWING MANUFACTURER'S RECOMMENDATIONS.*
4. *FORM RELEASE AGENT: APPLY FOLLOWING MANUFACTURER'S RECOMMENDATIONS.*
5. *FORM STRIPPING AND RELATED CONSTRUCTION SHALL AVOID CREATING DEFECTS IN THE FINISHED SURFACES.*
6. *WHERE FORM LINERS ABUT, CAREFULLY BLEND TO MATCH THE BALANCE OF THE STONE PATTERN, AVOIDING VISIBLE SEAMS OR FORM MARKS.*
7. *PLACE FORM TIES AT THE THINNEST POINTS OF LINER (HIGHER POINTS OF FINISHED WALL). NEATLY PATCH THE HOLE REMAINING AFTER DISENGAGING THE PROTRUDING PORTION OF THE TIE SO THAT IT WILL NOT BE VISIBLE AFTER SEALING THE CONCRETE SURFACE.*
8. *WHERE AN EXPANSION JOINT MUST OCCUR AT A POINT OTHER THAN AT MORTAR OR RUSTICATION JOINTS, SUCH AS AT THE FACE OF CONCRETE TEXTURE WHICH IS TO HAVE THE APPEARANCE OF STONE, CONSULT MANUFACTURER FOR PROPER TREATMENT OF EXPANSION MATERIAL.*

BASIS OF PAYMENT: PAYMENT FOR ACCEPTED QUANTITIES, COMPLETE IN PLACE, WILL BE MADE AT THE CONTRACT UNIT PRICE BID FOR ITEM SPECIAL, FORM LINER. THIS PRICE SHALL BE FULL COMPENSATION FOR ALL MATERIALS, LABOR, EQUIPMENT AND INCIDENTALS NECESSARY TO COMPLETE THIS ITEM AS SPECIFIED.

ITEM 511, CLASS QC2 CONCRETE, MISC.: SLEEPER SLAB SUPPORT CONCRETE

UNDER THIS ITEM, THE CONTRACTOR SHALL INSTALL 16"x16"x6'-0" LONG NON-REINFORCED CAST-IN-PLACE CONCRETE WHERE SHOWN ON THE PLANS TO SUPPORT THE SLEEPER SLAB IN THE AREA WHERE THE PROPOSED ENBRIDGE 12" DIAMETER AND 8" DIAMETER GAS MAINS WILL BE INSTALLED.

THIS ITEM SHALL ALSO INCLUDE ADDITIONAL ITEM 304 AGGREGATE BASE, BEYOND THE TYPICAL 6" BELOW THE SLEEPER SLAB, NECESSARY TO INSTALL THE SLEEPER SLAB SUPPORT CONCRETE AS DETAILED IN THE PLANS.

PAYMENT FOR THE ABOVE WORK WILL BE MADE AT THE CONTRACT UNIT BID PRICE PER ITEM 511, CLASS QC2 CONCRETE, MISC.: SLEEPER SLAB SUPPORT CONCRETE.

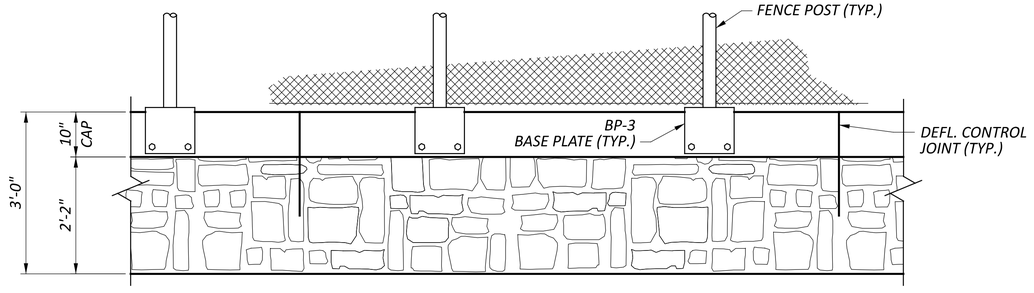

TYPICAL FORM LINER ELEVATION
(AS VIEWED FROM SIDEWALK)

ITEM 607, VANDAL PROTECTION FENCE, 6' STRAIGHT, COATED FABRIC, AS PER PLAN

THIS ITEM SHALL BE AS PER THE DETAILS IN THE PLAN, THE APPLICABLE PORTIONS OF STANDARD DRAWING VPF-1-24, AND THE MANUFACTURER'S RECOMMENDATIONS.

THE ANCHORS ON THE TOP OF THE PROPOSED CONCRETE BRIDGE RAILING SHALL BE CAST IN PLACE WITH A 6" OR 7" MINIMUM EMBEDMENT LENGTH, AS SHOWN ON THE STANDARD DRAWING FOR THE SPECIFIED BASE PLATE TYPE.

AT LOCATIONS WHERE THE FENCE SPANS ACROSS AN EXPANSION JOINT IN THE BRIDGE RAILING AT AN INTEGRAL OR SEMI-INTEGRAL ABUTMENT, DO NOT INSTALL LINE RAILS AND EXPANSION JOINT SLEEVES; HOWEVER, THE FABRIC SHALL REMAIN CONTINUOUS ACROSS THE EXPANSION JOINT.

THE COLOR OF THE FENCE FABRIC, RAILS, POSTS, PLATES, TIE WIRES, AND ADDITIONAL VISUAL HARDWARE AND CAULK SHALL BE BLACK.

PAYMENT FOR THE ABOVE SHALL BE AT THE UNIT PRICE BID PER FOOT FOR ITEM 607, VANDAL PROTECTION FENCE 6' STRAIGHT, COATED FABRIC, AS PER PLAN WHICH SHALL INCLUDE ALL LABOR, EQUIPMENT, MATERIALS, AND INCIDENTALS NECESSARY TO COMPLETE THE ABOVE WORK.

ITEM 690, ENBRIDGE GAS LINE ROLLER GUIDE/SUPPORT

UNDER THIS ITEM, THE CONTRACTOR WILL INSTALL PIPE ROLLER GUIDE/SUPPORTS AND BACKWALL SLEEVES WHERE SHOWN ON THE PLANS TO SUPPORT THE PROPOSED ENBRIDGE 12" DIAMETER AND 8" DIAMETER GAS MAINS. ROLLERS/SUPPORTS WILL BE SUPPLIED BY ENBRIDGE AND BE SIZED TO CARRY THE PROPOSED GAS LINE. SLEEVES SHALL EXTEND FROM THE ABUTMENT DIAPHRAGM FACES AND EXTEND TO THE ENDS OF THE APPROACH SLABS. SLEEVES WILL BE SUPPLIED BY ENBRIDGE AND BE PVC SCHEDULE 40 AND BE 12" DIAMETER (FOR 8" DIAMETER GAS MAIN) AND 16" DIAMETER (FOR 12" DIAMETER GAS MAINS).

THE ROLLERS/GUIDE SUPPORT WILL BE FULLY FIELD-ADJUSTABLE AND BE PROVIDED WITH ALL REQUIRED HARDWARE AND FASTENERS FOR A COMPLETE OPERABLE SYSTEM. ENBRIDGE SHALL FIELD VERIFY THE LOCATIONS OF SLEEVES BEFORE THE CONTRACTOR PLACES THE ABUTMENT DIAPHGRAM CONCRETE. ENBRIDGE WILL SUPPLY AND INSTALL THE GAS MAINS. THE CONTRACTOR SHALL COORDINATE WITH ENBRIDGE TO SCHEDULE THE WORK. NO ADDITIONAL PAYMENT WILL BE MADE FOR ANY SCHEDULE DELAYS WHEN COORDINATING THIS WORK WITH ENBRIDGE.

PAYMENT FOR THE ABOVE WORK WILL BE MADE AT THE LUMP SUM PRICE PER ITEM 690, ENBRIDGE GAS LINE ROLLER GUIDE/SUPPORT.

ITEM 516, ARMORLESS PREFORMED JOINT SEAL, AS PER PLAN

THIS ITEM SHALL BE PER THE DETAILS IN THE PLAN, THE APPLICABLE PORTIONS OF STANDARD DRAWING AS-2-15, AND THE MANUFACTURER'S RECOMMENDATIONS.

WHERE THE JOINT SEAL EXTENDS INTO THE SIDEWALK, FABRICATE THE SEAL TO CONFORM TO THE DIMENSIONS SHOWN IN THE PLANS. VULCANIZE BOND ALL REQUIRED MITERS FOR DIRECTIONAL CHANGES IN THE SHOP. FURNISH THE JOINT SEAL IN ONE CONTINUOUS PIECE FOR INSTALLATION AT THE COMPLETION OF THE FINAL PHASE OF CONSTRUCTION.

PAYMENT FOR THE ABOVE SHALL BE AT THE UNIT PRICE BID PER FOOT FOR ITEM 516 - ARMORLESS PREFORMED JOINT SEAL, AS PER PLAN, WHICH SHALL INCLUDE ALL LABOR, EQUIPMENT, MATERIALS AND INCIDENTALS NECESSARY TO COMPLETE THE WORK.

GENERAL NOTES (2 OF 3)
BRIDGE NO. CUY-00480-06.120
WEST 220TH ST. OVER I-480

SFN 1814168
DESIGN AGENCY
ms consultants, inc.
DESIGNER JSE | CHECKER SJR
REVIEWER JDH 07/22/26
PROJECT ID 115826
SUBSET 4 | TOTAL 39
SHEET P.51 | TOTAL 86

CUY-IR-480-06.12 DECK

MODEL: Sheet_SurvFt PAPERSIZE: 34x22 (in.) DATE: 11/9/2026 TIME: 3:55:17 PM USER: jellas
N:\01\60\08398-00\115826\400-Engineering\Structures\SFN_1814168\Sheets\115826_SFN_1814168_SN002.dgn

BY:	JSE	08-26-25
CHECKED:	SJR	08-26-25

ESTIMATED QUANTITIES

ITEM	ITEM EXT.	PARTICIPATION 01/BRO	PARTICIPATION 02/IMS	PARTICIPATION 03/IMS	TOTAL	UNIT	DESCRIPTION	ABUTMENTS	PIERS	SUPERSTRUCTURE	GENERAL	SHEET REF.
202	11203	LS			LS		PORTIONS OF STRUCTURE REMOVED, OVER 20 FOOT SPAN, AS PER PLAN				LS	3/39 & 7/39
202	22900	268			268	SY	APPROACH SLAB REMOVED				268	
202	75264	574			574	FT	VANDAL PROTECTION FENCE REMOVED FOR STORAGE				574	3/39
503	11101	LS			LS		COFFERDAMS AND EXCAVATION BRACING, AS PER PLAN				LS	3/39
503	21300	LS			LS		UNCLASSIFIED EXCAVATION				LS	
509	10000	175,430			175,430	LB	EPOXY COATED STEEL REINFORCEMENT	3,967	2,181	169,282		
510	10001	549			549	EACH	DOWEL HOLES WITH NONSHRINK, NONMETALLIC GROUT, AS PER PLAN	321	228			3/39
511	33500	4			4	EACH	SEMI-INTEGRAL DIAPHRAGM GUIDE	4				
511	34447	562			562	CY	CLASS QC2 CONCRETE WITH QC/QA, BRIDGE DECK, AS PER PLAN			562		13, 17, 31/39
511	34450	85			85	CY	CLASS QC2 CONCRETE WITH QC/QA, BRIDGE DECK (PARAPET)			85		
511	42510	22			22	CY	CLASS QC1 CONCRETE, PIER CAP		22			
511	45710	30			30	CY	CLASS QC1 CONCRETE, ABUTMENT	30				
511	51512	140			140	CY	CLASS QC2 CONCRETE WITH QC/QA, SIDEWALK			140		
511	53012			5	5	CY	CLASS QC2 CONCRETE, MISC.: SLEEPER SLAB SUPPORT CONCRETE				5	4/39
511	81200		LS		LS		CONCRETE, MISC.: PARAPET LETTERING			LS		3/39
512	10050	492			492	SY	SEALING OF CONCRETE SURFACES (NON-EPOXY)			492		
512	10100	1,271			1,271	SY	SEALING OF CONCRETE SURFACES (EPOXY-URETHANE)	85	546	640		
512	33000	10			10	SY	TYPE 2 WATERPROOFING	10				
513	20000	6,618			6,618	EACH	WELDED STUD SHEAR CONNECTORS			6,618		
513	90000	4,543		6,584	11,127	LB	STRUCTURAL STEEL, MISC.: ANGLES, CHANNELS, & PLATES			11,127		3/39
514	00051	1,876			1,876	SF	SURFACE PREPARATION OF EXISTING STRUCTURAL STEEL, AS PER PLAN			1,876		4/39
514	00057	1,876			1,876	SF	FIELD PAINTING OF EXISTING STRUCTURAL STEEL, PRIME COAT, AS PER PLAN			1,876		4/39
514	00061	1,937			1,937	SF	FIELD PAINTING STRUCTURAL STEEL, INTERMEDIATE COAT, AS PER PLAN			1,937		4/39
514	00067	1,937			1,937	SF	FIELD PAINTING STRUCTURAL STEEL, FINISH COAT, AS PER PLAN			1,937		4/39
514	00504	3			3	MNHR	GRINDING FINS, TEARS, SLIVERS ON EXISTING STRUCTURAL STEEL			3		
514	10000	1			1	EACH	FINAL INSPECTION REPAIR			1		
516	10011	139			139	FT	ARMORLESS PREFORMED JOINT SEAL, AS PER PLAN				139	4/39
516	12310	288			288	LB	SIDEWALK COVER PLATE			288		
516	13600	36			36	SF	1" PREFORMED EXPANSION JOINT FILLER			36		
516	13900	15			15	SF	2" PREFORMED EXPANSION JOINT FILLER	15				
516	14020	146			146	FT	SEMI-INTEGRAL ABUTMENT EXPANSION JOINT SEAL	146				
516	14600	12			12	FT	STRUCTURAL JOINT OR JOINT SEALER, MISC.: COMPRESSED FOAM EXPANSION JOINT SEAL	12				4/39 & 15/39
516	44100	16			16	EACH	ELASTOMERIC BEARING (14" X 18" X 2.668") WITH INTERNAL LAMINATES AND LOAD PLATE (NEOPRENE) (15" X 19" X 2.0")		16			
516	44100	8			8	EACH	ELASTOMERIC BEARING (16" X 18" X 2.668") WITH INTERNAL LAMINATES AND LOAD PLATE (NEOPRENE) (17" X 19" X 2.0")		8			
516	44200	17			17	EACH	ELASTOMERIC BEARING (12" X 16" X 3.273") WITH INTERNAL LAMINATES AND LOAD PLATE (NEOPRENE) (13" X 17" X 1.5")	17				
516	47001	LS			LS		JACKING AND TEMPORARY SUPPORT OF SUPERSTRUCTURE, AS PER PLAN				LS	4/39
518	12201	7			7	EACH	SCUPPERS, INCLUDING SUPPORTS, AS PER PLAN			7		27/39
518	21200	77			77	CY	POROUS BACKFILL WITH GEOTEXTILE FABRIC	77				
518	40000	131			131	FT	6" PERFORATED CORRUGATED PLASTIC PIPE	131				
518	40011	80			80	FT	6" NON-PERFORATED CORRUGATED PLASTIC PIPE, INCLUDING SPECIALS, AS PER PLAN	80				15,16,18,19/39
519	11101	100			100	SF	PATCHING CONCRETE STRUCTURE, AS PER PLAN	50	50			4/39
526	15011	308			308	SY	REINFORCED CONCRETE APPROACH SLABS WITH QC/QA (T=13"), AS PER PLAN				308	38/39
526	90030	139			139	FT	TYPE C INSTALLATION				139	
SPECIAL	53000400	240			240	EACH	STRUCTURES: GROUT AND SEAL TEMPORARY VANDAL PROTECTION FENCE ANCHOR HOLES			240		4/39
SPECIAL	53000600			1,684	1,684	SF	STRUCTURES: TEMPORARY FALSE DECKING FOR ENBRIDGE GAS LINES			1,684		5/39
SPECIAL	53013000	1,224			1,224	SF	FORM LINER				1,224	4/39
607	39901	582			582	FT	VANDAL PROTECTION FENCE, 6' STRAIGHT, COATED FABRIC, AS PER PLAN			582		4/39
SPECIAL	69098400			LS	LS		ENBRIDGE GAS LINE ROLLER GUIDE/SUPPORT			LS		4/39

TOTALS CARRIED TO GENERAL SUMMARY

NOTE:

1. FOR PROJECT PARTICIPATION SPLIT DEFINITIONS, SEE SHEET P.6/86.

CUY-IR-480-06.12 DECK

MODEL: Sheet_SurvFt PAPERSIZE: 34x22 (in.) DATE: 11/10/2026 TIME: 8:46:38 AM USER: jellas
N:\01\60\08398-00\115826\400-Engineering\Structures\SFN_1814168\Sheets\115826_SFN_1814168_SQ001.dgn

ESTIMATED QUANTITIES
BRIDGE NO. CUY-00480-06.120
WEST 220TH ST. OVER I-480

SFN 1814168

DESIGN AGENCY
ms consultants. inc.

DESIGNER	CHECKER
JSE	SJR

REVIEWER JDH 07/22/26

PROJECT ID 115826

SUBSET	TOTAL
6	39

SHEET	TOTAL
P.53	86

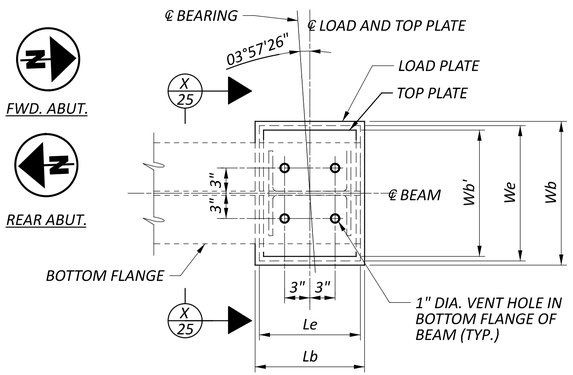

PLAN AT ABUTMENTS

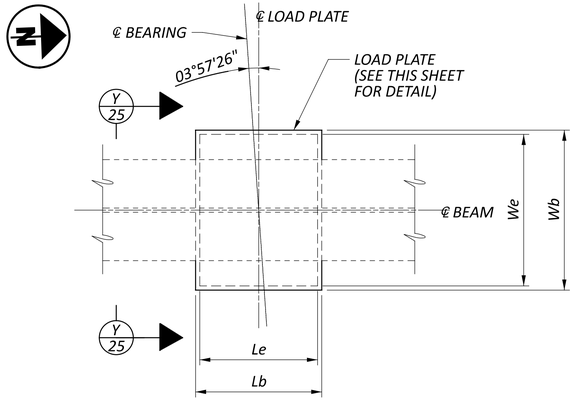

PLAN AT PIERS

NOTES:

1. GRADE 50 STEEL SHALL BE USED FOR ALL STEEL PLATES & HP SECTIONS AND SHALL BE GALVANIZED ACCORDING TO CMS 711.02.
2. THE STEEL LOAD PLATE SHALL BE BONDED BY VULCANIZATION TO THE ELASTOMER DURING THE MOLDING PROCESS.
3. ELASTOMERIC BEARINGS:
   THE ELASTOMER SHALL HAVE A HARDNESS OF 50 DUROMETER. THE BEARINGS WERE DESIGNED IN ACCORDANCE WITH DIVISION I, SECTION 14.7.6 (METHOD A) OF THE AASHTO STANDARD SPECIFICATIONS FOR HIGHWAY BRIDGES. THE LONG-TERM COMPRESSION PROOF LOAD TEST (AASHTO STANDARD SPECIFICATIONS FOR HIGHWAY BRIDGES, DIVISION II, SECTION 18.7.2.6) IS NOT REQUIRED.
4. Lb'' AND Wb'' INDICATE THE LENGTH AND WIDTH OF STEEL TOP LOAD PLATE FOR BEAM 9 AT REAR ABUTMENT ONLY.
5. ALL BEARINGS SHALL BE MARKED PRIOR TO SHIPPING. THE MARKS SHALL INCLUDE THE BEARING LOCATION ON THE BRIDGE, AND A DIRECTION ARROW THAT POINTS UP-STATION. ALL MARKS SHALL BE PERMANENT AND BE VISIBLE AFTER THE BEARING IS INSTALLED.

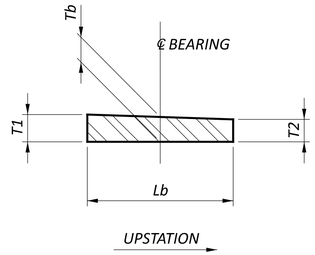

LOAD PLATE DETAIL

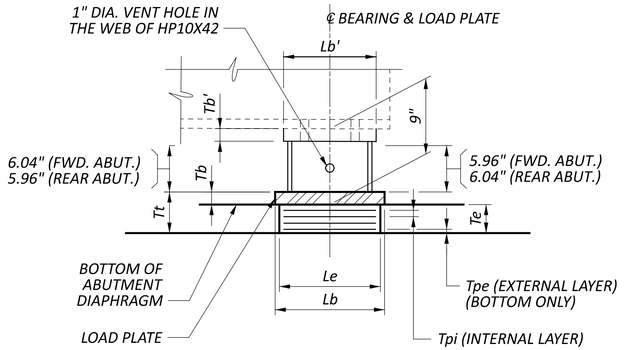

ELEVATION AT ABUTMENTS

(FWD. ABUT. SHOWN)
(REAR ABUT. OPPOSITE HAND)

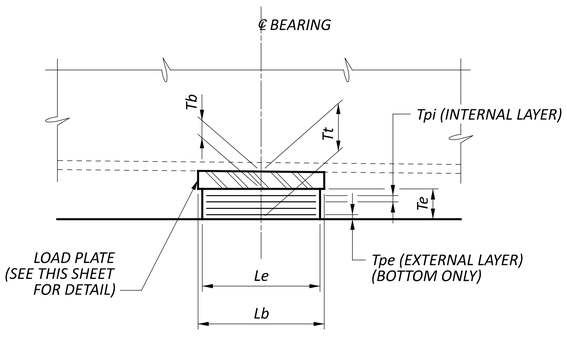

ELEVATION AT PIERS

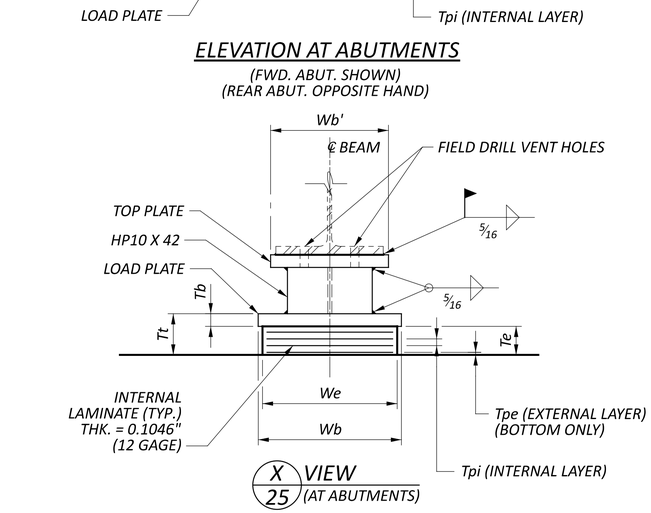

X 25 VIEW (AT ABUTMENTS)

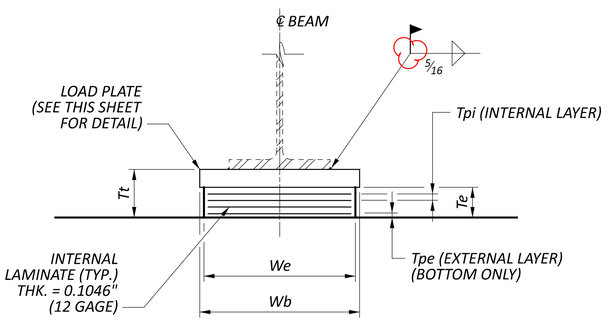

Y 25 VIEW (AT PIERS)

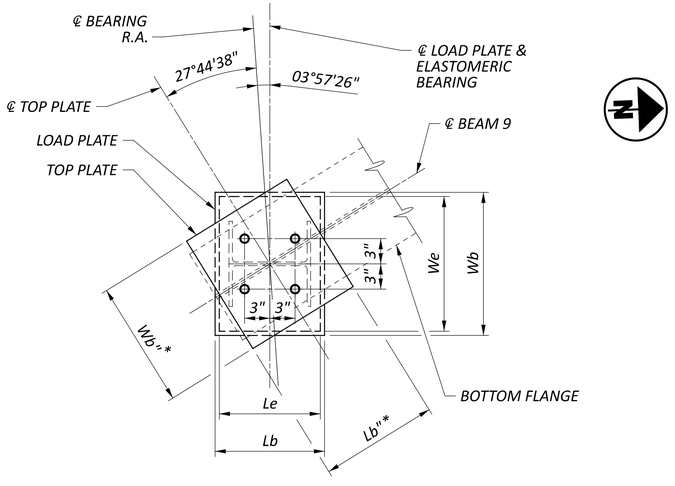

BEAM 9 BEARING PLAN

* - SEE NOTE 4

BEARING LOCATION	BEARING TYPE	NO. REQ'D. PER LOCATION	DEAD LOAD (KIPS)	LIVE LOAD (KIPS)	TOTAL LOAD (DL+LL) (KIPS)	Le (inches)	We (inches)	Tpi (inches)	NO. OF Tpi'S	Tpe (1 EA.) (inches)	NUMBER OF INTERNAL LAMINATES (12 GAGE)	Te (inches)	STEEL LOAD PLATE					STEEL TOP LOAD PLATE					Tt (inches)
													Lb (inches)	Wb (inches)	Tb (inches)	t1 (inches)	t2 (inches)	Lb' (inches)	Lb'' * (inches)	Wb' (inches)	Wb'' * (inches)	Tb' (inches)	
REAR ABUTMENT	EXP.	9	60.7	59.9	120.6	12	16	0.50	5	0.250	5	3.273	13	17	1.50	N/A	N/A	11	14	15	20"	1.50	4.773
PIER 1	EXP.	8	127.8	100.5	228.3	14	18	0.50	4	0.250	4	2.668	15	19	2.00	2.05	1.94	N/A	N/A	N/A	N/A	N/A	4.668
PIER 2	EXP.	8	158.7	109.8	268.5	16	18	0.50	4	0.250	4	2.668	17	19	2.00	2.06	1.95	N/A	N/A	N/A	N/A	N/A	4.668
PIER 3	EXP.	8	127.8	100.5	228.3	14	18	0.50	4	0.250	4	2.668	15	19	2.00	2.05	1.94	N/A	N/A	N/A	N/A	N/A	4.668
FWD. ABUTMENT	EXP.	8	60.7	59.9	120.6	12	16	0.50	5	0.250	5	3.273	13	17	1.50	N/A	N/A	11	N/A	15	N/A	1.50	4.773

BEARING DETAILS
BRIDGE NO. CUY-00480-06.120
WEST 220TH ST. OVER I-480

SFN 1814168
DESIGN AGENCY
ms consultants, inc.
DESIGNER DFK | CHECKER SJR
REVIEWER JDH 07/22/26
PROJECT ID 115826
SUBSET 25 | TOTAL 39
SHEET P.72 | TOTAL 86

CUY-IR-480-06.12 DECK

MODEL: Sheet_SurvFt PAPERSIZE: 34x22 (in.) DATE: 11/9/2026 TIME: 9:22:42 AM USER: jelias
N:\01\60\08398-00\115826\v00-Engineering\Structures\SFN_1814168\Sheets\115826_SFN_1814168_SB001.dgn

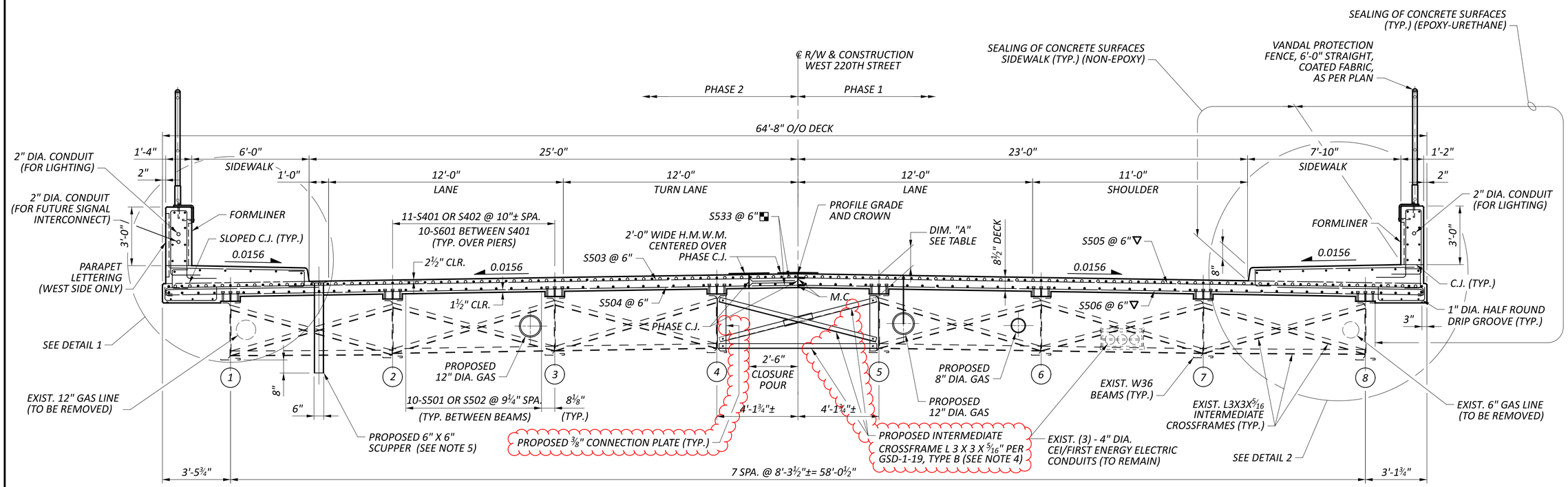

PROPOSED TRANSVERSE SECTION

(TYPICAL EXCEPT SOUTHEAST CORNER. SEE SHEET 28/39 FOR DETAIL)

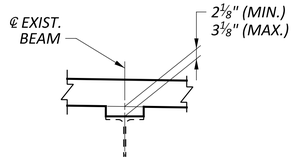

TYPICAL HAUNCH DETAIL

(BEAM 9 NOT INCLUDED)

LOCATION	DIM. "A"	HAUNCH
℄ BRGS. R.A. (BEAMS 1-7)	12 7/16"	3⅛"
℄ BRGS. R.A. (BEAM 8)	12¼"	2 15/16"
℄ BRGS. R.A. (BEAM 9)	10½"	1¼" *
℄ BRGS. PIER 1	11⅞"	2⅛"
℄ BRGS. PIER 2	12"	2 7/16"
℄ BRGS. PIER 3	12¼"	2½"
℄ BRGS. F.A.	12 7/16"	3⅛"

* UNDER SIDEWALK

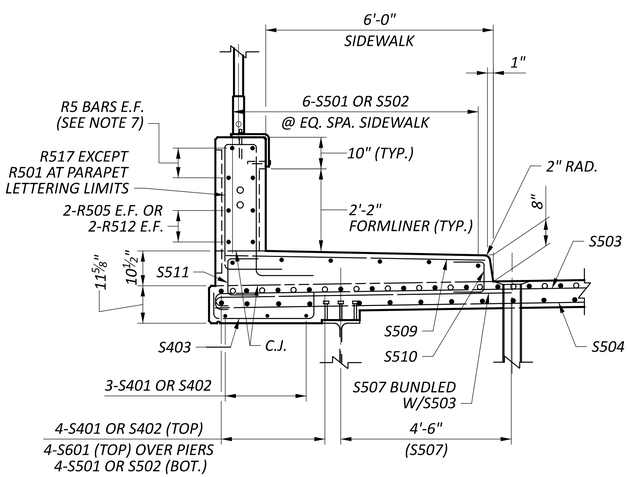

DETAIL 1

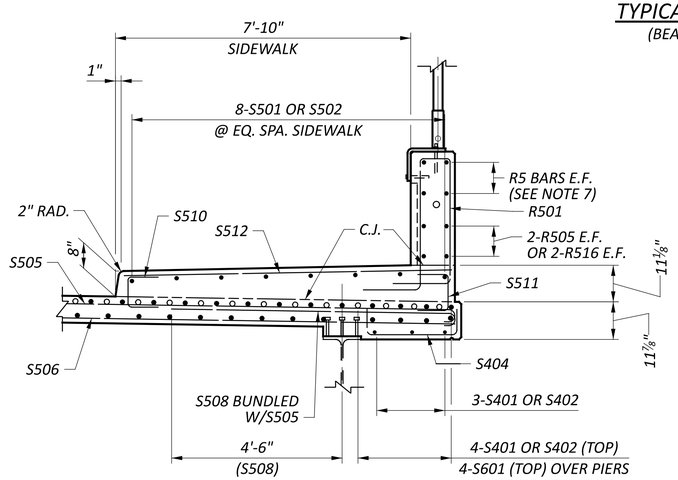

DETAIL 2

LEGEND:

(1) - DENOTES BEAM NUMBER

▽ - BAR WITH MECHANICAL CONNECTOR ONE END.

◪ - BAR WITH ONE END THREADED.

NOTES:

1. *DECK SLAB CONCRETE QUANTITY*

   THE ESTIMATED QUANTITY OF DECK SLAB CONCRETE IS BASED ON THE CONSTANT DECK SLAB THICKNESS, AS SHOWN, PLUS THE QUANTITY OF CONCRETE THAT FORMS EACH GIRDER HAUNCH. THE ESTIMATE ASSUMES A VARIABLE HAUNCH THICKNESS AND A HAUNCH WIDTH EQUAL TO THE TOP FLANGE WIDTH. DEVIATE FROM THIS HAUNCH THICKNESS AS NECESSARY TO PLACE THE DECK SURFACE AT THE FINISHED GRADE.

   THE HAUNCH THICKNESS WAS MEASURED AT THE CENTERLINE OF THE BEAM, FROM THE SURFACE OF THE DECK TO THE BOTTOM OF THE TOP FLANGE MINUS THE DECK SLAB THICKNESS. THE AREA OF ALL EMBEDDED STEEL PLATES HAS BEEN DEDUCTED FROM THE HAUNCH QUANTITY IN ACCORDANCE WITH 511.23.

2. *MECHANICAL CONNECTORS SHALL BE USED AT THE PHASE CONSTRUCTION JOINT. THE MECHANICAL CONNECTOR SHALL MEET THE REQUIREMENTS OF 509.07. REINFORCING BAR LENGTHS ARE DETAILED TO THE FACE OF JOINT.*

3. *PROVIDE VERTICAL CONSTRUCTION JOINT IN SIDEWALK FOR FULL-LENGTH OF PARAPET LETTERING ONLY. SEE SHEET 33/39 FOR PARAPET LETTERING DETAILS.*

4. *FABRICATOR SHALL DETAIL CROSSFRAMES TO FIT AT THE COMPLETION OF DECK PLACEMENT ON EACH SIDE OF THE CLOSURE POUR.*

5. *FOR SCUPPER DETAILS, SEE SHEET 27/39.*

6. *MINIMUM REBAR LAPS: #5 BARS = 2'-7"*

7. *FOR BARRIER REINFORCING, SEE RAILING ELEVATION AND DETAILS, SHEETS 34/39 AND 35/39.*

TRANSVERSE SECTION
BRIDGE NO. CUY-00480-06.120
WEST 220TH ST. OVER I-480

SFN 1814168
DESIGN AGENCY
ms consultants. inc.
DESIGNER JSE | CHECKER WER
REVIEWER JDH 07/22/26
PROJECT ID 115826
SUBSET 26 | TOTAL 39
SHEET P.73 | TOTAL 86

CUY-IR-480-06.12 DECK

MODEL: Sheet PAPERSIZE: 34x22 (in.) DATE: 11/9/2026 TIME: 11:38:40 AM USER: jelias
N:\01\60\08398-00\115826\400-Engineering\Structures\SFN_1814168\Sheets\115826_SFN_1814168_ST001.dgn