STATE OF OHIO
DEPARTMENT OF TRANSPORTATION
CUY-71-10.48
CITY OF CLEVELAND
CITY OF BROOKLYN
VILLAGE OF LINNDALE

CUYAHOGA COUNTY

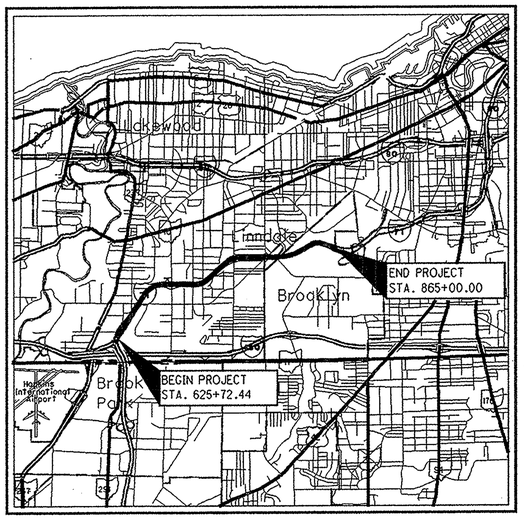

LOCATION MAP

LATITUDE:N 41°26'20" ± LONGITUDE:W 81°47'38" ±

SCALE IN MILES

0 1 2 3 4 5

N

PORTION TO BE IMPROVED
INTERSTATE & DIVIDED HIGHWAY
UNDIVIDED STATE & FEDERAL ROUTES
OTHER ROADS

DESIGN DESIGNATION

CURRENT ADT (2009)	100,950
DESIGN YEAR ADT (2021)	105,440
DESIGN HOURLY VOLUME (2021)	10,550
DIRECTIONAL DISTRIBUTION	72%
TRUCKS (24 HOUR B&C)	7%
DESIGN SPEED	60 MPH
LEGAL SPEED	60 MPH

DESIGN FUNCTIONAL CLASSIFICATION - URBAN INTERSTATE

DESIGN EXCEPTIONS : NONE

INDEX OF SHEETS:

TITLE SHEET 1
SCHEMATIC PLAN 2-4
TYPICAL SECTIONS 5-9
GENERAL NOTES 10-12
MAINTENANCE OF TRAFFIC NOTES 13-16
SUB-SUMMARIES 17-20
GENERAL SUMMARY 21
PLAN SHEETS 22-38
MISC. DETAILS 39

PROJECT EARTH DISTURBED AREA	= N/A (MAINTENANCE PROJECT)
ESTIMATED CONTRACTOR EARTH DISTURBED AREA	= N/A (MAINTENANCE PROJECT)
NOTICE OF INTENT EARTH DISTURBED AREA	= N/A (MAINTENANCE PROJECT)

PROJECT DESCRIPTION

THIS PROJECT PROVIDES FOR THE PLANING AND PAVING OF 4.48 MILES OF IR 71 WITH ITEM 424, FINE GRADED POLYMER ASPHALT CONCRETE, TYPE B. ADDITIONAL ITEMS INCLUDE PAVEMENT MARKINGS AND RAISED PAVEMENT MARKERS.

LIMITED ACCESS

THIS IMPROVEMENT IS ESPECIALLY DESIGNED FOR THROUGH TRAFFIC AND HAS BEEN DECLARED A LIMITED ACCESS HIGHWAY OR FREEWAY BY ACTION OF THE DIRECTOR IN ACCORDANCE WITH THE PROVISIONS OF SECTION 5511.02 OF THE OHIO REVISED CODE.

2008 SPECIFICATIONS

THE STANDARD SPECIFICATIONS OF THE STATE OF OHIO, DEPARTMENT OF TRANSPORTATION, INCLUDING CHANGES AND SUPPLEMENTAL SPECIFICATIONS LISTED IN THE PROPOSAL SHALL GOVERN THIS IMPROVEMENT.

I HEREBY APPROVE THESE PLANS AND DECLARE THAT THE MAKING OF THIS IMPROVEMENT WILL NOT REQUIRE THE CLOSING TO TRAFFIC OF THE HIGHWAY AND THAT PROVISIONS FOR THE MAINTENANCE AND SAFETY OF TRAFFIC WILL BE AS SET FORTH IN THE PLANS AND ESTIMATES.

UNDERGROUND UTILITIES
TWO WORKING DAYS
BEFORE YOU DIG
CALL 1-800-362-2764 (TOLL FREE)
OHIO UTILITIES PROTECTION SERVICE
NON-MEMBERS
MUST BE CALLED DIRECTLY

PLAN PREPARED BY:
OHIO
DEPARTMENT OF TRANSPORTATION
DISTRICT TWELVE
PRODUCTION

ENGINEERS SEAL:

STATE OF OHIO
ERIC M. KALLIO
E-59990
REGISTERED PROFESSIONAL ENGINEER

SIGNED: Eric M. Kallio
DATE: 10-17-08

STANDARD CONSTRUCTION DRAWINGS								SUPPLEMENTAL SPECIFICATIONS	
BP-3.1	10-19-07	MT-35.10	4-20-01	TC-41.10	10-19-07			800	10-17-08
BP-7.1	1-19-07	MT-95.30	9-5-06	TC-41.20	1-19-01			832	4-25-06
BP-9.1	4-15-05	MT-98.10	10-19-07	TC-52.10	1-19-07				
		MT-98.11	10-19-07	TC-52.20	1-19-07				
GR-1.1	7-16-04	MT-98.20	10-19-07	TC-65.10	1-21-05				
GR-2.1	1-16-04	MT-98.22	10-19-07	TC-71.10	1-19-07				
GR-3.1	1-19-07	MT-105.10	10-18-02	TC-72.20	1-21-05				
		MT-105.11	10-18-02					SPECIAL PROVISIONS	

APPROVED [signature] PE
DATE 10/17/08 DISTRICT DEPUTY DIRECTOR

APPROVED [signature]
DATE 10/30/08 DIRECTOR, DEPARTMENT OF TRANSPORTATION

FEDERAL PROJECT NO. E080(059)
PID NO. 83498
CONSTRUCTION PROJECT NO.
RAILROAD INVOLVEMENT NONE
CUY-71-10.48

CUY - IR-71-10.48
090010 PID - 83498
Dist 12 1/14/2009
I:\PROJECTS\PID83498\dgn\B83498gt001.dgn 16-OCT-2008 10:57AM ekallio

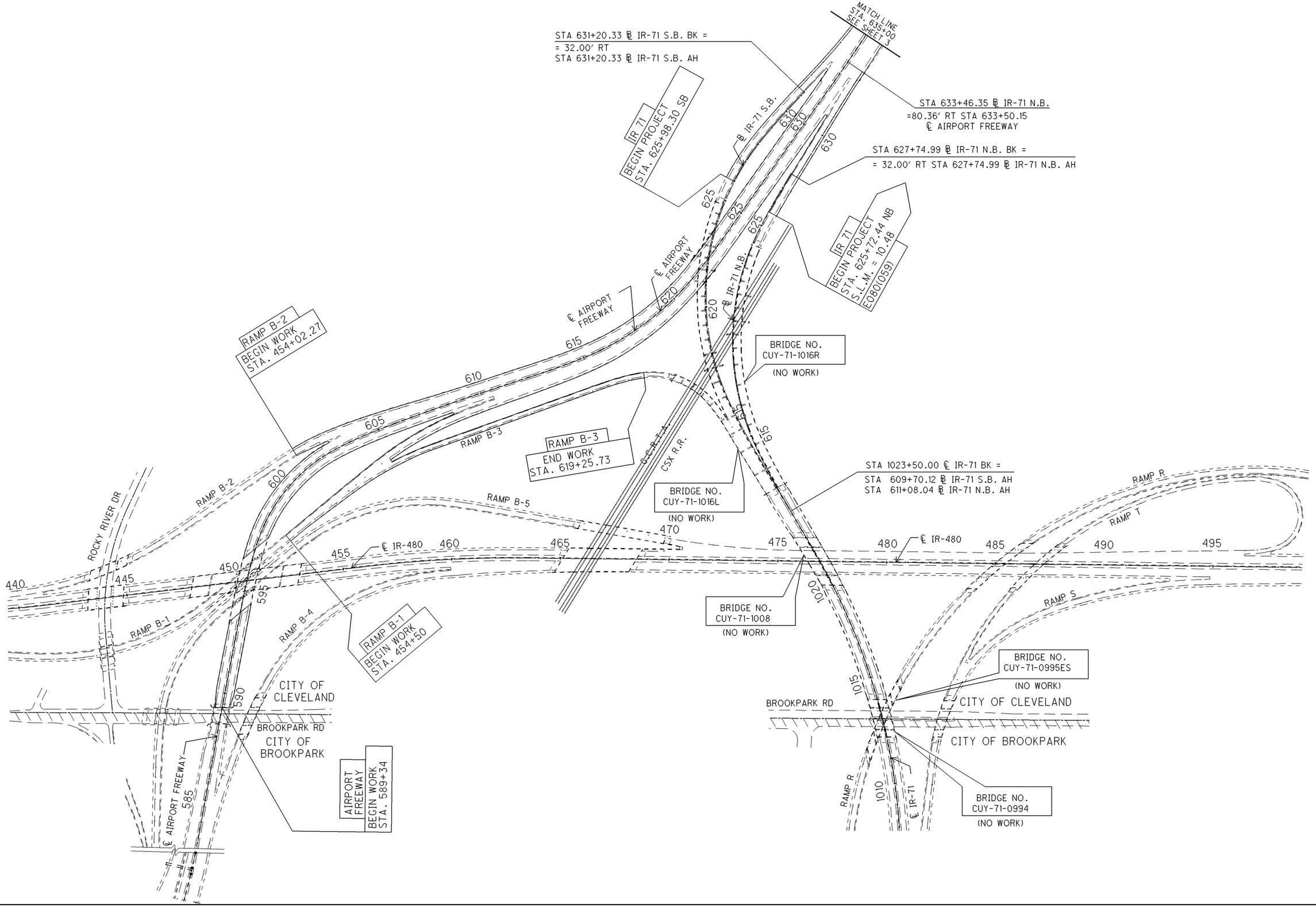

SCALE IN FEET
0 200 400

CALCULATED EMK
CHECKED LDH

SCHEMATIC PLAN SHEET
STA. 1008+00 TO STA. 635+00

CUY-71-10.48

I:\PROJECTS\Pid83498\dgn\83498gb001.dgn 16-OCT-2008 11:01AM ekallio

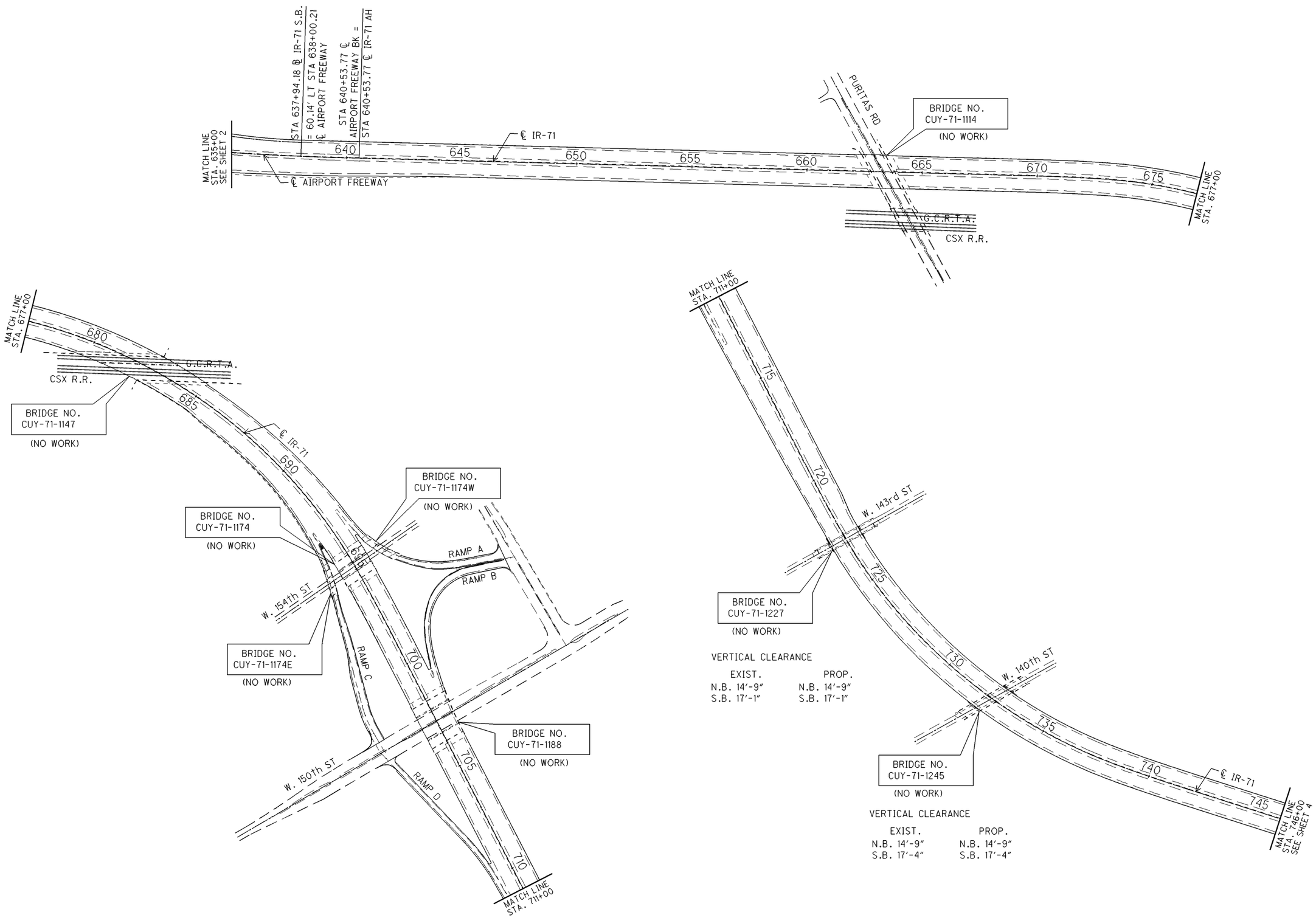

SCALE IN FEET
0 200 400

CALCULATED EMK
CHECKED LDH

SCHEMATIC PLAN SHEET
STA. 635+00 TO STA. 746+00

CUY-71-10.48

I:\PROJECTS\Pid83498\dgn\83498gb002.dgn 16-OCT-2008 11:02AM ekallio

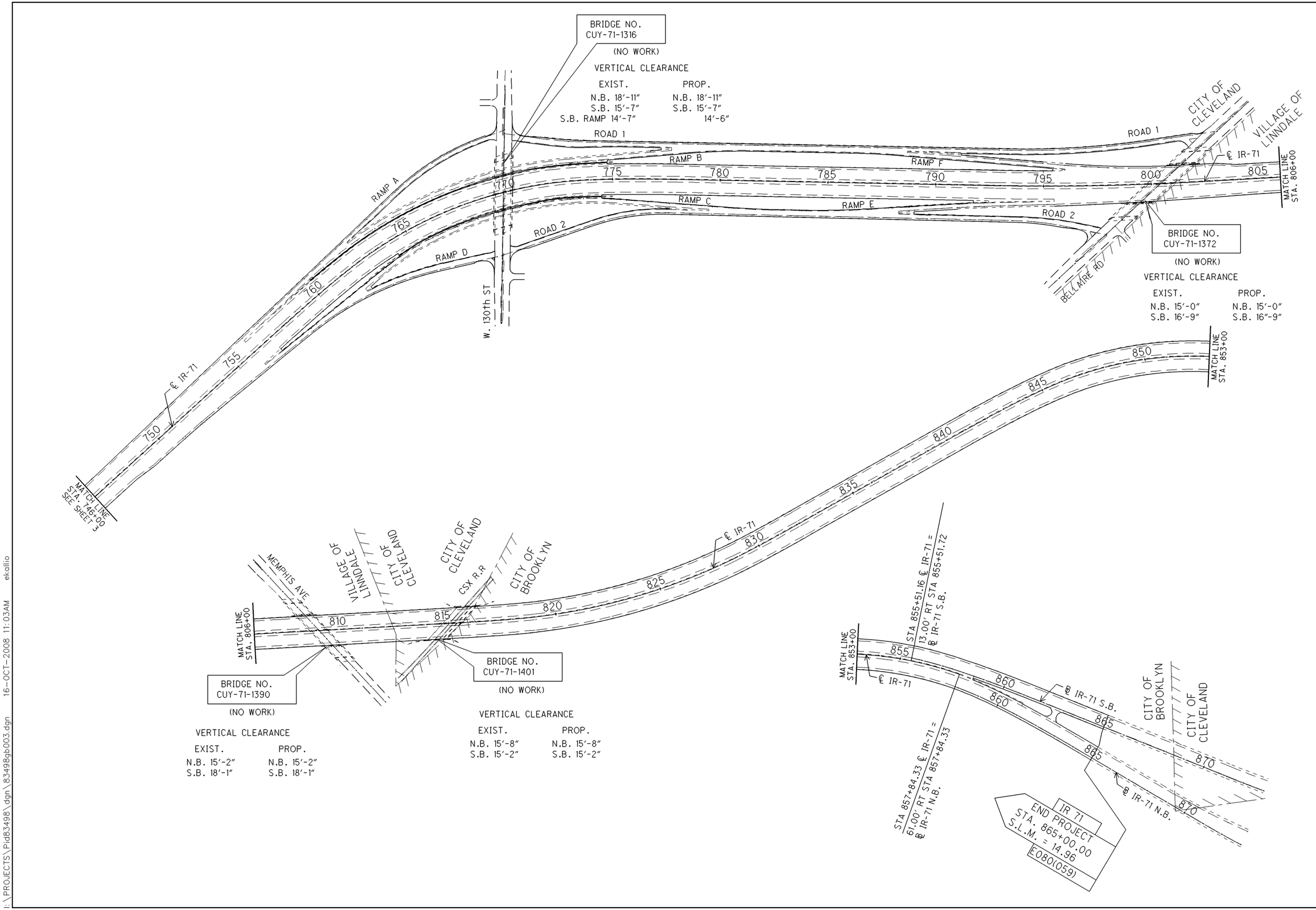

CALCULATED EMK
CHECKED LDH

SCHEMATIC PLAN SHEET
STA. 746+00 TO STA. 873+00

CUY-71-10.48

I:\PROJECTS\Pid83498\dgn\83498gb003.dgn 16-OCT-2008 11:03AM ekallio

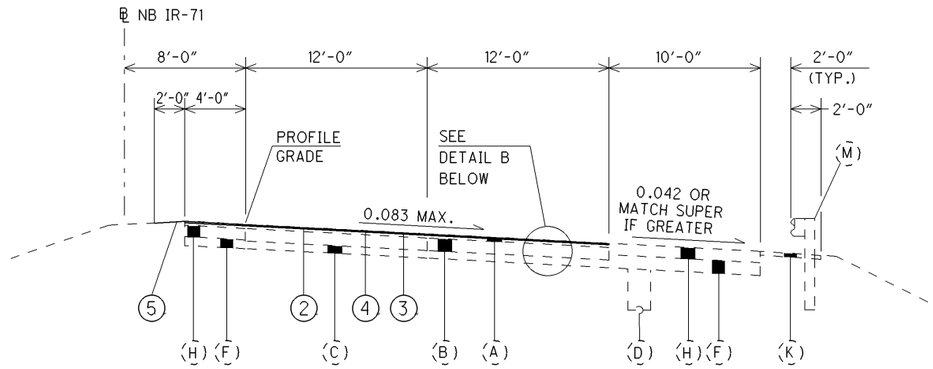

SUPERELEVATED SECTION - NB IR 71

STA. 625+72.44 TO STA. 632+88.93

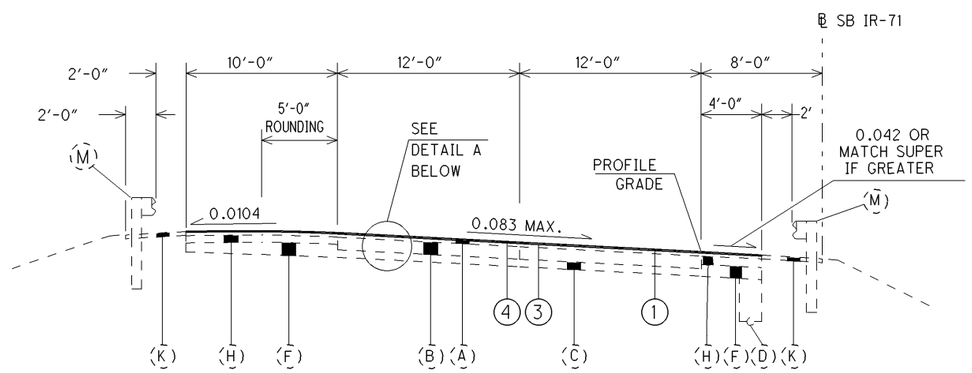

SUPERELEVATED SECTION - SB IR 71

STA. 625+98.30 TO STA. 633+06.69

PROPOSED

1. ITEM 254 - PAVEMENT PLANING, BITUMINOUS, AS PER PLAN, 1/2" (AVG.)
2. ITEM 254 - PAVEMENT PLANING, BITUMINOUS, AS PER PLAN, 1" (AVG.)
3. ITEM 407 - TACK COAT
4. ITEM 424 - 1" FINE GRADED POLYMER ASPHALT CONCRETE, TYPE B, AS PER PLAN
5. ITEM 617 - COMPACTED AGGREGATE, AS PER PLAN

EXISTING

- (A) ASPHALT OVERLAY (3 1/4"±)
- (B) 10" REINFORCED CONCRETE PAVEMENT
- (C) SUBBASE
- (D) UNDERDRAIN
- (E) CONCRETE BARRIER
- (F) AGGREGATE BASE
- (G) BITUMINOUS AGGREGATE BASE
- (H) 9" PLAIN CONCRETE PAVEMENT
- (J) CURB
- (K) ASPHALT UNDER GUARDRAIL
- (L) 9" REINFORCED CONCRETE BASE
- (M) GUARDRAIL
- (N) 10" CONCRETE BASE

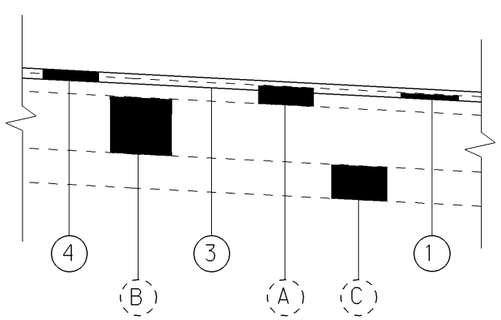

PAVEMENT DETAIL A

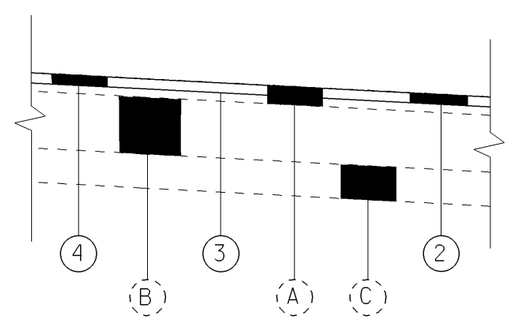

PAVEMENT DETAIL B

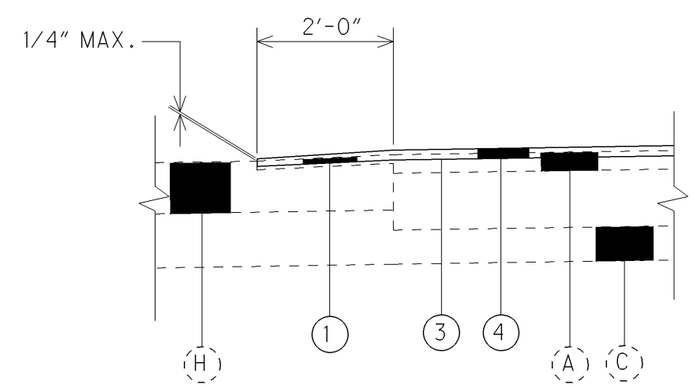

PAVEMENT DETAIL C

TYPICAL SECTIONS

CUY-71-10.48

I:\PROJECTS\Pid83498\dgn\83498gy001.dgn 16-OCT-2008 11:06AM ekallio

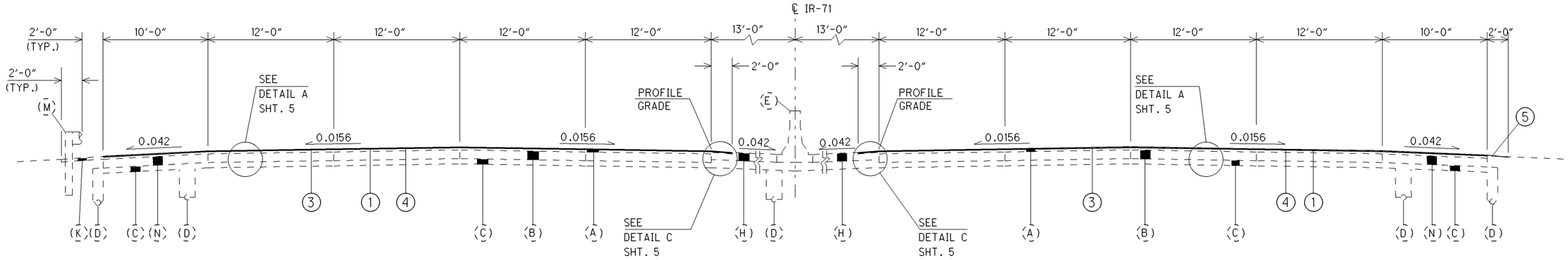

NORMAL SECTION - IR 71

STA. 640+53.77 TO STA. 662+52.54
STA. 664+08.08 TO STA. 668+25.00
STA. 700+50.00 TO STA. 701+59.50
STA. 704+02.74 TO STA. 717+50.00

STA. 743+50.00 TO STA. 756+00.00
STA. 779+50.00 TO STA. 814+00.00
STA. 833+75.00 TO STA. 839+50.00

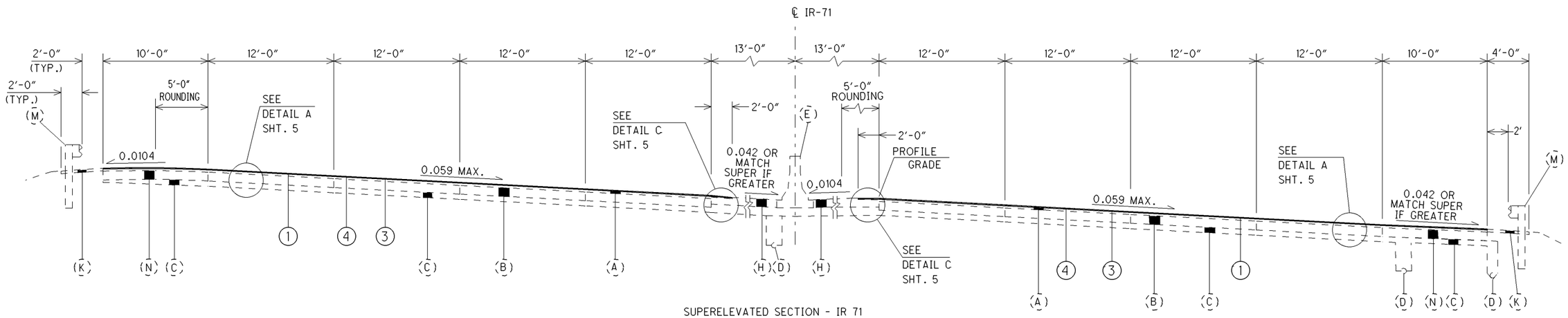

SUPERELEVATED SECTION - IR 71

STA. 668+25.00 TO STA. 681+28.83
STA. 684+04.56 TO STA. 694+36.98
STA. 696+00.41 TO STA. 700+50.00
STA. 717+50.00 TO STA. 743+50.00 (CURVE LEFT)

STA. 814+00.00 TO STA. 833+75.00 (0.047 MAX. SUPER.) (CURVE LEFT)
STA. 839+50.00 TO STA. 855+51.16 SB (0.083 MAX. SUPER.)
STA. 839+50.00 TO STA. 857+84.33 NB (0.083 MAX. SUPER.)

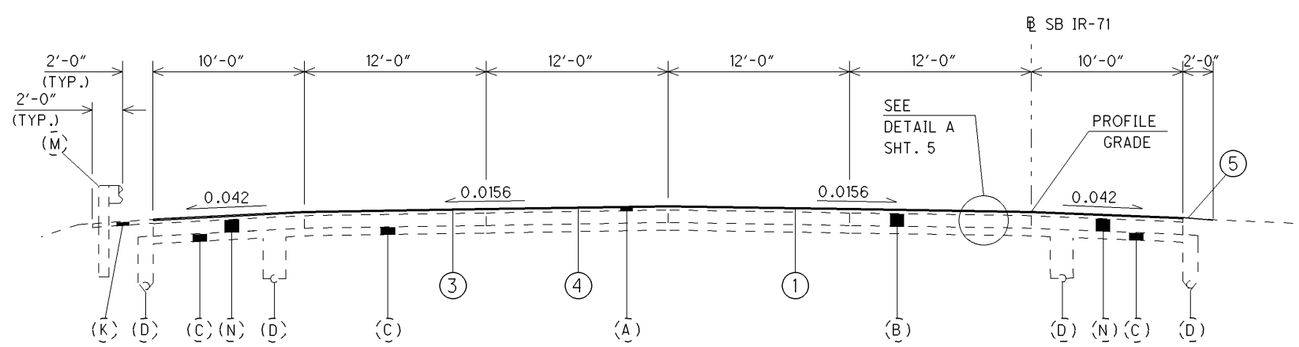

NORMAL SECTION - IR 71

STA. 863+00.00 TO STA. 865+00.00 SB

SEE SHEET 5 FOR LEGEND

TYPICAL SECTIONS

CUY-71-10.48

I:\PROJECTS\Pid83498\dgn\83498gy002.dgn 16-OCT-2008 11:17AM ekallio

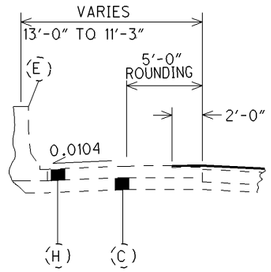

SHOULDER DETAIL

STA. 857+84.33 TO STA. 861+00.00 IR-71 NB

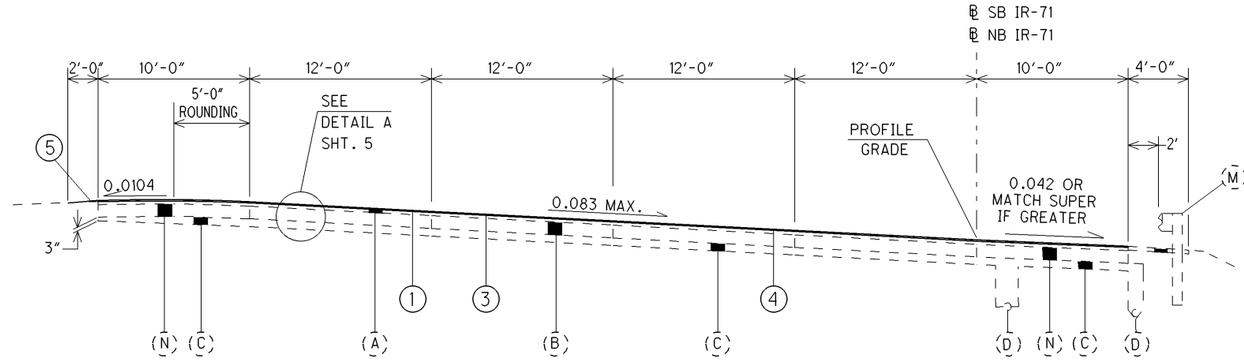

SUPERELEVATED SECTION - IR 71

STA. 857+84.33 TO STA. 865+00.00 NB
STA. 855+51.16 TO STA. 863+00.00 SB

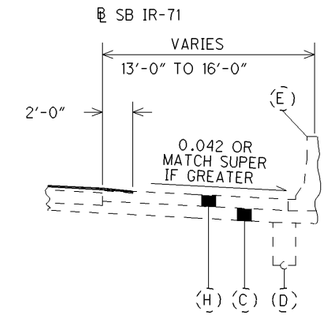

SHOULDER DETAIL

STA. 855+51.16 TO STA. 858+52.00 IR-71 SB

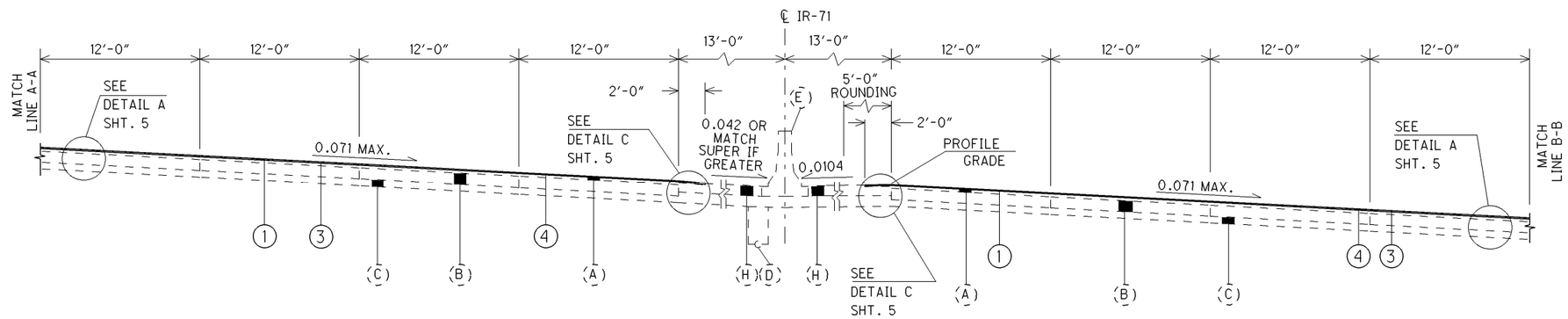

SUPERELEVATED SECTION - IR 71

STA. 756+00.00 TO STA. 779+50.00

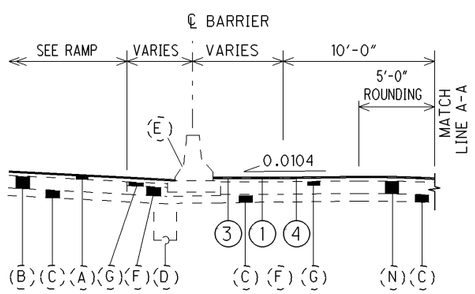

STA. 758+23.00 TO STA. 774+75.00

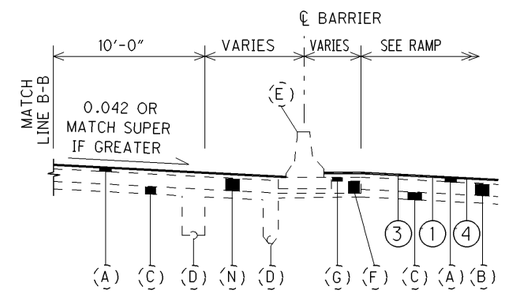

STA. 764+15.00 TO STA. 774+50.00

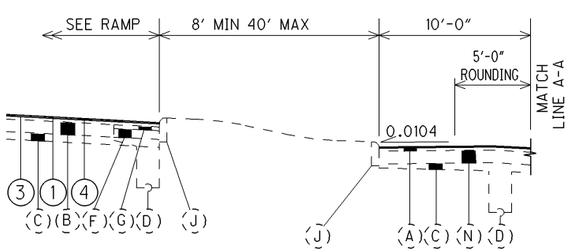

RAMP MEDIAN DETAIL

STA. 774+75.00 TO STA. 795+00.00

SEE SHEET 5
FOR LEGEND

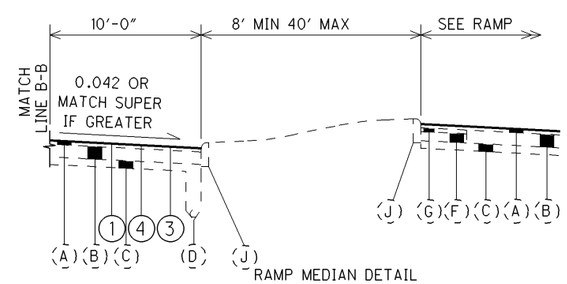

RAMP MEDIAN DETAIL

STA. 757+00.00 TO STA. 764+15.00
STA. 774+50.00 TO STA. 791+70.00

TYPICAL SECTIONS

CUY-71-10.48

I:\PROJECTS\Pid83498\dgn\83498gy003.dgn 16-OCT-2008 11:18AM ekallio

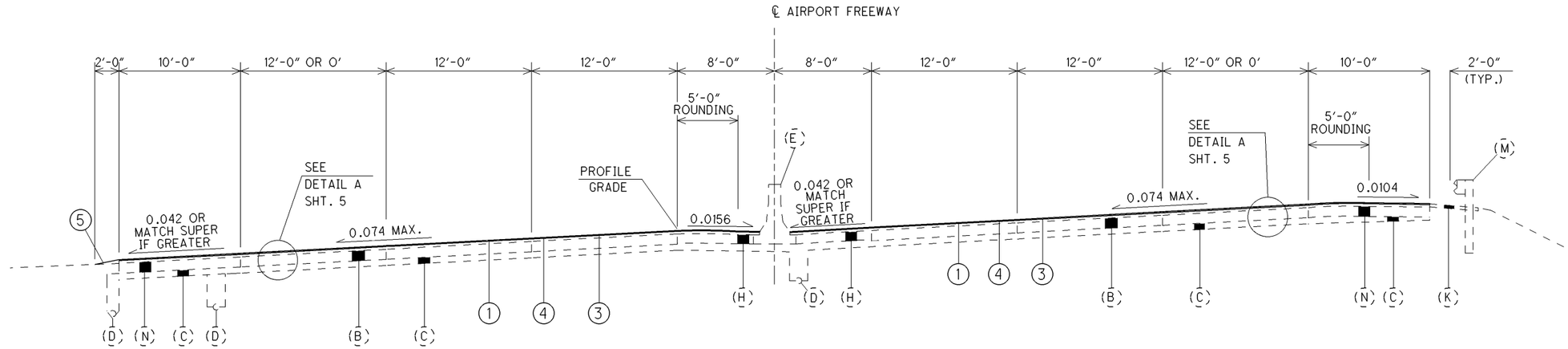

SUPERELEVATED SECTION - AIRPORT FREEWAY

STA. 591+00.00 TO STA. 593+57.99 (0.083 MAX. SUPER)(CURVE RIGHT)
STA. 597+08.73 TO STA. 607+25.00 (0.083 MAX. SUPER)(CURVE RIGHT)
STA. 610+75.00 TO STA. 625+75.00

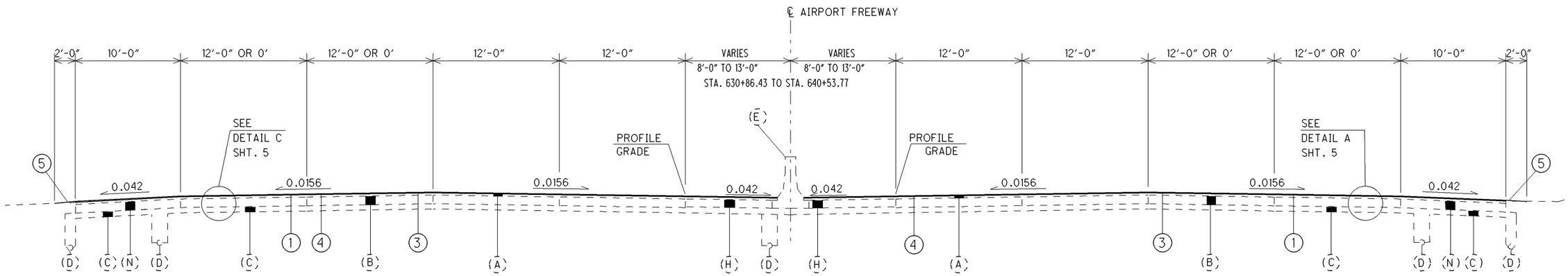

NORMAL SECTION - AIRPORT FREEWAY

STA. 589+34.00 TO STA. 591+00.00
STA. 607+25.00 TO STA. 610+75.00
STA. 625+75.00 TO STA. 640+53.77

SEE SHEET 5
FOR LEGEND

TYPICAL SECTIONS

CUY-71-10.48

I:\PROJECTS\Pid83498\dgn\83498gy004.dgn 16-OCT-2008 11:19AM ekallio

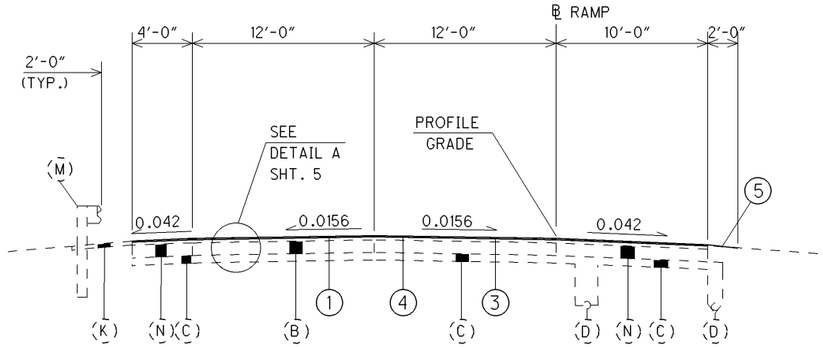

NORMAL 2 LANE PAVEMENT

STA. 452+00.00 TO STA.457+50.00 RAMP B-1

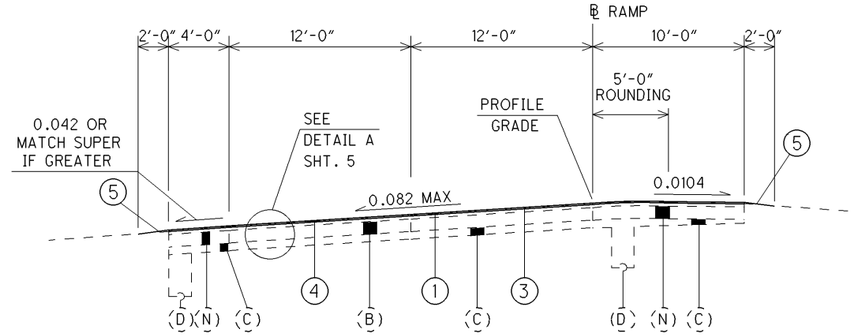

SUPERELEVATED 2 LANE PAVEMENT

STA. 447+00.00 TO STA. 452+00.00 RAMP B-1
STA. 457+50.00 TO STA. 465+93.66 RAMP B-1 (0.060 MAX. SUPER) (CURVE RIGHT)

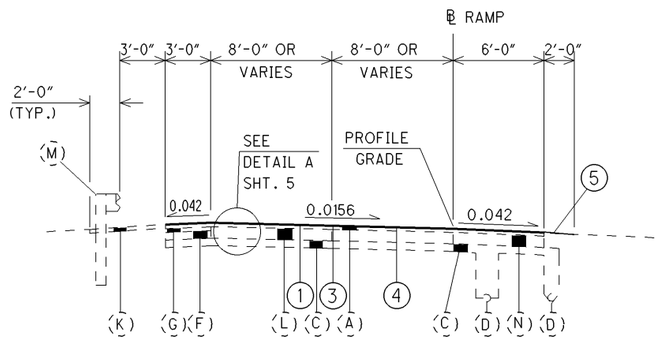

NORMAL RAMP SECTION

STA. 611+24.77 TO STA. 621+36.17 RAMP B-3 (NO EXISTING OVERLAY)
STA. 695+89.66 TO STA. 699+20.00 RAMP C (W.150th ST.)
STA. 703+17.00 TO STA. 707+25.00 RAMP D (W.150th ST.)
STA. 711+00.00 TO STA. 713+00.00 RAMP D (W.150th ST.)
STA. 56+00.00 TO STA. 65+25.00 RAMP A (W.130th ST.)
STA. 23+75.00 TO STA. 28+39.85 RAMP B (W.130th ST.)
STA. 55+99.30 TO STA. 61+78.96 RAMP D (W.130th ST.)
STA. 15+25.00 TO STA. 17+78.66 ROAD 1
STA. 14+00.00 TO STA. 19+89.00 ROAD NO. 2
STA. 33+25.00 TO STA. 37+03.78 ROAD NO. 2
STA. 88+28.07 TO STA. 95+50.00 RAMP E
STA. 8+70.15 TO STA. 16+04.73 RAMP F

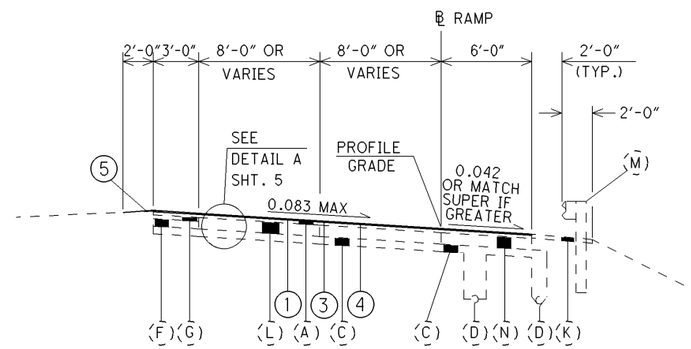

SUPERELEVATED RAMP SECTION

STA. 621+36.17 TO STA. 619+25.73 RAMP B-3 (NO EXISTING OVERLAY)
STA. 692+75.00 TO STA. 694+42.60 RAMP A (W.150th ST.)
STA. 696+15.53 TO STA. 699+53.43 RAMP A (W.150th ST.)
STA. 695+31.04 TO STA. 701+07.01 RAMP B (W.150th ST.)
STA. 692+82.96 TO STA. 694+26.34 RAMP C (W.150th ST.)
STA. 707+25.00 TO STA. 711+00.00 RAMP D (W.150th ST.)
STA. 65+25.00 TO STA. 70+79.53 RAMP A (W.130th ST.)
STA. 12+57.99 TO STA. 23+75.00 RAMP B (W.130th ST.)
STA. 11+81.48 TO STA. 28+86.26 RAMP C (W.130th ST.)
STA. 61+78.96 TO STA. 66+90.62 RAMP D (W.130th ST.)
STA. 11+14.00 TO STA. 15+25.00 ROAD NO. 1
STA. 28+73.80 TO STA. 41+24.44 ROAD NO. 1
STA. 11+09.00 TO STA. 14+00.00 ROAD NO. 2
STA. 28+70.00 TO STA. 33+25.00 ROAD NO. 2

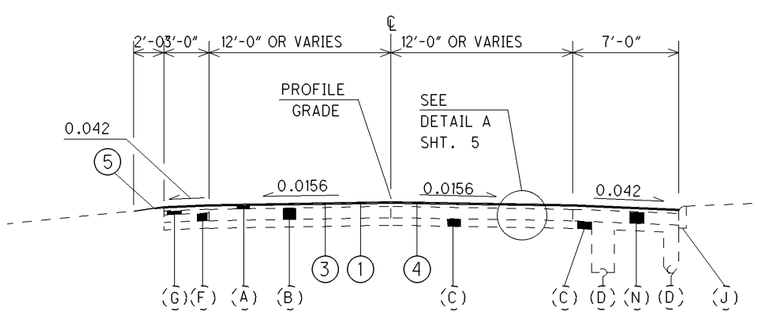

NORMAL RAMP SECTION

STA. 17+78.66 TO STA. 28+73.80 ROAD NO. 1
STA. 19+89.00 TO STA. 28+70.00 ROAD NO. 2

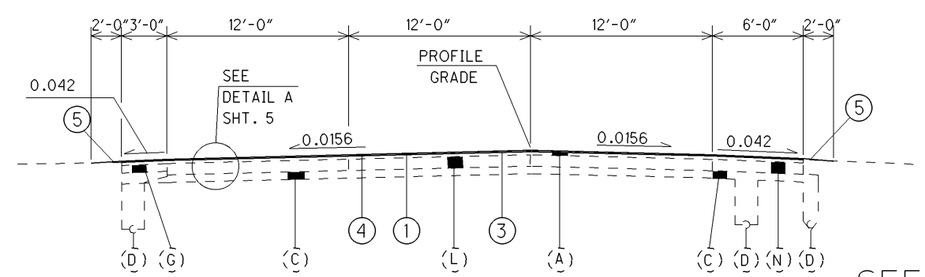

NORMAL RAMP SECTION

STA. 699+20 TO STA.702+33.53 RAMP C (W.150th ST.)

SEE SHEET 5
FOR LEGEND

TYPICAL SECTIONS

CUY-71-10.48

I:\PROJECTS\Pid83498\dgn\83498gy005.dgn 16-OCT-2008 11:21AM ekallio

GENERAL

PROJECT DESCRIPTION

THIS PROJECT INVOLVES THE IMPROVEMENT OF IR-71 BY REMOVING 0-1/2" OF ASPHALT AND OVERLAYING THE ROADWAY WITH 1" OF ITEM 424, FINE GRADED POLYMER ASPHALT CONCRETE, TYPE B, AS PER PLAN FROM SLM 10.48 TO SLM 14.96. INCIDENTAL WORK INCLUDES PARTIAL DEPTH PAVEMENT REPAIRS, PAVEMENT MARKINGS AND RAISED PAVEMENT MARKERS

EXISTING TYPICAL SECTIONS

EXISTING TYPICAL SECTIONS HAVE BEEN TAKEN FROM THE RECORDS AND ARE BELIEVED TO REPRESENT THE EXISTING PAVEMENT, BUT THE STATE OF OHIO DOES NOT GUARANTEE THE ACCURACY OF THE SAME.

FOR FURTHER INFORMATION IN REGARD TO THE EXISTING TYPICAL SECTIONS, THE CONTRACTOR SHALL REFER TO THE PREVIOUS CONSTRUCTION PLANS.

THESE PLANS MAY BE REVIEWED AT THE

OHIO DEPARTMENT TRANSPORTATION
DISTRICT 12 OFFICE
5500 TRANSPORTATION BOULEVARD
GARFIELD HEIGHTS, OHIO 44125

CONTINGENCY QUANTITIES

THE CONTRACTOR SHALL NOT ORDER MATERIALS OR PERFORM WORK FOR ITEMS DESIGNATED BY PLAN NOTE TO BE USED "AS DIRECTED BY THE ENGINEER" UNLESS AUTHORIZED BY THE ENGINEER. THE ACTUAL WORK LOCATIONS AND QUANTITIES USED FOR SUCH ITEMS SHALL BE INCORPORATED INTO THE FINAL CHANGE ORDER GOVERNING COMPLETION OF THIS PROJECT.

COOPERATION BETWEEN CONTRACTORS

THE CONTRACTOR SHALL COOPERATE AND COORDINATE OPERATIONS WITH THE CONTRACTORS ON OTHER PROJECTS THAT MAY BE IN FORCE DURING THE LIFE OF THE CONTRACT.

ALTERNATE METHODS

IF THE CONTRACTOR SO ELECTS, HE/SHE MAY SUBMIT ALTERNATE METHODS FOR THE MAINTENANCE OF TRAFFIC, PROVIDED THE INTENT OF THE PROVISIONS IS FOLLOWED AND NO ADDITIONAL INCONVENIENCE TO THE TRAVELING PUBLIC RESULTS THERE FROM. NO ALTERNATE PLAN SHALL BE PLACED INTO EFFECT UNTIL APPROVAL HAS BEEN GRANTED IN WRITING, BY THE DIRECTOR.

RIGHT OF WAY

ALL WORK SHALL BE PERFORMED WITHIN THE EXISTING RIGHT OF WAY OR EASEMENTS.

EQUIPMENT AND MATERIAL STORAGE

IN ORDER TO PROVIDE FOR THE SAFETY OF THE TRAVELING PUBLIC THE CONTRACTOR'S ATTENTION IS DIRECTED TO 614.03. IN ADDITION THE FOLLOWING PROVISIONS SHALL APPLY:

1) ANY REMOVED ITEMS SHALL NOT BE STORED ON THE RIGHT OF WAY FOR MORE THAN THIRTY DAYS.

2) THE STORAGE OF EQUIPMENT, MATERIALS, AND VEHICLES WITHIN THE HIGHWAY RIGHT OF WAY WILL BE PERMITTED. THE NUMBER OF AREAS AND EXACT LOCATIONS SHALL BE APPROVED BY THE ENGINEER.

3) ALL DISTURBED AREAS SHALL BE RETURNED TO THEIR ORIGINAL CONDITION AT NO EXPENSE TO THE STATE.

WORK LIMITS

THE WORK LIMITS SHOWN ON THESE PLANS ARE FOR PHYSICAL CONSTRUCTION ONLY. THE INSTALLATION AND OPERATION OF ALL TEMPORARY TRAFFIC CONTROL AND TEMPORARY TRAFFIC CONTROL DEVICES REQUIRED BY THESE PLANS SHALL BE PROVIDED BY THE CONTRACTOR WHETHER INSIDE OR OUTSIDE THESE WORK LIMITS

ITEM 619 - FIELD OFFICE, TYPE B

A TYPE B FIELD OFFICE IS REQUIRED FOR THIS PROJECT.

THE FOLLOWING ESTIMATED QUANTITY HAS BEEN CARRIED TO THE GENERAL SUMMARY:

ITEM 619 – FIELD OFFICE, TYPE B . . . . . **6 MONTH**

UTILITY OWNERSHIP

THE FOLLOWING UTILITIES AND OWNERS ARE LOCATED WITHIN THE WORK LIMITS OF THIS PROJECT. THE OHIO DEPARTMENT OF TRANSPORTATION HAS USED THE BEST AVAILABLE INFORMATION TO DETERMINE THE UTILITY COMPANIES SERVING THIS AREA, BUT CANNOT GUARANTEE THE UTILITY COMPANY LIST IS COMPLETE.

CITY OF CLEVELAND
DIVISION OF WATER
1201 LAKESIDE AVE.
CLEVELAND, OH 44114
(216) 664-2444, EXT 5555
FAX: (216) 664-2378

AT&T
13630 LORAIN AVE.
4TH FLOOR
CLEVELAND, OHIO 44111
(216) 476-6142
FAX: (216)573-5792

THE ILLUMINATING CO.
6896 MILLER RD
BRECKSVILLE, OH 44141
(440) 546-8748
FAX: (440) 546-8775

DOMINION EAST OHIO GAS CO.
1201 E. 55TH ST.
CLEVELAND, OH 44103
(216) 736-6675
FAX: (216) 736-6883

CUYAHOGA COUNTY
SANITARY ENGINEER
6100 WEST CANAL RD.
VALLEY VIEW, OHIO 44125
(216) 443-8204
FAX:(216) 443-8236

GREATER CLEVELAND REGIONAL
TRANSIT AUTHORITY
1240 WEST SIXTH STREET
CLEVELAND, OHIO 44113
PHONE: (216) 566-5100
FAX: (216) 781-4043

ROADWAY

ITEM 659 – SEEDING, MISC.: SEEDING AND MULCHING

THIS ITEM SHALL BE USED TO SEED AND MULCH ALL DISTURBED AREAS ADJACENT TO CURB RAMPS, CURB, AND SIDEWALK, AS DIRECTED BY THE ENGINEER. USE CLASS 1 LAWN MIXTURE.

AT DISTURBED AREAS, REMOVE TOP 2" OF SOIL AND REPLACE WITH MATERIAL CONFORMING TO 659.05.

PROVIDE A SINGLE APPLICATION OF COMMERCIAL FERTILIZER PER THE REQUIMENTS OF 659.04.

PLACEMENT OF TOPSOIL AND APPLICATION OF FERTILIZER ARE INCIDENTAL TO THIS ITEM.

THE FOLLOWING ESTIMATED QUANTITY IS CARRIED TO THE GENERAL SUMMARY FOR THIS PURPOSE.

ITEM 659 – SEEDING, MISC.:SEEDING AND MULCHING . . . . . **LUMP SUM**

I:\PROJECTS\PID83498\dgn\83498gn001.DGN 16-OCT-2008 11:24AM ekollio

CURB RAMP

REFERENCE NO.	LOCATION	202 WALK REMOVED	202 CURB REMOVED	608 CURB RAMP, AS PER PLAN	608 4" CONCRETE WALK
		S. F.	FT.	S. F.	S. F.
CR-1	RAMP A (W. 130TH ST)	120	30	50	85
CR-2	RAMP A (W. 130TH ST)	136	24	50	98
CR-3	ROAD NO. 1 (W. 130TH ST)	75	24	50	37
CR-4	ROAD NO. 1 (W. 130TH ST)	120	24	50	82
CR-5	RAMP D (W. 130TH ST)	140	25	50	102
CR-6	RAMP D (W. 130TH ST)			50	50
CR-7	RAMP D (W. 130TH ST)	120	30	50	85
CR-8	ROAD NO. 2 (W. 130TH ST)	85	21	50	40
CR-9	ROAD NO. 2 (W. 130TH ST)	50	22	50	21
CR-10	ROAD NO. 1 (BELLAIRE RD)	95	15	50	53
CR-11	ROAD NO. 1 (BELLAIRE RD)	70	12	50	26
CR-12	ROAD NO. 1 (BELLAIRE RD)	50	18	50	75
CR-13	ROAD NO. 1 (BELLAIRE RD)	60	10	50	15
CR-14	ROAD NO. 2 (BELLAIRE RD)	60	10	50	15
CR-15	ROAD NO. 2 (BELLAIRE RD)	60	10	50	15
CR-15A	ROAD NO. 2 (BELLAIRE RD)	50	10	50	
CR-16	ROAD NO. 2 (BELLAIRE RD)	60	10	50	15
CR-17	ROAD NO. 2 (BELLAIRE RD)	132	12	50	88
	TOTAL TO GEN. SUMMARY	**1483**	**307**	**900**	**902**

ITEM 608 - CURB RAMP, AS PER PLAN

IMPROVE EXISTING CURB RAMPS BY PROVIDING A LANDING AREA WITH TRUNCATED DOMES. IMPROVE EXISTING SIDEWALK AT ITS CURRENT WIDTH AND LOCATION. WORK AROUND EXISTING UTILITY FEATURES AND WITHIN THE EXISTING BACK OF SIDEWALK. CONSTRUCT RAMPS CONFORMING TO THE DETAILS RELATED TO THE SIZE AND CROSS-SLOPE OF THE LANDING AREA AND WITH TRUNCATED DOMES AS SHOWN ON STD. DRAWING BP-7.1.

MINIMIZE DISTURBED AREAS ADJACENT TO CURB RAMPS, CURB, AND SIDEWALK.

IN ADDITION TO THE CMS REQUIREMENTS FOR ITEM 608, CURB RAMP, A.P.P. WORK SHALL INCLUDE ANY SAWCUTTING OF ADJACENT WALK OR CURB AND ANY ADDITIONAL EXCAVATION NEEDED TO PLACE THE PROPOSED TRUNCATED DOMES.

DRAINAGE AND EROSION CONTROL

REVIEW OF DRAINAGE FACILITIES

BEFORE ANY WORK IS STARTED ON THE PROJECT AND AGAIN BEFORE FINAL ACCEPTANCE BY THE STATE, REPRESENTATIVES OF THE STATE AND THE CONTRACTOR, ALONG WITH LOCAL REPRESENTATIVES, SHALL MAKE AN INSPECTION OF ALL EXISTING SEWERS WHICH ARE TO REMAIN IN SERVICE AND WHICH MAY BE AFFECTED BY THE WORK. THE CONDITION OF THE EXISTING CONDUITS AND THEIR APPURTENANCES SHALL BE DETERMINED FROM FIELD OBSERVATIONS. RECORDS OF THE INSPECTION SHALL BE KEPT IN WRITING BY THE STATE.

ALL EXISTING SEWERS INSPECTED INITIALLY BY THE ABOVE MENTIONED PARTIES SHALL BE MAINTAINED AND LEFT IN A CONDITION REASONABLY COMPARABLE TO THAT DETERMINED BY THE ORIGINAL INSPECTION. ANY

CHANGE IN THE CONDITION RESULTING FROM THE CONTRACTOR'S OPERATIONS SHALL BE CORRECTED BY THE CONTRACTOR TO THE SATISFACTION OF THE ENGINEER.

PAYMENT FOR ALL OPERATIONS DESCRIBED ABOVE SHALL BE INCLUDED IN THE CONTRACT PRICE FOR THE PERTINENT 604 ITEMS.

ITEM SPECIAL – MISCELLANEOUS METAL

EXISTING CASTINGS MAY PROVE TO BE UNSUITABLE FOR REUSE, AS DETERMINED BY THE ENGINEER. IT SHALL BE THE CONTRACTOR'S RESPONSIBILITY TO PROVIDE THE CASTINGS OF THE REQUIRED TYPE, SIZE AND STRENGTH (HEAVY DUTY) FOR THE PARTICULAR STRUCTURE IN QUESTION. ALL MATERIALS MUST MEET ITEM 604 OF THE SPECIFICATIONS AND SHALL HAVE THE PRIOR APPROVAL OF THE ENGINEER.

THE CONTRACTOR IS CAUTIONED TO USE EXTREME CARE IN THE REMOVAL, STORAGE AND REPLACEMENT OF ALL EXISITING CASTINGS. CASTINGS DAMAGED BY THE NEGLIGENCE OF THE CONTRACTOR, AS DETERMINED BY THE ENGINEER, SHALL BE REPLACED WITH THE PROPER NEW CASTINGS AT THE EXPENSE OF THE CONTRACTOR. THE CONTRACTOR SHALL NOT ORDER MATERIALS UNTIL AUTHORIZED BY THE ENGINEER AND IF NONE ARE NEEDED THE ITEM IS TO BE NON-PERFORMED.

THE FOLLOWING ESTIMATED QUANTITY HAS BEEN CARRIED TO THE GENERAL SUMMARY FOR USE AS DIRECTED BY THE ENGINEER.

ITEM SPECIAL – MISCELLANEOUS METAL . . . . . **5000 LBS**

ITEM 604 - CASTINGS ADJUSTED TO GRADE, AS PER PLAN

DO NOT USE ADJUSTMENT DEVICES.

THE FOLLOWING ESTIMATED QUANTITIES HAVE BEEN CARRIED TO THE GENERAL SUMMARY:

ITEM 604 - CATCH BASIN ADJUSTED TO GRADE, AS PER PLAN . . . . **27 EACH**
ITEM 604 – MANHOLE ADJUSTED TO GRADE, AS PER PLAN . . . . . **1 EACH**

PAVEMENT

ITEM 251 - PARTIAL DEPTH PAVEMENT REPAIR, AS PER PLAN A

THIS ITEM SHALL BE USED FOR THE REPAIR OF UNSOUND, COLD-PATCH, OR POP-OUT AREAS OF LONGITUDINAL JOINTS AS DIRECTED BY THE ENGINEER. THIS WORK SHALL BE PERFORMED PRIOR TO THE MILLING OPERATION. THE DEPTH OF THE REPAIR FROM THE TOP OF THE EXISTING SURFACE SHALL BE 3". THE WIDTH OF THE REPAIR SHALL BE 12" CENTERED OVER THE EXISTING JOINT.

THE FOLLOWING ESTIMATED QUANTITY HAS BEEN INCLUDED IN THE GENERAL SUMMARY:

ITEM 251 – PARTIAL DEPTH PAVEMENT REPAIR,
AS PER PLAN A . . . . . **500 SQ. YD.**

ITEM 251 - PARTIAL DEPTH PAVEMENT REPAIR, AS PER PLAN B

THIS ITEM SHALL BE USED FOR THE REPAIR OF UNSOUND, COLD-PATCH, OR POP-OUT AREAS OF TRANSVERSE JOINTS AND CRACKS AS DIRECTED BY THE ENGINEER. THIS WORK SHALL BE PERFORMED PRIOR TO THE MILLING OPERATION. THE DEPTH OF THE REPAIR FROM THE TOP OF THE EXISTING SURFACE SHALL BE 3". THE WIDTH OF THE REPAIR SHALL BE 12" CENTERED OVER THE EXISTING JOINT.

THE FOLLOWING ESTIMATED QUANTITY HAS BEEN INCLUDED IN THE GENERAL SUMMARY:

ITEM 251 – PARTIAL DEPTH PAVEMENT REPAIR,
AS PER PLAN B . . . . . **350 SQ. YD.**

ITEM 407 - TACK COAT

THE RATE OF APPLICATION OF THE 407 TACK COAT SHALL BE SUBJECT TO ADJUSTMENT AS DIRECTED BY THE ENGINEER. PLAN QUANTITIES INDICATE AN AVERAGE APPLICATION RATE OF 0.10 GALLONS PER SQUARE YARD OF TACK COAT FOR ESTIMATING PURPOSES ONLY.

ITEM 424 – FINE GRADED ASPHALT CONCRETE, TYPE B, AS PER PLAN

THE COURSE AGGREGATE FOR THIS ITEM SHALL BE LIMITED TO A BLEND OF AIR COOLED BLAST FURNACE SLAG (ACBFS) OR TRAP ROCK FROM ONTARIO AND LIMESTONE. THE CONTRACTOR SHALL USE A MINIMUM OF 50% OF ACBFS OR TRAP ROCK FROM ONTARIO WITH LIMESTONE COMPRISING THE REMAINING PERCENTAGE.

SECTION 424.08 SHALL BE REVISED TO READ "FOR TYPE B MIXES COMPLY WITH ALL REQUIREMENTS OF 446."

I:\PROJECTS\P1083498\dgn\83498gn001.DGN 16-OCT-2008 11:25AM ekallio

ASPHALT CONCRETE SURFACE COURSES

IN ADDITION TO THE GUTTER SEALING REQUIREMENTS SPECIFIED ON SCD BP-3.1 AND IN 401.15, AFTER COMPLETION OF THE SURFACE COURSE, THE CONTRACTOR SHALL SEAL, WITH ASPHALT BINDER, THE FOLLOWING LOCATIONS:

- ALL CASTINGS INCLUDING BUT NOT LIMITED TO MONUMENTS, MANHOLES, WATER VALVES, CATCH BASINS.
- BUTT JOINTS INCLUDING BRIDGE APPROACHES.
- ALL LONGITUDINAL AND TRANSVERSE COLD JOINTS (SHALL BE SEALED PRIOR TO PLACEMENT OF PERMANENT PAVEMENT MARKINGS).

THE MATERIAL USED SHALL BE A HOT APPLIED PG 64-22 BINDER. THE WIDTH OF THE SEALER SHALL BE 4 INCHES AS PER 401.15. ANY ADDITIONAL COSTS ASSOCIATED WITH THE WORK IDENTIFIED IN THIS NOTE SHALL BE INCLUDED IN THE APPROPRIATE ASPHALT CONCRETE SURFACE COURSE ITEM OF WORK.

ALIGNMENT AND PROFILE

THE WORK PROPOSED BY THIS PROJECT IS FOR THE RE-SURFACING OF THE EXISTING PAVEMENT. THE PROFILE OF THE PROPOSED SURFACE WILL BE PARALLEL TO THAT OF THE EXISTING IR-71 AND RAMP PAVEMENT.

LONGITUDINAL JOINTS (FLEXIBLE PAVEMENT)

LONGITUDINAL JOINTS BETWEEN A PAVEMENT LANE AND ADJOINING BERM OR SPEED CHANGE LANE, AND BETWEEN A SPEED CHANGE LANE AND THE ADJOINING BERM SHALL BE MADE THE SAME DAY. ALL LONGITUDINAL JOINTS SHALL BE HOT WITH THE EXCEPTION OF ONE COLD JOINT PER ROADWAY. LONGITUDINAL JOINT LOCATIONS SHALL BE AS APPROVED BY THE ENGINEER. EACH RAMP SHALL HAVE ONLY ONE LONGITUDINAL COLD JOINT LOCATED APPROXIMATELY HALFWAY ACROSS THE RAMP.

ITEM 254 –PAVEMENT PLANING, ASPHALT CONCRETE, AS PER PLAN

THIS ITEM SHALL BE USED TO PLANE THE EXISTING ASPHALT CONCRETE PAVEMENT AT 1/2" OR 1" DEPTH. THIS ITEM SHALL ALSO BE USED TO PLANE THE TRANSITIONS AT MAINLINE AND OVERHEAD BRIDGES AND BUTT JOINTS AS DETAILED ON SHEET 39.

ALL COST ASSOCIATED WITH PLANING THE TRANSITIONS AND THE EXTRA PLANING UNDER THE OVERHEAD BRIDGES SHALL BE INCLUDED IN THE BID FOR ITEM 254, PAVEMENT PLANING, ASPHALT CONCRETE, AS PER PLAN.

ITEM 617 - COMPACTED AGGREGATE, AS PER PLAN

THIS ITEM SHALL BE USED ALONG THE SHOULDERS. MATERIAL SHALL BE LIMITED TO RECLAIMED ASPHALT CONCRETE PAVEMENT.

THE ACTUAL DEPTH USED WILL VARY DEPENDING UPON EXISTING CONDITIONS. FOR ESTIMATING PURPOSES, AN AVERAGE DEPTH OF 1 INCH WILL BE USED. WATER, IF NEEDED, SHALL BE APPLIED AS PER 617 AND INCLUDED UNDER ITEM 617, COMPACTED AGGREGATE, AS PER PLAN.

THE FOLLOWING ESTIMATED QUANTITY HAS BEEN CARRIED TO THE GENERAL SUMMARY:

ITEM 617 - COMPACTED AGGREGATE, AS PER PLAN . . . . . **275 CU. YD.**

ITEM 618 - RUMBLE STRIPS, (ASPHALT CONCRETE)

THE FOLLOWING ESTIMATED QUANTITY SHALL BE USED TO CONSTRUCT ITEM 618, RUMBLE STRIPS, (ASPHALT CONCRETE AND CONCRETE) AS PER STANDARD DRAWING BP-9.1 (THE QUANTITIES INCLUDE THE AIRPORT FREEWAY):

ITEM 618 - RUMBLE STRIPS, (ASPHALT CONCRETE) . . . . . **11.94 MILE**
ITEM 618 - RUMBLE STRIPS, (CONCRETE) . . . . . **8.35 MILE**

NOTE: FOR THE MEDIAN CONCRETE SHOULDER, PLACE THE RUMBLE STRIPS AT B=5', AS PER STANDARD DRAWING BP-9.1.

TRAFFIC CONTROL

RAISED PAVEMENT MARKERS

RAISED PAVEMENT MARKER SPACING SHALL BE 80 FEET.

PAVEMENT MARKINGS

ENTRANCE AND EXIT MARKINGS SHALL BE LOCATED AND INSTALLED AS PER STANDARD CONSTRUCTION DRAWING TC-72.20. PLAN DETAILS SHOWING GORE LOCATIONS ARE APPROXIMATE. THE CONTRACTOR SHALL BE RESPONSIBLE TO PERFORM ANY MEASUREMENTS AS NEEDED TO DETERMINE THE LOCATION OF THE MARKINGS.

AUXILIARY MARKINGS SHALL BE LOCATED AND INSTALLED AS PER STANDARD CONSTRUCTION DRAWING TC-71.10.

ITEM 621-RAISED PAVEMENT MARKER REMOVED

THE FOLLOWING ESTIMATED QUANTITY HAS BEEN INCLUDED IN THE GENERAL SUMMARY TO REMOVE AND DISPOSE OF RPMS.

ITEM 621- RAISED PAVEMENT MARKER REMOVED . . . . . **1200 EACH**

ITEM 646-LANE LINE, AS PER PLAN

THE WIDTH OF THE LANE LINES SHALL BE SIX INCHES (6").

ITEM 632 - DETECTOR LOOP, AS PER PLAN

PRIOR TO PLANING THE PAVEMENT, THE CONTRACTOR SHALL FIELD SURVEY THE LOCATIONS OF THE EXISTING LOOP DETECTORS WITHIN THE PROJECT LIMITS. THE SURVEY SHALL INCLUDE THE LOCATION OF THE LOOP, SIZE OF THE LOOP, OFFSET FROM CURB AND/OR CENTERLINE AND THE LOCATION OF THE STUB. A COPY OF THIS SURVEY SHALL BE GIVEN TO THE PROJECT ENGINEER.

AN ESTIMATED QUANTITY OF ITEM 632 - DETECTOR LOOP, AS PER PLAN HAS BEEN PROVIDED AS A CONTINGENCY WHEN WIRE IS CUT, BROKEN, OR DESTROYED DUE TO PAVEMENT PLANING OPERATIONS.

NEW LOOP DETECTORS SHALL BE PLACED AT THE SAME LOCATIONS AND SAME SIZE AS THE EXISTING.

WHEN REPLACING THE LOOP DETECTORS, THE LOOP DETECTOR WIRE SHALL BE REPLACED TO THE PULL BOX OR POLE, WHICHEVER IS APPLICABLE, UNDER ITEM 632 AND TC-82.10. THE NEW CABLE SPLICE KITS SHALL BE INCLUDED IN THIS PAY ITEM.

THE CONTRACTOR SHALL CONTACT THE PROJECT ENGINEER, 7 DAYS PRIOR TO PLANING THROUGH AN INTERSECTION TO ADJUST SIGNAL OPERATION AS NEEDED. THE DETECTOR LOOPS SHALL BE PLACED IN THE INTERMEDIATE COURSE PRIOR TO THE PLACEMENT OF THE SURFACE COURSE.

REFER TO PLAN SHEETS FOR APPROXIMATE LOCATION. THESE LOCATIONS ARE FROM RECORD PLANS AND FIELD VERIFICATION OF LOOPS IS NEEDED.

THE FOLLOWING ESTIMATED QUANTITIES HAVE BEEN CARRIED TO THE GENERAL SUMMARY TO BE USED AS DIRECTED BY THE ENGINEER:

ITEM 632 - DETECTOR LOOP, AS PER PLAN . . . . . 3 **EACH**

DETECTOR LOOP LOCATIONS:

REF.	LOCATIONS:	6' X 35' LOOP SIZE			
		EACH			
L-1	RAMP C (150TH ST)	1			
L-2	RAMP C (150TH ST)	1			
L-3	RAMP C (150TH ST)	1			

CALCULATED EMK
CHECKED LDH

GENERAL NOTES

CUY-71-10.48

I:\PROJECTS\P1d83498\dgn\83498gn001.DGN 16-OCT-2008 11:26AM ekollio

GENERAL

IT IS THE RESPONSIBILITY OF THE CONTRACTOR TO PROVIDE THRU VEHICULAR ACCESS AT ALL TIMES THROUGHOUT THE PROJECT AREA. THE PROJECT SHALL BE CONSTRUCTED IN PHASES IN ORDER TO MINIMIZE TRAFFIC DISRUPTION AND INCONVENIENCE TO THE GENERAL PUBLIC. THE CONTRACTOR SHALL BE RESPONSIBLE FOR PROVIDING ALL EQUIPMENT, MATERIALS AND MANPOWER NEEDED TO ADEQUATELY MAINTAIN TRAFFIC AS PROVIDED FOR IN THE PLANS AND SPECIFICATIONS.

THE CONTRACTOR IS REMINDED THAT, IN THE CONDUCT OF THIS PROJECT, HIS SEQUENCE OF OPERATIONS SHALL BE PLANNED IN SUCH A WAY AS TO MINIMIZE THE NUMBER OF LANE REDUCTIONS AND/OR LANE WIDTH REDUCTIONS REQUIRED TO MAINTAIN TRAFFIC THROUGH THE PROJECT.

PERMITTED LANE CLOSURES SHALL BE AS SHOWN ON THE “SCHEDULE OF THRU LANES TO BE MAINTAINED TABLE." THE TIME LIMITS SHOWN IN THIS TABLE SHALL BE ADHERED TO OR LIQUIDATED DAMAGES WILL BE ASSESED.

NIGHT VEST

ALL OF THE CONTRACTORS AND SUB-CONTRACTORS PERSONNEL WORKING DURING THE HOURS OF DARKNESS SHALL WEAR A 100% SILVER REFLECTIVE SAFETY VEST. THE SAFETY VEST SHALL BE PROVIDED BY THE CONTRACTOR. THE VEST MAY HAVE SEVERAL LIME OR ORANGE STRIPES ON IT.

MAINTENANCE OF TRAFFIC CONTROL ZONES

THE CONTRACTOR SHALL BE RESPONSIBLE TO MAINTAIN THE SIGNS, DRUMS OR CONES SPECIFIED IN THE STANDARD DRAWINGS. WHEN THE CONTRACTOR IS NOTIFIED OF DEFICIENCIES HE SHALL CORRECT THE DEFICIENCIES AS SOON AS POSSIBLE.

MAINTAINING VEHICULAR TRAFFIC

GENERAL PROVISIONS

1. TRAFFIC SHALL BE MAINTAINED IN ACCORDANCE WITH THE "SCHEDULE OF THRU LANES TO BE MAINTAINED" DESCRIBED ON SHEET NO. 16. THE CONTRACTOR SHALL SET UP AND OPERATE HIS EQUIPMENT IN SUCH A MANNER AS TO MINIMIZE ENCROACHMENT UPON THE TRAVELED WIDTH OF PAVEMENT.

2. THE CONTRACTOR SHALL NOTIFY THE ENGINEER, THE RESPONSIBLE LAW ENFORCEMENT AGENCY AND THE OHIO DEPARTMENT OF TRANSPORTATION, DISTRICT 12 PUBLIC INFORMATION OFFICER ((216) 584-2007) NOT LESS THAN SEVENTY-TWO (72) HOURS PRIOR TO A SCHEDULED DISRUPTION OF TRAFFIC.

3. NIGHTTIME WORK SHALL BE PERMITTED IN ACCORDANCE WITH THESE PLANS AND NOTES. THE CONTRACTOR SHALL PROVIDE FLOOD LIGHTING OF THE WORK AREA IN ORDER TO ASSURE THE SAFEST CONDITIONS DURING NIGHTTIME WORK. A LIGHTING PLAN FOR NIGHTTIME OPERATIONS SHALL BE PRESENTED TO AND APPROVED BY THE ENGINEER.

4. THE CONTRACTOR SHALL FURNISH, ERECT AND MAINTAIN ALL NEW WARNING AND INFORMATION SIGNS NECESSARY FOR MAINTAINING TRAFFIC. THE CONTRACTOR SHALL DETERMINE WHAT SIGNS ARE NEEDED AND ADVISE THE ENGINEER TWO (2) WEEKS IN ADVANCE OF HIS DETAILED PLANS.

   SEE THE OMUTCD AND STANDARD DRAWINGS FOR THE MINIMUM SIGNAGE REQUIRED.

CONSTRUCTION TRAFFIC

ALL CONSTRUCTION TRAFFIC SHALL USE ACCEPTABLE TRUCK ROUTES TO ACCESS THE CONSTRUCTION AREA. USE OF LOCAL RESIDENTIAL STREETS IS STRICTLY PROHIBITED UNLESS ALLOWED IN WRITING BY THE LOCAL ENFORCEMENT AUTHORITY.

THE CONTRACTOR SHALL BE RESPONSIBLE TO ANY DAMAGE TO TURN AROUNDS LOCATED WITHIN THE PROJECT LIMITS. ANY DAMAGE CAUSED BY THE CONTRACTOR'S ACTIONS SHALL BE REPAIRED AT NO COST TO THE STATE.

MAJOR WORK ITEMS

THE FOLLOWING MAJOR WORK ITEMS WILL REQUIRE TRAFFIC MAINTENANCE WHICH SHALL BE INCORPORATED INTO THE CONTRACTORS SEQUENCE OF OPERATIONS.

A. REMOVAL OF EXISTING RPM'S
B. PLANE ASPHALT CONCRETE
C. PLACE ASPHALT CONCRETE
D. PLACE PROPOSED PAVEMENT MARKINGS AND RAISED PAVEMENT MARKERS
E. RUMBLE STRIPS

TRAFFIC CONTROL MATERIALS

A. SIGNS

SIGN DIMENSIONS AND SPECIFICATIONS, INCLUDING LETTER SIZES, SHALL BE AS PROVIDED IN THE "MANUAL", OR IN SIGN DESIGN DRAWINGS PROVIDED BY THE DEPARTMENT OF TRANSPORTATION. THE SIGNS SHALL BE SUBJECT TO APPROVAL OF THE ENGINEER PRIOR TO THE START OF THE PROJECT.

ALL SIGNS SHALL HAVE A REFLECTORIZED BACKGROUND OF REFLECTIVE MATERIALS AS DESCRIBED IN THE "MANUAL".

B. SIGN SUPPORTS

TEMPORARY SIGN SUPPORTS SHALL BE AS SHOWN ON MT-105.10 AND MT-105.11.

C. DRUMS

DRUMS SHALL BE IN ACCORDANCE WITH PERTINENT SECTIONS OF THE OHIO MANUAL OF UNIFORM TRAFFIC CONTROL DEVICES. ALL PERMANENT LANE CLOSURES SHALL BE DELINEATED WITH DRUMS SPACED AT 50 FEET CENTER TO CENTER. ALL COSTS FOR INSTALLING, MAINTAINING AND SUBSEQUENT REMOVAL OF SAID DRUMS SHALL BE INCLUDED IN THE LUMP SUM BID PRICE FOR ITEM 614 - MAINTAINING TRAFFIC.

D. LIGHTING DEVICES

FLASHERS SHALL BE 12 VOLT BATTERY OPERATED MODELS WITH 7 INCH DIAMETER YELLOW LENSES ILLUMINATED BY RAPID INTERMITTENT FLASHES OF SHORT DURATION AND SHALL BE PLACED ON ALL SIGNS AT ALL TIMES.

CONTINUOUS BURN LIGHTS SHALL BE 12 VOLT BATTERY OPERATED MODELS WITH MINIMUM 7 INCH DIAMETER YELLOW LENSES.

E. FLASHING ARROW PANEL

WHENEVER ANY PART OF THE TRAVELED SURFACE IS CLOSED. THE MOTORIST SHALL BE WARNED AND DIVERTED BY THE CONTRACTOR THROUGH THE USE OF ONE FLASHING ARROW PANEL FOR EACH LANE CLOSED. THE CONTRACTOR SHALL REFER TO STANDARD DRAWING MT-35.10 AND THE PROVISION SET FORTH IN OHIO MANUAL OF UNIFORM TRAFFIC CONTROL DEVICES FOR STREETS AND HIGHWAYS FOR ALL INFORMATION REGARDING FURNISHING, MAINTAINING. AND USE OF FLASHING ARROW PANEL. IF THE FLASHING ARROW PANEL IS WITHIN 300 FT OF A RESIDENCE OR ON A SURFACE STREET, A SOLAR POWERED FLASHING ARROW PANEL SHALL BE USED. PAYMENT FOR THE ABOVE SHALL BE INCLUDED IN THE LUMP SUM BID FOR ITEM 614, MAINTAINING TRAFFIC.

I:\PROJECTS\Pid83498\dgn\83498m001.DGN 16-OCT-2008 12:12PM ekallio

ITEM 614 - LAW ENFORCEMENT OFFICER WITH PATROL CAR FOR ASSISTANCE DURING CONSTRUCTION OPERATIONS

USE OF LAW ENFORCEMENT OFFICERS (LEOS) BY CONTRACTORS OTHER THAN THE USES SPECIFIED IN THIS NOTE WILL NOT GENERALLY BE PERMITTED AT PROJECT COST UNLESS PRIOR APPROVAL HAS BEEN OBTAINED FROM THE ENGINEER. LEOS SHOULD NOT BE USED WHERE THE OHIO MANUAL OF UNIFORM TRAFFIC CONTROL DEVICES (OMUTCD) INTENDS THAT FLAGGERS BE USED.

IN ADDITION TO THE REQUIREMENTS OF CMS 614 AND THE LATEST EDITION OF THE OHIO MANUAL OF UNIFORM TRAFFIC CONTROL DEVICES (OMUTCD), A UNIFORMED LAW ENFORCEMENT OFFICER WITH AN OFFICIAL PATROL CAR WITH WORKING TOP MOUNTED EMERGENCY FLASHING LIGHTS AND COMPLETE MARKINGS OF THE APPROPRIATE LAW ENFORCEMENT AGENCY SHOULD BE PROVIDED FOR CONTROLLING TRAFFIC FOR THE FOLLOWING TASKS:

- FOR LANE CLOSURES: DURING INITIAL SET-UP PERIODS, TEAR DOWN PERIODS, SUBSTANTIAL SHIFTS OF A CLOSURE POINT OR WHEN NEW LANE CLOSURE ARRANGEMENTS ARE INITIATED. IN GENERAL, LEOS SHOULD BE POSITIONED AT THE POINT OF LANE RESTRICTION OR ROAD CLOSURE AND TO MANUALLY CONTROL TRAFFIC MOVEMENTS THROUGH INTERSECTIONS IN WORK ZONES.

- DURING THE ENTIRE ADVANCE PREPARATION AND CLOSURE SEQUENCE WHERE COMPLETE BLOCKAGE OF TRAFFIC IS REQUIRED.

- DURING A TRAFFIC SIGNAL INSTALLATION OR WHEN TRAFFIC NEEDS TO BE DIRECTED THROUGH AN ENERGIZED TRAFFIC SIGNAL CONTRARY TO THE SIGNAL DISPLAY (E.G., DIRECTING MOTORISTS THROUGH A RED LIGHT).

- ROUTING PATROLLING THROUGH THE WORK ZONE (WITH FLASHING LIGHTS OFF) AS SPECIFIED IN THE PLANS.

LEOS SHOULD NOT FORGO THEIR TRAFFIC CONTROL RESPONSIBILITIES TO APPREHEND MOTORISTS FOR ROUTINE TRAFFIC VIOLATIONS. HOWEVER, IF A MOTORISTS ACTIONS ARE CONSIDERED TO BE RECKLESS, THEN PURSUIT OF THE MOTORIST IS APPROPRIATE.

THE LEOS WORK AT THE DIRECTION OF THE CONTRACTOR. THE CONTRACTOR IS RESPONSIBLE FOR SECURING THE SERVICES OF THE LEOS AND COMMUNICATING THE INTENTIONS OF THE PLANS WITH RESPECT TO DUTIES OF THE LEOS. THE ENGINEER SHALL HAVE FINAL CONTROL OVER THE LEOS' DUTIES AND PLACEMENT, AND WILL RESOLVE ANY ISSUES THAT MAY ARISE BETWEEN THE TWO PARTIES. THE CONTRACTOR SHALL PROVIDE THE ENGINEER WITH A LIST OF THE APPROPRIATE LAW ENFORCEMENT AGENCY(S), INCLUDING ADDRESS AND TELEPHONE NUMBER.

THE LEO SHOULD REPORT IN TO THE CONTRACTOR PRIOR TO THE START OF THE SHIFT TO RECEIVE INSTRUCTIONS REGARDING SPECIFIC WORK ASSIGNMENTS DURING THE SHIFT. THE LEO IS EXPECTED TO STAY AT THE PROJECT SITE FOR THE ENTIRE DURATION OF THE SHIFT. SHOULD IT BE NECESSARY TO LEAVE THE PROJECT SITE, THE LEO SHOULD NOTIFY THE ENGINEER. THE CONTRACTOR SHALL PROVIDE THE LEO WITH A TWO-WAY COMMUNICATION DEVICE WHICH SHALL BE RETURNED TO THE CONTRACTOR AT THE END OF THE SHIFT.

LAW ENFORCEMENT OFFICERS (WITH PATROL CAR) REQUIRED BY THE TRAFFIC MAINTENANCE TASKS ABOVE SHALL BE PAID FOR ON A UNIT PRICE (HOURLY) BASIS UNDER ITEM 614, LAW ENFORCEMENT OFFICER (WITH PATROL CAR). THE FOLLOWING ESTIMATED QUANTITY HAS BEEN CARRIED TO THE GENERAL SUMMARY.

ITEM 614 - LAW ENFORCEMENT OFFICER W/PATROL CAR . . . . . **1000 HRS**

THE HOURS PAID SHALL INCLUDE MINIMUM SHOW-UP TIME REQUIRED BY THE LAW ENFORCEMENT AGENCY INVOLVED.

ANY ADDITIONAL COSTS (ADMINISTRATIVE OR OTHERWISE) INCURRED BY THE CONTRACTOR TO OBTAIN THE SERVICES OF AN LEO ARE INCLUDED WITH THE BID UNIT PRICE FOR ITEM 614, LAW ENFORCEMENT OFFICER WITH PATROL

PLANED SURFACES

THE DURATION OF TIME BETWEEN PLANING THE ASPHALT AND PLACING THE ASPHALT OVERLAY SHALL BE KEPT TO A MINIMUM. IN NO INSTANCE SHALL THIS TIME EXCEED 21 CALENDAR DAYS. THIS IS TO ENSURE THAT THE POTENTIAL DEGRADATION OF THE EXPOSED PAVEMENT DUE TO TRAFFIC IS KEPT TO A MINIMUM.

ITEM 630 - SIGNING MISC.: ADDITIONAL SIGNS, GROUND MOUNTED, AS DIRECTED BY THE ENGINEER

WHEN ADDITIONAL SIGNING IS NEEDED TO MAINTAIN TRAFFIC, THE CONTRACTOR SHALL FURNISH THE SIGN OR SIGNS AS DIRECTED BY THE ENGINEER. THESE SIGNS SHALL BE GROUND MOUNTED AND MEET ALL THE SPECIFICATIONS OF THE PLAN, PROPOSAL AND CURRENT YEAR CMS.

PAYMENT FOR THIS ITEM SHALL INCLUDE BUT NOT BE LIMITED TO THE COST TO FURNISH AND ERECT THE SIGN, INCLUDING DRIVE POSTS OR OTHER APPROVED METHODS OF SUPPORT, MAINTAINING THE SIGN AND REMOVAL OF THE SIGN.
THE FOLLOWING QUANTITY SHALL BE CARRIED TO THE GENERAL SUMMARY:

ITEM 630 - SIGNING MISC.: ADDITIONAL SIGNS, GROUND MOUNTED, AS DIRECTED BY THE ENGINEER. . . . . **300 SQ. FT.**

APPLICATION FOR USE OF WEIGHTED CHANNELIZER (GRABBER CONE)

THE WEIGHTED CHANNELIZER MAY BE USED ON THIS PROJECT AS DESCRIBED BELOW:

THE WEIGHTED CHANNELIZER SHALL BE PREDOMINANTLY ORANGE IN COLOR AND SHALL BE MADE OF A LIGHTWEIGHT, FLEXIBLE, AND DEFORMABLE MATERIAL. THEY SHALL BE AT LEAST 42 INCHES IN HEIGHT WITH A WEIGHTED BASE. THEY MAY HAVE A "HANDLE" OR LIFTING DEVICE WHICH EXTENDS ABOVE THE 42" MINIMUM HEIGHT.

THE MARKINGS ON THE WEIGHTED CHANNELIZER SHALL BE HORIZONTAL, CIRCUMFERENTIAL, ALTERNATING ORANGE AND WHITE RETROREFLECTIVE STRIPES 4 INCHES WIDE. EACH WEIGHTED CHANNELIZER SHALL HAVE A MINIMUM OF TWO ORANGE AND TWO WHITE STRIPES. ANY NONRETRO- REFLECTIVE SPACES BETWEEN THE HORIZONTAL ORANGE AND WHITE STRIPES, SHALL NOT EXCEED 2 INCHES WIDE. THE WEIGHTED CHANNELIZER SHALL HAVE A 4-INCH MINIMUM WIDTH, REGARDLESS OF ORIENTATION.

USE OF WEIGHTED CHANNELIZERS ON ODOT MAINTAINED HIGHWAY SHALL BE AS FOLLOWS:

ON FREEWAYS AND MULTILANE HIGHWAYS USE OF WEIGHTED CHANNELIZERS ON FREEWAYS AND MULTILANE HIGHWAYS SHALL BE LIMITED TO SHORT-TERM OPERATION, GENERALLY TWELVE HOURS OR LESS, FOR EITHER DAY OR NIGHT. UPON COMPLETION OF WORK WITHIN THE ABOVE NOTED TIME PERIOD, THE WEIGHTED CHANNELIZERS SHALL BE REMOVED. THE WEIGHTED CHANNELIZERS MAY AGAIN BE PLACED ON THE HIGHWAY WHEN THE WORK IS TO RESUME ON THE FOLLOWING DAY OR NIGHT. ANY LANE CLOSURE USING CHANNELIZATION DEVICES, EXPECTED TO REMAIN FOR MORE THAN TWELVE HOURS, SHALL REQUIRE THE USE OF DRUMS OR BARRIERS.

WHEN USED AT NIGHT, WEIGHTED CHANNELIZERS SHALL ONLY BE PLACED IN THE "TANGENT AREA." THE "TANGENT AREA" IS DEFINED AS THE AREA AFTER THE TRANSITION TAPER WHERE THE WORK TAKES PLACE. DRUMS SHALL BE USED IN THE TRANSITION TAPERS FOR NIGHT OPERATIONS.

MAXIMUM SPACING OF THE WEIGHTED CHANNELIZER SHALL BE 40 FT.

STEPS SHOULD BE TAKEN TO ENSURE THAT THE WEIGHTED CHANNELIZERS WILL NOT BE BLOWN OVER OR DISPLACED BY WIND OR MOVING TRAFFIC. BALLASTS SHOULD NOT PRESENT A HAZARD IF THE WEIGHTED CHANNELIZERS ARE INADVERTENTLY STRUCK, NOR SHOULD THEY AFFECT THE VISIBILITY OF THE WEIGHTED CHANNELIZERS. ALL BALLASTS USED SHOULD BE IN ACCORDANCE WITH THE MANUFACTURER'S SPECIFICATIONS.

SUSPENSION OF WORK

IF THE CONTRACTOR FAILS TO COMPLY WITH THE PROVISIONS FOR TRAFFIC CONTROL AS SET FORTH IN THESE PLANS OR WITH PROVISIONS OF THE OHIO MANUAL OF UNIFORM TRAFFIC CONTROL DEVICES, THE ENGINEER SHALL SUSPEND WORK UNTIL THE CONTRACTOR COMPLIES WITH THE NECESSARY REQUIREMENTS.

I:\PROJECTS\Pid83498\dgn\83498m001.DGN 16-OCT-2008 12:13PM ekallio

ITEM 614 - ASPHALT CONCRETE FOR MAINTAINING TRAFFIC AS PER PLAN

THIS ITEM SHALL BE USED TO PROVIDE TEMPORARY ASPHALT RAMPS FOR TRANSVERSE DISCONTINUITIES. RAMPING SHALL BE PLACED AT THE RATE OF 1" PER 10 FT OR TO BE USED AS DIRECTED BY THE ENGINEER.

TEMPORARY ASPHALT RAMPS SHALL BE REMOVED AS PART OF THIS ITEM.

ITEM 614 - ASPHALT CONCRETE FOR MAINTAINING TRAFFIC, AS PER PLAN . . . . . **50 CU. YD.**

WORK ZONE PAVEMENT MARKINGS

THE FOLLOWING ESTIMATED QUANTITIES HAVE BEEN CARRIED TO THE GENERAL SUMMARY, TO BE USED AS DIRECTED BY THE ENGINEER, TO PLACE WORK ZONE PAVEMENT MARKINGS AFTER THE CONTRACTOR HAS PLACED THE INTERMEDIATE COURSES AND AFTER THE SURFACE COURSE HAS BEEN PLACED.

ITEM 614 - WORK ZONE EDGE LINE, CLASS I, 642 PAINT . . . . . **58.36 MILE**
ITEM 614 - WORK ZONE LANE LINE, CLASS I, 642 PAINT . . . . . **59.00 MILE**
ITEM 614 - WORK ZONE CHANNELIZING LINE, CLASS I, 642 PAINT . . . . . **16,134 FT.**
ITEM 614 - WORK ZONE STOP LINE, CLASS I, 642 PAINT . . . . . **504 FT.**
ITEM 614 - WORK CROSSWALK LINE, CLASS I, 642 PAINT . . . . . **1,894 FT.**

WORKSITE TRAFFIC SUPERVISOR

SUBJECT TO APPROVAL OF THE ENGINEER, THE CONTRACTOR SHALL EMPLOY AND IDENTIFY (SOMEONE OTHER THAN THE SUPERINTENDENT) A CERTIFIED WORKSITE TRAFFIC SUPERVISOR (WTS) BEFORE STARTING WORK IN THE FIELD. THE WTS MAY BE CERTIFIED FROM ONE OF THE FOLLOWING ORGANIZATIONS:

1. AMERICAN TRAFFIC SAFETY SERVICE ASSOCIATION (ATSSA), PHONE NUMBER 1-800-272-8772, CERTIFIED TRAFFIC CONTROL SUPERVISOR (TCS).

2. NATIONAL HIGHWAY INSTITUTE, DESIGN AND OPERATION OF WORK ZONE TRAFFIC CONTROL, PHONE NUMBER 1-703-235-0528.

3. THE OHIO CONTRACTORS ASSOCIATION, TRAFFIC CONTROL SUPERVISOR (OCA/TCS) WORK ZONE CLASS, ONLY IF TAKEN AFTER MAY 5, 2004, PHONE NUMBER 1-614-599-7915.

4. OHIO LABORERS' TRAINING, TRAFFIC CONTROL SUPERVISORS CLASS, PHONE NUMBER 1-740-599-7915.

A COPY OF EACH WTSS CERTIFICATION AND 24-HOUR CONTACT INFORMATION SHALL BE PROVIDED TO THE ENGINEER AT THE PRECONSTRUCTION CONFERENCE. IF THE DESIGNATED WTS WILL NOT BE AVAILABLE FULL TIME (24/7) THE CONTRACTOR MAY DESIGNATE AN ALTERNATE WTS TO BE AVAILABLE WHEN THE PRIMARY IS OFF DUTY. EACH WTS SHALL HAVE A CURRENT WTS CERTIFICATION (WITH AN EXPIRATION DATE NO MORE THAN 5 YEARS FROM THE DATE OF ISSUE) FROM ANY OF THE APPROVED ORGANIZATIONS.

THE WTS POSITION HAS THE RESPONSIBILITY OF MONITORING AND CORRECTING TRAFFIC CONTROL DEFICIENCIES FOR THE ENTIRE WORK ZONE. THE DUTIES OF THE WTS ARE AS FOLLOWS:

1. BE AVAILABLE ON A 24-HOUR PER DAY BASIS, AND BE ABLE TO BE ON SITE FOR ALL EMERGENCY TRAFFIC CONTROL NEEDS WITHIN ONE HOUR OF NOTIFICATION BY POLICE OR PROJECT STAFF AND BE PREPARED TO EFFECT CORRECTIVE MEASURES IMMEDIATELY ON EXISTING WORK ZONE TRAFFIC CONTROL DEVICES.

2. ATTEND PRECONSTRUCTION MEETING AND ALL PROJECT MEETINGS WHERE TRAFFIC CONTROL MANAGEMENT IS DISCUSSED.

3. BE AVAILABLE FOR MEETINGS OR DISCUSSIONS WITH THE ENGINEER UPON REQUEST OR WITHIN 36 HOURS.

4. BE AWARE OF, AND COORDINATE IF NECESSARY, ALL TRAFFIC CONTROL OPERATIONS, INCLUDING THOSE OF SUBCONTRACTORS AND SUPPLIERS.

5. COORDINATE PROJECT ACTIVITIES WITH ALL LAW ENFORCEMENT OFFICERS (LEOS). A WTS SHALL ALSO BE THE MAIN CONTACT PERSON WITH THE LEOS WHILE THEY ARE ON THE PROJECT.

6. COORDINATE MEETINGS WITH ODOT PERSONNEL, LEOS AND OTHER APPLICABLE ENTITIES BEFORE EACH PLAN PHASE SWITCH TO DISCUSS WORK ZONE TRAFFIC CONTROL.

7. ENSURE COMPLIANCE WITH THE CONTRACT DOCUMENTS FOR SIGNS, BARRICADES, TEMPORARY CONCRETE BARRIER, PAVEMENT MARKINGS, PORTABLE MESSAGE SIGNS, AND OTHER TRAFFIC CONTROL DEVICES ON A DAILY BASIS; AND FACILITATE ANY CORRECTIVE ACTION NECESSARY.

8. NOTIFY THE CONTRACTOR OF THE NEED FOR CLEANING AND MAINTENANCE OF ALL TRAFFIC CONTROL DEVICES, INCLUDING THE COVERING AND REMOVAL OF INAPPLICABLE SIGNS.

9. INSPECT, EVALUATE, PROPOSE NECESSARY MODIFICATIONS TO, AND DOCUMENT THE EFFECTIVENESS OF, THE TRAFFIC CONTROL DEVICES AND/OR TRAFFIC OPERATIONS ON A DAILY BASIS (7 DAYS A WEEK).IN ADDITION, A WEEKLY NIGHT INSPECTION OF THE WORK ZONE SETUP FOR DAYTIME WORK OPERATIONS; AND ONE DAYTIME INSPECTION PER WEEK FOR NIGHTTIME PROJECTS. THIS SHALL INCLUDE (BUT NOT BE LIMITED TO) DOCUMENTATION ON THE FOLLOWING PROJECT EVENTS:
   a. INITIAL TRAFFIC CONTROL SETUP (DAY AND NIGHT REVIEW).
   b. DAILY TRAFFIC CONTROL SETUP AND REMOVAL.
   c. WHEN CONSTRUCTION STAGING CAUSES A CHANGE IN THE TRAFFIC CONTROL SETUP.
   d. CRASH OCCURRENCES WITHIN THE CONSTRUCTION AREA.
   e. REMOVAL OF TRAFFIC CONTROL DEVICES AT THE END OF A PHASE OR PROJECT.
   f. ALL OTHER EMERGENCY TRAFFIC CONTROL NEEDS.

10. COMPLETE THE DEPARTMENT APPROVED LONG TERM INSPECTION FORM (CA-D-8) AFTER EACH INSPECTION AS REQUIRED IN # 9 AND SUBMIT IT TO THE ENGINEER THE FOLLOWING WORK DAY. THESE REPORTS SHALL INCLUDE A CHECKLIST OF ALL TRAFFIC CONTROL MAINTENANCE ITEMS TO BE REVIEWED. A COPY OF THE FORM WILL BE PROVIDED AT THE PRE-CONSTRUCTION MEETING. ANY DEFICIENCIES OBSERVED SHALL BE NOTED, ALONG WITH RECOMMENDED CORRECTIVE ACTIONS AND THE DATES BY WHICH SUCH CORRECTIONS WERE, OR WILL BE, COMPLETED. A COPY OF THIS DOCUMENT CAN BE FOUND IN THE DEPARTMENT OF TRANSPORTATION CONSTRUCTION INSPECTION FORMS MANUAL DATED 10/15/06 OR CURRENT REVISION.

11. VERIFY THAT ALL FLAGGING OPERATIONS ARE BEING CONDUCTED PER THE OHIO MANUAL OF UNIFORM TRAFFIC CONTROL DEVICES.

12. HAVE COPIES OF THE ODOT TEMPORARY TRAFFIC CONTROL MANUAL AND APPLICABLE STANDARDS AND SPECIFICATIONS INCLUDED IN THE CONTRACT DOCUMENTS AVAILABLE AT ALL TIMES ON THE PROJECT.

THE DEPARTMENT WILL NOT PAY THE UNIT PRICE BID FOR THE WTS FOR ANY DAY ON WHICH THE CONTRACTOR FAILS TO PERFORM THE DUTIES SET FORTH ABOVE. SHOULD THE CONTRACTOR'S FAILURE TO PERFORM ANY OF THE DUTIES DESCRIBED ABOVE RESULT IN A MAINTENANCE OF TRAFFIC SAFETY ISSUE, THE DEPARTMENT WILL DEDUCT THE PRORATED DAILY AMOUNT FOR ITEM 614 MAINTENANCE OF TRAFFIC FROM THE CONTRACTOR'S NEXT SCHEDULED ESTIMATE.

IF THREE OR MORE FAILURES TO PERFORM THE DUTIES SET FORTH ABOVE OCCUR, THE WTS SHALL BE IMMEDIATELY REMOVED FROM THE WORK IN ACCORDANCE WITH C&MS 108.05.

THE FOLLOWING ESTIMATED QUANTITY HAS BEEN INCLUDED FOR THE WORKSITE TRAFFIC SUPERVISOR:

ITEM 614 - WORKSITE TRAFFIC SUPERVISOR . . . . . **6 MONTH**

I:\PROJECTS\Pid83498\dgn\83498m001.DGN 16-OCT-2008 12:14PM ekollio

ITEM 614 - PORTABLE CHANGEABLE MESSAGE SIGN, AS PER PLAN

THE CONTRACTOR SHALL FURNISH, INSTALL, MAINTAIN, AND REMOVE WHEN NO LONGER NEEDED A PORTABLE CHANGEABLE MESSAGE SIGN(S). THE PCMS SHALL BE OF THE TYPE SHOWN ON THE LIST OF APPROVED PCMS MAINTAINED BY THE DIRECTOR. THE PCMS SHALL BE A CLASS I OR II TYPE UNIT.

THE PORTABLE CHANGEABLE MESSAGE SIGN SHALL BE MOUNTED ON A TRAILER. THE LOCATION OF THE PCMS SHALL BE AS DIRECTED BY THE ENGINEER. THE PCMS UNIT SHALL BE LOCATED IN A HIGHLY VISIBLE POSITION YET PROTECTED FROM TRAFFIC. THE CONTRACTOR SHALL, AT THE DIRECTION OF THE ENGINEER, RELOCATE THE PCMS TO IMPROVE VISIBILITY OR ACCOMMODATE CHANGED CONDITIONS. WHEN NOT IN USE, THE PCMS WILL BE OFF.

THE ENGINEER SHALL BE PROVIDED ACCESS TO EACH SIGN UNIT AND SHALL BE PROVIDED WITH APPROPRIATE TRAINING AND OPERATION INSTRUCTIONS.

THE CONTRACTOR SHALL PROVIDE TO THE ENGINEER THE SOFTWARE NECESSARY TO CONTROL THE PCMS REMOTELY.

NO FLIP DISK UNITS ARE ALLOWED.
AT THE DIRECTION OF THE ENGINEER THE PCMS MAY BE REMOVED FOR PERIODS OR TIMES WHEN NOT IN USE. NO PAYMENT WILL BE MADE FOR THESE TIMES (EX. WINTER MONTHS).

THE PCMS UNIT SHALL BE MAINTAINED IN GOOD WORKING ORDER BY THE CONTRACTOR IN ACCORDANCE WITH THE PROVISIONS OF 614.07. THE CONTRACTOR SHALL, PRIOR TO ACTIVATING THE UNIT, MAKE ARRANGEMENTS WITH AN AUTHORIZED SERVICE AGENT FOR THE PCMS TO ASSURE PROMPT SERVICE IN THE EVENT OF FAILURE. ANY FAILURE SHALL NOT RESULT IN THE SIGN BEING OUT OF SERVICE FOR MORE THAN 12 HOURS INCLUDING WEEKENDS. FAILURE TO COMPLY MAY RESULT IN AN ORDER TO STOP WORK AND OPEN ALL TRAFFIC LANES AND/OR IN THE DEPARTMENT TAKING APPROPRIATE ACTION TO SAFELY CONTROL TRAFFIC AND THE ENTIRE COST TO CONTROL TRAFFIC ACCRUED BY THE DEPARTMENT WILL BE DEDUCTED FROM MONEYS DUE, OR TO BECOME DUE THE CONTRACTOR ON HIS CONTRACT.

THE CONTRACTOR SHALL BE RESPONSIBLE FOR 24 HOURS PER DAY OPERATION AND MAINTENANCE OF THESE SIGNS ON THE PROJECT FOR THE DURATION OF THE PHASES WHEN THE PLAN REQUIRES THEIR USE.

PAYMENT FOR THE ABOVE DESCRIBED ITEM SHALL BE AT THE CONTRACT UNIT PRICE BID PER SIGN MONTH FOR EACH ITEM 614 PORTABLE CHANGEABLE MESSAGE SIGN, AS PER PLAN AND SHALL INCLUDE ALL LABOR, MATERIALS, EQUIPMENT, FUELS, LUBRICATING OILS, SOFTWARE, HARDWARE AND INCIDENTALS TO PERFORM THE ABOVE DESCRIBED WORK.

THERE SHALL BE TWO CLASS I OR II CHANGEABLE MESSAGE SIGNS AT 6 MONTHS EACH.

ITEM 614 - PORTABLE CHANGEABLE MESSAGE
SIGN, AS PER PLAN . . . . . **12 SIGN-MONTHS**

HOLIDAY CLOSURES

NO WORK SHALL BE PERFORMED AND ALL EXISTING LANES SHALL BE OPEN TO TRAFFIC DURING THE FOLLOWING DESIGNATED HOLIDAYS OR EVENTS:

CHRISTMAS	NEW YEARS	MOTHERS DAY
MEMORIAL DAY	FOURTH OF JULY	EASTER
LABOR DAY	THANKSGIVING	

THE PERIOD OF TIME THAT THE LANES ARE TO BE OPEN DEPENDS ON THE DAY OF THE WEEK ON WHICH THE HOLIDAY OR EVENT FALLS. THE FOLLOWING SCHEDULE SHALL BE USED TO DETERMINE THIS PERIOD:

DAY OF THE WEEK	TIME ALL LANES MUST BE OPEN TO TRAFFIC				
SUNDAY	12:00N	FRIDAY	THROUGH	12:00N	MONDAY
MONDAY	12:00N	FRIDAY	THROUGH	12:00N	TUESDAY
TUESDAY	12:00N	MONDAY	THROUGH	12:00N	WEDNESDAY
WEDNESDAY	12:00N	TUESDAY	THROUGH	12:00N	THURSDAY
THURSDAY	12:00N	WEDNESDAY	THROUGH	12:00N	MONDAY
FRIDAY	12:00N	THURSDAY	THROUGH	12:00N	MONDAY
SATURDAY	12:00N	FRIDAY	THROUGH	12:00N	MONDAY

NO EXTENSIONS OF TIME SHALL BE GRANTED FOR DELAYS IN MATERIAL DELIVERIES, UNLESS SUCH DELAYS ARE INDUSTRY-WIDE, OR FOR LABOR STRIKES, UNLESS SUCH STRIKES ARE AREA-WIDE.

SHOULD THE CONTRACTOR FAIL TO MEET ANY OF THESE REQUIREMENTS, THE CONTRACTOR SHALL BE ASSESSED LIQUIDATED DAMAGES IN ACCORDANCE WITH 108.07.

CONTRACTOR'S EQUIPMENT - OPERATION AND STORAGE

VEHICLES AND EQUIPMENT SHALL ALWAYS MOVE WITH, AND NOT ACROSS OR AGAINST THE FLOW OF TRAFFIC. VEHICLES AND OTHER EQUIPMENT SHALL NOT PARK OR STOP EXCEPT WITHIN DESIGNATED WORK AREAS; AND SHALL NOT ENTER AND LEAVE WORK AREAS IN A MANNER WHICH WILL BE HAZARDOUS TO, OR INTERFERE WITH THE NORMAL TRAFFIC FLOW. PERSONAL VEHICLES WILL NOT BE PERMITTED TO PARK WITHIN THE RIGHT-OF-WAY EXCEPT IN SPECIFIC AREAS DESIGNATED BY THE ENGINEER.

EQUIPMENT, VEHICLES AND MATERIALS SHALL NOT BE STORED OR PARKED WITHIN 30 FEET OF THE TRAVELED WAY UNLESS 6 FEET BEHIND PCB OR GUARDRAIL.

ALL WORK VEHICLES AND EQUIPMENT THAT ENTERS THE WORK ZONE MORE THAN ONCE A DAY MUST BE EQUIPPED WITH AT LEAST ONE FLASHING, ROTATING, OR OSCILLATING AMBER LIGHT THAT IS VISIBLE IN ALL DIRECTIONS OF TRAFFIC FOR AT LEAST ONE QUARTER OF A MILE, DAY OR NIGHT.

ROAD USER COSTS/SHORT TERM LANE CLOSURES

SHORT TERM LANE CLOSURES ARE THOSE WHICH ARE PERMITTED BY THE "SCHEDULE OF THRU LANES TO BE MAINTAINED" TABLE.

THESE TIMES SHALL NOT BE REVISED WITHOUT PRIOR APPROVAL FROM THE DISTRICT 12 WORK ZONE TRAFFIC CONTROL ENGINEER.

IF SHORT TERM LANE CLOSURES ARE IN PLACE OUTSIDE THE SPECIFIED TIMES, THE CONTRACTOR WILL BE ASSESSED ROAD USER COSTS IN THE AMOUNT OF $75.00 PER MINUTE SHALL BE ASSESSED TO THE CONTRACTOR FOR EACH MINUTE THE LANE REMAINS CLOSED.

SHORT TERM LANE CLOSURES SHALL ONLY BE IMPLEMENTED WHEN WORK IS BEING CONTINUOUSLY PERFORMED. THE CLOSURE SHALL BE REMOVED AS SOON AS POSSIBLE AFTER WORK HAS STOPPED.

SCHEDULE OF THROUGH LANES TO BE MAINTAINED

Location	Lane Reductions		Permitted Ramp Closures			Half Width Ramp Paving
	1 Lane Closure	2 Lane Closure	Yes / No	Short Term Closure		
				Weekdays	Weekends	
IR-71 4 Lanes	Weekday ♦	NA				
	Weekend ♦	NA				
IR-71 2 Lanes	Weekday ♦	Weekday ♦				
	Weekend ♦	Weekend ♦				
All One Lane Ramps			**	10:00PM - 6:00AM	10:00PM - 6:00AM	
All Two Lane Ramps			NO	NO	NO	10:00PM - 6:00AM

♦ - ALL LANE CLOSURES LISTED ABOVE MAY ONLY BE IMPLEMENTED AT THE TIMES PERMITTED BY THE "DISTRICT 12, PERMITTED LANE CLOSURE TIMES" LIST, WHICH IS LOCATED ON THE ODOT WEBSITE AT:

www.dot.state.oh.us/districts/D12/HighwayManagement/Pages/PermittedLaneClosures.aspx

THE LATEST REVISION, AT 14 DAYS PRIOR TO THE BID DATE, SHALL BE IN EFFECT FOR THIS PROJECT. NO LANE OR SHOULDER CLOSURES SHALL BE IN PLACE WHEN NO WORK IS BEING PERFORMED.

** - ONE LANE RAMPS SHALL EACH BE CLOSED A TOTAL OF NO MORE THAN TWO NIGHTS, OR AS APPROVED BY THE ENGINEER.

I:\PROJECTS\Pid83498\dgn\83498mn001.DGN 16-OCT-2008 12:15PM ekollio

LOCATION	LOCATIONS STATION FROM	TO	LENGTH FEET	AVERAGE WIDTH FEET	PAVEMENT AREA SQ. FT.	SQ. YD.	254 PAVEMENT PLANING, ASPHALT CONCRETE, AS PER PLAN, 1/2" (AVG.) SQ. YD.	254 PAVEMENT PLANING, ASPHALT CONCRETE, AS PER PLAN, 1" (AVG.) SQ. YD.	407 TACK COAT GAL.	424 1" FINE GRADED POLYMER ASPHALT CONCRETE, TYPE B, AS PER PLAN CU. YD.
I.R.-71 N.B.	625+72.44	630+88.93	516.49	28	14462	1607		1607	160.7	44.6
	630+88.93	631+88.93	100.00	35.50	3550	394		394	39.4	11.0
	631+88.93	632+88.93	100.00	29	2900	322		322	32.2	9.0
APF N.B	632+92.36	635+75.00	282.64	87	24590	2732	2732		273.2	75.9
	635+75.00	639+00.00	325.00	82.5	26813	2979	2979		297.9	82.8
	639+00.00	640+53.77	153.77	77	11840	1316	1316		131.6	36.5
IR-71 N.B	640+53.77	644+75.00	421.23	67	28222	3136	3136		313.6	87.1
	644+75.00	662+37.54	1762.54	60	105752	11750	11750		1175.0	326.4
	662+37.54	662+52.54	15.00	60	900	100	100		10.0	2.8
	664+08.08	664+23.08	15.00	60	900	100	100		10.0	2.8
	664+23.08	681+13.83	1690.75	60	101445	11272	11272		1127.2	313.1
	681+13.83	681+28.83	15.00	60	900	100	100		10.0	2.8
	684+04.56	684+19.56	15.00	60	900	100	100		10.0	2.8
	684+19.56	685+00.00	80.44	60	4826	536	536		53.6	14.9
	685+00.00	686+00.00	100.00	65	6500	722	722		72.2	20.1
	686+00.00	690+00.00	400.00	71	28400	3156	3156		315.6	87.7
	690+00.00	692+82.96	282.96	81.90	23174	2575	2575		257.5	71.5
	692+82.96	693+00.00	17.04	92.23	1572	175	175		17.5	4.9
	693+00.00	694+21.98	121.98	60	7319	813	813		81.3	22.6
	694+21.98	694+36.98	15.00	60	900	100	100		10.0	2.8
	696+00.41	696+15.41	15.00	60	900	100	100		10.0	2.8
	696+15.41	701+44.50	529.09	60	31745	3527	3527		352.7	98.0
	701+44.50	701+59.50	15.00	60	900	100	100		10.0	2.8
	704+02.74	704+17.74	15.00	60	900	100	100		10.0	2.8
	704+17.74	709+38.00	520.26	60	31216	3468	3468		346.8	96.3
	709+38.00	723+00.00	1362.00	78.00	106236	11804	11804		1180.4	327.9
	723+00.00	748+00.00	2500.00	60	150000	16667	16667		1666.7	463.0
	748+00.00	749+00.00	100.00	65	6500	722	722		72.2	20.1
	749+00.00	756+00.00	700.00	81.50	57050	6339	6339		633.9	176.1
	756+00.00	764+15.00	815.00	60	48900	5433	5433		543.3	150.9
	764+15.00	766+00.00	185.00	65.25	12071	1341	1341		134.1	37.3
	766+00.00	772+30.47	630.47	64	40350	4483	4483		448.3	124.5
	772+30.47	774+50.00	219.53	65.25	14324	1592	1592		159.2	44.2
	774+50.00	792+47.00	1797.00	60	107820	11980	11980		1198.0	332.8
	792+47.00	805+50.00	1303.00	76	99028	11003	11003		1100.3	305.6
	805+50.00	861+50.00	5600.00	60	336000	37333	37333		3733.3	1037.0
	861+50.00	865+00.00	350.00	68	23800	2644	2644		264.4	73.5
	865+00.00	865+15.00	15.00	68	1020	113	113		11.3	3.1
IR-71 S.B	625+98.30	626+13.30	15.00	38	570	63	63		6.3	1.8
	626+13.30	632+06.69	593.39	38	22549	2505	2505		250.5	69.6
	632+06.69	633+06.69	100.00	39	3900	433	433		43.3	12.0
APF S.B	633+07.11	637+94.18	487.07	76	37017	4113	4113		411.3	114.3
	637+94.18	640+53.77	259.59	60	15575	1731	1731		173.1	48.1
IR-71 S.B	640+53.77	662+37.54	2183.77	60	131026	14558	14558		1455.8	404.4
	662+37.54	662+52.54	15.00	60	900	100	100		10.0	2.8
	664+08.08	664+23.08	15.00	60	900	100	100		10.0	2.8
	664+23.08	681+13.83	1690.75	60	101445	11272	11272		1127.2	313.1
	681+13.83	681+28.83	15.00	60	900	100	100		10.0	2.8
	684+04.56	684+19.56	15.00	60	900	100	100		10.0	2.8
TOTALS LEFT COLUMN							195489	2324	19781	5495

LOCATION	LOCATIONS STATION FROM	TO	LENGTH FEET	AVERAGE WIDTH FEET	PAVEMENT AREA SQ. FT.	SQ. YD.	254 PAVEMENT PLANING, ASPHALT CONCRETE, AS PER PLAN, 1/2" (AVG.) SQ. YD.	254 PAVEMENT PLANING, ASPHALT CONCRETE, AS PER PLAN, 1" (AVG.) SQ. YD.	407 TACK COAT GAL.	424 1" FINE GRADED POLYMER ASPHALT CONCRETE, TYPE B, AS PER PLAN CU. YD.
IR-71 S.B	684+04.56	684+19.56	15.00	71.20	1068	119	119		11.9	3.3
	684+19.56	692+75.00	855.44	71.20	60907	6767	6767		676.7	188.0
	692+75.00	694+21.98	146.98	60	8819	980	980		98.0	27.2
	694+21.98	694+36.98	15.00	60	900	100	100		10.0	2.8
	696+00.41	696+15.41	15.00	60	900	100	100		10.0	2.8
	696+15.41	701+04.28	488.87	60	29332	3259	3259		325.9	90.5
	701+04.28	701+44.50	40.22	88.90	3576	397	397		39.7	11.0
	701+44.50	701+59.50	15.00	88.90	1334	148	148		14.8	4.1
	704+02.74	704+17.74	15.00	70	1050	117	117		11.7	3.2
	704+17.74	721+00.00	1682.26	70	117758	13084	13084		1308.4	363.5
	721+00.00	722+00.00	100.00	65	6500	722	722		72.2	20.1
	722+00.00	723+00.00	100.00	60	6000	667	667		66.7	18.5
	723+00.00	746+80.00	2380.00	60.00	142800	15867	15867		1586.7	440.7
	746+80.00	758+23.00	1143.00	73	83439	9271	9271		927.1	257.5
	758+23.00	763+35.47	512.47	62	31773	3530	3530		353.0	98.1
	763+35.47	772+30.47	895.00	64	57280	6364	6364		636.4	176.8
	772+30.47	774+75.00	244.53	65.25	15956	1773	1773		177.3	49.2
	774+75.00	796+00.00	2125.00	60	127500	14167	14167		1416.7	393.5
	796+00.00	801+09.54	509.54	81.50	41528	4614	4614		461.4	128.2
	801+09.54	803+00.00	190.46	70	13332	1481	1481		148.1	41.1
	803+00.00	804+00.00	100.00	65	6500	722	722		72.2	20.1
	804+00.00	858+52.00	5452.00	60	327120	36347	36347		3634.7	1009.6
	858+52.00	865+00.00	648.00	68	44064	4896	4896		489.6	136.0
	865+00.00	865+15.00	15.00	68	1020	113	113		11.3	3.1
APF NB	589+34.00	589+49.00	15.00	33	495	55	55		5.5	1.5
	589+49.00	589+95.00	46.00	36.25	1668	185	185		18.5	5.1
	589+95.00	593+62.99	367.99	40.75	14996	1666	1666		166.6	46.3
	593+62.99	593+77.99	15.00	40.75	611	68	68		6.8	1.9
	596+88.78	597+03.78	15.00	40.75	611	68	68		6.8	1.9
	597+03.78	602+29.66	525.88	40.75	21430	2381	2381		238.1	66.1
	602+29.66	610+50.00	820.34	40.75	33429	3714	3714		371.4	103.2
	610+50.00	615+35.00	485.00	73.25	35526	3947	3947		394.7	109.6
	615+35.00	620+49.91	514.91	59.50	30637	3404	3404		340.4	94.6
	620+49.91	630+88.93	1039.02	52.50	54549	6061	6061		606.1	168.4
	630+88.93	632+92.36	203.43	48	9765	1085	1085		108.5	30.1
APF SB	589+34.00	589+49.00	15.00	33	495	55	55		5.5	1.5
	589+49.00	589+95.00	46.00	36.25	1668	185	185		18.5	5.1
	589+95.00	593+62.99	367.99	40.75	14996	1666	1666		166.6	46.3
	593+62.99	593+77.99	15.00	40.75	611	68	68		6.8	1.9
	596+88.78	597+03.78	15.00	40.75	611	68	68		6.8	1.9
	597+03.78	602+29.66	525.88	40.75	21430	2381	2381		238.1	66.1
	602+29.66	602+71.66	42.00	40.75	1712	190	190		19.0	5.3
	602+71.66	603+29.66	58.00	91.75	5322	591	591		59.1	16.4
	603+29.66	610+50.00	720.34	70.75	50964	5663	5663		566.3	157.3
	610+50.00	615+35.00	485.00	52.75	25584	2843	2843		284.3	79.0
	615+35.00	630+86.43	1551.43	52.50	81450	9050	9050		905.0	251.4
	630+86.43	633+07.11	220.68	48	10593	1177	1177		117.7	32.7
TOTALS RIGHT COLUMN							172178		17218	4783
TOTALS LEFT COLUMN							195489	2324	19781	5495
TOTALS TO GENERAL SUMMARY							369990		36999	10278

CALCULATED EMK
CHECKED LDH

PAVEMENT SUBSUMMARY

CUY-71-10.48

I:\PROJECTS\Pid83498\dgn\83498gs001.dgn 16-OCT-2008 2:16PM ekallio

ROUTE	LOCATIONS STATION FROM	LOCATIONS STATION TO	LENGTH FEET	AVERAGE WIDTH FEET	PAVEMENT AREA SQ. FT.	PAVEMENT AREA SQ. YD.	254 PAVEMENT PLANING, ASPHALT CONCRETE, AS PER PLAN, 1/2" (AVG.) SQ. YD.	254 PAVEMENT PLANING, ASPHALT CONCRETE, AS PER PLAN, 1" (AVG.) SQ. YD.	407 TACK COAT GAL.	424 1" FINE GRADED POLYMER ASPHALT CONCRETE, TYPE B, AS PER PLAN CU. YD.
RAMP A (150th)	692+75.00	694+13.00	138.00	29.18	4027	447	447		44.7	12.4
	694+13.00	694+27.60	14.60	27.5	402	45	45		4.5	1.2
	694+27.60	694+42.60	15.00	25	375	42	42		4.2	1.2
	696+15.53	696+30.53	15.00	25	375	42	42		4.2	1.2
	696+30.53	698+03.43	172.90	29	5014	557	557		55.7	15.5
	698+03.43	700+04.46	201.03	33	6634	737	737		73.7	20.5
	700+04.46	700+87.00	82.54	(CADD)	6246	694	694		69.4	19.3
RAMP B (150th)	699+53.43	700+04.46	51.03	33	1684	187	187		18.7	5.2
	695+31.04	697+18.29	187.25	33	6179	687	687		68.7	19.1
	697+18.29	698+18.29	100.00	29	2900	322	322		32.2	9.0
	698+18.29	700+07.01	188.72	25	4718	524	524		52.4	14.6
	700+07.01	701+07.01	100.00	27	2700	300	300		30.0	8.3
RAMP C (150th)	693+00.00	693+82.96	82.96	27.83	2309	257	257		25.7	7.1
	693+82.96	694+12.65	29.69	25	742	82	82		8.2	2.3
	694+12.65	694+27.65	15.00	25	375	42	42		4.2	1.2
	695+87.85	696+02.85	15.00	25	375	42	42		4.2	1.2
	696+02.85	696+40.00	37.15	25	929	103	103		10.3	2.9
	696+40.00	697+60.00	120.00	29	3480	387	387		38.7	10.7
	697+60.00	698+20.00	60.00	33	1980	220	220		22.0	6.1
	698+20.00	699+20.00	100.00	39	3900	433	433		43.3	12.0
	699+20.00	701+69.04	249.04	45	11207	1245	1245		124.5	34.6
	701+69.04	702+33.53	64.49	(CADD)	2592	288	288		28.8	8.0
RAMP D (150th)	703+15.44	703+46.02	30.58	(CADD)	1107	123	123		12.3	3.4
	703+46.02	703+73.23	27.21	21.50	585	65	65		6.5	1.8
	703+73.23	709+00.00	526.77	25	13169	1463	1463		146.3	40.6
	709+00.00	709+40.00	40.00	30.25	1210	134	134		13.4	3.7
RAMP A (130th)	58+25.00	62+59.70	434.70	37.00	16084	1787	1787		178.7	49.6
	62+59.70	63+59.70	100.00	22	2200	244	244		24.4	6.8
	63+59.70	64+59.70	100.00	23.50	2350	261	261		26.1	7.3
	64+59.70	70+79.53	619.83	25	15496	1722	1722		172.2	47.8
	70+79.53	71+33.91	54.38	(CADD)	1413	157	157		15.7	4.4
RAMP B (130th)	12+57.99	14+57.99	200.00	28	5600	622	622		62.2	17.3
	14+59.99	22+82.02	822.03	29	23839	2649	2649		264.9	73.6
	22+82.02	25+35.00	252.98	30.25	7653	850	850		85.0	23.6
	25+35.00	27+39.85	204.85	25	5121	569	569		56.9	15.8
	27+39.85	28+39.85	100.00	26	2600	289	289		28.9	8.0
RAMP D (130th)	56+00.00	56+99.30	99.30	26.25	2607	290	290		29.0	8.0
	56+99.30	59+00.00	200.70	25	5018	558	558		55.8	15.5
	59+00.00	61+78.96	278.96	42.50	11856	1317	1317		131.7	36.6
	61+78.96	65+49.00	370.04	30	11101	1233	1233		123.3	34.3
	65+49.00	66+90.62	141.62	33	4673	519	519		51.9	14.4
	66+90.62	67+51.53	60.91	33	2010	223	223		22.3	6.2
	67+51.53	67+87.10	35.57	(CADD)	1881	209	209		20.9	5.8
RAMP C (130th)	11+81.48	13+31.48	150.00	27	4050	450	450		45.0	12.5
	13+31.48	13+99.00	67.52	25	1688	188	188		18.8	5.2
	13+99.00	15+74.35	175.35	30.25	5304	589	589		58.9	16.4
	15+74.35	21+76.47	602.12	29	17461	1940	1940		194.0	53.9
	21+76.47	23+87.00	210.53	30.25	6369	708	708		70.8	19.7
	23+87.00	26+86.26	299.26	25	7482	831	831		83.1	23.1
TOTALS LEFT COLUMN							27674	0	2767	769

LOCATION	LOCATIONS STATION FROM	LOCATIONS STATION TO	LENGTH FEET	AVERAGE WIDTH FEET	PAVEMENT AREA SQ. FT.	PAVEMENT AREA SQ. YD.	254 PAVEMENT PLANING, ASPHALT CONCRETE, AS PER PLAN, 1/2" (AVG.) SQ. YD.	254 PAVEMENT PLANING, ASPHALT CONCRETE, AS PER PLAN, 1" (AVG.) SQ. YD.	407 TACK COAT GAL.	424 1" FINE GRADED POLYMER ASPHALT CONCRETE, TYPE B, AS PER PLAN CU. YD.
ROAD NO.1(130TH)	10+45.50	10+66.28	20.78	(CADD)	1422	158	158		15.8	4.4
	10+66.28	10+97.01	30.73	30	922	102	102		10.2	2.8
	10+97.01	11+71.77	74.76	31	2318	258	258		25.8	7.2
	11+71.77	13+35.00	163.23	34	5550	617	617		61.7	17.1
	13+35.00	15+25.00	190.00	30	5700	633	633		63.3	17.6
	15+25.00	16+78.66	153.66	26	3995	444	444		44.4	12.3
	16+78.66	17+78.66	100.00	27	2700	300	300		30.0	8.3
	17+78.66	21+59.18	380.52	46	17504	1945	1945		194.5	54.0
	21+59.18	26+25.26	466.08	34	15847	1761	1761		176.1	48.9
	26+25.26	28+73.80	248.54	39	9693	1077	1077		107.7	29.9
	28+73.80	29+73.80	100.00	22	2200	244	244		24.4	6.8
	29+73.80	30+73.80	100.00	24.50	2450	272	272		27.2	7.6
	30+73.80	41+24.44	1050.64	26	27317	3035	3035		303.5	84.3
	41+24.44	42+50.00	125.56	(CADD)	4248	472	472		47.2	13.1
RD. NO.2 (130th)	10+37.50	10+87.40	49.90	(CADD)	1413	157	157		15.7	4.4
	10+87.40	11+27.34	39.94	23	919	102	102		10.2	2.8
	11+27.34	17+89.00	661.66	26	17203	1911	1911		191.1	53.1
	17+89.00	22+80.92	491.92	44	21644	2405	2405		240.5	66.8
	22+80.92	24+17.88	136.96	34	4657	517	517		51.7	14.4
	24+17.88	28+70.00	452.12	46	20798	2311	2311		231.1	64.2
	28+70.00	36+28.92	758.92	26	19732	2192	2192		219.2	60.9
	36+28.92	36+92.92	64.00	23.5	1504	167	167		16.7	4.6
	36+92.92	37+95.20	102.28	(CADD)	4203	467	467		46.7	13.0
RAMP F (130th)	8+70.15	10+70.15	200.00	26	5200	578	578		57.8	16.0
	10+70.15	15+04.73	434.58	26	11299	1255	1255		125.5	34.9
	15+04.73	16+04.73	100.00	27.50	2750	306	306		30.6	8.5
RAMP E (I130th)	88+28.07	91+00.00	271.93	26	7070	786	786		78.6	21.8
	91+00.00	91+70.00	70.00	26	1820	202	202		20.2	5.6
	91+70.00	92+45.00	75.00	30	2250	250	250		25.0	6.9
RAMP B-1	454+35.00	454+50.00	15.00	38	570	63	63		6.3	1.8
	454+50.00	455+54.80	104.80	38	3982	442	442		44.2	12.3
	455+54.80	457+84.00	229.20	43.50	9970	1108	1108		110.8	30.8
	457+84.00	460+45.93	261.93	63	16502	1834	1834		183.4	50.9
	460+45.93	462+00.00	154.07	38	5855	651	651		65.1	18.1
	462+00.00	462+50.00	50.00	38.50	1925	214	214		21.4	5.9
	462+50.00	463+73.00	123.00	39	4797	533	533		53.3	14.8
	463+73.00	465+93.66	220.66	44	9709	1079	1079		107.9	30.0
RAMP B-2	454+02.27	454+17.27	15.00	38	570	63	63		6.3	1.8
	454+17.27	455+67.27	150.00	41	6150	683	683		68.3	19.0
	455+67.27	456+09.27	42.00	44	1848	205	205		20.5	5.7
RAMP B-3	611+24.77	612+24.77	100.00	26	2600	289	289		28.9	8.0
	612+24.77	621+36.17	911.40	25	22785	2532	2532		253.2	70.3
	621+36.17	619+40.73	195.44	25	4886	543	543		54.3	15.1
	619+40.73	619+25.73	15.00	25	375	42	42		4.2	1.2
	621+36.17	619+40.73	195.44	25	4886	543	543		54.3	15.1
	619+40.73	619+25.73	15.00	25	375	42	42		4.2	1.2
CROSSOVER	862+60.00			(CADD)		208			20.8	5.8
TOTALS RIGHT COLUMN							35632		3584	996
TOTALS LEFT COLUMN							27674		2767	769
TOTALS TO GENERAL SUMMARY							63306		6351	1764

CALCULATED EMK
CHECKED LDH

PAVEMENT SUBSUMMARY

CUY-71-10.48

I:\PROJECTS\PIid83498\dgn\83498gs001.dgn 16-OCT-2008 2:16PM ekallio

LOCATION	LOCATIONS - FROM PLAN RECORD		646													621			
	STATION		EDGE LINE		LANE LINE, AS PER PLAN	CHANNELIZING LINE		TRANSVERSE/ DIAGONAL LINE	STOP LINE	CROSSWALK LINE	LANE ARROW	WORD ON PAVEMENT	PAVEMENT MARKING, MISC.: 8" DOTTED LINE, 3' LONG WITH 12" GAPS	4" DOTTED LINE (WHITE)		RPM			
			WHITE	YELLOW		GORE	*									W	Y	W/R	Y/R
	FROM	TO	FOOT	FOOT	FOOT	FOOT	FOOT	FOOT	FOOT	FOOT	EACH	EACH	FOOT	FOOT		EACH			
I.R.-71, N.B.	625+72	632+89	717	717	717											9			
A.P.F., N.B.	632+92	640+53.77	1524	762	1524	762		215								20		19	
I.R.-71, N.B.	640+53.77	641+06	104	52	104	52		22								2		2	
	641+06	688+25	4719	4719	14157											177			
	688+25	690+50	225	225	900											12			
	690+50	693+00	250	250	750	500										9		15	
	693+00	713+00	2000	2000	6000											75			
	713+00	715+00	400	200	600	200										9		5	
	715+00	717+35	235	235	705											9			
	717+35	750+75	3340	3340	10020											126			
	750+75	752+50	175	175	700											8			
	752+50	756+00	350	350	1050	700										12		19	
	756+00	795+50	3950	3950	11850											147			
	795+50	797+00	300	150	450	150										6		5	
	797+00	799+75	275	275	1100											9			
	799+75	865+15	6540	6540	19620											246			
I.R.-71, S.B.	625+98	633+07	709	709	709											9			
A.P.F., S.B.	633+07	635+00	193	193	579	386		85								6		11	
	635+00	638+00	300	300	600		300									6		12	
	638+00	640+53.77	254	254	508								254			9			
I.R.-71, S.B.	640+53.77	689+50	4896	4896	12342								2346			183			
	689+50	691+50	200	200	800											12			
	691+50	692+75	250	125	375	125										6		4	
	692+75	701+04	829	829	2487											30			
	701+04	702+50	146	146	438	292										6		9	
	702+50	711+75	925	925	3700											48			
	711+75	722+00	1025	1025	3075									1025		39			
	722+00	751+85	2985	2985	8955											111			
	751+85	754+00	215	215	860											12			
	754+00	756+00	400	200	600	200										9		5.0	
	756+00	796+00	4000	4000	12000											150			
	796+00	799+00	300	300	900	600										12		17	
	799+00	801+00	200	200	800											12			
	801+00	865+15	6415	6415	19245											240			
A.P.F., N.B.	589+34	610+50	2116	2116	2116											26			
	610+50	614+25	750	375	750	375										10		10	
	614+25	625+00	1075	1075	2150											28			
	625+00	632+92	792	792	792			156								10			
A.P.F., S.B.	589+34	603+30	1396	1396	1396											18			
	603+30	606+50	320	320	640	640		125								8		17	
	606+50	633+00	2650	2650	5300			42								66			
	633+00	633+07	7	7	7	7													
RAMP A (150)	692+75	698+70	595	595															7
	698+70	699+11	41	41															1
	699+11	699+53.43	42	42	42													1	1
	699+53.43	700+70	234	234	117		117				4	1						6	
	700+70								35										
* - INSTEAD OF LANE LINE																			
TOTALS TO GENERAL SUMMARY			59364	57500	152530	4989	417	645	35		4	1	2600	1025		1942		157	9
			22.13 MI.		28.89 MI.	5406										2108			

CALCULATED EMK
CHECKED LDH

PAVEMENT MARKING SUBSUMMARY

CUY-71-10.48

I:\PROJECTS\PID83498\dgn\PID83498ts001.dgn 16-OCT-2008 12:20PM ekallio

LOCATION	LOCATIONS - FROM PLAN RECORD STATION FROM	TO	646 EDGE LINE WHITE FOOT	EDGE LINE YELLOW FOOT	LANE LINE, AS PER PLAN FOOT	CHANNELIZING LINE GORE FOOT	CHANNELIZING LINE * FOOT	TRANSVERSE/ DIAGONAL LINE FOOT	STOP LINE FOOT	CROSSWALK LINE FOOT	LANE ARROW EACH	WORD ON PAVEMENT EACH	PAVEMENT MARKING, MISC.: 8" DOTTED LINE, 3' LONG WITH 12' GAPS FOOT	4" DOTTED LINE (WHITE) FOOT		621 RPM W EACH	Y EACH	W/R EACH	Y/R EACH
RAMP B (150)	695+31	697+18	187	187	187													2	2
	697+18	701+07	389	389															5
RAMP C (150)	693+00	697+60	460	460															6
	697+60	699+40	180	180	180													2	2
	699+40	702+21	281	281			562				9	3						14	3
	702+21								56										
	702+28									132									
RAMP D (150)	703+22									94									
	703+22	713+00	978	978															12
RAMP A (130)	56+00	61+95	595	595															7
	61+95	62+60	130	65		65												3	1
	62+60	71+24	864	864															11
	71+24									85									
RAMP B (130)	12+60	28+40	1580	1580															20
RAMP C (130)	11+82	28+86	1704	1704															21
RAMP D (130)	56+00	60+91	491	491															6
	60+91	61+79	88	88		176												6	1
	61+79	65+49	370	370															5
	65+49	67+74	225	225			225				4	1						6	3
	67+74								54										
	67+81									139									
ROAD NO. 1	10+42									118									
	10+49								43										
	10+49	13+15	266	266			266				6	1						6	3
	13+15	17+79	464	464															6
	17+79	19+40	161	161		322		65										9	2
	19+40	27+80	840	840	840													11	11
	27+80	28+70	180	90		90												3	1
	28+70	42+33	1363	1363						130									17
	42+33																		
ROAD NO. 2	10+44									100									
	10+44	19+89	945	945															12
	19+89	21+00	222	111		111												3	2
	21+00	26+65	565	565	565													7	7
	26+65	28+70	205	205		410		75										11	3
	28+70	36+94	824	824															10
	36+94	37+72	78	78			78				4	1						3	1
	37+72									149									
	37+79								64										
RAMP E (130)	88+28	95+50	722	722															9
RAMP F (130)	8+70	16+05	735	735															9
RAMP B-1	454+35	458+66	431	431	431													5	5
	458+66	460+44	178	178	178	356												11	2
	460+44	465+94	550	550	550													7	7
RAMP B-2	454+03	456+67	264	264	264													3	3
RAMP B-3	611+25	621+36.17	1011	1011															13
	621+36.17	619+26	210	210															3
* - INSTEAD OF LANE LINE																			
TOTALS TO GENERAL SUMMARY			18736	18470	3195	1530	1131	140	217	947	23	6	0					112	231
			7.05 MI.		0.61 MI.	2661										343			

CALCULATED EMK
CHECKED LDH

PAVEMENT MARKING SUBSUMMARY

CUY-71-10.48

I:\PROJECTS\PID83498\dgn\PID83498ts001.dgn 16-OCT-2008 12:20PM ekallio

SHEET NUMBER 10	11	12	14	15	16	17	18	19	20	30		ITEM	ITEM EXT.	GRAND TOTAL	UNIT	DESCRIPTION	SEE SHEET NO.
																ROADWAY	
	1438											202	30000	1438	SQ FT	WALK REMOVED	
										12		202	30600	12	SQ YD	CONCRETE MEDIAN REMOVED	
	307											202	32000	307	FT	CURB REMOVED	
	902											608	10000	902	SQ FT	4" CONCRETE WALK	
	900											608	52001	900	SQ FT	CURB RAMP, AS PER PLAN	11
																EROSION CONTROL	
LUMP												659	98700	LUMP		SEEDING, MISC.: SEEDING AND MULCHING	10
												832	30000	5000	EACH	EROSION CONTROL	
																DRAINAGE	
	27											604	09001	27	EACH	CATCH BASIN ADJUSTED TO GRADE, AS PER PLAN	11
	1											604	34501	1	EACH	MANHOLE ADJUSTED TO GRADE, AS PER PLAN	11
	5000											SPECIAL	60450000	5000	POUND	MISCELLANEOUS METAL	11
																PAVEMENT	
	500											251	01001	500	SQ YD	PARTIAL DEPTH PAVEMENT REPAIR, AS PER PLAN A	11
	350											251	01001	350	SQ YD	PARTIAL DEPTH PAVEMENT REPAIR, AS PER PLAN B	11
						369990	63306					254	01001	433296	SQ YD	PAVEMENT PLANING, ASPHALT CONCRETE, AS PER PLAN	12
						36999	6351					407	10000	43350	GAL	TACK COAT	
						10278	1764					424	12001	12042	CU YD	FINE GRADED POLYMER ASPHALT CONCRETE, TYPE B, AS PER PLAN	11
										55		609	71000	55	SQ FT	CONCRETE MEDIAN	
		275										617	10101	275	CU YD	COMPACTED AGGREGATE, AS PER PLAN	12
		11.94										618	40600	11.94	MILE	RUMBLE STRIPS, (ASPHALT CONCRETE)	
		8.35										618	40700	8.35	MILE	RUMBLE STRIPS, (CONCRETE)	
																TRAFFIC CONTROL	
								2108	343			621	00100	2451	EACH	RPM	
		1200										621	54000	1200	EACH	RAISED PAVEMENT MARKER REMOVED	
		3										632	26501	3	EACH	DETECTOR LOOP, AS PER PLAN	
								22.13	7.05			646	10000	29.18	MILE	EDGE LINE	
								28.89	0.61			646	10101	29.50	MILE	LANE LINE, 6", AS PER PLAN	
								5406	2661			646	10300	8067	FT	CHANNELIZING LINE	
								35	217			646	10400	252	FT	STOP LINE	
									947			646	10500	947	FT	CROSSWALK LINE	
								645	140			646	10600	785	FT	TRANSVERSE / DIAGONAL LINE	
								4	23			646	20300	27	EACH	LANE ARROW	
								1	6			646	20400	7	EACH	WORD ON PAVEMENT, 72"	
								1025				646	20500	1025	FT	DOTTED LINE	
								2600				646	90000	2600	FT	PAVEMENT MARKING, MISC.:8" DOTTED LINE, 3' LONG WITH 12' GAPS	
																MAINTENANCE OF TRAFFIC	
			1000									614	11100	1000	HOUR	LAW ENFORCEMENT OFFICER WITH PATROL CAR	
				6								614	11500	6	MONTH	WORKSITE TRAFFIC SUPERVISOR	
				50								614	13001	50	CU YD	ASPHALT CONCRETE FOR MAINTAINING TRAFFIC, AS PER PLAN	15
					12							614	18601	12	SN MT	PORTABLE CHANGEABLE MESSAGE SIGN, AS PER PLAN	
				59.00								614	20100	59.00	MILE	WORK ZONE LANE LINE, CLASS I, 642 PAINT	
				58.36								614	22100	58.36	MILE	WORK ZONE EDGE LINE, CLASS I, 642 PAINT	
				16134								614	23200	16134	FT	WORK ZONE CHANNELIZING LINE, CLASS I, 642 PAINT	
				504								614	26200	504	FT	WORK ZONE STOP LINE, CLASS I, 642 PAINT	
				1894								614	27200	1894	FT	WORK ZONE CROSSWALK LINE, CLASS I, 642 PAINT	
			300									630	97800	300	SQ FT	SIGNING, MISC.: ADDITIONAL SIGNS, GROUND MOUNTED, AS DIRECTED BY THE ENGINEER	
												614	11000	LUMP		MAINTAINING TRAFFIC	
6												619	16010	6	MONTH	FIELD OFFICE, TYPE B	
												623	10000	LUMP		CONSTRUCTION LAYOUT STAKES	
												624	10000	LUMP		MOBILIZATION	

CALCULATED EMK
CHECKED LDH

GENERAL SUMMARY

CUY-71-10.48

I:\PROJECTS\PID83498\dgn\83498gg001.dgn 17-OCT-2008 7:05AM ekallio

CROSS REFERENCE	
RESURFACING QTY'S	17-18
PAV'T MARKINGS QTY'S	19-20

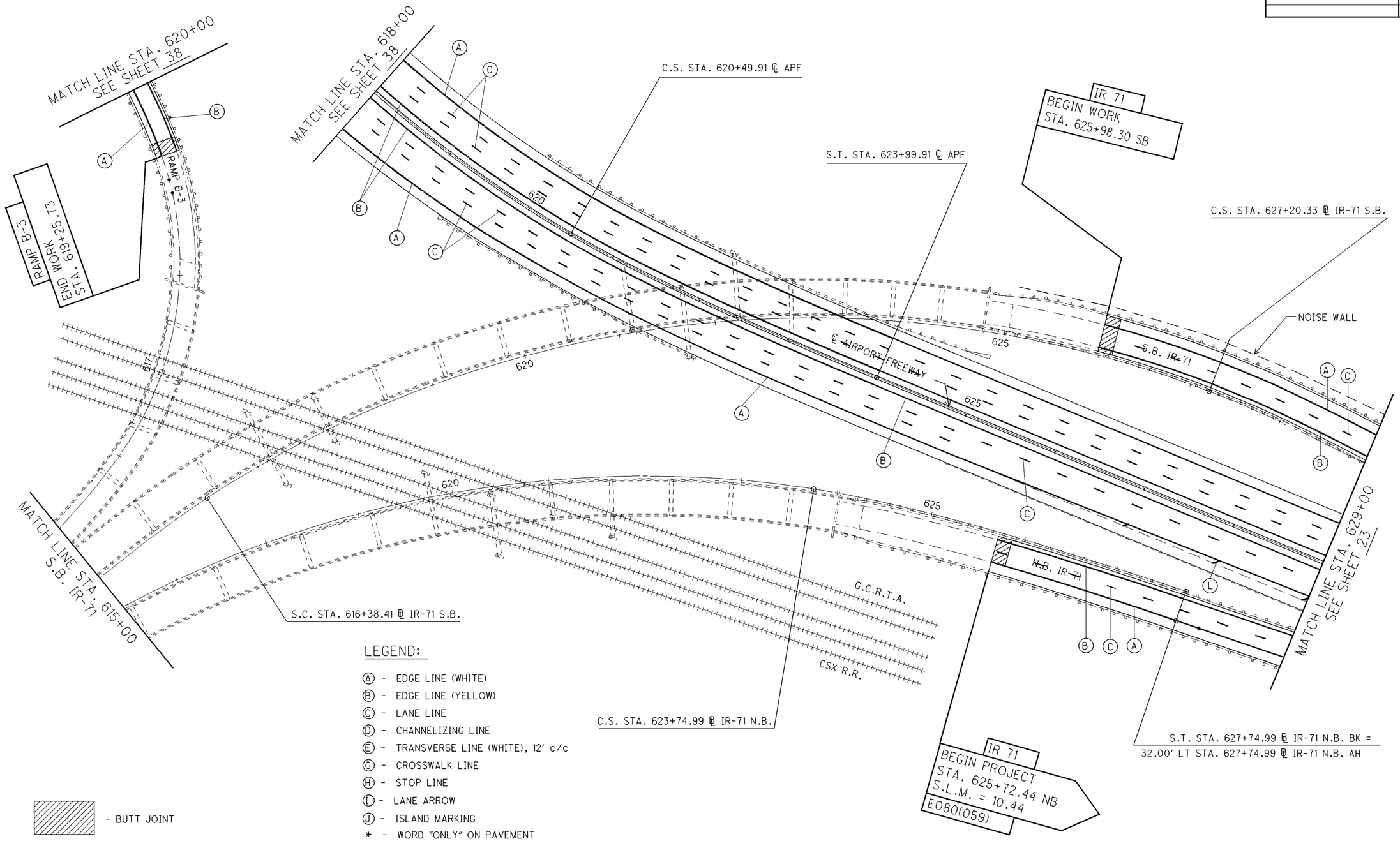

LEGEND:

- Ⓐ - EDGE LINE (WHITE)
- Ⓑ - EDGE LINE (YELLOW)
- Ⓒ - LANE LINE
- Ⓓ - CHANNELIZING LINE
- Ⓔ - TRANSVERSE LINE (WHITE), 12' c/c
- Ⓖ - CROSSWALK LINE
- Ⓗ - STOP LINE
- Ⓘ - LANE ARROW
- Ⓙ - ISLAND MARKING
- ✱ - WORD "ONLY" ON PAVEMENT
- Ⓚ - 8" DOTTED LINE (3' LONG W/12' GAPS)
- Ⓛ - TRANSVERSE LINE (WHITE), 100' C/C
- Ⓜ - 4" DOTTED LINE (WHITE)

- BUTT JOINT

SCALE IN FEET: 0 50 100

CALCULATED EMK
CHECKED LDH

PLAN SHEET
STA. 615+00 TO STA. 629+00

CUY-71-10.48

I:\PROJECTS\Pid83498\dgn\83498gp001.dgn 16-OCT-2008 12:28PM ekallio

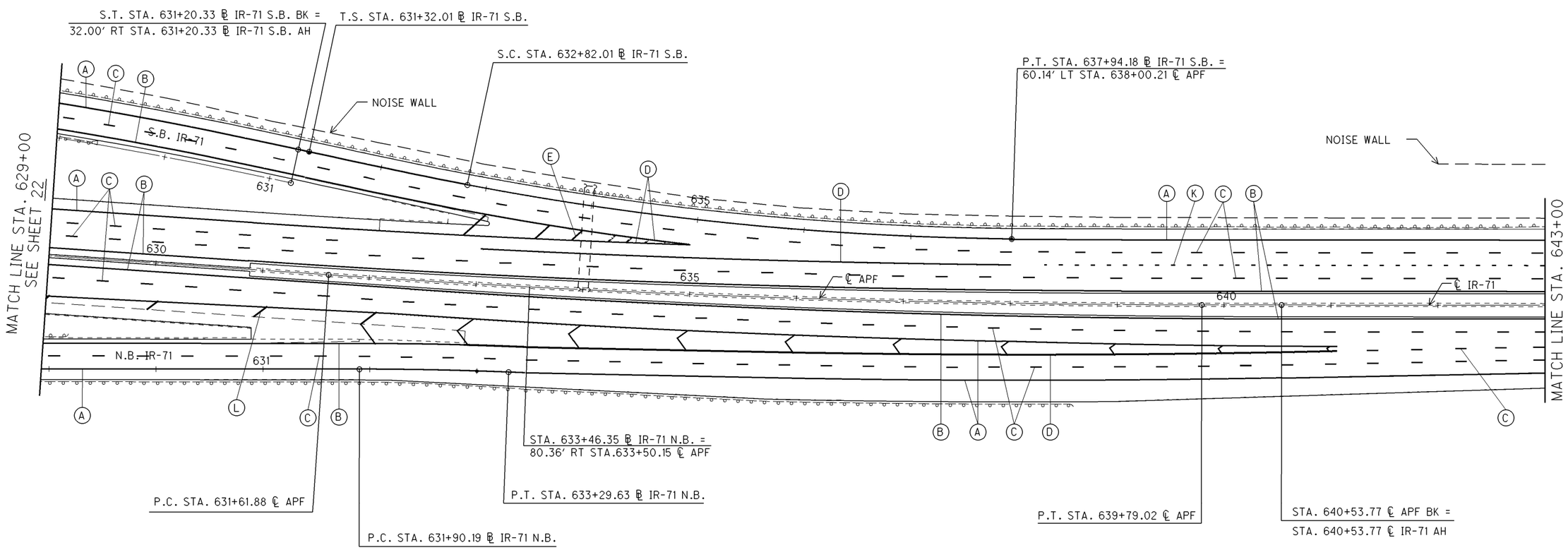

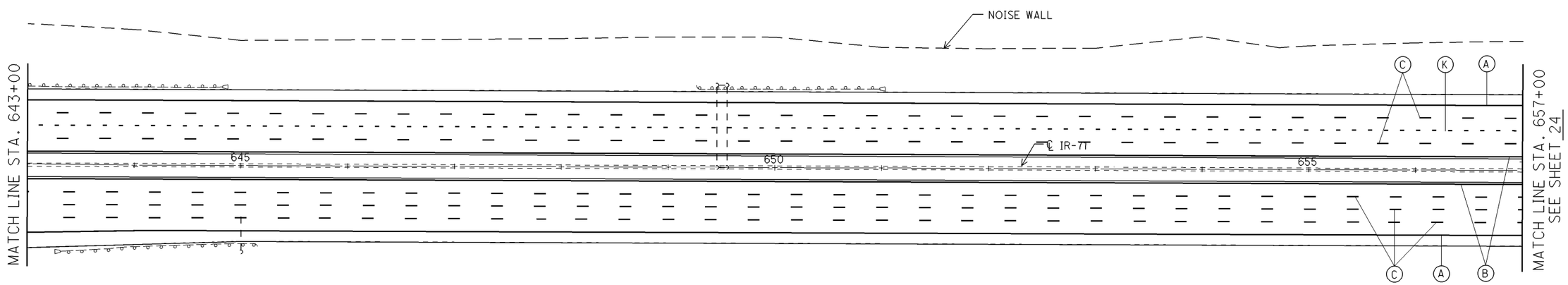

CROSS REFERENCE	
RESURFACING QTY'S	17-18
PAV'T MARKINGS QTY'S	19-20
PAV'T MARKING LEGEND	22

SCALE IN FEET 0 50 100

CALCULATED EMK
CHECKED LDH

PLAN SHEET
STA. 629+00 TO STA. 657+00

CUY-71-10.48

I:\PROJECTS\Pid83498\dgn\83498gp002.dgn 16-OCT-2008 12:30PM ekallio

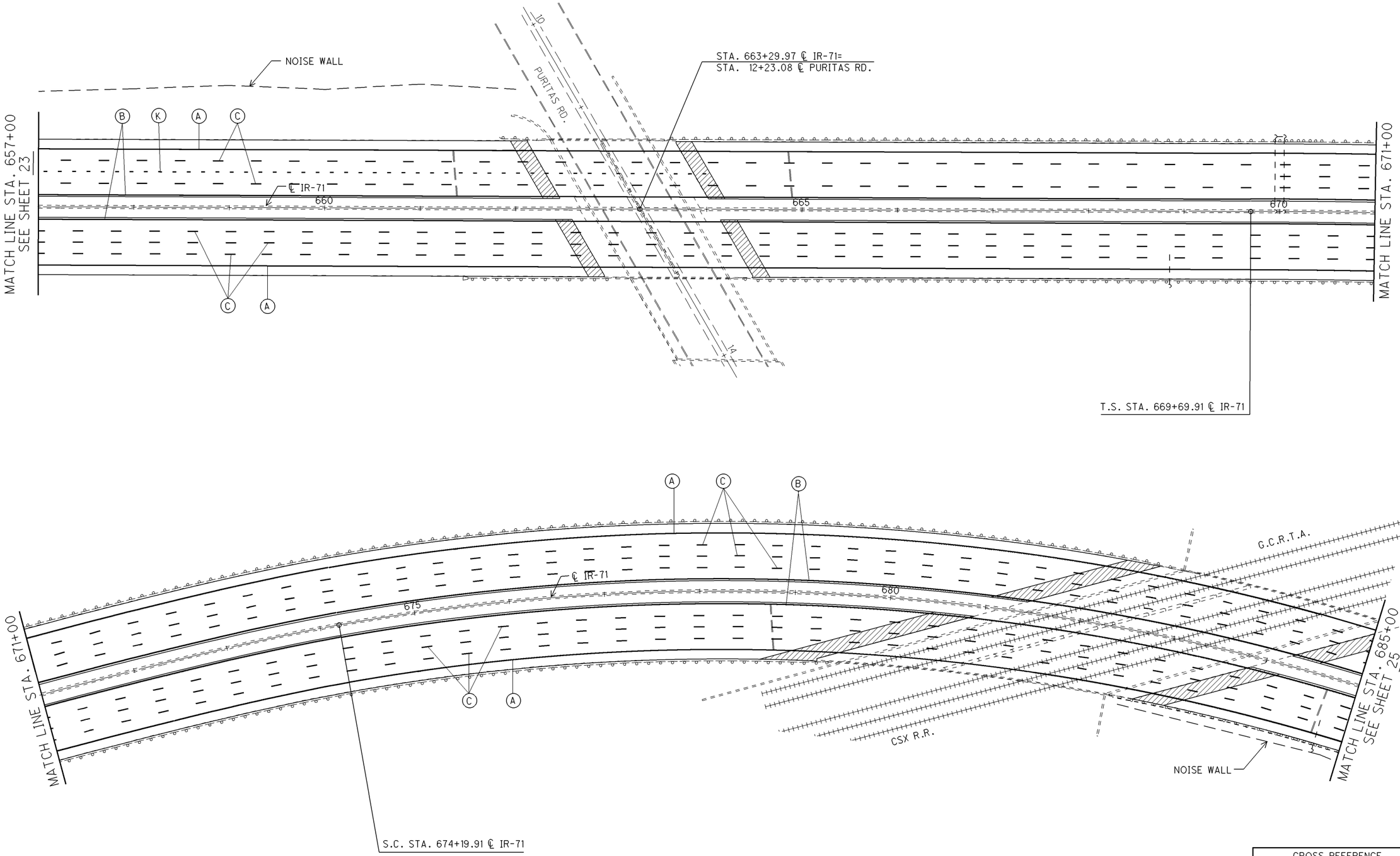

- BUTT JOINT

CROSS REFERENCE	
RESURFACING QTY'S	17-18
PAV'T MARKINGS QTY'S	19-20
PAV'T MARKING LEGEND	22

SCALE IN FEET 0 50 100

CALCULATED EMK
CHECKED LDH

PLAN SHEET
STA. 657+00 TO STA. 685+00

CUY-71-10.48

I:\PROJECTS\Pid83498\dgn\83498gp003.dgn 16-OCT-2008 12:30PM ekallio

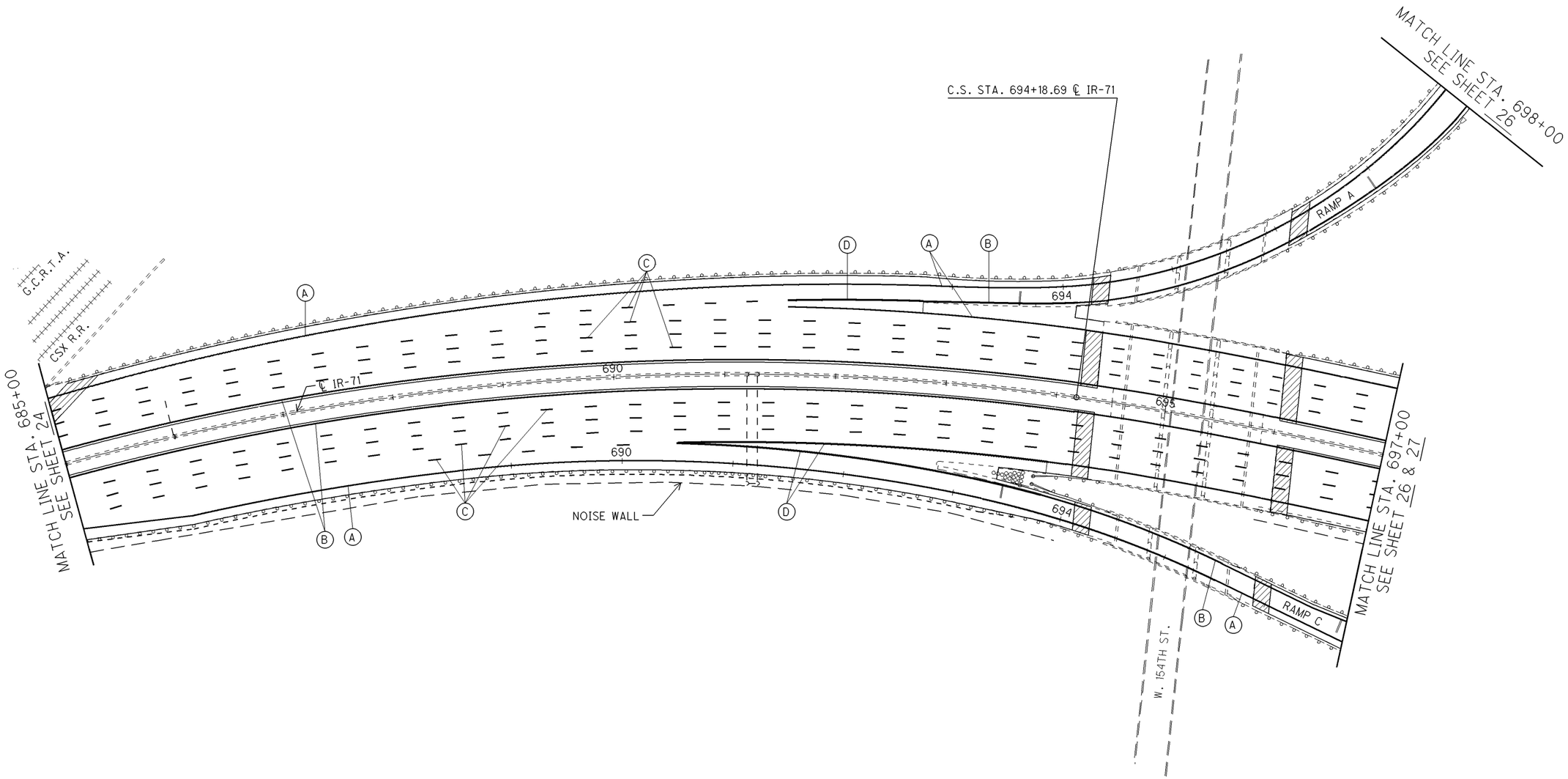

- BUTT JOINT

CROSS REFERENCE	
RESURFACING QTY'S	17-18
PAV'T MARKINGS QTY'S	19-20
PAV'T MARKING LEGEND	22

SCALE IN FEET 0 50 100

CALCULATED EMK
CHECKED LDH

PLAN SHEET
STA. 685+00 TO STA. 697+00

CUY-71-10.48

I:\PROJECTS\Pid83498\dgn\83498gp004.dgn 16-OCT-2008 12:31PM ekallio

CROSS REFERENCE	
RESURFACING QTY'S	17-18
PAV'T MARKINGS QTY'S	19-20
PAV'T MARKING LEGEND	22

- BUTT JOINT

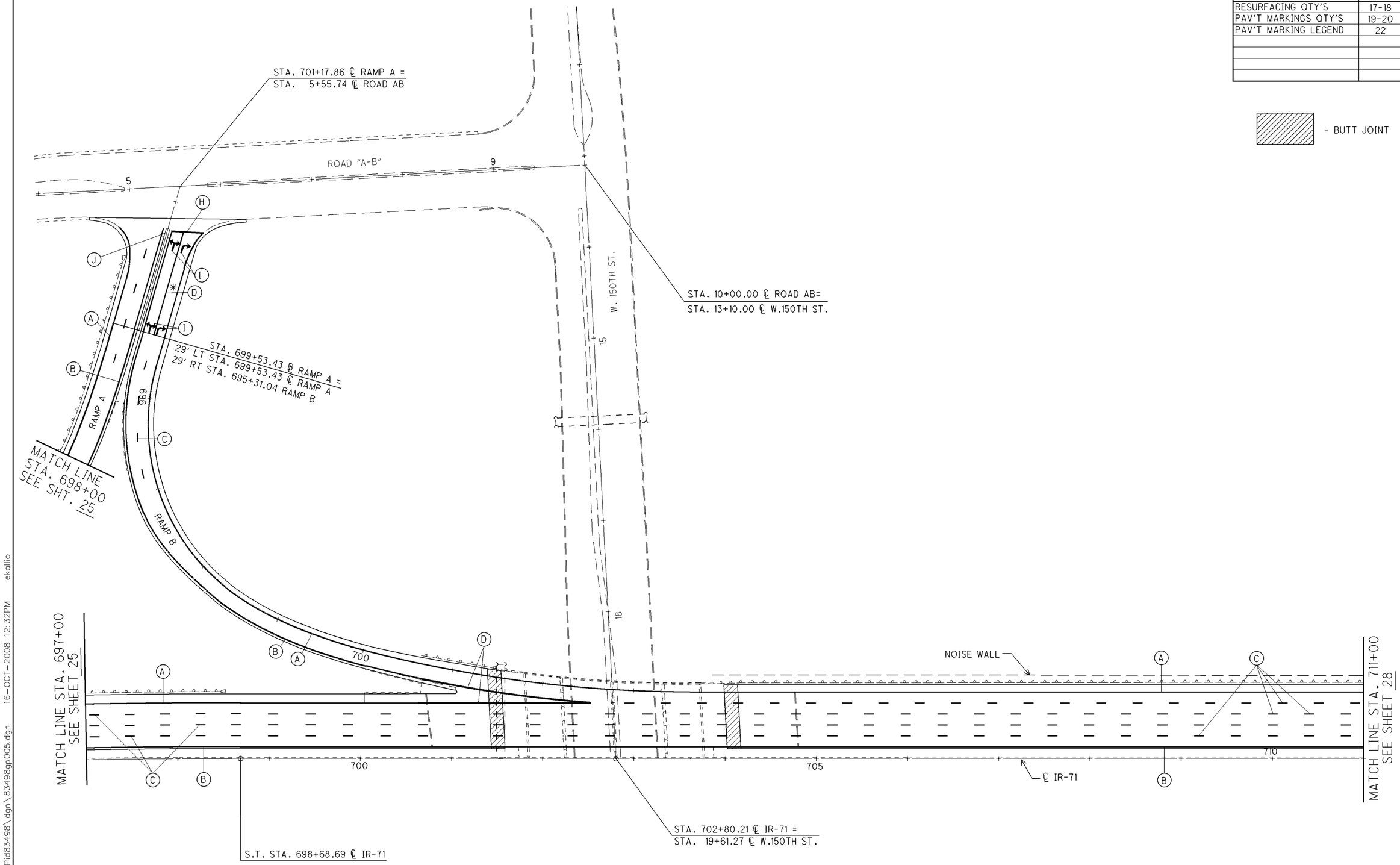

SCALE IN FEET
0 50 100

CALCULATED EMK
CHECKED ENF

PLAN SHEET
STA. 697+00 TO STA. 711+00

CUY-71-10.48

I:\PROJECTS\Pid83498\dgn\83498gp005.dgn 16-OCT-2008 12:32PM ekallio

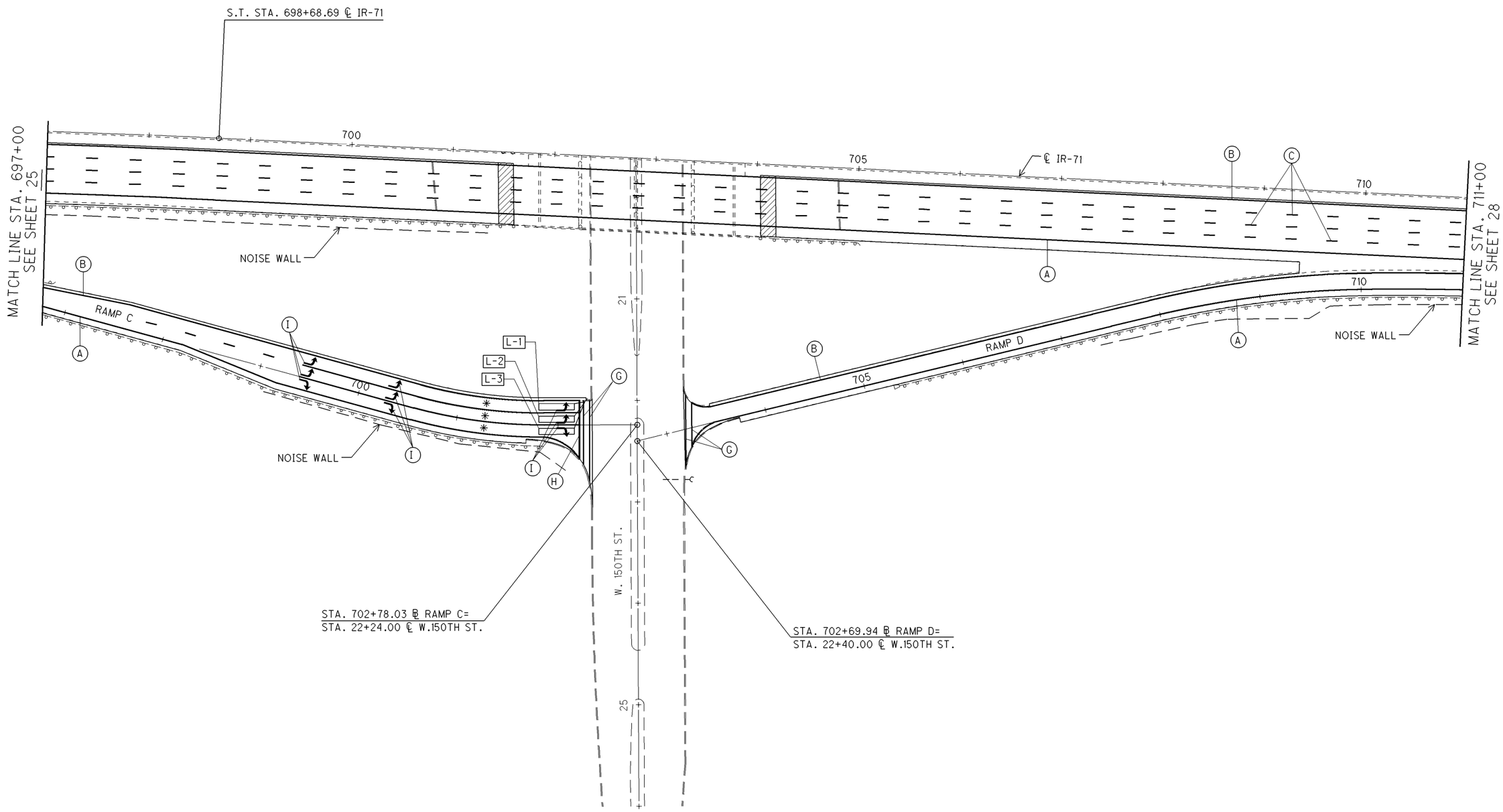

- BUTT JOINT

CROSS REFERENCE	
RESURFACING QTY'S	17-18
PAV'T MARKINGS QTY'S	19-20
PAV'T MARKING LEGEND	22

SCALE IN FEET 0 50 100

CALCULATED EMK
CHECKED ENF

PLAN SHEET
STA. 697+00 TO STA. 711+00

CUY-71-10.48

I:\PROJECTS\Pid83498\dgn\83498gp006.dgn 16-OCT-2008 12:33PM ekallio

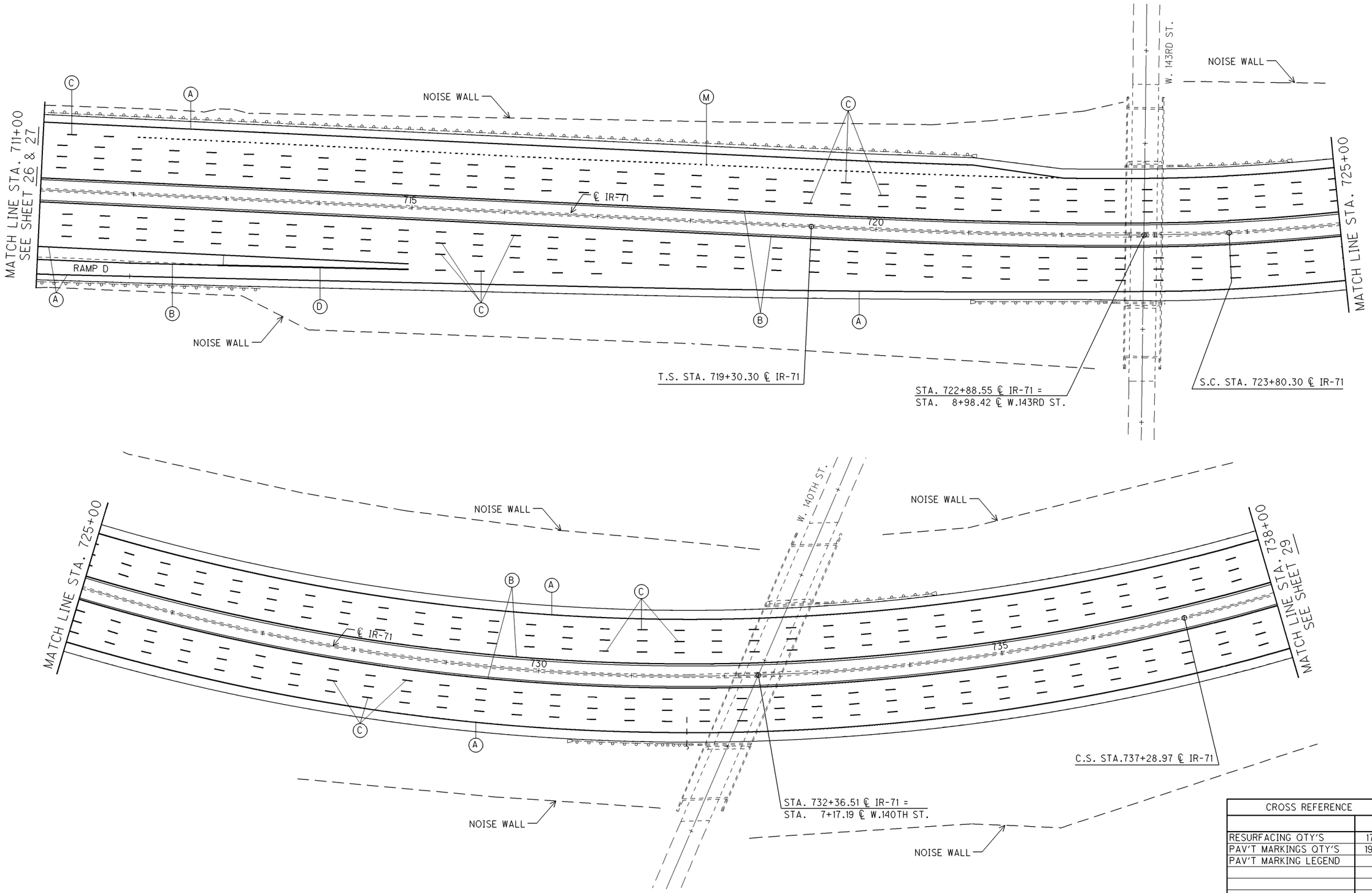

CROSS REFERENCE	
RESURFACING QTY'S	17-18
PAV'T MARKINGS QTY'S	19-20
PAV'T MARKING LEGEND	22

N

0 50 100 SCALE IN FEET

CALCULATED EMK
CHECKED LDH

PLAN SHEET
STA. 711+00 TO STA. 738+00

CUY-71-10.48

I:\PROJECTS\Pid83498\dgn\83498gp007.dgn 16-OCT-2008 12:34PM ekallio

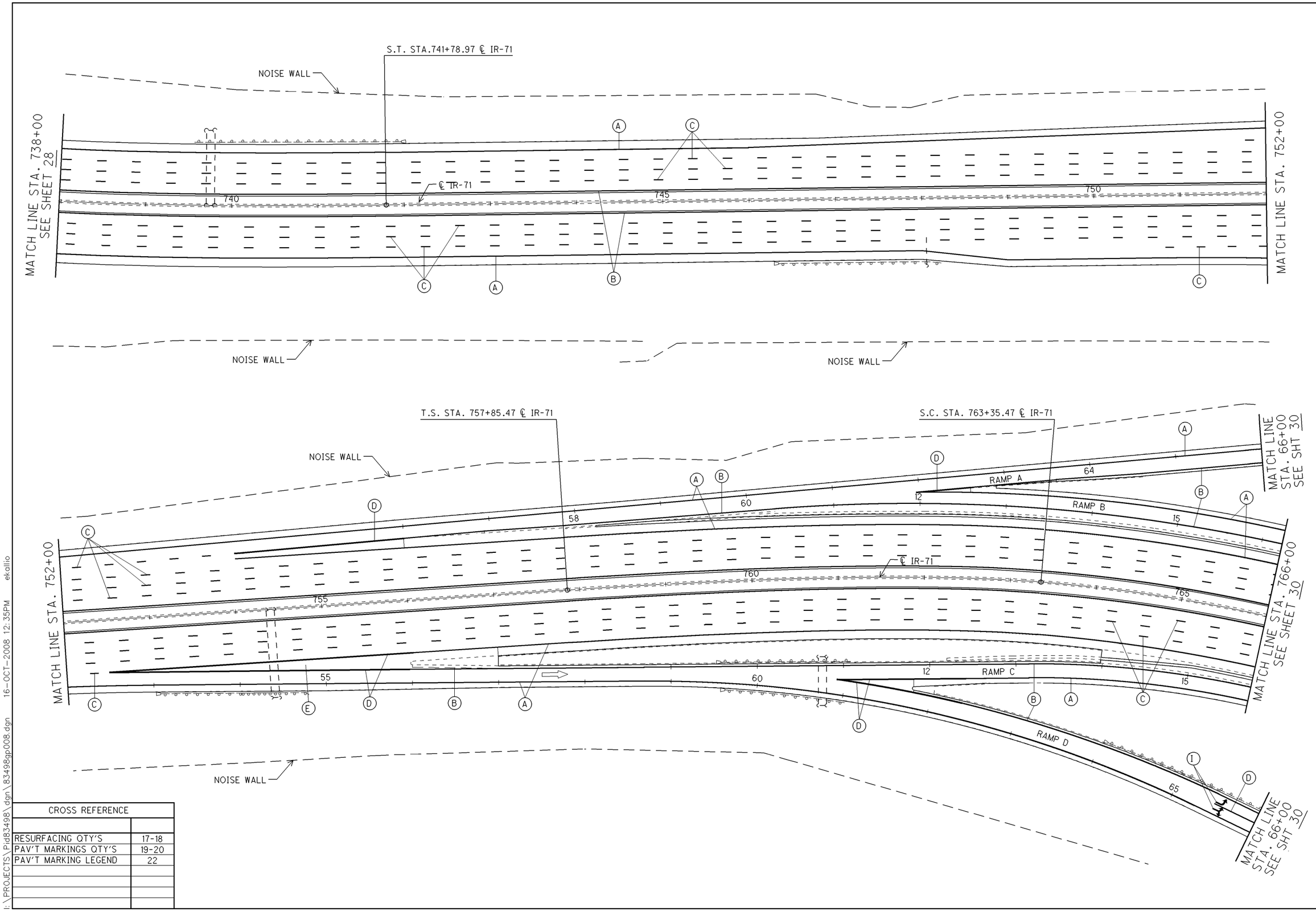

CROSS REFERENCE	
RESURFACING QTY'S	17-18
PAV'T MARKINGS QTY'S	19-20
PAV'T MARKING LEGEND	22

SCALE IN FEET
0 50 100

CALCULATED EMK
CHECKED LDH

PLAN SHEET
STA. 738+00 TO STA. 766+00

CUY-71-10.48

I:\PROJECTS\Pid83498\dgn\83498gp008.dgn 16-OCT-2008 12:35PM ekallio

STA. 71+69.41 ⅊ RAMP A =
STA. 17+05.02 ℄ W.130TH ST.

STA.10+00.00 ⅊ ROAD NO.1 =
STA.17+20.00 ℄ W.130TH ST.

C.S. STA. 772+30.47 ℄ IR-71

S.T. STA. 777+80.47 ℄ IR-71

STA. 769+88.99 ℄ IR-71 =
STA. 19+92.36 ℄ W.130TH ST.

STA. 68+24.10 ⅊ RAMP D =
STA. 10+00.00 ⅊ ROAD NO.2 =
STA. 22+86.02 ℄ W.130TH ST.

NOISE WALL

RAMP A

RAMP B

RAMP C

RAMP D

ROAD NO. 1

ROAD NO. 2

W. 130TH ST.

℄ IR-71

CR-1 CR-2 CR-3 CR-4 CR-5 CR-6 CR-7 CR-8 CR-9

SEE MEDIAN DETAIL

MATCH LINE STA. 66+00 SEE SHT 29

MATCH LINE STA. 766+00 SEE SHEET 29

MATCH LINE STA. 779+00 SEE SHEET 31

ESTIMATED QUANTITIES	
ITEM 202 - MEDIAN REMOVED	12 SY
ITEM 609 - CONCRETE MEDIAN	55 SF

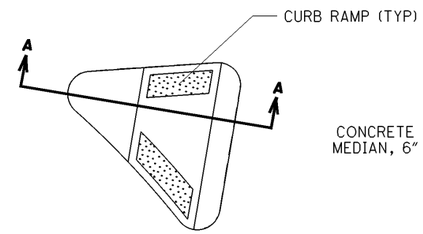

MEDIAN DETAIL

REPLACE AT SAME LOCATION AND SAME SIZE

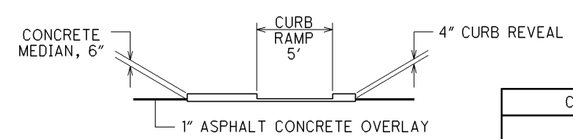

SECTION A-A

CROSS REFERENCE	
RESURFACING QTY'S	17-18
PAV'T MARKINGS QTY'S	19-20
PAV'T MARKING LEGEND	22

SCALE IN FEET 0 50 100

CALCULATED EMK
CHECKED LDH

PLAN SHEET
STA. 766+00 TO STA. 779+00

CUY-71-10.48

I:\PROJECTS\Pid83498\dgn\83498gp009.dgn 16-OCT-2008 12:36PM ekallio

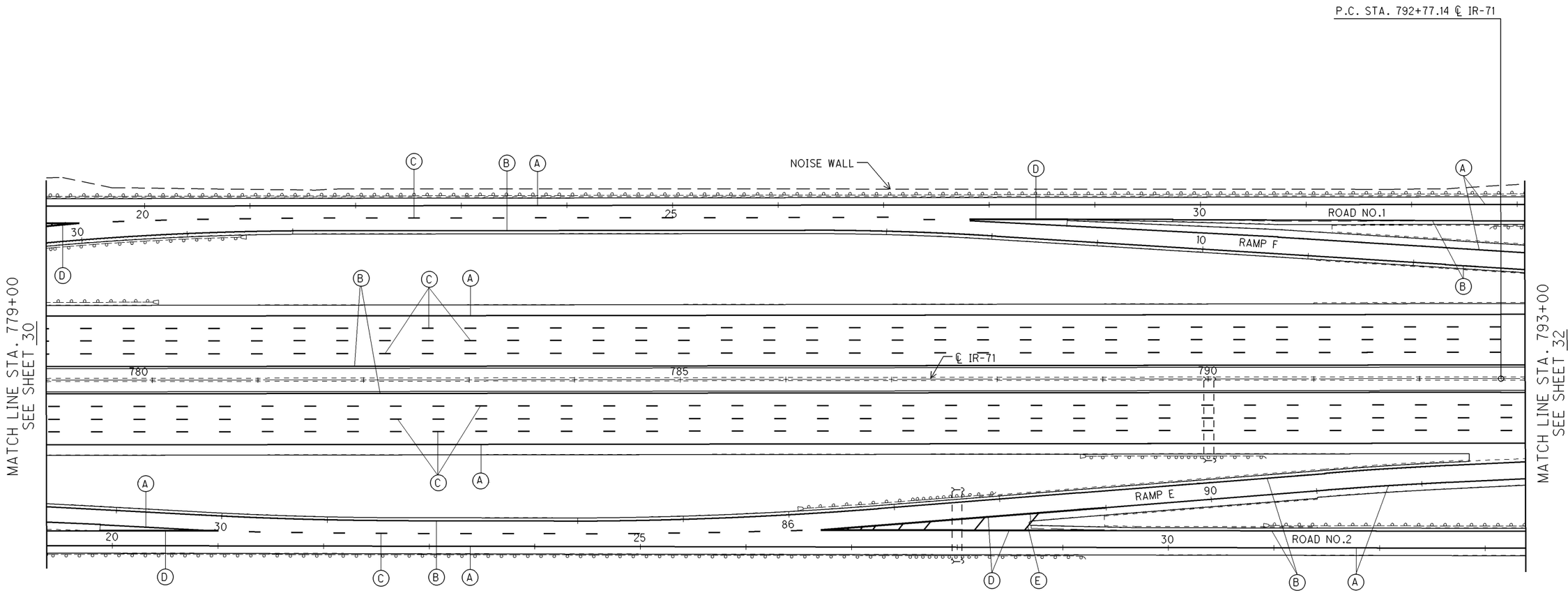

CROSS REFERENCE	
RESURFACING QTY'S	17-18
PAV'T MARKINGS QTY'S	19-20
PAV'T MARKING LEGEND	22

N

0 50 100
SCALE IN FEET

CALCULATED EMK
CHECKED LDH

PLAN SHEET
STA. 779+00 TO STA. 793+00

CUY-71-10.48

I:\PROJECTS\Pid83498\dgn\83498gp010.dgn 16-OCT-2008 12:36PM ekallio

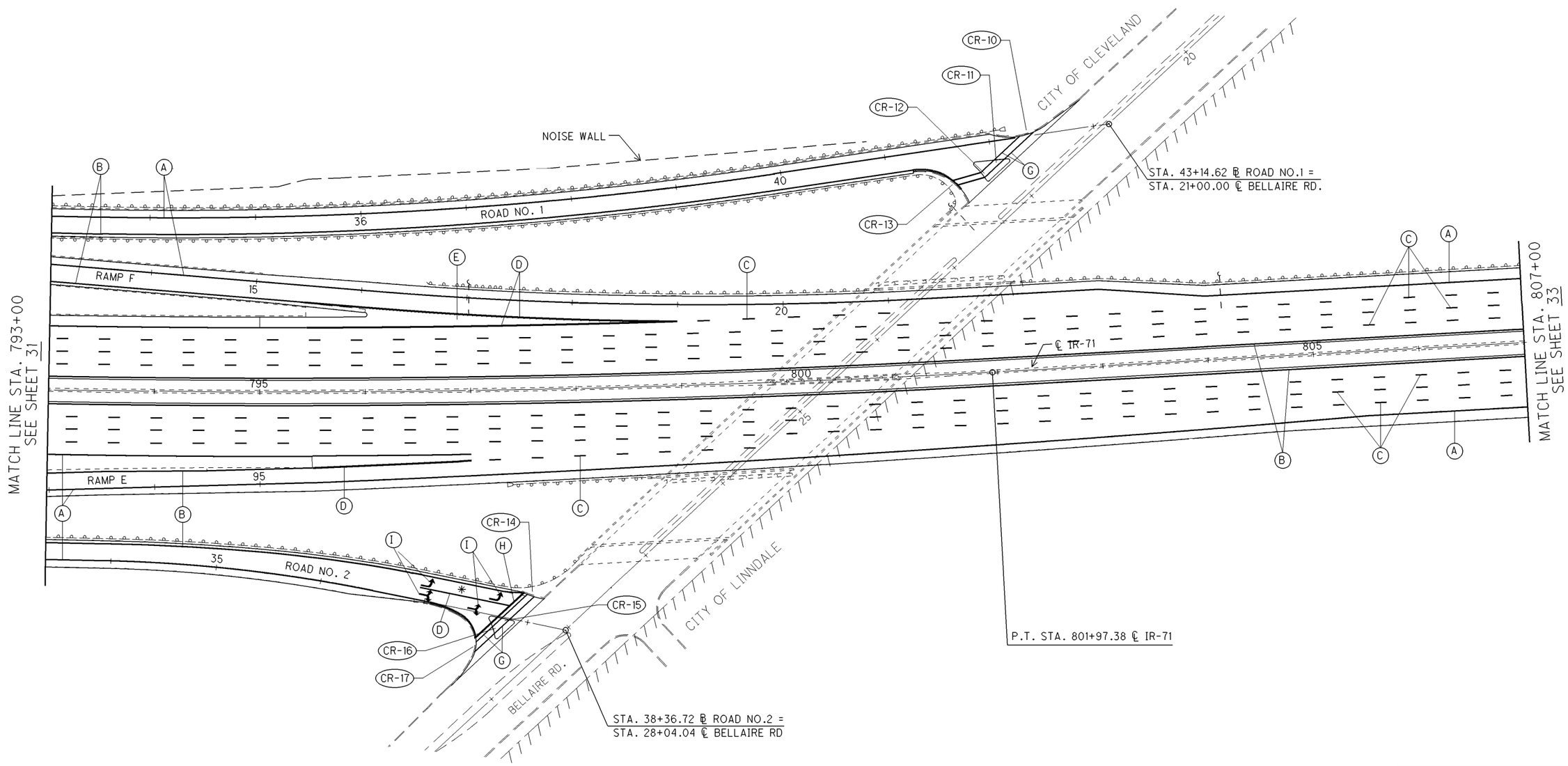

CROSS REFERENCE	
RESURFACING QTY'S	17-18
PAV'T MARKINGS QTY'S	19-20
PAV'T MARKING LEGEND	22

SCALE IN FEET 0 50 100

CALCULATED EMK
CHECKED LDH

PLAN SHEET
STA. 793+00 TO STA. 807+00

CUY-71-10.48

I:\PROJECTS\Pid83498\dgn\83498gp011.dgn 16-OCT-2008 12:38PM ekallio

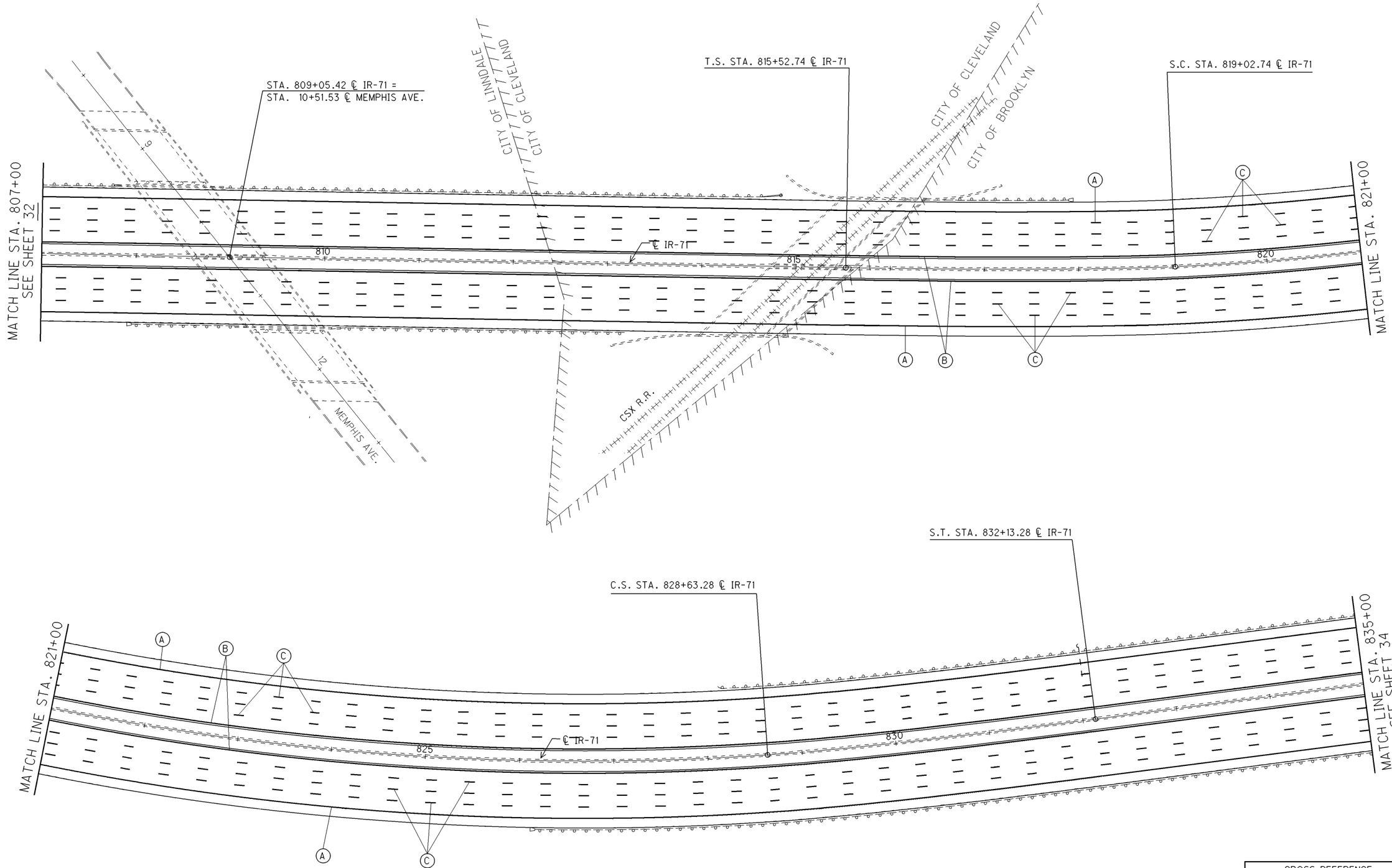

CROSS REFERENCE	
RESURFACING QTY'S	17-18
PAV'T MARKINGS QTY'S	19-20
PAV'T MARKING LEGEND	22

SCALE IN FEET 0 50 100

CALCULATED EMK
CHECKED LDH

PLAN SHEET
STA. 807+00 TO STA. 835+00

CUY-71-10.48

I:\PROJECTS\Pid83498\dgn\83498gp012.dgn 16-OCT-2008 12:38PM ekallio

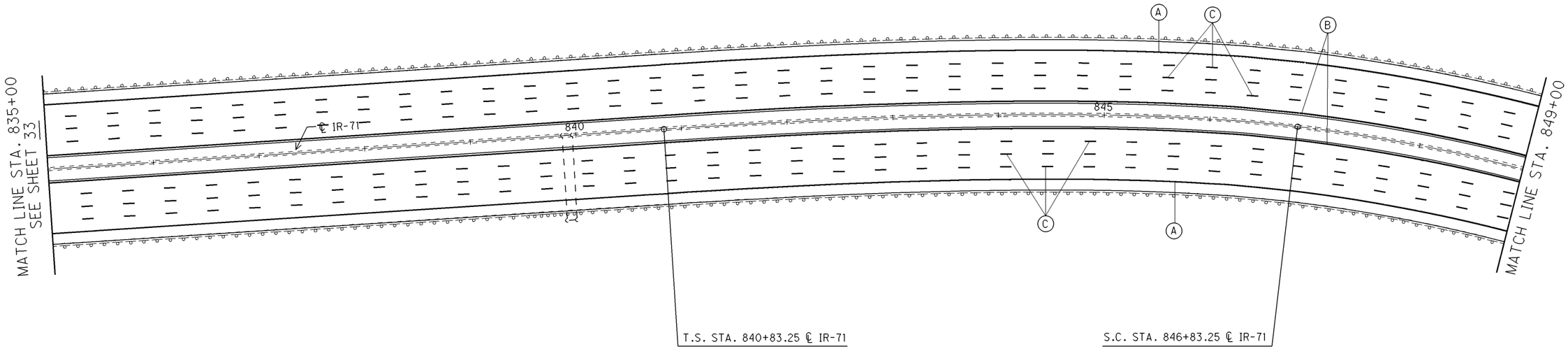

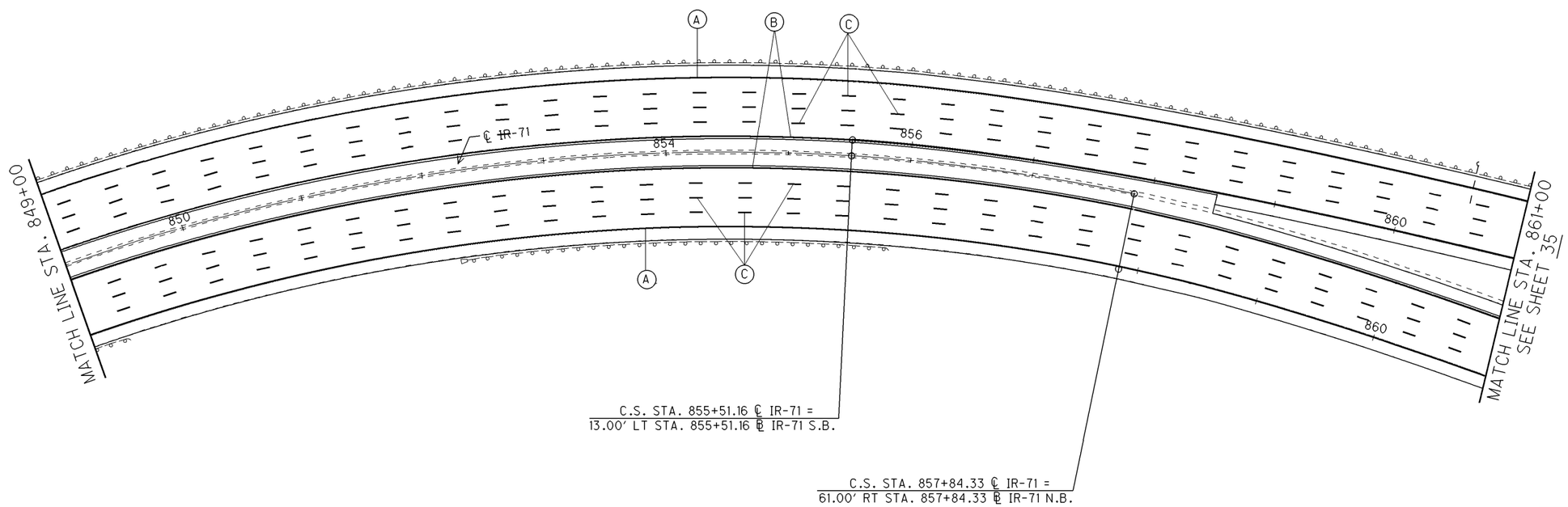

CROSS REFERENCE	
RESURFACING QTY'S	17-18
PAV'T MARKINGS QTY'S	19-20
PAV'T MARKING LEGEND	22

SCALE IN FEET 0 50 100

CALCULATED EMK
CHECKED LDH

PLAN SHEET
STA. 835+00 TO STA. 861+00

CUY-71-10.48

I:\PROJECTS\Pid83498\dgn\83498gp013.dgn 16-OCT-2008 12:39PM ekallio

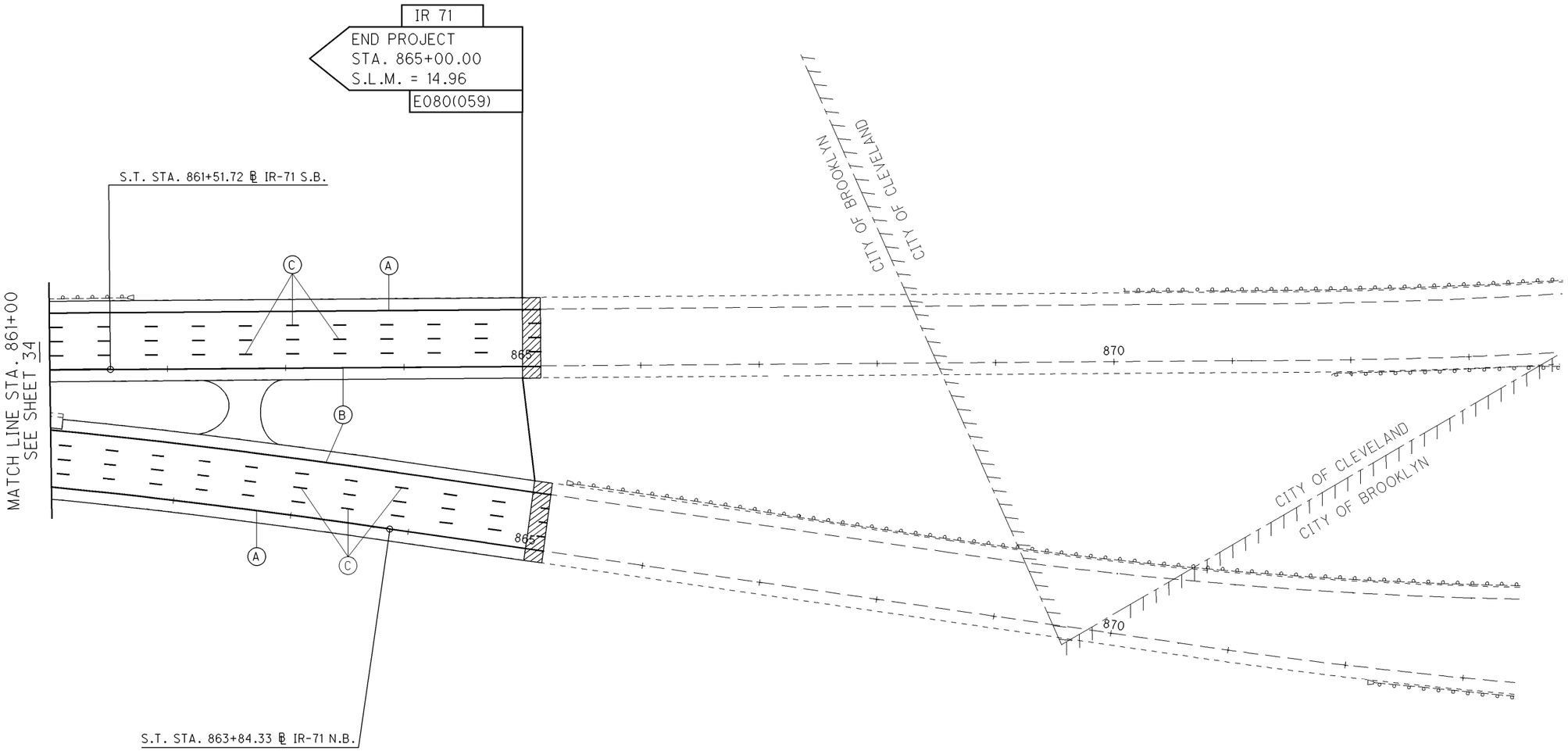

- BUTT JOINT

CROSS REFERENCE	
RESURFACING QTY'S	17-18
PAV'T MARKINGS QTY'S	19-20
PAV'T MARKING LEGEND	22

SCALE IN FEET 0 50 100

CALCULATED EMK
CHECKED LDH

PLAN SHEET
STA. 861+00 TO STA. 873+30

CUY-71-10.48

I:\PROJECTS\Pid83498\dgn\83498gp014.dgn 16-OCT-2008 12:45PM ekallio

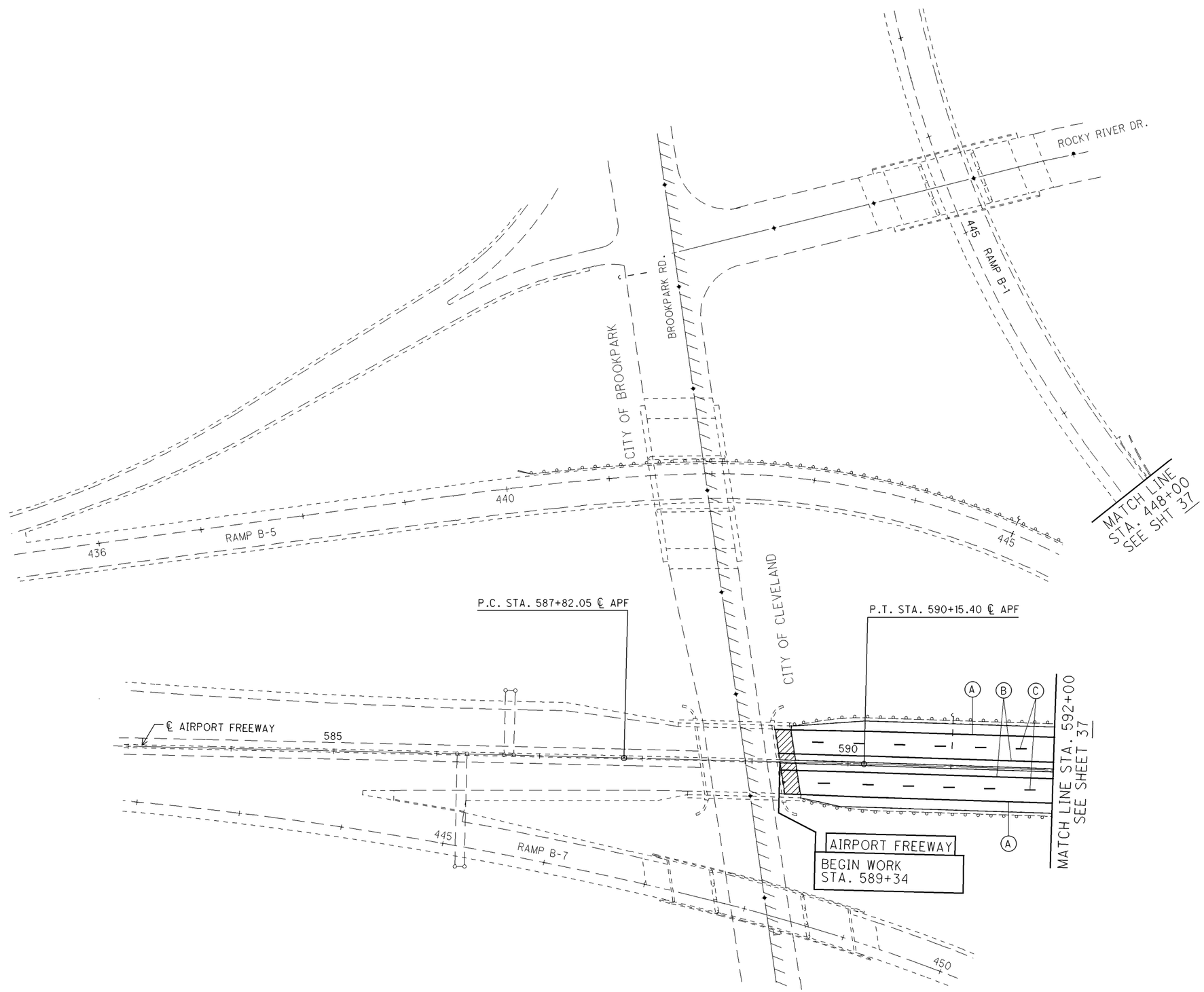

- BUTT JOINT

CROSS REFERENCE	
RESURFACING QTY'S	17-18
PAV'T MARKINGS QTY'S	19-20
PAV'T MARKING LEGEND	22

N

0 50 100
SCALE IN FEET

CALCULATED EMK
CHECKED LDH

PLAN SHEET - AIRPORT FREEWAY
STA. 583+00 TO STA. 592+00

CUY-71-10.48

36
39

I:\PROJECTS\Pid83498\dgn\83498gp015.dgn 16-OCT-2008 12:56PM ekallio

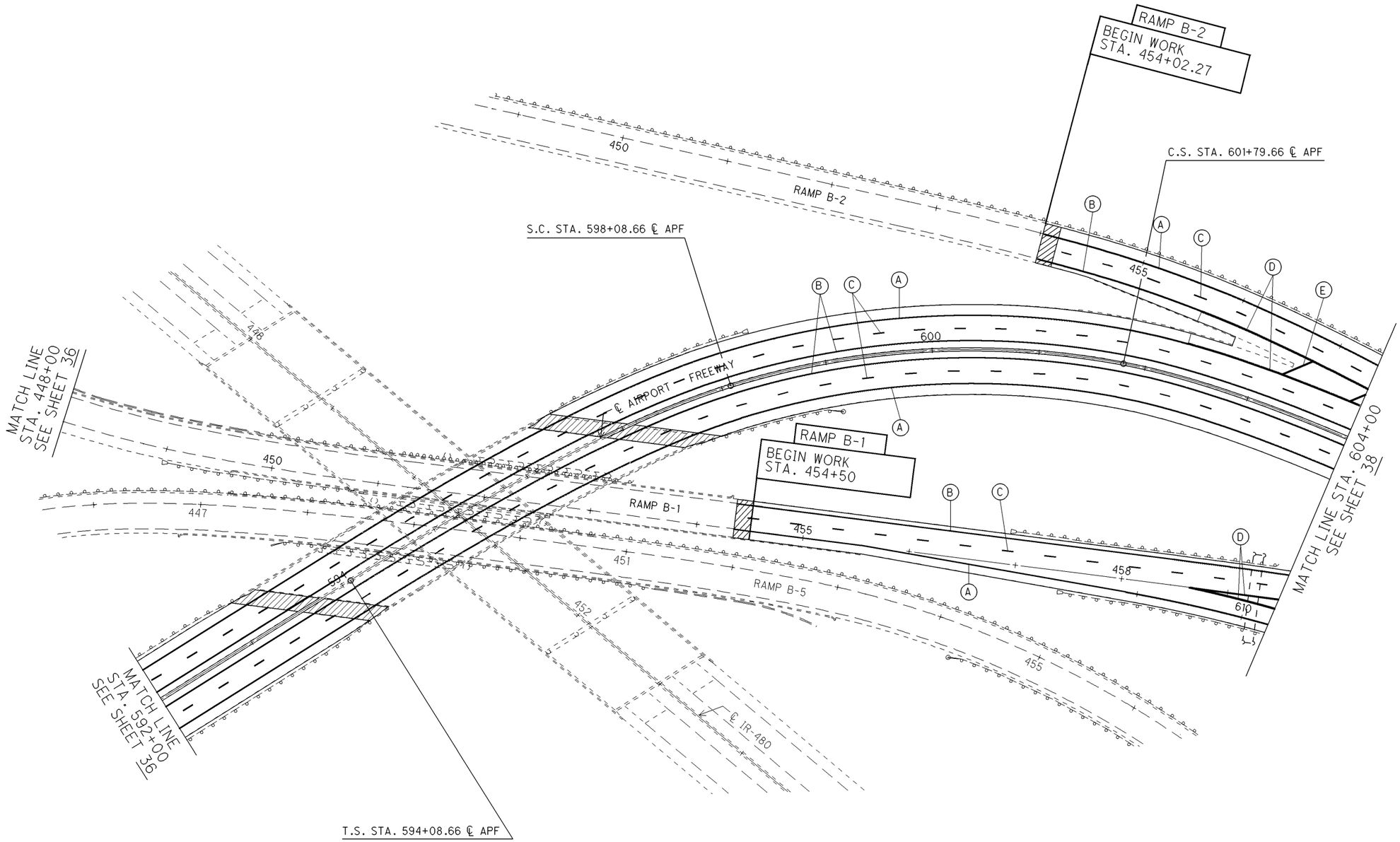

- BUTT JOINT

CROSS REFERENCE	
RESURFACING QTY'S	17-18
PAV'T MARKINGS QTY'S	19-20
PAV'T MARKING LEGEND	22

SCALE IN FEET 0 50 100

CALCULATED EMK
CHECKED ENF

PLAN SHEET - AIRPORT FREEWAY
STA. 592+00 TO STA. 604+00

CUY-71-10.48

I:\PROJECTS\Pid83498\dgn\83498gp016.dgn 16-OCT-2008 12:58PM ekallio

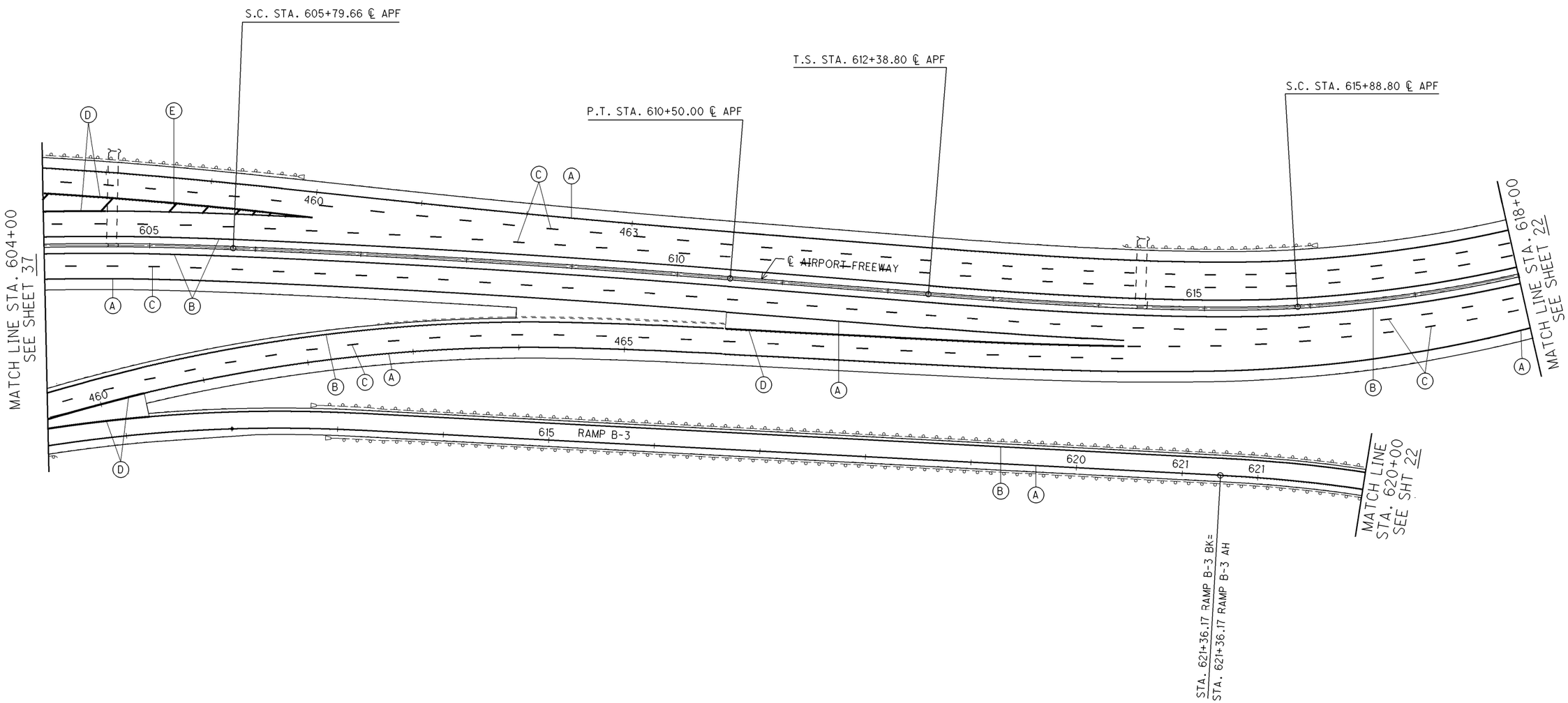

CROSS REFERENCE	
RESURFACING QTY'S	17-18
PAV'T MARKINGS QTY'S	19-20
PAV'T MARKING LEGEND	22

SCALE IN FEET 0 50 100

CALCULATED EMK
CHECKED LDH

PLAN SHEET - AIRPORT FREEWAY
STA. 604+00 TO STA. 618+00

CUY-71-10.48

I:\PROJECTS\Pid83498\dgn\83498gp017.dgn 16-OCT-2008 12:59PM ekallio

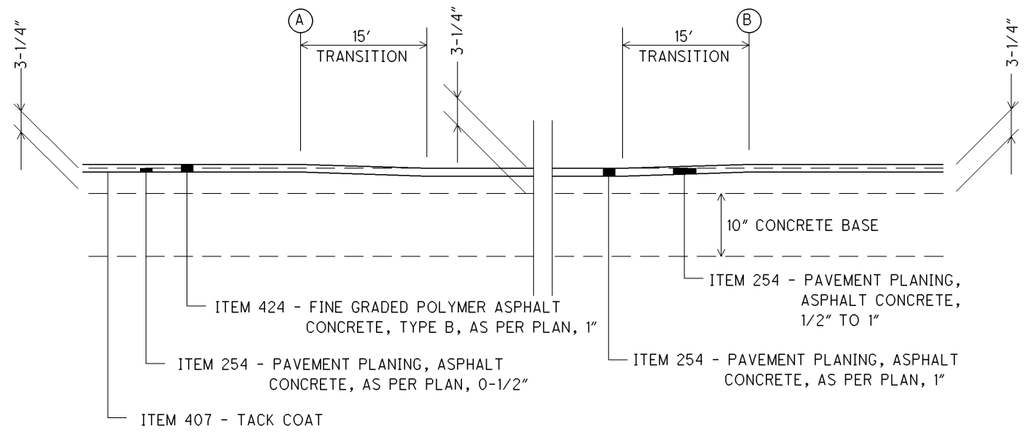

OVERLAY TRANSITION AT UNDERPASS

PLANING TRANSITION AREAS

LOCATION	STATION A	STATION B	LENGTH FOOT	AVERAGE WIDTH FOOT	TRANSITION AREA SQ YD	OVERPASS STRUCTURE	OVERPASS STREET
IR-71 NB	722+25	723+55	130	60	867	CUY-71-1227	W. 143RD ST
IR-71 SB	722+25	723+55	130	60	867	CUY-71-1227	W. 143RD ST
IR-71 NB	731+30	733+20	190	60	1267	CUY-71-1245	W. 140TH ST
IR-71 SB	731+60	733+50	190	60	1267	CUY-71-1245	W. 140TH ST
IR-71 NB	768+70	770+80	210	62	1447	CUY-71-1316	W. 130TH ST
IR-71 SB	769+00	771+10	210	62	1447	CUY-71-1316	W. 130TH ST
IR-71 NB	798+10	801+40	330	70	2567	CUY-71-1372	BELLAIRE RD
IR-71 SB	799+20	802+60	340	71	2682	CUY-71-1372	BELLAIRE RD
IR-71 NB	808+00	810+60	260	60	1733	CUY-71-1390	MEMPHIS AVE
IR-71 SB	807+40	810+00	260	60	1733	CUY-71-1390	MEMPHIS AVE
IR-71 NB	813+50	816+20	270	60	1800	CUY-71-1401	CSX RR
IR-71 SB	814+20	816+90	270	60	1800	CUY-71-1401	CSX RR
APF NB	620+30	623+40	310	52.5	1808	CUY-71-1016L	IR-71, SB
APF SB	621+00	625+00	400	52.5	2333	CUY-71-1016L	IR-71, SB
RAMP B	19+50	21+50	200	28	622	CUY-71-1316	W. 130TH ST
RAMP C	18+20	20+20	200	28	622	CUY-71-1316	W. 130TH ST

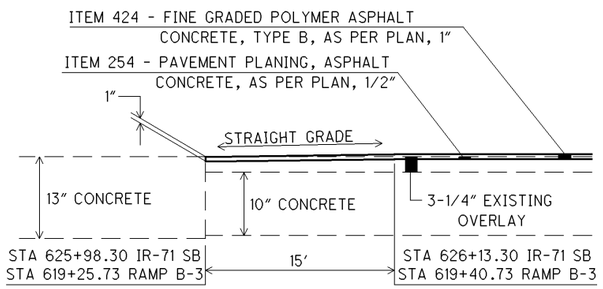

IR-71 SB AT STA. 625+98.30 &
RAMP B-3 AT STA. 619+25.73

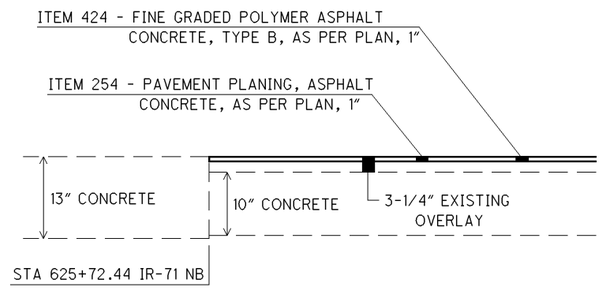

IR-71 NB AT STA. 625+72.44

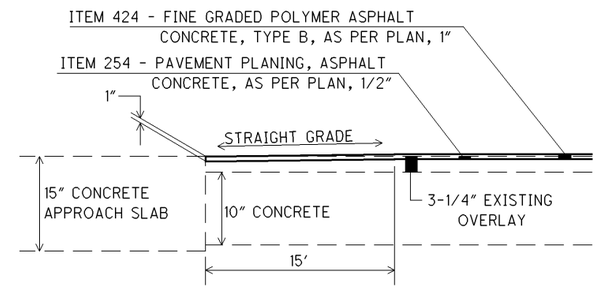

BRIDGE NOS. CUY-71-1114, 1147, 1174,
1174W, 1174E & 1188

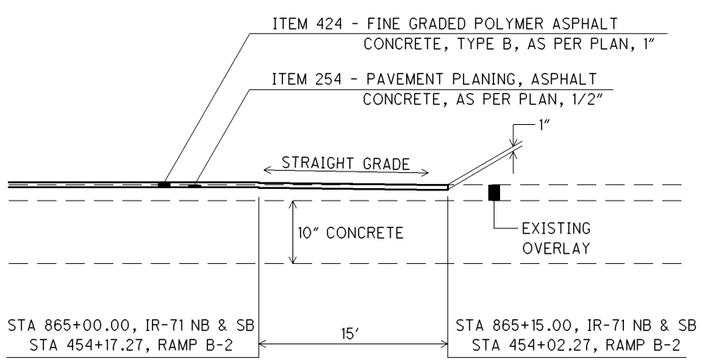

IR-71 NB & SB AT STA. 865+00 &
RAMP B-2 AT STA. 454+17.27

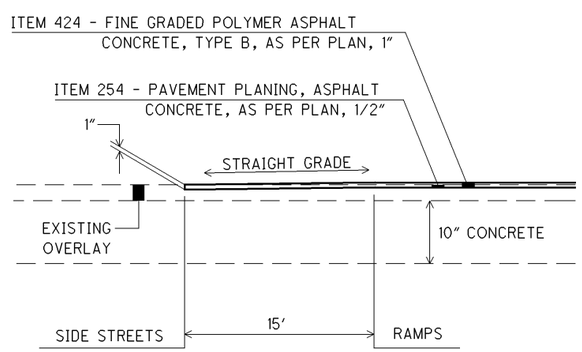

RAMPS AT SIDE STREETS

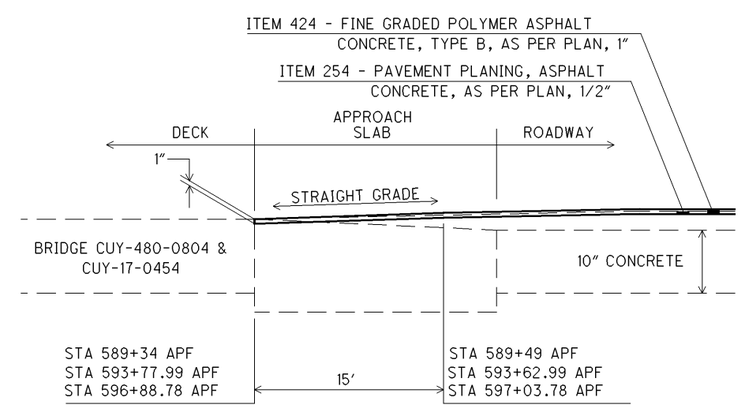

APF BRIDGES

CALCULATED EMK
CHECKED LDH

PAVEMENT TRANSITION DETAILS

CUY-71-10.48

I:\PROJECTS\Pid83498\dgn\B83498gm001.dgn 16-OCT-2008 1:00PM ekallio