STATE OF OHIO DEPARTMENT OF TRANSPORTATION

D01-GR-FY15

LOCATION MAP

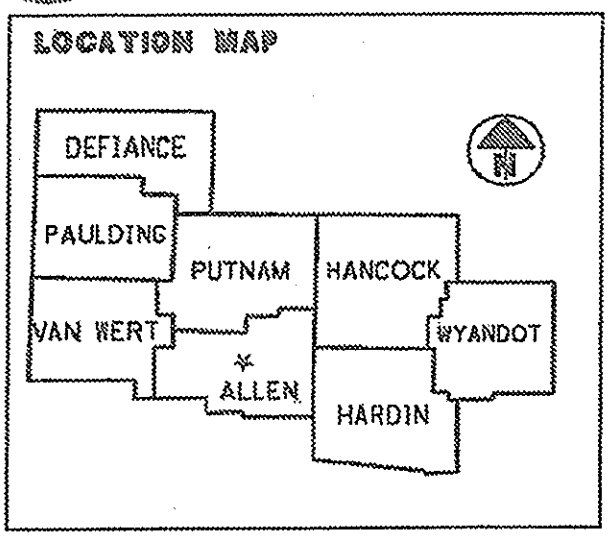

LATITUDE: 40° 46' 18" LONGITUDE: 84° 05' 34"

EARTH DISTURBED AREA:	N/A*
PROJECT EARTH DISTURBED AREA:	N/A*
EST. CONTRACTOR EARTH DISTURBED AREA:	N/A*
NOTICE OF INTENT EARTH DISTURBED AREA:	N/A*
RAILROAD INVOLVEMENT:	NONE

*TYPE OF PROJECT: MAINTENANCE

DESIGN DESIGNATION: NONE
DESIGN EXCEPTION: NONE

UNDERGROUND UTILITIES

CONTACT BOTH SERVICES
CALL TWO WORKING DAYS
BEFORE YOU DIG

CALL
1-800-362-2764
(TOLL FREE)
OHIO UTILITIES PROTECTION SERVICE
NON-MEMBERS MUST BE CALLED DIRECTLY

OIL & GAS PRODUCERS UNDERGROUND
PROTECTION SERVICE CALL: 1-800-925-0988

PID No. 92424

FEDERAL PROJECT No. NON-FEDERAL

STATE JOB No. 416949

CONSTRUCTION PROJECT No.

PROJECT DESCRIPTION
THIS PROJECT INCLUDES REPLACEMENT OF DETERIORATED GUARDRAIL POSTS IN DISTRICT 1

2013 SPECIFICATIONS
THE STANDARD SPECIFICATIONS OF THE STATE OF OHIO, DEPARTMENT OF TRANSPORTATION, INCLUDING CHANGES AND SUPLEMENTAL SPECIFICATIONS LISTED IN THE PROPOSAL SHALL GOVERN THIS IMPROVEMENT.

LIMITED ACCESS
THIS IMPROVEMENT IS ESPECIALLY DESIGNED FOR THROUGH TRAFFIC AND HAS BEEN DECLARED A LIMITED ACCESS HIGHWAY OF FREEWAY BY ACTION OF THE DIRECTOR IN ACCORDANCE WITH THE PROVISIONS OF SECTION 5511.02 OF THE OHIO REVISED CODE.

I HEREBY APPROVE THESE PLANS AND DECLARE THAT THE MAKING OF THIS IMPROVEMENT WILL NOT REQUIRE THE CLOSING OF THE HIGHWAY TO TRAFFIC AND THAT PROVISIONS FOR THE MAINTENANCE AND SAFETY OF TRAFFIC WILL BE AS SET FORTH IN THESE PLANS AND ESTIMATES.

APPROVED: _____
DISTRICT DEPUTY DIRECTOR

DATE: 3/6/14

APPROVED: _____
DIRECTOR, DEPARTMENT OF TRANSPORTATION

DATE: 3/2/15

PLANS PREPARED BY:
ODOT, DISTRICT 1 - P & E
Lima, OH

ENGINEERS SEAL:

STATE OF OHIO
James R. Clark
E-59426
REGISTERED
PROFESSIONAL ENGINEER

SIGN: _____

DATE: 3-6-14

STANDARD CONSTRUCTION DRAWINGS					SUPPLEMENTAL SPECIFICATIONS	
MT-97.10	07/18/14	TC-41.20	10/18/13		800	04/17/15
MT-105.10	07/19/13	TC-52.10	10/18/13		832	01/17/14
		TC-52.20	07/18/14			
		TC-61.30	07/18/14			
					SPECIAL PROVISIONS	

Contract Proposal Available @ www.contracts.dot.state.oh.us/home

STATE OF OHIO DEPARTMENT OF TRANSPORTATION

SCOPE OF WORK

THIS IS A DISTRICT WIDE GUARDRAIL REPAIR OPERATION WITH WORK IN ALLEN, HANCOCK & VAN WERT COUNTIES

THE INTENT OF THIS OPERATION IS TO REPLACE DETERIORATED GUARDRAIL POSTS, BLOCKOUTS AND HARDWARE.

THE LOCATION OF THE GUARDRAIL POST REPLACEMENTS ARE ON VARIOUS COUNTY ROAD OVER PASSES CROSSING US30 AND IR75.

COORDINATION OF CONTRACTORS

SINCE THE MAINTENANCE OF TRAFFIC AND WORK OF THIS PROJECT MAY OVERLAP OTHER PROJECTS, IT IS ESSENTIAL THAT EACH CONTRACTOR CONDUCT THEIR WORK AND COOPERATE WITH EACH OTHER IN SUCH A MANNER AS NOT TO HINDER THE PROGRESS OR COMPLETION OF THE WORK BEING PERFORMED BY THE OTHER CONTRACTOR.

PERSONAL PROTECTIVE EQUIPMENT (PPE)

THE CONTRACTOR SHALL FOLLOW ALL REQUIREMENTS OF SECTIONS III AND X OF THE OHIO DEPARTMENT OF TRANSPORTATION SAFETY &HEALTH STANDARD OPERATING PROCEDURE 220-006(SP) EFFECTIVE: JUNE 1, 2009 (EXCEPT AS AMENDED BELOW) AND ALL SUBSEQUENT UPDATES POSTED AT THE FOLLOWING WEBSITE:

HTTP://WWW.DOT.STATE.OH.US/
POLICY/POLICIESANDSOPS/POLICIES/220-006(SP).PDF

AMENDMENTS TO THE REQUIREMENTS OF THIS DOCUMENT ARE: III. HEAD PROTECTION (HARD HATS) ALL PERSONS WITHIN THE RIGHT-OF-WAY OF ANY HIGHWAY OR ANY OTHER TYPE OF ROADWAY OR CONSTRUCTION SITE WHO ARE EXPOSED TO EITHER TRAFFIC (VEHICLES USING THE HIGHWAY FOR PURPOSES OF TRAVEL) OR CONSTRUCTION EQUIPMENT WITHIN THE WORK AREA, REGARDLESS OF JOB TYPE, SHALL WEAR APPROPRIATE HEAD PROTECTION. ALL HARD HATS MUST MEET OR EXCEED ANSI Z89.1-2003 TYPE 1 CLASS E-

X. HIGH VISIBILITY SAFETY APPAREL
ALL PERSONS WITHIN THE RIGHT-OF-WAY OF ANY HIGHWAY OR ANY OTHER TYPE OF ROADWAY OR CONSTRUCTION SITE WHO ARE EXPOSED TO EITHER TRAFFIC (VEHICLES USING THE HIGHWAY FOR PURPOSES OF TRAVEL) OR CONSTRUCTION EQUIPMENT WITHIN THE WORK AREA, REGARDLESS OF JOB TYPE, SHALL WEAR A HIGH-VISIBILITY SAFETY VEST THAT MEETS THE PERFORMANCE CLASS 2 OR CLASS 3 REQUIREMENTS OF THE ANSI/ISEA 107-2004 PUBLICATION ENTITLED " AMERICAN NATIONAL STANDARD FOR HIGH-VISIBILITY SAFETY APPAREL AND HEADWEAR."

WORKERS MAY WEAR AN ANSI CLASS II OR ANSI CLASS III APPROVED RAIN SUIT OR JACKET WITHOUT A SAFETY VEST OVER IT. HIGH-VISIBILITY T-SHIRTS, SWEATSHIRTS, OR ZIP UP HOODIES ARE NOT ACCEPTABLE. ALL WORKERS SHALL WEAR A SAFETY VEST OVER THE T-SHIRTS, SWEATSHIRTS, AND ZIP-UP HOODIES, REGARDLESS OF THEIR ANSI RATING.

GUARDRAIL, MISC.: POST AND BLOCKOUT REPLACEMENT

THE CONTRACTOR SHALL REMOVE THE EXISTING DETERIORATED POST AND BLOCKOUT AND REPLACE WITH A NEW TYPE 5 POST AND BLOCKOUT. THE CONTRACTOR SHALL ALSO PROVIDE NEW HARDWARE TO REATTACH THE GUARDRAIL TO THE NEW POST AND BLOCKOUT.

ALL MATERIALS, LABOR, EQUIPMENT & INCIDENTALS REQUIRED TO COMPLETE THE POST AND BLOCKOUT REPLACEMENT PER THE ABOVE NOTE SHALL BE INCLUDED IN THE UNIT BID PER EACH FOR ITEM 606 GUARDRAIL MISC.: POST AND BLOCKOUT REPLACEMENT.

GUARDRAIL, MISC.: 6" X 8" POST AND BLOCKOUT REPLACEMENT

THE CONTRACTOR SHALL REMOVE THE EXISTING DETERIORATED POST, BLOCKOUT AND ANY CONCRETE ANCHORING SURROUNDING THE POST AND REPLACE WITH A NEW TYPE 5 POST, BLOCKOUT AND CONCRETE. THE CONTRACTOR SHALL ALSO PROVIDE NEW HARDWARE TO REATTACH THE GUARDRAIL TO THE NEW POST AND BLOCKOUT.

ALL MATERIALS, LABOR, EQUIPMENT & INCIDENTALS REQUIRED TO COMPLETE THE POST AND BLOCKOUT REPLACEMENT PER THE ABOVE NOTE SHALL BE INCLUDED IN THE UNIT BID PER EACH FOR ITEM 606 GUARDRAIL MISC.: 6" X 8" POST AND BLOCKOUT REPLACEMENT.

ENVIRONMENTAL COMMITMENTS

1. ALL WORK MUST OCCUR WITHIN EXISTING RIGHT OF WAY.
2. NO ROADWAY DITCHES AND/OR BACKSLOPES WILL BE RELOCATED.
3. ANY AND ALL SPOILS MUST BE DISPOSED OF PROPERLY AT AN UPLOAD STATION.
4. NO WORK, MATERIAL, OR EQUIPMENT IS PERMITTED WITHIN WETLANDS, STREAMS, OR OTHER WATERS ANT ANY TIME.
5. THE CONTRACTOR SHALL TAKE ALL PRECAUTIONS TO PREVENT ANY MATERIAL FROM GETTING INTO A WETLAND, STREAM, OR OTHER WATER. ANY MATERIAL THAT MAY GET INTO A WATER MUST BE REMOVED IMMEDIATELY THROUGH NON-MECHANICAL MEANS.

TRAFFIC MAINTENANCE

NORMAL DIRECTIONAL TRAFFIC SHALL BE MAINTAINED ON THE ROADWAY AT ALL TIMES DURING THE CONSTRUCTION PERIOD IN ACCORDANCE WITH THE STANDARD CONSTRUCTION DRAWINGS AND THE OHIO MANUAL OF UNIFORM TRAFFIC CONTROL DEVICES AS APPROVED BY THE ENGINEER.

ITEM 614, MAINTAINING TRAFFIC (LANES OPEN DURING HOLIDAYS)

No work shall be performed and the same number of lanes as were available at the start of the project shall be open to traffic during the following designated holidays :

Christmas	Fourth of July
New Years	Labor Day
Memorial Day	Thanksgiving

The period of time that the lanes are to be open depends on the day of the week on which the holiday or event falls. The following schedule shall be used to determine this period:

Day of holiday	Time all lanes must be open to traffic
Sunday	12:00N Friday through 6:00 AM Monday
Monday	12:00N Friday through 6:00 AM Tuesday
Tuesday	12:00N Monday through 6:00 AM Wednesday
Wednesday	12:00N Tuesday through 6:00 AM Thursday
Thursday	12:00N Wednesday through 6:00 AM Monday
Friday	12:00N Thursday through 6:00 AM Monday
Saturday	12:00N Friday through 6:00 AM Monday

No extensions of time shall be granted for delays in material deliveries, unless such delays are industry wide, or for labor strikes, unless such strikes are area wide.

Should the contractor fail to meet any of these requirements, the Contractor shall be assessed a disincentive in the amount of $50 for each fifteen (15) minutes the above described lane closure restrictions are violated, except lane closures on IR-75 shall be assessed a disincentive amount as per the lane use table in these plans.

NOTES

GENERAL: Components shown on this drawing are used in a variety of guardrail systems. See individual guardrail drawing for specific applications.

See CMS 606 for guardrail specifications not covered on these drawings.

Refer to AASHTO M 180 for dimensional details of W-Beam and Thrie-Beam rail elements, related buffer and end sections, beam splices, post and splice bolts, nuts, and Type 1 W-Beam to Thrie-Beam Transition sections.

RAIL ELEMENTS: W-Beam Rail has an effective length of 12'-6" unless otherwise specified, with ¾" x 2½" post bolt slots on 6'-3" centers regardless of post spacing. Field punch or drill bolt holes or slots for irregularly spaced posts as specified in CMS 606.04.

RAIL SPLICES: Lap splices between two rail elements or between a rail and terminal connector in the direction of traffic. Lap the buffer or flared end sections in the direction of traffic.

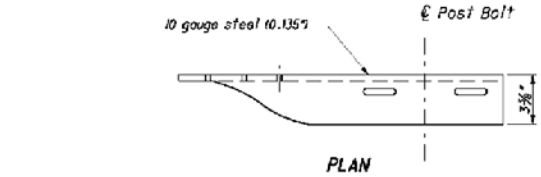

PLAN

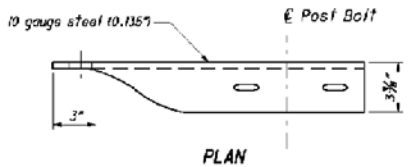

PLAN

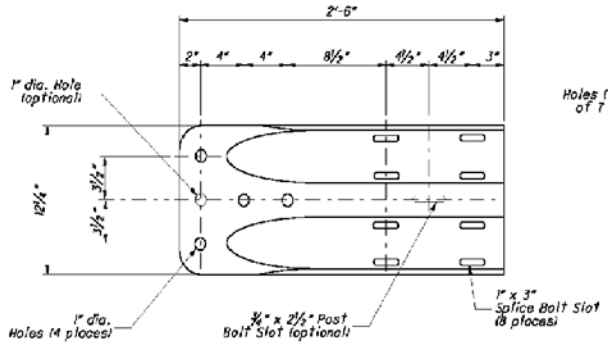

ELEVATION
W-BEAM TERMINAL CONNECTOR

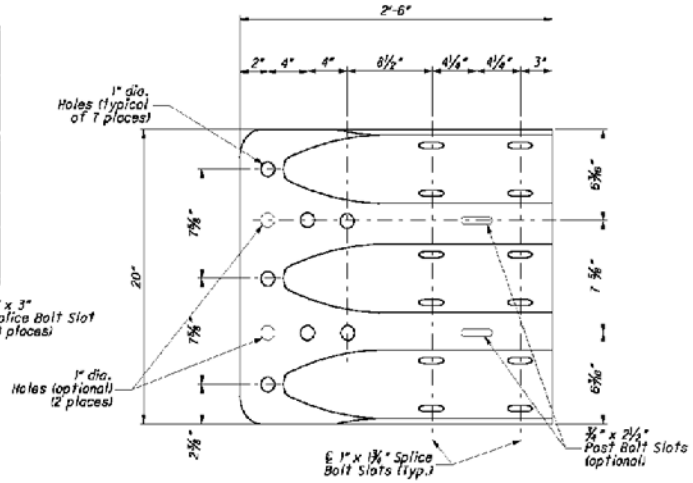

ELEVATION
THRIE-BEAM TERMINAL CONNECTOR

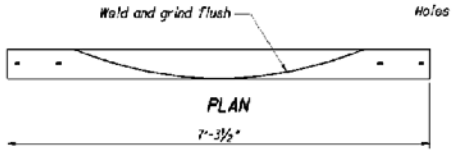

PLAN

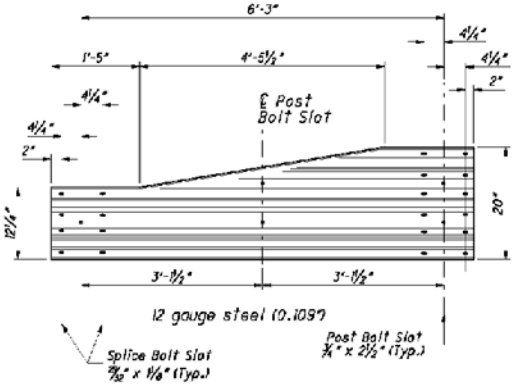

ELEVATION
TYPE 2 TRANSITION SECTION
(Asymmetric W to Thrie-Beam)

For details of Type 1 Transition Section (Symmetric), refer to AASHTO M 180, Figure 4.

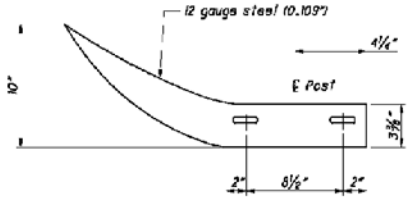

PLAN

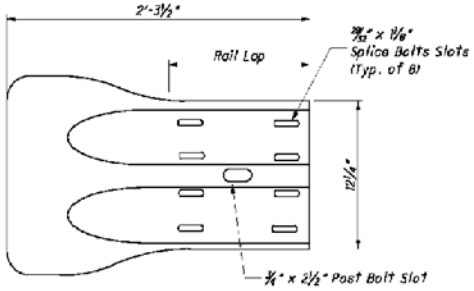

ELEVATION
W-BEAM FLARED END SECTION

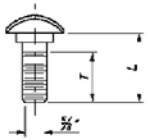

GUARDRAIL BOLT (For Post and Splice Bolts)		
L	T min.	Bolt Use
18" (Standard Rail)	4"	Type 5: WP/WB, PB
26" (Barrier Rail)		
10"	4"	Type 5: SP/WB, PB
1¼"	1⅛"	Splice Bolt

WP = Wood Post; SP = Steel Post; WB = Wood Blackout; PB = Plastic Blackout

Longer Bolt may be needed for round Wood Post larger than 8" dia.

OFFICE OF ROADWAY ENGINEERING

DESIGNED | REVIEWED BY | REVISION DATE | PIS NUMBER

PLAN INSERT SHEET

GUARDRAIL DETAILS (Rail Components)

PIS GR-1.1

1 / 3

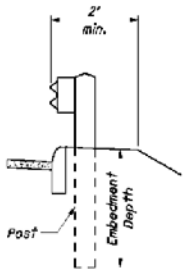

DETAIL A

See POST EMBEDMENT DEPTH Note

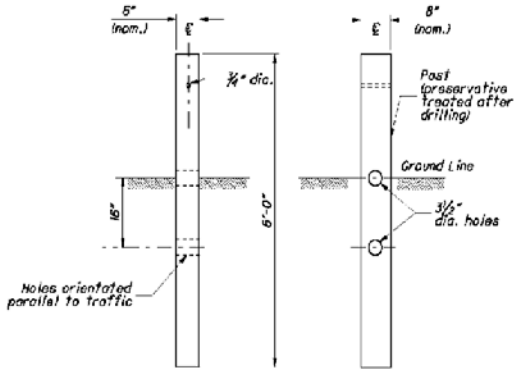

FRONT SIDE

TYPE 1 BREAKAWAY CRT POST

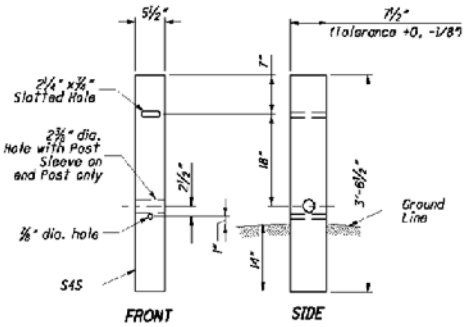

FRONT SIDE

TYPE 2 BREAKAWAY CRT POST

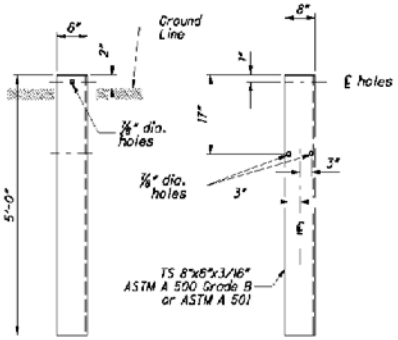

FRONT SIDE

STEEL GROUND TUBE

NOTES

GUARDRAIL HEIGHT: For initial installation, construct the guardrail within ± 1" of the standard height, h, or **29"** to the top of W-Beam rail. (See MEASURING GUARDRAIL HEIGHT Detail.)

When subsequent projects, such as resurfacings, affect the height of existing guardrail, the finished height is to be within ±2.5" of the standard height.

POST EMBEDMENT DEPTH: Standard embedment is 3'-5" min. Where less than 2' of graded shoulder width (10:1 or flatter) exists, measured from the face of the guardrail (see DETAIL "A"), use longer posts so that a minimum of 5'-5" embedment depth is provided. Payment for the longer posts will be made at the unit price bid for **ITEM 606 - GUARDRAIL POST, 9', Each.**

SPECIAL POST MOUNTINGS: Install posts located over a drainage inlet or structure as shown in the FOOTING ANCHOR Detail, or anchor per the details shown on **SCD GR-2.2.**

Install posts located over a footing with a cover of less than 2'-6" with a footing anchor as detailed here. (A plate, as detailed on SECTION B-B of **SCD GR-2.2**, may be used as an alternative attachment method.) Where the cover is between 2'-6" and 3'-5", the footing anchor may be omitted and the post encased instead with 4" (min.) of concrete.

Do not drive posts located over a culvert with less than 4'-3" of cover; instead set in drilled or dug holes. Where the available post embedment depth is less than 3'-5", encase the post with a minimum of 4" concrete.

All costs associated with special post mountings are included in the unit price bid of Item 606 Guardrail of the Type specified in the plans.

ANCHORS: Holes and grouting shall comply with CMS 510. Use either cement or non-shrink, nonmetallic grout.

Expansion shield anchors as specified in CMS 712.01 may be substituted except where concrete deterioration has occurred, as determined by the Engineer. Where self-drilling anchors are used, drill the holes with the expansion shield (not by a drill bit) and install the shield flush with the concrete surface.

PROTECTIVE COATING: In lieu of the complying with CMS 710.06, coat expansion shields, anchors and concrete insert anchor assemblies embedded in concrete in accordance with ASTM A 153 or be of stainless steel. Any bolts screwed into these devices shall meet CMS 710.06. (See sheet 3 for Concrete Insert Anchor Assembly Detail.)

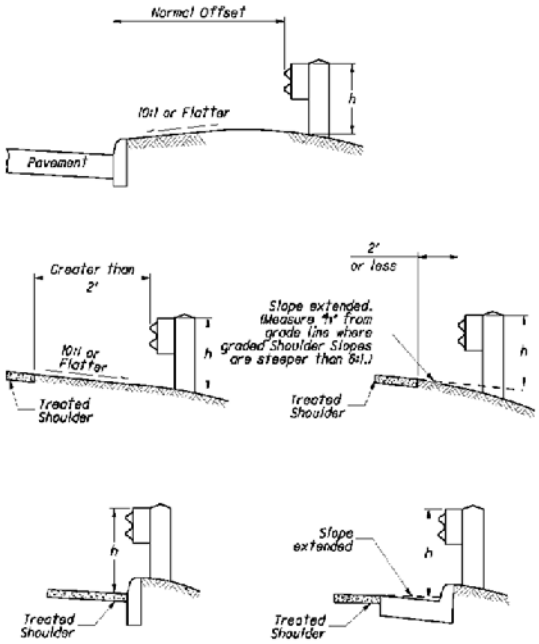

h = Standard Height (See GUARDRAIL HEIGHT Note)

MEASURING GUARDRAIL HEIGHT

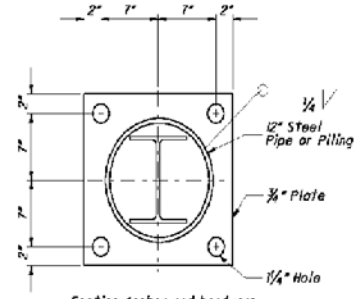

Footing Anchor and hardware need not be galvanized

SECTION A-A

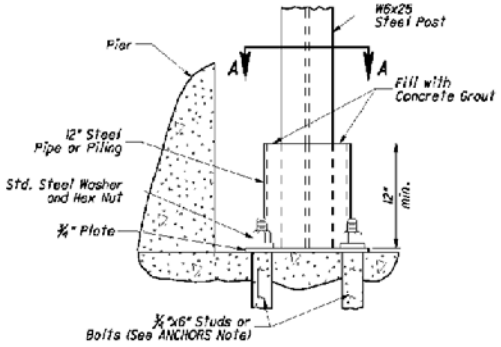

ELEVATION
FOOTING ANCHOR

See SPECIAL POST MOUNTINGS Note.

OFFICE OF ROADWAY ENGINEERING

DESIGNED | REVIEWED | REVISION DATE | PIS NUMBER

PLAN INSERT SHEET

GUARDRAIL DETAILS (Rail Components)

PIS GR-1.1

2 / 3

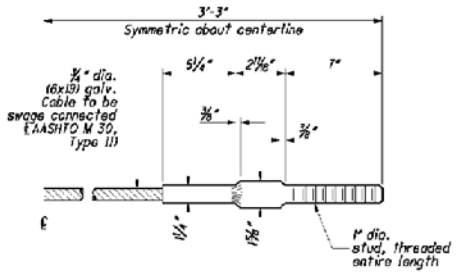

STANDARD SWAGED FITTING AND STUD

CABLE ANCHOR

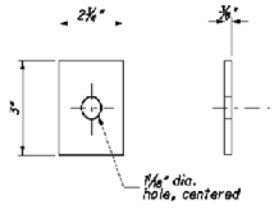

END PLATE

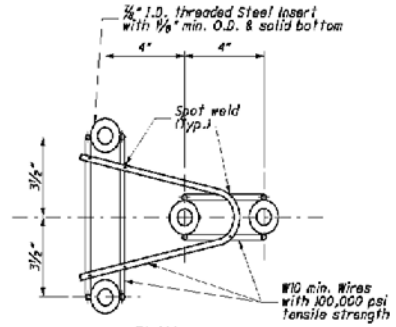

PLAN

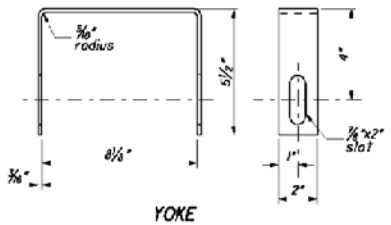

YOKE

Two required in Assembly

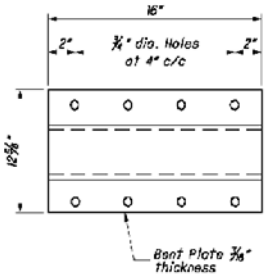

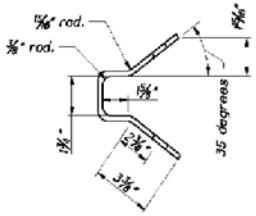

ANCHOR BRACKET

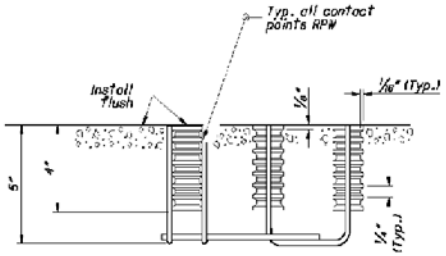

Four ⅞" Bolts required

ELEVATION

CONCRETE INSERT ANCHOR ASSEMBLY (W-BEAM ONLY)

See ANCHORS and PROTECTIVE COATINGS Notes on Sheet 2

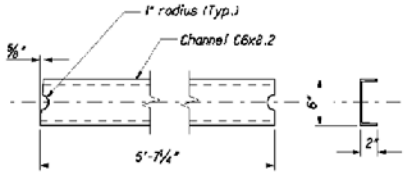

STRUT

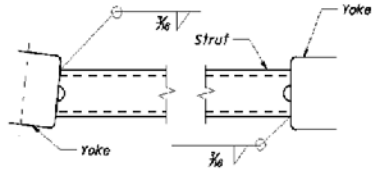

Channel legs shown down. For opposite hand, install Channel legs up.

STRUT AND YOKE ASSEMBLY

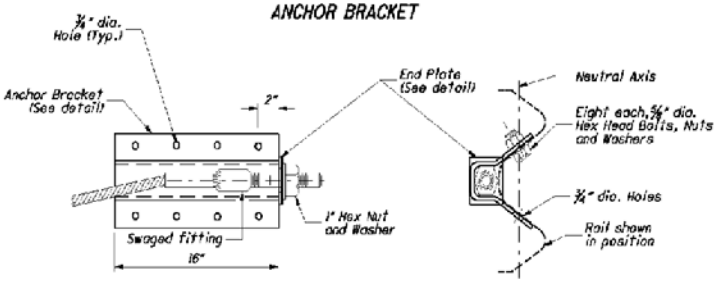

ANCHOR BRACKET ASSEMBLY DETAILS

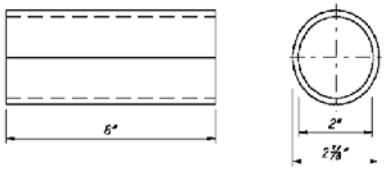

POST SLEEVE

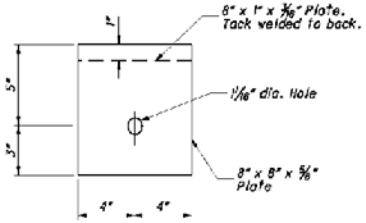

BEARING PLATE

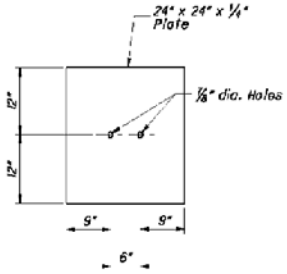

SOIL PLATE

OFFICE OF ROADWAY ENGINEERING

REVISION DATE | DESIGNED | DRAWN | CHECKED

PIS NUMBER

PLAN INSERT SHEET

GUARDRAIL DETAILS (Rail Components)

PIS GR-1.1

3 / 3

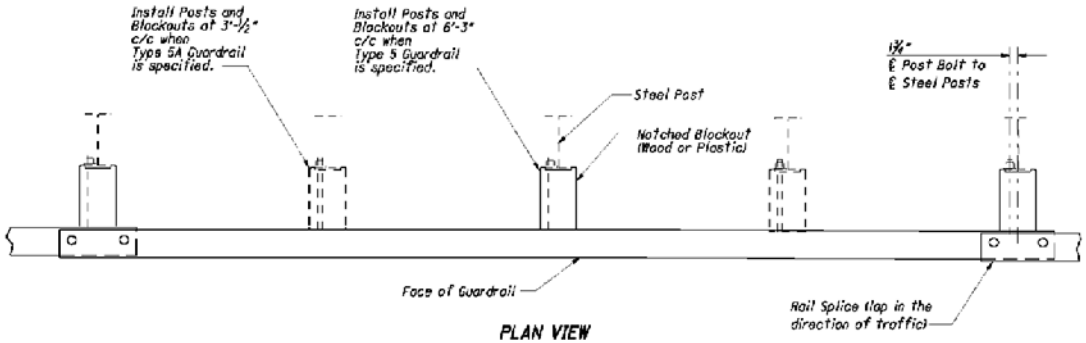

PLAN VIEW
(Steel Posts shown)

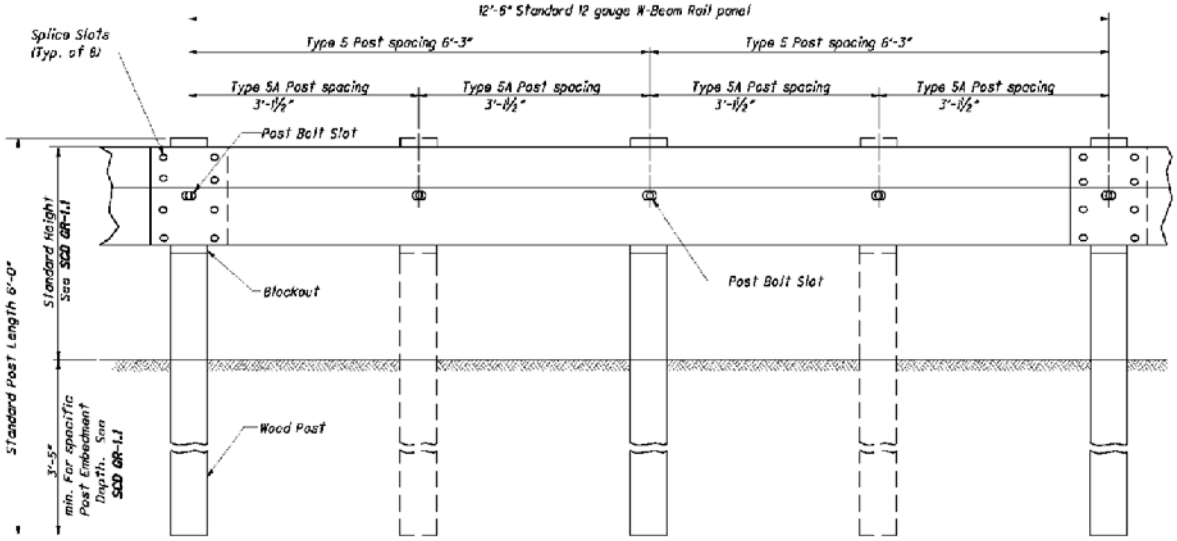

ELEVATION
(Wood Posts shown)

NOTES

RAIL: Use W-Beam rail meeting AASHTO M 180 Type II Class A, as specified in CMS 606.

POSTS: Posts may be constructed of wood or steel. Wood posts may be round or 6"x8" square-sawed.

Use round wood posts on runs of single-sided rail. The round posts shall be 8"±1 in diameter at the top and not more than 3" larger at the butt with a uniform taper.

Fabricated wood posts with square ends. Posts shall be pressure-treated as per CMS 710.14. Bore bolt holes and, if required, trim the tops of posts after the posts are set.

Steel posts are to be W6x9 or W6x8.5 galvanized steel. Use the same type of post throughout the length of the project unless otherwise specified in the plans or permitted by the Engineer.

All posts are 6'-0" long unless specified otherwise in the Contract Document. Posts may be set in drilled holes or may be driven to grade.

WELDED BEAM POSTS: Welded beam guardrail posts may be used for Item 606, Guardrail, provided the web and flange sizes are as shown here. Welding of the web to the flanges must comply with ASTM A 765, Class 1, using Grade 36 steel (250 MPa yield point) with the following exceptions:

Sec. 7.2 Test reports of tensile properties for each lot shall accompany each shipment.

Sec. 12 Beams that have imperfections repaired by welding shall not be accepted for use in Item 606.

Sec. 13 Random samples shall be tested by the Department from materials delivered to the project site, or other locations designated by the Laboratory.

ALTERNATE POSTS: Engineered guardrail posts having met NCHRP 350 criteria, and listed on the **Office of Materials Management's** Approved List are permitted as an equal alternate when installed according to the Manufacturer's instructions and within the limitations shown on the Approved List.

BLOCKOUTS: Blockout dimensions are dependent on post used. Wood Blockouts are to be pressure treated as specified in CMS 710.14. Bore bolt holes. Approved alternate blockouts may be used in lieu of the wood blockouts shown. The approved list is maintained by the **Office of Roadway Engineering.**

WASHERS: Install appropriate sized standard galvanized steel washers on the nut side of bolts installed on wood posts.

DELINEATION: For barrier reflectors, see CMS 626.

MISCELLANEOUS: For other guardrail details, see **SCD GR-1.1.**

STEEL BEAM POSTS (English)

Size	Beam depth	Flange width	Flange thickness	Web thickness
Rolled W6x8.5	5.8"	3.94"	0.193"	0.170"
Rolled W6x9	5.9"	3.94"	0.215"	0.170"
Welded 6x8.5	6.0"	3.94"	0.193"	0.170"
Welded 6x9	6.0"	3.94"	0.215"	0.170"

OFFICE OF ROADWAY ENGINEERING

REVISED DATE | REVISED BY | REVISED

PIS NUMBER | PROJECT

PLAN INSERT SHEET

GUARDRAIL TYPE 5 & 5A

PIS GR-2.1

1/2

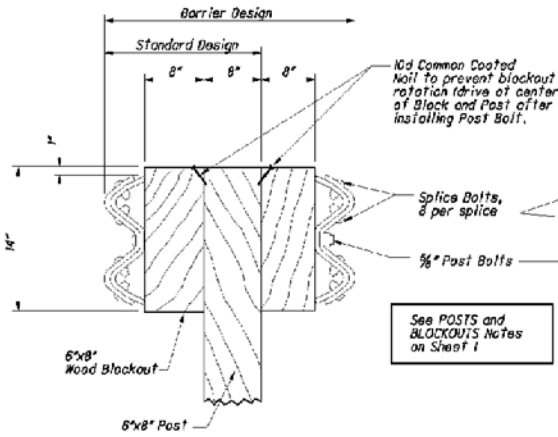

SQUARE WOOD POST

See POSTS and BLOCKOUTS Notes on Sheet 1

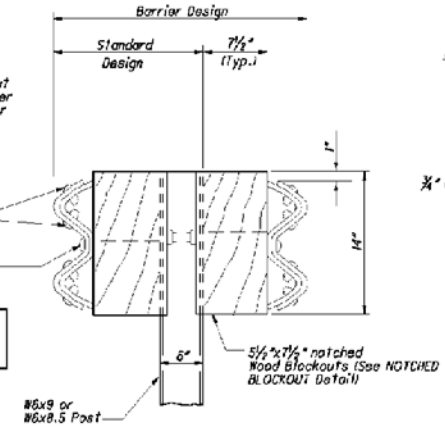

STEEL POST

See POSTS Note, Sheet 1

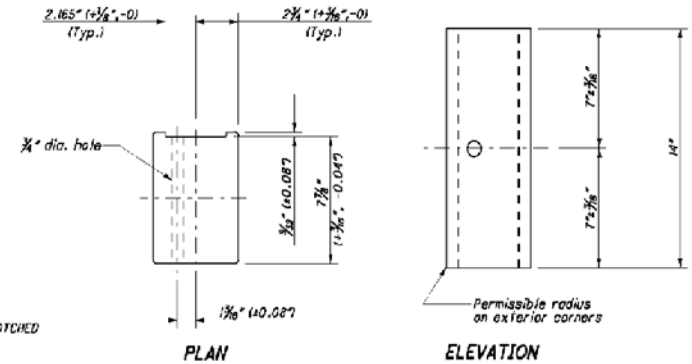

NOTCHED BLOCKOUTS FOR STEEL POSTS

See BLOCKOUTS Note on Sheet 1

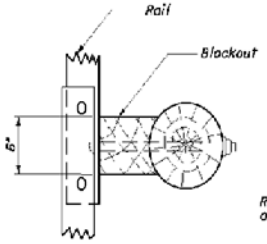

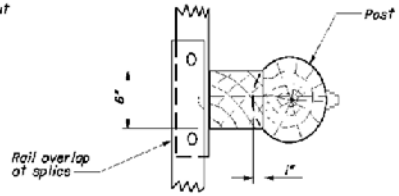

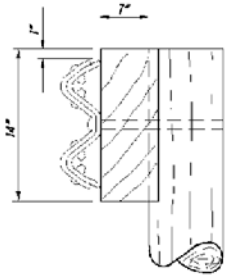

Method 1
Routed Blockout

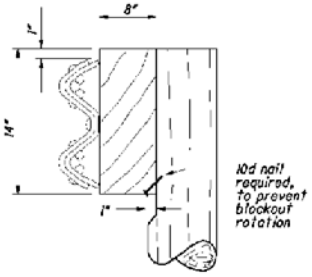

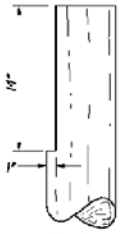

Toenail not required if post is cut as shown

Method 2
Notched Post

Alternate methods of placing the Blockouts on round Posts may be submitted for consideration and approved by the Engineer.

ROUND WOOD POSTS

Single Sided runs only (Standard Design)

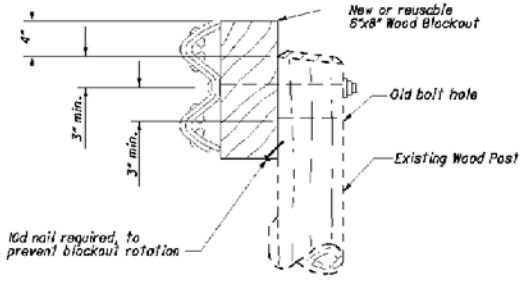

WOOD POSTS WITH WOOD BLOCK RAISING EXISTING GUARDRAIL HEIGHT

OFFICE OF ROADWAY ENGINEERING

DESIGNED

REVISION DATE

PIS NUMBER

PLAN INSERT SHEET

GUARDRAIL TYPE 5 & 5A

PIS GR-2.1

2/2

STATE OF OHIO DEPARTMENT OF TRANSPORTATION

LOCATION	STANDARD POST AND BLOCKOUTS	6" X 8" SQ. WD. POSTS IN CONCRETE AND BLOCKOUTS	BARRIER REFLECTOR
ALLEN ROUTE 30			
1.13 - CR 88 - OLD 30		12	
7.91 - CR 93 - GOMER	182	12	12
8.80 - TR 95 - SANDY POINT	163	12	11
13.92 - TR 162 - STEWART	96	12	8
ALLEN INTERSTATE 75			
09.90 - CR 162 - STEWART	326	12	20
10.30 - CR 110 - BIBLE	390		24
11.23 - CR 165 - SLABTOWN	306		20
13.87 - CR 173 - THAYER	330		21
15.05 - TR 84 - STATE	412		26
16.32 - CR 222 - NAPOLEON	658		41
19.44 - CR 230 - PHILLIPS	162		10
ALLEN COUNTY TOTALS	**3025**	**60**	**193**
HANCOCK INTERSTATE 75			
9.11 - CR 60 -	536		34
12.34 - CR 9	344		22
13.83 - CR 313 - AURAND RD	344		22
HANCOCK COUNTY TOTALS	**1224**	**0**	**78**
VAN WERT ROUTE 30			
15.81 - TR 127 - GILLILAND RD	194	12	12
16.15 - CR 418 - OLD 30	154	12	12
16.93 - CR 5 - HOAGHN CENTER	153	12	12
17.45 - TR 139 - GAMBLE	196	12	12
18.45 - TR 151 - CHENOWITH	142	12	12
18.96 - TR 159 - RINGWALD	133	12	12
20.41 - CR 418 - OLD 30	169	12	12
21.07 - CR 185 - MIDDLE POINT	90	12	8
22.07 - TR 197 - CONVERSE ROSELM	164	12	12
23.08 - TR 199 - BOCKEY	128	12	12
24.08 - TR 205 - BRICKNER	132	12	12
24.77 - TR 215 - SHEARK	153	12	12
VAN WERT COUNTY TOTALS	**1808**	**144**	**140**
GRAND TOTALS	**6057**	**204**	**411**

STATE OF OHIO DEPARTMENT OF TRANSPORTATION

SHEET NUMBER								01 /NFP/ OT	ITEM	ITEM EXT.	GRAND TOTAL	UNIT	DESCRIPTION	SEE SHEET NO.
					8									
					6057			6057	**606**	**98100**	**6057**	**EACH**	**GUARDRAIL, MISC.: POST AND BLOCKOUT REPLACEMENT**	
					204			204	**606**	**98100**	**204**	**EACH**	**GUARDRAIL, MISC.: 6" X 8" POST AND BLOCKOUT REPLACEMENT**	
					411			411	**626**	**00100**	**411**	**EACH**	**BARRIER REFLECTOR**	
								LUMP	**614**	**11000**	**LUMP**		**MAINTAINING TRAFFIC**	
								LUMP	**624**	**10000**	**LUMP**		**MOBILIZATION**	