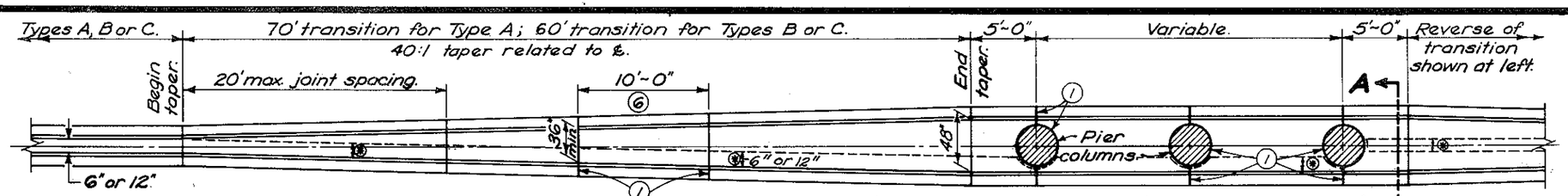

BRIDGE PIER TRANSITION - PLAN VIEW

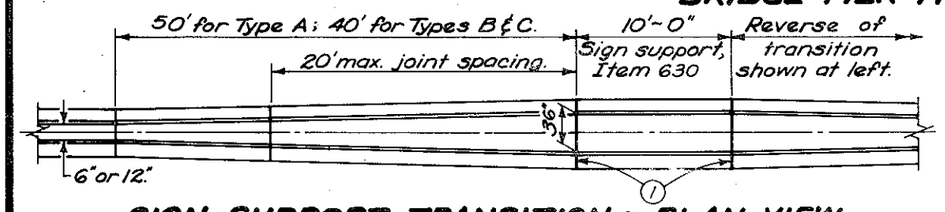

SIGN SUPPORT TRANSITION - PLAN VIEW

(For 50" barriers the upper 18" varies from 6" or 12" to 36" width)

LEGEND

1. Expansion joint, ¾" min. Preformed Filler 705.03.
2. No. 8 deformed steel bars, 12" long, spaced on staggered (except Type D) 4' centers. The End Terminal will require shorter dowel between points A & B. Omit dowels when top is constructed integral with the base.
3. 1" Radius or ¾" chamfer.
4. Permissible 10" radius.
5. Permissible 1" radius.
6. 630 Overhead Sign Support Foundation, if specified in the plan.

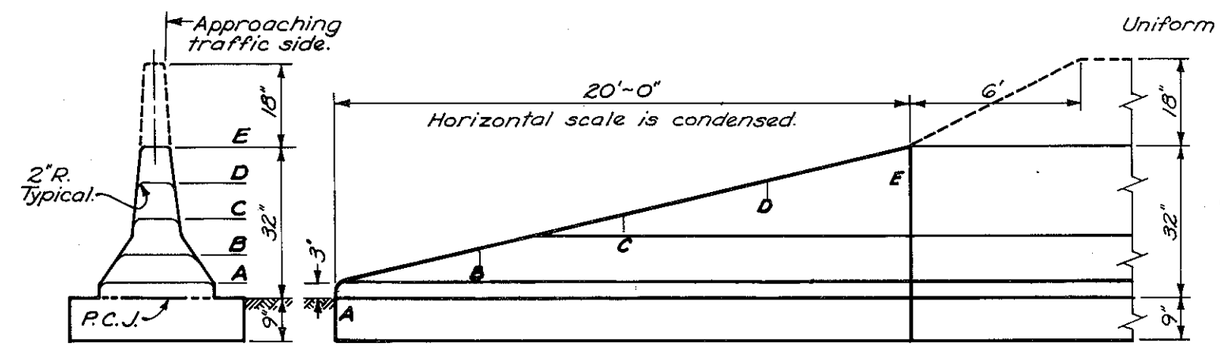

END VIEW

PROFILE VIEW

END TERMINAL DETAIL

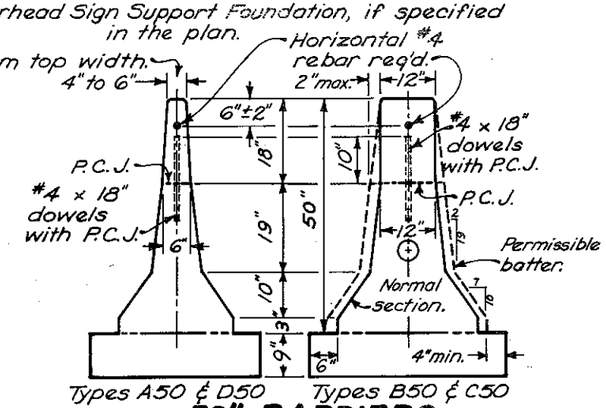

Types A50 & D50 Types B50 & C50

50" BARRIERS

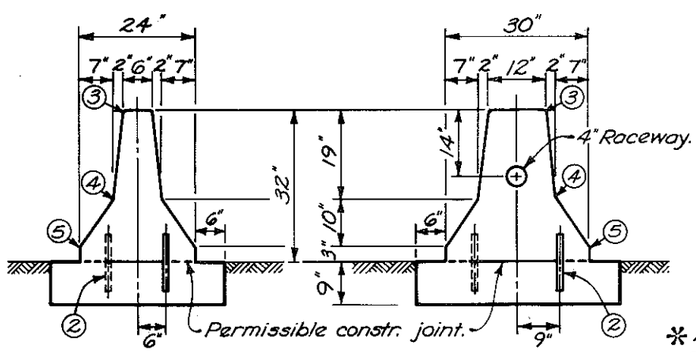

TYPE A

TYPE B

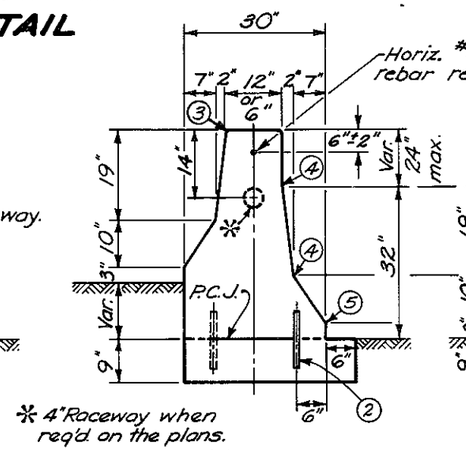

TYPE C

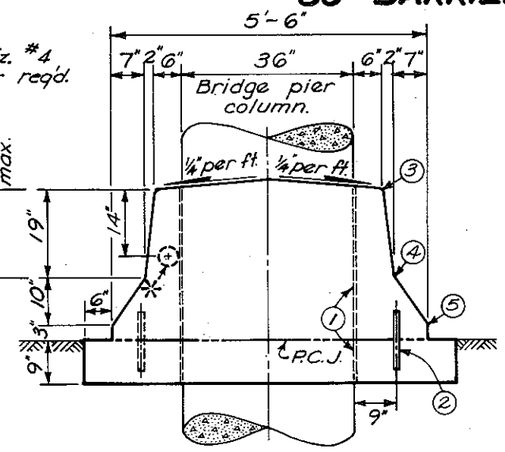

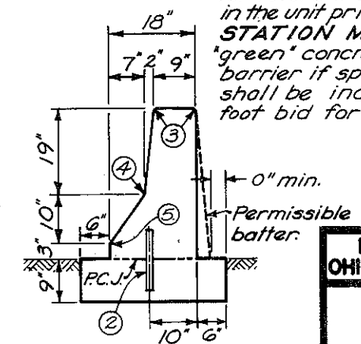

TYPE D

NORMAL SECTIONS

SECTION A-A

NOTES

JOINTS: Unsealed contraction joints spaced at 20' max. shall be constructed throughout the run of Concrete Barrier except that expansion joints shall be used at the center line of and around each bridge pier column and on either side of overhead sign supports, inlets and light pole foundations. If inlet top is slip formed the expansion joints adjacent to it may be omitted.

Contraction joints may be constructed with metal inserts inside the forms, preformed full width joint filler, a grooving tool, or by sawing. Inserts or tooled or sawed joints shall have a 1½" min. depth. All joints shall be constructed for the full height of the barrier including the base.

MEASUREMENT: 622 Concrete Barrier, including transitions and end terminals and pier sections, is paid for in linear feet as one of the four types (A, B, C or D) or as Type A50, B50, etc. (for 50" high barrier), with appropriate deductions for other items such as:

604 I-3 Median inlet — 20 Lin. Ft.
625 Light pole foundation or pullbox — 2.5 Lin. Ft.
630 Overhead sign support foundation — 10 Lin. Ft.
630 Barrier wall assembly — 10 Lin. Ft.

50 INCH HIGH BARRIER shall be built where specified on the plan, with the same bottom 32" slopes and 9" foundation as the standard Type specified. The upper 18" may be constructed integral with the bottom, or separately with #4 rebar dowels at 4' max. spacing. Start and end dowels 6" from barrier vertical joints.

* On variable width (i.e. pier transition) barrier sections not having sign support foundations, the upper 18" may be built with a 6" or 12" top width (per Type specified) on the ℄ or along one face of the barrier. At End Terminals taper the upper 18" to 0" in 6'.

RACEWAY: The Contractor shall insure that the electrical raceway is clear of internal obstructions. Cost of the 4" polyvinyl chloride raceway and No. 10 AWG copper-clad or aluminum-clad pull wire if needed for future installation of circuits shall be included in the unit price bid per linear for 622 Concrete Barrier.

STATION MARKING shall be impressed in the "green" concrete on both sides at the top of the barrier if specified in the plans which cost shall be incidental to the unit cost per linear foot bid for 622 Concrete Barrier.

BUREAU OF LOCATION AND DESIGN
OHIO DEPARTMENT OF TRANSPORTATION

CONCRETE BARRIER

DATE 1-1-74 11-1-77 1-30-84

STANDARD CONSTRUCTION DRAWING MC-9

APPROVED [signature] ENGR., L. & D.