FED. RD. DIVISION	STATE	PROJECT	
2	OHIO	STATE	

1 / 322

LOR - 20 - 12 62

STATE OF OHIO
DEPARTMENT OF HIGHWAYS
LOR-20-12.62

LORAIN COUNTY
CARLISLE AND EATON TOWNSHIPS
GRADE SEPARATION WITH THE BALTIMORE AND OHIO RAILROAD CO.

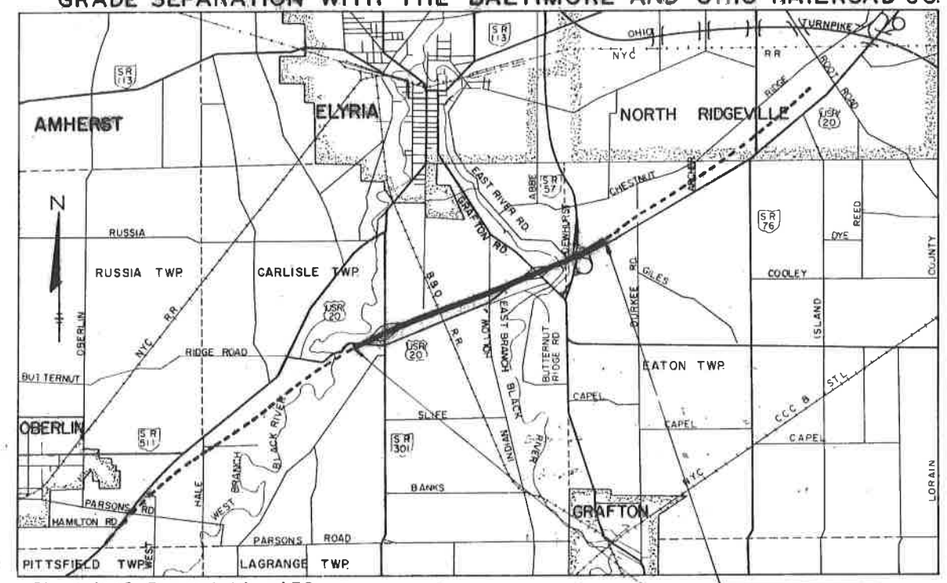

Sheet No. 23 Rev. 12-3-68 H.E.D.

END PROJECT
STA 843+01.58 BK

BEGIN PROJECT
STA. 665+00

CONVENTIONAL SIGNS

TREES AND STUMPS (EXISTING)
TREES (TO BE REMOVED IN NON - L A R/W)
FENCE LINE
POLE LINE
COUNTY LINE
TOWNSHIP LINE
SECTION LINE
CORPORATION LINE
CENTER LINE
GUARD RAIL — EXISTING — PROPOSED
DRAIN PIPE
RAILROAD
PROPERTY LINE — PL
EXISTING RIGHT OF WAY
PROPOSED RIGHT OF WAY — R/W
PROPOSED LIMITED ACCESS RIGHT OF WAY — LA
PROPOSED LIMITED ACCESS AND RIGHT OF WAY — LA R/W
WORK LIMITS

INDEX OF SHEETS

TITLE SHEET	1
SCHEMATIC LAYOUT & DESIGN DESIGNATION	2-4
TYPICAL SECTIONS	5-12
GENERAL NOTES	13-14
TRAFFIC NOTES	14
CALCULATIONS	15-17
SUMMARY OF TABLES	18-22
GENERAL SUMMARY	23-24
SPECIAL CONSTRUCTION & GUARD RAIL DETAILS	25-29-29A-29B
MEDIAN WIDTH TRANSITIONS	30-31
SUPERELEVATION TABLE (USR-20)	32
PLAN AND PROFILE USR-20	33-49
CROSS SECTIONS USR-20	50-91
SR-301 INTERCHANGE INDEX	92
SR-301 INTERCHANGE	92-126
GRAFTON ROAD INTERCHANGE	127-134
SR-57 INTERCHANGE	135-138
INTERCHANGE PAVEMENT QUANTITIES	139
INTERCHANGE SUMMARY OF TABLES	140-141
SIDE ROADS	142-164,164A,164B
STRUCTURES 20' SPAN & UNDER	165-178
TRAFFIC CONTROL	179-218
HIGHWAY LIGHTING	219-233,233A
STRUCTURE OVER 20' SPAN	234-297
RIGHT OF WAY AND FENCE PLAN	298-322

* Begin Work 669+95
Suspend " 669+55
Resume " 672+00
Suspend " 681+80
Resume " 685+20
End " 685+30

LOCATION MAP

0 1 2 3 4
SCALE IN MILES

PORTION TO BE IMPROVED — STATE HIGHWAYS
OTHER ROADS
PORTION TO BE IMPROVED UNDER SEPARATE CONTRACT

SCALES

PLAN	1" = 50'
PROFILE - HORIZONTAL	1" = 50'
PROFILE - VERTICAL	1" = 10'
CROSS SECTIONS	1" = 10'

GRAPHIC SCALES

1" = 50' : 0 50 100 150 200
1" = 10' : 0 10 20 30 40

LINE DATA						
PROJECT	BEGIN STATION	SUSPEND STATION	RESUME STATION	END STATION	LENGTH LIN. FT.	LENGTH MILES
LOR-20-12.62	665+00			843+01.58	17,801.58	
TOTAL LENGTH OF PROJECT					17,801.58	3.371

WORK	BEGIN STATION	SUSPEND STATION	RESUME STATION	END STATION	LENGTH LIN. FT.	LENGTH MILES
LOR.-20-12.62	661+00	843+01.58 BK	802+57.97 AH	806+55	18598.61	
RELOC. BUTTERNUT RIDGE RD.	664+15.63			695+52.93	3137.30	
SR-301	654+53			682+50	2797.00	
Exist. U.S. R 20 (Temp. Rd.)	625+92.19	630+64.39	631+05.66	637+94.28	1070.76	
Ex. U.S. R. 20 & Ex. B'nut Ridge Rd.	735+00			742+50	750.00	
* Dewhurst & S. River Rd. Connection					511.00	
* Grafton Rd.					1000.00	
** Existing S.R. 57					4090.00	
Total Length of Work					31,954.67	6.052

* Begin Work Sta. 50+61
Suspend " 53+27
Resume " 55+65
Suspend " 58+00
Resume " 59+95
End " 60+05

FILE NO.	LORAIN COUNTY
	LOR-20-12.62
	DATE OF LETTING
	CONTRACT NO.

STANDARD DRAWINGS								SUPPLEMENTAL SPECIFICATIONS			
BP-1	6-1-65	CB-8	6-6-68	MC-1	10-1-67	BR-1-65 sh.1	11-24-65	801	1-1-67	814	1-1-67
BP-2	1-17-68	F-2	6-1-65	MC-3	5-1-66	RB-1-55	2-2-59	806	3-1-68	832	5-25-67
BP-3	5-1-68	F-3	2-20-68	MC-4	6-1-65	AS-1-67	1-11-68	808	1-13-67	931	5-25-67
BP-4	1-10-67	L-1	6-1-65	MC-6	6-1-65	SD-1-65 sh.1,2,3	11-8-65	811	1-1-67		
BP-5	6-1-65			MC-7	3-1-66	SP-53	6-30-61	815	1-1-67		
BP-6	6-1-65	GR-1	1-1-67	MH-1	6-1-65			816	8-6-65		
BP-7	1-1-66	GR-2A	1-1-67	MH-1A	8-1-66			825	12-19-67		
C.B.2-2A&B	6-1-65	GR-2B	2-15-68	BP-8	11-1-67			828	1-1-67		
C.B.2-3&2-4	6-1-65	GR-6	7-15-68	HL-1	11-1-65			1001	3-21-66		
C.B.2-5&2-6	6-1-65	HW-E	6-1-65	HL-2	11-1-65						
C.B.5	6-6-68	I-2A	6-1-65	HL-3	11-1-65						
C.B.6	6-1-65			HL-4	1-1-66						

** Begin Work 668+20
Suspend " 668+30
Resume " 678+40
Suspend " 719+10
Resume " 729+95
End " 730+05

LIMITED ACCESS

THIS IMPROVEMENT IS ESPECIALLY DESIGNED FOR THROUGH TRAFFIC AND HAS BEEN DECLARED A LIMITED ACCESS HIGHWAY OR FREEWAY BY ACTION OF THE DIRECTOR OF HIGHWAYS IN ACCORDANCE WITH THE PROVISIONS OF SECTION 5511.02, REVISED CODE OF OHIO

1967 SPECIFICATIONS

THE STANDARD SPECIFICATIONS OF THE STATE OF OHIO, DEPARTMENT OF HIGHWAYS, INCLUDING CHANGES AND SUPPLEMENTAL SPECIFICATIONS LISTED IN THE PROPOSAL SHALL GOVERN THIS IMPROVEMENT

THE RIGHT-OF-WAY FOR THIS IMPROVEMENT WILL BE PROVIDED BY THE STATE OF OHIO

I HEREBY APPROVE THESE PLANS AND DECLARE THAT THE MAKING OF THIS IMPROVEMENT WILL NOT REQUIRE THE CLOSING OF THE HIGHWAY TO TRAFFIC AND THAT PROVISIONS FOR THE MAINTENANCE AND SAFETY OF TRAFFIC WILL BE AS SET FORTH ON THE PLANS AND ESTIMATES

APPROVED D.H. Cresmer
DATE 6-21-68 DIVISION DEPUTY DIRECTOR

APPROVED C.H. Altheater
DATE 8-2-68 ENGINEER OF BRIDGES

APPROVED R.E. Gatlin
DATE 8-21-68 ENGINEER OF LOCATION & DESIGN

APPROVED George J. Thornton
DATE 8-21-68 DEPUTY DIRECTOR OF DESIGN & CONSTRUCTION

APPROVED T.H. Borrard
DATE 8-20-68 DEPUTY DIRECTOR OF RIGHT-OF-WAY

APPROVED Thomas M. Moore
DATE 8-8-68 DEPUTY DIRECTOR OF PLANNING & PROGRAMMING

APPROVED R.W. Wilson
DATE 8-10-68 FIRST ASSISTANT DIRECTOR

APPROVED: P.E. Masheter
DATE 8-10-68 DIRECTOR OF HIGHWAYS

STATE OF OHIO
THOMAS L. SEITZ
24757
REGISTERED
PROFESSIONAL ENGINEER

PREPARED AND RECOMMENDED BY
SHAFFER, JOHNSTON, LICHTENWALTER & ASSOCS. INC.
CONSULTING ENGINEERS
MANSFIELD OHIO WOOSTER

FED. RD. DIVISION	STATE	PROJECT	
2	OHIO		

LOR-20-12.62

219

LEGEND

- GROUND MOUNTED LUMINAIRES ON POLE (41.7' M.H. 700 W)
- GROUND MOUNTED LUMINAIRES ON POLE (34.2' M.H. 400 W)
- BRIDGE MOUNTED LUMINAIRES ON POLE (40' M.H. 700 W)
- PULLBOX
- JUNCTION BOX IN BRIDGE PARAPET
- 1½" DUCT CABLE
- CONDUIT CROSS-OVER (1-3" UNLESS OTHERWISE INDICATED)
- TYPICAL LIGHT POLE IDENTIFICATION
- STATION II-400-15-AT — II OR III = A.S.A.-I.E.S. TYPE 400 (OR 700) LAMP WATTAGE; 10' & 15' = BRACKET ARM LENGTH
- A = ANCHOR BASE
- AT = ALUMINUM TRANSFORMER BASE
- S.O. = STUB-OUT & CAP
- = GLARE SHIELD
- MARKER

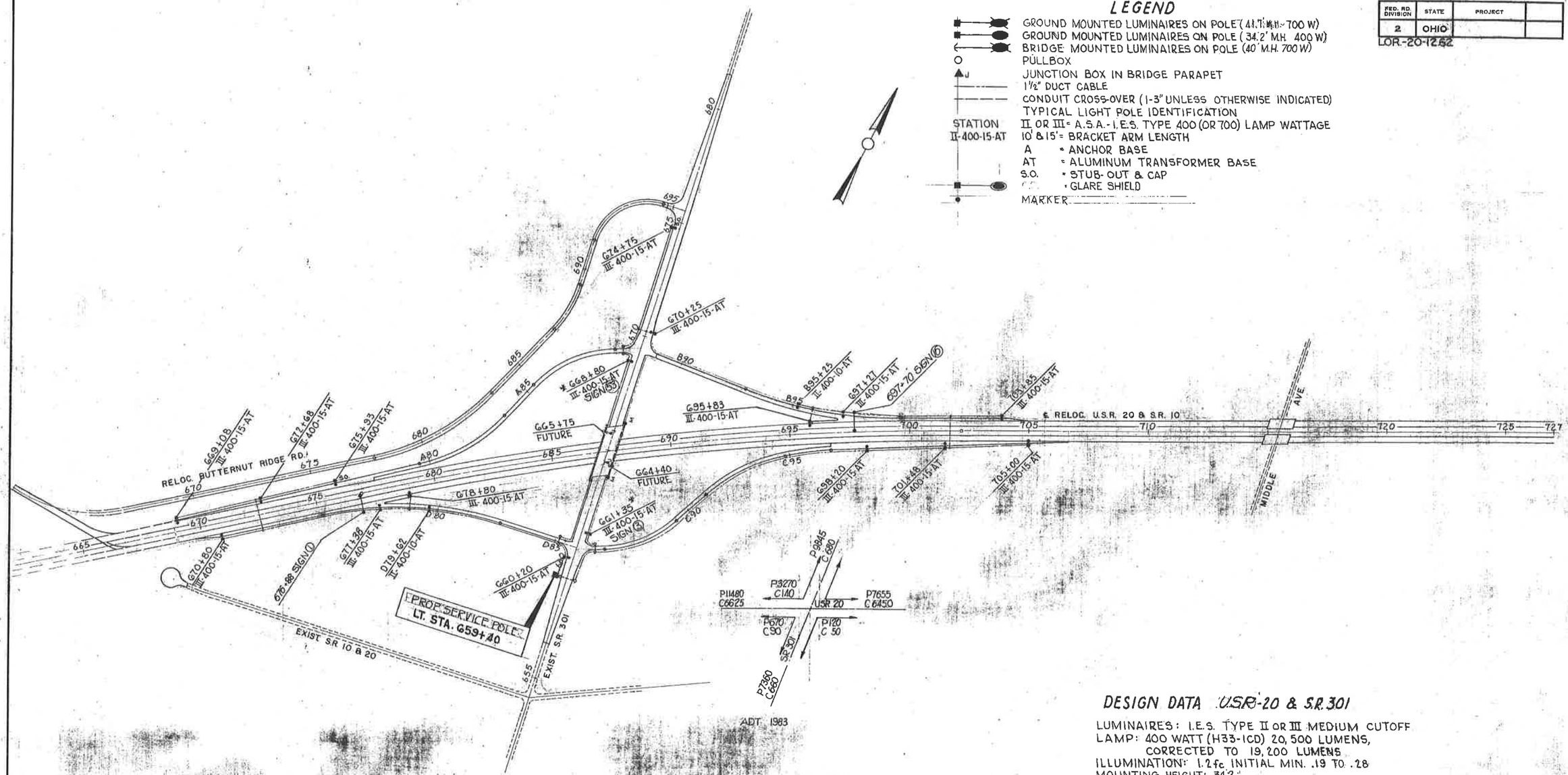

CIRCUIT "A" LT. S.R. 301
11 - 400 WATT LUMINAIRES
2 - SIGNS 1525 WATTS
TOTAL 6755 WATTS INCL. BALLAST
7-KVA

CIRCUIT "B" RT. S.R. 301
8 - 400 WATTS LUMINAIRES
2 - SIGNS 1465 WATT
TOTAL 5339 WATTS INCL. BALLAST
6-KVA

DESIGN DATA U.S.R. 20 & S.R. 301

LUMINAIRES: I.E.S. TYPE II OR III MEDIUM CUTOFF
LAMP: 400 WATT (H33-1CD) 20,500 LUMENS, CORRECTED TO 19,200 LUMENS
ILLUMINATION: 1.2 fc INITIAL MIN. .19 TO .28
MOUNTING HEIGHT: 34.2'
SPACING: VARIABLE

*COMBINATION SIGN & LIGHTING POLES
SEE DETAILS SHEET NO. 232 LIGHTING PLANS
SHEET NO. 194 TRAFFIC CONTROL
196

LIGHTING SCHEMATIC

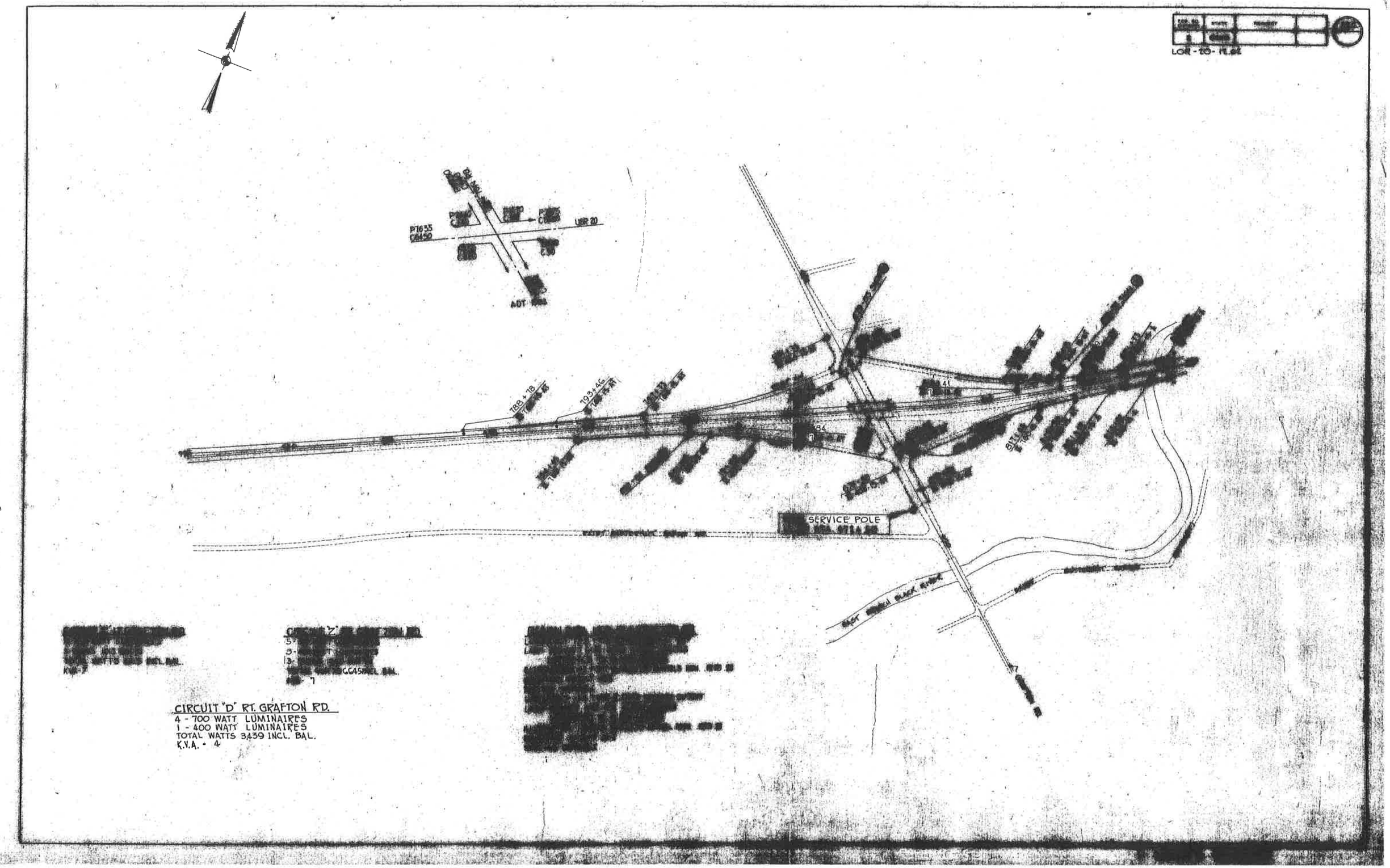
LOR-20-11.82
P1635
C6450
UBR 20
ADT
7BB + 7B
10 3+46
SERVICE POLE
CIRCUIT "D" RT. GRAFTON RD.
4 - 700 WATT LUMINAIRES
1 - 400 WATT LUMINAIRES
TOTAL WATTS 3439 INCL. BAL.
K.V.A. - 4

FED. RD. DIVISION	STATE	PROJECT	
2	OHIO		

LOR-20-12.62

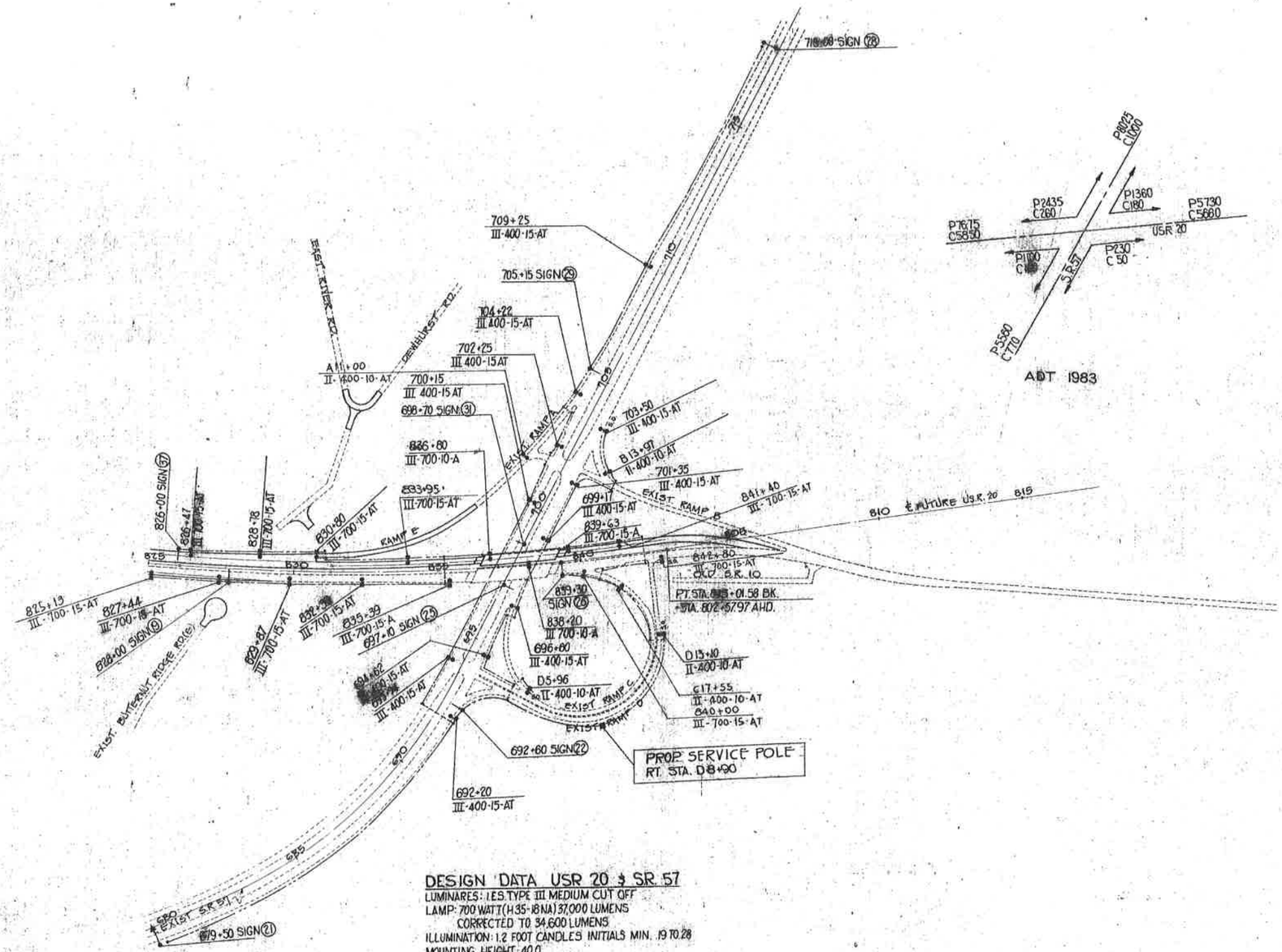

CIRCUIT "E"

8-400 WATT LUMINAIRES
2-SIGNS-925 WATTS
TOTAL WATTS 4800 INCL. BALLAST
KVA-5

CIRCUIT "F"

6-400 WATT LUMINAIRES
4-SIGNS-1775 WATTS
TOTAL WATTS 4950 INCL. BALLAST
KVA-5

CIRCUIT "G"

15-700 WATT LUMINAIRES
2-400 WATT LUMINAIRES
3-SIGNS-1290 WATTS
TOTAL WATTS 13,650 INCL. BALLAST
KVA 14

DESIGN DATA USR 20 & SR. 57

LUMINARES: I.E.S. TYPE III MEDIUM CUT OFF
LAMP: 700 WATT (H35-18NA) 37,000 LUMENS
CORRECTED TO 34,600 LUMENS
ILLUMINATION: 1.2 FOOT CANDLES INITIALS MIN. .19 TO 28
MOUNTING HEIGHT: 40.0
SPACING: VARIABLE
LUMINARIES: I.E.S. TYPE II OR III MEDIUM CUTOFF
LAMP: 400 WATT H33-ICD 20,500 LUMENS
CORRECTED TO 19,200 LUMENS
ILLUMINATION: 1.2 FOOT CANDLES INITIAL MIN. .19 TO 28
MOUNTING HEIGHT: 34.2'
SPACING VARIABLE

FED. RD. DIVISION	STATE	PROJECT	
2	OHIO		

LOR.-20-12.62

LIGHTING NOTES

GENERAL
THE CONTRACTOR SHALL COMPLY WITH ALL OF THE REQUIREMENTS OF SECTION 625& 715 OF THE CONSTRUCTION AND MATERIAL SPECIFICATIONS OF THE STATE OF OHIO, DATED JANUARY 1, 1967. REFERENCE: STANDARD DRAWING NUMBER HL-1, HL-2, HL-3 and HL-4.

THROUGHOUT THESE PLANS, THE USE OF "TRADE NAMES" FOR ELECTRICAL LIGHTING EQUIPMENT IS MEANT TO BE DESCRIPTIVE ONLY. COMPARABLE PRODUCTS OF OTHER ELECTRIC FIRMS ARE ACCEPTABLE IF ACCESSORIES AND MAIN MEMBERS ARE COMPATIBLE WITH ONE ANOTHER AND SERVE THE INTENDED PURPOSE.

THE CONTRACTOR SHALL CONTACT THE OHIO EDISON COMPANY, GENERAL OFFICES, AKRON, OHIO 44308 AT THE OUTSET OF THE PROJECT TO COORDINATE THE SEPARATE PARTS OF THE WORK NECESSARY FOR THE SYSTEM.

SCHEDULE WORK FOR THE LIGHTING SYSTEM TO COORDINATE WITH THE PROJECT ENGINEER'S SCHEDULE SO THAT ALL WORK MAY BE INSTALLED IN THE MOST DIRECT MANNER AND DELAYS WILL BE AVOIDED.

UPON COMPLETION OF THE WORK, THE CONTRACTOR SHALL HAVE ALL LUMINAIRES, POLES, CONTROL CENTERS AND OTHER EQUIPMENT IN FIRST CLASS CONDITION, FREE FROM DIRT, DUST AND FOREIGN MATERIALS. GLASSWARE SHALL BE CLEANED WITH A DETERGENT.

LIGHTING STANDARDS - LIGHT POLES
THE TERM "LIGHT POLE" WILL BE SUBSTITUTED HEREINAFTER FOR THE TERM "LIGHTING STANDARD" APPEARING IN THE CONSTRUCTION AND MATERIAL SPECIFICATIONS.

LIGHT POLES SHALL BE COMPLETE WITH A 4" X 10" REINFORCED HANDHOLE. AS AN ALTERNATE TO THE 4" X 10" HANDHOLE SHOWN ON STANDARD CONSTRUCTION DRAWING HL-2, A CAST STEEL HANDHOLE 4" X 8" AS DETAILED ON SHEET NO. 224 WILL BE APPROVED.

AFTER ERECTION, EACH LIGHT POLE SHALL BE PLUMBED BY USING GALVANIZED STEEL SHIMS. ALL POLE HARDWARE SHALL BE STAINLESS STEEL, GALVANIZED STEEL OR EVERDUR.

LAMPS
MERCURY VAPOR LAMPS SHALL BE GENERAL ELECTRIC BONUS LINE - WESTINGHOUSE LIFEGUARD - SYLVANIA BANNER LINE OR OTHER APPROVED EQUAL.

PULL BOXES
ONLY 18 INCH PULL BOXES SHALL BE USED ON THIS PROJECT. WALL THICKNESS SHALL BE 0.37" INSTEAD OF 0.44".

PULL BOX COVERS SHALL BE 19 INCHES IN DIAMETER AND SHALL BE 3/8" MINIMUM THICKNESS INSTEAD OF 1/4".

MODIFIED CLEVIS-TYPE HOLD DOWN BRACKET MAY BE SUBSTITUTED FOR THE "L" SHAPED BRACKET SHOWN ON STANDARD DRAWING HL-3 (SEE SHEET NO. 224).

NOTE: THE TOP ELEVATION OF THE PULL BOX FROM GRADE IS SHOWN ON STANDARD DRAWING HL-3 AS BEING 1-1/2" MINIMUM. THIS SHOULD BE CORRECTED TO READ 1" MAXIMUM.

TRENCHES
ANY SUBBASE, BASE COURSE, UNDERDRAINS OR SIMILAR ITEMS REMOVED OR DISTURBED SHALL BE REPLACED AT NO EXTRA COST. THE PRICE BID FOR THIS ITEM SHALL INCLUDE ALL THE VARIOUS WIDTH TRENCHES REQUIRED AND IN WHATEVER SUBSTANCES ENCOUNTERED.

ELECTRICAL CABLE
THE SPECIFICATION FOR CABLE IS HEREBY AMENDED FOR THIS PROJECT TO READ: "ALL CIRCUIT CABLE IN CONDUIT AND DUCT CABLE SHALL BE STANDARD STRANDED COPPER WITH 600 VOLT INSULATION: CROSSLINKED POLYETHYLENE NOMINALLY 4/64" FOR SIZES 8 TO 2, AND 5/64" FOR SIZES 1 TO 4/0 INCLUSIVE. CABLE TO BE GENERAL ELECTRIC "VULKENE" (SI-58073), ANACONDA "UNICON", PHELPS-DODGE "THERMOLENE", OR APPROVED EQUAL AS SUPPLIED BY OTHER CABLE MANUFACTURERS." (RRH OR RHW). CABLE SHALL BEAR U.L. TYPE RHH-90°C OR RHW-75°C LABELS.

CONTROL CENTER
THE CONTROL CENTERS SHALL CONSIST OF A DISCONNECT SWITCH ASSEMBLY. EACH ASSEMBLY SHALL CONSIST OF A 3-POLE, 60 AMP. SUITABLY FUSED SWITCH, AND GROUNDED NEUTRAL, MOUNTED IN NEMA AND WATERTIGHT AISA 302 OR 303 STAINLESS STEEL ENCLOSURE WITH FLANGE MOUNTED HANDLE. ENCLOSURES SHALL BE MOUNTED ON SERVICE POLES SPG, SPS OR SPC. SEE DETAILS ON SHEET NO. 233.

STRUCTURE JUNCTION BOXES.
BOXES ENCASED IN CONCRETE SHALL BE LIMITED TO CAST IRON GALVANIZED BOXES OR TO THE DESIGN SHOWN ON STANDARD DRAWING HL-4, EXCEPT THAT COVERS MAY BE CAST ALUMINUM. BOXES SHALL BE AS MANUFACTURED BY "O-Z", "T & B", "RUSSELL AND STOLL" OR OTHER APPROVED EQUAL.

CONDUIT UNDER EXISTING PAVEMENT.
THE 3" CONDUIT UNDER THE EXISTING PAVEMENT SHALL BE "PUSHED" OR "BORED". THE CONDUIT SHALL BE PLACED AT THE SAME ELEVATION AS DETAILED FOR CROSSOVERS. TYPE III TYPE III CONDUIT.

WIRE-CABLE - DUCT-CABLE IDENTIFICATION
ALL CIRCUIT AND GROUND CABLES AND DUCT-CABLE EXCEPT STRUCTURE GROUNDING SYSTEM WIRE SHALL BE PERMANENTLY IDENTIFIED IN EACH PULL BOX, HANDHOLE, TRANSFORMER BASE, BRIDGE JUNCTION BOX, CONTROL HOUSING, ETC. TAGS SHALL BE CIRCULAR IN SHAPE, 1-3/8" MINIMUM IN DIAMETER AND NOT LESS THAN .031" THICK COPPER, BRASS OR ALUMINUM. USE STEEL LETTERING DIES, 1/4" MINIMUM SIZE, OR THE EQUIVALENT ENGRAVING PROCESS TO MARK THE TAG. IT SHALL BE SECURELY ATTACHED WITH AN AWG #14 TYPE TW COPPER WIRE. MARKING OF TAGS SHALL CONSIST OF AN ABBREVIATION FOR THE GROUND WIRES "GW" OR CIRCUIT WITH NUMBER OR LETTER "CKT. A", ETC.

USE NON-METALLIC IDENTIFICATION MATERIALS WITHIN APPARATUS ENCLOSURES IN ORDER NOT TO REDUCE ELECTRICAL CLEARANCES.

PAYMENT FOR IDENTIFICATION SHALL BE INCLUDED IN THE RESPECTIVE BID PRICES FOR ITEMS REQUIRING IDENTIFICATION.

COMBINATION LIGHTING AND SIGN INSTALLATIONS.
UNDER THIS ITEM THE CONTRACTOR SHALL FURNISH ALL LABOR AND MATERIALS TO INSTALL THE FOLLOWING ITEMS:

1. LIGHTING BRACKET ARM AND ASSEMBLY
2. MERCURY VAPOR LAMP
3. HIGHWAY LIGHTING LUMINAIRE
4. POLE AND BRACKET CABLE
5. CONNECTOR KITS

PAYMENT SHALL BE MADE AT THE CONTRACT UNIT PRICE BID FOR EACH OF THE ITEMS LISTED ABOVE, WHICH PRICE SHALL BE FULL COMPENSATION FOR EACH ITEM INSTALLED IN PLACE AND ACCEPTED.

RIGID FERROUS METAL ELECTRICAL CONDUIT
EXPANSION FITTINGS AT STRUCTURE EXPANSION JOINTS AND AT ABUTMENTS SHALL BE O-Z COMPANY, TYPE AX-200 AND AJ-200 - APPELTON, NO. XJ-200-4 AND XJE-4-125-20 - CROUSE-HINDS, TYPE XJ-641 OR OTHER APPROVED EQUAL.

FOR CONDUIT DRAINAGE ON STRUCTURES, A 2" X 3/4" STANDARD PLUMBING, GALVANIZED, TEE FITTING MAY BE USED IN PLACE OF THE STEEL FITTING SPECIFIED ON STD. DRAWING HL-4.

CONDUIT SHALL INCLUDE ALL COUPLINGS, EXPANSION COUPLINGS, FITTINGS AND INCIDENTALS NECESSARY TO PROVIDE CONTINUOUS RUNS, AS SHOWN ON THE PLANS.

CROSSOVER CONDUIT, EXPOSED CONDUIT, AND BRIDGE CONDUIT SHALL BE EITHER TYPE II OR TYPE III.

BASIS OF PAYMENT
BID ITEMS SHALL BE AS SHOWN ON SHEET NO. 223 GENERAL LIGHTING QUANTITIES.

FOUNDATION
IN LIEU OF DETAILS SHOWN ON STD. CONSTRUCTION DRAWING HL-1 THE TOP ELEVATION OF THE FOUNDATION ABOVE THE GROUND SHALL BE A MAX. OF 1".

MECHANICAL PROPERTIES FOR LIGHT POLES

DESIGN NUMBER	TAPER	SHAFT SIZE	GA.	DIAM. OF BOLT CIRCLE	PROJ. ABOVE FOUND-ATION	ARM LENGTH	ELAST. DEFL. RATE INCHES PER 100 LBS.	AT 2/3 YIELD STR. LOAD IN LBS.	AT 2/3 YIELD STR. TOTAL DEFLECTION IN INCHES	AT 2/3 YIELD STR. PERMANENT SET IN INCHES	AT YIELD STRESS LOAD IN LBS.	AT YIELD STRESS TOTAL DEFLECTION IN INCHES	AT YIELD STRESS PERMANENT SET IN INCHES	TRANSFORMER BASE TYPE
11AT15B41.7	.10	9.0"×5.65"×33'-6"	11	17.25"	3½"	15'	2.92	576	17.3	0.5	865	28.3	3.0	AT-C
11A12B40	.10	9.0"×5.65"×33'-6"	11	12.5"	3"	12'	2.92	576	17.3	0.5	865	28.3	3.0	NONE
11AT15B34.2	.14	9.0"×4.87"×29'-6"	11	15.0"	3½"	15'	2.16	659	14.73	0.5	989	24.0	2.64	AT-A
11AT10B34.2	.14	8.0"×3.87"×29'-6"	11	15.0"	3½"	10'	3.32	517	17.66	0.5	776	28.84	3.08	AT-A

LUMINAIRES

(A) LUMINAIRES SHALL BE EQUIPPED FOR 700 WATT MERCURY LAMP AS MANUFACTURED BY GENERAL ELECTRIC, M-1000 - WESTINGHOUSE, TYPE OV-50 - MC GRAW-EDISON, "UNISTYLE", OR OTHER APPROVED EQUAL.

BALLAST SHALL BE INTEGRAL REGULATOR TYPE WITH VOLTAGE RATING OF 480 VOLTS FOR 700 WATT LUMINAIRES.

(B) LUMINAIRES SHALL BE EQUIPPED FOR 400 WATT MERCURY LAMP AS MANUFACTURED BY GENERAL ELECTRIC, M-400 - WESTINGHOUSE, TYPE OV-25 - MC GRAW-EDISON, "UNISTYLE", OR OTHER APPROVED EQUAL.

BALLAST SHALL BE INTEGRAL REGULATOR TYPE WITH DUAL VOLTAGE RATING FOR 240/480 VOLT OPERATION FOR 400 WATT LUMINAIRES.

ELECTRICAL CABLE (CONTINUED)
POLE AND BRACKET CABLE SHALL BE STRANDED, COPPER, 600 VOLT, PLASTIC INSULATED NYLON JACKETED, U.L. APPROVED TYPE THHN. (CABLE MARKED THWN-THHN WILL NOT MEET SPECIFICATIONS.)

CONNECTIONS

TYPE I OR TYPE IV CONNECTOR KITS SHALL BE USED IN PULLBOXES.
TYPE II OR TYPE III CONNECTOR KITS SHALL BE USED IN POLE BASES (AND SIGN SUPPORTS).
CONNECTOR KIT FUSES - FOR 400 WATT LUMINAIRE, USE 6 AMP. FUSE.
FOR 700 WATT LUMINAIRE, USE 10 AMP. FUSE.

SERVICE POLE.
THE SERVICE ENTRANCE WIRES SHALL BE NO. 4 SINGLE CONDUCTOR 600 VOLT WIRE.

FUND. PROJ. DIVISION	STATE	PROJECT	
2	OHIO		

LOR-20-12.62

STRUCTURES								ROADWAY												
BRIDGE Nº LOR-20 1303	BRIDGE Nº LOR-20 1559	BRIDGE Nº LOR-20 1533	BRIDGE Nº LOR-20 1587			SHEET NOS. ⇨		224	225	226	227	228	229	230		GRAND TOTAL	ITEM	UNIT	DESCRIPTION
								6	3	6		6		12		33	625	EACH	LIGHT POLE W/15' BRACKET ARM DESIGN 11AT15B34.2 (SHAFT 9.0"X 4.87" X 29'-6")
											15		6	5		26	625	EACH	LIGHT POLE W/15' BRACKET ARM DESIGN 11AT15B41.7 (SHAFT 9.0"X 5.65" X 33'-6")
								1		1	2			4		8	625	EACH	LIGHT POLE W/10' BRACKET ARM DESIGN 11AT10B34.2 (SHAFT 8.0" X 3.87"X 29'-6")
	2		2													4	625	EACH	LIGHT POLE W/12' BRACKET ARM DESIGN 11A12B40 (SHAFT 9.0"X 5.65"X 33'-6")
									2							2	625	EACH	15' BRACKET ARM ASSEMBLY FOR COMB. SIGN AND LIGHT POLE
								7	3	7	2	6		16		41	625	EACH	LIGHT POLE FOUNDATION 24"X 24"X 6'-0" (FOR 34.2' M.H.)
											15		6	5		26	625	EACH	" " " 24" X 24" X 8'-0" (FOR 41.7' M.H.)
	2		2								15		6	5		30	625	EACH	LUMINAIRE - TYPE III MEDIUM - CUT OFF W/700 WATT BALLAST
								1		1	2			4		8	625	EACH	LUMINAIRE - TYPE II MEDIUM - CUTOFF W/400 WATT BALLAST
								6	5	6		6		12		35	625	EACH	LUMINAIRE - TYPE III MEDIUM - CUTOFF W/400 WATT BALLAST
	2		2								15		6	5		30	625	EACH	MERCURY VAPOR LAMP 700 WATT (H35-18NA)
								7	5	7	2	6		16		43	625	EACH	" " " 400 WATT (H33-1CD)
														1		1	625	EACH	GLARE SHIELD
								7	3	7	17	6	6	21		67	625	EACH	GROUND ROD UNIT
								4	13	4	10	14	3	31		79	625	EACH	PULLBOX - ROUND FIBER 18"
									2		3	2				7	625	EACH	MARKER
								1685	3090	2175	3454	1185	1426	7521		20536	625	L.F.	TRENCH 2'-0" DEEP
								200		200	292	1190		550		3532	625	L.F.	TRENCH 4'-6" DEEP
493	351	178	560						40		20	24		22		1468	625	L.F.	CONDUIT - 2" RIGID FERROUS METAL TYPE II OR III
								192	251	196	211	246	32	783		1911	625	L.F.	CONDUIT - 3" RIGID FERROUS METAL TYPE II OR III
	942		776					424	1200	432	702	688	84	1958		7266	625	L.F.	CIRCUIT CABLE 1/C NO. 4 - 600 VOLT
	208		208					679	492	679	2086	590	680	2310		7988	625	L.F.	POLE & BRACKET CABLE 1/C NO. 10 - 600 VOLT
								1795	2814	2240	4305	3106	1459	8363		24082	625	L.F.	1½" DUCT CABLE WITH 2 - 1/C NO. 4
								2	24	2	12	16	4	44		104	625	EACH	CABLE CONNECTOR KIT TYPE I
			2					8	8	8	16	14	2	28		86	625	EACH	" " " " IV
	2		2					7	5	7	17	6	6	21		73	625	EACH	" " " " II
	2		2					7	5	7	17	6	6	21		73	625	EACH	" " " " III
									LUMP							LUMP	625	LUMP	SERVICE POLE AND CONTROL CENTER - SPA
												LUMP				LUMP	625	LUMP	SERVICE POLE AND CONTROL CENTER - SPB
														LUMP		LUMP	625	LUMP	SERVICE POLE AND CONTROL CENTER - SPC
1	1		1													3	625	EACH	STRUCTURE GROUNDING SYSTEM
2			3													5	625	EACH	STRUCTURE JUNCTION BOX
	LUMP		LUMP					LUMP	LUMP	LUMP	LUMP	LUMP	LUMP	LUMP		LUMP	625	LUMP	CIRCUIT & POLE IDENTIFICATION
2	2		2													6	625	SET	LIGHT POLE ANCHOR BOLTS FOR STRUCTURE SET OF 4 (1" X 40")
											60	248		694		1002	625	L.F.	CONDUIT 3" TYPE II OR III PUSHED OR BORED UNDER EXISTING PAVEMENT

QUANTITIES CALC. [illegible]

FED. RD. DIVISION	STATE	PROJECT	
2	OHIO		

224

LOR - 20 - 12.62

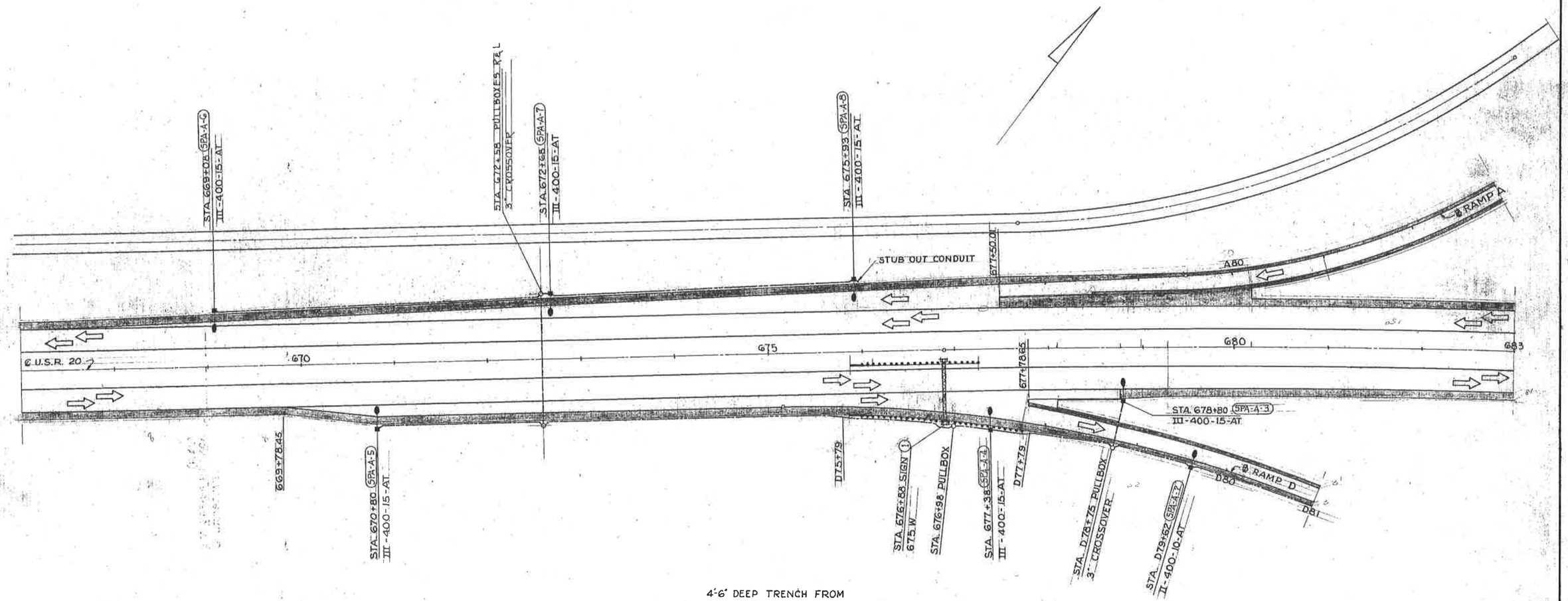

4'-6" DEEP TRENCH FROM
STA. D75+79 TO STA. D77+79

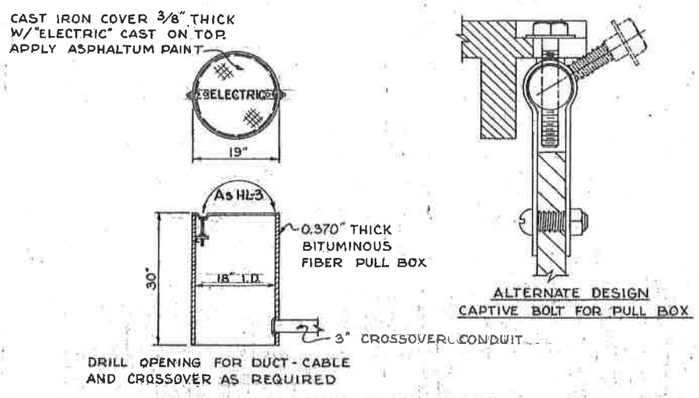

PULL BOX DETAILS

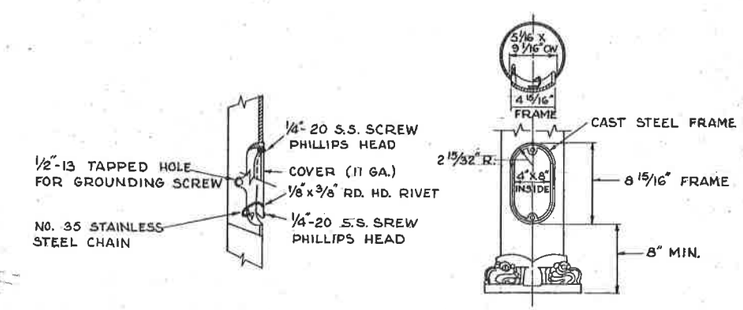

4x8 CURVED HANDHOLE FRAME
AND COVER DETAIL
SCALE: 1" = 8"

LIGHTING PLANS

FED. RD. DIVISION	STATE	PROJECT	
2	OHIO		

LOR - 20 - 12.62

225

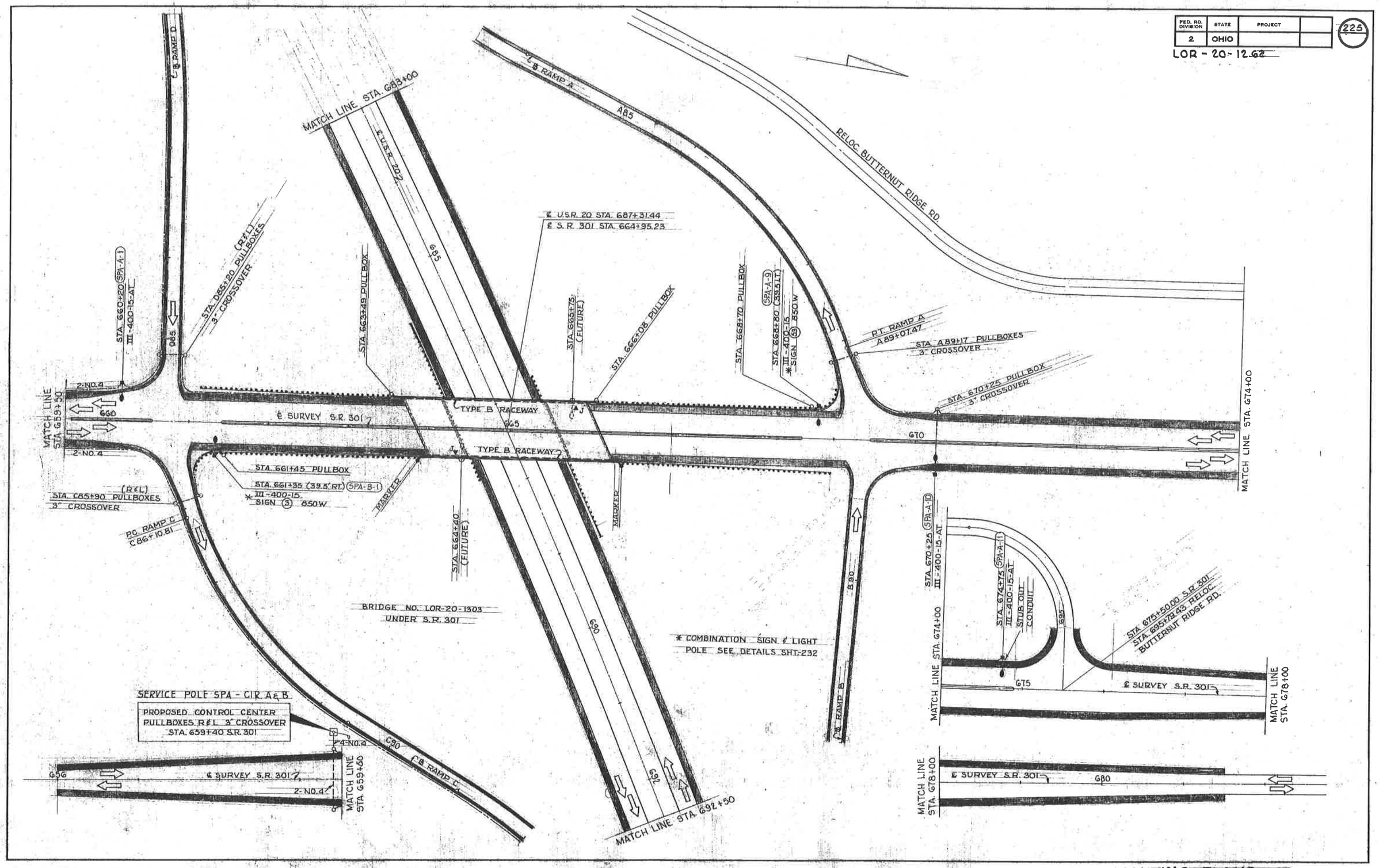

LIGHTING PLANS

FED. RD. DIVISION	STATE	PROJECT	
2	OHIO		

226

LOR - 20- 12.62

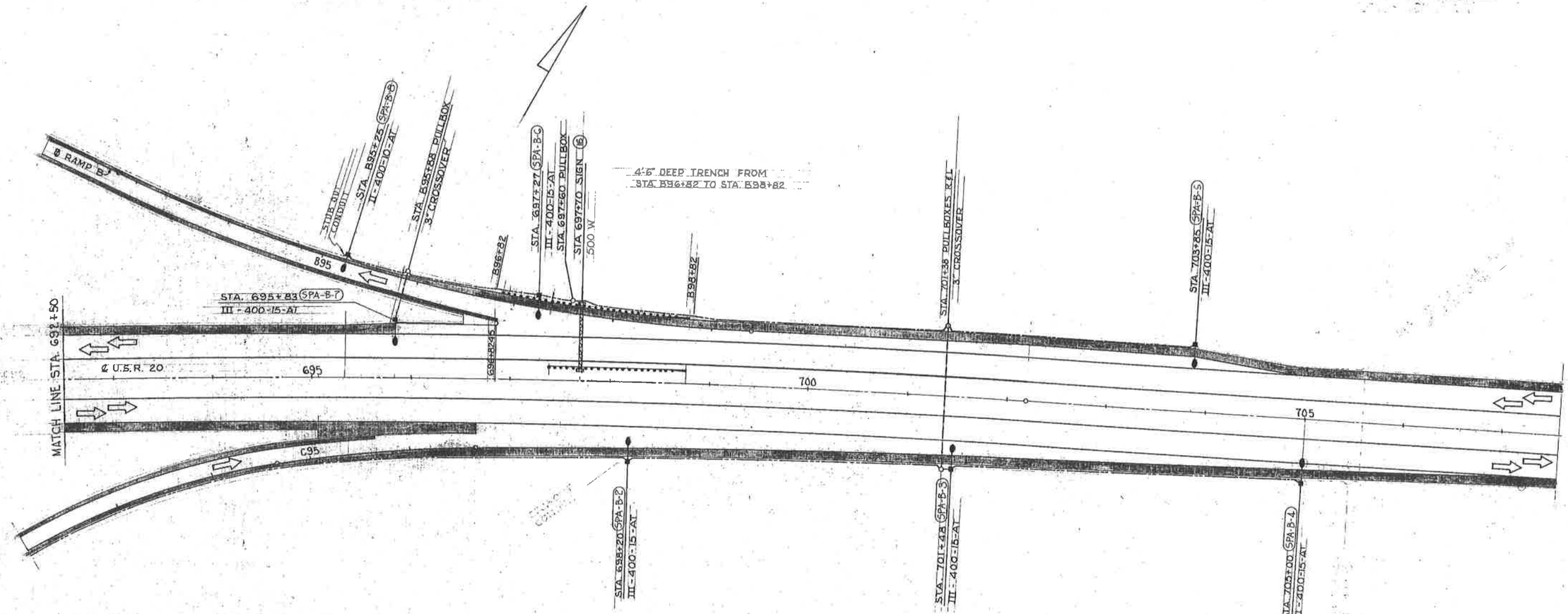

LIGHTING PLANS

FED. RD. DIVISION	STATE	PROJECT	
2	OHIO		

LOR - 20 - 12.62

227

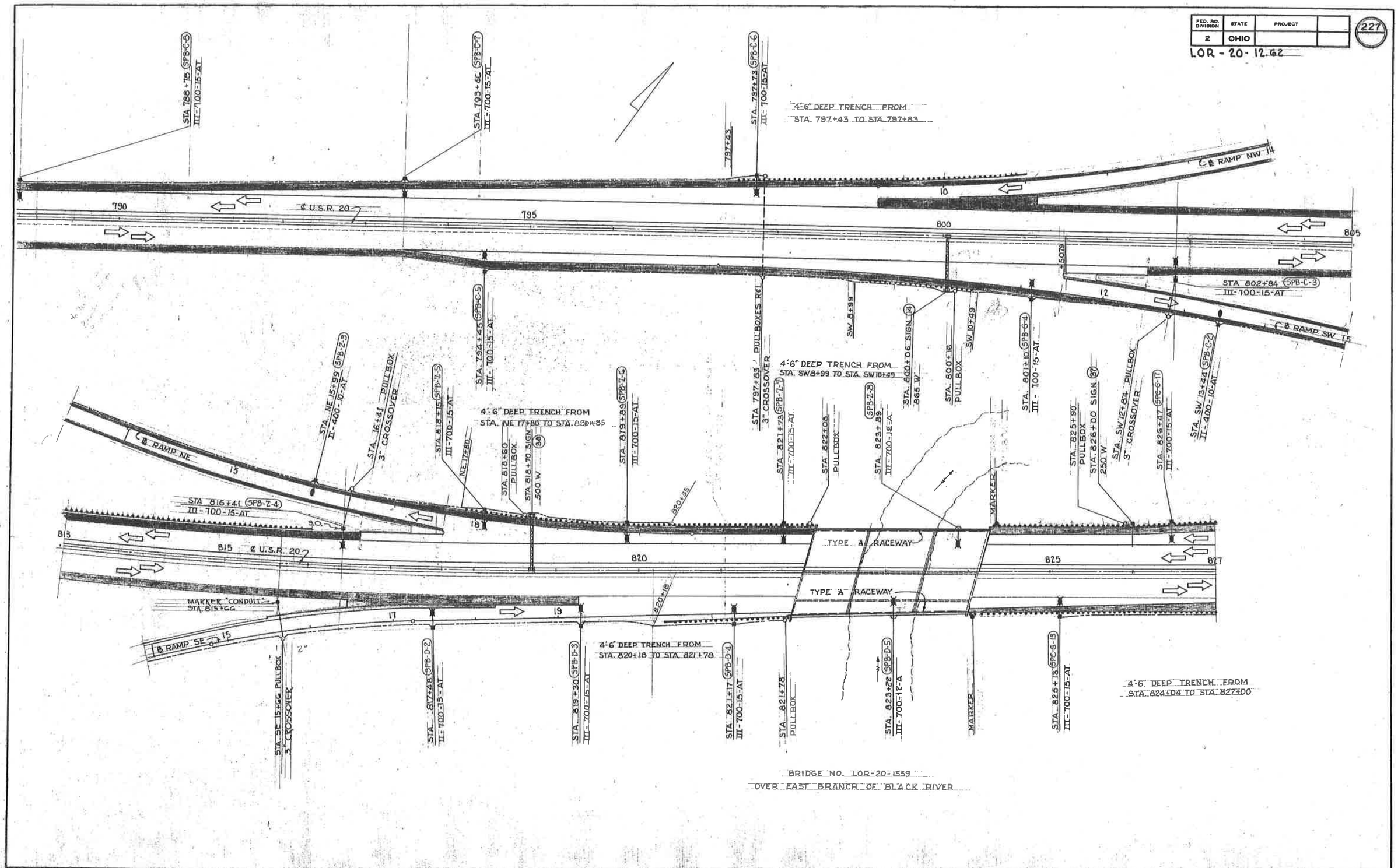

LIGHTING PLANS

FED. RD. DIVISION	STATE	PROJECT	
2	OHIO		

228

LOR - 20 - 12.62

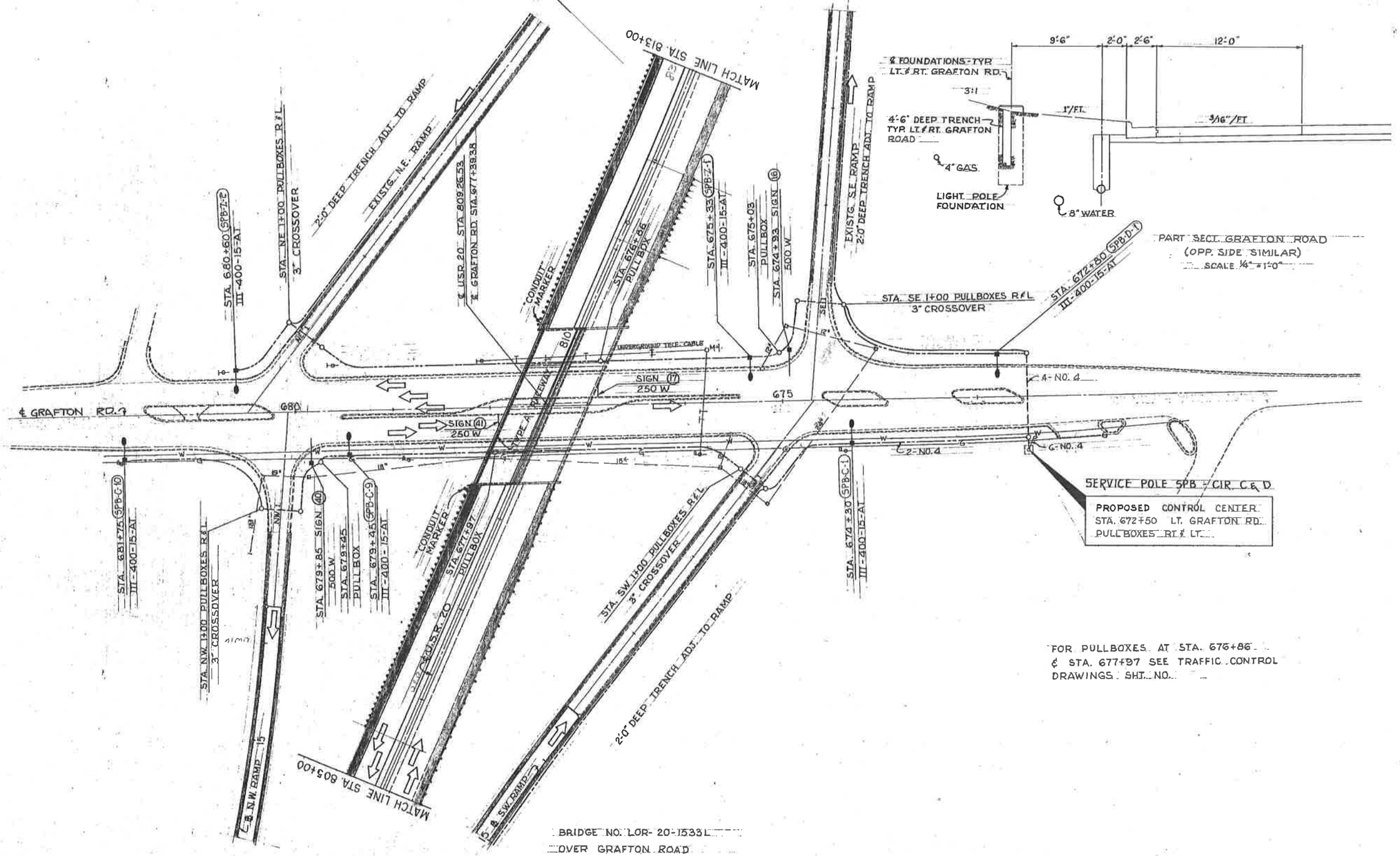

FOR PULLBOXES AT STA. 676+86 & STA. 677+97 SEE TRAFFIC CONTROL DRAWINGS SHT. NO.

BRIDGE NO. LOR-20-1533L
OVER GRAFTON ROAD

LIGHTING PLANS

FED. RD. DIVISION	STATE	PROJECT	
2	OHIO		

229

LOR -20-12.62

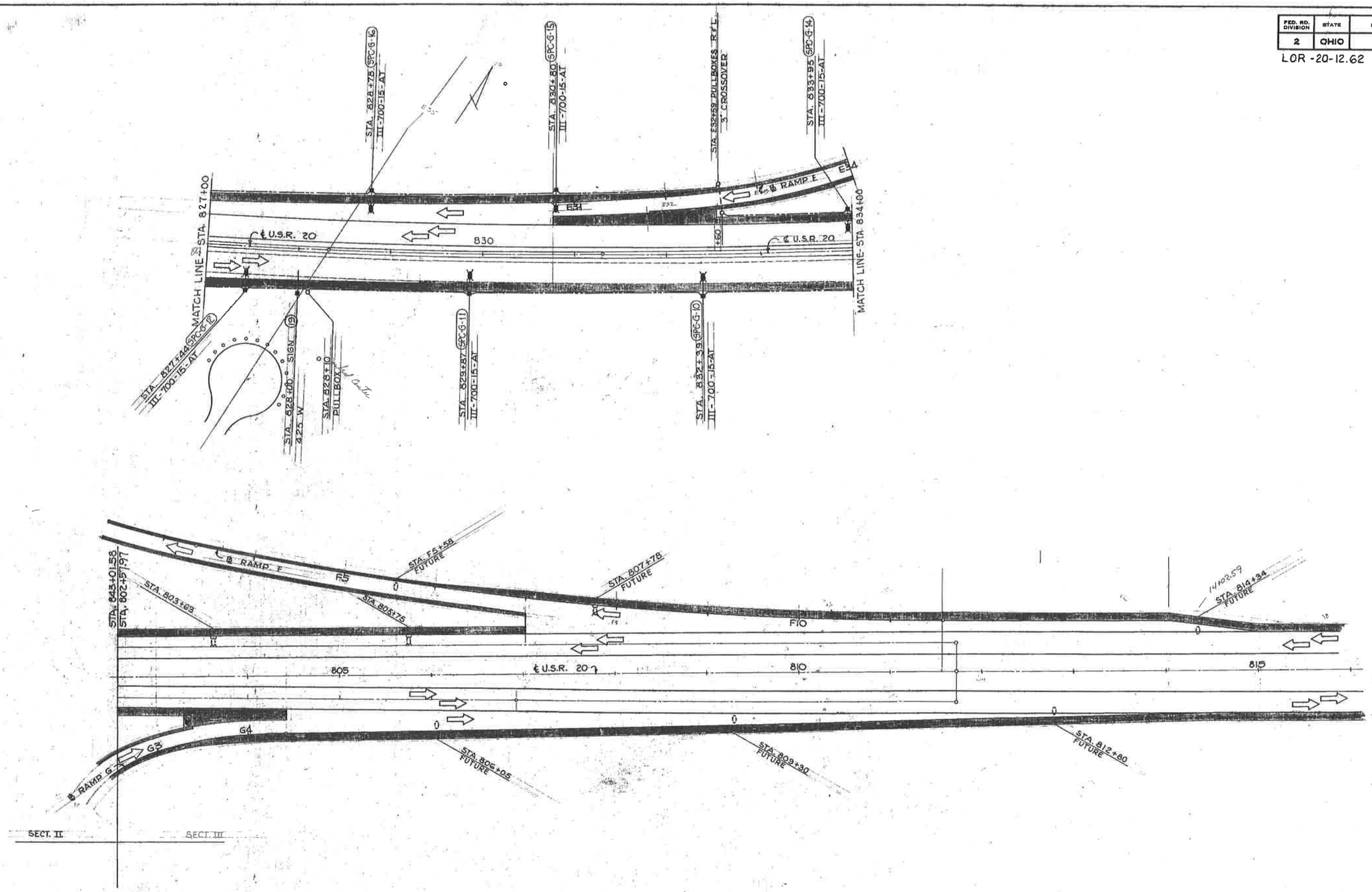

LIGHTING PLANS

FED. RD. DIVISION	STATE	PROJECT	
2	OHIO		

230

LOR-20-12.62

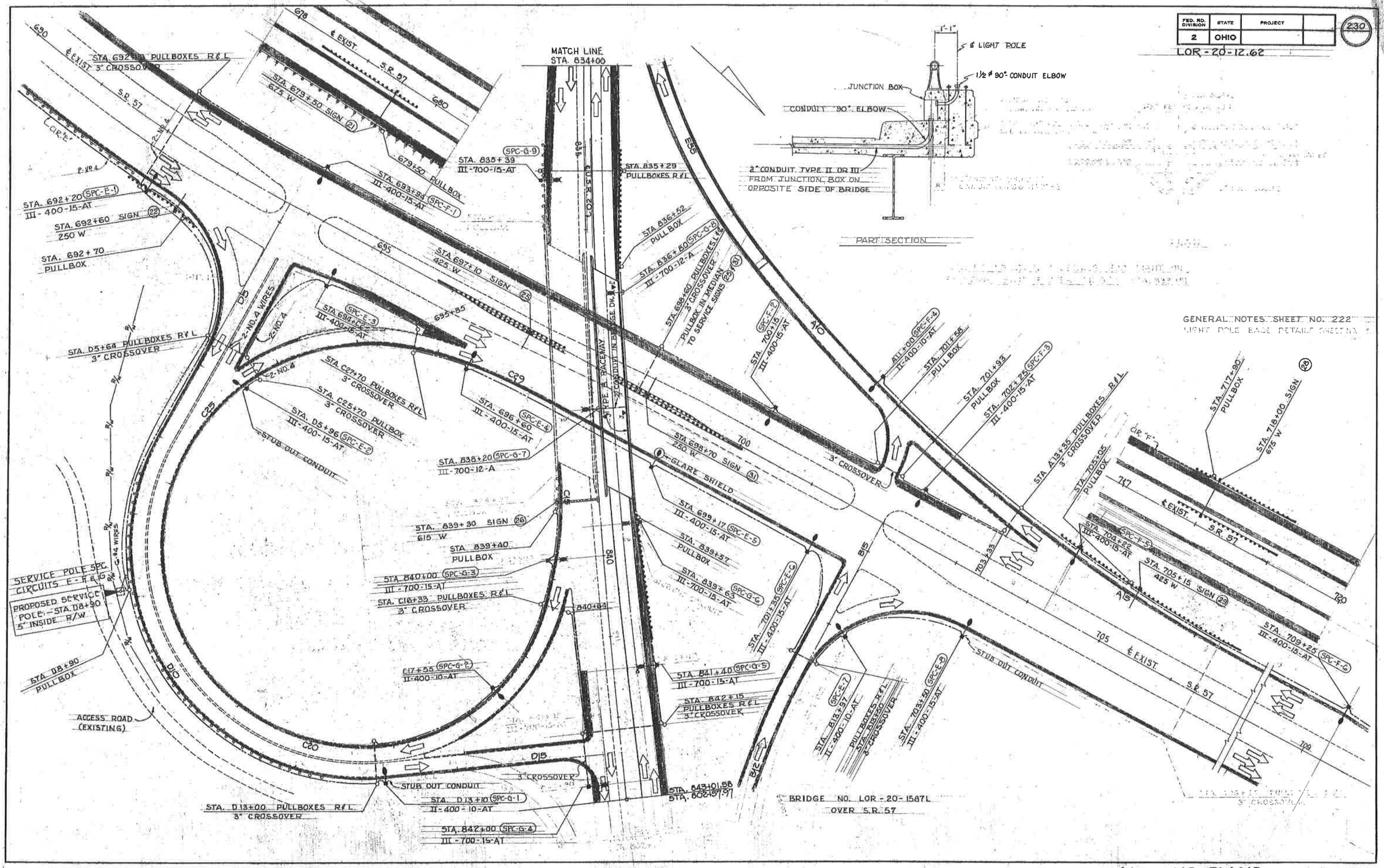

GENERAL NOTES SHEET NO. 222
LIGHT POLE BASE DETAILS SHEET NO.

LIGHTING PLANS

FED. RD. DIVISION	STATE	PROJECT	
2	OHIO		

23t

LOR-20-12.62

NOTE: Split-bolt Connector shall be made of tin plated copper alloy with tin plated spacer. Acceptable models are: Blackburn #10HPS, Burndy #KSU-25, Line Material #DK-5B-10, Kearney #118109-02 or an approved equal.

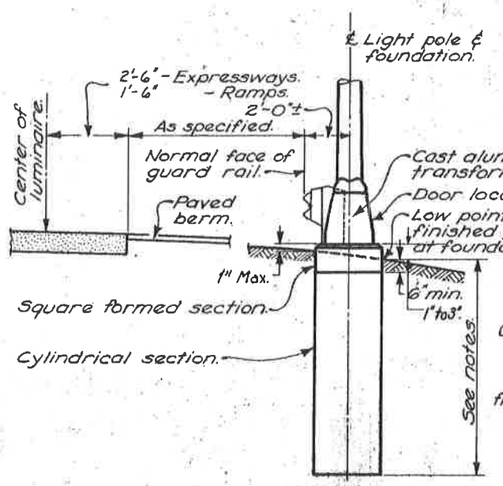

LOCATION OF POLE WITH OR WITHOUT ALUMINUM TRANSFORMER BASES

(Supersedes "Location of Light Pole Foundation" shown on Standard Drawing HL-1).

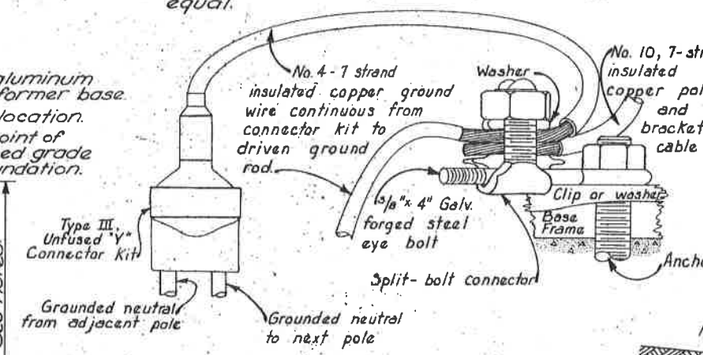

POLE GROUNDING DETAIL

(2-Wire Grounded Neutral System Only)

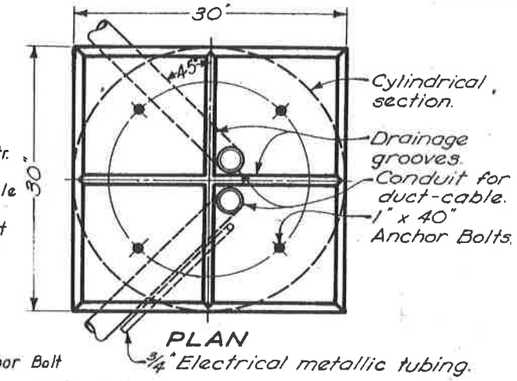

PLAN

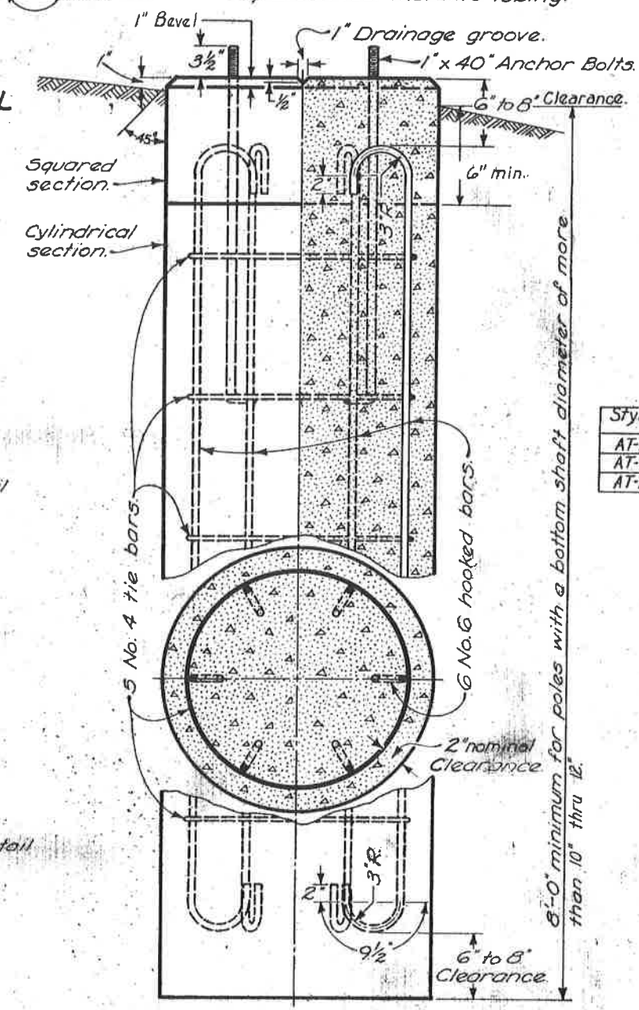

ELEVATION

30" FOUNDATION

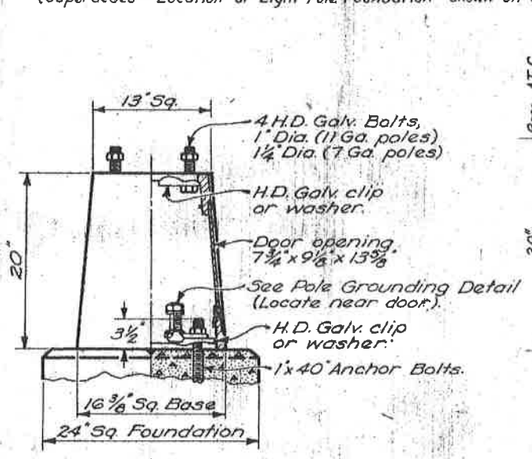

ELEVATION

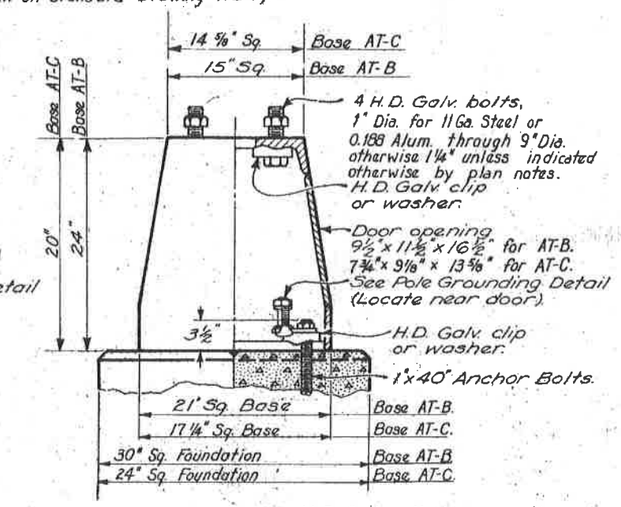

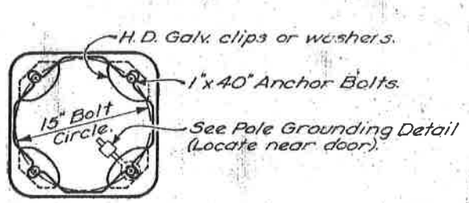

BASE FRAME

BASE AT-A

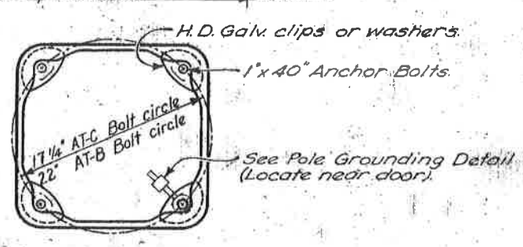

BASE FRAME

BASES AT-B AND AT-C

CAST ALUMINUM TRANSFORMER BASES

NOTES

FOUNDATION: Foundations for light poles shall be poured-in-place concrete (vibrated and spaded 511.09). Each foundation must meet minimum depths as specified, but additional depth may be required by the Engineer because of existing soil conditions. The 30" foundation (detailed hereon) shall be used for light poles having a bottom shaft diameter of more than 10" through 12". The 24" foundation (detailed on Standard Drawing HL-1) shall be used for all light poles having a bottom shaft diameter of 6.0" through 10". See HL-1 for Foundation depth. Rotate reinforcing bars to clear conduit.

Drainage grooves on foundation top, as detailed hereon, shall be required on all foundations even though they do not appear on Standard Drawing HL-1.

ALUMINUM TRANSFORMER BASES: All bases shall be cast from ASTM B-26 or B-108 Alloy 5G 70A-T6.

Base AT-A shall be used with anchor base poles of 6" through 9.2" dia. inclusive, thru 34'-6" Mtg. Hgt. Base AT-B shall be used for anchor base poles above 10" through 12" diameter. Base AT-C shall be used for anchor base poles with bottom diameter 9" through 10"*

The transformer bases shall be capable of resisting the following moments in foot pounds with load applied at a distance of 20" above the top of the base without collapsing or rupturing.

Style	Bolt Circle	Base Height	Moment-Foot Pounds	Arm Length
AT-A	15"	20"	37,000	15' Max.
AT-C	17 1/4"	20"	56,000	10' to 25'
AT-B	22"	24"	52,000	10' to 25'

Both the bottom of the cast steel pole base and the top of the aluminum transformer base shall be coated or painted with a heavy film of zinc rich paint (Federal Specification TT-P-641-Type II) to reduce galvanic action between the two dissimilar metals.

PAYMENT: 30" Light Pole Foundations shall be paid for at the unit price bid per each foundation.

Aluminum base complete with hardware, eye bolt and connector, zinc rich paint, and installation shall be included with ground-mounted poles for payment.

* AT-C Base can be used with 8" or 8 1/2" dia. base poles, if desired, in order to reduce maintenance items.

Revised: 5-16-68
Issued: 11-6-67

Design Services Sketch No. RL-SK-186

ALUMINUM TRANSFORMER BASE DETAILS

FED. RD. DIVISION	STATE	PROJECT	
2	OHIO		

LOR-20-12.62

232

NOTE: COMBINATION POLE SHALL HAVE FACTORY ATTACHED POLE PLATES. THE DOUBLE PIPE BRACKET ARM SHALL HAVE FACTORY ATTACHED BRACKET ARM PLATES, AS SHOWN ON STD. DWG. HL-2. FURNISH ALL NUTS, BOLTS, WASHERS AND ALL INCIDENTALS NECESSARY FOR ASSEMBLY IN THE FIELD.

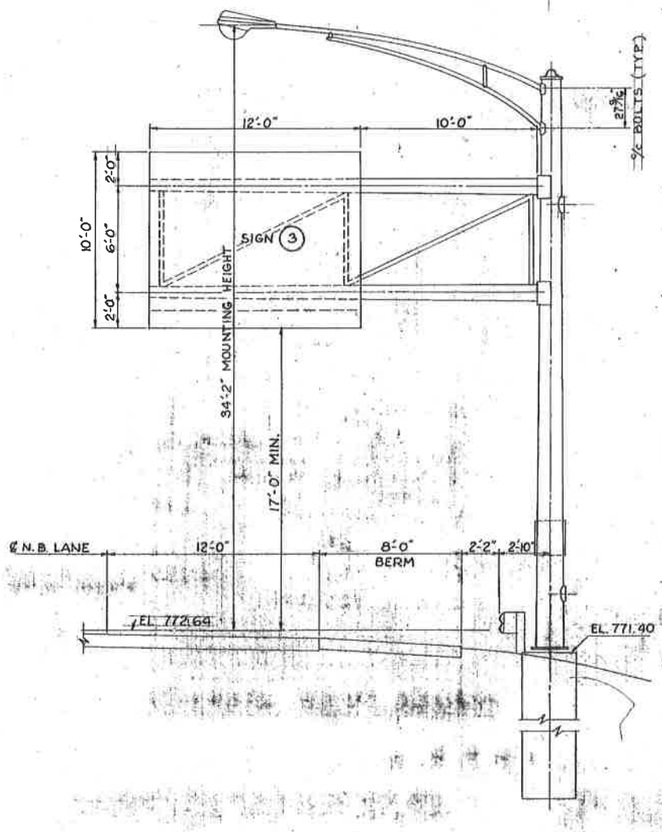

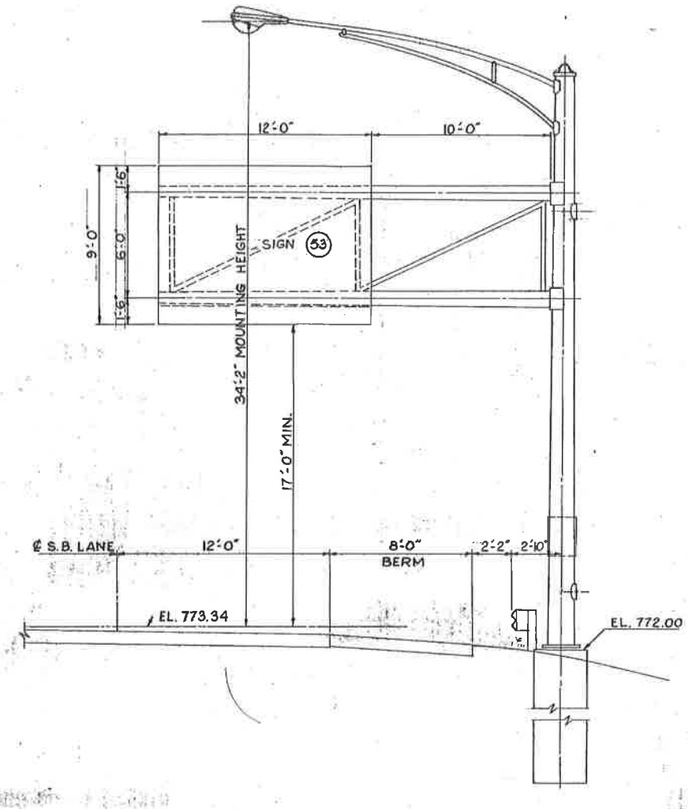

COMBINATION SIGN & LIGHT POLE DETAILS

S.R. STA. 661+35

S.R. STA. 668+80

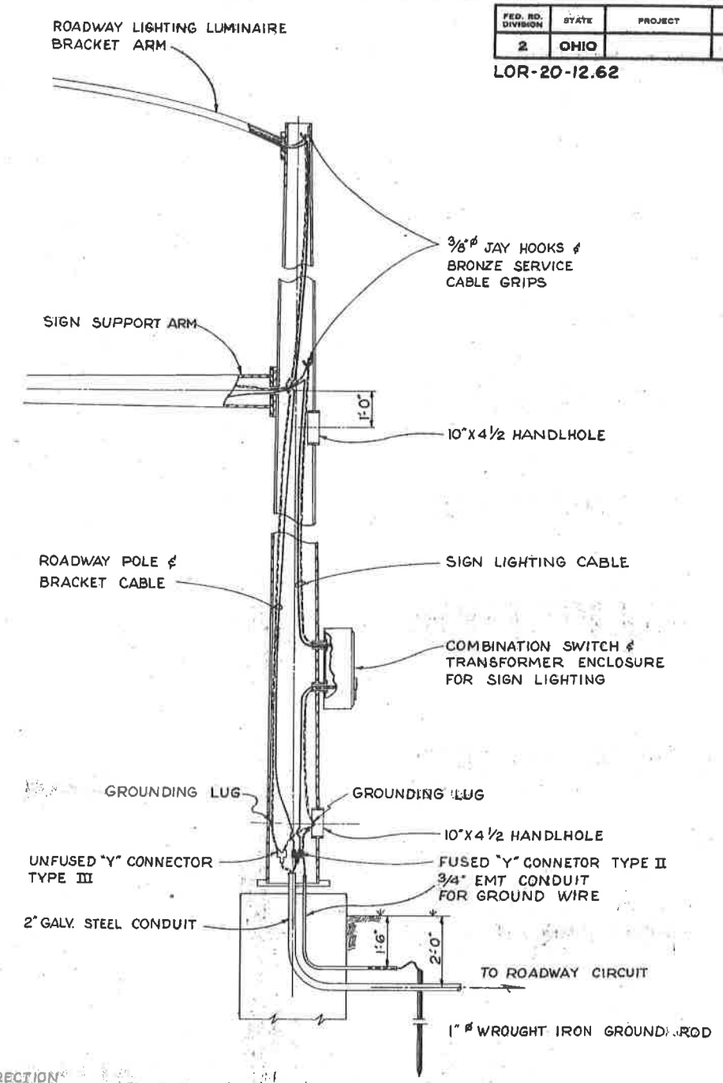

SCHEMATIC WIRING DIAGRAM

THE FOLLOWING ITEMS OF THE COMBINATION SIGN AND LIGHT POLE ARE INCLUDED IN HIGHWAY LIGHTING.

1. LUMINAIRE
2. MERCURY LAMP
3. LIGHTING BRACKET ARM
4. POLE AND BRACKET CABLE
5. CONNECTOR KITS

GENERAL LIGHTING NOTES SHEET NO. 222
HIGHWAY LIGHTING SUMMARY SHEET NO. 223

TRAFFIC CONTROL GENERAL NOTES SHEET NOS. 200 & 201
TRAFFIC CONTROL SUMMARY SHEET NO. 204

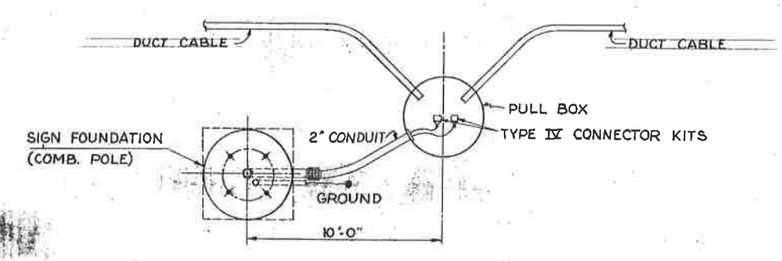

PULLBOX CABLE CONNECTION - ADJACENT COMBINATION SIGN & LIGHT POLE S.R. 301 (STA. 661+45 & STA. 668+70)

FED. RD. DIVISION	STATE	PROJECT	
2	OHIO		

233

LOR-20-12.62

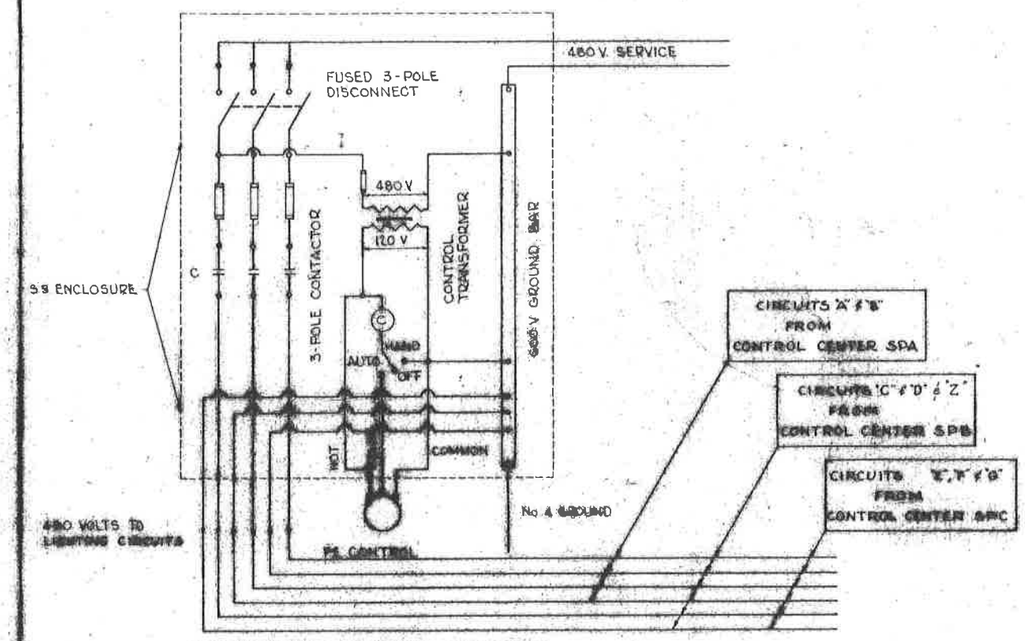

SCHEMATIC WIRING DIAGRAM

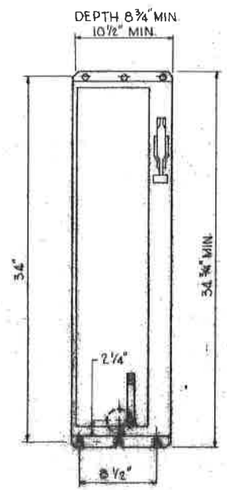

ENCLOSURE SWITCH-CONTACTOR

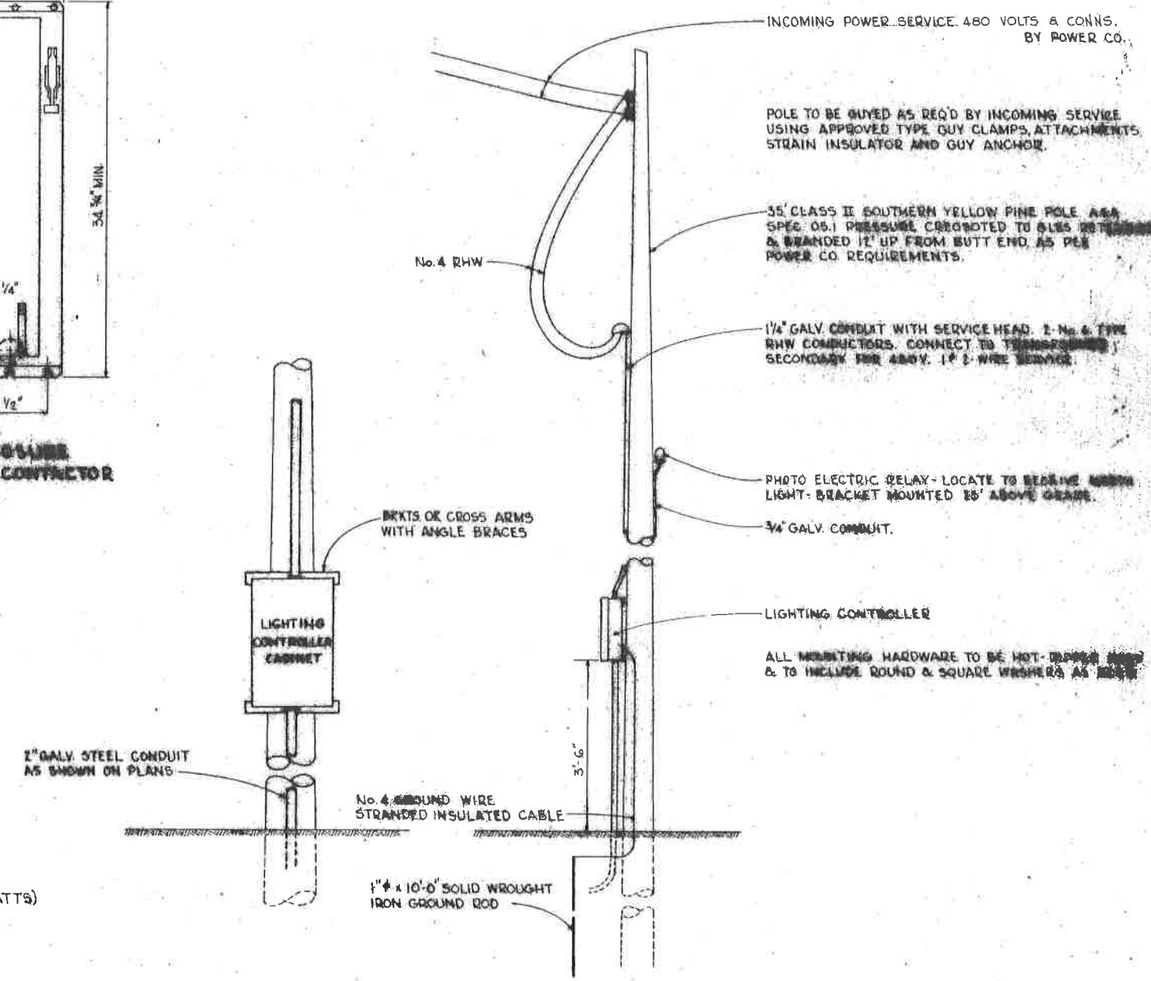

SERVICE POLE DETAIL

NOTES

POLE CONSTRUCTION TO BE IN ACCORDANCE WITH NATIONAL ELECTRICAL SAFETY CODE CLASS B CONST.

COMBINATION DISCONNECT SWITCH AND CONTACTOR SHALL BE SQUARE "D" CLASS 8903 TYPE WB39 FAG10A EQUIPMENT ELECTRIC WORKS, CEW 17 SS4660-TWVED, T360GOSS OR APPROVED EQUAL.

EACH CONTROLLER SHALL CONTAIN:
- 1 - 60 AMP. 3-POLE FUSIBLE DISCONNECT WITH 30 AMP. INTERCHANGEABLE FUSE CLIPS.
- 1 - SIZE "1" (60 AMP) 3-POLE MAGNETIC CONTACTOR.
- 1 - CONTROL POWER TRANSFORMER 480-120 VOLTS. WITH FUSES.
- 1 - 600 VOLT GROUND BAR.
- 1 - HAND-OFF-AUTOMATIC SWITCH.

THE ENCLOSURE SHALL BE STAINLESS STEEL NEMA-4.

A SCREWDRIVER IS NECESSARY FOR ENTRANCE INTO THE ENCLOSURE.

THE DISCONNECT HANDLE SHALL BE MOUNTED SO AS TO REMAIN WITH THE HOUSING WHEN THE DOOR IS OPENED.

THE DISCONNECT SHALL HAVE A PROVISION FOR PADLOCKING IN EITHER THE "ON" OR THE "OFF" POSITION.

THE DISCONNECT CANNOT BE TURNED ON UNLESS THE DOOR IS COMPLETELY CLOSED AND LOCKED.

THE DOOR MAY NOT BE OPENED NORMALLY WHEN THE DISCONNECT IS "ON". PROVISION SHALL BE MADE FOR OPENING THE DOOR INTENTIONALLY WHILE THE DISCONNECT IS "ON".

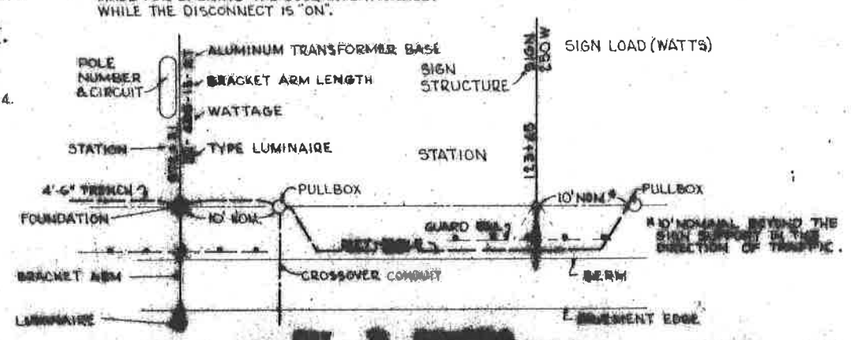

LIGHTING DETAILS

MICROFILMED
MAY 23 1966

FED. RD. DIVISION	STATE	PROJECT	
2	OHIO		

233-A

LOR-20-12.62

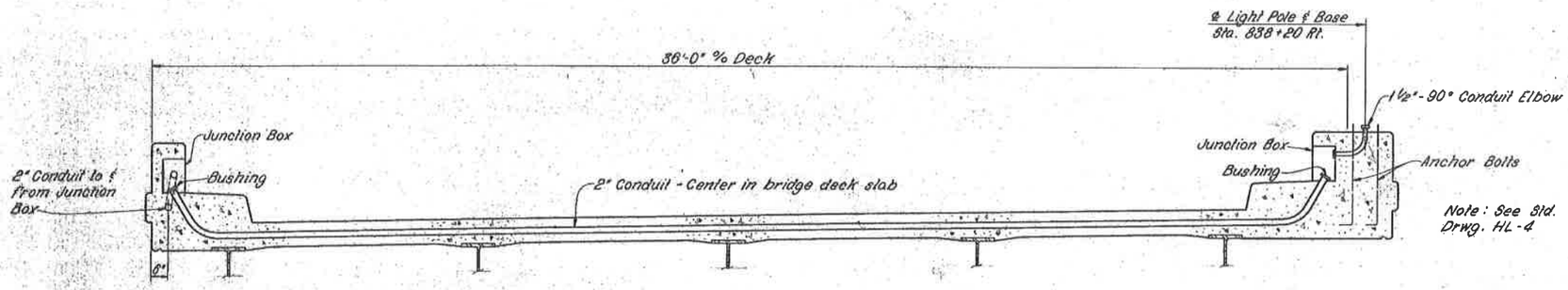

CONDUIT CROSSING AT STA. 838+20

BRIDGE No. LOR-20-1587 L

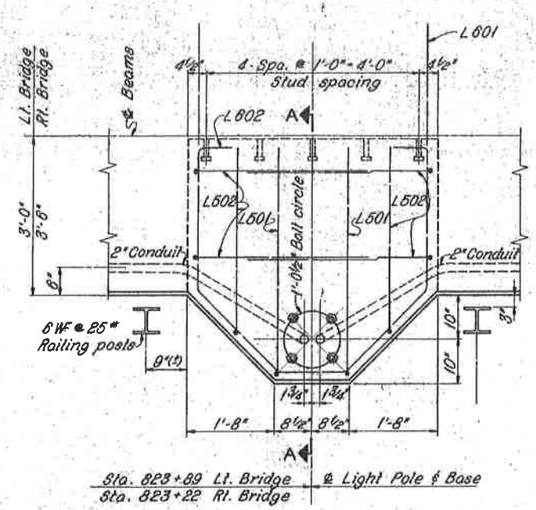

PLAN

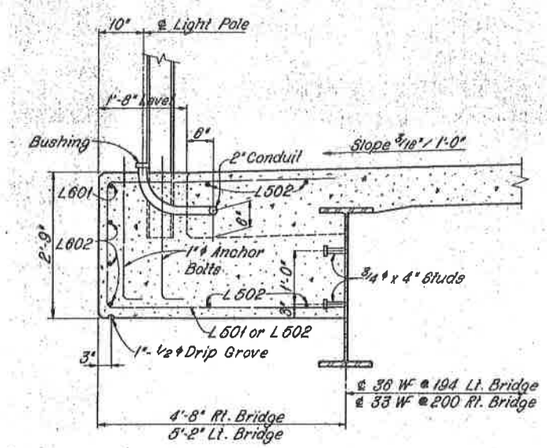

SECTION D-D

LIGHT POLE BASE DETAILS

BRIDGE No. LOR-20-1559

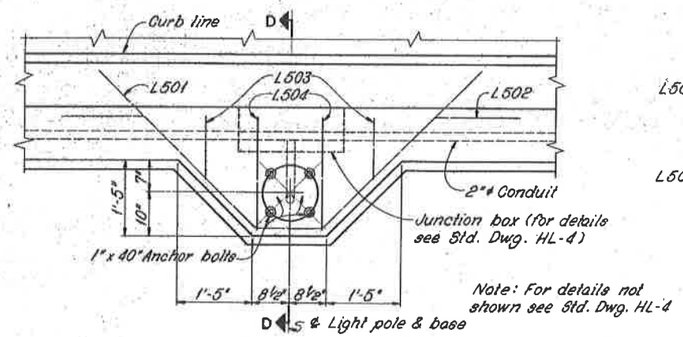

Note: For details not shown see Std. Dwg. HL-4

PLAN

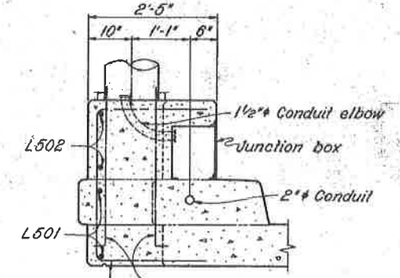

SECTION D-D

LIGHT POLE BASE DETAILS

BRIDGES No. LOR-20-1303 & 1587L

SHAFFER, JOHNSTON, LICHTENWALTER AND ASSOCIATES, INC.
Consulting Engineers
MANSFIELD OHIO WOOSTER

STRUCTURE LIGHTING DETAILS

LORAIN COUNTY S.R. 20

DESIGNED	DRAWN	TRACED	CHECKED	REVIEWED	DATE	REVISED
JPG	JPG	TWH		RAK	7-12-64	