MICROFILMED
AUG 20 1986

DESIGN DESIGNATION	
CURRENT YEAR 1985 A.D.T.	11,980
DESIGN YEAR 2005 A.D.T.	17,117
D.H.V.	1,710
D (DIRECTIONAL DISTRIBUTION)	55%
T (PERCENT B & C TRUCKS)	15%
V (DESIGN SPEED)	70 M.P.H.

CONVENTIONAL SIGNS

COUNTY LINE
TOWNSHIP LINE
CORPORATION LINE
CENTER LINE
PROPERTY LINE
EXISTING R/W LINE
EXISTING LA LINE
RIGHT OF WAY LINE,
LIMITED ACCESS LINE
TEMPORARY CHANNEL EASEMENT
CONSTRUCTION LIMITS
FENCE LINE (EXISTING, PROPOSED)
GUARD RAIL (EXISTING, PROPOSED)
RAIL ROAD
POLE LINE (POWER, TELEPHONE)
UNDERGROUND UTILITIES (GAS, WATER)
EXISTING STREET LIGHT
TILE, DRAIN PIPE
EXISTING TREES & STUMPS
EXISTING TREES & STUMPS TO BE REMOVED

INDEX OF SHEETS

TITLE SHEET	1
SCHEMATIC PLAN & EROSION CONTROL ITEMS	1A, 2, 2A, 2B
TYPICAL SECTIONS	3-6
GENERAL NOTES	7, 7A, 8, 8A, 8B
GENERAL SUMMARY, CALCULATIONS & SUMMARY OF TABLES	9-12, 15-17
GUARDRAIL PLANS	17A-17D
PLAN & PROFILE	18-34, 37-45
HURON-AVERY ROAD DETOUR PLAN	45A
WICK DRAIN PLANS	45B-45D
PAVEMENT DETAILS & LAYOUT DETAILS	46-57
SUPERELEVATION TABLES	58-60
CROSS SECTIONS	61-127, 131-140
STRUCTURES, 20' SPAN & UNDER	141-144, 147, 148, 151-153
DRAINAGE DETAILS & APPROACH SLAB DETAILS	155-157
STRUCTURES, OVER 20' SPAN	158-217
TRAFFIC CONTROL PLAN	218-220, 222-242, 232A
LIGHTING PLAN	253, 254, 257, 258, 258A, 259-261
RIGHT OF WAY (FENCE PLAN)	264-284, 285A

ERI-2-1640; 158A-158C, 159-167, 167A
ERI-2-1678; 168-178, 178A-178E
ERI-2-1701; 179-188, 188A
ERI-2-1781; 189-198
ERI-2-1798 STEEL ALTERNATE; 199-201, 201A-201Z, 202, 202A-202W
ERI-2-1798 PRESTRESSED CONCRETE ALTERNATE; 203-207, 207A-207Z, 208, 208A-208V
ERI-2-1833; 209-217, 217A
ALPHABETIC SERIES EXCLUDE LETTERS I, O AND Q

SHEETS DELETED FROM PLAN

13, 14, 35, 36, 128-130, 145, 146, 149, 150, 154, 221, 243-252, 255, 256, 262, 263

UNDERGROUND UTILITIES
TWO WORK DAYS
BEFORE YOU DIG
CALL...800-362-2764 (TOLL FREE)
OHIO UTILITIES PROTECTION SERVICE
NON-MEMBERS
MUST BE CALLED DIRECTLY

STATE OF OHIO DEPARTMENT OF TRANSPORTATION

F-73(4)

ERI-2-16.13

MICROFILMED
DEC 1 [illegible]

ERIE COUNTY
CITY OF HURON
HURON TOWNSHIP
GRADE SEPARATION WITH THE CONSOLIDATED RAIL CORPORATION

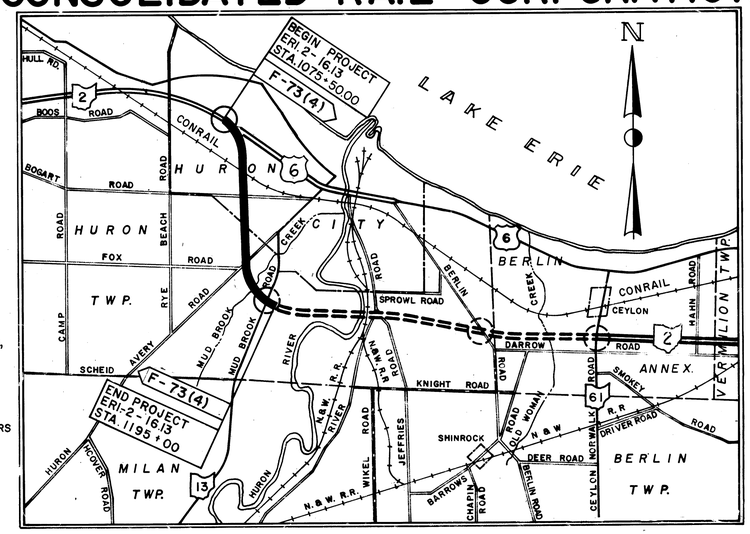

LOCATION MAP

SCALE OF MILES
0 1 2 3 4

STATE HIGHWAYS
OTHER HIGHWAYS (FREEWAYS)
OTHER ROADS
FUTURE IMPROVEMENTS
PORTION TO BE IMPROVED
PROPOSED INTERCHANGE

SCALES
PLAN
PROFILE HORIZONTAL
PROFILE VERTICAL
CROSS SECTIONS

GRAPHIC
0 20 40 60 80 100
0 5 10
0 5 10 15 20

LINE DATA

	MUNICIPAL	RURAL	TOTAL
BEGIN PROJECT	STA. 1075+50.00	STA. 1142+65.83	STA. 1075+50.00
END PROJECT	STA. 1142+65.83	STA. 1195+00.00	STA. 1195+00.00
ADDITIONS &/OR DEDUCTIONS			
LENGTH OF PROJECT	6,715.83 L.F. OR 1.272 MI.	5,234.17 L.F. OR 0.991 MI.	11,950.00 L.F. OR 2.263 MI.
S.R. 2 STA. 578+60 TO STA. 1075+50.00 STA. 1195+00 TO STA. 1196+82	3,684.11 L.F.	600.89 L.F. 182.00 L.F.	3,630.00 L.F. 182.00 L.F.
E.B. THRU RAMP STA. 1072+84.31 TO STA. 1110+49.96	3,360.65 L.F.	—	3,360.65 L.F.
W.B. THRU RAMP STA. 1076+32.09 TO STA. 1115+00	3,867.91 L.F.	—	3,867.91 L.F.
HURON AVERY RD. STA. 16+40 TO STA. 24+25	—	785.00 L.F.	785.00 L.F.
S.R. 13 STA. 4+29.18 TO STA. 32+20.83	—	2,791.65 L.F.	2,791.65 L.F.
RYE BEACH RD. STA. 33+75 TO STA. 54+22.73	2547.73 L.F.	—	2547.73 L.F.
LENGTH OF WORK	20,176.23 L.F. OR 3.821 MI.	14,998.71 L.F. OR 2.841 MI.	35,174.94 L.F. OR 6.662 MI.

PREPARED BY:
adache - ciuni - lynn associates
CONSULTING ENGINEERS CLEVELAND, OHIO

Steven V. Ciuni
STEVEN V. CIUNI
Willis C. Lynn
WILLIS C. LYNN

PROJECT ERI-2-16.13
DATE OF LETTING _____ 19__, CONTRACT Nº ____

SUPPLEMENTAL PRINTS OF STANDARD CONSTRUCTION DRAWINGS

DRAWING	DATE	DRAWING	DATE	DRAWING	DATE	DRAWING	DATE	DRAWING	DATE	DRAWING	DATE	DRAWING	DATE	DRAWING	DATE
AS-1-81	11-27-81	CB-2-2A&B	5-1-79	GR-1	1-11-85	MC-1	6-13-69	HL-1	12-28-84	HL-15	12-28-84	TC-32.10	3-8-79	TC-52.20	4-3-79
BP-1	6-1-65	CB-4	11-10-83	GR-2B	2-5-82	MC-8	6-12-75	HL-2	7-27-73	HL-16	12-28-84	TC-32.11	3-21-72	TC-61.10	4-5-82
BP-2	1-17-85	CB-5	11-10-83	GR-3	1-21-85	MC-4	7-26-76	HL-3	12-28-84	HL-19	3-22-77	TC-35.10	8-29-84		
BP-3	12-6-76	CB-6	5-1-79	GR-4	2-5-82	MC-7	10-15-76	HL-4	1-21-76	LA-1	6-1-79	TC-41.10	8-29-84	TC-72.20	2-26-82
BP-4	1-11-85	CB-458-A	5-1-79	GR-4A	1-30-84	MH-2	6-12-75	HL-5	9-6-73			TC-41.20	3-26-79		
BP-5	1-11-85	GR-3B	1-21-85	GR-4B	2-5-82	MC-9A	1-11-85	HL-7	1-21-76	TC-12.30	1-20-84	TC-41.50	3-26-79	TS-EJS-2-81	9-1-81
BP-6	6-1-65	F-2	5-1-76	GR-5	2-5-82	MC-10	5-1-76	HL-8	1-21-76			TC-42.10	8-19-77	BR-1	5-29-79
BP 7	12-6-76	F-3	5-1-76	GR-6	2-5-82	MC-11	8-1-78	HL-9	3-22-77	TC-21.20	1-20-84	TC-42.20	3-26-79	RB-1-55	2-2-59
BP-9	12-6-76	GR-3A	2-5-87	GR-6A	2-5-82	MH-1	12-18-84	HL-10	12-28-84	TC-22.10	3-1-79	TC-51.10	1-20-84	SD-1-69	6-12-69
BP-10	1-30-84	F-5	5-1-76	HW-4A	4-1-80	MH-3	12-18-84	HL-11	6-1-79	TC-22.20	3-1-79	TC-51.11	1-20-84	EXJ-2-81	4-2-84
		F-6	5-1-76	HW-4B	4-1-80	MH-5	6-12-75	HL-12	12-28-84	TC-31.21	3-6-79	TC-52.10	4-3-79	EXJ-3-82	8-1-84

SUPPLEMENTAL SPECIFICATIONS	
814	1-1-69
824	10-8-82
836	11-12-85
848	10-2-85
849	10-19-81
853	6-26-78
847	10-17-83
947	10-17-83
956	6-26-98
932	3-25-85

ERI-2-16.13	OHIO
	FHWA REGION 2
F-73(4)	FEDERAL PROJECT

1/284

The Project Designation ERI-2(16.13-17.39) Appearing Throughout This Plan Shall Be Construed To Read ERI-2-16.13

LIMITED ACCESS

This improvement is especially designed for through traffic and has been declared a limited access highway or freeway by action of the Director in accordance with the provisions of Section 5511.02 of the Revised Code of Ohio.

1985 SPECIFICATIONS

The standard specifications of the State of Ohio, Department of Transportation, including changes and supplemental specifications listed in the proposal shall govern this improvement.

I hereby approve these plans and declare that the making of this improvement will not require the closing to traffic of the highway, except as noted on sheet 7 and that provisions for the maintenance and safety of traffic will be as set forth on the plans and estimates.

Approved Harry W. Penn
Date 10/18/85 District Deputy Director of Transportation

Approved Walter J. Jastrzab
Date 12-12-85 Engineer, Bureau of Bridges and Structural Design

Approved Wayne H. Kaelble
Date 1-3-86 Chief Engineer, Planning and Design

Approved Warren J. Smith
Date 1-3-86 Director, Department of Transportation

DEPARTMENT OF TRANSPORTATION
FEDERAL HIGHWAY ADMINISTRATION

APPROVED:

DIVISION ADMINISTRATOR DATE

TITLE SHEET

MICROFILMED
AUG 20 1999

CALC. DATE	ERIE COUNTY	OHIO
CHKD. DATE	ERIE - 2 - 16.13	F.H.W.A. REGION 5

IA 184

SCHEMATIC PLAN

SCALE IN FEET
0 400 800 1200 1600 2000

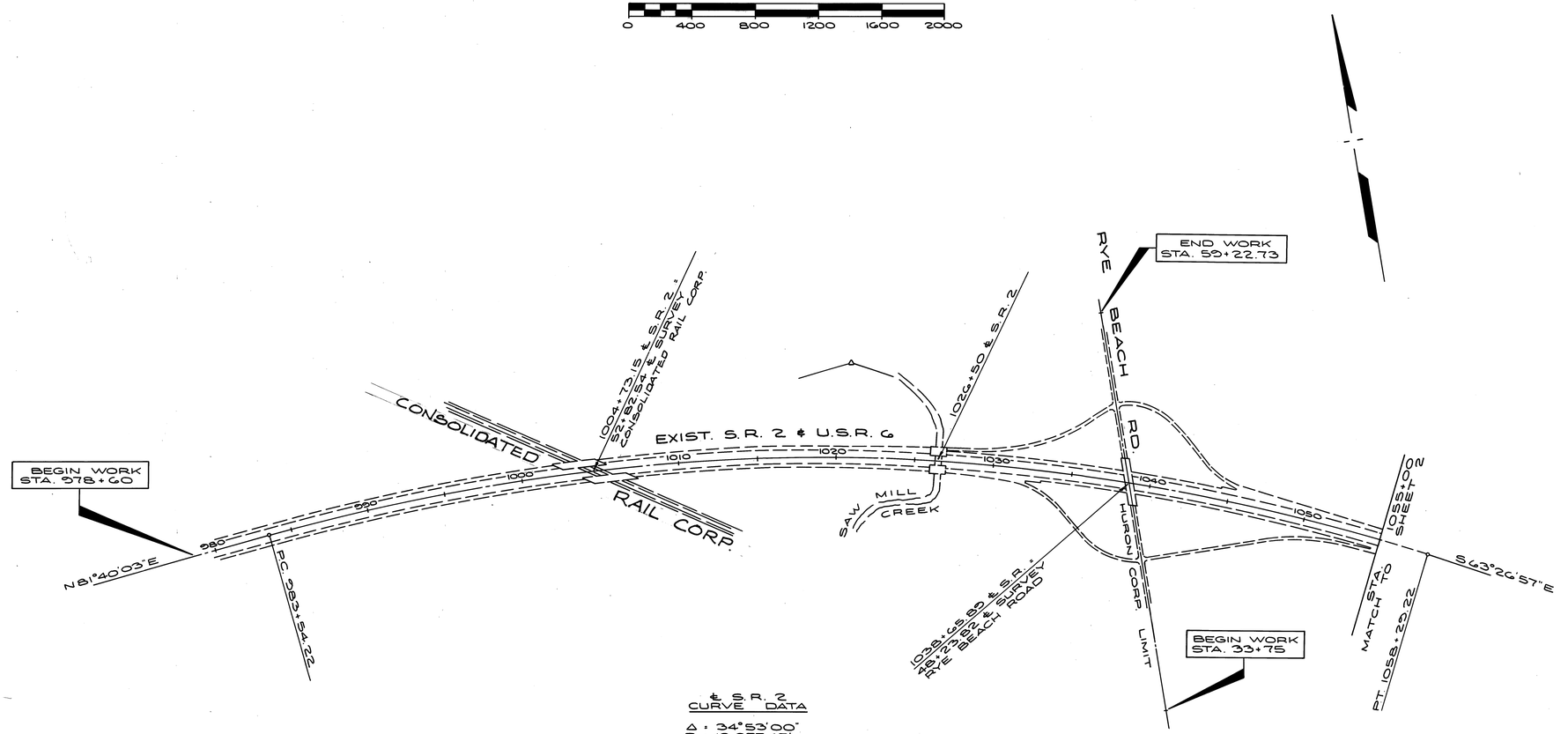

℄ S.R. 2
CURVE DATA

Δ : 34°53'00"
R : 12,277.65'
T : 3857.40'
L : 7475.00'
Dc : 0°28'
E : 591.70'
P.C. 983+54.22
P.I. 1022+11.62
P.T. 1058+29.22

A-C-L form no. 1

SCHEMATIC PLAN

MICROFILMED
AUG 20 1990

FED. RD. DIVISION	STATE	PROJECT	FISCAL YEAR
2	OHIO		

2 NBA

ERIE COUNTY
ERI 2 - (16.13 - 17.39)

SCHEMATIC PLAN

SCALE IN FEET
0 200 400 800 1200 1600 2000

N

EXISTING STRUCTURE

℄ S.R. 2 CURVE "2 DATA
Δ = 87° 18' 50"
Dc = 2° 00'
Ls = 300.00'
θs = 3° 00'
P = 1.30'
k = 149.99'
Yc = 5.24'
Xc = 299.92
R = 2864.79'
θc = 1° 00'
Ts = 2884.77'
Es = 1096.71'
Δc = 81° 18' 50"
Lc = 4065.69'
c = .00001111 (SPIRAL)
c = .6 (SIMPLE)
P.I. STA. 1191+14.95

S 88° 42' 02" E

ST STA. 1208+95.87

C.S. STA. 1205+95.87

END WORK STA. 32+20.83

END WORK STA. 1196+82

S.R. 13

MUD BROOK CREEK

HURON AVERY LINE

CORPORATION

URBAN RURAL

RAMP #4

RAMP #5

RAMP #2

RAMP #3

Z ℄ TEMP ROAD

S.L.M. 18.38

F-73 (4)

END PROJECT ERI-2-16.13 STA. 1195+00

℄ S.R. 2 STA. 1191+13.70
BR. # ERI-2-1833

BEGIN WORK STA. 4+29.18

T.S. STA. 1162+30.18

S.C. STA. 1165+30.18

END WORK STA. 24+25

MEDIAN CROSSOVER STA 1154+90

URBAN LIMIT S.L.M. 17.39

℄ S.R. 2 STA. 1173+19.78
TO STA. 1180+94.75
BR. # ERI-2-1798 L & R

℄ S.R. 2 STA 1142+65.83

℄ S.R. STA. 1165+06.46
BR. # ERI-2-1781

BEGIN WORK STA. 46+40

S 01° 25' 12" E

S.R. 2

CITY OF HURON

ROAD

FOX ROAD

℄ S.R. 2 STA. 1123+04.11
BR. # ERI-2-1701 L/R.

℄ S.R. 2 STA. 1110+29.15
BR. # ERI-2-1678 L/R.

C.S. STA. 1097+40.84

ST STA. 1101+00.84

CONSOLIDATED RAIL

BOGART ROAD

EXIST. S.R. 2 & U.S. R. 6

℄ S.R. 2 STA. 1090+45
BR. # ERI-2-1640

℄ E.B. THRU RAMP (U.S.R. 6 Directional Roadway)

END WORK W.B. THRU RAMP STA. 1115+00

℄ TEMP ROAD

END WORK E.B. THRU RAMP STA. 1105+44.96

℄ EXISTING S.R. 2 STA. 1104+23.86.66 Ahead
= ℄ E.B. THRU RAMP STA. 1105+71.50

BEGIN WORK W.B. THRU RAMP STA. 1076+32.04

BEGIN PROJECT ERI-2-16.13 STA. 1075+50.00

F-73 (4)

S.L.M. 16.13

℄ W.B. THRU RAMP

S.C. STA. 1080+32.04

T.S. STA. 1076+32.09

℄ S.R. 2 STA. 1076+64.31 Ahead
= ℄ E.B. THRU RAMP STA. 1076+32.48
116' LT.

S 63° 26' 57" E ℄ TEMP ROAD

MATCH LINE SEE SHEET 1A

℄ S.R. 2 CURVE "1 DATA
Δ = 62° 03' 45"
Dc = 3° 00'
Ls = 400.00'
θs = 6° 00'
P = 3.49'
k = 199.93'
Yc = 13.95'
Xc = 399.56'
R = 1909.86'
θc = 2° 00'
Ts = 1351.01'
Es = 323.05'
Δc = 50° 03' 45"
Lc = 1668.75'
c = .00001257
P.I. STA. 1089+93.10

RAMP LINE DATA

RAMP #2 STA. 1178+65 - 1189+88.57	=	1123.57
RAMP #3 STA. 1183+04.62 - 1193+20.35	=	1015.73
RAMP #4 STA. 1190+63.17 - 1191+50	=	86.83
RAMP #5 STA. 1191+02.82 - 1192+00	=	97.18
PAVEMENT TOTAL		2323.31

ADACHE ASSOCIATES INC., ENGINEER
CLEVELAND 42, OHIO

SCHEMATIC PLAN

DESIGNED	DRAWN	CHECKED	REVISED	D
MJR 10-28-67	MJR 10-28-67	RJZ 3-20-69		

MICROFILMED
AUG 20 1990

SCHEMATIC PLAN
EROSION CONTROL ITEMS

F.H.W.A. REGION	STATE	PROJECT	
5	OHIO		

2A
184

ERIE COUNTY
ERI.-2-(16.13-17.39)

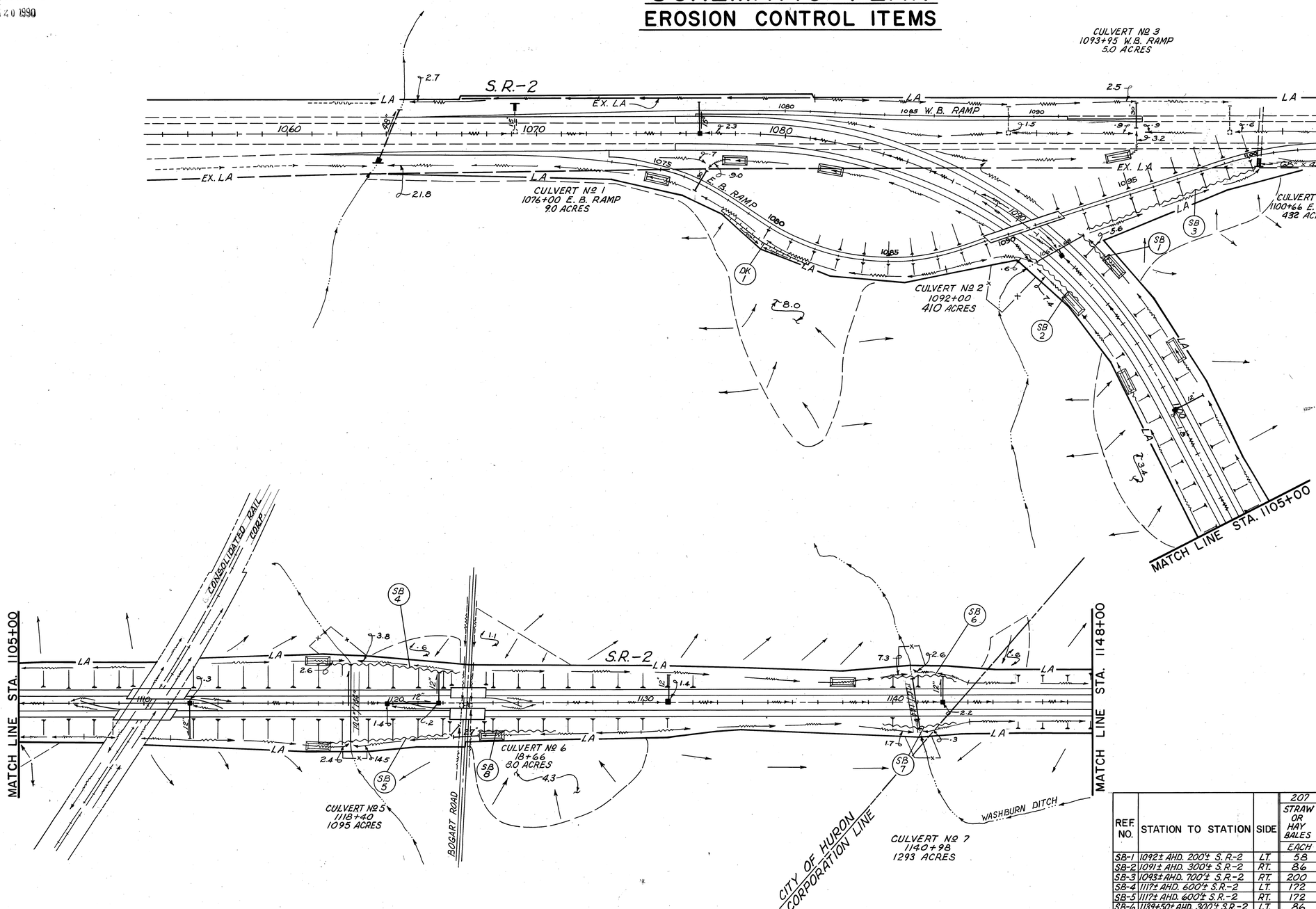

N

200 50 100 200 300 400 500 600
100 0
SCALE IN FEET

LEGEND

- 10.2 — DRAINAGE AREA ACRES.
- PROPOSED CATCH BASIN AND PIPE.
- EXISTING CATCH BASIN AND PIPE.
- PROPOSED MANHOLE AND PIPE.
- EXISTING MANHOLE AND PIPE.
- PROPOSED CULVERT.
- EXISTING CULVERT.
- PROPOSED DITCH.
- EXISTING DITCH.
- EXISTING NATURAL WATER COURE.
- LA — LIMITED ACCESS R/W.
- LA — EXISTING LIMITED ACCESS R/W.
- OTHER R/W.
- PROPOSED DRAINAGE EASEMENT.
- PROPOSED RETAINING WALL.
- PROPOSED EARTH DIKE.
- PROPOSED STRAW/HAY BALE DIKE.
- RIDGE LINE WITH GENERAL OVERLAND FLOW DIRECTION.
- OVERLAND. FLOW COURSE OF CONCENTRATION.
- PROPOSED SEDIMENT BASIN.
- CUT OR FILL SLOPES GREATER THAN 8'.

NOTE: THE DELINEATED QUANTITIES BELOW ARE INCLUDED WITH THE GENERAL NOTE QUANTITIES ON SHEET 7.

REF. NO.	STATION TO STATION	SIDE	207 STRAW OR HAY BALES EACH	207 TEMPORARY DIKES C.Y.	207 TEMPORARY SLOPE DRAINS LIN. FT.	601 TYPE "C" ROCK CHANNEL PROTECTION C.Y.		
SB-1	1092± AHD. 200'± S.R.-2	LT.	58					
SB-2	1091± AHD. 300'± S.R.-2	RT.	86					
SB-3	1093± AHD. 700'± S.R.-2	RT.	200					
SB-4	1117± AHD. 600'± S.R.-2	LT.	172					
SB-5	1117± AHD. 600'± S.R.-2	RT.	172					
SB-6	1139+50± AHD. 300'± S.R.-2	LT.	86					
SB-7	1139+50± AHD. 300'± S.R.-2	RT.	86					
SB-8	1123+25± AHD. 300'± S.R.-2	RT.	86					
DK-1	1078± AHD. 400'± S.R.-2	RT.		120	20	1		
TOTALS			946	120	20	1		

SCHEMATIC PLAN EROSION CONTROL ITEMS

MICROFILMED
AUG 20 1990

SCHEMATIC PLAN
EROSION CONTROL ITEMS

F.H.W.A. REGION	STATE	PROJECT	
5	OHIO		

2B
1844

ERIE COUNTY
ERI.-2-(16.13-17.39)

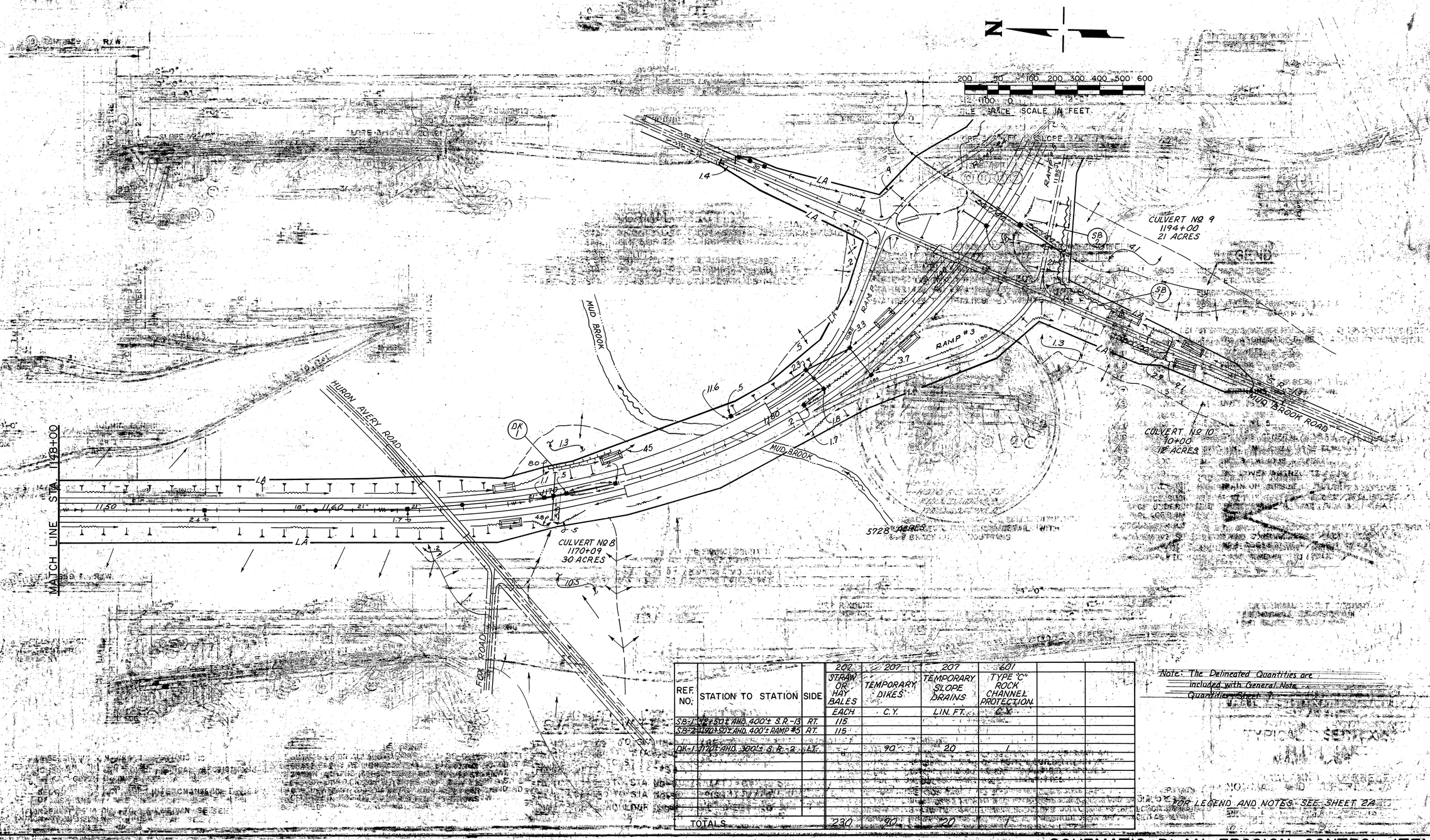

REF. NO.	STATION TO STATION	SIDE	207 STRAW OR HAY BALES	207 TEMPORARY DIKES	207 TEMPORARY SLOPE DRAINS	601 TYPE "C" ROCK CHANNEL PROTECTION		
			EACH	C.Y.	LIN. FT.	C.Y.		
SB-1	1192+50± AHD. 400'± S.R.-13	RT.	115					
SB-2	1190+50± AHD. 400'± RAMP #5	RT.	115					
DK-1	1170±AHD. 300'± S.R.-2	LT.	6	90	20			
TOTALS			230	90	20			

Note: The Delineated Quantities are included with General Note Quantities Sheet 2.

TYPICAL SECTION

FOR LEGEND AND NOTES SEE SHEET 2A

SCHEMATIC PLAN EROSION CONTROL ITEMS

FED. RD. DIVISION	STATE	PROJECT	FIS. YE.
2	OHIO		

ERIE COUNTY
ERI 2-(16.13-17.39)

TYPICAL SECTION

TYPE 404 ON 305

SCALE IN FEET
0 5 10 20

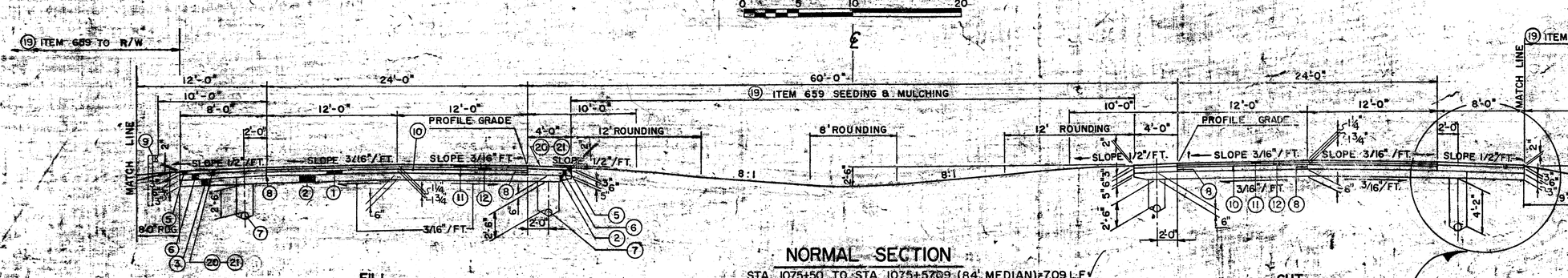

FILL

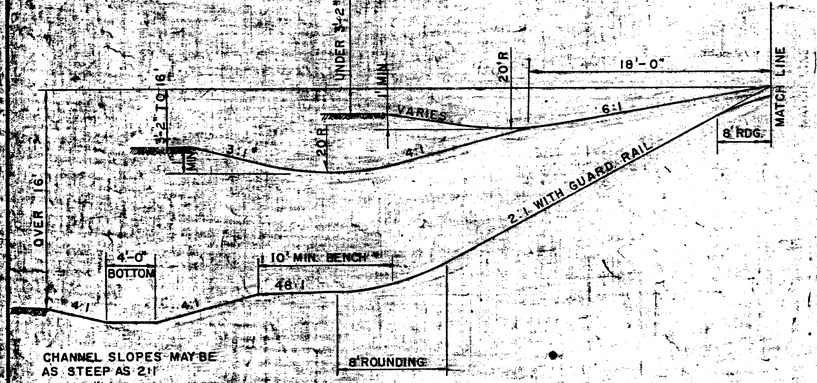

CHANNEL SLOPES MAY BE AS STEEP AS 2:1

NORMAL SECTION

STA. 1075+50 TO STA. 1075+57.09 (84' MEDIAN) = 7.09 L.F.
STA. 1101+75.85 TO STA. 1161+55.18 = 5979.33 L.F.

BRIDGE LIMITS

ERI-2-STA. 1109+42.41 TO STA. 1111+31.79 = 189.38 L.F.
ERI-2-STA. 1122+33.36 TO STA. 1123+74.86 = 141.50 L.F.

CUT

(3A) LIMITS OF 18" DEPTH SUBGRADE UNDERCUTTING & REPLACEMENT WITH 310 SUBBASE, TYPE I, GRADING A OR B

STA. 1142+50 TO STA. 1172+75 = 3025 L.F.
STA. 1180+00 TO STA. 1193+75 LEFT = 1375 L.F.
STA. 1182+25 TO STA. 1193+25 RIGHT = 1100 L.F.

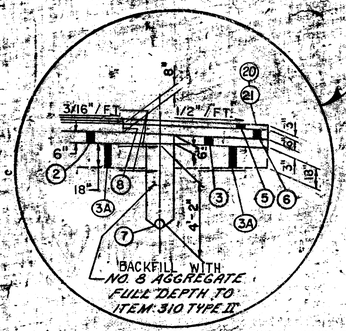

DRAINAGE CONNECTION DETAIL WITH SUBGRADE UNDERCUTTING.

LEGEND

(1)	305	8" CONCRETE BASE
(2)	310	SUBBASE, TYPE II.
(3)	310	SUBBASE, TYPE I, GRADING A.
(3A)	310	SUBBASE, TYPE I, GRADING A OR B
(5)	301	BITUMINOUS AGGREGATE BASE, AC-20 RT II OR RT 12
(11)	404	ASPHALT CONCRETE, AC-20
(12)	402	ASPHALT CONCRETE, AC-20
(6)	305	8"-6" CONCRETE BASE
(7)	605	6" PIPE UNDERDRAINS, AS PER PLAN. (SEE NOTE 1)
(8)		LONGITUDINAL JOINT. (SEE NOTE 7)
(9)	606	GUARD RAIL-TYPE 5
(10)	407	TACK COAT (SEE GENERAL NOTES)
(19)	659	SEEDING AND MULCHING (SEE GENERAL NOTES)
(20)	409	SEAL COAT BITMINOUS MATERIAL.
(21)	409	SEAL COAT COVER AGGREGATE NO. 8.

1. INSTALL PIPE UNDERDRAIN ON OUTSIDE SHOULDER.
2. PLACE SUBBASE, TYPE II TO OUTSIDE EDGE OF UNDERDRAIN. PAYMENT SHALL BE MADE FOR ALL SUBBASE PLACED IN THIS OPERATION.
3. CONSTRUCT ITEM 605.
4. REMOVE SUBBASE AND ANY CONTAMINATED BACKFILL OVER DRAIN AND REPLACE WITH NO. 8 AGGREGATE AS SHOWN BY (8).
5. COMPLETE SHOULDER AND ROADWAY CONSTRUCTION.

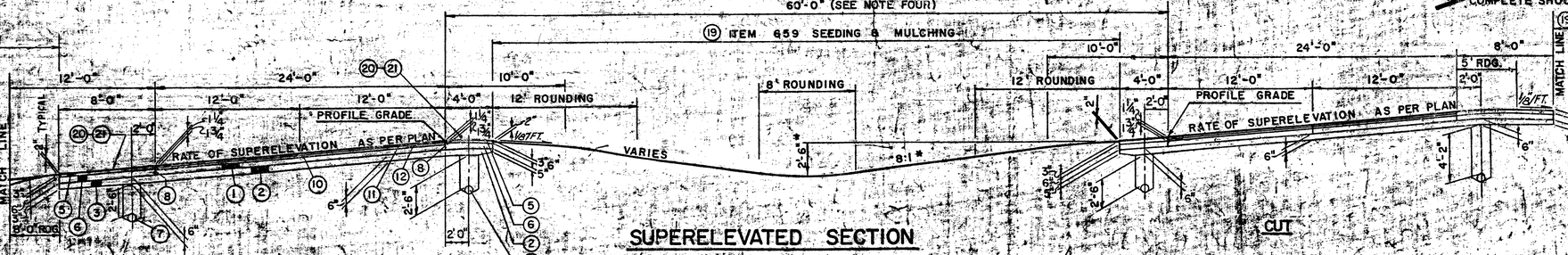

SEE NORMAL FILL SECTION FOR SLOPE TREATMENT.

SEE NORMAL CUT SECTION FOR SLOPE TREATMENT.

FILL

CUT

SUPERELEVATED SECTION

STA. 1075+57.09 TO STA. 1101+75.85 (REVERSE SLOPE) = 2618.76 L.F.
STA. 1161+55.18 TO STA. 1195+00.00 = 3344.82 L.F.

BRIDGE LIMITS: ERI-2-17.98 L/R

STA. 1173+25.26 TO STA. 1180+02.75 (LEFT) = 677.49 LIN. FT.
STA. 1173+18.50 TO STA. 1180+95.52 (RIGHT) = 777.02 LIN. FT.

NOTE FOR SHOULDER SLOPES SEE SHEET NO. 58

NOTES DEPT.

1. UNLESS OTHERWISE SHOWN ON CROSS SECTIONS.
2. CROSS SECTIONS SHALL GOVERN OVER TYPICAL SECTIONS IF VARIABLE CONDITIONS ARE ENCOUNTERED.
3. CUT AND FILL SECTIONS SHOWN ARE INTERCHANGEABLE WITH EITHER SIDE OF ROADWAY.
4. FOR TRANSITION FROM 84' MEDIAN TO 60' MEDIAN SEE SUPERELEVATION TABLES SHEET NO. 58

5. SUBBASE FOR ALL NORMAL SHALL BE CONSTRUCTED CROWNED AS PER THE TYPICAL SECTION AND NOT AS SHOWN ON THE CROSS SECTIONS. AN ADJUSTMENT FACTOR OF 0.66 CU. FT. PER FT. HAS BEEN ADDED BY CALCULATION TO ALL NORMAL FILL SECTIONS AND DEDUCTED FROM ALL NORMAL CUT SECTIONS.

NOTES CONTINUED

6. DUE TO AN INCREASE IN DEPTH OF SECTION, BUILD-UP AN ADJUSTMENT FACTOR OF 12 CU. FT. PER FT. HAS BEEN APPLIED BY CALCULATION TO THE EARTHWORK QUANTITIES, PLUS IN CUTS AND DEDUCTIONS IN FILLS.
7. WHERE MAINLINE 305 BASE AND 305 SHOULDERS ARE PLACED IN ONE OPERATION, TIE BAR SPACING ACROSS LONGITUDINAL SHOULDER JOINT MAY BE 60. LONGITUDINAL JOINTS SHALL BE SAW CUT WHERE MAINLINE AND SHOULDERS ARE PLACED AS SEPARATE OPERATIONS, TIE BAR OR HOOK BOLT SPACING SHALL BE 30".

APACHE ASSOCIATES INC. ENGINEERS
CLEVELAND 42, OHIO

TYPICAL SECTIONS
MAIN LINE
NORMAL AND SUPERELEVATED

DESIGNED	DRAWN	CHECKED	REVISED
MLR 3-10-69	DS 3-11-69	RJZ 3-19-69	

FED. RD. DIVISION	STATE	PROJECT	
2	OHIO		

4
184

ERIE COUNTY
ERI 2-(16.13-17.39)

TYPICAL SECTIONS

TYPE 404 ON 305

SCALE IN FEET
0 5 10 15

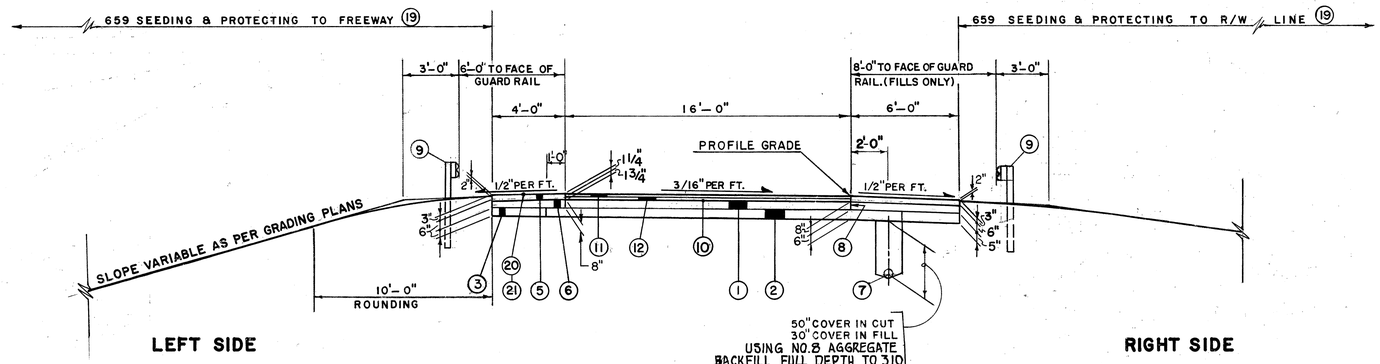

NORMAL ONE LANE DIRECTIONAL ROADWAY SECTION

STA. 1082+25.00 TO STA. 1088+12.02 W.B. THRU RAMP = 587.02 L.F.
STA. 1088+12.02 TO STA. 1094+12.02 W.B. THRU RAMP (PART WIDTH CONSTRUCTION)=600.00 L.F.
STA. 1088+93.07 TO STA. 1096+88.31 E.B. THRU RAMP (REVERSE SLOPE)=795.24 L.F.

BRIDGE LIMITS:
STA. 1088+99.79 TO STA. 1092+20.35 E.B. THRU RAMP = 320.56 LIN. FT.

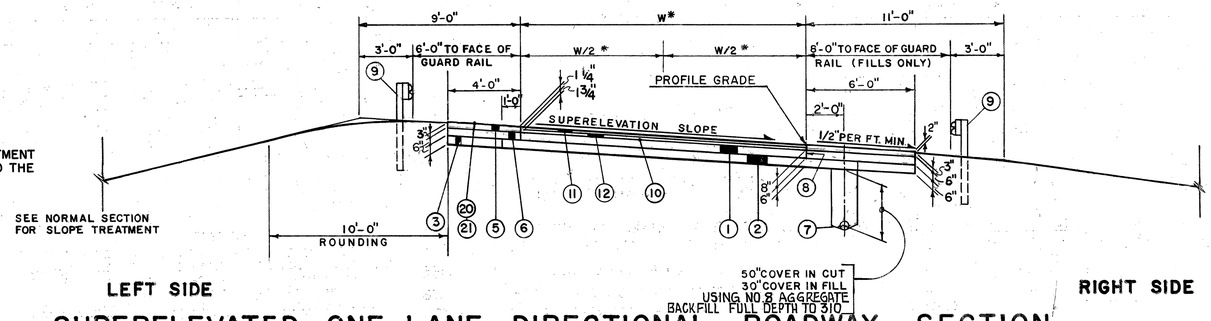

SUPERELEVATED ONE LANE DIRECTIONAL ROADWAY SECTION

STA. 1073+83.07 TO STA. 1078+75.20 E.B. THRU RAMP = 492.13 L.F.
STA. 1078+75.20 TO STA. 1088+93.07 E.B. THRU RAMP (REVERSE SLOPE) = 1017.87 L.F.
STA. 1096+88.31 TO STA. 1097+38.31 E.B. THRU RAMP (REVERSE SLOPE) = 50.00 L.F.
STA. 1097+38.31 TO STA. 1098+71.31 E.B. THRU RAMP = 133.00 L.F.
STA. 1098+71.31 TO STA. 1105+71.50 E.B. THRU RAMP (*FOR VARIABLE PAVEMENT WIDTH, SEE S.E. TABLES SHEET NO. 60) = 700.19 L.F.

NOTES

FOR CUT AND FILL SLOPE TREATMENT SEE MAIN LINE TYPICAL SECTIONS.

CROSS SECTION SHALL GOVERN OVER TYPICAL SECTIONS WHERE VARIABLE CONDITIONS ARE ENCOUNTERED IN SLOPES

CUT AND FILL SECTIONS SHOWN ARE INTERCHANGEABLE WITH EITHER SIDE OF ROADWAY.

LEFT SIDE AND RIGHT SIDE CONFIGURATIONS ARE REFERENCED TO THE DIRECTION OF TRAVEL INSTEAD OF THE DIRECTION OF STATIONING.

DUE TO AN INCREASE IN DEPTH OF SECTION BUILD-UP AN ADJUSTMENT FACTOR OF 4.33 CU. FT. PER FT. HAS BEEN APPLIED BY CALULATION TO THE EARTHWORK QUANTITIES, PLUS IN CUTS AND DEDUCTIONS IN FILLS.

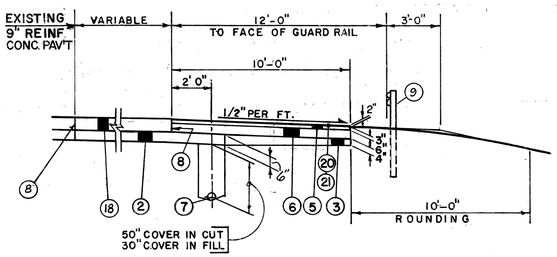

COMBINED ACCELERATION - DECELERATION LANE SECTION

LEGEND

① 305 8" CONCRETE BASE
② 310 SUBBASE, TYPE II.
③ 310 SUBBASE, TYPE I, GRADING A.
⑤ 301 BITUMINOUS AGGREGATE BASE, AC-20, RT-11 OR RT-12.
⑥ 305 8"-6" CONCRETE BASE
⑦ 605 6" PIPE UNDERDRAIN, AS PER PLAN
⑧ LONGITUDINAL JOINT. - *SEE NOTE 7, SHEET 3*
⑨ 606 GUARD RAIL - TYPE 5.
⑩ 407 TACK COAT. (SEE GENERAL NOTES)
⑪ 404 ASPHALT CONCRETE, AC-20.
⑫ 402 ASPHALT CONCRETE, AC-20.
⑲ 659 SEEDING AND MULCHING (SEE GENERAL NOTES)
⑰ STANDARD EXPANSION BOLT JOINT.
⑱ 451 9" REINFORCED CONCRETE PAVEMENT
⑳ 409 SEAL COAT, BITUMINOUS MATERIAL.
㉑ 409 SEAL COAT, COVER AGGREGATE NO. 8.

1. INSTALL PIPE UNDERDRAIN ON OUTSIDE SHOULDER.
2. PLACE SUBBASE, TYPE II TO OUTSIDE EDGE OF UNDERDRAIN. PAYMENT SHALL BE MADE FOR ALL SUBBASE PLACED IN THIS OPERATION.
3. CONSTRUCT ITEM 305
4. REMOVE SUBBASE AND ANY CONTAMINATED BACKFILL OVER DRAIN AND REPLACE WITH NO. 8 AGGREGATE AS SHOWN BY ⑧
5. COMPLETE SHOULDER AND PAVEMENT CONSTRUCTION.

ADACHE ASSOCIATES INC., ENGINEERS
CLEVELAND, OHIO 44142

TYPICAL SECTIONS
DIRECTIONAL ROADWAY
E.B. & W.B. THRU RAMPS
NORMAL AND SUPERELEVATED

DESIGNED	DRAWN	CHECKED	REVIEWED	DATE
JDA 3-10-69	JDA 3-10-69	RJZ 3-19-69		

TYPICAL SECTION
TYPE 404 ON 305

FED. RD. DIVISION	STATE	PROJECT	
2	OHIO		

5
184

ERIE COUNTY
ERIE 2-(16.13-17.39)

SCALE IN FEET
0 5 10 15

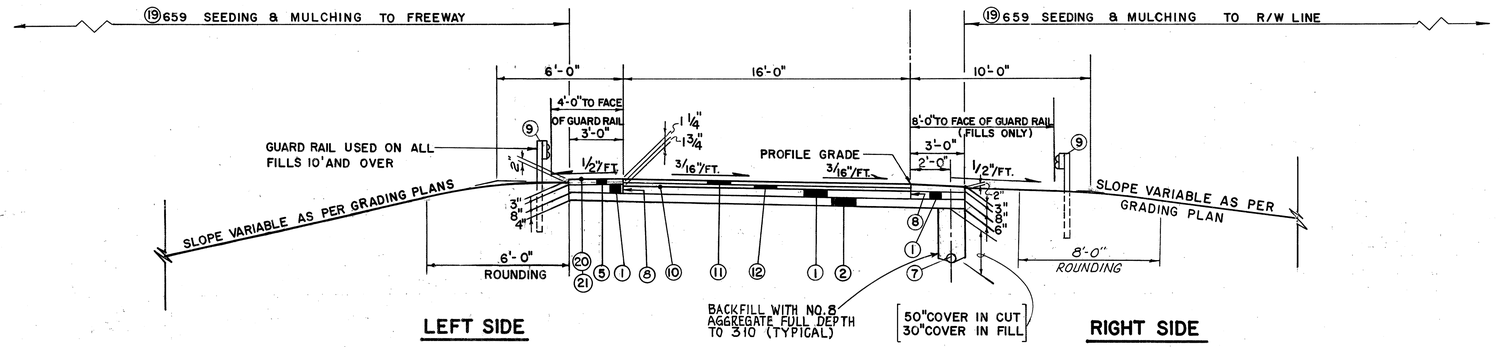

NORMAL RAMP SECTION

STA. 1187+00 TO STA. 1188+93.36 ℄ RAMP NO. 2 = 193.36 L.F.

NOTES

DUE TO AN INCREASE IN DEPTH OF SECTION BUILD-UP AN ADJUSTMENT FACTOR OF 3.67 CU. FT. PER FT. HAS BEEN APPLIED BY CALCULATION TO THE EARTHWORK QUANTITIES, PLUS IN CUTS AND DEDUCTIONS IN FILLS.

FOR CUT AND FILL SLOPE TREATMENT SEE MAIN LINE TYPICAL SECTIONS.

CROSS SECTION SHALL GOVERN OVER TYPICAL SECTIONS WHERE VARIABLE CONDITIONS ARE ENCOUNTERED IN SLOPES.

CUT AND FILL SECTIONS SHOWN ARE INTERCHANGEABLE WITH EITHER SIDE OF RAMP PAVEMENT.

LEFT SIDE AND RIGHT SIDE CONFIGURATIONS ARE REFERENCED TO THE DIRECTION OF TRAVEL INSTEAD OF THE DIRECTION OF STATIONING

**SUBBASE VARIES AS SHOWN ON CROSS SECTIONS (SEE DETAIL ℳ TYPICAL SECTION)

EXTRA DEPTH SUBBASE LIMITS

RAMP NO.2 STA. 1179+25 TO STA. 1187+00
RAMP NO.3 STA. 1182+25 TO STA. 1190+00

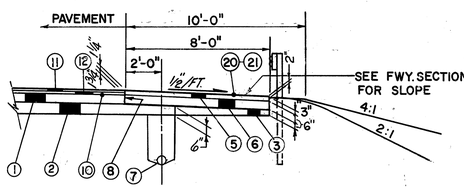

SHOULDER DETAIL FOR SPEED CHANGE LANES

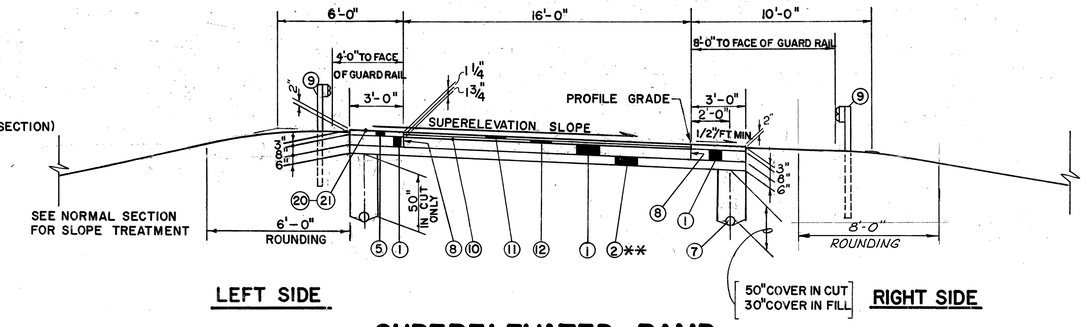

SUPERELEVATED RAMP

STA. 1183+85.00 TO STA. 1187+00.00 ℄ RAMP NO. 2 = 315 L.F.
STA. 1184+04.11 TO STA. 1186+92.25 ℄ RAMP NO. 3 = 288.14 L.F.

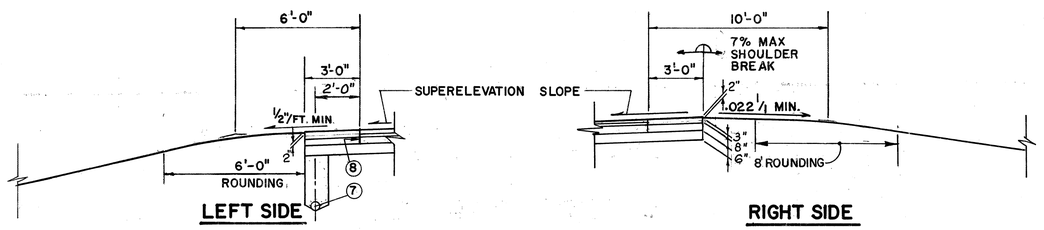

SHOULDER DETAIL-REVERSE SUPER

STA. 1186+92.25 TO STA. 1192+55.04 ℄ RAMP NO. 3 = 562.79 L.F.

LEGEND

①	305	8" CONCRETE BASE
②	310	SUBBASE TYPE II.
③	310	SUBBASE I. GRADING A.
⑤	301	BITUMINOUS AGGREGATE BASE AC-20, RT-11 OR RT-12.
⑪	404	ASPHALT CONCRETE AC-20.
⑫	402	ASPHALT CONCRETE AC-20.
⑥	305	8"-6" CONCRETE BASE
⑦	605	6"PIPE UNDERDRAIN, AS PER PLAN.
⑧		LONGITUDINAL JOINT. - SEE NOTE 7, SHEET 3
⑨	606	GUARD RAIL - TYPE 5
⑩	407	TACK COAT (SEE GENERAL NOTES)
⑲	659	SEEDING AND MULCHING (SEE GENERAL NOTES)
⑳	409	SEAL COAT BITUMINOUS MATERIAL.
㉑	409	SEAL COAT, COVER AGGREGATE NO. 8.

1. INSTALL PIPE UNDERDRAIN ON OUTSIDE SHOULDER
2. PLACE SUBBASE TYPE II TO OUTSIDE EDGE OF UNDERDRAIN. PAYMENT SHALL BE MADE FOR ALL SUBBASE PLACED IN THIS OPERATION.
3. CONSTRUCT ITEM 305
4. REMOVE SUBBASE AND ANY CONTAMINATED BACKFILL OVER DRAIN AND REPLACE WITH NO. 8 AGGREGATE AS SHOWN BY ⑧
5. COMPLETE SHOULDER ROADWAY CONSTRUCTION

ADACHE ASSOCIATES INC., ENGINEERS
CLEVELAND, OHIO 44142

TYPICAL SECTIONS
RAMPS
NORMAL AND SUPERELEVATED

DESIGNED	DRAWN	CHECKED	REVIEWED	DATE
FWH 3-10-69	JAS 3-11-69	RJZ 3-19-69		

FED. RD. DIVISION	STATE	PROJECT	
2	OHIO		

6
12A

ERIE COUNTY
ERI 2-(16.13-17.39)

TYPICAL SECTION

TYPE 404 ON 301

0 5 10 15
SCALE IN FEET

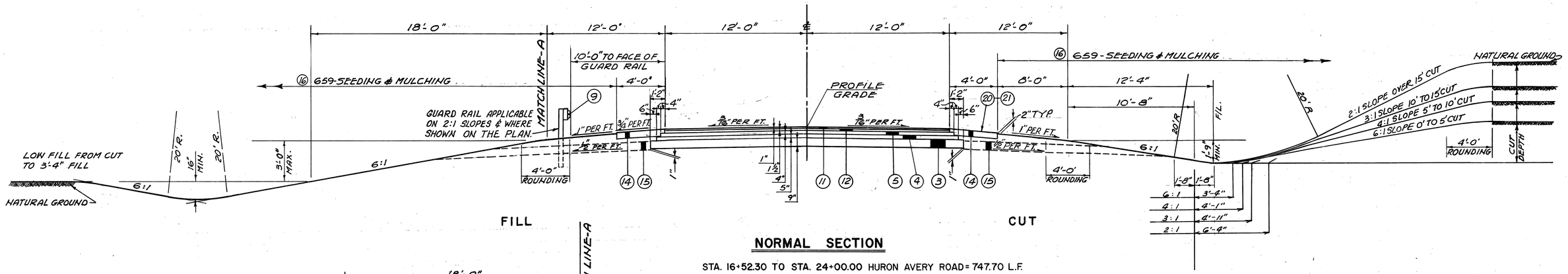

FILL CUT

NORMAL SECTION

STA. 16+52.30 TO STA. 24+00.00 HURON AVERY ROAD = 747.70 L.F.
BRIDGE LIMITS:
STA. 18+50.53 TO STA. 21+60.37 = 309.84 LIN. FT.

STA. 6+20.00 TO STA. 30+80.00 STATE ROUTE 13 = 2460 L.F.
BRIDGE LIMITS:
STA. 18+78.67 TO STA. 21+21.33 = 242.66 LIN. FT.

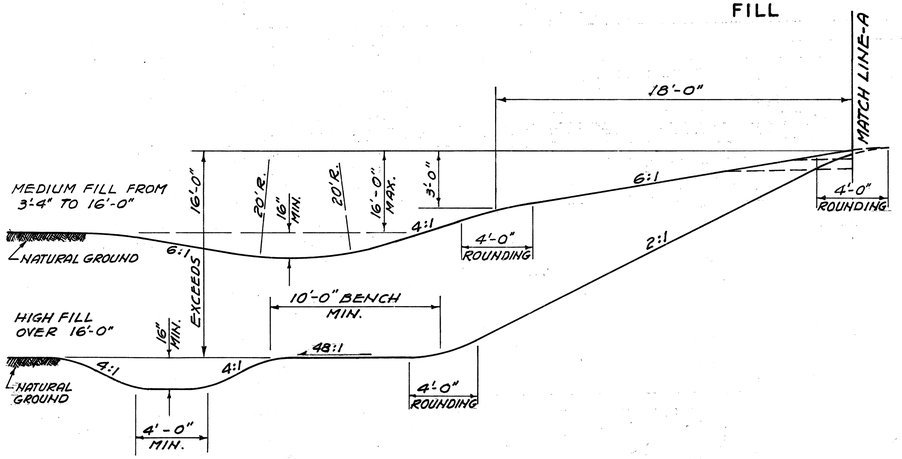

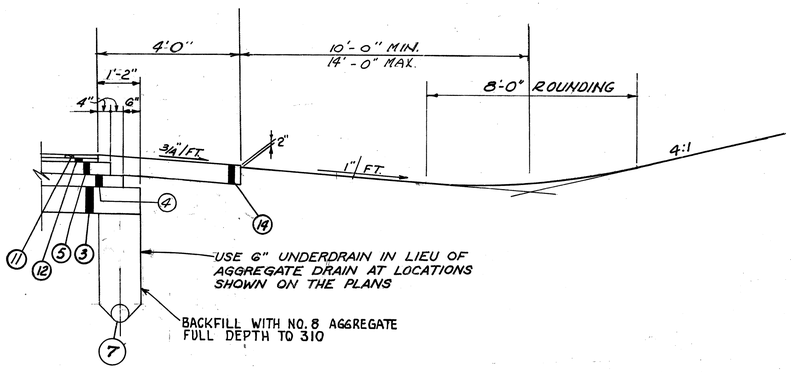

UNDERDRAIN DETAIL WITH TYPICAL YARD SECTION

NO SCALE

LEGEND

③ 310 SUBBASE TYPE II
⑤ 301 BITUMINOUS AGGREGATE BASE AC-20 RT 11 OR RT 12
④ 304 AGGREGATE BASE.
⑦ 605 6" PIPE UNDERDRAIN, AS PER PLAN
⑨ 606 GUARD RAIL TYPE-5
⑪ 404 ASPHALT CONCRETE AC-20
⑫ 402 ASPHALT CONCRETE AC-20
⑭ 411 6" STABILIZED CRUSHED AGGREGATE
⑮ 605 AGGREGATE DRAINS (SEE GENERAL NOTES)
⑯ 659 SEEDING AND MULCHING (SEE GENERAL NOTES)
⑳ 409 SEAL COAT, BITUMINOUS MATERIAL.
㉑ 409 SEAL COAT, COVER AGGREGATE NO. 8.

NOTES

1. CROSS SECTIONS SHALL GOVERN OVER TYPICAL SECTIONS WHERE VARIABLE CONDITIONS ARE ENCOUNTERED IN SLOPES.
2. CUT AND FILL SECTIONS SHOWN, ARE INTERCHANGEABLE WITH EITHER SIDE OF ROADWAY
3. BOGART ROAD PAVEMENT REPLACEMENT QUANTITIES CALCULATED USING SAME LAYERS AND THICKNESSES AS SHOWN ABOVE

ADACHE ASSOCIATES INC., ENGINEERS
CLEVELAND, OHIO 44142

TYPICAL SECTION

HURON AVERY ROAD
STATE ROUTE 13

DESIGNED	DRAWN	CHECKED	REVIEWED	DATE
MLR 3-10-69	JDA 3-11-69	RJZ 3-19-69		

ADACHE·CIUNI·LYNN ASSOC.
CALC. BY: R.W.H. DATE: NOV. 82
CHKD. BY: T.M.J. DATE: NOV 82

REVISED JULY, 85 R.W.H.

F.H.W.A. REGION	STATE	PROJECT	
5	OHIO		

ERIE COUNTY
ERI-2-(16.13-17.39)

7
284

GENERAL NOTES

MAINTENANCE OF TRAFFIC

A. EXISTING STATE ROUTE 2 AND U.S. 6

TWO-LANE TRAFFIC SHALL BE MAINTAINED IN EACH DIRECTION, EXCEPT DURING THE FINAL STAGES OF CONSTRUCTION, WHEN THE NEWLY CONSTRUCTED RAMPS SHALL BE USED TO MAINTAIN TRAFFIC. SEQUENCE OF CONSTRUCTION SHALL BE:

1. MAINTAIN THE TRAFFIC ON THE EXISTING ROADWAY WHILE CONSTRUCTING THE MAINLINE FROM STATION 1089+00 TO THE END OF THE PROJECT. THE EASTBOUND THRU RAMP TO STATION 1096 + 00, AND THE WESTBOUND THRU RAMP TAPER TO STATION 1075 + 50. (SEE SHEET NO. 235 FOR STAGE I CONSTRUCTION.)
2. MAINTAIN WESTBOUND TRAFFIC ON THE EXISTING ROADWAY AND PROVIDE A TEMPORARY 24-FT. ROAD FROM STATION 1097 + 04.04 TO STATION 1106 + 44.96 FOR EASTBOUND TRAFFIC. COMPLETE EASTBOUND THRU RAMP CONSTRUCTION. (SEE SHEET NO. 236 FOR STAGE II CONSTRUCTION AND SHEET NOS. 46 AND 47 FOR PAVEMENT DETAILS.)
3. ROUTE EASTBOUND TRAFFIC ON THE EASTBOUND THRU RAMP. PROVIDE A TWO-LANE TEMPORARY 24-FT. ROAD FROM STATION 1073 + 23.98 TO STATION 1077 + 76.02 AND USING A PORTION OF THE TEMPORARY ROAD ALREADY CONSTRUCTED FOR STAGE II. MAINTAIN WESTBOUND TRAFFIC ON THE EXISTING EASTBOUND PAVEMENT FROM STATION 1077 + 76.02 TO STATION 1097 + 04.04. COMPLETE THE WESTBOUND THRU RAMP CONSTRUCTION. (SEE SHEET NO. 237 FOR STAGE III CONSTRUCTION AND SHEET NOS. 46 AND 47 FOR PAVEMENT DETAILS.)
4. ROUTE WESTBOUND TRAFFIC ON THE WESTBOUND THRU RAMP AND REMOVE THE TEMPORARY CROSS-OVERS AND COMPLETE CONSTRUCTION. (SEE SHEET NO. 238 FOR STAGE IV CONSTRUCTION.)

STAGES II, III AND IV SHALL BE COMPLETED WITHIN 90 CALENDAR DAYS OF THE BEGINNING OF WORK ON STAGE II.

B. BOGART ROAD

TWO-WAY TRAFFIC SHALL BE MAINTAINED AT ALL TIMES ON BOGART ROAD EXCEPT THAT ONE-WAY TRAFFIC WILL BE PERMITTED FOR MINIMUM PERIODS OF TIME TO ALLOW FOR BRIDGE CONSTRUCTION OR ROAD RESTORATION. BOGART ROAD MAY BE CLOSED DURING THE CONSTRUCTION OF THE CULVERT FOR A MAXIMUM OF 2 DAYS WITH A R76C SIGN AND A TYPE III BARRICADE TO BE PROVIDED AT RYE BEACH ROAD TO THE WEST AND AT STATE ROUTE 13 (MAIN STREET) TO THE EAST. THIS CLOSING SHALL NOT BE ALLOWED WHILE THE HURON-AVERY ROAD DETOUR IS IN EFFECT.

HURON-AVERY ROAD

C. HURON-AVERY ROAD MAY BE CLOSED TO THROUGH TRAFFIC FOR A PERIOD NOT TO EXCEED 180 CONSECUTIVE CALENDAR DAYS. (SEE SHEET 45A FOR DETAILS.)

D. MUD BROOK ROAD - STATE ROUTE 13

TWO-WAY TRAFFIC SHALL BE MAINTAINED AT ALL TIMES THROUGH THE USE OF THE EXISTING PAVEMENT, THE PROPOSED PAVEMENT OR THE TEMPORARY ROAD, AS SHOWN ON SHEET NOS. 44 AND 45.

1. MAINTAIN THE TRAFFIC ON THE EXISTING ROADWAY WHILE CONSTRUCTING THE TEMPORARY ROAD.
2. MAINTAIN THE TRAFFIC ON THE TEMPORARY ROAD WHILE CONSTRUCTING THE PROPOSED S.R. 13 BRIDGE AND APPROACHES AS PER PLAN.
3. MAINTAIN THE TRAFFIC ON THE PROPOSED BRIDGE AND APPROACHES. REMOVE THE TEMPORARY ROAD AND COMPLETE THE CONSTRUCTION OF S.R. 2 AND RAMPS AS PER PLAN.

ESTIMATED QUANTITIES FOR TRAFFIC MAINTENANCE

ESTIMATED QUANTITIES OF 404, 410 AND 616 HAVE BEEN PROVIDED IN THE GENERAL SUMMARY FOR MAINTENANCE OF TRAFFIC, AND SHALL BE APPLIED AT LOCATIONS WHERE DIRECTED AND IN THE AMOUNTS SPECIFIED BY THE ENGINEER.

		URBAN	RURAL
ITEM 404	BITUMINOUS CONCRETE FOR MAINTAINING TRAFFIC	100 CU. YD.	100 CU. YD.
ITEM 410	TRAFFIC COMPACTED SURFACE, TYPE A OR B	500 CU. YD.	500 CU. YD.
ITEM 616	CALCIUM CHLORIDE	5 TON	5 TON
ITEM 616	WATER	100 M. GAL.	100 M. GAL.

USE OF TEMPORARY PAVEMENT

THE LIMITS AND DURATION OF USE OF TEMPORARY ROADWAYS SHALL BE HELD TO AN ABSOLUTE MINIMUM, AND IN ALL CASES SHALL BE SUBJECT TO THE APPROVAL OF THE ENGINEER.

MUNICIPAL NOTIFICATION

THE CONTRACTOR SHALL NOTIFY THE CITY MANAGER OF HURON AND THE ERIE COUNTY ENGINEER FORTY-EIGHT (48) HOURS PRIOR TO CLOSING HURON AVERY ROAD.

TRENCH FOR WIDENING

TRENCH EXCAVATION FOR BASE WIDENING SHALL BE PERFORMED ONLY ON ONE SIDE OF THE PAVEMENT AT A TIME. THE OPEN TRENCH SHALL BE ADEQUATELY MAINTAINED AND PROTECTED WITH DRUMS OR BARRICADES AT ALL TIMES. PLACEMENT OF PROPOSED SUBBASE AND BASE MATERIAL SHALL FOLLOW AS CLOSELY AS POSSIBLE BEHIND THE EXCAVATION OPERATIONS. THE LENGTH OF WIDENING TRENCH WHICH IS OPEN AT ANY ONE TIME SHALL BE HELD TO A MINIMUM AND SHALL AT ALL TIMES BE SUBJECT TO APPROVAL OF THE ENGINEER.

FOR TEMPORARY PAVEMENT MARKING NOTES SEE SHEET NO. 220

GENERAL

FIELD OFFICE

THE CONTRACTOR SHALL PROVIDE A SUITABLE FIELD OFFICE HAVING A MINIMUM OF 800 SQ. FT. OF FLOOR SPACE. PAYMENT SHALL BE AT THE LUMP SUM PRICE BID FOR ITEM 619-FIELD OFFICE.

ROUNDING OF CORNERS SHOWN ON CROSS SECTIONS

THE ROUNDED CORNERS SHOWN ON THE TYPICAL SECTIONS, APPLY TO ALL CROSS SECTIONS EVEN THOUGH OTHERWISE SHOWN ON THESE PLANS.

UNDERGROUND UTILITIES

THE LOCATIONS OF THE UNDERGROUND UTILITIES SHOWN ON THE PLANS ARE AS OBTAINED FROM THE OWNERS OF THE UTILITY AS REQUIRED BY SECTION 153.64 ORC.

ELEVATION DATUM

ALL ELEVATIONS ARE BASED ON "U.S.C.G.S." DATUM.

TEMPORARY SOIL EROSION AND SEDIMENT CONTROL

THE FOLLOWING ESTIMATED QUANTITIES ARE TO BE USED AS DIRECTED BY THE ENGINEER, FOR TEMPORARY EROSION AND SEDIMENT CONTROL MEASURES:

207	TEMPORARY SEEDING AND MULCHING	60,000 SQ. YD.	36,000 SQ. YD.
207	STRAW OR HAY BALES	1,400 EACH	600 EACH
207	TEMPORARY SLOPE DRAINS	1,180 LIN. FT.	880 LIN. FT.
207	TEMPORARY BENCHES, DIKES DAMS AND SEDIMENT BASINS	5,900 CU. YD.	4,400 CU. YD.
601	TYPE C ROCK CHANNEL PROTECTION (WITHOUT FILTER)	50 CU. YD.	25 CU. YD.
659	MOWING	675 M SQ. FT.	405 M SQ. FT.
659	COMMERCIAL FERTILIZER	13.00 TON	7.70 TON
659	REPAIR SEEDING AND MULCHING	15,000 SQ. YD.	9,000 SQ. YD.
659	WATER	130 M. GAL.	80 M. GAL.
SPEC.	SILT FENCE *		1400 LIN.FT.

THE ABOVE QUANTITIES INCLUDE ALL THE ITEMS AS DELINEATED ON SHEETS 2A AND 2B.
*FOR ITEM SPECIAL (SILT FENCE) SEE SHEET 207 FOR NOTE
ALL TEMPORARY SOIL EROSION AND SEDIMENT CONTROL ITEMS MUST BE APPROVED BY THE ENGINEER PRIOR TO INSTALLATION BY THE CONTRACTOR.

AVAILABLE BORROW

THE CONTRACTOR IS NOTIFIED THAT QUANTITIES OF BORROW MATERIAL ARE AVAILABLE FROM THE ADJACENT PROJECT ER1-2-(18.38). CROSS SECTIONS WILL BE AVAILABLE AT THE DISTRICT 3 OFFICE FOR LOCATING CUT AREAS.

WASTE AREAS

WASTE AREA SITE LOCATIONS OUTSIDE OF THE PROJECT RIGHT-OF-WAY SHALL BE SELECTED BY THE CONTRACTOR. PRIOR TO THE USE OF THE WASTE AREAS, THE CONTRACTOR SHALL INFORM THE DIRECTOR OF THE OHIO DEPARTMENT OF TRANSPORTATION AND THE UNITED STATES ARMY CORPS OF ENGINEERS, BUFFALO DISTRICT, IN WRITING OF THE LOCATION OF THE PROPOSED WASTE AREAS AND PROVIDE A WRITTEN DESCRIPTION OF THE WASTE AREAS. THE CONTRACTOR SHALL OBTAIN WRITTEN APPROVAL OF THE SELECTED WASTE AREAS FROM BOTH AGENCIES PRIOR TO THE USE OF THE AREAS.

DISPOSAL OF WASTE MATERIALS IN ANY WETLAND AREA AS DEFINED IN THE UNITED STATES DEPARTMENT OF INTERIOR, FISH AND WILDLIFE SERVICES " CIRCULAR 39, WETLANDS OF THE UNITED STATES" WILL NOT BE PERMITTED.

ALL ADDITIONAL REQUIREMENTS OF THE CONSTRUCTION AND MATERIAL SPECIFICATIONS SECTION 105.151 "BORROW AND WASTE AREAS" SHALL APPLY AND SHALL BE CONFORMED WITH.

CONTINGENCY QUANTITIES

THE CONTRACTOR SHALL NOT ORDER MATERIALS OR PERFORM WORK LISTED IN THE GENERAL SUMMARY FOR ITEMS DESIGNATED BY PLAN NOTE TO BE USED "AS DIRECTED BY THE ENGINEER" UNLESS AUTHORIZED BY THE ENGINEER. THE ACTUAL WORK LOCATIONS AND QUANTITIES USED AT THE ENGINEER'S DISCRETION SHALL BE MADE A MATTER OF RECORD BY INCORPORATION INTO THE FINAL CHANGE ORDER GOVERNING COMPLETION OF THIS PROJECT.

UTILITY OWNERSHIP

THE FOLLOWING UTILITIES AND OWNERS ARE LOCATED WITHIN THE WORK LIMITS OF THIS PROJECT:

OHIO EDISON COMPANY	GENERAL TELEPHONE COMPANY	CITY OF HURON, DEPT. OF PUBLIC UTILITIES
76 SOUTH MAIN STREET	117 N. SANDUSKY STREET	CITY HALL, P.O. BOX 468
AKRON, OHIO 44308	BELLEVUE, OHIO 44811	HURON, OHIO 44839
PHONE: 216-384-4631	PHONE: 419-483-8158	PHONE: 419-433-5000
COLUMBIA GAS OF OHIO	ERIE COUNTY SANITARY AND WATER DEPT.	
166 MILAN AVENUE	554 RIVER ROAD, P.O. Box 370	
NORWALK, OHIO 44857	HURON, OHIO 44839	
PHONE: 419-668-8291	PHONE: 419-627-7646	

SUBGRADE UNDERCUTTING AND REPLACEMENT WITH 310 SUBBASE

THE STATION LIMITS GIVEN ON THE TYPICAL SECTIONS FOR REPLACING UNSUITABLE SUBGRADE WITH 310 SUBBASE ARE APPROXIMATE AND THE ENGINEER MAY ORDER ADDITIONAL AREAS UNDERCUT WHERE UNSUITABLE SUBGRADE IS ENCOUNTERED. THE FOLLOWING ESTIMATED QUANTITIES ARE PROVIDED, TO BE USED AS DIRECTED BY THE ENGINEER, FOR ADDITIONAL UNDERCUTTING:

203 EXCAVATION ..... 2000 CU.YD.
310 SUBBASE, TYPE 1, GRADING A OR B ..... 2000 CU.YD. #

PROOF ROLLING SHALL NOT BE PROVIDED ON THE AREAS WHERE UNSUITABLE SUBGRADE IS REPLACED WITH THE 310 SUBBASE MATERIAL.

QUANTITY CARRIED TO SHEET 11

GENERAL NOTES

CALC.	ERIE COUNTY	OHIO
DATE	ERI-2-16.13	F.H.W.A. REGION 5
CHKD.		
DATE		

7A / 284

ROADWAY

REMOVAL OF TREES AND STUMPS

ALL TREES AND STUMPS SPECIFICALLY MARKED FOR REMOVAL WITHIN THE CONSTRUCTION LIMITS OF THIS PROJECT SHALL BE REMOVED UNDER THE LUMP SUM PRICE BID FOR ITEM 201, "CLEARING AND GRUBBING", EXCEPT THAT THOSE TREES FOR WHICH PROTECTION AND PRESERVATION WORK IS INDICATED ELSEWHERE IN THESE PLANS SHALL NOT BE REMOVED.

THE FOLLOWING IS AN APPROXIMATE ESTIMATE OF THE NUMBER OF TREES AND STUMPS TO BE REMOVED.

SIZES	NO. TREES	NO. STUMPS
18"	575	26
30"	212	12
48"	82	1
60"	1	1

THE ABOVE ESTIMATE IS APPROXIMATE AND THE STATE OF OHIO RESERVES THE RIGHT TO ORDER THE REMOVAL OF ADDITIONAL TREES OR STUMPS OUTSIDE OF THE LIMITS OF CONSTRUCTION BUT WITHIN THE RIGHT-OF-WAY AND/OR EASEMENT LINES. PAYMENT FOR THE REMOVAL OF THESE ADDITIONAL TREES OR STUMPS SHALL BE INCLUDED IN THE LUMP SUM PRICE BID FOR ITEM 201, "CLEARING AND GRUBBING".

REMOVAL OF EXISTING RIGID PAVEMENT

EXISTING RIGID PAVEMENTS SHALL BE REMOVED UNDER ITEM 202 WHEN THEY ARE LOCATED LESS THAN 3 FEET BELOW THE PROPOSED PAVEMENT SUBGRADE IN PROPOSED PAVEMENT AREAS OR LESS THAN 3 FEET BELOW THE PROPOSED FINISHED SURFACE IN AREAS OUTSIDE THE PROPOSED PAVEMENT.

SEEDING

QUANTITIES FOR SEEDING ARE CALCULATED FOR THE SOIL AREAS BETWEEN THE RIGHT-OF-WAY FENCE LINES, BETWEEN THE RIGHT-OF-WAY LINES IN UNFENCED AREAS, AND WITHIN THE WORK LIMITS FOR AREAS OUTSIDE THE RIGHT-OF-WAY LINES COVERED BY WORK AGREEMENT OR SLOPE EASEMENT.

GUARDRAIL REPLACEMENT

NO HAZARD SHALL BE LEFT UNPROTECTED EXCEPT FOR THE ACTUAL TIME NECESSARY TO REMOVE, GRADE AND REINSTALL GUARDRAIL IN A CONTINUOUS OPERATION. THE REMOVAL OF ALL GUARDRAIL SHALL AT ALL TIMES BE AS DIRECTED BY THE ENGINEER. NO GUARDRAIL SHALL BE REMOVED UNTIL THE REPLACEMENT MATERIAL IS ON THE SITE, READY FOR INSTALLATION. FAILURE TO COMPLY WITH THIS REQUIREMENT SHALL BE DEEMED SUFFICIENT CAUSE TO ORDER WORK SUSPENDED ON THIS PROJECT UNTIL SUCH TIME THAT THE ENGINEER IS ASSURED OF SAID COMPLIANCE.

LOCATION OF GUARDRAIL

THE LOCATIONS OF GUARDRAIL RUNS, AS SHOWN IN THESE PLANS, ARE SUBJECT TO ADJUSTMENT PRIOR TO FINAL ACCEPTANCE. THE ENGINEER SHALL BE SATISFIED THAT ALL INSTALLATIONS WILL AFFORD MAXIMUM PROTECTION FOR TRAFFIC.

WATERING AND MOWING PERMANENT SEEDED AREA

THE FOLLOWING ESTIMATED QUANTITIES ARE TO BE USED AS DIRECTED BY THE ENGINEER TO PROMOTE GROWTH AND TO CARE FOR THE PERMANENT SEEDED AREAS, AS PER 659.09.

659	WATER	525 M GAL.
659	MOWING	1.100 M. SQ. FT.

ITEM 604 MONUMENT ASSEMBLY, MODIFIED AS PER PLAN

ALL MONUMENT ASSEMBLIES WHERE CALLED FOR IN THIS PLAN SHALL BE CONSTRUCTED WITH AN ADJUSTABLE FRAME AS PER THE DETAILS ON THIS SHEET. ALL OTHER REQUIREMENTS FOR THE COMPLETE ASSEMBLY SHALL BE AS PER STANDARD CONSTRUCTION DRAWING MC-1 AND AS PER THE SPECIFICATIONS OF ITEM 604.

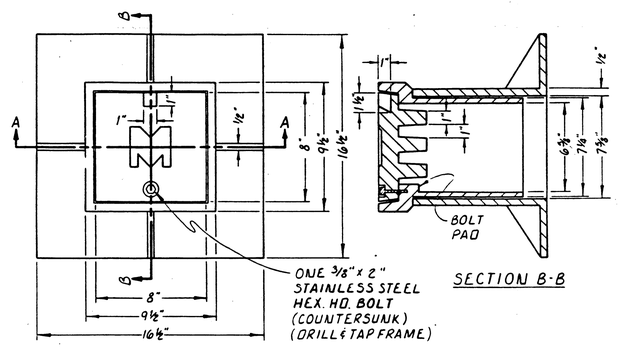

TOP VIEW

SECTION B-B

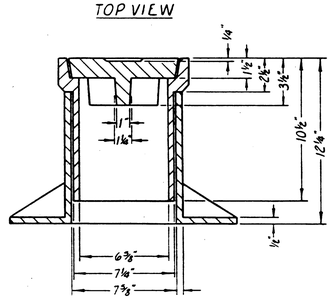

SECTION A-A

WEIGHTS

FRAME = 66 LBS.
SLEEVE = 37 LBS.
LID = 31 LBS.
TOTAL = 134 LBS.

MAT'L.
1. GRAY IRON, ASTM A 98 CLASS 30
2. PAINT: ONE COAT BLACK ASPHALT

DETAIL OF ADJUSTABLE FRAME AND COVER FOR MONUMENT ASSEMBLY MODIFIED AS PER PLAN

ITEM 603, 20" ENCASEMENT CONDUIT, 707.08, AS PER PLAN

THIS ITEM SHALL CONSIST OF ENCASING, WITH STEEL PIPE, THE EXISTING WATER MAIN CROSSING THE PROPOSED HIGHWAY AT STATION 1100+67±.

MATERIAL FURNISHED FOR THIS ITEM SHALL BE 3/8" WALL THICKNESS STEEL PIPE. THE PIPE SHALL MEET THE APPROPRIATE MATERIAL REQUIREMENTS OF 707.08. THE PIPE SECTIONS SHALL BE HELD TOGETHER BY WELDING MEETING THE REQUIREMENTS OF 513.17 AND IN ACCORDANCE WITH THE DETAILS IN THE PLAN. LENGTH OF PIPE SECTIONS SHALL BE IN ACCORDANCE WITH DETAILS ON PLAN SHEET 77.

THE WORK OF INSTALLING THE ENCASEMENT PIPE SHALL BE SO PROSECUTED THAT A MINIMUM LENGTH OF THE EXISTING WATER LINE SHALL BE UNSUPPORTED AT ANY ONE TIME. THE WATER MAIN SHALL BE SUPPORTED WITHIN THE ENCASEMENT PIPE BY BLOCKING OR BRACING APPROVED BY THE ENGINEER.

PAYMENT FOR ALL OF THE ABOVE SHALL BE INCLUDED IN THE UNIT PRICE BID FOR THE ENCASEMENT CONDUIT.

ADACHE·CIUNI·LYNN ASSOC.
CALC. BY: R.W.H. DATE: NOV. 82
CHKD.BY: T.M.J. DATE: NOV. 82

F.H.W.A. REGION	STATE	PROJECT	
5	OHIO		

8
284

ERIE COUNTY
ERI - 2 - (16.13 - 17.39)

GENERAL NOTES

ROADWAY

ITEM 203 BORROW, USING GRANULAR MATERIAL, AS PER PLAN

WET COMPRESSIBLE LOW STRENGTH EMBANKMENT FOUNDATION MATERIALS GENERALLY PREVAIL THROUGHOUT THE PROJECT LENGTH. REMOVAL AND REPLACEMENT SHALL BE LIMITED TO THE AREAS AS SHOWN ON THE PLAN AT BRIDGE ABUTMENTS AND CULVERTS BETWEEN STATION 1172 + 75 AND STATION 1173 + 50 AND BETWEEN STATION 1180 + 20 AND STATION 1181 + 75.

GRANULAR MATERIAL REQUIRED FOR SWAMP TREATMENT SHALL BE SPECIFIED AS "203 BORROW USING GRANULAR MATERIAL AS PER PLAN". THE GRANULAR MATERIAL SHALL MEET THE REQUIREMENTS OF 203.02 OF THE CONSTRUCTION AND MATERIAL SPECIFICATIONS MODIFIED TO REQUIRE AT LEAST 75 PERCENT BY WEIGHT OF THE GRAINS OR PARTICLES TO BE RETAINED ON THE NO. 200 SIEVE.

TRENCHING AND BACKFILLING SHALL BE CARRIED PROGRESSIVELY ACROSS EACH AREA AND SO COORDINATED AS TO LEAVE AN OPEN TRENCH NOT TO EXCEED IN LENGTH AT ANY TIME THE WORKING REACH OF THE EQUIPMENT USED FOR THE SWAMP EXCAVATION.

FILL SHALL BE CONSTRUCTED BY THE METHOD OF END DUMPING, USING GRANULAR MATERIAL, UP TO 2 FEET ABOVE WATER LEVEL. FILL ABOVE THIS LEVEL SHALL BE CONSTRUCTED IN ACCORDANCE WITH 203.07 TO 203.12 INCLUSIVE.

EXCAVATION OF UNSUITABLE MATERIAL AHEAD OF THE FILL AND END DUMPING OF GRANULAR MATERIAL ACROSS THE BOG AREA SHALL BE ADVANCED IN A STRAIGHT LINE FOR THE FULL EMBANKMENT WIDTH TO AVOID ENTRAPMENT OF UNSUITABLE MATERIAL BENEATH ANY PORTION OF THE FILL.

EXCAVATED UNSUITABLE MATERIAL WHICH IS TO BE USED ADJACENT TO FILLS FOR SLOPE FLATTENING OR WHICH IS PILED ADJACENT TO THE FILL TO BE DISPOSED OF LATER IN ACCORDANCE WITH 203.03, SHALL BE SHAPED TO ITS FINAL POSITION OR REMOVED FROM THE AREA AT LEAST TWO WEEKS PRIOR TO PAVING OPERATIONS ON THE FILL.

UNSUITABLE MATERIAL WHICH IS FOUND TO BE LESS THAN 20 FEET DEEP SHALL BE EXCAVATED TO ITS ENTIRE DEPTH. THE TEMPORARY SURCHARGE MAY BE OMITTED IN THESE AREAS.

CROSSHATCHED SECTIONS ARE INCLUDED IN QUANTITIES TO ALLOW FOR POSSIBLE SLOUGHING AND UNDERCUTTING.

PAYMENT FOR EXCAVATION OF UNSUITABLE MATERIAL BETWEEN THE LIMITING STATIONS SHALL BE INCLUDED IN THE UNIT PRICE BID FOR "203 BORROW USING GRANULAR MATERIAL AS PER PLAN , INCLUDING THE COST OF EXCAVATION OF UNSUITABLE MATERIAL". THE GRANULAR MATERIAL USED BETWEEN THE LIMITING STATIONS AS EMBANKMENT ABOVE THE ORIGINAL GROUND LINE SHALL BE PAID FOR AS "203 BORROW USING GRANULAR MATERIAL AS PER PLAN".

THE TOTAL QUANTITY OF 203 BORROW USING GRANULAR MATERIAL SHALL BE DETERMINED IN ACCORDANCE WITH 203.15(e) OF THE SPECIFICATIONS. THE QUANTITY OF 203 BORROW USING GRANULAR MATERIAL WHICH DOES NOT INCLUDE THE COST OF EXCAVATION SHALL BE THE VOLUME MEASURED IN FINAL POSITION BY THE END AREA METHOD PLUS FIVE PERCENT FOR COMPACTION, USING PROJECT CROSS SECTIONS. THE QUANTITY OF 203 BORROW USING GRANULAR MATERIAL, INCLUDING THE COST OF EXCAVATION OF UNSUITABLE MATERIAL, SHALL BE THE TOTAL QUANTITY OF GRANULAR MATERIAL AS MEASURED BY 203.15(e) MINUS THE QUANTITY WHICH DOES NOT INCLUDE THE COST OF EXCAVATION, AS DETERMINED ABOVE.

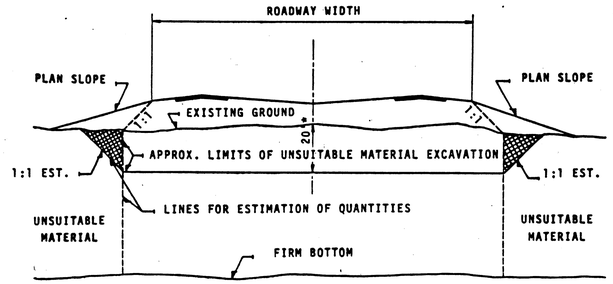

SWAMP TREATMENT DETAIL

TOTAL EXCAVATION METHOD (DEPTH, UP TO 20')
PARTIAL EXCAVATION METHOD (DEPTH, OVER 20')

*20' OR TO BOTTOM OF UNSUITABLE MATERIAL, WHICHEVER IS LESS

EMBANKMENT CONSTRUCTION: STA 1093 TO 1132, E. B. THRU RAMP, AND S. R. 13 AND RAMPS

WHERE EMBANKMENT HEIGHT IS FIVE (5) FEET OR LESS, NO SPECIAL FOUNDATION TREATMENT IS NEEDED. FOUNDATIONS FOR EMBANKMENT GREATER THAN FIVE (5) FEET IN HEIGHT SHALL BE TREATED WITH A SYSTEM OF WICK DRAINS. WICK DRAINS SHALL BE PLACED IN A 12.5 FOOT TRI-ANGULAR PATTERN, AS PER DETAIL ON SHEET 45B, AND SHALL EXTEND APPROXIMATELY ONE (1) FOOT INTO A 3-FOOT THICK SAND DRAINAGE BLANKET PLACED AT THE BOTTOM OF THE ENTIRE FILL AREA. DRAINS SHALL BE INSTALLED AT LEAST TWO ROWS PAST THE TOE OF ALL FRONT SLOPES AND TO MIDSLOPE OF THE SIDE SLOPES.

WHERE FINISHED EMBANKMENT HEIGHT IS GREATER THAN TEN (10) FEET, A 5-FOOT SURCHARGE SHALL BE APPLIED AND FILL PLACEMENT SHALL BE RESTRICTED AS FOLLOWS:

HEIGHT OF EMBANKMENT CONSTRUCTION	RESTRICTION
0 - 18'	MAXIMUM RATE OF FILL PLACEMENT OF THREE (3) FEET PER WEEK. A 10-WEEK WAITING PERIOD AFTER REACHING 18-FOOT HEIGHT.
18' OR GREATER	MAXIMUM RATE OF FILL PLACEMENT OF 1.5 FEET PER WEEK. A 12-WEEK WAITING PERIOD AFTER REACHING 27-FOOT HEIGHT. A 14-WEEK WAITING PERIOD AFTER REACHING 36-FOOT HEIGHT.

THE FIVE (5) FOOT SURCHARGE SHALL BE CONSTRUCTED OF SUITABLE EMBANKMENT MATERIAL AND SHALL BE PLACED BETWEEN THE OUTSIDE SHOULDERS UTILIZING 1:1 SIDE SLOPES. ALL COST OF PLACING AND REMOVING SURCHARGE SHALL BE PAID PER CUBIC YARD OF ITEMS 203, EMBANKMENT AND EXCAVATION. SEE ESTIMATED QUANTITIES ON SHEET 12.

A NINE (9) MONTH WAITING PERIOD IS TO BE OBSERVED AFTER COMPLETION OF THE FILL, AT WHICH TIME THE SURCHARGE MAY BE REMOVED.

AT THE ABUTMENTS OF THE BRIDGES MENTIONED BELOW, THE TYPICAL EXCAVATION AND REPLACE-MENT SCHEME SHOWN ON SHEETS 45B THRU 45D WILL APPLY AS FOLLOWS:

E. B. THRU RAMP

EXCAVATE TO 15-FOOT DEPTH AND REPLACE WITH GRANULAR EMBANKMENT. VERTICAL DRAINS NEED NOT BE INSTALLED IN THE AREA OF EXCAVATION, NOR WILL THE SURCHARGE BE REQUIRED. THE ABOVE MENTIONED RESTRICTIONS FOR RATE OF FILL PLACEMENT SHALL NOT APPLY. FILL PLACEMENT ABOVE ORIGINAL GROUND SURFACE IS RESTRICTED TO THREE (3) FEET PER WEEK WITH A ONE-MONTH WAITING PERIOD UPON COMPLETION OF THE FILL BEFORE INSTALLATION OF PILING.

BRIDGE OVER CONRAIL

EXCAVATE TO 15-FOOT DEPTH AND REPLACE WITH GRANULAR EMBANKMENT. VERTICAL DRAINS ARE TO BE INSTALLED IN THE AREA OF EXCAVATION AND REPLACEMENT AS DESCRIBED ABOVE. FILL ABOVE ORIGINAL GROUND IN THE AREA OF EXCAVATION AND REPLACEMENT MAY BE PLACED AT A MAXIMUM OF THREE (3) FEET PER WEEK WITH A 3-MONTH WAITING PERIOD UPON COMPLETION OF THE FILL BEFORE INSTALLATION OF PILING.

BRIDGE OVER BOGART ROAD

EXCAVATE TO 20-FOOT DEPTH AND REPLACE WITH GRANULAR EMBANKMENT. VERTICAL DRAINS ARE TO BE INSTALLED IN THE AREA OF EXCAVATION AND REPLACEMENT AS DESCRIBED ABOVE. FILL ABOVE ORIGINAL GROUND IN THE AREA OF EXCAVATION AND REPLACEMENT MAY BE PLACED AT A MAXIMUM OF THREE (3) FEET PER WEEK WITH A 3-MONTH WAITING PERIOD UPON COMPLETION OF THE FILL BEFORE INSTALLATION OF PILING.

S. R. 13 BRIDGE OVER S. R. 2

EXCAVATE TO 20-FOOT DEPTH AND REPLACE WITH GRANULAR EMBANKMENT. VERTICAL DRAINS ARE TO BE INSTALLED IN THE AREA OF EXCAVATION AND REPLACEMENT AS DESCRIBED ABOVE. FILL ABOVE ORIGINAL GROUND IN THE AREA OF EXCAVATION AND REPLACEMENT MAY BE PLACED AT A MAXIMUM OF THREE (3) FEET PER WEEK WITH A 5-MONTH WAITING PERIOD UPON COMPLETION OF THE FILL BEFORE INSTALLATION OF PILING.

FIELD INSTRUMENTATION

THE ABOVE RATES OF EMBANKMENT CONSTRUCTION AND WAITING PERIODS ARE BASED ON SINGLE DRAINAGE OCCURRING IN THE FOUNDATION SOILS. SETTLEMENT PLATFORMS, PIEZOMETERS, AND SLOPE INCLINOMETERS SHALL BE ESTABLISHED IN ACCORDANCE WITH PROPOSAL NOTES AND PLAN DETAILS.

LIMITING STATIONS FOR AREAS OF SURCHARGE

E.B. RAMP	STA. 1082+20 TO STA. 1088+45
E.B. RAMP	STA. 1092+75 TO STA. 1100+00
S. R. 2	STA. 1098+60 TO STA. 1109+05
S. R. 2	STA. 1111+75 TO STA. 1122+05
S. R. 2	STA. 1124+05 TO STA. 1129+25
S. R. 13	STA. 12+75 TO STA. 18+35 AND STA. 21+65 TO STA. 23+85
RAMP 3	STA. 1192+40 TO STA. 1193+13
RAMP 4	STA. 1190+70 TO STA. 1192+00
RAMP 5	STA. 1191+10 TO STA. 1194+40

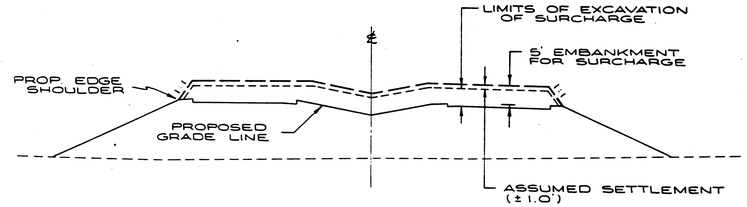

TYPICAL FOR EMBANKMENT AND EXCAVATION OF SURCHARGE

SETTLEMENT PLATFORMS

SETTLEMENT PLATFORMS SHALL BE PLACED AS DIRECTED BY THE ENGINEER TO MEASURE EMBANKMENT SETTLEMENT. (SEE NOTE IN PROPOSAL)

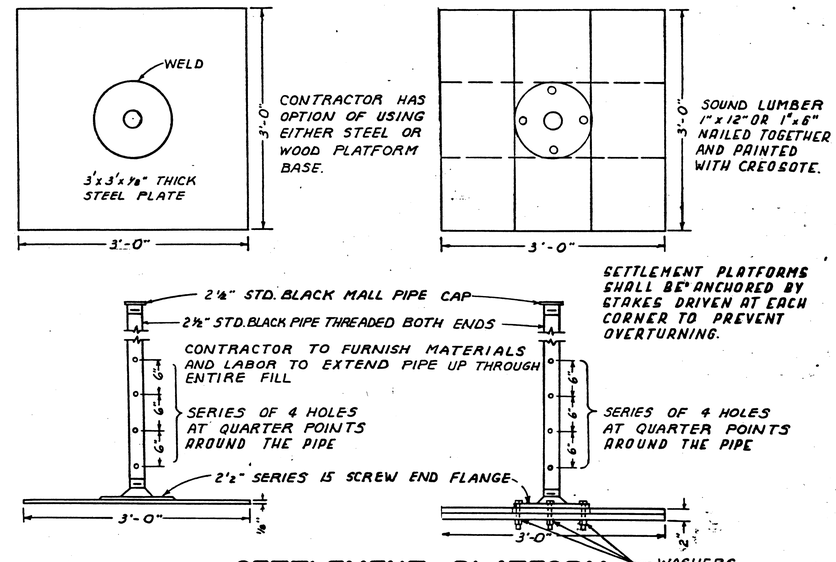

SETTLEMENT PLATFORM DETAIL

POROUS - TUBE PIEZOMETER AND SLOPE INDICATOR

FOR FURTHER DESCRIPTION, SEE PROPOSAL NOTES.
LOCATIONS TO BE AS PER PLAN SHEETS 45B - 45D.

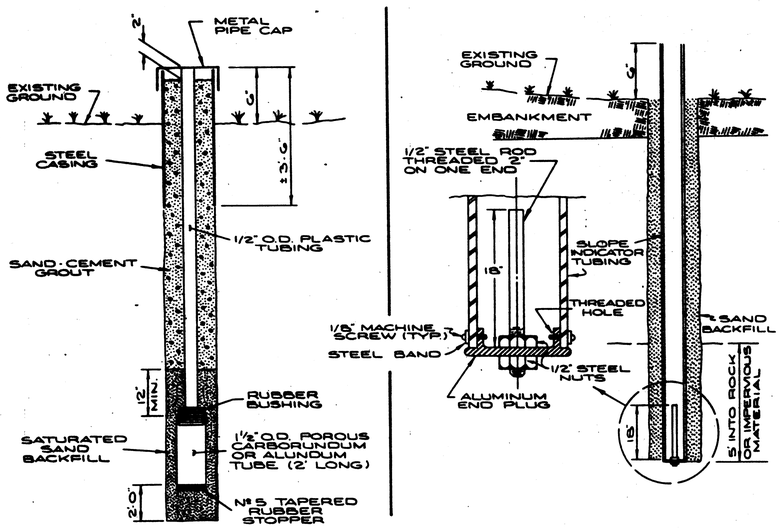

POROUS - TUBE PIEZOMETER **SLOPE INDICATOR**

ITEM SPECIAL: WICK DRAINS (PREFABRICATED VERTICAL DRAINS)

A. DESCRIPTION UNDER THIS ITEM, THE CONTRACTOR SHALL FURNISH ALL NECESSARY LABOR, EQUIPMENT AND MATERIALS, AND PERFORM ALL OPERATIONS NECESSARY FOR THE INSTALLATION OF WICK DRAINS IN ACCORDANCE WITH THE DETAILS SHOWN ON THE PLANS AND WITH THE REQUIREMENTS OF THESE SPECIFICATIONS. THE DRAINS SHALL BE SPACED AND ARRANGED AS SHOWN ON THE PLANS OR AS OTHERWISE DIRECTED BY THE ENGINEER.

B. MATERIALS THE PREFABRICATED DRAIN SHALL CONSIST OF A CONTINUOUS PLASTIC DRAINAGE CORE WRAPPED IN A NONWOVEN GEOTEXTILE MATERIAL. THE PREFABRICATED DRAINS USED SHALL BE ONE OF THE FOLLOWING PRODUCTS:

1.) ALI-DRAIN
2.) AMERDRAIN (TYPE 407)
3.) HITEK FLODRAIN (GRAY, DUPONT REEMAY FILTER JACKET AND ORIGINAL)
4.) MEBRA-DRAIN (MD 7007)

THE CONTRACTOR SHALL SUBMIT A 5-FOOT SAMPLE OF THE WICK DRAIN MATERIAL TO THE ENGINEER AND SHALL ALLOW THREE (3) WEEKS FOR THE ENGINEER TO EVALUATE THE MATERIAL. THE SAMPLE SHALL BE STAMPED OR LABELED BY THE MANUFACTURER AS BEING REPRESENTATIVE OF THE DRAIN HAVING THE SPECIFIED TRADE NAME. APPROVAL OF THE SAMPLE MATERIAL BY THE ENGINEER SHALL BE REQUIRED PRIOR TO SITE DELIVERY OF THE PRODUCTION DRAIN MATERIAL. THE CONTRACTOR SHALL STATE WHICH WICK DRAIN PRODUCT HE INTENDS TO INSTALL AT THE PRECONSTRUCTION CONFERENCE. THE DRAINS SHALL BE FREE OF DEFECTS, RIPS, HOLES, OR FLAWS. DURING SHIPMENT AND STORAGE, THE DRAIN SHALL BE WRAPPED IN A HEAVY DUTY PROTECTIVE COVERING. THE STORAGE AREA SHALL BE SUCH THAT THE DRAIN IS PROTECTED FROM SUNLIGHT, MUD, DIRT, DUST, DEBRIS, AND DETRIMENTAL SUBSTANCES. MANUFACTURER CERTIFICATION SHALL BE PROVIDED FOR ALL DRAIN MATERIAL DELIVERED TO THE PROJECT.

GENERAL NOTES

C. EQUIPMENT THE WICK DRAINS SHALL BE INSTALLED WITH EQUIPMENT WHICH WILL CAUSE A MINIMUM OF DISTURBANCE OF THE SUBSOIL DURING THE INSTALLATION. THE PREFABRICATED DRAINS SHALL BE INSTALLED USING A MANDREL OR SLEEVE THAT WILL BE ADVANCED THROUGH THE COMPRESSIBLE SOILS TO THE REQUIRED DEPTH USING VIBRATORY, CONSTANT LOAD, OR CONSTANT RATE OF ADVANCEMENT METHODS. USE OF FALLING WEIGHT IMPACT HAMMERS WILL NOT BE ALLOWED. JETTING SHALL NOT BE PERMITTED FOR INSTALLATION OF THE DRAIN. THE MANDREL SHALL PROTECT THE PREFABRICATED DRAIN MATERIAL FROM TEARS, CUTS, AND ABRASIONS DURING INSTALLATION AND SHALL BE WITHDRAWN AFTER THE INSTALLATION OF THE DRAIN. THE DRAIN SHALL BE PROVIDED WITH AN "ANCHOR" PLATE OR ROD AT THE BOTTOM TO ANCHOR THE BOTTOM OF THE DRAIN AT THE REQUIRED DEPTH AT THE TIME OF MANDREL REMOVAL. THE PROJECTED CROSS-SECTIONAL AREA OF THE MANDREL AND ANCHOR COMBINATION SHALL NOT BE GREATER THAN THAT SUGGESTED BY THE MANUFACTURER AND APPROVED BY THE ENGINEER.

AT LEAST THREE (3) WEEKS PRIOR TO THE INSTALLATION OF THE WICK DRAINS, THE CONTRACTOR SHALL SUBMIT TO THE ENGINEER, FOR REVIEW AND APPROVAL, DETAILS OF THE SEQUENCE AND METHOD OF INSTALLATION. THE SUBMITTAL SHALL, AT A MINIMUM, CONTAIN THE FOLLOWING SPECIFIC INFORMATION:

1.) SIZE, TYPE, WEIGHT, MAXIMUM PUSHING FORCE, VIBRATORY HAMMER RATED ENERGY, AND CONFIGURATION OF THE INSTALLATION RIG;

2.) DIMENSIONS AND LENGTH OF MANDREL;

3.) DETAILS OF DRAIN ANCHORAGE;

4.) DETAILED DESCRIPTION OF PROPOSED INSTALLATION PROCEDURES;

5.) PROPOSED METHOD(S) FOR OVERCOMING OBSTRUCTIONS; AND

6.) PROPOSED METHOD(S) FOR SPLICING DRAINS.

APPROVAL BY THE ENGINEER WILL NOT RELIEVE THE CONTRACTOR OF HIS RESPONSIBILITY TO INSTALL WICK DRAINS IN ACCORDANCE WITH THE PLANS AND SPECIFICATIONS. IF, AT ANY TIME, THE ENGINEER CONSIDERS THAT THE METHOD OF INSTALLATION DOES NOT PRODUCE A SATISFACTORY DRAIN, THE CONTRACTOR SHALL ALTER HIS METHOD AND/OR EQUIPMENT AS NECESSARY TO COMPLY WITH THE PLANS AND SPECIFICATIONS.

D. CONSTRUCTION REQUIREMENTS WHERE SHOWN ON THE PLANS OR AS DIRECTED BY THE ENGINEER, WICK DRAINS SHALL BE INSTALLED PRIOR TO EMBANKMENT CONSTRUCTION. PRIOR TO THE INSTALLATION OF PREFABRICATED DRAINS, THE CONTRACTOR SHALL STAKE OUT THE PROPOSED LOCATIONS OF THE DRAINS AND THEN TAKE ALL REASONABLE PRECAUTIONS TO PRESERVE THE STAKES. THE LOCATIONS OF THE STAKES SHALL NOT VARY BY MORE THAN SIX (6) INCHES FROM THE LOCATIONS INDICATED ON THE PLANS OR AS DIRECTED BY THE ENGINEER.

THE CONTRACTOR SHALL DEMONSTRATE THAT HIS EQUIPMENT, METHOD, AND MATERIALS PRODUCE A SATISFACTORY INSTALLATION IN ACCORDANCE WITH THIS SPECIFICATION. FOR THIS PURPOSE, THE CONTRACTOR WILL BE REQUIRED TO INSTALL SEVERAL TRIAL DRAINS AT LOCATIONS WITHIN THE WORK AREA DESIGNATED BY THE ENGINEER. TRIAL DRAINS CONFORMING TO THIS SPECIFICATION WILL BE PAID FOR AT THE SAME UNIT PRICE AS THE PRODUCTION DRAINS.

THE WICK DRAINS SHALL BE INSTALLED TO DEPTHS AS SHOWN ON THE PLANS OR AS DIRECTED BY THE ENGINEER. DRAINS THAT DEVIATE FROM THE PLAN LOCATION BY MORE THAN SIX (6) INCHES, OR THAT ARE DAMAGED, OR IMPROPERLY INSTALLED WILL BE REJECTED. REJECTED DRAINS MAY BE REMOVED OR ABANDONED IN PLACE, AT THE CONTRACTOR'S OPTION, REPLACEMENT DRAINS SHALL BE OFFSET APPROXIMATELY EIGHTEEN (18) INCHES FROM THE LOCATION OF THE REJECTED DRAIN. ALL REJECTED DRAINS WILL BE REPLACED AT THE CONTRACTOR'S EXPENSE.

THE DRAINS SHALL BE INSTALLED VERTICAL AND TO THE ELEVATIONS SHOWN ON THE PLANS OR AS ORDERED BY THE ENGINEER. THE CONTRACTOR SHALL PROVIDE THE ENGINEER WITH A SUITABLE MEANS OF VERIFYING THE PLUMBNESS OF THE MANDREL AND DETERMINING THE DEPTH OF THE DRAIN AT ANY TIME. THE EQUIPMENT SHALL BE CAREFULLY CHECKED FOR PLUMBNESS AND SHALL NOT DEVIATE MORE THAN .25 INCH PER FOOT FROM VERTICAL.

SPLICES OR CONNECTIONS IN THE WICK DRAIN MATERIAL SHALL BE DONE IN A PROFESSIONAL MANNER SO AS TO INSURE CONTINUITY OF THE WICK MATERIAL. THE PREFABRICATED DRAIN SHALL BE CUT SUCH THAT AT LEAST A SIX (6) INCH LENGTH PROTRUDES ABOVE THE WORKING SURFACE AT EACH PREFABRICATED DRAIN LOCATION.

IT MAY BE NECESSARY TO PREAUGER OR USE SOME OTHER METHOD TO CLEAR OBSTRUCTIONS AND FACILITATE THE INSTALLATION OF THE DRAINS THROUGH THE WORKING PLATFORM OR A NATURAL DEPOSIT ABOVE THE COMPRESSIBLE SOIL STRATA. THE DEPTH TO WHICH PREAUGERING IS USED SHALL BE SUBJECT TO APPROVAL BY THE ENGINEER BUT SHOULD NOT EXTEND MORE THAN TWO (2) FEET INTO THE UNDERLYING COMPRESSIBLE SOILS.

WHERE OBSTRUCTIONS ARE ENCOUNTERED WITHIN THE COMPRESSIBLE STRATA, WHICH CANNOT BE PENETRATED BY AUGERING OR SPUDDING, THE CONTRACTOR SHALL ABANDON THE HOLE. AT THE DIRECTION OF THE ENGINEER, THE CONTRACTOR SHALL THEN INSTALL A NEW DRAIN WITHIN EIGHTEEN (18) INCHES OF THE OBSTRUCTED DRAIN. A MAXIMUM OF TWO ATTEMPTS SHALL BE MADE AS DIRECTED BY THE ENGINEER FOR EACH OBSTRUCTED DRAIN. IF THE DRAIN STILL CANNOT BE INSTALLED TO THE DESIGN TIP ELEVATION, THE DRAIN LOCATION SHOULD BE ABANDONED AND THE INSTALLATION EQUIPMENT SHOULD BE MOVED TO THE NEXT DRAIN LOCATION.

WICK DRAINS ARE TO BE INSTALLED TO A DEPTH AT OR NEAR BEDROCK REFUSAL. THIS DEPTH IS ESTIMATED TO BE 35 FEET AND ESTIMATED QUANTITIES FOR WICK DRAINS HAVE BEEN CALCULATED ON THAT BASIS.

INSTALLATION OF THE DRAINS SHOULD CONSIDER AND BE COORDINATED WITH THE GEOTECHNICAL INSTRUMENTATION SHOWN ON THE PLANS. SPECIAL CARE SHOULD BE TAKEN TO INSTALL DRAINS IN SUCH A MANNER SO AS NOT TO DISTURB THE INSTRUMENTATION ALREADY IN PLACE. THE REPLACEMENT OF INSTRUMENTATION DAMAGED AS A RESULT OF THE CONTRACTOR'S ACTIVITIES WILL BE THE RESPONSIBILITY OF THE CONTRACTOR.

E. METHOD OF MEASUREMENT THE QUANTITY OF PREFABRICATED DRAIN SHALL BE THE NUMBER OF LINEAR FEET SATISFACTORILY INSTALLED FROM THE TOP OF THE WORKING PLATFORM DESIGN ELEVATION TO THE DESIGN ELEVATION OF THE DRAIN TIP.

IN CASE OF OBSTRUCTIONS, THE CONTRACTOR SHALL BE PAID AT THE CONTRACT UNIT PRICE FOR THE NUMBER OF LINEAR FEET OF DRAIN MEASURED FROM THE TOP OF THE WORKING PLATFORM TO THE ELEVATION AT WHICH THE OBSTRUCTION WAS ENCOUNTERED.

F. BASIS OF PAYMENT PAYMENT FOR WICK DRAINS WILL BE MADE AT THE CONTRACT UNIT PRICE PER LINEAR FOOT, WHICH PRICE SHALL BE FULL COMPENSATION FOR THE COST OF FURNISHING THE FULL LENGTH OF WICK DRAIN MATERIAL, INSTALLING THE DRAIN, ALTERING OF THE EQUIPMENT AND METHODS OF INSTALLATION IN ORDER TO PRODUCE THE REQUIRED END RESULT IN ACCORDANCE WITH THE PLANS AND SPECIFICATIONS, AND SHALL ALSO INCLUDE THE COST OF FURNISHING ALL TOOLS, MATERIALS, LABOR, EQUIPMENT, AND ALL OTHER COSTS NECESSARY TO COMPLETE THE REQUIRED WORK. NO DIRECT PAYMENT WILL BE MADE FOR UNACCEPTABLE DRAINS OR FOR ANY DELAYS OR EXPENSES THROUGH CHANGES NECESSITATED BY IMPROPER OR UNACCEPTABLE MATERIAL OR EQUIPMENT. NO DIRECT PAYMENT WILL BE MADE FOR PREAUGERING OR OTHER METHODS USED TO FACILITATE INSTALLATION OF THE DRAIN.

WICK DRAINS (PREFABRICATED VERTICAL DRAINS) PRODUCT INFORMATION

PRODUCTS

ALI DRAIN
MANUFACTURER: BURCAN INDUSTRIES LIMITED
SUITE 17-111 INDUSTRIAL DRIVE
WHITBY, ONTARIO, CANADA L1N5Z9
416-668-6752
U.S. SUPPLIER: DRAINAGE AND GROUND IMPROVEMENT, INCORPORATED
POST OFFICE BOX 13222
PITTSBURGH, PENNSYLVANIA 15243
412-257-2750

HITEK FLODRAIN
MANUFACTURER: BURCAN MANUFACTURING, INCORPORATED
SUITE 18-111 INDUSTRIAL DRIVE
WHITBY, ONTARIO, CANADA L1N5Z9
416-668-6752
U.S. SUPPLIER: SAME AS ALI DRAIN

MEBRA-DRAIN
MANUFACTURER: GEOTECHNICS HOLLAND BV
POST OFFICE BOX 270
6950 AF DIEREN
HOLLAND
U.S. SUPPLIER: (1) L. B. FOSTER COMPANY
415 HOLIDAY DRIVE
PITTSBURGH, PENNSYLVANIA 15220
412-928-3475
(2) INTERNATIONAL CONSTRUCTION EQUIPMENT, INCORPORATED
CORPORATE OFFICES 301 WAREHOUSE DRIVE
MATTHEWS, NORTH CAROLINA 28105
800-438-9281

AMERIDRAIN
MANUFACTURER: AMERICAN WICK DRAIN COMPANY
301 WAREHOUSE DRIVE
MATTHEWS, NORTH CAROLINA 28105
U.S. SUPPLIER: INTERNATIONAL CONSTRUCTION EQUIPMENT COMPANY
301 WAREHOUSE DRIVE
MATTHEWS, NORTH CAROLINA 28105
800-438-9281

Rev. 1-22-86

ADACHE·CIUNI·LYNN ASSOC.
CALC. BY: R.W.H. DATE: NOV. 82
CHKD.BY: T.M.J. DATE: NOV. 82

F.H.W.A. REGION 5 | STATE OHIO | PROJECT

ERIE COUNTY
ERI-2-(16.13-17.39)

88
284

GENERAL NOTES

DRAINAGE

SPECIAL DITCHES

FOR SPECIAL DITCH GRADES, SEE CROSS SECTIONS.

CUT-OFF WALLS

CUT-OFF WALLS SHALL BE CONSTRUCTED AT THE BEGINNING AND END OF ALL PAVED GUTTER, EXCEPT AT ENDS ADJACENT TO CATCH BASINS OR HEADWALLS.

ITEM 604 CATCH BASIN AND MANHOLES

THE TOP OF GRATE (T/G) ELEVATION FOR ALL SLANTING GRATES INDICATED ON THESE PLANS SHALL BE THE TOP OF THE FRAME OR GRATE AT ITS LOWEST POINT.

CATCH BASINS DEEPER THAN SIX FEET SHALL HAVE STEPS MEETING THE REQUIREMENT OF 604.

ITEM 605 AGGREGATE DRAINS

AGGREGATE DRAINS SHALL BE PLACED AT FIFTY (50) FOOT INTERVALS ON EACH SIDE OF NORMAL CROWNED SECTIONS AND AT TWENTY-FIVE (25) FOOT INTERVALS ON THE LOW SIDE ONLY OF SUPERELEVATED SECTIONS, EXCEPT WHERE ITEM 605 PIPE UNDERDRAINS HAVE BEEN PROVIDED.

AN AGGREGATE DRAIN SHALL BE PLACED AT THE LOW POINT OF EACH SAG VERTICAL CURVE.

SPRING DRAINS

REFERENCE IS MADE TO THE DETAILED DRAWING ON STANDARD DRAWING MC-1 SHOWING THE METHOD OF DRAINING ANY SPRING THAT MAY BE SHOWN ON THE PLAN OR ENCOUNTERED DURING CONSTRUCTION AS DETERMINED BY THE ENGINEER. THE FOLLOWING ESTIMATED QUANTITIES HAVE BEEN INCLUDED IN THE GENERAL SUMMARY FOR THIS PURPOSE:

		URBAN	RURAL
ITEM 605	6" UNCLASSIFIED PIPE UNDERDRAIN, 707.01 TYPE III OR 707.21, TYPE III AS PER PLAN	50 LIN. FT.	50 LIN. FT.
ITEM 605	AGGREGATE DRAINS FOR SPRINGS	10 LIN. FT.	10 LIN. FT.

THE CONTRACTOR SHALL NOT ORDER MATERIALS FOR "SPRING DRAINS" UNTIL AUTHORIZED BY THE ENGINEER AND IN THE EVENT NO SPRINGS ARE ENCOUNTERED, THE ITEM SHALL BE NON-PERFORMED.

SANITARY FLOW INTO HIGHWAY DRAINAGE SYSTEMS

PLAN MAKES NO PROVISION FOR CONNECTING, NOR SHALL THE ENGINEER OR CONTRACTOR CONNECT, ANY EXISTING OR NEW DRAINAGE INTO THE HIGHWAY DRAINAGE SYSTEM WHEN SUCH DRAINS CARRY FLOW FROM ANY PLUMBING FIXTURES, INCLUDING FLOOR DRAINS AND SINK DRAINS, OR DRAINS FROM LIVESTOCK LOTS OR BARNS.

EXISTING PIPE CARRYING FLOW WHICH COMES WITHIN THE CATEGORY OUTLINED ABOVE, SHALL BE PLUGGED WITH CLASS C CONCRETE AT THE RIGHT-OF-WAY LINE. PAYMENT FOR SAID PLUGGING SHALL BE INCLUDED IN THE UNIT PRICE BID FOR ITEM 203 EXCAVATION (OR THE PERTINENT 202 ITEM).

TREATED SANITARY FLOW INTO HIGHWAY DRAINAGE SYSTEMS

TREATED SANITARY FLOW MAY BE DISCHARGED INTO THE HIGHWAY DRAINAGE SYSTEM PROVIDED THE OWNER HAS SECURED THE APPROVAL OF THE LOCAL HEALTH AUTHORITIES AND HAS ACQUIRED FROM THE OHIO DEPARTMENT OF TRANSPORTATION, THE OFFICIAL PERMIT TO HAVE THE CONNECTION MADE.

IN EACH CASE WHERE A PERMIT HAS BEEN ISSUED FOR A SANITARY CONNECTION TO BE MADE INTO A HIGHWAY DRAINAGE CONDUIT, IT SHALL BE PROVIDED WITH AN INSPECTION WELL, IN ACCORDANCE WITH THE DETAIL SHOWN ON STANDARD DRAWING MC-8.

THE FOLLOWING ESTIMATED QUANTITIES HAVE BEEN INCLUDED IN THE GENERAL SUMMARY, FOR USE AS DIRECTED BY THE ENGINEER, IN MAKING THE ABOVE DESCRIBED CONNECTIONS:

ITEM 603, 6" CONDUIT, TYPE C 100 LIN. FT.
ITEM 604, INSPECTION WELLS 2 EACH

NECESSARY BENDS OR BRANCHES SHALL BE INCLUDED FOR PAYMENT IN THE PERTINENT CONDUIT ITEM.

NONE OF THE ABOVE MATERIALS SHALL BE ORDERED BY THE CONTRACTOR UNTIL AUTHORIZED BY THE ENGINEER.

FARM DRAINS

ALL FARM DRAINS WHICH ARE ENCOUNTERED DURING CONSTRUCTION SHALL BE PROVIDED WITH UNOBSTRUCTED OUTLETS UNDER THE DIRECTION OF THE ENGINEER. EXISTING COLLECTORS WHICH ARE LOCATED BELOW THE ROADWAY DITCH ELEVATIONS AND WHICH CROSS THE ROADWAY SHALL BE REPLACED WITHIN THE RIGHT-OF-WAY LIMITS BY ITEM 603 CONDUIT, TYPE B WITH CLASS B BEDDING, ONE COMMERCIAL SIZE LARGER THAN THE EXISTING CONDUIT.

EXISTING COLLECTORS AND ISOLATED FARM DRAINS WHICH ARE ENCOUNTERED ABOVE THE ELEVATION OF THE ROADWAY DITCHES SHALL BE OUTLETTED INTO THE ROADWAY DITCH BY 603 TYPE F CONDUIT. THE OPTIMUM OUTLET ELEVATION SHALL BE, IF POSSIBLE, ONE FOOT ABOVE THE FLOWLINE ELEVATION OF THE DITCH. LATERAL TILE FIELDS WHICH CROSS THE ROADWAY SHALL BE INTERCEPTED BY 603 TYPE E CONDUIT AND CARRIED IN A LONGITUDINAL DIRECTION TO AN ADEQUATE OUTLET OR ROADWAY CROSSING.

THE LOCATION, TYPE, SIZE AND GRADE OF REQUIRED REPLACEMENTS SHALL BE DETERMINED BY THE ENGINEER DURING CONSTRUCTION AND PAYMENT SHALL BE MADE ON FINAL MEASUREMENTS.

THE FOLLOWING ESTIMATED QUANTITIES HAVE BEEN INCLUDED IN THE GENERAL SUMMARY FOR THE WORK NOTED ABOVE:

		URBAN	RURAL
ITEM 601	ROCK CHANNEL PROTECTION TYPE C W/FILTER	5 CU. YD.	5 CU. YD.
ITEM 603	6" CONDUIT, TYPE B	50 LIN. FT.	50 LIN. FT.
	8" CONDUIT, TYPE B	50 LIN. FT.	50 LIN. FT.
	10" CONDUIT, TYPE B	50 LIN. FT.	50 LIN. FT.
	12" CONDUIT, TYPE B	50 LIN. FT.	50 LIN. FT.
	6" CONDUIT, TYPE E	50 LIN. FT.	50 LIN. FT.
	8" CONDUIT, TYPE E	50 LIN. FT.	50 LIN. FT.
	10" CONDUIT, TYPE E	50 LIN. FT.	50 LIN. FT.
	12" CONDUIT, TYPE E	50 LIN. FT.	50 LIN. FT.
	6" CONDUIT, TYPE F	50 LIN. FT.	50 LIN. FT.
	8" CONDUIT, TYPE F	50 LIN. FT.	50 LIN. FT.
	10" CONDUIT, TYPE F	50 LIN. FT.	50 LIN. FT.
	12" CONDUIT, TYPE F	50 LIN. FT.	50 LIN. FT.

ALL NECESSARY BENDS AND BRANCHES SHALL BE INCLUDED IN THE UNIT PRICE BID FOR THE PERTINENT CONDUIT ITEM.

NONE OF THE MATERIALS LISTED ABOVE SHALL BE ORDERED WITHOUT PRIOR APPROVAL OF THE PROJECT ENGINEER.

REVIEW OF DRAINAGE FACILITIES

BEFORE ANY WORK IS STARTED ON THE PROJECT, AND AGAIN BEFORE FINAL ACCEPTANCE BY THE STATE, REPRESENTATIVES OF THE STATE AND THE CONTRACTOR ALONG WITH LOCAL REPRESENTATIVES SHALL MAKE AN INSPECTION OF THE EXISTING SEWERS WITHIN THE WORK LIMITS WHICH ARE TO REMAIN IN SERVICE AND WHICH MAY BE AFFECTED BY THE WORK. THE CONDITION OF THE EXISTING CONDUITS AND THEIR APPURTENANCES SHALL BE DETERMINED FROM FIELD OBSERVATIONS. RECORDS OF THE INSPECTIONS SHALL BE KEPT IN WRITING BY THE STATE.

ALL NEW CONDUITS, INLETS, CATCH BASINS AND MANHOLES CONSTRUCTED AS PART OF THE PROJECT SHALL BE FREE OF ALL FOREIGN MATTER AND IN A CLEAN CONDITION BEFORE THE PROJECT WILL BE ACCEPTED BY THE STATE.

ALL EXISTING SEWERS INSPECTED INITIALLY BY THE ABOVE-MENTIONED PARTIES SHALL BE MAINTAINED AND LEFT IN A CONDITION REASONABLY COMPARABLE TO THAT DETERMINED BY THE ORIGINAL INSPECTION. ANY CHANGE IN THE CONDITION RESULTING FROM THE CONTRACTOR'S OPERATIONS SHALL BE CORRECTED BY THE CONTRACTOR TO THE SATISFACTION OF THE ENGINEER.

PAYMENT FOR ALL OPERATIONS DESCRIBED ABOVE SHALL BE INCLUDED IN THE UNIT PRICES BID FOR THE PERTINENT 603 ITEMS OF THE CONTRACT.

CONDUIT END TREATMENT

IMMEDIATELY AFTER PLACEMENT OF ANY CONDUITS, THE CONTRACTOR SHALL CONSTRUCT THE END TREATMENTS REQUIRED BY THE PLANS AT BOTH THE OUTLET AND INLET ENDS. THIS SHALL INCLUDE HEADWALLS, CONCRETE RIPRAP, ROCK CHANNEL PROTECTION, SODDING, ETC.

EROSION CONTROL

ITEMS 601, 660, AND 670 ARE PROVIDED IN THE PLANS FOR EROSION CONTROL. ROCK OF A STABLE NATURE WILL NOT BE REMOVED IN ORDER TO PLACE ANY OF THESE ITEMS, AND TURF OF A STABLE NATURE WILL NOT BE REMOVED IN ORDER TO PLACE 660, OR 670. THE ENGINEER SHALL CHECK AND NON-PERFORM QUANTITIES OR ADJUST LOCATIONS AND QUANTITIES FOR THESE ITEMS WHERE INDICATED BY FIELD CONDITIONS DURING CONSTRUCTION.

CONNECTIONS TO EXISTING PIPE

WHERE THE PLANS PROVIDE FOR PROPOSED CONDUIT TO BE CONNECTED TO OR TO CROSS OVER OR UNDER AN EXISTING SEWER, THE CONTRACTOR SHALL LOCATE THE EXISTING PIPE BOTH AS TO LINE AND GRADE BEFORE HE STARTS TO LAY THE PROPOSED CONDUIT. PAYMENT FOR THIS OPERATION SHALL BE INCLUDED IN THE UNIT PRICE BID FOR THE PERTINENT 603 CONDUIT ITEMS.

PAVEMENT

CONTRACTION AND EXPANSION JOINTS

ALTHOUGH SPECIFIC LOCATIONS OF CERTAIN EXPANSION AND CONTRACTION JOINTS HAVE BEEN DETAILED ON THIS PLAN, NO WAIVER OF THE SPECIFICATIONS IS INTENDED. PROVISION OF EXPANSION JOINTS AT ALL MAJOR STRUCTURES AND THE MAXIMUM SPACING BETWEEN CONTRACTION JOINTS SHALL IN ALL CASES BE IN ACCORDANCE WITH STANDARD CONSTRUCTION DRAWINGS AND SPECIFICATIONS.

CONTRACTION JOINTS IN CONCRETE BASE

THE CONTRACTION JOINTS IN THE 305 BASE SHALL BE CONSTRUCTED IN ACCORDANCE WITH STANDARD DRAWING BP-4 EXCEPT THAT JOINT SPACING IN THE 305 BASE FOR THE TRAVELLED LANES SHOULD BE RANDOMLY SPACED IN THE FOLLOWING SEQUENCE: 12', 15', 13', 14'. JOINTS SHALL BE SKEWED RIGHT EDGE FORWARD AT THE RATE OF 1 FT. IN 6 FT., EXCEPT FOR THE FIRST 25 JOINTS AWAY FROM THE PRESSURE RELIEF JOINT. THESE 25 JOINTS SHALL NOT BE SKEWED AND SHALL BE DOWELED IN THE TRAVELLED LANES AS PER STANDARD DRAWING BP-4.

407 TACK COAT

THE TACK COAT OPERATION SHALL BE DETERMINED AS PER SPEC. 407.05. PLAN QUANTITIES INDICATE ADVERAGE APPLICATION RATES OF 0.1 GALLONS PER SQUARE YARD OF TACK COAT FOR ESTIMATING PURPOSES ONLY.

SAND BLANKET. SAND BLANKET WILL BE PAID AS ITEM 203 EMBANKMENT USING GRANULAR MATERIAL AS PER PLAN. SEE PROPOSAL NOTE.

DRIVES

DRIVEWAYS SHALL BE LOCATED AND CONSTRUCTED AS SHOWN ON THE PLANS AND STANDARD CONSTRUCTION DRAWING BP-6.

FOR GENERAL NOTES PERTAINING TO WATER WORK, SEE SHEET NO. 147.

FOR GENERAL NOTES PERTAINING TO BRIDGE STRUCTURES, SEE SHEET NOS. 158, 169, 170, 201, 201A-201C, 205-207, 207A.

FOR GENERAL NOTES PERTAINING TO TRAFFIC CONTROL, SEE SHEET NOS. 219 & 220

FOR GENERAL NOTES PERTAINING TO LIGHTING, SEE SHEET NO. 257.

ACL form no. 1

ADACHE ASSOCIATES, INC.
CALC. BY P.I.W DATE 2-10-69
CHKD. BY R.J.Z DATE 2-12-69
REV. BY: R.W.H. DATE: NOV. 82

GENERAL SUMMARY

FED. RD. DIVISION	STATE	PROJECT	
2	OHIO		

9
284

ERIE COUNTY
ERI 2-(16.13-17.39)

ITEM	TOTAL	UNIT	DESCRIPTION	SHT.
			ROADWAY	
201	LUMP		CLEARING AND GRUBBING	7A
202	11,899	SQ. YD.	PAVEMENT REMOVED	11
202	6581	LIN. FT.	PIPE REMOVED, 24" AND UNDER	16
202	1	EACH	REFERENCE MONUMENT REMOVED	16
202	1	EACH	CATCH BASIN REMOVED	16
202	9762.5	LIN. FT.	GUARDRAIL REMOVED	16
202	600	LIN. FT.	GUARDRAIL REMOVED, BARRIER DESIGN	16
203	148,844	CU. YD.	EMBANKMENT USING GRANULAR MATERIAL, AS PER PLAN	16
203	122,424	SQ. YD.	SUBGRADE COMPACTION	12
203	~~544,242~~	CU. YD.	EXCAVATION NOT INCLUDING EMBANKMENT CONSTRUCTION	16
203	779,861	CU. YD.	EMBANKMENT	16
203	77,765	CU. YD.	GRANULAR BORROW, AS PER PLAN, TYPE 1	16
203	426	CU. YD	GRANULAR BORROW, AS PER PLAN, TYPE 2	12
203	38	HOUR	PROOF ROLLING	12
404	200	CU. YD.	BITUMINOUS CONCRETE FOR MAINTAINING TRAFFIC	7
410	1000	CU. YD.	TRAFFIC COMPACTED SURFACE; TYPE A OR B	7
604	18	EACH	REFERENCE MONUMENT, STANDARD	15
604	6	EACH	MONUMENT ASSEMBLY, STANDARD MODIFIED, AS PER PLAN	15
606	22,478.1	LIN. FT.	GUARDRAIL, TYPE 5	16
606	~~795~~	LIN. FT.	GUARD RAIL, BARRIER DESIGN, TYPE 5	16
606	1637.5	LIN. FT.	GUARD RAIL, TYPE 6	234
606	21	EACH	ANCHOR ASSEMBLY, STANDARD TYPE A	16
606	10	EACH	ANCHOR ASSEMBLY, BARRIER DESIGN, STANDARD TYPE A	16
606	26	EACH	BRIDGE TERMINAL ASSEMBLY, STANDARD TYPE A	16
606	8	EACH	ANCHOR ASSEMBLY, STANDARD TYPE B	16
606	31	EACH	ANCHOR ASSEMBLY, STANDARD TYPE T	16
606	8	EACH	BRIDGE TERMINAL ASSEMBLY, STANDARD TYPE D	16
606	11	EACH	BRIDGE TERMINAL ASSEMBLY, STANDARD TYPE J	16
607	27,034	LIN. FT.	FENCE, TYPE 4T	17
615	2,814	SQ. YD.	TEMPORARY PAVEMENT, CLASS A	16
615	5971	SQ. YD.	TEMPORARY PAVEMENT, CLASS B	16
615	LUMP		TEMPORARY ROADS	16
616	10	TON	CALCIUM CHLORIDE	7
616	200	M. GAL.	WATER	7
SPECIAL	260050	LIN. FT.	WICK DRAINS	16
SPECIAL	12	EACH	SETTLEMENT PLATFORMS	16
SPECIAL	11	EACH	SLOPE INDICATORS	16
SPECIAL	10	EACH	POROUS-TUBE PIEZOMETERS	16
			EROSION CONTROL	
601	137	CU. YD.	ROCK CHANNEL PROTECTION, TYPE B WITH FILTER	16
601	281	CU. YD.	ROCK CHANNEL PROTECTION TYPE C WITH FILTER	16&17
601	75	CU. YD.	ROCK CHANNEL PROTECTION, TYPE C WITHOUT FILTER	16
601	111	SQ. YD.	RIPRAP, USING 6" REINFORCED CONCRETE SLAB	16
659	63.4	TON	COMMERCIAL FERTILIZER	12
659	478,428	SQ. YD.	SEEDING AND MULCHING	12
659	24,000	SQ. YD.	REPAIR SEEDING AND MULCHING	7
659	2,180	M. SQ. FT.	MOWING	7&7A
659	735	M. GAL.	WATER	7&7A
207	96,000	SQ. YD.	TEMPORARY SEEDING AND MULCHING	7
207	2,060	LIN. FT.	TEMPORARY SLOPE DRAINS	7
207	10,300	CU. YD.	TEMPORARY BENCHES, DIKES, DAMS AND SEDIMENT BASINS	7
207	2,000	EACH	STRAW OR HAY BALES	7
660	170	SQ. YD.	SODDING	16
660	917	SQ. YD.	REINFORCED SODDING, STANDARD	16
670	5,317	SQ. YD.	SLOPE EROSION PROTECTION	16
670	6,995	SQ. YD.	DITCH EROSION PROTECTION	16
SPECIAL	1,400	LIN. FT.	SILT FENCE	7

ITEM	TOTAL	UNIT	DESCRIPTION	SHT.
			DRAINAGE	
602	75.1	CU. YD.	CONCRETE MASONRY	16
603	96	LIN. FT.	CONDUIT TYPE A 27" 706.02, 706.08 OR 33" 707.01 OR 707.21	15
603	94	LIN. FT.	CONDUIT TYPE A 30" 706.02, 706.08 OR 33" 707.01 (0.079) 707.04, 707.05 OR 707.21	15
603	92	LIN. FT.	CONDUIT, TYPE A 30" 706.02 OR 706.08	15
603	207	LIN. FT.	CONDUIT, TYPE A 33" 706.02 OR 706.08 OR 42" 707.01 (0.079) 707.04, 707.05 OR 707.21	15
603	267	LIN. FT.	CONDUIT, TYPE A 36" 706.02, 1250 D-LOAD OR 42" 707.01 (0.079) 707.04, 707.05 OR 707.21	15
603	209	LIN. FT.	CONDUIT TYPE A 36" 706.02, 2250 D-LOAD OR 42" 707.01 (0.079) 707.04, 707.05 OR 707.21	15
603	56	LIN. FT.	43" x 68" CONDUIT, TYPE A, 706.04 CLASS HE A	15
603	12	LIN. FT.	48" x 76" CONDUIT, TYPE A, 706.04 CLASS HE A	15
603	220	LIN. FT.	68" x 106" CONDUIT, TYPE A, 706.04 CLASS HE A	15
603	96	LIN. FT.	CONDUIT TYPE A, 30" 706.02 OR 706.08 OR 36" 707.01 OR 707.21	15
603	206	LIN. FT.	CONDUIT TYPE A, 120" 706.02 OR 144" 707.03 (0.109)	16
603	308	LIN. FT.	CONDUIT TYPE A, 120" 706.02 3250 D-LOAD, 1500 D-LOAD W/INDUCED TRENCH OR 144" 707.03 (0.188)	16
603	585	LIN. FT.	6" CONDUIT, TYPE B	15
603	411	LIN. FT.	12" CONDUIT, TYPE B	15
603	467	LIN. FT.	15" CONDUIT, TYPE B	15
603	156	LIN. FT.	18" CONDUIT, TYPE B	15
603	245	LIN. FT.	24" CONDUIT, TYPE B	15
603	100	LIN. FT.	8" CONDUIT, TYPE B,	15
603	100	LIN. FT.	10" CONDUIT, TYPE B,	15
603	12	LIN. FT.	15" CONDUIT, TYPE B, 706.01 OR 706.02	15
603	100	LIN. FT.	6" CONDUIT, TYPE C	88
603	890	LIN. FT.	12" CONDUIT, TYPE C	15
603	500	LIN. FT.	18" CONDUIT, TYPE C	15
603	1061	LIN. FT.	21" CONDUIT, TYPE C	15
603	347	LIN. FT.	24" CONDUIT, TYPE C	15
603	100	LIN. FT.	6" CONDUIT, TYPE E	15
603	100	LIN. FT.	8" CONDUIT, TYPE E	15
603	100	LIN. FT.	10" CONDUIT, TYPE E	15
603	100	LIN. FT.	12" CONDUIT, TYPE E	15
603	995	LIN. FT.	6" CONDUIT, TYPE F	15
603	375	LIN. FT.	12" CONDUIT, TYPE F	15
603	120	LIN. FT.	8" CONDUIT, TYPE F	15
603	160	LIN. FT.	10" CONDUIT, TYPE F	15
604	2	EACH	MANHOLE, STANDARD NO. 1	15
604	1	EACH	MANHOLE, STANDARD NO. 3	15
604	7	EACH	CATCH BASIN, STANDARD NO. 2-2-B	15
604	12	EACH	CATCH BASIN, STANDARD NO. 4	15
604	1	EACH	CATCH BASIN, STANDARD NO. 4A	15
604	3	EACH	CATCH BASIN, STANDARD NO. 5	15
604	1	EACH	CATCH BASIN, STANDARD NO. 6	15
604	1	EACH	CATCH BASIN RECONSTRUCT TO GRADE	15
604	2	EACH	INSPECTION WELLS, STANDARD	88
605	442	LIN. FT.	6" SHALLOW PIPE UNDERDRAIN 707.01 TYPE II OR 707.21 TYPE III	15
605	40,173	LIN. FT.	6" SHALLOW PIPE UNDERDRAINS, AS PER PLAN	15
605	11,899	LIN. FT.	6" DEEP PIPE UNDERDRAINS, AS PER PLAN	15
605	400	LIN. FT.	6" UNCLASSIFIED PIPE UNDERDRAINS, AS PER PLAN	15
605	2060	LIN. FT.	AGGREGATE DRAINS	12
605	20	LIN. FT.	AGGREGATE DRAINS FOR SPRINGS	88
605	100	LIN. FT.	6" UNCLASSIFIED PIPE UNDERDRAINS, 707.01 TYPE III OR 707.21 TYPE III, AS PER PLAN	88

ADACHE ASSOCIATES, INC.
CALC. BY P.I.W. DATE 12-10-69
CHKD. BY R.J.Z. DATE 12-12-69
REV. BY: R.W.H. DATE: NOV. 82

GENERAL SUMMARY

FED. RD. DIVISION	STATE	PROJECT	
2	OHIO		

10
284

ERIE COUNTY
ERI 2-(16.13-17.39)

ITEM				TOTAL	UNIT	DESCRIPTION	SHT.
						WATER WORK - TYPE CODE Y-060	
814				32	LIN. FT.	8" WATER MAIN, A.N.S.I. CLASS 56 DUCTILE IRON PIPE, CEMENT LINED, WITH PUSH ON JOINTS	147
814				19	LIN. FT.	12" WATER MAIN, A.N.S.I. CLASS 56 DUCTILE IRON PIPE, CEMENT LINED, WITH PUSH ON JOINTS	142
603				87	LIN. FT.	20" ENCASEMENT CONDUIT, 707.08, AS PER PLAN	16
						PAVEMENT	
310				21,889	CU. YD.	SUBBASE, TYPE I	11
301				3579	CU. YD.	BITUMINOUS AGGREGATE BASE: AC-20, RT-11 OR RT-12	11
304				1159	CU. YD.	AGGREGATE BASE	11
305				72,693	SQ. YD.	8" CONCRETE BASE	11
310				2,311	CU. YD.	SUBBASE, TYPE-I, GRADING A	11
310				18,282	CU. YD.	SUBBASE, TYPE-II	11
305				39,695	SQ. YD.	8" TO 6" THICK CONCRETE BASE	11
402				3757	CU. YD.	ASPHALT CONCRETE, AC-20	11
404				2665	CU. YD.	ASPHALT CONCRETE, AC-20	12
404				33	CU. YD.	ASPHALT CONCRETE, AC-20, DRIVEWAYS	16
411				314	CU. YD.	STABILIZED CRUSHED AGGREGATE	12
451				3138	SQ. YD.	9" REINFORCED CONCRETE PAVEMENT	16
609				488	LIN. FT.	CURB, STANDARD TYPE 6	16
622				530	LIN. FT.	TEMPORARY PRECAST CONCRETE BARRIER	234
611				193	SQ. YD.	REINFORCED CONCRETE APPROACH SLABS (T-13")	12
611				1,927	SQ. YD.	REINFORCED CONCRETE APPROACH SLABS (T=15")	12
SPECIAL				377	LIN. FT.	PRESSURE RELIEF JOINT, STANDARD TYPE A	16
407				7138	GAL.	TACK COAT	12
409				15,962	GAL.	SEAL COAT, BITUMINOUS MATERIAL	12
409				321	CU. YD.	SEAL COAT, COVER AGGREGATE, NO. 8	12
						TRAFFIC CONTROL	
614				1.55	MILE	TEMPORARY EDGE LINE, CLASS I	234
614				0.28	MILE	TEMPORARY LANE LINE, CLASS I	234
614				0.50	MILE	TEMPORARY CENTER LINE, CLASS I	234
614				1.45	MILE	TEMPORARY EDGE LINE, CLASS I, 947.03, TYPE B OR C	234
614				0.09	MILE	TEMPORARY LANE LINE, CLASS I, 947.03, TYPE B OR C	234
614				0.22	MILE	TEMPORARY CENTER LINE, CLASS I, 947.03, TYPE B OR C	234
						FOR ADDITIONAL TRAFFIC CONTROL QUANTITIES SEE SHEET 218	
						FOR LIGHTING QUANTITIES SEE SHEET 258	
						STRUCTURE OVER 20' SPAN	
						STRUCTURE Nº ERI-2-1640 QUANTITIES ON SHEET 159	
						STRUCTURE Nº ERI-2-1678 1/R QUANTITIES ON SHEET 169 159	
						STRUCTURE Nº ERI-2-1701 1/R QUANTITIES ON SHEET 180	
						STRUCTURE Nº ERI-2-1781 QUANTITIES ON SHEET 190	
						STRUCTURE Nº ERI-2-1798 1/R QUANTITIES ON SHEET 201D OR 207B	
						STRUCTURE Nº ERI-2-1833 QUANTITIES ON SHEET 210	

ITEM				TOTAL	UNIT	DESCRIPTION	SHT.
619				LUMP		FIELD OFFICE	7
624				LUMP		MOBILIZATION	
623				LUMP		CONSTRUCTION LAYOUT STAKES	
614				LUMP		MAINTAINING TRAFFIC	

C A L C U L A T I O N S

CALC. ERIE COUNTY OHIO
DATE
CHKD. ERI - 2 - 16.13 F.H.W.A. REGION 5
DATE

11
284

ITEM 202, PAVEMENT REMOVED

EXIST. S.R. 2 (W.B.) 1075+50 TO 1088+17.22 (1267.22 L.F. X 24' X 1/9)	=	3,379.3 S.Y.
EXIST. S.R. 2 (W.B.) 1088+17.22 TO 1094+17.22 (600 L.F. X 12' X 1/9)	=	800.0 S.Y.
EXIST. S.R. 2 (E.B.) 1075+50 TO 1104+23.86 (2873.86 L.F. X 24' X 1/9)	=	7,663.6 S.Y.
EXIST. S.R. 2 (W.B.) FOR CULVERT CONST. (10' X 12' X 1/9)	=	13.3 S.Y.
BOGART RD. (CULVERT CONST.) 18' X 21.5' X 1/9	=	43.0 S.Y.
		11,899.2 S.Y.

ITEM 305, 8" CONCRETE BASE

E.B. RAMP 1073+83.07 TO 1088+74.79 (1491.72 L.F. X 16' X 1/9)	=	2,651.9 S.Y.
E.B. RAMP 1092+45.35 TO 1098+71.31 (625.96 L.F. X 16' X 1/9)	=	1,112.8 S.Y.
E.B. RAMP 1098+71.31 TO 1103+10.78 (439.47 L.F. X 20' AVG. X 1/9)	=	976.6 S.Y.
E.B. RAMP 1103+10.78 TO 1105+71.50 (260.72 L.F. X 24' X 1/9)	=	695.3 S.Y.
W.B. RAMP 1082+25 TO 1088+12.02 (587.02 L.F. X 16' X 1/9)	=	1,043.6 S.Y.
W.B. RAMP 1088+12.02 TO 1094+12.02 (600 L.F. X 8' AVG. X 1/9)	=	533.3 S.Y.
FROM ITEM 202, PAVEMENT REMOVED EXIST. S. R. (W.B.) CULVERT CONST.	=	13.3 S.Y.
S.R. 2 1075+50 TO 1109+17.41 (3367.41 L.F. X 48' X 1/9)	=	17,959.5 S.Y.
S.R. 2 1111+56.79 TO 1122+08.36 (1051.57 L.F. X 48' X 1/9)	=	5,608.4 S.Y.
S.R. 2 1123+99.86 TO 1172+96.88 (4897.02 L.F. X 48' X 1/9)	=	26,117.4 S.Y.
S.R. 2 1180+28.12 TO 1195+00 (1471.88 L.F. X 24' X 1/9)	=	3,925.0 S.Y.
S.R. 2 1181+20.16 TO 1195+00 (1379.84 L.F. X 24' X 1/9)	=	3,679.6 S.Y.
RAMP #2 1183+85 TO 1188+93.36 (508.36 L.F. X 22' X 1/9)	=	1,242.7 S.Y.
RAMP #3 1184+04.11 TO 1192+55.04 (850.93 L.F. X 22' X 1/9)	=	2,080.1 S.Y.
		67,639.5 S.Y.
SUBTOTAL FROM PAVEMENT DETAILS (SHEET 16)	=	5,059 S.Y.
		72,698.5 S.Y.

ITEM 305, 8" - 6" CONCRETE BASE

USE LENGTHS FROM ITEM 305, 8" CONCRETE BASE

E.B. RAMP 1491.72+625.96+439.47+260.72 = 2817.87 L.F. X 10' X 1/9	=	3,131.0 S.Y.
W.B. RAMP 587.02 L.F. X 10' X 1/9	=	652.2 S.Y.
W.B. RAMP 600 L.F. X 4' X 1/9	=	266.7 S.Y.
S.R. 2 3367.41+1051.57+4897.02 = 9316.0 L.F. X 24' X 1/9	=	24,842.7 S.Y.
S.R. 2 (1471.88+1379.84) X 12' X 1/9	=	3,802.3 S.Y.
DEDUCT FOR OUTSIDE SHOULDER ALONG RAMPS:		
1075+50 TO 1080+65 (515 L.F. X 8' X 1/9)	=	- 457.8 S.Y.
1166+65 TO 1172+96.88 (631.88 L.F. X 8' X 1/9)	=	- 561.7 S.Y.
1171+97.26 TO 1172+96.88 (99.62 L.F. X 8' X 1/9)	=	- 88.6 S.Y.
1180+28.12 TO 1182+64.79 (236.67 L.F. X 8' X 1/9)	=	- 210.4 S.Y.
1181+20.16 TO 1182+96.61 (176.45 L.F. X 8' X 1/9)	=	- 156.8 S.Y.
		31,219.6 S.Y.
SUBTOTAL FROM PAVEMENT DETAILS (SHEET 16)		5,475 S.Y.
		36,694.6 S.Y.

ITEM 301, BITUMINOUS AGGREGATE BASE

FROM ITEM 305, 8" - 6" CONCRETE BASE 31,209.6 S.Y. X 3/36	=	2,600.8 C.Y.
RAMP #2 508.36 L.F. X 6' X 1/9 X 3/36	=	28.2 C.Y.
RAMP #3 850.93 L.F. X 6' X 1/9 X 3/36	=	47.3 C.Y.
HURON - AVERY ROAD:		
16+52.31 TO 17+00 LT. (47.69 L.F. X 17.33' X 1/9 X 4/36)	=	10.2 C.Y.
16+52.31 TO 17+00 RT. (47.69 L.F. X 11.68' X 1/9 X 4/36)	=	6.9 C.Y.
17+00 TO 18+30.53 (130.53 L.F. X 24.67' X 1/9 X 4/36)	=	39.8 C.Y.
21+80.37 TO 22+70.4 (90.03 L.F. X 24.67' X 1/9 X 4/36)	=	27.4 C.Y.
22+70.4 TO 24+00 (129.6 L.F. X 22.67' X 1/9 X 4/36)	=	36.3 C.Y.
S.R. 13:		
6+20 TO 7+00 (80 L.F. X 22.67' X 1/9 X 4/36)	=	22.4 C.Y.
7+00 TO 15+42.15 (842.16 L.F. X 24.67' X 1/9 X 4/36)	=	256.5 C.Y.
16+89.27 TO 18+53.67 (164.4 L.F. X 24.67' X 1/9 X 4/36)	=	50.1 C.Y.
21+46.33 TO 23+10.73 (164.4 L.F. X 24.67' X 1/9 X 4/36)	=	50.1 C.Y.
24+57.73 TO 30+00 (542.27 L.F. X 24.67' X 1/9 X 4/36)	=	165.2 C.Y.
30+00 TO 30+80 (80 L.F. X 22.67' X 1/9 X 4/36)	=	22.4 C.Y.
CROSSOVER @ STA. 1154+90 S.R. 2 3318 S.F. X 1/9 X 3/36	=	30.7 C.Y.
BOGART RD. CULVERT CONST. 43 S.Y. X 4/36	=	4.8 C.Y.
		3,399.1 C.Y.
SUBTOTAL FROM PAVEMENT DETAILS (SHEET 16)		580 C.Y.
		3,979.1 C.Y.

ACL form no. 1

ITEM 304, AGGREGATE BASE

HURON - AVERY RD.:

16+52.31 TO 17+00 LT. (47.69 L.F. X 17.67' X 1/9 X 5/36)	=	13.0 C.Y.
16+52.31 TO 17+00 RT. (47.69 L.F. X 12.02' X 1/9 X 5/36)	=	8.8 C.Y.
17+00 TO 18+30.53 (130.53 L.F. X 25.34' X 1/9 X 5/36)	=	51.0 C.Y.
21+80.37 TO 22+70.4 (90.03 L.F. X 25.34' X 1/9 X 5/36)	=	35.2 C.Y.
22+70.4 TO 24+00 (129.6 L.F. X 23.34' X 1/9 X 5/36)	=	46.7 C.Y.
S.R. 13:		
6+20 TO 7+00 (80 L.F. X 23.34' X 1/9 X 5/36)	=	28.8 C.Y.
7+00 TO 15+42.16 (842.16 L.F. X 25.34' X 1/9 X 5/36)	=	329.3 C.Y.
16+89.27 TO 18+53.67 (164.4 L.F. X 25.34' X 1/9 X 5/36)	=	64.3 C.Y.
21+46.33 TO 23+10.73 (164.4 L.F. X 25.34' X 1/9 X 5/36)	=	64.3 C.Y.
24+57.73 TO 30+00 (542.27 L.F. X 25.34' X 1/9 X 5/36)	=	212.1 C.Y.
30+00 TO 30+80 (80 L.F. X 23.34' X 1/9 X 5/36)	=	28.8 C.Y.
CROSSOVER @ STA. 1154+90 S.R. 2 3318 S.F. X 1/9 X 6/36	=	61.4 C.Y.
BOGART RD. CULVERT CONST. 43 S.Y. X 5/36	=	6.0 C.Y.
		949.7 C.Y.
SUBTOTAL FROM PAVEMENT DETAILS (SHEET 16)	=	209 C.Y.
		1,158.7 C.Y.

ITEM 310, SUBBASE, TYPE II

E.B. RAMP 1073+83.07 TO 1088+74.79 (1491.72 L.F. X 20' X 1/9 X 6/36)	=	552.5 C.Y.
E.B. RAMP 1092+45.35 TO 1098+71.31 (625.96 L.F. X 20' X 1/9 X 6/36)	=	231.8 C.Y.
E.B. RAMP 1098+71.31 TO 1103+10.78 (439.47 L.F. X 24' AVG. X 1/9 X 6/36)	=	195.3 C.Y.
E.B. RAMP 1103+10.78 TO 1105+71.50 (260.72 L.F. X 28' X 1/9 X 6/36)	=	135.2 C.Y.
ADD WEDGE FOR OUTSIDE SHOULDER TO MEET EXISTING 100' X 2' X 1/9 X 6/36	=	3.7 C.Y.
W.B. RAMP 1082+25 TO 1088+12.02 (587.02 L.F. X 20' X 1/9 X 6/36)	=	217.4 C.Y.
ADD WEDGE FOR OUTSIDE SHOULDER TO MEET EXISTING 100' X 2' X 1/9 X 6/36	=	3.7 C.Y.
W.B. RAMP 1088+12.02 TO 1094+12.02 (600 L.F. X 9' X 1/9 X 6/36)	=	100.0 C.Y.
EXIST. S.R. 2 CULVERT CONST. 13.3 S.Y. X 6/36	=	2.2 C.Y.
S.R. 2 1075+50 TO 1109+17.41 (3367.41 L.F. X 62' X 1/9 X 6/36)	=	3,866.3 C.Y.
DEDUCT FOR OUTSIDE SHOULDER (1075+50 TO 1080+65) 515 L.F. X 3' X 1/9 X6/36	=	- 28.6 C.Y.
S.R. 2 1111+56.79 TO 1122+08.36 (1051.57 L.F. X 62' X 1/9 X 6/36	=	1,207.4 C.Y.
S.R. 2 1123+99.86 TO 1172+96.88 (4897.02 L.F. X 62' X 1/9 X 6/36)	=	5,622.5 C.Y.
S.R. 2 1180+28.12 TO 1195+00 (1471.88 L.F. X 31' X 1/9 X 6/36)	=	845.0 C.Y.
S.R. 2 1181+20.16 TO 1195+00 (1379.84 L.F. X 31' X 1/9 X 6/36)	=	792.1 C.Y.
DEDUCT FOR OUTSIDE SHOULDER ALONG RAMPS:		
1166+65 TO 1172+96.88 (631.88 L.F. X 3' X 1/9 X 6/36)	=	- 35.1 C.Y.
1171+97.26 TO 1172+96.88 (99.62 L.F. X 3' X 1/9 X 6/36)	=	- 5.5 C.Y.
1180+28.12 TO 1182+64.79 (236.67 L.F. X 3' X 1/9 X 6/36)	=	- 13.1 C.Y.
1181+20.16 TO 1182+96.61 (176.45 L.F. X 3' X 1/9 X 6/36)	=	- 9.8 C.Y.
RAMP #2 1183+85 TO 1188+93.36 (508.36 L.F. X 19' X 1/9 X 6/36)	=	178.9 C.Y.
RAMP #2 INSIDE SHOULDER (508.36 L.F. X 3' X 1/9 X 5/36)	=	23.5 C.Y.
RAMP #3 1184+04.11 TO 1192+55.04 (850.93 L.F. X 19' X 1/9 X 6/36)	=	299.4 C.Y.
RAMP #3 INSIDE SHOULDER (850.93 L.F. X 3' X 1/9 X 5/36)	=	39.4 C.Y.
HURON - AVERY ROAD		
16+52.31 TO 17+00 LT. (47.69 L.F. X 18.17' X 1/9 X 9/36)	=	24.1 C.Y.
16+52.31 TO 17+00 RT. (47.69 L.F. X 12.52' X 1/9 X 9/36)	=	16.6 C.Y.
17+00 TO 18+30.53 (130.53 L.F. X 26.33' X 1/9 X 9/36)	=	95.5 C.Y.
21+80.37 TO 22+70.4 (90.03 L.F. X 26.33' X 1/9 X 9/36)	=	65.8 C.Y.
22+70.4 TO 24+00 (129.6 L.F. X 24.33' X 1/9 X 9/36)	=	87.6 C.Y.
S.R. 13:		
6+20 TO 7+00 (80 L.F. X 24.33' X 1/9 X 9/36)	=	54.1 C.Y.
7+00 TO 15+42.16 (842.16 L.F. X 26.33' X 1/9 X 9/36)	=	615.9 C.Y.
16+89.27 TO 18+53.67 (164.4 L.F. X 26.33' X 1/9 X 9/36)	=	120.2 C.Y.
21+46.33 TO 23+10.73 (164.4 L.F. X 26.33' X 1/9 X 9/36)	=	120.2 C.Y.
24+57.73 TO 30+00 (542.27 L.F. X 26.33' X 1/9 X 9/36)	=	396.6 C.Y.
30+00 TO 30+80 (80 L.F. X 24.33' X 1/9 X 9/36)	=	54.1 C.Y.
CROSSOVER @ STA. 1154+90 S.R. 2 3318 S.F. X 1/9 X 20.5/36	=	209.9 C.Y.
BOGART RD. CULVERT CONST. 43 S.Y. X 9/36	=	10.8 C.Y.
		16,095.6 C.Y.
APPROACH SLAB AREAS (1926+193) S.Y. X 6/36	=	353.2 C.Y.
SUBTOTAL FROM PAVEMENT DETAILS (SHEET 16)	=	1,833 C.Y.
		18,281.8 C.Y.

ITEM 310, SUBBASE, TYPE I, GRADING A

E.B. RAMP 1073+83.07 TO 1088+74.79		
INSIDE SH. 1491.72 L.F. X 3' X 1/9 X 6/36	=	82.9 C.Y.
OUTSIDE SH. 1491.72 L.F. X 3' X 1/9 X 5.5/36	=	76.0 C.Y.
E.B. RAMP 1092+45.35 TO 1098+71.31		
INSIDE SH. 625.96 L.F. X 3' X 1/9 X 6/36	=	34.8 C.Y.
OUTSIDE SH. 625.96 L.F. X 3' X 1/9 X 5.5/36	=	31.9 C.Y.
E.B. RAMP 1098+71.31 TO 1105+71.50		
INSIDE SH. 700.19 L.F. X 3' X 1/9 X 6/36	=	38.9 C.Y.
OUTSIDE SH. 700.19 X 3' X 1/9 X 5.5/36	=	35.7 C.Y.
ADD WEDGE FOR OUTSIDE SHOULDER TO MEET EXISTING 100 L.F. X 2' X 1/9X5.5/36	=	3.4 C.Y.
W.B. RAMP 1082+25 TO 1088+12.02		
INSIDE SH. 587.02 L.F. X 3' X 1/9 X 6/36	=	32.6 C.Y.
OUTSIDE SH. 587.02 L.F. X 3' X 1/9 X 5.5/36	=	29.9 C.Y.
ADD WEDGE FOR OUTSIDE SHOULDER TO MEET EXISTING 100 L.F. X 2'X1/9X5.5/36	=	3.4 C.Y.
W.B. RAMP 1088+12.02 TO 1094+12.02		
INSIDE SH. 600 L.F. X 3' X 1/9 X 6/36	=	33.3 C.Y.
S.R. 2 OUTSIDE SHOULDERS		
1080+65 TO 1109+17.41 LT (2852.41 L.F. X 5' X 1/9 X 4.5/36)	=	198.1 C.Y.
1075+50 TO 1109+17.41 RT (3367.41 L.F. X 5' X 1/9 X 4.5/36)	=	233.8 C.Y.
1111+56.79 TO 1122+08.36 LT & RT (1051.57 L.F. X 10' X 1/9 X 4.5/36)	=	146.1 C.Y.
1123+99.86 TO 1166+65 LT. (4265.14 L.F. X 5' X 1/9 X 4.5/36)	=	296.2 C.Y.
1123+99.86 TO 1171+97.26 RT. (4797.40 L.F. X 5' X 1/9 X 4.5/36)	=	333.2 C.Y.
1182+64.79 TO 1195+00 LT (1235.21 L.F. X 5' X 1/9 X 4.5/36)	=	85.8 C.Y.
1182+96.61 TO 1195+00 RT (1203.39 L.F. X 5' X 1/9 X 4.5/36)	=	83.6 C.Y.
		1,779.6 C.Y.
SUBTOTAL FROM PAVEMENT DETAILS (SHEET 16)	=	531 C.Y.
		2,310.6 C.Y.

ITEM 310 SUBBASE, GRADING I, TYPE A OR B
REPLACEMENT OF 18" SUBGRADE UNDERCUTTING:

S.R. 2 1142+50 TO 1172+75 (3025.00 L.F. X 72' X 1/9 X 18/36)	=	12,100.0 C.Y.
S.R. 2 1180+00 TO 1193+75 (1375.00 L.F. X 36' X 1/9 X 18/36)	=	2,750.0 C.Y.
S.R. 2 1181+25 TO 1193+25 (1200.00 L.F. X 36' X 1/9 X 18/36)	=	2,400.0 C.Y.
HURON AVERY RD. (450 L.F. X 36' X 1/9 X 18/36)	=	900.0 C.Y.
		18,150.0 C.Y.
SUBTOTAL FROM PAVEMENT DETAILS (SHEET 16)	=	1,739 C.Y.
QUANTITY FROM GENERAL NOTE (SHEET 7)		2000.0 C.Y.
TOTAL	=	21,889 C.Y.

ITEM 402, ASPHALT CONCRETE

SUBTOTAL FROM ITEM 305, 8" CONCRETE BASE 67,639.5 S.Y. X 1.75/36	=	3,288.0 C.Y.
DEDUCT RAMPS 1242.7 + 2080.1 X 1.75/36	=	- 161.5 C.Y.
RAMP #2 1183+85 TO 1188+93.36 (508.36 L.F. X 16' X 1/9 X 1.75/36)	=	43.9 C.Y.
RAMP #3 1184+04.11 TO 1192+55.04 (850.93 L.F. X 16' X 1/9 X 1.75/36)	=	73.5 C.Y.
HURON - AVERY ROAD		
16+52.31 TO 17+00 LT. (47.69 X 17' X 1/9 X 1.5/36)	=	3.8 C.Y.
16+52.31 TO 17+00 RT. (47.69 X 11.35' X 1/9 X 1.5/36)	=	2.5 C.Y.
17+00 TO 18+30.53 (130.53 X 24' X 1/9 X 1.5/36)	=	14.5 C.Y.
21+80.37 TO 22+70.4 (90.03' X 24' X 1/9 X 1.5/36)	=	10.0 C.Y.
22+70.4 TO 24+00 (129.6' X 22' X 1/9 X 1.5/36)	=	13.2 C.Y.
S.R. 13:		
6+20 TO 7+00 (80'X 22' X 1/9 X 1.5/36)	=	8.1 C.Y.
7+00 TO 15+42.16 (842.16' X 24' X 1/9 X 1.5/36)	=	93.6 C.Y.
16+89.27 TO 18+53.67 (164.4' X 24' X 1/9 X 1.5/36)	=	18.3 C.Y.
21+46.33 TO 23+10.73 (164.4' X 24' X 1/9 X 1.5/36)	=	18.3 C.Y.
24+57.73 TO 30+00 (542.27' X 24' X 1/9 X 1.5/36)	=	60.3 C.Y.
30+00 TO 30+80 (80 ' X 22' X 1/9 X 1.5/36)	=	8.1 C.Y.
BOGART RD. CULVERT CONST. 43 S.Y. X 1.5/36	=	1.8 C.Y.
		3,496.4 C.Y.
SUBTOTAL FROM PAVEMENT DETAILS (SHEET 16)		260 C.Y.
		3,756.4 C.Y.

C A L C U L A T I O N S

CALC.	ERIE COUNTY	OHIO	12
DATE	ERI - 2 - 16.13	F.H.W.A. REGION 5	284
CHKD.			
DATE			

ITEM 404, ASPHALT CONCRETE

SUBTOTAL FROM ITEM 305, 8" CONCRETE BASE 67,639.5 S.Y. X 1.25/36	=	2,348.6 C.Y.
DEDUCT RAMPS 1242.7 + 2080.1 X 1.25/36	=	- 115.4 C.Y.
CALC. SQUARE YARDS FROM ITEM 402:		
RAMP #2 903.8 S.Y. X 1.25/36	=	31.4 C.Y.
RAMP #3 1512.8 S.Y. X 1.25/36	=	52.5 C.Y.
HURON - AVERY ROAD 90.1 + 60.1 + 348.1 + 240.1 + 316.8 = 1055.2 S.Y. X 1/36	=	29.3 C.Y.
S.R. 13 195.6 + 2245.8 + 438.4 + 438.4 + 1446.1 + 195.6 = 4959.9 S.Y. X 1/36	=	137.8 C.Y.
BOGART RD. 43 S.Y. X 1/36	=	1.2 C.Y.
		2,485.4 C.Y.
SUBTOTAL FROM PAVEMENT DETAILS (SHEET 16)		183 C.Y.
		2,668.4 C.Y.

ITEM 407, TACK COAT

SUBTOTAL FROM ITEM 305, 8" CONCRETE BASE 67,639.5 S.Y. X 0.10	=	6,764.0 GAL.
DEDUCT RAMPS 1242.7 + 2080.1 X 0.10	=	-332.3 GAL.
RAMP #2 (FROM 404) 903.8 S.Y. X 0.10	=	90.4 GAL.
RAMP #3 (FROM 404) 1512.8 S.Y. X 0.10	=	151.3 GAL.
		6,673.4 GAL.
SUBTOTAL FROM PAVEMENT DETAILS (SHEET 16)		464 GAL.
		7,137.4 GAL.

ITEM 411, 6" STABILIZED CRUSHED AGGREGATE

HURON - AVERY RD.:		
16+52.31 TO 18+30.53 (178.22' X 8' X 1/9 X 6/36)	=	26.4 C.Y.
21+80.37 TO 24+00 (219.63' X 8' X 1/9 X 6/36)	=	32.5 C.Y.
DEDUCT DRIVES:		
17+75 (62' X 4' X 1/9 X 6/36)	=	- 4.6 C.Y.
22+12 (74' X 4' X 1/9 X 6/36)	=	- 5.5 C.Y.
S.R. 13:		
6+20 TO 15+42.16 (922.16' X 8' X 1/9 X 6/36)	=	136.6 C.Y.
16+89.27 TO 18+53.67 (164.4' X 8' X 1/9 X 6/36)	=	24.4 C.Y.
21+46.33 TO 23+10.73 (164.4' X 8' X 1/9 X 6/36)	=	24.4 C.Y.
24+57.73 TO 30+80 (622.27' X 8' X 1/9 X 6/36)	=	92.2 C.Y.
DEDUCT DRIVES:		
28+75 (81' X 4' X 1/9 X 6/36)	=	- 6.0 C.Y.
29+69 (62' X 4' X 1/9 X 6/36)	=	- 4.6 C.Y.
30+36 (65' X 4' X 1/9 X 6/36)	=	- 4.8 C.Y.
BOGART RD. CULVERT 18 L.F. X 8' X 1/9 X 6/36	=	2.7 C.Y.
		313.7 C.Y.

ITEM 409, SEAL COAT, BITUMINOUS MATERIAL

FROM ITEM 305, 8" - 6" CONCRETE BASE	=	31,219.6 S.Y.
RAMP #2 508.36 L.F. X 6' X 1/9	=	338.9 S.Y.
RAMP #3 850.93 L.F. X 6' X 1/9	=	567.3 S.Y.
FROM ITEM 411, 6" STABILIZED CRUSHED AGGREGATE 313.7 C.Y. ÷ 6 X 36	=	1,882.2 S.Y.
		34,008.0 S.Y.
33,998.0 S.Y. X 0.40 GAL./S.Y.	=	13,603.2 GAL.
SUBTOTAL FROM PAVEMENT DETAILS (SHEET 16)		2,359 GAL.
		15,962.2 GAL.

ITEM 409, SEAL COAT, COVER AGGREGATE

FROM ITEM 409, SEAL COAT, BITUMINOUS MATERIAL 34,008.0 S.Y. X 0.008 C.Y./S.Y.	=	272.0 C.Y.
SUBTOTAL FROM PAVEMENT DETAILS (SHEET 16)	=	49 C.Y.
		321.0 C.Y.

ITEM 203, SUBGRADE COMPACTION

E.B. RAMP 1073+83.07 TO 1088+74.79 (1491.72 L.F. X 26' X 1/9)	=	4309.4 S.Y.
E.B. RAMP 1092+45.35 TO 1098.71.31 (625.96 L.F. X 26' X 1/9)	=	1808.3 S.Y.
E.B. RAMP 1098+71.31 TO 1103+10.78 (439.47 L.F. X 36 Avg. X 1/9)	=	1464.9 S.Y.
E.B. RAMP 1103+10.78 TO 1105+71.50 (260.72 L.F. X 34' X 1/9)	=	984.9 S.Y.
W.B. RAMP 1082+25 TO 1085+09.27 (284.27 L.F. X 26' X 1/9)	=	821.2 S.Y.
W.B. RAMP 1085+09.27 TO 1088+12.02 (302.75 X 28' Avg. X 1/9)	=	941.9 S.Y.
W.B. RAMP 1088+12.02 TO 1094+12.02 (600 L.F. X 12' Avg. X 1/9)	=	800.0 S.Y.
S.R. 2		
(3367.41 + 1051.57 + 4897.02) X 72' X 1/9	=	7452.8 S.Y.
(1471.88 + 1379.84) X 36' X 1/9	=	1140.9 S.Y.
DEDUCT SHOULDERS (515.00 + 631.88 + 99.62 + 236.67 + 176.45) X 30' X 1/9	=	-553.2 S.Y.
RAMP #2 1183+85 TO 1188+93.36 (508.36 L.F. X 22' X 1/9)	=	1242.7 S.Y.
RAMP #3 1184+04.11 TO 1192+55.04 (850.93 L.F. X 22' X 1/9)	=	2080.1 S.Y.
HURON - AVERY ROAD		
47.69 L.F. X 28.35' AVG. X 1/9	=	150.2 S.Y.
(130.53 L.F. + 90.03 L.F.) X 24' X 1/9	=	588.2 S.Y.
129.6 L.F. X 22' Avg. X 1/9	=	316.8 S.Y.
S.R. 13		
(80 L.F. + 80 L.F.) X 22' Avg. X 1/9	=	391.1 S.Y.
(842.16 L.F. + 164.4 L.F. + 164.4 L.F. + 542.27 L.F.) X 24 X 1/9	=	4568.6 S.Y.
APPROACH SLAB AREAS (1926+193) S.Y.	=	2119.0 S.Y.
SUBTOTAL FROM PAVEMENT DETAILS (SHEET 16)	=	14855 S.Y.
		122,424 S.Y.

ITEM 203, PROOF ROLLING

TOTAL AREA FROM ITEM 203, SUBGRADE COMPACTION = 122,442 S.Y.
DEDUCT AREAS OF 310 SUBBASE, TYPE I, GRADING A OR B FOR 18" SUBGRADE UNDERCUTTING: 20,989 C.Y. ÷ 18"/36 = - 10,495 S.Y.
NET AREA (122,442 - 10,495) × (1/3000) S.Y./HR. = 111,947 × 0.00033 = 38 HR.

ITEM 203 GRANULAR BORROW, AS PER PLAN, TYPE 2

RURAL SUBTOTAL FROM SHEET 16 = 406 C.Y. X 105%	=	426 C.Y.

ITEM 605 AGGREGATE DRAINS

HURON - AVERY ROAD STATION 16+52.31 TO STATION 18+50.53 (RIGHT)		
(198.22 ÷ 50) + 1 = 5 DRAINS	=	198.2 L.F.
HURON - AVERY ROAD STATION 21+60.37 TO STATION 24+00 (LEFT)		
(239.63 ÷ 50) + 1 = 6 DRAINS	=	239.63 L.F.
S.R. 13 STATION 6+20 TO STATION 18+78.67		
[(1,258.67 ÷ 50) + 1] 2 = 52 DRAINS	=	1,258.67 L.F.
S.R. 13 STATION 21+21.33 TO STATION 30+80.00		
[(958.67 ÷ 50) + 1] 2 = 40 DRAINS	=	958.67 L.F.
103 DRAINS X 20' AVG.	=	2,060 L.F.

ITEM 659 SEEDING AND MULCHING

SUBTOTAL SEEDING AND MULCHING - SUBTOTAL ITEMS 660 AND 670 (SHEET 16) = 294,340.00 - (3941 + 2885 + 48 + 465)	TOTAL =	287,001 S.Y.
SUBTOTAL SEEDING AND MULCHING - SUB TOTAL ITEMS 660 AND 670 (SHEET 16) = 195,009.00 - (1376 + 4110 + 122 + 452)	TOTAL =	187,427 S.Y.
	TOTAL ITEM 659 =	474,428 S.Y.

ITEM 659 COMMERCIAL FERTILIZER

SUBTOTAL FROM ITEM 659, SEEDING AND MULCHING X 20#/1,000 S.F. X 9 ÷ 2000	=	25.83 TONS
ADD FOR TEMPORARY EROSION CONTROL (FROM SHEET 7)	=	13.00 TONS
	TOTAL =	38.83 TONS
SUBTOTAL FROM ITEM 659, SEEDING AND MULCHING X 20#/1,000 S.F. X 9 ÷ 2000	=	16.87 TONS
ADD FOR TEMPORARY EROSION CONTROL (FROM SHEET 7)	=	7.70 TONS
	TOTAL =	24.57 TONS
	ITEM 659 TOTAL =	63.40 TONS

ITEM 611, REINFORCED CONCRETE APPROACH SLAB (T = 15")

FOR STR. ERI-2-16.78 L/R CONSOLIDATED RAIL CORP.

40 X 25 - .58 (10.88 + 14.12) + .5 (14.75 + 9.90) = 997.8 S.F. X 1/9 = 110.87 S.Y. X 4	=	443.48 S.Y.

FOR STR. ERI-2-16.40 E. B. THRU RAMP

30 X 25 + (5.10 + 8.55) X .5 + $\frac{0.5 \times .36}{2}$ - (20 - 1.55 + 18 - 1.55) 7/12 = 736.56 S.F. X 1/9 X 2	=	163.68 S.Y.

FOR STR. ERI-2-18.33 S.R. 13

25 X 44 + 12.3 X 2 X .5 - (14.00 - 1.3) X 2 X 7/12 = 1097.48 S.F. X 1/9 X2	=	243.88 S.Y.

FOR STR. ERI-2-17.98 L/R MUD BROOK

AREA APPROACH SLAB NO. 1	=	1,250.00 S.F.
(10.64 + 10.34) X .5833	=	- 12.24 S.F.
(14.36 + 14.66) X .50	=	+ 14.51 S.F.
		1,252.27 S.F.
AREA APPROACH SLAB NO. 2	=	1,382.00 S.F.
(10.64 + 14.42) X .5833	=	- 14.62 S.F.
(14.36 + 10.40) X .50	=	+ 12.38 S.F.
		1,379.76 S.F.
AREA APPROACH SLAB NO. 3	=	1,285.00 S.F.
(10.60 + 10.36) X .5833	=	- 12.22 S.F.
(14.34 + 14.64) X .50	=	+ 14.49 S.F.
		1,287.27 S.F.
AREA APPROACH SLAB NO. 4	=	1,656.00 S.F.
(10.64 + 10.36) X .5833	=	- 12.25 S.F.
(14.44 + 14.64) X .50	=	+ 14.54 S.F.
		1,658.29 S.F.

1252.27 S.F. + 1379.76 S.F. + 1287.27 S.F. + 1658.29 S.F. = 5577.59 S.F. X 1/9 = 619.73 S.Y.

FOR STR. ERI-2-17.01 L.R BOGART RD.

41 X 25 = 1025 S.F. X 1/9 X 4	=	455.56 S.Y.
	TOTAL =	1,926.33 S.Y.

ITEM 611, REINFORCED CONCRETE APPROACH SLAB (T = 13")

FOR STR. ERI-2-17.81 HURON AVERY ROAD

20 X 44 + (2.88 + 6.62) X .5 - (15 ÷ 1.62 + 17.50 - 1.62) X 7/12 = 867.68 S.F. X 1/9 X 2	=	192.82 S.Y.

ITEM 203 EMBANKMENT FOR SURCHARGE

E.B. RAMP 1082+20 TO 1088+45 (625 L.F. X 195 X 1/27)	=	4,514 C.Y.
E.B. RAMP 1092+75 TO 1100+00 (725 L.F. X 195 X 1/27)	=	5,236 C.Y.
S.R. 2 1098+60 TO 1109+05 (1045 L.F. X 735 X 1/27)	=	28,447 C.Y.
S.R. 2 1111+75 TO 1122+05 (1030 L.F. X 735 X 1/27)	=	28,039 C.Y.
S.R. 2 1124+05 TO 1129+25 (520 L.F. X 735 X 1/27)	=	14,156 C.Y.
S.R. 13 12+75 TO 18+35 (560 L.F. X 235 X 1/27)	=	4,874 C.Y.
S.R. 13 21+65 TO 23+85 (220 L.F. X 235 X 1/27)	=	1,915 C.Y.
RAMP #3 1192+40 TO 1193+13 (73 L.F. X 160 X 1/27)	=	433 C.Y.
RAMP #4 1190+70 TO 1192+00 (130 L.F. X 160 X 1/27)	=	770 C.Y.
RAMP #5 1191+10 TO 1194+40 (330 L.F. X 160 X 1/27)	=	1,956 C.Y.
		90,340 C.Y. #

ITEM 203, EXCAVATION OF SURCHARGE

FROM ITEM 203, EMBANKMENT FOR SURCHARGE 90,340 C.Y. X 80%	=	72,272 C.Y. #

Quantities Carried to Sheet 16

SHEETS 13 & 14 OMITTED

FED. RD. DIVISION	STATE	PROJECT	
2	OHIO		

15
284

ERIE COUNTY
ERI 2-(16.13-17.39)

SUMMARY OF TABLES

	SHEET №	603 TYPE A: 30" 706.02, 706.08 (L.F.)	27" 706.02, 706.08 OR 707.01 OR 707.21 (L.F.)	30" 706.02, 706.08 OR 33" 707.01 (10.079) 707.04, 707.05 OR 707.21 (L.F.)	36" 706.02 OR 42" 707.01 OR 707.21 (L.F.)	36 ‡ 706.02 OR 42" 707.01 OR 707.04, 707.05 (L.F.)	36"** 706.02 OR 42" 707.01 (10.079) 707.04, 707.05 OR 707.21 (L.F.)	33" 706.02, 706.08 OR 42" 707.01 (10.079) 707.04, 707.05 OR 707.21 (L.F.)	H.E.A. 706.04 68+43 (L.F.)	H.E.A. 706.04 76+48 (L.F.)	H.E.A. 706.04 106+68 (L.F.)	30" 706.02, 706.08 OR 36" 707.01 OR 707.21 (L.F.)	603 TYPE B: 6" (L.F.)	12" (L.F.)	15" (L.F.)	18" (L.F.)	24" (L.F.)	706.01 & 706.02: 8" (L.F.)	10" (L.F.)	15" (L.F.)	603 TYPE C: 12" (L.F.)	18" (L.F.)	21" (L.F.)	24" (L.F.)	603 TYPE E: 6" (L.F.)	8" (L.F.)	10" (L.F.)	12" (L.F.)	603 TYPE F: 8" (L.F.)	10" (L.F.)	6" (L.F.)	12" (L.F.)	604 STANDARD MANHOLE No.1 (EA.)	STANDARD MANHOLE No.3 (EA.)	604 STANDARD CATCH BASIN № 2-2-B (EA.)	4 (EA.)	4-A (EA.)	5 (EA.)	6 (EA.)	C.B. RECONSTRUCT TO GRADE (EA.)	REF. MON. (EA.)	MON. ASSEM. STD. MOD. AS PER PLAN (EA.)	605 6" "SHALLOW" 707.01 TYPE III OR 707.21 TYPE III (L.F.)	605 PIPE UNDERDRAIN SHALLOW 6" (L.F.)	UNCL. 6" (L.F.)	DEEP 6" (L.F.)	SHEET №
GENERAL NOTES	88											50*	50*				50*	50*						50	50	50	50	50	50	50	50														88
1060+84 - 1070+00	18								12										12											40															18
1070+00 - 1082+00	19											62		126																60					1					2		3779			19
1082+00 - 1094+00	20																			16									60					1					1		4792			20
1094+00 - 1106+00	21												82																30	56				1					2		4831			21
1106+00 - 1118+00	22											56	61																30	95			1						2		104	3854			22
1118+00 - 1130+00	23												63							268									85	69			1	1					1		104	4040			23
1130+00 - 1142+00	24												105	103															220					2					1			3549	100	1183	24
1142+00 - 1142+65.83	25																												10										1			222	32		25
E.B. THRU RAMP STA.																																														
1072+83.48-1083+00	30											20																	40	25												1175			30
1083+00 - 1094+00	31																												10												36	729			31
1094+00 - 1105+71.50	32																												20													1011			32
W.B. THRU RAMP	33											36																	20													880			33
CULVERT #1 & #4	141	92						56																																					141
CULVERT #2	142									220																																				142
CULVERT #3	143			94																																									143
CULVERT #6	147		96																																										147
SUBTOTAL		92	96	94	—	—	—	56	12	220	—	50*/174	50*/311	229	—	—			50*	50*	12	284	—	—	—	50	50	50	50	675	295	—	—	2	6	—	—	—	10	—	244	30,409	132	1183	
GENERAL NOTES	88											50*	50*				50*	50*						50	50	50	50	50	50	50	50														88
1142+65.83 - 1154+00	25											168								500	652									30	2			2					1			2268	68	2200	25
1154+00 - 1166+00	26																				409							20											3			2290	100	2382	26
1166+00 - 1178+00	27											58		123	156	245				100			347						80				1	2					1		104	1410		1517	27
1178+00 - 1190+00	28													115															100				1	1		3	1		2		94	1835		1852	28
1190+00 - 1202+00	29											85																	40					1					1			1026		990	29
HURON AVERY RD.	34																												20									1		2		344			34
S.R.13 6+00-15+00	37																																							1						37
S.R.13 15+00-25+00	38																																							2						38
S.R.13 25+00-35+00	39																			230														3					1						39
RAMP #2	40																												20													275	50	413	40
RAMP #3	41																												10													200	50	1362	41
RAMP #5	43																																											117			43
CULVERT #8	151						207																																1						151
CULVERT #9	152				267	209																																							152
CULVERT #10	153									96																																				153
SUBTOTAL		—	—	—	267	209	207	—	—	—	96	50*/311	50*	238	156	245			50*	50*	—	606		500	1061	347		50	50	50	50			70	110				320	80	2	1	5	6	1	3	1	1	8	6	198	9769	268	10,716	

* FARM DRAIN CROSSING QUANTITIES
‡ 1250 D-LOAD
** 2250 D-LOAD
*** 2500 D-LOAD

1 / 3

ADACHE ASSOCIATES INC., ENGINEERS
CLEVELAND, OHIO 44142

SUMMARY OF TABLES

DESIGNED	DRAWN	CHECKED	REVIEWED	DATE	REVISED
P.I.W. 12-4-69	P.I.W. 12-4-69	R.J.Z. 12-11-69			R.W.H. 11-23-82

SUMMARY OF TABLES

FED. RD. DIVISION	STATE	PROJECT	
2	OHIO		

16 / 284

ERIE COUNTY

ERI 2 - (16.13-17.39)

	SHEET Nº	202 PIPE REMOVED 24" & UNDER	202 REF. MON. REMOVED	202 CATCH BASIN REMOVED	202 GUARD-RAIL REMOVED	202 GUARD-RAIL REMOVED BARRIER TYPE	203 (SAND BLANKET) EMBANKMENT USING GRANULAR MATERIAL AS PER PLAN	203 TYPICAL SECTION EARTHWORK ADJUSTMENTS: EXCAV. NOT INCL. EMB. CONST.	203 TYPICAL SECTION EARTHWORK ADJUSTMENTS: EMBANKMENT	203 EXCAV. NOT INCL. EMBANK. CONST.	203 EMBANKMENT	203 * GRANULAR BORROW AS PER PLAN TYPE 1	203 * GRANULAR BORROW AS PER PLAN TYPE 2	603 CONDUIT TYPE A 120" 706.02 OR 144" 707.03 (0.109)	603 CONDUIT TYPE A 120" 706.02 3250 D-LOAD 1500 D-LOAD W/INDUCED TRENCH OR 144" 707.03 (0.188)		601 ROCK CHANNEL PROTECTION, TYPE W/FILTER B	601 ROCK CHANNEL PROTECTION, TYPE W/FILTER C	601 ROCK CHANNEL PROTECTION, TYPE W/OUT FILTER C	601 RIPRAP USING 6" REINFORCED CONC. SLAB	602 CONCRETE MASONRY	606 GUARD RAIL TYPE 5	606 GUARD RAIL TYPE 5 BARRIER	606 ANCHOR ASSEMBLY, STANDARD TYPE B	606 ANCHOR ASSEMBLY, STANDARD TYPE T	606 ANCHOR ASSEMBLY, STANDARD TYPE A	606 BARRIER DESIGN, A	606 BRIDGE TERMINAL ASSEMBLY TYPE A	606 BRIDGE TERMINAL ASSEMBLY TYPE D	606 BRIDGE TERMINAL ASSEMBLY TYPE J	609 CURB, STD. TYPE 6	603 ENCASEMENT CONDUIT, 707.08, AS PER PLAN	SPECIAL PRESSURE RELIEF JOINT, STANDARD TYPE A	615 TEMPORARY PAVEMENT, CLASS A	615 TEMPORARY PAVEMENT, CLASS B	615 TEMPORARY ROADS	659 SEEDING & MULCHING	660 SODDING	660 REINFORCED SODDING, STANDARD	670 SLOPE EROSION PROTECTION	670 DITCH EROSION PROTECTION	SHEET Nº
		L.F.	EA.	EA.	L.F.	L.F.	C.Y.	C.Y.	C.Y.	C.Y.	C.Y.	C.Y.	C.Y.	L.F.	L.F.		C.Y.	C.Y.	C.Y.	S.Y.	C.Y.	L.F.	L.F.	EA.	EA.	EA.	EA.	EA.			LIN. FT.	LIN. FT.	LIN. FT.	SQ. YD.	SQ. YD.	LUMP	S.Y.	S.Y.	S.Y.	S.Y.	S.Y.	
GENERAL NOTES	7									2,000									50																							7
GENERAL NOTES	8B																	5.0																								8B
1060+84 - 1070+00	18	1473								4,508	3,308							1.8			1.59	95				1											12,450					18
1070+00 - 1082+00	19	3573	1	1					-311	6,815	8,893							2.7			0.27	17.5			1												21,169				125	19
1082+00 - 1094+00	20						407		-533	4,280	18,268							6.7				625			2	2											27,234				216	20
1094+00 - 1106+00	21						25,162		-521	3,063	74,092							2.9			0.21	878		1	1							87					31,209				253	21
1106+00 - 1118+00	22						32,081		-404	1,350	242,915							2.7			0.21	2220.9	100				2	4		2	108		96.4				34,456	20	127	1740	475	22
1118+00 - 1130+00	23						26,343		-423	2,210	122,414							2.9			0.42	1729.2	100	1	1		2	4		2	56		96.4				37,732	17	78	549	784	23
1130+00 - 1142+00	24						4018	189	-315	9,451	20,366							5.8			0.48																27,929				849	24
1142+00-1142+65.83	25								-28	425	1,519																										1,444				8	25
E.B. THRU RAMP																																										
1072+83.48-1083+00	30						3043	40	-123	3,868	6,306											252.5		2													22,224				175	30
1083+00 - 1094+00	31						12,934		-117	1,689	45,485											1490						2		2	76		32.2				25,654		260	1652		31
1094+00 - 1105+71.50	32	163					8902	60	-128	5,436	29,078											1065			2												28,087					32
W.B. THRU RAMP	33	1317							-141	3,145	5,161																										24,752					33
S.R. 2 TEMP. RD.	46																																	2814		LUMP						46
CULVERT #1 & #4	141									5								3.6			8.44																					141
CULVERT #2	142									1140							21.0	29.0		37.0	6.84																	11				142
CULVERT #3	143									261								4.2			1.36																					143
CULVERT #5	144									77	61	4654			308		58.0				23.78																					144
CULVERT #6	147																	4.0			1.36																					147
CULVERT #7	148									61	42			206			58.0				23.78																					148
CALCULATIONS	12									**72,272	**90,340	**(TOTAL URBAN & RURAL)																														
								(+289)	(-3,044)	(+289)	(-3,044)																															
SUBTOTAL		6526	1	1	—	—	112,890	—	—	122,345	665,204	4,654	—	206	308		137.0	71.3	50	37.0	68.74	8378.1	200	4	7	3	4	10	—	6	240	87	225.0	2814	—	LUMP	294,340	48	465	3,941	2,885	
	17A				1,252.5																	1,190			1	1																17A
	17B				5,410	600																5,910	475		2	2	4		8	4												17B
	17C				350																	712.5			3	3																17C
	17D				2,750																	2,725			8	5		4														17D
1142+65.83-1154+00	25							478	-25	99,670	897																										23,811				89	25
1154+00 - 1166+00	26							513		187,121	0							22.1			0.21	700			2	2											28,270		47		319	26
1166+00 - 1178+00	27							227	-85	32,291	7799	1869						18.0				262.5	50	1			1	2			52		70				18,122	17	44	255	874	27
1178+00 - 1190+00	28							383	-51	58,855	9,277	1104	406					2.9			0.46	362.5	50	1	1		1	2		1	56		82				20,964	85			992	28
1190+00 - 1202+00	29						5640	144	-78	17,465	11,522							2.9			0.27	700			2	2											12,961				375	29
HURON AVERY RD.	34									2,100	182											375			2	2		4			85						4,196		66			34
GENERAL NOTES	7 & 8B																	5.0	25																							7 & 8B
S.R. 13 6+00-15+00	37						5261			4,170	10,237											275				1											23,413				699	37
S.R. 13 15+00-25+00	38						12,803			290	37,365											887.5		2	3			4			55						11,658		295	1121	330	38
S.R. 13 25+00-35+00	39	55					1076			1,639	2359										0.21																14,023					39
RAMP #2	40						1480	42	-68	2,354	3076																										9,376					40
RAMP #3	41						2029	84	-51	12,848	4370																										16,357				125	41
RAMP #4	42						2693			475	4519																										2,710					42
RAMP #5	43						4972			686	23,012																										7,626				307	43
S.R. 13 TEMP. RD.	45																																		5971	LUMP						45
CULVERT #8	151									42								5.8		39.0	1.84																	11				151
CULVERT #9	152									12		7995						4.7		35.0	1.84																	9				152
CULVERT #10	153							(+1,871)	(-358)	(+1,871)8	(-358)							4.3			1.52																					153
SUBTOTAL		55	—	—	9762.5	600	35,954	—	—	421,897	114,657	10,968	406	—	—		—	65.7	25	74.0	6.35	14,100.0	575	4	24	18	6	16	8	5	248	—	152	—	5971	LUMP	193,487	122	452	1376	4110	

	SHEET Nº	203 SUBGRADE COMPACTION	301 BITUMINOUS AGGREGATE BASE, AC-20	304 AGGREGATE BASE	310 SUBBASE TYPE II	310 SUBBASE TYPE I, GRADING A	402 ASPHALT CONCRETE AC-20	404 ASPHALT CONCRETE AC-20		451 5" REINFORCED CONCRETE PAVEMENT	305 8"-6" CONCRETE BASE	305 8" CONCRETE BASE	407 TACK COAT		409 SEAL COAT BITUMINOUS MATERIAL	409 SEAL COAT COVER AGGREGATE	310 SUBBASE, TYPE I #	404 ASPHALT CONCRETE DRIVEWAYS
		S.Y.	C.Y.	C.Y.	C.Y.	C.Y.	C.Y.	C.Y.		S.Y.	S.Y.	S.Y.	GAL.		GAL.	C.Y.	C.Y.	C.Y.
E.B. THRU RAMP	48	3538	141		382	159	9	6		1681	1680	177	18		672	14		
W.B. THRU RAMP	49	5,036	193		566	235	62	44		1457	2305	1274	127		922	19		
S.R. 13 DETAILS	50	2,404	114	109	463		96	67				1620	130		129	3		
RAMP #2	51	2,315	103		254	113	53	38			1172	1144	108		495	10	1158	
RAMP #3	52	1,162	29		168	24	40	28			318	844	81		141	3	581	
DRIVEWAY DETAILS	53			100														33
TOTAL		14,455	580	209	1833	531	260	183		3138	5475	5059	464		2359	49	1739	33

REPLACEMENT OF 18" SUBGRADE UNDERCUTTING

* NOTE: GRANULAR BORROW HAS BEEN DIVIDED INTO TWO QUANTITIES ON THIS PROJECT AND SHALL BE DESIGNATED AS FOLLOWS:
TYPE 1: GRANULAR BORROW AS PER PLAN INCLUDING THE COST OF REMOVING UNSUITABLE MATERIAL. THIS QUANTITY WILL BE THE AMOUNT NEEDED TO BACKFILL THE SPACE OCCUPIED BY UNSUITABLE MATERIAL AND SHALL BE MEASURED TO THE ORIGINAL GROUND LINE.
TYPE 2: GRANULAR BORROW AS PER PLAN. THIS QUANTITY SHALL BE THE AMOUNT OF GRANULAR BORROW ABOVE THE ORIGINAL GROUND LINE PLUS 5% FOR COMPACTION

	SHEET Nº	203 GRANULAR BORROW TYPE I	SPECIAL WICK DRAINS AS PER PLAN	SPECIAL SETTLEMENT PLATFORM	SPECIAL SLOPE INDICATOR	SPECIAL PIEZOMETER
		CU. YD.	LIN. FT.	EACH	EACH	EACH
1166+00 TO 1178+00	27			1		
1178+00 TO 1190+00	28			1		
E. B. RAMP	45B	11,307	29,575	2	2	2
S. R. 2	45C	45,738	171,990	7	7	7
S.R.13 & RAMPS #2 - #5	45D	5098	58,485	1	2	1
TOTALS		62,143	260,050	12	11	10

2 / 3

ADACHE ASSOCIATES INC., ENGINEERS
CLEVELAND, OHIO 44142

SUMMARY OF TABLES

DESIGNED	DRAWN	CHECKED	REVIEWED	DATE	REVISED
P.I.W. 12-4-69	P.I.W. 12-4-69	RJZ 12-12-69			RWH 11-23-82

ADACHE ASSOCIATES, INC.
CALC. BY NG. DATE 5-20-16
CHKD. BY RZ DATE 5-20-16

ESTIMATED QUANTITIES OF FENCE

ITEM 607

FED. RD. DIVISION	STATE	PROJECT	FISCAL YEAR

17
1184

ERIE COUNTY
ERI 2 - (16.13-17.39)

FENCE LEFT

STATION	DISTANCE OUT	CORNER OR END TERMINAL	DEFLECTION POINT: INTERM. ANCHOR ASSEM.	DEFLECTION POINT: LINE POST	ITEM 607 FENCE, TYPE 47 LIN. FT.
1064+02±	138±	EPA*			
1064+02.00	153.00	CPA			15
1080+98.00	153.00	CPA	2		1696.00
1080+98±	138±	EPA*			15
Ex.& 1100+75.26±	148±	EPA*			
Ex.& 1098+00.00	218.00		1		280.44
1092+98.00	158.00	CPA			569.61
1096+00.00	158.00		1		326.80
1099+67.59	168.00		1		393.32
1103+00.00	148.00		1		333.01
1106+00.00	163.00		1		300.38
1110+65.88	163.00	CPA			465.88
BRIDGE ABUTMENT	65.17	ACA			140.53
BRIDGE ABUTMENT	23.00	ACA			27.
1109+22	0				
1111+51.00	0				27.
BRIDGE ABUTMENT	23.00	ACA			
BRIDGE ABUTMENT	65.17	ACA			116.45
1112+22.81	178.00	CPA			475.29
1117+00.00	188.00			1	50.00
1117+50.00	188.00		1		91
CULVERT HEADWALL	154.50	HCA			
					TYPE-B TERMINAL
CULVERT HEADWALL	154.50	HCA			64.
1119+00.00	188.00	CPA			337.59
1122+36	155.29	CPA			90
BRIDGE ABUTMENT	65.17	ACA			
BRIDGE ABUTMENTS	23.00 LT 23.00 RT	ACA ACA			46
BRIDGE ABUTMENT	65.17	ACA			83
1123+86	148.00	CPA			414.00
1128+00.00	148.00		1		500.10
1133+00.00	138.00		1		500.23
1138+00.00	123.00		1		225.97
1140+25.00	143.90	CPA			60.
CULVERT HEADWALL	102.57	HCA			
					TYPE-B TERMINAL
CULVERT HEADWALL	106.21	HCA			52.
1141+25.00	144.62	CPA			141.09
1142+65.83	——				
URBAN SUB TOTAL					7836.69
1142+65.83	——				273.33'
1145+37.91	111.94		1		262.58
1148+00.00	128.00		1		542.69
1153+42.69	128.00		1		557.40
1159+00.00	138.00		1		390.00
1162+90.00	138.00	CPA			27
1163+12	115	CPA			60
BRIDGE ABUTMENT	117.45	ACA			
BRIDGE ABUTMENT	117.45	ACA			52.
1164+75.70	150.24	CPA			310.37
1168+00.00	123.00		1		333.90
1171+50.00	143.00		1		138
1173+00.00	163.00	CPA			87
BRIDGE ABUTMENT	79.00	ACA			

FENCE LEFT

STATION	DISTANCE OUT	CORNER OR END TERMINAL	DEFLECTION POINT: INTERM. ANCHOR ASSEM.	DEFLECTION POINT: LINE POST	ITEM 607 FENCE, TYPE 47 LIN. FT.
BRIDGE ABUTMENT	23	ACA			
1173+23	0				24
1180+31	0				
1180+00	10	CPA			33
BRIDGE ABUTMENT	23	ACA			13
BRIDGE ABUTMENT	92.00	ACA			
1180+00.00	159.00	CPA			68
1181+00.00	158.00		1		39
1184+00.00	178.00		1		282.78
1188+88.38 =	383.02	CPA			485.19
SR 13 24+28	88.00				
SR 13 28+27.87	68.87	EPA			400.33
RURAL SUB TOTAL					4439.57
RYE BEACH ROAD (URBAN)					
39+75	~~48'~~ 11	EPA			
42+59.5±	~~73'~~ 11	EPA*			285.6
53+98±	~~88'~~ 11	EPA*			302.4
57+00	~~73'~~ 11		1		101.12
58+00	~~58'~~ 11		1		80.1
58+80.1	~~58'~~ 11	CPA			76.26
59+24.5	~~120.5'~~ 11	CPA			35.0
59+13.57	~~154.78~~ 11	EPA			
39+75	~~48'~~ RT	EPA			213.83
41+88.83	~~63'~~ RT			1	58.1
41+47±	~~63'~~ RT	EPA*			
53+98±	~~83'~~ RT	EPA*	2		675.0
58+61.94	~~2787~~ RT	EPA			
TOTALS RYE BEACH ROAD (URBAN)					1627.4
ABUTMENT CONN.		14			
HEADWALL CONN.		4			
CORNER POST		19			
END POST		12			
SUB TOTAL		49	23	2	

* Connect to Existing Fence

ABBREVIATIONS IN TABLE
IAPA = Intermediate Anchor Post Assembly
CPA = Corner Post Assembly
EPA = End Post Assembly
HCA = Headwall Connection
ACA = Abutment Connection

FOR TERMINAL DETAILS SEE STD. DRWG. F-5 & F-3

FENCE RIGHT

STATION	DISTANCE OUT	CORNER OR END TERMINAL	DEFLECTION POINT: INTERM. ANCHOR ASSEM.	DEFLECTION POINT: LINE POST	ITEM 607 FENCE, TYPE 47 LIN. FT.
1064+00±	156.33±	EPA*			
1073+00.00	178.00		1		900.26
1076+00.00	248.00		1		308.06
1077+50.00	323.00		1		167.71
1079+50.00	458.00		1		217.87
1083+00.00	518.00		1		271.50
1087+00.00	448.00		1		305.90
1089+50.00	308.00		1		244.05
1091+00.00	123.00	C.PA.			229.66
1091+35±	123.00	C.PA.			35
CULVERT HEADWALL		HCA			48
					TYPE-B TERMINAL
CULVERT HEADWALL		HCA			
1092+00.00	127.89	CPA			40
1094+00.00	123.00		1		186.72
1097+00.84	123.00		1		280.86
1099+67.54	148.00			1	253.47
1103+00.00	148.00			1	332.46
1108+51.48	163.00	CPA			551.68
BRIDGE ABUTMENT	65.17	ACA			101.9
BRIDGE ABUTMENT	23.00	ACA			27.
1109+22	0				
1111+51	0				27.
BRIDGE ABUTMENT	23.00	ACA			
BRIDGE ABUTMENT	65.17	ACA			153.29
1109+97.09	165.31	CPA	1		705.12
1117+00.00	193.00			1	100.00
1118+00.00	193.00	CPA			52
CULVERT HEADWALL	153.50	HCA			
					TYPE-B TERMINAL
CULVERT HEADWALL	153.50	HCA			67
1119+00.00	193.00	CPA			325.42
1122+25	176.60	CPA			111
BRIDGE ABUTMENT	65.17	ACA			
BRIDGE ABUTMENT	23.00 LT 23.00 RT	ACA ACA			46
BRIDGE ABUTMENT	65.17	ACA			92
1123+76	156.89	CPA	1		724.25
1131+00.00	138.00		1		301.50
1134+00.00	108.00		1		650.78
1140+50.00	139.70	CPA			66.
CULVERT HEADWALL	104.24	HCA			
					TYPE-B TERMINAL
CULVERT HEADWALL	100.60	HCA			45.
1141+50.00	139.45	CPA			116.52
1142+65.83	——				
URBAN SUB TOTAL					8084.98
1142+65.83	—				34.38
1143+00.00	123.00		1		232.05
1145+32.05	123.00	CPA			23.61
1145+31.06	146.59	CPA	2		1657.52
1161+88.55	138.40			1	349.77
1165+30.18	153.00	CPA			50.
BRIDGE ABUTMENT	118.11	ACA			——
BRIDGE ABUTMENT	118.11	ACA			89
1167+17	123	CPA			34
1167+28.88	159.34	CPA			601.26
1173+00.00	148.00		1		

FENCE RIGHT

STATION	DISTANCE OUT	CORNER OR END TERMINAL	DEFLECTION POINT: INTERM. ANCHOR ASSEM.	DEFLECTION POINT: LINE POST	ITEM 607 FENCE, TYPE 47 LIN. FT.
1173+00.00	14.8.00	CPA			
BRIDGE ABUTMENT	75.00	ACA			71
BRIDGE ABUTMENT	23.00	ACA			
1173+23	0				23
1180+31	0				
BRIDGE ABUTMENT	23.00	ACA			59.6
BRIDGE ABUTMENT	79.00	ACA			72
1181+00.00	149.36	CPA			
1184+00.00	178.00		1		317.00
1189+00.00	428.00	CPA			606.07
1191+07.86	434.79	CPA			239.08
1192+09.27	900.39		1		482.10
1192+47.57 =	989.52	EPA			104.40
SR 13 10+00	78.00				
RURAL SUB TOTAL					5,045.84
ABUTMENT CONN.		14			
HEADWALL CONN.		6			
CORNER POST		20			
END POST		2			
SUB TOTAL		42	20	4	

ESTIMATED QUANTITIES OF FENCE

	Rye Beach Rd.	S.R.2 (Left)	S.R.2 (Right)	TOTAL
URBAN	1627.4	7836.69	8084.98	17,549.07
RURAL		4439.57	5,045.84	9,485.41
TOTALS				27,034.48
GRAND TOTAL 27,034 L.F				

FENCE CROSSINGS
SUMMARY OF ITEM 601 ROCK CHANNEL PROTECTION TYPE C WITH FILTER

URBAN

LOCATION	TYPE	NO. OF CROSS.	QUANTITIES
BOGART ROAD	1	2	(24+30)x6'x1.5÷27 = 18.7 Cu.Yds.
CULVERT #2	1	2	(25+25)x6'x1.5÷27 = 16.7 Cu.Yds.
CULVERT #5	1	4	(4x20)x6'x1.5÷27 = 26.7 Cu.Yds.
CULVERT #7	1	4	(20+25+2x18)x6'x1.5÷27 = 27.0 Cu.Yds.
URBAN TOTAL			89.1 CU. YD

RURAL

LOCATION	TYPE	NO. OF CROSS.	QUANTITIES
HURON AVERY RD.	1	4	(2x20+2x25)x6'x1.5÷27 = 30.0 Cu.Yds.
MUD BROOK CREEK	1	4	(16+25+20+15)x6'x1.5÷27 = 25.3 Cu.Yds.
RURAL TOTAL			55.3 C.Y.
GRAND TOTAL			144.4 CU. YD

QUANTITIES CARRIED TO SHEET 2.

CALC ECV DATE 7-85	ERIE COUNTY	OHIO
CHKD RWH DATE 7-85	ERI-2-16.13	F.H.W.A. REGION 5

17-A
184

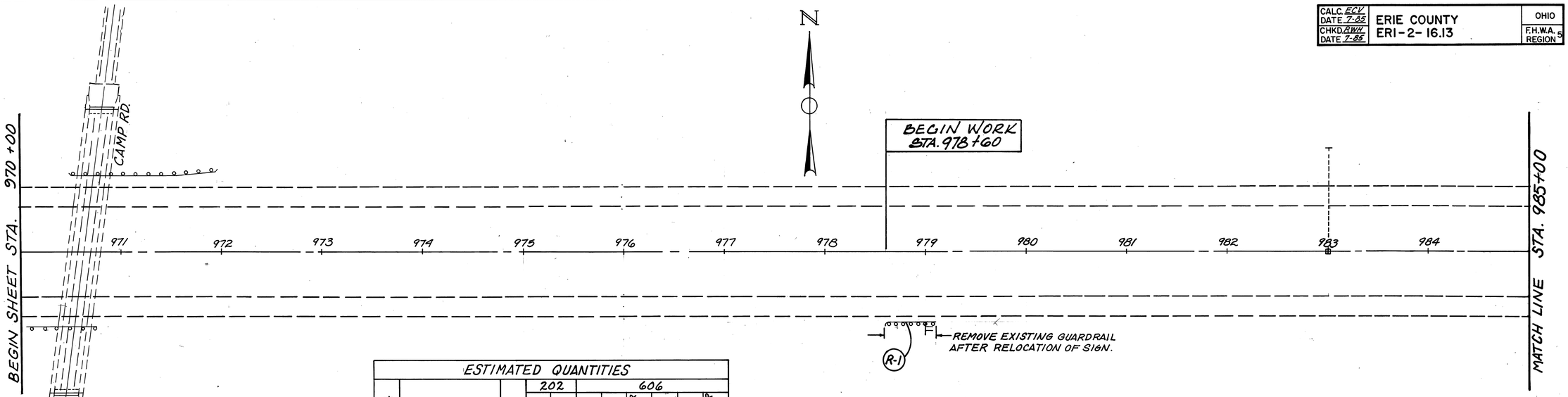

ESTIMATED QUANTITIES

REFERENCE NO.	STATION FROM	STATION TO	SIDE	202 GUARDRAIL REMOVED	606 STD. TYPE 5 GUARDRAIL	606 TYPE A ANCHOR ASSY (STD.)	606 TYPE T ANCHOR ASSEMBLY
				Lin.Ft.	Lin.Ft.	Ea.	Ea.
R-1	978+60	979+10	RT.	50			
R-2	993+72.5	1000+00	RT	602.5	602.5	1	
R-3	994+00	1000+00	RT	600	587.5		1
TOTALS				1252.5	1,190	1	1

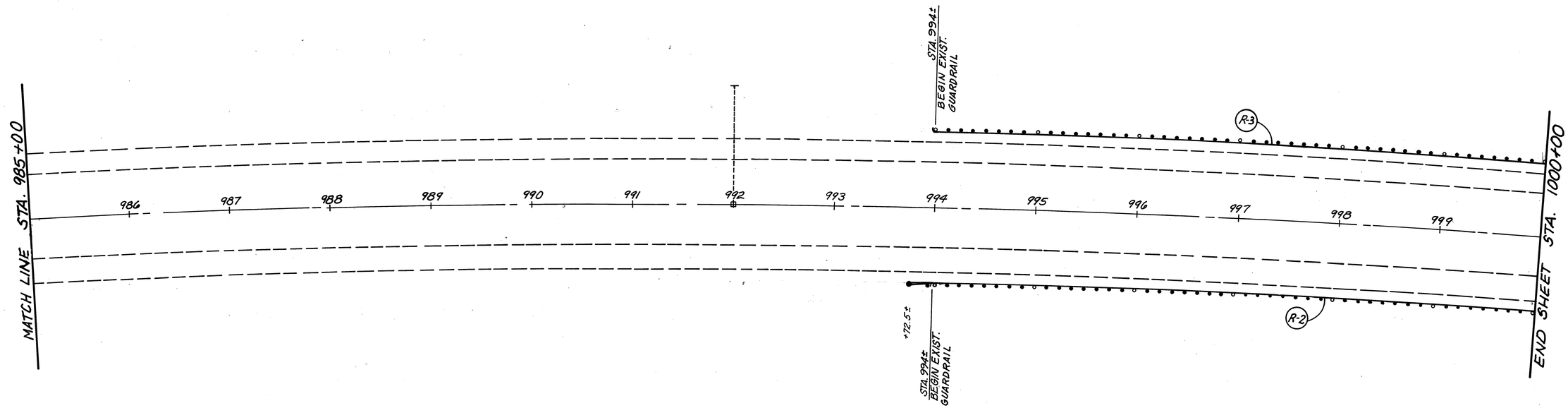

A.C.L. form no. 1

GUARDRAIL PLAN

CALC. ECV DATE 7-85	ERIE COUNTY	OHIO
CHKD. RWT DATE 7-85	ERI-2- 16.13	F.H.W.A. REGION 5

17-B
184

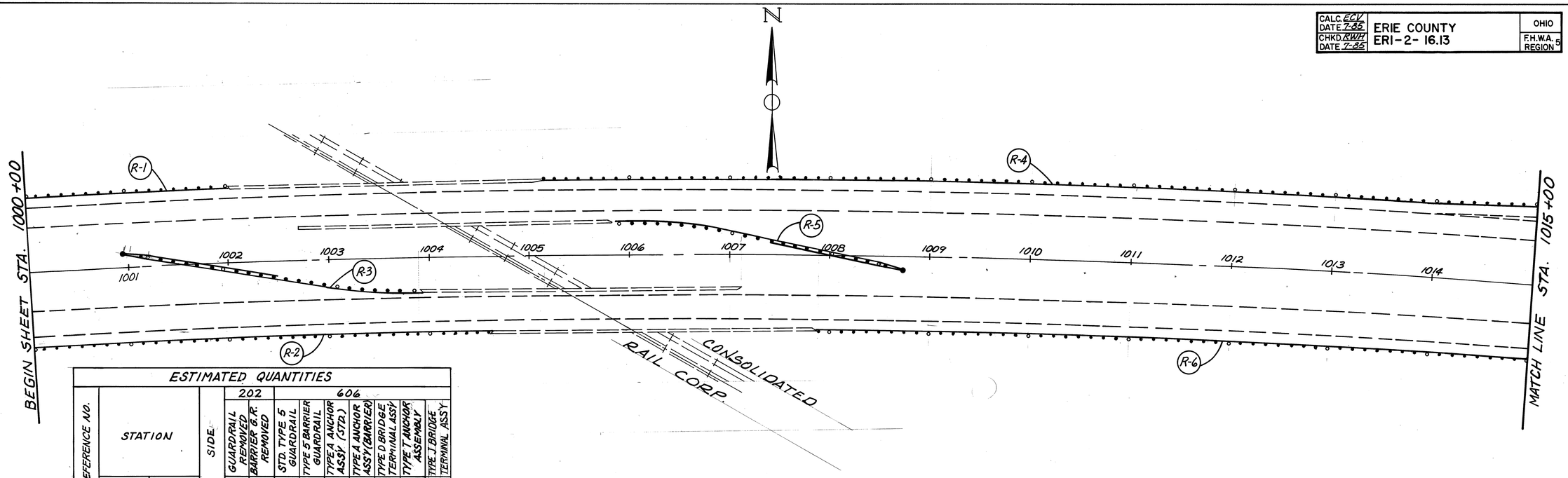

ESTIMATED QUANTITIES

REFERENCE NO.	STATION FROM	STATION TO	SIDE	202 GUARDRAIL REMOVED Lin.Ft.	202 BARRIER G.R. REMOVED Lin.Ft.	606 STD. TYPE 5 GUARDRAIL Lin.Ft.	606 TYPE 5 BARRIER GUARDRAIL Lin.Ft.	606 TYPE A ANCHOR ASS'Y (STA.) Ea.	606 TYPE A ANCHOR ASS'Y (BARRIER) Ea.	606 TYPE D BRIDGE TERMINAL ASS'Y Ea.	606 TYPE T ANCHOR ASSEMBLY Ea.	606 TYPE J BRIDGE TERMINAL ASS'Y Ea.
R-1	1000+00	1002+00	LT.	200		200						1
R-2	1000+00	1004+60	RT.	460		460				1		
R-3	1000+80	1003+79	MED.	150	150	150	125		1	1		
R-4	1005+15	1015+00	LT.	985		985				1		
R-5	1005+85	1009+00	MED.	150	150	150	125		1	1		
R-6	1007+90	1015+00	RT.	710		710						1
R-7	1015+00	1025+90	LT.	1,090		1,090						1
R-8	1015+00	1025+90	RT.	790		1,090				1		
R-9	1022+91	1025+90	MED.	150	150	150	125		1	1		
R-10	1027+10	1030+10	LT.	312.5		287.5		1		1		
R-11	1027+10	1030+25	MED.	150	150	200	100		1	1		
R-12	1027+10	1030+25	RT.	212.5		300					1	1
R-13	1028+50	1030+25	MED.	50		137.5		1			1	
TOTALS				5,410	600	5,910	475	2	4	8	2	4

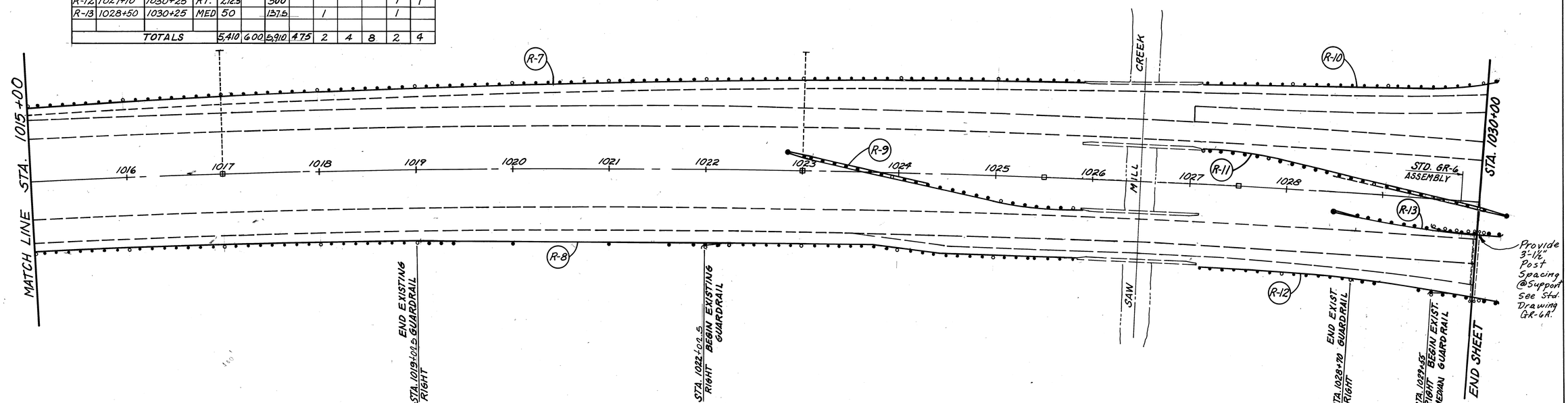

A-C-L form no. 1

GUARDRAIL PLAN

CALC. ECV	ERIE COUNTY	OHIO
DATE 7-85	ERI-2- 16.13	F.H.W.A. REGION 5
CHKD. RWH		
DATE 7-85		

17-C / 184

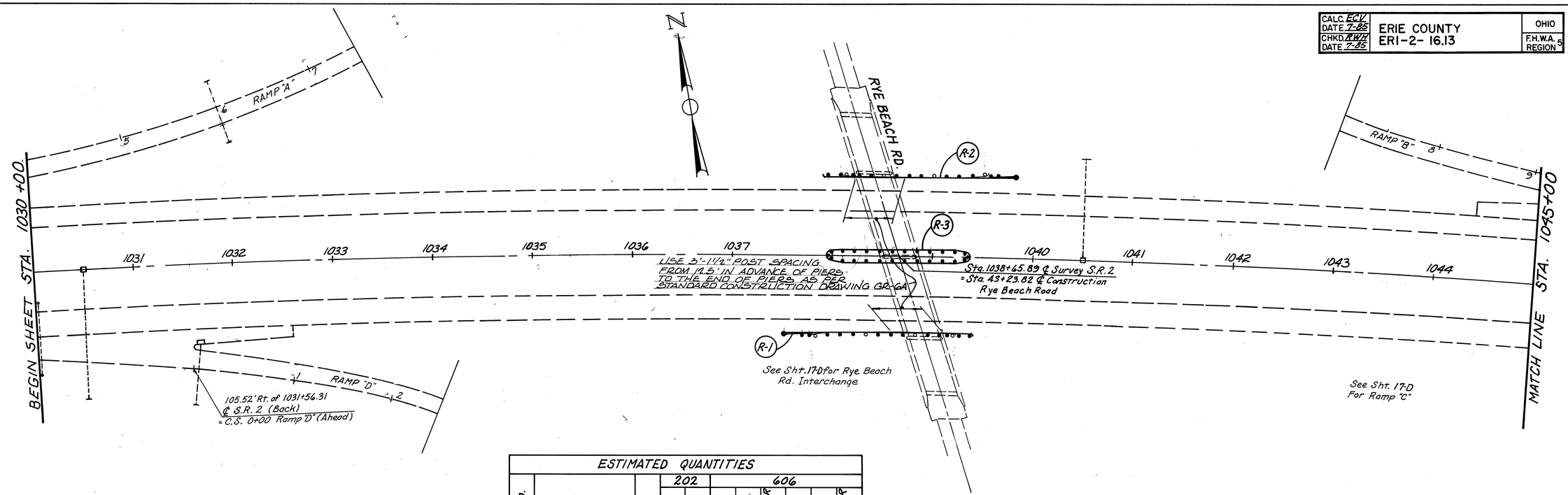

ESTIMATED QUANTITIES

REFERENCE NO.	STATION FROM	STATION TO	SIDE	202 GUARDRAIL REMOVED		606 STD. TYPE 5 GUARDRAIL		TYPE A ANCHOR ASSY (STD.)			TYPE T ANCHOR ASSEMBLY
				Lin.Ft.		Lin.Ft.		Ea.			Ea.
R-1	1037+52.5	1039+40	RT.	1375		150		1			1
R-2	1037+94.5	1039+82	LT.	1375		150		1			1
R-3	1037+95	1039+42.5	MED			300					
R-4	1053+30	1054+05	LT.	75							
R-5	1048+75	1050+25	LT.			112.5		1			1
TOTALS				350		712.5		3			3

A-C-L form no. 1

GUARDRAIL PLAN

CALC. ECV DATE 7-85	ERIE COUNTY	OHIO
CHKD. RWH DATE 7-85	ERI-2- 16.13	F.H.W.A. REGION 5

17D
184

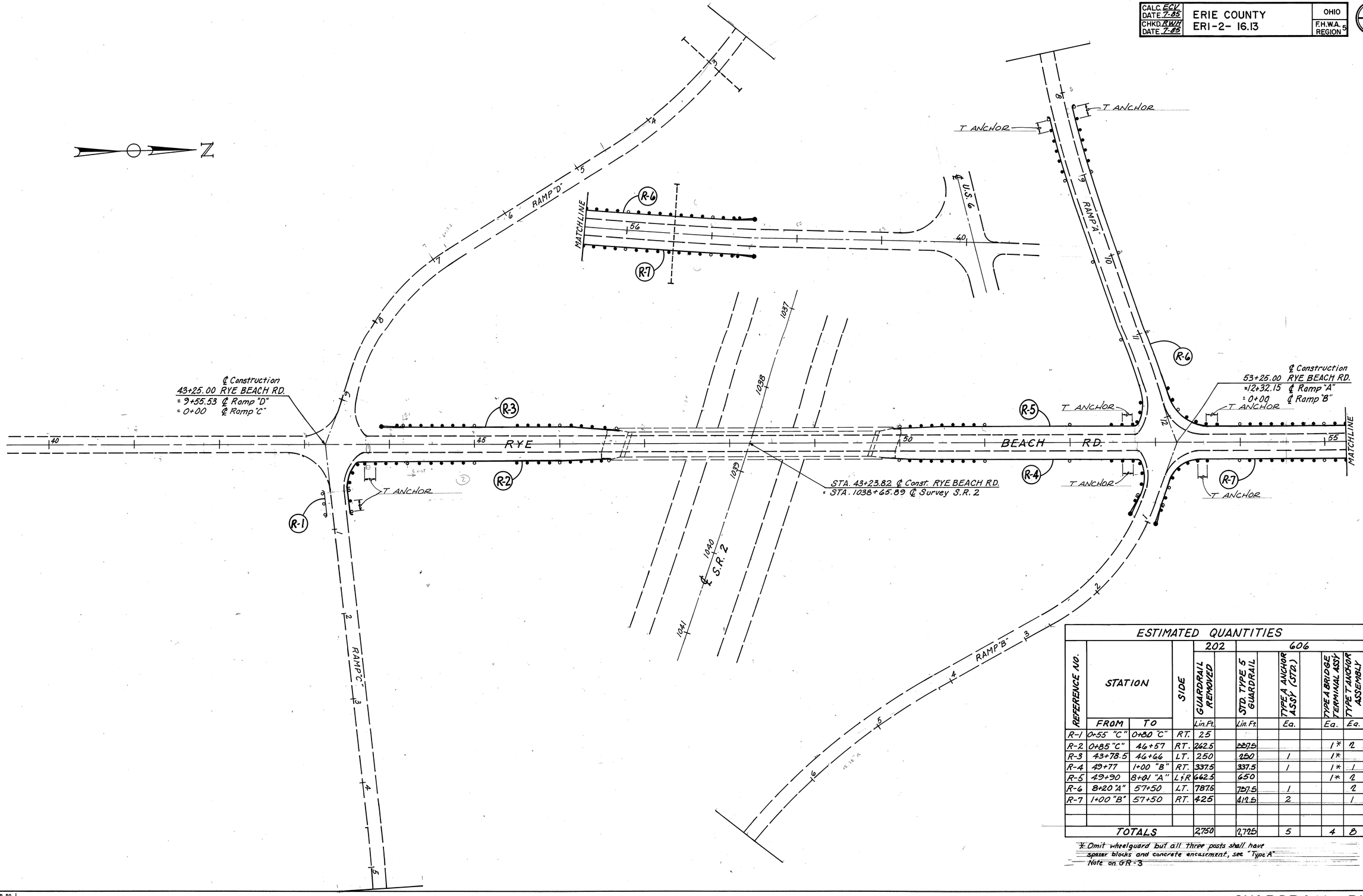

ESTIMATED QUANTITIES

REFERENCE NO.	STATION FROM	STATION TO	SIDE	202 GUARDRAIL REMOVED	606 STD. TYPE 5 GUARDRAIL	606 TYPE A ANCHOR ASSY (STD.)	606 TYPE A BRIDGE TERMINAL ASSY	606 TYPE T ANCHOR ASSEMBLY
				Lin.Ft.	Lin.Ft.	Ea.	Ea.	Ea.
R-1	0+55 "C"	0+80 "C"	RT.	25				
R-2	0+85 "C"	46+57	RT.	262.5	~~337.5~~ 250		1*	2
R-3	43+78.5	46+66	LT.	250	250	1	1*	
R-4	49+77	1+00 "B"	RT.	337.5	337.5	1	1*	1
R-5	49+90	8+01 "A"	L&R	662.5	650		1*	2
R-6	8+20 "A"	57+50	LT.	787.5	787.5	1		2
R-7	1+00 "B"	57+50	RT.	425	412.5	2		1
TOTALS				2,750	2,775	5	4	8

*Omit wheelguard but all three posts shall have spacer blocks and concrete encasement, see "Type A" Note on GR-3

A-C-L form no. 1

GUARDRAIL PLAN

RYE BEACH ROAD

FED. RD. DIVISION	STATE	PROJECT	FISCAL YEAR
2	OHIO		

18
184

ERIE COUNTY
ERI 2 - (16.13-17.39)

FOR W.B. THRU RAMP ACCELERATION LANE DETAILS SEE SHEET Nº 49

STA. 1069+00 (118' LT.) STD. HW-4 HEADWALL EL. 589.76± ROCK CH. PROT. 8'-4" TYPE "C" WITH FILTER

STA. 1064+32.09 (66' LT.) MEET EXIST. PAVEMENT

BEGIN SHEET STA. 1060+00

END SHEET STA. 1070+00

EXISTING L.A. TO STA. 1067+00

EXISTING FENCE

10' TYPE "F"

EXIST. 6" U.D. TO REMAIN

EXIST. 6" U.D. TO BE REMOVED

PLUG EXIST. 8"

EXIST. 76"×48" HEA CULV.

S 63°-26'-57" E

℄ EXISTING S.R. 2 & U.S.R. 6

STA. 1070+00 ℄ REF. MON. TO REMAIN IN PLACE

EXIST. 9" CONC. PAV'T. TO REMAIN

EXIST. EDGE OF PAVEMENT 48:1 Taper

EXIST. 24" EX. PAV'T.

B.M. "1"

B.M. "2"

EXISTING L.A. TO STA. 1064

FIELD DRIVE

℄ S.R. 2 P.O.T. STA. 1060+84 (78' RT.) BEGIN PAVEMENT WIDENING SECTION

8" TILE (TO BE ABAND.)

8" INTERCEPTOR (BY OWNER)

℄ 12" WATER MAIN

FIELD TILE (TO BE ABANDONED)

℄ S.R. 2 P.O.T. STA. 1068+30 (70' RT.) = ℄ E.B. THRU RAMP P.C. STA. 1068+30

NOTE: EXISTING S.R. 2 TYPICAL SECTION IDENTICAL TO PROPOSED S.R. 2 TYPICAL SECTION

STA. 1063+30 (16' LT.) STD. HW-4 HEADWALL EL. 586.63

FOR E.B. THRU RAMP DECELERATION LANE DETAILS SEE SHEET Nº 48

1060 1061 1062 1063 1064 1065 1066 1067 1068 1069 1070

597.29 597.40 597.38 597.36 597.35 597.33 597.32 597.31 597.29 597.29 597.28 597.27 597.27 597.26 597.26 597.26 597.26 597.26 597.27 597.28 597.28 597.29 597.30 597.32 597.33 597.35 597.36 597.38 597.39 597.41 597.43 597.46 597.48 597.50

PLAN DESIGN ELEVATION OF EXISTING PAVEMENT 54' RT. & LT.

STA. 1060+84 TO STA. 1070+00		
EXCAVATION	4,508	CU. YD.
EMBANKMENT	3,308	CU. YD.
SEEDING	12,450	SQ. YD.

610 605 600 595 590

PLAN DESIGN GRADE OF EXISTING PAVEMENT 54' RT. & LT.

0.08% +0.10%

+84 D-1 592.58 — 216' @ -0.24% — +00 D-1 592.06 — +44 D-1 592.56

D-1 6" SHALLOW UNDERDRAIN

D-1 OUTLET +00, 115' RT. 591.56

+55 D-2 592.36

PROPOSED 12' EXTENSION 12'-48"×76" TYPE "A" HEA 706.04

EXIST. 48"×76" ELLIPTICAL CONC. PIPE CULVERT

(D-4)

+32 D-3 592.62 — 218' @ -0.24% — 295' @ 0.24%

EXISTING GROUND AT ℄

+50 D-3 592.10

D-3 OUTLET +50, 105' LT. 591.60

250' @ +0.24% — 350' @ +0.24%

+00 D-3 592.70

+50 D-2 591.65

+50, 115' RT. 591.15 D-2 OUTLET

D-2 & D-3 6" SHALLOW UNDERDRAIN

100' @ -0.24%

+00 D-3 592.56

+00 D-2 592.49

592.9 593.0 593.3 593.4 593.6 593.7 594.0 594.6 595.5 +20 596.8 +23 594.9 595.0 594.3 594.3 594.1 593.8 593.5 593.2 593.2 593.1 +70 593.3 +89 593.2 592.8 593.1 593.1

1060 1061 1062 1063 1064 1065 1066 1067 1068 1069 1070

ESTIMATED QUANTITIES

REF. NO.	STATION TO STATION	SIDE	202 CL. B PIPE UNDERDRAIN 6" C.F.	601 ROCK CH. RIPRAP REINF. CONC. PAV'T. 6" C.Y.	602 CONC. MASON C.Y.	603 TYPE "F" MET. RAIL 78"×48"	603 CONC. B CONDUIT 706.02 15" L.F.	603 TYPE F CONDUIT 6" L.F.	BENDS & BRANCHES 6"×6" TEE	606 GUARD ANCHOR RAIL ASSEMBLY TYPE 5 TYPE A 1401.11 EACH	SEE SHEET NO.
D-1	1060+84 - 1063+44	RT.	260					10	1		
D-2	1063+55 - 1070+00	RT.	645					10	1		
D-3	1064+32 - 1070+00	LT.	568					20	1		
D-4	1063+30 - 1065+35	RT.			1.34	12	12				
D-5	1069+00	LT.		1.8	0.25						
										95	1
R-1	1068+80 - 1070+00	RT.								95	1
TOTAL			1473	1.8	1.59	12	12	40		190	2

PLAN & PROFILE STA. 1060+84 TO STA. 1070+00

ADACHE ASSOCIATES, INC.
CALC. BY J.D.A. DATE 5-69
CHKD. BY R.J.E. DATE 6-8-69

B.M. 1" R.R. SPIKE IN R/W FC. POST AT OF STA 1063+00 El. 593.836

B.M. "2" R.R. SPIKE IN R/W FC. POST RT OF STA 1069+50 El. 597.540

FED. RD. DIVISION	STATE	PROJECT	FISCAL YEAR
2	OHIO		

19
124

ERIE COUNTY
ERI 2-(16.13-17.39)

DRILL HOLE & CROW FEET — W.B. PAVEMENT EDGE — ℄ EXIST. S.R. 2 — 90° — E.B. PAVEMENT EDGE — DRILL HOLE & CROW FEET

IRON PIN, BURIED 10" - T.S. STA. 1076+32.09

FOR W.B. THRU RAMP PACING LANE AND ACCELERATION LANE DETAILS SEE SHEET Nº 49
FOR TEMPORARY ROAD DETAILS SEE SHT. 46

BEGIN PROJECT ERI-2-16.13 STA. 1075+50

F-73 (4)

STA. 1076+40 (8 S.R.2) STD. CB #4.76 S 44.80 STA. 1076+40 (129' LT.) STD. HW-4 ROCK CH. PROT. TYPE C W/FILTER (4'x12'x1.5')

STA. 1079+00 L.T. (EXIST) C.B. 15" PIPE & HW-E TO BE REMOVED

STA. 1079+32.09 ℄ S.R.2 P.O.S. STA. 1079+32.09 ℄ W.B. THRU RAMP

FOR W.B. THRU RAMP PLAN AND PROFILE SEE SHEET Nº 33

EXISTING FENCE — LA — LA — ℘ — PE

EXIST. LA TO STA. 1081+00

STA. 1080+00 ℄ REF. MON. TO BE REMOVED

℄ PROPOSED W.B. THRU RAMP (U.S.R. 6 DIRECTIONAL ROADWAY)

BEGIN SHEET STA. 1070+00

END SHEET STA 1082+00

D-1 D-7 D-5 D-12 D-11 D-3 D-6 M-1 D-8 M-2 M-3 D-13 D-10 D-9 D-2 D-4

6" UNDERDRAIN TO BE REMOVED

EXIST. 9" CONC. PAV'T TO REMAIN TO STA. 1075+50

EXIST. 9" CONC. PAV'T. TO BE REMOVED

6" UNDERDRAIN TO REMAIN TO STA. 1075+50

℄ TEMPORARY ROAD

℄ EXISTING S.R.2 & U.S.R. 6 S 63°-26'-57" E

H.P.

6" UNDERDRAIN TO REMAIN TO STA. 1076+36

EXIST. 9" CONC. PAV'T. TO REMAIN TO STA. 1075+50 CONNECT TO EXIST. UNDERDRAIN

℄ PROPOSED S.R. 2

6" UNDERDRAIN TO BE REMOVED — 6" UNDERDRAIN TO REMAIN TO STA. 1075+50

6" Cantilever Sign Support R-1

6" HYDRANT LINE VALVE

FIELD DRIVE — LA — FIELD TILE (TO BE ABAND.) — W

8" INTERCEPTOR (BY OWNER)

FOR E.B. THRU RAMP DECELERATION LANE DETAILS SEE SHEET Nº 48

S.R.2 STA. 1072+84.3 (89'RT.) E.B. CONN. STA. 1072+83.48 (6'LT.)

FOR CULVERT Nº 1 DETAILS SEE SHEET Nº 141

CULVERT Nº 1

T.S. STA. 1076+32.09

RW-STA. 1077+65.44 ℄ REF. MON.

SC STA. 1080+32.04 ℄ REF. MON.

FIELD DRIVE — TO BE ABANDONED

℄ PROPOSED E.B. THRU RAMP (U.S.R. 6 DIRECTIONAL ROADWAY)

BM 13

EXIST. 12" WATER MAIN

℘ CURVE DATA
P.I. STA. 1089+83.10
Δ = 62°-03'-45" RT.
D_c = 3°00' — R = 1909.86
L_s = 400' — θ_c = 2°-00'
G_s = 6°-00' — T_s = 1351.01
P = 3.49 — E_s = 323.05
K_s = 199.93 — Δ_c = 50°-03'-45"
Y_c = 13.95 — L_c = 1668.75
X_c = 399.56 — c = .0000125

NOTES:
PAVED BERM, STA. 1072+84.3 TO STA. 1075+50 TO BE REMOVED & RECONSTRUCTED, FOR DETAILS & QUANTITIES SEE SHT. 48.
STA. 1080+32.09; BEGIN MEDIAN WIDTH TRANSITION FOR VARIABLE MEDIAN WIDTHS; SEE SHEET Nº 58.
FOR E.B. THRU RAMP PLAN AND PROFILE SEE SHEET Nº 30.
FOR WEST HALF OF EXISTING S.R. 2 CONNECTION LAYOUT AND GRADING PLAN SEE SHEET Nº 54.

BM "3" R.R. Spike in Power Service Pole (near Red Barn) 330' Rt. Sta. 1077+22 Elev. 599.028

ADACHE ASSOCIATES, INC. DESIGNED BY: L.J.D.A. 5-6-69 DRAWN BY: R.I.E. 5-8-69 CHKD. BY: 5-8-69

597.58 597.68 597.78 597.88 597.98 598.08 597.87 597.94 597.96 597.99 598.02 598.06 598.10 598.14 598.19 598.24 598.29 598.34 598.40 598.47 598.54 598.61 598.68 598.76 598.92 599.24 599.56

1070 1071 1072 1073 1074 1075 1076 1077 1078 1079 1080 1081 1082

PLAN DESIGN ELEVATION OF EXISTING PAVEMENT 54' RT. & LT.

STA. 1070+00 TO STA. 1082+00		
EXCAVATION	6,815	CU. YD.
EMBANKMENT	8,893	CU. YD.
SEEDING	21,169	SQ. YD.

610 605 600 595 590

400' V.C.

PVC. STA. 1075+50 — EL. 598.12 — PVT. STA. 1079+50

PROPOSED GRADE — EXISTING GROUND — +0.32 %

PLAN DESIGN GRADE OF EXISTING PAVEMENT 54' RT. & LT.
℄ OF EXISTING PAVEMENT
+0.10 %

+00 D-1 592.46 — +25 D-1 592.14 — D-1 125' @ -0.24% — +00 D-2 592.49 — D-2 283.48' @ -0.24%
+25 D-1 591.64 — D-1 OUTLET 116' LT.
D-1 & D-2 SHALLOW UNDERDRAIN

+81 D-2 MEET EXIST. — EXIST. 6" U.D. 3.5' ± BELOW EDGE — D-1 512' @ +0.24%
+83.42 D-2 591.81

+37 D-3 593.80 — +40 D-13 593.74 — +43 D-5 & D-6 593.86 — +60 D-12 594.04
D-5 SHALLOW UNDERDRAIN
+37 D-1 593.37 — +60 D-5 & D-12 593.37 — +60 D-6 593.30 — D-13 210' @ 0.24%
+50 D-3 & D-4 593.47 — +20 D-3 593.30 — +40 D-3 593.06 — D-3 OUTLET C.B. ℄
+40 D-6 & D-13 593.14 — D-6 OUTLET C.B. ℄
+42 D-5 592.87 — D-5 OUTLET 130' LT.
D-4 & D-6 SHALLOW UNDERDRAIN

+50 D-13 594.14 — +50 D-6 593.85 — D-6 190' @ +0.24% — D-4 425' @ -0.24%
+75 D-4 592.43
+32 D-12 596.73 — +00 D-13 595.27 — +00 D-12 597.27 — +00 D-6 595.11
+32 D-5 595.53 — +00 D-4 592.57
+75 D-4 592.35 — D-4 OUTLET 100' RT.
D-4 & D-6 SHALLOW UNDERDRAIN D-12 & D-13

ESTIMATED QUANTITIES

REF. NO.	STATION TO STATION	SIDE	G01 RK. CHK. RKOT. TYPE 'C' WITH CURB C.Y.	G02 CONC. MASONRY C.Y.	G03 TYPE B 15" L.F.	G03 TYPE B 6" L.F.	G06 TYPE F GUARD RAIL TYPE 5 L.F.	G04 ANCH. ASSEM. TYPE EA.	G04 STD. C.B. No. 4 EACH
D-1	1070+00 - 1076+37	LT.				10			
D-2	1070+00 - 1072+84	RT.							
D-3	1075+50 - 1076+40	LT.				36			
D-4	1075+50 - 1082+00	RT.				10			
D-5	1076+40 - 1079+32	LT.				10			
D-6	1076+40 - 1082+00	LT.				10			
D-7	1076+40 - 1077+97	℄ LT.	2.7	0.27	126				1
D-8	1070+00 - 1082+00	RT.							
D-9	1070+00 - 1072+84	RT.							
D-10	1075+50 - 1082+00	LT.					20		
D-11	1079+00	LT.							
D-12	1076+60 - 1082+00	LT.						10	
D-13	1076+40 - 1082+00	RT.							
M-1	1077+65.44	℄							
M-2	1080+00	℄							
M-3	1080+32.04	℄							
R-1	1070+00 - 1070+30	RT.					12.5	1	1
TOTAL			2.7	0.27	126	60	32.5	11	1

BENDS & BRANCHES	REMOVE PIPE	PIPE UNDERDRAIN	DITCH. EROSION PROTECT.	SEE SHEET NO.
BEND/TEE W/E (DIRS)	C.B. & REF. MON. UNDER	℄ REF. SHALLOW 6"	S.Y.	
24.9				
24.9				
24.8				G4
REMOVED C.M.P. 90°	REMOVED 24" ℄ EA. L.F.	EACH L.F.		
/		661		
/		284		
/		121		
/	1906	673		
/	284	319		
/	1284	591		
/	99			
/			125	1 / 3573
		540		
		550		
1				2. 3779

PLAN & PROFILE STA. 1070+00 TO STA. 1082+00

ERIE COUNTY
ERI 2-(16.13-17.39)

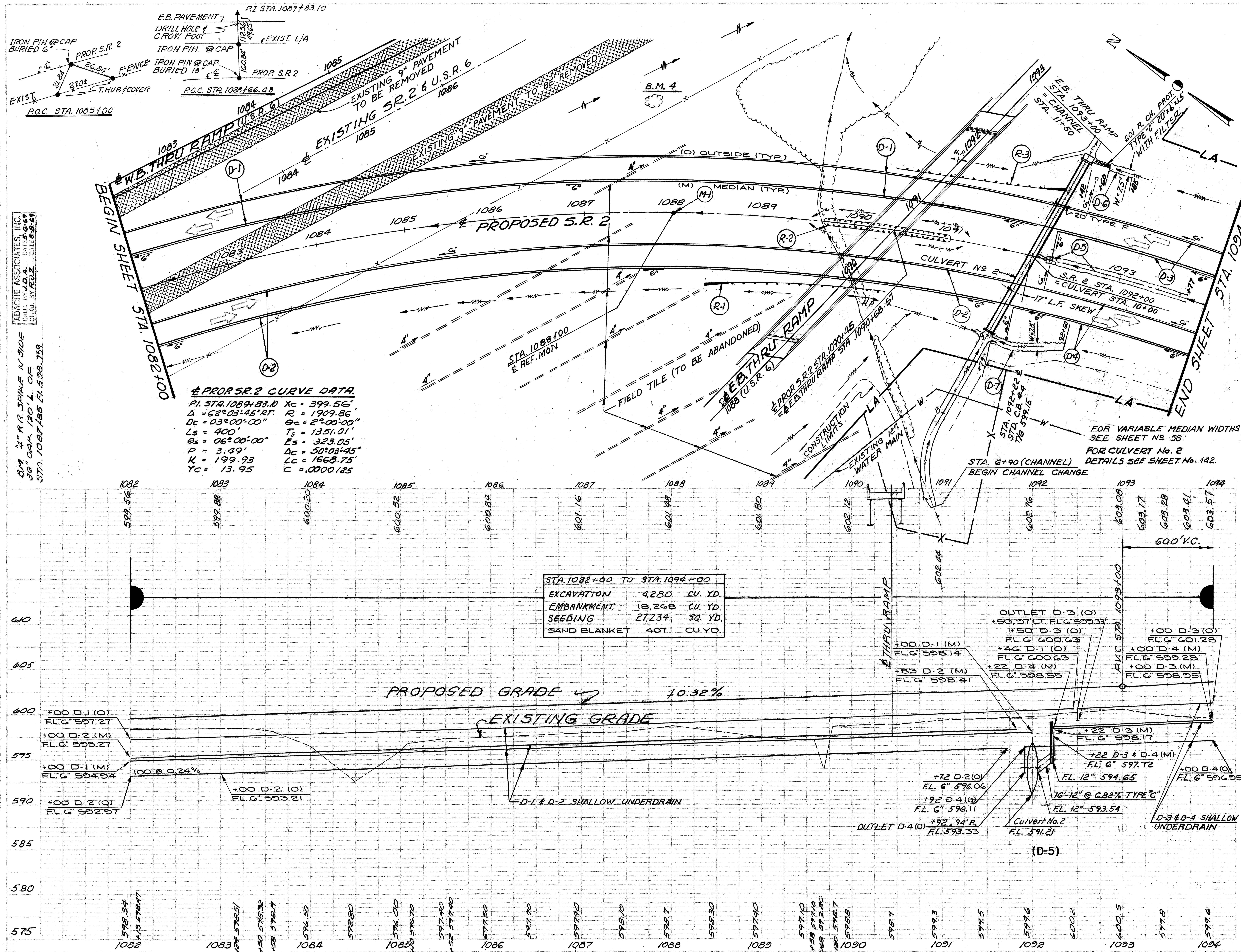

ESTIMATED QUANTITIES

REF. NO.	STATION TO STATION	SIDE	601 R.C.H. PROT., TYPE C W/FILTER C.Y.	603 TYPE "C" CONDUIT 12" L.F.	603 TYPE F CONDUIT 6" L.F.	604 C.B. STD. #4 EA.	604 ℄ REF. MON. EA.	605 PIPE UNDERDRAIN SHALLOW 6" L.F.	606 GUARD RAIL TYPE 5 L.F.	606 ANCHOR ASSEMBLY TYPE A EACH	606 TYPE T EACH	670 DITCH EROSION PROTECTION S.Y.	BENDS & BRANCH BEND 90°-45°	SEE SHEET NO.
D-1	1082+00 - 1092+46	LT.			20			2026						
D-2	1082+00 - 1091+83	RT.						1955						
D-3	1092+22 - 1094+00	LT			20			384					2	
D-4	1091+92 - 1094+00	RT.			20			427					2	
D-5	1092+22 - 1093+77	℄&LT.		16		1						125		
D-6	1092+42 - 1092+85	LT.	6.7									23		
D-7	1091+78 - 1092+60	RT.										68		
M-1	1088+00	℄					1							
R-1	1088+27.5 - 1090+27.5	RT.							162.5	1	1			
R-2	1089+65.5 - 1091+10	℄							300					
R-3	1090+37.5 - 1092+37.5	LT.							162.5	1	1			
	TOTAL		6.7	16	60	1	1	4792	[illegible]	2	2	216	X	

PLAN & PROFILE STA. 1082+00 TO STA. 1094+00

FED. RD. DIVISION	STATE	PROJECT	FISCAL YEAR
2	OHIO		

21
184

ERIE COUNTY
ERI 2 - (16.13-17.39)

S. R. 2

N

I.P. BURIED 15"

CURVE # 1

P.I.	1089 + 83.10	θs	6° 00' 00"
Δ	62° 03' 45" RT.	P	3.49'
Ts	1351.01'	K	199.93'
Es	323.05'	Yo	13.95'
Dc	3° 00' 00"	Xo	399.56'
Δc	50° 03' 45"	θc	2° 00' 00"
R	1909.86'	Lc	1668.75'
Ls	400.00'		

WOODS

PK-SHINNER 7" HIGH 30" TIMPLE
PK-SHINNER 6.5 HIGH 36" OAK

S.T. STA. 1101 + 00.84

STA. 1100+00 (37LT) STD. HW-4 FL. 592.55 R.CH. PROT. W/ FILTER TYPE "C" 13.4'x1.5'

CONSTRUCTION LIMIT — LA — LA

W-1 57 L.F. ENCASEMENT CONDUIT, 707.08, AS PER PLAN — SEE GENERAL NOTE

R-1 +48.5

D-5 D-6 D-7 D-1 D-2 D-3 D-4 M-1 M-2 R-2

12" W — 6" — 6" C — 10 TYPE F

24' 30' 30' 24'

1096 1097 1098 1099 1100 1101 1102 1103 1104 1105

S 1°-23'-12" E

20" Casing

BEGIN SHEET STA. 1094+00

END SHEET STA. 1106+00

EXISTING 12" WATER MAIN CROSSING @ STA. 1100+67±

CONSTRUCTION LIMIT — LA — LA

EXISTING 12" WATER MAIN

C.S. STA. 1097+00.84 ℄ REF. MON.

R/W STA. 1098+67.54 ℄ REF. MON.

STA. 1100+00 ℄ STD. C.B. No 4 TYG 610.75

S.T. STA. 1101+00.84

BM. "5"

20 L.F. ENCASEMENT CONDUIT, 707.08, AS PER PLAN
SEE GENERAL NOTE

NOTE: END TRANSITION FOR VARIABLE MEDIAN WIDTHS @ STA. 1097+00.84 SEE SHEET No. 58.

BM. "5" R.R. SPIKE E. SIDE 40" OAK, 170 RT. STA. 1097 + 75, EL. 602.622

ADACHE ASSOCIATES, INC.
CALC. BY U.D.A. DATE 5-6-69
CHKD. BY R.U.Z. DATE 5-8-69

1094 1095 1096 1097 1098 1099 1100 1101 1102 1103 1104 1105 1106

603.57 603.75 603.95 604.17 604.41 604.68 604.96 605.27 605.60 605.96 606.32 606.72 607.13 607.57 608.03 608.51 609.01 609.54 610.08 610.65 611.24 613.64 616.04 618.44 620.84 623.24 625.64 626.84 626.92 627.97

STA. 1094 + 00 TO	STA. 1106 + 00	
EXCAVATION	3,063	CU. YD.
EMBANKMENT	14,092	CU. YD.
SEEDING	31,209	SQ. YD.
SAND BLANKET	25,162	CU. YD.

600' V.C.

P.V.I. STA. 1096+00 ELEV. 604.04

P.V.T. STA. 1099+00

PROPOSED GRADE +2.4%

D-6, D-7, D-3 & D-4 SHALLOW UNDERDRAIN

+75.85 D-6, D-7, D-3 & D-4 F.L. 6" 613.34

P.V.C. STA. 1103+35

+00 D-10 & D-1, D-2, D-3 & D-4 F.L. 6" 623.47

+00, D-6, 95' LT. F.L. 6" 604.6

97+98, D-1, +00 F.L. 6" 606.5

+00.84 D-3 F.L. 6" 602.86

+00.84 D-1 F.L. 6" 604.86

+00 D-2 F.L. 6" 598.95

+00 D-3 F.L. 6" 599.28

+00 D-1 F.L. 6" 601.28

+02, D-7 F.L. 609.24

+00, D-7 & F.L. 608.3

+98, D-2 F.L. 6" 609.14

D-1, D-2, D-3 & D-4 SHALLOW UNDERDRAIN

EXISTING GRADE

+00.84 D-2 F.L. 6" 602.53

+00.84 D-4 F.L. 6" 600.53

+00 D-4 F.L. 6" 596.55

EXISTING 12" WATER MAIN & ELEV. 594.2± 12" CAST IRON & 20" STEEL JACKET

1330' V.C.

599.6 600.3 600.8 600.9 600.5 600.6 600.2 600.2 600.6 601.2 600.4 600.4 600.5 600.6 600.1 600.1 599.9 600.1 600.5 600.3 600.1 600.7 600.9 601.3 601.2

630 625 620 615 610 605 600 595

1094 1095 1096 1097 1098 1099 1100 1101 1102 1103 1104 1105 1106

ESTIMATED QUANTITIES

REF. NO.	STATION TO STATION	SIDE	601 R.C.H.P. TYPE "C" W/FILTER C.Y.	602 CONC. MASONRY C.Y.	603 TYPE "8" 12" L.F.	603 TYPE "F" CONDUIT 6" L.F.	603 TYPE "F" CONDUIT 12" L.F.	604 C.B. STD. 1164 EA.	605 PIPE UNDERDRAIN STABILON 6" L.F.	606 GUARD RAIL TYPE 5 TYPE T L.F.	606 ANCHOR ASSEMBLY TYPE B EA.	670 DITCH EROSION PROTECTION S.Y.	670 EXCAVATION FOR DITCH PROTECTION PLAN L.F.	BENDS & BRANCHES SEE SHEET NO.	BENDS W16 6X12 SEE SHEET NO.
D-1	1094+00 - 1097+98	LT.						1	398			253	87	2	77
D-2	1094+00 - 1099+98	LT.							598						1
D-3	1094+00 - 1106+00	RT.							1200						1
D-4	1094+00 - 1106+00	RT.							1200						
D-5	1100+00 - 1103+10	℄ LT.	2.9	0.21	82			1		439.0	1				
M-1	1097+00.84	℄								439.0	1				
M-2	1099+67.54	℄													
W-1	1100+67	LT. & RT.													
D-6	1098+00 - 1106+00	LT.				20			819						
D-7	1100+00 - 1106+00	LT.				10			616						
R-1	1101+48.5 - 1106+00	LT.													
R-2	1101+48.5 - 1106+00	RT.													
	TOTAL		2.9	0.21	82	30	56	1	4831	878.0	2	253	87	2	78

PLAN & PROFILE STA. 1094 + 00 TO STA. 1106+00

MICROFILMED
AUG 20 1990

FED. RD. DIVISION	STATE	PROJECT	FISCAL YEAR
2	OHIO		

22
284

ERIE COUNTY
ERI 2-(16.13-17.39)

S. R. 2

B.M. "7" - R.R. SPIKE IN U. POLE
ALONG RAILROAD, 254' LT.
STA. 1112 + 50, EL. 599.726

B.M. "6" - R.R. SPIKE IN P. POLE
248' RT. STA. 1107 + 90
EL. 604.425

ADACHE ASSOCIATES, INC.
CALC. BY: JAG 6-8-81
CHKD. BY: RJZ DATE: 6-9-81

N. NAIL & BUTTON
R.O.T. STA. 1110 + 82.35
IRON PIN BURIED 6"
20.13' R.R. TIE
3.43' FENCE POST
NAIL & BUTTON
NAIL & BUTTON

BM "7"
STA. 1111+75 ℄ STD. C.B. 2-28 T/G 632.50

S.R. 2 STA. 1110+29.15 = CON. RAIL CO. 2708+06.34

STA. 1109+00 ℄ REF. MON.

STA. 1111+55 ℄ REF. MON.

CONSTRUCTION LIMIT

CURB, TYPE 6 (TYP. @ APP. SLABS)

33'×3' SOD

24'×3' SOD

10" TYPE F

(O) OUTSIDE (TYP.)

(M) MEDIAN (TYP.)

S 1°-23'-12" E

CONSTRUCTION LIMIT

CONSOLIDATED RAIL CORP.

BM "6"

BEGIN SHEET STA. 1106+00

END SHEET STA. 1118+00

PROPOSED STRUCTURE DATA NO. ERI-2-1678 L/R.

TYPE: CONTINUOUS COMPOSITE STEEL BEAM WITH REINFORCED CONCRETE DECK AND SUBSTRUCTURE.
SPANS: 56'-0", 70'-0", 56'-0" c/c BEARINGS
ROADWAY: 40'-0" F/F PARAPETS.
LOADING: HS 20-44
SKEW: 33°-01'-40" LEFT FORWARD.
WEARING SURFACE: MONOLITHIC CONCRETE.
ALIGNMENT: TANGENT.
APPROACH SLABS: AS-1-81 (25'-0" LONG)

STA. 1111+75 (147' RT.)
STD. HW-4 F.L. 599.2
R. CH. PROT. TYPE C
1'1" × 4' × 1.5"W FILTER

+2.4% -1.7152%

PROPOSED GRADE

D-1 & D-2 SHALLOW UNDERDRAIN (O. & M.)

+00 D-1 & D-2 (O. & M.) F.L. 6" 623.47
+38 D-1 (M) F.L. 6" 625.13
+56 D-1 (O) F.L. 6" 625.28
+00 D-2 (M) F.L. 6" 628.60
+83 D-2 (O) F.L. 6" 628.44
+54 D-3 (O) F.L. 6" 631.00
+76 D-3 (M) F.L. 6" 631.05
+39 D-4 (M) F.L. 6" 630.35
+21 D-4 (O) F.L. 6" 630.40
+75 D-3 (O & M) F.L. 6" 630.09
+75 D-3 & D-4 (O & M) F.L. 6" 629.11
+00 D-13 & D-14 (O & M.) F.L. 6" 627.58

381' & 399' @ 0.24%
536' & 554' @ 0.24%

D-3 & D-4 SHALLOW UNDERDRAIN (O. & M.)

+00, D-3(M) D-4(M) F.L. 6" 628.8
+00, D-3(O) 78' LT. D-4(O) 78' RT F.L. 6" 627.8
+00, D-3(O) D-4(O) F.L. 6" 628.3
+02, D-13, D-14 F.L. 6" 628.75

BRIDGE LIMITS 189.38'
STA. 1109+42.41
STA. 1111+31.79
P.V.I. STA. 1112+00 El. 642.44

EXISTING GRADE

1330' V.C.

*STA. 1106+00 TO STA. 1118+00		
EXCAVATION	1,350	CU. YD.
EMBANKMENT	242,915	CU. YD.
SEEDING	34,456	SQ. YD.
SAND BLANKET	32,081	CU. YD.

* INCLUDES WORK ALONG CONSOLIDATED RAIL CORP. TRACK, SEE SHEET 126

ESTIMATED QUANTITIES

REF. NO.	STATION TO STATION	SIDE	601 R.CM.P. TYPE C W/FILTER C.Y.	602 CONC. MASONRY C.Y.	603 CONDUIT TYPE "B" TYPE "E" 6" 12" L.F. L.F.	604 C.B. 2-28 EA.	604 ℄ REF. MON. EA.	605 PIPE UNDERDRAIN 10"DIA.M.P. 12"DIA.M.P. 6"DIA.H.P.	606 GUARD RAIL TYPE 5 L.F.	606 BARRIER ASSEMBLY TYPE 3 EA.	606 BR. TERM. REINF. SLAB EA.	606 SEEDING & MULCH S.Y.	606 SEEDING & MULCH S.Y.	607 SPECIAL DITCH PAVING TYPE A JOINT LIN. FT.	607 SPECIAL DITCH PAVING TYPE A JOINT LIN. FT.	SEE SHEET NO.
D-1	1106+00 - 1109+56	LT.														475
D-2	1106+00 - 1109+01	RT.														1740
D-3	1111+76 - 1117+00	LT.														
D-4	1111+21 - 1117+00	RT.														
D-5	1108+56 - 1109+40	RT.														
D-6	1109+38 - 1110+60	LT.														
D-7	1110+10 - 1111+30	RT.														
D-8	1111+20 - 1112+10	LT.														
D-9	1111+75	RT.	2.7	0.21			1									
D-10	1115+90 - 1118+00	LT.				95										
D-11	1115+90 - 1118+00	RT.														
D-12	1108+96 - 1109+16	LT&RT.														
D-13	1117+02 - 1118+00	LT.														
M-1	1109+20	℄														
M-2	1111+55	℄														
D-14	1117+02 - 1118+00	RT.														
R-1	1106+00 - 1109+35	LT.														
R-2	1106+00 - 1108+86	RT.														
R-3	1107+05 - 1109+05	LT&RT.														
R-4	1107+007 - 1108+00	RT.														
R-5	1111+624 - 1113+24	LT&RT.														
R-6	1111+87.9 - 1118+00	RT.														
J-1	1108+60	LT.														
J-2	1108+20	RT.														
J-3	1112+30	LT.														
J-4	1112+10	RT.														
	TOTAL		2.7	0.21	56 61 30 95	1	2	104	2220.9	100	4	2	127	20	96.4	

PLAN & PROFILE STA. 1106+00 TO STA. 1118+00

ERIE COUNTY
ERI 2-(16.13-17.39)

MICROFILMED AUG 20 1990

PROPOSED STRUCTURE DATA NO. ERI-2-1701 L/R.

TYPE: CONTINUOUS STEEL BEAM WITH REINFORCED CONCRETE DECK AND SUBSTRUCTURE.
SPANS: 35'-0", 69'-6", 35'-0" C/C BEARINGS.
ROADWAY: 40'-0" F/F PARAPETS.
LOADING: HS 20-44
SKEW: 02°34'-37" LEFT FORWARD.
WEARING SURFACE: ASPHALT CONCRETE
ALIGNMENT: TANGENT
APPROACH SLABS: AS-1-81 (25'-0" LONG)

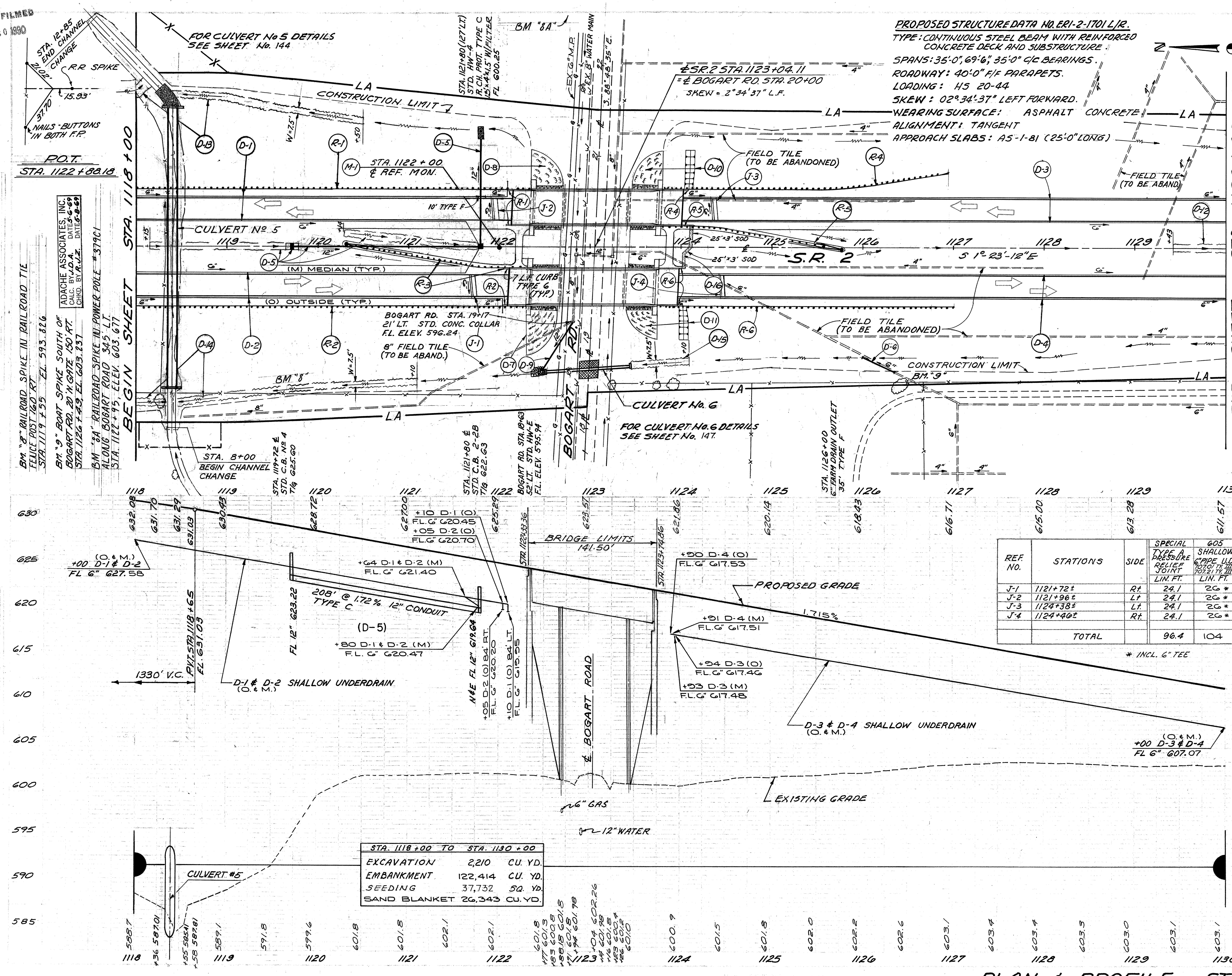

REF. NO.	STATIONS	SIDE	SPECIAL TYPE A PRESSURE RELIEF JOINT LIN. FT.	605 SHALLOW 6" PIPE U.D. 707.01 TY. III OR 707.21 TY. III LIN. FT.
J-1	1121+72±	Rt.	24.1	26 *
J-2	1121+96±	Lt.	24.1	26 *
J-3	1124+38±	Lt.	24.1	26 *
J-4	1124+46±	Rt.	24.1	26 *
	TOTAL		96.4	104

* INCL. 6" TEE

STA. 1118+00 TO STA. 1130+00		
EXCAVATION	2,210	CU. YD.
EMBANKMENT	122,414	CU. YD.
SEEDING	37,732	SQ. YD.
SAND BLANKET	26,343	CU. YD.

ESTIMATED QUANTITIES

REF. NO.	STATION TO STATION	SIDE	601 R. CH. PROT. TYPE C W/FILTER C.Y.	602 CONC. MASONRY C.Y.	609 CURB TYPE 6 L.F.	603 TYPE B CONDUIT 12" L.F.	603 TYPE C CONDUIT 12" L.F.	TYPE F CONDUIT 6" L.F.	TYPE F CONDUIT 12" L.F.	604 C.B. #2-2B EA.	604 C.B. #4 EA.	604 ℄ REF. MON. EACH	605 PIPE U.D. SHALLOW 6" L.F.	ANCHOR ASSEMBLY TYPE B EA.	ANCHOR ASSEMBLY TYPE T EA.	ANCHOR ASSEMBLY TYPE A BARRIER DESIGN EACH	606 BR. TERM. ASSEMBLY A EACH	606 BR. TERM. ASSEMBLY J EACH	GUARD RAIL BARRIER TYPE 5 L.F.	GUARD RAIL STD. TYPE 5 L.F.	660 REINF. SODDING STD. S.Y.	660 SODDING S.Y.	670 SLP. ERO. PROT. S.Y.	670 DIT. ERO. PROT. S.Y.	BENDS & BRANCHES 60°x6"	BENDS & BRANCHES 90°x6"	BENDS & BRANCHES 25°x12"	SEE SHEET NO.
D-1	1118+00 - 1122+30	LT.						30					802												1	1		
D-2	1118+00 - 1122+24	RT.						20					815												1	1		
D-3	1123+93 - 1130+00	LT.											1213															
D-4	1123+90 - 1130+00	RT.											1219															
D-5	1118+15 - 1122+18	℄&LT.	2.9	0.21		63	208		65	1	1													250			2	83
D-6	1126+00 - 1126+34	LT.						35																				85
D-7	1122+00 - 1122+63	RT.																					160					
D-8	1122+06 - 1122+70	LT.																					131					
D-9	BOGART RD. 18+63 - 19+17	LT.		0.21			60																					147
D-10	1123+46 - 1124+08	LT.																			39		129					
D-11	1123+40 - 1124+02	RT.																			39		129					
D-12	1129+43 - 1130+00	℄																						48				
D-13	1118+00 - 1120+50	LT.																						193				
D-14	1118+00 - 1121+10	RT																						239				
D-15	1123+45 - 1124+10	RT																						54				
D-16	1123+92 - 1124+15	LT&RT.																				17						
R-1	1118+00 - 1122+36.2	LT.			14													1		436.2								
R-2	1118+00 - 1122+30.5	RT.			7												1			430.5								
R-3	1120+32 - 1122+32	RT.			7											1	1		50	125								
R-4	1123+78 - 1126+90.5	LT.			7									1			1			300								
R-5	1123+76 - 1125+76	LT.			7											1	1		50	125								
R-6	1123+72 - 1126+97	RT.			14										1			1		312.5								
M-1	1122+00	℄										1																
TOTAL			2.9	0.42	56	63	268	85	65	1	1	1	4049	1	1	2	4	2	100	1729.2	78	17	549	784	X	X	X	

FED. RD. DIVISION	STATE	PROJECT	FISCAL YEAR
2	OHIO		

24
184

ERIE COUNTY
ERI-2-(16.13-17.39)

S.R. 2

ADACHE ASSOCIATES, INC.
CALC. BY A.D.A. DATE 6-69
CHKD. BY R.L.Z. DATE 6-69

BM "10" BOAT SPIKE END FENCE POST 160' RT. STA. 1133+78 ±, EL. 604.415

BM "11" SPIKE 40" OAK 335' RT., STA. 1138 ± 36 EL. 602.295

STA. 1131+00 (165' LT.) STD. HW-4 FL 600.25 R. CH. PROT. TYPE C 12.5'+4'+1.5' W/FILTER

STA. 1131+00 ℄ STD. C.B.-No 4 T/G 606.85

STA. 12+00 END CHANNEL CHANGE

STA. 1142+00 (103' LT) STD. HW-4 FL 598.80 R. CH. PROT. TYPE C 12.5'+4'+1.5' W/FILTER

BEGIN SHEET STA. 1130+00

END SHEET STA. 1142+00

LA

CONSTRUCTION LIMIT

STA. 1132+00 ℄ REF. MON.

M-1

ABANDON ALL FIELD TILE WITHIN LA LIMITS

FIELD DRIVE (TO BE ABANDONED)

10' TYPE F

30' TYPE F

5' TYPE F

CULVERT No 7

℄ S 1°-23'-12" E

BM. "10"

BM "11"

FOR CULVERT No 7 DETAILS SEE SHEET No 148

STA. 8+00 BEGIN CHANNEL CHANGE

STA. 1142+00 ℄ STD. C.B. No 4 T/G 594.72

CITY OF HURON CORP. LINE

D-1 D-2 D-3 D-4 D-5 D-6 D-7 D-8 D-9 D-10 D-11 D-12 D-13 D-14 D-15 D-16 D-17 D-18

1130 1131 1132 1133 1134 1135 1136 1137 1138 1139 1140 1141 1142

611.57 609.85 608.14 606.42 605.56 604.71 604.28 603.88 603.48 603.10 602.74 602.39 602.05 601.72 601.41 601.12 600.84 600.57 600.38 600.08 599.85 599.64 599.44 599.86 599.09 598.44 598.79 598.67 598.55 598.45 598.09 597.72

PROPOSED GRADE

-1.715%

600 V.C.

P.V.C. STA. 1134+00

P.V.I. STA. 1137+00 El. 599.56

P.V.T. STA. 1140+00

-0.3686%

+84 D-3 & D-6 F.L. 6" 605.62

+88 D-4 & D-7 F.L. 6" 605.55

+00 D-1, D-3, D-6 & D-9 F.L. 6" 607.07

+00 D-3 & D-6 F.L. 6" 604.40

EXISTING GRADE +98, D-1-95' LT, D-9-95' RT. FL 6" 604.60

D-1, D-3, D-6 & D-9 SHALLOW UNDERDRAIN

+98, D-1 & D-9 FL 6" 605.38

+02, D-17 & D-18 FL 6" 605.35

+50 D-17, D-4, D-7 & D-18 F.L. 6" 601.06

D-17, D-4, D-7 & D-18 SHALLOW UNDERDRAIN

+00 D-17 & D-18 F.L. 6" 598.54

D-17 & D-18 UNCL. UNDERDRAIN

D-17 & D-18 DEEP UNDERDRAIN

D-4 & D-7 SHALLOW UNDERDRAIN

+00 D-2, D-5, D-8 & D-10 F.L. 6" 593.22

+88 D-5 & D-8 F.L. 6" 593.27

+84 D-4 & D-7 F.L. 6" 593.28

+54 D-2 FL 6" 594.15

+79 D-10 FL 6" 594.03

D-2, D-4, D-7 & D-10 SHALLOW UNDERDRAIN

+50 D-17 FL 6" 592.50

+50 D-17 (95' LT) FL 6" 592.00

+75 D-18 FL 6" 592.38

+75 D-18 (95' RT.) FL 6" 591.93

+00 D-4 & D-7 F.L. 6" 591.58

CULVERT #7

STA. 1130 + 00 TO STA. 1142 + 00		
EXCAVATION	9,451	CU. YD.
EMBANKMENT	20,366	CU. YD.
SEEDING	27,929	SQ. YD.
SAND BLANKET	4018	CU. YD.

ESTIMATED QUANTITIES

REF. NO.	STATION TO STATION	SIDE	601 R.CH. TYPE C W/FILTER C.Y.	602 CONC. MASONRY C.Y.	603 TYPE "8" CONDUIT 12" L.F.	603 TYPE "8" CONDUIT 15" L.F.	604 C.B. No. 4 EA.	604 E.A.R.F. MON. EA.	605 PIPE UNDERDRAIN DEEP SHALLOW UNCL. 6" L.F.	605 PIPE UNDERDRAIN DEEP SHALLOW UNCL. 6" L.F.	607 DITCH EROSION PROTECTION S.Y.	BENDS & BRANCHES SEE SHEET NO.	TYPE "F" C.B. CONDUIT No. 4 6" L.F.	TOTAL
D-1	1130+00 - 1130+98	LT							579	148	77	86		849
D-2	1135+54 - 1142+00	LT							604	148	125	85		
D-3	1130+00 - 1131+00	LT									225			
D-4	1130+88 - 1142+00	LT									247			
D-5	1141+88 - 1142+00	LT									53			
D-6	1130+00 - 1131+00	RT									58			
D-7	1130+88 - 1142+00	RT												
D-8	1141+88 - 1142+00	RT												
D-9	1130+00 - 1130+98	RT												
D-10	1139+75 - 1142+00	RT												
D-11	1130+00 - 1131+00	℄ LT	2.9	0.21	105									100
D-12	1140+43 - 1142+00	℄ LT	2.9	0.27		103								3549
D-13	1137+50 - 1140+65	LT												
D-14	1137+50 - 1141+10	RT												
D-15	1140+86 - 1141+98	LT												1183
D-16	1141+31 - 1142+00	RT												
D-17	1131+02 - 1139+50	LT											10	220
D-18	1131+02 - 1139+75	RT											10	
M-1	1132+00	℄												2
TOTAL			5.8	0.48	105	103	1	1	1183	296	707	171	20	

PLAN & PROFILE STA. 1130+00 TO STA. 1142+00

DIST.	STATE	PROJECT	SHEET NO.
2	OHIO		25 / 184

ERIE COUNTY
ERI 2-(16.13-17.39)

I.P. BURIED 6" DEEP — NAIL & BUTTON FENCE POST — 5.49' — 7.09' — 24" HICK.

P.O.T.
STA. 1145+32.72

ADACHE ASSOCIATES, INC.
CALC. BY J.D.A. DATE 5-6-69
CHKD. BY R.J.Z. DATE 5-8-69

BM "12" R.R. SPIKE ROOT
36" OAK 114' LT.
STA. 1145+38. EL. 606.885

S.R. 2

URBAN — RURAL — CITY OF HURON CORP. LINE — DIVISION OF QUANTITIES STA. 1142+65.83

BEGIN SHEET STA. 1142+00 — END SHEET STA. 1154+00

STA. 1142+65.83 & REF. MON. — STA. 1152+00 & REF. MON.

LA — CONSTRUCTION LIMIT — BM "12" — 3" TYPE F — 6" — H.P. — D-1 — D-2 — D-3 — D-4 — D-5 — D-6 — D-7 — D-8 — D-9 — D-10 — M-1 — M-2

1143 — 1144 — 1145 — 1146 — 1147 — 1148 — 1149 — 1150 — 1151 — 1152 — 1153

S 1°-23-12" E

TAPER 200'

BEGIN TAPER STA. 1152+50.47 26' RT.

STA. 1142+65.83 TO STA. 1154+00		
EXCAVATION	99,670	CU. YD.
EMBANKMENT	897	CU. YD.
SEEDING	23,811	SQ. YD.

STA 1142+00 TO STA 1142+65.83		
EXCAVATION	425	CU. YD.
EMBANKMENT	1,519	CU. YD
SEEDING	1,444	SQ. YD.

597.72 — 597.35 — 596.98 — 596.61 — 596.25 — 595.88 — 595.51 — 595.14 — 594.77 — 594.40 — 594.03 — 593.67 — 593.30

610 — 605 — 600 — 595 — 590

EXISTING GRADE

PROPOSED GRADE

-0.3686%

+50 D-1 & D-5
FL 6" 593.04

+00 D-1, D-2, D-4 & D-5
FL 6" 593.22

+00 D-7 & D-10
FL 6" 591.18

+00 D-8 & D-9
FL 6" 588.80

+00 D-7 & D-10
FL 6" 587.13

D-1, D-5, D-7 & D-10 UNCL. UNDERDRAIN

D-1, D-2, D-4 & D-5 SHALLOW UNDERDRAIN

D-8 & D-9 SHALLOW UNDERDRAIN

D-7 & D-10 DEEP UNDERDRAIN

589.4 — 590.8 — 591.2 — 591.4 — 602.9 — 604.4 — 604.6 — 605.9 — 606.7 — 607.1 — 607.4 — 606.7 — 607.1 — 608.0 — 608.3 — 608.5 — 608.1 — 608.5 — 608.2 — 608.3 — 607.2 — 607.3 — 607.0 — 606.8 — 607.0

1142 — 1143 — 1144 — 1145 — 1146 — 1147 — 1148 — 1149 — 1150 — 1151 — 1152 — 1153 — 1154

ESTIMATED QUANTITIES

REF. NO.	STATION TO STATION	SIDE	603 TYPE F CURB & GUTTER 6" L.F.	604 CONC. APRON PROTECTION S.Y.	605 PIPE UNDERDRAIN DEPTH SHALLOW UNCL. 6' L.F.	605 PIPE UNDERDRAIN DEPTH SHALLOW UNCL. 8' L.F.	605 PIPE UNDERDRAIN DEPTH SHALLOW UNCL. 10' L.F.	605 PIPE UNDERDRAIN DEPTH DEEP 6' L.F.	605 PIPE UNDERDRAIN DEPTH DEEP 8' L.F.	605 PIPE UNDERDRAIN DEPTH DEEP 10' L.F.	604 CONC. APRON PROTECTION & AZF. CANOUN TOWN. EA.	SEE SHEET NO.
D-1	1142+00 - 1142+65.83	LT.	5			8.0						
D-2	1142+00-1142+65.83	LT.	5									
D-3	1142+00-1142+10	RT.										
D-4	1142+00 - 1142+65.83	RT.										
D-5	1142+00 - 1142+65.83	RT.										
M-1	1142+65.83	℄									1	
	TOTAL		10								1	
D-6	1152+93 - 1154+00	℄										
D-7	1142+65.83 - 1154+00	LT.										
D-8	1142+65.83 - 1154+00	LT.										
D-9	1142+65.83 - 1154+00	RT.										
D-10	1142+65.83 - 1154+00	RT.										
M-2	1152+00	℄									1	
	TOTAL			80	85		89				1	
						45	16					
						61						
						66	16					
						50						
						222	32					
					1100		34					
					1134							
					1134		34					
					1100							
					2200	268	68				1	

PLAN & PROFILE STA. 1142+00 TO STA. 1154+00

FED. RD. DIVISION	STATE	PROJECT	FISCAL YEAR
2	OHIO		

ERIE COUNTY
ERI 2-(16.13-17.39)

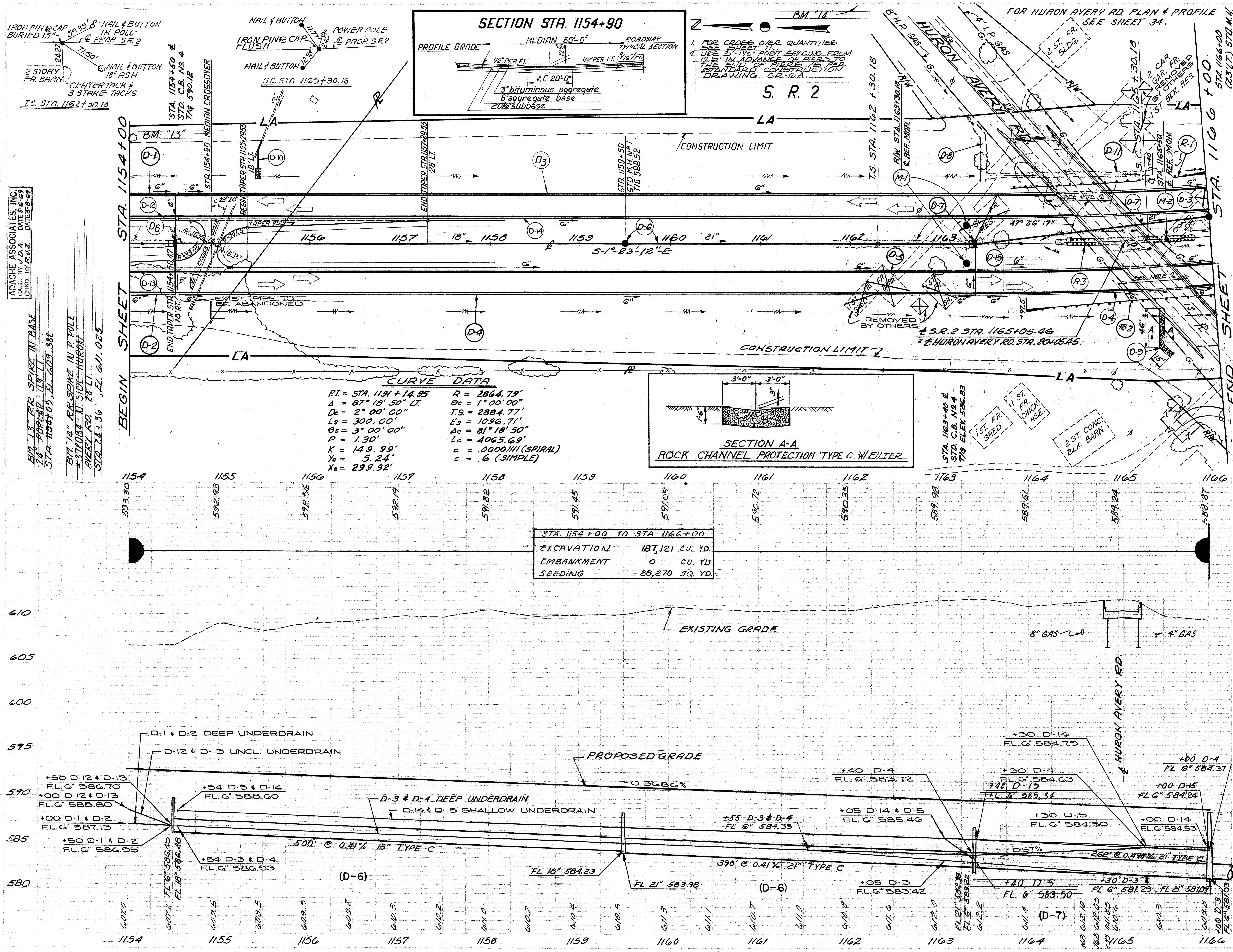

ESTIMATED QUANTITIES

REF. NO.	STATION TO STATION	SIDE	601 ROCK CHANNEL PROT., TYPE C W/ FILTER C.Y.	602 CONC. MASONRY C.Y.	603 TYPE "B" CONDUIT 6" L.F.	603 TYPE "C" CONDUIT 18" L.F.	603 TYPE "C" CONDUIT 21" L.F.	603 TYPE "F" CONDUIT 12" L.F.	604 C.B. STD. #4 EA	604 M.H. & STD. No1 EA	604 REF. MON. EA	605 PIPE UNDERDRAIN SHALLOW 6" L.F.	605 PIPE UNDERDRAIN DEEP 6" L.F.	605 PIPE UNDERDRAIN UNCL. 6" L.F.	606 GUARD RAIL TYPE 5 L.F.	606 ANCHOR ASSEMBLY TYPE A EACH	606 ANCHOR ASSEMBLY TYPE T EACH	670 DITCH EROSION PROTECTION S.Y.	660 REINF. SODDING S.Y.	BENDS & BRANCHES TEE 90°x6"	BENDS & BRANCHES BEND 90°6"	SEE SHEET NO.
D-1	1154+00 - 1154+50	LT.			56								50							1		
D-2	1154+00 - 1154+50	RT.			56								50							1		
D-3	1154+54 - 1166+00	LT.											1146									
D-4	1154+54 - 1166+00	RT.			56								1136								2	
D-5	1154+54 - 1163+40	RT.										886										
D-6	1159+00 - 1163+40	℄				500	390		1	1								36				
D-7	1161+83 - 1166+00	LT. & ℄					262		1	1								125				
D-8	1163+48	LT.																	47			
D-9	1165+41	RT.	20.3																			
D-10	1155+43	LT	1.8	0.21				30														92
D-11	1163+50 - 1165+40	LT.																158				
D-12	1154+00 - 1154+50	LT.												50							1	
D-13	1154+00 - 1154+50	RT.												50							1	
D-14	1154+54 - 1166+00	LT.										1146										
D-15	1163+42 - 1166+00	RT.										258										
M-1	1163+30.18 (20' offset)	RT. & LT.									2											
M-2	1165+50	℄									1											
R-1	1163+82.5 - 1166+07.5	LT													187.5	1	1					
R-2	1163+97.5 - 1166+22.5	RT.													187.5	1	1					
R-3	1164+28 - 1165+85	LT. & RT.													325							
	TOTAL		22.1	0.21	168	500	652	30	2	2	3	2290	2382	100	700	2	2	319	47	X	X	

PLAN & PROFILE STA. 1154+00 TO STA. 1166+00

F.H.W.A. REGION	STATE	PROJECT	
5	OHIO		

27/284

ERIE COUNTY
ERI 2-(16.13-17.39)

CURVE DATA

P.I. STA. 1191+14.95
Δ = 87°18'50" LT.
Dc = 2°00'00"
Le = 300.00'
θs = 3°00'00"
xm = 149.99'
p = 1.30'
k = 149.24'
Xc = 299.92'
R = 2864.79'
θc = 1°00'00"
Ts = 2864.77'
Es = 1096.71'
Δc = 81°18'50"
Lc = 4066.50'
c = .0000111 (SPIRAL)
c = .6 (SIMPLE)

S.R. 2

STA. 1166+00
STA. 1167+00 P.O.C.
STA. 1168+00
STA. 1169+00
STA. 1170+00
STA. 1171+00
STA. 1172+00
STA. 1173+00
STA. 1174+00
STA. 1175+00
STA. 1176+00
STA. 1177+00
STA. 1178+00

BEGIN SHEET
END SHEET

TELEPHONE CABLE LINE
IRON PIN BURIED
80.03'
74.78'

STA. 1165+00 ℄ SR 2
STD. 23 LH No 1
T/C 588.50

℄ SR 2 STA. 1166+65 (54' LT.)
BEGIN RAMP #2 ACCEL. TAPER

STA. 1165+60 ℄ SR 2
STD. CB No 4
T/G 584.55

STA. 1170+05 ℄ SR 2
STD. MH No 3
T/G 585.72

STA. 1170+60 ℄ SR 2
STD. CB No 4
T/G 584.30

STA. 1172+85 ℄ SR 2
STD. CB 2/2.8
T/G 585.25

QUANTITIES ON SHEET Nº 26

B.M. 16 ~ R.R. SPIKE IN EAST SIDE 30" WALNUT 43° LT. AVERY ROAD
STA. 1167+47.87
EL. 593.016

B.M. 15" ~ R.R. SPIKE IN EAST SIDE 30" WALNUT 43° LT. AVERY ROAD
STA. 15+49 ELEV. 601.927

ADACHE - CIUNI - LYNN
CALC BY DATE
CHKD. BY DATE

WOODED AREA

CONSTRUCTION LIMIT

REMOVED BY OTHERS
STY. BRICK RES.

FIELD TILE (TO BE ABANDONED)

MUD BROOK

LA

D-1 D-2 D-3 D-4 D-5 D-6 D-7 D-8 D-9 D-10 D-11 D-12 D-13
J-1 J-2
R-1 R-2 R-3 R-4
M-1

10' TYPE 'F'
14" L.F.
CULVERT Nº 8
21" 12"
3'-50' SOD
STA. 1173+00 ℄ REF. MON.

R.C.P. Type C W/ Filter 18" Thick

6" HURON AVERY RD 8
4" I.P. GAS
6" & 8" HP GAS

STA. 1169+80
FARM DRAIN OUTLET
20' TYPE F-6"

FOR CULVERT Nº 8 DETAILS SEE SHEET Nº 151.

℄ S.R. 2 STA. 1171+97.26 BEGIN RAMP 3 DECEL
54' RT.

STA. 1172+85 70' RT.
SETTLEMENT PLATFORM

BM "16"
BM "15"

CONSTRUCTION LIMITS

WOODED AREA

FOR RAMP #2 DETAILS SEE SHT. NO. 51
FOR RAMP #3 DETAILS SEE SHT. NO. 52

ESTIMATED QUANTITIES

REF NO.	STATION TO STATION	SIDE	601 TYPE C CONC. WITH FILTER CY	603 TYPE OF CONDUIT 12" 21" LF LF	603 8" LF	604 STANDARD CB EA	604 CB EA	604 REF MON EA	605 PIPE UD SHALL DEEP LF	605 ANCHOR ASSEMBLY TYPE B EA	606 TYPE 'S' BARR RAIL LF	606 TYPE A BRIDGE RAIL ASSM EA	606 TYPE B GUARD RAIL ASSM LF	606 TYPE B BARR RAIL STD EA	609 CURB TYPE G LF	610 SODDING SLOPE, DITCH & BORDER PROTECTION SY	610 SEEDING SLOPE, DITCH & BORDER PROTECTION SY	611 TOPSOIL SY	SPEC. 670 SEDIMENT CONTROL TYPE A PRESS. FORM JOINT EA	SPEC. 670 SEDIMENT CONTROL TYPE A PRESS. FORM JOINT LF	BENDS WYE TEE 30° × 6"	BENDS WYE TEE 60° × 6"	SEE SHT. NO.
D-1	1166+00 - 1170+22	LT																			1		
D-2	1166+00 - 1169+93	RT																				1	
D-3	1170+30 - 1172+96	LT																				1	
D-4	1170+30 - 1172+37	RT																				2	
D-5	1166+00 - 1172+82	RT																				1	
D-6	1166+00 - 1170+05	LT																					
D-7	1170+05 - 1173+05	LT/RT																					
D-8	1166+00 - 1173+02	LT																					
D-9	1166+75 - 1173+48	RT		18.0																			
D-10	1172+05 - 1173+48	LT																					
D-11	1172+80 - 1173+55	RT																					
D-12	1166+80 - 1173+55	LT																					
D-13	1168+50 - 1170+10	RT																					
J-1	1172+75	LT																					
J-2	1172+75	RT																					
R-1	1171+06 - 1173+06	RT																					
R-2	1171+62 - 1173+12	RT																					
R-3	1172+81 - 1175+17	LT																					
M-1	1173+00	℄																					
R-4	1172+79 - 1173+12	RT																					
TOTALS			18.0	276	409	80	20	2	1	1	104*	1410	1517	1	1	2625	50	52	17	44	1253	574	70	8

* 707.01 TYPE III OR 707.21 TYPE III

STA. 1166+00	TO STA. 1178+00	
EXCAVATION	32,291	CU. YD.
EMBANKMENT	7,799	CU. YD.
SEEDING	18,122	SQ. YD.

GRANULAR BORROW, TYPE 1 1869 CU.YD.

PROFILE

400' VERTICAL CURVE
P.V.C. STA. 1168+00
P.V.I. STA. 1170+00
P.V.I. ELEV. 587.40
P.V.T. STA. 1172+00
P.V.T. ELEV. 1172+00

BRIDGE LIMITS
42' RT. STA. 1173+18.50
42' LT. STA. 1173+25.26
LT. = 660 RT. = 780' ℄-℄ ABUT. BRG.

ALL ROADWAY PLAN STATIONS AND QUANTITIES ARE BASED ON THE "STEEL ALTERNATE" BRIDGE.

PROPOSED GRADE
EXISTING GRADE
-0.36%
+0.30 %

D-5 & D-8 SHALLOW UNDERDRAIN
D-1 & D-2 DEEP UNDERDRAIN
D-3 & D-4 DEEP UNDERDRAIN

+00 D-4 F.L.G" 583.24
+93 D-2 F.L.G" 583.42
+00 D-8 F.L.G" 584.53
+00 D-2 F.L.G" 584.37
+75 D-2 F.L.G" 583.17
+75 D-2 (106' RT.) F.L.G" 582.67
+00 D-4 (104 RT.) F.L.G" 582.74
+00 D-5 F.L.G" 584.24
+00 D-1 F.L.G" 581.03
+50 D-1 F.L.G" 579.56
+05 D-1 F.L.G" 579.43
+25 D-1 (96' LT.) F.L.G" 578.93
+22 D-1 F.L.G" 579.68
+75 D-8 F.L.G" 583.57
+75 D-2 F.L.G" 583.41
+75 D-5 F.L.G" 583.28
+60 D-5 F.L.G" 582.84
+60 D-8 F.L.G" 583.13
+00 D-5 F.L.G" 583.18
+97 D-4 F.L.G" 583.71
+97 D-4 F.L.G" 584.78
+02 D-8 F.L.G" 583.71
+92 D-5 F.L.G" 583.46
+96 D-3 F.L.G" 579.84
+00 D-3 F.L.G" 579.37
+00 D-3 (110' LT.) F.L.G" 578.87
+30 D-3 F.L.G" 579.87

360' @ 0.455% 21" TYPE C
D-1 55' @ 0.24%
45' @ 0.5% 21" TYPE C
51' @ 5% 12" TYPE C
225' @ 1.0% 12" TYPE C
D-3 156' @ 0.24%
D-2 100' @ 0.24%
D-5 185' @ 0.24%
D-8 185' @ 0.24%

FL. 21" 581.05
FL. 21" 579.31
FL. 21" 579.07
FL. 12" 578.87
FL. 12" 579.82
FL. 12" 582.84
FL. 12" 580.55
FL. 12" 582.34

PLAN & PROFILE STA. 1166+00 TO STA. 1178+00

FED. RD. DIVISION	STATE	PROJECT	FISCAL YEAR
2	OHIO		

ERIE COUNTY
ERI 2-(16.13-17.39)

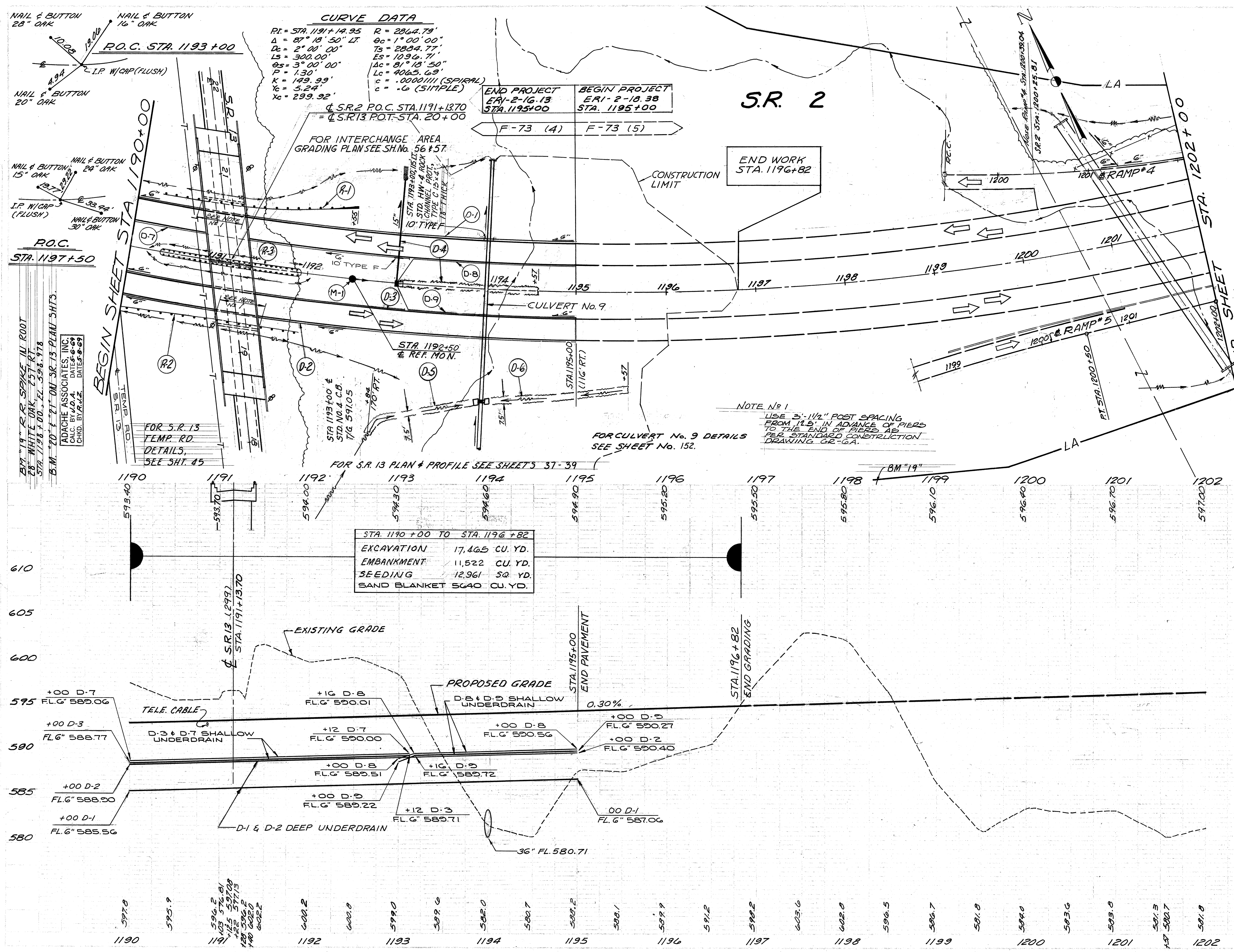

ESTIMATED QUANTITIES

REF. NO.	STATION TO STATION	SIDE	601 ROCK CHANNEL PROTECTION, TYPE C WITH FILTER C.Y.		602 CONCRETE MASONRY C.Y.	603 CONDUIT TYPE B 15" L.F.	603 CONDUIT TYPE F 6" L.F.	604 STD. CB No. 4	604 ℄ REF. MON. EA.	605 PIPE UNDERDRAIN SHALLOW 6" L.F.	605 PIPE UNDERDRAIN DEEP 6" L.F.	606 GUARD RAIL TYPE 5 L.F.	606 ANCHOR ASSEMBLY TYPE A EACH	606 ANCHOR ASSEMBLY TYPE T EACH		670 DITCH EROSION PROTECTION S.Y.		BENDS 60°x6"	SEE SHEET NO.
D-1	1190+00 - 1195+00	LT					10				490								
D-2	1190+00 - 1195+00	RT									500								
D-3	1190+00 - 1193+12	RT								312									
D-4	1193+00 - 1194+57	℄	2.9		0.27	115		1								125			111
D-5	1192+84 - 1193+93	RT														125			
D-6	1194+07 - 1195+00	RT														125			
D-7	1190+00 - 1193+12	LT					10			302									
D-8	1193+00 - 1195+00	LT					10			206								1	
D-9	1193+00 - 1195+00	RT					10			206								1	
M-1	1192+50	℄							1										
R-1	1190+30 - 1192+55	LT.										187.5	1	1					
R-2	1189+75 - 1192+00	RT.										187.5	1	1					
R-3	1190+35 - 1191+92	LT&RT.										325							
	TOTAL		2.9		0.27	115	40	1	1	1026	990	700	2	2		375		X	

PLAN & PROFILE STA. 1190+00 TO STA. 1202+00

MICROFILMED
AUG 21 1990

F.H.W.A. REGION	STATE	PROJECT	
5	OHIO		

28
184

ERIE COUNTY
ERI 2 - (16.13 - 17.39)

BM "17" R.R. SPIKE IN ROOT — BM "18" R.R. SPIKE IN BASE
32" DAK. ∠40° LT. — 12" ASH ∠64° RT.
STA. 1179+50± ELEV. 599.19 — STA. 1184+40± ELEV. 590.783

ADACHE-CIUNI-LYNN
CALC BY — DATE
CHKD. BY — DATE

S.R. 2

BEGIN SHEET STA. 1178+00

END SHEET STA. 1190+00

STA. 1178+50 STD. CB #5 T/G 577.00 — 18" THICK 13'-4" R.CH. PROT. TYPE C w/FILTER — ℄ S.R. 2 POC. STA. 1178+65 (105' LT.) — BEGIN 300' PACING LANE — STA. 1178+85 105' LT. STD. CB #5 T/G 577.00

℄ S.R. 2 POC. STA. 1181+65 (655.25 LT.) ℄ RAMP #2 STA. 1181+65

℄ RAMP #2 STA. 1182+00 22' LT. STD. CB #5 T/G 585.55

STA. 1182+00, 64' LT. STD. CB #6 T/G 588.78

STA. 1182+50 ℄ STD. CB #4 T/G 587.82

STA. 1184+50, 76' LT. STD. CB #5 T/G 587.65

STA. 1184+50, 80' RT. STD. CB #5 T/G 590.82

STA. 1181+50, 5' RT. STD. CB #2.28 T/G 588.25

℄ S.R. 2 POC. STA. 1179+50 (66' RT.) ℄ RAMP #3 STA. 1179+50

℄ S.R. 2 POC. STA. 1182+56 (1' RT.) ℄ RAMP #3 POC. STA. 1183+05 (12' LT.)

CONSTRUCTION LIMITS

MUD BROOK

B.M. "17"

B.M. "18"

STA. 1181+25, 80' RT. SETTLEMENT PLATFORM

TEMP. RD. ℄ STR. 13

QUANTITY INCLUDED ON SHEET № 29.

CURVE DATA

P.I. STA. 1191+14.95
DA = 87°18'50" LT.
Dc = 2°00'00"
Ls = 300.00'
θs = 1°30'00.00"
Xs = 299.94'
Ys = 15.99'
Xc = 299.92'

R = 2864.79'
Sc = 1°00'00"
Ts = 2884.77'
Es = 109.96.71'
Δc = 81°18'50"
Lc = 406.55'
c = .0000111 (SPIRAL)
c = .G (SIMPLE)

FOR RAMP #2 DETAILS SEE SHT. NO. 51
FOR RAMP #3 DETAILS SEE SHT. NO. 52

FOR INTERCHANGE AREA GRADING, SEE SHEET № 5G

PROPOSED STRUCTURE ERI-2-1798 L/R

TYPE: CONTINUOUS PRESTRESSED I-BEAMS WITH REINFORCED CONCRETE DECK AND SUB-STRUCTURE
SKEW: 0°00' (PARALLEL SUBSTRUCTURE)
SPANS: LEFT BRIDGE: 66'-0" @ SPANS @ 87'-0", 66'-0"
RIGHT BRIDGE: 66'-0" & SPANS @ 81'-0", 66'-0", 70'-0"
ROADWAY: LEFT BRIDGE: VARIES 51'-3" TO 65'-8" F/F PARAPETS
RIGHT BRIDGE: 50'-0" F/F PARAPETS AND VARIES
LOADING: HS-20-44 AND THE ALTERNATE MILITARY LOADING
WEARING SURFACE: MONOLITHIC CONCRETE (TOP LAYER OF REINFORCING EPOXY COATED)
APPROACH SLABS: AS-1-81 (25' LONG)
ALIGNMENT: 2°00' CURVE LEFT
SUPERELEVATION: 0.04 FT/FT
SLOPE PROTECTION: CRUSHED AGGREGATE

ALL ROADWAY PLAN STATIONS AND QUANTITIES ARE BASED ON THE "STEEL ALTERNATE" BRIDGE.

℄ ABUT. BRG. LT. = 660' RT. = 780'

BRIDGE LIMITS
LT. STA. 1180+02.75
RT. STA. 1180+95.52

EXISTING GROUND OVER D-5
PROPOSED GROUND OVER D-5
EXISTING GRADE
PROPOSED GRADE ±0.30%
D-4 & D-5 SHALLOW UNDERDRAINS
D-7 & D-8 DEEP UNDERDRAINS
D-1, D-2 & D-3 DEEP UNDERDRAINS

D-6 137 L.F. @ 0.24%
D-2 185 L.F. @ 0.24%
D-4 58 L.F. @ 0.80% 6" TYPE B
D-11 100 L.F. @ 1.00% 12" CONDUIT TYPE C
D-3 245 L.F. @ 0.80% 24" CONDUIT TYPE B
D-1 157 L.F. @ 0.24%
D-2 312 L.F. @ 2.80% 24" CONDUIT TYPE C
35 L.F. @ 1.0% 24" CONDUIT TYPE C

+34 D-1 F.L.G" 581.50
+37 D-1 F.L.G" 581.50
+25 D-1 F.L.G" 580.65
+40 D-1 & D-4 F.L.G" 581.15
+32 D-4 F.L.G" 586.16
+15 D-2 F.L.G" 586.14
F.L.G" 585.64
+00 D-6 F.L.G" 586.80
+ D-5 F.L.G" 586.72
+50 D-5 F.L.G" 586.22
F.L.G" 585.72
+00 D-2 F.L.G" 586.85
+05 D-3 F.L.G" 583.32
+00 D-3 F.L.G" 583.00
+37 D-6 F.L.G" 586.47
+47 D-3 F.L.G" 583.50
+47 D-6 F.L.G" 586.72
+53 D-7 F.L.G" 587.55
+65 D-7 F.L.G" 587.30
+50 D-7 F.L.G" 586.80
+50 D-6 F.L.G" 585.90
+60 D-8 F.L.G" 583.54
+53 D-8 F.L.G" 584.15
+50 D-8 F.L.G" 583.44
+00 D-7 F.L.G" 588.90
+00 D-4 F.L.G" 589.06
+00 D-5 F.L.G" 588.77
+00 D-8 F.L.G" 585.56

24" F.L. 583.06
18" F.L. 583.56
24" F.L. 572.36
24" F.L. 584.08
12" F.L. 581.10
15" F.L. 581.85
24" F.L. 581.10
15" F.L. 581.85
12" F.L. 583.08
15" F.L. 582.83

STA. 1178+00 TO STA. 1190+00		
EXCAVATION	58,855	CU. YD.
EMBANKMENT	9,277	CU. YD.
SEEDING	20,964	SQ. YD.

} GRANULAR BORROW, TYPE-1 = 1104 CU. YDS.
} GRANULAR BORROW, TYPE-2 = 406 CU. YDS.

ESTIMATED QUANTITIES

REF. NO.	STATION TO STATION	SIDE	601 ROCK PROT. TYPE C w/FILTER CY.	602 CONC. MASONRY CY.	603 TYPE B CONDUIT 6" LF.	603 TYPE B CONDUIT 15" LF.	603 TYPE B CONDUIT 18" LF.	603 TYPE B CONDUIT 24" LF.	603 TYPE C CONDUIT 12" LF.	603 TYPE C CONDUIT 24" LF.	603 TYPE F COND. 6" LF.	604 C.B. #2.28 EA.	604 C.B. #4 EA.	604 C.B. #5 EA.	604 C.B. #6 EA.	604 C.B. REF. MON. EA.	606 GUARD RAIL L.F.	660 SOD SY.	SPL. SETTLEMENT PLATE EA.	670 DITCH PROTECTION FORM SY.	609 CURB TYPE C L.F.	609 SPEC. PRESS JOINT TYPE A L.F.	BENDS & BRANCHES	SEE SHT. NO.
D-1	1180+25 - 1181+97	LT.																						
D-2	1181+15 - 1183+00	RT.																						
D-3	1182+00 - 1184+47	LT.																						
D-4	1180+32 - 1150+00	LT.				58											137.5	30					1-45° BEND	106
D-5	1178+37 - 1186+07	LT.															125.50	10					1-6" TEE	105
D-6	1183+00 - 1186+07	RT.																45						
D-7	1184+50 - 1150+00	RT.																		117				
D-8	1184+50 - 1150+00	LT.																						
D-10	1183+00 - 1186+07	LT/RT		2.9	0.46			245				3										40	1-45° BEND	
D-11	1186+55 - 1184+07	LT/RT					15G						1										1-6" TEE	
D-12	1180+10 - 1180+60	LT.																				42		
D-13	1180+75 - 1181+35	RT.					123																1-6" TEE	
D-14	1181+20 - 1182+60	RT.											1											
J-1	1180+60	LT.																						
J-2	1181+40	RT.																						
M-1	1180+75	℄														1								
M-2	1187+00	℄														1								
R-1	1180+20 - 1181+70	LT.																						
R-2	1180+11 - 1182+11	LT.																						
R-3	1181+04 - 1181+65	RT.																						
R-4	1180+16 - 1180+47	LT.																						
R-5	1181+15 - 1181+34	RT.																						
TOTALS			2.9	0.46	58	123	156	245	100	347	100	3	1	1	1	2	852	2.1	1	1	362.50	85	8	

* 50 (CONNECTS TO D-1)
* 44 (CONNECTS TO D-5)

* TOTAL TYPE III = 1,021 TYPE III

PLAN & PROFILE STA. 1178+00 TO STA. 1190+00

FED. RD. DIVISION	STATE	PROJECT	FISCAL YEAR
2	OHIO		

30
284

ERIE COUNTY
ERI 2-(16.13-17.39)

ADACHE ASSOCIATES, INC.
CALC. BY: J.D.A. DATE: 8-6-69
CHKD. BY: R.J.Z. DATE: 8-6-69

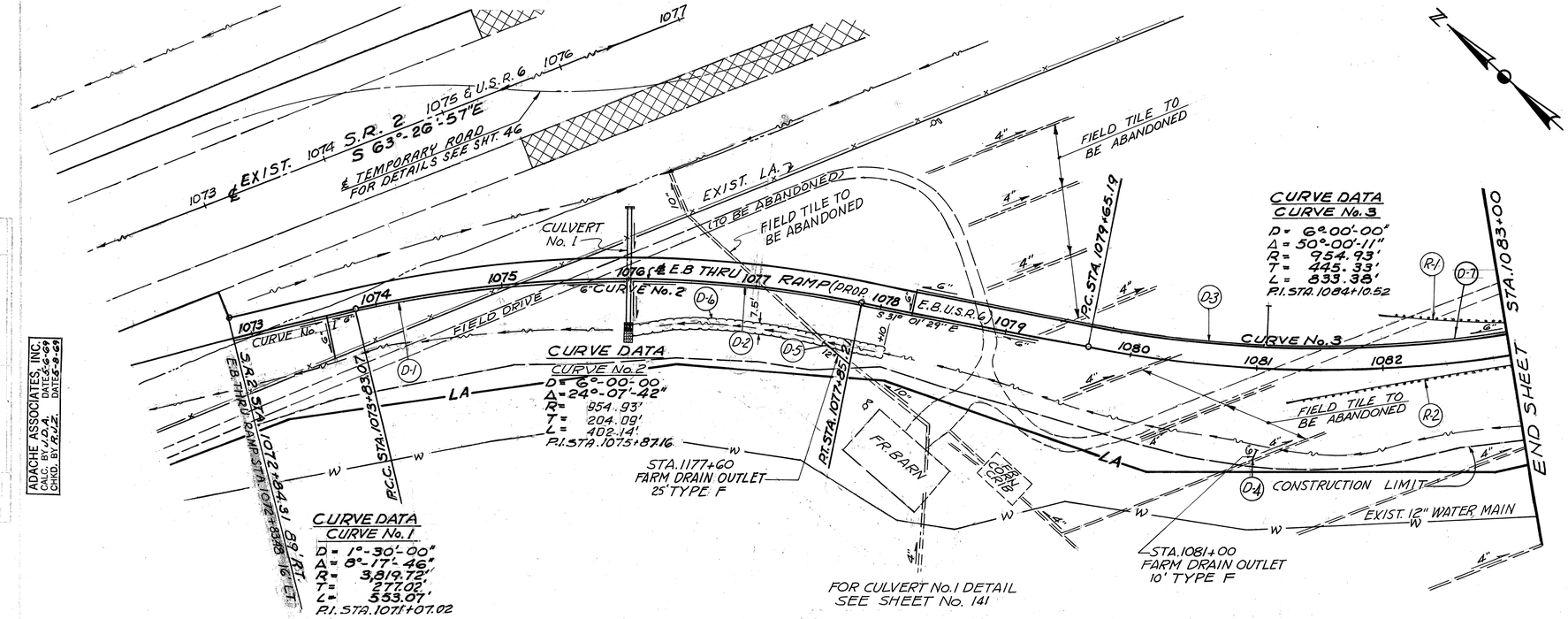

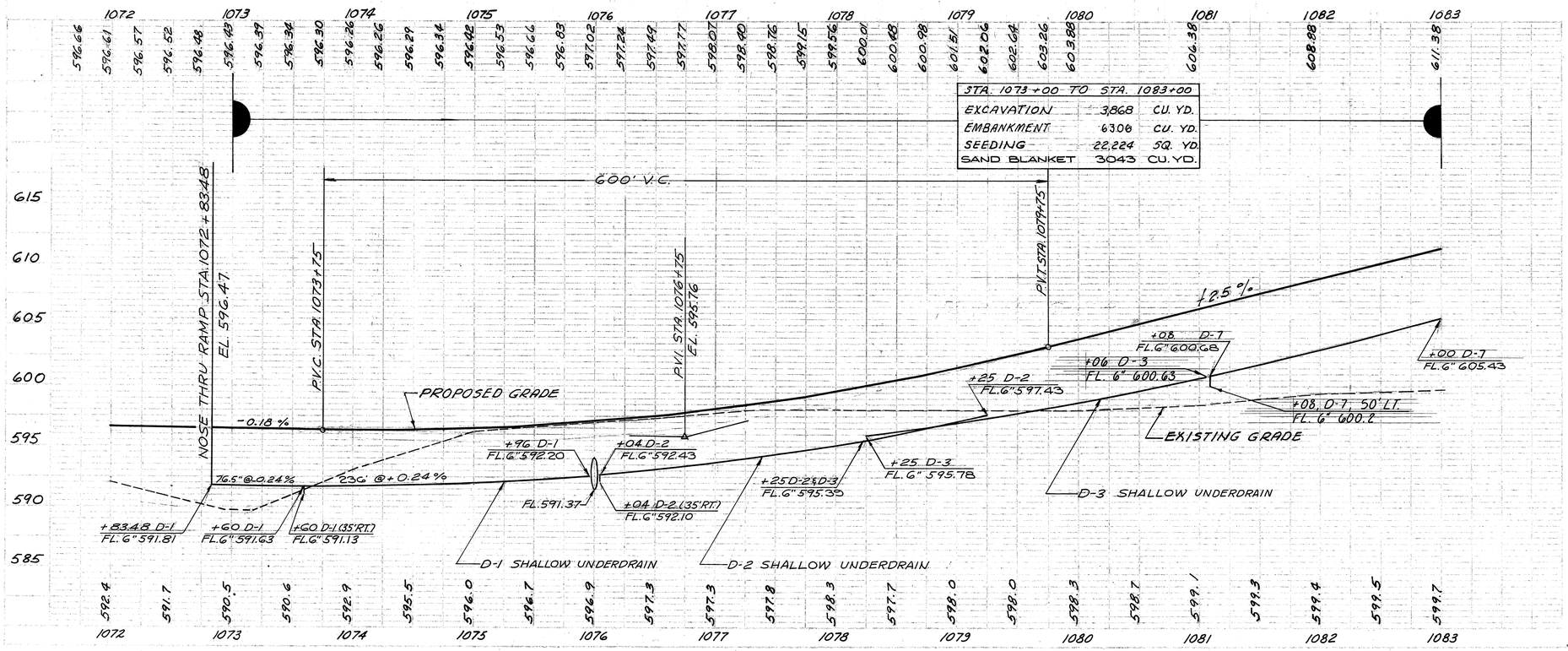

ESTIMATED QUANTITIES

REF NO.	STATION TO STATION	SIDE	603 6" CONDUIT L.F.	603 TYPE "B" CONDUIT 6" L.F.	605 TYPE "F" CONDUIT 6" L.F.	605 PIPE UNDERDRAIN 6" L.F.	606 GUARD RAIL ANCHOR ASSEMBLY TYPE 8B EACH	GTD DITCH EROSION PROTECTION SQ. YD.	BENDS & BRANCHES SEE SHEET NO. BEND 6"	BENDS & BRANCHES SEE SHEET NO. TEE 6"	BENDS & BRANCHES SEE SHEET NO. 30° 45°
D-1	1072+83.48 - 1075+96	RT.			10	336					
D-2	1076+04 - 1079+25	RT.			10	344					
D-3	1078+25 - 1081+06	LT.		20		281					
D-4	1081+00	RT.			10						
D-5	1077+60	RT.				25					
D-6	1076+00 - 1078+10	RT.									
D-7	1081+08 - 1083+00	LT.			10	214					
R-1	1082+03.5 - 1083+00	LT.					84	175	1	1	115
R-2	1081+14 - 1083+00	RT.					173.5				114
TOTALS			20	40	25	1175	257.5	175	2	2	229

U.S. 6 E.B. THRU RAMP PLAN & PROFILE STA. 1072+83.48 TO STA. 1083+00

MICROFILMED
AUG 21 1990

FED. RD. DIVISION	STATE	PROJECT	FISCAL YEAR	
2	OHIO			31/284

ERIE COUNTY
ERI 2-(16.13-17.39)

ADACHE ASSOCIATES, INC.
CALC. BY J.D.A. DATE 5-6-69
CHKD. BY R.J.Z. DATE 5-8-69

PROPOSED STRCTURE DATA NO. ERI-2-1640

TYPE: CONTINUOUS STEEL GIRDER WITH REINFORCED CONCRETE DECK AND SUBSTRUCTURE.
SPANS: 65'-0", 101'-0", 90'-0", 59'-0" C/C BEARINGS.
ROADWAY: 30'-0" F/F PARAPETS.
LOADING: HS 20-44
SKEW: 36°02'-03" RIGHT FORWARD W/R TO LOCAL TANGENT.
WEARING SURFACE: ASPHALT CONCRETE.
ALIGNMENT: TANGENT.
APPROACH SLABS: AS-1-81 (25'-0" LONG)
SUPERELEVATION: 0.0156'/FT.

CURVE DATA
CURVE No. 3
D = 6°-00'-00"
Δ = 50°-00'-11"
R = 954.93'
T = 445.33'
L = 833.38'
P.I. STA. 1084+10.52

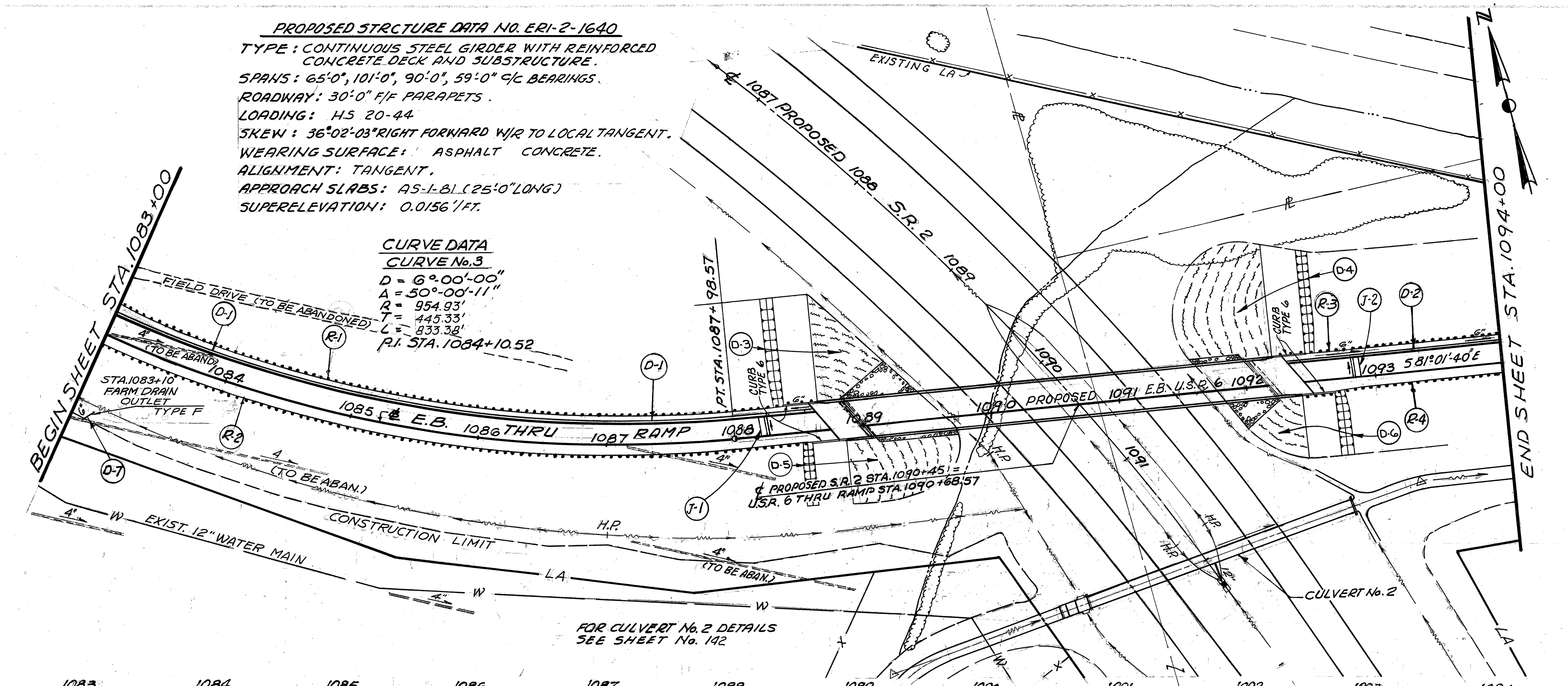

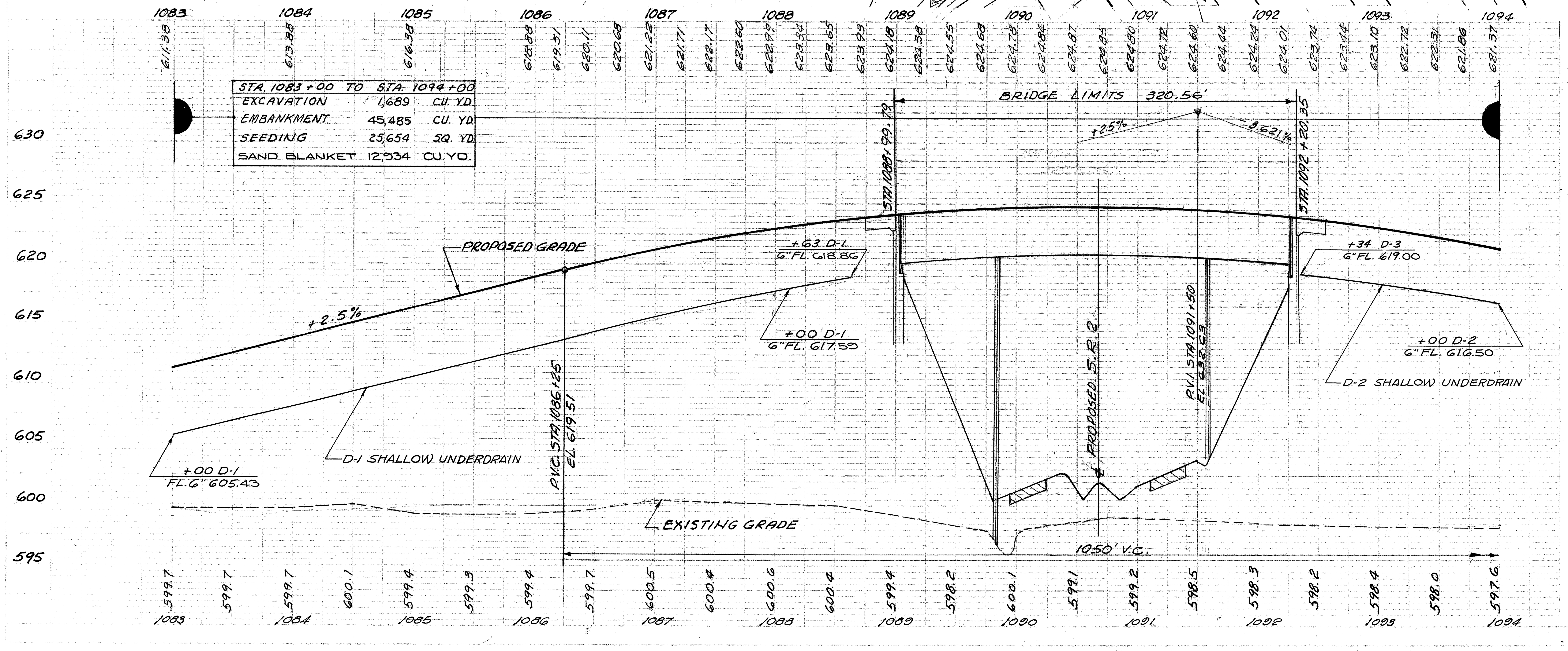

STA. 1083+00 TO STA. 1094+00		
EXCAVATION	1,689	CU. YD.
EMBANKMENT	45,485	CU. YD.
SEEDING	25,654	SQ. YD.
SAND BLANKET	12,934	CU. YD.

ESTIMATED QUANTITIES

REF. NO.	STATION TO STATION	SIDE	SPECIAL TYPE A PRESSURE RELIEF JOINT LIN. FT.	603 TYPE "F" CONDUIT 6" L.F.	605 PIPE UNDERDRAIN SHALLOW 6" L.F.	605 PIPE UNDERDRAIN 707.01 TY. III OR 707.21 TY. III 6" L.F.	606 GUARD RAIL TYPE 5 L.F.	606 BRIDGE TERM. ASSEM. A.T.J. EA.	609 TYPE 6 CURB L.F.	660 REINFORCED SODDING STANDARD S.Y.	670 SLOPE EROSION PROTECTION S.Y.	BENDS & BRANCHES 45°x6"	BENDS & BRANCHES 6" TEE	SEE SHEET NO.
D-1	1083+00 - 1088+63	LT.			563									
D-2	1092+34 - 1094+00	LT.			166									
D-3	1088+40 - 1089+18	LT.							20.5	82	339			
D-4	1091+73 - 1092+22	LT.							17.5	84	747			
D-5	1088+60 - 1089+73	RT							17.5	47	392			
D-6	1092+23 - 1092+43	RT							20.5	47	174			
D-7	1083+10 - 1083+13	RT		10								1		116
R-1	1083+00 - 1088+66	LT					566	1						
R-2	1083+00 - 1088+89	RT					589	1						
R-3	1092+21 - 1094+00	LT					179	1						
R-4	1092+44 - 1094+00	RT					156	1						
J-1	1088+25±		16.1			18							1	
J-2	1092+87±		16.1			18							1	
	TOTALS		32.2	10	729	36	1490	2	76.0	260	1652			

U.S.R. 6 E.B. THRU RAMP PLAN & PROFILE STA. 1083+00 TO STA. 1094+00

FED. RD. DIVISION	STATE	PROJECT	FISCAL YEAR
2	OHIO		

ERIE COUNTY
ERI 2-(16.13-17.39)

ADACHE ASSOCIATES, INC.
CALC. BY J.D.A. DATE 5-6-69
CHKD. BY R.J.Z. DATE 5-8-69

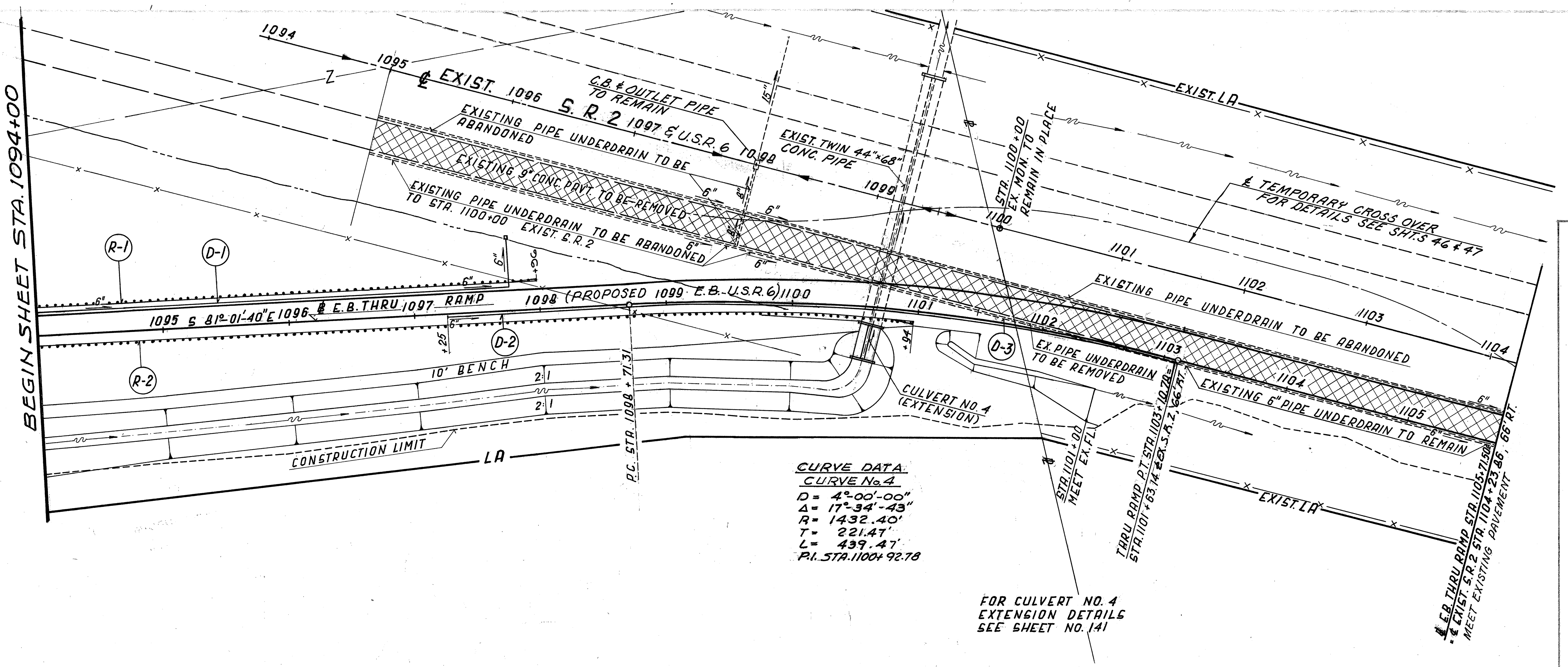

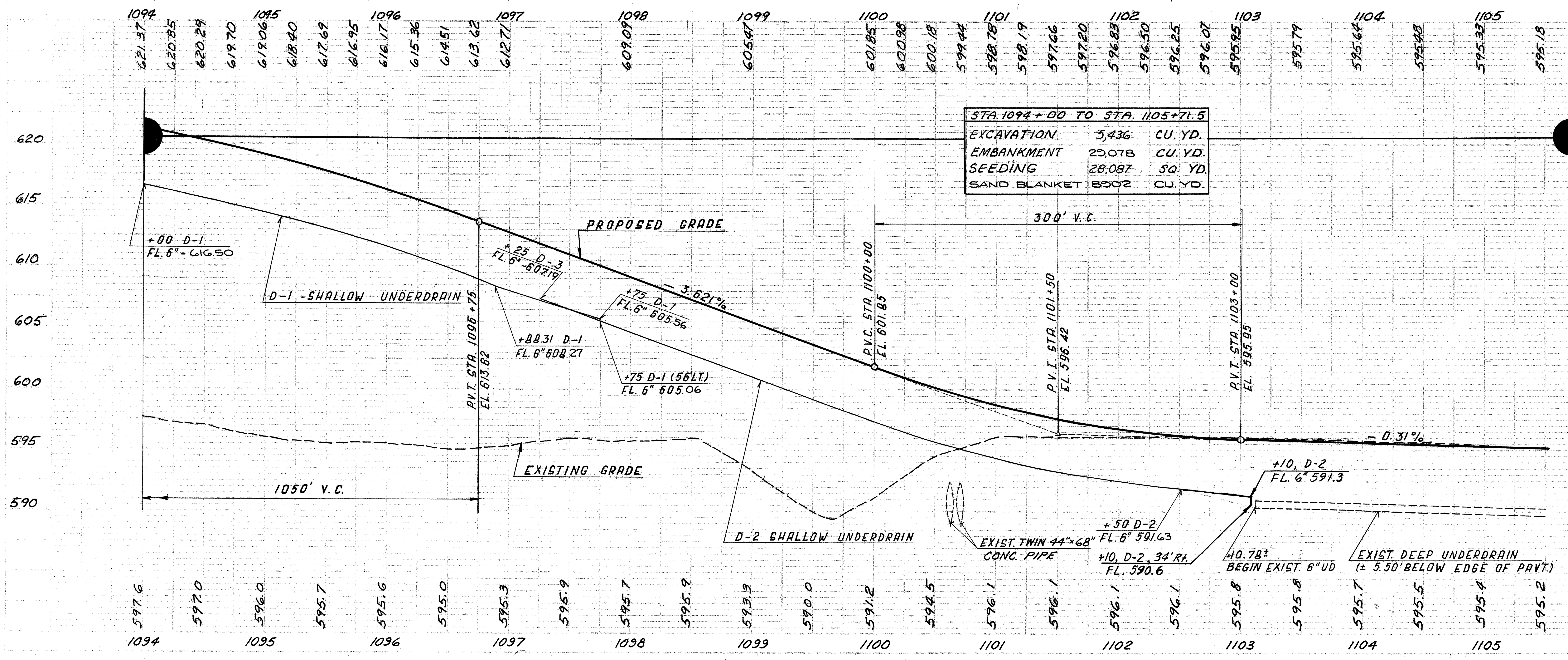

STA. 1094+00 TO STA. 1105+71.5		
EXCAVATION	5,436	CU. YD.
EMBANKMENT	29,078	CU. YD.
SEEDING	28,087	SQ. YD.
SAND BLANKET	8902	CU. YD.

ESTIMATED QUANTITIES

REF. NO.	STATION TO STATION	SIDE	603 TYPE "F" CONDUIT 6" L.F.	605 PIPE U.D. SHALLOW 6" L.F.	606 GUARD RAIL TYPE 5 L.F.	606 ANCHOR ASSEM TYPE T EA.	202 PIPE REMOVED 24" & UNDER L.F.	BENDS & BRANCHES BENDS 90°×6"	SEE SHEET NO.
D-1	1094+00-1097+75	LT.	10	404				1	
D-2	1097+25-1103+10	RT.	10	607				1	
D-3	EXIST. S.R. 2 STA. 1100+00 TO STA. 1101+63.14	RT.					163		
R-1	1094+00-1097+96	LT.			383.5	1			
R-2	1094+00-1100+94	RT.			681.5	1			
	TOTALS		20	1011	1065	2	163	X	

U.S.R. 6 E.B. THRU RAMP PLAN & PROFILE STA. 1094+00 TO STA 1105+71.50

FED. RD. DIVISION	STATE	PROJECT	FISCAL YEAR
2	OHIO		

33
1284

ERIE COUNTY
ERI 2-(1613-17.39)

ADACHE ASSOCIATES, INC.
CALC. BY J.D.A. DATE 5-6-69
CHKD. BY A.V.Z. DATE 5-8-69

FOR WESTBOUND THRU RAMP PACING & ACCELERATION LANE DETAILS SEE SHEET No 49.

℄ W.B. THRU RAMP
CURVE DATA
P.I. STA. 1085+93.90
Δ = 02°-10'-53"
D = 00° 30'-00"
R = 11,459.16'
T = 218.18'
L = 436.30'

℄ S.R. 2 P.O.S. STA. 1079+32.09 - 97.25 LT.
= ℄ W.B. THRU RAMP STA. 1079+32.09

P.C. STA. 1083+75.72

P.T. STA. 1088+12.02 ℄ W.B. THRU RAMP
= STA. 1088+17.22 ℄ EXIST. S.R. 2, 66 LT.
BEGIN SALVAGE SECTION ℄
25:1 TAPER, 16 LT.

℄ W.B. THRU P.O.T. STA. 1094+12.02
= ℄ EXIST. S.R. 2 P.O.T. STA. 1094+47.22
66 LT. MEET EXISTING SECT.

FOR CULVERT Nº 3 DETAILS SEE SHEET Nº 143.

N

BRUSH
EXISTING "LA"
CONSTRUCTION LIMIT
EXISTING LA
H.P.
+09.27
D-1
D-2
D-3
D-4
1080
1085
1090
1095
S. 61° 16' 04" E.
S. 63° 26' 57" E.
PROPOSED ℄ W.B. THRU RAMP U.S.R. 6
EXIST. 9" CONC. PAVEMENT TO BE REMOVED
EXIST. 9" CONC. PAVEMENT TO REMAIN MEET EXISTING CROWN
PLUG EXIST. 6" UNDERDRAIN
EXIST. 6" U.D. TO BE ABANDONED
EXIST. 6" U.D. TO REMAIN
EXIST. 6" PIPE U.D. TO REMAIN
CULVERT No 3
EXIST. MON. TO REMAIN IN PLACE
EXIST. PIPE U.D. TO BE ABANDONED
EXIST. 6" PIPE U.D. TO BE REMOVED TO STA. 1085+00
EXIST. 6" PIPE U.D. TO BE ABANDONED TO STA. 1095+00
EXIST. 9" CONC. PAVEMENT TO BE REMOVED
EXIST. 6" PIPE U.D. TO BE REMOVED TO STA 1086
EXIST. 6" PIPE U.D. TO BE ABANDONED
EXIST. 6" PIPE U.D. TO BE ABANDONED TO STA. 1095+00
℄ PROPOSED S.R. 2
℄ EXISTING U.S. 6 & S.R. 2
S.C. STA. 1090+32.09
EXISTING "LA"

FOR PROPOSED S.R. 2 PLAN AND PROFILE SEE SHEETS No. 19 & 20

ESTIMATED QUANTITIES

REF NO.	STATION TO STATION	SIDE	603 TYPE B COND. 6" L.F.	603 TYPE F COND. 6" L.F.	605 PIPE U.D. SHALLOW 6" L.F.	202 REMOVED PIPE 24" & UNDER L.F.	BENDS & BRANCHES BENDS 90°6"	BENDS & BRANCHES TEE 6"
D-1	1079+32.09 - 1088+12.02	LT.			880			
D-2	1093+94.8	LT.	36	20			1	1
D-3	1082+00 - 1088+17.22	LT.				617		
D-4	1082+00 - 1086+00	RT.				700		
	TOTAL		36	20	880	1317		

1080 1081 1082 1083 1084 1085 1086 1087 1088

599.94 600.08 600.27 600.43 600.56 600.66 600.74 600.79 600.82 600.81 600.78 600.73 600.64 600.53 600.28 600.03 599.78 599.53 599.28 599.13 599.05 598.94 598.84 598.76 598.68 598.60 598.54 598.48 598.41 598.40 598.37

615
610
605
600
595
590

℄ W.B. THRU RAMP STA. 1079+32.09

+0.80%
+32.09 D-1 F.L. 6" 595.59
+75 D-1 F.L. 6" 595.82
D-1, 175' @ +0.28%
+50 D-1 F.L. 6" 596.32
100' @ -0.24%
+50 D-1 F.L. 6" 596.08
+00 D-1 F.L. 6" 594.93
D-1, 312' @ -0.20%
-0.50%
-0.11%
-0.08% ±
300' V.C.
V.P.C. STA. 1085+00
V.P.I. STA. 1086+50 EL. 598.53
V.P.T. STA. 1088+00
STA. 1088+12.02 MEET EXISTING ELEV.
PROPOSED GRADE
EXISTING GRADE
V.P.C. STA. 1079+50
V.P.I. STA. 1081+00 EL. 601.28
V.P.T. STA. 1082+50
D-1 SHALLOW UNDERDRAIN
D-1 SHALLOW UNDERDRAIN
MEET EXISTING U.D. ELEV. 594.3±

595.8 596.5 597.6 597.9 598.0 598.1 598.2 598.4 598.3 598.2 598.1 598.0 598.0

1080 1081 1082 1083 1084 1085 1086 1087 1088 1089 1090 1091 1092 1093 1094

STA. 1081+00 TO STA. 1094+17.22		
EXCAVATION	3,145	CU. YD.
EMBANKMENT	5,161	CU. YD.
SEEDING	24,752	SQ. YD.

U.S.R. 6 W. B. THRU RAMP PLAN & PROFILE

SHEETS 35 & 36 OMITTED

MICROFILMED
AUG 21 1990

ADACHE ASSOCIATES, INC.
CALC. BY J.D.A. DATE 5-8-69
CHKD. BY R.U.Z. DATE 5-8-69

FOR DRIVEWAY DETAILS SEE SHEET No. 53.
FOR ITEM 601 R. CH. P. DETAILS AND QUANTITIES, SEE SHEET No. 26 & 27
FOR CROSS SECTIONS SEE SHEET NO. 127

P.K. IN POWER POLE & N.T.C.
P.K. SET IN POWER POLE & N.T.C.
NAIL FD. & USED
ANCHOR POLE
P.I. STA. 25+37.08

FED. RD. DIVISION	STATE	PROJECT	FISCAL YEAR
2	OHIO		

34
184

ERIE COUNTY
ERI 2-(16.13-17.39)

EXISTING TYPICAL SECTION
HURON AVERY ROAD
NO SCALE

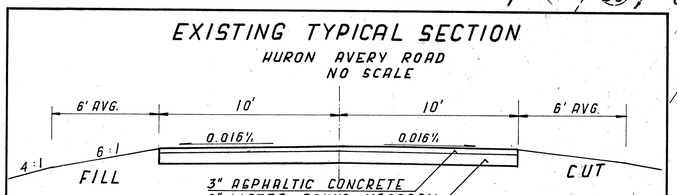

PROPOSED STRUCTURE DATA NO. ERI-2-17.81

TYPE: CONTINUOUS STEEL BEAM WITH REINFORCED CONCRETE DECK AND SUBSTRUCTURE.
SPANS: 63'-0", 89'-0", 89'-0", 63'-0" c/c BEARINGS.
ROADWAY: 44'-0" f/f PARAPETS.
LOADING: H.S. 20-44
SKEW: 39°32'10" LEFT FORWARD W/R TO LOCAL TANGENT OF SPIRAL
WEARING SURFACE: ASPHALT CONCRETE
ALIGNMENT: TANGENT; APPROACH SLABS: RS-1-81 (20'-0" LONG.)

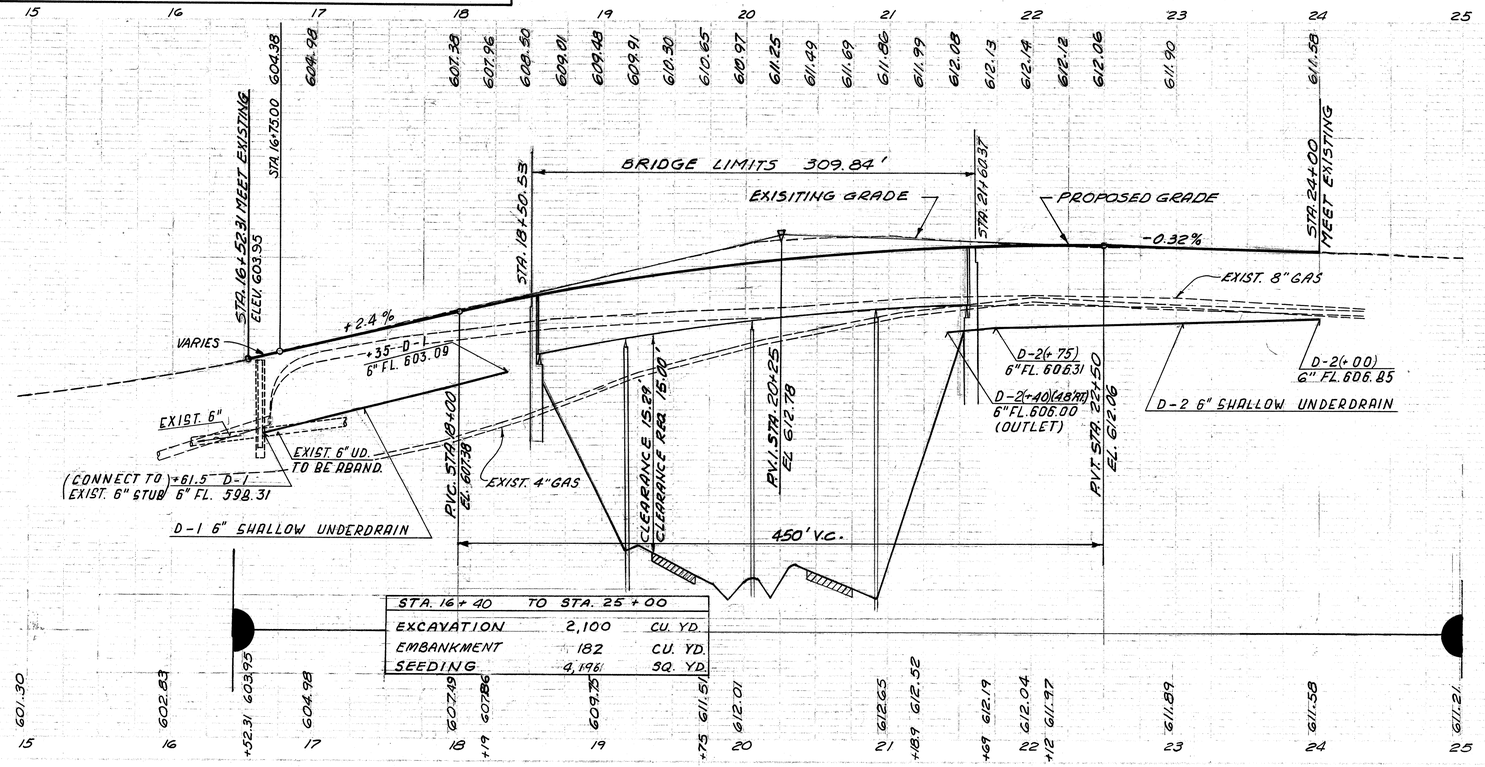

STA. 16+40 TO STA. 25+00		
EXCAVATION	2,100	CU. YD.
EMBANKMENT	182	CU. YD.
SEEDING	4,196	SQ. YD.

ESTIMATED QUANTITIES

REF. NO.	STATION TO STATION	SIDE	603 6" CONDUIT L.F.	603 TYPE "B" CONDUIT 6" L.F.	603 TYPE "T" CONDUIT 6" L.F.	604 2.2.8 CB, RECONST. ABSEM. TO GRADE EACH	605 PIPE UD 6" L.F.	606 GUARD RAIL TYPE 5 L.F.	606 TYPE A, TYPE-A ANCHOR ASSEM. EA.	606 TYPE-T ANCHOR ASSEM. EA.	DEMO-LISHING-MENTS DEMO 60'x6"	SEE SHEET NO.
D-1	16+61.5 - 18+35	LT.		35							1	53
D-2	21+40 - 24+00	RT.		50						1		53
D-3	17+89 - 18+18	RT.	23.1									
D-4	18+25 - 18+54	LT.	19.4									
D-5	21+56 - 21+85	RT.	19.4									
D-6	21+93.5 - 22+22.5	LT.	23.1									
D-7	16+61.5	LT.				1						
R-1	16+68 - 18+18	RT.					129	125				
R-2	17+51.5 - 18+54	LT.					215	75				
R-3	21+56 - 21+93.5	RT.						50				
R-4	21+52 - 23+42	LT.					37	125				
M-1	18+13.85	℄				1	29					
M-2	22+50	℄				1						
	TOTAL		85	85		2	344	375	4	2	2	2

* STANDARD, MODIFIED, AS PER PLAN 606

HURON AVERY ROAD PLAN & PROFILE

SHEETS 35 & 36 OMITTED

FED. RD. DIVISION	STATE	PROJECT	FISCAL YEAR
2	OHIO		

37
184

ERIE COUNTY
ERI 2-(16.13-17.39)

R.R. SPIKE
NAIL IN POWER POLE
℄ EXIST. S.R. 13
53.78
NAIL IN POWER POLE
NAIL IN 40" TREE
STA 0+00 ℄ EXIST. S.R.13

ADACHE ASSOCIATES, INC.
CALC. BY: J.D.A. DATE: 5-6-69
CHKD. BY: R.J.Z. DATE: 5-8-69

BEGIN WORK
STA. 4+29.18

P.C. STA. 4+29.18
P.I. STA. 5+00
P.T.
EX. 8" TILE
P.I. STA. 7+00, 100' LT. ℄ S.R. 13
STA. 6+20 MEET EXIST.
D-1
P.C.
R/W
W=25'+10
M-1
CONSTRUCTION LIMIT
T
LA
P.I. STA. 11+00 ℄ S.R. 13, 140' LT.
P.C.
P.T.
℄ TEMPORARY ROAD - 20' CLASS "B" TEMPORARY PAV'T.
FOR DETAILS OF TEMPORARY ROAD SEE SHEET No. 94
STA 15+00
END SHEET
41'-12" PIPE TO BE ABANDONED
C120, I-52 ℄ EX. UNDERGROUND TELEPHONE CABLE
RE B52-22
P20 P19 P18 P17 P16
40:1 TAPER
N 19°-10'-55" E
℄ S.R. 13
12+14
12"
D-5 STA. 6+17
FARM DRAIN OUTLET
60°-10" TYPE E
BEGIN TAPER STA. 6+20 LT. ℄ RT.
END TAPER STA. 7+00 LT. ℄ RT.
STA. 7+60 MON. ASS'EM.
CULVERT #10
W=11'
D-2
R-1
41'-12" PIPE TO BE ABANDONED
(TO BE BRAND.) EX. 12" TILE
CONSTRUCTION LIMIT
BM. "20"

FOR CULVERT No. 10 DETAILS SEE SHEET No. 153.
FOR CROSS SECTIONS SEE SHT. NO. 131

EXISTING TYPICAL SECTION
S. R. 13

3' 10' 10' 3'
3" 0.016⅔ 0.016⅔ 3"
2½" ASPHALTIC CONCRETE
ASPHALTIC LEVELING COURSE
EXISTING WATER BOUND MACADAM
7" ASPHALTIC CONCRETE SHOULDER
LOOSE STONE UNDERDRAINS
FILL
CUT

BM. "20" R.R. Spike in base
78" Oak 120' Rt.
Sta. 14+19 21' 393.364

	6	7	8	9	10	11	12	13	14	15
	598.23	597.92	597.67	597.48	597.35	597.28	597.27	597.32	597.43	597.61
	597.84	597.81	598.09	598.91	599.39	599.92	600.58	601.18	601.90	603.40
	604.14	604.85	605.54	606.20	606.84	607.45	608.04	608.60	609.14	609.66
	610.15	610.61								

620
615
610
605
600
595
590

STA. 6+20 MEET EXISTING
ELEV. 599.33
450' V.C.
P.V.C. STA. 7+00
EL. 598.23
P.V.I. STA. 9+25
EL. 595.15
P.V.T. STA. 11+50
EL. 601.90
PROPOSED GRADE
+3.00%
-1.37%
+3.00%
P.V.C. STA. 12+00
EL. 603.40
EXISTING GRADE
EXIST. U.G. TELEPHONE CABLE 31'± LT.
F.L. 592.44
1500' V.C.

6	7	8	9	10	11	12	13	14	15
598.62	598.24	596.93	595.72	594.90	594.89	595.96	595.91	598.40	592.10

STA. 6+00 TO STA. 15+00		
EXCAVATION	4,170	CU. YD.
EMBANKMENT	10,237	CU. YD.
SEEDING	23,413	SQ. YD.
SAND BLANKET 52G1		CU. YD.

ESTIMATED QUANTITIES * STANDARD, MODIFIED, AS PER PLAN

REF NO.	STATION TO STATION	SIDE	606 GUARD RAIL TYPE 5 L.F.	606 GUARD RAIL ANCHOR ASSEM TYPE "A" EA.	610 DITCH, EROSION PROTECTION B.Y.	SEE SHEET NO.
D-1	6+00 - 7+10	L.T.			92	
D-2	10+03 - 15+00	RT.			607	139
D-5	5+96 - 6+14	L.T.	275	1		
R-1	12+00 - 15+00	RT.	275	1	699	
M-1	7+50	℄				
TOTALS			550	2	1398	

REF NO.	STATION TO STATION	SIDE	603 TYPE "F" CONDUIT 10" L.F.	604 MON. ASS'EM. * EA.
D-1	6+00 - 7+10	L.T.		
D-2	10+03 - 15+00	RT.	60	1
D-5	5+96 - 6+14	L.T.		
R-1	12+00 - 15+00	RT.		1
M-1	7+50	℄		
TOTALS			60	1

S.R. 13

PLAN & PROFILE STA. 4+29.18 TO STA. 15+00

MICROFILMED
AUG 21 1990

FED. RD. DIVISION	STATE	PROJECT	FISCAL YEAR
2	OHIO		

38
784

ERIE COUNTY
ERI 2-(16.13-17.39)

REFERENCE POINTS:
STA. 16+25 SEE SHEET 43.
STA. 23+75 SEE SHEET 42.

FOR INTERCHANGE LAYOUT & GRADING PLAN SEE SHEETS No. 56 & 57

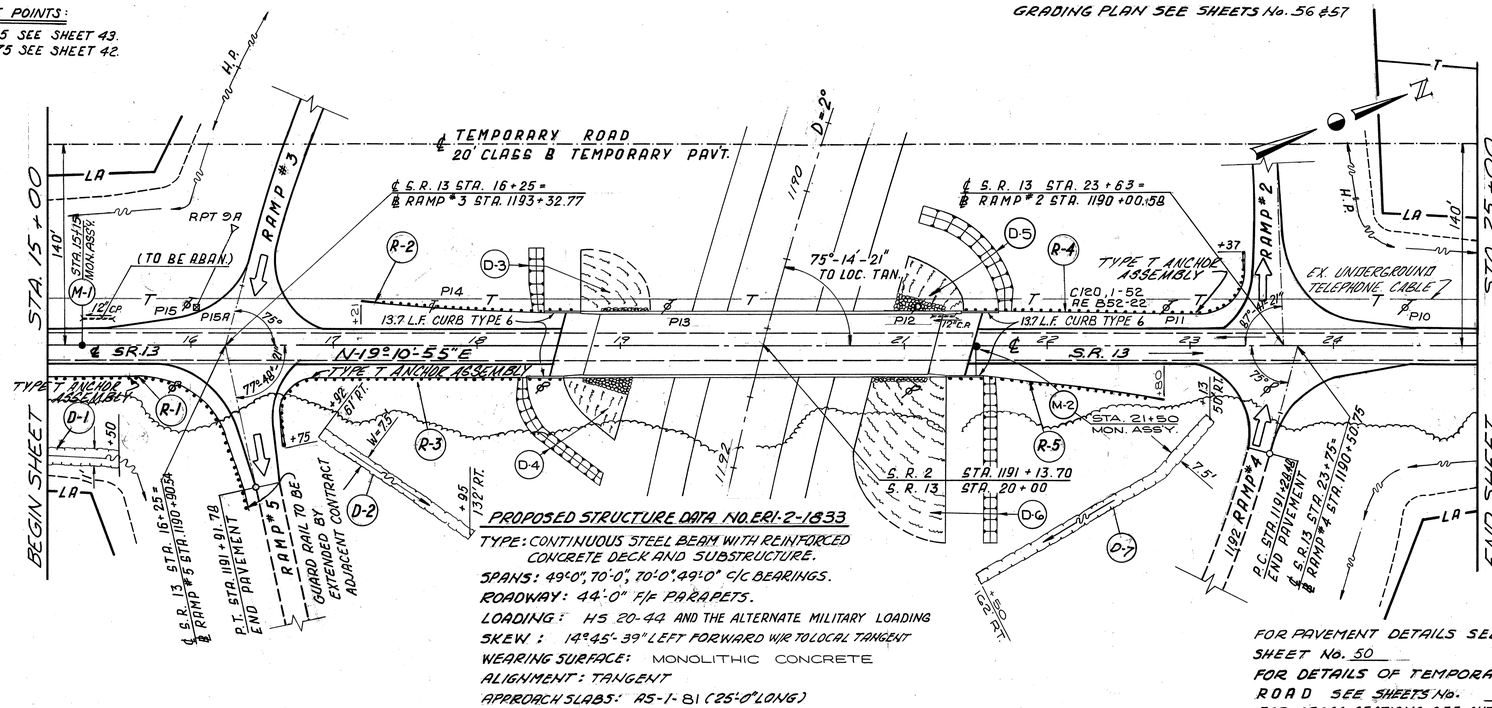

PROPOSED STRUCTURE DATA NO. ERI-2-1833

TYPE: CONTINUOUS STEEL BEAM WITH REINFORCED CONCRETE DECK AND SUBSTRUCTURE.
SPANS: 49'-0", 70'-0", 70'-0", 49'-0" c/c BEARINGS.
ROADWAY: 44'-0" F/F PARAPETS.
LOADING: H5 20-44 AND THE ALTERNATE MILITARY LOADING
SKEW: 14°45'-39" LEFT FORWARD W/R TO LOCAL TANGENT
WEARING SURFACE: MONOLITHIC CONCRETE
ALIGNMENT: TANGENT
APPROACH SLABS: AS-1-81 (25'-0" LONG)

FOR PAVEMENT DETAILS SEE SHEET No. 50
FOR DETAILS OF TEMPORARY ROAD SEE SHEETS No. 44 & 45
FOR CROSS SECTIONS SEE SHT. NO. 132 & 133

STA. 15+00 TO STA. 25+00		
EXCAVATION	290	CU. YD.
EMBANKMENT	37,365	CU. YD.
SEEDING	11.65	SQ. YD.
SAND BLANKET	12,803	CU. YD.

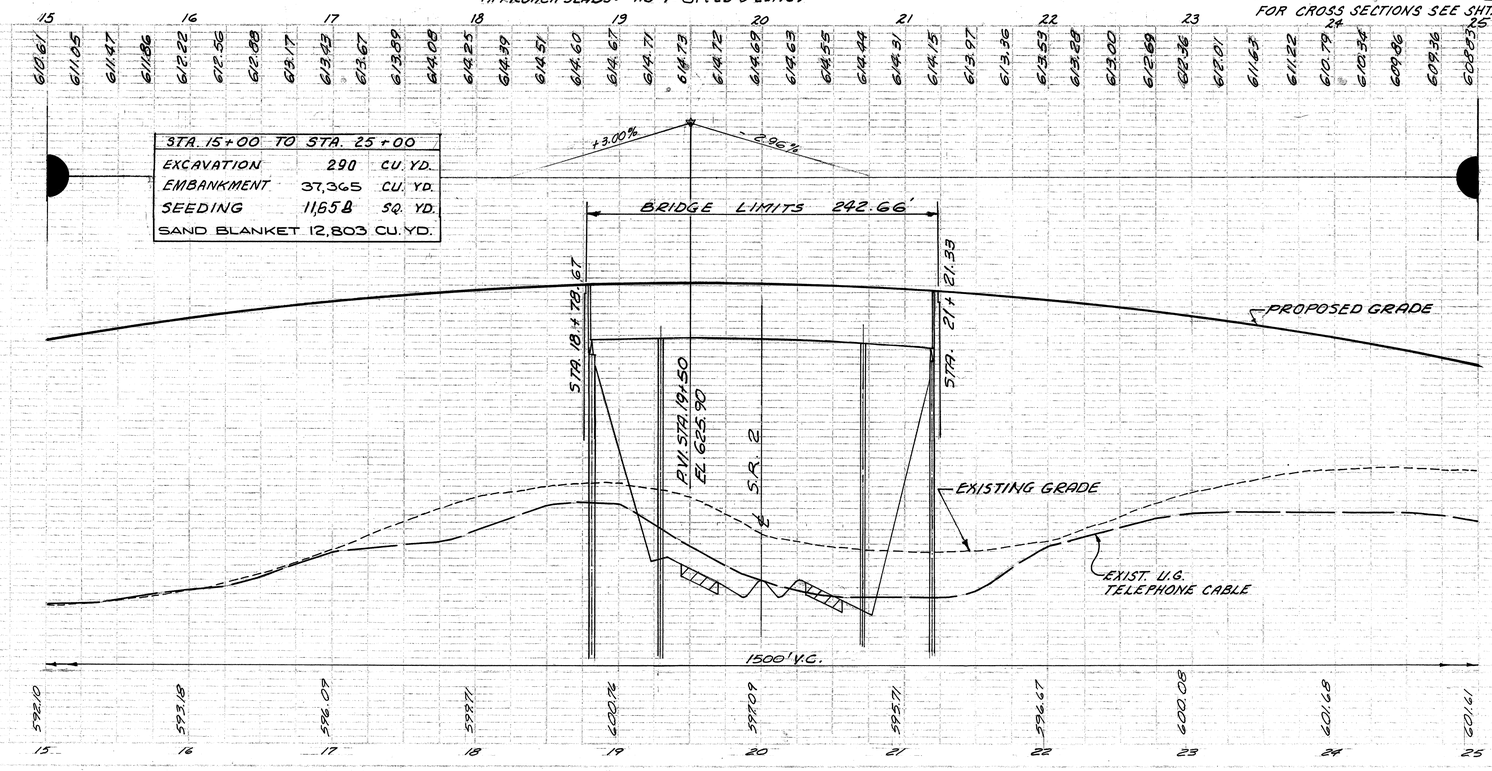

ESTIMATED QUANTITIES * STANDARD, MODIFIED AS PER PLAN

REF NO.	STATION TO STATION	SIDE	604 MON. ASSEM. * EA.	606 GUARD RAIL TYPE B L.F.	606 ANCHOR ASSEMBLY TYPE T EA.	606 BRIDGE RAIL TYPE T-ENDS TYPE A EA.	660 REINFORCED SODDING, STANDARD S.Y.	609 C&G DIT. FOR CURB TYPE 6 S.Y.	609 CURB TYPE 6 L.F.	SEE SHEET NO.
D-1	15+00 - 15+50	RT.						61		
D-2	16+62 - 17+95	RT.						104		
D-3	18+68 - 19+20	LT.					45		13.7	
D-4	18+56 - 19+05	RT.					65	125	13.7	
D-5	21+43 - 20+92	LT.					70	105	13.7	
D-6	21+31 - 20+65	RT.					115	110	13.7	
D-7	21+50 - 23+13	RT.						610		
M-1	15+15 ℄		1							
M-2	21+30 ℄		1							
R-1	15+00 - 1192+00	RT.		1875	1	1		1675		
R-2	17+21 - 18+71	LT.		125	1	1				
R-3	1191+75 - 18+58	RT.		237.5	1	1				
R-4	21+42 - 1189+37	LT.		212.5	1	1				
R-5	21+30 - 22+80	RT.		125	1	1				
TOTALS			2	885	3	4	295	1220	55	

S.R. 13

PLAN & PROFILE STA 15+00 TO STA. 25+00

ADACHE ASSOCIATES, INC.
CALC. BY J.D.A. DATE 3-6-89
CHKD. BY A.J.Z. DATE 3-8-89

FED. RD. DIVISION	STATE	PROJECT	FISCAL YEAR
2	OHIO		

39
NEA

ERIE COUNTY
ERI 2-(16.13-17.39)

ADACHE ASSOCIATES, INC.
CALC. BY: LDA DATE: 2-69
CHKD. BY: AJZ DATE: 2-69

BM "21" R.R. Spike in base of 32" White Oak 133 Rt.
Sta. 26+33 El. 597.000

BEGIN SHEET STA 25+00

P.I. STA. 25+00 ℄ S.R. 13 140' LT.

TEMPORARY ROAD
20' CLASS B TEMPORARY PAV'T.

300' R

P.I. STA. 29+50 ℄ S.R. 13 100' LT.

STA. 28+50.83 MON. ASSEM.

CONSTRUCTION LIMIT

EX. UNDERGROUND TELEPHONE CABLE

M-1

BEGIN 40:1 TAPER LT. RT. STA. 30+00

END 40:1 TAPER LT. & RT. STA. 30+80

D-2

END WORK STA. 32+20.83

P.I. STA. 31+50

P.T. STA. 32+64.10 ℄ TEMP. ROAD
STA. 32+20.82 ℄ S.R. 13

R.R. SPIKE
P.K. IN TELEPHONE POLE
℄ EXIST. S.R. 13
P.K. IN TELEPHONE POLE
P.K. IN SIGN POST
P.O.T. STA. 37+17.24

STA. 37+17.24
R.R. SPIKE FD. & USED

℄ S.R. 13

EX. 10" CONDUIT TO BE ABANDONED TO STA. 30+25

PROP. 12"

10" EXIST. STORM SEWER

S 19° 10' 55" E

60' R/W

CONSTRUCTION LIMIT

D-1

1 ST. FR. RES. & GAR.

WELL

SEPTIC TANK

HOUSE

STA. 28+50 (37' RT.) STD. HW-4

STA. 29+60 (28.4' RT.) STD. C.B. #2-28 T/G 594.00

STA. 30+25 (23.3' RT.) STD. C.B. #2-28, T/G - 592.00

STA. 30+80 (19.00' RT.) STD. C.B. #2-28, T/G - 591.00

30' EASEMENT

BM "21"

STA. 25+00 TO STA. 30+80		
EXCAVATION	1639	CU. YD.
EMBANKMENT	2359	CU. YD.
SEEDING	14,023	SQ. YD.
SAND BLANKET	1076	CU. YD.

NOTE: FOR DETAILS OF TEMPORARY ROAD SEE SHEET No. 45.
FOR DRIVEWAY DETAILS SEE SHEET No. 53.
FOR CROSS SECTIONS SEE SHT. NO. 133

PROPOSED GRADE
EXISTING GRADE
-29.6%
EXIST. U.G. TELEPHONE CABLE
1500' V.C.
PINT STA. 27+00 EL. 603.70
℄ 12" 598.00
10" @ 4.55% 12" TYPE C CONDUIT
(D-1)
65' @ 2.2% 12" TYPE C
55' @ 2.2% 12" TYPE C
℄ 12" 590.00
℄ 12" 589.50
℄ 12" 588.35
℄ EX. 10" 588.3 ±
EX. 10" CONC. PIPE
VARIES TO MEET EXIST.
STA. 28+50, 37' RT. STD. HW-4
STA. 29+60 STD. #2-28 C.B. T/G. 594.00
STA. 30+25 STD. #2-28 C.B. T/G. 592.00
STD. 2-28 C.B. T/G. 590.50
STA. 30+80 MEET EXISTING

REF NO.	STATION TO STATION	SIDE	602 CONC. MASONRY C.Y.	603 TYPE "C" CONDUIT 12" L.F.	202 PIPE REMOVED 24" & UNDER L.F.	604 MON. ASSEM. STD. #2, 28 EA.
D-1	28+50 - 30+80	RT.	0.21	230	55	1
D-2	30+25 - 30+80	RT.				3
M-1	28+50.83	℄				1
TOTALS			0.21	230	55	1 / 3

ESTIMATED QUANTITIES * STANDARD, MODIFIED, AS PER PLAN

SEE SHEET NO.

S.R. 13

PLAN & PROFILE STA 25+00 TO STA. 32+20.83

FED. RD. DIVISION	STATE	PROJECT	FISCAL YEAR
2	OHIO		

40
184

ERIE COUNTY
ERI 2-(16.13-17.39)

ADACHE ASSOCIATES, INC.
CALC. BY J.D.A. DATE 5-6-69
CHKD. BY R.J.Z. DATE 5-8-69

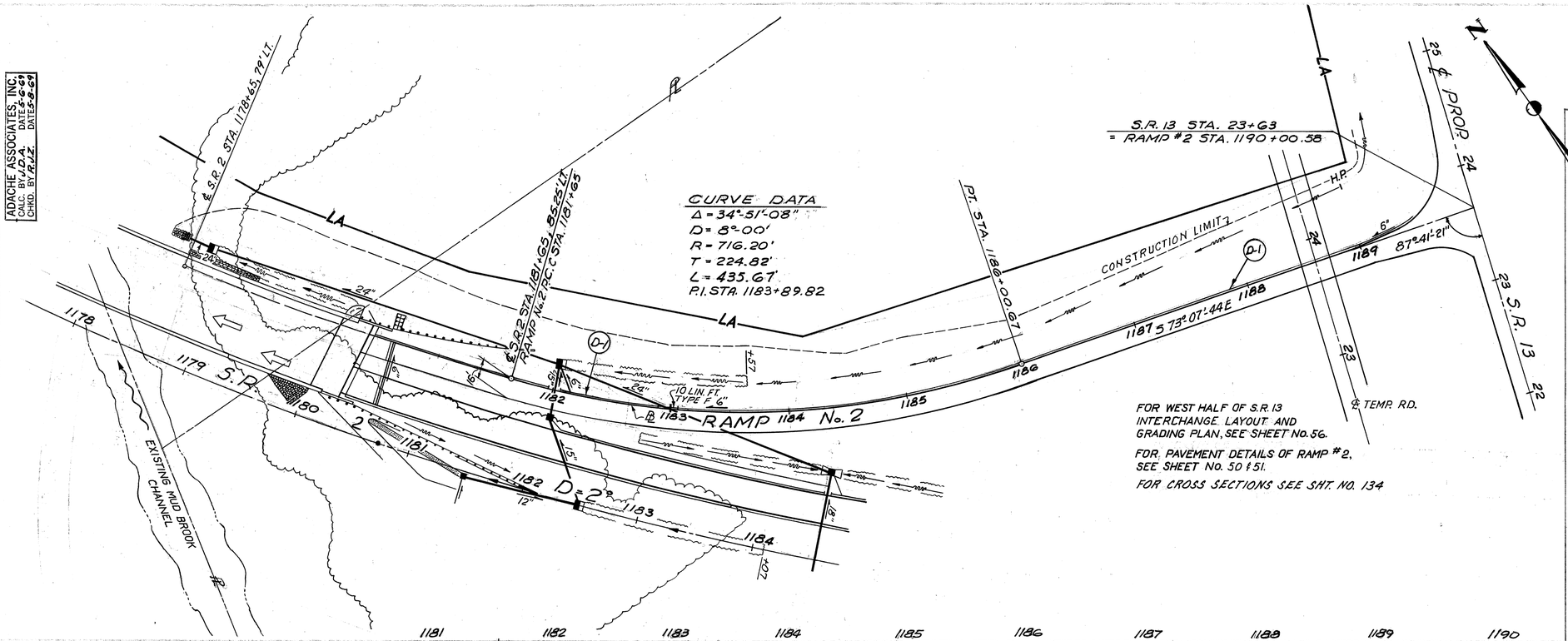

CURVE DATA
Δ = 34°-51'-08"
D = 8°-00'
R = 716.20'
T = 224.82'
L = 435.67'
P.I. STA. 1183+89.82

FOR WEST HALF OF S.R. 13 INTERCHANGE LAYOUT AND GRADING PLAN, SEE SHEET No. 56.

FOR PAVEMENT DETAILS OF RAMP #2, SEE SHEET No. 50 & 51.

FOR CROSS SECTIONS SEE SHT. NO. 134

STA. 1183+50 TO STA. 1189+50		
EXCAVATION	2,354	CU. YD.
EMBANKMENT	3076	CU. YD.
SEEDING	9,376	SQ. YD.
SAND BLANKET	1480	CU. YD.

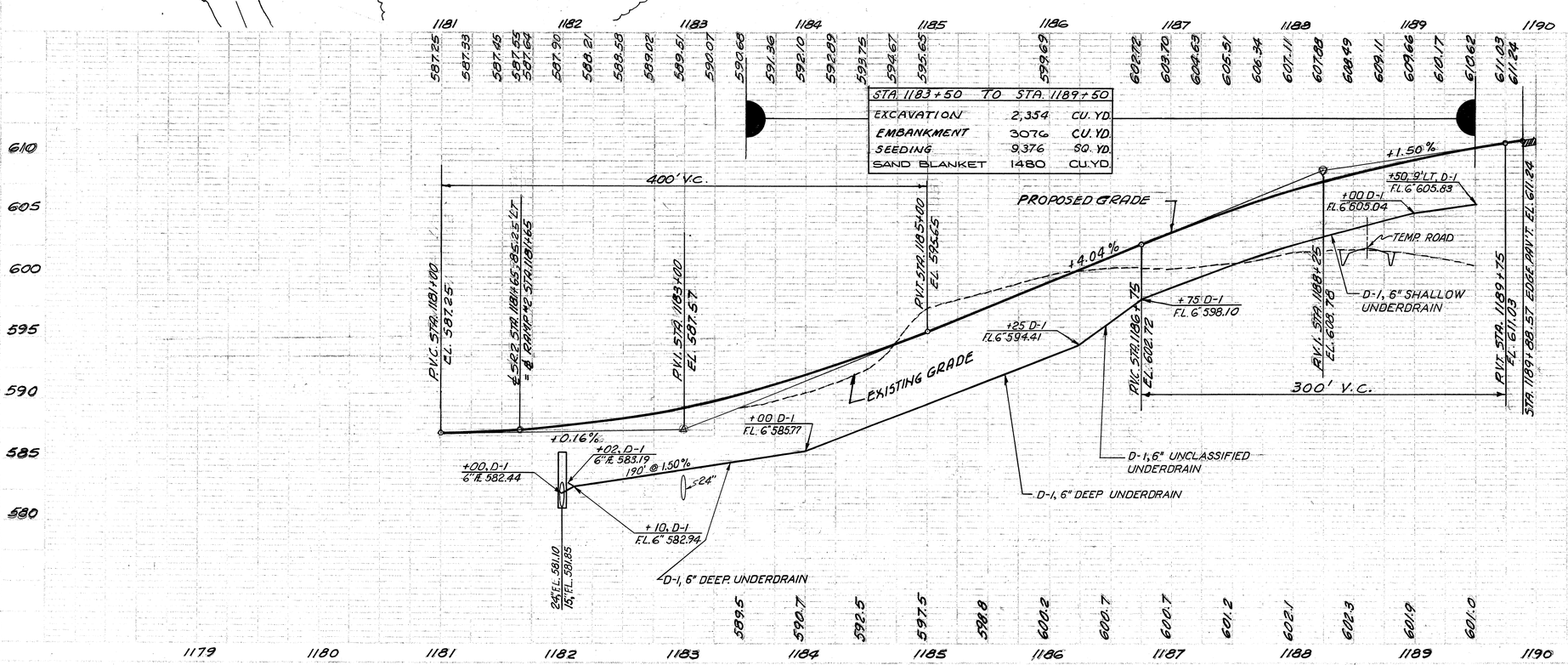

ESTIMATED QUANTITIES 603

REF. NO.	STATION TO STATION	SIDE	SEE SHEET NO.	BENDS & BRANCHES WYE 60°		PIPE CULVERT TYPE 1 CONCRETE 6" L.F.	PIPE UNDERDRAIN SHALLOW UNCL. DEEP L.F. L.F. L.F.	
D-1	1182+00 - 1189+50	LT.		1		20	275	50
TOTAL						20	275	50

RAMP # 2 PLAN & PROFILE STA. 1178+65 TO STA. 1189+88.57

ADACHE ASSOCIATES, INC.
CALC. BY: J.D.A. DATE: 5-8-69
CHKD. BY: R.J.Z. DATE: 5-8-69

FOR REFERENCE POINT AT STA. 16+25 ℄ S.R. 13 SEE SHEET 43.

FOR WEST HALF OF SR. 13 INTERCHANGE LAYOUT AND GRADING PLAN, SEE SHEET #56.
FOR RAMP #3 PAVEMENT DETAILS, SEE SHEET #50 & 52.
FOR CROSS SECTIONS SEE SHT. NO. 135 & 136
FOR S.R. 2 PLAN & PROFILE SEE SHEET NO. 28

FED. RD. DIVISION	STATE	PROJECT	FISCAL YEAR
2	OHIO		

41
184

ERIE COUNTY
ERI 2 - (16.13 - 17.39)

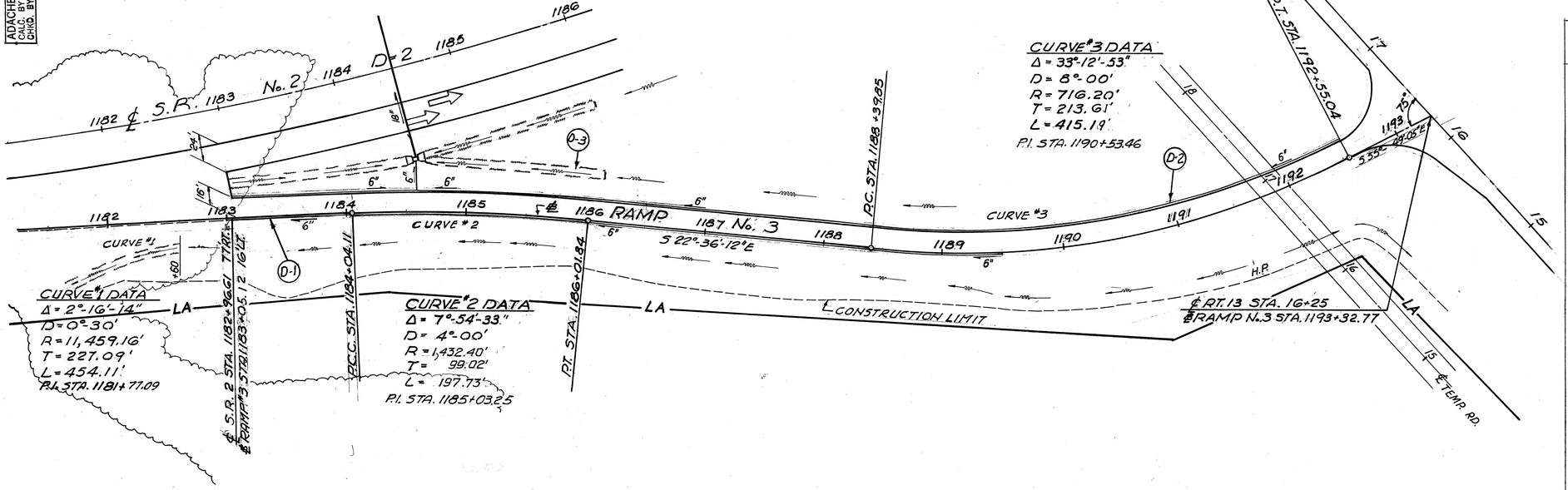

CURVE #1 DATA
Δ = 2°-16'-14"
D = 0°-30'
R = 11,459.16'
T = 227.09'
L = 454.11'
P.I. STA. 1181+77.09

CURVE #2 DATA
Δ = 7°-54'-33"
D = 4°-00'
R = 1,432.40'
T = 99.02'
L = 197.73'
P.I. STA. 1185+03.25

CURVE #3 DATA
Δ = 33°-12'-53"
D = 8°-00'
R = 716.20'
T = 213.61'
L = 415.19'
P.I. STA. 1190+53.46

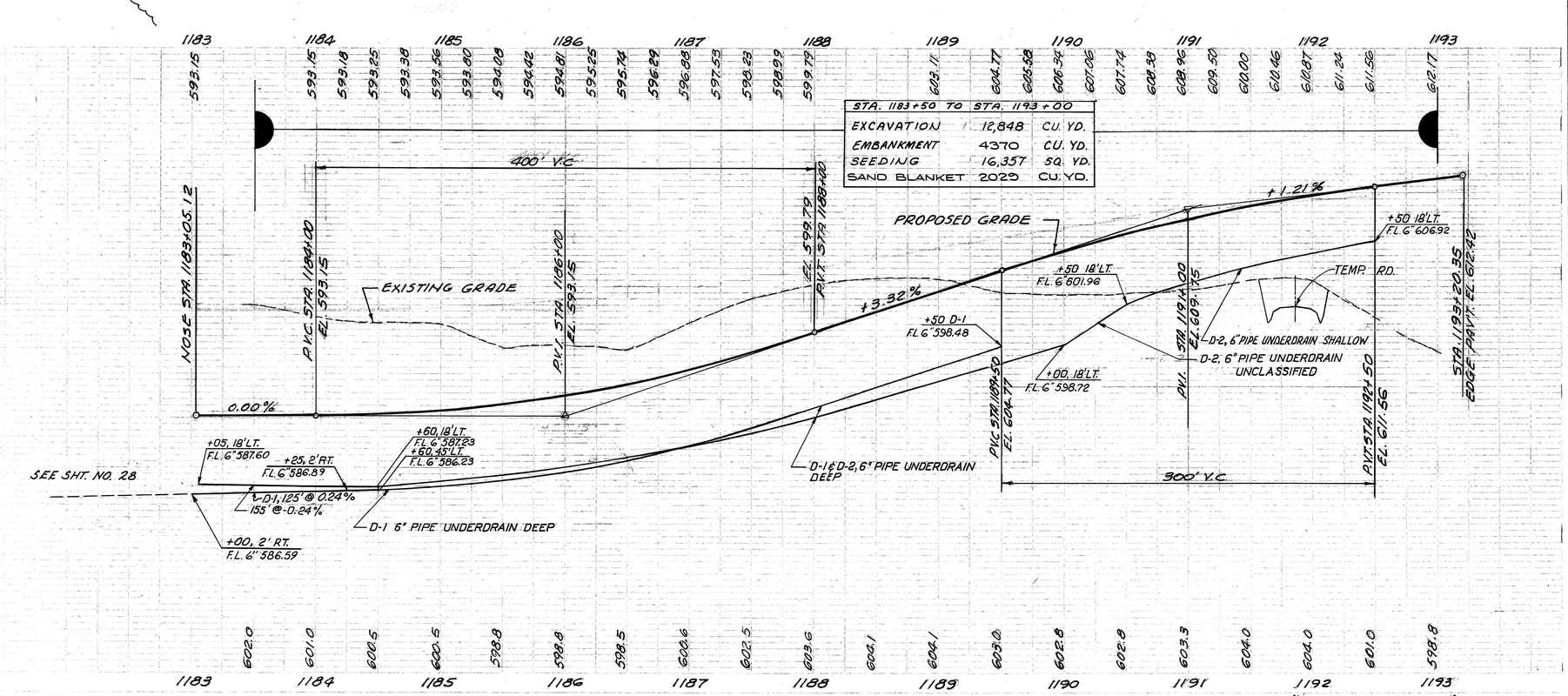

ESTIMATED QUANTITIES

REF. NO.	STATION TO STATION	SIDE	605 PIPE UNDERDRAIN STA. 6" L.F.	605 PIPE UNDERDRAIN UNCL. 6" DEEP L.F.	605 PIPE UNDERDRAIN UNCL. 6" L.F.	610 ENDS & BRANCHES CB END 6" TEE	670 DITCH EROSION PROTECTION S.Y.	603 TILE EF CONDUIT 6" L.F.	SEE SHEET NO.
D-1	1183+00 - 1189+50	RT.	650	712			125		1
D-2	1183+05 - 1192+50	LT.	50	1362				10	125
D-3	1184+65 - 1186+15	LT.	200	50					10
TOTAL			200	2074			125	10	

RAMP #3 PLAN & PROFILE STA. 1183+05.12 TO STA. 1193+20.35

FED. RD. DIVISION	STATE	PROJECT	FISCAL YEAR
2	OHIO		

42/284

ERIE COUNTY
ERI 2-(16.13-17.39)

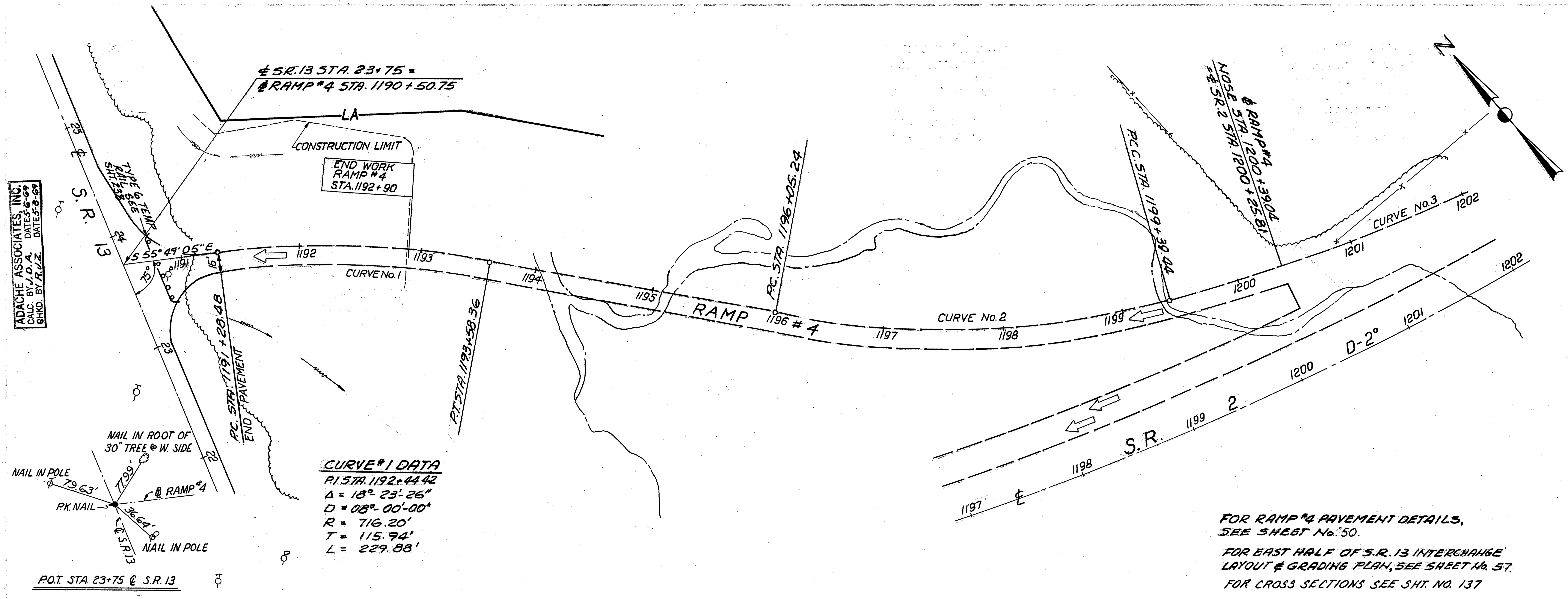

FOR RAMP #4 PAVEMENT DETAILS, SEE SHEET No. 50.

FOR EAST HALF OF S.R. 13 INTERCHANGE LAYOUT & GRADING PLAN, SEE SHEET No. 57.

FOR CROSS SECTIONS SEE SHT. NO. 137

STA 1191+00 TO STA 1192+90		
EXCAVATION	475	CU. YD.
EMBANKMENT	4919	CU. YD.
SEEDING	2,710	SQ. YD.
SAND BLANKET	2693	CU. YD.

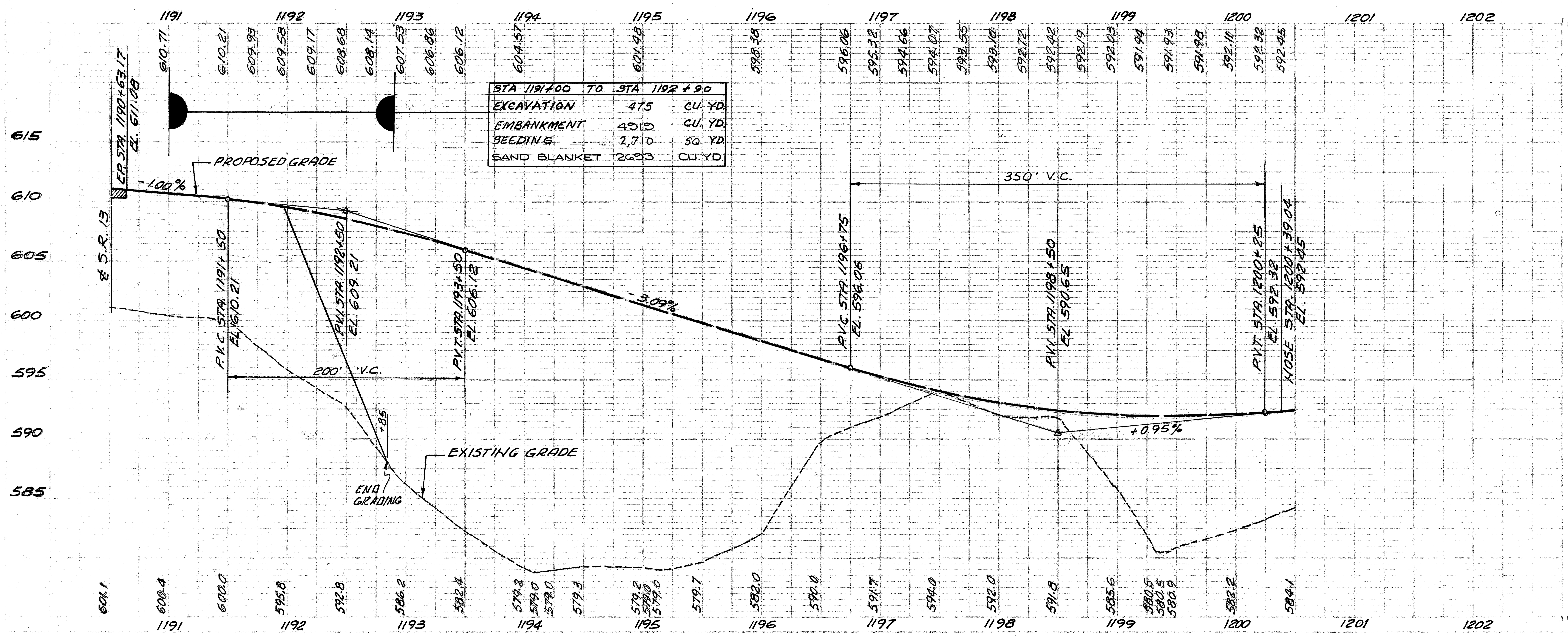

ESTIMATED QUANTITIES				
REF NO.	STATION TO STATION	SIDE		TOTAL

RAMP #4 PLAN & PROFILE STA. 1190+63.17 TO STA. 1192+90

FED. RD. DIVISION	STATE	PROJECT	FISCAL YEAR
2	OHIO		

43
184

ERIE COUNTY
ERI 2-(16.13-17.39)

ADACHE ASSOCIATES, INC.
CALC. BY J.D.A. DATE 5-6-69
CHKD. BY R.W.E. DATE 5-8-69

P.K. NAIL @ RAMP #5
3997'
47.47'
NAIL IN POLE
NAIL IN POLE
℄ S.R. 13
P.O.T. STA. 16+25 ℄ S.R. 13

FOR CULVERT Nº 9 DETAILS SEE SHEET Nº 152.

FOR GUARD RAIL QUANTITIES SEE SHEET No. 38

END WORK RAMP #5 STA. 1195+50

TYPE 6 TEMP. RAIL SEE SHT. 238

@ RAMP #5 STA. 1191+91.78 END PAVEMENT

WOODS

CULVERT #9

S.R. 13

PROP. ℄ S.R. 13

77°-48'-12"

16'

FUTURE RAIL

D-1 D-2 D-3

W=11' W=15'

+01 +14 +50 +60

CONST. LIMIT

LA

WOODS

℄ S.R. 13 STA 16+25 = @ RAMP #5 STA. 1190+90.54

RAMP # 5 S 83°-00'-44"E

S 78°58'-36"E

℄ S.R. 2

1191 1192 1193 1194 1195 1196 1197 1198 1199 1200 1201 1202 1203 1204 1205

D = 2°

P.C. STA. 1198+48.22

P.T. STA. 1200+50

P.O.C. STA. 1202+00 BEGIN 300' PACING LANE

NOSE ℄ S.R. 2 STA. 1205+00 END 300 PACING LANE

C.S. STA. 1205+85.87

FOR RAMP #5 PAVEMENT DETAILS, SEE SHEET No. 50.

FOR EAST HALF OF S.R. 13 INTERCHANGE LAYOUT & GRADING PLAN, SEE SHEET No. 57.

FOR CROSS SECTIONS SEE SHT. NO. 138

STA. 1191+50 TO STA. 1195+00		
EXCAVATION	686	CU. YD.
EMBANKMENT	23,012	CU. YD.
SEEDING	7.626	SQ. YD.
SAND BLANKET	4972	CU. YD.

611.94 611.66 611.32 610.92 610.46 609.95 609.37 608.73 608.04 606.35 603.59 600.79 600.09 599.46 598.83 598.37 597.91 597.52 597.18 596.91 596.70 596.54 596.45 596.42 596.45 596.53 596.68 596.89 597.64 598.79

620 615 610 605 600 595 590 585 580

℄ S.R. 13 ENTR. STA. 1191+02.82 EL. 612.56 EL. 612.41

-1.00%

PROPOSED GRADE

+50 D-1 FL. 607.32

+67 D-1 FL. 605.53 TO BE EXTENDED BY ADJACENT CONTRACT

D-1, SHALLOW UD

PVC STA. 1191+50 EL. 611.94

PVI STA. 1192+50 EL. 610.64

PVT STA. 1193+50 EL. 608.04

200' V.C.

-2.90%

-80'

END GRADING

PVC STA. 1196+00 EL. 600.79

400' V.C.

PVI STA. 1198+00 EL. 594.98

PVT STA. 1200+00 EL. 596.89

STA. 1202+00 EL. 598.79

+0.95%

EXISTING GRADE

FL. 582.60

593.8 588.0 584.6 583.9 585.0 583.6 583.0 584.8 589.3 597.0 601.8 602.6 601.8 603.4 604.4 604.5 604.0 603.2 599.2 594.2 588.1 589.5 593.9 600.4 595.5 594.0 592.7 592.5

1191 1192 1193 1194 1195 1196 1197 1198 1199 1200 1201 1202

ESTIMATED QUANTITIES

REF NO.	STATION TO STATION	SIDE	605 PIPE UNDERDRAIN SHALLOW L.F.	670 CATCH BASIN, FRAME-TION S.Y.
D-1	1191+50 - 1192+67	R.T.	117	185
D-2	1191+50 - 1193+01	R.T.		122
D-3	1193+14 - 1194+60	R.T.	117	
TOTAL			117	307

RAMP #5 PLAN & PROFILE STA. 1191+02.82 TO STA. 1195+50

FED. RD. DIVISION	STATE	PROJECT	FISCAL YEAR
2	OHIO		

44
164

ERIE COUNTY
ERI 2 - (16.13 - 17.39)

ADACHE ASSOCIATES, INC.
CALC. BY J.D.A. DATE 5-6-69
CHKD. BY R.J.Z. DATE 5-8-69

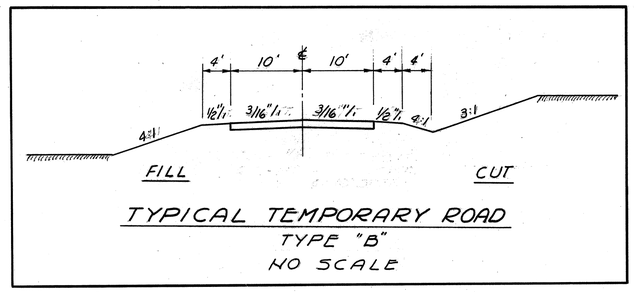

TYPICAL TEMPORARY ROAD
TYPE "B"
NO SCALE

℄ TEMPORARY S. R. 13 CURVE DATA				
		#1	#2	#3
P.I. STA.	=	5+00	7+21.06	11+21.83
Δ	=	26°33'54"	20°51'16"	05°42'38"
D	=	19°05'55"	19°05'55"	19°05'55"
R	=	300.00'	300.00'	300.00'
T	=	70.82'	55.21'	14.96'
L	=	139.09'	109.19'	29.90'

NOTE: TEMPORARY STRIPING ON EXISTING PAVEMENT SHALL BE 947.03 MATERIAL, TYPE B OR C.

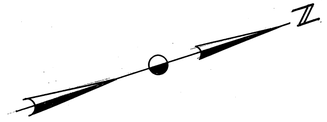

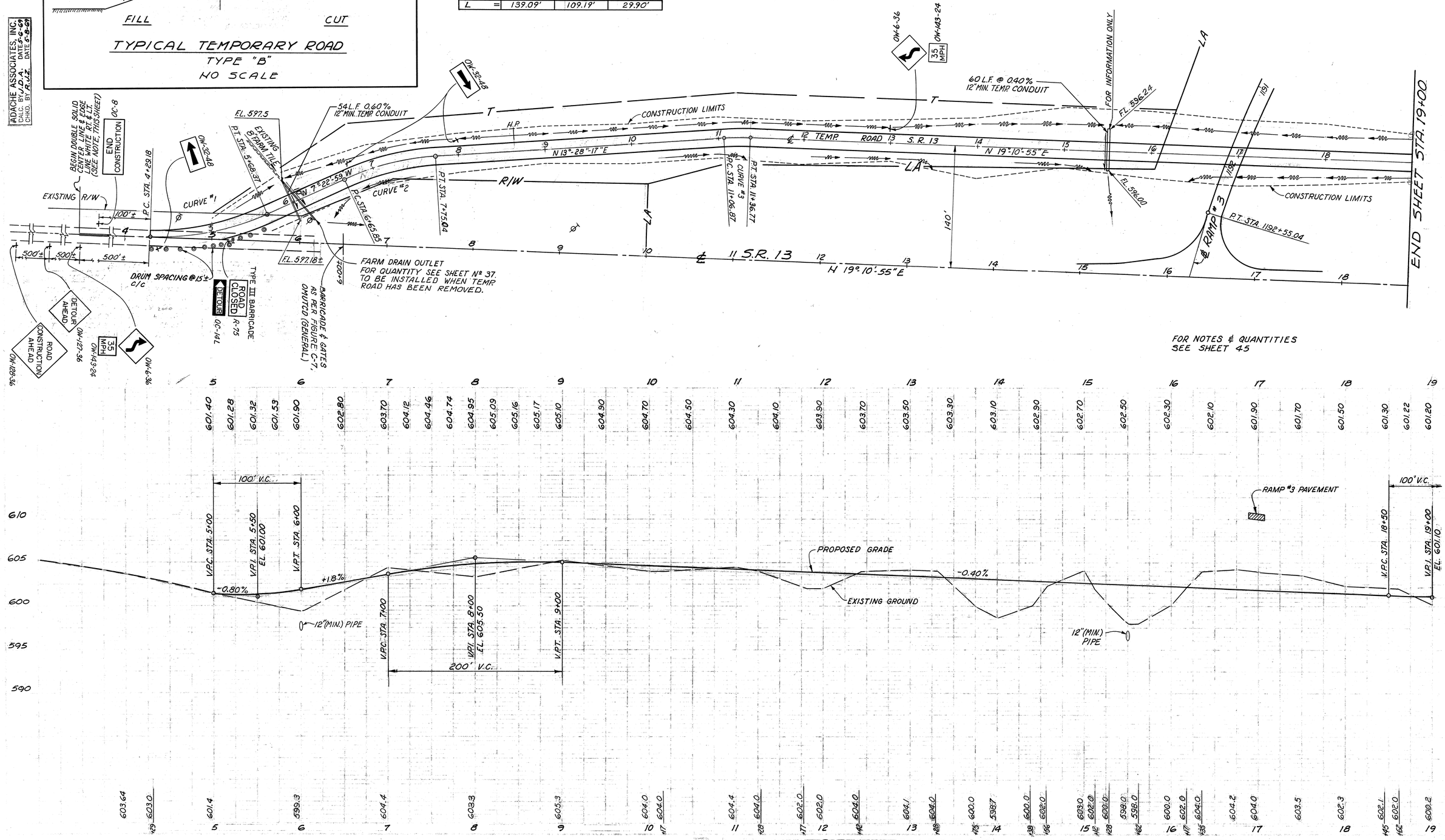

S.R. 13 TEMPORARY ROAD STA. 4+29.18 TO STA. 19+00

FED. RD. DIVISION	STATE	PROJECT	FISCAL YEAR
2	OHIO		

45
184

ERIE COUNTY
ERI 2-(16.13-17.39)

ADACHE ASSOCIATES, INC.
CALC. BY J.D.A. DATE 5-8-69
CHKD. BY R.J.Z. DATE 5-8-69

NOTES:
3. THE CONTRACTOR SHALL PROVIDE A FLAGGER AT EACH HAUL ROAD CROSSING OF THE TEMPORARY ROAD. APPROPRIATE SIGNS FOR EQUIPMENT CROSSING AND FLAGGER AHEAD SHALL BE PROVIDED AS SHOWN ABOVE.
4. SEE SHEET 241 FOR FLAGGER CLOSING ONE LANE OF A TWO LANE HIGHWAY DURING CONSTRUCTION OR REMOVAL AND RESTORATION OF THE TEMPORARY ROAD AREA ADJACENT TO THE EXISTING.
5. TEMPORARY STRIPING ON EXISTING PAVEMENT SHALL BE 947.03, MATERIAL, TYPE B OR C.
6. TEMPORARY PIPE COSTS ARE INCLUDED WITH TEMPORARY ROAD COST.

℄ CURVE DATA

CURVE #4	CURVE #5	CURVE #6
P.I. STA. 25+21.81	P.I. STA. 29+73.56	P.I. STA. 31+95.83
Δ = 05°04'-47"	Δ = 21°-29'-07"	Δ = 26°-33'-54"
D = 19°-05'-55"	D = 19°-05'-55"	D = 19°-05'-55"
R = 300.00'	R = 300.00'	R = 300.00'
T = 13.31'	T = 56.92'	T = 70.82'
L = 26.60'	L = 112.50'	L = 139.09'

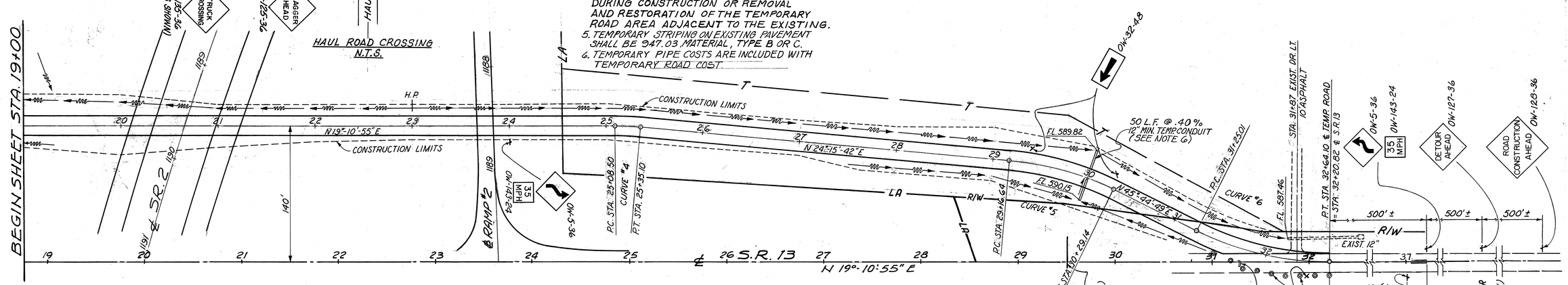

NOTES:
1. THE COST FOR ALL TRAFFIC CONTROL ITEMS EXCEPT FOR TEMPORARY PAVEMENT MARKINGS AND TEMPORARY ROAD AND TEMPORARY PAVEMENT SHALL BE INCLUDED IN THE LUMP PRICE BID FOR ITEM 614 MAINTAINING TRAFFIC.
2. FOR TEMPORARY PAVEMENT MARKING NOTES SEE SHEET 220.
(NOTES CONT. ABOVE)

ESTIMATED PAVEMENT MARKING QUANTITIES (TO SHT. 234)

614	TEMPORARY CENTER LINE CLASS I	2,614 L.F.
614	TEMPORARY EDGE LINE CLASS I	5,228 L.F. 615 *
614	TEMP. CENTER LINE, 947.03, TYPE B OR C	1,180 L.F. 615
614	TEMP. EDGE LINE, 947.03, TYPE B OR C	2,000 L.F.

ESTIMATED QUANTITIES (TO SHEET 16)

TEMPORARY PAVEMENT, CLASS B		5971.10 SQ. YDS.
TEMPORARY ROAD (EARTHWORK TO BE INCLUDED IN 615 LUMP SUM.)		LUMP
	EXCAVATION	(4,971 CU. YDS.)
	EMBANKMENT	(1,962 CU. YDS.)

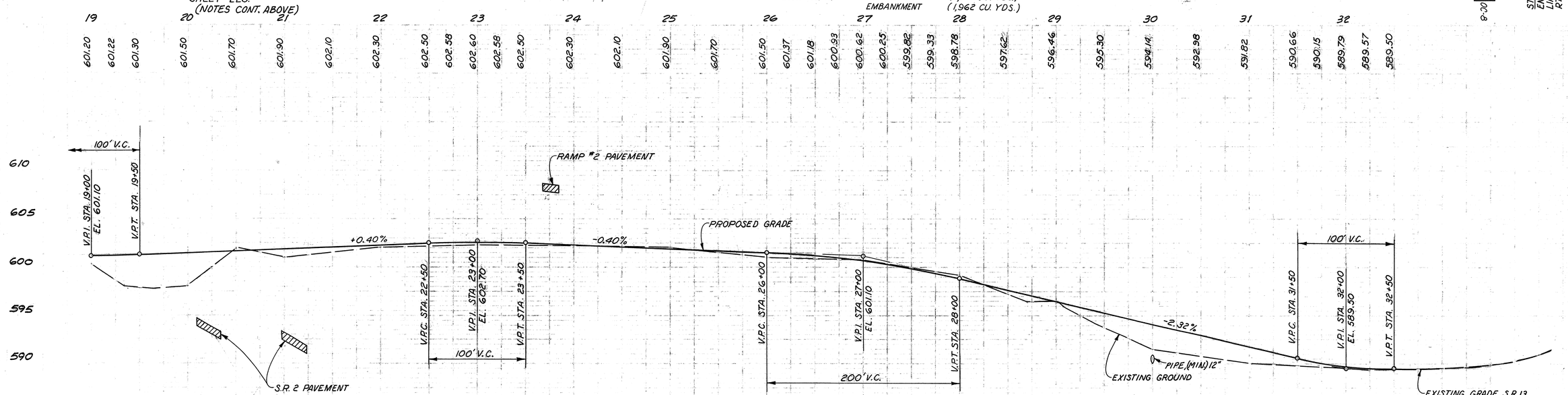

S.R. 13 TEMPORARY ROAD STA 19+00 TO STA. 32+64.10

CALC.		OHIO
DATE		F.H.W.A. REGION 5
CHKD.		
DATE		

45A
784

ERIE COUNTY
ERI.-2-16.13

HURON AVERY ROAD DETOUR PLAN

0 200 400 800 1200 1600 2000
SCALE IN FEET

N

CONSOLIDATED RAIL CORPORATION

BOGART ROAD

MUDBROOK ROAD

HURON AVERY ROAD

CITY OF HURON

RYE BEACH ROAD

FOX ROAD

℄ PROPOSED S.R. 2

ROAD CLOSED AHEAD — HURON AVERY RD. — D-14 — OW-120-36

DETOUR AHEAD — D-14 — HURON AVERY RD. — D-14 — OW-127-36

DETOUR — HURON AVERY RD. — D-14 — OC-29L

¾ MILE AHEAD LOCAL TRAFFIC ONLY — HURON AVERY RD. — D-14 — DETOUR — OC-14R — R-76A

DETOUR — OC-29 — HURON AVERY RD. — D-14 — M-2-21-2

DETOUR — OC-29R — D-14 — HURON AVERY RD.

HURON AVERY RD. — D-14 — DETOUR AHEAD — OW-127-36

HURON AVERY RD. — D-14 — ROAD CLOSED AHEAD — OW-120-36

TYPE III BARRICADE — ½ MILE AHEAD LOCAL TRAFFIC ONLY — R-76A

ROAD CONSTRUCTION AHEAD — OW-128-36

25 MPH — OW-143-24

HURON AVERY RD. — D-14 — DETOUR — OC-29R

HURON AVERY RD. — D-14 — DETOUR — OC-29

HURON AVERY RD. — D-14 — DETOUR — OC-29

HURON AVERY RD. — D-14 — DETOUR — OC-29L

TYPE III BARRICADE — ROAD CLOSED ¾ MILE AHEAD LOCAL TRAFFIC ONLY — R-76A

DETOUR — OC-14L

STOP — To Remain

STOP — To Remain

15 MPH — OW-143-24 — OW-13-36

OW-14-36

15 MPH — OW-143-24

DETOUR AHEAD — OW-127-36

ROAD CLOSED AHEAD — OW-120-36

D-14 — HURON AVERY RD. — DETOUR AHEAD — OW-127-36

DETOUR — OC-29 — HURON AVERY RD. — D-14

DETOUR — OC-29L — HURON AVERY RD. — D-14

TYPE III BARRICADE — ½ MILE AHEAD LOCAL TRAFFIC ONLY — R-76A

(GATES AND BARRICADES, See Sheet 242.) — ROAD CLOSED — R-75

Note: The cost of placing, maintaining and removing all detour signing shall be included for payment in the lump sum price bid for Item 614 - Maintaining Traffic.

41

REVISED JULY, 85 · R.W.H

A-C-L form no. 1

HURON AVERY ROAD DETOUR PLAN

CALC.		ERIE COUNTY	OHIO
DATE		ERI - 2 - 16.13	F.H.W.A. REGION 5
CHKD.			
DATE			

45B
184

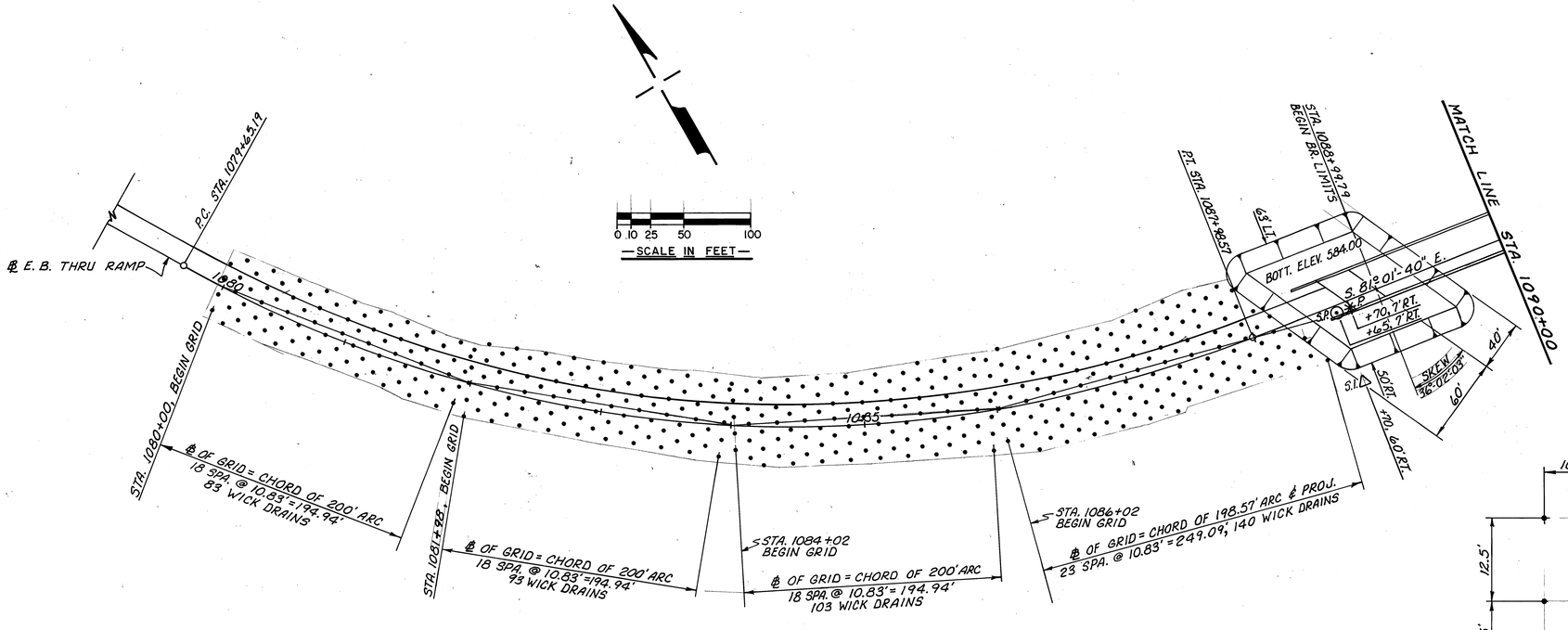

—LEGEND—

- • WICK DRAINS
- ⊙S.P. SETTLEMENT PLATFORM
- ✳P. PIEZOMETER
- △S.I. SLOPE INDICATOR

FOR DETAILS AND OTHER NOTES SEE SHEET B & BA.

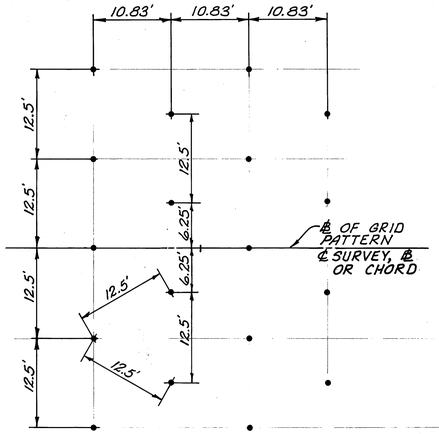

—TYPICAL WICK DRAIN PATTERN—

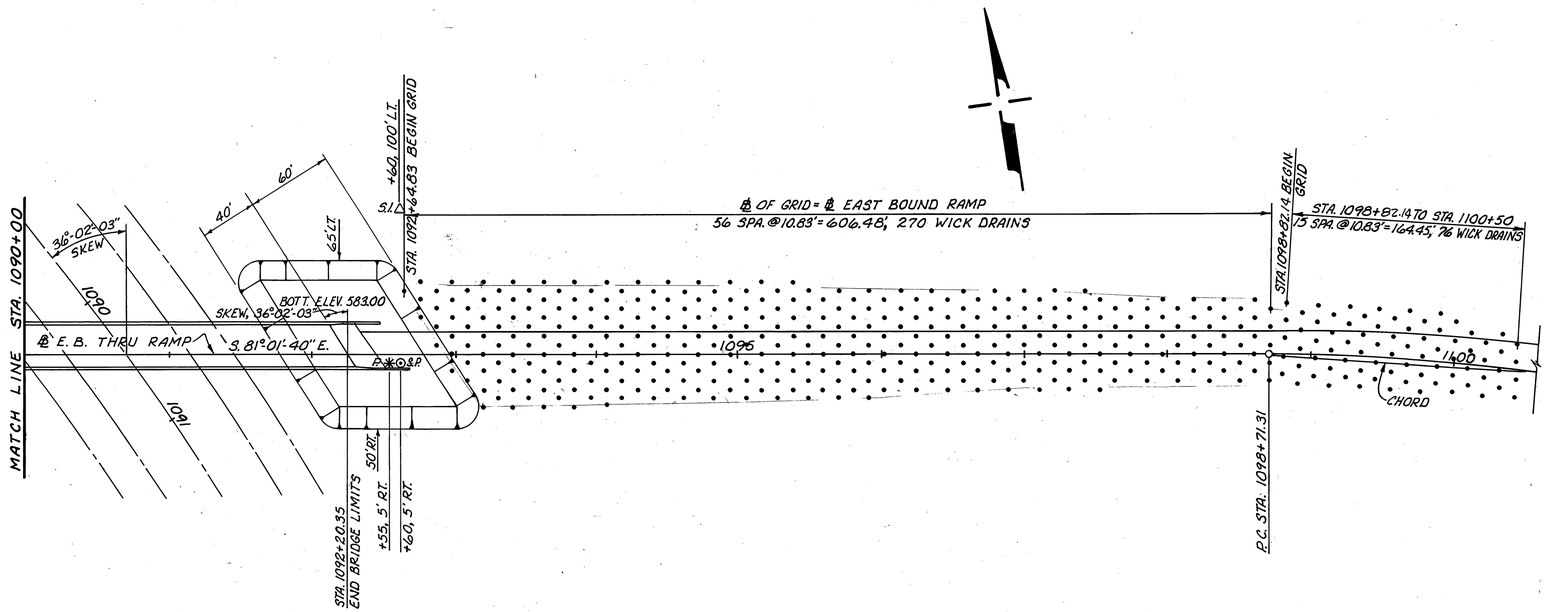

ESTIMATED QUANTITIES

LOCATION	SIDE	203 SPECIAL: GRANULAR BORROW	WICK DRAINS AS/PLAN	SETTLEMENT PLATFORM	SLOPE INDICATOR	PIEZOMETER
		CU. YDS.	LIN. FT.	EACH	EACH	EACH
1087+73 - 1089+40	LT. & RT.	5,595				
1091+70 - 1093+35	"	5,712				
1080+00 - 1082+00	"		2,905			
1082+00 - 1084+00	"		3,255			
1084+00 - 1086+00	"		3,605			
1086+00 - 1087+00	LT. & RT.		4,900			
1088+65	RT.			1	1	
1088+70	RT.					1
1092+50	RT.					1
1092+60	LT. & RT.			1	1	
1092+67 - 1097+00	"		9,275			
1097+00 - 1098+82.45	"		2,800			
1098+71.31 - 1101+50	LT. & RT.		2,836			
TOTAL		11,307	29,575	2	2	2

E. B. RAMP WICK DRAIN PLAN

A-C-L form no. 1

CALC.	ERIE COUNTY	OHIO
DATE	ERI-2-16.13	F.H.W.A. REGION 5
CHKD.		
DATE		

45C / 184

℄ GRID STA. 1093+50 TO C.S. STA. 1097+00.84
33 SPACES @ 10.83' = 357.39'; 231 WICK DRAINS

STA. 1000+67± EXISTING 12" WATER MAIN

1075

1100

1105

MATCH LINE STA. 1106+00

℄ GRID ON TANGENT PROJECTION FROM S.T.
37 SPACES @ 10.83' = 400.71'; 437 WICK DRAINS

℄ GRID, ℄ S.R.2, 90 SPACES @ 10.83' = 974.70'
℄ GRID ON TANGENT, 46 SPACES @ 10.83' = 498.18'
1254 WICK DRAINS

S.T. STA. 1101+00.84
BEGIN GRID BOTH WAYS

NOTES

1. FOR LEGEND AND TYPICAL WICK DRAIN PATTERN SEE SHEET NO 45B.
2. ADJUST WICK DRAINS TO MISS THE EXISTING WATER MAIN BY 12" CLEAR.
3. FOR CULVERT NO 5 DETAILS AND ITEM 203 "GRANULAR BORROW INCLUDING EXCAVATION OF UNSUITABLE MATERIAL" SEE SHEET NO 144.

℄ GRID, = ℄ S.R.2 CONTINUED

STA. 1109+42.41 BEGIN BRIDGE LIMITS

STA. 1110+22, S.I. 130' LT.

115' LT.

+25.74

STA. 1111+31.79 END BRIDGE LIMITS

50'

50'

115' LT.

STA. 1113+00 S.I., 135' LT.

160' LT.

STA. 1118+40 ℄ CULVERT #5

MATCH LINE STA. 1106+00

MATCH LINE STA. 1120+00

33°01'40" SKEW

STA. 1108+00 P., 5' LT.

STA. 1110+22 P., 5' LT.

STA. 1111+45 P., 5' LT.

STA. 1113+00 P., 5' LT.

STA. 1118+50 P., 5' LT.

1110

1115

STA. 1108+00 S.P., 5' RT.

STA. 1110+22 S.P., 5' RT.

STA. 1111+45 S.P., 5' RT.

STA. 1113+00 S.P., 5' RT.

STA. 1118+50 S.P., 5' RT.

1:1 TYP. 20' MIN.

BOTT. ELEV. 580

BOTT. ELEV. 580.0

BOTT. ELEV. 564

STA. 1122+33.36 BEGIN BRIDGE LIMITS

S.I. STA. 1108+00 130' RT.

110' RT.

STA. 1123+74.86 END BRIDGE LIMITS

105' LT.

102.59

115' RT.

STA. 1111+45 S.I., 135' RT.

160' RT.

STA. 1118+50 S.I., 155' RT.

℄ GRID = ℄ S.R.2
27 SPACES @ 10.83" = 292.91'
383 WICK DRAINS

STA. 1113+00, BEGIN GRID BOTH WAYS

℄ GRID = ℄ S.R.2
91 SPACES @ 10.83' = 985.53'
1494 WICK DRAINS

SKEW 2°34'37"

STA. 1122+20 S.I. 110' LT.

MONT.

STA. 1122+20 P., 5' LT.

STA. 1122+20 S.P., 5' RT.

STA. 1123+85 P. 5' LT.

STA. 1123+85 S.P. 5' RT.

1125

1130

1132

4:1 TYP.

BOTT. ELEV. 582

BOTT. ELEV. 583

STA. 1123+85 S.I., 105' RT.

7 SPACES @ 10.83' = 75.81'

105' RT.

℄ GRID = ℄ S.R.2
CONTINUED

℄ GRID = ℄ S.R.2 75 SPACES @ 10.83' = 801.42'
1115 WICK DRAINS

54' 110' RT. 46' 42' 58'

STA. 1124+00 BEGIN GRID BOTH WAYS

ESTIMATED QUANTITIES

LOCATION	SIDE	203 GRANULAR BORROW	SPECIAL WICK DRAINS AS PER PLAN	SETTLEMENT PLATFORM	SLOPE INDICATOR	PIEZOMETER
		CU. YDS.	LIN. FT.	EACH	EACH	EACH
1093+50-1097+01	LT.&RT.		8,085			
1097+01-1101+01	"		15,295			
1101+01-1110+75	"		43,890			
1108+00	"			1	1	1
1109+22	"			1	1	1
1108+25-1112+65	"	11,655				
1110+10-1112+60	"	11,955				
1110+07-1113+00	"		13,405			
1111+45-	"			1	1	1
1113+00	"			1	1	1
1118+50	"			1	1	1
1122+20	"			1	1	1
1121+80-1122+83	"	11,484				
1123+25-1124+30	"	10,644				
1123+24-1132+01	"		39,025			
1123+85	LT.&RT.			1	1	1
1113+00-1122+86	LT.&RT.		52,290			
TOTAL		45,738	171,990	7	7	7

S.R. 2 - WICK DRAIN PLAN

A-C-L form no. 1

CALC.	ERIE COUNTY	OHIO
DATE	ERI - 2 - 16.13	F.H.W.A. REGION 5
CHKD.		
DATE		

45D
184

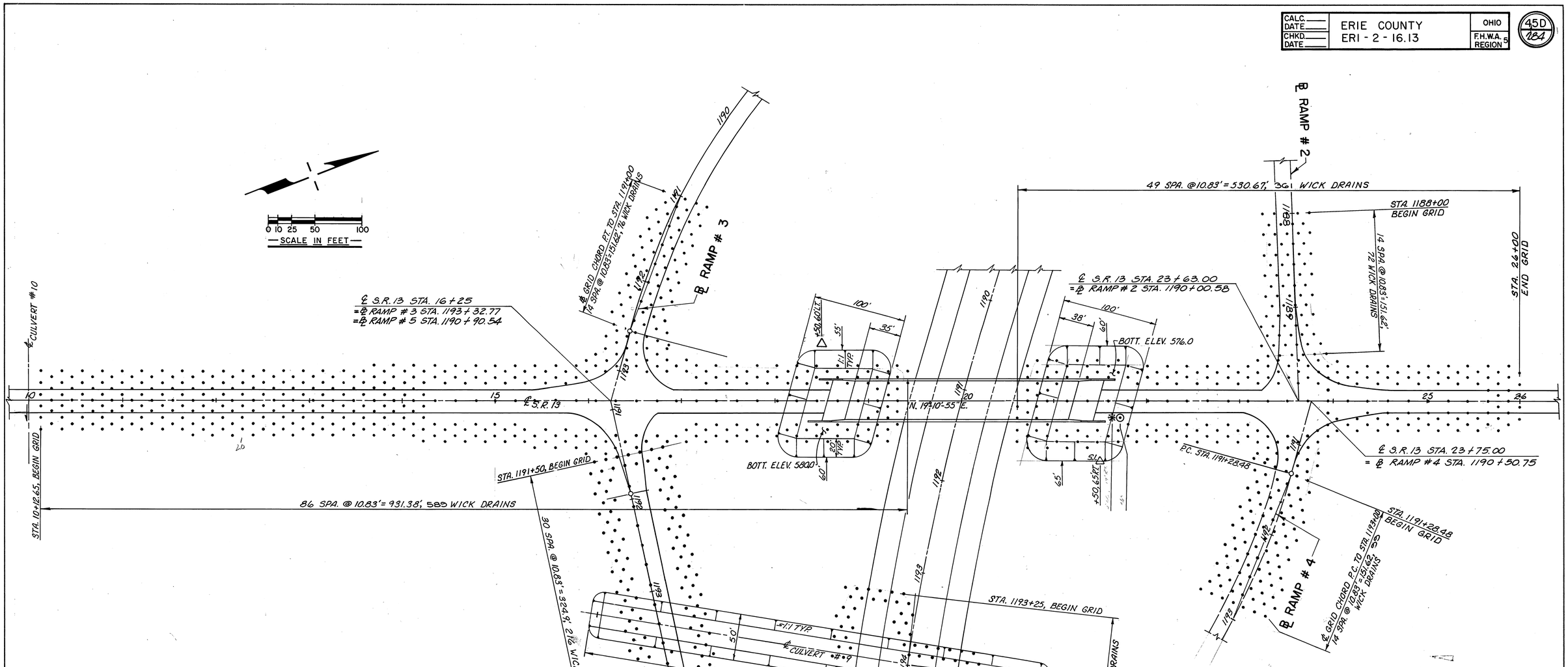

NOTES

1. FOR LEGEND AND TYPICAL WICK DRAIN PATTERN SEE SHEET NO 45B.
2. FOR CULVERT NO 9 DETAILS AND ITEM 203 "GRANULAR BORROW INCLUDING EXCAVATION OF UNSUITABLE MATERIAL", SEE SHEET NO 152.

ESTIMATED QUANTITIES

LOCATION	SIDE	203 GRANULAR BORROW	SPECIAL WICK DRAINS AS/PLAN	SETTLEMENT PLATFORM	SLOPE INDICATOR	PIEZOMETER		
		CU. YDS.	LIN.FT.	EACH	EACH	EACH		
S.R. 13								
10+12.65 TO 19+44	LT&RT.	2417	20,615					
18+50	LT.				1			
20+69 TO 20+100	LT&RT.	1681	12,635			-		
21+50	RT.				1			
21+60	RT.					1		
21+65	RT.			1				
S.R. 2								
1192+25 TO 1196+25	LT.&RT.		9030					
RAMP # 2								
1188+00 TO 1189+52	LT.&RT.		2520					
RAMP # 3								
1191+00 TO 1192+52	LT.&RT.		2660					
RAMP # 4								
1191+28.48 TO 1192+00	LT.&RT.		3465					
RAMP # 5								
1191+20 TO 1194+75	LT.&RT.		7560					
TOTAL		5098	58,485	1	2	1		

S. R. 13 & RAMPS #2 THRU #5 WICK DRAIN PLAN

A-C-L form no. 1

FED. RD. DIVISION	STATE	PROJECT	
2	OHIO		

46
284

ERIE COUNTY
ERI 2-(16.13-17.39)

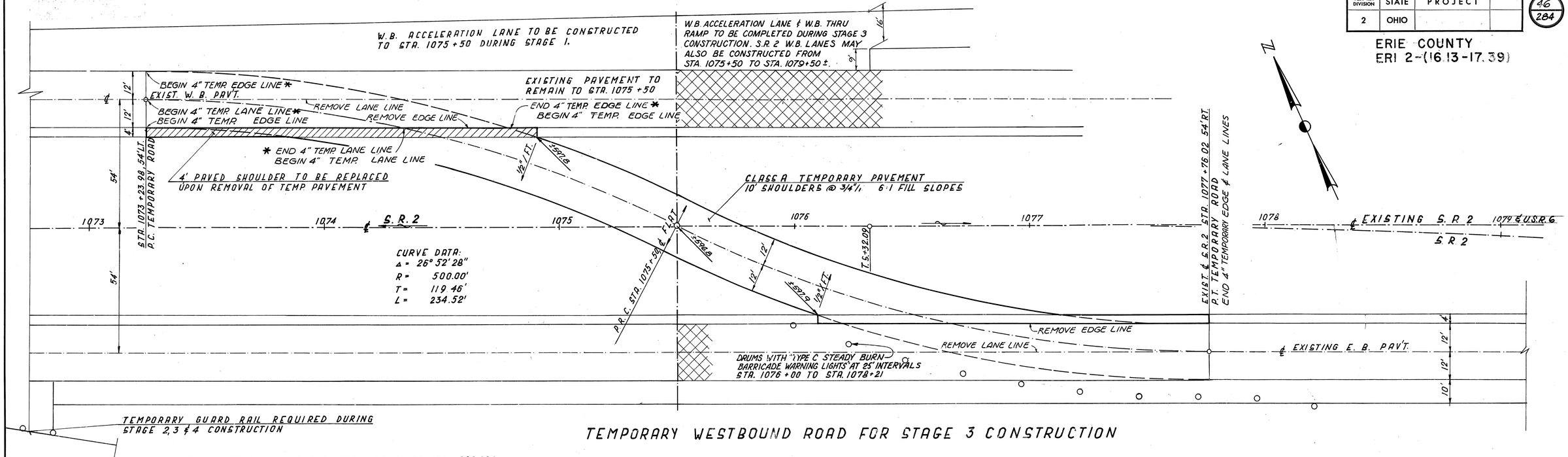

Temporary Concrete Barrier:
The Temporary Concrete Barrier shall use the precast connecting pin design as per Std. Drwg. MC-9A.

FOR TEMPORARY SIGNING & TRAFFIC CONTROL SEE SHEETS 235, 236, 237 & 238
FOR PAVEMENT MARKING QUANTITIES SEE SHEET 234
For Temporary Guardrail and Concrete Barrier Quantities, See Sheet 234.

REVISED JULY, 85 R.W.H.

NOTE: ALL TEMPORARY STRIPING SHOWN THUS: *, SHALL BE 947.03 MATERIAL, TYPE B OR C

ESTIMATED QUANTITIES

**615	TEMPORARY PAVEMENT, CLASS A	2814 SQ YDS.
• 615	TEMPORARY ROADS	LUMP

NOTE: COST OF PLACING, MAINTAINING AND REMOVING TEMPORARY GUARD RAIL WILL BE PAID FOR SEPARATELY AS GUARD RAIL, TYPE 6.
TRAFFIC CONTROL ITEMS SHALL BE INCLUDED IN THE LUMP SUM PRICE BID FOR ITEM 614 MAINTAINING TRAFFIC.

** TEMPORARY CONDUIT COSTS TO BE INCLUDED WITH ITEM 615 TEMPORARY ROADS.
• EARTHWORK INCLUDED WITH ITEM 615 TEMPORARY ROADS
LUMP EXCAVATION 150 CU.YD. EMBANKMENT 955 CU.YD

0 10 20 30 40 60 80 100
SCALE IN FEET

1 / 2

ADACHE ASSOCIATES INC., ENGINEERS
CLEVELAND, OHIO 44142

EXISTING STATE ROUTE 2 TEMPORARY ROAD DETAILS

DESIGNED	DRAWN	CHECKED	REVIEWED	DATE
P.I.W. 11-14-69	V.S. 11-19-69	R.J.Z 11-24-69		

FED. RD. DIVISION	STATE	PROJECT	
2	OHIO		

47
284

ERIE COUNTY
ERI 2-(16.13 - 17.39)

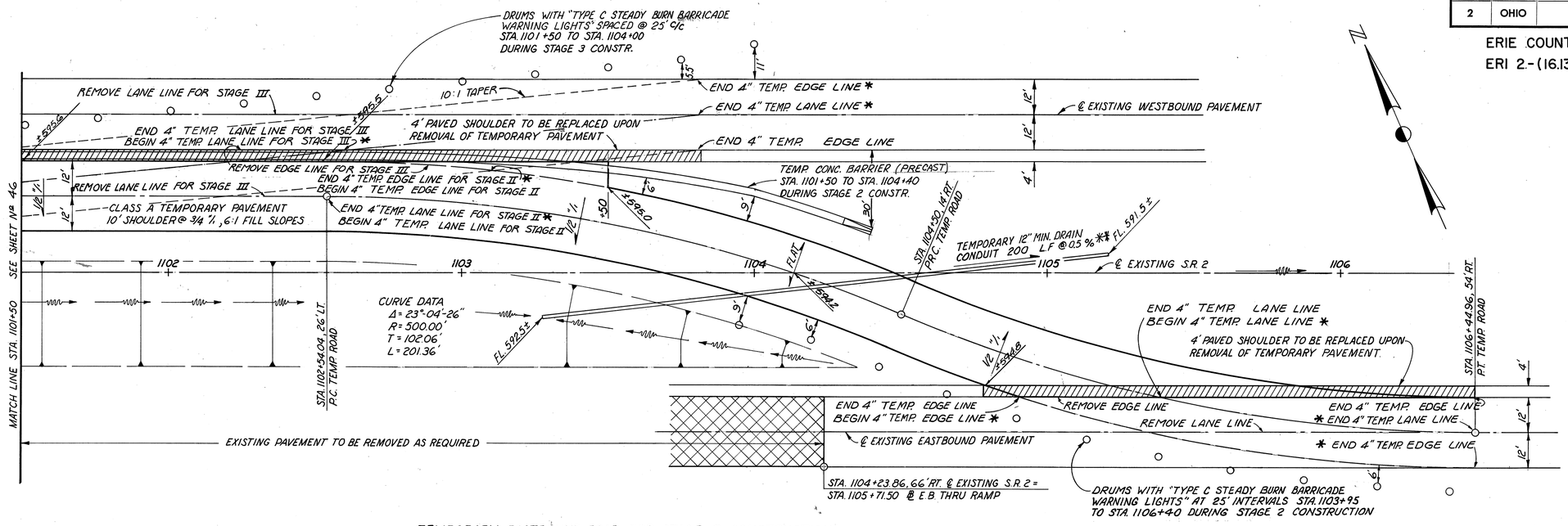

TEMPORARY EASTBOUND ROAD FOR STAGE 2 CONSTRUCTION
TEMPORARY WESTBOUND ROAD FOR STAGE 3 CONSTRUCTION

0 10 20 30 40 60 80 100
SCALE IN FEET

NOTE: ALL TEMPORARY STRIPING SHOWN THUS: *, SHALL BE 947.03 MATERIAL, TYPE B OR C

CONSTRUCTION SEQUENCE:

1. MAINTAIN THE TRAFFIC ON THE EXISTING PAVEMENT WHILE CONSTRUCTING THE MAINLINE FROM STATION 1089+00 ± TO THE END OF THE PROJECT, THE EASTBOUND THRU RAMP TO STATION 1096+00 ±, AND THE WESTBOUND THRU RAMP TO STATION 1075+50.

2. MAINTAIN WESTBOUND TRAFFIC ON THE EXISTING PAVEMENT AND PROVIDE A TEMPORARY 24 FT. PAVEMENT FROM STATION 1097+04.04 TO STATION 1106+44.96 FOR EASTBOUND TRAFFIC. COMPLETE EASTBOUND THRU RAMP CONSTRUCTION.

3. ROUTE EASTBOUND TRAFFIC ON THE EASTBOUND THRU RAMP. PROVIDE A TWO LANE TEMPORARY PAVEMENT FROM STATION 1073+23.98 TO STATION 1077+76.02 AND, USING THE TEMPORARY PAVEMENT FROM STAGE 2, MAINTAIN WESTBOUND TRAFFIC ON THE EXISTING EASTBOUND PAVEMENT FROM STATION 1077+76.02 TO STATION 1097+04.04. COMPLETE WESTBOUND THRU RAMP CONSTRUCTION.

4. ROUTE WESTBOUND TRAFFIC ON THE WESTBOUND THRU RAMP AND COMPLETE CONSTRUCTION.

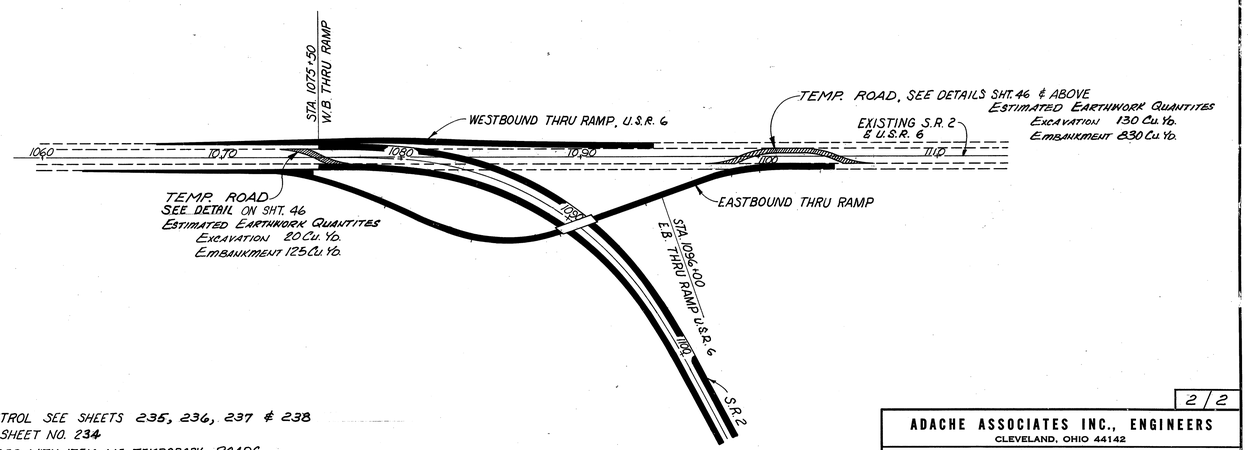

FOR TEMPORARY SIGNING AND TRAFFIC CONTROL SEE SHEETS 235, 236, 237 & 238
FOR PAVEMENT MARKING QUANTITIES SEE SHEET NO. 234
** TEMPORARY CONDUIT COSTS TO BE INCLUDED WITH ITEM 615 TEMPORARY ROADS.

2/2

ADACHE ASSOCIATES INC., ENGINEERS
CLEVELAND, OHIO 44142

EXISTING STATE ROAD 2
TEMPORARY ROAD DETAILS

DESIGNED	DRAWN	CHECKED	REVIEWED	DATE	REVISED
P.W. 11-14-69	P.W. 11-14-69	R.Z. 11-24-69			

FED. RD. DIVISION	STATE	PROJECT	
2	OHIO		

48
284

ERIE COUNTY
ERI 2-(16.13-17.39)

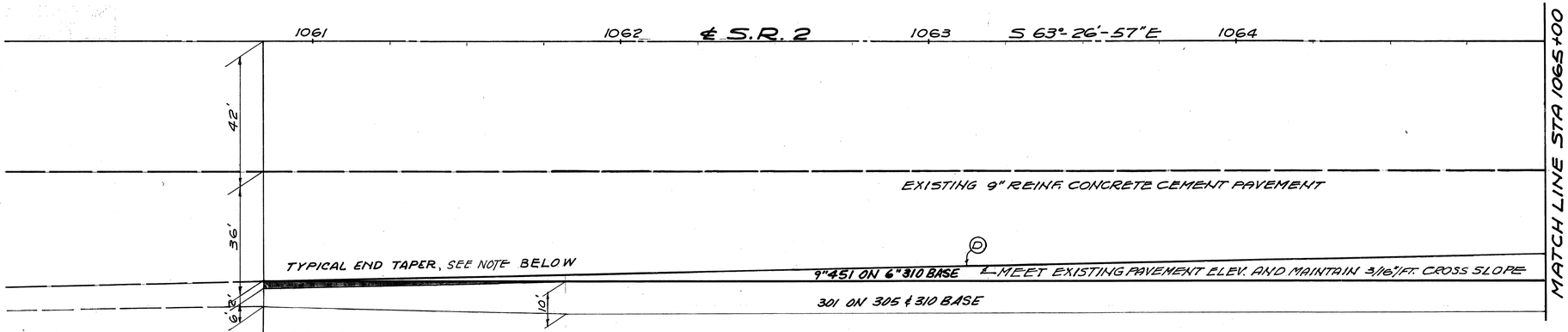

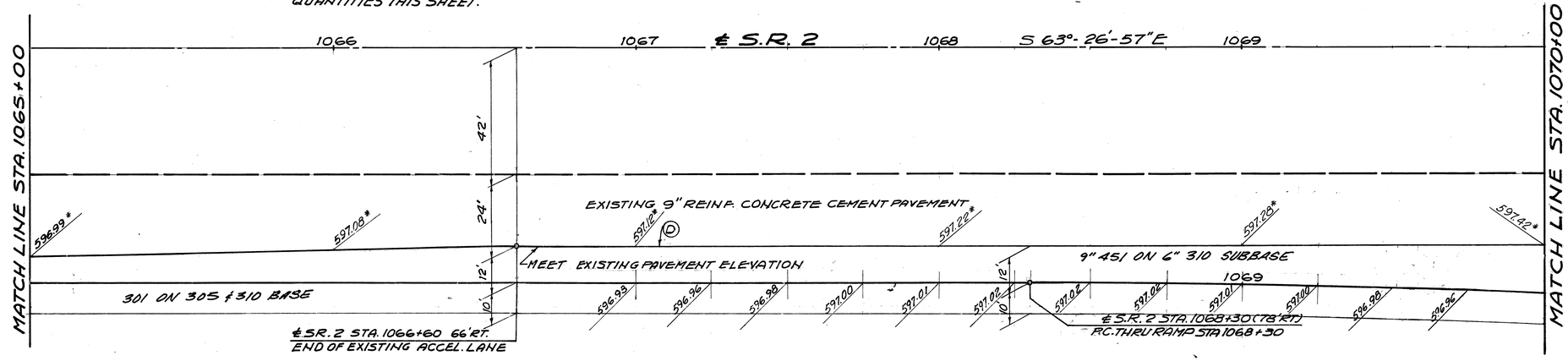

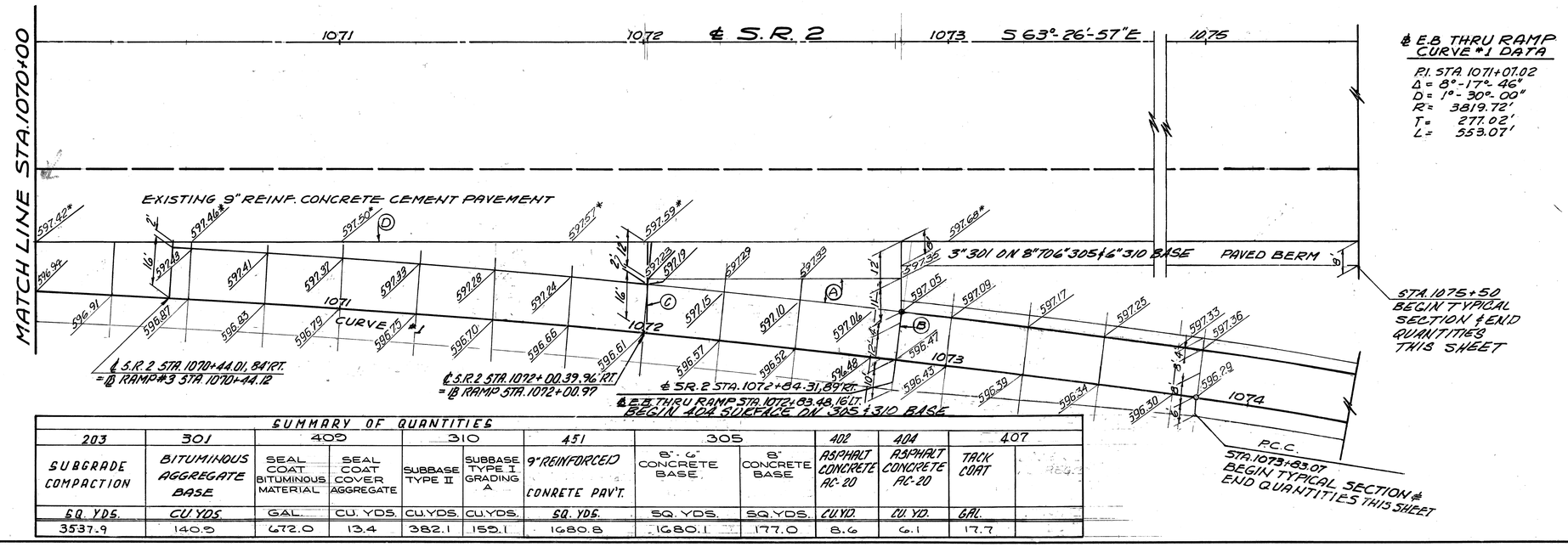

℄ E.B THRU RAMP CURVE #1 DATA

P.I. STA 1071+07.02
Δ = 8°-17'-46"
D = 1°-30°-00"
R = 3819.72'
T = 277.02'
L = 553.07'

LEGEND

- Ⓐ STANDARD LONGITUDINAL JOINT.
- Ⓑ STANDARD EXPANSION JOINT
- Ⓒ STANDARD CONTRACTION JOINT
- Ⓓ STANDARD EXPANSION BOLT JOINT

NOTES

1. * EXISTING EDGE OF PAVEMENT ELEVATIONS TAKEN FROM FIELD SURVEY.
2. ALL ELEVATIONS ARE TOP OF PAVEMENT ELEVATIONS.
3. FOR MEDIAN WIDTH TRANSITION SEE SUPERELEVATION TABLE SHEET No. 58.
4. THE TYPICAL CROSS SLOPE OF 3/16" PER FT. SHALL BE MAINTAINED FOR THE NEW PAVEMENT ALONG THE EXISTING PAVEMENT.

NOTE:

END TAPER DETAILS: THE SHADED AREA SHOWN IN THE END TAPER DETAILS SHALL BE CONSTRUCTED OF CONCRETE PAVEMENT.

SEE STANDARD DRAWING BP-9 FOR ADDITIONAL NOTES AND DETAILS.

SUMMARY OF QUANTITIES

203	301	409		310		451	305		402	404	407	
SUBGRADE COMPACTION	BITUMINOUS AGGREGATE BASE	SEAL COAT BITUMINOUS MATERIAL	SEAL COAT COVER AGGREGATE	SUBBASE TYPE II	SUBBASE TYPE I GRADING A	9" REINFORCED CONRETE PAV'T.	8"-6" CONCRETE BASE	8" CONCRETE BASE	ASPHALT CONCRETE AC-20	ASPHALT CONCRETE AC-20	TACK COAT	
SQ. YDS.	CU. YDS.	GAL.	CU. YDS.	CU. YDS.	CU. YDS.	SQ. YDS.	SQ. YDS.	SQ. YDS.	CU. YD.	CU. YD.	GAL.	
3537.9	140.9	672.0	13.4	382.1	159.1	1680.8	1680.1	177.0	8.6	6.1	17.7	

ADACHE ASSOCIATES INC., ENGINEERS
CLEVELAND, OHIO 44142

PAVEMENT DETAILS
E.B. THRU RAMP
STA. 1060+84.31 TO STA. 1073+83.07

DESIGNED	DRAWN	CHECKED	REVIEWED	DATE
RJE 10.18.68	JDA 2.7.69	WKW 2.12.69		

ERIE COUNTY
ERI 2-(16.13-17.39)

FED. RD. DIVISION	STATE	PROJECT	
2	OHIO		

49
284

℄ S.R. 2 STA. 1064+32.09 66' LT.
BEGIN ACCEL. LANE TAPER & QUANTITIES THIS SHEET.

TYPICAL END TAPER, SEE NOTE SHT. NO. 48.

3" 301 ON 8" T.O 6" 305 & 6" 310 BASE
9" 451 ON 6" 310 BASE
MEET EXISTING PAVEMENT ELEVATIONS AND MAINTAIN 3/16" / FT. CROSS SLOPE
EXISTING 9" REINF. CONCRETE CEMENT PAVEMENT

MATCH LINE STA. 1070+50

1065 1066 S 63°-26'-57"E 1067 ℄ S R 2 1068 1069 1070

MATCH LINE STA. 1071+00

MATCH LINE STA. 1077+00

BEGIN 404 SURFACE STA. 1076+50
℄ S.R. 2 T.S. STA. 1076+32.09 91' LT.
BEGIN W.B. THRU RAMP PACING LANE
404 ON 305
3" 301 ON 8" T.O 6" 305 & 6" 310 BASE
9" 451 ON 6" 310
℄ S.R. 2 STA. 1072+96.09
MEET EXISTING PAVEMENT
EXISTING 9" REINF. CONCRETE CEMENT PAVEMENT

1071 1072 S 63°-26'-57"E 1073 ℄ S R 2 1074 1075 1076

℄ S.R. 2 T.S. STA. 1076+32.09

℄ S.R. 2 POS. STA. 1079+32.09 97.25' LT.
= ℄ W.B. THRU RAMP STA. 1079+32.09 8' T.

STA. 1080+92.09

STA. 1082+25
BEGIN TYPICAL SECTION END QUANTITIES

S 61° 16' 04" E.

1078 1079 ℄ S R 2 1080 1081 1082

℄ S.R. 2 S.C. STA. 1080+32.09
BEGIN MEDIAN WIDTH TRANSITION

℄ SR 2 CURVE DATA

P.I. STA. 1089+83.10
Δ = 62°-03'-45" RT.
Dc = 03°-00'-00"
Ls = 400.00'
θs = 06°-00'-00"
P = 3.49'
K = 199.93
Yc = 13.95
Kc = 399.56'
R = 1909.86'
θc = 02°00'-00"
Ts = 1351.01'
Es = 323.05'
Δc = 50°03'45"
Lc = 1668.75'
C = 0.0000125

LEGEND

- (A) STANDARD LONGITUDINAL JOINT
- (B) STANDARD EXPANSION JOINT
- (C) STANDARD CONTRACTION JOINT
- (D) STANDARD EXPANSION BOLT JOINT

NOTES

1. ALL ELEVATIONS ARE TOP OF PAVEMENT ELEVATIONS
2. FOR MEDIAN WIDTH TRANSITION SEE SUPERELEVATION TABLE SHEET No. 58.
3. THE TYPICAL CROSS SLOPE OF 3/16" PER FT. SHALL BE MAINTAINED FOR THE NEW PAVEMENT ALONG THE EXISTING PAVEMENT.

SEE STANDARD DRAWING BP-9 FOR ADDITIONAL NOTES AND DETAILS.

SUMMARY OF QUANTITIES

203	301	305		310		402	404	407	451	409	
SUBGRADE COMPACTION	BITUMINOUS AGGREGATE BASE	8"-6" CONCRETE BASE	8" CONCRETE BASE	SUBBASE TYPE I GRADING A	SUBBASE TYPE II	ASPHALT CONCRETE AC-20	ASPHALT CONCRETE AC-20	TACK COAT	9" REINFORCED CONCRETE PAV'T.	SEAL COAT BITUMINOUS MATERIAL	SEAL COAT COVER AGGREGATE
SQ YDS.	CU. YDS.	SQ. YDS.	SQ. YDS.	CU. YDS.	CU. YDS.	CU. YDS.	CU. YDS.	GAL.	SQ. YDS.	GAL.	CU. YDS.
5036.0	193.0	2304.7	1274.3	234.6	565.9	61.9	44.2	127.4	1457.0	521.9	18.4

ADACHE ASSOCIATES INC., ENGINEERS
CLEVELAND, OHIO 44142

PAVEMENT DETAILS
W.B. THRU RAMP
STA. 1064+32.09 TO STA. 1082+25

DESIGNED	DRAWN	CHECKED	REVIEWED	DATE
RJZ 10-19-68	JDA 2-6-69	WKW 2-12-69		

FED. RD. DIVISION	STATE	PROJECT	
2	OHIO		

50
2.84

ERIE COUNTY
ERI 2-(16.13-17.39)

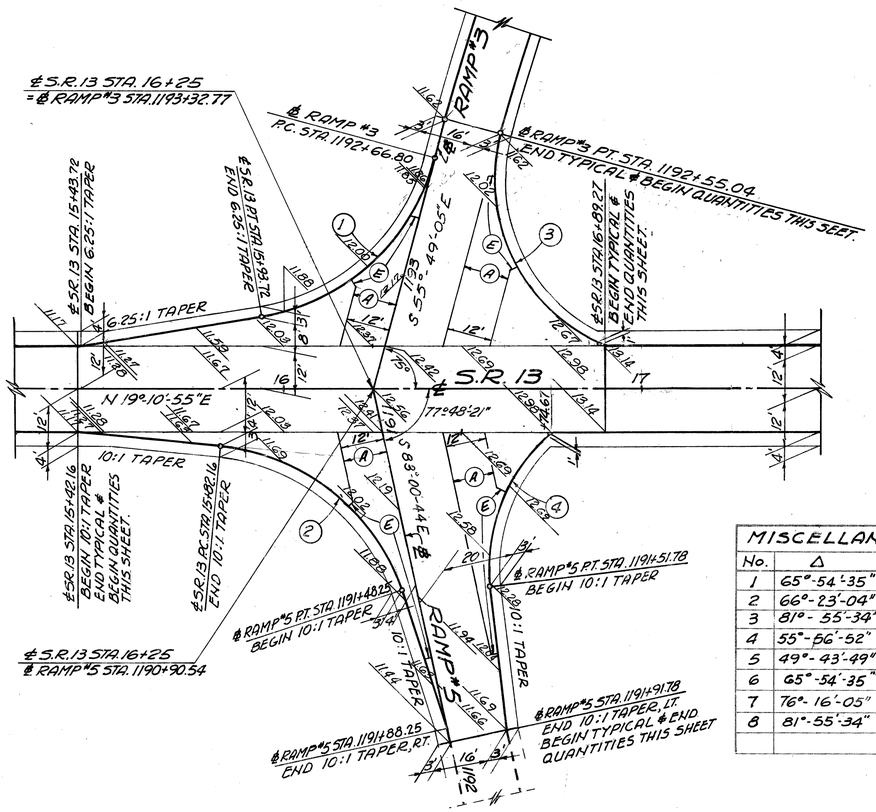

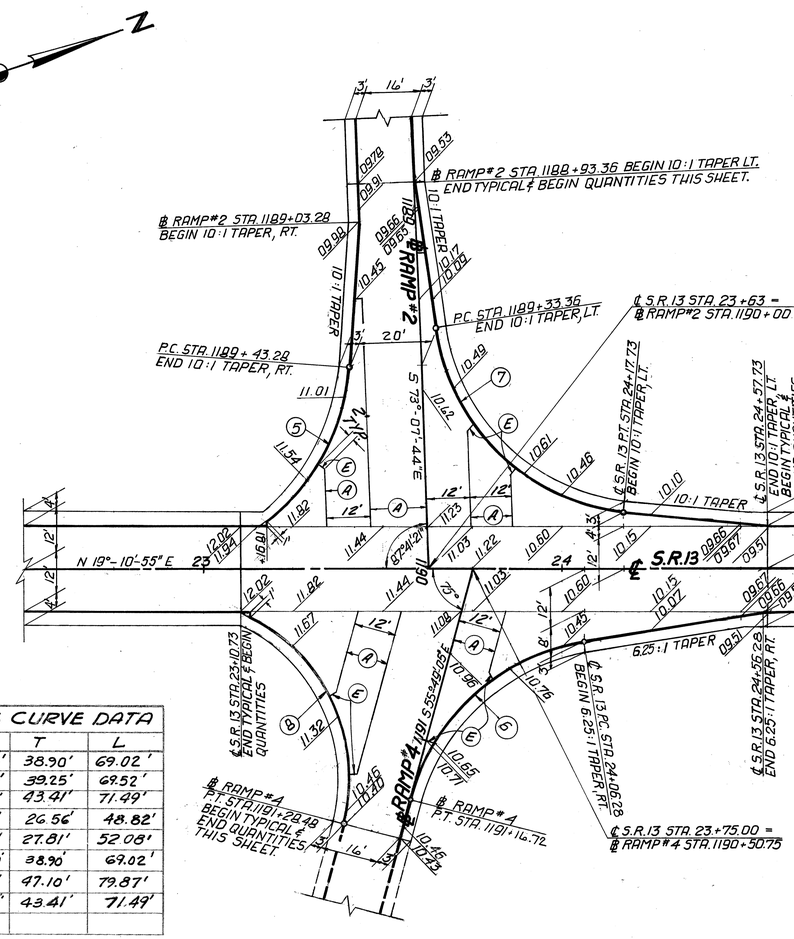

MISCELLANEOUS CURVE DATA				
No.	Δ	R	T	L
1	65°-54'-35"	60.00'	38.90'	69.02'
2	66°-23'-04"	60.00'	39.25'	69.52'
3	81°-55'-34"	50.00'	43.41'	71.49'
4	55°-56'-52"	50.00'	26.56'	48.82'
5	49°-43'-49"	60.00'	27.81'	52.08'
6	65°-54'-35"	60.00'	38.90'	69.02'
7	76°-16'-05"	60.00'	47.10'	79.87'
8	81°-55'-34"	50.00'	43.41'	71.49'

LEGEND

(A) STANDARD LONGITUDINAL JOINT
(E) EXSPANSION JOINT WITHOUT DOWELS

NOTES:

1. ALL ELEVATIONS ARE TOP OF PAVEMENT ELEVATIONS.
2. ADD 600 TO ALL ELEVATIONS.

PAVEMENT DETAILS
STA. 15+42.16 TO STA. 16+89.27

PAVEMENT DETAILS
STA. 23+10.73 TO STA. 24+57.73

SCALE IN FEET
0 10 20 40 60 80 100

SUMMARY OF QUANTITIES

LOCATION	203 SUBGRADE COMPACTION	301 BITUMINOUS AGGREGATE BASE	304 AGGREGATE BASE	310 SUBBASE TYPE-II	402 ASPHALT CONCRETE	404 ASPHALT CONCRETE	305 8" CONCRETE BASE	407 TACK COAT	409 SEAL COAT BITUMINOUS MATERIAL	409 SEAL COAT COVER AGGREGATE
	SQ. YDS.	CU. YDS.	CU. YDS.	CU. YDS.	CU. YDS.	CU. YDS.	SQ. YDS.	GAL.	GAL.	CU. YDS.
STA. 15+42.16 - 16+89.27	1176.5	56.8	54.5	227.1	46.7	32.7	784.2	62.6	63.4	1.3
STA. 23+10.73 - 24+57.73	1227.9	57.2	54.4	235.7	49.0	34.3	835.9	67.2	65.4	1.3
TOTAL	2404.4	114.0	108.9	462.8	95.7	67.0	1620.1	129.8	128.8	2.6

ADACHE ASSOCIATES INC., ENGINEERS
CLEVELAND, OHIO 44142

PAVEMENT DETAILS
S.R. 13
STA. 15+42.90 TO 16+89.27 & STA. 23+10.73 TO 24+57.73

DESIGNED	DRAWN	CHECKED	REVIEWED	DATE
WKW 2.13.69	JDA 2.14.69	RJZ 2.17.69		

FED. RD. DIVISION	STATE	PROJECT	
2	OHIO		

51
284

ERIE COUNTY
ERI 2-(16.13-17.39)

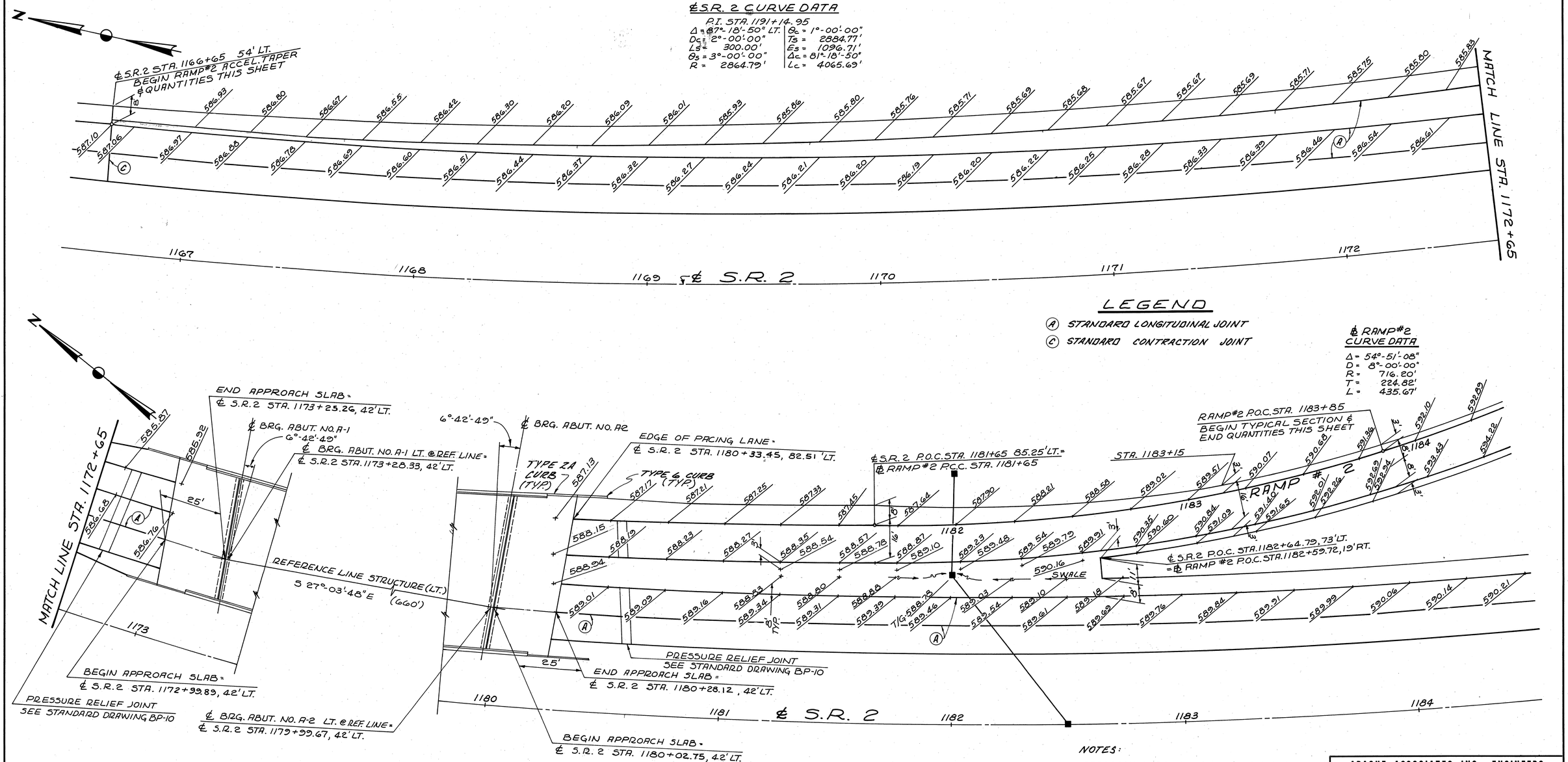

ACCELERATION AND PAVED BERM FROM STA. 1166+65 TO STA. 1182+64.79 AND RAMP Nº 2 TO STA. 1183+25 EXCLUDING BRIDGE AND APPROACH SLABS.

SUMMARY OF QUANTITIES

203		301	407	310		305		402	404	409	
EMBANKMENT	SUBGRADE COMPACTION	BITUMINOUS AGGREGATE BASE	TACK COAT	SUBBASE TYPE-II	SUBBASE TYPE I GRADING A	8"-6" CONCRETE BASE	8" CONCRETE BASE	ASPHALT CONCRETE AC-20	ASPHALT CONCRETE AC-20	SEAL COAT BITUMINOUS MATERIAL	SEAL COAT COVER AGGREGATE
CU. YDS.	SQ. YDS.	CU. YDS.	GAL.	CU. YDS.	CU. YDS.	SQ. YDS.	SQ. YDS.	CU. YDS.	CU. YDS.	GAL.	CU. YDS.
1157.6	2315.1	103.0	107.8	253.5	113.3	1171.7	1143.4	52.4	37.4	494.7	9.9

NOTES:

APPROACH SLAB STATIONING AND ALL ROADWAY QUANTITIES ARE BASED ON THE STEEL ALTERNATE.

SEE STANDARD DRAWING BP-9 FOR ADDITIONAL NOTES AND DETAILS.

ALL ELEVATIONS ARE TOP OF ITEM 404 PAVEMENT ELEVATIONS.

FOR APPROACH SLAB DETAILS SEE SHEET NO. 156.

ADACHE ASSOCIATES INC., ENGINEERS
CLEVELAND, OHIO 44142

PAVEMENT DETAILS RAMP #2 STA. 1166+65 TO STA. 1183+85 S.R.13 INTERCHANGE

DESIGNED	DRAWN	CHECKED	REVIEWED	DATE	REVISED
R.A.H.	J.D.P.				

FED. RD. DIVISION	STATE	PROJECT	
2	OHIO		

52
284

ERIE COUNTY
ERI 2-(16.13-17.39)

℄ S.R. 2 CURVE DATA

P.I. STA. 1191+14.95

Δ = 87° 18'-50" LT.		D_c = 1°-00'-00"	
D_c = 2°-00'-00"		T_s = 2884.77'	
L_s = 300.00'		E_s = 1096.71'	
θ_s = 3°-00'-00"		D_c = 81°-18'-50"	
R = 2864.79'		L_c = 4065.69'	

LEGEND

- (A) STANDARD LONGITUDINAL JOINT
- (B) STANDARD EXPANSION JOINT
- (C) STANDARD CONTRACTION JOINT

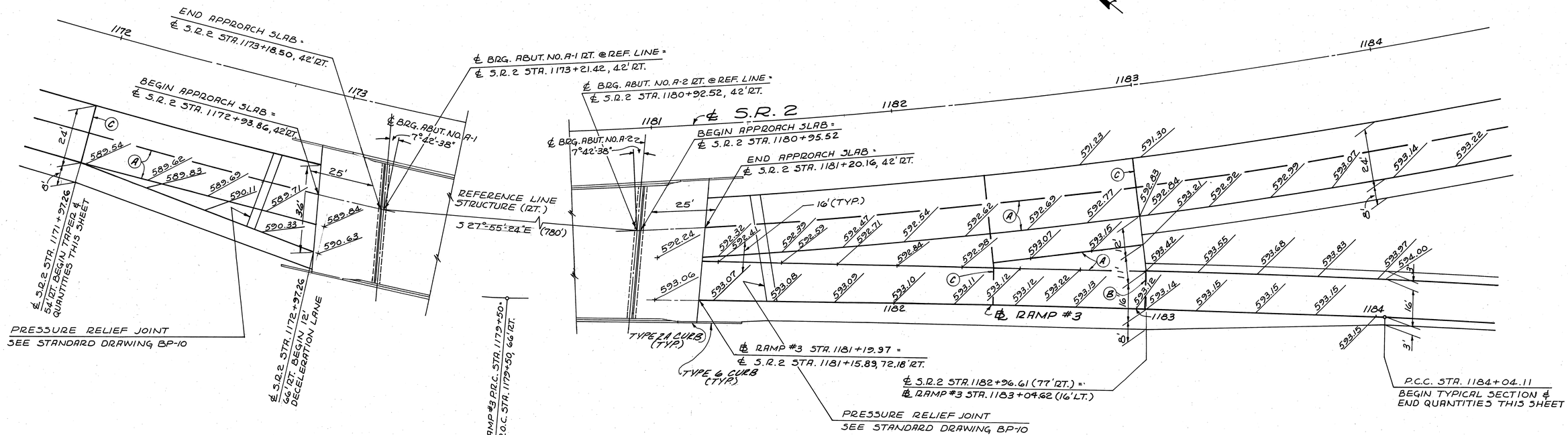

℄ RAMP #3 CURVE DATA

Δ = 02°-16'-14"
D = 00°-30'-00"
R = 11,459.16'
T = 227.09'
L = 454.11'
P.I. STA. 1181+77.09

NOTES:

ALL ELEVATIONS ARE TOP OF ITEM 404 PAVEMENT ELEVATIONS.

SEE STANDARD DRAWING BP-3 FOR ADDITIONAL NOTES AND DETAILS.

APPROACH SLAB STATIONING AND ALL ROADWAY QUANTITIES ARE BASED ON THE STEEL ALTERNATE.

FOR APPROACH SLAB DETAILS SEE SHEET NO. 157.

DECELERATION LANE AND PAVED BERM FROM STA. 1171+97.26 TO STA. 1182+96.61 AND RAMP No 3 TO STA. 1184+04.11 EXCLUDING BRIDGE AND APPROACH SLABS.

SUMMARY OF QUANTITIES

203		301		310		305		402	404	407	409	
EMBANKMENT	SUBGRADE COMPACTION	BITUMINOUS AGGREGATE BASE		SUBBASE TYPE-II	SUBBASE TYPE I GRADING A	8"-6" CONCRETE BASE	8" CONCRETE BASE	ASPHALT CONCRETE AC-20	ASPHALT CONCRETE AC-20	TACK COAT	SEAL COAT BITUMINOUS MATERIAL	SEAL COAT COVER AGGREGATE
CU. YDS.	SQ. YDS.	CU. YDS.		CU. YDS.	CU. YDS.	SQ. YDS.	SQ. YDS.	CU. YDS.	CU. YDS.	GAL.	GAL.	CU. YDS.
580.8	1161.6	29.3		167.7	23.6	318.2	843.4	39.4	28.1	81.0	140.6	2.8

ADACHE ASSOCIATES INC., ENGINEERS
CLEVELAND, OHIO 44142

PAVEMENT DETAILS RAMP #3

STA. 1175+00 TO STA. 1184+04.11
S.R. 13 INTERCHANGE

DESIGNED	DRAWN	CHECKED	REVIEWED	DATE	REVISED
R.A.H.	J.D.P.				

FED. RD. DIVISION	STATE	PROJECT	
2	OHIO		

53
284

ERIE COUNTY
ERI 2-(16.13-17.39)

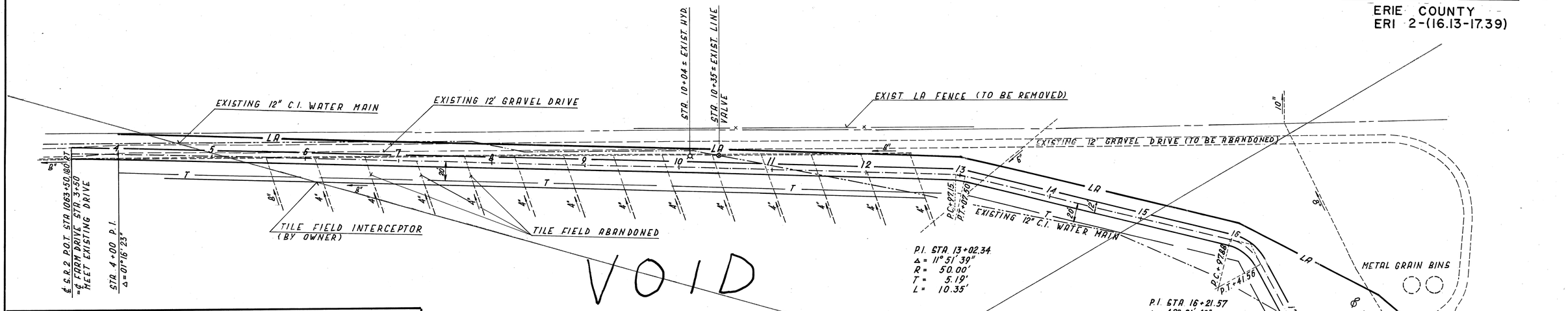

VOID

TYPICAL SECTION FARM DRIVE

NO SCALE

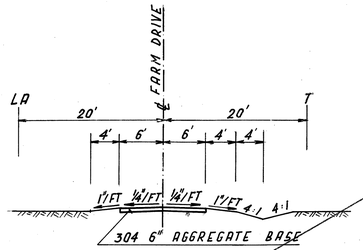

PLAN FARM DRIVE PARCEL 101

0 50 100 150 200 250 300

SCALE IN FEET

NOTES

1. PROFILE OF FARM DRIVE TO FOLLOW THE EXISTING GROUND AND THE COST OF GRADING THE SHOULDERS SHALL BE INCLUDED IN THE UNIT PRICE BID FOR AGGREGATE BASE.
2. THE DIRECTOR OF PUBLIC UTILITIES SHALL BE NOTIFIED 48 HOURS PRIOR TO BEGINNING CONSTRUCTION OF THIS DRIVE. CAUTION SHALL BE USED TO PROTECT THE EXISTING WATER LINE AND ITS APPURTENANCES.
3. NO WATER MAIN QUANTITIES ARE PROVIDED FOR IN THIS PLAN AND THE ADJUSTMENT OF VALVE BOXES, IF NECESSARY, SHALL BE CONSIDERED INCIDENTAL TO THE COMPLETION OF WORK.

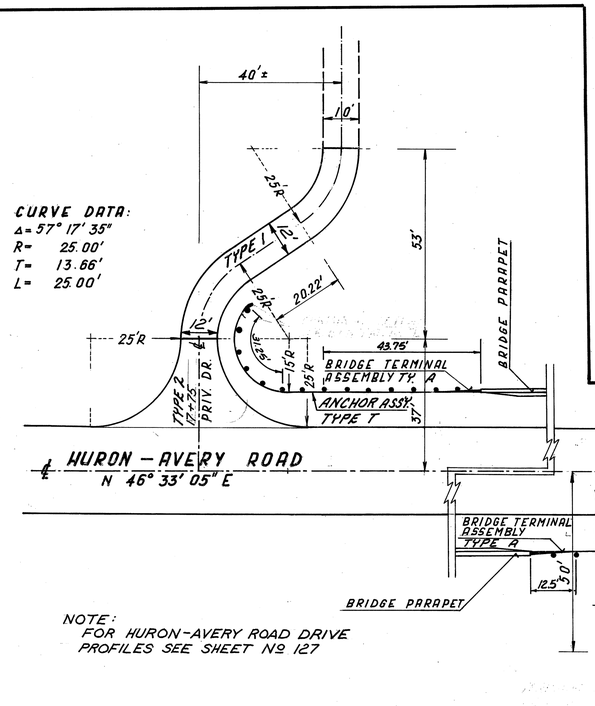

NOTE:
FOR HURON-AVERY ROAD DRIVE PROFILES SEE SHEET Nº 127

DRIVEWAY TYPES	
TYPE 1	8" ITEM 304 AGGREGATE BASE
TYPE 2	2½" ITEM 404 ASPHALT CONCRETE (DRIVEWAYS) 2-1¼" COURSES 6" ITEM 304 AGGREGATE BASE

PLAN DRIVEWAY DETAILS HURON AVERY ROAD

0 10 20 40 60 80 100 120

SCALE IN FEET

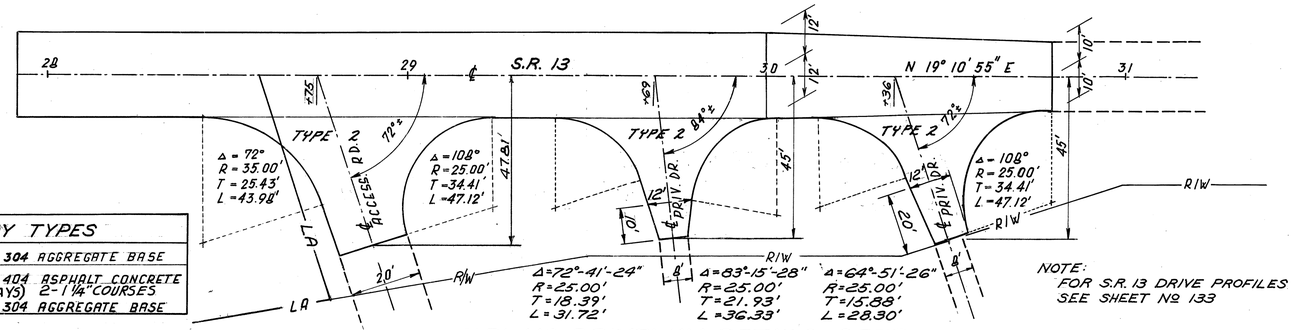

NOTE:
FOR S.R. 13 DRIVE PROFILES SEE SHEET Nº 133

PLAN DRIVEWAY DETAILS S.R. 13

0 10 20 40 60 80 100 120

SCALE IN FEET

ESTIMATED QUANTITIES – RURAL					
LOCATION	TYPE	AREA	304 AGGREGATE BASE		404 ASPHALT CONCRETE (DRIVEWAYS)
		SQ. YD.	CU. YD.		CU. YD.
HURON AVERY RD. 17+75	1 & 2	153.99	31.32		4.4
HURON AVERY RD. 22+12	2	131.14	21.86		9.1
℄ R. 13 STA. 28+75	2	120.65	21.44		9.0
℄ R. 13 STA. 29+69	2	71.44	11.91		5.0
℄ R. 13 STA 30+36	2	80.25	13.37		5.6
					—
TOTAL			99.90		33.1

ADACHE ASSOCIATES INC., ENGINEERS
CLEVELAND, OHIO 44142

MISCELLANEOUS DETAILS

DRIVEWAYS FOR HURON AVERY ROAD AND S.R. 13

DESIGNED	DRAWN	CHECKED	REVIEWED	DATE	REVISED
RWH 10.26.68	VS 10.27.69	RJZ 2.18.69			

FED. RD. DIVISION	STATE	PROJECT	
2	OHIO		

54
284

ERIE COUNTY
ERI 2-(16.13-17.39)

N

Curve Data.
Δ = 2°-10'-53
D = 0°-30'
R = 11,459.16'
T = 218.18'
L = 436.30
P.I. STA. 1085+93.90

℄ SR 2 T.S. STA. 1078+32.09 9' LT.
BEGIN W.B. THRU RAMP PAVING LANE

℄ SR 2 POS. STA. 1079+32.09 97.8' LT.
= ℄ W.B. THRU RAMP STA. 1079+32.09

P.C. STA: 1083+75.72

P.T. STA: 1088+12.02

℄ W. B. THRU RAMP U.S.R.6

℄ EXIST. S.R.2 & U.S. ROUTE 6

℄ S.R.2

CROWN 597

S 63°26'-57"E

1075 1077 1080 1085

596 598 600 602 592 594

T.S. STA: 1078+32.09

S.C. STA: 1080+32.09

Note ℄ SR 2 Sta. 1078+84.31 89' RT.
Sta: 1072+83.48 E.B. THRU RAMP 16' LT.

P.C.C. STA: 1073+83.07

P.C.C. STA: 1079+65.19

P.T. STA: 1077+85.21

597 598 599 600 610 620

℄ E.B. THRU RAMP U.S.R. 6

Curve No. 2 Data
D = 6°-00'-00"
Δ = 24°-07'-42"
R = 954.93'
T = 204.09'
L = 402.14'
P.I. STA. 1075+87.16

Main & Curve Data No. 1
P.I. Sta: 1083+83.10
Δ = 62°-03'-45" RT.
Dc = 3°-00'
Ls = 400.00'
θs = 6°-00'
P = 3.49'
k = 199.93'
Yc = 113.95'
Xc = 399.56'
R = 1909.86'
θc = 2°-00'
Ts = 1351.01'
Bs = 323.05'
Δc = 50°-03'-45"
Lc = 1668.75'
C = .0000125'

Curve No. 3 Data
D = 6°-00'-00"
Δ = 50°-00'-11"
R = 954.93'
T = 445.33'
L = 833.38'
P.I. STA. 1084+10.52

0 10 20 50 100 150 200 250
SCALE IN FEET

ADACHE ASSOCIATES INC., ENGINEERS
CLEVELAND, OHIO 44142

WEST HALF U.S. 6 JUNCTION
LAYOUT, GRADING AND CROSS SECTION PLAN

DESIGNED	DRAWN	CHECKED	REVIEWED	DATE
MLR 1-6-69	VS 1-12-69	RJZ 1-15-69		

FED. RD. DIVISION	STATE	PROJECT	
2	OHIO		

55
284

ERIE COUNTY
ERI 2-(16.13-17.39)

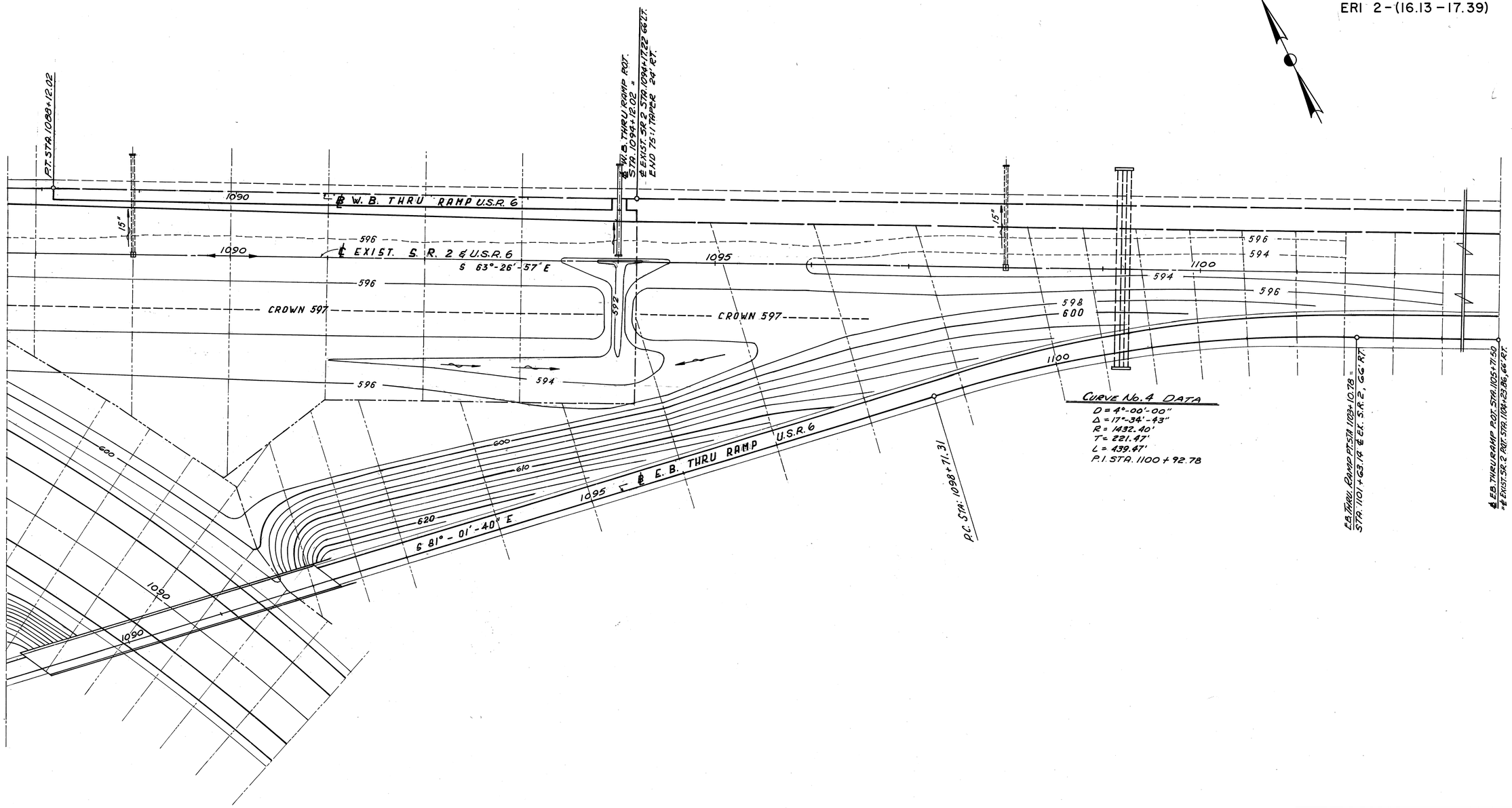

ADACHE ASSOCIATES INC., ENGINEERS
CLEVELAND, OHIO 44142

EAST HALF U.S. 6 JUNCTION LAYOUT, GRADING AND CROSS SECTION PLAN

DESIGNED	DRAWN	CHECKED	REVIEWED	DATE
MLR 1-7-69	VS 1-12-69	RJZ 1-15-69		

FED. RD. DIVISION	STATE	PROJECT	
2	OHIO		

56
284

ERIE COUNTY
ERI 2-(16.13-17.39)

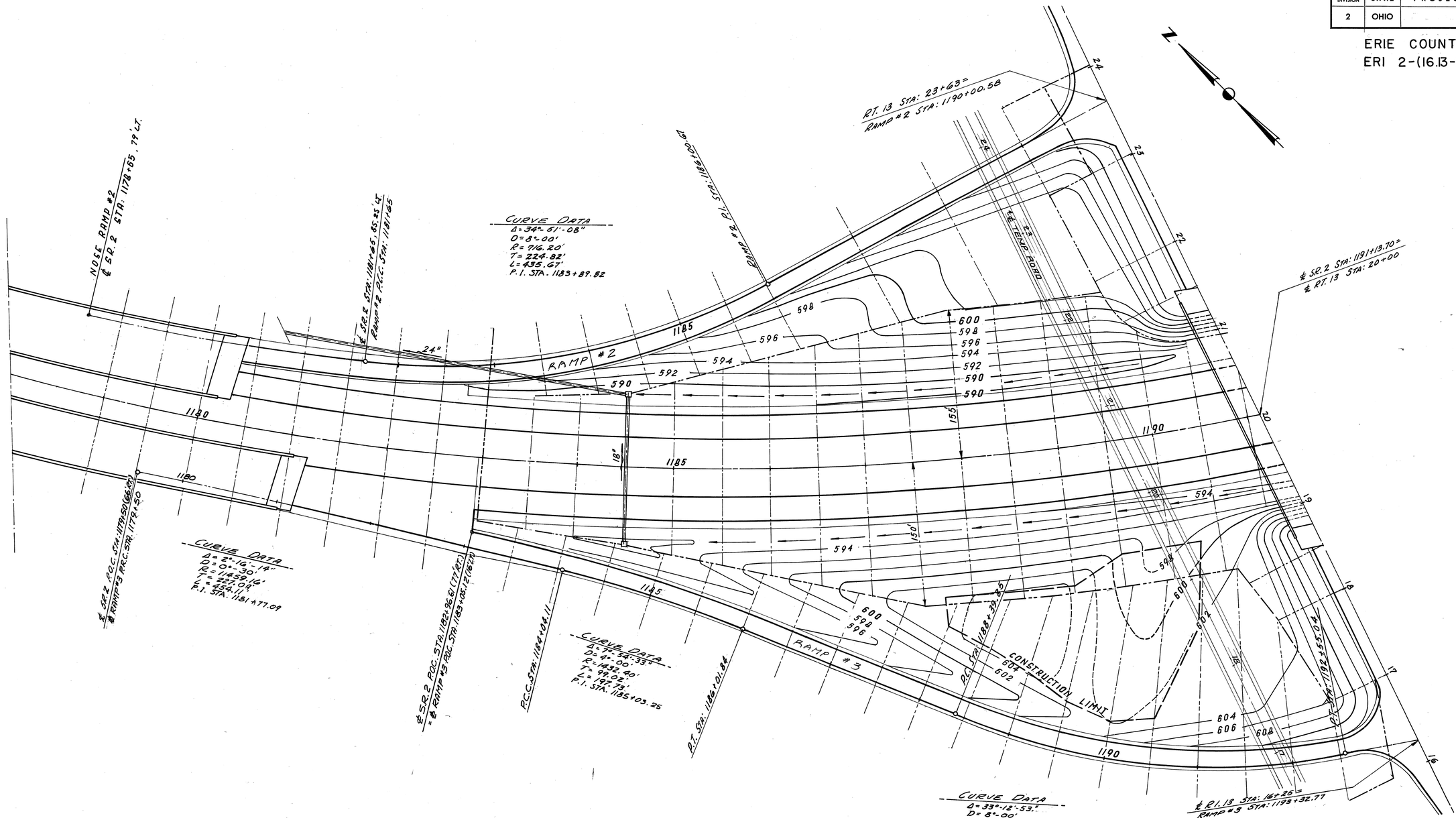

ADACHE ASSOCIATES INC., ENGINEERS
CLEVELAND, OHIO 44142

WEST HALF S.R. 13 INTERCHANGE

LAYOUT, GRADING AND CROSS SECTION PLAN

DESIGNED	DRAWN	CHECKED	REVIEWED	DATE
MLR 1-8-69	VS 1-12-69	RJZ 1-16-69		

FED. RD. DIVISION	STATE	PROJECT	
2	OHIO		

57
284

ERIE COUNTY
ERI 2-(16.13-17.39)

RT. 13 STA: 23+75 =
RAMP #4 STA: 1190+50.75

CURVE DATA
P.I. STA. 1192 + 44.42
Δ = 18°-23'-26"
D = 8°-00'
R = 716.20'
T = 115.96'
L = 229.88'

P.C. STA: 1191+28.48

CONSTRUCTION LIMIT

P.T. STA: 1193+58.36

E SR 2 STA: 1191 + 13.70 =
E RT. 13 STA: 20 +00

E SR. 13

END WORK
STA. 1198+82

END PROJECT
ERI-2-16.13
STA. 1195+00

RAMP #4

P.C. STA: 1196+05.24

P.C. STA. 1197+39.44

NOSE RAMP #4 STA. 1200+39.04
ST. 2 STA: 1200+25.81

P.C.C. STA. 1205+00

C.S. STA: 1205 + 95.87

NOSE RAMP #5
STA. 1205+00

P.C. STA. 1202+00
BEGIN 300' PACING LANE

P.T. STA. 1200+50

P.C. STA. 1198+48.22

RAMP #5

10' BENCH

10' BENCH

CONSTRUCTION LIMIT

S.R. 13 STA. 16+25
RAMP #5 STA. 1190+70.54

0 10 50 100 150 200 250
SCALE IN FEET

ADACHE ASSOCIATES INC., ENGINEERS
CLEVELAND, OHIO 44142

EAST HALF SR. 13 INTERCHANGE
LAYOUT, GRADING AND CROSS SECTION PLAN

DESIGNED	DRAWN	CHECKED	REVIEWED	DATE
MLR 1-9-69	VS 1-13-69	RJZ 1-16-69		

SUPERELEVATION TABLES

FED. RD. DIVISION	STATE	PROJECT	
2	OHIO		

58/284

ERIE COUNTY
ERI 2-(16.13-17.39)

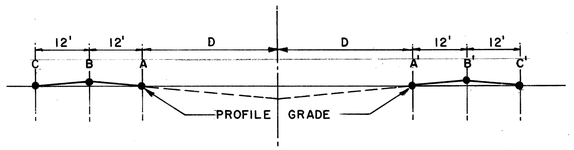

Dc = 3°-00' RIGHT MAX. SUPERELEVATION FOR 24' = 2.00' e = 0.083 '/FT.

C	B	A	D	STATION	D	A'	B'	C'
597.94	598.13	597.94	42.00	1075 + 57.09	42.00	597.94	598.13	597.94
598.00	598.15	597.96		+75		597.96	598.11	597.92
598.09	598.18	597.99		1076 + 00		597.99	598.09	597.89
598.19	598.21	598.02		+25		598.02	598.04	597.85
598.22	598.22	598.03		1076 + 32.09		598.03	598.03	597.84
598.28	598.26	598.06		+50		598.06	598.03	597.84
598.39	598.29	598.10		+75		598.10	598.00	597.81
598.50	598.33	598.14		1077 + 00		598.14	597.97	597.78
598.53	598.35	598.16		1077 + 07.09		598.16	597.97	597.78
598.65	598.42	597.19		+25		598.19	597.96	597.73
598.83	598.53	598.24		+50		598.24	597.95	597.65
599.00	598.65	598.29		+75		598.29	597.93	597.58
599.18	598.76	598.34		1078 + 00		598.34	597.92	597.50
599.36	598.88	598.40		+25		598.40	597.92	597.44
599.56	599.02	598.47		+50		598.47	597.92	597.38
599.75	599.15	598.54		+75		598.54	597.93	597.33
599.95	599.28	598.61		1079 + 00		598.61	597.94	597.27
600.14	599.42	598.68		+25		598.68	597.94	597.22
600.35	599.56	598.76		+50		598.76	597.96	597.17
600.55	599.70	598.84		+75		598.84	597.98	597.13
600.76	599.84	598.92		1080 + 00		598.92	598.00	597.08
600.96	599.98	599.00		+25		599.00	598.02	597.04
601.02	600.02	599.02	42.00	1080 + 32.09	42.00	599.02	598.02	597.02
601.08	600.08	599.08	41.87	+50	41.87	599.08	598.08	597.08
601.16	600.16	599.16	41.69	+75	41.69	599.16	598.16	597.16
601.24	600.24	599.24	41.51	1081 + 00	41.51	599.24	598.24	597.24
601.32	600.32	599.32	41.33	+25	41.33	599.32	598.32	597.32
601.40	600.40	599.40	41.15	+50	41.15	599.40	598.40	597.40
601.48	600.48	599.48	40.97	+75	40.97	599.48	598.48	597.48
601.56	600.56	599.56	40.79	1082 + 00	40.79	599.56	598.56	597.56
601.64	600.64	599.64	40.61	+25	40.61	599.64	598.64	597.64
601.72	600.72	599.72	40.43	+50	40.43	599.72	598.72	597.72
601.80	600.80	599.80	40.25	+75	40.25	599.80	598.80	597.80
601.88	600.88	599.88	40.07	1083 + 00	40.07	599.88	598.88	597.88
601.96	600.96	599.96	39.89	+25	39.89	599.96	598.96	597.96
602.04	601.04	600.04	39.71	+50	39.71	600.04	599.04	598.04
602.12	601.12	600.12	39.53	+75	39.53	600.12	599.12	598.12
602.20	601.20	600.20	39.35	1084 + 00	39.35	600.20	599.20	598.20
602.28	601.28	600.28	39.17	+25	39.17	600.28	599.28	598.28
602.36	601.36	600.36	38.99	+50	38.99	600.36	599.36	598.36
602.44	601.44	600.44	38.82	+75	38.82	600.44	599.44	598.44
602.52	601.52	600.52	38.64	1085 + 00	38.64	600.52	599.52	598.52
602.60	601.60	600.60	38.46	+25	38.46	600.60	599.60	598.60
602.68	601.68	600.68	38.28	+50	38.28	600.68	599.68	598.68
602.76	601.76	600.76	38.10	+75	38.10	600.76	599.76	598.76
602.84	601.84	600.84	37.92	1086 + 00	37.92	600.84	599.84	598.84
602.92	601.92	600.92	37.74	+25	37.74	600.92	599.92	598.92
603.00	602.00	601.00	37.56	+50	37.56	601.00	600.00	599.00
603.08	602.08	601.08	37.38	+75	37.38	601.08	600.08	599.08
603.16	602.16	601.16	37.20	1087 + 00	37.20	601.16	600.16	599.16
603.24	602.24	601.24	37.02	+25	37.02	601.24	600.24	599.24
603.32	602.32	601.32	36.84	+50	36.84	601.32	600.32	599.32
603.40	602.40	601.40	36.66	+75	36.66	601.40	600.40	599.40
603.48	602.48	601.48	36.48	1088 + 00	36.48	601.48	600.48	599.48
603.56	602.56	601.56	36.30	+25	36.30	601.56	600.56	599.56
603.64	602.64	601.64	36.12	+50	36.12	601.64	600.64	599.64
603.72	602.72	601.72	35.94	1088 + 75	35.94	601.72	600.72	599.72

TRANSITION

FULL SUPER

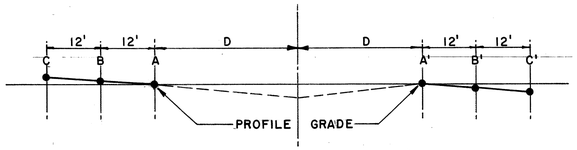

Dc = 3°-00' RIGHT MAX. SUPERELEVATION FOR 24' = 2.00' e = 0.083 '/FT.

C	B	A	D	STATION	D	A'	B'	C'
603.80	602.80	601.80	35.76	1089 + 00	35.76	601.80	600.80	599.80
603.88	602.88	601.88	35.58	+25	35.58	601.88	600.88	599.88
603.96	602.96	601.96	35.40	+50	35.40	601.96	600.96	599.96
604.04	603.04	602.04	35.22	+75	35.22	602.04	601.04	600.04
604.12	603.12	602.12	35.04	1090 + 00	35.04	602.12	601.12	600.12
604.20	603.20	602.20	34.86	+25	34.86	602.20	601.20	600.20
604.28	603.28	602.28	34.68	+50	34.68	602.28	601.28	600.28
604.36	603.36	602.36	34.50	+75	34.50	602.36	601.36	600.36
604.44	603.44	602.44	34.32	1091 + 00	34.32	602.44	601.44	600.44
604.52	603.52	602.52	34.14	+25	34.14	602.52	601.52	600.52
604.60	603.60	602.60	33.96	+50	33.96	602.60	601.60	600.60
604.68	603.68	602.68	33.72	+75	33.72	602.68	601.68	600.68
604.76	603.76	602.76	33.60	1092 + 00	33.60	602.76	601.76	600.76
604.84	603.84	602.84	33.42	+25	33.42	602.84	601.84	600.84
604.92	603.92	602.92	33.24	+50	33.24	602.92	601.92	600.92
605.00	604.00	603.00	33.06	+75	33.06	603.00	602.00	601.00
605.08	604.08	603.08	32.88	1093 + 00	32.88	603.08	602.08	601.08
605.17	604.17	603.17	32.70	+25	32.70	603.17	602.17	601.17
605.28	604.28	603.28	32.52	+50	32.52	603.28	602.28	601.28
605.41	604.41	603.41	32.34	+75	32.34	603.41	602.41	601.41
605.57	604.57	603.57	32.16	1094 + 00	32.16	603.57	602.57	601.57
605.75	604.75	603.75	31.98	+25	31.98	603.75	602.75	601.75
605.95	604.95	603.95	31.80	+50	31.80	603.95	602.95	601.95
606.17	605.17	604.17	31.62	+75	31.62	604.17	603.17	602.17
606.41	605.41	604.41	31.44	1095 + 00	31.44	604.41	603.41	602.41
606.68	605.68	604.68	31.26	+25	31.26	604.68	603.68	602.68
606.96	605.96	604.96	31.08	+50	31.08	604.96	603.96	602.96
607.27	606.27	605.27	30.90	+75	30.90	605.27	604.27	603.27
607.60	606.60	605.60	30.73	1096 + 00	30.73	605.60	604.60	603.60
607.96	606.96	605.96	30.54	+25	30.54	605.96	604.96	603.96
608.32	607.32	606.32	30.37	+50	30.37	606.32	605.32	604.32
608.72	607.72	606.72	30.19	+75	30.19	606.72	605.72	604.72
609.13	608.13	607.13	30.01	1097 + 00	30.01	607.13	606.13	605.13
609.15	608.15	607.15	30.00	1097 + 00.84	30.00	607.15	606.15	605.15
609.44	608.51	607.57		+25		607.57	606.63	605.70
609.78	608.91	608.03		+50		608.03	607.15	606.28
610.13	609.32	608.51		+75		608.51	607.70	606.89
610.51	609.76	609.01		1098 + 00		609.01	608.26	607.51
610.91	610.23	609.54		+25		609.54	608.85	608.17
611.33	610.70	610.08		+50		610.08	609.46	608.83
611.77	611.21	610.65		+75		610.65	610.09	609.53
612.24	611.74	611.24		1099 + 00		611.24	610.74	610.24
612.71	612.28	611.84		+25		611.84	611.40	610.97
613.19	612.82	612.44		+50		612.44	612.06	611.69
613.66	613.35	613.04		+75		613.04	612.73	612.42
614.14	613.89	613.64		1100 + 00		613.64	613.39	613.14
614.63	614.43	614.24		+25		614.24	614.05	613.88
614.63	614.45	614.26		+25.85		614.26	614.07	613.89
615.15	615.03	614.84		+50		614.84	614.71	614.53
615.69	615.63	615.44		+75		615.44	615.37	615.19
616.23	616.23	616.04		1101 + 00		616.04	616.03	615.85
616.25	616.25	616.06		+00.85		616.06	616.06	615.87
616.77	616.83	616.64		+25		616.64	616.70	616.51
617.31	617.43	617.24		+50		617.24	617.36	617.17
617.85	618.03	617.84		+75		617.84	618.02	617.83
617.86	618.05	617.86	30.00	1101 + 75.85	30.00	617.86	618.05	617.86

TRANSITION

FULL SUPER

SHOULDER SLOPE TREATMENT

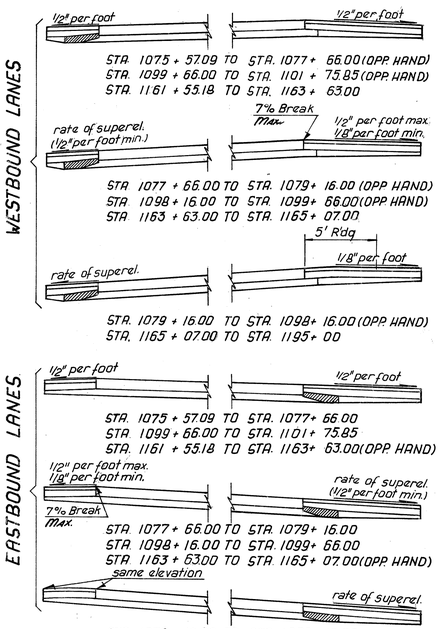

ADACHE ASSOCIATES INC., ENGINEERS
CLEVELAND, OHIO 44142

S.R. 2
SUPERELEVATION TABLE
CURVE No. 1

DESIGNED	DRAWN	CHECKED	REVIEWED	DATE
NF 10.18.67	GCS 10.24.67	RJE 10.20.68		

FED. RD. DIVISION	STATE	PROJECT	
2	OHIO		

59
284

ERIE COUNTY
ERI 2-(16.13-17.39)

SUPERELEVATION TABLES

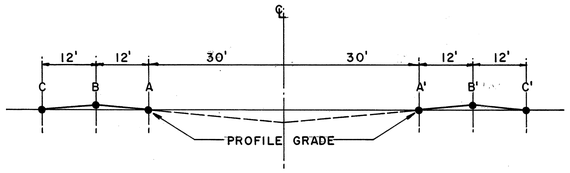

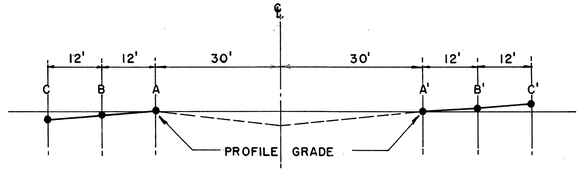

Dc = 2°-00' LEFT MAX. SUPERELEVATION FOR 24' 1.54' e=.064⅄FT.

C	B	A	STATION	A'	B'	C'
590.52	590.71	590.52	1161 ∔55.18	590.52	590.71	590.52
590.40	590.59	590.44	∔75	590.44	590.63	590.49
590.24	590.43	590.35	1162 ∔00	590.35	590.54	590.46
590.08	590.27	590.26	∔25	590.26	590.45	590.43
590.05	590.24	590.24	1162 ∔30.18	590.24	590.43	590.43
589.93	590.12	590.17	∔50	590.17	590.36	590.40
589.77	589.98	590.07	∔75	590.07	590.26	590.37
589.61	589.82	589.98	1163 ∔00	589.98	590.17	590.34
589.59	589.77	589.96	1163 ∔05.18	589.96	590.15	590.33
589.42	589.66	589.89	∔25	589.89	590.12	590.36
589.20	589.50	589.80	∔50	589.80	590.10	590.40
588.98	589.35	589.71	∔75	589.71	590.07	590.44
588.78	589.18	589.61	1164 ∔00	589.61	590.04	590.47
588.53	589.02	589.52	∔25	589.52	590.02	590.51
588.31	588.87	589.43	∔50	589.43	589.99	590.55
588.09	588.72	589.34	∔75	589.34	589.96	590.59
587.86	588.55	589.24	1165 ∔00	589.24	589.93	590.62
587.64	588.40	589.15	∔25	589.15	589.90	590.66
587.59	588.33	589.13	1165 ∔30.18	589.13	589.90	590.67
587.52	588.29	589.06	∔50	589.06	589.83	590.60
587.43	588.20	588.97	∔75	588.97	589.74	590.51
587.3	588.10	588.87	1166 ∔00	588.87	589.64	590.41
587.24	588.01	588.78	∔25	588.78	589.55	590.32
587.15	587.92	588.69	∔50	588.69	589.46	590.23
587.06	587.83	588.60	∔75	588.60	589.37	590.14
586.97	587.74	588.51	1167 ∔00	588.51	589.28	590.05
586.88	587.65	588.42	∔25	588.42	589.19	589.96
586.79	587.56	588.33	∔50	588.33	589.10	589.87
586.69	587.46	588.23	∔75	588.23	589.00	589.77
586.60	587.37	588.14	1168 ∔00	588.14	588.91	589.68
586.51	587.28	588.05	∔25	588.05	588.82	589.59
586.44	587.21	587.98	∔50	587.98	588.75	589.52
586.37	587.14	587.91	∔75	587.91	588.68	589.45
586.32	587.09	587.86	1169 ∔00	587.86	588.63	589.40
586.27	587.04	587.81	∔25	587.81	588.58	589.35
586.24	587.01	587.78	∔50	587.78	588.55	589.32
586.21	586.98	587.75	∔75	587.75	588.52	589.29
586.20	586.97	587.74	1170 ∔00	587.74	588.51	589.28
586.19	586.96	587.73	∔25	587.73	588.50	589.27
586.20	586.97	587.74	∔50	587.74	588.51	589.28
586.22	586.99	587.76	∔75	587.76	588.53	589.30
586.25	587.02	587.79	1171 ∔00	587.79	588.56	589.33
586.28	587.05	587.82	∔25	587.82	588.59	589.36
586.33	587.10	587.87	∔50	587.87	588.64	589.41
586.39	587.16	587.93	∔75	587.93	588.70	589.47
586.46	587.23	588.00	1172 ∔00	588.00	588.77	589.54
586.54	587.31	588.08	∔25	588.08	588.85	589.62

TRANSITION

FULL SUPER

Dc = 2° 00' LEFT MAX. SUPERELEVATION FOR 24'=1.54' e=.064⅄FT

C	B	A	STATION	A'	B'	C'
586.61	587.38	588.15	1172 ∔50	588.15	588.92	589.69
586.69	587.46	588.23	∔75	588.23	589.00	589.77
586.76	587.53	588.30	1173 ∔00	588.30	589.07	589.84
586.84	587.61	588.38	∔25	588.38	589.15	589.92
586.91	587.68	588.45	∔50	588.45	589.22	589.99
586.99	587.76	588.53	∔75	588.53	589.30	590.07
587.06	587.83	588.60	1174 ∔00	588.60	589.37	590.14
587.14	587.91	588.68	∔25	588.68	589.45	590.22
587.21	587.98	588.75	∔50	588.75	589.52	590.29
587.29	588.06	588.83	∔75	588.83	589.60	590.37
587.36	588.13	588.90	1175 ∔00	588.90	589.67	590.44
587.44	588.21	588.98	∔25	588.98	589.75	590.52
587.51	588.28	589.05	∔50	589.05	589.82	590.59
587.59	588.36	589.13	∔75	589.13	589.90	590.67
587.66	588.43	589.20	1176 ∔00	589.20	589.97	590.74
587.74	588.51	589.28	∔25	589.28	590.05	590.82
587.81	588.58	589.35	∔50	589.35	590.12	590.89
587.89	588.66	589.43	∔75	589.43	590.20	590.97
587.96	588.73	589.50	1177 ∔00	589.50	590.27	591.04
588.04	588.81	589.58	∔25	589.58	590.35	591.12
588.11	588.88	589.65	∔50	589.65	590.42	591.19
588.19	588.96	589.73	∔75	589.73	590.50	591.27
588.26	589.03	589.80	1178 ∔00	589.80	590.57	591.34
588.34	589.11	589.88	∔25	589.88	590.65	591.42
588.41	589.18	589.95	∔50	589.95	590.72	591.49
588.49	589.26	590.03	∔75	590.03	590.80	591.57
588.56	589.33	590.10	1179 ∔00	590.10	590.87	591.64
588.64	589.41	590.18	∔25	590.18	590.95	591.72
588.71	589.48	590.25	∔50	590.25	591.02	591.79
588.79	589.56	590.33	∔75	590.33	591.10	591.87
588.86	589.63	590.40	1180 ∔00	590.40	591.17	591.94
588.94	589.71	590.48	∔25	590.48	591.25	592.02
589.01	589.78	590.55	∔50	590.55	591.32	592.09
589.09	589.86	590.63	∔75	590.63	591.40	592.17
589.16	589.93	590.70	1181 ∔00	590.70	591.47	592.24
589.24	590.01	590.78	∔25	590.78	591.55	592.32
589.31	590.08	590.85	∔50	590.85	591.62	592.39
589.39	590.16	590.93	∔75	590.93	591.70	592.47
589.46	590.23	591.00	1182 ∔00	591.00	591.77	592.54
589.54	590.31	591.08	∔25	591.08	591.85	592.62
589.61	590.38	591.15	∔50	591.15	591.92	592.69
589.69	590.46	591.23	∔75	591.23	592.00	592.77
589.76	590.53	591.30	1183 ∔00	591.30	592.07	592.84
589.84	590.61	591.38	∔25	591.38	592.15	592.92
589.91	590.68	591.45	∔50	591.45	592.22	592.99
589.99	590.76	591.53	∔75	591.53	592.30	593.07
590.06	590.83	591.60	1184 ∔00	591.60	592.37	593.14
590.14	590.91	591.68	∔25	591.68	592.45	593.22

FULL SUPER

Dc = 2°-00' LEFT MAX. SUPERELEVATION FOR 24'=1.54' e=.064⅄FT

C	B	A	STATION	A'	B'	C'
590.21	590.98	591.75	1184 ∔50	591.75	592.52	593.29
590.29	591.06	591.83	∔75	591.83	592.60	593.37
590.36	591.13	591.90	1185 ∔00	591.90	592.67	593.44
590.44	591.21	591.98	∔25	591.98	592.75	593.52
590.51	591.28	592.05	∔50	592.05	592.82	593.59
590.59	591.36	592.13	∔75	592.13	592.90	593.67
590.66	591.43	592.20	1186 ∔00	592.20	592.97	593.74
590.74	591.51	592.28	∔25	592.28	593.05	593.82
590.81	591.58	592.35	∔50	592.35	593.12	593.89
590.89	591.66	592.43	∔75	592.43	593.20	593.97
590.96	591.73	592.50	1187 ∔00	592.50	593.27	594.04
591.04	591.81	592.58	∔25	592.58	593.35	594.12
591.11	591.88	592.65	∔50	592.65	593.42	594.19
591.19	591.96	592.73	∔75	592.73	593.50	594.27
591.26	592.03	592.80	1188 ∔00	592.80	593.57	594.34
591.34	592.11	592.88	∔25	592.88	593.65	594.42
591.41	592.18	592.95	∔50	592.95	593.72	594.49
591.49	592.26	593.03	∔75	593.03	593.80	594.57
591.56	592.33	593.10	1189 ∔00	593.10	593.87	594.64
591.64	592.41	593.18	∔25	593.18	593.95	594.72
591.71	592.48	593.25	∔50	593.25	594.02	594.79
591.79	592.56	593.33	∔75	593.33	594.10	594.87
591.86	592.63	593.40	1190 ∔00	593.40	594.17	594.94
591.94	592.71	593.48	∔25	593.48	594.25	595.02
592.01	592.78	593.55	∔50	593.55	594.32	595.09
592.09	592.86	593.63	∔75	593.63	594.40	595.17
592.16	592.93	593.70	1191 ∔00	593.70	594.47	595.24
592.24	593.01	593.78	∔25	593.78	594.55	595.32
592.31	593.08	593.85	∔50	593.85	594.62	595.39
592.39	593.16	593.93	∔75	593.93	594.70	595.47
592.46	593.23	594.00	1192 ∔00	594.00	594.77	595.54
592.54	593.31	594.08	∔25	594.08	594.85	595.62
592.61	593.38	594.15	∔50	594.15	594.92	595.69
592.69	593.46	594.23	∔75	594.23	595.00	595.77
592.76	593.53	594.30	1193 ∔00	594.30	595.07	595.84
592.84	593.61	594.38	∔25	594.38	595.15	595.92
592.91	593.68	594.45	∔50	594.45	595.22	595.99
592.99	593.76	594.53	∔75	594.53	595.30	596.07
593.06	593.83	594.60	1194 ∔00	594.60	595.37	596.14
593.14	593.91	594.68	∔25	594.68	595.45	596.22
593.21	593.98	594.75	∔50	594.75	595.52	596.29
593.29	594.06	594.83	∔75	594.83	595.60	596.37
593.36	594.13	594.90	1195 ∔00	594.90	595.67	596.44

FULL SUPER

ADACHE ASSOCIATES INC., ENGINEERS
CLEVELAND, OHIO 44142

S.R. 2
SUPERELEVATION TABLE
CURVE No. 2

DESIGNED	DRAWN	CHECKED	REVIEWED	DATE
NF 10-17-67	GCS 10-24-67	RJZ 11-20-68		

SUPERELEVATION TABLES

FED. RD. DIVISION	STATE	PROJECT	
2	OHIO		

60
284

ERIE COUNTY
ERI 2-(16.13-17.39)

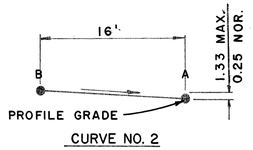

CURVE NO. 2

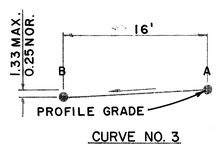

CURVE NO. 3

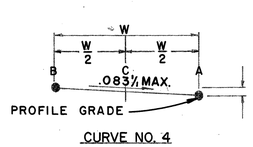

CURVE NO. 4

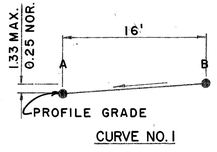

CURVE NO. 1

E.B. THRU RAMP

STATION	B	A
1074 + 00	597.42	596.26
1074 + 25	597.54	596.26
+ 33.88	597.60	596.27
+ 50	597.62	596.29
+ 75	597.67	596.34
1075 + 00	597.75	596.42
+ 25	597.86	596.53
+ 50	597.99	596.66
+ 75	598.16	596.83
1076 + 00	598.35	597.02
+ 25	598.57	597.24
+ 42.45	598.74	597.41
+ 50	598.77	597.49
+ 75	598.91	597.77
1077 + 00	599.07	598.07
+ 25	599.26	598.40
+ 50	599.47	598.76
+ 75	599.72	599.15
1078 + 00	600.15	599.56
+ 25	600.30	600.01
+ 50	600.62	600.48
+ 75.20	600.98	600.98
1079 + 00	601.37	601.51
+ 25	601.78	602.06
+ 50	602.21	602.64
+ 75	602.69	603.26
1080 + 00	603.17	603.88
+ 25	603.65	604.50
+ 50	604.13	605.13
+ 75	604.61	605.75
1081 + 00	605.10	606.38
+ 07.95	605.25	606.58
+ 25	605.67	607.00
+ 50	606.30	607.63
+ 75	606.92	608.25
1082 + 00	607.55	608.88
+ 25	608.17	609.50
+ 50	608.80	610.13
+ 75	609.42	610.75
1083 + 00	610.05	611.38
+ 25	610.67	612.00
+ 50	611.30	612.63
+ 75	611.92	613.25
1084 + 00	612.55	613.88
+ 25	613.17	614.50
+ 50	613.80	615.13
+ 75	614.42	615.75
1085 + 00	615.05	616.38
+ 25	615.67	617.00
+ 50	616.30	617.63
+ 75	616.92	618.25
1086 + 00	617.55	618.88
+ 25	618.18	619.51
+ 50	618.78	620.11
+ 75	619.35	620.68

STATION	B	A
1087 + 00	619.89	621.22
+ 04.07	619.97	621.30
+ 25	620.50	621.71
+ 50	621.10	622.17
+ 75	621.68	622.60
1088 + 00	622.21	622.99
+ 25	622.70	623.34
+ 50	623.16	623.65
+ 75	623.58	623.93
+ 93.07	623.87	624.12

STATION	B	A	W	C
1096 + 88.31	612.89	613.14		
1097 + 00	612.52	612.71		
+ 25	611.74	611.81		
1097 + 38.31	611.33	611.33		
+ 50	610.96	610.90		
+ 75	610.18	610.00		
1098 + 00	609.39	609.09		
+ 25	608.62	608.19		
+ 50	607.84	607.28		
+ 71.31	607.17	606.51	16.00	
1099 + 00	606.30	605.47	16.52	
+ 25	605.56	604.57	16.98	
+ 50	604.81	603.66	17.43	
+ 75	604.08	602.76	17.89	
1100 + 00	603.35	601.85	18.34	
+ 04.31	603.22	601.69	18.42	
+ 25	602.54	600.98	18.80	
+ 50	601.78	600.18	19.25	
+ 75	601.08	599.44	19.71	
1101 + 00	600.45	598.78	20.16	
+ 25	599.90	598.19	20.62	
+ 50	599.41	597.66	21.07	
+ 75	598.99	597.20	21.53	
1102 + 00	598.52	596.83	21.98	
+ 25	598.09	596.50	22.44	
+ 50	597.74	596.25	22.89	
+ 75	597.45	596.07	23.34	
1103 + 00	597.22	595.95	23.82	
+ 10.78	597.14	595.92	24.00	
+ 25	597.01	595.87		
+ 50	596.79	595.79		
+ 75	596.56	595.71		
1104 + 00	596.35	595.64		
+ 25	596.13	595.56		
+ 50	595.90	595.48		
+ 59	595.82	595.45		595.64
+ 75	595.70	595.40		595.59
+ 96.50	595.53	595.34		595.53
1105 + 00	595.51	595.33		595.52
+ 25	595.37	595.25		595.44
+ 50	595.23	595.18		595.37
+ 71.50	595.11	595.11		595.30

RAMP NO. 2

STATION	A	B
1184 + 00	592.10	593.43
+ 25	592.89	594.22
+ 50	593.75	595.08
+ 75	594.67	596.00
1185 + 00	595.65	596.98

STATION	A	B
1185 + 25	596.66	597.85
+ 50	597.67	598.73
+ 75	598.68	599.60
1186 + 00	599.69	600.48
+ 00.67	599.75	600.54
+ 25	600.70	601.35
+ 50	601.71	602.23
+ 75	602.72	603.10
1187 + 00	603.70	603.95

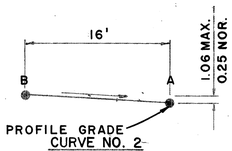

CURVE NO. 2

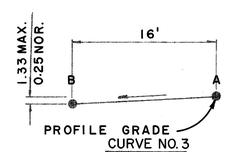

CURVE NO. 3

RAMP NO. 3

STATION	B	A
1184 + 04.11	594.00	593.15
+ 25	594.15	593.18
+ 41.12	594.28	593.22
+ 50	594.31	593.25
+ 75	594.44	593.38
1185 + 00	594.62	593.56
+ 06.75	594.68	593.62
+ 25	594.75	593.80
+ 50	594.89	594.08
+ 75	595.06	594.42
1186 + 00	595.33	594.81
+ 01.84	595.35	594.84
+ 25	595.63	595.25
+ 50	595.98	595.74
+ 75	596.39	596.29
+ 92.25	596.69	596.69
1187 + 00	596.84	596.88
+ 25	597.34	597.53
+ 50	597.90	598.23
+ 75	598.52	598.99
1188 + 00	599.18	599.79

STATION	B	A
1188 + 25	599.86	600.62
+ 39.85	600.28	601.12
+ 50	600.55	601.45
+ 75	601.24	602.28
1189 + 00	601.93	603.11
+ 25	602.61	603.94
+ 50	603.44	604.77
+ 75	604.25	605.58
1190 + 00	605.01	606.34
+ 20	605.59	606.92
+ 25	606.76	607.06
+ 50	606.58	607.74
+ 75	607.36	608.37
1191 + 00	608.09	608.96
+ 25	608.77	609.50
+ 50	609.41	610.00
+ 75	610.02	610.46
1192 + 00	610.57	610.87
+ 25	611.08	611.24
+ 50	611.54	611.56
+ 55.04	611.62	611.62

NOTE: FOR ALL ELEVATIONS NOT SHOWN ON THIS SHEET SEE PAVEMENT DETAILS.

ADACHE ASSOCIATES INC., ENGINEERS
CLEVELAND, OHIO 44142

S.R. 2
SUPERELEVATION TABLES
E.B THRU RAMP
RAMP #2 & 3

DESIGNED	DRAWN	CHECKED	REVIEWED	DATE
N.F. 10-16-67	JT 10-24-67	R.J.Z. 11-22-68		

FED. RD. DIVISION	STATE	PROJECT	FISCAL YEAR
2	OHIO		

61/284

ERIE COUNTY
ERI. 2-(16.13-17.39)

ADACHE ASSOCIATES, INC.
CALC. BY J.D.A. DATE 2-14-69
CHKD. BY R.J.Z. DATE 5-5-69

SEEDING END WIDTH	SEEDING SQ. YDS.	END AREA CUT	END AREA FILL	VOLUME CUT	VOLUME FILL
61	694	83	75	269	278
64	783	62	75	244	256
77	861	70	63	226	193
78	139	52	41	15	12
78		0	0		

STA 1064+32.09 LEFT
BEGIN WORK & SEEDING
MEET EXIST ELEVATION

LA
155' LT

12' Extension of 48"x76" type A, 706.04 HE-A Culvert

6:1
4:1
3:1
48"x76" HE II Culvert 1063+40 I
HW-4 Headwall
FL 588.80
To Culvert

STA. 1064+00
595.5

EX-LA

To Culvert
EX-LA
FL 588.80

STA. 1063+00
594.0

EX-LA

EX-LA
160' RT
FL 589.00

STA. 1062+00
593.6

EX-LA

EX-LA
163' RT
6:1
4:1
3:1
FL 589.20

STA. 1061+00
593.3

STA 1060+89 BEGIN EARTH WORK & SEEDING RT.
MEET EXISTING ELEVATION

STA 1060+84
EX-LA

EX-LA
165' RT

STA. 1060+00
592.9

CROSS SECTIONS STA. 1060+00 TO STA. 1064+00

SEEDING	
END WIDTH	SQ. YDS.

ADACHE ASSOCIATES, INC.
CALC. BY J.D.A. DATE 2-1-68
CHKD. BY R.J.Z. DATE 5-5-68

FED. RD. DIVISION	STATE	PROJECT	FISCAL YEAR
2	OHIO		

62
284

ERIE COUNTY
ERI. 2-(16.13-17.39)

END AREA		VOLUME	
CUT	FILL	CUT	FILL
233	125	809	467
201	127	713	430
184	105	591	419
135	121	494	409
105	100	398	329
STA. 1064+00		83	75

STA. 1069+00

592.8

157 | 1728

601- 8'x 4'x 1.5 R.C.H. PROT. TYPE "C" W/WINGWALLS

600 / 590

8:1, 4:1, 6:1, 1.5'

LA 155' LT.

DITCH FL. 589.76

12" @ 0.38% 15" TYPE B CONNECT TO EXIST. PIPE

(D-5 SHEET 18)

EXIST. 15" 589.82±

EXIST. 15" CONCRETE

EXIST. 15" 589.20

EXIST. No. 4 C.B.

6:1, 4:1

20 30 140

3:1

LA 170' RT.

589.80

STA. 1068+00

593.2

159 | 1717

LA 155' LT.

600 / 590

589.6

LA 168' RT.

589.60

STA. 1067+00

593.5

155 | 1722

LA 155' LT.

600 / 590

589.4

LA 166' RT.

589.40

STA. 1066+00

594.1

155 | 1711

LA 155' LT.

600 / 590

589.2

LA 163' RT.

589.20

STA. 1065+00

594.3

153 | 1156

LA 155' LT.

600 / 590

9:1, 4:1, 6:1

FL. 589.00

LA 161' RT.

6:1, 4:1, 3:1

589.00

AH STA. 1064+32
BK START SEEDING LT.
153 | 217
AH STA. 1064+00
61 | 61

140 30 20 10 100 90 80 70 60 50 40 30 20 10 0 10 20 30 40 50 60 70 80 90 100 10 20 30 140

CROSS SECTIONS STA. 1065+00 TO STA. 1069+00

FED. RD. DIVISION	STATE	PROJECT	FISCAL YEAR
2	OHIO		

63
284

ERIE COUNTY
ERI. 2-(16.13-17.39)

ADACHE ASSOCIATES, INC.
CALC. BY J.D.A DATE 2.1.69
CHKD. BY R.J.Z DATE 2.3.69

SEEDING END WIDTH	SEEDING SQ. YDS.
88	867
68	767
70	141
138	1550
169	1706
153	1789
157	1722

STA. 1075+00

594.8

LA 155' LT.

600

590

591.27

595.25

MATCH LINE E.B. THRU RAMP

Temporary Road

STA. 1074+00

594.4

LA 155' LT.

600

590

591.02

596.25

MATCH LINE E.B. THRU RAMP

MATCH LINE E.B. THRU RAMP AH.

MATCH TO SHEET 113

Temporary Road

STA. 1073+00

593.7

LA 155' LT.

600

590

590.52

590.40

LA 180' BK. RT.

STA. 1072+00

593.3

LA 155' RT.

600

590

590.27

590.20

LA 175' RT.

STA. 1071+00

593.2

LA 155' LT.

600

590

590.02

590.00

LA 173' RT.

STA. 1070+00

EXISTING GRADE: 593.1

STA. 1169+00

STA. 1069+00

FOR DITCH CONTIN. SEE THRU RAMP E.B. X SECTIONS

END AREA CUT	END AREA FILL	VOLUME CUT	VOLUME FILL
107	151		
		387	506
102	122		
		385	454
AH 106	123		
BK 253	248	906	833
236	202	896	759
288	208	881	674
228	156	854	520
233	125		

CROSS SECTIONS STA. 1070+00 TO STA. 1075+00

SEEDING

END WIDTH	SQ. YDS.
188	1014
177	
185	
GH.178 BK102	528
88	
1006	
1008	

CALC. BY J.D.A. DATE 2/4/69
CHKD. BY R.J.Z. DATE 2/5/69

STATE PROJECT NO. 64 284

ERIE COUNTY
ERI. 2-(16.13-17.39)

END AREA CUT	END AREA FILL	VOLUME CUT	VOLUME FILL
114	155		
		812	284
115	152		
		219	274
121	144		
		265	319
165	200		
		252	325
107	151		

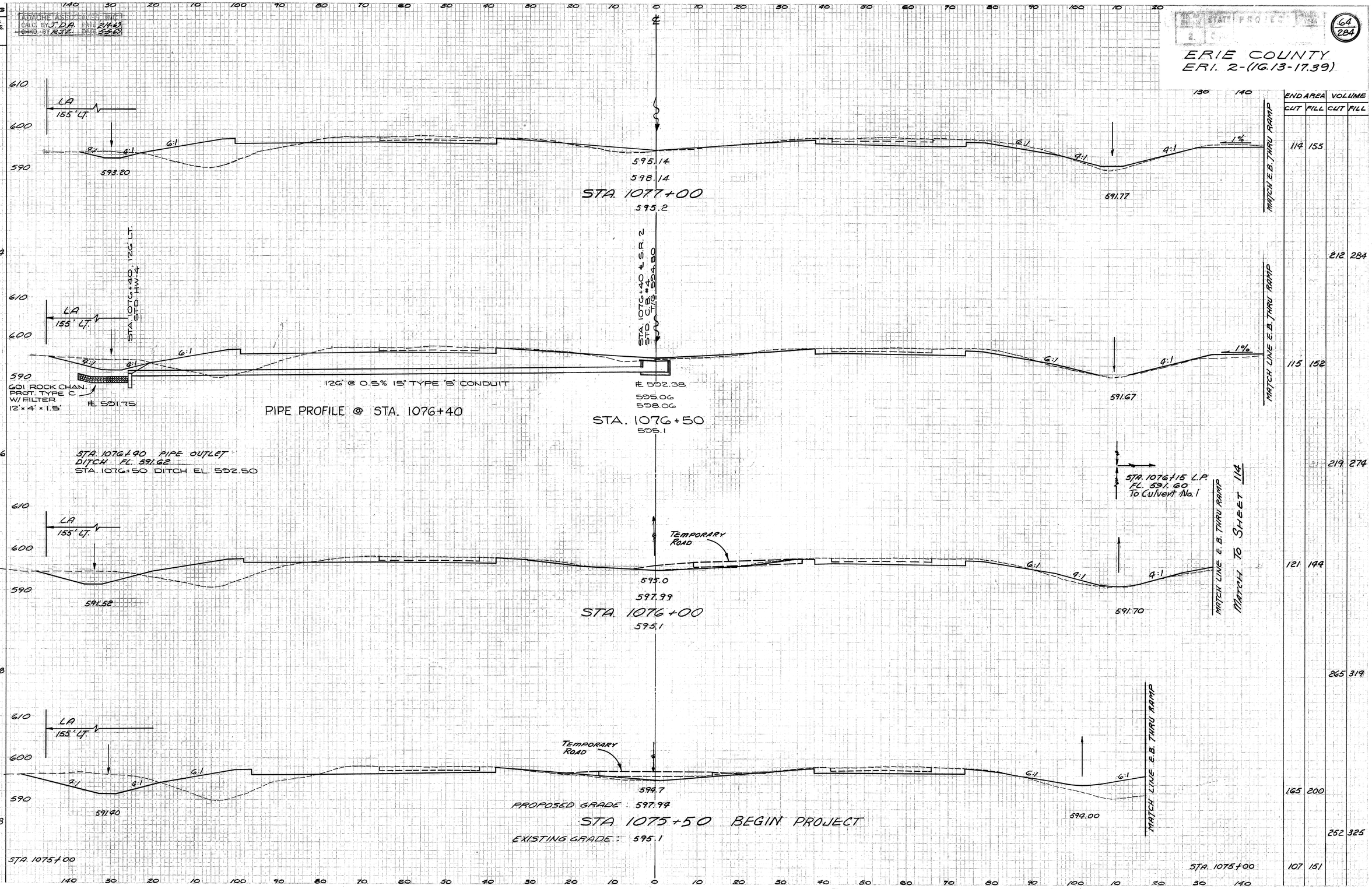

CROSS SECTIONS STA. 1075+50 TO STA. 1077+00

SEEDING

END WIDTH	SQ. YDS.
205	1144
207	1139
203	1131
204	1089
188	

ADACHE ASSOCIATES, INC.
CALC. BY JDD.H. DATE 2-14-73
CHKD. BY R.T.Z. DATE 3-5-73

RDWY RD DIVISION	STATE	PROJECT	FISCAL YEAR
2	OHIO		

65/284

ERIE COUNTY
ERI. 2-(16.13-17.39)

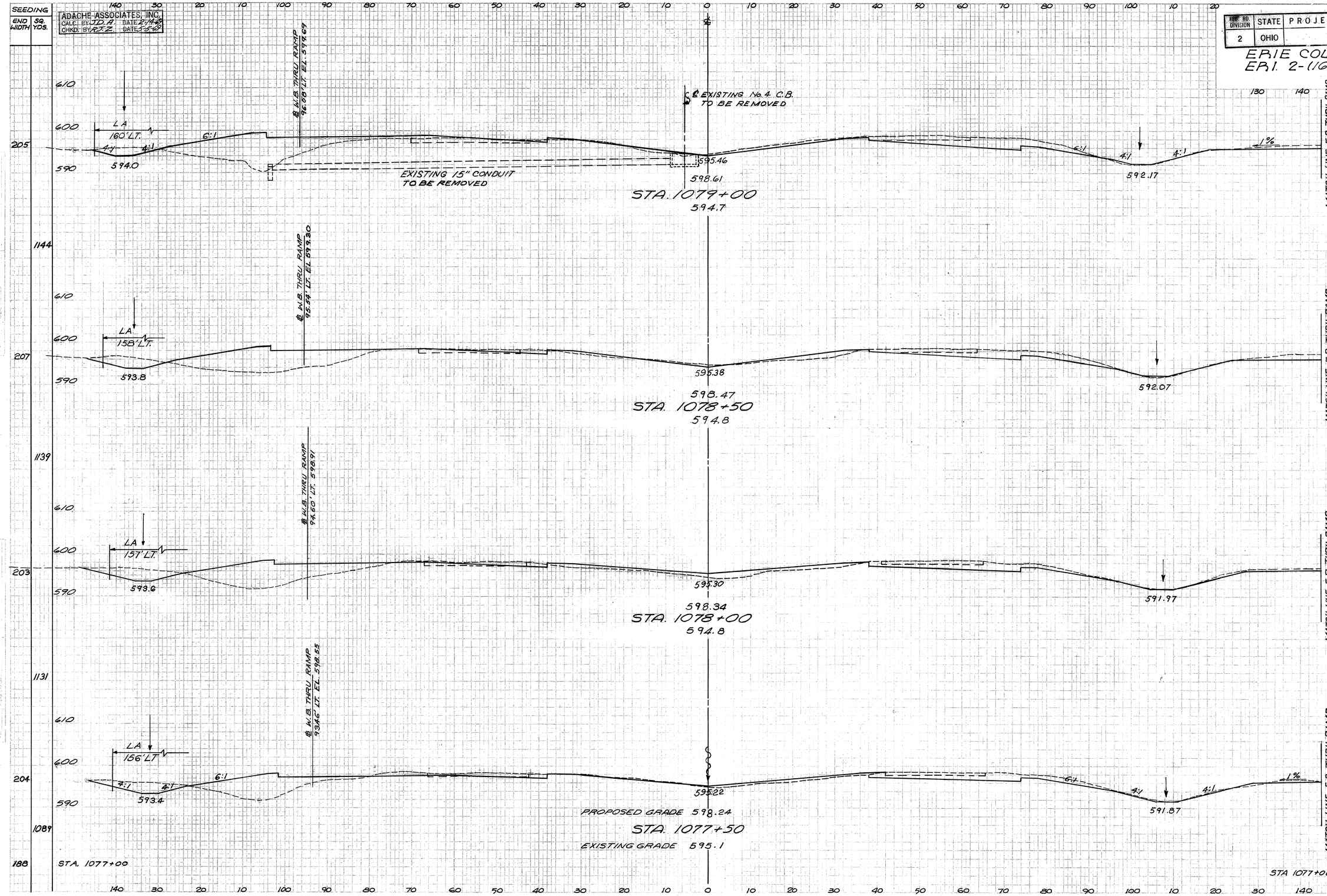

END AREA CUT	END AREA FILL	VOLUME CUT	VOLUME FILL
140	207		
		282	383
165	207		
		298	381
157	205		
		282	315
148	135		
		243	269
114	155		

CROSS SECTIONS STA. 1077+50 TO STA. 1079+00

ADACHE ASSOCIATES, INC.
CALC. BY J.D.A DATE 2/1/99
CHKD. BY R.J.E DATE 3/5/99

FED. RD. DIVISION	STATE	PROJECT	FISCAL YEAR
2	OHIO		

66
284

ERIE COUNTY
ERI. 2-(16.13-17.39)

SEEDING END WIDTH	SQ. YD.
AH152 BK211	1178
	213
	1178
	211
	1164
	208
	1147
	205

140 130 120 110 100 90 80 70 60 50 40 30 20 10 0 10 20 30 40 50 60 70 80 90 100 110 120 130 140

610 / 600 / 590

℄ W.B. THRU RAMP 108'± LT. EL. 600.80
MATCH LINE W.B. THRU RAMP AH.
LA 166' LT.
4:1 6:1 6:1 6:1 6:1 1%
594.8 595.82 593.0
599.24
STA. 108+00
596.8

℄ W.B. THRU RAMP 103'± LT. EL. 600.68
LA 173' LT.
594.6 595.70 592.5
599.08
STA. 1080+50
596.0

1080+32.09 BEGIN MEDIAN TRANSITION
(SEE SHT. 58 FOR WIDTH)

℄ N.B. THRU RAMP 99.5'± LT. EL. 600.45
LA 168' LT.
594.4 595.62 592.37
598.92
STA. 1080+00
525.4

℄ N.B. THRU RAMP 98'± LT. EL. 600.09
LA 163' LT.
4:1 4:1 6:1 4:1 4:1 1%
594.2 595.54 592.27
PROPOSED GRADE 598.76
STA. 1079+50
EXISTING GRADE 594.9

STA 1072+00

MATCH LINE E.B. THRU RAMP
MATCH LINE E.B. THRU RAMP
MATCH LINE E.B. THRU RAMP
MATCH TO SHEET 115
MATCH LINE E.B. THRU RAMP

STA. 1079+00

	END AREA CUT	END AREA FILL	VOLUME CUT	VOLUME FILL
AH108 BK122	173	362		
			256	638
	155	327		
			251	606
	116	328		
			219	534
	121	249		
			242	422
	140	207		

CROSS SECTIONS STA. 1079+50 TO STA. 1081+00

ADACHE ASSOCIATES, INC.
CALC. BY JDA DATE 2/46
CHKD. BY EDZ DATE 3/50

FED. RD. DIVISION	STATE	PROJECT	FISCAL YEAR
2	OHIO		

67
284

ERIE COUNTY
ERI. 2-(16.13-17.39)

SEEDING END WIDTH	SEEDING SQ. YDS.
174	958
171	928
163	897
160	867

MATCH LINE W.B. THRU RAMP

MATCH LINE E.B. THRU RAMP

MATCH TO SHEET 124

MATCH TO SHEET 116

MATCH TO SHEET 115

STA. 1083+00
596.46
599.88
598.5
595.00
6:1
6:1
130 1% 140

STA. 1082+50
596.30
599.72
598.5
594.50
6:1
6:1

STA. 1082+00
596.14
599.56
598.34
594.00
6:1
6:1

STA. 1081+50
595.98
PROPOSED GRADE 599.40
EXISTING GRADE 597.70
593.50
6:1
6:1
1%

STA. 1081+00

END AREA CUT	END AREA FILL	VOLUME CUT	VOLUME FILL
117	405		
		188	727
86	380		
		152	642
78	313		
		156	523
90	252		
		183	394
STA. 1081+00 108	173		

CROSS SECTIONS STA 1081+50 TO STA 1083+00

FED. ROAD DIV. NUMBER	STATE	PROJECT	FISCAL YEAR
2	OHIO		

68
284

ERIE COUNTY
ERI. 2-(16.13-17.39)

SEEDING	
END WIDTH	SQ. YDS.
201	1094
193	1050
185	1014
180	983
174	

ADACHE ASSOCIATES, INC.
CALC. BY J.D.A. DATE 2/10/69
CHKD. BY R.J.Z. DATE 3-3-69

MATCH LINE W.B. THRU RAMP

MATCH TO SHEET 124

MATCH LINE W.B. THRU RAMP

MATCH LINE W.B. THRU RAMP

MATCH LINE W.B. THRU RAMP

STA. 1085+00
597.10
600.52
596.00

STA. 1084+50
596.94
600.36
592.80

STA. 1084+00
596.78
600.20
596.50

STA. 1083+50
596.62
PROPOSED GRADE 600.04
EXISTING GRADE 598.32

STA. 1083+00

595.90
595.70
595.50
595.30

MATCH LINE E.B. THRU RAMP
MATCH TO SHEET 117

MATCH LINE E.B. THRU RAMP
MATCH TO SHEET 116

MATCH LINE E.B. THRU RAMP

END AREA		VOLUME	
CUT	FILL	CUT	FILL
151	417		
		197	803
62	450		
		105	836
51	453		
		135	839
95	453		
		196	794
117	405		

CROSS SECTIONS STA. 1083+50 TO STA. 1085+00

FED. HWY. DIVISION	STATE	PROJECT	FISCAL YEAR
2	OHIO		

69/284

ERIE COUNTY
ERI. 2-(16.13-17.39)

ADACHE ASSOCIATES, INC.
CALC. BY J.D.A DATE 2-14-83
CHKD. BY R.J.Z. DATE 2-15-83

SEEDING

END WIDTH	30. YDS.
216	1197
215	1194
215	1183
211	1144
201	STA. 1085+00

MATCH LINE W.B. THRU RAMP STA. 1087+00 — 597.90
597.74
601.16
6:1
8:1
6:1
1%
596.70
MATCH LINE E.B. THRU RAMP
MATCH TO SHEET 118

MATCH LINE W.B. THRU RAMP STA. 1086+50 — 597.70
CROWN EL 597.0
597.58
601.00
1%
596.50
MATCH LINE E.B. THRU RAMP
MATCH TO SHEET 121

MATCH TO SHEET 121
MATCH LINE W.B. THRU RAMP STA. 1086+00 — 597.60
BEGIN CROWN EL 597.0
597.42
600.84
1%
596.30
MATCH LINE E.B. THRU RAMP
MATCH TO SHEET 117

MATCH LINE W.B. THRU RAMP STA. 1085+50 — 597.40
PROPOSED GRADE 597.26
600.68
6:1
8:1
6:1
1%
596.10
MATCH LINE E.B. THRU RAMP
MATCH TO SHEET 117

	END AREA CUT	END AREA FILL	VOLUME CUT	VOLUME FILL
	73	500		
			147	913
	86	486		
			151	894
	77	479		
			146	857
	81	447		
			215	800
STA. 1085+00	151	417		

CROSS SECTIONS STA. 1085+50 TO STA. 1087+00

FED. RD DIVISION	STATE	PROJECT	FISCAL YEAR
2	OHIO		

70
284

ERIE COUNTY
ERI. 2-(16.13-17.39)

SEEDING

ADACHE ASSOCIATES, INC.
CALC. BY JDD.R DATE 2-14-83
CHKD. BY R.D.D. DATE 2-15-83

END WIDTH	SQ YDS.
153	867
159	939
179	1050
199	1153
216	

MATCH LINE W.B. THRU RAMP

MATCH LINE E.B. THRU RAMP

STA. 1089+00
598.38
601.80
597.40
6:1
597.50

STA. 1088+50
598.22
601.64
598.30
6:1
597.30

STA. 1088+00
598.06
601.48
598.70
8:1
6:1
597.10

STA. 1087+50
597.90
PROPOSED GRADE 601.32
EXISTING GRADE 598.10
8:1
6:1
596.90

STA. 1087+00

MATCH TO SHEET 125

MATCH TO SHEET 118

END AREA CUT	END AREA FILL	VOLUME CUT	VOLUME FILL
5	395		
		11	689
7	349		
		27	657
22	361		
		109	640
96	330		
		156	769
73	500		

CROSS SECTIONS STA. 1087+50 TO STA. 1089+00

FINAL SURVEY
SURVEYED
PLOTTED
TEMPLATE
CHECKED
AREAS CHECKED
DATE
BY

ORIGINAL SURVEY
SURVEYED
PLOTTED
TEMPLATE
CHECKED
AREAS CHECKED
DATE
BY

ADACHE ASSOCIATES, INC.
CALC. BY JDS DATE 2/4/69
CHKD. BY RJT DATE 3/5/69

FED. HWY. DIVISION	STATE	PROJECT	FISCAL YEAR
2	OHIO		

71
284

ERIE COUNTY
ERI. 2-(16.13-17.39)

SEEDING END WIDTH	SEEDING SQ. YDS.	END AREA CUT	END AREA FILL	VOLUME CUT	VOLUME FILL
142	906	99	455	137	914
184	928	49	532	46	1033
150	836	1	616	1	1259
151	844	0	744	5	1055
158		5	395		

MATCH TO SHEET 119

MATCH LINE E.B. THRU RAMP

602.44
STA. 1091+00
599.3

MATCH LINE 145' RT.
STA. 1091+00

6:1
596.5
LA
FILL EXISTING DITCH TO EL. 599.5
MATCH LINE 145' RT.

602.28
STA. 1090+50
598.9

MATCH LINE 145' RT.
STA. 1090+50

6:1
597.6
AH
BK
MATCH LINE E.B. THRU RAMP BACK
MATCH LINE 145' RT.

STA. 10.90+25 RT. DITCH H.P.
FL 598.20

MATCH LINE E.B. THRU RAMP

602.12
STA. 1090+00
598.8

6:1
597.90
MATCH LINE E.B. THRU RAMP

MATCH TO SHEET 125

MATCH LINE W.B. THRU RAMP

PROPOSED GRADE 601.96
STA. 1089+50
EXISTING GRADE 597.1

6:1
597.70
MATCH LINE E.B. THRU RAMP

MATCH TO SHEET 119

STA. 1089+00

CROSS SECTIONS STA. 1089+50 TO STA. 1091+00

SEEDING END WIDTH	SEEDING SQ. YDS.
(27)	
(75)	610
221	600
	590
1175	
	610
202	600
	590
(2570)	
1044	
	610
174	600
	590
889	
	610
146	600
	590
800	
142	STA. 1091+00

ADACHE ASSOCIATES, INC.
CALC. BY J.D.A. DATE 2-14-69
CHKD. BY R.J.Z. DATE 2-15-69

FEDERAL AID PROJECT NUMBER	STATE	PROJECT	SHEET NO.	TOTAL SHEETS
	OHIO		72	284

ERIE COUNTY
ERI. 2-(16.13-17.39)

ADD FOR PARCEL 101 S-1 RT.

ADD FOR PARCEL 101 S LT.

LA 160' LT.

3:1 4:1 6:1 595.25 599.48 597.50 6:1 4:1

603.08
STA. 1093+00
600.5

MATCH TO SHEET 120
MATCH LINE E.B. THRU RAMP BK
USE FULL DITCH SEC. AH

2:1 2:1 4:1 6:1 592.13 599.27 597.00 6:1 4:1

602.92
STA. 1092+50
600.2

FOR DITCH CONNECTIONS SEE CULVERT DETAILS

ADD FOR PARCEL 101 X RT.

STA. 1092+20
℄ MEDIAN, C.B. № 4
T/G 599.15

MATCH TO SHEET 120
MATCH LINE E.B. THRU RAMP

4:1 6:1 596.0 599.24 594.50 6:1 3:1 2:1

602.76
STA. 1092+00
599.6

1' Min. Cover over Culvert Transition Shoulder slopes in 75' each side of culvert

STA. 1092+00
FOR CULVERT DETAILS
SEE SHEET 142

STA. 1091+60
FOR DITCH CONNECTION
SEE CULVERT DETAILS

MATCH TO SHEET 119
MATCH LINE E.B. THRU RAMP

6:1 3:1 592.80 599.44

PROPOSED GRADE 602.60
STA. 1091+50
EXISTING GRADE 599.5

STA. 1091+00

	END AREA CUT	END AREA FILL	VOLUME CUT	VOLUME FILL
	182	250		
			409	466
AH	260	253		
BK	290	253		
			476	519
	224	308		
			394	593
	201	332		
			278	729
	99	455		

140 30 20 10 100 90 80 70 60 50 40 30 20 10 0 10 20 30 40 50 60 70 80 90 100 10 20 30 140

CROSS SECTIONS STA. 1091+50 TO STA. 1093+00

ADACHE ASSOCIATES, INC.
CALC. BY JDH DATE 2-4-69
CHKD. BY RJZ DATE 3-5-69

SECTION	STATE	PROJECT	SHEET
2	OH 110		

73
284

ERIE COUNTY
ERI. 2-(16.13-17.39)

SEEDING	
END WIDTH	SQ. YDS.

					END AREA		VOLUME	
					CUT	FILL	CUT	FILL
214	610 LA	600	590	595.75	154	177		
				601.01		235		
				604.41				
				STA. 1095+00				
				600.8				
1183							293	316
								421
212	610 LA.	600	590	595.63	162	164		
				600.50		220		
				603.95				
				STA. 1094+50				
				600.3				
1172							295	316
								426
210	610 LA	600	590	595.50	157	177		
				600.07		240		
				603.57				
				STA. 1094+00				
				599.6				
1178							288	294
								407
214	610 LA 156' LT	600	590	595.37	AH. BK. 154	140 340 200		
				599.73				
				PROPOSED GRADE 603.28				
1208				STA. 1093+50				311 546
				EXISTING GRADE 599.8				
221	STA 1093+00				STA 1093+00	182 250		

BEGIN SAND BLANKET

CROSS SECTIONS STA. 1093+50 TO STA. 1095+00

SEEDING
END WIDTH 30 YDS

ADACHE ASSOCIATES, INC.
CALC. BY JDH DATE 2-9-23
CHKD. BY R.T.E. DATE 2-9-23

DIST.	STATE	PROJECT	TOTAL SHEETS
2	OHIO		74 284

ERIE COUNTY
ERI. 2-(16.13-17.39)

STA. 1097+00.84 END MEDIAN TRANSITION

140 130 120 110 100 90 80 70 60 50 40 30 20 10 0 10 20 30 40 50 60 70 80 90 100 110 120 130 140

213 — 610 — 600 — 590

LA 155'LT. — 4:1 — 596.25 — 6:1 — SAND — 603.88 — 6:1 — 4:1 — 598.50 — LA

607.13

STA. 1097+00

600.2

END AREA CUT 83 — FILL 278, 540

VOLUME CUT 177 — FILL 306, 358

1186

610 — 600 — 590

LA 156'LT. — 4:1 — 596.13 — SAND — 603.07 — 598.38 — LA

214

606.32

STA. 1096+50

600.5

END AREA CUT 108 — FILL 150, 455

1208

610 — 600 — 590

LA 160'LT. — 4:1 — 596.00 — SAND — 603.30 — 598.25 — LA

221

605.60

STA. 1096+00

600.5

AH. BK. 107 — FILL 75, 268, 475, 282

VOLUME CUT 199 — FILL 208, 858

1222

610 — 600 — 590

LA 156'LT. — 4:1 — 595.88 — 6:1 — SAND — 601.61 — 6:1 — 4:1 — 598.13 — LA

219

PROPOSED GRADE 604.96

STA. 1095+50

EXISTING GRADE 600.9

END AREA CUT 110 — FILL 206, 268

VOLUME CUT 244 — FILL 355, 466

1203

214 STA. 1095+00

STA. 1095+00 — 154 — 177, 235

201 — 430, 505

CROSS SECTION STA. 1095+50 TO STA. 1097+00

FED. RD. DIVISION	STATE	PROJECT	FISCAL YEAR
2	OHIO		

75
284

ERIE COUNTY
ERI. 2-(16.13-17.39)

ADACHE ASSOCIATES, INC.
CALC. BY JD.P. DATE 2-1968
CHKD. BY R.E.J.Z. DATE 3-5-69

SEEDING END WIDTH	SEEDING SQ. YDS.
243	1331
236	1281
225	1219
214	1186
213	

610
600
590

LA 163'LT.
4:1
596.75
6:1
4:1
3'
SAND
599.00
611.24
STA. 1099+00
600.4

BEGIN SURCHARGE STA. 1098+60

LA 160'LT.
596.63
598.88
610.08
STA 1098+50
600.2

LA 158'LT.
596.50
598.75
609.01
STA. 1098+00
600.6

LA 156'LT.
4:1
596.33
598.63
PROPOSED GRADE 608.03
STA. 1097+50
EXISTING GRADE 600.2

STA. 1097+00

END AREA CUT	END AREA FILL	VOLUME CUT	VOLUME FILL
55	908		
	657		
113		1569	
			1186
67		726	
			624
131		1187	
			1131
74		556	
			597
129		544	
			1083
65		463	
			573
137		686	
			1031
83		278	
			540

CROSS SECTIONS STA. 1097+50 TO STA. 1099+00

SEEDING	
END WIDTH	SQ. YDS.

ADACHE ASSOCIATES, INC.
CALC. BY: JJD DATE 2-14-85
CHKD. BY: RJZ DATE 3-4-85

FED. RD. DIVISION	STATE	PROJECT	FISCAL YEAR
2	OHIO		

TG 284

ERIE COUNTY
ERI. 2-(16.13-17.39)

	END AREA		VOLUME	
	CUT	FILL	CUT	FILL
59		1907		
		720		
103			3329	
			1321	
52		1688		
		707		
102			2537	
			1285	
58		1484		
		681		
105			2270	
			1239	
55		968		
		657		

140 30 20 10 100 90 80 70 60 50 40 30 20 10 0 10 20 30 40 50 60 70 80 90 100 10 20 30 140

LA 165'LT. — 6:1 / 4:1 — 597.12 — 614.84 — STA. 1100+50 — 600.6 — SAND — LA 150'RT. — 599.38

LA 168'LT. — 10' @ 2.7% 12" TYPE F — CONCRETE COLLAR — 601-ROCK CHANNEL PROT., 13'x4'x1.5' TYPE C W/FILTER — 82' @ 2.7% 12" TYPE B — 6" SHALLOW U.D. F.L. 609.19 — 12" FL. 607.30 — 15' @ 2.5% 12" TYPE F — 12"x15° BEND 12" FL. 597.92 — 31' @ 2.5% 12" TYPE F — 12" FL. 597.55 — 597.00 — (D-5 SHEET 21) — 613.64 — STA. 1100+00 — 600.5 — SAND — LA 150' RT. — 599.25

STA 1100+00 ℄ STD. C.B. NO 4 T/G 610.25

LA 167' LT. — 596.88 — PROPOSED GRADE 612.44 — STA. 1099+50 — EXISTING GRADE 600.4 — SAND — LA — 599.13

STA. 1099+00 — STA. 1099+00

CROSS SECTIONS STA. 1099+50 TO STA. 1100+50

ADACHE ASSOCIATES, INC.
CALC. BY LTD/R DATE 3-1-68
CHKD. BY RJT DATE 3-5-68

STATE PROJECT
77
284

ERIE COUNTY
ERI. 2-(16.13-17.39)

SEEDING END WIDTH	SEEDING SQ. YDS.
210	2522
244	2744
250	1397
	253

END AREA CUT	END AREA FILL	VOLUME CUT	VOLUME FILL
40	2703		
	617		
161		9285	
		2252	
47	2311		
	599		
169		7946	
		2396	
44	1380		
	605		
95		3558	
		1310	
59	1307		
	720		

STA. 1103+00
620.84
600.5

LA 150' LT.
2:1
4:1 4:1
597.75

LA 150' RT.
4:1 4:1
599.25

STA. 1102+00
618.44
599.9

LA 156' LT.
2:1
591.50

LA 150' RT.
2:1
599.0

STA. 1101+00
PROPOSED GRADE 616.04
EXISTING GRADE 600.1

LA 162' LT.
6:1 3:1 3:1
163' LT.
597.25
PROP. 20" ENCASEMENT CONDUIT, 707.08, AS PER PLAN
EXISTING 12" WATERMAIN ℄ ELEVATION 592.50
EXISTING 20" STEEL CASING ℄ 12" WATERMAIN ℄ ELEVATION 594.00

LA 150' RT.
6:1 3:1 3:1
148' RT.
598.75
EXISTING 20" STEEL CASING ℄ 12" WATERMAIN ℄ ELEVATION 594.50
PROPOSED 20" ENCASEMENT CONDUIT, 707.08, AS PER PLAN (SEE DETAIL ABOVE)
12" WATERMAIN ℄ ELEVATION 594.50

EX. 12" W.M.
WOOD BLOCKING, FULL LENGTH
3/8" 3/8"
PROP. 20" ENCASEMENT CONDUIT, 707.08, AS PER PLAN

DETAIL OF PROPOSED ENCASEMENT CONDUIT, 707.08 AS PER PLAN

STA. 1100+50

CROSS SECTIONS STA. 1101+00 TO STA. 1103+00

SEEDING	
END WIDTH	SQ. YDS.

ADACHE ASSOCIATES, INC.
CALC. BY LDA DATE 2/7/69
CHKD. BY RJE DATE 2/8/69

FED. AID DIVISION	STATE	PROJECT	FISCAL YEAR
2	OHIO		

78/284

ERIE COUNTY
ERI. 2-(16.13-17.39)

	END AREA		VOLUME	
	CUT	FILL	CUT	FILL
265		23	4121	652
255		37	3644	661
246		42	3288	642
210		40	2703	617
2889		111	14380	2506
2783		146	12837	2413
2533		152	11084	2331

STA. 1103+00 — 598.00 — LA 155' LT. — 2:1 — 4:1 — 3' SAND — 599.50 — LA 153' RT. — 2:1 — 4:1 — STA. 1103+00

PROPOSED GRADE 623.24
STA. 1104+00
EXISTING GRADE 600.1

STA. 1105+00 — 598.25 — LA 160' LT. — 2:1 — 4:1 — 3' SAND — 600.00 — LA 155' RT. — 2:1 — 4:1

625.64
STA. 1105+00
600.9

STA. 1106+00 — 598.50 — LA 165' LT. — 2:1 — 4:1 — 3' SAND — 600.50 — LA 158' RT. — 2:1 — 4:1

627.97
STA. 1106+00
601.2

CROSS SECTIONS STA. 1104+00 TO STA. 1106+00

STATE	PROJECT	FISCAL YEAR
OHIO		

79
284

ERIE COUNTY
ER.I. 2-(16.13-17.39)

ADACHE ASSOCIATES, INC.
CALC. BY J.D.P. DATE 2-17-69
CHKD. BY E.U.L. DATE 3-3-69

SUSPEND SURCHARGE STA. 1109+05

SEEDING END WIDTH	SEEDING SQ. YDS.
280	3139
272	2994
267	2956
265	

	END AREA CUT	END AREA FILL	VOLUME CUT	VOLUME FILL
		11	5010	755
STA. 1108+90 FULL SECTION		5091	750	27 1871 279
STA. 1108+40 END RT. DITCH EL. 601.70 AH 13 BK 36				16500 2452
				53
		36	4809	721
				124 17420 2654
		31	4598	712
				100 16146 2600
		23	4121	602

LA 165' LT. — 2:1 — 4:1 — 600.00 — 633.18 — STA. 1109+00 — 602.1 — SAND — 6' — FOR UNDERCUTTING, SEE SHEET 45C — LA 166' RT.

LA 165' LT. — 599.50 — 631.75 — STA 1108+00 — 601.7 — LA 164' RT. — 601.50

LA 165' LT. — 599.00 — PROPOSED GRADE 630.02 — STA. 1107+00 — EXISTING GRADE 601.4 — LA 161' RT. — 601.00

STA. 1106+00 — STA. 1106+00

CROSS SECTIONS STA. 1107+00 TO STA 1109+00

ADACHE ASSOCIATES, INC.
CALC. BY JDA DATE 2/7/69
CHKD. BY RJZ DATE 6-5-69

STATE | PROJECT | SHEET NO.
80 / 284

ERIE COUNTY
ERI. 2-(16.13-17.39)

SEEDING END WIDTH	SEEDING SQ. YDS.

STA. 1111+75
STD. C.B. NO 22B
T/G 632.50

12" FL. 629.01

CONCRETE COLLAR

10' @ 1.00% 12" TYPE F

61' @ 1.00% 12" TYPE B

12"-25° BEND EL. 628.3

58' @ 50% = 65 L.F. 12" TYPE F

2:1

(D-9 SHEET 22)

LA 177' RT.

12" FL. 599.2

4:1

598.5

12"-25° BEND EL. 599.3

20' @ 0.50% 12" TYPE F

1.5:1

601-ROCK CHANNEL PROT., TYPE C 12'×4'×1.5' W/FILTER

PIPE PROFILE @ STA. 1111+75

	END AREA CUT	END AREA FILL	VOLUME CUT	VOLUME FILL
130				
140				
	22	5883		
		790		
			4378	
			565	
	76			
		5038		
		735		
	19	2418		
		515		
	46	3806		
		811		
	AH 19			
	BK 12	0		
		0		
	16	1287		
		335		
	12	1390		
		342		
	43	11852		
		2069		
	11	5010		
		755		

MATCH LINE

2:1

R.R. R/W

LA

FOR UNDERCUTTING, SEE SHEET 45B

3'

SAND

635.60

STA. 1112+00
(601.3)

STA. 1112+00
MATCH LINE 145' LT.

STA. 1111+50

STA. 1111+50
RESUME SEEDING
SOUTH OF CONRAIL R.R. LT. SIDE

RESUME SURCHARGE STA. 1111+75

BRIDGE

LA 179' LT.

LA 174' RT.

FOR UNDERCUTTING, SEE SHEET 45C

635.10

STA. 1111+00
(603.1)

STA. 1110+35 SO.

STA. 1110+50 NO.

STA. 1110+35
END LT. DITCH
EL. 600.67

STA. 1110+50
SUSPEND EARTHWORK & SEEDING
NORTH OF CONRAIL R.R.

STA. 1110+15
RESUME EARTHWORK & SEEDING
SOUTH OF CONRAIL R.R.

STA. 1110+35
BEGIN RT. DITCH
EL. 602.80

STA. 1110+50
SUSPEND FILL N. OF R.R.

BRIDGE

LA 165' LT.

LA 170' RT.

600.50

FOR UNDERCUTTING, SEE SHEET 45B

PROPOSED GRADE 634.29

STA. 1110+00
EXISTING GRADE (602.1)

STA. 1109+22

STA. 1109+22
SUSPEND SEEDING
NORTH OF CONRAIL R.R. RT. SIDE

STA. 1109+00

STA. 1109+00

CROSS SECTIONS STA. 1110+00 TO STA. 1112+00

SEEDING	
END WIDTH	SQ. YDS.
321	
3544	
317	
3483	
310	
3406	
303	

ADACHE ASSOCIATES, INC.
CALC. BY J.D.A. DATE 2-17-69
CHKD. BY R.J.Z. DATE 2-26-69

DIST.	STATE	PROJECT	SHEET NO.
2	OHIO		81 / 284

ERIE COUNTY
ERI. 2-(16.13-17.39)

	END AREA		VOLUME	
	CUT	FILL	CUT	FILL
41		7034		830
170		25452		3046
51		6710		815
176		24163		2954
44		6338		802
139		22631		2948
12				
22		5883		790

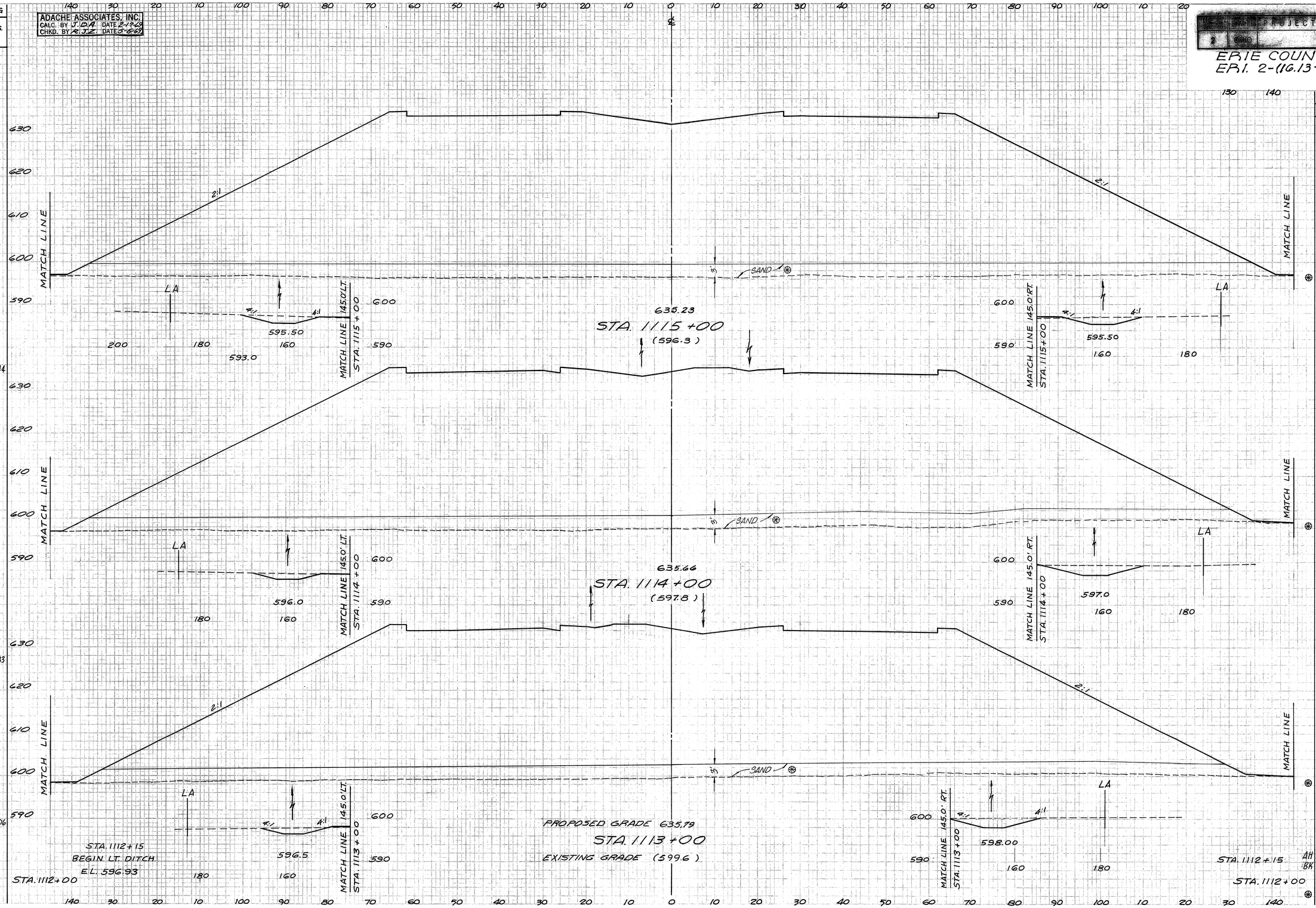

AH 44
BK 22

CROSS SECTIONS STA. 1113+00 TO STA. 1115+00

SEEDING	
END WIDTH	SQ. YDS.
(1549)	
335	
3722	
3672	
326	
3594	
321	

ADACHE ASSOCIATES, INC.
CALC. BY J.D.A. DATE 3-7-68
CHKD. BY R.J.Z. DATE 3-8-68

STATE	PROJECT	SHEET NO.
OHIO		82 284

ERIE COUNTY
ERI. 2-(16.13-17.39)

ADD FOR PARCEL 105 X LT.

630 620 610 600 590 580

2:1

MATCH LINE

LA

TO CULVERT

587.0

MATCH LINE 145.0' LT. STA. 1118+00

200 180 160

632.08
STA. 1118+00
(588.7)

130 140

2:1

MATCH LINE

3" SAND

590 580

MATCH LINE 145.0' RT. STA. 1118+00

TO CULVERT

LA

587.0

MATCH LINE

160 180 200

633.44
STA. 1117+00
(591.3)

630 620 610 600 590

2:1

MATCH LINE

LA

589.50

MATCH LINE 145.0' LT. STA. 1117+00

190 180 170 160

3" SAND

600 590

MATCH LINE 145.0' RT. STA. 1117+00

LA

589.50

150 160 170 180 190 200

MATCH LINE

PROPOSED GRADE 634.49
STA. 1116+00
EXISTING GRADE (594.5)

630 620 610 600 590

2:1

MATCH LINE

LA

595.0

MATCH LINE 145.0' LT. STA. 1116+00

STA. 1115+00 190 180 160

3" SAND

600 590

MATCH LINE 145.0' RT. STA. 1116+00

LA

594.0

160 180 190

STA. 1115+00

MATCH LINE

140 30 20 10 100 90 80 70 60 50 40 30 20 10 0 10 20 30 40 50 60 70 80 90 100 10 20 30 140

END AREA		VOLUME	
CUT	FILL	CUT	FILL
28	8331		
	893		
117		30183	
		3263	
35	7968		
	869		
120		28289	
		3143	
30	7308		
	828		
131		26559	
		3070	
41	7034		
	830		

CROSS SECTIONS STA. 1116+00 TO STA. 1118+00

SEEDING	
GND WIDTH	SQ. YDS.
273	
3283	
318	
(278)	
3628	
335	
3722	
335	

ADACHE ASSOCIATES, INC.
CALC. BY: JSD-JT DATE: 6-7-63
CHKD. BY: R.V.T. DATE: 6-26-63

2	OHIO			

83/284

ERIE COUNTY
ER.I. 2-(16.13-17.39)

10' @ 2.25% 12" TYPE F
CONCRETE COLLAR
63' @ 2.25% 12" TYPE B
12"x25° BEND EL. 618.00
(D-5 SHEET 23)
STA. 1121+80
STD. CB. TYPE B
INLET
STA. 1121+80
12" FL. 618.64
PIPE PROFILE STA. 1121+80

601 - R.C.P. 13'x4'x1.5' TYPE C W/FILTER
39' @ 50% 12" TYPE F
20' @ 2.25% 12" TYPE F
12"x25° BEND EL. 600.70
12" FL. 600.25
599.75
599.25
LA 170' LT.
2:1
4:1
4:1
626.50
627.00
STA. 1121+00
(601.8)
LA 185' RT.
2:1
SAND
595.10

4:1
6:1
626.25
2:1
LA 180' LT.
2:1
SAND
596.50
628.72
STA. 1120+00
(599.6)
MATCH LINE STA. 1120+00 145.0' RT.
595.50
LA
MATCH LINE
ADD FOR PARCEL 126 X RT.
2:1
2:1
MATCH LINE
SAND
LA
4:1
4:1
587.0
MATCH LINE 145.0' LT. STA. 1119+00
STA. 1118+00
FOR DITCH CONNECTIONS SEE CULVERT DETAILS
PROPOSED GRADE 630.43
STA. 1119+00
EXISTING GRADE (589.1)
STA. 1118+40
FOR CULVERT #5 DETAILS SEE SHEET Nº 144, 145, 146.
MATCH LINE 145.0' RT. STA. 1119+00
4:1
4:1
587.0
LA
MATCH LINE
FOR DITCH CONNECTIONS SEE CULVERT DETAILS
STA. 1118+00

END AREA		VOLUME	
CUT	FILL	CUT	FILL
83	3747		678
219		16120	2657
35	4258		757
124	23503		3000
32	7737		843
111	29756		3252
28	8331		893

CROSS SECTIONS STA. 1119+00 TO STA. 1121+00

SEEDING	
END WIDTH	SQ. YDS.

ADACHE ASSOCIATES, INC.
CALC. BY JDA DATE 2-17-69
CHKD. BY RJZ DATE 2-26-69

FEDERAL PROJECT	STATE	PROJECT	YEAR
2	OHIO		

84
284

ERIE COUNTY
ERI. 2-(16.13-17.39)

RESUME SURCHARGE STA. 1124+05

END AREA CUT	END AREA FILL	VOLUME CUT	VOLUME FILL	
				STA. 1123+59
70	2684			
	557			
		53	2038	
			453	
0	0			STA. 1122+50

246

620
610
600
590

L.A. 150'LT

600.75

2:1

6' SAND

2:1

LA 158'RT

3:1 3:1

598.50

FOR UNDERCUTTING, SEE SHEET 45C.

621.86
STA. 1124+00
(600.9)

3100

STA 1123+59 RESUME EARTHWORK FILL SOUTH OF BOGART ROAD SEE BRIDGE SITE PLAN FOR DETAILS.

STA. 1123+40
BEGIN LT. DITCH EL. 601.00
CONNECT SOUTH DITCH OF
BOGART RD.

STA. 1123+45
MEET CULVERT NO. 6
FOR DETAILS SEE SHT. 147

620
610

LA 151'LT

AH312
BK.326

600
590

FOR BOGART ROAD CROSS SECTIONS SEE SHEET NO. 126

BRIDGE

LA 161' RT AH

LA 175' RT. BK.

STA. 1122+50
MEET CULVERT Nº6
FOR DETAILS SEE SHT. 147

623.57
STA. 1123+00

STA. 1122+90
END LT. DITCH EL. 601.0
CONNECT NORTH DITCH OF
BOGART RD.

STA. 1122+50 SUSPEND EARTHWORK FILL NORTH OF BOGART ROAD. SEE BRIDGE SITE PLAN FOR DETAILS

3383

SUSPEND SURCHARGE STA. 1122+05

620
610

LA 161'LT.

2:1

2:1

LA 180'RT.

59 2325 619

283

600

6' SAND

64 2511 668

600.50

3089 590

FOR UNDERCUTTING, SEE SHEET 45C

595.58

PROPOSED GRADE 625.29
STA. 1122+00
EXISTING GRADE (602.1)

272 11585 2493

STA. 1121+00

273

STA. 1121+00 83 3747 678

140 30 20 10 100 90 80 70 60 50 40 30 20 10 0 10 20 30 40 50 60 70 80 90 100 10 20 30 140

CROSS SECTIONS STA. 1122+00 TO STA. 1124+00

FED. RD. DIVISION	STATE	PROJECT	FISCAL YEAR
2	OHIO		

ERIE COUNTY
ERI. 2-(16.13-17.39)

ADACHE ASSOCIATES, INC.
CALC. BY J.D.H. DATE 2-17-69
CHKD. BY R.J.Z. DATE 3-3-69

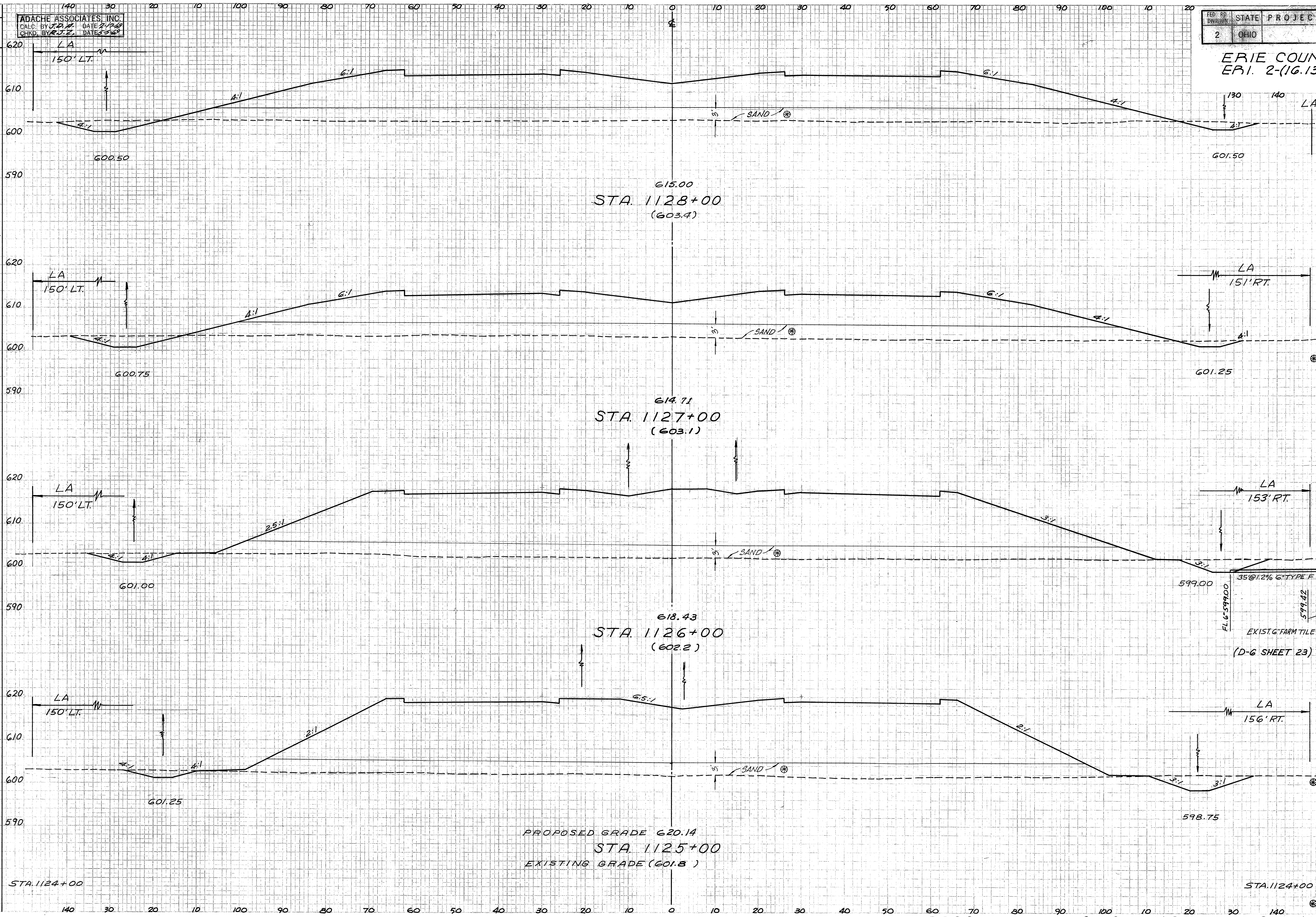

SEEDING END WIDTH	SEEDING SQ. YDS.
234	
	2606
235	
	2644
241	
	2711
247	
	2739
246	

END AREA CUT	END AREA FILL	VOLUME CUT	VOLUME FILL
70	1582		
	670		
		244	5333
			2443
62	1258		
	649		
		200	6174
			2367
46	2036		
	629		
		180	8054
			2244
51	2335		
	583		
		224	9254
			2185
70	2684		
	597		

CROSS SECTIONS STA. 1125+00 TO STA. 1128+00

SEEDING

END WIDTH 30 YDS.

ADACHE ASSOCIATES, INC.
CALC. BY JJS DATE 2/1988
CHKD. BY RDE DATE 2/1988

FED. RD. DIVISION	STATE	PROJECT	FISCAL YEAR
2	OHIO		

86
284

ERIE COUNTY
ERI. 2-(16.13-17.39)

	END AREA		VOLUME	
	CUT	FILL	CUT	FILL
AH		557		
BK	90	75		
		482		
	293		1097	1911
	68		517	550
	257		2431	2107
	71		706	588
	263		3363	2239
	71		1020	621
	261		4819	2351
	70		1582	670

END SAND BLANKET

222 | 610 | 600 | 590

LA — 6:1 — 4:1 — 4:1 — F-273 — SAND — F-284 — 6:1 — 4:1 — LA

599.50 — 601.50

608.14

STA 1132+00

603.1

2422 | 610 | 600 | 590

STA. 1134+00
STD. C.B. No. 4
T/G 609.85

LA — 6:1 — 4:1 — 15' — SAND — LA

601 - R.C.P. 13'-4"x1.5' TYPE C W/FILTER

599.75

12" FL. 600.25

105' @ 3.00% 12" TYPE B

(D-11 SHEET 24)

12" FL. 603.40

601.75

609.85

STA. 1131+00

(602.8)

214 | 610 | 600 | 590

2400 | 610 | 600 | 590

LA — 6:1 — 4:1 — 15' — SAND — LA

600.00

H.P. 602.00

611.57

STA. 1130+00

(603.1)

END SURCHARGE STA. 1129+25

218 | 610 | 600 | 590

2456 | 610 | 600 | 590

LA — 6:1 — 4:1 — 4:1 — 15' — SAND — 6:1 — 4:1 — 4:1 — LA

600.25

601.75

PROPOSED GRADE 613.28

STA. 1129+00

EXISTING GRADE (603.0)

2544 | 610 | 600 | 590

234 | 610 | 600 | 590

STA. 1128+00

STA. 1128+00

CROSS SECTIONS STA 1129 +00 TO STA. 1132+00

ADACHE ASSOCIATES, INC.
CALC. BY JDA DATE 3-17-69
CHKD. BY A.J.E. DATE 3-31-69

FED. RD. DIVISION	STATE	PROJECT	FISCAL YEAR
2	OHIO		

87
284

ERIE COUNTY
ERI. 2-(16.13-17.39)

SEEDING END WIDTH	SEEDING SQ. YDS.	END AREA CUT	END AREA FILL	VOLUME CUT	VOLUME FILL
180	1989	499	0	1685	0
178	1961	411	0	1013	41
175	2022	136	22	472	539
189	2283	119	269	387	1530
222		90	557		

STA 1136+00
(603.4)
601.72
598.50
600.05

STA 1135+00
(603.8)
603.10
598.75
600.75

STA. 1134+00
(603.3)
604.71
599.00
601.00

STA 1133+00
PROPOSED GRADE 606.42
EXISTING GRADE (603.2)
599.25
601.25

STA. 1132+00

CROSS SECTIONS STA. 1133+00 TO STA. 1136+00

FED. RD. DIVISION	STATE	PROJECT	FISCAL YEAR
2	OHIO		

88
284

ERIE COUNTY
ERI. 2-(16.13-17.39)

ADACHE ASSOCIATES, INC.
CALC. BY JD.A DATE 2-17-69
CHKD. BY R.J.Z DATE 3-3-69

SEEDING	
END WIDTH	SQ. YDS.
214	2278
196	2111
184	2022
180	2000

END AREA		VOLUME	
CUT	FILL	CUT	FILL
32	1285		
		131	2904
39	283		
		689	524
		333	0
		1917	0
		702	0
		2224	0
		499	0

STA. 1140+00
(589.2)
598.45
587.00
590.00
594.25
594.00

STA 1139+00
(596.6)
598.94

STA. 1138+00
(600.6)
599.64
597.97
597.97
598.25
598.90

STA 1137+00
PROPOSED GRADE 600.57
EXISTING GRADE (603.2)

STA. 1136+00

CROSS SECTIONS STA 1137+00 TO STA 1140+00

SEEDING	
END WIDTH	SQ. YDS.
187	2083
188	2194
207	2378 (920) (726)
221	2417
214	

ADACHE ASSOCIATES, INC.
CALC. BY J.D.R. DATE 2-1-69
CHKD. BY R.J.Z. DATE 2-5-69

FED. RD. DIVISION	STATE	PROJECT	SHEET NO.
2	OHIO		89 284

ERIE COUNTY
ERI. 2-(16.13-17.39)

END AREA		VOLUME	
CUT	FILL	CUT	FILL
1222	0		
		2807	109
294	59		
		646	2307
55	1187		
		213	5559
60	1815		
		170	5741
32	1285		

140 30 20 10 100 90 80 70 60 50 40 30 20 10 0 10 20 30 40 50 60 70 80 90 100 10 20 30 140

℄

610 / 600 / 590

LA — 4:1 — 4:1 — LA

596.98
STA. 1144+00
(602.9)

610 / 600 / 590

LA — 4:1 — 6:1 — LA

597.35
STA 1143+00
(594.2)

STA. 1142 + 50
BEGIN 24" SUBBASE RT. & LT.

STA. 1142+00
STD. C.B. No 4
T/G 594.72

600 / 590 / 580

LA — 4:1 — 6:1 — 6:1 — 4:1 — 4:1 — LA

15' — 588.00 — 60' R.C.P. TYPE C 13'x4'x1.5' W/ FILTER — 15" FL. 588.80

103' @ 1.65% 15" TYPE B
(D-12 SHEET 24)

15" FL. 590.50

591.00

597.72
STA. 1142+00
(589.4)

FOR DITCH CONNECTION
SEE CULVERT DETAILS

ADD FOR PARCELS 110Y & 111Y RT.
ADD FOR PARCELS 110X & 111X LT.

600 / 590 / 580

LA — 4:1 — 4:1 — 6:1 — 6:1 — 4:1 — 4:1 — LA

585.50 — PROPOSED GRADE 598.09 — 585.00

STA 1141+00

FOR DITCH CONNECTION
SEE CULVERT DETAILS

EXISTING GRADE (587.6)

STA. 1140+98
FOR CULVERT No 7 DETAILS
SEE SHEET No 148, 149 & 150.

STA. 1141 + 00

STA. 1140+00

140 30 20 10 100 90 80 70 60 50 40 30 20 10 0 10 20 30 40 50 60 70 80 90 100 10 20 30 140

CROSS SECTIONS STA. 1141+00 TO STA 1144+00

SEEDING END WIDTH	SEEDING SQ. YDS.
189	2100
189	2078
185	2044
183	2056
187	

ADACHE ASSOCIATES, INC.
CALC. BY J.D.R. DATE 2-/26
CHKD. BY R.J.E. DATE 3-26-69

FED. RD. DIVISION	STATE	PROJECT	SHEET
2	OHIO		

90
284

ERIE COUNTY
ERI. 2-(16.13-17.39)

610
600
590

LA

8:1

595.51
STA. 1148+00
(607.1)

2:1

2.5:1

595.88
STA. 1147+00
(607.4)

2.5:1

3:1

596.25
STA 1146+00
(606.7)

3:1

4:1

PROPOSED GRADE 596.61
STA. 1145+00
EXISTING GRADE (604.6)

3:1

STA. 1140+00

STA. 1144+00

	END AREA CUT	END AREA FILL	VOLUME CUT	VOLUME FILL
LA	3179	0		
			10411	0
LA	2443	0		
			8696	0
LA	2253	0		
			7378	0
LA	1731	0		
			5469	0
LA	1222	0		

CROSS SECTIONS STA. 1145+00 TO STA. 1148+00

ORIG. FIELD SURVEY
SHAPEFIL
PLOTTED
TRACED
WRITE FROM
NOS.
AREAS CHECKED
FINAL SURVEY
SHAPEFIL
PLOTTED
TRACED
WRITE FROM
NOS.
AREAS CHECKED
DATE
BY

SEEDING	
END WIDTH	SQ. YDS.

ADACHE ASSOCIATES, INC.
CALC. BY J.D.A. DATE 2-17-69
CHKD. BY R.J.Z. DATE 3-5-69

FEDERAL DIVISION	STATE	PROJECT	PAGE NO.
2	OHIO		

91
284

ERIE COUNTY
ERI. 2-(16.13-17.39)

END AREA		VOLUME	
CUT	FILL	CUT	FILL
3266	0		
		11961	0
3193	0		
		11137	0
2821	0		
		10361	0
2774	0		
		11024	0
3179	0		

140 30 20 10 100 90 80 70 60 50 40 30 20 10 0 10 20 30 40 50 60 70 80 90 100 10 20 30 140

610
600
590

LA

2:1

594.03
STA. 1152+00
(607.2)

130 140

191 2122

594.40
STA. 1151+00
(609.2)

191 2117

594.77
STA. 1150+00
(608.1)

190 2117

PROPOSED GRADE 595.14
STA. 1149+00
EXISTING GRADE (608.3)

191 2111

STA. 1148+00

189

CROSS SECTIONS STA. 1149+00 TO STA. 1152+00

FED. DIV.	STATE	PROJECT	SHEET NO.
2	OHIO		92 284

ERIE COUNTY
ERI. 2-(16.13-17.39)

ADACHE ASSOCIATES, INC.
CALC. BY JDA DATE 2/7/69
CHKD. BY RJZ DATE 2/7/69

SEEDING
END WIDTH | SQ. YDS.

END AREA		VOLUME	
CUT	FILL	CUT	FILL
3649	0		
		11714	0
2677	0		
		9266	0
2327	0		
		9233	0
2659	0		
		10972	0
3266	0		

140 30 20 10 100 90 80 70 60 50 40 30 20 10 0 10 20 30 40 50 60 70 80 90 100 10 20

194 | 610 | 600 | 590 | 2128

LA — 2:1 — 592.56 — 2:1 — LA — 130 120

STA. 1156+00
(609.5)

189 | 610 | 600 | 590 | 2100

LA — 10' @ 0.40% 12" TYPE F — EX. 12" @ +0.4% — 12" 25° BEND EL. 597.5 — 12" 25° BEND EL. 591.4 — 5' @ 0.0% 12" TYPE F — 13' @ 50.0% - 15' OF 12" TYPE F — DITCH 591.18 — L.O.I. ROCK CHAN. PROT. TYPE C 8'x4'x1.5' W/FILTER — 592.93 — 6:1 — LA

STA. 1155+00
(609.5)

PIPE PROFILE - STA 1155+43
12" @ 591.4

189 | 610 | 600 | 590 | 2111

LA — 593.30 — VARIES — LA

STA. 1154+00
607.0

191 | 610 | 600 | 590 | 2122

LA — 2:1 — 6:1 — LA

PROPOSED GRADE 593.67
STA. 1153+00
EXISTING GRADE (607.0)

191 STA. 1152+00 — STA. 1152+00

140 30 20 10 100 90 80 70 60 50 40 30 20 10 0 10 20 30 40 50 60 70 80 90 100 10 20 30 140

CROSS SECTIONS STA. 1153+00 TO STA. 1156+00

FINAL SURVEY — SUPPLIED BY — DATE — NOTE BOOK — TEMP. PT. — PAGES — PAGES COMPUTED — NO. — DATE

ORIGINAL SURVEY — SUPPLIED BY — DATE — NOTE BOOK — PAGES — PAGES COMPUTED — NO. — DATE

FED. ROAD DIVISION	STATE	PROJECT	FISCAL YEAR
2	OHIO		

93
284

ERIE COUNTY
ERI. 2-(16.13-17.39)

ADACHE ASSOCIATES, INC.
CALC. BY TDW DATE 2-1769
CHKD. BY RJT DATE 3-3-69

SEEDING	
END WIDTH	SQ. YDS.
208	2272
201	2233
201	2194
194	

END AREA		VOLUME	
CUT	FILL	CUT	FILL
4142	0		
		15024	0
3971	0		
		14339	0
3772	0		
		13742	0
3649	0		

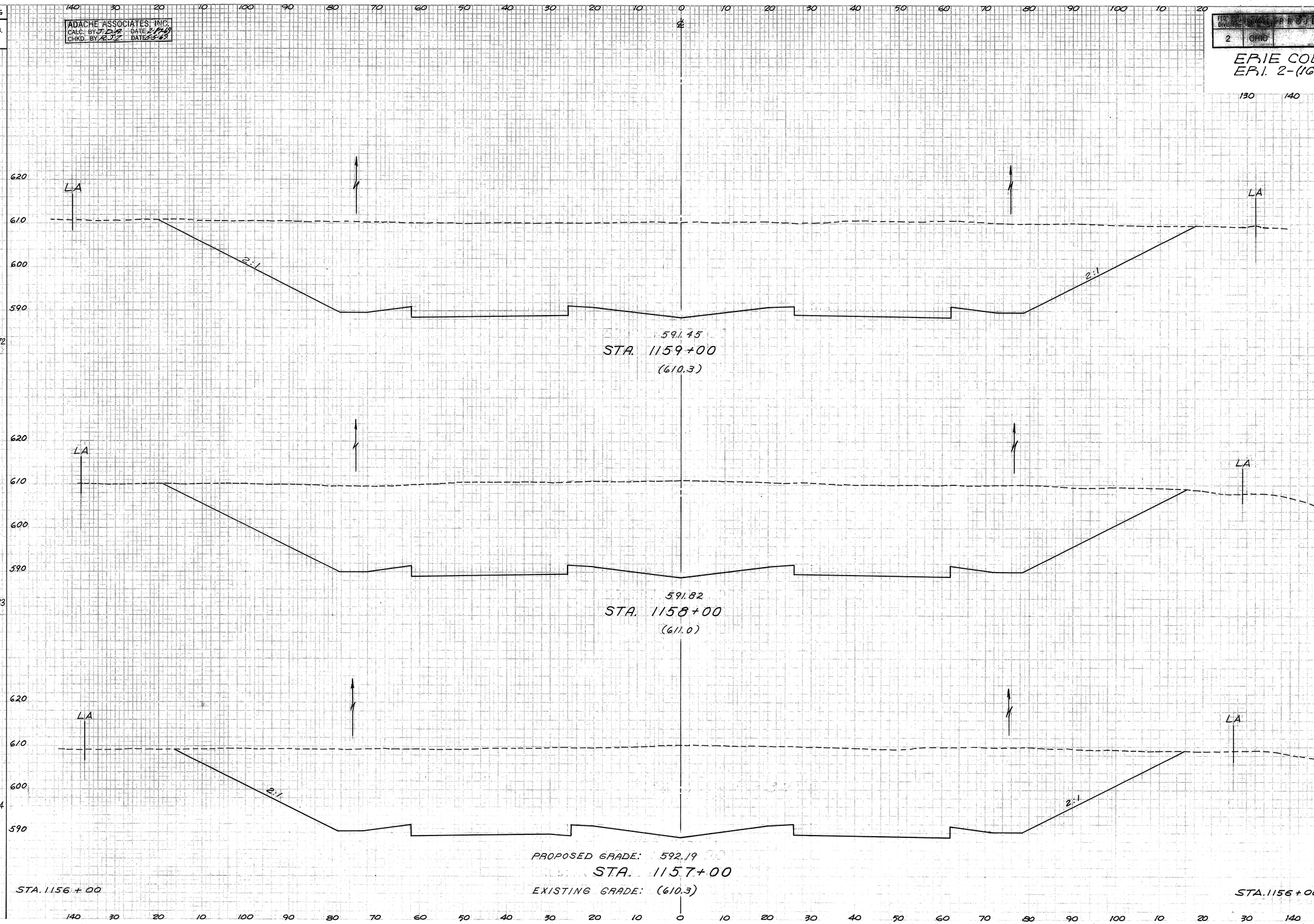

CROSS SECTIONS STA. 1157+00 TO STA. 1159+00

SEEDING	
END WIDTH	SQ. YDS.
217	
	2389
213	
	2367
213	
	2339
208	

ADACHE ASSOCIATES, INC.
CALC. BY JDJA DATE 2-1769
CHKD. BY RJZ DATE 3-5-69

LEGEND DIVISION	STATE	PROJECT	SHEET
2	OHIO		

94
284

ERIE COUNTY
ERI. 2-(16.13-17.39)

END AREA CUT	END AREA FILL	VOLUME CUT	VOLUME FILL
4539	0		
		16704	0
4481	0		
		16296	0
4319	0		
		15669	0
4142	0		

140 130 120 110 100 90 80 70 60 50 40 30 20 10 0 10 20 30 40 50 60 70 80 90 100 110 120 130 140

620 610 600 590

LA

2:1

590.35
STA. 1162+00
610.8

588.72

590.72
STA. 1161+00
610.7

588.91

PROPOSED GRADE: 591.09
STA. 1160+00
EXISTING GRADE: 611.3

STA. 1159+00

CROSS SECTIONS STA. 1160+00 TO STA. 1162+00

SEEDING	
END WIDTH	SQ. YDS.

ADACHE ASSOCIATES, INC.
CALC. BY: JDP DATE 8/96
CHKD. BY: RJZ DATE 33-69

[redacted] STATE PROJECT [redacted]
2 [redacted]

95
284

ERIE COUNTY
ERI. 2-(16.13-17.39)

END AREA		VOLUME	
CUT	FILL	CUT	FILL
5088	0		
		9272	0
4926	0		
		8846	0
4628	0		
		8488	0
4539	0		

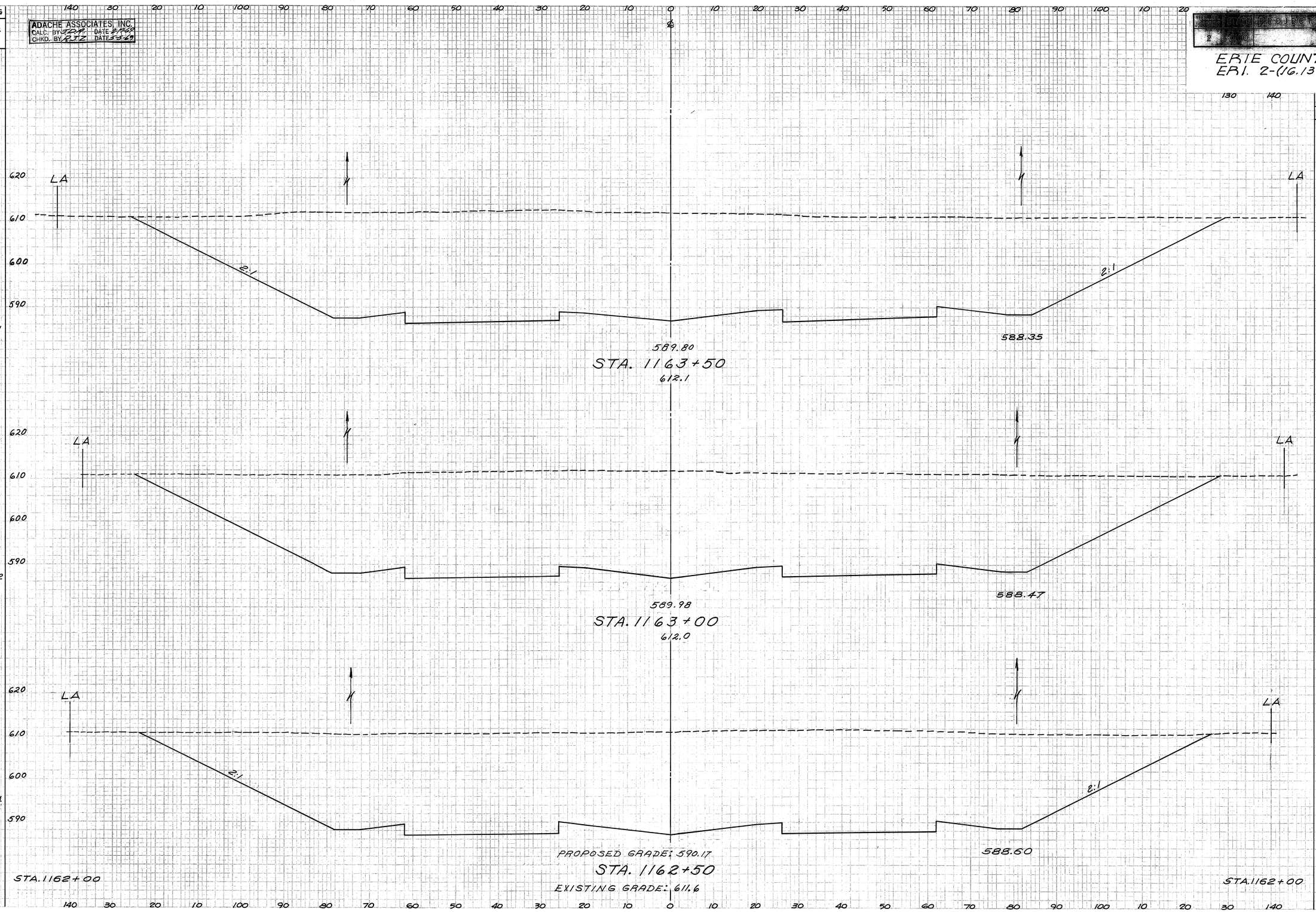

CROSS SECTIONS STA. 1162+50 TO STA. 1163+50

ADACHE ASSOCIATES, INC.
CALC. BY JJR DATE 2-1-69
CHKD. BY RJZ DATE 3-3-69

FED. ROAD DIVISION	STATE	PROJECT	SHEET NO.
2	OHIO		96 / 284

ERIE COUNTY
ERI. 2-(16.13-17.39)

SEEDING		END AREA		VOLUME	
END WIDTH	SQ. YDS.	CUT	FILL	CUT	FILL
241	1331	5265	0	9642	0
238	1297	5148	0	9618	0
229	1256	5239	0	9562	0
223		5088	0		

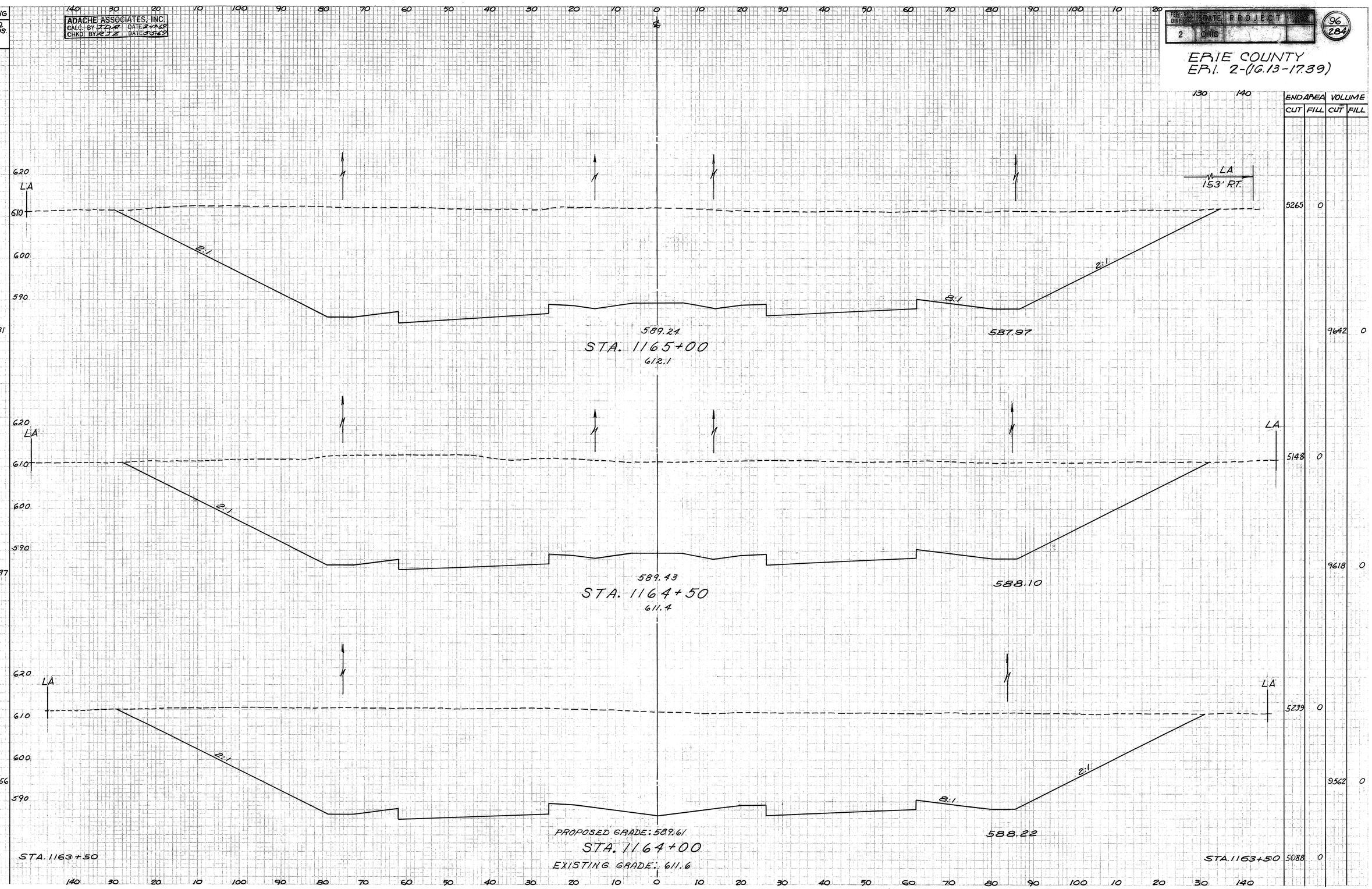

CROSS SECTIONS STA. 1164+00 TO STA. 1165+00

FED. RD. DIVISION	STATE	PROJECT	FISCAL YEAR
2	OHIO		

97
284

ERIE COUNTY
ERI. 2-(16.13-17.39)

ADACHE ASSOCIATES, INC.
CALC. BY JDH DATE 2-1969
CHKD. BY RJS DATE 5-1969

SEEDING END WIDTH	SEEDING SQ. YDS.	STA.	LT.	RT.	END AREA CUT	END AREA FILL	VOLUME CUT	VOLUME FILL
		1166+50	140	130				
235	1319		LA 620	LA 158' RT. 620	4125	0		
			610					
			600					
			590				8333	0
			2:1 584.50	2:1 587.60				
			588.69					
			STA. 1166+50					
			608.4					
240	1347	1166+00	LA 620	LA 156' RT. 620	4875	0		
			610					
			600					
			590				9289	0
			584.80	587.72				
			588.87					
			STA. 1166+00					
			610.6					
245	1350	1165+50	LA 620	LA 156' RT. 620	5157	0		
			610					
			600					
			590				9650	0
			2:1 585.20	2:1 587.85				
			PROPOSED GRADE: 589.06					
			STA. 1165+50					
			EXISTING GRADE: 610.2					
241		1165+00	STA. 1165+00	STA. 1165+00	5265	0		

CROSS SECTIONS STA. 1165+50 TO STA. 1166+50

FED. RD. DIVISION	STATE	PROJECT	FISCAL YEAR
2	OHIO		

98
284

ERIE COUNTY
ERI. 2-(16.13-17.39)

ADACHE ASSOCIATES, INC.
CALC. BY JDA. DATE 2-17-69
CHKD. BY RJZ. DATE 2-26-69

SEEDING		END AREA		VOLUME	
END WIDTH	SQ. YDS.	CUT	FILL	CUT	FILL
		648	3		
210					
	1158			1468	3
207		937	0		
	1192			2242	0
222		1484	0		
	1253			3456	0
229		2248	0		
	1289			5901	0
235		4125	0		

STA. 1166+50

STA. 1167+00

STA. 1167+50

STA. 1168+00

STA. 1168+50

CROSS SECTIONS STA. 1167+00 TO STA. 1168+50

ADACHE ASSOCIATES, INC.
CALC. BY JDA DATE 2-7-69
CHKD. BY RJZ DATE 3-5-69

FED. ROAD DIV. & NO.	STATE	PROJECT	FISCAL YEAR
2	OHIO		

99
284

ERIE COUNTY
ERI. 2-(16.13-17.39)

SEEDING END WIDTH	SEEDING SQ. YDS.
208	1150
206	1144
206	1136
203	1147
210	

END AREA CUT	END AREA FILL	VOLUME CUT	VOLUME FILL
200	361		
		336	730
163	427		
		642	442
530	50		
		1412	46
995	0		
		1521	3
648	3		

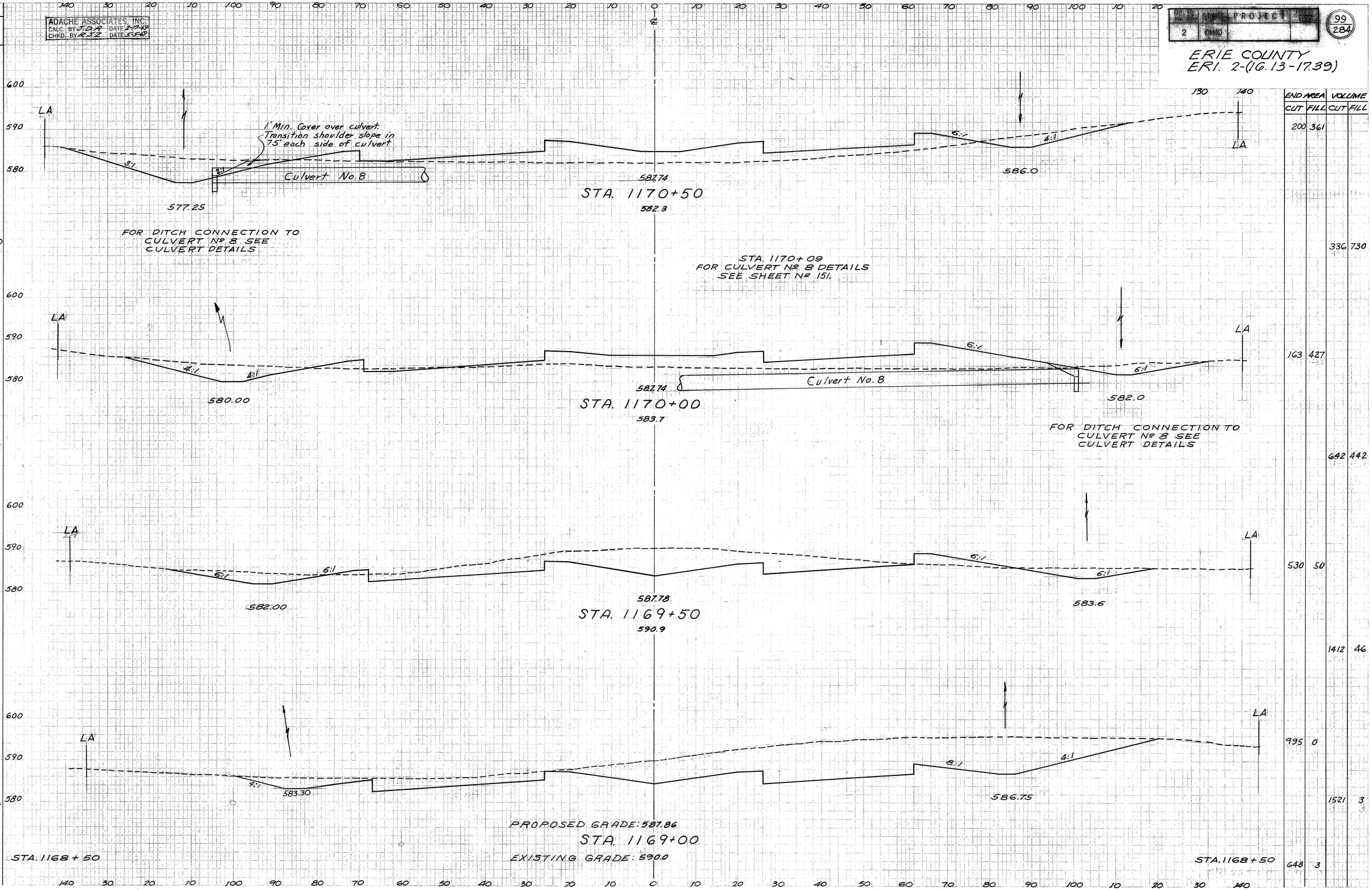

CROSS SECTIONS STA. 1169+00 TO STA. 1170+50

SEEDING	
END WIDTH	SQ. YDS.

ADACHE ASSOCIATES, INC.
CALC. BY J.D.H. DATE 2-1969
CHKD. BY R.J.Z. DATE 3-5-69

DIVISION	STATE	PROJECT	YEAR
2	OHIO		

100
284

ERIE COUNTY
ER.I. 2-(16.13-17.39)

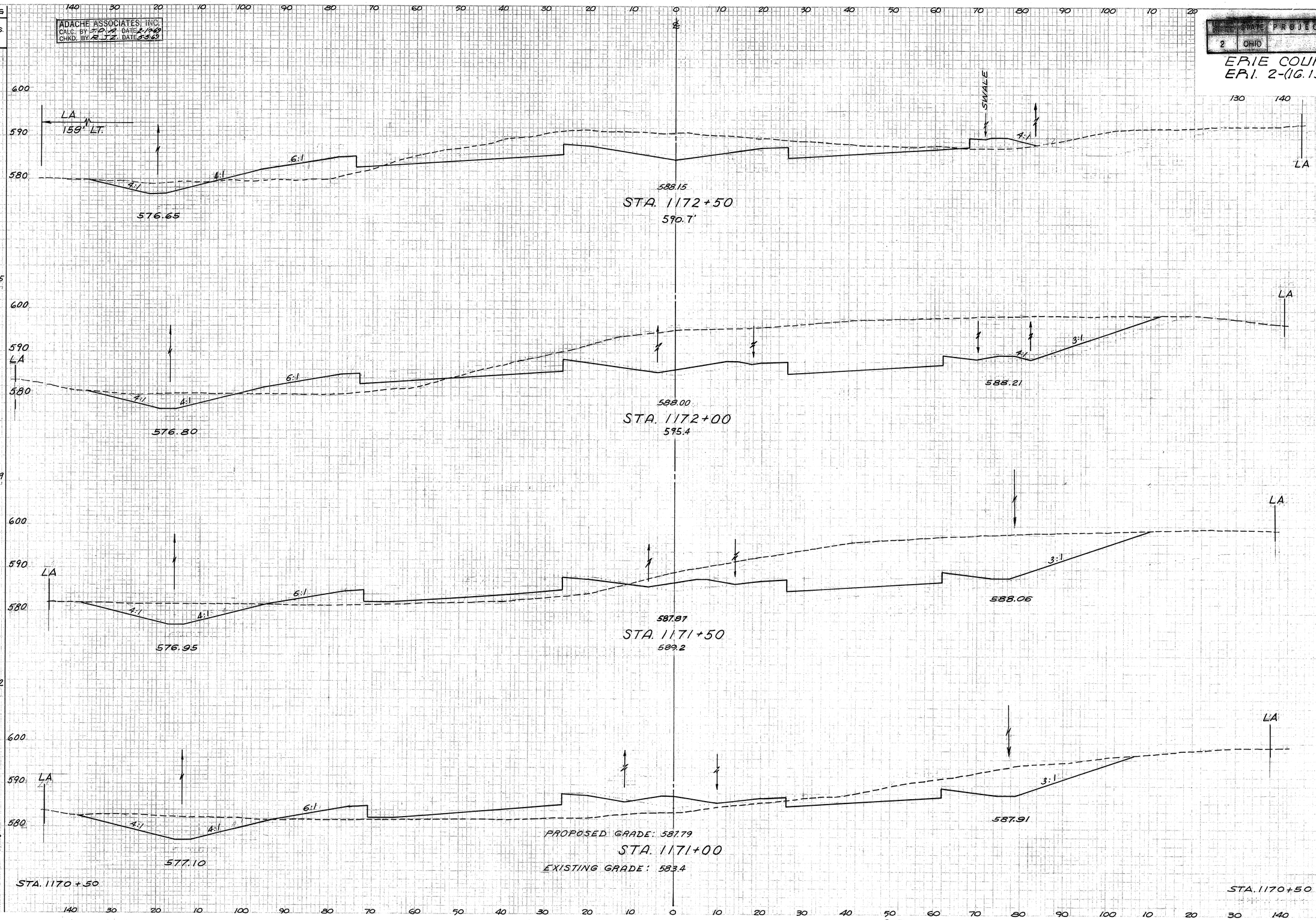

END AREA		VOLUME	
CUT	FILL	CUT	FILL
469	145		
		2178	251
1883	126		
		2584	258
908	153		
		1188	397
375	276		
		532	590
200	361		

CROSS SECTIONS STA. 1171+00 TO STA. 1172+50

F.H.W.A. REGION	STATE	PROJECT	
5	OHIO		

101/284

ERIE COUNTY
ERI. 2-(16.13-17.39)

ADACHE · CIUNI · LYNN ASSOC.
CALC. BY DATE
CHKD. BY DATE

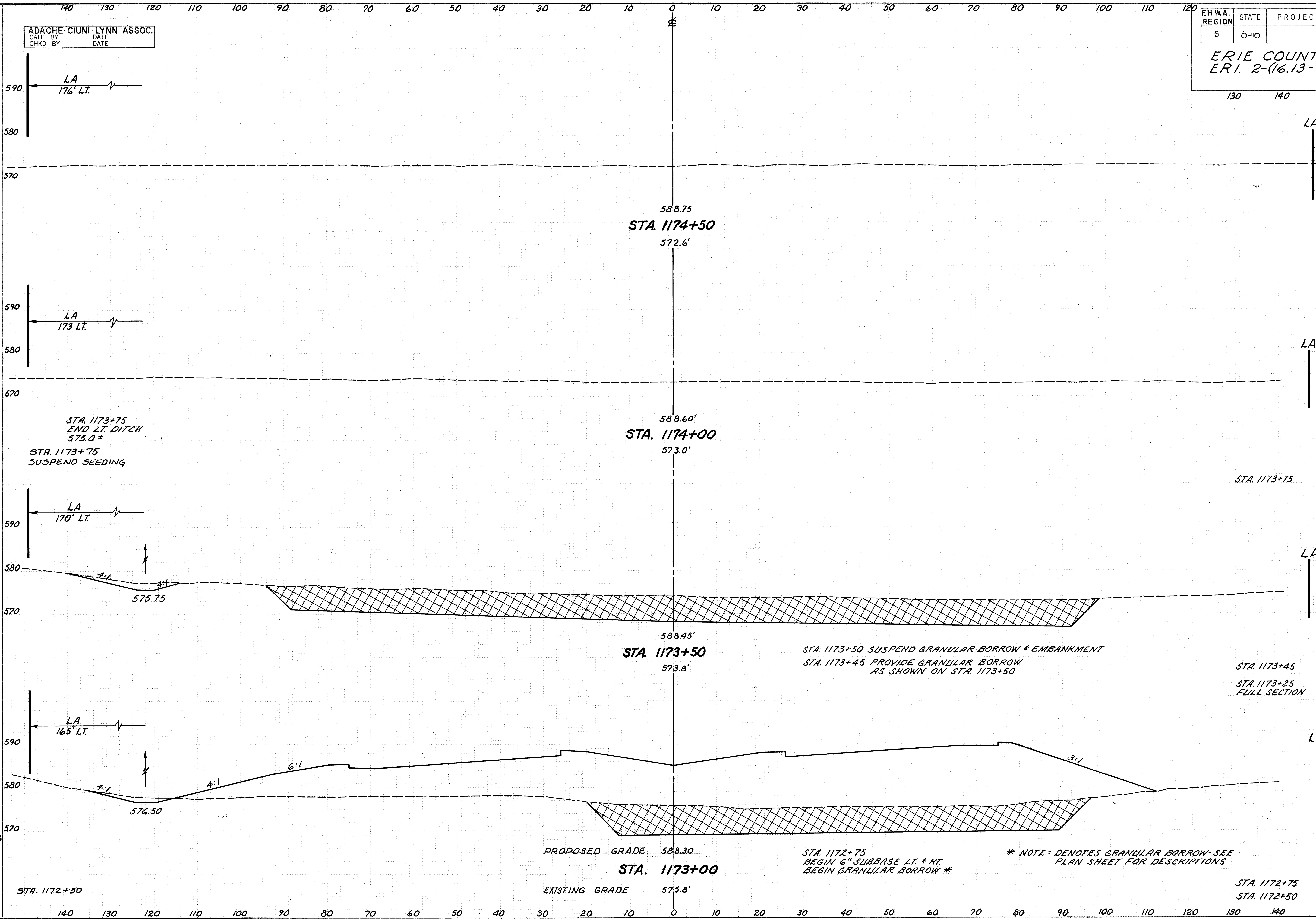

SEEDING	
END WIDTH	SQ. YDS.
25	
	104
50 AH. 233 BK.	
	1283
229	
	1258
224	

Station	END AREA CUT	END AREA FILL	VOLUME CUT	VOLUME FILL
(STA. 1174+50)	0	0		
			0	0
(STA. 1174+00)	0	0		
			0	0
STA. 1173+75	0	0		
			10	0
(STA. 1173+50)	22 / 0*	0		
			19 / 101*	1030
STA. 1173+45	1094*			
STA. 1173+25 FULL SECTION	20	2225		
			1462* / 18	1992
(STA. 1173+00)	18 / 660*	2077		
			451 / 306*	2057
STA. 1172+75	0*			
STA. 1172+50	469	145		

CROSS SECTIONS STA. 1173+00 TO STA. 1174+50

SEEDING	
END WIDTH	SQ. YDS.

ADACHE-CIUNI-LYNN ASSOC.
CALC. BY DATE
CHKD. BY DATE

F.H.W.A. REGION	STATE	PROJECT	
5	OHIO		

102
284

ERIE COUNTY
ERI. 2-(16.13-17.39)

140 130 120 110 100 90 80 70 60 50 40 30 20 10 0 10 20 30 40 50 60 70 80 90 100 110 120 130 140

590
580
570

LA 180' LT.

LA 160' RT.

589.35'
STA. 1176+50
572.3'

LA 155' RT.

589.20'
STA. 1176+00
572.4'

LA 180' LT.

LA 151' RT.

589.05'
STA. 1175.50
572.5'

LA 178' LT.

LA

PROPOSED GRADE 588.90'
STA. 1175+00
EXISTING GRADE 572.4'

STA. 1174+50

	END AREA		VOLUME	
	CUT	FILL	CUT	FILL
	0	0		
			0	0
	0	0		
			0	0
	0	0		
			0	0
	0	0		
	0	0		

CROSS SECTIONS STA. 1175+00 TO STA. 1176+50

SEEDING	
END WIDTH	SQ. YDS.

ADACHE·CIUNI·LYNN ASSOC.
CALC. BY DATE
CHKD. BY DATE

F.H.W.A. REGION	STATE	PROJECT	
5	OHIO		

103
284

ERIE COUNTY
ERI. 2-(16.13-17.39)

140 130 120 110 100 90 80 70 60 50 40 30 20 10 0 ℄ 10 20 30 40 50 60 70 80 90 100 110 120 130 140

590
580
570

LA 166' LT.

LA 152' RT.

589.95
STA. 1178+50
570.40

LA 173' LT.

LA 154' RT.

589.80
STA. 1178+00
571.50

LA 176' LT.

LA 159' RT.

589.65
STA. 1177+50
572.10

LA 179' LT.

LA 165' RT.

PROPOSED GRADE 589.50
STA. 1177+00
EXISTING GRADE 572.30

STA. 1176+50

END AREA		VOLUME	
CUT	FILL	CUT	FILL
0	0		
		0	0
0	0		
		0	0
0	0		
		0	0
0	0		
		0	0
0	0		

CROSS SECTIONS STA. 1177+00 TO STA. 1178+50

ADACHE·CIUNI·LYNN ASSOC.
CALC. BY DATE
CHKD. BY DATE

F.H.W.A. REGION	STATE	PROJECT	
5	OHIO		

104/284

ERIE COUNTY
ERI. 2-(16.13-17.39)

SEEDING
END WIDTH | SQ. YDS.

140 130 120 110 100 90 80 70 60 50 40 30 20 10 0 10 20 30 40 50 60 70 80 90 100 110 120 130 140

℄

130 — 694 — 120 — 539 — 74 — 406 — 72 — 200 — 0

590 / 580 / 570 / 590 / 580 / 570 / 590 / 580 / 570 / 590 / 580 / 570 / 590 / 580 / 570

LA 168' LT.
LA 163' LT.
LA 163' LT.
LA 160' LT.

2:1 4:1 585.0
2:1 4:1 578.0
2:1 4:1 577.5
2:1 4:1 577.25

.064'/FT.
GROUND LINE AH.
.064'/FT.
GROUND LINE AT FACE OF ABUTMENT BK.

2:1 VARIES
TYPE II
TYPE I

590.55'
STA. 1180+50
586.2'

STA. 1180+20 ± BEGIN GRANULAR BORROW

* TYPE I = CUT, TYPE II = FILL

STA. 1180+00 BEGIN 24" DEPTH SUBASE AT BACK OF ABUTMENT

590.40
STA. 1180+00
575.7'

590.25'
STA. 1179+50
572.6'

PROPOSED GRADE 590.10'
STA. 1179+00
EXISTING GRADE 572.1'

STA. 1178+50
RESUME SEEDING

STA. 1178+50

	END AREA CUT	END AREA FILL	VOLUME CUT	VOLUME FILL
LA				
	676	143		
	148*	42*		
			82*	23*
STA. 1180+20	0*	0*		
			1776	220
LA				
AH.	1242	95		
BK.	1521	73		
			2744	68
LA				
	1442	0		
			1983	0
LA				
	700	0		
			648	0
STA. 1178+50	0	0		

CROSS SECTIONS STA. 1179+00 TO STA. 1180+50

FED. HIGHWAY DIVISION	STATE	PROJECT	FISCAL YEAR
2	OHIO		

105
284

ERIE COUNTY
ER1.2-(16.13-17.39)

ADACHE ASSOCIATES, INC.
CALC. BY JDP DATE 3-26-69
CHKD. BY RTE DATE 3-26-69

SEEDING

END WIDTH	SQ. YDS.
214	
	1181
211	
	1142
200	
	1111
200	
	917
130	

STA. 1182+50
591.15'
582.7

STA. 1182+00
591.00
581.1

STA. 1181+50
590.85'
581.4'

STA. 1181+00
PROPOSED GRADE 590.70'
EXISTING GRADE 585.5'

STA. 1180+50

LA 175' LT.

2:1

8" RAMP 2 STA. 1182+00 STD. CB #5 T/G 585.95

STA. 1182+00, 64' LT. STD. CB #6 T/G 588.78

42' @ 0.80% - 15" TYPE B

15" Ø 581.85
24" Ø 581.10
DITCH EL. 585.60

81' @ 0.80% - 15" TYPE B

15" Ø 582.15

STA. 1182+50 Ø 15" Ø 583.95 T/G 587.82

81' @ 0.8% - 15" TYPE B

12" Ø 583.33
15" Ø 583.08

4:1

590.00

LA 162' RT.

STA. 1182+25 RT.
BEGIN 24" SUBBASE

LA 171' LT.

6:1 6:1

4:1 4:1

588.00

LA 158' RT.

LA 167' LT.

STA. 1181+50.5' RT. STD. C.B. №2-28 T/G 588.25

6:1 8:1

12" F.L. 584.08

585.45

STA 1181+75
END GRANULAR BORROW

LA 154' RT.

3:1 3:1 4:1

580.50

LA 160' LT.

8:1 4:1

585.30

6:1 8:1

2:1

STA. 1181+10 ±
BEGIN RT. DITCH
± 574.0

LA 150' RT.

*NOTE: DENOTES GRANULAR BORROW TYPE 1 CUT, TYPE 2 FILL

	END AREA CUT	END AREA FILL	VOLUME CUT	VOLUME FILL
STA. 1182+50	785	617		
			1414	1431
	742	928		
			1510	2107
STA. 1181+75	0*	0*		
			125*	41*
	889	1348		
	270*	89*		
			1604	2420
	505*	193*		
	843	1266		
	275*	119*		
			1406*	1305
STA. 1180+50	647	143	392	149*
	148*	42*		

CROSS SECTIONS STA. 1181+00 TO STA. 1182+50

SEEDING

END WIDTH	SQ. YDS.
82	422
70	372
	1297
	229
	1228
	214

ADACHE ASSOCIATES, INC.
CALC. BY JTJ-JA DATE 8-1-69
CHKD. BY RJZ DATE 8-5-69

STATE PROJECT
2

106
284

ERIE COUNTY
ERI. 2-(16.13-17.39)

140 130 120 110 100 90 80 70 60 50 40 30 20 10 0 10 20 30 40 50 60 70 80 90 100 110 120 130 140

MATCH LINE RAMP #2
STA. 1184+50.00 ℄ 5 1/2 @ 2.80% RT.
STD. C.I.3.#5 TYG 587.69
24" ℄ 583.06
18" ℄ 583.56

156' @ 0.80% 18" TYPE B

MATCH LINE RAMP #3
STA. 1184+50.00 ℄ 5 1/2 @ 2.80% RT.
STD. C.I.3.#5 TYG 590.82
18" ℄ 584.81

591.75
STA. 1184+50
592.5

MATCH TO SHEET 134

MATCH LINE RAMP #2

MATCH LINE RAMP #3

MATCH TO SHEET 135

591.60
STA. 1184+00
595.5

MATCH LINE RAMP #2 AH.

MATCH LINE RAMP #3 AH

LA
179' LT.

LA
174' RT.

AH. 64
BK. 238

AH. 615 117
BK. 1673 195

590.45

591.45
STA. 1183+50
592.4

LA
178' LT.

LA
167' RT.

590.25

PROPOSED GRADE 591.30
STA. 1183+00
EXISTING GRADE 585.6

STA. 1182+50

STA. 1182+50

END AREA CUT	END AREA FILL	VOLUME CUT	VOLUME FILL
553	25		
		1251	42
798	20		
		1308	127
		2472	568
997	418		
		1650	958
		785	617

CROSS SECTIONS STA. 1183+00 TO STA. 1184+50

ADACHE ASSOCIATES, INC.
CALC. BY JDA DATE 2-18-09
CHKD. BY RJA DATE 3-9-09

FED. ROAD DIVISION	STATE	PROJECT	FISCAL YEAR
2	OHIO		

107
284

ERIE COUNTY
ERI. 2-(16.13-17.39)

SEEDING		END AREA		VOLUME	
END WIDTH	SQ. YDS.	CUT	FILL	CUT	FILL
		1735	0		
179	922			3126	0
153	786	1641	0	2553	0
130	653	1116	0	1569	4
105	519	579	4	1048	27
82		553	25		

STA. 1186+50
598.9
MATCH LINE RAMP #2
MATCH LINE RAMP #3
6:1
592.35
591.95

STA. 1186+00
598.4
MATCH LINE RAMP #2
MATCH LINE RAMP #3
592.20
591.80

MATCH TO SHEET 134

MATCH TO SHEET 135

STA. 1185+50
594.8
MATCH LINE RAMP #2
MATCH LINE RAMP #3
4:1
6:1
592.05
591.65

PROPOSED GRADE 591.90
STA. 1185+00
EXISTING GRADE 592.3
MATCH LINE RAMP #2
MATCH LINE RAMP #3
591.50

STA. 1184+50
STA. 1184+50

CROSS SECTIONS STA. 1185+00 TO STA. 1186+50

ORIGINAL SURVEY — FINAL SURVEY
NOTE BOOK | PAGE NO. | SURVEYED BY | PLOTTED BY | LAYOUT BY | AREAS BY | QUANTITIES BY | AREAS CHECKED BY | DATE | NO. | BY | DATE

SEEDING	
END WIDTH	SQ. YDS.

ADACHE ASSOCIATES, INC.
CALC. BY F.D.R. DATE 2-18-69
CHKD. BY R.J.Z. DATE 3-5-69

FED. ROAD DIVISION	STATE	PROJECT	SHEET NO.
2	OHIO		108 284

ERIE COUNTY
ERI. 2-(16.13-17.39)

	END AREA		VOLUME	
	CUT	FILL	CUT	FILL
MATCH LINE RAMP #3 TO SHEET 136	2800	0		
			5130	0
MATCH LINE RAMP #3 TO SHEET 136	2740	0		
			4815	0
MATCH LINE RAMP #3 TO SHEET 136	2460	0		
			4144	0
MATCH LINE RAMP #3	2016	0		
			3473	0
MATCH LINE RAMP #3	1735	0		

MATCH LINE RAMP #2 — 232 — 1297 — 235 — 1281 — MATCH TO SHEET 134 — 226 — 1183 — 200 — 1053 — 179

140 30 20 10 100 90 80 70 60 50 40 30 20 10 0 10 20 30 40 50 60 70 80 90 100 10 20 30 140

STA. 1186+50

MATCH LINE RAMP #2 — 610 — 600 — 590 — 6:1 — 592.65 — STA. 1187+50 — 601.1

MATCH LINE RAMP #2 — 610 — 600 — 590 — 6:1 — PROPOSED GRADE 592.50 — STA. 1187+00 — EXISTING GRADE 598.8

MATCH LINE RAMP #2 — 610 — 600 — 590 — 592.95 — STA. 1188+50 — 602.9

610 — 600 — 590 — 592.80 — STA. 1188+00 — 602.7

MATCH LINE RAMP #3 — 592.25 — 6:1

MATCH LINE RAMP #3 — 592.10 — 6:1

MATCH LINE RAMP #3 — 592.55 — 6:1

MATCH LINE RAMP #3 — 592.40

STA. 1186+50

CROSS SECTIONS STA. 1187+00 TO STA. 1188+50

SEEDING
END WIDTH 30' YDS

ADACHE ASSOCIATES, INC.
CALC. BY TJD DATE 3-18-69
CHKD. BY R.L.C. DATE 3-25-69

DIV. NO.	STATE	PROJECT	SHEET NO.
2	OHIO		

109
284

ERIE COUNTY
ERI. 2-(16.13-17.39)

FINAL SURVEY
ORIGINAL SURVEY
DATE DROP
DATE
NO.
TRACE
TEMPLATE
CHK.
CHKD. BY

140 130 30 20 10 100 90 80 70 60 50 40 30 20 10 0 10 20 30 40 50 60 70 80 90 100 10 20 130 140

℄

END AREA VOLUME

	CUT	FILL	CUT	FILL
MATCH LINE RAMP #3				
902	0			
			1933	0
MATCH LINE RAMP #3				
1186	0			
			3221	0
MATCH LINE RAMP #3				
2293	0			
			4770	0
MATCH LINE RAMP #3				
2859	0			
			5240	0
MATCH LINE RAMP #3				
2800	0			

MATCH TO SHEET 136

610 600 590

173 997 186 1169 235 1300 233 1292 232

MATCH LINE S.R.13

MATCH TO SHEET 132

MATCH LINE RAMP #2

6:1

593.55
STA. 1190+50
595.9

593.40

593.40
STA. 1190+00
597.8

593.00

FILL FOR TEMP. ROAD TO BE REMOVED UNDER ITEM 614

593.25
STA. 1189+50
602.6

592.85

PROPOSED GRADE 593.10
STA. 1189+00
EXISTING GRADE 603.00

592.70

STA. 1188+50

CROSS SECTIONS STA. 1189+00 TO STA. 1190+50

ADACHE ASSOCIATES, INC.
CALC. BY JEF-H DATE 2-18-63
CHKD. BY R.J.Z. DATE 3-5-63

FED. RD. DIVISION	STATE	PROJECT	FISCAL YEAR
2	OHIO		

110
284

ERIE COUNTY
ERI. 2-(16.13-17.39)

SEEDING END WIDTH	SEEDING SQ. YDS.	END AREA CUT	END AREA FILL	VOLUME CUT	VOLUME FILL
		2030	12		
247	1094			3153	11
147		1375	0		
119	811			2477	0
112	642	1300	0		
				2152	0
119	811	1024	0		
				1783	0
173	STA. 1190+50	902	0	STA. 1190+50	

STA. 1192+50
600.8
590.85
594.15
MATCH LINE 145'LT.
585.0
LIMIT OF SEEDING
MATCH LINE 145'LT. STA. 1192+50
190
170
150
MATCH LINE S.R.13
588.0
592.00
593.00
MATCH LINE S.R.13
6:1
8:1

STA. 1192+00
600.2
592.97
594.00
MATCH LINE S.R.13
590.40
STATION 1191+50
DITCH H.P. 594.00
MATCH LINE S.R.13

STA. 1191+50
602.2
593.85
MATCH LINE S.R.13
MATCH LINE S.R.13
593.89
6:1
2:1
8:1

STA. 1191+00
PROPOSED GRADE 593.70
EXISTING GRADE 596.2
STATION 1191+00
DITCH H.P. 590.23
MATCH LINE S.R.13

MATCH TO SHEET 132
MATCH TO SHEET 132

CROSS SECTIONS STA. 1191+00 TO STA. 1192+50

FED. RD. DIVISION	STATE	PROJECT	FISCAL YEAR
2	OHIO		

111
284

ERIE COUNTY
ERI. 2-(16.13-17.39)

SEEDING

END WIDTH	SQ. YDS.

ADACHE ASSOCIATES, INC.
CALC. BY JDA DATE 2/1969
CHKD. BY RJZ DATE 3/1969

END AREA CUT	END AREA FILL	VOLUME CUT	VOLUME FILL
0	1711		
	784		
		0	3116
			1458
0	1654		
	791		
		284	2205
			1110
307	732		
	408		
		469	
			378
	A.H. 280		
	B.K. 688		
	408		
			1678
			428
1505	237		
		3273	231
2030	12		

198 — 600 / 590 / 580 — 8:1 — 1:1 — SAND — 594.75 — STA. 1194+50 — 580.6 — MATCH LINE RAMP #5

1122 — 600 / 590 / 580 — 8:1 — 2:1 — SAND — 594.60 — STA. 1194+00 — 582.0 — MATCH LINE RAMP #5

FOR UNDERCUTTING, SEE SHEET 45D

STATION 1193+75 LT.
BEGIN 6" SUBBASE

STATION 1194+00
FOR CULVERT #9 DETAILS
SEE SHEET # 152.

STATION 1194+00
AREA LOW POINT SEE
GRADING AND CULVERT
DETAILS

MATCH TO SHEET 138

187 — 600 / 590 / 580 — 584.25 — SAND — 594.45 — STA. 1193+50 — 589.6 — MATCH LINE RAMP #5

BEGIN SAND
BLANKET @ 1193+25

STATION 1193+25 RT.
BEGIN 6" SUBBASE

1233 — 600 / 590 / 580 — MATCH LINE 14.5' LT. — 601'-R.C.P. TYPE C 13"x4"x15" W/FILTER — 15" F.L. 584.78 — 1.5' — TYPE 4 H.W. STA. 1193+00, 115' LT — 8:1 — 115' @ 2.8% 15" TYPE B — 15" F.L. 588.00 — STA. 1193+00 ℄ — STD. No 4 C.B. TG 59105 — MATCH LINE RAMP #5

257 — 1400 — GRADE TO DRAIN — MATCH LINE 14.5' LT. ST. 1193+00 — (D-4 SHEET 29) — PROPOSED GRADE 594.30 — STA. 1193+00 — EXISTING GRADE 599.0

247 — STA. 1192+50 — STA. 1192+50

CROSS SECTIONS STA. 1193+00 TO STA. 1194+50

SEEDING	
END WIDTH	SQ. YRDS.
0	
	124
70	
	611
150	
	944
190	
	1075
197	
	1097
198	

ADACHE ASSOCIATES, INC.
CALC. BY JDA. DATE 2/6/85
CHKD. BY R.J.E. DATE 3/20/85

FED. RD. DIVISION	STATE	PROJECT	FISCAL YEAR
2	OHIO		

112
284

ERIE COUNTY
ERI. 2-(16.13-17.39)

STA 1196+82

STA. 1196+82
END WORK

595.35
STA. 1196+50
591.2

END SAND BLANKET
STA. 1196+25 BK

595.20
STA. 1196+00
598.9

595.05
STA. 1195+50
588.1

PROPOSED GRADE 594.80
STA. 1195+00 END PROJECT
EXISTING GRADE 588.2

STA. 1194+50

8:1
4:1
SAND
LINE RAMP #5
MATCH LINE RAMP #5
MATCH TO SHEET 138

END AREA		VOLUME	
CUT	FILL	CUT	FILL
STA 1196+82 0	0		
	0 184	0	109
	193		
	232		
BK	225		
			237
			208
	0 280		
	225		
		79	355
			582
	85 756		
	404		
		366	1388
			776
	310 743		
	434		
		287	2272
			1128
STA. 1194+50 0	1711		
	784		

CROSS SECTIONS STA. 1195+00 TO STA. 1196+50

FED. RD. DIVISION	STATE	PROJECT	FISCAL YEAR
2	OHIO		

113
284

ERIE COUNTY
ERI. 2-(16.13-17.39)

ADACHE ASSOCIATES, INC.
CALC. BY J.D.A. DATE 3-18-69
CHKD. BY R.T.E. DATE 3-31-69

SEEDING END WIDTH	SEEDING SQ. YDS.
	600
92	590
	528
	600
98	590
	536
	600
95	590
	517
	600
91	590
	483
	600
83	590
	439
	600
75	590

STA. 1073+00
BEGIN SEEDING
QUANTITIES

100 90 80 70 60 50 40 30 20 10 0 10 20 30 40 50 60 70 80 90 100

MATCH TO SHEET 64 LINE S.R.2

596.66
STA. 1075+50
596.7

591.10

MATCH TO SHEET 63 LINE S.R.2

596.42
STA. 1075+00
596.0

591.00

MATCH LINE S.R.2

596.29
STA. 1074+50
595.5

590.90

MATCH LINE S.R.2

596.26
STA. 1074+00
592.9

590.80

MATCH LINE S.R.2

596.34
STA. 1073+50
590.6

590.70

MATCH TO SHEET 63 LINE S.R.2 AH.

596.43
STA. 1073+00
590.5

590.60

6:1 4:1 3:1 LA

STA. 1073+00
BEGIN EARTHWORK
QUANTITIES

ENDAREA CUT	ENDAREA FILL	VOLUME CUT	VOLUME FILL
170	42		
		284	163
137	134		
		291	272
177	160		
		318	312
166	177		
		286	269
143	114		
		271	242
150	147		

CROSS SECTION THRU RAMP E.B. STA. 1073+00 TO 1075+50

ADACHE ASSOCIATES, INC.
CALC. BY J.D.A. DATE 7-1960
CHKD. BY R.J.L. DATE 7-19-60

FED. RD. DIVISION	STATE	PROJECT	FISCAL YEAR
2	OHIO		

114
284

ERIE COUNTY
ERI. 2-(16.13-17.39)

SEEDING END WIDTH	SEEDING SQ. YDS.
208	1058
173	897
150	761
124	614
97	525
92	511
92	

STA. 1075+50

MATCH TO SHEET 65

MATCH TO SHEET 64

MATCH LINE S.R.2

1.0%

6:1

3:1

4:1

LA

600.48
STA. 1078+50
597.7

595.40

599.56
STA. 1078+00
598.3

595.20

598.76
STA. 1077+50
597.8

594.20

25'@1.0% 10" TYPE F

EXIST. 10" FARM DRAIN

FL 10" 594.50
STA 1077+60

FL 10" 594.75

(D-5 SHEET 30)

GRADE TO DRAIN

598.07
STA. 1077+00
597.3

593.20

597.49
STA. 1076+50
597.3

592.20

1' Min. cover over culvert
Transition shoulder slope in 75' each side of culvert

12:1

2:1

597.02
STA. 1076+00
596.9

591.70

591.20

FOR DITCH AND CULVERT DETAILS SEE SHEET 141.

END AREA CUT	END AREA FILL	VOLUME CUT	VOLUME FILL
82	119		
		134	165
63	59		
		151	99
100	48		
		186	81
101	39		
		212	70
128	37		
		301	62
197	30		
		340	67
170	42		

CROSS SECTION THRU RAMP E.B. STA. 1076+00 TO 1078+50

FED. RD. DIVISION	STATE	PROJECT	FISCAL YEAR
2	OHIO		

115
284

ERIE COUNTY
ERI. 2-(16.13-17.39)

ADACHE ASSOCIATES, INC.
CALC. BY JDA DATE 2-18-69
CHKD. BY E.J.Z. DATE 2-17-69

SEEDING END WIDTH	SEEDING SQ. YDS.
334	1836
327	1781
314	1711
302	1608
277	1444
243	1253
208	

STA. 1078+50

STA. 1079+00

STA. 1079+50

STA. 1080+00

STA. 1080+50

STA. 1081+00

STA. 1081+50

STA. 1081+14
BEGIN GUARD RAIL

MATCH LINE

MATCH LINE S.R.2

MATCH TO SHEET 66

MATCH TO SHEET GT

MATCH LINE 185'LT. STA. 1081+50

MATCH LINE 185'LT. STA. 1081+00

MATCH LINE 185'LT. STA. 1080+50

MATCH LINE 185'LT. STA. 1080+00

MATCH LINE 185'LT. STA. 1079+50

MATCH LINE 185'LT. STA. 1079+00

1.0%

6:1

4:1

3:1

3' SAND

LA

607.63
599.3

606.38
599.1

605.13
599.7

603.88
598.3

602.64
598.0

601.61
598.0

596.60

596.40

596.20

596.00

595.80

595.60

10'@1.0% 6" TYPE

EXIST. 4" FARM DRAIN

FL. 6" 596.60

FL. 6" 596.70

(D-4 SHEET 30)

AH BK.

BEGIN SAND BLANKET

END AREA CUT	END AREA FILL	VOLUME CUT	VOLUME FILL
52	266		
	300		
		103	464
			538
59	235		
	281		
		127	379
			493
78	174		
	251		
		148	281
			440
82	354		
	224		
		154	565
84	256		
		160	385
89	160		
		158	258
82	119		

CROSS SECTION THRU RAMP E.B. STA. 1079+00 TO 1081+50

FED. RD. DIVISION	STATE	PROJECT	FISCAL YEAR
2	OHIO		

116
284

ERIE COUNTY
ERI. 2-(16.13-17.39)

ADACHE ASSOCIATES, INC.
CALC. BY J.D.H. DATE 2-1-83
CHKD. BY R.T.S. DATE 2-1-83

SEEDING

END WIDTH	SQ. YDS.
339	1900
345	1931
350	1933
346	1911
342	1878
334	

180 170 160 150 140 130 120 110 100 90 80 70 60 50 40 30 20 10 0 10 20 30 40 50 60 70 80 90 100

600
590
MATCH LINE
1.0%
MATCH LINE S.R.2
270 260 250 240 230 220 210 200 190
MATCH LINE 185' LT. STA. 1084+00
600
550
4:1
2:1
3'
SAND
LA
4'
613.88
STA. 1084+00
599.7
598.40

MATCH TO SHEET 68
MATCH LINE S.R.2
280 270 260 250 240 230 220 210 200 190
MATCH LINE 185' LT. STA. 1083+50
600
550
4:1
612.63
STA. 1083+50
599.7
598.20

MATCH TO SHEET 67
MATCH LINE S.R.2
280 270 260 250 240 230 220 210 200 190
MATCH LINE 185' LT. STA. 1083+00
600
550
4:1
6:1
611.38
STA. 1083+00
599.7
597.20
2:1
FL. 597.40
FL. 597.50
10'@1.0%
6" TYPE F
EXIST. 4" FARM DRAIN
STA. 1083+10
(D-7 SHEET 31)

MATCH TO SHEET 67
MATCH LINE S.R.2
280 270 260 250 240 230 220 210 200 190
MATCH LINE 185' LT. STA. 1082+50
600
590
4:1
6:1
610.13
STA. 1082+50
599.5
597.00
BEGIN SURCHARGE STA. 1082+80

MATCH TO SHEET 67
MATCH LINE S.R.2
280 270 260 250 240 230 220 210 200 190
MATCH LINE 185' LT. STA. 1082+00
600
500
4:1
6:1
3:1
608.88
STA. 1082+00
599.4
596.80
STA. 1082+03.5
BEGIN GUARD RAIL LT.
STA. 1081+50

END AREA VOLUME			
CUT	FILL	CUT	FILL
15	852		
	310		
		33	1356
			554
21	612		
	288		
		56	1053
			523
39	525		
	277		
		72	926
			502
39	475		
	265		
		80	846
			515
47	435		
	295		
		92	653
			551
52	266		
	300		

CROSS SECTION THRU RAMP E.B. STA. 1082+00 TO 1084+00

FED. RD. DIVISION	STATE	PROJECT	FISCAL YEAR
2	OHIO		

117
284

ERIE COUNTY
ERI. 2-(16.13-17.39)

TADACHE ASSOCIATES, INC.
CALC. BY J.D.M. DATE 2-18-69
CHKD. BY E.J.Z. DATE 3-3-69

SEEDING END WIDTH	SEEDING SQ. YDS.
	283
	1636
	306
	1747
	323
	1814
	330
	1842
	333
	1867
	339

MATCH TO SHEET 69

MATCH LINE S.R.2 — MATCH LINE 185' LT. STA. 1086+50 — 1.0% — 200 190 180 170 160 — 600 590

MATCH LINE — 1.0% — 600 610 620

MATCH TO SHEET 68

MATCH LINE S.R.2 — MATCH LINE 185' LT. STA. 1086+00 — 1.0% — 160 170 180 190 — 600 590

MATCH LINE — 1.0% — 600 610 620

MATCH LINE S.R.2 — MATCH LINE 185' LT. STA. 1085+50 — 1.0% — 140 150 160 170 180 190 — 600 590

MATCH LINE — 1.0% — 600 610 620

MATCH TO SHEET 67

MATCH LINE S.R.2 — MATCH LINE 185' LT. STA. 1085+00 — 1.0% — 130 140 150 160 170 180 190 — 600 590

MATCH LINE — 1.0% — 600 610 620

MATCH LINE S.R.2 — MATCH LINE 185' LT. STA. 1084+50 — 1.0% — 120 130 140 150 160 170 180 190 — 600 590

MATCH LINE — 1.0% — 600 610 620

STA. 1084+00

180 170 160 150 140 130 120 110 100 90 80 70 60 50 40 30 20 10 0 10 20 30 40 50 60 70 80 90 100

4:1 — 3' SAND — LA

620.11
STA. 1086+50
599.70

599.40

4:1 — 3' SAND — LA

618.88
STA. 1086+00
599.40

599.20

4:1 — 3' SAND — LA

617.63
STA. 1085+50
599.30

599.00

4:1 — 3' SAND — LA

616.38
STA. 1085+00
599.40

598.80

4:1 — 2:1 — 3' SAND — LA

615.13
STA. 1084+50
600.10

598.60

STA. 1084+00

END AREA CUT	END AREA FILL	VOLUME CUT	VOLUME FILL
18	1487		
	422		
		27	2639
			765
11	1363		
	404		
		24	2393
			731
15	1221		
	385		
		25	2070
			654
12	1015		
	365		
		29	1827
			644
19	958		
	331		
		31	1676
			594
15	852		
	310		

CROSS SECTION THRU RAMP E.B. STA. 1084+50 TO 1086+50

ADACHE ASSOCIATES, INC.
CALC. BY RJT DATE 2-9-69
CHKD. BY RJT DATE 2-15-69

FED. RD. DIVISION	STATE	PROJECT	FISCAL YEAR
2	OHIO		

118
284

ERIE COUNTY
ERI. 2-(16.13-17.39)

SEEDING END WIDTH	SEEDING SQ. YDS.
169	1033
203	1197
228	1297
239	1328
239	1450
283	

620 610 600

100 90 80 70 60 50 40 30 20 10 0 10 20 30 40 50 60 70 80 90 100

MATCH TO SHEET 70

MATCH LINE S.R.2

3:1 2:1 6' SAND LA

624.18
STA. 1089+00
599.40

FOR UNDERCUTTING, SEE SHEET 45B

597.50

MATCH LINE S.R.2

6' SAND LA

623.65
STA. 1088+50
600.40

597.75

SUSPEND SURCHARGE STA. 1088+45

MATCH LINE S.R.2

4:1 1.0% 6' SAND LA

622.99
STA. 1088+00
600.60

598.00

MATCH TO SHEET 69

MATCH LINE S.R.2

1.0% 3' SAND LA

622.17
STA. 1087+50
600.40

599.00

MATCH LINE S.R.2

4:1 2:1 1.0% 3' SAND LA

621.22
STA. 1087+00
600.50

STA. 1087+00
DITCH H.P. EL. 600.00

STA. 1086+50

END AREA CUT	END AREA FILL	VOLUME CUT	VOLUME FILL
20	1358		
	382		
57		3026	
			795
42	1870		
	477		
88		3368	
			894
53	1767		
	489		
82		3263	
			885
36	1763		
	467		
43		3194	
			845
10	1687		
	446		
26		2939	
			804
18	1487		
	422		

CROSS SECTION THRU RAMP E.B. STA. 1087+00 TO 1089+00

ERIE COUNTY
ERI. 2-(16.13-17.39)

CROSS SECTION THRU RAMP E.B. STA. 1089+50 TO 1092+00

ADACHE ASSOCIATES, INC.
CALC. BY JDH DATE 5-4-69
CHKD. BY RJZ DATE 5-7-69

FED. RD. DIVISION	STATE	PROJECT	FISCAL YEAR
2	OHIO		

120
284

ERIE COUNTY
ERI. 2 -(16.13-17.39)

SEEDING END WIDTH	SEEDING SQ. YDS.
	222
	2616
	249
	2955
AH283 BK255	1336
	226
	1069
	159

END AREA OUT	END AREA FILL	VOLUME OUT	VOLUME FILL
	192		1733
			416
	750		6681
			1587
	213		1875
			441
	817		7393
			1669
AH. 228 BK. 209			2117
			460
	208		4015
			855
	16		2219
			463
	15		2242
			751
	0		558
			391

MATCH LINE W.B. THRU RAMP

3:1 2:1 3' SAND LA

619.06
STA. 1095+00
596.0

590.46

MATCH LINE W.B. THRU RAMP

621.37
STA. 1094+00
597.6

590.69

MATCH TO SHEET 125

MATCH LINE W.B. THRU RAMP

MATCH LINE 145' LT. STA. 1093+00

170 160 150

MATCH LINE S.R.2 BK. USE FULL SECT. AH. MATCH TO SHEET 72

623.10
STA. 1093+00
598.4

590.92

RESUME SURCHARGE STA. 1092+75

MATCH LINE W.B. THRU RAMP

MATCH LINE 145' LT. STA. 1092+50

180 170 160 150

MATCH LINE S.R.2 MATCH TO SHEET 72

623.74
STA. 1092+50
598.2

STA. 1092+00

100 90 80 70 60 50 40 30 20 10 0 10 20 30 40 50 60 70 80 90 100 10 20 30 140

CROSS SECTION THRU RAMP E.B. STA. 1092+50 TO 1095+00

FED. NO. DIVISION	STATE	PROJECT	FISCAL YEAR
2	OHIO		

121
284

ERIE COUNTY
ERI. 2 -(16.13-17.39)

ADACHE ASSOCIATES, INC.
CALC. BY JDP DATE 2-1980
CHKD. BY RJZ DATE 3-1980

SEEDING END WIDTH	SEEDING SQ. YDS.	END AREA CUT	END AREA FILL	VOLUME CUT	VOLUME FILL
222	2644	190	341		
			208		
				691	1789
					1141
254	3050	183	625		
			318		
				693	2331
					1259
295	3489	191	958		
			362		
				746	4019
					1413
333	3417	212	1212		
			401		
				793	4841
					1465
282	2800	216	1402		
			350		
				756	5806
					1493
222		192	1733		
			416		

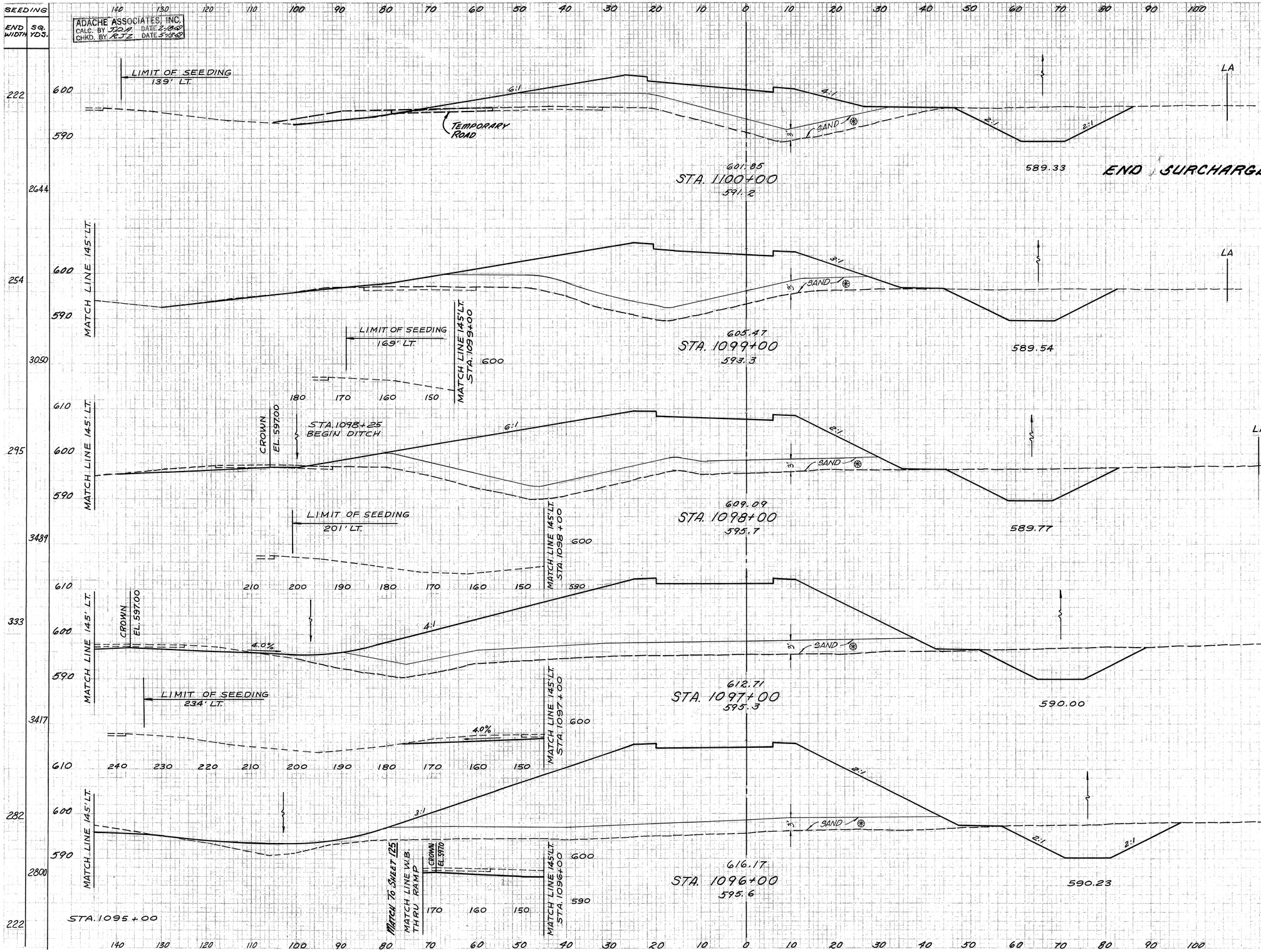

CROSS SECTION THRU RAMP E.B. STA. 1096+00 TO 1100+00

SEEDING	
END WIDTH	SQ. YDS.
139	803
150	872
164	947
177	1019
190	1106
208	1194
222	

ADACHE ASSOCIATES, INC.
CALC. BY: JBH DATE 3/4/69
CHKD. BY: RJT DATE 3/5/69

FED. RD. DIVISION	STATE	PROJECT	FISCAL YEAR
2	OHIO		

122
284

ERIE COUNTY
ERI. 2-(16.13-17.39)

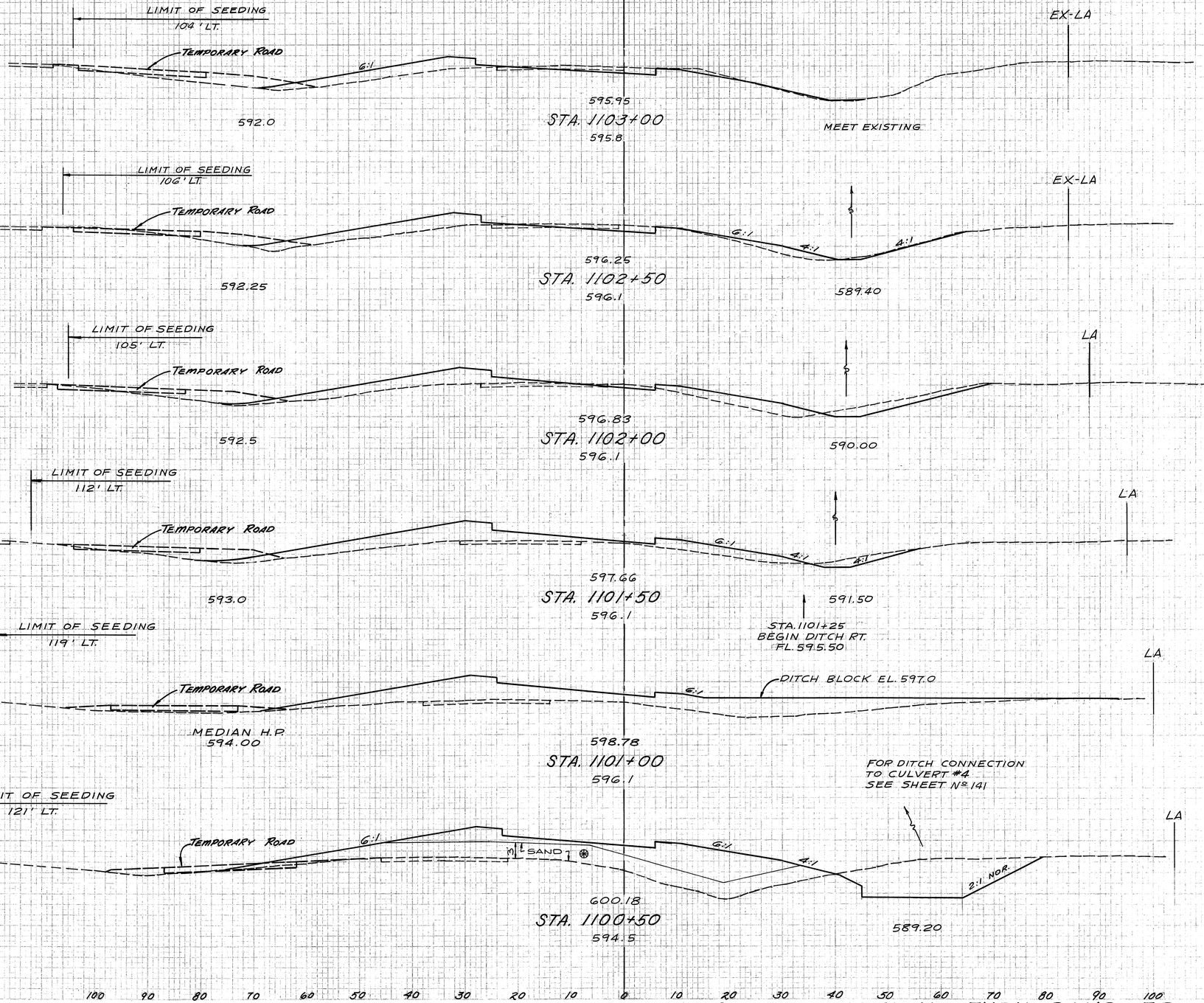

END AREA		VOLUME	
CUT	FILL	CUT	FILL
16	70		
		31	157
17	100		
		55	269
42	190		
		62	368
25	207		
		12	
STA. 1101+25 AH. 0			544
0	380		
		175	802
AH. 189	486		
BK.	196		
	290		
		351	457
			544
STA. 1100+00 190	341		
	298		

CROSS SECTION THRU RAMP E.B. STA. 1100+50 TO 1103+00

SEEDING	
END WIDTH	SQ. YDS.
0	
	171
143	
	600
	590
794	
143	600
	590
794	
143	600
	590
794	
143	600
	590
783	
139	STA. 1103+00

ADACHE ASSOCIATES, INC.
CALC. BY JDP DATE 2/86
CHKD. BY RJZ DATE 3-3-86

FED. RD. DIVISION	STATE	PROJECT	FISCAL YEAR
2	OHIO		

123
284

ERIE COUNTY
ERI. 2-(16.13-17.39)

STA. 1105+71.5
END SEEDING

STA. 1105+71.5
END WORK
MEET EXISTING PAVEMENT

LIMIT OF SEEDING
104' LT.

TEMPORARY ROAD

EX-LA

595.18
STA. 1105+50
595.2

595.33
STA. 1105+00
595.4

595.48
STA. 1104+50
595.5

595.64
STA. 1104+00
595.7

595.79
STA. 1103+50
595.8

STA. 1103+00

	END AREA		VOLUME	
	CUT	FILL	CUT	FILL
STA. 1105+71.5 END EARTHWORK QUANTITIES	0	0		
			24	0
	61	0		
			88	17
	34	18		
			60	61
	31	48		
			60	86
	34	45		
			53	93
	23	55		
			36	116
STA. 1103+00	16	70		

CROSS SECTION THRU RAMP E.B. STA. 1103+50 TO 1105+50

ADACHE ASSOCIATES, INC.
CALC. BY JJD DATE 3/1/69
CHKD. BY RJJ DATE 3/14/69

FED. RD. DIVISION	STATE	PROJECT	FISCAL YEAR
2	OHIO		

124
284

ERIE COUNTY
ERI. 2-(16, 13-17.39)

SEEDING END WIDTH	SEEDING SQ. YDS.	STATION	EXISTING ELEV.	END AREA CUT	END AREA FILL	VOLUME CUT	VOLUME FILL
		STA. 1087+00	594.7	79	35		
171						191	181
	1683	STA. 1086+00	594.3	24	63		
						76	285
	1356	STA. 1085+00	594.8	17	91		
						93	493
	1144	STA. 1084+00	594.7	33	175		
						117	656
	950	STA. 1083+00	594.8	30	179		
						81	791
	794	STA. 1082+00	594.2	14	248		
						52	935
	678	STA. 1081+00 BEGIN EARTHWORK QUANTITIES	594.8	14	257		

STA. 1081+00
BEGIN SEEDING

NOTE: W.B. THRU RAMP EARTHWORK AND SEEDING QUANTITIES BASED ON EXISTING S.R.2 STATIONING

CROSS SECTIONS W. B. THRU RAMP STA. 1081+00 TO STA. 1087+00

ADACHE ASSOCIATES, INC.
CALC. BY JDH DATE 2-1048
CHKD. BY RJZ DATE 5-1485

FED. RD. DIVISION	STATE	PROJECT	FISCAL YEAR
2	OHIO		

125
284

ERIE COUNTY
ERI. 2-(16.13-17.39)

*EQ. W.B. THRU RAMP STA. 1094+12.02 END WORK

℄ EXISTING S.R.2

STA. 1094+00
FOR CULVERT 3.4' DITCH DETAILS SEE SHT. No 143.

STA. 1094+17.22
END SEEDING

1' Min. cover over culvert. Transition shoulder slope in 7.5 each side of culvert

STA. 1094+17.22
END EARTHWORK

STA. 1093+00

STA. 1092+00

STA. 1091+00

STA. 1090+00

STA. 1089+00

STA. 1088+00

STA. 1087+00

MEET EXISTING DITCH EL. 591.00±

591.25

591.50

591.75

EXISTING 15" PIPE

MEET EXISTING INLET

PIPE & INLET TO REMAIN

W. B. THRU RAMP
℄ 66.01 LT. EL. 598.37

STA. 1088+17.22
MEET EXIST. PAVT. AH.

MATCH LINE S.R.2
163' RT

MATCH LINE S.R.2

MATCH LINE 145' RT
EXIST. S.R.2 - STA. 1090+00

MATCH LINE E.B. THRU RAMP

MATCH LINE E.B. THRU RAMP BK.

MATCH TO SHEET 12

MATCH TO SHEET 11

MATCH TO SHEET 10

MATCH TO SHEET 10

*NOTE: W.B. THRU RAMP EARTHWORK AND SEEDING QUANTITIES BASED ON EXISTING S.R. 2 STATIONING

SEEDING END WIDTH	SEEDING SQ. YDS.
181	2364
182	2022
182	2028
AH.183 BK.249	3261
338	3472
287	2822
221	2178
171	

END AREA CUT	END AREA FILL	VOLUME CUT	VOLUME FILL
98	61		
		428	315
99	84		
		348	237
89	44		
		302	165
74	45		
		341	354
110	146		
		402	370
107	54		
		383	207
100	58		
		331	172
79	35		

CROSS SECTIONS W. B. THRU RAMP STA. 1088+00 TO STA. 1094+12.02

SEEDING	
ENTD WIDTH	SQ YD.

ADACHE ASSOCIATES, INC.
CALC. BY JDF DATE 2-17-65
CHKD. BY RJS DATE 5-16-65

END AREA		VOLUME	
CUT	FILL	CUT	FILL

FED. RD. DIVISION	STATE	PROJECT	FISCAL YEAR
2	OHIO		

126
284

ERIE COUNTY
ER1 2-(16.13-17.39)

STA. 2706+06
605.07
T.R. 605.47 T.R. 605.73 T.R. 606.00 T.R. 606.26
R/W R/W

STA. 2707+06
604.98
T.R. 605.47 T.R. 605.60 T.R. 605.99 T.R. 606.18
R/W R/W
MATCH LINE S.R.2 80

STA. 2708+06.34
605.00
T.R. 605.49 T.R. 606.08
R/W R/W
MATCH LINE S.R.2 80
MATCH TO SHEET
MATCH LINE S.R.2

STA. 2709+06
604.91
T.R. 605.40 T.R. 605.42 T.R. 605.98 T.R. 606.03
R/W R/W

STA. 2710+06
EXISTING GRADE: 604.91
T.R. 605.46 T.R. 605.46 T.R. 605.85 T.R. 605.88
R/W R/W

EXISTING CROSS SECTIONS CONRAIL R.R. STA 2710+06 TO STA. 2706+06

STA. 22+00
603.53
R/W R/W

STA 21+00
602.52
MATCH LINE S.R.2
MATCH LINE S.R.2

STA. 20+00
602.25
2:1
MATCH LINE S.R.2 84
MATCH TO SHEET
MATCH LINE S.R.2
2:1
MATCH LINE S.R.2

STA. 19+00
602.53
R/W R/W

STA. 18+00
EXISTING GRADE 603.14

EXISTING CROSS SECTIONS BOGART RD. STA. 18+00 TO STA. 22+00

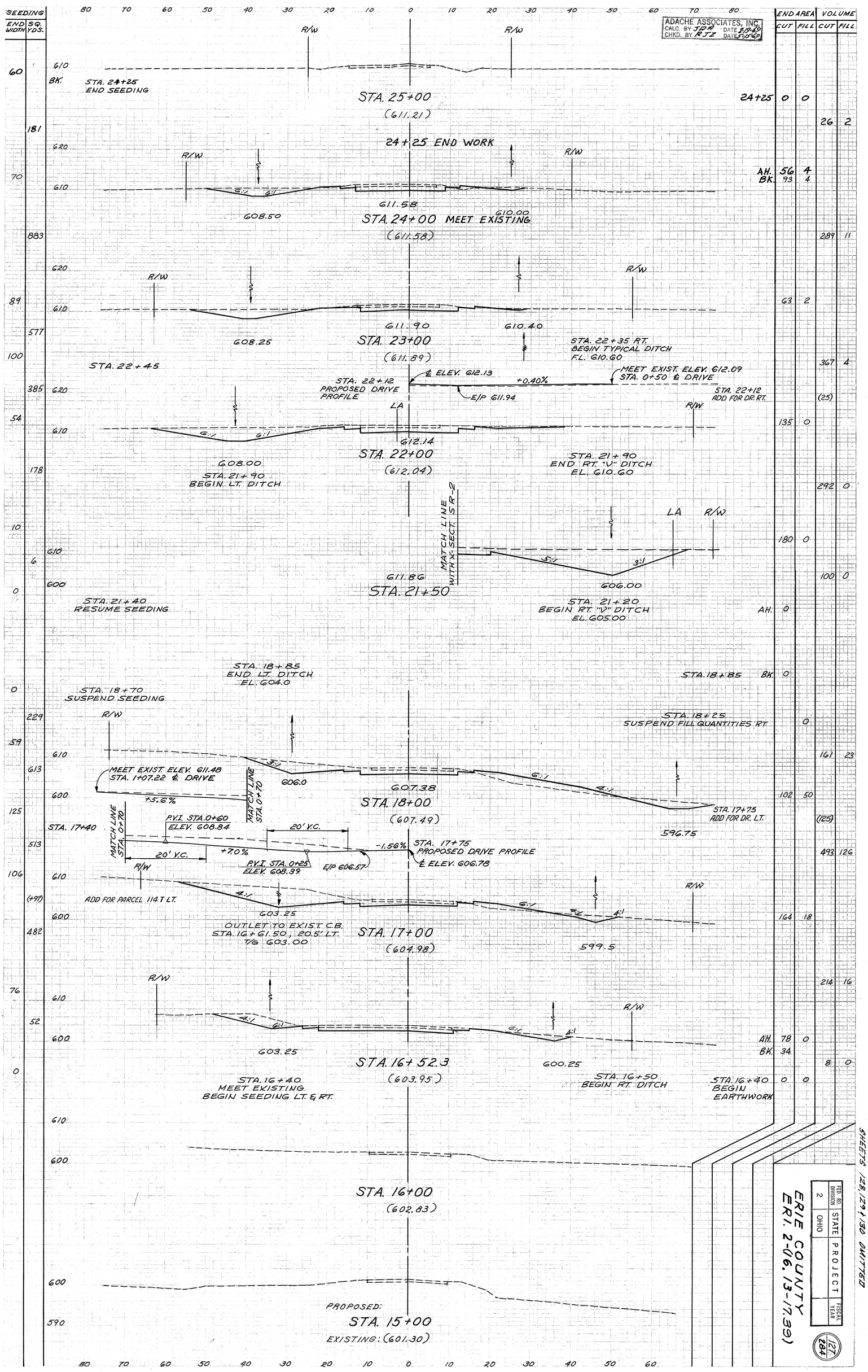

CROSS SECTIONS HURON AVERY ROAD STA. 16+52.3 TO 24+00

SHEETS 128, 129 & 130 OMITTED

FED. ROAD DIVISION	STATE	PROJECT	FISCAL YEAR
2	OHIO		

ERIE COUNTY
ERI. 2-(6, 13-17.39)

127
264

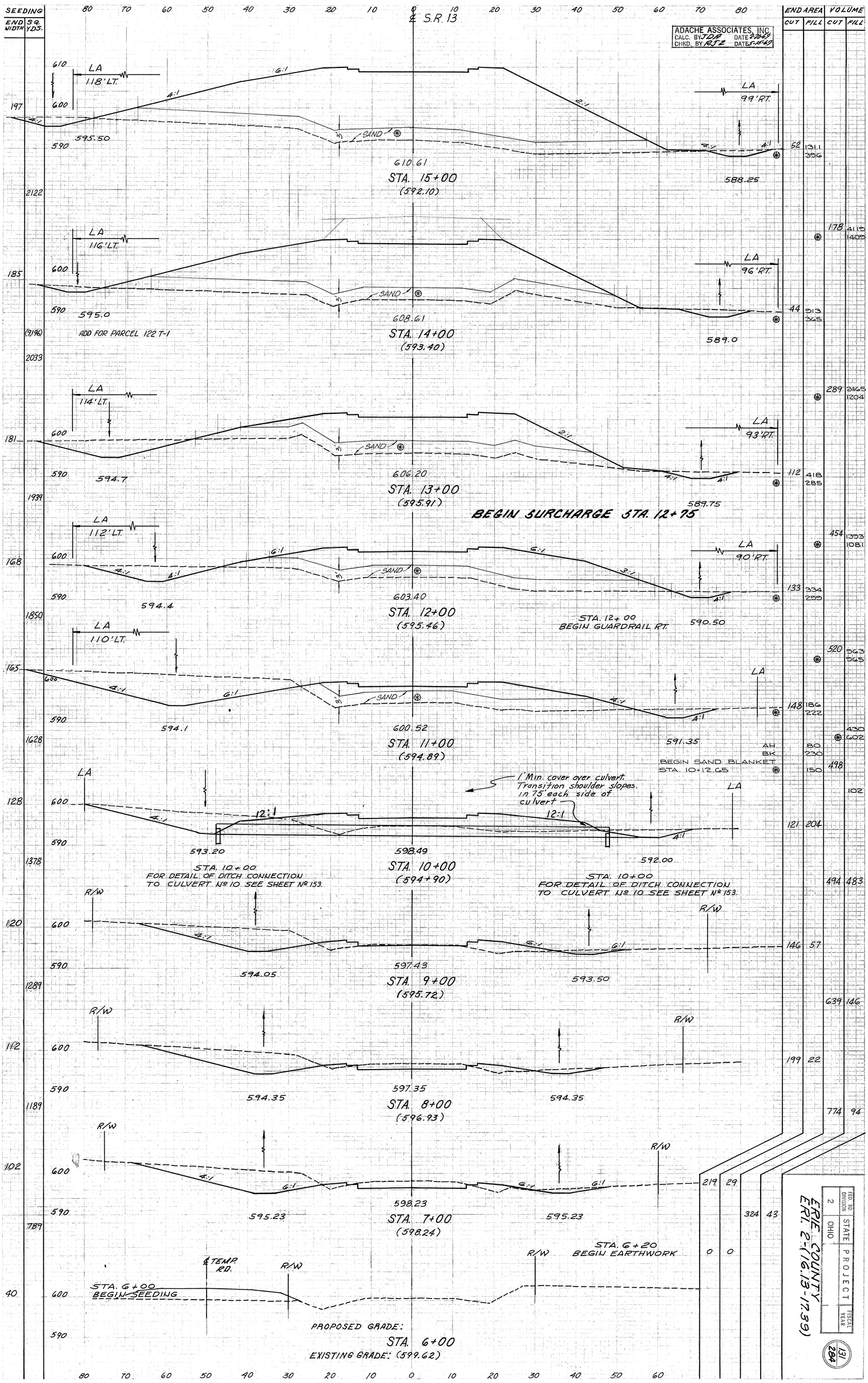
SEEDING
END WIDTH
SQ. YDS.
80 70 60 50 40 30 20 10 0 10 20 30 40 50 60 70 80
℄ S.R. 13
ADACHE ASSOCIATES, INC.
CALC. BY JDA DATE 2-24-69
CHKD. BY RJZ DATE 3-14-69
END AREA CUT FILL
VOLUME CUT FILL
LA 118' LT.
LA 99' RT.
610.61
STA. 15+00
(592.10)
595.50
588.25
LA 116' LT.
LA 96' RT.
608.61
STA. 14+00
(593.40)
595.0
589.0
ADD FOR PARCEL 122 T-1
LA 114' LT.
LA 93' RT.
606.20
STA. 13+00
(595.91)
594.7
589.75
BEGIN SURCHARGE STA. 12+75
LA 112' LT.
LA 90' RT.
603.40
STA. 12+00
(595.46)
594.4
590.50
STA. 12+00
BEGIN GUARDRAIL RT.
LA 110' LT.
600.52
STA. 11+00
(594.89)
594.1
591.35
AH. 80
BK. 230
BEGIN SAND BLANKET
STA. 10+12.65 150
1' Min. cover over culvert. Transition shoulder slopes. in 75' each side of culvert
12:1
598.49
STA. 10+00
(594+90)
593.20
592.00
STA. 10+00
FOR DETAIL OF DITCH CONNECTION TO CULVERT Nº 10 SEE SHEET Nº 153.
STA. 10+00
FOR DETAIL OF DITCH CONNECTION TO CULVERT Nº 10 SEE SHEET Nº 153.
R/W
597.43
STA. 9+00
(595.72)
594.05
593.50
597.35
STA. 8+00
(596.93)
594.35
594.35
598.23
STA. 7+00
(598.24)
595.23
595.23
℄ TEMP. RD.
STA. 6+20
BEGIN EARTHWORK
STA. 6+00
BEGIN SEEDING
PROPOSED GRADE:
STA. 6+00
EXISTING GRADE: (599.62)
S.R. 13 CROSS SECTIONS STA. 6+00 TO STA. 15+00
SHEETS 128, 129 & 130 OMITTED
ERIE COUNTY
ERI. 2-1(16.13-17.39)
FED. RD. DIVISION 2
STATE OHIO
PROJECT
FISCAL YEAR
131
284

FED. RD DIVISION	STATE	PROJECT	FISCAL YEAR
2	OHIO		

132
284

ERIE COUNTY
ERI. 2-(16.13-17.39)

ADACHE ASSOCIATES, INC.
CALC. BY JRF DATE 2/96
CHKD. BY JRF DATE 2/96

	VOLUME CUT	VOLUME FILL
END AREA CUT	0	14 3033 1142
END AREA FILL	0 1232 612	15 1984 621
END AREA CUT	0 0	21 1756 863
END AREA FILL	0 0	0 261 466
END AREA CUT	0 0	0 1243 415
END AREA FILL	0 0	0 3805 935
END AREA CUT	0 0	0 5974 1700
END AREA FILL	0 2245 931	0 376 383 327
END AREA CUT	0 0	0 4702 1428
END AREA FILL	0 0	124 7124 1556
END AREA CUT	0 0	0 2156 2536 444
END AREA FILL	0 0	52 1311 306

MATCH LINE

MATCH TO RAMP #4
SHEET No. 137

MATCH LINE RAMP #4

MATCH LINE

MATCH LINE RAMP #4

RESUME EARTHWORK
STA. 20+75

SUSPEND EARTHWORK
STA. 19+10

MATCH LINE
SR 2
MATCH TO SHEET 111

MATCH LINE 85' RT.

MATCH LINE RAMP #5

MATCH TO RAMP #5
SHEET No. 138

MATCH LINE RAMP #5

MATCH LINE

MATCH LINE RAMP #5

SUSPEND SURCHARGE STA. 18+35

MATCH LINE 85' RT.

MATCH LINE 85' RT.

MATCH LINE 85' RT.

MATCH LINE RAMP #4

MATCH LINE RAMP #3

MATCH LINE RAMP #3AH

MATCH LINE RAMP #3BK

MATCH LINE RAMP #3 AH.

MATCH LINE 80' LT.

MATCH LINE RAMP #2

MATCH TO SHEET 134

MATCH TO SHEET 109

MATCH TO SHEET 136

MATCH TO SHEET 136

RESUME SURCHARGE STA. 21+65

℄ S.R. 13

STA. 22+00 (596.67)

STA. 21+50 (595.71)

STA. 20+00 (597.09)

STA. 18+50 (600.76)

STA. 18+00 (599.71)

STA. 17+00 (596.07)

STA. 16+00 (595.18)

STA. 15+00

PROPOSED GRADE: 612.22

EXISTING GRADE: (595.18)

SAND

VARIES

5:1

4:1

6:1 NOR

4:1 NOR

LA 185' LT.

598.5

SEEDING END AREA	SQ. YDS.
FROM	
	199
	1164
	220
	917
	0
	517
	155
	961
	1494
	483
	58
	205
	2233
	197

S.R. 13 CROSS SECTIONS STA. 16+00 TO STA. 22+00

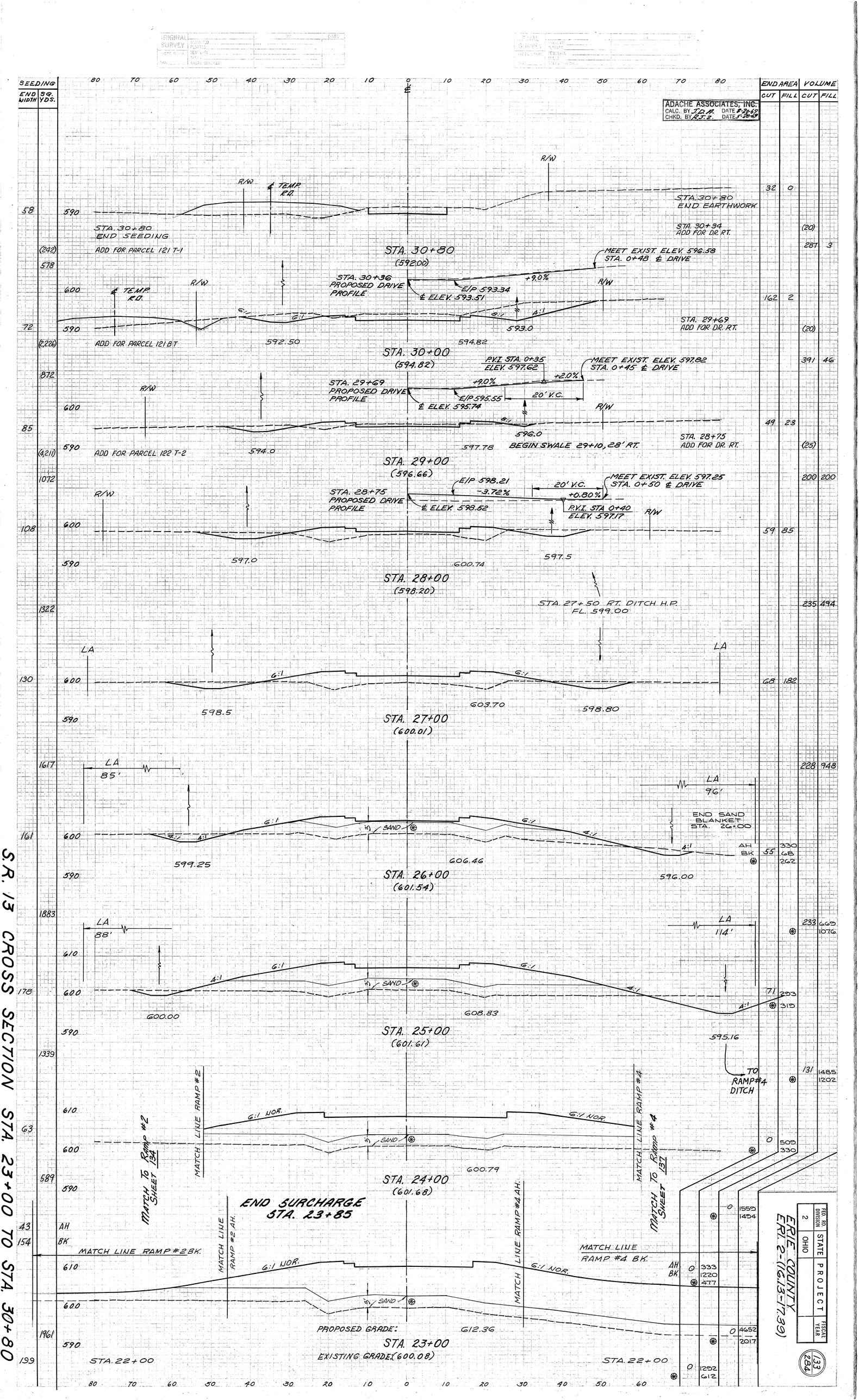
SEEDING
END WIDTH
SQ. YDS.
80 70 60 50 40 30 20 10 0 10 20 30 40 50 60 70 80
END AREA
CUT FILL
VOLUME
CUT FILL
ADACHE ASSOCIATES, INC.
CALC. BY J.D.A. DATE 5-29-69
CHKD. BY R.T.E. DATE 5-29-69
STA. 30+80 END SEEDING
ADD FOR PARCEL 121 T-1
ADD FOR PARCEL 121 BT
ADD FOR PARCEL 122 T-2
STA. 30+80 (592.00)
STA. 30+80 END EARTHWORK
STA. 30+34 ADD FOR DR. RT.
STA. 29+69 ADD FOR DR. RT.
STA. 28+75 ADD FOR DR. RT.
STA. 30+36 PROPOSED DRIVE PROFILE
E/P 593.34
℄ ELEV. 593.51
+9.0%
MEET EXIST. ELEV. 596.58 STA. 0+48 ℄ DRIVE
STA. 30+00 (594.82)
P.V.I. STA. 0+35 ELEV. 597.62
STA. 29+69 PROPOSED DRIVE PROFILE
E/P 595.55
℄ ELEV. 595.74
+9.0%
+2.0%
20' V.C.
MEET EXIST. ELEV. 597.82 STA. 0+45 ℄ DRIVE
BEGIN SWALE 29+10, 28' RT.
STA. 29+00 (596.66)
STA. 28+75 PROPOSED DRIVE PROFILE
E/P 598.21
℄ ELEV. 598.52
-3.72%
20' V.C.
+0.80%
P.V.I. STA 0+40 ELEV. 597.17
MEET EXIST. ELEV. 597.25 STA. 0+50 ℄ DRIVE
STA. 28+00 (598.20)
STA. 27+50 RT. DITCH H.P. FL. 599.00
STA. 27+00 (600.01)
STA. 26+00 (601.54)
END SAND BLANKET STA. 26+00
STA. 25+00 (601.61)
TO RAMP #4 DITCH
STA. 24+00 (601.68)
MATCH LINE RAMP #2
MATCH LINE RAMP #4
MATCH TO SHEET 134
MATCH TO SHEET 131
END SURCHARGE STA. 23+85
MATCH LINE RAMP #2 AH.
MATCH LINE RAMP #2 BK.
MATCH LINE RAMP #4 AH.
MATCH LINE RAMP #4 BK.
PROPOSED GRADE:
STA. 23+00
EXISTING GRADE (600.08)
STA. 22+00
6:1 NOR.
SAND
LA
R/W
℄ TEMP. R.D.
AH
BK
S.R. 13 CROSS SECTION STA. 23+00 TO STA. 30+80
ERIE COUNTY
ERI-2-(10.13-17.39)
FED. RD. DIVISION 2
STATE OHIO
PROJECT
FISCAL YEAR
133
284

FED. RD. DIVISION	STATE	PROJECT	FISCAL YEAR
2	OHIO		

134
284

ERIE COUNTY
ERI. 2-(16.13-17.39)

ADACHE ASSOCIATES, INC.
CALC. BY JDH DATE 2-2003
CHKD. BY RFZ DATE 2-20-03

	0	380	300	114	270	407	293	69	250	531	23	111	321	210	120	831	42	128	101	215	4	274	3	232	54	62	67	176	160	306	158	128	106	203	65
END AREA CUT												AH.						AH																	
END AREA FILL												BK.						BK.																	
VOLUME CUT				13	602			69	250						120			476	194		6			112			272								
VOLUME FILL					545				531							831				453			469					176							

MATCH LINE SR 2
MATCH TO SHEET 108
AH.
BK.
BEGIN SAND BLANKET
STA. 1188+00

STA. 1189+50
END EARTHWORK

MATCH LINE
AH
BK

MATCH LINE S.R2
MATCH TO SHEET 108

MATCH TO SHEET 107

MATCH LINE S.R2

MATCH LINE S.R2

MATCH LINE S.R2

MATCH LINE S.R2

MATCH LINE S.R2

MATCH TO SHEET 106

STA. 1183+50
BEGIN EARTHWORK

MATCH LINE S.R13

MATCH LINE S.R2

MATCH LINE AH. S.R13

MATCH LINE STA 1189+00

℄ RAMP #2

MATCH LINE S.R13

STA. 1189+50
END SEEDING

610.17		610.0		609.66		601.9		607.11		602.1		603.20		599.50		600.7		599.69		600.2		597.67		598.8		595.65		597.5		593.75		592.5		592.10		590.7
STA. 1189+50				STA. 1189+00				STA. 1188+00				STA. 1187+00				STA. 1187+00 BEGIN G. SUBBASE AH.				STA. 1186+00				STA. 1185+50				STA. 1185+00				STA. 1184+50				STA. 1184+00
600				600.75				600.25																												
610																																			
600																																			
600																																			
610																																			
600																																			
600																																			
590																																			
600																																			
590																																			
600																																			
590																																			

LA 73'LT.
LA 76'LT.
LA 77'LT.
LA 78'LT.
LA 78'LT.
LA 75'LT.
LA 68'LT.
LA 65'LT.
LA 73'LT.

VARIES
VARIES
VARIES
VARIES
VARIES
VARIES
VARIES
VARIES
VARIES

6:1 NOR.
6:1
6:1
6:1
6:1
6:1
6:1
6:1
4:1
3:1
3:1

SAND
SAND
SAND

PROPOSED GRADE 590.68
EXISTING GRADE 589.5

STA. 1183+50
BEGIN SEEDING

SEEDING																																			
EXTRA WIDTH S & S YDS.	63		489		2306		187		1906		156		1650		141		733		123		658		114		600		102		542		93		492		84	

AH 113
BK 228

CROSS SECTIONS RAMP #2 STA. 1183+50 TO STA. 1189+50

FED. RD. DIVISION	STATE	PROJECT	FISCAL YEAR
2	OHIO		

135
284

ERIE COUNTY
ERI. 2-(16, 13-17.39)

CROSS SECTIONS RAMP #3 STA. 1183+50 TO STA. 1188+00

FED. RD. DIVISION	STATE	PROJECT	FISCAL YEAR
2	OHIO		

136
284

ERIE COUNTY
ERI. 2-(16. 13-17.39)

ADACHE ASSOCIATES, INC.
CHKD. BY: DATE: 2-20-95
CHKD. BY: DATE: 2-20-95

	END AREA CUT	END AREA FILL	VOLUME CUT	VOLUME FILL
STA. 1193+00 END EARTHWORK	0	1174	0	1611
		312		515
STA. 1192+25 CONNECT RT. DITCH TO S.R.13	0	566	19	846
		305		539
STA. 1191+50 DITCH HIGH POINT	20	348	53	912
		273		436
BEGIN SAND BLANKET STA. 1191+00	37	222	53	526
		244		475
STA. 1190+50	20	342	33	312
		227		341
STA. 1190+00 6'-SUBBASE A.H.	16	242	30	347
STA. 1189+50	16	133	112	145
		113		41
STA. 1189+00	23	44	344	41
	98	0		
STA. 1188+50	273	0	647	0
	426	0	948	0
STA. 1188+00	598	0		

MATCH TO SHEET 132

MATCH LINE S.R.13

STA. 1193+13

END SURCHARGE STA. 1193+00

STA. 1193+00

STA. 1192+50

STA. 1192+40

BEGIN SURCHARGE STA. 1192+00

STA. 1192+00

STA. 1191+50

STA. 1191+00

STA. 1190+50

STA. 1190+00

STA. 1189+50

STA. 1189+00

STA. 1188+50

STA. 1188+00

MATCH TO SHEET 132

MATCH LINE S.R.13

MATCH LINE

MATCH LINE STA. 1191+50

MATCH LINE STA. 1192+00

CUT FOR TEMP. RD. TO BE FILLED UNDER ITEM 615

MATCH TO SHEET 109

MATCH LINE S.R.2

MATCH LINE STA. 1191+00

MATCH LINE STA. 1190+50

MATCH LINE STA. 1190+00

MATCH LINE STA. 1189+50

MATCH LINE STA. 1189+00

MATCH LINE STA. 1188+50

STA. 1193+00 END SEEDING

SEEDING	610	600	590	610	600	610	600	610	600	610	600	610	600	610	600	610	600	610	600
END VOLUMES	22	286	81	797	206	1308	265	1475	266	1453	257	1364	234	1242	213	1139	197	1011	167	881	150

CROSS SECTIONS RAMP # 3 STA. 1188+50 TO STA. 1193+00

FED. RD DIVISION	STATE	PROJECT	FISCAL YEAR
2	OHIO		

137
284

ERIE COUNTY
ERI. 2-16.13 -17.39)

END AREA		VOLUME	
CUT	FILL	CUT	FILL
0	0	33	404
		364	
		45	546
		452	
		142	1602
		947	
		108	1184
		552	
		200	1651
		751	
		108	555
		302	
		100	261
		171	
		0	763
		315	

ADACHE ASSOCIATES, INC.
CALC. BY JCZ DATE 2-84
CHKD. BY MTZ DATE 3-84

RAMP No. 4

MATCH LINE

MATCH LINE S.R.13
MATCH TO SHEET 132

END WORK STA. 1192+90
MATCH LINE S.R. 13
125' RT.
MATCH TO SHEET 132

MATCH LINE S.R.13
MATCH TO SHEET 132

MATCH LINE S.R.13
MATCH TO SHEET 132

STA. 1191+00
BEGIN EARTHWORK

END SURCHARGE STA. 1192+00

BEGIN SURCHARGE STA. 1190+70

MATCH LINE 105'RT.

MATCH LINE 60'LT STA. 1193+00

MATCH LINE 60'LT STA. 1192+50

MATCH LINE 60'LT STA. 1192+00

MATCH LINE 60'LT STA. 1191+50

MATCH LINE SR 13

MATCH TO SHT 132

PROPOSED GRADE 610.71
EXISTING GRADE (600.4)

STA. 1193+00
607.53
586.7

STA. 1192+50
608.68
592.8

STA. 1192+00
609.58
595.8

STA. 1191+50
610.21
600.0

STA. 1191+00
BEGIN SEEDING

SEEDING	
END	SQ
WIDTH	YDS.
105.0	295
585.0	
120	221
592.0	1208
113	214
594.85	958
110	131
595.25	544
110	65

CROSS SECTIONS RAMP # 4 STA. 1191+00 TO STA. 1193+00

FED. RD. DIVISION	STATE	PROJECT	FISCAL YEAR
2	OHIO		

138
284

ERIE COUNTY
ERI. 2-(16.13-17.39)

ADACHE ASSOCIATES, INC.
CALC. BY JJ DATE 4-78
CHKD. BY AJJ DATE 4-78

	END AREA CUT	END AREA FILL	VOLUME CUT	VOLUME FILL
RAMP No. 5	316	0		
STA. 1195+00		256	314	54
	23	256	64	1236
STA. 1194+50				658
	46	1277	68	3273
		415		734
STA. 1194+00	27	2258	52	4535
		443		838
STA. 1193+50	29	2644	87	5111
		462		845
STA. 1193+00	65	2876	81	4940
		455		850
STA. 1192+50	22	2459		
		443		
STA. 1192+00	20	3857		
		705		
STA. 1191+50	0	1707		
		303		

STA. 1194+50
END RT. DITCH
THIS PROJECT

END SAND BLANKET
STA. 1194+75

END SURCHARGE
STA. 1194+40

STA. 1193+34
FOR CULVERT #9
DETAILS SEE SHEET 152.

STA. 1193+10
FOR DETAILS OF DITCH
CONNECTIONS TO CULVERT #9
SEE SHEET 152.

MATCH LINE SR 13
STA. 1191+50
BEGIN EARTHWORK

STA. 1195+00
END SEEDING

STA. 1191+50
BEGIN SEEDING

BEGIN SURCHARGE STA. 1191+10

	SEEDING END WIDTH	SEEDING SQ. YDS.
STA. 1195+00	72	769
STA. 1194+50	205	1192
STA. 1194+00	224	1281
STA. 1193+50	237	1292
STA. 1193+00	228	1250
STA. 1192+50	222	1128
STA. 1192+00	184	714
STA. 1191+50	73	

CROSS SECTIONS RAMP #5 STA. 1191+50 TO STA. 1195+00

ADACHE ASSOCIATES, INC.
CALC. BY P.I.W DATE 11/9/69
CHKD. BY R.I.2 DATE 11/20/69

FED. RD. DIVISION	STATE	PROJECT	FISCAL YEAR
2	OHIO		

139
284

ERIE COUNTY
ERI. 2 - (16.13 - 17.39)

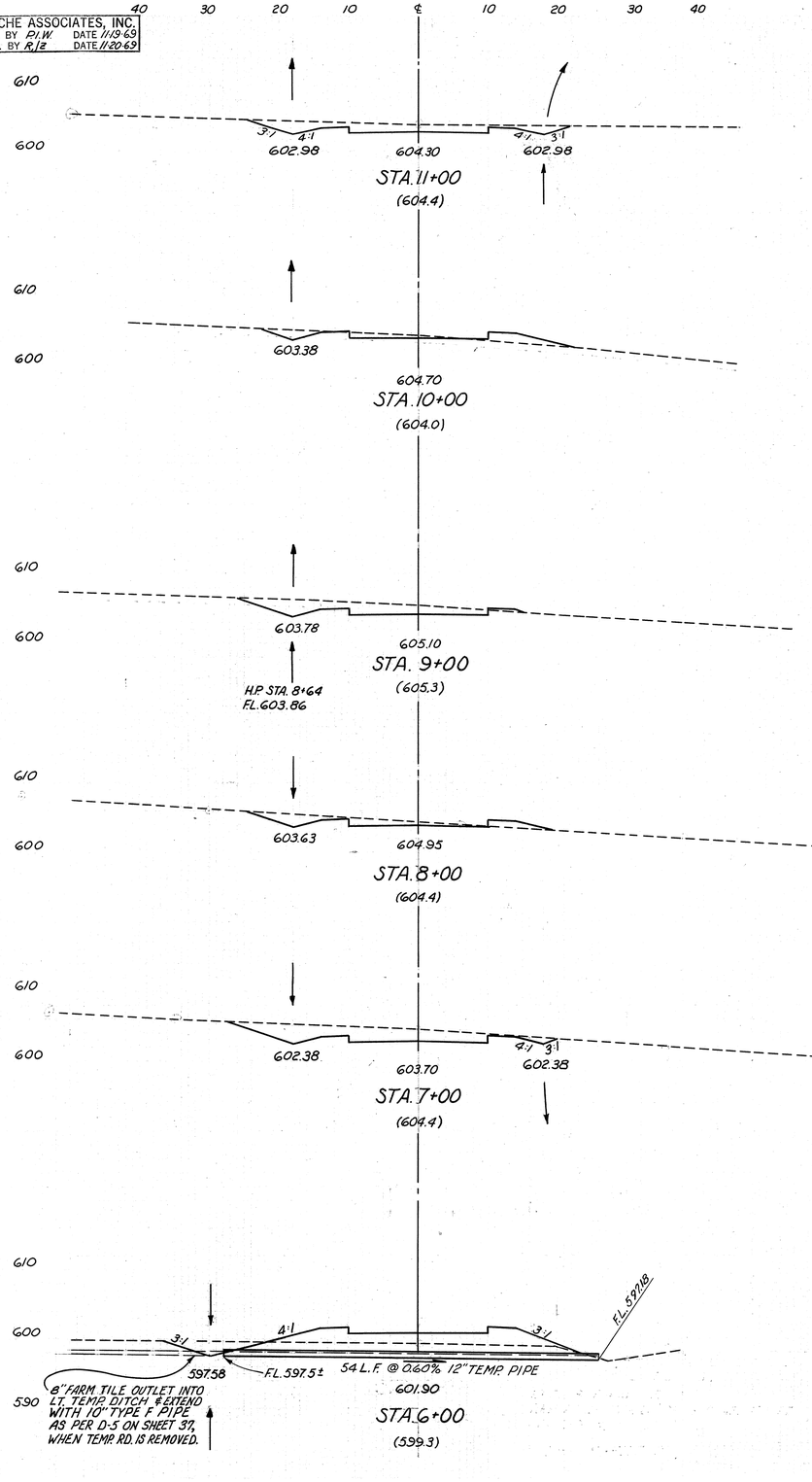

END AREA CUT	END AREA FILL	VOLUME CUT	VOLUME FILL
52	0		
		119	22
12	12		
		111	24
48	1		
		139	15
27	7		
		174	13
67	0		
		152	124
15	67		

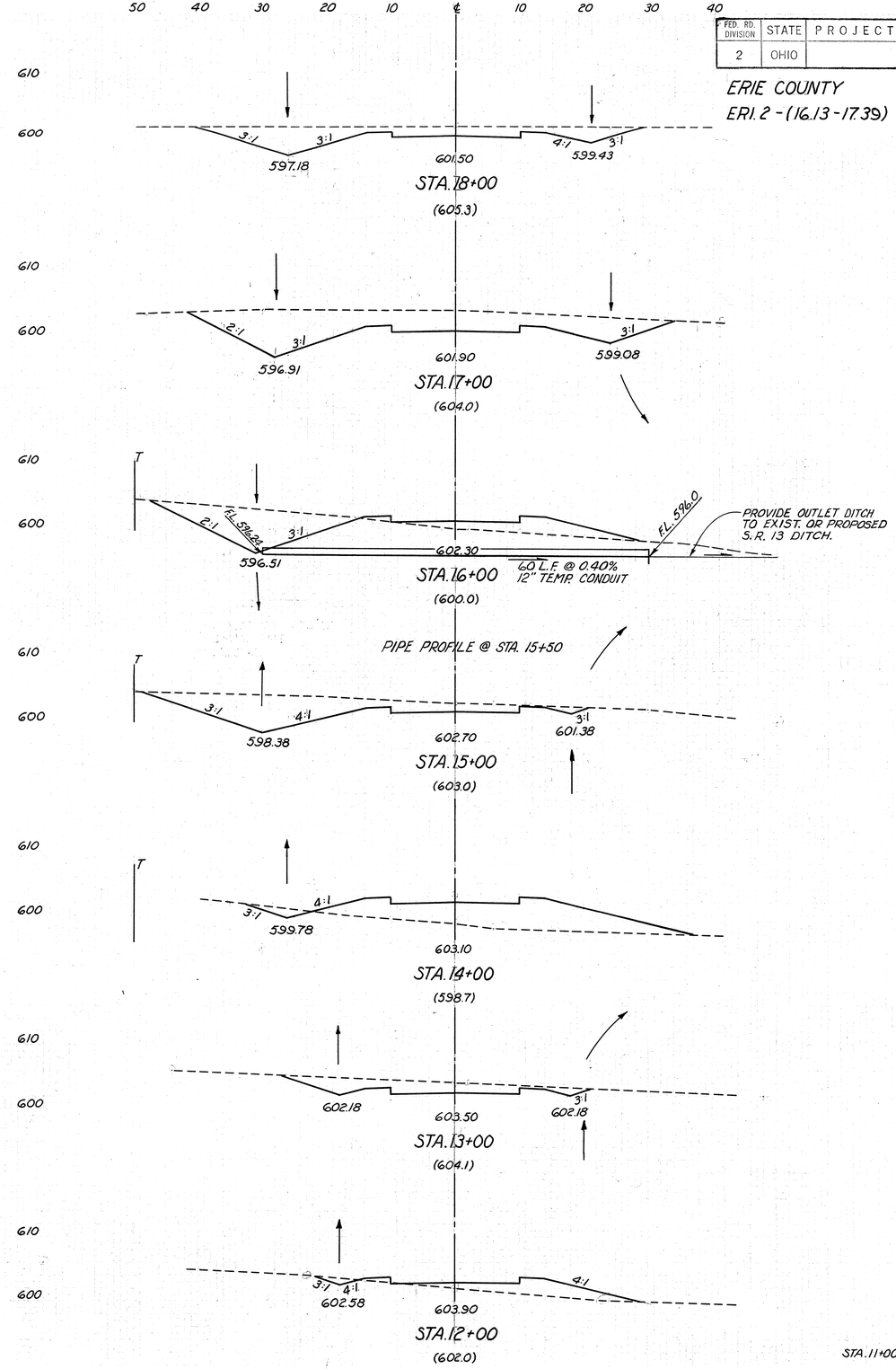

END AREA CUT	END AREA FILL	VOLUME CUT	VOLUME FILL
149	0		
		739	0
250	0		
		685	96
120	52		
		500	96
150	0		
		291	322
7	174		
		137	322
67	0		
		130	104
3	56		
		102	104
STA. 11+00	52	0	

CROSS SECTIONS - S.R. 13 TEMPORARY ROAD STA. 6+00 TO STA. 18+00

APACHE ASSOCIATES, INC.
CALC. BY PIW DATE 11/9/69
CHKD. BY RJE DATE 11-20-69

FED. RD. DIVISION	STATE	PROJECT	FISCAL YEAR
2	OHIO		

ERIE COUNTY
ERI. 2 - (16.13 - 17.39)

140
284

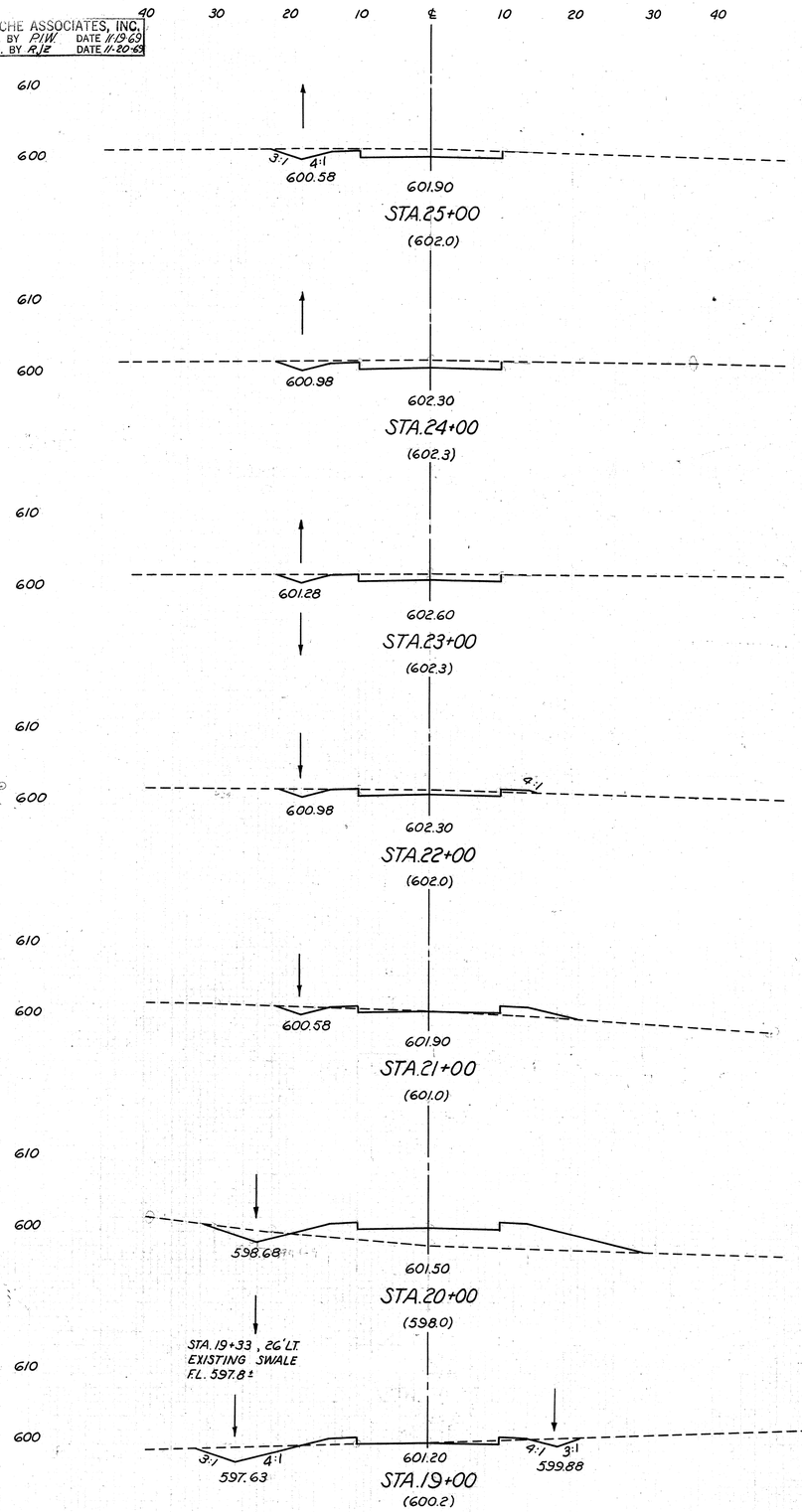

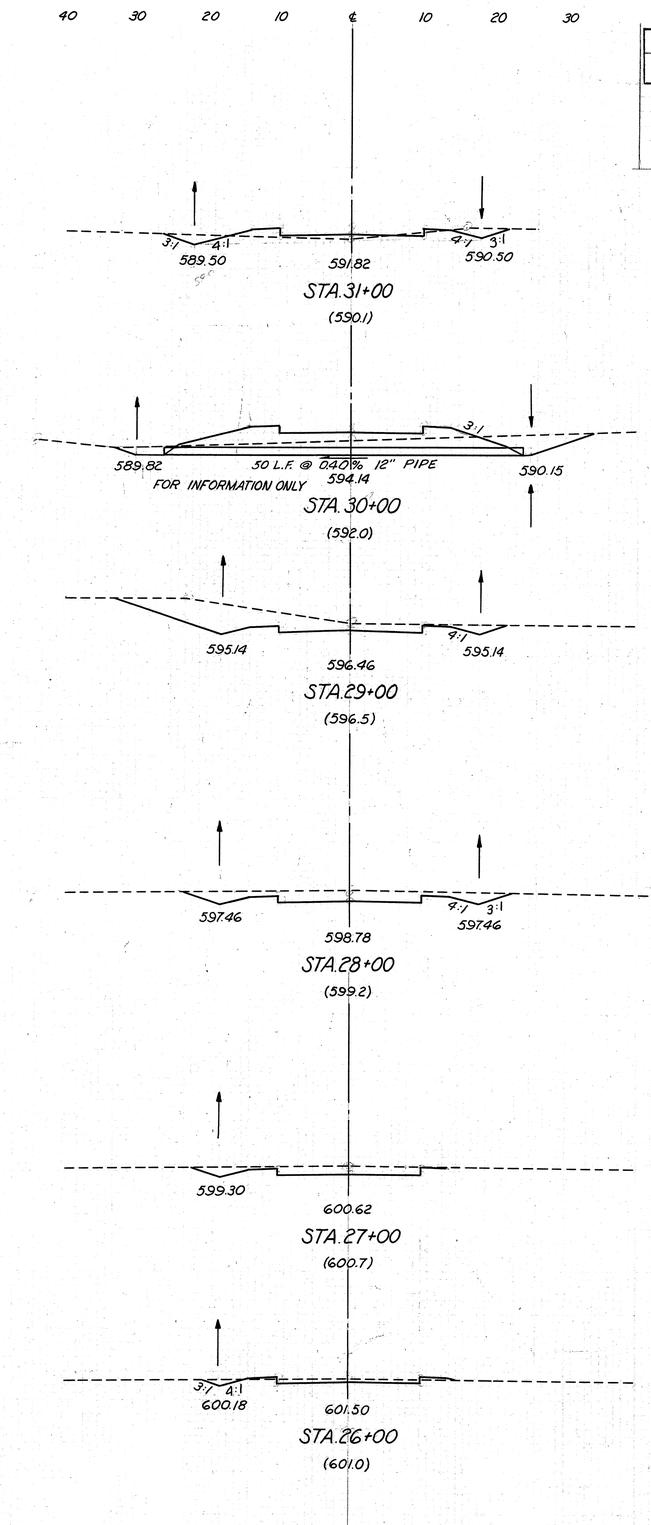

	END AREA CUT	END AREA FILL	VOLUME CUT	VOLUME FILL
	28	0		
			106	0
	29	0		
			93	0
	21	0		
			74	4
	19	2		
			48	24
	7	11		
			33	220
	11	108		
			59	211
	21	6		
			315	11
STA. 18+00	149	0		

	END AREA CUT	END AREA FILL	VOLUME CUT	VOLUME FILL
	13	3		
			113	131
	48	58		
			261	107
	93	0		
			274	0
	55	0		
			159	0
	31	0		
			81	6
	13	3		
			76	6
STA. 25+00	28	0		

CROSS SECTIONS - S.R. 13 TEMPORARY ROAD STA. 19+00 TO STA. 31+00

ERIE COUNTY
ERI 2-(16.13-17.39)

FED. RD. DIVISION	STATE	PROJECT	
2	OHIO		

141/284

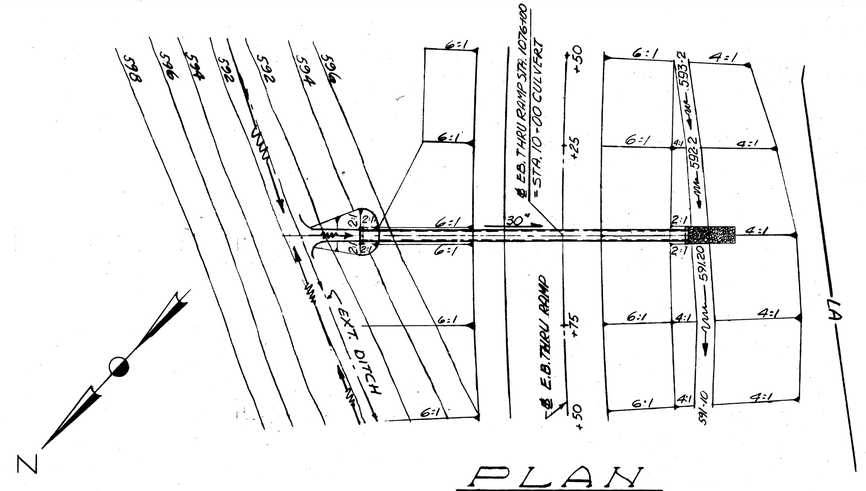

PLAN

0 5 10 20 40 60 80 100
SCALE IN FEET

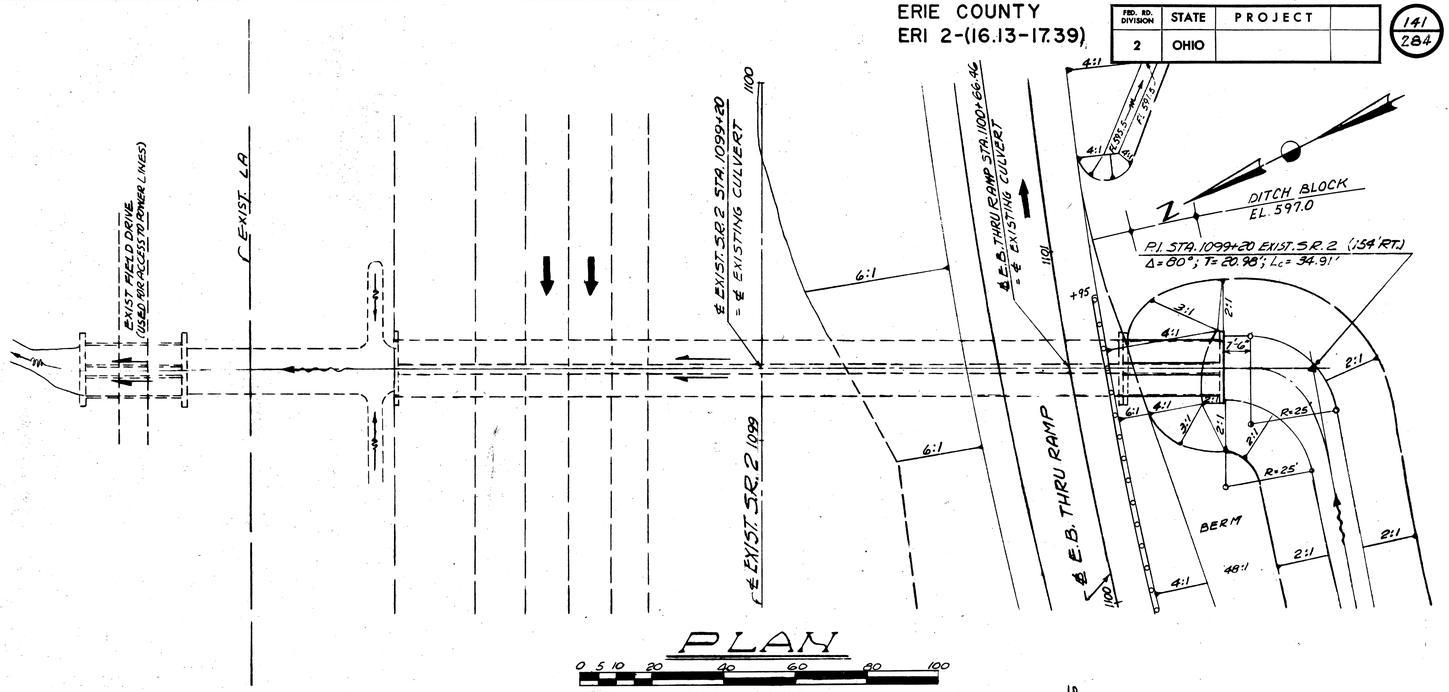

PLAN

0 5 10 20 40 60 80 100
SCALE IN FEET

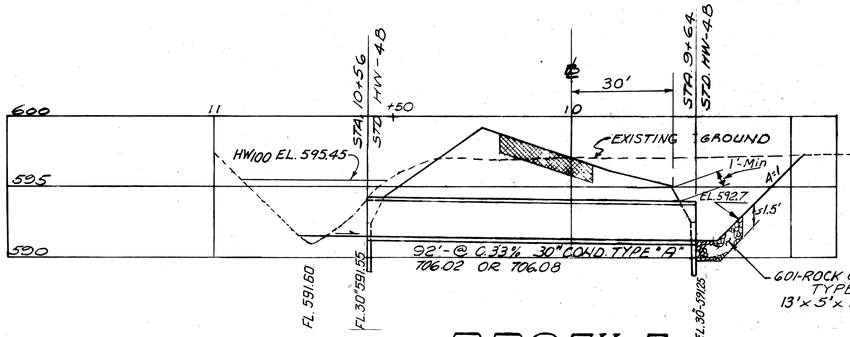

PROFILE

VERT: 0 5 10 15 20 25
HORIZ: 0 5 10 20 40 60 80 100
SCALE IN FEET

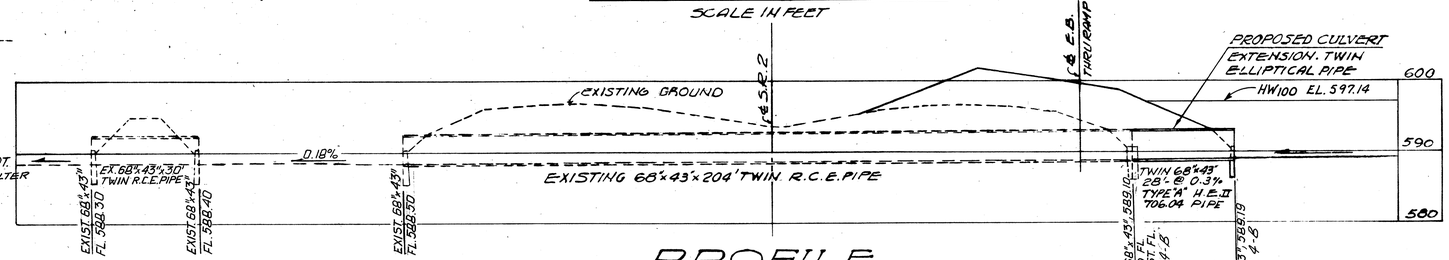

PROFILE

VERT: 0 5 10 20 30 40 50
HORIZ: 0 5 10 20 40 60 80 100
SCALE IN FEET

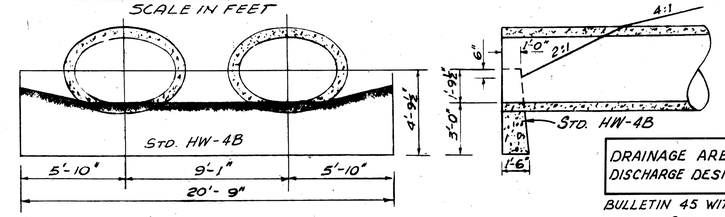

HEADWALL DETAIL

0 5 10 15
SCALE IN FEET

ESTIMATED QUANTITIES

CULVERT No 1, STA. 1076+00 E.B. THRU RAMP

203	EXCAVATION NOT INCLUDING EMBANKMENT CONSTRUCTION	5	C.Y.
601	ROCK CHANNEL PROTECTION, TYPE C WITH FILTER	3.6	C.Y.
602	CONCRETE MASONRY	1.12	C.Y.
603	30" COND. TYPE A 706.02 OR 706.08	92	L.F.

DRAINAGE AREA A= 9 ACRES
DISCHARGE DESIGN Q = 34 C.F.S.

RATIONAL METHOD (15 MIN.) CONCENTRATION TIME
Q50 = 34 C.F.S.
Q100 = 39 C.F.S.
HW100 = 595.45

DRAINAGE AREA = 432 ACRES
DISCHARGE DESIGN Q = 315 C.F.S.

BULLETIN 45 WITH 100% URBANIZATION
Q50 = 315 C.F.S.
Q100 = 340 C.F.S.
HW100 = 597.14

ESTIMATED QUANTITIES

CULVERT No 4 EXTEN. AT STA. 1100+66.46

602	CONCRETE MASONRY	7.32	C.Y.
603	68"x43" CONDUIT TYPE A H.E.A, 706.04	56	L.F.

ADACHE ASSOCIATES INC., ENGINEERS
CLEVELAND, OHIO 44142

S.R. 2
CULVERT #1&4 DETAILS
E.B. THRU RAMP STA. 1076+00 AND STA 1100+66.46 (EXTENSION)

DESIGNED	DRAWN	CHECKED	REVIEWED	DATE
R.J.Z 11-28-69	JDA 12-3-69	JJD 12-5-69		

ERIE COUNTY
ERI 2-(16.13-17.39)

RED. RD. DIVISION	STATE	PROJECT	
2	OHIO		

142/284

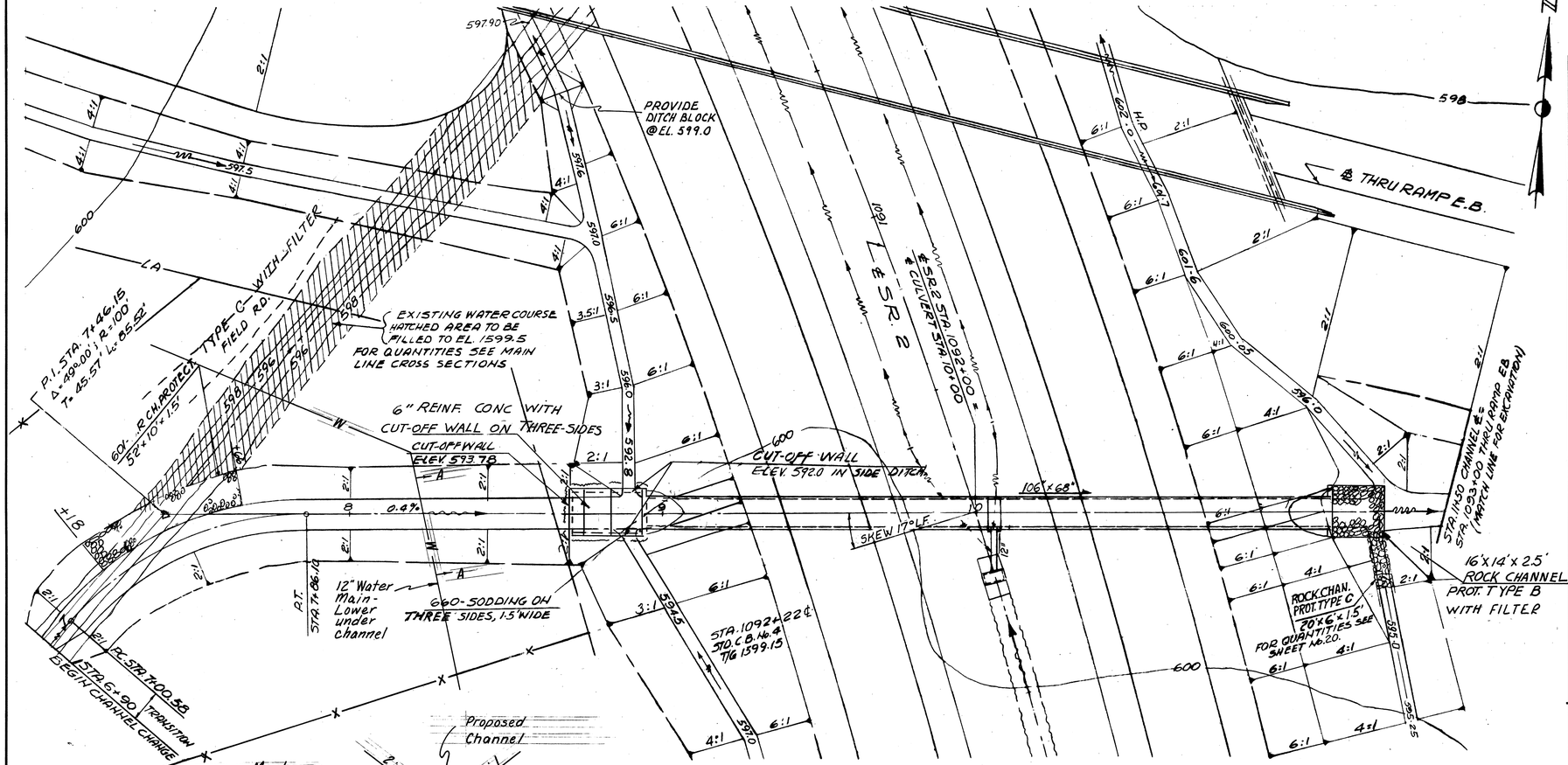

DRAINAGE AREA	A = 410 ACRES
DISCHARGE DESIGN Q	= 311 C.F.S.

BULLETIN 45
Q50 = 299 C.F.S.
Q100 = 323 C.F.S.
HW100 = 597.73

ESTIMATED WATERWORK QUANTITIES
814 12" Water Main A.N.S.I. Class 56 Ductile Iron Pipe, Cement Lined with Push On Joints.
19 Lin. Ft. ✳ WITH FILTER

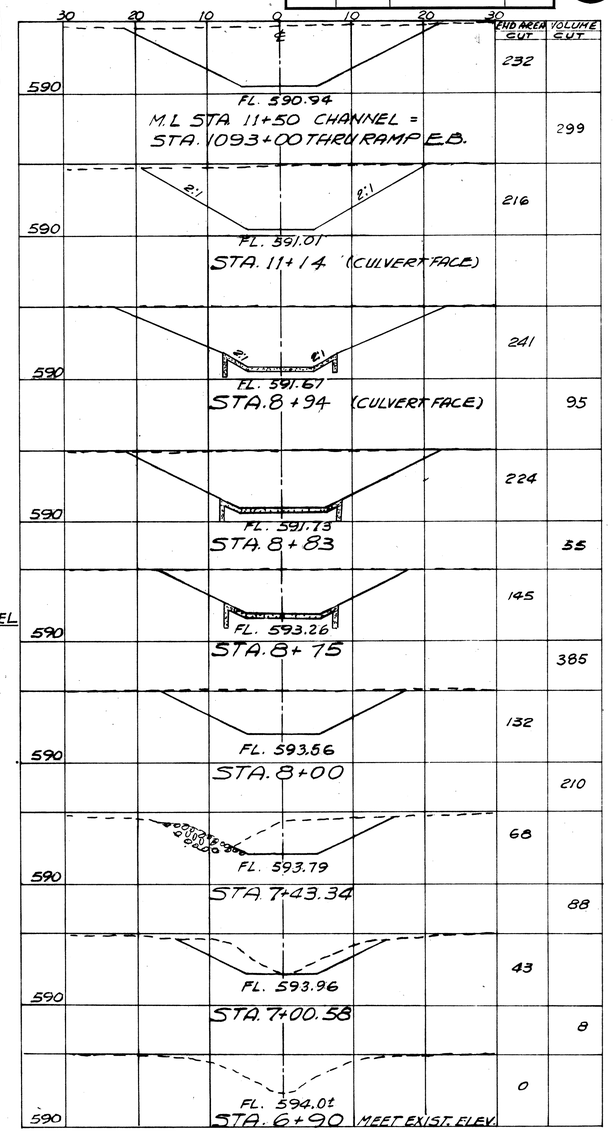

CHANNEL CROSS SECTIONS
SCALE IN FEET

Revised 5/17/85

ESTIMATED QUANTITIES

203 EXCAVATION NOT INCLUDING EMBANKMENT CONSTRUCTION	1140 C.Y.
601 RIPRAP USING 6" REIN. CONCRETE	37.0 S.Y.
601 ROCK CHANNEL PROT. TYPE B*	21 C.Y.
602 CONCRETE MASONRY	6.84 C.Y.
603 106"x68" TYPE A CL. HE-II, 706.04 (106"x68"x12" TEE TYPE A CL. HE-II, 706.04 INCLUDED)	220 L.F.
660 SODDING	11 S.Y.
601 ROCK CHANNEL PROT. TYPE C WITH FILTER	29 C.Y.

ADACHE ASSOCIATES INC., ENGINEERS
CLEVELAND, OHIO 44142

S.R. 2

CULVERT #2 DETAILS

STA. 1092+00

DESIGNED	DRAWN	CHECKED	REVIEWED	DATE
RJZ 11-28-69	JDA 12-3-69	JJD 12-5-69		

FED. RD. DIVISION	STATE	PROJECT	
2	OHIO		

143
284

ERIE COUNTY
ERI 2-(16.13-17.39)

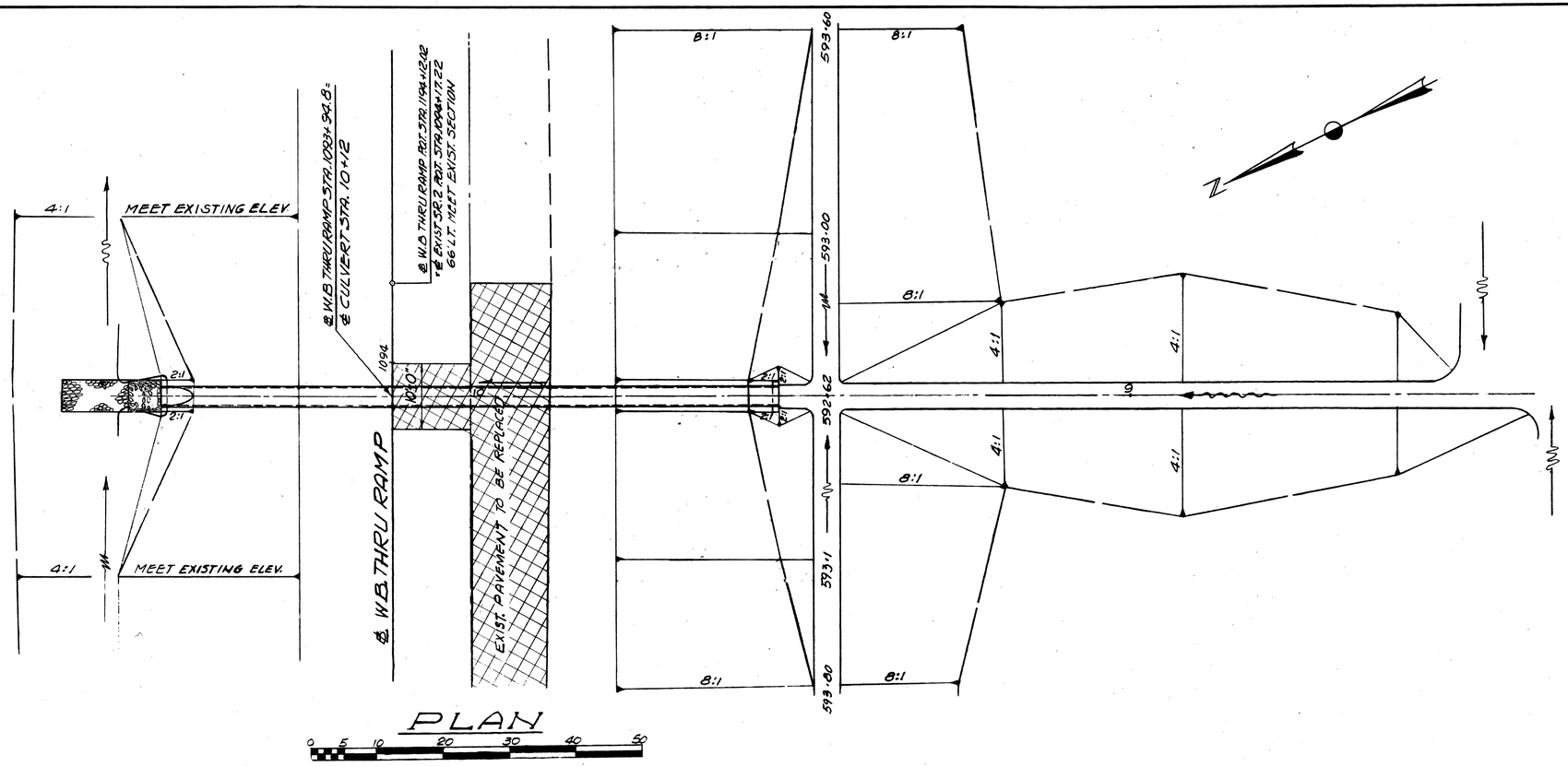

PLAN

0 5 10 20 30 40 50
SCALE IN FEET

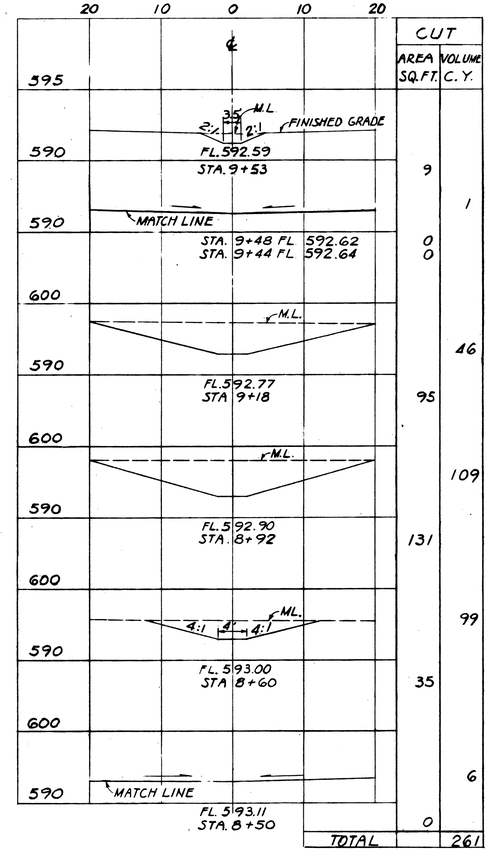

CHANNEL CROSS SECTIONS

0 5 10 20 30 40 50
SCALE IN FEET

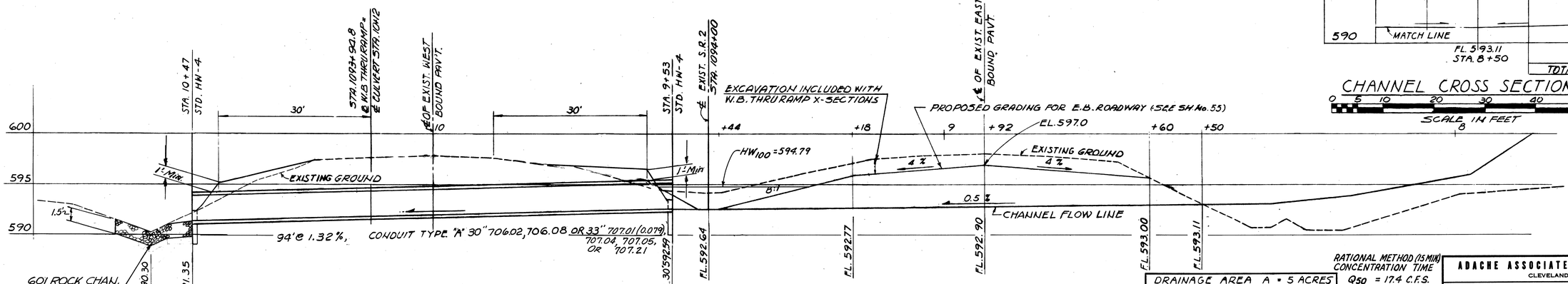

PROFILE

VERT: 0 5 10 15 20 25
HORIZ: 0 10 20 30 40 50
SCALE IN FEET

RATIONAL METHOD (15 MIN) CONCENTRATION TIME
DRAINAGE AREA A = 5 ACRES
DISCHARGE DESIGN Q = 23 C.F.S.
Q50 = 17.4 C.F.S.
Q100 = 19.6 C.F.S.
HW100 = 594.79

ESTIMATED QUANTITIES

203	EXCAVATION NOT INCL. EMBANKMENT CONSTRUCTION	261	C.Y.
601	ROCK CHANNEL PROTECTION TYPE C*	4.2	C.Y.
602	CONCRETE MASONRY	1.36	C.Y.
603	CONDUIT TYPE A 30" 706.02, 706.08, OR 33" 707.01(0.079) 707.04, 707.05 OR 707.21	94	L.F.

* WITH FILTER

ADACHE ASSOCIATES INC., ENGINEERS
CLEVELAND, OHIO 44142

S.R. 2
CULVERT NO. 3 DETAILS
W.B. THRU RAMP
STA. 1093+94.8

DESIGNED	DRAWN	CHECKED	REVIEWED	DATE
RJZ 11-28-69	JDA 12-1-69	JJD 12-5-69		

SHEETS 145 & 146 OMITTED

FED. RD. DIVISION	STATE	PROJECT	
2	OHIO		

144 / 284

ERIE COUNTY
ERI 2 - 16.13

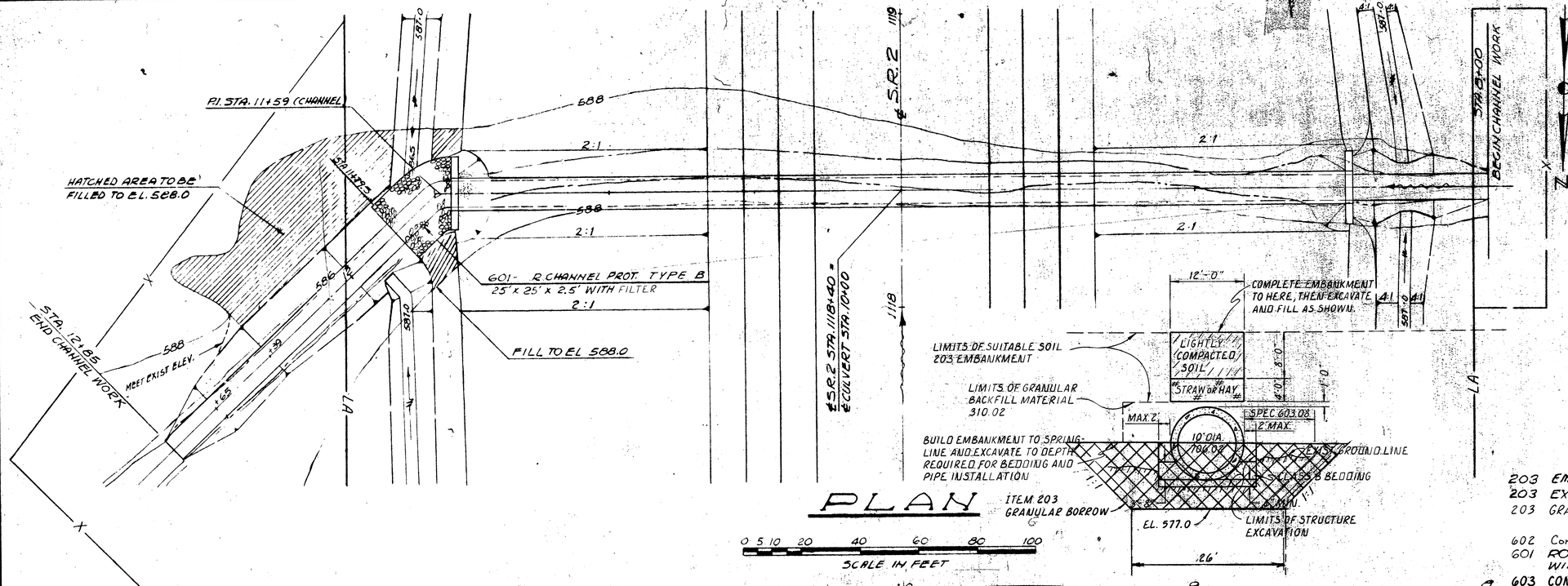

PLAN

SCALE IN FEET 0 5 10 20 40 60 80 100

BULLETIN 45 WITH 40% URBANIZATION FACTOR
Q50 = 560 C.F.S.
Q100 = 630 C.F.S.
HW100 = 593.7

DRAINAGE AREA	A = 1095	ACR
DISCHARGE DESIGN	Q = 470	CFS
HW-ELEV	= 591.9	

ESTIMATED QUANTITIES

203	EMBANKMENT	61	C.Y.
203	EXCAVATION NOT INCL. EMBANKMENT CONSTRUCTION	77	C.Y.
203	GRANULAR BORROW	4654	C.Y.
602	Concrete Masonry	23.78	C.Y.
601	ROCK CHANNEL PROTECTION TYPE B WITH FILTER	58	C.Y.
603	CONDUIT TYPE A, 120" 706.02 3250 D-LOAD, 1500 D-LOAD WITH INDUCED TRENCH OR 144" 707.03 (0.188)	308	L.F.

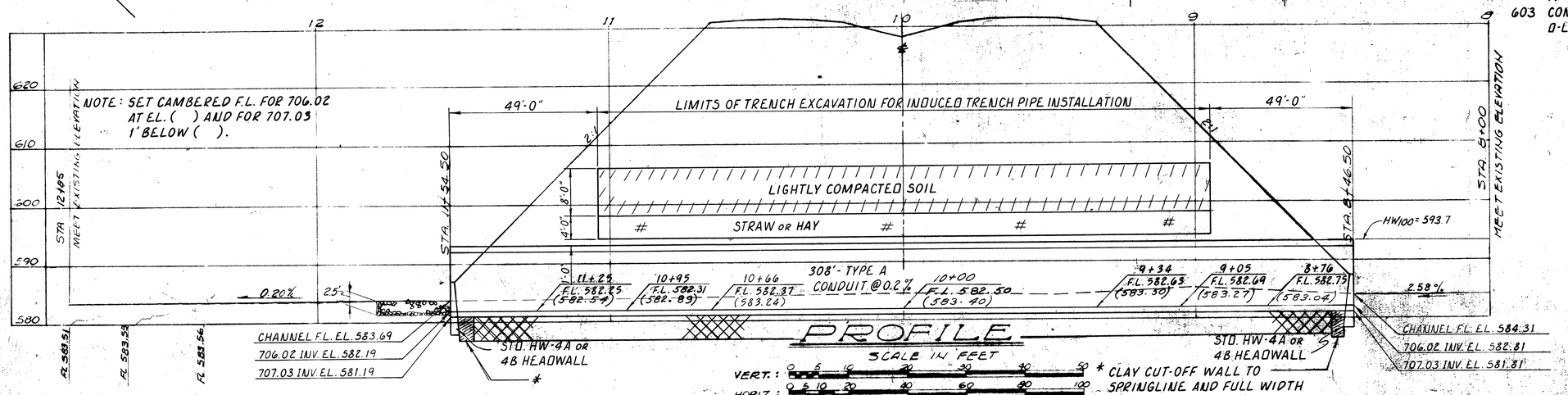

PROFILE

SCALE IN FEET
VERT.: 0 5 10 20 30 40 50
HORIZ.: 0 5 10 20 40 60 80 100

* CLAY CUT-OFF WALL TO SPRINGLINE AND FULL WIDTH OF GRANULAR MATERIAL

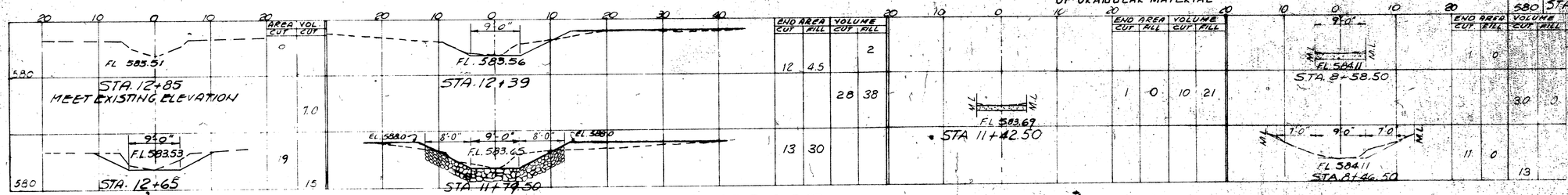

CHANNEL CROSS SECTIONS

SCALE IN FEET

7/3

Revised: R.E.L. 5-13-69

ADACHE ASSOCIATES INC., ENGINEERS
CLEVELAND, OHIO 44142

S.R. 2
CULVERT "5" SITE PLAN
STA. 1118+40
STARR-HEIMBERG DITCH

DESIGNED	DRAWN	CHECKED	REVIEWED	DATE
RJE 11-26-68	JDA 12-2-68	JJD 12-3-68		

SHEETS 145 & 146 OMITTED

FED. RD. DIVISION	STATE	PROJECT	
2	OHIO		

147/284

ERIE COUNTY
ERI 2-(16.13-17.39)

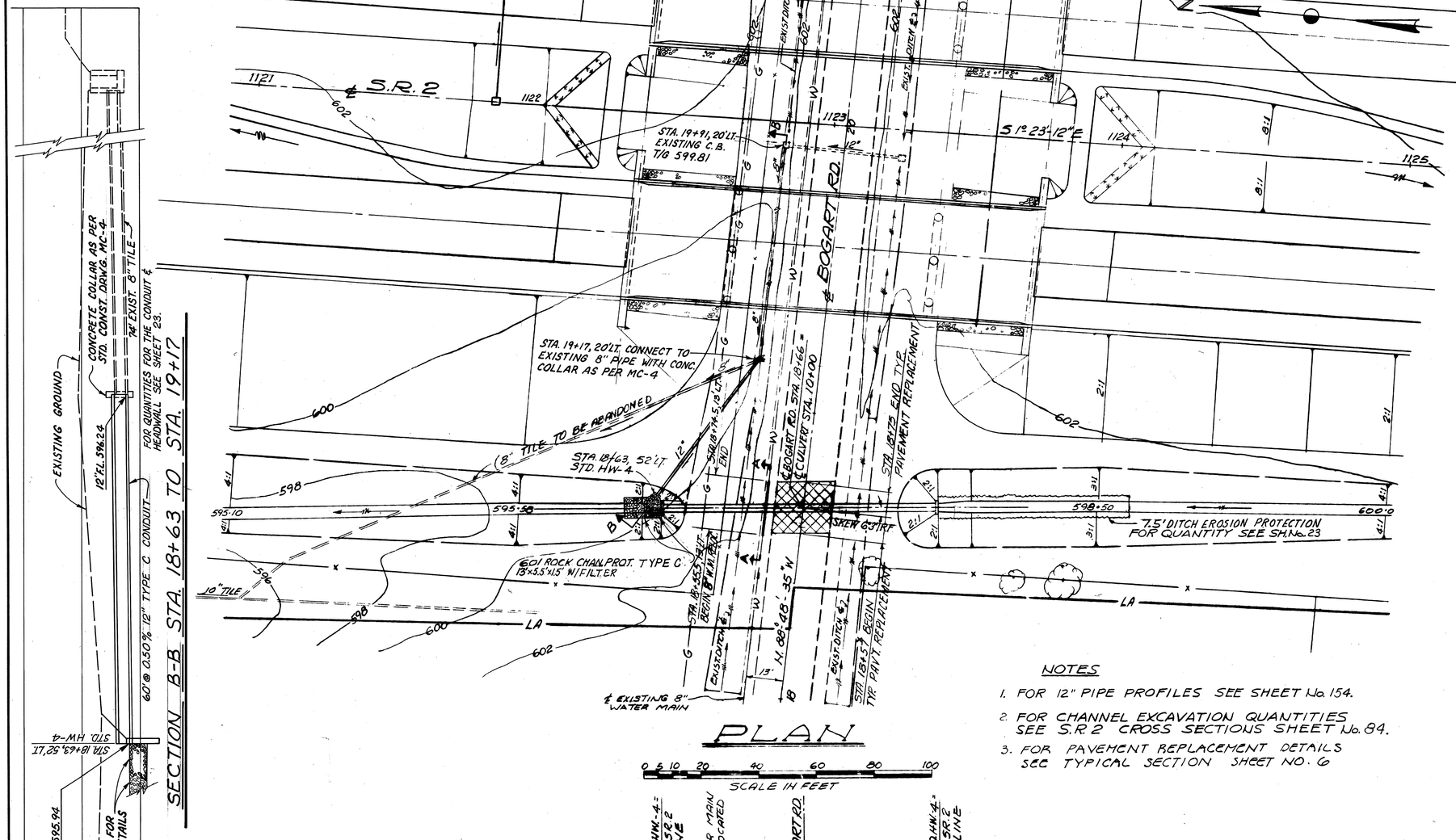

PLAN

SCALE IN FEET

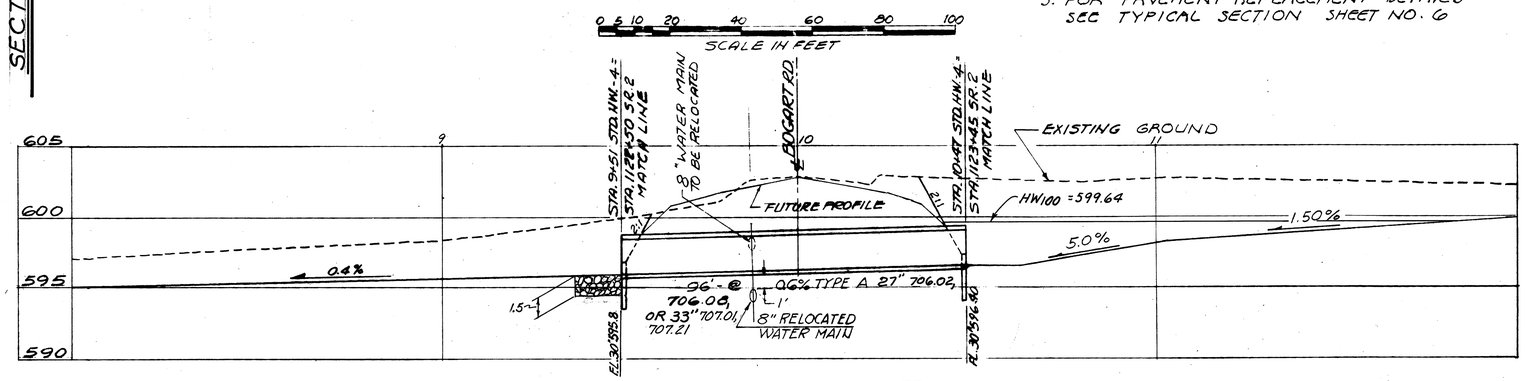

PROFILE

VERT: 0 5 10 15 20 25
HORIZ: 0 5 10 20 40 60 80 100
SCALE IN FEET

NOTES

1. FOR 12" PIPE PROFILES SEE SHEET No. 154.
2. FOR CHANNEL EXCAVATION QUANTITIES SEE S.R 2 CROSS SECTIONS SHEET No. 84.
3. FOR PAVEMENT REPLACEMENT DETAILS SEE TYPICAL SECTION SHEET NO. 6

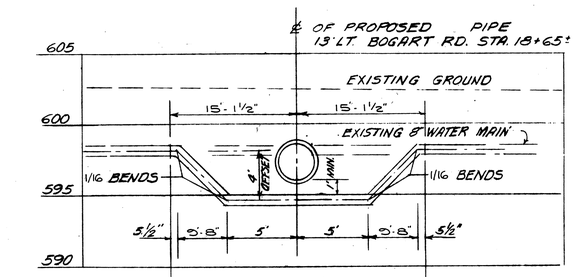

SECTION A-A DETAIL OF 8" WATER MAIN RELOCATION

0 5 10 15 20 25
SCALE IN FEET

WATER MAIN RELOCATION PROCEDURE NOTES

1. NOTIFY THE CITY OF HURON DEPARTMENT OF PUBLIC UTILITIES 48 HOURS BEFORE WORK IS TO BEGIN.
2. CONSTRUCT OFFSET ALIGNMENT PIPE COMBINATION.
3. CLOSE THE FIRST LINE VALVE, EAST AND WEST OF WORK, CUT AND REMOVE EXISTING PIPE, AND INSERT OFFSET ALIGNMENT PIPE.
4. THE CONTRACTOR SHALL PROVIDE ALL PIPE CONNECTIONS, CHLORINE, AND ALL LABOR NECESSARY TO TEST AND CHLORINATE THE LINE AS DIRECTED BY THE CITY OF HURON DEPARTMENT OF PUBLIC UTILITIES.
5. THE UNIT PRICE BID FOR WATERMAIN WORK SHALL INCLUDE ALL NECESSARY MATERIAL, EQUIPMENT AND LABOR REQUIRED TO CONSTRUCT, TEST AND CHLORINATE THE WATER MAIN RELOCATION.

RATIONAL METHOD (15 MIN.)
Q_{50} = 27 C.F.S.
Q_{100} = 30 C.F.S.
HW100 = 599.64

DRAINAGE AREA A = 8 ACR.
DISCHARGE DESIGN Q = 29 C.F.S.

ESTIMATED CULVERT QUANTITIES

601	ROCK CHANNEL PROTECTION TYPE C W/ FILTER	40 C.Y.
602	CONCRETE MASONRY	1.36 C.Y.
603	CONDUIT TYPE A 27" 706.02, 706.08 OR 33" 707.01 OR 707.21	96 L.F.

ESTIMATED WATERWORK QUANTITIES

814	8" WATER MAIN A.N.S.I. CLASS 56 DUCTILE IRON PIPE, CEMENT LINED WITH PUSH ON JOINTS	32 L.F.

ADACHE ASSOCIATES INC., ENGINEERS
CLEVELAND, OHIO 44142

S.R. 2
CULVERT #6 & WATER MAIN RELOCATION DETAILS
BOGART RD. STA 18+66

DESIGNED	DRAWN	CHECKED	REVIEWED	DATE
R.J.Z. 11-28-69	J.D.A. 12-3-69	J.J.D. 12-5-69		

SHEETS 149 & 150 OMITTED

FED. RD. DIVISION	STATE	PROJECT	
2	OHIO		

198
284

ERIE COUNTY
ERI 2 - 16.13

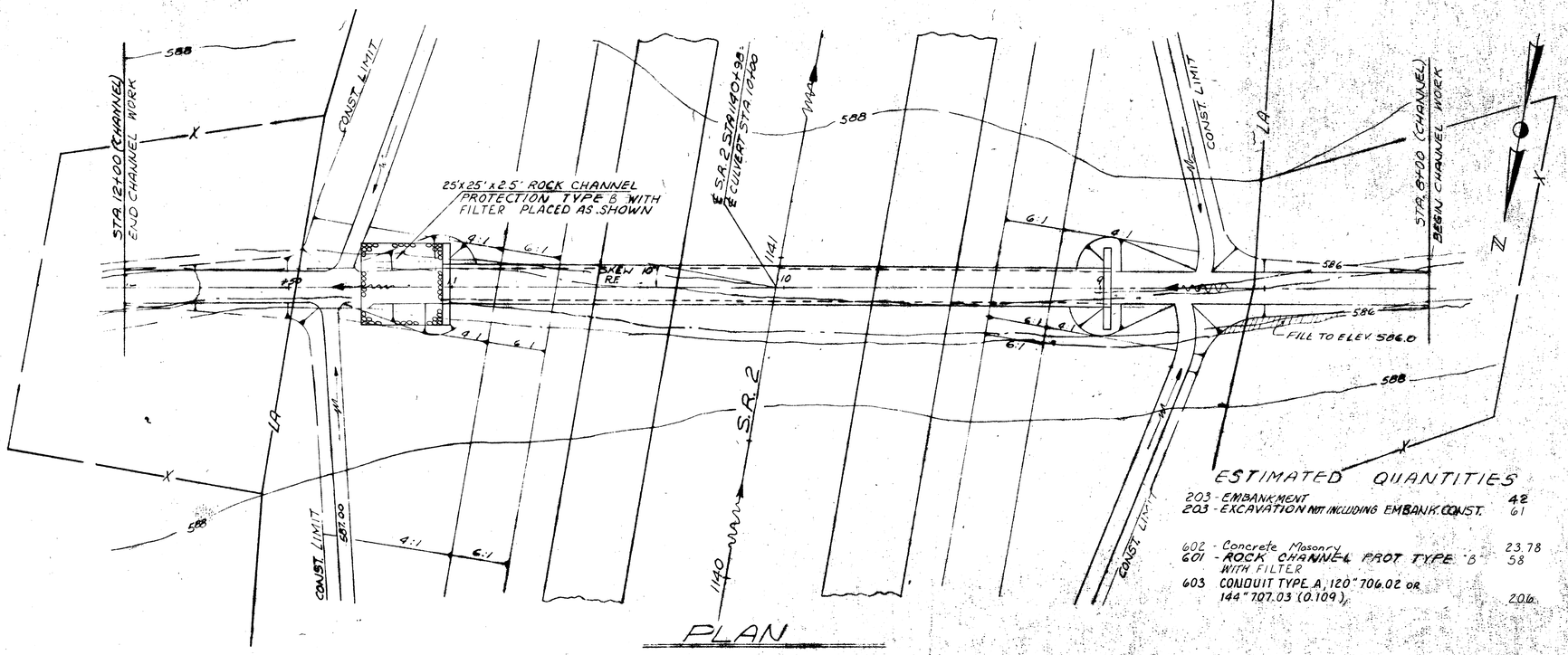

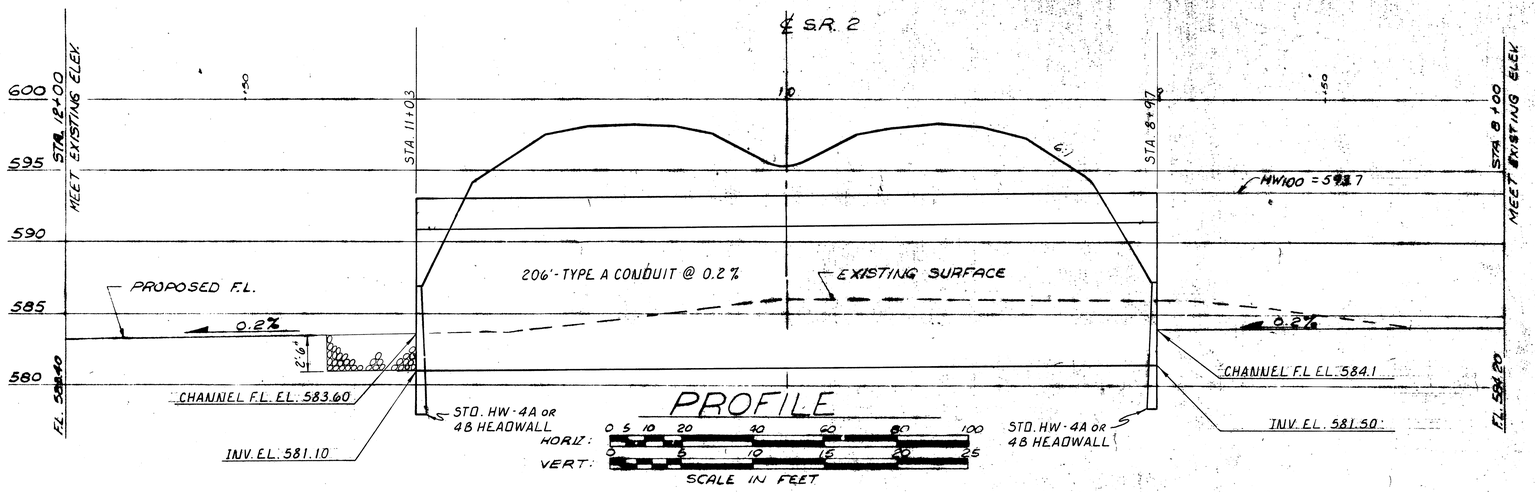

ESTIMATED QUANTITIES

203	EMBANKMENT	42	CY
203	EXCAVATION NOT INCLUDING EMBANK. CONST.	61	CY
602	Concrete Masonry	23.78	CY
601	ROCK CHANNEL PROT TYPE 'B' WITH FILTER	58	CY
603	CONDUIT TYPE A 120" 706.02 OR 144" 707.03 (0.109)	206	LF

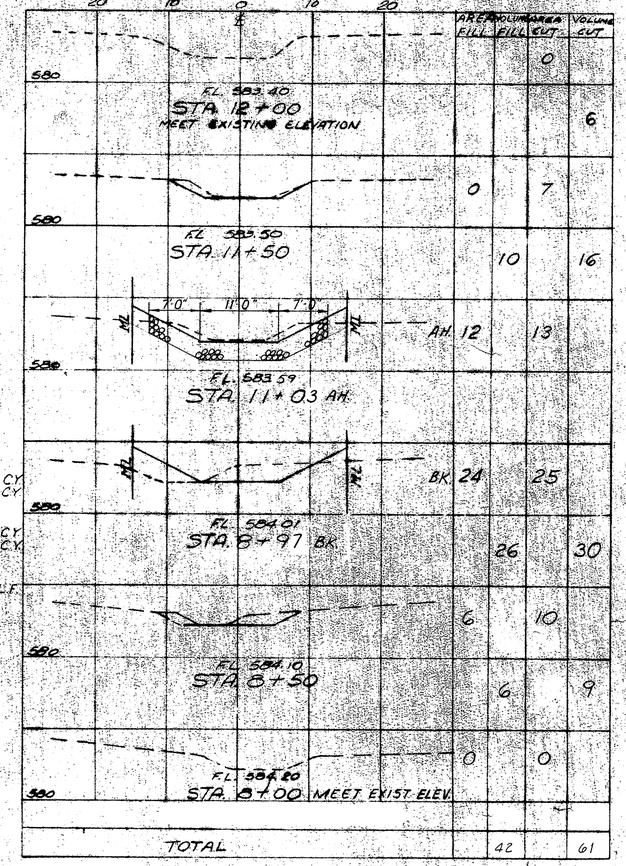

CHANNEL CROSS SECTIONS

SCALE: 1" = 10'

BULLETIN 45 WITH 40% URBANIZATION
Q50 = 657 C.F.S.
Q100 = 713 C.F.S. HW100 = 593.7

AS PER LETTER 3-14-69	DRAINAGE AREA	A = 1293 ACRES
	DISCHARGE DESIGN	Q = 475 C.F.S.
	H.W. ELEV.	= 591.36

1 / 3

ADACHE ASSOCIATES INC., ENGINEERS
CLEVELAND, OHIO 44142

S.R. 2
CULVERT #7 SITE PLAN
STA. 1140+98
WASHBURN DITCH

Revised: R.E.L. 5-13-83

DESIGNED	DRAWN	CHECKED	REVIEWED	DATE	REVISED
R.I. 11-28-69	JDA 12-4-69	JJD 12-5-69			

SHEETS 149 & 150 OMITTED

FED. RD. DIVISION	STATE	PROJECT	
2	OHIO		

151 / 284

ERIE COUNTY
ERI 2-(16.13-17.39)

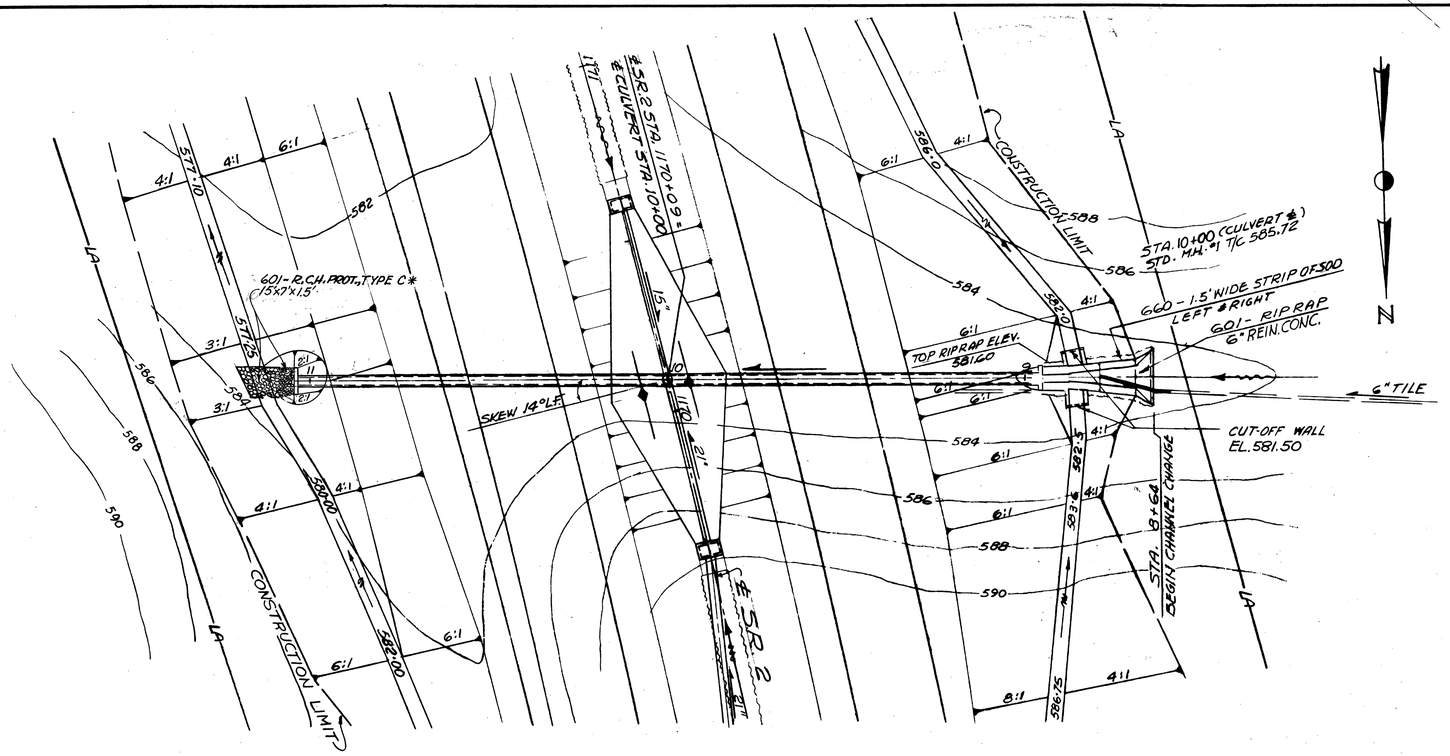

PLAN

SCALE IN FEET

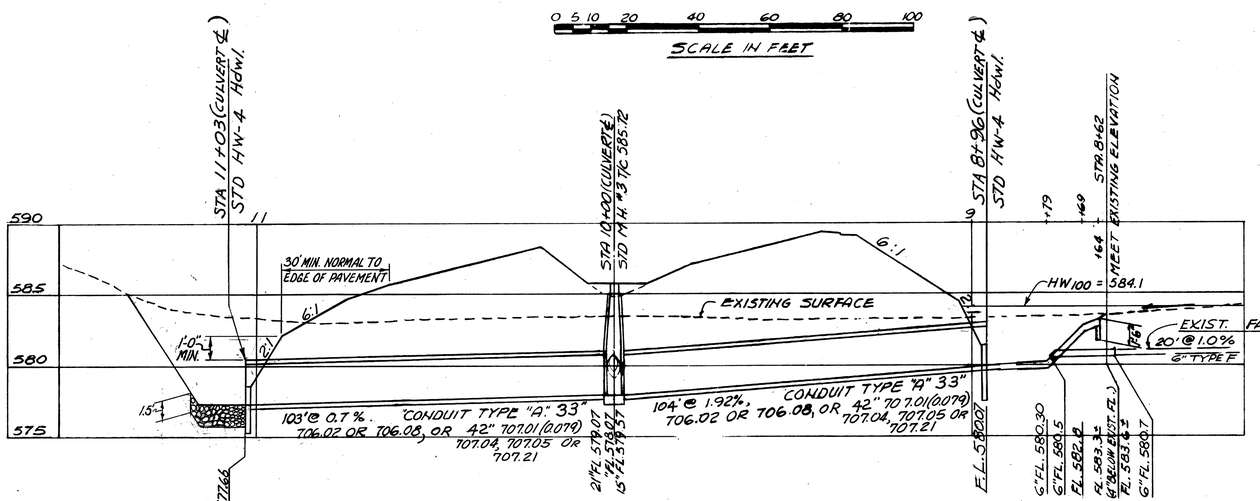

PROFILE

VERT: 0 5 10 15 20 25
HORIZ: 0 5 10 20 40 60 80 100

SCALE IN FEET

NOTE:
FOR TYPE F 6" CONDUIT QUANTITIES, SEE SHEET No. 27

DRAINAGE AREA	A= 30 ACR.
DISCHARGE DESIGN	Q = 44 C.F.S.

BULLETIN 45 WITH 40% URBANIZATION
Q50 = 43 C.F.S.
Q100 = 48 C.F.S.
HW100 = 584.1

ESTIMATED QUANTITIES

203	EXCAVATION NOT INCLUDING EMBANKMENT CONSTRUCTION	42	C.Y.
601	RIPRAP USING 6" REINFORCED CONCRETE	39.0	S.Y.
601	ROCK CHANNEL PROTECTION TYPE C*	5.8	C.Y.
602	CONCRETE MASONRY	1.84	C.Y.
603	CONDUIT TYPE A 33" 706.02, 706.08 OR 42"**	207	L.F.
604	STANDARD MANHOLE No. 3	1	EA.
660	SODDING	11	S.Y.

* - WITH FILTER
** - 707.01 (0.079) 707.04, 707.05 OR 707.21

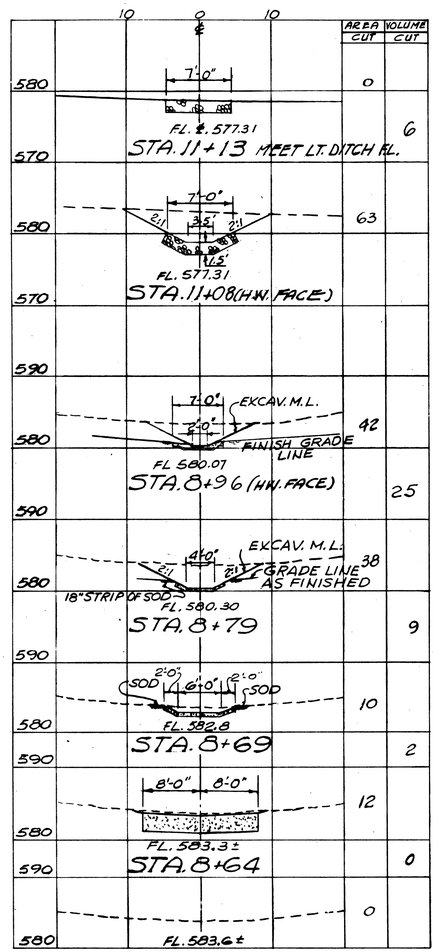

CHANNEL CROSS SECTIONS

0 5 10 20 30 40 50

SCALE IN FEET

ADACHE ASSOCIATES INC., ENGINEERS
CLEVELAND, OHIO 44142

S.R. 2
CULVERT #8 DETAILS
STA. 1170+09

DESIGNED	DRAWN	CHECKED	REVIEWED	DATE
RJZ 11-28-69	JDA 12-4-69	JJD 12-5-69		

FED. RD. DIVISION	STATE	PROJECT	
2	OHIO		

152 / 284

ERIE COUNTY
ERI 2-(16.13-17.39)

* FOR EXTENSION OF CULVERT SEE PROJECT ERI 2-18.38

601 Rock Channel Prot. Type C With Filter 12'x7'x1.5' - Non-perform if adjacent contract is ready to extend culvert

STA 11+42 ℄ CULVERT END 36" PIPE

STA. 11+41 ℄ CULVERT STD. HW-4

BEGIN CONTOUR LINE 596.0

℄ S.R.2

℄ S.R.2 STA. 1194+00 = ℄ PIPE STA. 10+00 (RADIAL)

EXISTING WATER COURSE

PROPOSED CONTOUR LINE 590

CLOSE INT. CONTOUR

℄ RAMP 5

℄ RAMP 6 STA. 11+93 PIPE ℄ STA. 11+32.10

SKEW 5°-13'-44"

BERM

CONST. LIMIT

STA. 6+42 BEGIN CHANNEL CHANGE

CUT-OFF WALL

TOP RIPRAP EL. 584.5

EL. 583.8

601 - RIPRAP 6" REIN. CONC. SLAB

EXISTING WATER COURSE

660 - STRIP OF SOD 18"

EL. 584.5

EL. 584.7

CUT-OFF WALL

GRANULAR BORROW

SECTION A-A

11'-6" | 27'-0" | 11'-6" | 11'-6"

PLAN

0 5 10 20 40 60 80 100

SCALE IN FEET

PROFILE

VERT: 0 5 10 15 20 25

HORIZ: 0 5 10 20 40 60 80 100

SCALE IN FEET

STA. 1141 ℄ CULVERT STD. HW-4

STA. 8+75 ℄ CULVERT STD. 1¾ 44 76 589.75

STA. 6+66 ℄ CULVERT STD. HW-4

STA. 6+42 MEET EXISTING ELEVATION

RAMP #5

HW100 = 587.9 WITH EXTENSION OF CULVERT FOR ERI-2-18.38

EXISTING GROUND

A

267'- @ 0.62%, CONDUIT TYPE "A" 36", 706.02, 1250 D-LOAD OR 42" 707.01 (0.079) 707.04, 707.05 OR 707.21

209' @ 0.62%, CONDUIT TYPE "A" 36", 706.02, 2250 D-LOAD OR 42" 707.01 (0.079) 707.04, 707.05 OR 707.21

36"ℓ 580.04

36"ℓ 581.69

36"ℓ 582.45

EL. 583.06

EL. 584.81

EL. 585.40

EL. 585.70

Clay cut-off wall to springline & full width of granular material

EXIST. FL. 579.0

HEADWALL TO BE SET 1'-0" BACK TO FACILITATE FUTURE EXTENSION

ITEM 203, GRANULAR BORROW TO BE PLACED UNDER ENTIRE LENGTH OF CULVERT (SEE QUANTITIES AT RIGHT.)

CHANNEL INLET CROSS SECTIONS

STA. 6+42 — MEET EXIST. ELEV. — FL. 585.7± — AREA=0 — VOL.=0

STA. 6+43 — FL. 585.4 (3'-6" BELOW EXIST. SURFACE) — AREA=8 — VOL.=1

STA. 6+48 — FL. 585.50 — FL. 584.40 — AREA=8 — VOL.=4

STA. 6+55 — FINISHED GRADE — FL. 583.90 — FL. 583.05 — AREA=21 — VOL.=7

STA. 6+66 — FINISHED GRADE — FL. 582.99 — AREA=15

0 5 10 20 30 40 50

SCALE IN FEET

ESTIMATED QUANTITIES

203	EXCAVATION NOT INCLUDING EMBANKMENT CONSTRUCTION	12	C.Y.
601	RIPRAP USING 6" REIN. CONC.	35	S.Y.
602	CONCRETE MASONRY	1.84	C.Y.
603	CONDUIT TYPE A 36", 706.02, 1250 D-LOAD *	267	L.F.
603	CONDUIT TYPE A 36", 706.02, 2250 D-LOAD *	209	L.F.
604	STD. CATCH BASIN No. 4-A	1	EA.
660	SODDING	9	S.Y.
203	GRANULAR BORROW, TYPE 1	7995	C.Y.
601	ROCK CHANNEL PROTECTION, TYPE C WITH FILTER	4.7	C.Y.

* OR 42" 707.01 (0.079) 707.04, 707.05 OR 707.21

DRAINAGE AREA	A = 24 ACRES
DISCHARGE DESIGN	Q50 = 43 C.F.S.
	Q100 = 49 C.F.S.

ABACHE ASSOCIATES INC., ENGINEERS
CLEVELAND, OHIO 44142

S.R.2
CULVERT #9 DETAILS
STA. 1194+00

DESIGNED	DRAWN	CHECKED	REVIEWED	DATE
RJE 11-29-69	JDA 12-1-69	JJD 12-5-69		

SHEET 15A OMITTED

FED. RD. DIVISION	STATE	PROJECT	
2	OHIO		

153
284

ERIE COUNTY
ERI 2-(16.13-17.39)

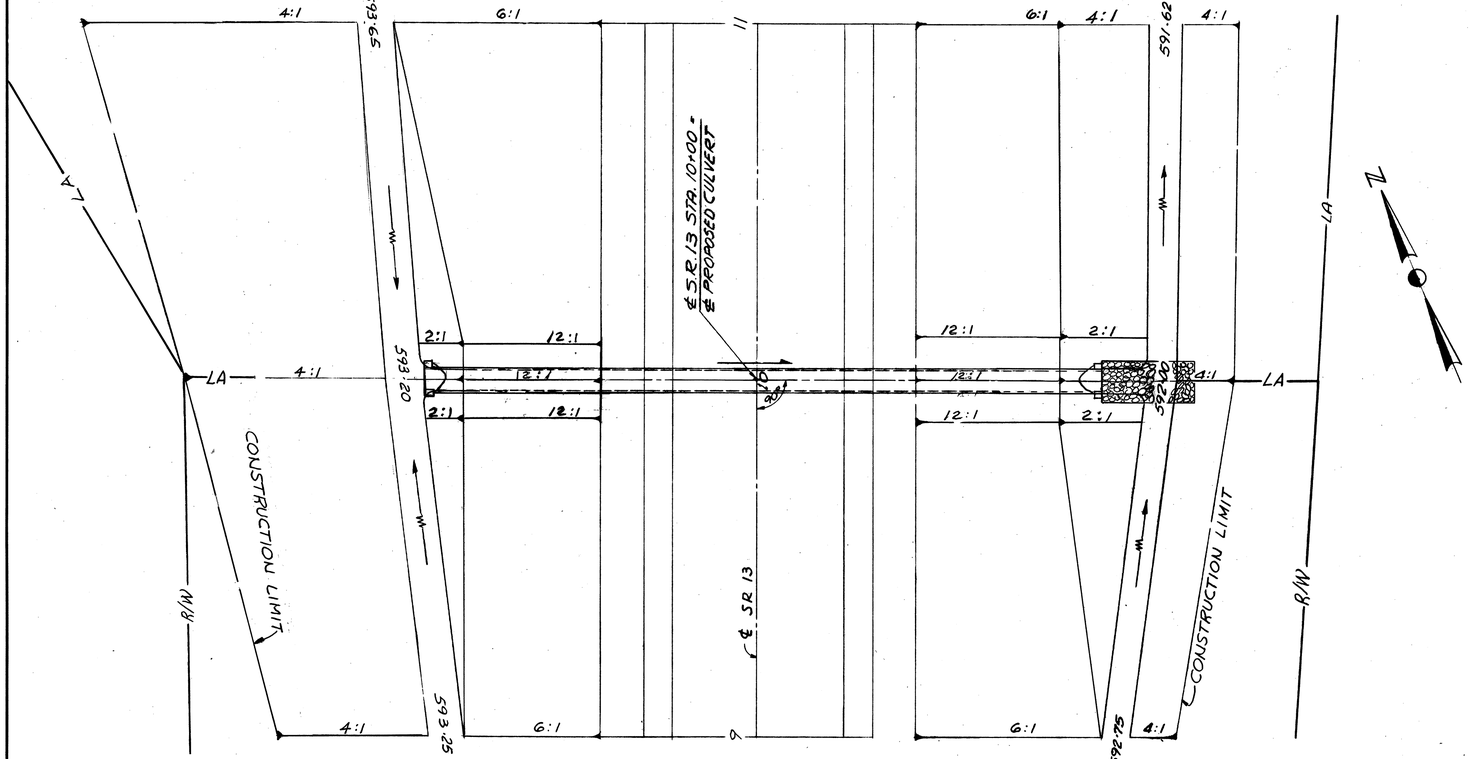

PLAN

0 5 10 20 30 40 50
SCALE IN FEET

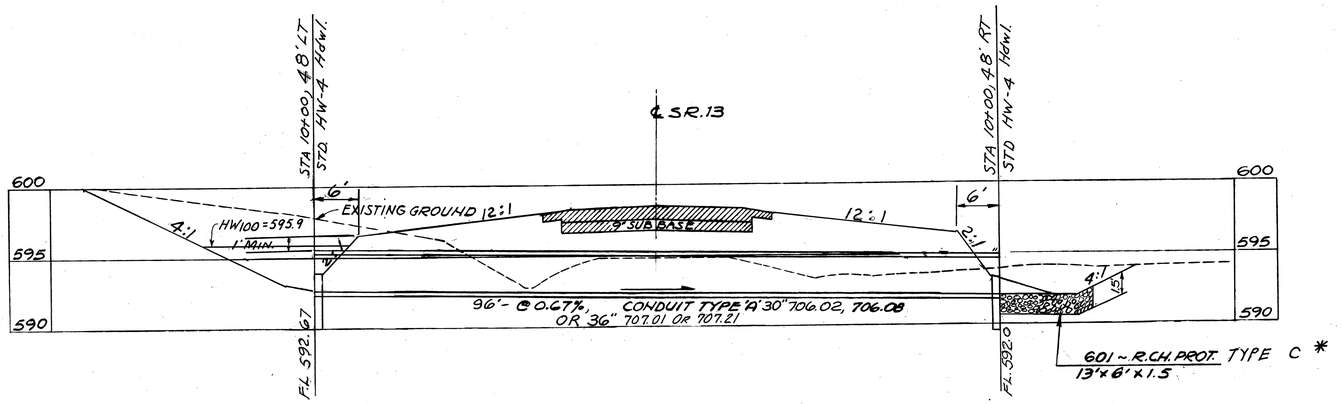

PROFILE

VERTICAL 0 5 10 15 20 25
HORIZONTAL 0 5 10 20 30 40 50
SCALE IN FEET

DRAINAGE AREA	A = 12 ACR
DISCHARGE DESIGN	Q50 = 30 C.F.S.
	Q100 = 34 C.F.S.

RATIONAL METHOD
Q50 = 30 C.F.S.
Q100 = 34 C.F.S.
HW100 = 595.9

CONCENTRATION TIME 26 MIN.

ESTIMATED QUANTITIES

203	EXCAVATION NOT INCLUDING EMBANKMENT CONSTRUCTION	8	C.Y.
601	ROCK CHANNEL PROTECTION TYPE C*	4.3	C.Y.
602	CONCRETE MASONRY	1.52	C.Y.
603	CONDUIT TYPE A 30" 706.02, 706.08 OR 36" 707.01 OR 707.21	96	L.F.

* WITH FILTER

ADACHE ASSOCIATES INC., ENGINEERS
CLEVELAND, OHIO 44142

S.R. 2
CULVERT NO. 10 DETAILS
S.R.13 STA. 10+00

DESIGNED	DRAWN	CHECKED	REVIEWED	DATE
RJZ 11-28-69	JDA 12-1-69	JJD 12-4-69		

SHEET 154 OMITTED

FED. RD. DIVISION	STATE	PROJECT	
2	OHIO		

155
284

ERIE COUNTY
ERI 2-(16.13-17.39)

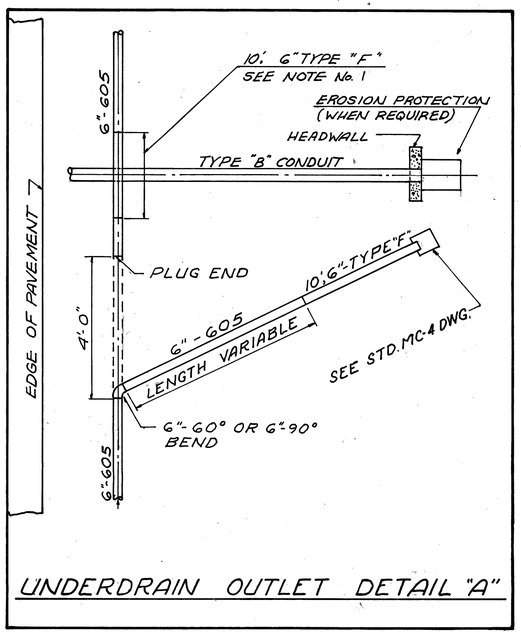

UNDERDRAIN OUTLET DETAIL "A"

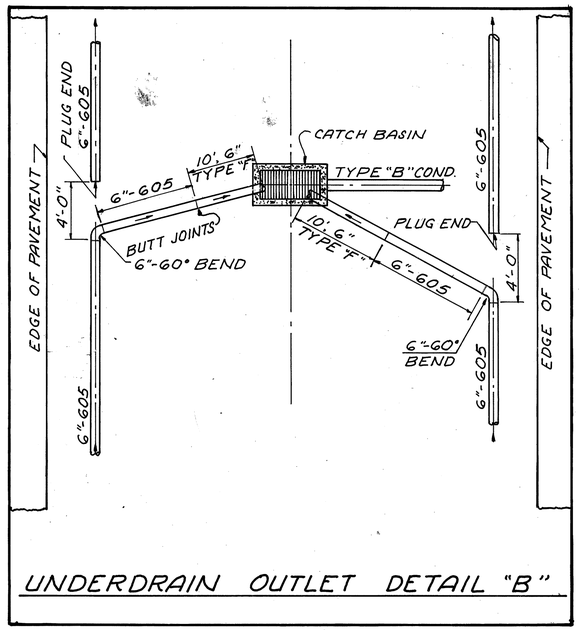

UNDERDRAIN OUTLET DETAIL "B"

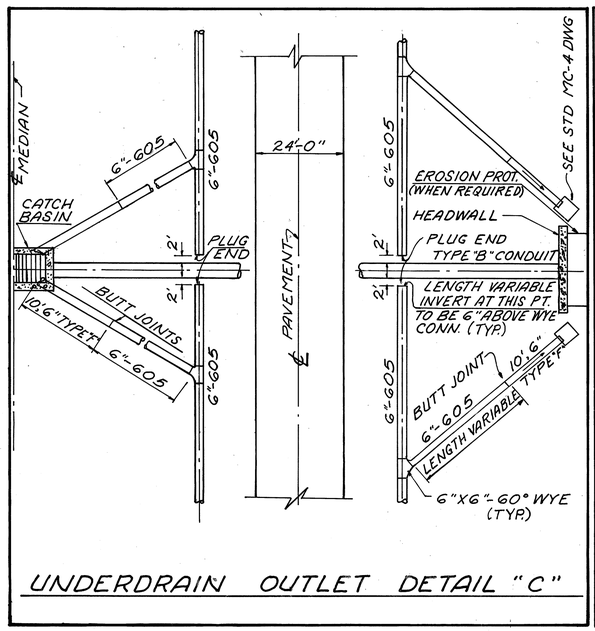

UNDERDRAIN OUTLET DETAIL "C"

PRE-FABRICATED "T" CONNECTION

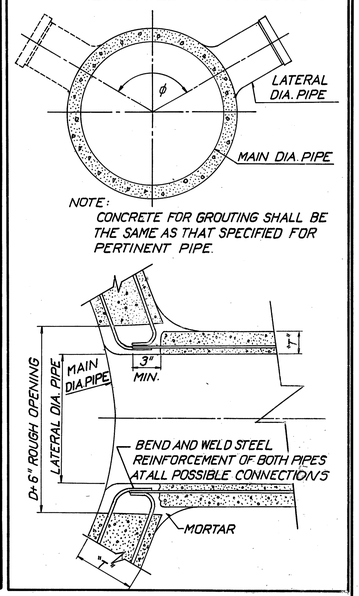

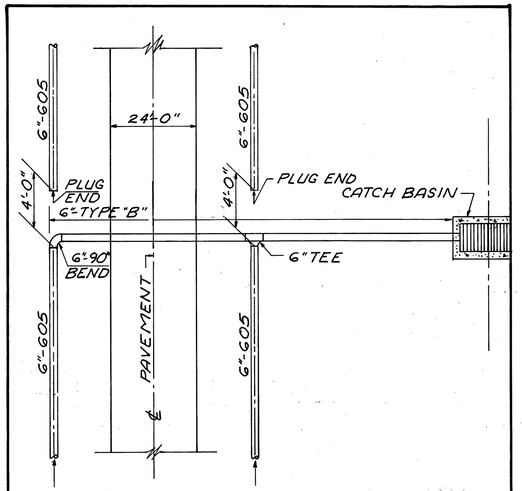

UNDERDRAIN OUTLET DETAIL "D"

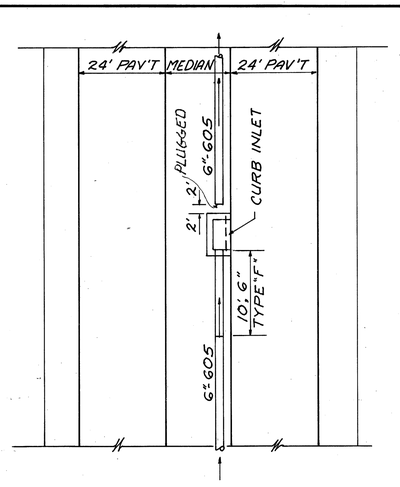

UNDERDRAIN OUTLET DETAIL "E"

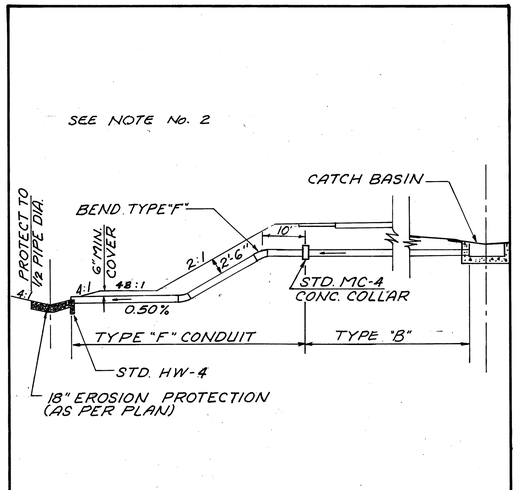

MEDIAN OUTLET DETAIL IN HIGH FILL

NOTES

1. WHEN IT IS DESIRABLE TO CONTINUE THE UNDERDRAIN ACROSS A TRANSVERSE LINE SUCH AS IN DETAIL "A", A 10' MIN. LENGTH OF 6" TYPE "F" CONDUIT SHOULD BE USED TO SPAN THE TRENCH UNLESS SUCH CROSSING IS ABOVE THE AREA OF GRANULAR BACKFILL.
2. MEDIAN OUTLET PIPES IN HIGH FILL MAY OUTLET ONE FOOT ABOVE DITCH BOTTOM.

ADACHE ASSOCIATES INC., ENGINEERS
CLEVELAND, OHIO 44142

MISCELLANEOUS DRAINAGE DETAILS

NO SCALE

DESIGNED	DRAWN	CHECKED	REVIEWED	DATE	REVISED
-	JAS 4-1-69	R/E 4-3-69			

CALC. T.M.J.		OHIO
DATE 8-23-83		
CHKD. R.W.H.		F.H.W.A. REGION 5
DATE 11-17-83		

156
284

ERIE COUNTY
ERIE - 2 - (16.13-17.39)

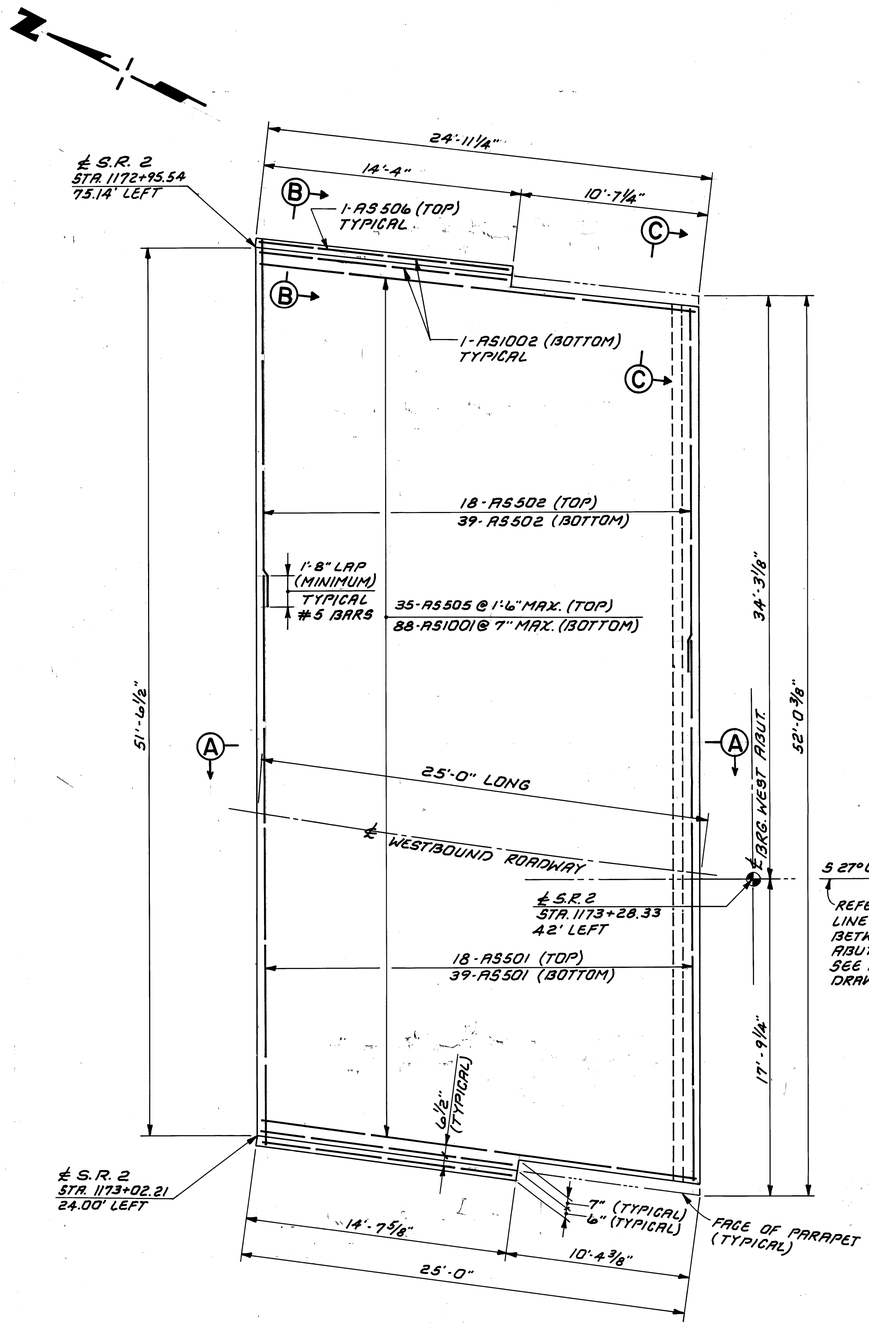

WEST APPROACH SLAB
WESTBOUND LANES

LOCATION "A"

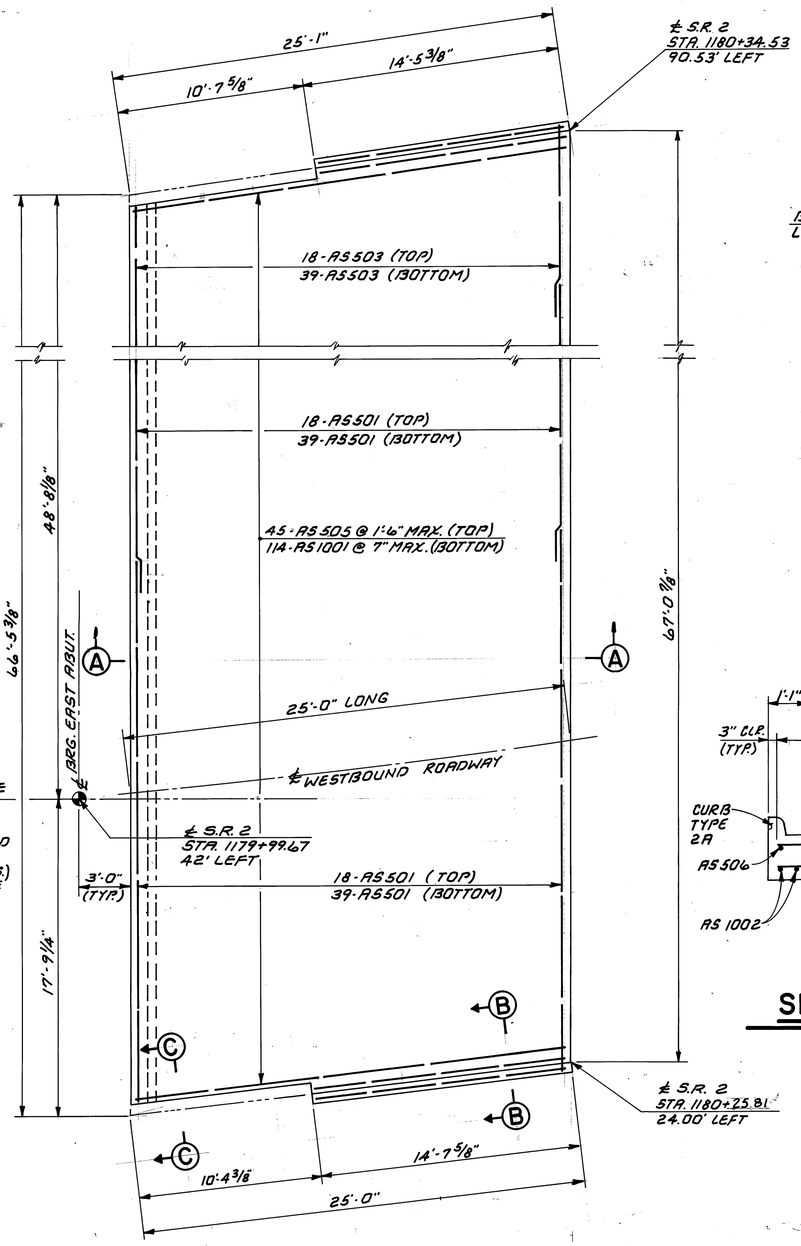

EAST APPROACH SLAB
WESTBOUND LANES

LOCATION "B"

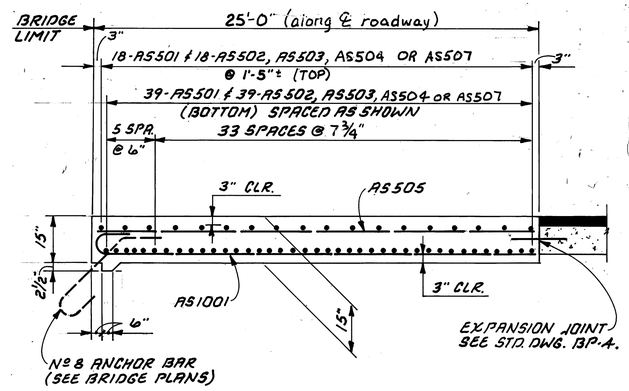

SECTION A-A

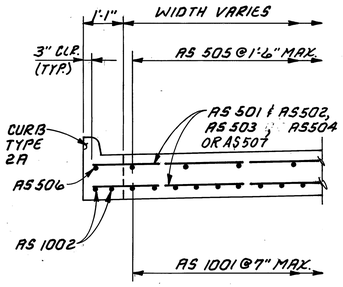

SECTION B-B

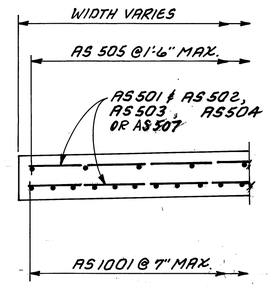

SECTION C-C

NOTE:
FOR APPROACH SLAB NOTES AND
REINFORCING SCHEDULE,
SEE SHEET 2 / 2

NOTE:
FOR APPROACH SLAB DETAILS ON EASTBOUND LANES
SEE SHEET 2 / 2

1 / 2

adache - ciuni - lynn associates
CONSULTING ENGINEERS CLEVELAND, OHIO 44131

APPROACH SLAB DETAILS

BRIDGE № ERI - 2 - 1798 L/R
S.R.2 OVER MUD BROOK

ERIE COUNTY
ERI - 2 - 16.13

DESIGNED	DRAWN	CHECKED	REVIEWED	DATE	REVISED
R.W.H.	T.M.J.				

A-C-L form no. B-1

MICROFILMED

CALC. T.M.J.		OHIO
DATE 8-23-83		
CHKD. R.W.H.		F.H.W.A. REGION 5
DATE 11-17-83		

157
284

ERIE COUNTY
ERIE - 2 - (16.13-17.39)

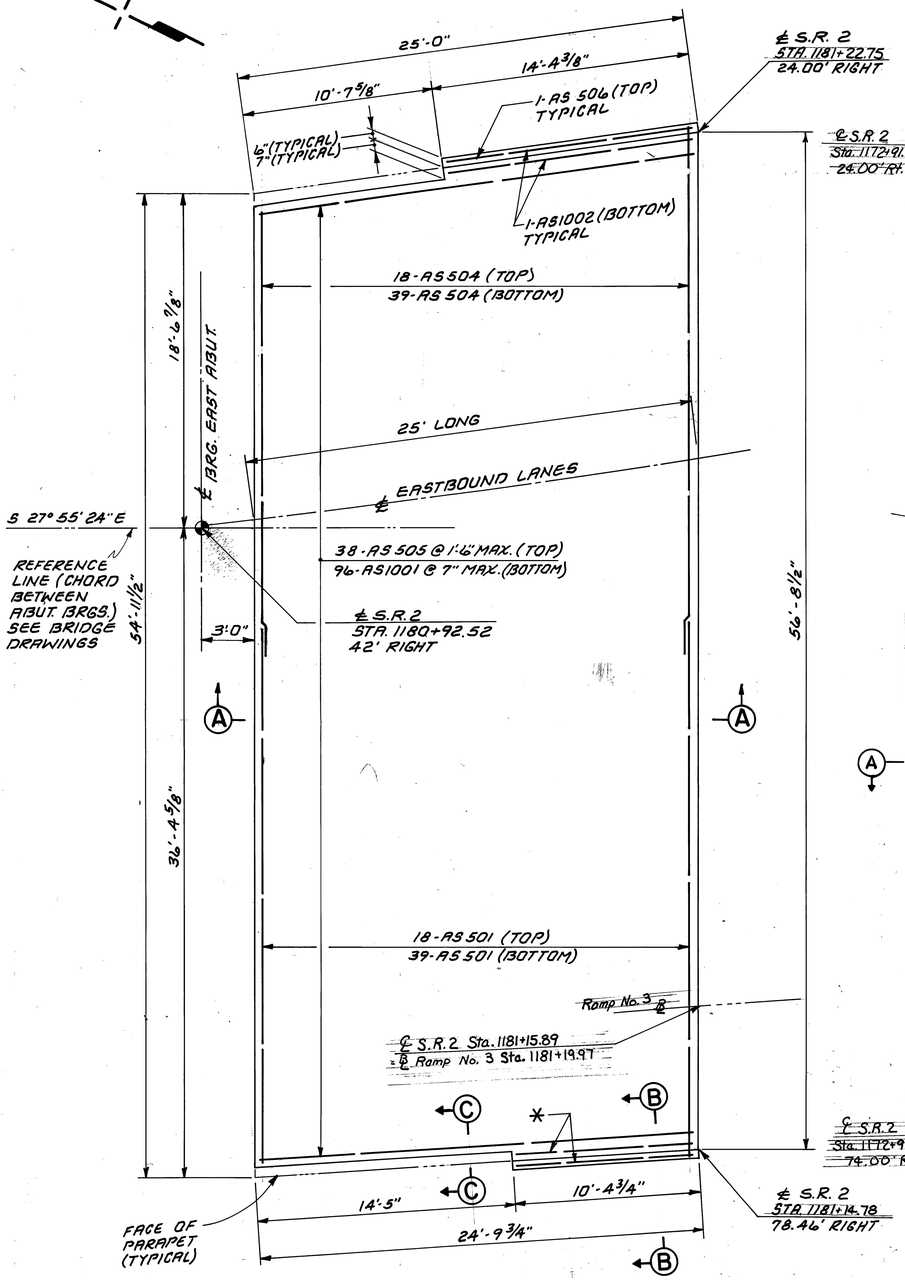

EAST APPROACH SLAB
EASTBOUND LANES

* FIELD CUT AS REQUIRED
Location "C"

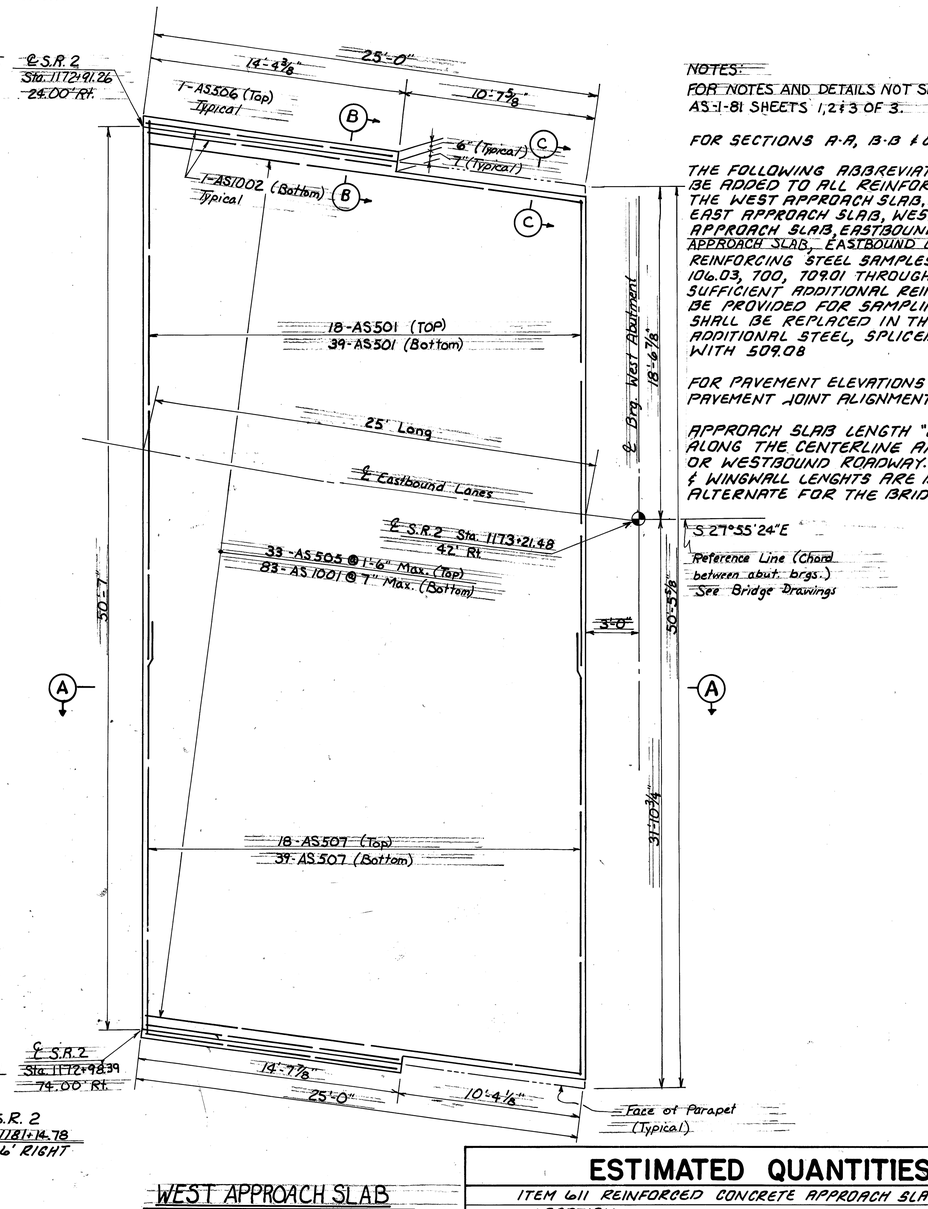

WEST APPROACH SLAB
EASTBOUND LANES

Location "D"

NOTES:

FOR NOTES AND DETAILS NOT SHOWN SEE STD. DRWG. AS-1-81 SHEETS 1, 2 & 3 OF 3.

FOR SECTIONS A-A, B-B & C-C SEE SHEET 1 / 2.

THE FOLLOWING ABBREVIATIONS A, B, C & D SHALL BE ADDED TO ALL REINFORCING BAR MARKS IN THE WEST APPROACH SLAB, WESTBOUND LANES; EAST APPROACH SLAB, WESTBOUND LANES, EAST APPROACH SLAB, EASTBOUND LANES & WEST APPROACH SLAB, EASTBOUND LANES RESPECTIVELY.

REINFORCING STEEL SAMPLES, REFER TO C.M.S. SECTION 106.03, 700, 709.01 THROUGH 709.05 AND 709.08. SUFFICIENT ADDITIONAL REINFORCING STEEL SHALL BE PROVIDED FOR SAMPLING. RANDOM SAMPLES SHALL BE REPLACED IN THE STRUCTURES BY THE ADDITIONAL STEEL, SPLICED IN ACCORDANCE WITH 509.08

FOR PAVEMENT ELEVATIONS AND ADJOINING PAVEMENT JOINT ALIGNMENT, SEE SHEETS 51 & 52.

APPROACH SLAB LENGTH "25 FEET" IS MEASURED ALONG THE CENTERLINE ARC OF THE EASTBOUND OR WESTBOUND ROADWAY. THE STATION, OFFSETS & WINGWALL LENGHTS ARE BASED ON THE STEEL ALTERNATE FOR THE BRIDGE.

S 27°55'24"E
Reference Line (Chord between abut. brgs.) See Bridge Drawings

REINFORCING SCHEDULE

MARK	Nº REQD.	LOCATION A	B	C	D	LENGTH	SHAPE	WEIGHT (LB.)
AS501	285	57	114	57	57	30'-0"	STR.	6,918
AS502	57	57				24'-0"	STR.	1,427
AS503	57		57			10'-7"	STR.	629
AS504	57			57		28'-2"	STR.	1,675
AS505	151	35	45	38	33	24'-6"	STR.	3,859
AS506	8	2	2	2	2	13'-10"	STR.	115
AS507	57				57	22'-8"	STR.	1,348
AS1001	381	88	114	96	83	25'-11"	BT.	42,489
AS1002	16	4	4	4	4	15'-3"	BT.	1,050
						TOTAL WT. =		61,510#

Cost included in Item 611

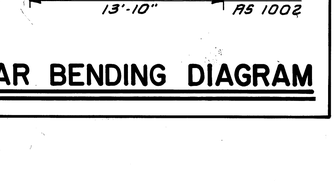

BAR BENDING DIAGRAM

ESTIMATED QUANTITIES

Calculations on sheet 12

ITEM 611 REINFORCED CONCRETE APPROACH SLABS (T=15")

LOCATION	QUANTITY (S.Y.)
(A) WEST APPROACH SLAB, WESTBOUND LANES	143.03
(B) EAST APPROACH SLAB, WESTBOUND LANES	184.25
(C) EAST APPROACH SLAB, EASTBOUND LANES	153.31
(D) WEST APPROACH SLAB, EASTBOUND LANES	139.14

2 / 2

adache - ciuni - lynn associates
CONSULTING ENGINEERS CLEVELAND, OHIO 44131

APPROACH SLAB DETAILS
BRIDGE Nº ERI - 2 - 1798 L/R
S.R. 2 OVER MUD BROOK
ERIE COUNTY
ERI - 2 - 16.13

DESIGNED	DRAWN	CHECKED	REVIEWED	DATE	REVISED
R.W.H.	T.M.J.				

A-C-L form no. B-1

MICROFILMED
AUG 21 1990

F.H.W.A. REGION	STATE	PROJECT
5	OHIO	

158
284

ERIE COUNTY
ERI-2-(16.13-17.39)

STRUCTURAL GENERAL NOTES

THE FOLLOWING GENERAL NOTES APPLY TO THESE STRUCTURES:

BRIDGE NO. ERI-2-1640	EASTBOUND THRU RAMP
BRIDGE NO. ERI-2-1701 L/R	S.R. 2 OVER BOGART ROAD
BRIDGE NO. ERI-2-1781	HURON AVERY ROAD OVER S.R. 2
BRIDGE NO. ERI-2-1833	S.R. 13 OVER S.R. 2

REFERENCE SHALL BE MADE TO STANDARD DRAWINGS:

SUPERSTRUCTURE DETAILS	SD-1-69 SHEETS 1, 2, 3 AND 4 OF 4	DATED 6-12-69
ROCKER AND BOLSTER DETAILS	RB-1-55	REVISED 2-2-59
APPROACH SLAB DETAILS	AS-1-81 SHEETS 1, 2 AND 3 OF 3	DATED 11-27-81
BRIDGE RAILING DETAILS	BR-1	DATED 5-29-79
ELASTOMERIC JOINT SEAL TYPE 1A	TS-EJS-2-81	DATED 9-1-81

AND TO SUPPLEMENTAL SPECIFICATIONS:

836 CONCRETE CURING AND PROTECTIVE MEMBRANE	DATED 11-12-85
824 EPOXY COATED REINFORCING STEEL	DATED 10-8-82

DESIGN SPECIFICATIONS:

THIS STRUCTURE CONFORMS TO "STANDARD SPECIFICATIONS FOR HIGHWAY BRIDGES" ADOPTED BY THE AMERICAN ASSOCIATION OF STATE HIGHWAY AND TRANSPORTATION OFFICIALS, 1969, AND THE OHIO "SUPPLEMENT" TO THESE SPECIFICATIONS.

DESIGN DATA:

DESIGN LOADING	HS20-44 AND THE ALTERNATE MILITARY LOADING
CONCRETE CLASS S	UNIT STRESS 1500 P.S.I. (SUPERSTRUCTURE)
CONCRETE CLASS C	UNIT STRESS 1333 P.S.I. (SUBSTRUCTURE)
REINFORCING STEEL	ASTM A615, A616 OR A617
	GRADE 60 - UNIT STRESS 24,000 P.S.I.
	SPIRAL REINFORCEMENT MAY BE PLAIN BARS, ASTM A82 OR A615
STRUCTURAL STEEL	ASTM A36 - UNIT STRESS 20,000 P.S.I.
DECK PROTECTION METHOD	EPOXY COATED REINFORCING STEEL, TOP MAT ONLY.

ABUTMENT PILING:

BRIDGE NO. ERI-2-1701 L/R; ABUTMENT PILING BENDING STRESS MAY APPROACH, REACH OR EXCEED YIELD STRESS.

EMBANKMENT CONSTRUCTION

THE EMBANKMENTS AT BRIDGE NO. ERI-2-1640, BRIDGE NO. ERI-2-1701 L/R AND BRIDGE NO. ERI-2-1833 SHALL BE CONSTRUCTED IN ACCORDANCE WITH THE REQUIREMENTS STATED IN THE ROADWAY GENERAL NOTES, SHEET 8. THE FOLLOWING WAITING PERIODS SHALL BE OBSERVED AFTER COMPLETION OF THE EMBANKMENTS TO THE LEVEL OF SUBGRADE.

BRIDGE NO. ERI-2-1640; EASTBOUND THRU RAMP OVER S.R. 2: EXCAVATION FOR PIER NO. 2 AND DRIVING OF PIER NO. 2 PILES MAY BE STARTED AFTER COMPLETION OF THE EMBANKMENTS TO THE LEVEL OF SUBGRADE. THERE SHALL BE A MINIMUM ONE-MONTH WAITING PERIOD BEFORE STARTING ABUTMENT AND PIERS NO. 1 AND NO. 3 CONSTRUCTION AND DRIVING ABUTMENT AND PIERS NO. 1 AND NO. 3 PILES.

BRIDGE NO. ERI-2-1701 L/R; S.R. 2 OVER BOGART ROAD: THERE SHALL BE A MINIMUM THREE-MONTH WAITING PERIOD BEFORE STARTING ABUTMENT AND PIER CONSTRUCTION AND DRIVING ABUTMENT AND PIER PILES.

BRIDGE NO. ERI-2-1833; S.R. 13 OVER S.R. 2: EXCAVATION FOR PIER NO. 2 AND DRIVING OF PIER NO. 2 PILES MAY BE STARTED AFTER COMPLETION OF THE EMBANKMENTS TO THE LEVEL OF SUBGRADE. THERE SHALL BE A MINIMUM 5-MONTH WAITING PERIOD BEFORE STARTING ABUTMENT AND PIERS NO. 1 AND NO. 3 CONSTRUCTION AND DRIVING ABUTMENT AND PIERS NO. 1 AND NO. 3 PILES.

PILES:

PILES SHALL BE DRIVEN TO REFUSAL ON BEDROCK. REFUSAL SHALL BE CONSIDERED AS OBTAINED BY PENETRATING SOFT BEDROCK FOR SEVERAL INCHES WITH A MINIMUM RESISTANCE OF 20 BLOWS PER INCH OR REFUSAL SHALL BE CONSIDERED AS OBTAINED AFTER THE PILE HAS CONTACTED HARD BEDROCK AND THE PILE HAS RECEIVED AT LEAST 20 BLOWS.

PILE DESIGN LOADS

	ABUTMENT PILES	PIER PILES
BRIDGE NO. ERI-2-1640	34 TONS/PILE	35 TONS/PILE
BRIDGE NO. ERI-2-1701 L/R	32 TONS/PILE	34 TONS/PILE
BRIDGE NO. ERI-2-1781	33 TONS/PILE	34 TONS/PILE
BRIDGE NO. ERI-2-1833	34 TONS/PILE	35 TONS/PILE

UTILITY LINES:

ALL EXPENSE INVOLVED IN RELOCATING (INSTALLING) THE AFFECTED UTILITY LINES SHALL BE BORNE BY THE OWNER(S). THE CONTRACTOR AND OWNER(S) ARE REQUESTED TO COOPERATE BY ARRANGING THEIR WORK IN SUCH A MANNER THAT INCONVENIENCE TO EITHER WILL BE HELD TO A MINIMUM.

MAINTENANCE AND PROTECTION OF TRAFFIC:

TRAFFIC SHALL BE MAINTAINED ON BOGART ROAD AS INDICATED ON THE ROADWAY PLANS (GENERAL NOTES).

REINFORCING BAR LAPPED SPLICES:

REINFORCING BARS SHALL BE LAPPED AS FOLLOWS, UNLESS OTHERWISE NOTED IN THESE PLANS.

NO. 4 BAR - 1'-10" MIN.
NO. 5 BAR - 2'-5" MIN.
NO. 6 BAR - 2'-10" MIN.
NO. 8 BAR - 4'-9" MIN.
NO. 10 BAR - 7'-8" MIN.

ITEM 511, CLASS S CONCRETE, AS PER PLAN

IN LIEU OF THE PROPORTIONING SPECIFIED IN 499.03 AND 511.02, THE FOLLOWING TABLE SHALL BE USED TO ESTABLISH THE QUANTITIES PER CUBIC YARD FOR CONCRETE, THE COARSE AGGREGATE SHALL BE LIMESTONE.

CONCRETE IN THE PARAPETS NEED NOT BE PLACED AT NIGHT.

QUANTITIES PER CUBIC YARD (USING NO. 8 LIMESTONE)

FINE AGGREGATE (LB)	COARSE AGGREGATE (LB)	TOTAL (LB)	CEMENT CONTENT (LB)	WATER-CEMENT RATIO
1555	1100	2655	715	0.40

AIR CONTENT - 8±2%

HIGH RANGE WATER REDUCER MAY BE USED AT THE OPTION OF THE CONTRACTOR. THE DOSAGE RATE WILL BE DETERMINED BY THE CONTRACTOR BASED ON MANUFACTURER'S RECOMMENDATION TO ACHIEVE THE DESIRED WORKABILITY LEVEL.

HIGH RANGE WATER REDUCER SHALL CONFORM TO 705.12, ASTM-C494 TYPE F AND SHALL NOT CONTAIN CALCIUM CHLORIDE.

THE CEMENT CONTENT SHALL BE MAINTAINED AND A MAXIMUM WATER-CEMENT RATIO OF 0.40 SHALL NOT BE EXCEEDED. THE SLUMP OF THE UNPLASTICIZED CONCRETE DELIVERED TO THE JOB SITE SHALL BE 1 1/2 1/2 INCH. THE SUPERPLASTICIZING ADMIXTURE SHALL BE ADDED AT THE JOB SITE AND MIXED A MINIMUM OF FIVE (5) MINUTES. AFTER THE SUPERPLASTICIZER HAS BEEN ADDED, THE SLUMP SHALL BE 6 1/2 1/2 INCH. THE CONTRACTOR SHALL FURNISH A VOLUMETRIC DISPENSER FOR THE SUPERPLASTICIZER.

CONCRETE MIXTURES CONTAINING A HIGH RANGE WATER REDUCER SHALL MEET THE SAME REQUIREMENTS FOR ENTRAINED AIR CONTENT, MINIMUM STRENGTH, AND MAXIMUM WATER-CEMENT RATIO AS REQUIRED FOR THE RESPECTIVE GRADE OF CONCRETE WITHOUT A HIGH RANGE WATER REDUCER.

SAMPLING AND TESTING FOR ENTRAINED AIR CONTENT AND MINIMUM STRENGTH SHOULD BE TAKEN FROM THE CONCRETE THAT HAS BEEN TREATED WITH A HIGH RANGE WATER REDUCER.

CURING SHALL BE IN ACCORDANCE WITH 511.14 TYPE "A" WATER CURING.

PLACEMENT

PLACEMENT OF CONCRETE SHALL BE COMPLETED UNDER FAVORABLE ATMOSPHERIC CONDITIONS. FAVORABLE ATMOSPHERIC CONDITIONS EXIST WHEN THE SURFACE EVAPORATION RATE AS AFFECTED BY AMBIENT AIR TEMPERATURE, CONCRETE TEMPERATURE, RELATIVE HUMIDITY AND WIND VELOCITY IS 0.1 POUNDS PER SQUARE FOOT PER HOUR OR LESS. FIGURE (1) SHALL BE USED TO DETERMINE GRAPHICALLY THE SURFACE EVAPORATION RATE. FAVORABLE ATMOSPHERIC CONDITIONS MAY REQUIRE PLACEMENT DURING LATE EVENING, NIGHT OR EARLY MORNING HOURS.

IF PLACEMENT OF THE OVERLAY IS TO BE MADE AT NIGHT, THE CONTRACTOR SHALL SUBMIT A PLAN WHICH PROVIDES ADEQUATE LIGHTING FOR THE WORK AREA AT LEAST 15 CALENDAR DAYS IN ADVANCE AND RECEIVE WRITTEN APPROVAL FROM THE ENGINEER BEFORE PLACING THE CONCRETE. THE LIGHTS SHALL BE SO DIRECTED THAT THEY DO NOT AFFECT OR DISTRACT APPROACHING TRAFFIC.

PAYMENT FOR ALL OF THE ABOVE SHALL BE AT THE UNIT PRICE BID PER CUBIC YARD FOR ITEM 511 CLASS S CONCRETE, AS PER PLAN WHICH SHALL INCLUDE ALL LABOR, EQUIPMENT, MATERIALS AND INCIDENTALS NECESSARY TO COMPLETE THE ABOVE.

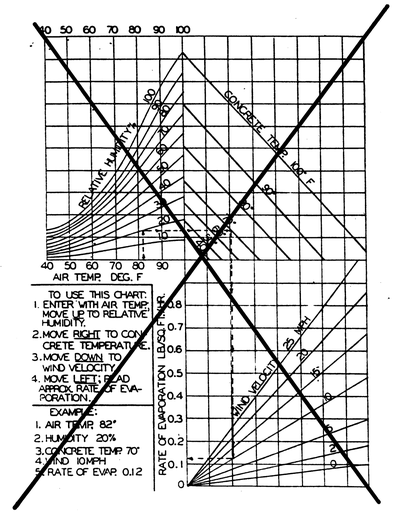

1/1

adache - ciuni - lynn associates
CONSULTING ENGINEERS CLEVELAND, OHIO 44130

STRUCTURAL GENERAL NOTES
BRIDGE Nos. ERI-2-1640
ERI-2-1701 L/R
ERI-2-1781
ERI-2-1833

DESIGNED	DRAWN	CHECKED	REVIEWED	DATE	REVISED
L.E.D.	J.D.P.	E.A.F.	L.E.D.	9-23-85	

MICROFILMED
AUG 21 1980

FHWA REGION	STATE	PROJECT	
5	OHIO		

158A
284

ERIE COUNTY
ERI - 2 - (16.13 - 17.39)

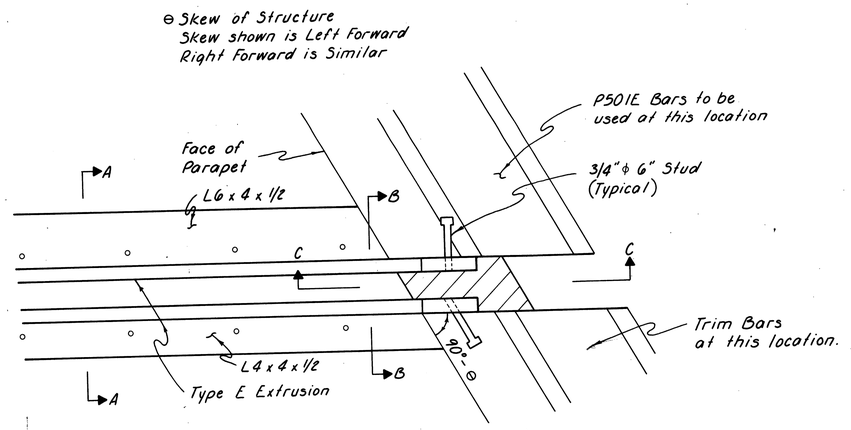

EXPANSION JOINT PLAN VIEW

EPOXY COATED REINFORCING STEEL

MARK	NO.	LENGTH	SHAPE
P501E‡	160	4'-0"	5

‡ TO BE USED AS DIRECTED BY THE ENGINEER IN THE PARAPET EXPANSION JOINT AREA. PLAN REINFORCING STEEL DOES NOT ALLOW FOR SKEW OF EXPANSION JOINT. ALSO SOME BARS MAY BE TRIMMED AS DIRECTED BY THE ENGINEER. COST FOR ALL OF THE ABOVE SHALL BE INCLUDED IN ITEM 516 STRUCTURAL STEEL EXPANSION JOINT INCLUDING STRIP SEALS, AS PER PLAN.

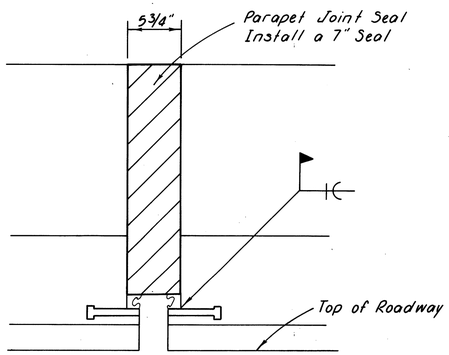

SECTION B-B
JOINT NORMAL THROUGH PARAPET

* Contractor shall Split Extrusions as shown at his option (at no additional cost to the State) if required to facilitate Placement of Strip Seal.

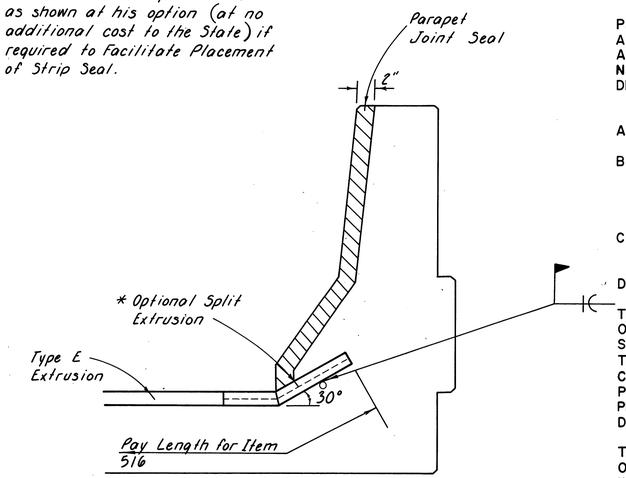

SECTION C-C
JOINT TRANSVERSE THROUGH PARAPET

** Included with Item 516 for Payment.
The Angeles, Plates, Studs and Steel Extrusions Shall Be Galvanized As Per 711.02. The Grooves in the Steel Extrusions shall be cleaned to Grade SA 3, ASTM D 2200.

For Details not shown
See Standard Drwg. SD-1-69

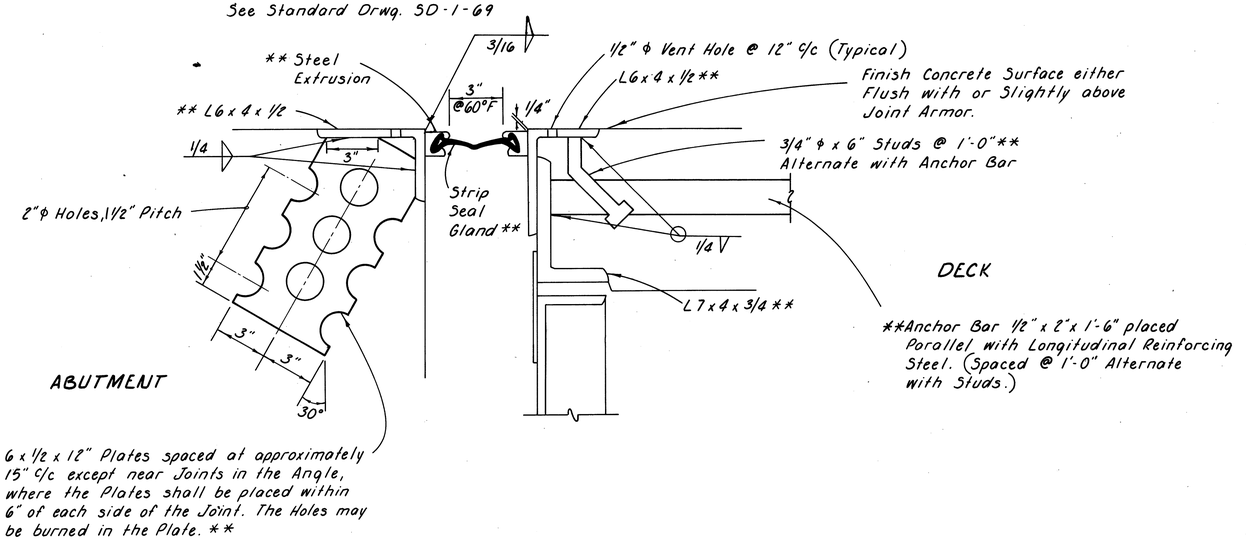

6 x 1/2 x 12" Plates spaced at approximately 15" c/c except near Joints in the Angle, where the Plates shall be placed within 6" of each side of the Joint. The Holes may be burned in the Plate. **

SECTION A-A
JOINT NORMAL THROUGH ROADWAY

ITEM 516 STRUCTURAL STEEL EXPANSION JOINTS INCLUDING STRIP SEALS, AS PER PLAN

THIS ITEM SHALL INCLUDE ALL THE WORK REQUIRED TO CONSTRUCT THE STEEL EXPANSION JOINTS AS PER DETAILS IN THE PLAN.

THE STEEL EXTRUSION SHALL BE TYPE E WITH S400E NEOPRENE EXTRUSION AS MANUFACTURED BY WATSON BOWMAN ASSOCIATES, INC., 1280 NIAGARA STREET, BUFFALO, NEW YORK 14213; OR APPROVED EQUAL AS NOTED BELOW.

THE NEOPRENE EXTRUSION SHALL BE ONE CONTINUOUS PIECE. THE NEOPRENE SHALL NOT BE INSTALLED UNTIL ALL OTHER WORK IS COMPLETE UPON THE STRUCTURE. AN ADHESIVE SHALL BE USED TO FACILITATE PLACEMENT OF THE NEOPRENE EXTRUSION. THE CONTRACTOR SHALL VERIFY ALL DIMENSIONS PRIOR TO FABRICATION.

PHYSICAL PROPERTIES:

A. THE STEEL EXTRUSION SHALL CONFORM TO ASTM A36 OR, A588.
B. ADHESIVES SHALL BE ONE-PART MOISTURE CURING POLY-URETHANE AND HYDRCARBON MIXTURES AS DISTRIBUTED UNDER THE TRADE NAME BON-LASTIC BY WATSON BOWMAN ASSOCIATES, INC., OF BUFFALO, NEW YORK; OR AN APPROVED EQUIVALENT.
C. THE NEOPRENE EXTRUSION SHALL CONFORM TO THE PHYSICAL PROPERTIES SPECIFIED FOR AASHTO M220 EXCEPT FOR THE RECOVERY TEST.
D. SET SCREWS FOR FASTENING OF OPTIONAL SPLIT EXTRUSION SHALL BE STAINLESS STEEL.

THE D.S. BROWN COMPANY, P.O. BOX 158, NORTH BALTIMORE, OHIO 45872, WILL BE ACCEPTED AS ONE ALTERNATE. THE STEEL EXTRUSION SHALL BE TYPE SS-E WITH NO. 500 SEAL. THE CONTRACTOR SHALL FURNISH MATERIAL SPECIFICATION, CERTIFIED MATERIAL TEST RESULTS. CERTIFICATION THAT THE PRODUCT MEETS SPECIFICATIONS, APPROPRIATE INSTALLATION PROCEDURES NECESSARY TO ACCOMMODATE ANY ALTERNATE DESIGN.

THE APPROVAL OF AN ALTERNATE JOINT SEAL DESIGN AND THE ISSUANCE OF REVISED PROJECT PLANS SHALL BE BASED ON THE UNDERSTANDING THAT SUCH PROJECT MODIFICATIONS WILL BE DONE WITHOUT COST TO THE STATE.

THE PARAPET JOINT SHALL BE SEALED AS PART OF THIS ITEM. THE PARAPET JOINT SEAL SHALL BE EVAZOTE 50 AS MANUFACTURED BY E-POXY INDUSTRIES INC., 14 WEST SHORE STREET, RAVENA, NEW YORK 12143, TELEPHONE (518) - 756 - 6193 OR E.V.A. AS MANUFACTURED BY THERMAL - CHEM INC, 1400 LOUIS AVENUE, ELK GROVE VILLAGE, IL. 60007 USA, TELEPHONE (323) - 364 - 0364.

THE SEAL SHALL BE CEMENTED IN WITH AN ADHESIVE AS RECOMMENDED BY THE MANUFACTURER OF THE JOINT SEAL. ALL LAITANCIES OR SURFACES CONTAMINANTS SHALL BE REMOVED TO INSURE MAXIMUM ADHESION.

PAYMENT FOR ALL OF THE ABOVE SHALL BE AT THE UNIT PRICE BID PER LINEAL FOOT FOR ITEM 516, STRUCTURAL STEEL EXPANSION JOINTS INCLUDING STRIP SEALS, AS PER PLAN, WHICH SHALL INCLUDE ALL THE LABOR, EQUIPMENT, MATERIALS AND INCIDENTALS NECESSARY TO COMPLETE THE ABOVE WORK

STATE OF OHIO
DEPARTMENT OF TRANSPORTATION
DISTRICT THREE

11/1

EXPANSION JOINT DETAILS

ERI - 2 - 1640
ERI - 2 - 1678
ERI - 2 - 1781
ERI - 2 - 1833

DESIGNED	DRAWN	TRACED	CHECKED	REVIEWED	DATE	REVISED
K W 10-85	MA 10-85	MA 10-85				

MICROFILMED
AUG 21 1990

GENERAL NOTES

STRUCTURAL GENERAL NOTES

ERI-2-1640
ERI-2-1678 L/R
ERI-2-1701 L/R
ERI-2-1781
ERI-2-1798 L/R
ERI-2-1833

ITEM 511 – CLASS S CONCRETE, AS PER PLAN

IN LIEU OF THE PROPORTIONING SPECIFIED IN 499.03 AND 511.02, THE FOLLOWING TABLE SHALL BE USED TO ESTABLISH THE QUANTITIES PER CUBIC YARD FOR CONCRETE. THE COARSE AGGREGATE SHALL BE LIMESTONE.

QUANTITIES PER CUBIC YARD (USING NO. 8 LIMESTONE)

AGGREGATE FINE (LB)	AGGREGATE COARSE (LB)	AGGREGATE TOTAL (LB)	CEMENT CONTENT (LB)	WATER/ CEMENT RATIO
1591	1127	2718	715	0.40

AIR CONTENT – 8% PLUS OR MINUS 2%

HIGH RANGE WATER REDUCER (SUPERPLASTICIZER) MAY BE USED AT THE OPTION OF THE CONTRACTOR IF REQUIRED FOR PLACEMENT. THE DOSAGE RATE WILL BE DETERMINED BY THE CONTRACTOR BASED ON THE MANUFACTURERE'S RECOMMENDATION TO ACHIEVE THE DESIRED WORKABILITY LEVEL.

HIGH RANGE WATER REDUCER SHALL CONFORM TO 705.12, ASTM-C494 TYPE F AND SHALL NOT CONTAIN CALCIUM CHLORIDE.

TYPE A OR D CHEMICAL ADMIXTURE CONFORMING TO 705.12 ASTM TYPE F AND NOT CONTAINING CALCIUM CHLORIDE SHALL BE ADDED TO THE CONCRETE AT THE PLANT.

ALL ADDITIVES, INCLUDING AIR ENTRAINMENT, SHALL BE MANUFACTURED BY THE SAME COMPANY AND CERTIFIED AS COMPATIBLE BY THE MANUFACTURING COMPANY.

THE CEMENT CONTENT SHALL BE MAINTAINED AND A MAXIMUM WATER-CEMENT RATIO OF 0.40 SHALL NOT BE EXCEEDED. THE SLUMP OF THE UNPLASTICIZED CONCRETE DELIVERED TO THE JOB SITE SHALL BE 1-1/2" PLUS OR MINUS 1/2".
THE SUPERPLASTICIZING ADMIXTURE SHALL BE ADDED AT THE JOB SITE AND MIXED A MINIMUM OF FIVE (5) MINUTES. AFTER THE SUPERPLASTICIZER HAS BEEN ADDED, THE SLUMP SHALL BE 6" PLUS OR MINUS 1". THE CONTACTOR SHALL FURNISH A VOLUMERIC DISPENSER FOR THE SUPERPLASTICIZER.

CONCRETE MIXTURES CONTAINING A HIGH RANGE WATER REDUCER SHALL MEET THE SAME REQUIREMENTS FOR ENTRAINED AIR CONTENT, MINIMUM STRENGTH, AND MAXIMUM WATER-CEMENT RATIO AS REQUIRED FOR THE RESPECTIVE GRADE OF CONCRETE WITHOUT A HIGH RANGE WATER REDUCER.

SAMPLING AND TESTING FOR ENTRAINED AIR CONTENT AND MINIMUM STRENGTH SHOULD BE TAKEN FROM THE CONCRETE THAT HAS BEEN TREATED WITH A HIGH RANGE WATER REDUCER.

ALL INITIAL TESTS SHALL BE THE RESPONSIBILITY OF THE CONTRACTOR. THESE TESTS SHALL BE PERFORMED BY A COMPETENT CONCRETE TECHNICIAN. THIS INFORMATION SHALL BE PROVIDED TO THE PROJECT ENGINEER. THE PROJECT ENGINEER SHALL MAKE ONLY THE FINAL TESTS AS THE CONCRETE IS PLACED ON THE DECK.

THE CONTRACTOR SHALL MAKE ONE OR MORE TRIAL BATCHES OF THE SUPERPLASTICIZED DENSE CONCRETE OF THE SIZE TO BE HAULED AT LEAST FOUR DAYS BEFORE THE DECK IS TO BE PLACED. HE SHALL CAST ONE OR MORE TEST SLABS, E.G. 8 FT. LONG X A WIDTH WHICH IS WIDE ENOUGH TO ACCOMODATE HIS TINING EQUIPMENT X 4 INCHES THICK, FOR TEXTURING ACCORDING TO 511.16 AND SHALL PREPARE OTHER SAMPLES AND SPECIMENS AS DIRECTED BY THE PROJECT ENGINEER. THE CONTRACTOR SHALL FURNISH THE REQUIRED MATERIALS AND SAMPLES WITHOUT CHARGE TO THE STATE AS PER 106.03. THE PROJECT ENGINEER SHALL BE NOTIFIED SEVEN (7) DAYS IN ADVANCE OF THE TEST BATCH PREPARATION AND HE WILL CONDUCT ALL OF THE REQUIRED TESTS.

CURING:

CURING SHALL BE IN ACCORDANCE WITH 511.14 TYPE A WATER CURING.

PLACEMENT:

PLACEMENT OF CONCRETE SHALL BE COMPLETED UNDER FAVORABLE ATMOSPHERIC CONDITIONS. FAVORABLE ATMOSPHERIC CONDITIONS EXIST WHEN THE SURFACE EVAPORATION RATE AS AFFECTED BY THE AMBIENT AIR TEMPERATURE, CONCRETE TEMPERATURE, RELATIVE HUMIDITY, AND WIND VELOCITY IS 0.1 POUNDS PER SQUARE FOOT PER HOUR OR LESS. FIGURE (1) SHALL BE USED TO DETERMINE GRAPHICALLY THE SURFACE EVAPORATION RATE. FAVORABLE ATMOSPHERIC CONDITIONS MAY REQUIRE PLACEMENT DURING LATE EVENINGS (6:00 P.M. TO OFFICIAL SUNSET), NIGHT (OFFICIAL SUNSET TO OFFICIAL SUNRISE), OR EARLY MORNING (SUNRISE TO 8:00 A.M.). PLACEMENT DURING THESE TIMES WILL BE CONSIDERED TO MEET THE REQUIREMENTS FOR FAVORABLE ATMOSPHERIC CONDITIONS.

IF PACEMENT OF THE CLASS S CONCRETE IS TO BE MADE AT NIGHT, THE CONTRACTOR SHALL SUBMIT A PLAN WHICH PROVIDES ADEQUATE LIGHTING FOR THE WORK AREA AT LEAST FIFTEEN (15) CALENDER DAYS IN ADVANCE AND RECEIVE WRITTEN APPROVAL FROM THE ENGINEER BEFORE PLACING THE CONCRETE. THE LIGHTS SHALL BE SO DIRECTED THAT THEY DO NOT AFFECT OR DISTRACT APPROACHING TRAFFIC.

ALL OTHER PROVISIONS OF 511 SHALL REMAIN IN EFFECT.

PAYMENT FOR THE ABOVE COMPLETED AND ACCEPTED QUANTITIES WILL BE MADE AT THE CONTRACT BID PRICE FOR:

ITEM	UNIT	DESCRIPTION
511	CU.YD.	CLASS S CONCRETE, SUPERSTRUCTURE, AS PER PLAN

FIGURE NO. 1

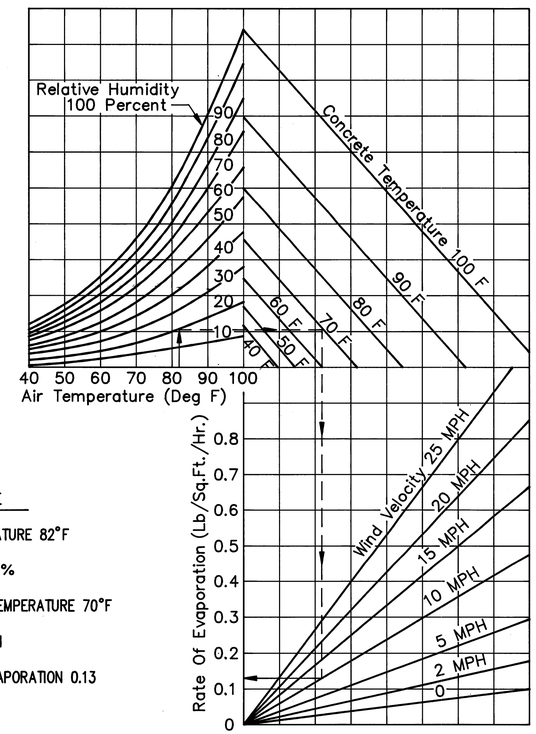

TO USE THIS CHART:

1. ENTER WITH AIR TEMPERATURE, MOVE UP TO RELATIVE HUMIDITY.
2. MOVE RIGHT TO CONCRETE TEMPERATURE .
3. MOVE DOWN TO WIND VELOCITY.
4. MOVE LEFT, READ APPROX. RATE OF EVAPORATION.

EXAMPLE

1. AIR TEMPERATURE 82°F
2. HUMIDITY 20 %
3. CONCRETE TEMPERATURE 70°F
4. WIND 10 MPH
5. RATE OF EVAPORATION 0.13

LATEST REVISION – 8/85

MICROFILMED
AUG 21 1990

FED. RD. DIVISION	STATE	PROJECT	
2	OHIO		

159
284

ERIE COUNTY
ERI-2-(16.13–17.39)

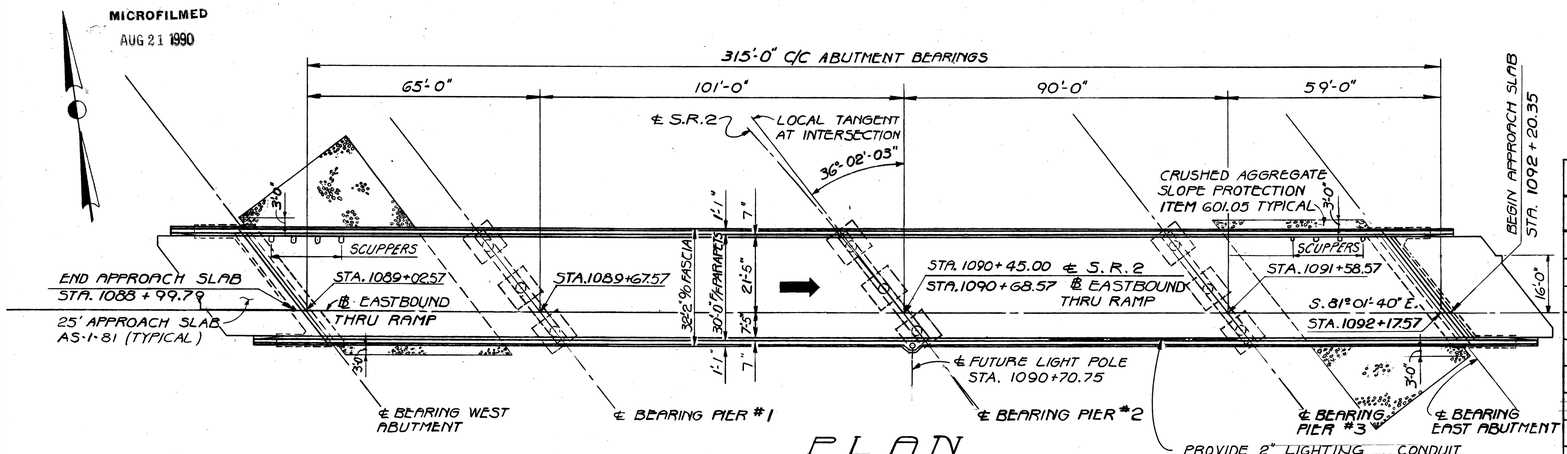

PLAN

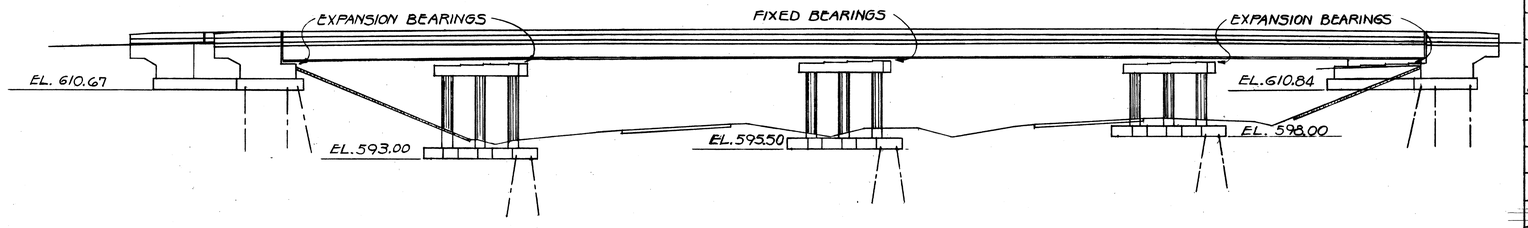

ELEVATION

ESTIMATED QUANTITIES

ITEM	TOTAL	UNIT	DESCRIPTION	SUPER	ABUT.	PIERS	GEN'L
503	LUMP	SUM	COFFERDAMS, CRIBS AND SHEETING				LUMP
503	458	CU.YDS.	UNCLASSIFIED EXCAVATION		250	208	
505	LUMP	SUM	PILE DRIVING EQUIPMENT MOBILIZATION				LUMP
507	1,840	LIN.FT	STEEL PILES, HP10x42		930	910	
509	72,647	LBS.	REINFORCING STEEL, GRADE-60	29,702	12,303	30,642	
511	368	CU.YDS	CLASS 'S' CONCRETE, SUPERSTRUCTURE AS PER PLAN	368			
511	86	CU.YDS	CLASS "C" CONCRETE, PIER CAPS & COLUMNS			86	
511	103	CU.YDS.	CLASS "C" CONCRETE ABUTMENTS ABOVE FOOTINGS		103		
511	156	CU.YDS.	CLASS "C" CONCRETE FOOTINGS		75	81	
513	285,600	LBS.	STRUCTURAL STEEL A-36 (AISC CATEGORY-III)	285,600			
514	285,600	LBS.	FIELD PAINTING OF NEW STRUCTURAL STEEL, SYSTEM-A	285,600			
516	75	Lin.Ft.	Structural Steel Expansion Joints Including Strip Seals, As Per Plan	75			
518	48	CU.YDS.	POROUS BACKFILL		48		
518	66	LIN.FT	6" PERFORATED HELICAL C.S.P., 707.01		66		
518	46	LIN.FT	6" NON-PERFORATED HELICAL C.S.P. INCLUDING SPECIALS, 707.01		46		
518	8	EACH	SCUPPERS INCLUDING SUPPORTS	8			
601	591	SQ.YDS.	CRUSHED AGGREGATE SLOPE PROTECTION				591
625			SEE SHEET 258 FOR LIGHTING SUMMARY				
824	49,432	LBS.	EPOXY COATED REINFORCING STEEL, GRADE-60	46,591	2,841		
516	20	Each	Rockers and Bolsters Galvanized	20			
Spec.	439	Sq.Yd.	Sealing of Concrete Surfaces (See Proposal Note)	288		151	

ITEM 516 - ROCKERS AND BOLSTERS GALVANIZED

The complete Rocker and Bolster Assembly shall be Galvanized As Per 711.02.

Payment for the above shall be included in Item 516 Rockers and Bolsters Galvanized which shall include all Labor, Equipment, Materials and Incidentals necessary to complete the above work.

ITEM SPECIAL SEALING OF CONCRETE SURFACES

The Parapet and Piers shall be sealed using either Silane or an Epoxy Sealer see details in the Plan for Areas to be Sealed. See the Proposal Note for Surface Preparation Requirements, Application Rates, Material Requirements and Application Procedures.

NOTES:
FOR SCUPPER LOCATIONS AND SPACING SEE SHEET 7/11
FOR APPROACH SLAB DETAILS SEE STANDARD DRAWING AS-1-81
FOR GENERAL NOTES SEE SHEET 158/284

2/11

ADACHE ASSOCIATES INC., ENGINEERS
CLEVELAND, OHIO 44142

GENERAL PLAN, ELEV. & ESTIMATED QUANTITIES

BRIDGE NO. ERI - 2 - 1640
EASTBOUND THRU RAMP OVER S.R.2
ERIE COUNTY — STA. 1088 + 99.79 TO
ERI - 2-16.13 — STA. 1092 + 20.35

DESIGNED	DRAWN	CHECKED	REVIEWED	DATE	REVISED
L.A. 7-10-69	N.K	L.E.D. 7-23-69	L.E.D.	9-21-85	

MICROFILMED
AUG 21 1990

ERIE COUNTY
ERI - 2-(16.13-17.39)

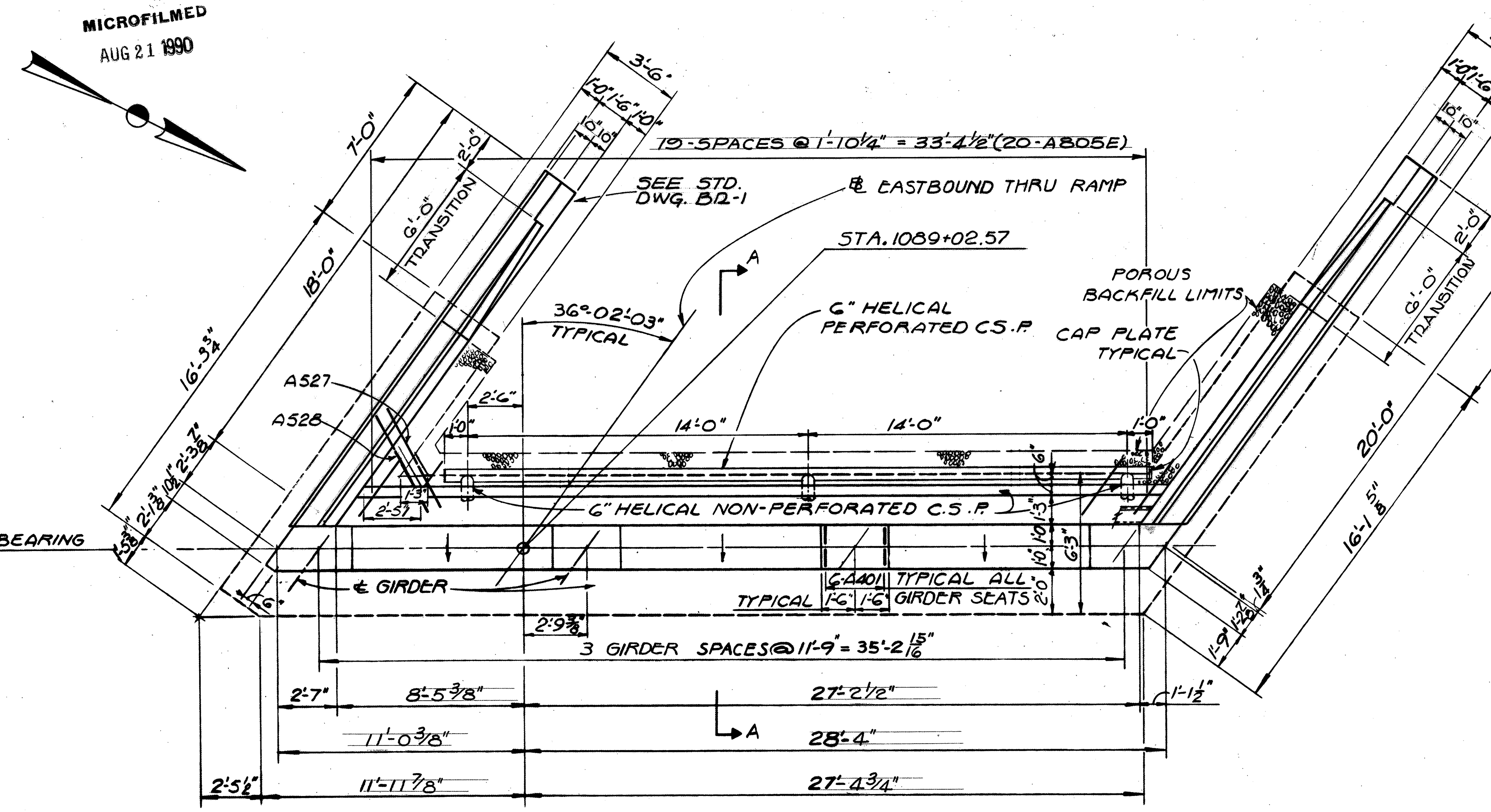

PLAN
WEST ABUTMENT

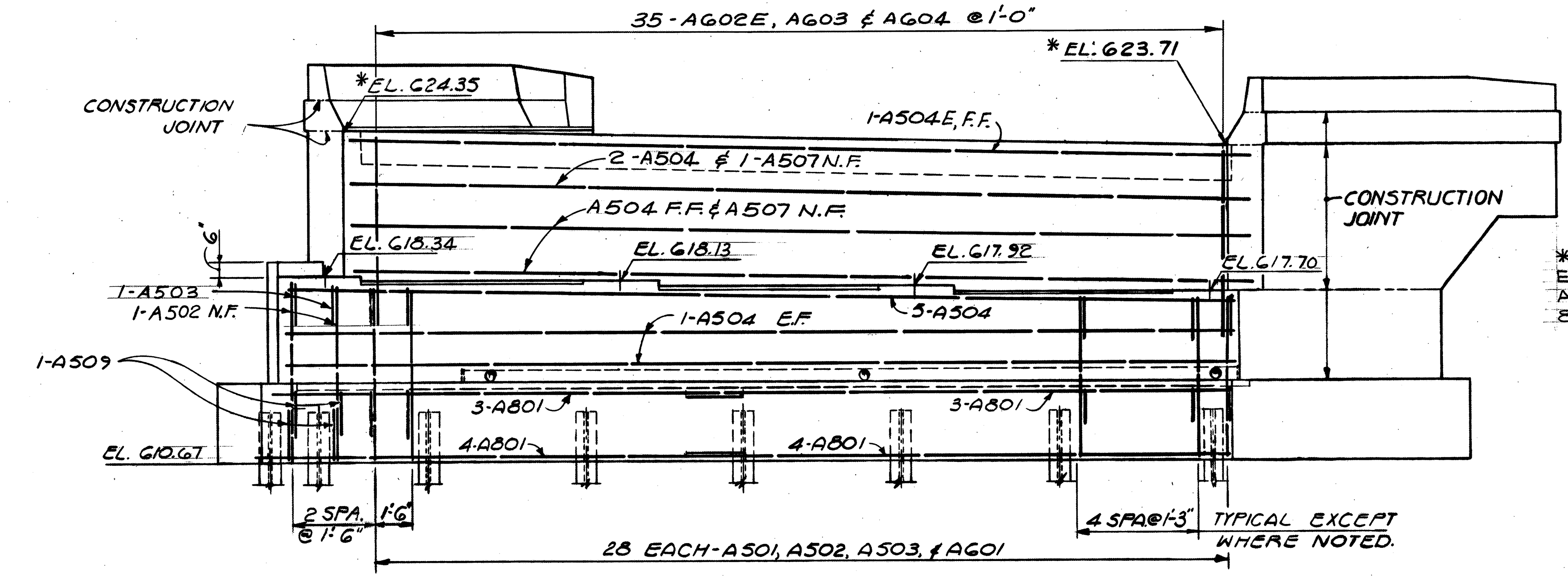

ELEVATION

* NOTE:
ELEVATIONS ALONG BACKWALL ARE GIVEN TO THE TOP OF THE 8×4×1 ANGLE OF THE END DAM.

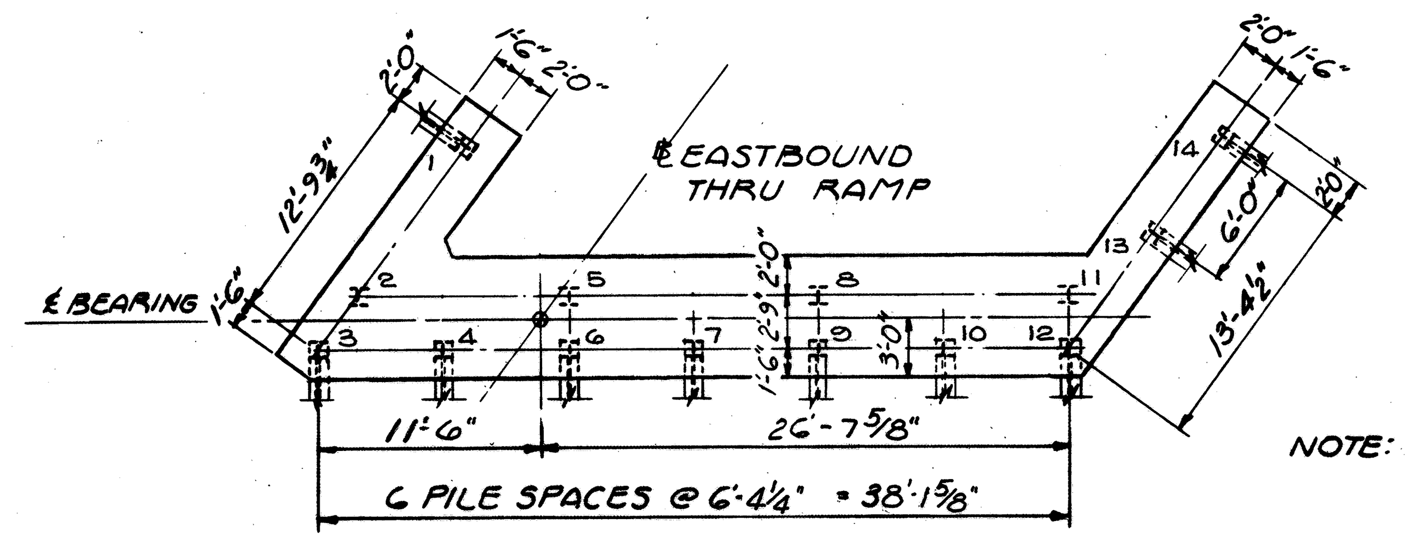

NOTE: USE 14 PILES THIS ABUTMENT.

PILING LAYOUT

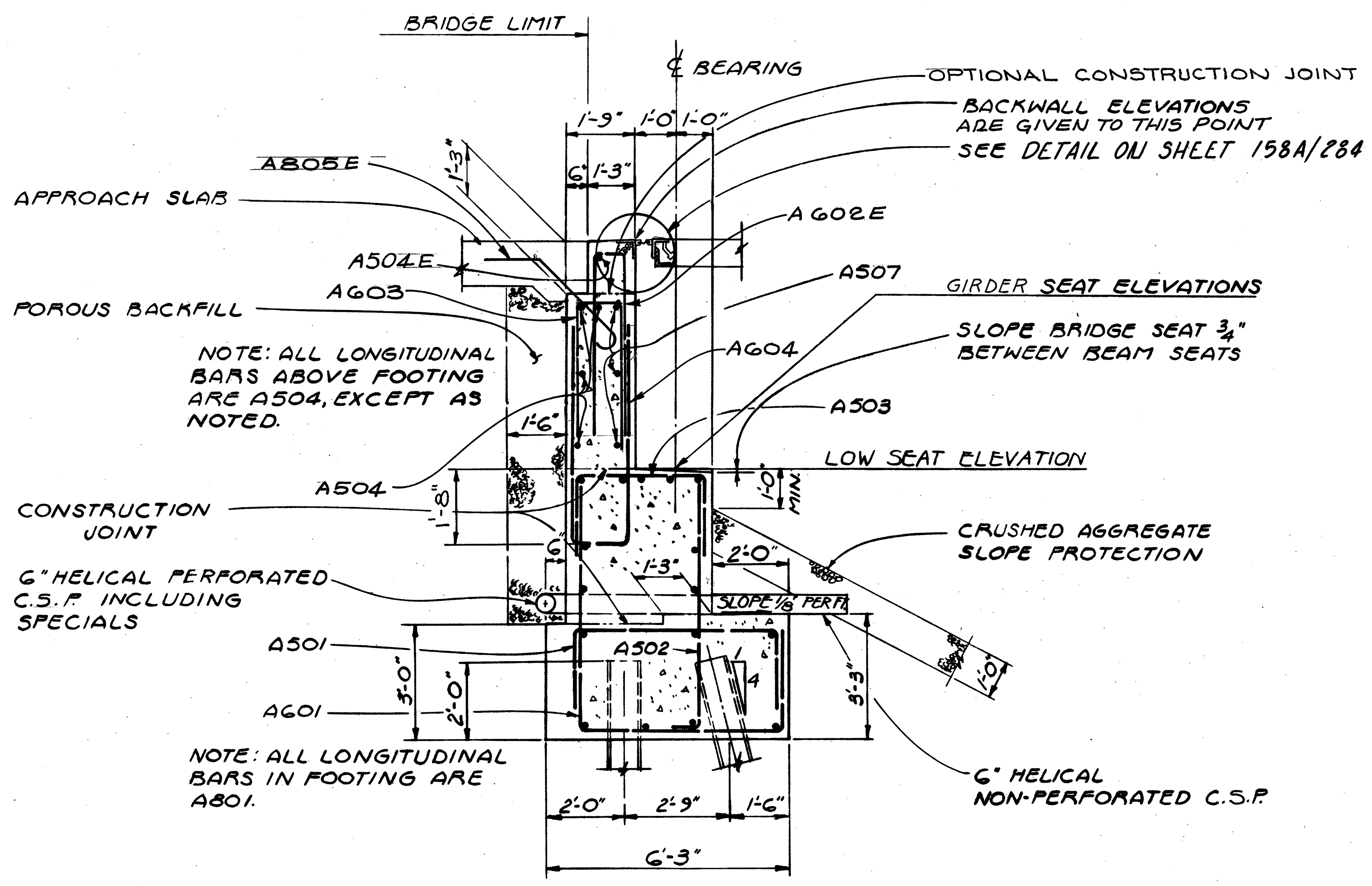

SECTION A-A

NOTES:

IN ADDITION TO THE PROVISIONS OF 511.08, BACKWALL CONCRETE ABOVE THE OPTIONAL CONSTRUCTION JOINT AT THE APPROACH SLAB SEAT SHALL NOT BE PLACED UNTIL AFTER THE DECK CONCRETE IN THE SPAN ADJACENT TO THE ABUTMENT HAS BEEN PLACED.

ABUTMENT PILES ARE HP 10×42
BATTERED PILES SHALL BE BATTERED 1 ON 4 IN DIRECTION SHOWN.

POROUS BACKFILL, 1.5 AND 2 FEET THICK AS SHOWN, SHALL EXTEND UP TO THE PLANE OF THE SUBGRADE AND TO THE LIMITS SHOWN ON THE PLAN.

WINGWALL DETAILS -- SEE SHEET 5/11
REINFORCING STEEL LIST AND BAR BENDING DIAGRAMS -- SEE SHEET 10 & 11/11

ABBREVIATIONS USED -- E.F. = EACH FACE, N.F. = NEAR FACE, F.F. = FAR FACE

ALL FOOTING REINFORCEMENT SHALL HAVE 3" MINIMUM CONCRETE COVER.

ADACHE ASSOCIATES INC., ENGINEERS
CLEVELAND, OHIO 44142

ABUTMENT DETAILS

BRIDGE NO. ERI - 2 - 1640
EASTBOUND THRU RAMP OVER S.R.2

ERIE COUNTY — STA. 1088 + 99.79 TO
ERI - 2-16.13 — STA. 1092 + 20.35

DESIGNED	DRAWN	CHECKED	REVIEWED	DATE	REVISED
L.E.D.	W.J.S.	N.K.	L.E.D.	9-21-85	

MICROFILMED
AUG 21 1990

FED. RD. DIVISION	STATE	PROJECT	
2	OHIO		

161
284

ERIE COUNTY
ERI - 2-(16.13-17.39)

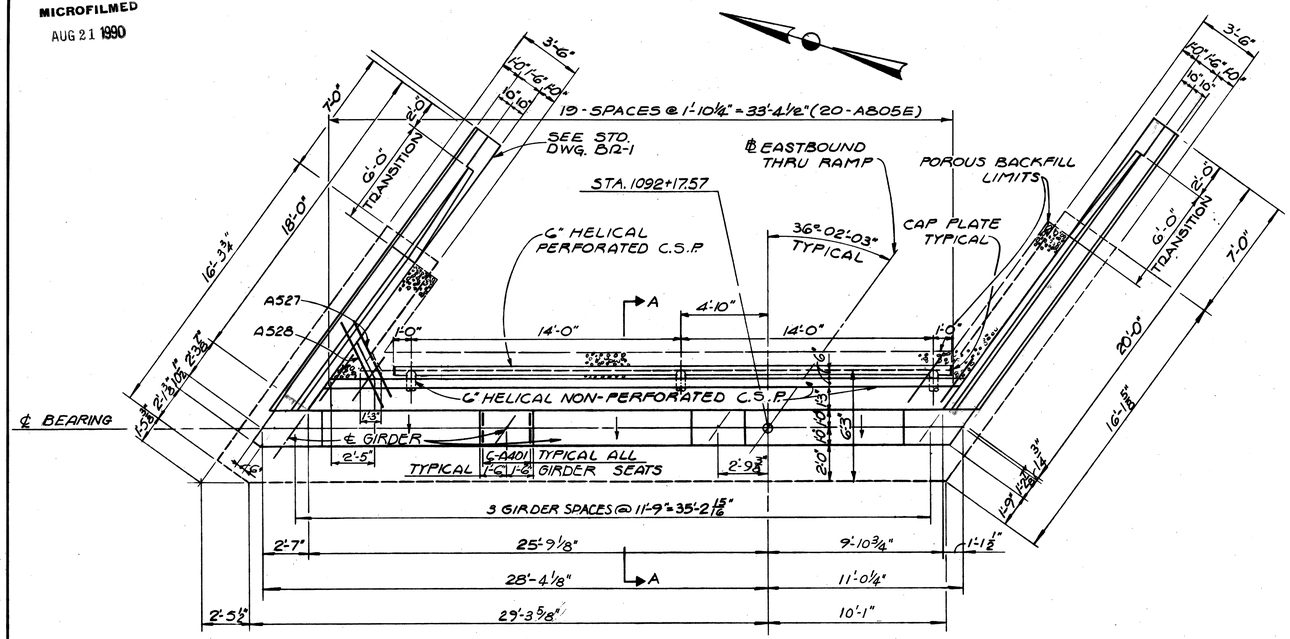

PLAN

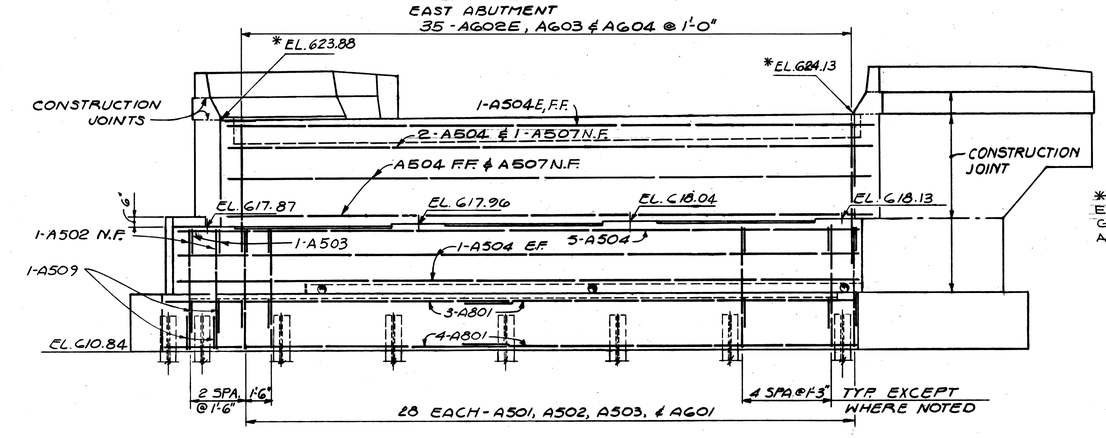

* NOTE:
ELEVATIONS ALONG BACKWALL ARE GIVEN TO THE TOP OF THE 8x4x1 ANGLE OF THE END DAM.

ELEVATION

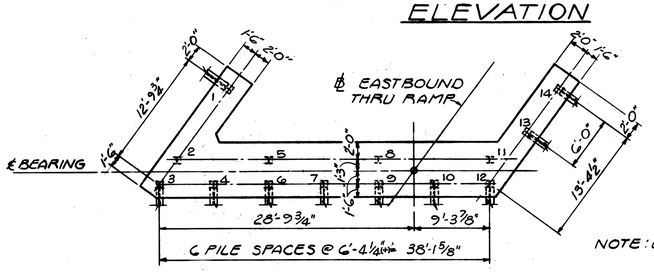

NOTE: USE 14 PILES THIS ABUTMENT

PILING LAYOUT

NOTES:
FOR ADDITIONAL NOTES SEE SHEET 3/10

ABUTMENT PILES ARE HP10x42
BATTERED PILES SHALL BE BATTERED 1 ON 4 IN DIRECTION SHOWN
POROUS BACKFILL, 1.5 AND 2 FEET THICK AS SHOWN, SHALL EXTEND UP TO THE PLANE OF THE SUBGRADE AND TO THE LIMITS SHOWN ON THE PLAN.

SECTION A-A-------- SEE SHEET 3/11
WINGWALL DETAILS -- SEE SHEET 5/11
REINFORCING STEEL LIST AND BAR BENDING DIAGRAMS -- SEE SHEET 10 & 11/11
ABBREVIATIONS USED -- E.F. = EACH FACE, N.F. = NEAR FACE, F.F. = FAR FACE
ALL FOOTING REINFORCEMENT SHALL HAVE 3" MINIMUM CONCRETE COVER.

4/11

ADACHE ASSOCIATES INC., ENGINEERS
CLEVELAND, OHIO 44142

ABUTMENT DETAILS

BRIDGE NO. ERI - 2 - 1640
EASTBOUND THRU RAMP OVER S.R.2
ERIE COUNTY — STA. 1088 + 99 79 TO
ERI - 2-16.13 — STA. 1092 + 20.35

DESIGNED	DRAWN	CHECKED	REVIEWED	DATE	REVISED
L.E.D	W.J.S.	N.K.	L.E.D.	9.21.85	

MICROFILMED
AUG 21 1990

FED. RD. DIVISION	STATE	PROJECT	
2	OHIO		

162/784

ERIE COUNTY
ERI - 2-(16.13 - 17.39)

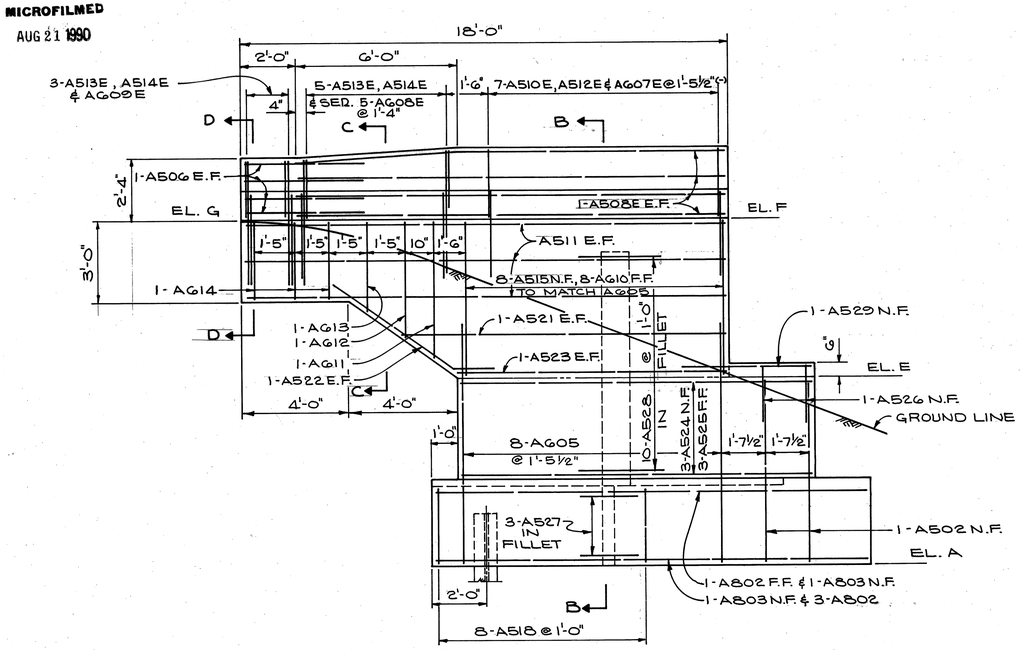

ELEVATION

WEST ABUTMENT ~ SOUTH WINGWALL
EAST ABUTMENT ~ NORTH WINGWALL

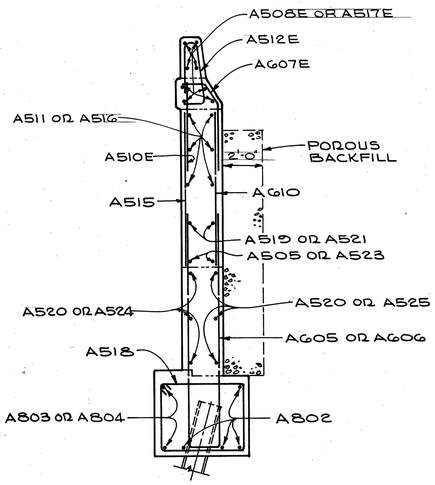

SECTION B-B

SEE DETAIL - "A"

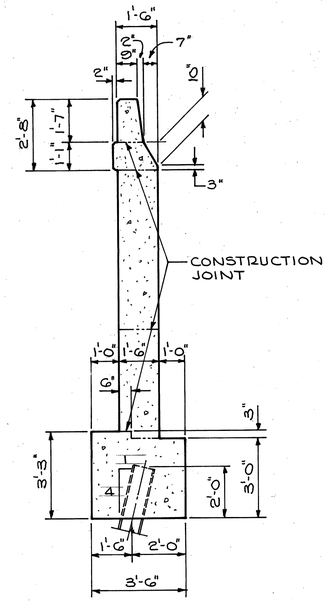

DETAIL - "A"

REINFORCEMENT NOT SHOWN

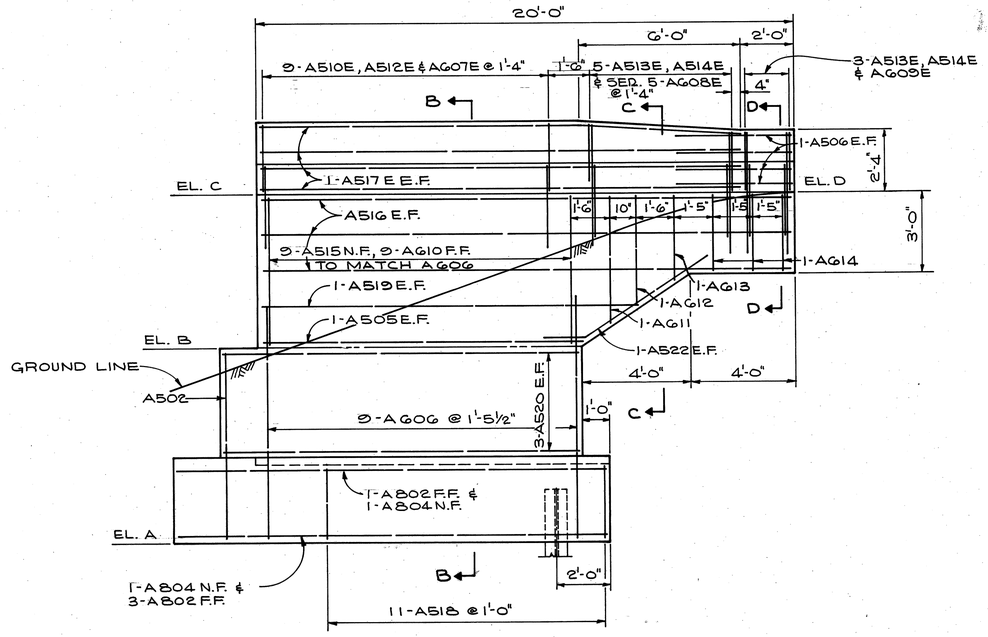

ELEVATION

WEST ABUTMENT ~ NORTH WINGWALL
EAST ABUTMENT ~ SOUTH WINGWALL

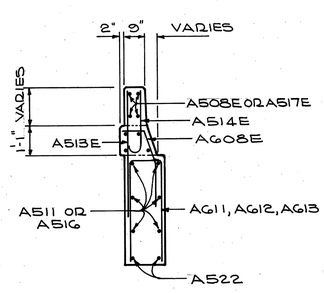

SECTION C-C

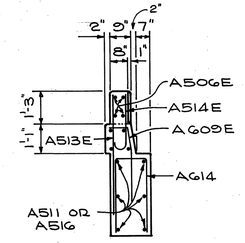

SECTION D-D

NOTES:

FOR WEST ABUTMENT PLAN AND ELEVATION DETAILS - SEE SHEET 3/11

FOR EAST ABUTMENT PLAN AND ELEVATION DETAILS - SEE SHEET 4/11

FOR ADDITIONAL NOTES - SEE SHEET 3/11

FOR ADDITIONAL RAILING DETAILS SEE STANDARD DRAWING BR-1.

PROVIDE 2" CONDUIT THROUGH THE SOUTH WINGWALL OF BOTH THE EAST AND THE WEST ABUTMENTS AS PER STANDARD DRAWING HL-5.

ELEVATIONS							
LOCATION	A	B	C	D	E	F	G
EAST ABUTMENT	610.84	618.13	624.13	623.92	617.87	623.88	623.72
WEST ABUTMENT	610.67	617.70	623.71	623.50	618.34	624.35	624.18

5/11

ADACHE ASSOCIATES INC., ENGINEERS
CLEVELAND, OHIO 44142

WINGWALL DETAILS

BRIDGE NO. ERI - 2 - 1640
EASTBOUND THRU RAMP OVER S.R.2
ERIE COUNTY — STA. 1088 + 99.79 TO
ERI - 2 - 16.13 — STA. 1092 + 20.35

DESIGNED	DRAWN	CHECKED	REVIEWED	DATE	REVISED
L.E.D.	W.J.S.	N.K.	L.E.D.	9-21-85	

MICROFILMED
AUG 21 1990

FED. RD. DIVISION	STATE	PROJECT	
2	OHIO		

163
284

ERIE COUNTY
ERI-2-(16.13-17.39)

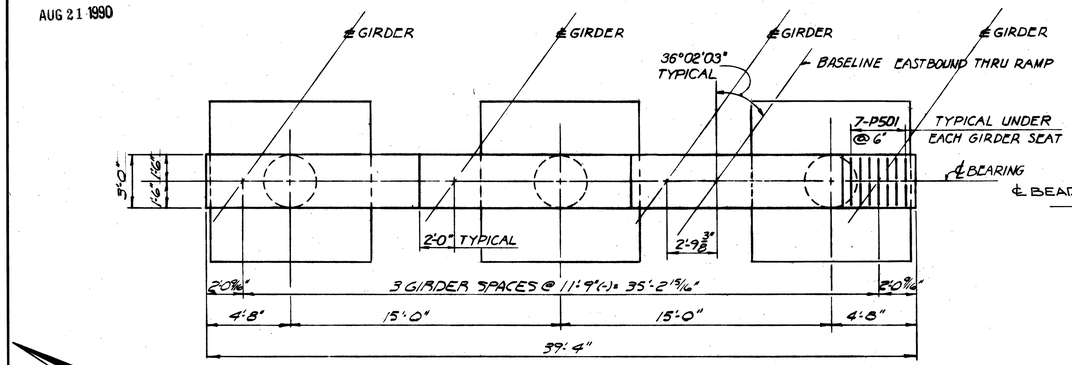

PLAN

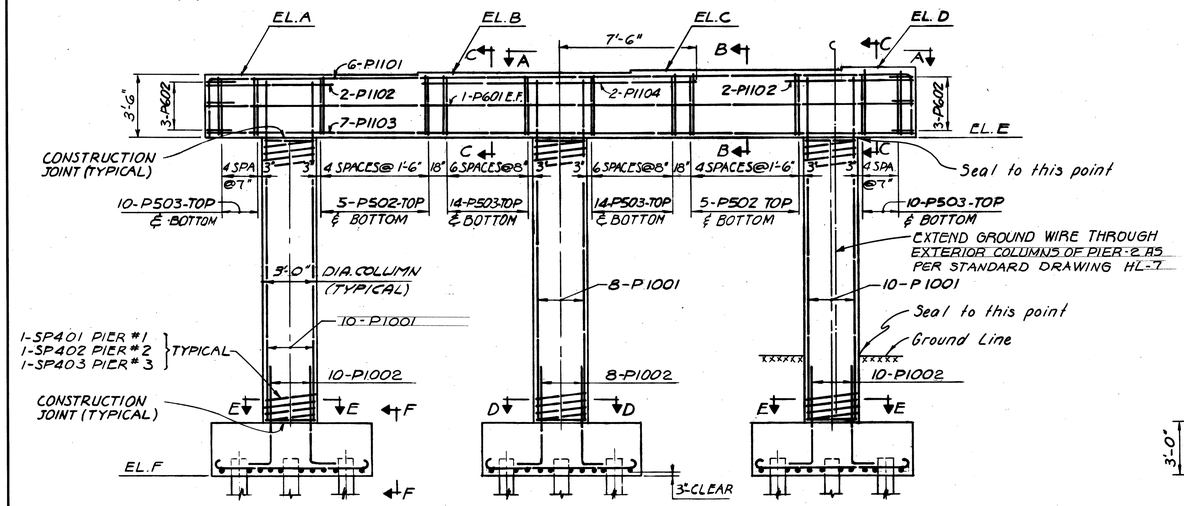

ELEVATION

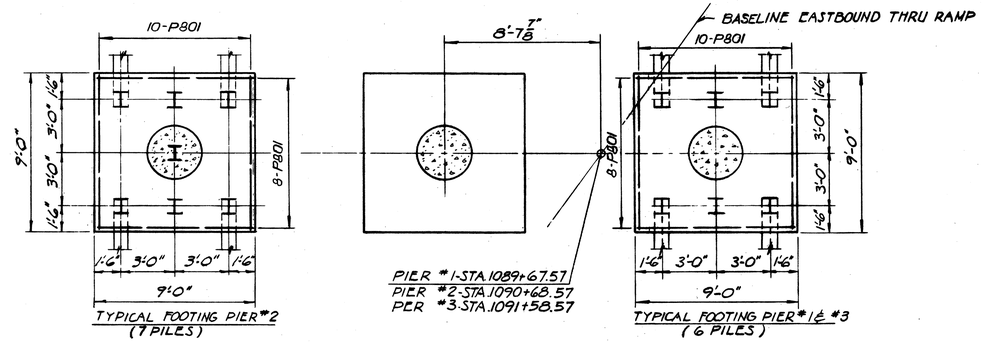

FOOTING PLAN

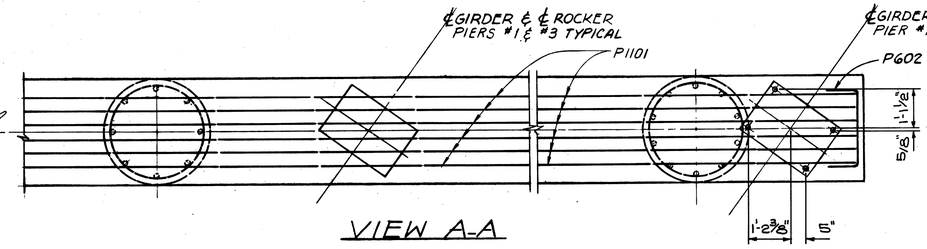

VIEW A-A

NOTE: SPECIAL CARE SHALL BE TAKEN IN PLACING REINFORCING STEEL IN THE VICINITY OF THE BRIDGE SEATS OF PIER #2 SO AS TO AVOID INTERFERENCE WITH THE DRILLING OF ANCHOR BOLT HOLES.

BEARING ANCHORS: AT THE OPTION OF THE CONTRACTOR, BEARING ANCHORS (OR FORMED HOLES), LOCATED AND SUPPORTED BY TEMPLATES, MAY BE CAST IN PLACE.

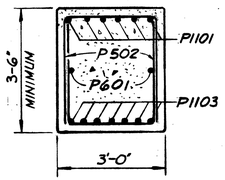

SECTION B-B

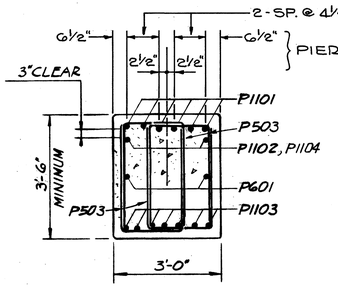

SECTION C-C

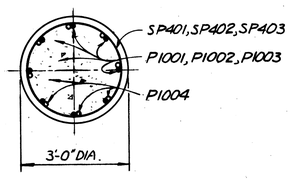

SECTION D-D

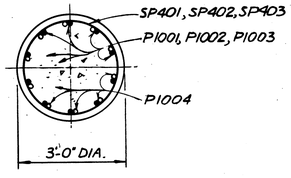

SECTION E-E

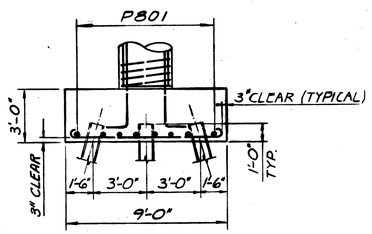

VIEW F-F

NOTES:
PIER PILES ARE HP10x42

BATTERED PILES SHALL BE BATTERED 1 ON 4 IN DIRECTION SHOWN

ABBREVIATION USED--E.F. = EACH FACE

FOR REINFORCING STEEL LIST AND BAR BENDING DIAGRAMS --SEE SHEET 10 & 11/11

THE PREFIX "1P", "2P", "3P" SHALL BE ADDED TO ALL REINFORCING BAR MARKS IN PIERS 1, 2 AND 3 RESPECTIVELY.

ELEVATION TABLE

LOCATION	A	B	C	D	E	F
PIER # 1	617.63	617.82	618.00	618.18	614.13	593.00
PIER # 2	617.84	617.98	618.13	618.27	614.34	595.50
PIER # 3	617.79	617.90	618.01	618.12	614.29	598.00

6/11

ADACHE ASSOCIATES INC., ENGINEERS
CLEVELAND, OHIO 44142

PIER DETAILS

BRIDGE NO. ERI - 2-1640
EASTBOUND THRU RAMP OVER S.R.2
ERIE COUNTY STA. 1088 + 99.79 TO
ERI - 2-16.13 STA. 1092 + 20.35

DESIGNED	DRAWN	CHECKED	REVIEWED	DATE	REVISED
L.E.D. L.A.	V.I.P.	L.A. N.K.	L.E.D.	9-21-85	

MICROFILMED
AUG 21 1990

FED. RD. DIVISION	STATE	PROJECT	
2	OHIO		

ERIE COUNTY
ERI - 2-(16.13-17.39)

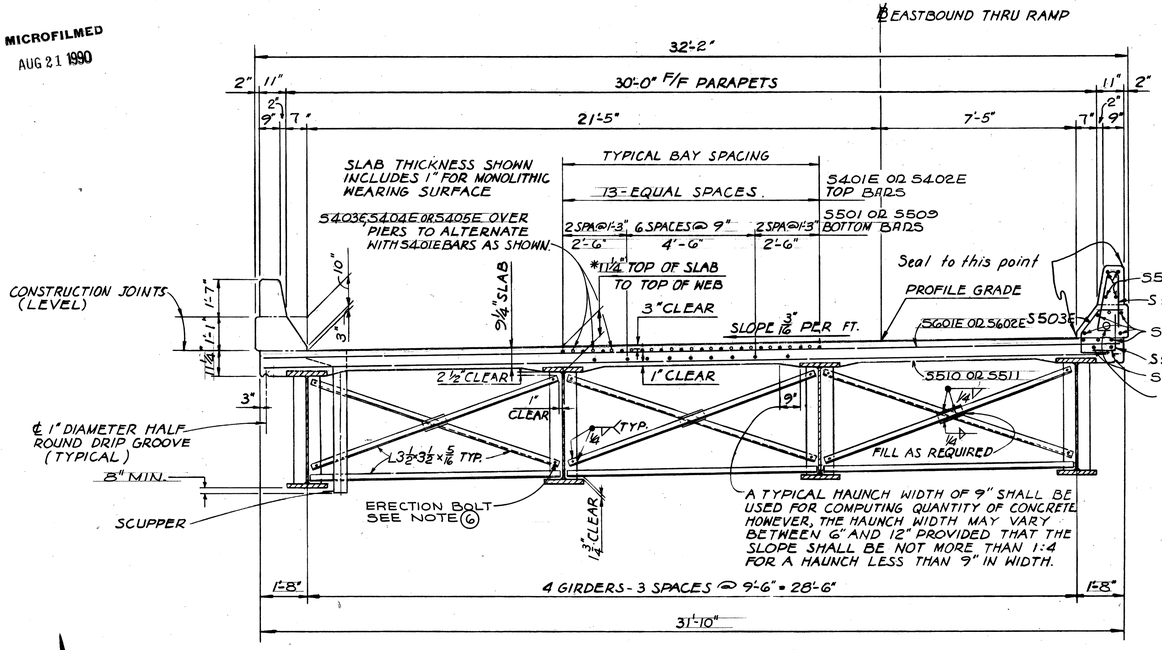

TRANSVERSE SECTION

*NOTE: THIS IS THE DESIGN DIMENSION. THE QUANTITY OF DECK CONCRETE TO BE PAID FOR SHALL BE BASED UPON THIS DIMENSION, EVEN THOUGH DEVIATION FROM IT MAY BE NECESSARY BECAUSE THE TOP FLANGE OF THE GIRDER MAY NOT HAVE THE EXACT CAMBER OR CONFORMATION REQUIRED TO PLACE IT PARALLEL TO THE FINISHED GRADE. DEDUCTION SHALL BE MADE FOR VOLUME OF ENCASED STEEL PLATES AS PER SECTION 511.18 OF THE CONSTRUCTION AND MATERIAL SPECIFICATIONS.

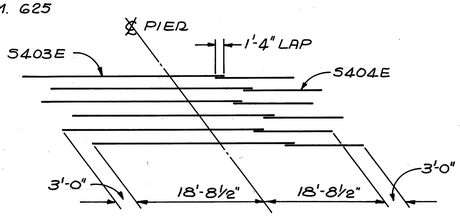

STAGGER DIAGRAM
S403E & S404E BARS OVER PIERS 1 & 2

STAGGER DIAGRAM
S405E OVER PIER-3

END CROSSFRAMES
4 x 4 x 5/16 LS

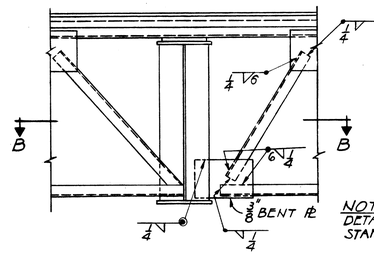

NOTE: FOR END CROSSFRAME DETAILS NOT SHOWN SEE STANDARD DNG. SD-1-69.

VIEW A-A

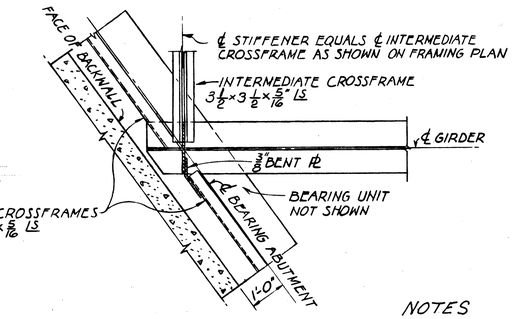

SECTION B B

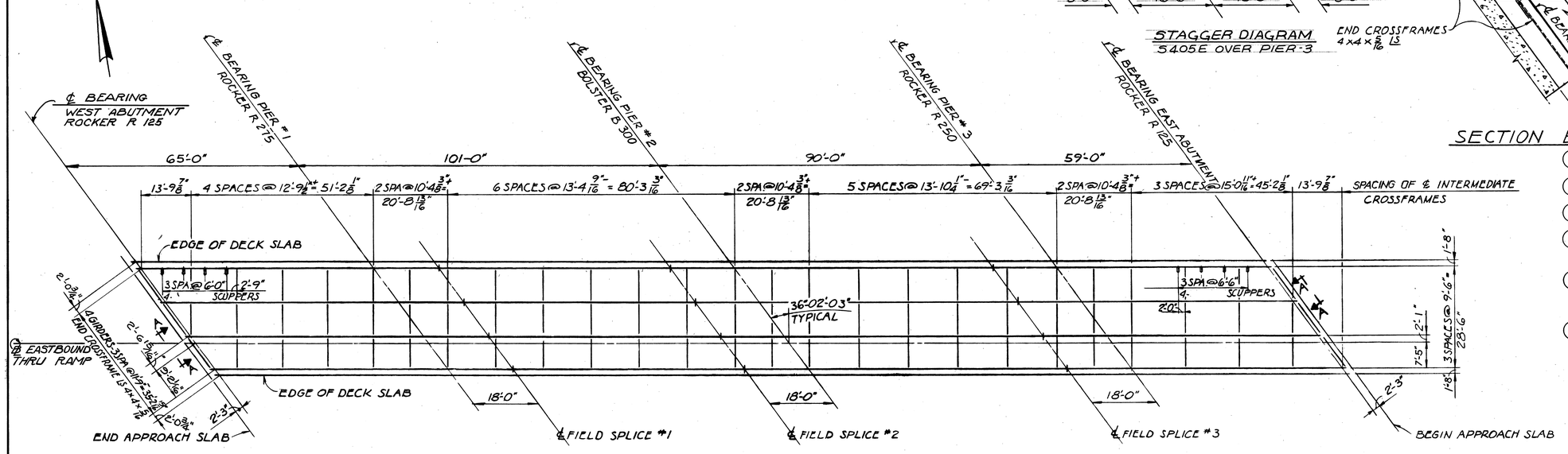

FRAMING PLAN
(STIFFENERS NOT SHOWN)

NOTES

See sheet 158A for Structural Steel Expansion Joints.

(1) - FOR DECK SLAB PLAN AND DECK ELEVATION PLAN SEE SHEET NO. 9 11

(2) - FOR SUPERSTRUCTURE DETAILS SEE SHEET NO. 8 11

(3) - FOR ROCKERS AND BOLSTERS SEE STANDARD DRAWING RB-1-55.

(4) - FOR END CROSSFRAMES, AND SCUPPER DETAILS SEE STANDARD DRAWING SD-1-69.

(5) - SCUPPERS SHALL BE IN ACCORDANCE WITH STD. DWG. S.D-1-69 EXCEPT THAT SCUPPER PIPES SHALL EXTEND 8" BELOW THE BOTTOM OF BEAMS INSTEAD OF 2".

(6) - HOLES FOR 5/8" ϕ ERECTION BOLTS SHALL BE PROVIDED IN THE CONNECTIONS OF CROSS FRAMES TO GIRDER STIFFENERS. PROVIDE 11/16" ϕ HOLES IN CROSS FRAME ANGLES AND 13/16" ϕ HOLES IN STIFFENERS.

7 / 11

ADACHE ASSOCIATES INC., ENGINEERS
CLEVELAND, OHIO 44142

TRANSVERSE SECTION & FRAMING PLAN

BRIDGE NO. ERI - 2 - 1640
EASTBOUND THRU RAMP OVER S.R.2
ERIE COUNTY STA. 1088 + 99.79 TO
ERI - 2-16.13 STA. 1092 + 20.35

DESIGNED	DRAWN	CHECKED	REVIEWED	DATE	REVISED
L.E.D. L.A.	V.I.P.	L.A.	L.E.D.	9-21-85	

MICROFILMED
AUG 21 1990

FED. RD. DIVISION	STATE	PROJECT	
2	OHIO		

165
284

ERIE COUNTY
ERI - 2-(16.13-17.39)

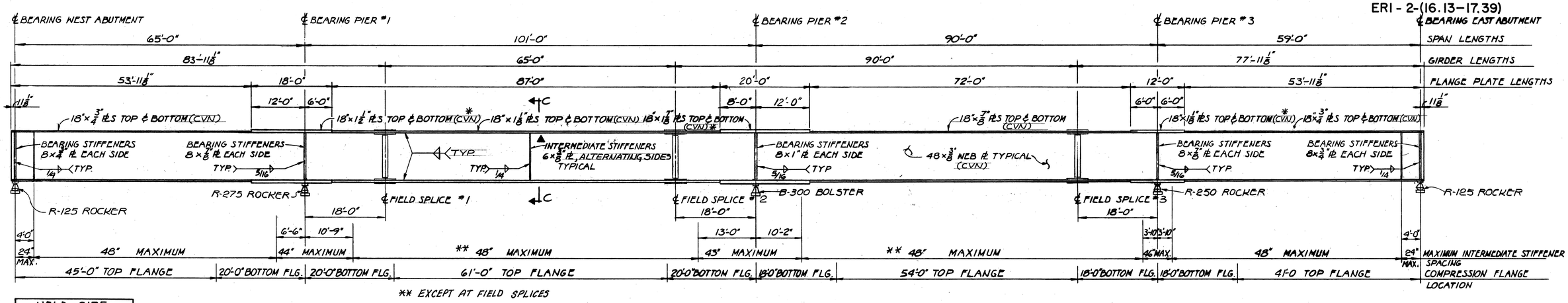

** EXCEPT AT FIELD SPLICES

TYPICAL GIRDER ELEVATION

WELD SIZE FLANGE TO WEB	
FLANGE PLATE THICKNESS	FILLET WELD SIZE
OVER ½" TO ¾"	¼"
OVER ¾" TO 1½"	5/16"
OVER 1½" TO 2¼"	⅜"

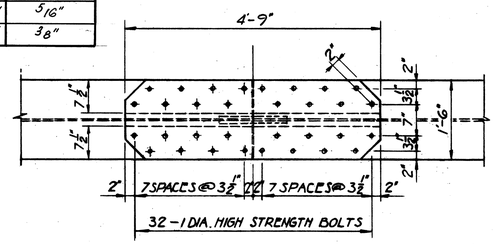

VIEW B-B

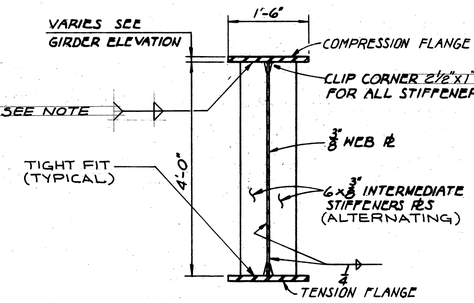

SECTION C-C

*NOTE: SINGLE STIFFENERS ON ALTERNATING SIDES OF GIRDER WEB SHALL BE WELDED TO THE COMPRESSION FLANGE. WELD SIZE SHALL BE THE SAME AS FLANGE TO WEB. (SEE TABLE THIS SHT.)

INTERMEDIATE STIFFENERS REQUIRED FOR CONNECTION OF CROSSFRAMES SHALL BE WELDED TO BOTH FLANGES.

DEFLECTION AND CAMBER TABLE

GIRDERS	DESCRIPTION	A	B	C	D	E	F	G	H	J	K	L	M	N	P	R	X	Y	Z
INTERIOR GIRDERS	DEFLECTION DUE TO WEIGHT OF STEEL	0"	0"	0"	1/16"	1/8"	3/16"	1/8"	1/16"	0"	1/16"	1/16"	0"	0"	0"	0"	5 11/16"	8 5/8"	5 5/16"
	DEFLECTION DUE TO REMAINING DEAD LOAD	1/8"	1/8"	0"	5/16"	1/2"	13/16"	7/16"	5/16"	3/16"	7/16"	5/16"	1/4"	1/16"	3/16"	1/8"			
	VERTICAL CURVE ADJUSTMENT	1/4"	3/8"	1/4"	1/2"	11/16"	7/8"	11/16"	1/2"	1/2"	11/16"	9/16"	7/16"	1/4"	5/16"	1/4"			
	REQUIRED CAMBER	3/8"	1/2"	1/4"	3/8"	1 5/16"	1 5/8"	1 1/4"	7/8"	1 1/16"	1 3/16"	1 5/16"	1 1/16"	5/8"	1/2"	3/8"			
	ORDINATE BETWEEN CHORD & BASE LINE	1 7/16"	2 13/16"	4 1/4"	6 3/16"	6 7/16"	7 3/16"	7 15/16"	8 1/8"	7 15/16"	6 15/16"	6 1/8"	5 15/16"	3 15/16"	2 5/8"	1 5/16"			
EXTERIOR GIRDERS	DEFLECTION DUE TO WEIGHT OF STEEL	0"	0"	0"	1/16"	1/8"	3/16"	1/8"	1/16"	0"	1/16"	1/16"	0"	0"	0"	0"	5 11/16"	8 5/8"	5 5/16"
	DEFLECTION DUE TO REMAINING DEAD LOAD	1/8"	1/8"	0"	1/4"	3/8"	5/8"	5/16"	3/16"	1/8"	5/16"	3/16"	3/16"	0"	1/8"	1/8"			
	VERTICAL CURVE ADJUSTMENT	1/4"	3/8"	1/4"	1/2"	11/16"	7/8"	11/16"	1/2"	1/2"	11/16"	9/16"	7/16"	1/4"	5/16"	1/4"			
	REQUIRED CAMBER	3/8"	1/2"	1/4"	13/16"	1 3/16"	1 11/16"	1 1/8"	3/4"	5/8"	1 1/16"	13/16"	5/8"	1/4"	7/16"	3/8"			
	ORDINATE BETWEEN CHORD & BASE LINE	1 7/16"	2 13/16"	4 1/4"	6 3/16"	6 7/16"	7 3/16"	7 15/16"	8 1/8"	7 13/16"	6 15/16"	6 1/8"	5 15/16"	3 15/16"	2 5/8"	1 5/16"			

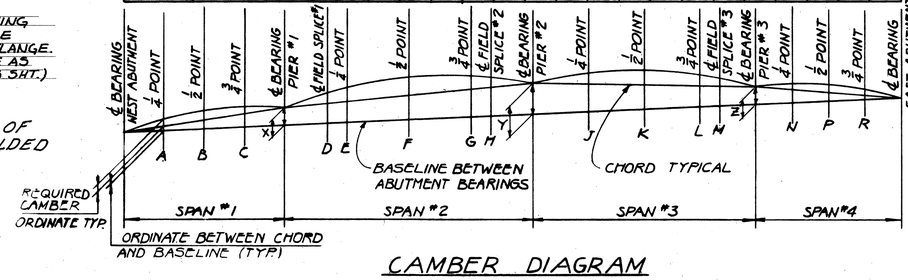

CAMBER DIAGRAM

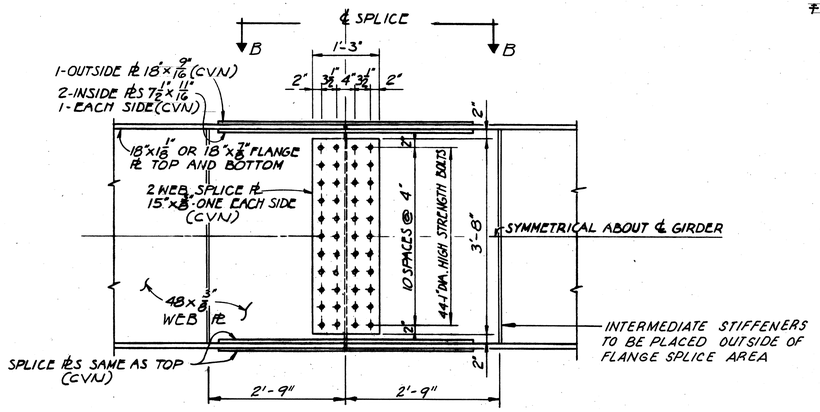

GIRDER SPLICE DETAIL
TYPICAL FOR ALL FIELD SPLICES

NOTES

THE WEB PLATES MAY BE SHOP SPLICED AS REQUIRED BY AVAILABLE PLATE LENGTHS. THE LOCATION OF SUCH SHOP WEB SPLICES AND THE LOCATION AND DETAILS OF ANY ADDITIONAL SHOP FLANGE SPLICES SHALL BE SUBMITTED TO THE DIRECTOR OF HIGHWAYS FOR APPROVAL PRIOR TO THE ORDERING OF MATERIALS.

INTERMEDIATE STIFFENERS SHALL BE LOCATED TO SERVE AS ATTACHMENTS FOR CROSSFRAMES. INTERMEDIATE STIFFENERS SHALL BE EQUALLY SPACED BETWEEN CROSSFRAMES, OR CROSSFRAMES AND STIFFENERS LOCATED AS SHOWN ON TYPICAL GIRDER ELEV. MAXIMUM STIFFENER SPACING NOT TO EXCEED THE VALUES SHOWN ON TYPICAL GIRDER ELEVATION.

WHERE A SHAPE OR PLATE IS DESIGNATED (CVN), THE MATERIAL SHALL MEET SPECIFIED MINIMUM NOTCH TOUGHNESS REQUIREMENT AS SPECIFIED IN 711.02 OF CMS.

BEARING STIFFENERS SHALL HAVE MILL FIT AT BOTTOM AND TIGHT FIT AT TOP.

FOR FRAMING PLAN SEE SHEET NO. 7/11

FOR CROSSFRAME DETAILS, SEE STANDARD DRAWING SD-1-69, SHEETS 1 & 2 OF 4. THE 2"×½"×1'-6" ANCHOR BARS SHALL BE 4 1/4" FROM TOP OF SLAB INSTEAD OF THE 3" SHOWN IN SECTION A-A.

~~PROVIDE 8" BEVELED BAR, ⅛" MINIMUM THICKNESS, WELDED TO MAIN ANGLE OF END DAM EVEN THOUGH ROADWAY GRADIENT AT END OF DAM MAY BE LESS THAN 2%.~~

ALL FLANGE PLATES SHALL HAVE COMPLETE PENETRATION WELDS.

* INDICATES, TOP PLATE ONLY.

▲ - INTERMEDIATE STIFFENERS SHALL BE PLACED ON ALTERNATING SIDES OF THE GIRDER EXCEPT WHERE NECESSARY TO SERVE AS ATTACHMENTS FOR CROSS FRAMES.

▲ - INTERMEDIATE STIFFENERS SHALL NOT BE PLACED ON THE FASCIA SIDE OF THE EXTERIOR GIRDERS.

WELDED ATTACHMENT OF SUPPORTS FOR CONCRETE DECK FINISHING MACHINE MAY BE MADE TO AREAS OF THE FASCIA STRINGER FLANGES DESIGNATED "COMPRESSION". ATTACHMENTS SHALL NOT BE MADE TO AREAS DESIGNATED "TENSION". FILLET WELDS TO COMPRESSION FLANGES SHALL BE NOT CLOSER THAN 1" FROM EDGE OF FLANGE, BE NOT MORE THAN 2" LONG, AND BE NOT SMALLER THAN THE MINIMUM SIZE REQUIRED BY AASHTO.

8/11

ADACHE ASSOCIATES INC., ENGINEERS
CLEVELAND, OHIO 44142

SUPERSTRUCTURE DETAILS

BRIDGE NO. ERI - 2 - 1640
EASTBOUND THRU RAMP OVER S.R.2
ERIE COUNTY STA. 1088 + 99.79 TO
ERI - 2 - 16.13 STA. 1092 + 20.35

DESIGNED	DRAWN	CHECKED	REVIEWED	DATE	REVISED
L.E.D. L.A.	V.I.P.	L.A.	L.E.D.	9-21-85	

MICROFILMED
AUG 21 1990

FED. RD. DIVISION	STATE	PROJECT	
2	OHIO		

166
284

ERIE COUNTY
ERI - 2-(16.13-17.39)

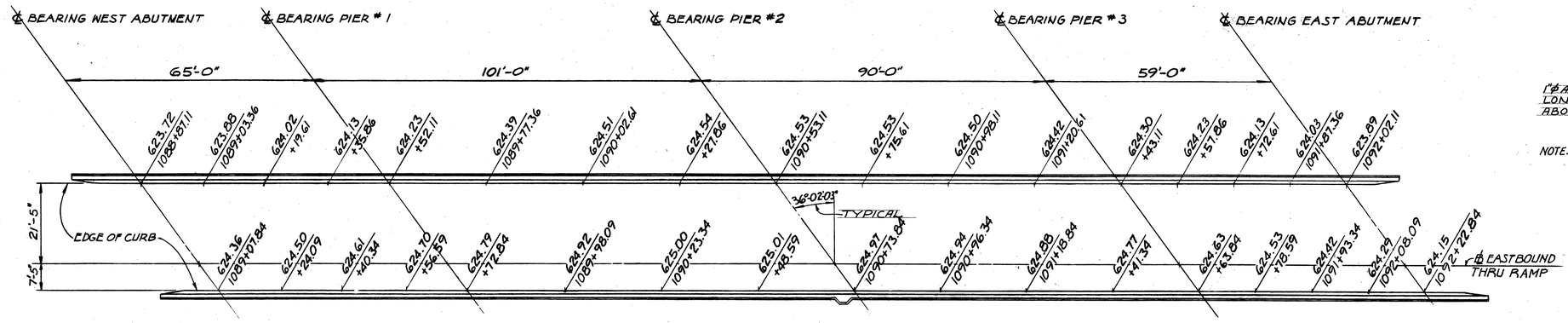

DECK ELEVATION PLAN

NOTE: THE ELEVATIONS SHOWN ARE TOP OF CONCRETE SLAB ELEVATIONS WHICH ARE REQUIRED BEFORE THE CONCRETE IS PLACED. PROPER ALLOWANCE HAS BEEN MADE FOR THE DEADLOAD DEFLECTIONS CAUSED BY THE WEIGHT OF THE CONCRETE SLAB.

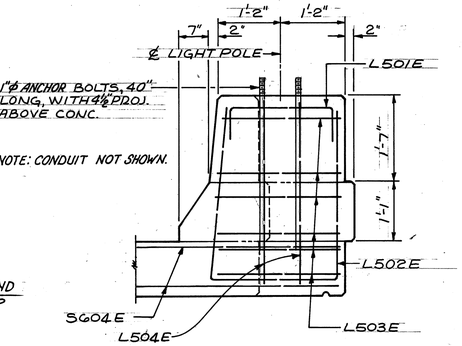

SECTION D-D

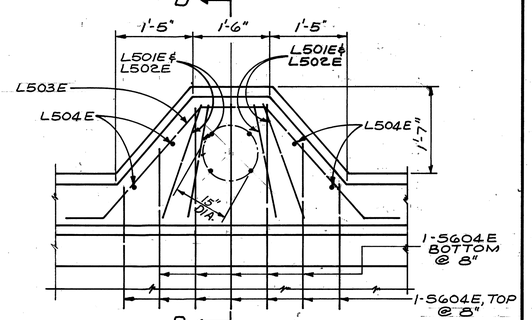

NOTE: FOR ADDITIONAL DETAILS OF STRUCTURE MOUNTED LIGHT POLE SEE STANDARD DRAWINGS HL-3, 4, 5, 7 & 19 AND LIGHTING PLANS.

PLAN DETAIL "C"

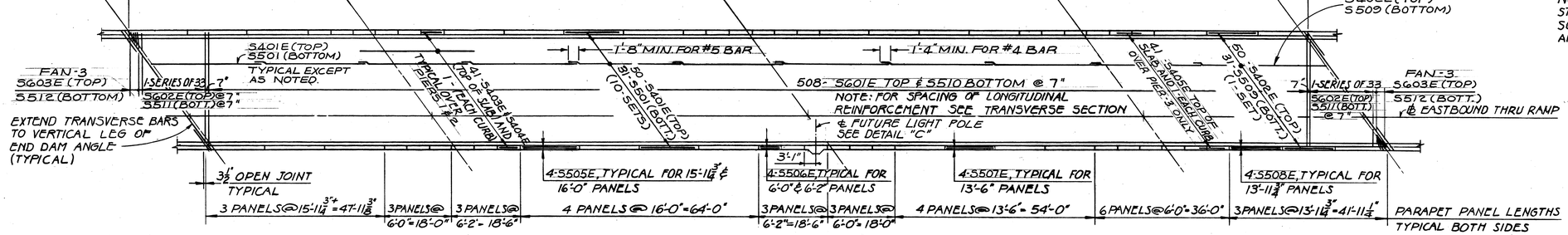

DECK SLAB PLAN

NOTES

FOR TRANSVERSE SECTION SEE SHEET 7/11.

FOR REINFORCING STEEL LIST AND BAR BENDING DIAGRAMS SEE SHEET 11/11.

FOR RAILING DETAILS NOT SHOWN SEE STANDARD DRAWING BR-1, DATED 5-25-79.

9/11

ADACHE ASSOCIATES INC., ENGINEERS
CLEVELAND, OHIO 44142

DECK SLAB PLAN & DECK ELEVATION PLAN

BRIDGE NO. ERI - 2 - 1640
EASTBOUND THRU RAMP OVER S.R.2
ERIE COUNTY — STA. 1088 + 99.79 TO
ERI - 2 - 16.13 — STA. 1092 + 20.35

DESIGNED	DRAWN	CHECKED	REVIEWED	DATE	REVISED
L.E.D.	V.I.P.	H.G.	L.E.D.	9-21-85	

MICROFILMED
AUG 21 1990

FED. RD. DIVISION	STATE	PROJECT	
2	OHIO		

167/284

ERIE COUNTY
ERI-2-(16.13-17.39)

ABUTMENTS

MARK	Nº REQUIRED WEST ABUTMENT	Nº REQUIRED EAST ABUTMENT	Nº REQUIRED TOTAL	LENGTH	TYPE	DIMENSIONS A	B	C	D	INCRM.	WEIGHT LBS.
A401	24	24	48	3'-4"	7	2'-2"					107
A501	28	28	56	7'-9"	1	1'-4"	5'-4"	1'-4"			453
A502	32	32	64	7'-3"	13	6'-7"	9"				484
A503	30	30	60	7'-8"	1	2'-3"	3'-5"	2'-3"			480
A504	12	12	24	38'-6"	ST.						964
A505	2	2	4	11'-9"	ST.						49
A507	3	3	6	37'-4"	ST.						232
A509	4	4	8	9'-3"	1	2'-1"	5'-4"	2'-1"			77
A511	6	6	12	17'-8"	ST.						221
A515	17	17	34	5'-8"	ST.						201
A516	6	6	12	19'-8"	ST.						246
A518	19	19	38	11'-5"	3	2'-6"	3'-0"				452
A519	2	2	4	13'-8"	ST.						57
A520	6	6	12	13'-1"	ST.						164
A521	2	2	4	11'-9"	ST.						49
A522	4	4	8	8'-1"	8	2'-0"	6'-1"	5'-0"	3'-6"		67
A523	2	2	4	9'-9"	ST.						41
A524	3	3	6	12'-10"	ST.						80
A525	3	3	6	11'-0"	ST.						69
A526	2	2	4	2'-3"	ST.						9
A527	3	3	6	4'-3"	ST.						27
A528	10	10	20	5'-6"	ST.						115
A529	1	1	2	4'-8"	ST.						10
A601	28	28	56	14'-1"	1	6'-7"	5'-4"	2'-6"			1,185
A603	35	35	70	8'-11"	1	3'-11"	1'-5"	3'-11"			938
A604	35	35	70	12'-3"	1	5'-7"	1'-5"	5'-7"			1,288.
A605	8	8	16	19'-11"	1	9'-6"	1'-2"	9'-6"			479
A606	9	9	18	19'-2"	1	9'-2"	1'-2"	9'-2"			518
A610	17	17	34	5'-8"	ST.						289
A611	2	2	4	10'-0"	1	4'-7"	1'-2"	4'-7"			60
A612	2	2	4	8'-10"	1	4'-0"	1'-2"	4'-0"			53
A613	2	2	4	6'-8"	1	2'-11"	1'-2"	2'-11"			40
A614	6	6	12	6'-2"	1	2'-8"	1'-2"	2'-8"			111
A801	14	14	28	22'-1"	ST.						1,639
A802	8	8	16	15'-0"	ST.						641
A803	2	2	4	20'-0"	5	--	1'-6"	2'-0"	1'-11"	15'-10"	214
A804	2	2	4	18'-2"	8	15'-9"	2'-6"	2'-0"	1'-6"		194
									TOTAL ABUTMENTS		12,303

PIER Nº1

MARK	Nº REQUIRED		TOTAL	LENGTH	TYPE	DIMENSIONS A	B	C	D	INCRM.	WEIGHT LBS.
1P501			28	5'-5"	1	1'-6"	2'-8"	1'-6"			158
1P502			20	7'-11"	1	2'-9"	2'-8"	2'-9"			165
1P503			96	7'-2"	1	2'-9"	1'-11"	2'-9"			718

PIER Nº1 CONTINUED

MARK	Nº REQUIRED		TOTAL	LENGTH	TYPE	DIMENSIONS A	B	C	D	INCRM.	WEIGHT LBS.
1P601			2	39'-0"	ST.						117
1P602			6	6'-4"	1	2'-0"	2'-8"	2'-0"			57
1P801			54	10'-8"	11	8'-6"					1,538
1P1001			28	21'-4"	ST.						2,570
1P1002			28	9'-3"	13	8'-1"	1'-6"				1,114
1P1101			6	44'-8"	1	3'-2"	39'-0"	3'-2"			1,424
1P1102			4	7'-0"	ST.						149
1P1103			7	39'-0"	ST.						1,450
1P1104			2	15'-0"	ST.						159
										TOTAL SPIRALS	1,003
										TOTAL PIER NO. 1	10,622

PIER Nº2

MARK	Nº REQUIRED		TOTAL	LENGTH	TYPE	DIMENSIONS A	B	C	D	INCRM.	WEIGHT LBS.
2P501			28	5'-5"	1	1'-6"	2'-8"	1'-6"			158
2P502			20	7'-11"	1	2'-9"	2'-8"	2'-9"			165
2P503			96	7'-2"	1	2'-9"	1'-11"	2'-9"			718
2P601			2	39'-0"	ST.						117
2P602			6	6'-4"	1	2'-0"	2'-8"	2'-0"			57
2P801			54	10'-8"	11	8'-6"					1,538
2P1001			28	19'-1"	ST.						2,299
2P1002			28	9'-3"	13	8'-1"	1'-6"				1,114
2P1101			6	44'-8"	1	3'-2"	39'-0"	3'-2"			1,424
2P1102			4	7'-0"	ST.						149
2P1103			7	39'-0"	ST.						1,450
2P1104			2	15'-0"	ST.						159
										TOTAL SPIRALS	882
										TOTAL PIER NO. 2	10,230

BENDING DIAGRAMS

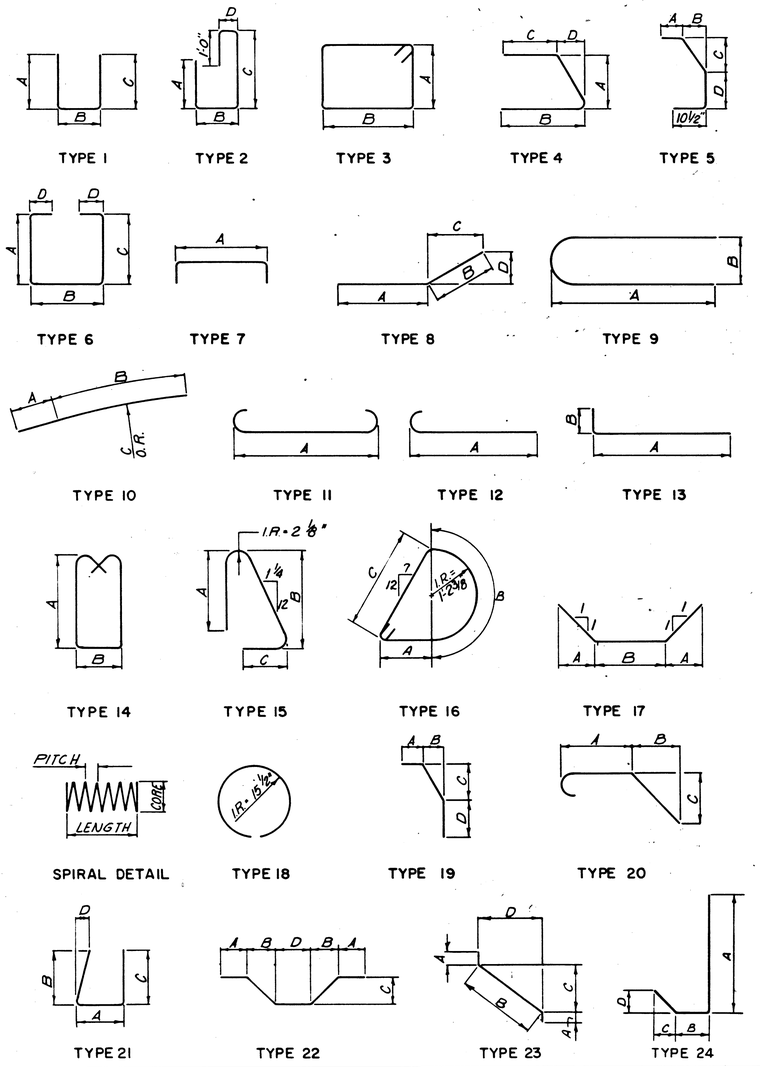

REINFORCING STEEL SAMPLES:

REFER TO CMS SECTIONS 106.03, 700, 709.01 THROUGH 709.05 AND 709.08. SUFFICIENT ADDITIONAL REINFORCING STEEL SHALL BE PROVIDED FOR SAMPLING. RANDOM SAMPLES SHALL BE REPLACED IN THE STRUCTURES BY THE ADDITIONAL STEEL, SPLICED IN ACCORDANCE WITH 509.08.

NOTE:
BAR DIMENSIONS GIVEN ARE OUT TO OUT.

10/11

ADACHE ASSOCIATES INC., ENGINEERS
CLEVELAND, OHIO 44142

REINFORCING STEEL LIST

BRIDGE Nº ERI - 2 - 1640
EASTBOUND THRU RAMP OVER S.R.2
ERIE COUNTY — STA. 1088+99.79 TO
ERI - 2 - 16.13 — STA. 1092+20.35

DESIGNED	DRAWN	CHECKED	REVIEWED	DATE	REVISED
J.D.P.	D.R.J.	K.L.M.	L.E.D.	9-23-85	

MICROFILMED
AUG 21 1990

F.H.W.A. REGION	STATE	PROJECT	
5	OHIO		

167A
284

ERIE COUNTY
ERI-2-(16.13-17.39)

EPOXY COATED REINFORCING STEEL

PIER Nº 3

MARK	Nº REQUIRED		TOTAL	LENGTH	TYPE	DIMENSIONS A	B	C	D	INCRM.	WEIGHT LBS.
3P501			28	5'-5"	1	1'-6"	2'-8"	1'-6"			158
3P502			20	7'-11"	1	2'-9"	2'-8"	2'-9"			165
3P503			96	7'-2"	1	2'-9"	1'-11"	2'-9"			718
3P601			2	39'-0"	ST.						117
3P602			6	6'-4"	1	2'-0"	2'-8"	2'-0"			57
3P801			54	10'-8"	11	8'-6"					1,538
3P1001			28	16'-7"	ST.						1,998
3P1002			28	9'-3"	13	8'-1"	1'-6"				1,114
3P1101			6	44'-8"	1	3'-2"	39'-0"	3'-2"			1,424
3P1102			4	7'-0"	ST.						149
3P1103			7	39'-0"	ST.						1,450
3P1104			2	15'-0"	ST.						159
									TOTAL SPIRALS		743
									TOTAL PIER NO. 3		9,790

SPIRAL REINFORCEMENT

MARK	Nº	LENGTH	WEIGHT	CORE	PITCH	SPACERS
SP401	3	17'-9"	1,003	32"	4-1/2"	12 - L^S 1X1X1/8"
SP402	3	15'-6"	882	32"	4-1/2"	12 - L^S 1X1X1/8"
SP403	3	12'-11"	743	32"	4-1/2"	12 - L^S 1X1X1/8"

SUPERSTRUCTURE

MARK	Nº REQUIRED		TOTAL	LENGTH	TYPE	DIMENSIONS A	B	C	D	INCRM.	WEIGHT LBS.
S501			310	30'-0"	ST.						9,700
S502			426	2'-5"	13	1'-8"	10"				1,074
S509			31	33'-2"	ST.						1,072
S510			508	31'-6"	ST.						16,690
S511		2 SER. OF 33 BARS		3'-9" TO 29'-6"	ST.					1'-0-3/8"	1,144
S512			6	3'-6"	ST.						22
									TOTAL SUPERSTRUCTURE		29,702

ABUTMENTS

MARK	Nº REQUIRED WEST ABUTMENT	EAST ABUTMENT	TOTAL	LENGTH	TYPE	DIMENSIONS A	B	C	D	INCRM.	WEIGHT LBS.
A504E	1	1	2	38'-6"	ST.						80
A506E	16	16	32	4'-4"	ST.						145
A508E	8	8	16	15'-10"	ST.						264
A510E	16	16	32	3'-0"	ST.						100
A512E	16	16	32	5'-3"	15	2'-2"	2'-5"	7-1/2"			175
A513E	16	16	32	4'-7"	ST.						153
A514E	16	16	32	2'-8"	12	2'-1"					89
A517E	8	8	16	17'-10"	ST.						298
A602E	35	35	70	6'-3"	1	2'-10"	11"	2'-10"			657
A607E	16	16	32	3'-9"	19	9"	6"	8-1/2"	2'-5"		180
A608E	2 SER. OF 5 BARS	2 SER. OF 5BARS	4 SER. OF 5 BARS	3'-7" TO 3'-9"	19	7" TO 9"	2" TO 6"	8-1/2"	2'-5"	1/2"	110
A609E	6	6	12	3'-7"	19	7"	2"	8-1/2"	2'-5"		65
A805E	20	20	40	4'-11"	20	2'-7"	1'-0"	1'-0"			525
									TOTAL ABUTMENT EPOXY BARS		2,841

SUPERSTRUCTURE

MARK	Nº REQUIRED		TOTAL	LENGTH	TYPE	DIMENSIONS A	B	C	D	INCRM.	WEIGHT LBS.
S401E			500	30'-0"	ST.						10,020
S402E			50	29'-10"	ST.						996
S403E			86	29'-9"	ST.						1,709
S404E			86	12'-0"	ST.						689
S405E			43	36'-0"	ST.						1,034
S503E			426	3'-0"	5	9"	6"	8"	9"		1,333
S504E			426	5'-3"	15	2'-2"	2'-5"	7"			2,333
S505E			56	15'-8"	ST.						915
S506E			144	5'-8"	ST.						851
S507E			32	13'-2"	ST.						439
S508E			24	13'-8"	ST.						342
S601E			508	31'-6"	ST.						24,035
S602E		2 SER. OF 33 BARS		3'-9" TO 29'-6"	ST.					1'-0-3/8"	1,648
S603E			6	3'-6"	ST.						32
S604E			12	6'-0"	ST.						108
										SUBTOTAL	46,484

SUPERSTRUCTURE CONTINUED

MARK	Nº REQUIRED		TOTAL	LENGTH	TYPE	DIMENSIONS A	B	C	D	INCRM.	WEIGHT LBS.
				LIGHT POLE PILASTER							
L501E			4	3'-3"	1	10"	1'-10"	10"			14
L502E			4	8'-5"	21	2'-4"	3'-2"	3'-2"	6-1/2"		35
L503E			6	7'-3"	22	6"	1'-10"	1'-10"	1'-4"		45
L504E			4	3'-2"	ST.						13
										SUBTOTAL	107
									TOTAL SUPERSTRUCTURE EPOXY BARS		46,591

NOTE:

ALL REINFORCING BARS SHOWN WITH SUFFIX-E TO BE EPOXY COATED.

11 / 11

adache - ciuni - lynn associates
CONSULTING ENGINEERS CLEVELAND, OHIO 44130

REINFORCING STEEL LIST

BRIDGE Nº ERI - 2 - 1640
EASTBOUND THRU RAMP OVER S.R.2
ERIE COUNTY STA. 1088+99.79 TO
ERI-2-16.13 STA. 1092+20.35

DESIGNED	DRAWN	CHECKED	REVIEWED	DATE	REVISED
J.D.P.	J.D.P.	K.L.M.	L.E.B.	9-23-85	

MICROFILMED
AUG 21 1990

F.H.W.A. REGION	STATE	PROJECT	
5	OHIO		

168
284

ERIE COUNTY
ERI-2-(16.13-17.39)

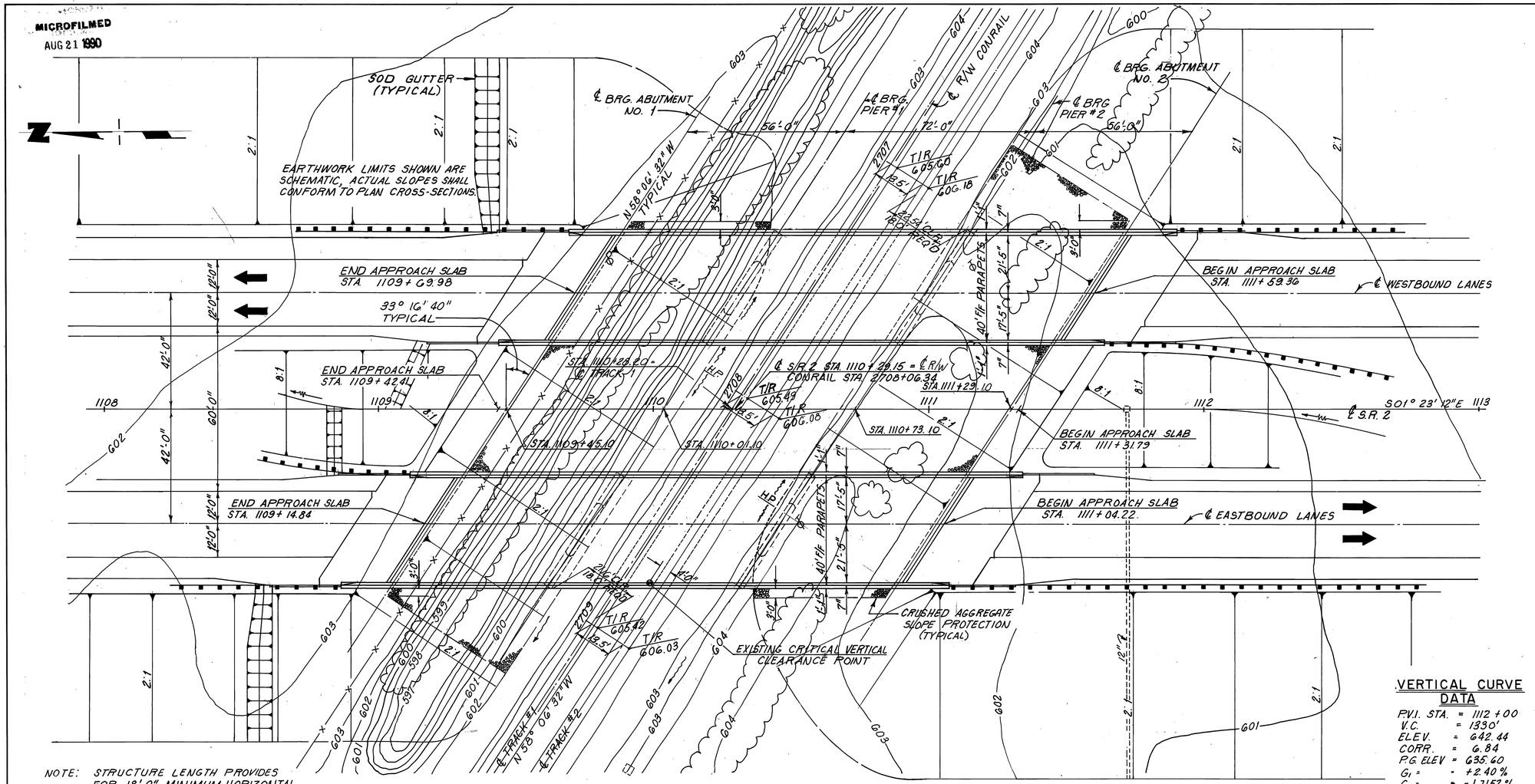

NOTE: STRUCTURE LENGTH PROVIDES FOR 18'-0" MINIMUM HORIZONTAL CLEARANCE TO TOE OF SLOPE 2'-6" BELOW TOP OF RAIL FOR BOTH TRACKS #1 & #2.

PLAN

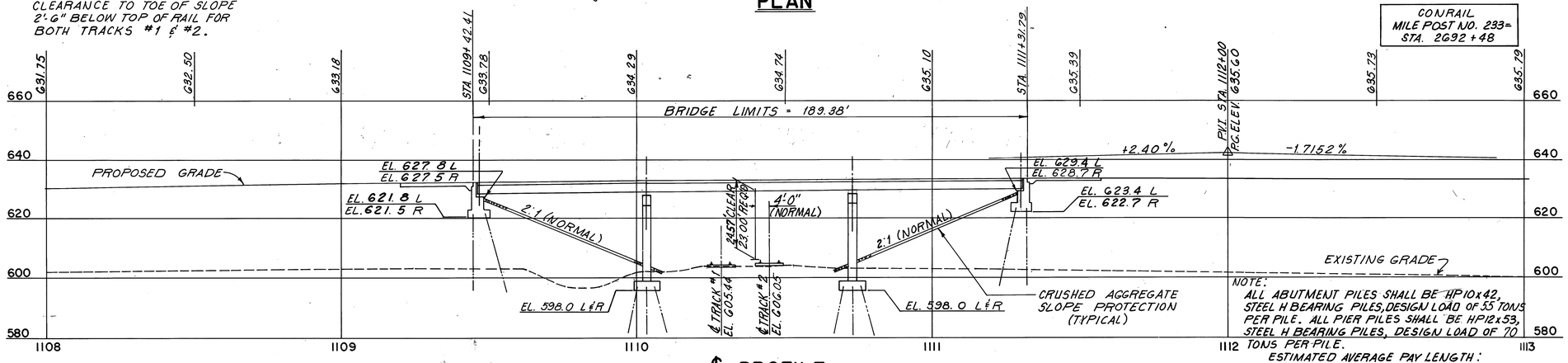

℄ PROFILE

NOTE:
ALL ABUTMENT PILES SHALL BE HP10x42, STEEL H BEARING PILES, DESIGN LOAD OF 55 TONS PER PILE. ALL PIER PILES SHALL BE HP12x53, STEEL H BEARING PILES, DESIGN LOAD OF 70 TONS PER PILE.
ESTIMATED AVERAGE PAY LENGTH:
ABUTMENT #1, ABUTMENT #2 55 FT.
ALL PIERS 30 FT.

VERTICAL CURVE DATA

PVI. STA. = 1112+00
V.C. = 1330'
ELEV. = 642.44
CORR. = 6.84
P.G. ELEV = 635.60
G_1 = + 2.40 %
G_2 = - 1.7152 %

PROPOSED STRUCTURE

TYPE: CONTINUOUS, COMPOSITE STEEL BEAM WITH REINFORCED CONCRETE DECK AND SUBSTRUCTURE

SPANS: 56'-0", 72'-0", 56'-0"

ROADWAY: 40'-0" F/F PARAPETS

LOADING: HS20-44, CASE II AND ALTERNATE MILITARY LOADING

SKEW: 33° 16' 40" LEFT FORWARD

WEARING SURFACE: MONOLITHIC CONCRETE (TOP LAYER OF REINFORCING EPOXY COATED)

ALIGNMENT: TANGENT

SUPERELEVATION: NONE (NORMAL CROWN)

APPROACH SLABS: AS-1-81 (25'-0" LONG)

TRAFFIC: ADT (2000) 17,115
ADTT (2000) 2,670

1 / 16

adache - ciuni - lynn associates
CONSULTING ENGINEERS CLEVELAND, OHIO 44130

SITE PLAN

BRIDGE NO. ERI-2-1678 L/R
SR. 2 OVER CONRAIL
ERIE COUNTY STA. 1109+42.41 TO
ERI-2-16.13 STA. 1111+31.79

DESIGNED	DRAWN	CHECKED	REVIEWED	DATE	REVISED
I.M.B.	D.R.J.	L.E.D.	R.D.H.	8-13-82	

MICROFILMED
AUG 21 1990

F.H.W.A. REGION	STATE	PROJECT	
5	OHIO		

169
284

ERIE COUNTY
ERI-2-(16.13-17.39)

ESTIMATED QUANTITIES

ITEM	TOTAL	UNIT	DESCRIPTION	ABUT.	PIERS	SUP. STRU.	GEN'L		
503	LUMP	LUMP SUM	COFFERDAMS, CRIBS AND SHEETING				LUMP		
503	1,105	CU.YD.	UNCLASSIFIED EXCAVATION	887	218				
505	LUMP	LUMP SUM	PILE DRIVING EQUIPMENT MOBILIZATION				LUMP		
507	4,180	LIN.FT.	STEEL PILES, HP 10x42	4,180					
507	1,560	LIN.FT.	STEEL PILES, HP 12x53		1,560				
509	141,068	LBS.	REINFORCING STEEL, GRADE 60	29,004	64,160	47,904			
511	523	CU.YD.	CLASS S CONCRETE, SUPERSTRUCTURE, AS PER PLAN			523			
511	360	CU.YD.	CLASS C CONCRETE, PIERS ABOVE FOOTING		360				
511	231	CU.YD.	CLASS C CONCRETE, ABUT. ABOVE FOOTING	231					
511	290	CU.YD.	CLASS C CONCRETE, FOOTINGS	179	111				
513	304,300	LBS.	STRUCTURAL STEEL, AISC CATEGORY 1			304,300			
			(UNPAINTED A588 EXCEPT AS NOTED)						
513	3,720	EACH	WELDED STUD SHEAR CONNECTORS			3,720			
516	192	Lin. Ft.	Structural Steel Expansion Joints Including Strip Seals, As Per Plan			192			
518	135	CU.YD.	POROUS BACKFILL	135					
518	220	LIN.FT.	6" PERFORATED, HELICAL CORRUGATED STEEL	220					
			PIPE, 707.01						
518	70	LIN.FT.	6" NON-PERFORATED, HELICAL CORRUGATED	70					
			STEEL PIPE, 707.01						
518	8	EACH	SCUPPERS, INCLUDING SUPPORTS, AS PER PLAN			8			
601.	2,100	SQ.YD.	CRUSHED AGGREGATE SLOPE PROTECTION				2,100		
516	40	Each	Rockers and Bolsters Galvanized *			40			
Spec.	352	Sq. Yd.	Sealing of Concrete Surfaces *(See Proposal Note)			352			
824	73,589	LBS.	EPOXY COATED REINFORCING STEEL, GRADE 60	2907		70,682			
SPEC.	7,806	SQ.FT.	PROTECTION OF CONC. SURFACES (SEE PROPOSAL NOTE)		7,806				

* See General Note on Sheet 159/284

QUANTITY CALCULATIONS
BY AJM DATE 7/14/83
CHKD. J.R.S. DATE 7-21-83

GENERAL NOTES

ITEM 511, CLASS S CONCRETE, AS PER PLAN

IN LIEU OF THE PROPORTIONING SPECIFIED IN 499.03 AND 511.02, THE FOLLOWING TABLE SHALL BE USED TO ESTABLISH THE QUANTITIES PER CUBIC YARD FOR CONCRETE, THE COARSE AGGREGATE SHALL BE LIMESTONE.

CONCRETE IN THE PARAPETS NEED NOT BE PLACED AT NIGHT.

QUANTITIES PER CUBIC YARD (USING NO. 8 LIMESTONE)

FINE AGGREGATE (LB)	COARSE AGGREGATE (LB)	TOTAL (LB)	CEMENT CONTENT (LB)	WATER-CEMENT RATIO
1555	1100	2655	715	0.40

AIR CONTENT - 8±2%

HIGH RANGE WATER REDUCER MAY BE USED AT THE OPTION OF THE CONTRACTOR. THE DOSAGE RATE WILL BE DETERMINED BY THE CONTRACTOR BASED ON MANUFACTURER'S RECOMMENDATION TO ACHIEVE THE DESIRED WORKABILITY LEVEL.
HIGH RANGE WATER REDUCER SHALL CONFORM TO 705.12, ASTM-C494 TYPE F AND SHALL NOT CONTAIN CALCIUM CHLORIDE.

THE CEMENT CONTENT SHALL BE MAINTAINED AND A MAXIMUM WATER-CEMENT RATIO OF 0.40 SHALL NOT BE EXCEEDED. THE SLUMP OF THE UNPLASTICIZED CONCRETE DELIVERED TO THE JOB SITE SHALL BE 1 1/2", ±1/2 INCH. THE SUPERPLASTICIZING ADMIXTURE SHALL BE ADDED AT THE JOB SITE AND MIXED A MINIMUM OF FIVE (5) MINUTES. AFTER THE SUPERPLASTICIZER HAS BEEN ADDED, THE SLUMP SHALL BE 6 1/2", ±1/2 INCH. THE CONTRACTOR SHALL FURNISH A VOLUMETRIC DISPENSER FOR THE SUPERPLASTICIZER.

CONCRETE MIXTURES CONTAINING A HIGH RANGE WATER REDUCER SHALL MEET THE SAME REQUIREMENTS FOR ENTRAINED AIR CONTENT, MINIMUM STRENGTH, AND MAXIMUM WATER-CEMENT RATIO AS REQUIRED FOR THE RESPECTIVE GRADE OF CONCRETE WITHOUT A HIGH RANGE WATER REDUCER.

SAMPLING AND TESTING FOR ENTRAINED AIR CONTENT AND MINIMUM STRENGTH SHOULD BE TAKEN FROM THE CONCRETE THAT HAS BEEN TREATED WITH A HIGH RANGE WATER REDUCER.

CURING SHALL BE IN ACCORDANCE WITH 511.14 TYPE "A" WATER CURING.

PLACEMENT

PLACEMENT OF CONCRETE SHALL BE COMPLETED UNDER FAVORABLE ATMOSPHERIC CONDITIONS. FAVORABLE ATMOSPHERIC CONDITIONS EXIST WHEN THE SURFACE EVAPORATION RATE AS AFFECTED BY AMBIENT AIR TEMPERATURE, CONCRETE TEMPERATURE, RELATIVE HUMIDITY AND WIND VELOCITY IS 0.1 POUNDS PER SQUARE FOOT PER HOUR OR LESS. FIGURE (1) SHALL BE USED TO DETERMINE GRAPHICALLY THE SURFACE EVAPORATION RATE. FAVORABLE ATMOSPHERIC CONDITIONS MAY REQUIRE PLACEMENT DURING LATE EVENING, NIGHT OR EARLY MORNING HOURS.
IF PLACEMENT OF THE CONCRETE IS TO BE MADE AT NIGHT, THE CONTRACTOR SHALL SUBMIT A PLAN WHICH PROVIDES ADEQUATE LIGHTING FOR THE WORK AREA AT LEAST 15 CALENDAR DAYS IN ADVANCE AND RECEIVE WRITTEN APPROVAL FROM THE ENGINEER BEFORE PLACING THE CONCRETE. THE LIGHTS SHALL BE SO DIRECTED THAT THEY DO NOT AFFECT OR DISTRACT APPROACHING TRAFFIC.

PAYMENT FOR ALL OF THE ABOVE SHALL BE AT THE UNIT PRICE BID PER CUBIC YARD FOR ITEM 511 CLASS S CONCRETE, AS PER PLAN WHICH SHALL INCLUDE ALL LABOR, EQUIPMENT, MATERIALS AND INCIDENTALS NECESSARY TO COMPLETE THE ABOVE.

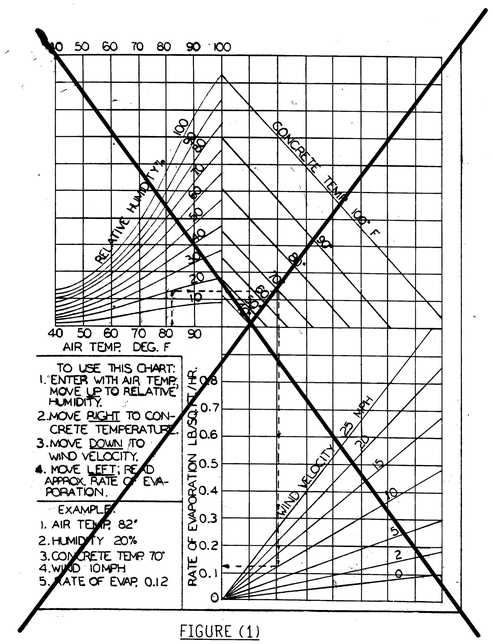

FIGURE (1)

2/16

adache · ciuni · lynn associates
CONSULTING ENGINEERS CLEVELAND, OHIO 44130

ESTIMATED QUANTITIES
AND GENERAL NOTES
BRIDGE № ERI-2-1678 L/R
S.R.2 OVER CONRAIL
ERIE COUNTY STA. 1109+42.41 TO
ERI-2-16.13 STA. 1111+31.79

DESIGNED	DRAWN	CHECKED	REVIEWED	DATE	REVISED
AJM	W.P.R.	R.J.P.	L.E.D.	9-21-85	

MICROFILMED
AUG 21 1990

F.H.W.A. REGION	STATE	PROJECT	
5	OHIO		

170
284

ERIE COUNTY
ERI-2-(16.13-17.39)

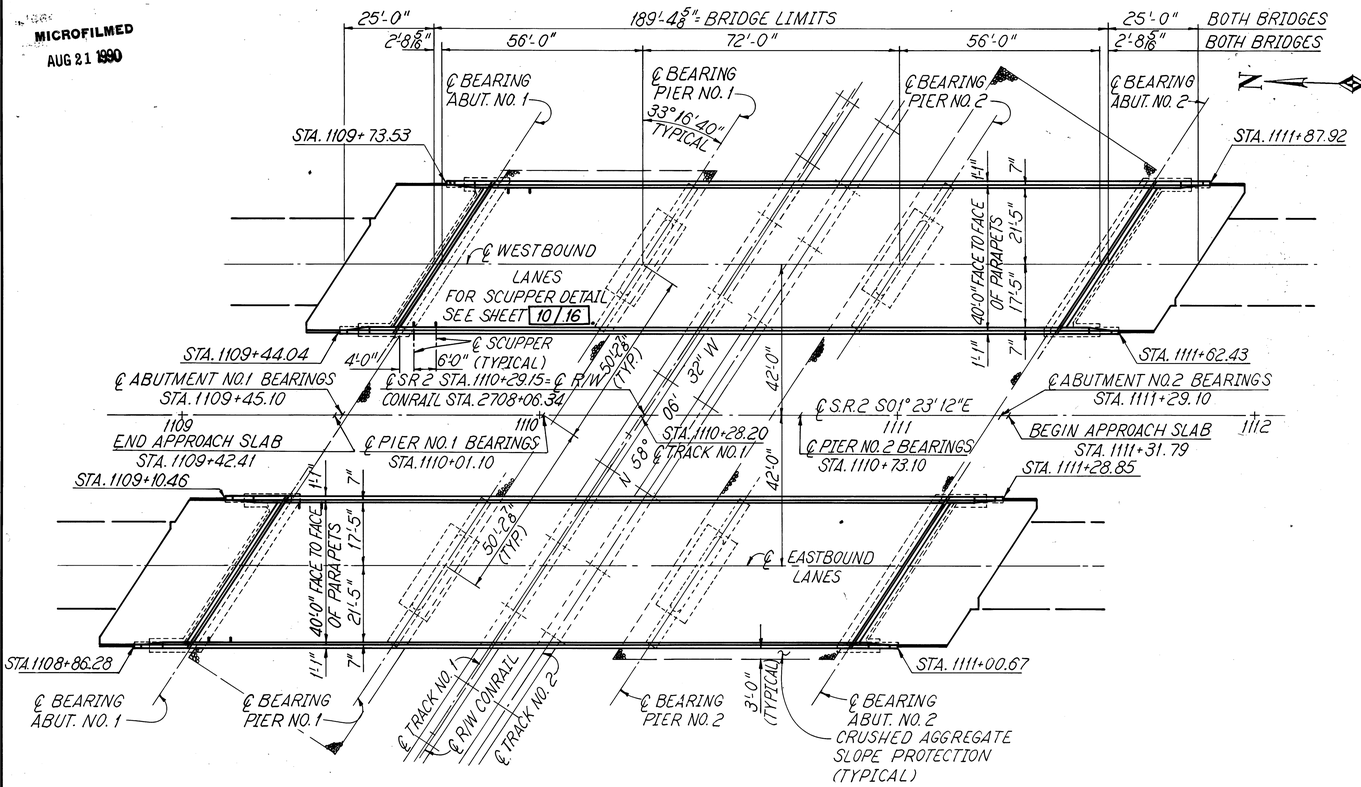

GENERAL PLAN

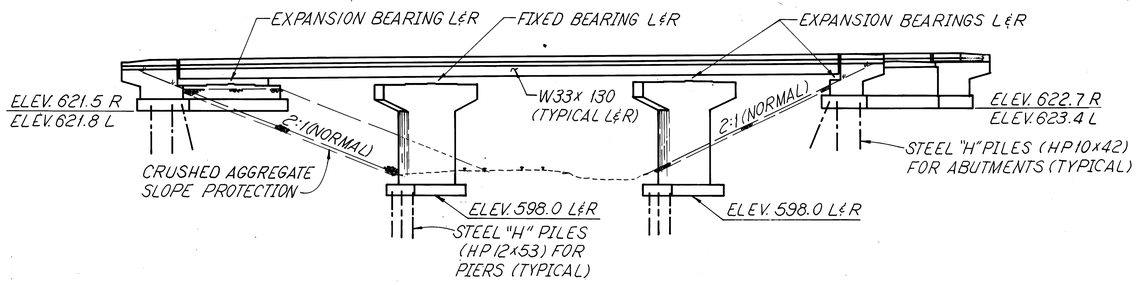

ELEVATION

GENERAL NOTES

DESIGN SPECIFICATIONS

THIS STRUCTURE CONFORMS TO "STANDARD SPECIFICATIONS FOR HIGHWAY BRIDGES" ADOPTED BY THE AMERICAN ASSOCIATION OF STATE HIGHWAY AND TRANSPORTATION OFFICIALS, 1977, INCLUDING THE 1978, 1979, 1980, 1981, AND 1982 INTERIM SPECIFICATIONS AND THE OHIO "SUPPLEMENT" TO THESE SPECIFICATIONS.

DESIGN DATA

DESIGN LOADING - HS20-44 CASE II AND THE ALTERNATE MILITARY LOADING.

DESIGN STRESSES

CONCRETE CLASS S - UNIT STRESS 1500 P.S.I. (SUPERSTRUCTURE).

CONCRETE CLASS C - UNIT STRESS 1333 P.S.I. (SUBSTRUCTURE).

REINFORCING STEEL ASTM A615, A616, OR A617
GRADE 60 - UNIT STRESS 24,000 P.S.I.

STRUCTURAL STEEL ASTM A588 - UNIT STRESS 27,000 P.S.I.

REFERENCES

REFERENCE SHALL BE MADE TO STANDARD DRAWING(S):

BR-1 DATED 5-29-79
RB-1-55 REVISED 2-02-59
SD-1-69 DATED 6-12-69
AS-1-81 DATED 11-27-81

AND TO SUPPLEMENTAL SPECIFICATION(S):

824 DATED 10-8-82
836 DATED 11-12-85
853 DATED 6-26-78

DECK PROTECTION METHOD

EPOXY COATED REINFORCING STEEL, TOP MAT ONLY.

MONOLITHIC WEARING SURFACE

MONOLITHIC WEARING SURFACE IS ASSUMED, FOR DESIGN PURPOSES, TO BE 1" THICK.

CONSTRUCTION CLEARANCE

CONSTRUCTION CLEARANCE OF 8'-0" HORIZONTALLY FROM THE CENTER OF TRACKS AND 22.57' VERTICALLY FROM A POINT LEVEL WITH THE TOP OF THE HIGHER RAIL, AND 4 FEET FROM THE CENTER OF TRACKS, SHALL BE MAINTAINED AT ALL TIMES.

RAILROAD AERIAL LINES

RAILROAD AERIAL LINES WILL BE RELOCATED BY THE RAILROAD. THE CONTRACTOR SHALL USE ALL PRECAUTIONS NECESSARY TO SEE THAT THE LINES ARE NOT DISTURBED DURING THE CONSTRUCTION STAGE AND SHALL COOPERATE WITH THE RAILROAD IN THE RELOCATION OF THESE LINES. THE COST OF THE RELOCATION SHALL BE INCLUDED IN THE RAILROAD FORCE ACCOUNT WORK.

PILE DRIVING

THE PILE HAMMER USED TO INSTALL THE STEEL "H" BEARING PILES SHALL HAVE A STATE'S ENERGY RATING OF NOT LESS THAN 18,000 FOOT-POUNDS. THIS REQUIREMENT DOES NOT RELIEVE THE CONTRACTOR FROM 108.05 WHICH STATES THAT THE CONTRACTOR IS TO PROVIDE SUFFICIENT EQUIPMENT FOR PROSECUTING THE REQUIRED WORK.

EMBANKMENT CONSTRUCTION

THE EMBANKMENTS SHALL BE CONSTRUCTED TO THE LEVEL OF SUBGRADE IN ACCORDANCE WITH THE REQUIREMENTS STATED IN THE ROADWAY GENERAL NOTES, SHEET B. THERE SHALL BE A MINIMUM THREE-MONTH WAITING PERIOD AFTER COMPLETION OF THE EMBANKMENTS TO SUBGRADE BEFORE STARTING ABUTMENT AND PIER CONSTRUCTION AND DRIVING ABUTMENT AND PIER PILES.

PILES DRIVEN TO BEDROCK

PILES SHALL BE DRIVEN TO REFUSAL ON BEDROCK. REFUSAL SHALL BE CONSIDERED AS ATTAINED BY PENETRATING SOFT BEDROCK WITH A MINIMUM RESISTANCE OF 20 BLOWS PER INCH, OR REFUSAL SHALL BE CONSIDERED AS ATTAINED AFTER THE PILE HAS CONTACTED HARD BEDROCK AND THE PILE HAS THEN RECEIVED AT LEAST 20 BLOWS.

THE DESIGN LOAD IS 55 TONS PER PILE FOR THE ABUTMENT PILES AND 70 TONS PER PILE FOR THE PIER PILES.

UTILITY LINES

ALL EXPENSE INVOLVED IN RELOCATING THE AFFECTED UTILITY LINES SHALL BE BORNE BY THE OWNER. THE CONTRACTOR AND OWNER ARE REQUESTED TO COOPERATE BY ARRANGING THEIR WORK IN SUCH A MANNER THAT INCONVENIENCE TO EITHER WILL BE HELD TO A MINIMUM.

3/16

adache · ciuni · lynn associates
CONSULTING ENGINEERS CLEVELAND, OHIO 44130

GENERAL PLAN AND ELEVATION AND GENERAL NOTES
BRIDGE Nº ERI-2-1678 L/R
S.R.2 OVER CONRAIL
ERIE COUNTY STA. 1109+42.41 TO
ERI-2-16.13 STA. 1111+31.79

DESIGNED	DRAWN	CHECKED	REVIEWED	DATE	REVISED
R.J.P.	R.C.K.	AJM	L.E.D.	9-21-85	

MICROFILMED
AUG 21 1990

FHWA REGION	STATE	PROJECT	
5	OHIO		

171
284

ERIE COUNTY
ERI - 2 - (16.13 - 17.39)

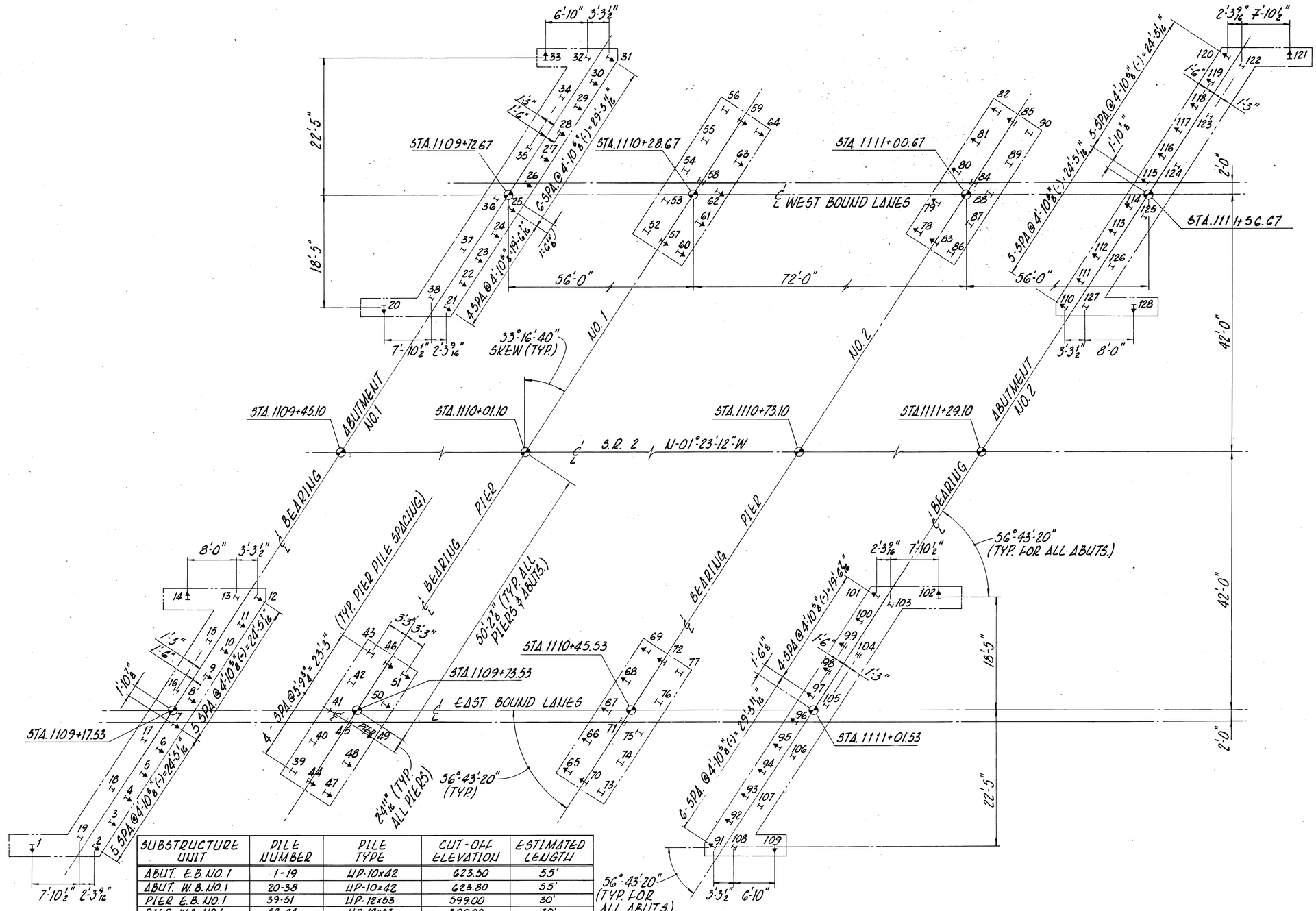

SUBSTRUCTURE UNIT	PILE NUMBER	PILE TYPE	CUT-OFF ELEVATION	ESTIMATED LENGTH
ABUT. E.B. NO. 1	1-19	HP-10x42	623.50	55'
ABUT. W.B. NO. 1	20-38	HP-10x42	623.80	55'
PIER E.B. NO. 1	39-51	HP-12x53	599.00	30'
PIER W.B. NO. 1	52-64	HP-12x53	599.00	30'
PIER E.B. NO. 2	65-77	HP-12x53	599.00	30'
PIER W.B. NO. 2	78-90	HP-12x53	599.00	30'
ABUT. E.B. NO. 2	91-109	HP-10x42	624.70	55'
ABUT. W.B. NO. 2	110-128	HP-10x42	625.40	55'

NOTES

PILES SHOWN THUS ↑ SHALL BE BATTERED 1:4 IN DIRECTION SHOWN.

FOR PILE TYPE, CUTOFF ELEVATION AND ESTIMATED PILE LENGTH SEE PILE TABLE.

THE DESIGN LOAD FOR THE ABUTMENT PILES, HP10x42, IS 55 TONS PER PILE AND THE DESIGN LOAD FOR THE PIER PILES, HP12x53, IS 70 TONS PER PILE. PILE LAYOUT DIMENSIONS ARE MEASURED ALONG BOTTOM OF FOOTING.

PILE LAYOUT DIMENSIONS ARE MEASURED ALONG BOTTOM OF FOOTING.

4 16

adache · ciuni · lynn associates
CONSULTING ENGINEERS CLEVELAND, OHIO 44130

PILING PLAN

BRIDGE № ERI - 2 - 1678 L/R
S.R. 2 OVER CONRAIL

ERIE COUNTY STA 1109 + 42.41 TO
ERI - 2 - 16.13 STA 1111 + 31.79

DESIGNED	DRAWN	CHECKED	REVIEWED	DATE	REVISED
R.J.P.	W.P.R.	AJM	L.E.D.	9-21-85	

MICROFILMED
AUG 21 1990

FHWA REGION	STATE	PROJECT	
5	OHIO		

172
284

ERIE COUNTY
ERI-2-(16.13-17.39)

* DENOTES ABUTMENT NO. 1 W.B. LANES
≠ DENOTES ABUTMENT NO. 2 E.B. LANES

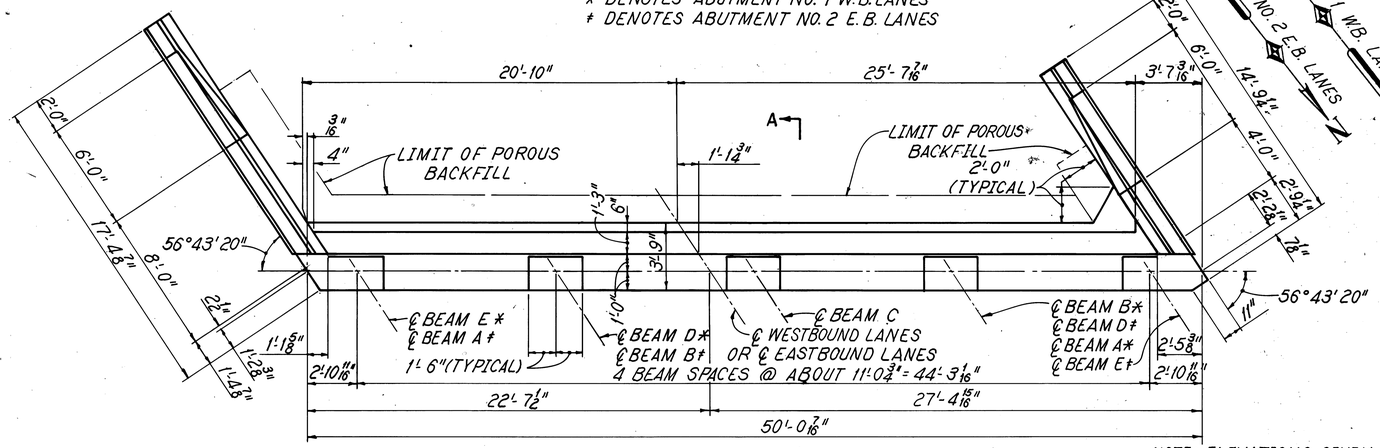

PLAN

NOTE: ELEVATIONS GIVEN AT THE TOP OF THE BACKWALL ARE THE ELEVATIONS AT THE TOP OF THE 1"x2" EDGE BAR OF THE END DAM.

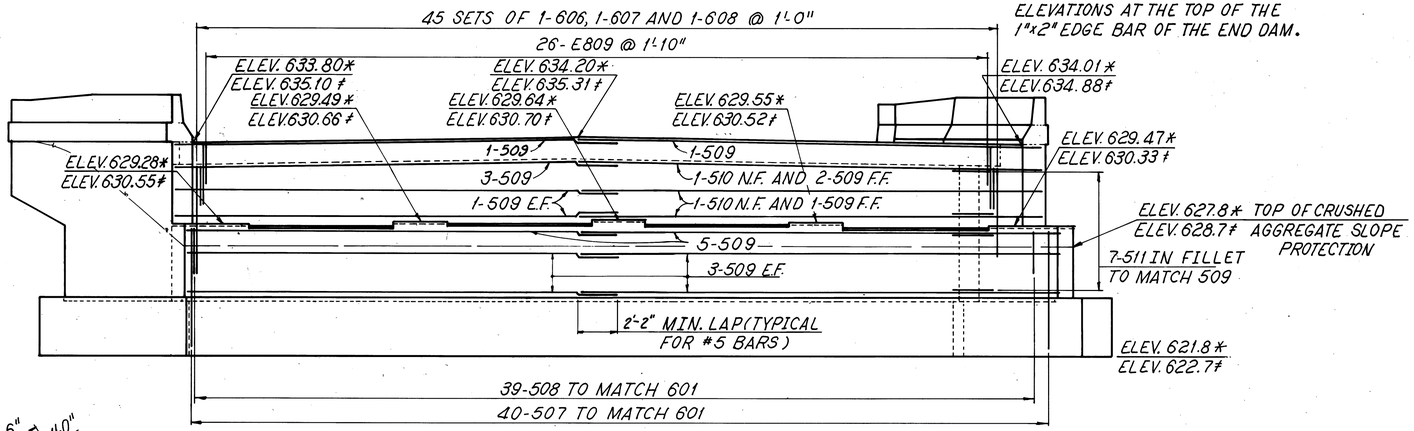

ELEVATION

ABUTMENT NO. 1 W.B. LANES SHOWN
ABUTMENT NO. 2 E.B. LANES SIMILAR EXCEPT AS NOTED

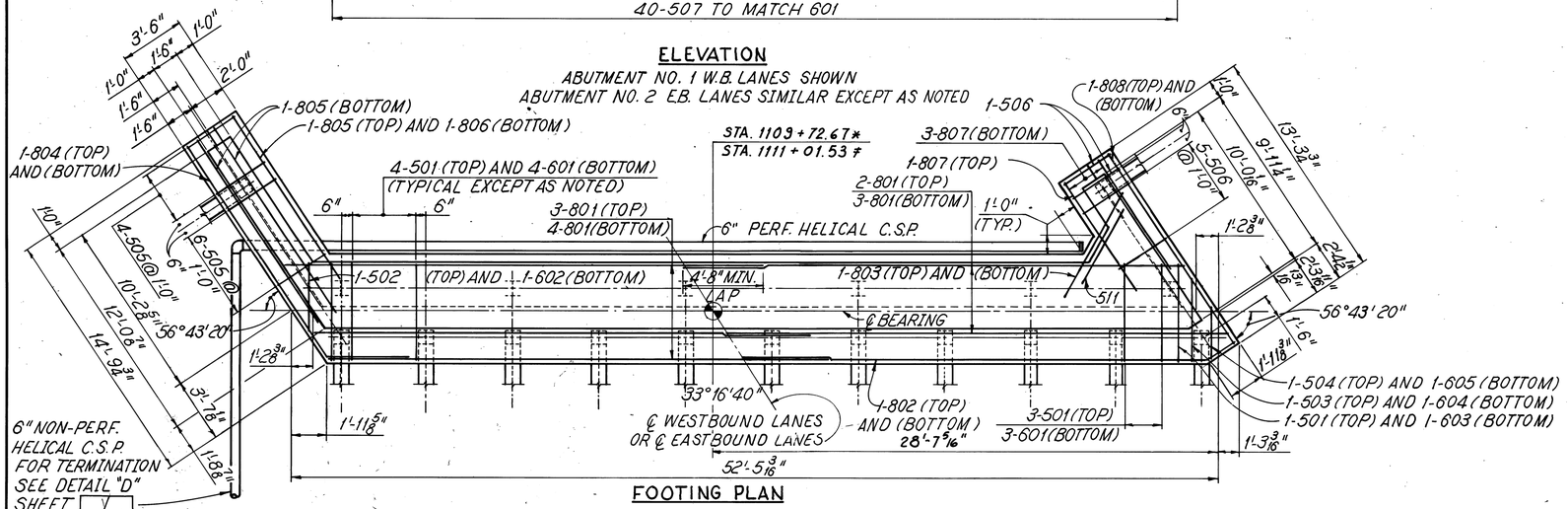

FOOTING PLAN

NOTES:

FOR PILING PLAN SEE SHEET 4/16.

FOR END DAM DETAILS SEE STANDARD DRAWING SD-1-69 SHEET 1/4 AND 2/4. THE 2" X 1/2" X 1 - 6" ANCHOR BARS SHALL BE LOCATED 4 1/4" FROM THE TOP OF THE SLAB INSTEAD OF 3" AS SHOWN IN SECTION A-A. PROVIDE A 3" BEVELED BAR, 1/4" MINIMUM THICKNESS WELDED TO THE MAIN ANGLE, EVEN THOUGH THE GRADIENT AT END DAM MAY BE LESS THAN 2.0%.

FOR CURB AND PARAPET TRANSITIONS AND FOR GUARD RAIL ANCHOR DETAILS, SEE "PART PLAN AT ABUTMENT" ON OHIO STANDARD DRAWING BR-1.

ALL REINFORCING BAR MARKS SHALL BE PREFIXED "W1A" FOR ABUTMENT NO. 1 WEST BOUND LANES AND "D2A" FOR ABUTMENT NO. 2 EAST BOUND LANES.

THE FOLLOWING ABBREVIATIONS ARE USED:

N.F. = NEAR FACE
F.F. = FAR FACE
E.F. = EACH FACE
TYP. = TYPICAL
PERF = PERFORATED
CSP = CORRUGATED STEEL PIPE

IN ADDITION TO THE PROVISIONS OF 511.08, BACKWALL CONCRETE ABOVE THE OPTIONAL CONSTRUCTION JOINT AT THE APPROACH SLAB SEAT SHALL NOT BE PLACED UNTIL AFTER THE DECK CONCRETE IN THE SPAN ADJACENT TO THE ABUTMENT HAS BEEN PLACED.

POROUS BACKFILL, FULL LENGTH OF ABUTMENT AND WINGS, SHALL EXTEND UP TO THE PLANE OF THE SUBGRADE WITHIN THE ROADWAY AREA EXTENDED LATERALLY TO THE WING WALLS 1.5 FT. THICK AT THE ABUTMENT AND 2.0 FT. THICK AT THE WINGS.

FOR BEARING DETAILS AT ABUTMENTS SEE STANDARD DWG. RB-1-55.

FOR WINGWALL DETAILS SEE SHEET 6/16.

FOR REINFORCEMENT SCHEDULE AND BAR BENDING DIAGRAMS SEE SHEET 13/16.

ALL REINFORCING STEEL BAR MARKS PREFIXED "E" SHALL BE EPOXY COATED.

FOR SECTION A SEE SHEET 7/16.

5/16

adache · ciuni · lynn associates
CONSULTING ENGINEERS CLEVELAND, OHIO 44130

ABUTMENT NO. 1 W.B.
AND ABUTMENT NO. 2 E.B.
BRIDGE No. ERI-2-1678 L/R
S.R. 2 OVER CONRAIL
ERIE COUNTY STA. 1109+42.41 TO
ERI-2-16.13 STA. 1111+31.79

DESIGNED	DRAWN	CHECKED	REVIEWED	DATE	REVISED
R.J.P.	R.C.K.	AJM	L.E.D	9-21-85	

MICROFILMED
AUG 21 1990

FHWA REGION	STATE	PROJECT	
5	OHIO		

173
284

ERIE COUNTY
ERI-2-(16.13-17.39)

* DENOTES ABUT. NO. 1 W.B. LANES
≠ DENOTES ABUT. NO. 2 E.B. LANES

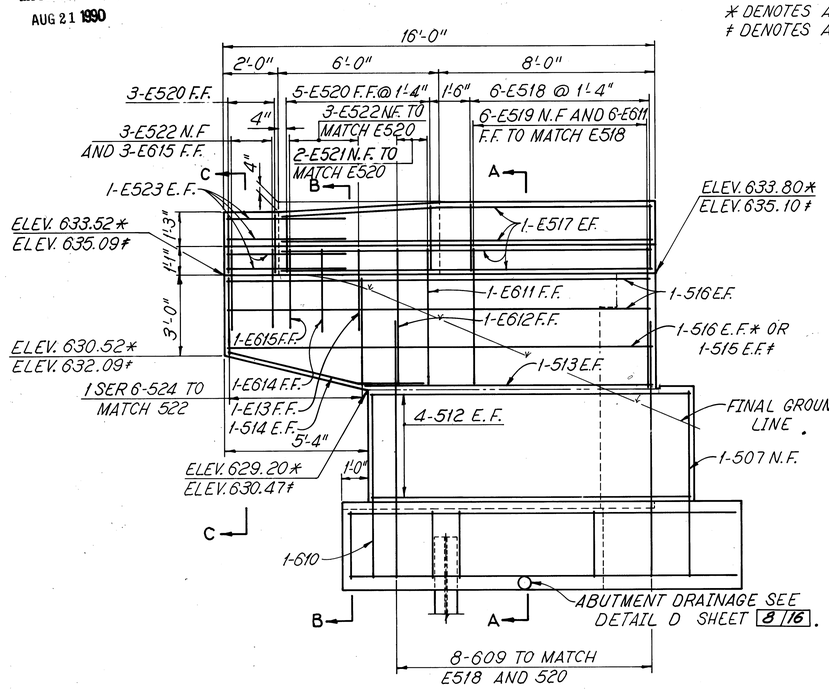

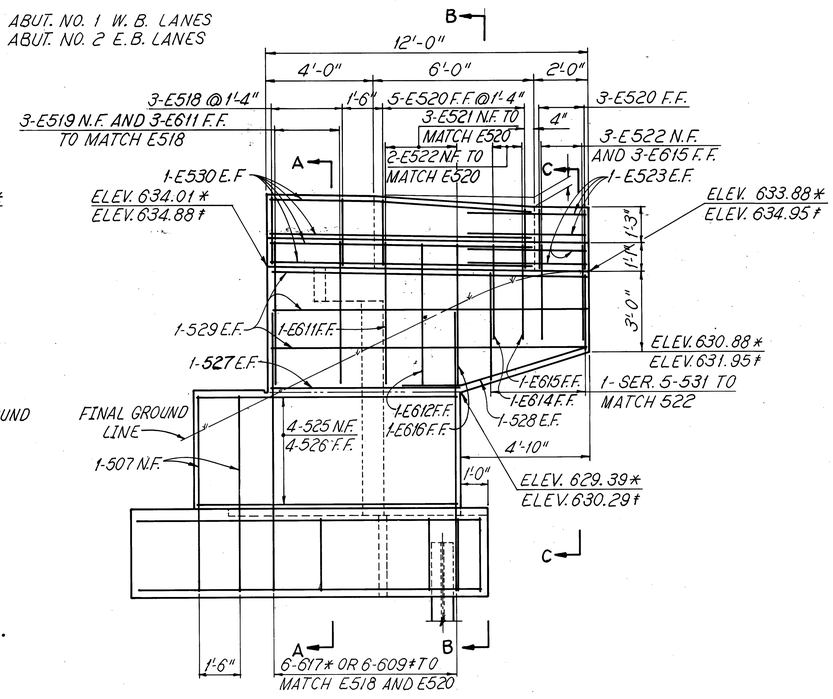

ELEVATION

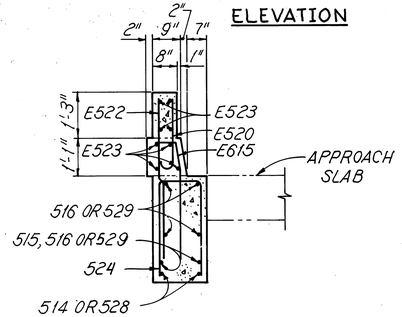

SECTION C-C

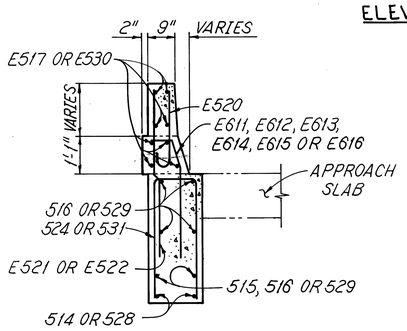

SECTION B-B

ELEVATION

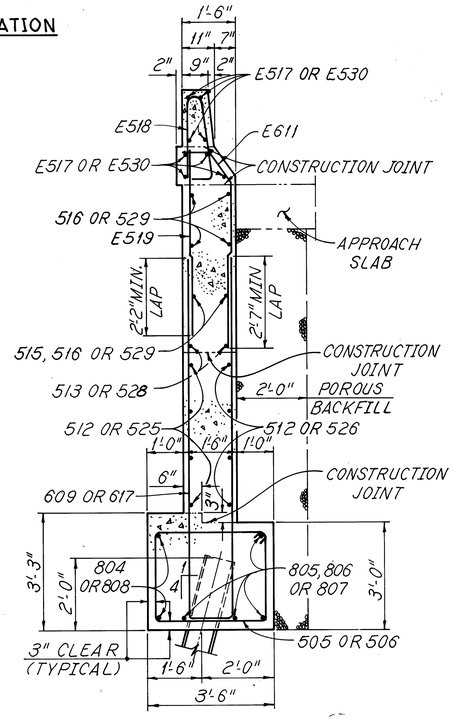

SECTION A-A

NOTES:
FOR ABUTMENT NOTES SEE SHEET 5/16.

6/16

adache - ciuni - lynn associates
CONSULTING ENGINEERS CLEVELAND, OHIO 44130

WINGWALLS
ABUTMENT NO. 1 W.B.
AND ABUTMENT NO. 2 E.B.
BRIDGE № ERI-2-1678 L/R
S.R. 2 OVER CONRAIL
ERIE COUNTY STA. 1109+42.41 TO
ERI-2-16.13 STA. 1111+31.79

DESIGNED	DRAWN	CHECKED	REVIEWED	DATE	REVISED
R.J.P.	R.C.K.	P.A.G.	L.E.D.	9-21-85	

MICROFILMED
AUG 21 1990

FHWA REGION	STATE	PROJECT	
5	OHIO		

174/284

ERIE COUNTY
ERI-2-(16.13-17.39)

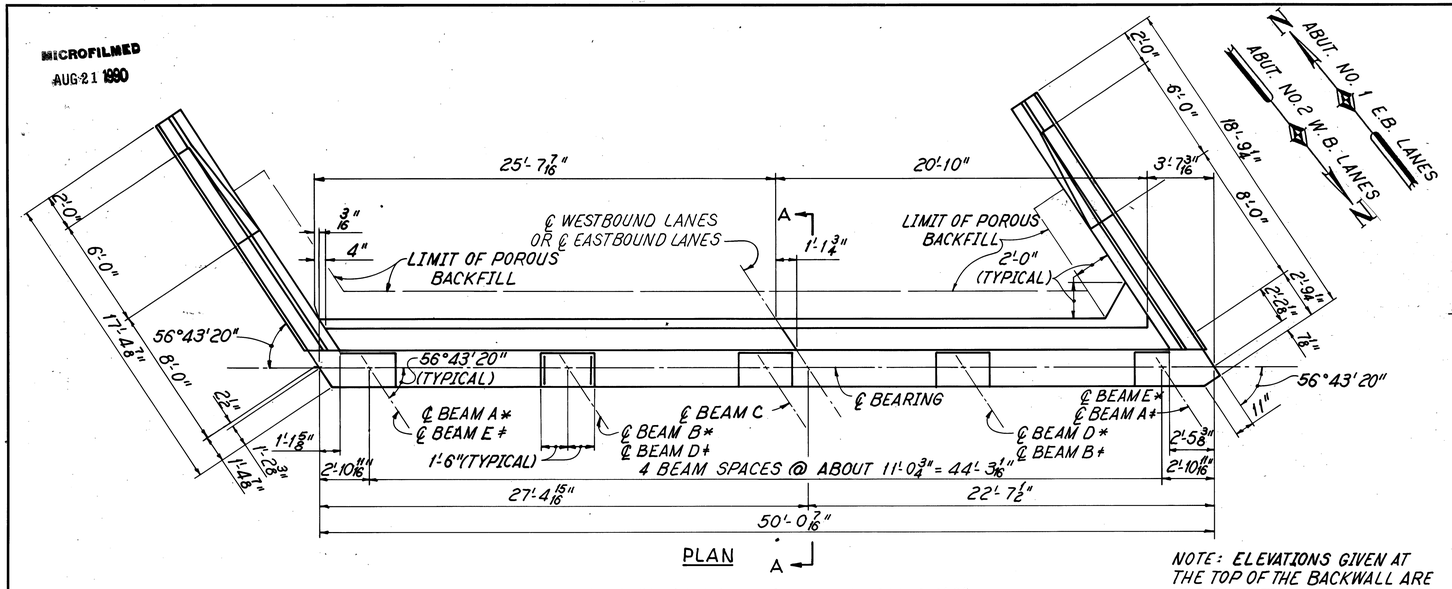

PLAN

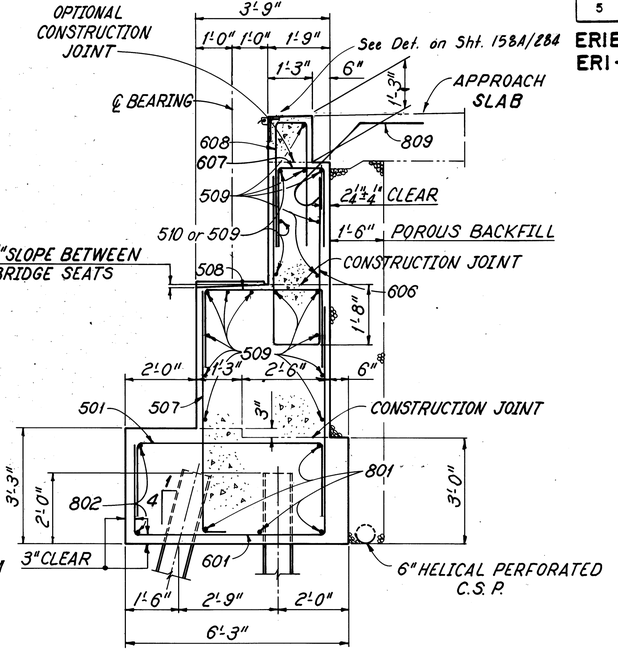

SECTION (A)

NOTE: ELEVATIONS GIVEN AT THE TOP OF THE BACKWALL ARE THE ELEVATIONS AT THE TOP OF THE 1"×2" EDGE BAR OF THE END DAM

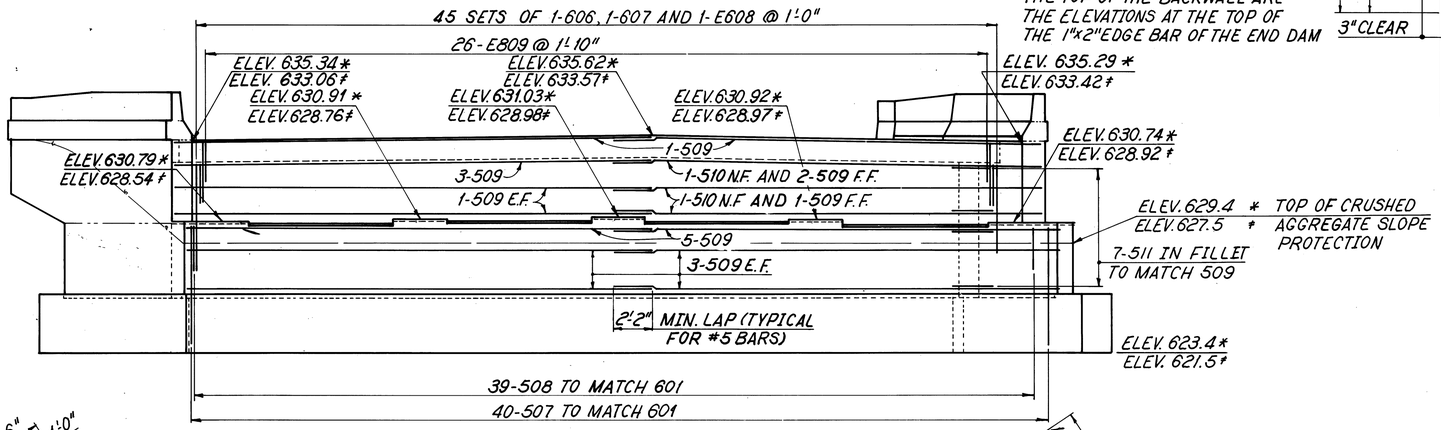

* DENOTES ABUTMENT NO.2 W.B. LANES
≠ DENOTES ABUTMENT NO.1 E.B. LANES

ELEVATION

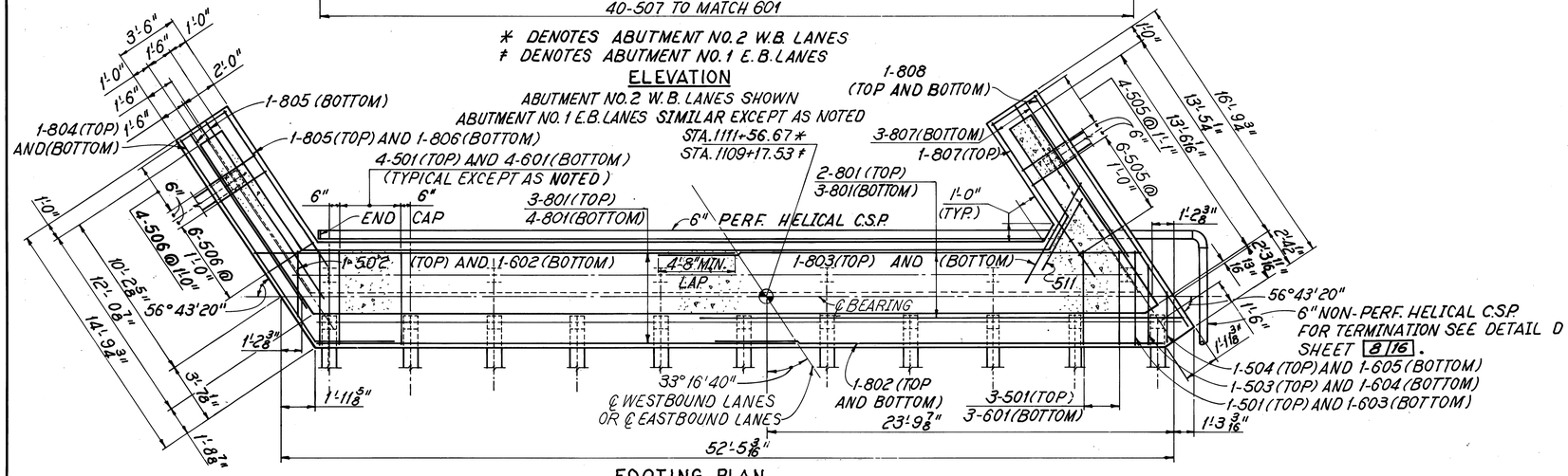

FOOTING PLAN

NOTES:

FOR ABUTMENT NOTES SEE SHEET 5/16

ALL REINFORCING BAR MARKS SHALL BE PREFIXED "W2A" FOR ABUTMENT NO.2 WEST BOUND LANES AND "D1A" FOR ABUTMENT NO.1 EAST BOUND LANES.

7/16

adache · ciuni · lynn associates
CONSULTING ENGINEERS CLEVELAND, OHIO 44130

ABUTMENT NO.2 W.B.
AND ABUTMENT NO.1 E.B.

BRIDGE № ERI-2-1678 L/R
S.R.2 OVER CONRAIL

ERIE COUNTY STA. 1109+42.41 TO
ERI-2-16.13 STA. 1111+31.79

DESIGNED	DRAWN	CHECKED	REVIEWED	DATE	REVISED
R.J.P.	R.C.K.	P.A.G.	L.E.D.	9-21-85	

MICROFILMED
AUG 21 1990

FHWA REGION	STATE	PROJECT	
5	OHIO		

175
284

ERIE COUNTY
ERI - 2 - (16.13 - 17.39)

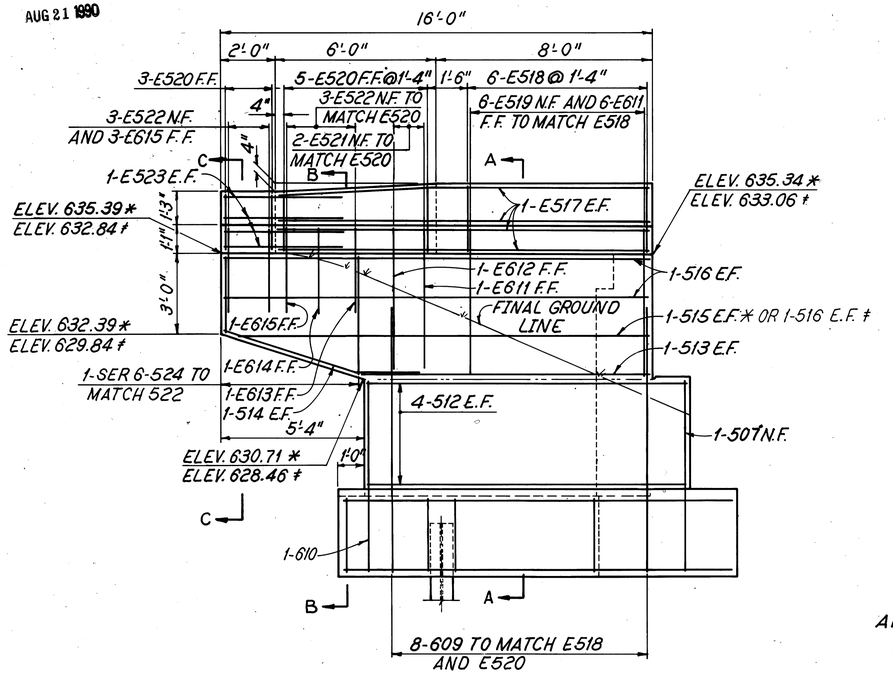

ELEVATION

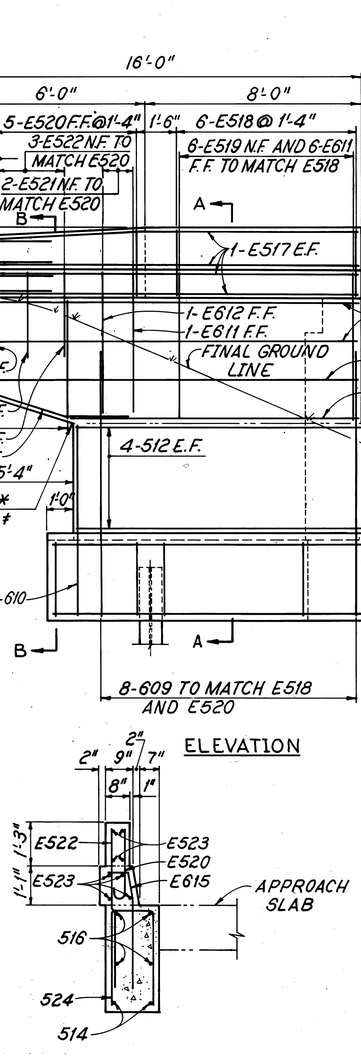

SECTION C-C

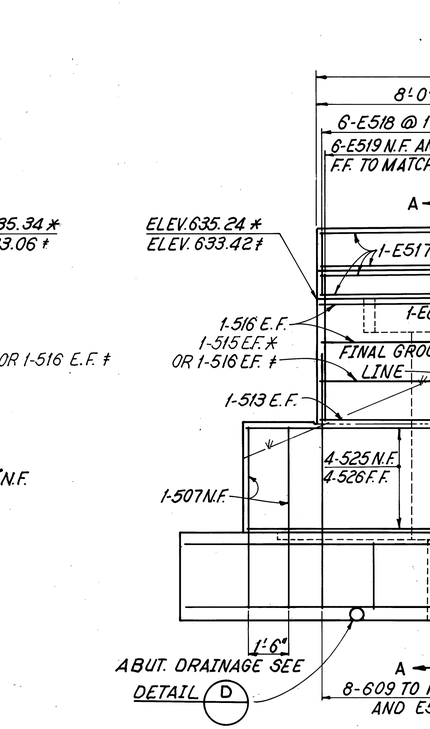

SECTION B-B

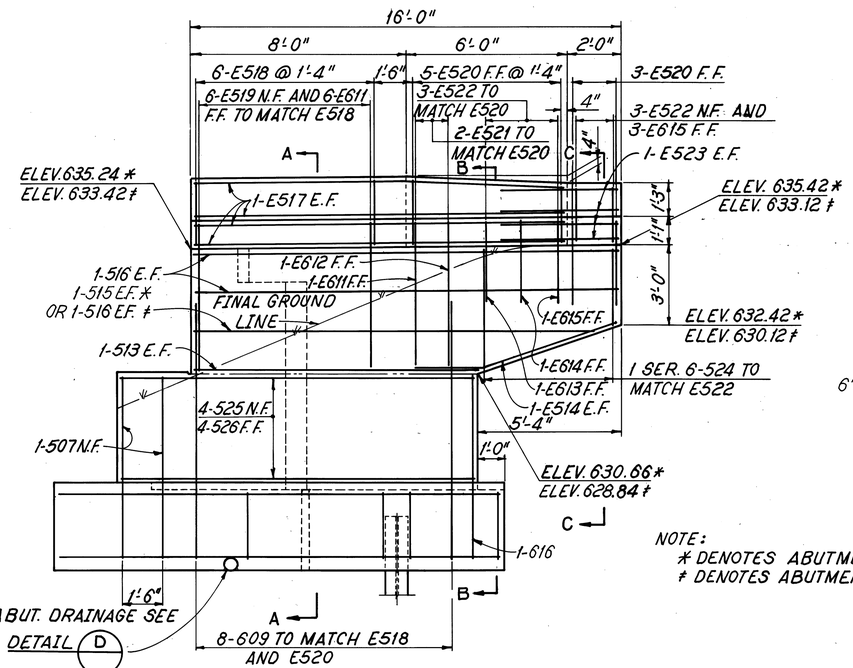

ELEVATION

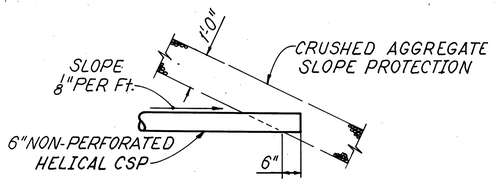

DETAIL D

NOTE:
* DENOTES ABUTMENT NO. 2 W.B. LANES
† DENOTES ABUTMENT NO. 1 E.B. LANES

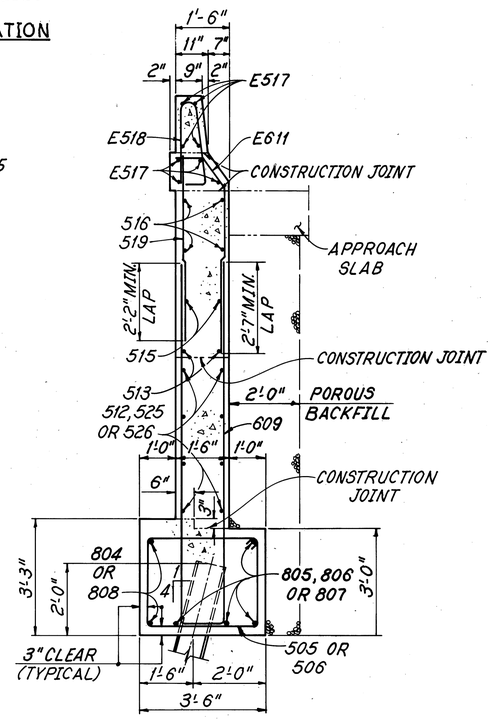

SECTION A-A

NOTE:
FOR ABUTMENT NOTES SEE SHEET 5/16

8/16

adache - ciuni - lynn associates
CONSULTING ENGINEERS CLEVELAND, OHIO 44130

WINGWALLS
ABUTMENT NO. 2 W.B.
AND ABUTMENT NO. 1 E.B.
BRIDGE № ERI - 2 - 1678 L/R
S.R. 2 OVER CONRAIL

ERIE COUNTY STA. 1109 + 42.41 TO
ERI - 2 - 16.13 STA. 1111 + 31.79

DESIGNED	DRAWN	CHECKED	REVIEWED	DATE	REVISED
R.J.P.	R.C.K.	P.A.G.	L.E.D.	9-21-85	

NOTE:
AT THE OPTION OF THE CONTRACTOR, BEARING ANCHORS (OR FORMED HOLES), LOCATED AND SUPPORTED BY TEMPLATES, MAY BE CAST IN PLACE.

MICROFILMED
AUG 21 1990

FHWA REGION	STATE	PROJECT	
5	OHIO		

176
284

ERIE COUNTY
ERI-2-(16.13-17.39)

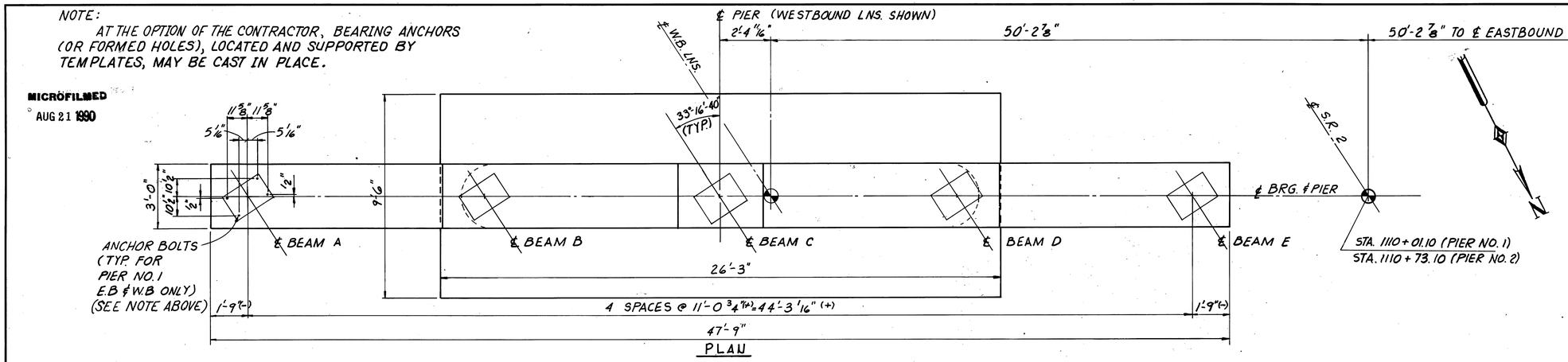

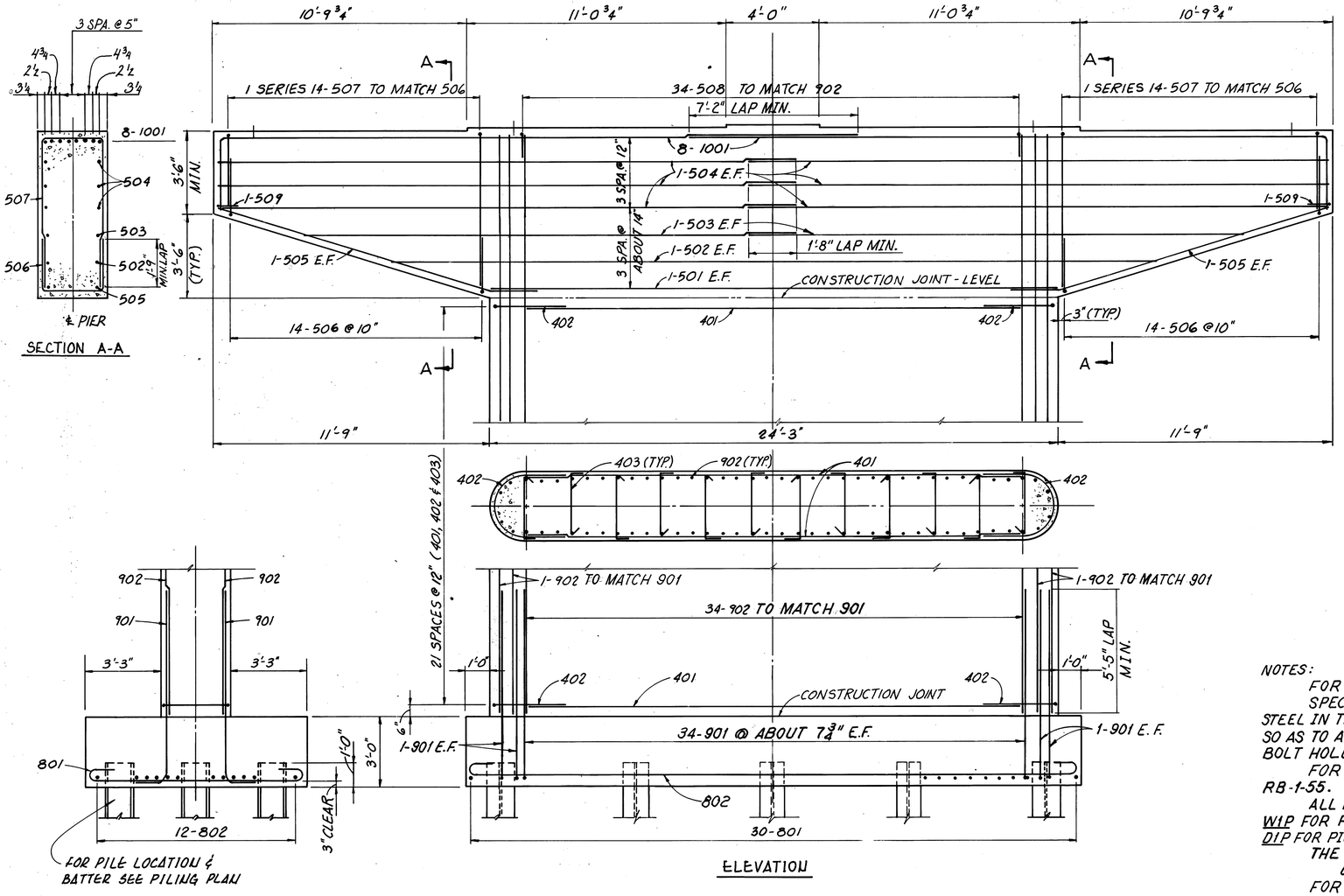

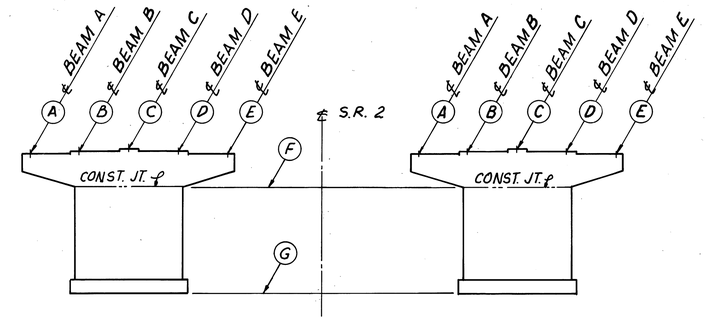

KEY ELEVATION

PIER NO.	ELEVATIONS A	B	C	D	E	F	G
PIER NO. 1- WESTBOUND LNS.	629.59	629.69	629.77	629.64	629.44	622.44	598.0
PIER NO. 1- EASTBOUND LNS.	629.12	629.20	629.22	629.02	628.80	621.80	598.0
PIER NO. 2- WESTBOUND LNS.	630.11	630.21	630.31	630.10	630.01	623.01	598.0
PIER NO. 2- EASTBOUND LNS.	629.77	629.86	629.89	629.70	629.50	622.50	598.0

NOTES:
FOR PILE LOCATIONS SEE PILING PLAN SHEET 4/16.
SPECIAL CARE SHALL BE TAKEN IN PLACING REINFORCING STEEL IN THE VICINITY OF THE BRIDGE SEAT FOR PIER NO. 1 SO AS TO AVOID INTERFERENCE WITH THE DRILLING OF ANCHOR BOLT HOLES.
FOR ANCHOR BOLT DETAILS, SEE OHIO STANDARD DRAWING RB-1-55.
ALL REINFORCING BAR MARKS SHALL BE PREFIXED W1P FOR PIER NO. 1 WESTBOUND, W2P FOR PIER NO. 2 WESTBOUND D1P FOR PIER NO. 1 EASTBOUND, D2P FOR PIER NO. 2 EASTBOUND
THE FOLLOWING ABBREVIATIONS ARE USED:
E.F. = EACH FACE (TYP.) = TYPICAL
FOR REINFORCING STEEL LIST, SEE SHEET 15/16.

9/16

adache - ciuni - lynn associates
CONSULTING ENGINEERS CLEVELAND, OHIO 44130

PIER DETAILS

BRIDGE No. ERI-2-1678 L/R
S.R. 2 OVER CONRAIL
ERIE COUNTY ERI-2-16.13
STA. 1109+42.41 TO STA. 1111+31.79

DESIGNED	DRAWN	CHECKED	REVIEWED	DATE	REVISED
R.J.P.	J.R.S.	J.R.S.	L.E.D.	9-21-85	

MICROFILMED
AUG 21 1990

FHWA REGION	STATE	PROJECT	
5	OHIO		

177
284

ERIE COUNTY
ERI-2-(16.13-17.39)

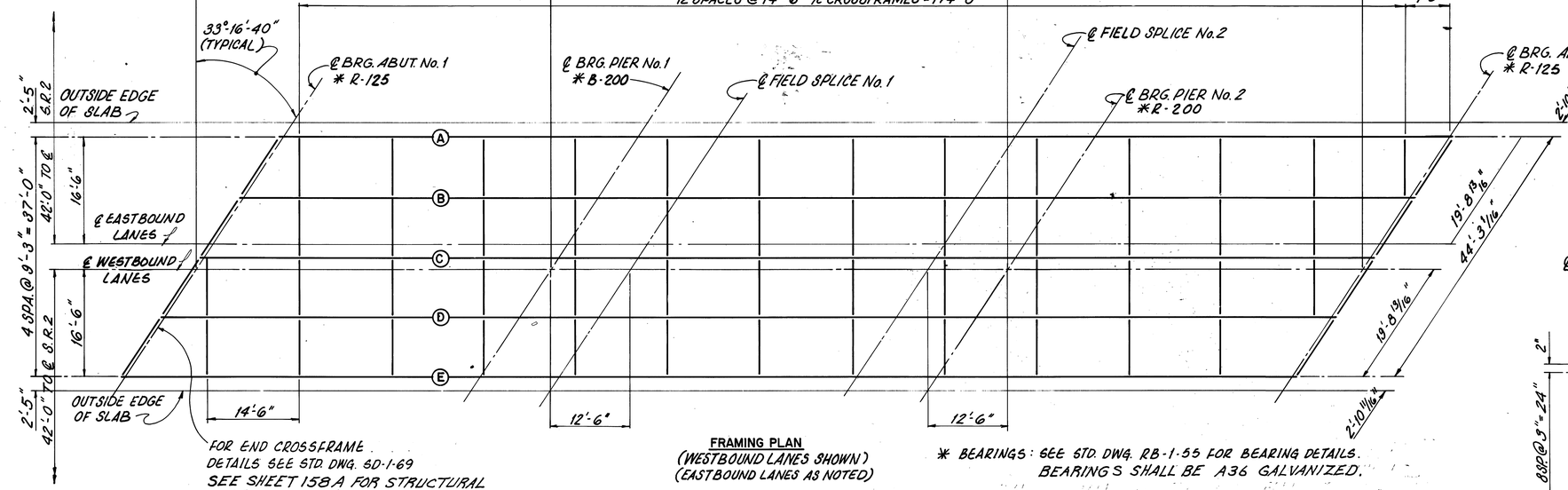

FOR END CROSSFRAME DETAILS SEE STD. DWG. SD-1-69
SEE SHEET 158A FOR STRUCTURAL STEEL EXPANSION JOINT

FRAMING PLAN
(WESTBOUND LANES SHOWN)
(EASTBOUND LANES AS NOTED)

* BEARINGS: SEE STD. DWG. RB-1-55 FOR BEARING DETAILS. BEARINGS SHALL BE A36 GALVANIZED.

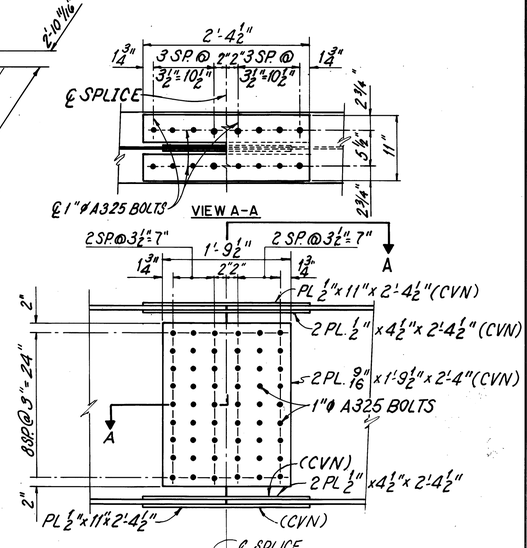

BEAM SPLICE DETAIL

MAX. STUD SPACING / DISTANCE	1'-0" / 17'-0"	1'-3" / 22'-6"	11/4" / 3'-9"	NO STUDS / 12'-9"	13'-7"	11/4" / 3'-9"	1'-1" / 37'-4"	11/4" / 3'-9"	NO STUDS / 13'-7"	12'-1"	11/4" / 3'-9"	1'-3" / 22'-6"	1'-0" / 17'-0"
		COMPRESSION		TENSION			COMPRESSION		TENSION			COMPRESSION	

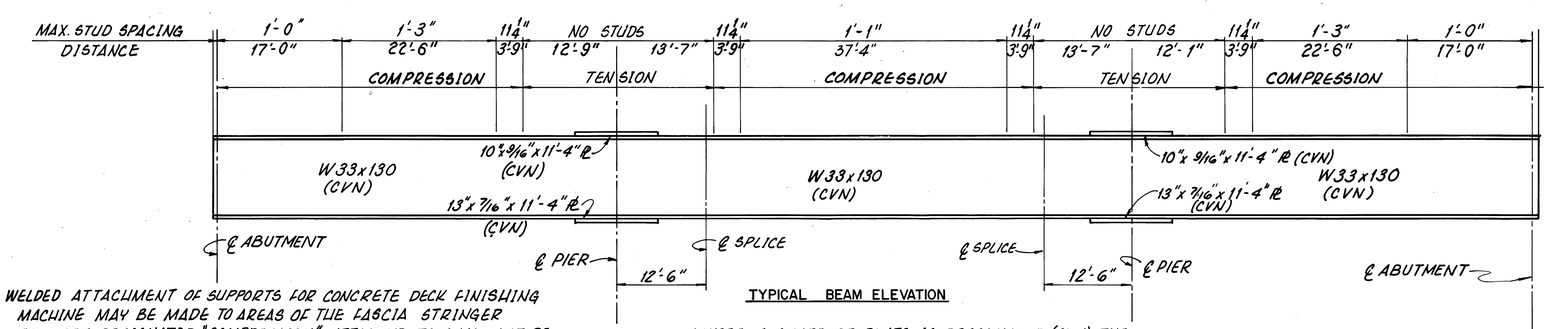

TYPICAL BEAM ELEVATION

WELDED ATTACHMENT OF SUPPORTS FOR CONCRETE DECK FINISHING MACHINE MAY BE MADE TO AREAS OF THE FASCIA STRINGER FLANGES DESIGNATED "COMPRESSION." ATTACHMENTS SHALL NOT BE MADE TO AREAS DESIGNATED "TENSION." FILLET WELDS TO COMPRESSION FLANGES SHALL BE NOT CLOSER THAN 1" FROM EDGE OF FLANGE, BE NOT MORE THAN 2" LONG, AND BE NOT SMALLER THAN THE MIN. SIZE REQUIRED BY AASHTO.

WHERE A SHAPE OR PLATE IS DESIGNATED (CVN) THE MATERIAL SHALL MEET SPECIFIED MIN. NOTCH TOUGHNESS REQUIREMENTS AS SPECIFIED IN 711.01 OF CMS.

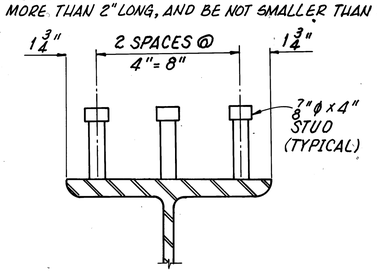

TYPICAL STUD SPACING

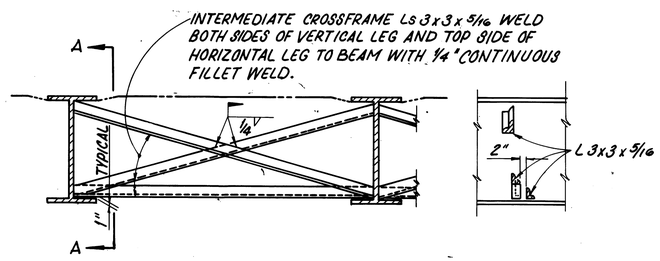

INTERMEDIATE CROSSFRAME

SECTION A-A

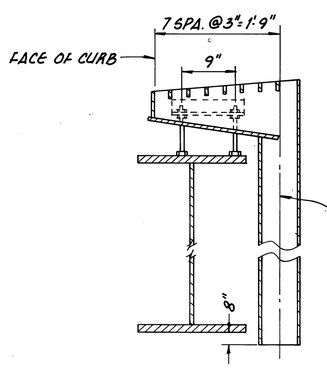

SCUPPER CROSS SECTION

SCUPPERS SHALL BE IN ACCORDANCE W/STD. DWG. SD-1-69 EXCEPT AS SHOWN ON THIS DWG. FOR SCUPPER LOCATION SEE SHEET 3/16

NOTES:

1. PARTIAL PAINTING OF A588 STEEL: A TEN (10') FOOT LENGTH OF THE ENDS OF BEAMS ADJACENT TO ABUTMENTS AND ALL CROSS-FRAMES AND OTHER A588 STEEL WITHIN THESE LIMITS SHALL BE PAINTED. PAINT SHALL BE 514, SYSTEM A. THE PRIME COAT SHALL BE 708.17. THE TOP COAT SHALL BE 708.18 EXCEPT THAT THE COLOR SHALL CLOSELY APPROACH FED. STD. No. 595a-20045 OR 20059. PAYMENT FOR THIS PAINTING SHALL BE INCLUDED IN ITEM 513 STRUCTURAL STEEL, AISC CATEGORY I. (UNPAINTED A588 EXCEPT AS NOTED)

10/16

adache · ciuni · lynn associates
CONSULTING ENGINEERS CLEVELAND, OHIO 44130

FRAMING PLAN AND BEAM ELEVATION
BRIDGE No. ERI-2-1678 L/R
S.R.2 OVER CONRAIL

ERIE COUNTY ERI-2-16.13 STA. 1109+42.41 TO STA. 1111+31.79

DESIGNED	DRAWN	CHECKED	REVIEWED	DATE	REVISED
AJM	C.W.H.	P.A.G.	L.E.D.	9.21.85	

MICROFILMED
AUG 21 1990

FHWA REGION	STATE	PROJECT	
5	OHIO		

178
284

ERIE COUNTY
ERI - 2 - (16.13 - 17.39)

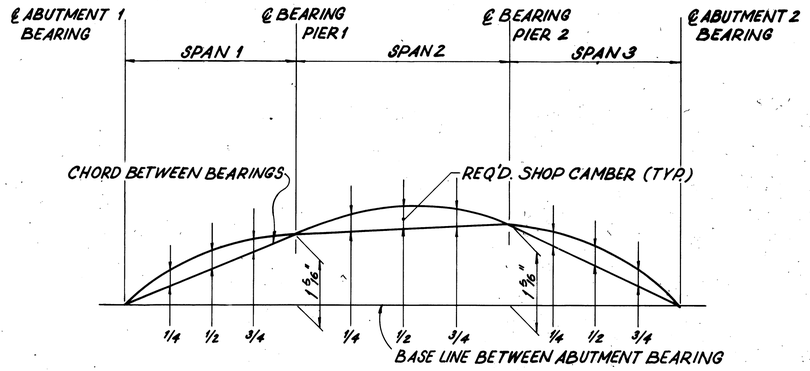

LAYOUT DIAGRAM

TYPICAL FOR ALL BEAMS WESTBOUND AND EASTBOUND LANES

LOCATION	DEFLECTION DUE TO WT. OF STEEL	DEFLECTION DUE TO REMAINING D. L.	ADJ. REQ'D. FOR VERTICAL CURVE	REQ'D. SHOP CAMBER
℄ ABUT.-1				
1/4	1/16	3/8	1/8	3/16
1/2	1/16	3/8	1/8	3/16
3/4	0	3/16	1/8	5/16
℄ PIER 1				
℄ SPLICE	1/16	5/16	1/8	1/2
1/4	1/16	5/16	3/16	9/16
1/2	1/16	5/8	1/4	15/16
3/4	1/16	5/16	3/16	9/16
℄ SPLICE	1/16	5/16	1/8	1/2
℄ PIER 2				
1/4	0	3/16	1/8	5/16
1/2	1/16	3/8	1/8	9/16
3/4	1/16	3/8	1/8	3/16
℄ ABUT. 2				

11/16

adache · ciuni · lynn associates
CONSULTING ENGINEERS CLEVELAND, OHIO 44130

DEFLECTION AND CAMBER DIAGRAM
BRIDGE № ERI - 2 - 1678 L/R
S.R. 2 OVER CONRAIL
ERIE COUNTY STA. 1109 + 42.41 TO
ERI - 2 - 16.13 STA. 1111 + 31.79

DESIGNED	DRAWN	CHECKED	REVIEWED	DATE	REVISED
P.A.G.	C.W.H.	A.J.M.	L.E.D.	9.21.85	

MICROFILMED
AUG 21 1990

FHWA REGION	STATE	PROJECT	
5	OHIO		

178A
284

ERIE COUNTY
ERI-2-(16.13-17.39)

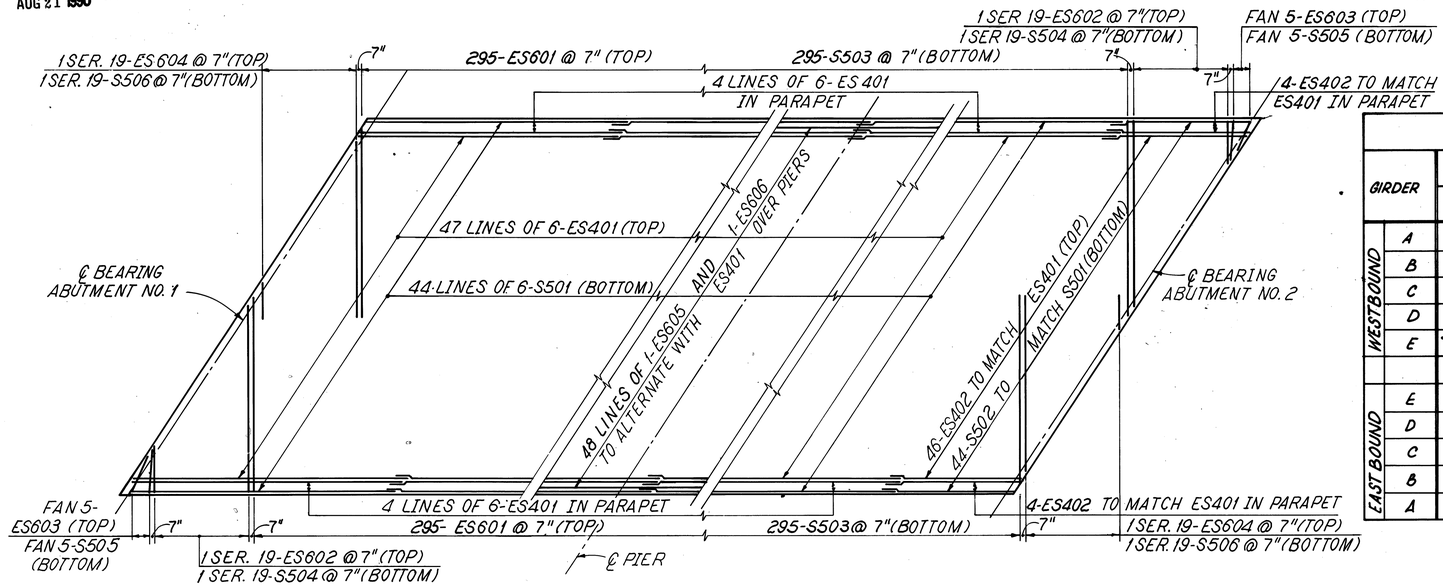

SLAB PLAN

(WESTBOUND LANES SHOWN EASTBOUND LANES SIMILAR)

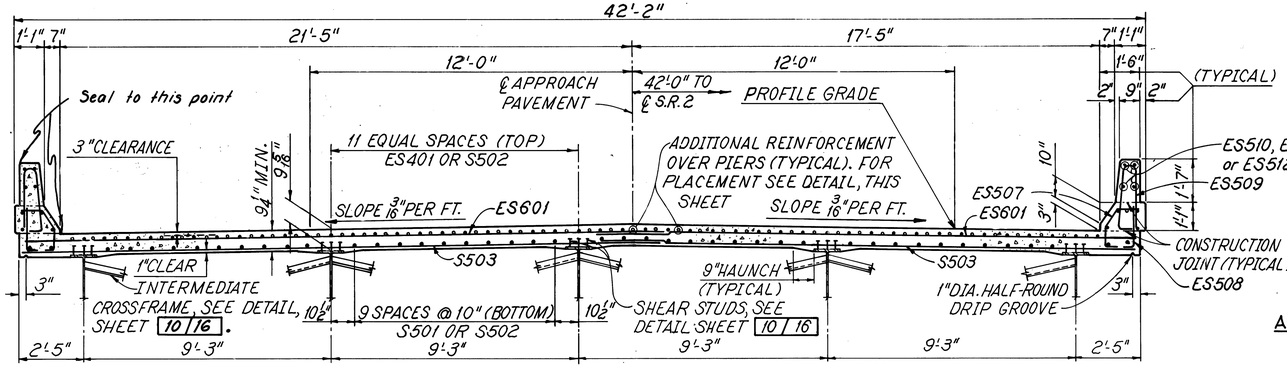

TYPICAL CROSS SECTION

(WESTBOUND LANES SHOWN EASTBOUND LANES SIMILAR EXCEPT OPPOSITE HAND)

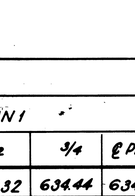

ADDITIONAL REINFORCEMENT OVER PIERS

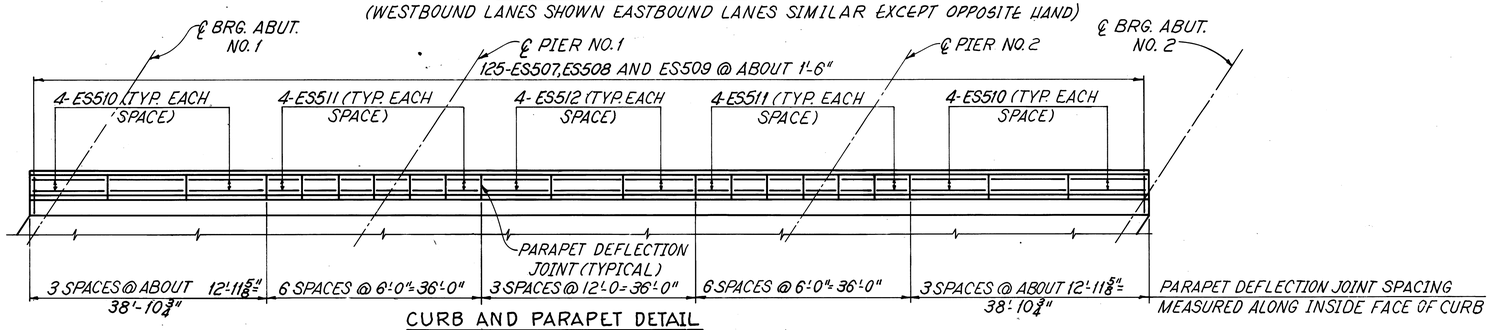

CURB AND PARAPET DETAIL

(EAST PARAPET SHOWN WEST PARAPET SIMILAR)
(WESTBOUND LANES SHOWN EASTBOUND LANES SIMILAR)

TOP OF PAVEMENT ELEVATIONS

GIRDER		SPAN 1					SPAN 2				SPAN 3				
		℄ ABUT.	1/4	1/2	3/4	℄ PIER	1/4	1/2	3/4	℄ PIER	1/4	1/2	3/4	℄ ABUT.
WESTBOUND	A	634.03	634.19	634.32	634.44	634.54	634.71	634.86	634.97	635.06	635.16	635.24	635.31	635.35
	B	634.11	634.28	634.41	634.53	634.63	634.81	634.97	635.10	635.16	635.27	635.36	635.43	635.47
	C	634.20	634.37	634.51	634.63	634.73	634.91	635.07	635.20	635.28	635.38	635.47	635.55	635.59
	D	634.04	634.22	634.36	634.48	634.59	634.77	634.94	635.05	635.15	635.26	635.35	635.43	635.47
	E	633.84	634.00	634.15	634.28	634.39	634.57	634.74	634.86	634.97	635.08	635.16	635.25	635.30
EAST BOUND	E	633.10	633.29	633.46	633.62	633.76	633.97	634.17	634.32	634.46	634.60	634.71	634.81	634.89
	D	633.32	633.52	633.68	633.83	633.96	634.18	634.38	634.52	634.65	634.79	634.90	635.01	635.07
	C	633.54	633.74	633.90	634.05	634.18	634.39	634.58	634.73	634.85	634.98	635.10	635.20	635.26
	B	633.53	633.72	633.88	634.02	634.15	634.36	634.55	634.69	634.81	634.94	635.05	635.15	635.21
	A	633.46	633.64	633.80	633.95	634.07	634.27	634.46	634.59	634.72	634.85	634.95	635.04	635.11

THE ELEVATIONS SHOWN ARE TOP OF CONCRETE SLAB ELEVATIONS WHICH ARE REQUIRED BEFORE THE CONCRETE IS PLACED. PROPER ALLOWANCE HAS BEEN MADE FOR THE DEADLOAD DEFLECTIONS CAUSED BY THE WEIGHT OF THE CONCRETE SLAB.

NOTES:

DECK SLAB DEPTH: THE DISTANCE SHOWN FROM TOP OF DECK SLAB TO TOP OF STEEL BEAM IS THE DESIGN DIMENSION. THE QUANTITY OF DECK CONC. TO BE PAID FOR SHALL BE BASED ON THIS DIMENSION, EVEN THOUGH DEVIATION FROM IT MAY BE NECESSARY BECAUSE THE TOP FLANGE OF THE BEAM MAY NOT HAVE THE EXACT CAMBER OR CONFORMATION REQUIRED TO PLACE IT PARALLEL TO THE FINISHED GRADE..

A HAUNCH WIDTH OF 9" SHALL BE USED FOR COMPUTING QUANTITY OF CONCRETE. HOWEVER, THE HAUNCH WIDTH MAY VARY BETWEEN 6" AND 12" PROVIDED THAT THE SLOPE SHALL BE NOT MORE THAN 1:4 FOR A HAUNCH LESS THAN 9" WIDTH.

12/16

adache · ciuni · lynn associates
CONSULTING ENGINEERS CLEVELAND, OHIO 44130

SLAB PLAN AND TYPICAL SECTION
BRIDGE Nº ERI-2-1678 L/R
S.R.2 OVER CONRAIL

ERIE COUNTY STA 1109+42.41 TO
ERI-2-16.13 STA 1111+31.79

DESIGNED	DRAWN	CHECKED	REVIEWED	DATE	REVISED
AJM	R.C.K.	R.J.P.	L.E.D.	9.21.85	

MICROFILMED
AUG 21 1990

FHWA REGION	STATE	PROJECT	
5	OHIO		

1788
284

ERIE COUNTY
ERI-2-(16.13-17.39)

MARK	NUMBER	LENGTH	TYPE	SER. INCR.	WEIGHT (LBS.)	A	B	C	R
ABUTMENT NO.1 (EASTBOUND LANES)									
D1A501	41	9'-5"	1		403	5'-4"	2'-2"		
D1A502	1	7'-5"	1		8	3'-4"	2'-2"		
D1A503	1	8'-7"	1		9	4'-6"	2'-2"		
D1A504	1	5'-10"	1		7	1'-9"	2'-2"		
D1A505	11	11'-0"	3		127	3'-0"	2'-3"		
D1A506	11	11'-6"	3		132	3'-0"	2'-6"		
D1A507	44	6'-5"	2		295	11"	5'-7"		
D1A508	40	10'-2"	1		425	3'-5"	3'-6"		
D1A509	35	25'-11"	STR.		947				
D1A510	3	25'-4"	4		80	24'-1"	1'-3"	7 7/8	
D1A511	7	4'-11"	STR.		36				
D1A512	8	11'-9"	STR.		99				
D1A513	4	10'-4"	STR.		87				
D1A514	4	7'-7"	4		31	5'-5"	2'-2"	3 3/4	
D1A516	12	15'-8"	STR.		197				
ED1A517	16	13'-8"	STR.		229				
ED1A518	12	5'-3"	5		66	2'-2"	2'-5"	7½"	2½"
ED1A519	12	4'-9"	STR.		60				
ED1A520	16	2'-8"	6		45	2'-1"			
ED1A521	4	6'-4"	STR.		27				
ED1A522	12	4'-6"	STR.		57				
ED1A523	16	4'-4"	STR.		73				
D1A524	2 BER 6	9'-0" / 6'-2"	1	3 3/8"	96	1'-2"	4'-1" / 2'-8"		
D1A525	4	13'-1"	STR.		55				
D1A526	4	12'-9"	STR.		54				
D1A601	40	13'-2"	7		792	5'-4"	5'-7"	2'-7"	
D1A602	1	8'-2"	1		13	3'-4"	2'-7"		
D1A603	1	10'-2"	1		16	5'-4"	2'-7"		
D1A604	1	9'-4"	1		15	4'-6"	2'-7"		
D1A605	1	6'-7"	1		10	1'-9"	2'-7"		
D1A606	45	10'-11"	8		739	1'-5"	4'-11"		
D1A607	45	6'-11	8		468	1'-5"	2'-11"		
D1A608	45	9'-3"	8		626	11"	4'-4"		
D1A609	16	20'-2"	8		485	1'-2"	9'-8"		
D1A610	1	14'-0"	8		22	1'-2"	6'-7"		
ED1A611	14	5'-6"	9		116	9"	6"	4'-3"	
ED1A612	4	5'-4"	9		32	8"	5"	4'-3"	
ED1A613	4	3'-11"	9		24	8"	4"	2'-11"	
ED1A614	4	3'-9"	9		23	7"	3	2'-11"	
ED1A615	4	3'-8"	9		23	7"	2	2'-11"	
D1A616	1	14'-2"	8		22	1'-2"	6'-8"		

MARK	NUMBER	LENGTH	TYPE	SER. INCR.	WEIGHT (LBS.)	A	B	C	R
D1A801	14	28'-4"	STR.		1059				
D1A802	2	28'-1"	4		150	26'-6"	1'-9"	7 7/8	
D1A803	2	6'-9"	STR.		36				
D1A804	2	19'-0"	4		102	14'-4"	4'-8"	7 7/8	
D1A805	8	12'-5"	STR.		100				
D1A806	1	11'-8"	STR.		32				
D1A807	4	10'-0"	STR.		107				
D1A808	2	16'-4"	STR		88				
	TOTAL ~ UNCOATED BARS				7970				
	TOTAL ~ EPOXY COATED BARS				775				
ABUTMENT NO.2 (EAST BOUND LANES)									
D2A501	41	9'-5"	1		403	5'-4"	2'-2"		
D2A502	1	7'-5"	1		8	3'-4"	2'-2"		
D2A503	1	8'-7"	1		9	4'-6"	2'-2"		
D2A504	1	5'-10"	1		7	1'-9"	2'-2"		
D2A505	10	11'-0"	3		115	3'-0"	2'-3"		
D2A506	7	11'-6"	3		84	3'-0"	2'-6"		
D2A507	44	7'-10"	2		360	11"	7'-0"		
D2A508	40	8'-2"	1		341	3'-5"	2'-6"		
D2A509	35	25'-11"	STR.		947				
D2A510	3	25'-4"	4		80	24'-1"	1'-3"	7 7/8	
D2A511	7	4'-11"	STR.		36				
D2A512	8	11'-9"	STR.		98				
D2A513	2	10'-4"	STR.		22				
D2A514	2	7'-7"	4		16	5'-5"	2'-2"	3	
D2A515	2	15'-0"	STR.		32				
D2A516	2	15'-8"	STR.		33				
ED2A517	8	13'-8"	STR.		115				
ED2A518	9	5'-3"	5		50	2'-2"	2'-5"	7½"	2½"
ED2A519	9	5'-1"	STR.		48				
ED2A520	16	2'-8"	6		45	2'-1"			
ED2A521	5	6'-8"	STR.		35				
ED2A522	5	4'-6"	STR.		24				
ED2A523	16	4'-4"	STR.		73				
D2A524	1 SER 6	8'-11" / 6'-2"	1	3 3/16"	48	1'-2"	4'-0" / 2'-8"		
D2A525	4	9'-7"	STR.		40				
D2A526	4	9'-3"	STR.		39				
D2A527	2	6'-10"	STR.		15				
D2A528	2	7'-1"	4		15	4'-11"	2'-2"	3"	
D2A529	6	11'-8"	STR.		73				
ED2A530	8	8'-8"	STR.		81				
D2A531	1 SER 5	6'-7" / 6'-2"	1	3 1/2"	39	1'-2"	3'-10" / 2'-8"		

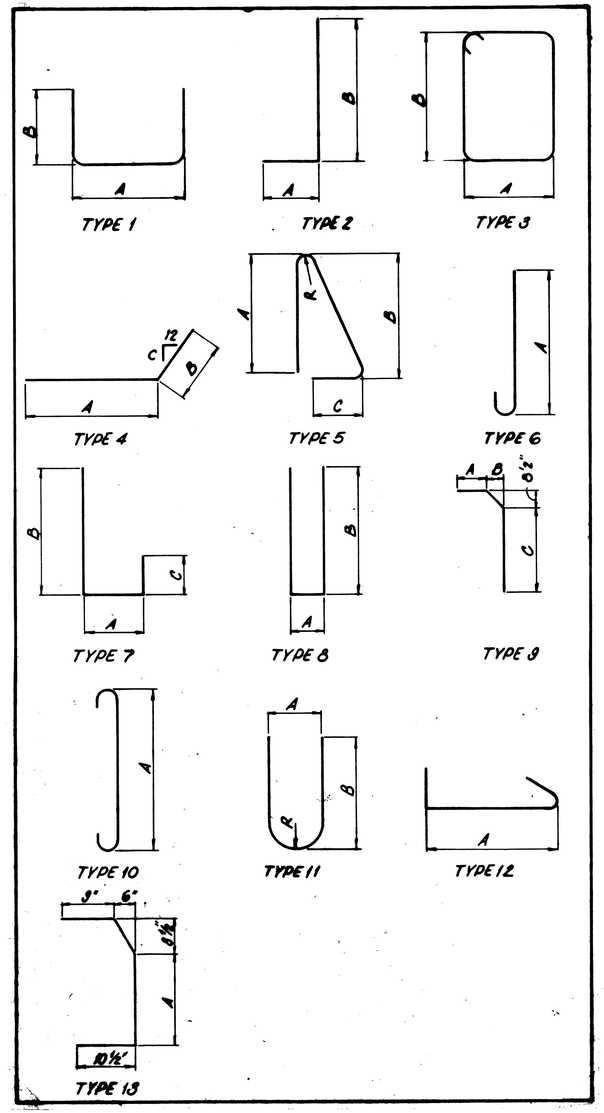

13/16

adache · ciuni · lynn associates
CONSULTING ENGINEERS CLEVELAND, OHIO 44130

REINFORCING STEEL LIST

BRIDGE Nº ERI-2-1678 L/R
S.R.2 OVER CONRAIL

ERIE COUNTY STA. 1109+42.41 TO
ERI-2-16.13 STA. 1111+31.79

DESIGNED	DRAWN	CHECKED	REVIEWED	DATE	REVISED
P.A.G.	C.W.H.	P.A.G.	L.E.D.	9-21-85	

MICROFILMED
AUG 21 1990

FH.WA. REGION	STATE	PROJECT	
5	OHIO		

178C 284

ERIE COUNTY
ERI-2-(16.13-17.39)

MARK	NUMBER	LENGTH	TYPE	SER. INCR.	WEIGHT (LBS.)	A	B	C	R
ABUTMENT NO. 2 (EASTBOUND LANE)									
D2A601	40	14'-7"	7		876	5'-4"	7'-0"	2'-7"	
D2A602	1	5'-9"	2		9	3'-4"	2'-7"		
D2A603	1	7'-9"	2		12	5'-4"	2'-7"		
D2A604	1	6'-11"	2		11	4'-6"	2'-7"		
D2A605	1	4'-1"	2		7	1'-9"	2'-7"		
D2A606	45	6'-2"	2		417	1'-5"	4'-11"		
D2A607	45	4'-0"	2		271	1'-5"	2'-9"		
D2A608	45	5'-0"	2		338	11"	4'-3"		
D2A609	14	11'-0"	8		232	1'-2"	10'-2"		
D2A610	1	8'-0"	8		12	1'-2"	7'-2"		
ED2A611	11	5'-9"	9		95	9"	6"	4'-6"	
ED2A612	2	5'-7"	9		17	8"	5"	4'-6"	
ED2A613	1	3'-11"	9		6	8"	4"	2'-11"	
ED2A614	2	3'-9"	9		12	7"	3"	2'-11"	
ED2A615	8	3'-8"	9		45	7"	2"	2'-11"	
ED2A616	1	5'-2"	8		8	8"	4"	4'-6"	
D2AB01	14	28'-4"	STR.		1059				
D2AB02	2	28'-3"	4		150	26'-8"	1'-9"	7/8	
D2AB03	2	6'-9"	STR.		36				
D2AB04	2	19'-0"	4		102	14'-4"	4'-8"	7/8	
D2AB05	3	12'-5"	STR.		100				
D2AB06	1	11'-8"	STR		32				
D2AB07	4	6'-6"	STR.		70				
D2AB08	2	12'-10"	STR.		69				
	TOTAL	UNCOATED	BARS		6663				
TOTAL	EPOXY	COATED	BARS		654				
ABUTMENT NO. 1 (WESTBOUND LANES)									
W1A501	41	9'-5"	1		403	5'-4"	2'-2"		
W1A502	1	7'-5"	1		8	3'-4"	2'-2"		
W1A503	1	8'-7"	1		9	4'-6"	2'-2"		
W1A504	1	5'-10"	1		7	1'-9"	2'-2"		
W1A505	10	5'-9"	3		60	3'-0"	2'-3"		
W1A506	7	6'-0"	3		44	3'-0"	2'-6"		
W1A507	44	7'-10"	2		360	11"	7'-0"		
W1A508	40	8'-0"	1		334	3'-5"	2'-5"		
W1A509	35	25'-11"	STR.		947				
W1A510	3	25'-4"	4		80	24'-1"	1'-3"	7/8	
W1A511	7	4'-11"	STR.		36				
W1A512	8	11'-9"	STR.		98				
W1A513	2	10'-4"	STR.		22				
W1A514	2	7'-7"	4		16	5'-5"	2'-2"	3	

MARK	NUMBER	LENGTH	TYPE	SER. INCR.	WEIGHT (LBS.)	A	B	C	R
ABUTMENT NO. 1 (WESTBOUND LANES)									
W1A516	6	15'-8"	STR		99				
EW1A517	8	13'-8"	STR		115				
EW1A518	9	5'-3"	5		50	2'-2"	2'-5"	7½"	2½"
EW1A519	9	5'-1"	STR		48				
EW1A520	16	2'-8"	6		45	2'-1"			
EW1A521	4	6'-8"	STR.		28				
EW1A522	12	4'-6"	STR.		57				
EW1A523	16	4'-4"	STR.		73				
W1A524	18ER6	8'-11" / 6'-3"	1	3 3/16	48	1'-2"	4'-0" / 2'-8"		
W1A525	4	8'-7"	STR		40				
W1A526	4	9'-3"	STR		39				
W1A527	2	6'-10"	STR		15				
W1A528	2	7'-1"	4		15	4'-11"	2'-2"	3 11/16	
W1A529	6	11'-8"	STR.		73				
EW1A530	8	9'-6"	STR.		80				
W1A531	18ER5	8'-7" / 6'-3"	1	3½"	39	1'-2"	3'-10" / 2'-8"		
W1A601	40	14'-7"	7		876	5'-4"	7'-0"	2'-7"	
W1A602	1	5'-9"	2		9	3'-4"	2'-7"		
W1A603	1	7'-9"	2		12	5'-4"	2'-7"		
W1A604	1	6'-11"	2		11	4'-6"	2'-7"		
W1A605	1	4'-2"	2		7	1'-9"	2'-7"		
W1A606	45	6'-1"	2		411	1'-5"	4'-10"		
W1A607	45	3'-11"	2		265	1'-5"	2'-8"		
W1A608	45	5'-0"	2		338	11"	4'-3"		
W1A609	8	20'-4"	8		245	1'-2"	9'-9"		
W1A610	1	14'-4"	8		22	1'-2"	6'-9"		
EW1A611	11	5'-9"	9		95	9"	6"	4'-6"	
EW1A612	2	5'-7"	9		17	8"	5"	4'-6"	
EW1A613	1	3'-11"	9		6	8"	4"	2'-11"	
EW1A614	2	3'-9"	9		12	7"	3"	2'-11"	
EW1A615	8	3'-8"	9		45	7"	2"	2'-11"	
EW1A616	1	5'-6"	9		9	8"	4"	4'-6"	
W1A617	6	21'-2"	8		191	1'-2"	10'-2"		
W1AB01	14	28'-4"	STR		1059				
W1AB02	2	28'-3"	4		150	26'-8"	1'-9"	7/8	
W1AB03	2	6'-9"	STR.		36				
W1AB04	2	19'-0"	4		102	14'-4"	4'-8"	7/8	
W1AB05	3	12'-5"	STR.		100				
W1AB06	1	11'-8"	STR.		32				
W1AB07	4	6'-6"	STR.		70				
W1AB08	2	12'-10"	STR.		69				
TOTAL	UNCOATED	BARS			6797				
TOTAL	EPOXY	COATED	BARS		680				

MARK	NUMBER	LENGTH	TYPE	SER. INCR.	WEIGHT (LBS)	A	B	C	R
ABUTMENT NO. 2 (WESTBOUND LANES)									
W2A501	41	9'-5"	1		403	5'-4"	2'-2"		
W2A502	1	7'-5"	1		8	3'-4"	2'-2"		
W2A503	1	8'-7"	1		9	4'-6"	2'-2"		
W2A504	1	5'-10"	1		7	1'-9"	2'-2"		
W2A505	10	11'-0"	3		115	3'-0"	2'-3"		
W2A506	10	11'-6"	3		120	3'-0"	2'-6"		
W2A507	44	7'-7"	2		348	11"	6'-9"		
W2A508	40	7'-8"	1		320	3'-5"	2'-3"		
W2A509	35	25'-11	STR.		947				
W2A510	3	25'-4	4		80	24'-1"	1'-3"		
W2A511	7	4'-11"	STR.		36				
W2A512	8	11'-9"	STR.		98				
W2A513	4	10'-4"	STR.		44				
W2A514	4	7'-7"	4		32	5'-5"	2'-2"		
W2A515	4	15'-0"	STR		63				
W2A516	8	15'-8"	STR.		132				
EW2A517	16	13'-8"	STR.		229				
EW2A518	12	5'-3"	5		66	2'-2"	2'-5"	7½"	2½"
EW2A519	12	5'-1"	STR.		64				
EW2A520	16	2'-8"	6		45	2'-1"			
EW2A521	4	6'-8	STR.		28				
EW2A522	12	4'-6"	STR.		57				
EW2A523	16	4'-4	STR.		73				
W2A524	28ER6	9'-3" / 6'-3"	2	3 5/8	97	1'-2"	4'-2" / 2'-8"		
W2A525	4	13'-1"	STR		55				
W2A526	4	12'-9"	STR.		64				

14/16

adache · ciuni · lynn associates
CONSULTING ENGINEERS CLEVELAND, OHIO 44130

REINFORCING STEEL LIST

BRIDGE No. ERI-2-1678 L/R
S.R.2 OVER CONRAIL

ERIE COUNTY STA. 1109+42.41 TO
ERI-2-16.13 STA. 1111+31.79

DESIGNED	DRAWN	CHECKED	REVIEWED	DATE	REVISED
R.C.K.	C.W.H.	P.A.G.	L.E.D.	9-21-85	

MICROFILMED
AUG 21 1990

FHWA REGION	STATE	PROJECT	
5	OHIO		

1780 / 284

ERIE COUNTY
ERI-2-(16.13-17.39)

MARK	NUMBER	LENGTH	TYPE	SER. INCR.	WEIGHT (LBS.)	A	B	C	R
ABUTMENT NO.2 (WESTBOUND LANES)									
W2A601	40	14'-4"	7		861	5'-4"	6'-9"	2'-7"	
W2A602	1	8'-2"	2		13	3'-4"	2'-7"		
W2A603	1	10'-2"	2		16	5'-4"	2'-7"		
W2A604	1	9'-4"	2		14	4'-6"	2'-7"		
W2A605	1	6'-7"	2		10	1'-9"	2'-7"		
W2A606	45	10'-7"	2		716	1'-5"	4'-9"		
W2A607	45	6'-7"	2		445	1'-5"	2'-9"		
W2A608	45	8'-9"	2		592	11"	4'-1"		
W2A609	16	10'-6"	8		253	1'-2"	9'-8"		
W2A610	1	7'-8"	8		12	1'-2"	6'-10"		
EW2A611	14	5'-9"	9		121	9"	6"	4'-6"	
EW2A612	4	5'-7"	9		34	8"	5"	4'-6"	
EW2A613	4	3'-11"	9		24	8"	4"	2'-11"	
EW2A614	4	3'-9"	9		23	7"	3"	2'-11"	
EW2A615	4	3'-8"	9		22	7"	2"	2'-11"	
EW2A616	1	7'-6"	8		12	1'-2"	6'-8"		
W2A801	14	28'-4"	STR		1059				
W2A802	2	28'-1"	4		150	26'-6"	1'-9"	7⅞"	
W2A803	2	6'-9"	STR		36				
W2A804	2	19'-0"	4		102	14'-4"	4'-8"	7⅞"	
W2A805	3	12'-5"	STR		100				
W2A806	1	11'-8"	STR		32				
W2A807	4	10'-0"	STR		107				
W2A808	2	16'-4"	STR		88				
	TOTAL~	UNCOATED	BARS		7574				
	TOTAL~	EPOXY COATED	BARS		798				
PIER NO.1 (WESTBOUND LANE)									
W1P401	44	21'-8"	STR.		625				
W1P402	44	6'-1"	11		179	2'-8"	2'-4"		
W1P403	264	3'-8"	12		648	2'-8			
W1P501	2	24'-3"	STR.		51				
W1P502	2	32'-1"	STR.		67				
W1P503	4	21'-0"	STR.		88				
W1P504	4	24'-6"	STR.		103				
W1P505	4	12'-11"	4		54	12'-1"	10"	3 9/16"	
W1P506	28	6'-5"	1		188	2'-8"	2'-0"		
W1P507	2 SER 14	15'-3" / 8'-9"	1	3"	351	2'-8"	6'-5" / 3'-2"		
W1P508	34	4'-11"	1		175	2'-8"	1'-3"		
W1P509	2	3'-11	1		9	2'-6"	10"		
W1P801	30	10'-10"	10		868	9'-0"	9"		
W1P802	12	27'-7"	10		884	25'-9"	9"		
W1P901	76	9'-7"	2		2,476	8'-2"	1'-7"		
W1P902	76	28'-0"	STR.		7,236				
W1P1001	16	30'-1"	2		2,071	27'-3"	3'-2"		
	TOTAL~	UNCOATED	BARS		16,073				

MARK	NUMBER	LENGTH	TYPE	SER. INCR.	WEIGHT (LBS.)	A	B	C	R
PIER NO.2 (WESTBOUND LANES)									
W2P401	44	21'-3"	STR		625				
W2P402	44	6'-1	11		179	2'-8"	2'-4"		
W2P403	264	3'-8"	12		648	2'-8"			
W2P501	2	24'-3"	STR.		51				
W2P502	2	32'-1"	STR.		67				
W2P503	4	21'-0"	STR.		88				
W2P504	4	24'-6"	STR		103				
W2P505	4	12'-11"	4		54	12'-1"	10"	3 9/16"	
W2P506	28	6'-5"	1		188	2'-8"	2'-0"		
W2P507	2 SER 14	15'-3" / 8'-9"	1	3"	351	2'-8"	6'-5" / 3'-2"		
W2P508	34	4'-11"	1		175	2'-8"	1'-3"		
W2P509	2	3'-11"	1		9	2'-6"	10"		
W2P801	30	10'-10"	10		868	9'-0"	9"		
W2P802	12	27'-7"	10		884	25'-9"	9"		
W2P901	76	9'-7"	2		2476	8'-2"	1'-7"		
W2P902	76	28'-4"	STR.		7321				
W2P1001	16	30'-1"	2		2071	27'-3"	3'-2"		
	TOTAL~	UNCOATED	BARS		16,158				
PIER NO.1 (EASTBOUND LANES)									
D1P401	44	21'-3"	STR.		625				
D1P402	44	6'-1"	10		179	2'-8"	2'-4"		
D1P403	264	3'-8	12		648	2'-8"			
D1P501	2	24'-3"	STR		51				
D1P502	2	32'-1"	STR		67				
D1P503	4	21'-0"	STR		88				
D1P504	4	24'-6"	STR		103				
D1P505	4	12'-11"	4		54	12'-1"	10"	3 9/16"	
D1P506	28	6'-5"	1		188	2'-8"	2'-0"		
D1P507	2 SER 14	15'-3" / 8'-9"	1	3"	351	2'-8"	6'-5" / 3'-2"		
D1P508	34	4'-11"	1		175	2'-8"	1'-3"		
D1P509	2	3'-11"	1		9	2'-6"	10"		
D1P801	30	10'-10"	10		868	9'-0"	9"		
D1P802	12	27'-7"	10		884	25'-9"	9"		

MARK	NUMBER	LENGTH	TYPE	SER. INCR.	WEIGHT (LBS.)	A	B	C	R
D1P901	76	8'-7"	2		2476	8'-2"	1'-7"		
D1P902	76	27'-4"	STR		7063				
D1P1001	16	30'-1"	2		2071	27'-3"	3'-2"		
	TOTAL~	UNCOATED	BARS		13,900				
PIER NO.2 (EASTBOUND LANES)									
D2P401	44	21'-3"	STR.		625				
D2P402	44	6'-1"	11		179	2'-8"	2'-4"		
D2P403	264	3'-8"	12		648	2'-8"			
D2P501	2	24'-3"	STR		51				
D2P502	2	32'-1"	STR		67				
D2P503	4	21'-0"	STR		88				
D2P504	4	24'-6"	STR		103				
D2P505	4	12'-11"	4		54	12'-1"	10"	3 9/16"	
D2P506	28	6'-5"	1		188	2'-8"	2'-0"		
D2P507	2 SER 14	15'-3" / 8'-9"	1	3"	351	2'-8"	6'-5" / 3'-2"		
D2P508	34	4'-11"	1		175	2'-8"	1'-3"		
D2P509	2	3'-11"	1		9	2'-6"	10"		
D2P801	30	10'-10"	10		868	9'-0"	9"		
D2P802	12	27'-7"	10		884	25'-9"	9"		
D2P901	76	9'-7"	2		2476	8'-2"	1'-7"		
D2P902	76	27'-10"	STR.		7102				
D2P1001	16	30'-1"	2		2071	27'-3"	3'-2"		
	TOTAL~	UNCOATED	BARS		16,029				

15/16

adache · ciuni · lynn associates
CONSULTING ENGINEERS CLEVELAND, OHIO 44130

REINFORCING STEEL LIST

BRIDGE Nº ERI-2-1678 L/R
S.R.2 OVER CONRAIL

ERIE COUNTY STA. 1109+42.41 TO
ERI-2-16.13 STA. 1111+31.79

DESIGNED	DRAWN	CHECKED	REVIEWED	DATE	REVISED
R.C.K.	C.W.H.	P.A.G.	L.E.D.	9-21-85	

MICROFILMED
AUG 21 1990

FH.WA. REGION	STATE	PROJECT	
5	OHIO		

178E
284

ERIE COUNTY
ERI-2-(16.13-17.39)

MARK	NUMBER	LENGTH	TYPE	SER. INCR.	WEIGHT (LBS.)	A	B	C	R
BRIDGE DECK SLAB (1 BRIDGE)									
ES401	324	30'-0"	STR		6,493				
ES402	54	15'-6"	STR		560				
S501	264	30'-0"	STR		8,261				
S502	44	18'-6"	STR		849				
S503	590	22'-5"	STR		13,797	21'-10"			
S504	2 SER 19	3'-6" 21'-6"	STR	10 1/16"	536	4'-11" 20'-11"			
S505	10	5'-0"	STR		53				
S506	2 SER 19	3'-5" 19'-7"	STR	10 3/4"	456				
ES507	250	3'-2"	18		827	11"			
ES508	250	2'-4"	2		608	1'-7"			
ES509	250	5'-3"	5		1,369				
ES510	48	12'-6"	STR		626				
ES511	98	5'-6"	STR		551				
ES512	24	11'-6"	STR		288				
ES601	590	22'-1"	STR		19,570				
ES602	2 SER 19	5'-2" 21'-2"	STR	10 1/16"	752				
ES603	10	5'-0"	STR		76				
ES604	2 SER 19	4'-3" 19'-10"	STR	10 3/8"	688				
ES605	48	30'-0"	STR		2,163				
ES606	48	10'-8"	STR		770				
TOTAL ~ UNCOATED BARS (1 BRIDGE)					23,952				
TOTAL ~ EPOXY COATED BARS (1 BRIDGE)					35,341				
TOTAL ~ UNCOATED BARS (BOTH BRIDGES)					47,904				
TOTAL ~ EPOXY COATED BARS (BOTH BRIDGES)					70,682				

REINFORCING STEEL SAMPLES

REFER TO CMS SECTIONS 106.03, 700, 709.01 THROUGH 709.05, AND 709.08. SUFFICIENT ADDITIONAL REINFORCING STEEL SHALL BE PROVIDED FOR SAMPLING. RANDOM SAMPLES SHALL BE REPLACED IN THE STRUCTURES BY THE ADDITIONAL STEEL, SPLICED IN ACCORDANCE WITH 509.08.

16/16

adache · ciuni · lynn associates
CONSULTING ENGINEERS CLEVELAND, OHIO 44130

REINFORCING STEEL LIST

BRIDGE Nº ERI-2-1678 L/R
S.R.2 OVER CONRAIL

ERIE COUNTY STA. 1109+42.41 TO
ERI-2-16.13 STA. 1111+31.79

DESIGNED	DRAWN	CHECKED	REVIEWED	DATE	REVISED
R.C.K.	C.W.H.	P.A.G.	L.E.D.	9-21-85	

MICROFILMED
AUG 21 1990

FED. RD. DIVISION	STATE	PROJECT	FISCAL YEAR
2	OHIO		

179
184

ERIE COUNTY
ERI.-2-(16.13-17.39)

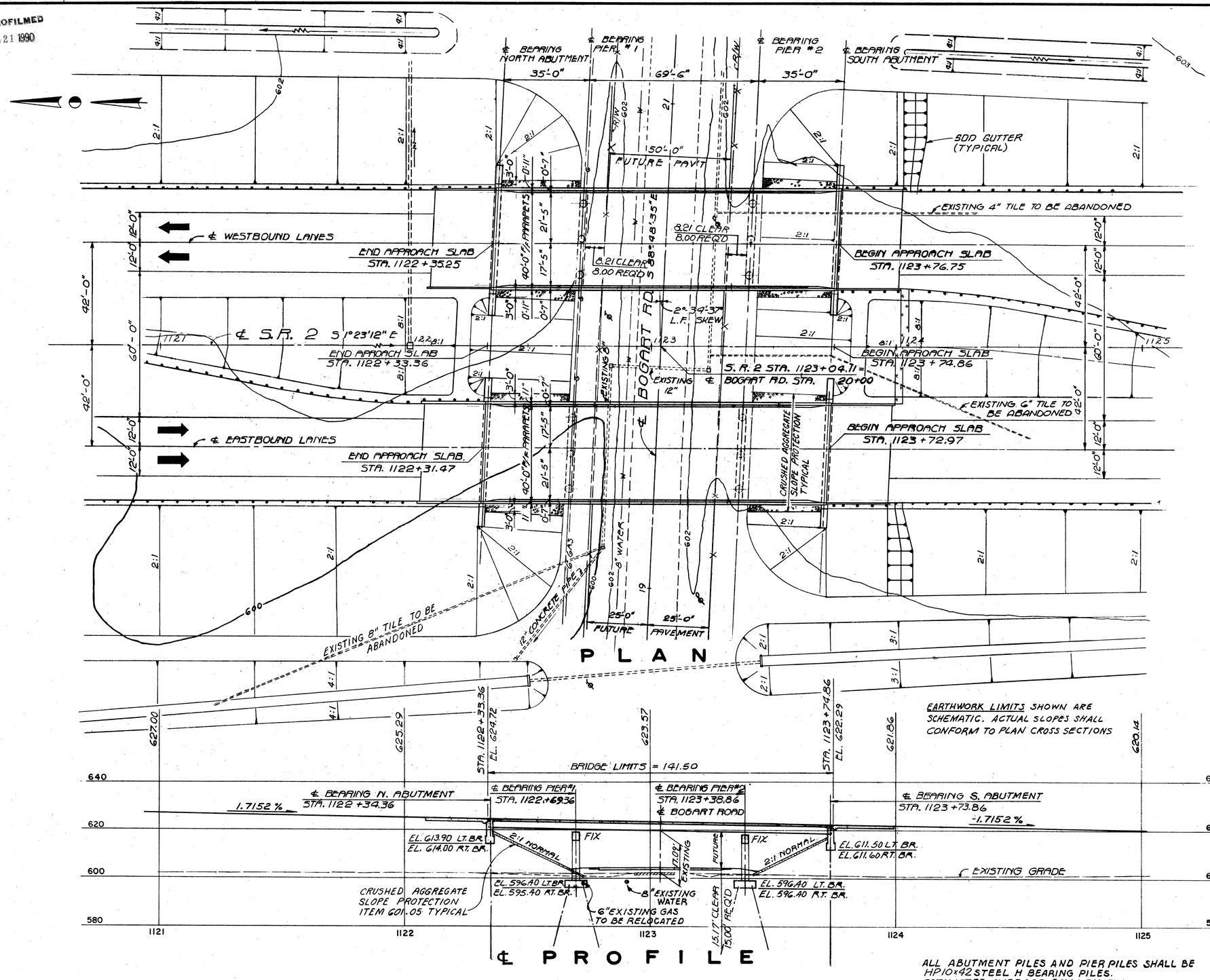

NOTE: STRUCTURE LENGTH PROVIDES FOR BOGART ROAD FUTURE PAVEMENT OF 50'-0" WITH 8'-0" SHOULDERS.

DESIGN TRAFFIC
ADT (2001) = 17,115
ADTT (2001) = 2,670

PROPOSED STRUCTURE

TYPE: CONTINUOUS STEEL BEAM WITH REINFORCED CONCRETE DECK AND SUBSTRUCTURE
SPANS: 35'-0", 69'-6", 35'-0" ℄ BEARING
ROADWAY: 40'-0" F/F PARAPETS
LOADING: HS-20-44 AND THE ALTERNATE MILITARY LOADING
SKEW: 2°-34'-37" LEFT FORWARD
WEARING SURFACE: MONOLITHIC CONCRETE
ALIGNMENT: TANGENT
APPROACH SLABS: RS-1-81 (25' LONG)

1/11

ALL ABUTMENT PILES AND PIER PILES SHALL BE HP10x42 STEEL H BEARING PILES.
ESTIMATED AVERAGE PAY LENGTH:
ALL ABUTMENTS 50 FEET
ALL PIERS 31 FEET.

ADACHE ASSOCIATES INC., ENGINEERS
CLEVELAND 42, OHIO

SITE PLAN

BRIDGE NO. ERI-2-1701 L/R
S.R.2 OVER BOGART RD.

ERIE COUNTY
ERI-2-16.13
STA. 1122 + 33.36 TO
STA. 1123 + 74.86

DESIGNED	DRAWN	CHECKED	REVIEWED	DATE
N. K.	N. K.	M. G.	L.E.D.	9-21-85

MICROFILMED
AUG 21 1990

FED. RD. DIVISION	STATE	PROJECT	
2	OHIO		

(158/284)

ERIE COUNTY
ERI - 2-(16.13-17.39)

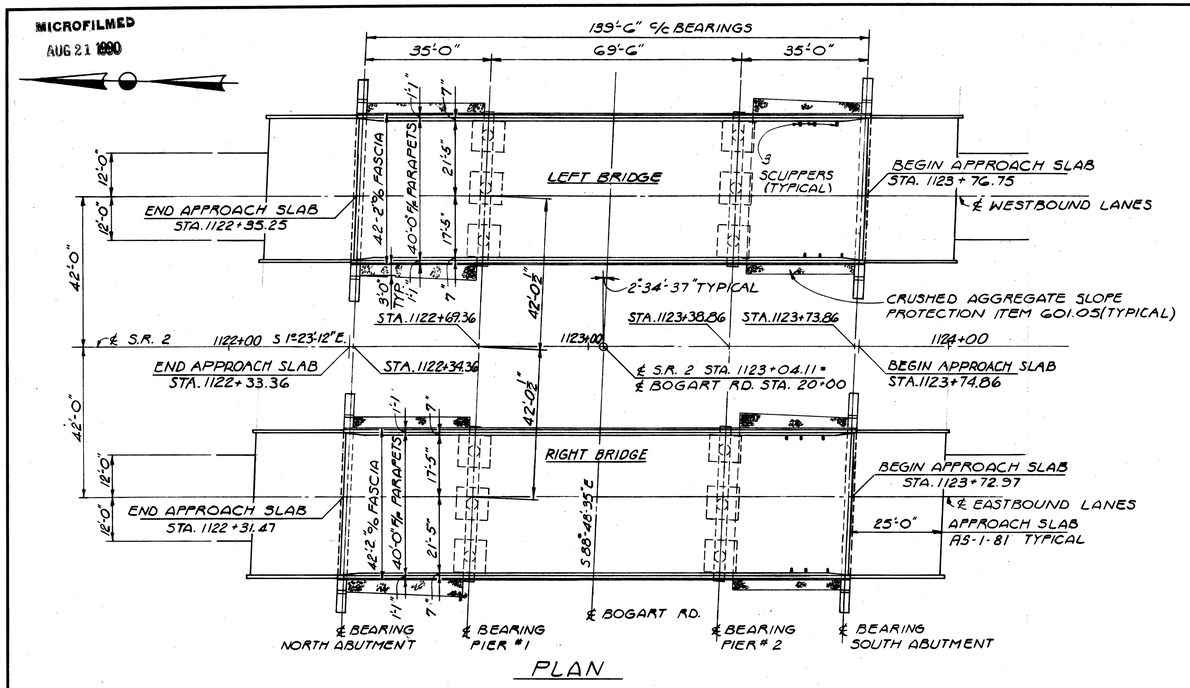

PLAN

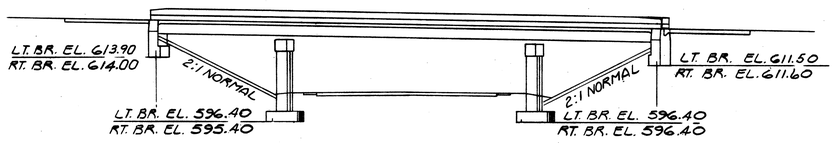

ELEVATION

ESTIMATED QUANTITIES

ITEM	TOTAL	UNIT	DESCRIPTION	SUPERSTR. LEFT	SUPERSTR. RIGHT	ABUTMENTS LEFT	ABUTMENTS RIGHT	PIERS LEFT	PIERS RIGHT	GENERAL LEFT	GENERAL RIGHT
503	528	CU.YDS.	UNCLASSIFIED EXCAVATION			114	114	150	150		
505	LUMP	SUM	PILE DRIVING EQUIPMENT MOBILIZATION							LUMP	
507	4,240	LIN.FT.	STEEL PILES HP 10x42			1,000	1,000	1,120	1,120		
509	100,155	LBS.	REINFORCING STEEL, GRADE 60	42,457		22,368		35,330			
511	456	CU.YDS.	CLASS 'S' CONCRETE, SUPERSTRUCTURE AS PER PLAN	228	228						
511	117	CU.YDS.	CLASS 'C' CONCRETE PIER CAPS & COLUMNS					58	59		
511	103	CU.YDS.	CLASS 'C' CONCRETE ABUTMENTS ABOVE FOOTING			52	51				
511	190	CU.YDS.	CLASS 'C' CONCRETE FOOTINGS			41	41	54	54		
513	269,400	LBS.	STRUCTURAL STEEL A-36 (AISC CATEGORY-I)	134,700	134,700						
514	269,400	LBS.	FIELD PAINTING OF NEW STRUCTURAL STEEL (SYSTEM-A)	134,700	134,700						
516	200	LIN.FT.	ELASTOMERIC JOINT SEAL, TYPE IA			100	100				
516	188	SQ.FT.	1" PREFORMED EXPANSION JOINT FILLER			94	94				
516	158	SQ.FT.	¼" PREFORMED EXPANSION JOINT FILLER			79	79				
518	102	CU.YDS.	POROUS BACKFILL			51	51				
518	252	LIN.FT.	6" PERFORATED HELICAL C.M.P. INCLUDING SPECIALS 707.01			126	126				
518	106	LIN.FT.	6" NON-PERFORATED HELICAL C.M.P., 707.01			53	53				
518	12	EACH	SCUPPERS INCLUDING SUPPORTS	6	6						
601	760	SQ.YDS.	CRUSHED AGGREGATE SLOPE PROTECTION							380	380
824	56,414	LBS.	EPOXY COATED REINFORCING STEEL, GRADE 60	56,414							
Spec.	228	SQ.YDS.	SEALING OF CONCRETE SURFACES (SEE PROPOSAL NOTE)	114	114						
			QUANTITIES CHECKED BY K.L.M. 2-14-83								

NOTES:
FOR SCUPPER LOCATIONS AND SPACING ~ SEE SHEET 6/11
FOR APPROACH SLAB DETAILS ~ SEE STANDARD DRAWING AS-1-81
FOR STRUCTURAL GENERAL NOTES ~ SEE SHEET (158/284)

2/11

ADACHE ASSOCIATES INC., ENGINEERS
CLEVELAND, OHIO 44142

GENERAL PLAN, ELEV. & ESTIMATED QUANTITIES

BRIDGE NO. ERI - 2 - 1701 L/R
S.R.2 OVER BOGART RD.
ERIE COUNTY
ERI - 2-16.13
STA. 1122 + 33.36 TO
STA. 1123 + 74.86

DESIGNED	DRAWN	CHECKED	REVIEWED	DATE	REVISED
H.G. 7-16-69	H.V.S.	L.A. 7-21-69	L.E.D. 9.21.85		

FED. RD. DIVISION	STATE	PROJECT	
2	OHIO		

181
284

ERIE COUNTY
ERI - 2 - (16.13 - 17.39)

MICROFILMED
AUG 21 1990

NORTH ABUTMENT LEFT BRIDGE

SOUTH ABUTMENT RIGHT BRIDGE

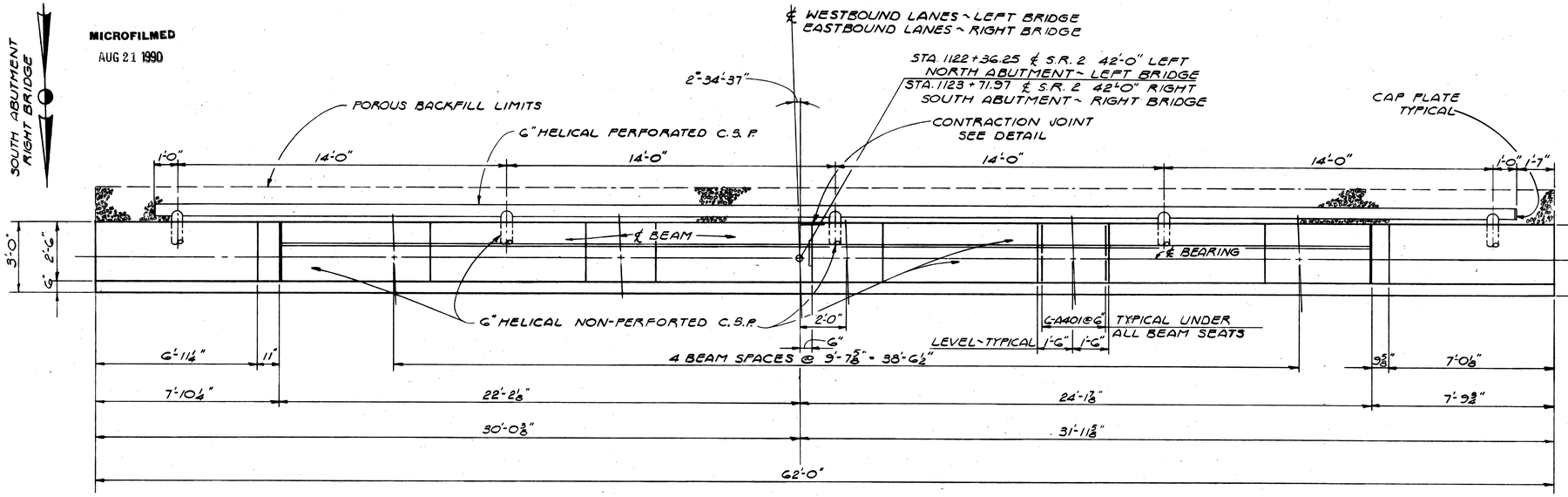

PLAN
NORTH ABUTMENT ~ LEFT BRIDGE
SOUTH ABUTMENT ~ RIGHT BRIDGE

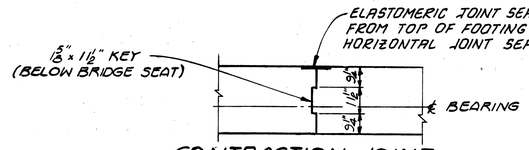

CONTRACTION JOINT DETAIL

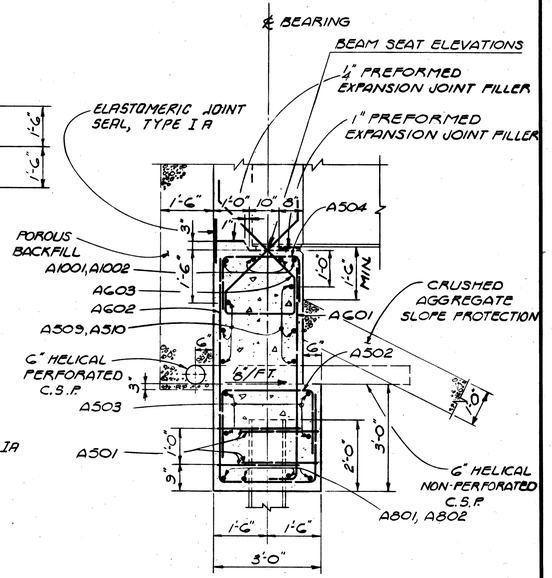

SECTION A-A

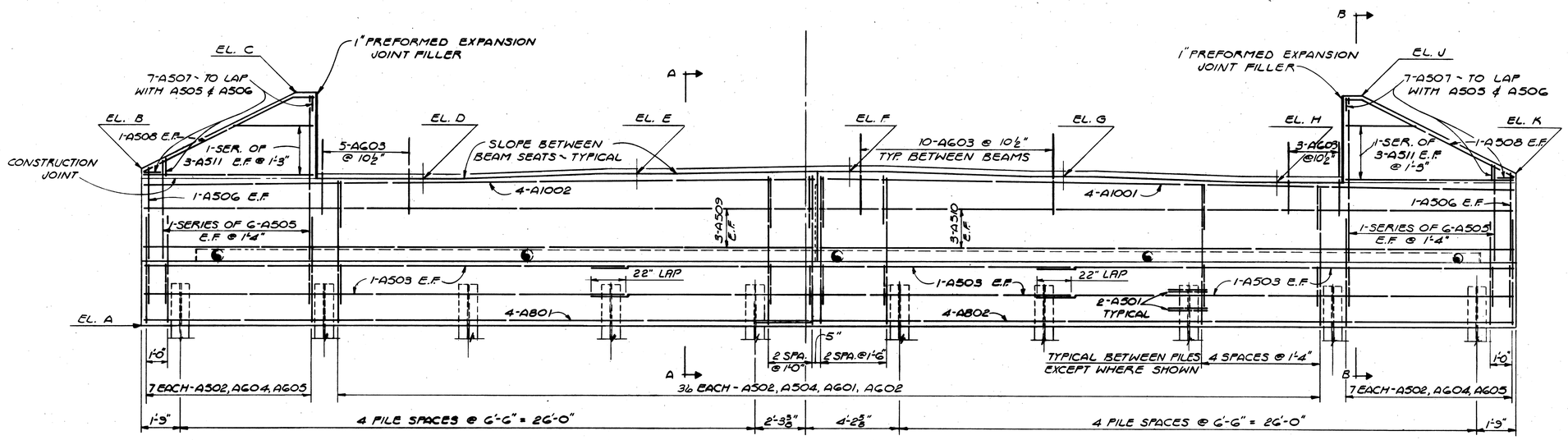

ELEVATION

ELEVATION TABLE

LOCATION	A	B	C	D	E	F	G	H	J	K
NORTH ABUTMENT LEFT BRIDGE	613.90	621.13	624.60	620.67	620.81	620.89	620.74	620.58	624.51	621.00
SOUTH ABUTMENT RIGHT BRIDGE	611.60	618.77	622.24	618.32	618.47	618.57	618.43	618.28	622.21	618.70

NOTES:

FOR SECTION 13:13, SEE SHEET 4 / 11.

ABUTMENT PILES ARE HP10 x 42

POROUS BACKFILL SHALL EXTEND UPWARD TO THE PLANE OF THE SUBGRADE AND LATERALLY TO THE SURFACE OF THE EMBANKMENT SLOPES.

FOR REINFORCING STEEL LIST AND BAR BENDING DIAGRAM, SEE SHEET 10 / 11.

FOR ELASTOMERIC JOINT SEAL, TYPE IA DETAILS, SEE TENTATIVE STANDARD DRAWING E.J.S-2-81.

ABBREVIATIONS USED: E.F = EACH FACE

ALL FOOTING REINFORCING SHALL HAVE 3" MINIMUM CONCRETE COVER

FOR ADDITIONAL LAYOUT DIMENSIONS SEE GENERAL PLAN SHEET 2 / 11

3 / 11

ADACHE ASSOCIATES INC., ENGINEERS
CLEVELAND, OHIO 44142

ABUTMENT DETAILS

BRIDGE NO. ERI - 2 - 1701 L/R
S.R.2 OVER BOGART RD.
ERIE COUNTY STA. 1122 + 33.36 TO
ERI - 2 - 16.13 STA. 1123 + 74.86

DESIGNED	DRAWN	CHECKED	REVIEWED	DATE	REVISED
L.E.D. H.G.	H.V.S.	H.G.	L.E.D.	9.21.85	

MICROFILMED
AUG 29 1990

FED. RD. DIVISION	STATE	PROJECT	
2	OHIO		

182
284

ERIE COUNTY
ERI - 2 - (16.13 - 17.39)

SOUTH ABUTMENT LEFT BRIDGE

NORTH ABUTMENT RIGHT BRIDGE

℄ WESTBOUND LANES ~ LEFT BRIDGE
EASTBOUND LANES ~ RIGHT BRIDGE

STA. 1123 + 75.75 ℄ S.R. 2 42'-0" LEFT
SOUTH ABUTMENT ~ LEFT BRIDGE
STA. 1122 + 32.47 ℄ S.R. 2 42'-0" RIGHT
NORTH ABUTMENT ~ RIGHT BRIDGE

2°-34'-37" CONTRACTION JOINT SEE DETAIL

POROUS BACKFILL LIMITS

CAP PLATE TYPICAL

6" HELICAL PERFORATED C.S.P.

1'-0" 14'-0" 14'-0" 2'-0" 14'-0" 14'-0" 1'-0" 2'-5"

3'-0" 2'-6" 6"

℄ BEARING

℄ BEAM

1'-6" 1'-6"

C-A4016C TYPICAL UNDER ALL BEAM SEATS

LEVEL ~ TYPICAL

6"

6" HELICAL NON-PERFORATED C.S.P.

7'-0⅛" 11" 4 BEAM SPACES @ 9'-7⅝" = 38'-6½" 9⅜" 6'-1⅛"

7'-1⅛" 24'-2⅛" 22'-1¾" 7'-9"

32'-1¼" 23'-10¾"

62'-0"

PLAN

NORTH ABUTMENT ~ RIGHT BRIDGE
SOUTH ABUTMENT ~ LEFT BRIDGE

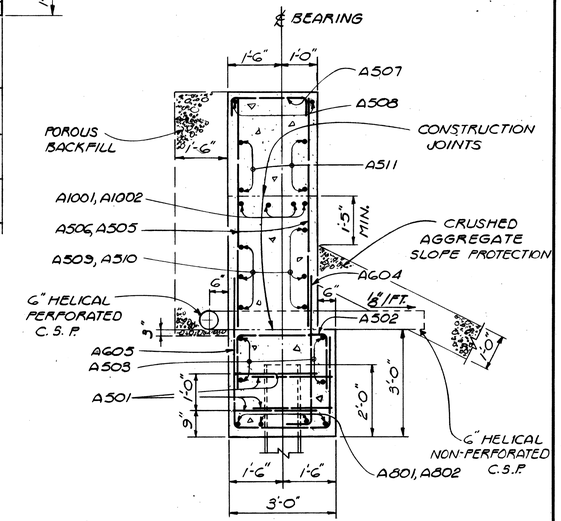

SECTION B-B

EL. C
7-A507 ~ TO LAP WITH A505 & A506
1" PREFORMED EXPANSION JOINT FILLER
EL. B
EL. D
EL. E
A
EL. F
EL. G
10-AG03 @ 10½" TYP BETWEEN BEAMS
EL. H
5-AG03 @ 10½"
B
EL. J
7-A507 ~ TO LAP WITH A505 & A506
EL. K
1-A508 E.F.
1 SERIES OF 3-A511 E.F. @ 1'-3"
3-AG03 @ 10½"
SLOPE BETWEEN BEAM SEATS ~ TYPICAL
1-A508 E.F.
1 SERIES OF 3-A511 E.F. @ 1'-3"
CONSTRUCTION JOINT
1-A506 E.F.
4-A1001
4-A1002
1-A506 E.F.
1 SERIES OF C-A505 E.F. @ 1'-4"
3-A510 E.F.
22" LAP (TYPICAL A-503 BARS)
3-A509 E.F.
1 SERIES OF C-A505 E.F. @ 1'-4"
1-A503 E.F.
1-A503 E.F.
2-A501 TYPICAL
4-A801
4-A802
1-A503 E.F.
EL. A
A
B
1'-0"
3"
2 SPA @ 1'-6"
2 SPA @ 1'-0"
TYPICAL BETWEEN PILES 4 SPA. @ 1'-4" EXCEPT WHERE SHOWN
1'-0"
7 EACH - A502, AG04, AG05
36 EACH - A502, A504, AG01, AG02.
7 EACH - A502, AG04, & AG05
1'-9"
4 PILE SPA. @ 6'-6" = 26'-0"
4'-4¼"
2'-1¾"
4 PILE SPA. @ 6'-6" = 26'-0"
1'-9"

ELEVATION

ELEVATION TABLE

LOCATION	A	B	C	D	E	F	G	H	J	K
NORTH ABUTMENT RIGHT BRIDGE	614.00	621.10	624.60	620.68	620.82	620.96	620.87	620.71	624.64	621.17
SOUTH ABUTMENT LEFT BRIDGE	611.50	618.60	622.11	618.18	618.34	618.50	618.42	618.28	622.21	618.74

NOTES

FOR SECTION A-A ~ SEE SHEET 3/11

FOR CONTRACTION JOINT DETAIL ~ SEE SHEET 3/11

FOR ADDITIONAL NOTES ~ SEE SHEET 3/11

4/11

ADACHE ASSOCIATES INC., ENGINEERS
CLEVELAND, OHIO 44142

ABUTMENT DETAILS

BRIDGE NO. ERI - 2 - 1701 L/R
S.R.2 OVER BOGART RD.
ERIE COUNTY STA. 1122 + 33.36 TO
ERI - 2 - 16.13 STA. 1123 + 74.86

DESIGNED	DRAWN	CHECKED	REVIEWED	DATE	REVISED
L.E.D. H.G.	H.J.S.	H.G.	L.E.D.	9.21.85	

MICROFILMED
AUG 29 1990

FED. RD. DIVISION	STATE	PROJECT	
2	OHIO		

183/284

ERIE COUNTY
ERI - 2-(16.13-17.39)

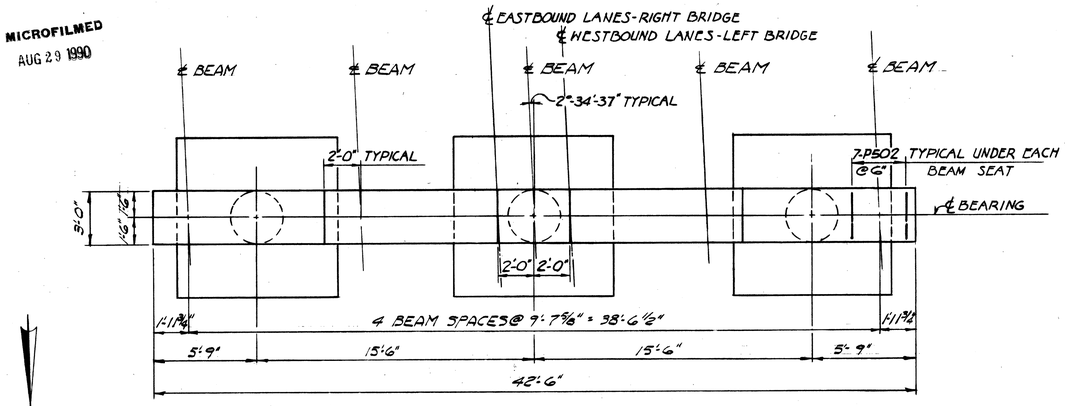

PLAN

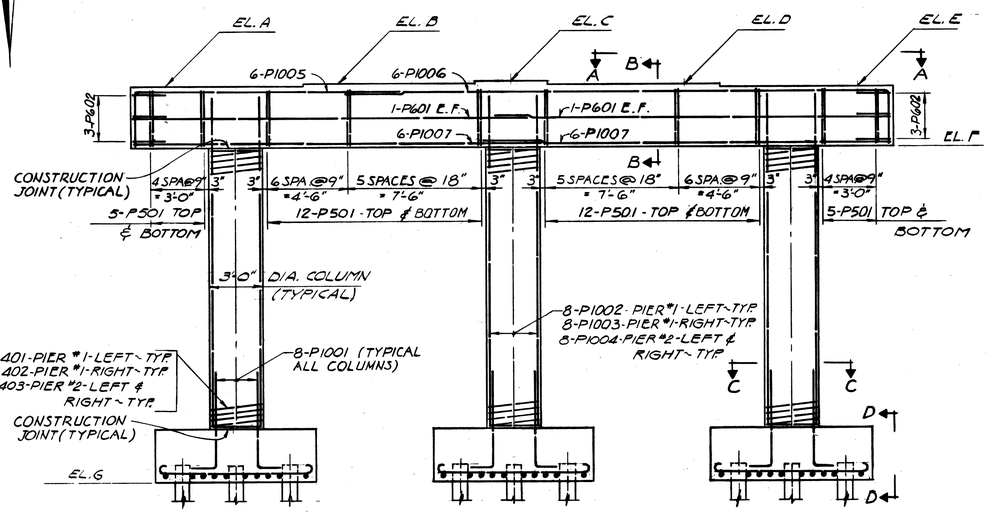

ELEVATION

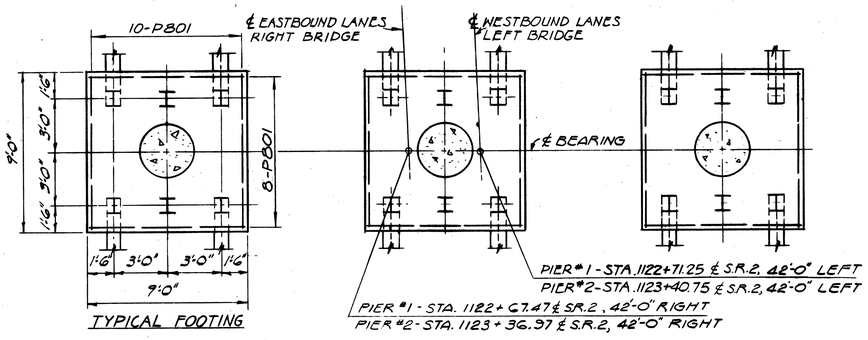

TYPICAL FOOTING

FOOTING PLAN

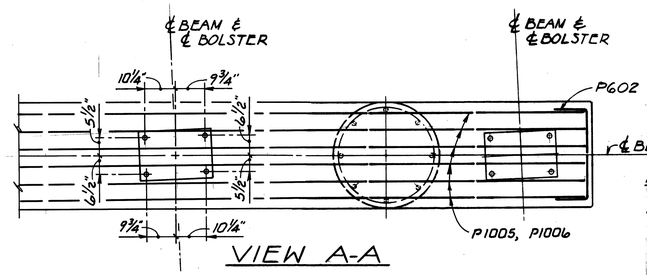

VIEW A-A

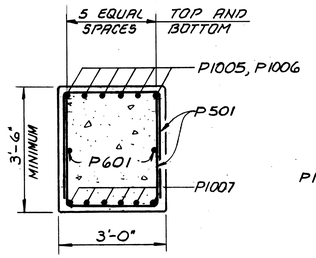

SECTION B-B

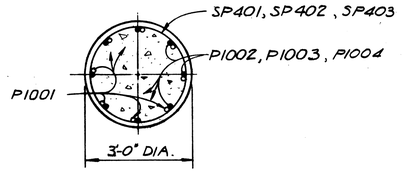

SECTION C-C

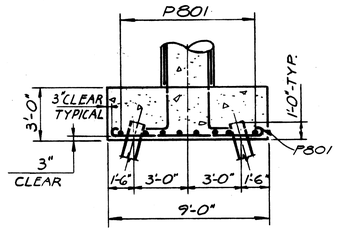

VIEW D-D

BRIDGE SEAT REINFORCING: REINFORCING STEEL IN THE VICINITY OF THE BRIDGE SEAT SHALL BE ACCURATELY PLACED TO AVOID INTERFERENCE WITH THE DRILLING OF BEARING ANCHOR HOLES OR THE PRE-SETTING OF OF BEARING ANCHORS.

BEARING ANCHORS: AT THE OPTION OF THE CONTRACTOR, BEARING ANCHORS (OR FORMED HOLES), LOCATED AND SUPPORTED BY TEMPLATES, MAY BE CAST IN PLACE.

ELEVATION TABLE							
LOCATION	A	B	C	D	E	F	G
LEFT BRIDGE PIER #1	618.62	618.78	618.94	618.86	618.72	615.12	596.40
LEFT BRIDGE PIER #2	617.43	617.59	617.75	617.67	617.52	613.93	596.40
RIGHT BRIDGE PIER #1	618.76	618.91	619.01	618.87	618.72	615.26	595.40
RIGHT BRIDGE PIER #2	617.56	617.72	617.82	617.67	617.53	614.06	596.40

NOTES

PIER PILES ARE HP 10x42

BATTERED PILES SHALL BE BATTERED 1 ON 4 IN DIRECTION SHOWN

ABBREVIATION USED : E.F. = EACH FACE

FOR REINFORCING STEEL LIST AND BAR BENDING DIAGRAM ~ SEE SHEET 10/11 & 11/11.

FOR ADDITIONAL LAYOUT DIMENSIONS SEE GENERAL PLAN SHEET 2/11

5/11

ADACHE ASSOCIATES INC., ENGINEERS
CLEVELAND, OHIO 44142

PIER DETAILS

BRIDGE NO. ERI - 2 - 1701 L/R
S.R.2 OVER BOGART RD.
ERIE COUNTY STA. 1122 + 33.36 TO
ERI - 2-16.13 STA. 1123 + 74.86

DESIGNED	DRAWN	CHECKED	REVIEWED	DATE	REVISED
L.E.D. L.A.	V.I.P.	H.G.	L.E.D.	9-21-85	

MICROFILMED
AUG 29 1990

MICROFILMED
AUG 29 1990

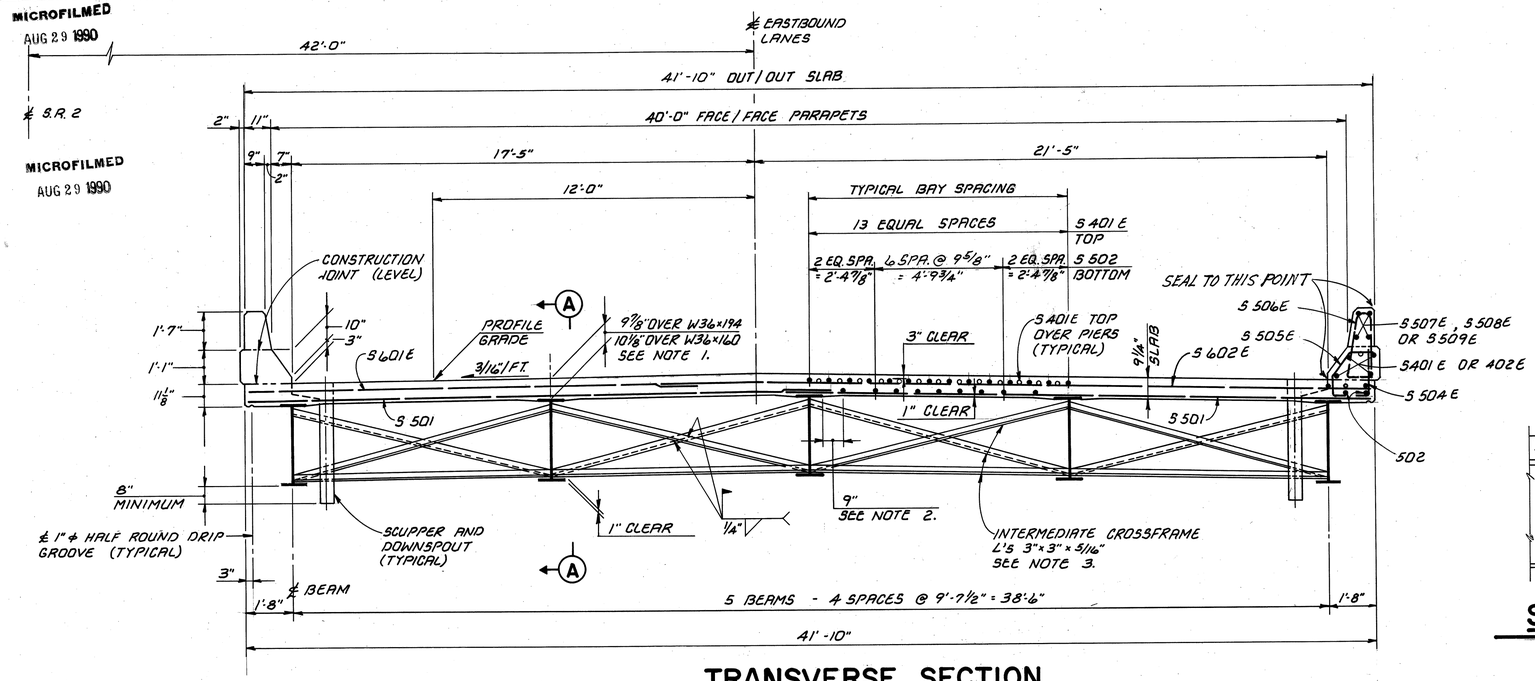

TRANSVERSE SECTION

(RIGHT BRIDGE SHOWN, LEFT BRIDGE OPPOSITE HAND)

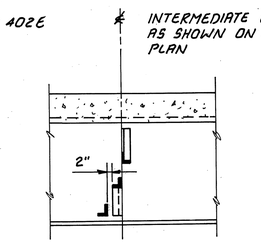

SECTION A-A

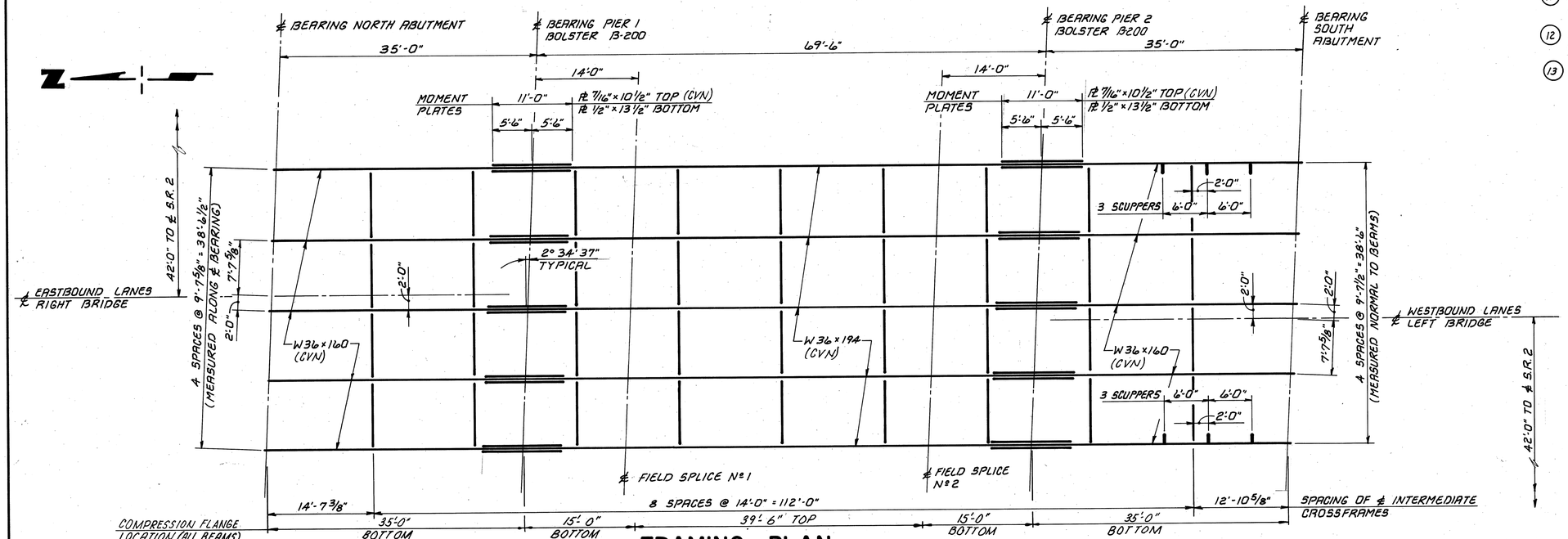

FRAMING PLAN

TYPICAL BOTH BRIDGES

FED. RD. DIVISION	STATE	PROJECT	
2	OHIO		

184
284

ERIE COUNTY
ERI-2-(16.13-17.39)

NOTES:

1. THE DISTANCE SHOWN FROM THE TOP OF DECK SLAB TO THE TOP OF STEEL BEAM IS THE DESIGN DIMENSION. THE QUANTITY OF DECK CONCRETE TO BE PAID FOR SHALL BE BASED ON THIS DIMENSION, EVEN THOUGH DEVIATION FROM IT MAY BE NECESSARY BECAUSE THE TOP FLANGE OF THE BEAM MAY NOT HAVE THE EXACT CAMBER OR CONFORMATION REQUIRED TO PLACE IT PARALLEL TO THE FINISHED GRADE.
2. A HAUNCH WIDTH OF 9" SHALL BE USED FOR COMPUTING QUANTITY OF CONCRETE. HOWEVER THE HAUNCH WIDTH MAY VARY BETWEEN 6" AND 12".
3. INTERMEDIATE CROSSFRAME ANGLES SHALL BE WELDED BOTH SIDES OF THE VERTICAL LEG AND TOP SIDE OF THE HORIZONTAL LEG TO THE BEAM WITH CONTINUOUS 1/4" FILLET WELD.
4. TRANSVERSE DECK REINFORCING BARS (S 602) SHALL BE FIELD BENT AS REQUIRED. FIELD BENDING SHALL BE INCLUDED WITH ITEM SPECIAL, EPOXY COATED REINFORCING STEEL, GRADE 60 FOR PAYMENT.
5. WHERE A SHAPE OR PLATE IS DESIGNATED (CVN) THE MATERIAL SHALL MEET SPECIFIED MINIMUM NOTCH TOUGHNESS REQUIREMENTS AS SPECIFIED IN 711.02 OF C.M.S.
6. SCUPPERS SHALL CONFORM TO STANDARD DRAWING SD-1-69 EXCEPT THAT SCUPPERS SHALL EXTEND 8" BELOW THE BOTTOM OF THE BEAMS INSTEAD OF 2".
7. FOR BOLSTERS, SEE STANDARD DRAWING RB-1-55.
8. FOR SUPERSTRUCTURE DETAILS, SEE SHEET 7 / 11.
9. FOR DECK SLAB PLAN AND DECK ELEVATION PLAN, SEE SHEET 8 / 11.
10. FOR DECK DETAILS, SEE SHEET 9 / 11.
11. FOR ADDITIONAL LAYOUT DIMENSIONS, SEE GENERAL PLAN SHEET 2 / 11.
12. BAR MARKS DENOTED WITH THE SUFFIX E ARE EPOXY COATED.
13. WELDED ATTACHMENTS OF SUPPORTS FOR CONCRETE DECK FINISHING MACHINE MAY BE MADE TO AREAS OF THE FASCIA STRINGER FLANGES DESIGNATED "COMPRESSION." ATTACHMENTS SHALL NOT BE MADE TO AREAS DESIGNATED "TENSION". FILLET WELDS TO COMPRESSION FLANGES SHALL BE NOT CLOSER THAN 1" FROM EDGE OF FLANGE, BE NOT MORE THAN 2" LONG, AND BE NOT SMALLER THAN THE MINIMUM SIZE REQUIRED BY AASHTO.

6 / 11

ADACHE ASSOCIATES INC., ENGINEERS
CLEVELAND, OHIO 44142

TRANSVERSE SECTION & FRAMING PLAN

BRIDGE NO. ERI-2-1701 L/R
S.R.2 OVER BOGART RD.
ERIE COUNTY — STA. 1122 + 33.36 TO
ERI-2-16.13 — STA. 1123 + 74.86

DESIGNED	DRAWN	CHECKED	REVIEWED	DATE	REVISED
K.L.M.	T.M.J.	D.R.J.	L.E.D.	9.21.85	

MICROFILMED
AUG 29 1990

FED. RD. DIVISION	STATE	PROJECT	
2	OHIO		

185
284

ERIE COUNTY
ERI - 2 - (16.13 - 17.39)

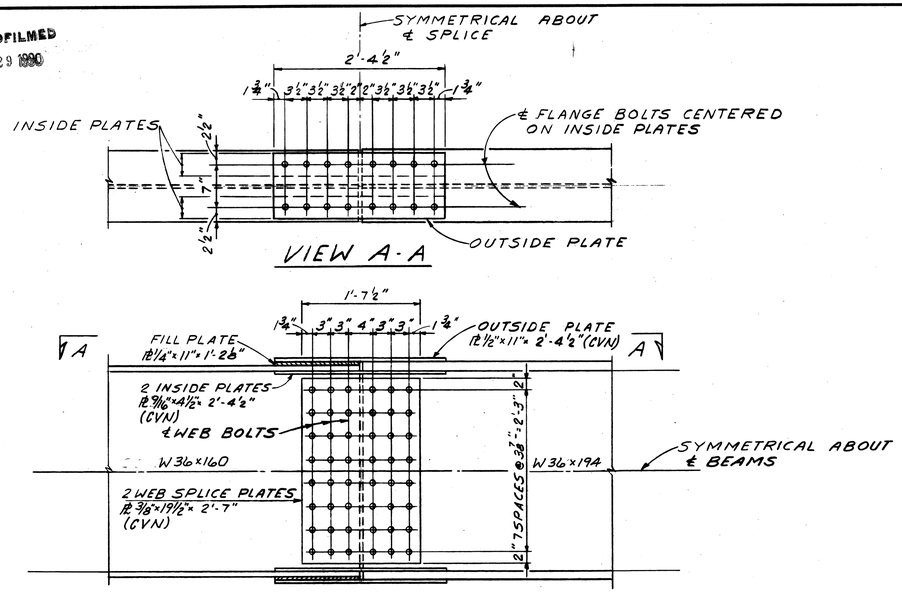

BEAM SPLICE DETAILS

(TYPICAL FIELD SPLICES 1 & 2)

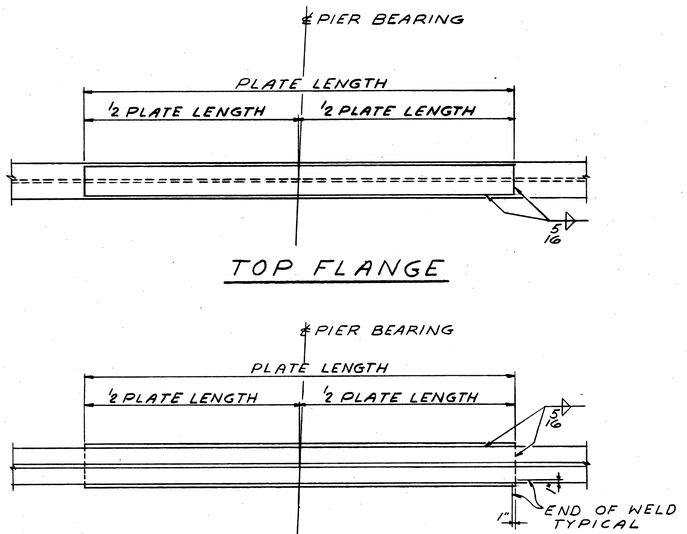

MOMENT PLATE DETAILS

DEFLECTION AND CAMBER TABLE										
BEAMS	DESCRIPTION	A	B	C	D	E	F	G	H	J
ALL BEAMS BOTH STRUCTURES	DEFLECTION DUE TO WEIGHT OF STEEL	0"	0"	0"	1/16"	1/8"	1/16"	0"	0"	0"
	DEFLECTION DUE TO REMAINING DEAD LOAD	0"	-1/16"	-1/16"	5/16"	3/4"	5/16"	-1/16"	-1/16"	0"
	REQUIRED CAMBER	0"	-1/16"	-1/16"	3/8"	7/8"	3/8"	-1/16"	-1/16"	0"

NOTE: NEGATIVE VALUES INDICATE UPWARD DEFLECTION.

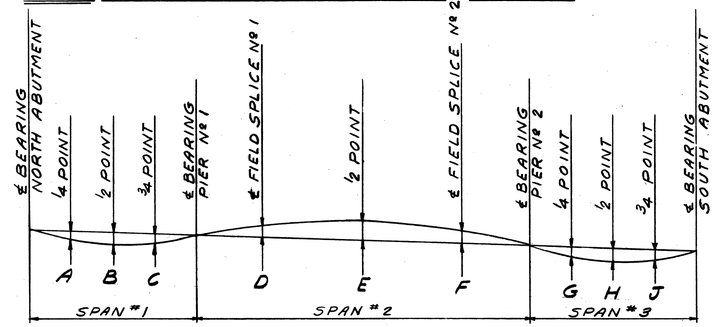

CAMBER DIAGRAM

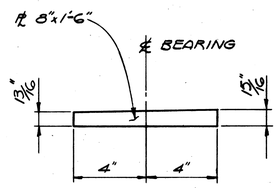

BEVELED BEARING PLATE DETAIL

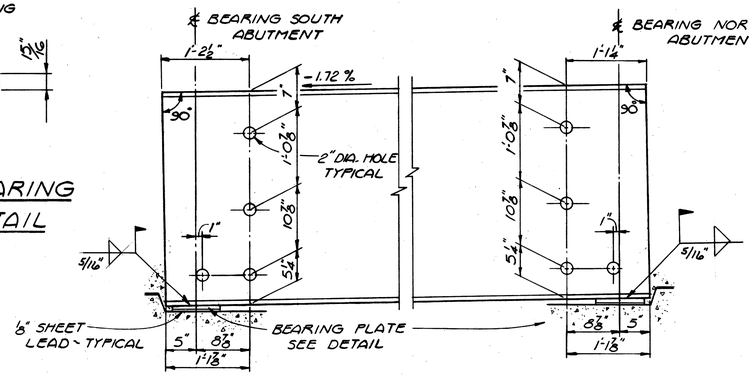

BEAM DETAIL AT ABUTMENT BEARING

NOTES

HIGH STRENGTH BOLTS SHALL BE 1" DIAMETER UNLESS OTHERWISE NOTED

FOR FRAMING PLAN - SEE SHEET 6/11

FOR ADDITIONAL FIELD SPLICE DETAILS - SEE STANDARD DRAWING SD-1-69.

7/11

ADACHE ASSOCIATES INC., ENGINEERS
CLEVELAND, OHIO 44142

SUPERSTRUCTURE DETAILS

BRIDGE NO. ERI - 2 - 1701 L/R
S.R.2 OVER BOGART RD.
ERIE COUNTY
ERI - 2 - 16.13
STA. 1122 + 33.36 TO
STA. 1123 + 74.86

DESIGNED	DRAWN	CHECKED	REVIEWED	DATE	REVISED
L.E.D. L.A.	Z	H.G.	L.E.D.	9-21-85	

MICROFILMED
AUG 29 1990

FED. RD. DIVISION	STATE	PROJECT	
2	OHIO		

186
284

ERIE COUNTY
ERI-2-(16.13-17.39)

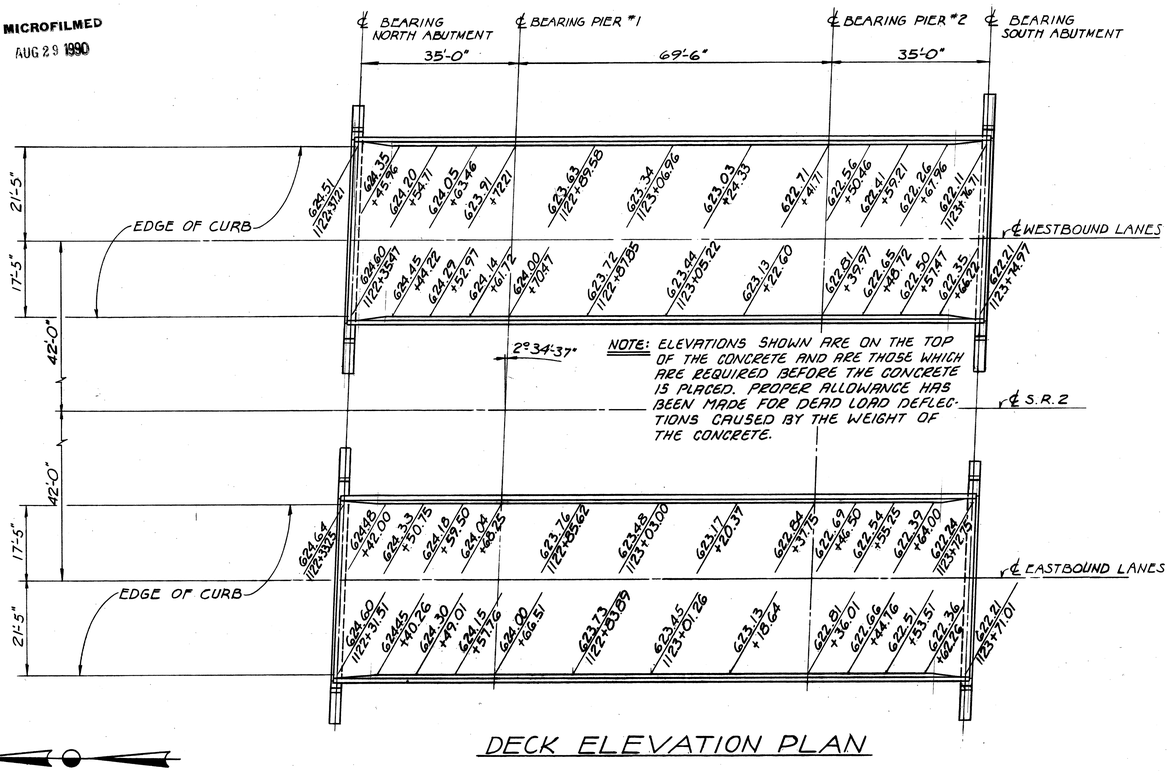

NOTE: ELEVATIONS SHOWN ARE ON THE TOP OF THE CONCRETE AND ARE THOSE WHICH ARE REQUIRED BEFORE THE CONCRETE IS PLACED. PROPER ALLOWANCE HAS BEEN MADE FOR DEAD LOAD DEFLECTIONS CAUSED BY THE WEIGHT OF THE CONCRETE.

DECK ELEVATION PLAN

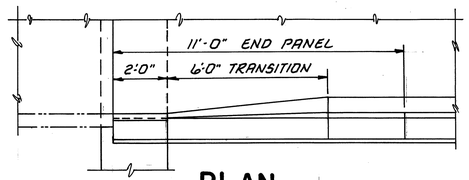

PLAN

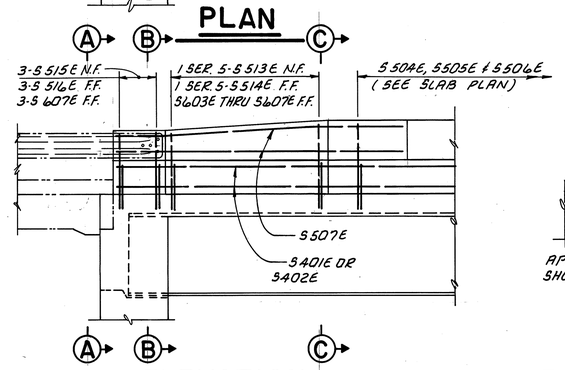

ELEVATION

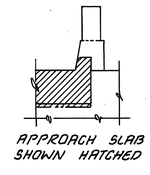

APPROACH SLAB SHOWN HATCHED

VIEW A-A

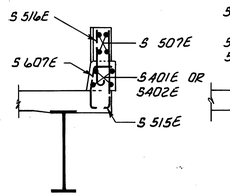

SECTION B-B

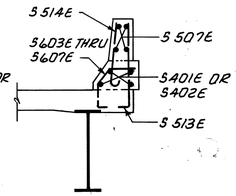

SECTION C-C

TYPICAL PARAPET END PANEL

1) FOR DIMENSIONS, CALLOUTS AND DETAILS NOT SHOWN, SEE STD. DRWG. BR-1.
2) BAR MARKS DENOTED WITH SUFFIX E ARE EPOXY COATED.
3) FIELD BEND S401E OR S402E AND S507E AS REQUIRED.

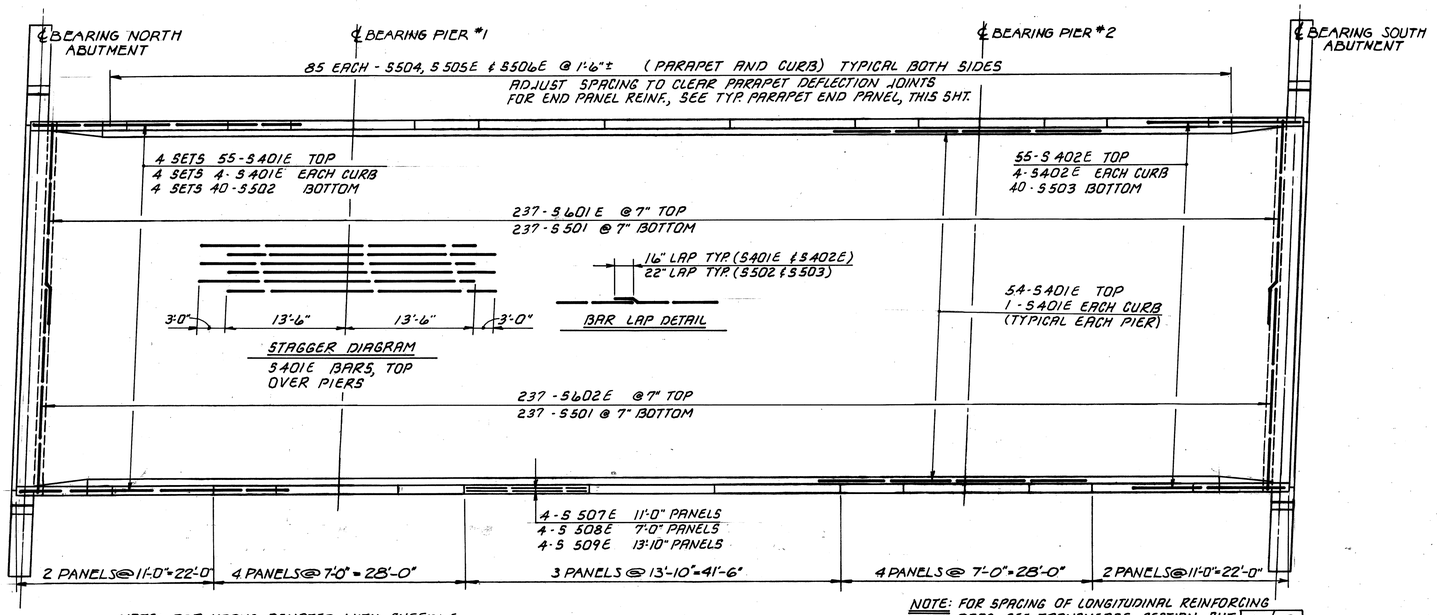

NOTE: BAR MARKS DENOTED WITH SUFFIX E ARE EPOXY COATED.

NOTE: FOR SPACING OF LONGITUDINAL REINFORCING BARS, SEE TRANSVERSE SECTION SHT. 6/10.

DECK SLAB PLAN
RIGHT BRIDGE SHOWN
(REINFORCEMENT TYPICAL BOTH BRIDGES)

NOTES

FOR TRANSVERSE SECTION - SEE SHEET 6/11

FOR ADDITIONAL DECK DETAILS - SEE SHEET 9/11

FOR REINFORCING STEEL LIST AND BAR BENDING DIAGRAMS - SEE SHEET 11/11

ABBREVIATIONS USED ARE: N.F. = NEAR FACE, F.F. = FAR FACE, E.F. = EACH FACE

HOLES FOR SPLICE BOLTS ATTACHING GUARDRAIL TO THE TERMINAL CONNECTION AT ENDS OF PARAPETS SHALL BE SLOTTED 29/32" x 3" AND ALL BOLTS SHALL BE TIGHTENED AS SPECIFIED FOR EXPANSION JOINTS AS PER CMS 606.05 TO ALLOW FOR BRIDGE MOVEMENT.

8/11

ADACHE ASSOCIATES INC., ENGINEERS
CLEVELAND, OHIO 44142

DECK SLAB PLAN & DECK ELEVATION PLAN

BRIDGE NO. ERI-2-1701 L/R
S.R.2 OVER BOGART RD.
ERIE COUNTY STA. 1122+33.36 TO
ERI-2-16.13 STA. 1123+74.86

DESIGNED	DRAWN	CHECKED	REVIEWED	DATE	REVISED
L.E.D.	V.I.P.	H.G.	L.E.D.	9.21.85	

MICROFILMED
AUG 29 1990

FED. RD. DIVISION	STATE	PROJECT	
2	OHIO		

187
284

ERIE COUNTY
ERI - 2 - (16.13-17.39)

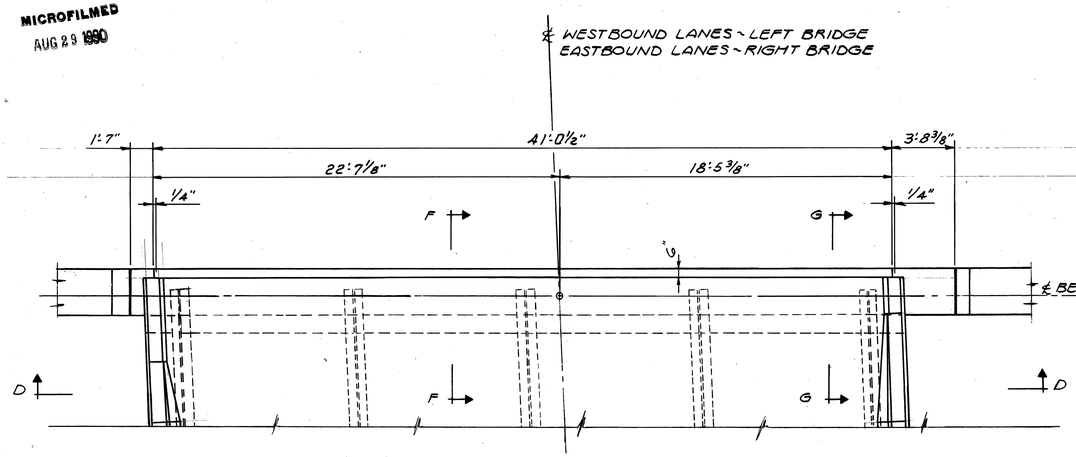

PART PLAN AT ABUTMENT

NORTH ABUTMENT ~ RIGHT BRIDGE
SOUTH ABUTMENT ~ LEFT BRIDGE

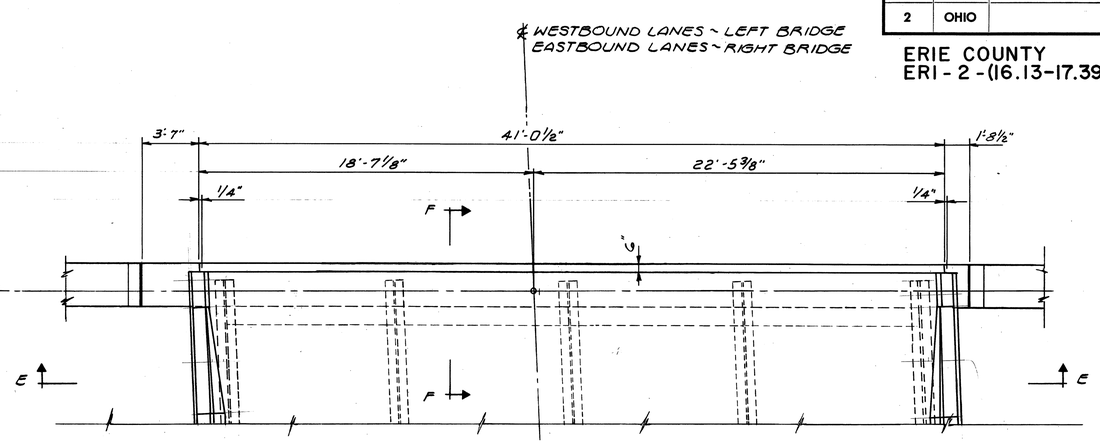

PART PLAN AT ABUTMENT

NORTH ABUTMENT ~ LEFT BRIDGE
SOUTH ABUTMENT ~ RIGHT BRIDGE

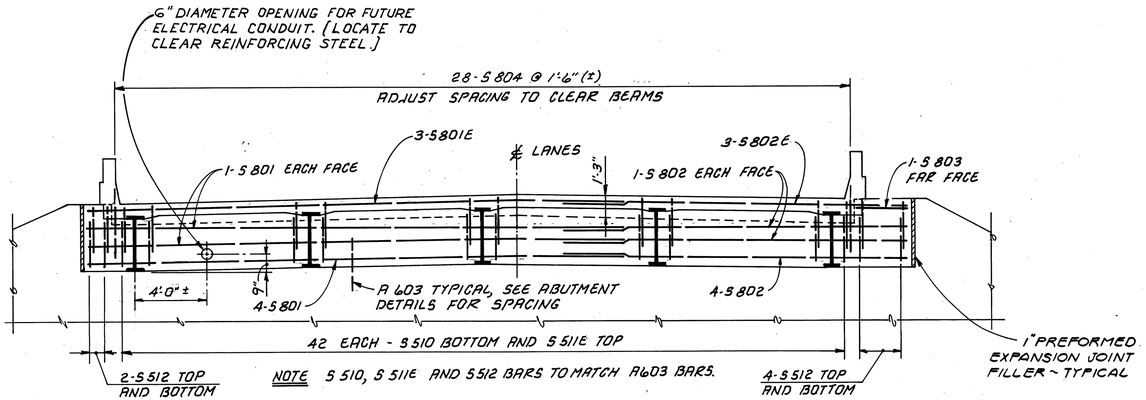

SECTION D·D

SECTION E·E OPPOSITE HAND

BAR MARKS DENOTED WITH SUFFIX E ARE EPOXY COATED.

TYPICAL BEARING PLATE, SEE DETAIL, SHEET 7/11.

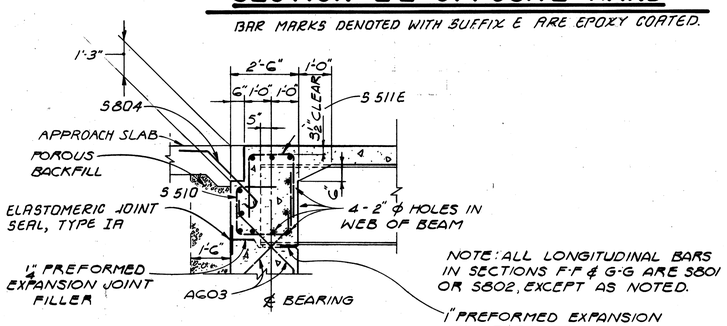

SECTION F-F

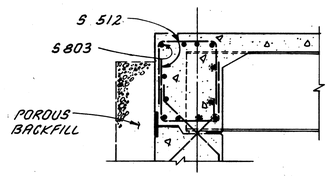

SECTION G-G

NOTES

FOR DECK SLAB PLAN ~ SEE SHEET 8/11

FOR ADDITIONAL NOTES ~ SEE SHEET 8/11

FOR ADDITIONAL LAYOUT DIMENSIONS SEE GENERAL PLAN SHEET 2/11

9/11

ADACHE ASSOCIATES INC., ENGINEERS
CLEVELAND, OHIO 44142

DECK DETAILS

BRIDGE NO. ERI - 2 - 1701 L/R
S.R.2 OVER BOGART RD.
ERIE COUNTY STA. 1122 + 33.36 TO
ERI - 2 - 16.13 STA. 1123 + 74.86

DESIGNED	DRAWN	CHECKED	REVIEWED	DATE	REVISED
L.E.D	H.V.S	H.G.	L.E.D	9.21.85	

MICROFILMED
AUG 29 1990

FED. RD. DIVISION	STATE	PROJECT	
2	OHIO		

188
284

ERIE COUNTY
ERI-2-(16.13-17.39)

ABUTMENT Nº 1

MARK	Nº REQUIRED LEFT	RIGHT	TOTAL	LENGTH	TYPE	DIMENSIONS A	B	C	D	INCRM.	WEIGHT LBS.
A401	30	30	60	3'-4"	7	2'-2"					134
A501	40	40	80	5'-10"	1	2'-2"	1'-9"	2'-2"			486
A502	50	50	100	6'-3"	1	2'-0"	2'-6"	2'-0"			652
A503	12	12	24	21'-9"	ST.						544
A504	36	36	72	5'-10"	1	2'-0"	2'-1"	2'-0"			438
A505	4 SER. OF 6 BARS	4 SER. OF 6 BARS	8 SER. OF 6 BARS	4'-5" TO 7'-4"	ST.					7"	294
A506	4	4	8	4'-0"	ST.						33
A507	14	14	28	3'-8"	7	2'-2"					107
A508	4	4	8	8'-0"	8	7"	7'-6"	6'-9"	3'-3"		67
A509	6	6	12	30'-0"	ST.						375
A510	6	6	12	31'-2"	ST.						390
A511	4 SER. OF 3 BARS	4 SER. OF 3 BARS	8 SER. OF 3 BARS	3'-1" TO 7'-5"	ST.					2'-2"	131
A601	36	36	72	6'-11"	13	6'-3"	10"				748
A602	36	36	72	10'-11"	1	6'-3"	2'-6"	2'-6"			1,181
A603	48	48	96	10'-2"	10	6"	1'-0"	2'-2"	3'-1"		1,466
A604	14	14	28	5'-8"	13	5'-0"	10"				238
A605	14	14	28	9'-8"	1	5'-0"	2'-6"	2'-6"			407
A801	4	4	8	30'-0"	ST.						641
A802	4	4	8	34'-11"	ST.						746
A1001	4	4	8	31'-2"	ST.						1,073
A1002	4	4	8	30'-0"	ST.						1,033
								TOTAL ABUTMENT NO. 1 =			11,184

ABUTMENT Nº 2

MARK	Nº REQUIRED LEFT	RIGHT	TOTAL	LENGTH	TYPE	DIMENSIONS A	B	C	D	INCRM.	WEIGHT LBS.
A401	30	30	60	3'-4"	7	2'-2"					134
A501	40	40	80	5'-10"	1	2'-2"	1'-9"	2'-2"			486
A502	50	50	100	6'-3"	1	2'-0"	2'-6"	2'-0"			652
A503	12	12	24	21'-9"	ST.						544
A504	36	36	72	5'-10"	1	2'-0"	2'-1"	2'-0"			438
A505	4 SER. OF 6 BARS	4 SER. OF 6 BARS	8 SER. OF 6 BARS	4'-5" TO 7'-4"	ST.					7"	294
A506	4	4	8	4'-0"	ST.						33
A507	14	14	28	3'-8"	7	2'-2"					107
A508	4	4	8	8'-0"	8	7"	7'-6"	6'-9"	3'-3"		67
A509	6	6	12	30'-0"	ST.						375
A510	6	6	12	31'-2"	ST.						390
A511	4 SER. OF 3 BARS	4 SER. OF 3 BARS	8 SER. OF 3 BARS	3'-1" TO 7'-5"	ST.					2'-2"	131

ABUTMENT Nº 2 CONTINUED

MARK	Nº REQUIRED LEFT	RIGHT	TOTAL	LENGTH	TYPE	DIMENSIONS A	B	C	D	INCRM.	WEIGHT LBS.
A601	36	36	72	6'-11"	13	6'-3"	10"				748
A602	36	36	72	10'-11"	1	6'-3"	2'-6"	2'-6"			1,181
A603	48	48	96	10'-2"	10	6"	1'-0"	2'-2"	3'-1"		1,466
A604	14	14	28	5'-8"	13	5'-0"	10"				238
A605	14	14	28	9'-8"	1	5'-0"	2'-6"	2'-6"			407
A801	4	4	8	30'-0"	ST.						641
A802	4	4	8	34'-11"	ST.						746
A1001	4	4	8	31'-2"	ST.						1,073
A1002	4	4	8	30'-0"	ST.						1,033
								TOTAL ABUTMENT		NO. 2 =	11,184

PIER Nº 1

MARK	Nº REQUIRED LEFT	RIGHT	TOTAL	LENGTH	TYPE	DIMENSIONS A	B	C	D	INCRM.	WEIGHT LBS.
1P501	68	68	136	8'-5"	1	3'-0"	2'-8"	3'-0"			1,194
1P502	35	35	70	4'-2"	7	2'-8"					304
1P601	4	4	8	22'-6"	ST.						270
1P602	6	6	12	6'-8"	1	2'-2"	2'-8"	2'-2"			120
1P801	54	54	108	10'-4"	11	8'-6"					2,980
1P1001	24	24	48	9'-7"	13	8'-1"	1'-10"				1,979
1P1002	24	0	24	19'-0"	ST.						1,962
1P1003	0	24	24	20'-2"	ST.						2,083
1P1005	6	6	12	18'-11"	13	16'-1"	3'-2"				977
1P1006	6	6	12	34'-5"	13	31'-7"	3'-2"				1,777
1P1007	12	12	24	23'-11"	ST.						2,470
										TOTAL SPIRALS =	1,812
										TOTAL PIER NO. 1 =	17,928

BENDING DIAGRAMS

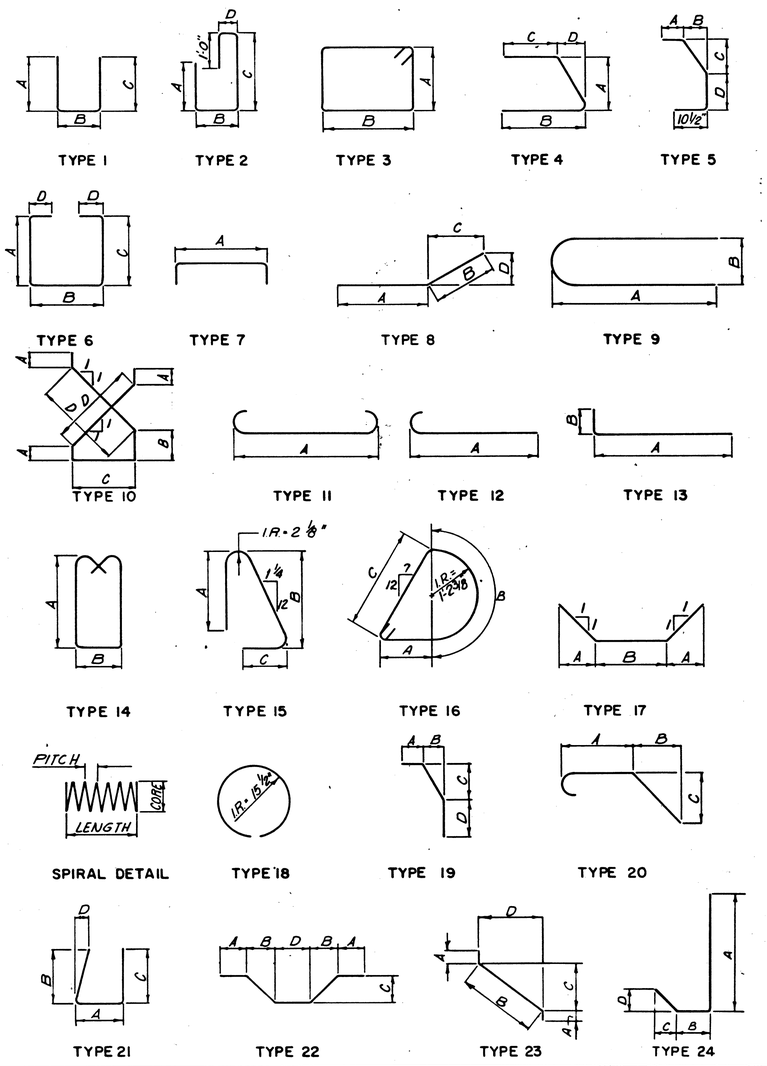

REINFORCING STEEL SAMPLES:

REFER TO CMS SECTIONS 106.03, 700, 709.01 THROUGH 709.05 AND 709.08. SUFFICIENT ADDITIONAL REINFORCING STEEL SHALL BE PROVIDED FOR SAMPLING. RANDOM SAMPLES SHALL BE REPLACED IN THE STRUCTURES BY THE ADDITIONAL STEEL, SPLICED IN ACCORDANCE WITH 509.08.

NOTE:
BAR DIMENSIONS GIVEN ARE OUT TO OUT.

10/11

ADACHE ASSOCIATES INC., ENGINEERS
CLEVELAND, OHIO 44142

REINFORCING STEEL LIST

BRIDGE Nº ERI - 2 - 1701 L/R
S.R. 2 OVER BOGART RD.

ERIE COUNTY
ERI - 2 - 16.13

STA. 1122+33.36
STA. 1123+74.86

DESIGNED	DRAWN	CHECKED	REVIEWED	DATE	REVISED
T.M.J.	D.R.J.	K.L.M.	L.E.D.	9-23-85	

MICROFILMED
AUG 29 1990

PIER Nº 2

MARK	Nº REQUIRED LEFT	RIGHT	TOTAL	LENGTH	TYPE	DIMENSIONS A	B	C	D	INCRM.	WEIGHT LBS.
2P501	68	68	136	8'-5"	1	3'-0"	2'-8"	3'-0"			1,194
2P502	35	35	70	4'-2"	7	2'-8"					304
2P601	4	4	8	22'-6"	ST.						270
2P602	6	6	12	6'-8"	1	2'-2"	2'-8"	2'-2"			120
2P801	54	54	108	10'-4"	11	8'-6"					2,980
2P1001	24	24	48	9'-7"	13	8'-1"	1'-10"				1,979
2P1004	24	24	48	17'-11"	ST.						3,701
2P1005	6	6	12	18'-11"	13	16'-1"	3'-2"				977
2P1006	6	6	12	34'-5"	13	31'-7"	3'-2"				1,777
2P1007	12	12	24	23'-11"	ST.						2,470
									TOTAL SPIRALS =		1,630
									TOTAL PIER NO. 2 =		17,402

SPIRAL REINFORCEMENT

MARK	LEFT	RIGHT	TOTAL	LENGTH	WEIGHT	CORE	PITCH	SPACERS
SP401	3	0	3	15'-5"	876	32	4-1/2"	12 L'S 1 X 1 X 1/8
SP402	0	3	3	16'-6"	936	32	4-1/2"	12 L'S 1 X 1 X 1/8
SP403	3	3	6	14'-3"	1,630	32	4-1/2"	12 L'S 1 X 1 X 1/8

SUPERSTRUCTURE

MARK	Nº REQUIRED LEFT	RIGHT	TOTAL	LENGTH	TYPE	DIMENSIONS A	B	C	D	INCRM.	WEIGHT LBS.
S501	486	486	972	21'-7"	ST.						21,881
S502	160	160	320	30'-0"	ST.						10,013
S503	40	40	80	27'-10"	ST.						2,322
S504	170	170	340	2'-4"	13	1'-7"	10-1/2"				826
S510	84	84	168	7'-4"	6	1'-10"	2'-1"	2'-4"	1'-6"		1,284
S512	24	24	48	6'-7"	1	2'-4"	2'-2"	2'-4"			330
S801	16	16	32	30'-0"	ST.						2,563
S802	16	16	32	20'-7"	ST.						1,759
S803	2	2	4	3'-2"	ST.						34
S804	96	56	112	4'-10"	20	2'-7"	1'-0"	1'-0"			1,445
									TOTAL SUPERSTRUCTURE =		42,457

SUPERSTRUCTURE - EPOXY COATED

MARK	Nº REQUIRED LEFT	RIGHT	TOTAL	LENGTH	TYPE	DIMENSIONS A	B	C	D	INCRM.	WEIGHT LBS.
S401E	364	364	728	30'-0"	ST.						14,589
S402E	63	63	126	26'-6"	ST.						2,230
S505E	170	170	340	3'-2"	5	9"	6"	8-1/2"	11"		1,124
S506E	170	170	340	5'-3"	15	2'-2"	2'-5"	7-1/2"			1,862
S507E	32	32	64	10'-6"	ST.						701
S508E	64	64	128	6'-6"	ST.						868
S509E	24	24	48	13'-4"	ST.						667
S511E	84	84	168	6'-1"	1	2'-4"	1'-8"	2'-4"			1,066
S513E	4 SER. OF 5 BARS	4 SER. OF 5 BARS	8 SER. OF 5 BARS	3'-8" TO 3'-11"	13	2'-11" TO 3'-2"	10-1/2"			3/4"	158
S514E	4 SER. OF 5 BARS	4 SER. OF 5 BARS	8 SER. OF 5 BARS	2'-9" TO 3'-1"	12	2'-2" TO 2'-6"				1"	122
S515E	12	12	24	3'-8"	13	2'-11"	10-1/2"				92
S516E	12	12	24	2'-9"	12	2'-2"					69
S601E	237	237	474	16'-11"	ST.						12,044
S602E	237	237	474	26'-7"	ST.						18,926
S603E	4	4	8	3'-0"	5	9"	6"	8-1/2"	11"		36
S604E	4	4	8	2'-11"	5	8"	5"	8-1/2"	11"		35
S605E	4	4	8	2'-11"	5	8"	4"	8-1/2"	11"		35
S606E	4	4	8	2'-10"	5	7"	3"	8-1/2"	11"		34
S607E	16	16	32	2'-10"	5	7"	2"	8-1/2"	11"		136
S801E	6	6	12	30'-0"	ST.						961
S802E	6	6	12	20'-7"	ST.						659
									TOTAL SUPERSTRUCTURE - EPOXY COATED =		56,414

FED. ED. DIVISION	STATE	PROJECT
2	OHIO	

188A
284

ERIE COUNTY
ERI-2-(16.13-17.39)

BENDING DIAGRAMS

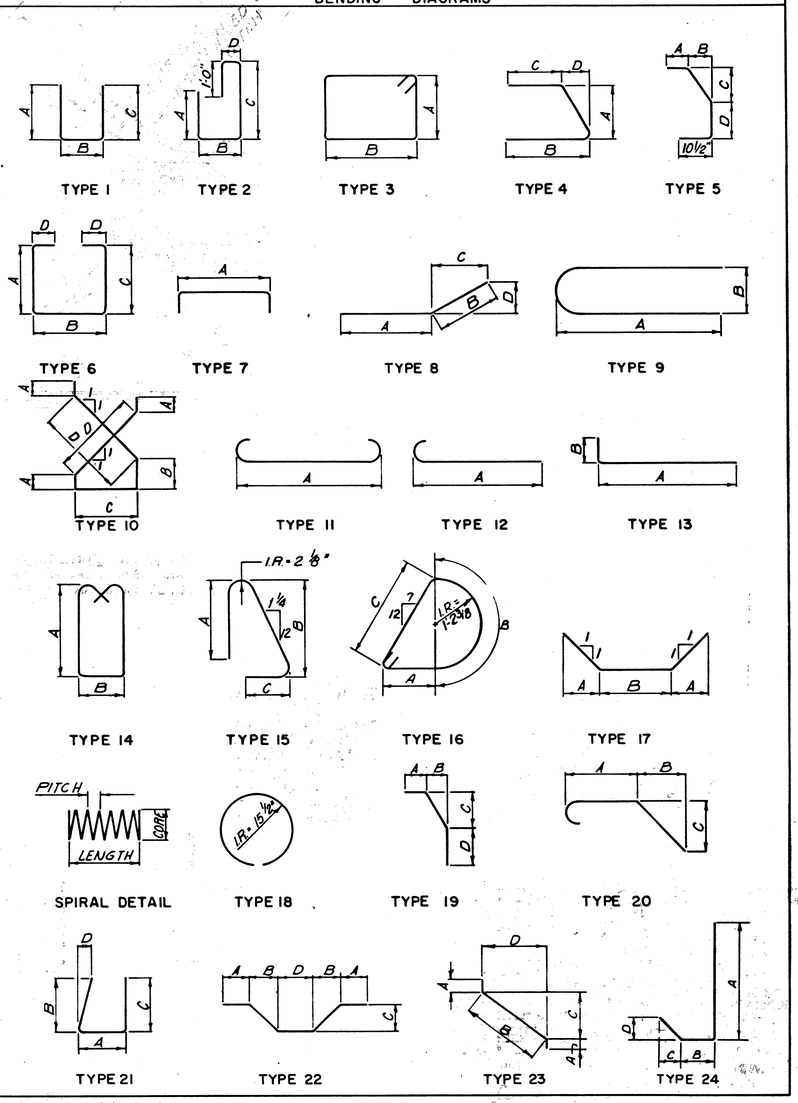

REINFORCING STEEL SAMPLES:

REFER TO CMS SECTIONS 106.03, 700, 709.01 THROUGH 709.05 AND 709.08. SUFFICIENT ADDITIONAL REINFORCING STEEL SHALL BE PROVIDED FOR SAMPLING. RANDOM SAMPLES SHALL BE REPLACED IN THE STRUCTURES BY THE ADDITIONAL STEEL, SPLICED IN ACCORDANCE WITH 509.08.

NOTE:
BAR DIMENSIONS GIVEN ARE OUT TO OUT.

11/11

ADACHE ASSOCIATES INC., ENGINEERS
CLEVELAND, OHIO 44142

REINFORCING STEEL LIST

BRIDGE Nº ERI - 2 - 1701 L/R
S.R. 2 OVER BOGART RD.
ERIE COUNTY STA. 1122+33.36
ERI-2-16.13 STA. 1123+74.86

DESIGNED	DRAWN	CHECKED	REVIEWED	DATE	REVISED
T.M.J.	D.R.J.	K.L.M.	L.E.D.	9-23-85	

MICROFILMED
AUG 29 1990

FED. RD. DIVISION	STATE	PROJECT	FISCAL YEAR
2	OHIO		

187
284

ERIE COUNTY
ERI.-2-(16.13-17.39)

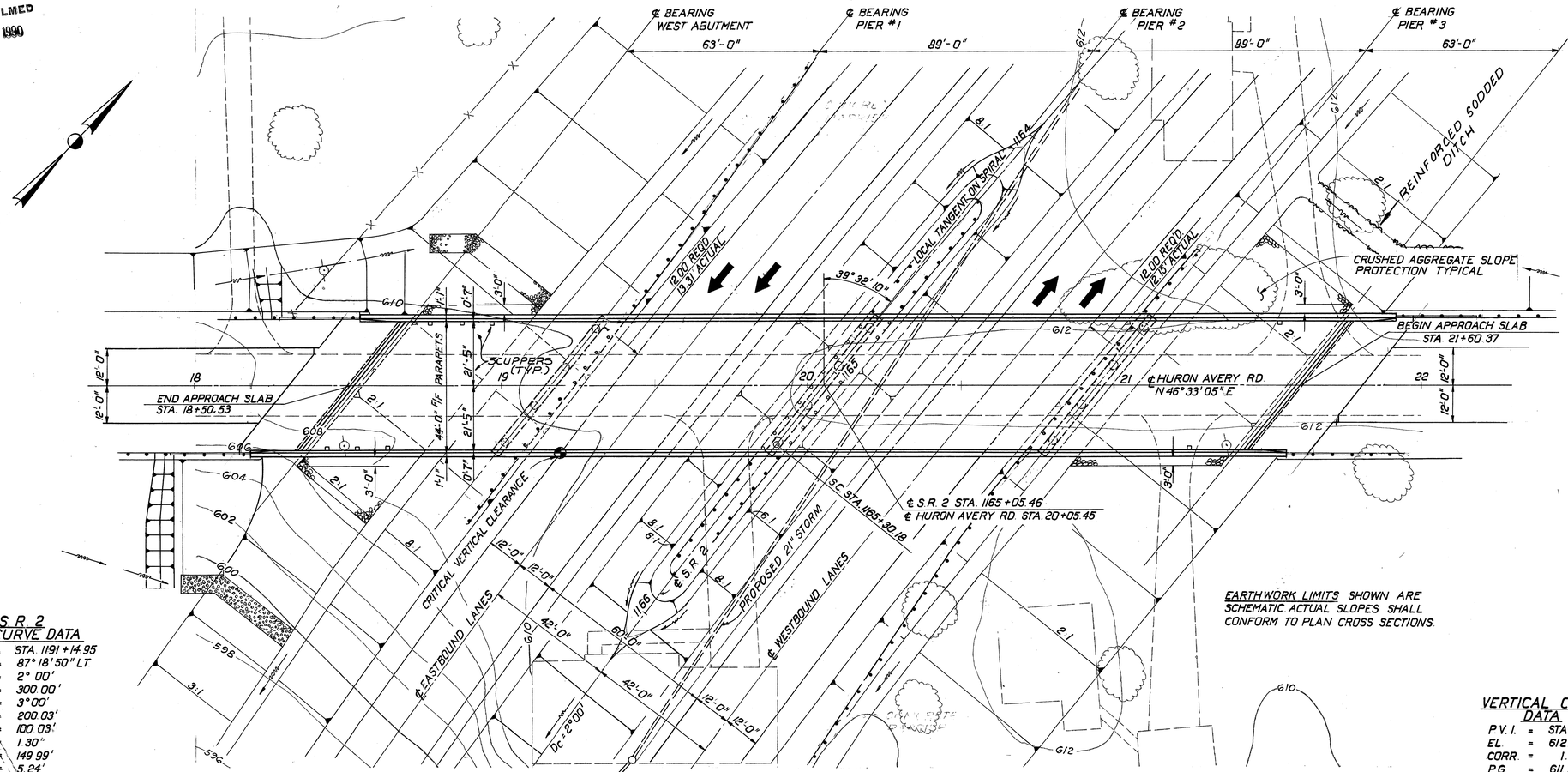

PLAN

S.R. 2 ℄ CURVE DATA

P.I.	=	STA. 1191+14.95
Δ	=	87° 18' 50" LT.
Dc	=	2° 00'
Ls	=	300.00'
Bs	=	3°00'
L.T.	=	200.03'
S.T.	=	100.03'
P	=	1.30'
K	=	149.99'
Yc	=	5.24'
Xc	=	299.92'
R	=	2864.79'
Θc	=	1°00'
T.S	=	2884.77'
E's	=	1096.71'
Δc	=	81°18'50"
Lc	=	4065.69'

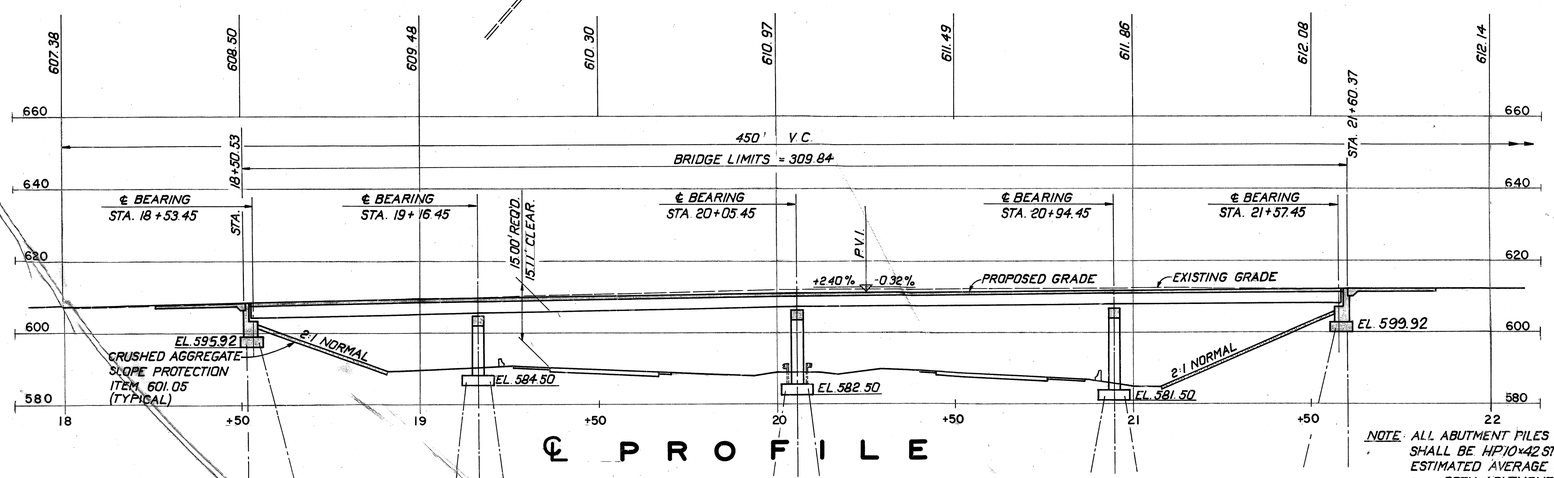

℄ PROFILE

NOTE: ALL ABUTMENT PILES AND ALL PIER PILES SHALL BE HP10x42 STEEL H BEARING PILES
ESTIMATED AVERAGE PAY LENGTH:
BOTH ABUTMENTS 40 FEET
PIER Nº 1. 28 FEET
PIER Nº 2. 25 FEET
PIER Nº 3. 23 FEET

VERTICAL CURVE DATA

P.V.I.	=	STA. 20+25
EL.	=	612.78
CORR.	=	1.53'
P.G.	=	611.25
V.C.	=	450'
G1	=	+2.40%
G2	=	-0.32%

DESIGN TRAFFIC

ADT (2001)	2850
ADTT (2001)	85

PROPOSED STRUCTURE

TYPE:	CONTINUOUS STEEL BEAM WITH REINFORCED CONCRETE DECK AND SUBSTRUCTURE
SPANS:	63'-0", 89'-0", 89'-0", 63'-0" ℄/℄ BRG'S.
ROADWAY:	44'-0" F/F PARAPETS
LOADING:	HS20-44 AND THE ALTERNATE MILITARY LOADING
SKEW:	39°32'10" LEFT FORWARD W/R. TO LOCAL TANGENT OF SPIRAL
WEARING SURFACE:	MONOLITHIC CONCRETE
ALIGNMENT:	TANGENT
APPROACH SLABS:	AS-1-81 (20' LONG)

1 / 10

ADACHE ASSOCIATES INC., ENGINEERS
CLEVELAND 42, OHIO

SITE PLAN

BRIDGE NO. ERI-2-1781
HURON AVERY RD. OVER S.R.2
ERIE COUNTY STA. 18+50.53 TO
ERI-2-16.13 STA. 21+60.37

DESIGNED	DRAWN	CHECKED	REVIEWED	DATE
NOYER	J.T.	L.A.	L.E.D.	9-21-85

F.H.W.A. REGION	STATE	PROJECT	
5	OHIO		

201M 284

ERIE COUNTY
ERI-2-(16.13-17.39)

NOTE:
FOR NOTES SEE SHEET 14/47.

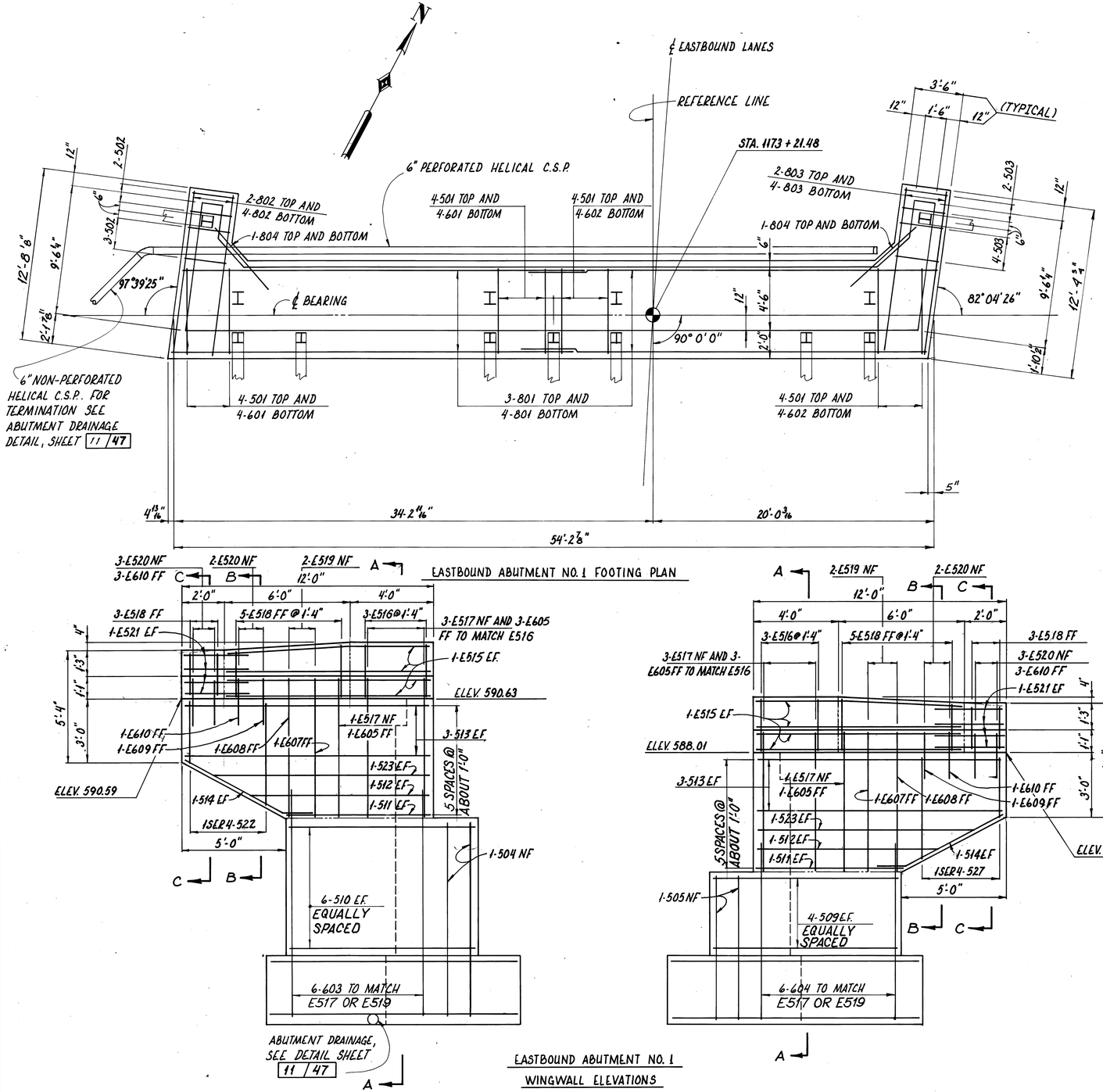

EASTBOUND ABUTMENT NO. 1 FOOTING PLAN

EASTBOUND ABUTMENT NO. 1
WINGWALL ELEVATIONS

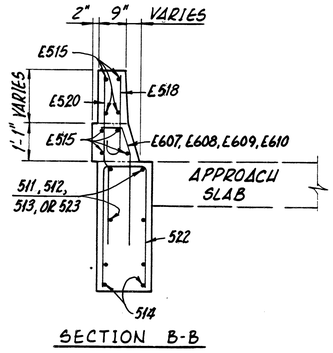

SECTION B-B

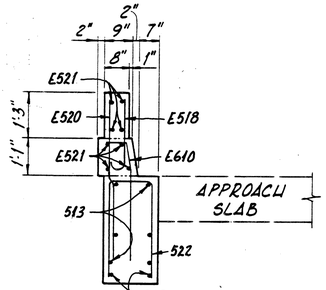

SECTION C-C

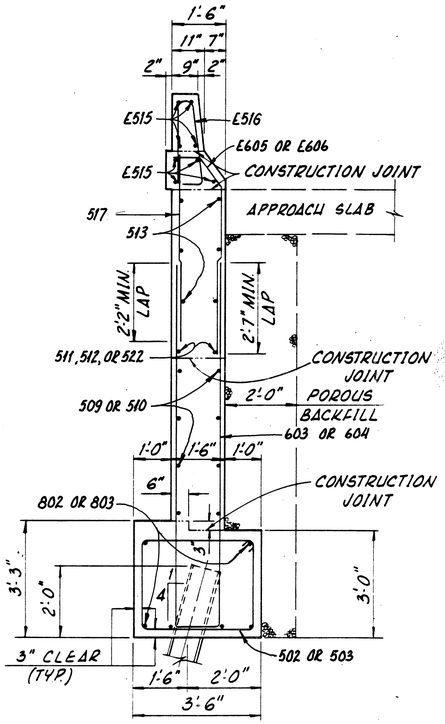

SECTION A-A

STEEL ALTERNATE 15/47

adache - ciuni - lynn associates
CONSULTING ENGINEERS CLEVELAND, OHIO 44130

FOOTING PLAN AND WINGWALL ELEVATIONS

BRIDGE NO. ERI-2-1798 L/R
S.R. 2 OVER MUD BROOK

ERIE COUNTY
ERI-2-16.13

STA. 1173+18.50 TO
STA. 1180+95.50

DESIGNED	DRAWN	CHECKED	REVIEWED	DATE	REVISED
P.A.G.	P.A.G.	P.A.G.	L.E.D.	9-23-85	

FHWA REGION	STATE	PROJECT	
5	OHIO		

20/N
284

ERIE COUNTY
ERI - 2 - (16.13 - 17.39)

NOTES:
FOR NOTES SEE SHEET 14/47

FOR FOUNDATION PLAN AND WINGWALL ELEVATIONS SEE SHEET 17/47

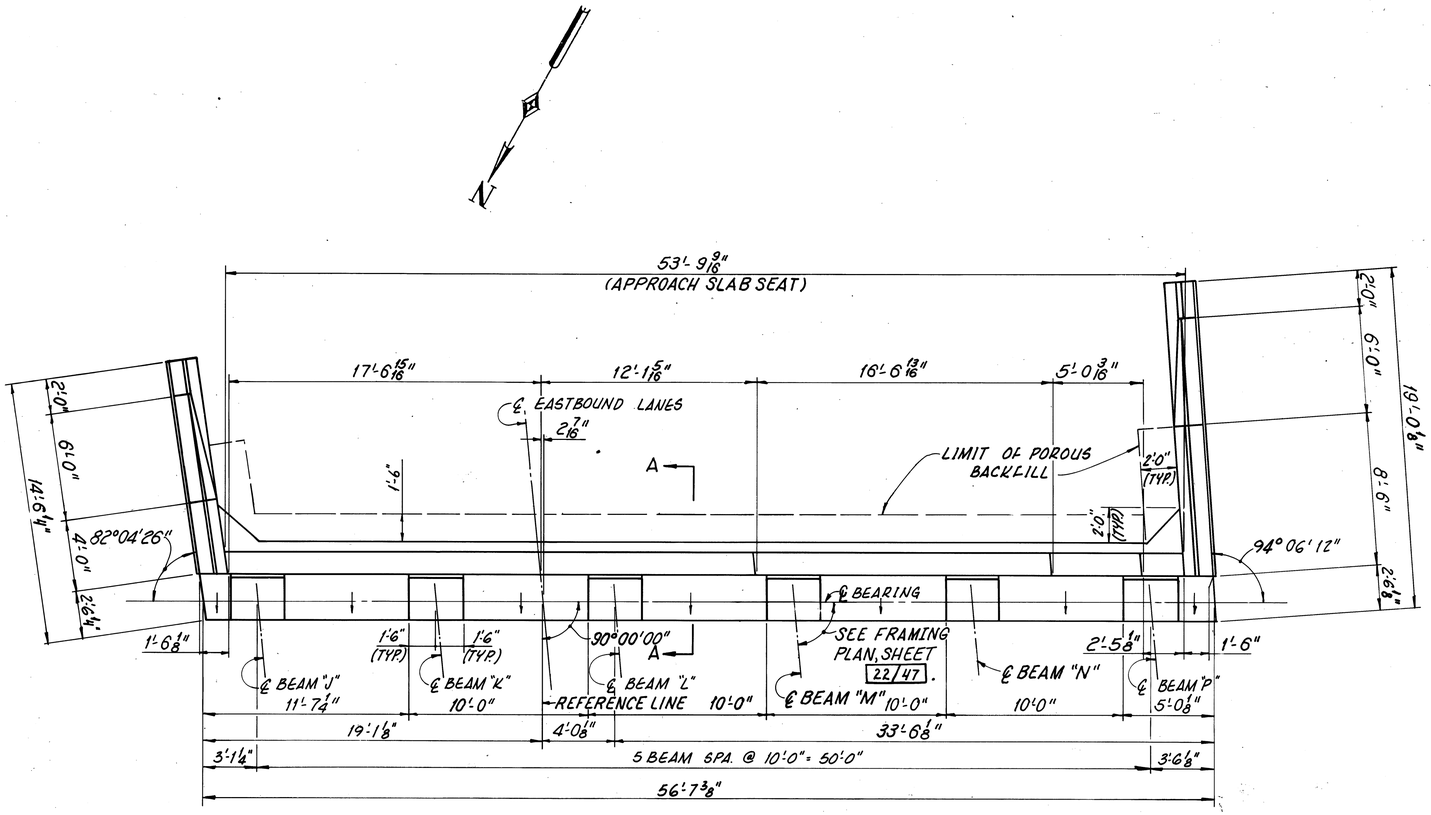

EASTBOUND ABUTMENT Nº 2 PLAN

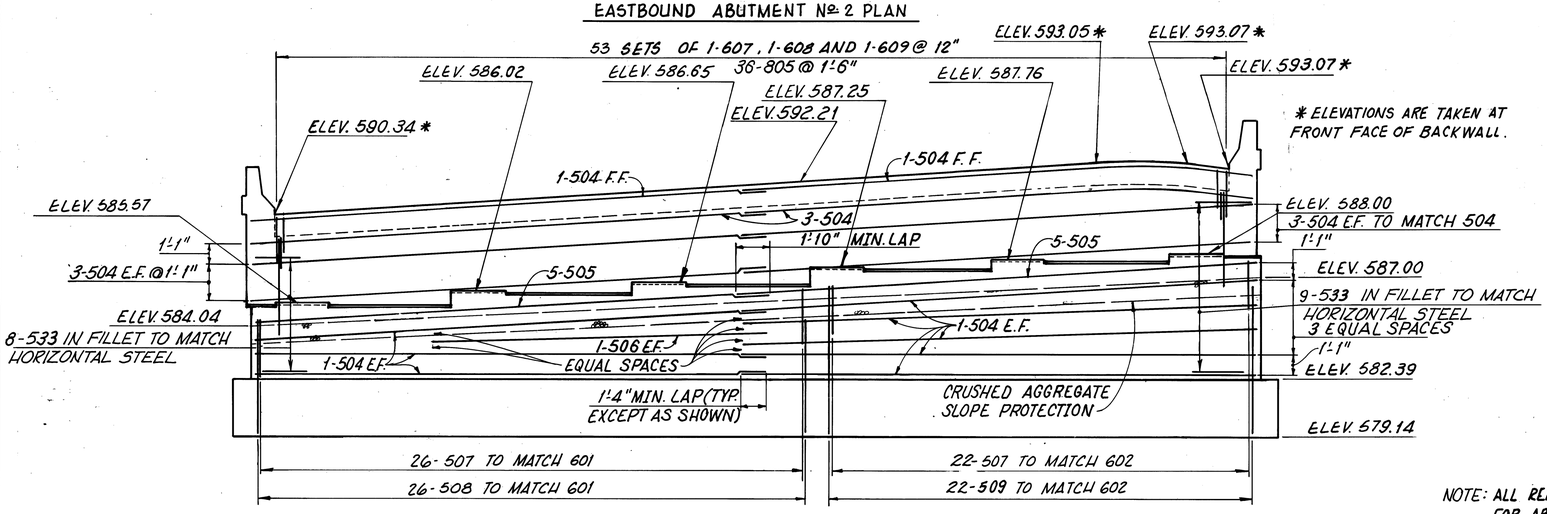

EASTBOUND ABUTMENT Nº 2 ELEVATION

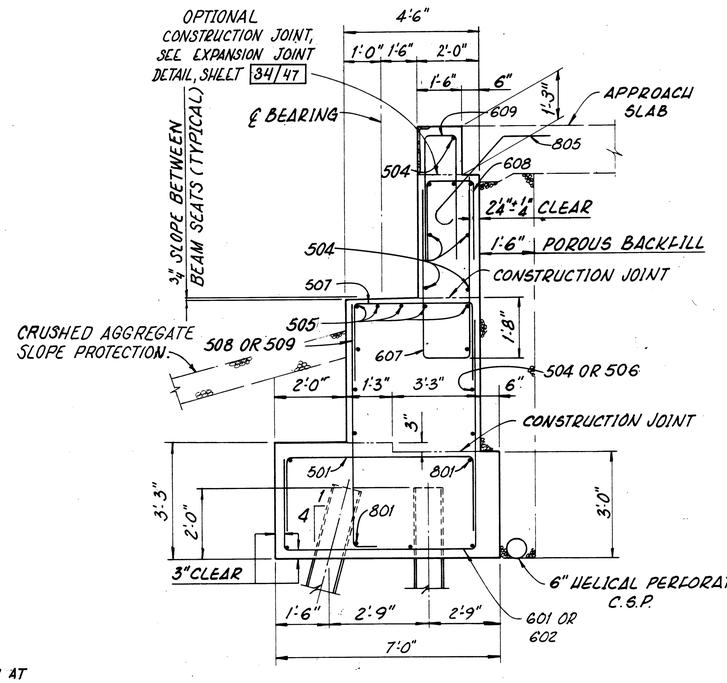

SECTION A-A

NOTES:
FOR WINGWALL DETAILS SEE SHEET 17/47.
FOR ADDITIONAL NOTES SEE SHEET 14/47.
HORIZONTAL REINFORCEMENT IN BACKWALL SHALL BE FIELD BENT AS REQUIRED; PAYMENT SHALL BE INCLUDED WITH ITEM 509, REINFORCING STEEL.

NOTE: ALL REINFORCING BAR MARKS SHALL BE PREFIXED "D2A" FOR ABUTMENT NO. 2 EASTBOUND LANES

STEEL ALTERNATE 16/47

adache · ciuni · lynn associates
CONSULTING ENGINEERS CLEVELAND, OHIO 44130

ABUTMENTS
EASTBOUND LANES
BRIDGE Nº ERI - 2 - 1798 L/R
S.R.2 OVER MUD BROOK

ERIE COUNTY — STA. 1173+18.50 TO.
ERI - 2 - 16.13 — STA. 1180+95.50

DESIGNED	DRAWN	CHECKED	REVIEWED	DATE	REVISED
P.A.G.	W.P.R.	P.A.G.	L.E.D.	9-23-85	

F.H.W.A. REGION	STATE	PROJECT	
5	OHIO		

201P 284

ERIE COUNTY
ERI-2-(16.13-17.39)

NOTE:
FOR NOTES SEE SHEET 14/47.

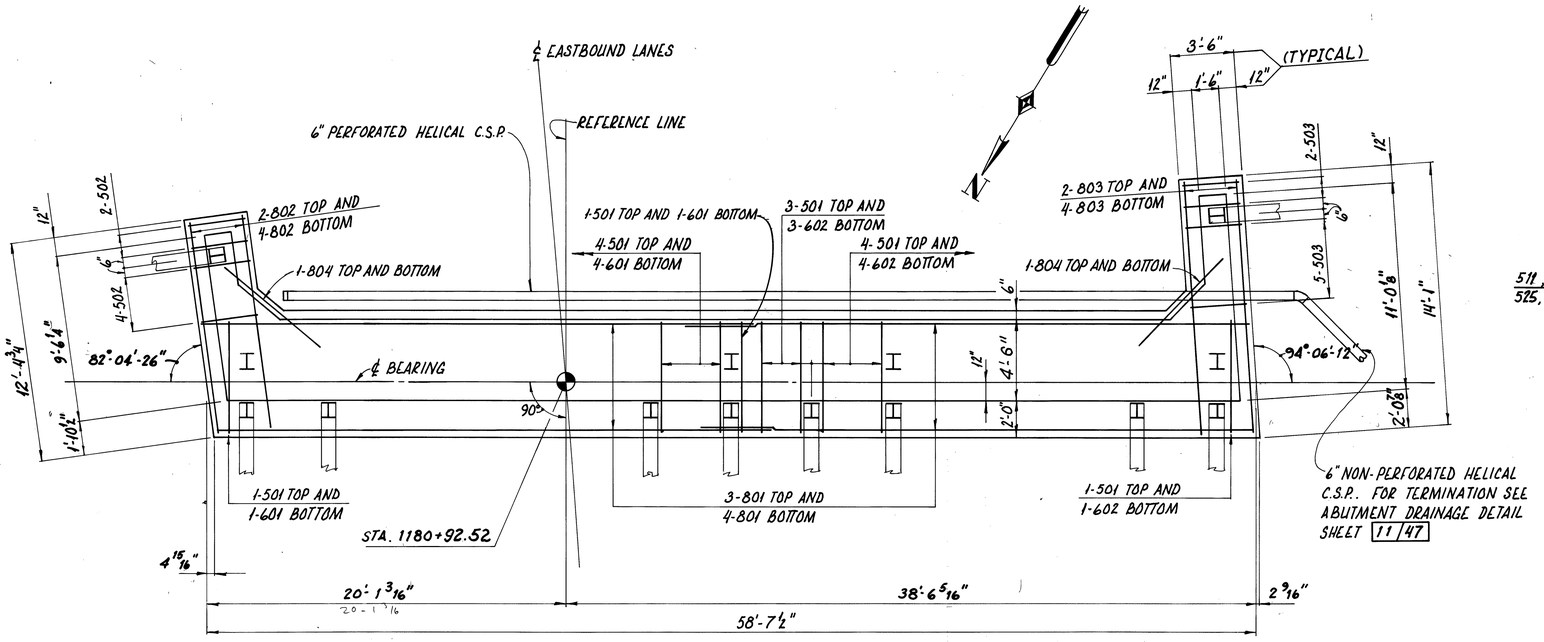

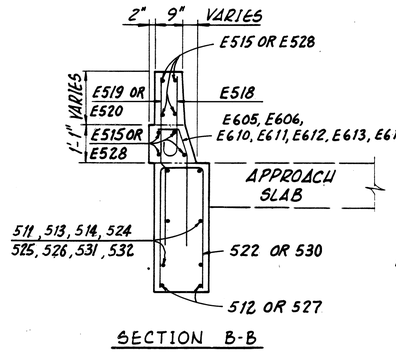

SECTION B-B

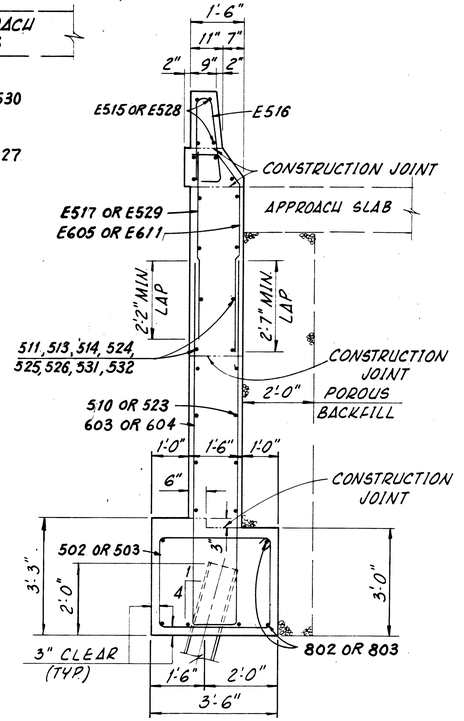

SECTION A-A

EASTBOUND ABUTMENT NO. 2 FOOTING PLAN

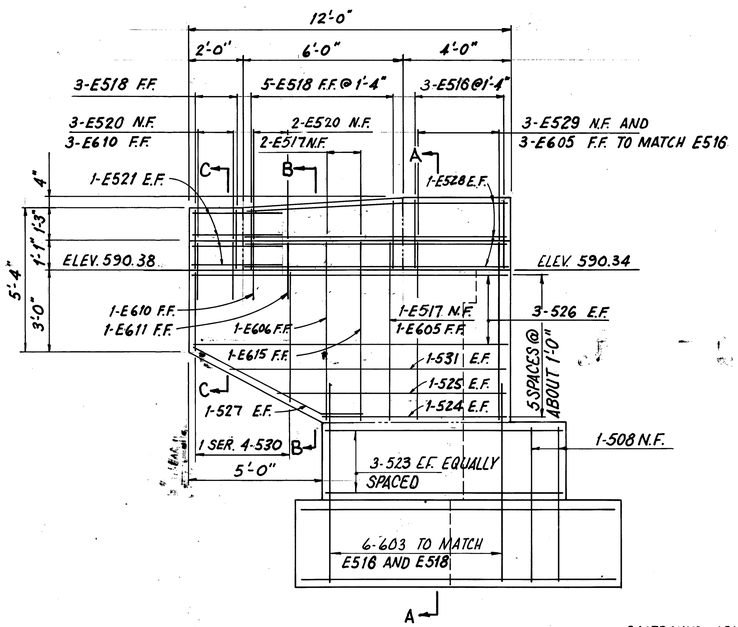

EASTBOUND ABUTMENT NO. 2
WINGWALL ELEVATIONS

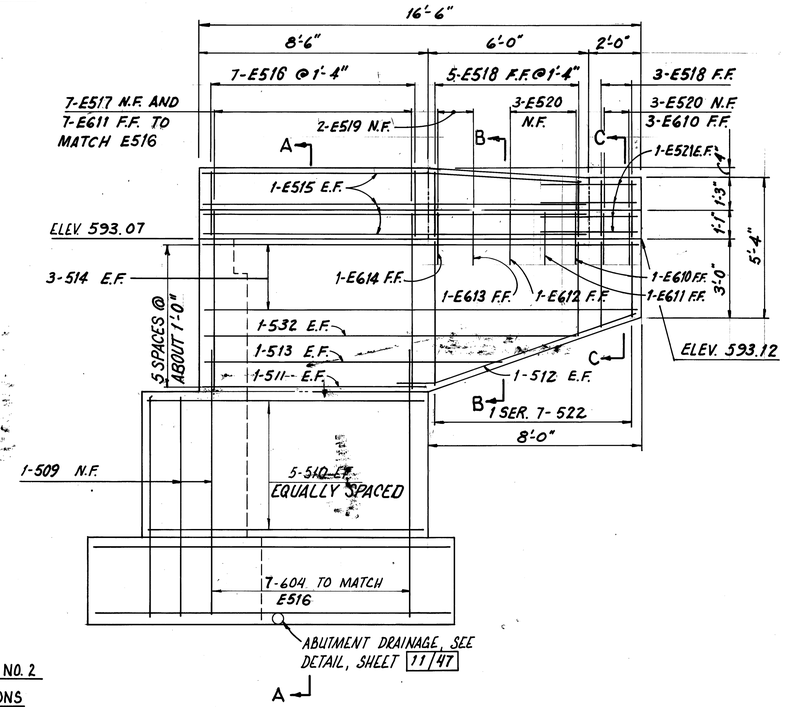

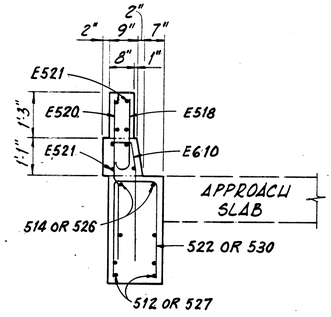

SECTION C-C

STEEL ALTERNATE 17/47

adache - ciuni - lynn associates
CONSULTING ENGINEERS CLEVELAND, OHIO 44130

FOOTING PLAN AND WINGWALL ELEVATIONS

BRIDGE NO. ERI-2-1798 L/R
S. R. 2 OVER MUD BROOK

ERIE COUNTY
ERI-2-16.13

STA. 1173+18.50 TO
STA. 1180+95.50

DESIGNED	DRAWN	CHECKED	REVIEWED	DATE	REVISED
PAG	PAG	P.A.G.	L.E.D.	9-23-85	

F.H.W.A. REGION	STATE	PROJECT	
5	OHIO		

2012
284

ERIE COUNTY
ERI-2-(16.13-17.39)

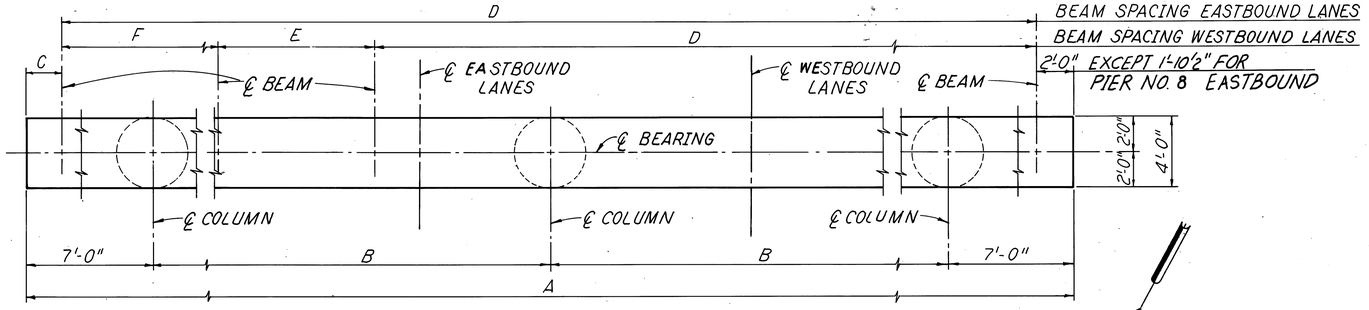

PLAN

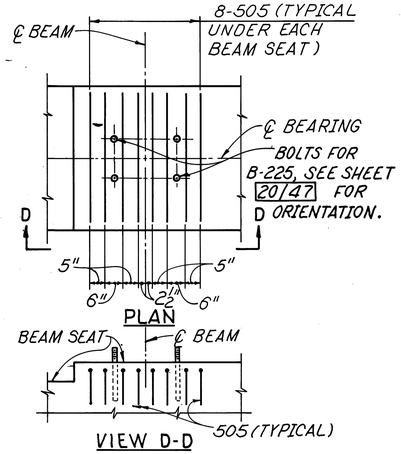

VIEW D-D

FIXED PIER BEAM SEAT REINFORCING DETAIL

(PIER 4 WESTBOUND, PIER 5 EASTBOUND)

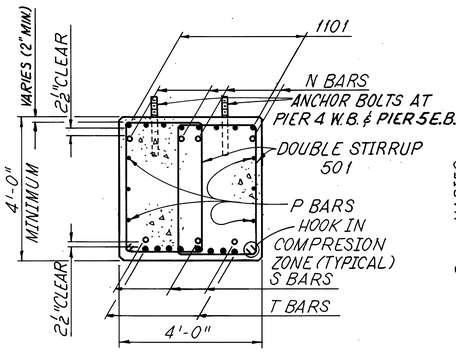

SECTION A-A

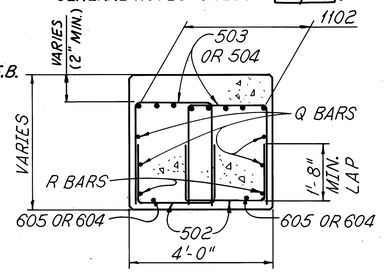

SECTION B-B

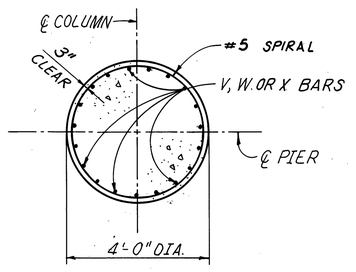

SECTION C-C

NOTES:

REINFORCING STEEL IN THE VICINITY OF THE BRIDGE SEAT SHALL BE ACCURATELY PLACED TO AVOID INTERFERENCE WITH PRESETTING OF BEARING ANCHOR.

ANCHOR BOLTS SHALL BE CAST-IN-PLACE.

FOR ANCHOR BOLT DETAILS SEE OHIO STANDARD DRAWING RB-1-55.

ALL REINFORCING BAR MARKS SHALL BE PREFIXED W1P FOR PIER NO. 1 WESTBOUND, D1P FOR PIER NO. 1 EASTBOUND, ETC.

THE FOLLOWING ABBREVIATIONS ARE USED:
E.F. = EACH FACE ELEV. = ELEVATION

BRIDGE SEAT CONFIGURATION VARIES PER PIER CAP PROFILES, SHEET 19/47

FOR ITEMS INCLUDED FOR PAYMENT IN ITEM SPECIAL "DRILLED-IN PIER COLUMNS" SEE GENERAL NOTES SHEET 4/47.

FOR TABLE OF DIMENSIONS AND ADDITIONAL DETAILS SEE SHEET 19/47.

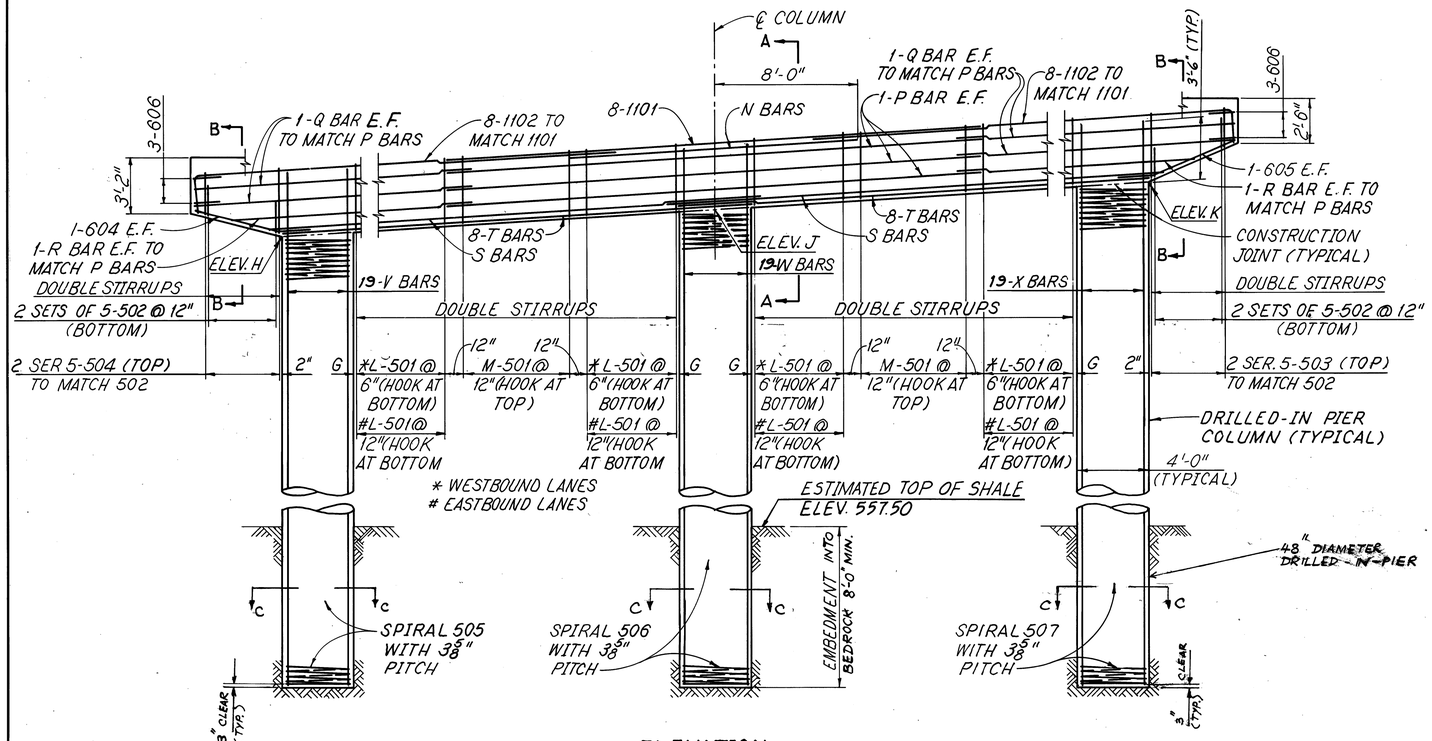

ELEVATION

BRIDGE SEATS NOT SHOWN
SEE NOTES

FOR REINFORCING IN DRILLED-IN PIER COLUMNS, SEE SHEETS 44/47 & 45/47

FOR REINFORCING STEEL LIST FOR PIER CAP, SEE SHEETS 37/47 & 43/47

MINIMUM BAR LAP	
BAR SIZE	MIN. LAP
6	1'-5"
7	2'-0"
9	3'-3"
10	4'-2"
11 (TOP)	3'-0"
11 (OTHERS)	5'-2"

STEEL ALTERNATE 18/47

adache - ciuni - lynn associates
CONSULTING ENGINEERS CLEVELAND, OHIO 44130

PIER DETAILS

BRIDGE NO. ERI-2-1798 L/R
S. R. 2 OVER MUD BROOK

ERIE COUNTY
ERI-2-16.13

STA. 1173+18.50 TO
STA. 1180+95.50

DESIGNED	DRAWN	CHECKED	REVIEWED	DATE	REVISED
J.R.S.	R.C.K	J.R.S.	L.E.D	9-23-85	

F.H.W.A. REGION	STATE	PROJECT	
5	OHIO		

2015
284

ERIE COUNTY
ERI-2-(16.13-17.39)

	PIER NO.	DIMENSIONS A	B	C	D	E	F	G	ELEVATIONS H	J	K	REINFORCEMENT L	M	N	P	Q	R	S	T	V	W	X	EMBEDMENT
WESTBOUND LANES	1	58'-6"	22'-3"	4'-10 9/16"	4 BEAM SPACES @ 9'-3" = 37'-0"	7'-10 7/16"	6'-9"	1 1/2"	575.91	577.46	579.02	11	7	—	601	602	603	—	1001	1002	1003	1004	9'-0"
	2	58'-6"	22'-3"	3'-0 7/16"	4 BEAM SPACES @ 9'-3" = 37'-0"	9'-3"	7'-2 9/16"	1 1/2"	576.21	577.76	579.32	11	7	—				—					9'-0"
	3	58'-6"	22'-3"	1'-11 9/16"	4 BEAM SPACES @ 9'-3" = 37'-0"	9'-3"	8'-3 7/16"	1 1/2"	576.47	578.02	579.58	11	7	—				—					9'-0"
	4	61'-8"	23'-10"	3'-8"	5 BEAM SPACES @ 9'-3" = 46'-3"	4'-10 1/2"	4'-10 1/2"	5"	576.50	578.15	579.81	11	8	2-1002				—					14'-0"
	5	61'-8"	23'-10"	1'-11 7/16"	5 BEAM SPACES @ 9'-3" = 46'-3"	5'-8 9/16"	5'-8 9/16"	5"	576.80	578.45	580.11	11	8	2-1002	601	602	603	—	1001				14'-0"
	6	65'-9"	25'-10 1/2"	3'-11 1/8"	5 BEAM SPACES @ 9'-3" = 46'-3"	6'-9 7/16"	6'-9 7/16"	5 1/4"	576.80	578.68	580.37	13	8	4-1104	701	702	703	3-1001	1103				15'-0"
	7	65'-9"	25'-10 1/2"	2'-0 1/4"	5 BEAM SPACES @ 9'-3" = 46'-3"	7'-8 7/8"	7'-8 7/8"	5 1/4"	577.03	578.81	580.60	13	8	4-1104	701	702	703	3-1001	1103	1002	1003	1004	15'-0"
EASTBOUND LANES	1	51'-6"	18'-9"	2'-0"	5 BEAM SPACES @ 9'-6" = 47'-6"	—	—	4 1/2"	578.77	580.04	581.31	4	7	—	601	602	602	—	901	902	903	904	8'-0"
	2					—	—		578.97	580.24	581.51			—				—					
	3					—	—		579.24	580.51	581.78			—				—					
	4					—	—		579.45	580.72	581.99			—				—					
	5					—	—		579.70	580.97	582.24			—				—					
	6					—	—		579.92	581.19	582.46			—				—					
	7			2'-0"	5 BEAM SPACES @ 9'-6" = 47'-6"	—	—		580.19	581.46	582.73			—				—					
	8	51'-6"	18'-9"	1'-10 1/2"	5 BEAM SPACES @ 9'-6 5/8" = 47'-9"	—	—	4 1/2"	580.39	581.66	582.93	4	7	—				—					
	9	53'-0"	19'-6"	2'-0"	5 BEAM SPACES @ 9'-9 3/8" = 49'-0"	—	—	3"	580.65	581.96	583.28	4	8	—	601	602	603	—	901	902	903	904	8'-0"

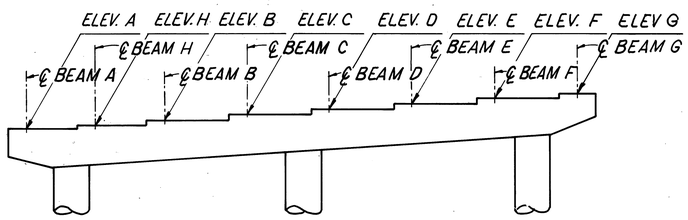

PIER CAP PROFILE
(PIERS 4 THRU 7 WESTBOUND LANES)

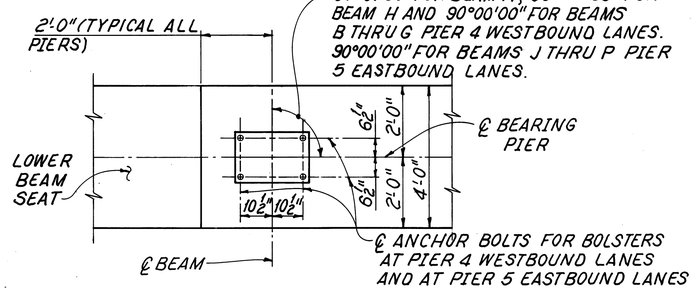

BEAM SEAT PLAN
FOR BEARING DETAILS SEE SHEET 20/45

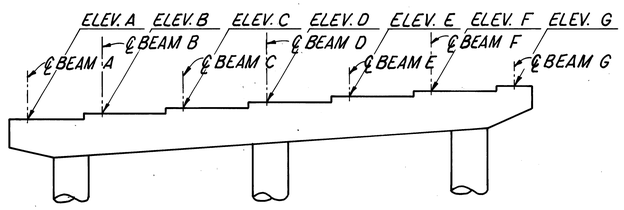

PIER CAP PROFILE
(PIERS 1, 2 AND 3 WESTBOUND LANES)

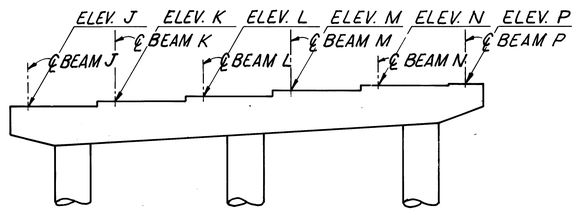

PIER CAP PROFILE
(TYPICAL EASTBOUND LANES)

BEAM SEAT ELEVATIONS

	PIER NO.	BEAMS A	H	B	C	D	E	F	G
WESTBOUND LANES	1	580.37	—	580.80	581.30	581.90	582.49	583.08	583.67
	2	580.54	—	581.01	581.60	582.19	582.78	583.38	583.97
	3	580.74	—	581.27	581.86	582.45	583.05	583.64	584.23
	4	580.88	581.19	581.50	582.09	582.69	583.28	583.87	584.46
	5	581.07	581.44	581.81	582.40	582.99	583.58	584.17	584.76
	6	581.21	581.65	582.08	582.67	583.25	583.84	584.43	585.02
	7	581.33	581.83	582.32	582.90	583.49	584.08	584.66	585.25

	PIER NO.	BEAMS J	K	L	M	N	P
EASTBOUND LANES	1	582.96	583.57	584.18	584.78	585.39	585.61
	2	583.24	583.85	584.46	585.06	585.67	585.81
	3	583.43	584.04	584.65	585.26	585.87	586.08
	4	583.71	584.32	584.93	585.54	586.15	586.29
	5	583.94	584.54	585.15	585.76	586.36	586.54
	6	584.20	584.81	585.41	586.02	586.62	586.76
	7	584.40	585.01	585.61	586.22	586.82	587.03
	8	584.69	585.29	585.90	586.51	587.12	587.23
	9	584.89	585.50	586.13	586.75	587.37	587.58

STEEL ALTERNATE 19/47

adache - ciuni - lynn associates
CONSULTING ENGINEERS CLEVELAND, OHIO 44130

PIER DETAILS

BRIDGE NO. ERI-2-1798 L/R
S. R. 2 OVER MUD BROOK

ERIE COUNTY
ERI-2-16.13

STA. 1173+18.50 TO
STA. 1180+95.50

DESIGNED	DRAWN	CHECKED	REVIEWED	DATE	REVISED
J.R.S.	R.C.K.	J.R.S.	L.E.D.	9-23-85	

F.H.W.A. REGION	STATE	PROJECT	
5	OHIO		

2017
284

ERIE COUNTY
ERI-2-(16.13-17.39)

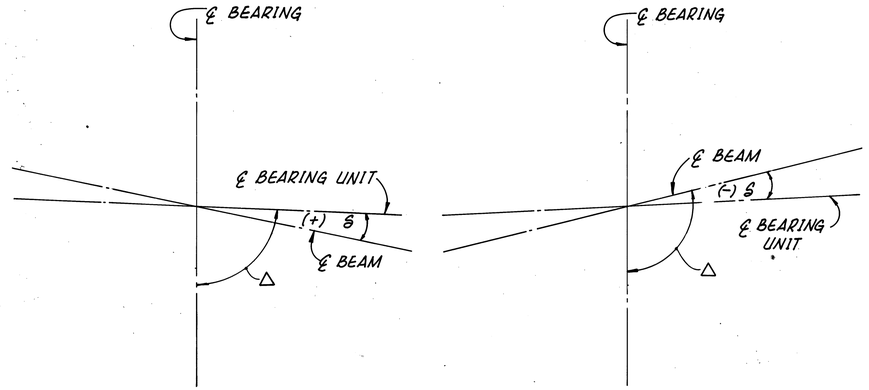

WEST OF FIXED PIER

EAST OF FIXED PIER

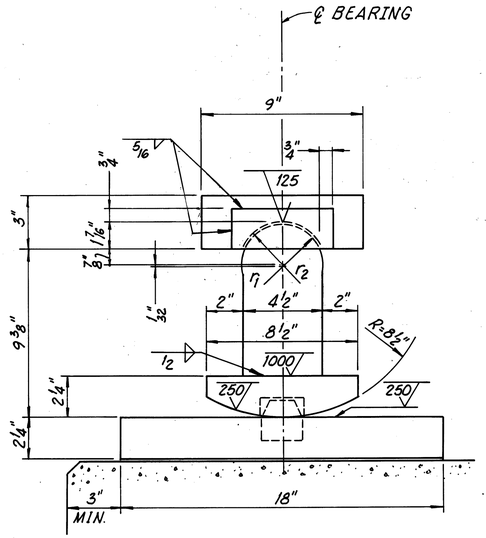

r_2 (TOP PL.) = $2\frac{11}{32}$"
r_1 (WEB) = $2\frac{5}{16}$"

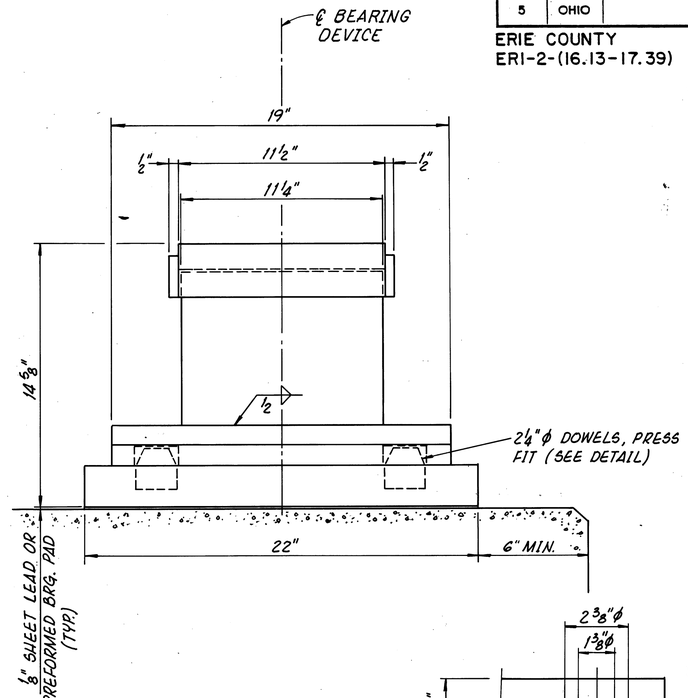

STRUCTURAL STEEL ROCKER
R-150 MODIFIED
FOR DETAILS AND NOTES NOT SHOWN, SEE OHIO STATE STANDARD DWG. RB-1-55 REV. 2-2-59

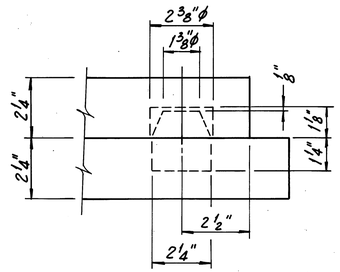

DOWEL DETAIL

ANGLES / BEAM	ABUTMENT #1		PIER #1		PIER #2		PIER #3		PIER #4	
	△	δ	△	δ	△	δ	△	δ	△	δ
A	86°04'00"	01°47'02"	86°04'00"	02°15'23"	88°04'10"	01°10'56"	88°04'10"	02°21'55"	91°01'50"	(-)01°01'50"
B	85°51'40"	01°25'35"	85°51'40"	01°48'14"	87°21'58"	01°03'05"	87°21'58"	02°06'14"	90°00'00"	0
C TO G	84°43'52"	02°04'48"	84°43'52"	02°37'54"	87°21'58"	01°03'05"	87°21'58"	02°06'14"	90°00'00"	0
H									90°30'55"	(-)00°30'55"

ANGLES / BEAM	PIER #5		PIER #6		PIER #7		ABUTMENT #2	
	△	δ	△	δ	△	δ	△	δ
A	94°02'18"	(-)02°24'06"	94°02'18"	(-)01°11'59"	96°29'49"	(-)02°36'01"	96°29'49"	(-)02°03'18"
B	92°38'03"	(-)02°06'14"	92°38'03"	(-)01°03'06"	95°16'08"	(-)02°37'54"	95°16'08"	(-)02°04'48"
C TO G	92°38'03"	(-)02°06'14"	92°38'03"	(-)01°03'06"	95°16'08"	(-)02°37'54"	95°16'08"	(-)02°04'48"
H	93°20'12"	(-)02°18'11"	93°20'12"	(-)01°07'33"	95°53'01"	(-)02°36'59"	95°53'01"	(-)02°04'04"

WESTBOUND LANES

ANGLES / BEAM	ABUTMENT #1		PIER #1		PIER #2		PIER #3	
	△	δ	△	δ	△	δ	△	δ
J TO P	83°58'24"	02°19'02"	83°58'24"	02°47'28"	83°58'24"	03°43'32"	87°09'20"	01°08'10"

ANGLES / BEAM	PIER #4		PIER #5		PIER #6		PIER #7	
	△	δ	△	δ	△	δ	△	δ
J TO P	87°09'20"	02°16'24"	90°00'00"	0	92°50'40"	(-)02°16'24"	92°50'40"	(-)01°08'10"

ANGLES / BEAM	PIER #8		PIER #9		ABUTMENT #2	
	△	δ	△	δ	△	δ
J	96°05'32"	(-)03°47'12"	96°05'32"	(-)02°50'13"	96°05'32"	(-)02°21'19"
K	95°55'07"	(-)03°37'30"	95°55'07"	(-)02°42'57"	95°55'07"	(-)02°15'17"
L	95°44'42"	(-)03°27'47"	95°44'42"	(-)02°35'41"	95°44'42"	(-)02°09'16"
M	95°34'16"	(-)03°18'03"	95°34'16"	(-)02°28'24"	95°34'16"	(-)02°03'13"
N	95°23'50"	(-)03°08'19"	95°23'50"	(-)02°21'07"	95°23'50"	(-)01°57'11"
P	95°13'24"	(-)02°58'35"	95°13'24"	(-)02°13'50"	95°13'24"	(-)01°51'08"

EASTBOUND LANES

BEARING ANGLES AND BEAM ANGLES

NOTE:
ALL STRUCTURAL STEEL FOR BEARINGS SHALL BE ASTM A36 GALVANIZED.

STEEL ALTERNATE 20/47

adache · ciuni · lynn associates
CONSULTING ENGINEERS CLEVELAND, OHIO 44130

BEARING DETAILS

BRIDGE NO. ERI-2-1798 L/R
S. R. 2 OVER MUD BROOK

ERIE COUNTY STA. 1173+18.50 TO
ERI-2-16.13 STA. 1180+95.50

DESIGNED	DRAWN	CHECKED	REVIEWED	DATE	REVISED
G.J.B.	W.P.R.	R.J.P.	L.E.D.	9-23-85	

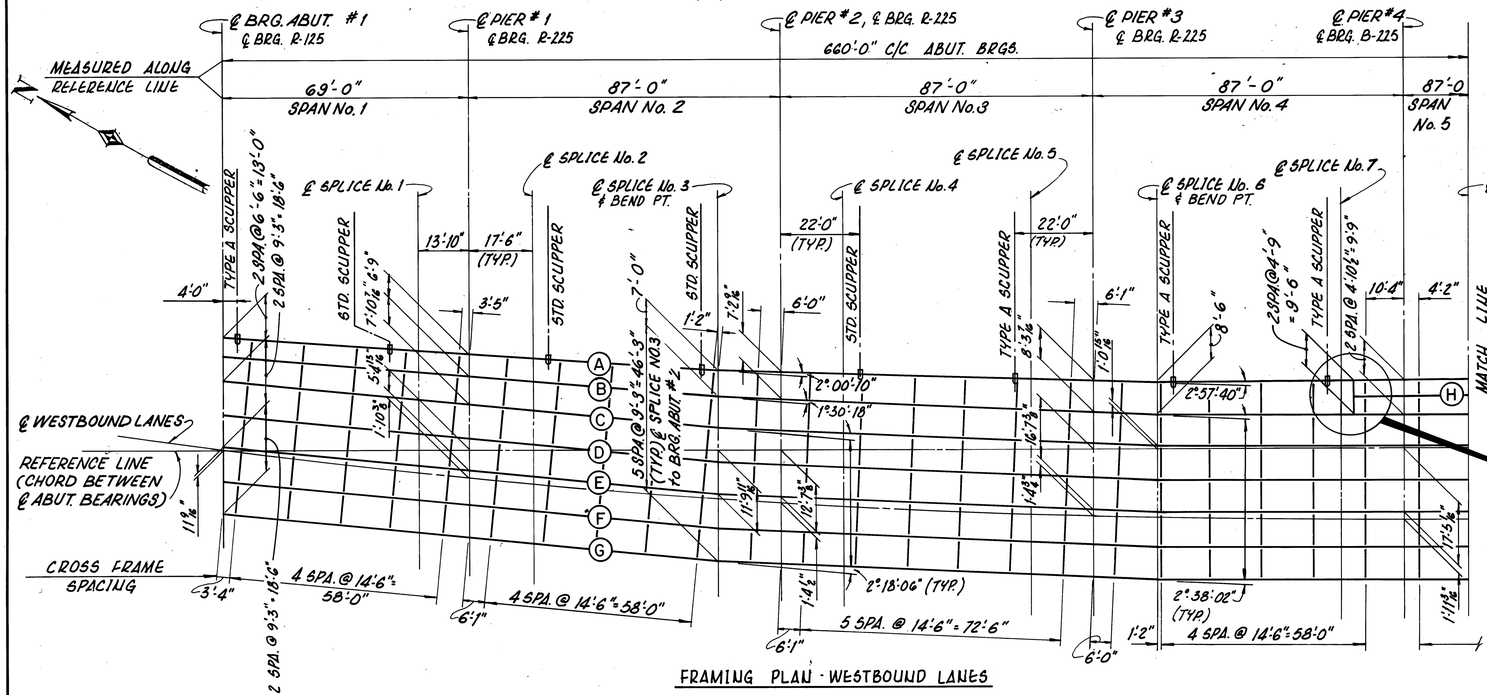

FRAMING PLAN - WESTBOUND LANES

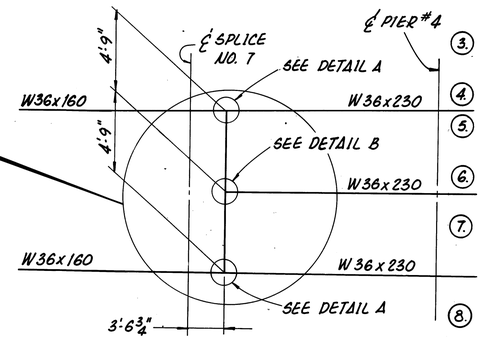

FHWA REGION	STATE	PROJECT	
5	OHIO		

2010
284

ERIE COUNTY
ERI - 2 - (16.13 - 17.39)

NOTES:

1. ALL STRUCTURAL STEEL SHALL CONFORM TO ASTM A 588 GRADE 50 WEATHERING STEEL, UNLESS NOTED OTHERWISE.
2. ALL FIELD SPLICES SHALL BE MADE WITH 1" DIAMETER HIGH STRENGTH STEEL BOLTS, CONFORMING TO A325. THE BOLTS SHALL BE PLACED WITH THEIR HEADS ON THE OUTSIDE FACE OF EXTERIOR GIRDERS AND ON THE BOTTOM FLANGE PLATES AND TOP OF THE TOP FLANGE PLATES.
3. FOR BEAM AND GIRDER ELEVATIONS SEE SHEET 23/47
4. FOR FRAMING DETAILS SEE SHEET 23/47
5. FOR BEARING DETAILS FOR UNIT NO.1 SEE SHEET 20/47
6. FOR DEFLECTION AND CAMBER DETAILS SEE SHEET 25/47
7. WHERE A SHAPE OR PLATE IS DESIGNATED "CVN" THE MATERIAL SHALL MEET SPECIFIED MINIMUM NOTCH TOUGHNESS REQUIREMENTS AS SPECIFIED IN 711.01 OF CMS.
8. FOR SCUPPER DETAILS SEE SHEET 23/47

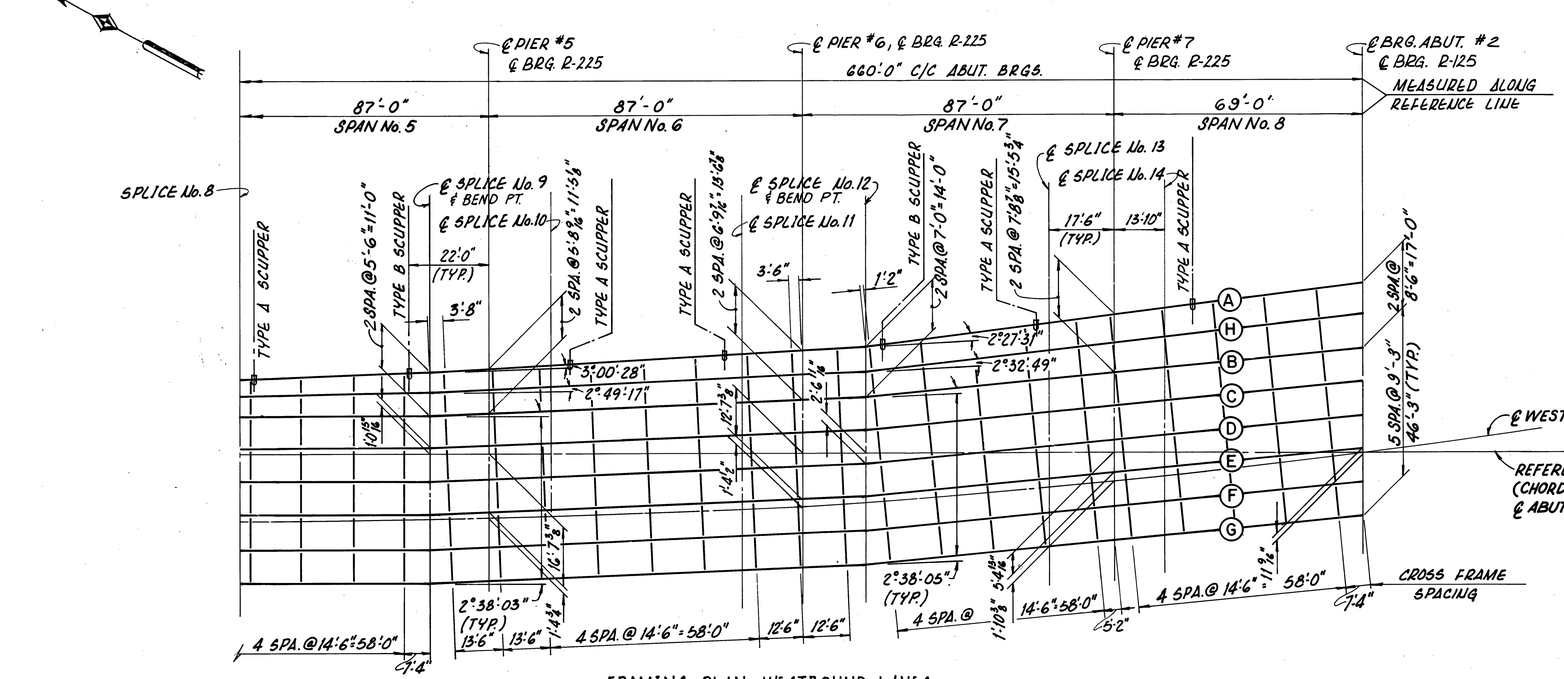

FRAMING PLAN - WESTBOUND LANES

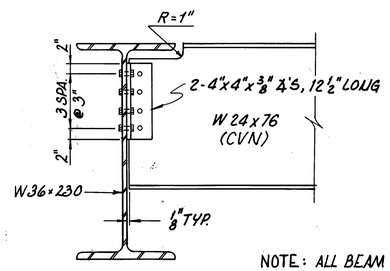

DETAIL A

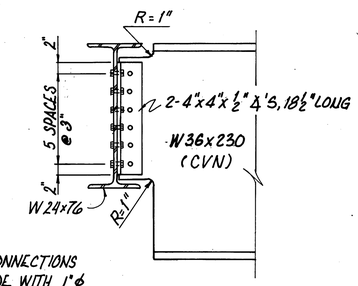

DETAIL B

NOTE: ALL BEAM CONNECTIONS SHALL BE MADE WITH 1"ϕ A325 HIGH STRENGTH BOLTS

STEEL ALTERNATE 21/47

adache - ciuni - lynn associates
CONSULTING ENGINEERS CLEVELAND, OHIO 44130

FRAMING PLAN
WESTBOUND LANES
BRIDGE Nº ERI - 2 - 1798 L/R
S.R.2 OVER MUD BROOK

ERIE COUNTY STA. 1173+18.50 TO
ERI - 2 - 16.13 STA. 1180 + 95.50

DESIGNED	DRAWN	CHECKED	REVIEWED	DATE	REVISED
P.A.G.	W.P.R	AJM	L.E.D.	9.23.85	

FHWA REGION	STATE	PROJECT	
5	OHIO		

2011
284

ERIE COUNTY
ERI-2-(16.13-17.39)

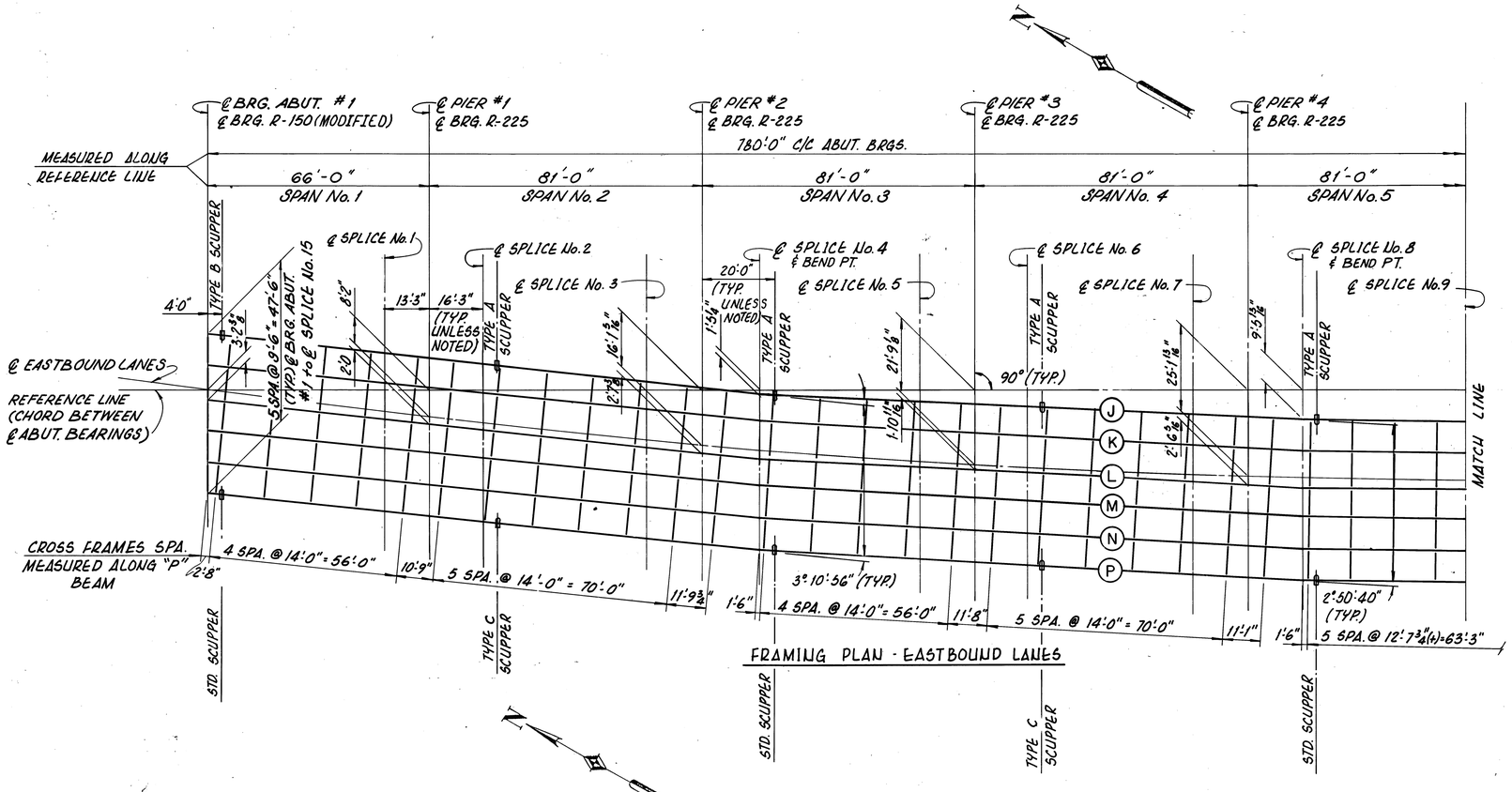

FRAMING PLAN - EASTBOUND LANES

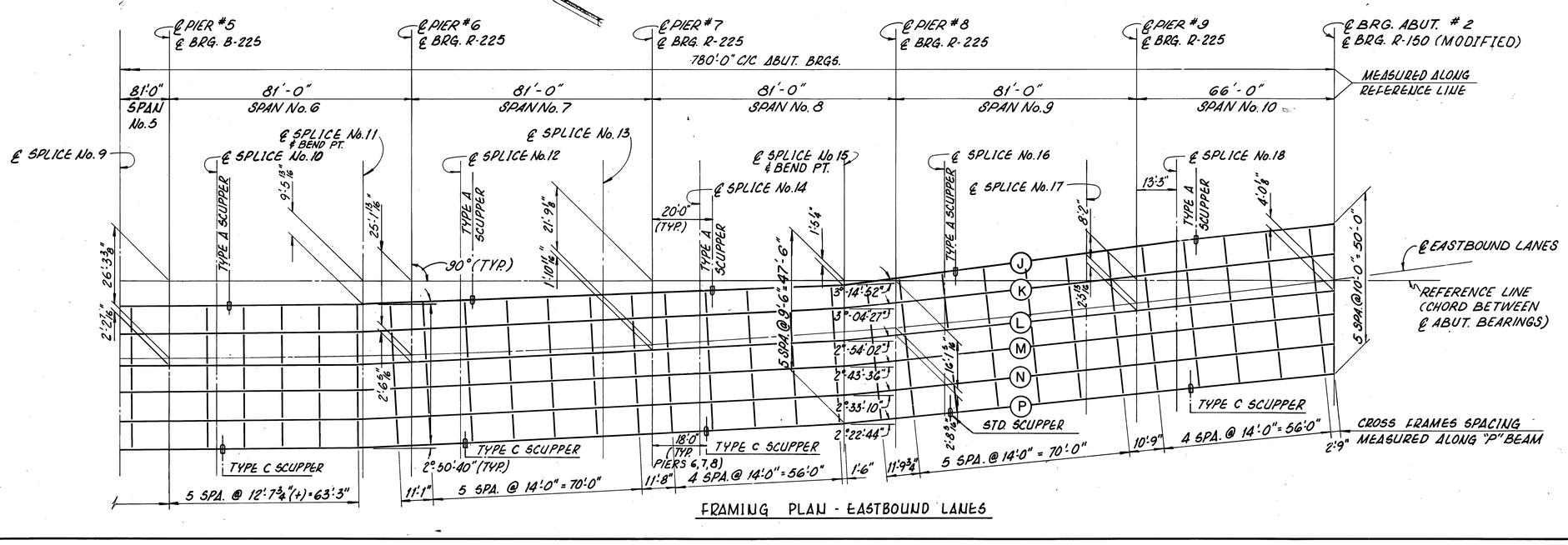

FRAMING PLAN - EASTBOUND LANES

NOTES:

1. ALL STRUCTURAL STEEL SHALL CONFORM TO ASTM A 588 GRADE 50 WEATHERING STEEL, UNLESS NOTED OTHERWISE.
2. ALL FIELD SPLICES SHALL BE MADE WITH 1" DIAMETER HIGH STRENGTH STEEL BOLTS, CONFORMING TO A325. THE BOLTS SHALL BE PLACED WITH THEIR HEADS ON THE OUTSIDE FACE OF EXTERIOR GIRDERS AND ON THE BOTTOM FLANGE PLATES AND TOP OF THE TOP FLANGE PLATES.
3. FOR BEAM AND GIRDER ELEVATIONS SEE SHEET 24/47
4. FOR FRAMING DETAILS SEE SHEET 24/47
5. FOR BEARING DETAILS FOR UNIT NO.1 SEE SHEET 20/47
6. FOR DEFLECTION AND CAMBER DETAILS SEE SHEET 26/47
7. WHERE A SHAPE OR PLATE IS DESIGNATED "CVN" THE MATERIAL SHALL MEET SPECIFIED MINIMUM NOTCH TOUGHNESS REQUIREMENTS AS SPECIFIED IN 711.01 OF CMS.
8. FOR SCUPPER DETAILS SEE SHEET 23/47

STEEL ALTERNATE 22/47

adache - ciuni - lynn associates
CONSULTING ENGINEERS CLEVELAND, OHIO 44130

FRAMING PLAN
EASTBOUND LANES
BRIDGE Nº ERI-2-1798 L/R
S.R.2 OVER MUD BROOK

ERIE COUNTY ERI-2-16.13
STA. 1173+18.50 TO STA. 1180+95.50

DESIGNED	DRAWN	CHECKED	REVIEWED	DATE	REVISED
J.R.S.	W.P.R.	AJM	L.E.D.	9.23.85	

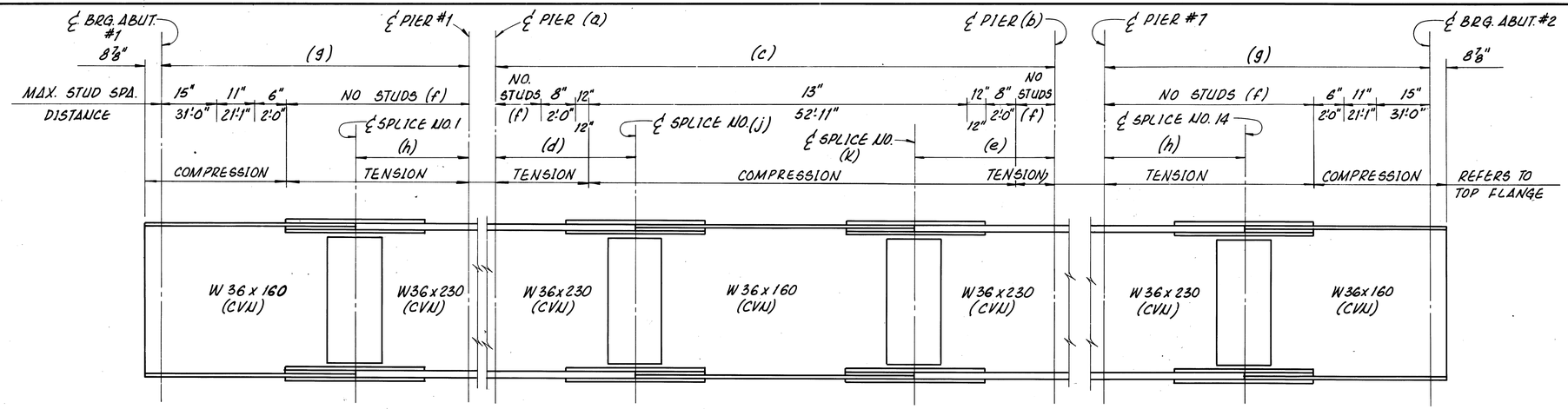

BEAM ELEVATION

SPAN	BEAM	SUBST. TO SUBST.		DIMENSIONS (c)	(d)	(e)	(f)	(g)	(h)	SPLICE NO. (j)	(K)
1	A	ABUT. TO PIER 1					15'-1"	69'-2"	13'-10 3/8"		
	B	ABUT. TO PIER 1		–	–	–	15'-1 1/4"	69'-2 1/4"	13'-10 7/16"	–	–
	C THRU G	ABUT. TO PIER 1		–	–	–	15'-2 1/2"	69'-3 1/2"	13'-10 1/2"	–	–
		PIER(a) TO PIER(b)		–	–	–				–	–
2	A	1	2	87'-2 1/16"	17'-6 1/2"	17'-6 1/8"	14'-1 3/4"	–	–	2	3
	B	1	2	87'-2 3/8"	17'-6 1/2"	17'-6 1/4"	14'-1 7/8"	–	–	2	3
	C THRU G	1	2	87'-3 3/4"	17'-6 7/8"	17'-6 1/4"	14'-2 1/2"	–	–	2	3
3	A	2	3	87'-0 1/2"	17'-6 1/8"	17'-6 1/8"	14'-0 3/4"	–	–	4	5
	B THRU G	2	3	87'-1"	17'-6 1/4"	17'-6 1/4"	14'-1"	–	–	4	5
4	A	3	4	87'-0 1/4"	17'-6 1/4"	17'-6"	14'-0 5/8"	–	–	6	7
	B THRU G	3	4	87'-0 1/8"	17'-6 1/4"	17'-6"	14'-0 5/8"	–	–	6	7
5	A	4	5	87'-0 5/8"	17'-6"	17'-6 1/2"	14'-0 1/2"	–	–	8	9
	B THRU G	4	5	87'-0 1/4"	17'-6"	17'-6 1/4"	14'-0 1/2"	–	–	8	9
	H	4	5	87'-0 3/8"	17'-6"	17'-6 3/8"	14'-0 1/2"	–	–	8	9
6	A	5	6	87'-2 7/16"	17'-6 1/2"	17'-6 1/2"	14'-1 3/4"	–	–	10	11
	B THRU G	5	6	87'-1"	17'-6 1/4"	17'-6 1/4"	14'-1"	–	–	10	11
	H	5	6	87'-1 5/8"	17'-6 3/8"	17'-6 3/8"	14'-1 1/4"	–	–	10	11
7	A	6	7	87'-5 15/16"	17'-6 1/2"	17'-7 3/8"	14'-3"	–	–	12	13
	B THRU G	6	7	87'-3 7/8"	17'-6 1/4"	17'-6 7/8"	14'-2"	–	–	12	13
	H	6	7	87'-4 3/4"	17'-6 3/8"	17'-7 1/8"	14'-2 1/2"			12	13
8	A	PIER 7 TO ABUT.		–	–	–	15'-4 3/8"	69'-5 3/8"	13'-11 1/16"	–	–
	B THRU G	PIER 7 TO ABUT.		–	–	–	15'-2 9/16"	69'-3 9/16"	13'-10 11/16"	–	–
	H	PIER 7 TO ABUT.		–	–	–	15'-3 1/16"	69'-4 7/16"	13'-10 7/8"	–	–

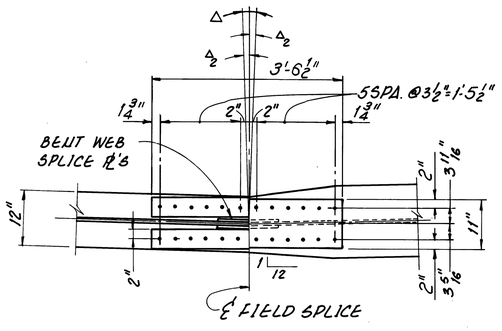

SECTION A-A
FOR SPLICE NOS. 3, 6, 9, 12

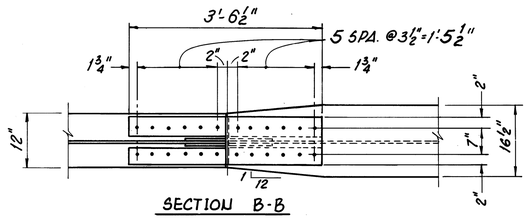

SECTION B-B
FOR SPLICE NOS. 1, 2, 4, 5, 7, 8, 10, 13, 14

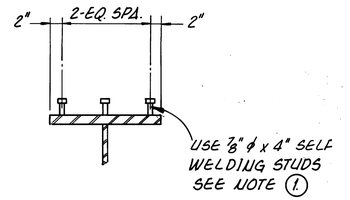

TYPICAL STUD SPACING

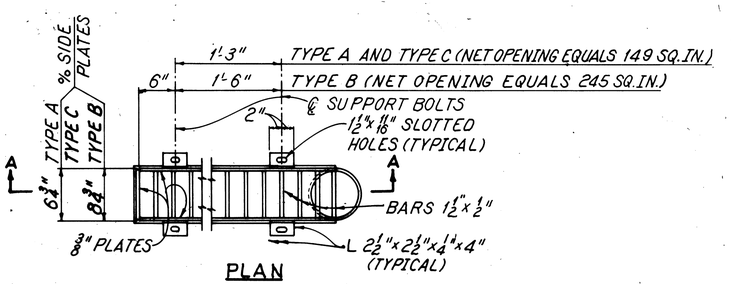

PLAN

NOTE:
FOR DETAILS NOT SHOWN SEE SCUPPER DETAILS, STANDARD DRAWING SD-1-69 SHEET 3 | 4.

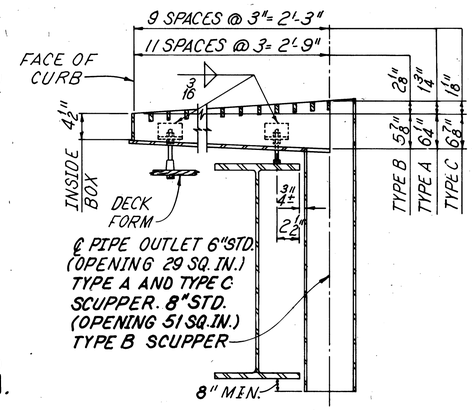

SECTION A-A

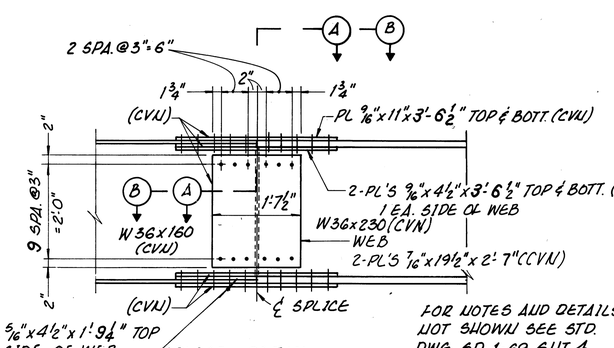

SPLICE DETAIL

FOR NOTES AND DETAILS NOT SHOWN SEE STD. DWG. SD-1-69, SHT. 4

SCUPPER DETAILS

FHWA REGION	STATE	PROJECT	
5	OHIO		

201W 284

ERIE COUNTY
ERI-2-(16.13-17.39)

NOTES:

1. LOCATE CONNECTORS IN GROUPS OF 3 AS SHOWN. SHEAR CONNECTORS MAY BE SHIFTED TO CLEAR BOLT HEADS ON SPLICE. FOR SPACING ALONG BEAMS AND GIRDERS SEE ELEVATIONS. STUD WELDING SHALL BE IN ACCORDANCE WITH A.W.S. D1.1-80, SECTION 4, PART F.
2. WELDED ATTACHMENTS OF SUPPORTS FOR CONCRETE DECK FINISHING MACHINE MAY BE MADE TO AREAS OF THE FACIA STRINGER FLANGES DESIGNATED "COMPRESSION." ATTACHMENTS SHALL NOT BE MADE TO AREAS DESIGNATED "TENSION." FILLET WELDS TO COMPRESSION FLANGES SHALL BE NOT CLOSER THAN 1" FROM EDGE OF FLANGE, BE NOT MORE THAN 2" LONG, AND BE NOT SMALLER THAN THE MINIMUM SIZE REQUIRED BY AASHTO.
3. FOR ADDITIONAL NOTES SEE SHEET 21 | 47

STEEL ALTERNATE 23 | 47

adache · ciuni · lynn associates
CONSULTING ENGINEERS CLEVELAND OHIO 44130

BEAM ELEVATION AND DETAILS
WESTBOUND LANES
BRIDGE Nº ERI-2-1798 L/R
S.R.2 OVER MUD BROOK

ERIE COUNTY STA. 1173+18.50 TO
ERI-2-16.13 STA. 1180+95.50

DESIGNED	DRAWN	CHECKED	REVIEWED	DATE	REVISED
P.A.G.	W.P.R.	AJM	L.E.D. 9-23-85		

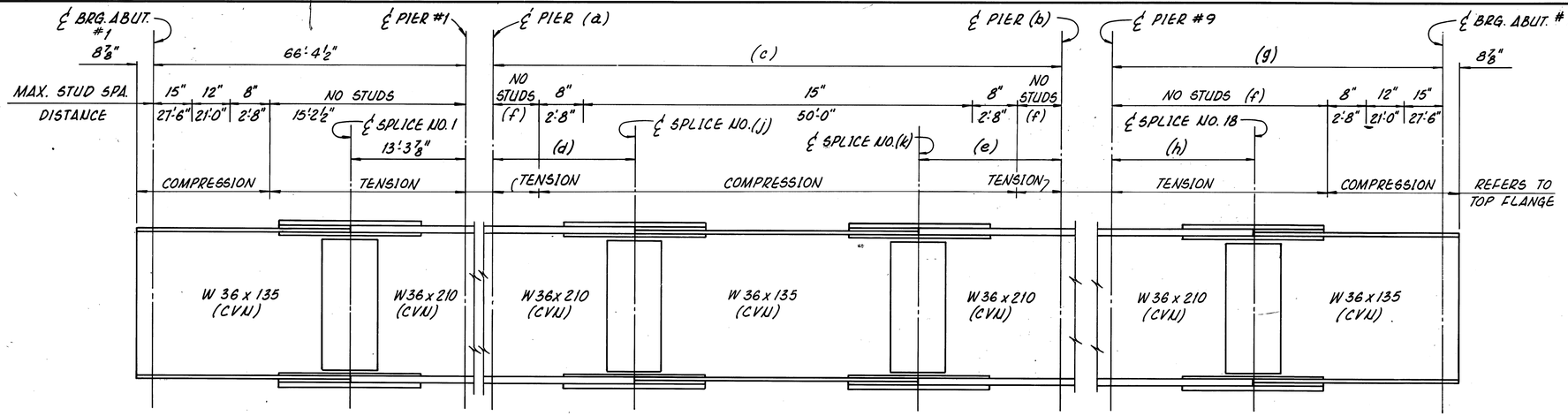

BEAM ELEVATION

SPAN	BEAM	℄ PIER (a)	℄ PIER (b)	DIMENSIONS (c)	(d)	(e)	(f)	(g)	(h)	SPLICE NO. (j)	(k)
2	ALL	1	2	81'-5 5/16"	16'-4 1/8"	16'-4 1/2"	13'-0 3/8"	–	–	2	3
3	↓	2	3	81'-1 15/16"	16'-4 1/16"	16'-3 1/4"	12'-11"	–	–	4	5
4	↓	3	4	81'-1 3/16"	16'-3 1/4"	16'-3 1/4"	12'-10 5/8"	–	–	6	7
5	↓	4	5	81'-0 1/4"	16'-3 1/4"	16'-3"	12'-10 1/16"	–	–	8	9
6	↓	5	6	81'-0 1/4"	16'-3"	16'-3 1/4"	12'-10 1/16"	–	–	10	11
7	ALL	6	7	81'-1 3/16"	16'-3 1/4"	16'-3 1/4"	12'-10 5/8	–	–	12	13
8	J	7	8	81'-2"	↓	16'-4 1/2"	12'-11"	–	–	14	15
	K	↓	↓	81'-1 15/16"		16'-4 1/16"	↓	–	–	↓	↓
	L	↓	↓	81'-1 7/8"		16'-4"	↓	–	–	↓	↓
	M	↓	↓	81'-1 3/16"		16'-3 15/16"	↓	–	–	↓	↓
	N	↓	↓	81'-1 3/4"		16'-3 7/8"	↓	–	–	↓	↓
	P	7	8	81'-1 11/16"	16'-3 1/4"	16'-3 13/16"	12'-11"	–	–	14	15
9	J	8	9	81'-5 7/16"	16'-4 1/8"	16'-4 1/8"	13'-0 3/4"	–	–	16	17
	K	↓	↓	81'-5 1/8	16'-4 1/16"	16'-4 1/16"	13'-0 9/16"	–	–	↓	↓
	L	↓	↓	81'-4 7/8"	16'-4"	16'-4"	13'-0 7/16"	–	–	↓	↓
	M	↓	↓	81'-4 9/16"	16'-3 15/16"	16'-3 15/16"	13'-0 1/4"	–	–	↓	↓
	N	↓	↓	81'-4 1/4"	16'-3 7/8"	16'-3 7/8"	13'-0 1/8"	–	–	↓	↓
	P	8	9	81'-4"	16'-3 13/16	16'-3 13/16	13'-0"	–	–	16	17
10	J	–	–	–	–	–	15'-2 9/16"	66'-4 9/16"	13'-3 7/8"	–	–
	K	–	–	–	–	–	15'-2 5/16"	66'-4 5/16"	13'-3 13/16"	–	–
	L	–	–	–	–	–	15'-2 1/16"	66'-4 1/16"	13'-3 13/16"	–	–
	M	–	–	–	–	–	15'-1 13/16"	66'-3 13/16"	13'-3 3/4"	–	–
	N	–	–	–	–	–	15'-1 5/8"	66'-3 5/8"	13'-3 11/16"	–	–
	P	–	–	–	–	–	15'-1 3/8"	66'-3 3/8"	13'-3 5/8"	–	–

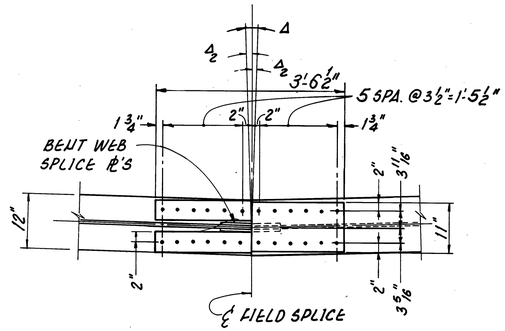

SECTION A-A

FOR SPLICE NOS. 4, 8, 11, 15

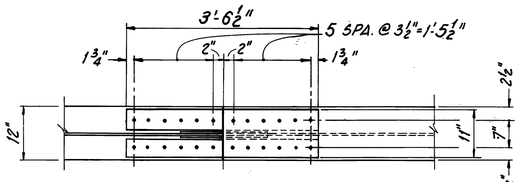

SECTION B-B

FOR SPLICE NOS. 1, 2, 3, 5, 6, 7, 9, 10, 13, 14, 16, 17, 18

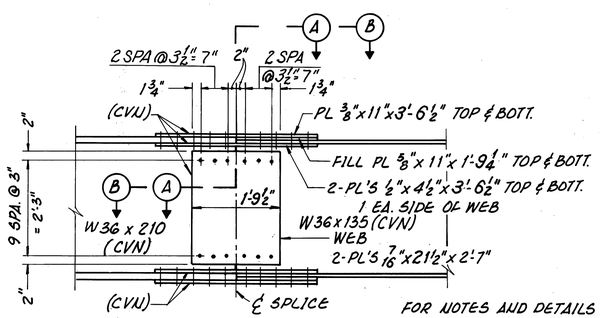

FOR NOTES AND DETAILS NOT SHOWN SEE STD. DWG. SD-1-69, SHT. 4

SPLICE DETAIL

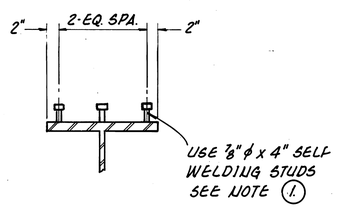

TYPICAL STUD SPACING

FHWA REGION	STATE	PROJECT	
5	OHIO		

201X
284

ERIE COUNTY
ERI-2-(16.13-17.39)

NOTES:

1. LOCATE CONNECTORS IN GROUPS OF 3 AS SHOWN. SHEAR CONNECTORS MAY BE SHIFTED TO CLEAR BOLT HEADS ON SPLICE. FOR SPACING ALONG BEAMS AND GIRDERS SEE ELEVATIONS. STUD WELDING SHALL BE IN ACCORDANCE WITH A.W.S. D1.1-80, SECTION 4, PART F.
2. WELDED ATTACHMENTS OF SUPPORTS FOR CONCRETE DECK FINISHING MACHINE MAY BE MADE TO AREAS OF THE FACIA STRINGER FLANGES DESIGNATED "COMPRESSION." ATTACHMENTS SHALL NOT BE MADE TO AREAS DESIGNATED "TENSION." FILLET WELDS TO COMPRESSION FLANGES SHALL BE NOT CLOSER THAN 1" FROM EDGE OF FLANGE, BE NOT MORE THAN 2" LONG, AND BE NOT SMALLER THAN THE MINIMUM SIZE REQUIRED BY AASHTO.
3. FOR ADDITIONAL NOTES SEE SHEET 22/47

STEEL ALTERNATE 24/47

adache · ciuni · lynn associates
CONSULTING ENGINEERS CLEVELAND OHIO 44130

BEAM ELEVATION AND DETAILS
EASTBOUND LANES
BRIDGE Nº ERI-2-1798 L/R
S.R.2 OVER MUD BROOK

ERIE COUNTY ERI-2-16.13 STA. 1173+**18.50** TO STA. 1180+**95.50**

DESIGNED	DRAWN	CHECKED	REVIEWED	DATE	REVISED
J.R.S.	W.P.R.	AJM	L.E.D.	9-23-85	

F.H.W.A. REGION	STATE	PROJECT	
5	OHIO		

2017
284

ERIE COUNTY
ERI-2-(16.13-17.39)

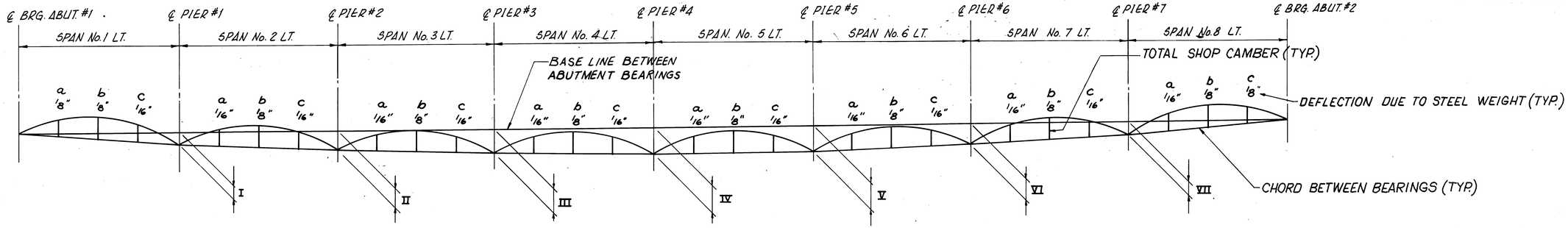

LAYOUT DIAGRAM
BEAMS A-G

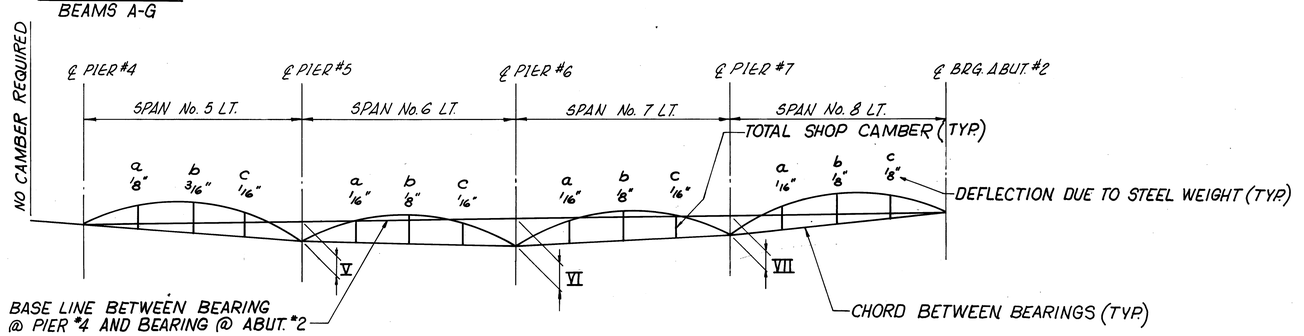

LAYOUT DIAGRAM
BEAM H

LAYOUT DIAGRAM
OFFSETS (IN.)

BEAM	I	II	III	IV	V	VI	VII
A	15/16	3/4	5/16	1/2	1/16	5/16	3/4
B	1 9/16	2	1 13/16	1 13/16	1 1/4	15/16	1
C	3/4	3/8	7/16	7/8	7/16	3/8	3/4
D	11/16	3/8	3/8	13/16	3/8	3/8	3/4
E	11/16	5/16	5/16	3/4	5/16	5/16	3/4
F	11/16	5/16	5/16	11/16	5/16	5/16	11/16
G	11/16	1/4	1/4	11/16	1/4	1/4	11/16
H	—	—	—	—	-1/4	1/16	11/16

TOTAL CAMBER= STEEL WEIGHT CAMBER + REMAINING DEAD LOAD CAMBER + ADJUSTMENT FOR HORIZONTAL CURVE

NEGATIVE VALUES INDICATE OPPOSITE DIRECTION THAN SHOWN IN DIAGRAMS.

REMAINING DEADLOAD DEFLECTION, ADJUSTMENT FOR HORIZONTAL CURVE AND CAMBER (IN.)

BEAM	SPAN No. 1									SPAN No. 2								
	1/4 POINT a			1/2 POINT b			SPLICE No. 1 c			SPLICE No. 2 a			1/2 POINT b			SPLICE No. 3 c		
	REM. D.L.	ADJ.	TOTAL	REM. D.L.	ADJ	TOTAL	REM. D.L.	ADJ.	TOTAL	REM. D.L.	ADJ.	TOTAL	REM. D.L.	ADJ.	TOTAL	REM. D.L.	ADJ.	TOTAL
A	5/16	-1/8	5/16	3/8	-3/16	5/16	3/16	-1/8	1/8	1/4	-1/16	1/4	7/16	0	9/16	1/4	3/16	1/2
B	1/2	-1/8	1/4	9/16	-3/16	1/2	1/4	-1/8	3/16	3/8	-1/8	5/16	5/8	-1/16	11/16	3/8	1/16	1/2
C THRU F	9/16	-1/8	9/16	11/16	-3/16	5/8	5/16	-1/8	1/4	7/16	-1/16	7/16	3/4	1/16	15/16	7/16	1/4	3/4
G	3/8	-1/8	3/8	1/2	-3/16	7/16	1/4	-1/8	3/16	5/16	-1/16	5/16	1/2	1/16	11/16	5/16	1/4	5/8
H	—	—	—	—	—	—	—	—	—	—	—	—	—	—	—	—	—	—

BEAM	SPAN No. 3									SPAN No. 4								
	SPLICE No. 4 a			1/2 POINT b			SPLICE No. 5 c			SPLICE No. 6 a			1/2 POINT b			SPLICE No. 7 c		
	REM. D.L.	ADJ.	TOTAL	REM. D.L.	ADJ.	TOTAL	REM. D.L.	ADJ.	TOTAL	REM. D.L.	ADJ.	TOTAL	REM. D.L.	ADJ.	TOTAL	REM. D.L.	ADJ.	TOTAL
A	1/4	-3/16	1/8	7/16	-1/4	5/16	1/4	-3/16	3/16	1/4	5/16	5/8	7/16	1/16	5/8	1/4	0	5/16
B	5/16	-3/16	3/16	5/8	-1/4	1/2	3/8	-3/16	1/4	5/16	1/4	5/8	5/8	1/16	13/16	3/8	-1/16	3/4
C THRU F	3/8	-3/16	1/4	3/4	-1/4	5/8	7/16	-3/16	5/16	3/8	1/4	11/16	3/4	1/16	15/16	7/16	-1/16	7/16
G	1/4	-3/16	1/8	1/2	-1/4	3/8	5/16	-3/16	3/16	1/4	5/16	5/8	1/2	1/16	11/16	5/16	-1/16	5/16
H	—	—	—	—	—	—	—	—	—	—	—	—	—	—	—	—	—	—

REMAINING DEADLOAD DEFLECTION, ADJUSTMENT FOR HORIZONTAL CURVE AND CAMBER (IN.)

BEAM	SPAN No. 5									SPAN No. 6								
	SPLICE No. 8 a			1/2 POINT b			SPLICE No. 9 c			SPLICE No. 10 a			1/2 POINT b			SPLICE No. 11 c		
	REM. D.L.	ADJ.	TOTAL	REM. D.L.	ADJ.	TOTAL	REM. D.L.	ADJ.	TOTAL	REM. D.L.	ADJ.	TOTAL	REM. D.L.	ADJ.	TOTAL	REM. D.L.	ADJ.	TOTAL
A	5/16	0	3/8	1/2	1/16	11/16	1/4	3/8	11/16	5/16	-3/16	3/16	1/2	-1/4	3/8	1/4	-3/16	1/8
B	3/8	-1/16	3/8	5/8	1/16	13/16	5/16	1/4	5/8	3/8	-3/16	1/4	5/8	-1/4	1/2	5/16	-3/16	3/16
C THRU F	7/16	-1/16	7/16	3/4	1/16	15/16	3/8	1/4	11/16	7/16	-3/16	5/16	3/4	-1/4	5/8	3/8	-3/16	1/4
G	5/16	-1/16	5/16	1/2	1/16	11/16	1/4	1/4	9/16	5/16	-3/16	3/16	1/2	-1/4	3/8	1/4	-3/16	1/8
H	5/16	0	7/16	1/2	1/16	3/4	1/4	5/16	5/8	1/4	-3/16	1/8	1/2	-1/4	3/8	1/4	-3/16	1/8

BEAM	SPAN No. 7									SPAN No. 8								
	SPLICE No. 12 a			1/2 POINT b			SPLICE No. 13 c			SPLICE No. 14 a			1/2 POINT b			3/4 POINT c		
	REM. D.L.	ADJ.	TOTAL	REM. D.L.	ADJ.	TOTAL	REM. D.L.	ADJ.	TOTAL	REM. D.L.	ADJ.	TOTAL	REM. D.L.	ADJ.	TOTAL	REM. D.L.	ADJ.	TOTAL
A	5/16	1/4	1/8	1/2	0	5/8	5/16	-1/16	5/16	3/16	-1/8	1/8	7/16	-3/16	3/8	3/8	-1/8	3/8
B	3/8	1/4	11/16	5/8	1/16	13/16	3/8	0	7/16	1/4	-1/8	3/16	5/8	-1/8	5/8	1/2	-1/8	1/2
C THRU F	7/16	1/4	3/4	3/4	1/16	15/16	7/16	0	1/2	5/16	-1/8	1/4	11/16	-1/8	11/16	9/16	-1/8	9/16
G	5/16	1/4	5/8	1/2	1/16	11/16	5/16	0	3/8	1/4	-1/16	1/4	1/2	-1/8	1/2	3/8	-1/8	3/8
H	3/8	1/4	11/16	5/8	1/16	13/16	5/16	-1/16	5/16	1/4	-1/8	3/16	5/8	-3/16	9/16	9/16	-1/8	9/16

STEEL ALTERNATE 25/47

adache · ciuni · lynn associates
CONSULTING ENGINEERS CLEVELAND OHIO 44130

DEFLECTION AND CAMBER DIAGRAM
WESTBOUND LANES
BRIDGE Nº ERI-2-1798 L/R
S.R.2 OVER MUD BROOK

ERIE COUNTY — STA. 1173+18.50 TO.
ERI-2-16.13 — STA. 1180+95.50

DESIGNED	DRAWN	CHECKED	REVIEWED	DATE	REVISED
JRS/GJB	W.P.R.	R.J.P.	L.E.D.	9-23-85	

F.H.W.A. REGION	STATE	PROJECT	
5	OHIO		

2012
284

ERIE COUNTY
ERI-2-(16.13-17.39)

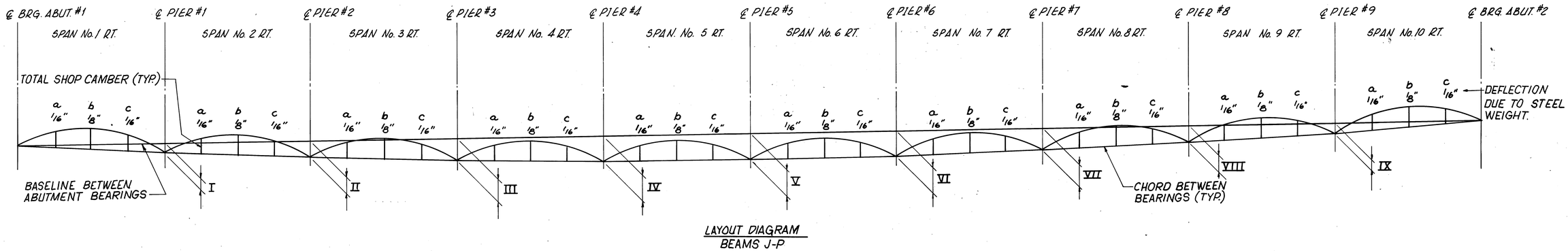

LAYOUT DIAGRAM
BEAMS J-P

REMAINING DEADLOAD DEFLECTION, ADJUSTMENT FOR HORIZONTAL CURVE AND CAMBER (IN.)

BEAM	SPAN No. 1									SPAN No. 2								
	1/4 POINT a			1/2 POINT b			SPLICE No. 1 c			SPLICE No. 2 a			1/2 POINT b			SPLICE No. 3 c		
	REM. D.L.	ADJ.	TOTAL	REM. D.L.	ADJ.	TOTAL	REM. D.L.	ADJ.	TOTAL	REM. D.L.	ADJ.	TOTAL	REM. D.L.	ADJ.	TOTAL	REM. D.L.	ADJ.	TOTAL
J	7/16	-1/8	3/8	9/16	-1/8	9/16	1/4	-1/8	3/16	1/4	-3/16	1/8	1/2	-3/16	7/16	1/4	-3/16	1/8
K THRU L	5/8	-1/8	9/16	3/4	-1/8	3/4	5/16	-1/8	1/4	5/16	-3/16	3/16	11/16	-3/16	5/8	3/8	-3/16	1/4
M	5/8	-1/8	9/16	3/4	-1/8	3/4	5/16	-1/8	1/4	5/16	-3/16	3/16	11/16	-3/16	5/8	3/8	-3/16	1/4
N	5/8	-1/8	9/16	3/4	-1/8	3/4	5/16	-1/8	1/4	5/16	-3/16	3/16	11/16	-3/16	5/8	3/8	-3/16	1/4
P	7/16	1/16	9/16	9/16	1/8	13/16	1/4	1/16	3/8	1/4	1/8	7/16	1/2	1/8	3/4	1/4	1/8	7/16

BEAM	SPAN No. 3									SPAN No. 4								
	SPLICE No. 4 a			1/2 POINT b			SPLICE No. 5 c			SPLICE No. 6 a			1/2 POINT b			SPLICE No. 7 c		
	REM. D.L.	ADJ.	TOTAL	REM. D.L.	ADJ.	TOTAL	REM. D.L.	ADJ.	TOTAL	REM. D.L.	ADJ.	TOTAL	REM. D.L.	ADJ.	TOTAL	REM. D.L.	ADJ.	TOTAL
J	1/4	3/8	11/16	7/16	1/8	11/16	1/4	0	5/16	1/4	-3/16	1/8	7/16	-3/16	3/8	1/4	-3/16	1/8
K THRU L	3/8	3/8	13/16	5/8	1/8	7/8	3/8	0	7/16	3/8	-3/16	1/4	5/8	-3/16	9/16	3/8	-3/16	1/4
M	3/8	3/8	13/16	5/8	1/8	7/8	3/8	0	7/16	3/8	-3/16	1/4	5/8	-3/16	9/16	3/8	-3/16	1/4
N	3/8	3/8	13/16	5/8	1/8	7/8	3/8	0	7/16	3/8	-3/16	1/4	5/8	-3/16	9/16	3/8	-3/16	1/4
P	7/16	-1/4	1/16	7/16	-1/8	7/16	1/4	0	5/16	1/4	1/8	7/16	7/16	1/8	11/16	1/4	1/8	7/16

BEAM	SPAN No. 5								
	SPLICE No. 8 a			1/2 POINT b			SPLICE No. 9 c		
	REM. D.L.	ADJ.	TOTAL	REM. D.L.	ADJ.	TOTAL	REM. D.L.	ADJ.	TOTAL
J	1/4	5/16	5/8	7/16	1/8	11/16	1/4	0	5/16
K THRU L	3/8	5/16	3/4	5/8	1/8	7/8	3/8	0	7/16
M	3/8	5/16	3/4	5/8	1/8	7/8	3/8	0	7/16
N	3/8	5/16	3/4	5/8	1/8	7/8	3/8	0	7/16
P	7/16	-3/16	1/8	7/16	-1/16	1/2	1/4	0	5/16

REMAINING DEADLOAD DEFLECTION, ADJUSTMENT FOR HORIZONTAL CURVE AND CAMBER (IN.)

BEAM	SPAN No. 6									SPAN No. 7								
	SPLICE No. 10 a			1/2 POINT b			SPLICE No. 11 c			SPLICE No. 12 a			1/2 POINT b			SPLICE No. 13 c		
	REM. D.L.	ADJ.	TOTAL	REM. D.L.	ADJ.	TOTAL	REM. D.L.	ADJ.	TOTAL	REM. D.L.	ADJ.	TOTAL	REM. D.L.	ADJ.	TOTAL	REM. D.L.	ADJ.	TOTAL
J	1/4	0	5/16	7/16	1/16	5/8	1/4	5/16	5/8	1/4	-3/16	1/8	7/16	-1/4	5/16	1/4	-3/16	1/8
K THRU L	3/8	0	7/16	5/8	1/8	7/8	3/8	5/16	3/4	3/8	-3/16	1/4	5/8	-3/16	9/16	3/8	-3/16	1/4
M	3/8	0	7/16	5/8	1/16	13/16	3/8	5/16	3/4	3/8	-3/16	1/4	5/8	-3/16	9/16	3/8	-1/8	5/16
N	3/8	0	7/16	5/8	1/8	7/8	3/8	5/16	3/4	3/8	-3/16	1/4	5/8	-3/16	9/16	3/8	-3/16	1/4
P	1/4	0	5/16	7/16	-1/16	1/2	1/4	-3/16	1/8	1/4	1/8	7/16	7/16	1/8	11/16	1/4	1/8	7/16

BEAM	SPAN No. 8									SPAN No. 9								
	SPLICE No. 14 a			1/2 POINT b			SPLICE No. 15 c			SPLICE No. 16 a			1/2 POINT b			SPLICE No. 17 c		
	REM. D.L.	ADJ.	TOTAL	REM. D.L.	ADJ.	TOTAL	REM. D.L.	ADJ.	TOTAL	REM. D.L.	ADJ.	TOTAL	REM. D.L.	ADJ.	TOTAL	REM. D.L.	ADJ.	TOTAL
J	1/4	0	5/16	7/16	1/8	11/16	1/4	3/8	11/16	1/4	-3/16	1/8	1/2	-1/4	3/8	1/4	-3/16	1/8
K THRU L	3/8	0	7/16	5/8	1/8	7/8	3/8	3/8	13/16	3/8	-3/16	1/4	11/16	-3/16	5/8	5/16	-3/16	3/16
M	3/8	0	7/16	5/8	1/16	13/16	3/8	1/4	11/16	3/8	-3/16	1/4	11/16	-3/16	5/8	5/16	-3/16	3/16
N	3/8	0	7/16	5/8	1/16	13/16	3/8	1/4	11/16	3/8	-3/16	1/4	11/16	-1/4	9/16	5/16	-3/16	3/16
P	1/4	0	5/16	7/16	-1/16	1/2	1/4	-3/16	1/8	1/4	-1/4	1/16	1/2	-5/16	5/16	1/4	-1/4	1/16

BEAM	SPAN No. 10								
	SPLICE No. 18 a			1/2 POINT b			3/4 POINT c		
	REM. D.L.	ADJ.	TOTAL	REM. D.L.	ADJ.	TOTAL	REM. D.L.	ADJ.	TOTAL
J	1/4	-1/8	3/16	9/16	-1/8	9/16	7/16	-1/8	3/8
K THRU L	5/16	-1/8	1/4	3/4	-1/8	3/4	5/8	-1/8	9/16
M	5/16	0	3/8	3/4	0	7/8	5/8	0	11/16
N	5/16	5/16	11/16	3/4	-3/8	1/2	5/8	1/4	15/16
P	1/4	7/16	3/4	9/16	5/8	1 5/16	7/16	5/16	13/16

LAYOUT DIAGRAM
OFFSETS (IN.)

BEAM	I	II	III	IV	V	VI	VII	VIII	IX
J	15/16	1/2	1 1/16	9/16	13/16	9/16	1	7/16	7/8
K	15/16	1/2	1 1/16	5/8	15/16	11/16	1 3/16	5/8	1
L	15/16	9/16	1 3/16	3/4	1 1/16	7/8	1 7/16	7/8	1 1/8
M	15/16	1/2	1 1/8	3/4	1 1/16	7/8	1 7/16	7/8	15/16
N	13/16	1/4	3/4	3/16	7/16	1/8	9/16	-1/8	-1/8
P	-3/8	1/8	0	9/16	5/8	1	13/16	1 1/2	3/8

TOTAL CAMBER = STEEL WEIGHT CAMBER + REMAINING DEAD LOAD CAMBER + ADJUSTMENT FOR HORIZONTAL CURVE

NEGATIVE VALUES INDICATE OPPOSITE DIRECTION THAN SHOWN IN DIAGRAM.

STEEL ALTERNATE 26/47

adache - ciuni - lynn associates
CONSULTING ENGINEERS CLEVELAND OHIO 44130

DEFLECTION AND CAMBER DIAGRAM
EASTBOUND LANES
BRIDGE Nº ERI-2-1798 L/R
S.R.2 OVER MUD BROOK

ERIE COUNTY STA. 1173 - 18.50 TO
ERI-2-16.13 STA. 1180 - 95.50

DESIGNED	DRAWN	CHECKED	REVIEWED	DATE	REVISED
JRS/GJB	W.P.R.	AJM	L.E.D.	9-23-85	

FHWA REGION	STATE	PROJECT	
5	OHIO		

202
284

ERIE COUNTY
ERI-2-(16.13-17.39)

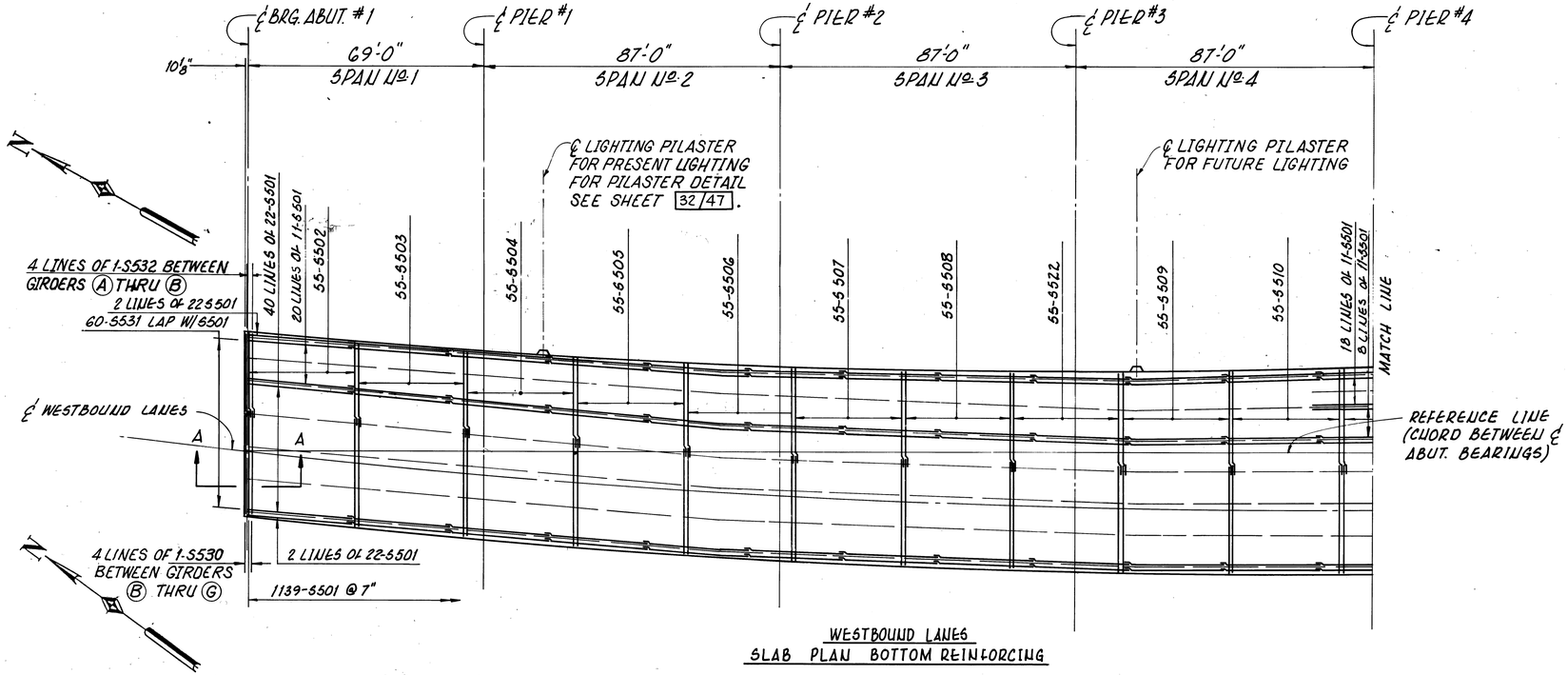

WESTBOUND LANES
SLAB PLAN BOTTOM REINFORCING

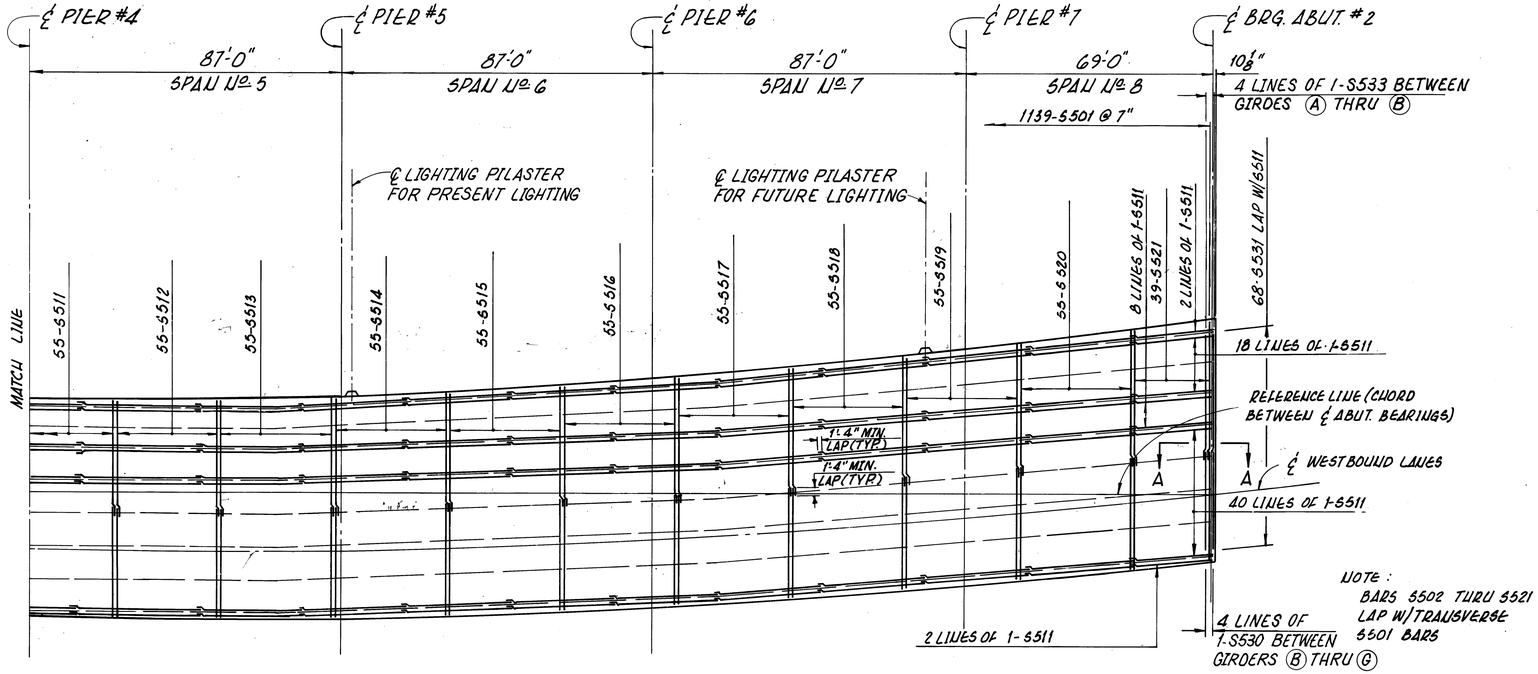

WESTBOUND LANES
SLAB PLAN BOTTOM REINFORCING

NOTE:
ALL REINFORCING BAR MARKS SHALL BE PREFIXED "WS" FOR WESTBOUND LANES.

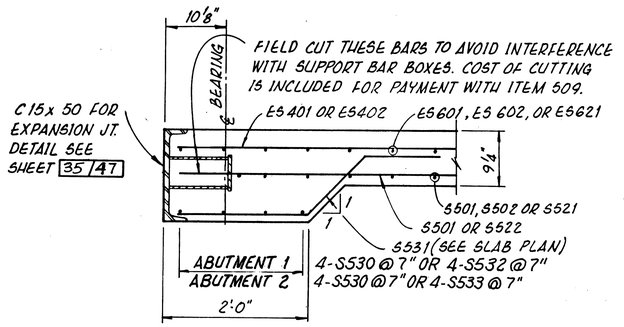

SECTION A-A

STEEL ALTERNATE 27/47

adache · ciuni · lynn associates
CONSULTING ENGINEERS CLEVELAND, OHIO 44130

SLAB PLAN - BOTTOM REINFORCING
WESTBOUND LANES
BRIDGE No. ERI-2-1798 L/R
S.R.2 OVER MUD BROOK

ERIE COUNTY
ERI-2-16.13

STA. 1173 + 18.50 TO
STA. 1180 + 95.50

DESIGNED	DRAWN	CHECKED	REVIEWED	DATE	REVISED
P.A.G.	W.P.R.	AJM	L.E.D.	9-23-85	

FHWA REGION	STATE	PROJECT	
5	OHIO		

2024
284

ERIE COUNTY
ERI-2-(16.13-17.39)

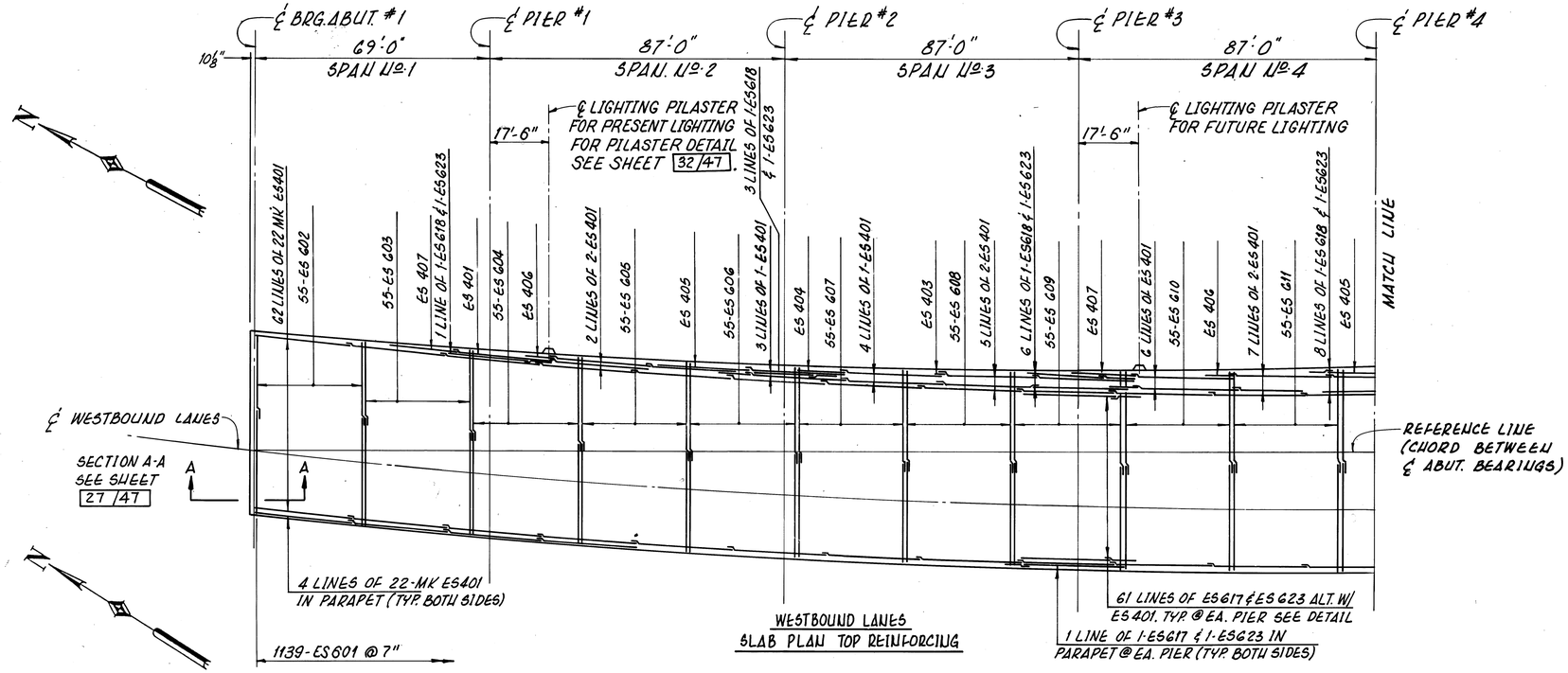

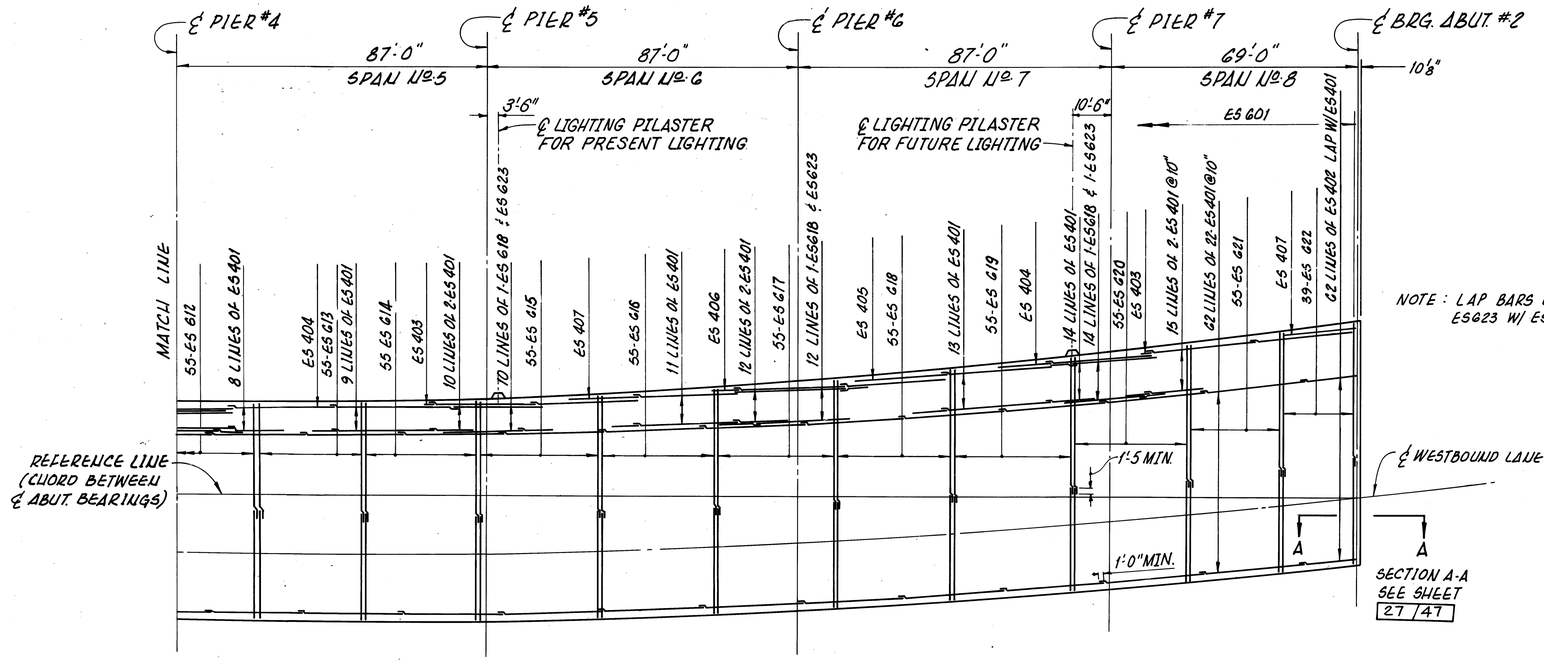

NOTE : LAP BARS ES602 THRU ES623 W/ ES601 BARS.

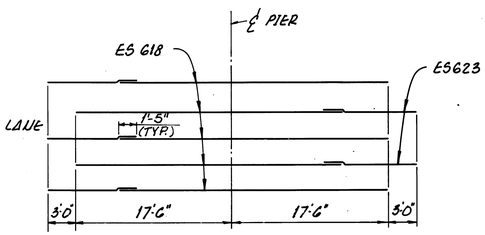

ADDITIONAL REINFORCING OVER PIER

NOTE:
ALL REINFORCING BAR MARKS SHALL BE PREFIXED "WS" FOR WESTBOUMD LANES.

STEEL ALTERNATE 28/47

adache - ciuni - lynn associates
CONSULTING ENGINEERS CLEVELAND, OHIO 44130

SLAB PLAN - TOP REINFORCING WESTBOUND LANES

BRIDGE No ERI-2-1798 L/R
S.R.2 OVER MUD BROOK

ERIE COUNTY
ERI-2-16.13

STA. 1173+18.50 TO
STA. 1180+95.50

DESIGNED	DRAWN	CHECKED	REVIEWED	DATE	REVISED
P.A.G.	W.P.R.	AJM	L.E.D.	9-23-85	

FHWA REGION	STATE	PROJECT	
5	OHIO		

2028
284

ERIE COUNTY
ERI-2-(16.13-17.39)

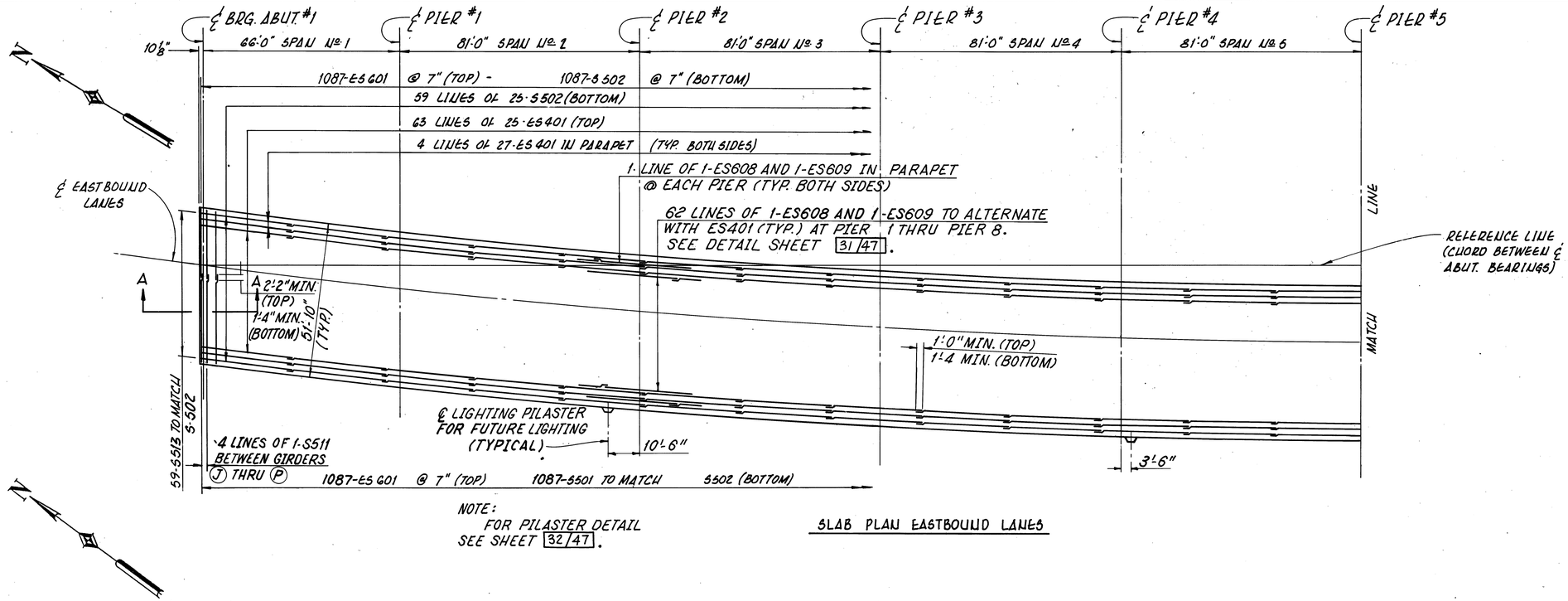

NOTE:
FOR PILASTER DETAIL SEE SHEET 32/47.

SLAB PLAN EASTBOUND LANES

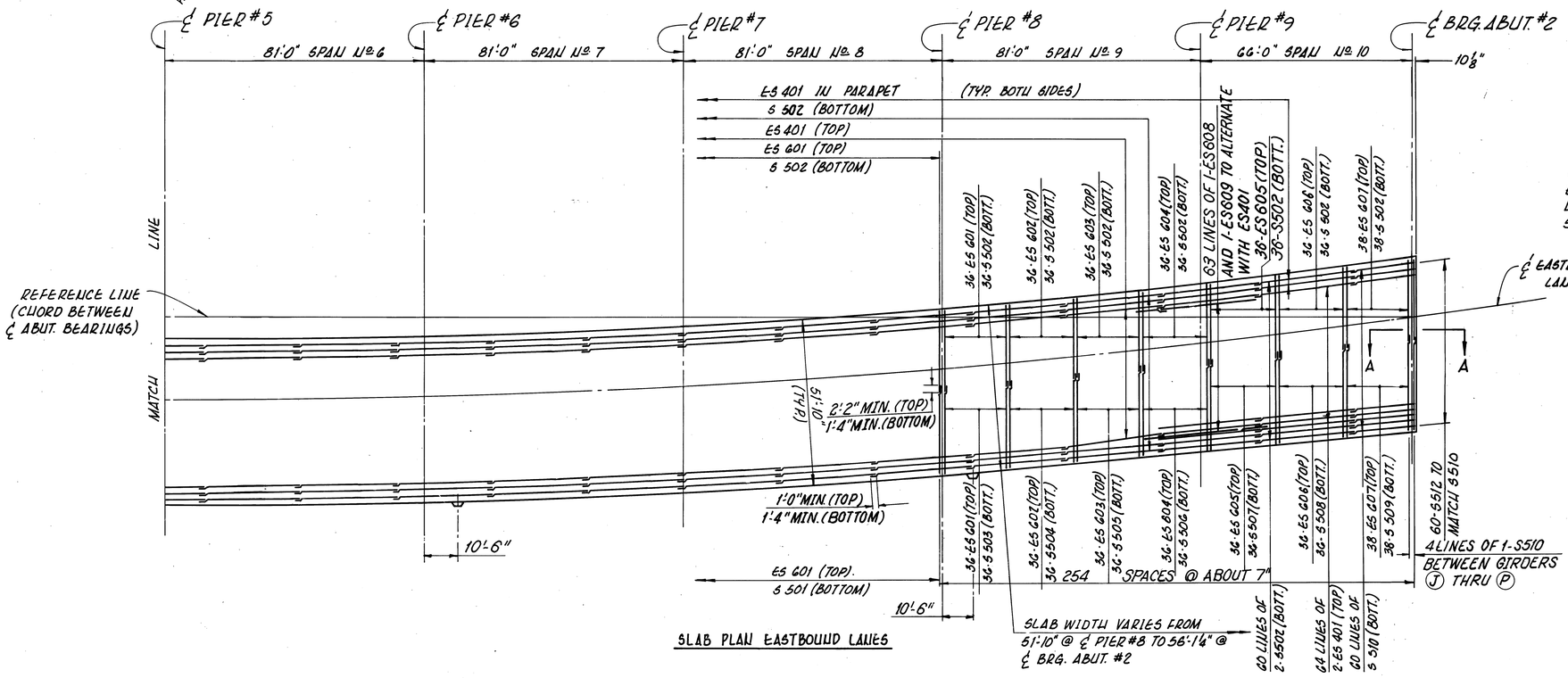

SLAB PLAN EASTBOUND LANES

NOTE:
ALL REINFORCING BAR MARKS SHALL BE PREFIXED "DS" FOR EASTBOUND LANES.

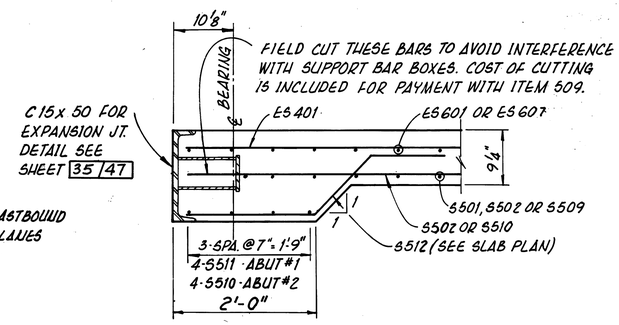

SECTION A-A

STEEL ALTERNATE 29/47

adache · ciuni · lynn associates
CONSULTING ENGINEERS CLEVELAND, OHIO 44130

SLAB PLAN REINFORCING
EASTBOUND LANES
BRIDGE No ERI-2-1798 L/R
S.R.2 OVER MUD BROOK

ERIE COUNTY STA. 1173+18.50 TO
ERI-2-16.13 STA. 1180+95.50

DESIGNED	DRAWN	CHECKED	REVIEWED	DATE	REVISED
J.R.S.	W.P.R.	AJM	L.E.D.	9.23.85	

FHWA REGION	STATE	PROJECT	
5	OHIO		

2020
284

ERIE COUNTY
ERI-2-(16.13-17.39)

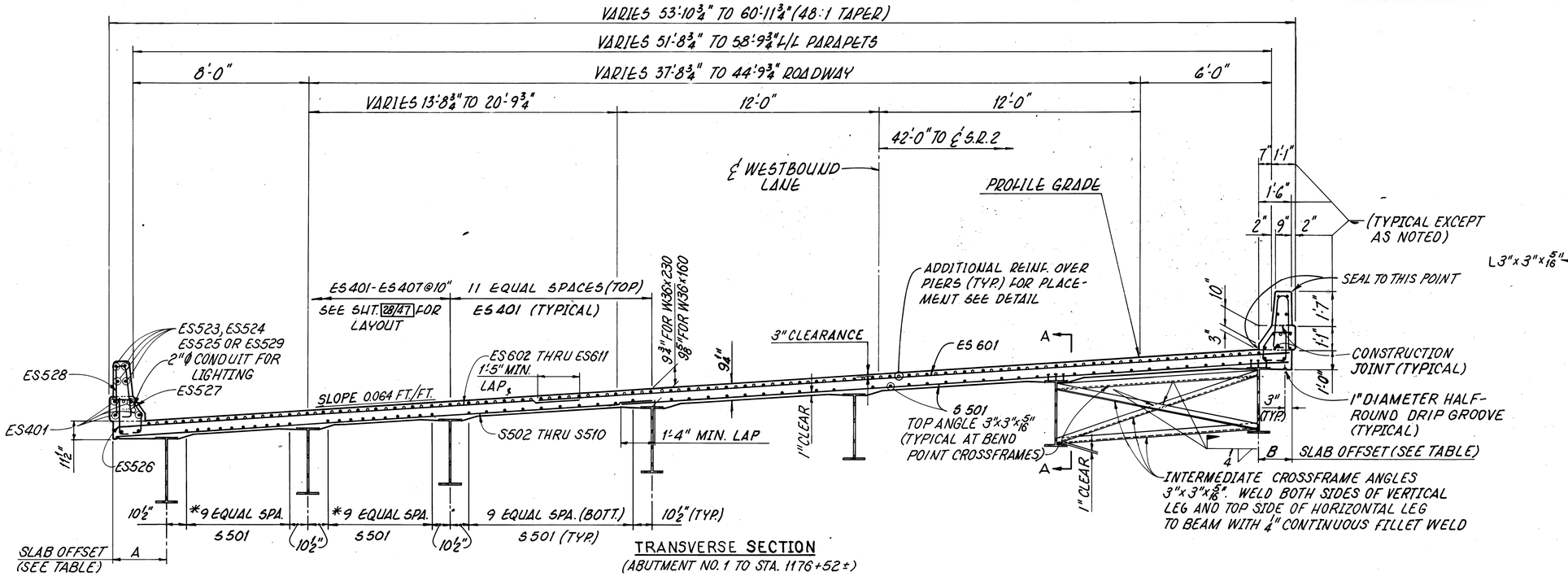

TRANSVERSE SECTION
(ABUTMENT NO. 1 TO STA. 1176+52±)

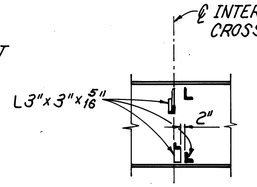

SECTION A-A

SLAB OFFSETS
SEE TRANSVERSE SECTION

	LOCATION	A	B
SPAN NO. 1	A-1	2'-5 5/8"	1'-6 1/8"
	1/4	1'-11 13/16"	1'-10 5/8"
	1/2	1'-7 15/16"	2'-1 13/16"
	F.S. NO. 1	1'-5 1/16"	2'-3 11/16"
SPAN NO. 2	P-1	1'-3 11/16"	2'-4 3/8"
	F.S. NO. 2	1'-3 11/16"	2'-3 5/16"
	1/2	1'-5 13/16"	2'-0 5/16"
SPAN NO. 3	F.S. NO. 3	1'-9 15/16"	1'-7 1/4"
	P-2	1'-8 13/16"	1'-9 15/16"
	F.S. NO. 4	1'-7 7/8"	2'-0 15/16"
	1/2	1'-9"	2'-1 15/16"
SPAN NO. 4	F.S. NO. 5	2'-0 3/16"	2'-0 15/16"
	P-3	2'-5 3/8"	1'-9 7/8"
	F.S. NO. 6	2'-10"	1'-7 3/16"
SPAN NO. 5	1/2	2'-5 3/4"	2'-0 3/16"
	F.S. NO. 7	2'-3 5/8"	2'-3 3/16"
	P-4	2'-3 1/2"	2'-4 3/16"
	F.S. NO. 8	2'-5 7/16"	2'-3 3/16"
SPAN NO. 6	1/2	2'-9 3/8"	2'-0 3/16"
	F.S. NO. 9	3'-3 7/16"	1'-7 3/16"
	P-5	3'-0 1/16"	1'-9 7/8"
	F.S. NO. 10	2'-8 15/16"	2'-0 7/8"
SPAN NO. 7	1/2	2'-7 5/16"	2'-1 15/16"
	F.S. NO. 11	2'-7 13/16"	2'-0 15/16"
	P-6	2'-10 3/8"	1'-9 15/16"
	F.S. NO. 12	3'-0 13/16"	1'-7 1/4"
SPAN NO. 8	1/2	2'-8 3/16"	2'-0 5/16"
	F.S. NO. 13	2'-5 11/16"	2'-9 5/16"
	P-7	2'-5 1/4"	2'-4 3/8"
	F.S. NO. 14	2'-6 3/8"	2'-3 11/16"
	1/2	2'-8 7/8"	2'-1 13/16"
	3/4	3'-0 5/8"	1'-10 5/8"
	A-2	3'-5 11/16"	1'-6 1/8"

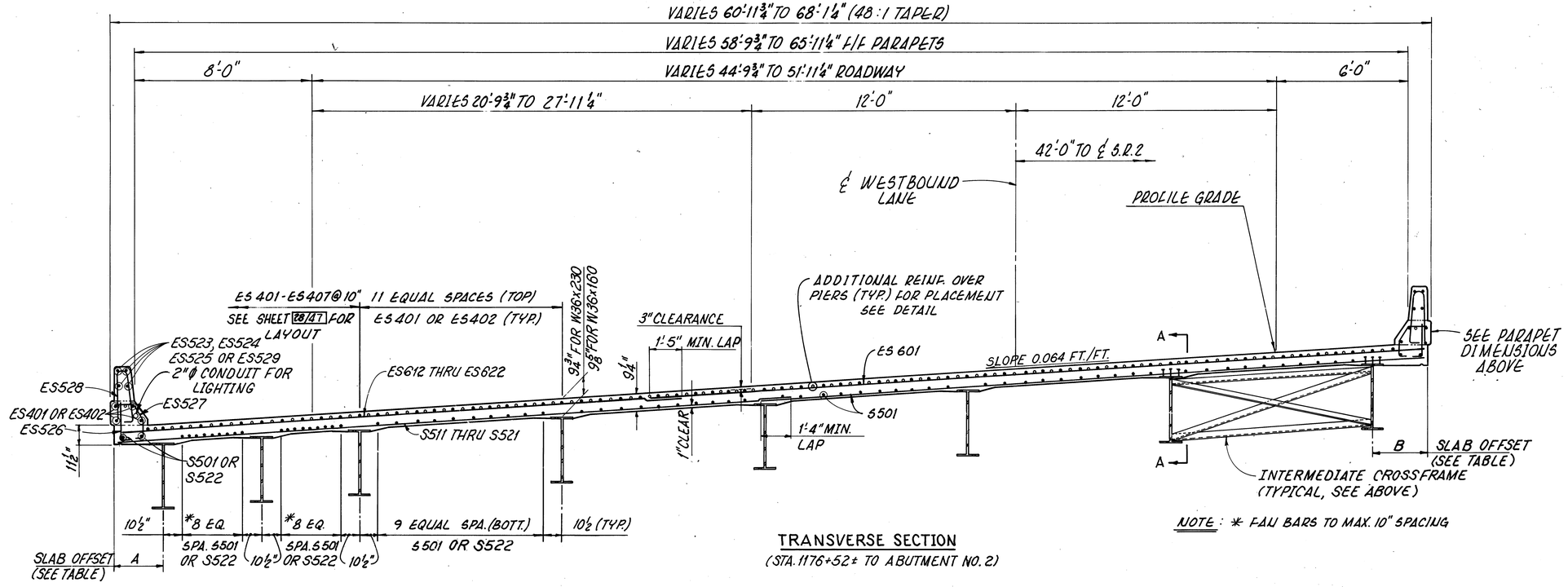

TRANSVERSE SECTION
(STA. 1176+52± TO ABUTMENT NO. 2)

NOTE: * FAU BARS TO MAX. 10" SPACING

NOTE:
FOR NOTES SEE SHEET 31/47.

STEEL ALTERNATE 30/47

adache · ciuni · lynn associates
CONSULTING ENGINEERS CLEVELAND, OHIO 44130

TRANSVERSE SECTION
WESTBOUND LANES
BRIDGE Nº ERI-2-1798 L/R
S.R.2 OVER MUD BROOK

ERIE COUNTY STA. 1173+18.50 TO
ERI-2-16.13 STA. 1180+95.50

DESIGNED	DRAWN	CHECKED	REVIEWED	DATE	REVISED
P.A.G.	W.P.R.	AJM	L.E.D.	9-28-85	

F.H.W.A. REGION	STATE	PROJECT	
5	OHIO		

2020
284

ERIE COUNTY
ERI - 2 - (16.13 - 17.39)

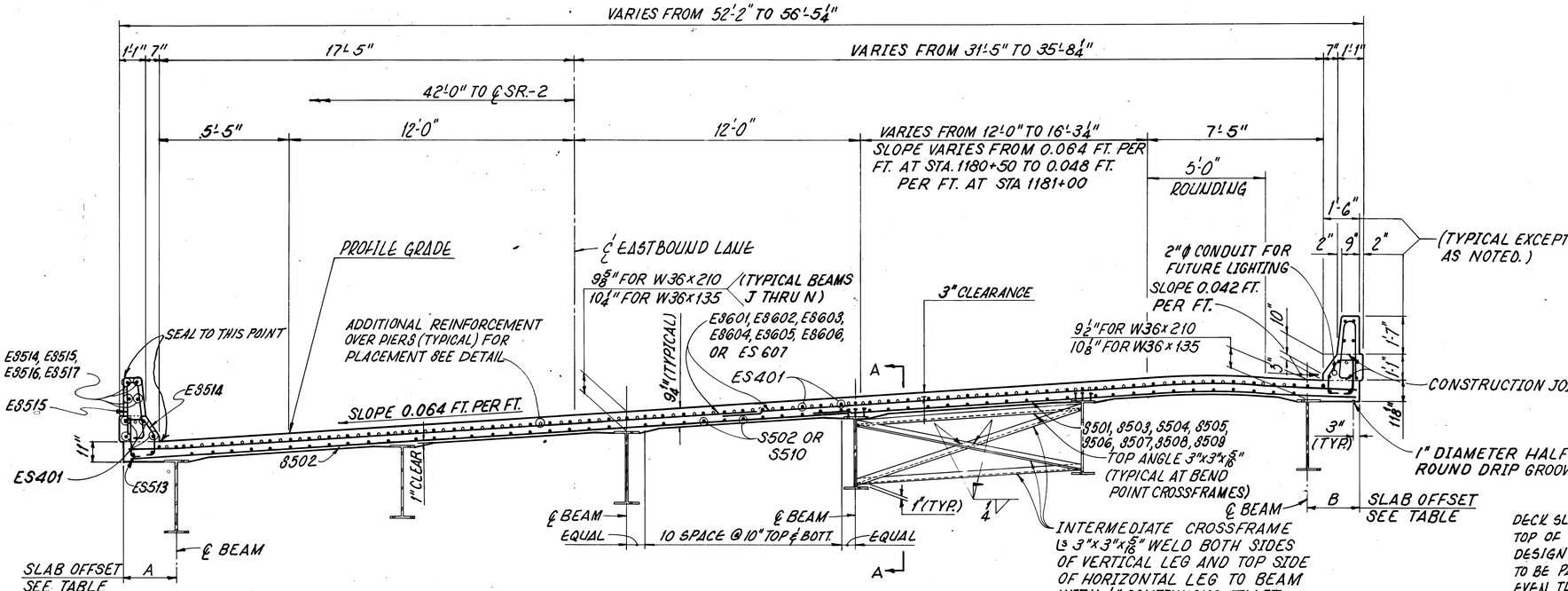

TRANSVERSE SECTION

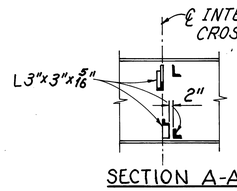

SECTION A-A

NOTES:

DECK SLAB DEPTH: THE DISTANCE SHOWN FROM TOP OF DECK SLAB TO TOP OF STEEL BEAM IS THE DESIGN DIMENSION. THE QUANTITY OF DECK CONC. TO BE PAID FOR SHALL BE BASED ON THIS DIMENSION, EVEN THOUGH DEVIATION FROM IT MAY BE NECESSARY BECAUSE THE TOP FLANGE OF THE BEAM MAY NOT HAVE THE EXACT CAMBER OR CONFORMATION REQUIRED TO PLACE IT PARALLEL TO THE FINISHED GRADE.

A HAUNCH WIDTH OF 9" SHALL BE USED FOR COMPUTING QUANTITY OF CONCRETE. HOWEVER, THE HAUNCH WIDTH MAY VARY BETWEEN 6" AND 12" PROVIDED THAT THE SLOPE SHALL BE NOT MORE THAN 1:4 FOR A HAUNCH LESS THAN 9" WIDTH.

TRANSVERSE REINFORCEMENT SHALL BE FIELD BENT AS REQUIRED, PAYMENT SHALL BE INCLUDED WITH ITEM 509, REINFORCING STEEL.

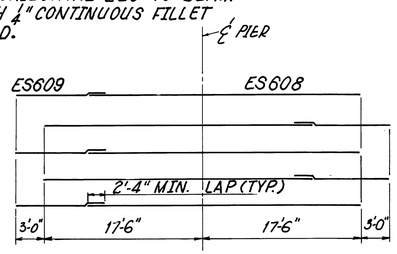

ADDITIONAL REINFORCEMENT, OVER PIERS

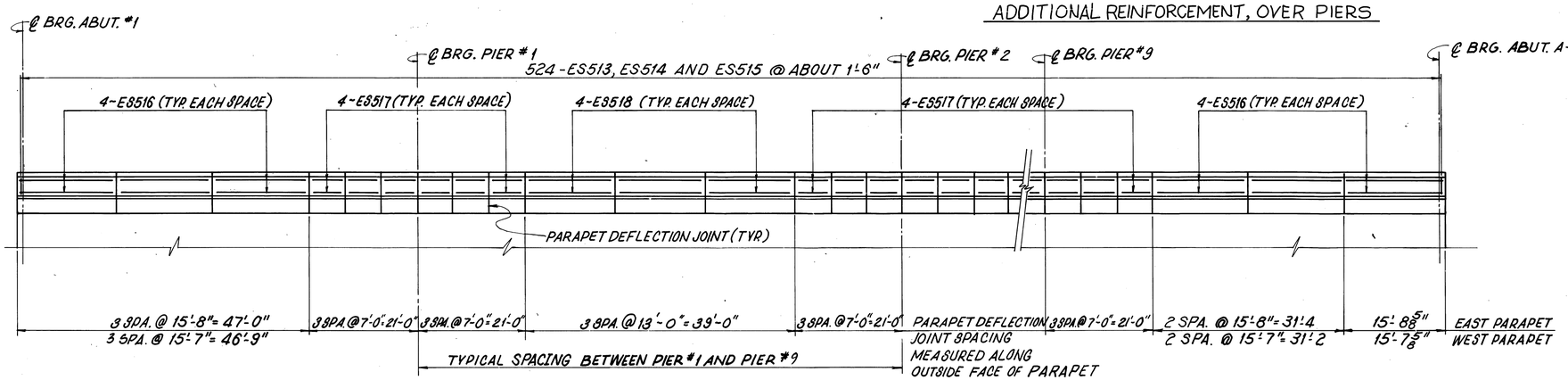

DEVELOPED CURB AND PARAPET DETAIL
(EAST PARAPET AS SHOWN & NOTED, WEST PARAPET OPP. HAND & AS NOTED)

SLAB OFFSETS
SEE TRANSVERSE SECTION

	LOCATION	A	B
SPAN NO. 1	A-1	3'-3 1/2"	1'-6 3/16"
	1/4	2'-10"	1'-11 1/16"
	1/2	2'-5 5/16"	2'-3 1/16"
	F.S. NO. 1	2'-2 1/2"	2'-5 13/16"
SPAN NO. 2	P-1	2'-0 7/16"	2'-7 7/16"
	F.S. NO. 2	1'-11 9/16"	2'-7 7/8"
	1/2	2'-0 3/8"	2'-6 5/8"
	F.S. NO. 3	2'-2 7/8"	2'-3 11/16"
SPAN NO. 3	P-2	2'-7 3/16"	1'-11"
	F.S. NO. 4	2'-10 1/2"	1'-7 3/8"
	1/2	2'-4 5/8"	2'-0 7/8"
	F.S. NO. 5	2'-0 1/2"	2'-4 3/4"
SPAN NO. 4	P-3	1'-10 1/16"	2'-6 11/16"
	F.S. NO. 6	1'-9 9/16"	2'-7 1/16"
	1/2	1'-10 5/16"	2'-6 1/4"
	F.S. NO. 7	2'-1"	2'-3 3/8"
SPAN NO. 5	P-4	2'-5 3/8"	1'-10 7/8"
	F.S. NO. 8	2'-9 1/8"	1'-7 1/16"
	1/2	2'-4 7/8"	1'-11 1/4"
	F.S. NO. 9	2'-2 5/16"	2'-1 3/4"
SPAN NO. 6	P-5	2'-1 7/16"	2'-2 9/16"
	F.S. NO. 10	2'-2 5/16"	2'-1 3/4"
	1/2	2'-4 7/8"	1'-11 1/4"
	F.S. NO. 11	2'-9 1/8"	1'-7 1/16"
SPAN NO. 7	P-6	2'-5 3/8"	1'-10 7/8"
	F.S. NO. 12	2'-1"	2'-3 3/8"
	1/2	1'-10 5/16"	2'-6 1/4"
	F.S. NO. 13	1'-9 5/16"	2'-7 7/16"
SPAN NO. 8	P-7	1'-10 1/16"	2'-6 15/16"
	F.S. NO. 14	2'-0 1/2"	2'-4 3/4"
	1/2	2'-4 5/8"	2'-0 7/8"
	F.S. NO. 15	2'-10 1/2"	1'-7 3/8"
SPAN NO. 9	P-8	2'-6 15/16"	1'-8 1/4"
	F.S. NO. 16	2'-2 3/8"	1'-10"
	1/2	1'-11 9/16"	2'-0 1/16"
	F.S. NO. 17	1'-10 7/16"	2'-2 9/16"
SPAN NO. 10	P-9	1'-11 1/16"	2'-5 1/2"
	F.S. NO. 18	2'-0 7/8"	2'-8 1/4"
	1/2	2'-3 7/8"	2'-11 1/4"
	3/4	2'-7 15/16"	3'-2 9/16"
	A-2	3'-1 1/4"	3'-6 1/8"

STEEL ALTERNATE 31/47

adache · ciuni · lynn associates
CONSULTING ENGINEERS CLEVELAND, OHIO 44130

TRANSVERSE SECTION AND PARAPET DETAILS EASTBOUND LANES
BRIDGE Nº ERI - 2 - 1798 L/R
S.R.2 OVER MUD BROOK

ERIE COUNTY STA. 1173 + 18.50 TO
ERI - 2 - 16.13 STA. 1180 + 95.50

DESIGNED	DRAWN	CHECKED	REVIEWED	DATE	REVISED
J.R.S.	W.P.R	AJM	L.E.D.	9-23-85	

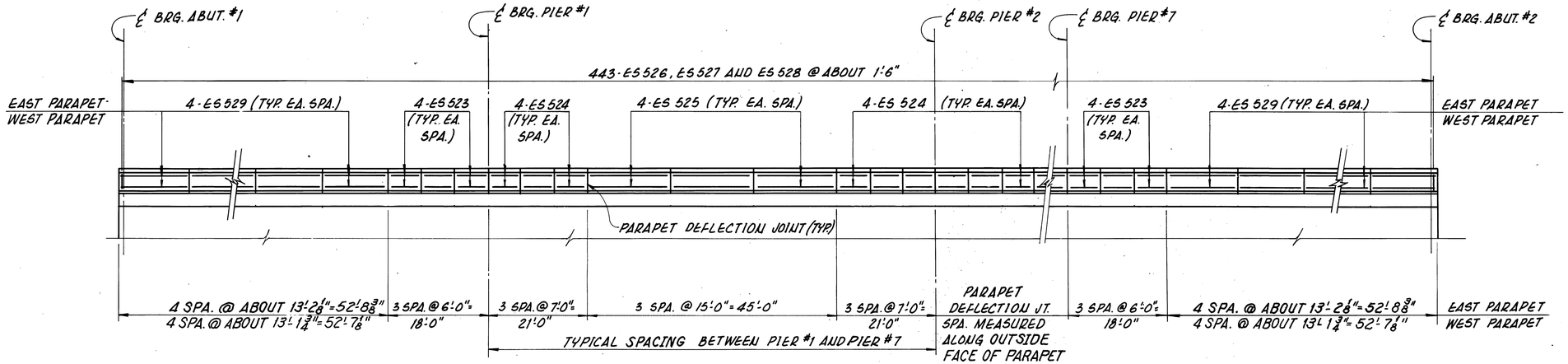

WESTBOUND LANES
DEVELOPED CURB AND PARAPET DETAIL

* (EAST PARAPET AS SHOWN AND NOTED, WEST PARAPET OPP. HAND AND AS NOTED)

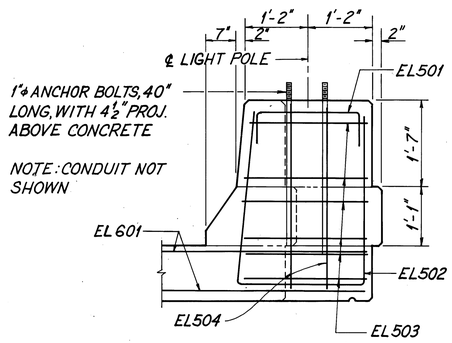

SECTION A-A

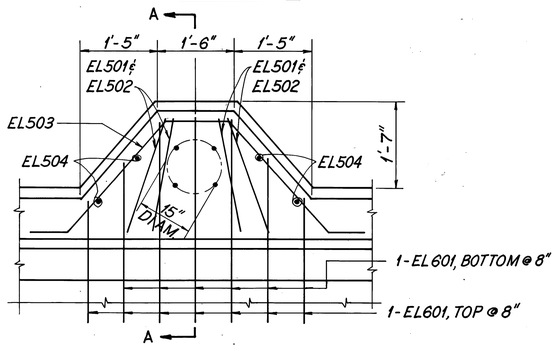

NOTE: FOR ADDITIONAL DETAILS OF STRUCTURE MOUNTED LIGHT POLE SEE STANDARD DRAWINGS HL-3,4,5 & 7 AND LIGHTING PLANS.

PLAN

LIGHTING PILASTER DETAIL

FHWA REGION	STATE	PROJECT	
5	OHIO		

2028
284

ERIE COUNTY
ERI-2-(16.13-17.39)

STEEL ALTERNATE 32/47

adache · ciuni · lynn associates
CONSULTING ENGINEERS CLEVELAND, OHIO 44130

PARAPET AND LIGHTING PILASTER DETAILS

BRIDGE Nº ERI-2-1798 L/R
S.R.2 OVER MUD BROOK

ERIE COUNTY
ERI-2-16.13

STA. 1173+18.50 TO.
STA. 1180+95.50

DESIGNED	DRAWN	CHECKED	REVIEWED	DATE	REVISED
P.A.G.	W.P.R.	R.J.P.	L.E.D.	9-23-85	

FHWA REGION	STATE	PROJECT	
5	OHIO		

202F
284

ERIE COUNTY
ERI-2-(16.13-17.39)

FORMING ELEVATIONS

GIRDER	SPAN 1				SPAN 2				SPAN 3				SPAN 4				SPAN 5				
	℄ ABUT.	1/4	1/2	3/4	℄ PIER-1	1/4	1/2	3/4	℄ PIER-2	1/4	1/2	3/4	℄ PIER-3	1/4	1/2	3/4	℄ PIER-4	1/4	1/2	3/4	℄ PIER-5
A	585.54	585.57	585.59	585.59	585.59	585.65	585.71	585.76	585.77	585.82	585.88	585.92	585.96	586.05	586.07	586.08	586.10	586.17	586.24	586.29	586.30
B	585.96	586.00	586.03	586.02	586.02	586.10	586.16	586.21	586.23	586.30	586.39	586.44	586.49	586.59	586.66	586.70	586.72	586.83	586.93	587.00	587.03
C	586.37	586.45	586.50	586.51	586.52	586.63	586.73	586.80	586.82	586.90	586.99	587.04	587.08	587.19	587.26	587.29	587.32	587.43	587.53	587.59	587.62
D	586.96	587.04	587.09	587.10	587.12	587.22	587.33	587.39	587.41	587.49	587.59	587.63	587.68	587.79	587.86	587.88	587.91	588.02	588.12	588.18	588.21
E	587.56	587.63	587.68	587.69	587.71	587.82	587.92	587.99	588.01	588.09	588.18	588.22	588.27	588.38	588.45	588.48	588.50	588.61	588.71	588.78	588.80
F	588.15	588.22	588.27	588.28	588.30	588.41	588.51	588.58	588.60	588.68	588.77	588.82	588.86	588.97	589.04	589.07	589.09	589.20	589.30	589.37	589.39
G	588.74	588.80	588.85	588.87	588.89	588.99	589.08	589.16	589.19	589.26	589.34	589.40	589.46	589.56	589.61	589.65	589.68	589.78	589.88	589.95	589.98
H	—	—	—	—	—	—	—	—	—	—	—	—	—	—	—	—	586.41	586.50	586.59	586.65	586.66
J	588.12	588.19	588.22	588.23	588.24	588.32	588.41	588.46	588.52	588.62	588.67	588.68	588.71	588.79	588.88	588.93	588.99	589.10	589.15	589.18	589.21
K	588.73	588.81	588.84	588.84	588.85	588.93	589.03	589.08	589.13	589.23	589.29	589.30	589.32	589.41	589.50	589.55	589.60	589.72	589.77	589.79	589.82
L	589.34	589.41	589.45	589.45	589.46	589.54	589.64	589.68	589.74	589.84	589.90	589.91	589.93	590.02	590.11	590.16	590.21	590.32	590.38	590.40	590.43
M	589.95	590.01	590.06	590.06	590.06	590.15	590.25	590.29	590.35	590.45	590.51	590.52	590.54	590.63	590.72	590.77	590.82	590.93	590.99	591.01	591.04
N	590.55	590.61	590.66	590.66	590.67	590.75	590.86	590.90	590.95	591.06	591.11	591.13	591.15	591.24	591.33	591.38	591.43	591.54	591.60	591.62	591.65
P	590.63	590.74	590.81	590.84	590.88	590.95	591.03	591.06	591.08	591.13	591.25	591.30	591.35	591.43	591.50	591.53	591.56	591.62	591.71	591.76	591.81

FORMING ELEVATIONS

GIRDER	SPAN 6				SPAN 7				SPAN 8				SPAN 9				SPAN 10			
	1/4	1/2	3/4	℄ PIER-6	1/4	1/2	3/4	℄ PIER-7	1/4	1/2	3/4	℄ ABUT.	1/4	1/2	3/4	℄ PIER-9	1/4	1/2	3/4	℄ ABUT.
A	586.34	586.39	586.40	586.44	586.52	586.54	586.55	586.56	586.61	586.68	586.72	586.75								
B	587.11	587.19	587.24	587.30	587.41	587.47	587.50	587.54	587.62	587.72	587.78	587.82								
C	587.71	587.79	587.83	587.89	588.00	588.07	588.10	588.13	588.22	588.31	588.37	588.40								
D	588.30	588.38	588.43	588.48	588.59	588.66	588.68	588.71	588.80	588.89	588.95	588.99								
E	588.89	588.97	589.01	589.07	589.18	589.25	589.27	589.30	589.39	589.48	589.54	589.57								
F	589.48	589.56	589.60	589.66	589.77	589.83	589.86	589.89	589.98	590.07	590.12	590.16								
G	590.06	590.13	590.18	590.25	590.35	590.40	590.45	590.47	590.56	590.64	590.69	590.74								
H	586.72	586.78	586.82	586.87	586.96	587.01	587.03	587.05	587.12	587.20	587.26	587.28								
												℄ PIER-8								
J	589.30	589.38	589.46	589.48	589.53	589.59	589.63	589.68	589.77	589.87	589.94	589.97	590.02	590.09	590.12	590.17	590.25	590.34	590.40	590.44
K	589.91	590.01	590.08	590.08	590.15	590.22	590.25	590.28	590.38	590.49	590.56	590.57	590.64	590.72	590.74	590.79	590.88	590.98	591.05	591.07
L	590.52	590.62	590.68	590.69	590.76	590.83	590.86	590.89	590.99	591.10	591.16	591.18	591.25	591.34	591.36	591.41	591.50	591.60	591.67	591.70
M	591.13	591.22	591.29	591.30	591.36	591.43	591.47	591.49	591.59	591.69	591.76	591.79	591.86	591.95	591.98	592.03	592.11	592.23	592.28	592.30
N	591.74	591.84	591.90	591.90	591.97	592.04	592.07	592.10	592.20	592.30	592.37	592.39	592.47	592.56	592.59	592.65	592.74	592.83	592.84	592.81
P	591.88	591.95	591.98	592.03	592.12	592.21	592.26	592.30	592.37	592.42	592.46	592.50	592.59	592.69	592.76	592.85	592.96	593.06	593.07	593.05

NOTES:
THE ELEVATIONS SHOWN ARE TOP OF CONCRETE SLAB ELEVATIONS WHICH ARE REQUIRED BEFORE THE CONCRETE IS PLACED. PROPER ALLOWANCE HAS BEEN MADE FOR THE DEADLOAD DEFLECTIONS CAUSED BY THE WEIGHT OF THE CONCRETE SLAB.

STEEL ALTERNATE 33/47

adache · ciuni · lynn associates
CONSULTING ENGINEERS CLEVELAND, OHIO 44130

FORMING ELEVATIONS

BRIDGE Nº ERI-2-1798 L/R
S.R.2 OVER MUD BROOK

ERIE COUNTY
ERI-2-16.13

STA. 1173+18.50 TO
STA. 1180+95.50

DESIGNED	DRAWN	CHECKED	REVIEWED	DATE	REVISED
AJM	AJM	R.J.P.	L.E.D.	9-23-85	

F.H.W.A. REGION	STATE	PROJECT	
5	OHIO		

202G
284

ERIE COUNTY
ERI-2-(16.13-17.39)

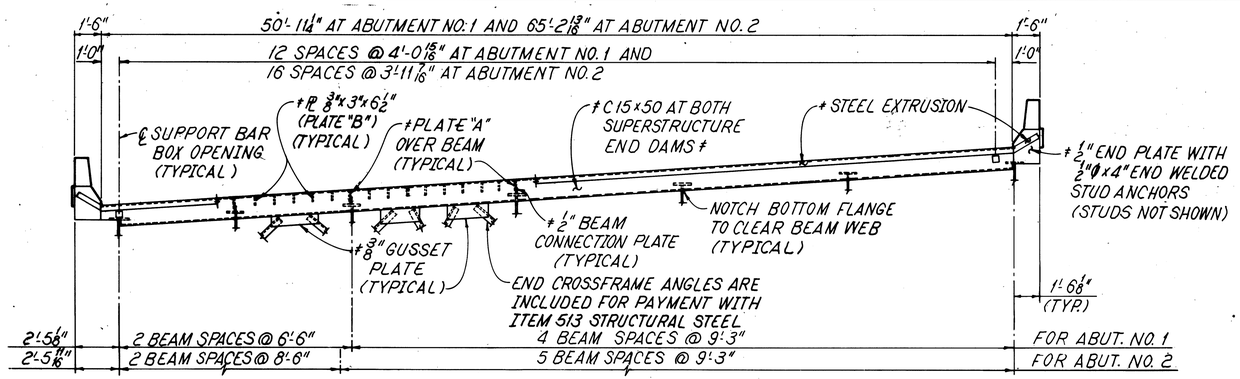

TRANSVERSE SECTION
WESTBOUND LANES

SUPERSTRUCTURE SIDE OF JOINT SHOWN
ABUTMENT SIDE OF JOINT OPPOSITE HAND AND SIMILAR EXCEPT AS NOTED

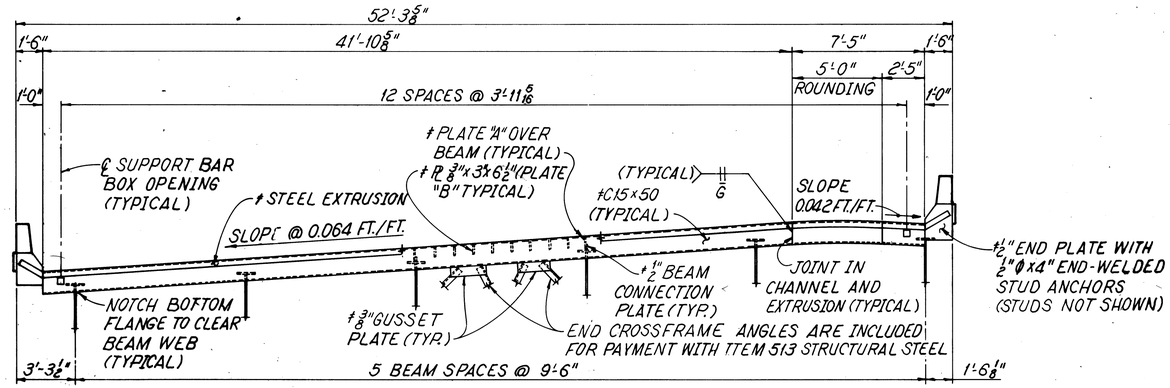

TRANSVERSE SECTION
EASTBOUND LANES

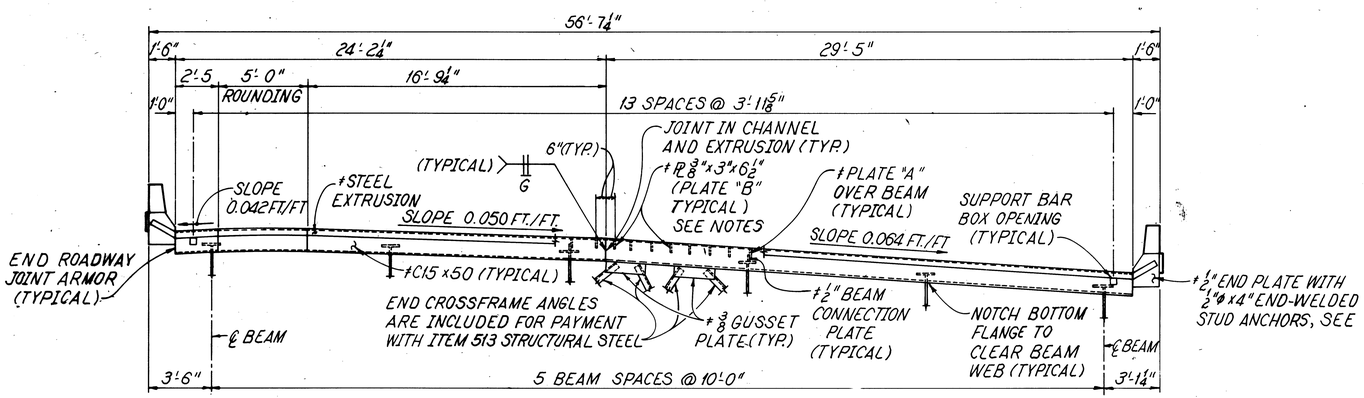

TRANSVERSE SECTION
EASTBOUND LANES

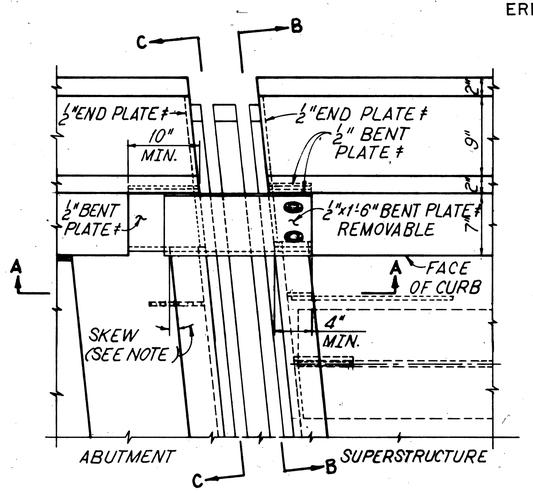

PART PLAN AT EXPANSION JOINT
SKEW FOR WESTBOUND LANES IS 05°16'08"
SKEW FOR EASTBOUND LANES IS 06°01'36"

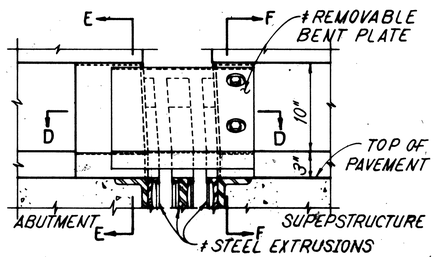

SECTION A-A

NOTES:

# INDICATES MEMBERS TO BE INCLUDED FOR PAYMENT IN THE UNIT PRICE BID FOR ITEM -516, STRUCTURAL EXPANSION JOINTS.

FOR SECTION AT EXPANSION JOINT, SECTIONS B-B, C-C, E-E AND F-F AND FOR SUPPORT BAR COVER BOX DETAIL SEE SHEET 35/47,

FOR ADDITIONAL DETAILS AND REGULATIONS SEE OHIO STANDARD DRAWINGS, SD-1-69 SHEETS 1 AND 2 OF 4 AND EXJ-2-81 SHEETS 1 AND 2 OF 2.

FOR DECK SLAB THICKENING AND REINFORCEMENT AT EXPANSION JOINTS SEE SLAB PLAN SHEET 27/47,

FOR GENERAL NOTES SEE SHEET 3/47.

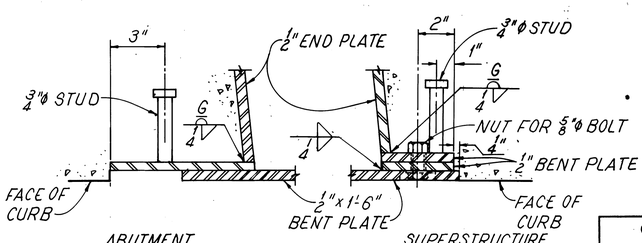

SECTION D-D

STEEL ALTERNATE 34/47

adache - ciuni - lynn associates
CONSULTING ENGINEERS CLEVELAND, OHIO 44130

EXPANSION JOINT AND CURB PLATE DETAILS

BRIDGE NO. ERI-2-1798 L/R
S. R. 2 OVER MUD BROOK

ERIE COUNTY
ERI-2-16.13

STA. 1173+18.50 TO
STA. 1180+ 95.50

DESIGNED	DRAWN	CHECKED	REVIEWED	DATE	REVISED
AJM/ECK	R.C.K.	AJM	L.E.D.	9-23-85	

F.H.W.A. REGION	STATE	PROJECT	
5	OHIO		

2024
284

ERIE COUNTY
ERI-2-(16.13-17.39)

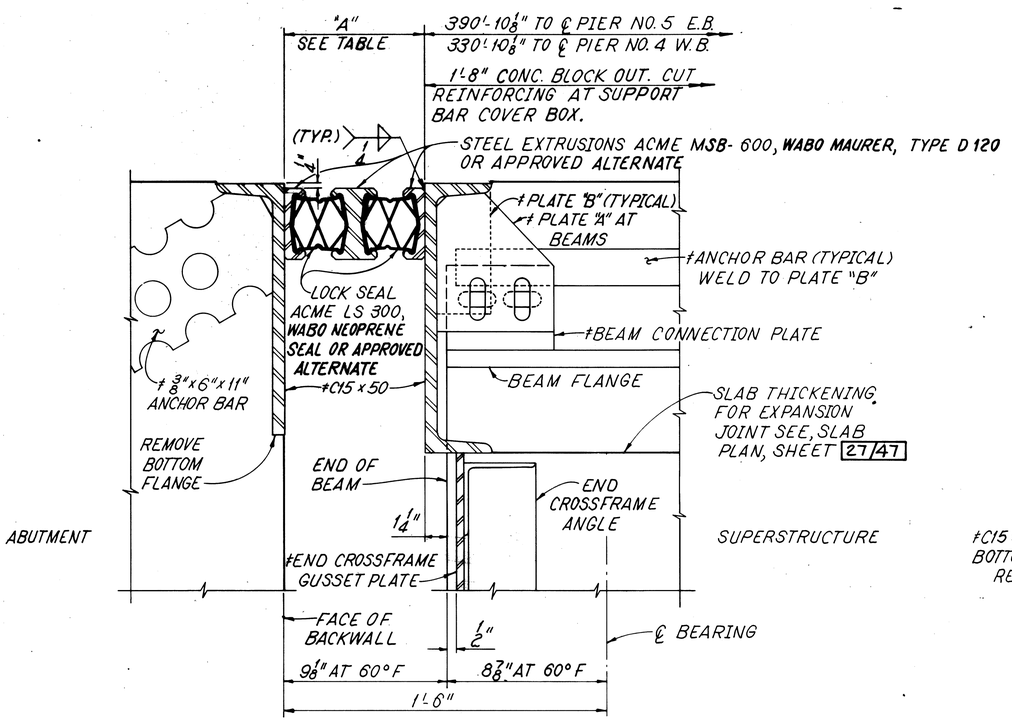

SECTION AT EXPANSION JOINT

SECTION TAKEN PERPENDICULAR TO JOINT SUPPORT BAR AND COVER BOX NOT SHOWN

TEMPERATURE ADJUSTMENT FOR "A"								JOINT
40°F	50°F	60°F	70°F	80°F	90°F	MIN.	MAX.	LOCATION
8⅜"	8⅛"	7⅞"	7⅝"	7⅜"	7⅛"	5"	11"	WESTBOUND
8½"	8⅛"	7⅞"	7⅝"	7¼"	7"	5"	11"	EASTBOUND

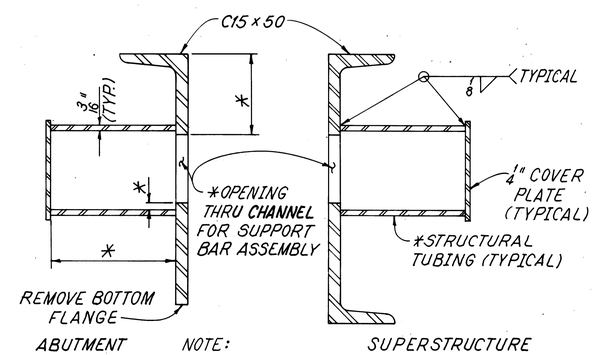

NOTE:
* DENOTES ITEMS THAT SHALL BE VARIFIED BY THE JOINT MANUFACTURER, PRIOR TO FABRICATION.

COVER BOX DETAIL

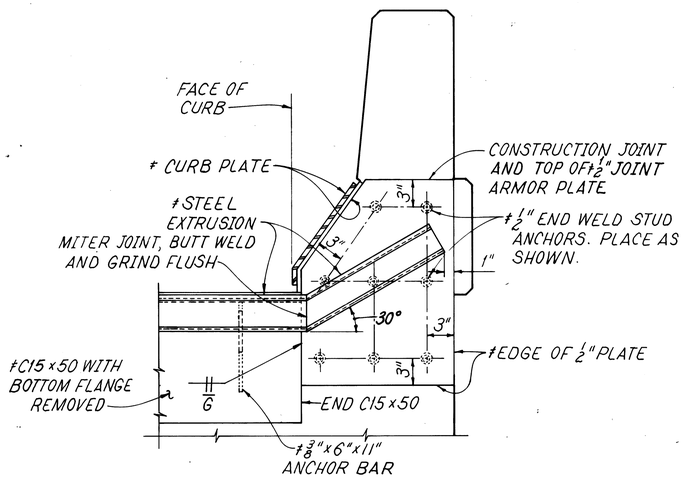

SECTION C-C

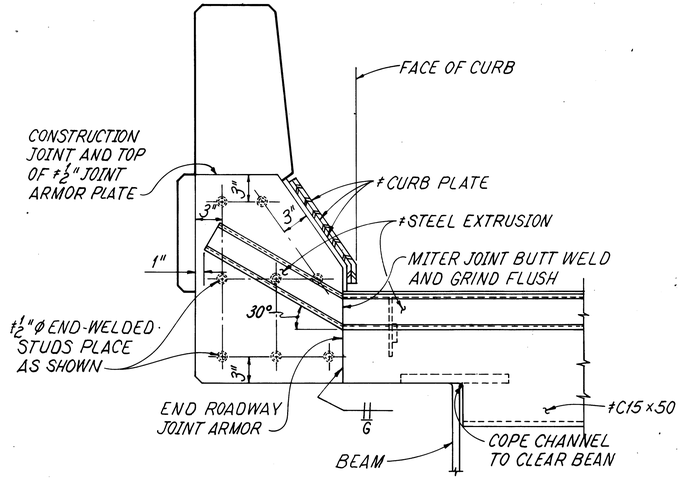

SECTION B-B

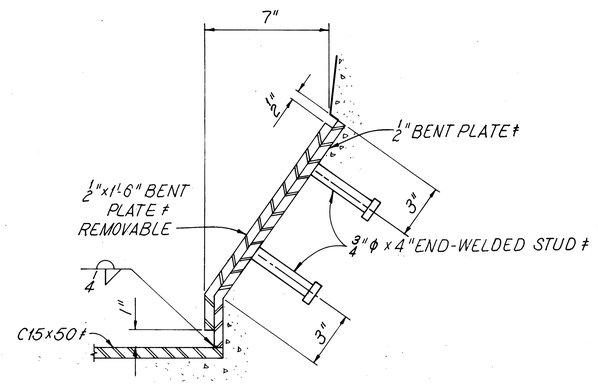

SECTION E-E

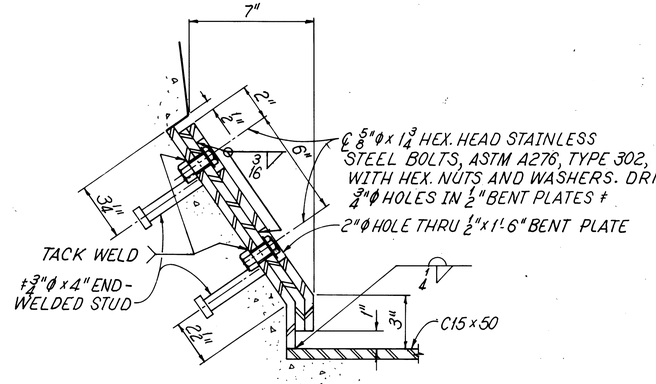

SECTION F-F

NOTES:

≠ INDICATES MEMBERS TO BE INCLUDED FOR PAYMENT IN THE UNIT PRICE BID FOR ITEM -516, STRUCTURAL EXPANSION JOINT.

FOR TRANSVERSE SECTIONS AT EXPANSION JOINTS, FOR PART PLAN AT EXPANSION JOINT AND FOR SECTIONS A-A AND D-D, SEE EXPANSION JOINT DETAILS SHEET 34/47.

FOR ADDITIONAL DETAILS AND REGULATIONS SEE OHIO STANDARD DRAWINGS, SD-1-69 SHEETS 1 AND 2 OF 4 AND TS-EXJ-2-81 SHEETS 1 AND 2 OF 2.

FOR GENERAL NOTES SEE SHEET 3/47.

STEEL ALTERNATE 35/47

adache · ciuni · lynn associates
CONSULTING ENGINEERS CLEVELAND, OHIO 44130

EXPANSION JOINT AND CURB PLATE DETAILS

BRIDGE NO. ERI-2-1798 L/R
S. R. 2 OVER MUD BROOK

ERIE COUNTY
ERI-2-16.13

STA. 1173+18.50 TO
STA. 1180+95.50

DESIGNED	DRAWN	CHECKED	REVIEWED	DATE	REVISED
AJM/RCK	R.C.K.	AJM	L.E.D.	9-23-85	

FHWA REGION	STATE	PROJECT
5	OHIO	

2021
284

ERIE COUNTY
ERI-2-(16.13-17.39)

MARK	NUMBER	LENGTH	TYPE	SER. INCR.	WEIGHT (LBS)	A	B	C	R
ABUTMENT NO.1 (WESTBOUND LANES)									
W1A501	48	10'-2"	1		510	6'-1"	2'-2"		
W1A502	6	11'-6"	3		72	3'-0"	2'-6"		
W1A503	6	11'-3"	3		71	3'-0"	2'-3"		
W1A504	26	9'-1"	2		247	0'-11"	8'-3"		
W1A505	26	7'-8"	2		208	0'-11"	6'-10"		
W1A506	48	9'-11"	1		497	4'-2"	3'-0"		
W1A507	35	27'-7"	STR		1,007				
W1A508	4	28'-7"	STR		120				
W1A509	5	27'-10"	STR		145				
W1A510	22	9'-2"	STR		211				
W1A511	1 SER 4	11'-8" / 6'-6"	1	10 1/8"	38	1'-2"	5'-4" / 2'-10"		
W1A512	4	6'-9"	STR		28				
W1A513	4	8'-4"	STR		35				
W1A514	4	10'-0"	STR		42				
W1A515	2	7'-2"	4		15	5'-0"	2'-2"	4 3/16"	
EW1A516	16	9'-8"	STR		162				
EW1A517	6	5'-3"	5		33	2'-2"	2'-5"	7 1/2"	I.R. 28 1/4"
EW1A518	4	5'-8"	STR		24				
EW1A519	16	2'-8"	6		45	2'-1"			
EW1A520	2	8'-6"	STR		18				
EW1A521	10	4'-6"	STR		47				
EW1A522	16	4'-4"	STR		73				
W1A523	1 BER 4	9'-1" / 6'-9"	1	5 11/16"	32	1'-2"	4'-1" / 2'-8"		
W1A524	12	11'-8"	STR		146				
EW1A525	2	7'-1"	STR		15				
W1A526	4	7'-2"	STR		30				
W1A527	2	7'-10"	4		17	5'-8"	2'-2"	7 11/16"	
W1A528	18	6'-0"	STR		113				
W1AG01	24	16'-7"	7		598	6'-1"	8'-3"	2'-7"	
W1AG02	24	15'-2"	7		547	6'-1"	6'-10"	2'-7"	
W1AG03	6	23'-10"	1		215	1'-2"	11'-6"		
W1AG04	6	20'-6"	1		185	1'-2"	9'-10"		
EW1AG05	4	6'-3"	9		38	0'-9"	0'-6"	5'-0"	

MARK	NUMBER	LENGTH	TYPE	SER. INCR.	WEIGHT (LBS)	A	B	C	R
ABUTMENT NO.1 (WESTBOUND LANES)									
EW1AG06	4	7'-6"	9		45	9"	6"	6'-3"	
EW1AG07	1	6'-1"	9		10	8"	5"	5'-0"	
EW1AG08	1	3'-11"	9		6	8"	4"	2'-11"	
EW1AG09	2	3'-9"	9		12	7"	3"	2'-11"	
EW1AG10	8	3'-3"	9		39	7"	2"	2'-11"	
EW1AG11	1	4'-0"	9		6	8"	5"	2'-11"	
EW1AG12	1	4'-2"	9		7	9"	6"	2'-11"	
W1AG13	52	9'-4"	1		729	1'-2"	4'-3"		
W1AG14	52	11'-8"	1		607	1'-8"	5'-2"		
W1AG15	52	7'-1"	1		573	1'-8"	3'-0"		
W1AB01	14	28'-9"	STR		1075				
W1AB02	6	11'-10"	STR		190				
W1AB03	6	12'-0"	STR		193				
W1AB04	4	7'-10"	STR		75				
W1AB05	35	4'-11"	14		460				
TOTAL WEIGHT EPOXY COATED BARS =					580				
TOTAL WEIGHT UNCOATED BARS =					9031				
ABUTMENT NO. 2 (WESTBOUND LANES)									
W2A501	58	10'-3"	1		620	6'-2"	2'-2"		
W2A502	6	11'-6"	3		72	3'-0"	2'-6"		
W2A503	8	11'-0"	3		92	3'-0"	2'-3"		
W2A504	35	34'-9"	STR.		1,269				
W2A505	2	23'-9"	STR.		50				
W2A506	4	31'-9"	STR.		133				
W2A507	33	7'-3"	2		250	11"	6'-6"		
W2A508	58	10'-11"	1		661	4'-2"	3'-6"		
W2A509	10	35'-0"	STR		365				
W2A510	8	9'-2"	STR		77				
W2A511	33	9'-7"	2		330	11"	8'-9"		
W2A512	16	10'-8"	STR		178				
W2A513	2	8'-2"	STR		17				
W2A514	2	10'-1"	4		21	7'-11"	2'-2"	2 13/16"	
W2A515	2	10'-10"	STR		23				
W2A516	2	13'-6"	STR		29				
W2A517	6	16'-2"	STR		102				
EW2A518	8	14'-2"	STR		119				
EW2A519	10	5'-3"	5		55	2'-2"	2'-5"	7 1/2"	I.R. 28 1/4"
EW2A520	7	5'-10"	STR		43				

BENDING DIAGRAMS

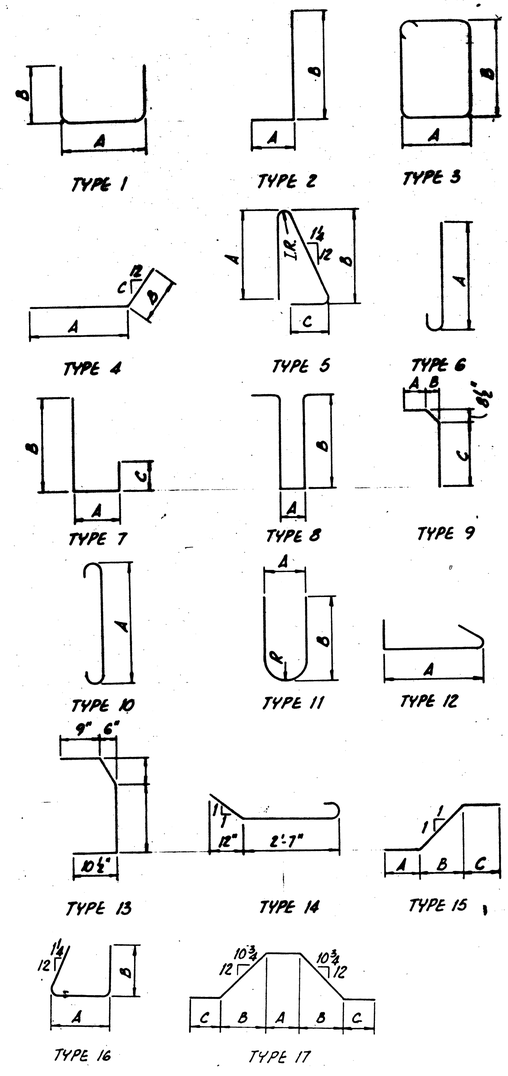

REINFORCING STEEL SAMPLES
REFER TO CMS SECTIONS 106.03, 700, 709.01 THROUGH 709.05 AND 709.08. SUFFICIENT ADDITIONAL REINFORCING STEEL SHALL BE PROVIDED FOR SAMPLING. RANDOM SAMPLES SHALL BE REPLACED IN THE STRUCTURES BY THE ADDITIONAL STEEL, SPLICED IN ACCORDANCE WITH 509.08.

STEEL ALTERNATE 36/47

adache · ciuni · lynn associates
CONSULTING ENGINEERS CLEVELAND, OHIO 44130

REINFORCING STEEL LIST
WESTBOUND LANES
BRIDGE NO. ERI-2-1798 L/R
S.R. 2 OVER MUD BROOK

ERIE COUNTY
ERI-2-16.13

STA. 1173+18.50 TO
STA. 1180+95.50

DESIGNED	DRAWN	CHECKED	REVIEWED	DATE	REVISED
P.A.G.	C.W.H.	P.A.G.	L.E.D.	9-23-85	

F.H.W.A. REGION	STATE	PROJECT	
5	OHIO		

202K 284

ERIE COUNTY
ERI-2-(16.13-17.39)

MARK	NUMBER	LENGTH	TYPE	SER. INCR.	WEIGHT (LBS)	A	B	C	R
ABUTMENT NO. 2 (WESTBOUND LANES)									
EW2A521	16	2'-8"	6		45	2'-1"			
EW2A522	4	6'-8"	STR		28				
EW2A523	11	4'-6"	STR		52				
EW2A524	16	4'-4"	STR		73				
W2A525	1 SER 7	9'-5" / 6'-3"	1	3 3/16"	58	1'-2"	4'-3" / 2'-8"		
W2A526	6	11'-8"	STR		73				
W2A527	2	8'-4"	STR		18				
W2A528	2	6'-8"	STR		14				
W2A529	1 SER 4	8'-11" / 6'-3"	1	5 3/16"	32	1'-2"	4'-0" / 2'-8"		
W2A530	2	7'-2"	4		15	5'-0"	2'-2"	4 1/8"	
EW2A531	8	9'-8"	STR		81				
EW2A532	4	5'-9"	STR		24				
W2A533	18	6'-0"	STR		113				
W2A534	2	10'-0"	STR		21				
W2AG01	31	13'-3"	7		617	6'-2"	4'-10"	2'-7"	
W2AG02	27	16'-5"	7		666	6'-2"	8'-0"	2'-7"	
EW2AG03	8	3'-8"	9		44	7"	2"	2'-11"	
EW2AG04	1	4'-1"	9		7	9"	5"	2'-11"	
W2AG05	6	20'-4"	1		184	1'-2"	9'-9"		
W2AG06	65	14'-4"	1		1399	1'-8"	6'-6"		
W2AG07	65	6'-10"	1		666	1'-8"	2'-9"		
W2AG08	65	9'-4"	1		911	1'-2"	4'-3"		
W2AG09	7	28'-4"	1		298	1'-2"	13'-9"		
EW2AG10	4	6'-1"	9		36	9"	6"	4'-10"	
EW2AG11	7	6'-3"	9		66	9"	6"	5'-0"	
EW2AG12	2	3'-11"	9		12	8"	4"	2'-11"	
EW2AG13	2	3'-10"	9		12	7"	4"	2'-11"	
EW2AG14	2	3'-9"	9		12	7"	3"	2'-11"	
W2A801	14	36'-10"	STR		1377				
W2A802	5	12'-0"	STR		161				
W2A803	2	7'-8"	STR		41				
W2A804	5	13'-2"	STR		176				
W2A805	2	8'-0"	STR		43				
W2A806	4	7'-0"	STR		75				

MARK	NUMBER	LENGTH	TYPE	SER. INCR.	WEIGHT (LBS)	A	B	C	R
ABUTMENT No. 2 (WESTBOUND LANES)									
W2A807	44	4'-11"	14		578				
TOTAL WEIGHT EPOXY COATED BARS =					709				
TOTAL WEIGHT UNCOATED BARS =					11825				
PIER NO. 1 (WESTBOUND LANES)									
W1P501	116	12'-4"	3		1492	2'-3"	3'-8"		
W1P502	20	5'-4"	1		112	2'-3"	1'-8"		
W1P503	2 SER 5	9'-2" / 6'-2"	1	4 1/2"	80	2'-3"	3'-7" / 2'-1"		
W1P504	2 SER 5	9'-2" / 6'-8"	1	3 3/4"	83	2'-3"	3'-7" / 2'-4"		
W1P601	6	30'-0"	STR.		271				
W1P602	8	15'-7"	STR.		188				
W1P603	4	14'-3"	STR.		86				
W1P604	2	6'-5"	4		20	5'-0"	1'-5"	3 7/8"	
W1P605	2	6'-8"	4		20	5'-3"	1'-5"	4 1/4"	
W1P606	6	6'-2"	1		56	3'-7"	1'-5"		
W1P1001	16	26'-5"	STR.		1825				
W1P1101	8	30'-0"	STR.		1276				
W1P1102	16	24'-9"	2		2104	23'-1"	2'-0"		
TOTAL WEIGHT =					7613				
PIER NO. 2 (WESTBOUND LANES)									
W2P501	116	12'-4"	3		1492	2'-3"	3'-8"		
W2P502	20	5'-4"	1		112	2'-3"	1'-8"		
W2P503	2 SER 5	9'-2" / 6'-2"	1	4 1/2"	80	2'-3"	3'-7" / 2'-1"		
W2P504	2 SER 5	9'-2" / 6'-8"	1	3 3/4"	83	2'-3"	3'-7" / 2'-4"		
W2P601	6	30'-0"	STR.		271				
W2P602	8	15'-7"	STR.		188				
W2P603	4	14'-3"	STR.		86				

MARK	NUMBER	LENGTH	TYPE	SER. INCR.	WEIGHT (LBS)	A	B	C	R
PIER NO. 2 (WESTBOUND LANES)									
W2P604	2	6'-5"	4		20	5'-0"	1'-5"	3 7/8"	
W2P605	2	6'-8"	4		20	5'-3"	1'-5"	4 1/4"	
W2P606	6	6'-2"	1		56	3'-7"	1'-5"		
W2P1001	16	26'-5"	STR		1825				
W2P1101	8	30'-0"	STR.		1276				
W2P1102	16	24'-9"	2		2104	23'-1"	2'-0"		
TOTAL WEIGHT =					7613				
PIER NO. 3 (WESTBOUND LANES)									
W3P501	116	12'-4"	3		1492	2'-3"	3'-8"		
W3P502	20	5'-4"	1		112	2'-3"	1'-8"		
W3P503	2 SER 5	9'-2" / 6'-2"	1	4 1/2"	80	2'-3"	3'-7" / 2'-1"		
W3P504	2 SER 5	9'-2" / 6'-8"	1	3 3/4"	83	2'-3"	3'-7" / 2'-4"		
W3P601	6	30'-0"	STR.		271				
W3P602	8	15'-7"	STR.		188				
W3P603	4	14'-3"	STR.		86				
W3P604	2	6'-5"	4		20	5'-0"	1'-5"	3 7/8"	
W3P605	2	6'-8"	4		20	5'-3"	1'-5"	4 1/4"	
W3P606	6	6'-2"	1		56	3'-7"	1'-5"		

STEEL ALTERNATE 37/47

adache - ciuni - lynn associates
CONSULTING ENGINEERS CLEVELAND, OHIO 44130

REINFORCING STEEL LIST
WESTBOUND LANES

BRIDGE NO. ERI-2-1798 L/R
S.R. 2 OVER MUD BROOK

ERIE COUNTY
ERI-2-16.13

STA. 1173+18.50 TO.
STA. 1180+95.50

DESIGNED	DRAWN	CHECKED	REVIEWED	DATE	REVISED
P.A.G./J.P.S.	C.W.H.	J.R.S.	L.E.D.	9.23.85	

F.H.W.A. REGION	STATE	PROJECT	
5	OHIO		

202L
284

ERIE COUNTY
ERI-2-(16.13-17.39)

MARK	NUMBER	LENGTH	TYPE	SER. INCR.	WEIGHT (LBS)	A	B	C	R
PIER NO. 3 (WESTBOUND LANES)									
W3P1001	16	26'-5"	STR.		1825				
W3P1101	8	30'-0"	STR.		1276				
W3P1102	16	24'-9"	2		2104				
		TOTAL WEIGHT =			7613				
PIER NO. 4 (WESTBOUND LANES)									
W4P501	120	12'-4"	3		1544	2'-3"	3'-8"		
W4P502	20	5'-4"	1		112	2'-3"	1'-8"		
W4P503	2 SER 5	9'-2" / 6'-2"	1	4½"	80	2'-3"	3'-7" / 2'-1"		
W4P504	2 SER 5	9'-2" / 6'-8"	1	3¾"	83	2'-3"	3'-7" / 2'-4"		
W4P505	64	5'-11"	1		395	3'-8"	1'-3"		
W4P601	6	30'-0"	STR.		271				
W4P602	8	17'-1"	STR.		206				
W4P603	4	16'-0"	STR.		97				
W4P604	2	6'-5"	4		20	5'-0"	1'-5"	3⅞"	
W4P605	2	6'-8"	4		20	5'-3"	1'-5"	4¼"	
W4P606	6	6'-2"	1		56	3'-7"	1'-5"		
W4P1001	16	27'-11"	STR.		1923				
W4P1002	2	16'-0"	STR.		138				
W4P1101	8	30'-0"	STR.		1276				
W4P1102	16	26'-4"	2		2239	24'-8"	2'-0"		
		TOTAL WEIGHT =			8460				
PIER NO. 5 (WESTBOUND LANES)									
W5P501	120	12'-4"	3		1544	2'-3"	3'-8"		
W5P502	20	5'-4"	1		112	2'-3"	1'-8"		
W5P503	2 SER 5	9'-2" / 6'-2"	1	4½"	80	2'-3"	3'-7" / 2'-1"		

MARK	NUMBER	LENGTH	TYPE	SER. INCR.	WEIGHT (LBS)	A	B	C	R
PIER NO. 5 (WESTBOUND LANES)									
W5P504	2 SER 5	9'-2" / 6'-8"	1	3¾"	83	2'-3"	3'-7" / 2'-4"		
W5P601	6	30'-0"	STR.		271				
W5P602	8	17'-1"	STR.		206				
W5P603	4	16'-0"	STR.		97				
W5P604	2	6'-5"	4		20	5'-0"	1'-5"	3⅞"	
W5P605	2	6'-8"	4		20	5'-3"	1'-5"	4¼"	
W5P606	6	6'-2"	1		56	3'-7"	1'-5"		
W5P1001	16	27'-11"	STR.		1923				
W5P1002	2	16'-0"	STR.		138				
W5P1101	8	30'-0"	STR.		1276				
W5P1102	16	26'-4"	2		2239	24'-8"	2'-0"		
		TOTAL WEIGHT =			8065				
PIER NO. 6 (WESTBOUND LANES)									
W6P501	136	12'-4"	3		1749	2'-3"	3'-8"		
W6P502	20	5'-4"	1		112	2'-3"	1'-8"		
W6P503	2 SER 5	9'-2" / 6'-2"	1	4½"	80	2'-3"	3'-7" / 2'-1"		
W6P504	2 SER 5	9'-2" / 6'-8"	1	3¾"	83	2'-3"	3'-7" / 2'-4"		
W6P604	2	6'-5"	4		20	5'-0"	1'-5	3⅞"	
W6P605	2	6'-8"	4		20	5'-3"	1'-5	4¼"	
W6P606	6	6'-2"	1		56	3'-7"	1'-5"		
W6P701	6	30'-0"	STR.		368				
W6P702	8	19'-9"	STR.		323				
W6P703	4	18'-3"	STR.		153				

MARK	NUMBER	LENGTH	TYPE	SER. INCR.	WEIGTH (LBS)	A	B	C	R
PIER NO. 6 (WESTBOUND LANES)									
W6P1001	6	30'-0"	STR.		775				
W6P1101	8	30'-0"	STR.		1276				
W6P1102	16	28'-5"	2		2416	26'-9"	2'-0"		
W6P1103	16	30'-6"	STR.		2592				
W6P1104	4	16'-0"	STR.		340				
		TOTAL WEIGHT =			10363				
PIER NO. 7 (WESTBOUND LANES)									
W7P501	136	12'-4"	3		1749	2'-3"	3'-8"		
W7P502	20	5'-4"	1		112	2'-3"	1'-8"		
W7P503	2 SER 5	9'-2" / 6'-2"	1	4½"	80	2'-3"	3'-7" / 2'-1"		
W7P504	2 SER 5	9'-2" / 6'-8"	1	3¾"	83	2'-3"	3'-7" / 2'-4"		
W7P604	2	6'-5"	4		20	5'-0"	1'-5"	3⅞"	
W7P605	2	6'-8"	4		20	5'-3"	1'-5"	4¼"	
W7P606	6	6'-2"	1		56	3'-7"	1'-5"		
W7P701	6	30'-0"	STR.		368				
W7P702	8	19'-9"	STR.		323				
W7P703	4	18'-8"	STR.		153				

STEEL ALTERNATE 38/47

adache · ciuni · lynn associates
CONSULTING ENGINEERS CLEVELAND OHIO 44130

REINFORCING STEEL LIST
WESTBOUND LANES

BRIDGE NO. ERI-2-1798 L/R
S. R. 2 OVER MUD BROOK

ERIE COUNTY
ERI-2-16.13

STA. 1173+18.50 TO
STA. 1180+95.50

DESIGNED	DRAWN	CHECKED	REVIEWED	DATE	REVISED
JRS	R.C.K.	J.R.S.	L.E.D.	9-23-85	

FHWA REGION	STATE	PROJECT	
5	OHIO		

202M 284

ERIE COUNTY
ERI-2-(16.13-17.39)

MARK	NUMBER	LENGTH	TYPE	SER. INCR.	WEIGHT (LBS)	A	B	C	R
PIER NO. 7 (WESTBOUND LANES)									
W7P1001	6	30'-0"	STR.		775				
W7P1101	8	30'-0"	STR.		1276				
W7P1102	16	28'-5"	2		2416	26'-9"	2'-0"		
W7P1103	16	30'-6"	STR.		2592				
W7P1104	4	16'-0"	STR.		340				
		TOTAL WEIGHT =			10,363				
SUPERSTRUCTURE (WESTBOUND LANES)									
EWS401	1535	30'-0"	STR.		30,762				
EWS402	62	24'-11"	STR.		1,032				
EWS403	3	2'-10"	STR.		6				
EWS404	3	14'-3"	STR.		29				
EWS405	3	25'-8"	STR.		52				
EWS406	3	8'-6"	STR.		17				
EWS407	4	19'-11"	STR.		54				
WS501	2668	30'-0"	STR.		83,482				
WS502	55	25'-7"	STR.		1467				
WS503	55	26'-3"	STR.		1506				
WS504	55	26'-11"	STR.		1544				
WS505	55	27'-7"	STR.		1582				
WS506	55	28'-3"	STR.		1621				
WS507	55	28'-11"	STR.		1659				
WS508	55	29'-7"	STR.		1697				
WS509	55	30'-11"	STR.		1774				
WS510	55	31'-7"	STR.		1812				
WS511	125	32'-3"	STR.		4205				
WS512	55	32'-11"	STR.		1888				
WS513	55	33'-7"	STR.		1927				
WS514	55	34'-3"	STR.		1965				
WS515	55	34'-11"	STR.		2003				
WS516	55	35'-7"	STR.		2041				
WS517	55	36'-3"	STR.		2080				
WS518	55	36'-11"	STR.		2118				
WS519	55	37'-7"	STR.		2156				
WS520	55	38'-3"	STR.		2195				
WS521	39	39'-3"	STR.		1597				
WS522	55	30'-3"	STR.		1736				

MARK	NUMBER	LENGTH	TYPE	SER. INCR.	WEIGHT (LBS)	A	B	C	R
SUPERSTRUCTURE (WESTBOUND LANES)									
EWS523	24	5'-6"	STR.		138				
EWS524	144	6'-6"	STR.		977				
EWS525	72	14'-6"	STR.		1089				
EWS526	443	2'-5"	2		1119	10½"	1'-8"		
EWS527	443	2'-5"	13		1119	11"			
EWS528	443	5'-3"	5		2426	2'-2"	2'-5"	7½"	2⅛"
EWS529	32	12'-6"	STR.		418				
WS530	36	9'-0"	STR.		338				
WS531	128	4'-6"	15		601	1'-10"	11"	1'-4"	
WS532	8	6'-3"	STR.		52				
WS533	8	8'-3"	STR.		69				
EWS601	1139	35'-6"	STR.		60,733				
EWS602	55	20'-2"	STR.		1666				
EWS603	55	20'-10"	STR.		1721				
EWS604	55	21'-6"	STR.		1776				
EWS605	55	22'-2"	STR.		1831				
EWS606	55	22'-10"	STR.		1886				
EWS607	55	23'-6"	STR.		1941				
EWS608	55	24'-2"	STR.		1997				
EWS609	55	24'-10"	STR.		2051				
EWS610	55	25'-6"	STR.		2107				
EWS611	55	26'-2"	STR.		2162				
EWS612	55	26'-10"	STR.		2216				
EWS613	55	27'-2"	STR.		2245				
EWS614	55	27'-10"	STR.		2299				
EWS615	55	28'-6"	STR.		2354				
EWS616	55	29'-2"	STR.		2410				
EWS617	55	29'-10"	STR.		2464				
EWS618	550	30'-6"	STR.		25,196				
EWS619	55	31'-2"	STR.		2575				
EWS620	55	31'-10"	STR.		2629				
EWS621	55	32'-6"	STR.		2685				
EWS622	39	33'-10"	STR.		1982				
EWS623	495	8'-11"	STR		6629				
TOTAL WEIGHT EPOXY COATED BARS = 174,793									
TOTAL WEIGHT UNCOATED BARS = 125,115									
LIGHT POLE PILASTER (TYPICAL OF FOUR) (WESTBOUND LANES)									
EL501	4	3'-3"	1		14	1'-10"	10"		
EL502	4	8'-5"	16		35	2'-4"	3'-2"		
EL503	6	7'-0"	17		44	1'-4"	1'-10"	1'-0"	
EL504	4	3'-2"	STR.		13				

MARK	NUMBER	LENGTH	TYPE	SER. INCR.	WEIGHT (LBS)	A	B	C	R
LIGHT POLE PILASTER (TYPICAL OF FOUR) (WESTBOUND LANES)									
EL601	12	3'-9"	STR.		68				
TOTAL WEIGHT PER PILASTER					174				
SUMMARY OF TOTAL WEIGHT (WESTBOUND LANES)									
ABUTMENTS :									
EPOXY COATED BARS					1289				
UNCOATED BARS					20856				
PIERS :									
EPOXY COATED BARS					0				
UNCOATED BARS					60,090				
SUPERSTRUCTURE :									
EPOXY COATED BARS-DECK					174,193				
4 LIGHT POLE PILASTERS					696				
TOTAL EPOXY COATED BARS					174,889				
UNCOATED BARS					125,115				

STEEL ALTERNATE 39/47

adache - ciuni - lynn associates
CONSULTING ENGINEERS CLEVELAND, OHIO 44130

REINFORCING STEEL LIST
WESTBOUND LANES
BRIDGE NO. ERI-2-1798 L/R
S. R. 2 OVER MUD BROOK

ERIE COUNTY
ERI-2-16.13

STA. 1173+18.50 TO
STA. 1180+95.50

DESIGNED	DRAWN	CHECKED	REVIEWED	DATE	REVISED
PAG/JRS	R.C.K.	J.R.S.	L.E.D.	9.23.85	

F.H.W.A. REGION	STATE	PROJECT	
5	OHIO		

ERIE COUNTY
ERI-2-(16.13-17.39)

2021
284

MARK	NUMBER	LENGTH	TYPE	SER. INCR.	WEIGHT (LBS)	A	B	C	R
ABUTMENT NO.1 (EASTBOUND LANES)									
D1A501	48	10'-2"	1		510	6'-1"	2'-2"		
D1A502	5	11'-0"	3		58	3'-0"	2'-3"		
D1A503	6	11'-6"	3		72	3'-0"	2'-6"		
D1A504	26	9'-11"	2		269	11"	8'-1"		
D1A505	26	7'-8"	2		208	11"	6'-10"		
D1A506	48	8'-11"	1		447	4'-2"	2'-6"		
D1A507	38	26'-9"	STR.		1060				
D1A508	10	27'-0"	STR.		282				
D1A509	8	9'-2"	STR.		77				
D1A510	12	8'-11"	STR.		112				
D1A511	4	6'-10"	STR.		29				
D1A512	4	8'-4"	STR.		35				
D1A513	12	11'-4"	STR.		142				
D1A514	4	7'-2"	4		30	5'-0"	2'-2"	5"	
ED1A515	16	9'-4"	STR.		156				
ED1A516	6	5'-3"	5		33	2'-2"	2'-5"	7½"	I.R. 2⅛"
ED1A517	8	6'-1"	STR.		51				
ED1A518	16	2'-8"	6		45	2'-1"			
ED1A519	4	7'-5"	STR.		31				
ED1A520	10	4'-6"	STR.		47				
ED1A521	16	4'-4"	STR.		73				
D1A522	2SER. 4	9'-11" / 6'-7"	1		69	1'-2"	4'-6" / 2'-10"		
D1A523	4	9'-10"	STR.		41				
D1A524	16	6'-0"	STR.		100				
D1A525	2	15'-0"	STR.		31				
D1A601	24	16'-5"	7		592	6'-1"	8'-1"	2'-7"	
D1A602	24	15'-2"	7		547	6'-1"	6'-10"	2'-7"	
D1A603	6	24'-4"	1		220	1'-2"	11'-9"		
D1A604	6	19'-8"	1		178	1'-2"	9'-5"		
ED1A605	8	6'-5"	9		78	9"	6"	5'-2"	

MARK	NUMBER	LENGTH	TYPE	SER. INCR.	WEIGHT (LBS)	A	B	C	R
ABUTMENT NO.1 (EASTBOUND LANES)									
D1A606	50	7'-1"	1		532	1'-8"	3'-0"		
ED1A607	2	6'-3"	9		19	8"	5"	5'-0"	
ED1A608	2	6'-2"	9		19	8"	4"	2'-11"	
ED1A609	2	3'-8"	9		12	7"	3"	2'-11"	
ED1A610	8	3'-8"	9		44	7"	2"	2'-11"	
D1A611	50	9'-4"	1		701	1'-2"	4'-3"		
D1A612	50	14'-4"	1		1077	1'-8"	6'-6"		
D1A801	14	29'-2"	STR		1091				
D1A802	6	11'-10"	STR		190				
D1A803	6	12'-2"	STR		195				
D1A804	4	6'-6"	STR		70				
D1A805	33	4'-11"	14		434				
TOTAL WEIGHT EPOXY COATED BARS =					608				
TOTAL WEIGHT UNCOATED BARS =					9399				
ABUTMENT NO. 2 (EASTBOUND LANES)									
D2A501	50	10'-2"	1		531	6'-1"	2'-2"		
D2A502	6	11'-6"	3		72	3'-0"	2'-6"		
D2A503	7	11'-0"	3		81	3'-0"	2'-3"		
D2A504	38	27'-8"	STR		1097				
D2A505	10	27'-11"	STR		291				
D2A506	2	18'-8"	STR.		39				
D2A507	48	8'-11"	1		447	4'-2"	2'-6"		
D2A508	28	6'-8"	2		195	11"	5'-10"		
D2A509	24	8'-4"	2		209	11"	7'-6"		
D2A510	10	10'-4"	STR.		108				
D2A511	2	8'-4"	STR.		18				
D2A512	2	10'-0"	4		21	7'-10"	2'-2"	3 5/16"	
D2A513	2	10'-11"	STR.		23				
D2A514	6	16'-2"	STR.		102				
ED2A515	8	14'-2"	STR.		119				
ED2A516	10	5'-3"	5		55	2'-2"	2'-5"	7½"	I.R. 2⅛"
ED2A517	10	6'-1"	STR.		64				
ED2A518	16	2'-8"	6		45	2'-1"			
ED2A519	2	5'-10"	STR.		13				
ED2A520	11	4'-6"	STR.		52				

BENDING DIAGRAMS

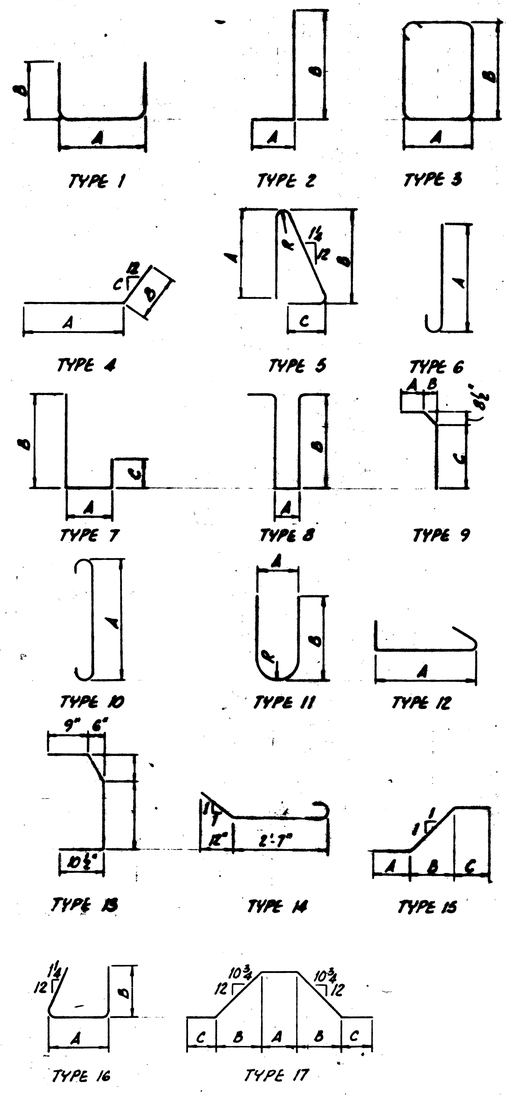

REINFORCING STEEL SAMPLES
REFER TO CMS SECTIONS 106.03, 700, 709.01 THROUGH 709.05 AND 709.08. SUFFICIENT ADDITIONAL REINFORCING STEEL SHALL BE PROVIDED FOR SAMPLING. RANDOM SAMPLES SHALL BE REPLACED IN THE STRUCTURES BY THE ADDITIONAL STEEL, SPLICED IN ACCORDANCE WITH 509.08.

STEEL ALTERNATE 40/47

adache - ciuni - lynn associates
CONSULTING ENGINEERS CLEVELAND OHIO 44130

REINFORCING STEEL LIST
EASTBOUND LANES

BRIDGE NO. ERI-2-1798 L/R
S.R. 2 OVER MUD BROOK

ERIE COUNTY
ERI-2-16.13

STA. 1173+18.50 TO
STA. 1180+95.50

DESIGNED	DRAWN	CHECKED	REVIEWED	DATE	REVISED
PAG	CWH	PAG	L.E.D	9-25-85	

F.H.W.A. REGION	STATE	PROJECT	
5	OHIO		

202P 284

ERIE COUNTY
ERI-2-(16.13-17.39)

MARK	NUMBER	LENGTH	TYPE	SER. INCR.	WEIGHT (LBS)	A	B	C	R
ABUTMENT NO. 2 (EASTBOUND LANES)									
ED2A521	16	4'-4"	STR.		73				
D2A522	1 SER 7	10'-5" / 6'-7"	1	4"	62	1'-2"	4'-9" / 2'-10"		
D2A523	6	9'-2"	STR.		58				
D2A524	2	6'-10"	STR.		15				
D2A525	2	8'-4"	STR.		18				
D2A526	6	11'-4"	STR.		71				
D2A527	2	7'-1"	4		15	4'-11"	2'-2"	4 3/16"	
ED2A528	8	9'-4"	STR.		78				
ED2A529	3	5'-9"	STR.		18				
D2A530	1 SER 4	9'-3" / 6'-7"	1	5 3/8"	33	1'-2"	4'-2" / 2'-10"		
D2A531	2	9'-10"	STR		21				
D2A532	2	13'-7"	STR		29				
D2A533	18	6'-0"	STR		113				
D2A601	27	14'-2"	7		575	6'-1"	5'-10"	2'-7"	
D2A602	23	15'-10"	7		547	6'-1"	7'-6"	2'-7"	
D2A603	6	18'-2"	1		164	1'-2"	8'-8"		
D2A604	7	22'-6"	1		237	1'-2"	10'-10"		
ED2A605	4	6'-1"	9		37	9"	6"	4'-10"	
ED2A606	1	5'-10"	9		9	8"	4"	4'-10"	
D2A607	53	14'-4"	1		1141	1'-8"	6'-6"		
D2A608	53	6'-10"	1		544	1'-8"	2'-9"		
D2A609	53	9'-4"	1		743	1'-2"	4'-3"		
ED2A610	8	3'-8"	9		44	7"	2"	2'-11"	
ED2A611	2	3'-9"	9		12	7"	3"	2'-11"	
ED2A612	1	3'-10"	9		6	7"	4"	2'-11"	
ED2A613	1	4'-0"	9		6	8"	5"	2'-11"	
ED2A614	1	4'-2"	9		7	9"	6"	2'-11"	
ED2A615	1	5'-11"	9		9	8"	5"	4'-10"	
ED2A616	7	6'-5"	9		68	9"	6"	5'-2"	
D2A801	14	31'-3"	STR		1169				
D2A802	6	11'-10"	STR		190				
D2A803	6	13'-2"	STR		211				
D2A804	4	7'-0"	STR		75				
D2A805	36	4'-11"	14		473				
TOTAL WEIGHT EPOXY COATED BARS =					715				
TOTAL WEIGHT UNCOATED BARS =					9,738				

MARK	NUMBER	LENGTH	TYPE	SER. INCR.	WEIGHT (LBS)	A	B	C	R
PIER NO. 1 (EASTBOUND LANES)									
D1P501	60	12'-4"	3		772	2'-3"	3'-8"		
D1P502	20	5'-4"	1		112	2'-3"	1'-8"		
D1P503	2 SER 5	9'-2" / 6'-2"	1	4 1/2"	80	2'-3"	3'-7" / 2'-1"		
D1P504	2 SER 5	9'-2" / 6'-8"	1	3 3/4"	83	2'-3"	3'-7" / 2'-4"		
D1P601	6	30'-0"	STR.		271				
D1P602	8	12'-0"	STR.		142				
D1P603	4	10'-11"	STR.		66				
D1P604	2	6'-5"	4		20	5'-0"	1'-5"	3 7/8"	
D1P605	2	6'-8"	4		20	5'-3"	1'-5"	4 1/4"	
D1P606	6	6'-2"	1		56	3'-7"	1'-5"		
D1P901	16	22'-10"	STR.		1242				
D1P1101	8	30'-0"	STR		1276				
D1P1102	16	21'-3"	2		1807	19'-7"	2'-0"		
TOTAL WEIGHT					5947				
PIER NO. 2 (EASTBOUND LANES)									
D2P501	60	12'-4"	3		772	2'-3"	3'-8"		
D2P502	20	5'-4"	1		112	2'-3"	1'-8"		
D2P503	2 SER 5	9'-2" / 6'-2"	1	4 1/2"	80	2'-3"	3'-7" / 2'-1"		
D2P504	2 SER 5	9'-2" / 6'-8"	1	3 3/4"	83	2'-3"	3'-7" / 2'-4"		
D2P601	6	30'-0"	STR		271				
D2P602	8	12'-0"	STR		142				
D2P603	4	10'-11"	STR		66				
D2P604	2	6'-5"	4		20	5'-0"	1'-5"	3 7/8"	
D2P605	2	6'-8"	4		20	5'-3"	1'-5"	4 1/4"	
D2P606	6	6'-2"	1		56	3'-7"	1'-5"		
D2P901	16	22'-10"	STR		1242				
D2P1101	8	30'-0"	STR		1276				
D2P1102	16	21'-3"	2		1807	19'-7"	2'-0"		
TOTAL WEIGHT					5947				

MARK	NUMBER	LENGTH	TYPE	SER. INCR.	WEIGHT (LBS)	A	B	C	R
PIER NO. 3 (EASTBOUND LANES)									
D3P501	60	12'-4"	3		772	2'-3"	3'-8"		
D3P502	20	5'-4"	1		112	2'-3"	1'-8"		
D3P503	2 SER 5	9'-2" / 6'-2"	1	4 1/2"	80	2'-3"	3'-7" / 2'-1"		
D3P504	2 SER 5	9'-2" / 6'-8"	1	3 3/4"	83	2'-3"	3'-7" / 2'-4"		
D3P601	6	30'-0"	STR		271				
D3P602	8	12'-0"	STR		142				
D3P603	4	10'-11"	STR		66				
D3P604	2	6'-5"	4		20	5'-0"	1'-5"	3 7/8"	
D3P605	2	6'-8"	4		20	5'-3"	1'-5"	4 1/4"	
D3P606	6	6'-2"	1		56	3'-7"	1'-5"		
D3P901	16	22'-10"	STR		1242				
D3P1101	8	30'-0"	STR		1276				
D3P1102	16	21'-3"	2		1807	19'-7"	2'-0"		
TOTAL WEIGHT					5947				

STEEL ALTERNATE 41/47

adache · ciuni · lynn associates
CONSULTING ENGINEERS CLEVELAND, OHIO 44130

REINFORCING STEEL LIST
EASTBOUND LANES
BRIDGE NO. ERI-2-1798 L/R
S. R. 2 OVER MUD BROOK

ERIE COUNTY
ERI-2-16.13

STA. 1173+18.50 TO
STA. 1180+95.50

DESIGNED	DRAWN	CHECKED	REVIEWED	DATE	REVISED
P.A.G.	C.W.H.	P.A.G.	L.E.D.	9-23-85	

F.H.W.A. REGION	STATE	PROJECT	
5	OHIO		

202R
284

ERIE COUNTY
ERI-2-(16.13-17.39)

MARK	NUMBER	LENGTH	TYPE	SER. INCR.	WEIGHT (LBS)	A	B	C	R
PIER NO. 4 (EASTBOUND LANES)									
D4P501	60	12'-4"	3		772	2'-3"	3'-8"		
D4P502	20	5'-4"	1		112	2'-3"	1'-8"		
D4P503	2 SER 5	9'-2" / 6'-2"	1	4½"	80	2'-3"	3'-7" / 2'-1"		
D4P504	2 SER 5	9'-2" / 6'-8"	1	3¾"	83	2'-3"	3'-7" / 2'-4"		
D4P601	6	30'-0"	STR		271				
D4P602	8	12'-0"	STR		142				
D4P603	4	10'-11"	STR		66				
D4P604	2	6'-5"	4		20	5'-0"	1'-5"	3⅞"	
D4P605	2	6'-8"	4		20	5'-3"	1'-5"	4¼"	
D4P606	6	6'-2"	1		56	3'-7"	1'-5"		
D4P901	16	22'-10"	STR		1242				
D4P1101	8	30'-0"	STR		1276				
D4P1102	16	21'-3"	2		1807	19'-7"	2'-0"		
TOTAL WEIGHT					5947				

MARK	NUMBER	LENGTH	TYPE	SER. INCR.	WEIGHT (LBS)	A	B	C	R
TOT									
PIER NO. 5 (EASTBOUND LANES)									
D5P501	60	12'-4"	3		772	2'-3"	3'-8"		
D5P502	20	5'-4"	1		112	2'-3"	1'-8"		
D5P503	2 SER 5	9'-2" / 6'-2"	1	4½"	80	2'-3"	3'-7" / 2'-1"		
D5P504	2 SER 5	9'-2" / 6'-8"	1	3¾"	83	2'-3"	3'-7" / 2'-4"		
D5P505	48	6'-9"	1		338	3'-8"	1'-8"		
D5P601	6	30'-0"	STR		271				
D5P602	8	12'-0"	STR		142				
D5P603	4	10'-11"	STR		66				
D5P604	2	6'-5"	4		20	5'-0"	1'-5"	3⅞"	
D5P605	2	6'-8"	4		20	5'-3"	1'-5"	4¼"	
D5P606	6	6'-2"	1		56	3'-7"	1'-5"		
D5P901	16	22'-10"	STR		1242				
D5P1101	8	30'-0"	STR		1276				
D5P1102	16	21'-3"	2		1807	19'-7"	2'-0"		
TOTAL WEIGHT					6285				

MARK	NUMBER	LENGTH	TYPE	SER. INCR.	WEIGHT (LBS)	A	B	C	R
PIER NO. 6 (EASTBOUND LANES)									
D6P501	60	12'-4"	3		772	2'-3"	3'-8"		
D6P502	20	5'-4"	1		112	2'-3"	1'-8"		
D6P503	2 SER 5	9'-2" / 6'-2"	1	4½"	80	2'-3"	3'-7" / 2'-1"		
D6P504	2 SER 5	9'-2" / 6'-8"	1	3¾"	83	2'-3"	3'-7" / 2'-4"		
D6P601	6	30'-0"	STR		271				
D6P602	8	12'-0"	STR		142				
D6P603	4	10'-11"	STR		66				
D6P604	2	6'-5"	4		20	5'-0"	1'-5"	3⅞"	
D6P605	2	6'-8"	4		20	5'-3"	1'-5"	4¼"	
D6P606	6	6'-2"	1		56	3'-7"	1'-5"		
D6P901	16	22'-10"	STR		1242				
D6P1101	8	30'-0"	STR		1276				
D6P1102	16	21'-3"	2		1807	19'-7"	2'-0"		
TOTAL WEIGHT					5947				

MARK	NUMBER	LENGTH	TYPE	SER. INCR.	WEIGHT (LBS)	A	B	C	R
PIER NO. 7 (EASTBOUND LANES)									
D7P501	60	12'-4"	3		772	2'-3"	3'-8"		
D7P502	20	5'-4"	1		112	2'-3"	1'-8"		
D7P503	2 SER 5	9'-2" / 6'-2"	1	4½"	80	2'-3"	3'-7" / 2'-1"		
D7P504	2 SER 5	9'-2" / 6'-8"	1	3¾"	83	2'-3"	3'-7" / 2'-4"		
D7P601	6	30'-0"	STR		271				
D7P602	8	12'-0"	STR		142				
D7P603	4	10'-11"	STR		66				
D7P604	2	6'-5"	4		20	5'-0"	1'-5"	3⅞"	
D7P605	2	6'-8"	4		20	5'-3"	1'-5"	4¼"	
D7P606	6	6'-2"	1		56	3'-7"	1'-5"		
D7P901	16	22'-10"	STR		1242				
D7P1101	8	30'-0"	STR		1276				
D7P1102	16	21'-3"	2		1807	19'-7"	2'-0"		
TOTAL WEIGHT					5947				

MARK	NUMBER	LENGTH	TYPE	SER. INCR.	WEIGHT (LBS)	A	B	C	R
PIER NO. 8 (EASTBOUND LANES)									
D8P501	60	12'-4"	3		772	2'-3"	3'-8"		
D8P502	20	5'-4"	1		112	2'-3"	1'-8"		
D8P503	2 SER 5	9'-2" / 6'-2"	1		80	2'-3"	3'-7" / 2'-1"		
D8P504	2 SER 5	9'-2" / 6'-8"	1		83	2'-3"	3'-7" / 2'-4"		
D8P601	6	30'-0"	STR		271				
D8P602	8	12'-0"	STR		142				
D8P603	4	10'-11"	STR		66				
D8P604	2	6'-5"	4		20	5'-0"	1'-5"	3⅞"	
D8P605	2	6'-8"	4		20	5'-3"	1'-5"	4¼"	
D8P606	6	6'-2"	1		56	3'-7"	1'-5"		
D8P901	16	22'-10"	STR		1242				
D8P1101	8	30'-0"	STR		1276				
D8P1102	16	21'-3"	2		1807	19'-7"	2'-0"		
TOTAL WEIGHT					5947				

STEEL ALTERNATE 42/47

adache - ciuni - lynn associates
CONSULTING ENGINEERS CLEVELAND, OHIO 44130

REINFORCING STEEL LIST
EASTBOUND LANES
BRIDGE NO. ERI-2-1798 L/R
S.R. 2 OVER MUD BROOK

ERIE COUNTY
ERI-2-16.13

STA. 1173+18.50 TO
STA. 1180+95.50

DESIGNED	DRAWN	CHECKED	REVIEWED	DATE	REVISED
P.A.G.	C.W.H.	P.A.G.	L.E.D.	9.23.85	

F.H.W.A. REGION	STATE	PROJECT	
5	OHIO		

2025
284

ERIE COUNTY
ERI-2-(16.13-17.39)

MARK	NUMBER	LENGTH	TYPE	SER. INCR.	WEIGHT (LBS)	A	B	C	R
PIER PIER NO. 9 (EASTBOUND LANES)									
D9P501	64	12'-4"	3		823	2'-3"	3'-8"		
D9P502	20	5'-4"	1		112	2'-3"	1'-8"		
D9P503	2 SER 5	9'-2" 6'-2"	1	4½"	80	2'-3"	3'-7" 2'-1		
D9P504	2 SER 5	9'-2" 6'-8"	1	3¾"	83	2'-3"	3'-7" 2'-4"		
D9P601	6	30'-0"	STR		271				
D9P602	8	12'-9"	STR		154				
D9P603	4	11'-8"	STR		71				
D9P604	2	6'-5"	4		20	5'-0"	1'-5"	3⅜"	
D9P605	2	6'-8"	4		20	5'-3"	1'-5"	4¼"	
D9P606	6	6'-2"	1		56	3'-7"	1'-5"		
D9P901	16	23'-7"	STR		1283				
D9P1101	8	30'-0"	STR		1276				
D9P1102	16	22'-0"	2		1870	20'-4"	2'-0"		
TOTAL WEIGHT					6119				
SUPERSTRUCTURE (EASTBOUND LANES)									
ED9401	1,919	30'-0"	STR		38,457				
DS501	1,087	23'-4"	STR		26,454				
DS502	2,896	30'-0"	STR		90,616				
DS503	36	23'-1	STR		867				
DS504	36	23'-5	STR		879				
DS505	36	23'-9"	STR		892				
DS506	36	24'-5"	STR		917				
DS507	36	25'-1"	STR		942				
DS508	36	26'-6"	STR		995				
DS509	38	27'-7"	STR		1,093				
DS510	80	9'-9"	STR		814				
DS511	20	9'-3"	STR		193				
DS512	119	4'-6"	15		559	1'-10"	11"	1'-4"	
ED5513	524	2'-6"	2		1,421	10½"	1'-9"		
ED5514	524	3'-2"	13		1,733	11"			
ED5515	524	5'-8"	5		2,869	2'-2"	2'-5"	7½"	2⅛"
ED5516	48	15'-1	STR.		755				

MARK	NUMBER	LENGTH	TYPE	SER. INCR.	WEIGHT (LBS)	A	B	C	R
SUPERSTRUCTURE (EASTBOUND LANES)									
ED5517	432	6'-6"	STR		2,929				
ED5518	192	12'-6"	STR		2,503				
ED5601	2,246	26'-8"	STR		89,971				
ED5602	72	26'-9"	STR		2,889				
ED5603	72	26'-11"	STR		2,907				
ED5604	72	27'-3"	STR		2,943				
ED5605	72	27'-7"	STR		2,979				
ED5606	72	28'-0"	STR.		3,024				
ED5607	76	28'-10"	STR.		3,287				
ED5608	577	30'-0"	STR		25,965				
ED5609	577	9'-5"	STR		8,153				
TOTAL WEIGHT EPOXY COATED BARS					192,785				
TOTAL WEIGHT UNCOATED BARS					125,221				
LIGHT POLE PILASTER (TYPICAL OF FOUR) (EASTBOUND LANES)									
EL501	4	3'-3"	1		14	1'-10"	10"		
EL502	4	8'-5"	16		35	2'-4"	3'-2"		
EL503	6	7'-0"	17		44	1'-4"	1'-10"	1'-0"	
EL504	4	3'-2"	STR		13				
EL601	12	3'-9"	STR		68				
TOTAL WEIGHT PER PILASTER					174				

SUMMARY OF TOTAL WEIGHT (EASTBOUND LANES)	
ABUTMENTS :	
EPOXY COATED BARS	1323
UNCOATED BARS	19137
PIERS :	
EPOXY COATED BARS	0
UNCOATED BARS	54,033
SUPERSTRUCTURE :	
EPOXY COATED BARS-DECK	192,785
4 LIGHT POLE PILASTERS	696
TOTAL- EPOXY COATED BARS	193,481
TOTAL- UNCOATED BARS	125,221

MARK	NUMBER	LENGTH	TYPE	SER. INCR.	WEIGHT (LBS)	A	B	C	R

STEEL ALTERNATE 43/47

adache · ciuni · lynn associates
CONSULTING ENGINEERS CLEVELAND, OHIO 44130

REINFORCING STEEL LIST
EASTBOUND LANES
BRIDGE NO. ERI-2-1798 L/R
S.R. 2 OVER MUD BROOK

ERIE COUNTY
ERI-2-16.13

STA. 1173+18.50 TO
STA. 1180+95.50

DESIGNED	DRAWN	CHECKED	REVIEWED	DATE	REVISED
P.A.G.	C.W.H.	P.A.G.	L.E.D.	9-23-85	

MARK	NUMBER	LENGTH	TYPE	SER. INCR.	WEIGHT (LBS)	A	B	C	R
PIER NO. 1 (WESTBOUND LANES)									
W1P505	1	27'-5"	18		1170				
W1P506	1	29'-0"	18		1236				
W1P507	1	31'-0"	18		1319				
W1P1002	19	30'-11"	STR.		2528				
W1P1003	19	32'-6"	STR.		2657				
W1P1004	19	34'-0"	STR.		2780				
TOTAL WEIGHT UNCOATED BARS					11,690				
PIER NO. 2 (WESTBOUND LANES)									
W2P505	1	27'-9"	18		1184				
W2P506	1	29'-3"	18		1246				
W2P507	1	30'-10"	18		1312				
W2P1002	19	31'-3"	STR.		2555				
W2P1003	19	32'-9"	STR.		2678				
W2P1004	19	34'-4"	STR.		2807				
TOTAL WEIGHT UNCOATED BARS					11,782				
PIER NO. 3 (WESTBOUND LANES)									
W3P505	1	28'-0"	18		1194				
W3P506	1	29'-7"	18		1259				
W3P507	1	31'-1"	18		1322				
W3P1002	19	31'-6"	STR.		2575				
W3P1003	19	33'-1"	STR.		2705				
W3P1004	19	34'-7"	STR.		2827				
TOTAL WEIGHT UNCOATED BARS					11,882				
PIER NO. 4 (WESTBOUND LANES)									
W4P505	1	33'-0"	18		1401				
W4P506	1	34'-8"	18		1470				
W4P507	1	36'-4"	18		1539				
W4P1002	19	36'-6"	STR.		2984				
W4P1003	19	38'-2"	STR.		3120				
W4P1004	19	39'-10"	STR.		3257				
TOTAL WEIGHT UNCOATED BARS					13,771				

MARK	NUMBER	LENGTH	TYPE	SER. INCR.	WEIGHT (LBS)	A	B	C	R
PIER NO. 5 (WESTBOUND LANES)									
W5P505	1	33'-4"	18		1415				
W5P506	1	35'-0"	18		1484				
W5P507	1	36'-8"	18		1553				
W5P1002	19	36'-10"	STR.		3011				
W5P1003	19	38'-6"	STR.		3148				
W5P1004	19	40'-2"	STR.		3284				
TOTAL WEIGHT UNCOATED BARS					13,895				
PIER NO. 6 (WESTBOUND LANES)									
W6P505	1	34'-4"	18		1457				
W6P506	1	36'-2"	18		1532				
W6P507	1	37'-10"	18		1601				
W6P1002	19	37'-10"	STR.		3093				
W6P1003	19	39'-7"	STR.		3236				
W6P1004	19	41'-5"	STR.		3386				
TOTAL WEIGHT UNCOATED BARS					14,305				
PIER NO. 7 (WESTBOUND LANES)									
W7P505	1	34'-6"	18		1463				
W7P506	1	36'-4"	18		1539				
W7P507	1	38'-1"	18		1612				
W7P1002	19	38'-1"	STR.		3114				
W7P1003	19	39'-10"	STR.		3257				
W7P1004	19	41'-7"	STR.		3400				
TOTAL WEIGHT UNCOATED BARS					14,385				
PIER NO. 1 (EASTBOUND LANES)									
D1P505	1	29'-3"	18		1245				
D1P506	1	30'-6"	18		1298				
D1P507	1	31'-10"	18		1353				
D1P902	19	32'-9"	STR.		2116				
D1P903	19	34'-0"	STR.		2196				
D1P904	19	35'-3"	STR.		2277				
TOTAL WEIGHT UNCOATED BARS					10,485				

F.H.W.A. REGION	STATE	PROJECT
5	OHIO	

2027 284

ERIE COUNTY
ERI-2-(16.13-17.39)

NOTES

REINFORCING STEEL SAMPLES
REFER TO CMS SECTIONS 106.03, 700, 709.01 THROUGH 709.05 AND 709.08. SUFFICIENT ADDITIONAL REINFORCING STEEL SHALL BE PROVIDED FOR SAMPLING. RANDOM SAMPLES SHALL BE REPLACED IN THE STRUCTURES BY THE ADDITIONAL STEEL, SPLICED IN ACCORDANCE WITH 509.08.

SPIRAL REINFORCING BARS
THE LENGTH SHOWN IN THE STEEL LIST FOR THE SPIRAL BARS IS THE DISTANCE FROM THE BOTTOM OF THE DRILLED-IN PIER COLUMN SOCKET TO THE TOP OF THE COLUMN, INCLUDING THREE (3) CLOSED COILS (ONE AND ONE HALF CLOSED COILS AT THE ENDS OF EACH SPIRAL UNIT). THE LENGTH MAY REQUIRE ADJUSTMENT DUE TO VARIATION OF ACTUAL TOP OF BEDROCK ELEVATION, ACTUAL MEASURED SOCKET EMBEDMENT IN BEDROCK, ETC.

FOUR ANGLE SPACERS WEIGHING APPROXIMATELY 1.01 POUNDS PER LINEAL FOOT OF SPACER SHALL BE PROVIDED FOR EACH SPIRAL UNIT LISTED. THEY SHALL BE EQUALLY SPACED ALONG THE PERIPHERY OF EACH COIL. THE NUMBER OF POUNDS OF THESE SPACERS WILL BE PAID FOR AS REINFORCING STEEL AND IS INCLUDED IN THE TABULATED SPIRAL WEIGHT.

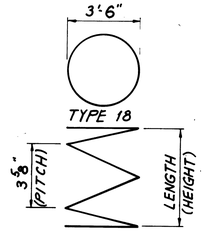

STEEL ALTERNATE 44/47

adache · ciuni · lynn associates
CONSULTING ENGINEERS CLEVELAND, OHIO 44130

REINFORCING STEEL LIST
DRILLED-IN PIER COLUMNS
BRIDGE NO. ERI-2-1798 L/R
S. R. 2 OVER MUD BROOK

ERIE COUNTY
ERI-2-16.13

STA. 1173+18.50 TO
STA. 1180+95.50

DESIGNED	DRAWN	CHECKED	REVIEWED	DATE	REVISED
R.C.K.	J.R.S.	J.R.S.	L.E.D.	9-23-85	

F.H.W.A. REGION	STATE	PROJECT	
5	OHIO		

2020
284

ERIE COUNTY
ERI-2-(16.13-17.39)

MARK	NUMBER	LENGTH	TYPE	SER. INCR.	WEIGHT (LBS)	A	B	C	R
PIER NO. 2 (EASTBOUND LANES)									
D2P505	1	29'-6"	18		1257				
D2P506	1	30'-9"	18		1308				
D2P507	1	32'-0"	18		1360				
D2P902	19	32'-11"	STR.		2126				
D2P903	19	34'-2"	STR.		2207				
D2P904	19	35'-5"	STR.		2288				
TOTAL WEIGHT UNCOATED BARS					10,546				
PIER NO. 3 (EASTBOUND LANES)									
D3P505	1	29'-9"	18		1267				
D3P506	1	31'-0"	18		1319				
D3P507	1	32'-3"	18		1371				
D3P902	19	33'-2"	STR.		2143				
D3P903	19	34'-5"	STR.		2223				
D3P904	19	35'-9"	STR.		2309				
TOTAL WEIGHT UNCOATED BARS					10,632				
PIER NO. 4 (EASTBOUND LANES)									
D4P505	1	30'-0"	18		1277				
D4P506	1	31'-3"	18		1328				
D4P507	1	32'-6"	18		1352				
D4P902	19	33'-5"	STR.		2159				
D4P903	19	34'-8"	STR.		2239				
D4P904	19	35'-11"	STR.		2320				
TOTAL WEIGHT UNCOATED BARS					10,675				
PIER NO. 5 (EASTBOUND LANES)									
D5P505	1	30'-2"	18		1284				
D5P506	1	31'-6"	18		1339				
D5P507	1	32'-9"	18		1391				
D5P902	19	33'-8"	STR.		2175				
D5P903	19	34'-11"	STR.		2256				
D5P904	19	36'-2"	STR.		2336				
TOTAL WEIGHT UNCOATED BARS					10,781				

MARK	NUMBER	LENGTH	TYPE	SER. INCR.	WEIGHT (LBS)	A	B	C	R
PIER NO. 6 (EASTBOUND LANES)									
D6P505	1	30'-5"	18		1294				
D6P506	1	31'-8"	18		1347				
D6P507	1	33'-0"	18		1401				
D6P902	19	33'-11"	STR.		2191				
D6P903	19	35'-2"	STR.		2272				
D6P904	19	36'-5"	STR.		2353				
TOTAL WEIGHT UNCOATED BARS					10,858				
PIER NO. 7 (EASTBOUND LANES)									
D7P505	1	30'-8"	18		1304				
D7P506	1	32'-0"	18		1360				
D7P507	1	33'-3"	18		1412				
D7P902	19	34'-2"	STR.		2207				
D7P903	19	35'-5"	STR.		2288				
D7P904	19	36'-8"	STR.		2369				
TOTAL WEIGHT UNCOATED BARS					10,940				
PIER NO. 8 (EASTBOUND LANES)									
D8P505	1	30'-10"	18		1311				
D8P506	1	32'-2"	18		1367				
D8P507	1	33'-5"	18		1418				
D8P902	19	34'-4"	STR.		2218				
D8P903	19	35'-7"	STR.		2299				
D8P904	19	36'-10"	STR.		2379				
TOTAL WEIGHT UNCOATED BARS					10,992				
PIER NO. 9 (EASTBOUND LANES)									
D9P505	1	31'-2"	18		1325				
D9P506	1	32'-5"	18		1377				
D9P507	1	33'-9"	18		1433				
D9P902	19	34'-7"	STR.		2234				
D9P903	19	35'-11"	STR.		2320				
D9P904	19	37'-3"	STR.		2406				
TOTAL WEIGHT UNCOATED BARS					11,095				

MARK	NUMBER	LENGTH	TYPE	SER. INCR.	WEIGTH (LBS)	A	B	C	R

STEEL ALTERNATE 45/47

adache · ciuni · lynn associates
CONSULTING ENGINEERS CLEVELAND, OHIO 44130

REINFORCING STEEL LIST
DRILLED-IN PIER COLUMNS

BRIDGE NO. ERI-2-1798 L/R
S.R. 2 OVER MUD BROOK

ERIE COUNTY
ERI-2-16.13

STA. 1173+18.50 TO
STA. 1180+95.50

DESIGNED	DRAWN	CHECKED	REVIEWED	DATE	REVISED
R.C.K.	J.R.S.	J.R.S.	L.E.D.	9-23-85	

INSPECTION RECORD FOR DRILLED SHAFTS

FHWA REGION	STATE	PROJECT	
5	OHIO		

2021
284

ERIE COUNTY
ERI-2-(16.13-17.39)

BRIDGE NO. _____
LOCATION _____
PROJECT NO. _____

GENERAL CONTRACTOR _____
DRILLING CONTRACTOR _____
PROJECT ENGINEER _____

TYPE & MODEL OF DRILLING MACHINERY _____
MAX. CONTINUOUS TORQUE _____ FT.-LB.
CROWD (MAX. CONTINUOUS DOWNWARD FORCE) _____ LBS.

TYPE OF CONCRETE PUMP _____
HOSE DIAMETER _____ INCHES
CAPACITY _____ CU.FT./MIN.

COST PER LINEAL FOOT
~~PIER~~ DRILLED SHAFTS _____
~~FOOTING~~ WALL
DRILLED SHAFTS _____

SUBSTRUCTURE		DATE AND TIME OF DRILLING		APPROX. ELEVATION OF TOP OF OVER BURDEN	LENGTH OF DRILLED SHAFTS				OBSTRUCTIONS ENCOUNTERED		BEDROCK			LENGTH OF CASING (FEET)	CASING GUAGE	REINFORCING STEEL				CONCRETE					RESULTS OF PROOF TESTING	TOLERENCES (INCH)			PLAN SHAFT DIA. (INCH)	CONSTRUCTED SHAFT DIA. (INCH)
																VERTICAL		SPIRAL								DEVIATION FROM PLUMB OR PLAN BATTER		DEVIATION OF COLUMN TOP CENTER FROM PLAN LOCATION HORIZONTALLY		
PIER NO. OR W.B.)	NUMBER	STARTED	FINISHED		REMOVABLE CASING	THROUGH OVER BURDEN	THROUGH BEDROCK	PAY LENGTH	NUMBER	SIZE (INCH.)	APPROX. ELEVATION OF TOP OF BEDROCK	APPROX. ELEV. OF BOTT. OF BEDROCK SOCKET	LENGTH OF BEDROCK SOCKET (FEET)			BAR SIZE NO.	NO. OF REBARS	BAR SIZE NO.	PITCH (INCH)	SLUMP TEST RESULT (INCH.)	CYLINDER STRENGTH f'_c (P.S.I.)	AIR TEMP (F)	TIME NEEDED TO PLACE CONCRETE (HR.)	QUANTITY (CU. YD.)		N-S	E-W			
#1 E.B.	1																													
	2																													
↓	3																													
#2 E.B.	4																													
↓	5																													
↓	6																													
#3 E.B.	7																													
	8																													
↓	9																													
#4 E.B.	10																													
↓	11																													
↓	12																													
#5 E.B.	13																													
↓	14																													
↓	15																													
#6 E.B.	16																													
↓	17																													
↓	18																													
#7 E.B.	19																													
↓	20																													
↓	21																													
#8 E.B.	22																													
↓	23																													
↓	24																													

PROJECT ENGINEERS COMMENTS

METHOD OF CONSTRUCTION

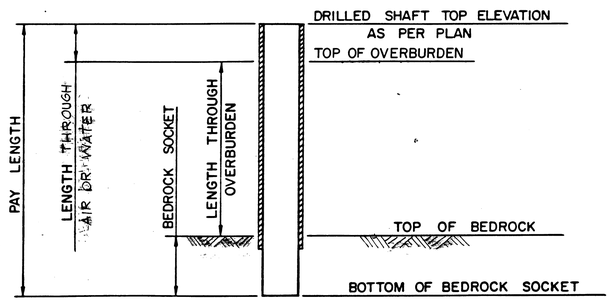

STEEL ALTERNATE 46,47

adache · ciuni · lynn associates
CONSULTING ENGINEERS CLEVELAND, OHIO 44130

DRILLED SHAFTS

BRIDGE NO. ERI-2-1798 L/R
S.R. 2 OVER MUD BROOK

ERIE COUNTY STA. 1173+18.50 TO
ERI-2-16.13 STA. 1180+95.50

DESIGNED	DRAWN	CHECKED	REVIEWED	DATE	REVISED
	M.A.G.		L.E.D.	9-23-85	

KEY BLUE PRINT CO. N/5414

INSPECTION RECORD FOR DRILLED SHAFTS

FHWA REGION	STATE	PROJECT	
5	OHIO		

202N 284

ERIE COUNTY
ERI-2-(16.13-17.39)

BRIDGE NO. _____
LOCATION _____
PROJECT NO. _____

GENERAL CONTRACTOR _____
DRILLING CONTRACTOR _____
PROJECT ENGINEER _____

TYPE & MODEL OF DRILLING MACHINERY _____
MAX. CONTINUOUS TORQUE _____ FT.-LB.
CROWD (MAX. CONTINUOUS DOWNWARD FORCE) _____ LBS.

TYPE OF CONCRETE PUMP _____
HOSE DIAMETER _____ INCHES
CAPACITY _____ CU.FT./MIN.

COST PER LINEAL FOOT
PIER DRILLED SHAFTS _____
DRILLED SHAFTS _____

SUBSTRUCTURE		DATE AND TIME OF DRILLING		APPROX. ELEVATION OF TOP OF OVER BURDEN	LENGTH OF DRILLED SHAFTS				OBSTRUCTIONS ENCOUNTERED		BEDROCK			LENGTH OF CASING (FEET)	CASING GUAGE	REINFORCING STEEL				CONCRETE					RESULTS OF PROOF TESTING	TOLERENCES (INCH)			PLAN SHAFT DIA. (INCH)	CONSTRUCTED SHAFT DIA. (INCH)
																VERTICAL		SPIRAL								DEVIATION FROM PLUMB OR PLAN BATTER		DEVIATION OF COLUMN TOP -CENTER FROM PLAN LOCATION HORIZONTALLY		
PIER NO. OR W.B.)	NUMBER	STARTED	FINISHED		REMOVABLE CASING	THROUGH OVER BURDEN	THROUGH BEDROCK	PAY LENGTH	NUMBER	SIZE (INCH.)	APPROX. ELEVATION OF TOP OF BEDROCK	APPROX. ELEV. OF BOTT. OF BEDROCK SOCKET	LENGTH OF BEDROCK SOCKET (FEET)			BAR SIZE NO.	NO. OF REBARS	BAR SIZE NO.	PITCH (INCH)	SLUMP TEST RESULT (INCH.)	CYLINDER STRENGTH f'_c (P.S.I.)	AIR TEMP (F)	TIME NEEDED TO PLACE CONCRETE (HR.)	QUANTITY (CU. YD.)		N-S	E-W			
#9 E.B.	25																													
↓	26																													
↓	27																													
#1 W.B.	28																													
↓	29																													
↓	30																													
#2 W.B.	31																													
↓	32																													
↓	33																													
#3 W.B.	34																													
↓	35																													
↓	36																													
#4 W.B.	37																													
↓	38																													
↓	39																													
#5 W.B.	40																													
↓	41																													
↓	42																													
#6 W.B.	43																													
↓	44																													
↓	45																													
#7 W.B.	46																													
↓	47																													
↓	48																													

PROJECT ENGINEERS COMMENTS

METHOD OF CONSTRUCTION

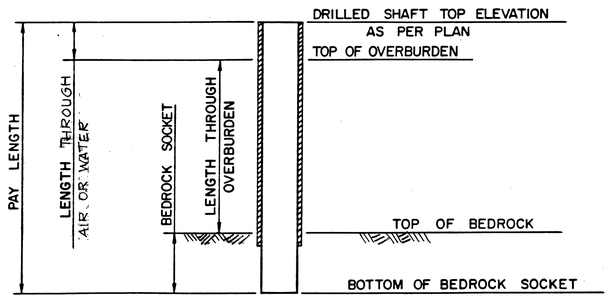

STEEL ALTERNATE 47/47

adache · ciuni · lynn associates
CONSULTING ENGINEERS CLEVELAND, OHIO 44130

DRILLED SHAFTS

BRIDGE NO. ERI-2-1798 L/R
S.R. 2 OVER MUD BROOK

ERIE COUNTY
ERI-2-16.13

STA. 1173+18.50 TO
STA. 1180+95.50

DESIGNED	DRAWN	CHECKED	REVIEWED	DATE	REVISED
	M.A.G.		L.E.D.	9-23-85	

KEY BLUE PRINT CO. 14/8414

MICROFILMED
AUG 29 1990

FHWA REGION	STATE	PROJECT	
5	OHIO		

203
284

ERIE COUNTY
ERI-2-(16.13-17.39)

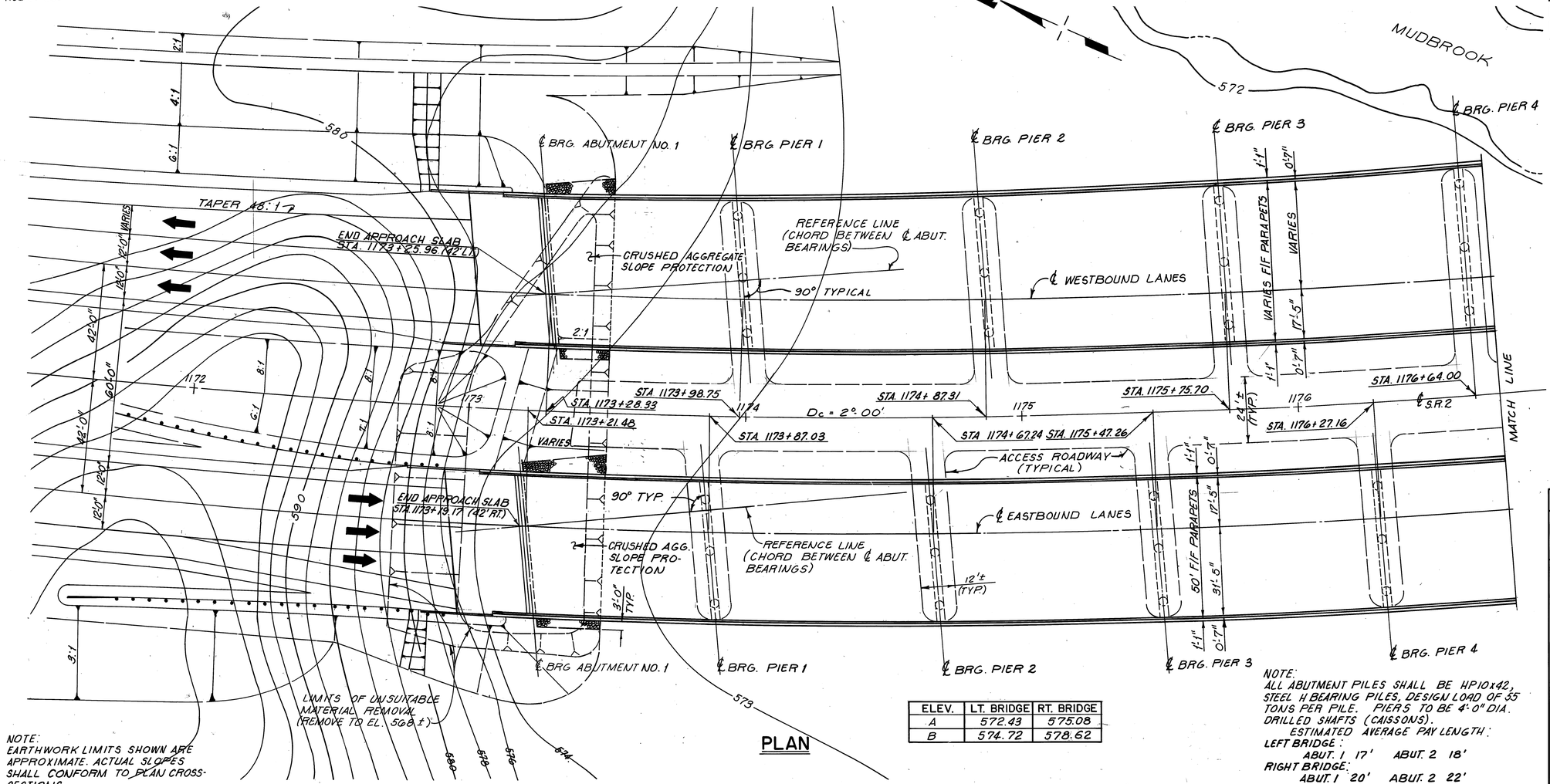

NOTE:
EARTHWORK LIMITS SHOWN ARE APPROXIMATE. ACTUAL SLOPES SHALL CONFORM TO PLAN CROSS-SECTIONS.

PLAN

ELEV.	LT. BRIDGE	RT. BRIDGE
A	572.43	575.08
B	574.72	578.62

NOTE:
ALL ABUTMENT PILES SHALL BE HP10x42, STEEL H BEARING PILES, DESIGN LOAD OF 55 TONS PER PILE. PIERS TO BE 4'-0" DIA. DRILLED SHAFTS (CAISSONS).
ESTIMATED AVERAGE PAY LENGTH:
LEFT BRIDGE:
ABUT. 1 17' ABUT. 2 18'
RIGHT BRIDGE:
ABUT. 1 20' ABUT. 2 22'

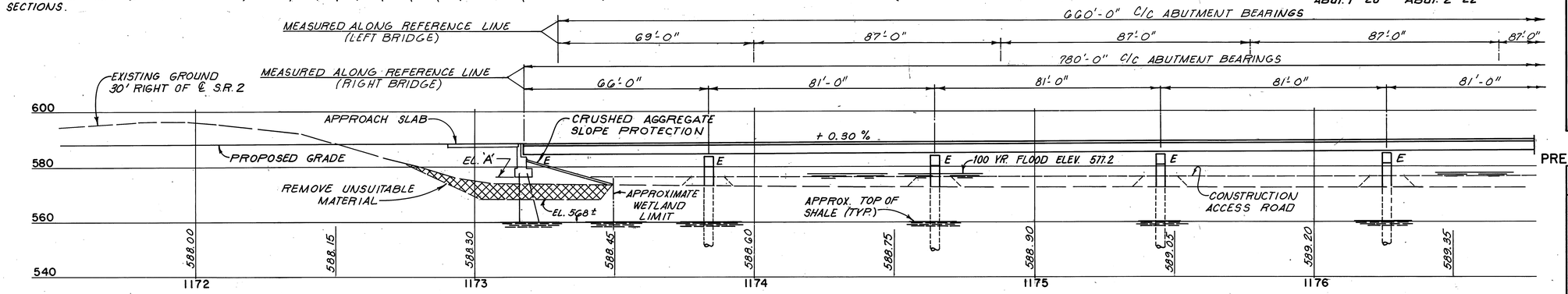

PROFILE

(RIGHT BRIDGE SHOWN, LEFT BRIDGE SIMILAR)

PRESTRESSED CONCRETE ALTERNATE

TYPE: CONTINUOUS PRESTRESSED I-BEAMS WITH REINFORCED CONCRETE DECK AND SUB-STRUCTURE

SKEW: 0° 00' (PARALLEL SUBSTRUCTURE)

SPANS: LEFT BRIDGE: 69'-0", 6 SPANS @ 87'-0", 69'-0"
RIGHT BRIDGE: 66'-0", 8 SPANS @ 81'-0", 66'-0"

ROADWAY: LEFT BRIDGE: VARIES 51.9' TO 65.8' F/F PARAPETS
RIGHT BRIDGE: 50' F/F PARAPETS AND VARIES

LOADING: HS-20-44 AND THE ALTERNATE MILITARY LOADING

WEARING SURFACE: MONOLITHIC CONCRETE (TOP LAYER OF REINFORCING EPOXY COATED.)

APPROACH SLABS: AS-1-81 (25'-0" LONG)

ALIGNMENT: 2° 00' CURVE LEFT

SUPERELEVATION: .064 '/'

SLOPE PROTECTION: CRUSHED AGGREGATE

TRAFFIC: ADT (2000) 7370
ADTT (2000) 1810

PRESTRESSED CONC. ALTERNATE 1/48

adache - ciuni - lynn associates
CONSULTING ENGINEERS CLEVELAND, OHIO 44130

SITE PLAN

BRIDGE Nº ERI-2-1798 L/R S.R.2 OVER MUD BROOK

ERIE COUNTY
ERI-2-16.13

STA. 1173+19.17 TO.
STA. 1180+94.84

DESIGNED	DRAWN	CHECKED	REVIEWED	DATE	REVISED
I.M.B.	D.R.J.	L.E.D.	R.D.H.	8-11-82	

MICROFILMED
AUG 30 1990

PACKAGING AND IDENTIFICATION REQUIREMENTS:

THE ENGINEERING FABRIC SHALL BE PROVIDED IN ROLLS WRAPPED WITH PROTECTIVE COVERING TO PROTECT THE FABRIC FROM MUD, DIRT, DUST, AND DEBRIS. THE FABRIC SHALL BE FREE OF DEFECTS OR FLAWS WHICH SIGNIFICANTLY AFFECT ITS PHYSICAL PROPERTIES. EACH ROLL OF FABRIC IN THE SHIPMENT SHALL BE LABELED WITH A NUMBER OR SYMBOL TO IDENTIFY THAT PRODUCTION RUN.

SAMPLING AND COMPLIANCE REQUIREMENTS:

THE MANUFACTURER SHALL SUBMIT CERTIFIED TEST DATA TO COVER EACH SHIPMENT OF MATERIAL.

INSTALLATION DETAILS:

THE ENGINEERING FABRIC SHALL BE INSTALLED IN ACCORDANCE WITH THE MANUFACTURER'S RECOMMENDATIONS. SEPARATE ROLLS SHALL BE JOINED BY OVERLAPPING. UNSEWN OVERLAPS SHALL BE 48 INCHES WIDE MINIMUM. SEWN OVERLAPS SHALL BE 9 INCHES MINIMUM AND SHALL BE SEWN TWICE. FABRIC WITH UNSEWN OVERLAPS SHOULD NOT BE UNROLLED MORE THAN 25 FEET AHEAD OF AGGREGATE PLACEMENT IN ORDER TO AVOID OVERLAP SEPARATION.

AGGREGATE

AGGREGATE FOR THE TEMPORARY ROAD SHALL MEET THE REQUIREMENTS OF ITEM 304 AGGREGATE BASE AND SHALL BE CRUSHED CARBONATE STONE OR CRUSHED GRAVEL. NO SLAGS WILL BE PERMITTED.

PLACING AND COMPACTING AGGREGATE FILL:

THE AGGREGATE SHOULD BE BACK DUMPED AND SPREAD IN A UNIFORM LIFT MAINTAINING THE DESIGN AGGREGATE THICKNESS AT ALL TIMES. CONSTRUCTION VEHICLES WILL ONLY BE ALLOWED TO TRAFFIC DIRECTLY ON THE FABRIC IF NO RUTS DEVELOP.

OVERSTRESSING THE SOIL SHOULD BE AVOIDED BY UTILIZING EQUIPMENT IN SPREADING AND DUMPING THAT EXERTS ONLY MODERATE PRESSURES ON THE SOIL. SEVERE RUTTING AT THE TIME OF PLACEMENT IS AN INDICATION OF OVERSTRESSING THE SOIL. SUCH SOIL OVERSTRESSING MUST BE AVOIDED. INCREASING AGGREGATE DEPTHS AND REDUCING LOADS ARE TWO METHODS OF REDUCING THE PRESSURES ON THE SOIL.

ANY RUTS WHICH DEVELOP DURING SPREADING OR COMPACTING SHOULD BE FILLED WITH ADDITIONAL AGGREGATE RATHER THAN BLADED FROM SURROUNDING AREAS. PLACING ADDITIONAL AGGREGATE INTO THE RUTTED AREAS INSURES THAT THE DESIGN AGGREGATE THICKNESS IS MAINTAINED.

THE AGGREGATE SHOULD BE COMPACTED THOROUGHLY WITH VIBRATORY ROLLERS PRIOR TO USE BY THE HAUL EQUIPMENT. VIBRATORY FREQUENCY AND AMPLITUDE ADJUSTMENTS ARE OCCASIONALLY REQUIRED. INITIAL ROLLING MIGHT BE A SEAL ROLL WITH FINAL ROLLING AT INCREASED AMPLITUDES AND FREQUENCIES.

MAINTENANCE

THE CONTRACTOR SHALL MAINTAIN THE TEMPORARY ACCESS ROAD DURING THE CONSTRUCTION PERIOD IN A SUITABLE CONDITION FOR EFFICIENT PROSECUTION OF THE BRIDGE CONSTRUCTION WORK.

AGGREGATE REMOVAL

WHEN NO LONGER NEEDED FOR ACCESS THE TEMPORARY ROAD AGGREGATE SHALL BE REMOVED TO A LEVEL OF APPROXIMATELY 6 INCHES BELOW THE LEVEL OF THE ORIGINAL MARSH SOIL SURFACE. IF PERMITTED BY THE ENGINEER THE RETRIEVED AGGREGATE MAY BE INCORPORATED AS EMBANKMENT IN OTHER PROJECT AREAS. OTHERWISE THE RETRIEVED AGGREGATE SHALL BE DISPOSED OF.

PAYMENT:

ACCESS ROAD CONSTRUCTION, MAINTENANCE AND AGGREGATE REMOVAL WHEN THE ACCESS ROAD IS NO LONGER NEEDED ARE CONSIDERED INCIDENTAL TO THE BRIDGE CONSTRUCTION. NO SEPARATE PAYMENT WILL BE MADE FOR ACCESS ROAD. THE ACCESS ROAD MATERIALS, CONSTRUCTION, MAINTENANCE AND SUBSEQUENT AGGREGATE REMOVAL SHALL BE INCLUDED WITH THE OTHER ITEMS OF BRIDGE CONSTRUCTION FOR PAYMENT.

ALTERNATE CONSTRUCTION ACCESS METHODS

IF THE CONTRACTOR ELECTS TO CONSTRUCT THE MUD BROOK BRIDGES USING AN ALTERNATE WETLAND ACCESS METHOD RATHER THAN THE TEMPORARY ACCESS ROAD, A COMPLETE DESCRIPTION OF THE ALTERNATE ACCESS METHOD SHALL BE SUBMITTED IN WRITING TO THE DIRECTOR FOR APPROVAL. WRITTEN APPROVAL OF THE ALTERNATE ACCESS METHOD MUST BE OBTAINED PRIOR TO IMPLEMENTING THE ALTERNATE. MINIMIZATION OF WETLAND DISTURBANCE AND LONG TERM WETLAND DAMAGE WILL BE CONSIDERATIONS FOR APPROVAL OF CONTRACTOR PROPOSED ALTERNATE WETLAND ACCESS ALTERNATES.

DRILLED-IN PIER COLUMNS, EXCAVATED MATERIAL CONTAINMENT

EXCAVATED MATERIALS FROM THE DRILLED-IN PIER COLUMNS SHALL BE REMOVED FROM THE SITE AND DISPOSED OF IN AN APPROVED WASTE AREA. TEMPORARY DEPOSITION OF THE EXCAVATED MATERIAL IN THE MUD BROOK WETLANDS DURING DRILLING OPERATIONS SHALL BE CONFINED TO AN AREA WITHIN A 10 FOOT RADIUS OF THE CENTER OF THE PIER SHAFT. THE CONTRACTOR SHALL PROVIDE A SUITABLE TEMPORARY STRUCTURE TO CONFINE THE EXCAVATED MATERIAL WITHIN THE PERMITTED AREA IF NEEDED.

BACKFILL AROUND THE DRILLED-IN COLUMNS, IF NEEDED, SHALL BE MADE WITH SAND. BACKFILL WITH MATERIAL EXCAVATED DURING DRILLING OPERATIONS WILL NOT BE PERMITTED.

DISPOSAL OF THE EXCAVATED MATERIAL, TEMPORARY CONTAINMENT STRUCTURES AND BACKFILL ARE CONSIDERED INCIDENTAL TO DRILLED-IN PIER COLUMN CONSTRUCTION AND SHALL BE INCLUDED WITH ITEM SPECIAL, DRILLED-IN PIER COLUMNS FOR PAYMENT.

PRESTRESSED CONC. ALTERNATE 6/48

adache - ciuni - lynn associates
CONSULTING ENGINEERS CLEVELAND, OHIO 44131

GENERAL NOTES

BRIDGE NO. ERI-2-1798 L/R
S.R. 2 OVER MUD BROOK

ERIE COUNTY
ERI-2-16.13

STA. 1173+19.17 TO
STA. 1180+94.84

DESIGNED	DRAWN	CHECKED	REVIEWED	DATE	REVISED
L.E.D.	E.R.	D.R.J.	L.E.D.	9-23-85	

A-C-L form no. 1

MICROFILMED
AUG 30 1990

F.H.W.A. REGION	STATE	PROJECT	
5	OHIO		

2078
284

ERIE COUNTY
ERI-2-(16.13-17.39)

ESTIMATED QUANTITIES

ITEM	TOTAL	UNIT	DESCRIPTION	WESTBOUND LANES					EASTBOUND LANES				
				ABUT.	PIERS	SUPER-STR.	GEN'L.		ABUT.	PIERS	SUPER-STR.	GEN'L.	
503	1078	CU. YD.	UNCLASSIFIED EXCAVATION	581					497				
505	LUMP	LUMP SUM	PILE DRIVING EQUIPMENT MOBILIZATION				LUMP					LUMP	
507	1760	LIN. FT.	STEEL PILES, HP 10×42	850					910				
509	453,655	LBS.	REINFORCING STEEL, GRADE 60	22,269	57,811	152,869			16,645	50,421	153,640		
511	2721	CU. YD.	CLASS S CONCRETE, SUPERSTR., AS PER PLAN			1338					1383		
511	542	CU. YD.	CLASS C CONCRETE, PIER CAPS		264					278			
511	315	CU. YD.	CLASS C CONCRETE, ABUT. ABOVE FOOTING	164					151				
511	196	CU. YD.	CLASS C CONCRETE, FOOTINGS	102					94				
511	350	CU. YD.	CLASS C CONCRETE, DIAPHRAGMS			172					178		
515			PRESTRESSED CONCRETE I-54 BEAMS (SEE PROPOSAL NOTE)										
	10	EACH	TYPE A								10		
	40	EACH	TYPE B								40		
	13	EACH	TYPE C			13							
	39	EACH	TYPE D			39							
516	232	LIN. FT.	STRUCTURAL EXPANSION JOINTS INCL. ELASTO-MERIC COMP. SEALS			123					109		
516	20	EACH	BEARING TYPE B								20		
516	92	EACH	BEARING TYPE C			52					40		
516	46	EACH	BEARING TYPE D			26					20		
516	23	EACH	BEARING TYPE E			13					10		
518	168	CU. YD.	POROUS BACKFILL	94					74				
518	196	LIN. FT.	6" PERFORATED, HELICAL CORRUGATED STEEL PIPE, 707.01	105					91				
518	112	LIN. FT.	6" NON-PERFORATED, HELICAL CORRUGATED STEEL PIPE, INCLUDING SPECIALS, 707.01	58					54				
518	28	EACH	SCUPPERS, INCLUDING SUPPORTS			11					17		
601	1217	SQ. YD.	CRUSHED AGGREGATE SLOPE PROTECTION	509					708				
625			SEE LIGHTING SUMMARY SHEET										
824	427,060	LBS.	EPOXY COATED REINFORCING STEEL, GRADE 60	1567		238,796			1627		184,070		
SPEC.	1200	SQ. YDS.	SEALING OF CONCRETE SURFACES (SEE PROPOSAL NOTE)			552					648		
SPEC.	15,646	SQ. FT.	PROTECTION OF CONC. SURFACES (SEE PROPOSAL NOTE)		7501					8145			
SPEC.	1,516	LIN. FT.	DRILLED-IN PIER COLUMNS ~~43" DIAMETER~~		679					837			
516	23	EACH	BEARING TYPE A	13					10				

QUANTITY CALCULATIONS
BY J.R.S. DATE 7-7-83
CHKD. A.J.M. DATE 7/14/83

PRESTRESSED CONC. ALTERNATE 7/48

adache - ciuni - lynn associates
CONSULTING ENGINEERS CLEVELAND, OHIO 44130

ESTIMATED QUANTITIES

BRIDGE NO. ERI-2-1798 L/R
S. R. 2 OVER MUD BROOK

ERIE COUNTY
ERI-2-16.13

STA. 1173+19.17 TO
STA. 1180+94.84

DESIGNED	DRAWN	CHECKED	REVIEWED	DATE	REVISED
J.R.S.	J.R.S.	AJM	L.E.D.	9-23-85	

MICROFILMED
AUG 30 1990

F.H.W.A. REGION	STATE	PROJECT	
5	OHIO		

201C
284

ERIE COUNTY
ERI-2-(16.13-17.39)

NOTE: PILES SHOWN THUS ↥ SHALL BE BATTERED 1:4 IN DIRECTION SHOWN

FOR GENERAL NOTES, SEE SHEET 3/48

FOR CONTINUATION SEE SHEET 9/48

* SEE PIER SHEET 18/48
** INDICATES 4'-0" DIAMETER DRILLED-IN PIER COLUMNS

SUBSTRUCTURE UNIT	PILE NUMBER	PILE TYPE	CUT-OFF ELEVATION	ESTIMATED LENGTH
ABUT. W.B. NO.1	20-41	HP10×42	574.43	17'
PIER W.B. NO.1	28-30	**	*	28'
PIER W.B. NO.2	31-33	**	*	29'
PIER W.B. NO.3	34-36	**	*	29'
PIER W.B. NO.4	37-39	**	*	34'
ABUT. E.B. NO.1	1-19	HP10×42	577.08	10'
PIER E.B. NO.1	1-3	**	*	30'
PIER E.B. NO.2	4-6	**	*	30'
PIER E.B. NO.3	7-9	**	*	30'
PIER E.B. NO.4	10-12	**	*	31'
PIER E.B. NO.5	13-15	**	*	31'

PRESTRESSED CONC. ALTERNATE 8/48

adache · ciuni · lynn associates
CONSULTING ENGINEERS CLEVELAND, OHIO 44130

PILING PLAN

BRIDGE Nº ERI-2-1798 L/R
S.R.2 OVER MUD BROOK

ERIE COUNTY
ERI-2-16.13

STA. 1173+19.17 TO.
STA. 1180+94.84

DESIGNED	DRAWN	CHECKED	REVIEWED	DATE	REVISED
J.R.S.	M.D.	R.J.P.	L.E.D.	9-23-85	

MICROFILMED
AUG 30 1990

FHWA REGION	STATE	PROJECT	
5	OHIO		

2070
2.84

ERIE COUNTY
ERI - 2 - (16.13 - 17.39)

NOTE: PILES SHOWN THUS ± SHALL BE BATTERED 1:4 IN THE DIRECTION SHOWN.

* SEE PIER SHEET 18148
** INDICATES 4'-0" DIAMETER DRILLED-IN PIER COLUMN.

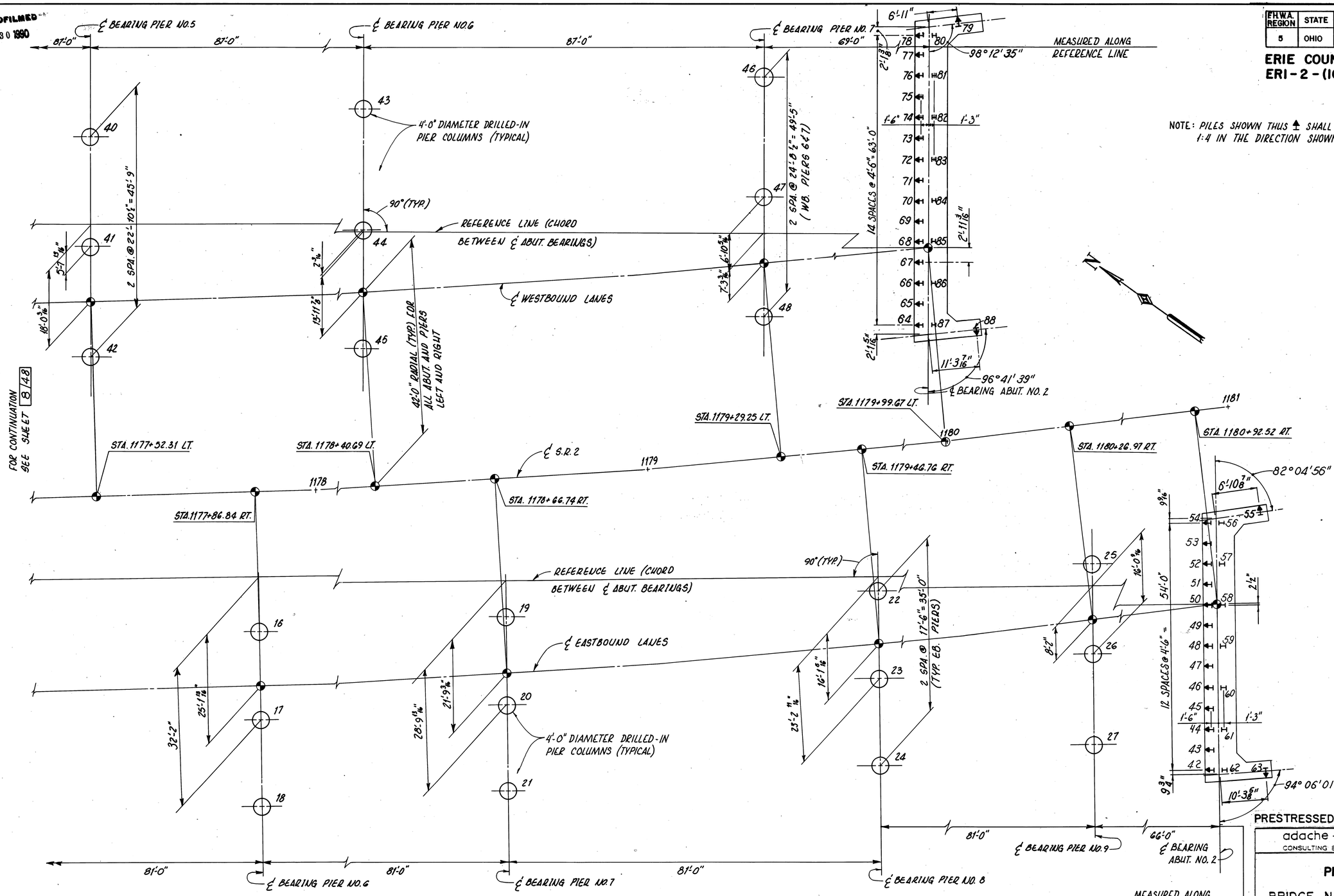

SUBSTRUCTURE UNIT	PILE NUMBER	PILE TYPE	CUT-OFF ELEVATION	ESTIMATED LENGTH
PIER W.B. NO.5	40-42	**	*	35'
PIER W.B. NO.6	43-45	**	*	36'
PIER W.B. NO.7	46-48	**	*	36'
ABUT W.B. NO.8	64-88	HP10×42	576.72	19'
PIER E.B. NO.6	16-18	**	*	31'
PIER E.B. NO.7	19-21	**	*	31'
PIER E.B. NO.8	22-24	**	*	32'
PIER E.B. NO.9	25-27	**	*	32'
ABUT E.B. NO.2	42-63	HP10×42	580.62	24'

PRESTRESSED CONC. ALTERNATE 9/48

adache · ciuni · lynn associates
CONSULTING ENGINEERS CLEVELAND, OHIO 44130

PILING PLAN

BRIDGE Nº ERI - 2 - 1798 L/R
S.R.2 OVER MUD BROOK

ERIE COUNTY
ERI - 2 - 16.13

STA. 1173 + 19.17 TO.
STA. 1180 + 94.84

DESIGNED	DRAWN	CHECKED	REVIEWED	DATE	REVISED
J.R.S.	M.D.	R.J.P.	L.E.D.	9-23-85	

MICROFILMED
AUG 30 1990

FHWA REGION	STATE	PROJECT	
5	OHIO		

207E
284

ERIE COUNTY
ERI-2-(16.13-17.39)

NOTES:
FOR NOTES SEE SHEET 14/48.
FOR FOUNDATION PLAN AND FOR WINGWALL ELEVATIONS SEE SHEET 11/48.

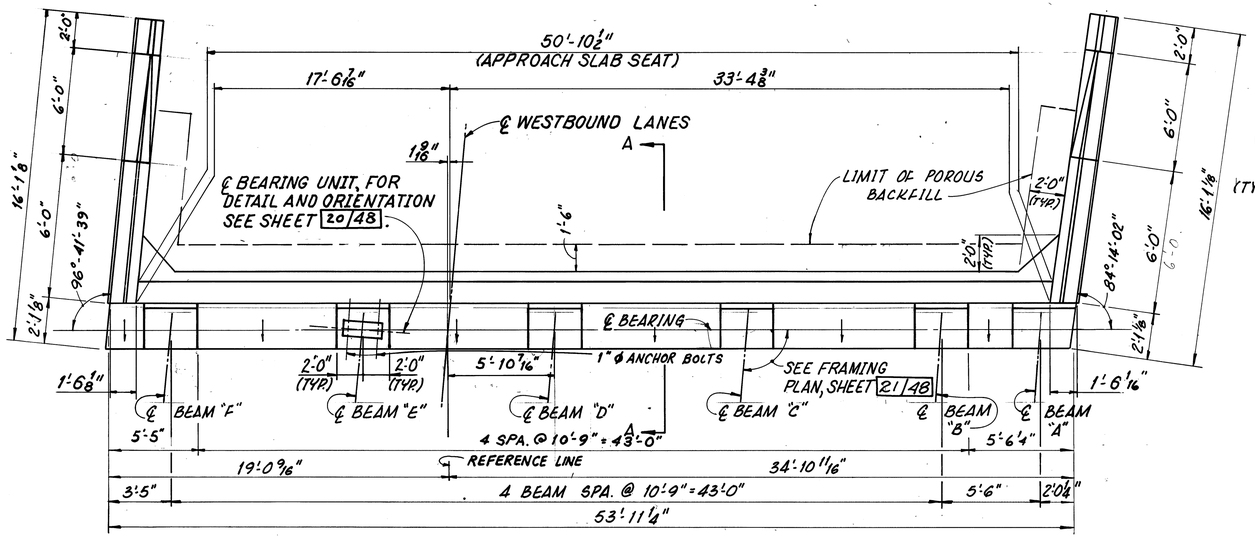

WESTBOUND ABUTMENT Nº 1 PLAN

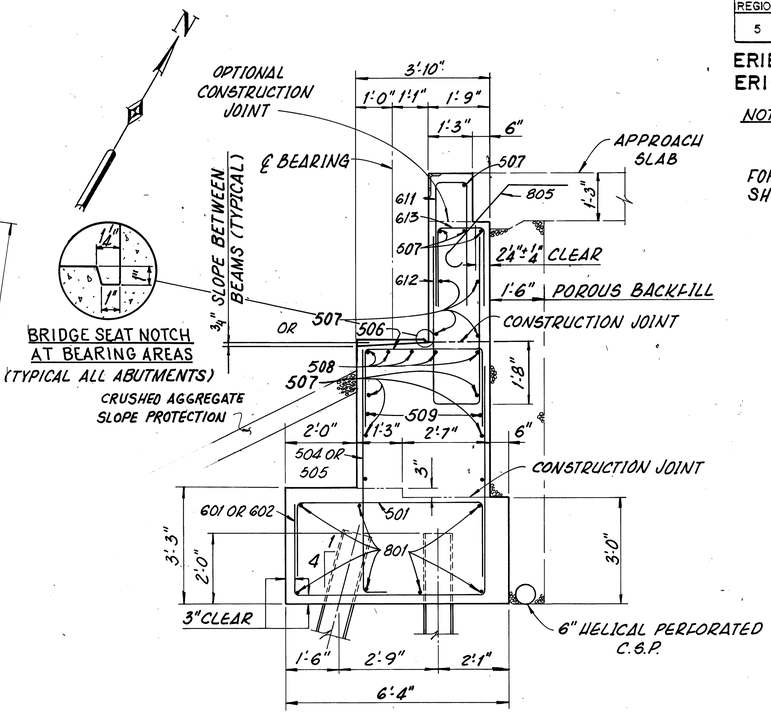

SECTION A-A

NOTE: ALL REINFORCING BAR MARKS SHALL BE PREFIXED "W1A" FOR ABUTMENT NO. 1 WESTBOUND LANES.

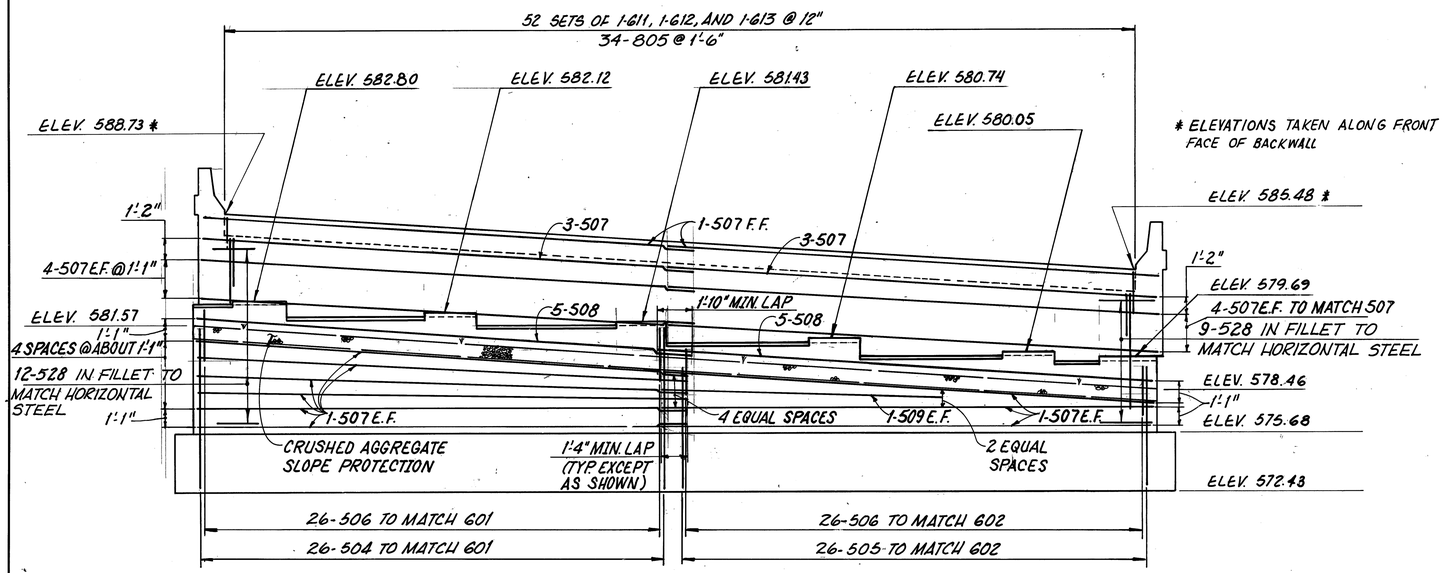

NOTE: BRIDGE SEAT ELEVATIONS HAVE BEEN ADJUSTED UPWARD 1/4" AT ABUTMENTS TO COMPENSATE FOR THE VERTICAL DEFORMATION OF THE BEARING.

WESTBOUND ABUTMENT Nº 1 ELEVATION

NOTE: SEAT ELEVATIONS ARE BASED ON BEARING ALTERNATE 1 AND MAY REQUIRE ADJUSTMENT DEPENDING ON BEARING SELECTED.

PRESTRESSED CONC. ALTERNATE 10/48

adache · ciuni · lynn associates
CONSULTING ENGINEERS CLEVELAND, OHIO 44130

ABUTMENTS
WESTBOUND LANES
BRIDGE Nº ERI-2-1798 L/R
S.R.2 OVER MUD BROOK

ERIE COUNTY STA. 1173+19.17 TO.
ERI-2-16.13 STA. 1180+94.84

DESIGNED	DRAWN	CHECKED	REVIEWED	DATE	REVISED
P.A.G.	W.P.R.	P.A.G.	L.E.D.	9.23.85	

MICROFILMED
AUG 30 1990

F.H.W.A. REGION	STATE	PROJECT	
5	OHIO		

207F
284

ERIE COUNTY
ERI-2-(16.13-17.39)

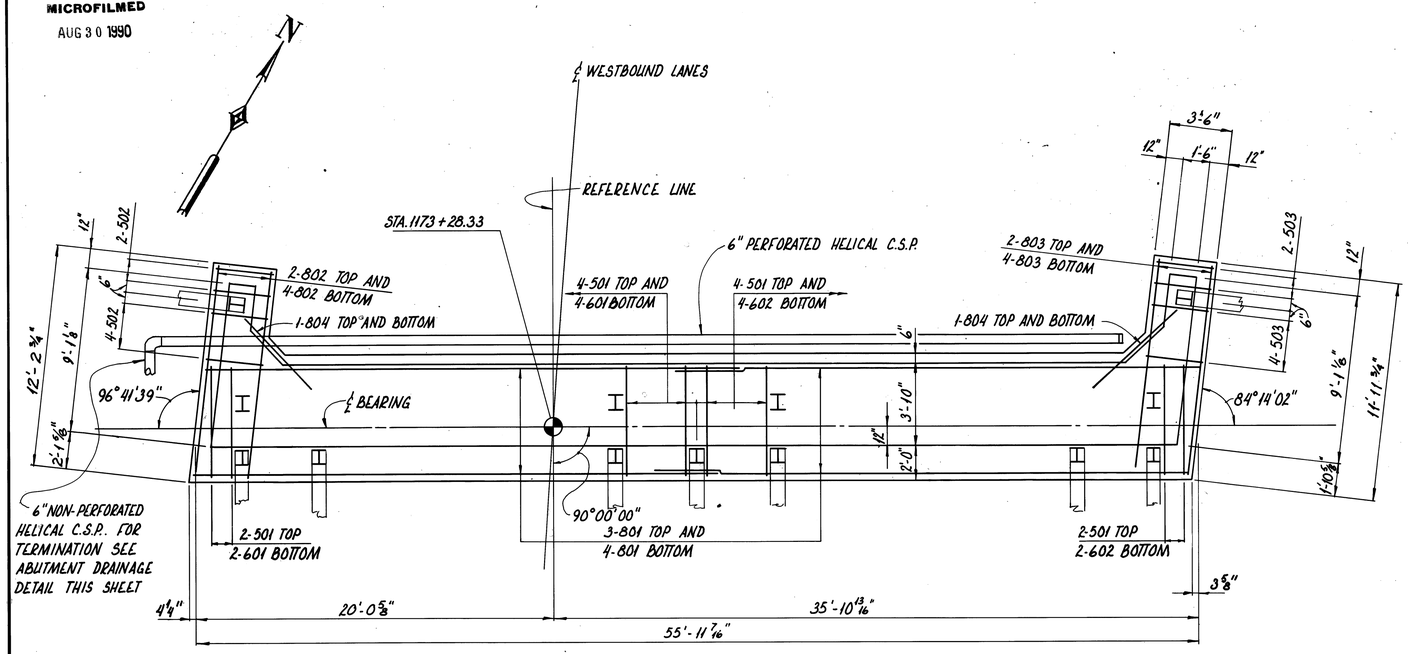

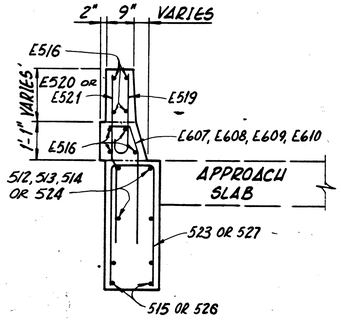

SECTION B-B

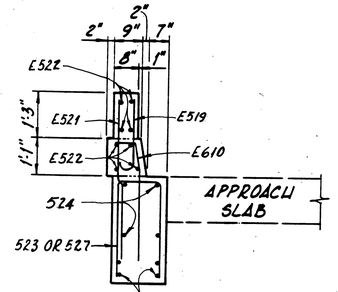

SECTION C-C

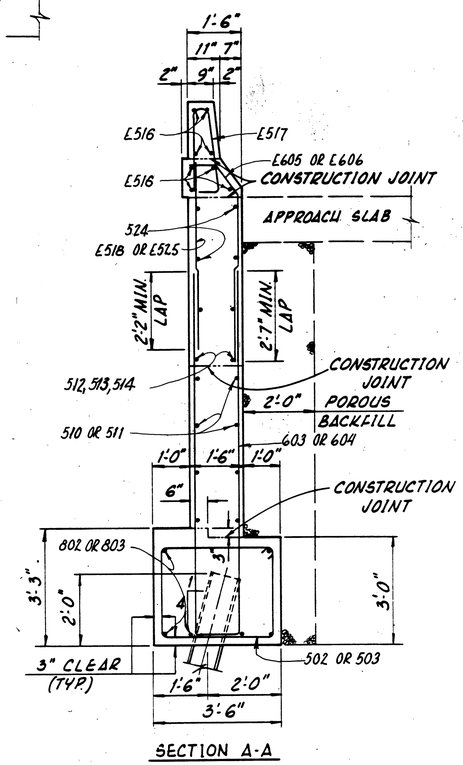

SECTION A-A

NOTE:
FOR NOTES SEE SHEET 14/48

WESTBOUND ABUTMENT NO. 1 FOOTING PLAN

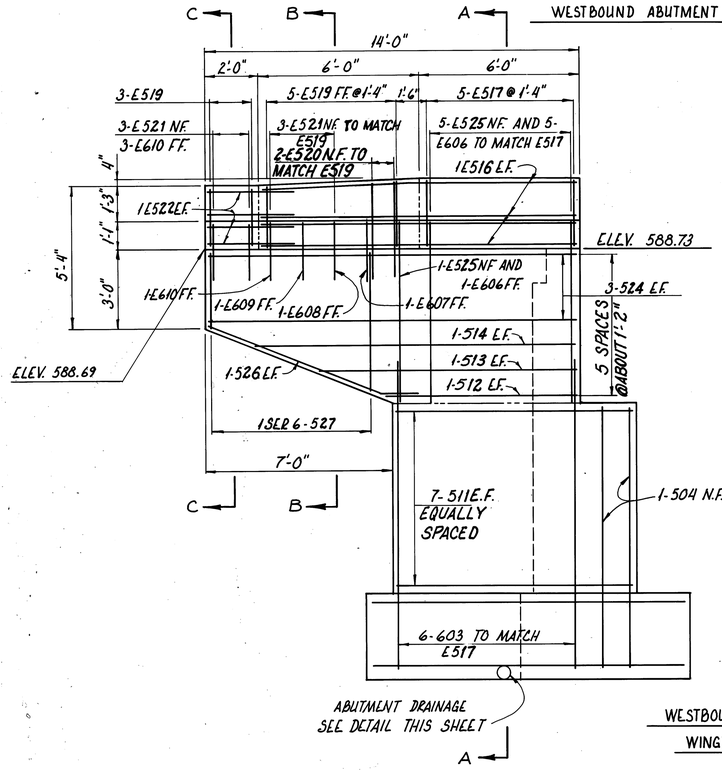

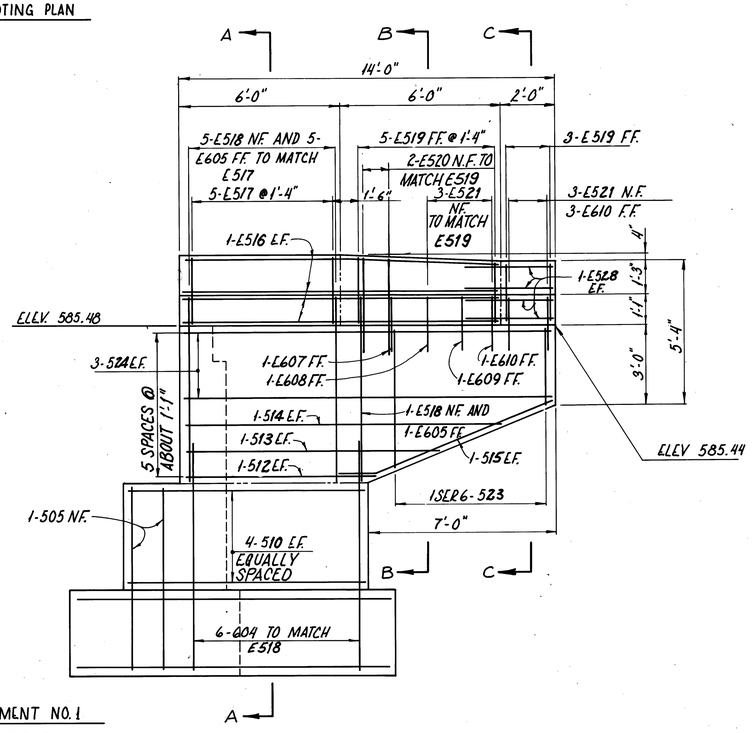

WESTBOUND ABUTMENT NO. 1
WINGWALL ELEVATIONS

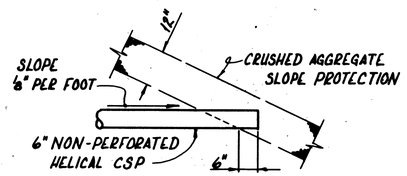

ABUTMENT DRAINAGE DETAIL

PRESTRESSED CONC. ALTERNATE 11/48

adache - ciuni - lynn associates
CONSULTING ENGINEERS CLEVELAND, OHIO 44130

FOOTING PLAN AND WINGWALL ELEVATIONS

BRIDGE NO. ERI-2-1798 L/R
S. R. 2 OVER MUD BROOK

ERIE COUNTY ERI-2-16.13
STA. 1173+19.17 TO STA. 1180+94.84

DESIGNED	DRAWN	CHECKED	REVIEWED	DATE	REVISED
P.A.G.	P.A.G.	P.A.G.	L.E.D.	9-23-85	

MICROFILMED
AUG 30 1990

F.H.W.A. REGION	STATE	PROJECT	
5	OHIO		

207G
284

ERIE COUNTY
ERI-2-(16.13-17.39)

NOTES:
FOR NOTES SEE SHEET 14/48
FOR FOUNDATION PLAN AND WINGWALL ELEVATIONS SEE SHEET 13/48

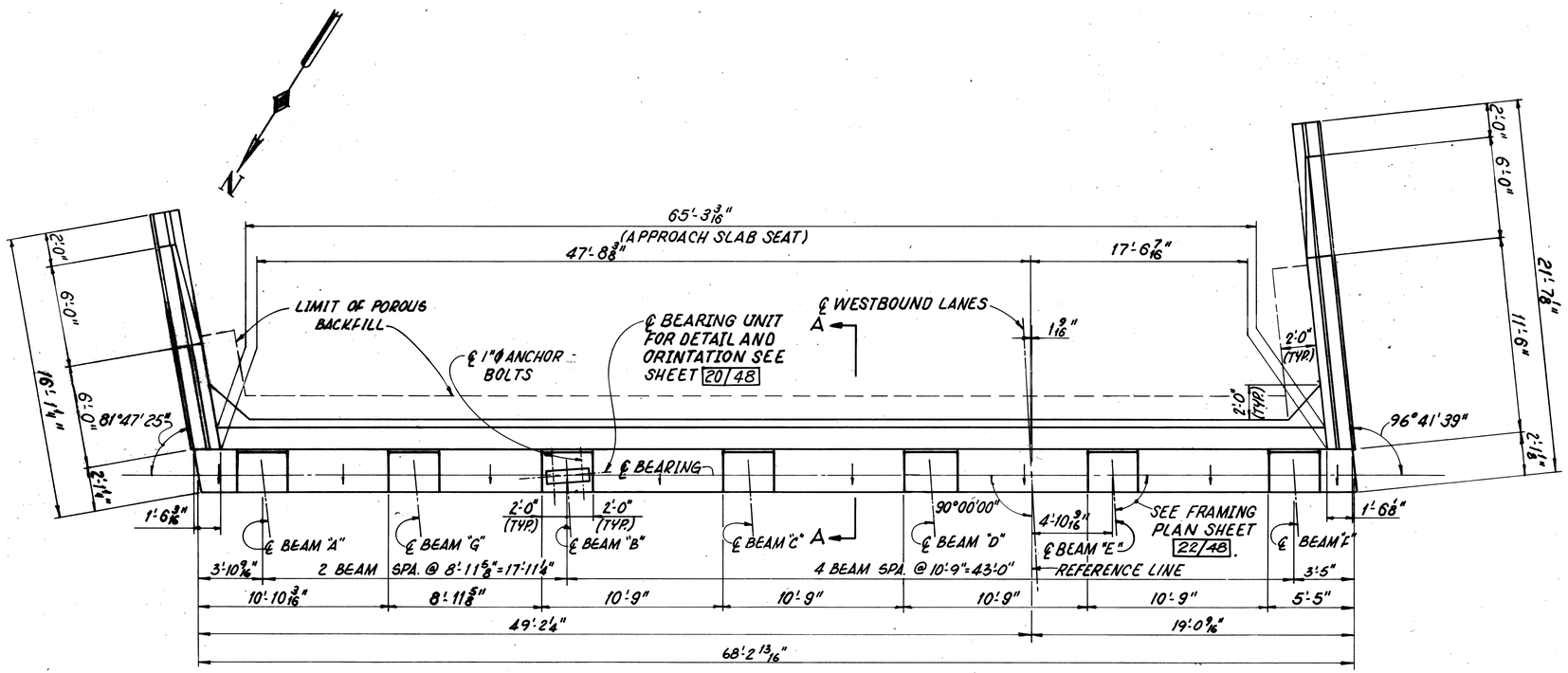

WESTBOUND ABUTMENT No. 2 PLAN

WESTBOUND ABUTMENT No. 2 ELEVATION

NOTE: BRIDGE SEAT ELEVATIONS HAVE BEEN ADJUSTED UPWARD 1/4" AT ABUTMENTS TO COMPENSATE FOR THE VERTICAL DEFORMATION OF THE BEARINGS

NOTE: ALL REINFORCING BAR MARKS SHALL BE PREFIXED "W2A" FOR ABUTMENT NO. 2 WESTBOUND LANES

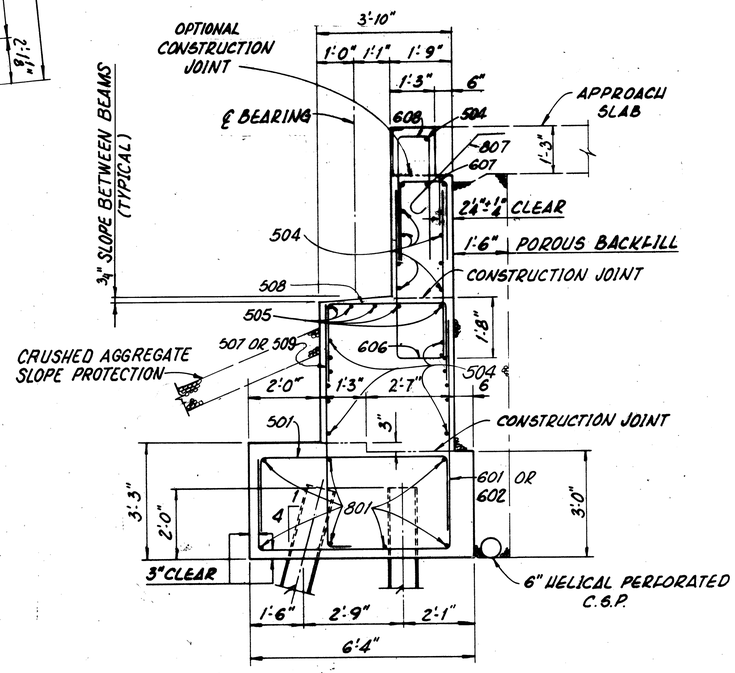

SECTION A-A

*ELEVATIONS TAKEN ALONG FRONT FACE OF BACKWALL.

NOTES:
SEAT ELEVATIONS ARE BASED ON BEARING ALTERNATE 1 AND MAY REQUIRE ADJUSTMENT DEPENDING ON BEARING SELECTED.

PRESTRESSED CONC. ALTERNATE 12/48

adache · ciuni · lynn associates
CONSULTING ENGINEERS CLEVELAND, OHIO 44130

ABUTMENTS
WESTBOUND LANES
BRIDGE No. ERI-2-1798 L/R
S.R.2 OVER MUD BROOK

ERIE COUNTY
ERI-2-16.13
STA. 1173+19.17 TO
STA. 1180+94.84

DESIGNED	DRAWN	CHECKED	REVIEWED	DATE	REVISED
P.A.G.	W.P.R.	P.A.G.	L.E.D.	9-23-65	

MICROFILMED
AUG 30 1990

FHWA REGION	STATE	PROJECT	
5	OHIO		

207H
284

ERIE COUNTY
ERI-2-(16.13-17.39)

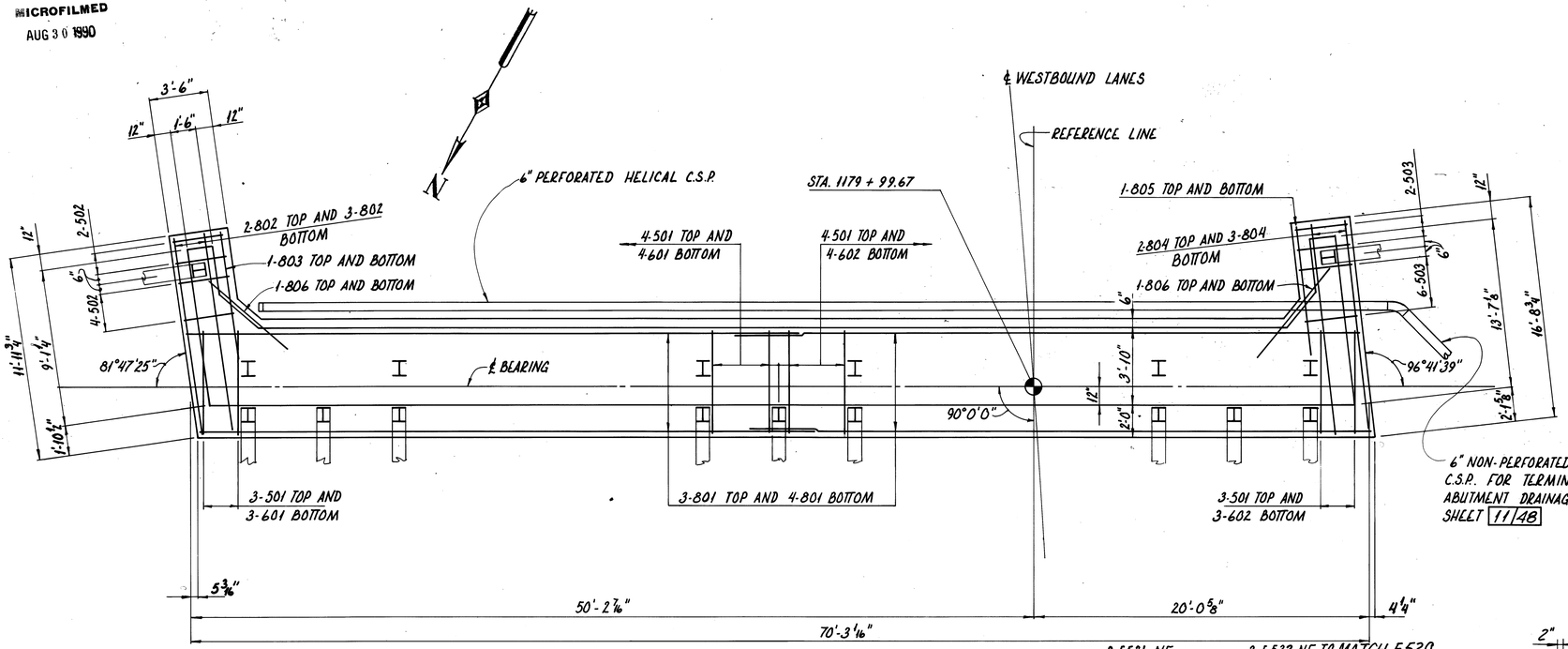

WESTBOUND ABUTMENT NO. 2 FOOTING PLAN

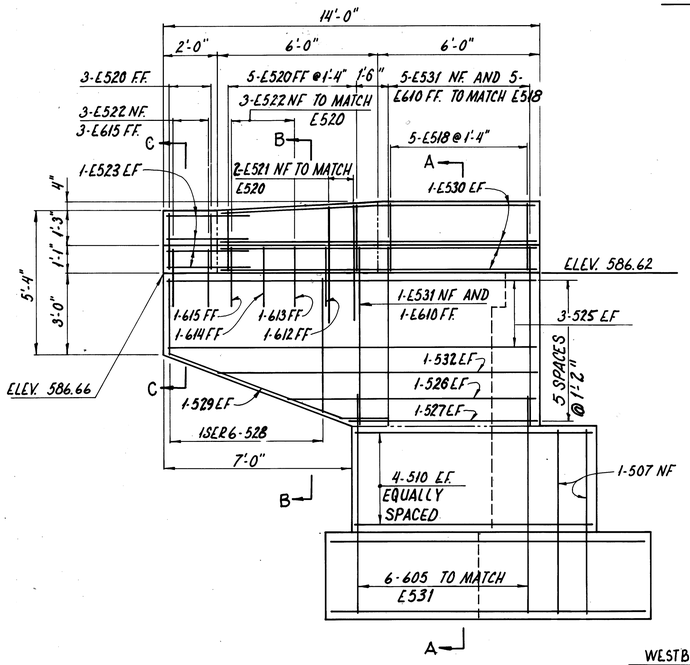

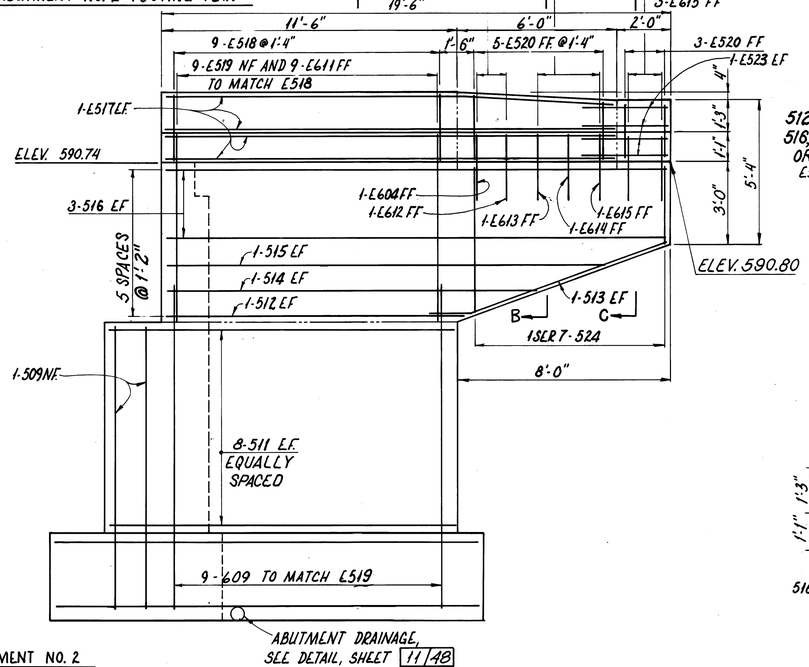

WESTBOUND ABUTMENT NO. 2
WINGWALL ELLEVATIONS

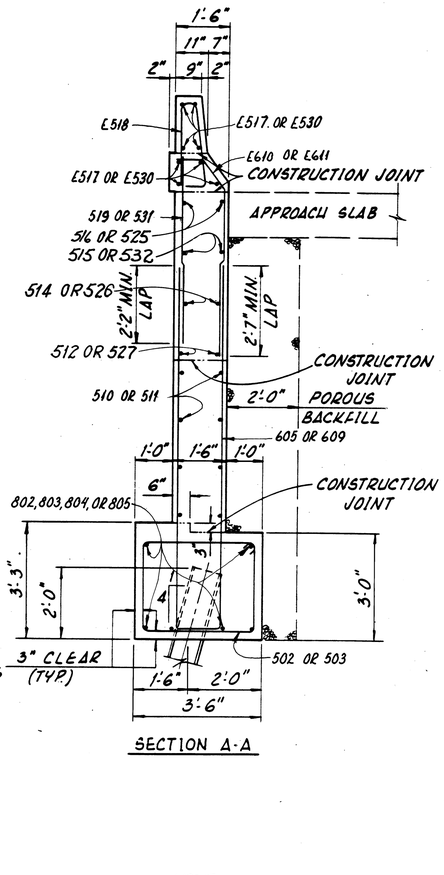

SECTION A-A

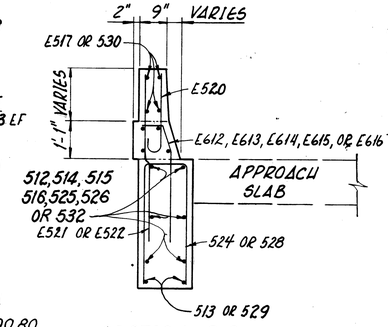

SECTION B-B

NOTE:
FOR NOTES SEE SHEET 14/48

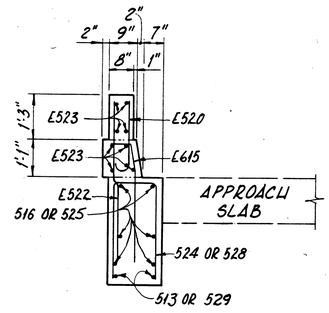

SECTION C-C

PRESTRESSED CONC. ALTERNATE 13/48

adache - ciuni - lynn associates
CONSULTING ENGINEERS CLEVELAND, OHIO 44130

FOOTING PLAN AND WINGWALL ELEVATIONS

BRIDGE NO. ERI-2-1798 L/R
S. R. 2 OVER MUD BROOK

ERIE COUNTY
ERI-2-16.13

STA. 1173+19.17 TO
STA. 1180+94.84

DESIGNED	DRAWN	CHECKED	REVIEWED	DATE	REVISED
P.A.G.	P.A.G.	P.A.G.	L.E.D.	9-23-85	

MICROFILMED
AUG 30 1990

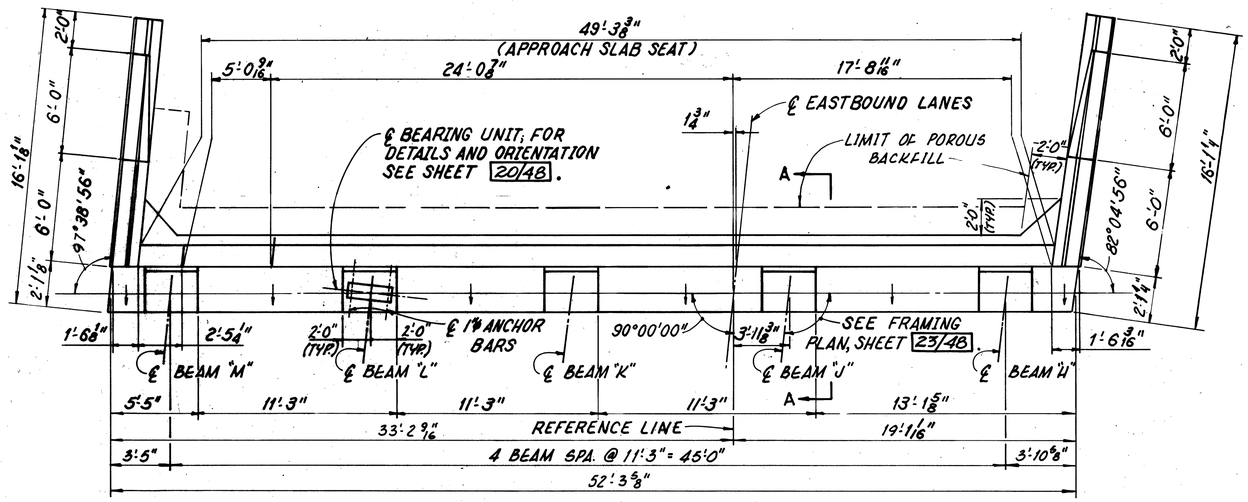

EASTBOUND ABUTMENT Nº 1 PLAN

NOTE: ALL REINFORCING BAR MARKS SHALL BE PREFIXED "D1A" FOR ABUTMENT NO. 1 EASTBOUND LANES

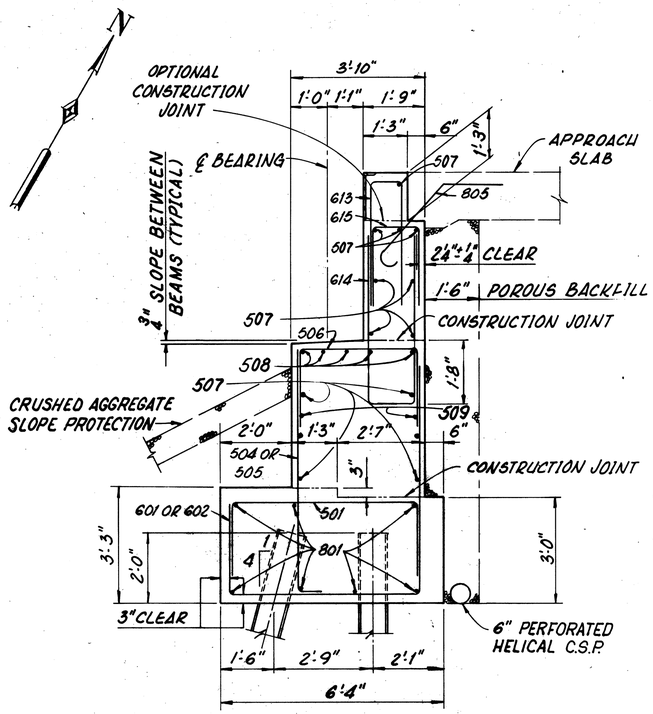

SECTION A-A

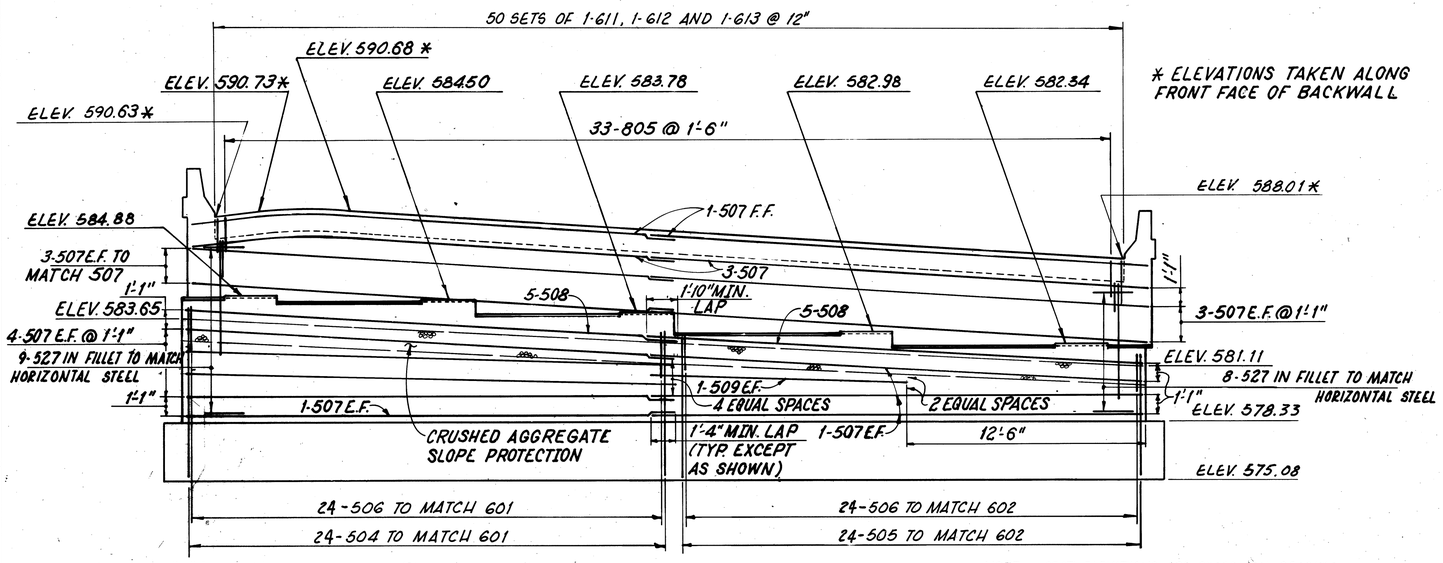

NOTE: BRIDGE SEAT ELEVATIONS HAVE BEEN ADJUSTED UPWARD 1/4" AT ABUTMENTS TO COMPENSATE FOR THE VERTICAL DEFORMATION OF THE BEARINGS

EASTBOUND ABUTMENT Nº 1 ELEVATION

NOTE: SEAT ELEVATIONS ARE BASED ON BEARING ALTERNATE 1 AND MAY REQUIRE ADJUSTMENT DEPENDING ON BEARING SELECTED.

FHWA REGION	STATE	PROJECT	
5	OHIO		

207J / 284

ERIE COUNTY
ERI-2-(16.13-17.39)

NOTES:

FOR PILING PLAN SEE SHEET 6/48.

FOR CURB AND PARAPET TRANSITIONS AND FOR GUARD RAIL ANCHOR DETAILS, SEE "PART PLAN AT ABUTMENT" ON OHIO STANDARD DRAWING BR-1.

THE FOLLOWING ABBREVIATIONS ARE USED:

N.F. = NEAR FACE
F.F. = FAR FACE
E.F. = EACH FACE
TYP. = TYPICAL
CSP = CORRUGATED STEEL PIPE

POROUS BACKFILL, FULL LENGTH OF ABUTMENT AND WINGS, SHALL EXTEND UP TO THE PLANE OF THE SUBGRADE WITHIN THE ROADWAY AREA EXTENDED LATERALLY TO THE WING WALLS 1.5 FT. THICK AT THE ABUTMENT AND 2.0 FT. THICK AT THE WINGS.

FOR BEARING DETAILS AT ABUTMENTS SEE STD. DWG. RB-1-55.

FOR EXPANSION JOINT DETAILS SEE SHEET 36/48.

FOR WINGWALL DETAILS SEE SHEET 15/48

FOR REINFORCEMENT SCHEDULE AND BAR BENDING DIAGRAMS SEE SHEET 37/48.

ALL REINFORCING STEEL BAR MARKS PREFIXED "E" SHALL BE EPOXY COATED.

FOR FOUNDATION PLAN AND WINGWALL ELEVATIONS SEE SHEET 15/48.

PRESTRESSED CONC. ALTERNATE 14/48

adache · ciuni · lynn associates
CONSULTING ENGINEERS CLEVELAND, OHIO 44130

ABUTMENTS
EASTBOUND LANES
BRIDGE Nº ERI-2-1798 L/R
S.R.2 OVER MUD BROOK

ERIE COUNTY
ERI-2-16.13

STA. 1173+19.17 TO.
STA. 1180+94.84

DESIGNED	DRAWN	CHECKED	REVIEWED	DATE	REVISED
P.A.G.	W.P.R.	A.A.G.	L.E.D.	9-23-85	

MICROFILMED
AUG 30 1990

F.H.W.A. REGION	STATE	PROJECT	
5	OHIO		

207K
284

ERIE COUNTY
ERI-2-(16.13-17.39)

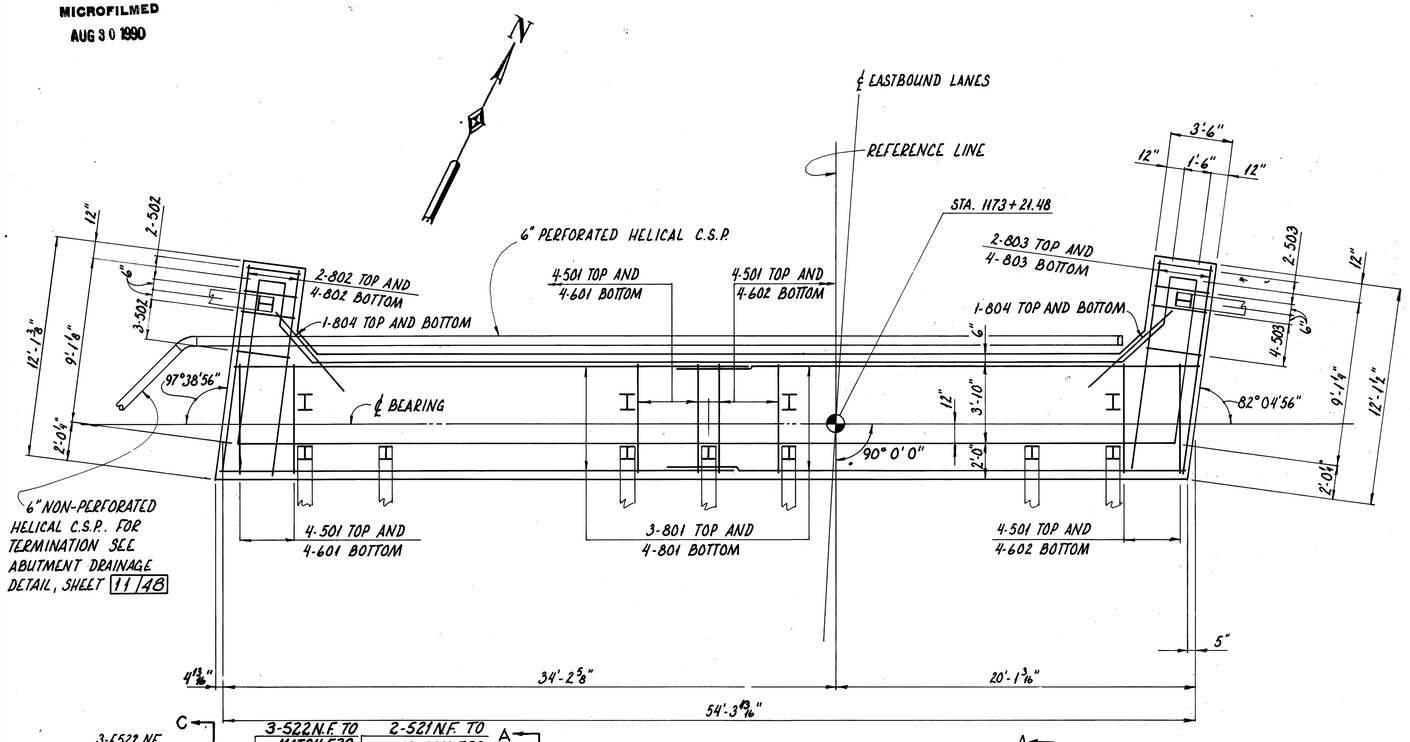

EASTBOUND ABUTMENT NO. 1 FOOTING PLAN

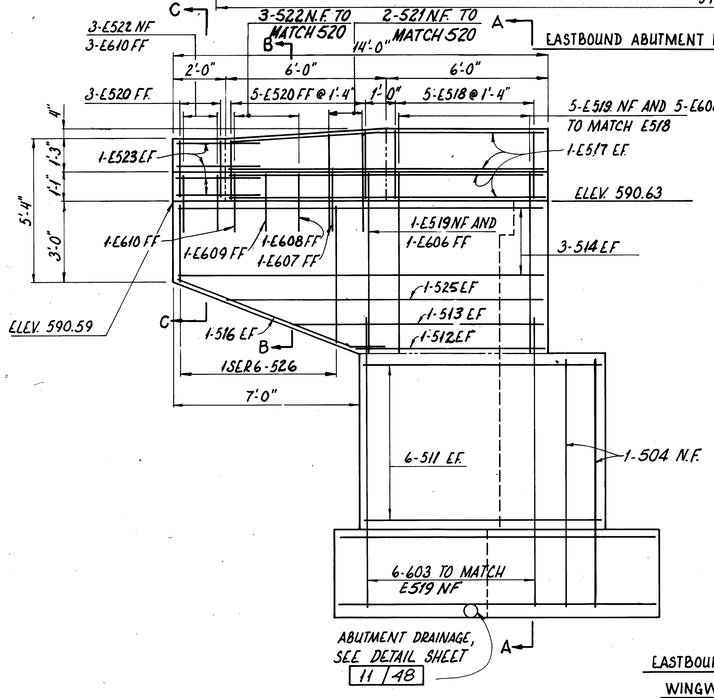

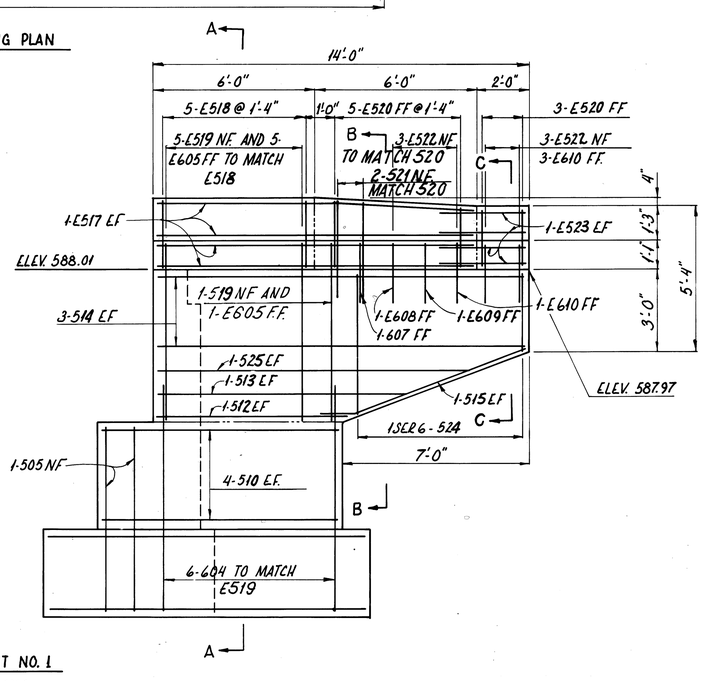

EASTBOUND ABUTMENT NO. 1
WINGWALL ELEVATIONS

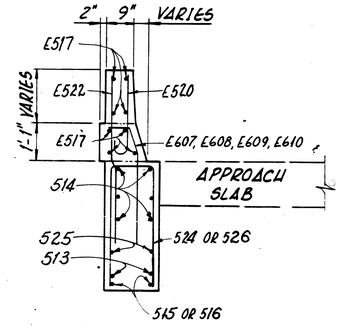

SECTION B-B

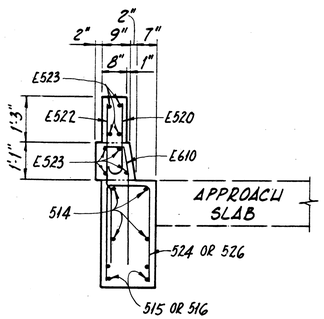

SECTION C-C

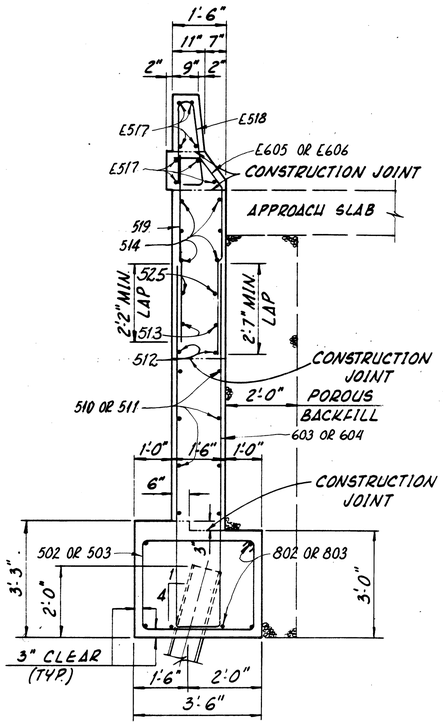

SECTION A-A

NOTE:
FOR NOTES SEE SHEET 14/48

PRESTRESSED CONC. ALTERNATE 15/48

adache · ciuni · lynn associates
CONSULTING ENGINEERS CLEVELAND, OHIO 44130

FOOTING PLAN AND WINGWALL ELEVATIONS

BRIDGE NO. ERI-2-1798 L/R
S. R. 2 OVER MUD BROOK

ERIE COUNTY
ERI-2-16.13

STA. 1173+19.17 TO
STA. 1180+94.84

DESIGNED	DRAWN	CHECKED	REVIEWED	DATE	REVISED
P.A.G.	P.A.G.	P.A.G.	L.E.D.	9-23-85	

MICROFILMED
AUG 30 1990

FHWA REGION	STATE	PROJECT	
5	OHIO		

207L
284

ERIE COUNTY
ERI-2-(16.13-17.39)

NOTES:
FOR NOTES SEE SHEET 14/48
FOR FOUNDATION PLAN AND WINGWALL ELEVATIONS SEE SHEET 17/48

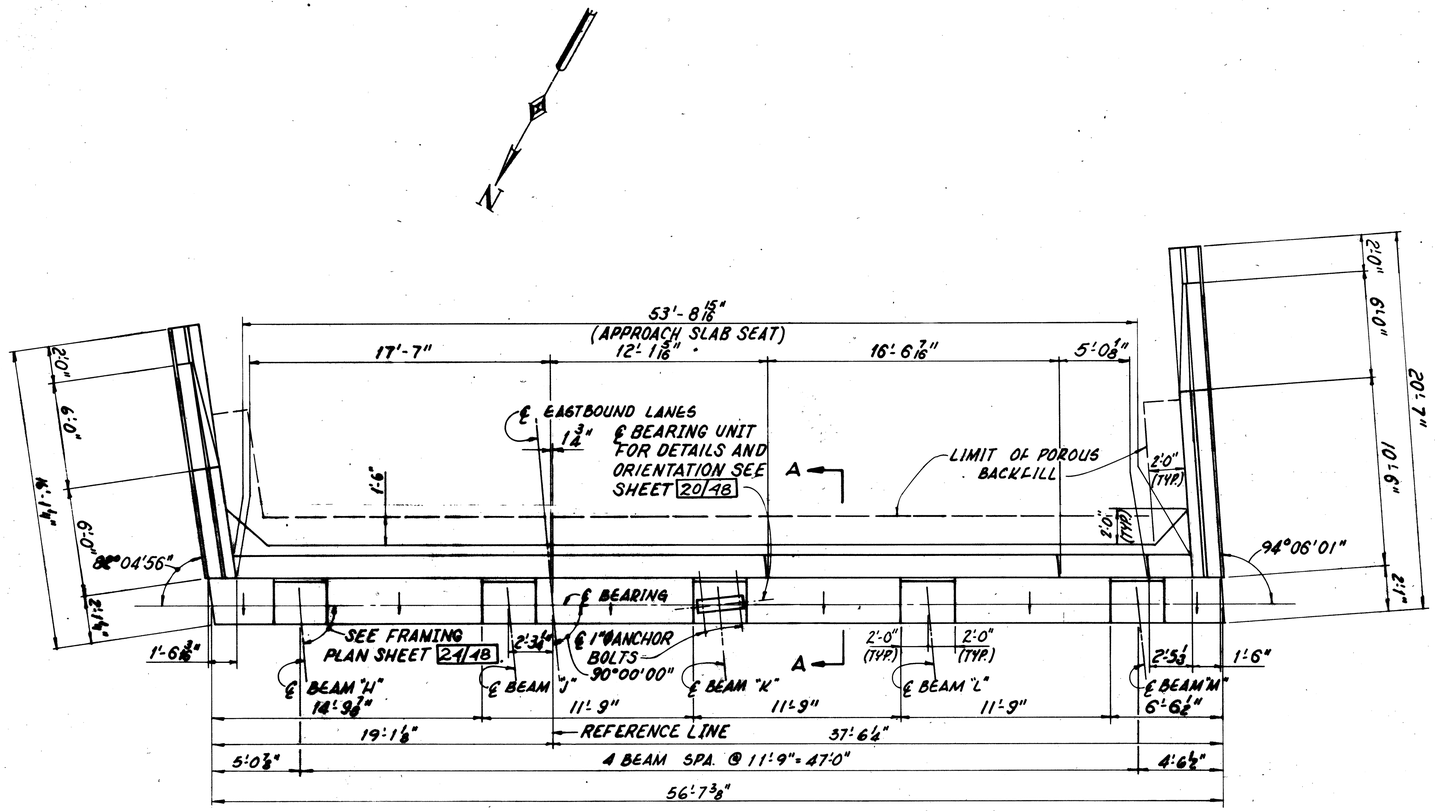

NOTE: ALL REINFORCING BAR MARKS SHALL BE PREFIXED "D2A" FOR ABUTMENT NO.2 EASTBOUND LANES

EASTBOUND ABUTMENT Nº 2 PLAN

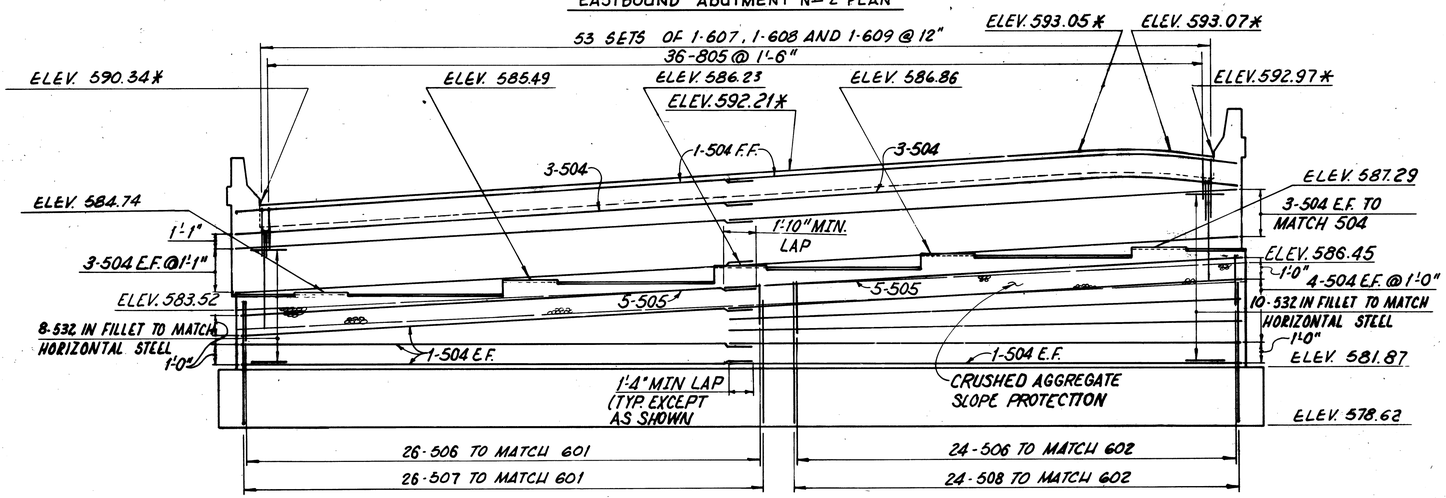

NOTE: BRIDGE SEAT ELEVATIONS HAVE BEEN ADJUSTED UPWARD 1/4" AT ABUTMENTS TO COMPENSATE FOR THE VERTICAL DEFORMATION OF THE BEARINGS

EASTBOUND ABUTMENT Nº 2 ELEVATION

NOTE: SEAT ELEVATIONS ARE BASED ON BEARING ALTERNATE 1 AND MAY REQUIRE ADJUSTMENT DEPENDING ON BEARING SELECTED.

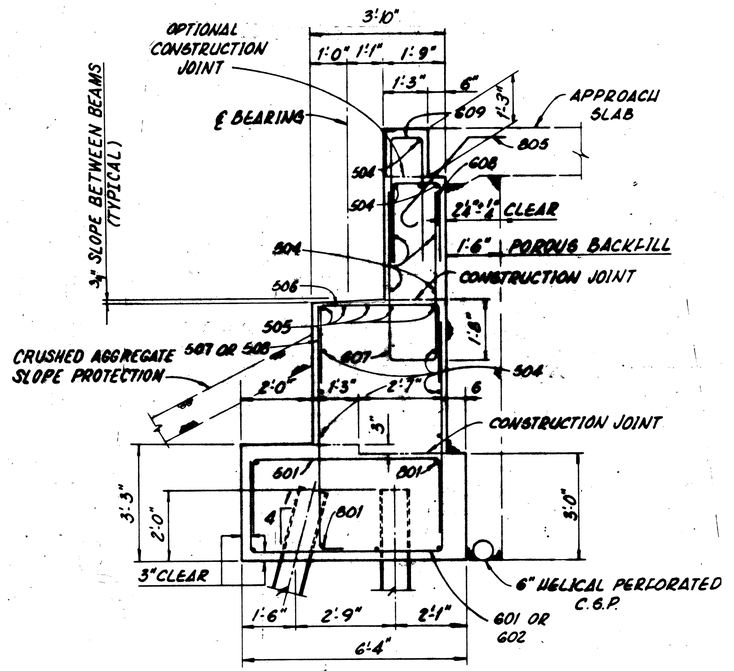

SECTION A-A

* ELEVATIONS ARE TAKEN ALONG FRONT FACE OF BACKWALL.

PRESTRESSED CONC. ALTERNATE 16/18

adache · ciuni · lynn associates
CONSULTING ENGINEERS CLEVELAND, OHIO 44130

ABUTMENTS
EASTBOUND LANES
BRIDGE Nº ERI-2-1798 L/R
S.R.2 OVER MUD BROOK

ERIE COUNTY
ERI-2-16.13

STA. 1173+19.17 TO
STA. 1180+94.84

DESIGNED	DRAWN	CHECKED	REVIEWED	DATE	REVISED
P.A.G.	W.P.R.	P.A.G.	L.E.D.	9-23-85	

MICROFILMED
AUG 30 1990

F.H.W.A. REGION	STATE	PROJECT	
5	OHIO		

207M
284

ERIE COUNTY
ERI-2-(16.13-17.39)

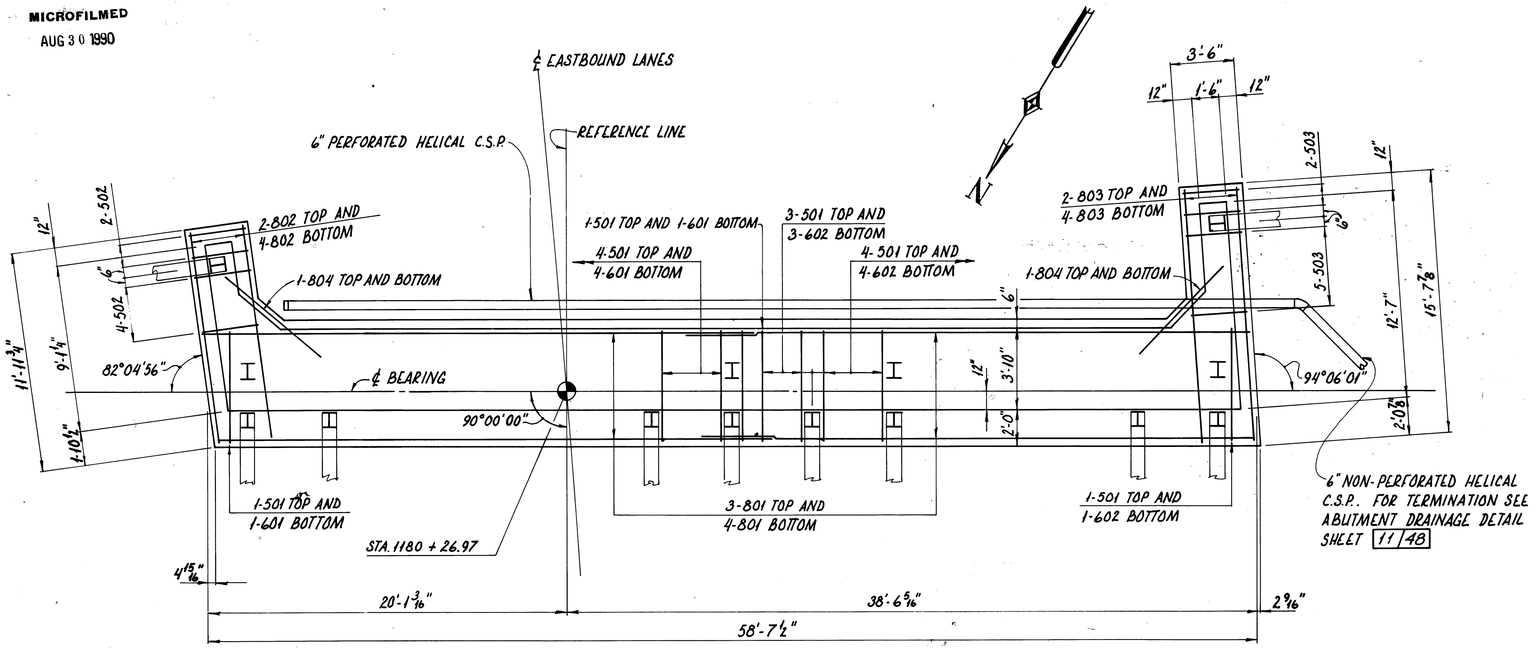

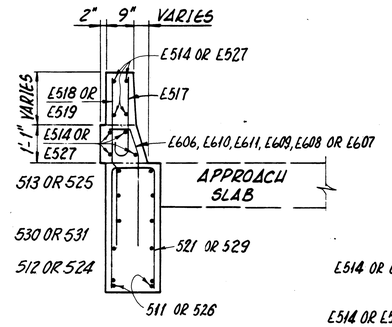

SECTION B-B

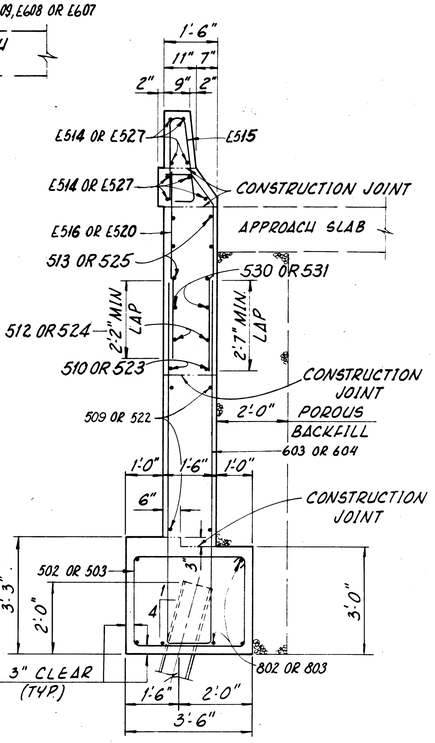

SECTION A-A

NOTE:
FOR NOTES SEE SHEET 14/48

EASTBOUND ABUTMENT NO. 2 FOOTING PLAN

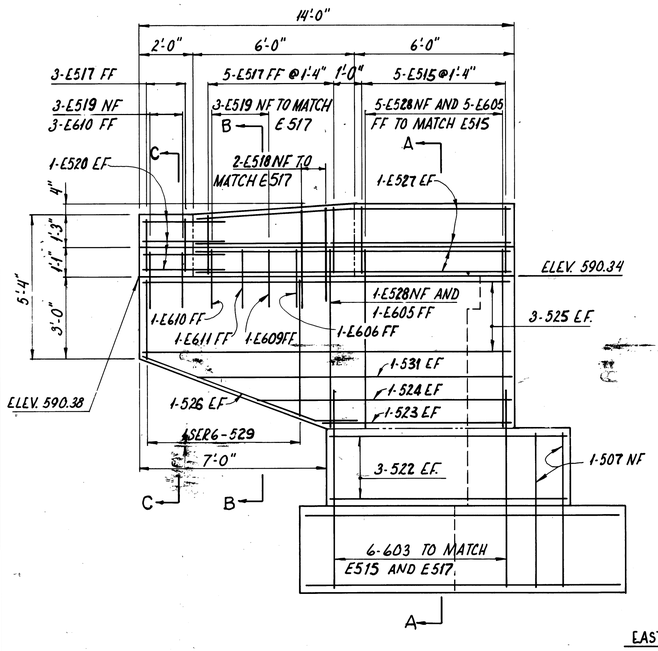

EASTBOUND ABUTMENT NO. 2 WINGWALL ELEVATIONS

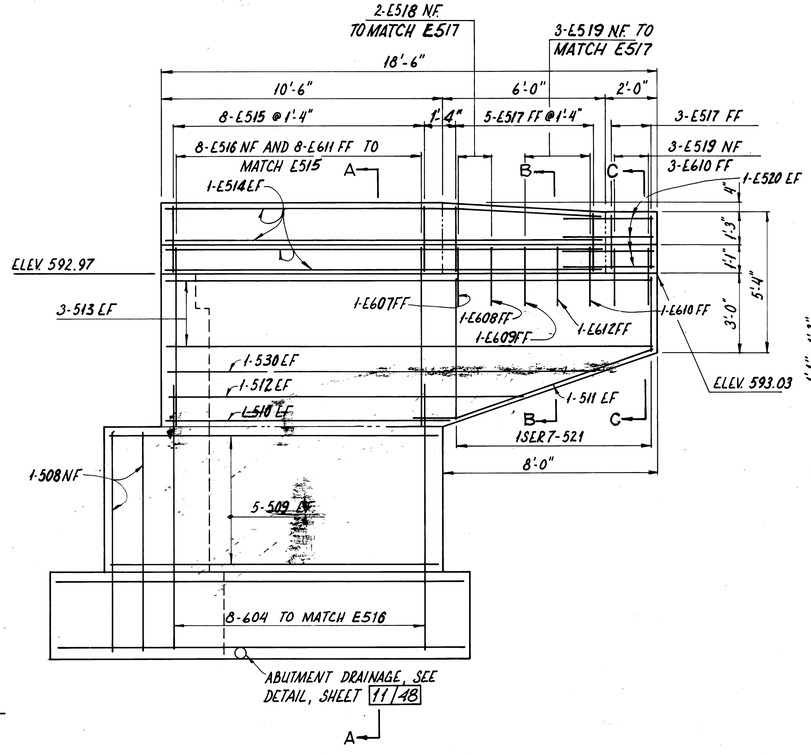

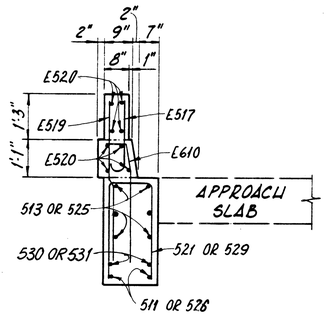

SECTION C-C

PRESTRESSED CONC. ALTERNATE 17/48

adache - ciuni - lynn associates
CONSULTING ENGINEERS CLEVELAND, OHIO 44130

FOOTING PLAN AND WINGWALL ELEVATIONS

BRIDGE NO. ERI-2-1798 L/R
S. R. 2 OVER MUD BROOK

ERIE COUNTY
ERI-2-16.13

STA. 1173+19.17 TO
STA. 1180+94.84

DESIGNED	DRAWN	CHECKED	REVIEWED	DATE	REVISED
P.A.G.	P.A.G.	P.A.G.	L.E.D.	9-23-85	

MICROFILMED
AUG 30 1990

FHWA REGION	STATE	PROJECT	
5	OHIO		

207N
284

ERIE COUNTY
ERI-2-(16.13-17.39)

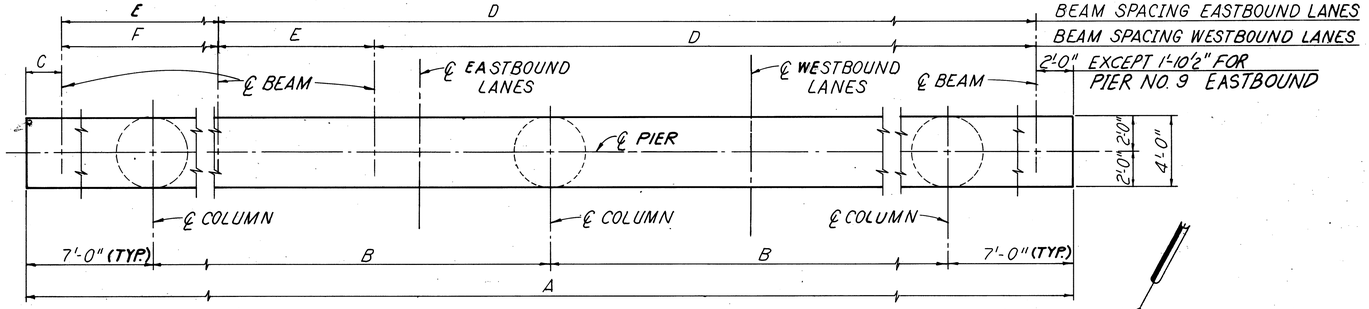

PLAN

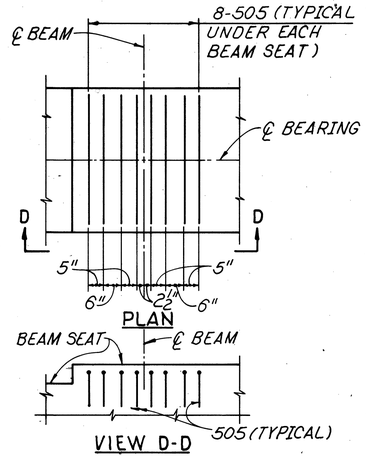

NOTES:
ALL REINFORCING BAR MARKS SHALL BE PREFIXED WIP FOR PIER NO. 1 WESTBOUND, DIP FOR PIER NO. 1 EASTBOUND, ETC.

THE FOLLOWING ABBREVIATIONS ARE USED:
E.F. = EACH FACE ELEV. = ELEVATION

BRIDGE SEAT CONFIGURATION VARIES PER PIER CAP PROFILES, SHEET 19/48

CONCRETE AND REINFORCING STEEL INSIDE COLUMNS TO BE INCLUDED WITH ITEM-SPECIAL "DRILLED-IN PIER COLUMNS" FOR PAYMENT. FOR REINFORCING IN "DRILLED-IN PIER COLUMN SEE SHEETS 45/48 & 46/48

REINFORCING STEEL IN THE VICINITY OF THE BRIDGE SEATS SHALL BE ACCURATELY PLACED TO AVOID INTERFERENCE WITH PRESETTING OF BEARING ANCHORS.

ANCHOR DOWEL BARS SHALL BE CAST-IN PLACE.

FOR BEARING DETAILS SEE SHEET 20/48.

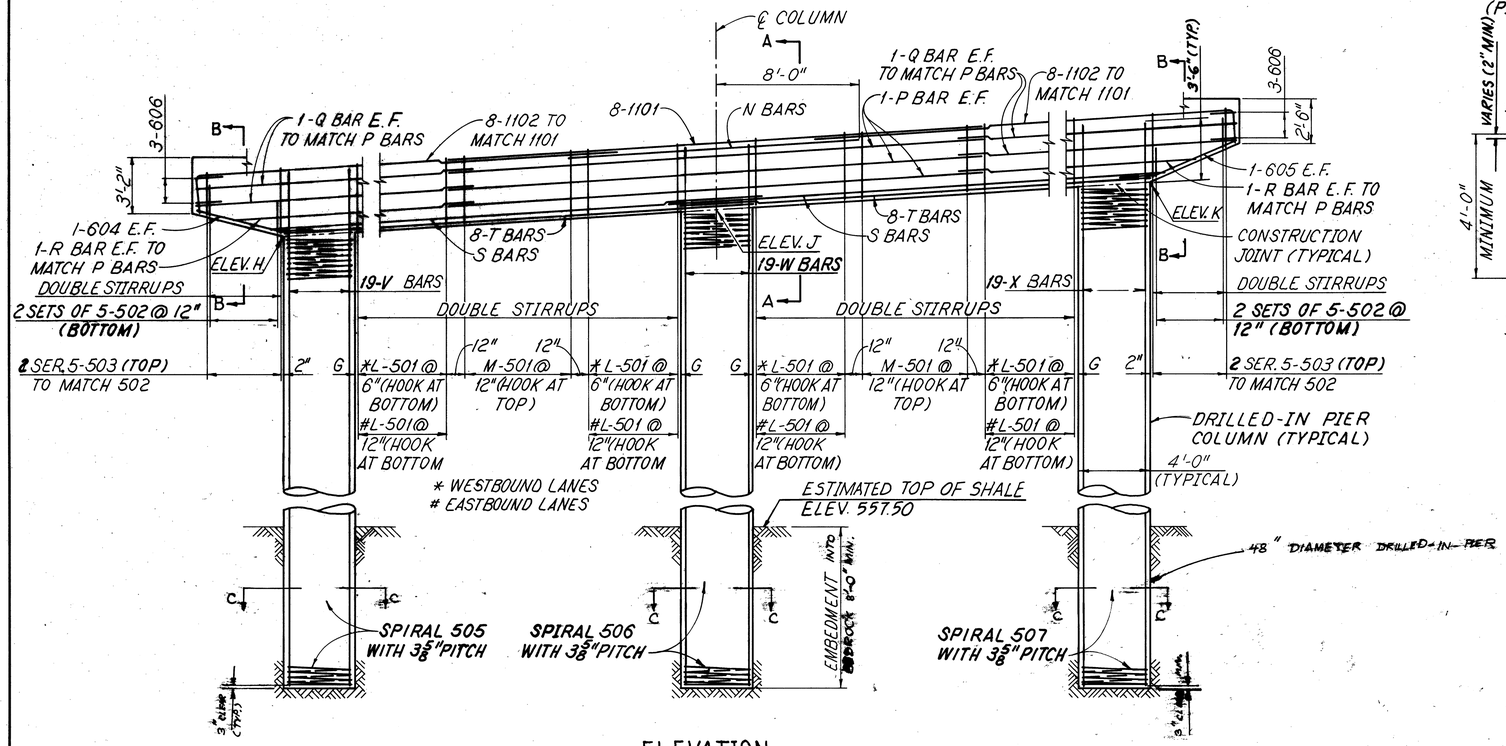

ELEVATION
BRIDGE SEATS NOT SHOWN
SEE NOTES

FIXED PIER BEAM SEAT REINFORCING DETAIL
(PIER 4 WESTBOUND, PIER 5 EASTBOUND)

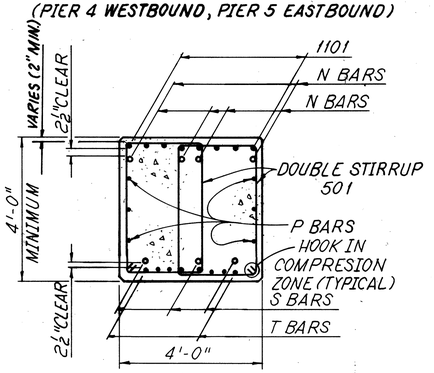

SECTION A-A

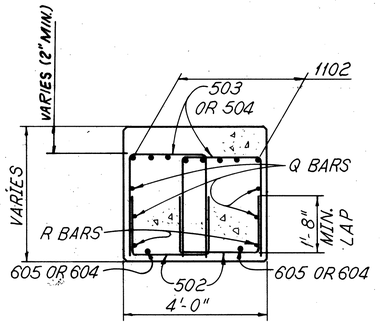

SECTION B-B

FOR TABLE OF DIMENSIONS AND ADDITIONAL DETAILS SEE SHEET 19/48.

FOR REINFORCING STEEL LIST SEE SHEETS 38/48, 39/48, 42/48 & 43/48.

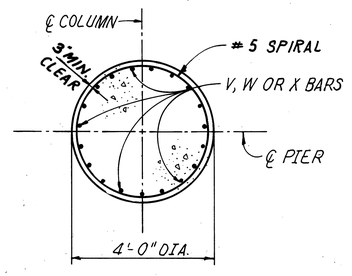

SECTION C-C

MINIMUM BAR LAP	
BAR SIZE	MIN. LAP
6	1'-5"
7	2'-0"
9	3'-3"
10	4'-2"
11 (TOP)	5'-0"
11 (OTHERS)	3'-2"

PRESTRESSED CONC. ALTERNATE 18/48

adache - ciuni - lynn associates
CONSULTING ENGINEERS CLEVELAND, OHIO 44130

PIER DETAILS

BRIDGE NO. ERI-2-1798 L/R
S. R. 2 OVER MUD BROOK

ERIE COUNTY
ERI-2-16.13

STA. 1173+19.17 TO
STA. 1180+94.84

DESIGNED	DRAWN	CHECKED	REVIEWED	DATE	REVISED
J.R.S.	R.C.K.	J.R.S.	L.E.D.	9-23-85	

MICROFILMED
AUG 30 1990

F.H.W.A. REGION	STATE	PROJECT	
5	OHIO		

207P
284

ERIE COUNTY
ERI-2-(16.13-17.39)

	PIER NO.	DIMENSIONS A	B	C	D	E	F	G	ELEVATIONS H	J	K	REINFORCEMENT L	M	N	P	Q	R	S	T	V	W	X	EMBEDMENT
WESTBOUND LANES	1	56'-6"	21'-3"	4'-6"	3 BEAM SPACES @ 10'-9" = 32'-3"	10'-9"	7'-0"	12 1/2"	575.35	576.86	578.38	9	8	—	601	602	603	—	1001	1002	1003	1004	9'-0"
	2	56'-6"	21'-3"	2'-7"	3 BEAM SPACES @ 10'-9" = 32'-3"	10'-9"	8'-11"	12 1/2"	575.61	577.12	578.64	9	8	—	↑	↑	↑	—	↑	↑	↑	↑	9'-0"
	3	56'-6"	21'-3"	2'-0"	3 BEAM SPACES @ 10'-9" = 32'-3"	10'-9"	9'-6"	12 1/2"	576.07	577.58	579.09	9	8	—	↓	↓	↓	—	↓	↓	↓	↓	9'-0"
	4	59'-9"	22'-10 1/2"	3'-11"	4 BEAM SPACES @ 10'-9" = 43'-0"	5'-5"	5'-5"	5 1/2"	576.18	577.79	579.41	11	7	2-1002									14'-0"
	5	59'-9"	22'-10 1/2"	2'-0"2"	↕	6'-4 1/4"	6'-4 1/2"	5 1/2"	576.38	578.00	579.62	11	7	2-1002	601	602	603	—	1001				14'-0"
	6	63'-5"	24'-8 1/2"	3'-10 1/4"		7'-3 3/8"	7'-3 3/8"	4 1/2"	576.48	578.09	579.70	14	6	4-1104	701	702	703	3-1001	1103	↓	↓	↓	15'-0"
	7	63'-5"	24'-8 1/2"	2'-0"	4 BEAM SPACES @ 10'-9" = 43'-0"	8'-2 1/2"	8'-2 1/2"	4 1/2"	576.49	578.23	579.97	14	6	4-1104	701	702	703	3-1001	1103	1002	1003	1004	15'-0"
EASTBOUND LANES	1	49'-0"	17'-6"	2'-0"	3 BEAM SPACES @ 11'-3" = 33'-9"	11'-3"	—	3"	578.13	579.40	580.67	4	6	—	601	602	603	—	901	902	903	904	8'-0"
	2	↑	↑	↑	↑	↑	—	↑	578.45	579.72	580.99	↑	↑	—	↑	↑	↑	—	↑	↑	↑	↑	↑
	3						—		578.68	579.95	581.22			—				—					
	4						—		579.11	580.38	581.65			—				—					
	5						—		579.40	580.67	581.94			—				—					
	6						—		579.59	580.86	582.13			—				—					
	7						—		579.63	580.90	582.17			—				—					
	8			2'-0"		11'-3"	—		579.88	581.15	582.42			—				—					
	9	49'-0"	17'-6"	1'-10 1/2"	3 BEAM SPACES @ 11'-3" = 33'-9"	11'-6"	—	3"	580.09	581.36	582.63	4	6	—	601	602	603	—	901	902	903	904	8'-0"

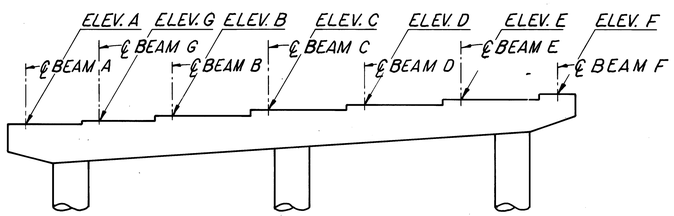

PIER CAP PROFILE
(PIERS 4 THRU 7 WESTBOUND LANES)

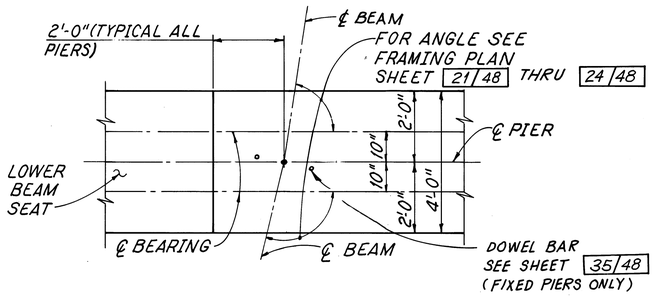

BEAM SEAT PLAN
FOR BEARING DETAILS SEE SHEET 20/48

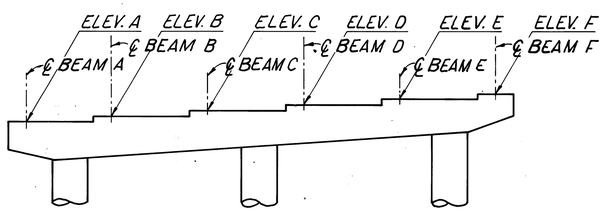

PIER CAP PROFILE
(PIERS 1, 2 AND 3 WESTBOUND LANES)

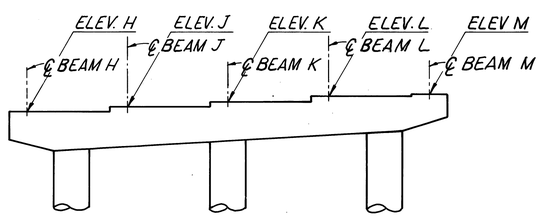

PIER CAP PROFILE
(TYPICAL EASTBOUND LANES)

BEAM SEAT ELEVATIONS

	PIER NO.	BEAMS A	G	B	C	D	E	F
WESTBOUND LANES	1	579.87	—	580.36	581.06	581.75	582.44	583.11
	2	580.00	—	580.61	581.32	582.01	582.70	583.37
	3	580.44	—	581.09	581.78	582.47	583.15	583.82
	4	580.67	581.01	581.38	582.09	582.78	583.47	584.14
	5	580.77	581.17	581.60	582.31	583.00	583.68	584.35
	6	580.74	581.20	581.68	582.39	583.07	583.76	584.42
	7	580.91	581.43	581.97	582.66	583.34	584.03	584.69

	PIER NO.	BEAMS H	J	K	L	M
EASTBOUND LANES	1	582.55	583.29	584.01	584.73	585.13
	2	582.87	583.61	584.33	585.05	585.45
	3	583.10	583.84	584.56	585.28	585.69
	4	583.53	584.27	584.99	585.71	586.11
	5	583.82	584.56	585.28	586.00	586.40
	6	584.01	584.75	585.47	586.19	586.59
	7	584.06	584.80	585.52	586.23	586.63
	8	584.31	585.05	585.77	586.48	586.87
	9	584.52	585.26	585.98	586.69	587.12

NOTE:
BRIDGE SEAT ELEVATIONS HAVE BEEN ADJUSTED UPWARD 3/16" AT PIER NO. 1, 2, 6 AND 7 FOR WESTBOUND LANES AND 3/16" AT PIER NO. 1, 2, 3, 7, 8 AND 9 FOR EASTBOUND LANES TO COMPENSATE FOR THE DEAD LOAD DEFORMATION OF THE BEARINGS.

PRESTRESSED CONC. ALTERNATE 19/48

adache - ciuni - lynn associates
CONSULTING ENGINEERS CLEVELAND, OHIO 44130

PIER DETAILS

BRIDGE NO. ERI-2-1798 L/R
S. R. 2 OVER MUD BROOK

ERIE COUNTY
ERI-2-16.13

STA. 1173+19.17 TO
STA. 1180+94.84

DESIGNED	DRAWN	CHECKED	REVIEWED	DATE	REVISED
J.R.S.	R.C.K.	J.R.S.	L.E.D.	9-23-85	

MICROFILMED
AUG 30 1990

F.H.W.A. REGION	STATE	PROJECT	
5	OHIO		

2078
284

ERIE COUNTY
ERI - 2 - (16.13 - 17.39)

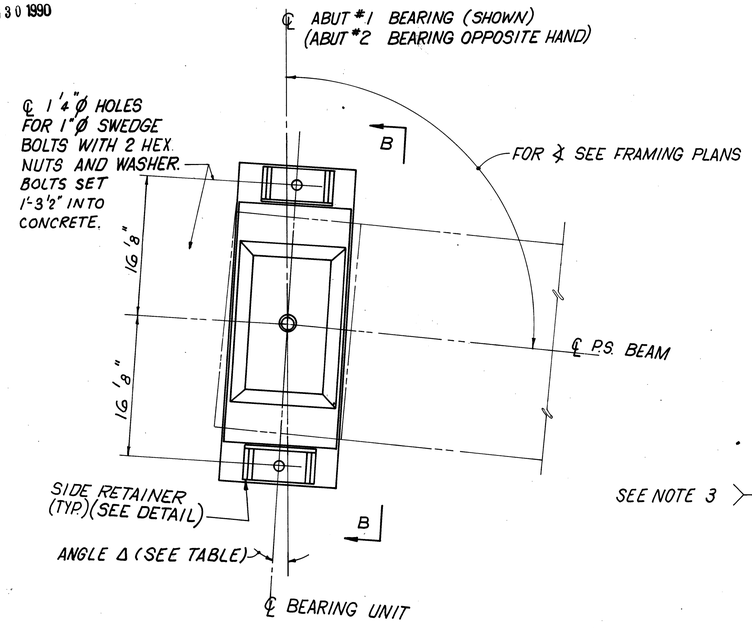

BEARING TYPE A - ALTERNATE 1

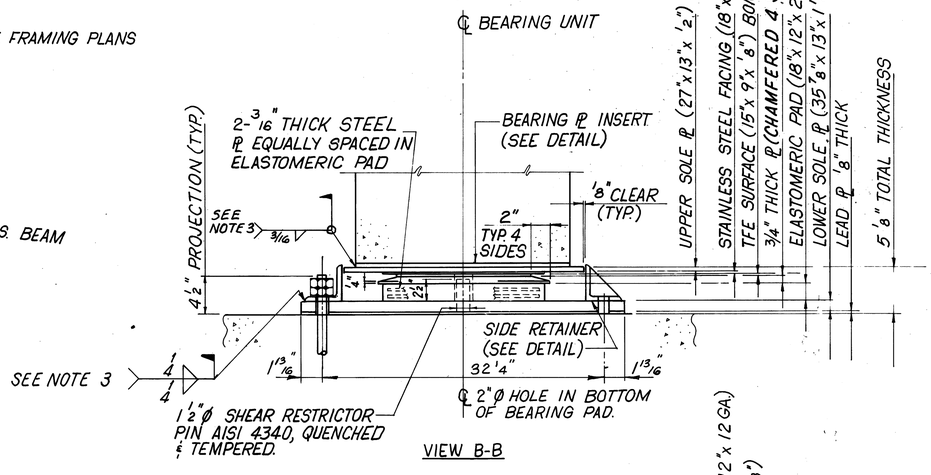

VIEW B-B

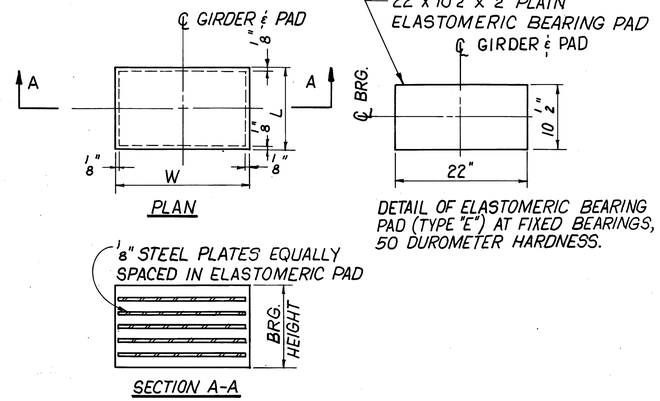

DETAIL OF ELASTOMERIC BEARING PAD (TYPE "E") AT FIXED BEARINGS, 50 DUROMETER HARDNESS.

DETAIL OF ELASTOMERIC BEARING PAD (TYPE "B" THRU "D") AT EXPANSION BEARINGS, 50 DUROMETER HARDNESS

EXPANSION BEARING PAD TABLE				
BEARING TYPE	W (IN)	L (IN)	BEARING HEIGHT	N° OF 1/8" PLATES
B	22	11 3/4	4 1/2	5
C	22	10 1/2	3 1/2	4
D	22	10 1/2	1 1/8	1

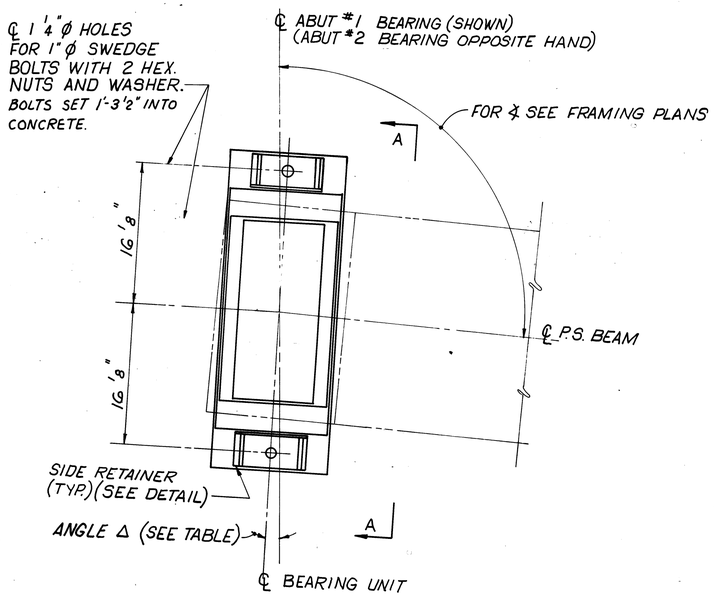

BEARING TYPE A-ALTERNATE 2

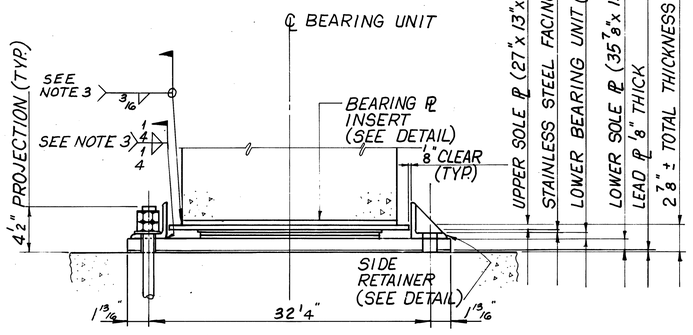

VIEW A-A

NOTE: ANGLE Δ IS TURNED CLOCKWISE FROM ℄ ABUT #1 AND COUNTER CLOCKWISE FROM ℄ ABUT #2

ANGLE Δ		
BEAM	ABUT #1	ABUT #2
A	2°-24'-38"	4°-33'-43"
B	3°-20'-03"	3°-20'-03"
C	↑	↑
D	↑	↑
E	↑	↑
F	3°-20'-03"	3°-20'-03"
G	—	3°-56'-55"
H	3°-48'-42"	3°-38'-20"
J	↑	3°-33'-56"
K	↑	3°-29'-33"
L	↑	3°-25'-09"
M	3°-48'-42"	3°-20'-46"

NOTE: BENT ANCHOR BARS MAY BE SUBSTITUTED FOR WELDED STUDS.

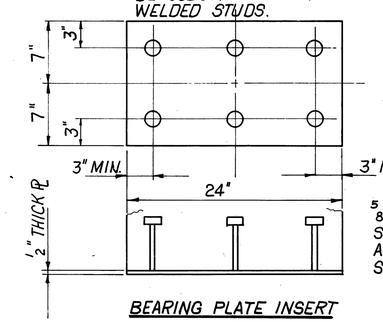

BEARING PLATE INSERT

NOTES:

1. STEEL FOR BEARINGS AND BEARING PLATES SHALL CONFORM TO ASTM A-36.
2. BEARING PLATE INSERTS SHALL BE GALVANIZED AFTER FABRICATION IN ACCORDANCE WITH ASTM A-123.
3. WELDING SHALL BE CONTROLLED SO THAT THE PLATE TEMPERATURE AT THE ELASTOMER BONDED SURFACE DOES NOT EXCEED 300°F AS DETERMINED BY USE OF PYROMETRIC STICKS OR OTHER TEMPERATURE MONITORING DEVICES.
4. STAINLESS STEEL FACING SHALL BE BONDED TO UPPER SOLE PLATE BY SEAL WELDING AROUND THE ENTIRE PERIMETER AND GRINDING FLUSH.
5. THE 3/4" CHAMFERED PLATE AND THE LOWER SOLE PLATE SHALL BE VULCANIZED BONDED TO THE ELASTOMERIC PAD.
6. BONDING: ALL MATERIALS AND PROCEDURES SHALL BE APPROVED BY THE DIRECTOR.
7. SEE SHEET 3/48 FOR ADDITIONAL NOTES.

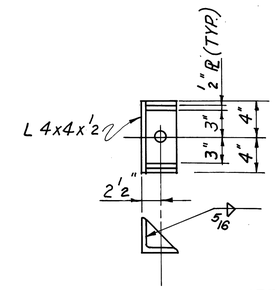

SIDE RETAINER
GALVANIZE AFTER FABRICATION

PRESTRESSED CONC. ALTERNATE 20/48

adache · ciuni · lynn associates
CONSULTING ENGINEERS CLEVELAND OHIO 44130

BEARING DETAILS

BRIDGE Nº ERI - 2 - 1798 L/R
S.R.2 OVER MUD BROOK

ERIE COUNTY STA. 1173+19.17 TO.
ERI - 2 - 16.13 STA. 1180+94.84

DESIGNED	DRAWN	CHECKED	REVIEWED	DATE	REVISED
J.R.S.	M.A.G.	J.R.S.	L.E.D.	9-23-85	

MICROFILMED
AUG 30 1990

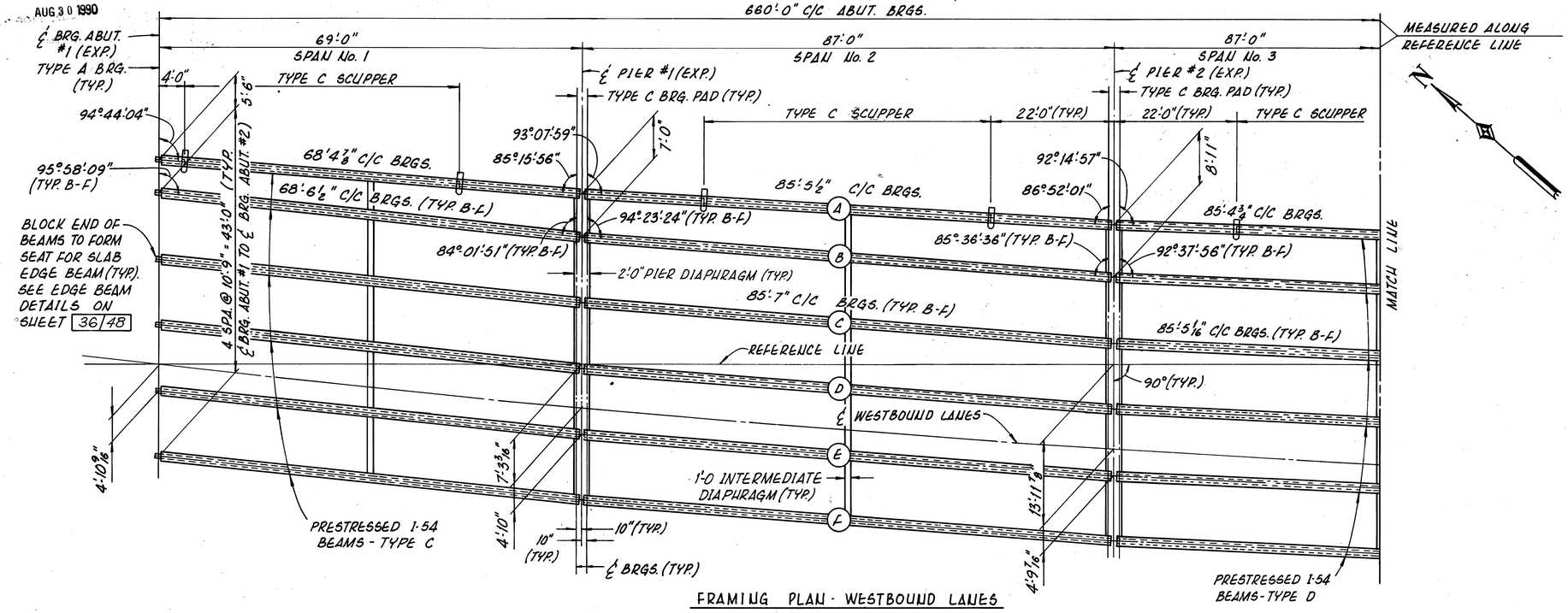

FRAMING PLAN - WESTBOUND LANES

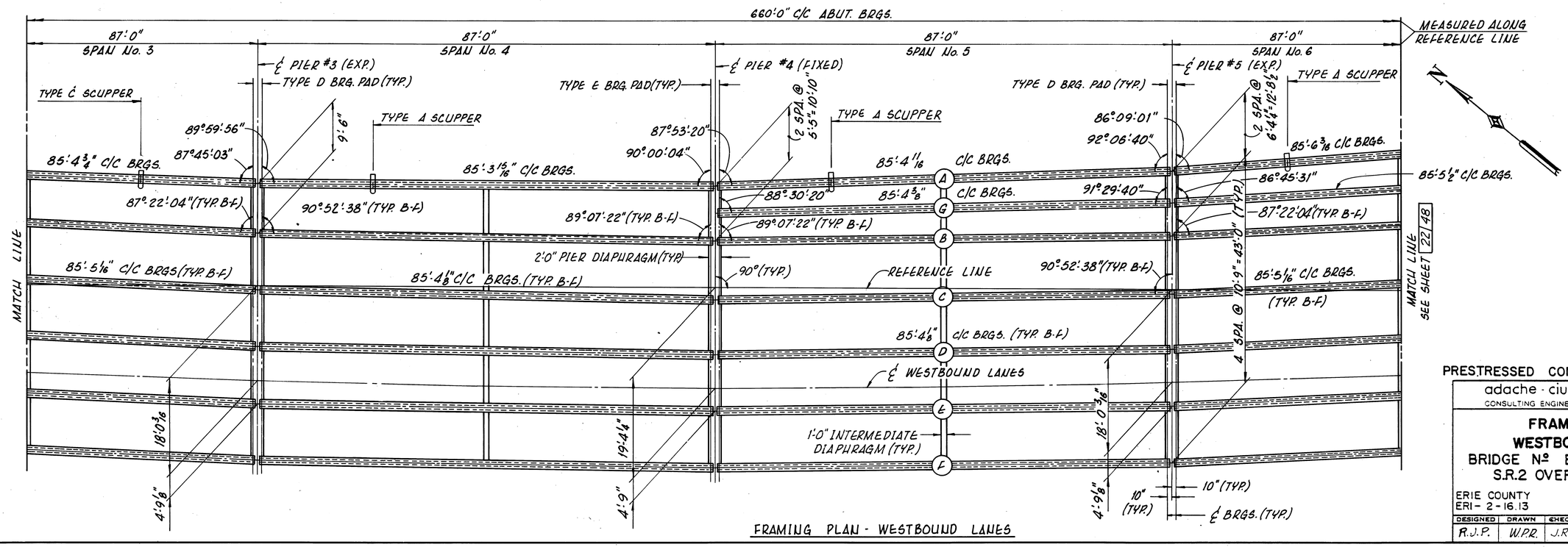

FRAMING PLAN - WESTBOUND LANES

FHWA REGION	STATE	PROJECT	
5	OHIO		

207S
284

ERIE COUNTY
ERI-2-(16.13-17.39)

PRESTRESSED CONC. ALTERNATE 21/48

adache · ciuni · lynn associates
CONSULTING ENGINEERS CLEVELAND, OHIO 44130

FRAMING PLAN
WESTBOUND LANES
BRIDGE Nº ERI-2-1798 L/R
S.R.2 OVER MUD BROOK

ERIE COUNTY ERI-2-16.13
STA. 1173+19.17 TO. STA. 1180+94.84

DESIGNED	DRAWN	CHECKED	REVIEWED	DATE	REVISED
R.J.P.	W.P.R.	J.R.S.	L.E.D.	9-23-85	

MICROFILMED
AUG 30 1990

FHWA REGION	STATE	PROJECT	
5	OHIO		

2077
284

ERIE COUNTY
ERI - 2 - (16.13 - 17.39)

NOTES:

FOR SCUPPER DETAILS SEE SHEET 35/48

FOR DETAILS OF PRESTRESSED CONCRETE BEAMS SEE SHEET 25/48 & 26/48

FOR BEARING DETAILS SEE SHEET 20/48

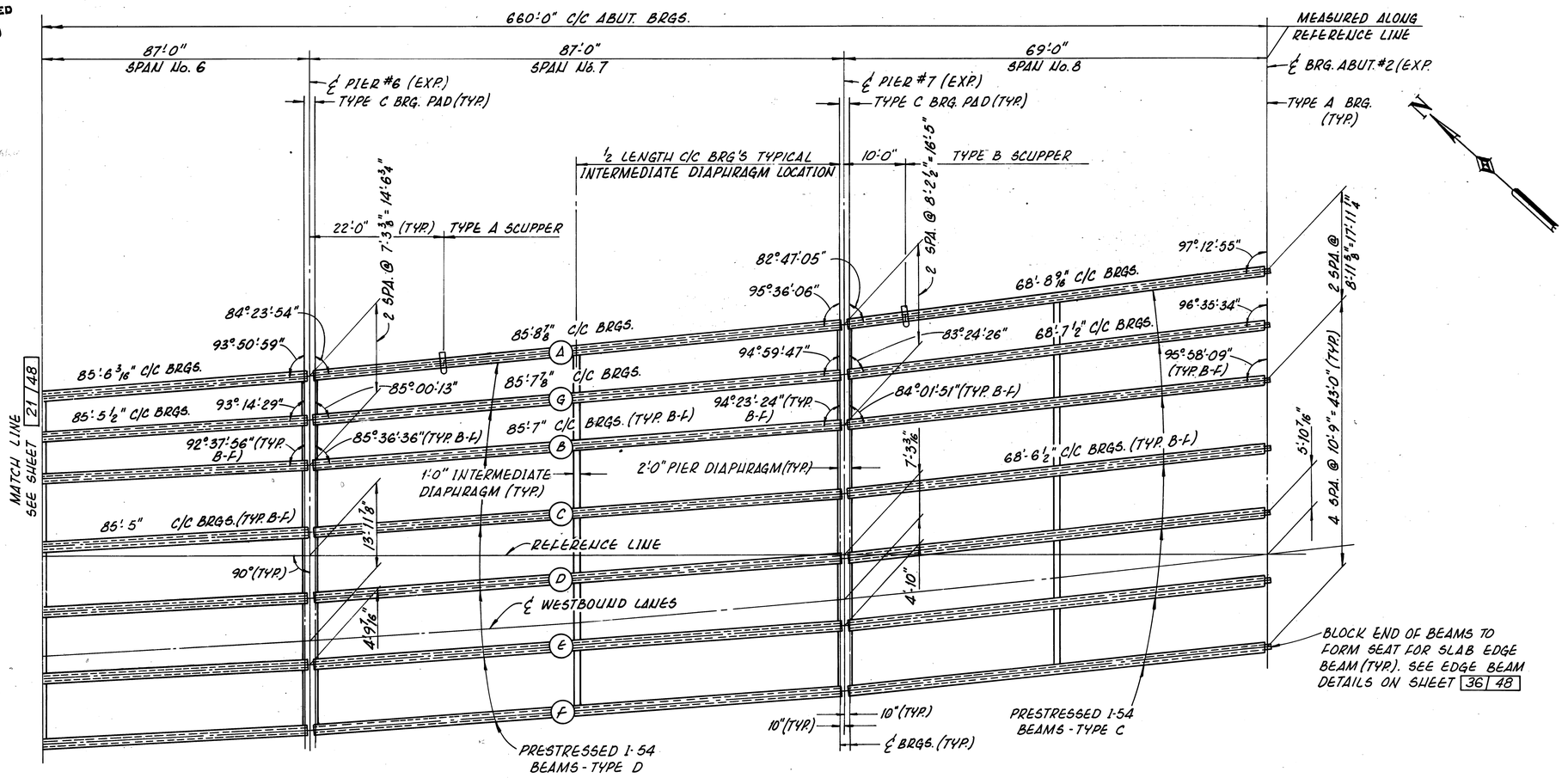

FRAMING PLAN - WESTBOUND LANES

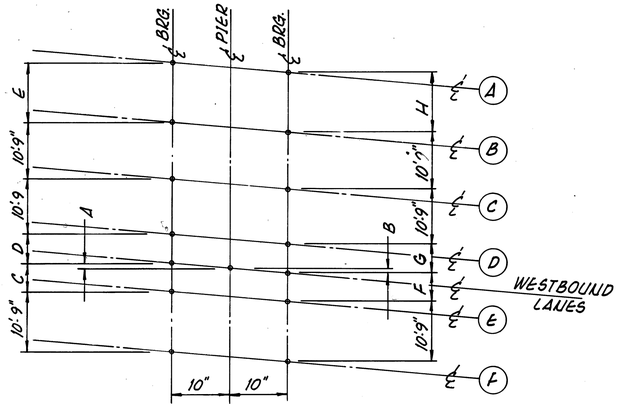

PARTIAL GEOMETRIC PLAN FOR PIERS #1 THRU #3

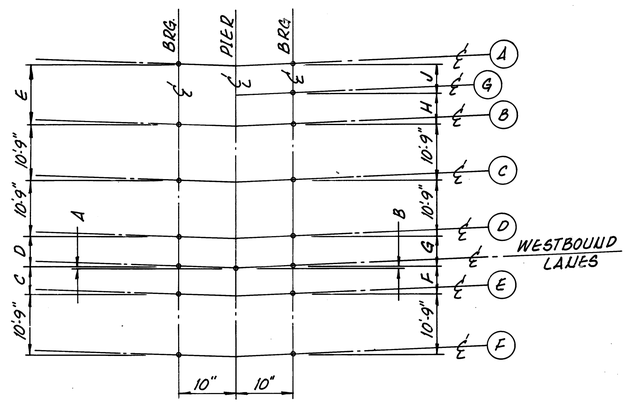

PARTIAL GEOMETRIC PLAN FOR PIER #4

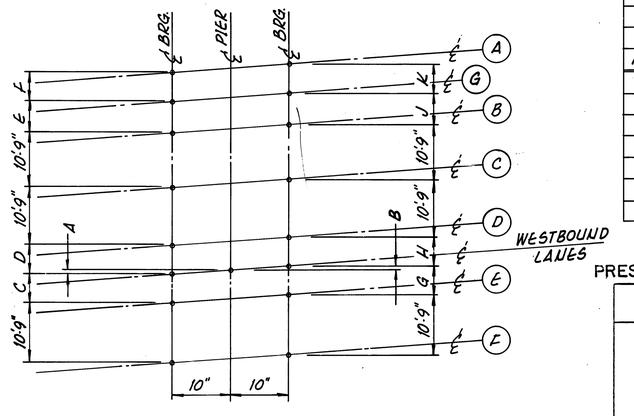

PARTIAL GEOMETRIC PLAN FOR PIERS #5 THRU #7

PIER #	A	B	C	D	E
P.1	0'-0 15/16"	0'-1"	4'-9⅞"	5'-11⅛"	6'-11 13/16"
P.2	0'-0 5/8"	0'-0 5/8"	4'-9 5/16"	5'-11 1/16"	8'-10¾"
P.3	0'-0 5/16"	0'-0 5/16"	4'-8 15/16"	6'-0 1/16"	9'-5 15/16"
P.4	0	0	4'-8⅞"	6'-0⅛"	10'-9⅞"
P.5	0'-0 5/16"	0'-0 5/16"	4'-8 15/16"	6'-0 1/16"	6'-4⅛"
P.6	0'-0⅝"	0'-0⅜"	4'-9¼"	5'-11¾"	7'-3¼"
P.7	0'-0 15/16"	0'-0 15/16"	4'-9 1/16"	5'-11 3/16"	8'-2⅜"

PIER #	F	G	H	J	K
P.1	4'-9 13/16"	5'-11 3/16"	7'-0 3/16"	—	—
P.2	4'-9¼"	5'-11¾"	8'-11 1/16"	—	—
P.3	4'-8 15/16"	6'-0 1/16"	9'-6 3/16"	—	—
P.4	4'-8⅞"	6'-0⅛"	5'-5⅛"	5'-5⅛"	—
P.5	6'-4⅛"	4'-8 15/16"	6'-0 1/16"	6'-4⅜"	6'-4⅜"
P.6	7'-3¼"	4'-9 5/16"	5'-11 1/16"	7'-3½"	7'-3½"
P.7	8'-2⅜"	4'-9 7/16"	5'-11⅛"	8'-2⅝"	8'-2⅝"

PRESTRESSED CONC. ALTERNATE 22/48

adache · ciuni · lynn associates
CONSULTING ENGINEERS CLEVELAND OHIO 44130

FRAMING PLAN
WESTBOUND LANES
BRIDGE Nº ERI - 2 - 1798 L/R
S.R. 2 OVER MUD BROOK

ERIE COUNTY STA. 1173 + 19.17 TO
ERI - 2 - 16.13 STA. 1180 + 94.84

DESIGNED	DRAWN	CHECKED	REVIEWED	DATE REVISED
R.J.P.	W.P.R.	J.R.S.	L.E.D.	9-23-85

F.H.W.A. REGION	STATE	PROJECT	
5	OHIO		

207U
284

ERIE COUNTY
ERI - 2 - (16.13 - 17.39)

MICROFILMED
AUG 30 1990

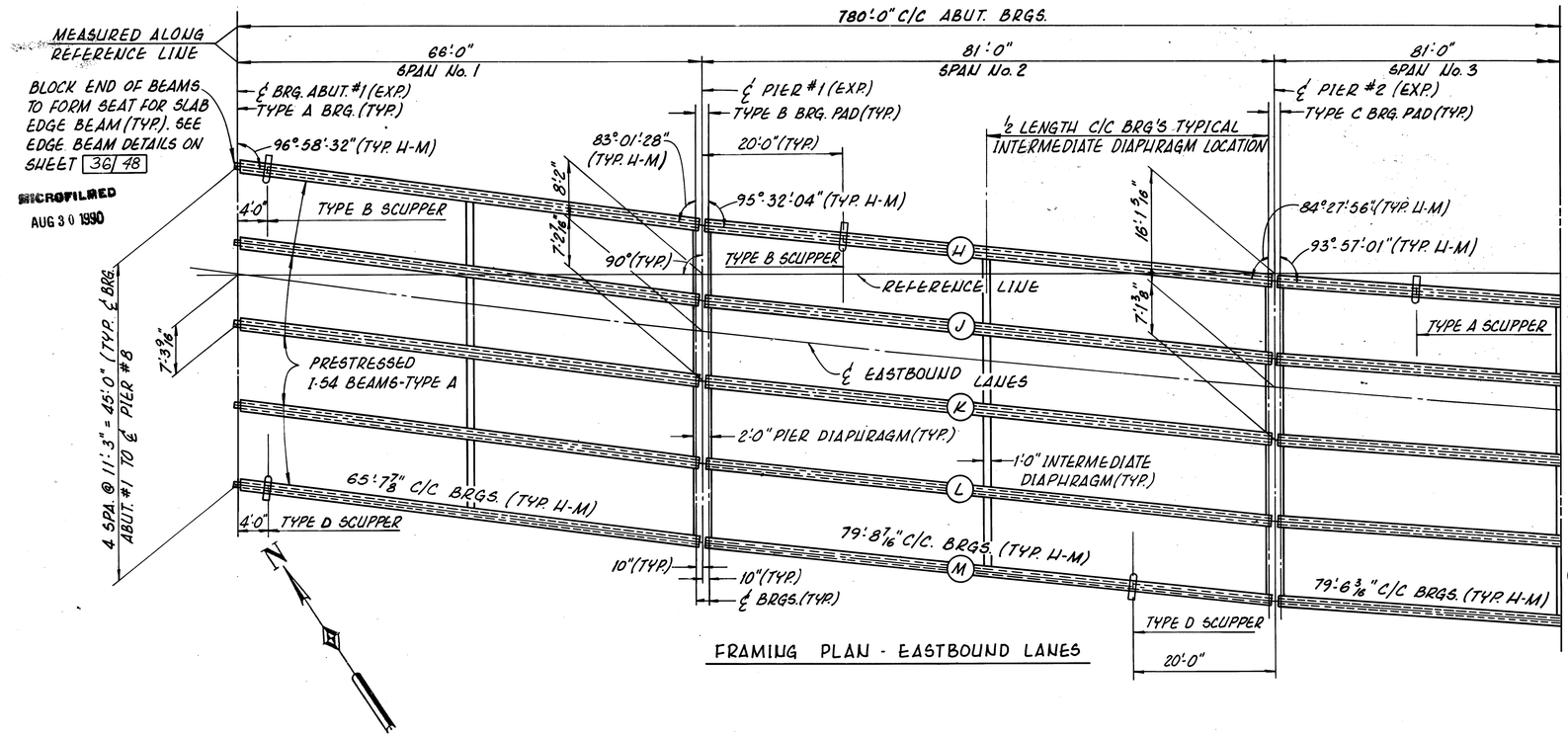

FRAMING PLAN - EASTBOUND LANES

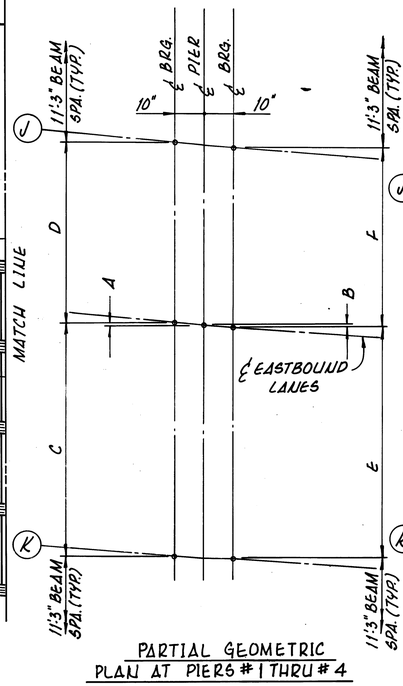

PARTIAL GEOMETRIC PLAN AT PIERS #1 THRU #4

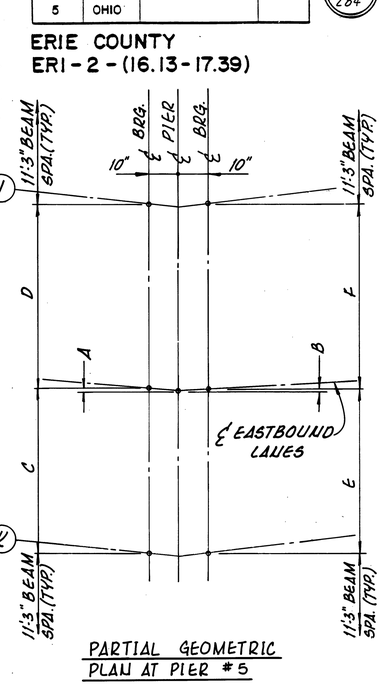

PARTIAL GEOMETRIC PLAN AT PIER #5

PIER#	A	B	C	D	E	F
P.1	0'-1⅛"	0'-1⅛"	7'-2⅜"	4'-0⅝"	7'-2⅝"	4'-0 1/16"
P.2	0'-0⅜"	0'-0 1/16"	7'-1¼"	4'-1¾"	7'-1¼"	4'-1⅜"
P.3	0'-0 9/16"	0'-0⅜"	7'-0½"	4'-2½"	7'-0 1/16"	4'-2 9/16"
P.4	0'-0¼"	0'-0¼"	7'-0"	4'-3"	7'-0"	4'-3"
P.5	0	0	6'-11⅞"	4'-3⅛"	6'-11⅞"	4'-3⅛"

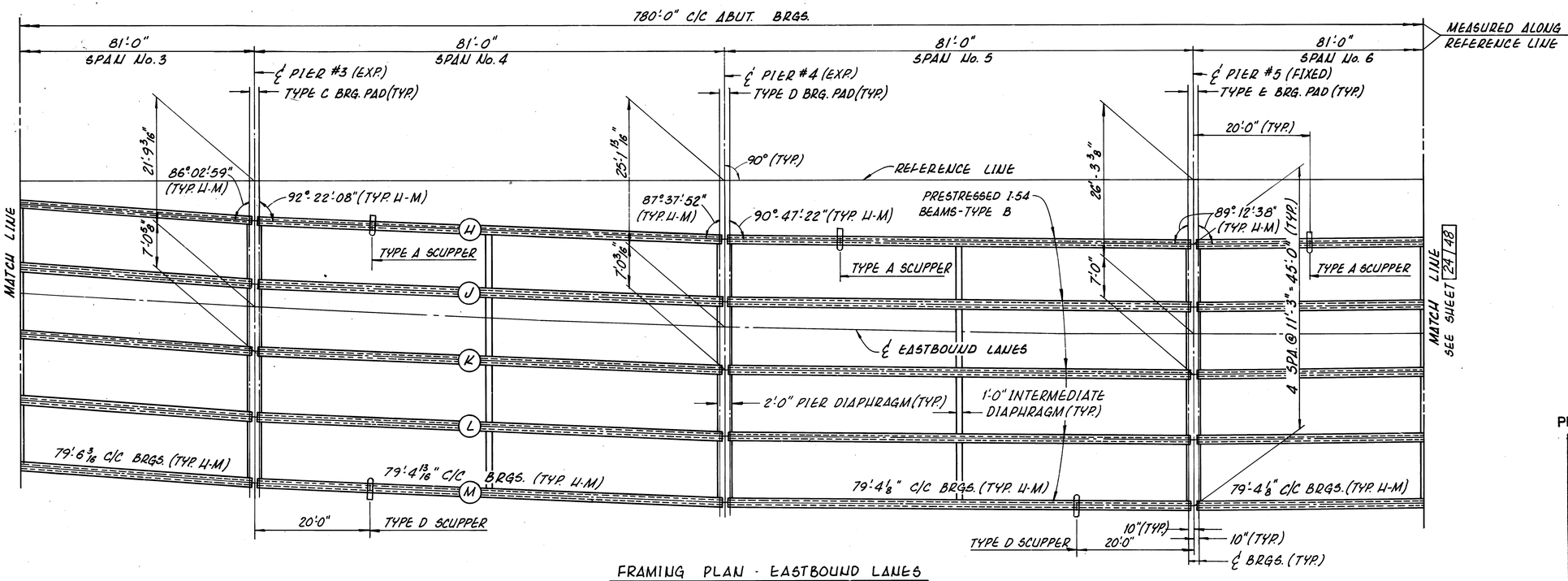

FRAMING PLAN - EASTBOUND LANES

PRESTRESSED CONC. ALTERNATE 23/48

adache · ciuni · lynn associates
CONSULTING ENGINEERS CLEVELAND OHIO 44130

FRAMING PLAN
EASTBOUND LANES
BRIDGE Nº ERI - 2 - 1798 L/R
S.R.2 OVER MUD BROOK

ERIE COUNTY STA. 1173+19.17 TO.
ERI - 2 - 16.13 STA. 1180+94.84

DESIGNED	DRAWN	CHECKED	REVIEWED	DATE	REVISED
R.J.P.	W.P.R.	J.R.S.	L.E.D.	9-23-85	

MICROFILMED
AUG 30 1990

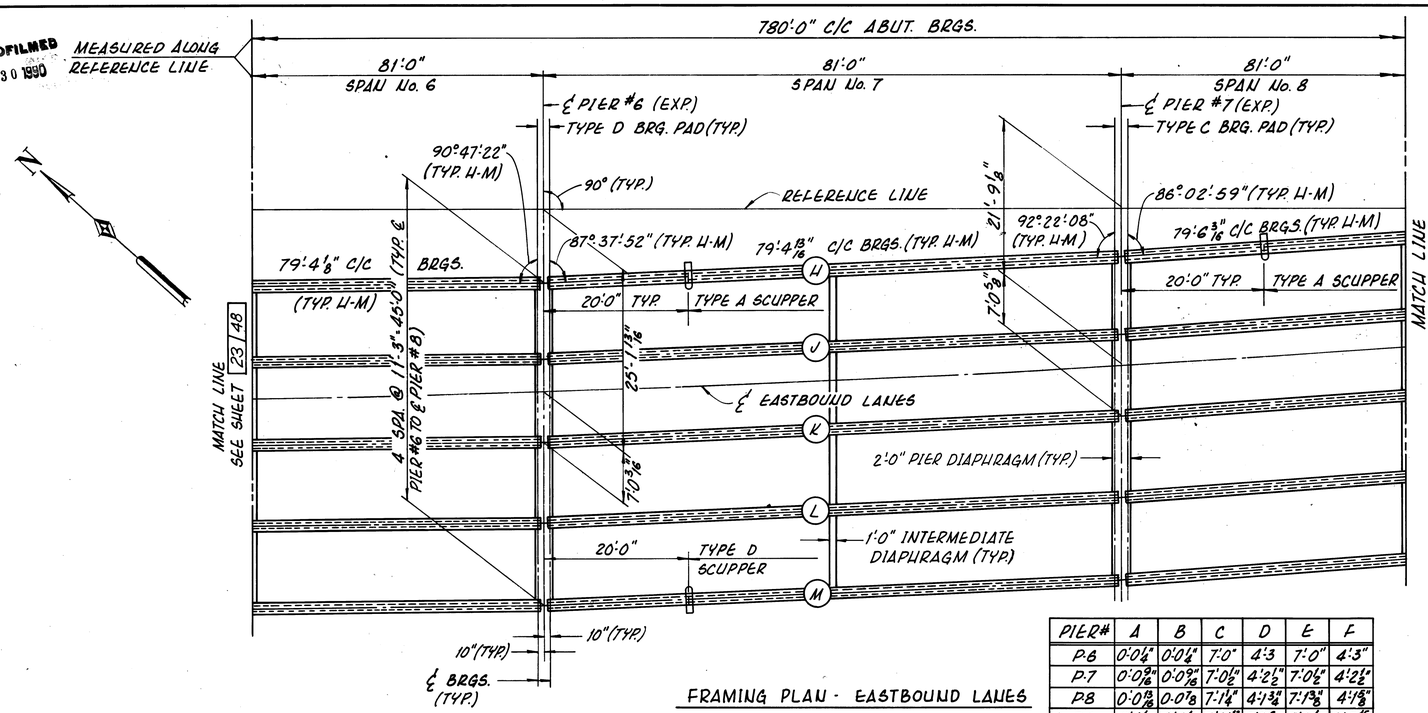

FRAMING PLAN - EASTBOUND LANES

PIER#	A	B	C	D	E	F
P.6	0'-0 1/4"	0'-0 1/4"	7'-0"	4'-3	7'-0"	4'-3"
P.7	0'-0 9/16"	0'-0 9/16"	7'-0 1/2"	4'-2 1/2"	7'-0 1/2"	4'-2 1/2"
P.8	0'-0 13/16"	0'-0 13/16"	7'-1 1/4"	4'-1 3/4"	7'-1 3/8"	4'-1 3/8"
P.9	0'-1 1/8"	0'-1 1/8"	7'-1 15/16"	3'-3 5/16"	8'-0 1/8"	3'-2 15/16"

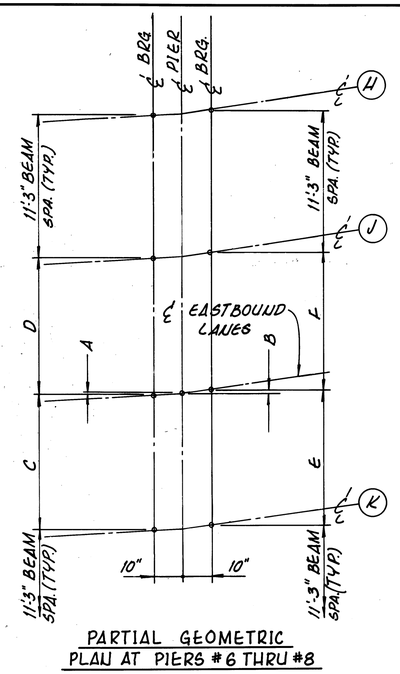

PARTIAL GEOMETRIC PLAN AT PIERS #6 THRU #8

FEDERAL HIGHWAY ADMIN. REGION	STATE	PROJECT	
5	OHIO		

207V
284

ERIE COUNTY
ERI - 2 - (16.13 - 17.39)

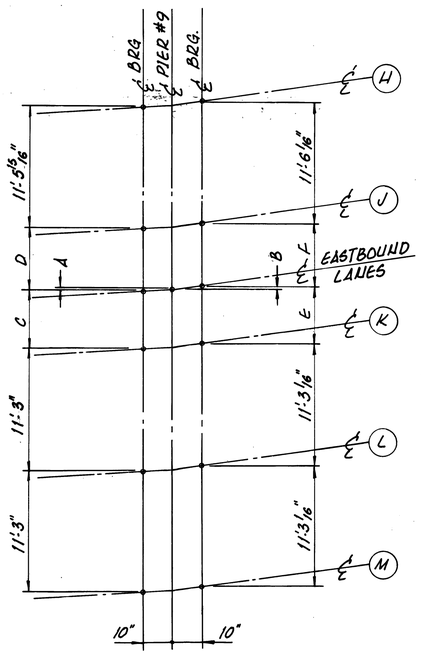

PARTIAL GEOMETRIC PLAN AT PIER #9

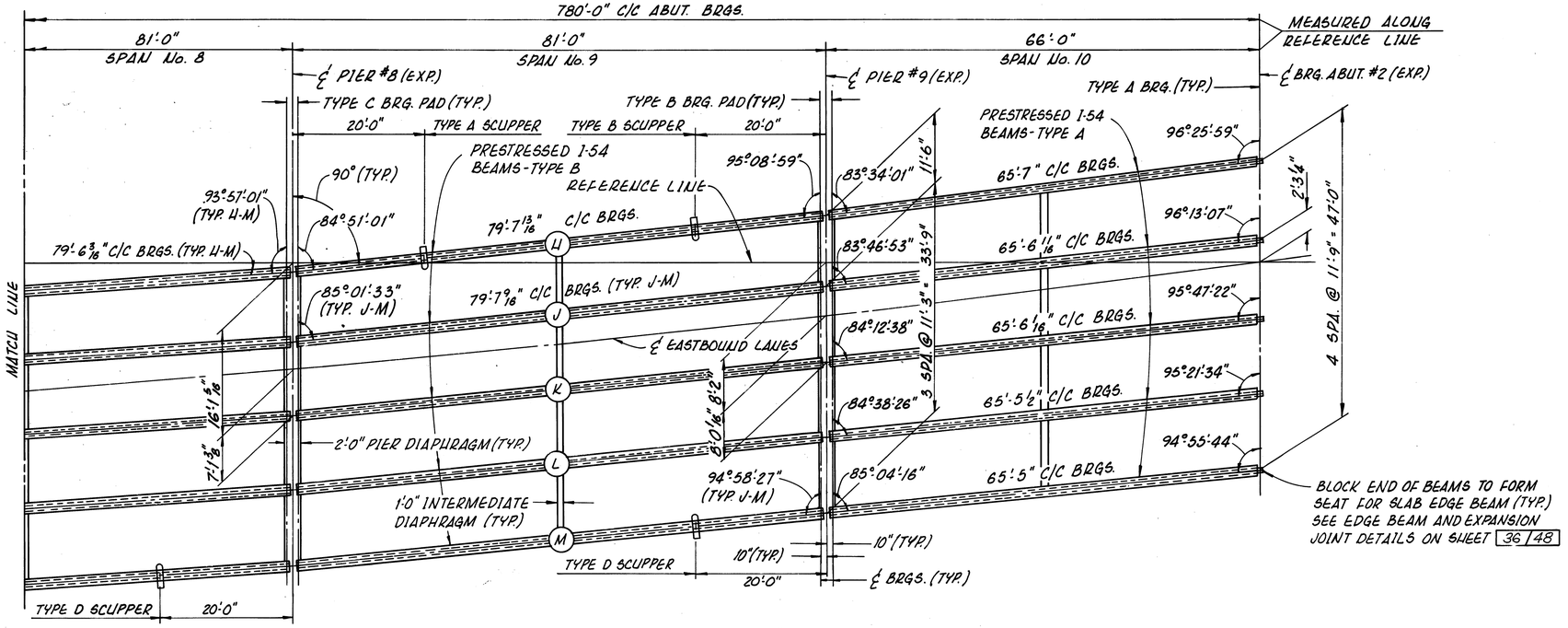

FRAMING PLAN - EASTBOUND LANES

NOTES:

FOR SCUPPER DETAILS SEE SHEET 35 48

FOR DETAILS OF PRESTRESSED CONCRETE BEAMS SEE SHEETS 25 48 & 26 48

FOR BEARING DETAILS SEE SHEET 20 48

PRESTRESSED CONC. ALTERNATE 24 48

adache · ciuni · lynn associates
CONSULTING ENGINEERS CLEVELAND OHIO 44130

FRAMING PLAN
EASTBOUND LANES
BRIDGE Nº ERI - 2 - 1798 L/R
S.R.2 OVER MUD BROOK

ERIE COUNTY ERI - 2 - 16.13
STA. 1173 + 19.17 TO STA. 1180 + 94.84

DESIGNED	DRAWN	CHECKED	REVIEWED	DATE	REVISED
R.J.P.	W.P.R.	J.R.S.	L.E.D.	9-23-85	

MICROFILMED
AUG 30 1990

F.H.W.A. REGION	STATE	PROJECT	
5	OHIO		

207W
284

ERIE COUNTY
ERI-2-(16.13-17.39)

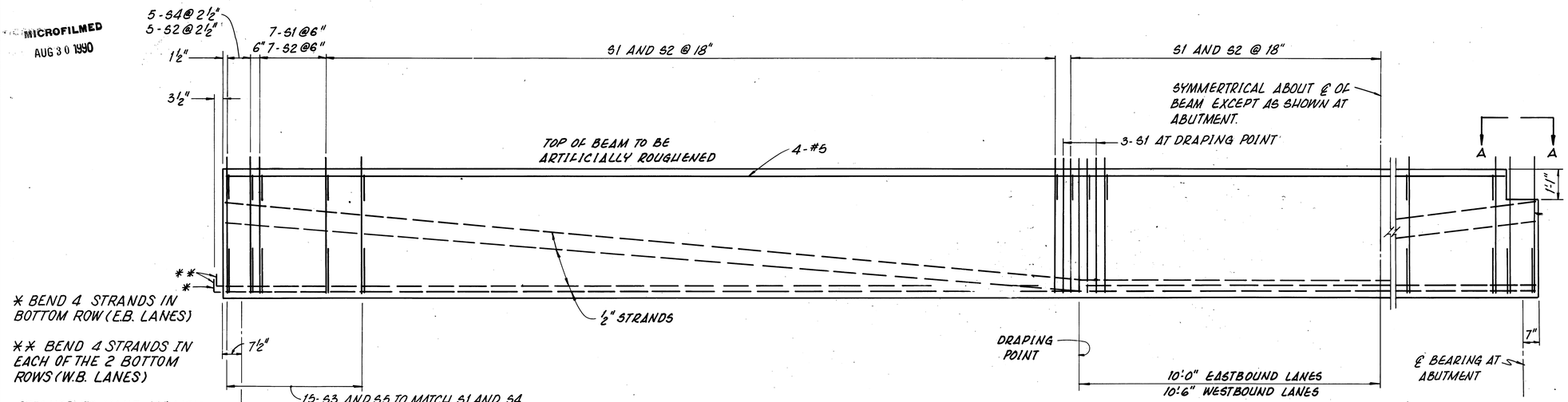

BEAM ELEVATION

SPANS №1 AND №10 - EASTBOUND LANES - TYPE A
SPANS №1 AND №8 - WESTBOUND LANES - TYPE C

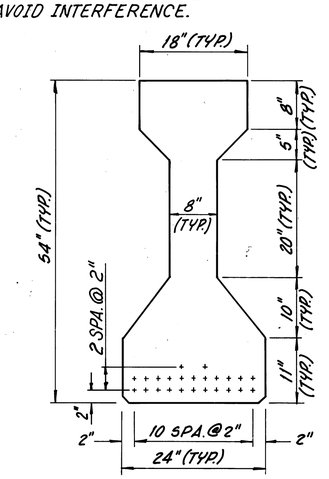

TYPICAL STRAND PATTERN AT MIDPOINT OF BEAM

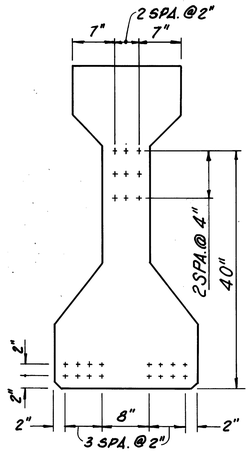

TYPICAL STRAND PATTERN AT END OF BEAM

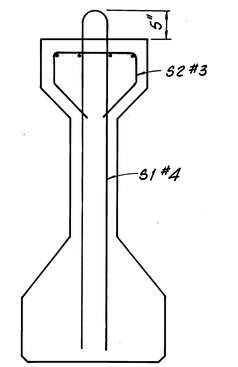

MILD STEEL REINFORCEMENT (TYPICAL)

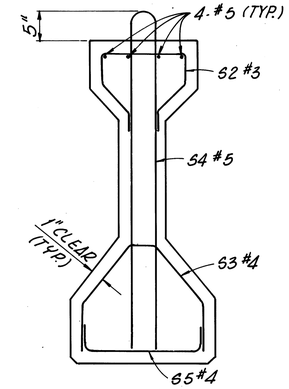

MILD STEEL REINFORCEMENT AT END OF BEAM (TYPICAL)

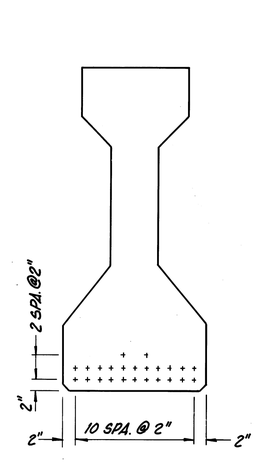

TYPICAL STRAND PATTERN AT MIDPOINT OF BEAM

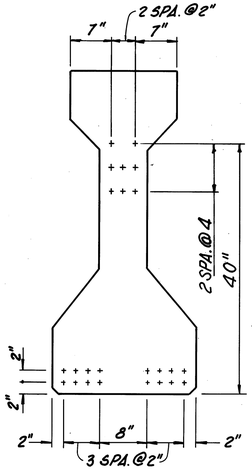

TYPICAL STRAND PATTERN AT END OF BEAM

EASTBOUND LANES

WESTBOUND LANES

DIMENSIONS NOTED AS TYPICAL ARE FOR EAST AND WESTBOUND LANE BEAMS.

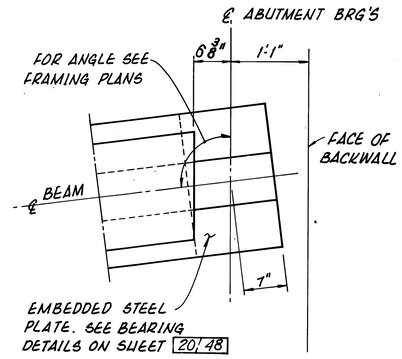

VIEW A-A

NOTES:

CONCRETE STRESSES: MIN. CONCRETE STRENGTH AT 28 DAYS f'_c = 5500 P.S.I. MIN. CONCRETE STRENGTH AT TIME OF INITIAL PRESTRESS f'_c 4000 P.S.I.

PRESTRESSING STRANDS: ½" DIAMETER 270K SEVEN-WIRE, UNCOATED, STRESS-RELIEVED STRAND. INITIAL TENSION = 28,900 LBS. PER STRAND. FINAL TENSION = 23,130 LBS. PER STRAND AFTER ALL LOSSES.

PRESTRESSED CONC. ALTERNATE 25/48

adache - ciuni - lynn associates
CONSULTING ENGINEERS CLEVELAND OHIO 44130

SUPERSTRUCTURE DETAILS
PRESTRESSED BEAMS
BRIDGE №ERI-2-1798 L/R
S.R.2 OVER MUD BROOK

ERIE COUNTY
ERI-2-16.13

STA. 1173+19.17 TO.
STA. 1180+94.84

DESIGNED	DRAWN	CHECKED	REVIEWED	DATE	REVISED
R.J.P.	W.P.R.	J.R.S.	L.E.D.	9-23-85	

MICROFILMED
AUG 30 1990

FHWA REGION	STATE	PROJECT	
5	OHIO		

207X
284

ERIE COUNTY
ERI-2-(16.13-17.39)

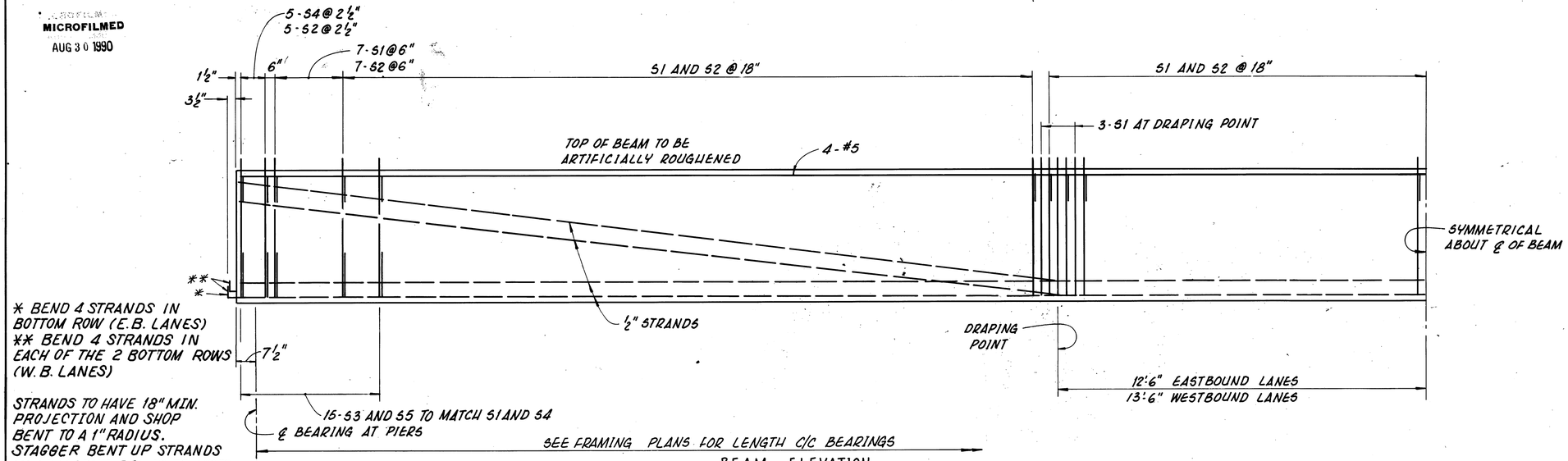

* BEND 4 STRANDS IN BOTTOM ROW (E.B. LANES)
** BEND 4 STRANDS IN EACH OF THE 2 BOTTOM ROWS (W.B. LANES)

STRANDS TO HAVE 18" MIN. PROJECTION AND SHOP BENT TO A 1" RADIUS. STAGGER BENT UP STRANDS IN ADJACENT BEAMS TO AVOID INTERFERENCE.

BEAM ELEVATION

SPANS Nº 2 THRU Nº 9 - EASTBOUND LANES - TYPE B
SPANS Nº 2 THRU Nº 7 - WESTBOUND LANES - TYPE D

NOTES:

CONCRETE STRESSES: MIN. CONCRETE STRENGTH AT 28 DAYS f'_c = 5500 P.S.I. MIN. CONCRETE STRENGTH AT TIME OF INITIAL PRESTRESS f'_{ci} 4000 P.S.I.

PRESTRESSING STRANDS: ½" DIAMETER 270ᴷ SEVEN-WIRE, UNCOATED, STRESS-RELIEVED STRAND. INITIAL TENSION = 28,900 LBS. PER STRAND. FINAL TENSION = 23,130 LBS. PER STRAND AFTER ALL LOSSES.

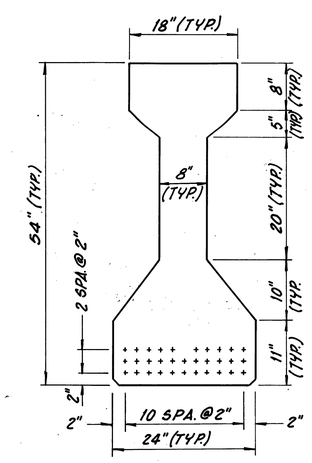

TYPICAL STRAND PATTERN AT MIDPOINT OF BEAM

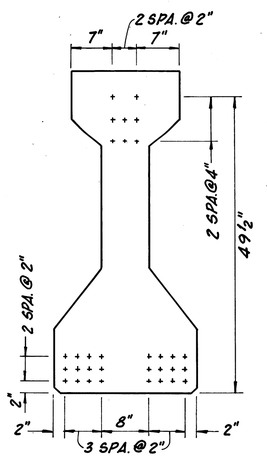

TYPICAL STRAND PATTERN AT END OF BEAM

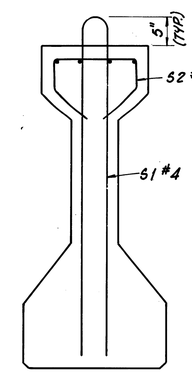

MILD STEEL REINFORCEMENT (TYPICAL)

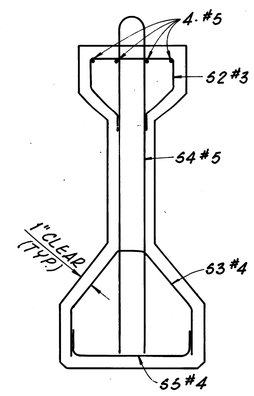

MILD STEEL REINFORCEMENT AT END OF BEAM (TYPICAL)

EASTBOUND LANES

DIMENSIONS NOTED AS TYPICAL ARE FOR EAST AND WESTBOUND LANE BEAMS.

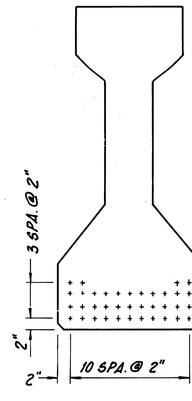

TYPICAL STRAND PATTERN AT MIDPOINT OF BEAM

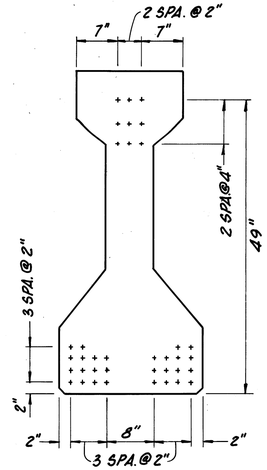

TYPICAL STRAND PATTERN AT END OF BEAM

WESTBOUND LANES

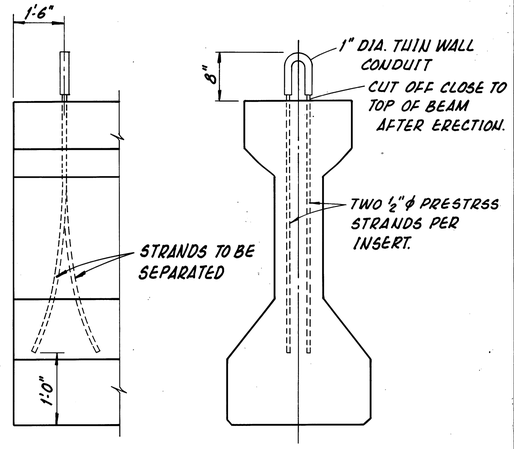

NOTES:
LIFTING INSERTS OF THE CONTRACTORS DESIGN MAY BE USED IF APPROVED BY THE DIRECTOR.

POSITION OF LIFTING INSERTS MAY BE SHIFTED SLIGHTLY WHERE NECESSARY TO CLEAR REINFORCING STEEL.

BEAM LIFTING INSERT

PRESTRESSED CONC. ALTERNATE 26/48

adache - ciuni - lynn associates
CONSULTING ENGINEERS CLEVELAND OHIO 44130

SUPERSTRUCTURE DETAILS PRESTRESSED BEAMS
BRIDGE Nº ERI-2-1798 L/R
S.R.2 OVER MUD BROOK

ERIE COUNTY
ERI-2-16.13
STA. 1173+19.17 TO
STA. 1180+94.84

DESIGNED	DRAWN	CHECKED	REVIEWED	DATE	REVISED
R.J.P.	W.P.R.	J.R.S.	L.E.D.	9-23-85	

MICROFILMED
AUG 30 1990

FHWA REGION	STATE	PROJECT	
5	OHIO		

207Y
284

ERIE COUNTY
ERI-2-(16.13-17.39)

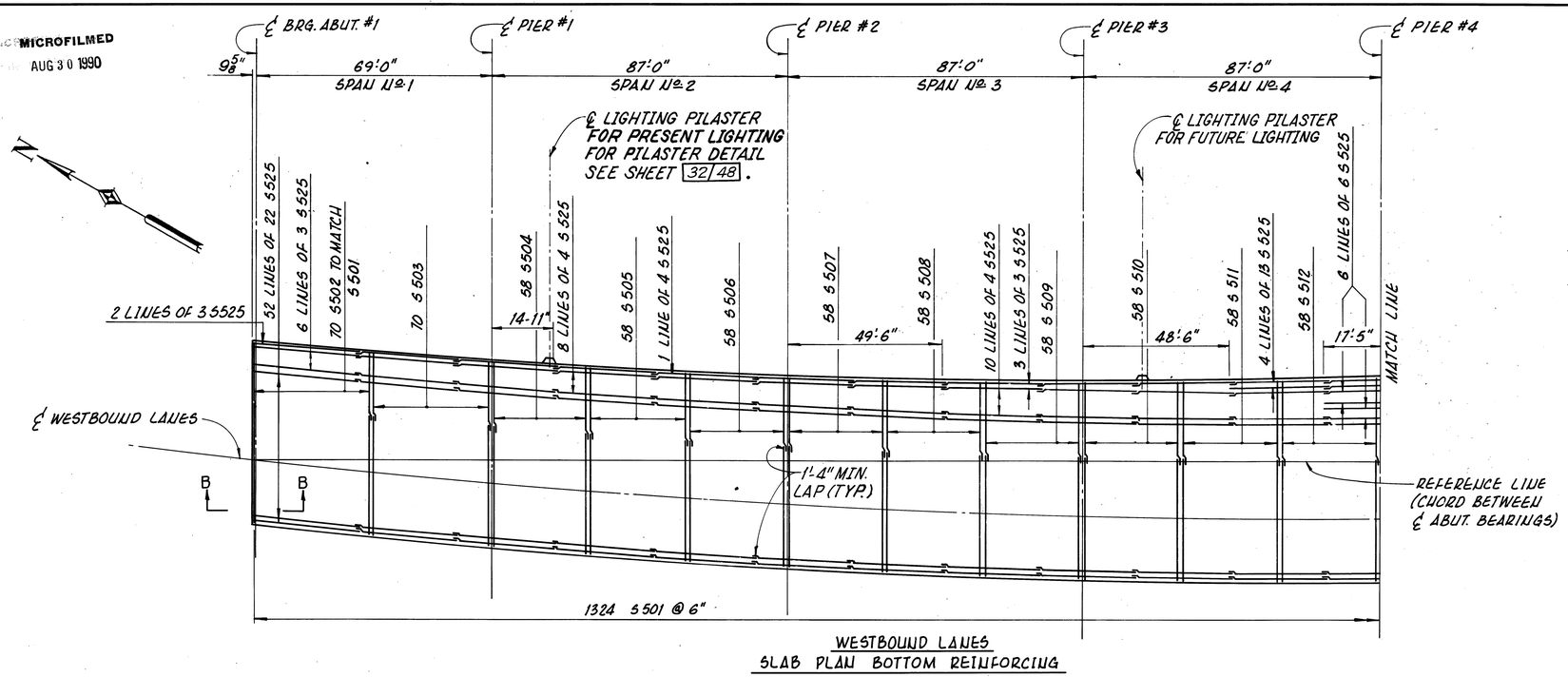

WESTBOUND LANES
SLAB PLAN BOTTOM REINFORCING

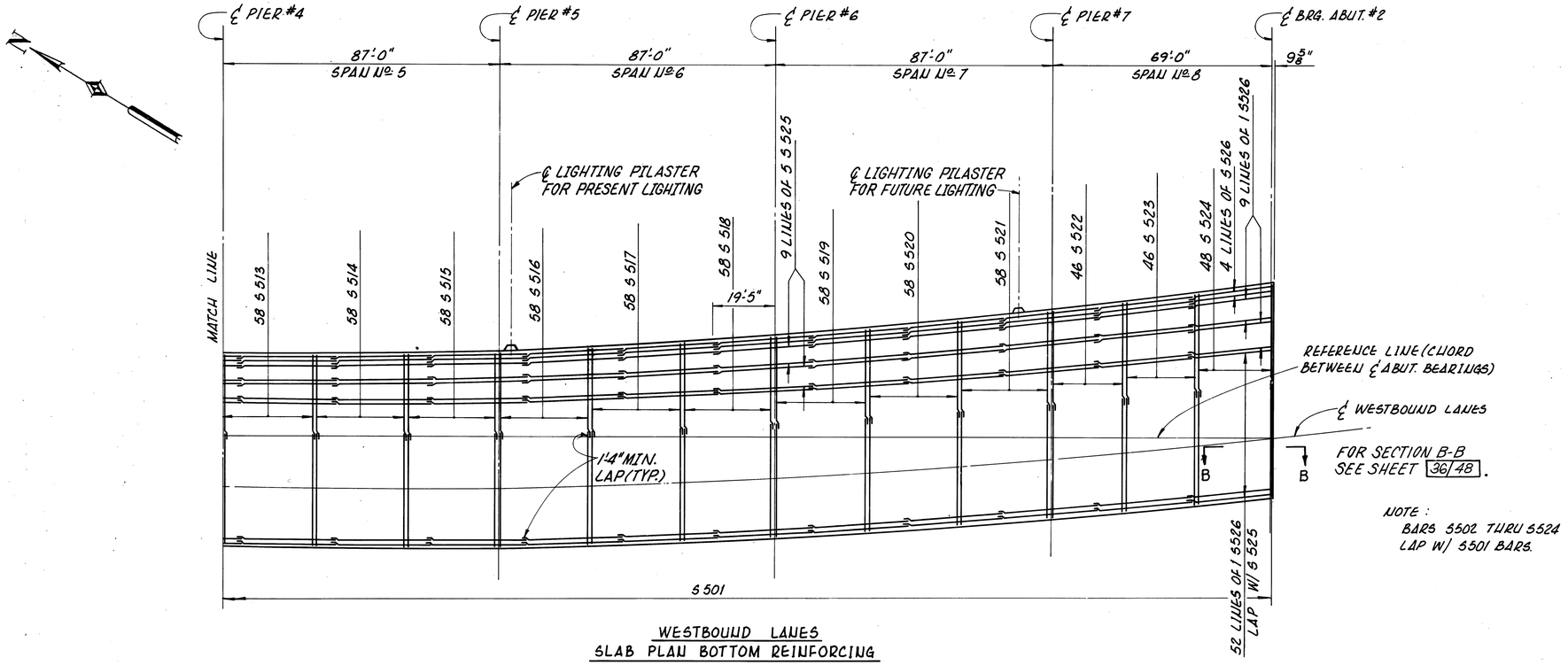

NOTE :
BARS S502 THRU S524 LAP W/ S501 BARS.

WESTBOUND LANES
SLAB PLAN BOTTOM REINFORCING

NOTE:
FOR NOTES SEE SHEET 28/48.

PRESTRESSED CONC. ALTERNATE 27/48

adache · ciuni · lynn associates
CONSULTING ENGINEERS CLEVELAND OHIO 44130

SLAB PLAN
BOTTOM REINFORCEMENT
WESTBOUND LANES
BRIDGE No. ERI-2-1798 L/R
S.R.2 OVER MUD BROOK.

ERIE COUNTY
ERI-2-16.13

STA. 1173+19.17 TO
STA. 1180+94.84

DESIGNED	DRAWN	CHECKED	REVIEWED	DATE	REVISED
AJM	W.P.R.	J.R.S.	L.E.D.	9-23-85	

MICROFILMED
AUG 3 0 1990

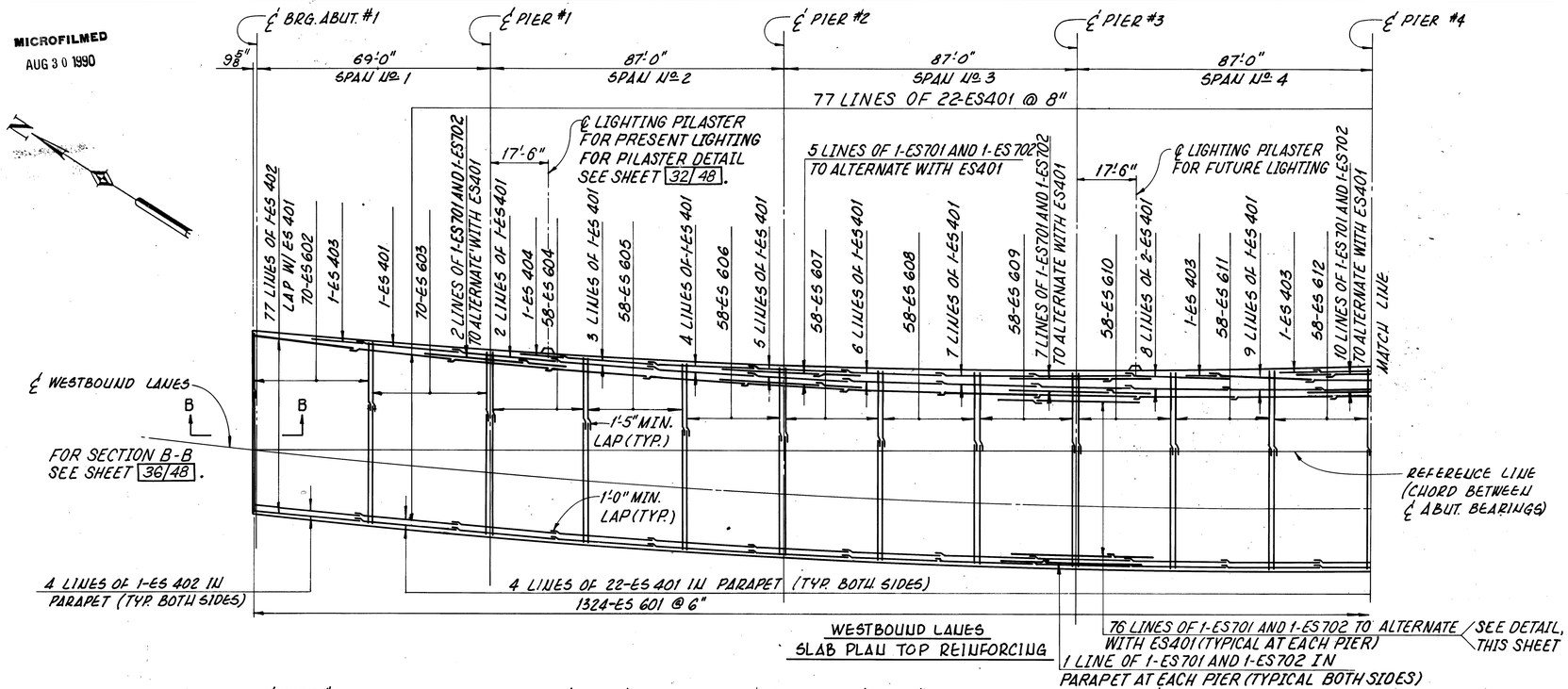

WESTBOUND LANES
SLAB PLAN TOP REINFORCING

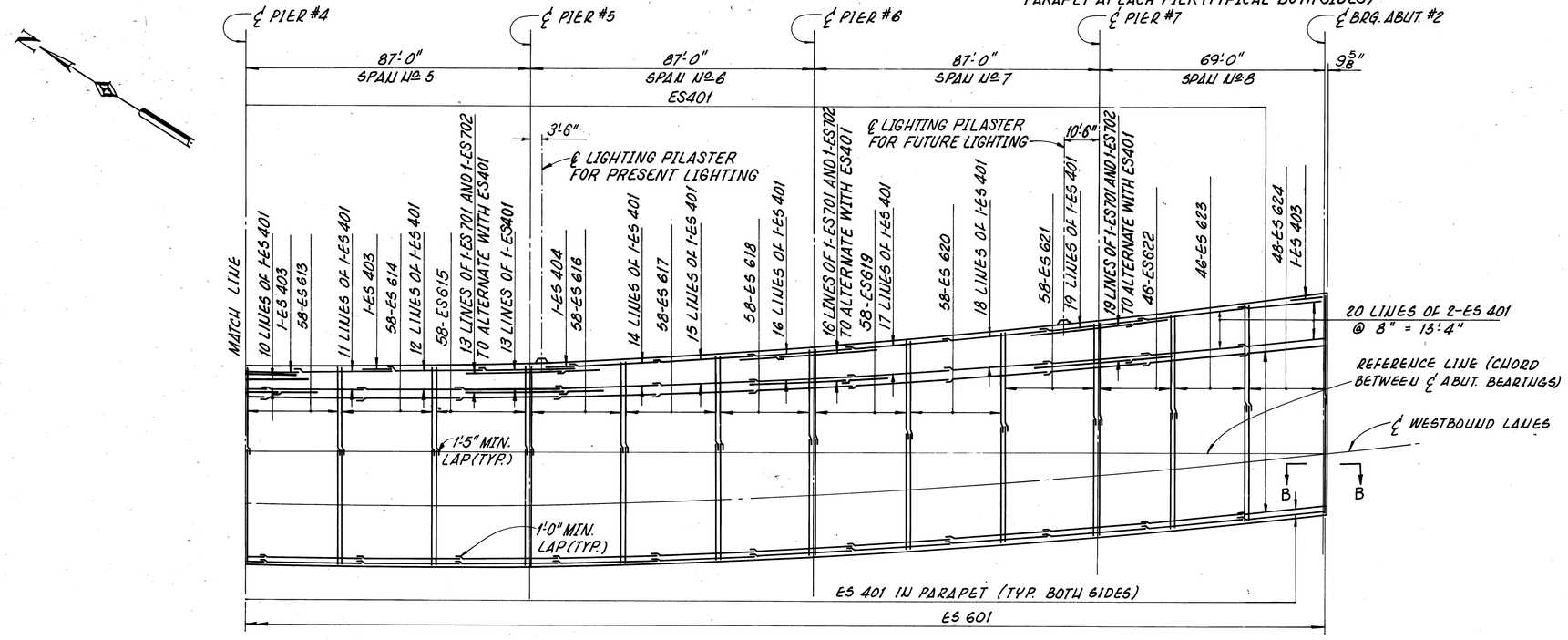

WESTBOUND LANES
SLAB PLAN TOP REINFORCING

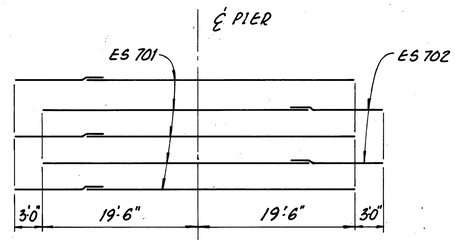

ADDITIONAL REINFORCING OVER PIER

FHWA REGION	STATE	PROJECT	
5	OHIO		

207.2 / 284

ERIE COUNTY
ERI-2-(16.13-17.39)

NOTES:

(1) SPACING OF OUTERMOST BARS ALONG EAST SIDE OF SLAB VARIES IN ORDER TO APPROXIMATELY FOLLOW THE GUTTER LINE. SEE TYPICAL TRANSVERSE SECTION ON SHEET 30/48
FOR FORMING ELEVATIONS SEE SHEET 34/48.
FOR TRANSVERSE SECTION SEE SHEET 30/48.
BARS ES602 THRU ES624 SHALL MATCH ES601.

PRESTRESSED CONC. ALTERNATE 28/48

adache · ciuni · lynn associates
CONSULTING ENGINEERS CLEVELAND OHIO 44130

SLAB PLAN-TOP REINFORCEMENT
WESTBOUND LANES
BRIDGE No ERI-2-1798 L/R
S.R.2 OVER MUD BROOK

ERIE COUNTY ERI-2-16.13 — STA. 1173+19.17 TO STA. 1180+94.84

DESIGNED	DRAWN	CHECKED	REVIEWED	DATE	REVISED
AJM	W.P.R.	J.R.S.	L.E.D.	9-23-85	

MICROFILMED
AUG 29 1990

F.H.W.A. REGION	STATE	PROJECT	
5	OHIO		

204
284

ERIE COUNTY
ERI-2-(16.13-17.39)

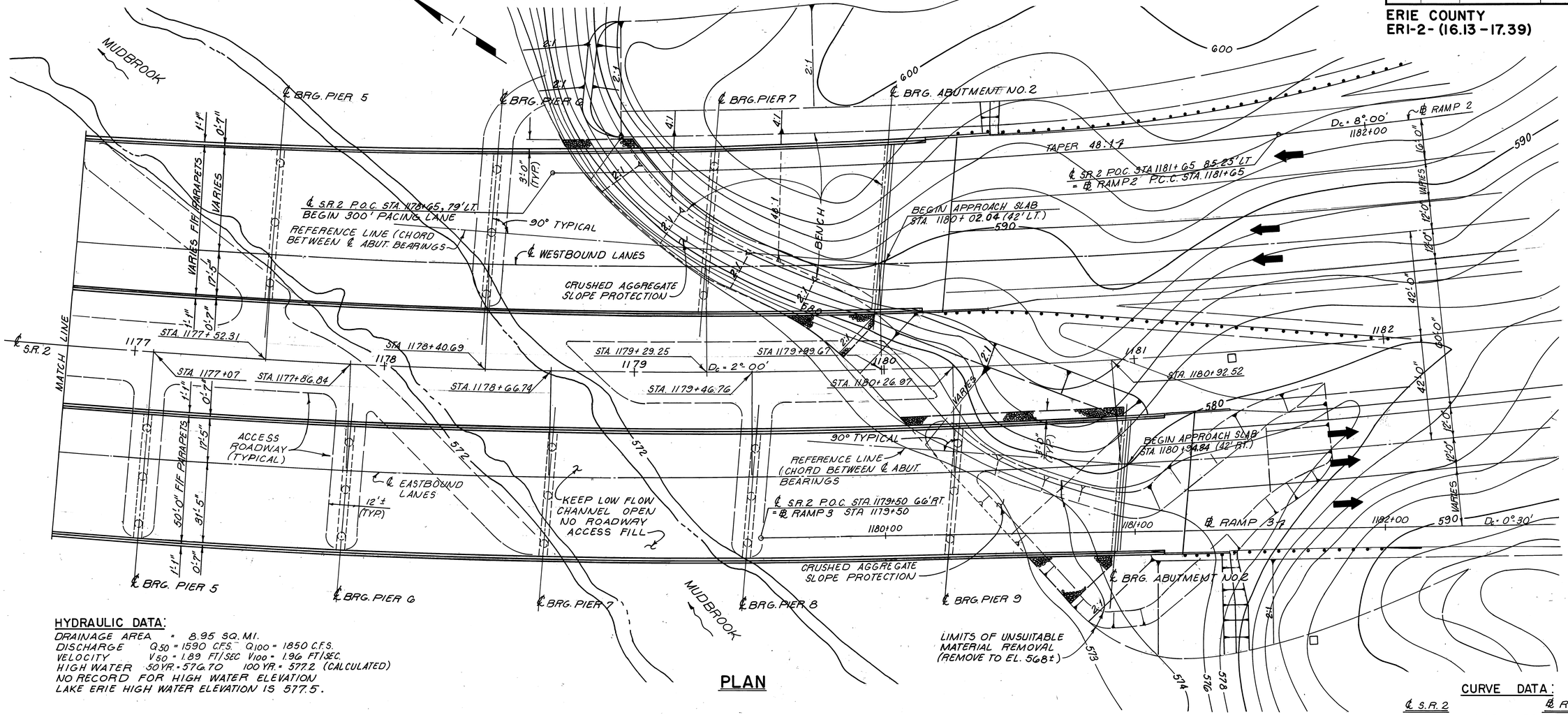

PLAN

HYDRAULIC DATA:

DRAINAGE AREA = 8.95 SQ. MI.
DISCHARGE Q_{50} = 1590 C.F.S. Q_{100} = 1850 C.F.S.
VELOCITY V_{50} = 1.89 FT/SEC V_{100} = 1.96 FT/SEC.
HIGH WATER 50 YR. = 576.70 100 YR. = 577.2 (CALCULATED)
NO RECORD FOR HIGH WATER ELEVATION
LAKE ERIE HIGH WATER ELEVATION IS 577.5.

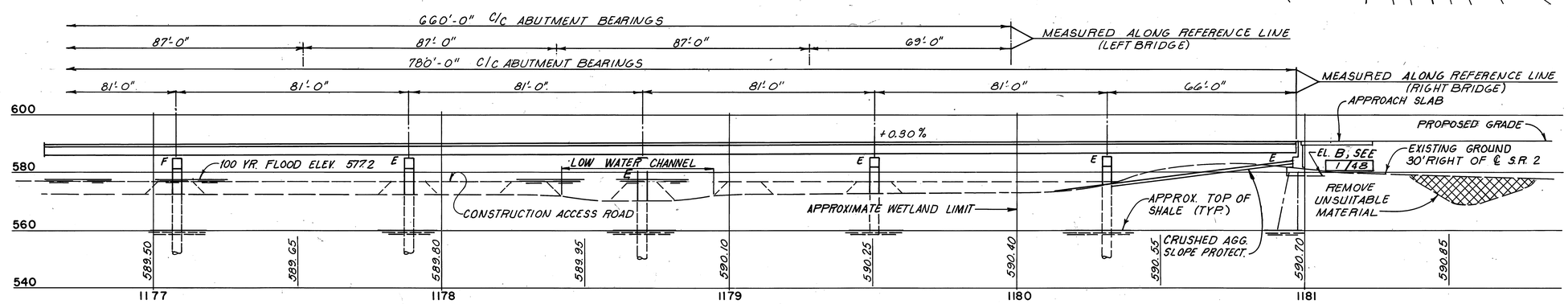

PROFILE

(RIGHT BRIDGE SHOWN, LEFT BRIDGE SIMILAR)

CURVE DATA:

℄ S.R. 2	℄ RAMP #3
P.I. STA. 1191+14.95	P.I. STA. 1181+77.09
Δ = 87°18'50"	Δ = 2°16'14"
Dc = 2°00'	Dc = 0°30"
R = 2864.79'	R = 11,459.16'
T = 2884.77'	T = 227.09'
Lc = 4065.69'	L = 454.11'
Ls = 300.00'	
θs = 3°00'	

PRESTRESSED CONC. ALTERNATE 2/48

adache - ciuni - lynn associates
CONSULTING ENGINEERS CLEVELAND, OHIO 44130

SITE PLAN

BRIDGE Nº ERI-2-1798 L/R S.R.2 OVER MUD BROOK

ERIE COUNTY
ERI-2-16.13

STA. 1173+19.17 TO
STA. 1180+94.84

DESIGNED	DRAWN	CHECKED	REVIEWED	DATE	REVISED
I.M.B.	D.R.J.	L.E.D.	R.D.H.	8-11-82	

MICROFILMED
AUG 29 1990

GENERAL NOTES

F.H.W.A. REGION	STATE	PROJECT	
5	OHIO		

205
284

ERIE COUNTY
ERI-2-(16.13-17.39)

DESIGN SPECIFICATIONS

THIS STRUCTURE CONFORMS TO "STANDARD SPECIFICATIONS FOR HIGHWAY BRIDGES" ADOPTED BY THE AMERICAN ASSOCIATION OF STATE HIGHWAY AND TRANSPORTATION OFFICIALS, 1977, INCLUDING THE 1978, 1979, 1980, 1981, AND 1982 INTERIM SPECIFICATIONS AND THE OHIO "SUPPLEMENT" TO THESE SPECIFICATIONS.

DESIGN DATA

DESIGN LOADING - HS20-44 AND THE ALTERNATE MILITARY LOADING.

DESIGN STRESSES
- CONCRETE CLASS S - COMPRESSIVE STRENGTH 4500 P.S.I.
- CONCRETE CLASS C - COMPRESSIVE STRENGTH 4000 P.S.I.
- REINFORCING STEEL - ASTM A615, A616 OR A617 - GRADE 60
  - MINIMUM YIELD STRENGTH 60,000 P.S.I.
  - SPIRAL REINFORCEMENT MAY BE PLAIN BARS, ASTM A82 OR A615.
- CONCRETE FOR PRESTRESSED BEAMS -
  - UNIT STRESS 2200 P.S.I. COMPRESSION, 444 P.S.I. TENSION
- PRESTRESSING STRAND ASTM A416
  - F'_s = 270,000 P.S.I.
  - INITIAL STRESS = 0.70 F'_s

REFERENCES

REFERENCE SHALL BE MADE TO STANDARD DRAWING(S):

BR-1	DATED	5-29-79
AS-1-81	DATED	11-27-81
EXJ-3-82,	DATED	4-2-84

AND TO SUPPLEMENTAL SPECIFICATION(S):

824	DATED	10-8-82
836	DATED	11-12-85
849	DATED	10-19-81

PILE DRIVING

THE PILE HAMMER USED TO INSTALL THE STEEL "H" BEARING PILES SHALL HAVE A STATE'S ENERGY RATING OF NOT LESS THAN 15,000 FOOT-POUNDS. THIS NOTE DOES NOT RELIEVE THE CONTRACTOR FROM THE REQUIREMENT OF 108.5 WHICH STATES THAT THE CONTRACTOR IS TO PROVIDE SUFFICIENT EQUIPMENT FOR PROSECUTING THE REQUIRED WORK.

PILE DRIVING CONSTRAINTS

PRIOR TO DRIVING PILES AT THE ABUTMENTS, THE SPILL THROUGH SLOPE EMBANKMENT AT THE ABUTMENTS SHALL BE CONSTRUCTED TO THE LEVEL OF THE SUBGRADE FOR A MINIMUM DISTANCE OF 65 FEET BACK OF ABUTMENT NO. 1 AND 200 FEET BACK OF ABUTMENT NO. 2. EMBANKMENTS AT THE BRIDGES ARE TO BE CONSTRUCTED AS PER THE ROADWAY EMBANKMENT REQUIREMENTS. EACH COMPLETED EMBANKMENT, EXCEPT AT ABUTMENT NO. 2 OF THE LEFT STRUCTURE, MUST EXPERIENCE A WAITING PERIOD OF 30 DAYS PRIOR TO EXCAVATING AND DRIVING PILES FOR THE ABUTMENTS. THE WAITING PERIOD CAN BE SHORTENED IF THE CONTRACTOR CAN SHOW THAT 90 PERCENT CONSOLIDATION HAS BEEN ATTAINED.

PILES DRIVEN TO BEDROCK

PILES SHALL BE DRIVEN TO REFUSAL ON BEDROCK. REFUSAL SHALL BE CONSIDERED AS ATTAINED BY PENETRATING SOFT BEDROCK WITH A MINIMUM RESISTANCE OF 20 BLOWS PER INCH, OR REFUSAL SHALL BE CONSIDERED AS ATTAINED AFTER THE PILE HAS CONTACTED HARD BEDROCK AND THE PILE HAS THEN RECEIVED AT LEAST 20 BLOWS.

THE DESIGN LOAD IS 55 TONS PER PILE FOR THE ABUTMENT PILES.

DRILLED-IN PIER COLUMNS

THE DESIGN LOAD FOR A DRILLED-IN PIER COLUMN IS ASSUMED TO BE RESISTED BY SHAFT ADHESION WITHIN A PORTION OF THE BEDROCK SOCKET AND ALSO BY SHAFT END BEARING PRESSURE. THE MAXIMUM ALLOWABLE BEDROCK SOCKET SHAFT ADHESION IS 1.5 TONS PER SQUARE FOOT, WHICH IS ASSUMED TO ACT ALONG THE LENGTH OF THE BEDROCK SOCKET, NEGLECTING THE UPPER 3 FEET OF THE SOCKET. THE MAXIMUM ALLOWABLE DESIGN END BEARING PRESSURE IS 18 TONS PER SQUARE FOOT.

THE MAXIMUM DESIGN LOAD FOR THE DRILLED-IN PIER COLUMNS VARIES FOR LEFT AND RIGHT STRUCTURES. THE MAXIMUM DESIGN LOAD FOR THE MOST HEAVILY LOADED COLUMNS IS 450 TONS. THE CALCULATED ADHESION RESISTANCE IS 226 TONS, WHICH IS ASSUMED TO ACT ALONG THE BOTTOM 12 FEET OF THE 15 FOOT BEDROCK SOCKET. THE CALCULATED END BEARING PRESSURE IS 224 TONS, WHICH IS EQUAL TO THE ACTUAL END BEARING PRESSURE OF 17.8 TONS PER SQUARE FOOT. (COLUMNS HAVING LESS BEDROCK SOCKET THAN THE MOST HEAVILY LOADED COLUMNS HAVE CORRESPONDING LESS MAXIMUM DESIGN LOADS AND CALCULATED ADHESION RESISTANCE.)

DECK PROTECTION METHOD

EPOXY COATED REINFORCING STEEL, TOP MAT ONLY.

MONOLITHIC WEARING SURFACE

MONOLITHIC WEARING SURFACE IS ASSUMED, FOR DESIGN PURPOSES, TO BE 1" THICK.

ITEM 516, BEARING TYPE A

THIS ITEM CONSISTS OF FURNISHING ALL NECESSARY MATERIALS, INSTALLATION AND LABOR FOR COMPLETE SLIDING BEARINGS, AS DETAILED ON THE PLANS. TWO ALTERNATES ARE DETAILED ON THE PLANS. ALTERNATE 1 IS A SLIDING LAMINATED ELASTOMERIC BEARING, COMBINING A TEFLON SLIDING SURFACE WITH A CONVENTIONAL 50 DUROMETER HARDNESS LAMINATED ELASTOMERIC BEARING. AN INTERNAL RESTRICTER PIN IS ALSO PROVIDED TO AVOID OVER-STRESSING THE NEOPRENE IN SHEAR. ALTERNATE 2 IS A FABREEKA STRUCTURAL EXPANSION BEARING, MODEL 148-209-5-15-5, OR APPROVED EQUAL. OTHER MANUFACTURERS MAY BE SUBMITTED FOR APPROVAL. IN ORDER FOR AN ALTERNATE BEARING TO BE CONSIDERED AS AN APPROVED EQUAL, IT MUST BE CAPABLE OF SUPPORTING A MAXIMUM REACTION OF 140,000 POUNDS WITH A VERTICAL ROTATION OF 0.005 RADIANS, AN EXPANSION OF 1 1/2 INCHES AND A TOTAL MOVEMENT OF 2 1/4 INCHES.

IF THE CONTRACTOR PROPOSES TO USE AN ALTERNATE BEARING, THE CONTRACTOR SHALL SUBMIT TO THE DIRECTOR FOR APPROVAL COMPLETE BEARING DETAILS ALONG WITH DETAILS OF ANY CHANGES IN THE REMAINDER OF THE STRUCTURES REQUIRED TO ACCOMMODATE THE ALTERATE DESIGN. THESE DETAILS AND PLAN REVISIONS SHALL BE MADE AT THE EXPENSE OF THE CONTRACTOR.

THE QUANTITY SHALL BE THE ACTUAL NUMBER OF SLIDING BEARINGS. PAYMENT FOR FURNISHING AND INSTALLING SLIDING BEARINGS WILL BE MADE AT THE CONTRACT PRICE AS PER ITEM SPECIAL - SLIDING BEARINGS.

ITEM 511, CLASS S CONCRETE, AS PER PLAN (See sheet 158B)

IN LIEU OF THE PROPORTIONING SPECIFIED IN 499.03 AND 511.02, THE FOLLOWING TABLE SHALL BE USED TO ESTABLISH THE QUANTITIES PER CUBIC YARD FOR CONCRETE, THE COARSE AGGREGATE SHALL BE LIMESTONE.

CONCRETE IN THE PARAPETS NEED NOT BE PLACED AT NIGHT.

QUANTITIES PER CUBIC YARD (USING NO. 8 LIMESTONE)

FINE AGGREGATE (LB)	COARSE AGGREGATE (LB)	TOTAL (LB)	CEMENT CONTENT (LB)	WATER-CEMENT RATIO
1555	1100	2655	715	0.40

AIR CONTENT - 8±2%

HIGH RANGE WATER REDUCER MAY BE USED AT THE OPTION OF THE CONTRACTOR. THE DOSAGE RATE WILL BE DETERMINED BY THE CONTRACTOR BASED ON MANUFACTURER'S RECOMMENDATION TO ACHIEVE THE DESIRED WORKABILITY LEVEL.

HIGH RANGE WATER REDUCER SHALL CONFORM TO 705.12, ASTM-C494 TYPE F AND SHALL NOT CONTAIN CALCIUM CHLORIDE.

THE CEMENT CONTENT SHALL BE MAINTAINED AND A MAXIMUM WATER-CEMENT RATIO OF 0.40 SHALL NOT BE EXCEEDED. THE SLUMP OF THE UNPLASTICIZED CONCRETE DELIVERED TO THE JOB SITE SHALL BE 1 1/2", ±1/2 INCH. THE SUPERPLASTICIZING ADMIXTURE SHALL BE ADDED AT THE JOB SITE AND MIXED A MINIMUM OF FIVE (5) MINUTES, AFTER THE SUPERPLASTICIZER HAS BEEN ADDED, THE SLUMP SHALL BE 6 1/2", ±1/2 INCH. THE CONTRACTOR SHALL FURNISH A VOLUMETRIC DISPENSER FOR THE SUPERPLASTICIZER.

CONCRETE MIXTURES CONTAINING A HIGH RANGE WATER REDUCER SHALL MEET THE SAME REQUIREMENTS FOR ENTRAINED AIR CONTENT, MINIMUM STRENGTH, AND MAXIMUM WATER-CEMENT RATIO AS REQUIRED FOR THE RESPECTIVE GRADE OF CONCRETE WITHOUT A HIGH RANGE WATER REDUCER.

SAMPLING AND TESTING FOR ENTRAINED AIR CONTENT AND MINIMUM STRENGTH SHOULD BE TAKEN FROM THE CONCRETE THAT HAS BEEN TREATED WITH A HIGH RANGE WATER REDUCER.

CURING SHALL BE IN ACCORDANCE WITH 511.14 TYPE "A" WATER CURING.

PLACEMENT

PLACEMENT OF CONCRETE SHALL BE COMPLETED UNDER FAVORABLE ATMOSPHERIC CONDITIONS. FAVORABLE ATMOSPHERIC CONDITIONS EXIST WHEN THE SURFACE EVAPORATION RATE AS AFFECTED BY AMBIENT AIR TEMPERATURE, CONCRETE TEMPERATURE, RELATIVE HUMIDITY AND WIND VELOCITY IS 0.1 POUNDS PER SQUARE FOOT PER HOUR OR LESS. FIGURE (1) SHALL BE USED TO DETERMINE GRAPHICALLY THE SURFACE EVAPORATION RATE. FAVORABLE ATMOSPHERIC CONDITIONS MAY REQUIRE PLACEMENT DURING LATE EVENING, NIGHT OR EARLY MORNING HOURS.

IF PLACEMENT OF THE CONCRETE IS TO BE MADE AT NIGHT, THE CONTRACTOR SHALL SUBMIT A PLAN WHICH PROVIDES ADEQUATE LIGHTING FOR THE WORK AREA AT LEAST 15 CALENDAR DAYS IN ADVANCE AND RECEIVE WRITTEN APPROVAL FROM THE ENGINEER BEFORE PLACING THE CONCRETE. THE LIGHTS SHALL BE SO DIRECTED THAT THEY DO NOT AFFECT OR DISTRACT APPROACHING TRAFFIC.

PAYMENT FOR ALL OF THE ABOVE SHALL BE AT THE UNIT PRICE BID PER CUBIC YARD FOR ITEM 511 CLASS S CONCRETE, AS PER PLAN WHICH SHALL INCLUDE ALL LABOR, EQUIPMENT, MATERIALS AND INCIDENTALS NECESSARY TO COMPLETE THE ABOVE.

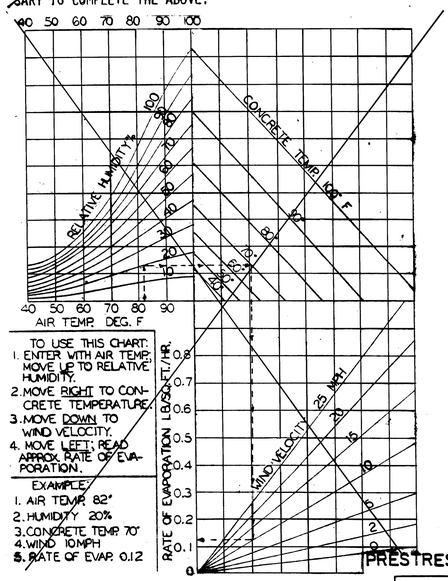

FIGURE (1)

PRESTRESSED CONC. ALTERNATE 3/48

adache - ciuni - lynn associates
CONSULTING ENGINEERS CLEVELAND, OHIO 44120

GENERAL NOTES

BRIDGE NO. ERI-2-1798 L/R
S. R. 2 OVER MUD BROOK

ERIE COUNTY STA. 1173+19.17 TO
ERI-2-16.13 STA. 1180+94.84

DESIGNED	DRAWN	CHECKED	REVIEWED	DATE	REVISED
AJM	AJM	R.J.P.	L.E.D.	9.23.85	

ADACHE · CIUNI · LYNN ASSOC.
CALC. BY: · · · DATE:
CHKD. BY: DATE:

MICROFILMED
AUG 30 1990

GENERAL NOTES

ITEM SPECIAL - DRILLED-IN PIER COLUMNS SPECIFICATIONS FOR DRILLED-IN PIER COLUMNS

DESCRIPTION

THIS ITEM SHALL CONSIST OF FURNISHING AND INSTALLING DRILLED-IN PIER COLUMNS OF THE TYPE AND SIZE CALLED FOR BY THE PLANS. THE CONTRACTOR SHALL FURNISH ALL LABOR, MATERIALS, AND APPURTENANCES REQUIRED TO COMPLETE THE WORK AS SPECIFIED. THE CONTRACTOR'S RESPONSIBILITY WILL NOT BE AFFECTED IF THE ESTIMATED PAY LENGTH SHOWN ON THE PLANS IS DIFFERENT FROM THE LENGTH DETERMINED TO BE NECESSARY AT THE TIME OF CONSTRUCTING THE DRILLED-IN PIER COLUMNS.

THE LIMITS OF EACH DRILLED-IN PIER COLUMN SHALL BE DEFINED AT THE TOP BY THE BOTTOM OF THE PIER CAP, AND AT THE BOTTOM BY THE BOTTOM OF THE SOCKET IN BEDROCK. A CASING WILL BE NECESSARY FOR EACH DRILLED-IN PIER COLUMN. THE CASING SHALL BE LEFT IN PLACE EXCEPT THAT THE UPPER PORTION, FROM THE BOTTOM OF THE PIER CAP TO THE TOP OF ACCESS ROADWAY (OR THE MUDBROOK WATER SURFACE) ELEVATION SHALL BE REMOVED.

GENERAL

CONTRACTOR QUALIFICATIONS

THE CONTRACTOR SHALL SUBMIT INFORMATION TO DOCUMENT THAT HIS PERSONNEL ARE EXPERIENCED IN THE CONSTRUCTION OF DRILLED-IN PIER COLUMNS OF THE TYPE AND SIZE DESCRIBED BY THE PLANS. THIS INFORMATION SHALL BE SUBMITTED AT THE PRECONSTRUCTION CONFERENCE.

DEVIATION FROM PLAN

THE CONTRACTOR SHALL BE RESPONSIBLE FOR THE COSTS INVOLVED WHEN MAKING CORRECTIONS TO DEVIATIONS FROM THE PLANS. THE DIRECTOR SHALL DECIDE WHEN CORRECTIONS ARE NECESSARY.

CASING

THE CASINGS SHALL BE MADE OF STEEL AND SHALL BE WATER TIGHT AND SHALL BE OF AMPLE STRENGTH TO WITHSTAND HANDLING STRESSES AND EXTERNAL SUBSURFACE PRESSURES. THE CASINGS SHALL BE SEATED INTO THE BEDROCK THUS ATTEMPTING TO SEAL OFF INCOMING WATER, AND THE CASING LENGTH SHALL BE AS NECESSARY TO CONSTRUCT EACH DRILLED-IN PIER COLUMN.

EXCAVATION

EXCAVATION FOR THE DRILLED-IN PIER COLUMNS SHALL BE PERFORMED BY ROTARY DRILLING METHODS USING ANY PRACTICAL METHODS AND MACHINERY ACCEPTABLE TO THE ENGINEER. WHEN OBJECTS SUCH AS LARGE BOULDERS ARE ENCOUNTERED, THEY SHALL BE REMOVED. BLASTING METHODS MAY BE USED ONLY WITH PERMISSION FROM THE ENGINEER AND WHEN USED SHALL BE SO CONDUCTED AS TO AVOID DISTURBANCE OF THE BEDROCK FORMATION BELOW AND OUTSIDE THE LIMITS OF THE PROPOSED DRILLED-IN PIER COLUMN EXCAVATION. THE CONTRACTOR SHALL CARRY LIABILITY INSURANCE AND SHALL COMPLY WITH ALL APPLICABLE FEDERAL, STATE, AND LOCAL EXPLOSIVE REGULATIONS. THE DRILLED-IN PIER COLUMNS SHALL BE SOCKETED INTO SHALE BEDROCK TO THE LENGTH SPECIFIED. THE BEDROCK SOCKET SHALL BE MEASURED FROM THE BOTTOM OF THE CASING TO THE BOTTOM OF THE DRILLED-IN PIER COLUMN UNLESS THE ENGINEER IS ASSURED THAT A PORTION OF THE METAL CASING IS EMBEDDED IN SOLID BEDROCK, THEN A MAXIMUM OF 2 FEET OF EMBEDDED DISTANCE CAN BE INCLUDED AS PART OF THE BEDROCK SOCKET.

DEWATERING

THE CONTRACTOR SHALL BE RESPONSIBLE FOR CONTROLLING ANY INCOMING WATER SUCH THAT THE SHAFT EXCAVATION IS MAINTAINED DRY ENOUGH FOR PERFORMANCE OF THE REQUIRED INSPECTION OPERATION. PLACING OF THE CONCRETE UNDER WATER WILL ONLY BE ALLOWED AFTER ALL REASONABLE ATTEMPTS TO CONTROL INCOMING WATER HAVE BEEN UNSUCCESSFUL AS DETERMINED BY THE ENGINEER.

BOTTOM CLEANOUT

THE BOTTOM OF THE DRILLED-IN PIER COLUMN EXCAVATION SHALL BE AS CLEAN AS PRACTICABLE (NO MORE THAN ONE QUARTER INCH OF LOOSE MATERIAL ON THE BOTTOM) PRIOR TO CONCRETE PLACEMENT. THE SIDES OF THE BEDROCK SOCKET SHALL BE BRUSHED CLEAN.

APPROVAL BEFORE CONCRETE PLACEMENT

NO CONCRETE SHALL BE PLACED IN ANY DRILLED-IN PIER COLUMN EXCAVATION WITHOUT PRIOR APPROVAL FROM THE ENGINEER. THE DRILLED-IN PIER COLUMN EXCAVATION SHALL BE INSPECTED IMMEDIATELY BEFORE THE CONCRETE IS PLACED. A POWERFUL LIGHT ADEQUATE FOR THOROUGHLY INSPECTING THE SIDES, BOTTOM, AND REINFORCING STEEL CAGE OF THE DRILLED-IN PIER COLUMN SHALL BE USED. NO CONCRETE SHALL BE PLACED DURING INCLEMENT WEATHER CONDITIONS WHICH PROHIBIT A THOROUGH INSPECTION.

CONCRETE PLACEMENT

THE CONCRETE FOR THE DRILLED-IN PIER COLUMNS SHALL BE PLACED AS PER ITEM 511 EXCEPT AS MODIFIED BY THE PLANS. THE CONCRETE PLACEMENT OPERATION SHOULD BE CONTINUOUS FROM START TO FINISH. THE CONCRETE SHALL BE PLACED AGAINST THE EXISTING BEDROCK AND SHALL BE PLACED PROMPTLY AFTER THE FINAL INSPECTION OF THE SHAFT. IF PRACTICABLE, THE CONCRETE SHALL BE PLACED IN A CLEAN DRY EXCAVATION. CARE SHALL BE TAKEN TO ASSURE THAT CONCRETE IS NOT BEING PLACED IN MOVING WATER. THE CONCRETE CAN BE PLACED IN A DRY DRILLED-IN PIER COLUMN EXCAVATION BY THE FREE FALL METHOD PROVIDED IT FALLS TO ITS FINAL POSITION THROUGH AIR WITHOUT STRIKING THE SIDES OF THE HOLE, THE REBAR CAGE, OR ANY OTHER OBSTRUCTION. THE FREE FALL METHOD ALLOWS THE CONCRETE TO BE DROPPED FROM THE TOP THROUGH A CENTERING CHUTE TO THE CONCRETE'S FINAL POSITION.

IF THE ENGINEER DETERMINES THAT DEWATERING IS NOT PRACTICABLE, THE CONTRACTOR WILL BE GIVEN PERMISSION TO PLACE THE CONCRETE UNDER WATER. TO PLACE CONCRETE UNDER WATER THE DRILLED-IN PIER COLUMN EXCAVATION SHALL BE FILLED WITH WATER SUCH THAT ALL WATER MOTION HAS CEASED. THE CONCRETE SHALL THEN BE PLACED BY MEANS OF A PUMP. THE PUMP EQUIPMENT SHALL BE SO ARRANGED THAT NO VIBRATIONS RESULT WHICH MIGHT DAMAGE FRESHLY PLACED CONCRETE. PIPES CARRYING CONCRETE FROM THE PUMP TO THE SHAFT SHOULD BE LAID OUT WITH A MINIMUM OF BENDS AND WITH NO UNAUTHORIZED CHANGE IN SIZE.

THE EQUIPMENT SHALL BE SUITABLE IN KIND AND ADEQUATE IN CAPACITY FOR THE WORK REQUIRED. THE USE OF ALUMINUM PIPE AS A CONVEYANCE FOR THE CONCRETE WILL NOT BE PERMITTED. AN ADEQUATE QUANTITY OF GROUT MORTAR OR REGULAR CONCRETE WITH COARSE AGGREGATE OMITTED SHALL BE PUMPED THROUGH THE EQUIPMENT AHEAD OF THE REGULAR CONCRETE TO PROVIDE LUBRICATION TO THE PUMPING SYSTEM. THE CONCRETE USED FOR LUBRICATION SHALL NOT BE PLACED IN THE SHAFT. THE LUBRICATION PROCESS WILL NOT BE REPEATED AS LONG AS THE PUMPING OPERATIONS ARE CONTINUOUS. THE OPERATION OF THE PUMP SHALL BE SUCH THAT A CONTINUOUS STREAM OF CONCRETE WITHOUT AIR POCKETS IS PRODUCED. IN ORDER TO PREVENT THE CONTAMINATION OF THE CONCRETE PLACED INITIALLY AT THE BOTTOM OF THE SHAFT, THE OUTLET END OF THE PUMPING PIPE SHALL BE SEALED WITH A DIAPHRAM OR PLUG THAT IS FLUSHED OUT WHEN THE HYDOSTATIC PRESSURE FROM THE COLUMN OF CONCRETE EXCEEDS THAT OF THE WATER IN THE SHAFT. THE INITIAL RATE OF CONCRETE PLACEMENT MUST BE CAREFULLY CONTROLLED SO AS NOT TO LIFT THE REINFORCING CAGE. THE CONVEYING SYSTEM SHALL BE WATER TIGHT AND THE OUTLET END SHALL ALWAYS REMAIN WELL BELOW THE TOP OF THE FRESHLY PLACED CONCRETE. WHEN THE CONCRETE REACHES THE TOP OF THE DRILLED-IN PIER COLUMN ALL LAITANCE SHALL BE REMOVED.

ALTERNATE CONSTRUCTION METHODS

THE CONTRACTOR MAY PROPOSE ALTERNATE CONSTRUCTION METHODS WHICH WILL BE APPROVED OR REJECTED BY THE DIRECTOR.

TOLERANCES

THE CONTRACTOR SHALL LOCATE AND CONSTRUCT THE TOP CENTER OF EACH CAISSON WITHIN A ONE-INCH RADIUS OF THE POSITION INDICATED BY THE PLANS. THE DRILLED-IN PIER COLUMNS ARE TO BE INSTALLED VERTICALLY AND MUST BE WITHIN 0.5 PERCENT OF PLUMB FOR THE TOTAL LENGTH OF THE DRILLED-IN PIER COLUMN.

CONCRETE

CONCRETE FOR ALL DRILLED-IN PIER COLUMNS SHALL BE CLASS S CONCRETE AND SHALL BE IN ACCORDANCE WITH ITEM 511, EXCEPT AS MODIFIED AND SUPPLEMENTED HEREIN. THE REQUIRED SLUMP IS SIX (6) INCHES, PLUS OR MINUS ONE-HALF INCH. THE MAXIMUM ALLOWABLE WATER TO CEMENT RATIO SHALL BE 0.50. IF CONCRETE IS PLACED UNDER WATER, THE REQUIREMENT OF ADDING 10 PERCENT MORE CEMENT TO THE CONCRETE MIX SHALL BE WAIVED. ONLY THE TOP 15 FEET OF THE DRILLED-IN PIER COLUMN IS REQUIRED TO BE VIBRATED, WITH SPECIAL CARE BEING TAKEN NOT TO OVER VIBRATE THE CONCRETE.

REINFORCING STEEL

REINFORCING SHALL MEET THE REQUIREMENTS OF ITEM 509. THE REINFORCING STEEL SHALL BE GRADE 60. THE SPRIAL REINFORCING STEEL MAY BE PLAIN BARS ASTM A82 OR A615. THE REINFORCING STEEL SHALL BE COMPLETELY ASSEMBLED PRIOR TO PLACEMENT AND THE LENGTH SHALL BE AS NECESSARY TO CONSTRUCT EACH DRILLED-IN PIER COLUMN.

INSPECTION

THE CONTRACTOR SHALL PROVIDE AND MAINTAIN SUITABLE MEANS FOR ACCESS AND SAFE DESCENT INTO THE DRILLED-IN PIER COLUMN EXCAVATION, SUCH AS A POSITIVE FORWARD AND REVERSE HYDRAULIC WINCH OR A POWER-UP AND POWER-DOWN HOIST ON A CRANE. THE METHOD CHOSEN FOR ENTERING AND LEAVING THE SHAFT SHALL BE CONVENIENT, SAFE, AND NOT UNCOMFORTABLE FOR THE USER. THE CONTRACTOR SHALL ALSO PROVIDE PROTECTIVE CLOTHING FOR USE BY THOSE MAKING AN INSPECTION OF THE SHAFT.
A CHART HAS BEEN INCLUDED WITH THE PLANS ON SHEET 47 OF 48 AND SHALL BE COMPLETED BY THE ENGINEER. THE CONTRACTOR SHALL PROVIDE ALL NECESSARY EQUIPMENT NEEDED TO OBTAIN THE MEASUREMENTS FOR COMPLETING THE CHART AND THE CONTRACTOR SHALL ASSIST THE ENGINEER IN OBTAINING THESE MEASUREMENTS. MEASUREMENTS SHALL BE OBTAINED PRIOR TO PLACING CONCRETE.
THE ENGINEER SHOULD OBTAIN PHOTOGRAPHS OF THE CONTRACTOR'S CONSTRUCTION PROCEDURES.

SAFETY PROVISIONS

THE CONTRACTOR SHALL HAVE AT THE JOB SITE ALL EQUIPMENT AND MATERIALS NEEDED TO PROVIDE SAFE CONSTRUCTION AND INSPECTION OF THE DRILLED-IN CAISSONS AS REQUIRED BY CITY, STATE, AND FEDERAL SAFETY REQUIREMENTS.
SAFETY PROVISIONS SHALL INCLUDE, BUT NOT BE LIMITED TO, THE REQUIREMENTS SPECIFIED BY THE PLANS, SPECIAL PROVISIONS, AND PROPOSAL.
THE CONTRACTOR SHALL PROVIDE CONTINUOUS SURVEILLANCE OF ALL PERSONS IN THE SHAFT. AT ANY TIME WHEN A PERSON IS IN THE DRILLED-IN PIER COLUMN EXCAVATION, PROVISION SHALL BE MADE FOR PUMPING FRESH AIR TO SAID PERSON. ALL LIGHTING SHALL BE BY ELECTRIC LIGHTS. MECHANICAL EQUIPMENT USED INSIDE THE SHAFT SHALL BE OPERATED BY AIR OR ELECTRICITY. THE USE OF GASOLINE ENGINES OR OTHER TYPES OF EQUIPMENT PRODUCING FUMES, WILL NOT BE PERMITTED. THE CONTRACTOR SHALL PROVIDE GAS DETECTION AND OXYGEN ANALYZERS, AND SHALL TEST THE DRILLED-IN PIER COLUMN EXCAVATION ATMOSPHERE QUANTITATIVELY THROUGHOUT THE COLUMNS' ENTIRE LENGTH AND ASSURE THAT THE QUANTITIES OF GASES AND OXYGEN PRESENT ARE IN SAFE AMOUNT AND SAFE PROPORTIONS PRIOR TO PERMITTING ANY PERSON TO ENTER THE SHAFT.

METHOD OF MEASUREMENT

THE LENGTH OF EACH DRILLED-IN PIER COLUMN TO BE PAID FOR SHALL BE THE COMPLETED AND ACCEPTED LENGTH, MEASURED ALONG THE AXIS OF THE DRILLED-IN PIER COLUMN FROM THE BOTTOM OF THE BEDROCK SOCKET TO THE PROPOSED BOTTOM OF THE PIER CAP.

BASIS OF PAYMENT

PAYMENT FOR FURNISHING AND INSTALLING DRILLED-IN PIER COLUMNS WILL BE MADE AT THE CONTRACT UNIT PRICE PER LINEAR FOOT OF ACCEPTED DRILLED-IN PIER COLUMN AS PER ITEM SPECIAL DRILLED-IN PIER COLUMNS.

THIS PRICE SHALL INCLUDE THE FURNISHING OF ALL LABOR, MATERIALS, AND EQUIPMENT NECESSARY TO COMPLETE THE ITEM AS SPECIFIED, INCLUDING ALL EXCAVATION, CONCRETE, REINFORCING STEEL, AND CASINGS.

PRESTRESSED CONC. ALTERNATE 4/48

adache · ciuni · lynn associates
CONSULTING ENGINEERS CLEVELAND, OHIO 44131

GENERAL NOTES

BRIDGE NO. ERI-2-1798 L/R
S. R. 2 OVER MUD BROOK

ERIE COUNTY
ERI-2-16.13

STA. 1173+19.17 TO
STA. 1180+94.84

DESIGNED	DRAWN	CHECKED	REVIEWED	DATE	REVISED
J.R.S.	J.R.S.	AJM	L.E.D.	9/23/85	

ACL form no. 1

MICROFILMED
AUG 30 1990

SILT FENCE

IF DIRECTED BY THE ENGINEER, THE CONTRACTOR SHALL INSTALL SILT FENCES ACROSS THE MUD BROOK WETLANDS PRIOR TO COMMENCING ANY WORK IN THE WETLANDS. TWO CONTINUOUS LINES OF SILT FENCE SHALL BE INSTALLED ACROSS THE WETLANDS TO ENCLOSE THE BRIDGE CROSSING AREA. ONE LINE SHALL BE LOCATED UPSTREAM AND THE SECOND LINE SHALL BE LOCATED DOWNSTREAM OF THE PROPOSED MUD BROOK BRIDGES. THE SILT FENCES SHALL BE LOCATED APPROXIMATELY 25 FEET OUTSIDE THE EXTERIOR FASCIAS OF THE DUAL BRIDGES AND SHALL ROUGHLY PARALLEL THE EXTERIOR BRIDGE FASCIAS.

SILT FENCE FABRIC SHALL BE C&M SPEC. 712.09 TYPE C. THE SILT FENCE FABRIC SHALL BE SUPPORTED, SECURED AND ANCHORED AS NECESSARY TO PREVENT REMOVAL BY STREAM FLOW AND TO CONFINE SILTATION TO WITHIN THE ENCLOSED AREA.

THE CONTRACTOR, IF DIRECTED BY THE ENGINEER, SHALL INSTALL THE SILT FENCE PRIOR TO WORK IN THE MUD BROOK WETLANDS, MAINTAIN THE FENCE DURING THE CONSTRUCTION PERIOD, AND SUBSEQUENTLY REMOVE THE SILT FENCE AFTER ALL OTHER WORK IN THE WETLANDS HAS BEEN COMPLETED.

PAYMENT FOR THE INSTALLATION, MAINTENANCE AND SUBSEQUENT REMOVAL OF THE SILT FENCE SHALL BE FOR THE ACTUAL LINEAL FEET OF SILT FENCE INSTALLED AND SHALL BE FULL COMPENSATION FOR ALL MATERIAL, LABOR AND EQUIPMENT REQUIRED FOR THIS ITEM OF WORK.

PAYMENT WILL BE MADE AT CONTRACT PRICES FOR:

ITEM	UNIT	DESCRIPTION
SPECIAL	LIN. FEET	SILT FENCE

AN ESTIMATED QUANTITY OF 1400 LIN. FEET OF ITEM SPECIAL, SILT FENCE IS INCLUDED IN THE ROADWAY PLAN GENERAL SUMMARY FOR PAYMENT OF THE INSTALLATION OF SILT FENCES ACROSS THE MUD BROOK WETLANDS IF DIRECTED BY THE ENGINEER.

BRIDGE CONSTRUCTION ACCESS ROAD

IT IS INTENDED TO CONSTRUCT THE MUD BROOK BRIDGES CAUSING MINIMAL DISTURBANCE AND MINIMAL LONG TERM DAMAGE TO THE WETLANDS. FOR ACCESS IN THE WETLANDS TO CONSTRUCT THE BRIDGES A TEMPORARY HAUL ROAD SHALL BE CONSTRUCTED IN THE MEDIAN AREA BETWEEN THE DUAL BRIDGES AS INDICATED IN GENERAL ON THE SITE PLAN. ACCESS TO EACH OF BRIDGE PIERS SHALL BE FROM TEMPORARY ROAD PROJECTIONS CONSTRUCTED FROM THE MAIN HAUL ROAD. THE TEMPORARY HAUL ROAD SHALL BE DISCONTINUOUS AT THE LOW FLOW CHANNEL INDICATED ON THE SITE PLAN AND A 25 FOOT MINIMUM WIDTH OF CHANNEL SHALL REMAIN OPEN AT ALL TIMES TO MAINTAIN FLOW.

WIDTH OF THE TEMPORARY ROAD SHALL BE AS REQUIRED BY THE CONTRACTOR'S CONSTRUCTION AND ERECTION EQUIPMENT AND FOR EFFICIENT PROSECUTION OF THE BRIDGE CONSTRUCTION WORK. MINIMUM USABLE WIDTH SHALL BE 20 FEET. THE CONTRACTOR SHALL CONSTRUCT THE TEMPORARY ROAD TO A LEVEL ABOVE THE MARSH SOIL LEVEL THAT WILL PERMIT USE OF THE ROAD DURING A TWO YEAR FREQUENCY FLOOD. THE TEMPORARY ROAD SHALL HAVE RELATIVELY FLAT (4:1 OR FLATTER) SIDE SLOPES TO MINIMIZE HEAVING OF THE MARSH SOIL ADJACENT TO THE ROAD.

THE TEMPORARY ROAD SHALL BE CONSTRUCTED BY INSTALLING A SOIL STABILIZATION ENGINEERING FABRIC ON THE MARSH SOIL AND PLACING AND COMPACTING CRUSHED AGGREGATE FILL ON THE FABRIC TO THE REQUIRED GRADE LEVEL. PRIOR TO PLACING THE FABRIC, THE MARSH SURFACE SHALL BE CLEARED AND PREPARED IN ACCORDANCE WITH THE FABRIC MANUFACTURER'S RECOMMENDATIONS.

SOIL STABILIZATION ENGINEERING FABRIC

THE ENGINEERING FABRIC SHALL PROVIDE A PERMEABLE LAYER OR MEDIA, PLANAR FLOW, AND TENSILE REINFORCEMENT, WHILE RETAINING THE SOIL MATRIX.

MATERIAL REQUIREMENTS:

THE ENGINEERING FABRIC SHALL BE A NONWOVEN FABRIC CONSISTING ONLY OF CONTINUOUS CHAIN POLYMERIC FILAMENTS OR YARNS OF POLYESTER, FORMED INTO A STABLE NETWORK BY NEEDLE PUNCHING. THE FABRIC SHALL BE INERT TO COMMONLY ENCOUNTERED CHEMICALS, HYDROCARBONS, MILDEW AND ROT RESISTANT, RESISTANT TO ULTRAVIOLET LIGHT EXPOSURE, INSECT AND RODENT RESISTANT, AND CONFORM TO THE PROPERTIES IN THE FOLLOWING TABLE. THE AVERAGE ROLL MINIMUM VALUE (WEAKEST PRINCIPLE DIRECTION) FOR STRENGTH PROPERTIES OF ANY INDIVIDUAL ROLL TESTED FROM THE MANUFACTURING LOT OR LOTS OF A PARTICULAR SHIPMENT SHALL BE IN EXCESS OF THE AVERAGE ROLL MINIMUM VALUE (WEAKEST PRINCIPLE DIRECTION) STIPULATED HEREIN.

TEST REQUIREMENTS:

PHYSICAL PROPERTIES	AVERAGE ROLL MINIMUM VALUE (WEAKEST PRINCIPLE DIRECTION)*
GRAB TENSILE STRENGTH* ASTM D1682 (LBS.)	270
ELONGATION AT FAILURE* ASTM D1682 (%)	60
MULLEN BURST STRENGTH ASTM D3786 (PSI)	430
PLANAR WATER FLOW (QTS./HR./2" FABRIC)	.3
COEFFICIENT OF NORMAL PERMEABILITY - K (CM/SEC.) (5 IN. CONSTANT HEAD)	.1
VERTICAL WATER FLOW (GAL/MIN/FT^2) (5 IN. CONSTANT HEAD)	100
EQUIVALENT OPENING SIZE (U.S. STANDARD SIEVE NO.) CW-02215 U.S. STD. SIEVE NUMBER LARGER THAN	50
TRAPEZOID TEAR STRENGTH* ASTM 1117 (LBS.)	80
PUNCTURE STRENGTH ASTM D751 (MODIFIED) (LBS.)	125

FOR WASTE AREAS NOTE, SEE ROADWAY GENERAL NOTES, SHEET 7 (284)

PRESTRESSED CONC. ALTERNATE 5/48

adache - ciuni - lynn associates
CONSULTING ENGINEERS CLEVELAND, OHIO 44131

GENERAL NOTES

BRIDGE NO. ERI-2-1798 L/R
S.R. 2 OVER MUD BROOK

ERIE COUNTY STA. 1173+19.17 TO
ERI-2-16.13 STA. 1180+94.84

DESIGNED	DRAWN	CHECKED	REVIEWED	DATE	REVISED
L.E.D.	E. R.	D.R.J.	L.E.D.	9-23-85	

A-C-L form no. 1

MICROFILMED
AUG 30 1990

F.H.W.A. REGION	STATE	PROJECT	
5	OHIO		

208
284

ERIE COUNTY
ERI - 2 - (16.13 - 17.39)

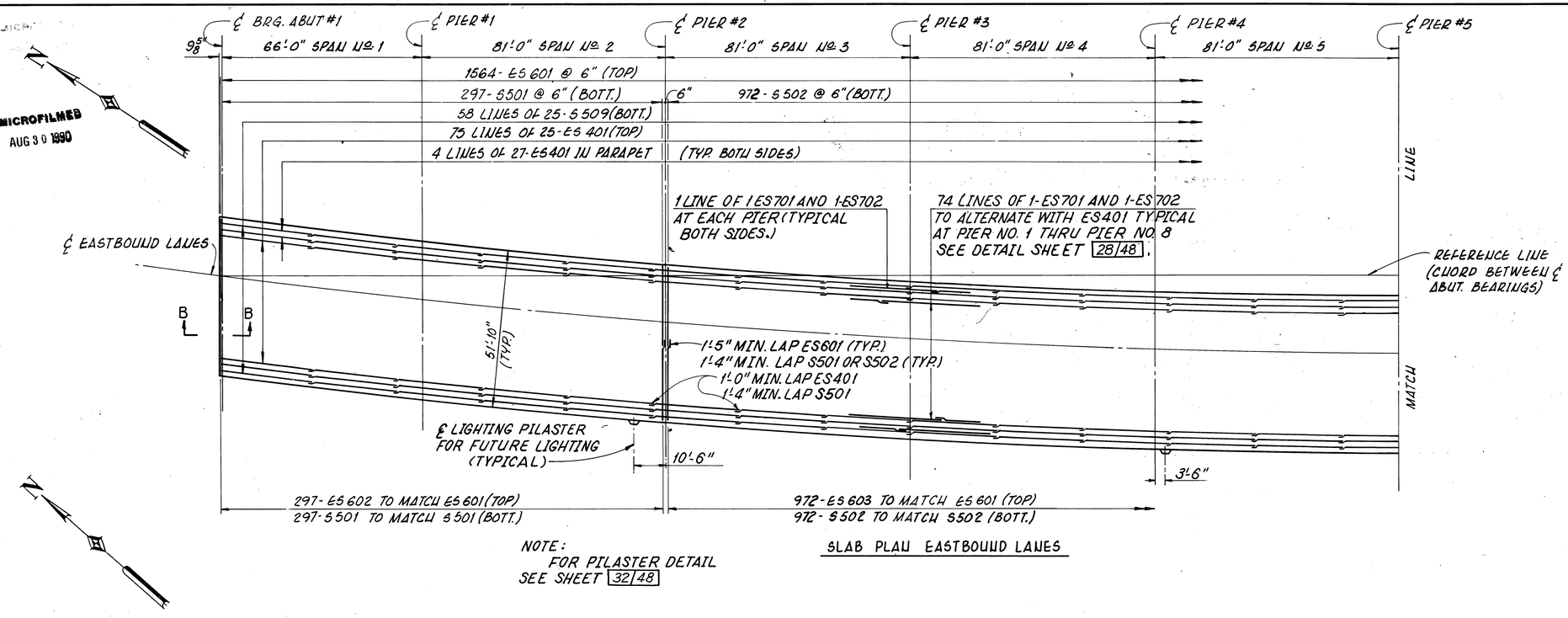

NOTE:
FOR PILASTER DETAIL
SEE SHEET 32/48

SLAB PLAN EASTBOUND LANES

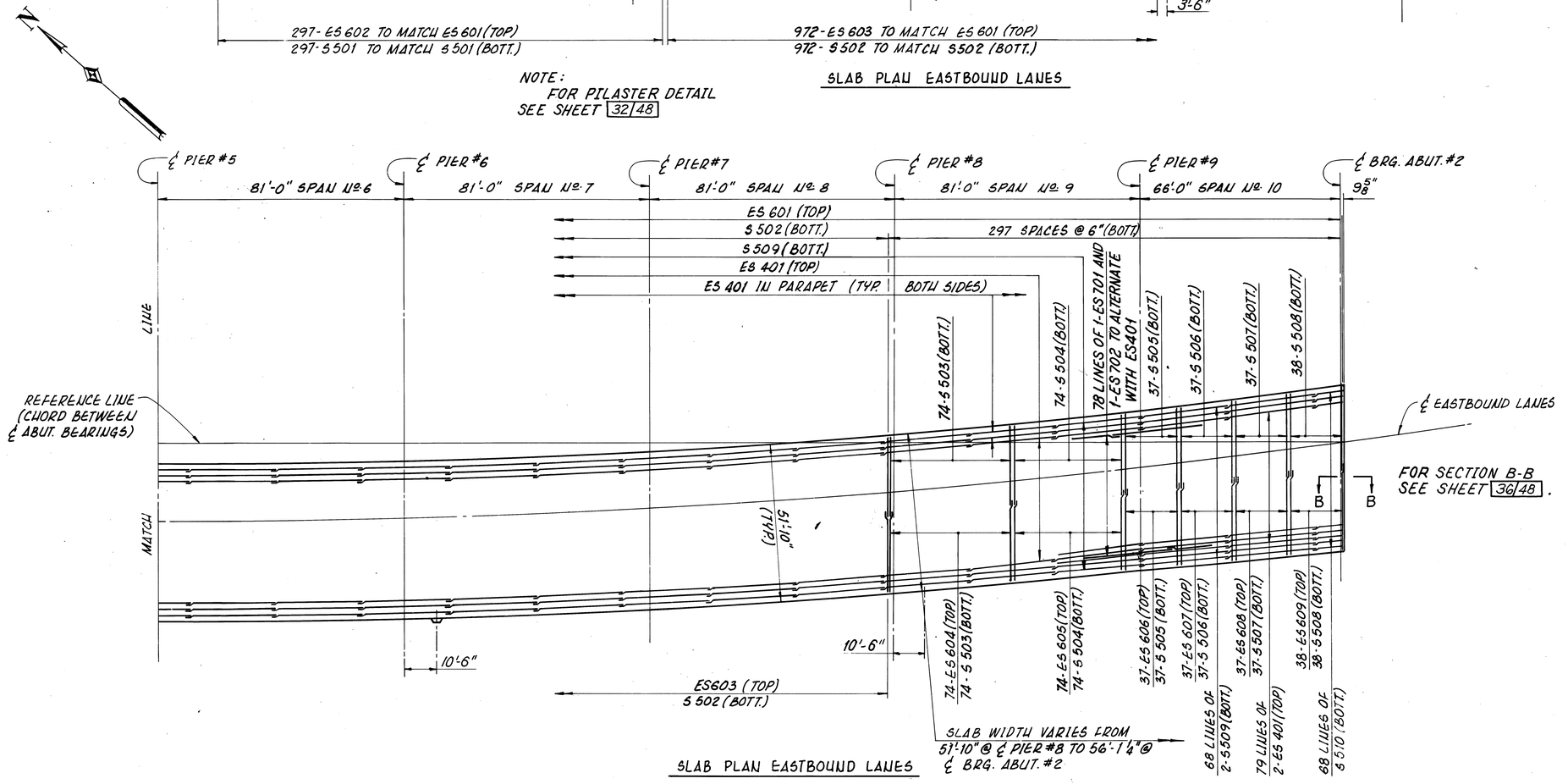

SLAB PLAN EASTBOUND LANES

PRESTRESSED CONC. ALTERNATE 29/48

adache · ciuni · lynn associates
CONSULTING ENGINEERS CLEVELAND OHIO 44130

SLAB PLAN
EASTBOUND LANES
BRIDGE No. ERI - 2 - 1798 - L/R
S.R. 2 OVER MUD BROOK

ERIE COUNTY
ERI - 2 - 16.13

STA. 1173 + 19.17 TO
STA. 1180 + 94.84

DESIGNED	DRAWN	CHECKED	REVIEWED	DATE	REVISED
AJM	W.P.R.	J.R.S.	L.E.D.	9-23-85	

MICROFILMED
AUG 30 1990

NOTES:
FOR FRAMING PLANS SEE SHEETS 21|48 & 22|48
FOR FORMING ELEVATION TABLE SEE SHEET 34|48

F.H.W.A. REGION	STATE	PROJECT	
5	OHIO		

208A
284

ERIE COUNTY
ERI-2-(16.13-17.39)

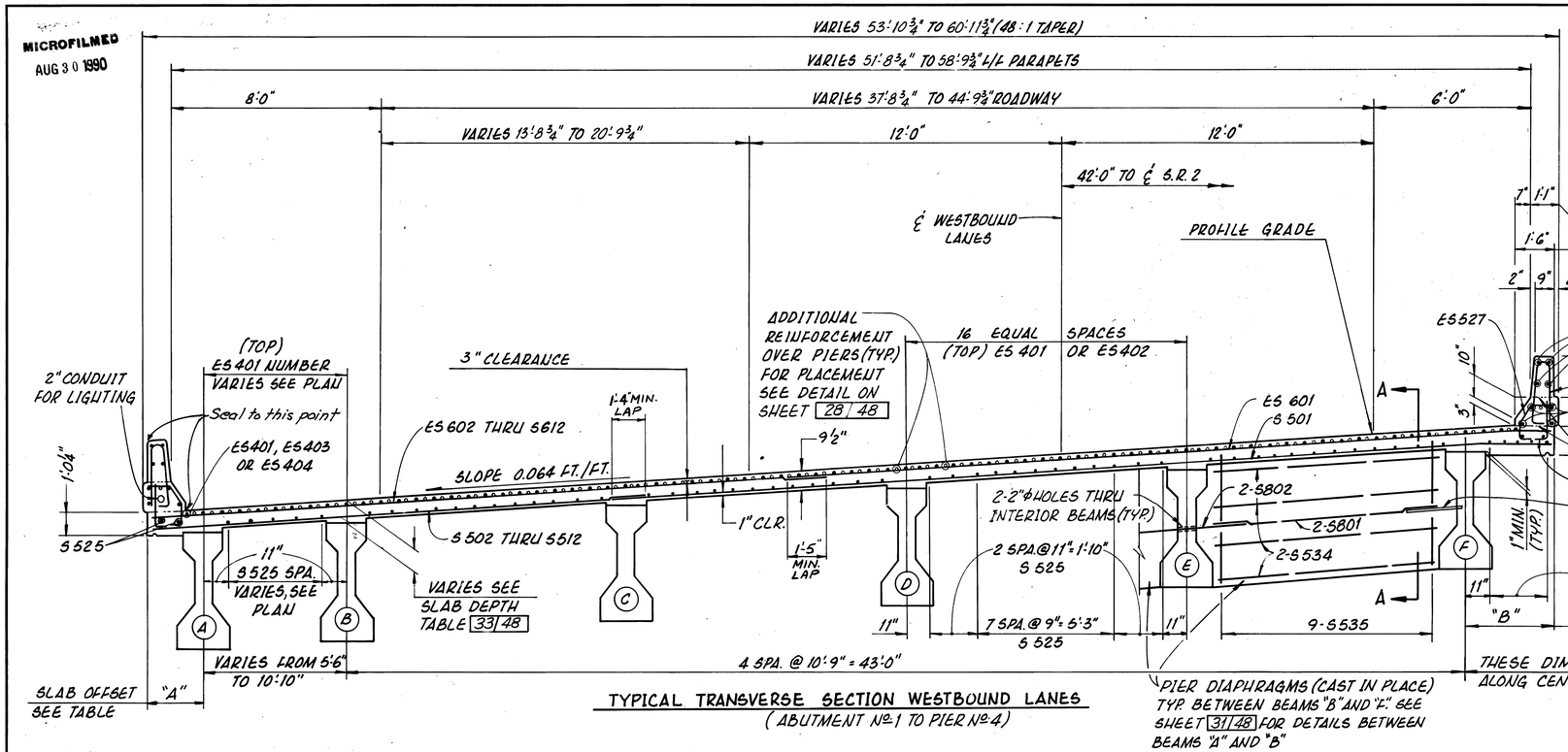

TYPICAL TRANSVERSE SECTION WESTBOUND LANES
(ABUTMENT No. 1 TO PIER No. 4)

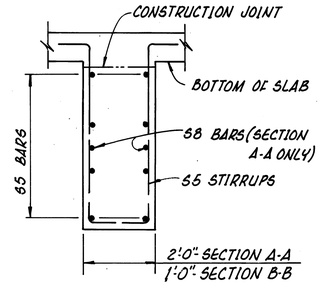

SECTION A-A (SHOWN)
SECTION B-B (AS NOTED)

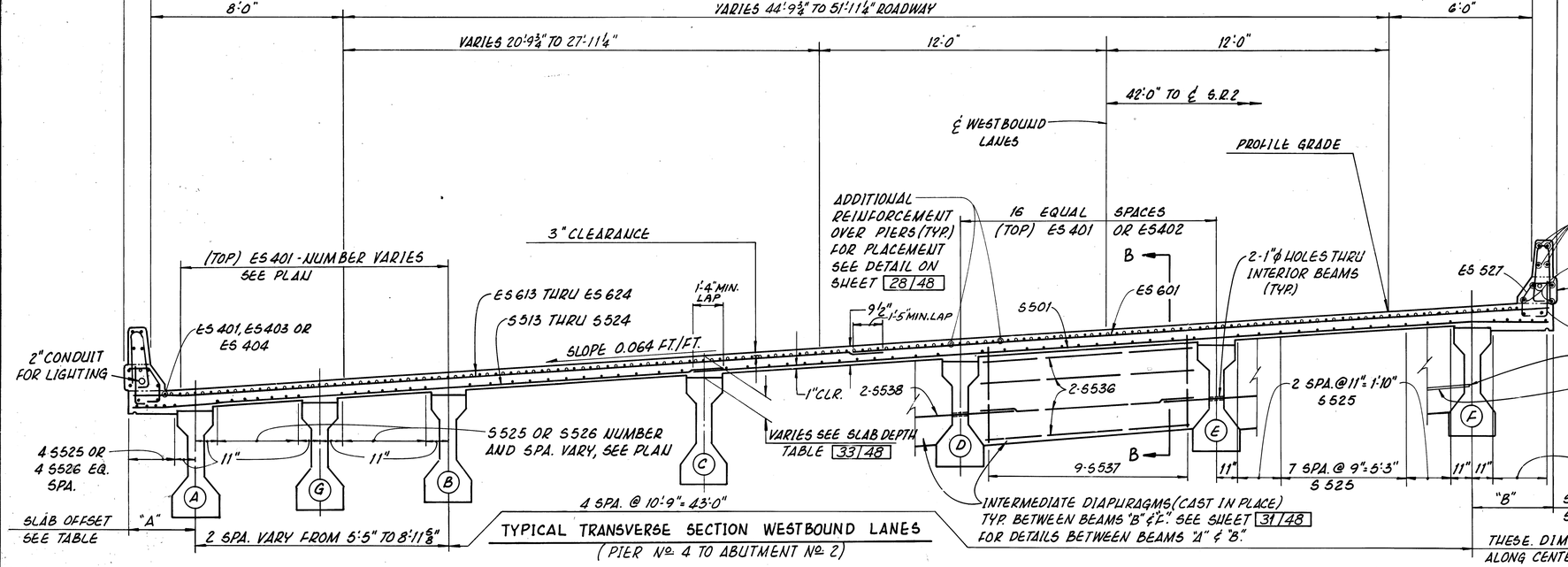

TYPICAL TRANSVERSE SECTION WESTBOUND LANES
(PIER No. 4 TO ABUTMENT No. 2)

SLAB OFFSETS*
SEE TRANSVERSE SECTION

	LOCATION	A	B
SPAN NO. 1	A-1	2'-0 1/4"	3'-5"
	1/4	1'-9 7/8"	3'-6 7/8"
	1/2	1'-8 3/4"	3'-7 1/2"
	3/4	1'-9"	3'-6 7/8"
SPAN NO. 2	P-1	1'-10 1/2"	3'-5"
	1/4	1'-6 7/8"	3'-8"
	1/2	1'-5 1/4"	3'-9"
	3/4	1'-5 3/4"	3'-8"
SPAN NO. 3	P-2	1'-8 1/4"	3'-5"
	1/4	1'-8 3/4"	3'-8"
	1/2	1'-11 3/4"	3'-9"
	3/4	2'-4"	3'-8"
SPAN NO. 4	P-3	2'-10 5/8"	3'-5"
	1/4	2'-9 1/8"	3'-8"
	1/2	2'-9 5/8"	3'-9"
	3/4	3'-0 1/8"	3'-8"
SPAN NO. 5	P-4	3'-4 5/8"	3'-5"
	1/4	3'-1 3/4"	3'-8"
	1/2	3'-0 3/4"	3'-9"
	3/4	3'-1 7/8"	3'-8"
SPAN NO. 6	P-5	3'-5"	3'-5"
	1/4	3'-1 7/8"	3'-8"
	1/2	3'-1 1/2"	3'-9"
	3/4	3'-2 7/8"	3'-8"
SPAN NO. 7	P-6	3'-6 3/8"	3'-5"
	1/4	3'-3 3/8"	3'-8"
	1/2	3'-3 3/8"	3'-9"
	3/4	3'-5"	3'-8"
SPAN NO. 8	P-7	3'-8 5/8"	3'-5"
	1/4	3'-7 1/8"	3'-6 7/8"
	1/2	3'-7"	3'-7 1/2"
	3/4	3'-8 1/8"	3'-6 7/8"
	A-2	3'-10 5/8"	3'-5"

* FOR LOCATION OF POINTS FOR SLAB OFFSETS SEE KEY PLAN ON SHEET 34|48

PRESTRESSED CONC. ALTERNATE 30|48

adache · ciuni · lynn associates
CONSULTING ENGINEERS CLEVELAND OHIO 44130

TRANSVERSE SECTIONS
WESTBOUND LANES
BRIDGE No ERI-2-1798 L/R
S.R.2 OVER MUD BROOK

ERIE COUNTY ERI-2-16.13
STA. 1173+19.17 TO STA. 1180+94.84

DESIGNED	DRAWN	CHECKED	REVIEWED	DATE	REVISED
R.J.P.	W.P.R.	A.J.M.	L.E.D.	9-23-85	

MICROFILMED
AUG 3 0 1990

F.H.W.A. REGION	STATE	PROJECT	
5	OHIO		

2088
284

ERIE COUNTY
ERI-2-(16.13-17.39)

* FOR LOCATION OF POINTS FOR SLAB OFFSETS SEE KEY PLAN ON SHEET 34|48

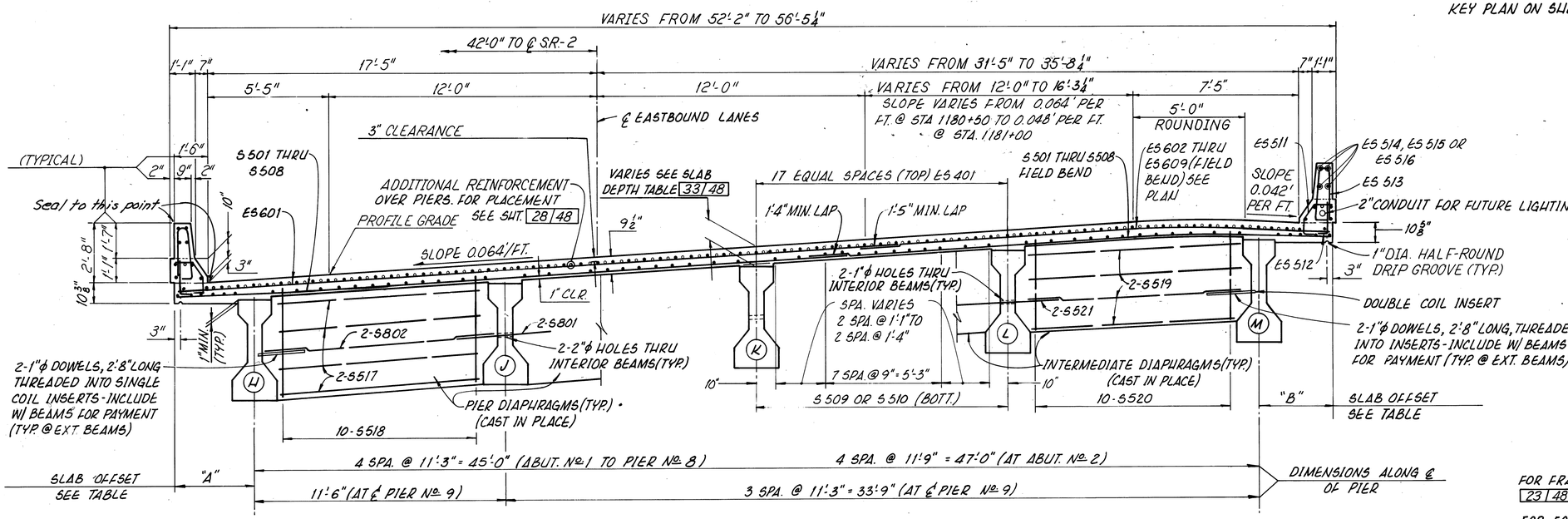

TYPICAL TRANSVERSE SECTION EASTBOUND LANES

NOTES:

FOR FRAMING PLANS SEE SHEETS 23|48 & 24|48

FOR FORMING ELEVATION TABLE SEE SHEET 34|48

SLAB OFFSETS*
SEE TRANSVERSE SECTION

LOCATION	A	B
Δ-1	3'-10 5/8"	3'-5"
1/4	3'-8 1/2"	3'-6 3/4"
1/2	3'-7 1/2"	3'-7 1/4"
3/4	3'-7 5/8"	3'-6 3/4"
P-1	3'-8 3/8"	3'-5"
1/4	3'-5 5/8"	3'-7 1/2"
1/2	3'-4 5/8"	3'-8 3/8"
3/4	3'-5"	3'-7 1/2"
P-2	3'-7 1/4"	3'-5"
1/4	3'-4 1/4"	3'-7 1/2"
1/2	3'-3 3/8"	3'-8 3/8"
3/4	3'-3 3/4"	3'-7 1/2"
P-3	3'-6"	3'-5"
1/4	3'-3 1/4"	3'-7 1/2"
1/2	3'-2 1/4"	3'-8 3/8"
3/4	3'-2 7/8"	3'-7 1/2"
P-4	3'-5 1/4"	3'-5"
1/4	3'-2 5/8"	3'-7 1/2"
1/2	3'-1 3/4"	3'-8 3/8"
3/4	3'-2 5/8"	3'-7 1/2"
P-5	3'-5"	3'-5"
1/4	3'-2 1/2"	3'-7 1/2"
1/2	3'-1 3/4"	3'-8 3/8"
3/4	3'-2 1/2"	3'-7 1/2"
P-6	3'-5 1/4"	3'-5"
1/4	3'-2 5/8"	3'-7 1/2"
1/2	3'-2 1/4"	3'-8 3/8"
3/4	3'-3 1/4"	3'-7 1/2"
P-7	3'-6"	3'-5"
1/4	3'-3"	3'-7 1/2"
1/2	3'-3 5/8"	3'-8 3/8"
3/4	3'-4 1/4"	3'-7 1/2"
P-8	3'-7 1/4"	3'-5"
1/4	3'-4 1/4"	3'-5 5/8"
1/2	3'-7 7/8"	3'-6 5/8"
3/4	3'-10 3/4"	3'-8 5/8"
P-9	4'-3 1/2"	3'-10"
1/4	4'-4 5/8"	3'-11 3/4"
1/2	4'-5 7/8"	4'-1 3/8"
3/4	4'-8 3/4"	4'-4"
Δ-2	5'-0 5/8"	4'-6 1/2"

SPAN NO. 1 | SPAN NO. 2 | SPAN NO. 3 | SPAN NO. 4 | SPAN NO. 5 | SPAN NO. 6 | SPAN NO. 7 | SPAN NO. 8 | SPAN NO. 9 | SPAN NO. 10

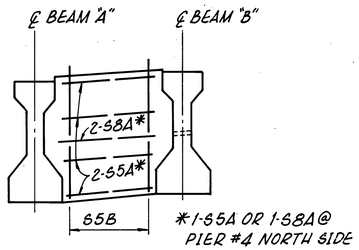

PIER DIAPHRAGM
(PIER #1 TO PIER #4 NORTH SIDE)

BAR SCHEDULE - PIER DIAPHRAGM								
LOCATION	PIER #1		PIER #2		PIER #3		PIER #4	
BAR TYPE	TOT. NO. BARS	MARK NO.	TOT. NO. BARS	MARK NO.	TOT. NO. BARS	MARK NO.	TOT. NO. BARS	MARK NO.
S5A	8	S539	8	S540	8	S541	4	S542
S5B	6	S535	7	S535	8	S535	SEE NOTE	
S8A	2	S803	2	S804	2	S805	1	S806

NOTE: FOR STIRRUPS SEE PIER DIAPHRAGM @ PIER #4 SOUTH SIDE

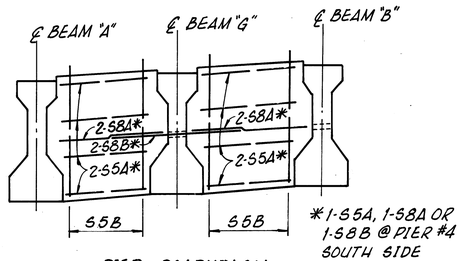

PIER DIAPHRAGM
(PIER #4 SOUTHSIDE TO PIER #7)

BAR SCHEDULE - PIER DIAPHRAGM								
LOCATION	PIER #4		PIER #5		PIER #6		PIER #7	
BAR TYPE	TOT. NO. BARS	MARK NO.	TOT. NO. BARS	MARK NO.	TOT. NO. BARS	MARK NO.	TOT. NO. BARS	MARK NO.
S5A	8	S543	16	S544	16	S545	16	S546
S5B	8	S535	10	S535	12	S535	14	S535
S8A	2	S807	4	S808	4	S809	4	S810
S8B	1	S802	2	S802	2	S802	2	S802

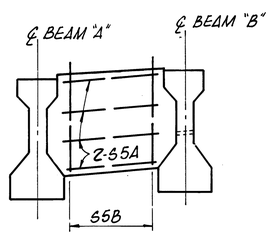

INTERMEDIATE DIAPHRAGM
(SPAN №1 TO SPAN №4)

BAR SCHEDULE - INTERMEDIATE DIAPHRAGM								
LOCATION	SPAN №1		SPAN №2		SPAN №3		SPAN №4	
BAR TYPE	TOT. NO. BARS	MARK NO.	TOT. NO. BARS	MARK NO.	TOT. NO. BARS	MARK NO.	TOT. NO. BARS	MARK NO.
S5A	8	S547	8	S548	8	S549	8	S550
S5B	5	S537	7	S537	8	S537	9	S537

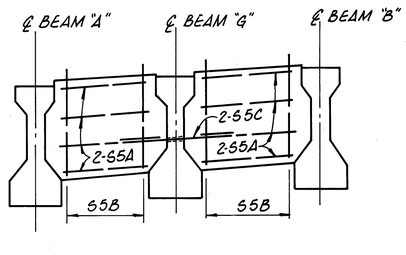

INTERMEDIATE DIAPHRAGM
(SPAN №5 TO SPAN №8)

BAR SCHEDULE - INTERMEDIATE DIAPHRAGM								
LOCATION	SPAN №5		SPAN №6		SPAN №7		SPAN №8	
BAR TYPE	TOT. NO. BARS	MARK NO.	TOT. NO. BARS	MARK NO.	TOT. NO. BARS	MARK NO.	TOT. NO. BARS	MARK NO.
S5A	16	S551	16	S539	16	S552	16	S553
S5B	10	S537	10	S537	12	S537	14	S537
S5C	2	S538	2	S538	2	S538	2	S538

DIAPHRAGM DETAILS - BETWEEN BEAMS "A" AND "B"
WESTBOUND LANES

PRESTRESSED CONC. ALTERNATE 31|48

adache · ciuni · lynn associates
CONSULTING ENGINEERS CLEVELAND OHIO 44130

TRANSVERSE SECTION AND DIAPHRAGM DETAILS
BRIDGE № ERI-2-1798 L/R
S.R.2 OVER MUD BROOK

ERIE COUNTY
ERI-2-16.13

STA. 1173+19.17 TO.
STA. 1180+94.84

DESIGNED	DRAWN	CHECKED	REVIEWED	DATE	REVISED
R.J.P.	W.P.R.	A.J.M.	L.E.D	9-23-85	

MICROFILMED
AUG 30 1990

F.H.W.A. REGION	STATE	PROJECT	
5	OHIO		

208C
284

ERIE COUNTY
ERI-2-(16.13-17.39)

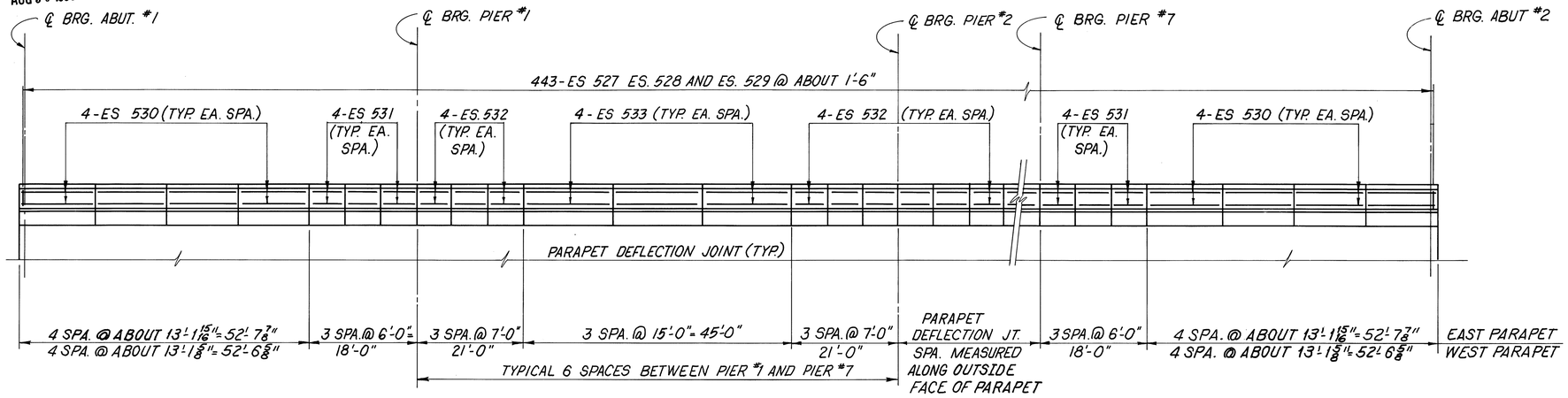

WESTBOUND LANES
DEVELOPED CURB AND PARAPET DETAIL
(EAST PARAPET AS SHOWN AND NOTED, WEST PARAPET OPP. HAND AND AS NOTED)

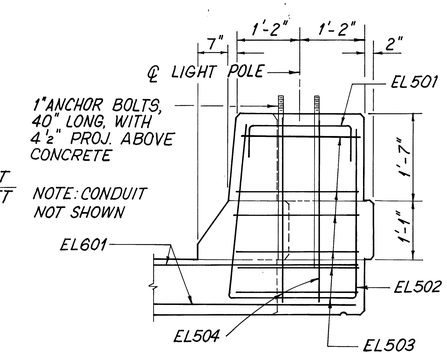

SECTION A-A

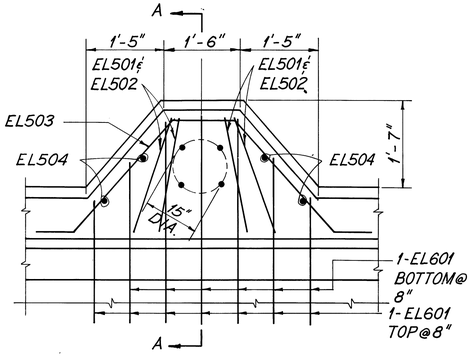

NOTE: FOR ADDITIONAL DETAILS OF STRUCTURE MOUNTED LIGHT POLE SEE STANDARD DRAWINGS HL-3,4,5 & 7 AND LIGHTING PLANS.

PLAN

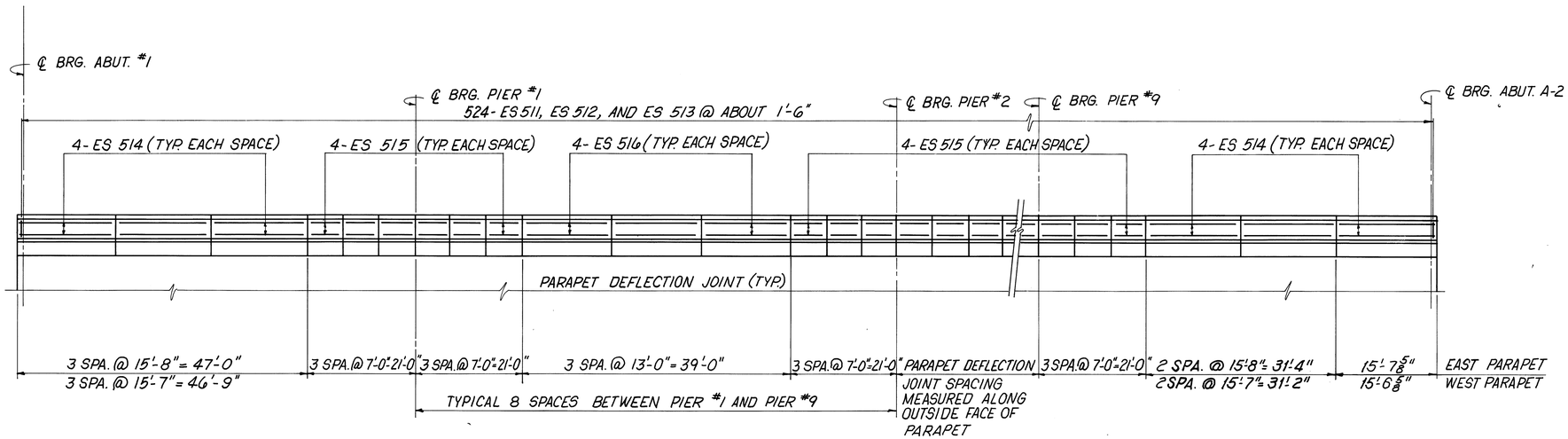

EASTBOUND LANES
DEVELOPED CURB AND PARAPET DETAIL
(EAST PARAPET AS SHOWN AND NOTED, WEST PARAPET OPP. HAND AND AS NOTED)

PRESTRESSED CONC. ALTERNATE 32/48

adache · ciuni · lynn associates
CONSULTING ENGINEERS CLEVELAND, OHIO 44130

PARAPET AND LIGHTING PILASTER DETAILS

BRIDGE NO. ERI-2-1798 L/R
S. R. 2 OVER MUD BROOK

ERIE COUNTY
ERI-2-16.13

STA. 1173+19.17 TO
STA. 1180+94.84

DESIGNED	DRAWN	CHECKED	REVIEWED	DATE	REVISED
P.A.G.	M.A.G.	J.R.S.	L.E.D.	9-23-85	

MICROFILMED
AUG 30 1990

F.H.W.A. REGION	STATE	PROJECT	
5	OHIO		

2080
284

ERIE COUNTY
ERI-2-(16.13-17.39)

SLAB DEPTH (INCHES)

	BEAM											
LOCATION	A	B	C	D	E	F	G	H	J	K	L	M
ABUT. NO. 1	11 1/16	10 7/8	10 3/4	10 3/4	10 3/4	10 7/8	—	10 15/16	10 7/8	10 7/8	10 7/8	11
MID SPAN NO. 1	10 1/2	10 5/16	10 1/4	10 1/4	10 1/4	10 5/16	—	10 5/16	10 5/16	10 1/4	10 1/4	9 7/8
PIER NO. 1	11 3/4	11 3/16	11	11	11	11 1/4	—	11 1/4	11 1/16	11 1/16	11 1/16	11
MID SPAN NO. 2	10 1/8	10 1/8	10 1/8	10 1/8	10 1/8	10 1/8	—	10 1/8	10 1/8	10 1/8	10 1/8	9 7/8
PIER NO. 2	11 3/4	11 3/16	11	11	11	11 1/4	—	11 1/4	11 1/16	11 1/16	11 1/16	11
MID SPAN NO. 3	10 1/4	10 3/16	10 1/8	10 1/8	10 1/8	10 1/8	—	10 1/8	10 1/8	10 1/8	10 1/8	9 7/8
PIER NO. 3	11 1/2	11 1/16	11	11	11	11 1/4	—	11 1/4	11 1/16	11 1/16	11 1/16	11
MID SPAN NO. 4	10 1/4	10 5/16	10 1/8	10 1/8	10 1/8	10 1/8	—	10 1/8	10 1/8	10 1/8	10 1/8	9 7/8
PIER NO. 4	11 9/16	11 5/16	11	11	11	11 1/4	11 5/8	11 1/4	11 1/16	11 1/16	11 1/16	11
MID SPAN NO. 5	10 1/8	10 1/8	10 1/8	10 1/8	10 1/8	10 1/8	10 3/8	10 1/8	10 1/8	10 1/8	10 1/8	9 7/8
PIER NO. 5	11 9/16	11 5/16	11	11	11	11 1/4	11 5/8	11 1/4	11 1/16	11 1/16	11 1/16	11
MID SPAN NO. 6	10 1/8	10 1/8	10 1/8	10 1/8	10 1/8	10 1/8	10 1/8	10 1/8	10 1/8	10 1/8	10 1/8	9 7/8
PIER NO. 6	11 1/2	11 1/4	11	11	11	11 1/4	11 9/16	11 1/4	11 1/16	11 1/16	11 1/16	11
MID SPAN NO. 7	10 1/8	10 1/8	10 1/8	10 1/8	10 1/8	10 1/8	10 1/4	10 1/8	10 1/8	10 1/8	10 1/8	9 7/8
PIER NO. 7	11 7/16	11 3/16	11	11	11	11 1/4	11 3/8	11 1/4	11 1/16	11 1/16	11 1/16	11
MID SPAN NO. 8	10 3/8	10 5/16	10 1/4	10 1/4	10 1/4	10 5/16	10 3/8	10 1/8	10 1/8	10 1/8	10 1/8	9 7/8
ABUT. NO. 2/PIER NO. 8	10 15/16	10 13/16	10 3/4	10 3/4	10 3/4	10 7/8	10 7/8	11 1/4	11 1/16	11 1/16	11 1/16	11
MID SPAN NO. 9	—	—	—	—	—	—	—	10 1/8	10 1/8	10 1/8	10 1/8	9 7/8
PIER NO. 9	—	—	—	—	—	—	—	11 1/4	11 1/16	11 1/16	11 1/16	11
MID SPAN NO. 10	—	—	—	—	—	—	—	10 5/16	10 1/4	10 1/4	10 1/4	10 1/16
ABUT. NO. 2	—	—	—	—	—	—	—	10 7/8	10 13/16	10 13/16	10 13/16	10 5/8

NOTE: THIS IS THE NOMINAL DIMENSION. THE PAY QUANTITY OF THAT PORTION OF THE DECK CONCRETE OVER THE BEAMS SHALL BE BASED ON THE AVERAGE OF THIS DIMENSION AND THE DEPTH AT BEAM BEARINGS EVEN THOUGH DEVIATION FROM THIS AVERAGE MAY OCCUR BECAUSE THE TOP OF THE BEAM MAY NOT HAVE THE CAMBER ANTICIPATED IN THE DESIGN. THE CAMBER OF BEAMS SHALL BE MEASURED IN THE FIELD BEFORE THE DECK IS PLACED. THE ACTUAL DEPTH AT MID-SPAN SHALL BE THE NOMINAL DIMENSION PLUS OR MINUS THE DIFFERENCE BETWEEN ACTUAL AND ANTICIPATED CAMBER.

ANTICIPATED CAMBER (INCHES)

	BEAM											
LOCATION	A	B	C	D	E	F	G	H	J	K	L	M
SPAN NO. 1	1 1/4	1 1/4	1 1/4	1 1/4	1 1/4	1 1/4	—	1 1/4	1 1/4	1 1/4	1 1/4	1 1/4
SPAN NO. 2	2 3/8	2 3/8	2 3/8	2 3/8	2 3/8	2 3/8	—	2 1/8	2 1/8	2 1/8	2 1/8	2 1/8
SPAN NO. 3	↑	↑	↑	↑	↑	↑	—	↑	↑	↑	↑	↑
SPAN NO. 4							—					
SPAN NO. 5							2 3/8					
SPAN NO. 6	↓	↓	↓	↓	↓	↓	2 3/8	↓	↓	↓	↓	↓
SPAN NO. 7	2 3/8	2 3/8	2 3/8	2 3/8	2 3/8	2 3/8	2 3/8					
SPAN NO. 8	1 1/4	1 1/4	1 1/4	1 1/4	1 1/4	1 1/4	1 1/4					
SPAN NO. 9	—	—	—	—	—	—	—	2 1/8	2 1/8	2 1/8	2 1/8	2 1/8
SPAN NO. 10	—	—	—	—	—	—	—	1 1/4	1 1/4	1 1/4	1 1/4	1 1/4

PRESTRESSED CONC. ALTERNATE 33/48

adache - ciuni - lynn associates
CONSULTING ENGINEERS CLEVELAND OHIO 44130

SLAB DEPTH TABLE

BRIDGE Nº ERI-2-1798 L/R
S.R.2 OVER MUD BROOK

ERIE COUNTY
ERI-2-16.13

STA. 1173+19.17 TO
STA. 1180+94.84

DESIGNED	DRAWN	CHECKED	REVIEWED	DATE PE. SEC
J.R.S.	M.A.G.	J.R.S.	L.E.D.	9-23-85

MICROFILMED
AUG 30 1990

F.H.W.A. REGION	STATE	PROJECT	
5	OHIO		

208E
284

ERIE COUNTY
ERI-2-(16.13-17.39)

FORMING ELEVATIONS (WESTBOUND LANES)

BEAM	A		B		C		D		E		F		G	
LOCATION	THEORETICAL GRADE ELEV.	FORMING ELEVATION	THEORETICAL GRADE ELEV.	FORMING ELEVATION	THEORETICAL GRADE ELEV.	FORMING ELEVATION	THEORETICAL GRADE ELEV.	FORMING ELEVATION	THEORETICAL GRADE ELEV.	FORMING ELEVATION	THEORETICAL GRADE ELEV.	FORMING ELEVATION	THEORETICAL GRADE ELEV.	FORMING ELEVATION
ABUT. #1	585.52	585.52	585.87	585.87	586.55	586.55	587.24	587.24	587.93	587.93	588.62	588.62	—	—
1/4	585.53	585.55	585.91	585.94	586.60	586.63	587.28	587.31	587.97	588.00	588.65	588.68	—	—
1/2	585.56	585.58	585.96	586.00	586.64	586.69	587.33	587.38	588.02	588.07	588.71	588.75	—	—
3/4	585.59	585.61	586.01	586.04	586.70	586.73	587.39	587.42	588.08	588.11	588.76	588.79	—	—
PIER #1	585.63	585.63	586.07	586.07	586.76	586.76	587.45	587.45	588.14	588.14	588.83	588.83	—	—
1/4	585.64	585.69	586.12	586.20	586.81	586.90	587.50	587.59	588.19	588.28	588.88	588.96	—	—
1/2	585.67	585.74	586.18	586.29	586.87	586.99	587.56	587.68	588.25	588.37	588.94	589.05	—	—
3/4	585.71	585.76	586.25	586.33	586.94	587.03	587.63	587.72	588.32	588.41	589.01	589.09	—	—
PIER #2	585.76	585.76	586.33	586.33	587.02	587.02	587.71	587.71	588.40	588.40	589.09	589.09	—	—
1/4	585.80	585.86	586.38	586.46	587.07	587.16	587.76	587.85	588.45	588.54	589.14	589.22	—	—
1/2	585.85	585.93	586.44	586.56	587.13	587.25	587.82	587.94	588.51	588.63	589.20	589.31	—	—
3/4	585.92	585.98	586.52	586.60	587.20	587.29	587.89	587.98	588.58	588.67	589.27	589.35	—	—
PIER #3	585.99	585.99	586.60	586.60	587.29	587.29	587.98	587.98	588.66	588.66	589.35	589.35	—	—
1/4	586.02	586.09	586.65	586.74	587.34	587.43	588.03	588.12	588.71	588.80	589.40	589.48	—	—
1/2	586.06	586.16	586.71	586.83	587.40	587.52	588.09	588.21	588.77	588.89	589.46	589.57	—	—
3/4	586.11	586.18	586.78	586.87	587.47	587.56	588.16	588.25	588.85	588.94	589.53	589.61	—	—
PIER #4	586.17	586.17	586.86	586.86	587.55	587.55	588.24	588.24	588.93	588.93	589.62	589.62	586.52	586.52
1/4	586.19	586.24	586.92	586.99	587.60	587.69	588.29	588.38	588.98	589.07	589.67	589.75	586.55	586.60
1/2	586.22	586.30	586.98	587.08	587.66	587.78	588.35	588.47	589.04	589.16	589.73	589.84	586.60	586.67
3/4	586.27	586.32	587.05	587.12	587.74	587.83	588.42	588.51	589.11	589.20	589.80	589.88	586.66	586.71
PIER #5	586.32	586.32	587.13	587.13	587.82	587.82	588.51	588.51	589.19	589.19	589.88	589.88	586.73	586.73
1/4	586.34	586.40	587.18	587.25	587.87	587.96	588.56	588.65	589.24	589.33	589.93	590.01	586.76	586.82
1/2	586.38	586.46	587.25	587.35	587.93	588.05	588.62	588.74	589.30	589.42	589.99	590.10	586.81	586.89
3/4	586.42	586.48	587.32	587.39	588.01	588.10	588.69	588.78	589.38	589.47	590.06	590.14	586.87	586.93
PIER #6	586.48	586.48	587.40	587.40	588.09	588.09	588.77	588.77	589.46	589.46	590.14	590.14	586.94	586.94
1/4	586.50	586.56	587.46	587.54	588.14	588.23	588.83	588.92	589.51	589.60	590.19	590.27	586.98	587.05
1/2	586.54	586.63	587.52	587.63	588.20	588.32	588.89	589.01	589.57	589.69	590.25	590.36	587.03	587.12
3/4	586.58	586.64	587.59	587.67	588.28	588.37	588.96	589.05	589.64	589.73	590.33	590.41	587.09	587.16
PIER #7	586.64	586.64	587.68	587.68	588.36	588.36	589.04	589.04	589.73	589.73	590.41	590.41	587.16	587.16
1/4	586.66	586.69	587.73	587.76	588.41	588.44	589.09	589.12	589.77	589.80	590.45	590.48	587.19	587.22
1/2	586.69	586.73	587.78	587.83	588.46	588.51	589.14	589.19	589.82	589.87	590.50	590.54	587.23	587.27
3/4	586.73	586.76	587.84	587.87	588.52	588.55	589.20	589.23	589.88	589.91	590.56	590.59	587.28	587.31
ABUT. #2	586.77	586.77	587.90	587.90	588.58	588.58	589.26	589.26	589.94	589.94	590.62	590.62	587.33	587.33

FORMING ELEVATIONS (EASTBOUND LANES)

BEAM	H		J		K		L		M	
LOCATION	THEORETICAL GRADE ELEV.	FORMING ELEVATION	THEORETICAL GRADE ELEV.	FORMING ELEVATION	THEORETICAL GRADE ELEV.	FORMING ELEVATION	THEORETICAL GRADE ELEV.	FORMING ELEVATION	THEORETICAL GRADE ELEV.	FORMING ELEVATION
ABUT. #1	588.16	588.16	588.88	588.88	589.60	589.60	590.32	590.32	590.71	590.71
1/4	588.20	588.23	588.92	588.95	589.64	589.67	590.36	590.39	590.77	590.80
1/2	588.24	588.28	588.96	590.00	589.68	589.72	590.40	590.44	590.82	590.86
3/4	588.30	588.33	589.01	589.04	589.73	589.76	590.45	590.48	590.86	590.89
PIER #1	588.35	588.35	589.07	589.07	589.79	589.79	590.51	590.51	590.91	590.91
1/4	588.40	588.46	589.12	589.19	589.83	589.90	590.56	590.63	590.98	591.04
1/2	588.45	588.53	589.17	589.27	589.89	589.99	590.61	590.71	591.04	591.12
3/4	588.51	588.57	589.23	589.30	589.95	590.02	590.67	590.74	591.10	591.16
PIER #2	588.59	588.59	589.31	589.31	590.03	590.03	590.75	590.75	591.15	591.15
1/4	588.63	588.69	589.35	589.42	590.07	590.14	590.79	590.86	591.21	591.27
1/2	588.69	588.77	589.41	589.51	590.13	590.23	590.85	590.95	591.28	591.36
3/4	588.75	588.81	589.47	589.54	590.19	590.26	590.91	590.98	591.33	591.39
PIER #3	588.82	588.82	589.54	589.54	590.26	590.26	590.98	590.98	591.39	591.39
1/4	588.87	588.93	589.59	589.66	590.31	590.38	591.03	591.10	591.45	591.51
1/2	588.92	589.00	589.64	589.74	590.36	590.46	591.08	591.18	591.52	591.60
3/4	588.98	589.04	589.71	589.78	590.43	590.50	591.15	591.22	591.57	591.63
PIER #4	589.06	589.06	589.78	589.78	590.50	590.50	591.22	591.22	591.62	591.62
1/4	589.10	589.16	589.82	589.89	590.55	590.62	591.27	591.34	591.69	591.75
1/2	589.16	589.24	589.88	589.98	590.60	590.70	591.32	591.42	591.75	591.83
3/4	589.22	589.28	589.94	590.01	590.66	590.73	591.38	591.45	591.81	591.87
PIER #5	589.30	589.30	590.02	590.02	590.74	590.74	591.46	591.46	591.86	591.86
1/4	589.34	589.40	590.06	590.13	590.78	590.85	591.50	591.57	591.93	591.99
1/2	589.40	589.48	590.12	590.22	590.84	590.94	591.56	591.66	591.99	592.07
3/4	589.47	589.53	590.18	590.25	590.90	590.97	591.62	591.69	592.05	592.11
PIER #6	589.54	589.54	590.26	590.26	590.98	590.98	591.70	591.70	592.10	592.10
1/4	589.59	589.65	590.31	590.38	591.02	591.09	591.74	591.81	592.16	592.22
1/2	589.64	589.72	590.36	590.46	591.08	591.18	591.80	591.90	592.23	592.31
3/4	589.71	589.77	590.43	590.50	591.14	591.21	591.86	591.93	592.28	592.34
PIER #7	589.78	589.78	590.50	590.50	591.22	591.22	591.93	591.93	592.33	592.33
1/4	589.83	589.89	590.55	590.62	591.27	591.34	591.98	592.05	592.40	592.46
1/2	589.89	589.97	590.61	590.71	591.32	591.42	592.04	592.14	592.46	592.54
3/4	589.96	590.02	590.67	590.74	591.39	591.46	592.10	592.17	592.52	592.58
PIER #8	590.03	590.03	590.75	590.75	591.46	591.46	592.18	592.18	592.57	592.57
1/4	590.09	590.15	590.81	590.88	591.52	591.59	592.23	592.31	592.64	592.70
1/2	590.16	590.25	590.88	590.98	591.59	591.69	592.30	592.40	592.71	592.79
3/4	590.23	590.29	590.96	591.03	591.67	591.74	592.38	592.46	592.80	592.86
PIER #9	590.32	590.32	591.04	591.04	591.76	591.76	592.47	592.47	592.90	592.90
1/4	590.37	590.40	591.10	591.13	591.82	591.85	592.54	592.57	593.00	593.03
1/2	590.43	590.47	591.16	591.21	591.89	591.94	592.60	592.65	593.07	593.11
3/4	590.49	590.52	591.23	591.26	591.96	591.99	592.63	592.66	593.08	593.11
ABUT. #2	590.56	590.56	591.30	591.30	592.04	592.04	592.67	592.67	593.09	593.09

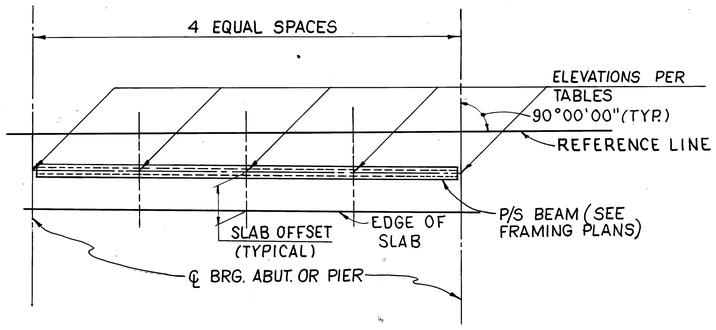

KEY PLAN

NOTE:
THE ELEVATIONS SHOWN ARE TOP OF CONCRETE SLAB ELEVATIONS WHICH ARE REQUIRED BEFORE THE CONCRETE IS PLACED. PROPER ALLOWANCE HAS BEEN MADE FOR THE DEADLOAD DEFLECTIONS CAUSED BY THE WEIGHT OF THE CONCRETE SLAB.

PRESTRESSED CONC. ALTERNATE 34/48

adache - ciuni - lynn associates
CONSULTING ENGINEERS CLEVELAND OHIO 44130

FORMING ELEVATIONS

BRIDGE Nº ERI-2-1798 L/R
S.R.2 OVER MUD BROOK

ERIE COUNTY
ERI-2-16.13

STA 1173+19.17 TO.
STA 1180+94.84

DESIGNED	DRAWN	CHECKED	REVIEWED	DATE	REVISED
J.R.S.	M.A.G.	J.R.S.	L.E.D.	9.23.85	

MICROFILMED
AUG 30 1990

F.H.W.A. REGION	STATE	PROJECT	
5	OHIO		

208F
284

ERIE COUNTY
ERI-2-(16.13-17.39)

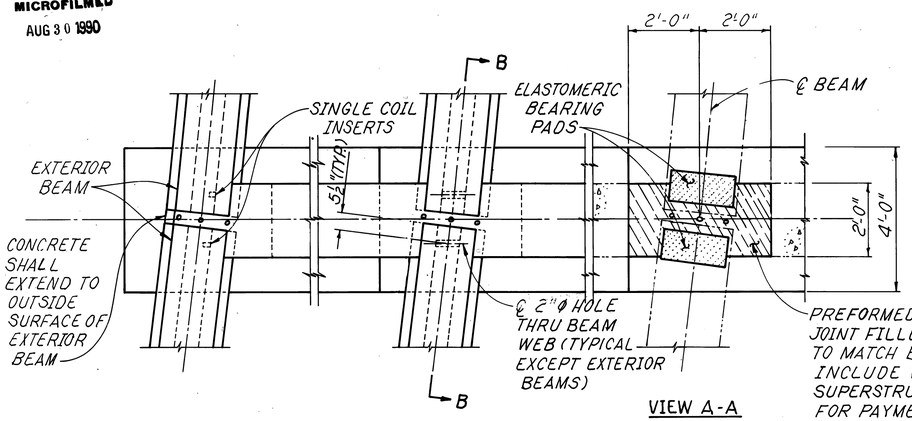

VIEW A-A

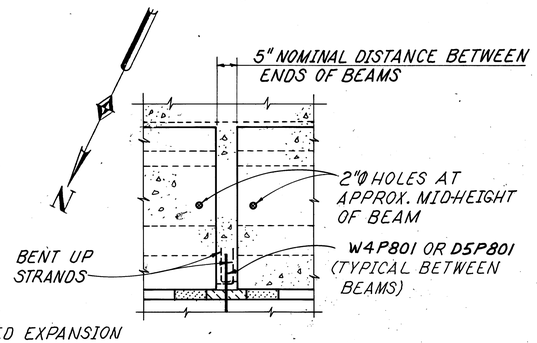

SECTION B-B

PARTIAL PLAN OF DIAPHRAGMS AT PIERS

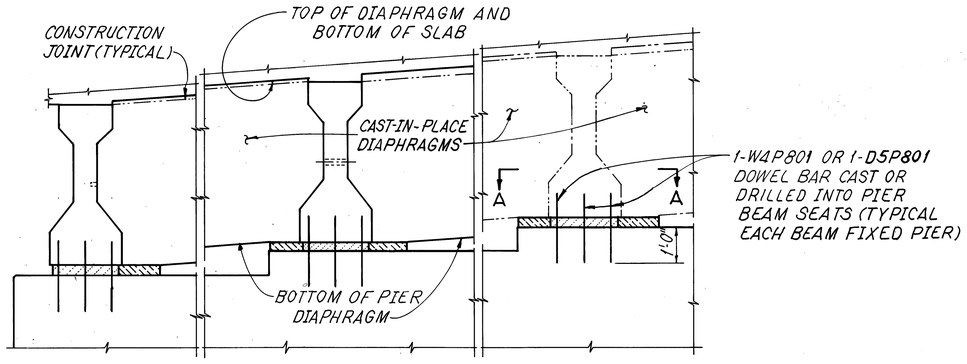

PARTIAL ELEVATION OF DIAPHRAGMS AT PIERS

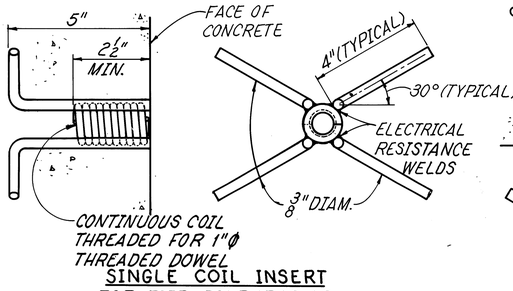

SINGLE COIL INSERT
FOR PIER DIAPHRAGMS

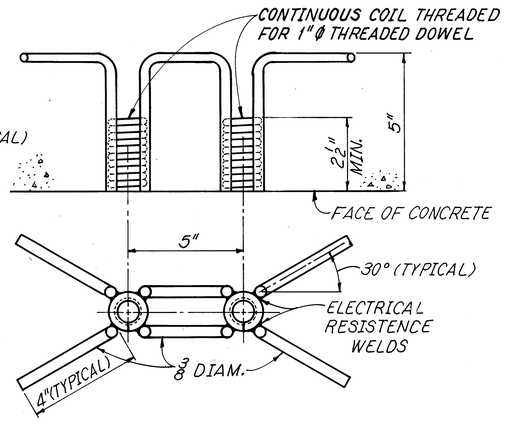

DOUBLE COIL INSERT
FOR INTERMEDIATE DIAPHRAGMS

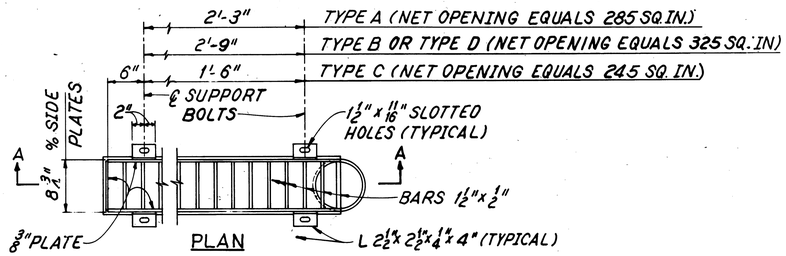

PLAN

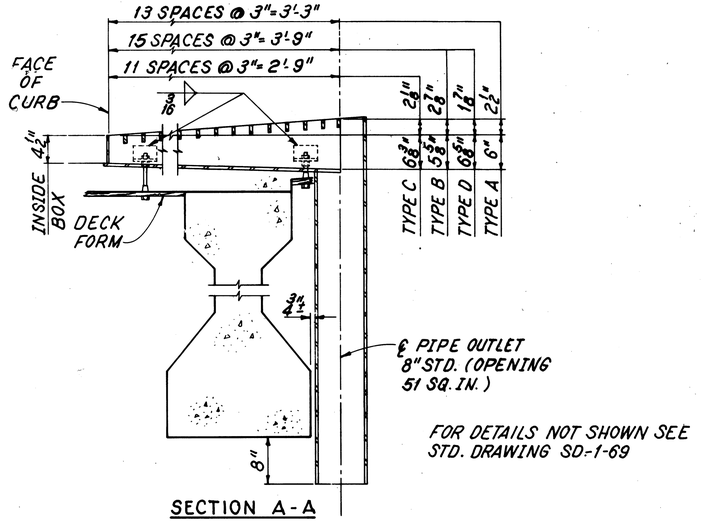

SECTION A-A

SCUPPER DETAILS

PRESTRESSED CONC. ALTERNATE
35/48

adache · ciuni · lynn associates
CONSULTING ENGINEERS CLEVELAND, OHIO 44130

SUPERSTRUCTURE DETAILS

BRIDGE NO. ERI-2-1798 L/R
S. R. 2 OVER MUD BROOK

ERIE COUNTY STA. 1173+19.17 TO
ERI-2-16.13 STA. 1180+94.84

DESIGNED	DRAWN	CHECKED	REVIEWED	DATE	REVISED
R.J.P.	RC K.	AJM	L.E.D.	9-23-85	

MICROFILMED
AUG 30 1990

F.H.W.A. REGION	STATE	PROJECT	
5	OHIO		

208G
284

ERIE COUNTY
ERI-2-(16.13-17.39)

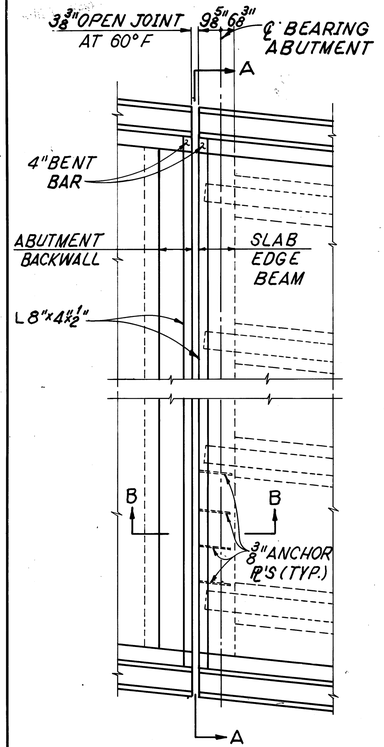

PARTIAL PLAN
EDGEBEAM AND
EXPANSION JOINT

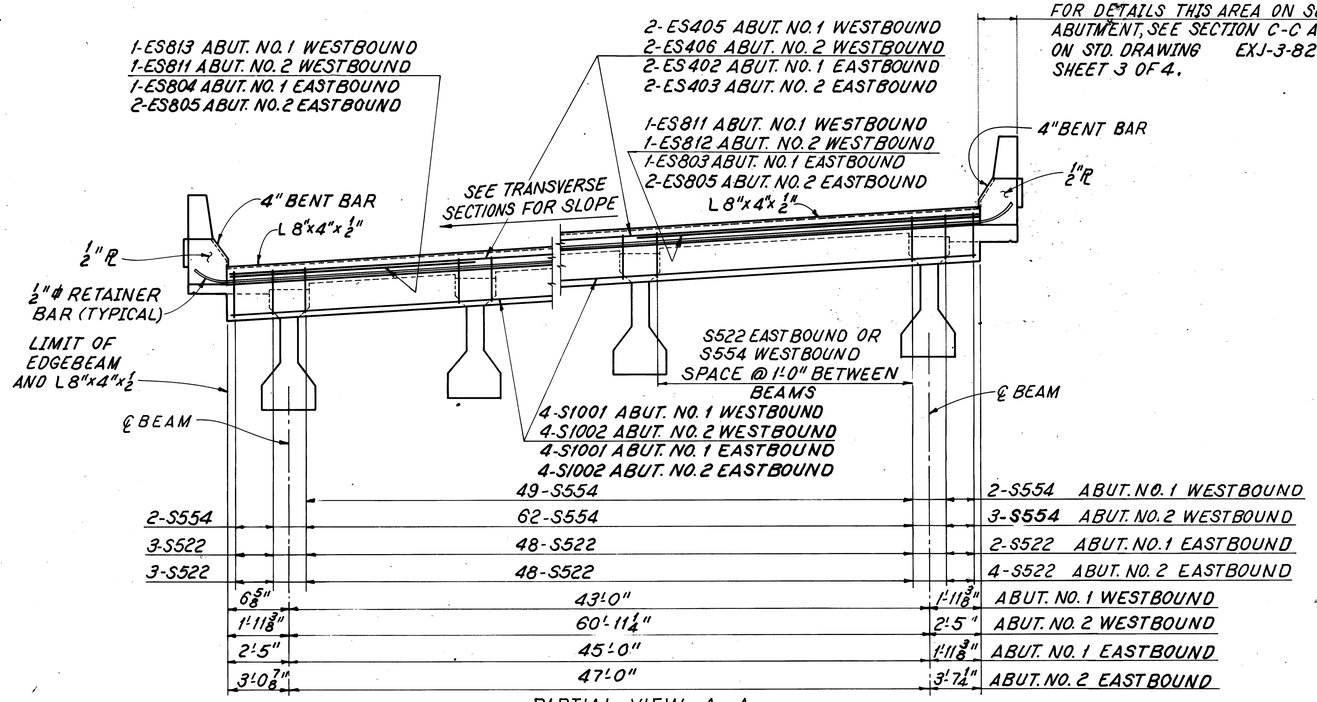

PARTIAL VIEW A-A

NOTES:
END DAM STEEL SHALL BE A588 OR A36, WITH SYSTEM B FIELD PAINT ON EXPOSED STEEL SURFACES. FIELD PAINT SHALL CONSIST OF TWO PRIME COATS AND ONE FINISH COAT.
MEASUREMENT FOR PAY PURPOSES SHALL BE BASED ON THE SEALED LENGTH OF JOINTS MEASURED HORIZONTALLY ALONG THE JOINT CENTERLINES. PAYMENT PER LINEAR FOOT FOR ITEM 516, "STRUCTURAL EXPANSION JOINTS INCLUDING ELASTOMERIC COMPRESSION SEALS", INCLUDES ALL LABOR, MATERIALS AND EQUIPMENT NECESSARY TO COMPLETE THE JOINT IN PLACE INCLUDING THE JOINT ARMOR, 1/2" STEEL PLATES, 4" BENT BAR AND ANCHORING DEVICES.

TEMPERATURE ADJUSTMENT FOR "A"								
40°F	50°F	60°F	70°F	80°F	90°F	MIN.	MAX.	JOINT LOCATION
3 7/8"	3 5/8"	3 3/8"	3 1/8"	2 7/8"	2 11/16"	2"	5 1/8"	WESTBOUND
3 15/16"	3 5/8"	3 3/8"	3 1/8"	2 13/16"	2 9/16"	2"	5 1/8"	EASTBOUNB

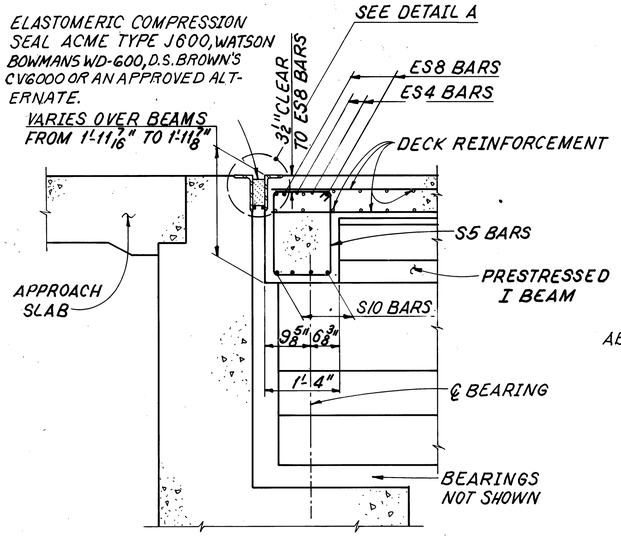

SECTION B-B

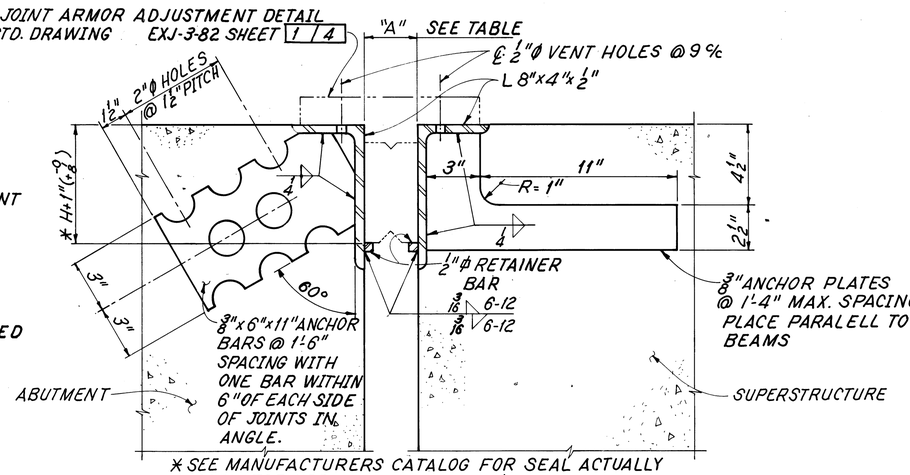

* SEE MANUFACTURERS CATALOG FOR SEAL ACTUALLY CHOSEN FOR USE.
TRANSVERSE JOINTS IN ABUTMENT ARMOR ANGLES SHALL BE CLOSELY BUTTED WITH A MINIMUM OF 6'-0" BETWEEN JOINTS. TRANSVERSE JOINTS IN SUPERSTRUCTURE ARMOR ANGLES SHALL HAVE COMPLETE PENETRATION BUTT WELDS. BUTT WELD METAL IN CONTACT WITH COMPRESSION SEAL AND RETAINER BAR SHALL BE GROUND FLUSH.

DETAIL A

5/8" ϕ BOLTS @ 1'-0" c/s WITH NUTS WELDED TO 8"x4" ANGLE, TEMPORARY SUPPORT FOR END DAM DURING PLACEMENT OF SLAB EDGEBEAM CONCRETE. REMOVE BOLTS WITH FORMS.

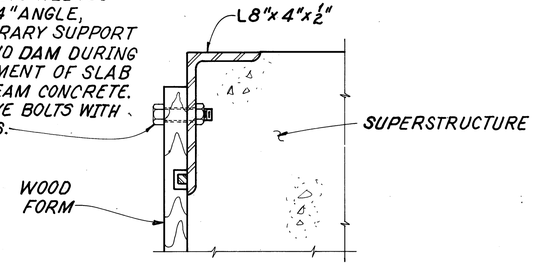

TEMPORARY SUPPORT FOR END DAM

PRESTRESSED CONC. ALTERNATE 36/48

adache · ciuni · lynn associates
CONSULTING ENGINEERS CLEVELAND, OHIO 44130

EDGEBEAM AND EXPANSION JOINT DETAILS
BRIDGE NO. ERI-2-1798 L/R
S. R. 2 OVER MUD BROOK

ERIE COUNTY ERI-2-16.13
STA. 1173+19.17 TO STA. 1180+94.84

DESIGNED	DRAWN	CHECKED	REVIEWED	DATE	REVISED
R.J.P.	R.C.K.	AJM	L.E.D.	9-23-85	

MICROFILMED
AUG 30 1990

F.H.W.A. REGION	STATE	PROJECT	
5	OHIO		

208H
284

ERIE COUNTY
ERI-2-(16.13-17.39)

MARK	NUMBER	LENGTH	TYPE	SER. INCR.	WEIGHT (LBS)	A	B	C	R
ABUTMENT NO. 1 (WESTBOUND LANES)									
W1A501	52	9'-6"	1		516	5'-5"	2'-2"		
W1A502	6	11'-0"	3		69	3'-0"	2'-3"		
W1A503	6	11'-6"	3		72	3'-0"	2'-6"		
W1A504	28	9'-3"	2		271	11"	8'-5"		
W1A505	28	7'-6"	2		219	11	6'-8"		
W1A506	52	8'-3"	1		448	3'-6"	2'-6"		
W1A507	42	27'-6"	STR.		1205				
W1A508	10	27'-9"	STR.		289				
W1A509	2	15'-9"	STR.		33				
W1A510	8	8'-9"	STR.		73				
W1A511	14	8'-6"	STR.		125				
W1A512	4	7'-0"	STR.		30				
W1A513	4	9'-2"	STR.		39				
W1A514	4	11'-5"	STR.		48				
W1A515	2	9'-6"	4		20	7'-4"	2'-2"	4 3/8"	
EW1A516	16	11'-8"	STR.		195				
EW1A517	10	5'-3"	5		55	2'-2"	2'-5"	7 1/2"	IR=2 1/8"
EW1A518	6	6'-9"	STR.		43				
EW1A519	10	2'-8"	6		28	2'-1"			
EW1A520	4	5'-4"	STR.		22				
EW1A521	12	4'-6"	STR.		57				
EW1A522	16	4'-4"	STR.		73				
W1A523	1 SER. 6	11'-5" / 6'-7"	1	5 13/16	57	1'-2"	5'-3 / 2'-10"		
W1A524	12	13'-8"	STR.		171				
EW1A525	6	6'-11"	STR.		44				
W1A526	2	9'-7"	4		20	7'-5"	2'-2"	5 1/16"	
W1A527	1 SER. 6	11'-9" / 6'-7"	1	6 5/16	58	1'-2"	5'-5" / 2'-10"		
W1A528	21	6'-0"	STR.		131				
W1A601	26	16'-1"	7		628	5'-5"	8'-5"	2'-7"	
W1A602	26	14'-4"	7		560	5'-5"	6'-8"	2'-7"	
W1A603	6	25'-5"	1		229	1'-2"	12'-4"		
W1A604	6	19'-10"	1		179	1'-2"	9'-6"		
EW1A605	6	7'-1"	9		64	9"	6"	5'-10"	

MARK	NUMBER	LENGTH	TYPE	SER. INCR.	WEIGHT (LBS)	A	B	C	R
ABUTMENT NO. 1 (WESTBOUND LANES)									
EW1A606	6	7'-3"	9		66	9"	6"	6'-0"	
EW1A607	2	4'-0"	9		12	8"	5"	2'-11"	
EW1A608	2	3'-11"	9		12	8"	4"	2'-11"	
EW1A609	2	3'-9"	9		12	7"	3"	2'-11"	
EW1A610	8	3'-8"	9		44	7"	2"	2'-11"	
EW1A611	52	9'-1"	1		710	11"	4'-3"		
EW1A612	52	16'-5"	1		1283	1'-5"	7'-8"		
W1A613	52	7'-1"	1		553	1'-5"	3'-0"		
W1A801	14	30'-0"	STR.		1122				
W1A802	6	11'-4"	STR.		182				
W1A803	6	11'-5"	STR.		183				
W1A804	4	7'-0"	STR.		75				
W1A805	34	4'-11"	14		447				
TOTAL WEIGHT EPOXY COATED BARS					727				
TOTAL WEIGHT UNCOATED BARS					10,045				
ABUTMENT NO. 2 (WESTBOUND LANES)									
W2A501	62	9'-6"	1		615	5'-5"	2'-2"		
W2A502	6	11'-6"	3		72	3'-0"	2'-6"		
W2A503	8	11'-0"	3		92	3'-0"	2'-3"		
W2A504	42	34'-7"	STR.		1515				
W2A505	10	34'-10"	STR.		363				
W2A506	2	9'-6"	STR.		20				
W2A507	32	6'-6"	2		217	11"	5'-8"		
W2A508	58	9'-3"	1		560	3'-6"	3'-0"		
W2A509	30	9'-4"	2		292	11"	8'-6"		
W2A510	8	8'-9"	STR.		73				
W2A511	16	13'-0"	STR.		217				
W2A512	2	11'-4"	STR.		24				
W2A513	2	10'-5"	4		22	8'-3"	2'-2"	4 3/8"	
W2A514	2	13'-11"	STR.		29				
W2A515	2	16'-6"	STR.		35				
W2A516	6	19'-2"	STR.		120				
EW2A517	8	17'-2"	STR.		144				
EW2A518	14	5'-3"	5		77	2'-2"	2'-5"	7 1/2"	I.R=2 1/8"

BENDING DIAGRAMS

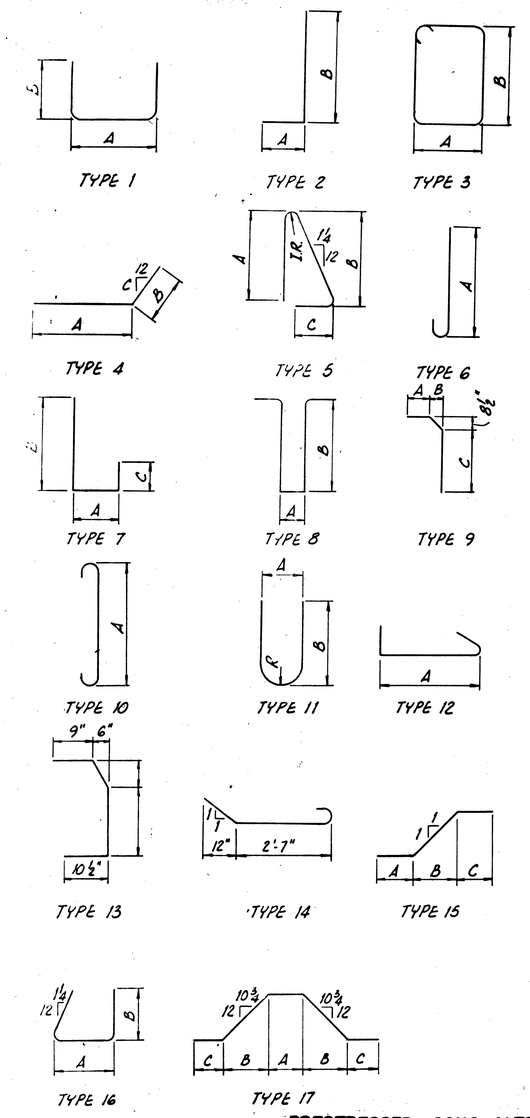

REINFORCING STEEL SAMPLES
REFER TO CMS SECTIONS 106.03, 700, 709.01 THROUGH 709.05 AND 709.08. SUFFICIENT ADDITIONAL REINFORCING STEEL SHALL BE PROVIDED FOR SAMPLING. RANDOM SAMPLES SHALL BE REPLACED IN THE STRUCTURES BY THE ADDITIONAL STEEL, SPLICED IN ACCORDANCE WITH 509.08.

PRESTRESSED CONC. ALTERNATE 37/48

adache - ciuni - lynn associates
CONSULTING ENGINEERS CLEVELAND, OHIO 44130

REINFORCING STEEL LIST
WESTBOUND LANES
BRIDGE NO. ERI-2-1798 L/R
S. R. 2 OVER MUD BROOK

ERIE COUNTY
ERI-2-16.13

STA. 1173+19.17 TO
STA. 1180+94.84

DESIGNED	DRAWN	CHECKED	REVIEWED	DATE	REVISED
P.A.G.	J.R.S.	P.A.G.	L.E.D.	9-23-85	

MICROFILMED
AUG 30 1990

F.H.W.A. REGION	STATE	PROJECT	
5	OHIO		

ERIE COUNTY
ERI-2-(16.13-17.39)

208J
284

MARK	NUMBER	LENGTH	TYPE	SER. INCR.	WEIGHT (LBS)	A	B	C	R
ABUTMENT NO. 2 (WESTBOUND LANES)									
EW2A519	9	6'-11"	STR.		65				
EW2A520	16	2'-8"	6		45	2'-1"			
EW2A521	4	6'-6"	STR.		27				
EW2A522	12	4'-6"	STR.		57				
EW2A523	16	4'-4"	STR.		73				
W2A524	1 SER. 7	12'-2" / 6'-8"	1	5 8/"	69	1'-2"	5'-7" / 2'-10"		
W2A525	6	13'-8"	STR.		86				
W2A526	2	9'-1"	STR.		19				
W2A527	2	6'-10"	STR.		15				
W2A528	1 SER. 6	11'-0" / 6'-8"	1	5 4/"	56	1'-2"	5'-0" / 2'-10"		
W2A529	2	9'-4"	4		20	7'-2"	2'-2"	4 3/4"	
EW2A530	8	11'-8"	STR.		98				
W2A531	6	6'-8"	STR.		42				
W2A532	2	11'-4"	STR.		24				
W2A533	16	6'-0"	STR.		101				
W2A601	32	14'-5"	7		641	5'-5"	5'-8"	2'-7"	
W2A602	30	16'-2"	7		729	5'-5"	8'-6"	2'-7"	
W2A603		(NOT USED)							
E → EW2A604	1	4'-0"	9		6	8"	5"	2'-11"	
W2A605	6	17'-4"	1		157	1'-2"	8'-3"		
W2A606	65	17'-1"	1		1668	1'-5"	8'-0"		
W2A607	65	6'-7"	1		643	1'-5"	2'-9"		
W2A608	65	9'-1"	1		887	11"	4'-3"		
W2A609	9	23'-0"	1		311	1'-2"	11'-1"		
EW2A610	6	7'-0"	9		63	9"	6"	5'-9"	
EW2A611	9	7'-9"	9		105	9"	6"	6'-6"	
EW2A612	2	3'-11"	9		12	8"	4"	2'-11"	
EW2A613	2	3'-10"	9		12	7"	4"	2'-11"	
EW2A614	2	3'-9"	9		12	7"	3"	2'-11"	
EW2A615	8	3'-8"	9		44	7"	2"	2'-11"	
W2A801	14	36'-10"	STR.		1377				
W2A802	5	11'-9"	STR.		157				
W2A803	2	7'-6"	STR.		40				
W2A804	5	16'-0"	STR.		214				
W2A805	2	10'-0"	STR.		54				
W2A806	4	6'-6"	STR.		70				
W2A807	44	4'-11"	14		578				

MARK	NUMBER	LENGTH	TYPE	SER. INCR.	WEIGHT (LBS)	A	B	C	R
ABUTMENT NO. 2 (WESTBOUND LANES)									
TOTAL WEIGHT EPOXY COATED BARS					840				
TOTAL WEIGHT UNCOATED BARS					12,224				
PIER NO. 1 (WESTBOUND LANES)									
W1P501	104	12'-4"	3		1338	2'-3"	3'-8"		
W1P502	20	5'-4"	1		112	2'-3"	1'-8"		
W1P503	2 SER. 5	9'-2" / 6'-2"	1		80	2'-3"	3'-7" / 2'-1"		
W1P504	2 SER. 5	9'-2" / 6'-8"	1		83	2'-3"	3'-7" / 2'-4"		
W1P601	6	30'-0"	STR.		271				
W1P602	8	14'-6"	STR.		175				
W1P603	4	13'-2"	STR.		80				
W1P604	2	6'-5"	4		20	5'-0"	1'-5"	3 7/8"	
W1P605	2	6'-8"	4		20	5'-3"	1'-5"	4 1/4"	
W1P1001	16	25'-4"	STR.		1745				
W1P1101	8	30'-0"	STR.		1276				
W1P1102	16	23'-9"	2		2019	22'-1"	2'-0"		
TOTAL WEIGHT					7219				
PIER NO. 2 (WESTBOUND LANES)									
W2P501	104	12'-4"	3		1338	2'-3"	3'-8"		
W2P502	20	5'-4"	1		112	2'-3"	1'-8"		
W2P503	2 SER. 5	9'-2" / 6'-2"	1		80	2'-3"	3'-7" / 2'-1"		
W2P504	2 SER. 5	9'-2" / 6'-8"	1		83	2'-3"	3'-7" / 2'-4"		
W2P601	6	30'-0"	STR.		271				
W2P602	8	14'-6"	STR.		175				
W2P603	4	13'-2"	STR.		80				
W2P604	2	6'-5"	4		20	5'-0"	1'-5"	3 7/8"	
W2P605	2	6'-8"	4		20	5'-3"	1'-5"	4 1/4"	
W2P1001	16	25'-4"	STR.		1745				
W2P1101	8	30'-0"	STR.		1276				
W2P1102	16	23'-9"	2		2019	22'-1"	2'-0"		
TOTAL WEIGHT					7219				

MARK	NUMBER	LENGTH	TYPE	SER. INCR.	WEIGHT (LBS)	A	B	C	R
PIER NO. 3 (WESTBOUND LANES)									
W3P501	104	12'-4"	3		1338	2'-3"	3'-8"		
W3P502	20	5'-4"	1		112	2'-3"	1'-8"		
W3P503	2 SER. 5	9'-2" / 6'-2"	1		80	2'-3"	3'-7" / 2'-1"		
W3P504	2 SER. 5	9'-2" / 6'-8"	1		83	2'-3"	3'-7" / 2'-4"		
W3P601	6	30'-0"	STR.		271				
W3P602	8	14'-6"	STR.		175				
W3P603	4	13'-2"	STR.		80				
W3P604	2	6'-5"	4		20	5'-0"	1'-5"	3 7/8"	
W3P605	2	6'-8"	4		20	5'-3"	1'-5"	4 1/4"	
W3P1001	16	25'-4"	STR.		1745				
W3P1101	8	30'-0"	STR.		1276				
W3P1102	16	23'-9"	2		2019	22'-1"	2'-0"		
TOTAL WEIGHT					7219				

PRESTRESSED CONC. ALTERNATE 38/48

adache - ciuni - lynn associates
CONSULTING ENGINEERS CLEVELAND, OHIO 44130

REINFORCING STEEL LIST
WESTBOUND LANES
BRIDGE NO. ERI-2-1798 L/R
S.R. 2 OVER MUD BROOK

ERIE COUNTY
ERI-2-16.13

STA. 1173+19.17 TO
STA. 1180+94.84

DESIGNED	DRAWN	CHECKED	REVIEWED	DATE	REVISED
J.R.S.	W.P.R.	P.A.G.	L.E.D.	9-23-85	

MICROFILMED
AUG 30 1990

F.H.W.A. REGION	STATE	PROJECT	
5	OHIO		

208K/284

ERIE COUNTY
ERI-2-(16.13-17.39)

MARK	NUMBER	LENGTH	TYPE	SER. INCR.	WEIGHT (LBS)	A	B	C	R
PIER NO. 4 (WESTBOUND LANES)									
W4P501	116	12'-4"	3		1493	2'-3"	3'-8"		
W4P502	20	5'-4"	1		112	2'-3"	1'-8"		
W4P503	2 SER. 5	9'-2" / 6'-2"	1		80	2'-3"	3'-7" / 2'-1"		
W4P504	2 SER. 5	9'-2" / 6'-8"	1		83	2'-3"	3'-7" / 2'-4"		
W4P505	56	5'-11"	1		346	3'-8"	1'-3"		
W4PG01	6	30'-0"	STR.		271				
W4PG02	8	16'-2"	STR.		195				
W4PG03	4	14'-10"	STR.		90				
W4PG04	2	6'-5"	4		20	5'-0"	1'-5"	3 3/8"	
W4PG05	2	6'-8"	4		20	5'-3"	1'-5"	4 1/4"	
W4PB01	21	2'-0"	STR.		112				
W4P1001	16	27'-0"	STR.		1859				
W4P1002	2	16'-0"	STR.		138				
W4P1101	8	30'-0"	STR.		1276				
W4P1102	16	25'-5"	2		2161	23'-9"	2'-0"		
TOTAL WEIGHT					8256				
PIER NO. 5 (WESTBOUND LANES)									
W5P501	116	12'-4"	3		1493	2'-3"	3'-8"		
W5P502	20	5'-4"	1		112	2'-3"	1'-8"		
W5P503	2 SER. 5	9'-2" / 6'-2"	1		80	2'-3"	3'-7" / 2'-1"		
W5P504	2 SER. 5	9'-2" / 6'-8"	1		83	2'-3"	3'-7" / 2'-4"		
W5P601	6	30'-0"	STR.		271				
W5P602	8	16'-2"	STR.		195				
W5P603	4	14'-10	STR.		90				
W5PG04	2	6'-5"	4		20	5'-0"	1'-5"	3 3/8"	
W5PG05	2	6'-8"	4		20	5'-3"	1'-5"	4 1/4"	
W5P1001	16	27'-0"	STR.		1859				
W5P1002	2	16'-0"	STR.		138				
W5P1101	8	30'-0"	STR.		1276				
W5P1102	16	25'-5"	2		2161	23'-9"	2'-0"		
TOTAL WEIGHT					7798				

MARK	NUMBER	LENGTH	TYPE	SER. INCR.	WEIGHT (LBS)	A	B	C	R
PIER NO. 6 (WESTBOUND LANES)									
W6P501	136	12'-4"	3		1750	2'-3"	3'-8"		
W6P502	20	5'-4"	1		112	2'-3"	1'-8"		
W6P503	2 SER. 5	9'-2" / 6'-2"	1		80	2'-3"	3'-7" / 2'-1"		
W6P504	2 SER. 5	9'-2" / 6'-8	1		83	2'-3"	3'-7" / 2'-4"		
W6PG04	2	6'-5"	4		20	5'-0"	1'-5"	3 3/8"	
W6PG05	2	6'-8"	4		20	5'-3"	1'-5"	4 1/4"	
W6P701	6	30'-0"	STR.		368				
W6P702	8	18'-7"	STR.		304				
W6P703	4	17'-3"	STR.		141				
W6P1001	6	28'-10"	STR.		745				
W6P1101	8	30'-0"	STR.		1276				
W6P1102	16	27'-3"	2		2317	25'-7"	2'-0"		
W6P1103	16	29'-4"	STR.		2494				
W6P1104	4	16'-0"	STR.		340				
TOTAL WEIGHT					10,050				
PIER NO. 7 (WESTBOUND LANES)									
W7P501	136	12'-4"	3		1750	2'-3"	3'-8"		
W7P502	20	5'-4"	1		112	2'-3"	1'-8"		
W7P503	2 SER. 5	9'-2" / 6'-2"	1		80	2'-3"	3'-7" / 2'-1"		
W7P504	2 SER. 5	9'-2" / 6'-8"	1		83	2'-3"	3'-7" / 2'-4"		
W7PG04	2	6'-5"	4		20	5'-0"	1'-5"	3 3/8"	
W7PG05	2	6'-8"	4		20	5'-3"	1'-5"	4 1/4"	
W7P701	6	30'-0"	STR.		368				
W7P702	8	18'-7"	STR.		304				
W7P703	4	17'-3"	STR.		141				
W7P1001	6	28'-10"	STR.		745				
W7P1101	8	30'-0"	STR.		1276				
W7P1102	16	27'-3"	2		2317	25'-7"	2'-0"		
W7P1103	16	29'-4"	STR.		2494				
W7P1104	4	16'-0"	STR.		340				

MARK	NUMBER	LENGTH	TYPE	SER. INCR.	WEIGHT (LBS)	A	B	C	R
PIER NO. 7 (WESTBOUND LANES)									
TOTAL WEIGHT					10,050				
SUPERSTRUCTURE (WESTBOUND LANES)									
EW5401	2108	30'-0"	STR.		42,245				
EW5402	85	24'-11"	STR.		1415				
EW5403	6	15'-0"	STR.		61				
EW5404	2	10'-0"	STR.		14				
EW5405	4	23'-6"	STR.		63				
EW5406	4	33'-4"	STR.		89				
W5501	1324	36'-2"	STR.		49,944				
W5502	70	19'-5"	STR.		1418				
W5503	70	20'-1"	STR.		1466				
W5504	58	20'-8"	STR.		1250				
W5505	58	21'-3"	STR.		1286				
W5506	58	21'-10"	STR.		1321				
W5507	58	22'-5"	STR.		1356				
W5508	58	23'-0"	STR.		1391				
W5509	58	23'-7"	STR.		1427				
W5510	58	24'-3"	STR.		1467				
W5511	58	24'-11"	STR.		1507				
W5512	58	25'-6"	STR.		1543				
W5513	58	26'-2"	STR.		1583				
W5514	58	26'-9"	STR.		1618				
W5515	58	27'-5"	STR.		1659				
W5516	58	28'-1"	STR.		1699				
W5517	58	28'-9"	STR.		1739				
W5518	58	29'-5"	STR.		1780				
W5519	58	30'-1"	STR.		1820				
W5520	58	30'-9"	STR.		1860				
W5521	58	31'-5"	STR.		1901				
W5522	46	32'-0"	STR.		1535				
W5523	46	32'-7"	STR.		1563				
W5524	48	33'-1"	STR.		1656				

PRESTRESSED CONC. ALTERNATE 39/48

adache - ciuni - lynn associates
CONSULTING ENGINEERS CLEVELAND, OHIO 44130

REINFORCING STEEL LIST
WESTBOUND LANES
BRIDGE NO. ERI-2-1798 L/R
S.R. 2 OVER MUD BROOK

ERIE COUNTY
ERI-2-16.13

STA. 1173+19.17 TO
STA. 1180+94.84

DESIGNED	DRAWN	CHECKED	REVIEWED	DATE	REVISED
J.R.S.	W.P.R.	R.A.G.	L.E.D.	9-23-85	

MICROFILMED
AUG 30 1990

F.H.W.A. REGION	STATE	PROJECT	
5	OHIO		

208L
284

ERIE COUNTY
ERI-2-(16.13-17.39)

MARK	NUMBER	LENGTH	TYPE	SER. INCR.	WEIGHT (LBS)	A	B	C	R
SUPERSTRUCTURE (WESTBOUND LANES)									
W5525	1467	30'-0"	STR.		45,902				
W5526	74	32'-4"	STR.		2496				
EW5527	886	3'-3"	13		3004	1'-0"			
EW5528	886	2'-7"	2		2384	10½"	1'-10"		
EW5529	886	5'-3"	5		4852	2'-2"	2'-5"	7½"	28"
EW5530	64	12'-6"	STR.		835				
EW5531	48	5'-6"	STR.		276				
EW5532	288	6'-6"	STR.		1953				
EW5533	144	14'-6"	STR.		2178				
W5534	224	8'-7"	STR.		1999				
W5535	317	12'-3"	8		4050	1'-8"	4'-11"		
W5536	256	8'-9"	STR.		2336				
W5537	363	9'-5"	8		3566	8"	4'-0"		
W5538	36	4'-8"	STR.		175				
W5539	24	4'-10	STR.		121				
W5540	8	6'-9"	STR.		56				
W5541	8	7'-4"	STR.		61				
W5542	4	8'-8"	STR.		36				
W5543	8	3'-3"	STR.		27				
W5544	16	4'-2"	STR.		70				
W5545	16	5'-1"	STR.		85				
W5546	16	6'-0"	STR.		100				
W5547	8	4'-3"	STR.		36				
W5548	8	5'-11"	STR.		49				
W5549	8	7'-2"	STR.		60				
W5550	8	8'-2"	STR.		68				
W5551	16	3'-10"	STR.		64				
W5552	16	5'-9"	STR.		96				
W5553	16	6'-7"	STR.		110				
W5554	118	5'-8"	3		697	1'-0"	1'-7"		
EW5601	1324	29'-4"	STR.		58,333				
EW5602	70	26'-6"			2786				
EW5603	70	27'-2"			2856				
EW5604	58	27'-9"			2417				
EW5605	58	28'-4"			2468				
EW5606	58	28'-11"			2519				
EW5607	58	29'-6"			2570				
EW5608	58	30'-1"			2621				
EW5609	58	30'-8"			2672				
EW5610	58	31'-4"			2730				
EW5611	58	32'-0"			2788				
EW5612	58	32'-7"			2839				
EW5613	58	33'-3"			2897				
EW5614	58	33'-10"			2947				
EW5615	58	34'-6"	STR.		3006				

MARK	NUMBER	LENGTH	TYPE	SER. INCR.	WEIGHT (LBS)	A	B	C	R
SUPERSTRUCTURE (WESTBOUND LANES)									
EW5616	58	35'-2"	STR.		3064				
EW5617	58	35'-10"			3122				
EW5618	58	36'-6"			3180				
EW5619	58	37'-2"			3238				
EW5620	58	37'-10"			3296				
EW5621	58	38'-6"			3354				
EW5622	46	39'-1"			2700				
EW5623	46	39'-8"			2741				
EW5624	48	40'-2"	STR.		2896				
EW5701	618	30'-0"	STR.		37,896				
EW5702	618	14'-0"	STR.		17,685				
W5801	56	9'-1"	STR.		1358				
W5802	63	6'-0"	STR.		1009				
W5803	2	5'-4"	STR.		29				
W5804	2	7'-3"	STR.		39				
W5805	2	7'-10"	STR.		42				
W5806	1	9'-2"	STR.		24				
W5807	2	3'-9"	STR.		20				
W5808	4	4'-8"	STR.		50				
W5809	4	5'-7"	STR.		60				
W5810	4	6'-6"	STR.		69				
EW5811	2	12'-4"	STR.		66				
EW5812	1	11'-0"	STR.		29				
EW5813	1	5'-8"	STR.		15				
W51001	8	25'-10"	STR.		889				
W51002	8	35'-9"	STR.		1231				
TOTAL WEIGHT EPOXY COATED BARS					239,100				
TOTAL WEIGHT UNCOATED BARS					152,869				
LIGHT POLE PILASTER (TYPICAL OF FOUR)									
(WESTBOUND LANES)									
EL501	4	3'-3"	1		14	1'-10"	10"		
EL502	4	8'-5"	16		35	2'-4"	3'-2"		
EL503	6	7'-0"	17		44	1'-4"	1'-10"	1'-0"	
EL504	4	3'-2"	STR.		13				

MARK	NUMBER	LENGTH	TYPE	SER. INCR.	WEIGHT (LBS)	A	B	C	R
LIGHT POLE PILASTER (TYPICAL OF FOUR)									
(WESTBOUND LANES)									
EL601	12	3'-9"	STR.		68				
TOTAL WEIGHT PER PILASTER					174				
SUMMARY OF TOTAL WEIGHT (WESTBOUND LANES)									
ABUTMENTS :									
EPOXY COATED BARS					1567				
UNCOATED BARS					22,269				
PIERS :									
EPOXY COATED BARS					0				
UNCOATED BARS					57,811				
SUPERSTRUCTURE :									
EPOXY COATED BARS					239,100				
4-LIGHT POLE PILASTERS					696				
TOTAL WEIGHT-EPOXY COATED BARS					239,796				
TOTAL WEIGHT-UNCOATED BARS					152,869				

PRESTRESSED CONC. ALTERNATE 40/48

adache - ciuni - lynn associates
CONSULTING ENGINEERS CLEVELAND, OHIO 44130

REINFORCING STEEL LIST
WESTBOUND LANES
BRIDGE NO. ERI-2-1798 L/R
S.R. 2 OVER MUD BROOK

ERIE COUNTY
ERI-2-16.13

STA. 1173+19.17 TO
STA. 1180+94.84

DESIGNED	DRAWN	CHECKED	REVIEWED	DATE	REVISED
A.J.M.	W.P.R.	P.A.G.	L.E.D.	9-23-85	

MICROFILMED
AUG 30 1990

F.H.W.A. REGION	STATE	PROJECT	
5	OHIO		

208M
284

ERIE COUNTY
ERI-2-(16.13-17.39)

MARK	NUMBER	LENGTH	TYPE	SER. INCR.	WEIGHT (LBS)	A	B	C	R
ABUTMENT NO. 1 (EASTBOUND LANES)									
D1A501	48	9'-6"	1		476	5'-5"	2'-2"		
D1A502	5	11'-0"	3		56	3'-0"	2'-3"		
D1A503	6	11'-6"	3		72	3'-0"	2'-6"		
D1A504	26	8'-11"	2		242	11"	8'-1"		
D1A505	26	7'-6"	2		204	11"	6'-8"		
D1A506	48	9'-3"	1		463	3'-6"	3'-0"		
D1A507	36	26'-8"	STR.		1001				
D1A508	10	26'-11"	STR.		281				
D1A509	2	14'-4"	STR.		30				
D1A510	8	8'-9"	STR.		73				
D1A511	12	8'-6"	STR.		107				
D1A512	4	6'-10"	STR.		29				
D1A513	4	9'-1"	STR.		38				
D1A514	12	18'-8"	STR.		171				
D1A515	2	9'-2"	4		20	7'-0"	2'-2"	$4\frac{5}{8}$"	
EDIA517	16	11'-8"	STR.		195				
EDIA518	10	5'-3"	5		55	2'-2"	2'-5"	$7\frac{1}{2}$"	I.R.=$2\frac{1}{8}$"
EDIA519	12	6'-8"	STR.		84				
EDIA520	16	2'-8"	6		45	2'-1"			
EDIA521	4	5'-4"	STR.		22				
EDIA522	12	4'-6"	STR.		57				
EDIA523	16	4'-4"	STR.		73				
D1A524	1 SER. 6	11'-5" / 6'-7"	1	$5\frac{13}{16}$"	57	1'-2"	5'-3" / 2'-10"		
D1A525	4	11'-5"	STR.		48				
D1A516	2	9'-2"	4		20	7'-0"	2'-2"	$4\frac{13}{16}$"	
D1A526	1 SER. 6	11'-7" / 6'-7"	1	6"	57	1'-2"	5'-4" / 2'-10"		
D1A527	17	6'-0"	STR.		106				
D1A601	24	15'-9"	7		568	5'-5"	8'-1"	2'-7"	
D1A602	24	14'-4"	7		517	5'-5"	6'-8"	2'-7"	
D1A603	6	24'-10"	1		224	1'-2"	12'-0"		
D1A604	6	19'-10"	1		179	1'-2"	9'-6"		
EDIA605	6	7'-0"	9		63	9"	6"	5'-9"	

MARK	NUMBER	LENGTH	TYPE	SER. INCR.	WEIGHT (LBS)	A	B	C	R
ABUTMENT NO. 1 (EASTBOUND LANES)									
EDIA606	6	7'-1"	9		64	9"	6"	5'-10"	
EDIA607	2	4'-0"	9		12	8"	5"	2'-11"	
EDIA608	2	3'-11"	9		12	8"	4"	2'-11"	
EDIA609	2	3'-9"	9		12	7"	3"	2'-11"	
EDIA610	8	3'-8"	9		44	7"	2"	2'-11"	
D1A611	50	9'-1"	1		682	11"	4'-3"		
D1A612	50	13'-1"	1		983	1'-5"	6'-0"		
D1A613	50	7'-1"	1		532	1'-5"	3'-0"		
D1A801	14	29'-2"	STR.		1091				
D1A802	6	11'-5"	STR.		183				
D1A803	6	11'-9"	STR.		189				
D1A804	4	7'-0"	STR.		75				
D1A805	33	4'-11"	14		434				
TOTAL WEIGHT EPOXY COATED BARS					738				
TOTAL WEIGHT UNCOATED BARS					9,210				
ABUTMENT NO. 2 (EASTBOUND LANES)									
D2A501	52	9'-6"	1		516	5'-5"	2'-2"		
D2A502	6	11'-6"	3		72	3'-0"	2'-6"		
D2A503	7	11'-0"	3		81	3'-0"	2'-3"		
D2A504	38	28'-10"	STR.		1143				
D2A505	10	29'-1"	STR.		303				
D2A506	52	8'-3"	1		448	3'-6"	2'-6"		
D2A507	30	6'-5"	2		201	11"	5'-7"		
D2A508	26	7'-10"	2		213	11"	7'-0"		
D2A509	10	12'-0"	STR.		126				
D2A510	2	10'-4"	STR.		22				
D2A511	2	10'-2"	4		22	8'-0"	2'-2"	$4\frac{1}{4}$"	
D2A512	2	12'-11"	STR.		27				
D2A513	6	18'-2"	STR.		114				
EDA514	8	16'-2"	STR.		135				
EDA515	23	5'-3"	5		126	2'-2"	2'-5"	$7\frac{1}{2}$"	I.R.=$2\frac{1}{8}$"
EDA516	8	6'-8"	STR.		56				
EDA517	16	2'-8"	6		45	2'-1"			
EDA518	4	5'-4"	STR.		22				

BENDING DIAGRAMS

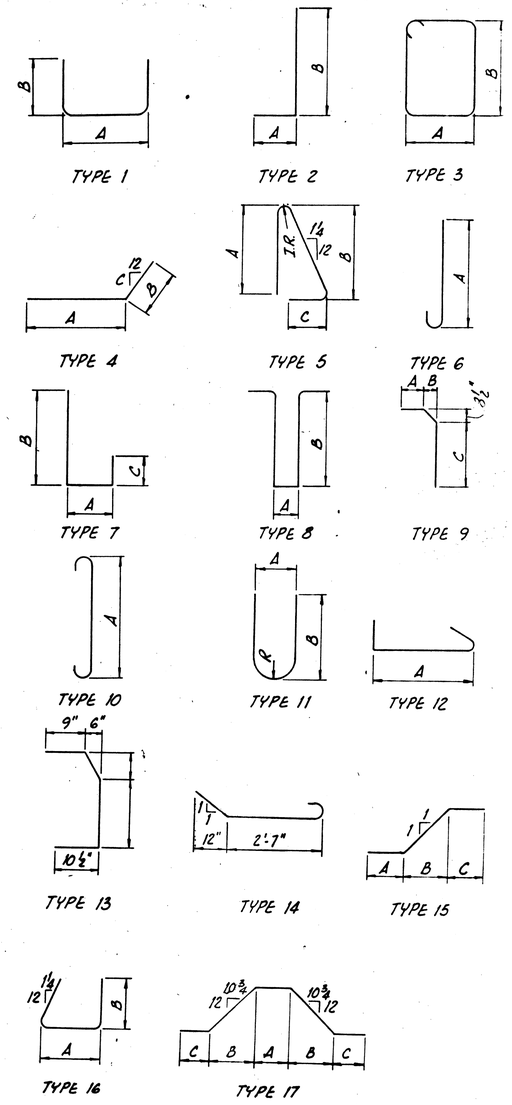

REINFORCING STEEL SAMPLES
REFER TO CMS SECTIONS 106.03, 700, 709.01 THROUGH 709.05 AND 709.08. SUFFICIENT ADDITIONAL REINFORCING STEEL SHALL BE PROVIDED FOR SAMPLING. RANDOM SAMPLES SHALL BE REPLACED IN THE STRUCTURES BY THE ADDITIONAL STEEL, SPLICED IN ACCORDANCE WITH 509.08.

PRESTRESSED CONC. ALTERNATE 41/48

adache - ciuni - lynn associates
CONSULTING ENGINEERS CLEVELAND, OHIO 44130

REINFORCING STEEL LIST
EASTBOUND LANES
BRIDGE NO. ERI-2-1798 L/R
S. R. 2 OVER MUD BROOK

ERIE COUNTY
ERI-2-16.13

STA. 1173+19.17 TO
STA. 1180+94.84

DESIGNED	DRAWN	CHECKED	REVIEWED	DATE	REVISED
P.A.G.	W.P.R.	M.A.G.	L.E.D	9-23-85	

MICROFILMED
AUG 30 1990

F.H.W.A. REGION	STATE	PROJECT	
5	OHIO		

208N
284

ERIE COUNTY
ERI-2-(16.13-17.39)

MARK	NUMBER	LENGTH	TYPE	SER. INCR.	WEIGHT (LBS)	A	B	C	R
ABUTMENT NO. 2 (EASTBOUND LANES)									
ED2A519	12	4'-6"	STR.		57				
ED2A520	16	4'-4"	STR.		73				
D2A521	1 SER. 7	11'-7" / 6'-7"	1	.5"	67	1'-2"	5'-4" / 2'-10"		
D2A522	6	8'-9"	STR.		55				
D2A523	2	6'-10"	STR.		15				
D2A524	2	9'-1"	STR.		19				
D2A525	6	13'-8"	STR.		86				
D2A526	2	9'-2"	4		20	7'-0"	2'-2"	4 11/16"	
D2A527	8	11'-8"	STR.		98				
ED2A528	6	6'-7"	STR.		42				
D2A529	1 SER. 6	11'-3" / 6'-7"	1	5 5/8"	56	1'-2"	5'-2" / 2'-10"		
D2A530	2	15'-7"	STR.		33				
D2A531	2	11'-5"	STR.		24				
D2A532	18	6'-0"	STR.		113				
D2A601	28	13'-3"	7		558	5'-5"	5'-7"	2'-7"	
D2A602	24	14'-8"	7		529	5'-5"	7'-0"	2'-7"	
D2A603	6	17'-6"	1		158	1'-2"	8'-4"		
D2A604	8	22'-2"	1		267	1'-2"	10'-8"		
ED2A605	6	7'-0"	9		63	9"	6"	5'-9"	
ED2A606	1	4'-0"	9		6	8"	5"	2'-11"	
ED2A607	1	4'-2"	9		7	9"	6"	2'-11"	
ED2A608	1	3'-11"	9		6	8"	4"	2'-11"	
ED2A609	2	3'-10"	9		12	7"	4"	2'-11"	
ED2A610	8	3'-8"	9		44	7"	2"	2'-11"	
ED2A611	8	7'-0"	9		85	9"	6"	5'-9"	
ED2A612	2	3'-9"	9		12	7"	3"	2'-11"	
D2AB01	14	31'-3"	STR.		1,169				
D2AB02	6	11'-9"	STR.		189				
D2AB03	6	15'-0"	STR.		241				
D2AB04	4	7'-0"	STR.		75				
D2AB05	36	4'-11"	14		473				
TOTAL WEIGHT EPOXY COATED BARS					889				
TOTAL WEIGHT UNCOATED BARS					7,435				

7448

MARK	NUMBER	LENGTH	TYPE	SER. INCR.	WEIGHT (LBS)	A	B	C	R
PIER NO. 1 (EASTBOUND LANES)									
D1P501	56	12'-4"	3		721	2'-3"	3'-8"		
D1P502	20	5'-4"	1		112	2'-3"	1'-8"		
D1P503	2 SER 5	9'-2" / 6'-2"	1		80	2'-3"	3'-7" / 2'-1"		
D1P504	2 SER 5	9'-2" / 6'-8"	1		83	2'-3"	3'-7" / 2'-4"		
D1P601	6	30'-0"	STR.		271				
D1P602	8	10'-9"	STR.		90				
D1P603	4	9'-5"	STR.		40				
D1P604	2	6'-5"	4		20	5'-0"	1'-5"	3 7/8"	
D1P605	2	6'-8"	4		20	5'-3"	1'-5"	4 1/4"	
D1P901	16	21'-2"	STR.		1152				
D1P1101	8	30'-0"	STR.		1276				
D1P1102	16	20'-0"	2		1701	18'-3"	2'-0"		
TOTAL WEIGHT					5566				
PIER NO. 2 (EASTBOUND LANES)									
D2P501	56	12'-4"	3		721	2'-3"	3'-8"		
D2P502	20	5'-4"	1		112	2'-3"	1'-8"		
D2P503	2 SER 5	9'-2" / 6'-2"	1		80	2'-3"	3'-7" / 2'-1"		
D2P504	2 SER 5	9'-2" / 6'-8"	1		83	2'-3"	3'-7" / 2'-4"		
D2P601	6	30'-0"	STR.		271				
D2P602	8	10'-9"	STR.		90				
D2P603	4	9'-5"	STR.		40				
D2P604	2	6'-5"	4		20	5'-0"	1'-5"	3 7/8"	
D2P605	2	6'-8"	4		20	5'-3"	1'-5"	4 1/4"	
D2P901	16	21'-2"	STR.		1152				
D2P1101	8	30'-0"	STR.		1276				
D2P1102	16	20'-0"	2		1701	18'-3"	2'-0"		
TOTAL WEIGHT					5566				

MARK	NUMBER	LENGTH	TYPE	SER. INCR.	WEIGHT (LBS)	A	B	C	R
PIER NO. 3 (EASTBOUND LANES)									
D3P501	56	12'-4"	3		721	2'-3"	3'-8"		
D3P502	20	5'-4"	1		112	2'-3"	1'-8"		
D3P503	2 SER 5	9'-2" / 6'-2"	1		80	2'-3"	3'-7" / 2'-1"		
D3P504	2 SER 5	9'-2" / 6'-8"	1		83	2'-3"	3'-7" / 2'-4"		
D3P601	6	30'-0"	STR.		271				
D3P602	8	10'-9"	STR.		90				
D3P603	4	9'-5"	STR.		40				
D3P604	2	6'-5"	4		20	5'-0"	1'-5"	3 7/8"	
D3P605	2	6'-8"	4		20	5'-3"	1'-5"	4 1/4"	
D3P901	16	21'-2"	STR.		1152				
D3P1101	8	30'-0"	STR.		1276				
D3P1102	16	20'-0"	2		1701	18'-3"	2'-0"		
TOTAL WEIGHT					5566				
PIER NO. 4 (EASTBOUND LANES)									
D4P501	56	12'-4"	3		721	2'-3"	3'-8"		
D4P502	20	5'-4"	1		112	2'-3"	1'-8"		
D4P503	2 SER 5	9'-2" / 6'-2"	1		80	2'-3"	3'-7" / 2'-1"		
D4P504	2 SER 5	9'-2" / 6'-8"	1		83	2'-3"	3'-7" / 2'-4"		
D4P601	6	30'-0"	STR.		271				
D4P602	8	10'-9"	STR.		90				
D4P603	4	9'-5"	STR.		40				
D4P604	2	6'-5"	4		20	5'-0"	1'-5"	3 7/8"	
D4P605	2	6'-8"	4		20	5'-3"	1'-5"	4 1/4"	

PRESTRESSED CONC. ALTERNATE 42/48

adache - ciuni - lynn associates
CONSULTING ENGINEERS CLEVELAND, OHIO 44130

REINFORCING STEEL LIST
EASTBOUND LANES
BRIDGE NO. ERI-2-1798 L/R
S.R. 2 OVER MUD BROOK

ERIE COUNTY
ERI-2-16.13

STA. 1173+19.17 TO
STA. 1180+94.84

DESIGNED	DRAWN	CHECKED	REVIEWED	DATE	REVISED
J.R.S.	W.P.R.	M.A.G.	L.E.D.	9-23-85	

MICROFILMED
AUG 30 1990

F.H.W.A. REGION	STATE	PROJECT	
5	OHIO		

208P 284

ERIE COUNTY
ERI-2-(16.13-17.39)

MARK	NUMBER	LENGTH	TYPE	SER. INCR.	WEIGHT (LBS)	A	B	C	R
PIER NO. 4 (EASTBOUND LANES)									
D4P901	16	21'-2"	STR.		1152				
D4P1101	8	30'-0"	STR.		1276				
D4P1102	16	20'-0"	2		1701	18'-3"	2'-0"		
TOTAL WEIGHT					5566				
PIER NO. 5 (EASTBOUND LANES)									
D5P501	56	12'-4"	3		721	2'-3"	3'-8"		
D5P502	20	5'-4"	1		112	2'-3"	1'-8"		
D5P503	2 SER. 5	9'-2" / 6'-2"	1		80	2'-3"	3'-7" / 2'-1"		
D5P504	2 SER. 5	9'-2" / 6'-8"	1		83	2'-3"	3'-7" / 2'-4"		
D5P505	40	5'-11"	1		247	3'-8"	1'-3"		
D5P601	6	30'-0"	STR.		271				
D5P602	8	10'-9"	STR.		90				
D5P603	4	9'-5"	STR.		40				
D5P604	2	6'-5"	4		20	5'-0"	1'-5"	3 7/8"	
D5P605	2	6'-8"	4		20	5'-3"	1'-5"	4 1/4"	
D5P801	15	2'-0"	STR.		80				
D5P901	16	21'-2"	STR.		1152				
D5P1101	8	30'-0"	STR.		1276				
D5P1102	16	20'-0"	2		1701	18'-3"	2'-0"		
TOTAL WEIGHT					5893				
PIER NO. 6 (EASTBOUND LANES)									
D6P501	56	12'-4"	3		721	2'-3"	3'-8"		
D6P502	20	5'-4"	1		112	2'-3"	1'-8"		
D6P503	2 SER. 5	9'-2" / 6'-2"	1		80	2'-3"	3'-7" / 2'-1"		
D6P504	2 SER. 5	9'-2" / 6'-8"	1		83	2'-3"	3'-7" / 2'-4"		
D6P601	6	30'-0"	STR.		271				
D6P602	8	10'-9"	STR.		90				
D6P603	4	9'-5"	STR.		40				
D6P604	2	6'-5"	4		20	5'-0"	1'-5"	3 7/8"	

MARK	NUMBER	LENGTH	TYPE	SER. INCR.	WEIGHT (LBS)	A	B	C	R
PIER NO. 6 (EASTBOUND LANES)									
D6P605	2	6'-8"	4		20	5'-3"	1'-5"	4 1/4"	
D6P901	16	21'-2"	STR.		1152				
D6P1101	8	30'-0"	STR.		1276				
D6P1102	16	20'-0"	2		1701	18'-3"	2'-0"		
TOTAL WEIGHT					5566				
PIER NO. 7 (EASTBOUND LANES)									
D7P501	56	12'-4"	3		721	2'-3"	3'-8"		
D7P502	20	5'-4"	1		112	2'-3"	1'-8"		
D7P503	2 SER. 5	9'-2" / 6'-2"	1		80	2'-3"	3'-7" / 2'-1"		
D7P504	2 SER. 5	9'-2" / 6'-8"	1		83	2'-3"	3'-7" / 2'-4"		
D7P601	6	30'-0"	STR.		271				
D7P602	8	10'-9"	STR.		90				
D7P603	4	9'-5"	STR.		40				
D7P604	2	6'-5"	4		20	5'-0"	1'-5"	3 7/8"	
D7P605	2	6'-8"	4		20	5'-3"	1'-5"	4 1/4"	
D7P901	16	21'-2"	STR.		1152				
D7P1101	8	30'-0"	STR.		1276				
D7P1102	16	20'-0"	2		1701	18'-3"	2'-0"		
TOTAL WEIGHT					5566				
PIER NO. 8 (EASTBOUND LANES)									
D8P501	56	12'-4"	3		721	2'-3"	3'-8"		
D8P502	20	5'-4"	1		112	2'-3"	1'-8"		
D8P503	2 SER. 5	9'-2" / 6'-2"	1		80	2'-3"	3'-7" / 2'-1"		
D8P504	2 SER. 5	9'-2" / 6'-8"	1		83	2'-3"	3'-7" / 2'-4"		
D8P601	6	30'-0"	STR.		271				
D8P602	8	10'-9"	STR.		90				
D8P603	4	9'-5"	STR.		40				
D8P604	2	6'-5"	4		20	5'-0"	1'-5"	3 7/8"	
D8P605	2	6'-8"	4		20	5'-3"	1'-5"	4 1/4"	

MARK	NUMBER	LENGTH	TYPE	SER. INCR.	WEIGHT (LBS)	A	B	C	R
PIER NO. 8 (EASTBOUND LANES)									
D8P901	16	21'-2"	STR.		1152				
D8P1101	8	30'-0"	STR.		1276				
D8P1102	16	20'-0"	2		1701	18'-3"	2'-0"		
TOTAL WEIGHT					5566				
PIER NO. 9 (EASTBOUND LANES)									
D9P501	56	12'-4"	3		721	2'-3"	3'-8"		
D9P502	20	5'-4"	1		112	2'-3"	1'-8"		
D9P503	2 SER. 5	9'-2" / 6'-2"	1		80	2'-3"	3'-7" / 2'-1"		
D9P504	2 SER. 5	9'-2" / 6'-8"	1		83	2'-3"	3'-7" / 2'-4"		
D9P601	6	30'-0"	STR.		271				
D9P602	8	10'-9"	STR.		90				
D9P603	4	9'-5"	STR.		40				
D9P604	2	6'-5"	4		20	5'-0"	1'-5"	3 7/8"	
D9P605	2	6'-8"	4		20	5'-3"	1'-5"	4 1/4"	
D9P901	16	21'-2"	STR.		1152				
D9P1101	8	30'-0"	STR.		1276				
D9P1102	16	20'-0"	2		1701	18'-3"	2'-0"		
TOTAL WEIGHT					5566				

PRESTRESSED CONC. ALTERNATE 43/48

adache - ciuni - lynn associates
CONSULTING ENGINEERS CLEVELAND, OHIO 44130

REINFORCING STEEL LIST
EASTBOUND LANES
BRIDGE NO. ERI-2-1798 L/R
S.R. 2 OVER MUD BROOK

ERIE COUNTY
ERI-2-16.13

STA. 1173+19.17 TO
STA. 1180+94.84

DESIGNED	DRAWN	CHECKED	REVIEWED	DATE	REVISED
J.R.S.	W.P.R.	M.A.G.	L.E.D.	9-23-85	

MICROFILMED
AUG 30 1990

F.H.W.A. REGION	STATE	PROJECT
5	OHIO	

ERIE COUNTY
ERI-2-(16.13-17.39)

208R / 284

MARK	NUMBER	LENGTH	TYPE	SER. INCR.	WEIGHT (LBS)	A	B	C	R
SUPERSTRUCTURE (EASTBOUND LANES)									
EDS401	2249	30'-0"	STR.		45,070				
EDS402	4	25'-4"	STR.		68				
EDS403	4	27'-6"	STR.		73				
DS501	594	26'-8"	STR.		16,521				
DS502	1944	26'-6"	STR.		53,731				
DS503	148	26'-10"	STR.		4142				
DS504	148	27'-2"	STR.		4194				
DS505	74	27'-7"	STR.		2123				
DS506	74	28'-1"	STR.		2161				
DS507	74	28'-5"	STR.		2194				
DS508	76	28'-10"	STR.		2279				
DS509	1586	30'-0"	STR.		46,626				
DS510	68	9'-10"	STR.		695				
EDS511	524	3'-2"	13		1731	10½"			
EDS512	524	2'-6"	2		1362	10½"	1'-8½"		
EDS513	524	5-3"	5		2869	2'-2"	2'-5"	7½"	2⅛"
EDS514	48	15'-1"	STR.		753				
EDS515	432	6'-6"	STR.		2929				
EDS516	192	12'-6"	STR.		2503				
DS517	288	9'-1"	STR.		2727				
DS518	360	12'-3"	8		4600	1'-8"	4'-11"		
DS519	320	9'-3"	STR.		3087				
DS520	400	9'-5"	8		3929	8"	4'-0"		
DS521	60	4'-8"	STR.		292				
DS522	108	5'-8"	3		638	1'-0"	1'-7"		
EDS601	1564	32'-3"	STR.		75,565				
EDS602	297	21'-2"			9443				
EDS603	970	20'-11"			30,475				
EDS604	74	21'-7"			2399				
EDS605	74	22'-2"			2464				
EDS606	37	23'-1"			1283				
EDS607	37	24'-7"			1366				
EDS608	37	25'-6"			1417				
EDS609	38	26'-2"	STR.		1494				
DS801	54	6'-0"	STR.		865				
DS802	72	9'-7"	STR.		1842				
EDS803	1	12'-10"	STR.		34				
EDS804	1	13'-4"	STR.		36				
EDS805	4	15'-0"	STR.		40				

MARK	NUMBER	LENGTH	TYPE	SER. INCR.	WEIGHT (LBS)	A	B	C	R
SUPERSTRUCTURE (EASTBOUND LANES)									
DS1001	4	27'-9"	STR.		478				
DS1002	4	30'-0"	STR.		516				
TOTAL WEIGHT EPOXY COATED BARS					183,374				
TOTAL WEIGHT UNCOATED BARS					153,640				
LIGHT POLE PILASTER (TYPICAL OF FOUR) (EASTBOUND LANES)									
EL501	4	3'-3"	1		14	1'-10"	10"		
EL502	4	8'-5"	16		35	2'-4"	3'-2"		
EL503	6	7'-0"	17		44	1'-4"	1'-10"	1'-0"	
EL504	4	3'-2"	STR.		13				
EL601	12	3'-9"	STR.		68				
TOTAL WEIGHT PER PILASTER					174				
SUMMARY OF TOTAL WEIGHT (EASTBOUND LANES)									
ABUTMENTS :									
EPOXY COATED BARS					1627				
UNCOATED BARS					16,645				
PIERS :									
EPOXY COATED BARS					0				
UNCOATED BARS					50,421				
SUPERSTRUCTURE :									
EPOXY COATED BARS					183,374				
4-LIGHT POLE PILASTERS					696				
TOTAL WEIGHT-EPOXY COATED BARS					184,070				
TOTAL WEIGHT-UNCOATED BARS					153,640				

MARK	NUMBER	LENGTH	TYPE	SER. INCR.	WEIGHT (LBS)	A	B	C	R

PRESTRESSED CONC. ALTERNATE 44/48

adache - ciuni - lynn associates
CONSULTING ENGINEERS CLEVELAND, OHIO 44130

REINFORCING STEEL LIST
EASTBOUND LANES

BRIDGE NO. ERI-2-1798 L/R
S. R. 2 OVER MUD BROOK

ERIE COUNTY
ERI-2-16.13

STA. 1173+19.17 TO
STA. 1180+94.84

DESIGNED	DRAWN	CHECKED	REVIEWED	DATE	REVISED
A.J.M.	W.P.R.	M.A.G.	L.E.D.	9-23-85	

MICROFILMED
AUG 30 1990

F.H.W.A. REGION	STATE	PROJECT	
5	OHIO		

2085
284

ERIE COUNTY
ERI-2-(16.13-17.39)

MARK	NUMBER	LENGTH	TYPE	SER. INCR.	WEIGHT (LBS)	A	B	C	R
PIER NO. 1 (WESTBOUND LANES)									
W1P505	1	26'-10"	18		1146				
W1P506	1	28'-4"	18		1208				
W1P507	1	29'-10"	18		1370				
W1P1002	19	30'-4"	STR.		2480				
W1P1003	19	31'-10"	STR.		2602				
W1P1004	19	33'-5"	STR.		2732				
TOTAL WEIGHT UNCOATED BARS					11,538				
PIER NO. 2 (WESTBOUND LANES)									
W2P505	1	27'-1"	18		1156				
W2P506	1	28'-8"	18		1222				
W2P507	1	30'-2"	18		1284				
W2P1002	19	30'-7"	STR.		2500				
W2P1003	19	32'-1"	STR.		2623				
W2P1004	19	33'-8"	STR.		2752				
TOTAL WEIGHT UNCOATED BARS					11,537				
PIER NO. 3 (WESTBOUND LANES)									
W3P505	1	27'-7"	18		1177				
W3P506	1	29'-1"	18		1239				
W3P507	1	30'-7"	18		1301				
W3P1002	19	30'-1"	STR.		2459				
W3P1003	19	32'-7"	STR.		2664				
W3P1004	19	34'-1"	STR.		2786				
TOTAL WEIGHT UNCOATED BARS					11,626				
PIER NO. 4 (WESTBOUND LANES)									
W4P505	1	32'-8"	18		1388				
W4P506	1	34'-4"	18		1457				
W4P507	1	35'-11"	18		1523				
W4P1002	19	36'-2"	STR.		2957				
W4P1003	19	37'-9"	STR.		3086				
W4P1004	19	39'-5"	STR.		3223				
TOTAL WEIGHT UNCOATED BARS					13,634				

MARK	NUMBER	LENGTH	TYPE	SER. INCR.	WEIGHT (LBS)	A	B	C	R
PIER NO. 5 (WESTBOUND LANES)									
W5P505	1	33'-2"	18		1409				
W5P506	1	34'-6"	18		1464				
W5P507	1	36'-2"	18		1533				
W5P1002	19	36'-5"	STR.		2977				
W5P1003	19	38'-0"	STR.		3107				
W5P1004	19	39'-7"	STR.		3236				
TOTAL WEIGHT UNCOATED BARS					13,726				
PIER NO. 6 (WESTBOUND LANES)									
W6P505	1	34'-0"	18		1443				
W6P506	1	35'-7"	18		1509				
W6P507	1	37'-2"	18		1575				
W6P1002	19	37'-6"	STR.		3066				
W6P1003	19	39'-1"	STR.		3195				
W6P1004	19	40'-8"	STR.		3325				
TOTAL WEIGHT UNCOATED BARS					14,111				
PIER NO. 7 (WESTBOUND LANES)									
W7P505	1	34'-0"	18		1443				
W7P506	1	35'-9"	18		1516				
W7P507	1	37'-6"	18		1588				
W7P1002	19	37'-6"	STR.		3066				
W7P1003	19	39'-3"	STR.		3209				
W7P1004	19	41'-0"	STR.		3352				
TOTAL WEIGHT UNCOATED BARS					14,174				
PIER NO. 1 (EASTBOUND LANES)									
D1P505	1	28'-8"	18		1222				
D1P506	1	29'-11"	18		1274				
D1P507	1	31'-2"	18		1326				
D1P902	19	32'-2"	STR.		2078				
D1P903	19	33'-5"	STR.		2159				
D1P904	19	34'-8"	STR.		2233				
TOTAL WEIGHT UNCOATED BARS					10,292				

NOTES

REINFORCING STEEL SAMPLES
REFER TO CMS SECTIONS 106.03, 700, 709.01 THROUGH 709.05 AND 709.08. SUFFICIENT ADDITIONAL REINFORCING STEEL SHALL BE PROVIDED FOR SAMPLING. RANDOM SAMPLES SHALL BE REPLACED IN THE STRUCTURES BY THE ADDITIONAL STEEL, SPLICED IN ACCORDANCE WITH 509.08.

SPIRAL REINFORCING BARS
THE LENGTH SHOWN IN THE STEEL LIST FOR THE SPIRAL BARS IS THE DISTANCE FROM THE BOTTOM OF THE DRILLED-IN PIER COLUMN SOCKET TO THE TOP OF THE COLUMN, INCLUDING THREE (3) CLOSED COILS (ONE AND ONE HALF CLOSED COILS AT THE ENDS OF EACH SPIRAL UNIT). THE LENGTH MAY REQUIRE ADJUSTMENT DUE TO VARIATION OF ACTUAL TOP OF BEDROCK ELEVATION, ACTUAL MEASURED SOCKET EMBEDMENT IN BEDROCK, ETC.

FOUR ANGLE SPACERS WEIGHING APPROXIMATELY 1.01 POUNDS PER LINEAL FOOT OF SPACER SHALL BE PROVIDED FOR EACH SPIRAL UNIT LISTED. THEY SHALL BE EQUALLY SPACED ALONG THE PERIPHERY OF EACH COIL. THE NUMBER OF POUNDS OF THESE SPACERS WILL BE PAID FOR AS REINFORCING STEEL AND IS INCLUDED IN THE TABULATED SPIRAL WEIGHT.

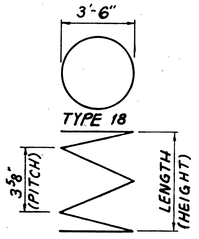

PRESTRESSED CONC. ALTERNATE 15/48

adache - ciuni - lynn associates
CONSULTING ENGINEERS CLEVELAND OHIO 44130

REINFORCING STEEL LIST
DRILLED-IN PIER COLUMNS
BRIDGE NO. ERI-2-1798 L/R
S. R. 2 OVER MUD BROOK

ERIE COUNTY STA. 1173+19.17 TO
ERI-2-16.13 STA. 1180+94.84

DESIGNED	DRAWN	CHECKED	REVIEWED	DATE	REVISED
R.C.K.	J.R.S.	J.R.S.	L.E.D.	9-23-85	

MICROFILMED
AUG 30 1990

F.H.W.A. REGION	STATE	PROJECT	
5	OHIO		

208T
284

ERIE COUNTY
ERI-2-(16.13-17.39)

MARK	NUMBER	LENGTH	TYPE	SER. INCR.	WEIGHT (LBS)	A	B	C	R
	PIER NO. 2 (EASTBOUND LANES)								
D2P505	1	28'-11"	18		1233				
D2P506	1	30'-3"	18		1288				
D2P507	1	31'-6"	18		1340				
D2P902	19	32'-5"	STR.		2094				
D2P903	19	33'-9"	STR.		2180				
D2P904	19	35'-0"	STR.		2261				
TOTAL	WEIGHT UNCOATED BARS				10,396				
	PIER NO. 3 (EASTBOUND LANES)								
D3P505	1	29'-2"	18		1243				
D3P506	1	30'-6"	18		1298				
D3P507	1	31'-9"	18		1350				
D3P902	19	32'-8"	STR.		2110				
D3P903	19	33'-11"	STR.		2191				
D3P904	19	35'-3"	STR.		2277				
TOTAL	WEIGHT UNCOATED BARS				10,469				
	PIER NO. 4 (EASTBOUND LANES)								
D4P505	1	29'-8"	18		1264				
D4P506	1	30'-11"	18		1316				
D4P507	1	32'-2"	18		1367				
D4P902	19	33'-1"	STR.		2137				
D4P903	19	34'-5"	STR.		2223				
D4P904	19	35'-8"	STR.		2304				
TOTAL	WEIGHT UNCOATED BARS				10,611				
	PIER NO. 5 (EASTBOUND LANES)								
D5P505	1	30'-1"	18		1281				
D5P506	1	31'-4"	18		1333				
D5P507	1	32'-8"	18		1388				
D5P902	19	33'-7"	STR.		2169				
D5P903	19	34'-10"	STR.		2250				
D5P904	19	36'-2"	STR.		2336				
TOTAL	WEIGHT UNCOATED BARS				10,757				

MARK	NUMBER	LENGTH	TYPE	SER. INCR.	WEIGHT (LBS)	A	B	C	R
	PIER NO. 6 (EASTBOUND LANES)								
D6P505	1	30'-1"	18		1281				
D6P506	1	31'-4"	18		1333				
D6P507	1	32'-8"	18		1388				
D6P902	19	33'-7"	STR.		2169				
D6P903	19	34'-10"	STR.		2250				
D6P904	19	36'-2"	STR.		2336				
TOTAL	WEIGHT UNCOATED BARS				10,757				
	PIER NO. 7 (EASTBOUND LANES)								
D7P505	1	30'-2"	18		1285				
D7P506	1	31'-3"	18		1329				
D7P507	1	32'-8"	18		1388				
D7P902	19	33'-0"	STR.		2175				
D7P903	19	34'-11"	STR.		2256				
D7P904	19	36'-2"	STR.		2336				
TOTAL	WEIGHT UNCOATED BARS				10,769				
	PIER NO. 8 (EASTBOUND LANES)								
D8P505	1	30'-4"	18		1292				
D8P506	1	31'-8"	18		1347				
D8P507	1	32'-11"	18		1399				
D8P902	19	33'-11"	STR.		2191				
D8P903	19	35'-2"	STR.		2272				
D8P904	19	36'-5"	STR.		2353				
TOTAL	WEIGHT UNCOATED BARS				10,854				
	PIER NO. 9 (EASTBOUND LANES)								
D9P505	1	30'-7"	18		1301				
D9P506	1	31'-10"	18		1354				
D9P507	1	33'-2"	18		1409				
D9P902	19	34'-1"	STR.		2202				
D9P903	19	35'-4"	STR.		2283				
D9P904	19	36'-8"	STR.		2369				
TOTAL	WEIGHT UNCOATED BARS				10,918				

MARK	NUMBER	LENGTH	TYPE	SER. INCR.	WEIGHT (LBS)	A	B	C	R

PRESTRESSED CONC. ALTERNATE 46/48

adache - ciuni - lynn associates
CONSULTING ENGINEERS CLEVELAND, OHIO 44130

REINFORCING STEEL LIST
DRILLED-IN PIER COLUMNS

BRIDGE NO. ERI-2-1798 L/R
S. R. 2 OVER MUD BROOK

ERIE COUNTY
ERI-2-16.13

STA. 1173+19.17 TO
STA. 1180+94.84

DESIGNED	DRAWN	CHECKED	REVIEWED	DATE	REVISED
R.C.K.	J.R.S.	J.R.S.	L.E.D.	9-25-85	

MICROFILMED
AUG 30 1990

INSPECTION RECORD FOR DRILLED SHAFTS

FHWA REGION	STATE	PROJECT	
5	OHIO		

20BU 284

ERIE COUNTY
ERI-2-(16.13-17.39)

BRIDGE NO. _____ GENERAL CONTRACTOR _____ TYPE & MODEL OF DRILLING MACHINERY _____ TYPE OF CONCRETE PUMP _____ COST PER LINEAL FOOT

LOCATION _____ DRILLING CONTRACTOR _____ MAX. CONTINUOUS TORQUE _____ FT.-LB. HOSE DIAMETER _____ INCHES PIER DRILLED SHAFTS _____

PROJECT NO. _____ PROJECT ENGINEER _____ CROWD (MAX. CONTINUOUS DOWNWARD FORCE) _____ LBS. CAPACITY _____ CU.FT./MIN. DRILLED SHAFTS _____

SUBSTRUCTURE		DATE AND TIME OF DRILLING		APPROX. ELEVATION OF TOP OF OVER BURDEN	LENGTH OF DRILLED SHAFTS				OBSTRUCTIONS ENCOUNTERED		BEDROCK			LENGTH OF CASING (FEET)	CASING GUAGE	REINFORCING STEEL				CONCRETE					RESULTS OF PROOF TESTING	TOLERENCES (INCH)			PLAN SHAFT DIA. (INCH.)	CONSTRUCTED SHAFT REMARKS DIA. (INCH.)
																VERTICAL		SPIRAL								DEVIATION FROM PLUMB OR PLAN BATTER		DEVIATION OF COLUMN TOP -CENTER FROM PLAN LOCATION HORIZONTALLY		
PIER NO. (E.B. OR W.B.)	NUMBER	STARTED	FINISHED		REMOVABLE CASING	THROUGH OVER BURDEN	THROUGH BEDROCK	PAY LENGTH	NUMBER	SIZE (INCH.)	APPROX. ELEVATION OF TOP OF BEDROCK	APPROX. ELEV. OF BOTT. OF BEDROCK SOCKET	LENGTH OF BEDROCK SOCKET (FEET)			BAR SIZE NO.	NO. OF REBARS	BAR SIZE NO.	PITCH (INCH)	SLUMP TEST RESULT (INCH.)	CYLINDER STRENGTH f'_c (P.S.I.)	AIR TEMP (F)	TIME NEEDED TO PLACE CONCRETE (HR.)	QUANTITY (CU. YD.)		N-S	E-W			
#1 E.B.	1																													
↓	2																													
↓	3																													
#2 E.B.	4																													
↓	5																													
↓	6																													
#3 E.B.	7																													
↓	8																													
↓	9																													
#4 E.B.	10																													
↓	11																													
↓	12																													
#5 E.B.	13																													
↓	14																													
↓	15																													
#6 E.B.	16																													
↓	17																													
↓	18																													
#7 E.B.	19																													
↓	20																													
↓	21																													
#8 E.B.	22																													
↓	23																													
↓	24																													

PROJECT ENGINEERS COMMENTS

METHOD OF CONSTRUCTION

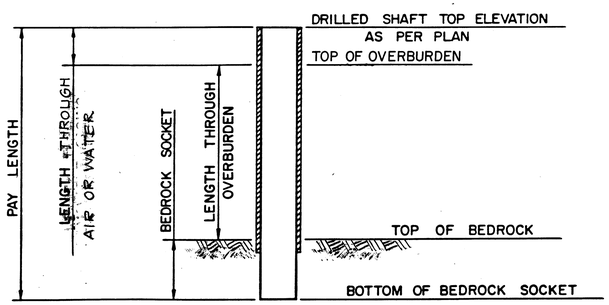

PRESTRESSED CONC. ALTERNATE 47/48

adache - ciuni - lynn associates
CONSULTING ENGINEERS CLEVELAND, OHIO 44130

DRILLED SHAFTS

BRIDGE NO. ERI-2-1798 L/R
S. R. 2 OVER MUD BROOK

ERIE COUNTY STA. 1173+19.17 TO
ERI-2-16.13 STA. 1180+94.84

DESIGNED	DRAWN	CHECKED	REVIEWED	DATE	REVISED
	M.A.G.		L.E.D	9-23-85	1-8-86

KEY BLUE PRINT CO. IN/0614

MICROFILMED
AUG 30 1990

INSPECTION RECORD FOR DRILLED SHAFTS

FHWA REGION	STATE	PROJECT	
5	OHIO		

208V 284

ERIE COUNTY
ERI-2-(16.13-17.39)

BRIDGE NO. _____
LOCATION _____
PROJECT NO. _____

GENERAL CONTRACTOR _____
DRILLING CONTRACTOR _____
PROJECT ENGINEER _____

TYPE & MODEL OF DRILLING MACHINERY _____
MAX. CONTINUOUS TORQUE _____ FT.-LB.
CROWD (MAX. CONTINUOUS DOWNWARD FORCE) _____ LBS.

TYPE OF CONCRETE PUMP _____
HOSE DIAMETER _____ INCHES
CAPACITY _____ CU. FT./MIN.

COST PER LINEAL FOOT
PIER DRILLED SHAFTS _____
DRILLED SHAFTS _____

SUBSTRUCTURE		DATE AND TIME OF DRILLING		APPROX. ELEVATION OF TOP OF OVER BURDEN	LENGTH OF DRILLED SHAFTS				OBSTRUCTIONS ENCOUNTERED		BEDROCK			LENGTH OF CASING (FEET)	CASING GUAGE	REINFORCING STEEL				CONCRETE					RESULTS OF PROOF TESTING	TOLERENCES (INCH)			PLAN SHAFT DIA. (INCH)	CONSTRUCTED SHAFT DIA. (INCH)
																VERTICAL		SPIRAL									DEVIATION FROM PLUMB OR PLAN BATTER				
PIER NO. (E.B. OR W.B.)	NUMBER	STARTED	FINISHED		REMOVABLE CASING	THROUGH OVER BURDEN	THROUGH BEDROCK	PAY LENGTH	NUMBER	SIZE (INCH.)	APPROX. ELEVATION OF TOP OF BEDROCK	APPROX. ELEV. OF BOTT. OF BEDROCK SOCKET	LENGTH OF BEDROCK SOCKET (FEET)			BAR SIZE NO.	NO. OF REBARS	BAR SIZE NO.	PITCH (INCH)	SLUMP TEST RESULT (INCH.)	CYLINDER STRENGTH f'_c (P.S.I.)	AIR TEMP (F)	TIME NEEDED TO PLACE CONCRETE (HR.)	QUANTITY (CU. YD.)		N-S	E-W	DEVIATION OF COLUMN TOP -CENTER FROM PLAN LOCATION HORIZONTALLY		
#9 E.B.	25																													
↓	26																													
↓	27																													
#1 W.B.	28																													
↓	29																													
↓	30																													
#2 W.B.	31																													
↓	32																													
↓	33																													
#3 W.B.	34																													
↓	35																													
↓	36																													
#4 W.B.	37																													
↓	38																													
↓	39																													
#5 W.B.	40																													
↓	41																													
↓	42																													
#6 W.B.	43																													
↓	44																													
↓	45																													
#7 W.B.	46																													
↓	47																													
↓	48																													

PROJECT ENGINEERS COMMENTS

METHOD OF CONSTRUCTION

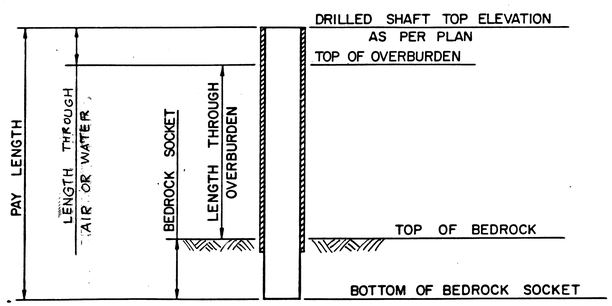

PRESTRESSED CONC. ALTERNATE 48/48

adache · ciuni · lynn associates
CONSULTING ENGINEERS CLEVELAND, OHIO 44130

DRILLED SHAFTS

BRIDGE NO. ERI-2-1798 L/R
S. R. 2 OVER MUD BROOK

ERIE COUNTY
ERI-2-16.13

STA. 1173+19.17 TO
STA. 1180+94.84

DESIGNED	DRAWN	CHECKED	REVIEWED	DATE	REVISED
	M.A.G.		L.E.D.	9-23-85	1-8-86

KEY BLUE PRINT CO. N/B&W

MICROFILMED
AUG 30 1990

FED. RD. DIVISION	STATE	PROJECT	FISCAL YEAR
2	OHIO		

209
284

ERIE COUNTY
ERI.-2-(16.13-17.39)

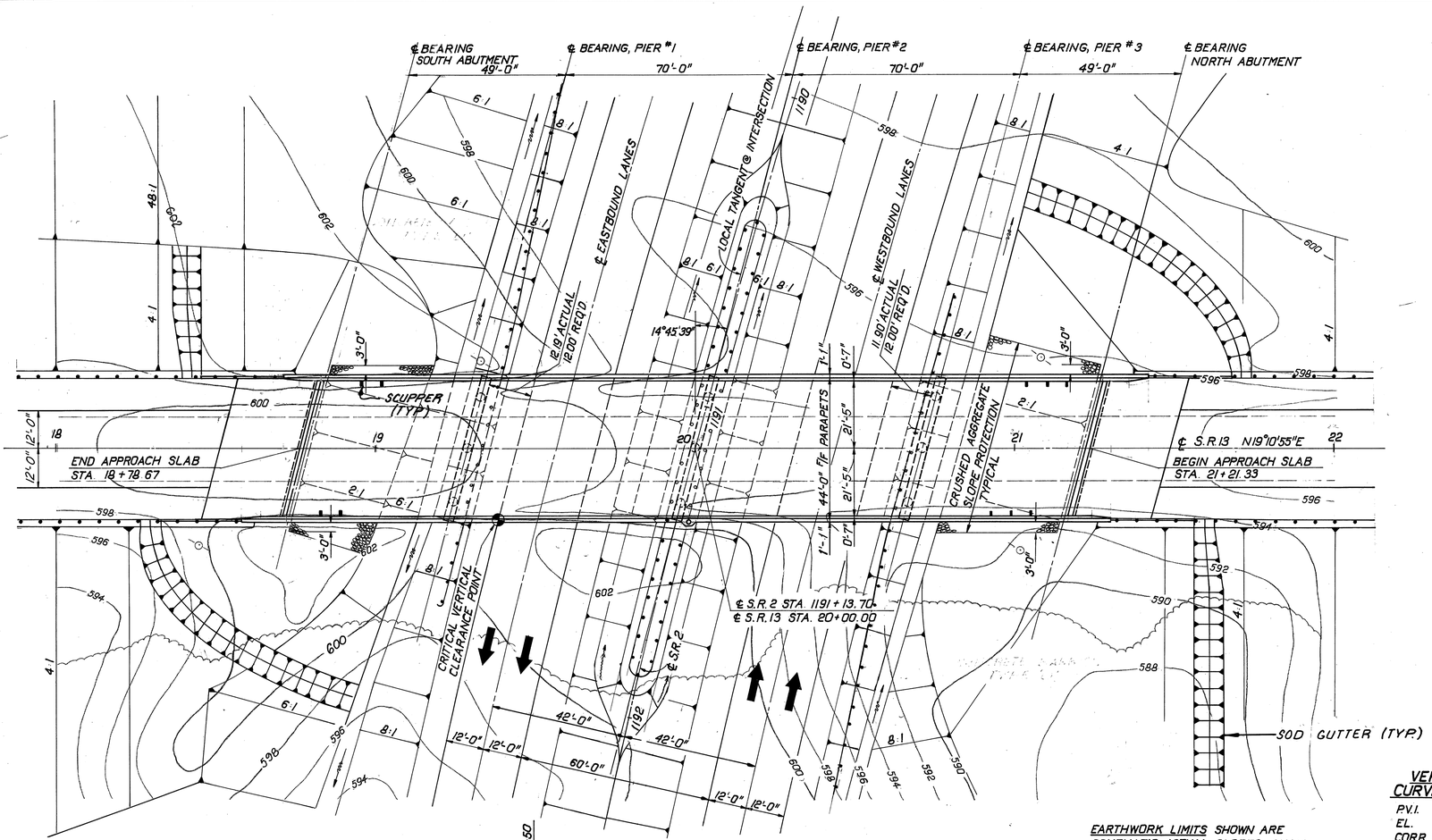

PLAN

S.R. 2 CURVE DATA

P.I.	=	1191+14.95
Δ	=	87°18'50"
Dc	=	2°00'
R	=	2864.79'
T	=	2884.77'
Lc	=	4065.69'
Ls	=	300.00'
θs	=	3°00'

EARTHWORK LIMITS SHOWN ARE SCHEMATIC. ACTUAL SLOPES SHALL CONFORM TO PLAN CROSS SECTIONS.

VERTICAL CURVE DATA

P.V.I.	=	STA. 19+50
EL.	=	625.90'
CORR.	=	11.17'
P.G.	=	614.73
V.C.	=	1500'
G_1	=	+3.00%
G_2	=	-2.96%

DESIGN TRAFFIC
ADT(2001) = 4630
ADTT(2001) = 325

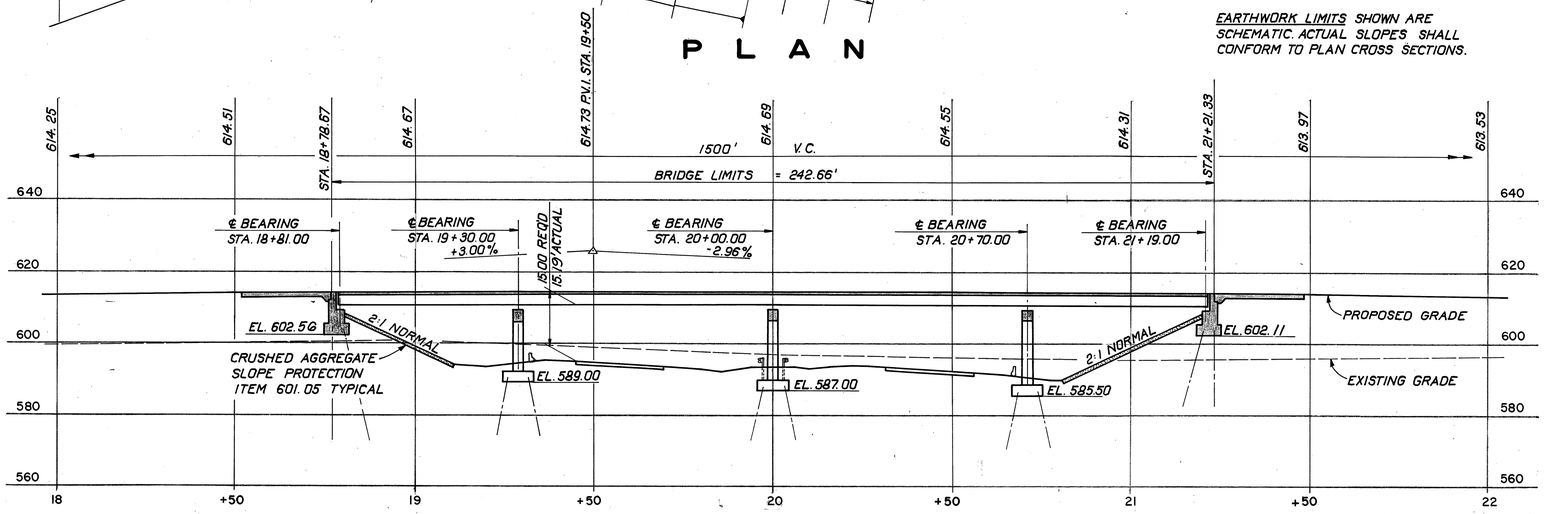

℄ PROFILE

NOTE:
ALL ABUTMENT PILES AND ALL PIER PILES SHALL BE HP10×42 STEEL H BEARING PILES.
ESTIMATED AVERAGE PAY LENGTH:
BOTH ABUTMENTS 50 FT.
PIER Nº 1 38 FEET
PIERS Nº2&3 35 FEET

PROPOSED STRUCTURE

TYPE: CONTINUOUS STEEL BEAM WITH REINFORCED CONCRETE DECK AND SUBSTRUCTURE
SPANS: 49'-0", 70'-0", 70'-0", 49'-0" ℄/℄ BRG'S.
ROADWAY: 44'-0" F/F PARAPETS
LOADING: HS 20-44 AND THE ALTERNATE MILITARY LOADING
SKEW: 14°45' 39" LEFT FORWARD W/R TO LOCAL TANGENT
WEARING SURFACE: MONOLITHIC CONCRETE
ALIGNMENT: TANGENT
APPROACH SLABS: AS-1-81 (25' LONG)

1 / 10

ADACHE ASSOCIATES INC., ENGINEERS
CLEVELAND 42, OHIO

SITE PLAN

BRIDGE NO. ERI-2-1833
S.R. 13 OVER S.R. 2
ERIE COUNTY STA. 18+78.67 TO
ERI-2-16.13 STA. 21+21.33

DESIGNED	DRAWN	CHECKED	REVIEWED	DATE
V.N.	J.T.	H.G.	L.E.D.	9-21-85

MICROFILMED
AUG 30 1990

FED. RD. DIVISION	STATE	PROJECT	
2	OHIO		

210/284

ERIE COUNTY
ERI.- 2-(16.13-17.39)

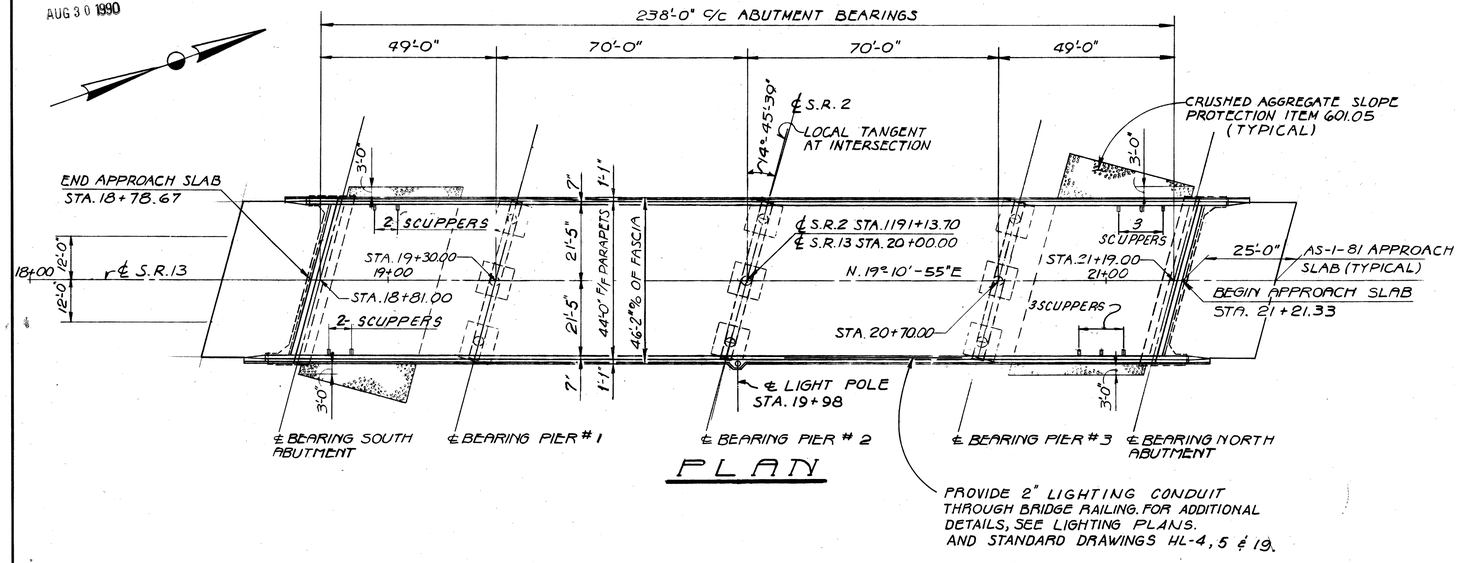

PLAN

PROVIDE 2" LIGHTING CONDUIT THROUGH BRIDGE RAILING. FOR ADDITIONAL DETAILS, SEE LIGHTING PLANS. AND STANDARD DRAWINGS HL-4, 5 & 19.

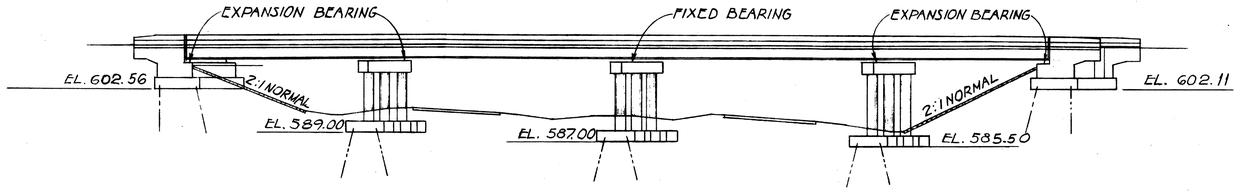

ELEVATION

ESTIMATED QUANTITIES

ITEM	TOTAL	UNIT	DESCRIPTION	SUPER	ABUT.	PIERS	GEN'L		
503	LUMP	SUM.	COFFERDAMS, CRIBS AND SHEETING				LUMP		
503	455	CU. YDS.	UNCLASSIFIED EXCAVATION		220	235			
505	LUMP	SUM.	PILE DRIVING EQUIPMENT MOBILIZATION				LUMP		
507	3,240	LIN. FT.	STEEL PILES HP 10×42		1,300	1,940			
509	73,730	LBS.	REINFORCING STEEL, GRADE 60	30,411	11,831	31,488			
511	367	CU. YDS.	CLASS 'S' CONC. SUPERSTRUCTURE, AS PER PLAN	367					
511	95	CU. YDS.	CLASS 'C' CONCRETE PIER CAPS & COLUMNS.			95			
511	103	CU. YDS.	CLASS 'C' CONCRETE ABUTMENTS ABOVE FOOTINGS		103				
511	161	CU. YDS.	CLASS 'C' CONCRETE FOOTINGS.		80	81			
512	5	SQ. YDS.	TYPE 'B' WATERPROOFING		5				
513	262,200	LBS	STRUCTURAL STEEL A-36 (AISC CATEGORY - I)	262,200					
516	91	Lin. Ft.	Structural Steel Expansion Joints including Strip Seals, As Per Plan	91					
514	262,200	LBS.	FIELD PAINTING OF NEW STRUCTURAL STEEL, (SYSTEM - A)	262,200					
518	43	CU. YDS.	POROUS BACKFILL.		43				
518	84	LIN. FT.	6" PERFORATED HELICAL C.S.P., 707.01		84				
518	56	LIN. FT.	6" NON-PERFORATED HELICAL C.S.P. INCLUDING SPECIALS, 707.01		56				
518	10	EACH	SCUPPERS INCLUDING SUPPORTS,	10					
601	465	SQ. YDS	CRUSHED AGGREGATE SLOPE PROTECTION.				465		
625			SEE SHEET 258 FOR LIGHTING SUMMARY						
824	49,004	LBS.	EPOXY COATED REINFORCING STEEL, GRADE 60	46,254	2,750				
516	30	Each	Rockers and Bolsters Galvanized *	30					
Spec.	364	Sq. Yd.	Sealing of Concrete Surfaces * (See Proposal Note)	213		151			

* See General Note on Sht. 159/284

NOTES

FOR SCUPPER LOCATIONS AND SPACING SEE SHEET NO. 6/10
FOR APPROACH SLAB DETAILS SEE STANDARD DRAWING AS-1-81.
FOR GENERAL NOTES, SEE SHEET 158/284.

2/10

ADACHE ASSOCIATES INC., ENGINEERS
CLEVELAND, OHIO 44142

GENERAL PLAN, ELEV. & ESTIMATED QUANTITIES

BRIDGE NO. ERI - 2 - 1833
S.R. 13 OVER S.R. 2
ERIE COUNTY
ERI-2-16.13
STA. 18+78.67 TO
STA. 21+21.33

DESIGNED	DRAWN	CHECKED	REVIEWED	DATE	REVISED
L.E.D. 7-7-69	V.I.P.	L.A. 7-14-69	L.E.D.	9-21-85	

MICROFILMED
AUG 30 1990

FED. RD. DIVISION	STATE	PROJECT	
2	OHIO		

211
284

ERIE COUNTY
ERI.- 2-(16.13-17.39)

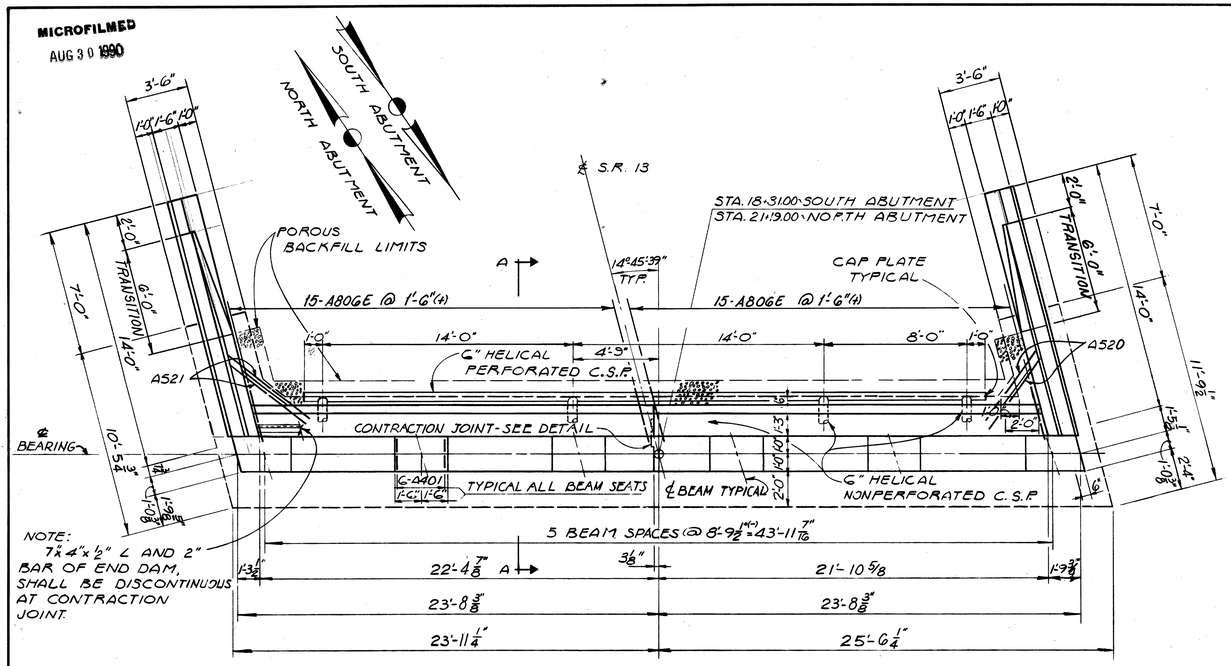

PLAN
NORTH & SOUTH ABUTMENTS

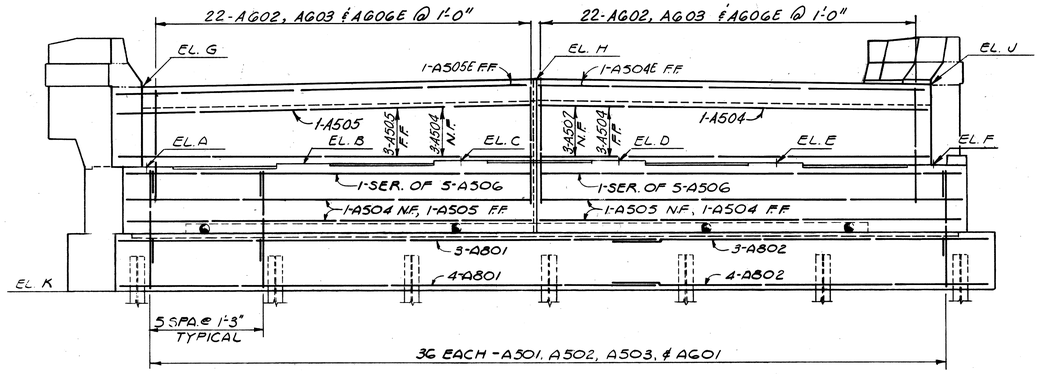

ELEVATION

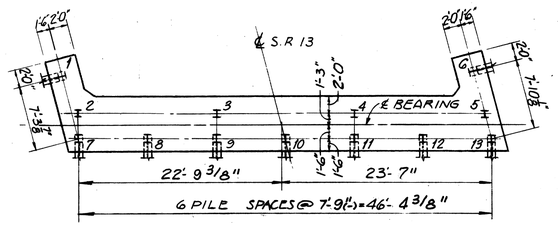

PILING LAYOUT

NOTE: USE 13 PILES EACH ABUTMENT

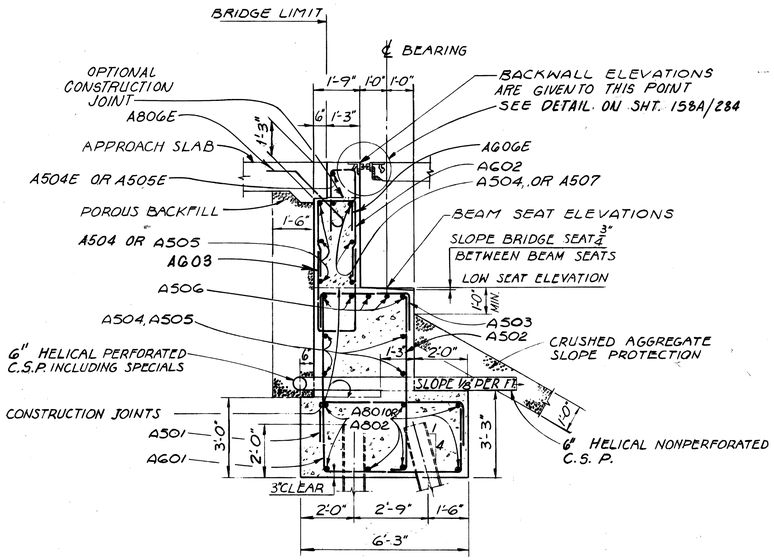

SECTION A-A

TYPE 'B' WATERPROOFING, 36" WIDE CENTERED ON ℄ OF CONTRACTION JOINT, FROM TOP OF FOOTING TO BOTTOM OF APPROACH SLAB

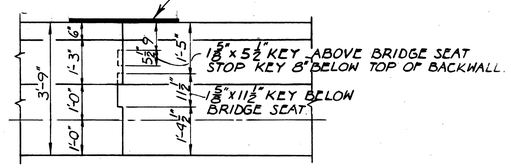

CONTRACTION JOINT-DETAIL

ELEVATION TABLE										
LOCATION	"A"	"B"	"C"	"D"	"E"	"F"	"G"	"H"	"J"	"K"
SOUTH ABUTMENT	609.59	609.73	609.87	609.87	609.75	609.62	614.26	614.61	614.30	602.56
NORTH ABUTMENT	609.14	609.29	609.44	609.45	609.33	609.21	613.82	614.18	613.89	602.11

NOTES

POROUS BACKFILL 1.5 AND 2.0 FEET THICK AS SHOWN, SHALL EXTEND UP TO THE PLANE OF SUBGRADE AND TO THE LIMITS SHOWN ON THE PLAN.

ABUTMENT PILES ARE HP10x42. BATTERED PILES SHALL BE BATTERED 1 IN 4 IN THE DIRECTION SHOWN.

WINGWALL DETAILS - SEE SHEET NO. 4/10
REINFORCING STEEL LIST AND BAR BENDING DIAGRAMS SEE SHEET NO. 9/10 AND 10/10
ABBREVIATIONS USED: E.F. = EACH FACE, N.F. = NEAR FACE, F.F. = FAR FACE.
ALL FOOTING REINFORCEMENT SHALL HAVE 3" MINIMUM CONCRETE COVER.

IN ADDITION TO THE PROVISIONS OF 511.08, BACKWALL CONCRETE ABOVE THE OPTIONAL CONSTRUCTION JOINT AT THE APPROACH SLAB SEAT SHALL NOT BE PLACED UNTIL AFTER THE DECK CONCRETE IN THE SPAN ADJACENT TO THE ABUTMENT HAS BEEN PLACED

3/10

ADACHE ASSOCIATES INC., ENGINEERS
CLEVELAND, OHIO 44142

ABUTMENT DETAILS

BRIDGE NO. ERI - 2 - 1833
S.R. 13 OVER S.R. 2
ERIE COUNTY
ERI - 2 - 16.13
STA. 18 + 78.67 TO
STA. 21 + 21.33

DESIGNED	DRAWN	CHECKED	REVIEWED	DATE	REVISED
L.E.D.	W.J.S.	L.A. L.E.D.	L.E.D.	9-21-85	

MICROFILMED
AUG 30 1990

FED. RD. DIVISION	STATE	PROJECT	
2	OHIO		

212
284

ERIE COUNTY
ERI.- 2-(16.13-17.39)

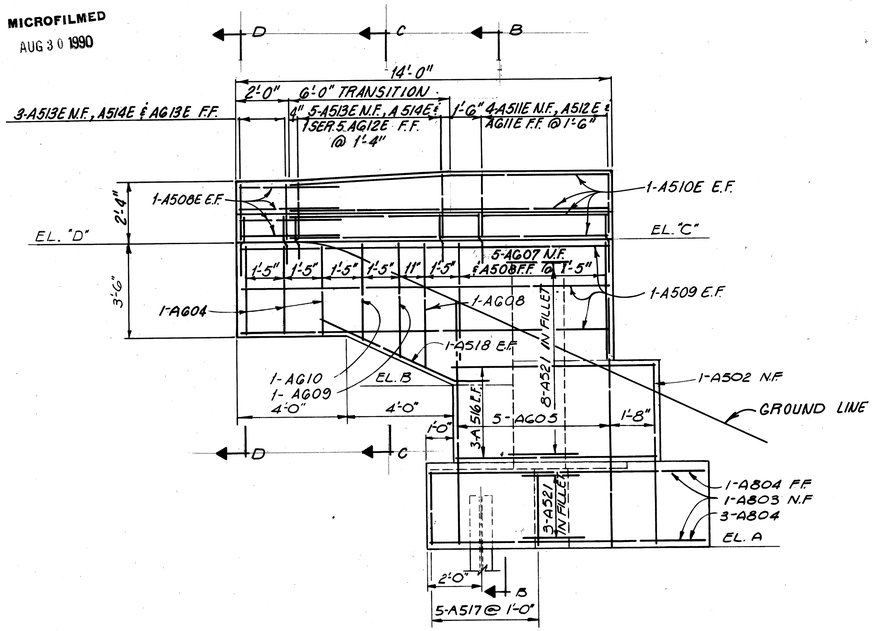

WINGWALL ELEVATION
SOUTH ABUTMENT - EAST WINGWALL
NORTH ABUTMENT - WEST WINGWALL

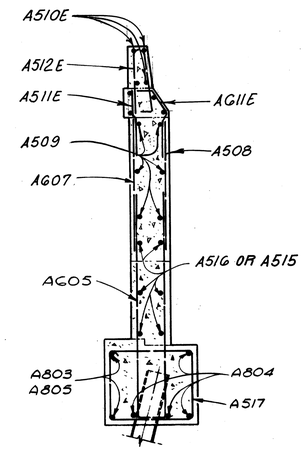

SECTION B-B
SEE DETAIL "A"

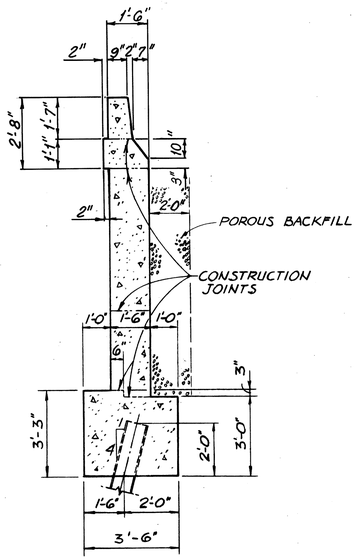

DETAIL "A"
REINFORCEMENT NOT SHOWN

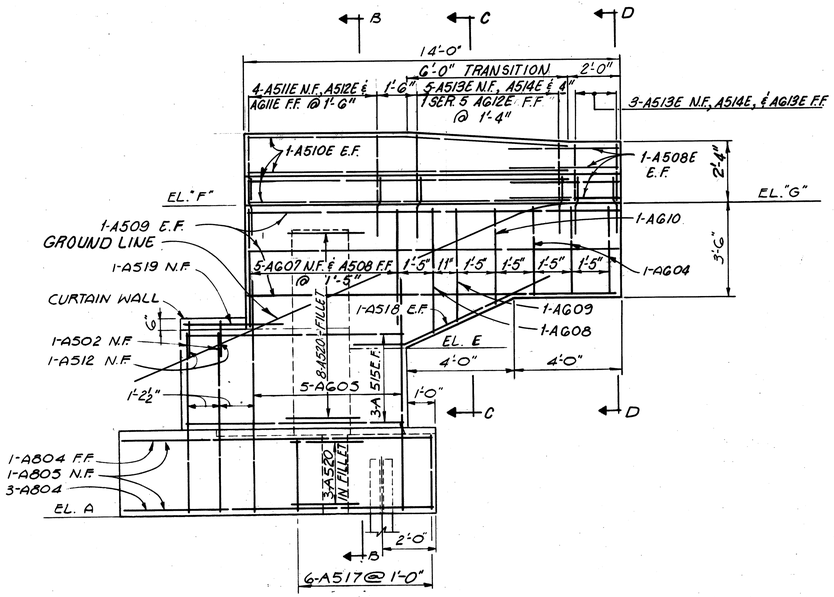

WINGWALL ELEVATION
SOUTH ABUTMENT -WEST WINGWALL
NORTH ABUTMENT - EAST WINGWALL

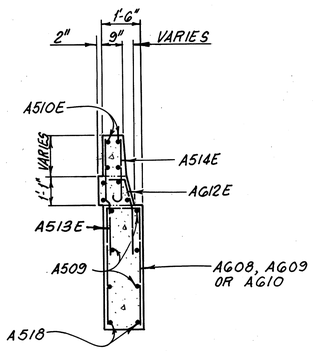

SECTION C-C

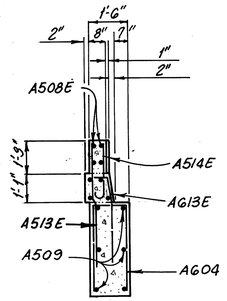

SECTION D-D

NOTES

ABUTMENT PLAN AND ELEVATION DETAILS SEE SHEET NO. 3/10

ADDITIONAL NOTES - SEE SHEET NO. 3/10

FOR ADDITIONAL RAILING DETAILS SEE STANDARD DRAWING BR-1, SHEET NO. 1 OF 1. PROVIDE 2" CONDUIT THROUGH THE EAST WINGWALL OF BOTH THE NORTH AND THE SOUTH ABUTMENTS PER STANDARD DRAWING HL-5 AND THE LIGHTING PLANS.

ELEVATION TABLE

LOCATION	"A"	"B"	"C"	"D"	"E"	"F"	"G"
SOUTH ABUTMENT	602.56	608.88	614.26	614.2	608.92	614.30	614.26
NORTH ABUTMENT	602.11	608.40	613.82	613.72	608.47	613.89	613.80

4/10

ADACHE ASSOCIATES INC., ENGINEERS
CLEVELAND, OHIO 44142

WINGWALL DETAILS

BRIDGE NO. ERI - 2 - 1833
S.R. 13 OVER S.R. 2
ERIE COUNTY
ERI - 2 - 16.13
STA. 18+78.67 TO STA. 21+21.33

DESIGNED	DRAWN	CHECKED	REVIEWED	DATE	REVISED
L.E.D.	W.J.S.	L.A. L.E.D.	L.E.D.	9.21.85	

MICROFILMED
AUG 30 1990

FED. RD. DIVISION	STATE	PROJECT	
2	OHIO		

213/284

ERIE COUNTY
ERI - 2-(16.13-17.39)

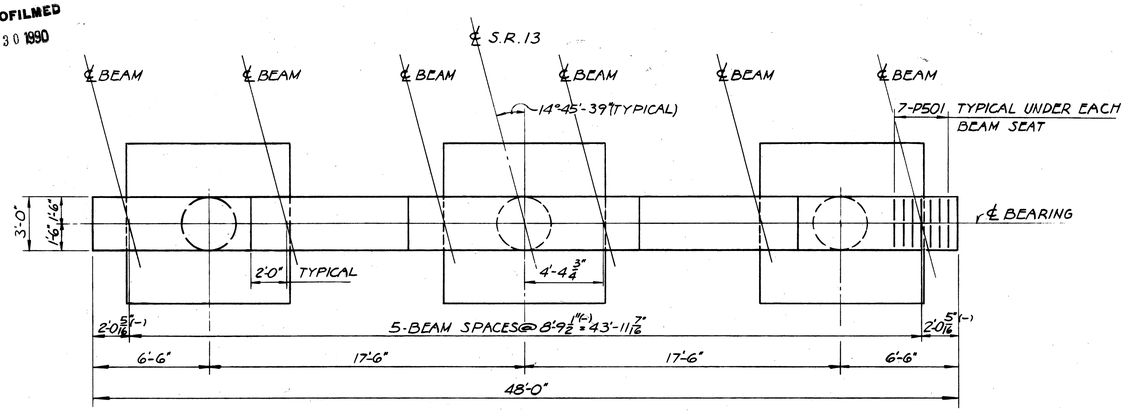

PLAN

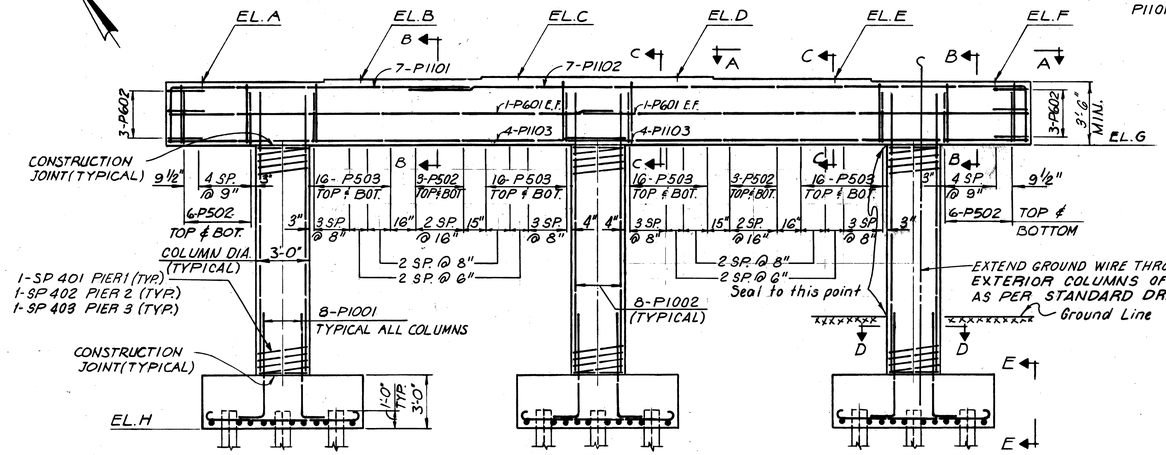

ELEVATION

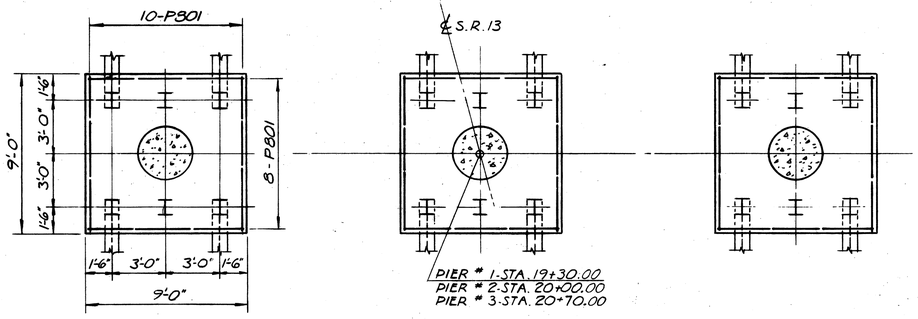

TYPICAL FOOTING

FOOTING PLAN

NOTE:
LAP TOP CAP BEAM STEEL VERTICALLY TO PROVIDE CLEARANCE FOR ANCHOR BOLTS.

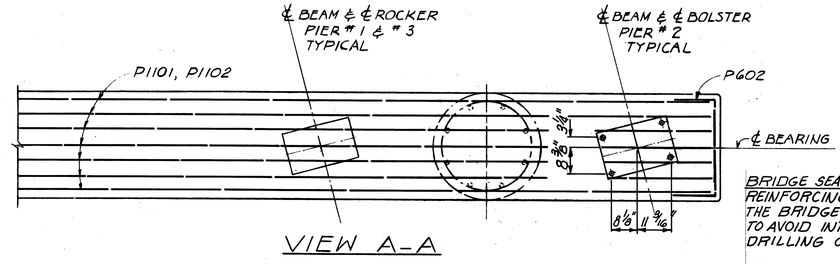

VIEW A-A

BRIDGE SEAT REINFORCING
REINFORCING STEEL IN THE VICINITY OF THE BRIDGE SEAT SHALL BE PLACED TO AVOID INTERFERENCE WITH THE DRILLING OF ANCHOR BAR HOLES

BEARING ANCHORS
AT THE OPTION OF THE CONTRACTOR, BEARING ANCHORS (OR FORMED HOLES), LOCATED AND SUPPORTED BY TEMPLATES, MAY BE CAST IN PLACE.

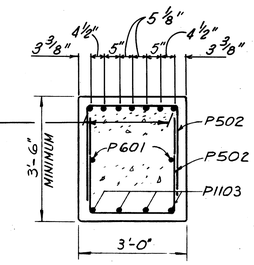

SECTION B-B

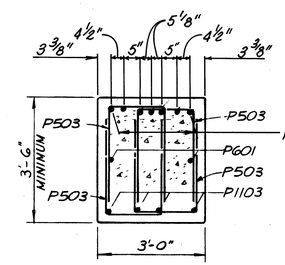

SECTION C-C

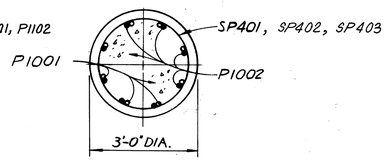

SECTION D-D

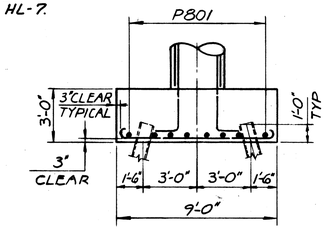

VIEW E-E

NOTES
PIER PILES ARE HP 10x42
BATTERED PILES SHALL BE BATTERED 1 ON 4 IN DIRECTION SHOWN.
ABBREVIATIONS USED: E.F. = EACH FACE T & B. = TOP & BOTTOM.
REINFORCING STEEL LIST AND BAR BENDING DIAGRAMS SEE SHEET NO. 9/10 AND 10/10

ELEVATION TABLE

LOCATION	A	B	C	D	E	F	G	H
PIER # 1	609.27	609.40	609.53	609.53	609.40	609.26	605.77	589.00
PIER # 2	609.12	609.26	609.39	609.40	609.27	609.14	605.62	587.00
PIER # 3	608.99	609.13	609.28	609.29	609.16	609.04	605.49	585.50

5/10

ADACHE ASSOCIATES INC., ENGINEERS
CLEVELAND, OHIO 44142

PIER DETAILS

BRIDGE NO. ERI - 2 - 1833
S.R. 13 OVER S.R. 2
ERIE COUNTY
ERI - 2 - 16.13
STA. 18+78.67 TO STA. 21+21.33

DESIGNED	DRAWN	CHECKED	REVIEWED	DATE	REVISED
L.E.D.	V.I.P.	L.A.	L.E.D.	9-21-85	

MICROFILMED
AUG 30 1990

FED. RD. DIVISION	STATE	PROJECT	
2	OHIO		

214
284

ERIE COUNTY
ERI - 2-(16.13-17.39)

NOTE:
THE DISTANCE SHOWN FROM TOP OF DECK SLAB TO TOP OF STEEL BEAM IS THE DESIGN DIMENSION. THE QUANTITY OF DECK CONCRETE TO BE PAID FOR SHALL BE BASED UPON THIS DIMENSION, EVEN THOUGH DEVIATION FROM IT MAY BE NECESSARY BECAUSE THE TOP FLANGE OF THE BEAM MAY NOT HAVE THE EXACT CAMBER OR CONFORMATION REQUIRED TO PLACE IT PARALLEL TO THE FINISHED GRADE.

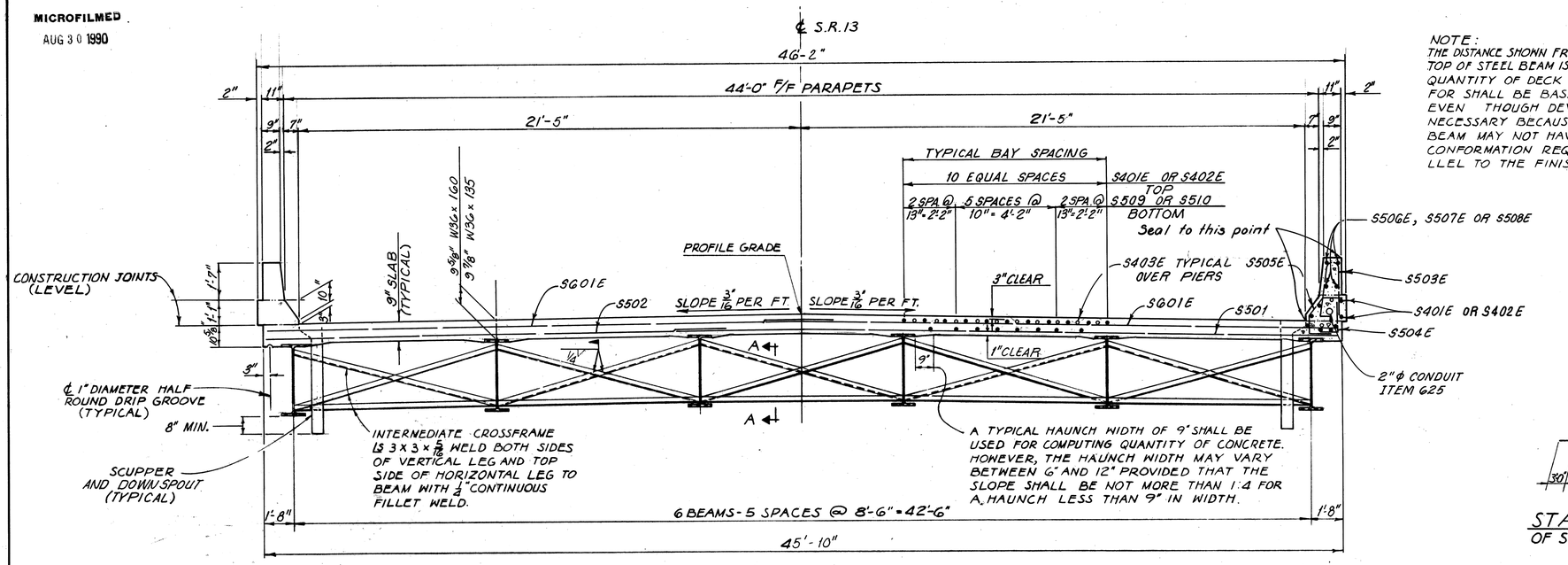

TRANSVERSE SECTION

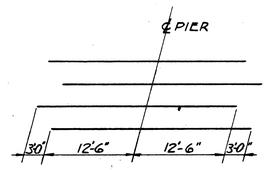

STAGGER DIAGRAM
OF S403E BARS OVER PIERS

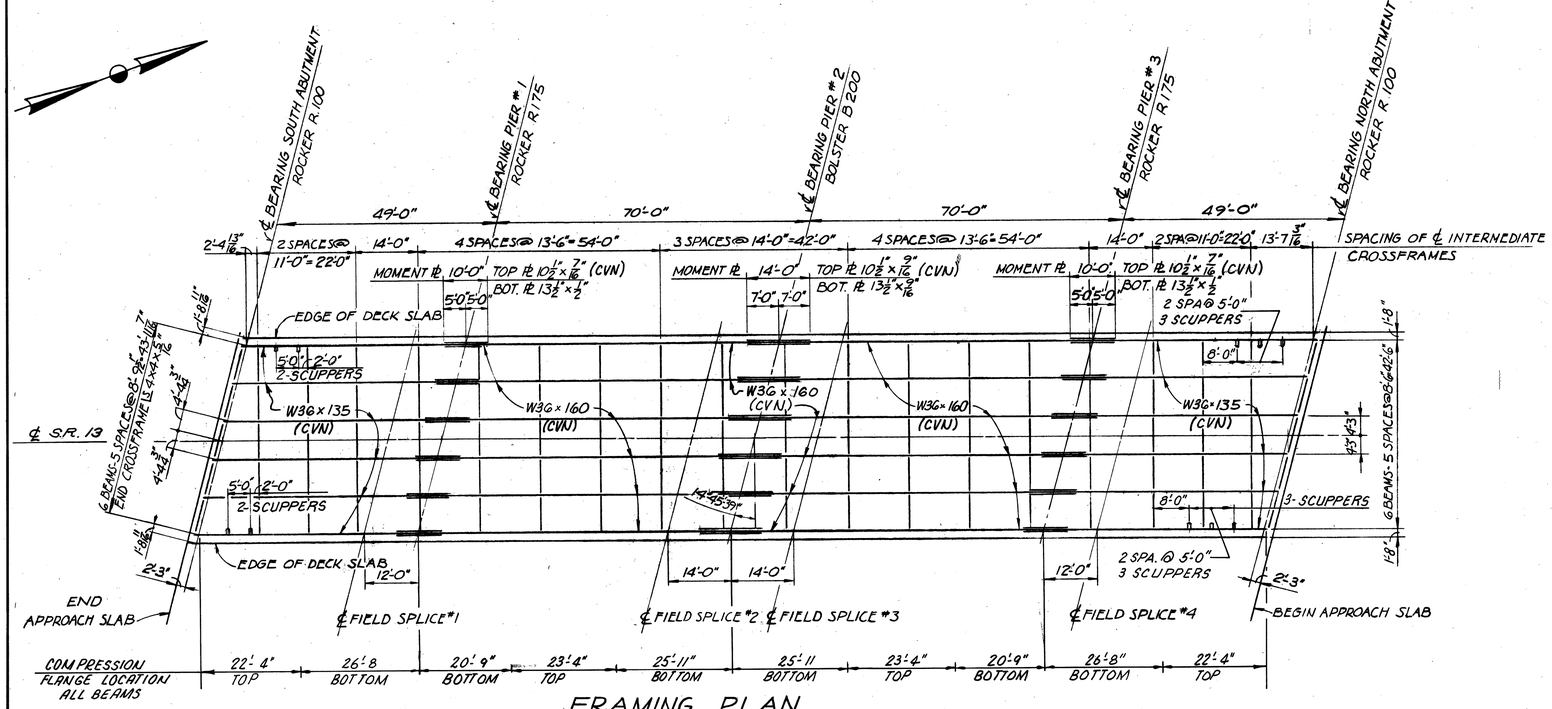

FRAMING PLAN

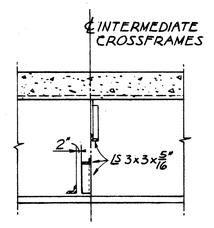

SECTION A-A

NOTES

FOR DECK SLAB PLAN SEE SHEET NO. 8/10
FOR SUPERSTRUCTURE DETAILS SEE SHEET NO. 7/10
FOR ROCKERS AND BOLSTERS SEE STANDARD DRAWING RB-1-55.

SCUPPERS SHALL BE IN ACCORDANCE WITH STD. DWG. SD-1-69 EXCEPT THAT SCUPPER PIPES SHALL EXTEND 8" BELOW THE BOTTOM OF THE BEAMS INSTEAD OF 2".

WELDED ATTACHMENT OF SUPPORTS FOR CONCRETE DECK FINISHING MACHINES MAY BE MADE TO AREAS OF THE FASCIA STRINGER FLANGES DESIGNATED "COMPRESSION". ATTACHMENTS SHALL NOT BE MADE TO AREAS DESIGNATED "TENSION". FILLET WELDS TO COMPRESSION FLANGES SHALL BE NOT CLOSER THAN 1" FROM EDGE OF FLANGE, BE NOT MORE THAN 2" LONG AND BE NOT SMALLER THAN THE MINIMUM SIZE REQUIRED BY AASHTO. 6/10

ADACHE ASSOCIATES INC., ENGINEERS
CLEVELAND, OHIO 44142

TRANSVERSE SECTION & FRAMING PLAN

BRIDGE NO. ERI - 2 - 1833
S.R. 13 OVER S.R.2
ERIE COUNTY
ERI-2-16.13
STA. 18+78.67 TO
STA. 21+21.33

DESIGNED	DRAWN	CHECKED	REVIEWED	DATE	REVISED
L.E.D.	V.I.P.	L.A.	L.E.D.	9.21.85	

MICROFILMED
AUG 30 1990

FED. RD. DIVISION	STATE	PROJECT	
2	OHIO		

215/284

ERIE COUNTY
ERI - 2-(16.13-17.39)

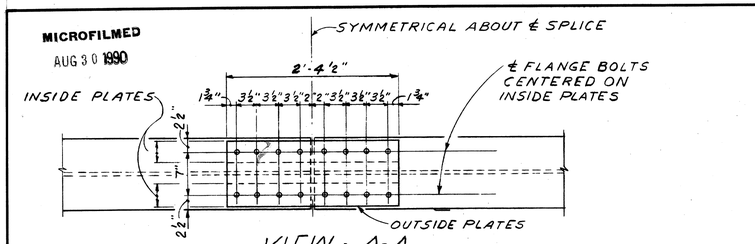

VIEW - A-A

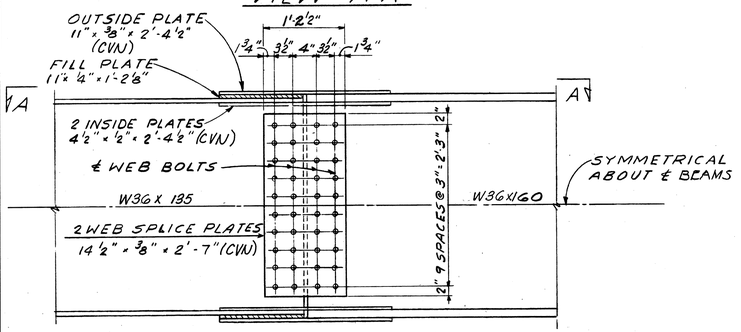

FIELD SPLICES #1 & #4

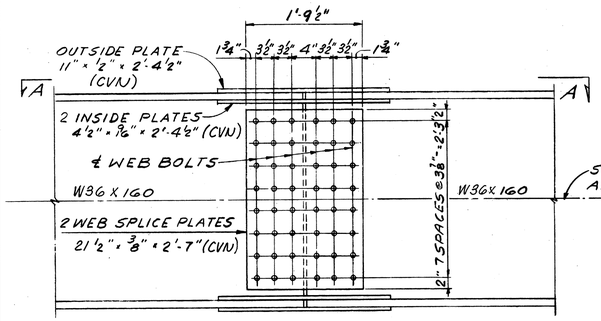

FIELD SPLICES #2 & #3

BEAM SPLICE DETAILS

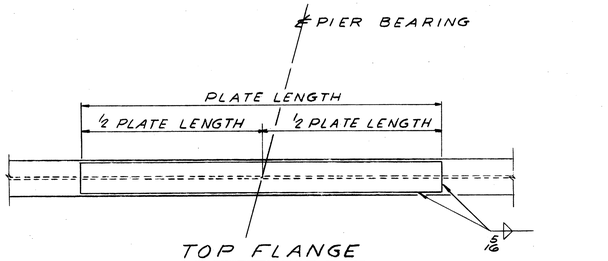

TOP FLANGE

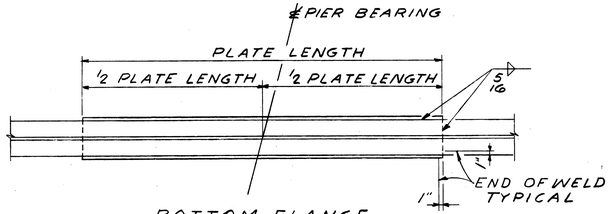

BOTTOM FLANGE

MOMENT PLATE DETAILS

DEFLECTION AND CAMBER TABLE

BEAMS	DESCRIPTION	A	B	C	D	E	F	G	H	J	K	L	M	W	X	Y
APPLIES TO ALL BEAMS	DEFLECTION DUE TO WEIGHT OF STEEL	0"	0"	0"	1/16"	1/16"	0"	0"	1/16"	1/16"	0"	0"	0"	2 3/16"	3 3/8"	2 3/16"
	DEFLECTION DUE TO REMAINING DEAD LOAD	1/8"	3/16"	1/16"	1/4"	3/8"	1/8"	1/8"	3/8"	1/4"	1/16"	3/16"	1/8"			
	VERTICAL CURVE ADJUSTMENT	1/8"	1/8"	1/8"	1/4"	5/16"	3/16"	3/16"	5/16"	1/4"	1/8"	1/8"	1/8"			
	REQUIRED CAMBER	1/4"	5/16"	3/16"	9/16"	3/4"	5/16"	5/16"	3/4"	9/16"	3/16"	5/16"	1/4"			
	ORDINATE BETWEEN CHORD AND BASE LINE	9/16"	1 1/8"	1 11/16"	2 1/2"	2 13/16"	3 1/16"	3 1/16"	2 13/16"	2 1/2"	1 11/16"	1 1/8"	9/16"			

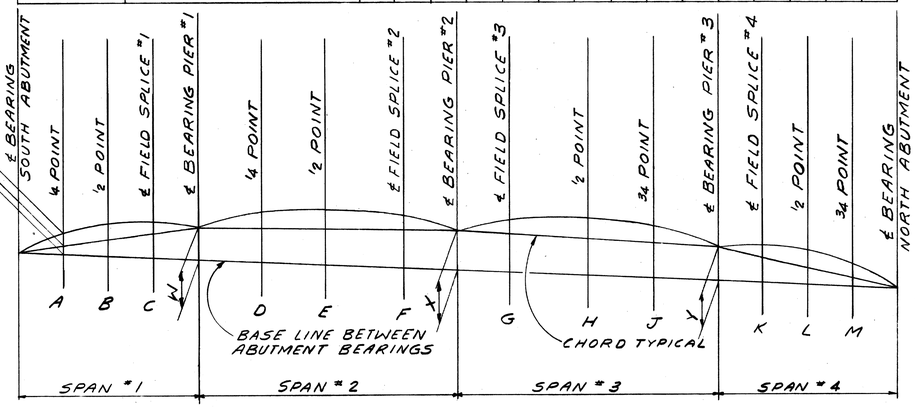

CAMBER DIAGRAM

NOTES

HIGH STRENGTH BOLTS SHALL BE 1" DIAMETER UNLESS OTHERWISE NOTED.

FOR FRAMING PLAN SEE SHEET NO. 6/10

FOR ADDITIONAL FIELD SPLICE DETAILS SEE STANDARD DRAWING SD-1-69

~~FOR END DAM AND END CROSSFRAME DETAILS, SEE STANDARD DRAWING SD-1-69, SHEETS 1 AND 2 OF 4. THE 2" x 1/2" x 1'-0" ANCHOR BARS SHALL BE 4 1/4" FROM THE TOP OF SLAB INSTEAD OF 3" AS SHOWN IN SECTION A-A. PROVIDE 3" BEVELED BAR, 1/4" MINIMUM THICKNESS, WELDED TO MAIN ANGLE OF END DAM EVEN THOUGH ROADWAY GRADIENT AT END DAM MAY BE LESS THAN 2%.~~

WHERE A SHAPE OR PLATE IS DESIGNATED (CVN) THE MATERIAL SHALL MEET MINIMUM NOTCH TOUGHNESS REQUIREMENTS AS SPECIFIED IN 711.02 OF C.M.S.

7/10

ADACHE ASSOCIATES INC., ENGINEERS
CLEVELAND, OHIO 44142

SUPERSTRUCTURE DETAILS

BRIDGE NO. ERI - 2 - 1833
S.R. 13 OVER S.R.2
ERIE COUNTY
ERI - 2 - 16.13
STA. 18+78.67 TO
STA. 21+21.33

DESIGNED	DRAWN	CHECKED	REVIEWED	DATE	REVISED
L.E.D.	Z	L.A.	L.E.D.	9.21.85	

MICROFILMED
AUG 30 1990

FED. RD. DIVISION	STATE	PROJECT	
2	OHIO		

216
284

ERIE COUNTY
ERI - 2-(16.13-17.39)

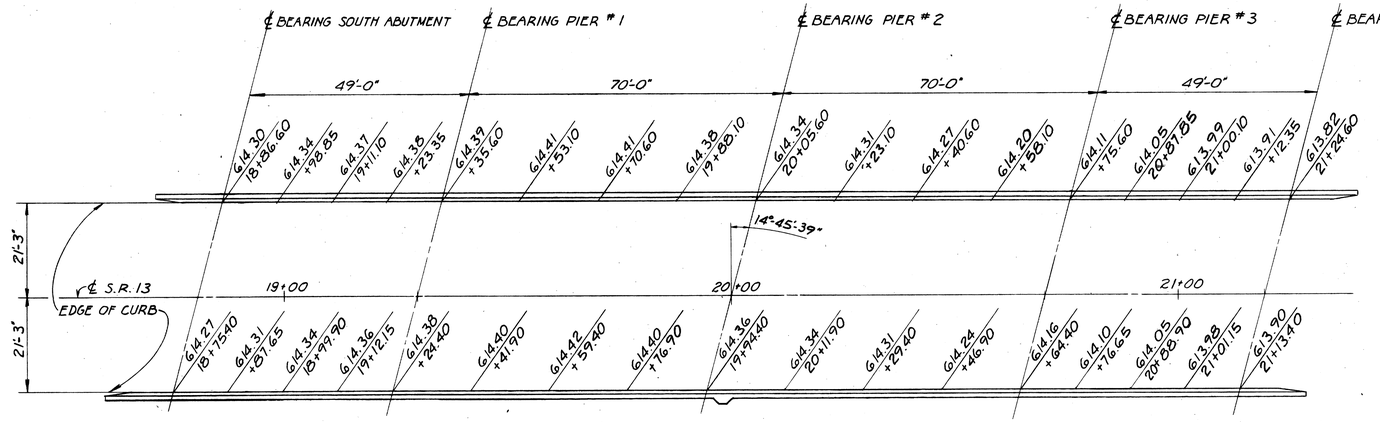

DECK ELEVATION PLAN

THE ELEVATIONS SHOWN ARE TOP OF CONCRETE SLAB ELEVATIONS WHICH ARE REQUIRED BEFORE THE CONCRETE IS PLACED. PROPER ALLOWANCE HAS BEEN MADE FOR THE DEADLOAD DEFLECTIONS CAUSED BY THE WEIGHT OF THE CONCRETE SLAB.

NOTE: FOR ADDITIONAL DETAILS OF STRUCTURE MOUNTED LIGHT POLE, SEE STANDARD DRAWING HL-3, 4, 5, 7 & 19. AND LIGHTING PLANS.

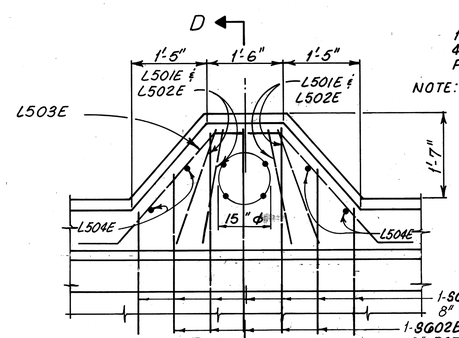

DETAIL "C"

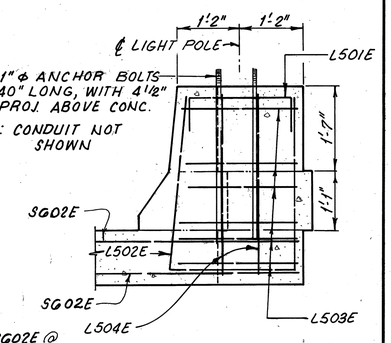

SECTION D-D

NOTES

FOR TRANSVERSE SECTION SEE SHEET NO. 6/10
FOR REINFORCING STEEL LIST AND BAR BENDING DIAGRAMS SEE SHEET NO. 9/10 AND 10/10.
FOR RAILING DETAILS NOT SHOWN SEE STANDARD DRAWING BR-1, SHEET NO. 1 OF 1.

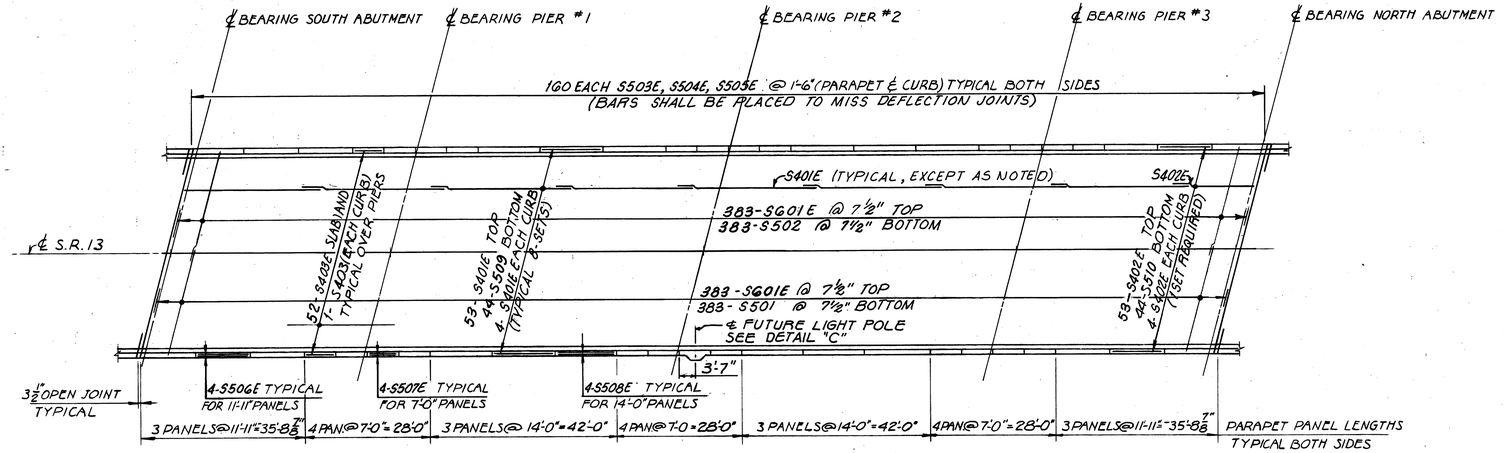

NOTE: FOR SPACING OF LONGITUDINAL REINFORCEMENT SEE TRANSVERSE SECTION.

DECK SLAB PLAN

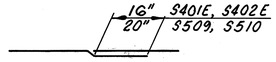

BAR LAP DETAIL

8/10

ADACHE ASSOCIATES INC., ENGINEERS
CLEVELAND, OHIO 44142

DECK SLAB PLAN & DECK ELEVATION PLAN

BRIDGE NO. ERI - 2 - 1833
S.R. 13 OVER S.R. 2
ERIE COUNTY
ERI-2-16.13
STA. 18+78.67 TO STA. 21+21.33

DESIGNED	DRAWN	CHECKED	REVIEWED	DATE	REVISED
L.E.D.	V.I.P.	L.A.	L.E.D.	9-21-85	

MICROFILMED
AUG 30 1990

ABUTMENTS

MARK	Nº REQUIRED			LENGTH	TYPE	DIMENSIONS				INCRM.	WEIGHT LBS.
			TOTAL			A	B	C	D		
	NORTH ABUTMENT	SOUTH ABUTMENT									
A501	36	36	72	7'-9"	1	1'-4"	5'-4"	1'-4"			582
A502	36	36	72	7'-4"	13	6'-7"	10"				551
A503	36	36	72	8'-0"	1	2'-5"	3'-5"	2'-5"			601
A504	11	11	22	22'-10"	ST.						524
A505	8	8	16	23'-8"	ST.						395
A506	2 SETS OF 5 BARS	2 SETS OF 5 BARS	4 SETS OF 5 BARS	22'-10" TO 23'-8"	ST.					2-1/2"	485
A507	3	3	6	21'-11"	ST.						137
A508	10	10	20	4'-4"	ST.						90
A509	12	12	24	13'-8"	ST.						342
A515	6	6	12	7'-8"	ST.						96
A516	6	6	12	7'-3"	ST.						91
A517	11	11	22	11'-6"	3	2'-6"	3'-0"				264
A518	4	4	8	7'-6"	8	6'-0"	1'-7"	1'-5"	8"		63
A519	1	1	2	4'-3"	ST.						9
A520	11	11	22	4'-7"	ST.						105
A521	11	11	22	5'-4"	ST.						122
A601	36	36	72	14'-4"	1	6'-7"	5'-4"	2'-9"			1,550
A602	44	44	88	6'-3"	1	2'-7"	1'-5"	2'-7"			826
A603	44	44	88	9'-7"	1	4'-3"	1'-5"	4'-3"			1,267
A604	6	6	12	7'-2"	1	3'-2"	1'-2"	3'-2"			129
A605	10	10	20	18'-8"	1	8'-11"	1'-2"	8'-11"			561
A607	10	10	20	4'-6"	ST.						135
A608	2	2	4	9'-8"	1	4'-5"	1'-2"	4'-5"			58
A609	2	2	4	8'-10"	1	4'-0"	1'-2"	4'-0"			53
A610	2	2	4	7'-6"	1	3'-4"	1'-2"	3'-4"			45
A801	7	7	14	30'-0"	ST.						1,121
A802	7	7	14	23'-1"	ST.						863
A803	2	2	4	13'-8"	8	10'-0"	3'-8"	3'-6"	11"		146
A804	8	8	16	10'-10"	ST.						463
A805	2	2	4	14'-8"	4	3'-6"	11'-3"		11"		157
										TOTAL ABUTMENTS =	11,831

PIER NO. 1

MARK	Nº REQUIRED		TOTAL	LENGTH	TYPE	DIMENSIONS A	B	C	D	INCRM.	WEIGHT LBS.
1P501			42	4'-1"	7	2'-8"					179
1P502			36	8'-5"	1	3'-0"	2'-8"	3'-0"			316
1P503			128	7'-8"	1	3'-0"	1'-11"	3'-0"			1,024
1P601			4	24'-11"	ST.						150
1P602			6	6'-8"	1	2'-2"	2'-8"	2'-2"			60
1P801			54	10'-4"	11	8'-6"					1,490
1P1001			24	9'-7"	13	8'-1"	1'-10"				990
1P1002			24	17'-0"	ST.						1,756

PIER NO. 1 (CONT.)

MARK	Nº REQUIRED		TOTAL	LENGTH	TYPE	DIMENSIONS A	B	C	D	INCRM.	WEIGHT LBS.
1P1101			7	22'-8"	13	19'-10"	3'-2"				843
1P1102			7	40'-2"	13	37'-4"	3'-2"				1,494
1P1103			8	27'-3"	ST.						1,158
										TOTAL SPIRALS	770
										TOTAL PIER NO. 1	10,230

PIER NO. 2

MARK	Nº REQUIRED		TOTAL	LENGTH	TYPE	DIMENSIONS A	B	C	D	INCRM.	WEIGHT LBS.
2P501			42	4'-1"	7	2'-8"					179
2P502			36	8'-5"	1	3'-0"	2'-8"	3'-0"			316
2P503			128	7'-8"	1	3'-0"	1'-11"	3'-0"			1,024
2P601			4	24'-11"	ST.						150
2P602			6	6'-8"	1	2'-2"	2'-8"	2'-2"			60
2P801			54	10'-4"	11	8'-6"					1,490
2P1001			24	9'-7"	13	8'-1"	1'-10"				990
2P1002			24	18'-10"	ST.						1,945
2P1101			7	22'-8"	13	19'-10"	3'-2"				843
2P1102			7	40'-2"	13	37'-4"	3'-2"				1,494
2P1103			8	27'-3"	ST.						1,158
										TOTAL SPIRALS	869
										TOTAL PIER NO. 2	10,518

PIER NO. 3

MARK	Nº REQUIRED		TOTAL	LENGTH	TYPE	DIMENSIONS A	B	C	D	INCRM.	WEIGHT LBS.
3P501			42	4'-1"	7	2'-8"					179
3P502			36	8'-5"	1	3'-0"	2'-8"	3'-0"			316
3P503			128	7'-8"	1	3'-0"	1'-11"	3'-0"			1,024
3P601			4	24'-11"	ST.						150
3P602			6	6'-8"	1	2'-2"	2'-8"	2'-2"			60
3P801			54	10'-4"	11	8'-6"					1,490
3P1001			24	9'-7"	13	8'-1"	1'-10"				990
3P1002			24	20'-3"	ST.						2,091

FED. RD. DIVISION	STATE	PROJECT	
2	OHIO		

217
284

ERIE COUNTY
ERI-2-(16.13-17.39)

BENDING DIAGRAMS

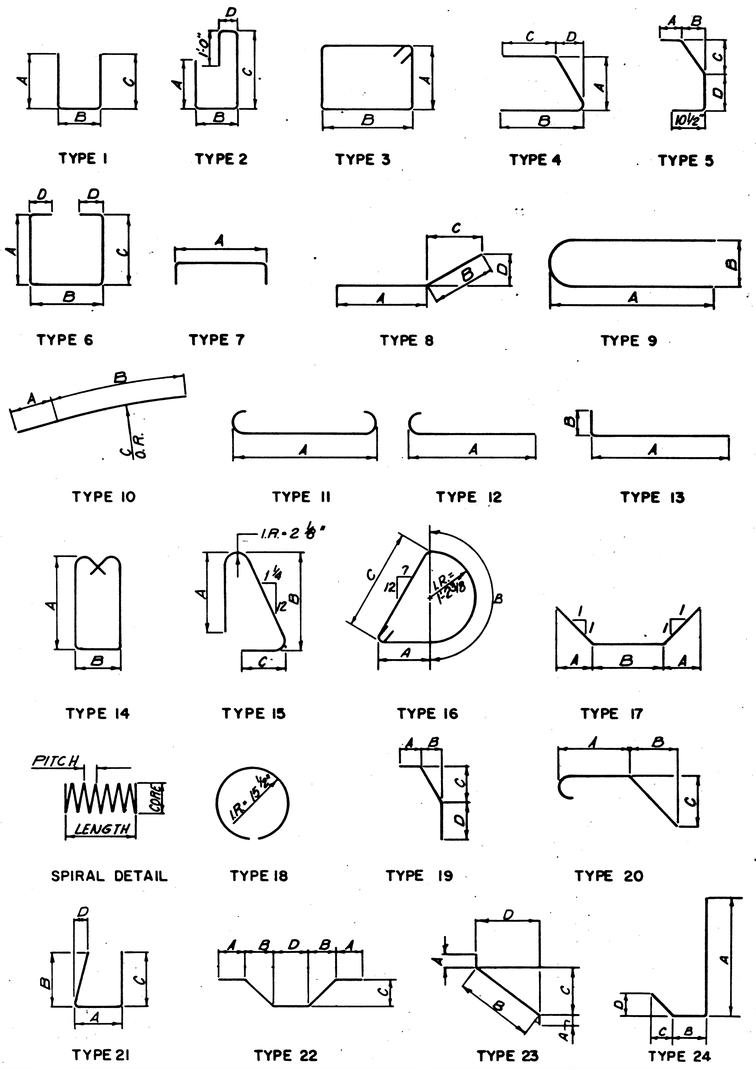

REINFORCING STEEL SAMPLES:

REFER TO CMS SECTIONS 106.03, 700, 709.01 THROUGH 709.05 AND 709.08. SUFFICIENT ADDITIONAL REINFORCING STEEL SHALL BE PROVIDED FOR SAMPLING. RANDOM SAMPLES SHALL BE REPLACED IN THE STRUCTURES BY THE ADDITIONAL STEEL, SPLICED IN ACCORDANCE WITH 509.08.

NOTE:
BAR DIMENSIONS GIVEN ARE OUT TO OUT.

9/10

ADACHE ASSOCIATES INC., ENGINEERS
CLEVELAND, OHIO 44142

REINFORCING STEEL LIST

BRIDGE Nº ERI - 2 - 1833
S.R. 13 OVER S.R. 2

ERIE COUNTY
ERI - 2 - 16.13

STA. 18+78.67 TO
STA. 21+21.33

DESIGNED	DRAWN	CHECKED	REVIEWED	DATE	REVISED
D.R.J.	D.R.J.	K.L.M.	L.E.D.	9-23-85	

MICROFILMED
AUG 30 1990

F.H.W.A. REGION	STATE	PROJECT	
5	OHIO		

2174
284

ERIE COUNTY
ERI-2-(16.13-17.39)

PIER NO. 3 (CONT.)

MARK	NO REQUIRED		TOTAL	LENGTH	TYPE	DIMENSIONS A	B	C	D	INCRM.	WEIGHT LBS.
3P1101			7	22'-8"	13	19'-10"	3'-2"				843
3P1102			7	40'-2"	13	37'-4"	3'-2"				1,494
3P1103			8	27'-3"	ST.						1,158
									TOTAL SPIRALS		945
									TOTAL PIER NO. 3		10,740

SPIRAL REINFORCEMENT

MARK	Nº	LENGTH	WEIGHT	CORE	PITCH	SPACERS
1SP401	3	13'-5"	770	32"	4-1/2"	12 - L S 1 X 1 X 1/8
2SP402	3	15'-3"	869	32"	4-1/2"	12 - L S 1 X 1 X 1/8
3SP403	3	16'-8"	945	32"	4-1/2"	12 - L S 1 X 1 X 1/8

SUPERSTRUCTURE

MARK	NO REQUIRED		TOTAL	LENGTH	TYPE	DIMENSIONS A	B	C	D	INCRM.	WEIGHT LBS.
S501			383	27'-10"	ST.						11,119
S502			383	19'-4"	ST.						7,723
S509			352	30'-0"	ST.						11,014
S510			44	12'-1"	ST.						555
									TOTAL SUPERSTRUCTURE BARS		30,411

EPOXY COATED REINFORCING

ABUTMENTS

MARK	NO REQUIRED NORTH ABUTMENT	SOUTH ABUTMENT	TOTAL	LENGTH	TYPE	DIMENSIONS A	B	C	D	INCRM.	WEIGHT LBS.
A504E	1	1	2	22'-10"	ST.						48
A505E	1	1	2	23'-8"	ST.						49
A508E	16	16	32	4'-4"	ST.						145
A510E	16	16	32	11'-10"	ST.						395
A511E	8	8	16	3'-0"	ST.						50
A512E	8	8	16	5'-3"	15	2'-2"	2'-5"	7-1/2"			88
A513E	16	16	32	4'-7"	ST.						153
A514E	16	16	32	2'-8"	12	2'-1"					89
A606E	44	44	88	5'-3"	1	2'-4"	11"	2'-4"			694
A611E	8	8	16	3'-9"	19	9"	6"	8-1/2"	2'-5"		90
A612E	2 SETS OF 5 BARS	2 SETS OF 5 BARS	4 SETS OF 5 BARS	3'-7" TO 3'-9"	19	7" TO 9"	2" TO 6"	8-1/2"	2'-5"	1/2"	110
A613E	6	6	12	3'-7"	19	7"	2"	8-1/2"	2'-5"		65
A306E	30	30	60	4'-10"	20	2'-7"	1'-0"	1'-0"			774
									TOTAL ABUTMENTS EPOXY BARS		2,750

SUPERSTRUCTURE

MARK	NO REQUIRED		TOTAL	LENGTH	TYPE	DIMENSIONS A	B	C	D	INCRM.	WEIGHT LBS.
S401E			488	30'-0"	ST.						9,780
S402E			61	9'-5"	ST.						384
S403E			162	28'-0"	ST.						3,030
S503E			320	5'-3"	15	2'-2"	2'-5"	7-1/2"			1,752
S504E			320	2'-5"	13	1'-8"	10-1/2"				807
S505E			320	3'-1"	5	9"	6"	8-1/2"	9-1/2"		1,029
S506E			48	11'-7"	ST.						580
S507E			96	6'-8"	ST.						668
S508E			48	13'-8"	ST.						684
S601E			766	23'-9"	ST.						27,325
S602E			12	6'-0"	ST.						108
										SUBTOTAL	46,147
				LIGHT POLE PILASTER							
L501E			4	3'-3"	1	10"	1'-10"	10"			14
L502E			4	8'-5"	21	2'-4"	3'-2"	3'-2"	6-1/2"		35
L503E			6	7'-3"	22	6"	1'-10"	1'-10"	1'-4"		45
L504E			4	3'-2"	ST.						13
										SUBTOTAL	107
									TOTAL SUPERSTRUCTURE EPOXY BARS		46,254

10/10

adache · ciuni · lynn associates
CONSULTING ENGINEERS CLEVELAND, OHIO 44130

REINFORCING STEEL LIST

BRIDGE Nº ERI - 2 - 1833
S.R. 13 OVER S.R. 2

ERIE COUNTY
ERI - 2 - 16.13

STA. 18+78.67 TO
STA. 21+21.33

DESIGNED	DRAWN	CHECKED	REVIEWED	DATE	REVISED
D.R.J.	D.R.J.	K.L.M.	L.E.D.	9.23.85	

ADACHE · CIUNI · LYNN
CALC. BY: J.T.O. DATE: JAN. 83
CHKD. BY: R.W.H. DATE: JAN. 83

Rev. JUL. 85 R.W.H.

F.H.W.A. REGION	STATE	PROJECT	
5	OHIO		

218
284

ERIE COUNTY
ERI-2-16.13

TRAFFIC CONTROL GENERAL SUMMARY

ITEM	SHEET NUMBERS 219	222	223	224	227	239	TOTAL	UNIT	DESCRIPTION
620			210				210	EACH	DELINEATORS, TYPE C, FLEXIBLE POST MOUNTED
620			11				11	EACH	DELINEATORS, TYPE C, BRACKET MOUNTED
620			29				29	EACH	DELINEATORS, TYPE D, FLEXIBLE POST MOUNTED
620						8	8	EACH	DELINEATORS, TYPE D, BRACKET MOUNTED
620		4					4	EACH	REFLECTOR, TYPE D
621			12.82				12.82	MILES	EDGE LINE
621			4.57				4.57	MILES	LANE LINE
621			0.45				0.45	MILES	CENTER LINE
621			846				846	LIN. FT.	CHANNELIZING LINE
621			67				67	LIN. FT.	STOP LINE
621			888				888	LIN. FT.	TRANSVERSE LINE
621			2128				2128	LIN. FT.	REMOVAL OF PAVEMENT MARKING
625		7					7	EACH	GROUND ROD
630		19.62					19.62	CU. YD.	CONCRETE FOR ANCHOR BASE FOUNDATIONS
630		43.68				1.32	45.00	CU. YD.	CONCRETE FOR EMBEDDED FOUNDATIONS
630		251					251	LIN. FT.	GROUND MOUNTED SUPPORTS, NO 3 POST
630		560.5				160.5	721	LIN. FT.	GROUND MOUNTED SUPPORTS, NO 4 POST
630		47					47	LIN. FT.	ONE WAY SUPPORT, NO.4 POST
630		195					195	LIN. FT.	GROUND MOUNTED SUPPORTS, S 4 × 7.7 BEAM
630		73.5				67.5	141	LIN. FT.	GROUND MOUNTED SUPPORTS, W 6 × 9 BEAM
630		171					171	LIN. FT.	GROUND MOUNTED SUPPORTS, W 10 × 12 BEAM
630		93					93	LIN. FT.	GROUND MOUNTED SUPPORTS, W 8 × 18 BEAM
630		112					112	LIN. FT.	GROUND MOUNTED SUPPORTS, W 10 × 22 BEAM
630		415					415	LIN. FT.	GROUND MOUNTED SUPPORTS, W 12 × 30 BEAM
630		32				4	36	EACH	BREAKAWAY BEAM CONNECTION
630		2					2	EACH	OVERHEAD SIGN SUPPORT, TYPE 12.30 DESIGN 8, 30' ARM
630		4					4	EACH	COMBINATION OVERHEAD SIGN SUPPORT, TYPE 12.30, DESIGN 4, 19 FOOT ARM
630		7					7	EACH	SIGN ATTACHMENT ASSEMBLY
630		726					726	SQ. FT.	SIGNS, OVERLAY
630	95	105					200	SQ FT	COVERING OF SIGNS
630		514				93	607	SQ. FT.	SIGNS, FLAT SHEET, TYPE G
630		3074				96	3170	SQ. FT.	SIGNS, EXTRUSHEET, TYPE G
630				1			1	EACH	REMOVAL OF GROUND MOUNTED MAJOR SIGN AND RE-ERECTION
630				14	31		45	EACH	REMOVAL OF GROUND MOUNTED SIGN AND STORAGE
630				5			5	EACH	REMOVAL OF GROUND MOUNTED MAJOR SIGN AND STORAGE
630		2					2	EACH	REMOVAL OF OVERHEAD MOUNTED SIGN AND STORAGE
630		5					5	EACH	REMOVAL OF GROUND MOUNTED SIGN AND RE-ERECTION
630				12	20		32	EACH	REMOVAL OF GROUND MOUNTED POST SUPPORT
630				14			14	EACH	REMOVAL OF GROUND MOUNTED BEAM SUPPORT

ITEM	SHEET NUMBERS 222	TOTAL	UNIT	DESCRIPTION
631	7	7	EACH	SIGN SERVICE
631	12	12	EACH	SIGNS WIRED
631	7	7	EACH	DISCONNECT SWITCH WITH ENCLOSURE, TYPE X"
631	18	18	EACH	BALLAST TYPE CMRT-175-480
631	18	18	EACH	MERCURY VAPOR LUMINAIRE, TYPE TC-31.21 WITH 175 WATT LAMP
631	1	1	EACH	BALLAST WIRING ENCLOSURE, TYPE "A"
631	6	6	EACH	BALLAST WIRING ENCLOSURE, TYPE "B"
631	1	1	EACH	BALLAST WIRING ENCLOSURE MOUNTING BRACKET
630	5	5	EACH	LUMINAIRE SUPPORT ASSEMBLY TYPE TC-31.21

TRAFFIC CONTROL NOTES

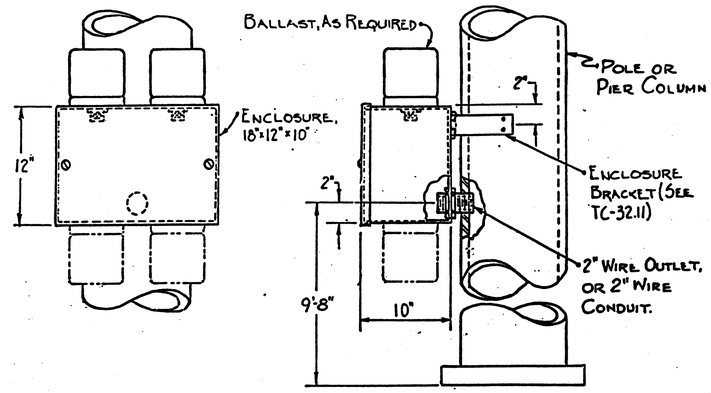

BALLAST ENCLOSURE, TYPE B

TRAFFIC MAINTENANCE

FOR GENERAL TRAFFIC MAINTENANCE NOTES SEE SHEET 7. FOR STATE ROUTE 2 STAGE CONSTRUCTION DETAILS SEE SHEETS 234 - 238. FOR TERMINAL TREATMENT AT S.R. 13 SEE SHEET 239.

ITEM 614 MAINTENANCE OF TRAFFIC

ALTHOUGH STAGE CONSTRUCTION TRAFFIC CONTROL ITEMS ARE SHOWN AND ITEMIZED ON SHEETS 234 - 238 THEY SHALL BE INCLUDED IN THE LUMP SUM PRICE BID FOR ITEM 614 MAINTENANCE OF TRAFFIC, EXCEPT FOR TEMPORARY PAVEMENT MARKING, AND AS SHOWN ON TRAFFIC MAINTENANCE SHEETS.

UNDERGROUND UTILITIES

EXTREME CAUTION SHALL BE EXERCISED IN AREAS WITH UNDERGROUND ELECTRICAL CONDUIT OR CABLE, SEWERS, DRAINS, WATER LINE, OR OTHER UNDERGROUND UTILITIES.

THE CONTRACTOR IS FULLY RESPONSIBLE FOR ALL DAMAGE INFLICTED ON UNDERGROUND UTILITIES IN THE EXCAVATION AND PLACEMENT OF SIGN SUPPORT FOUNDATIONS, PROTECTIVE GUARD RAIL, DELINEATORS AND THE LIKE.

FOR LISTING OF EXISTING UTILITIES INVOLVED WITHIN THE PROJECT LIMITS SEE SHEET 7.

POWER SUPPLY

THE POWER SUPPLY FOR THE LIGHTED SIGNS ARE INCORPORATED INTO THE ROADWAY LIGHTING CIRCUITS, SEE SHEETS 253 - 254 OF THE LIGHTING PLAN.

ITEM 630 COVERING OF SIGNS

IN ADDITION TO THE 105 SQUARE FEET REFERRED TO IN THE PLANS, AN ADDITIONAL QUANTITY OF 95 SQUARE FEET FOR ITEM 630, "COVERING OF SIGNS", HAVE BEEN INCLUDED TO COVER SIGNS AS DIRECTED BY THE ENGINEER.

TRAFFIC CONTROL STANDARD CONSTRUCTION DRAWINGS

References to Supplemental Specifications 857, 858, 859, 957, 958 and 959 on the Traffic Control Standard Construction, Drawings in these plans shall be considered to read as respective references to Items 630, 631, 632, 730, 731 and 732.

SHEET 221 OMITTED

CALC. BY / DATE	ERIE COUNTY	OHIO	220
CHKD. BY / DATE	ERI-2-16.13	FHWA REGION 5	284

614 WORK ZONE PAVEMENT MARKINGS

GENERAL

THE CONTRACTOR SHALL FURNISH, INSTALL, MAINTAIN AND WHEN NECESSARY, REMOVE WORK ZONE RETROREFLECTIVE PAVEMENT MARKINGS ON EXISTING, RECONSTRUCTED, RESURFACED OR TEMPORARY ROADS WITHIN THE WORK LIMITS, IN ACCORDANCE WITH THE FOLLOWING REQUIREMENTS.

THE MARKINGS SHALL BE MAINTAINED IN GOOD CONDITION TO PROVIDE DAY AND NIGHT VISIBILITY. THE MARKINGS SHALL BE REPAIRED OR REPLACED AS DIRECTED BY THE ENGINEER TO MAINTAIN REQUIRED VISUAL EFFECTIVENESS AND NIGHT VISIBILITY AT NO ADDITIONAL COST TO THE STATE.

THE CONTRACTOR SHALL, IN ADVANCE OF ANY SECTION OF ROADWAY LACKING OMUTCD FULL PATTERN STANDARD DIMENSION EDGE LINE OR CENTER LINE MARKINGS, ERECT A "NO EDGE LINES" (OW-167) SIGN OR "UNMARKED NO PASSING ZONES" (OW-168) SIGN OR BOTH AS MAY BE APPROPRIATE. THESE SIGNS SHALL BE IN PLACE PRIOR TO EXPOSING THE ROADWAY TO TRAFFIC. THESE SIGNS SHALL BE REPEATED EVERY 1 TO 2 MILES AND AT OTHER LOCATIONS AS NECESSARY. THESE SIGNS SHALL BE REMOVED WHEN THEY NO LONGER APPLY. THE COST FOR FURNISHING AND ERECTING AND SUBSEQUENTLY REMOVING THESE SIGNS SHALL BE INCLUDED IN 614 MAINTAINING TRAFFIC, UNLESS SPECIFICALLY ITEMIZED.

TEMPORARY PAVEMENT MARKING MATERIALS

UNLESS OTHERWISE INDICATED ON THE PLANS, TEMPORARY PAVEMENT MARKINGS MAY BE EITHER 621.02 PAINT OR 947.03 TYPE B OR C PREFORMED MATERIAL. WHERE PAVEMENT MARKINGS ARE NOT LIABLE TO BE TRACKED, EITHER CONVENTIONAL OR FAST DRYING PAINT MAY BE USED FOR 621.02.

PAINT

PAINTED MARKINGS SHALL BE IN ACCORDANCE WITH 621 EXCEPT THAT THE INCREASE OF 25 PERCENT IN THE APPLICATION RATE FOR NEW BITUMINOUS PAVEMENT AND PARAGRAPH 621.14 SHALL NOT APPLY.

TYPE B AND TYPE C PREFORMED MATERIAL

PREFORMED MATERIAL SHALL COMPLY WITH 947.03 EXCEPT THAT NO PREFORMED MATERIAL CONTAINING METAL SHALL BE PLACED ON ANY SURFACE UNLESS IT WILL BE REMOVED LATER BY THE CONTRACTOR. TEMPORARY PAVEMENT MARKINGS OF 947.03 PREFORMED MATERIAL SHALL BE REMOVED PRIOR TO PLACEMENT OF 621 OR 847 SURFACE COURSE MARKINGS AT THAT LOCATION. PREFORMED MATERIAL SHALL BE APPLIED IN ACCORDANCE WITH 847 EXCEPT AS MODIFIED HEREIN.

PLACEMENT

TEMPORARY MARKINGS SHALL BE COMPLETE AND IN PLACE ON ALL PAVEMENT PRIOR TO EXPOSING IT TO TRAFFIC. WHEN TEMPORARY MARKINGS CONFLICT WITH THE TRAFFIC PATTERN, THEY SHALL BE REMOVED BY THE CONTRACTOR IN ACCORDANCE WITH 621.134.

TEMPORARY MARKING CLASSES

CLASS I MARKINGS

CLASS I MARKINGS SHALL BE APPLIED TO THE FULL DIMENSIONS AS DEFINED IN 621 WITH THE FOLLOWING ADDITIONS OR EXCEPTIONS:

1) LANE LINES SHALL BE 4-INCHES IN WIDTH.
2) TRANSVERSE LINES SHALL BE 8-INCHES IN WIDTH.
3) STOP LINES SHALL BE 12-INCHES IN WIDTH.
4) CROSS WALK LINES SHALL BE 8-INCHES IN WIDTH.

CLASS II MARKINGS

CLASS II MARKINGS (ABBREVIATED) SHALL BE DEFINED AS FOLLOWS:

CENTER LINES SHALL CONSIST OF SINGLE, YELLOW 4-INCH WIDE BY A MINIMUM OF 48-INCH LONG DASHES SPACED AT A MAXIMUM OF 40-FOOT INTERVALS.

LANE LINES SHALL CONSIST OF WHITE 4-INCH WIDE BY A MINIMUM OF 48-INCH LONG DASHES SPACED AT A MAXIMUM OF 40-FOOT INTERVALS.

GORE MARKINGS SHALL BE TWO CONTINUOUS, WHITE 4-INCH LINES PLACED AT THE THEORETICAL GORE OF AN EXIT RAMP OR DIVERGING ROADWAYS.

THE PAINT APPLICATION RATE SHALL BE NOT LESS THAN 1.6 GALLONS PER MILE FOR LANE LINE AND CENTER LINE AND 16 GALLONS PER MILE FOR GORE MARKINGS.

CONFLICTING EXISTING MARKINGS

THE CONTRACTOR SHALL, PRIOR TO PLACING TEMPORARY MARKINGS, REMOVE ALL CONFLICTING EXISTING MARKINGS VISIBLE TO THE TRAVELING PUBLIC DURING DAYLIGHT OR NIGHTTIME HOURS IN ACCORDANCE WITH 621.134. THE COST FOR REMOVAL OF CONFLICTING MARKINGS SHALL BE INCLUDED IN 614 MAINTAINING TRAFFIC UNLESS SPECIFICALLY ITEMIZED.

THE CONTRACTOR SHALL ALSO REMOVE THE PRISMATIC RETRO-REFLECTOR WITHIN ANY RAISED PAVEMENT MARKER (RPM) WHICH IS IN CONFLICT WITH THE TEMPORARY PAVEMENT MARKINGS. WHEN THE TEMPORARY PAVEMENT MARKINGS ARE REMOVED AND THE RPM IS NO LONGER IN CONFLICT, THE CONTRACTOR SHALL THOROUGHLY CLEAN THE RECESSED REFLECTOR ATTACHMENT AREA OF THE CASTING AND INSTALL A NEW PRISMATIC RETRO-REFLECTOR OF THE SAME KIND AND COLOR. THE COST FOR THIS WORK SHALL BE INCIDENTAL TO THE VARIOUS PAY ITEMS.

INTERIM MARKINGS

WITHIN 21 CALENDAR DAYS AFTER OPENING ANY LENGTH OF PAVEMENT TO TRAFFIC, THE 621 OR 847 PAVEMENT MARKINGS CALLED FOR IN THE PLANS OR EQUIVALENT 614 CLASS I, PAINT MARKINGS SHALL BE APPLIED. THE CONTRACTOR SHALL FURNISH ALL LABOR, EQUIPMENT, AND MATERIAL NECESSARY TO PLACE AND MAINTAIN 614 CLASS I PAINT MARKINGS AS PART OF THE LUMP SUM BID FOR 614 MAINTAINING TRAFFIC.

FOR EACH CALENDAR DAY BEYOND 21 DAYS THAT THIS WORK SHALL REMAIN UNCOMPLETED, THE PROVISIONS OF 108.07 WILL BE INVOKED, EXCEPT THAT BETWEEN NOVEMBER 15 AND APRIL 15 WEATHER CONDITIONS SHALL NOT BE AN ACCEPTABLE REASON FOR EXTENSION.

METHOD OF MEASUREMENT

TEMPORARY PAVEMENT MARKINGS WILL BE MEASURED COMPLETE IN PLACE, BY CLASS AND MATERIAL, IN THE UNITS DESIGNATED. LINE QUANTITIES WILL BE THE LENGTH OF THE COMPLETED STRIPE, INCLUDING GAPS, INTERSECTIONS, AND OTHER SECTIONS OF PAVEMENT NOT NORMALLY MARKED, IN ACCORDANCE WITH 621.15.

TEMPORARY PAVEMENT MARKINGS WILL INCLUDE THE LAYOUT, APPLICATION AND REMOVAL OF THE MARKINGS, WHEN REQUIRED.

BASIS OF PAYMENT

PAYMENT FOR ACCEPTED QUANTITIES COMPLETE IN PLACE WILL BE MADE AT THE CONTRACT UNIT PRICE. PAYMENT SHALL BE FULL COMPENSATION FOR ALL MATERIALS, LABOR, INCIDENTALS AND EQUIPMENT FOR PLACEMENT, MAINTENANCE AND NECESSARY REMOVAL OF THE MARKINGS.

ITEM	UNIT	DESCRIPTION
614	MILES	TEMPORARY LANE LINES, CLASS I, *
614	MILES	TEMPORARY CENTER LINES, CLASS I, *
614	LIN. FT.	TEMPORARY CHANNELIZING LINES, CLASS I, *
614	MILES	TEMPORARY EDGE LINES, CLASS I, *
614	LIN. FT.	TEMPORARY GORE MARKINGS, CLASS II, *
614	LIN. FT.	TEMPORARY STOP LINES, CLASS I, *
614	LIN. FT.	TEMPORARY CROSSWALK LINES, CLASS I, *
614	EACH	TEMPORARY LANE ARROWS, CLASS I, *
614	EACH	TEMPORARY RAILROAD SYMBOL MARKINGS, CLASS I, *
614	EACH	TEMPORARY WORD "ONLY" ON PAVEMENT, 72-INCH, CLASS I, *
614	LIN. FT.	TEMPORARY TRANSVERSE LINES, CLASS I, *
614	LIN. FT.	TEMPORARY DOTTED LINES, CLASS I, *

*621 PAINT, 947.03 TYPE B OR 947.03 TYPE C

fh4

July 25, 1984

SHEET 221 OMITTED

FED. RD. DIVISION	STATE	PROJECT	
2	OHIO		

222
284

ERIE COUNTY
ERI-2-(16.13-17.39)

SIGN QUANTITIES

SHEET	STATION	SIDE	SIGN CODE NUMBER	630 SIGNS FLAT SHEET TYPE G SQ.FT.	630 SIGNS EXTRU SHEET TYPE G SQ.FT.	630 SIGN REMOVED RE-ERECTED EACH	630 GROUND MOUNTED SUPPORTS #3 LIN.FT.	#4 LIN.FT.	W6x9 LIN.FT.	S4x7.7 LIN.FT.	W10x12 LIN.FT.	W10x22 LIN.FT.	W12x30 LIN.FT.	W8x18 LIN.FT.	ONE WAY SUPPORT LIN.FT.	620 REFLECTORS TYPE D EACH	630 SIGNS OVERLAY SQ.FT.	CONCRETE FOR EMBEDDED FOUNDATIONS CU.YDS.	BACKWARD BEAM CONNECTION EA.
	S.R. 2																		
224	1032+50	RT.	GF 6'x5'		30					16'-8"								0.54	2
	1047+50	RT.	R-10-48	20				16'-0" 16'-6"											
	1050+00	RT.	W-49R-48	16				16'-0" 16'-6"											
	1045+25	LT.	GF 6'x5'		30					16'-8" 17'-2"								0.54	2
	1064+35	℄	R-123-36 & R-19-24	14				14'-0"								1			
	1064+65	℄	R-123-36 & R-19-24	14				14'-0"								1			
	1060+25	RT.	⑫ 13'x9.5'		123.5							26'-3" 29'-3"		28'-9" 31'-3"			102	2.46	2
	~~1060+50~~	~~LT.~~	~~⑫ 18'x9'-6"~~		~~171~~													3.00	2
	1084+00	RT.	M-39-36 M-2-36	13.5				14'-6"											
	1085+00	LT.	W-49R-48	16				16'-0" 16'-6"											
	1088+00	LT.	13'x5'		65						8'-3" 21'-0"							2.20	2
	1096+50 W.B.	W.B. RAMP LEFT	W-60D-48	16				16'-0" 16'-6"											
	1096+50 W.B.	W.B. RAMP RIGHT	W-60D-48	16				16'-0" 16'-6"											
	1101+00	W.B. RAMP RIGHT	W-52-48	16				16'-0" 16'-6"											
	1099+50	E.B. RAMP RIGHT	M-39-24 M-1-24	6			13'-0"												
	1101+00	H.O. RAMP LEFT	W-52-48	16				16'-0" 16'-6"											
	1106+60	E.B. RAMP RIGHT	12'x4'								20'-9" 22'-3"							2.20	2
	1115+00	W.O. RAMP LEFT	⑪ 8'x7'		56						22'-9" 23'-9"							2.20	2
	979+00	RT.	GB 18'x9'-6"		171								28'-6" 28'-6"					3.00	2
	1015+00	RT	GB 18'x9'-6"		171								27'-0" 32'-0"					3.00	
	1108+00	RT.	18'x9'-6"		171								27'-6" 31'-6"					3.00	
	1099+50	LT.	⑧ 18'x9'-6"		171								27'-9" 30'-3"					3.00	2
	1091+50	LT.	13'x5'		65						8'-3" 19'-3"							2.20	
225	1105+00	RT.	⑬ GJ 14'x5'		70									20'-9" 26'-0"			52	2.20	
	1121+50	RT.	⑭ GB 15'x12'		180								30'-3" 34'-6"				154	3.00	
	1124+20	LT.	⑮ GJ 17'x5'		85									21'-3" 26'-0"				2.20	
	1132+50	LT.	R-10-48	20				16'-0" 16'-6"											
	1142+50	LT.	9'x3'-6"		31.5					17'-9" 18'-3"								0.66	2
	1145+00	RT.	R-10-48	20				16'-0" 16'-6"											
		MED.	R-123-36	9															
	1154+75	MED.	R-19-24	5				14'-0"								1			
	1155+05	MED.	R-19-24	5				14'-0"								1			
		MED.	R-123-36	9															
	1160+00	LT.	M-2-36 M-40-36	13.5				14'-6"											
	1172+00	RT.	⑯ 12'x12'		144							26'-3" 29'-0"						2.46	
	1183+25	RT.	⑰ GF 6'x5'		30					16'-8" 17'-2"								0.54	2
	1184+00	LT.	W-40R-48	16				16'-0" 16'-6"											
	1152+00	RT.	⑮A 13'x12'		156								26'-3" 30'-6"				132	3.00	2
	S.R. 13 (MUDBROOK ROAD)																		
226	6+50	RT.	M-2-24 M-17-24	6			13'-0"												
	9+50	LT.	D-6-60	12.5				15'-6" 15'-0"											
	10+50	RT.	M-52A-108		22.5					15'-6" 15'-0"							2.8	0.54	2
	12+50	LT.	R-10-24	5			13'-6"												
	15+00	LT.	M-2-24 M-38-24	6			13'-0"												
	25+00	RT.	M-8-24 M-37-24	6			13'-0"												
	29+00	LT.	M-52A-108		22.5					15'-6" 16'-0"							2.8	0.54	2
	33+50	LT.	M-2-24 M-17-24	6			13'-0"												
	RAMP #2																		
225	1188+75	LT.	R-15A-36	9				14'-0"											
	RAMP #3 1191+00	LT. RT.	R-41A-36	6			13'-0" 13'-0"												
	1188+40	RT.	O-4B ~ 9'x4' M-2-30 M-25-24	9.25	36					15'-6" 15'-9"								0.54	2
226	1192+82	LT	R-41B-36 R-43L-36 R-43R-36	15											15'-6"				
226	1193+00	RT.	R-41B-36 R-1-48	25				15'-0" 15'-6"											

SHEET	STATION	SIDE	SIGN CODE NUMBER	630 SIGNS FLAT SHEET TYPE G SQ.FT.	630 SIGNS EXTRU SHEET TYPE G SQ.FT.	630 SIGN REMOVED RE-ERECTED EACH	630 GROUND MOUNTED SUPPORTS #3 LIN.FT.	#4 LIN.FT.	ONE WAY SUPPORT LIN.FT.	S4x7.7 LIN.FT.	WGx5 LIN.FT.	W10x12 LIN.FT.	W8x18 LIN.FT.	W10x22 LIN.FT.	W12x30 LIN.FT.	620 REFLECTORS TYPE D EACH	630 SIGNS OVERLAY SQ.FT.	CONCRETE FOR EMBEDDED FOUNDATIONS CU.YDS.	BACKWARD BEAM CONNECTION EA.
	RYE BEACH ROAD																		
227	33+25	RT.	M-1-24-2, M-2-24-2 M-17-24 (x2)	12				13'-0" 14'-0"											
	40+00	RT.	M-52A-108 (x2)		45						18'/19'							0.66	2
	40+00	LT.	R-10-24	5				13'-6"											
	43+25	LT	R-41B-36, R-1-48	25				15'-0" 15'-6"											
	0+60 RAMP "C"	RT.				1		13'-6"											
	6+00 RAMP "D"	L&R	R-41A-36 (2)	12				13'-0" 13'-0"											
	43+75		R-41B-36 R-43L-36 R-43R-36	15					15'-6"										
	44+50	RT.	M-2-24 M-1-24-2 M-24-24	8.7				14'-3"											
	4+50 RAMP "B"	L&R	R-41A-36 (2)	12				13'-0" 13'-0"											
	52+75	RT.	R-41B-36 R-43L-36 R-43R-36	15					15'-6"										
	11+90 RAMP "A"	LT.				1	13'-6"												
	53+25	RT.	R-41B-36, R-1-48	25				15'-0" 15'-6"											
	58+00	RT.	D-1-72 (x2)	12		3	13'-0" 13'-0"												
	TOTAL			513.95	204.7	5	25½	560.25	46.5	194.5	73.5	170.75	93	111.75	414.5	4	445.6	43.68	32

QUANTITIES TO SHEET 218

OVERHEAD SIGNING QUANTITIES

SHEET NO.	LOCATION	REFERENCE NO.	STATION	630 REMOVAL OF OVERHEAD MOUNTED SIGN & STORAGE EA.	630 LUMINAIRE SUPPORT ASSY., TYPE TC-31.21 EA.	631 SIGN SERVICE EA.	631 SIGNS WIRED EA.	631 DISCONNECT SWITCH WITH ENCLOSURE, TYPE X EA.	630 OVERHEAD SIGN SUPPORT TYPE 12.30 DESIGN 8 ARM 30 FT. EA.	630 OVERHEAD SIGN SUPPORT TYPE 12.30 SIGN ATTACHMENT ASSEMBLY EA.	630 COMBINATION SIGN SUPPORT TYPE 12.30 19' ARM DESIGN 4 EA.	631 BALLAST TYPE CWA-325 (480) EA.	631 BALLAST WIRING ENCLOSURE, TYPE A EA.	631 BALLAST WIRING ENCLOSURE, TYPE B EA.	631 BALLAST WIRING ENCLOSURE MOUNTING BRACKET EA.	631 MERCURY VAPOR LUMINAIRE W/TYPE 175 WATT LAMP TC-31.27 EA.	625 GROUND RODS EA.	COVERING OF SIGNS S.F.	SIGN SIZE LENGTH FT.	SIGN SIZE OVERALL SIGN HEIGHT FT.	SIGN SIZE SIGNS OVERLAY S.F.	SIGN SIZE SIGNS EXTRU SHEET TYPE G S.F.	CONCRETE FOR ANCHOR BASE FOUNDATIONS C.Y.
224	U.S. 2	4A	1030+00 RT.	1		1		1					1				1						
		4B			2		1			3		2				2		13	10.5	102	130		
		4C		1	3		1			4		3				3		21	8		157.5		
224	U.S. 2		1070+50 RT.																				
		7B				1	1	1		1		2	1			2	1	16	8	90	120		3.97
224	U.S. 2		1149+00 LT.																				
		5B				1	1	1		1		3	1			3	1	21	8		157.5		3.97
226	SR. 13	33A	16+90 RT.			1	1	1			1	1	1			1	1	9	7.5	44	63		2.97
		33B					1					1				1		9	7.5	44	63		
226	SR. 13	32A	23+10 LT.			1	1	1			1	1	1			1	1	52.5	7	7.5		49	2.82
		32B					1					1				1		52.5	7	7.5		49	
227	RYE BEACH ROAD	34A	43+70 RT			1	1	1			1	1	1			1	1		10	7.5		70	2.97
		34B					1					1				1			10	7.5		70	
227		35A	52+75 LT			1	1	1			1	1	1			1	1		7	7.5		49	2.97
		35B					1					1				1			7	7.5	210	49	
	TOTALS			2	5	7	12	7		8	7	4	18	1	6	18	7	105			280	1027	19.62

ADACHE ASSOCIATES INC., ENGINEERS
CLEVELAND, OHIO 44142

SIGN QUANTITIES

DESIGNED	DRAWN	CHECKED	REVIEWED	DATE	REVISED
W.B. 11-10-69	J.T.	W.S. 11-12-69			

REVISED JUL., 85 R.W.H
REVISED JAN., 83 R.W.H.

PAVEMENT MARKING AND DELINEATOR QUANTITIES

FED. RD. DIVISION	STATE	PROJECT	
2	OHIO		

ERIE COUNTY
ERI-2-(16.13-17.39)

223
284

ITEM 621

STATION FROM	STATION TO	SIDE	WHITE EDGE LINE L.F.	4" LANE LINE L.F.		CHANNELIZING LINE L.F.	24" WHITE TRANSVERSE LINE L.F.	YELLOW EDGE LINE L.F.	CENTER LINES SINGLE BROKEN L.F.	CENTER LINES DOUBLE BROK. & SOLID L.F.	CENTER LINES DOUBLE SOLID L.F.		STOP LINE 24" L.F.
S.R. 2													
1060+84	1180+00	LT.	11,916	11,916				11,916					
1072+00	1074+88	LT.		288									
1074+88	1076+32	LT.	144			144							
1060+84	1170+00	RT.	10,916	10,916				10,916					
1065+45	1070+05	RT.		460									
1070+05	1072+84	RT.				558	888						
1174+33	1177+21	LT.		288									
1177+21	1178+65	LT.	144			144							
1170+00	1183+00	RT.	1,300					1,100					
W.B. THRU RAMP													
1076+32	1094+17	RT.	1785					1785					
E.B. THRU RAMP													
1072+83	1105+72	LT.	3289					3289					
1103+10	1105+72	LT.		262									
RAMP #2													
1178+65	S.R.13-23+17	RT.						1130					
1178+65	S.R.13-24+58	RT. & LT.	1188										
RAMP #3													
1183+05	S.R.13-16+89	LT.						1022					
1183+05	S.R.13-15+44	LT. & RT.	1,080										
1193+07	——												67

ITEM 621 (CONT.)

STATION FROM	STATION TO	SIDE	WHITE EDGE LINE L.F.	4" LANE LINE L.F.		CHANNELIZING LINE L.F.	24" WHITE TRANSVERSE LINE L.F.	YELLOW EDGE LINE L.F.	CENTER LINES SINGLE BROKEN L.F.	CENTER LINES DOUBLE BROK. & SOLID L.F.	CENTER LINES DOUBLE SOLID L.F.		STOP LINE 24" L.F.
S.R. 13 (MUDBROOK ROAD)													
6+00	15+44	RT. & LT.	1888										
6+00	16+20	CEN.							500	520			
16+89	23+17	LT.	628										
15+44	24+58	RT.	914										
16+90	23+10	CEN.									620		
24+58	31+30	RT. & LT.	1344										
23+75	31+30	CEN.							380	375			
SR 2 REMOVAL OF PAVEMENT MARKING EDGE LINE													
1060+84	1072+84	RT.	1200'										
1064+32	1073+60	LT.	928'										
	TOTAL		2128'										
TOTAL (FEET)			36,536	24,130		846	888	31,158	880	895	620		67
TOTAL (MILES)			6.92	4.57				5.90	0.45				

12.82
TOTAL EDGE LINES

QUANTITIES TO SHEET 218

ITEM 620

STATION FROM	STATION TO	SIDE	INTERVAL L.F.	TYPE C POST P EA	TYPE C POST B EA	TYPE D POST EACH
WESTBOUND THRU RAMP						
1060+50	1094+50	LT.	200	18		
EASTBOUND THRU RAMP						
1061+00	1073+00	RT.	200	7		
1073+00	1079+00	LT.	100			7
1079+00	1088+00	RT.	100	10		
1088+00	1104+00	RT.	200	7	2	
S.R. 2						
1078+65	1166+65	LT.	400	21	1	
1166+65	1182+65	LT.	200	6	3	
1076+00	1172+00	RT.	400	24	1	
1172+00	1182+00	RT.	200	2	4	
RAMP #2						
1182+80	1186+00	RT.	80			5
1186+00	1189+00	LT.	150	3		
RAMP #3						
1184+00	1186+00	RT.	200	2		
1186+00	1187+60	RT.	160	1		
1187+60	1192+40	RT.	80	6		
SR. 2						
978+00	1018+00	LT.	400	11		
1018+00	1030+00	LT.	200	6		
1031+00	1043+00	LT.	200	7		
1045+00	1053+00	LT.	200	5		
1053+00	1060+50	LT.	400	2		
979+50	1023+50	RT.	400	12		
1023+50	1031+50	RT.	200	4		
1032+00	1052+00	RT.	200	11		
1052+00	1088+00	RT.	200	18		
1053+00	1061+00	RT.	200	4		
RAMP 'A'						
3+00	11+00	LT.	200	4		
RAMP 'B'						
	0+75	LT.		1		
0+75	2+75	RT.	50	5		
2+75	7+55	RT.	80			8
7+55	9+45	RT.	145			2
RAMP 'C'						
0+50	12+50	RT.	200	6		
RAMP 'D'						
0+00	1+40	LT.	140			2
1+40	4+90	LT.	70			5
4+90	6+30	RT.	140	2		
6+30	8+80	RT.	50	5		
TOTAL				210	11	29

QUANTITIES TO SHEET 218

P = POST MOUNTED (FLEXIBLE)
B = BRACKET MOUNTED

REVISED JAN., 83 R.W.H.

ADACHE ASSOCIATES INC., ENGINEERS
CLEVELAND, OHIO 44142

PAVEMENT MARKING AND DELINEATOR QUANTITIES

DESIGNED	DRAWN	CHECKED	REVIEWED	DATE	REVISED
WB 11-19-69	V.P.	WJS 11-26-69			

FED. RD. DIVISION	STATE	PROJECT	
2	OHIO		

224
284

ERIE COUNTY
ERI-2-(16.13-17.39)

BEGIN PROJECT
ERI-2-16.13
STA. 1076+32.09

MATCH LINE STA. 1065+00

MATCH LINE STA. 1100+00

QUANTITIES TO SHEET 218

PEDESTRIAN OVERPASS (EXISTING)

Type D Reflector
See Detail
Sheet 233

R-123-36
EMERGENCY AND AUTHORIZED VEHICLES ONLY
R-19-24

EXISTING SIGNS TO BE REMOVED

EXISTING SIGN TO BE REMOVED

EXISTING SIGN TO REMAIN

EXISTING SIGNS TO BE RE-ERECTED

EXISTING SIGNS TO BE REMOVED

EXISTING SIGN TO BE REMOVED

EXISTING SIGN TO BE RE-ERECTED AT SAME LOCATION

REMOVE EXISTING SIGNS AND 4¢ (18"x5'-5") REUSE EXISTING OVERHEAD SIGN SUPPORT.

LEGEND

- = NEW
- = EXISTING
- = EXISTING TO BE RE-ERECTED
- = EXISTING TO BE REMOVED
- = TYPE C, DELINEATOR, COLORLESS
- = TYPE D, DELINEATOR, YELLOW
- = LIGHT POLE

ITEM 630 ESTIMATE OF QUANTITIES SIGN REMOVAL ITEMS

LOCATION	SIDE	REMOVAL OF GROUND MOUNTED: MAJOR SIGN AND STORAGE EACH	SIGN AND STORAGE EACH	SIGN SUPPORT POST EACH	SIGN SUPPORT BEAM EACH	MAJOR SIGN AND REERECTION EACH
1031+00	LT.		1			
1047+50	RT.		2	2		
1053+50	RT.	1			2	
1064+65	MED.		1	1		
1064+95	MED.		1	1		
1071+00	RT.		4	2		
1081+50	RT.		2	2		
1088+00	LT.	1			2	
1097+80	LT.	1			2	
1032+50	RT.		1		2	
1045+25	LT.		1		2	
1050+00	RT.		1	2		
1106+60	RT.			2		1
979+00 And 1023+50	RT	2			4	
TOTAL		5	14	12	14	1

ADACHE ASSOCIATES INC., ENGINEERS
CLEVELAND, OHIO 44142

TRAFFIC CONTROL PLAN

DESIGNED	DRAWN	CHECKED	REVIEWED	DATE
W.F.B.	V.P.	W.S.		

REVISED JUL., 85 RWH
REVISED JAN., 83 R.W.H.

FED. RD. DIVISION	STATE	PROJECT	
2	OHIO		

22S
284

ERIE COUNTY
ERI-2-(16.13-17.39)

MATCH LINE STA. 1100+00

MATCH LINE STA. 1160+00

℄ CONRAIL

℄ BOGART ROAD

STA. 1105+00

STA. 1121+50

STA. 1124+20

STA. 1132+50

SIGNS OVERLAY
13'x4'

13 Elyria 31 Cleveland 51 II
GJ 14'x5'

SPEED LIMIT 55 R-10-48

10 Sandusky 22 Port Clinton 15 II
GJ 17'x5'

III Huron CORP LIMIT 9'x3'-6" GN

1142+50

CORP. LINE

CITY OF HURON

1143+00

SPEED LIMIT 55 R-10-48

1152+00

1154+75

1155+05

See Detail Sheet 233

MATCH LINE STA. 1160+00

N

Type D Reflector R-123-36

R-19-24

EMERGENCY AND AUTHORIZED VEHICLES ONLY

R-123-36

EMERGENCY AND AUTHORIZED VEHICLES ONLY

Type D Reflector

R-19-24

14 GB 13 Huron Norwalk EXIT ¼ MILES I
15'x12'

15A GB 13 Huron Norwalk Exit ½ Mile. I
13'x12'

LEFT LANE ENDS ¼ MILE I
SIGNS OVERLAY 12'x11'

FREEWAY ENDS ¾ MILE I
SIGNS OVERLAY 14'x11'

PROHIBITED
PEDESTRIANS
FARM MACHINERY
ANIMALS
BICYCLES OR MOTORCYCLES (LESS THAN 5 BRAKE HP)
R-15A-36

W-49R-48

S.R. 13

END OF PROJECT
ERI-2-16.13
STA. 1195+00

RAMP 2

RAMP 3

RAMP 4

RAMP 5

STA. 1184+00

STA. 1183+25

STA. 1192+00 (LEFT TURN)

WRONG WAY R-41A-36

WEST 2 M-2-36 M-40-36

16 GE 12'x12' 13 Huron Norwalk I

17 EXIT GF 6'x5'

NORWALK 9 HURON 2 13 M-2-30 M-2-24 D-48

℄ FOX ROAD

℄ HURON-AVERY RD.

END OF SHEET STA. 1220+00

TYPE C, DELINEATORS, COLORLESS
TYPE D, DELINEATORS, YELLOW
LIGHT POLE

ADACHE ASSOCIATES INC., ENGINEERS
CLEVELAND, OHIO 44142

TRAFFIC CONTROL PLAN

DESIGNED	DRAWN	CHECKED	REVIEWED	DATE
W.B.	V.P.	W.S.		

REVISED JUL., 85 R.W.H.
REVISED JAN., 83 R.W.H.

FED. RD. DIVISION	STATE	PROJECT	
2	OHIO		

226
284

ERIE COUNTY
ERI-2-(16.13-17.39)

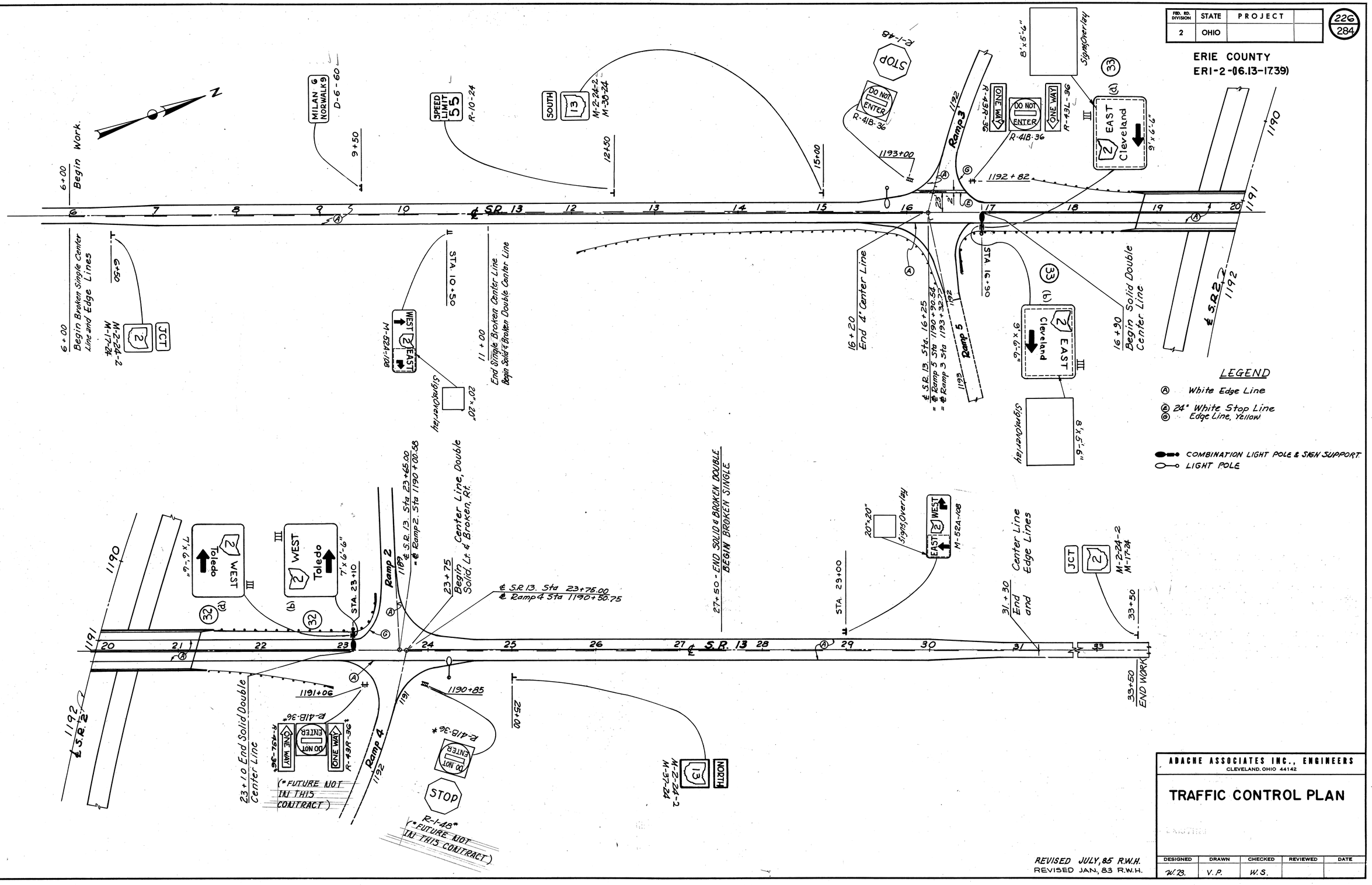

ADACHE ASSOCIATES INC., ENGINEERS
CLEVELAND, OHIO 44142

TRAFFIC CONTROL PLAN

DESIGNED	DRAWN	CHECKED	REVIEWED	DATE
W.B.	V.P.	W.S.		

REVISED JULY, 85 R.W.H.
REVISED JAN., 83 R.W.H.

CALC.	DATE	CHKD.	DATE	ERIE COUNTY ERI-2-16.13	OHIO F.H.W.A. REGION 5	227/284

ITEM 630 ESTIMATE OF QUANTITIES SIGN REMOVAL ITEMS

LOCATION	SIDE		REMOVAL OF GROUND MOUNTED SIGN AND STORAGE EACH	SIGN SUPPORT POST EACH		
40+85 ±	RT.		3	1		
43+10 ±	LT.		11	3		
43+28 ±	RT.		1	1		
43+32 ±	LT.		1	1		
43+65 ±	RT.		2	2		
52+70 ±	LT.		8	3		
52+75 ±	RT		1	2		
52+80 ±	RT.		1	1		
53+28 ±	RT.		2	1		
55+11 ±	RT.		1	2		
56+25 ±	RT.			2		
53+06 ±	LT.			1		
TOTALS			31	20		

QUANTITIES TO SHEET 218

A·C·L form no. 1

TRAFFIC CONTROL PLAN

FED. RD. DIVISION	STATE	PROJECT	
2	OHIO		

228
284

ERIE COUNTY
ERI-2-(16.13-17.39)

N

+50

STA. 1060+84
BEGIN EDGE LINE L&R
BEGIN 4" LANE LINE

1047 1048 1049 1050 1051 1052 1053 1054 1055 1056 1057 1058 1059 1060 1061 1062

℄ S.R. 2

MATCH LINE STA. 1063+00

STA. 1060+84
BEGIN EDGE LINE L&R
BEGIN 4" LANE LINE

LEGEND

- (A) 4" EDGE LINE WHITE
- (B) 4" LANE LINE
- (D) CHANNELIZING LINE
- (F) TRANSVERSE LINE, WHITE
- (G) EDGE LINE YELLOW
- ▫ TYPE C, DELINEATORS, COLORLESS
- ▪ TYPE D, DELINEATORS, YELLOW

N

+50

MATCH LINE STA. 1063+00

STA. 1065+45
BEGIN 4" LANE LINE

STA. 1070+05
BEGIN CHANNELIZING LINE
BEGIN TRANSVERSE LINE
END 4" LANE LINE

STA. 1072+00
BEGIN 4" LANE LINE

STA. 1074+88
END 4" LANE LINE
BEGIN CHANNELIZING LINE
BEGIN EDGE LINE WHITE

℄ S.R. 2 STA. 1076+32.09 91.'L
℄ WB THRU RAMP STA. 1076+32.09
END CHANNELIZING LINE
BEGIN EDGE LINE, YELLOW

WEST BOUND THRU RAMP U.S. 6

1064 1065 1066 1067 1068 1069 1070 1071 1072 1073 1074 1075 1076

℄ S.R. 2 & U.S. 6

℄ S.R. 2 STA. 1072+84.31 89'R.
℄ THRU RAMP STA. 1072+83.48
END CHANNELIZING LINES
END TRANSVERSE LINE
BEGIN EDGE LINES

EAST BOUND THRU RAMP U.S. 6

1074 1075

REVISED JAN., 83 R.W.H.

ADACHE ASSOCIATES INC., ENGINEERS
CLEVELAND, OHIO 44142

TRAFFIC CONTROL PLAN

DESIGNED	DRAWN	CHECKED	REVIEWED	DATE
W.B.	V.P.	W.S.		

FED. RD. DIVISION	STATE	PROJECT	
2	OHIO		

229
284

ERIE COUNTY
ERI-2-(16.13-17.39)

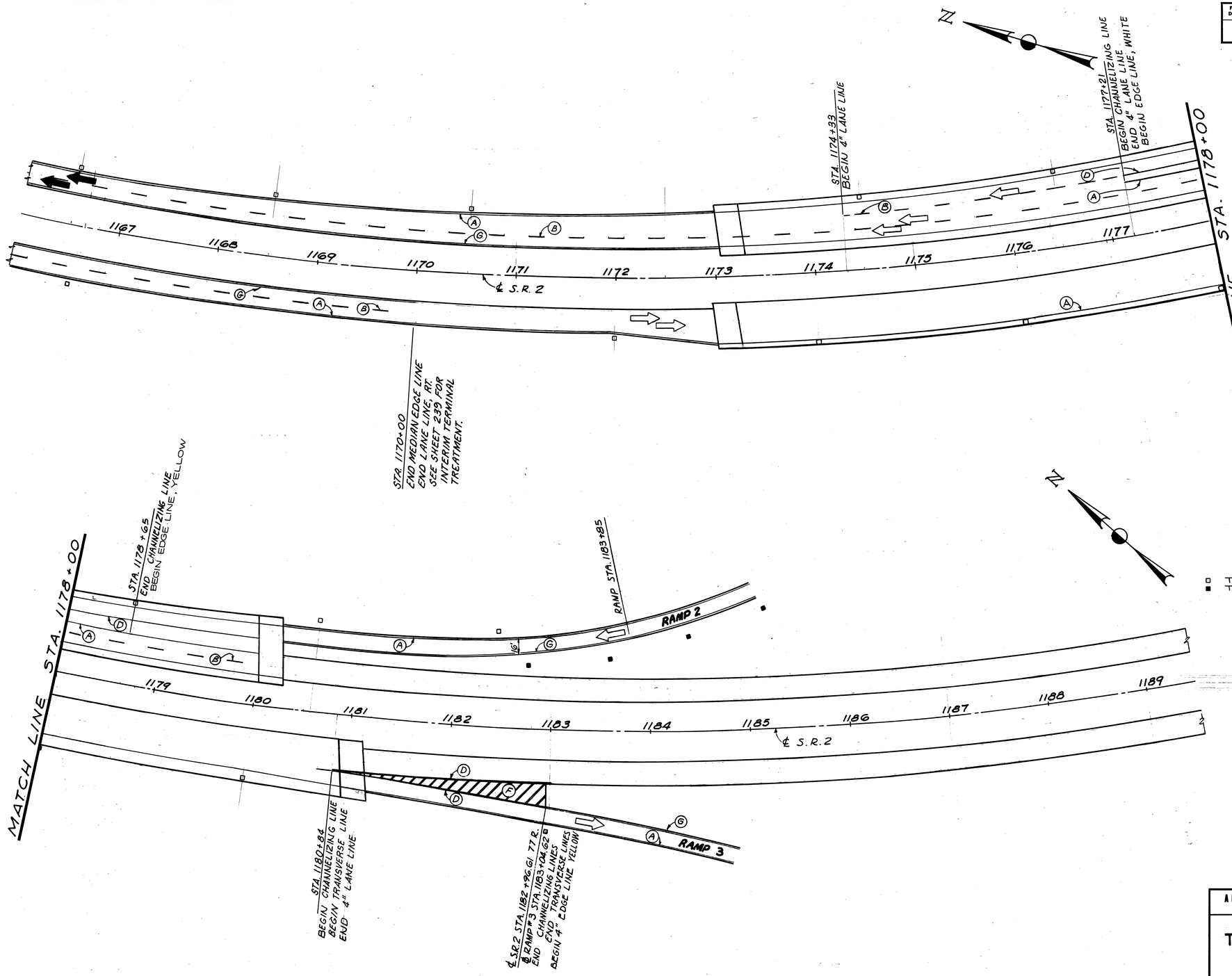

LEGEND

- (A) EDGE LINE, WHITE
- (B) 4" LANE LINE
- (D) CHANNELIZING LINE
- (F) TRANSVERSE LINE, WHITE
- (G) EDGE LINE, YELLOW

- ▫ TYPE C, DELINEATORS, COLORLESS
- ▪ TYPE D, DELINEATORS, YELLOW

REVISED JAN., 83 R.W.H.

ADACHE ASSOCIATES INC., ENGINEERS
CLEVELAND, OHIO 44142

TRAFFIC CONTROL PLAN

DESIGNED	DRAWN	CHECKED	REVIEWED	DATE
W.B.	V.P.	W.S.		

FHWA REGION	STATE	PROJECT	
5	OHIO		

230
284

ERIE COUNTY
ERI-2-(16.13-17.39)

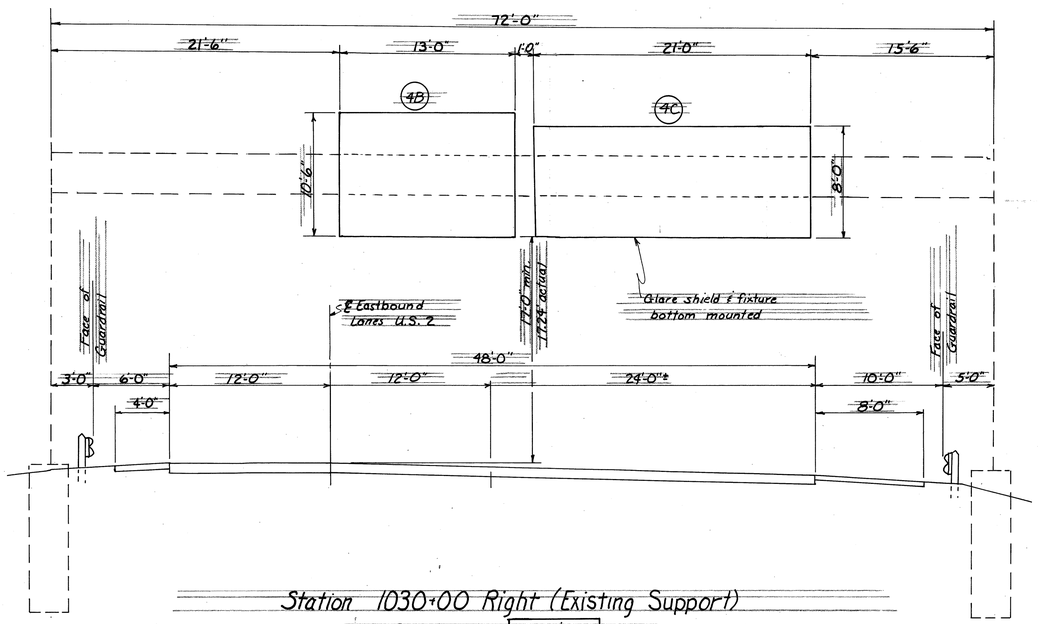

Station 1030+00 Right (Existing Support)

Reference No. 4B & 4C

Overhead Sign Support Similar To T.C.-7.65 Design 6

3 Brackets for 4B
3 Brackets for 4C

Note: Remove existing signs at 4a (8'x5.5') and 4c (18'x5.5'). Reuse existing overhead sign supports.

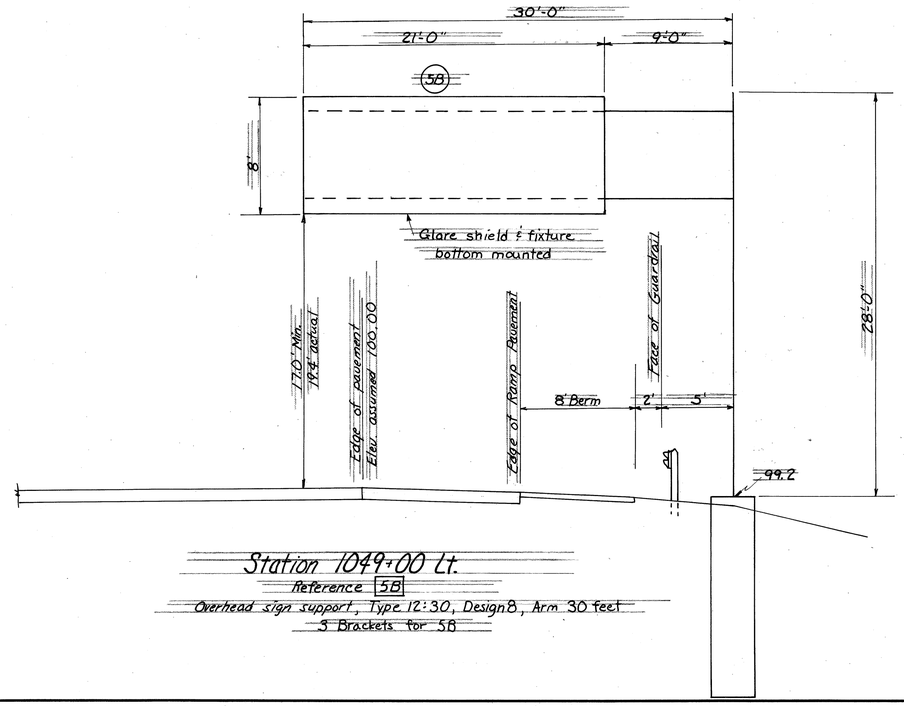

Station 1049+00 Lt.

Reference 5B

Overhead sign support, Type 12.30, Design 8, Arm 30 feet

3 Brackets for 5B

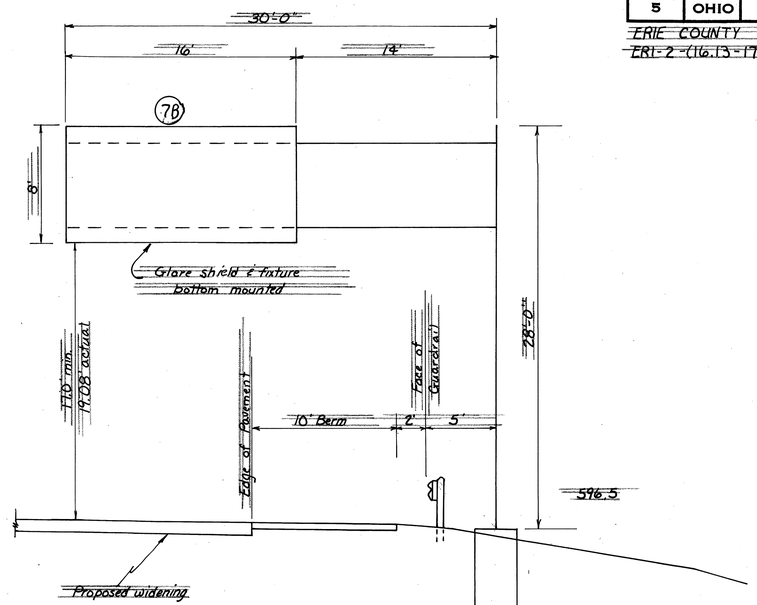

Station 1070+05 Rt.

Reference No. 7B

Overhead sign support, Type 12.30 Design 8, Arm 30 feet

3 Brackets for 7B

NOTES

1. For details of overhead sign supports, see Standard Construction Drawing TC-12.30
2. For sign support foundation details, see Standard Construction Drawing 21.20
3. For sign lighting details, see Standard Construction Drawing TC-31.21 & 32.10.

TRAFFIC CONTROL PLAN
OVERHEAD SIGN DETAILS

FED. RD. DIVISION	STATE	PROJECT	
2	OHIO		

231
284

ERIE COUNTY
ERI-2-(16.13-17.39)

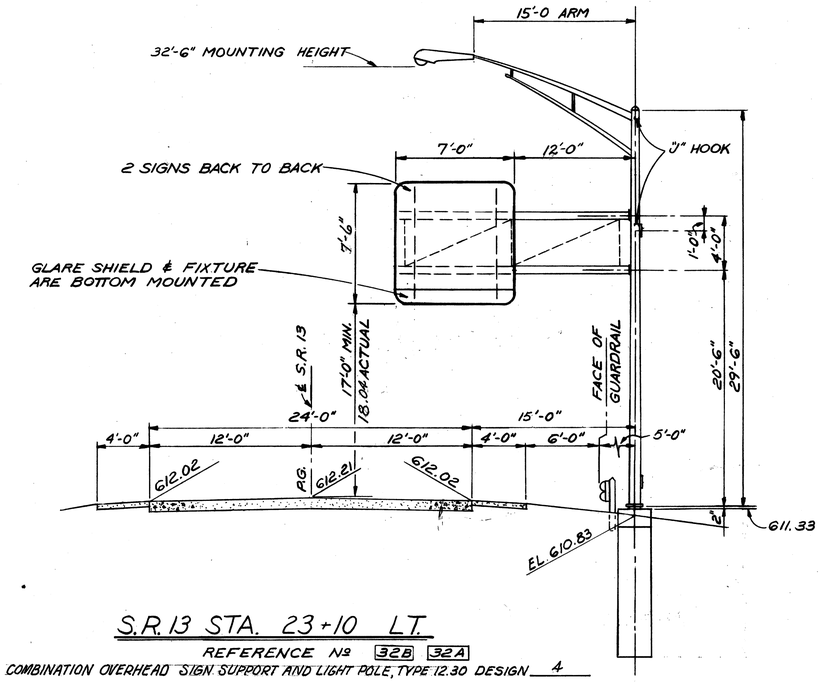

S.R. 13 STA. 23+10 LT.

REFERENCE Nº 32B 32A

COMBINATION OVERHEAD SIGN SUPPORT AND LIGHT POLE, TYPE 12.30 DESIGN 4

2 BRACKETS FOR 32A
2 BRACKETS FOR 32B

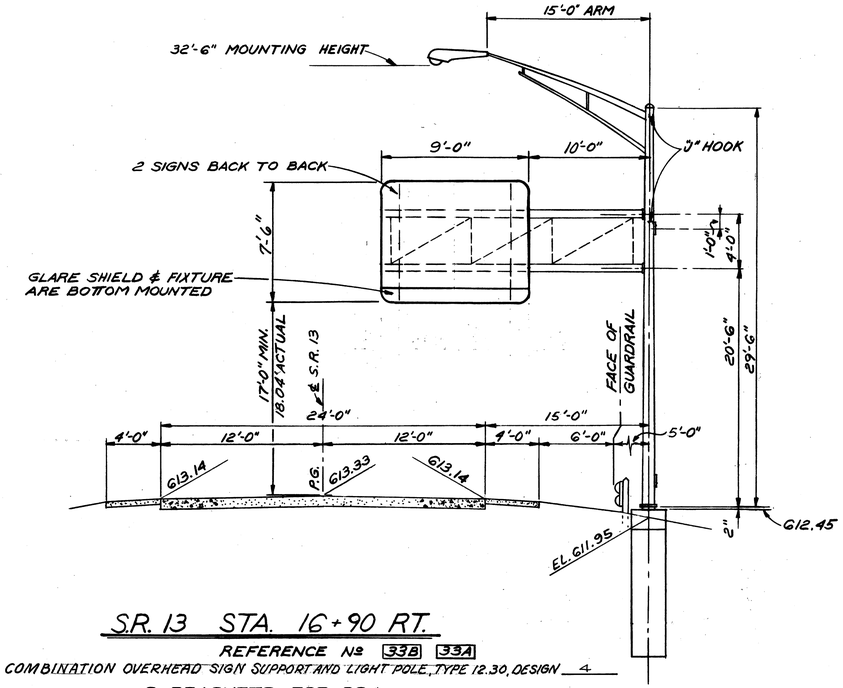

S.R. 13 STA. 16+90 RT.

REFERENCE Nº 33B 33A

COMBINATION OVERHEAD SIGN SUPPORT AND LIGHT POLE, TYPE 12.30, DESIGN 4

2 BRACKETS FOR 33A
2 BRACKETS FOR 33B

NOTE: LIGHTING BRACKET ARM, LUMINAIRE, LAMP, AND POLE & BRACKET CABLE ARE INCLUDED WITH HIGHWAY LIGHTING QUANTITIES.

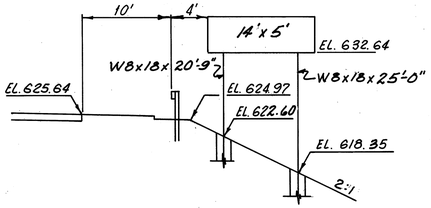

STA. 1105+00 RT.

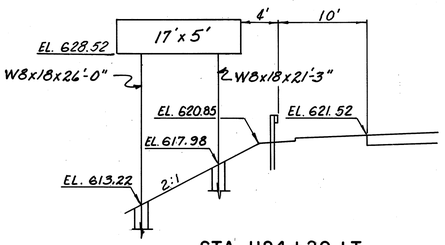

STA. 1124+20 LT.

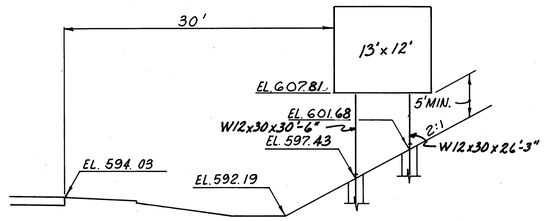

STA. 1152+00 RT.

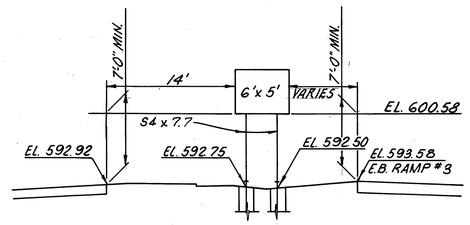

STA. 1183+25 RT. } SHOWN

STA. 1045+25 LT.
STA. 1032+50 RT. } SIMILAR

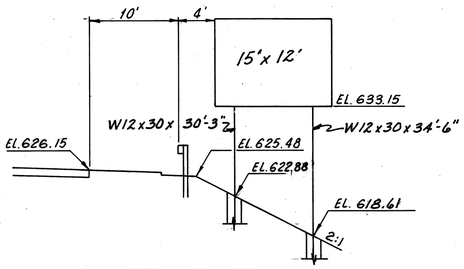

STA. 1121+50 RT.

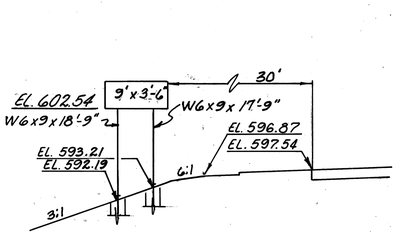

STA. 1142+50 LT.

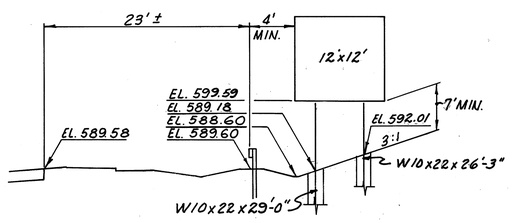

STA. 1172+00 RT.

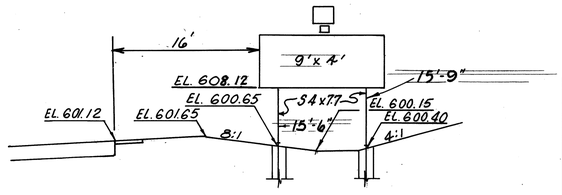

STA. 1188+40 RAMP Nº 3 RT.

REV. JUL., 85 R.W.H.
REVISED JAN., 83 R.W.H.

ADACHE ASSOCIATES INC., ENGINEERS
CLEVELAND, OHIO 44142

TRAFFIC CONTROL PLAN OVERHEAD SIGN DETAILS AND GROUND MOUNTED SIGN DETAILS

DESIGNED	DRAWN	CHECKED	REVIEWED	DATE	REVISED
W.B.	J.T.	W.S.			

FED. RD. DIVISION	STATE	PROJECT	
2	OHIO		

232
284

ERIE COUNTY
ERI-2-(16.13-17.39)

℄ EAST BOUND LANES - 54' RT.

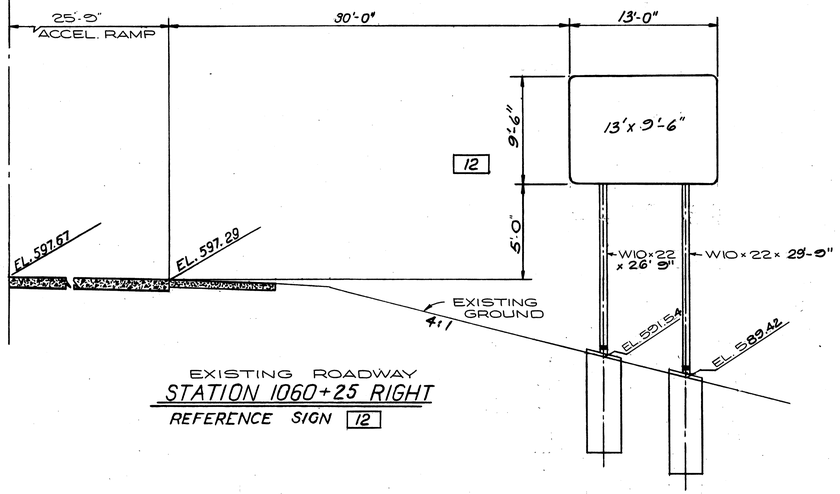

EXISTING ROADWAY
STATION 1060+25 RIGHT
REFERENCE SIGN 12

℄ WEST BOUND LANES - 54' LT.

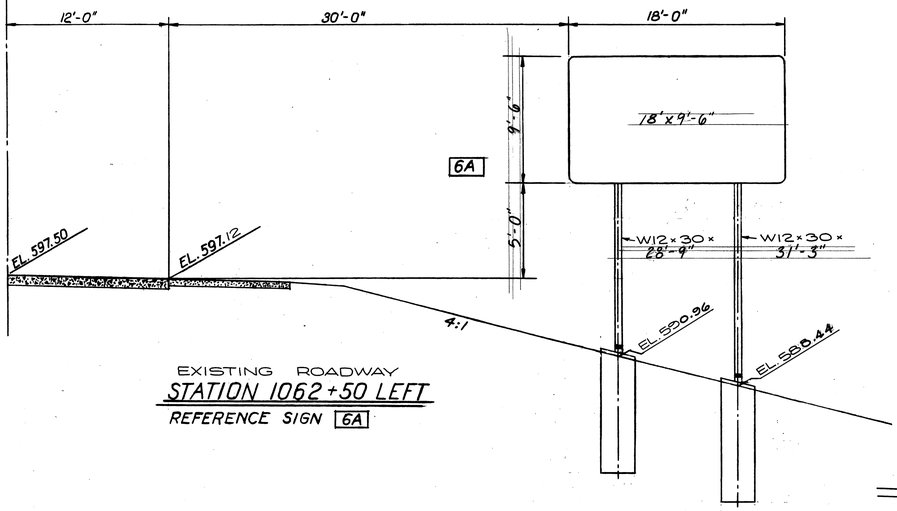

EXISTING ROADWAY
STATION 1062+50 LEFT
REFERENCE SIGN 6A

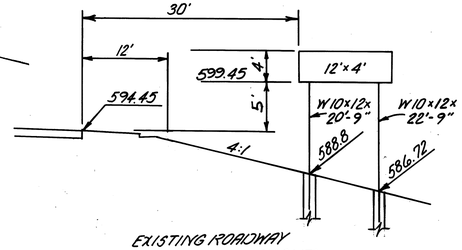

EXISTING ROADWAY
STA. 1106+60 RIGHT
REFERENCE SIGN 10

℄ WEST BOUND LANES - 54' LT.

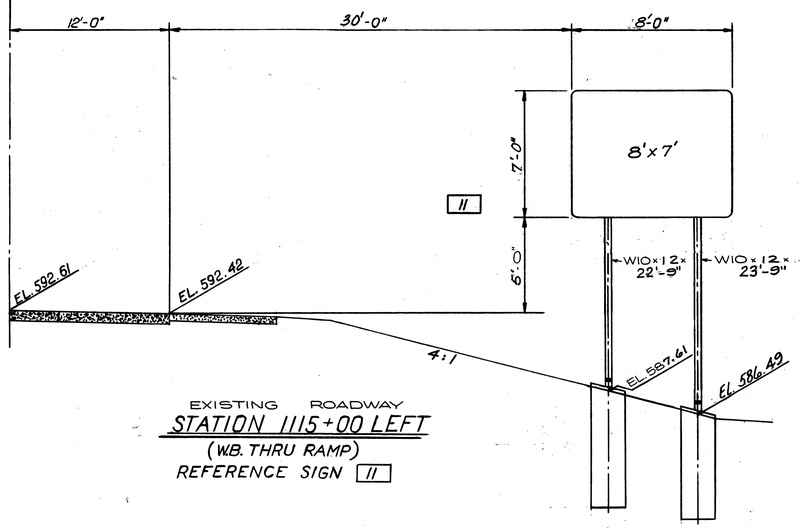

EXISTING ROADWAY
STATION 1115+00 LEFT
(W.B. THRU RAMP)
REFERENCE SIGN 11

℄ WEST BOUND LANES - 42' LT.

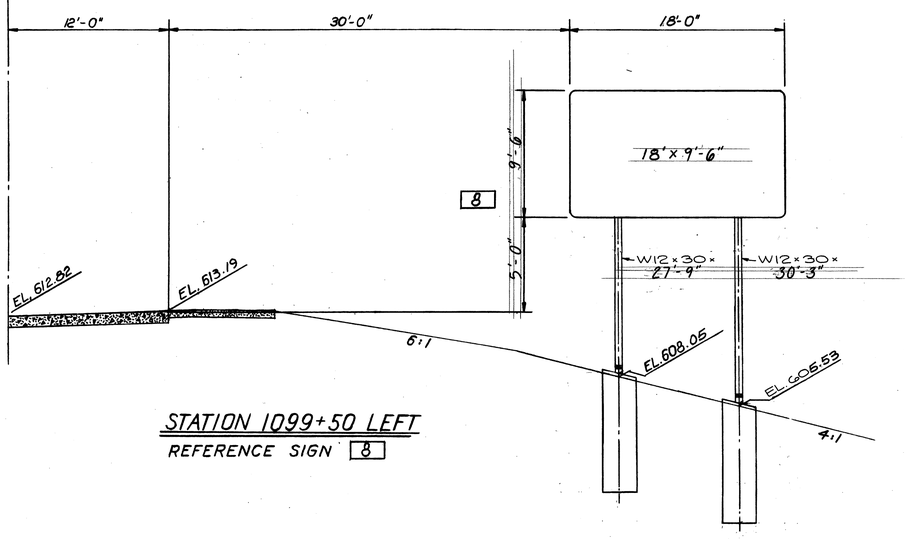

STATION 1099+50 LEFT
REFERENCE SIGN 8

REVISED JUL., 85 R.W.H.
REVISED JAN., 83 R.W.H.

ADACHE ASSOCIATES INC., ENGINEERS
CLEVELAND, OHIO 44142

TRAFFIC CONTROL PLAN
SIGN DETAILS
GROUND MOUNTED

DESIGNED	DRAWN	CHECKED	REVIEWED	DATE	REVISED
W.B.	J.T.	W.S.			

CALC.	ERIE COUNTY	OHIO
DATE	ERI-2-16.13	F.H.W.A. 5 REGION
CHKD.		
DATE		

NOTE: LIGHTING BRACKET ARM, LUMINAIRE, LAMP AND POLE AND BRACKET CABLE ARE INCLUDED WITH HIGHWAY LIGHTING QUANITITIES.

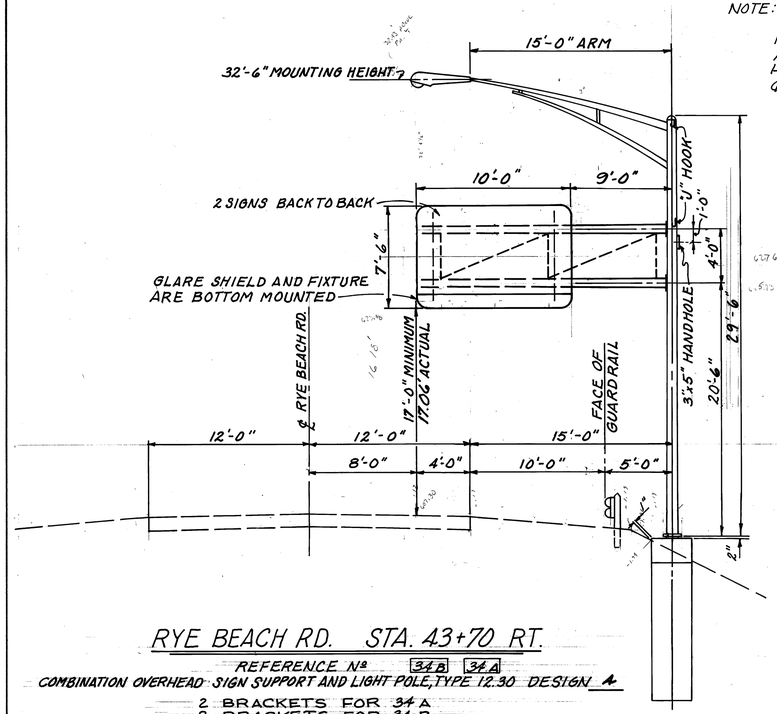

RYE BEACH RD. STA. 43+70 RT.

REFERENCE Nº 34B 34A

COMBINATION OVERHEAD SIGN SUPPORT AND LIGHT POLE, TYPE 12.30 DESIGN 4

2 BRACKETS FOR 34A
2 BRACKETS FOR 34B

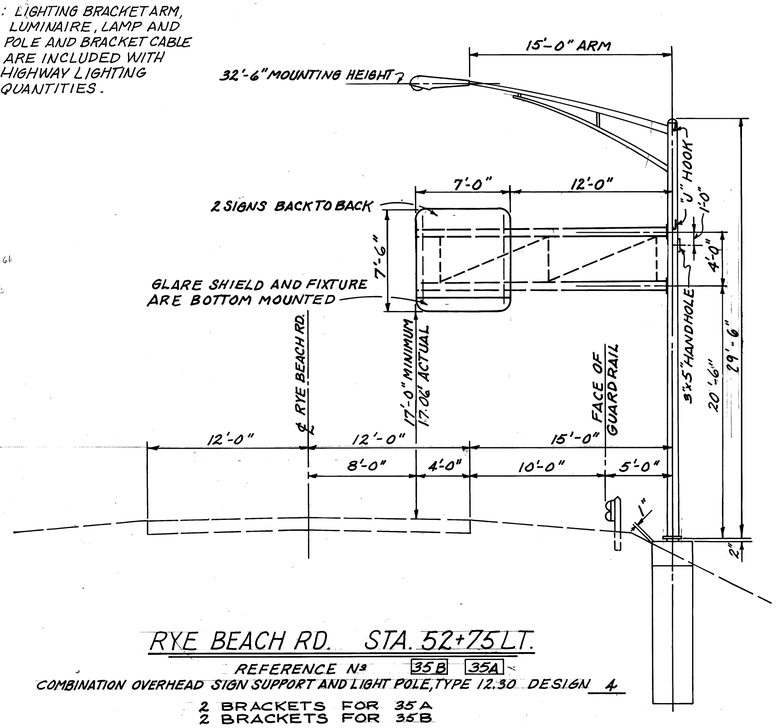

RYE BEACH RD. STA. 52+75 LT.

REFERENCE Nº 35B 35A

COMBINATION OVERHEAD SIGN SUPPORT AND LIGHT POLE, TYPE 12.30 DESIGN 4

2 BRACKETS FOR 35A
2 BRACKETS FOR 35B

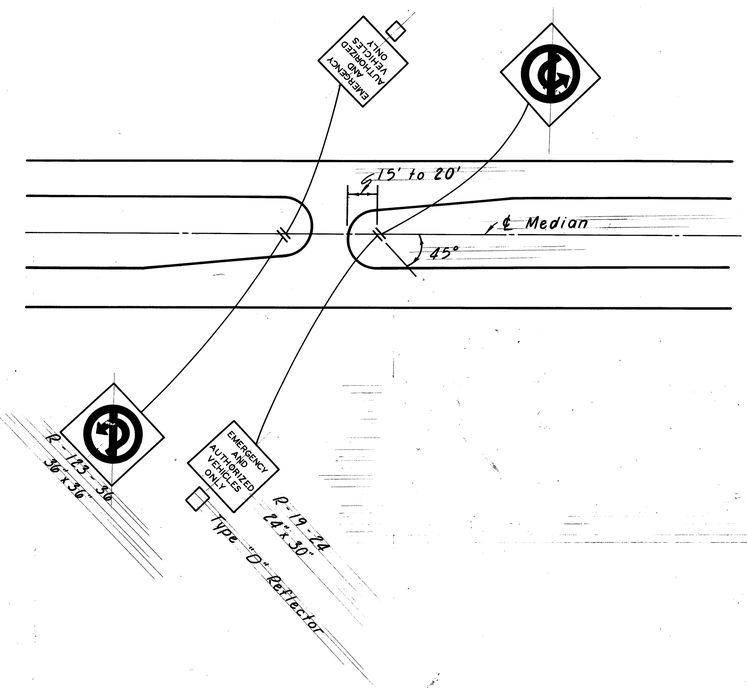

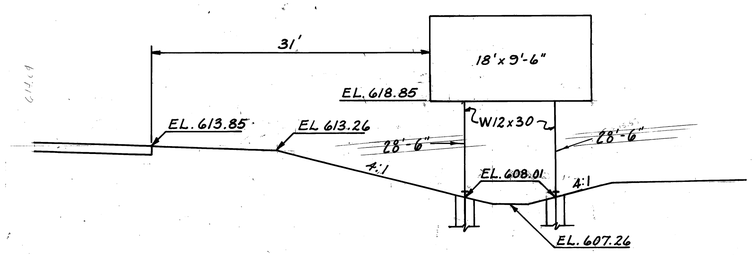

STA. 979+00 RT

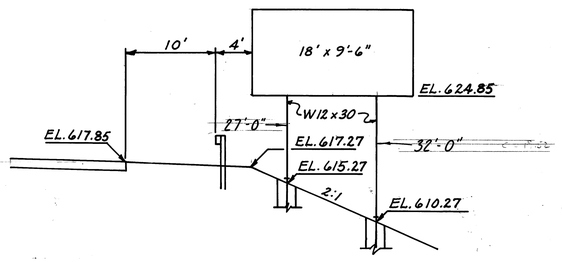

STA. 1015+00 RT

A-G-L form no. 1

TRAFFIC CONTROL PLAN

FHWA REGION	STATE	PROJECT	
5	OHIO		

232A
284

ERIE COUNTY
ERI-2-(16.13-17.39)

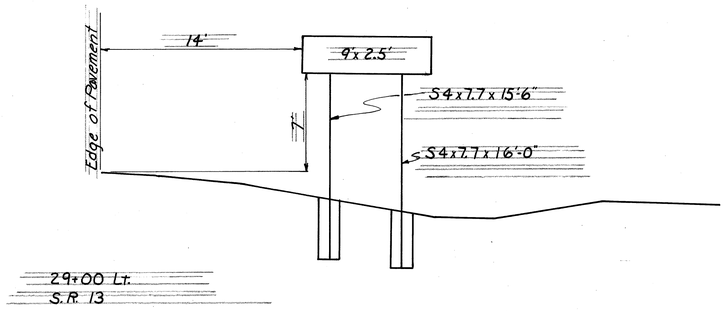

29+00 Lt.
S.R. 13

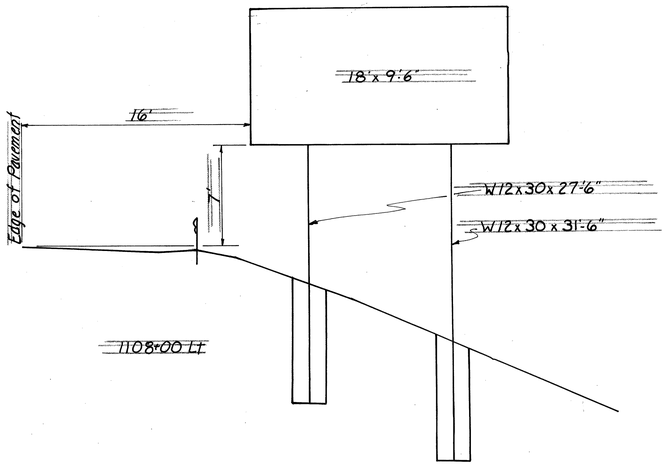

1108+00 Lt

10+50 Rt.
S.R. 13

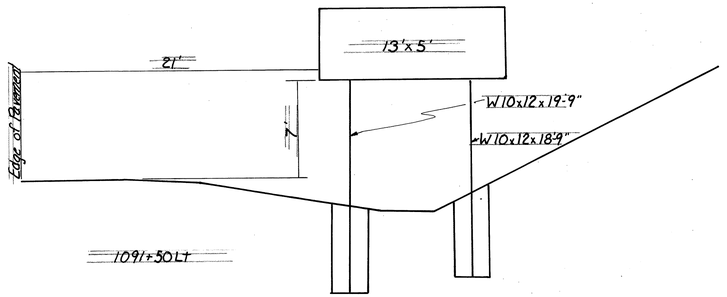

1091+50 Lt

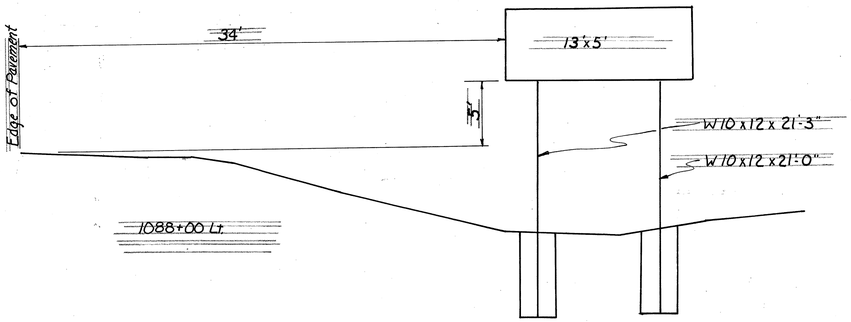

1088+00 Lt

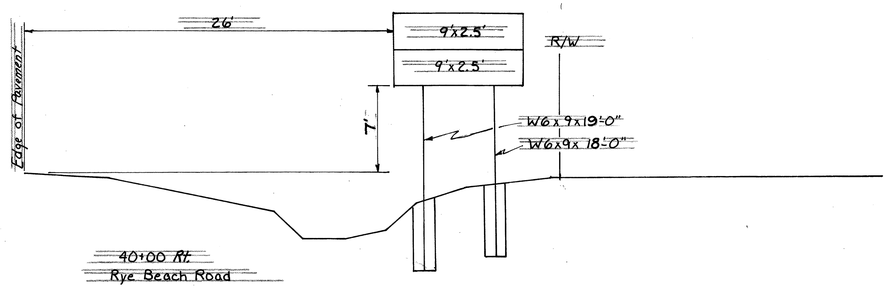

40+00 Rt.
Rye Beach Road

FED. RD. DIVISION	STATE	PROJECT	
2	OHIO		

234
284

ERIE COUNTY
ERI - 2 - (16.13 - 17.39)

* TEMP. TRAFFIC CONTROL SIGN QUANTITIES

		STATION	SIDE	SIGN CODE NUMBER	SIGN FLAT SHEET TYPE	SIGN EXTRU SHEET TYPE	GROUND MOUNTED SUPPORTS PIECES	#3 POST	#4 POST	W/6"x9" BEAM	EMB. CONC.	BREAK AWAY CONN.
					SQ. FT.	SQ. FT.	NO.	LIN. FT.	LIN. FT.	LIN. FT.	CU. YD.	EACH
E.B.	STAGE I	1015+00	RT.	OW-128-48	16.0		2		16'-3" 17'-0"			
		1015+00	MED.	OW-128-48	16.0		2		15'-6" 16'-0"			
		1040+00	RT.	OW-132-48 OW-143-24	20.0		2		17'-3" 18'-0"			
		1040+00	MED.	OW-132-48 OW-143-24	20.0		2		16'-6" 17'-0"			
		1045+00	RT.	OC-39L-36	9.0		1		13'-6"			
		1045+00	MED.	OC-39L-36	9.0		1		13'-6"			
		RAMP 1040+00	LT.	OW-128-48	16.0		2		16'-3" 17'-0"			
		1078+00	RT.	OC-8-48	8.0		2	13'-6" 14'-0"				
W.B.		1060+00	LT.	OC-8-48	8.0		2	13'-6" 14'-0"				
		1091+00	MED.	OC-39L-36	9.0		1		14'-6"			
		1091+00	LT.	OC-39L-36	9.0		1		14'-6"			
		1096+00	MED.	OW-132-48 OW-143-24	20.0		2		16'-6" 17'-0"			
		1096+00	LT.	OW-132-48 OW-143-24	20.0		2		17'-3" 18'-0"			
		1119+50	LT.&MED.	OW-128-48	16.0		4	LT. M	16'-3" 17'-0" 15'-6" 16'-0"			
E.B.	STAGE III	1072+75	RT.	R-75-48	16.0	PORTABLE	BARRICADE	TYPE III				
		1083+00	RT.	OW-127-48	16.0		2		16'-3" 17'-0"			
		1083+00	MED.	OW-127-48	16.0		2		15'-6" 16'-0"			
		1093+00	RT.	OW-18-36 OW-143-24	13.0		1		16'-0"			
		1093+00	MED.	OW-18-36 OW-143-24	13.0		1		15'-3"			
		1097+00	RT.	OW-18-36 OW-143-24	13.0		1		16'-0"			
		1097+00	MED.	OW-18-36 OW-143-24	13.0		1		15'-3"			
		1099+00	RT.	R-75-48 OC-14L-48	20.0	PORTABLE BARRICADE TYPE III						
		1101+50	RT.	OW-17-36 OW-143-24	13.0		1	15'-3"				
W.B.		1109+50	LT.&RT.	OW-143-24	2x4=8.0		1/1	15'-0" / 15'-0"				
E.B.		1109+50	RT.	OC-10-48	8.0		2	13'-6" 14'-0"				
E.B.		1030+00	OH.	W-54-144		48.0	MOUNT ON EXISTING OVERHEAD SUPPORT					
		1045+50	RT.	W-54-144		48.0	2			17'-0" 19'-0"	.66	2
		1045+50	MED.	W-54-144		48.0	2			16'-6" 17'-6"	.66	2
		1054+50	RT.	W-GOD-48	16.0		2		16'-3" 17'-0"			
		1054+50	MED.	W-GOD-48	16.0		2		15'-6" 16'-0"			
		1060+00	RT.	W-54-144		48.0	2			17'-0" 19'-0"	.66	2
		1060+00	MED.	W-54-144		48.0	2			16'-6" 17'-6"	.66	2
	STAGE III	1060+00-1072+50	RT.	(5) W-138-30	5x6.25=31.25		5		5x11.0=55.0	(BARREL MOUNTED)		
		1066+00	RT.	R-33-30	7.5		1		14.0			
W.B.		1083+00	RT.	OW-5-36 OW-143-24	13.0		1		16'-0"			
		1083+00	MED.	OW-5-36 OW-143-24	13.0		1		15'-3"			
		1099+50	LT.	R-75-48 OC-14L-48	20.0	PORTABLE BARRICADE TYPE III						
		1100+50-1104+00		(4) OW-138-30	4x6.25=25.0		4		4x11.0=44.0			
		1109+50	MED.	OW-5-36 OW-143-24	13.0		1		15'-3"			
		1109+50	LT.	OW-5-36 OW-143-24	13.0		1		16'-0"			
		1115+00	MED.	OW-127-48	16.0		2		16'-6" 17'-0"			
		1115+00	LT.	OW-127-48	16.0		2		16'-3" 17'-0"			
E.B.		1050+00	RT.	W-49R-48	16.0		2		16'-3" 17'-0"			
		1050+00	LT.MED.	W-49R-48	16.0		2		15'-6" 16'-0"			
W.B.		1094+20	LT.MED.	W-GOD-48	16.0		2		15'-6" 16'-0"			
		1094+20	LT.	W-GOD-48	16.0		2		16'-3" 17'-0"			
	STAGE IV	1082+50	LT.MED.	OC-39R-36	9.0		1		14'-0"			
		1082+50	LT.	OC-39R-36	9.0		1		14'-6"			
		1110+00	LT.MED.	OW-123-48	16.0		2		15'-6" 16'-0"			
		1110+00	LT.	OW-123-48	16.0		2		16'-3" 17'-0"			

SUB-SUMMARY ⊙-YELLOW

TEMP. PAVEMENT MARKING QUANTITIES

STATION FROM	STATION TO	SIDE	CLASS I 4" EDGE	CLASS I 4" LANE	CLASS I, 947.03 TYPE B, or C 4" EDGE	CLASS I, 947.03 TYPE B, or C 4" LANE	CLASS I CENTER LINES	CLASS I 947.03 TYPE B or C CENTER LINES
STAGE II								
E.B.								
1097+04	1100+96	RT.	404					
1097+04	1100+96	CEN.		404				
1097+04	1100+96	LT.	404⊙					
1100+96	1106+45	RT.	402		160			
1100+96	1106+45	CEN.		296		158 168		
1100+96	1106+45	LT.	347⊙		215⊙			
STAGE III								
W.B. 1073+24	1077+76	RT.	472⊙					
1073+24	1077+76	CEN.		362		110		
1073+24	1077+76	LT.	315		157			
1100+96	1103+82	RT.	288⊙					
1100+96	1103+82	CEN.		166		122		
1100+96	1103+82	LT.		288				
E.B. 1060+00	1072+84	RT.			1284			
1097+04	1100+96		(STAGE II LINES MAINTAINED)					
STAGE IV								
W.B. 1064+00	1076+32	LT.			1232			
E.B. 1170+00	1183+00	RT.			1300			
S.R. 13 TEMPORARY ROAD - SHEET 45			5528		2000		2614	1150
SR. 13 TERMINAL TREATMENT - SHEET 239					1300			
TOTAL LIN. FT.			8,160	1516	7648	498	2614	1150
TOTAL MILE			1.55	0.28	1.45	0.09	0.50	0.22

* INTERIM PAVEMENT MARKING REMOVAL QUANTITIES

STATION FROM	STATION TO	SIDE	PAINT 4" EDGE	PAINT 6" LANE	TAPE 4" EDGE	TAPE 4" LANE
STAGE II						
W.B. 1063+32	1076+32	LT.			1300	
E.B. 1060+84	1073+84	LT.			1300	
1097+04	1100+96	RT.&CEN.	155	110		
1100+96	1106+45	LT.&CEN.	155	110		
STAGE III						
W.B. 1063+32	1076+32	LT.	1300			
1073+24	1077+76	RT.-LT. CEN.	155 155	110 110		
1100+96	1103+82	RT. & CEN.	245	115		
E.B. 1060+84	1073+84	RT.	1300		1300	
1100+96	1106+45	RT.-LT. CEN.			160	159 0 81.5
STAGE IV						
W.B. 1064+00	1076+32	LT.	232		1232	
1073+24	1077+76	LT. & CEN.			154	110
1100+96	1103+82	LT. CEN.			286	122
STAGE V						
W.B. 1064+00	1076+32	LT.			1232	
E.B. 1060+00	1072+84	RT.			1284	
TOTAL LIN. FT.			4697	555	8251	713

QUANTITIES TO SHEETS 9 & 10

SUMMARY OF QUANTITIES

ITEM	FROM SHEET		TO SHEET		QUANTITY	UNIT	DESCRIPTION
	46-47		234	239			
614		1.55			1.55	MILE	TEMPORARY EDGE LINE CLASS I
614		0.28			0.28	MILE	TEMPORARY LANE LINE CLASS I
614		0.50			0.50	MILE	TEMPORARY CENTER LINES CLASS I
614		1.45			1.45	MILE	TEMPORARY EDGE LINES CLASS I, 947.03 *
614		0.09			0.09	MILE	TEMPORARY LANE LINE, CLASS I, 947.03*
614		0.22			0.22	MILE	TEMPORARY CENTERLINE, CLASS I, 947.03*
606	212.5		1425		1637.5	LIN. FT.	GUARD RAIL TYPE 6
622	530				530	LIN. FT.	TEMPORARY PRECAST CONCRETE BARRIER

* TYPE B OR C

* TEMPORARY GUARD RAIL TYPE 6 (ATTACHED TO BARRELS)

	STATION FROM	STATION TO	GUARD RAIL SINGLE	BARRELS	TYPE C STEADY BURN LIGHTS	CONCRETE BARRIER RAIL TYPE D
	STAGE I					
W.B.	1062+00	1076+82		29▲	29	
E.B.	1060+84	1073+84		27▲	27	
	STAGE II					
E.B.	1060+84	1073+84	(STAGE I DRUMS & LIGHTS MAINTAINED)			
X-OVER	1097+00	1099+00	200	17	5	
	1099+40	1104+00				462.5
	1103+95	1106+20		18▲	18	
	STAGE III					
X-OVER						
	1076+00	1078+21		19▲	19	
	1099+50	1104+00		19▲	19	
	1097+00	1099+00		17▲	17	
E.B.	1060+00	1072+50		50▲	50	
	STAGE IV					
E.B.	1060+00	1072+50	(STAGE III DRUMS & LIGHTS MAINTAINED)			

THE COST FOR ALL ITEMS IN THIS TEMPORARY TRAFFIC CONTROL WORK SHALL BE INCLUDED IN THE PRICE BID FOR ITEM 614 MAINTAINING TRAFFIC EXCEPT TEMPORARY PAVEMENT MARKINGS, GUARD RAIL TYPE 6, TEMPORARY ROADS, TEMPORARY PAVEMENT AND CONCRETE BARRIER MEDIAN.

REVISED, JULY, 85 R.W.H.
REVISED JAN., 83 R.W.H.

1

ADACHE ASSOCIATES INC., ENGINEERS
CLEVELAND, OHIO

TEMPORARY TRAFFIC CONTROL QUANTITIES

DESIGNED	DRAWN	CHECKED	REVIEWED	DATE	REVISED
RJS 12-5-69	J.T.	WS 12-9-69			

FED. RD. DIVISION	STATE	PROJECT	
2	OHIO		

ERIE COUNTY
ERI-2-(16.13-17.39)

235
284

SEQUENCE OF WORK FOR STAGE I A CONSTRUCTION ITEMS

PHASE 1. PROVIDE AND ERECT THE CONSTRUCTION SIGNS AND DRUMS WITH STEADY BURN LIGHTS AS SHOWN, ALONG THE EXISTING EDGE LINE* FOR ALL NON-WORKING HOURS OR WHILE CONSTRUCTION DOES NOT REQUIRE WORK ALONG THE EXISTING EDGE OF PAVEMENT.

PHASE 2. CONSTRUCT THE STAGE I A ROADWAY ITEMS. SEE SHEET 240 FOR DETAILS OF SIGNS REQUIRED FOR SINGLE LANE CLOSURE OF A FOUR LANE DIVIDED HIGHWAY.

* DURING NON-WORKING HOURS THE DRUMS SHALL BE SET JUST BEHIND THE EXISTING EDGE LINE.

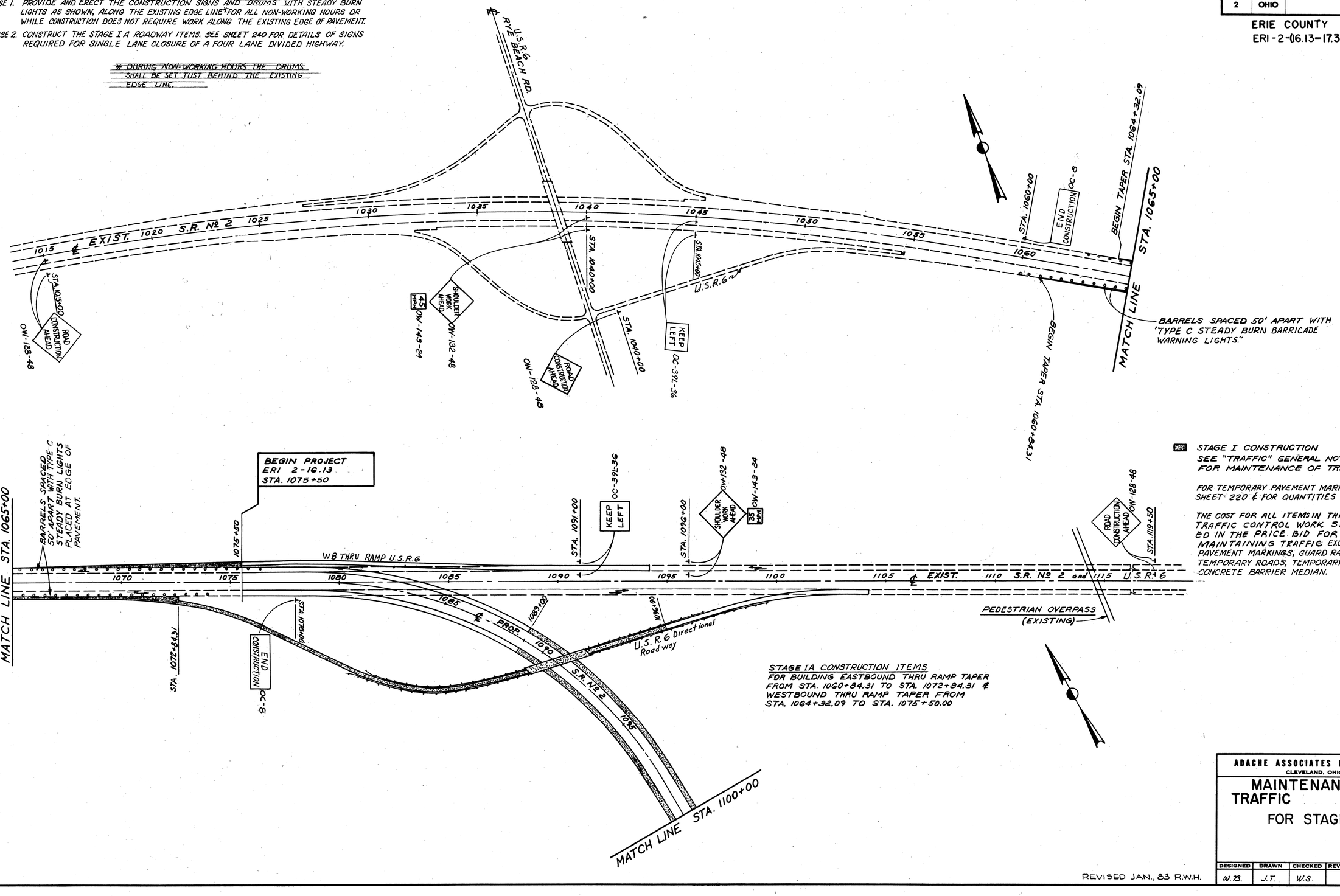

STAGE I CONSTRUCTION
SEE "TRAFFIC" GENERAL NOTES ON SHEET 7 FOR MAINTENANCE OF TRAFFIC.

FOR TEMPORARY PAVEMENT MARKING NOTES SEE SHEET 220 & FOR QUANTITIES SEE SHEET 234.

THE COST FOR ALL ITEMS IN THIS TEMPORARY TRAFFIC CONTROL WORK SHALL BE INCLUDED IN THE PRICE BID FOR ITEM C14 MAINTAINING TRAFFIC EXCEPT TEMPORARY PAVEMENT MARKINGS, GUARD RAIL TYPE 6, TEMPORARY ROADS, TEMPORARY PAVEMENT AND CONCRETE BARRIER MEDIAN.

STAGE IA CONSTRUCTION ITEMS
FOR BUILDING EASTBOUND THRU RAMP TAPER FROM STA. 1060+84.31 TO STA. 1072+84.31 & WESTBOUND THRU RAMP TAPER FROM STA. 1064+32.09 TO STA. 1075+50.00

ADACHE ASSOCIATES INC., ENGINEERS
CLEVELAND, OHIO

MAINTENANCE OF TRAFFIC PLAN
FOR STAGE I A

DESIGNED	DRAWN	CHECKED	REVIEWED	DATE	REVISED
W.B.	J.T.	W.S.			

REVISED JAN., 83 R.W.H.

RTE. NO. DIVISION	STATE	PROJECT	
2	OHIO		

236
284

ERIE COUNTY
ERI-2-16.13-17.39)

SEQUENCE OF WORK FOR STAGE II CONSTRUCTION ITEMS

PHASE 1. PROVIDE CONCRETE BARRIER AND CONSTRUCT THE TEMPORARY ROAD AS SHOWN ON SHEETS 46 AND 47 WHILE MAINTAINING THE EASTBOUND AND WESTBOUND TRAFFIC ON THE EXISTING ROADWAY. SEE SHEET 240 FOR SINGLE LANE CLOSING DETAILS DURING CONSTRUCTION OF TEMPORARY ROAD OR PLACEMENT OF THE CONCRETE BARRIER.

PHASE 2. PROVIDE THE DETOUR SIGNS, BARRELS AND BARRICADES AS SHOWN TO DETOUR THE EASTBOUND TRAFFIC ONTO THE TEMPORARY ROAD PROVIDED UNDER PHASE I.

PHASE 3. CONSTRUCT ALL OF THE REMAINING ROADWAY ITEMS FOR THE EASTBOUND RAMP AS PER THE PLANS.

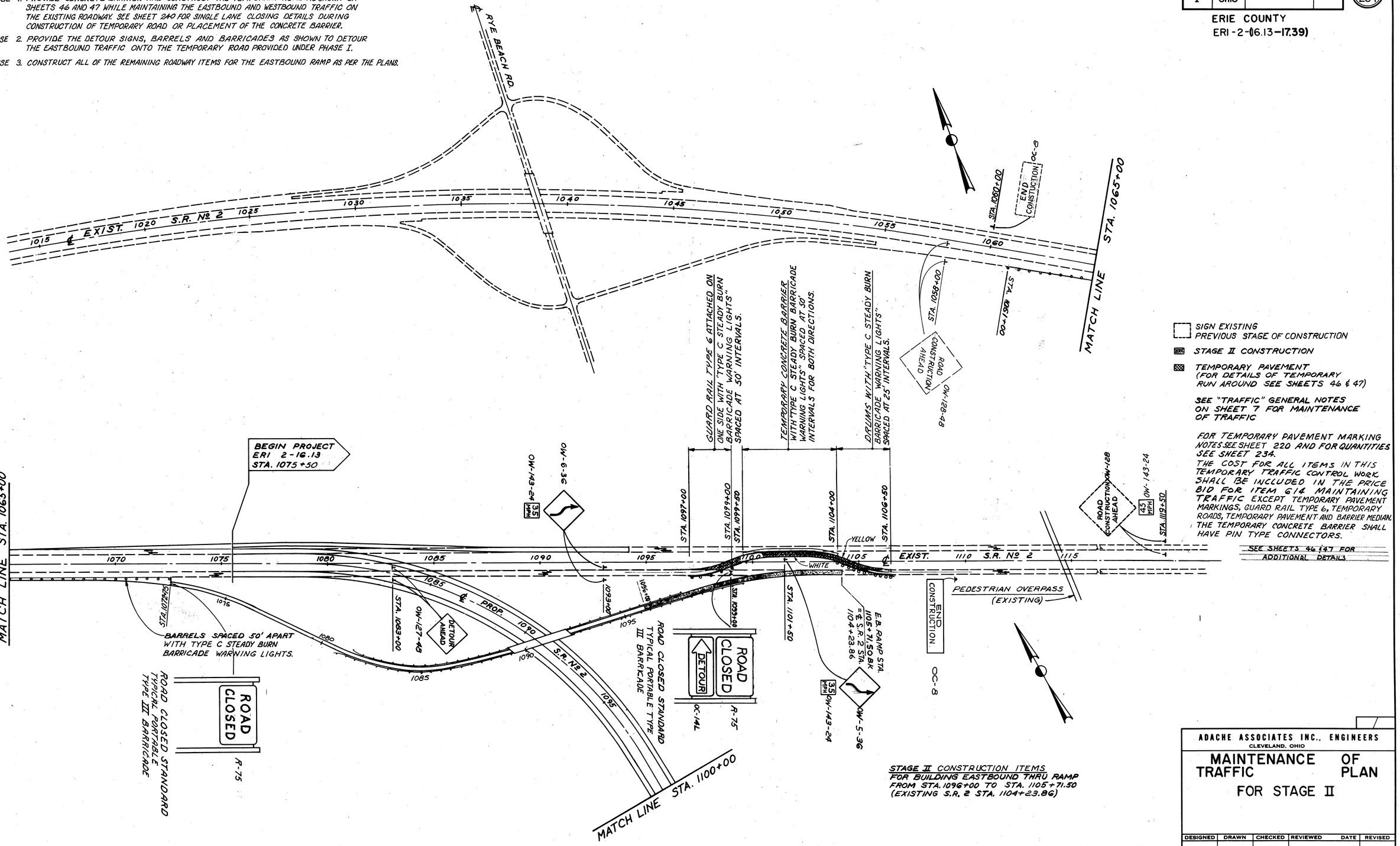

SIGN EXISTING PREVIOUS STAGE OF CONSTRUCTION

STAGE II CONSTRUCTION

TEMPORARY PAVEMENT (FOR DETAILS OF TEMPORARY RUN AROUND SEE SHEETS 46 & 47)

SEE "TRAFFIC" GENERAL NOTES ON SHEET 7 FOR MAINTENANCE OF TRAFFIC

FOR TEMPORARY PAVEMENT MARKING NOTES SEE SHEET 220 AND FOR QUANTITIES SEE SHEET 234.

THE COST FOR ALL ITEMS IN THIS TEMPORARY TRAFFIC CONTROL WORK SHALL BE INCLUDED IN THE PRICE BID FOR ITEM 614 MAINTAINING TRAFFIC EXCEPT TEMPORARY PAVEMENT MARKINGS, GUARD RAIL TYPE 6, TEMPORARY ROADS, TEMPORARY PAVEMENT AND BARRIER MEDIAN. THE TEMPORARY CONCRETE BARRIER SHALL HAVE PIN TYPE CONNECTORS.

STAGE II CONSTRUCTION ITEMS
FOR BUILDING EASTBOUND THRU RAMP FROM STA. 1096+00 TO STA. 1105+71.50 (EXISTING S.R. 2 STA. 1104+23.86)

REVISED JAN., 83 R.W.H.

ADACHE ASSOCIATES INC., ENGINEERS
CLEVELAND, OHIO

MAINTENANCE OF TRAFFIC PLAN FOR STAGE II

DESIGNED	DRAWN	CHECKED	REVIEWED	DATE	REVISED
W.B.	J.T.	W.S.			

FED. ROAD DIVISION	STATE	PROJECT	
2	OHIO		

237
284

ERIE COUNTY
ERI-2-(16.13-17.39)

SEQUENCE OF WORK FOR STAGE III CONSTRUCTION ITEMS

PHASE 1. REMOVE THE EASTERLY PORTION OF THE DETOUR PROVIDED FOR THE STAGE II CONSTRUCTION WHILE MAINTAINING THE EASTBOUND TRAFFIC ON THE NEWLY COMPLETED EASTBOUND RAMP ROADWAY WITH ALL OF THE SIGNS, BARRELS AND GUARDRAIL AS SHOWN. ALL PERMANENT GUARDRAIL AND PAVEMENT MARKINGS SHALL BE IN PLACE BEFORE OPENING TO TRAFFIC.

PHASE 2. CONSTRUCT THE WESTERLY TEMPORARY ROAD CROSS-OVER AS PER THE DETAILS ON SHEET 46 WHILE MAINTAINING THE WESTBOUND TRAFFIC ON THE EXISTING ROADWAY. SEE SHEET 240 FOR SINGLE LANE CLOSURE DETAILS DURING CONSTRUCTION OF THE TEMPORARY ROAD.

PHASE 3 PROVIDE THE REMAINING SIGNS, BARRELS, BARRICADES AND STRIPING AS SHOWN TO DETOUR THE WESTBOUND TRAFFIC.

PHASE 4 DETOUR THE WESTBOUND TRAFFIC ONTO THE TEMPORARY ROAD AND CONSTRUCT ALL OF THE WESTBOUND RAMP AND THE WESTBOUND ROADWAY BETWEEN STATIONS 1075+00± AND 1081+00±.

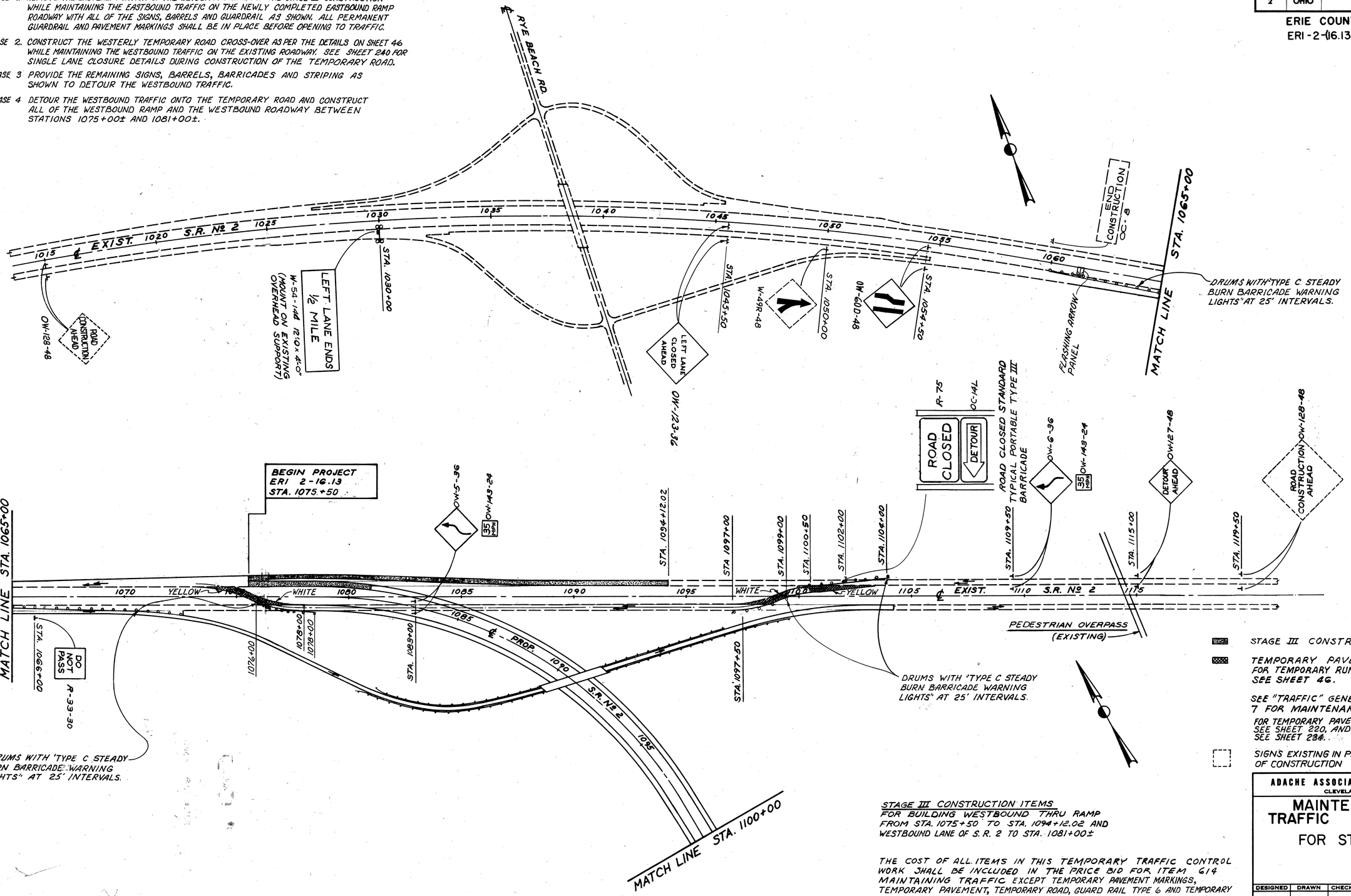

STAGE III CONSTRUCTION

TEMPORARY PAVEMENT FOR TEMPORARY RUN AROUND DETAILS SEE SHEET 46.

SEE "TRAFFIC" GENERAL NOTES ON SHEET 7 FOR MAINTENANCE OF TRAFFIC.

FOR TEMPORARY PAVEMENT MARKING NOTES SEE SHEET 220, AND FOR QUANTITIES SEE SHEET 286.

SIGNS EXISTING IN PREVIOUS STAGES OF CONSTRUCTION

STAGE III CONSTRUCTION ITEMS

FOR BUILDING WESTBOUND THRU RAMP FROM STA. 1075+50 TO STA. 1094+12.02 AND WESTBOUND LANE OF S.R. 2 TO STA. 1081+00±

THE COST OF ALL ITEMS IN THIS TEMPORARY TRAFFIC CONTROL WORK SHALL BE INCLUDED IN THE PRICE BID FOR ITEM 614 MAINTAINING TRAFFIC EXCEPT TEMPORARY PAVEMENT MARKINGS, TEMPORARY PAVEMENT, TEMPORARY ROAD, GUARD RAIL TYPE 6 AND TEMPORARY CONCRETE BARRIER.

REVISED JAN. 83 R.W.H.

ADACHE ASSOCIATES INC., ENGINEERS
CLEVELAND, OHIO

MAINTENANCE OF TRAFFIC PLAN FOR STAGE III

DESIGNED	DRAWN	CHECKED	REVIEWED	DATE	REVISED
W.73	J.T.	W.S.			

FED. RD. DIVISION	STATE	PROJECT	
2	OHIO		

238
284

ERIE COUNTY
ERI-2-(16.13-17.39)

SEQUENCE OF WORK FOR STAGE IV CONSTRUCTION

PHASE 1. PROVIDE AND ERECT THE SIGNS AND BARRELS AS SHOWN TO MAINTAIN THE WESTBOUND TRAFFIC ON THE NEWLY CONSTRUCTED ROADWAY IN STAGE III CONSTRUCTION. ALL PERMANENT PAVEMENT MARKINGS FOR THE WESTBOUND ROADWAY AND ACCELERATION RAMP SHALL BE IN PLACE BEFORE OPENING TO TRAFFIC.

PHASE 2. REMOVE THE TEMPORARY ROADS USED IN THE FOREGOING STAGES OF CONSTRUCTION AND COMPLETE ALL REMAINING WORK ON THE MAINLINE FOR S.R. 2. SEE SHEET 240 FOR SINGLE LANE CLOSING DURING REMOVAL AND RESTORATION WORK.

PHASE 3. REMOVE ALL TEMPORARY SIGNS WHEN NO LONGER REQUIRED FOR MAINTENANCE OF TRAFFIC.

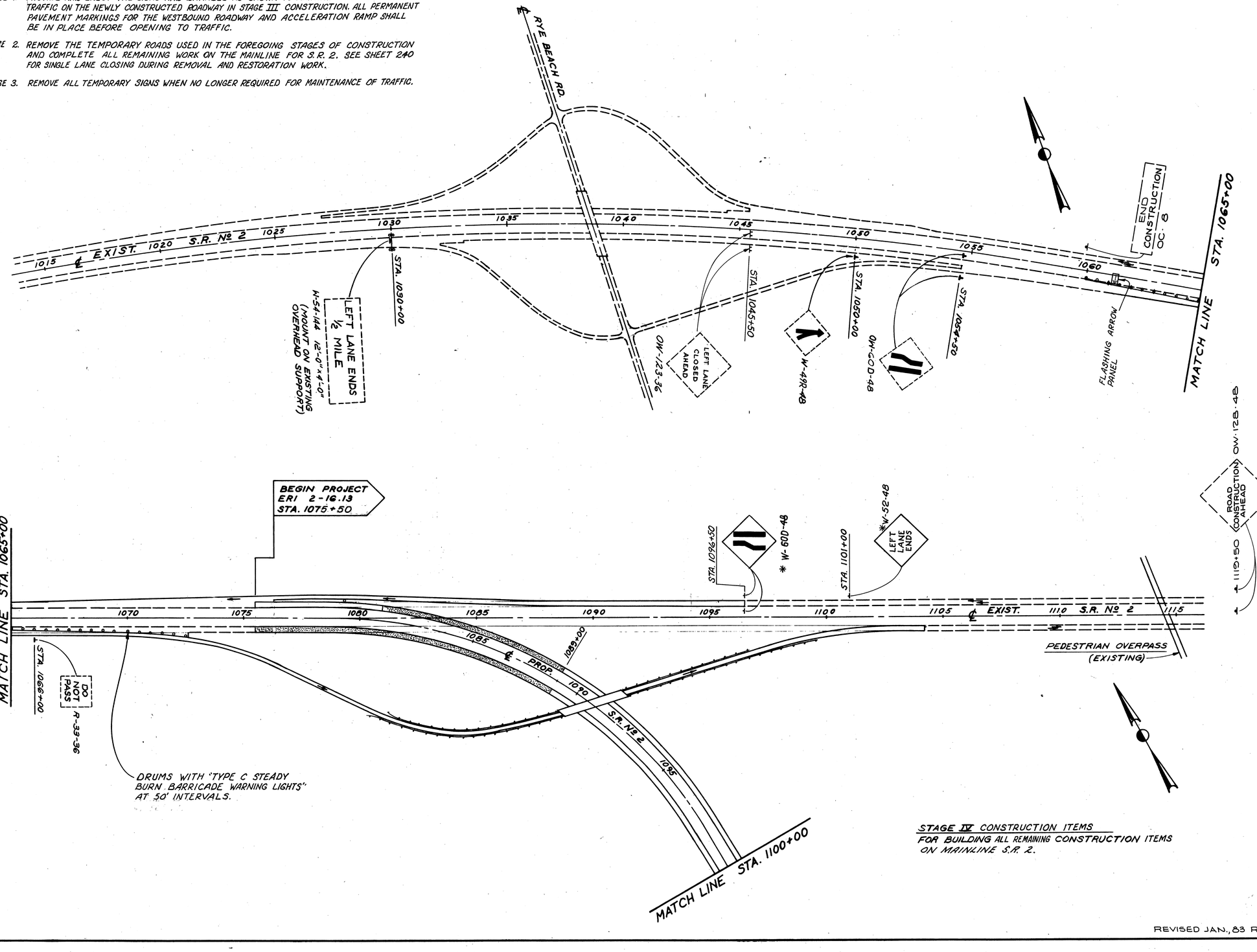

* INSTALL PERMANENT SIGNS.

SIGNS EXISTING IN PREVIOUS STAGES OF CONSTRUCTION.

STAGE IV CONSTRUCTION

SEE "TRAFFIC" GENERAL NOTES ON SHEET 7 FOR MAINTENANCE OF TRAFFIC.

FOR TEMPORARY PAVEMENT MARKING NOTES SEE SHEET 220 AND FOR QUANTITIES SEE SHEET 234.

THE COST OF ALL ITEMS IN THIS TEMPORARY TRAFFIC CONTROL WORK SHALL BE INCLUDED IN THE PRICE BID FOR ITEM 614 MAINTAINING TRAFFIC EXCEPT TEMPORARY PAVEMENT MARKINGS, TEMPORARY PAVEMENT, TEMPORARY ROAD, GUARD RAIL TYPE 6 AND TEMPORARY CONCRETE BARRIER.

STAGE IV CONSTRUCTION ITEMS

FOR BUILDING ALL REMAINING CONSTRUCTION ITEMS ON MAINLINE S.R. 2.

REVISED JAN., 83 R.W.H.

ADACHE ASSOCIATES INC., ENGINEERS
CLEVELAND, OHIO 44142

MAINTENANCE OF TRAFFIC PLAN FOR STAGE IV

DESIGNED	DRAWN	CHECKED	REVIEWED	DATE	REVISED
W.B.	J.T.	W.S.			

FED. RD. DIVISION	STATE	PROJECT	
2	OHIO		

239
284

ERIE COUNTY
ERI- 2 -(16.13-17.39)

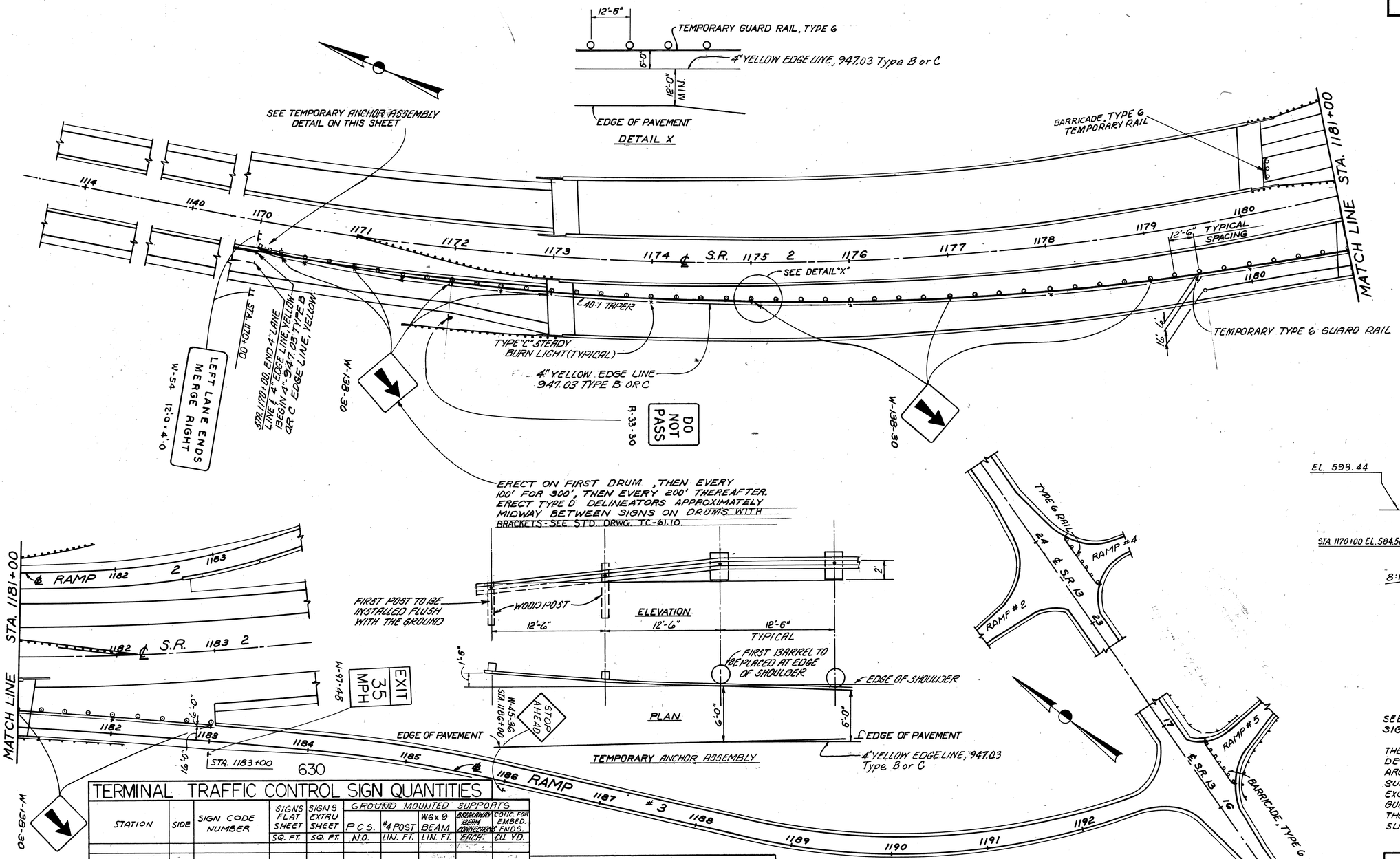

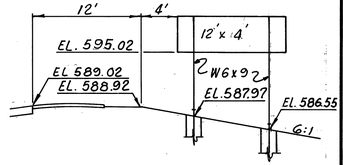

STA. 1170+00

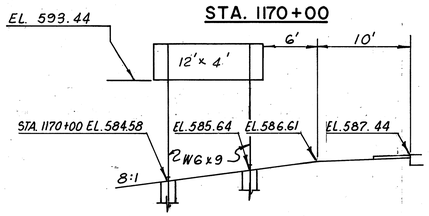

STA. 1170+00

TERMINAL TRAFFIC CONTROL SIGN QUANTITIES

STATION	SIDE	SIGN CODE NUMBER	SIGNS FLAT SHEET SQ. FT.	SIGNS EXTRU SHEET SQ. FT.	GROUND MOUNTED SUPPORTS P.C.S. NO.	#4 POST LIN. FT.	W6x9 BEAM LIN. FT.	BREAKAWAY BEAM CONNECTIONS EACH	CONC. FOR EMBED. FNDS. CU. YD.
1170+00	RT.	W-54-144		48.0	2		16'-0"+3'-3"	2	0.66
1170+00	MED.	W-54-144		48.0	2		16'-0"+1'-6"	2	0.66
1170+00-1183+00		(9) W-138-30	9'-6.38" x 36.38"		"9"	9'x11'-9.0			
1173+00	RT.	R-33-30	7.5		1	13'-9"			
1183+00	RT.	W-97-48	20		2	16'-0"+16'-0"			
RAMP #3 1186+00	RT.	W-45-36	9.0		1	15'-3"			
TOTAL			92.75	96.00	17	160.5	67.25	4	1.32

TERMINAL TRAFFIC CONTROL QUANTITIES

	STATION FROM	STATION TO	946 TYPE 6 TEMPORARY GUARDRAIL LIN. FT. **	626 TYPE 'D' DELINEATOR (BRACKET MOUNTED)	618 947.03 TYPE B or C EDGE LINE LIN. FT. *
W.B.	1178+75		25 *		LIN. FT. *
E.B.	1170+00	1183+00	1300 *	8	1300 *
	RAMP #4	S.R. 13	50 *		
	RAMP #5	S.R. 13	50 *		
	TOTAL		*1425 *	8	1300 *

* THESE RUNS OF TEMPORARY GUARDRAIL SHALL REMAIN IN PLACE - TO BE REMOVED BY OTHERS AT A LATER DATE.

* CARRIED TO SHEET 234

ALL OTHER QUANTITIES TO SHEET No. 218

REVISED JAN., 83 R.W.H.

SEE SHEETS 219 & 220 FOR PERMANENT SIGNS ON RAMP 3 AND S.R. 13

THE QUANTITIES FOR TRAFFIC CONTROL DEVICES FOR THE TERMINAL TREATMENT ARE CARRIED TO THE TRAFFIC CONTROL SUMMARY ON SHEET NO. 218 WITH THE EXCEPTION OF THE TEMPORARY BEAM RAIL GUARD RAIL WHICH ARE INCLUDED IN THE ROADWAY QUANTITIES ON GENERAL SUMMARY SHEET NO. 9.

ADACHE ASSOCIATES INC., ENGINEERS
CLEVELAND, OHIO 44142

TRAFFIC CONTROL PLAN TERMINAL TREATMENT AT S.R. 13

DESIGNED	DRAWN	CHECKED	REVIEWED	DATE	REVISED
W.B. 12-8-69	J.T.	W.S. 12-10-69			

FHWA REGION	STATE	PROJECT	
5	OHIO		

240
284

ERIE COUNTY
ERIE-2-16.13

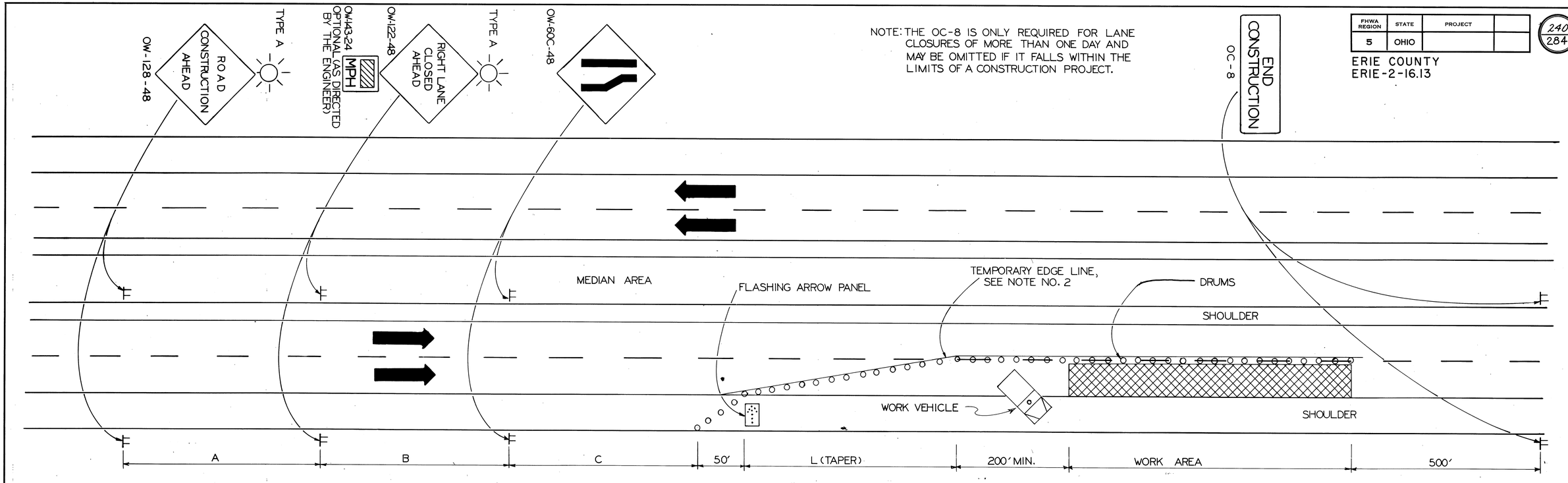

NOTE: THE OC-8 IS ONLY REQUIRED FOR LANE CLOSURES OF MORE THAN ONE DAY AND MAY BE OMITTED IF IT FALLS WITHIN THE LIMITS OF A CONSTRUCTION PROJECT.

1) THE TAPER LENGTH (L) SHALL BE IN ACCORDANCE WITH SECTION 7F-17 OF THE OMUTCD. THE LOCATION OF THE TRANSITION TAPER AND LOCATION OF THE ADVANCE WARNING SIGNS SHOULD BE ADJUSTED TO PROVIDE FOR ADEQUATE SIGHT DISTANCE FOR THE EXISTING VERTICAL AND HORIZONTAL ROADWAY ALIGNMENT. IN ORDER TO DETERMINE THE MINIMUM NUMBER OF CHANNELIZING DEVICES FOR THE TRANSITION TAPER SEE TABLE 7-5 OMUTCD. FOR A 55 MPH PREVAILING SPEED AND A 12 FT. LANE, NOT LESS THAN THIRTEEN (13) DRUMS SHALL BE USED TO FORM THE LANE TRANSITION TAPER IN ADVANCE OF THE WORK AREA. NOT LESS THAN FIVE (5) DRUMS SHALL BE USED TO FORM THE TAPER ON THE SHOULDER. DRUMS SHALL BE SPACED 50' CENTER TO CENTER IN THE WORK AREA. CONES HAVING A MINIMUM HEIGHT OF 28 INCHES MAY BE SUBSTITUTED FOR DRUMS FOR DAY TIME LANE CLOSURES. PROVISIONS SHALL BE MADE TO STABILIZE THE CONES TO PREVENT THEM FROM BLOWING OVER.
2) IF THE CONSTRUCTION OPERATION REQUIRES THE LANE CLOSURE FOR MORE THAN ONE DAY THEN THE EXISTING CONFLICTING PAVEMENT MARKINGS AND REFLECTORS FROM THE RAISED PAVEMENT MARKERS SHALL BE REMOVED AND THE APPROPRIATE COLOR TEMPORARY EDGE LINES SHALL BE APPLIED. PAVEMENT MARKING TAPE MAY BE USED. AFTER COMPLETION OF THE WORK, TEMPORARY MARKINGS SHALL BE REMOVED IN ACCORDANCE WITH 621.134 AND THE ORIGINAL MARKINGS AND RAISED PAVEMENT MARKER REFLECTORS SHALL BE RESTORED.
3) THE MAJOR STANDARD LEVEL (36") WARNING SIGNS MAY BE USED ON DIVIDED STREETS OR HIGHWAYS THAT ARE NOT CLASSIFIED AS FREEWAYS OR EXPRESSWAYS.
4) WHEN WORK IS BEING PERFORMED IN THE LANE ADJACENT TO THE MEDIAN ON A DIVIDED HIGHWAY AN OW-123-48 SIGN(S) SHALL BE SUBSTITUTED FOR THE OW-122-48 SIGN(S) AND AN OW-60D-48 SIGN(S) SHALL BE SUBSTITUTED FOR THE OW-60C-48 SIGN(S). NOTE NO. 2 IS APPLICABLE FOR THIS CLOSURE ALSO.
5) THE WORK VEHICLE SHOWN AT THE BEGINNING OF THE WORK AREA SHALL BE IN PLACE AND UNOCCUPIED WHENEVER WORKERS ARE IN THE WORK AREA. THIS WORK VEHICLE SHALL BE REMOVED FROM THE PAVEMENT WHENEVER WORKERS ARE NOT IN THE WORK AREA. OTHER PROTECTIVE DEVICES MAY BE USED IN LIEU OF THE WORK VEHICLE SHOWN WHEN APPROVED BY THE ENGINEER. THE VEHICLE SHALL BE EQUIPPED WITH A 360° ROTATING OR FLASHING AMBER BEACON CLEARLY VISIBLE FOR A MINIMUM OF ONE-QUARTER (1/4) MILE.
6) THE FLASHING ARROW PANEL SHALL MEET THE REQUIREMENTS OF STANDARD DRAWING TC-35.10.
7) TYPE C STEADY BURN BARRICADE WARNING LIGHTS SHALL BE ERECTED ON DRUMS FOR NIGHT LANE CLOSURES. THE MAXIMUM SPACING SHALL BE IDENTICAL TO THE CHANNELIZING DEVICE SPACING REQUIREMENTS DESCRIBED IN NOTE NO. 1.
8) TYPE A FLASHING BARRICADE WARNING LIGHTS SHOWN ON THE "ROAD CONSTRUCTION AHEAD" AND THE "RIGHT LANE CLOSED AHEAD" SIGNS ARE REQUIRED WHENEVER A NIGHT LANE CLOSURE IS NECESSARY.
9) SOME WORK AREA LOCATIONS MAY REQUIRE MORE THAN JUST STATIC OR CONVENTIONAL SIGNS TO ENHANCE COMMUNICATION WITH THE DRIVER. AT THESE LOCATIONS PORTABLE CHANGEABLE MESSAGE SIGNS (PCMS) UNITS ARE RECOMMENDED. THESE DEVICES SHOULD BE LOCATED APPROXIMATELY 2000'-4000' IN ADVANCE OF A LANE CLOSURE OR OTHER POINT OF REQUIRED ACTION. SEE SECTION 7G-8.1, OMUTCD FOR FURTHER GUIDANCE ON USE OF PCMS UNITS. THESE UNITS, IF REQUIRED, WILL BE SPECIFICALLY CALLED FOR IN THE PLANS AND PAID FOR SEPARATELY.
10) PAYMENT FOR ALL OF THE ABOVE, UNLESS ITEMIZED SEPARATELY, SHALL BE INCLUDED IN ITEM 614, MAINTAINING TRAFFIC.

MINIMUM DISTANCE	A	B	C
	FEET	FEET	FEET
MAJOR STANDARD	500	500	500
URBAN FREEWAY & EXPRESSWAY	500 TO 1000	500 TO 1000	500 TO 1000
RURAL FREEWAY & EXPRESSWAY	2600	1600	1000

OHIO DEPARTMENT OF TRANSPORTATION

CLOSING ONE LANE OF A FOUR LANE DIVIDED HIGHWAY

DATE: 12/82

REVISED: CN 10-83

R.B.P.

FHWA REGION	STATE	PROJECT	
5	OHIO		

241/284

ERIE COUNTY
ERIE-2-16.13

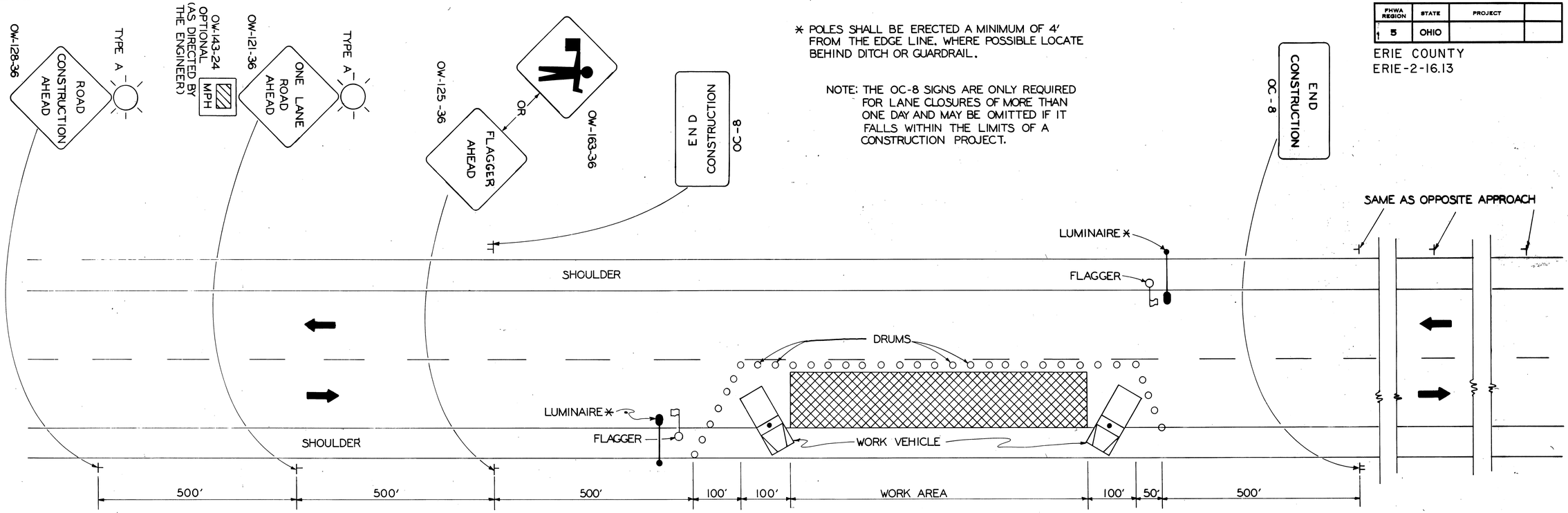

1) FLAGGERS, ONE FOR EACH DIRECTION, SHALL BE USED TO CONTROL TRAFFIC CONTINUOUSLY FOR AS LONG AS A ONE-LANE OPERATION IS IN EFFECT. THE FLAGGERS SHALL BE ABLE TO COMMUNICATE WITH EACH OTHER AT ALL TIMES AND CONFORM TO OTHER REQUIREMENTS AS DESCRIBED IN THE OHIO MANUAL OF UNIFORM TRAFFIC CONTROL DEVICES (OMUTCD) IN SECTION 7H: CONTROL OF TRAFFIC THROUGH WORK AREAS.

2) DRUMS SHALL BE SPACED AT 50' CENTER TO CENTER IN THE WORK AREA. DRUMS ON THE ADVANCE AND RETURN TAPERS SHALL BE SPACED AT 10' CENTER TO CENTER. CONES HAVING A MINIMUM HEIGHT OF 28" MAY BE SUBSTITUTED FOR DRUMS FOR DAY-TIME LANE CLOSURES. PROVISIONS SHALL BE MADE TO STABILIZE THE CONES TO PREVENT THEM FROM BLOWING OVER.

3) ADEQUATE AREA ILLUMINATION TO CLEARLY IDENTIFY THE FLAGGER STATION AT NIGHT SHALL BE PROVIDED BY USING 150 WATT MINIMUM HIGH PRESSURE SODIUM LUMINAIRES OR 250 WATT MINIMUM MERCURY VAPOR LUMINAIRES. THE LUMINAIRES SHALL BE LOCATED ADJACENT TO THE FLAGGER STATION FOR EACH DIRECTION OF TRAFFIC AS SHOWN ABOVE. THE MOUNTING HEIGHT FOR THE LUMINAIRES SHALL BE A MINIMUM OF 27 FEET ABOVE THE PAVEMENT AND MOUNTED ON A SUPPORT OF ADEQUATE STRENGTH TO PROVIDE A SATISFACTORY INSTALLATION. THE OVERHEAD CONDUCTOR CLEARANCE SHALL BE A MINIMUM OF 20 FEET ABOVE THE PAVEMENT.
THE LUMINAIRE ARMS SHALL BE OF SUFFICIENT LENGTH TO EXTEND TO THE EDGE OF THE PAVEMENT.

4) THE LOCATION OF THE ADVANCE WARNING SIGNS SHOULD BE ADJUSTED TO PROVIDE FOR ADEQUATE SIGHT DISTANCE FOR THE EXISTING VERTICAL AND HORIZONTAL ROADWAY ALIGNMENT. THE DISTANCES SHOWN ARE MINIMUMS.

5) THE TYPE A FLASHING BARRICADE WARNING LIGHTS SHOWN ON THE "ROAD CONSTRUCTION AHEAD" AND THE "ONE LANE ROAD AHEAD" SIGNS ARE REQUIRED WHENEVER A NIGHT LANE CLOSURE IS NECESSARY.

6) TYPE C STEADY BURNING BARRICADE WARNING LIGHTS SHALL BE ERECTED ON DRUMS FOR NIGHT LANE CLOSURES. THE MAXIMUM SPACING SHALL BE IDENTICAL TO THE CHANNELIZING DEVICE SPACING REQUIREMENTS DESCRIBED IN NOTE 2.

7) THE WORK VEHICLES SHOWN AT THE BEGINNING AND END OF THE WORK AREA SHALL BE IN PLACE AND UNOCCUPIED WHENEVER WORKERS ARE IN THE WORK AREA. THESE WORK VEHICLES SHALL BE REMOVED FROM THE PAVEMENT WHENEVER WORKERS ARE NOT IN THE WORK AREA. OTHER PROTECTIVE DEVICES MAY BE USED IN LIEU OF THE WORK VEHICLES SHOWN WHEN APPROVED BY THE ENGINEER. THE VEHICLES SHALL BE EQUIPPED WITH A 360° ROTATING OR FLASHING AMBER BEACON CLEARLY VISIBLE FOR A MINIMUM OF ONE-QUARTER (1/4) MILE.

8) SEVERAL SMALL WORK SITES CLOSE TOGETHER SHALL BE COMBINED INTO ONE WORK AREA TO MAKE A CLOSURE NOT MORE THAN 2000 FEET LONG INCLUDING TAPERS.
CLOSURES OF MORE THAN 2000 FEET MAY BE APPROVED BY THE ENGINEER. THE MINIMUM LENGTH BETWEEN CLOSURES SHALL BE 2000 FEET. ONLY ONE SIDE OF THE ROAD SHALL BE CLOSED IN ANY ONE WORK AREA.

9) PAYMENT FOR ALL OF THE ABOVE, UNLESS ITEMIZED SEPARATELY, SHALL BE INCLUDED IN ITEM 614 MAINTAINING TRAFFIC.

OHIO DEPARTMENT OF TRANSPORTATION

FLAGGER CLOSING I LANE OF A 2 LANE HIGHWAY

DATE 12-82

REVISED CN 5/84

R.B.P.

DES

MOVABLE GATE

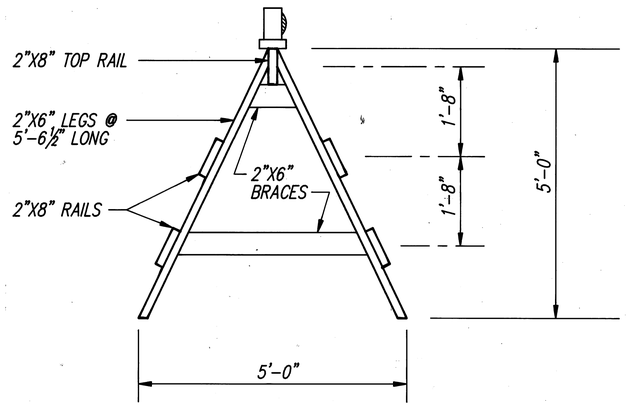

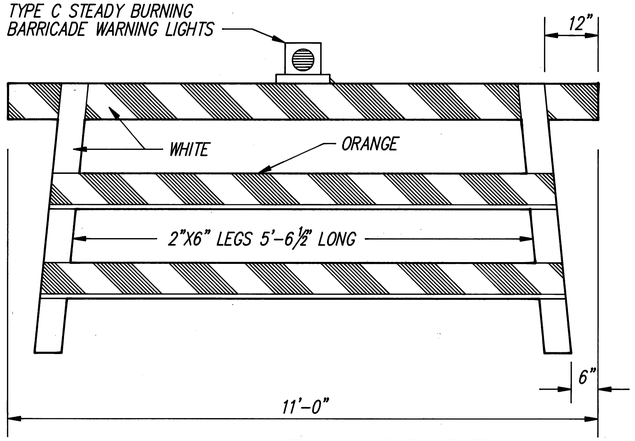

GATES SHALL BE WELL SPIKED USING SPIKES LONG ENOUGH TO CLINCH.

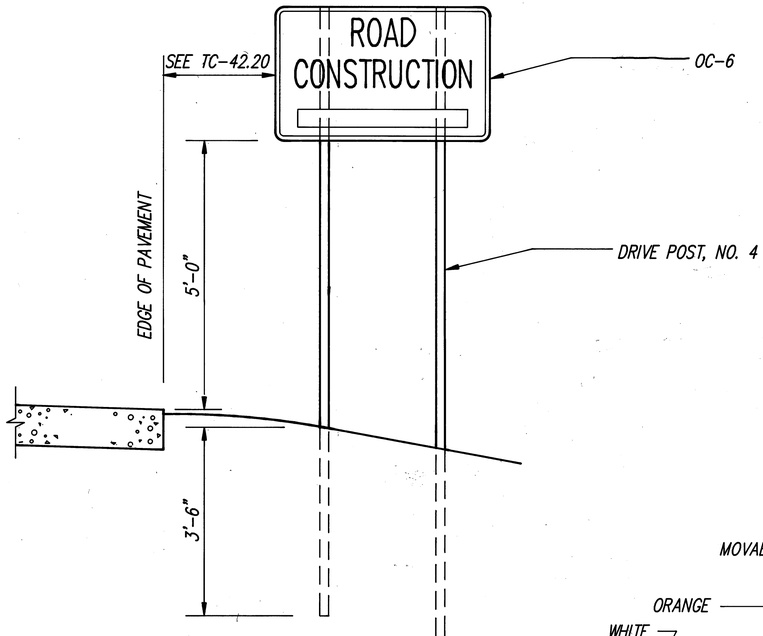

-NOTES-

① **BARRICADES:** BARRICADES SHALL BE CONSTRUCTED ACCORDING TO DETAILS SHOWN. WHEN THE ROAD IS CLOSED TO TRAFFIC, BARRICADES AND GATES SHALL BE USED TO EFFECTIVELY CLOSE THE ENTIRE ROADWAY INCLUDING THE MEDIAN OF DIVIDED HIGHWAYS. IN URBAN AREAS AND AT LOCATIONS WHERE IT IS IMPRACTICAL TO EXTEND THE BARRICADE TO THE RIGHT-OF-WAY LINE BECAUSE OF A SIDEWALK OR OTHER OBSTRUCTION, THE ENDS OF THE BARRICADE SHALL BE LOCATED AS DIRECTED BY THE ENGINEER TO EFFECT THE DESIRED CLOSING OF THE HIGHWAY.

② **PAINTING AND REFLECTORIZATION:** ALL RAILS OF THE BARRICADES AND GATES SHALL BE REFLECTORIZED WITH ORANGE AND WHITE REFLECTORIZED SHEETING IN 6" WIDE ALTERNATE STRIPES WHICH SLOPE DOWNWARD TOWARD THE CENTER LINE OF THE ROAD AT AN ANGLE OF 45°. ALL THREE RAILS OF THE ROAD CLOSED BARRICADE SHALL BE STRIPED ON THE SIDE FACING TRAFFIC. ALL GATE RAILS SHALL BE STRIPED ON BOTH SIDES. ALL POSTS, BRACES, GATE LEGS, AND ANY UNSTRIPED RAILS SHALL BE PAINTED WHITE.

③ **GATES:** ONE GATE SHALL BE ERECTED FOR EACH TRAFFIC LANE. GATES SHALL BE CHAINED AND PADLOCKED TO ONE ANOTHER AND TO ADJACENT POSTS OF THE BARRICADES. CHAINS SHALL BE 1/4" STOCK OR LARGER WITH WELDED LINKS.

A HINGED GATE MAY BE USED AND SHALL BE AN APPROVED 12'x4' STEEL FRAME FARM TYPE, OR A TYPE APPROVED BY THE ENGINEER. THE GATE SHALL BE HUNG ON HINGE SCREW HOOKS, OR AS OTHERWISE APPROVED. STRIPING SIMILAR TO THAT USED ON THE MOVEABLE GATE SHALL BE ACCOMPLISHED WITH 1"x8" LUMBER OR WITH METAL STRIPS FASTENED TO THE GATE. THE GATE SHALL BE SUPPORTED AT THE CENTER IN AN APPROVED MANNER.

④ **TYPE C STEADY BURNING BARRICADE WARNING LIGHTS:** EACH GATE SHALL BE EQUIPPED WITH A TYPE C STEADY BURNING BARRICADE WARNING LIGHT, CONSPICUOUSLY VISABLE AT ALL DISTANCES UP TO 1000' UNDER NORMAL ATMOSPHERIC CONDITIONS. THE LIGHT SHALL BE IN OPERATION AT ALL TIMES BETWEEN SUNSET AND SUNRISE DURING THE PERIOD THE HIGHWAY IS CLOSED.

⑤ **SIGNS:** WHERE THE ROAD IS CLOSED TO TRAFFIC BY THE ERECTION OF GATES AND BARRICADES, ROAD CLOSED SIGNS (R-75) SHALL BE MOUNTED ON THE GATES AS SHOWN.

WHERE TRAFFIC IS MAINTAINED, A ROAD CONSTRUCTION AHEAD SIGN (OW-12B) SHALL BE USED ON THE RIGHT SHOULDER ON THE APPROACHES TO MAJOR CONSRUCTION OR MAINTENANCE JOBS LESS THAN TWO (2) MILES IN LENGTH. A ROAD CONSTRUCTION NEXT __ MILES SIGN (OC-6) SHALL BE USED ON THE RIGHT SHOULDER ON THE APPROACHES TO ANY MAJOR CONSTRUCTION OR MAINTENANCE JOB OF TWO (2) MILES OR MORE IN LENGTH. AN END CONSTRUCTION SIGN (OC-8) SHALL BE ERECTED FACING TRAFFIC LEAVING THE CONSTRUCTION SECTION. THE SIGNS SHALL BE ERECTED AS DETAILED HEREON.

⑥ **LUMBER:** LUMBER USED IN THE CONSTRUCTION OF THE GATES AND BARRICADES SHALL BE NO. 1 COMMON YELLOW PINE OR NO. 1 COMMON DOUGLAS FIR, SURFACED ON FOUR SIDES STANDARD, OR OTHER MATERIALS APPROVED BY THE ENGINEER. ALL SIZES ARE NOMINAL.

⑦ **POSTS:** POSTS SHALL BE SOUND 4"x4" SAWED OR 4 ½" ROUND. RAILS OF THE BARRICADE SHALL BE BOLTED TO THE POSTS WITH 5/8" BOLTS.

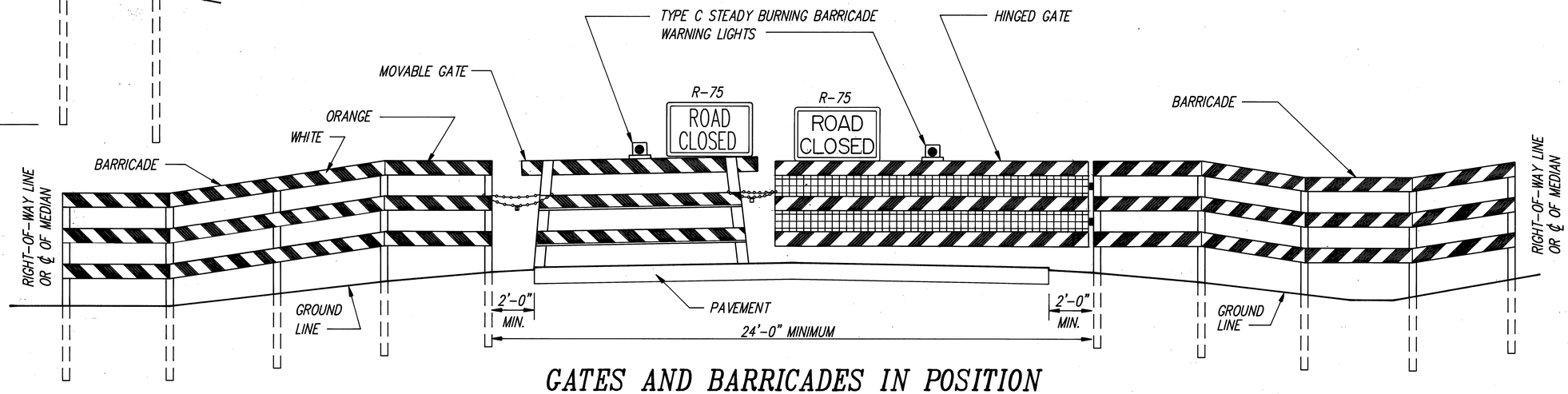

GATES AND BARRICADES IN POSITION

D3-1

DETAILS FOR POSITIONING GATES AND BARRICADES

SHEETS 243 THRU 252 ARE OMITTED

FED. RD. DIVISION	STATE	PROJECT	
2	OHIO		

253
284

ERIE COUNTY
ERI-2-(16.13-17.39)

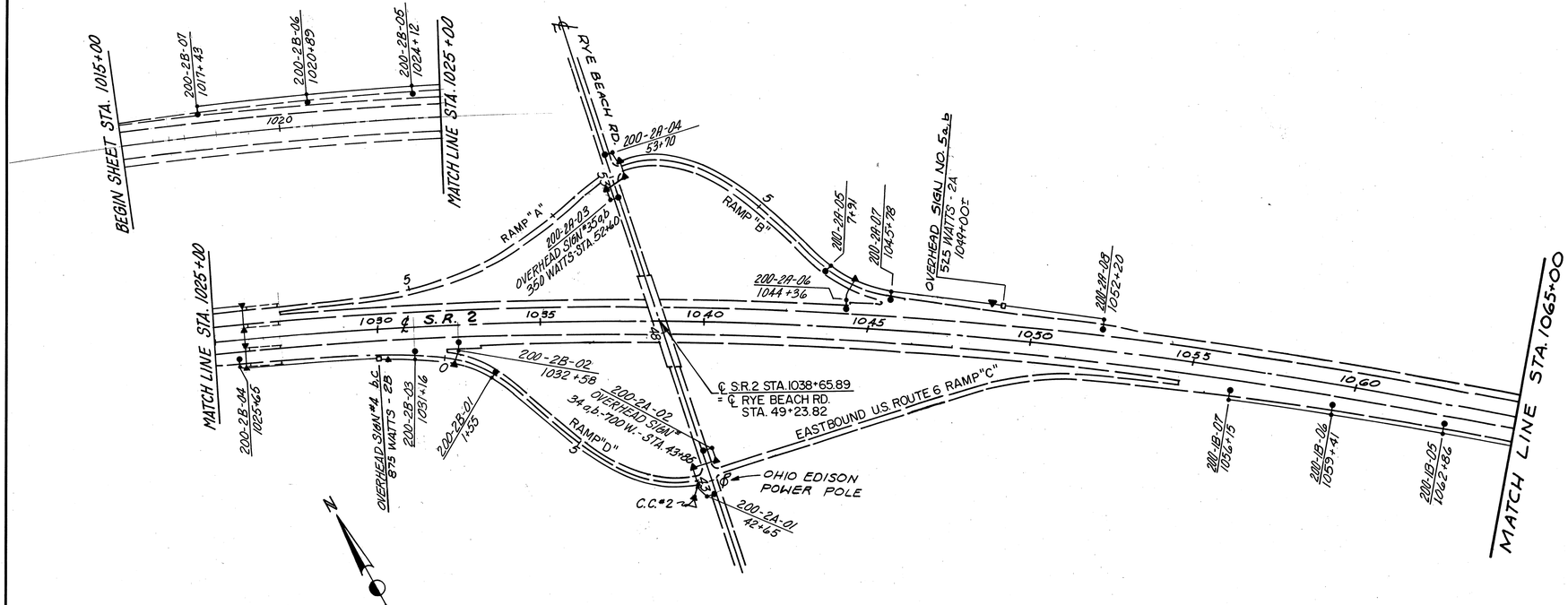

LIGHTING DESIGN DATA

INITIAL INTENSITY 1.0 TO 1.2 FC.
UNIFORMITY RATIO 4/1 MAX.
SYSTEM VOLTAGE 480 60 HZ.
LIGHTS 200 W. @ 34.2 FT. M.H. (NOM.)

LEGEND FOR THIS PLAN

- LIGHTING UNITS - POLE MOUNTED (WATTAGE & CIRCUIT Nº.)
- ILLUMINATED SIGN (WATTAGE & CIRCUIT Nº.)
- CONTROL CENTER
- PULLBOX
- GROUND

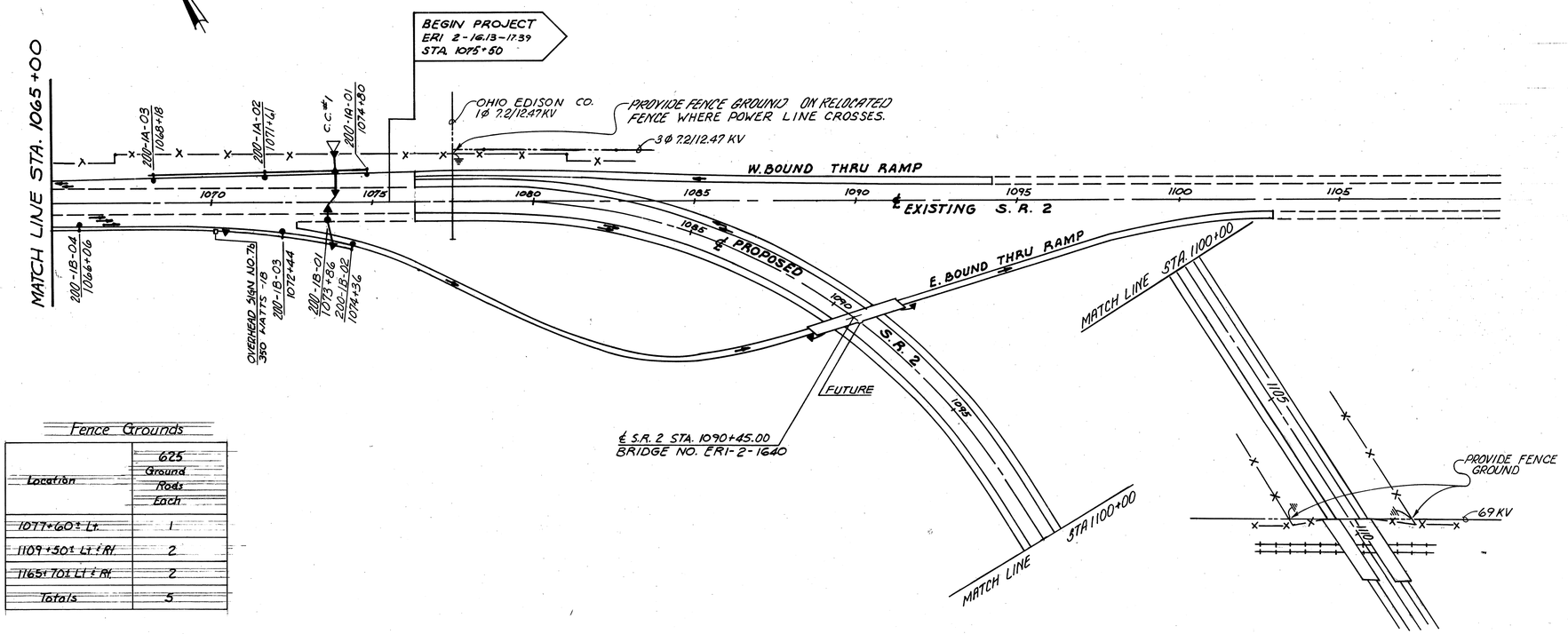

Fence Grounds

Location	625 Ground Rods Each
1077+60± Lt.	1
1109+50± Lt & Rt.	2
1165+70± Lt & Rt.	2
Totals	5

CIRCUIT LOADING

CIRCUIT Nº.	LAMPS	SIGNS	TOTAL	CURRENT LOAD	FUSE
1A	3 @ 200 = 600	—	600 W.	1.3	10
1B	7 @ 200 = 1400	350W.	1750 W.	6.8	10
2A	8 @ 200 = 1600	1575 W.	3175 W.	7.7	10
2B	7 @ 200 = 1400	875 W.	2275 W.	5.7	10

MIN. FUSE SIZE 10 AMP.

REVISED JULY, 85 R.W.H.
REVISED JAN., 83 R.W.H.

ADACHE ASSOCIATES INC., ENGINEERS
CLEVELAND, OHIO 44142

LIGHTING PLAN RYE BEACH ROAD & EASTBOUND THRU RAMP SCHEMATIC

DESIGNED	DRAWN	CHECKED	REVIEWED	DATE	REVISED
WB	D.S.	WS			

SHEETS 255 & 256 ARE OMITTED

FED. RD. DIVISION	STATE	PROJECT	
2	OHIO		

254
284

ERIE COUNTY
ERI - 2-(16.13-17.39)

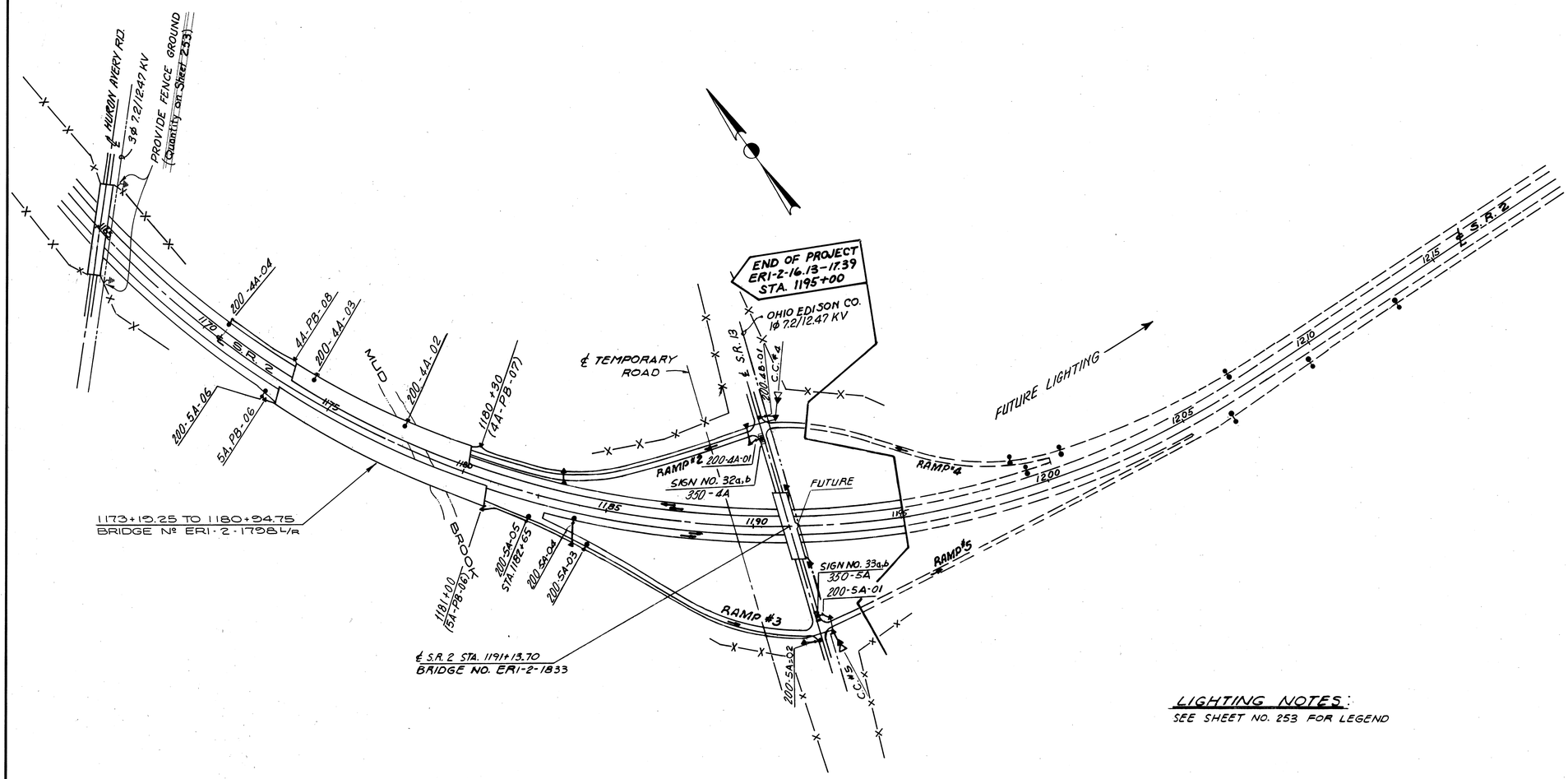

LIGHTING NOTES:

SEE SHEET NO. 253 FOR LEGEND

CIRCUIT LOADING					
CIRCUIT Nº.	LAMPS	SIGNS	TOTAL	CURRENT LOAD	FUSE
4A	4 @ 200 = 800W.	350W.	1150W.	2.5	10
4B ERI-2-(16.13-17.39)	1 @ 200 = 200W.		200W.		
4B ERI-2-18.38	4 @ 200 = 800W.		800W.	2.2	10
5A ERI-2-(16.13-17.39)	6 @ 200 = 1200W.	350W.	1550W.	3.4	10
5B ERI-2-18.38	3 @ 200 = 600W.		600W.	1.3	10

MIN. FUSE SIZE 10 AMP.

REVISED JAN., 83 R.W.H.

ADACHE ASSOCIATES INC., ENGINEERS
CLEVELAND, OHIO 44142

LIGHTING PLAN
S.R. 13 INTERCHANGE
SCHEMATIC

DESIGNED	DRAWN	CHECKED	REVIEWED	DATE	REVISED
WB	DS	WS			

SHEETS 255 & 256 ARE OMITTED

CALC.	ERIE COUNTY	OHIO	257
DATE			284
CHKD.	ERI-2-(16.13)	F.H.W.A. REGION 5	
DATE			

LIGHTING NOTES

SPECIFICATIONS

THESE NOTES ARE SUPPLEMENTAL TO ITEMS 625 AND 713 OF THE STATE OF OHIO DEPARTMENT OF TRANSPORTATION CONSTRUCTION AND MATERIAL SPECIFICATIONS.

REFERENCE SHALL BE MADE TO STANDARD CONSTRUCTION DRAWINGS LISTED ON THE TITLE SHEET OF THESE PLANS.

625.03 GENERAL

THE POWER SUPPLYING AGENCY FOR THIS PROJECT IS:

OHIO EDISON COMPANY
76 SOUTH MAIN STREET
AKRON, OHIO 44308
PHONE: 216-384-5234

THIS PROJECT HAS BEEN DESIGNED FOR 480 VOLT TWO-WIRE SERVICE, ONE SIDE GROUNDED AND ON THE BASIS OF 5% VOLTAGE DROP WITH A MAXIMUM UNIFORMITY RATIO OF 4.0 TO 1 FOR CONVENTIONAL LIGHTING UNITS.

625.07 - 713.11 LUMINAIRES

STYLE B LUMINAIRES SHALL HAVE SINGLE RATED 480 VOLT, 200 WATT, INTEGRAL REGULATOR BALLASTS FOR USE WITH HIGH PRESSURE SODIUM LAMPS AND SHALL BE GENERAL ELECTRIC M400, CROUSE-HINDS OV-25 TUDOR, ITT AMERICAN 400, OR EQUAL APPROVED BY THE ENGINEER.

713.14 LAMPS

HIGH PRESSURE SODIUM LAMPS SHALL BE GENERAL ELECTRIC "LUCALOX", WESTINGHOUSE "CERAMALUX", SYLVANIA "LUMALUX", OR EQUAL APPROVED BY THE ENGINEER.

CONDUIT ON PROPOSED STRUCTURES

EXPANSION FITTINGS FOR CONDUIT ON STRUCTURES SHALL BE OZ TYPE AX, CROUSE-HINDS TYPE XJ-4, APPLETON TYPE XJ-4, OR EQUAL APPROVED BY THE ENGINEER, FOR BRIDGES NO. ER1-2-1640 AND ER1-2-1833 AND OZ TYPE AX-8, CROUSE-HINDS TYPE XJ-8, APPLETON TYPE XJ-8, OR EQUAL APPROVED BY THE ENGINEER, FOR BRIDGE ER1-2-1798 LEFT AND RIGHT.

EACH EXPANSION FITTING SHALL HAVE A COPPER EXTERNAL BONDING JUMPER.

CONDUIT ON EXISTING STRUCTURES

LIQUID TIGHT FLEXIBLE METALLIC CONDUIT ON EXISTING STRUCTURES SHALL BE OZ/GEDNEY TYPE UAG, , OR EQUAL APPROVED BY THE ENGINEER. EACH SECTION OF LIQUID TIGHT FLEXIBLE METALLIC CONDUIT SHALL HAVE EXTERNAL GROUNDING TYPE FITTINGS AND A COPPER EXTERNAL BONDING JUMPER. MEASUREMENT OF THE CONDUIT SHALL BE THE ACTUAL AMOUNT OF LINEAL FEET INSTALLED BETWEEN THE PULL BOXES ADJACENT TO THE STRUCTURE INCLUDING ALL HARDWARE, MOUNTING ASSEMBLIES, CONDUIT, FITTINGS, JUMPERS, TRENCHING, BACKFILLING, CONCRETE ENCASEMENT AND INCIDENTALS NECESSARY TO INSTALL THE CONDUIT PER PLAN.

ELECTRICAL SERVICE FOR ILLUMINATED SIGNS

THE PAY ITEMS IN THE LIGHTING GENERAL SUMMARY INCLUDE THE PULL BOX ADJACENT TO EACH LIGHTED SIGN AND THE ELECTRICAL SERVICE CONNECTIONS LEADING INTO THE BOX, INCLUDING THE CABLE SPLICING KITS IN THE PULL BOX. QUANTITIES FOR ELECTRICAL SERVICE FROM THE CONNECTION IN THE PULL BOX TO THE SIGN ARE INCLUDED IN THE TRAFFIC CONTROL GENERAL SUMMARY.

UNDERDRAINS FOR PULL BOXES

REFERENCE IS MADE TO STANDARD DRAWING HL-10 FOR DETAILS OF DRAINING PULL BOXES. UNDERDRAINS FOR PULL BOXES SHALL BE USED AS DIRECTED BY THE ENGINEER AND SHALL BE PROVIDED WHERE THE LENGTH REQUIRED FOR A SATISFACTORY OUTLET DOES NOT EXCEED APPROXIMATELY TWENTY (20) FEET. AN ESTIMATED QUANTITY OF "600 LINEAR FEET OF ITEM 603, 4" CONDUIT, TYPE E IN THE LIGHTING GENERAL SUMMARY FOR THIS PURPOSE.

ITEM 625 POWER SERVICE

THE CONTRACTOR SHALL FURNISH AND INSTALL ALL EQUIPMENT NECESSARY TO PROVIDE COMPLETE ELECTRICAL SERVICE TO THE ROADWAY FACILITIES. FOUR COMPLETE POWER SERVICE INSTALLATIONS (CONTROL CENTERS 1, 2, 4 AND 5) SHALL BE INSTALLED IN ACCORDANCE WITH 625.18 AND 713.19.
EACH INSTALLATION WILL INCLUDE A SERVICE POLE, AN ENCLOSURE TYPE SC-60, AND A PHOTOELECTRIC CELL TO CONTROL THE CONTACTOR, WITH ALL NECESSARY HARDWARE, MATERIALS, AND LABOR NECESSARY TO COMPLETE THE WORK AS SPECIFIED.
NOTE: CONTROL CENTER NO.3 HAS BEEN DELETED.

PADLOCKS AND KEYS

PADLOCKS FURNISHED SHALL BE EITHER BRASS OR BRONZE, EQUAL TO MASTER NO. 4BKA OR WILSON BOHANNAN 660A, AND SHALL BE KEYED IN ACCORDANCE WITH SPECIFICATION 631.08, PARAGRAPH 3. PAYMENT SHALL BE INCLUDED IN THE BID FOR THE ITEM(S) BEING LOCKED.

Additional Fence Grounds

In addition to the fence grounds shown on the plans, all other locations where overhead power lines cross new right of way fences shall have fence grounds provided as per Standard Drawings HL-11. The following additional quantity is provided to be used at locations as directed by the engineer:

625 - Ground Rods 4 Each

LIGHT POLE DATA

DESIGN NUMBER	FOUNDATION ANCHOR BOLTS		TRANSFORMER BASE STYLE
		BOLT CIRCLE DIAMETER IN INCHES	
AT-10B-34.2		15	AT-A
AT-15B-34.2		15	AT-A
ST-15B-34.2		15	ST-A

ACL form no. 1

ADACHE · CIUNI · LYNN
CALC BY E.C.V. DATE JULY, 85
CHKD BY R.W.H DATE JULY, 85

F.H.W.A. REGION	STATE	PROJECT	
5	OHIO		

258
284

ERIE COUNTY
ERI-2-(16.13-17.39)

LIGHTING
GENERAL SUMMARY

ITEM	SHEET NUMBERS					TOTAL	UNIT	DESCRIPTION
625			11	9	4	24	EA.	LIGHT POLE, DESIGN AT-15B-34.2
625					2	2	EA.	LIGHT POLE, DESIGN ST-15B-34.2
625			2	1	3	6	EA.	LIGHT POLE, DESIGN AT-10B-34.2
625			2		2	4	EA.	BRACKET ARM, 15'-0"
625			6	1	4	11	EA.	LUMINAIRE - STYLE "B", TYPE II, 200 WATT, HIGH PRESSURE SODIUM
625			9	9	7	25	EA.	LUMINAIRE - STYLE "B", TYPE III, 200 WATT, HIGH PRESSURE SODIUM
625			13	10	7	30	EA.	LIGHT POLE FOUNDATION: 24"x6'-0" DEEP
625	5	4	14	11	9	43	EA.	GROUND ROD, 713.16
625			18	8	17	43	EA.	PULL BOX, 713.09, 18" Dia.
625			4,611	2,694	3,083	10,388	LIN.FT.	TRENCH, 24" DEEP
625				376	1,827	2,203	LIN. FT.	2" CONDUIT, 713.04
625			75	108	490	673	LIN. FT.	3" CONDUIT, 713.04
625			362	120		482	LIN. FT.	3" CONDUIT, 713.04 - JACKED OR DRILLED UNDER PAVEMENT.
625			511			511	LIN. FT.	2" CONDUIT, 713.04 - ATTACHED TO EXISTING BRIDGE AS PER PLAN.
625			2,266	662	4,530	7,458	LIN. FT.	Nº 4 AWG, 5000 VOLT, DISTRIBUTION CABLE
625			1,450	872	1,036	3,358	LIN. FT.	Nº 10 AWG, POLE AND BRACKET CABLE
625			4,746	2,661	2,626	10,033	LIN. FT.	1½" DUCT CABLE, W/2 - Nº 4 AWG 5000 VOLT CABLES
625			15	10	10	35	EA.	CONNECTOR KIT, TYPE II
625			15	10	10	35	EA.	CONNECTOR KIT, TYPE III
625			36	16	24	76	EA.	CABLE SPLICING KIT
625				1	9	10	EA.	STRUCTURE JUNCTION BOX, TYPE 2
625				4	36	40	EA.	LIGHT POLE ANCHOR L-BOLTS ON STRUCTURES
625			1	1	2	4	EA.	POWER SERVICE
603		600				600	LIN. FT.	4" CONDUIT, TYPE E
625						LUMP	LUMP	HIGH VOLTAGE TEST
625			1			1	EA.	Structure Grounding System for Bridge No. ERI-2-1518L
625			1			1	EA.	Structure Grounding System for Bridge No. ERI-2-1518R
625			1			1	EA.	Structure Grounding System for Bridge No. ERI-2-1542
625				1		1	EA.	Structure Grounding System for Bridge No. ERI-2-1640
625					1	1	EA.	Structure Grounding System for Bridge No. ERI-2-1798L
625					1	1	EA.	Structure Grounding System for Bridge No. ERI-2-1798R
625					1	1	EA.	Structure Grounding System for Bridge No. ERI-2-1833

LIGHTING

ADACHE · CIUNI · LYNN ASSOC.
CALC. BY: E.C.V. DATE: JULY, 85
CHKD. BY: R.W.H DATE: JULY, 85

F.H.W.A. REGION	STATE	PROJECT
5	OHIO	

258A
284

ERIE COUNTY
ERI-2-(16.13-17.39)

SUB-SUMMARY OF QUANTITIES
LIGHTING

SHEET NO.	LOCATION FROM	LOCATION TO	SIDE	625 LIGHT POLE DESIGN AT-15B 34.2 Ea.	ST-15B 34.2 Ea.	AT-10B 34.2 Ea.	BRACKET ARM -15' Ea.	LIGHT POLE FOUNDATION Ea.	LUMINAIRE 200W, H.P.S. I Ea.	LUMINAIRE 200W, H.P.S. II Ea.	TYPE III Ea.	GROUND ROD Ea.	PULL BOX 713.09, 18" Ea.	TRENCH 24" DEEP L.F.	CONDUIT 713.04 2" L.F.	3" JACKED OR DRILLED UNDER PAVT L.F.	2" @ EXIST. BRIDGE AS PER PLAN L.F.	N°4 AWG 5000 VOLT DISTRIBUTION CABLE L.F.	N°10 AWG POLE AND BRACKET CABLE L.F.	1¼" DUCT CABLE W/2 N°4 AWG 5000 VOLT CABLES L.F.	CONNECTOR KIT TYPE II Ea.	CONNECTOR KIT TYPE III Ea.	CABLE SPLICE KIT Ea.	STRUCTURE JUNCTION BOX Ea.	ANCHOR BOLTS Ea.	GROUND SYSTEM Ea.	POWER SERVICE Ea.	REMARKS
259																												
		1017+43	LT.	1				1		1		1								98		1	1						
	1017+43	1020+89	LT.	1				1		1		1		346						98	356	1	1						
	1020+89	1024+12	LT.	1				1		1		1		323						98	333	1	1						
	1024+12	1025+75	LT.										1	163							173			2					
	1025+75	1025+75	LT. & MED.										1				40		90					2					
	1025+75	1025+75	MED. & RT.										2	68			40		90		78			4					
	1025+75	1025+65	RT.	1				1		1	1			10						98	20	1	1						
	1025+75	1027+25	RT.										1					151	322					2			1		EX. BRIDGE
	1027+25	1030+10	RT.										1	285							295			2					Sign #4
	1030+10	1031+16	RT.	1				1		1	1			106						98	116	1	1						
	1031+16	"D" 1+00	RT.										1	140							150			2					
	"D" 1+00	1032+58	RT.	1				1		1	1						27		74	98		1	1						
	1+00	"D" 1+55	RT.			1		1	1		1			55						88	65	1	1						
	1+55	"RYE" 43+25	LT.										1	755							765			4					
	"RYE" 43+25	42+60	LT.								1	1		75	75				340					2				1	C.C. #2
	43+25	42+65	LT.	1				1	1		1			75						98	85	1	1						
	43+25	43+70	LT										1				45		110										
	43+70	43+70	LT. & RT.										1				50		120					2					
	43+70	43+85	RT.				1		1					15						98	25	1	1						SIGN #34
	43+85	46+40	RT.										1	255							265			2					
	46+40	50+00	RT.										1					360	740					2			1		EX. BRIDGE
	50+00	52+75	RT.										1	275							285			2					
	52+75	52+70	RT. & LT.										1				50		120					2					
	52+70	52+60	LT.				1		1					10						98	20	1	1						SIGN #35
	52+75	53+25	RT.										1				50		120					2					
	53+25	53+70	RT	1				1	1		1			65						98	75	1	1						
	53+25	"B" 7+91	LT. / B			1		1	1		1			751						88	761	1	1						
	"B" 7+91	8+40	LT.										1	49							59			2					
	8+40	1044+36	LT.	1				1		1	1						60		140	98		1	1						
	8+40	1045+78	LT.	1				1		1	1			148						98	158	1	1						
	1045+78	1048+90	LT.										1	312							322			2					Sign #5
	1048+90	1052+20	LT.	1				1		1	1			330						98	340	1	1						
259	SUB-TOTALS			11		2		2	13	6	9	14	18	4,611		75	362	511	2,266	1,450	4,746	15	15	36			2	1	
260																													
		1068+18	LT.	1				1		1	1									98		1	1						
	1068+18	1071+61	LT.	1				1		1	1			343						98	353	1	1						
	1071+61	1074+10	LT.										1	249							259			4					
	1074+10	1074+80	LT.	1				1		1	1			70						98	80	1	1						
	1074+10	1074+10	LT.								1	1		53	53				252									1	C.C. #1
	1074+10	1074+10	LT. & MED.										1				65		150					2					
	1074+10	1073+86	MED.										1	68							78			2					
	1073+86	1073+86	MED. & RT.	1				1		1	1						55		130	88		1	1						
	1073+86	"EB" 1073+75	RT.										1	55	55				130					2					
	1073+75	1074+36	RT.			1		1	1		1			61							71	1	1						
	1073+75	1072+44	RT.	1				1		1	1			131						98	141	1	1						
	1072+44	1070+15	RT.										1	229							239			2					SIGN #7
	1070+15	1066+06	RT.	1				1		1	1			409						98	419	1	1						
	1066+06	1062+86	RT.	1				1		1	1			320						98	330	1	1						
	1062+86	1059+41	RT.	1				1		1	1			345						98	355	1	1						
	1059+41	1056+15	RT.	1				1		1	1			326						98	336	1	1						
	BRIDGE	ERI-2-1640																											
	1088+77	1092+53	RT.										2	35	376									4	1	4	1		
260	SUB-TOTALS			9		1		10	1	9	11	8	2,694	376	108	120			662	872	2,661	10	10	16	1	4	1	1	
261																													
		1170+65	LT.	1						1		1								98			1	1					
	1170+65	1172+95	LT.										1	230															
	1172+95	1174+10	LT.		1					1				10	115					92			1	1		1	4		
	1174+10	1177+60	LT.		1					1					350					92			1	1		2	8	1	
	1177+60	1180+30	LT.										1	10	270						560						2	1	4	
	1180+30	"R2" 1184+00	LT.										1	370															
	"R2" 1184+00	1184+20	LT.										1	65	65														
	"R2" 1184+20	"R13" 23+97	LT.										1	585															
	"R13" 23+97	23+20	LT.										1		78						176								
	23+20	23+10	LT.								1			10															
	23+97	23+97	LT. & RT.										1	66	66						152								
	23+97	24+25	LT.					1		1	1			30															
	23+97	24+35	LT.										1	75	75						340								
		1172+90	RT.	1						1		1								98			1	1					
	1172+90	1173+00	RT.										1	10															
	1173+00	1181+00	RT.										1	35	800						1,620								
	1181+00	1182+65	RT.	1						1		1	1	165						98			1	1					
	1182+65	1184+00	RT.										1	135															
	"R3" 1184+00	1183+99	RT.	1						1		1	1	55	55					98			1	1					
	1184+00	"R3" 1184+57	RT.					1		1		1	1	57						88	67		1	1					
	"R3" 1184+57	"R13" 16+15	RT. & LT.										1	853							863						2		
	"R13" 16+15	15+75	LT.					1		1	1		1	42						88	52		1	1					
	16+15	16+10	LT. & RT.										1	81	81						182						4		
	16+10	15+43	RT.									1	1	75							340								1	C.C. #5
	16+10	16+80	RT.										1	70	70						160						2		
	16+80	16+90	RT.					1		1				19						98	29	1	1						SIGN #33
	BRIDGE	ERI-2-1833																											
	18+48	21+40	RT.										2	35	292												1	4	1	
261	SUB-TOTALS			4	2	3		2	7	4	7	9	17	3,083	1,827	490				4,530	1,036	2,626	10	10	24	9	36	3	2	

A·C·L form no. 1

SUB-SUMMARY OF QUANTITIES

LIGHTING

FED. RD. DIVISION	STATE	PROJECT	
2	OHIO		

259
284

ERIE COUNTY
ERI-2-(16.13-17.39)

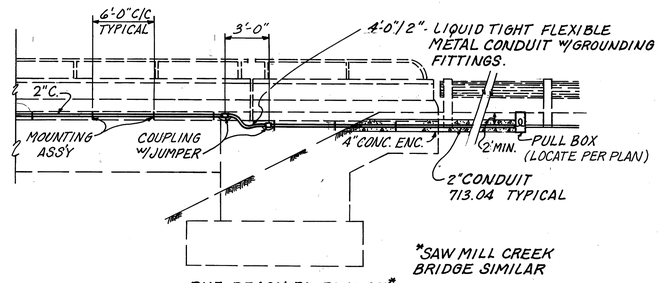

RYE BEACH RD. BRIDGE*
CONDUIT LOCATION
N.T.S.

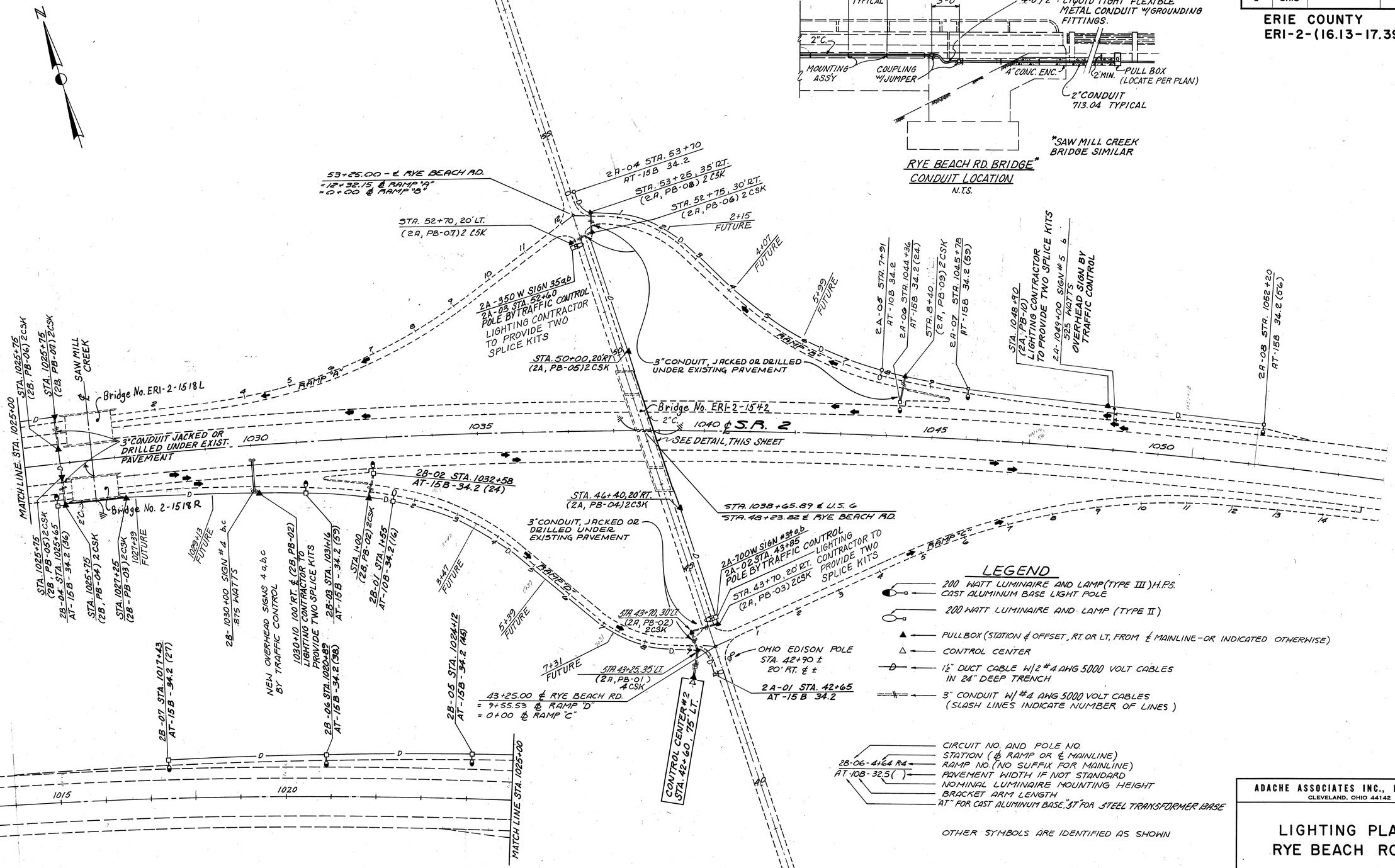

LEGEND

- 200 WATT LUMINAIRE AND LAMP (TYPE III) H.P.S. CAST ALUMINUM BASE LIGHT POLE
- 200 WATT LUMINAIRE AND LAMP (TYPE II)
- ▲ PULLBOX (STATION & OFFSET, RT OR LT, FROM ℄ MAINLINE – OR INDICATED OTHERWISE)
- △ CONTROL CENTER
- D 1½" DUCT CABLE W/2 #4 AWG 5000 VOLT CABLES IN 24" DEEP TRENCH
- 3" CONDUIT W/ #4 AWG 5000 VOLT CABLES (SLASH LINES INDICATE NUMBER OF LINES)

28-06-4+64 R4
AT-10B-32.5( )

- CIRCUIT NO. AND POLE NO.
- STATION (℄ RAMP OR ℄ MAINLINE)
- RAMP NO. (NO SUFFIX FOR MAINLINE)
- PAVEMENT WIDTH IF NOT STANDARD
- NOMINAL LUMINAIRE MOUNTING HEIGHT
- BRACKET ARM LENGTH
- "AT" FOR CAST ALUMINUM BASE. "3T" FOR STEEL TRANSFORMER BASE

OTHER SYMBOLS ARE IDENTIFIED AS SHOWN

REVISED JULY, 85 R.W.H.
REVISED JAN., 83 R.W.H.

ADACHE ASSOCIATES INC., ENGINEERS
CLEVELAND, OHIO 44142

LIGHTING PLAN
RYE BEACH ROAD

DESIGNED	DRAWN	CHECKED	REVIEWED	DATE	REVISED
WS	J.G.	EB			

FED. RD. DIVISION	STATE	PROJECT	
2	OHIO		

260
284

ERIE COUNTY
ERI-2-(16.13-17.39)

MATCH LINE STA. 1069+00

1069+92 FUTURE

1A-02 1071+61 AT-15 B-34.2 (39)

1073+23 FUTURE

1074+10 97' LT. ℄ CTR_PB-01)4CSM

CONTROL CENTER #1 STA 1074+10 150' LT. ℄

OHIO EDISON POLE STA. 1074+40 ± 170' LT. ℄ ±

1A-01 1074+80 AT-15 B-34.2 (46)

℄ S.R. 2 T.S. STA. 1076+32.09 ℄ LT. BEGIN WB. THRU RAMP LANE

℄ S.R. 2 P.O.S. STA. 1079+32.09 ℄ LT. = ℄ W.B. THRU RAMP STA. 1079+32.09

P.C. Sta. 1083+75.72

WEST BOUND THRU RAMP

3" CONDUIT, JACKED OR DRILLED UNDER EXIST. PAVEMENT

1074+10 32' LT. ℄ (1B, PB-01) 2CSK

1073+86.32' RT. ℄ (1B, PB-02) 2CSK

1069+51 FUTURE

2A 1070+05 Sign 7B Overhead sign by Traffic Control (360 watts)

1070+15 100' RT. ℄ (1B, PB-03) Lighting contractor shall provide 7 no. splice kits.

1071+07 Future

1B-03 1072+44 AT-15 B-34.2 (59)

Note: ℄ S.R. 2 Sta. 1072+84.31 49° RT. Sta. 1072+83.49 ℄ E.B. Thru Ramp 18'LT.

1B-01 1073+86 AT-15 B 34.2

1073+75 E.B. 10' RT. ℄ (1B, PB-04) 12CSK

1B-02 1074+36 AT-10B 34.2

T.S. Sta. 1076+32.09

S.C. Sta. 1080+32.09

1075 1076 1077 ℄ 1078 S.R. 2 1079 1080 1081 1082 1083 1084

1075 EAST BOUND 1080

1081 THRU 1082 RAMP 1083 1084

MATCH LINE STA. 1069+00

1B-07 1056+15 AT-15B 34.2 (46.8)

1057+75 (FUTURE)

1B-06 1059+41 AT-15B 34.2 (39.0')

1061+41 (FUTURE)

1B-05 1062+86 AT-15B 34.2 (38.)

1064+60 (FUTURE)

1B-04 1066+06 AT-15B 34.2 (36)

1167+80 FUTURE

1066 1067 1068 ℄ S.R. 2

1B-08 1054+60 (FUTURE)

14-03 1068+18 AT-15B 34.2 (32)

STA. 1090+45.00 ℄ S.R. 2 = STA. 1090+68.57 ℄ EASTBOUND THRU RAMP BRIDGE NO. ERI-2-1640

℄ S.R. 2 1090

EASTBOUND 1090 THRU RAMP 1091 1092 1093

1088 1091

STA. 1088+77 11' RT. ℄

FUTURE 1090+70.75

STA. 1092+53 11' RT. ℄

2" CONDUIT, CAP BOTH ENDS AND PROVIDE PULL WIRE FOR FUTURE USE. FOR INSTALLATION, SEE STANDARD DRAWINGS.

FOR LEGEND SEE SHEET NO. 259

REVISED JAN., 83 R.W.H.

ADACHE ASSOCIATES INC., ENGINEERS
CLEVELAND, OHIO 44142

LIGHTING PLAN

DESIGNED	DRAWN	CHECKED	REVIEWED	DATE	REVISED
WS	J.G.	RB			

SHEETS 262 & 263 ARE OMITTED

FED. RD. DIVISION	STATE	PROJECT	
2	OHIO		

261
284

ERIE COUNTY
ERI-2-(16.13-17.39)

MATCH LINE STA. 1179+00

1179+20 FUTURE

1180+80 (4A-PB-07) 2 CSK
1180+98 FUTURE

℄ SR 2 STA. 1181+45.81 L.T.
RAMP #2 R.C.C. STA. 1181+65

1181+77 FUTURE

1182+90 R-2 FUTURE

1184+00 R-2 10' LT. ℄ R. #2 (4A, PB-05)

1184+82 R-2 FUTURE

1186+74 R-2 FUTURE

S.R. 13 STA: 23+63 =
℄ RAMP #2 STA: 1190+00.58

1188+66 FUTURE

23+97 (4A, PB-03) 33' LT. ℄ S.R. 13 2 CSK

℄ OHIO EDISON POLE
STA. 26+10 ±
30' RT. ℄ ±

S.R. 13 STA. 23+75 =
℄ RAMP #4 STA. 1190+50.75

4B-01- 24+25 SR. 13
AT-10B-34.2(32)

END OF PROJECT
ERI-2-16.13-17.39
STA. 1195+00

CONTROL CENTER #4
STA. 24+35 97' RT. ℄ S.R. 13

23+97 (4A, PB-01)
33' RT. ℄ S.R. 13
2 CSK

℄ SR 2 P.O.C. STA. 1179+50.66 (ERI-2)
= ℄ RAMP #3 P.R.C. STA. 1179+50

1179+60 FUTURE
TYPE II JUNCTION BOX (TYPICAL)

1181+00 (5A-PB-06) 2 CSK
1181+23 FUTURE

1184+20 66' LT. ℄ (4A, PB-06)

3" CONDUIT - CAP BOTH ENDS AND PROVIDE PULL-WIRE FOR FUTURE USE

LIGHTING CONTRACTOR TO PROVIDE TWO SPLICE KITS.

23+20 32' LT. ℄ S.R. 13 (4A, PB-04) 2 CSK

4A-350W-SIGN #32a, b
4A-01-23+10 S.R. 13
POLE BY TRAFFIC CONTROL

RAMP #4

P.C. STA. 1191+20.48

21+40
24' RT. ℄ S.R. 13

℄ S.R. 2 STA. 1191+13.70 =
℄ S.R. 13 STA. 20+00
BRIDGE NO. ERI-2-1833

FUTURE 19+98.0

℄ TEMPORARY ROAD

2" CONDUIT - CAP BOTH ENDS AND PROVIDE PULL-WIRE FOR FUTURE USE. FOR CONDUIT INSTALLATION DETAILS, SEE STANDARD DRAWING HL-4.

18+48
24' RT. ℄ S.R. 13

5A-05 - 1182+65
AT-15 B-34.2 (57)

℄ S.R. 2 P.O.C. STA. 1182+84.61 (79.27)
= ℄ RAMP #3 P.O.C. STA. 1183+05.25 (20.64)

1184+00 R-3 10' RT. ℄ (5A, PB-05) 2 CSK

5A-04 1183+93
AT-15 B-34.2

5A-03 1184+57 R-3
AT-10E-34.2

1186+42 R-3 FUTURE

1188+17 R-3 FUTURE

BRIDGE Nº ERI-2-1798 L/R

4A-04-1170+65
AT-15B-34.2(32)

1172+35 FUTURE

3TR. 1172+95
(4A, PB-08) 2 CSK

4A-08-1174+10
3T-15B-31.2 (39.5)

1175+95 FUTURE

4A-02-1177+60
3T-15B-31.2

1190+02 R-3 FUTURE

1191+27 R-3 FUTURE

P.T. STA. 1192+35.04

5A-350W-SIGN #33 a, b
5A-01-16+90 S.R. 13
POLE BY TRAFFIC CONTROL

16+80
35' RT. ℄ S.R. 13
5A-PB-02 2 CSK

LIGHTING CONTRACTOR TO PROVIDE TWO SPLICE KITS

RAMP #5

FOR LEGEND SEE SHEET NO. 259

OHIO EDISON POLE
STA. 15+90 ± 30' RT. ℄ ±

℄ S.R. 13 STA. 16+85 =
℄ RAMP #5 STA. 1193+38.77
℄ RAMP #5 STA. 1190+90.54

5A-PB-03 16+75 40' LT. ℄ S.R. 13 2 CSK

5A-02-15+75 SR. 13 AT-10D 34.2(32)

CONTROL CENTER #5
STA. 15+43
73' RT. ℄ S.R. 13

16+10 40' RT. ℄ S.R. 13 (5A-PB-01) 4 CSK

5A-06-1172+90.75' RT. AT-15B 34.2 (36)

1173+00, 75' RT. 5A-PB-07 2 CSK

1174+60 FUTURE

1176+30 FUTURE

1177+95 FUTURE

MATCH LINE STA. 1179+00

ADACHE ASSOCIATES INC., ENGINEERS
CLEVELAND, OHIO 44142

LIGHTING PLAN
S.R. 13 INTERCHANGE

DESIGNED	DRAWN	CHECKED	REVIEWED	DATE	REVISED
WS	J.G.	RB			

REVISED JULY, 85 R.W.H.
REVISED JAN., 83 R.W.H.

FED. RD. DIVISION	STATE	PROJECT	
2	OHIO		

264/284

R/W 1/20

CENTER LINE SURVEY PLAT

STATE ROUTE 2 SEC. 16.13

S.R. 2 (RELOCATED)
ERIE COUNTY, OHIO
CITY OF HURON
HURON T.WP. R-22-W, T-6-N, SECTION 2, LOT 32, 33, 27, 26, 25, 24

SCALE IN FEET 0 100 200 400 600 800 1000

SOLD AS ERI 2-16.13
ERI 2-16.07 R/W

ERIE COUNTY

LIMITED ACCESS

THIS IMPROVEMENT HAS BEEN DECLARED A LIMITED ACCESS HIGHWAY, FROM STATION 1076+32.09 TO STATION 1195+00 BY ACTION OF THE DIRECTOR OF HIGHWAYS AND AS RECORDED BY ENTRY MADE ON THE JOURNAL OF THE DIRECTOR OF HIGHWAY, AUGUST 21, 1964, VOL. 49 PAGE 663.

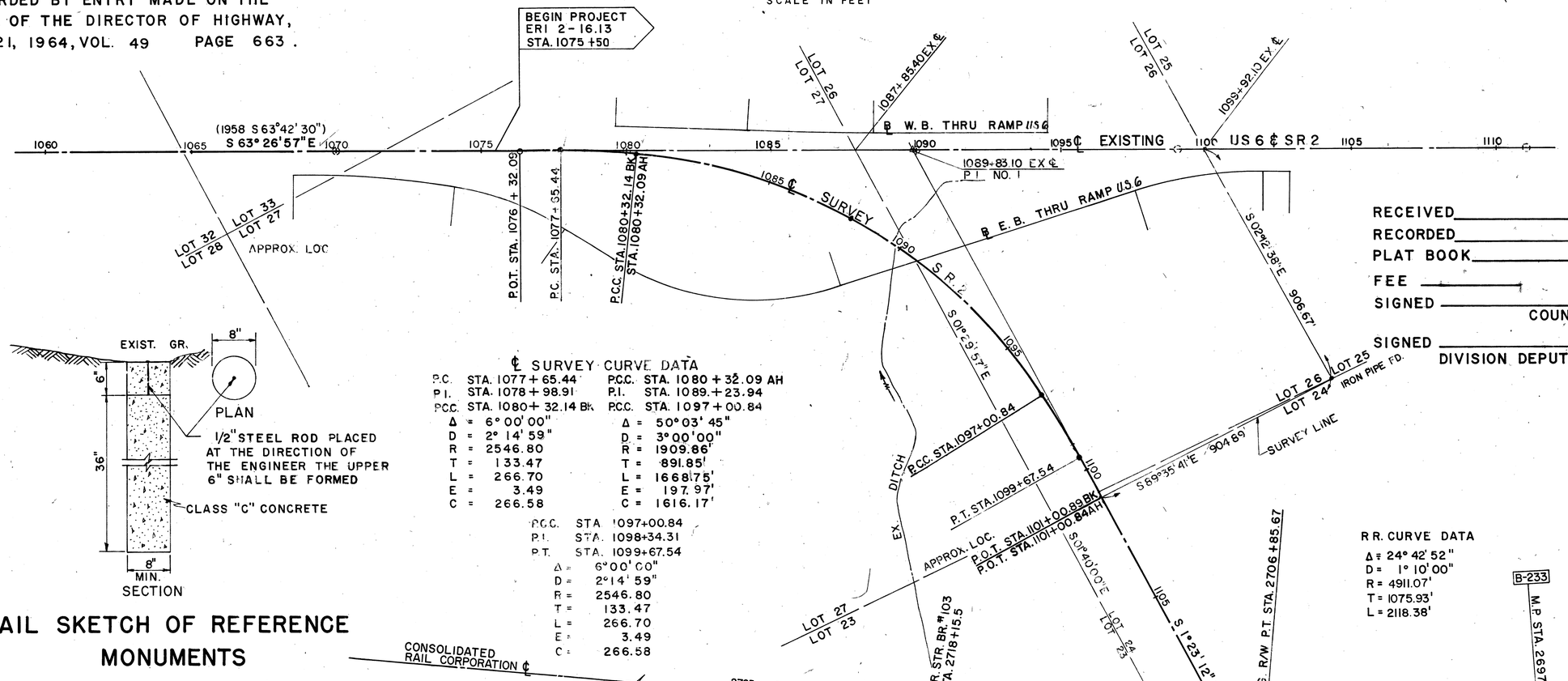

DETAIL SKETCH OF REFERENCE MONUMENTS

℄ SURVEY CURVE DATA

P.C.	STA. 1077+65.44	P.C.C.	STA. 1080+32.09 AH
P.I.	STA. 1078+98.91	P.I.	STA. 1089.+23.94
P.C.C.	STA. 1080+32.14 BK	P.C.C.	STA. 1097+00.84
Δ	= 6° 00' 00"	Δ	= 50° 03' 45"
D	= 2° 14' 59"	D	= 3° 00' 00"
R	= 2546.80	R	= 1909.86'
T	= 133.47	T	= 891.85'
L	= 266.70	L	= 1668.75'
E	= 3.49	E	= 197.97'
C	= 266.58	C	= 1616.17'

P.C.C.	STA 1097+00.84
P.I.	STA. 1098+34.31
P.T.	STA. 1099+67.54
Δ	= 6° 00' 00"
D	= 2° 14' 59"
R	= 2546.80
T	= 133.47
L	= 266.70
E	= 3.49
C	= 266.58

RR. CURVE DATA

Δ = 24° 42' 52"
D = 1° 10' 00"
R = 4911.07'
T = 1075.93'
L = 2118.38'

LEGEND

- EXISTING REFERENCE MONUMENTS
- REFERENCE MONUMENTS (SEE DETAIL THIS SHEET)
- STANDARD MONUMENT ASSEMBLY (SEE STD. DWG. MC-1)

LOCATION OF R/W MONUMENTS

REF MON REQ'D.	MON ASSY REQ'D.	STATION	LOCATION	REMARKS
1		1077+65.44	℄ S.R. 2	P.C.
1		1080+32.09	"	P.C.C.AH.
1		1088+00	"	P.O.C.
1		1097+00.84	"	P.C.C.
1		1099+67.54	"	P.T.
1		1109+00	"	P.O.T.
1		1111+55	"	P.O.T.
1		1122+00	"	P.O.T.
1		1132+00	"	P.O.T.
1		1142+65.83	"	P.O.T.
1		1152+00	"	P.O.T.
2		1163+30.18	20' left Lt&Rt.	P.C.
1		1165+50	"	P.O.C.
1		1173+00	"	P.O.C.
1		1187+00	"	P.O.C.
1		1192+50	"	P.O.C.
1		1180+75	"	P.O.C.

LOCATION OF R/W MONUMENTS

REF MON REQ'D.	MON ASSY REQ'D.	STATION	LOCATION	REMARKS
	1	7+50	℄ S.R. 13	P.O.T.
	1	15+23.15	"	"
	1	21+50	"	"
	1	28+50.83	"	"
		1070+00	℄ EX. S.R. 2 & U.S. 6	
		1090+00	" "	(TO BE
		1099+00	" "	(MAINTAINED
		1111+00	" "	
		1080+00	" "	TO BE REMOVED
	1	18+13.95	HURON AVERY RD.	P.O.T.
	1	22+50		P.O.T.
18	6			TOTAL *

* QUANTITIES CARRIED ON RESPECTIVE PLAN SHEET

RECEIVED _____ 19
RECORDED _____ 19
PLAT BOOK _____ PAGE _____
FEE _____
SIGNED _____
COUNTY RECORDER
SIGNED _____ P.E. NO. _____
DIVISION DEPUTY DIRECTOR, DIV. NO. 3

I HEREBY CERTIFY THIS PLAT TO BE A TRUE DELINEATION OF A SURVEY MADE BY ADACHE ASSOCIATES INC. OF CLEVELAND, OHIO FOR THE OHIO DEPARTMENT OF HIGHWAYS
DATE 1-19-70 BY Raymond Wheeler
REGISTERED SURVEYOR NO. S-5157

STATE OF OHIO RAYMOND W. HASS S-5157 REGISTERED SURVEYOR
SEAL

J.E.C. 11-06-85 Rev. Mon. Loc. to 1163+30.18 & 1192+50

Completed 8-7-70

FED. RD. DIVISION	STATE	PROJECT	
2	OHIO		

265/284

ERIE COUNTY
SOLD AS ERI 2-16.13
ERI 2 16.07 R/W

R/W 2/20

CENTER LINE SURVEY PLAT
STATE ROUTE 2 SEC. 16.13

S.R. 2 (RELOCATED)
ERIE COUNTY, OHIO
CITY OF HURON
HURON TWP. R-22-W, T-6-N, SECTION 2, LOT 24,17,16,9 & 8

0 100 200 400 600 800 1000
SCALE IN FEET

N

℄ SURVEY CURVE DATA

P.C. STA.	1163+30.18	P.C.C. STA. 1165+30.18 AH.
P.I. STA.	1164+30.21	P.I. STA. 1189+90.55
P.C.C. STA.	1165+30.19 BK.	P.C.C. STA. 1205+95.87
Δ =	3° 00' 00"	Δ = 81° 18' 50"
D =	1° 29' 59.83"	D = 2° 00' 00"
R =	3,819.84'	R = 2,864.79'
T =	100.03'	T = 2,460.37'
L =	200.01	L = 4,065.69'
E =	1.31'	E = 911.51'
C =	199.98'	C = 3,732.98'

BEGIN SHEET STA. 1115+00
℄ STARR - HEIMBURG
℄ BOGART ROAD
S 88° 48' 35" E
LOT 24
LOT 17
SR. 2 STA. 1123+04.11
=BOGART RD. STA. 20+00
LOT 24
LOT 23
S 01° 40' 00" E
16.12
92° 34' 37"
I.P. FD. & USED
DITCH
LOT 23
LOT 18
1120
1125
1130
1135
1140
℄ SURVEY
STA. 1142+65.83
S 50° 13' 31" E
LOT 17
LOT 18
S 01° 42' 15" E
48° 50' 19"
N 89° 30' 10" W
LOT 17
LOT 16
S.R. 2
1145
1150
S 01° 23' 12" E
1155
1160
1165
1170
CITY OF HURON CORP. LINE
FC. COR. USED
146.68
S 01° 40' 10" E
LOT 18 N 88° 38' 52" W
LOT 16
LOT 15
℄ WASHBURN DITCH
LOT 15
LOT 16
℄ SR. 2 STA. 1165+05.51
℄ HURON AVERY RD. 20+C5.56
50° 34' 05"
TO LOC TAN
ANGLE PT.
NAIL FD. & USED
℄ HURON-AVERY RD.
P.O.T. STA. 1162+30.78
P.C. STA. 1163+30.18
22.50
53.66'
353.10'
P.C.C. STA. 1165+30.19 BK.
STA. 1165+30.18 AH.
N 88° 49' 29" W
193.73
LOT 16
LOT 9
℄ MUD BROOK
MATCH LINE STA. 1175+00
IRON PIN FD & USED
AS ℄ HURON
AVERY ROAD
18+13.85
IRON PIN FD & USED
S 01° 40' 10" E
APPROX. LOC
113.83
LOT 9
LOT 10
IRON PIN FD. & USED
STA. 37+17.24
IRON PIN FD. & USED
LOT 17
LOT 16
30
28+50.83
I.P. FD. ON W. R/W
OF S.R. 13
MATCH LINE STA. 1175+00
END PROJECT
ERI. 2-16.13
STA. 1195+00
S 88° 45' 54" E
1089.71'
1/2 LOT LINE
STA. 1179+48.13
S 01° 41' 54" E
SECTION LINE
1102.5 DEED
N 19° 10' 55" E
25
1180
℄ RAMP 2
℄ RAMP 4
1183.34
P.C.C. STA. 1205+95.87
P.I. STA. 1207+95.88
P.O.T. STA. 1208+95.87 AH.
STA. 1208+95.88 BK
LOT 16
LOT 9
1210
1215
1185
SURVEY
1190
℄ RAMP 3
21+50
1195
S.R. 27
1200
1205
65° 14' 21" TO LOC. TAN.
℄ S.R. 13
℄ S.R. 2 STA. 1191+13.70
℄ S.R. 13 STA. 20+00
℄ RAMP 5
℄ FOX RD.
N 88° 34' 22" W
LOT 15
LOT 10
S 46° 33' 05" W
LOT 9
LOT 8
S 89° 43' 29" E
APPROX. LOC.
15+23.15
SECTION 1
SECTION 2
INTERSECTION
OF ABAND. FENCE
7+50
IRON PIN FD. & USED.
P.I. OF MUD BROOK RD.
40' N. OF SCHEID RD.
MUD BROOK RD. 15

FOR CONTINUATION OF ℄ SURVEY PLAT
SEE PROJECT ERI. 2-18.38

JEC. 11-6-85 Changed Mon. from 1194+00 to 1192+58
JEC. 11-585 Rev. location of ℄ Rec'd Mon. at P.C. 1163+30.18
Completed 8-7-70

SUMMARY OF ADDITIONAL RIGHT OF WAY REQUIRED

FED. RD. DIVISION	STATE	PROJECT	
2	OHIO		

266/784

ERIE COUNTY
SOLD AS ERI-2-16.13
ERI-2-16.07 R/W

R/W 3/20

03706 (0)

TOTAL NO. OF OWNERS 21 | TOTAL NO. OF TOTAL TAKES 1 | TOTAL NO. OF OWNERS WITH STRUCTURES TO BE REMOVED 4

PARCEL NO.	OWNER	TYPE FUNDS	DEED RECORD BOOK	DEED RECORD PAGE	DEED AREA	TOTAL P.R.O.	GROSS TAKE	P.R.O. IN TAKE	NET TAKE LAND	NET TAKE BLDG	LEFT RESIDUE NET	LEFT RESIDUE P.R.O.	RIGHT RESIDUE NET	RIGHT RESIDUE P.R.O.	SHEET NO.	REMARKS
101 WL	GEORGE A & EVELYN C STALEY		258	394	201.00*	28.62	28.82	—	28.82	YES	22.27*	—	121.23		8-9-10-11-12	* PLUS 2 LOTS (LOTS 87 & 89 IN B.C. TAYLOR SUBDIV)
101 X	" " "								0.53						11	TO CONSTRUCT DITCH
101 S	" " "								0.02						11	SEWER
101 S-1	" " "								0.01						11	SEWER
102 WL	OHIO EDISON COMPANY		—	—	—	—	0.59	—	0.59	NO	—	—	—	—	8-9	
102 A-WL	OHIO EDISON COMPANY		—	—	0.57	—	0.57	—	0.57	NO	—	—	—	—	11	TOTAL TAKE
103	CITY OF HURON		359	01	8.542	—	—	—	—	NO	—	—	—	—	10	NO R/W REQUIRED
104 AERIAL	PENN CENTRAL COMPANY								23,537 S.F.	NO	—	—	—	—	20 & 20A	
104	" " "								354 S.F.						20 & 20A	TO CONSTRUCT PIER
104 A	" " "								354 S.F.						20 & 20A	TO CONSTRUCT PIER
104 B	" " "								354 S.F.						20 & 20A	TO CONSTRUCT PIER
104 C	" " "								354 S.F.						20 & 20A	TO CONSTRUCT PIER
104-SL	" " "								10,838 S.F.						20 & 20A	TO CONSTRUCT SLOPE
104 SL-1	" " "								9,420 S.F.						20	TO CONSTRUCT SLOPE
104 T	" " "								6,352 S.F.						20	GRADING
104 D	CONSOLIDATED RAIL CORPORATION								325 S.F.						20A	TO CONSTRUCT PIER
104 E	" " "								325 S.F.						20A	TO CONSTRUCT PIER
104 F	" " "								325 S.F.						20A	TO CONSTRUCT PIER
104 G	" " "								325 S.F.						20A	TO CONSTRUCT PIER
104 SL-2	" " "								5,148 S.F.						20A	TO CONSTRUCT SLOPE
104 SL-3	" " "								4,031 S.F.						20A	TO CONSTRUCT SLOPE
105 WL	ELEANOR M. HART		182	8	15.73	0.39	9.43	0.18	9.25	NO	6.09	0.21	—	—	12-13	
105 X	" "		179	306					0.32						12-13	TO CONSTRUCT DITCH
106 WL	FRANK E. & MARY G. WECHTER		263	360	37.66	0.59	0.63	0.01	0.62	NO	—	—	36.45	0.58	12-13	
106 X	" " "								0.06						13	TO CONSTRUCT DITCH
107	NOT ASSIGNED															
108	NOT ASSIGNED															
109	NOT ASSIGNED															
110 WL	THEODORE & MARY CHRISTINE HAHN		390	413	79.01	1.07	11.43	0.18	11.25	NO	16.16	0.25	50.53	0.64	13-14	
110 X			267	468					0.07						14	TO CONSTRUCT DITCH
110 Y									0.11						14	TO CONSTRUCT DITCH
111 WL	CORA O. HAHN & HENRY C. HAHN, JR.		276	183	42.79	0.12	2.73	—	2.73	NO	37.20	0.12	2.74 L.L.	—	14	
111 X	" " " "		156	528					0.08						14	TO CONSTRUCT DITCH
111 Y	" " " "								0.08						14	TO CONSTRUCT DITCH
112	JOHN H. & JEAN B. BOOS		243 285 288	224 571 11	10.70										14	NOT NEEDED
113 WL	HAROLD F. & RITA M. BOETTICHER		357	413	17.72	0.28	4.17	—	4.17	NO	12.96	0.28	0	—	14-15	
113 WL-1	" " "		313	534			0.31	—	0.31						14-15	

STATE

Recorded 10-20-1975 in V-445, P-853-859 ERIE CO. Deed Records.

NOTE:

ALL AREAS SHOWN ARE IN ACRES AND DECIMAL PARTS THERE OF UNLESS OTHERWISE NOTED.

NO.	DESCRIPTION	DATE
R.W.H.	REVISED OWNERSHIP PARCEL 104 ADDED PARCELS 104 D, E, F & G & 104 SL-2 & SL-3. DELETED PARCEL 104 T	5-83
J.R.Y.	Par. 102A Rev. Net Take (J.E.C.)	7-10-78
J.R.Y.	Removed Par. 112 WL (Not Needed)	9-28-77
J.R.Y. & J.T.H.	Removed Par. 101 T	4-28-77
	Added Par. 113 WL-1	3-14-77
SEP	Rev. 102 WL	10-1-76
SEP	Rev No. of Owners 1 to 21	9-1-76

REVISIONS Complete

SUMMARY OF ADDITIONAL RIGHT OF WAY REQUIRED

TOTAL NO. OF OWNERS 21 TOTAL NO OF TOTAL TAKES 1 TOTAL NO. OF OWNERS WITH STRUCTURES TO BE REMOVED 4

PARCEL NO.	OWNER	TYPE FUNDS	DEED RECORD BOOK	DEED RECORD PAGE	DEED AREA	TOTAL P.R.O.	GROSS TAKE	P.R.O. IN TAKE	NET TAKE LAND	NET TAKE BLDG	LEFT RESIDUE NET	LEFT RESIDUE P.R.O.	RIGHT RESIDUE NET	RIGHT RESIDUE P.R.O.	SHEET NO.	REMARKS
114 WL	HELEN HOAK, NEIL K. HOAK, GUARDIAN OF		137,173	174, 446	55.50	0.69	0.07	0.01	0.06	NO	—	—	54.47	0.48	15-16	
114 WD	" " " " "						0.48	0.20	0.28						16	
114 T	" " " " "								0.02						16	TO CONSTRUCT DRIVE
115 WL	VINCENT J. SEDLON		274 258	169 445	5.58	0.14	1.99	—	1.99	NO	3.45	0.14	0	—	15	
116 WL	ADDISON E. Jr. & OZELMA C WILES		361	144	9.75	0.55	6.15	0.22	5.93	YES	3.09	0.16	0	—	15 - 16	
116 WD	(aka OZELMA FREY)		361	142			0.35	0.17	0.18						15-16	
117 WL	ADDISON E. WILES		304	150	10.08	0.27	0.07	0.04	0.03	NO	9.59	0.05	—	—	16	
117 WD	" "		299	285			0.37	0.18	0.19						16	
118 WL	CHESTER & MARIE E SENDER		304	184	1.24	0.07	0.36	0.07	0.29	YES	0.88 LL.	—	—	—	16	
118 EL	" " "		296	534			0.88	0.0	0.88		0		0		16	
119 WL	OTIS E & EVELYN M TURNER	STATE	274	336	1.69	0.11	1.27	0.11	1.16	YES	0	—	—	—	16	
119 EL	" " "						0.42	0.00	0.42						16	
120 WL	HELEN M ALTGELT		115	564	92.12	2.33	7.46	—	7.46	NO	8.08 L.L.	—	82.25	2.26	16-17-18	
120 WD	" "						0.15	0.07	0.08						16	
120 X	" "								1.86						16-17-18	TO CONSTRUCT CHANNEL
120 T	" "								1.46						16-17	TO FILL EXIST. CHANNEL & SLOPE
120 T-1	" "								0.51						17-18	TO FILL EXIST. CHANNEL & SLOPE
121 WL	GORDEN E. & MILDRED L. THOMAS		290	363	13.84	0.28	0.52	—	0.52	NO	13.03	0.24	—	—	16-17-18-19	
121 WD	" " "						0.05	0.04	0.01						19	
121 X	" " "								2.16						16-17-18	TO CONSTRUCT CHANNEL
121 T	" " "								1.41						16-17	TO FILL EXIST. CHANNEL
121 T-1	" " "								0.05						19	TO CONSTRUCT TEMP ROAD
121A T	VILLAGE OF HURON		[illegible]	[illegible]	[illegible]	[illegible]	[illegible]	[illegible]	[illegible]	[illegible]	5.71	0.35	—	—	17	TO CONSTRUCT CHANNEL
122 WL	GOLF INC.		322, 331, 324	447, 46, 631	76.16	2.41	16.37	1.27	15.10	NO	4.39 L.L.	—	53.88	0.86	17-18-19	
122 WD	" "						0.66	0.28	0.38						19	
122 X	" "								0.24						17	TO CONSTRUCT CHANNEL
122 T	" "								0.75						17-18	TO FILL EXIST. CHANNEL
122 T-1	" "								1.90						19	TO CONSTRUCT TEMP. ROAD
122 T-2	" "								0.87						19	TO CONSTRUCT TEMP. ROAD
121 BWL	JUNE M. WARNER		400	339	6.55	0.17	0.60	0	0.60	No	5.61	0	0	0	17, 18	
121 BWD	" "						0.34	0.17	0.17						19	
121 BT	" "								0.46						19	To Construct Temp. Road

NOTE:
ALL AREAS SHOWN ARE IN ACRES AND DECIMAL PARTS THERE OF UNLESS OTHERWISE NOTED.

NO	DESCRIPTION	DATE
EP	Added 119 EL	8-15-72
	Rev. Par. 114 Name Correction	4-5-71
EP	Rev. 115 & 116	3-18-71
EP	Rev. 121 Added 121B	9-1-70

REVISIONS Completed 8-[illegible]

FED. RD. DIVISION	STATE	PROJECT	FISCAL YEAR
2	OHIO		

ERIE COUNTY
ERI.-2-16.13
ERI.-2-16.07 R/W.

RW

268 / 284

5 / 20

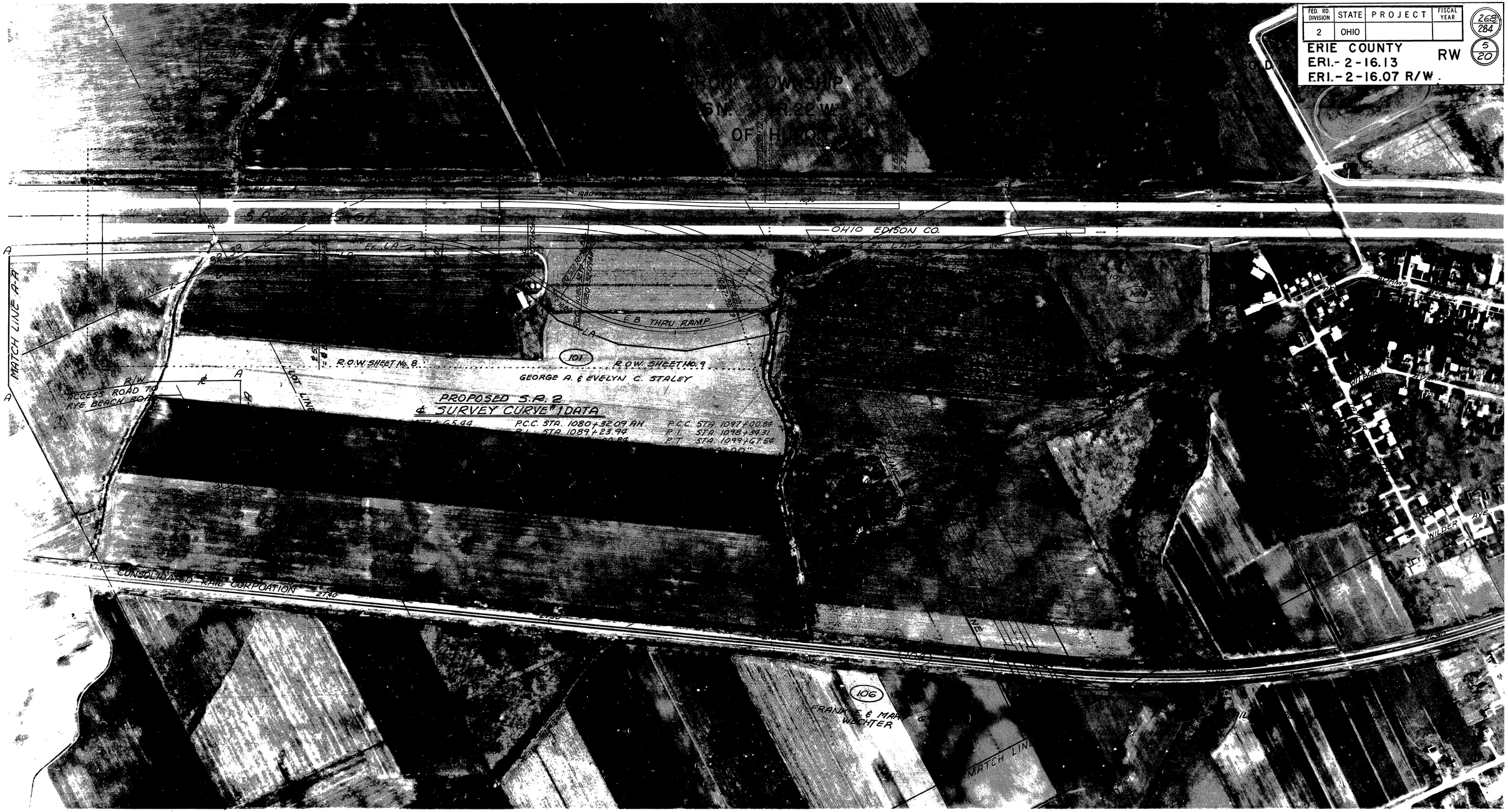

PARCEL NO.	OWNER:	PARCEL NO.	OWNER
101	GEORGE A. & EVELYN C. STALEY		
102	OHIO EDISON COMPANY		
103	CITY OF HURON		
104	CONSOLIDATED RAIL CORPORATION		
105	ELEANOR M. HART		
106	FRANK E. & MARY G. WECHTER		

NORTHERN OHIO TELEPHONE CO
BELLEVUE, OHIO 44811

AMERICAN TELEPHONE & TELEGRAPH CO.
ONE NORTH WACKER DR.
CHICAGO, ILL. 60606

ERIE COUNTY SEWER & WATER SYSTEM
COUNTY COURT HOUSE
SANDUSKY, OHIO 44870

COLUMBIA GAS OF OHIO INC.
10 WEST MAIN STREET
NORWALK, OHIO 44858

OHIO EDISON CO.
2508 WEST PERKINS AVE.
SANDUSKY, OHIO 44870

GRAPHIC SCALE

0' 100' 200' 400' 600' 800' 1000'

SCALE IN FEET

No	DESCRIPTION	DATE
	REVISIONS Completed 8-7-70	
5-J.T.H	Removed Par 101T	4-20-71
	Rev. Par 102 W.L	1-21-71

PROPERTY MAP

STATE OF OHIO
DEPARTMENT OF HIGHWAYS

AERIAL MOSAIC

ERI.-2-16.13

SCALE: GRAPHIC PHOTOGRAPHED APRIL 12, 1966

ADACHE ASSOCIATES INC., ENGINEERS
CLEVELAND 42, OHIO

SHEET 1 OF 3 SHEETS

FED. RD. DIVISION	STATE	PROJECT	FISCAL YEAR
2	OHIO		

269 / 284

ERIE COUNTY RW 6 / 20

ERI.-2-16.13

ERI.-2-16.07 R/W

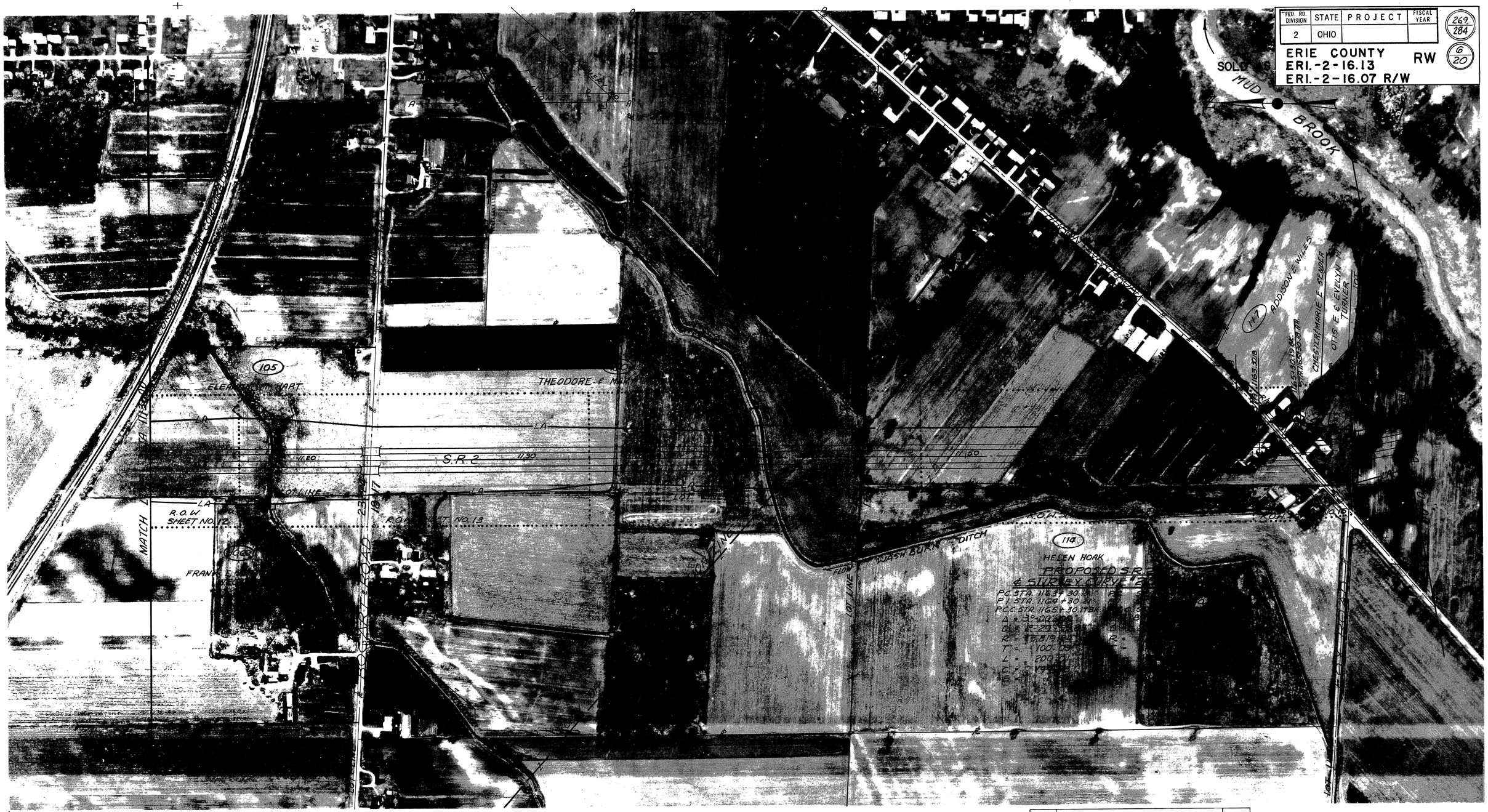

PARCEL NO.	OWNER	PARCEL NO.	OWNER
105	ELEANOR M. HART	116	ADDISON E. & OZELMA (aka OZELMA FREY) WILES
106	FRANK E. & MARY G. WECHTER		
107, 108, 109	NOT ASSIGNED	117	ADDISON E WILES
110	THEODORE & MARY CHRISTINE HAHN	118	CHESTER & MARIE E. SENDER
111	CORA O. & HENRY C. HAHN, Jr.	119	OTIS E. & EVELYN M. TURNER
112	JOHN H. & JEAN B. BOOS	120	HELEN M. ALTGELT & BERT SPRAGUE
113	HAROLD E. & RITA M. BOETTICHER		
114	HELEN HOAK		
115	VINCENT J. SEDLON		

GRAPHIC SCALE

0' 100' 200' 400' 600' 800' 1000'

SCALE IN FEET

No.	DESCRIPTION	DATE
BP	Added 119 Ex.	8-15-72
	Added Par. 113 WL-1	3-18-71
BP	Rev. R/W Line Par 115 & 116	3-18-71
	REVISIONS Completed 8-7-70	

PROPERTY MAP

STATE OF OHIO

DEPARTMENT OF HIGHWAYS

AERIAL MOSAIC

ERI.-2-16.13

SCALE: GRAPHIC PHOTOGRAPHED APRIL 12, 1966

ADACHE ASSOCIATES INC., ENGINEERS

CLEVELAND 42, OHIO

SHEET 2 OF 3 SHEETS

6

FED. RD. DIVISION	STATE	PROJECT	FISCAL YEAR
2	OHIO		

270/284

ERIE COUNTY
ERI.-2-16.13 RW 7/20
ERI.-2-16.07 R/W

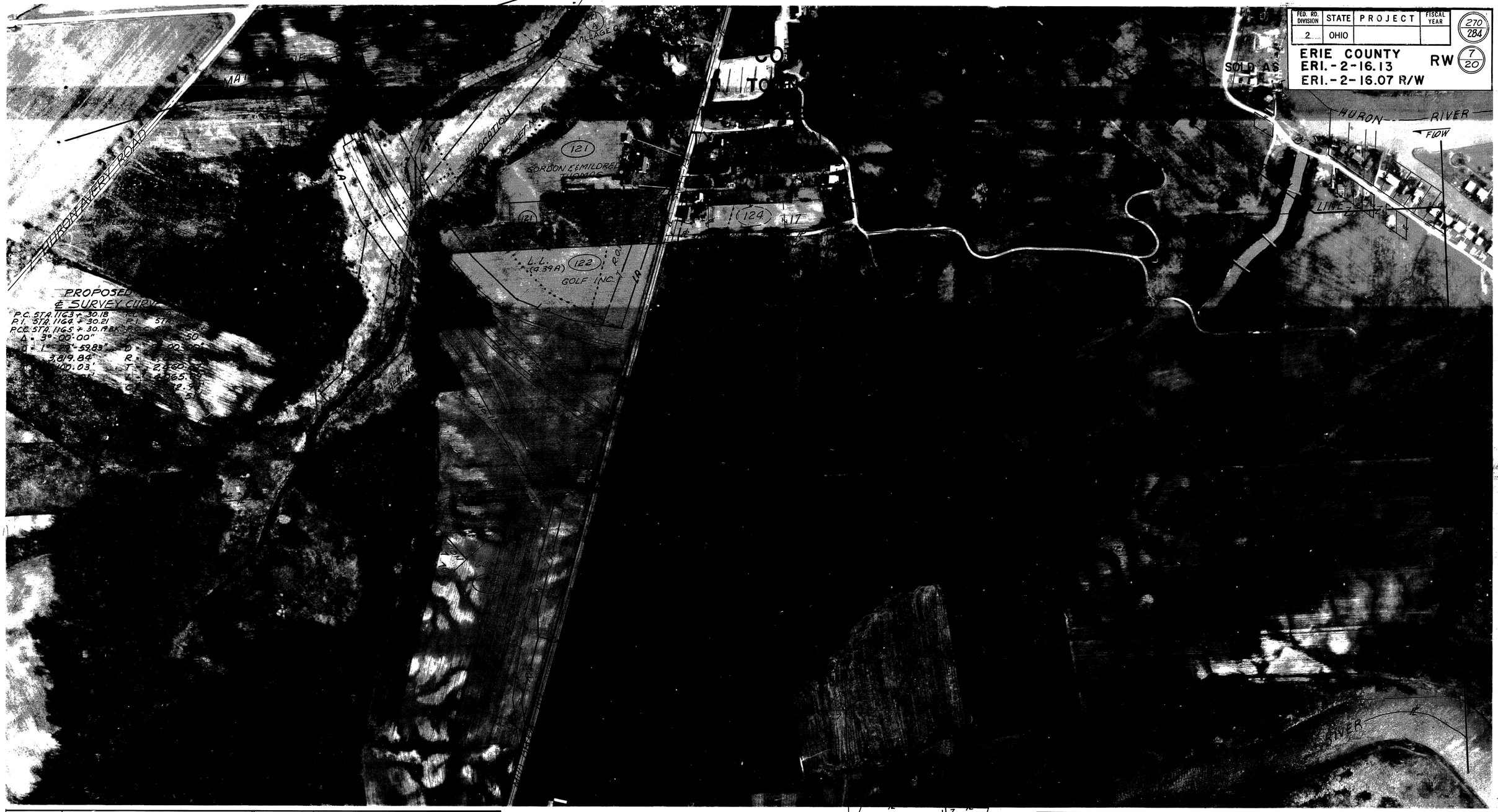

PARCEL NO.	OWNER	PARCEL NO.	OWNER
120	HELEN M. ALTGELT		
121	GORDON E & MILDRED L THOMAS		
122	GOLF INC.		
123	JUNE M. WARNER		
124	JUNE M. WARNER		
125	GOLF INC.		

SKETCH OF H. M. ALTGELT & GOLF INC. PROPERTY

GRAPHIC SCALE

0' 100' 200' 400' 600' 800' 1000'

SCALE IN FEET

No	DESCRIPTION	DATE
	REVISIONS Completed 8-7-70	
RWH	DELETED MUD BROOK RELOCATION & EXTENDED MUD BROOK BRIDGE LIMITS	5-83
EAP	Added Par. 121B	9-1-70

PROPERTY MAP

STATE OF OHIO
DEPARTMENT OF HIGHWAYS

AERIAL MOSAIC
ERI – 2 – 16.13
SCALE: GRAPHIC PHOTOGRAPHED APRIL 12, 1966

ADACHE ASSOCIATES INC., ENGINEERS
CLEVELAND 42, OHIO
SHEET 3 OF 3 SHEETS

PLAN COMPLETED	9-16-70
REV. DATE	DESCRIPTION
4-19-71	Rev. Par. 268 D + 268 DLA & Corrected Name
6-21-71	Added Par. 101 SA
8-12-75	Par. 268 C-LA. Change of Ownership

HURON TWP. ERIE CO.
SECT. 2 T-6N R-22W

FED. RD. DIVISION	STATE	PROJECT	
2	OHIO		

271

7A / 20

ERI.-6-15.20
RYE BEACH RD.
R/W PLAN
SCALE - 1" = 100'

SOLD AS ERI-2-16.13

273 A — Shell Oil Co.

273 — Max Osterling

268 DLA — Cont: 0.07 Ac. P.R.O.: 1.11 Ac. Total: 1.18 Ac. — Thomas H. Hauker & Martin Price

268 D — Cont: 0.16 Ac.

268 CLA — The Standard Oil Company

270 LA — William G & Carolyn Z. Beatty

270 SLA — Standard Oil Co.

271 A — George A. & Evelyn C. Staley

101 SA — Cont 2.10 Ac. Hatched area vacated by Entry dated 8-17-72 in Vol. 54 Pg. 657 of the Director's Journal

* Reference ERI-2-12.588 (2000)

Limited Access Ends 59+61.94 29.57 Rt.

Limited Access Ends 59+55.65 169.61 Lt.

Limited Access Ends 59+25.00

Connect to Existing Fence

Existing Fence

Existing R/W Fence

Exist. R/W

Exist. LA

Exist. R/W Of Boss Rd.

Saw Mill Creek

E Rye Beach Rd. US. Rt. 6

& Exist. S.R. 2

West Corporation Line Of City Of Huron Also Lot Line

Lot 32 Lot 31 Lot 30 Lot 29

50' Access Road Being Built By The City

Entry Vacated

RYE BEACH RD.

SEC. 2, HURON TWP. T.6 N., R.22 W.
LOTS 27, 28, 32, & 33

FED. HIGHWAY DIVISION	STATE	PROJECT	FISCAL YEAR
2	OHIO		

272
284

ERIE COUNTY
SOLD AS ERI. 2-16.13
ERI. 2-16.07 R/W

R/W
3
20

N

BEGIN ACQUISITION
STA. 1063+00
ERI-2-16.07

EXISTING LIMITED ACCESS ACQUIRED UNDER
ERI-6-11.30 JOB No. 03357

STA. 1064+92.03
END TAPER

1064+00
155' LT

N 26°-33'-03" E
15'

1064+00
140' LT.

BRUSH

S 63°-26'-57" E

EXIST. LA

Connect to Existing Fence

Ex. Channel Easement

102 WL CONT. 0.69 Ac.

OHIO EDISON COMPANY

1700.00'

S 63°-26'-57" E

BRUSH

EXIST. LA FENCE

102 WL

1700.00'

N 63°-26'-57" W

CONSTRUCTION LIMIT

1060+00

15"

1060

STA. 1060+44 END 48:1 TAPER 78' RT.
EXISTING

1062+00
160' RT.

SIGN

EX. CULVERT 76" X 48"

1064+00
158.34' RT.

APPROXIMATE Z LOCATION

1065

℄ EXISTING S.R. 2 & U.S. 6
℄ OF SURVEY

S 63°-26'-57" E

15"

8"

1070

CITY OF HURON

APPROXIMATE LOCATION

1070

℄ E.B. THRU RAMP U.S. 6
CURVE No. 1

274 LA

CONSTRUCTION LIMIT

S 63°-55'-35" E

1000.04'

EXIST. LA

EXIST. LA FENCE

101 WL TO BE ABAND.

N 62°-04'-12" W

FIELD DRIVE 900.26'

8" TILE

Connect to Existing Fence

8"

4"

℄ 12" WATER MAIN

LOT 32
LOT 28

LOT 33
LOT 27

LOSE ℄ E.B. THRU RAMP
STA. 1071+83.43

1080+00

E.B THRU RAMP
℄ SURVEY CURVE #1 DATA

P.I. STA. 1071+07.02
Δ = 8° - 17' - 46" RT
D = 1° - 30' - 00"
R = 3819.72'
T = 277.021'
L = 553.07'
P.C. STA. 1068+30.00
P.C.C. STA. 1073+83.07

GEORGE A. & EVELYN C. STALEY

101 WL	101 X	101 S	101 S-1
CONT. 28.82 AC.	CONT. 0.53 AC.	CONT. 0.02 AC.	CONT. 0.01 AC.

GRAPHIC SCALE
0 50 100 150 200 250
SCALE IN FEET

NO.	DESCRIPTION	Compiled by
	REVISION	
4-4TH	Removed Part 101.7	
3RD	Rev. Part 102 WL	

STATE FUNDS
RIGHT OF WAY STA. 1058+00 TO STA. 1073+00

SEC. 2, HURON TWP. T. 6 N. R. 22 W.
LOTS 26 & 27

FED. RD. DIVISION	STATE	PROJECT	FISCAL YEAR
2	OHIO		

27-2
284

R/W
9
20

EXISTING LIMITED ACCESS ACQUIRED UNDER ERI 6 11.30 JOB No. 03357

ERI COUNTY
SOLD AS ERI. 2-16.13
ERI. 2-16.07 R/W

W.B THRU RAMP & SURVEY CURVE DATA

Δ = 2°-10'-53.44"
D = 0°-30'-00"
R = 11,459.16'
T = 218.177'
L = 436.30'
P.I. STA. 1085+94.90
P.C. STA. 1083+75.72
P.T. STA. 1088+12.02

BEGIN PROJECT
ERI-2-16.13
STA. 1075+50

LOT 33
LOT 27
LOT 26
LOT LINE
APPROX LOC.
BRUSH
CONT. 0.59 Ac.
102 WL
OHIO EDISON CO. LA
1700.00'
1081+00 155' LT. EX. ℄
S 26°-33'-03" W 15.00'
1081+00, 140' LT. EX. SR 2 ℄
1080+79.95, 160.90' LT. PROP. SR 2 ℄
S 61°16'04" E
℄ W.B. THRU RAMP U.S.-6
Connect to Existing Fence
P.C. STA. 1083+25.72
EXIST. LA
EXIST. LA FENCE
CONSTRUCTION LIMIT
S 63°-26'-57" E
1085
P.T. STA. 1088+12.02
S 1°-29'-57" E
272 A-LA
+ 85.40
1088
CITY OF HURON
883.10' 1086 TO PI #1
℄ EXISTING S.R. 2
MATCH LINE STA. 1088+00
N 63°-26'-57" W
S 63°-26'-57" E
N26°-33'-03" E 140.00'
1084
1083
1082
1081
1080
REF. MON. 1081
REF. MON.
℄ PROP. 1083 S.R. 2
SURVEY ℄ CONSTRUCTION
860.10'
+ 58.58
1086
1087
EXIST. LA FENCE
MATCH LINE STA. 1073+00
1078
1077
1076
1075
1074
15"
8"
P.O.T. STA. 1076+32.09
P.C. STA. 1077+65.44
274 LA
S 64°-24'-14" E
1080+12.86 128.60' RT.
1080+32.09 AH.
P.I. STA. 1078+98.91
Δ = 6°-00'-00"
D = 2°-14'-50"
R = 2546.80'
T = 133.47'
L = 266.70'
C = 266.58'
E = 3.49'
P.I. STA. 1089+23.94
Δ = 50°-03'-45" RT
D = 3°-00'-00"
R = 1909.86'
T = 891.85'
L = 1668.75'
P.C. STA. 1079+65.19
P.C.C. STA. 1080+32.14 Bk.
P.C.C. STA. 1077+65.94
P.C.C. STA. 1080+32.14 Bk.
P.C.C. STA. 1097+00.82
E.B. THRU RAMP CURVE #3 ℄ SURVEY CURVE DATA
Δ = 50°-00'-11"
D = 6°-00'-00" LT
R = 954.93'
T = 445.33'
L = 833.38'
P.I. STA. 1084+10.62
P.C. STA. 1079+65.19
P.T. STA. 1087+98.59
10" (TO BE ABAND.)
8" TILE (TO BE ABAND.)
1074+00 150 RT.
1075
CURVE No. 1
S 63°55'-35" E 1000.94'
600.08'
EXISTING "LA"
FARM DRIVE
6" TILE (TO BE ABAND.)
30'
1076+00 CURVE No. 2 250' RT.
N 36°-53'-03" W 167.71'
P.T. STA. 1077+65.32
P.C. STA. 1079+65.19
P.G.C. STA. 1080+32.14 BK. STA. 1080+32.09 AH.
FIELD TILE (TO BE ABAND.)
101 WL
1073+00 180 RT.
P.C.C. STA. 1073+83.07
N 50°-18'-54" W 308.06'
℄ 12" WATER MAIN
METAL GRAIN BINS WITH CONC. PAD
FR. BARN
S 31°01'29" E
1080
CURVE No. 3
℄ E.B. THRU RAMP U.S. 6
1085
N 23°-18'-01" W 217.87'
N 41°-56'-48" W 271.55'
305.90'
N 56°-33'-59" W
℄ CONSTRUCTION LIMIT
244.05'
N 68°-34'-51" W
1089+50 310' RT.
N 21°-57'-07" W 221.66'
1079+50 460' RT.
1083+00 520' RT.
1089+00 450' RT.
℄ 12" WATER MAIN.
GEORGE A. & EVELYN C STALEY
101 WL CONT. 28.82 AC.
101 X CONT. 0.53 AC.
101 S CONT. 0.02 AC.
101 S-1 CONT. 0.01 AC.

E.B. THRU RAMP ℄ SURVEY CURVE DATA

CURVE No. 1	CURVE No. 2
Δ = 8°-17'-46"	Δ = 24°-07'-42"
D = 1°-30'-00"	D = 6°-00'-00"
R = 3819.72'	R = 954.93'
T = 277.021'	T = 204.095'
L = 553.07'	L = 402.139'
P.I. STA. 1071+07.02	P.I. STA. 1075+87.16
P.C. STA. 1068+30.00	P.C.C. STA. 1073+83.07
P.C.C. STA. 1073+83.07	P.T. STA. 1077+85.21

PROPOSED S.R.2 ℄ SURVEY CURVE DATA

P.I. STA. 1078+98.91
Δ = 6°-00'-00"
D = 2°-14'-50"
R = 2546.80'
T = 133.47'
L = 266.70'
C = 266.58'
E = 3.49'
P.I. STA. 1089+23.94
Δ = 50°-03'-45" RT
D = 3°-00'-00"
R = 1909.86'
T = 891.85'
L = 1668.75'
P.C. STA. 1079+65.19
P.C.C. STA. 1080+32.14 BK.
P.C.C. STA. 1077+65.94
P.C.C. STA. 1080+32.14 BK.
P.C.C. STA. 1097+00.82

GRAPHIC SCALE
0 50 100 150 200 250
SCALE IN FEET

$-JTH	Removed Par 101 T Rev. Par. 102 WL	4-28-71 1-21-71
NO	DESCRIPTION	DATE
REVISION	Completed	8-7-70

STATE FUNDS
RIGHT OF WAY STA. 1073+00 TO STA. 1088+00

SEC. 2, HURON TWP. T.6 N., R.22 W.
LOTS 24, 25, & 26

EXISTING LIMITED ACCESS ACQUIRED UNDER ERI-6-11.30 JOB No. 03357

FED. NO. DIVISION	STATE	PROJECT	FISCAL YEAR
2	OHIO		

ERIE COUNTY
SOLD AS ERI 2-16.13
ERI 2-16.07 R/W

R/W

MATCH LINE STA. 1088+50

BRUSH

EXIST. LA
EXIST. LA FENCE

CONSTRUCTION LIMIT

STA. 1094+12.02
END ST. 11 AHEAD
EXIST S.R. 2 STA. 1094+11.22

S 63°26'57" E

℄ W.B. THRU RAMP U.S. 6

CULVERT NO 3
30"

883.10'
P.I. #1

1090 1091 1092 1093 1094 1095 1096 1097 1098 1099 1100 1101

EXIST. 1096 S.R. 2 & 1097 U.S. 6
S 63°-26'-57" E

272A-LA

274A-LA

MATCH LINE SH. 11

MATCH LINE STA. 1094+50

274X

50'

1097 1096 1095

℄ E.B. THRU RAMP U.S. 6 S 81°01'40" E

101 WL

CONSTRUCTION LIMIT

N 84°-39'-30" W 567.61'

LA

P.C. STA. 1098+71.31

S 88°-24'-57" E

15"

18"

EX. CULVERT

LOT 25
LOT 26

EX. CHANNEL EASEMENT

S 63° 26'-57" E
EXIST. LA
EXIST. LA FENCE

S 22°12'-38" E
268.43'

CITY OF HURON

CURVE No. 4
159.70

1100+68.94
140' RT. EX℄
1095+51.89
944.71' LT.

CULVERT NO. 4
2-68"x43"

1102 1103

1101

1100

1099

1098

EXIST. LA FENCE
855.96'

S 22°12'-38" E
11.40'

S 63°-26'-57" E
EXIST. LA

N 77°45'-38" W 283.21'

1100+74.43
150' RT. EX℄
1095+59.42
943.32' LT.

BRUSH

1098+00 EX ℄
220' RT.
1094+75.09
686.36' LT.

CURVE DATA
CURVE No. 4
D = 4°-00'-00"
Δ = 17°-34'-43" RT
R = 1432.40'
T = 221.473'
L = 439.467'
P.I. STA. 1100+92.78
P.C. STA. 1098+71.31
P.T. STA. 1103+10.78

Connect to Existing Fence

906.67'

235.37'

E.B. THRU RAMP PT. STA. 1103+10.78
252.8 STA. 1101+63.14, 66' RT.

S 63°-26'-57" E
EXIST. LA

CITY OF HURON

103

LOT 25
LOT 26

IRON PIPE
1101+29.19
904.45' LT.

LOT 26
LOT 24

GEORGE A. & EVELYN C. STALEY

101 WL	101 T	101 X	101 S	101 S-1
CONT. 28.82 AC.	CONT. 1.51 AC.	CONT. 0.53 AC.	CONT. 0.02 AC.	CONT. 0.01 AC.

GRAPHIC SCALE
0 50 100 150 200 250
SCALE IN FEET

NO.	DESCRIPTION	DATE
REVISION		

STATE FUNDS

RIGHT OF WAY

FED. RD. DIVISION	STATE	PROJECT	FISCAL YEAR
2	OHIO		

275
284

SEC. 2, HURON TWP. T.6N., R.22W.
LOTS 23, 24, 25, 26, & 27

EXISTING LIMITED ACCESS ACQUIRED UNDER ERI-6-11.30 JOB No. 03357

ERIE COUNTY
SOLD AS ERI. 2-16.13
ERI. 2-16.07 R/W

R/W
11
20

N 2°-12'-38" W 906.67' I.P. TO ℄ EXIST. S.R.2

MATCH LINE STA. 1094+50

MATCH LINE STA. 1088+00

MATCH LINE STA. 1103+00

℄ EXIST. S.R.2 S 63°-26'-57" E

℄ PROP. S.R.2 STA. 1090+45

℄ E.B. THRU RAMP STA. 1090+68.57

℄ E.B. THRU RAMP

TANGENT LINE

GEORGE A. & EVELYN C. STALEY

OHIO EDISON CO.

101 WL CONT. 28.82 AC.

101 T CONT. 1.51 AC.

101 X CONT. 0.53 AC.

101 S CONT. 0.02 AC.

101 S-1 CONT. 0.01 AC.

102A-WL CONT. 0.57 AC.

EXIST. FENCE S 63°-26'-57" E 197.24'

EX. S.R.2 ℄ STA. 1089+30.25 27.65' RT.
PROP. S.R.2 ℄ STA. 1089+58.12 55.91' LT.

℄ PROP. S.R.2 STA. 1090+45

℄ E.B. THRU RAMP

EX. S.R.2 ℄ STA. 1092+70.84, 425.35' RT.
PROP. S.R.2 ℄ STA. 1093+00, 160.00' LT.

S 84°-39'-30" E 58.94'

N 84°-39'-30" W 56.61'

S 71°-02'-16" W 55.43'

1093+22.39 158.23' LT.

1093+22.20 215.66' LT.

1096+00 160' LT.

S 14°-54'-43" E 324.80'

N 14°-54'-43" W 24.32'

S 7°-05'-39" E 393.27'

CONSTRUCTION LIMIT

LA

N 1°-23'-12" W 1351.01' PT. #1 TO ℄ STATION 1101+00.84 A.H.

1192.54'

24" SANITARY SEWER (FUTURE)

℄ PROP. S.R.2

CULVERT NO. 2

REF. MON.

℄ SURVEY & CONSTRUCTION

REF. MON.

1100 REF. MON

1099+67.54 170' LT.

1101+05.95 161.68' LT.

1101+29.19 904.45' LT.

LOT LINE

LOT 26

LOT 24

143.13'

APPROX. LOC. N 89°-35'-41" W 904.89' ℄ TO 1 PIPE

S 2°-03'-23" W 194.45'

333.11'

SURVEY LINE 2

181.76'

1103+00 150' LT.

1088+60.10 140' RT. EX. ℄

1088+35.51 139.95' LT.

S 63°-26'-57" E 860.10'

1089+83.10 TANGENT LINE

1090+59.34 140' RT. EX. ℄

1090+86.87 245.64' LT.

1090+95.73 337.77' LT.

1092+12.99 140' RT. EX. ℄

S 63°-26'-57" E 859.96'

155.65'

158.47'

S 1°-29'-57" E 149.17'

S 1°-29'-57" E

+88.47

+15

36°-02'-03"

S 81°-04'-40" E

S 81°-07'-07" W

1090+38.13 207.53' RT.

N 39°-16'-30" E 128.95'

1091+00 125' RT.

227.66'

100.00'

1092+00 129.89' RT.

1093+06.42 129.73' RT.

N 20°-54'-43" W 280.08'

93.44'

N 71°-02'-16" E 15.00'

S 20°-54'-43" E 16.00'

1093+23.58 129.18' RT.

S 71°-02'-16" W 15.00'

1094+00 125' RT.

1093+06.34 144.73' RT.

N 20°-54'-43" W 16.00'

1093+22.85 144.19' RT.

101 S-1

℄ 12" WATER MAIN

N 11°-53'-58" W 280.86'

CONSTRUCTION LIMIT

253.47'

1097+00.84 125' RT.

LOT 26

LOT 27

N 1°-15'-57" E

332.51'

P.C.C. STA. 1097+00.84

1099+67.54 150' RT.

P.T. STA. 1099+67.54

NOT FOUND

N 1°-23'-12" W

S 1°-40'-00" E

APPROX. LOC.

P.O.T. STA. 1101+00.89 (BK.)
P.O.T. STA. 1101+00.84 A.H.

1103+00 150' RT.

LOT 27
LOT 23

12"

88°-12'-29"

1102

S 1°-23'-12" E

101 X

101 WL

S 67°-55'-17" W 200.00'

1091+00 325' RT.

N 20°-27'-34" W 82.99'

1092+00 330' RT.

FIELD TILE (TO BE ABAND.)

TYPE I Crossings 25'-6"-15" TYPE C R.C.P.

4"

6"

℄ SURVEY CURVE DATA

P.I. STA. 1098+34.31	P.I. STA. 1089+23.94
Δ = 6°-00'-00"	Δ = 50°-03'-45" RT.
D = 2°-14'-59"	D = 3°-00'-00"
R = 2546.80'	R = 1909.86'
T = 133.47'	T = 891.85'
L = 266.70'	L = 1668.75'
C = 266.58'	C = 1616.17'
E = 3.49'	E = 197.97'
P.C.C. STA. 1097+00.84	P.C.C. STA. 1080+32.09 AH
P.T. STA. 1099+67.54	P.C.C. STA. 1097+00.84

GRAPHIC SCALE

0 50 100 150 200 250

SCALE IN FEET

Nº	DESCRIPTION	DATE
J.R.Y.	Par. 102 A Rev. Net Take (J.E.C.)	7-10-70
REVISION	Completed: 8-7-70	

STATE FUNDS

RIGHT OF WAY STA. 1088+00 TO STA. 1103+00

SEC. 2, HURON TWP. T.6N., R.22W.
LOTS 23 & 24

FED. RD. DIVISION	STATE	PROJECT	FISCAL YEAR
2	OHIO		

276
284

ERIE COUNTY
SOLD AS ERI.-2-16.13
ERI. 2-16.07 R/W

R/W
12
20

101 WL CONT. 28.82 AC. | 101 T CONT. 1.51 AC. | 101 X CONT. 0.53 AC. | 101 S CONT. 0.02 AC. | 101 S-1 CONT. 0.01 AC.

GEORGE A. & EVELYN C. STALEY

ELEANOR M. HART
105 WL CONT. 9.25 AC, P.R.O. 0.18 AC, TOTAL 9.43 AC
105 X CONT. 0.32 AC.

MATCH LINE STA. 1103+00

150' LT.
S 4°-14'-57" E 300.38'
1106+00 165' LT.
S 1°-23'-12" E
LA
467.88'
CONSTRUCTION LIMIT
101 WL
S.R. 2 STA. 1110+29.15
CONRAIL STA. 2708+06.34
1110+46.87 132.71' LT.
1110+67.88 165' LT.
R = 4853.07'
ARC = 38.53'
CH. = 38.53'
CH.BR= N 58°-20'-11" W
BRUSH
℄ E.W.B. TRACK STA 2708+06.34 HURON
1112+22.81 180' LT.
S 2°-35'-14" E
477.29'
1117+50 305' LT.
S 36°-05'-22" W 189.01'
S 46°-23'-12" E 106.07'
1116+75 230' LT.
1117+00 190' LT.
N 56°-36'-29" E 47.17'
105 X
S 1°-23'-12" E 200.00'
105 WL
R = 4976.07'
ARC = 136.09'
CH. = 136.00'
CH.BR= S 58°-53'-33" E
1111+49.70 65.22' LT.
104 AERIAL
1104 1105 1106 1107 ℄ PROP 1108 S.R. 2 1109 1110 1111 1112 1113 1114 1115 1116 1117
℄ SURVEY & CONSTRUCTION
REF. MON. +59.77
REF. MON. +06.90
S 1°-23'-12" E
MATCH LINE STA. 1118+00
356.10' BRUSH N 58°-06'-32" W
278.14' S 58°-06'-32" E
104 SL-2
104 SL
104 SL-1
104 SL-3
SWITCH CONTROL VAULT
12"
CONSTRUCTION LIMIT 1108+51.48 165' RT.
S 58°-06'-32" E
1109+97.09 167.31' RT.
N 0°-10'-17" E 551.68'
LOT LINE LOT 24 LOT 23
S 1°-40'-00" E
150' RT.
1299.79' N 1°-40'-00" W
705.12' N 0°-38'-42" E
106 WL
1109+95.32 170' RT. S 58°-06'-32" E 3.22'
1117+00 195' RT.
N 1°-23'-12" W 200.00'
CONSOLIDATED RAIL CORPORATION SANDUSKY
BRUSH

FRANK E. & MARY G. WECHTER
106 WL CONT. 0.62 Ac., P.R.O. 0.01 Ac., TOTAL 0.63 Ac.
106 X CONT. 0.06 Ac.

SEE SHEET NO. 20 & 20A
FOR PARCELS : 104 AERIAL
104, 104A, 104B, 104C, 104D, 104E, 104F, 104G
104 SL, 104-SL-1, 104 SL-2 & 104 SL-3

GRAPHIC SCALE
0 50 100 150 200 250
SCALE IN FEET

NO	DESCRIPTION	DATE
RW-H	REVISED OWNERSHIP OF PARCEL 104, BRIDGE LIMITS, PIER LOCATION, CHANGED PAR. 104T TO 104 SL-2 & ADDED 104 SL-3 ADD REF. TO SHEET 20A	5-83
REVISION	Completed 8-7-70	

STATE FUNDS
RIGHT OF WAY STA. 1103+00 TO STA. 1118+00

SEC. 2, HURON TWP. T. 6 N., R. 22 W.
LOTS 23, 24, 17, & 18
FED. RD. DIVISION | STATE | PROJECT | FISCAL YEAR
2 | OHIO
277 / 284
ERIE COUNTY
SOLD AS ERI. 2-16.13
ERI. 2-16.07 R/W
R/W
13 / 20
ELEANOR M. HART
105 WL
105 X
CONT. 9.25 AC
P.R.O. 0.18 AC
TOTAL 9.43 AC
CONT. 0.32 AC.
105 X
S 36°-05'-22" W
189.01'
1119+00 190' LT.
S 1°-23'-12" E
200.00'
S 4°-10'-27" W
412.80'
Type I Crossings 20'-6'-1.5' Type B R.C.P.
105 WL
MATCH LINE STA. 1118+00
EXISTING R/W
BOGART ROAD
LOT LINE
LOT 24
LOT 17
S 88°-48'-35" E
60'
1122+85.94 152.43' LT.
1123+10.86 150' LT.
1123+35.89 150' LT.
25.03
25.03
12"
311.27
150.15
St. Light
+40
1119
1120
1121
REF. MON.
1122
1123
1124
1125
1126 ℄ PROP. 1127 S.R. 2
1128
1129
1784.07'
1130
1131
1132
REF. MON.
℄ SURVEY & CONSTRUCTION
S 1°-23'-12" E
CULVERT NO. 5
FIELD TILE (TO BE ABANDONED)
CONSTRUCTION LIMIT
THEODORE & MARY CHRISTINE HAHN
110 WL
110 X
110 Y
CONT. 11.25 AC
P.R.O. 0.18 AC
TOTAL 11.43 AC
CONT. 0.07 AC
CONT. 0.11 AC
S 1°-23'-12" E
LA
489.14'
1128+00 150' LT.
S 0°-14'-27" E
500.10'
1133+00 140' LT.
110 WL
FIELD TILE (TO BE ABANDONED)
MATCH LINE STA. 1133+00
S.R. 2 - STA. 1123+04.11
BOGART RD. STA. 20+00
S 88°-48'-35" E
161.12'
310.62
Type I Crossing 26'-6'-1.5' Type C, R.C.P.
TILE (TO BE ABAND.)
1122+71.84 161.08' RT.
Type I Crossing 30'-6'-1.5' Type C, R.C.P.
BUSH
6" CEDAR
12" CEDAR
12" CEDAR
CONSTRUCTION LIMIT
N 2°-52'-54" W
803.41'
N 7°-05'-50" W
301.50'
LA
LOT 17
LOT 18
N 1°-42'-15" W
FIELD DRIVE
1131+00 140' RT.
1133+00 120' RT.
Type I Crossings 20'-6'-1.5' Type C, R.C.P.
N 1°-23'-12" W
200.00'
LOT LINE
LOT 24
LOT 23
1299.79'
106 WL
N 1°-40'-00" W
396.74'
N 4°-16'-34" W
LOT LINE
100.00'
106 X
1118+00 195' RT.
1118+00 220' RT.
N 88°-36'-48" E
25.00'
N 1°-23'-12" W
100.00'
1119+00 195' RT.
1119+00 220' RT.
S 88°-36'-48" W
25.00'
1122+71.15 176.27' RT.
1122+96.23 175' RT.
25.03
1123+21.92 160.31' RT.
25.06'
1122+96.87 I.P. FND. USED
160.96' RT.
S 88°-48'-35" E
14.05'
8" EXIST. WATER LINE
LOT 23
LOT 18
60'
FRANK E. & MARY G. WECHTER
106 WL
106 X
CONT. 0.62 Ac.
P.R.O. 0.01 Ac.
TOTAL 0.63 Ac.
CONT. 0.06 Ac.
STARR HEIMBURG DITCH
PARCEL NO. 107, 108, 109 NOT ASSIGNED
GRAPHIC SCALE
0 50 100 150 200 250
SCALE IN FEET
THEODORE & MARY CHRISTINE HAHN
R.W.H. | ADDED LOCATION OF EXISTING GAS LINE NORTH SIDE OF BOGART RD. | 7-28-83
No. | DESCRIPTION | DATE
REVISION | Completed 8-7-70
STATE FUNDS
RIGHT OF WAY STA. 1118+00 TO STA. 1133+00

SEC. 2, HURON TWP. T. 6 N., R. 22 W.
LOTS 15, 16, 17, & 18

FED. RD. DIVISION	STATE	PROJECT	FISCAL YEAR
2	OHIO		

278
284

ERIE COUNTY
SOLD AS ERI. 2-16.13
ERI. 2-16.07 R/W

R/W
14
20

THEODORE & MARY CHRISTINE HAHN

110 WL	110 X	110 Y
CONT. 11.25 AC. PRO 0.18 AC. TOTAL 11.43 AC.	CONT. 0.07 AC.	CONT. 0.11 AC.

HENRY C. HAHN Jr. & CORA O. HAHN

111 WL	111 X	111 Y
CONT. 2.73 AC.	CONT. 0.08 AC.	CONT. 0.08 AC.

JOHN H. & JEAN B. BOOS
112
PAR 112 NOT NEEDED

HAROLD F. & RITA M. BOETTICHER
113 WL-1 Cont 0.31 Ac
113 WL CONT. 4.17 AC.

114
HELEN HOAK

114 WL	114 WD	114 T
CONT. 0.06 AC. PRO. 0.01 Ac. TOTAL 0.07 Ac.	CONT. 0.28 Ac. PRO. 0.20 Ac. TOTAL 0.48 Ac.	CONT. 0.02 Ac.

111 WL
LANDLOCKED
(2.74 ACRES)

CITY OF HURON CORP. LINE
S 50°-13'-31" E

MATCH LINE STA. 1133+00

MATCH LINE STA. 1148+00

FIELD DR.

FIELD TILE (TO BE ABANDONED)

CULVERT No. 7

CONSTRUCTION LIMIT

Type 1 Crossings
18'×6'×1.5' Type C RCP

Type 1 Crossing
25'×6'×1.5' Type C RCP

Type 1 Crossing
20'-6'-1.5' Type C RCP

℄ SURVEY & CONSTRUCTION

℄ PROP. S.R. 2

℄ WASHBURN DITCH

1784.07' S1°-23'-12"E

1796.02 TO P.C. STATION 1163+30.18

REFMON

LOT 17
LOT 18
LOT 15

GRAPHIC SCALE
0 50 100 150 200 250
SCALE IN FEET

No	DESCRIPTION	DATE
J.R.Y.	Removed Par. 112 WL (Not Needed)	9-28-71
	Added Par. 113 WL-1	3-18-71
REVISION	Completed.	8-7-70

STATE FUNDS
RIGHT OF WAY STA. 1133+00 TO STA. 1148+00

SEC. 2, HURON TWP. T.6 N., R.22 W.
LOTS 15 & 16
FED. RD. DIVISION 2 | STATE OHIO | PROJECT | FISCAL YEAR
279
284
ERIE COUNTY
SOLD AS ERI. 2-16.13
ERI. 2-16.07 R/W
R/W
15
20
HAROLD F. & RITA M. BOETTICHER
113 WL-1 cont. 0.31 Ac.
113 WL CONT. 4.17 AC.
VINCENT J. SEDLON
115 WL CONT. 1.99 AC.
ADDISON E. & OZELMA C. (aka OZELMA FREY) WILES
116 WL CONT. 5.93 AC P.R.O. 0.22 AC TOTAL 6.15 AC
116 WD CONT. 0.18 AC P.R.O. 0.17 AC TOTAL 0.35 AC
117 WD ADDISON E. WILES
Cont. 0.18 Ac. P.R.O. 0.19 Ac. Total 0.37 Ac.
SEE SHEET NO. 16 FOR 116 WD
HURON AVERY RD
S 53°-49'-42"E
S 54°-31'-19"E
S 54°-32'-03"E
N 39°-50'-48"E
S 65°-40'-48"E
N 46°-33'-05"E
S 6°-07'-30"E 86.59'
25+00 25' RT.
25+00 25' LT.
24+00 40' RT.
24+00 55' LT.
1150+34.76 130' LT.
1153+42.69 130' LT.
1156+58.75 135.67' LT.
1159+00 140' LT.
130' LT.
484.57' S 1°-23'-12"E 792.30'
307.93' S 1°-23'-12"E
S 2°-24'-53"E
316.11'
S 2°-24'-53"E
241.29'
S 1°-23'-12"E 390.00'
CONSTRUCTION LIMIT
22+50.86 = 1162+90 68.82' LT. = 140' LT.
162.49' 344.47'
169.55' 349.48'
113 WL
115 WL
116 WL
MATCH LINE STA. 1148+00
MATCH LINE STA. 1163+00
+34.80
+45.21
1084.97' TO P.C. STATION 1163+30.18
+57.06
773.12' TO P.C. STATION 1163+30.18
1149 1150 1151 1152 1153 ℄ PROP. 1154 S.R. 2 1155 1156 1157 1158 1159 1160 1161 1162
P.O.T.
REF. MON.
℄ SURVEY & CONSTRUCTION
S-1°-23'-12"-E
318.73'
156.24'
180.03'
N 1°-23'-12"W 308.63'
1148+38.68 125' RT.
621.43'
N 1°-23'-12"W 312.80'
1151+51.48 125' RT.
125' RT.
CONSTRUCTION LIMIT
1184.71' 445.24' N 1°-40'-10"W
LOT 16
LOT 15
313.06' N 1°-40'-10"W
739.47'
N 1°-40'-10"W
N 0°-06'-45"E 349.77'
1161+88.55 140.40' RT.
145.59' 1151+36.04
144.05' 1154+49.09
113 WL-1
NEIL K. HOAK, GUARDIAN OF HELEN HOAK
114 WL CONT. 0.06 Ac. P.R.O. 0.01 Ac. TOTAL 0.07 Ac.
114 WD CONT. 0.28 Ac. P.R.O. 0.20 Ac. TOTAL 0.48 Ac.
114 T CONT. 0.02 Ac.
114 WL
2 St. Fr. Barn
1 St. Fr. Shed
1 St. Fr. Shed
DIRT LANE
WASHBURN DITCH
GRAPHIC SCALE
0 50 100 150 200 250
SCALE IN FEET
R.W.H. ADD GAS LINES ALONG HURON AVERY RD. 7-28-83
Rev. Par. 114 Name Correction 4-5-71
Added Par. 113 WL-1 3-18-71
Rev. Par. 115 WL & 116 WL 3-18-71
No. DESCRIPTION DATE
REVISION Completed 8-7-70
STATE FUNDS
RIGHT OF WAY STA. 1148+00 TO STA. 1163+00
15

SEC. 2, HURON TWP. T.6 N. R.22 W.
LOTS 9, 10, 15, & 16
FED. RD. DIVISION 2 | STATE OHIO | PROJECT | FISCAL YEAR
280/284
ERIE COUNTY
SOLD AS ERI. 2-16.13
ERI. 2-16.07 R/W
R/W
16/20
ADDISON E. & OZELMA C. WILES (aka OZELMA FREY)
116 WL
CONT. 5.93 AC.
P.R.O. 0.22 AC.
TOTAL 6.15 AC.
116 WD
CONT. 0.18 AC.
P.R.O. 0.17 AC.
TOTAL 0.35 AC.
ADDISON E. WILES
117 WL
CONT. 0.03 Ac.
P.R.O. 0.04 Ac.
Total 0.07 Ac.
117 WD
CONT. 0.19 Ac.
P.R.O. 0.18 Ac.
Total 0.37 Ac.
118 WL
CONT. 0.29 Ac.
P.R.O. 0.07 Ac.
TOTAL 0.36 Ac.
CHESTER & MARIE E. SENDER
OTIS E. & EVELYN M. TURNER
LANDLOCKED (0.88 AC.)
PROP. S.R. 2 CURVE #2
& SURVEY CURVE DATA
P.I. STA. 1164+30.21
Δ = 3°-00'-00" LT.
D = 1°-29'-59.83"
R = 3819.84'
T = 100.03'
E = 1.31'
L = 200.01'
C = 199.98'
S 02°53'-12" E
P.C. STA. 1163+30.18
P.C.C. STA. 1165+30.19 BK
P.I. STA. 1189+90.55
Δ = 81°-18'-50" LT.
D = 2°-00'-00"
R = 2864.79'
T = 2460.37'
E = 911.51'
L = 4065.69'
C = 3732.98'
P.C.C. STA. 1165+30.18 AH
P.C.C. STA. 1205+95.87
STATION 1165+30.18 AH TO STATION 1167+56.00
Δ = 04°-30'-59"
L = 225.82'
C = 225.75'
CH. BR. = S 06°-38'-42" E
STA. 1167+56.00 TO STA. 1178+40.16
Δ = 21°-41'-00"
L = 1084.16
C = 1077.71
CH. BR. = S 19°-44'-41" E
STA. 1167+56 TO STA. 1191+13.70
Δ = 47°09'-14"
L = 2357.70
C = 2291.72
CH. BR. = S 32°29'-48" E
HELEN M. ALTGELT
120 WL
CONT. 7.46 AC.
120 X
CONT. 1.86 AC.
120 WD
CONT. 0.08 AC
P.R.O. 0.07 AC
TOTAL 0.15 AC
120 T
CONT. 1.46 AC.
120 T-1
CONT. 0.51 AC.
LANDLOCKED (8.08 AC)
GORDON E. & MILDRED L. THOMAS
121 WL
CONT. 0.52 AC.
121 WD
CONT. 0.01 AC
P.R.O. 0.04 AC
TOTAL 0.05 AC
121 X
CONT. 2.16 AC
121 T
CONT. 1.41 AC.
121 T-1
CONT. 0.05 AC.
MUD BROOK
MATCH LINE SHT. NO. 17
MATCH LINE STA. 1163+00
MATCH LINE STA. 1178+00
HURON AVERY RD.
PROP. S.R. 2
& SURVEY & CONSTRUCTION
CULVERT NO. 8
CONSTRUCTION LIMIT
TANGENT LINE
6" TILE (TO BE ABAND.)
APPROX. LOC. LOT LINE
LOT 9 / LOT 10
LOT 16 / LOT 15
Type 1 Crossing 25'×6'×1.5' Type C, R.C.P.
Type 1 Crossing 16'×6'×1.5' Type C, R.C.P.
NEIL K. HOAK, GUARDIAN OF HELEN HOAK
114 WL
CONT. 0.06 Ac.
P.R.O. 0.01 Ac.
TOTAL 0.07 Ac.
114 WD
CONT. 0.28 Ac.
P.R.O. 0.20 Ac.
TOTAL 0.48 Ac.
114 T
CONT. 0.02 Ac.
GRAPHIC SCALE
0 50 100 150 200 250
SCALE IN FEET
R.W.H. ADDED GAS LINE LOC. ALONG HURON AVERY RD. 7-28-83
R.W.H. EXTENDED MUD BROOK BRIDGE LIMITS AND DECELERATION LANE. REVISED CONSTRUCTION LIMITS AND FENCE LOCATION. 5-83
Added 119 EL 8-15-72
Rev. Par. 114 Name Correction 4-5-71
Rev. Par 116 WL 3-18-71
Added Gas Lines 1-18-71
Rev. Par. 121 WL 9-1-70
NO. DESCRIPTION DATE
REVISION Completed 8-7-70
STATE FUNDS
RIGHT OF WAY STA. 1163+00 TO STA. 1178+00

SEC. 2, HURON TWP. T. 6 N., R. 22 W.
LOTS 9 & 10

FED. RD. DIVISION	STATE	PROJECT	FISCAL YEAR
2	OHIO		

283 / 284

ERIE COUNTY
SOLD AS ERI-2-16.13
ERI-2-16.07 R/W

R/W 17/20

HELEN M. ALTGELT

120 WL	120 WD	120 X	120 T	120 T-1
CONT. 7.46 AC.	CONT. 0.08 AC. PRO. 0.07 AC. TOTAL 0.15 AC.	CONT. 1.86 AC.	CONT. 1.46 AC.	CONT. 0.51 AC.

APPROX. LOC.
LOT 10
LOT 9
S 1°-40'-10" E
1181+00 750' RT.
N 54°-13'-01" E 125.00'
1181+00 625' RT.
611.18'
N 17°-07'-15" E
120 X
1177+50 160.05' RT.
188.39' S 33°-37'-51" E
16 & 18 RT.
1178
+40.16
1179+00 150.80' RT.
83.1'
206.27'
N 14°-12'-52" E
1179 ℄ PROP. S.R. 2
1180
1181
S 16°-20'-01" W
120 T-1
1180+63.85 252.35' RT.
N 14°-21'-52" E 137.45'
BROOK
MUD
℄
1179+78.96 149.27' RT.
127.40 S 33°-37'-51" E
MATCH LINE SHEET # 16 & 18 RT.
LA
N 36°-46'-59" W 88.87'
1181+48.50 481.26' RT.
434.99'
N 47°-13'-16" E 263.64'
℄
N 47°-13'-16" E 91.00'
N 23°-45'-27" E 167.47'
37.30'
N 36°-46'-59" W
1181+70.44 749.54' RT.
1182+00 750' RT.
S 52°-13'-01" W 190.00'
122 X
N 16°-20'-01" E 102.80'
122 T
S 52°-13'-01" W
1181+40.11 396.78' RT.
220.00'
S 24°-30'-53" W 226.43'
1181+00 151.36' RT.
1182+00 510' RT.
1182+00 350' RT.
1174
1174+00 170.69' LT.
LA

GULF INC

122 WL	122 WD	122 X	122 T	122 T1	122 T2
CONT. 15.10 AC. PRO. 1.27 AC. TOTAL 16.37 AC.	C.W.L. 0.38 AC. PRO. 0.28 AC. TOTAL 0.66 AC.	CONT. 0.24 AC	CONT. 0.75 AC	CONT. 1.90 AC	CONT. 0.87 AC.

1175
N 53°-41'-23" E 309.38'
1173+07.19 468.93' LT.
N 25°-29'-11" W 167.21'
MUD
146.74'
BROOK
202.24'
N 55°-41'-10" E
℄ PROP. S.R. 2
1176
N 30°-24'-40" E
1174+37.22 918.42' LT.
1175+32.34 200.85' LT.
N 5°-04'-23" E 49.15'
1175+77.92 176.37' LT.
N 28°-29'-11" W 90.94'
MATCH LINE SHEET # 16 & 18 LT.
1173+86.81 917.03' LT.
202.24'
N 72°-44'-52" E
120 T
HELEN M. ALTGELT
8.08 Ac. Landlocked
N 67°-48'-16" E 465.54'
1174+06.90 718.65' LT.
N 64°-13'-01" E 39.24'
1172+79.85 934.01' LT.
N 34°-13'-01" E 38.17'
S 46°-16'-59" E 55.18'
1173+53.80 958.34' LT.
60
121 AT
1173+86.11 926.93' LT.
S 46°-16'-59" E 64.82'
N 70°-49'-05" W 64.33'
1174+43.04 985.26' LT.
S 43°-43'-01" W 10.94'
1174+49.69 975.24'
N 43°-43'-01" E 620.13'
1176+77.35 174.92' LT.
N 25°-29'-11" W 128.36'
1174+03.86 751.82' LT.
208.80'
N 64°-13'-01" E 171.35'
121 X
S 43°-43'-01" W 856.86'
1178+13.68 167.74' LT.
LA
1179+00 160' LT.
1177+99.56 39.68' LT.
N 88°-45'-54" W
1178+21.70 18.25'
N 14°-12'-52" E 25.92'
+40.16
N 14°-12'-52" E 30.64'
302.35'
253.20'
RN 5°-04'-23" E
℄ PROP. S.R. 2
1178
1179
1180

121 AT
VILLAGE OF HURON
Cont. 0.04 Ac.

121 BWL
JUNE M. WARNER
Cont. 0.60 Ac.

GORDON E. & MILDRED L. THOMAS

121 WL	121 WD	121 X	121 T.	121 T-1
CONT. 0.52 AC.	CONT. 0.01 AC P.R.O. 0.04 AC TOTAL 0.05 AC	CONT. 2.16 AC.	CONT. 1.41 AC.	CONT. 0.05 AC.

GRAPHIC SCALE
0 50 100 150 200 250
SCALE IN FEET

N.º	DESCRIPTION	DATE
RWH	DELETED MUD BROOK RELOCATION	5-83
SP	Rev. 121 WL, Added Par 121 BWL	9-1-70
REVISION	Completed	8-7-70

STATE FUNDS
RIGHT OF WAY MUD BROOK CREEK

FED. RD. DIVISION	STATE	PROJECT	FISCAL YEAR
2	OHIO		

282
284

ERIE COUNTY
SOLD AS ERI. 2-16.13
ERI. 2-16.07 R/W

R/W
18
20

SEC. 2 HURON TWP. T.6 N., R. 22 W.
Lots 8 & 9

GORDON E. & MILDRED L. THOMAS

121 WL Cont. 0.52 Ac.
121 WD Cont. 0.01 Ac. PRO. 0.04 Ac. Total 0.05 Ac.
121 X Cont. 2.16 Ac.
121 T Cont. 1.41 Ac.
121 T1 Cont. 0.05 Ac.

JUNE M. WARNER
121 BWL Cont. 0.60 Ac. Cont. 0.17 Ac. PRO. 0.17 Ac. Total 0.34 Ac.
121 BWD Cont. 0.46 Ac.
121 BT

½ LOT LINE
N 88°-45'-54" W

GOLF INC.
LAND LOCKED (4.39 AC.)

MATCH SH. 17

MATCH LINE STA. 1178+00

Type 1 Crossing 20'-6"-15" Type C, RCP

121 X
121 WL
121 BWL
120 WL
120 X
120 T
120 T-1
122 T
122 WL

1178+13.68 = 51+57.20 60 RT
167.74' LT.
S 25°-29'-11" E 303.45'
1179+00 160' LT
160.45'
1179+14.78
1180+64.71 160.96' LT.
S 33°-46'-59" E 141.51'
13.95'
1181+00 160' LT
S 33°-46'-59" E 33.33'
N 88°-45'-54" W 196.81'
24"
S 42°-50'-00" E 282.78'
1184+00 180' LT
S 71°-39'-22" E 483.19'
S 73°-07'-44" E
P.I.
℄ RAMP #2
℄ CONSTRUCTION LIMIT
P.C.C.
1179+40.54 66.50 RT.
1179+76.60 79.19'
1178+70 82.25'
S 14°-21'-50" W 262.83'
N 33°-37'-51" W 294.56'
MATCH LINE SHEET #17
N 14°-21'-52" E 113.19'
1178+28.66 149.27 RT.
1181+00 151.36 RT.
MUD BROOK
1182
1183
1184
1185
1186
1187
1188
1189
1190
1191
1192
+40.16
+48.13
+75 REF. MON.
REF. MON.
PROP. S.R. 2 ℄ SURVEY & CONSTRUCTION
Dc = 2°
1184+00 180 RT.
N 33°-37'-51" W 445.89'
CURVE No. 2
P.C.C.
P.T.
℄ RAMP #3
S 22°-36'-12" E
N 22°-31'-12" W
CONSTRUCTION LIMIT
LA 606.07'
1189+00 430' RT.
N 52°-12'-11" W 237.08'
CURVE No. 3
℄ TEMPORARY ROAD
MATCH LINE STA. 24+00 SH. #19
S 55°-49'-05" E
RAMP #4
P.C.
℄ S.R. 13 N 19°-10'-55" E
℄ S.R. 13 STA. 23+75.00 = ℄ RAMP #4 STA. 1190+47.86
℄ S.R. 13 STA. 23+63.00 = ℄ RAMP #2 STA. 1190+00.58
UNDER GROUND TELE. DUCT TO BE REMOVED
EX. R/W 2 ac.
60'
℄ S.R. 13 STA. 20+00 = ℄ S.R. 2 STA. 1191+13.70
75°-14'-21"
125 WL
ACQUIRED UNDER ERI. 2-18.38
MUD BROOK TWP. RD.
℄ S.R. 13 STA. 16+25.00 = ℄ RAMP #5 STA. 1190+90.54
RAMP #5
S 89°-00'-44" E
S 55°-49'-05" E
℄ S.R. 13 STA. 16+25.00 = ℄ RAMP #3 STA. 1193+32.77
MATCH LINE STA. 16+00 SH. #19
LOT 9 S 84°-49'-29" E APPROX. LOC.
LOT 8

END OF ACQUISITION	BEGIN ACQUISITION CONSTRUCTION PROJECT
ERI-2-16.13	ERI-2-18.38
ERI-2-16.07 R/W	ERI-2-16.07 R/W
STATION 1191+13.70	STATION 1191+13.70

STA. 1167+56.00 TO STA. 1178+40.16
Δ = 21°-41'-00"
L = 1084.16
C = 1077.71
CH. BR = S 19°44'-41" E

RAMP #2 CURVE DATA
P.I. STA 1183+89.82
Δ = 34°-51'-08" LT.
D = 8° 00'-00"
R = 716.20'
T = 224.82'
L = 435.67'
P.C.C. STA. 1181+65
P.T. STA 1186+00.67

PROPOSED S.R. 2 & SURVEY CURVE DATA
P.I. STA. 1189+90.55
Δ = 81°18'50"
D = 2° 00'00"
R = 2864.79'
T = 2460.37'
L = 4065.69'
C = 3732.98'
E = 911.51'
P.C.C. STA. 1165+30.18 AH.
P.C.C. STA. 1205+95.87

STA. 1167+56 TO STA. 1191+13.70
Δ = 47°-09'-14"
L = 2357.70
C = 2291.72
CH. BR = S 32°-28'-48" E

RAMP #3 & SURVEY CURVE DATA

CURVE #1	CURVE #2	CURVE #3
P.I. STA. 1181+77.09	P.I. STA. 1185+03.25	P.I. STA. 1190+53.46
Δ = 2°-16'-14"	Δ = 7°-54'-33.94"	Δ = 53°-12'-53.32"
D = 0°-30'-00"	D = 4°-00'-00"	D = 8°-00'-00"
R = 11,459.16'	R = 1432.40'	R = 716.20'
T = 227.09'	T = 99.023'	T = 213.609'
L = 454.112'	L = 197.732'	L = 415.187'
P.R.C. STA. = 1179+50	P.C.C. STA. = 1184+04.11	P.C.C. STA. = 1088+39.85
P.C.C. STA. = 1184+00	P.T. STA. = 1186+01.84	P.T. STA. = 1192+55.04

HELEN M. ALTGELT

120 WL	120 WD	120 X	120 T	120 T-1
CONT. 7.46 AC.	CONT. 0.08 AC PRO. 0.07 AC TOTAL 0.15 AC	CONT. 1.86 AC	CONT. 1.46 AC	CONT. 0.51 AC

GOLF INC.

122 WL	122 WD	122 X	122 T	122 T-1	122 T-2
CONT. 15.10 AC. PRO. 1.27 AC. TOTAL 16.37 AC.	CONT. 0.38 AC PRO. 0.28 AC TOTAL 0.66 AC	CONT. 0.24 AC.	CONT. 0.75 AC.	CONT. 1.90 AC.	CONT. 0.87 AC.

GRAPHIC SCALE
0 50 100 150 200 250
SCALE IN FEET

N.º	DESCRIPTION	DATE
R.W.H.	ADDED U.G. TELE. DUCT W. SIDE OF S.R. 13	7-26-83
R.W.H.	EXTENDED MUD BROOK BRIDGE LIMITS, REVISED FENCE LOCATION AND CONSTRUCTION LIMITS.	5-83
[illegible]	Rev. Par. 121WL, Added Par. 121BWL	3-1-70
REVISION	Completed 8-7-70	

STATE FUNDS
RIGHT OF WAY STA. 1178+00 TO STA. 1193+00

18

SEC. 2 HURON TWP. T.6N., R.22 W.
Lots 8 & 9
FED. RD. DIVISION 2
STATE OHIO
PROJECT
FISCAL YEAR
283
284
ERIE COUNTY
SOLD AS ERIE 2-16.13
ERI - 2-16.07 R/W
R/W
19
20
N 19°-10'-55" E 503.58'
N 12°-50'-30" E 452.77'
1190+41.84 = 16+03.58
432.85' RT = 190' LT
11+00
190' LT.
6+50
140' LT
10+00 = 1192+45.57
80' LT = 991.52' RT
1192+07.27 = 11+00
900.39' RT = 110' LT
1191+05.89 = 15+80
436.79' RT = 120' LT
S 52°-12'-11" E
73.86'
N 52°-12'-11" W
237.08'
TEMPORARY ROAD
CONSTRUCTION LIMIT
N 17°-59'-18" E
480.10'
N 17°-04'-19" W
7+00
75' LT
300.04'
S 18°-13'-38" W
104.40'
N 2°-28'-58" E
N 70°-49'-05" W
80.00'
S 5°-02'-45" E
109.66'
5+00
30' LT.
186.01'
S 19°-10'-55" W
T-100.00'
R=300'
6+00
30' LT
N 70°-49'05" W
30.00'
122 T-1
122 WD
122 WL
125 WD
125 WL
EX. R/W
S.R. 13
MUD BROOK ROAD
N 19°-10'-55" E
400.00'
1000.00'
MON. ASSY.
1850.83'
(TO BE ABANDON) EX. 12" TILE
R/W
LA
60'
MATCH LINE STA. 16+00 SHEET # 18 RT.
RAMP #3
RAMP #5
APPROX. LOC.
LOT 9
LOT 8
S.R. 2
S.R. 2 - STA. 1191+13.70
S.R. 13 - STA. 20+00
END OF ACQUISITION
ERI - 2-16.13
ERI - 2-16.07 R/W
STATION 1191+13.70
BEGIN ACQUISITION
CONSTRUCTION PROJECT
ERI - 2-18.38
ERI - 2-16.07 R/W
STATION 1191+13.70
GOLF INC.
122 WL CONT. 15.10 AC P.R.O. 1.27 AC TOTAL 16.37 AC
122 WD CONT. 0.38 AC P.R.O. 0.28 AC TOTAL 0.66 AC
122 X CONT. 0.24 AC.
122 T CONT. 0.75 AC.
122 T-1 CONT. 1.90 AC.
122 T-2 CONT. 0.87 AC.
JUNE M. WARNER
121 BWL Cont. 0.60 Ac
121 BWD Cont. 0.17 Ac. P.R.O. 0.17 Ac. Total 0.34 Ac.
121 BT Cont. 0.46 Ac.
GORDON E. & MILDRED L. THOMAS
121 WL CONT. 0.52 AC.
121 WD CONT. 0.01 AC. P.R.O. 0.04 AC. TOTAL 0.05 AC.
121 X CONT. 2.16 AC.
121 T CONT. 1.41 AC.
121 T-1 CONT. 0.05 AC.
4.39 Ac. Landlocked
1187+72.75 = 24+28.44
346.40 LT = 196.36' LT
N 24°-15'-42" E
370.88'
1186+33.33 = 27+97.87
699.44' LT = 163.52' LT.
N 24°-15'-42" E
152.73'
1/2 LOT LINE
S 88°-45'-54" E
29+50
150' LT
N 47°-15'-16" E
133.57'
N 86°-41'-54" E
30+92.65
1188+86.38 = 24+30
385.02' LT = 90' LT
N 21°-56'-04" E
1187+31.54 = 28+27.87
763.77' LT. = 70.87' LT.
398.33'
122 T-2
121 BT
R=300'
122.27'
29+50
65' LT
N 29°-06'-30" E
132.65'
121 BWD
121 T1
121 WD
30+67.86
30+80.66
8' ASPH.
31+50
30' LT
31+75
30' LT
S 88°-45'-54" E
74.50'
N 21°-56'-04" E
MATCH LINE STA. 24+00 SHEET # 18 LT.
RAMP #2
RAMP #4
UNDER GROUND TELE. DUCT
N 70°-49'-05" E
30.00'
S 19°-10'-55" W
25.00'
ABANDON TO STA. 30+80
PROP. 12"
1850.83'
850.83'
241.82'
124 WD
123 WD
1 C. 1ST FR.
GAR.
S 88°-45'-54" E
30' EASEMENT
GRAPHIC SCALE
0 50 100 150 200 250
SCALE IN FEET
R.W.H. ADDED U.G. TELE. DUCT W. SIDE OF S.R. 13 7-28-83
Rev. 121WD, 121T1, Added 121BWD, 121BT 3-1-70
NO. DESCRIPTION DATE
REVISION Completed 8-7-70
STATE FUNDS
RIGHT OF WAY
STATE ROUTE 13
SEC. 2 HURON TWP. T.6N., R.22 W.

SEC. 2, HURON TWP. T.6 N., R.22W.

LOTS 23 & 24

FED. RD. DIVISION	STATE	PROJECT	
2	OHIO		

283A / 284

ERIE COUNTY

SOLD AS ERI. 2 - 16.13
ERI. 2 - 16.07 R/W

R/W 20 / 20

N

℄ S.R. 2 STA. 1109+88.04

℄ S.R. 2 S 1°-23'-12" E

SKEW 33°-01'-40"

PIERS ℄ N 58°-21'-32" W

℄ W.B. LANE

℄ E.B. LANE

1110+19.65 59.64'LT. S 31°-38'-28" W 12.00'

1110+29.72 53.10'LT.

FOOTER 10'x27'-6"

S 58°-21'-32" E 29.50'

N 58°-21'-32" W 29.50'

N 31°-38'-28" E 12.00'

104

1110+03.57 34.90'LT.

℄ S.R.2 STA. 1110+13.64, 28.36'LT.
P.C.Co. STA. 2707+91.14, 28.53'RT.

1109+62.44 28.36'RT. S 31°-38'-28" W 12.00'

℄ S.R.2 STA. 1109+72.51, 34.90'RT.
P.C.Co. STA. 2708+66.60, 28.20'RT.

104 A

1109+46.36 53.10'RT.

1109+56.43 59.64'RT.

SCALE 1"=10'

P.O.C.

1110+67.88 165.00'LT.

R = 4853.07'
ARC = 38.53'
CH. = 38.53'
CH.BR=S 58°-20'-11" E

P.T.

1110+46.87 132.71'LT.

S 89°-46'-49" W 49.49'

1110+70.33 115.57'LT.

35.61'

1110+72.09 80.00'LT. N 58°-06'-32" W 2707

℄ ORIGINAL R/W

HURON

1110+12.28 80.00'LT. S 1°-23'-12" E

104 SL-1

R = 4976.07'
ARC = 136.09'
CH. = 136.09'
CH.BR=N 58°-55'-33" W

1111+59.37 80.00LT

147.09'

1111+49.70 65.22'LT.

P.O.C.

104 B

P.T.

R = 4976.07'
ARC = 17.66'
CH. = 17.66'
CH.BR=N 58°-12'-38" W

1111+94.90 180.00'LT.

S 1°-23'-12" E 27.91'

1112+22.81 180.00'LT.

P.O.C.

1111+16.65 59.64'LT. S 31°-38'-29" W 12.00'

1111+26.72 53.10'LT.

FOOTER 10'x27'-6"

S 58°-21'-32" E 29.50'

N 58°-21'-32" W 29.50'

N 31°-38'-29" E 12.00'

℄ S.R.2 STA. 1111+00.57, 34.90'LT.
P.C.Co. STA. 2707+37.97, 40.56'LT.

1111+10.64 28.36'LT.

℄ S.R. 2 STA. 1110+85.04

SKEW 33°-01'-40"

PIERS ℄ N 58°-21'-32" W

℄ S.R. 2 S 1°-23'-12" E

℄ S.R.2 STA. 1110+59.44, 28.36'RT.
P.C.Co. STA. 2708+13.43, 40.88'LT.

104 C

1110+69.51 34.90'RT.

FOOTER 10'x27'6"

S 58°-21'-32" E 29.50'

N 58°-21'-32" W 29.50'

N 31°-38'-29" E 12.00'

1110+43.36 53.10'RT.

1110+53.43 59.64'RT.

SCALE 1"=10'

NOTE:
SEE SHEET 20A FOR REVISIONS

℄ S.R. 2 S 1°-23'-12" E

℄ S.R.2 STA. 1109+59.77
℄ P.C.Co. STA. 2708+44.41, 58.00'RT.

℄ S.R.2 STA. 1110+19.58
℄ P.C.Co. STA. 2708+12.69, 9.67'RT.

℄ S.R.2 STA. 1110+29.15
℄ P.C.Co. STA. 2708+06.34'

℄ S.R.2 STA. 1111+06.90
P.C.Co. STA. 2707+63.68, 65.00'LT

1110

1111

2708

356.10'

150.74'

95.59'

191.38'

95.59'

78.01'

104

104 AERIAL

104 A

104 B

104 C

104 SL

104 T

S 58°-06'-32" E 95.59'

N 58°-06'-32" W 284.36'

95.60'

1109+07.26 80.00'RT.

N 1°-23'-12" W

197.36'

19.736'

2708

147.13'

1110+54.39 80.00'RT

PENN CENTRAL Co. R/W

FUTURE TRACK

TRACK #1

TRACK #2

SIDING TRACK

S 58°-21'-32" E 351.12'

PENN CENTRAL Co. R/W

N 58°-21'-32" W 334.65'

N 58°-06'-32" W 293.05'

SANDUSKY

1109+98.08 122.76'RT.

203.35' 107.65'

S 88°-03'-10" E 47.32'

1108+87.93 165.00'RT.

36.45'

23.36'

N 1°-23'-12" W

1108+51.48 165.00'RT

1108+11.89 165.00'RT.

1109+95.32 170.00'RT.

LOTS 24 / LOTS 23

APPROX. LOCATION ℄

SCALE 1"=20'

PENN CENTRAL COMPANY

PARCEL NUMBER	EASEMENT REQUIRED	TOTAL AREA	AREA OF OVERLAP HIGHWAY	AERIAL	SLOPE
104 AERIAL	AERIAL	23,537 SQ FT.	1,416 SQ FT.	——	10,310 SQ FT.
104	HIGHWAY	354 SQ FT.	——	354 SQ FT.	354 SQ FT.
104 A	HIGHWAY	354 SQ FT.	——	354 SQ FT.	354 SQ FT.
104 B	HIGHWAY	354 SQ FT.	——	354 SQ FT.	354 SQ FT.
104 C	HIGHWAY	354 SQ FT.	——	354 SQ FT.	354 SQ FT.
104 SL	SLOPE	10,838 SQ FT.	708 SQ FT.	5,668 SQ FT.	——
104 T	HIGHWAY	6,352 SQ FT.	——	3,902 SQ FT.	——
104 SL-1	SLOPE	9,420 SQ FT.	708 SQ FT.	4,642 SQ FT.	——

VALUATION SURVEY STATIONING PLAT VOL 206 PG 23

R/W PLAN PENN CENTRAL COMPANY Completed 8-7-70

CONSOLIDATED RAIL CORPORATION

PARCEL NUMBER	EASEMENT REQUIRED	TOTAL AREA		AREA OF OVERLAP					
				HIGHWAY		AERIAL		SLOPE	
		EXISTING	NEW	EXISTING	NEW	EXISTING	NEW	EXISTING	NEW
104D			325	13		325		17	308
104E			325	23		325		29	296
104F			325	45		325		56	269
104G			325	34		325		43	282
104 SL-2	SLOPE		5,148		604	3,169			
104 SL-3	SLOPE		4,031		551	2,542			

SEC. 2, HURON TWP. T. 6 N., R. 22 W.
LOTS 23 & 24

CALC. ____ DATE ____ CHKD. ____ DATE ____		OHIO / F.H.W.A. REGION 5

284 / 284

ERIE COUNTY
ERI. 2-16.13
ERI. 2-16.07 R/W

20-A

—LEGEND—

EXISTING EASEMENTS—ACQUIRED IN JUNE 17, 1975 FROM THE TRUSTEES OF THE PROPERTY OF PENN CENTRAL TRANSPORTATION COMPANY, DEBOT. RECORDED IN VOL. 445 PAGES 853–859 OF ERIE COUNTY RECORDS.

NEW AREAS.

VALUATION SURVEY STATIONING PLAT VOL. 206 PG. 23

R/W PLAN CONSOLIDATED RAIL CORPORATION

A·C·L form no. 1

MICROFILMED
AUG 30 1990

GENERAL INFORMATION

INTRODUCTION

THE PROJECT CONSISTS OF THE RELOCATION OF 2.3 MILES OF SR 2 (HURON BYPASS), BEGINNING ON EXISTING SR 2, 0.6 MILE EAST OF RYE BEACH ROAD, EXTENDING SOUTHWARD, AND TERMINATING 400 FEET EAST OF SR 18, APPROXIMATELY 0.5 MILE SOUTH OF HURON. INCLUDED IN THIS REPORT ARE SOIL PROFILES OF BOGART AND HURON-AVERY ROADS AND SR 13.

PROPOSED GRADES INDICATE THE FOLLOWING MAXIMUM CUTS AND FILLS:

	CUTS (MAX.)	FILL EMBANKMENTS (MAX.)
SR 2	21'	41'
BOGART ROAD	-	-
HURON-AVERY ROAD	-	2'
SR 13	-	18'

GEOLOGY AND OBSERVATIONS OF THE PROJECT

THE ALIGNMENT TRAVERSES A PORTION OF THE FLAT, GLACIATED LAKE PLAIN, PRESENTLY BEING INCISED BY MUD BROOK AND SEVERAL SMALL STREAMS, IN AN AREA WHERE MODERATELY DEEP LACUSTRINE DEPOSITS, DRIFT, AND ALLUVIAL AND SEDIMENTARY DEPOSITS (ON THE FLOODPLAIN OF MUD BROOK), OVERLIE SHALES, OF DEVONIAN AGE. A MARSH WAS NOTED ALONG BOTH SIDES OF MUD BROOK, BETWEEN STATIONS 1173+00 AND 1179+50.

EXPLORATION

BORINGS WERE MADE BY MEANS OF TRUCK-MOUNTED MECHANICAL SOIL AUGER AND PEAT SAMPLER (IN AREAS OF DIFFICULT ACCESS), BETWEEN JUNE 26 AND JULY 19, 1967. INCLUDED ARE THREE LOGS OF BORINGS FROM PRECEDING PROJECT, ERI-6-14.97.

INVESTIGATIONAL FINDINGS

MATERIALS OCCURRING IMMEDIATELY BELOW PROPOSED GRADE AT THE BEGINNING OF THE PROJECT CONSIST PREDOMINANTLY OF CLAYS (A-7-6). OVER THE REMAINDER OF THE PROJECT, MATERIALS OCCURING IMMEDIATELY BELOW PROPOSED GRADE CONSIST PREDOMINANTLY OF GENERALLY WET, FROST SUSCEPTIBLE SILTS (A-4b), WITH FEW SANDY SILTS AND SILT CLAYS.

EMBANKMENT FOUNDATION MATERIALS COMPRISE GENERALLY WET SILTS (A-4b), AND SILT CLAYS (A-6a) HAVING MOISTURE CONTENTS GENERALLY IN THE LOWER PORTIONS OF THE PLASTIC RANGE, WITH OCCASIONAL SANDY SILTS, SILTY CLAYS AND CLAYS.

WET, LOW-STRENGTH PEATS WERE ENCOUNTERED ON THE FLOODPLAIN OF MUD BROOK, BETWEEN STATIONS 1173+00 AND 1179+50.

WET MATERIALS WERE ENCOUNTERED THROUGHOUT MOST OF THE EMBANKMENT FOUNDATIONS.

LEGEND FOR PROJECT AVERAGE RESULTS OF TESTS — 216 SAMPLES TESTED

DESCRIPTION	H.R.B. CLASS	OHIO CLASS	% AGG.	% C. SAND	% F. SAND	% SILT	% CLAY	LIQUID LIMIT	PLASTICITY INDEX	WATER CONTENT	SAMPLES TESTED
GRAVEL AND STONE FRAGMENTS WITH SAND	A-1-b(0)	A-1-b	61	8	7	15	9	33	6	18	4
COARSE AND FINE SAND	-----	A-3a	0	1	67	17	15	NP	NP	18	4
SANDY SILT	A-4(5)	A-4a	9	5	25	33	28	25	6	16	14
SILT	A-4(8)	A-4b	0	0	0	63	31	27	4	25	120
SILT AND CLAY	A-6(8)	A-6a	1	1	5	45	48	32	11	23	56
SILTY CLAY	A-6(11)	A-6b	7	2	8	34	49	37	18	22	4
CLAY	A-7-6(16)	A-7-6	5	1	3	32	59	46	28	29	7
SEDIMENTARY PEAT			VISUAL CLASSIFICATION								4
WOODY PEAT			VISUAL CLASSIFICATION								7
VARIOUS OTHER MATERIALS			VISUAL CLASSIFICATION								-

SOD AND/OR TOPSOIL=X'=APPROXIMATE DEPTH.

AUGER BORING-PLAN VIEW.

AUGER BORING PLOTTED TO VERTICAL SCALE ONLY.

WATER CONTENT NEARLY EQUAL TO OR GREATER THAN LIQUID LIMIT.

INDICATES A NON-PLASTIC MATERIAL WITH A HIGH WATER CONTENT.

W FREE WATER.

NOTE: FIGURES BESIDE BORINGS INDICATE WATER CONTENT IN PERCENT. E.G. 15

SOIL PROFILE

1/32

ERIE COUNTY
ERI 2-(16.13-17.39)

OHIO STATE HIGHWAY TESTING LABORATORY
1620 W. BROAD ST. COLUMBUS 23, OHIO

1/9

NOTE: INFORMATION SHOWN BY THIS SUBGRADE PROFILE WAS OBTAINED SOLELY FOR USE IN ESTABLISHING DESIGN CONTROLS FOR THE PROJECT. THE STATE OF OHIO DOES NOT GUARANTEE THE ACCURACY OF THIS DATA AND IT IS NOT TO BE CONSTRUED AS A PART OF THE PLANS GOVERNING CONSTRUCTION OF THE PROJECT.

FED. NO. F-73(4)

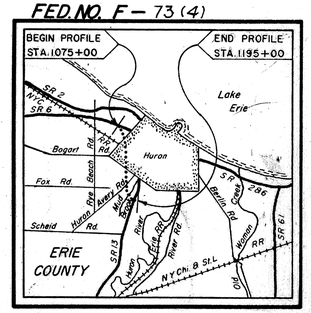

LOCATION MAP

Recon. - J.F.S. - 5/8/67

Drilling - Auger - T.R.S, W.S.B - 6/27/67 to 7/19/67

Drafting - R.G.M., G.P.W., E.J.S. - 9/7/67

MICROFILMED
AUG 11 1990

SOIL PROFILE
ERIE COUNTY
ERI 2-(16.13-17.39)

OHIO STATE HIGHWAY TESTING LABORATORY
1620 W. BROAD ST. COLUMBUS 23, OHIO

SUMMARY OF SOIL TEST DATA

NOTE: NP SHOWN IN LIQUID LIMIT AND PLASTICITY INDEX COLUMNS INDICATES THAT THE MATERIAL IS NON-PLASTIC.
*DENOTES SAMPLE TAKEN AT OR NEAR GRADE.

STATION & OFFSET		DEPTH FROM	TO	% AGG.	% C.S.	% F.S.	% SILT	% CLAY	L.L.	P.I.	% W.C.	SHTL CLASS.
						SR 2						
1075+00	CL	0.5-	5.0	0	1	5	36	58	45	19	-	A-7-6*
		5.0-	9.0	6	4	9	29	52	34	11	-	A-6a
		9.0-	10.0	61	8	7	15	9	33	6	18	A-1-b
1078+00	CL	0.5-	5.0	0	1	5	36	58	45	19	28	A-7-6*
		5.0-	9.5	6	4	9	29	52	34	11	17	A-6a
1082+00	CL	0.5-	7.0	0	1	4	37	58	47	22	22	A-7-6*
1086+50	CL	0.0-	5.0	0	1	4	45	50	40	15	20	A-6a*
		5.0-	10.0	0	1	3	46	50	37	14	20	A-6a
		10.0-	15.0	0	1	5	28	66	37	13	31	A-6a
1089+50	CL	0.0-	5.0	0	0	3	42	55	46	17	21	A-7-6*
		5.0-	9.0	0	1	2	48	49	39	12	21	A-6a
		9.0-	15.0	0	0	1	40	59	36	11	20	A-6a
1095+00	CL	1.0-	5.0	0	1	64	21	14	NP	NP	23	A-3a*
		5.0-	8.0	0	1	9	37	53	39	12	22	A-6a
		8.0-	12.0	0	1	7	33	59	35	11	18	A-6a
1098+00	90'Rt	0.0-	6.0	0	0	1	48	51	34	11	21	A-6a
		6.0-	11.0	0	1	2	50	47	37	17	19	A-6b
		11.0-	16.0	0	6	14	41	39	28	6	16	A-4a
		16.0-	20.0	28	6	13	30	23	28	9	11	A-4a
1103+00	80'Lt	0.0-	6.0	0	1	8	54	37	26	9	24	A-4b
		6.0-	11.0	0	1	1	58	40	27	8	28	A-4b
		11.0-	16.0	0	0	1	57	42	29	4	28	A-4b
		16.0-	20.0	0	1	4	39	56	33	12	24	A-6a
1103+00	80'Rt	0.0-	3.0	0	1	67	14	18	NP	NP	14	A-3a
		3.0-	8.0	0	1	8	55	36	28	7	19	A-4b
		8.0-	14.0	0	1	4	41	54	33	13	24	A-6a
		14.0-	20.0	0	0	1	54	45	33	12	25	A-6a
1106+00	CL	0.0-	6.0	0	0	7	60	33	27	7	19	A-4b
		6.0-	11.0	0	1	3	55	41	30	9	28	A-4b
		11.0-	16.0	0	1	2	64	33	32	9	23	A-4b
		16.0-	21.0	0	1	2	36	61	37	13	25	A-6a
		21.0-	25.0	26	7	15	29	23	40	22	13	A-6b
1108+50	90'Rt	0.0-	6.0	0	1	28	29	42	34	15	30	A-6a
		6.0-	11.0	0	0	7	54	39	32	10	22	A-4b
		11.0-	16.0	0	0	5	57	38	NP	NP	20	A-4b
		16.0-	21.0	0	2	5	40	53	25	12	24	A-6a
		21.0-	27.0	14	5	16	33	32	25	6	17	A-4a
		27.0-	29.0	25	7	13	29	26	28	10	13	A-4a
1109+00	90'Lt	0.0-	5.0	0	1	65	18	16	NP	NP	16	A-3a
		5.0-	8.0	0	1	6	52	41	33	10	27	A-4b
		8.0-	14.0	0	0	3	57	40	28	7	27	A-4b
		14.0-	20.0	0	0	4	65	33	25	5	22	A-4b
		20.0-	25.0	0	1	4	40	55	44	24	29	A-7-6
		25.0-	29.5	0	1	4	43	52	30	11	29	A-6a
1113+00	95'Lt	0.0-	5.0	11	1	4	44	40	36	12	17	A-6a
		5.0-	10.0	0	1	3	55	41	30	11	23	A-6a
		10.0-	15.0	0	0	2	55	43	28	8	24	A-4b
		15.0-	20.0	0	0	3	53	44	30	6	24	A-4b
		20.0-	26.0	0	0	1	59	40	26	10	24	A-4b
		26.0-	29.0	22	7	13	31	27	22	7	12	A-4a
1113+00	95'Rt	0.0-	6.0	0	3	2	46	49	38	15	21	A-6a
		6.0-	11.0	0	2	2	59	37	28	9	27	A-4b
		11.0-	17.0	0	0	2	57	41	30	11	28	A-6a
		17.0-	22.0	0	1	2	53	44	33	11	23	A-6a
		22.0-	28.0	0	0	2	39	59	38	12	26	A-6a
		28.0-	30.0	20	4	7	26	43	35	12	17	A-6a
1117+00	100'Lt	0.0-	6.0	0	0	5	50	45	38	12	11	A-6a
		6.0-	10.0	0	0	2	54	44	33	11	24	A-6a
		10.0-	16.0	0	1	2	51	46	33	12	22	A-6a
		16.0-	21.0	0	1	2	39	57	35	16	25	A-6b
		21.0-	25.0	9	5	10	36	40	23	4	15	A-4a

STATION & OFFSET		DEPTH FROM	TO	% AGG.	% C.S.	% F.S.	% SILT	% CLAY	L.L.	P.I.	% W.C.	SHTL CLASS.
1117+00	100'Rt	0.0-	6.0	0	1	3	53	43	31	12	12	A-6a
		6.0-	11.0	0	1	2	58	39	33	2	21	A-4b
		11.0-	16.0	0	2	2	38	51	30	11	20	A-6a
		16.0-	21.0	0	0	2	40	58	39	13	25	A-6a
1119+00	CL	0.0-	6.0	0	1	12	38	49	37	16	24	A-6b
		6.0-	12.0	0	0	2	50	48	25	9	27	A-4b
		12.0-	18.0	0	1	3	37	59	29	11	14	A-6a
		18.0-	22.0	0	11	18	32	39	20	6	12	A-4a
1122+50	CL	0.0-	6.0	0	1	13	73	13	NP	NP	27	A-4b
		6.0-	11.0	0	0	4	50	46	25	9	30	A-4b
		11.0-	16.0	0	0	2	61	37	21	2	28	A-4b
		16.0-	21.0	0	0	1	50	49	27	8	30	A-4b
		21.0-	26.0	0	0	1	45	54	32	12	32	A-6a
		26.0-	30.0	0	0	0	30	70	35	16	25	A-6b
1126+00	75'Lt	0.0-	6.0	2	1	4	64	29	22	4	20	A-4b
		6.0-	11.0	0	0	1	81	18	NP	NP	24	A-4b
1126+00	75'Rt	0.0-	6.0	0	1	24	43	32	25	5	20	A-4a
		6.0-	10.0	0	0	6	42	52	32	15	23	A-6a
1131+00	CL	0.0-	6.0	0	1	24	31	44	28	11	20	A-6a
		6.0-	10.0	0	0	9	51	40	24	6	25	A-4b
1134+15	CL	0.0-	6.0	0	0	4	76	20	NP	NP	21	A-4b*
		6.0-	12.0	0	0	5	51	44	24	8	29	A-4b
1137+25	CL	0.0-	6.0	0	1	8	45	46	28	11	22	A-6a*
		6.0-	11.0	0	0	3	59	38	30	12	22	A-6a*
		11.0-	15.0	0	0	2	55	43	28	9	27	A-4b
1140+75	CL	0.0-	6.0	0	0	3	42	55	39	13	23	A-6a
		6.0-	11.0	0	0	1	30	69	40	15	21	A-6a
		11.0-	16.0	22	8	16	28	26	22	8	11	A-4a
		16.0-	20.0	10	8	16	31	35	26	11	11	A-6a
1145+00	CL	0.0-	4.0	0	0	4	74	22	NP	NP	20	A-4b
		4.0-	8.0	0	0	0	19	69	12	NP	NP	30	A-4b*
		8.0-	14.0	0	0	2	64	34	23	4	28	A-4b*
		14.0-	20.0	0	0	3	59	38	24	8	29	A-4b
1150+00	70'Rt	0.0-	6.0	0	1	11	70	18	NP	NP	23	A-4b
		6.0-	11.0	0	0	1	86	13	NP	NP	20	A-4b
		11.0-	16.0	0	0	1	58	41	25	5	31	A-4b*
		16.0-	21.0	0	0	2	59	39	31	9	29	A-4b
		21.0-	25.0	0	0	2	60	38	31	11	29	A-6a
1152+50	CL	0.0-	4.0	0	0	71	14	15	NP	NP	19	A-3a
		4.0-	9.0	0	0	20	73	7	NP	NP	22	A-4b
		9.0-	14.0	0	0	3	88	9	NP	NP	22	A-4b*
		14.0-	19.0	0	0	21	62	17	NP	NP	21	A-4b*
		19.0-	25.0	0	0	12	65	23	19	3	22	A-4b
		25.0-	30.0	0	0	5	64	31	23	6	25	A-4b
1154+00	130'Rt	0.0-	6.0	0	0	39	42	19	NP	NP	17	A-4a
		6.0-	11.0	0	0	13	79	8	NP	NP	30	A-4b
		11.0-	16.0	0	0	2	88	10	NP	NP	20	A-4b*
		16.0-	21.0	0	0	6	76	18	NP	NP	24	A-4b
		21.0-	26.0	0	0	3	59	38	NP	NP	25	A-4b
		26.0-	30.0	0	0	3	64	33	NP	NP	25	A-4b
1159+00	130'Rt	0.0-	5.0	0	0	49	37	14	NP	NP	15	A-4a
		5.0-	9.0	0	0	18	69	13	NP	NP	21	A-4b
		9.0-	15.0	0	0	1	88	11	NP	NP	19	A-4b
		15.0-	20.0	0	0	21	62	17	NP	NP	22	A-4b*
		20.0-	25.0	0	0	20	61	19	NP	NP	22	A-4b*
		25.0-	30.0	0	0	11	58	31	NP	NP	23	A-4b
1170+50	CL	0.0-	5.0	0	1	15	59	25	26	6	18	A-4b
		5.0-	10.0	32	1	4	27	36	50	21	26	A-7-6
		10.0-	15.0	0	1	1	22	76	44	16	34	A-7-6
1172+00	CL	0.0-	5.0	0	0	5	57	38	35	11	19	A-6a
		5.0-	9.0	0	1	2	62	35	28	8	25	A-4b*
		9.0-	13.0	0	1	2	64	33	26	6	25	A-4b*
		13.0-	16.0	0	0	1	62	37	28	7	24	A-4b

STATION & OFFSET		DEPTH FROM	TO	% AGG.	% C.S.	% F.S.	% SILT	% CLAY	L.L.	P.I.	% W.C.	SHTL CLASS.
1173+00	CL	0.0-	5.0	BROWN CLAYEY SILT					NP	NP	35	VISUAL
		5.0-	7.0	WOODY PEAT					218	167	-	VISUAL
		7.0-	10.0	0	2	7	42	49	-	-	22	A-6a
1174+00	75'Lt	0.0-	5.0	BROWN WOODY PEAT							341	VISUAL
		5.0-	10.0	GRAY SILT AND CLAY					31	14	26	A-6a
1174+00	CL	0.0-	4.0	BROWN SEDIMENTARY PEAT					82	-	64	VISUAL
		4.0-	10.0	0	0	5	47	48	PL = 20		19	A-6a
1174+00	75'Rt	0.0-	4.5	BROWN WOODY PEAT							190	VISUAL
		4.5-	9.0	0	1	7	57	35	29	11	22	A-6a
1176+00	75'Lt	0.0-	5.0	BROWN WOODY PEAT							218	VISUAL
		5.0-	10.0	0	0	8	59	33	25	7	14	A-4b
1176+00	CL	0.0-	5.0	BROWN WOODY PEAT							269	VISUAL
		5.0-	9.5	0	1	4	50	45	PL = 21		23	A-6a
1176+00	75'Rt	0.0-	5.0	BROWN WOODY PEAT							356	VISUAL
		5.0-	10.0	GRAY SILT AND CLAY					30	13	20	A-6a
1178+00	75'Lt	0.0-	3.0	BROWN SEDIMENTARY PEAT					175	-	78	VISUAL
		3.0-	10.0	0	1	4	57	38	33	13	39	A-6a
1178+00	CL	0.0-	3.6	GRAY SEDIMENTARY PEAT					83	-	70	VISUAL
		3.6-	10.0	0	3	12	48	37	30	13	34	A-6a
1178+00	75'Rt	0.0-	5.0	BROWN SEDIMENTARY PEAT					79	-	124	VISUAL
		5.0-	10.0	0	0	4	52	44	33	15	20	A-6a
1179+00	CL	0.0-	3.0	BROWN WOODY PEAT							93	VISUAL
		3.0-	7.0	0	1	6	47	46	PL = 47		28	A-6a
1182+00	CL	0.5-	4.0	0	0	12	61	27	NP	NP	17	A-4b
		4.0-	8.0	0	0	7	55	38	28	10	21	A-4b
		8.0-	12.0	0	1	2	60	37	29	8	23	A-4b
		12.0-	16.0	0	1	2	34	63	35	14	20	A-6a
		16.0-	20.0	0	0	1	26	73	43	20	31	A-7-6
1184+00	CL	0.8-	4.0	0	3	7	56	34	24	5	21	A-4b*
		4.0-	8.0	0	0	5	72	23	NP	NP	30	A-4b*
		8.0-	12.0	0	1	4	64	31	NP	NP	33	A-4b
		12.0-	17.0	0	0	3	61	36	NP	NP	30	A-4b
		17.0-	22.0	0	0	2	68	30	NP	NP	30	A-4b
		22.0-	25.0	0	0	2	67	31	22	3	32	A-4b
		25.0-	30.0	0	1	2	50	47	29	10	25	A-4b
1188+00	CL	1.0-	3.0	0	0	14	47	39	29	11	18	A-6a
		3.0-	8.0	0	0	9	54	37	NP	NP	33	A-4b
		8.0-	12.0	0	0	10	60	30	NP	NP	25	A-4b*
		12.0-	15.0	0	0	4	67	29	NP	NP	25	A-4b*
		15.0-	20.0	0	0	6	62	32	23	5	22	A-4b
		20.0-	25.0	0	0	5	63	32	24	5	23	A-4b
		25.0-	30.0	0	0	3	60	37	23	4	23	A-4b
1191+75	CL	0.5-	4.0	0	0	12	56	32	24	5	15	A-4b
		4.0-	10.0	0	1	10	56	33	25	6	18	A-4b*
		10.0-	15.0	0	0	3	66	31	NP	NP	25	A-4b*
		15.0-	20.0	0	0	3	64	33	NP	NP	23	A-4b
		20.0-	25.0	0	0	3	62	35	24	5	23	A-4b
		25.0-	30.0	0	0	2	56	42	25	7	20	A-4b
1194+50	CL	0.5-	4.0	0	1	5	44	50	48	29	28	A-7-6
		4.0-	9.0	0	0	1	28	71	47	23	32	A-7-6
		9.0-	14.0	0	0	1	50	49	27	8	27	A-4b
		14.0-	20.0	0	0	1	37	62	36	14	26	A-6a
						BOGART ROAD						
13+00	12'Rt	0.0-	4.0	0	0	2	77	21	NP	NP	31	A-4b*
		4.0-	10.0	0	0	4	51	45	26	5	27	A-4b
17+00	12'Rt	0.0-	6.0	0	1	7	74	18	NP	NP	27	A-4b*
		6.0-	10.0	0	0	5	53	42	24	7	23	A-4b

STATION & OFFSET		DEPTH FROM	TO	% AGG.	% C.S.	% F.S.	% SILT	% CLAY	L.L.	P.I.	% W.C.	SHTL CLASS.
22+00	12'Rt	0.0-	5.0	0	8	53	11	28	29	10	15	A-4a*
		5.0-	10.0	0	0	4	50	46	34	13	23	A-6a
25+00	12'Rt	0.0-	6.0	0	3	29	46	22	28	6	29	A-4a*
		6.0-	10.0	0	0	8	51	41	29	9	23	A-4b
						HURON-AVERY ROAD						
16+00	25'Rt	0.8-	5.0	0	1	17	57	25	25	6	24	A-4b*
		5.0-	8.0	0	0	5	71	24	NP	NP	25	A-4b
		8.0-	10.0	0	0	4	71	25	NP	NP	23	A-4b
19+25	20'Lt	0.5-	5.0	0	0	33	56	11	NP	NP	20	A-4b*
		5.0-	11.0	0	0	7	89	4	NP	NP	23	A-4b
		11.0-	15.0	0	0	1	87	12	NP	NP	23	A-4b
		15.0-	20.0	0	0	1	85	14	NP	NP	19	A-4b
		20.0-	25.0	0	0	1	75	18	NP	NP	24	A-4b
		25.0-	30.0	0	0	4	67	29	27	9	23	A-4b
23+75	15'Rt	0.5-	5.0	0	1	42	29	28	NP	NP	15	A-4a*
		5.0-	8.0	0	0	11	84	5	NP	NP	26	A-4b
		8.0-	10.0	0	0	15	80	5	NP	NP	16	A-4b
						SR 13						
10+00	12'Lt	0.5-	4.0	0	0	13	51	36	31	11	20	A-6a*
		4.0-	9.0	0	0	5	69	26	25	2	14	A-4b
		9.0-	10.0	0	0	2	75	23	NP	NP	31	A-4b
14+50	40'Lt	0.5-	6.0	0	0	12	51	37	31	10	28	A-4b
		6.0-	13.0	0	1	3	69	27	30	7	39	A-4b
		13.0-	15.0	0	0	2	52	46	27	6	32	A-4b
14+50	35'Rt	0.5-	5.0	0	1	5	50	35	26	7	22	A-4b
		5.0-	9.0	0	1	3	54	42	29	8	23	A-4b
		9.0-	13.0	0	1	2	57	40	31	11	24	A-6a
		13.0-	15.0	0	0	2	60	38	23	6	28	A-4b
18+00	40'Rt	0.5-	5.0	0	0	6	55	39	30	10	22	A-4b
		5.0-	9.0	0	1	3	67	29	NP	NP	28	A-4b
		9.0-	13.0	0	0	2	70	28	NP	NP	30	A-4b
		13.0-	15.0	0	0	1	63	36	NP	NP	25	A-4b
21+00	12'Lt	0.5-	5.0	0	0	10	69	21	NP	NP	23	A-4b
		5.0-	10.0	0	0	4	62	34	27	7	29	A-4b
		10.0-	14.0	0	1	4	62	33	25	6	37	A-4b
		14.0-	17.0	0	1	7	59	33	29	8	28	A-4b
		17.0-	21.0	0	1	2	63	34	27	8	30	A-4b
		21.0-	25.0	0	1	2	50	47	31	9	24	A-4b
		25.0-	30.0	0	1	2	50	47	31	9	26	A-4b
21+00	20'Rt	0.5-	4.0	0	0	4	57	39	30	12	20	A-6a
		4.0-	9.0	0	1	5	60	34	29	10	25	A-4b
		9.0-	14.0	0	1	5	59	35	31	13	23	A-6a
		14.0-	20.0	0	1	2	61	36	22	6	24	A-4b
24+50	15'Lt	1.0-	6.0	0	1	8	62	29	25	6	22	A-4b
		6.0-	10.0	0	0	5	64	31	NP	NP	28	A-4b
28+25	15'Lt	0.5-	5.0	0	0	7	51	42	36	14	24	A-6a*
		5.0-	10.0	0	1	3	62	34	26	6	23	A-4b

TE - 127
1500-12-66

MICROFILMED
AUG 31 1990

SOIL PROFILE

ERIE COUNTY

ERI 2-(16.13-17.39)

OHIO STATE HIGHWAY TESTING LABORATORY.
1620 W. BROAD ST. COLUMBUS, OHIO 43223

3/32

3/9

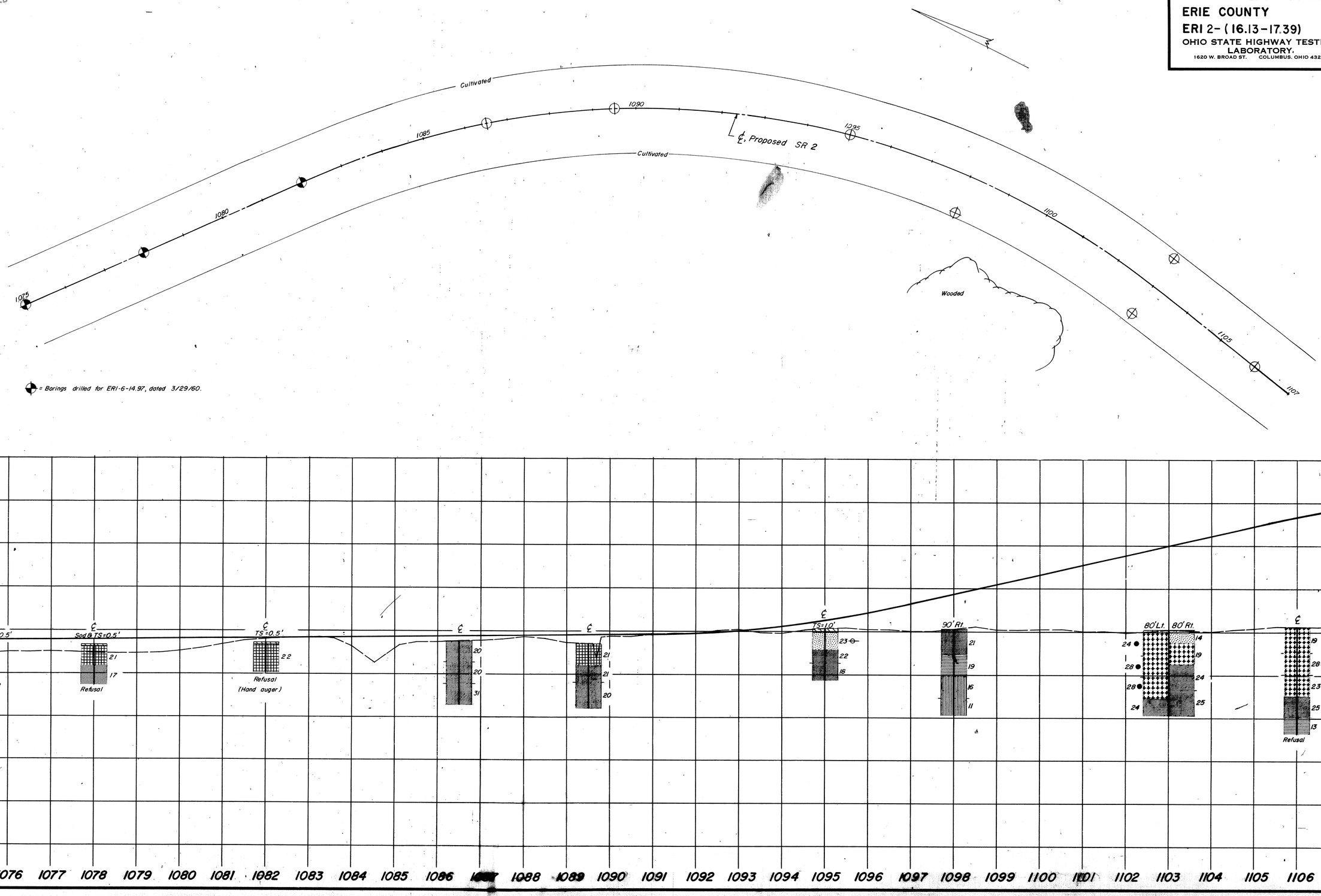

TE - 127
1500-12-66

MICROFILMED
AUG 2 1 1990

SOIL PROFILE

ERIE COUNTY
ERI 2 - (16.13 - 17.39)

OHIO STATE HIGHWAY TESTING LABORATORY
1620 W. BROAD ST. COLUMBUS, OHIO 43223

4/32

4/9

NOTE For complete plan-view and profile of Bogart Rd see sheet 7.

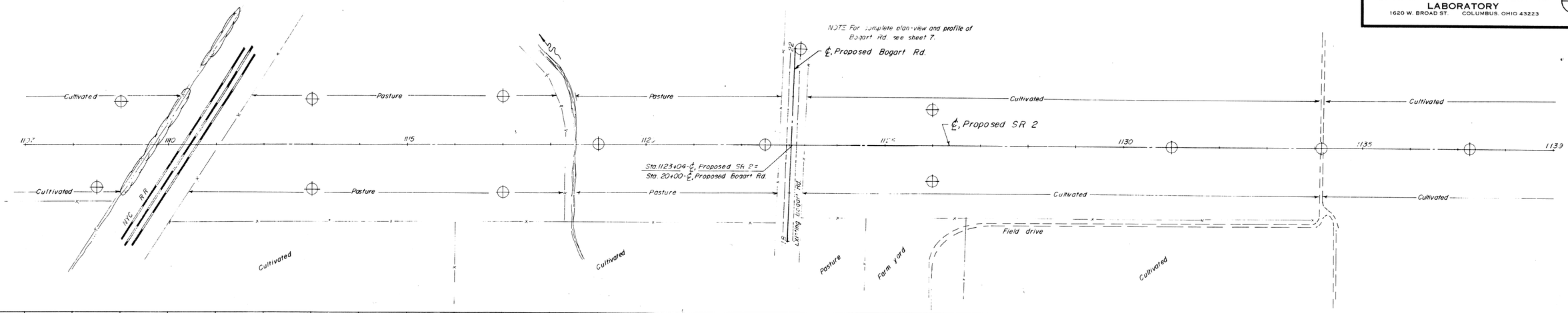

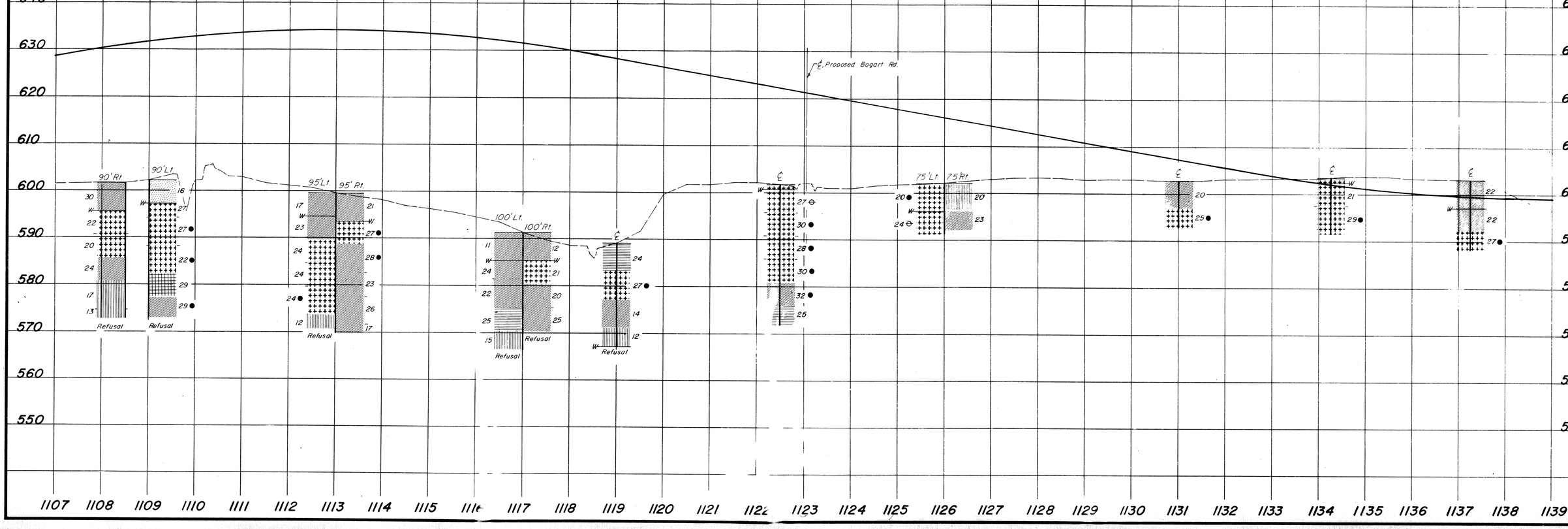

TE - 127
1500-12-66

MICROFILMED
AUG 31 1990

SOIL PROFILE

5/32

ERIE COUNTY
ERI 2-(16.13-17.39)

OHIO STATE HIGHWAY TESTING LABORATORY
1620 W. BROAD ST. COLUMBUS, OHIO 43223

5/9

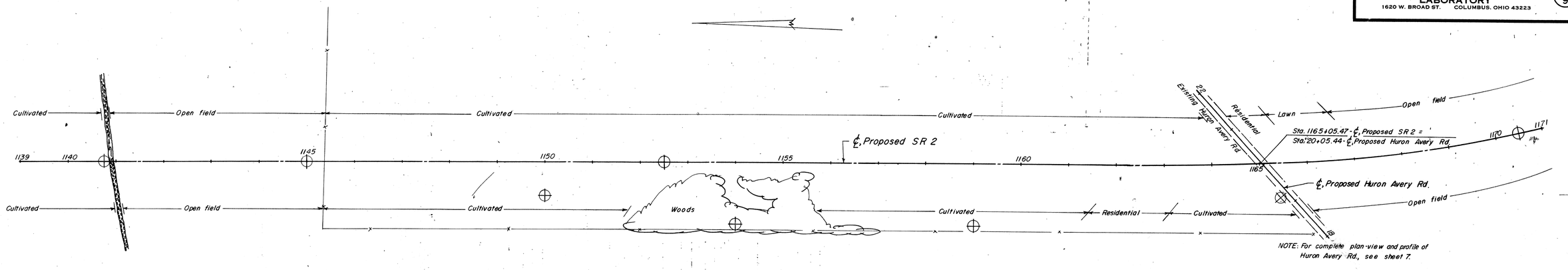

NOTE: For complete plan-view and profile of Huron Avery Rd., see sheet 7.

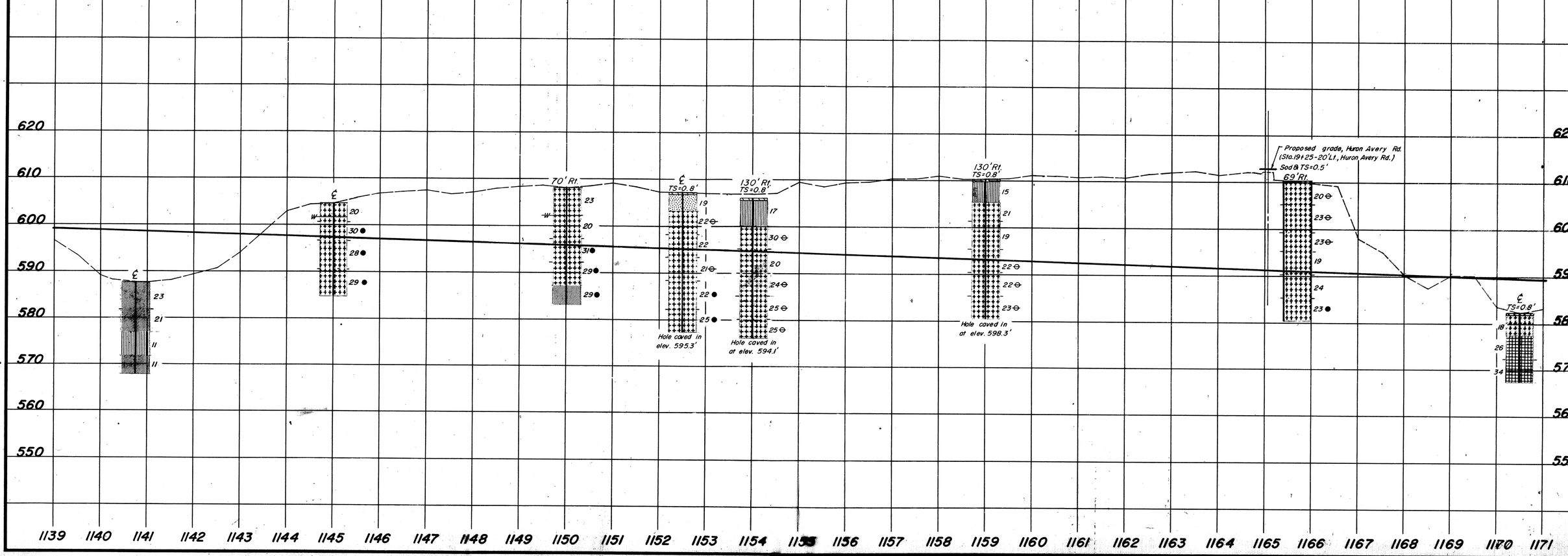

TE - 127
1500-12-69

DESCRIPTIONS
JUN 1 1970

SOIL PROFILE

ERIE COUNTY
ERI 2 - (16.13 - 17.39)

OHIO STATE HIGHWAY TESTING LABORATORY
1620 W. BROAD ST. COLUMBUS, OHIO 43223

6/32

6/9

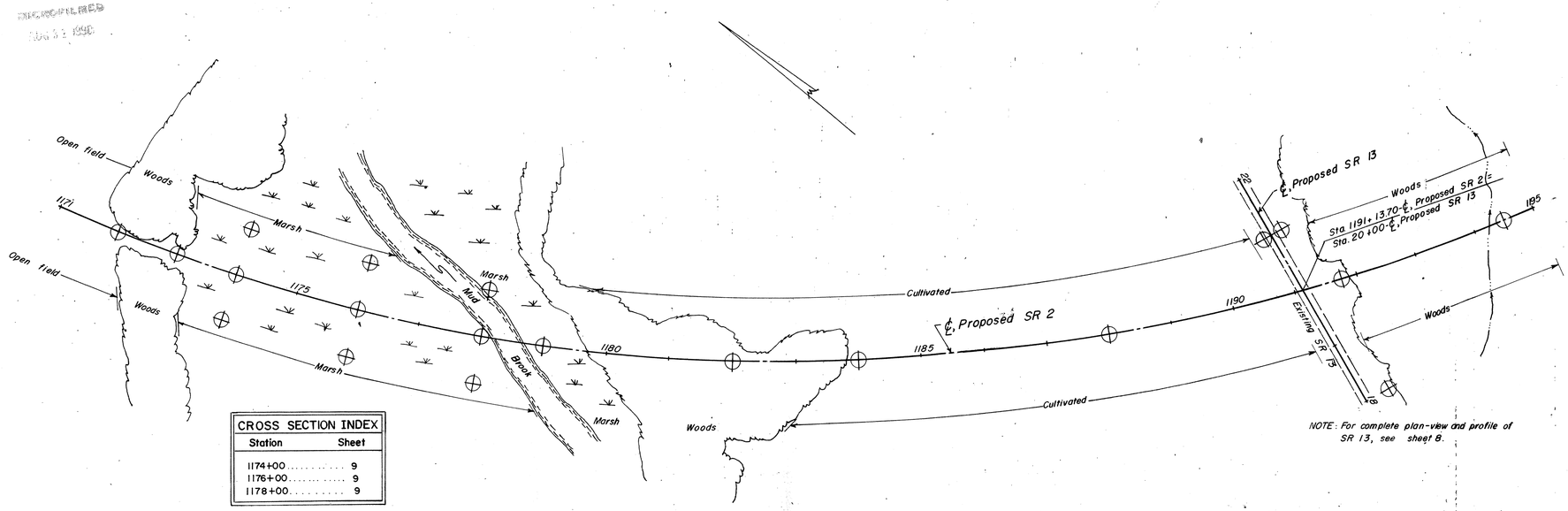

CROSS SECTION INDEX	
Station	Sheet
1174+00	9
1176+00	9
1178+00	9

NOTE: For complete plan-view and profile of SR 13, see sheet 8.

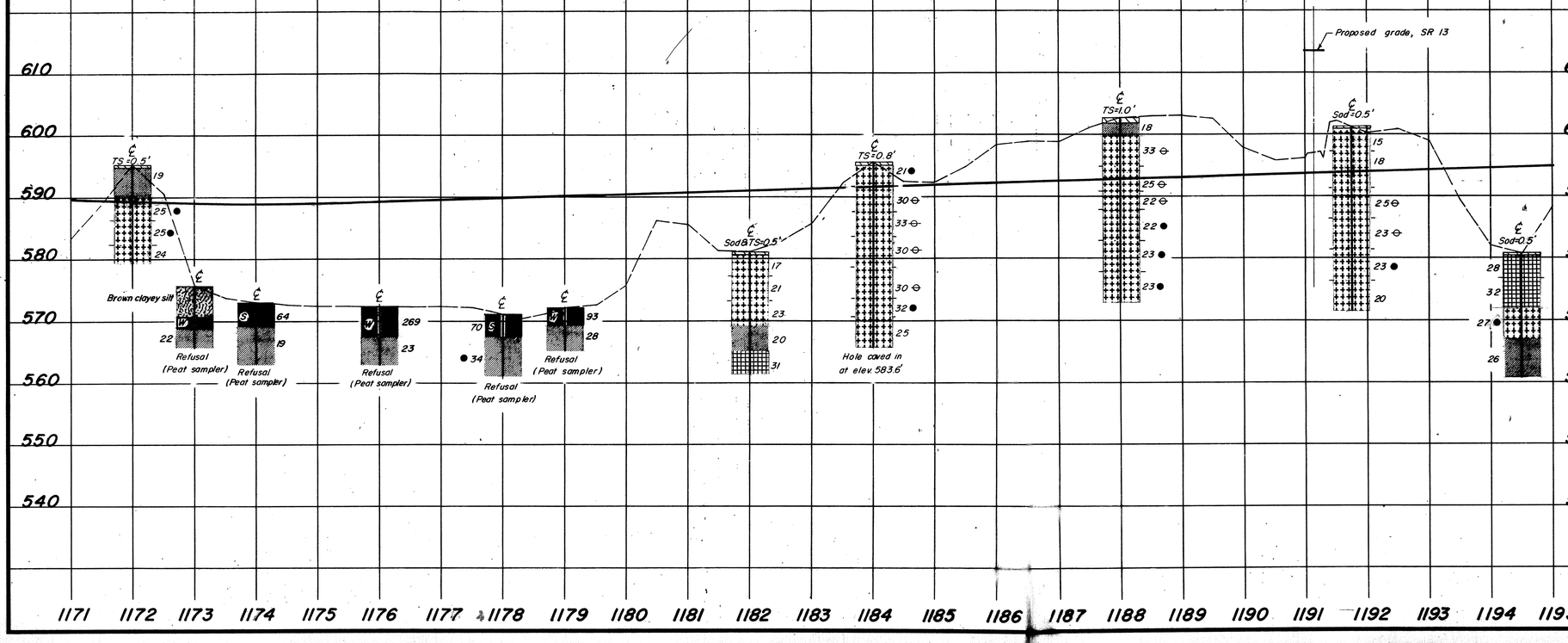

TE - 127
1800-12-68

MICROFILMED
AUG 21 1980

SOIL PROFILE

ERIE COUNTY

ERI 2-(16.13-17.39)

OHIO STATE HIGHWAY TESTING LABORATORY
1620 W. BROAD ST. COLUMBUS, OHIO 43223

7/32

7/9

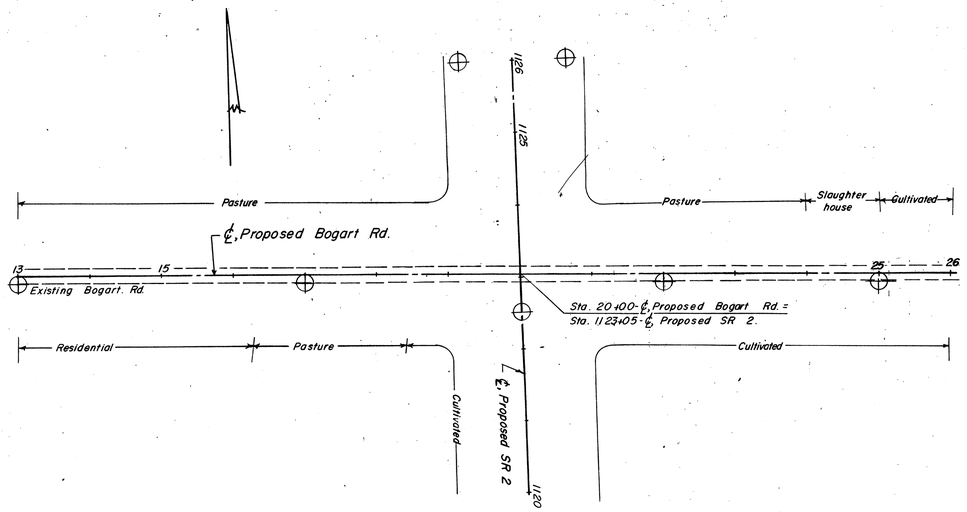

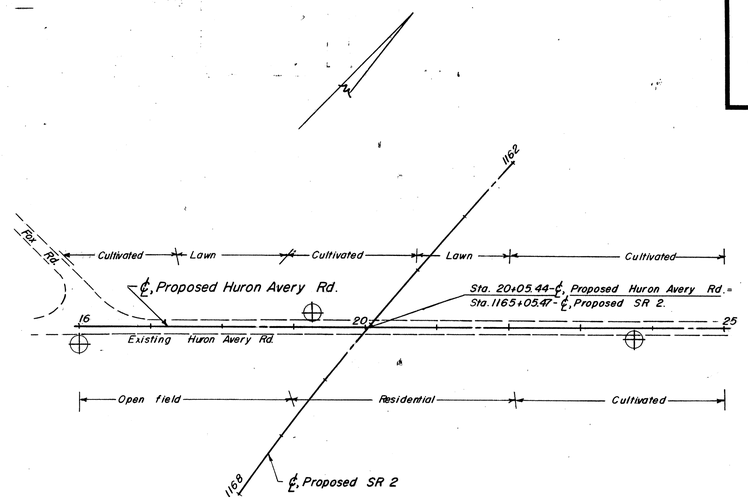

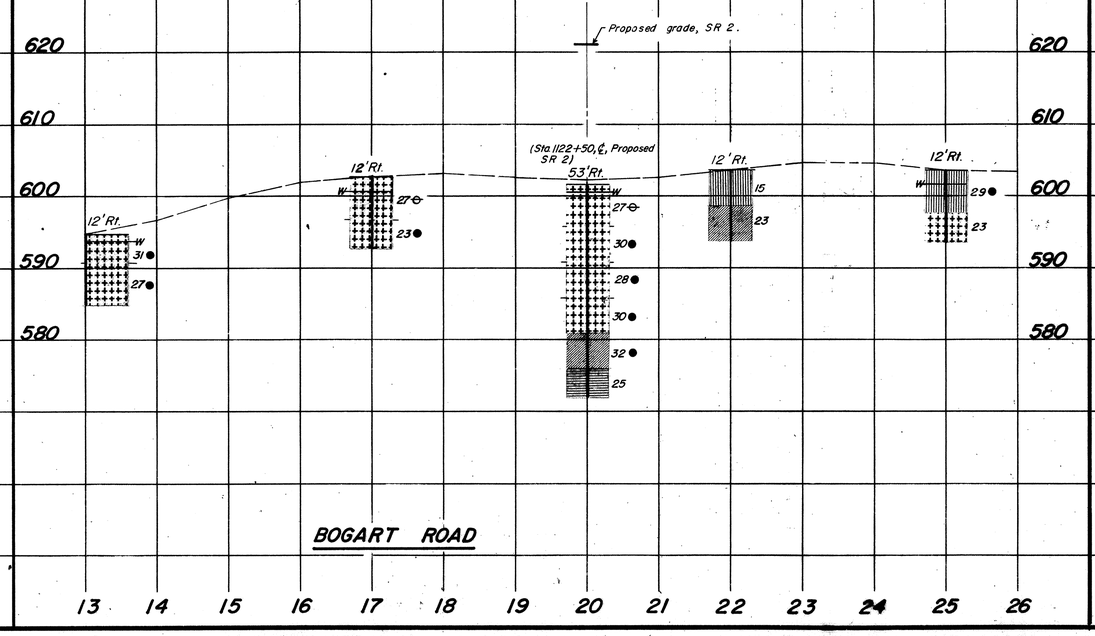

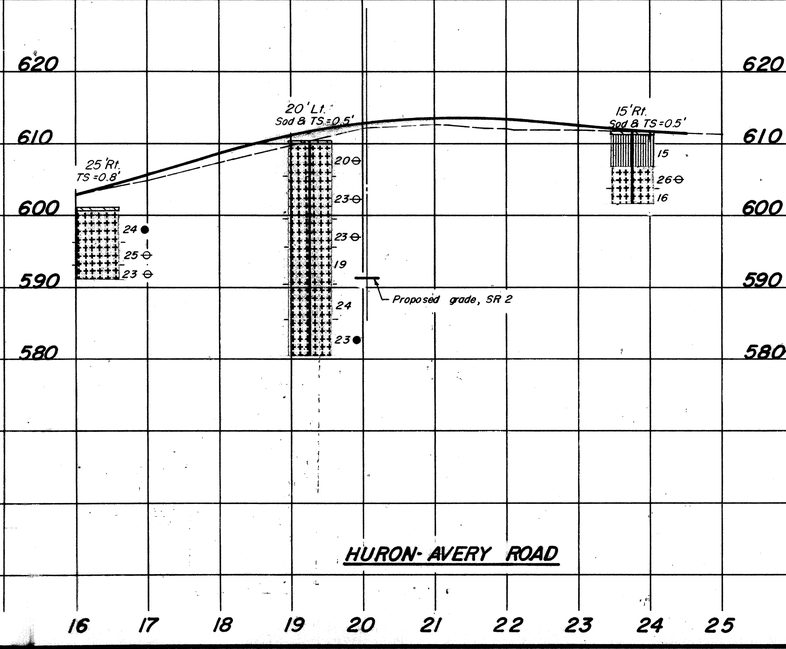

TE - 127
1800-12-68

MICROFILMED
AUG 31 1990

SOIL PROFILE

ERIE COUNTY

ERI 2 - (16.13-17.39)

OHIO STATE HIGHWAY TESTING LABORATORY
1620 W. BROAD ST. COLUMBUS, OHIO 43223

8/32

8/9

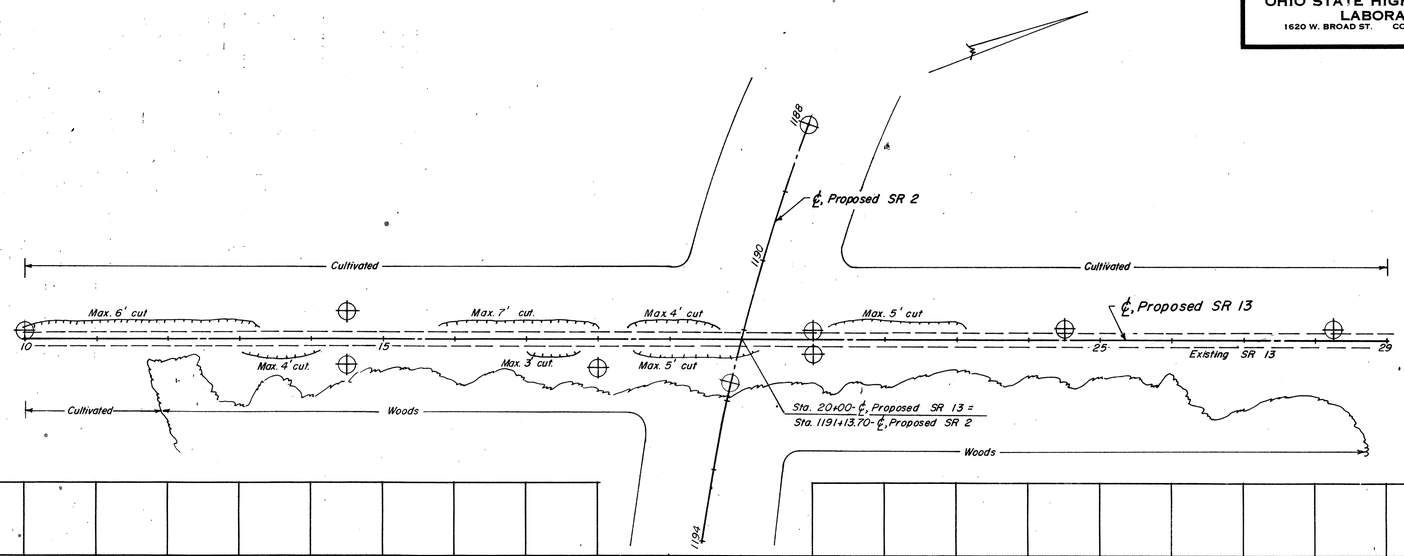

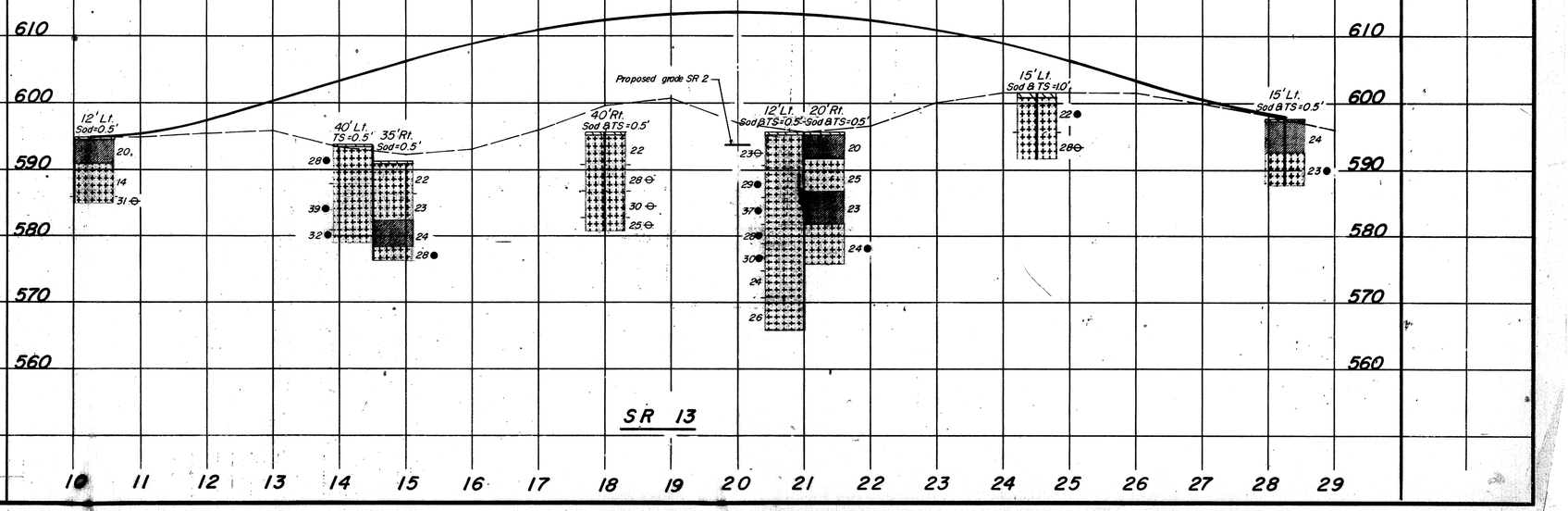

MICROFILMED
AUG 1 1990

SOIL PROFILE

ERIE COUNTY

ERI 2-(16.13-17.39)

OHIO STATE HIGHWAY TESTING LABORATORY
1620 W. BROAD ST. COLUMBUS 23, OHIO

9/32

9/9

Sta. 1178+00

600 590 580 570 560

S 78 / 39 — Refusal (Gravel) (Peat sampler)

Limits of Mud Brook

Water elev. 572.8'

S 70 / 34 — Refusal (Peat sampler)

Approximate ground line

S 124 / 20 — Refusal (Peat sampler)

100 50 ℄ 50 100

Sta. 1176+00

600 590 580 570 560

W 218 / 14 — Refusal (Peat sampler)

Water elev. 573.0'

W 269 / 23 — Refusal (Peat sampler)

Approximate ground line

W 356 / 20 — Refusal (Peat sampler)

100 50 ℄ 50 100

Sta. 1174+00

600 590 580 570 560

W 341 / 26 — Refusal (Peat sampler)

Water elev. 573.6'

64 / 19 — Refusal (Peat sampler)

Approximate ground line

C 190 / 22 — Refusal (Peat sampler)

100 90 80 70 60 50 40 30 20 10 ℄ 10 20 30 40 50 60 70 80 90 100

TE - 118
600 - 4 - 66

MICROFILMED
AUG 31 1990

ERIE COUNTY
ERI-2-16.13

GEOLOGY OF THE SITE
THE STRUCTURE SITE IS LOCATED ON THE FLAT GLACIATED LAKE PLAIN, IN AN AREA WHERE SHALLOW GLACIAL LAKE DEPOSITS OVERLIE SHALE BEDROCK, OF DEVONIAN AGE.

EXPLORATION
THE EXPLORATION CONSISTED OF TWO DRIVE SAMPLE-CORE BORINGS AND FIVE DRIVE ROD PENETRATION TESTS, MADE BETWEEN APRIL 10 AND 17, 1968.

INVESTIGATIONAL FINDINGS
BORINGS DISCLOSED THAT RELATIVELY FLAT-LYING BEDROCK SURFACE, ENCOUNTERED AT 18-FOOT DEPTH, ELEVATION 582 AND 581 FEET, IS OVERLAIN BY DENSE, STIFF SILTS AND CLAYS. THE BORINGS WERE TERMINATED AT 30-FOOT DEPTHS, ELEVATIONS 569 AND 568 FEET, AFTER PENETRATING 12 FEET BELOW BEDROCK SURFACE.

ROD SOUNDINGS ENCOUNTERED RAPID INCREASE IN PENETRATION RESISTANCE WITH INCREASE IN DEPTH AND WERE TERMINATED UPON ENCOUNTER WITH RATHER ABRUPT REFUSAL TO PENETRATION AT 18 TO 20-FOOT DEPTHS, ELEVATIONS 582 TO 579 FEET, CONSIDERED TO BE ON BEDROCK SURFACE, AS REVEALED BY THE BORINGS.

NO FREE WATER WAS ENCOUNTERED IN ANY OF THE ROD SOUNDING HOLES.

IF IT IS THE INTENTION TO FOUND SUBSTRUCTURE UNITS ON BEDROCK, IT IS CONSIDERED ADVISABLE THAT THE OPEN EXCAVATIONS BE INSPECTED IN THE FIELD IN ORDER TO INSURE THAT THE EXCAVATIONS HAVE BEEN EXTENDED TO ROCK THROUGHOUT THE ENTIRE FOUNDING AREA. IT IS FURTHER SUGGESTED THAT THE AREA OF THE FOOTING CONTACT NOT BE SUBJECTED TO PROLONGED ATMOSPHERIC EXPOSURE, AND THAT THE EXCAVATION BE KEPT DRAINED AT ALL TIMES, DUE PARTICULARLY TO THE FACT THAT WHILE THIS SHALE BEDROCK IS GENERALLY FIRM IN PLACE, IT IS SUSCEPTIBLE TO DISINTEGRATION UPON EXPOSURE TO THE ATMOSPHERE AND WATER.

UNCONFINED COMPRESSION TESTS ON SIMILAR SHALE BEDROCK INDICATES A CRUSHING STRENGTH ON THE ORDER OF 100 TONS PER SQUARE FOOT.

LEGEND

- Auger Boring Location - Plan View.
- Press and / or Drive Sample and / or Core Boring Location - Plan View.
- Drive Rod Penetration Resistance Sounding Location - Plan View.
- Capped Pile
- Footing
- Footing on Pile
- TR — Top of Rock
- Horizontal Bar on Boring Log Indicates the Depth the Sample Was Taken.
- X/Y — Figures Beside the Boring Log in Profile Indicate the Number of Blows for Standard Penetration Test. X = Number of Blows for First 6 inches. Y = Number of Blows for Second 6 inches.
- Drive Rod Penetration Resistance Sounding Log - Profile
- Casing
- Resistance "R" < 10,000 lbs.
- Resistance "R" > 10,000 lbs.
- Z — Indicates Final Measurement of Penetration, in Inches.
- W — Indicates Free Water Elevation.
- Indicates Static Water Elevation.

SYMBOLS OF ROCK TYPES

- Coal
- Weathered Indurated Clay
- Indurated Clay
- Weathered Shale
- Shale
- Weathered Sandstone
- Sandstone
- Leached Dolomite
- Dolomite
- Leached Limestone
- Limestone

GENERAL INFORMATION

Drive Rod Penetration Sounding Tests

Drive rod penetration resistance tests constitute driving a 1.315-inch diameter steel rod, with a 45° cone point, into the ground, using a 122-pound drop-hammer with a free fall of five feet. At one or two-foot depth intervals, a measurement is taken to determine the amount of penetration achieved in three hammer drops. This reading is converted to an empirical value for capacity "R", in thousands of pounds (which is a measure of both the point resistance and frictional resistance on the rod), by using charts prepared by the Ohio Department of Highways, Bureau of Bridges, on the basis of correlation study of rod penetration with past performance of pile driving. For interpretation, a graph is prepared by plotting the value "R" against the depth at which the reading was taken, and connecting the plotted points. The curve so obtained reflects the density of subsurface materials in a manner that can be readily compared with data from similar tests at other locations on the structure site. From this comparison, the overall uniformity of subsurface condition may be evaluated.

Drive Sample Borings - Drive-Press Sample Borings

Drive sample borings are made by means of a rotary-type drill rig, employing a 2" O.D., 1-3/8" I.D. sampler, at 2-1/2 and / or 5-foot depth intervals, driven by means of a 140 - pound drop-hammer with a free fall of 30 inches. The number of blows required to drive the sampler 12 inches is considered the standard penetration test.

Drive-press sample borings are made by means of a rotary-type drill rig, employing a 2" O.D., 1-3/8" I.D. drive sampler, and 3" O.D. thin-wall press sampler. The press sampler is advanced by continuous uniform pressure, applied by the drill rig.

The boring log sheets show a graphic plot of the information obtained, including depth and elevation of the sample, number of blows for the standard penetration tests in two 6-inch increments, depth of press samples, field sample number, sample description - based on laboratory tests and the Casagrande AC classification system - and gradation, plasticity, and moisture content determinations. Results of strength and consolidation testing, if performed, appear on separate enclosures.

At depths where materials are bouldery or gravelly to the extent that the sampler can not be driven, a wash sample is procured for visual classification, in order to determine the general character of the material. These samples are not considered sufficiently representative to warrant laboratory testing.

Particle Size Definitions

Boulders	Cobbles	Gravel	Coarse Sand	Fine Sand	Silt	Clay
	8" / 3"	2.0mm (No. 10 sieve)	0.42mm (No. 40 sieve)	0.074mm (No. 200 sieve)	0.005mm	

LOG OF BORING

Date Started 4-16-68 | Sampler Type SS | Dia. 1 3/8" | Water Elev. —
Date Completed 4-17-68 | Casing: Length — | Dia —
Boring No. B-3 | Station & Offset 1089+60, 22' Lt. (Rear Pier) | Surface Elev. 599.1'

Elev.	Depth	Std. Pen. (N)	Rec. ft.	Loss ft.	Description	Sample No.	% Agg	% C.S	% F.S	% Silt	% Clay	L.L.	P.I.	W.C.	SHTL Class.
599.1	0														
	2														
	4														
594.1	6	5/8			Brown Silt and Clay	1	0	4	8	30	58	40	13	22	A-6a
591.6	8	8/9			Gray Sandy Clay	2	9	9	15	33	34	50	30	18	A-7-6
589.1	10	8/10			Gray Sandy Silt	3	13	8	15	31	33	23	7	12	A-4a
586.6	12														
	14	7/10			Gray Gravelly Sandy Silt	4	16	8	14	28	34	22	6	14	A-4a
584.1	16	19/20			Gray Sandy Gravelly Silt — TOP OF ROCK	5	36	10	11	19	24	22	6	14	A-4a
581.6		30*(0.1')													
581.5	18				**										
579.1	20		0.8	1.7	Silt Shale - hard, light gray to dark gray, firm, badly broken with 70% material not recovered. Core Loss 70%.										
	22														
	24		4.9	0.1	Silt Shale - hard, light gray to dark gray, firm. No Core Loss.										
	26														
	28		5.0	0.0											
569.1	30				BOTTOM OF BORING										

**Silt Clay (Driller's Description)

*Refusal

V I S U A L

LOG OF BORING

Date Started 4-15-68 | Sampler Type SS | Dia. 1 3/8" | Water Elev. —
Date Completed 4-16-68 | Casing: Length — | Dia —
Boring No. B-8 | Station & Offset 1091+65, 8' Rt. (Forward Pier) | Surface Elev. 598.2'

Elev.	Depth	Std. Pen. (N)	Rec. ft.	Loss ft.	Description	Sample No.	% Agg	% C.S	% F.S	% Silt	% Clay	L.L.	P.I.	W.C.	SHTL Class.
598.2	0														
	2														
	4														
593.2	6	5/7			Brown Clayey Silt	1	0	3	8	35	54	32	10	23	A-4a
590.7	8	6/12			Brown Silt and Clay	2	0	1	3	37	59	32	11	20	A-6a
588.2	10	5/7			Gray Silt and Clay	3	0	2	4	28	66	32	11	22	A-6a
585.7	12														
	14	4/5			Gray Sandy Gravelly Silt	4	19	6	11	25	39	26	8	18	A-4a
583.2	16	4/36			Gray Gravelly Silt — TOP OF ROCK	5	20	4	8	28	40	26	9	24	A-4a
580.7															
579.7	18	30/43			Gray Weathered Shale	6	60	15	8	8	9	23	6	6	
	20														
	22														
	24		4.8	0.2	Silt Shale - Gray to dark gray, hard, firm. Core Loss 3%.										
	26														
	28		5.0	0.0											
568.2	30				BOTTOM OF BORING										

NOTE: Information shown by this subsurface investigation was obtained solely for the use in establishing design controls for the project. The State of Ohio does not guarantee the accuracy of this data and it is not to be construed as a part of the plans governing construction of the project.

OHIO DEPARTMENT OF HIGHWAYS
TESTING LABORATORY
1620 WEST BROAD STREET, COLUMBUS 23, OHIO

STRUCTURE FOUNDATION INVESTIGATION
BRIDGE NO. ERI-2-1640
UNDER E.B. THRU RAMP
SEC. ERI-2-16.13

CHECKED BY	REVIEWED BY	DATE
L.N.L.	R.D.R.	5/8/68

TE - 119
1000 - 4 - 66

MICROFILMED
AUG 31 1990

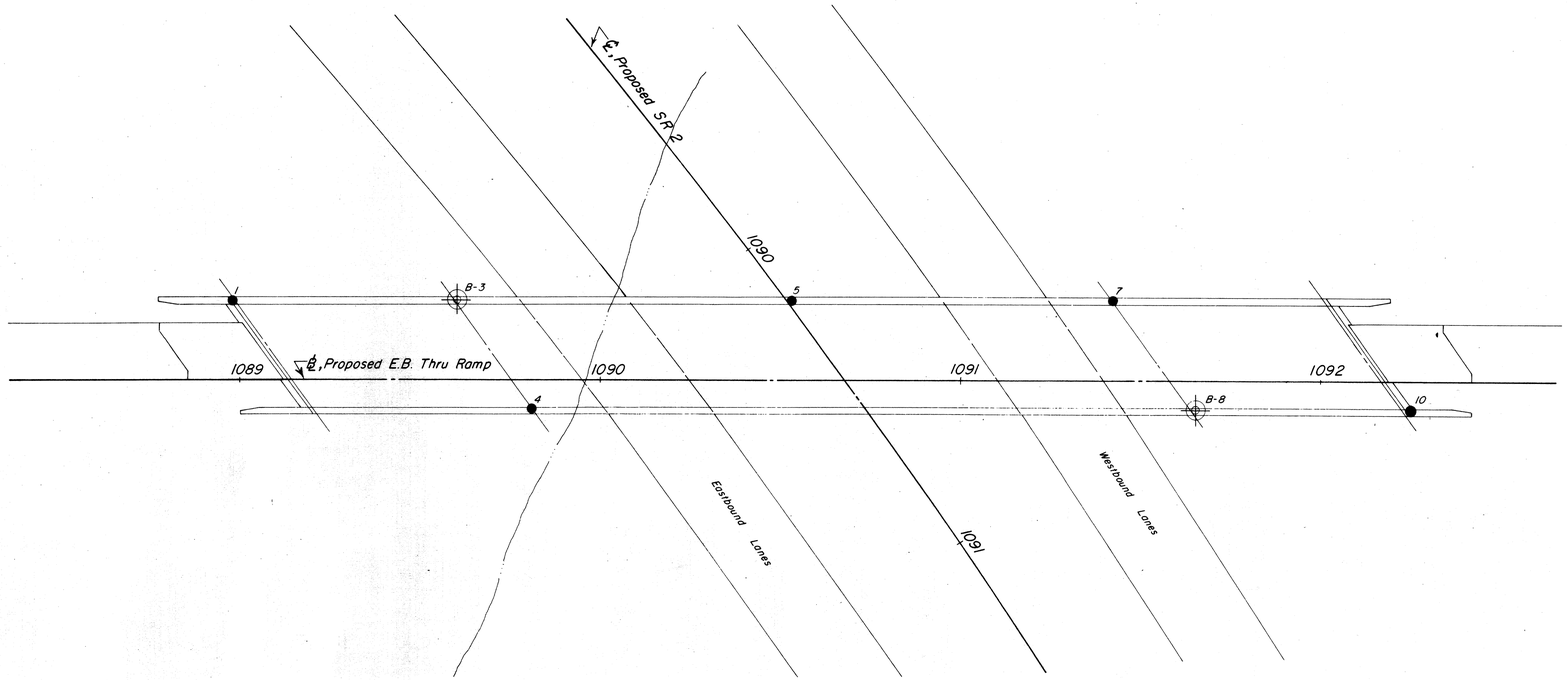

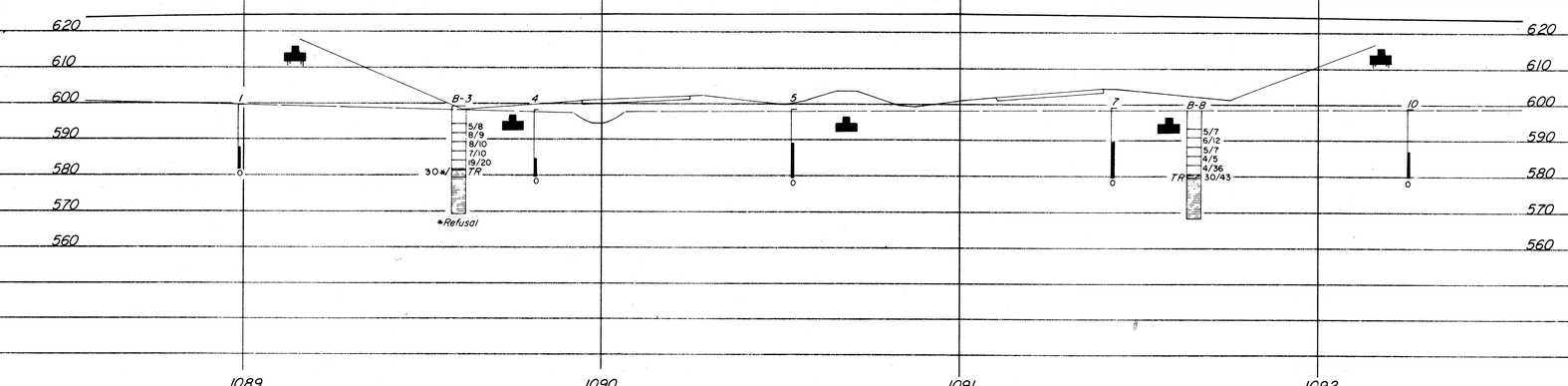

SCALE: 1" = 20'

OHIO DEPARTMENT OF HIGHWAYS
TESTING LABORATORY
1620 WEST BROAD STREET, COLUMBUS 23, OHIO

STRUCTURE FOUNDATION INVESTIGATION
BRIDGE NO. ERI- 2-1640
UNDER E.B. THRU RAMP
SEC. ERI-2-16.13

PLAN AND PROFILE

DRAWN BY	CHECKED BY	REVIEWED BY	DATE
J.E.C.	L.N.L.	R.D.R.	5/8/68

TE-114
1000-7-67
MICROFILMED
AUG 31 1990

ERI-2-16.13

Test Location No. ____
Station & Offset ____
Surface Elev. ____ Water Elev. ____
Piling ____
Hammer ____
Formula ____
Reference ____
Rod Condition ____

Capacity "R" in Thousands of Pounds

Test Location No. ____
Station & Offset ____
Surface Elev. ____ Water Elev. ____
Piling ____
Hammer ____
Formula ____
Reference ____
Rod Condition ____

Capacity "R" in Thousands of Pounds

Test Location No. ____
Station & Offset ____
Surface Elev. ____ Water Elev. ____
Piling ____
Hammer ____
Formula ____
Reference ____
Rod Condition ____

Capacity "R" in Thousands of Pounds

Test Location No. 1
Station & Offset 1088+98.22'LT.
REAR ABUTMENT
Surface Elev. 589.7' Water Elev. ____
Piling ____
Hammer ____
Formula ____
Reference ____
Rod Condition GOOD

TEST ROD

Capacity "R" in Thousands of Pounds

Test Location No. 4
Station & Offset 1089+81.8'RT.
REAR PIER
Surface Elev. 598.8' Water Elev. ____
Piling ____
Hammer ____
Formula ____
Reference ____
Rod Condition GOOD

TEST ROD

Capacity "R" in Thousands of Pounds

Test Location No. 5
Station & Offset 1090+53.22'LT.
CENTER PIER
Surface Elev. 598.4 Water Elev. ____
Piling ____
Hammer ____
Formula ____
Reference ____
Rod Condition GOOD

TEST ROD

Capacity "R" in Thousands of Pounds

Test Location No. 7
Station & Offset 1091+42.22'LT.
FORWARD PIER
Surface Elev. 599.1 Water Elev. ____
Piling ____
Hammer ____
Formula ____
Reference ____
Rod Condition GOOD

TEST ROD

Capacity "R" in Thousands of Pounds

Test Location No. 10
Station & Offset 1092+25.6'RT.
FORWARD ABUTMENT
Surface Elev. 598.9' Water Elev. ____
Piling ____
Hammer ____
Formula ____
Reference ____
Rod Condition GOOD

TEST ROD

Capacity "R" in Thousands of Pounds

OHIO STATE HIGHWAY TESTING LABORATORY
1620 WEST BROAD ST. COLUMBUS 23, OHIO

STRUCTURE FOUNDATION INVESTIGATION
BRIDGE NO. ERI-2-1640
UNDER E.B. THRU RAMP
SEC. ERI-2-16.13

DRIVE ROD PENETRATION RESISTANCE DATA

PLOTTED BY	CHECKED BY	REVIEWED BY	DATE
R.C.	L.N.L.	R.D.R.	5/8/68

H. COLE CO.-BDM-10-67-1000

TE - 118
600 - 4 - 66

MICROFILMED
AUG 31 1990

GEOLOGY OF THE SITE
THE STRUCTURE SITE IS LOCATED ON THE FLAT GLACIATED LAKE PLAIN, IN AN AREA WHERE MODERATELY DEEP GLACIAL LAKE DEPOSITS OVERLIE SHALE BEDROCK, OF DEVONIAN AGE.

EXPLORATION
THE EXPLORATION CONSISTED OF TWO DRIVE SAMPLE-CORE BORINGS AND EIGHT DRIVE ROD PENETRATION TESTS, MADE BETWEEN APRIL 9 AND 11, 1968.

INVESTIGATIONAL FINDINGS
BORINGS DISCLOSED THAT BEDROCK SURFACE, ENCOUNTERED AT 30-FOOT DEPTH, ELEVATIONS 571 AND 570 FEET, IS OVERLAIN BY WET, SOFT TO STIFF CLAYS AND VERY LOOSE TO MEDIUM DENSE SILTS. THE BORINGS WERE TERMINATED AT 40 AND 45-FOOT DEPTHS, ELEVATIONS 561 AND 555 FEET, AFTER PENETRATING 10 AND 15 FEET BELOW BEDROCK SURFACE.

ROD SOUNDINGS ENCOUNTERED RAPID INCREASE IN PENETRATION RESISTANCE WITH INCREASE IN DEPTH AND WERE TERMINATED UPON ENCOUNTER WITH RATHER ABRUPT REFUSAL TO PENETRATION AT 28 TO 32-FOOT DEPTHS, ELEVATIONS 573 TO 572 FEET, CONSIDERED TO BE SLIGHTLY ABOVE BEDROCK SURFACE, AS REVEALED BY THE BORINGS.

NO FREE WATER WAS OBSERVED IN ANY OF THE ROD SOUNDING HOLES.

LEGEND

- Auger Boring Location - Plan View.
- Press and / or Drive Sample and / or Core Boring Location - Plan View.
- Drive Rod Penetration Resistance Sounding Location - Plan View.
- Capped Pile
- Footing
- Footing on Pile
- TR — Top of Rock
- Horizontal Bar on Boring Log Indicates the Depth the Sample Was Taken.
- X/Y — Figures Beside the Boring Log in Profile Indicate the Number of Blows for Standard Penetration Test.
  X = Number of Blows for First 6 inches.
  Y = Number of Blows for Second 6 inches.
- Drive Rod Penetration Resistance Sounding Log - Profile
- Casing
- Resistance "R" < 10,000 lbs.
- Resistance "R" > 10,000 lbs.
- Z — Indicates Final Measurement of Penetration, in Inches.
- W — Indicates Free Water Elevation.
- Indicates Static Water Elevation.

SYMBOLS OF ROCK TYPES

- Coal
- Weathered Indurated Clay
- Indurated Clay
- Weathered Shale
- Shale
- Weathered Sandstone
- Sandstone
- Leached Dolomite
- Dolomite
- Leached Limestone
- Limestone

GENERAL INFORMATION

Drive Rod Penetration Sounding Tests

Drive rod penetration resistance tests constitute driving a 1.315-inch diameter steel rod, with a 45° cone point, into the ground, using a 122-pound drop-hammer with a free fall of five feet. At one or two-foot depth intervals, a measurement is taken to determine the amount of penetration achieved in three hammer drops. This reading is converted to an empirical value for capacity "R", in thousands of pounds (which is a measure of both the point resistance and frictional resistance on the rod), by using charts prepared by the Ohio Department of Highways, Bureau of Bridges, on the basis of correlation study of rod penetration with past performance of pile driving. For interpretation, a graph is prepared by plotting the value "R" against the depth at which the reading was taken, and connecting the plotted points. The curve so obtained reflects the density of subsurface materials in a manner that can be readily compared with data from similar tests at other locations on the structure site. From this comparison, the overall uniformity of subsurface condition may be evaluated.

Drive Sample Borings - Drive-Press Sample Borings

Drive sample borings are made by means of a rotary-type drill rig, employing a 2" O.D., 1-3/8" I.D. sampler, at 2-1/2 and / or 5-foot depth intervals, driven by means of a 140 - pound drop-hammer with a free fall of 30 inches. The number of blows required to drive the sampler 12 inches is considered the standard penetration test.

Drive-press sample borings are made by means of a rotary-type drill rig, employing a 2" O.D., 1-3/8" I.D. drive sampler, and 3" O.D. thin-wall press sampler. The press sampler is advanced by continuous uniform pressure, applied by the drill rig.

The boring log sheets show a graphic plot of the information obtained, including depth and elevation of the sample, number of blows for the standard penetration tests in two 6-inch increments, depth of press samples, field sample number, sample description - based on laboratory tests and the Casagrande AC classification system - and gradation, plasticity, and moisture content determinations. Results of strength and consolidation testing, if performed, appear on separate enclosures.

At depths where materials are bouldery or gravelly to the extent that the sampler can not be driven, a wash sample is procured for visual classification, in order to determine the general character of the material. These samples are not considered sufficiently representative to warrant laboratory testing.

Particle Size Definitions

Boulders	Cobbles	Gravel	Coarse Sand	Fine Sand	Silt	Clay
8"	3"	2.0mm (No. 10 sieve)	0.42mm (No. 40 sieve)	0.074mm (No. 200 sieve)	0.005mm	

LOG OF BORING

Date Started 4-11-68 — Sampler Type SS — Dia. 1 3/8" — Water Elev. —
Date Completed 4-11-68 — Casing: Length — Dia. —
Boring No. B-4 — Station & Offset 1109+67, 64' Lt. (Rear Abutment) — Surface Elev. 600.7'

Elev.	Depth	Std. Pen. (N)	Rec. ft.	Loss ft.	Description	Sample No.	Physical Characteristics: % Agg.	% C.S.	% F.S.	% Silt	% Clay	L.L.	P.I.	W.C.	SHTL Class.
600.7	0														
	2														
	4														
595.7	6	11/14			Brown Sandy Silt	1	1	0	19	67	12	NP	NP	25	A-4b
593.2	8	6/10			Gray Clayey Silt	2	0	0	3	53	44	24	7	19	A-4b
590.7	10	3/4			Gray Silt	3	0	0	0	54	46	23	6	25	A-4b
588.2	12														
	14	2/3			Gray Clayey Silt	4	0	0	2	53	45	25	7	24	A-4b
585.7	16	2/3			Gray Silt and Clay	5	0	0	2	40	58	30	11	29	A-6a
583.2	18	3/3			Gray Clayey Silt	6	1	1	2	43	53	27	9	22	A-4a
580.7	20	3/3			Gray Clayey Silt	7	2	4	9	30	55	27	9	15	A-4a
578.2	22														
	24	5/8			Gray Gravelly Sandy Silt	8	17	9	16	27	31	24	8	13	A-4a
575.7	26	5/8			Gray Sandy Gravelly Silt	9	27	9	14	22	28	22	7	16	A-4a
	28														
570.7	30				TOP OF ROCK										
	32														
	34		5.0	0.0	Shale, dark-gray and gray, firm to hard, carbonaceous and petroliferous, in part with pyritiferous intervals, broken and jointed. No Core Loss.										
	36														
	38		5.0	0.0											
560.7	40				BOTTOM OF BORING										

LOG OF BORING

Date Started 4-10-68 — Sampler Type SS — Dia. 1 3/8" — Water Elev. —
Date Completed 4-11-68 — Casing: Length — Dia. —
Boring No. B-13 — Station & Offset 1111+07, 64' Rt. (Forward Abutment) — Surface Elev. 599.8'

Elev.	Depth	Std. Pen. (N)	Rec. ft.	Loss ft.	Description	Sample No.	Physical Characteristics: % Agg.	% C.S.	% F.S.	% Silt	% Clay	L.L.	P.I.	W.C.	SHTL Class.
599.8	0														
	2														
	4														
594.8	6	4/6			Gray Silt and Clay	1	0	0	2	60	38	32	12	23	A-6a
592.3	8	4/4			Gray Clayey Silt	2	0	2	8	28	62	26	9	26	A-4a
589.8	10	2/3			Gray Silt	3	0	0	2	23	75	23	5	29	A-4a
587.3	12														
	14	2/3			Gray Silt	4	0	0	1	53	46	25	5	33	A-4b
584.8	16	2/2			Gray Clayey Silt	5	0	1	3	40	56	31	10	30	A-4a
582.3	18	4/4			Gray Silt and Clay	6	0	4	6	31	59	30	11	29	A-6a
579.8	20	2/4			Gray Clayey Silt	7	0	0	1	40	59	30	8	24	A-4a
577.3	22														
	24	2/3			Gray Clayey Silt	8	0	2	6	28	64	31	10	32	A-4a
574.8	26	1/1			Gray Clayey Silt	9	0	2	5	24	69	31	9	27	A-4a
	28														
569.8	30				TOP OF ROCK										
	32														
	34		4.8	0.2	Shale, dark-gray and gray, firm to hard, carbonaceous and petroliferous in part with pyritiferous intervals, broken and jointed. Core Loss 3%.										
	36														
	38		4.8	0.2											
	40														
	42														
	44		5.0	0.0											
554.8					BOTTOM OF BORING										

NOTE: Information shown by this subsurface investigation was obtained solely for the use in establishing design controls for the project. The State of Ohio does not guarantee the accuracy of this data and it is not to be construed as a part of the plans governing construction of the project.

OHIO DEPARTMENT OF HIGHWAYS
TESTING LABORATORY
1620 WEST BROAD STREET, COLUMBUS 23, OHIO

STRUCTURE FOUNDATION INVESTIGATION
BRIDGE NO. ERI-2-1678 L/R
OVER CONRAIL RR.
SEC. ERI-2-16.13

CHECKED BY	REVIEWED BY	DATE
L.N.L.	R.D.R.	4/26/68

TE - 119
1000 - 4 - 66

MICROFILMED
AUG 31 1990

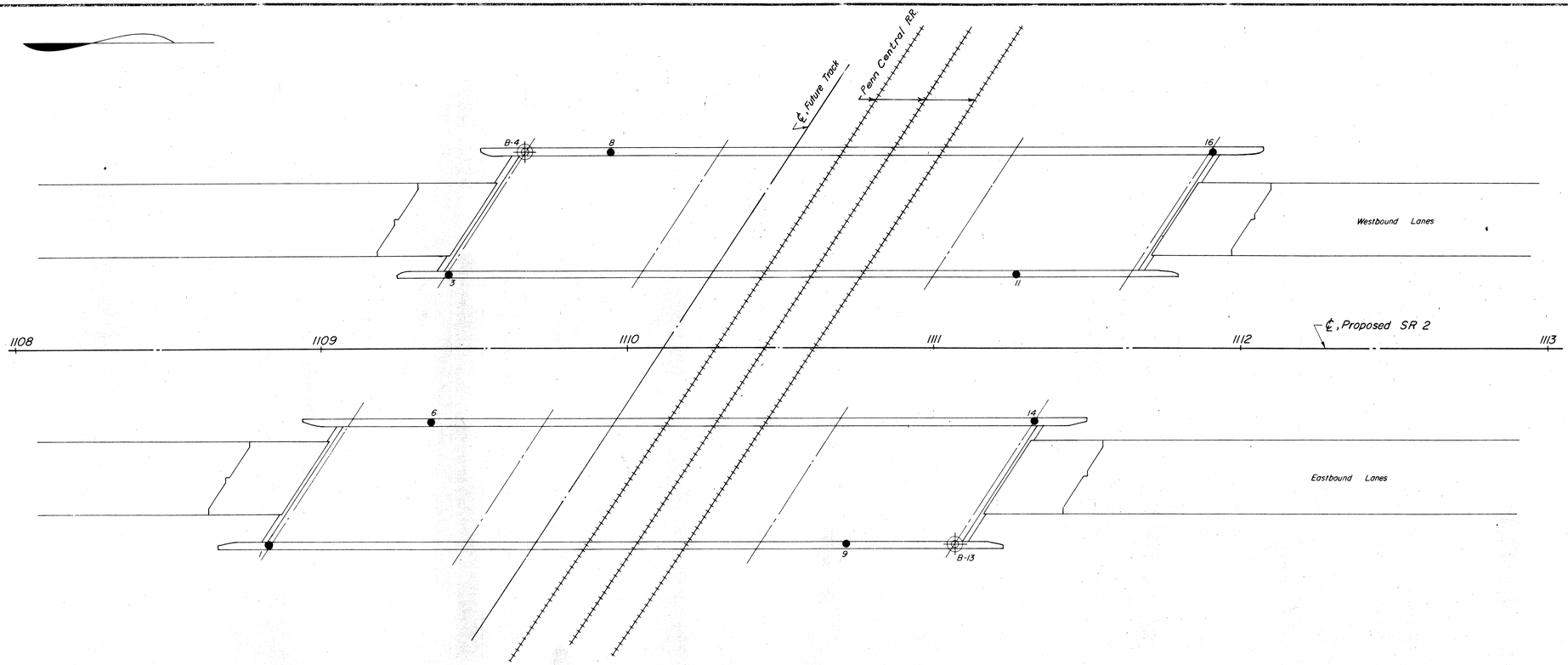

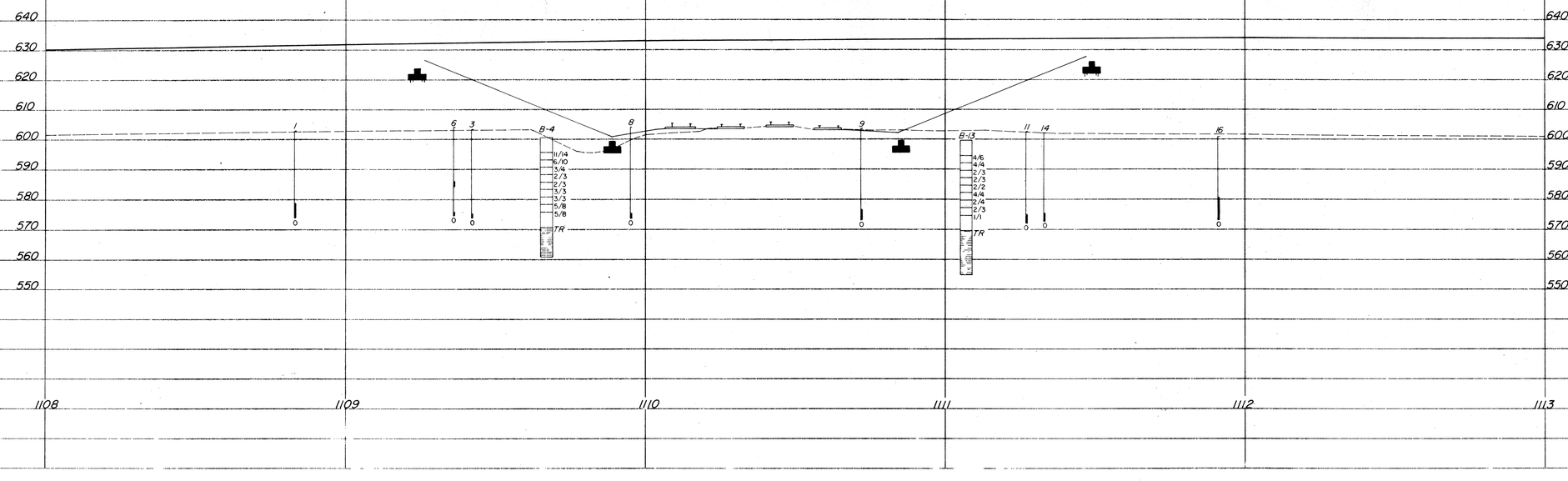

SCALE: 1" = 20'

OHIO DEPARTMENT OF HIGHWAYS
TESTING LABORATORY
1620 WEST BROAD STREET, COLUMBUS 23, OHIO

STRUCTURE FOUNDATION INVESTIGATION
BRIDGE NO. ERI-2-1678 L/R
OVER CONRAIL RR.
SEC. ERI-2-16.13

PLAN AND PROFILE

DRAWN BY	CHECKED BY	REVIEWED BY	DATE
L.N.L.	L.N.L.	R.D.R.	4/26/68

IE-114
1000-9-67
MICROFILMED
JUL 31 1990

ERI-2-16.13 3/3

Test Location No. 1
Station & Offset 1108+83.64'RT REAR ABUTMENT
Surface Elev. 602.8 Water Elev.
Piling
Hammer
Formula
Reference
Rod Condition
608 604 600 596 592 588 584 580 576 572 568
TEST ROD
10 20 30 40 50 60 70 80 90 100
Capacity "R" in Thousands of Pounds

Test Location No. 3
Station & Offset 1109+42.24'LT REAR ABUTMENT
Surface Elev. 603.2 Water Elev.
Piling
Hammer
Formula
Reference
Rod Condition GOOD
TEST ROD
10 20 30 40 50 60 70 80 90 100
Capacity "R" in Thousands of Pounds

Test Location No. 6
Station & Offset 1109+36.24'RT REAR PIER
Surface Elev. 604.0 Water Elev.
Piling
Hammer
Formula
Reference
Rod Condition GOOD
TEST ROD
10 20 30 40 50 60 70 80 90 100
Capacity "R" in Thousands of Pounds

Test Location No. 8
Station & Offset 1109+95.64'LT REAR PIER
Surface Elev. 603.9 Water Elev.
Piling
Hammer
Formula
Reference
Rod Condition GOOD
TEST ROD
10 20 30 40 50 60 70 80 90 100
Capacity "R" in Thousands of Pounds

Test Location No. 9
Station & Offset 1110+[illegible]4'RT FORWARD PIER
Surface Elev. 603.6 Water Elev.
Piling
Hammer
Formula
Reference
Rod Condition GOOD
TEST ROD
10 20 30 40 50 60 70 80 90 100
Capacity "R" in Thousands of Pounds

Test Location No. 11
Station & Offset 1111+27.24'LT FORWARD PIER
Surface Elev. 602.4 Water Elev.
Piling
Hammer
Formula
Reference
Rod Condition GOOD
TEST ROD
10 20 30 40 50 60 70 80 90 100
Capacity "R" in Thousands of Pounds

Test Location No. 14
Station & Offset 1111+33.24'RT FORWARD ABUTMENT
Surface Elev. 602.0 Water Elev.
Piling
Hammer
Formula
Reference
Rod Condition GOOD
TEST ROD
10 20 30 40 50 60 70 80 90 100
Capacity "R" in Thousands of Pounds

Test Location No. 16
Station & Offset 1111+91.64'LT FORWARD ABUTMENT
Surface Elev. 600.9 Water Elev.
Piling
Hammer
Formula
Reference
Rod Condition GOOD
TEST ROD
10 20 30 40 50 60 70 80 90 100
Capacity "R" in Thousands of Pounds

OHIO STATE HIGHWAY TESTING LABORATORY
1620 WEST BROAD ST. COLUMBUS 23, OHIO

STRUCTURE FOUNDATION INVESTIGATION
BRIDGE NO. ERI-2-1678 L/R OVER CONRAIL RR.
SEC. ERI-2-16.13

DRIVE ROD PENETRATION RESISTANCE DATA

PLOTTED BY	CHECKED BY	REVIEWED BY	DATE
R.C.	L.N.L.	R.D.R.	4/26/68

M. COST CO., BRYAN, OHIO

TE - 118
600 - 4 - 66

MICROFILMED
AUG 31 1990

GEOLOGY OF THE SITE
THE STRUCTURE SITE IS LOCATED ON THE FLAT, GLACIATED LAKE PLAIN IN AN AREA WHERE MODERATELY DEEP GLACIAL LAKE DEPOSITS OVERLIE SHALE BEDROCK, OF DEVONIAN AGE.

EXPLORATION
THE EXPLORATION CONSISTED OF TWO DRIVE SAMPLE-CORE BORINGS AND EIGHT DRIVE ROD PENETRATION TESTS, MADE BETWEEN MARCH 27 AND APRIL 10, 1968.

INVESTIGATIONAL FINDINGS
BORINGS DISCLOSED VERY MOIST SOFT CLAYS AND VERY LOOSE SILTS TO BEDROCK SURFACE, ENCOUNTERED AT 35-FOOT DEPTHS, ELEVATION 567 FEET. THE BORINGS WERE TERMINATED AT 47 AND 50-FOOT DEPTHS, ELEVATIONS 555 AND 552 FEET, AFTER PENETRATING 12 AND 15 FEET OF BEDROCK.

THE ROD SOUNDINGS ENCOUNTERED GENERALLY MEDIUM HIGH RESISTANCE WITH INCREASING DEPTH AND WERE TERMINATED DUE TO REFUSAL TO PENETRATION AT 31 TO 37-FOOT DEPTHS, ELEVATIONS 568 TO 566 FEET, CONSIDERED TO BE ON OR SLIGHTLY BELOW BEDROCK SURFACE, AS REVEALED BY THE BORINGS.

NO FREE WATER WAS OBSERVED IN ANY OF THE ROD SOUNDING HOLES.

LEGEND

- Auger Boring Location - Plan View.
- Press and / or Drive Sample and / or Core Boring Location - Plan View.
- Drive Rod Penetration Resistance Sounding Location - Plan View.
- Capped Pile
- Footing
- Footing on Pile
- TR — Top of Rock
- Horizontal Bar on Boring Log Indicates the Depth the Sample Was Taken.
- X/Y — Figures Beside the Boring Log in Profile Indicate the Number of Blows for Standard Penetration Test. X = Number of Blows for First 6 inches. Y = Number of Blows for Second 6 inches.
- Drive Rod Penetration Resistance Sounding Log - Profile
- Casing
- Resistance "R" < 10,000 lbs.
- Resistance "R" > 10,000 lbs.
- Z — Indicates Final Measurement of Penetration, in Inches.
- W — Indicates Free Water Elevation.
- Indicates Static Water Elevation.

SYMBOLS OF ROCK TYPES

- Coal
- Weathered Indurated Clay
- Indurated Clay
- Weathered Shale
- Shale
- Weathered Sandstone
- Sandstone
- Leached Dolomite
- Dolomite
- Leached Limestone

GENERAL INFORMATION

Drive Rod Penetration Sounding Tests

Drive rod penetration resistance tests constitute driving a 1.315-inch diameter steel rod, with a 45° cone point, into the ground, using a 122-pound drop-hammer with a free fall of five feet. At one or two-foot depth intervals, a measurement is taken to determine the amount of penetration achieved in three hammer drops. This reading is converted to an empirical value for capacity "R", in thousands of pounds (which is a measure of both the point resistance and frictional resistance on the rod), by using charts prepared by the Ohio Department of Highways, Bureau of Bridges, on the basis of correlation study of rod penetration with past performance of pile driving. For interpretation, a graph is prepared by plotting the value "R" against the depth at which the reading was taken, and connecting the plotted points. The curve so obtained reflects the density of subsurface materials in a manner that can be readily compared with data from similar tests at other locations on the structure site. From this comparison, the overall uniformity of subsurface condition may be evaluated.

Drive Sample Borings - Drive-Press Sample Borings

Drive sample borings are made by means of a rotary-type drill rig, employing a 2" O.D., 1-3/8" I.D. sampler, at 2-1/2 and / or 5-foot depth intervals, driven by means of a 140 - pound drop-hammer with a free fall of 30 inches. The number of blows required to drive the sampler 12 inches is considered the standard penetration test.

Drive-press sample borings are made by means of a rotary-type drill rig, employing a 2" O.D., 1-3/8" I.D. drive sampler, and 3" O.D. thin-wall press sampler. The press sampler is advanced by continuous uniform pressure, applied by the drill rig.

The boring log sheets show a graphic plot of the information obtained, including depth and elevation of the sample, number of blows for the standard penetration tests in two 6-inch increments, depth of press samples, field sample number, sample description - based on laboratory tests and the Casagrande AC classification system - and gradation, plasticity, and moisture content determinations. Results of strength and consolidation testing, if performed, appear on separate enclosures.

At depths where materials are bouldery or gravelly to the extent that the sampler can not be driven, a wash sample is procured for visual classification, in order to determine the general character of the material. These samples are not considered sufficiently representative to warrant laboratory testing.

LOG OF BORING

Date Started 4-9-68 — Sampler Type SS — Dia. 1 3/8" — Water Elev. —
Date Completed 4-10-68 — Casing: Length — Dia. —
Boring No. B-8 — Station & Offset 1122+70, 64' Lt. (Rear Pier) — Surface Elev. 601.8'

Elev.	Depth	Std. Pen. (N)	Rec. ft.	Loss ft.	Description	Sample No.	Physical Characteristics: % Agg.	% C.S.	% F.S.	% Silt	% Clay	L.L.	P.I.	W.C.	SHTL Class.
601.8	0														
	2														
599.3	4	3/4			Brown Silty Clay	1	5	1	5	41	48	35	16	28	A-6b
596.8	6	2/3			Brownish-Gray Silt and Clay	2	5	0	4	42	49	33	11	28	A-6a
594.3	8	2/2			Gray Silt and Clay	3	0	0	2	46	52	29	11	30	A-6a
591.8	10	1/1			Gray Clayey Silt	4	1	0	2	53	44	25	8	31	A-4b
589.3	12	1/2			Gray Clayey Silt	5	0	0	1	54	45	26	10	32	A-4b
586.8	14	2/3			Gray Silt	6	0	0	1	55	44	24	6	29	A-4b
584.3	16	3/2			Gray Clayey Silt	7	0	0	1	49	50	27	8	30	A-4a
581.8	18	2/2			Gray Silt and Clay	8	0	0	1	47	52	34	14	30	A-6a
	20														
	22														
576.8	24														
	26	2/3			Gray Clay	9	0	0	1	20	79	49	24	32	A-7-6
	28														
571.8	30														
	32	2/4			Gray Silty Clay	10	4	4	7	32	53	31	17	17	A-6b
	34														
566.8	36				TOP OF ROCK										
	38		3.5	1.5	Shale, dark-gray, and gray, firm to hard, carbonaceous, and petroliferous in part with pyritiferous intervals, broken and jointed. Core Loss 10%.										
	40														
	42		5.0	0.0											
	44														
	46														
	48		5.0	0.0											
551.8	50				BOTTOM OF BORING										

LOG OF BORING

Date Started 4-4-68 — Sampler Type SS — Dia. 1 3/8" — Water Elev. —
Date Completed 4-5-68 — Casing: Length 35' — Dia. 3 1/2" — Surface Elev. 601.7'
Boring No. B-9 — Station & Offset 1123+37, 64' Rt. (Forward Pier)

Elev.	Depth	Std. Pen. (N)	Rec. ft.	Loss ft.	Description	Sample No.	Physical Characteristics: % Agg.	% C.S.	% F.S.	% Silt	% Clay	L.L.	P.I.	W.C.	SHTL Class.
601.7	0														
	2														
	4														
596.7	6	4/4			Brownish-Gray Silt and Clay	1	0	0	7	39	54	32	14	32	A-6a
594.2	8	1/2			Gray Clayey Silt	2	0	0	3	47	50	24	7	31	A-4a
591.7	10	1/1			Gray Silt	3	0	0	4	48	48	23	6	36	A-4a
589.2	12	1/1			Gray Clayey Silt	4	0	0	4	49	47	27	10	28	A-4a
586.7	14	1/2			Gray Silt	5	0	0	2	56	42	22	5	29	A-4b
584.2	16	1/2			Gray Clayey Silt	6	0	0	1	46	53	28	9	29	A-4a
581.7	18	1/1			Gray Silt and Clay	7	0	0	1	48	51	30	11	31	A-6a
579.2	20	1/2			Gray Silt and Clay	8	0	0	0	46	54	32	12	35	A-6a
576.7	22	2/3			Gray Clayey Silt	9	0	0	1	45	54	30	8	25	A-4a
	24														
	26														
571.7	28	1/3			Gray Silt and Clay	10	0	0	1	26	73	36	12	26	A-6a
	30														
	32														
566.7	34				Gray Weathered Shale — TOP OF ROCK	11	-	-	-	-	-	24	7	9	
566.3	36	30* (0.4')													
	38		4.4	0.2	Shale, dark-gray, hard, carbonaceous, fissile, broken and jointed. Core Loss 3%.										
	40														
	42														
	44		7.0	0.0											
	46														
554.7					BOTTOM OF BORING										

*Refusal

Particle Size Definitions

Boulders	Cobbles	Gravel	Coarse Sand	Fine Sand	Silt	Clay
	8"	3"	2.0mm (No. 10 sieve)	0.42mm (No. 40 sieve)	0.074mm (No. 200 sieve)	0.005mm

NOTE: Information shown by this subsurface investigation was obtained solely for the use in establishing design controls for the project. The State of Ohio does not guarantee the accuracy of this data and it is not to be construed as a part of the plans governing construction of the project.

OHIO DEPARTMENT OF HIGHWAYS
TESTING LABORATORY
1620 WEST BROAD STREET, COLUMBUS 23, OHIO

STRUCTURE FOUNDATION INVESTIGATION
BRIDGE NO. ERI - 2 - 1701 L/R
OVER BOGART ROAD
SEC. ERI - 2 - 16.13

CHECKED BY	REVIEWED BY	DATE
L.N.L.	R.D.R.	4/26/68

TE - 119
1000 - 4 - 66

MICROFILMED
AUG 31 1990

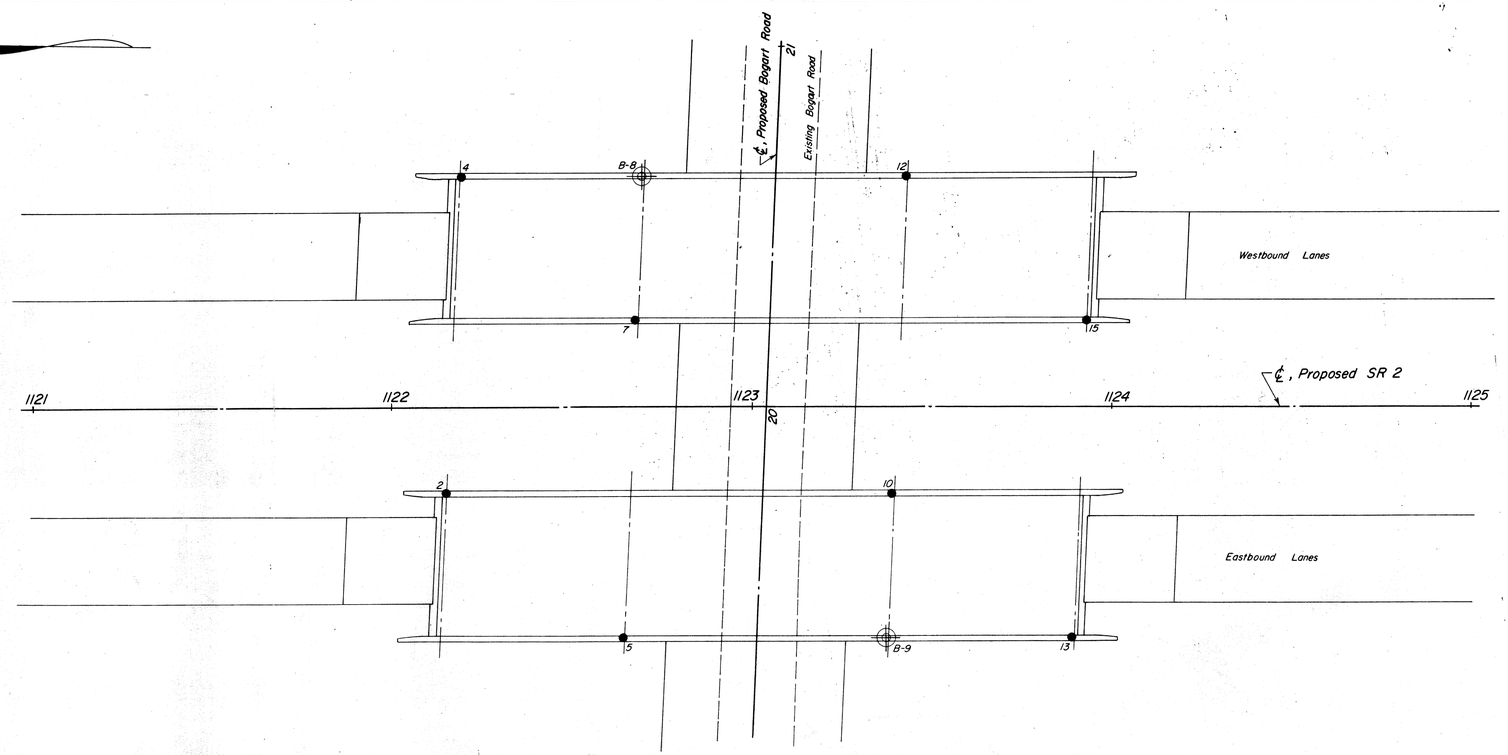

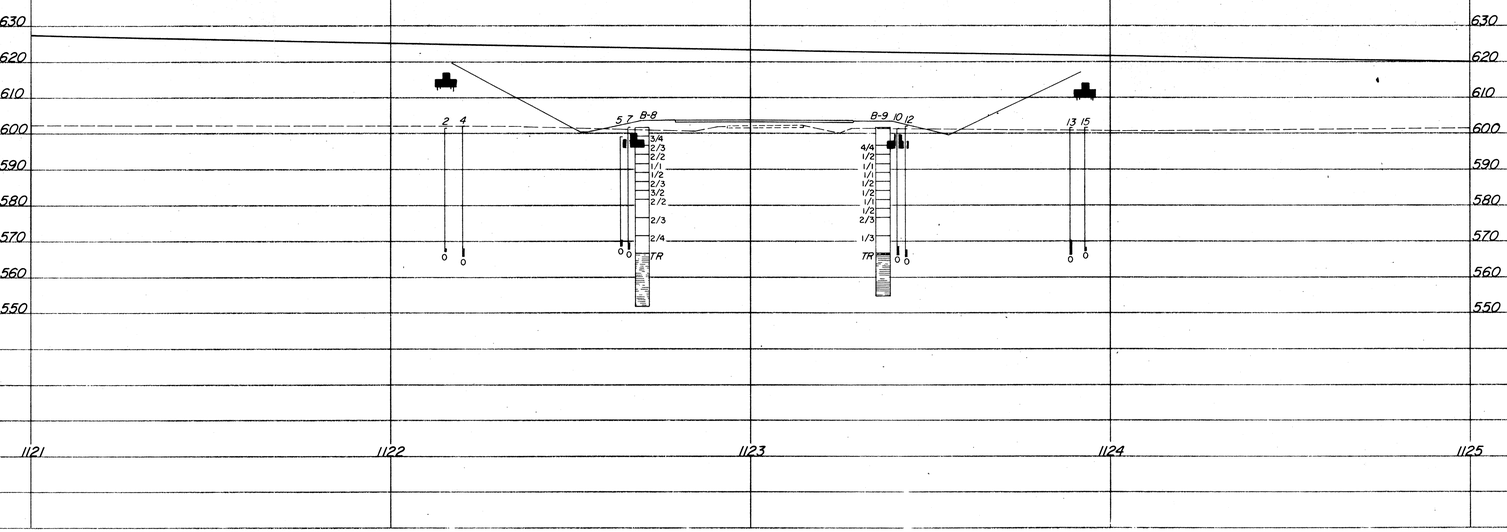

SCALE: 1" = 20'

OHIO DEPARTMENT OF HIGHWAYS
TESTING LABORATORY
1620 WEST BROAD STREET, COLUMBUS 23, OHIO

STRUCTURE FOUNDATION INVESTIGATION
BRIDGE NO. ERI-2-1701 L/R
OVER BOGART ROAD
SEC. ERI-2-16.13

PLAN AND PROFILE

DRAWN BY	CHECKED BY	REVIEWED BY	DATE
L.N.L.	L.N.L.	R.D.R.	4/26/68

TE-114
MICROFILMED
AUG 31 1970

ERI-2-16.13 3/3

Test Location No. 2
Station & Offset 1122+15 24'RT REAR ABUTMENT
Surface Elev. 604.6 Water Elev.
Piling
Hammer
Formula
Reference
Rod Condition GOOD
TEST ROD
Capacity "R" in Thousands of Pounds

Test Location No. 4
Station & Offset 1122+20 64'LT REAR ABUTMENT
Surface Elev. 602.0 Water Elev.
Piling
Hammer
Formula
Reference
Rod Condition GOOD
TEST ROD
Capacity "R" in Thousands of Pounds

Test Location No. 5
Station & Offset 1122+64 64'RT REAR PIER
Surface Elev. 598.0 Water Elev.
Piling
Hammer
Formula
Reference
Rod Condition GOOD
TEST ROD
Capacity "R" in Thousands of Pounds

Test Location No. 7
Station & Offset 1122+68 24'LT REAR PIER
Surface Elev. 601.8 Water Elev.
Piling
Hammer
Formula
Reference
Rod Condition GOOD
TEST ROD
Capacity "R" in Thousands of Pounds

Test Location No. 10
Station & Offset 1123+39 24'RT FORWARD PIER
Surface Elev. 604.6 Water Elev.
Piling
Hammer
Formula
Reference
Rod Condition GOOD
TEST ROD
Capacity "R" in Thousands of Pounds

Test Location No. 12
Station & Offset 1123+43 64'LT FORWARD PIER
Surface Elev. 602.0 Water Elev.
Piling
Hammer
Formula
Reference
Rod Condition POINT ROD BENT
TEST ROD
Capacity "R" in Thousands of Pounds

Test Location No. 13
Station & Offset 1123+89 64'RT FORWARD ABUTMENT
Surface Elev. 601.6 Water Elev.
Piling
Hammer
Formula
Reference
Rod Condition GOOD
TEST ROD
Capacity "R" in Thousands of Pounds

Test Location No. 15
Station & Offset 1123+93 24'LT FORWARD ABUTMENT
Surface Elev. 601.7 Water Elev.
Piling
Hammer
Formula
Reference
Rod Condition GOOD
TEST ROD
Capacity "R" in Thousands of Pounds

OHIO STATE HIGHWAY TESTING LABORATORY
1620 WEST BROAD ST. COLUMBUS 23, OHIO

STRUCTURE FOUNDATION INVESTIGATION
BRIDGE NO. ERI-2-1701 L/R OVER BOGART ROAD
SEC. ERI-2-16.13

DRIVE ROD PENETRATION RESISTANCE DATA

PLOTTED BY	CHECKED BY	REVIEWED BY	DATE
R.C.	L.N.L.	R.D.R.	4/26/68

H. COLE CO. -40M-10-67-1000

TE - 118
600 - 4 - 66

MICROFILMED
SEP 4 1980

GEOLOGY OF THE SITE
THE STRUCTURE SITE IS LOCATED ON THE FLAT GLACIATED LAKE PLAIN, IN AN AREA WHERE MODERATELY DEEP GLACIAL LAKE DEPOSITS OVERLIE SHALE BEDROCK OF DEVONIAN AGE.

EXPLORATION
THE EXPLORATION CONSISTED OF TWO DRIVE SAMPLE-CORE BORINGS AND FIVE DRIVE ROD PENETRATION TESTS, MADE BETWEEN MARCH 28 AND APRIL 3, 1968.

INVESTIGATIONAL FINDINGS
BORINGS DISCLOSED VERY MOIST LOOSE TO MEDIUM DENSE SILTS AND MEDIUM STIFF TO STIFF CLAYS TO BEDROCK SURFACE, ENCOUNTERED AT 50 AND 52-FOOT DEPTHS, ELEVATIONS 561 AND 559 FEET. THE BORINGS WERE TERMINATED AT 65-FOOT DEPTHS, ELEVATION 546 FEET AFTER PENETRATING 13 AND 15 FEET OF BEDROCK.

ROD SOUNDINGS ENCOUNTERED GENERALLY MEDIUM HIGH RESISTANCE TO PENETRATION WITH INCREASING DEPTH AND WERE TERMINATED DUE TO REFUSAL OR NEAR REFUSAL TO PENETRATION AT 48 TO 51-FOOT DEPTHS, ELEVATIONS 562 TO 559 FEET, CONSIDERED TO BE ON OR SLIGHTLY ABOVE BEDROCK SURFACE, AS REVEALED BY THE BORINGS.

NO FREE WATER WAS OBSERVED IN THE ROD SOUNDING HOLES.

LEGEND

- Auger Boring Location - Plan View.
- Press and / or Drive Sample and / or Core Boring Location - Plan View.
- Drive Rod Penetration Resistance Sounding Location - Plan View.
- Capped Pile
- Footing
- Footing on Pile
- TR — Top of Rock
- Coal
- Weathered Indurated Clay
- Indurated Clay
- Weathered Shale
- Shale
- Horizontal Bar on Boring Log Indicates the Depth the Sample Was Taken.
- X/Y — Figures Beside the Boring Log in Profile Indicate the Number of Blows for Standard Penetration Test.
  X = Number of Blows for First 6 inches.
  Y = Number of Blows for Second 6 inches.
- Drive Rod Penetration Resistance Sounding Log - Profile
- Casing
- Resistance "R" < 10,000 lbs.
- Resistance "R" > 10,000 lbs.
- Z — Indicates Final Measurement of Penetration, in Inches.
- W — Indicates Free Water Elevation.
- Indicates Static Water Elevation.

LOG OF BORING

Date Started 3-28-68 | Sampler Type SS | Dia. 1 3/8" | Water Elev. ____
Date Completed 4-2-68 | Casing: Length 55' | Dia. 3 1/2"
Boring No. B-4 | Station & Offset 19+34, 22' Lt. (Rear Pier) | Surface Elev. 610.8'

Elev.	Depth	Std. Pen. (N)	Rec. ft.	Loss ft.	Description	Sample No.	% Agg.	% C.S.	% F.S.	% Silt	% Clay	L.L.	P.I.	W.C.	SHTL Class.
610.8	0														
	2														
	4														
605.8	6	4/5			Brown Silt	1	0	0	15	73	12	NP	NP	34	A-4b
	8														
600.8	10	6/8			Gray Silt	2	0	0	1	82	17	NP	NP	24	A-4b
	12														
	14														
595.8	16	3/3			Brown Silt	3	0	0	11	60	29	NP	NP	27	A-4b
	18														
590.8	20	6/6			Gray Silt	4	0	0	3	68	29	NP	NP	29	A-4b
	22														
	24														
585.8	26	3/4			Gray Clayey Silt	5	0	0	2	57	41	26	7	30	A-4b
583.3	28	2/3			Gray Silt and Clay	6	0	0	1	40	59	31	11	34	A-6a
580.8	30	3/3			Gray Silt	7	0	0	1	56	43	25	5	34	A-4b
578.3	32	3/3			Gray Clayey Silt	8	0	0	1	50	49	27	9	23	A-4b
575.8	34	3/3			Gray Silt and Clay	9	3	1	3	46	47	30	11	26	A-6a
573.3	36	7/8			Gray Clayey Silt	10	2	1	3	30	64	31	10	23	A-4a
570.8	38														
	40	8/10			Gray Silt and Clay	11	0	1	3	35	61	33	12	24	A-6a
	42														
	44														
565.8	46	18/33			Gray Sandy Silt	12	13	10	17	32	28	21	6	11	A-4a
	48														
560.8	50														
558.8	52		2.7	2.3	TOP OF ROCK Shale, gray, medium-firm, with thick clay seams, very badly broken and jointed. Core Loss 80%.										
556.3	54														
	56		4.9	0.1											
	58				Shale, dark-gray, hard, carbonaceous, fissile, broken and jointed. Core Loss 3%.										
	60														
	62		3.3	1.7											
545.8	64				BOTTOM OF BORING										

LOG OF BORING

Date Started 4-2-68 | Sampler Type SS | Dia. 1 3/8" | Water Elev. ____
Date Completed 4-3-68 | Casing: Length 52' | Dia. 3 1/2"
Boring No. B-9 | Station & Offset 23+45, 22' Rt. (Forward Abutment) | Surface Elev. 610.5'

Elev.	Depth	Std. Pen. (N)	Rec. ft.	Loss ft.	Description	Sample No.	% Agg.	% C.S.	% F.S.	% Silt	% Clay	L.L.	P.I.	W.C.	SHTL Class.
610.5	0														
	2														
	4														
605.5	6	10/16			Brown Silt	1	0	0	13	82	5	NP	NP	24	A-4b
	8														
600.5	10	7/10			Gray Silt	2	0	0	2	80	18	NP	NP	20	A-4b
	12														
	14														
595.5	16	1/2			Gray Silt	3	0	0	11	55	34	21	1	33	A-4b
	18														
590.5	20	4/4			Gray Silt	4	0	0	3	66	31	NP	NP	28	A-4b
	22														
	24														
585.5	26	3/3			Gray Silt	5	0	0	2	65	33	27	6	28	A-4b
583.0	28	3/3			Gray Silt	6	0	0	1	65	34	NP	NP	27	A-4b
580.5	30	3/4			Gray Clayey Silt	7	0	0	1	51	48	28	7	30	A-4b
578.0	32	3/3			Gray Clayey Silt	8	0	0	1	57	42	29	10	31	A-4b
575.5	34	3/4			Gray Clayey Silt	9	0	0	1	52	47	31	10	25	A-4b
573.0	36	3/4			Gray Clayey Silt	10	0	0	1	57	42	28	7	29	A-4b
570.5	38														
	40	4/6			Gray Clayey Silt	11	0	1	2	40	57	32	9	29	A-4a
	42														
	44														
565.5	46	4/6			Gray Silt and Clay	12	0	0	1	30	69	35	13	32	A-6a
	48														
560.5	50														
	52		4.6	0.4	TOP OF ROCK										
	54														
	56		5.0	0.0											
	58				Shale, dark-gray, hard, carbonaceous, fissile, broken and jointed. Core Loss 3%.										
	60														
	62		5.0	0.0											
545.5	64				BOTTOM OF BORING										

GENERAL INFORMATION

Drive Rod Penetration Sounding Tests

Drive rod penetration resistance tests constitute driving a 1.315-inch diameter steel rod, with a 45° cone point, into the ground, using a 122-pound drop-hammer with a free fall of five feet. At one or two-foot depth intervals, a measurement is taken to determine the amount of penetration achieved in three hammer drops. This reading is converted to an empirical value for capacity "R", in thousands of pounds (which is a measure of both the point resistance and frictional resistance on the rod), by using charts prepared by the Ohio Department of Highways, Bureau of Bridges, on the basis of correlation study of rod penetration with past performance of pile driving. For interpretation, a graph is prepared by plotting the value "R" against the depth at which the reading was taken, and connecting the plotted points. The curve so obtained reflects the density of subsurface materials in a manner that can be readily compared with data from similar tests at other locations on the structure site. From this comparison, the overall uniformity of subsurface condition may be evaluated.

Drive Sample Borings - Drive-Press Sample Borings

Drive sample borings are made by means of a rotary-type drill rig, employing a 2" O.D., 1-3/8" I.D. sampler, at 2-1/2 and / or 5-foot depth intervals, driven by means of a 140 - pound drop-hammer with a free fall of 30 inches. The number of blows required to drive the sampler 12 inches is considered the standard penetration test.

Drive-press sample borings are made by means of a rotary-type drill rig, employing a 2" O.D., 1-3/8" I.D. drive sampler, and 3" O.D. thin-wall press sampler. The press sampler is advanced by continuous uniform pressure, applied by the drill rig.

The boring log sheets show a graphic plot of the information obtained, including depth and elevation of the sample, number of blows for the standard penetration tests in two 6-inch increments, depth of press samples, field sample number, sample description - based on laboratory tests and the Casagrande AC classification system-and gradation, plasticity, and moisture content determinations. Results of strength and consolidation testing, if performed, appear on separate enclosures.

At depths where materials are bouldery or gravelly to the extent that the sampler can not be driven, a wash sample is procured for visual classification, in order to determine the general character of the material. These samples are not considered sufficiently representative to warrant laboratory testing.

Particle Size Definitions

Boulders	Cobbles	Gravel	Coarse Sand	Fine Sand	Silt	Clay
8"	3"	2.0mm (No. 10 sieve)	0.42mm (No. 40 sieve)	0.074mm (No. 200 sieve)	0.005mm	

NOTE: Information shown by this subsurface investigation was obtained solely for the use in establishing design controls for the project. The State of Ohio does not guarantee the accuracy of this data and it is not to be construed as a part of the plans governing construction of the project.

OHIO DEPARTMENT OF HIGHWAYS
TESTING LABORATORY
1620 WEST BROAD STREET, COLUMBUS 23, OHIO

STRUCTURE FOUNDATION INVESTIGATION
BRIDGE NO. ERI-2-1781
UNDER HURON AVERY ROAD
SEC. ERI-2-16.13

CHECKED BY	REVIEWED BY	DATE
L.N.L.	R.D.R.	4/22/68

TP-119
1000-4-66

MICROFILMED
SEP 4 1968

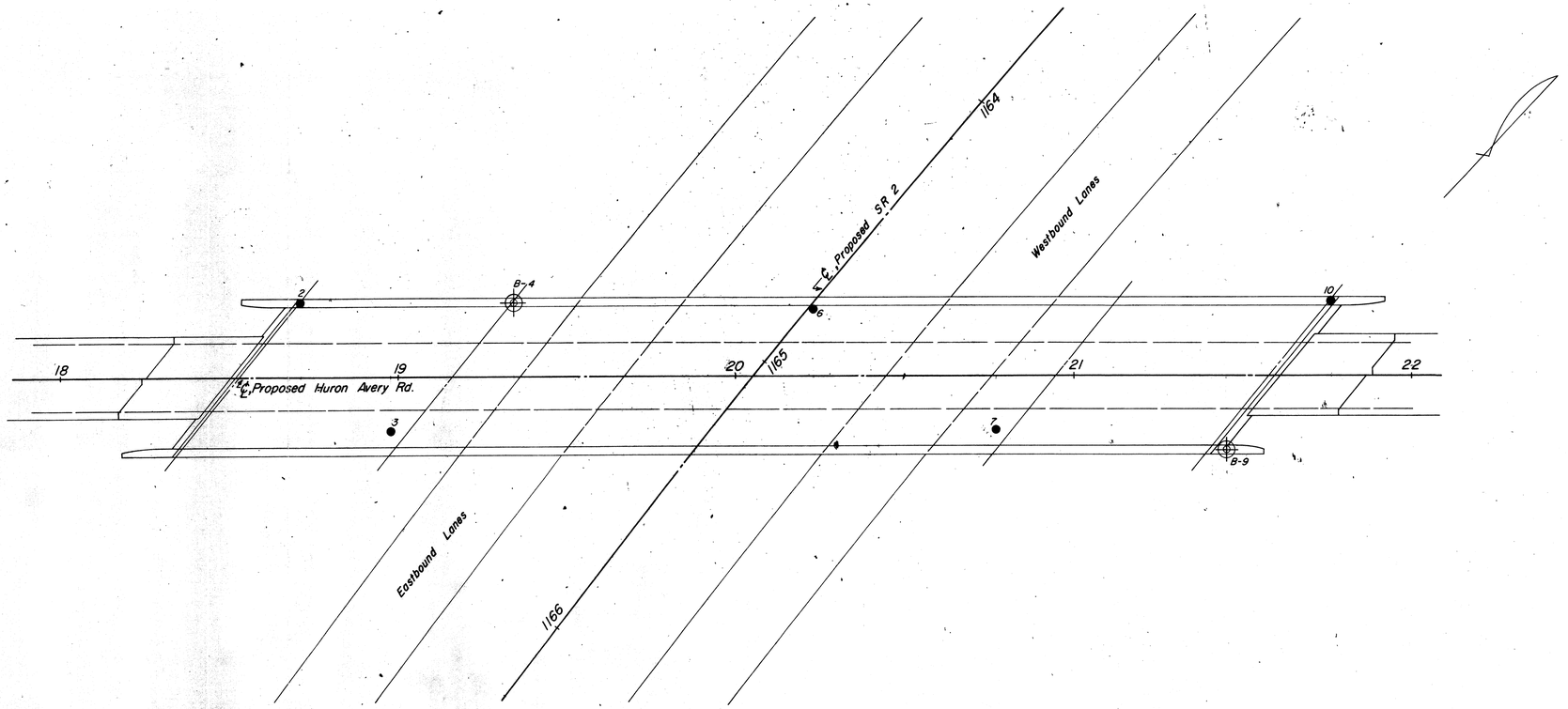

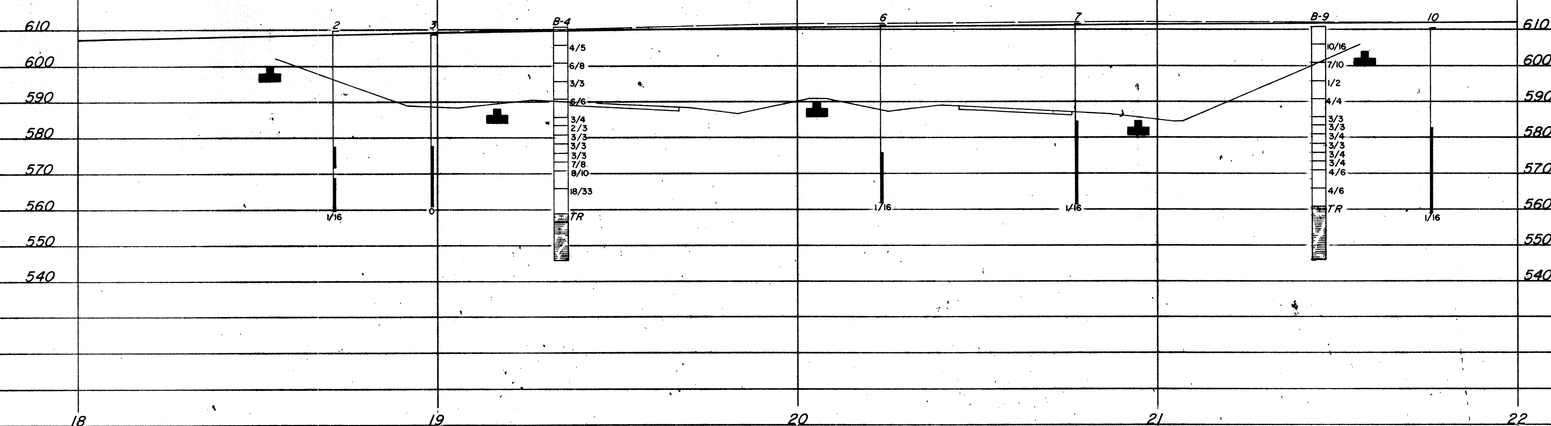

SCALE: 1" = 20'

OHIO DEPARTMENT OF HIGHWAYS TESTING LABORATORY 1620 WEST BROAD STREET, COLUMBUS 23, OHIO			
STRUCTURE FOUNDATION INVESTIGATION BRIDGE NO. ERI-2-1781 UNDER HURON AVERY ROAD SEC. ERI-2-16.13			
PLAN AND PROFILE			
DRAWN BY J.E.C.	CHECKED BY L.N.L.	REVIEWED BY R.D.R.	DATE 4/22/68

TE-114
1000-9-67

MICROFILMED
SEP 4 1968

21
32

3
3

ERI-2-16.13

Test Location No.	Station & Offset	Surface Elev.	Water Elev.	Piling	Hammer	Formula	Reference	Rod Condition
		616						
1								
2	18+71.22'LT	609.9						GOOD
	REAR ABUTMENT							
3	18+98.16'RT	608.8						GOOD
	REAR PIER							
6	20+23.20'LT	612						GOOD
	CENTER PIER							
7	20+77.16'RT	611.5						GOOD
	FORWARD PIER							
10	21+76.22'LT	610.1						GOOD
	FORWARD ABUTMENT							

612 608 604 600 596 592 588 584 580 576 572 568 564 560 556

TEST ROD

10 20 30 40 50 60 70 80 90 100
Capacity "R" in Thousands of Pounds

OHIO STATE HIGHWAY TESTING LABORATORY
1620 WEST BROAD ST. COLUMBUS 23, OHIO

STRUCTURE FOUNDATION INVESTIGATION
BRIDGE NO. ERI-2-1781
UNDER HURON AVERY ROAD
SEC. ERI-2-16.13

DRIVE ROD PENETRATION RESISTANCE DATA

PLOTTED BY	CHECKED BY	REVIEWED BY	DATE
R.C.	L.N.L.	R.D.R.	4/22/68

H. COLE CO.-80M-10-67-1000

TE - 118
600 - 6 - 73

GEOLOGY OF THE SITE

THE STRUCTURE SITE IS LOCATED IN THE RELATIVELY FLAT GLACIATED LAKE PLAIN REGION, ON THE INUNDATED FLOODPLAIN OF AND OVER MUD BROOK, IN AN AREA WHERE SHALLOW TO THIN SEDIMENTS (PEAT AT-SURFACE) OVERLIES SHALE BEDROCK, OF DEVONIAN AGE.

EXPLORATION

THE EXPLORATION CONSISTED OF TWO DRIVE SAMPLE-CORE BORINGS AND TWO CORE BORINGS MADE BY MEANS OF A MECHANICALLY-POWERED HOLLOW STEM AUGER AND SOLID STEM AUGER MOUNTED ON A BARGE, PERFORMED ON OCTOBER 27, 28 AND 29, 1981 AND ON MAY 11 AND 12, 1982. PRIOR EXPLORATION CONSISTED OF FOUR MANUALLY-DRIVEN PROBES PERFORMED ON APRIL 17, 1968. ALSO INCLUDED WITH THIS REPORT ARE THE LOGS OF FOUR BORINGS MADE BY MEANS OF A PEAT SAMPLER DEVICE IN CONJUNCTION WITH THE ROADWAY INVESTIGATION.

INVESTIGATIONAL FINDINGS AND OBSERVATIONS

THE BORINGS DISCLOSED THAT INTERVALS OF EXTREMELY LOOSE TO MEDIUM-DENSE UNSTRATIFIED BASIC CLAYS AND RIVER SEDIMENTS MODIFIED WITH SILTS, SAND AND GRAVEL THAT GRADUALLY INCREASE IN DENSITY WITH INCREASE IN DEPTH OVERLIE RELATIVELY FLAT-LYING BEDROCK SURFACE, ENCOUNTERED AT 14.5 TO 15.0-FOOT DEPTH, ELEVATION 559.0 TO 557.5 FEET. THE BORINGS WERE TERMINATED AT 19.0 TO 20.5-FOOT DEPTH, ELEVATION 554.0 TO 552.0 FEET, AFTER PENETRATING 4.5 TO 5.5 FEET BELOW BEDROCK SURFACE.

THE PEAT SAMPLER BORINGS DISCLOSED 3 TO 5 FEET OF PEAT DEPOSITS OVERLYING SOFT SILT CLAYS. THE BORINGS WERE TERMINATED AT 7 TO 10-FOOT DEPTHS, ELEVATIONS 565 TO 561 FEET, CONSIDERED TO BE ON OR SLIGHTLY ABOVE BEDROCK SURFACE.

THE MANUALLY-DRIVEN PROBES MET REFUSAL TO PENETRATION AT 10 TO 12-FOOT DEPTHS, ELEVATIONS 560 TO 559 FEET, CONSIDERED TO BE ON BEDROCK SURFACE.

LEGEND

- Auger Boring Location - Plan View.
- Press and / or Drive Sample and / or Core Boring Location - Plan View.
- Drive Rod Penetration Resistance Sounding Location - Plan View.
- Capped Pile
- indicates Right Structure Footing on Pile and Ground Line.
- indicates Left Structure Footing on Pile and Ground Line.
- *TR* Top of Rock

- Horizontal Bar on Boring Log Indicates the Depth the Sample Was Taken.
- X/Y/Z Figures Beside the Boring Log in Profile Indicate the Number of Blows for Standard Penetration Test.
  - X = Number of Blows for First 6 inches.
  - Y = Number of Blows for Second 6 inches.
  - Z = Number of Blows for Third 6 inches.
- Drive Rod Penetration Resistance Sounding Log - Profile
- Casing
- Resistance "R" < 10,000 lbs.
- Resistance "R" > 10,000 lbs.
- Z Indicates Final Measurement of Penetration, in Inches.
- W Indicates Free Water Elevation.
- Indicates Static Water Elevation.

SYMBOLS OF ROCK TYPES

- Coal
- Weathered Mudstone or Claystone
- Mudstone or Claystone
- Weathered Shale
- Shale
- Weathered Siltstone
- Siltstone
- Weathered Sandstone
- Sandstone
- Leached Dolomite
- Dolomite
- Leached Limestone
- Limestone
- Boulders or Cobbles

GENERAL INFORMATION

Drive Rod Penetration Sounding Tests

Drive rod penetration resistance tests constitute driving a 1.315-inch diameter steel rod, with a 45° cone point, into the ground, using a 122-pound drop-hammer with a free fall of five feet. At one or two-foot depth intervals, a measurement is taken to determine the amount of penetration achieved in three hammer drops. This reading is converted to an empirical value for capacity "R", in thousands of pounds (which is a measure of both the point resistance and frictional resistance on the rod), by using charts prepared by the Ohio Department of Highways, Bureau of Bridges, on the basis of correlation study of rod penetration with past performance of pile driving. For interpretation, a graph is prepared by plotting the value "R" against the depth at which the reading was taken, and connecting the plotted points. The curve so obtained reflects the density of subsurface materials in a manner that can be readily compared with data from similar tests at other locations on the structure site. From this comparison, the overall uniformity of subsurface condition may be evaluated.

Drive Sample Borings - Drive-Press Sample Borings

Drive sample borings are made by means of a rotary-type drill rig, employing a 2" O.D., 1-3/8" I.D. sampler, at 2-1/2 and / or 5-foot depth intervals, driven by means of a 140 - pound drop-hammer with a free fall of 30 inches. The number of blows required to drive the sampler 18 inches is considered the standard penetration test.

Drive-press sample borings are made by means of a rotary-type drill rig, employing a 2" O.D., 1-3/8" I.D. drive sampler, and 3" O.D. thin-wall press sampler. The press sampler is advanced by continuous uniform pressure, applied by the drill rig.

The boring log sheets show a graphic plot of the information obtained, including depth and elevation of the sample, number of blows for the standard penetration tests in three 6-inch increments, depth of press samples, field sample number, sample description - based on laboratory tests and the Casagrande AC classification system - and gradation, plasticity, and moisture content determinations. Results of strength and consolidation testing, if performed, appear on separate enclosures.

At depths where materials are bouldery or gravelly to the extent that the sampler can not be driven, a wash sample is procured for visual classification, in order to determine the general character of the material. These samples are not considered sufficiently representative to warrant laboratory testing.

Particle Size Definitions

Boulders	Cobbles	Gravel	Coarse Sand	Fine Sand	Silt	Clay
12"	3"	2.0mm (No. 10 sieve)	0.42mm (No. 40 sieve)	0.074mm (No. 200 sieve)	0.005mm	

NOTE - ALL AVAILABLE SOIL AND BEDROCK INFORMATION WHICH CAN BE CONVENIENTLY SHOWN ON THE STRUCTURE FOUNDATION INVESTIGATION SHEETS HAS BEEN SO REPORTED. ADDITIONAL SUBSURFACE INVESTIGATIONS MAY HAVE BEEN MADE TO STUDY SOME SPECIAL ASPECT OF THE PROJECT. COPIES OF THIS DATA, IF ANY, MAY BE INSPECTED IN THE DISTRICT DEPUTY DIRECTOR'S OFFICE, THE BUREAU OF TESTS AT 1600 WEST BROAD STREET, THE PAVEMENT AND SOILS SECTION OF THE BUREAU OF LOCATION AND DESIGN OR IN THE BRIDGE BUREAU AT 25 SOUTH FRONT STREET.

Revised 10/12/82

NOTE: Information shown by this subsurface investigation was obtained solely for the use in establishing design controls for the project. The State of Ohio does not guarantee the accuracy of this data and it is not to be construed as a part of the plans governing construction of the project.

OHIO DEPARTMENT OF TRANSPORTATION
DIVISION OF HIGHWAYS — TESTING LABORATORY
1600 WEST BROAD STREET, COLUMBUS, OHIO 43223

STRUCTURE FOUNDATION INVESTIGATION
BRIDGE NO. ERI-2-1798
OVER MUD BROOK
SEC. ERI-2-16.13

CHECKED BY	REVIEWED BY	DATE
L. N. L.	G. P. H.	5/22/68

TE - 121
200 - 10 - 73

23
32

ERI-2-16.13

2
5

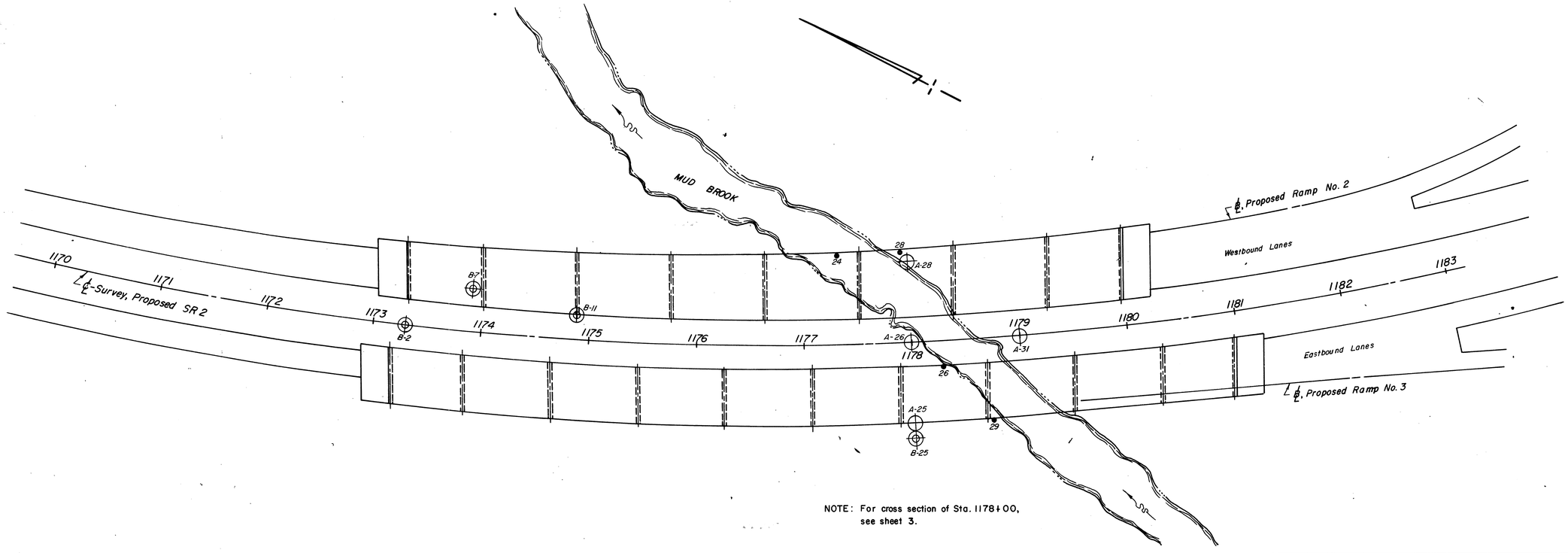

NOTE: For cross section of Sta. 1178+00, see sheet 3.

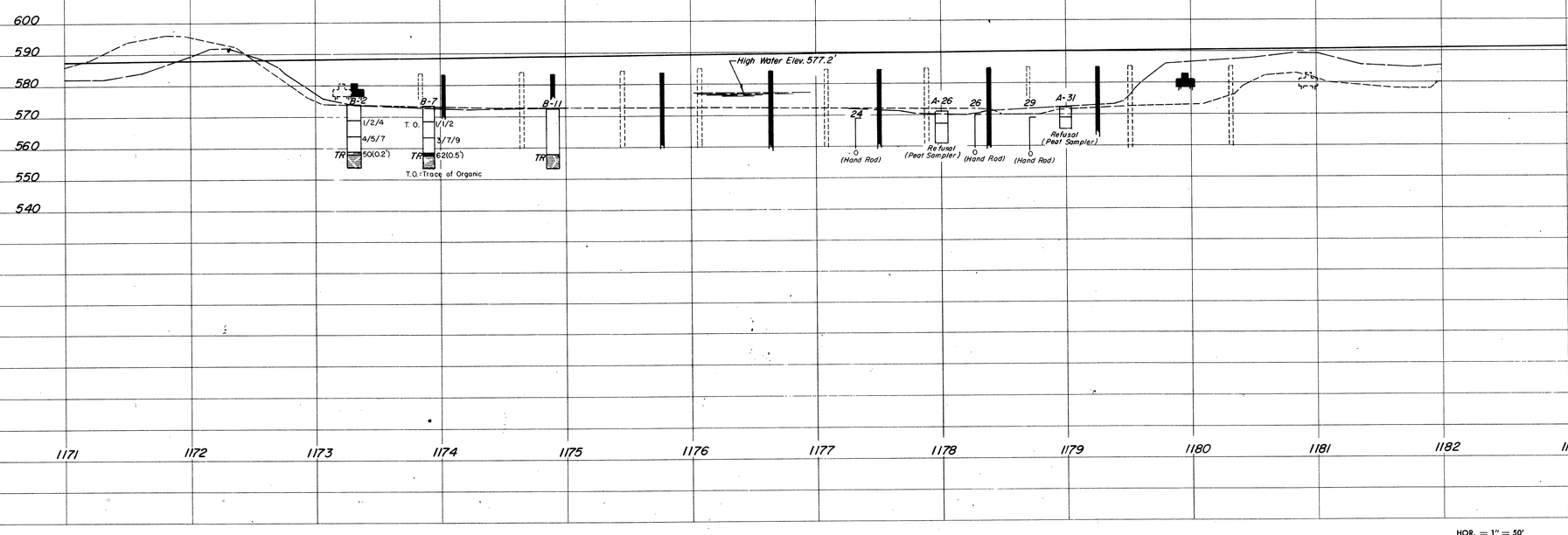

SCALE: HOR. = 1" = 50'
VERT. = 1" = 20'

Revised 10/12/82

OHIO DEPARTMENT OF TRANSPORTATION
DIVISION OF HIGHWAYS - TESTING LABORATORY
1600 WEST BROAD STREET COLUMBUS, OHIO 43223

STRUCTURE FOUNDATION INVESTIGATION
BRIDGE NO. ERI-2-1798
OVER MUD BROOK
SEC. ERI-2-16.13

PLAN AND PROFILE

DRAWN BY	CHECKED BY	REVIEWED BY	DATE
J. E. C.	L. N. L.	G. P. H.	5/22/68

TE - 121
200 - 10 - 73

MICROFILMED
SEP 4 1990

CROSS SECTION
Sta. 1178+00

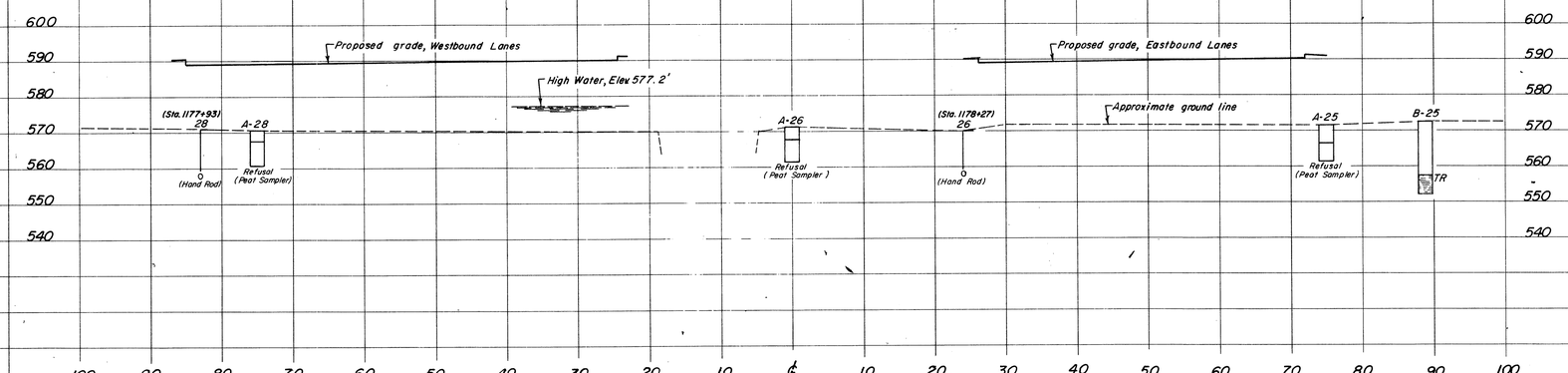

SCALE: HOR. = 1" = 10'
VERT. = 1" = 20'

Supplement 10/12/82

OHIO DEPARTMENT OF TRANSPORTATION
DIVISION OF HIGHWAYS - TESTING LABORATORY
1600 WEST BROAD STREET COLUMBUS, OHIO 43223

STRUCTURE FOUNDATION INVESTIGATION
BRIDGE NO. ERI-2- 17.98
OVER MUD BROOK
SEC. ERI-2-16.13

PLAN AND PROFILE

DRAWN BY	CHECKED BY	REVIEWED BY	DATE
A. F.	L. N. L.	R. D. R.	10/12/82

TE - 122
400 - 12 - 72

MICROFILMED
SEP 4 1990

LOG OF BORING

Date Started 10/27/81 Sampler Type SS Dia. 1 3/8" Water Elev. ____
Date Completed 10/28/81 Casing: Length ____ Dia. ____
Boring No. B-2 Station & Offset 1173+30 - CL (REAR ABUTMENT) Surface Elev. 574.0'

Elev.	Depth	Std. Pen. (N)	Rec. ft.	Loss ft.	Description	Sample No.	Physical Characteristics: % Agg.	% C.S.	% F.S.	% Silt	% Clay	L.L.	P.I.	W.C.	SHTL Class.
574.0	0														
	2														
569.0	4														
	6	1/2/4			BROWN-GRAY SILTY CLAY	1	5	1	9	41	44	36	19	23	A-6b
564.0	8														
	10														
	12	4/5/7			BROWN-GRAY SILTY CLAY	2	3	0	2	18	77	42	19	26	A-7-6
559.0	14														
					TOP OF ROCK										
558.0	16	50(0.2')			**										
	18		3.1	0.9	CLAY SHALE, DARK-GRAY, HARD CARBONACEOUS, FISSILE, BROKEN. CORE LOSS 22%										
554.0	20														

BOTTOM OF BORING

* DK-GRAY CARBONACEOUS CLAY SHALE 3 - - - - - - - 10 VISUAL

** DK-GRAY CARBONACEOUS CLAY SHALE (DRILLER'S DESCRIPTION)

LOG OF BORING

Date Started 10/28/81 Sampler Type SS Dia. 1 3/8" Water Elev. ____
Date Completed 10/29/81 Casing: Length ____ Dia. ____
Boring No. B-7 Station & Offset 1173+90 - 40' LT. (1st Pier) Surface Elev. 573.5

Elev.	Depth	Std. Pen. (N)	Rec. ft.	Loss ft.	Description	Sample No.	Physical Characteristics: % Agg.	% C.S.	% F.S.	% Silt	% Clay	L.L.	P.I.	W.C.	SHTL Class.
573.5	0														
	2														
568.5	4														
	6	1/1/2			BROWN-GRAY SILT AND CLAY, TRACE OF ORGANIC	4	0	1	6	42	51	38	14	37	A-6a
563.5	8														
	10														
	12	3/7/9			GRAY-BROWN SILTY CLAY	5	12	0	3	23	62	42	20	24	A-7-6
558.5	14														
					TOP OF ROCK										
557.7	16	62(0.5')			*										
	18		3.8	0.4	CLAY SHALE, DARK-GRAY, HARD, CARBONACEOUS, FISSILE, BROKEN. CORE LOSS 10 %										
553.5	20														

BOTTOM OF BORING

* DR GRAY CARBONACEOUS CLAY SHALE 6 76 8 4 5 7 NP NP 9 VISUAL

** GRAY CLAY SHALE (DRILLER'S DESCRIPTION)

LOG OF BORING

Date Started 5-11-82 Sampler Type SS Dia. 1 3/8 Water Elev. ____
Date Completed 5-11-82 Casing: Length ____ Dia. ____
Boring No. B-11 Station & Offset 1174+89, 23' LT. (2nd Pier) Surface Elev. 572.5'

Elev.	Depth	Std. Pen. (N)	Rec. ft.	Loss ft.	Description	Sample No.	Physical Characteristics: % Agg.	% C.S.	% F.S.	% Silt	% Clay	L.L.	P.I.	W.C.	SHTL Class.
572.5	0														
	2														
	4														
	6				RIVER SEDIMENTS	-	-	-	-	-	-	-	-	-	VISUAL
	8														
	10														
	12														
558.0	14														
					TOP OF ROCK										
	16														
	18		4.3	0.2	CLAY SHALE, DARK-GRAY, HARD, CARBONACEOUS, MASSIVE, BROKEN. CORE LOSS 4%.										
553.5															

BOTTOM OF BORING

LOG OF BORING

Date Started 5-12-82 Sampler Type SS Dia. 1 3/8 Water Elev. ____
Date Completed 5-12-82 Casing: Length ____ Dia. ____
Boring No. B-25 Station & Offset 1178+00, 89' RT. (6th Pier) Surface Elev. 572.5'

Elev.	Depth	Std. Pen. (N)	Rec. ft.	Loss ft.	Description	Sample No.	Physical Characteristics: % Agg.	% C.S.	% F.S.	% Silt	% Clay	L.L.	P.I.	W.C.	SHTL Class.
572.5	0														
	2														
	4														
	6														
	8				RIVER SEDIMENTS	-	-	-	-	-	-	-	-	-	VISUAL
	10														
	12														
	14														
557.5					TOP OF ROCK										
	16														
	18		5.3	0.2	CLAY SHALE, DARK GRAY, HARD, CARBONACEOUS, MASSIVE, BROKEN. CORE LOSS 4%.										
552.0	20														

BOTTOM OF BORING

LOG OF BORING

Date Started 7/13/67 Sampler Type PEAT SAMPLER Water Elev. Immediate 572.5'
Date Completed 7/13/67 After ____ Hours ____
Boring No. A-25 Station & Offset 1178+00 75' RT. (6th PIER) Surface Elev. 571.5'

Elev.	Depth	Description	Field No.	Lab. Nos. So.	Physical Characteristics: % Agg.	% C.S.	% F.S.	% Silt	% Clay	L.L.	P.I.	W.C.	SHTL Class.
571.5	0												
	2												
	4	BROWN SEDIMENTARY PEAT	75	47664	-	-	-	-	-	79	-	124	VISUAL
566.5	6												
	8	GRAY SILT AND CLAY	85	47665	0	0	4	52	44	33	15	20	A-6A
561.5	10												

BOTTOM OF BORING (REFUSAL)

LOG OF BORING

Date Started 7-13-67 Sampler Type PEAT SAMPLER Water Elev. Immediate 572.8'
Date Completed 7-13-67 After ____ Hours ____
Boring No. A-26 Station & Offset 1178+00 CL (6th PIER) Surface Elev. 571.2'

Elev.	Depth	Description	Field No.	Lab. Nos. So.	Physical Characteristics: % Agg.	% C.S.	% F.S.	% Silt	% Clay	L.L.	P.I.	W.C.	SHTL Class.
571.2	0												
	2	GRAY SEDIMENTARY PEAT	35	47660	-	-	-	-	-	83	-	70	VISUAL
567.6	4												
	6	GRAY SILT AND CLAY	45	47661	0	3	12	48	37	30	13	34	A-6A
561.2	8												
	10												

BOTTOM OF BORING (REFUSAL)

LOG OF BORING

Date Started 7-13-67 Sampler Type PEAT SAMPLER Water Elev. Immediate 572.4'
Date Completed 7-13-67 After ____ Hours ____
Boring No. A-28 Station & Offset 1178+00 75' LT. (6th PIER) Surface Elev. 570.5'

Elev.	Depth	Description	Field No.	Lab. Nos. So.	Physical Characteristics: % Agg.	% C.S.	% F.S.	% Silt	% Clay	L.L.	P.I.	W.C.	SHTL Class.
570.5	0												
	2	GRAY SEDIMENTARY PEAT	55	47662	-	-	-	-	-	175	-	79	VISUAL
567.5	4												
	6												
	8	GRAY SILT AND CLAY	65	47663	0	0	4	52	44	33	15	20	A-6A
560.5	10												

BOTTOM OF BORING (REFUSAL)

LOG OF BORING

Date Started 7/13/67 Sampler Type PEAT SAMPLER Water Elev. Immediate 574.1'
Date Completed 7/13/67 After ____ Hours ____
Boring No. A-31 Station & Offset 1179+00 CL (7th pier) Surface Elev. 572.1'

Elev.	Depth	Description	Field No.	Lab. Nos. So.	Physical Characteristics: % Agg.	% C.S.	% F.S.	% Silt	% Clay	L.L.	P.I.	W.C.	SHTL Class.
572.1	0												
	2	BROWN WOODY PEAT	15	47658	-	-	-	-	-	-	-	93	VISUAL
569.1	4												
	6	GRAY SILTY CLAY	25	47659	0	1	6	47	46	PL =	17	28	A-6A
565.1													

BOTTOM OF BORING (REFUSAL)

Supplement 10/12/82

OHIO DEPARTMENT OF TRANSPORTATION
DIVISION OF HIGHWAYS - TESTING LABORATORY
1600 WEST BROAD STREET COLUMBUS, OHIO 43223

STRUCTURE FOUNDATION INVESTIGATION
BRIDGE NO. ERI-2-1798
OVER MUD BROOK
SEC. ERI-2-16.13

BORING DATA

TYPED BY	CHECKED BY	REVIEWED BY	DATE
S. M. G.	L. N. L.	R. D. R.	10/12/82

MICROFILMED
SEP 4 1990

Test Location No. ____
Station & Offset ____
Surface Elev. ____ Water Elev. ____
Piling ____
Hammer ____
Formula ____
Reference ____
Rod Condition ____

575
571
567
563
559
555

10 20 30 40 50 60 70 80 90 100
Capacity "R" in Thousands of Pounds

Test Location No. ____
Station & Offset ____
Surface Elev. ____ Water Elev. ____
Piling ____
Hammer ____
Formula ____
Reference ____
Rod Condition ____

10 20 30 40 50 60 70 80 90 100
Capacity "R" in Thousands of Pounds

Test Location No. ____
Station & Offset ____
Surface Elev. ____ Water Elev. ____
Piling ____
Hammer ____
Formula ____
Reference ____
Rod Condition ____

10 20 30 40 50 60 70 80 90 100
Capacity "R" in Thousands of Pounds

Test Location No. ____
Station & Offset ____
Surface Elev. ____ Water Elev. ____
Piling ____
Hammer ____
Formula ____
Reference ____
Rod Condition ____

10 20 30 40 50 60 70 80 90 100
Capacity "R" in Thousands of Pounds

Test Location No. 24
Station & Offset 1177+32-82' Lt. 5th. Pier
Surface Elev. 569.0' Water Elev. 572.0'
Piling ____
Hammer ____
Formula ____
Reference ____
Rod Condition ____

567
563
559
555
HAND ROD

10 20 30 40 50 60 70 80 90 100
Capacity "R" in Thousands of Pounds

Test Location No. 28
Station & Offset 1177+93-83' Lt. 6th. Pier
Surface Elev. 571.0' Water Elev. 572.0'
Piling ____
Hammer ____
Formula ____
Reference ____
Rod Condition ____

HAND ROD

10 20 30 40 50 60 70 80 90 100
Capacity "R" in Thousands of Pounds

Test Location No. 26
Station & Offset 1178+27-24' Rt. 6th. Pier
Surface Elev. 570.0 Water Elev. 572.0'
Piling ____
Hammer ____
Formula ____
Reference ____
Rod Condition ____

HAND ROD

10 20 30 40 50 60 70 80 90 100
Capacity "R" in Thousands of Pounds

Test Location No. 29
Station & Offset 1178+71-76' Rt. 7th. Pier
Surface Elev. 568.9' Water Elev. 572.0'
Piling ____
Hammer ____
Formula ____
Reference ____
Rod Condition ____

567
563
559
555
HAND ROD

10 20 30 40 50 60 70 80 90 100
Capacity "R" in Thousands of Pounds

26/32
5/5
ERI-2-16.13

Revised 10/12/82

OHIO STATE HIGHWAY TESTING LABORATORY
1620 WEST BROAD ST. COLUMBUS 23, OHIO

STRUCTURE FOUNDATION INVESTIGATION
BRIDGE NO. ERI-2-1798
OVER MUD BROOK
SEC. ERI-2-16.13

DRIVE ROD PENETRATION RESISTANCE DATA

PLOTTED BY	CHECKED BY	REVIEWED BY	DATE
R.C.	L.N.L.	G.P.H.	5/22/68

H. COLE CO. -BDM-11-67-100

TE - 118
600 - 4 - 66

ERIE COUNTY
ERI-2-16.13

GEOLOGY OF THE SITE
THE STRUCTURE SITE IS LOCATED ON THE FLAT, GLACIATED LAKE PLAIN, ON THE FLOOD PLAIN AND OVER MUD BROOK, IN AN AREA WHERE SHALLOW SEDIMENTS (PEAT AT-SURFACE) OVERLIES SHALE BEDROCK, OF DEVONIAN AGE.

EXPLORATION
THE EXPLORATION CONSISTED OF FOUR HAND DRIVEN PROBES, MADE ON APRIL 17, 1968. INCLUDED WITH THIS REPORT ARE THE LOGS OF FOUR BORINGS MADE BY MEANS OF PEAT SAMPLER FOR THE ROADWAY INVESTIGATION.

INVESTIGATIONAL FINDINGS
THE PEAT SAMPLER BORINGS DISCLOSED 3 TO 5 FEET OF PEAT DEPOSITS OVERLYING SOFT SILT CLAYS. THE BORINGS WERE TERMINATED AT 7 TO 10-FOOT DEPTHS, ELEVATIONS 565 TO 561 FEET, CONSIDERED TO BE ON OR SLIGHTLY ABOVE BEDROCK SURFACE.

THE HAND DRIVEN PROBES MET REFUSAL TO PENETRATION AT 10 TO 12-FOOT DEPTHS, ELEVATIONS 560 AND 559 FEET, CONSIDERED TO BE ON BEDROCK SURFACE.

ON THE BASIS OF THE BORINGS, HAND PROBES AND THE GEOLOGY OF THE AREA, BEDROCK SURFACE IS CONSIDERED TO BE FLAT-LYING ACROSS THE SITE AT APPROXIMATE ELEVATION 560 FEET.

LEGEND

- Auger Boring Location - Plan View.
- Press and / or Drive Sample and / or Core Boring Location - Plan View.
- Drive Rod Penetration Resistance Sounding Location - Plan View.
- Capped Pile
- Footing
- Footing on Pile
- TR — Top of Rock
- Horizontal Bar on Boring Log Indicates the Depth the Sample Was Taken.
- X/Y — Figures Beside the Boring Log in Profile Indicate the Number of Blows for Standard Penetration Test.
  X = Number of Blows for First 6 inches.
  Y = Number of Blows for Second 6 inches.
- Drive Rod Penetration Resistance Sounding Log - Profile
- Casing
- Resistance "R" < 10,000 lbs.
- Resistance "R" > 10,000 lbs.
- Z — Indicates Final Measurement of Penetration, in Inches.
- W — Indicates Free Water Elevation.
- Indicates Static Water Elevation.

SYMBOLS OF ROCK TYPES

- Coal
- Weathered Indurated Clay
- Indurated Clay
- Weathered Shale
- Shale
- Weathered Sandstone
- Sandstone
- Leached Dolomite
- Dolomite

GENERAL INFORMATION

Drive Rod Penetration Sounding Tests

Drive rod penetration resistance tests constitute driving a 1.315-inch diameter steel rod, with a 45° cone point, into the ground, using a 122-pound drop-hammer with a free fall of five feet. At one or two-foot depth intervals, a measurement is taken to determine the amount of penetration achieved in three hammer drops. This reading is converted to an empirical value for capacity "R", in thousands of pounds (which is a measure of both the point resistance and frictional resistance on the rod), by using charts prepared by the Ohio Department of Highways, Bureau of Bridges, on the basis of correlation study of rod penetration with past performance of pile driving. For interpretation, a graph is prepared by plotting the value "R" against the depth at which the reading was taken, and connecting the plotted points. The curve so obtained reflects the density of subsurface materials in a manner that can be readily compared with data from similar tests at other locations on the structure site. From this comparison, the overall uniformity of subsurface condition may be evaluated.

Drive Sample Borings - Drive-Press Sample Borings

Drive sample borings are made by means of a rotary-type drill rig, employing a 2" O.D., 1-3/8" I.D. sampler, at 2-1/2 and / or 5-foot depth intervals, driven by means of a 140 - pound drop-hammer with a free fall of 30 inches. The number of blows required to drive the sampler 12 inches is considered the standard penetration test.

Drive-press sample borings are made by means of a rotary-type drill rig, employing a 2" O.D., 1-3/8" I.D. drive sampler, and 3" O.D. thin-wall press sampler. The press sampler is advanced by continuous uniform pressure, applied by the drill rig.

The boring log sheets show a graphic plot of the information obtained, including depth and elevation of the sample, number of blows for the standard penetration tests in two 6-inch increments, depth of press samples, field sample number, sample description - based on laboratory tests and the Casagrande AC classification system - and gradation, plasticity, and moisture content determinations. Results of strength and consolidation testing, if performed, appear on separate enclosures.

At depths where materials are bouldery or gravelly to the extent that the sampler can not be driven, a wash sample is procured for visual classification, in order to determine the general character of the material. These samples are not considered sufficiently representative to warrant laboratory testing.

Particle Size Definitions

Boulders	Cobbles	Gravel	Coarse Sand	Fine Sand	Silt	Clay
8"	3"	2.0mm (No. 10 sieve)	0.42mm (No. 40 sieve)	0.074mm (No. 200 sieve)	0.005mm	

State of Ohio
Department of Highways
Testing Laboratory

LOG OF BORING

Date Started 7-13-67 Sampler Type Peat Sampler Water Elev. Immediate 572.6'
Date Completed 7-13-67 After ___ Hours ___
Boring No. 1A Station & Offset 1178+00, 75' Lt. Surface Elev. 570.5'

Elev.	Depth	Description	Field No.	Lab. Nos. So.	Physical Characteristics: % Agg.	% C.S.	% F.S.	% Silt	% Clay	L.L.	P.I.	W.C.	AASHTO Class.
570.5	0												
	2	Gray Sedimentary Peat	55	47662						175	-	79	Visual
567.5	4												
	6												
	8	Gray Silt and Clay	65	47663	0	0	4	52	44	33	15	20	A-6a
560.5	10												

BOTTOM OF BORING
Refusal = Peat Sampler

State of Ohio
Department of Highways
Testing Laboratory

LOG OF BORING

Date Started 7-13-67 Sampler Type Peat Sampler Water Elev. Immediate 572.8'
Date Completed 7-13-67 After ___ Hours ___
Boring No. 2A Station & Offset 1178+00, CL. Surface Elev. 571.2'

Elev.	Depth	Description	Field No.	Lab. Nos. So.	Physical Characteristics: % Agg.	% C.S.	% F.S.	% Silt	% Clay	L.L.	P.I.	W.C.	AASHTO Class.
571.2	0												
	2	Gray Sedimentary Peat	35	47660						83	-	70	Visual
567.6	4												
	6												
	8	Gray Silt and Clay	45	47661	0	3	12	48	37	30	13	34	A-6a
561.2	10												

BOTTOM OF BORING
Refusal - Peat Sampler

State of Ohio
Department of Highways
Testing Laboratory

LOG OF BORING

Date Started 7-13-67 Sampler Type Peat Sampler Water Elev. Immediate 572.5'
Date Completed 7-13-67 After ___ Hours ___
Boring No. 3A Station & Offset 1178+00, 75' Rt. Surface Elev. 571.5'

Elev.	Depth	Description	Field No.	Lab. Nos. So.	Physical Characteristics: % Agg.	% C.S.	% F.S.	% Silt	% Clay	L.L.	P.I.	W.C.	AASHTO Class.
571.5	0												
	2												
	4	Brown Sedimentary Peat	75	47664						79	-	124	Visual
566.5	6												
	8	Gray Silt and Clay	85	47665	0	0	4	52	44	33	15	20	A-6a
561.5	10												

BOTTOM OF BORING
Refusal - Peat Sampler

State of Ohio
Department of Highways
Testing Laboratory

LOG OF BORING

Date Started 7-13-67 Sampler Type Peat Sampler Water Elev. Immediate 574.1'
Date Completed 7-13-67 After ___ Hours ___
Boring No. 4A Station & Offset 1179+00, CL. Surface Elev. 572.1'

Elev.	Depth	Description	Field No.	Lab. Nos. So.	Physical Characteristics: % Agg.	% C.S.	% F.S.	% Silt	% Clay	L.L.	P.I.	W.C.	AASHTO Class.
572.1	0												
	2	Brown Woody Peat	15	47658								93	Visual
569.1	4												
	6	Gray Silty Clay	25	47659	0	1	6	47	46	PL =	17	28	A-6a
565.1													

BOTTOM OF BORING
Refusal = Peat Sampler

NOTE: Information shown by this subsurface investigation was obtained solely for the use in establishing design controls for the project. The State of Ohio does not guarantee the accuracy of this data and it is not to be construed as a part of the plans governing construction of the project.

OHIO DEPARTMENT OF HIGHWAYS
TESTING LABORATORY
1620 WEST BROAD STREET, COLUMBUS 23, OHIO

STRUCTURE FOUNDATION INVESTIGATION
BRIDGE NO. ERI-2-1806 L/R
OVER MUD BROOK
SEC. ERI-2-16.13

CHECKED BY	REVIEWED BY	DATE
L.N.L.	G. P. H.	5/22/68

TE - 119
1000 - 4 - 66

28
32

ERI-2-16.13

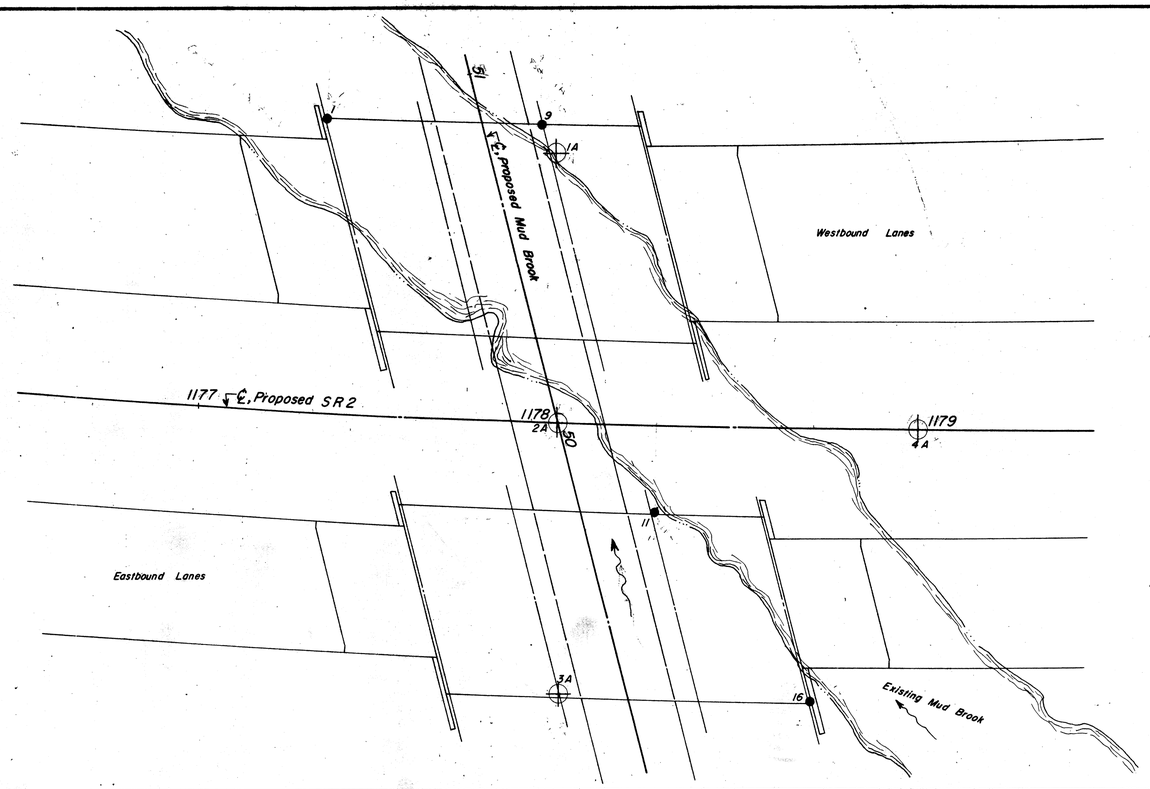

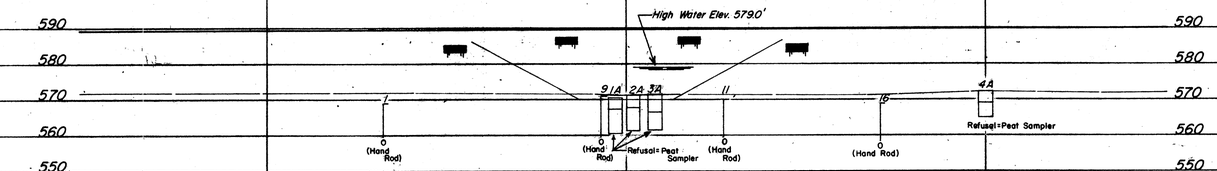

SCALE: 1" = 20'

OHIO DEPARTMENT OF HIGHWAYS
TESTING LABORATORY
1620 WEST BROAD STREET, COLUMBUS 23, OHIO

STRUCTURE FOUNDATION INVESTIGATION
BRIDGE NO. ERI-2-1806 L/R
OVER MUD BROOK
SEC. ERI-2-16.13

PLAN AND PROFILE

DRAWN BY	CHECKED BY	REVIEWED BY	DATE
J.E.C.	L.N.L.	G.P.H.	5/22/68

ERI-2-16.13 (3/3)

Test Location No. ——
Station & Offset ——
Surface Elev. 574.0 Water Elev. ——
Piling ——
Hammer ——
Formula ——
Reference ——
Rod Condition ——

Test Location No. ——
Station & Offset ——
Surface Elev. ——Water Elev. ——
Piling ——
Hammer ——
Formula ——
Reference ——
Rod Condition ——

Test Location No. ——
Station & Offset ——
Surface Elev. ——Water Elev. ——
Piling ——
Hammer ——
Formula ——
Reference ——
Rod Condition ——

Test Location No. ——
Station & Offset ——
Surface Elev. ——Water Elev. ——
Piling ——
Hammer ——
Formula ——
Reference ——
Rod Condition ——

Test Location No. 1
Station & Offset 1177+32.83'LT REAR ABUTMENT
Surface Elev. 569.0 Water Elev. 572.0'
Piling ——
Hammer ——
Formula ——
Reference ——
Rod Condition ——
HAND ROD

Test Location No. 9
Station & Offset 1177+93.83'LT FORWARD PIER
Surface Elev. 571.0 Water Elev. 572.0'
Piling ——
Hammer ——
Formula ——
Reference ——
Rod Condition ——
HAND ROD

Test Location No. 11
Station & Offset 1178+27.24'RT FORWARD PIER
Surface Elev. 570.0' Water Elev. 572.0'
Piling ——
Hammer ——
Formula ——
Reference ——
Rod Condition ——
HAND ROD

Test Location No. 16
Station & Offset 1178+71.76'RT FORWARD ABUTMENT
Surface Elev. 568.9' Water Elev. 572.0'
Piling ——
Hammer ——
Formula ——
Reference ——
Rod Condition ——
HAND ROD

574 571 567 563 559 555

10 20 30 40 50 60 70 80 90 100
Capacity "R" in Thousands of Pounds

OHIO STATE HIGHWAY TESTING LABORATORY
1620 WEST BROAD ST. COLUMBUS 23, OHIO

STRUCTURE FOUNDATION INVESTIGATION
BRIDGE NO. ERI-2-1806 L/R
OVER MUD BROOK
SEC. ERI-2-16.13

DRIVE ROD PENETRATION RESISTANCE DATA

PLOTTED BY	CHECKED BY	REVIEWED BY	DATE
R.C.	L.N.L.	G.P.H.	5/22/68

TE - 118
600 - 4 - 66

SEP 4 1968

30
32
1
3

ERIE COUNTY
ERI - 2 - 16.13

GEOLOGY OF THE SITE
THE STRUCTURE SITE IS LOCATED ON THE FLAT GLACIATED LAKE PLAIN, IN AN AREA WHERE MODERATELY DEEP GLACIAL LAKE DEPOSITS OVERLIE SHALE BEDROCK, OF DEVONIAN AGE.

EXPLORATION
THE EXPLORATION CONSISTED OF TWO DRIVE SAMPLE-CORE BORINGS AND FIVE DRIVE ROD PENETRATION TESTS, MADE BETWEEN MARCH 28 AND APRIL 5, 1968.

INVESTIGATIONAL FINDINGS
BORINGS DISCLOSED THAT BEDROCK SURFACE, ENCOUNTERED AT 41 AND 45-FOOT DEPTHS, ELEVATION 556 FEET, IS OVERLAIN BY WET, SOFT, VERY LOOSE CLAYS AND SILTS. THE BORINGS WERE TERMINATED AT 52 AND 55-FOOT DEPTHS, ELEVATIONS 544 AND 543 FEET, AFTER PENETRATING 10 FEET BELOW BEDROCK SURFACE.

ROD SOUNDINGS ENCOUNTERED RAPID INCREASE IN PENETRATION RESISTANCE WITH INCREASE IN DEPTH AND WERE TERMINATED UPON ENCOUNTER WITH RATHER ABRUPT REFUSAL TO PENETRATION AT 41 TO 46-FOOT DEPTHS, ELEVATIONS 554 TO 553 FEET, CONSIDERED TO BE ON OR SLIGHTLY BELOW BEDROCK SURFACE, AS REVEALED BY THE BORINGS.

NO FREE WATER WAS OBSERVED IN ANY OF THE ROD SOUNDING HOLES.

LEGEND

- Auger Boring Location - Plan View.
- Press and / or Drive Sample and / or Core Boring Location - Plan View.
- Drive Rod Penetration Resistance Sounding Location - Plan View.
- Capped Pile
- Footing
- Footing on Pile
- TR — Top of Rock
- Horizontal Bar on Boring Log Indicates the Depth the Sample Was Taken.
- X/Y — Figures Beside the Boring Log in Profile Indicate the Number of Blows for Standard Penetration Test.
  X = Number of Blows for First 6 inches.
  Y = Number of Blows for Second 6 inches.
- Drive Rod Penetration Resistance Sounding Log - Profile
- Casing
- Resistance "R" < 10,000 lbs.
- Resistance "R" > 10,000 lbs.
- Z — Indicates Final Measurement of Penetration, in Inches.
- W — Indicates Free Water Elevation.
- Indicates Static Water Elevation.

SYMBOLS OF ROCK TYPES

- Coal
- Weathered Indurated Clay
- Indurated Clay
- Weathered Shale
- Shale
- Weathered Sandstone
- Sandstone
- Leached Dolomite

GENERAL INFORMATION

Drive Rod Penetration Sounding Tests

Drive rod penetration resistance tests constitute driving a 1.315-inch diameter steel rod, with a 45° cone point, into the ground, using a 122-pound drop-hammer with a free fall of five feet. At one or two-foot depth intervals, a measurement is taken to determine the amount of penetration achieved in three hammer drops. This reading is converted to an empirical value for capacity "R", in thousands of pounds (which is a measure of both the point resistance and frictional resistance on the rod), by using charts prepared by the Ohio Department of Highways, Bureau of Bridges, on the basis of correlation study of rod penetration with past performance of pile driving. For interpretation, a graph is prepared by plotting the value "R" against the depth at which the reading was taken, and connecting the plotted points. The curve so obtained reflects the density of subsurface materials in a manner that can be readily compared with data from similar tests at other locations on the structure site. From this comparison, the overall uniformity of subsurface condition may be evaluated.

Drive Sample Borings - Drive-Press Sample Borings

Drive sample borings are made by means of a rotary-type drill rig, employing a 2" O.D., 1-3/8" I.D. sampler, at 2-1/2 and / or 5-foot depth intervals, driven by means of a 140 - pound drop-hammer with a free fall of 30 inches. The number of blows required to drive the sampler 12 inches is considered the standard penetration test.

Drive-press sample borings are made by means of a rotary-type drill rig, employing a 2" O.D., 1-3/8" I.D. drive sampler, and 3" O.D. thin-wall press sampler. The press sampler is advanced by continuous uniform pressure, applied by the drill rig.

The boring log sheets show a graphic plot of the information obtained, including depth and elevation of the sample, number of blows for the standard penetration tests in two 6-inch increments, depth of press samples, field sample number, sample description - based on laboratory tests and the Casagrande AC classification system - and gradation, plasticity, and moisture content determinations. Results of strength and consolidation testing, if performed, appear on separate enclosures.

At depths where materials are bouldery or gravelly to the extent that the sampler can not be driven, a wash sample is procured for visual classification, in order to determine the general character of the material. These samples are not considered sufficiently representative to warrant laboratory testing.

Particle Size Definitions

Boulders	Cobbles	Gravel	Coarse Sand	Fine Sand	Silt	Clay
8"	3"	2.0mm (No. 10 sieve)	0.42mm (No. 40 sieve)	0.074mm (No. 200 sieve)	0.005mm	

LOG OF BORING

Date Started 4-3-68 — Sampler Type SS — Dia. 1 3/8" — Water Elev. —
Date Completed 4-2-68 — Casing: Length 45' — Dia. 3 1/2"
Boring No. B-3 — Station & Offset 19+23, 18' Rt. (Rear Pier) — Surface Elev. 598.8'

Elev.	Depth	Std. Pen. (N)	Rec. ft.	Loss ft.	Description	Sample No.	% Agg.	% C.S.	% F.S.	% Silt	% Clay	L.L.	P.I.	W.C.	SHTL Class.
598.8	0														
	2														
	4														
593.8	6	4/4			Brown Silt	1	0	0	3	60	37	25	5	34	A-4b
	8														
588.8	10	2/2			Gray Silt	2	0	0	2	62	36	NP	NP	31	A-4b
586.3	12	1/2			Gray Silt	3	0	0	1	62	37	24	4	33	A-4b
583.8	14	1/1			Gray Silt	4	0	0	1	61	38	22	1	32	A-4b
581.3	16	1/1			Gray Silt	5	0	0	1	55	44	26	5	35	A-4b
578.8	18	2/2			Gray Silt	6	0	0	1	56	43	24	5	31	A-4b
576.3	20	2/1			Gray Clayey Silt	7	0	0	1	50	49	26	8	37	A-4b
573.8	22	1/1			Gray Clayey Silt	8	0	0	1	50	49	26	8	32	A-4b
571.3	24	1/2			Gray Clayey Silt	9	0	0	0	43	57	28	10	34	A-4a
568.8	26	1/2			Gray Silt and Clay	10	0	0	1	51	48	32	12	36	A-4a
	28														
	30														
563.8	32	2/3			Gray Silt and Clay	11	0	5	1	18	76	33	12	36	A-4a
	34														
	36														
558.8	38	3/3			Gray Silt	12	9	2	4	36	49	27	6	31	A-4a
	40														
	42														
553.8	44				TOP OF ROCK										
	46		5.0	0.0											
	48				Shale, dark-gray, hard, carbonaceous, fissile, broken and jointed. Core Loss 2%.										
	50														
	52		4.8	0.2											
543.8	54				BOTTOM OF BORING										

LOG OF BORING

Date Started 4-3-68 — Sampler Type SS — Dia. 1 3/8" — Water Elev. —
Date Completed 4-3-68 — Casing: Length 41.5' — Dia. 3 1/2"
Boring No. B-8 — Station & Offset 20+72, 24' Lt. (Forward Pier) — Surface Elev. 595.0'

Elev.	Depth	Std. Pen. (N)	Rec. ft.	Loss ft.	Description	Sample No.	% Agg.	% C.S.	% F.S.	% Silt	% Clay	L.L.	P.I.	W.C.	SHTL Class.
595.0	0														
	2														
	4														
590.0	6	1/1			Brown Clayey Silt	1	0	0	15	40	45	28	9	32	A-4a
	8														
585.0	10	2/3			Brownish-Gray Silt	2	0	0	2	62	36	28	6	32	A-4b
582.5	12	3/3			Brownish-Gray Silt	3	0	0	3	63	34	NP	NP	36	A-4b
580.0	14	1/1			Gray Silt	4	0	0	1	81	18	22	3	37	A-4b
577.5	16	1/1			Gray Silt	5	0	0	1	57	42	22	4	35	A-4b
575.0	18	1/2			Gray Clayey Silt	6	0	0	1	40	59	27	9	32	A-4a
572.5	20	1			Gray Clayey Silt	7	0	0	1	36	63	29	9	41	A-4a
570.0	22	1/1			Gray Clayey Silt	8	0	0	1	43	56	28	9	34	A-4a
567.5	24	1/1			Gray Clayey Silt	9	0	0	1	44	55	29	9	31	A-4a
565.0	26	1/2			Gray Silt and Clay	10	0	0	1	34	65	33	11	34	A-4a
	28														
	30														
560.0	32	1/1			Gray Clayey Silt	11	0	1	2	39	58	27	8	31	A-4a
	34														
	36														
555.0	38	4/4			No Sample Recovered										
553.5	40				TOP OF ROCK										
	42		3.4	0.1											
	44				Shale, dark-gray, hard, carbonaceous, fissile, broken and jointed. Core Loss 1%.										
	46														
	48		7.0	0.0											
	50														
543.0	52				BOTTOM OF BORING										

NOTE: Information shown by this subsurface investigation was obtained solely for the use in establishing design controls for the project. The State of Ohio does not guarantee the accuracy of this data and it is not to be construed as a part of the plans governing construction of the project.

OHIO DEPARTMENT OF HIGHWAYS
TESTING LABORATORY
1620 WEST BROAD STREET, COLUMBUS 23, OHIO

STRUCTURE FOUNDATION INVESTIGATION
BRIDGE NO. ERI-2-1833
UNDER SR 13
SEC. ERI-2-16.13

CHECKED BY	REVIEWED BY	DATE
L.N.L.	R.D.R.	4/22/68

TE - 119
000 - 4 - 66

MICROFILMED
SEP 4 1990

ERI-2-16.13

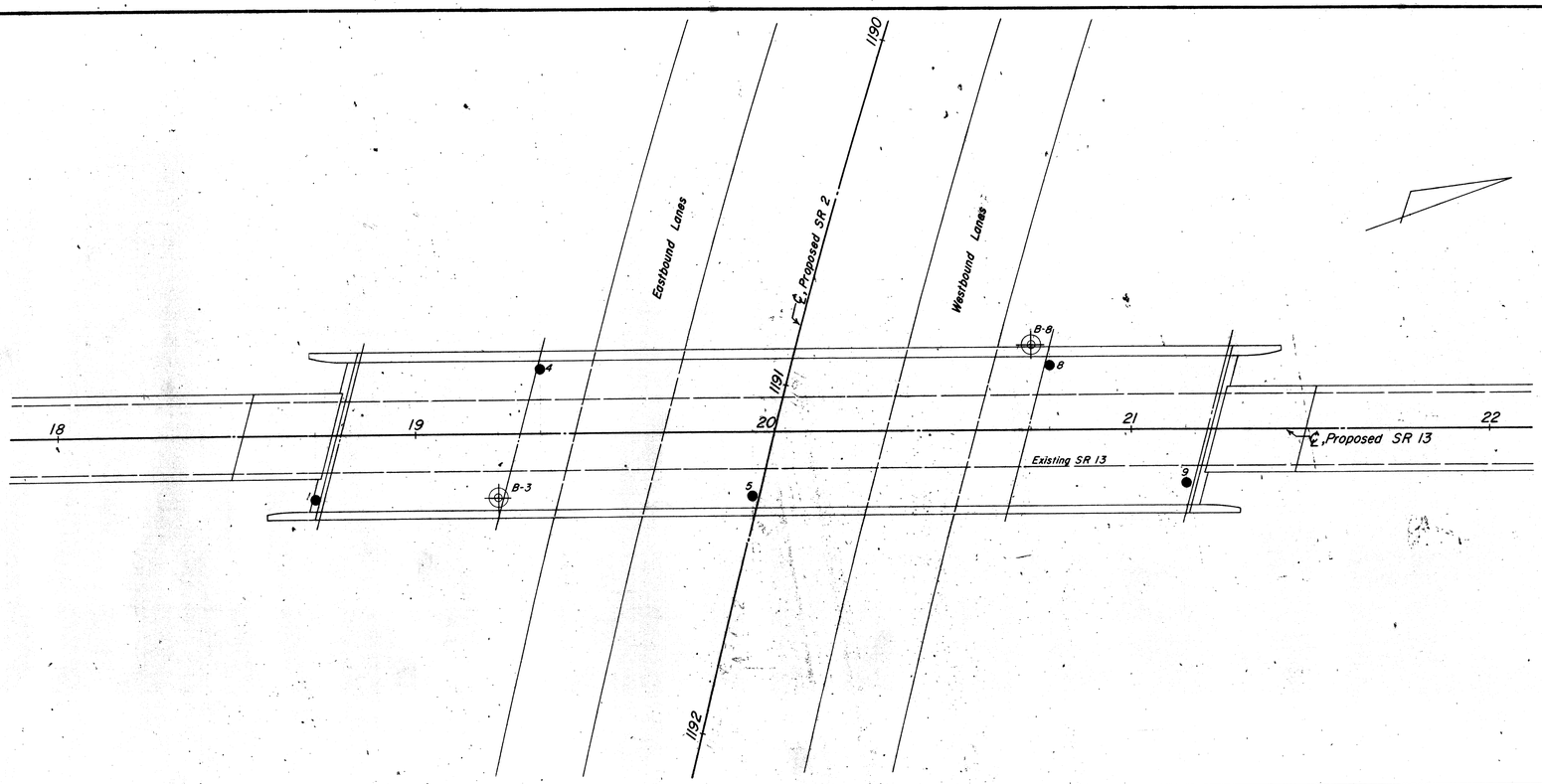

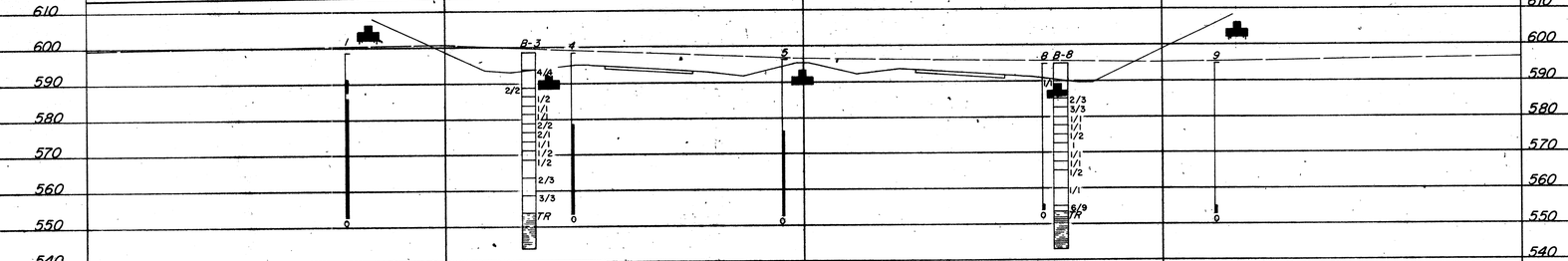

SCALE: 1" = 20'

OHIO DEPARTMENT OF HIGHWAYS
TESTING LABORATORY
1620 WEST BROAD STREET, COLUMBUS 23, OHIO

STRUCTURE FOUNDATION INVESTIGATION
BRIDGE NO. ERI-2-1833
UNDER SR 13
SEC. ERI-2-16.13

PLAN AND PROFILE

DRAWN BY	CHECKED BY	REVIEWED BY	DATE
J.E.C.	L.N.L.	R.D.R.	4/22/68

TE-114
100-9-67
MICROFILMED
SEP 4 1968

ERI-2-16.13

Test Location No. ____
Station & Offset ____
Surface Elev. ____ Water Elev. ____
Piling ____
Hammer ____
Formula ____
Reference ____
Rod Condition ____

603 599 595 591 587 583 579 575 571 567 563 559 555 551

10 20 30 40 50 60 70 80 90 100
Capacity "R" in Thousands of Pounds

Test Location No. ____
Station & Offset ____
Surface Elev. ____ Water Elev. ____
Piling ____
Hammer ____
Formula ____
Reference ____
Rod Condition ____

10 20 30 40 50 60 70 80 90 100
Capacity "R" in Thousands of Pounds

Test Location No. ____
Station & Offset ____
Surface Elev. ____ Water Elev. ____
Piling ____
Hammer ____
Formula ____
Reference ____
Rod Condition ____

10 20 30 40 50 60 70 80 90 100
Capacity "R" in Thousands of Pounds

Test Location No. 1
Station & Offset 18+72.18' RT.
REAR ABUTMENT
Surface Elev. 598.8 Water Elev. ____
Piling ____
Hammer ____
Formula ____
Reference ____
Rod Condition GOOD

TEST ROD

10 20 30 40 50 60 70 80 90 100
Capacity "R" in Thousands of Pounds

Test Location No. 4
Station & Offset 19+35.18' LT
REAR PIER
Surface Elev. 598.5 Water Elev. ____
Piling ____
Hammer ____
Formula ____
Reference ____
Rod Condition GOOD

599 595 591 587 583 579 575 571 567 563 559 555 551

TEST ROD

10 20 30 40 50 60 70 80 90 100
Capacity "R" in Thousands of Pounds

Test Location No. 5
Station & Offset 19+04.18' RT.
CENTER PIER
Surface Elev. 596.6 Water Elev. ____
Piling ____
Hammer ____
Formula ____
Reference ____
Rod Condition GOOD

TEST ROD

10 20 30 40 50 60 70 80 90 100
Capacity "R" in Thousands of Pounds

Test Location No. 8
Station & Offset 20+77.18' LT
FORWARD PIER
Surface Elev. 594.9 Water Elev. ____
Piling ____
Hammer ____
Formula ____
Reference ____
Rod Condition GOOD

TEST ROD

10 20 30 40 50 60 70 80 90 100
Capacity "R" in Thousands of Pounds

Test Location No. 9
Station & Offset 21+15.15' RT.
FORWARD ABUTMENT
Surface Elev. 594.0 Water Elev. ____
Piling ____
Hammer ____
Formula ____
Reference ____
Rod Condition GOOD

595 591 587 583 579 575 571 567 563 559 555 551

TEST ROD

10 20 30 40 50 60 70 80 90 100
Capacity "R" in Thousands of Pounds

OHIO STATE HIGHWAY
TESTING LABORATORY
1620 WEST BROAD ST. COLUMBUS 23, OHIO

STRUCTURE FOUNDATION INVESTIGATION
BRIDGE NO. ERI-2-1833
UNDER SR 13
SEC. ERI-2-16.13

DRIVE ROD PENETRATION RESISTANCE DATA

PLOTTED BY	CHECKED BY	REVIEWED BY	DATE
R.C.	L.N.L.	R.D.R.	4/22/

K. COLE CO. -80M-10-67-1000