MICROFILMED
JAN 13 1995

F.H.W.A. REGION	STATE	PROJECT	
5	OHIO		

1
133

RIC-13-15.81
CITY OF MANSFIELD
RICHLAND COUNTY

STATE OF OHIO
DEPARTMENT OF TRANSPORTATION
NON-FEDERAL

RIC-13-15.81
CITY OF MANSFIELD
RICHLAND COUNTY

DESIGN DESIGNATION

CURRENT A.D.T. (1990)	8929
DESIGN YEAR A.D.T. (2010)	10,714
D.H.V.	1071
D (DIRECTIONAL DISTRIBUTION)	51%
T (PERCENT B & C TRUCKS)	7%
V (DESIGN SPEED)	35 M.P.H.
LEGAL SPEED	35 M.P.H.
FUNCTIONAL CLASSIFICATION	PRINCIPAL ARTERIAL (URBAN)

DESIGN EXCEPTIONS	APPROVAL DATE
STOPPING SIGHT DISTANCE	12-2-88
CROSS SLOPES & SUPERELEVATION	12-2-88

(SEE TABLE ON SHEET No. 2)

CONVENTIONAL SIGNS

COUNTY LINE
TOWNSHIP LINE
SECTION LINE
CORPORATION LINE
FENCE LINE (EXISTING) X—X—X (PROPOSED) X—X
CENTER LINE 3 4 5
TREES STUMPS (TO BE REMOVED)
UTILITY POLES: TELEPHONE POWER LIGHT
SIGNS (EXISTING) (PROPOSED)
LIMITED ACCESS (only) L.A
RIGHT OF WAY (only) R/W
FIBER OPTIC CABLE F.O.
EXISTING RIGHT OF WAY
PROPERTY LINE (IN EXISTING FENCE) X—X
RAILROAD
GUARDRAIL (EXISTING) (PROPOSED)
CONSTRUCTION LIMITS
TEMPORARY RIGHT OF WAY TEMP. R/W

INDEX OF SHEETS

TITLE SHEET	1
SCHEMATIC PLAN	2,3
TYPICAL SECTIONS	4-8
EXISTING TYPICAL SECTIONS	9
GENERAL NOTES	10,11
MAINTENANCE OF TRAFFIC & DETOUR PLAN	12,13
CALCULATIONS	14
SUMMARY OF TABLES	15-17
GENERAL SUMMARY	18-20
CENTERLINE REFERENCES	21
SPECIAL CONSTRUCTION DETAILS	22
SUPERELEVATION TABLES	23
PAVEMENT DETAILS	24-27
APPROACH SLAB DETAILS	28
DRIVE & ALLEY DETAILS	29
DRAINAGE LAYOUT PLAN	30
STORM SEWER PROFILES	31-35
WATERLINE, OUTFALL & SANITARY SEWER	36
WATERLINE DETAILS & NOTES	37-39
PORTABLE CONCRETE BARRIER DETAILS	40
N.B.L. PLAN AND PROFILE	41-45
N.B.L QUANTITIES	46-49
N.B.L. CROSS SECTIONS	50-59
S.B.L. PLAN AND PROFILE	60-64
S.B.L. QUANTITIES	65-68
S.B.L. CROSS SECTIONS	69-77
OLIVE STREET PLAN AND PROFILE	78
OLIVE STREET CROSS SECTIONS	79-81
OHIO BRASS ROAD PLAN & PROFILE	82
OHIO BRASS ROAD & DRIVE CROSS SECTIONS	83,84
SURREY ROAD PLAN & PROFILE	85
SURREY ROAD DRIVE PLAN & PROFILE	86
SURREY ROAD DRIVE CROSS SECTIONS	87-90
FAC-WARE STREET & DRIVE CROSS SECTIONS	91-93
TOUBY'S RUN CHANNEL SECTIONS	94-97
TRAFFIC CONTROL	98A,98-106
STRUCTURES OVER 20 FOOT SPAN	107-120
RIGHT OF WAY	121-133, 132A

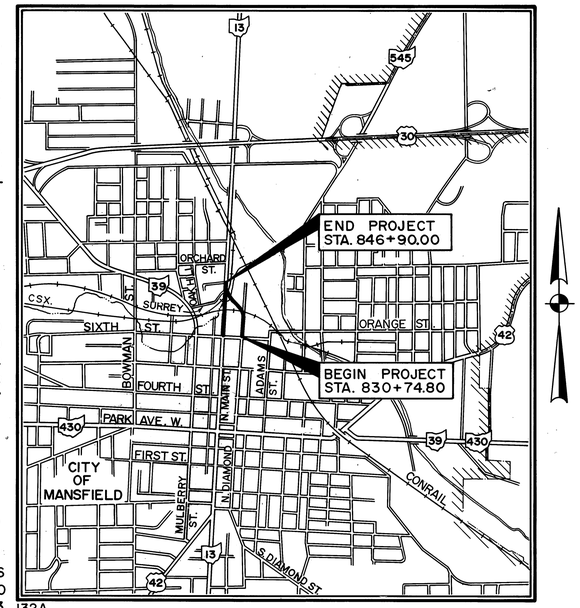

LOCATION MAP

SCALE IN FEET
0 1600 3200

PORTION TO BE IMPROVED
FEDERAL AND STATE HIGHWAYS
OTHER STREETS

PLAN	0'	40'
PROFILE - HORIZONTAL	0'	40'
PROFILE - VERTICAL	0'	10'
CROSS SECTIONS	0'	10'
OTHERS	AS SHOWN	

UNDERGROUND UTILITIES
2 WORKING DAYS
BEFORE YOU DIG
CALL...800-362-2764 (TOLL FREE)
OHIO UTILITIES PROTECTION SERVICE
NON-MEMBERS
MUST BE CALLED DIRECTLY

1989 SPECIFICATIONS

THE STANDARD SPECIFICATIONS OF THE STATE OF OHIO DEPARTMENT OF TRANSPORTATION, INCLUDING CHANGES AND SUPPLEMENTAL SPECIFICATIONS LISTED IN THE PROPOSAL SHALL GOVERN THIS IMPROVEMENT.

I HEREBY APPROVE THESE PLANS AND DECLARE THAT THE MAKING OF THIS IMPROVEMENT WILL REQUIRE THE CLOSING TO TRAFFIC OF THE HIGHWAY AND THAT DETOURS WILL BE PROVIDED AS INDICATED ON THE PLANS.

APPROVED Gary W. Cross
DATE 6/28/90 DISTRICT DEPUTY DIRECTOR OF TRANSPORTATION

APPROVED B.D. Hulwanni / WTC
DATE 8/20/90 ENGINEER, BUREAU OF BRIDGES AND STRUCTURAL DESIGN

APPROVED Theodore J. Stitt
DATE 9/14/90 CHIEF ENGINEER, PLANNING AND DESIGN

APPROVED Bernard B. Hunt
DATE 9/14/90 DIRECTOR, DEPARTMENT OF TRANSPORTATION

LINE DATA

PROJECT	BEGIN STATION	SUSPEND STATION	RESUME STATION	END STATION	LENGTH LIN. FT.	LENGTH MILE
	830+74.80	839+63.41	839+74.76	846+90.00	1582.55	
		844+20.20	844+41.50			
TOTAL LENGTH OF PROJECT					1582.55	0.300
WORK	BEGIN STATION			END STATION		
NORTH DIAMOND STREET	825+70.00			845+42.91	1972.91	
NORTH MAIN STREET	131+50.00				1399.51	
STATION EQUATION	145+49.51 BK = 845+42.91 AH					
				847+00	157.09	
OLIVE STREET	5+97.21			9+15.19	317.98	
TOTAL LENGTH OF WORK					3847.49	0.729

SUPPLEMENTAL PRINTS OF STANDARD CONSTRUCTION DRAWINGS

BP-2	1-11-85	F-1	11-10-83	MT-97.10	4-29-88	AS-1-81	11-27-81
BP-4	10-1-87	I-2A	12-18-84	MT-99.10	11-14-86	PSBD-1-81	6-20-89
BP-5	10-1-87	HW-4B	4-1-80	MT-99.20	4-29-88	BR-2-82	11-1-82
BP-6	10-1-87			TC-41.20	3-26-79	EXJ-3-82	8-1-84
BP-7	10-1-87	MC-1	6-13-69	TC-41.40	6-18-79	BR-1	5-29-79
BP-12	10-1-87	MC-4	7-26-76	TC-41.50	3-26-79	DBR-2-73	4-10-73
		MC-11	8-1-78	TC-42.20	3-26-79		
CB2-2A & B	5-1-79			TC-52.10	4-3-79		
CB2-3 & 2-4	5-1-79	MH-1	12-18-84	TC-52.20	4-3-79		
CB-3	5-1-79	MH-3	12-18-84				
CB-3A	5-1-79	MH-5	6-12-75				
CB-6	5-1-79						

SUPPLEMENTAL SPECIFICATIONS

802	4-13-90
814	1-21-88
836	11-12-85
847	10-17-83
849	12-24-85
915	1-21-88
947	10-17-83
949	9-26-86

PROJECT RIC-13-15.81 RICHLAND COUNTY
DATE OF LETTING _____ 19____ CONTRACT NO. _____

PREPARED AND RECOMMENDED BY
K.E. McCARTNEY & ASSOCIATES
CONSULTING ENGINEERS MANSFIELD, OHIO

STATE OF OHIO
MARION R. SCHAUS
34141
REGISTERED
PROFESSIONAL ENGINEER

REVISED 12-16-90

SCHEMATIC PLAN

QUANTITIES	
CALCULATED	M.R.S. 11-21-89
CHECKED	T.L.L. 6-90

F.H.W.A. REGION	STATE	PROJECT	
5	OHIO		

2 / 133

RIC-13-15.81
CITY OF MANSFIELD
RICHLAND COUNTY

DESIGN DESIGNATION

CURRENT A.D.T. (1990) 8929
DESIGN YEAR A.D.T. (2010) 10,714
D.H.V. 1071
D (Directional Distribution) 51 %
T (Percent B & C Trucks) 7 %
V (Design Speed) 35 M.P.H.
LEGAL SPEED 35 M.P.H. (Sideroads 25 M.P.H.)
FUNCTIONAL CLASSIFICATION Principal Arterial (Urban)

DESIGN EXCEPTIONS Date Appoved: 12-2-88			
ITEM	DESIGN SPEED	PROPOSED	REQUIRED
Vertical Alignment			
P.V.I. Sta. 140+00 (Crest)	35 M.P.H.	S.S.D. 205'	S.S.D. 225'
P.V.I. Sta. 141+25 (Sag)	35 M.P.H.	S.S.D. 215'	S.S.D. 225'
Superelevation			
Sta. 839+70±	35 M.P.H.	0 - R.R. Tracks	0.027 Ft./Ft.
Sta. 844+25±	35 M.P.H.	0 - R.R. Tracks	0.027 Ft./Ft.
Surrey Rd. Sta. 7+75 to Sta. 9+27.79	25 M.P.H.	0.0208 Ft./Ft. - 0 R.R. Tracks	0.04 Ft./Ft.
Surrey Rd. Sta. 10+02.54 to Sta. 11+41.04	25 M.P.H.	0	0.025 Ft./Ft.
Ohio Brass Rd. Sta. 10+44.92 to Sta. 11+42.09	25 M.P.H.	0	0.025 Ft./Ft.
Cross Slopes			
Sta. 139+50±	35 M.P.H.	0 - R.R. Tracks	0.0156 Ft./Ft.
Sta. 144+00±	35 M.P.H.	0 - R.R. Tracks	0.0156 Ft./Ft.

UTILITY OWNERSHIP

Sanitary Sewers:
Water Lines:
Overhead Fire Alarm Signal Cable:

City of Mansfield
30 North Diamond St.
Mansfield, Ohio 44902

Overhead & Underground Telephone Cables:

United Telephone Company of Ohio
25 South Mulberry St.
Mansfield, Ohio 44902

Overhead Electric:

Ohio Edison Company
76 South Main St.
Akron, Ohio 44308

Underground Fiber Optic Cable:

A.T.&T. Interstate Division
Central Region
1 Wacker Drive
Chicago, Illinois 60606

Underground Gas Lines:

Columbia Gas of Ohio
1120 West Fourth St.
P.O. Box 1328
Mansfield, Ohio 44901

Underground Telegraph Cable:

MCI COMMUNICATIONS CORP.
2400 LAKESIDE BLVD.
SUITE 480
RICHARDSON, TEXAS 75085
(214) 918-4129

Overhead Cable Television:

Adelphia Cable Communications, Inc.
1575 Lexington Ave.
Mansfield, Ohio 44907

SCALE IN FEET
0 25 50 100

NOTE: Numerical designation beside R-76C sign or gates and barricades refers to the phase of construction.

LEGEND

(RC-1) R-76C Signs, Supports & Lights, Phase 1 (See Figure C-5 OMUTCD)

(G&B-1) Gates and Barricades, Phase 1

(EC) Erosion Control Items

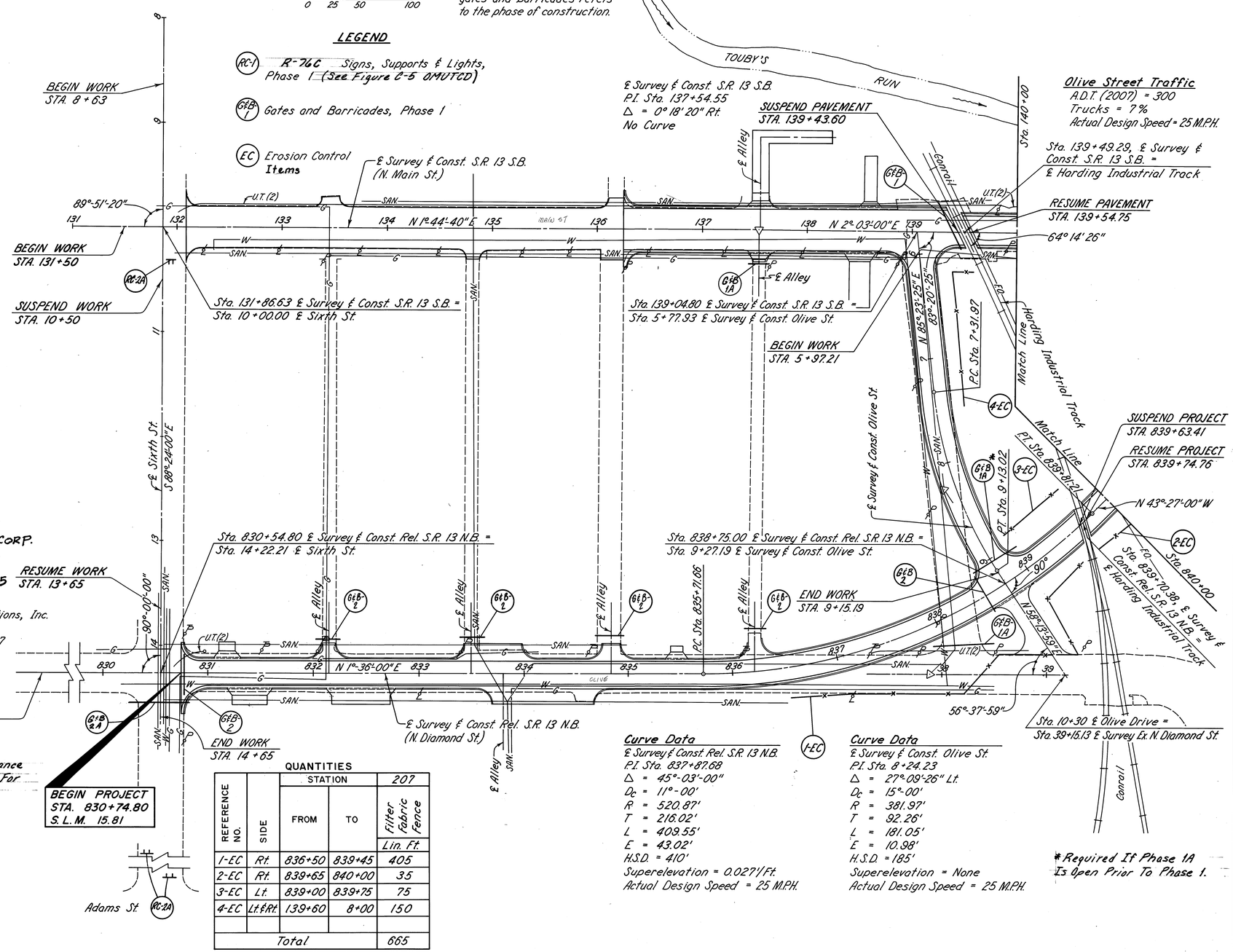

For Additional Maintenance Of Traffic Requirements For Phase 2A See Sheet 13.

BEGIN PROJECT
STA. 830+74.80
S.L.M. 15.81

QUANTITIES

REFERENCE NO.	SIDE	STATION FROM	STATION TO	207 Filter Fabric Fence Lin. Ft.
1-EC	Rt.	836+50	839+45	405
2-EC	Rt.	839+65	840+00	35
3-EC	Lt.	839+00	839+75	75
4-EC	Lt. & Rt.	139+60	8+00	150
Total				665

Curve Data

℄ Survey & Const. Rel. S.R. 13 N.B.
P.I. Sta. 837+87.68
Δ = 45°-03'-00"
D_c = 11°-00'
R = 520.87'
T = 216.02'
L = 409.55'
E = 43.02'
H.S.D. = 410'
Superelevation = 0.027'/Ft.
Actual Design Speed = 25 M.P.H.

Curve Data

℄ Survey & Const. Olive St.
P.I. Sta. 8+24.23
Δ = 27°-09'-26" Lt.
D_c = 15°-00'
R = 381.97'
T = 92.26'
L = 181.05'
E = 10.98'
H.S.D. = 185'
Superelevation = None
Actual Design Speed = 25 M.P.H.

*Required If Phase 1A Is Open Prior To Phase 1.

SCHEMATIC PLAN

QUANTITIES	
CALCULATED	M.R.S. 11-21-89
CHECKED	T.L.L. 6-90

F.H.W.A. REGION	STATE	PROJECT	
5	OHIO		

3
133

RIC-13-15.81
CITY OF MANSFIELD
RICHLAND COUNTY

Ohio Brass Road Traffic
A.D.T. (2007) = 790
Trucks = 7 %
Actual Design Speed = 25 M.P.H.

Surrey Road Traffic
A.D.T. (2007) = 1230
Trucks = 7 %
Actual Design Speed = 25 M.P.H.

Curve Data
℄ Survey ℄ Const. Surrey Rd.
P.I. Sta. 8+81.19
Δ = 39°-20'-11" Rt.
Dc = 40°-00'
R = 143.24'
T = 51.20'
L = 98.34'
E = 8.87'
H.S.D. = 100'
Superelevation = 0.025 Ft./Ft.
Actual Design Speed = 25 M.P.H.

Curve Data
℄ Survey ℄ Const. Surrey Rd.
P.I. Sta. 10+73.98
Δ = 34°-37'-31" Lt.
Dc = 25°-00'
R = 229.18'
T = 71.44'
L = 138.50'
E = 10.88'
H.S.D. = 140'
Superelevation - None
Actual Design Speed = 25 M.P.H.

Curve Data
℄ Survey ℄ Const. Ohio Brass Rd.
P.I. Sta. 10+94.19
Δ = 23°-19'-15" Lt.
Dc = 24°-00'
R = 238.73'
T = 49.27'
L = 97.17'
E = 5.03'
H.S.D. = 100'
Superelevation - None
Actual Design Speed = 25 M.P.H.

Curve Data
℄ Survey ℄ Const. Rel. S.R. 13 N.B.
P.I. Sta. 843+47.69
Δ = 45°-30' Rt.
Dc = 11°-00'
R = 520.87'
T = 218.42'
L = 413.64'
E = 43.94'
H.S.D. = 415'
Superelevation = 0.027 Ft./Ft.
Actual Design Speed = 35 M.P.H.

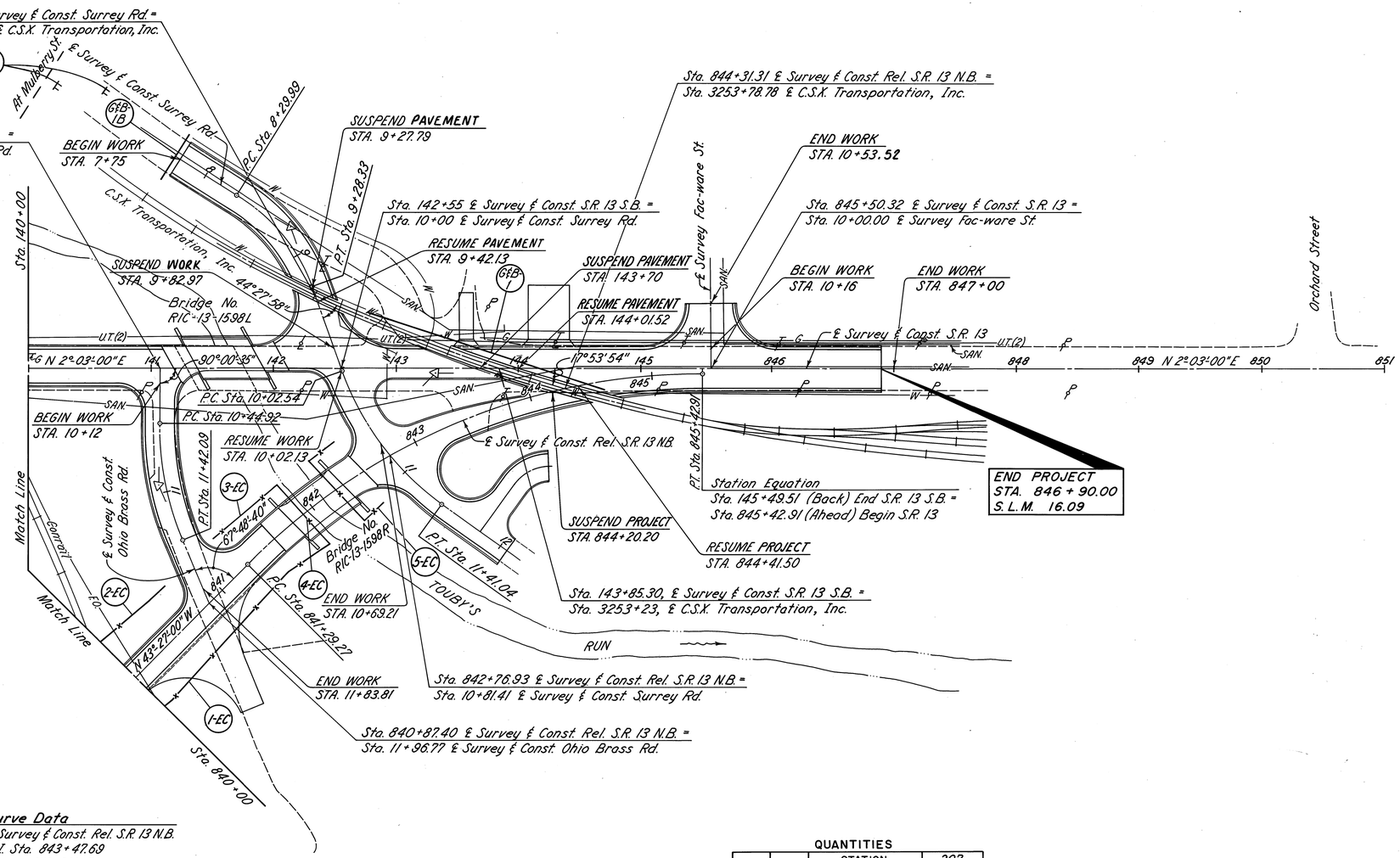

QUANTITIES

REFERENCE NO.	SIDE	STATION FROM	STATION TO	207 Filter Fabric Fence Lin. Ft.
1-EC	Rt.	840+00	841+85	185
2-EC	Lt.	840+00	840+70	70
3-EC	Lt.	841+25	841+90	65
4-EC	Lt.&Rt.	841+90		65
5-EC	Lt.&Rt.	842+20	842+45	115
Total				500

For legend see sheet no. 2.

F.H.W.A. REGION	STATE	PROJECT	
5	OHIO		

107
133

RIC-13-15.81
CITY OF MANSFIELD
RICHLAND COUNTY

B.M. - Top of S.E. bolt of R.R. Signal.
Sta. 140+06.5, 88.7' Rt.
Elev. = 1155.16

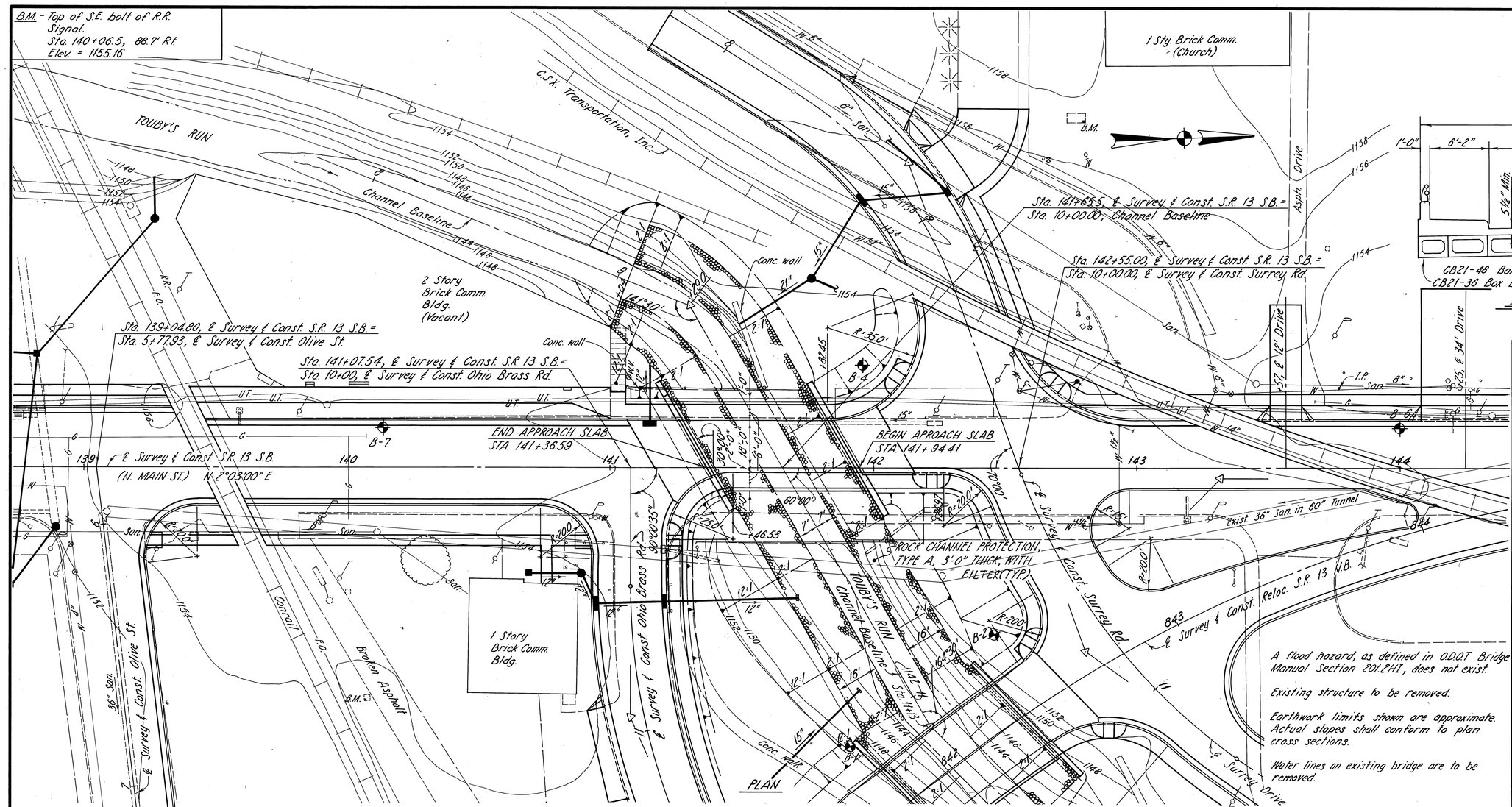

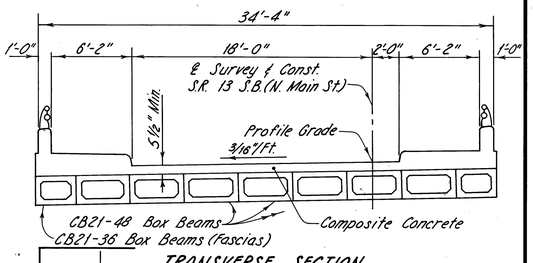

TRANSVERSE SECTION

B-1 : Indicates Core Boring Location

LOCATION

Mansfield North Quadrangle, Madison Township, Richland County, City of Mansfield
N. 40°46'11.56" W. 82°30'05.17"

HYDRAULICS

DRAINAGE AREA: 9.15 Sq. Mi.
SLOPE: (0.10 L to 0.85 L) = .0015'/Ft. = 39.54'/Mile
LOCAL SLOPE = .0104 0'/Ft. = 54.91'/Mile

Q25 = 1625 C.F.S.	Q100 = 2400 C.F.S.
V25 = 8.58 Ft./Sec.	V100 = 9.30 Ft./Sec.
A25 = 189.4 Sq. Ft.	A100 = 258.0 Sq. Ft.
B.W.25 = 0.00'	B.W.100 = 0.04'

EXISTING STRUCTURE

TYPE: Temporary timber trestle, treated timber deck, treated timber pile substructure
SPANS: 3 @ 16' ℄'s; 48'4" % deck
ROADWAY: 36'-0" ⅊ of 10'-9" sidewalks; 58'-0" % deck
LOADING: H-15; STR. File no. 7000545
SKEW: 30°00' R.F.
WEARING SURFACE: Asphalt concrete
APPROACH SLABS: None known
ALIGNMENT: Tangent
HEIGHT-GRADE TO STREAM BED: 10'±
HEIGHT-GRADE TO HIGH WATER: 1.0'±
APPROX. WIDTH BETWEEN BANKS: 40'
CHANNEL DEPTH: 10'±
NATURE OF BOTTOM: Sand and gravel
CONDITION: Poor (Built in 1942)
AVERAGE DAILY TRAFFIC: P.A = 6400, B+C = 380, Total = 6780 (1984)

A flood hazard, as defined in O.D.O.T Bridge Manual Section 201.2H1, does not exist.

Existing structure to be removed.

Earthwork limits shown are approximate. Actual slopes shall conform to plan cross sections.

Water lines on existing bridge are to be removed.

PROPOSED STRUCTURE

TYPE: Prestressed concrete box beams with 5½" composite deck on capped pile abutments
SPAN: 53' ℄ bearings
ROADWAY: 20' ⅊ of 6' sidewalks, 34' % deck
LOADING: HS20-44 and the alternate military loading.
SKEW: 30°00' R.F.
WEARING SURFACE: Monolithic concrete
APPROACH SLABS: AS-1-81. (20' long)
ALIGNMENT: Tangent
CROWN: 3/16"/Ft.
AVERAGE DAILY TRAFFIC: P.A = 4982, B+C = 375 Total = 5357 (2009)

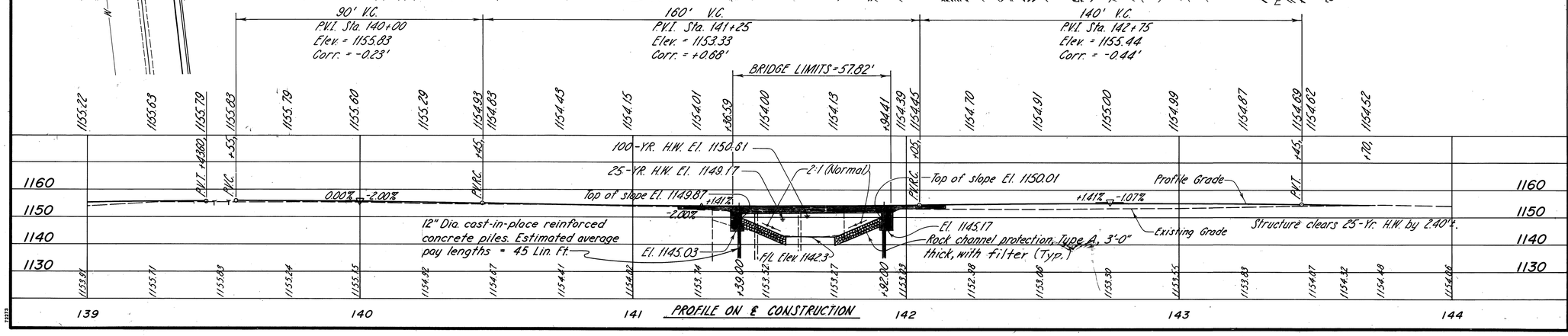

K.E. McCARTNEY & ASSOCIATES
MANSFIELD, OHIO

1/7

SITE PLAN

BRIDGE NO. RIC-13-1598L
OVER TOUBY'S RUN

RICHLAND COUNTY STA. 141+36.59
TO
CITY OF MANSFIELD STA. 141+94.41

PRESENT TOPOGRAPHY			PROPOSED WORK		
SURVEYED K.E. McC. ASSOC.	DRAWN K.S.M.	DESIGNED R.A.K.	DRAWN K.S.M.	CHECKED L.J.S.	REVIEWED M.R.S.

F.H.W.A. REGION	STATE	PROJECT	
5	OHIO		

108/133

RIC-13-15.81
CITY OF MANSFIELD
RICHLAND COUNTY

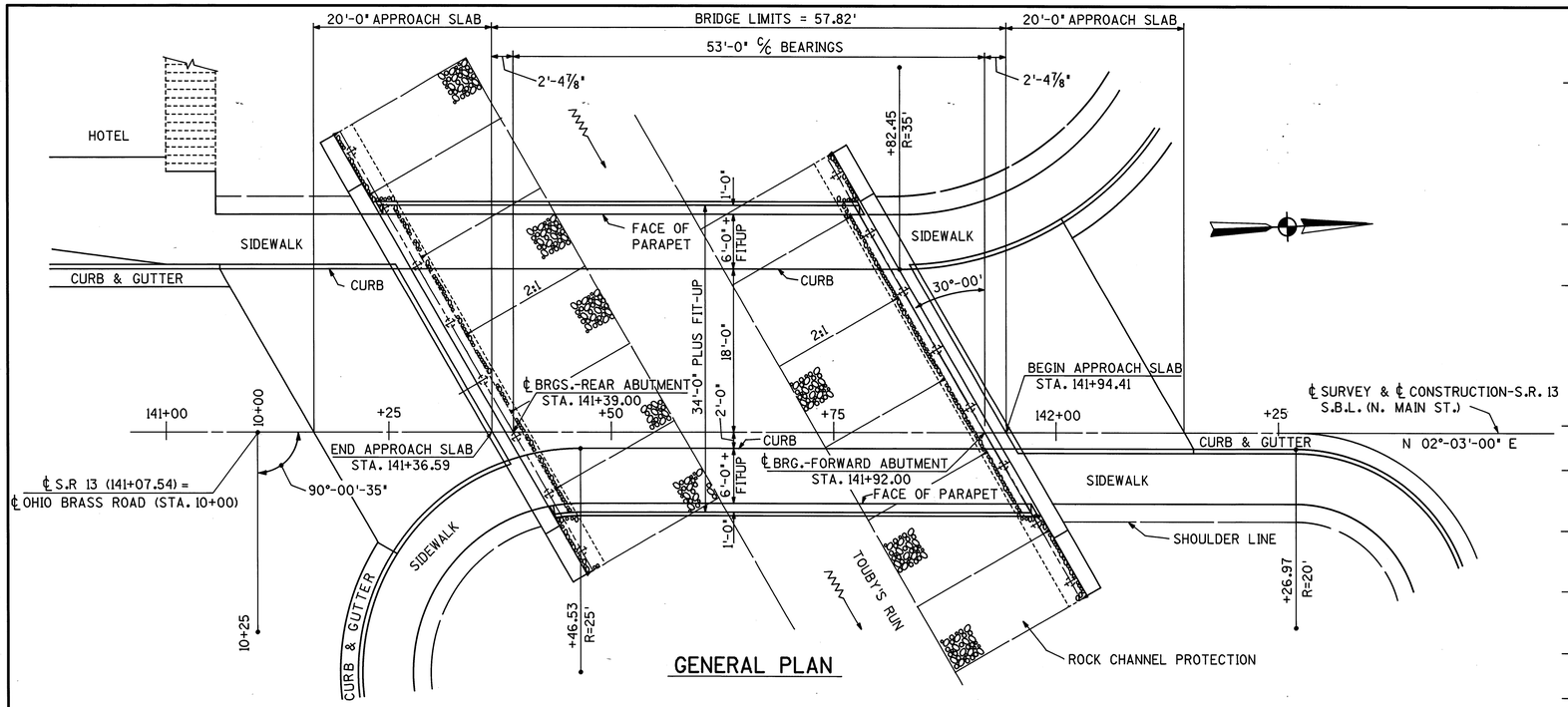

GENERAL PLAN

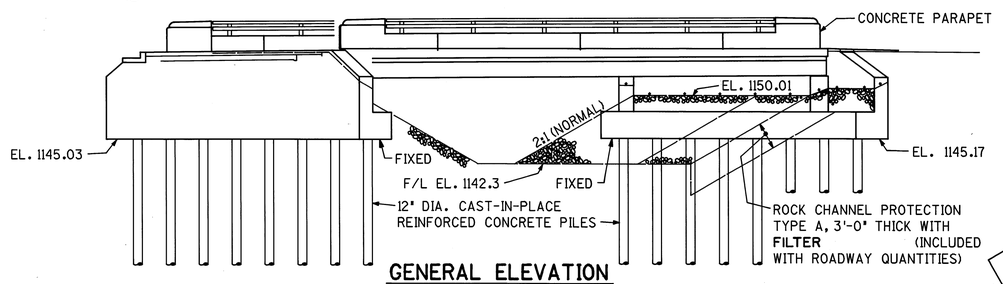

GENERAL ELEVATION

GENERAL NOTES

REFERENCE SHALL BE MADE TO STANDARD DRAWINGS:
AS-1-81 (DATED 11-27-81)
PSBD-1-81, SHEETS 1-4 (REVISED 6-20-89)
BR-2-82 (DATED 11-1-82)
EXJ-3-82 (REVISED 8-1-84)
AND TO SUPPLEMENTAL SPECIFICATIONS:
836 (DATED 11-12-85) 849 (DATED 12-24-85)
949 (DATED 9-26-86)

DESIGN SPECIFICATIONS: THIS STRUCTURE CONFORMS TO "STANDARD SPECIFICATIONS FOR HIGHWAY BRIDGES" ADOPTED BY THE AMERICAN ASSOCIATION OF STATE HIGHWAY AND TRANSPORTATION OFFICIALS, 1989 AND THE OHIO "SUPPLEMENT" TO THESE SPECIFICATIONS.

DESIGN DATA
DESIGN LOADING - HS20-44 AND THE ALTERNATE MILITARY LOADING
CONCRETE, CLASS "S" - COMPRESSIVE STRENGTH 4500 P.S.I. FOR SUPERSTRUCTURE EXCEPT BOX BEAMS
CONCRETE, CLASS "C" - COMPRESSIVE STRENGTH 4000 P.S.I. FOR SUBSTRUCTURE
REINFORCING STEEL - ASTM A615, A616 OR A617 - GRADE 60, MINIMUM YIELD STRENGTH 60,000 P.S.I.. GRADE 40, MINIMUM YIELD STRENGTH 40,000 P.S.I. PERMITTED FOR BOX BEAMS ONLY.
CONCRETE FOR PRESTRESSED CONCRETE BEAMS-UNIT STRESS 2200 P.S.I. COMPRESSION, 444 P.S.I. TENSION.
PRESTRESSING STRAND-ASTM A416-f's = 270,000 P.S.I., INITIAL STRESS = 0.70 f's

DECK PROTECTION METHOD: CLASS "S" CONCRETE, EPOXY COATED REINFORCING STEEL, AND SEALING OF CONCRETE SURFACES.

REMOVAL OF EXISTING STRUCTURE: WHEN NO LONGER NEEDED TO MAINTAIN TRAFFIC, THE EXISTING STRUCTURE SHALL BE REMOVED TO THE LIMITS DESCRIBED IN THE CMS, SECTION 202.03. SUITABLE WASTE MASONRY MAY BE PLACED AS BANK PROTECTION AS DIRECTED BY THE ENGINEER.

UTILITY LINES: ALL EXPENSE INVOLVED IN RELOCATING THE AFFECTED UTILITY LINES SHALL BE BORNE BY THE OWNERS. THE CONTRACTOR AND THE OWNERS ARE REQUESTED TO COOPERATE BY ARRANGING THEIR WORK IN SUCH A MANNER THAT INCONVENIENCE TO EITHER WILL BE HELD TO A MINIMUM.

ITEM SPECIAL, SEALING OF CONCRETE SURFACES: A CONCRETE SEALER SHALL BE APPLIED TO THE SURFACES SHOWN ON SHEETS 3/7, 4/7 AND 5/7. SEE THE PROPOSAL FOR SURFACE PREPARATION REQUIREMENTS, APPLICATION RATES, MATERIAL REQUIREMENTS AND APPLICATION PROCEDURES.

EMBANKMENT CONSTRUCTION: THE EMBANKMENTS SHALL BE CONSTRUCTED TO THE LEVEL OF THE SUBGRADE. EXCAVATION MAY THEN BE MADE FOR THE ABUTMENTS AND PILES DRIVEN.

MONOLITHIC WEARING SURFACE IS ASSUMED, FOR DESIGN PURPOSES, TO BE 1" THICK.

ABUTMENT PILING: ABUTMENT PILING BENDING STRESS MAY APPROACH, REACH OR EXCEED YIELD STRESS.

REINFORCING STEEL LIST: SEE SHEET 7/7.

⅛" PREFORMED BEARING PAD SHIMS, 8" X 10" OR 10" X 10" IN PLAN AREA, SHALL BE PLACED ON TOP OF BEARINGS WHERE REQUIRED FOR PROPER BEARING, 2 SHIMS PER BEAM. SHIMS NOT USED SHALL BECOME PROPERTY OF THE STATE.

PILE DESIGN LOADS: THE DESIGN LOAD FOR THE PILES IS 41 TONS PER PILE

POROUS BACKFILL MATERIAL SHALL BE GRAVEL OR SLAG, BUT NOT LIMESTONE

ESTIMATED QUANTITIES

CALC'D. BY RAK 1-23-90 CHK'D. BY MRS 3-05-90

ITEM	ITEM EXT.	TOTAL	UNIT	DESCRIPTION	SUPER.	ABUTS.	GEN'L
202	11002	LUMP		STRUCTURES REMOVED			LUMP
503	11000	LUMP		COFFERDAMS, CRIBS AND SHEETING		LUMP	
503	21100	LUMP		UNCLASSIFIED EXCAVATION		LUMP	
505	11100	LUMP		PILE DRIVING EQUIPMENT MOBILIZATION		LUMP	
507	22200	720	LIN. FT.	12" DIA. CAST-IN-PLACE REINFORCED CONCRETE PILES		720	
509	12400	5516	LBS.	REINFORCING STEEL, GRADE 60		5516	
509	15800	7862	LBS.	EPOXY COATED REINFORCING STEEL, GRADE 60	4715	3147	
511	45100	114	CU. YD.	CLASS C CONCRETE, ABUTMENTS		114	
511	31600	64	CU. YD.	CLASS S CONCRETE, SUPERSTRUCTURE	64		
515	52500	2	EACH	PRESTRESSED CONCRETE BRIDGE MEMBERS, CB21-36, 54'-1⅞" LENGTH *	2		
515	54100	7	EACH	PRESTRESSED CONCRETE BRIDGE MEMBERS, CB21-48, 54'-1⅞" LENGTH *	7		
516	10500	75	LIN. FT.	STRUCTURAL EXPANSION JOINTS INCLUDING ELASTOMERIC COMPRESSION SEALS	75		
516	41200	12	SQ. FT.	⅛" PREFORMED BEARING PADS, 711.21		12	
516	43100	8	EACH	LAMINATED ELASTOMERIC BEARINGS (1" X 8" X 8" ELASTOMERIC PADS), 50 DUROMETER		8	
516	43100	28	EACH	LAMINATED ELASTOMERIC BEARINGS (1" X 10" X 10" ELASTOMERIC PADS), 50 DUROMETER		28	
517	71500	107.71	LIN. FT.	RAILING (CONCRETE PARAPET WITH DOUBLE PIPE RAIL)	107.71		
518	21101	40	CU. YD.	POROUS BACKFILL, AS PER PLAN		40	
518	12500	1	EACH	SCUPPERS, AS PER PLAN	1		
SPEC.	512GT500	212	SQ. YD.	SEALING OF CONCRETE SURFACES *	206	6	
SPEC.	512GT502	60	SQ. YD.	SEALING OF CONCRETE SURFACES (EPOXY) *		60	

* - SEE PROPOSAL NOTE

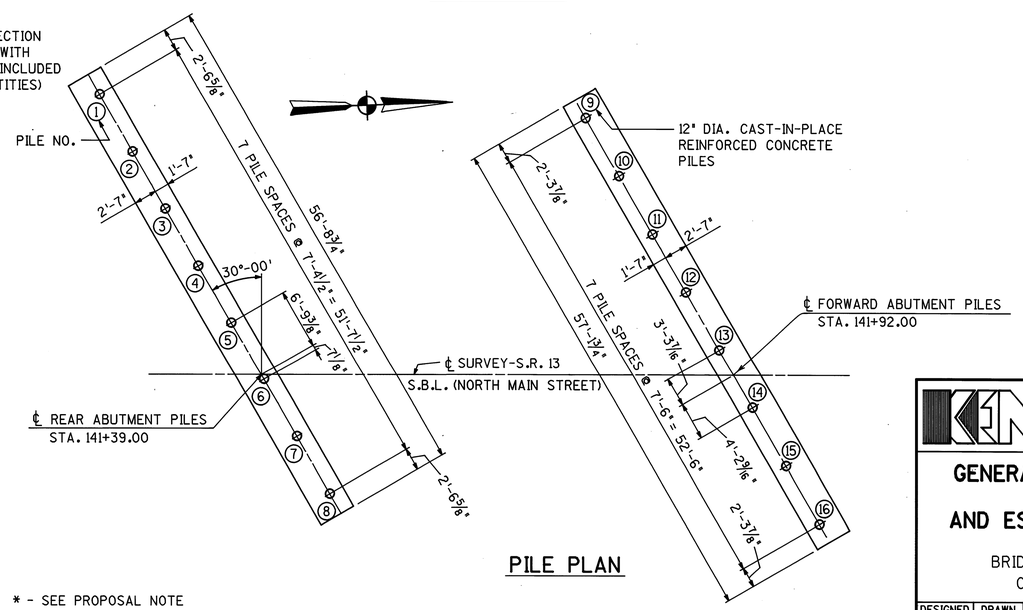

PILE PLAN

K.E. McCARTNEY & ASSOCIATES
MANSFIELD, OHIO

2/7

GENERAL PLAN, ELEVATION, NOTES AND ESTIMATED QUANTITIES

BRIDGE NO. RIC-13-1598 L
OVER TOUBY'S RUN

DESIGNED	DRAWN	TRACED	CHECKED	REVIEWED	DATE	REVISED
RAK	RAK	DDD	HGS	MRS	03-90	

DINGES DESIGN & DRAFTING RIC3593.2

F.H.W.A. REGION	STATE	PROJECT	
5	OHIO		

109/133

RIC-13-15.81
CITY OF MANSFIELD
RICHLAND COUNTY

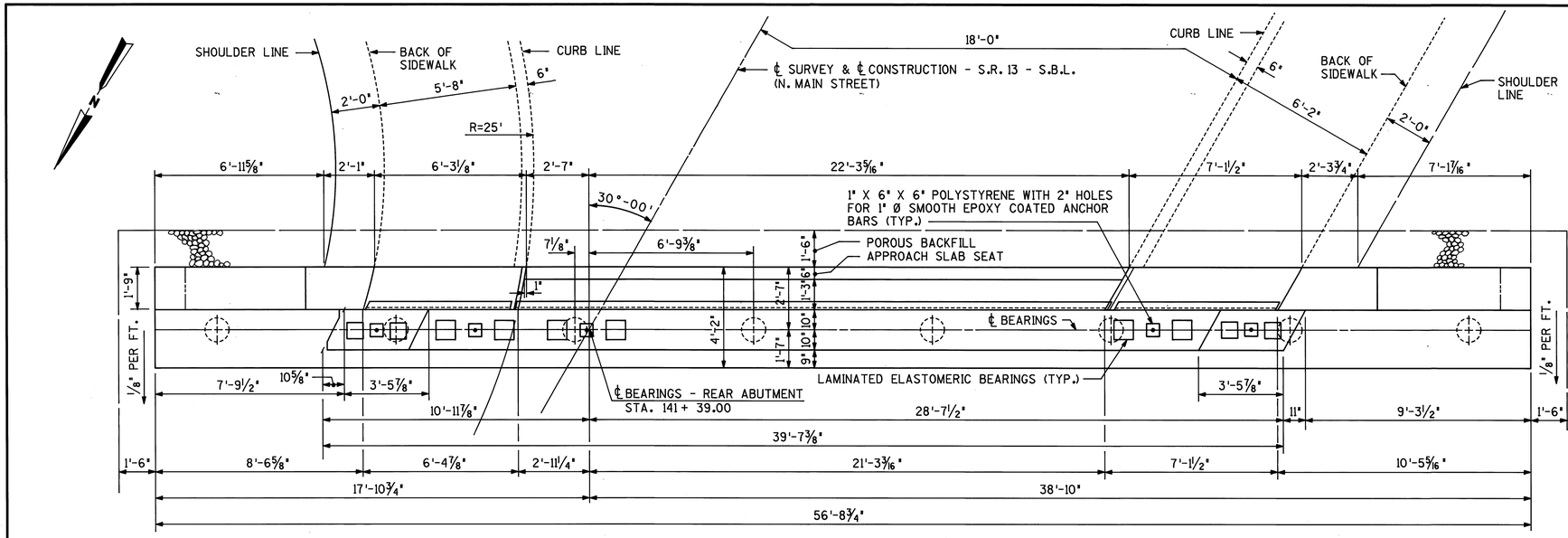

PLAN

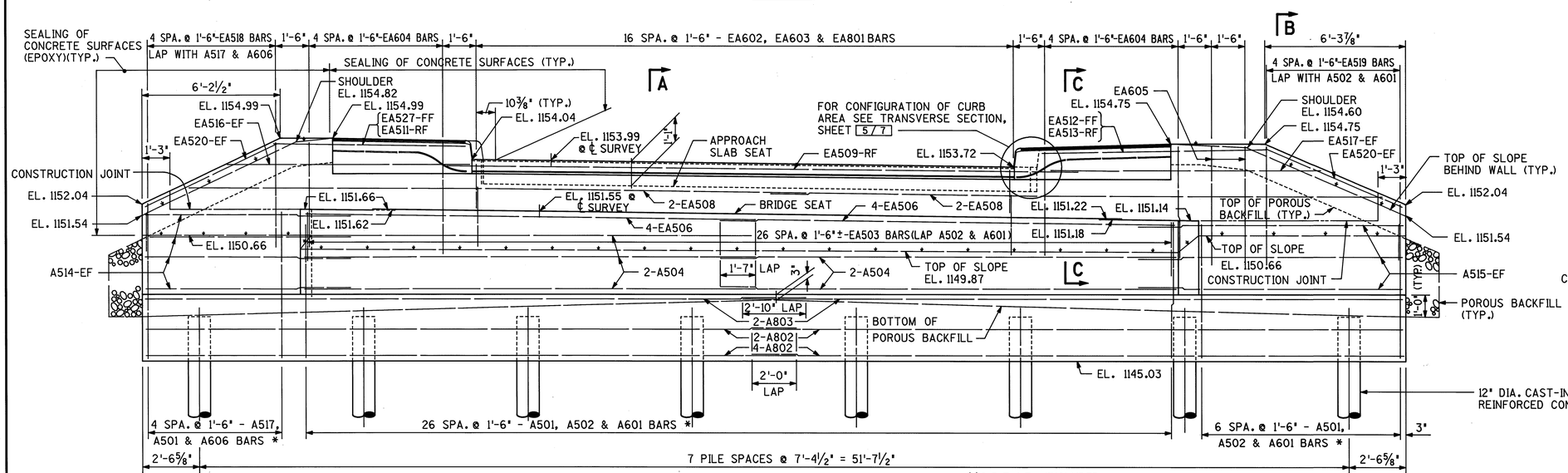

* - ADJUST SPACING TO MISS PILES

ELEVATION

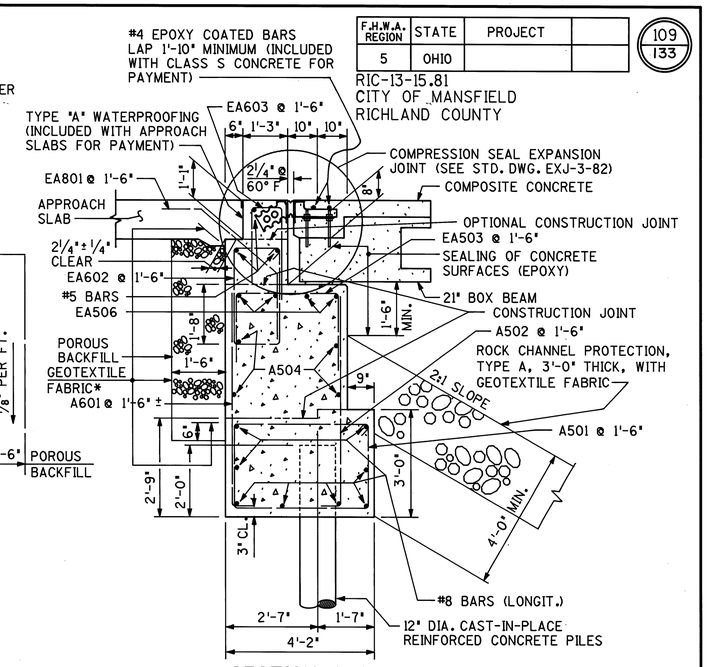

SECTION A-A

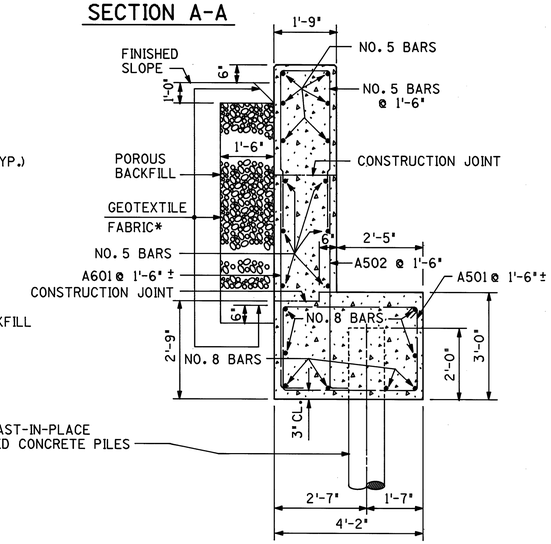

SECTION B-B

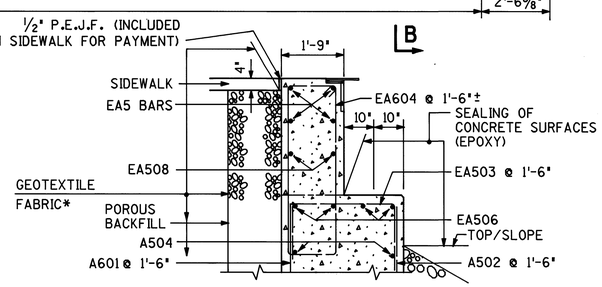

SECTION C-C

*GEOTEXTILE FABRIC SHALL CONFORM WITH 712.09, TYPE A, AND SHALL BE INCLUDED WITH POROUS BACKFILL FOR PAYMENT.

ABUTMENT NOTES: SEE SHEET 4/7

3/7

K.E. McCARTNEY & ASSOCIATES
MANSFIELD, OHIO

REAR ABUTMENT

BRIDGE NO. RIC-13-1598 L
OVER TOUBY'S RUN

DESIGNED	DRAWN	TRACED	CHECKED	REVIEWED	DATE	REVISED
RAK	RAK	DDD	HGS	MRS	03-90	

DWGES DESIGN & DRAFTING RC3593.3

F.H.W.A. REGION	STATE	PROJECT	
5	OHIO		

110
133

RIC-13-15.81
CITY OF MANSFIELD
RICHLAND COUNTY

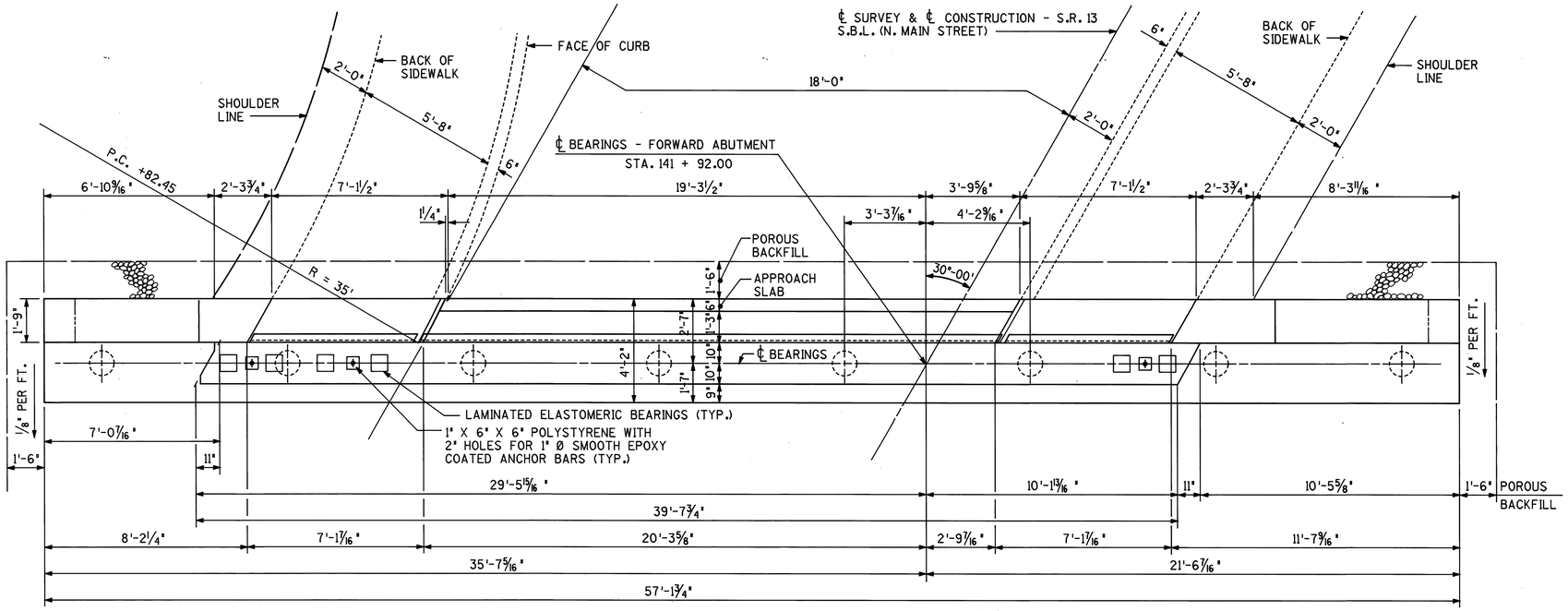

PLAN

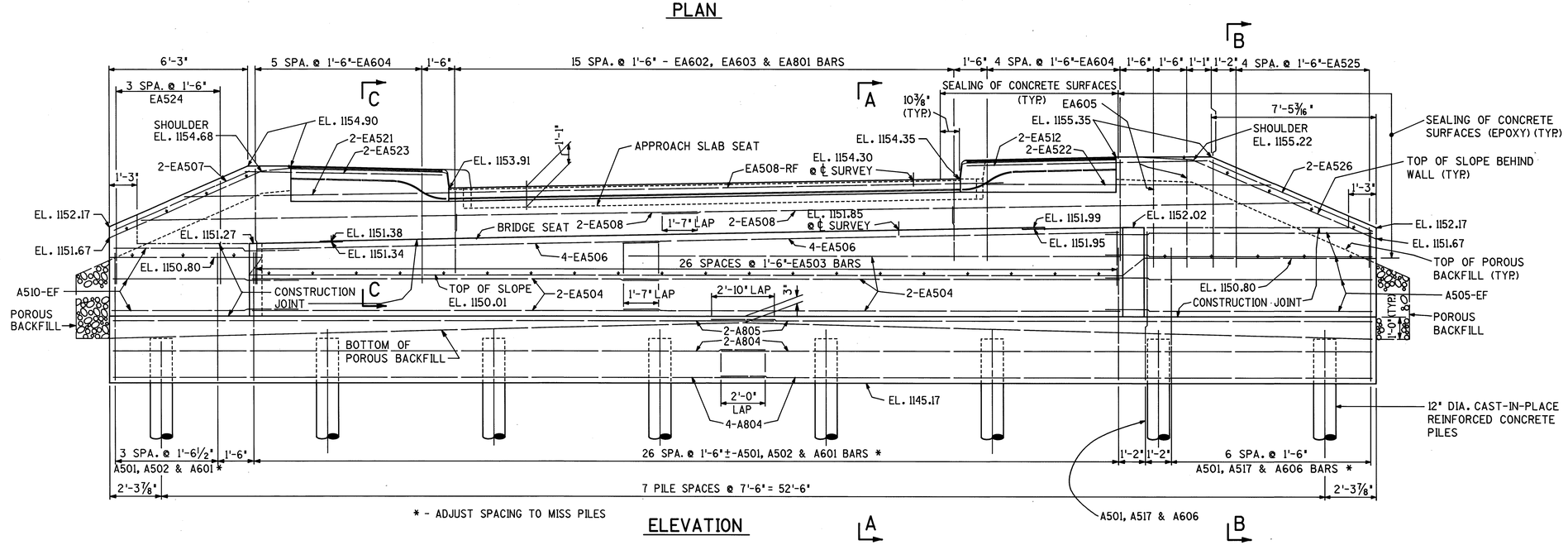

* - ADJUST SPACING TO MISS PILES

ELEVATION

ABUTMENT NOTES

POROUS BACKFILL, 1'-6" THICK, SHALL EXTEND UPWARD TO THE PLANE OF THE SUBGRADE TO 1'-0" BELOW THE FINISHED GROUND, AND LATERALLY TO THE SURFACE OF THE EMBANKMENT SLOPES AS SHOWN ON THE ABUTMENT PLAN. IT SHALL BE ENCASED WITH GEOTEXTILE FABRIC MEETING THE REQUIREMENTS OF 712.09, TYPE A GEOTEXTILE FABRIC AND TO BE INCLUDED WITH ITEM 518, POROUS BACKFILL, FOR PAYMENT.

BRIDGE SEAT REINFORCING: REINFORCING STEEL IN THE VICINITY OF THE BRIDGE SEAT SHALL BE ACCURATELY PLACED TO AVOID INTERFERENCE WITH THE DRILLING OF ANCHOR BAR HOLES.

NOTATION: FF-FRONT FACE, RF-REAR FACE, EF-EACH FACE
RA-REAR ABUTMENT, FA-FORWARD ABUTMENT

BACKWALL CONCRETE ABOVE THE BRIDGE SEAT CONSTRUCTION JOINT SHALL NOT BE PLACED UNTIL AFTER THE BEAMS ARE SET AND THE CONCRETE DECK IS POURED IN PLACE.

SEE SHEET 3/7 FOR SECTIONS A, B & C

4/7

K.E. McCARTNEY & ASSOCIATES
MANSFIELD, OHIO

FORWARD ABUTMENT

BRIDGE NO. RIC-13-1598 L
OVER TOUBY'S RUN

DESIGNED	DRAWN	TRACED	CHECKED	REVIEWED	DATE	REVISED
RAK	RAK	DDD	HGS	MRS	03-90	

DWGS DESIGN & DRAFTING RIC3B9.4

F.H.W.A. REGION	STATE	PROJECT	
5	OHIO		

111/133

RIC-13-15.81
CITY OF MANSFIELD
RICHLAND COUNTY

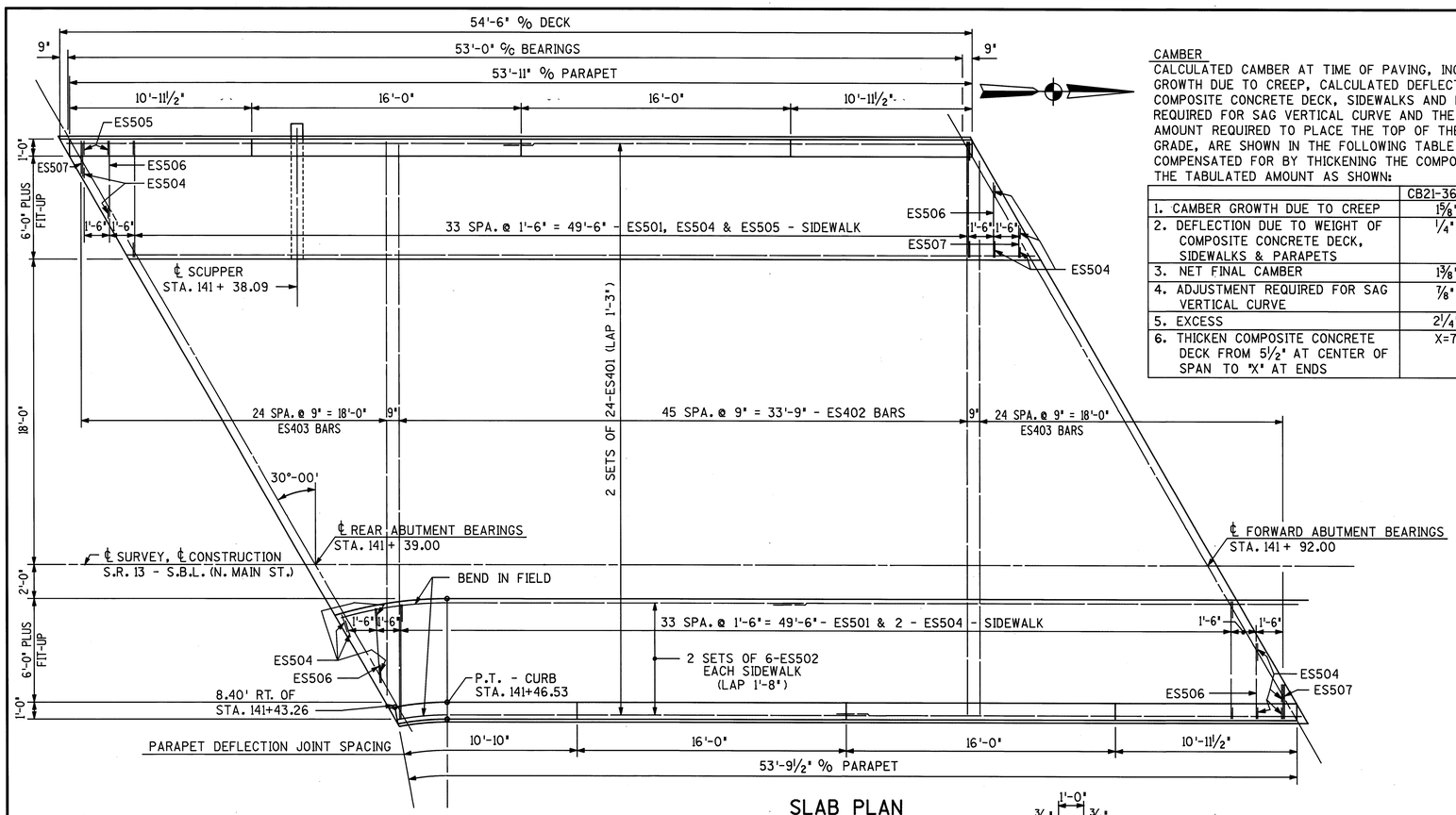

SLAB PLAN

CAMBER

CALCULATED CAMBER AT TIME OF PAVING, INCLUDING ALLOWANCE FOR CAMBER GROWTH DUE TO CREEP, CALCULATED DEFLECTION DUE TO WEIGHT OF COMPOSITE CONCRETE DECK, SIDEWALKS AND PARAPETS, ADJUSTMENT REQUIRED FOR SAG VERTICAL CURVE AND THE EXCESS OF THE AMOUNT REQUIRED TO PLACE THE TOP OF THE BEAMS PARALLEL TO PROFILE GRADE, ARE SHOWN IN THE FOLLOWING TABLE. THESE EXCESSES SHALL BE COMPENSATED FOR BY THICKENING THE COMPOSITE CONCRETE DECK FROM 5" TO THE TABULATED AMOUNT AS SHOWN:

	CB21-36 BEAMS	CB21-48 BEAMS
1. CAMBER GROWTH DUE TO CREEP	1⅝" ↑	1¾" ↑
2. DEFLECTION DUE TO WEIGHT OF COMPOSITE CONCRETE DECK, SIDEWALKS & PARAPETS	¼" ↓	⅞" ↓
3. NET FINAL CAMBER	1⅜" ↑	⅞" ↑
4. ADJUSTMENT REQUIRED FOR SAG VERTICAL CURVE	⅞" ↑	⅞" ↑
5. EXCESS	2¼"	1¾"
6. THICKEN COMPOSITE CONCRETE DECK FROM 5½" AT CENTER OF SPAN TO "X" AT ENDS	X=7¾"	X=7¼"

SUPERSTRUCTURE NOTES

PARAPETS AND RAILING: SEE STANDARD DRAWING BR-2-82

PRESTRESSED CONCRETE BOX BEAM DETAILS: THE FOLLOWING DETAILS FROM PSBD -1-81 APPLY TO THIS PROJECT:
SHEET 1 OF 4: BEAM LIFTING INSERTS, ANCHOR DOWELS, DETAILS AND REINFORCEMENT OF BEAM ENDS.
SHEET 2 OF 4: TYPICAL PLANS OF DIAPHRAGMS AND TRANSVERSE TIE RODS, BEAM DIMENSIONAL TOLERANCES, AND END DETAILS OF TRANSVERSE TIE ROD ANCHORAGE.
SHEET 3 OF 4: 48-INCH WIDE COMPOSITE BEAMS (CB21-48)
SHEET 4 OF 4: 36-INCH WIDE COMPOSITE BEAMS AND 36-INCH AND 48-INCH WIDE COMPOSITE BEAM WITH SLAB.
THE FOLLOWING NOTES FROM PSBD -1-81 APPLY TO THIS PROJECT:
SHEET 1 OF 4: TRANSVERSE TIE RODS, GALVANIZING, ANCHOR DOWELS, END OF BEAMS, CLEANING PRIOR TO PLACEMENT OF COMPOSITE SLAB, NON-SHRINKING MORTAR, PREPARATION OF CONCRETE SURFACES IN CONTACT WITH NON-SHRINKING MORTAR, AND AS REQUIRED TO SUPPLEMENT APPLICABLE DETAILS.
SHEET 2 AND 3 OF 4: AS REQUIRED TO SUPPLEMENT APPLICABLE DETAILS.

⅛" THICK PREFORMED BEARING PAD SHIMS, PLAN AREA, SHALL BE PLACED ON TOP OF BEARINGS WHERE REQUIRED FOR PROPER BEARING. THE NUMBER SUPPLIED SHALL BE 2 SHIMS PER BEAM. SHIMS NOT USED SHALL BECOME THE PROPERTY OF THE STATE.

COMPRESSION SEALS: SEE STANDARD DRAWING EXJ-3-82, SHEETS 1,2 AND 3. DIMENSION "D" = 8"

LAMINATED ELASTOMERIC BEARINGS: SEE DETAIL. 50 DUROMETER, 2 EACH END OF EACH BEAM.

PRESTRESSING STRANDS ARE ASTM A416, ½ INCH, 7 WIRE, UNCOATED STRESS-RELIEVED STRANDS WITH AN ULTIMATE STRENGTH OF 270,000 PSI AND AN INITIAL TENSION OF 28,900 LBS. PER STRAND.

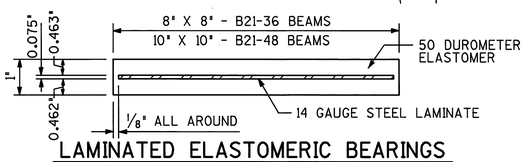

LAMINATED ELASTOMERIC BEARINGS

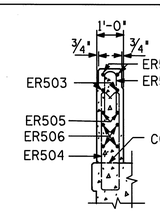

SECTION D-D

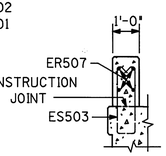

SECTION E-E

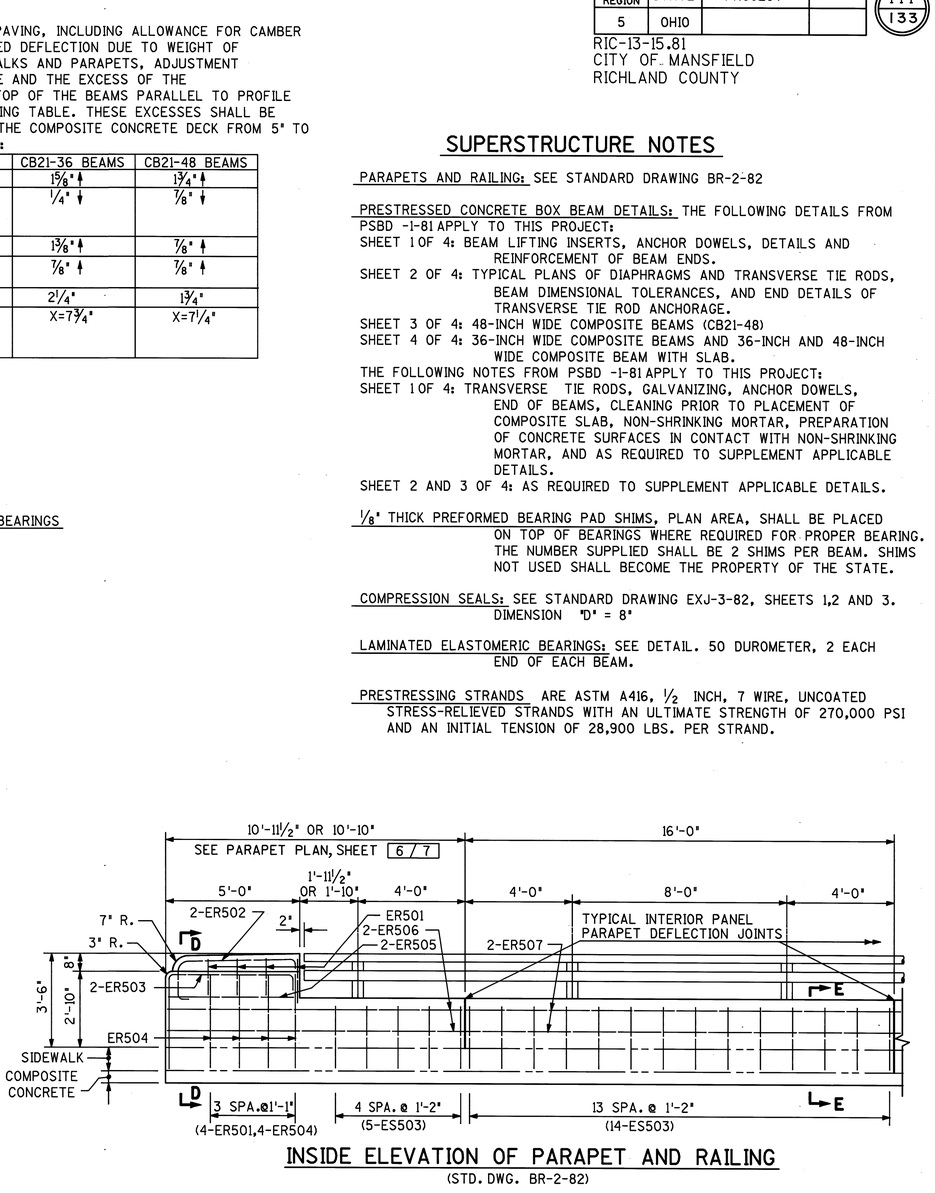

INSIDE ELEVATION OF PARAPET AND RAILING

(STD. DWG. BR-2-82)

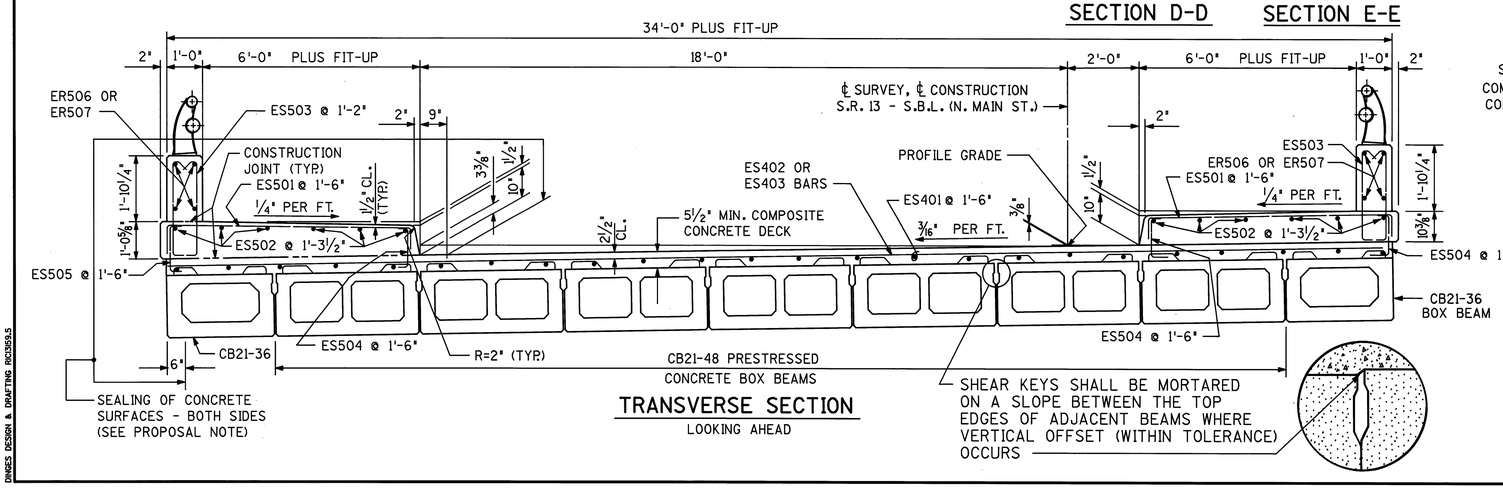

TRANSVERSE SECTION

LOOKING AHEAD

TABLE OF DECK ELEVATIONS

	LEFT CURB LINE	PROFILE GRADE	RIGHT CURB LINE
℄ BEARING - REAR ABUTMENT	1153.72	1153.99	1154.02
¼ SPAN	1153.71	1154.01	1154.05
MIDSPAN	1153.74	1154.14	1154.11
¾ SPAN	1153.80	1154.16	1154.20
℄ BEARING - FORWARD ABUTMENT	1153.91	1154.29	1154.34

K.E. McCARTNEY & ASSOCIATES
MANSFIELD, OHIO

5/7

SUPERSTRUCTURE - 1

BRIDGE NO. RIC-13-1598 L
OVER TOUBY'S RUN

DESIGNED	DRAWN	TRACED	CHECKED	REVIEWED	DATE	REVISED
RAK	RAK	DDD	HGS	MRS	03-90	

DWGS. DESIGN & DRAFTING RICS95.5

F.H.W.A. REGION	STATE	PROJECT	
5	OHIO		

112/133

RIC-13-15.81
CITY OF MANSFIELD
RICHLAND COUNTY
PARAPET DEFLECTION JOINT SPACING

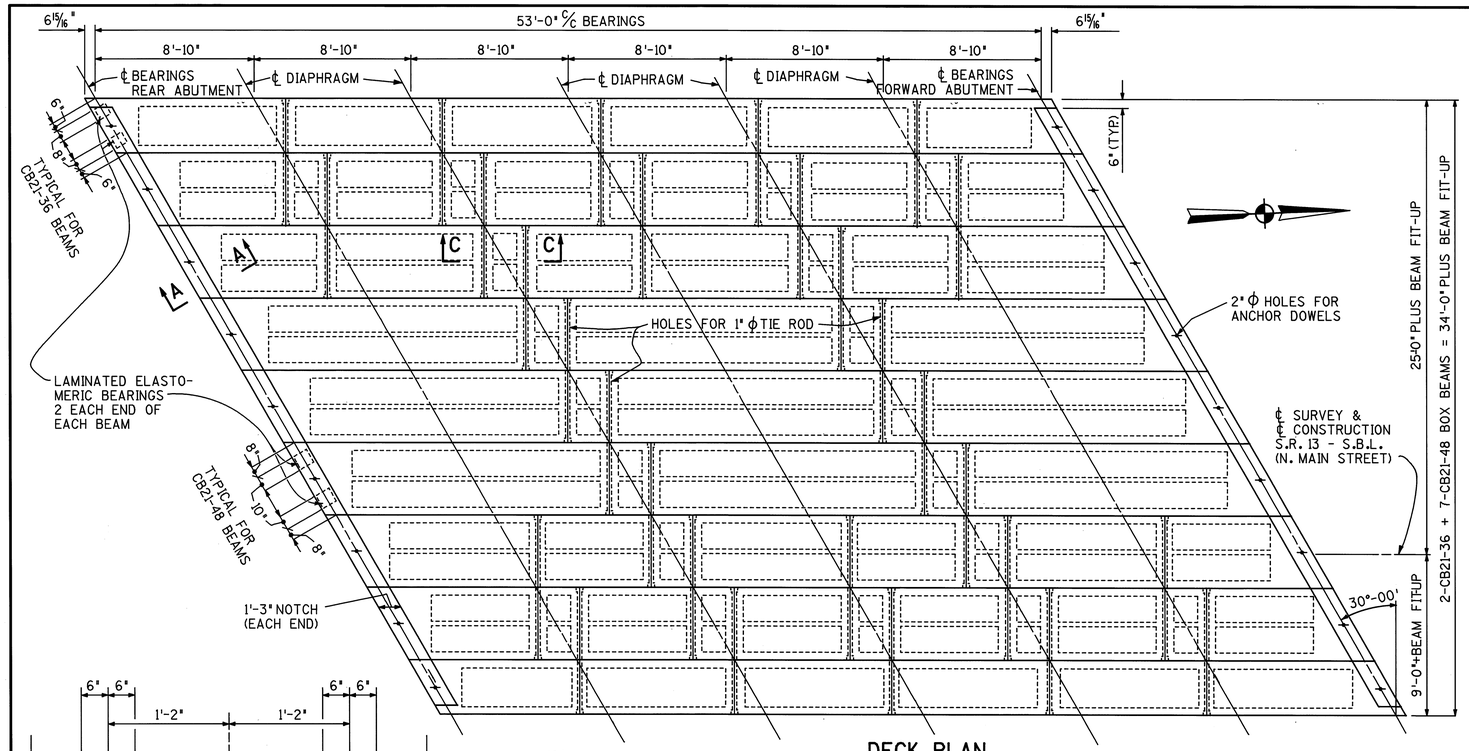

DECK PLAN

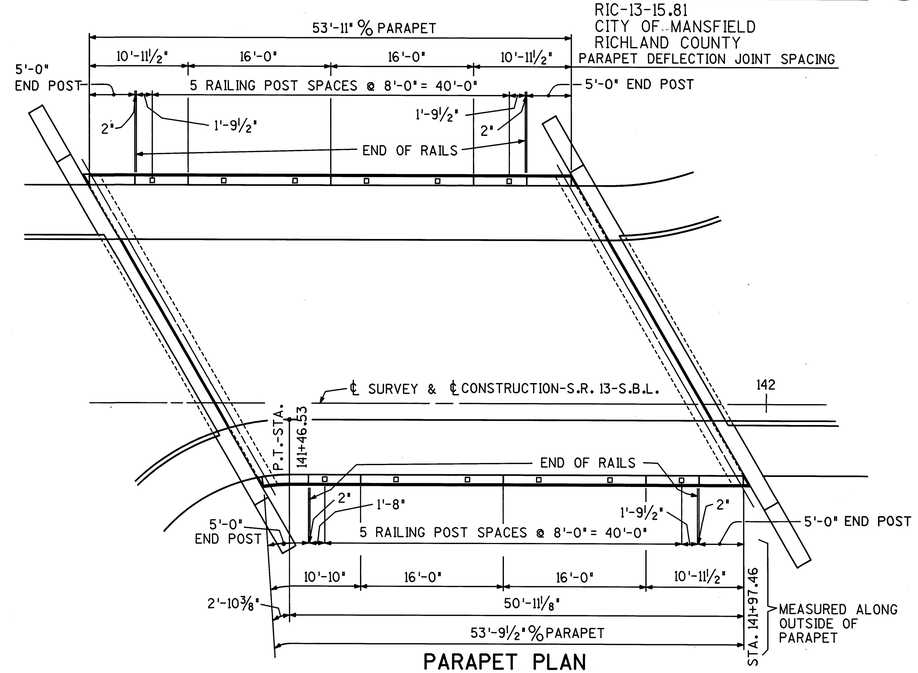

PARAPET PLAN

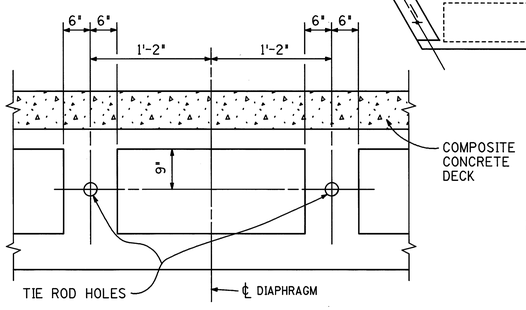

SECTION C-C

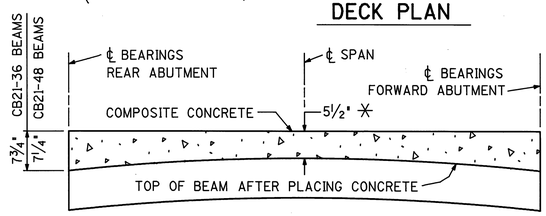

CAMBER DIAGRAM

✳ THIS IS THE NOMINAL DIMENSION. THE PAY QUANTITY OF THAT PORTION OF THE DECK CONCRETE OVER THE BEAMS SHALL BE BASED ON THE AVERAGE OF THIS DIMENSION AND THE DEPTH AT THE BEAM BEARINGS EVEN THOUGH DEVIATION FROM THIS AVERAGE MAY OCCUR BECAUSE THE TOP OF THE BEAM MAY NOT HAVE THE CAMBER ANTICIPATED IN THE DESIGN, I.E. 1⅝" OR 1¾". THE CAMBER OF THE BEAMS SHALL BE MEASURED IN THE FIELD BEFORE THE DECK IS PLACED. THE ACTUAL DEPTH AT MID-SPAN SHALL BE THE NOMINAL DIMENSION PLUS OR MINUS THE DIFFERENCE BETWEEN ACTUAL AND ANTICIPATED CAMBER.

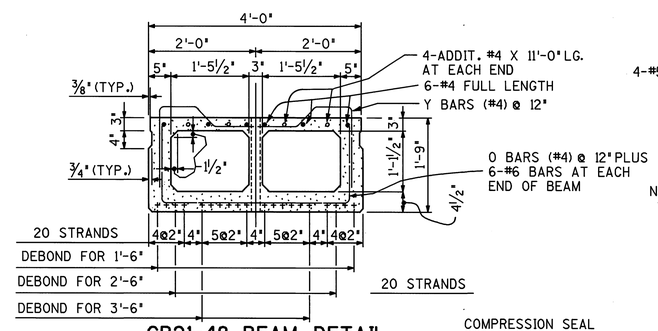

CB21-48 BEAM DETAIL

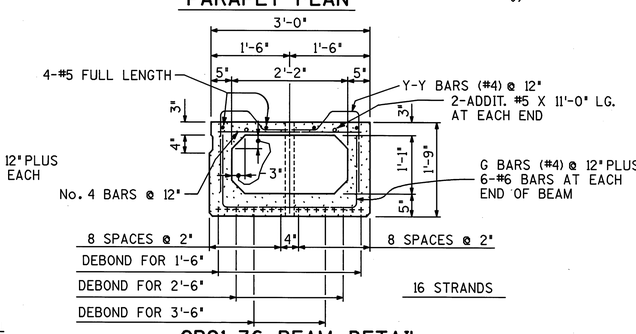

CB21-36 BEAM DETAIL

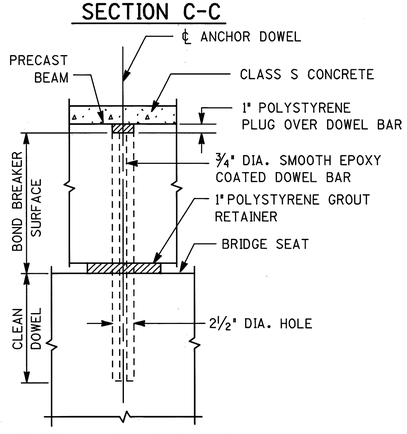

FIXED ANCHOR DOWEL

PROCEDURE: PLACE POLYSTYRENE GROUT RETAINER. DRILL AND CLEAN HOLES. THEN PLACE NON-SHRINKING GROUT, DOWEL AND 1-INCH MINIMUM THICKNESS POLYSTYRENE PLUG.

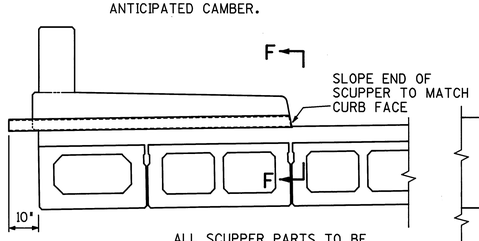

ALL SCUPPER PARTS TO BE GALVANIZED AFTER FABRICATION

SCUPPER DETAIL

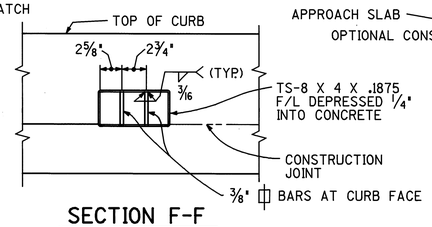

SECTION F-F

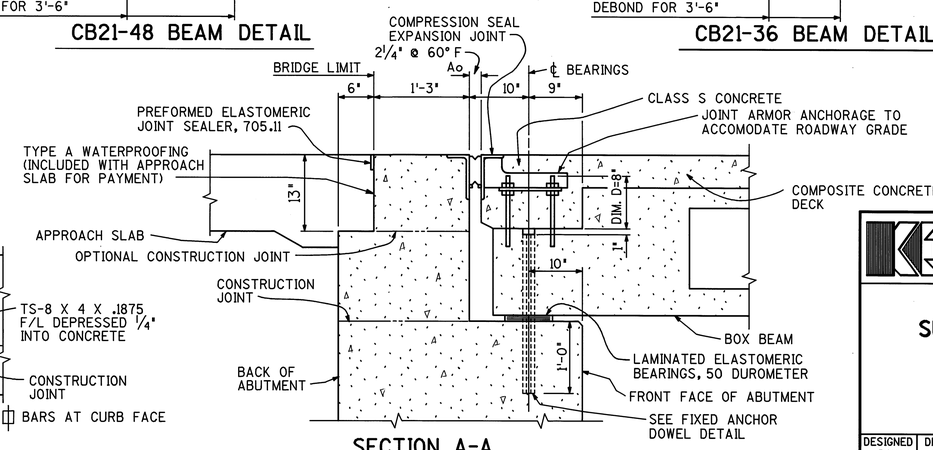

SECTION A-A

6/7

K.E. McCARTNEY & ASSOCIATES
MANSFIELD, OHIO

SUPERSTRUCTURE - 2

BRIDGE NO. RIC-13-1598 L
OVER TOUBY'S RUN

DESIGNED	DRAWN	TRACED	CHECKED	REVIEWED	DATE	REVISED
RAK	RAK	DDD	HGS	MRS	03-90	

DNGES DESIGN & DRAFTING RIC1359.6

QUANTITIES	INITIAL	DATE
CALCULATED	RAK	01-90
CHECKED	MRS	03-90
REVISED		

F.H.W.A. REGION	STATE	PROJECT	
5	OHIO		

113
133

RIC-13-15.81
CITY OF MANSFIELD
RICHLAND COUNTY

REINFORCING STEEL, GRADE 60 - ABUTMENTS

MARK	NO	LENGTH	WEIGHT	SHP	NUMBER RA	NUMBER FA
A501	78	12'-10"	1044	BT	5+27+7	8+27+4
A502	65	6'-4"	429	BT	27+7	27+4
A504	20	20'-4"	424	S	10	10
A505	8	11'-11"	99	S	-	8
A514	8	9'-1"	76	S	8	-
A515	6	11'-10"	74	S	6	-
A517	13	7'-1"	96	BT	5	8
A601	65	6'-5"	626	BT	27+7	27+4
A606	13	7'-2"	140	BT	5	8
A802	12	29'-2"	934	S	12	-
A803	4	29'-7"	316	S	4	-
A804	12	29'-4"	940	S	-	12
A805	4	29'-9"	318	S	-	4
TOTAL WEIGHT			5516			

BENDING DIAGRAMS & NOTES

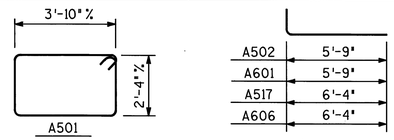

EPOXY COATED REINFORCING STEEL, GRADE 60 - ABUTMENTS

MARK	NO	LENGTH	WEIGHT	SHP	NUMBER RA	NUMBER FA
EA503	54	7'-2"	404	BT	27	27
EA506	16	20'-4"	339	S	8	8
EA507	2	6'-7"	14	S	-	2
EA508	9	27'-5"	257	S	4	4+1
EA509	1	28'-5"	30	S	1	-
EA510	6	8'-4"	52	S	-	6
EA511	1	8'-9"	9	S	1	-
EA512	3	10'-9"	34	S	1	2
EA513	1	9'-11"	10	S	1	-
EA516	2	10'-6"	22	S	2	-
EA518	1 SERIES OF 5	③	41	BT	1 SERIES OF 5	-
EA519	1 SERIES OF 5	④	44	BT	1 SERIES OF 5	-
EA520	4	6'-9"	28	S	4	-
EA521	2	12'-3"	26	S	-	2
EA522	2	12'-7"	26	S	-	2
EA523	2	8'-7"	18	S	-	2
EA524	1 SERIES OF 4	⑦	34	BT	-	1 SERIES OF 4
EA525	1 SERIES OF 5	⑧	38	BT	-	1 SERIES OF 5
EA526	2	7'-11"	17	S	-	2
EA527	1	8'-4"	9	S	1	-
EA602	33	9'-0"	446	BT	17	16
EA603	33	4'-2"	207	BT	17	16
EA604	22	13'-8"	452	BT	10	11
EA605	5	11'-1"	83	BT	2	3
EA801	33	5'-9"	507	BT	17	16
TOTAL WEIGHT			3147			

BENDING DIAGRAMS

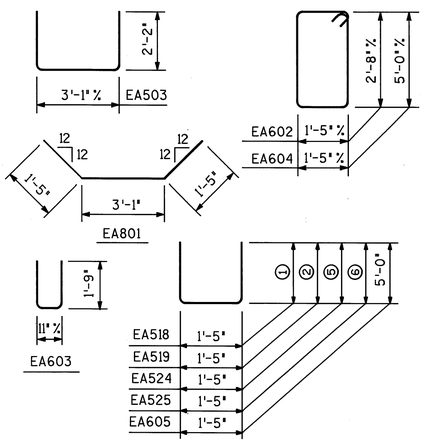

NOTE: "E" PREFIX TO BAR NUMBER INDICATES EPOXY COATED

EPOXY COATED REINFORCING STEEL, GRADE 60 - SUPERSTRUCTURE

MARK	NO	LENGTH	WEIGHT	SHP
ES401	48	27'-6"	882	S
ES402	46	34'-0"	1045	S
ES403	2 SERIES OF 25	①	576	S
ES501	68	8'-1"	573	BT
ES502	24	27'-6"	688	S
ES503	76	6'-4"	502	BT
ES504	116	2'-7"	313	BT
ES505	36	2'-9"	103	BT
ES506	4	6'-1"	25	BT
ES507	3	2'-8"	8	BT
ER501	16	3'-3"	*	BT
ER502	8	6'-7"	*	BT
ER503	8	8'-9"	*	BT
ER504	16	8'-4"	*	BT
ER505	8	4'-8"	*	S
ER506	16	10'-6"	*	S
ER507	16	15'-8"	*	S
TOTAL WEIGHT			4715	

BENDING DIAGRAMS

① - VARIES FROM 1'-8" TO 32'-10". INCREMENT = 1'-3⅝"

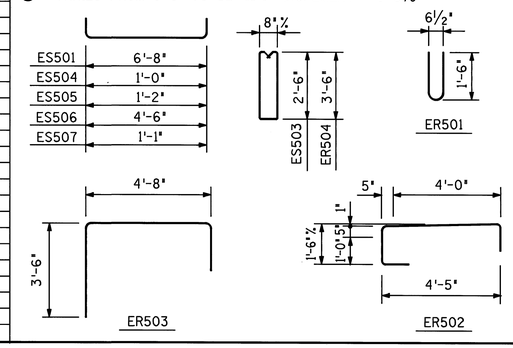

NOTE: "E" PREFIX TO BAR NUMBER INDICATES EPOXY COATED
* - INCLUDED IN ITEM 517, RAILING (CONCRETE PARAPET WITH DOUBLE PIPE RAIL FOR PAYMENT)

SERIES BARS			
NOTE	VARIES FROM	VARIES TO	INCREMENT
①	2'-0"	4'-8"	8"
②	2'-4"	5'-0"	8"
③	5'-2"	10'-6"	1'-4"
④	5'-10"	11'-2"	1'-4"
⑤	2'-6"	4'-5¼"	7¾"
⑥	1'-10"	4'-4"	7½"
⑦	6'-2"	10'-0½"	1'-3½"
⑧	4'-10"	9'-10"	1'-3"

7/7

K.E. McCARTNEY & ASSOCIATES
MANSFIELD, OHIO

REINFORCING STEEL

BRIDGE NO. RIC-13-1598 L
OVER TOUBY'S RUN

DESIGNED	DRAWN	TRACED	CHECKED	REVIEWED	DATE	REVISED
RAK	RAK	DDD	HGS	MRS	03-90	

DINGES DESIGN & DRAFTING RIC3859.7