| FED. RD. DIVISION | STATE | PROJECT |
|---|---|---|
| 2 | OHIO | |

STA-30-12.47

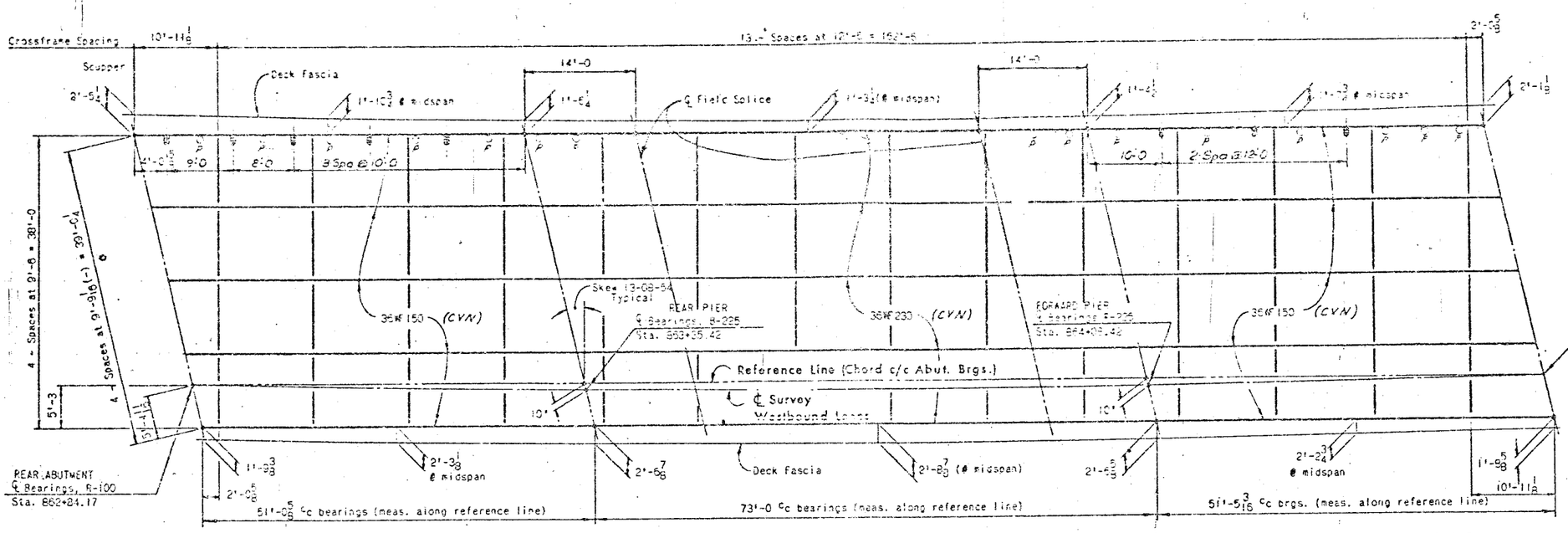


STEEL FRAMING PLAN

NOTE: 1) All dimensions shown from exterior beams to Deck Fascia are Radial dimensions.
2) P = Subdrain pipe shown schematically.

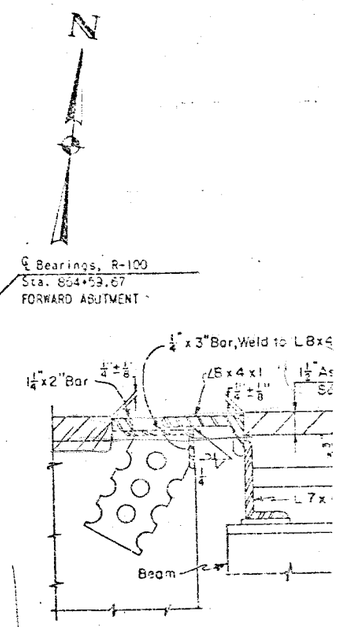


For additional end dam details see Standard Drawing SD-1-69, Sh

END DAM DETAILS

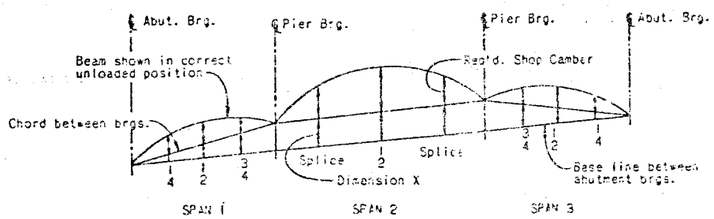


DEFLECTION & CAMBER DIAGRAM

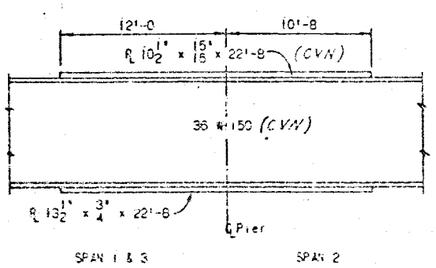


MOMENT PLATE DETAILS

DEFLECTION & CAMBER

| LOCATION | SPAN 1 | | | | | SPAN 2 | | | | | | SPAN 3 | | | | |
|---|---|---|---|---|---|---|---|---|---|---|---|---|---|---|---|---|
| | Brg. | 1/4 | 1/2 | 3/4 | Brg. | 1/4 | 1/2 | 3/4 | Pier | 3/4 | Brg. | 3/4 | 1/2 | 1/4 | Brg. |
| Dimension X | 0 | 1/8 | 1/4 | 3/8 | 7/16 | 7/16 | 7/16 | 7/16 | 7/16 | 7/16 | 7/16 | 3/8 | 1/4 | 1/8 | 0 |
| Deflection due to weight of steel | 0 | 0 | 0 | 0 | 0 | 1/8 | 1/8 | 1/16 | 0 | 0 | 0 | 0 | 0 | 0 | 0 |
| Deflection due to remaining dead load | 0 | 1/8 | 1/8 | 1/16 | 0 | 1/4 | 7/16 | 1/4 | 0 | 1/16 | 1/8 | 1/8 | 0 | | |
| Required Shop Camber | 0 | 1/8 | 1/8 | 1/16 | 0 | 7/16 | 9/16 | 5/16 | 0 | 1/16 | 1/8 | 1/8 | 0 | | |

## SUPERSTRUCTURE NOTES

ADDITIONAL DETAILS: Refer to Standard Drawings RB-1-55, SD-1-69, sheets 1, 2, 3 and 4, and BR-1-67, sheet 1 for details not shown.

FIELD SPLICES: shall be for 36WF150 as detailed on Standard Drawing SD-1-69, sheet 4. All material for splices shall be CVN

DECK SLAB HAUNCH: A typical haunch width of 9" shall be used for computing quantity of concrete. However, the haunch width may vary between 6" and 12" provided that the slope shall not be greater than 1:4 for a haunch less than 9" wide.

BEAMS: All beams are parallel to Reference Line Chord.

For SCUPPER details see Std. Dwg. SD-1-69 Sheet 3 of 4 and sh. (Sheet 4 of 35) SUBDRAINAGE pipe locations are indicated ○ P.

For additional details see sheet 12.

Where "(CVN)" follows a shape size c material shall meet specified minimu requirements. The fabricator shall a procedure designed for positive material through all phases of fab shall be fabricated until the Direc the procedure.

W.E.
SHE

W. E. QUICKSALL AND A
CONSULTING ENGINEERS • NE

SUPERSTRUCTUR
BRIDGE NO. STA
U.S.R. 30 over RELOCATED

STARK COUNTY

| DRAWN | CHECKED | | |
|---|---|---|---|
| wds | wds | | DO |