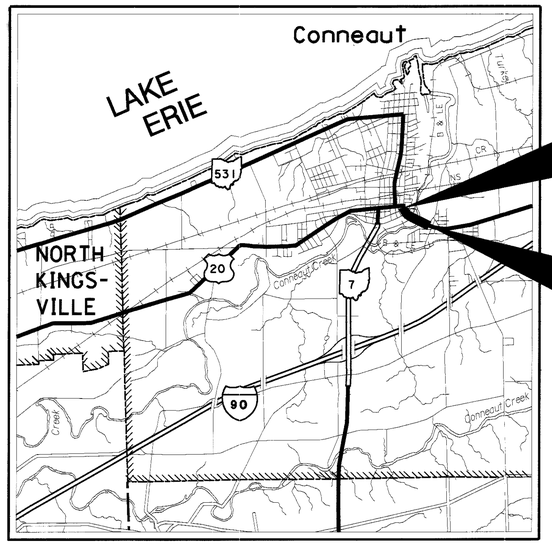

LOCATION MAP

LATITUDE: N 41°56'30" LONGITUDE: W 80°33'06"

SCALE IN MILES

0 1 2 3 4

N

PORTION TO BE IMPROVED
INTERSTATE & DIVIDED HIGHWAY
UNDIVIDED STATE & FEDERAL ROUTES
OTHER ROADS

DESIGN DESIGNATION

U.S.R. 20:

CURRENT ADT (2003)	10290
DESIGN YEAR ADT (2023)	12890
DESIGN HOURLY VOLUME (2023)	1160
DIRECTIONAL DISTRIBUTION	52%
TRUCKS (24 HOUR B&C)	10%
DESIGN SPEED	40 MPH
LEGAL SPEED	35 MPH

DESIGN FUNCTIONAL CLASSIFICATION - URBAN PRINCIPAL ARTERIAL

DESIGN EXCEPTIONS

NONE REQUIRED

ALL OTHER ROADS: SEE SCHEMATIC PLAN

UNDERGROUND UTILITIES
TWO WORKING DAYS
BEFORE YOU DIG
CALL 1-800-362-2764 (TOLL FREE)
OHIO UTILITIES PROTECTION SERVICE
NON-MEMBERS
MUST BE CALLED DIRECTLY

PLAN PREPARED BY:
McCOY ASSOCIATES, INC.
367 GHENT ROAD - SUITE 1A
AKRON, OHIO 44333
PHONE (330) 668-4727
FAX (330) 666-0778

ENGINEERS SEAL:

STATE OF OHIO
MITCHELL A. McCOY
E-53421
REGISTERED PROFESSIONAL ENGINEER

SIGNED: Mitchell A McCoy
DATE: 11/12/02

STATE OF OHIO
DEPARTMENT OF TRANSPORTATION

ATB-20-26.19

CITY OF CONNEAUT
ASHTABULA COUNTY

INDEX OF SHEETS:

TITLE SHEET	1	PLAN & PROFILE - KEYES ST.	71
SCHEMATIC PLAN	2	CROSS SECTIONS - KEYES ST.	72-75
REFERENCE TIES	3	PLAN & PROFILE - HARBOR ST.	76
TYPICAL SECTIONS	4-13	CROSS SECTIONS - HARBOR ST.	77,78
GENERAL NOTES	14-16,15A, 16A,16B	PLAN & PROFILE - CHARLES ST.	79
		CROSS SECTIONS - CHARLES ST.	80-82
MAINTENANCE OF TRAFFIC	17-23,17A	INTERSECTION DETAILS	83,84
GENERAL SUMMARY	24-27,24A	DRIVEWAY DETAILS	85,86
SUBSUMMARIES	28	UNDERDRAIN DETAILS	87
CALCULATIONS	30,31	SANITARY SEWER	88
STORM WATER POLLUTION PREVENTION PLAN	32,33	TRAFFIC CONTROL	89-94
PLAN & PROFILE - U.S.R. 20	34-38	LIGHTING	95-97,96A
CROSS SECTIONS - U.S.R. 20	39-55	STRUCTURES OVER 20'	98-139,106A,124A
CROSS SECTIONS - TURN LANE	56-60	RIGHT OF WAY	140-162
PLAN & PROFILE - LIBERTY ST.	61	SOIL INVESTIGATION SHEETS	
CROSS SECTIONS - LIBERTY ST.	62-66		
PLAN & PROFILE - SOUTH LIBERTY ST.	67		
CROSS SECTIONS - SOUTH LIBERTY ST.	68-70		
CURB RAMP DETAILS	16C,16D,16E		

SHEETS NOT USED: 29

PROJECT DESCRIPTION

IMPROVEMENT OF 0.39 MILE OF U.S.R. 20 BY REPLACEMENT OF THE EXISTING CONNEAUT VIADUCT OVER CONNEAUT CREEK WITH A NEW STRUCTURE ON AN IMPROVED HORIZONTAL ALIGNMENT, INCLUDING APPROACH CONSTRUCTION.

LIMITED ACCESS

THIS IMPROVEMENT IS ESPECIALLY DESIGNED FOR THROUGH TRAFFIC AND HAS BEEN DECLARED A LIMITED ACCESS HIGHWAY OR FREEWAY BY ACTION OF THE DIRECTOR IN ACCORDANCE WITH THE PROVISIONS OF SECTION 5511.02 OF THE OHIO REVISED CODE.

1997 SPECIFICATIONS

THE STANDARD SPECIFICATIONS OF THE STATE OF OHIO, DEPARTMENT OF TRANSPORTATION, INCLUDING CHANGES AND SUPPLEMENTAL SPECIFICATIONS LISTED IN THE PROPOSAL SHALL GOVERN THIS IMPROVEMENT.

I HEREBY APPROVE THESE PLANS AND DECLARE THAT THE MAKING OF THIS IMPROVEMENT WILL NOT REQUIRE THE CLOSING TO TRAFFIC OF THE HIGHWAY EXCEPT AS NOTED ON SHEETS 19-21, AND THAT PROVISIONS FOR THE MAINTENANCE AND SAFETY OF TRAFFIC WILL BE SET FORTH ON THE PLANS AND ESTIMATES.

UNDER AUTHORITY OF SECTION 4511.21, DIVISION (I) OF THE OHIO REVISED CODE, THE REVISED PRIMA FACIE SPEED LIMITS AS INDICATED HEREIN ARE DETERMINED TO BE REASONABLE AND SAFE, AND ARE HEREBY ESTABLISHED FOR THE DURATION OF THIS PROJECT. THE PRIMA FACIE SPEED LIMIT OR LIMITS HEREBY ESTABLISHED SHALL BECOME EFFECTIVE WHEN APPROPRIATE SIGNS GIVING NOTICE THEREOF ARE ERECTED.

STANDARD CONSTRUCTION DRAWINGS

								SUPPLEMENTAL SPECIFICATIONS	
BP-3.1	7-28-00	GR-1.2M	1-3-96	MT-97.10	4-19-02	AS-1-81	4-20-01	842	1-6-99
BP-4.1	7-28-00	GR-1.3M	11-30-94	MT-97.11	4-19-02	BR-2-98	7-19-02	846	9-9-97
BP-5.1	7-28-00	GR-2.1M	4-14-98	MT-99.10M	1-30-95	EXJ-6-95	4-20-01	863	10-12-99
				MT-101.60M	4-25-94	GSD-1-96	4-20-01	864	7-11-00
CB-1.1	7-20-01	HW-2.2	7-20-01	MT-105.10M	4-25-94	PSID-1-99	10-20-00	865	2-22-00
CB-2.1	7-20-01			MT-105.11M	4-25-94			870	3-27-01
CB-2.2	7-20-01	MH-1.2	7-20-01					877	4-13-99
CB-4.2	7-20-01			HL-20.14M	5-1-95			899	10-21-98
				HL-30.11	4-19-02			905	4-1-98
DM-1.1	7-20-01	RM-1.1	4-29-99	HL-30.22	4-19-02			907	10-18-02
DM-4.3	7-20-01	RM-4.2	1-18-02	HL-30.31M	5-1-95			954	9-9-97
DM-4.4	7-20-01			HL-30.32	4-19-02	TC-41.20	1-19-01		
				HL-40.10	4-19-02	TC-41.40	1-18-02		
				HL-50.11	7-20-01	TC-42.20	4-20-01		
				HL-50.22	1-18-02	TC-52.10	4-20-01		
				HL-60.11	7-20-01	TC-52.20	4-20-01		

SPECIAL PROVISIONS

APPROVED _____ DISTRICT DEPUTY DIRECTOR
DATE 11-13-02

APPROVED Gordon Proctor
DATE 12-3-02 DIRECTOR, DEPARTMENT OF TRANSPORTATION

FEDERAL PROJECT NO. TE21-G020(268)
PID NO. 18520
CONSTRUCTION PROJECT NO.
RAILROAD INVOLVEMENT BESSEMER & LAKE ERIE
ATB-20-26.19
1/162

ATB - USR 20 - 26.19
030101 PID - 18520
Dist 4 2/12/2003

18520GTA.dgn

PROPOSED KEYES ST. CURVE DATA

P.I. Sta = 49+25.74
Δ = 44° 32′ 23″ (LT)
Dc = 53° 46′ 20″ (NDC 16°30′ MAX.)
R = 106.55′
T = 43.63′
L = 82.83′
E = 8.59′
e_{max} = 0.029 (NDC 0.040)

EXISTING SOUTH LIBERTY ST. CURVE DATA

P.I. Sta = 72+12.83
Δ = 44° 09′ 44″ (LT)
Dc = 10° 55′ 16″
R = 524.64′
T = 212.83′
L = 404.38′
E = 41.53′

PROPOSED TURN-LANE CURVE DATA

P.I. Sta = 59+85.33
Δ = 73° 25′ 28″ (LT)
Dc = 26° 38′ 57″
R = 215.00′
T = 160.33′
L = 275.52′
E = 53.20′
e_{max} = 0.0154

PROPOSED U.S.R. 20 CURVE DATA

CURVE 1A
P.I. Sta = 10+01.44
Δ = 17° 29′ 00″ (LT)
Dc = 9° 29′ 48″
R = 603.32′
T = 92.77′
L = 184.10′
E = 7.09′
e_{max} = 0.023

CURVE 1
P.I. Sta = 12+96.47
Δ = 24° 05′ 00″ (LT)
Dc = 6° 00′ 00″
R = 954.93′
T = 203.70′
L = 401.39′
E = 21.48′
e_{max} = NC

CURVE 2
P.I. Sta = 24+78.85
Δ = 16° 38′ 40″ (LT)
Dc = 6° 00′ 00″
R = 954.93′
T = 139.69′
L = 277.41′
E = 10.16′
e_{max} = NC

CURVE 3
P.I. Sta = 27+21.15
Δ = 12° 30′ 00″ (RT)
Dc = 6° 00′ 00″
R = 954.93′
T = 104.58′
L = 208.33′
E = 5.71′
e_{max} = NC

CURVE 4
P.I. Sta = 28+98.77
Δ = 6° 49′ 47″ (LT)
Dc = 4° 37′ 41″
R = 1,237.99′
T = 73.87′
L = 147.56′
E = 2.20′
e_{max} = NC

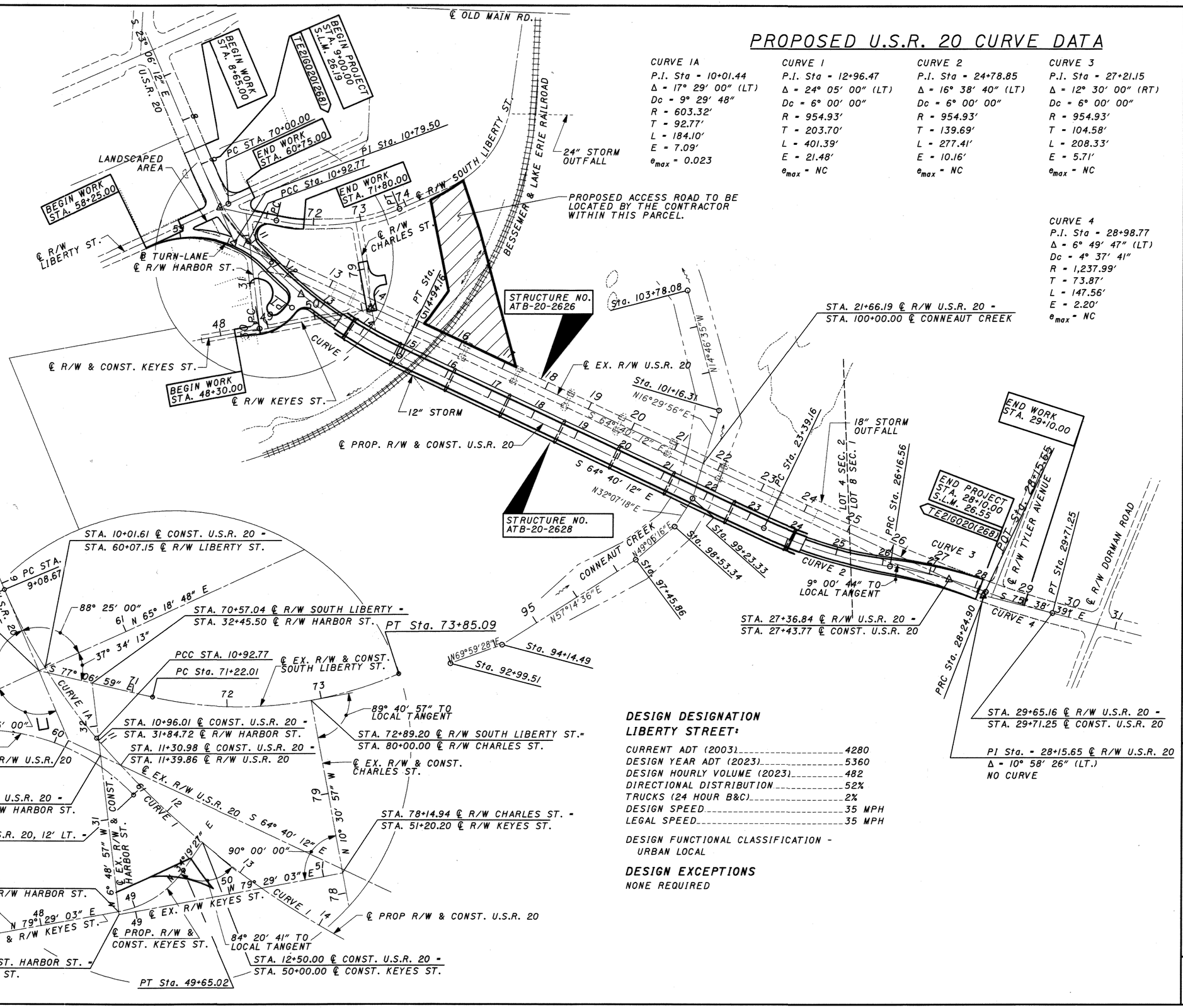

DESIGN DESIGNATION
LIBERTY STREET:

CURRENT ADT (2003)	4280
DESIGN YEAR ADT (2023)	5360
DESIGN HOURLY VOLUME (2023)	482
DIRECTIONAL DISTRIBUTION	52%
TRUCKS (24 HOUR B&C)	2%
DESIGN SPEED	35 MPH
LEGAL SPEED	35 MPH

DESIGN FUNCTIONAL CLASSIFICATION - URBAN LOCAL

DESIGN EXCEPTIONS
NONE REQUIRED

HORIZONTAL SCALE IN FEET
0 50 100 200

SCHEMATIC PLAN

ATB-20-26.19

I8520GBA.dgn

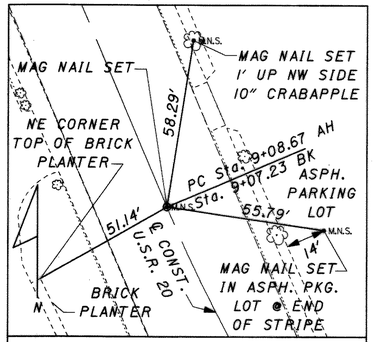

P.O.T ℄ CONST. U.S.R. 20
STA. 9+07.23 BK/STA. 9+08.67 AH

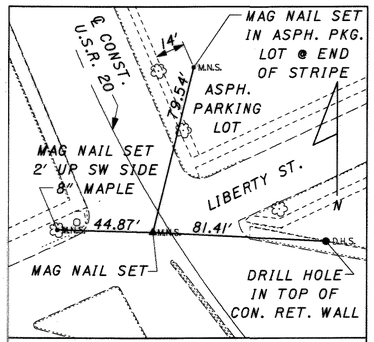

P.I. ℄ CONST. U.S.R. 20
STA. 10+01.44

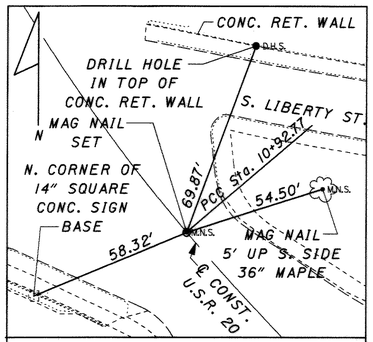

PCC ℄ CONST. U.S.R. 20
STA. 10+92.77

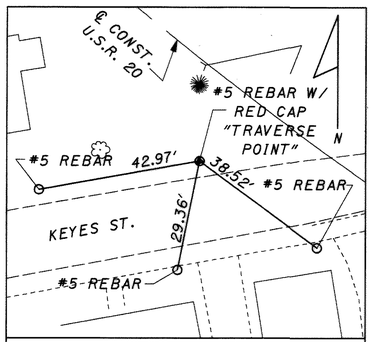

P.I. ℄ CONST. U.S.R. 20
STA. 12+96.47

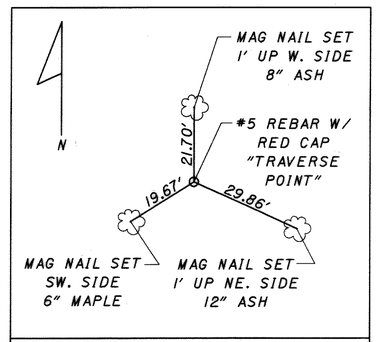

MISC. CONTROL NO. 1
STA. 15+96.94, 363.63' RT.,
U.S.R. 20

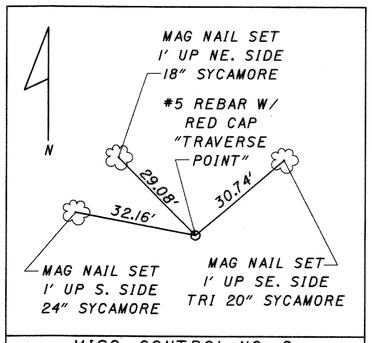

MISC. CONTROL NO. 2
STA. 18+54.67, 456.98' RT.,
U.S.R. 20

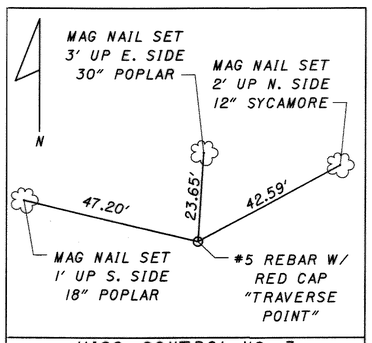

MISC. CONTROL NO. 3
STA. 19+80.28, 305.41' RT.,
U.S.R. 20

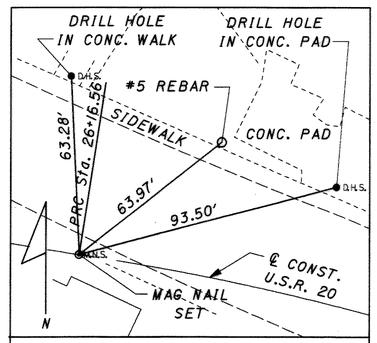

PRC ℄ CONST. U.S.R. 20
STA. 26+16.56

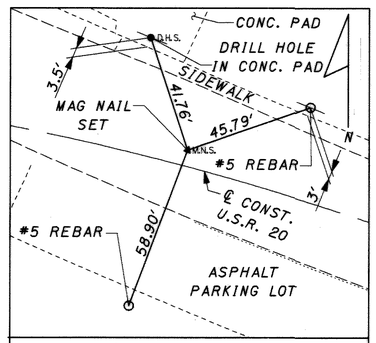

PI ℄ CONST. U.S.R. 20
STA. 27+21.15

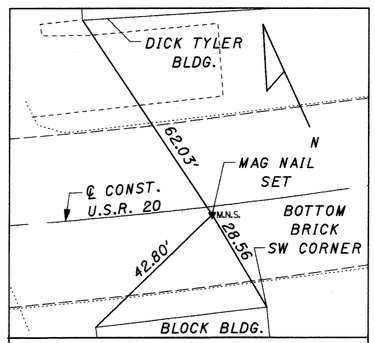

PI ℄ CONST. U.S.R. 20
STA. 28+98.77

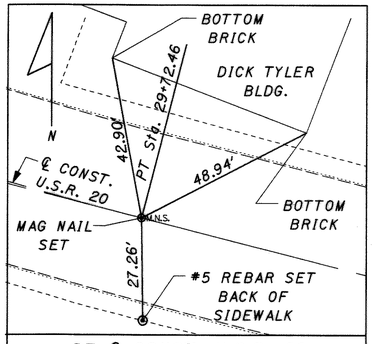

PT ℄ CONST. U.S.R. 20
STA. 29+72.46

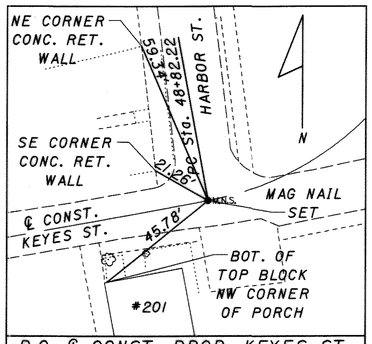

P.C. ℄ CONST. PROP. KEYES ST.
STA. 48+82.22 & ℄ EX. R/W
HARBOR ST. STA. 30+03.01

LOCATION	ROAD	STATION	OFFSET	NORTHING	EASTING	DESCRIPTION
POT	U.S.R. 20	9+07.23BK/9+08.67 AH		835188.2745	2497972.8621	MAG NAIL SET
PI	U.S.R. 20	10+01.44		835102.9448	2498009.2643	MAG NAIL SET
PCC	U.S.R. 20	10+92.77		835032.4933	2498069.6203	MAG NAIL SET
PI	U.S.R. 20	12+96.47		834877.7972	2498202.1489	#5 REBAR W/ RED CAP "TRAVERSE POINT"
MISC NO. 1	U.S.R. 20	15+96.94	363.63' RT.	834417.9990	2498323.6000	#5 REBAR W/ RED CAP "TRAVERSE POINT"
MISC NO. 2	U.S.R. 20	18+54.67	456.98' RT.	834223.3650	2498516.6100	#5 REBAR W/ RED CAP "TRAVERSE POINT"
MISC NO. 3	U.S.R. 20	19+80.28	305.41' RT.	834306.6180	2498694.9900	#5 REBAR W/ RED CAP "TRAVERSE POINT"
PRC	U.S.R. 20	26+16.56		834348.2747	2499414.3703	MAG NAIL SET
PI	U.S.R. 20	27+21.15		834332.4816	2499517.7528	MAG NAIL SET
PI	U.S.R. 20	28+98.77		834267.9904	2499684.1454	MAG NAIL SET
PT	U.S.R. 20	29+72.46		834249.6744	2499755.7102	MAG NAIL SET
PC	KEYES ST.	48+82.22		834849.4472	2498093.6505	MAG NAIL SET

REFERENCE TIES

ATB-20-26.19

18520CBB.dgn

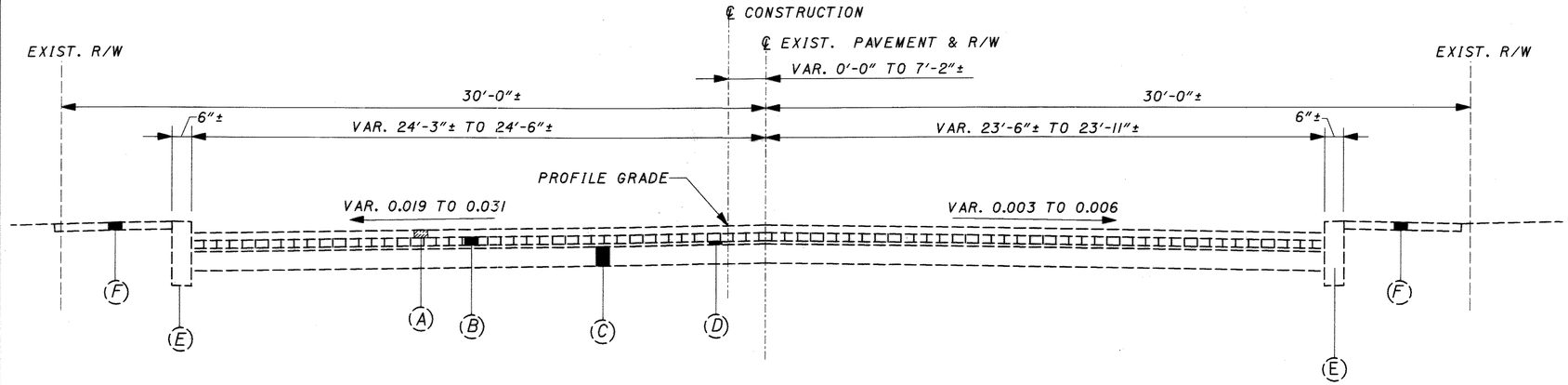

EXISTING SECTION - U.S.R. 20

SECTION APPLIES:
STA. 7+00.00 TO STA. 10+00.00

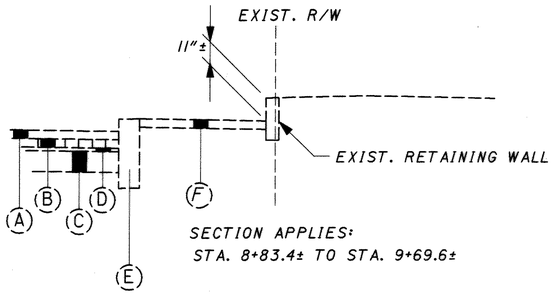

SECTION APPLIES:
STA. 8+83.4± TO STA. 9+69.6±

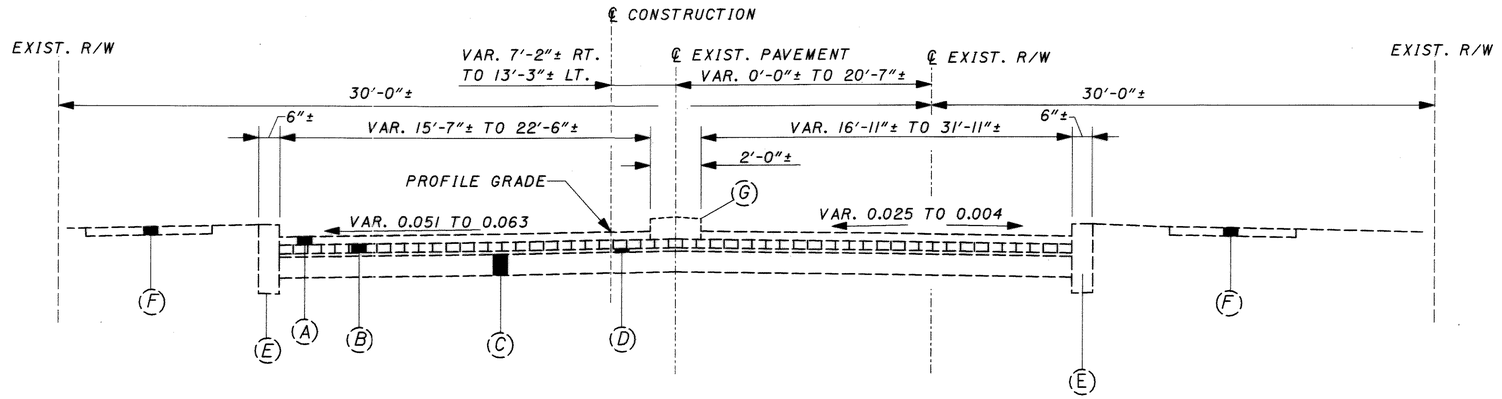

EXISTING SECTION - U.S.R. 20

SECTION APPLIES:
STA. 10+00.00 TO 11+63.64

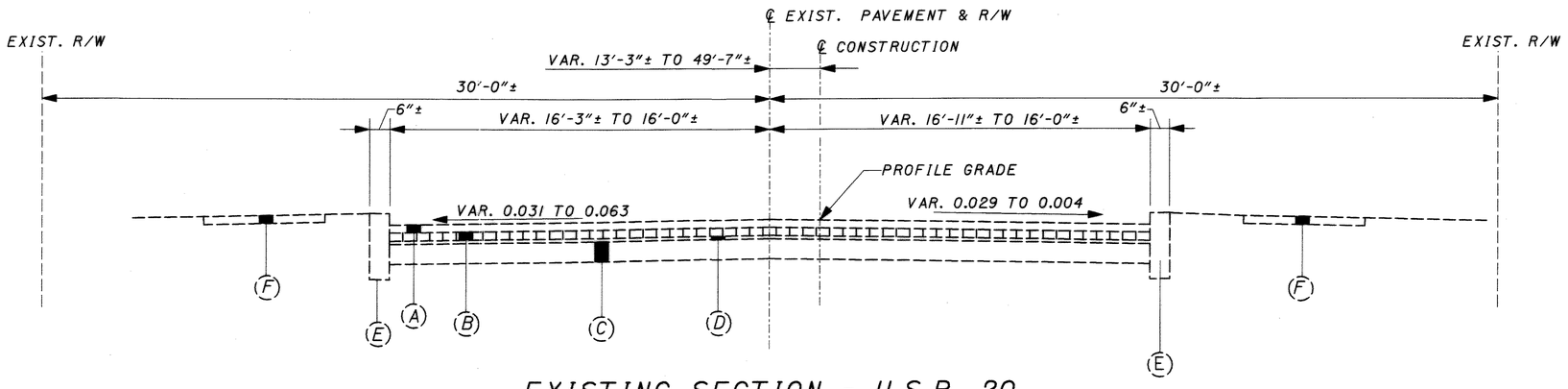

EXISTING SECTION - U.S.R. 20

SECTION APPLIES:
STA. 11+63.64 TO STA. 12+99.85

EXISTING LEGEND

- Ⓐ - VARIABLE DEPTH ASPHALT CONCRETE
- Ⓑ - 4"± PAVING BRICK
- Ⓒ - 6"± CONCRETE BASE
- Ⓓ - 1"± SLAG CUSHION
- Ⓔ - CONCRETE CURB
- Ⓕ - CONCRETE SIDEWALK
- Ⓖ - CONCRETE TRAFFIC DIVIDER

PROPOSED LEGEND

1. ITEM 448 - 1¼" ASPHALT CONCRETE SURFACE COURSE, TYPE 1, PG64-22
2. ITEM 407 - TACK COAT FOR INTERMEDIATE COURSE
3. ITEM 448 - 1¾" ASPHALT CONCRETE INTERMEDIATE COURSE, TYPE 2, PG64-22
4. ITEM 301 - 9" BITUMINOUS AGGREGATE BASE, PG64-22
5. ITEM 254 - PAVEMENT PLANING, BITUMINOUS, VAR. (AVG. 3")
6. ITEM 304 - 6" AGGREGATE BASE
7. ITEM 203 - SUBGRADE COMPACTION
8. ITEM 830 - CURB, TYPE 6
9. ITEM 608 - 4" CONCRETE WALK
10. ITEM 611 - REINFORCED CONCRETE APPROACH SLAB (T=15"), AS PER PLAN
11. ITEM 605 - 4" SHALLOW PIPE UNDERDRAIN
12. ITEM 870 - SEEDING AND MULCHING
13. NOT USED
14. NOT USED
15. ITEM 301 - 7" BITUMINOUS AGGREGATE BASE, PG64-22
16. ITEM 608 - 4" CONCRETE WALK, AS PER PLAN
17. ITEM 407 - TACK COAT

EXISTING TYPICAL SECTIONS - U.S.R.-20

ATB-20-26.19

NOTE:
FOR LEGEND SEE SHEET 4.

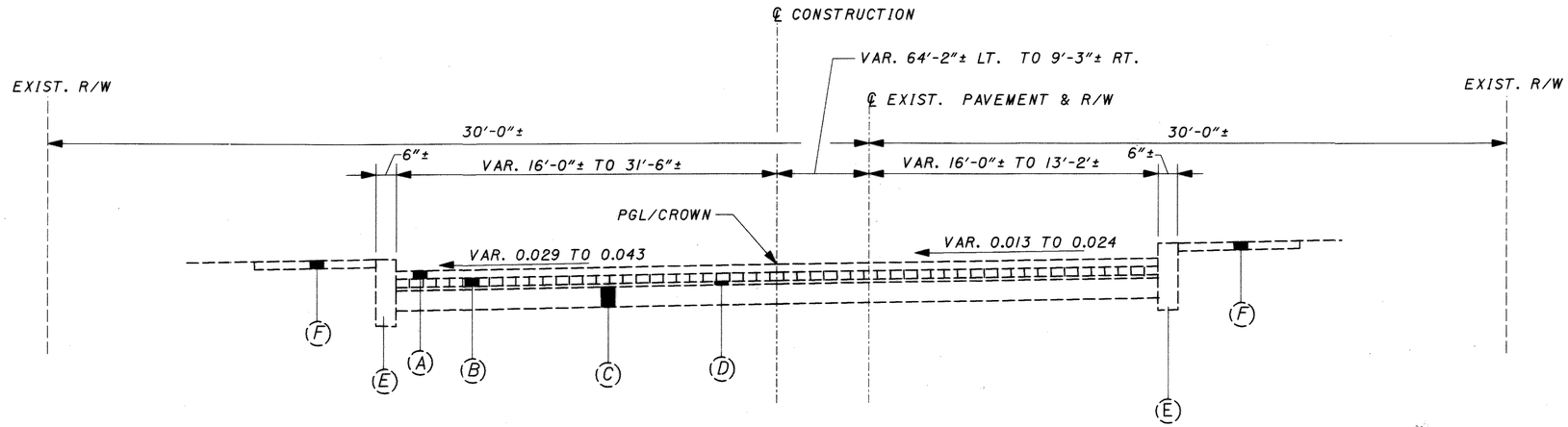

EXISTING SECTION - U.S.R. 20

SECTION APPLIES:
STA. 24+29.55 TO STA. 28+24.00

EXISTING BRIDGE LIMITS STA. 12+99.85 TO STA. 24+29.55

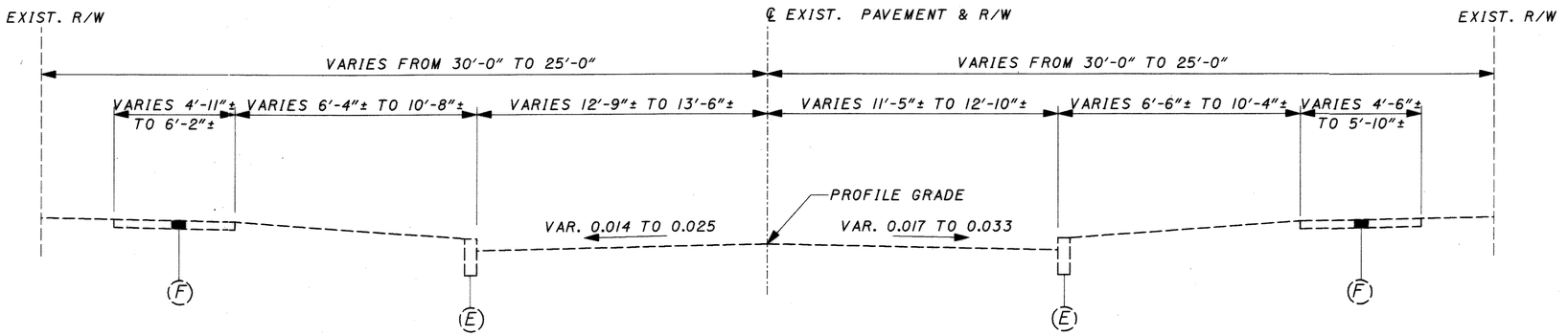

EXISTING SECTION - LIBERTY ST.

SECTION APPLIES:
STA. 58+00.00 TO STA. 62+00.00

EXISTING TYPICAL SECTIONS - SIDE ROADS

ATB-20-26.19

NOTE:
FOR LEGEND SEE SHEET 4.

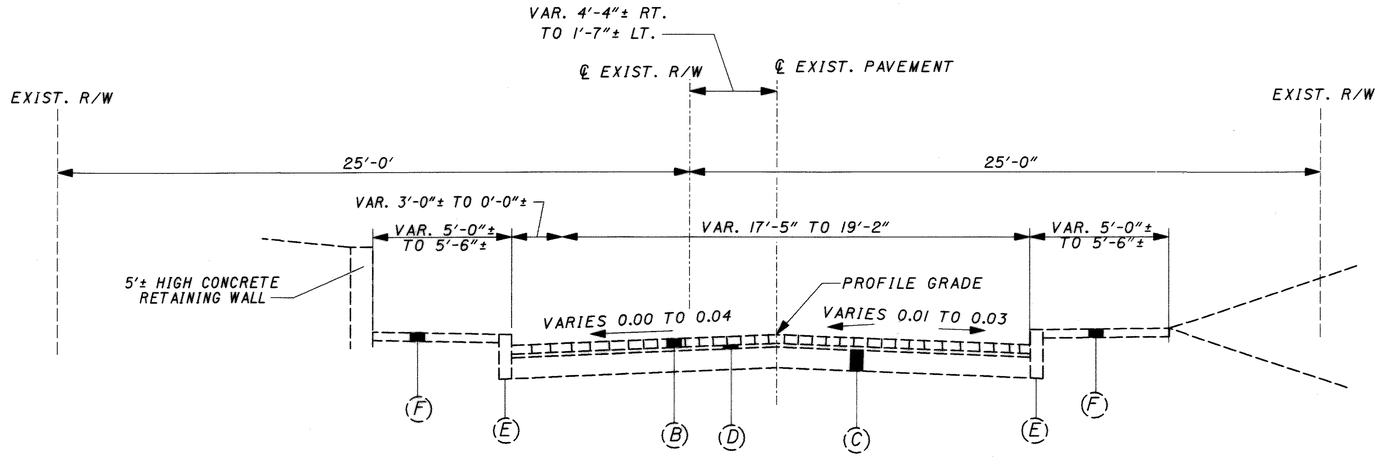

EXISTING SECTION - SOUTH LIBERTY ST.

SECTION APPLIES:
STA. 70+00.00 TO STA. 73+00.00

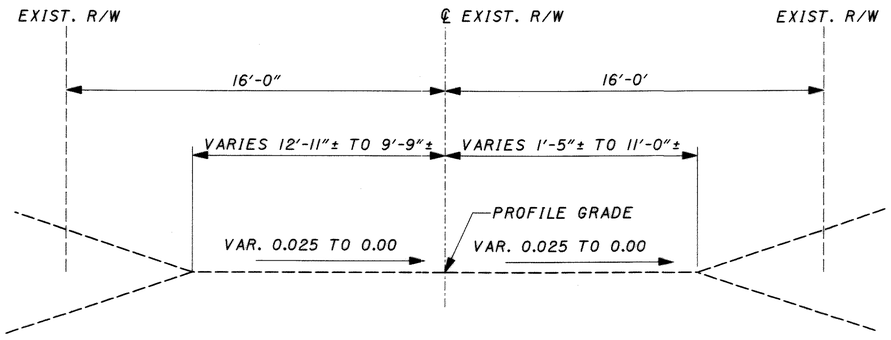

EXISTING SECTION - CHARLES ST.

SECTION APPLIES:
STA. 78+05.52 TO STA. 79+78.88

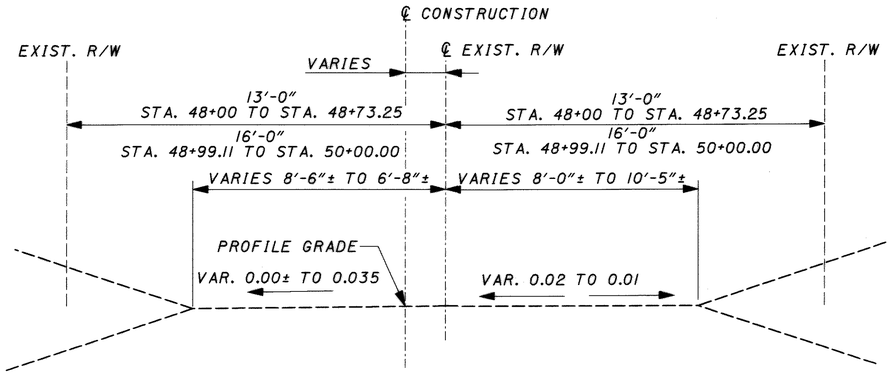

EXISTING SECTION - KEYES ST.

SECTION APPLIES:
STA. 48+00.00 TO STA. 50+00.00

TYPICAL SECTIONS - SIDE ROADS

EXISTING

ATB-20-26.19

NOTES:
1. FOR LEGEND SEE SHEET 4.

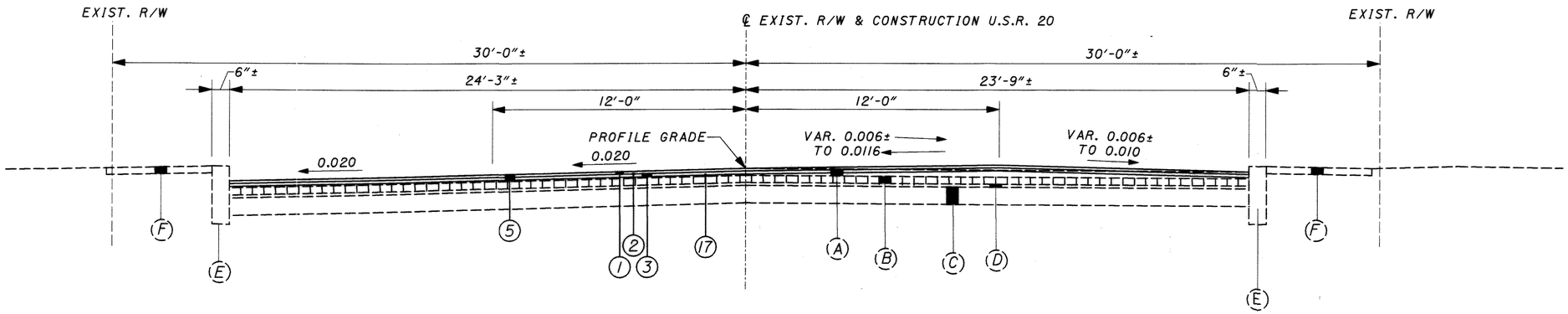

RESURFACING SUPERELEVATED SECTION - U.S.R. 20

SECTION APPLIES:
STA. 8+65.00 TO STA. 9+00.00 = 35.00 LIN. FT.

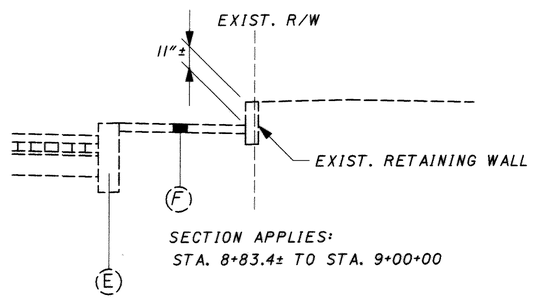

SECTION APPLIES:
STA. 8+83.4± TO STA. 9+00+00

TYPICAL SECTIONS - U.S.R.-20

ATB-20-26.19

* UNLESS OTHERWISE SHOWN ON CROSS SECTIONS

NOTES:
1. FOR LEGEND SEE SHEET 4.

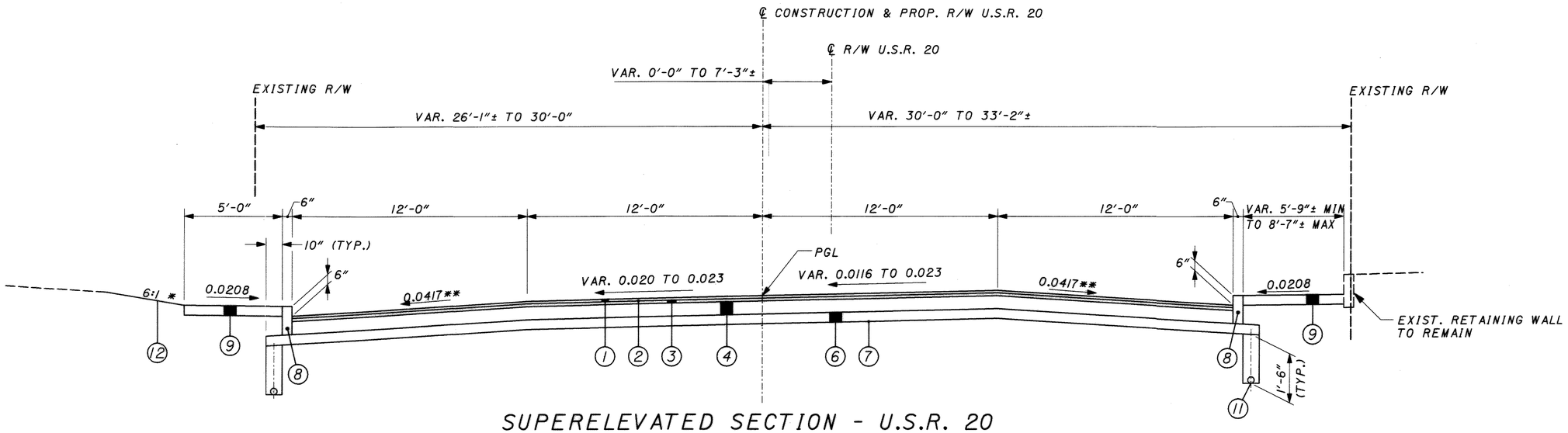

SUPERELEVATED SECTION - U.S.R. 20

SECTION APPLIES:
STA. 9+00.00 TO STA. 10+01.61 = 100.17 LIN. FT.

** VARIES 0.020 TO 0.0417 LT. SHOULDER AND 0.01 TO 0.0417 RT. SHOULDER STA. 9+00.00 TO STA. 9+50.00

STATION EQUATION:
STA. 9+07.23 (BK) = STA. 9+08.67 (AH)

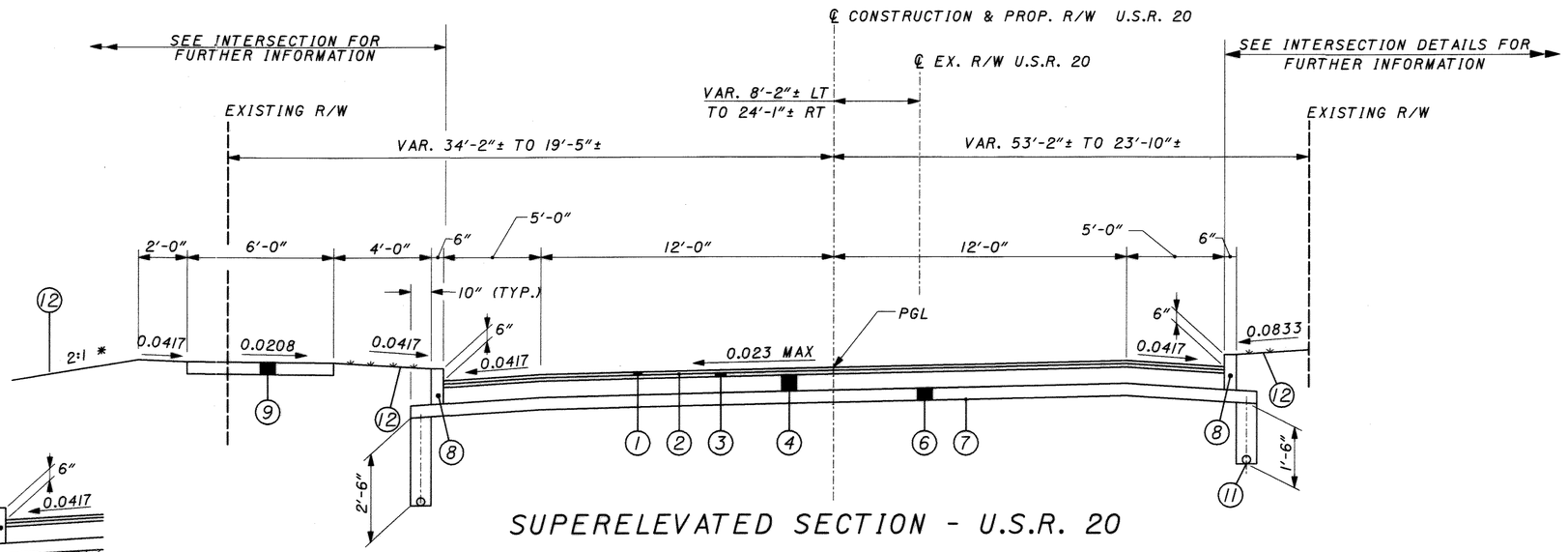

SUPERELEVATED SECTION - U.S.R. 20

SECTION APPLIES:
STA. 10+01.61 TO STA. 11+52.16 = 150.55 LIN. FT.

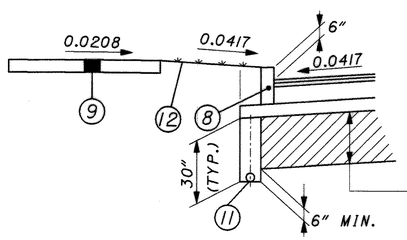

MATERIAL TO BE REMOVED AND REPLACED. SEE TREATMENT OF UNSUITABLE SUBGRADE NOTE IN GENERAL NOTES.

UNDERDRAIN IN UNDERCUT DETAIL

TYPICAL SECTIONS - U.S.R. 20

ATB-20-26.19

18520GYB.dgn

* UNLESS OTHERWISE SHOWN ON CROSS SECTIONS

NOTES:

1. FOR LEGEND SEE SHEET 4.
2. CONSTRUCT RIGHT SIDEWALK FROM STA. 28+10 TO MEET EXISTING WALK AT STA. 29+10.
3. SEE STRUCTURE PLANS FOR APPROACH SLAB DETAILS.

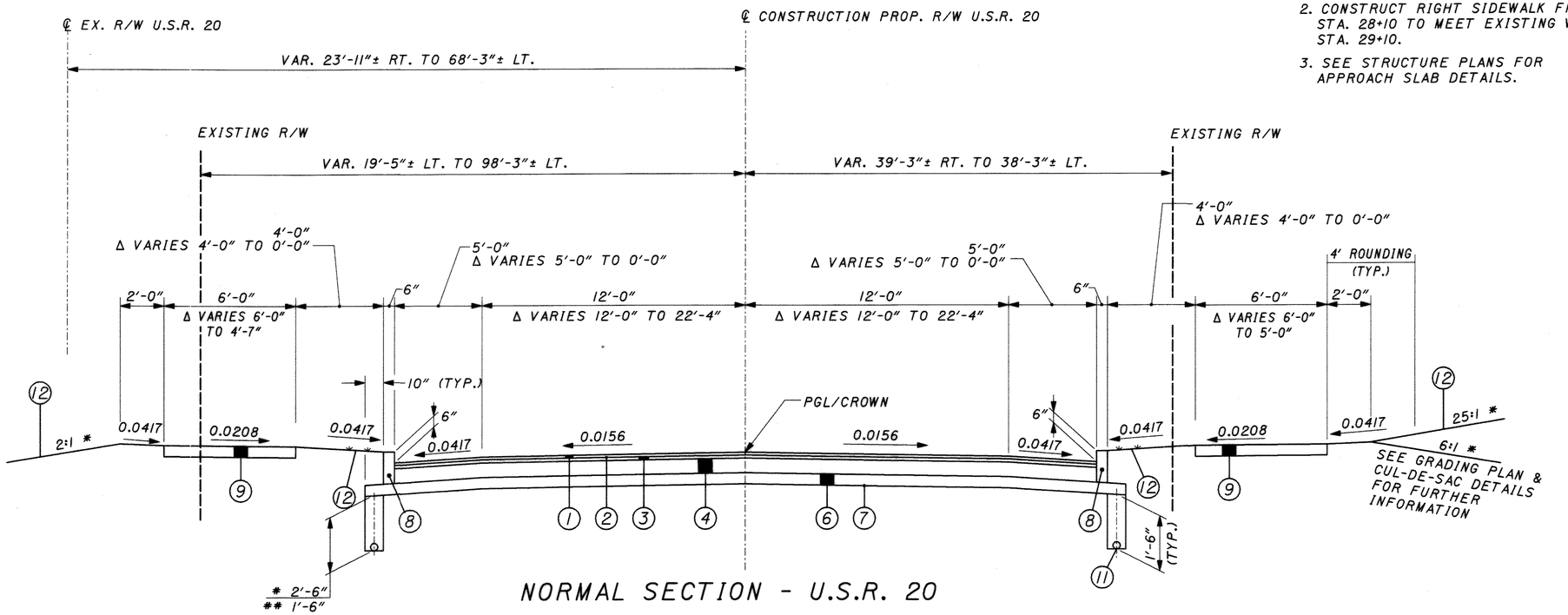

NORMAL SECTION - U.S.R. 20

SECTION APPLIES:
\# STA. 11+52.16 TO STA. 13+46.75 - 194.59 LIN. FT.
\## STA. 24+28.25 TO STA. 25+30.00 - 101.75 LIN. FT.
Δ STA. 25+30.00 TO STA. 28+10.00 - 280.00 LIN. FT.
TOTAL - 576.34 LIN. FT.

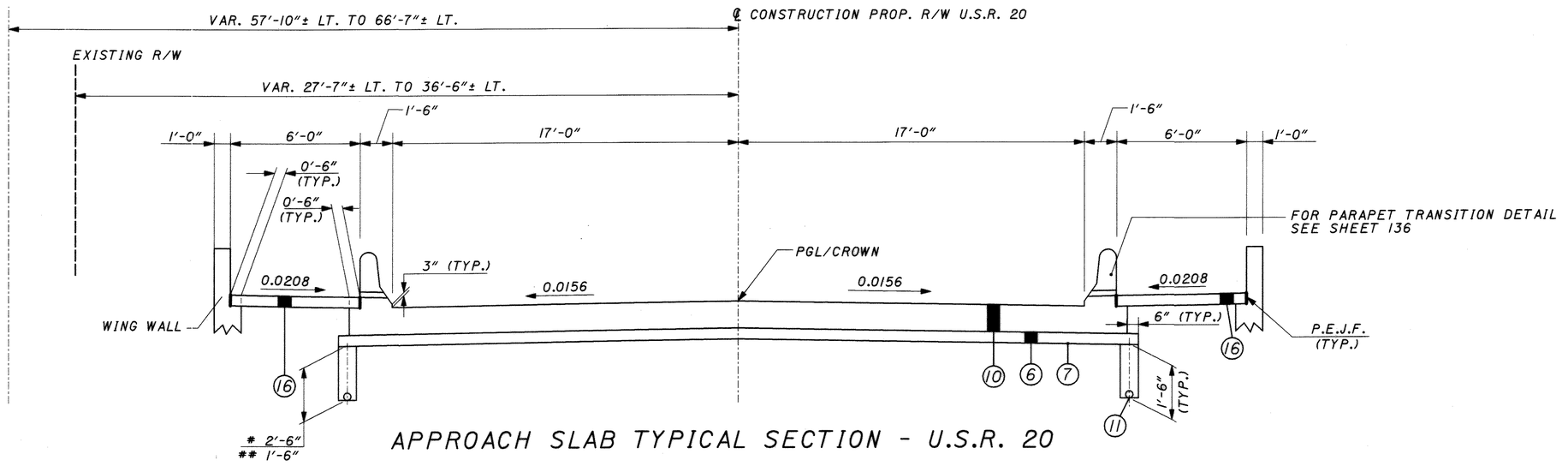

APPROACH SLAB TYPICAL SECTION - U.S.R. 20

SECTION APPLIES:
\# STA. 13+46.75 TO STA. 13+71.75 - 25.00 LIN. FT.
\## STA. 24+03.25 TO STA. 24+28.25 - 25.00 LIN. FT.
TOTAL - 50.00 LIN. FT.

BRIDGE LIMITS: STA. 13+71.25 TO STA. 24+03.25 - 1031.50 LIN. FT.

TYPICAL SECTIONS - U.S.R. 20

ATB-20-26.19

NOTE:
FOR LEGEND SEE SHEET 4.

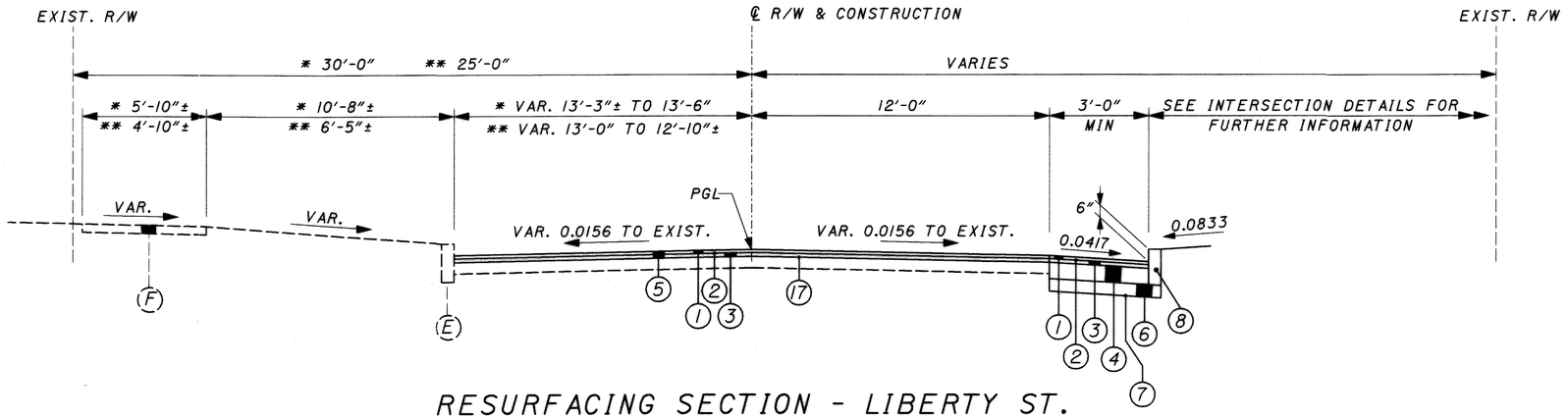

RESURFACING SECTION - LIBERTY ST.

SECTION APPLIES:
* STA. 59+10.00 TO STA. 59+50.00 = 40.00 LIN. FT.
** STA. 60+50.00 TO STA. 60+75.00 = 25.00 LIN. FT.
TOTAL = 65.00 LIN. FT.

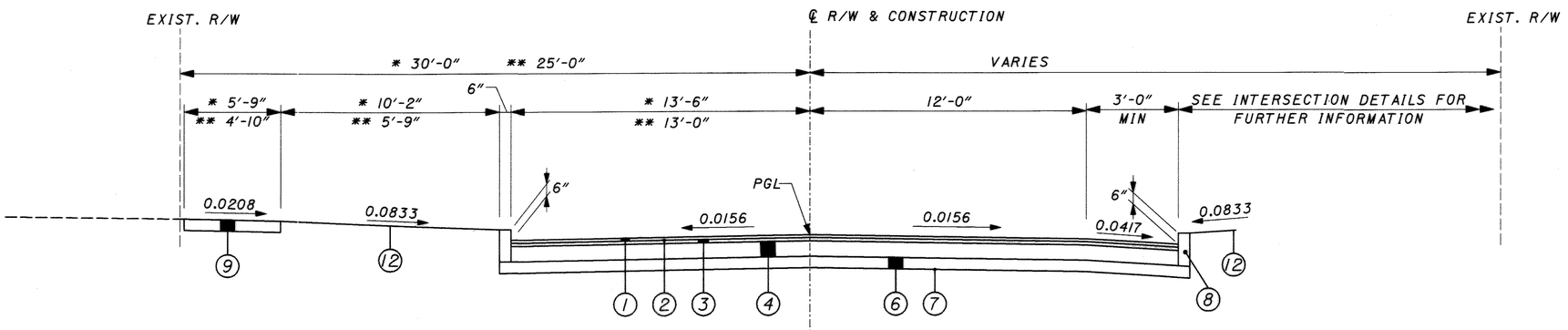

NORMAL SECTION - LIBERTY ST.

SECTION APPLIES:
* STA. 59+50.00 TO STA. 59+76.94 = 26.94 LIN. FT.
** STA. 60+31.35 TO STA. 60+50.00 = 18.65 LIN. FT.
TOTAL = 45.59 LIN. FT.

TYPICAL SECTIONS - LIBERTY STREET

ATB-20-26.19

18520CYB.dgn

* UNLESS OTHERWISE SHOWN ON CROSS SECTIONS

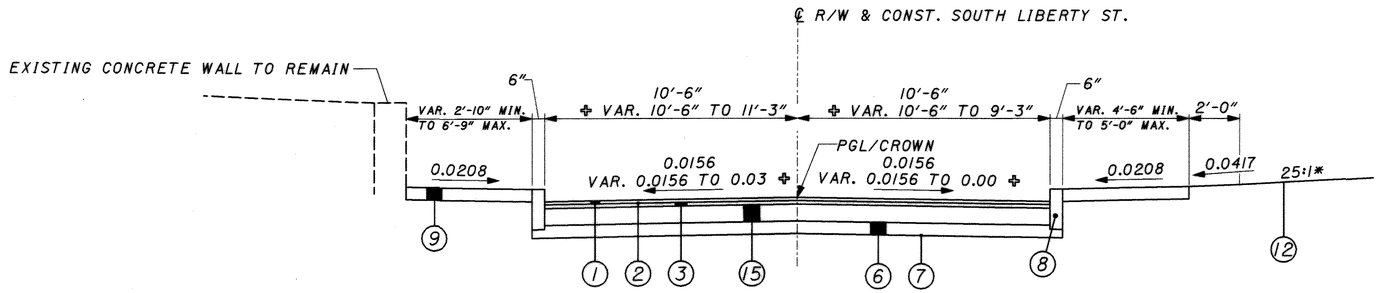

NORMAL SECTION - SOUTH LIBERTY STREET

SECTION APPLIES:
STA. 70+72.56 TO STA. 71+65.00 = 92.44 LIN. FT.
+ STA. 71+65.00 TO STA. 71+80.00 = 15.00 LIN. FT.
TOTAL = 107.44 LIN. FT.

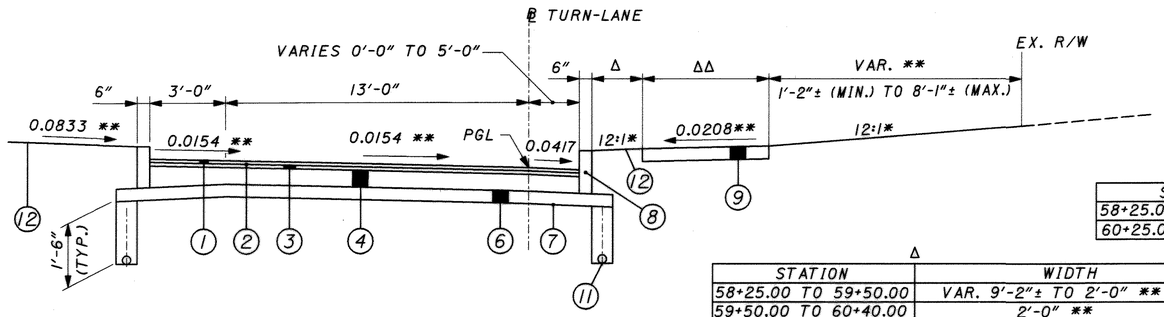

SUPERELEVATED SECTION - TURN LANE

SECTION APPLIES:
STA. 58+25.00 TO STA. 61+00.52 = 275.52 LIN. FT.
TOTAL = 275.52 LIN. FT.

ΔΔ

STATION	WIDTH
58+25.00 TO 60+25.00	5′-8″ **
60+25.00 TO 61+00.52	VAR. 5′-8″ TO 6′-0″ **

Δ

STATION	WIDTH
58+25.00 TO 59+50.00	VAR. 9′-2″± TO 2′-0″ **
59+50.00 TO 60+40.00	2′-0″ **
60+40.00 TO 61+00.52	VAR. 2′-0″ TO 4′-0″ **

** SEE INTERSECTION DETAIL AND TURN-LANE CROSS SECTIONS FOR FURTHER INFORMATION

NOTES:
1. FOR LEGEND SEE SHEET 4.
2. FOR INTERSECTION DETAILS SEE SHEET 83.

TYPICAL SECTIONS - SIDE ROADS

ATB-20-26.19

* UNLESS OTHERWISE SHOWN ON CROSS SECTIONS

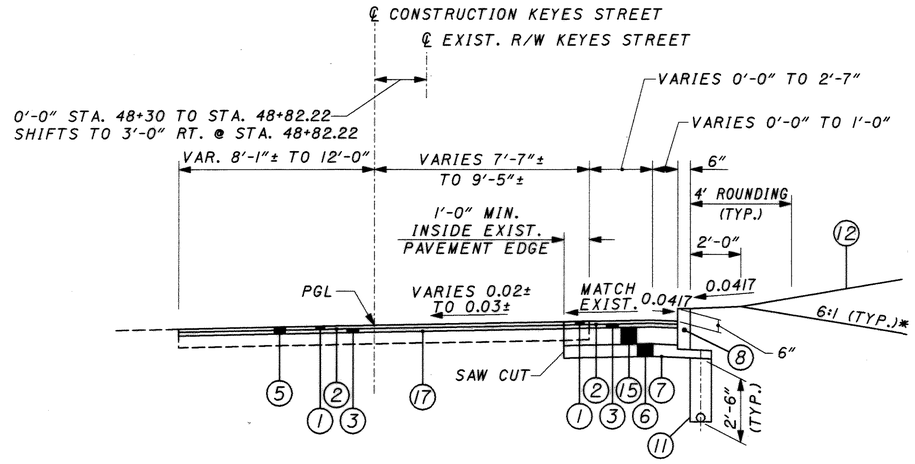

WIDENING & RESURFACING SECTION - KEYES STREET

SECTION APPLIES:
STA. 48+30.00 TO STA. 48+82.22 = 52.22 LIN. FT.
TOTAL = 52.22 LIN. FT.

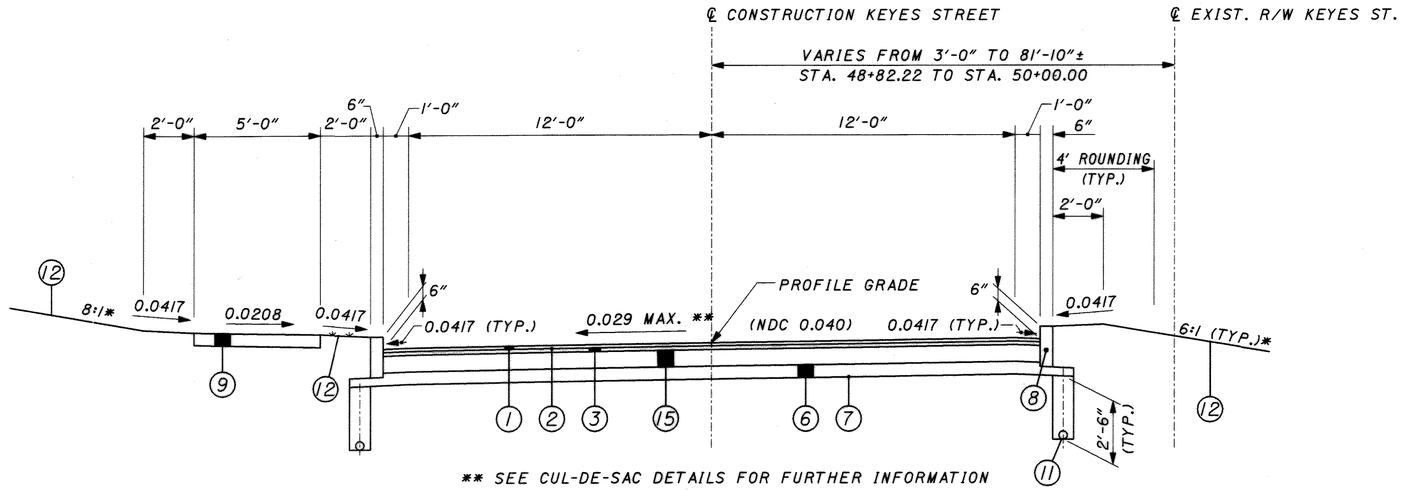

** SEE CUL-DE-SAC DETAILS FOR FURTHER INFORMATION

SUPERELEVATED SECTION - KEYES STREET

SECTION APPLIES:
STA. 48+82.22 TO STA. 49+87.94 = 105.72 LIN. FT.
TOTAL = 105.72 LIN. FT.

NOTES:
1. FOR LEGEND SEE SHEET 4.
2. FOR INTERSECTION DETAILS SEE SHEET 84.

TYPICAL SECTIONS - SIDE ROADS

ATB-20-26.19

12
162

18520GYB.dgn 6 of 7

* UNLESS OTHERWISE SHOWN ON CROSS SECTIONS

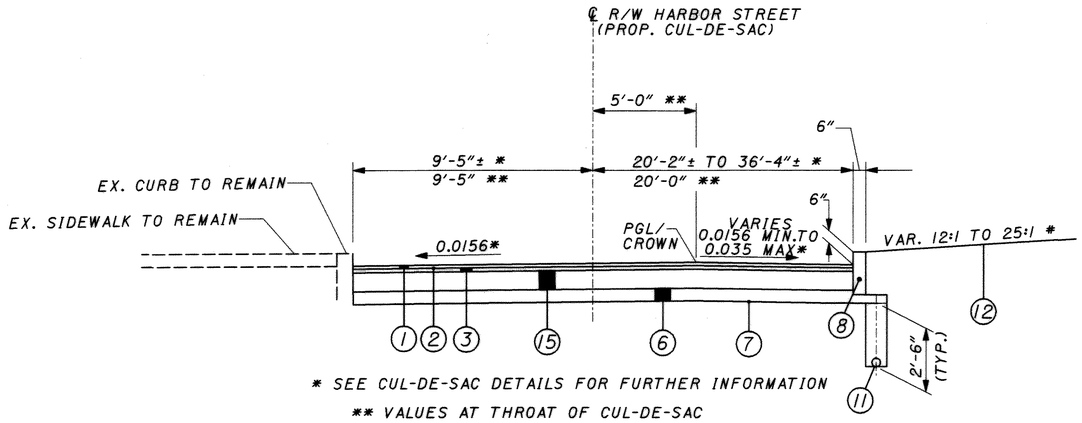

* SEE CUL-DE-SAC DETAILS FOR FURTHER INFORMATION

** VALUES AT THROAT OF CUL-DE-SAC

CUL-DE-SAC SECTION - HARBOR STREET

SECTION APPLIES:

STA. 30+15.53 TO STA. 31+08.31 - 92.78 LIN. FT.

TOTAL - 92.78 LIN. FT.

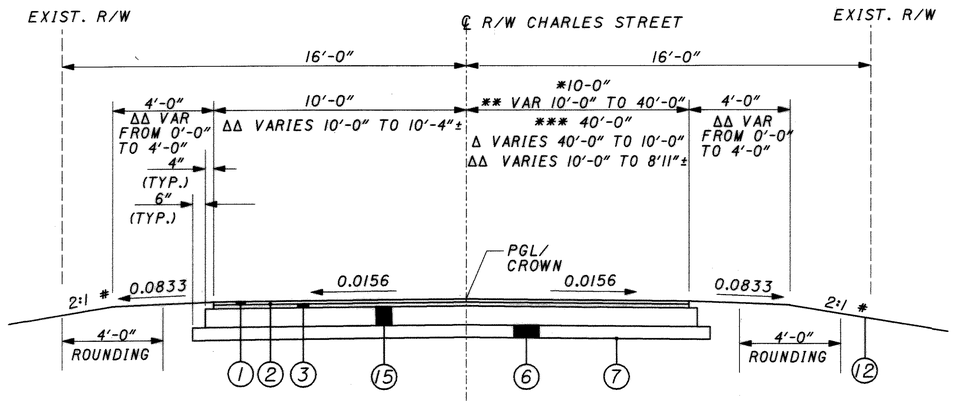

CHARLES STREET TURN-AROUND

SECTION APPLIES:

* STA. 78+10.00 TO STA. 78+40.00 - 30.00 LIN. FT.

** STA. 78+40.00 TO STA. 78+60.00 - 20.00 LIN. FT.

*** STA. 78+60.00 TO STA. 78+80.00 - 20.00 LIN. FT.

Δ STA. 78+80.00 TO STA. 79+00.00 - 20.00 LIN. FT.

ΔΔ STA. 79+00.00 TO STA. 79+15.00 - 15.00 LIN. FT.

TOTAL - 105.00 LIN. FT.

NOTES:

1. FOR LEGEND SEE SHEET 4.
2. FOR CUL-DE-SAC DETAILS SEE SHEET 84.

CALCULATED SMG
CHECKED SAC

GENERAL NOTES

GENERAL

ROUNDING
THE ROUNDING AT SLOPE BREAKPOINTS SHOWN ON THE TYPICAL SECTIONS APPLY TO ALL CROSS-SECTIONS EVEN THOUGH OTHERWISE SHOWN.

UTILITIES
LISTED BELOW ARE ALL UTILITIES LOCATED WITHIN THE PROJECT CONSTRUCTION LIMITS TOGETHER WITH THEIR RESPECTIVE OWNERS:

DOMINION EAST OHIO GAS
ATTN: DUANE RATHBUN
7001 CENTER ROAD
ASHTABULA, OH 44004-8948
(440) 998-3823

CITY OF CONNEAUT, WATER DEPT.
ATTN: DAVID JURY
294 MAIN STREET
CONNEAUT, OH 44030
(440) 593-7420

CONNEAUT TELEPHONE
ATTN: PAUL BIDWELL
224 STATE ST., P.O. BOX 579
CONNEAUT, OH 44030-0579
(440) 543-7100

OHIO EDISON
ATTN: AL WASHINGTON
730 SOUTH AVE.
YOUNGSTOWN, OH 44501
(330) 740-7606

LAKE ERIE & BESSEMER RAILROAD
ATTN: STEVE BENDER
LARRY DIERSEN
P.O. BOX 68
MONROEVILLE, PA 15146
(412) 829-6866

CITY OF CONNEAUT
PUBLIC WORKS DEPARTMENT
ATTN: BOB HOWLAND
285 SIXTEENTH STREET
CONNEAUT, OH 44030
(440) 593-7430

CITY OF CONNEAUT
WASTEWATER TREATMENT PLANT
ATTN: CHARLIE BEAVER
1206 BROAD ST. EXT.
CONNEAUT, OH 44030
(440) 593-7434

THE LOCATION OF THE UNDERGROUND UTILITIES SHOWN ON THE PLANS ARE AS OBTAINED FROM THE OWNERS AS REQUIRED BY SECTION 153.64 O.R.C.

THE UNDERGROUND UTILITIES ON THIS PLAN HAVE BEEN LOCATED BY USING A SUBSURFACE UTILITY ENGINEERING COMPANY (SUE). IF THERE ARE ANY DISCREPANCIES BETWEEN FIELD MARKINGS AND WHAT THE PLAN INDICATES, PLEASE CONTACT STEVE JONES, DISTRICT UTILITY COORDINATER, 330-297-0801 EXT. 298, PRIOR TO ANY SUBSURFACE WORK BEING INITIATED.

ELEVATION DATUM
ALL ELEVATIONS ARE BASED ON U.S.G.S. DATUM NAVD88.

CONTINGENCY QUANTITIES
THE CONTRACTOR SHALL NOT ORDER MATERIALS OR PERFORM WORK FOR ITEMS DESIGNATED BY PLAN NOTE TO BE USED "AS DIRECTED BY THE ENGINEER" UNLESS AUTHORIZED BY THE ENGINEER. THE ACTUAL WORK LOCATIONS AND QUANTITIES USED FOR SUCH ITEMS SHALL BE INCORPORATED INTO THE FINAL CHANGE ORDER GOVERNING COMPLETION OF THIS PROJECT.

CONVERSION OF STANDARD CONSTRUCTION DRAWINGS
THE METRIC STANDARD DRAWINGS REFERENCED IN THIS PLAN SHALL BE CONVERTED TO ENGLISH UNITS USING THE SI (METRIC) TO ENGLISH CONVERSION FACTORS PROVIDED IN SECTION 109.011 OF THE 1997 CONSTRUCTION AND MATERIAL SPECIFICATIONS. CONVERSIONS SHALL BE APPROPRIATELY PRECISE AND SHALL REFLECT STANDARD INDUSTRY ENGLISH VALUES WHERE SUITABLE.

WORK LIMITS
THE WORK LIMITS SHOWN ON THESE PLANS ARE FOR PHYSICAL CONSTRUCTION ONLY. THE INSTALLATION AND OPERATION OF ALL TEMPORARY TRAFFIC CONTROL AND TEMPORARY TRAFFIC CONTROL DEVICES REQUIRED BY THESE PLANS SHALL BE PROVIDED BY THE CONTRACTOR WHETHER INSIDE OR OUTSIDE THESE WORK LIMITS.

CONSTRUCTION NOISE
ACTIVITIES AND LAND USE ADJACENT TO THIS PROJECT MAY BE AFFECTED BY CONSTRUCTION NOISE. IN ORDER TO MINIMIZE ANY ADVERSE CONSTRUCTION NOISE IMPACTS, ANY POWER-OPERATED CONSTRUCTION-TYPE DEVICE SHALL NOT BE OPERATED BETWEEN THE HOURS OF 8:00 P.M. AND 7:00 A.M. IN ADDITION, ANY SUCH DEVICE SHALL NOT BE OPERATED AT ANY TIME IN SUCH A MANNER THAT THE NOISE CREATED SUBSTANTIALLY EXCEEDS THE NOISE CUSTOMARILY AND NECESSARILY ATTENDANT TO THE REASONABLE AND EFFICIENT PERFORMANCE OF SUCH EQUIPMENT.

CONSTRUCTION OPERATIONS NEAR RAILROAD
A RAILROAD FLAGMAN SHALL BE PRESENT FOR ANY ACTIVITY WITHIN 25 FEET OF THE RAILROAD TRACKS. THIS SHALL INCLUDE, BUT IS NOT LIMITED TO, THE ACCESS ROAD CONSTRUCTION AND REMOVAL, EQUIPMENT CROSSING, AND OVERHEAD BRIDGE DEMOLITION AND CONSTRUCTION. NO WORK SHALL BE PERMITTED OVER THE TRACKS WHILE A TRAIN IS PASSING UNDERNEATH.

ENVIRONMENTAL CONSTRAINTS

WETLAND IMPACT/AVOIDANCE
THIS PROJECT WILL TEMPORARILY IMPACT AN ESTIMATED 0.2347 ACRE AND PERMANENTLY IMPACT AN ESTIMATED 0.0248 ACRE OF WETLANDS WITHIN THE PROJECT AREA.

UNDER NO CIRCUMSTANCES SHALL THE CONTRACTOR IMPACT THE REMAINING WETLANDS INDICATED ON THE PLANS. UNDER NO CIRCUMSTANCES SHALL THE CONTRACTOR STORE EQUIPMENT AND/OR MATERIALS WITHIN THESE WETLAND AREAS. TO PROTECT AND DELINEATE THE BOUNDARY OR THE EXISTING REMAINING WETLANDS, A QUANTITY OF FILTER FABRIC FENCE HAS BEEN SHOWN ON THE STORM WATER POLLUTION PREVENTION PLAN.

THIS IS TO BE INSTALLED AT THE PROPOSED CONSTRUCTION LIMITS WITHIN THE WETLANDS AREA BY THE CONTRACTOR PRIOR TO THE START OF ANY CONSTRUCTION ACTIVITIES WITHIN THESE LIMITS AND ADJACENT AREAS, INCLUDING ANY NECESSARY CLEARING AND GRUBBING, AND MAINTAINED BY THE CONTRACTOR THROUGHOUT PROJECT CONSTRUCTION.

HISTORIC SITE IMPACTS/AVOIDANCE
UNDER NO CIRCUMSTANCES SHALL THE CONTRACTOR IMPACT THE NATIONAL REGISTER OF HISTORIC PLACES-ELIGIBLE CHUCK'S AUTO SERVICE PROPERTY (PPN 12-117-00-055-00), FORMER STANDARD OIL COMPANY, OHIO HISTORIC INVENTORY ATB-353-7 INDICATED ON THE PLAN. UNDER NO CIRCUMSTANCES SHALL THE CONTRACTOR STORE EQUIPMENT AND/OR MATERIALS AT THIS SITE.

RIPARIAN BUFFER IMPACTS/AVOIDANCE
RIPARIAN AREA INCURSIONS INCLUDING ALL WORK AND STORAGE ADJACENT TO CONNEAUT CREEK SHALL BE LIMITED TO ONLY THOSE AREAS NECESSARY TO GAIN ACCESS TO DEMOLISH THE EXISTING STRUCTURE. AND CONSTRUCT THE NEW STRUCTURE A MINIMUM 50 FOOT RIPARIAN BUFFER SHALL BEMAINTAINED AT ALL AREAS THAT WILL NOT BE DISTURBED BYEITHER NEW STRUCTURE CONSTRUCTION OR CONSTRUCTION ACCESS.

DISCOVERY OF ARCHAEOLOGICAL RESOURCES DURING CONSTRUCTION
IN ACCORDANCE WITH 36 CODE OF FEDERAL REGULATIONS (CFR) 800.13 (b) (3), SHOULD AN UNANTICIPATED DISCOVERY OF ARCHAEOLOGICAL RESOURCES OCCUR WITHIN THE PROJECT AREA, CONSTRUCTION RELATED ACTIVITY WILL BE TEMPORARILY DISCONTINUED AND THE OHIO STATE HISTORIC PRESERVATION OFFICE (OSHPO) CONTACTED WITHIN 48 HOURS. ODOT SHALL ENTER INTO CONSULTATION WITH THE OSHPO TO EVALUATE THE SIGNIFICANCE OF THE HISTORIC RESOURCE, ASSESS POTENTIAL EFFECTS AND DEVELOP MITIGATION STRATEGIES AS NECESSARY. ALL ACTIVITIES WILL BE IN ACCORDANCE WITH THE SECRETARY OF THE INTERIOR'S STANDARDS AND GUIDELINES FOR ARCHAEOLOGICAL DOCUMENTATION AND DATA RECOVERY (48 CFR 44716 - 44740); TAKE INTO ACCOUNT THE ADVISORY COUNCIL ON HISTORIC PRESERVATION'S PUBLICATION, TREATMENT OF ARCHAEOLOGICAL PROPERTIES: A HANDBOOK (1980), AND WILL BE APPROVED BY THE OSHPO PRIOR TO IMPLEMENTATION. ALL ARCHAEOLOGICAL WORK WILL BE CARRIED OUT BY OR UNDER THE DIRECT SUPERVISION OF INDIVIDUALS MEETING, AT A MINIMUM, THE APPROPRIATE FEDERAL QUALIFICATIONS AND PREQUALIFIED BY ODOT FOR SUCH WORK [(36 CFR PART 61, APPENDIX A; THE OSHPO ARCHAEOLOGY GUIDLINES (1994)].

ENDANGERED TREE IMPACT/AVOIDANCE
UNDER NO CIRCUMSTANCES SHALL THE CONTRACTOR IMPACT THE BUTTERNUT AND STRIPED MAPLE TREES AS INDICATED IN THE CATEGORICAL EXCLUSION ENVIRONMENTAL DOCUMENT.

ACCESS-ROAD PARCEL TREE AVOIDANCE
THE PROPOSED ACCESS ROAD IS TO BE LOCATED WITHIN PARCEL 40 AS INDICATED IN THE RIGHT OF WAY PLANS. UNDER NO CIRCUMSTANCES SHALL THE EXISTING 36" MAPLE TREE LOCATED ON PARCEL 40 (STA. 75+16, 58' RT, S. LIBERTY ST.) BE DISTURBED AT ANY TIME. CONSTRUCTION FENCING SHALL BE PLACED AROUND THE TREE AT A MINIMUM DISTANCE OF 5 FEET FROM THE BASE. THE COST OF THE CONSTRUCTION FENCING SHALL BE INCIDENTAL TO THE CONSTRUCTION OF THE ACCESS ROAD.

MECHANICAL EQUIPMENT OPERATION AT STREAM CHANNEL
THE MECHANICAL EQUIPMENT USED TO EXECUTE THE WORK AUTHORIZED HEREIN SHALL BE OPERATED IN SUCH A WAY AS TO MINIMIZE TURBIDITY THAT COULD DEGRADE WATER QUALITY AND ADVERSELY AFFECT AQUATIC PLANT AND ANIMAL LIFE.

ENDANGERED SPECIES HABITAT
THIS PROJECT IS WITHIN THE RANGE OF THE FEDERALLY ENDANGERED INDIANA BAT (MYOTIS SODALIS) AND MAY IMPACT SUMMER ROOSTING HABITAT FOR THIS SPECIES. THE SUMMER ROOSTING HABITAT FOR THE INDIANA BAT CONSISTS OF LIVING OR DEAD TREES OR SNAGS WITH EXFOLIATING, PEELING OR LOOSE BARK, SPLIT TRUNKS AND/OR BRANCHES OR CAVITIES. THERFORE, ANY UNAVOIDABLE CUTTING OF TREES WILL BE PERFORMED ONLY AFTER SEPTEMBER 15 AND BEFORE APRIL 15.

ATB-20-26.19

INSTREAM WORK

ALL INSTREAM WORK WITHIN CONNEAUT CREEK SHALL OCCUR BETWEEN JUNE 15 AND SEPTEMBER 30. INSTREAM WORK WILL BE LIMITED WHERE PRACTICABLE AND ONLY CLEAN NON-ERODIBLE MATERIAL WILL BE USED FOR FORDS OR COFFERDAMS. A TEMPORARY STREAM CROSSING WILL BE PLACED WITHIN THE PROPOSED CONSTRUCTION LIMITS TO ALLOW HEAVY EQUIPMENT TO FORD CONNEAUT CREEK. THE WIDTH OF THE TEMPORARY CROSSING SHALL NOT EXCEED 30 FEET IN WIDTH. THE FORD SHALL BE CONSTRUCTED TO ALLOW PASSAGE OF THE WATERS OF CONNEAUT CREEK BY USE OF A SERIES OF CULVERT PIPES SIZED IN ACCORDANCE WITH THE AVERAGE STREAM WATER DEPTH. THE EXACT LOCATION OF THE TEMPORARY CROSSING WILL BE DETERMINED BY THE CONTRACTOR. THIS TEMPORARY PLACED MATERIAL SHALL BE REMOVED AND THE STREAM BOTTOM AND BANKS RESTORED TO NEAR NATURAL CONDITIONS WHEN WORK IS COMPLETED.

CONSTRUCTION AND DEMOLITION DEBRIS

THE CONTRACTOR SHALL TAKE PRECAUTIONS TO AVOID AND/OR LIMIT CONSTRUCTION AND DEMOLITION DEBRIS FROM ENTERING THE STREAM. ANY MATERIAL THAT DOES FALL INTO THE STREAM SHALL BE REMOVED AS SOON AS POSSIBLE.

STREAM CHANNEL EXCAVATION

THE CONTRACTOR SHALL TAKE ALL PRECAUTIONS NECESSARY TO PREVENT ANY INCIDENTAL DISCHARGES ASSOCIATED WITH THE EXCAVATION AND HAULING OF MATERIAL FROM THE STREAM CHANNEL. THIS PERTAINS TO ANY EXCAVATION OPERATIONS SUCH AS, FOUNDATION PIER OR ABUTMENT EXCAVATION, CHANNEL CLEAN OUT, EXCAVATION FOR ROCK CHANNEL PROTECTION AND REMOVAL OF ANY TEMPORARY FILL ASSOCIATED WITH CONSTRUCTION OPERATIONS.

CONDUITS CONTAINING ASBESTOS

ASBESTOS ABATEMENT:
THE PROJECT PLANS INDICATE THAT APPROXIMATELY 75 LINEAR FEET OF TRANSITE CONDUIT [CATEGORY 2 NON-FRIABLE ASBESTOS CONTAINING MATERIAL (ACM TRANSITE PIPE)] IS LOCATED ON THE GROUND BELOW THE VIADUCT. THE CONTRACTOR SHALL REMOVE ALL VISIBLE TRANSITE CONDUIT FOUND BENEATH THE STRUCTURE PRIOR TO DEMOLITION OF THE VIADUCT. IF ANY ADDITIONAL TRANSITE CONDUIT IS FOUND DURING DEMOLITION IT SHALL BE REMOVED ACCORDINGLY. THE CONTRACTOR SHALL TAKE ALL PRECAUTIONS POSSIBLE TO ENSURE THAT ASBESTOS CONTAINING MATERIALS DO NOT BECOME FRIABLE (BROKEN-UP OR DISPERSED). ADDITIONALLY, THE REMOVAL AND DISPOSAL OF THE ACM TRANSITE PIPES SHALL COMPLY WITH THE OHIO ADMINISTRATIVE CODE, THE OCCUPATIONAL SAFETY AND HEALTH ADMINISTRATION (OSHA) REGULATIONS AND THE NATIONAL EMISSION STANDARD FOR HAZARDOUS AIR POLLUTANTS (NESHAP) STANDARDS FOR ASBESTOSIS.

BASIS OF PAYMENT:
THE CONTRACTOR SHALL FURNISH ALL THE LABOR, EQUIPMENT AND MATERIALS NECESSARY TO PROPERLY HANDLE, TRANSPORT AND DISPOSE OF ASBESTOS CONTAINING MATERIALS AND CONCRETE ENCASEMENT IN A LICENSED (BY THE LOCAL HEALTH DEPARTMENT) AND PERMITTED BY THE OHIO ENVIRONMENTAL PROTECTION AGENCY - DIVISION OF AIR POLLUTION CONTROL TO ACCEPT ACM. PAYMENT FOR THIS WORK SHALL BE MADE AT THE CONTRACT PRICE BID PER LINEAR FOOT. THE FOLLOWING ESTIMATED QUANTITY HAS BEEN INCLUDED IN THE GENERAL SUMMERY FOR THE WORK NOTED ABOVE.

ITEM SPECIAL - MISC.: WORK INVOLVING ASBESTOS CONTAINING MATERIALS AND CONCRETE ENCASEMENT - 75 LIN. FT.

STRUCTURE PAINTING/CONCRETE SEALING OPERATIONS

THE CONTRACTOR SHALL TAKE ALL PRECAUTIONS NECESSARY TO PREVENT EPOXY URETHANE SEALER, PAINT, OR OTHER MATERIAL USED TO CLEAN, SEAL, TREAT OR REPAIR ANY STRUCTURE FROM ENTERING ANY DITCHES, STREAMS, WETLANDS OR OTHER WATERS OF THE UNITED STATES AND TAKE THE APPROPRIATE ACTIONS IN THE EVENT OF AN ACCIDENTAL RELEASE.

INSTREAM BLASTING

NO INSTREAM BLASTING WILL BE PERMITTED WITHOUT PRIOR WRITTEN PERMISSION OF THE CHIEF OF THE DIVISION OF WILDLIFE, OHIO DEPARTMENT OF NATURAL RESOURCES, IN ACCORDANCE WITH OHIO REVISED CODE SECTION 1533.58.

ENVIRONMENTAL WORK

THE INTENTION OF THIS NOTE IS TO REMOVE SOIL AND GROUNDWATER CONTAMINATION FROM THE RESIDUAL OF PARCEL 29 AND REMOVE THE MONITORING WELLS PLACED DURING THE ENVIRONMENTAL INVESTIGATIONS FOR THE PROJECT. THIS NOTE GOVERNS THE CONTRACTORS ACTIVITIES ON PARCEL 29 (REFER TO SHEETS 38). PRIOR TO THE DEMOLITION OF THE EXISTING STRUCTURES THE CONTRACTOR SHALL ABANDON THE 13 MONITORING WELLS PRESENT. THE MONITORING WELLS SHALL BE ABANDONED IN ACCORDANCE WITH THE OHIO DEPARTMENT OF NATURAL RESOURCES' (ODNR) TECHNICAL GUIDELINES FOR SEALING UNUSED WELLS. THESE GUIDELINES MAY BE OBTAINED BY CALLING THE OHIO DEPARTMENT OF NATURAL RESOURCES AT (614) 265-6739 OR ON THE INTERNET AT:
WWW.DNR.STATE.OH.US/WATER/PUB/PDFS/WELLSEALING.PDF.
PAYMENT FOR THIS WORK SHALL BE AS PER ITEM SPECIAL - MONITORING WELL ABANDONMENT, EACH

ENVIRONMENTAL STUDIES HAVE SHOWN 1 UNDERGROUND STORAGE TANK (UST) ON PARCEL 29 (SCROFANO PROPERTY) LOCATED AT APPROXIMATELY STA 24+60 RT 73FT. THE CONTRACTOR SHALL REMOVE THIS UST IN ACCORDANCE WITH ODOT CMS 202.062. THE ESTIMATED QUANTITY HAS BEEN INCLUDED IN THE GENERAL SUMMARY FOR THIS WORK.

ENVIRONMENTAL STUDIES HAVE SHOWN PARCEL 29, SAL'S AUTO SUPPLY/DELUXE DRY CLEANERS, CONTAINS 2 AREAS THAT HAVE BEEN IMPACTED WITH ENVIRONMENTALLY REGULATED MATERIALS.

THE FIRST AREA IS WEST OF THE SAL'S AUTO SUPPLY BUILDING. THE APPROXIMATE REMOVAL AREA IS AN 8' BY 8' BOX WHOSE CENTER POINT IS A MONITORING WELL AT APPROXIMATELY STA 24+57 RT 52 FT. THE SECOND AREA'S CORNERS ARE LOCATED AT STA 26+37 RT48 FT, STA 26+37 RT 87 FT, STA 26+40 RT 87 FT, STA 26+48 RT 59 FT, AND STA 26+48 RT 48 FT. TWO MONITORING WELLS, LABELED MW-2 AND MW 5-7, ARE LOCATED IN THE REMOVAL AREA. THE CONTAMINATION INCLUDES DRY CLEANER FLUIDS AND PETROLEUM PRODUCTS. THE CONTRACTOR SHALL REMOVE ALL SOILS WITHIN THE AFOREMENTIONED LOCATIONS TO A DEPTH OF 10 FOOT AND MANAGE THESE MATERIALS ACCORDING AS FOLLOWS. THE ESTIMATED QUANTITIES HAVE BEEN INCLUDED IN THE GENERAL SUMMARY FOR THIS WORK. ALL EXCAVATIONS WITHIN THE AFOREMENTIONED LIMITS SHALL BE PAID FOR UNDER THE ORIGINAL PLAN BID ITEMS.

ALL MATERIAL EXCAVATED BY THE CONTRACTOR MAY BE STORED IN LEAKPROOF, COVERED, CONTAINERS IN AN AREA PROVIDED BY THE CONTRACTOR AND APPROVED BY THE ENGINEER. THE ENGINEER MAY PERMIT THE CONTRACTOR TO DIRECT LOAD THE EXCAVATED MATERIAL FOR DISPOSAL.

EXCAVATED MATERIALS SHALL BE PROPERLY TESTED (IF NECESSARY), TRANSPORTED AND DISPOSED OF IN A LICENSED (BY THE LOCAL HEALTH DEPARTMENT) AND PERMITTED (BY THE OHIO ENVIRONMENTAL PROTECTION AGENCY) SOLID WASTE FACILITY. THE CONTRACTOR SHALL BE RESPONSIBLE FOR OBTAINING ALL NECESSARY PERMITS, APPROVALS AND ANY ADDITIONAL TESTING THAT IS REQUIRED FOR DISPOSAL.

THE CONTRACTOR SHALL DEVELOP A WATER MANAGEMENT PLAN TO GOVERN HIS OPERATIONS. THIS PLAN SHALL INCLUDE INSTRUCTIONS ON MAINTAINING NORMAL DRAINAGE AND COLLECTING AND DISPOSING OF WATER IN THE AFOREMENTIONED REMOVAL AREAS. THE CONTRACTOR SHALL DEWATER, STORE AND SUBSEQUENTLY DISPOSE OF THESE WATERS BY APPROPRIATE METHODS. THE CONTRACTOR SHALL OBTAIN ALL THE NECESSARY PERMITS AND/OR AUTHORIZATION NEEDED TO STORE, TEST (FOR DISPOSAL), TRANSPORT, AND TREAT OR DISPOSE OF THE WATER IN ACCORDANCE WITH ALL APPLICABLE LOCAL, STATE, OR FEDERAL REGULATIONS. WORK INVOLVED WITH THIS ITEM SPECIAL INCLUDES THE COMPLYING WITH THE SSH&SP, HANDLING, STORAGE, AND DISPOSAL OF THE REGULATED WATER AND/OR NON-REGULATED WATER. IF DETERMINED AS NECESSARY BY THE ENGINEER TO PREVENT REGULATED WATER FROM MIGRATING ALONG THE BACKFILL, THE CONTRACTOR SHALL USE LOW STRENGTH MORTAR TO BACKFILL FOR NEARBY DRAINAGE FEATURES.

THE CONTRACTOR SHALL FURNISH ALL THE LABOR, EQUIPMENT, AND MATERIALS NECESSARY TO PROPERLY HANDLE, STORE (IF NECESSARY), TEST FOR DISPOSAL, TRANSPORT, AND DISPOSE OF REGULATED MATERIALS, INCLUDING ANY REQUIRED PERMITS, APPROVALS, OR FEES WITHIN THE LIMITS IDENTIFIED ABOVE. PAYMENT FOR THIS WORK SHALL BE MADE AT THE CONTRACT PRICE BID PER MONITORING WELL, UNDERGROUND STORAGE TANK, TON, CUBIC YARD, OR GALLON. THE FOLLOWING ESTIMATED QUANTITIES HAVE BEEN INCLUDED IN THE GENERAL SUMMARY FOR THE WORK NOTED ABOVE:

690E65010 ITEM SPECIAL - WORK INVOLVING SOLID WASTE - 250 TON

690E65020 ITEM SPECIAL - WORK INVOLVING WATER - 500 GAL

690E65024 ITEM SPECIAL - WORK INVOLVING REGULATED WATER - 500 GAL

ITEM SPECIAL - MONITORING WELL ABANDONMENT - 13 EACH

ITEM 202 - UNDERGROUND STORAGE TANK REMOVED - 1 EACH
OR
ITEM 202 - REGULATED UNDERGROUND STORAGE TANK REMOVED - 1 EACH

ITEM 613 - LOW STRENGTH MORTAR BACKFILL - 100 CU. YD.

CALCULATED SMG CHECKED SAC

GENERAL NOTES

ATB-20-26.19

WATER WORKS

THE FOLLOWING ARE ESTIMATED QUANTITIES TO BE USED AT THE APPROXIMATE LOCATIONS FOR RELOCATING THE WATER LINE AROUND POTENTIAL CONFLICTS.

APPROX. LOCATION	6" WATER MAIN, POLYVINYL CHLORIDE PIPE AND FITTINGS, AWWA C900, CLASS 150
U.S. 20, STA. 9+68, 19' RT.	13 LIN. FT.
TURN-LANE, STA. 60+57, 8' RT.	13 LIN. FT.
TOTAL	26 LIN. FT.

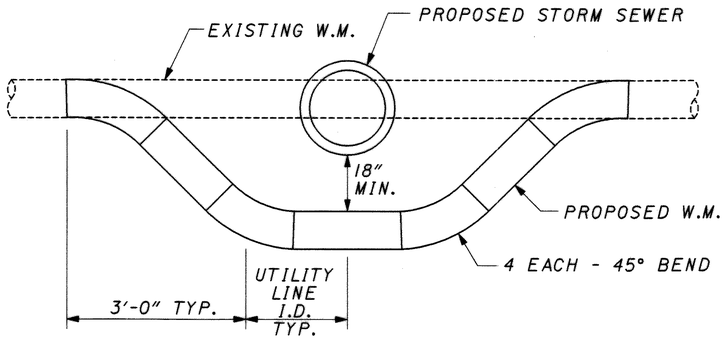

EXISTING WATER MAIN RELOCATION UNDER PROPOSED STORM SEWER

THE FOLLOWING ARE ESTIMATED QUANTITIES TO BE USED AS DIRECTED BY THE ENGINEER FOR RELOCATING THE WATER LINE AROUND LOCATIONS OF CONFLICT.

ITEM 638 - 4" WATER MAIN, POLYVINYL CHLORIDE PIPE AND FITTINGS, AWWA C900, CLASS 150 - 30 LIN. FT.

ITEM 638 - 6" WATER MAIN, POLYVINYL CHLORIDE PIPE AND FITTINGS, AWWA C900, CLASS 150 - 30 LIN. FT.

ROADWAY

ITEM SPECIAL - CEMENT STABILIZED SUBGRADE

1 DESCRIPTION
2 MATERIALS
3 CONSTRUCTION
4 CURING
5 PROOF ROLLING
6 CONTRACTOR DESIGNED CEMENT SOIL
7 METHOD OF MEASUREMENT
8 BASIS OF PAYMENT

1 DESCRIPTION. THIS WORK CONSISTS OF CONSTRUCTING A CEMENT STABILIZED SUBGRADE (CSS) AND DESIGNING THE CEMENT PERCENTAGE IN THE SOIL. DRAIN AND MAINTAIN THE WORK ACCORDING TO 203.04.A. CONSTRUCT THE EMBANKMENT WITH SUFFICIENT CROSS-SLOPE TO DRAIN IN CASE OF RAIN. IF RAIN SATURATES THE EMBANKMENT CONSTRUCTION, STAY OFF THE EMBANKMENT CONSTRUCTION UNTIL THE EMBANKMENT DRIES OR STABILIZES. EXPEDITE THE CONSTRUCTION BY REMOVING THE SATURATED EMBANKMENT OR DRY THE EMBANKMENT BY SCARIFYING, PLOWING, DISKING, AND RECOMPACTING THE EMBANKMENT. THROUGHOUT THE EMBANKMENT CONSTRUCTION OPERATION AND AT THE END OF EACH DAY'S OPERATION, SHAPE TO DRAIN, COMPACT, AND RE-COMPACT THE WORK AREA TO A UNIFORM CROSS-SECTION. ELIMINATE ALL RUTS AND LOW SPOTS THAT COULD HOLD WATER.

2 MATERIALS. FURNISH PORTLAND CEMENT CONFORMING TO THE REQUIREMENTS OF 701.04. USE BETWEEN 4 AND 10 PERCENT CEMENT IN THE SOIL. THIS PERCENTAGE IS BASED ON THE DRY WEIGHT OF THE SUBGRADE SOIL. FURNISH ITEM 408 PRIME COAT USING 702.04 EMULSIFIED ASPHALTS, TYPES RS-1 OR RS-2 FOR CURING. USE AT A RATE OF 0.3 GALLON PER SQUARE YARD (1.3 LITERS PER SQUARE METER). THE CONTRACT DOCUMENTS WILL CONTAIN AN ESTIMATED QUANTITY FOR THE PROJECT BASED ON USING 6 PERCENT CEMENT PER DRY WEIGHT OF A SOIL WEIGHING 110 POUNDS PER CUBIC FOOT (1760 KG/CU. M.).

3 CONSTRUCTION.

A. LIMITATIONS. PERFORM THE CEMENT STABILIZATION WORK WHEN THE AIR TEMPERATURE IS 40°F (5°C) OR ABOVE AND THE MATERIAL TO BE TREATED IS NOT FROZEN. DO NOT PERFORM WORK DURING WET OR UNSUITABLE WEATHER. WHEN SPECIFIED, TEST ROLL PRIOR TO THE ADDITION OF CEMENT WITH A PROOF ROLLER CONFORMING TO 203.14. SHAPE THE SUBGRADE SO THAT AFTER THE MIXING AND COMPACTING OF THE CSS, THE SURFACE IS 1 INCH (25MM) HIGHER THAN THE PROFILE GRADE AND PERMITS THE CONSTRUCTION OF A UNIFORM COMPACTED COURSE OF CEMENT TREATED SOIL TO THE THICKNESS SHOWN ON THE PLANS. WHEN SHAPING 1 INCH (25MM) HIGHER THAN THE PROFILE GRADE, ACCOUNT FOR THE SWELLING OF THE CSS, DUE TO MIXING THE CEMENT WITH THE SOIL.

B. SPREADING. PREPARE A REPORT DENOTING THE TYPE OF EQUIPMENT TO BE USED, SPEED OF THE INTENDED EQUIPMENT USAGE, RATE OF APPLICATION OF THE CEMENT, AND CALCULATIONS TO PRODUCE THE REQUIRED PERCENT CEMENT. SUBMIT THIS REPORT 2 WORKING DAYS PRIOR TO THE WORK FOR APPROVAL. SPREAD THE CEMENT AT THE APPROVED RATE. SPREAD THE CEMENT UNIFORMLY ON THE SUBGRADE BY MEANS OF DISTRIBUTORS OR TANKS. SPREAD BULK CEMENT USING A MECHANICAL SPREADER. UNIFORMLY SPREAD DRY CEMENT AT A CONSTANT SLOW RATE OF SPEED. THE CONTRACTOR MAY ELECT TO USE A DOZER OR MOTOR GRADE TO TOW THE CEMENT TRUCK IN ORDER TO MAINTAIN THIS SLOW RATE OF SPEED. DO NOT SPREAD THE CEMENT ON STANDING WATER. PROVIDE A SQUARE YARD CANVAS AHEAD OF THE SPREADING OPERATION TO CHECK THE AMOUNT OF CEMENT SPREAD ON GRADE. CAREFULLY PICK UP THE CANVAS AND CEMENT AND WEIGH AFTER THE SPREADER HAS PASSED TO ASSURE CONFORMANCE WITH THE CONTRACT REQUIREMENTS. MINIMIZE DUSTING WHEN SPREADING DRY CEMENT. USE A CEMENT DISTRIBUTION BAR WITH A MAXIMUM HEIGHT OF 3 FEET (1 METER) ABOVE THE SUBGRADE. USE A CANVAS SHROUD THAT SURROUNDS THE DISTRIBUTION BAR AND EXTENDS TO THE SUBGRADE. COMPLY WITH 107.21. CONTROL THE FUGITIVE DUST GENERATED BY THE WORK ACCORDING TO OHIO ADMINISTRATIVE CODE (OAC) -3745-17-07(B), OAC-3745-17-08, OAC-3745-15-07, AND OAC-3745-17-03 AND LOCAL ORDINANCES AND REGULATIONS. IN ADDITION, USE DUST CONTROL MEASURES WHEN FUGITIVE DUST CREATES UNSAFE CONDITIONS AS DETERMINED BY THE ENGINEER. PERFORM THIS WORK WITHOUT ADDITIONAL COMPENSATION EXCEPT FOR ITEM 616.

C. MIXING. IMMEDIATELY AFTER SPREADING THE CEMENT, MIX THE CEMENT AND SOIL USING A POWER DRIVEN TRANSVERSE TYPE MIXER EQUIPPED WITH A COMPUTER CONTROLLED VOLUMETRIC WATER READ OUT. CONTINUE MIXING UNTIL THE CEMENT IS THOROUGHLY INCORPORATED INTO THE SOIL AND IS A UNIFORM COLOR. DO NOT WATER DURING THE INITIAL MIXING. COMPLETE THE INITIAL MIXING, SO THAT 80 PERCENT OF THE SOIL CEMENT MIXTURE MUST PASS A NO. 4 SIEVE (4.75 MM) AND 100 PERCENT PASS THE 1 INCH SIEVE (25MM), EXCLUSIVE OF GRAVEL OR STONE. FOLLOWING THE INITIAL MIXING, REMIX THE SOIL AND INTRODUCE WATER THROUGH THE TRANSVERSE MIXER TO BRING THE MIXED MATERIAL TO AT LEAST 2 PERCENT ABOVE OPTIMUM MOISTURE. UNIFORMLY DISTRIBUTE THE WATER IN SUFFICIENT QUANTITY TO HYDRATE THE CEMENT. THE CONTRACTOR MAY ELECT TO USE ONE MIXING CYCLE, IF 80 PERCENT OF THE SOIL CEMENT MIXTURE PASSES THE NO. 4 SIEVE (4.75 MM) AND 100 PERCENT PASSES THE 1 INCH SIEVE (25MM), EXCLUSIVE OF GRAVEL OR STONE. IN ADDITION, ADD WATER THROUGH THE TRANSVERSE MIXER TO BRING THE MIXED MATERIAL TO AT LEAST 2 PERCENT ABOVE OPTIMUM MOISTURE. RESTRICT THE ADDITION OF WATER WHEN MOISTURE CONTENT OF SOIL EXCEEDS 4 PERCENT ABOVE OPTIMUM. ADD WATER TO THE MIXED SOIL IN LESS THAN 2 HOURS AFTER THE INITIAL MIXING. UNLESS OTHERWISE SPECIFIED, MIX THE CEMENT MIXTURE TO A DEPTH OF 12 INCHES (300 MM). CHECK THE UNIFORMITY OF THE MIX BY DIGGING TRENCHES OR A SERIES OF HOLES AT REGULAR INTERVALS FOR THE FULL DEPTH OF TREATMENT AND INSPECTING THE COLOR AND DEPTH OF THE EXPOSED MATERIAL.

CALCULATED SMG
CHECKED SAC

GENERAL NOTES

ATB-20-26.19

D. COMPACTION. AFTER MIXING, SHAPE THE SUBGRADE. START COMPACTION IMMEDIATELY AFTER THE FINAL MIXING. USE A STEEL WHEEL ROLLER HAVING A MINIMUM WEIGHT OR CENTRIFUGAL FORCE OF 10 TONS (9 METRIC TONS). THE ENGINEER WILL PERFORM THE COMPACTION TESTING. THE ENGINEER WILL OBTAIN THE MAXIMUM DRY DENSITY FOR ACCEPTANCE BY USING THE MOISTURE DENSITY CURVES SUBMITTED BY THE GEOTECHNICAL CONSULTANT, THE OHIO TYPICAL DENSITY CURVES OR THE MAXIMUM DRY DENSITY OBTAINED BY TEST SECTION METHOD. COMPACT THE CSS TO AT LEAST 98 PERCENT OF THE MAXIMUM DRY DENSITY. WHEN A TEST SECTION METHOD IS USED FOR COMPACTION ACCEPTANCE; USE 98 PERCENT OF THE TEST SECTION MAXIMUM DRY DENSITY FOR ACCEPTANCE OF THE PRODUCTION CSS CONSTRUCTION. USE AT LEAST THE SAME NUMBER OF PASSES AND COMPACTIVE EFFORT USED TO CONSTRUCT THE TEST SECTION IN THE PRODUCTION CSS AREAS. CONSTRUCT A NEW TEST SECTION WHEN THE MATERIAL CHANGES, SUPPORTING FOUNDATION OR EMBANKMENT CHANGES. REDUCE THE MOISTURE CONTENT IF THE MATERIAL BECOMES UNSTABLE. SPRINKLE ENOUGH WATER ON EMBANKMENT MATERIAL THAT CONTAINS TOO LITTLE MOISTURE TO WET IT TO A MOISTURE CONTENT NEEDED TO MEET THE DENSITY REQUIREMENTS. APPLY THE WATER USING TANK TRUCKS EQUIPPED WITH SUITABLE SPRINKLING DEVICES. THOROUGHLY INCORPORATE THE WATER INTO THE MATERIAL BY USING DISCS, PLOWS, OR OTHER APPROVED EQUIPMENT. CONTINUE TO WATER AND TO MANIPULATE UNTIL THE REQUIRED MOISTURE IS UNIFORMLY DISTRIBUTED THROUGHOUT THE LIFT. BEFORE OR DURING COMPACTION, ALLOW THE EMBANKMENT MATERIAL THAT CONTAINS EXCESS MOISTURE TO DRY TO A MOISTURE CONTENT NEEDED TO MEET THE DENSITY REQUIREMENTS. CONTINUE DRYING UNTIL THE REQUIRED MOISTURE IS UNIFORM THROUGHOUT THE LIFT. HOWEVER, FOR MATERIAL THAT DISPLAYS PRONOUNCED ELASTICITY OR DEFORMATION UNDER THE ACTION OF LOADED RUBBER TIRE CONSTRUCTION EQUIPMENT OR OTHER EQUIPMENT, REDUCE THE MOISTURE CONTENT TO SECURE STABILITY. EXPEDITE AND MANIPULATE THE EMBANKMENT MATERIAL BY DRYING THE WET EMBANKMENT MATERIAL BY USING PLOWS OR DISCS; BY ADDING DRY MATERIAL, LIME, OR CEMENT; OR BY OTHER METHODS. ENSURE THAT THE MOISTURE CONTENT AT THE TIME OF COMPACTION IS AT LEAST 2 PERCENT ABOVE OPTIMUM. PERFORM THE FINAL ROLLING USING A STEEL-WHEELED ROLLER WITHOUT VIBRATION. BEGIN THE COMPACTION OF THE WATER, SOIL AND CEMENT MIXTURE WITHIN ½ HOUR OF THE INTRODUCTION OF WATER IN THE TRANSVERSE MIXER. COMPLETE THE MIXING AND COMPACTING WITHIN 2 HOURS OF INTRODUCING WATER INTO THE TRANSVERSE MIXER FROM START TO FINISH.

4 CURING. COVER THE SURFACE WITH ITEM 408 PRIME COAT TO CURE THE CSS. APPLY THE CURING WITHIN 1 HOUR OF THE FINAL COMPACTION. KEEP THE CSS WET BY SPRINKLING WATER UNTIL APPLYING THE CURE. CURE THE COMPACTED CSS FOR FIVE DAYS BEFORE THE PLACEMENT OF THE OVERLYING COURSE. PROTECT THE CSS. DO NOT OPERATE CONSTRUCTION EQUIPMENT ON THE CSS DURING THE CURE PERIOD. DO NOT ALLOW THE CSS TO FREEZE DURING THE CURE PERIOD. SHAPE OR FINE GRADE THE CSS TO THE PROFILE GRADE WITHIN THE TOLERANCES IN 203.06 AFTER THE CURE PERIOD. IF THE UNDERDRAINS ARE PLACED AND THE CSS IS USED FOR A HAUL ROAD, THEN KEEP THE LOADED VEHICLES AT LEAST 6 FEET(2M) AWAY AND UNLOADED VEHICLES AT LEAST 3 FEET(1M) AWAY FROM THE UNDERDRAINS. THE EQUIPMENT MAY USE THESE AREAS FOR SHORT DISTANCES OF LESS THAN 50 FEET(17M) WHEN PLACING THE OVERLAYING BASE.

5 PROOF ROLLING. AFTER THE CURE PERIOD PROOF ROLL THE CSS ACCORDING TO ITEM 203.

6 CONTRACTOR DESIGNED CEMENT SOIL. WHEN SPECIFIED IN THE CONTRACT DOCUMENTS, DESIGN THE PERCENT OF CEMENT IN THE SOIL. HIRE A DEPARTMENT PRE-QUALIFIED GEOTECHNICAL CONSULTANT EXPERIENCED IN CEMENT STABILIZATION TO RECOMMEND TO THE DEPARTMENT A MINIMUM PERCENTAGE OF CEMENT REQUIRED FOR THE PROJECT. TAKE ONE SOIL SAMPLE FOR EVERY 5000 CUBIC YARDS (3800 CUBIC METERS) OF SOIL, ONE PER MAJOR TYPE OF SOIL, OR A MINIMUM OF THREE SOIL SAMPLES PER PROJECT, WHICHEVER IS GREATER. TAKE SOIL SAMPLES IN LOCATIONS SUCH AS IN THE SHOULDER AREA OF A SUBGRADE TO BE STABILIZED, AND AT APPROXIMATE EQUAL INTERVALS ALONG THE PROJECT WORK. CLASSIFY THE SOILS ACCORDING TO THE DEPARTMENT'S SPECIFICATIONS FOR SUBSURFACE INVESTIGATION. DETERMINE THE PERCENT OF CEMENT BY USING COMPRESSIVE STRENGTH TESTS PERFORMED ON THE SOIL CEMENT CYLINDERS PREPARED ACCORDING TO ASTM D 1633. PERFORM THE COMPRESSIVE STRENGTH TEST ON CYLINDERS USING 5, 7 AND 28 DAY CURES. USE A PERCENTAGE OF CEMENT IN THE SOIL OF 0, 6, 8, AND 10 FOR EACH SOIL SAMPLE. MAKE THREE SOIL CYLINDERS FOR EACH PERCENTAGE AT THE OPTIMUM MOISTURE OF THE CEMENT SOIL MIXTURE. RECOMMEND THE PERCENTAGE OF CEMENT FOR THE PROJECT THAT OBTAINS AN UNCONFINED STRENGTH OF 150 PSI (1.0 MPA) IN 7 DAYS. PERFORM DURABILITY TESTS ON THE CEMENT SOIL MIXTURES ACCORDING TO ASTM D-560 ON EACH SAMPLE TAKEN AND AT EACH PERCENTAGE OF CEMENT. COMPARE THE RESULTS TO THE MINIMUMS IN THE SOIL CEMENT LABORATORY HANDBOOK REFERENCED IN SECTION 3 OF ASTM D-560. SUBMIT FOUR COPIES OF A REPORT FROM THE GEOTECHNICAL CONSULTANT WITH ALL THE DATA SUITABLY PRESENTED TO THE ENGINEER FOR ACCEPTANCE. THE ENGINEER WILL DETERMINE THE PERCENTAGE USED ON THE PROJECT. THE ENGINEER MAY INCREASE THE PERCENTAGE OF CEMENT CHOSEN BY THE LAB DATA BY 1% TO MEET FIELD VARIATIONS. AFTER THE DEPARTMENT ACCEPTS THE CEMENT PERCENTAGE, MAKE MOISTURE DENSITY CURVES FOR THE CHOSEN PERCENTAGE OF CEMENT ACCORDING TO AASHTO T 99 FOR EACH SOIL SAMPLE TAKEN ABOVE. THOROUGHLY MIX THE CEMENT IN THE SOIL. PLOT THE WET AND DRY WEIGHT ON ONE GRAPH, AND PLOT THE WET WEIGHT ON THE OHIO TYPICAL DENSITY CURVES. SUBMIT THIS DATA 3 WORKING DAYS PRIOR TO THE WORK. WHEN THE CEMENT PERCENTAGE FOR THE PROJECT CHANGES, RE-SUBMIT THE SPREADING PROCEDURE REPORT REQUIRED IN 3 B BASED ON THE CHANGED PERCENTAGE.

7 METHOD OF MEASUREMENT.

A. CEMENT STABILIZED SUBGRADE. THE DEPARTMENT WILL MEASURE THE NUMBER OF SQUARE YARDS (SQUARE METERS) COMPUTED FROM THE TYPICAL SECTIONS AND THE PROFILE GRADE COMPLETED AND ACCEPTED IN PLACE. THE DEPTH OF THE STABILIZATION FOR PAYMENT IS MEASURED FROM THE FINAL PROFILE GRADE TO MIXING DEPTH.

B. CEMENT. THE DEPARTMENT WILL MEASURE THE NUMBER OF TONS (METRIC TONS) DELIVERED FOR CSS AND INCORPORATED IN THE WORK. THE CEMENT INCORPORATED IN THE CSS WILL BE MEASURED FOR PAYMENT IN TONS (METRIC TONS).

C. TEST ROLLING AND PROOF ROLLING. THE DEPARTMENT WILL MEASURE ACCORDING TO ITEM 203 PROOF ROLLING.

D. PRIME COAT. THE DEPARTMENT WILL MEASURE ACCORDING TO ITEM 408.

E. CONTRACTOR DESIGNED CEMENT SOIL. THE DEPARTMENT WILL NOT MEASURE CDCS. PAYMENT WILL BE LUMP SUM.

8 BASIS OF PAYMENT. THE DEPARTMENT WILL PAY FOR PRIME COAT UNDER ITEM 408. THE DEPARTMENT WILL PAY FOR PROOF ROLLING UNDER ITEM 203. THE DEPARTMENT WILL PAY FOR ACCEPTED QUANTITIES AT THE CONTRACT PRICE AS FOLLOWS:

ITEM	UNIT	DESCRIPTION
SPECIAL	SQUARE YARD (SQUARE METER)	CEMENT STABILIZED SUBGRADE
SPECIAL	TON (METRIC TON)	CEMENT
SPECIAL	HOUR	TEST ROLLING
SPECIAL	LUMP	CONTRACTOR DESIGNED CEMENT SOIL

CALCULATED SMG CHECKED SAC

GENERAL NOTES

ATB-20-26.19

CALCULATED SMG CHECKED SAC

GENERAL NOTES

TREATMENT OF UNSUITABLE SUBGRADE

SOIL BORINGS HAVE BEEN TAKEN AT VARIOUS LOCATIONS THROUGHOUT THE PROJECT. THESE BORINGS WERE USED TO DETERMINE AREAS OF POTENTIAL POOR SUBGRADE MATERIAL. THE FOLLOWING ARE THE APPROXIMATE LOCATIONS WHERE UNSUITABLE SOIL WILL BE ENCOUNTERED AND THE TREATMENTS NECESSARY TO PREPARE THE SUBGRADE. THE WIDTH OF TREATMENT SHOULD GENERALLY EXTEND THROUGHOUT THE PROPOSED PAVEMENT AREA WHERE MATERIAL IS PRESENT.

THE FOLLOWING ESTIMATED QUANTITIES HAVE BEEN ADDED TO THE GENERAL SUMMARY TO BE USED AS DIRECTED BY THE ENGINEER.

APPROXIMATE AREA		BORING #
STA. 10+00 TO STA. 11+25	U.S.R. 20	R3
STA. 60+00 TO STA. 60+50	LIBERTY ST.	
STA. 70+00 TO STA. 71+80	S. LIBERTY ST.	

SUBGRADE TREATMENT: CEMENT STABILIZATION

SPECIAL CEMENT STABILIZED SUBGRADE (12")	820 SQ. YD.
SPEICAL CEMENT	9 TONS
SPECIAL TEST ROLLING	0.4 HR.
SPECIAL CONTRACTOR DESIGNED CEMENT SOIL	LUMP
408 BITUMINOUS PRIME COAT	246 GAL.

APPROXIMATE AREA		BORING #
STA. 11+25 TO STA. 12+50	U.S.R. 20	R1
STA. 49+00 TO STA. 49+87	KEYES ST.	
STA. 30+15 TO STA. 31+10	HARBOR ST.	

SUBGRADE TREATMENT: UNDERCUT/REPLACEMENT

203 EXCAVATION OF UNSUITABLE MATERIAL	545 CU. YD.
203 EMBANKMENT USING GRANULAR MATERIAL	545 CU. YD.
690 GEOTEXTILE FABRIC	1153 SQ. YD.

APPROXIMATE AREA		BORING #
STA. 24+50 TO STA. 27+50	U.S.R. 20	R2

SUBGRADE TREATMENT: CEMENT STABILIZATION

SPECIAL CEMENT STABILIZED SUBGRADE (12")	1490 SQ. YD.
SPECIAL CEMENT	2.2 TONS
SPECIAL TEST ROLLING	0.8 HR.
SPECIAL CONTRACTOR DESIGNED CEMENT SOIL	LUMP
408 BITUMINOUS PRIME COAT	447 GAL.

MONUMENTS

MONUMENTS SHALL BE CONSTRUCTED IN ACCORDANCE WITH DETAILS AS SHOWN ON THE STANDARD CONSTRUCTION DRAWINGS AND AT THE LOCATIONS SHOWN ON SHEET NO. 142.

PROOF ROLLING

AN ESTIMATED QUANTITY FOR THIS ITEM HAS BEEN PROVIDED IN THE GENERAL SUMMARY FOR USE AS DIRECTED BY THE ENGINEER.

ITEM 203 PROOF ROLLING	3HRS.
QUANTITY CARRIED TO THE GENERAL SUMMARY	

CLEARING AND GRUBBING

ALL TREES AND STUMPS SPECIFICALLY MARKED FOR REMOVAL WITHIN THE CONSTRUCTION LIMITS SHALL BE REMOVED UNDER THE LUMP SUM BID FOR ITEM 201, CLEARING AND GRUBBING. INDIVIDUAL TREES AND STUMPS IN THE PROJECT AREA UNDER THE BRIDGE HAVE NOT BEEN MARKED FOR REMOVAL. UNLESS SPECIFICALLY DESIGNATED AS "DO NOT DISTURB" IN THE PLANS, REMOVE ALL TREES AND STUMPS WITHIN THE CONSTRUCTION LIMITS UNDER THE LUMP SUM BID FOR ITEM 201, CLEARING AND GRUBBING. THE FOLLOWING IS AN APPROXIMATE ESTIMATE OF THE NUMBER OF TREES AND STUMPS TO BE REMOVED FOR THE ENTIRE PROJECT.

SIZES	NO. TREES	NO. STUMPS	TOTAL
18"	59	0	59
30"	48	0	48
48"	3	0	3
60"	0	0	0

EROSION CONTROL

SEEDING AND MULCHING

THE FOLLOWING QUANTITIES ARE PROVIDED TO PROMOTE GROWTH AND CARE OF PERMANENT SEEDED AREAS:

870, SOIL ANALYSIS TEST	2 EACH
870, TOPSOIL	456 CU. YD.
870, COMMERCIAL FERTILIZER	0.55 TON
870, AGRICULTURAL LIME	1.70 TON
870, WATER	22 M. GAL.
870, MOWING	9 M. SQ. FT.

SEEDING AND MULCHING SHALL BE APPLIED TO ALL AREAS OF EXPOSED SOIL BETWEEN THE RIGHT-OF-WAY LINES, AND WITHIN THE CONSTRUCTION LIMITS FOR AREAS OUTSIDE THE RIGHT-OF-WAY LINES COVERED BY WORK AGREEMENT OR SLOPE EASEMENT. QUANTITY CALCULATIONS FOR SEEDING AND MULCHING ARE BASED ON THESE LIMITS.

EROSION CONTROL

ITEMS 601 AND 670 ARE PROVIDED IN THE PLANS FOR EROSION CONTROL. ROCK OF A STABLE NATURE SHALL NOT BE REMOVED IN ORDER TO PLACE ANY OF THESE ITEMS AND TURF OF A STABLE NATURE SHALL NOT BE REMOVED IN ORDER TO PLACE 670. THE ENGINEER SHALL CHECK AND NON-PERFORM QUANTITIES OR ADJUST LOCATIONS AND QUANTITIES OF THESE ITEMS WHERE INDICATED BY FIELD CONDITIONS DURING CONSTRUCTION.

TEMPORARY SOIL EROSION AND SEDIMENT CONTROL

THE FOLLOWING ESTIMATED QUANTITIES ARE TO BE PLACED BY THE CONTRACTOR WITH THE ENGINEER'S CONCURRENCE FOR TEMPORARY EROSION AND SEDIMENT CONTROL MEASURES:

877, TEMPORARY SEEDING AND MULCHING	4104 SQ. YD.
877, TEMPORARY INLET PROTECTION FILTER FABRIC FENCE	278 LIN. FT.
877, TEMPORARY PERIMETER FILTER FABRIC FENCE	1148 LIN.FT.
877, TEMPORARY SLOPE DRAINS	50 LIN. FT.
877, TEMPORARY SEDIMENT BASINS AND SEDIMENT DAMS	134 CU. YD.
877, TEMPORARY DITCH PROTECTION	19 SQ. YD.
877, SEDIMENT REMOVAL	34 CU. YD.
877, TEMPORARY DIKES	15 CU. YD.
601, ROCK CHANNEL PROTECTION, TYPE C (WITH FILTER)	27 CU. YD.
601, ROCK CHANNEL PROTECTION, TYPE C (WITHOUT FILTER)	243 CU. YD.
870, REPAIR SEEDING AND MULCHING	205 SQ. YD.
870, COMMERCIAL FERTILIZER	0.32 TON
870, INTER-SEEDING	205 SQ. YD.
870, WATER	11 M. GAL.

TEMPORARY SOIL EROSION AND SEDIMENT CONTROL MEASURES

ALL SOIL EROSION AND SEDIMENT CONTROL MEASURES AS SPECIFIED IN THE STORM WATER POLLUTION PREVENTION PLAN SHALL BE IN PLACE PRIOR TO ANY EXCAVATION, GRADING OR FILLING OPERATIONS AND INSTALLATION OF PROPOSED STRUCTURES OR UTILITIES. THEY SHALL REMAIN IN PLACE UNTIL CONSTRUCTION IS COMPLETE AND THE AREA IS STABILIZED AS ACCEPTED BY THE ENGINEER. THE CONNEAUT CREEK LACUSTUARY IS THE HIGHEST QUALITY LACUSTUARY IN THE STATE OF OHIO. WATER COLUMN AND SEDIMENTATION IMPACTS SHALL BE KEPT TO A MINIMUM THROUGH THE USE OF BEST MANAGEMENT PRACTICES FOR SOIL EROSION AND SEDIMENTATION CONTROL.

ATB-20-26.19

16A
162

DRAINAGE

CROSSINGS AND CONNECTIONS TO EXISTING PIPES AND UTILITIES

WHERE PLANS PROVIDE FOR A PROPOSED CONDUIT TO BE CONNECTED TO, OR CROSS OVER OR UNDER AN EXISTING SEWER OR UNDERGROUND UTILITY, THE CONTRACTOR SHALL LOCATE THE EXISTING PIPES OR UTILITIES BOTH AS TO LINE AND GRADE BEFORE STARTING TO LAY THE PROPOSED CONDUIT.

IF IT IS DETERMINED THAT THE ELEVATION OF THE EXISTING CONDUIT, OR EXISTING APPURTENANCE TO BE CONNECTED, DIFFERS FROM THE PLAN ELEVATION OR RESULTS IN A CHANGE IN THE PLAN CONDUIT SLOPE, THE ENGINEER SHALL BE NOTIFIED BEFORE STARTING CONSTRUCTION OF ANY PORTION OF THE PROPOSED CONDUIT WHICH WILL BE AFFECTED BY THE VARIANCE IN THE EXISTING ELEVATIONS.

IF IT IS DETERMINED THAT THE PROPOSED CONDUIT WILL INTERSECT AN EXISTING SEWER OR UNDERGROUND UTILITY IF CONSTRUCTED AS SHOWN ON THE PLAN, THE ENGINEER SHALL BE NOTIFIED BEFORE STARTING CONSTRUCTION OF ANY PORTION OF THE PROPOSED CONDUIT WHICH WOULD BE AFFECTED BY THE INTERFERENCE WITH AN EXISTING FACILITY.

PAYMENT FOR ALL THE OPERATIONS DESCRIBED ABOVE SHALL BE INCLUDED IN THE CONTRACT PRICE FOR THE PERTINENT 603 CONDUIT ITEM.

RESIDENTIAL AND COMMERICAL DRAINAGE CONNECTIONS

EXISTING ROOF DRAINS, FOOTER DRAINS, OR YARD DRAINS, DISTURBED BY THE WORK, SHALL BE PROVIDED WITH UNOBSTRUCTED OUTLETS BY CONNECTING A CONDUIT THROUGH THE CURB OR INTO A DRAINAGE STRUCTURE. THE LOCATION, TYPE, SIZE AND GRADE OF THE NEW CONDUIT REQUIRED TO REPLACE OR EXTEND THE EXISTING DRAIN WILL BE DETERMINED BY THE ENGINEER.

THE FOLLOWING CONDUIT TYPES MAY BE USED: 707.33, 707.41 NON-PERFORATED, 707.42, 707.43, 707.45, 707.46, 707.47, 707.51, 707.52 SDR35.

THE FOLLOWING ESTIMATED QUANTITIES HAVE BEEN INCLUDED IN THE GENERAL SUMMARY FOR USE AS DIRECTED BY THE ENGINEER FOR THE WORK NOTED ABOVE:

603, 4" CONDUIT, TYPE B, FOR DRAINAGE CONNECTION
100 LIN. FT.

603, 4" CONDUIT, TYPE C, FOR DRAINAGE CONNECTION
100 LIN. FT.

603, 6" CONDUIT, TYPE B, FOR DRAINAGE CONNECTION
100 LIN. FT.

603, 6" CONDUIT, TYPE C, FOR DRAINAGE CONNECTION
100 LIN. FT.

REVIEW OF DRAINAGE FACILITIES

BEFORE ANY WORK IS STARTED ON THE PROJECT AND AGAIN BEFORE FINAL ACCEPTANCE BY THE STATE, REPRESENTATIVES OF THE STATE AND THE CONTRACTOR, ALONG WITH LOCAL REPRESENTATIVES, SHALL MAKE AN INSPECTION OF ALL EXISTING SEWERS WHICH ARE TO REMAIN IN SERVICE AND WHICH MAY BE AFFECTED BY THE WORK. THE CONDITION OF THE EXISTING CONDUITS AND THEIR APPURTENANCE SHALL BE DETERMINED FROM FIELD OBSERVATIONS. RECORDS OF THE INSPECTION SHALL BE KEPT IN WRITING BY THE STATE.

ALL NEW CONDUITS, INLETS, CATCH BASINS, AND MANHOLES CONSTRUCTED AS A PART OF THE PROJECT SHALL BE FREE OF ALL FOREIGN MATTER AND IN A CLEAN CONDITION BEFORE THE PROJECT WILL BE ACCEPTED BY THE STATE.

ALL EXISTING SEWERS INSPECTED INITIALLY BY THE ABOVE MENTIONED PARTIES SHALL BE MAINTAINED AND LEFT IN A CONDITION REASONABLY COMPARABLE TO THAT DETERMINED BY THE ORIGINAL INSPECTION. ANY CHANGE IN THE CONDITION RESULTING FROM THE CONTRACTOR'S OPERATIONS SHALL BE CORRECTED BY THE CONTRACTOR TO THE SATISFACTION OF THE ENGINEER.

PAYMENT FOR ALL OPERATIONS DESCRIBED ABOVE SHALL BE INCLUDED IN THE CONTRACT PRICE FOR THE PERTINENT 603 CONDUIT ITEMS.

PIPE CONNECTIONS TO CORRUGATED METAL STRUCTURES

CONNECTIONS OF PROPOSED LONGITUDINAL DRAINAGE TO CORRUGATED METAL STRUCTURES SHALL BE MADE BY MEANS OF SHOP FABRICATED OR FIELD WELDED STUB ON THE STRUCTURE. THE STUB SHALL MEET THE REQUIREMENTS OF 707 AND HAVE A MINIMUM LENGTH OF 2 FEET AND A MIMIMUM WALL THICKNESS OF 0.064 INCHES.

THE LOCATION AND ELEVATION OF THE STUB ARE TO BE CONSIDERED APPROXIMATE AND MAY BE ADJUSTED BY THE ENGINEER TO AVOID CUTTING THROUGH JOINTS IN THE STRUCTURE.

A MASONRY COLLAR, AS PER STANDARD DRAWING DM-1.1, WILL BE REQUIRED TO CONNECT THE LONGITUDINAL DRAINAGE TO THE STUB, WHEN PIPE OTHER THAN CORRUGATED METAL IS PROVIDED FOR THE LONGITUDINAL DRAINAGE.

PAYMENT FOR CUTTING INTO THE STRUCTURE AND PROVIDING THE CONNECTION DESCRIBED, SHALL BE INCLUDED IN THE CONTRACT PRICE FOR ITEM 603.

SANITARY WORK

THE FOLLOWING CONDUIT TYPES MAY BE USED; 707.42, 707.43, 707.44, 707.45, 707.46. 707.47, 707.51, 707.52 SDR35, 706.01, 707.02 OR 706.08 WITH JOINTS AS PER 706.11 OR 706.12.

PAVEMENT

PART WIDTH CONSTRUCTION

BECAUSE OF THE NECESSITY TO BUILD THIS PROJECT UNDER TRAFFIC AND TO CONSTRUCT THE FULL PAVEMENT WIDTH IN STAGES, EXTREME CARE SHALL BE TAKEN TO PREVENT THE CONSTRUCTION OF A BUTT JOINT IN THE BASE COURSES. LONGITUDINAL JOINTS SHALL BE LAPPED AS SHOWN ON STANDARD CONSTRUCTION DRAWING BP-3.1.

CURBING/PARAPET ON APPROACH SLABS

THE SHAPE OF THE CURBING/PARAPET ON APPROACH SLABS SHALL BE TRANSITIONED, FROM THE STANDARD SECTION ON THE APPROACHES TO THE SECTION USED ON THE BRIDGE, WITHIN THE LIMITS OF THE APPROACH SLAB. SEE SHEET 136 FOR DETAILS.

PAVEMENT RESTORATION FOR MONUMENT ASSEMBLY INSTALLATIONS

THE FOLLOWING QUANTITIES HAVE BEEN PROVIDED FOR PAVEMENT RESTORATION FOLLOWING INSTALLATION OF ITEM 604 MONUMENT ASSEMBLIES.

ITEM 301 BITUMINOUS AGGREGATE BASE, PG64-22 — 4 CU. YD.

ITEM 448 ASPHALT CONCRETE SURFACE COURSE, TYPE I, PG64-22 — 1 CU. YD.

THE ABOVE QUANTITIES ARE BASED ON A 301 THICKNESS OF 11 INCHES AND A 448 THICKNESS OF 3 INCHES FOR A WIDTH OF TWO FEET AROUND THE PERIMETER OF THE MONUMENT ASSEMBLIES.

PROVIDE ANY MATERIALS USED OUTSIDE THE LIMITS STATED ABOVE AT NO ADDITIONAL COST.

ITEM 407 - TACK COAT AND ITEM 407- TACK COAT FOR INTERMEDIATE COURSE

THE RATE OF APPLICATION OF THE 407 TACK COAT SHALL BE SUBJECT TO ADJUSTMENT AS DIRECTED BY THE ENGINEER. FOR ESTIMATING PURPOSES ONLY, THE PLAN QUANTITIES INDICATE AN AVERAGE APPLICATION RATE OF:

ITEM 407 TACK COAT — 0.075 GAL. PER SQ. YD.

ITEM 407 TACK COAT FOR INTERMEDIATE COURSE — 0.04 GAL. PER SQ. YD.

ITEM 611- REINFORCED CONCRETE APPROACH SLAB (T=15"), AS PER PLAN

BARRIER CURB ON APPROACH SLAB AND THE SEALING OF CONCRETE SURFACES (EPOXY-URETHANE) SHALL BE INCLUDED FOR PAYMENT AND SHALL INCLUDE ALL MATERIALS, EQUIPMENT, AND LABOR NECESSARY TO COMPLETE THE ABOVE WORK. FOR ADDITIONAL DETAILS SEE SHEET 136.

CALCULATED SMG CHECKED SAC

GENERAL NOTES

ATB-20-26.19

16B
162

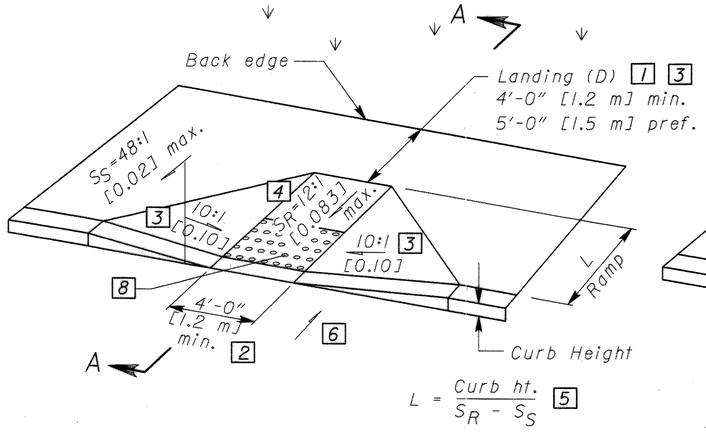

See Sht. 3/3 for SECTION A-A

PERPENDICULAR CURB RAMP DETAIL

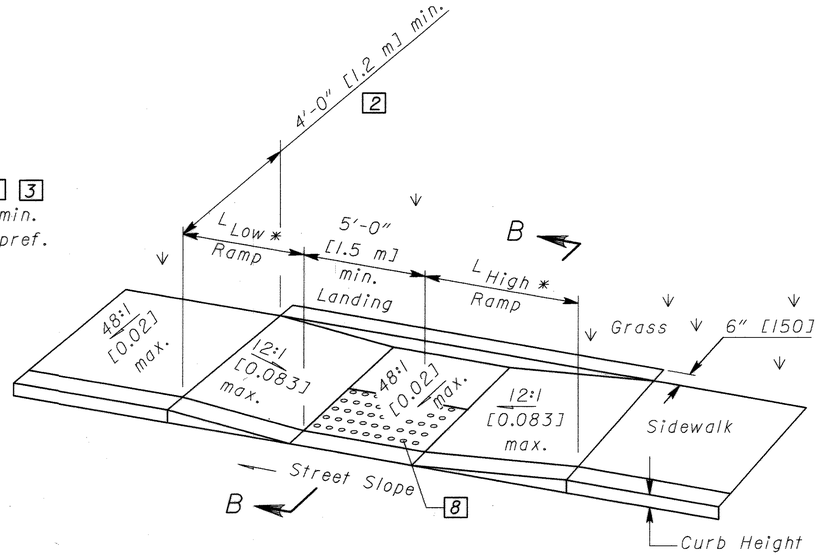

See Sht. 3/3 for SECTION B-B

PARALLEL CURB RAMP DETAIL (DOUBLE)

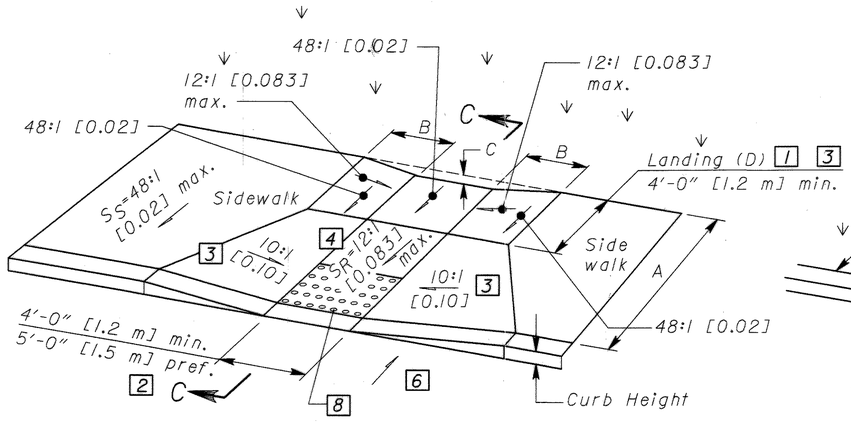

See Sht. 3/3 for SECTION C-C

COMBINED CURB RAMP DETAIL

$B = C / 0.083$

$C = [\text{Curb ht.} + A(S_S)] - [(A-D)S_R + D(0.02)]$

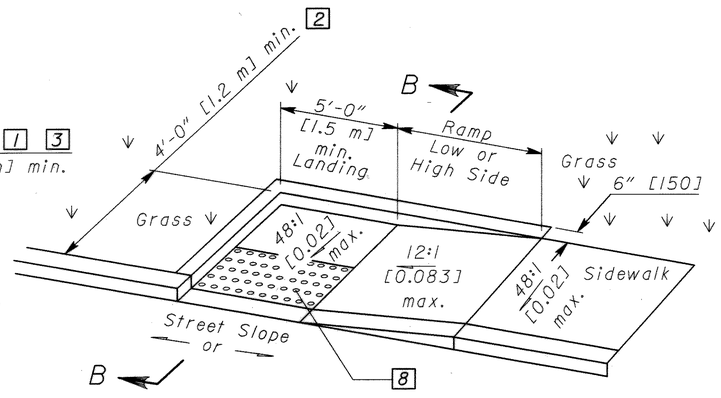

See Sht. 3/3 for SECTION B-B

PARALLEL CURB RAMP DETAIL (SINGLE)

Street Slope	Ramp Length @ 1"/ft [0.083]	
	$L_{LOW\ SIDE}$ *	$L_{HIGH\ SIDE}$ *
0.01	5'-5" [1.6 m]	6'-10" [2.1 m]
0.02	4'-10" [1.5 m]	7'-11" [2.4 m]
0.03	4'-5" [1.3 m]	9'-5" [2.9 m]
0.04	4'-1" [1.2 m]	11'-8" [3.6 m]
0.05	3'-9" [1.1 m]	15'-2" [4.6 m]
* Measured along the back of a 6" [150] high curb.		

$$L_{HIGH} = \frac{\text{Curb ht.}}{0.083 - \text{Street Slope}}$$ 7

$$L_{LOW} = \frac{\text{Curb ht.}}{0.083 + \text{Street Slope}}$$ 7

LEGEND

1 May be reduced to 3'-0" [915] in existing sidewalks if the landing is unconstrained along the back edge.

2 May be reduced to 3'-4" [1.02 m] in existing sidewalks to better fit the walk configuration or where site conditions are restricted by narrow walks, pole foundations, drainage inlets, etc. The width may be tapered.

3 Where landing width (D) has been reduced to 3'-0" [915] the flared sides shall have a maximum slope of 12:1 [0.083].

Flared sides are not required where the edges of a curb ramp are protected by landscaping or other barriers to travel by wheel chair users or pedestrians across the edge of the curb ramp. However, if the flared sides are used in these areas, they may be of any slope.

4 The slope of the ramp toward the curb is preferred to be 12:1 [0.083] or flatter related to the horizontal, but the maximum slope shall be 12:1 [0.083] relative to the existing or proposed walk slope.

In existing sidewalks, where the maximum ramp slope (S_R) is not feasible, it may be reduced as follows:

A) 10:1 [0.10] for a max. rise of 6" [150],
B) 8:1 [0.125] for a max. rise of 3" [75],
C) 6:1 [0.167] over a max. run of 2'-0" [610] for historic areas where a flatter slope is not feasible.

5 The minimum length of a perpendicular ramp is 6' [2.0 m] from the back of a 6" [150] curb and may be increased where feasible to obtain a flatter ramp slope or to better blend with the walk configuration.

6 Gutter counter slopes at the foot of perpendicular curb ramps should not exceed 20:1 [0.05] over a distance of 2'-0" [610] from the curb.

7 Dimensions derived by equation are nominal. Construct ramps to meet required slopes and existing conditions.

8 Detectable Warnings (truncated domes) are to be installed in the location shown. Dimensions of the domes are 24" [610] from the back of the curb by the width of the ramp. See NOTES on sheet 3.

7-12-02

CURB RAMPS WITH TRUNCATED DOMES

ATB-20-26.19

16C
162

18520GNB.dgn

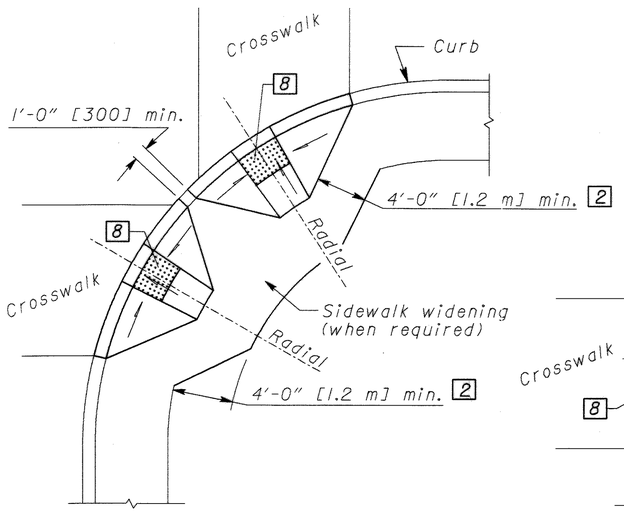

DESIGN A
PERPENDICULAR RAMP

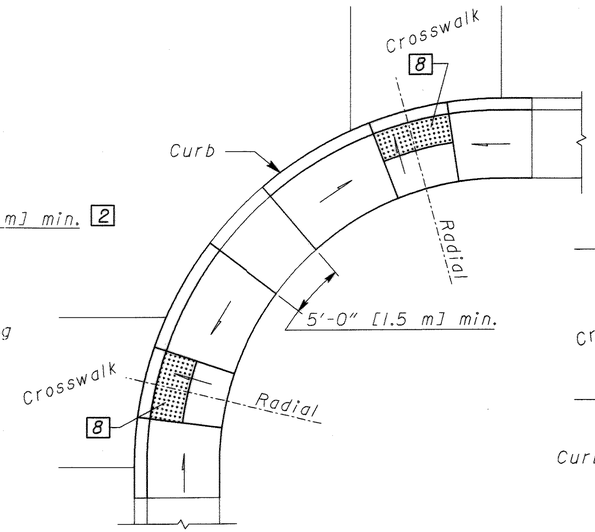

DESIGN B
PARALLEL RAMP

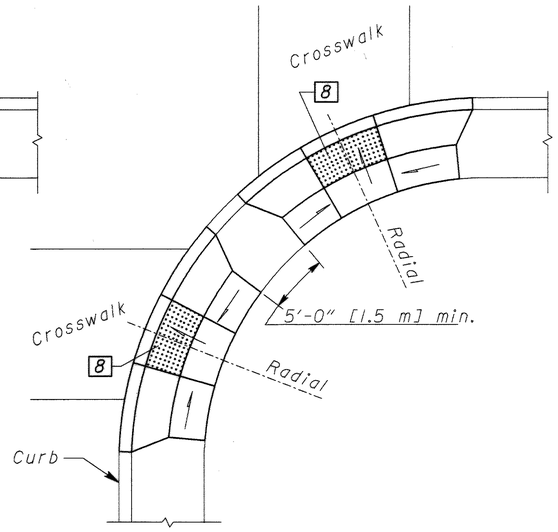

DESIGN C
COMBINATION RAMP

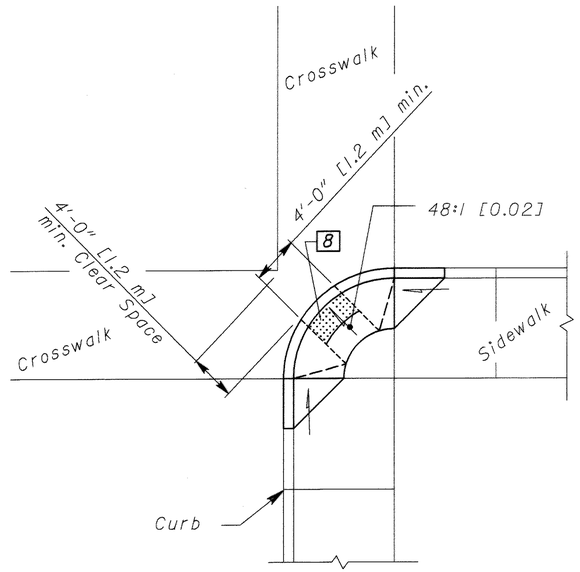

DESIGN D
DIAGONAL RAMP

Use in existing walks only and when site constraints prohibit other designs. The diagonal ramp may be perpendcular, parallel or combination.

Avoid using where curb radii are less than 20'-0" [6.0 m].

CORNER CURB RAMP DESIGNS

(See Curb Ramp Details on Sht. 1/3 for additional requirements.)

For LEGEND, See sheet 1.

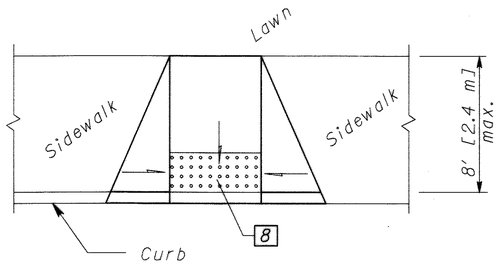

DESIGN E
PERPENDICULAR RAMP

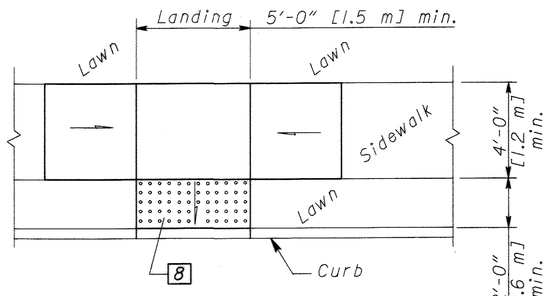

DESIGN F
PARALLEL RAMP

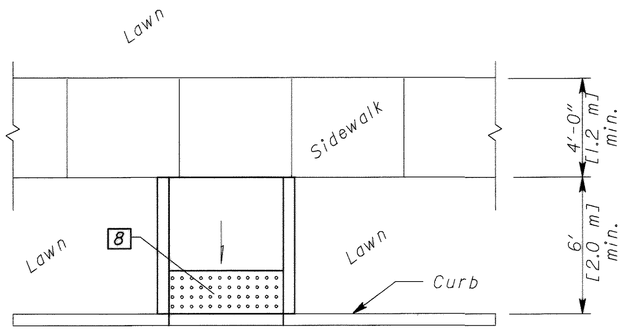

DESIGN G
PERPENDICULAR RAMPS
w/o FLARES

MID BLOCK CURB RAMP DESIGNS

(See Curb Ramp Details on Sht. 1/3 for additional requirements.)

18520GNB.dgn

7-12-02

CURB RAMPS WITH TRUNCATED DOMES

ATB-20-26.19

NOTES

SURFACE TEXTURE: Texture of concrete surfaces shall be obtained by coarse brooming transverse to the ramp slopes and shall be rougher than adjacent walk.

TRUNCATED DOMES: Install detectable warnings (truncated domes) for a distance of 24" [610] from the back of the curb for the entire width of the ramp opening as shown on details on Sheet 1.

Pavers will meet ASTM C 902 Class SX, Type 1, or C 936, or C 1272 Type R.

Acceptable manufacturers and products are:

1) Whitacre-Greer Fireproofing Company,
   1400 S. Mahoning Ave, Alliance, OH, 44601, (800) WG PAVER
   ADA Paver, 4"x8"x2-1/4", Clear Red (Rustic) #30.

2) Hanover Architectural Products,
   240 Bender Rd., Hanover, PA. 17331, (717) 637-0500
   Detectable Warning Paver, 12"x12"x2", or 24"x24"x2",
   Red or Quarry Red.

3) Endicott Clay Products,
   PO Box 17, Fairbury, NE, 68352, (402) 729-5804
   Handicap Detectable Warning Paver,
   4"x8"x2-1/4", Red Blend.

Pavers will laid on top of a 4" [100] unreinforced concrete base. Setting bed and joints to be mortared in accordance with manufacturer's instruction, or with a maximum 1/2" [13] thick bed of latex modified cement mortar. Mortar joints to a width not greater than 5/32" [4] and not less than 1/16" [1.5]. Pavers shall not be directly touching each other unless they have spacing bars.

Mortared joints are to be flush with top surface and struck so as to give a smooth surface. Pavers shall be laid such that joints are level with adjoining joints so as to provide a smooth transition from brick to brick and brick to concrete surface.

The surface of any two adjacent units should not differ by more than 1/8" [3] in height. Bricks shall be placed in a running bond pattern. Face of all brick shall be clean of cement and protected so as to avoid chipping during constructionn.

EXPANSION JOINTS: shall be provided in the curb ramp as extensions of walk joints and consistent with Item 608.03 requirements for a new concrete walk. A 1/2" [13] Item 705.03 expansion joint filler shall be provided around the edge of ramps built in existing concrete walk. Lines shown on this drawing indicate the ramp edge and slope changes and are not necessarily joint lines.

PAYMENT: Walk and curb, Items 608 and 609, shall be measured through the curb ramp area paid for under their respective Items. **Item 608 - Curb Ramp, As Per Plan, Each** constructed in new curb and walk shall include the cost of any additional materials and installation (including truncated domes), grading, forming and finishing. **Item 608 - Curb Ramp. As Per Plan, Square Foot [Meter],** constructed in existing curb and walk shall include the cost of furnishing and installing all materials (including truncated domes), grading, forming, and finishing of the curb and walk of the curb ramp. Removal of existing curb and walk shall be paid for under Item 202.

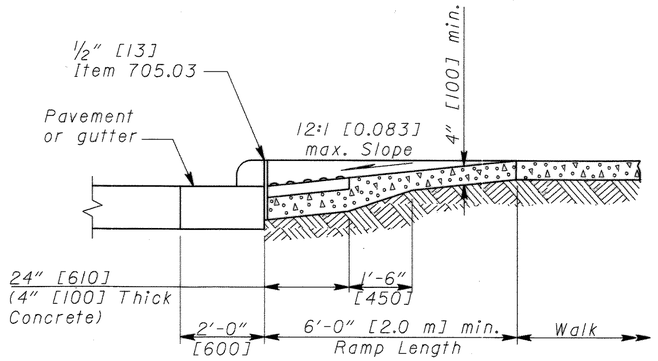

SECTION A-A
NORMAL DETAIL
See Sheet 1 of 3.
(Gutter shown)

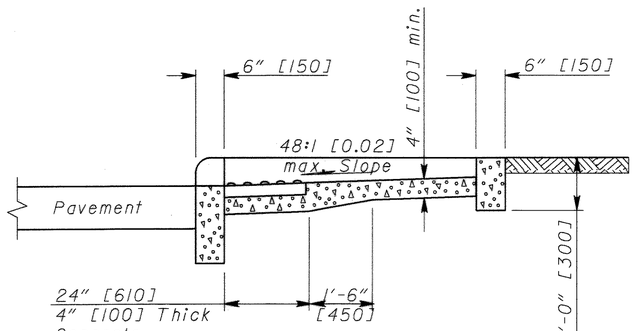

SECTION B-B
See Sheet 1 of 3.

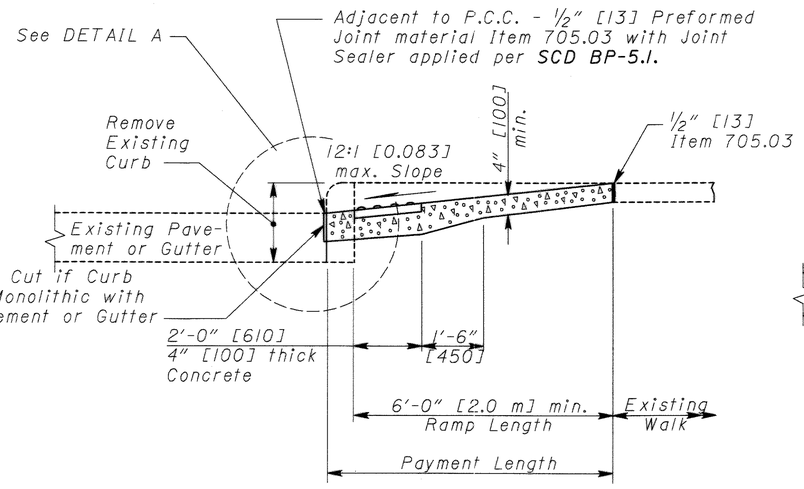

SECTION A-A
EXISTING WALK DETAIL
See Sheet 1 of 3.

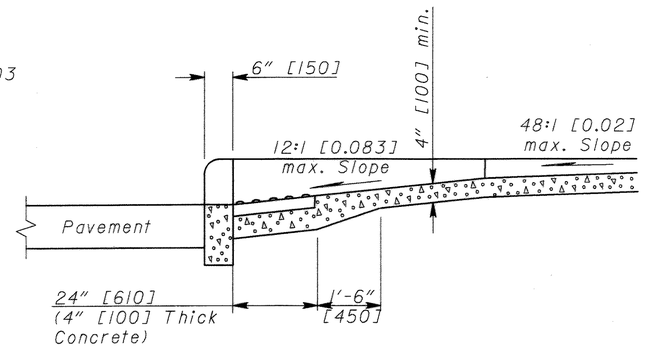

SECTION C-C
See Sheet 1 of 3.

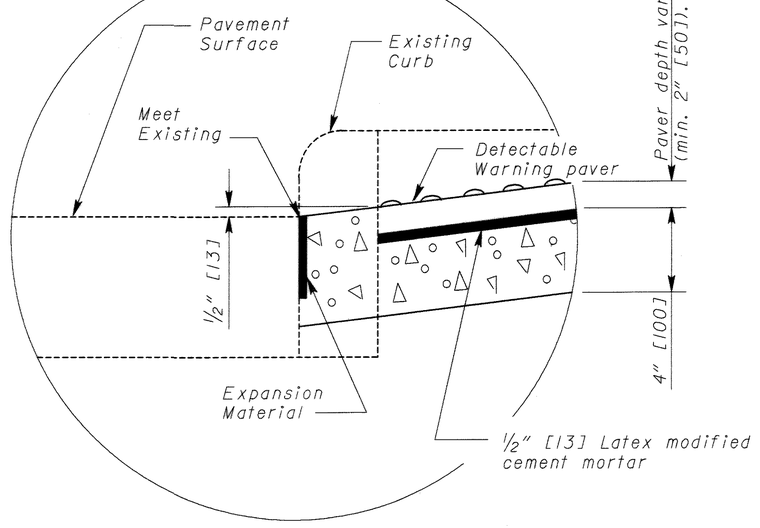

DETAIL A

7-12-02

CURB RAMPS WITH TRUNCATED DOMES

ATB-20-26.19

3 / 3

16E
162

18520GNB.dgn

MAINTENANCE OF TRAFFIC

THIS ITEM SHALL CONSIST OF MAINTENANCE OF TRAFFIC ON EXISTING ROADWAYS AND RAMPS IN ACCORDANCE WITH THE OHIO MANUAL OF UNIFORM TRAFFIC CONTROL DEVICES FOR STREETS AND HIGHWAYS, CURRENT EDITION, LATEST REVISION, THE SPECIFICATIONS AND THE FOLLOWING:

1. A MINIMUM OF ONE TEN FOOT LANE IN EACH DIRECTION SHALL BE MAINTAINED ON THE EXISTING PAVEMENT (COMPLETED PAVEMENT AND TEMPORARY PAVEMENT) DURING CONSTRUCTION OF THE WORK.

2. THE CONTRACTOR SHALL INFORM THE DISTRICT OFFICE (330) 297-0801 EXT 209, EIGHTEEN (18) DAYS PRIOR TO THE BEGINNING OF WORK.

3. CONES SHALL NOT BE ACCEPTABLE TRAFFIC CONTROL DEVICES FOR LANE RESTRICTIONS OR LANE REDUCTIONS THAT ARE IN OPERATION ONE-HALF HOUR AFTER SUNSET OR ONE HALF-HOUR BEFORE SUNRISE. ALL NIGHTTIME LANE RESTRICTIONS SHALL REQUIRE DRUMS OR BARRICADES AT A MAXIMUM SPACING OF FIFTY (50) FEET.

4. THE CONTRACTOR SHALL FURNISH, ERECT, MAINTAIN AND SUBSEQUENTLY REMOVE ALL FLAGS, BARRICADES, SIGNS, SIGN SUPPORTS AND FURNISH AND MAINTAIN ALL FLAGGERS, WATCHERS AND INCIDENTALS RELATED THERETO.

5. AN ESTIMATED QUANTITY OF ITEM 622 PORTABLE CONCRETE BARRIER, 32" HAS BEEN PROVIDED FOR THIS PROJECT AND IS SHOWN ON THE MAINTENANCE OF TRAFFIC SUMMARY. THE BARRIER SHALL BE PLACED AS SHOWN ON SHEET THE PHASE DETAIL SHEETS.

6. NO FULL DEPTH BRIDGE REPAIR SHALL BE PERFORMED OVER AN OPEN LANE. A SAFETY NET OR PLATFORM SHALL BE REQUIRED TO PROTECT THE RAILROAD OR STREAM DURING THE REMOVAL OF THE EXISTING CONCRETE PARAPET AND DECK. THE CONTRACTOR SHALL PROVIDE A SAFETY NET OR PLATFORM OF SUITABLE STRENGTH ON THE UNDERSIDE OF THE DECK. THE DESIGN OF THE NET OR PLATFORM SHALL CONFORM WITH OSHA REQUIREMENTS AND THE APPROVAL OF THE ENGINEER AND SHALL REMAIN IN PLACE UNTIL THE WORK HAS BEEN COMPLETED AND ACCEPTED OR AS DIRECTED BY THE ENGINEER. THE CONTRACTOR SHALL SUBMIT A DEMOLITION PLAN AND SAFETY NET OR PLATFORM DESIGN 10 DAYS PRIOR TO COMMENCING ANY DEMOLITION FOR APPROVAL BY THE ENGINEER. THE SUBMITTAL SHALL BE IN WRITING TO THE DISTRICT CONSTRUCTION ENGINEER WITH A COPY TO THE PROJECT ENGINEER.

THE CONTRACTOR SHALL TAKE EXTRA PRECAUTIONS TO SAFEGUARD THE RAILROAD TRACKS BENEATH THE EXISTING AND PROPOSED BRIDGES. THE CONTRACTOR MAY USE A SYSTEM OF RAILROAD TIES AND STEEL PLATES, OR SOME OTHER METHOD APPROVED BY THE RAILROAD COMPANY. ALL SHIELDING MUST BE REMOVABLE TO ALLOW TRAINS TO USE THE TRACKS. ALL CONSTRUCTION ACTIVITIES WITHIN 25 FEET OF THE TRACKS SHALL REQUIRE A RAILROAD FLAGGER TO BE PRESENT.

7. UNDER NO CIRCUMSTANCES SHALL THE CONTRACTOR BE PERMITTED TO HAVE SUCCESSIVE WORK ZONES UNLESS THE DISTANCE BETWEEN THE DRUMS, BARRICADES OR CONES EXCEEDS TWO (2) MILES RURAL OR ONE (1) MILE URBAN.

8. ONLY DURING OFF-PEAK PERIODS (ie. ANY PERIOD OTHER THAN 6-8AM AND 3-6PM) SHALL THE CONTRACTOR INSTALL AND SUBSEQUENTLY RESET ALL TRAFFIC CONTROL NECESSARY FOR MAINTAINING TRAFFIC EACH CONSTRUCTION PHASE.

9. A QUANTITY OF 50 CU. YDS. OF 614 BITUMINOUS CONCRETE FOR MAINTAINING TRAFFIC SHALL BE PROVIDED FOR USE IN MAINTAINING PAVEMENT, SHOULDERS AND OTHER LOCATIONS PRIOR TO RESURFACING, AS DIRECTED BY THE ENGINEER.

10. PRIOR TO OPENING TO TRAFFIC EACH LANE SHALL BE IN A SAFE, PASSABLE CONDITION. ALL TRANSVERSE JOINTS SHALL EXTEND ACROSS THE FULL LANE AND SHOULDER WIDTH AND EACH LANE SHALL BE FREE FROM UNEVEN LONGITUDINAL JOINTS. THE CONTRACTOR SHALL PROVIDE ASPHALT WEDGES FOR TRANSVERSE JOINTS WHEREVER THERE ARE PAVEMENT ELEVATION DIFFERENCES.

11. A QUANTITY OF ITEM 614 WORK ZONE MARKING SIGN HAS BEEN INCLUDED IN THE PLAN. THIS QUANTITY SHALL INCLUDE, BUT NOT BE LIMITED TO, THE FOLLOWING SIGNS: OW-62 [BUMP], OW-71[TWO-WAY TRAFFIC], OW-167 [NO EDGE LINES], OW-171 [UNEVEN LANES SYMBOL]. THESE QUANTITES SHALL BE AS PER 614.04.

THE FOLLOWING QUANTITIES SHALL BE USED FOR THE MAINTENANCE OF TRAFFIC ON THIS PROJECT:

ITEM 614 WORK ZONE MARKING SIGN 8 EACH

DETOUR NOTIFICATION

THE CONTRACTOR SHALL ADVISE THE ODOT DISTRICT OFFICE (330-297-0801, EXT. 339) AND THE PENNDOT DISTRICT OFFICE (814-678-7085 ATTN: NEIL CHEERS) EIGHTEEN (18) DAYS IN ADVANCE OF WHEN THE DETOUR ROUTES SHOULD BE IN EFFECT. ODOT SHALL THEN PROVIDE AND INSTALL ALL DEVICES NECESSARY TO DEFINE THE ROUTE OF THE U.S.R. 20 DETOUR, INCLUDING SECTIONS OF THE DETOUR IN PENNSYLVANIA, AND SHALL MAINTAIN THE SAME THROUGHOUT THE DETOUR LIMITATION DATES. THE CONTRACTOR SHALL PROVIDE AND INSTALL ALL DEVICES NECESSARY TO DEFINE THE ROUTE OF THE LIBERTY STREET DETOUR AS SHOWN ON SHEETS 20 & 21. ALL TRAFFIC CONTROL DEVICES REQUIRED, OTHER THAN FOR THE U.S.R. 20 DETOUR, SHALL BE FURNISHED, ERECTED, MAINTAINED, AND SUBSEQUENTLY REMOVED BY THE CONTRACTOR.

DETOUR DURATION

THE MAXIMUM LENGTH OF TIME FOR THE DETOUR ROUTE TO BE IN EFFECT SHALL BE NINETY (90) CONSECUTIVE DAYS. CONSTRUCTION WORK MAY BE PERFORMED BEFORE AND AFTER THE DETOUR LIMITATION DATES, BUT THERE SHALL BE NO RESTRICTIONS (LANE WIDTH REDUCTIONS, TEMPORARY ROADWAYS, OR ONE-WAY TRAFFIC) TO THROUGH OR LOCAL TRAFFIC. IT SHALL BE THE RESPONSIBILITY OF THE CONTRACTOR TO SCHEDULE AND PERFORM THE CONSTRUCTION WORK WITHIN THE DETOUR LIMITATION TIME. THE FAILURE OF THE CONTRACTOR TO MEET THE DETOUR LIMITATION DATES WILL CAUSE SEPARATE LIQUIDATED DAMAGES OF $900 PER CALENDAR DAY OF OVERRUN OF DETOUR LIMITATION TIME TO BE ASSESSED. THE CONTRACTOR WILL COMPLY WITH ALL PROVISIONS OF 108.07 OF THE DEPARTMENT OF TRANSPORTATION CONSTRUCTION AND MATERIAL SPECIFICATIONS.

LOCATION	STATION FROM	STATION TO	SIDE	614 TEMPORARY EDGE LINE, CLASS I (MILE)	614 TEMPORARY CENTER LINE, CLASS I (MILE)	614 TEMPORARY STOP LINE, CLASS I (L.F.)	614 TEMPORARY IMPACT ATTENUATOR, (QUADGUARD CZ), (UNIDIRECTIONAL) (EACH)	615 TEMPORARY PAVEMENT, CLASS B (S.Y.)	622 PORTABLE CONCRETE BARRIER, 32" (L.F.)
PHASE II (U.S. 20)									
	6+75	11+32	LT.&RT.	0.12	0.08		1		260
		9+77	RT.			10			
		10+16	RT.			10			
	11+00	11+25	RT.					27	
PHASE II (HARBOR)									
	30+53	32+10	LT.	0.04	0.03				160
PHASE II (KEYES)									
		48+65	RT.			10			
PHASE III (U.S. 20)									
	6+75	12+20	LT.&RT.	0.10			1		340
	8+66	9+56	LT.		0.02				
	11+09	13+50	LT.		0.05				
PHASE III (KEYES)									
		49+81	RT.			23			
PHASE III (KEYES)	48+81	49+81	LT.		0.02				
TOTALS CARRIED TO GEN. SUM.				0.26	0.20	53	2	27	760

614 MAINTAINING TRAFFIC

THE FOLLOWING ESTIMATED QUANTITIES HAVE BEEN INCLUDED FOR USE AS DIRECTED BY THE ENGINEER FOR THE MAINTENANCE OF TRAFFIC.

410, TRAFFIC COMPACTED SURFACE, TYPE A OR B 120 CU. YD.

614, BITUMINOUS CONCRETE FOR MAINTAINING TRAFFIC 50 CU. YD.

616, CALCIUM CHLORIDE 5 TON

616, WATER 50 M. GAL.

MAINTAINING TRAFFIC, AS PER PLAN

TEMPORARY ACCESS ROAD/HAUL ROAD

PARCEL 40-T, LOCATED ON SOUTH LIBERTY ST., HAS BEEN PROVIDED FOR THE CONTRACTOR TO ESTABLISH A TEMPORARY ACCESS ROAD/ HAUL ROAD TO THE WORK AREA. THE CONTRACTOR SHALL CONSTRUCT A SUITABLE HAUL ROAD TO PROVIDE ACCESS FOR EQUIPMENT AND MATERIALS DELIVERY. AT THE COMPLETION OF THE BRIDGE CONSTRUCTION, THE SITE SHALL BE RESTORED TO ITS ORIGINAL CONDITION, INCLUDING SEEDING. ALL COSTS INCURRED TO CONSTRUCT, MAINTAIN, AND RESTORE THIS SITE SHALL BE INCLUDED IN THE LUMP SUM BID FOR ITEM 614 MAINTAINING TRAFFIC, AS PER PLAN.

CALCULATED SMG CHECKED SAC

MAINTENANCE OF TRAFFIC GENERAL NOTES

ATB-20-26.19

ITEM 614 - WORK ZONE IMPACT ATTENUATOR, QUADGUARD CZ [(MODEL QZ2403Y), (UNIDIRECTIONAL)]:

THIS ITEM SHALL CONSIST OF FURNISHING AND INSTALLING A QUADGUARD CZ WORK ZONE IMPACT ATTENUATOR MANUFACTURED BY ENERGY ABSORPTION SYSTEMS, INC., ONE EAST WACKER DRIVE, CHICAGO, IL 60601 (TELEPHONE: 312-467-6750).

INSTALLATION SHALL BE AT THE LOCATIONS SPECIFIED IN THE PLANS, IN ACCORDANCE WITH THE MANUFACTURER'S SPECIFICATIONS AS DETAILED ON THE FOLLOWING PRE-APPROVED SHOP DRAWINGS:

DWG. NO.	DRAWING NAME	DWG./ REV. DATE	ODOT APPROVAL DATE
QSCZCVR-T4	QUADGUARD CZ SYSTEM FOR CONSTRUCTION ZONES	5/13/99 Rev. J	8/27/99
35-40-10	QUADGUARD SYSTEM CONCRETE PAD, CZ, QG	11/19/97 Rev. D	8/27/99
35-40-16	QUADGUARD SYSTEM BACKUP ASSEMBLY, CZ, QG	7/30/99 Rev. F	8/27/99
354051Z	QUADGUARD CZ SYSTEM NOSE ASSEMBLY, CZ, QG, 24, 30, 36	5/17/99	8/27/99
35-40-18	TRANSITION ASSEMBLY, 4 OFFSET, QG	6/25/99 Rev. F	8/27/99
35400260	QUADGUARD SYSTEM PCMB ANCHOR ASSEMBLY	11/19/97 Rev. C	8/27/99

THE CONTRACTOR SHALL PROVIDE A REPLACEMENT UNIT WHEN AN IMPACT IS SEVERE ENOUGH TO REQUIRE COMPLETE REPLACEMENT OF THE ATTENUATOR. THE CONTRACTOR SHALL HAVE A SPARE PARTS PACKAGE AVAILABLE ON THE PROJECT SITE AT ALL TIMES WHEN AN ATTENUATOR IS IN PLACE. THE CONTRACTOR SHALL PROVIDE A MINIMUM OF ONE COMPLETE SPARE PARTS PACKAGE FOR EVERY 1 TO 6 UNITS INSTALLED ON THE PROJECT SITE. FOR EXAMPLE, 5 INSTALLED UNITS REQUIRE 1 SPARE PARTS PACKAGE AND 7 INSTALLED UNITS REQUIRE 2 SPARE PARTS PACKAGES.

WHEN BI-DIRECTIONAL DESIGNS ARE SPECIFIED, THE CONTRACTOR SHALL SUPPLY APPROPRIATE TRANSITIONS. PAYMENT FOR THE ABOVE WORK SHALL BE MADE AT THE UNIT PRICE BID FOR ITEM 614, WORK ZONE IMPACT ATTENUATOR, QUADGUARD CZ [(MODEL NO.), (UNIDIRECTIONAL OR BIDIRECTIONAL)], EACH, AND SHALL INCLUDE ALL LABOR, TOOLS, EQUIPMENT AND MATERIALS NECESSARY TO CONSTRUCT, MAINTAIN, REPAIR, REPLACE OR RELOCATE A COMPLETE AND FUNCTIONAL IMPACT ATTENUATOR SYSTEM, INCLUDING ALL RELATED BACKUPS, TRANSITIONS, LEVELING PADS, HARDWARE AND GRADING, NOT SEPARATELY SPECIFIED, AS REQUIRED BY THE MANUFACTURER.

PAVEMENT REPLACEMENT ADJACENT TO MAINTENANCE OF TRAFFIC LANES

THE OPEN TRENCH FOR REPLACING THE PAVEMENT SHALL BE ADEQUATELY MAINTAINED AND PROTECTED WITH BARRICADES AT ALL TIMES. A 5 DAY PERIOD EACH FOR PHASE II AND PHASE III SHALL BE ALLOWED FOR REPLACING THE PAVEMENT AT THESE LOCATIONS, AND A DROP OFF OF NO MORE THAN 3 INCHES SHALL BE PERMITTED AT ALL OTHER TIMES. THE CONTACTOR SHALL MAINTAIN ACCESS TO PROPERTIES AT ALL TIMES AT ACCESS POINTS ON U.S. 20 AND ON LIBERTY STREET.

CALCULATED SMG CHECKED SAC

MAINTENANCE OF TRAFFIC GENERAL NOTES

ATB-20-26.19

17A / 162

DESIGNATED LOCAL DETOUR ROUTE

IN ADDITION TO THE OFFICIAL, SIGNED DETOUR ROUTE, A LOCAL ROUTE HAS BEEN DETERMINED TO BE THE SECONDARY, UNSIGNED DETOUR ROUTE OR "DESIGNATED LOCAL DETOUR ROUTE." THIS ROUTE IS SHOWN ON THE DETOUR PLAN SHEET DURING THE TIME THAT TRAFFIC IS DETOURED, THE CONTRACTOR SHALL MAINTAIN THIS ROUTE IN A CONDITION WHICH IS REASONABLY SMOOTH AND FREE FROM HOLES, RUTS, RIDGES, BUMPS, DUST AND STANDING WATER. ONCE THE DETOUR IS REMOVED AND TRAFFIC RETURNED TO ITS NORMAL PATTERN, THE DESIGNATED LOCAL DETOUR ROUTE SHALL BE RESTORED TO A CONDITION THAT IS EQUIVALENT TO THAT WHICH EXISTED PRIOR TO ITS USE FOR THIS PURPOSE. ALL SUCH WORK SHALL BE PERFORMED WHEN AND AS DIRECTED BY THE ENGINEER.

THE FOLLOWING ESTIMATED QUANTITIES ARE PROVIDED FOR USE AS DIRECTED BY THE ENGINEER TO MAINTAIN AND SUBSEQUENTLY RESTORE THE DESIGNATED LOCAL DETOUR ROUTE.

301, BITUMINOUS AGGREGATE BASE, PG 64-22 589 CU. YD.

304, AGGREGATE BASE 393 CU. YD.

448, ASPHALT CONCRETE, SURFACE COURSE, TYPE 1, PG 64-22 131 CU. YD.

407, TACK COAT 177 GAL.

408, BITUMINOUS PRIME COAT 942 GAL.

616, WATER 20 M. GAL.

616, CALCIUM CHLORIDE 2 TON

ITEM 614 - BARRIER REFLECTORS AND/OR OBJECT MARKERS

BARRIER REFLECTORS AND/OR OBJECT MARKERS SHALL BE INSTALLED ON ALL PORTABLE CONCRETE BARRIER USED FOR TRAFFIC CONTROL. BARRIER REFLECTORS, OBJECT MARKERS AND THEIR INSTALLATION SHALL CONFORM TO THE APPROPRIATE PROPOSAL NOTE AND ITEM 626 EXCEPT THAT THE SPACING SHALL BE 25 FEET. AN ESTIMATED QUANTITY OF 47 EACH OF ITEM 614 BARRIER REFLECTOR, TYPE B, AND 47 EACH OF ITEM 614 OBJECT MARKERS HAVE BEEN PROVIDED AND CARRIED TO THE GENERAL SUMMARY.

DUST CONTROL

THE CONTRACTOR SHALL FURNISH AND APPLY WATER FOR DUST CONTROL AS DIRECTED BY THE ENGINEER. THE FOLLOWING QUANTITY HAS BEEN INCLUDED FOR DUST CONTROL PURPOSES:

616, WATER 34 M. GAL.

SIGNS AT ADJACENT ROAD INTERSECTIONS

THE CONTRACTOR SHALL, IN ADDITION TO THE GENERAL REQUIREMENTS OF ITEM 614 ON THE PROJECT, PERFORM THE FOLLOWING:

PROVIDE, ERECT, AND MAINTAIN STANDARD 48"X30" SIZE "ROAD CLOSED" SIGN SUPPORTS AT THE FOLLOWING LOCATIONS DURING PERIOD(S) IN WHICH THE AFFECTED ROADS ARE CLOSED TO TRAFFIC:

PHASE II-
LIBERTY, EAST OF U.S. 20
SOUTH LIBERTY
USR 20/TYLER INTERSECTION

PHASE III-
LIBERTY, WEST OF U.S. 20

SIGN SUPPORTS FOR "ROAD CLOSED" SIGNS SHALL BE AS DETAILED IN THE OHIO MANUAL OF UNIFORM TRAFFIC CONTROL DEVICES. PAYMENT FOR PROVIDING, ERECTING, MAINTAINING, AND REMOVING SIGNS, AND SIGN SUPPORTS SHALL BE INCLUDED IN THE LUMP SUM PRICE BID FOR ITEM 614 MAINTAINING TRAFFIC.

TEMPORARY LANE RESTRICTIONS ON EXISTING STRUCTURE

PORTIONS OF THE EXISTING STRUCTURE MAY BE CLOSED, AS DIRECTED BY THE ENGINEER, TO AID IN THE CONSTRUCTION OF THE PROPOSED STRUCTURE. THESE CLOSURES SHALL OCCUR ONLY BETWEEN THE HOURS OF 8:00 AM TO 4:00 PM. ALTERNATING ONE-WAY, ONE LANE OF TRAFFIC SHALL BE MAINTAINED AT ALL TIMES THROUGH THE USE OF FLAGGERS AS PER STANDARD CONSTRUCTION DRAWING MT-97.10. A MINIMUM LANE WIDTH OF ELEVEN FEET SHALL BE PROVIDED AND SAID LANE MUST HAVE AT LEAST A ONE FOOT CLEARANCE TO THE PARAPET WALL AND/OR ANY TEMPORARY BARRIER ERECTED BY THE CONTRACTOR.

SEQUENCE OF CONSTRUCTION

THE FOLLOWING IS AN OUTLINE OF THE MAJOR PHASES FOR THE MAINTENANCE OF TRAFFIC ALONG U.S. ROUTE 20 DURING THE REPLACEMENT OF THE CONNEAUT VIADUCT, STRUCTURE NUMBER ATB-20-2626. THIS PROJECT WILL ALSO IMPROVE THE INTERSECTION AT THE WEST END OF THE BRIDGE, RELOCATE PART OF KEYES ST., CLOSE PORTIONS OF HARBOR ST. AND CHARLES ST., ADD A CUL-DE-SAC TO HARBOR ST., AND CHANGE SOUTH LIBERTY ST. TO A ONE-WAY STREET.

PHASE I PRIOR TO BEGINNING PHASE I, KEYES ST. SHALL BE CLOSED EAST OF HARBOR ST. FROM APPROXIMATELY STA. 49+20 AND CHARLES ST. SHALL BE CLOSED TO THE SOUTH FROM APPROXIMATELY STA. 79+00. BARRICADES SHALL BE ERECTED AS PER SCD MT-101.60M. TEMPORARY PAVEMENT REQUIRED FOR PHASE II TRAFFIC SHALL BE PLACED IN PHASE I. THE PROPOSED STRUCTURE SHALL BE CONSTRUCTED IN ITS ENTIRETY FROM ABUTMENT TO ABUTMENT WHILE TRAFFIC IS MAINTAINED ON THE EXISTING STRUCTURE. APPROACH WORK SHALL ALSO BE COMPLETED UP TO AND INCLUDING THE APPROACH SLAB FROM STA. 13+46 TO STA. 24+28. ANY OTHER WORK WHICH MAY BE COMPLETED WITHOUT AN IMPACT ON TRAFFIC FLOW, SUCH AS UTILITY WORK, DRAINAGE, ETC., SHALL ALSO BE COMPLETED IN THIS PHASE. PEDESTRIAN TRAFFIC SHALL BE MAINTAINED ON THE EXISTING FACILITIES.

SEQUENCE OF CONSTRUCTION (CONT.)

PHASE II TRAFFIC WISHING TO USE U.S. 20, LIBERTY ST., OR SOUTH LIBERTY ST. SHALL BE DETOURED AS SHOWN ON THE DETOUR PLAN SHEETS. LOCAL TRAFFIC SHALL BE PREVENTED FROM CROSSING EITHER THE EXISTING OR PROPOSED STRUCTURE AT BOTH ENDS DURING THIS PHASE. THE TURN-LANE LEADING FROM LIBERTY ST. TO U.S. 20 SHALL BE CLOSED JUST AFTER THE FIRST DRIVE TO THE HISTORICAL PROPERTY ON THE CORNER SO ACCESS TO THIS PROPERTY CAN BE MAINTAINED FROM LIBERTY. ON THE WEST END, PROPOSED FULL WIDTH APPROACH WORK SHALL BE COMPLETED UP TO AND INCLUDING THE INTERMEDIATE COURSE FROM APPROXIMATELY STA. 11+75 TO STA. 13+46. ALSO, PART WIDTH FULL DEPTH CONSTRUCTION SHALL BE COMPLETED UP TO AND INCLUDING THE INTERMEDIATE COURSE ON THE LEFT SIDE OF U.S. 20 FROM STA. 8+65 TO STA. 11+75 AND ON THE NORTH HALF OF THE INTERSECTION, INCLUDING WORK ON SOUTH LIBERTY AND LIBERTY, AS SHOWN IN THE PLANS. PROPOSED KEYES ST. SHALL ALSO BE CONSTRUCTED IN ITS ENTIRETY. WHEN NECESSARY, SCD MT-97.10 SHALL BE USED TO MAINTAIN TRAFFIC ON HARBOR/KEYES. THE CHARLES ST. TURN-AROUND SHALL BE CONSTRUCTED IN THIS PHASE. ON THE EAST END OF THE PROJECT, ALL PROPOSED APPROACH WORK SHALL BE COMPLETED IN ITS ENTIRETY. ACCESS TO ALL THE AFFECTED PROPERTIES SHALL BE MAINTAINED AT ALL TIMES. PORTIONS OF THE EXISTING STRUCTURE SHALL BE DEMOLISHED AS NECESSARY TO COMPLETE THE ABOVE STATED WORK.

PHASE III SOUTH LIBERTY SHALL BE OPENED AS A ONE WAY STREET TO THE EAST. TWO-WAY ACCESS TO U.S. 20 AND TO HARBOR/KEYES SHALL BE MAINTAINED ON THE WEST END BY DIRECTING TRAFFIC TO THE NEWLY CONSTRUCTED WESTBOUND PAVEMENT AS SHOWN ON THE PLANS. THE EAST END OF U.S. 20 AND THE NEW STRUCTURE SHALL BE OPENED TO THROUGH TRAFFIC. TRAFFIC WISHING TO USE LIBERTY ST. SHALL BE DETOURED AS SHOWN ON THE DETOUR PLAN SHEET. THE RIGHT SIDE OF THE WEST APPROACH SHALL BE CONSTRUCTED UP TO AND INCLUDING THE INTERMEDIATE COURSE, FROM STA. 8+65 TO STA. 11+75 AS WELL AS THE TURN-LANE AND ANY REMAINING WORK ON LIBERTY ST., AS SHOWN ON THE PLANS. THE NEW HARBOR CUL-DE-SAC SHALL ALSO BE COMPLETED. ACCESS TO ALL THE AFFECTED PROPERTIES SHALL BE MAINTAINED AT ALL TIMES PEDESTRIAN TRAFFIC SHALL BE ROUTED ONTO THE NEWLY CONSTRUCTED SIDEWALK ON THE LEFT SIDE OF U.S. 20.

PHASE IV THE FINAL SURFACE COURSE, PAVEMENT MARKINGS, AND OTHER RELATED WORK SHALL BE COMPLETED WHILE LOCAL TRAFFIC IS MAINTAINED AS PER SCD MT-97.11M WHERE NEEDED.

PHASE V U.S. 20 SHALL BE REOPENED TO TRAFFIC ON THE PROPOSED ROADWAY. SOUTH LIBERTY SHALL BE REOPENED TO TRAFFIC AS A ONE-WAY STREET WITH TRAFFIC GOING EASTBOUND ONLY. THE REMAINDER OF THE EXISTING STRUCTURE SHALL BE DEMOLISHED.

CALCULATED SMG CHECKED SAC

MAINTENANCE OF TRAFFIC GENERAL NOTES

ATB-20-26.19

18520mna.dgn

U.S.R. 20 DETOUR

OFFICIAL DETOUR ROUTE ⟶

U.S.R. 20 / S.R. 7 / I.R. 90 / U.S.R. 6N / U.S.R. 20

LOCAL DETOUR ROUTE (UNSIGNED) ⟿

U.S.R. 20 (MAIN RD.) / U.S.R. 20 (HARBOR ST.) / OLD MAIN / U.S.R. 20 (MAIN RD.)

FOR LIBERTY ST. DETOUR SEE SHEETS 20 AND 21.

DETOUR MAP

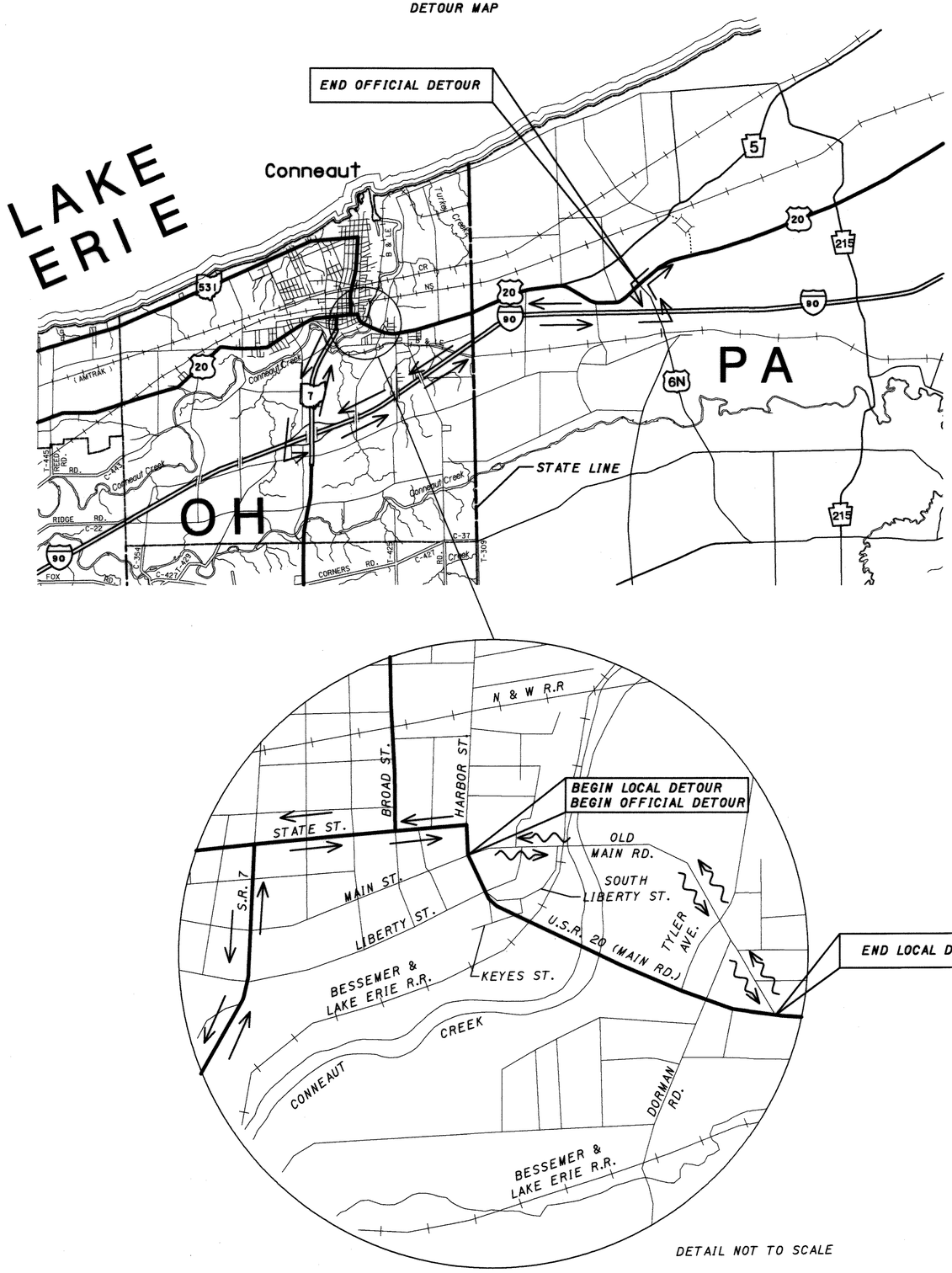

U.S.R. 20 DETOUR

N

0 0.5 2
HORIZONTAL SCALE IN MILES

CALCULATED SMG
CHECKED SAC

DETOUR PLAN

U.S. 20 DETOUR

ATB-20-26.19

18520MDA.dgn

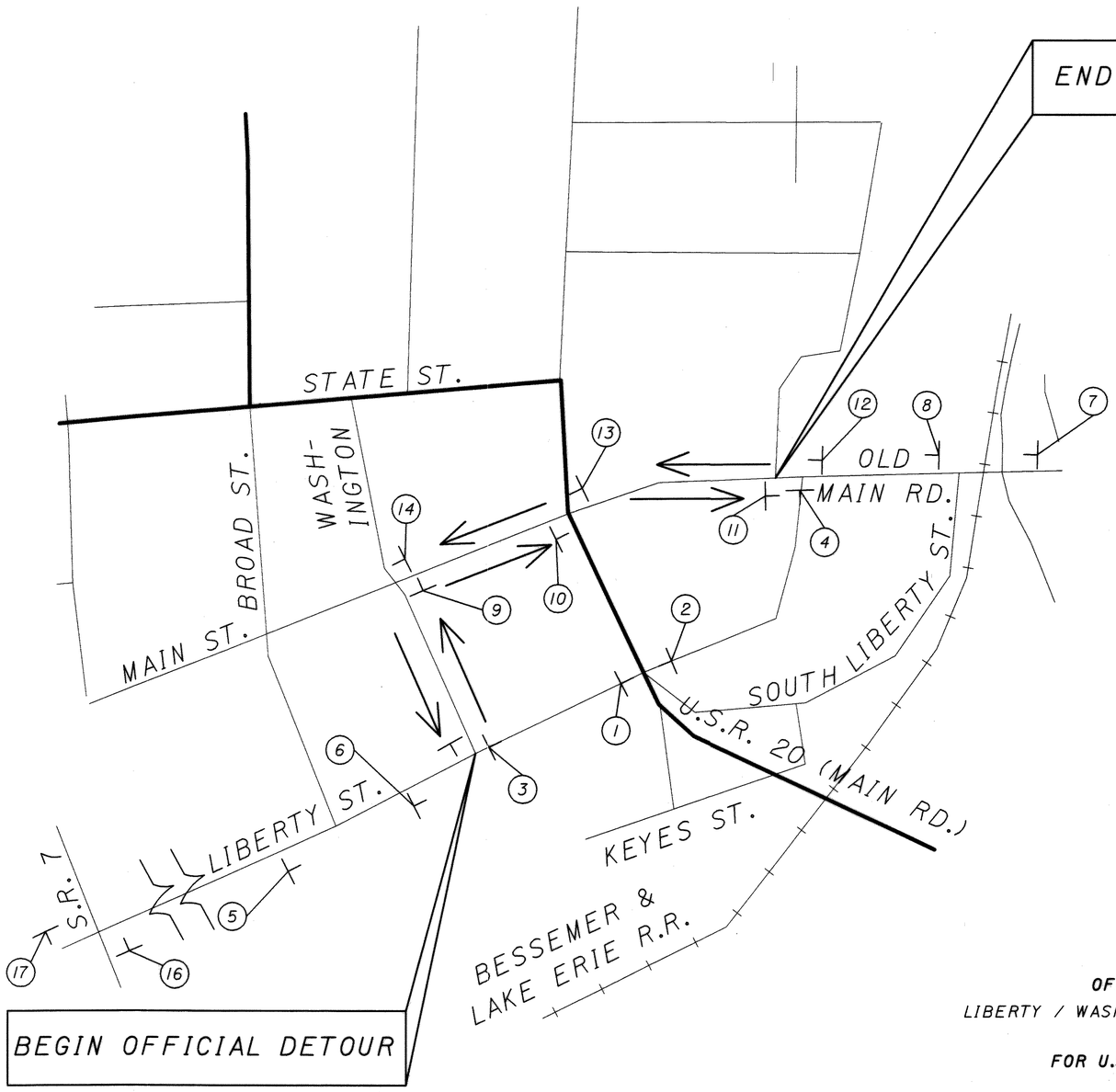

LIBERTY ST. DETOUR

9 — D-14-36 LIBERTY ST. / OC-29R-30 DETOUR

10 12 13 — D-14-36 LIBERTY ST. / OC-29-30 DETOUR

11 — D-14-36 LIBERTY ST.

14 — D-14-36 LIBERTY ST. / OC-29L-30 DETOUR

D-14-36 LIBERTY ST.

15 — NOT USED

OW-120-36 ROAD CLOSED AHEAD

16 17 — D-14-36 LIBERTY ST.

1 2 — Type B Warning Lights; R-75-48 ROAD CLOSED; On Type III Barricade

3 — Type B Warning Lights; R-76C-60 ROAD CLOSED TO THRU TRAFFIC; OC-14L-48 DETOUR; On Type III Barricade

4 — Type B Warning Lights; R-76C-60 ROAD CLOSED TO THRU TRAFFIC; OC-14R-48 DETOUR; On Type III Barricade

5 7 — ROAD CLOSED AHEAD; OW-120-36

6 8 — DETOUR AHEAD; OW-127-36

LIBERTY ST. DETOUR

OFFICIAL DETOUR ROUTE →

LIBERTY / WASHINGTON / MAIN / OLD MAIN / LIBERTY

FOR U.S. 20 DETOUR SEE SHEET 19.

PAYMENT FOR ALL OF THE WORK REQUIRED BY THE CONTRACTOR FOR TRAFFIC CONTROL NOTED ON THIS SHEET INCLUDING PROVIDING, ERECTING, MAINTAINING, AND REMOVING ALL FLASHERS, SIGNS, BARRICADES, SUPPORTS AND ALL OTHER TRAFFIC CONTROL DEVICES SHALL BE INCLUDED IN THE LUMP SUM BID FOR ITEM 614 MAINTAINING TRAFFIC UNLESS SEPARATELY ITEMIZED ON THIS SHEET. (THE CONTRACTOR SHALL INSTALL ADVANCE WARNING SIGNS PER STANDARD DRAWING MT-101.60M.)

N

0 0.5 1 2 HORIZONTAL SCALE IN MILES

CALCULATED SMG CHECKED SAC

LIBERTY ST. DETOUR PLAN PHASE II

ATB-20-26.19

18520MDA.dgn

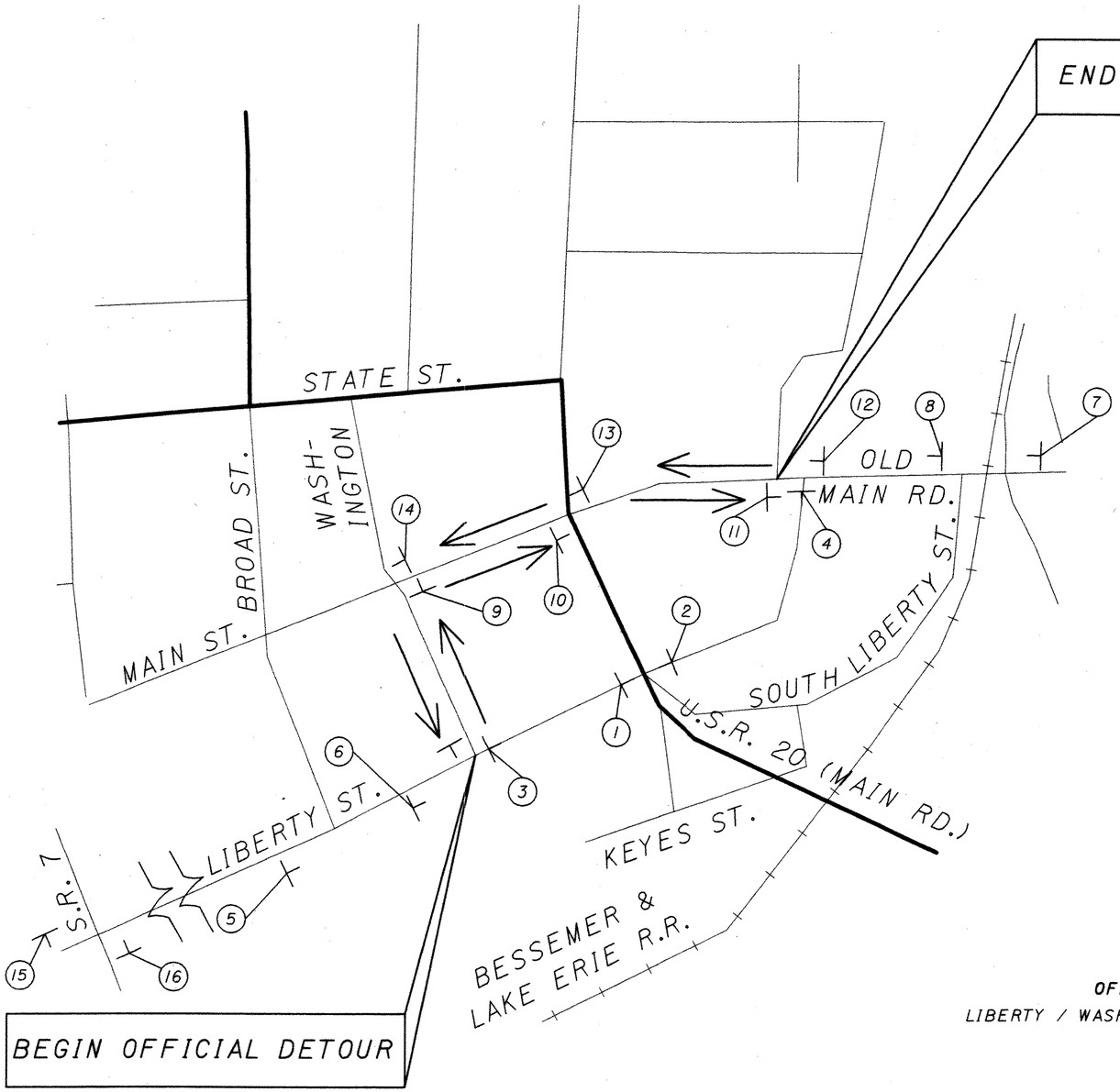

LIBERTY ST. DETOUR

(9) (11) (14) D-14-36 LIBERTY ST.
OC-29R-30 DETOUR
OC-29L-30 DETOUR

(10) (12) (13) D-14-36 LIBERTY ST.
OC-29-30 DETOUR

(16) (15) OW-120-36 ROAD CLOSED AHEAD
D-14-36 LIBERTY ST.

(1) (2) Type B Warning Lights
R-75-48 ROAD CLOSED
On Type III Barricade

(3) Type B Warning Lights
R-76C-60 ROAD CLOSED TO THRU TRAFFIC
OC-14L-48 DETOUR
On Type III Barricade

(4) Type B Warning Lights
R-76C-60 ROAD CLOSED TO THRU TRAFFIC
OC-14R-48 DETOUR
On Type III Barricade

(5) (7) ROAD CLOSED AHEAD
OW-120-36

(6) (8) DETOUR AHEAD
OW-127-36

LIBERTY ST. DETOUR

OFFICIAL DETOUR ROUTE ⟶
LIBERTY / WASHINGTON / MAIN / OLD MAIN / LIBERTY

PAYMENT FOR ALL OF THE WORK REQUIRED BY THE CONTRACTOR FOR TRAFFIC CONTROL NOTED ON THIS SHEET INCLUDING PROVIDING, ERECTING, MAINTAINING, AND REMOVING ALL FLASHERS, SIGNS, BARRICADES, SUPPORTS AND ALL OTHER TRAFFIC CONTROL DEVICES SHALL BE INCLUDED IN THE LUMP SUM BID FOR ITEM 614 MAINTAINING TRAFFIC UNLESS SEPARATELY ITEMIZED ON THIS SHEET. (THE CONTRACTOR SHALL INSTALL ADVANCE WARNING SIGNS PER STANDARD DRAWING MT-101.60M.)

N

HORIZONTAL SCALE IN MILES
0 0.5 1 2

CALCULATED SMG
CHECKED SAC

LIBERTY ST. DETOUR PLAN PHASE III

ATB-20-26.19

8520MDA.dgn

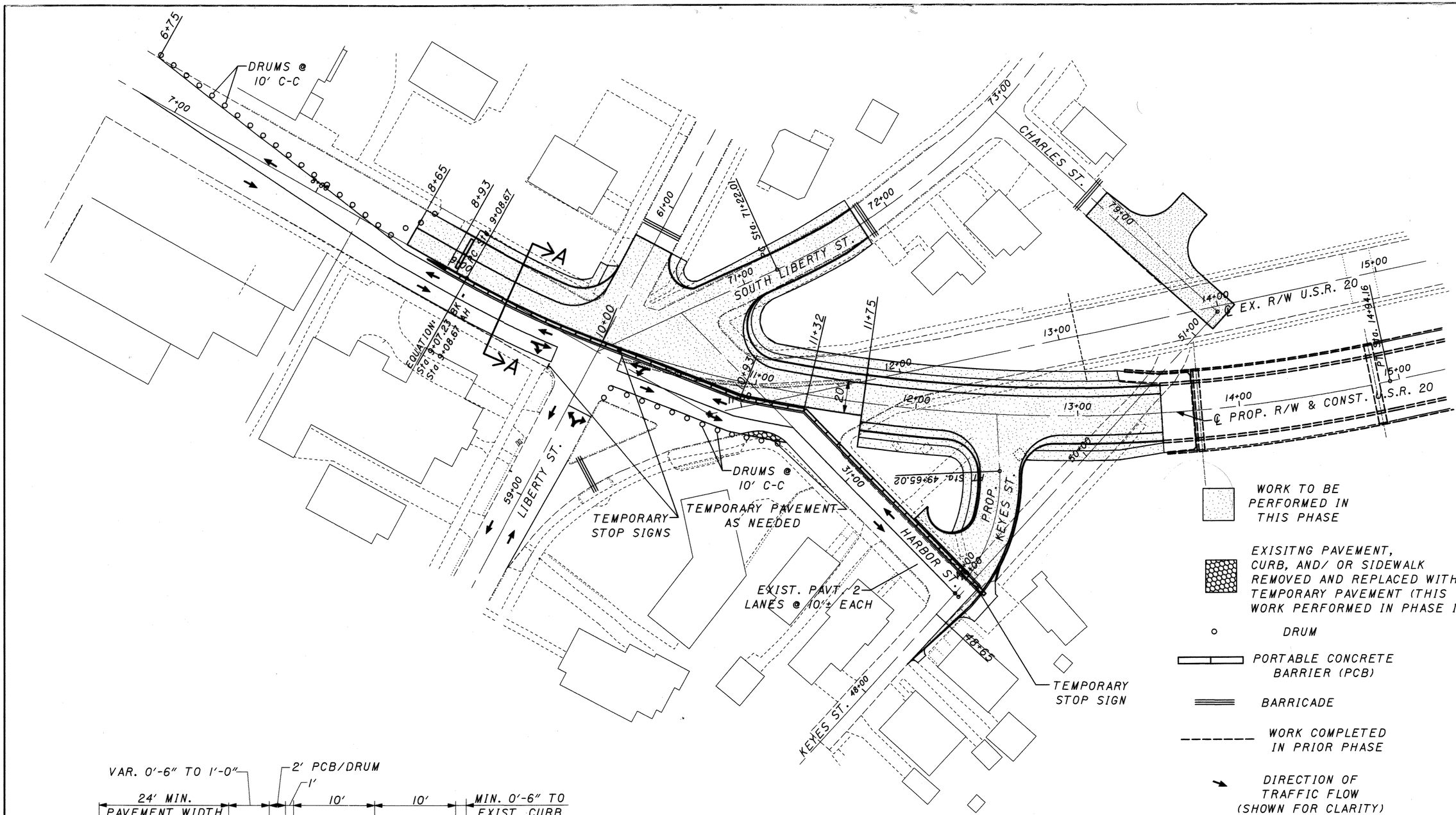

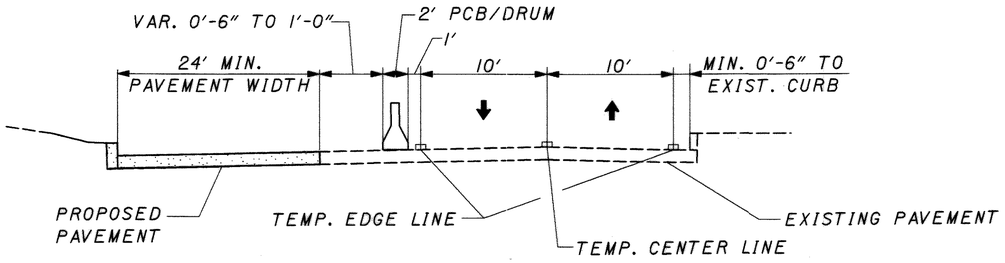

SECTION A-A

PHASE II

U.S.R. 20, LIBERTY ST., AND SOUTH LIBERTY
SOUTHBOUND TRAFFIC DETOURED

HORIZONTAL SCALE IN FEET
0 15 30 60

CALCULATED SMG
CHECKED SAC

MAINTENANCE OF TRAFFIC
PHASE II

ATB-20-26.19

22
162

18520mpa.dgn 1 of 2

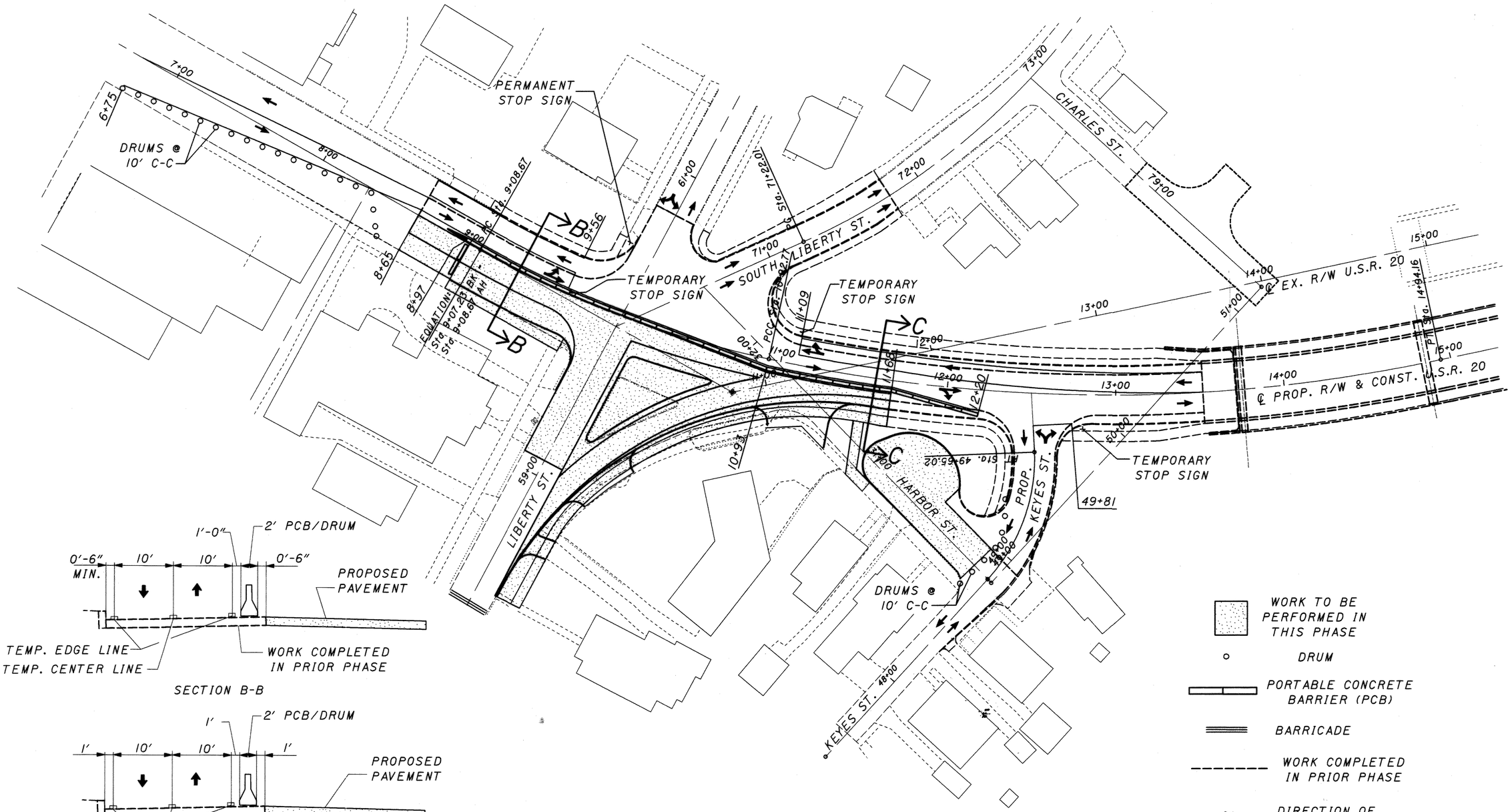

PHASE III

LIBERTY ST. NORTHBOUND TRAFFIC DETOURED

0 15 30 60
HORIZONTAL SCALE IN FEET

CALCULATED SMG
CHECKED SAC

MAINTENANCE OF TRAFFIC
PHASE III

ATB-20-26.19

23
162

18520mpa.dgn 2 of 2

SHEET NUMBER										ITEM	ITEM EXT.	GRAND TOTAL	UNIT	DESCRIPTION	SEE SHEET NO.
15	16A	28	30	31	67	71	79	97	142					* Misc.:	
														ROADWAY	
	LUMP									201	11000	LUMP		CLEARING AND GRUBBING	
					LUMP					202	11200	LUMP		PORTIONS OF STRUCTURE REMOVED	
				4527						202	23000	4527	SQ. YD.	PAVEMENT REMOVED	
				11398						202	30000	11398	SQ. FT.	WALK REMOVED	
				38						202	30600	38	SQ. YD.	CONCRETE MEDIAN REMOVED	
				2046						202	32000	2046	LIN. FT.	CURB REMOVED	
		777								202	35100	777	LIN. FT.	PIPE REMOVED, 24" AND UNDER	
		67								202	38000	67	LIN. FT.	GUARDRAIL REMOVED	
		1								202	42206	1	EACH	ANCHOR ASSEMBLY REMOVED	
		1								202	47000	1	EACH	BRIDGE TERMINAL ASSEMBLY REMOVED	
		4								202	58000	4	EACH	MANHOLE REMOVED	
		6								202	58100	6	EACH	CATCH BASIN REMOVED	
1										202	66500	1	EACH	UNDERGROUND STORAGE TANK REMOVED	
1										202	67000	1	EACH	REGULATED UNDERGROUND STORAGE TANK REMOVED	
						14	153			202	75000	167	LIN. FT.	FENCE REMOVED	
								12		202	75401	12	EACH	LIGHT POLE REMOVED, AS PER PLAN	96A
								12		202	75507	12	EACH	LUMINAIRE REMOVED, AS PER PLAN	96A
								2		202	75800	2	EACH	DISCONNECT EXISTING CIRCUIT	
		3								202	98100	3	EACH	REMOVAL MISC.: BILLBOARD	
						3				202	98100	3	EACH	REMOVAL MISC.: PLANTER	
							1			202	98100	1	EACH	REMOVAL MISC.: SHED	
				4415						203	12000	4415	CU. YD.	EXCAVATION NOT INCLUDING EMBANKMENT CONSTRUCTION	
	545									203	13100	545	CU. YD.	EXCAVATION OF UNSUITABLE MATERIAL	
				3156						203	20000	3156	CU. YD.	EMBANKMENT	
	545									203	21000	545	CU. YD.	EMBANKMENT USING GRANULAR MATERIAL	
	3									203	45000	3	HOUR	PROOF ROLLING	
			5485							203	50000	5485	SQ. YD.	SUBGRADE COMPACTION	
									10	604	38500	10	EACH	MONUMENT ASSEMBLY	
							25			606	13000	25	LIN. FT.	GUARDRAIL, TYPE 5	
							2			606	20000	2	EACH	FLARED END SECTION	
			11144							608	10000	11144	SQ. FT.	4" CONCRETE WALK	
			600							608	10001	600	SQ. FT.	4" CONCRETE WALK, AS PER PLAN	136
		5								608	49001	5	EACH	CURB RAMP, AS PER PLAN	16C-E
100										613	41200	100	CU. YD.	LOW STRENGTH MORTAR BACKFILL	
	1153									SPECIAL	69012010	1153	SQ. YD.	GEOTEXTILE FABRIC	15A,16
250										SPECIAL	69065010	250	TON	WORK INVOLVING SOLID WASTE	15
500										SPECIAL	69065020	500	GAL.	WORK INVOLVING WATER	15
500										SPECIAL	69065024	500	GAL.	WORK INVOLVING REGULATED WATER	15
13										SPECIAL	69098000	13	EACH	*MONITORING WELL ABANDONMENT	15
75										SPECIAL	69098100	75	LIN. FT.	MISC.: WORK INVOLVING ASBESTOS CONTAINING MATERIALS AND CONCRETE ENCASEMENT	15
	2310									SPECIAL	80410000	2310	SQ. YD.	CEMENT STABILIZED SUBGRADE	15A,16
	11.2									SPECIAL	80410200	11.2	TON	CEMENT	15A,16
	1.2									SPECIAL	80411000	1.2	HOUR	TEST ROLLING	15A,16
	LUMP									SPECIAL	80414000	LUMP		CONTRACTOR DESIGNED CEMENT SOIL	15A,16

CALCULATED CMK
CHECKED SAC

GENERAL SUMMARY

ATB-20-26.19

I8520GGA.dgn

SHEET NUMBER										ITEM	ITEM EXT.	GRAND TOTAL	UNIT	DESCRIPTION	SEE SHEET NO.
			16A		31	32	33		79						
														EROSION CONTROL	
			27							601	32200	27	CU.YD.	ROCK CHANNEL PROTECTION, TYPE C WITH FILTER	
			243			74	40			601	34200	357	CU. YD.	ROCK CHANNEL PROTECTION, TYPE C WITHOUT FILTER	
									75	670	40000	75	SQ.YD.	DITCH EROSION PROTECTION	
			2							870	00100	2	EACH	SOIL ANALYSIS TEST	
			456							870	00300	456	CU. YD.	TOPSOIL	
					4104					870	10000	4104	SQ.YD.	SEEDING AND MULCHING	
			205							870	14000	205	SQ. YD.	REPAIR SEEDING AND MULCHING	
			205							870	15000	205	SQ. YD.	INTER-SEEDING	
			0.87							870	20000	0.87	TON	COMMERCIAL FERTILIZER	
			1.70							870	30000	1.7	TON	AGRICULTURAL LIME	
			33							870	35000	33	M. GAL	WATER	
			9							870	40000	9	M. SQ. FT.	MOWING	
			4104							877	10000	4104	SQ. YD.	TEMPORARY SEEDING AND MULCHING	
			1148			1410	885			877	30100	3443	LIN. FT.	TEMPORARY PERIMETER FILTER FABRIC FENCE	
			278			350	205			877	30300	833	LIN. FT.	TEMPORARY INLET PROTECTION FILTER FABRIC FENCE	
			50			50	5			877	40000	105	LIN. FT.	TEMPORARY SLOPE DRAINS	
			134							877	50000	134	CU. YD.	TEMPORARY SEDIMENT BASINS AND DAMS	
			15			126	25			877	55000	166	CU. YD.	TEMPORARY DIKES	
			19							877	55500	19	SQ. YD.	TEMPORARY DITCH PROTECTION	
			34							877	60000	34	CU. YD.	SEDIMENT REMOVAL	

CALCULATED CMK
CHECKED SAC

GENERAL SUMMARY

ATB-20-26.19

24A
162

I8520GSA.dgn

SHEET NUMBER													ITEM	ITEM EXT.	GRAND TOTAL	UNIT	DESCRIPTION	SEE SHEET NO.
16A	16B	18	28	30	61	67	71	79	85	87	88	97						
																	DRAINAGE	
			0.43										602	20000	0.43	CU. YD.	CONCRETE MASONRY	
	100												603	00100	100	LIN. FT.	4" CONDUIT, TYPE B	
	100												603	00200	100	LIN. FT.	4" CONDUIT, TYPE C	
												80	603	00400	80	LIN. FT.	4" CONDUIT, TYPE E	
	100												603	00900	100	LIN. FT.	6" CONDUIT, TYPE B	
	100												603	01100	100	LIN. FT.	6" CONDUIT, TYPE C	
											50		603	01800	50	LIN. FT.	8" CONDUIT, TYPE B	
											196		603	02000	196	LIN. FT.	8" CONDUIT, TYPE C	
			366					107					603	04400	473	LIN. FT.	12" CONDUIT,TYPE B	
			271										603	04600	271	LIN. FT.	12" CONDUIT, TYPE C	
			88										603	05900	88	LIN. FT.	15" CONDUIT, TYPE B	
						10							603	07400	10	LIN. FT.	18" CONDUIT, TYPE B	
			10										603	07600	10	LIN. FT.	18" CONDUIT, TYPE C	
			79										603	08900	79	LIN. FT.	21" CONDUIT, TYPE B	
			540										603	10400	540	LIN. FT.	24" CONDUIT, TYPE B	
			112										603	10600	112	LIN. FT.	24" CONDUIT, TYPE C	
			9										604	00400	9	EACH	CATCH BASIN, NO. 3	
			7										604	00800	7	EACH	CATCH BASIN, NO. 3A	
			1										604	02000	1	EACH	CATCH BASIN, NO. 6	
			1					1					604	04500	2	EACH	CATCH BASIN NO. 2-2B	
			2										604	10100	2	EACH	INLET, SIDE DITCH	
			4			1		1			4		604	31500	10	EACH	MANHOLE, NO. 3	
			1		1		1						604	34500	3	EACH	MANHOLE ADJUSTED TO GRADE	
										1939			605	05100	1939	LIN. FT.	4" SHALLOW PIPE UNDERDRAIN, 707.31	
										104			605	05150	104	LIN. FT.	4" DEEP PIPE UNDERDRAIN, 707.31	
										55			605	05200	55	LIN. FT.	4" UNCLASSIFIED PIPE UNDERDRAIN, 707.31	
								102					605	13402	102	LIN. FT.	6" UNCLASSIFIED PIPE UNDERDRAIN FOR SPRINGS	
								102					605	32200	102	LIN. FT.	AGGREGATE DRAIN FOR SPRINGS	
																	PAVEMENT	
				461									254	01000	461	SQ. YD.	PAVEMENT PLANING, BITUMINOUS	
	4	589		1303									301	46000	1896	CU. YD.	BITUMINOUS AGGREGATE BASE, PG 64-22	
		393		1015					62				304	20000	1470	CU. YD.	AGGREGATE BASE	
		177		35									407	10000	212	GAL.	TACK COAT	
				238					12				407	14000	250	GAL.	TACK COAT FOR INTERMEDIATE COURSE	
693		942											408	10000	1635	GAL.	BITUMINOUS PRIME COAT	
									14				448	46024	14	CU. YD.	ASPHALT CONCRETE INTERMEDIATE COURSE, TYPE 2, PG 64-22 (DRIVEWAYS)	
				289									448	46050	289	CU. YD.	ASPHALT CONCRETE INTERMEDIATE COURSE, TYPE 2, PG 64-22	
	1	131		206									448	47020	338	CU. YD.	ASPHALT CONCRETE SURFACE COURSE, TYPE 1, PG 64-22	
									10				448	48020	10	CU. YD.	ASPHALT CONCRETE SURFACE COURSE, TYPE 1, PG 64-22 (DRIVEWAY)	
									27				452	10000	27	SQ. YD.	6" PLAIN CONCRETE PAVEMENT	
									281				452	12000	281	SQ. YD.	8" PLAIN CONCRETE PAVEMENT	
				211									611	25001	211	SQ. YD.	REINFORCED CONCRETE APPROACH SLAB (T-15"), AS PER PLAN	136
				2423					120				830	26000	2543	LIN. FT.	CURB, TYPE 6	

CALCULATED CMK
CHECKED SAC

GENERAL SUMMARY

ATB-20-26.19

185200GB.dgn

SHEET NUMBER											ITEM	ITEM EXT.	GRAND TOTAL	UNIT	DESCRIPTION	SEE SHEET NO.
			15A		92	93	94		97							
															WATER WORKS	
			30								638	00500	30	LIN. FT.	4" WATER MAIN POLYVINYL CHLORIDE PIPE AND FITTINGS, AWWA C900, CLASS 150	
			56								638	01100	56	LIN. FT.	6" WATER MAIN POLYVINYL CHLORIDE PIPE AND FITTINGS, AWWA C900, CLASS 150	
															LIGHTING	
									36		625	00500	36	EACH	CONNECTOR KIT, TYPE II	
									4		625	01500	4	EACH	CABLE SPLICING KIT	
									18		625	10480	18	EACH	LIGHT POLE, DECORATIVE	
									72		625	10614	72	EACH	LIGHT POLE ANCHOR BOLTS ON STRUCTURE	
									4399		625	23200	4399	LIN.FT.	NO. 4 AWG. 5000 VOLT DISTRIBUTION CABLE	
									2052		625	23400	2052	LIN. FT.	NO. 10 AWG. POLE AND BRACKET CABLE	
									4102		625	25402	4102	LIN.FT.	CONDUIT, 2", 713.07	
									18		625	27551	18	EACH	LUMINAIRE, DECORATIVE, AS PER PLAN	96
									24		625	29920	24	EACH	STRUCTURE JUNCTION BOX	
									4		625	30700	4	EACH	PULL BOX, 713.08, 18"	
									1		625	33000	1	EACH	STRUCTURE GROUNDING SYSTEM	
									1		625	34001	1	EACH	POWER SERVICE, AS PER PLAN	96
									150		SPECIAL	62536000	150	LIN.FT.	SPECIAL- PLASTIC CAUTION TAPE	96
									LUMP		SPECIAL	62540000	LUMP		MAINTAIN EXISTING LIGHTING	96A
															TRAFFIC CONTROL	
						134	235				630	03100	369	LIN. FT.	GROUND MOUNTED SUPPORT, NO. 3 POST	
						3					630	79500	3	EACH	SIGN SUPPORT ASSEMBLY, POLE MOUNTED	
						97.69	97.75				630	80102	195.44	SQ. FT.	SIGN, FLAT SHEET, TYPE G	
						16	9				630	85000	25	EACH	REMOVAL OF GROUND MOUNTED SIGN AND STORAGE	
						11	7				630	86002	18	EACH	REMOVAL OF GROUND MOUNTED POST SUPPORT AND DISPOSAL	
						3					630	87510	3	EACH	REMOVAL OF POLE MOUNTED SIGN AND STORAGE	
					0.98						642	00101	0.98	MILE	EDGE LINE, TYPE I, AS PER PLAN	89
					0.36						642	00301	0.36	MILE	CENTER LINE, TYPE I, AS PER PLAN	89
					40						642	00490	40	LIN. FT.	STOP LINE	
					189						642	00790	189	LIN. FT.	CURB MARKING	

CALCULATED CMK
CHECKED SAC

GENERAL SUMMARY

ATB-20-26.19

18520GGC.dgn

SHEET NUMBER									ITEM	ITEM EXT.	GRAND TOTAL	UNIT	DESCRIPTION	SEE SHEET NO.
					17	18	31							
													BUILDING DEMOLITION	
							1		202	56100	1	EACH	BUILDING DEMOLISHED, PARCEL 13-WD, 2 STORY FRAME HOUSE,#144	
							1		202	56100	1	EACH	BUILDING DEMOLISHED, PARCEL **16-SH**, 1 STORY FRAME GARAGE	
							1		202	56100	1	EACH	BUILDING DEMOLISHED, PARCEL 23-WD, 2 STORY FRAME HOUSE, #185	
							1		202	56100	1	EACH	BUILDING DEMOLISHED, PARCEL 24-WD, 1 1/2 STORY FRAME HOUSE, #189	
							1		202	56100	1	EACH	BUILDING DEMOLISHED, PARCEL 29-SH, 1 STORY COMMERCIAL BRICK BUILDING, #195	
							1		202	56100	1	EACH	BUILDING DEMOLISHED, PARCEL 29-SH, 1 STORY COMMERCIAL BRICK BUILDING, #201	
													STRUCTURES	
													FOR STRUCTURE QUANTITIES SEE SHEET 103, **104**	
													MAINTENANCE OF TRAFFIC	
					120				410	12000	120	CU. YD.	TRAFFIC COMPACTED SURFACE, TYPE A OR B	
					2				614	12346	2	EACH	TEMPORARY IMPACT ATTENUATOR, QUADGUARD CZ, (UNIDIRECTIONAL)	
					8				614	12460	8	EACH	WORK ZONE MARKING SIGN	
					100				614	13000	100	CU. YD.	BITUMINOUS CONCRETE FOR MAINTAINING TRAFFIC	
						47			614	13300	47	EACH	BARRIER REFLECTOR, TYPE B	
						47			614	13350	47	EACH	OBJECT MARKER	
					0.20				614	21000	0.2	MILE	TEMPORARY CENTER LINE, CLASS I	
					0.26				614	22000	0.26	MILE	TEMPORARY EDGE LINE, CLASS I	
					53				614	26000	53	LIN. FT.	TEMPORARY STOP LINE, CLASS I	
					27				615	25000	27	SQ. YD.	TEMPORARY PAVEMENT, CLASS B	
					50	54			616	10000	104	M. GAL.	WATER	
					5	2			616	20000	7	TON	CALCIUM CHLORIDE	
					760				622	40020	760	LIN. FT.	PORTABLE CONCRETE BARRIER, 32"	
									614	11001	LUMP		MAINTAINING TRAFFIC, AS PER PLAN	17
									623	10000	LUMP		CONSTRUCTION LAYOUT STAKES	
									624	10000	LUMP		MOBILIZATION	
									806	16020	24	MONTH	FIELD OFFICE, TYPE C	

CALCULATED CMK
CHECKED SAC

GENERAL SUMMARY

ATB-20-26.19

18520GGD.dgn

DRAINAGE

REF NO.	SHEET NO.	STATION FROM	STATION TO	SIDE	602 CONCRETE MASONRY		603 12" CONDUIT, TYPE B	603 12" CONDUIT, TYPE C	603 15" CONDUIT, TYPE B	603 18" CONDUIT, TYPE C	603 21" CONDUIT, TYPE B	603 24" CONDUIT, TYPE B	603 24" CONDUIT, TYPE C		604 CATCH BASIN, NO. 2-2B	604 CATCH BASIN, NO. 3	604 CATCH BASIN, NO. 3A	604 INLET, SIDE DITCH	604 MANHOLE, NO. 3	604 MANHOLE, ADJUSTED TO GRADE	604 CATCH BASIN, NO. 6
					CU YD		LIN FT	LIN FT	LIN FT	LIN FT	LIN FT	LIN FT	LIN FT		EACH	EACH	EACH	EACH	EACH	EACH	EACH
D-1	35,61,67	9+74	9+67	LT,RT			49										1				
D-1a	35,61	9+67	59+65 (LIBERTY)	RT,LT				24									1				
D-2	35,61	59+65 (LIBERTY)	59+82.60 (LIBERTY)	LT,RT			28									1					
D-3	35,61,67	59+82.60 (LIBERTY)	71+00 (S. LIBERTY)	RT					8			122							1		
D-4	35	59+82.60 (LIBERTY)	10+56.50	RT							51						1				
D-5	35	10+56.50	60+10 (TURN-LANE)	RT							28					1					
D-6	35	58+45 (TURN-LANE)	59+30 (TURN-LANE)	RT			84									1					
D-7	35	59+30 (TURN-LANE)	60+10 (TURN-LANE)	RT			79														1
D-8	35	60+10 (TURN-LANE)	60+92 (TURN-LANE)	RT					80								1				
D-9	35	11+50	60+92 (TURN-LANE)	LT,RT			34									1					
D-9a	35	11+50	11+60	LT				19							1						
D-10	35,76	60+92 (TURN-LANE)	31+04.92 (HARBOR)	RT				22								1					
D-11	35	60+92 (TURN-LANE)	49+77 (KEYES)	RT				83									1				
D-12	35	49+77 (KEYES)	49+74.77 (KEYES)	LT,RT			35										1				
D-13	35	49+74.77 (KEYES)	12+90	RT				20									1				
D-14	37	24+31	24+34	RT			17									1					
D-15	37	24+34		LT								17							1		
D-16	37,38	24+34	24+82.70	LT									87			1					
D-17	38	24+55.50	24+82.70	LT	0.43					10			25						1		
D-18	38	25+11.60	26+00	LT				84										1			
D-19	37,38	24+34	26+65	℄								231							1		
D-20	38	26+65		LT			20									1					
D-20a	38	26+65		LT				19										1			
D-21	38	26+65		RT			20									1					
D-22	38	26+65	28+35.80	RT								170									
MH-1	35	60+59 (TURN LANE)		LT																1	
TOTALS CARRIED TO GENERAL SUMMARY					0.43		366	271	88	10	79	540	112		1	9	7	2	4	1	1

ROADWAY

REF NO.	SHEET NO.	STATION FROM	STATION TO	SIDE	608 CURB RAMP, AS PER PLAN	
					EACH	
CR-1	35	60+68 (LIBERTY)		RT	1	
CR-2	35	70+99 (S. LIBERTY)		LT	1	
CR-3	35	71+03 (S. LIBERTY)		RT	1	
CR-4	35	49+63 (KEYES)		LT	1	
CR-5	35	49+63 (KEYES)		RT	1	
TOTALS CARRIED TO GENERAL SUMMARY					5	

REMOVAL

REF NO.	SHEET NO.	STATION FROM	STATION TO	SIDE	202 GUARDRAIL REMOVED	202 ANCHOR ASSEMBLY REMOVED	202 BRIDGE TERMINAL ASSEMBLY REMOVED	202 PIPE REMOVED 24" AND UNDER	202 CATCH BASIN REMOVED	202 MANHOLE REMOVED	202 REMOVAL MISC.: BILLBOARD
					LIN FT	EACH	EACH	LIN FT	EACH	EACH	EACH
R-1	35,61,67	9+73.63	10+06.96	LT,RT				57	1		
R-2		(NOT USED)									
R-3	35,61	58+90.85 (LIBERTY)	59+26 (LIBERTY)	RT				38			
R-4	35	10+69.35	10+81.27	LT				26	1		
R-5	35	10+81.27	10+99.15	LT,RT				52	1		
R-6	35	10+99.15	11+42.37	RT				48	1		
R-7	35	10+99.15	11+46.38	RT				51	1		
R-8	37,38	24+08.23	24+55.51	LT				43			
R-9	38	25+11.60	25+18.98	LT				24		1	
R-10	38	25+18.98	26+86.21	LT				170		1	
R-11	38	26+86.21	26+99.65	LT				29	1		
R-12	38	26+79.25	26+86.21	LT,RT				32			
R-13	38	26+86.21	28+35.77	LT,RT				150			
R-14	35	11+66.00	12+25.86	RT	67	1	1				
R-15	35	12+90		LT							1
R-16	37	24+00		RT							2
R-17	35,61	59+26 (LIBERTY)	59+65.5 (LIBERTY)	RT				39		1	
R-18	35,61	59+65.5 (LIBERTY)	59+82.70 (LIBERTY)	RT				18		1	
TOTALS CARRIED TO GENERAL SUMMARY					67	1	1	777	6	4	3

CALCULATED CMK
CHECKED REG

SUBSUMMARY-U.S.R. 20

ATB-20-26.19

185206SA.dgn

PAVEMENT CALCULATIONS

CALCULATED SMG | CHECKED CMK

STATION TO STATION		SIDE	LENGTH L	LENGTH OF ITEM 304-AGGREGATE BASE STEP S	AVERAGE WIDTH W	SURFACE AREA A A=LxW	PLANIMETERED AREAS	203 (7) SUBGRADE COMPACTION A/9 S.Y.	254 (5) PAVEMENT PLANING, BITUMINOUS A/9 S.Y.	301 (15) BITUMINOUS AGGREGATE BASE PG 64-22, 7" 7A/12x27 C.Y.	301 (4) BITUMINOUS AGGREGATE BASE PG 64-22, 9" 9A/12x27 C.Y.	304 (6) AGGREGATE BASE, 6" 6 A+(1.33xS)/12x27 C.Y.	407 (17) TACK COAT (0.075 GAL./S.Y.) Ax0.075/9 GAL.	407 (2) TACK COAT FOR INTERMEDIATE COURSE, (0.04 GAL./S.Y.) Ax0.040/9 GAL.	448 (1) ASPHALT CONCRETE SURFACE COURSE, TYPE I, PG 64-22, 1.25" Ax1.25/12x27 C.Y.	448 (3) ASPHALT CONCRETE INTERMEDIATE COURSE, TYPE 2, PG 64-22, 1.75" Ax1.75/12x27 C.Y.	608 (9) 4" CONCRETE WALK CADD AREA S.F.	608 (16) 4" CONCRETE WALK, AS PER PLAN CADD AREA S.F.	611 (10) REINFORCED CONC. APPROACH SLAB (T=15"), AS PER PLAN A/9 S.Y.	830 (8) CURB, TYPE 6 L.F.
U.S. 20																				
8+65.00	9+00.00	BOTH	35.00	0.00	48.00	1680.00			186.67				14.00	7.47	6.48	9.07				
9+00.00	10+01.61	BOTH	100.17	140.00	48.00	4808.16		534.24			133.56	92.49		21.37	18.55	25.97	901			140
(INT.:SLIB/LIB/US20)		N.A.		152.01	N.A.		2517.81	279.76			69.94	50.37		11.19	9.71	13.60	112			152
10+01.61	11+63.00	BOTH	161.39	52.39	29.00	4680.31		520.03			130.01	87.96		20.80	18.06	25.28	312			52
11+63.00	12+17.67	BOTH	54.67	109.34	34.00	1858.78		206.53			51.63	37.11		8.26	7.17	10.04	658			110
(ISLAND)		N.A.		191.00	N.A.		1152.00	128.00			32.00	26.04		5.12	4.44	6.22				191
(INT.:US 20/KEYES)		N.A.		199.00	N.A.		2475.00	275.00			68.75	50.73		11.00	9.55	13.37	656			199
12+89.13	13+46.75	BOTH	57.62	115.24	34.00	1959.08		217.68			54.42	39.12		8.71	7.56	10.58	694			116
(BRIDGE)																				
24+28.25	25+30.00	BOTH	101.75	203.50	34.00	3459.50		384.39			96.10	69.08		15.38	13.35	18.69	1224			204
25+30.00	28+10.00	BOTH	280.00	560.00	39.35	11018.00		1224.22			306.06	217.83		48.97	42.51	59.51	3318			560
LIBERTY ST.																				
59+10.00	59+50.00	BOTH	40.00	0.00	25.40	1016.00			112.89				8.47	4.52	3.92	5.49				
59+50.00	59+76.94	BOTH	26.94	16.44	25.50	686.97		76.33			19.08	13.13		3.05	2.65	3.71	121			16.44
60+31.35	60+50.00	BOTH	18.65	0.00	25.00	466.25		51.81			12.95	8.63		2.07	1.80	2.52	54			
60+50.00	60+75.00	BOTH	25.00	0.00	24.80	620.00			68.89				5.17	2.76	2.39	3.35				
TURN-LANE																				
(INT.:LIB/TURN LANE)		N.A.		80.00	N.A.		435.00	48.33			12.08	10.03		1.93	1.68	2.35	441			80
59+05.00	60+25.00	N.A.	120.00	120.00	15.05	1806.00		200.67			50.17	36.40		8.03	6.97	9.75	663			120
(TURN LANE/US20)		N.A.		75.00	N.A.		652.00	72.44			18.11	13.92		2.90	2.52	3.52	679			75
KEYES ST.																				
(RESURFACING)		N.A.		0	N.A.		835.00		92.78				6.96	3.71	3.22	4.51				
48+30.00	48+82.22	RT	52.22	52.22	2.40	125.33		13.93		2.71		3.61		0.56	0.48	0.68				
48+82.22	49+87.94	BOTH	105.72	94	26.00	2748.72		305.41		59.39		53.22		12.22	10.60	14.85	189			94
SOUTH LIBERTY ST.																				
70+72.56	71+65.00	BOTH	92.44	147	21.00	1941.24		215.69		41.94		39.57		8.63	7.49	10.49	674			147
71+65.00	71+80.00	BOTH	15.00	30.00	20.76	311.40		34.60		6.73		6.51		1.38	1.20	1.68	162			30
HARBOR ST. 30+15.33	31+08.31	N.A.		137	N.A.		3393.00	377.00		73.31		66.21		15.08	13.09	18.33	67			137
CHARLES ST. 78+10.00	79+15.00	N.A.		272.00	N.A.		2866.00	318.44		63.88*		57.27**		12.74	11.06	15.48				
APPROACH SLABS																				
13+46.75	13+71.75	BOTH	25.00	50.00	38.00	950.00						18.06#						300	105.56	
24+03.25	24+28.25	BOTH	25.00	50.00	38.00	950.00						18.06#						300	105.56	
STATION EQUATION: STA. 9+07.23 (BK)																				
= STA. 9+08.67 (AH) U.S. 20																				
TOTALS CARRIED TO GENERAL SUMMARY								5485	461	1303		1015	35	238	206	289	11144	600	211	2423

\# EQUATION = $6\frac{A+(0.50xS)}{12x27}$

* EQUATION = $7\frac{A+(0.33xS)}{12x27}$

** EQUATION = $6\frac{A+(0.83xS)}{12x27}$

ATB-20-26.19

18520gca.dgn

ITEM 202 WALK REMOVED

US 20
LEFT SIDE

STA. 9+00 TO STA. 9+89.65 = 432.66 SQ. FT.
STA. 10+70 TO STA. 12+56.98 = 910.45 SQ. FT.
STA. 24+69.12 TO STA. 28+10 = 2021.33 SQ. FT.

RIGHT SIDE

STA. 9+00 TO STA. 9+75.71 = 463.58 SQ. FT.
STA. 11+59 TO STA. 12+78.19 = 643.78 SQ. FT.
STA. 24+62.54 TO STA. 29+09 = 2411.67 SQ. FT.

LIBERTY
LEFT SIDE

STA. 59+50 TO STA. 59+71 = 124.68 SQ. FT.
STA. 60+31 TO STA. 60+50 = 92.61 SQ. F.T

RIGHT SIDE

STA. 60+41 TO STA. 60+74 = 139.78 SQ. FT.

SOUTH LIBERTY
LEFT SIDE

STA. 70+44 TO STA. 71+80 = 681.13 SQ.FT.

RIGHT SIDE

STA. 70+75 TO STA. 71+80 = 509.57 SQ. FT.

TURN LANE
RIGHT SIDE

STA. 58+25 TO STA. 60+50 = 1091.99 SQ. FT.

HARBOR
LEFT SIDE

STA. 30+93 TO STA. 31+47 = 293.53 SQ. FT.

RIGHT SIDE

STA. 30+11 TO STA. 31+11 = 548.07 SQ. F.T.

KEYES
RIGHT SIDE

STA. 48+42 TO STA. 49+91 = 990.75 SQ. FT.
STA. 49+45 (TO HOUSE) = 42.75 SQ. FT.

TOTAL CARRIED TO GENERAL SUMMARY = 11398 SQ.FT.

ITEM 202 - CONCRETE MEDIAN REMOVED

US 20 STA. 10+16 RT. TO STA. 11+64 LT.

A= 334.34 SQ.FT. = 37.15 SQ.YD FROM CAD

TOTAL CARRIED TO GENERAL SUMMARY = 38 SQ. YD.

ITEM 202 - CURB REMOVED

US 20
LEFT SIDE

STA. 9+00 TO STA. 9+92 = 92.18 LIN. FT.
STA. 10+70 TO STA. 12+58 = 191.19 LIN. FT.
STA. 24+69 TO STA. 28+10 = 344.86 LIN. FT.

RIGHT SIDE

STA. 9+00 TO STA. 9+84 = 92.63 LIN. FT.
STA. 10+12 TO STA. 10+48 = 41.98 LIN. FT.
STA. 11+57 TO STA. 12+65 = 133.11 LIN. FT.
STA. 24+63 TO STA. 28+10 = 347.77 LIN. FT.

LIBERTY
LEFT SIDE

STA. 59+50 TO STA. 59+67 = 17.05 LIN. FT.
STA. 60+35 TO STA. 60+53 = 17.79 LIN. FT.

RIGHT SIDE

STA. 59+31 TO STA. 59+73 = 44.42 LIN. FT.
STA. 60+38 TO STA. 60+75 = 49.34 LIN. FT.

SOUTH LIBERTY
LEFT SIDE

STA. 70+45 TO STA. 71+80 = 133.64 LIN. FT.

RIGHT SIDE

STA. 70+75 TO STA. 71+80 = 110.58 LIN. FT.

TURN LANE
LEFT SIDE

STA. 59+27 TO STA. 59+80 = 56.23 LIN. FT.

RIGHT SIDE

STA. 58+25 TO STA. 60+59 = 233.00 LIN. FT.

HARBOR
LEFT SIDE

STA. 30+93 TO STA. 31+42 = 48.37 LIN. FT.

RIGHT SIDE

STA. 30+20 TO STA. 31+11 = 91.41 LIN. FT.

TOTAL CARRIED TO GENERAL SUMMARY = 2046 LIN. FT.

ITEM 203 - EXCAVATION NOT INCLUDING EMBANKMENT

(TOTALS FROM CROSS SECTIONS)

U.S. 20 = 3042 CU. YD.
TURN-LANE = 251 CU. YD.
LIBERTY ST. = 191 CU. YD.
S. LIBERTY ST. = 122 CU. YD.
KEYES ST. = 305 CU. YD.
HARBOR ST. = 207 CU. YD.
CHARLES ST. = 297 CU. YD.

TOTAL CARRIED TO GENERAL SUMMARY = 4415 CU. YD.

ITEM 202 - BUILDING DEMOLISHED

STA. 30+43.45 48.17' RT. (HARBOR ST.), PARCEL 13-WD, 2 STORY FRAME HOUSE, #144
STA. 30+60.18 86.41' RT. (HARBOR ST.), PARCEL 13-WD, 1 STORY FRAME GARAGE

STA. 49+55.58 97.94' RT. (KEYES ST.), PARCEL 23-WD, 2 STORY FRAME HOUSE #185

STA. 49+36.75 68.93' RT. (KEYES ST.), PARCEL 24-WD, 1½STORY FRAME HOUSE #189

STA. 25+01.73 50.32' RT. (U.S. 20), PARCEL 29-SH, 1 STORY COMM. BRICK BUILDING #195
STA. 26+12.77 34.31' RT. (U.S. 20), PARCEL 29-SH, 1 STORY COMM. BRICK BUILDING #201

ITEM 202- - PAVEMENT REMOVED

(AREAS PLANIMETERED FROM CADD)

US 20
STA. 9+00 TO STA. 12+99.21 PROP. (STA. 13+10.81 EX.)
A= 20,597.49 SQ. FT. = 2288.61 SQ. YD.

STA. 24+31.19 PROP. (STA. 24+25.11 EX.) TO STA. 28+10
A=15,025.37 SQ.FT. = 1,669.49 SQ. YD.

S. LIBERTY
STA. 70+79.80 TO STA. 71+80
A = 2,030.30 SQ. FT. = 225.59 SQ. YD.

LIBERTY
STA. 59+50 TO STA. 59+67.05
A = 564.02 SQ. FT = 62.67 SQ.YD.

STA. 60+38.76 TO STA. 60+50
A = 2,78.17 SQ. FT. = 30.91 SQ. YD.

TURN LANE
STA. 58+25 TO STA. 59+79.98
A = 1,735.90 SQ. FT. = 192.88 SQ. YD.

HARBOR - CONCRETE DRIVE
STA. 30+60 RT. HARBOR
A = 21.21 SQ. FT. + 494.27 SQ. FT. = 515.48 SQ. FT. = 57.28 SQ. YD.

TOTAL CARRIED TO GENERAL SUMMARY = 4527 SQ. YD.

ITEM 203 - EMBANKMENT

(TOTALS FROM CROSS SECTIONS)

U.S. 20 = 2765 CU. YD.
TURN-LANE = 12 CU. YD.
LIBERTY ST. = 5 CU. YD.
S. LIBERTY ST. = 7 CU. YD.
KEYES ST. = 197 CU. YD.
HARBOR ST. = 2 CU. YD.
CHARLES ST. = 168 CU. YD.

TOTAL CARRIED TO GENERAL SUMMARY = 3156 CU. YD.

ITEM 870 - SEEDING AND MULCHING

(TOTALS FROM CROSS SECTIONS)

U.S. 20 = 3030 SQ. YD.
TURN-LANE = 216 SQ. YD.
LIBERTY ST. = 92 SQ. YD.
S. LIBERTY ST. = 26 SQ. YD.
KEYES ST. = 291 SQ. YD.
HARBOR ST. = 83 SQ. YD.
CHARLES ST. = 366 SQ. YD.

TOTAL CARRIED TO GENERAL SUMMARY = 4104 SQ. YD.

CALCULATED SMG
CHECKED SAC

CALCULATIONS

ATB-20-26.19

18520CCB.dgn

LEGEND

- FILTER FABRIC FENCE
- TEMPORARY INLET PROTECTION FILTER FABRIC FENCE
- WETLAND AREA

PROJECT DESCRIPTION

IMPROVEMENT OF 0.39 MILE OF U.S.R. 20 BY REPLACEMENT OF THE EXISTING CONNEAUT VIADUCT OVER CONNEAUT CREEK WITH A NEW STRUCTURE ON AN IMPROVED HORIZONTAL ALIGNMENT, INCLUDING APPROACH CONSTRUCTION.

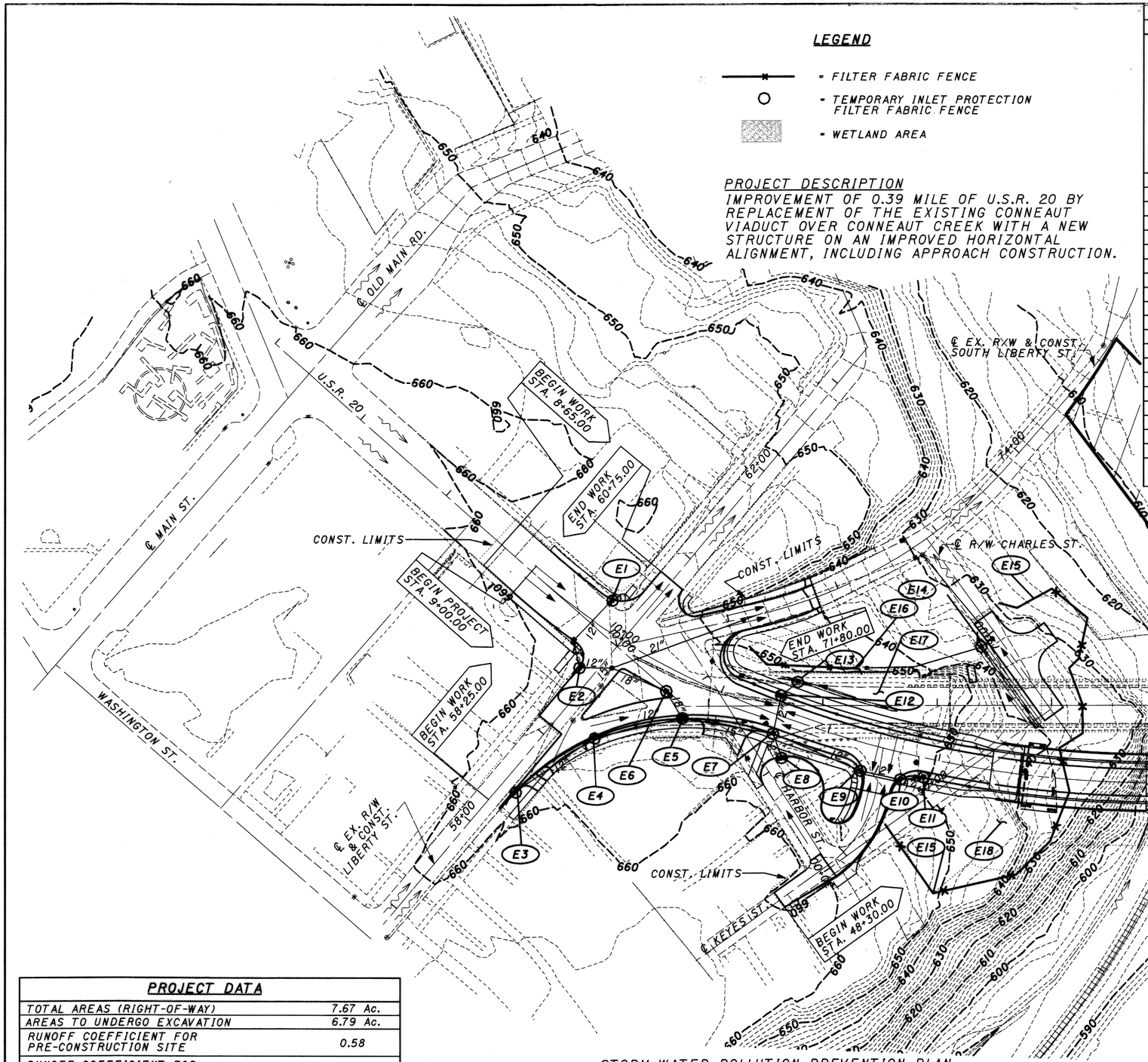

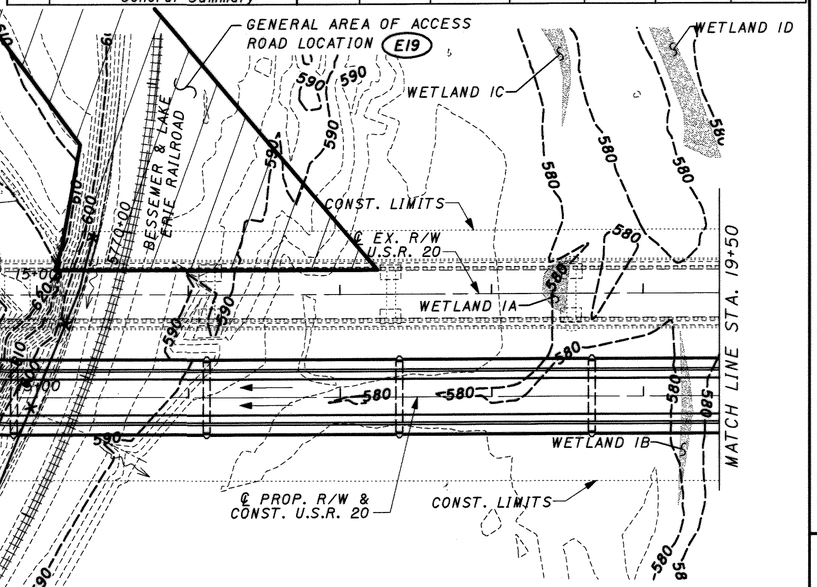

ESTIMATED QUANTITIES

REF NO.	Location	Side	601 ROCK CHANNEL PROTECTION, TYPE C, W/O FILTER (CU. YD.)	877 TEMPORARY PERIMETER FILTER FABRIC FENCE (LIN. FT.)	877 TEMPORARY DITCH CHECK FILTER FABRIC FENCE (LIN. FT.)	877 TEMPORARY INLET PROTECTION FILTER FABRIC FENCE (LIN. FT.)	877 TEMPORARY SLOPE DRAINS (LIN. FT.)	877 TEMPORARY DIKES (CU. YD.)
E1	9+74.00 (USR 20)	LT				25		
E2	59+64.6 (LIBERTY)	LT				25		
E3	58+45.14 (LIBERTY)	RT				25		
E4	59+30.03 (TURN LANE)	RT				25		
E5	60+10.02 (TURN LANE)	RT				25		
E6	10+56.54 (USR 20)	RT				25		
E7	11+55.00 (USR 20)	RT				25		
E8	11+68.97 (USR 20)	RT				25		
E9	49+77.00 (KEYES)	LT				25		
E10	49+74.77 (KEYES)	RT				25		
E11	12+90.00 (USR 20)	RT				25		
E12	11+50.00 (USR 20)	LT				25		
E13	11+60.00 (USR 20)	LT				25		
E14	78+95.00 (CHARLES)	LT				25		
E15	12+70± TO 13+20± (USR 20)	RT/LT	20	500				
E16	11+05± TO 12+15± (USR 20)	LT	4	110				
E17	12+00± TO 13+75± (USR 20)	LT	35				35	88
E18	13+00± TO 13+75± (USR 20)	RT	15				15	38
E19	ACCESS ROAD	RT/LT		800				
	Totals Carried to General Summary		74	1410		350	50	126

PROJECT DATA

TOTAL AREAS (RIGHT-OF-WAY)	7.67 Ac.
AREAS TO UNDERGO EXCAVATION	6.79 Ac.
RUNOFF COEFFICIENT FOR PRE-CONSTRUCTION SITE	0.58
RUNOFF COEFFICIENT FOR POST-CONSTRUCTION SITE	0.59
SOIL DATA	SEE SOIL PROFILE SHEETS
IMMEDIATE RECEIVING WATERS	CONNEAUT CREEK
SUBSEQUENT RECEIVING WATERS	LAKE ERIE
PROJECT LOCATION	USGS QUADRANT NO. N4152.5-W8030/7.5 CONNEAUT, OHIO-PA LATITUDE: N41°56'30" LONGITUDE: W80°33'06"

STORM WATER POLLUTION PREVENTION PLAN

THE CONDITIONS OF THE NPDES CONSTRUCTION STORM WATER GENERAL PERMIT (SEE PROPOSAL) SHALL BE MET DURING ALL STAGES OF CONSTRUCTION. THE LOCATION AND TIMING OF ALL EROSION AND SEDIMENT CONTROL ITEMS SHALL BE FIELD ADJUSTED TO PREVENT SIGNIFICANT IMPACTS ON RECEIVING WATERS. IMPLEMENTATION OF THIS STORM WATER POLLUTION PREVENTION PLAN SHALL CONTINUE THROUGHOUT THE DURATION OF THE PROJECT OR UNTIL SUCH TIME THAT THE UPSLOPE DISTURBED AREAS ARE STABILIZED.

STORM WATER POLLUTION PREVENTION PLAN (CONTINUED)

INSTALLATION OF SEDIMENT BASINS/DAMS, PERIMETER FILTER FABRIC FENCE, AND DITCH CHECKS SHALL BE CONCURRENT WITH CLEARING AND GRUBBING.

ALL REASONABLE ATTEMPTS SHOULD BE MADE TO MINIMIZE THE TOTAL AREA OF DISTURBED LAND.

AREAS TO REMAIN DORMANT FOR MORE THAN 45 DAYS SHALL BE IMMEDIATELY STABILIZED WITH CONSTRUCTION SEEDING AND MULCHING, EROSION CONTROL MATTING, OR OTHER APPROPRIATE EROSION CONTROL MEASURES. WATER COLUMN AND SEDIMENTATION IMPACTS SHALL BE KEPT TO A MINIMUM THROUGH THE USE OF BEST MANAGEMENT PRACTICES FOR SOIL EROSION AND SEDIMENTATION CONTROL.

ADDITIONAL QUANTITIES OF TEMPORARY SOIL EROSION AND SEDIMENT CONTROL ITEMS ARE GIVEN IN THE GENERAL NOTES.

HORIZONTAL SCALE IN FEET: 0, 25, 50, 100

CALCULATED CMK
CHECKED JMB

STORM WATER POLLUTION PREVENTION PLAN STA. 6+00 TO STA. 19+50

ATB-20-26.19

32
162

I8520DEA.dgn

LEGEND

- FILTER FABRIC FENCE
- TEMPORARY INLET PROTECTION FILTER FABRIC FENCE
- WETLAND AREA

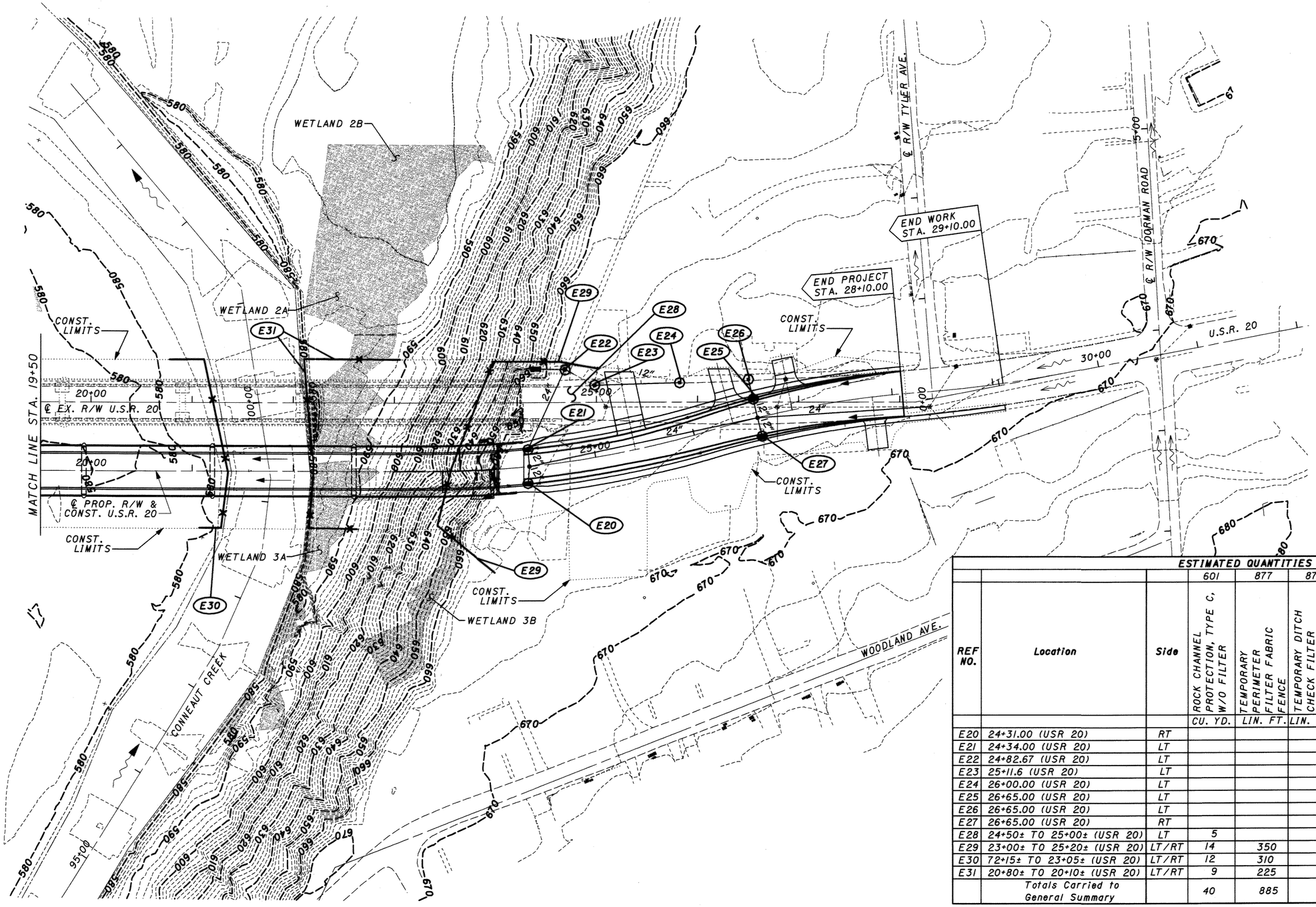

ESTIMATED QUANTITIES

REF NO.	Location	Side	601 ROCK CHANNEL PROTECTION, TYPE C, W/O FILTER	877 TEMPORARY PERIMETER FILTER FABRIC FENCE	877 TEMPORARY DITCH CHECK FILTER FABRIC FENCE	877 TEMPORARY INLET PROTECTION FILTER FABRIC FENCE	877 TEMPORARY SLOPE DRAINS	877 TEMPORARY DIKES
			CU. YD.	LIN. FT.	LIN. FT.	LIN. FT.	LIN. FT.	CU. YD.
E20	24+31.00 (USR 20)	RT				25		
E21	24+34.00 (USR 20)	LT				25		
E22	24+82.67 (USR 20)	LT				30		
E23	25+11.6 (USR 20)	LT				25		
E24	26+00.00 (USR 20)	LT				25		
E25	26+65.00 (USR 20)	LT				25		
E26	26+65.00 (USR 20)	LT				25		
E27	26+65.00 (USR 20)	RT				25		
E28	24+50± TO 25+00± (USR 20)	LT	5				5	25
E29	23+00± TO 25+20± (USR 20)	LT/RT	14	350				
E30	72+15± TO 23+05± (USR 20)	LT/RT	12	310				
E31	20+80± TO 20+10± (USR 20)	LT/RT	9	225				
	Totals Carried to General Summary		40	885		205	5	25

HORIZONTAL SCALE IN FEET
0 25 50 100

CALCULATED CMK
CHECKED JMB

STORM WATER POLLUTION PREVENTION PLAN
STA. 19+50 TO STA. 32+00

ATB-20-26.19

I8520DEB.dgn

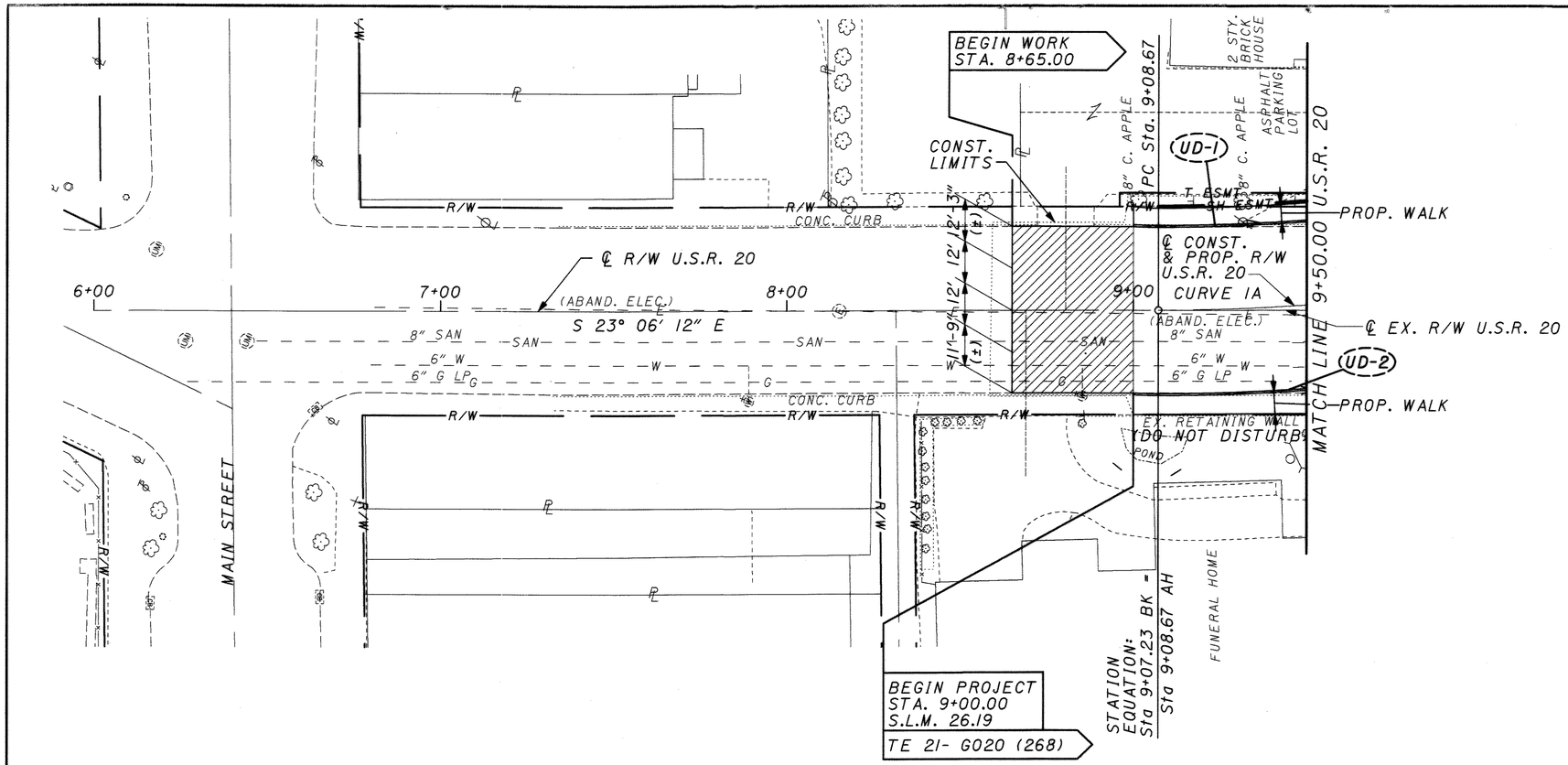

CURVE DATA -
CURVE IA
P.I. Sta = 10+01.44
Δ = 17° 29′ 00″ (LT)
Dc = 9° 29′ 48″
R = 603.32′
T = 92.77′
L = 184.10′
E = 7.09′
$e_{max.}$ = 0.023

PAVEMENT PLANING AND RESURFACING

FOR UNDERDRAIN QUANTITIES SEE SHEET 87.
FOR INTERSECTION DETAIL SEE SHEET 83.

BENCHMARK #1 ELEV. 662.57
TOP S.E. CORNER STONE CAP ON
BRICK PLANTER @ E. SIDE MARCY
FUNERAL HOME @ N.W. CORNER
LIBERTY ST. & U.S.R. 20 (HARBOR ST.),
STA. 59+52, 60.23′ LT.

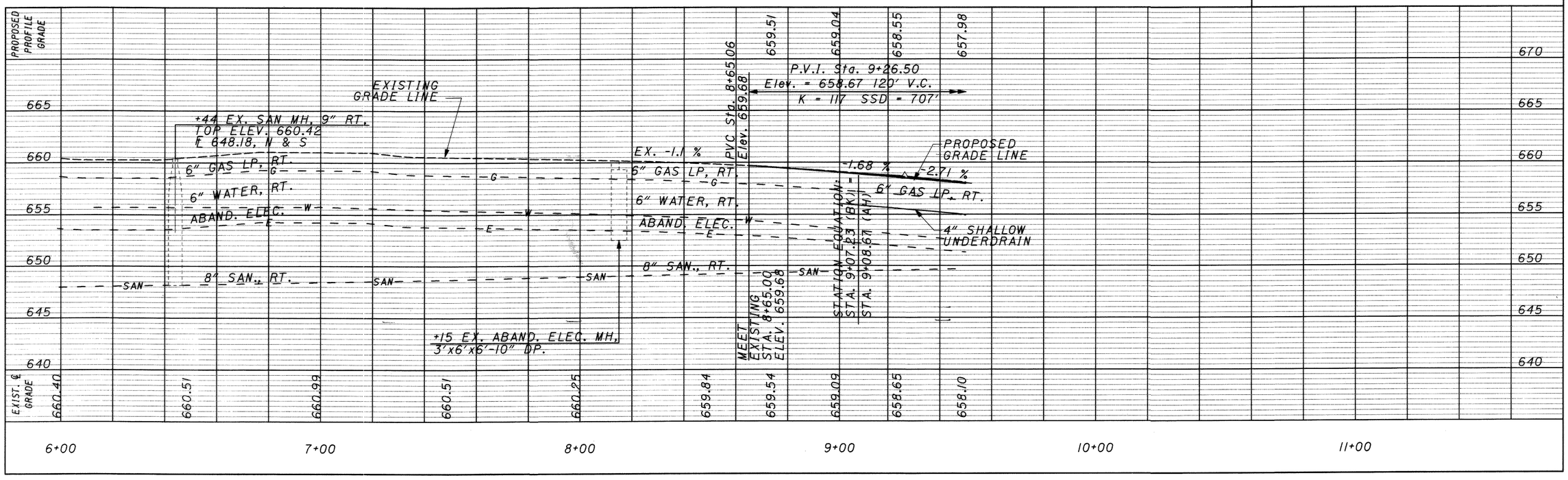

HORIZONTAL SCALE IN FEET
0 10 20 40
CALCULATED CMK
CHECKED SMG

PLAN AND PROFILE - U.S.R. 20
STA. 6+00 TO STA. 9+50

ATB-20-26.19

34
162

I8520GPA.dgn

STA. 10+01.61 ℄ CONST.
& PROP. R/W U.S.R. 20 =
STA. 60+07.15 ℄ CONST.
& R/W LIBERTY ST.

MATCH LINE 9+50 U.S.R. 20

MATCH LINE 14+50 U.S.R. 20

℄ R/W & CONST. SOUTH LIBERTY ST.
S 77° 06′ 59″ E 71+00

℄ R/W CHARLES ST.
S 10° 27′ 51″ E

℄ EX. R/W U.S.R. 20
S 64° 40′ 12″ E 13+00

℄ R/W KEYES ST.
N 79° 31′ 09″ E

CURVE IA
S 23° 06′ 12″ E
60+00

CURVE 1
61+00

℄ EX. R/W U.S.R. 20 TURN-LANE
60+00

℄ R/W HARBOR ST.
S 06° 44′ 48″ W
59+00

℄ R/W LIBERTY ST.
S 06° 44′ 48″ W
59+00

℄ CONST. KEYES ST.

STA. 12+50.00 ℄ CONST. U.S.R. 20 =
STA. 50+00.00 ℄ CONST. KEYES ST.

SEE SOUTH LIBERTY & CHARLES PLAN & PROFILE SHEET 67

SEE KEYES STREET PLAN & PROFILE SHEET 71

CONST. LIMITS

2 STY. FRAME RES.

2 STY. FRAME BLDG.

2 STY. FRAME BAR.

1½ STY. FRAME RES.

WOODS

WOOD DECK

CONC. PLANTER

CORB/WALL

ASPHALT PARKING LOT

BILLBOARD

84° 21′ TO LOCAL TANGENT.

(ABAND. ELEC.) DO NOT DISTURB

BEGIN WORK STA. 58+25.00

PC STA. 58+25.00

PT STA. 61+00.52

+39.5 ℄ COMM. DR.

+20 ℄ COMM. DR.

165 ℄ COMM. DR.

CURVE DATA - CURVE IA
P.I. Sta = 10+01.44
Δ = 17° 29′ 00″ (LT)
Dc = 9° 29′ 48″
R = 603.32′
T = 92.77′
L = 184.10′
E = 7.09′
e_{max} = 0.023

CURVE DATA-CURVE 1
P.I. Sta. = 12+96.47
Δ = 24° 05′ 00″ (LT.)
Dc = 6° 00′ 00″
R = 954.93′
T = 203.70′
L = 401.39′
E = 21.48′
e_{max} = NC

CURVE DATA-TURN LANE
P.I. Sta. = 59+85.33
Δ = 73° 25′ 28″ (RT.)
Dc = 26° 38′ 57″
R = 215.00′
T = 160.33′
L = 275.52′
E = 53.20′
e_{max} = 0.0154

FOR ESTIMATED QUANTITIES SEE SHEET 28.
FOR DRIVE DETAILS AND QUANTITIES SEE SHEET 85, 86.
FOR INTERSECTION DETAILS SEE SHEET 83.
FOR TURN-LANE CROSS SECTIONS SEE SHEET 56-60.
FOR UNDERDRAIN QUANTITIES SEE SHEET 87.
FOR SANITARY DETAILS SEE SHEET 88.

BENCHMARK #1 ELEV. 662.57
TOP S.E. CORNER STONE CAP ON BRICK PLANTER @ E. SIDE MARCY FUNERAL HOME @ N.W. CORNER LIBERTY ST. & U.S.R. 20 (HARBOR ST.), STA. 59+52, 60.23′ LT.

EXIST. ℄ GRADE

PROPOSED PROFILE GRADE

℄ LIBERTY ST. STA. 10+01.61 Elev. = 656.69

PRVC Sta. 9+86.50 Elev. 657.04

P.V.I. Sta. 11+00.00 Elev. = 653.97

PVT Sta. 12+13.50 Elev. 655.09

℄ KEYES ST. STA. 12+50.00

BEGIN APPR. SLAB STA. 13+46.75

BRIDGE LIMITS

P.V.I. Sta. 13+50.00 Elev. = 656.44 GRADE BREAK (NO CURVE)

PROPOSED GRADE LINE

EXISTING GRADE LINE

24 L.F. 12″ TYPE C @ 5.96%

28 L.F. 12″ TYPE B @ 5.96%

51 L.F. 21″ TYPE B @ 2.00%

28 L.F. 21″ TYPE B @ 2.14%

83 L.F. - 12″ TYPE C @ 1.05%

80 L.F. 15″ TYPE B @ 1.00%

35 L.F. 12″ TYPE B @ 0.86%

20 L.F. 12″ TYPE C @ 1.15%

-2.71 %

+0.99 %

+0.75 %

CB-3A
STA. 10+56.50
20.00′ RT.
GRATE = 655.28
INV. 21″SW&NW = 647.33
INV. 4″ N&SW = 652.28

CB-3
STA. 60+10.00, 2.94′ RT. (TURN-LANE)
GRATE = 654.31
INV. 12″W = 648.70
INV. 15″SE=648.45
INV. 21″N = 647.95
INV. 4″E&W = 651.31

CB-3A
STA. 49+77.00, 16.43′ LT. (KEYES ST.)
GRATE = 654.36
INV 12″S&N = 650.37
INV. 4″S = 650.87

CB-3A
STA. 12+90.00, 17.00′ RT.
GRATE = 655.29′
INV 12″W = 650.90
INV. 4″E = 652.29

CB-3A
STA. 49+74.77, 19.11′ RT. (KEYES ST.)
GRATE = 654.91
INV 12″E&NW = 650.67
INV. 4″E&SW = 651.74

CB-3A
STA. 60+92.00, 4.81′ RT. (TURN-LANE)
GRATE = 654.34
INV. 12″ NE,S,&SE = 649.50
INV. 15″ NW = 649.25
INV. 4″ N = 651.34
INV. 4″ S= 650.35

MH No. 3
STA. 59+82.60, 8.80′ RT. (LIBERTY ST.)
TOP = 656.62
INV. 12″ NW = 648.00
INV. 15″ W = 648.67*
INV. 21″SE = 646.35
INV. 24″ E = 646.08

+61 EX. ABAND. ELEC. MH, 4′ RT. 3′x6′x7′-1″ DP.
INV. 6″ W = 657.98
INV. 6″ E = 657.35
12″ VCP STORM
4″ SHALLOW UNDERDRAIN
8″ UNK.

+68 EX. CB, 26′ RT., TOP ELEV. 657.53, ℄654.28
+74 EX. CB, 20′ LT. TOP ELEV. 656.66, ℄653.81
CB-3A
STA. 9+67.00, 24.00′ RT.
GRATE = 657.10
INV. 12″E & SW = 651.10
INV. 4″N = 653.50

CB-3
STA. 59+65.00, 13.50′ LT. (LIBERTY ST.)
GRATE = 656.46
INV. 12″NW&SE = 649.67
INV. 4″E&W = 653.46

+15 EX. ABAND. ELEC. MH, 11′ LT. 3′x6′x7′ DP.

+05 EX. SAN. MH, 17′ RT. TOP ELEV. 656.62
℄8″ 649.99N, ℄6″ 650.48W, ℄6″ 650.24E

* USE 8 L.F-15″ TYPE B TO CONNECT TO EXIST. STORM CONDUIT

658.10 656.33 655.49 654.89 654.53 654.48 654.67 654.87 654.85 655.12 655.24 649.45 643.85 634.14 626.86

10+00 11+00 12+00 13+00 14+00

670 665 660 655 650 645 640 635

I8520GPB.dgn

CALCULATED CMK CHECKED SMG

HORIZONTAL SCALE IN FEET 0 10 20 40

PLAN AND PROFILE - U.S.R. 20
STA. 9+50 TO STA. 14+50

ATB-20-26.19

35
162

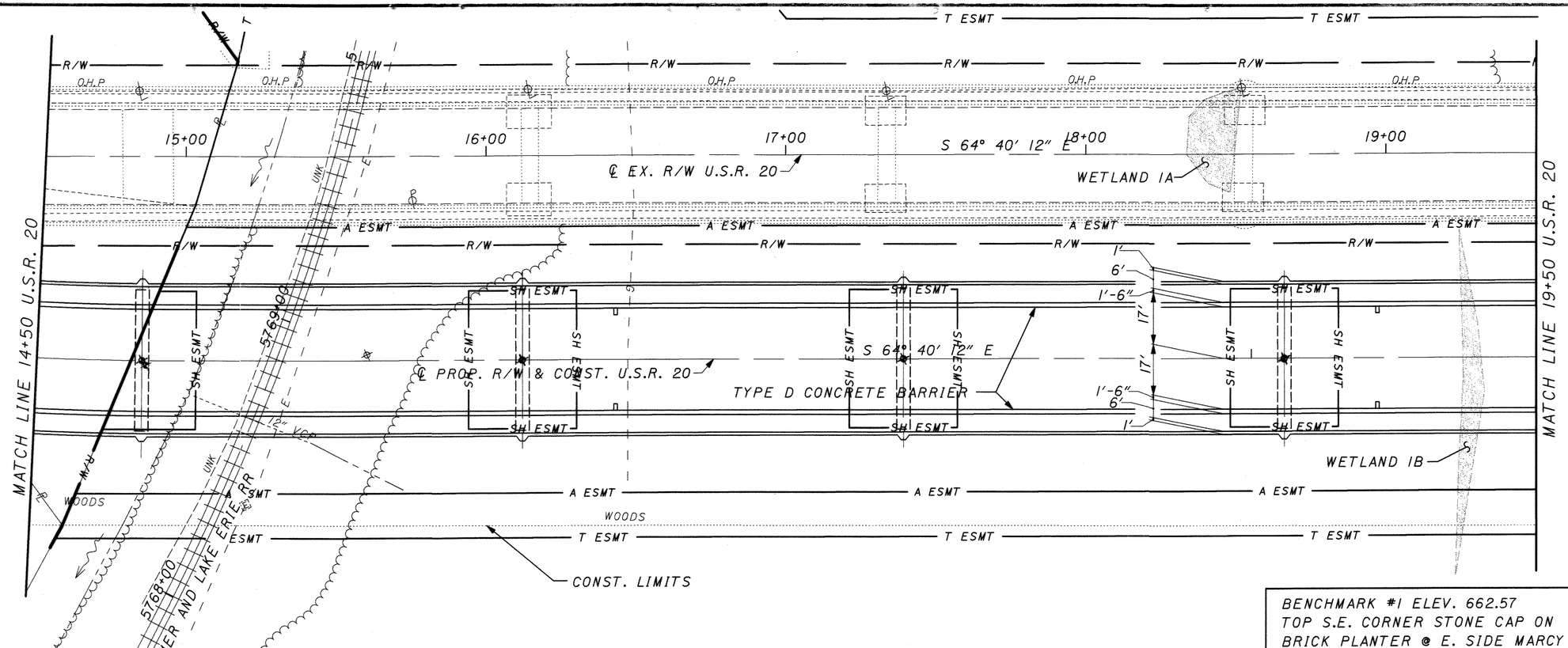

BENCHMARK #1 ELEV. 662.57
TOP S.E. CORNER STONE CAP ON
BRICK PLANTER @ E. SIDE MARCY
FUNERAL HOME @ N.W. CORNER
LIBERTY ST. & U.S.R. 20 (HARBOR ST.),
STA. 59+52, 60.23′ LT.

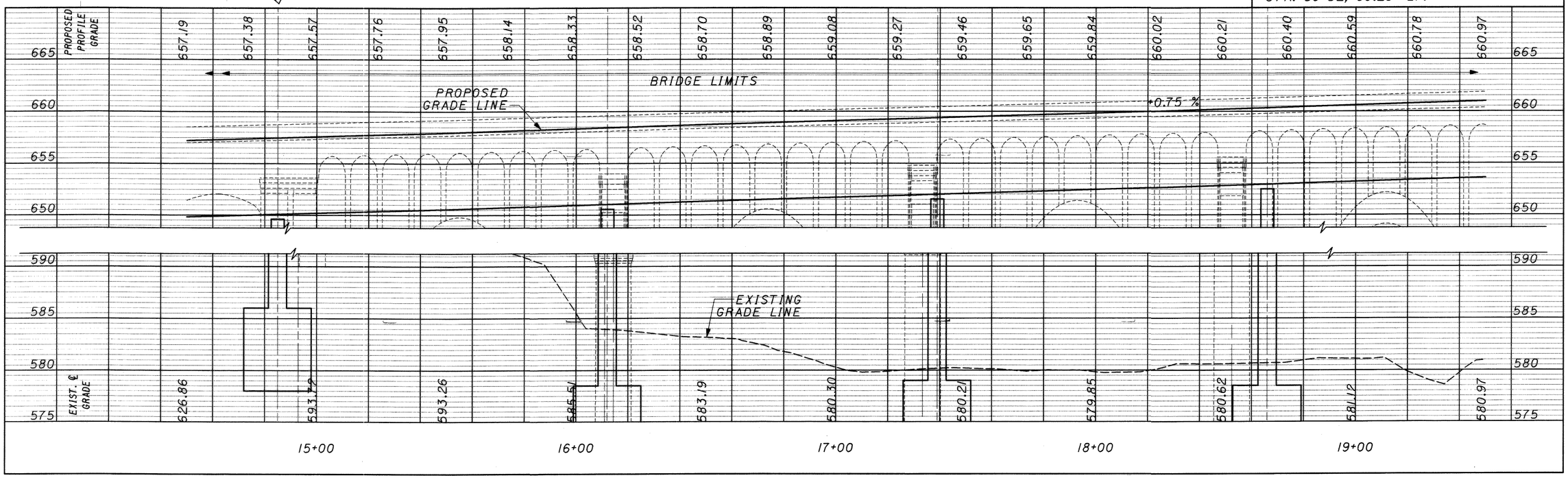

HORIZONTAL SCALE IN FEET
0 10 20 40
CALCULATED CMK
CHECKED SMG

PLAN AND PROFILE - U.S.R. 20
STA. 14+50 TO STA. 19+50

ATB-20-26.19

36
162

I8520GPC.dgn

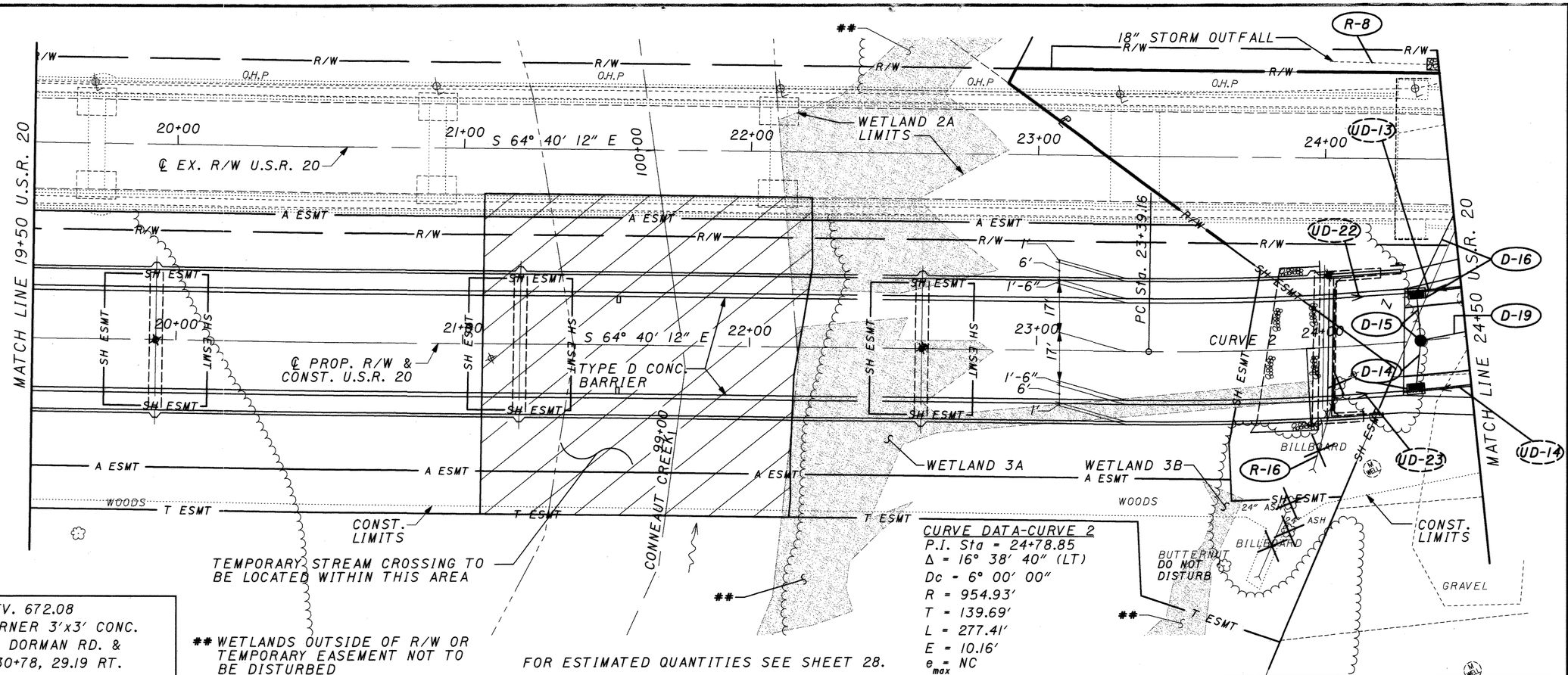

BENCHMARK #2 ELEV. 672.08
CHS. □ ON N.W. CORNER 3'x3' CONC. PAD @ S.E. CORNER DORMAN RD. & E. MAIN RD., STA. 30+78, 29.19 RT.

** WETLANDS OUTSIDE OF R/W OR TEMPORARY EASEMENT NOT TO BE DISTURBED

FOR ESTIMATED QUANTITIES SEE SHEET 28.

CURVE DATA-CURVE 2
P.I. Sta = 24+78.85
Δ = 16° 38' 40" (LT)
Dc = 6° 00' 00"
R = 954.93'
T = 139.69'
L = 277.41'
E = 10.16'
e_{max} = NC

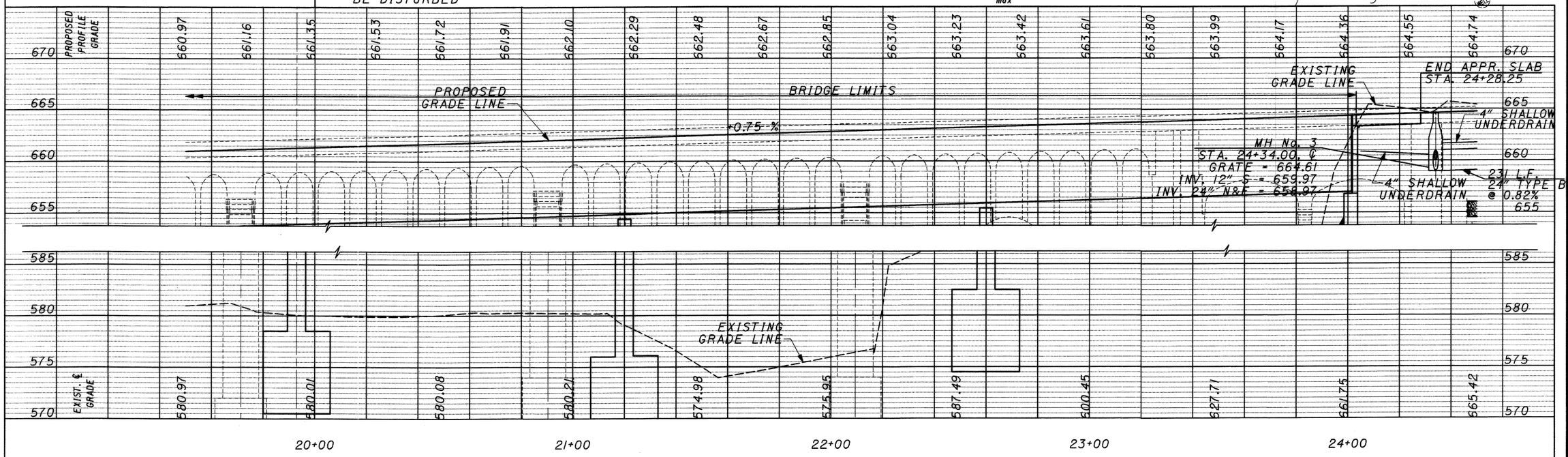

PLAN AND PROFILE - U.S.R. 20
STA. 19+50 TO STA. 24+50

HORIZONTAL SCALE IN FEET
0 10 20 40
CALCULATED CMK
CHECKED SMG

ATB-20-26.19

18520GPD.dgn

CURVE DATA

CURVE 2
P.I. Sta = 24+78.85
Δ = 16° 38′ 40″ (LT)
Dc = 6° 00′ 00″
R = 954.93′
T = 139.69′
L = 277.41′
E = 10.16′
e_{max} = NC

CURVE 3
P.I. Sta = 27+21.15
Δ = 12° 30′ 00″ (RT)
Dc = 6° 00′ 00″
R = 954.93′
T = 104.58′
L = 208.33′
E = 5.71′
e_{max} = NC

CURVE 4
P.I. Sta = 28+98.77
Δ = 6° 49′ 47″ (LT)
Dc = 4° 37′ 41″
R = 1,237.99′
T = 73.87′
L = 147.57′
E = 2.20′
e_{max} = NC

BENCHMARK #2 ELEV. 672.08
CHS. □ ON N.W. CORNER 3′x3′ CONC. PAD @ S.E. CORNER DORMAN RD. & E. MAIN RD., STA. 30+78, 29.19 RT.

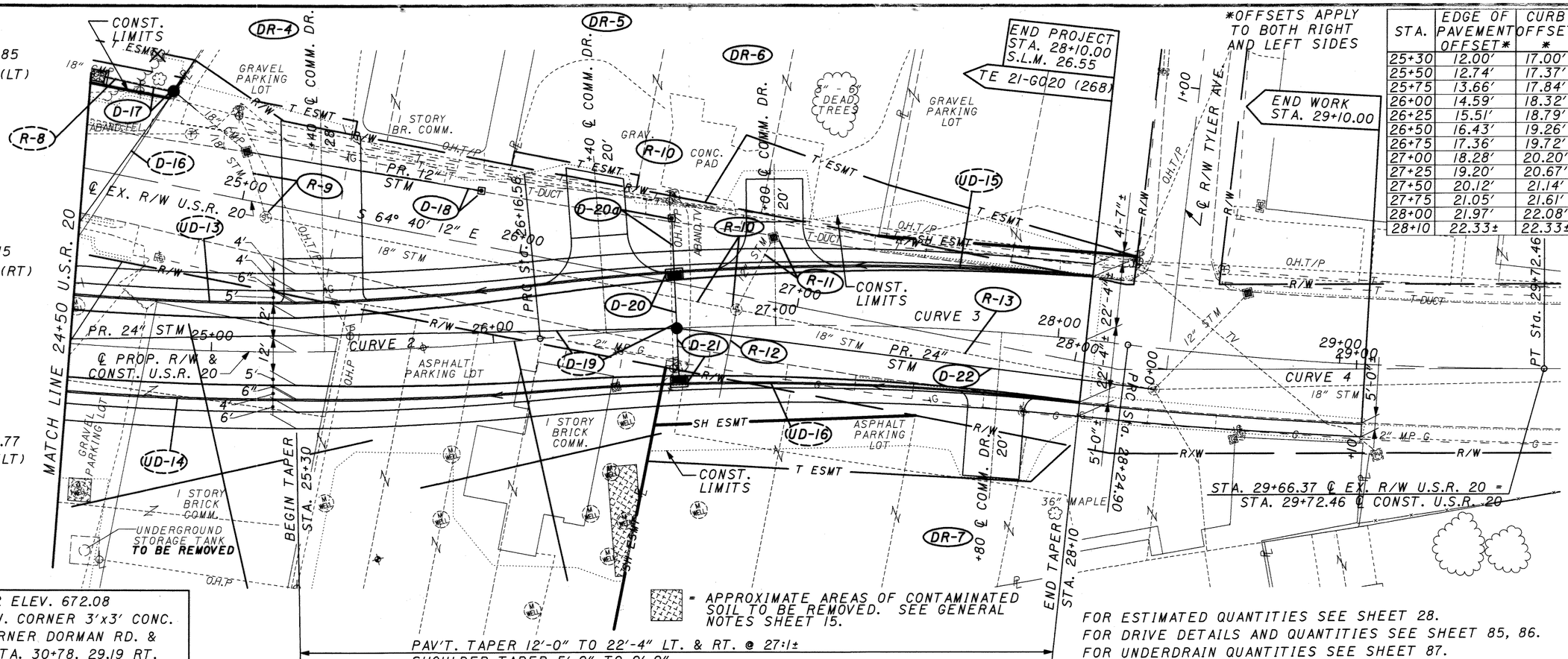

STA.	EDGE OF PAVEMENT OFFSET*	CURB OFFSET *
25+30	12.00′	17.00′
25+50	12.74′	17.37′
25+75	13.66′	17.84′
26+00	14.59′	18.32′
26+25	15.51′	18.79′
26+50	16.43′	19.26′
26+75	17.36′	19.72′
27+00	18.28′	20.20′
27+25	19.20′	20.67′
27+50	20.12′	21.14′
27+75	21.05′	21.61′
28+00	21.97′	22.08′
28+10	22.33±	22.33±

▨ = APPROXIMATE AREAS OF CONTAMINATED SOIL TO BE REMOVED. SEE GENERAL NOTES SHEET 15.

PAV'T. TAPER 12′-0″ TO 22′-4″ LT. & RT. @ 27:1±
SHOULDER TAPER 5′-0″ TO 0′-0″

FOR ESTIMATED QUANTITIES SEE SHEET 28.
FOR DRIVE DETAILS AND QUANTITIES SEE SHEET 85, 86.
FOR UNDERDRAIN QUANTITIES SEE SHEET 87.

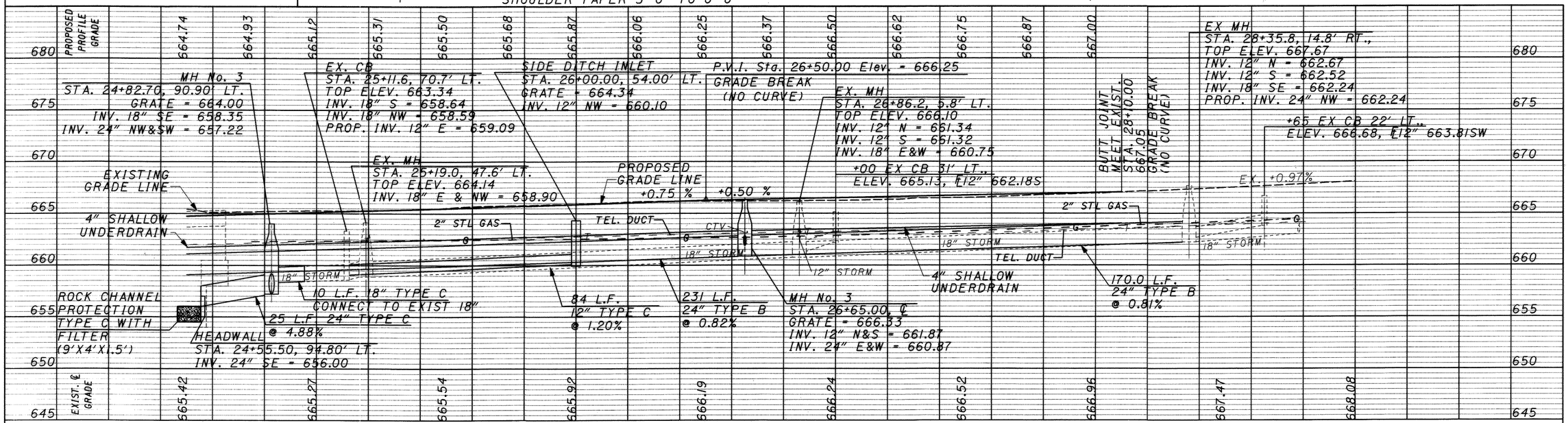

I8520GPE.dgn

CALCULATED CMK
CHECKED SMG

HORIZONTAL SCALE IN FEET
0 10 20 40

PLAN AND PROFILE - U.S.R. 20
STA. 24+50 TO STA. 29+00

ATB-20-26.19

SEEDING	
END WIDTH	SQ. YDS.

END AREA		VOLUME	
CUT	FILL	CUT	FILL

CALCULATED SAC

CHECKED DAK

CROSS SECTIONS - U.S.R. 20
STA. 7+00.00 TO STA. 8+50.00

ATB-20-26.19

60 50 40 30 20 10 0 10 20 30 40 50 60

EX. R/W EX. R/W

660

655

650

6" GAS

ELEC. (ABAND)

6" WATER

8+50.00
659.84

8" SAN

EX. R/W EX. R/W

660

655

650

6" GAS

ELEC. (ABAND)

6" WATER

8+00.00
660.25

8" SAN

EX. R/W EX. R/W

660

655

650

6" GAS

ELEC. (ABAND)

6" WATER

7+50.00
660.51

8" SAN

EX. R/W EX. R/W

660

655

650

6" GAS

ELEC (ABAND)

6" WATER

7+00.00
660.99

8" SAN

60 50 40 30 20 10 0 10 20 30 40 50 60

SHEET TOTAL SHEET TOTAL

18520CXA.dgn

SEEDING	
END WIDTH	SQ. YDS.
	0
	0
	0
	0
	0
0	SHEET TOTAL

END AREA		VOLUME	
CUT	FILL	CUT	FILL
84	0		
		146	0
78	0		
		51	0
0	0		
		197	0

CALCULATED SAC
CHECKED DAK

CROSS SECTIONS - U.S.R. 20
STA. 8+65.00 TO STA. 9+50.00

ATB-20-26.19

40
162

TEMP. R/W
SH ESMT
EX. R/W
EX. RETAINING WALL DO NOT DISTURB
4" SHALLOW PIPE UNDERDRAIN
8" UNK.
6" WATER
6" GAS
TO BE RELOCATED BY OTHERS
ELEC. (ABAND)
8" SAN
CB-3A
STA. 9+74.00, 24.88' LT.
GRATE = 656.63
INV. 12" W = 652.33
INV. 4" N = 653.63
49 L.F. - 12" TYPE B @ 2.51%
24 L.F.-12"TYPE C @ 5.96%
CB-3
STA. 89+65.00, 13.50' LT.
(LIBERTY ST.)
GRATE = 656.46
INV. 12" NW & SE = 649.67
INV. 4" E&W = 653.46
657.98
9+50.00
658.10
CB-3A
STA. 9+67.00, 24.00' RT.
GRATE = 657.10
INV. 12" E & SW = 651.10
INV. 4" N = 653.50
EX. R/W
TEMP. R/W
EX. R/W
EX. RETAINING WALL DO NOT DISTURB
6" GAS
4" U.D. (TYP.)
6" WATER
8" SAN
ELEC. (ABAND)
659.04
9+00.00
659.09
EX. R/W
EX. R/W
6" GAS
6" WATER
8" SAN
ELEC. (ABAND)
659.68
8+65.00
659.68
MEET EXISTING

18520CXA.dgn

SEEDING	
END WIDTH	SQ. YDS.
0	0
0	0
0	0
0	0

END AREA		VOLUME	
CUT	FILL	CUT	FILL
44	0		
51	0	24	0
		125	0
SHEET TOTAL		149	0

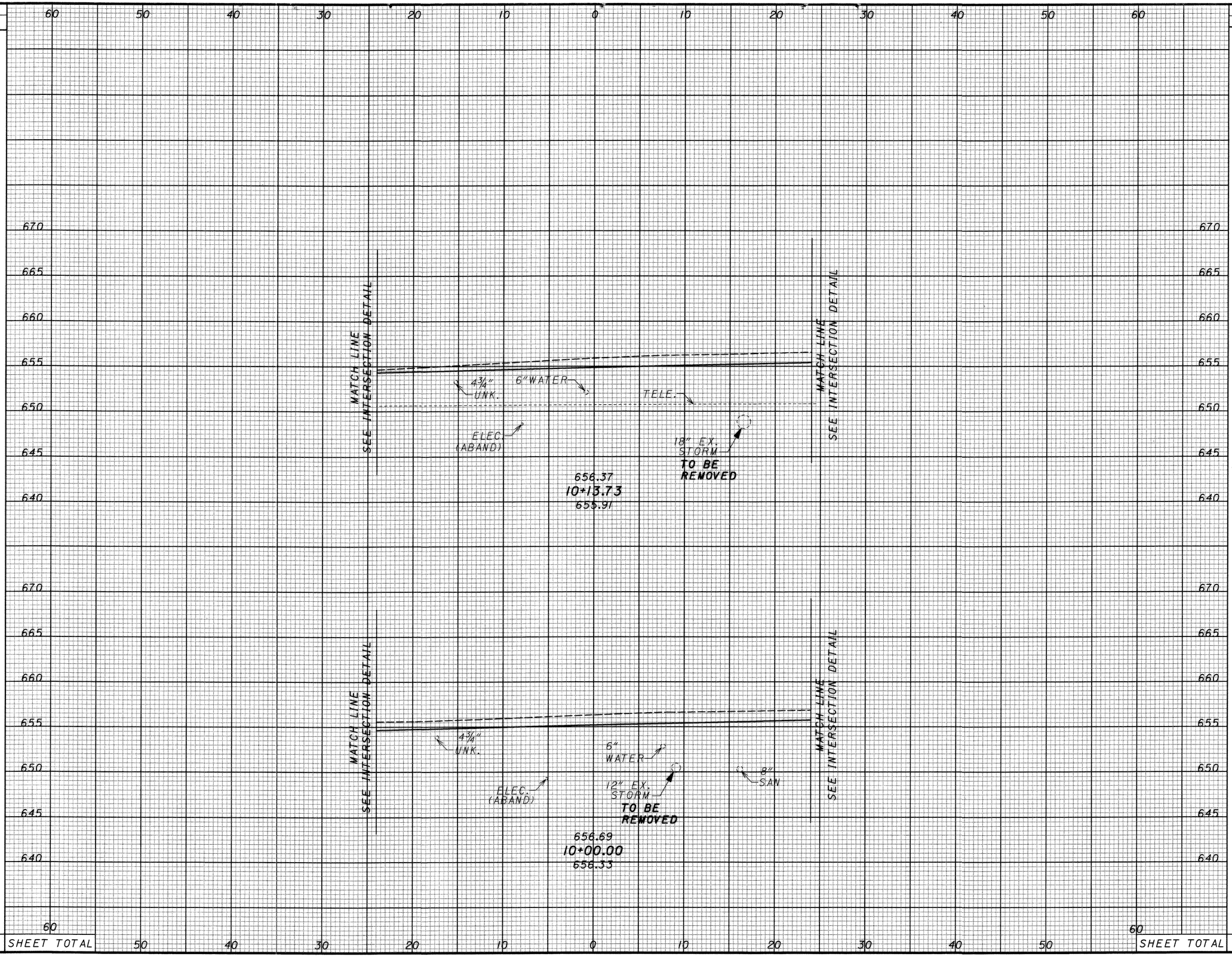

CALCULATED SAC
CHECKED DAK

CROSS SECTIONS - U.S.R. 20
STA. 10+00.00 TO STA. 10+13.73

ATB-20-26.19

41
162

18520CXA.dgn

SEEDING	
END WIDTH	SQ. YDS.
13	
0	36
	0
	36

END AREA		VOLUME	
CUT	FILL	CUT	FILL
47	21		
28	0		
		69	19
		48	0
		117	19

CALCULATED SAC

CHECKED DAK

CROSS SECTIONS - U.S.R. 20
STA. 10+50.00 TO STA. 11+00.00

ATB-20-26.19

42
162

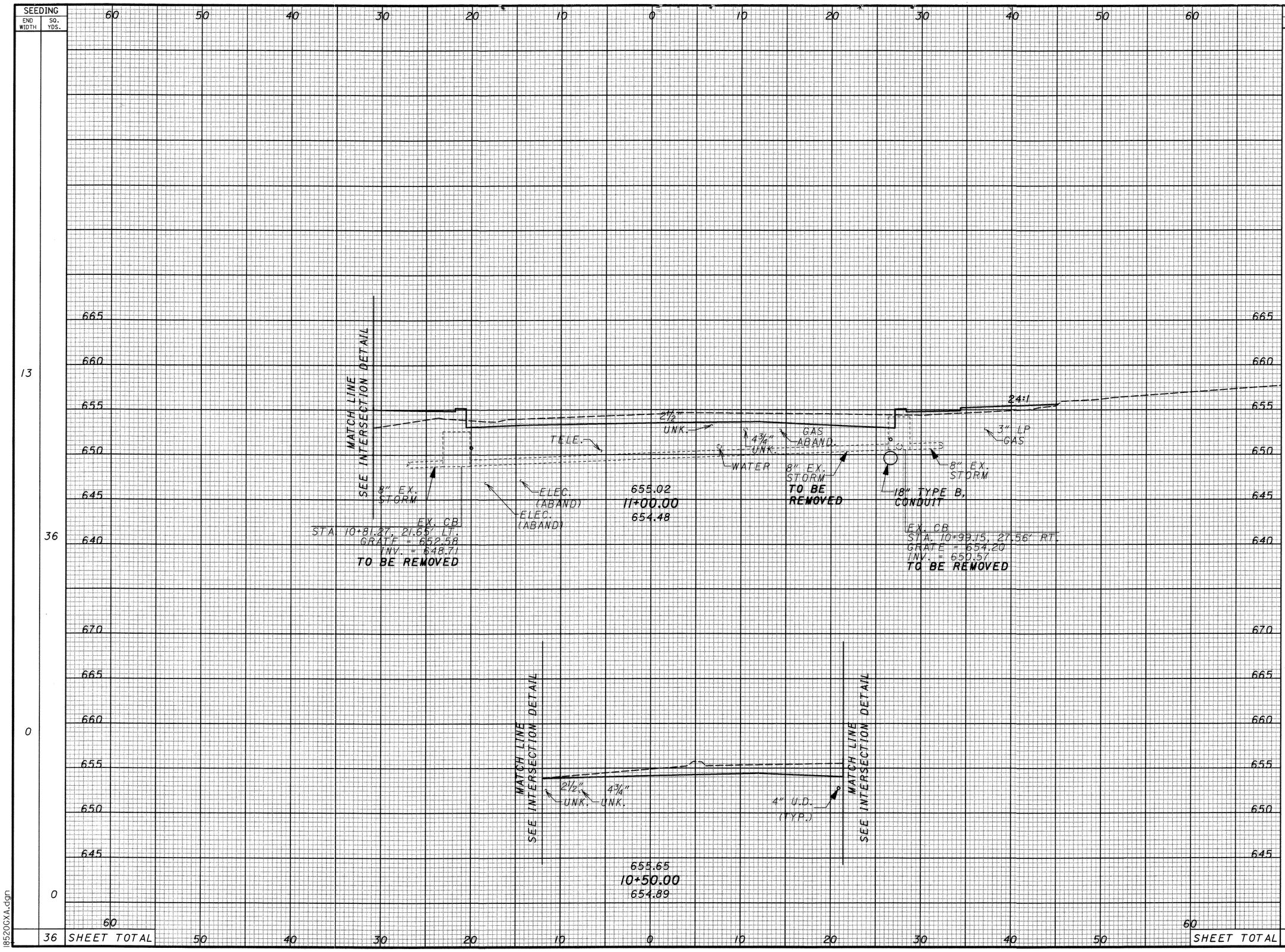

SHEET TOTAL

SHEET TOTAL

I8520CXA.dgn

SEEDING	
END WIDTH	SQ. YDS.
15	
35	
10	
32	
67	SHEET TOTAL

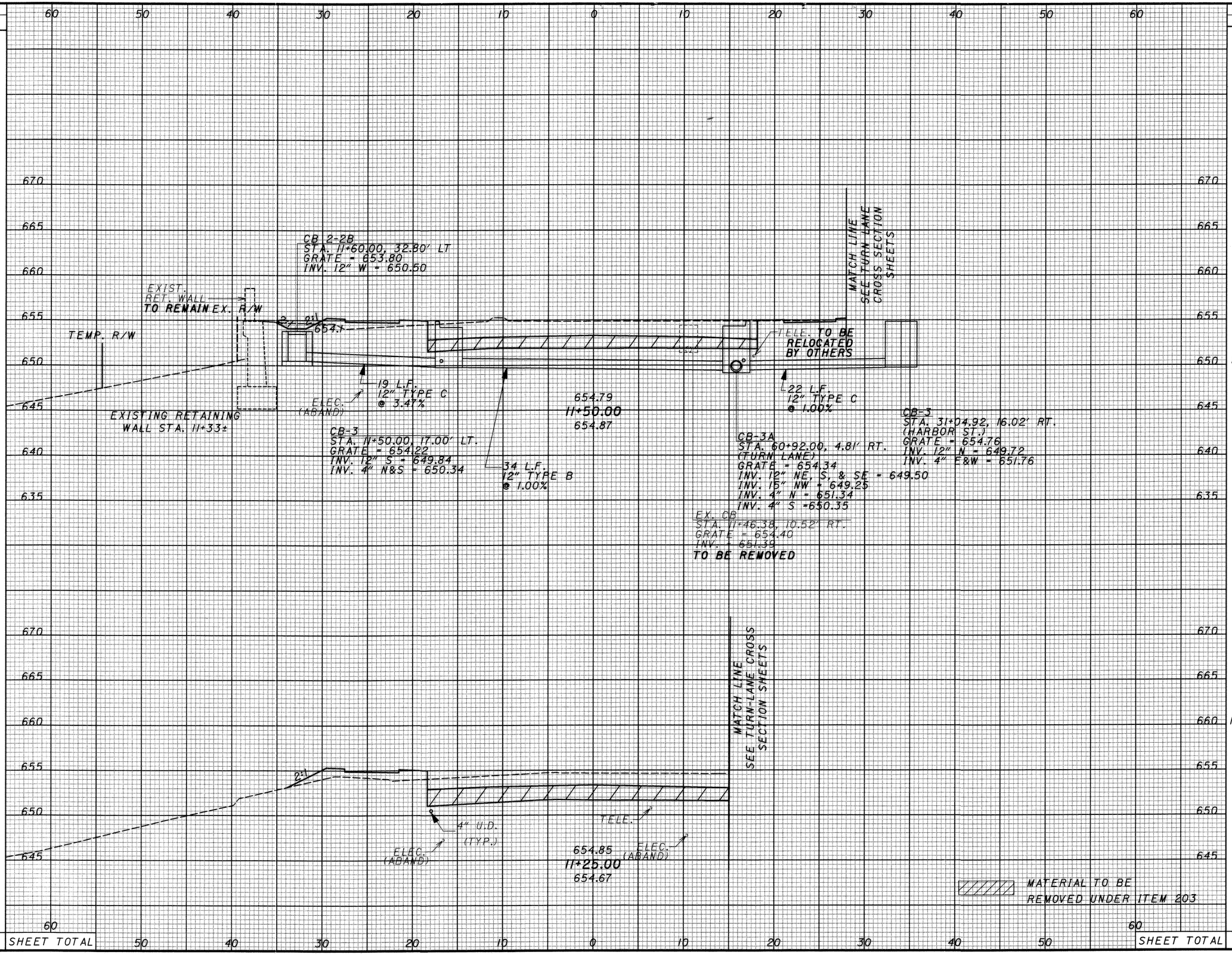

END AREA		VOLUME	
CUT	FILL	CUT	FILL
113	54		
99	56		
100	67		
68	41		
167	97		

CALCULATED SAC
CHECKED DAK

CROSS SECTIONS - U.S.R. 20
STA. 11+25.00 TO STA. 11+50.00

ATB-20-26.19

43
162

I8520CXA.dgn

SEEDING	
END WIDTH	SQ. YDS.
21	
18	
54	
46	
100	SHEET TOTAL

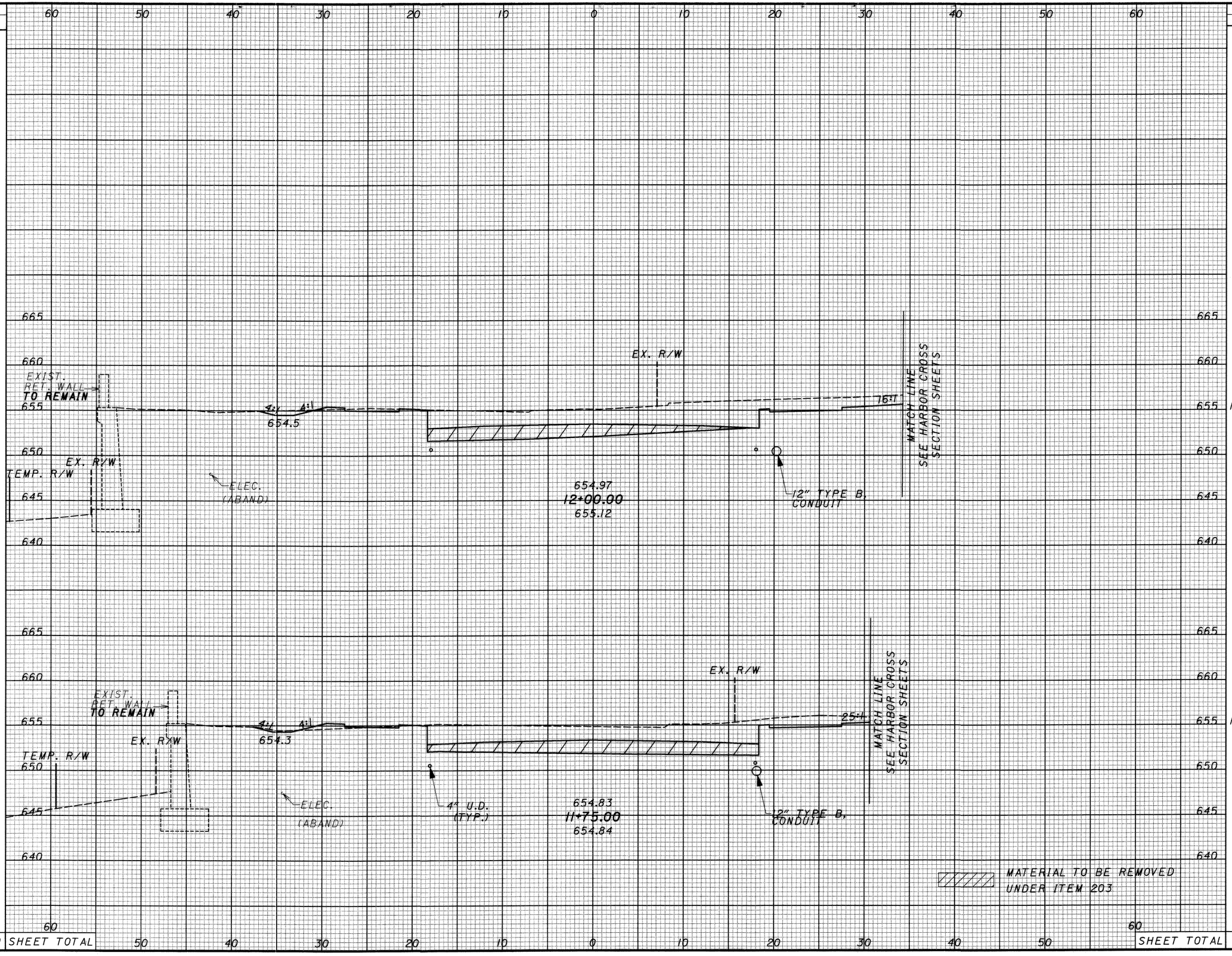

END AREA		VOLUME	
CUT	FILL	CUT	FILL
139	41		
		124	42
129	50		
		112	48
		236	90
SHEET TOTAL			

CALCULATED SAC
CHECKED DAK

CROSS SECTIONS - U.S.R. 20
STA. 11+75.00 TO STA. 12+00.00

ATB-20-26.19

18520CXA.dgn

SEEDING END WIDTH	SEEDING SQ. YDS.
	38
	113
	43
	89
	202

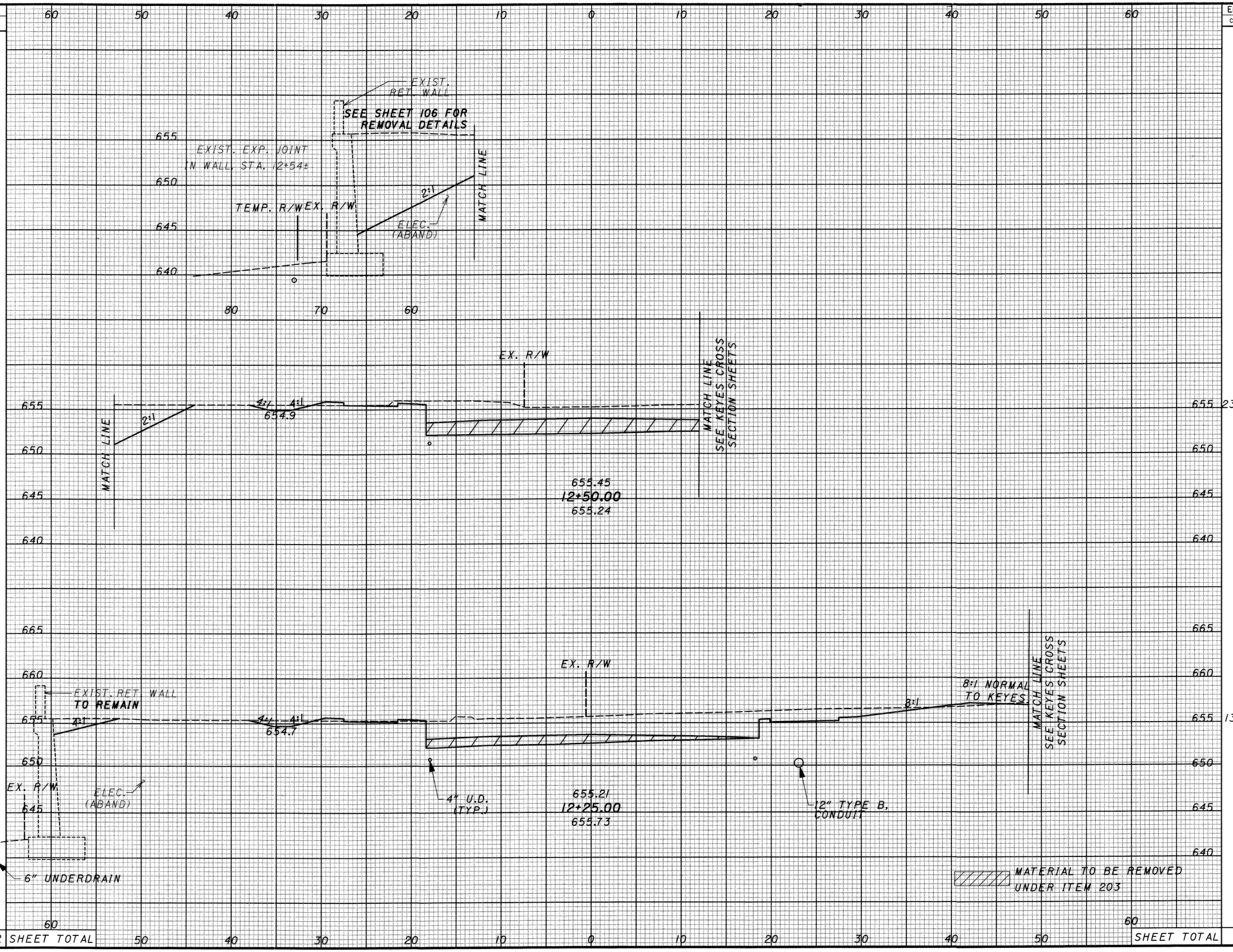

END AREA CUT	END AREA FILL	VOLUME CUT	VOLUME FILL
230	48		
		171	37
139	31		
		129	33
	SHEET TOTAL	300	70

CALCULATED SAC
CHECKED DAK

CROSS SECTIONS - U.S.R. 20
STA. 12+25.00 TO STA. 12+50.00

ATB-20-26.19

45/162

I8520GXA.dgn

SEEDING	
END WIDTH	SQ. YDS.
43	
131	
51	
124	
255	SHEET TOTAL

END AREA		VOLUME	
CUT	FILL	CUT	FILL
0	395		
		148	198
320	32		
		255	37
		403	235

CALCULATED SAC
CHECKED DAK

CROSS SECTIONS - U.S.R. 20
STA. 12+75.00 TO STA. 13+00.00

ATB-20-26.19

46
162

18520CXA.dgn

SEEDING	
END WIDTH	SQ. YDS.
97	
236	
98	
196	
432	SHEET TOTAL

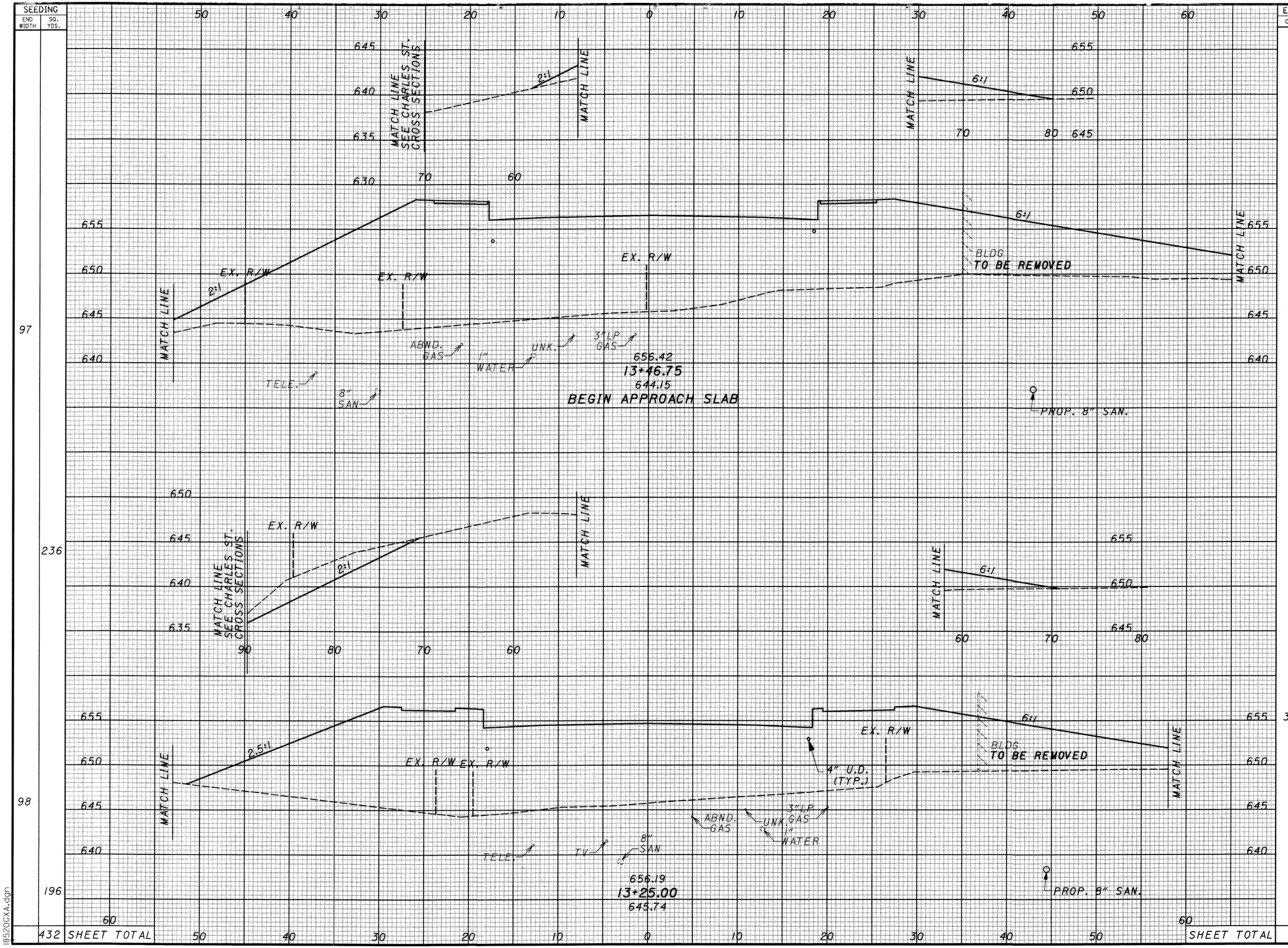

END AREA		VOLUME	
CUT	FILL	CUT	FILL
0	1006		
		13	737
32	823		
		15	564
		28	1301
SHEET TOTAL			

CALCULATED SAC
CHECKED DAK

CROSS SECTIONS - U.S.R. 20
STA. 13+25.00 TO STA. 13+46.75

ATB-20-26.19

47
162

I8520CXA.dgn

SEEDING	
END WIDTH	SQ. YDS.
124	
	307
307	SHEET TOTAL

END AREA		VOLUME	
CUT	FILL	CUT	FILL
	51	434	
		24	667
SHEET TOTAL		24	667

CALCULATED SAC
CHECKED DAK

CROSS SECTIONS - U.S.R. 20
STA. 13+71.75

ATB-20-26.19

48
162

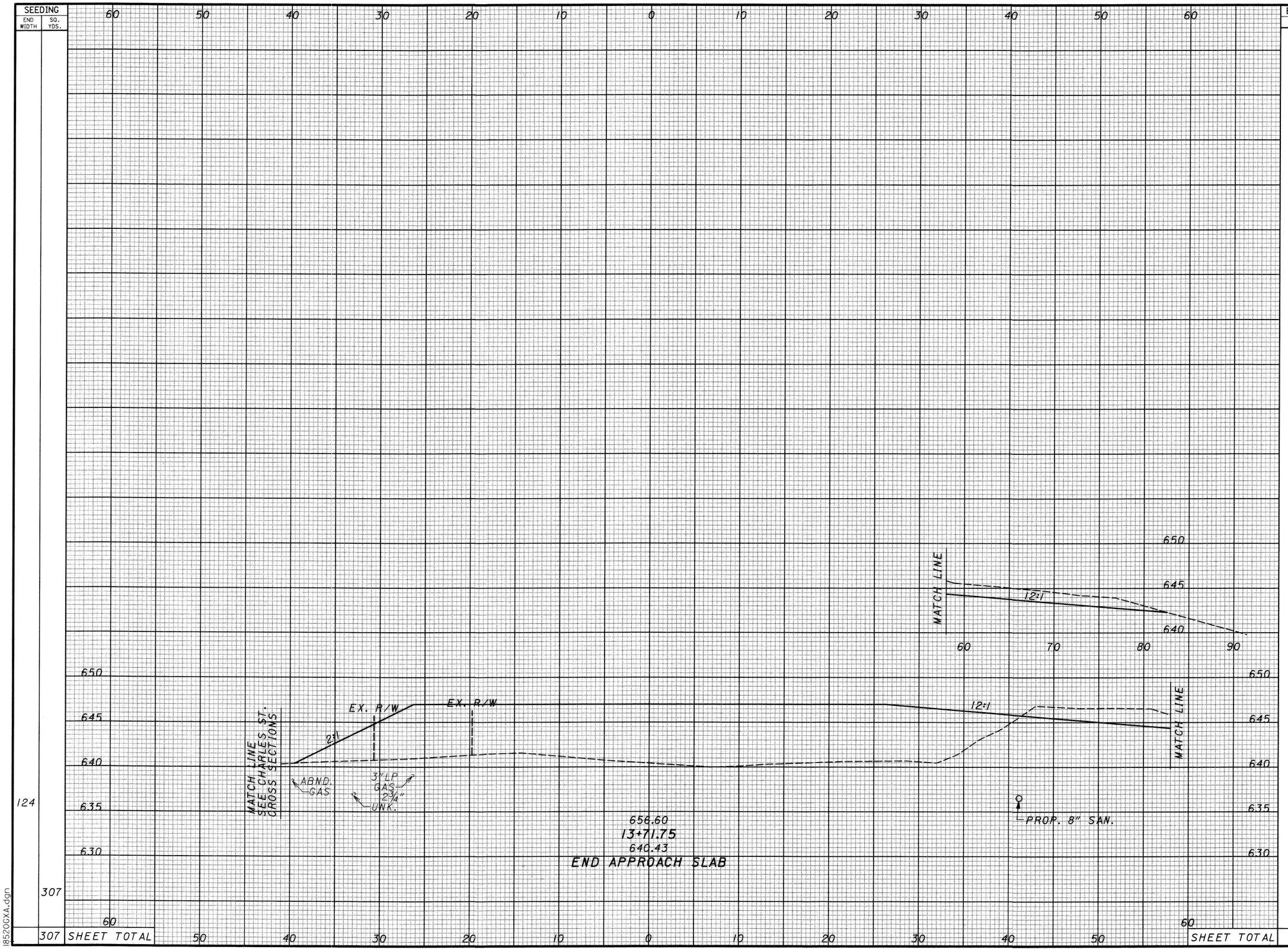

18520GXA.dgn

SEEDING	
END WIDTH	SQ. YDS.
27	
98	
174	SHEET TOTAL

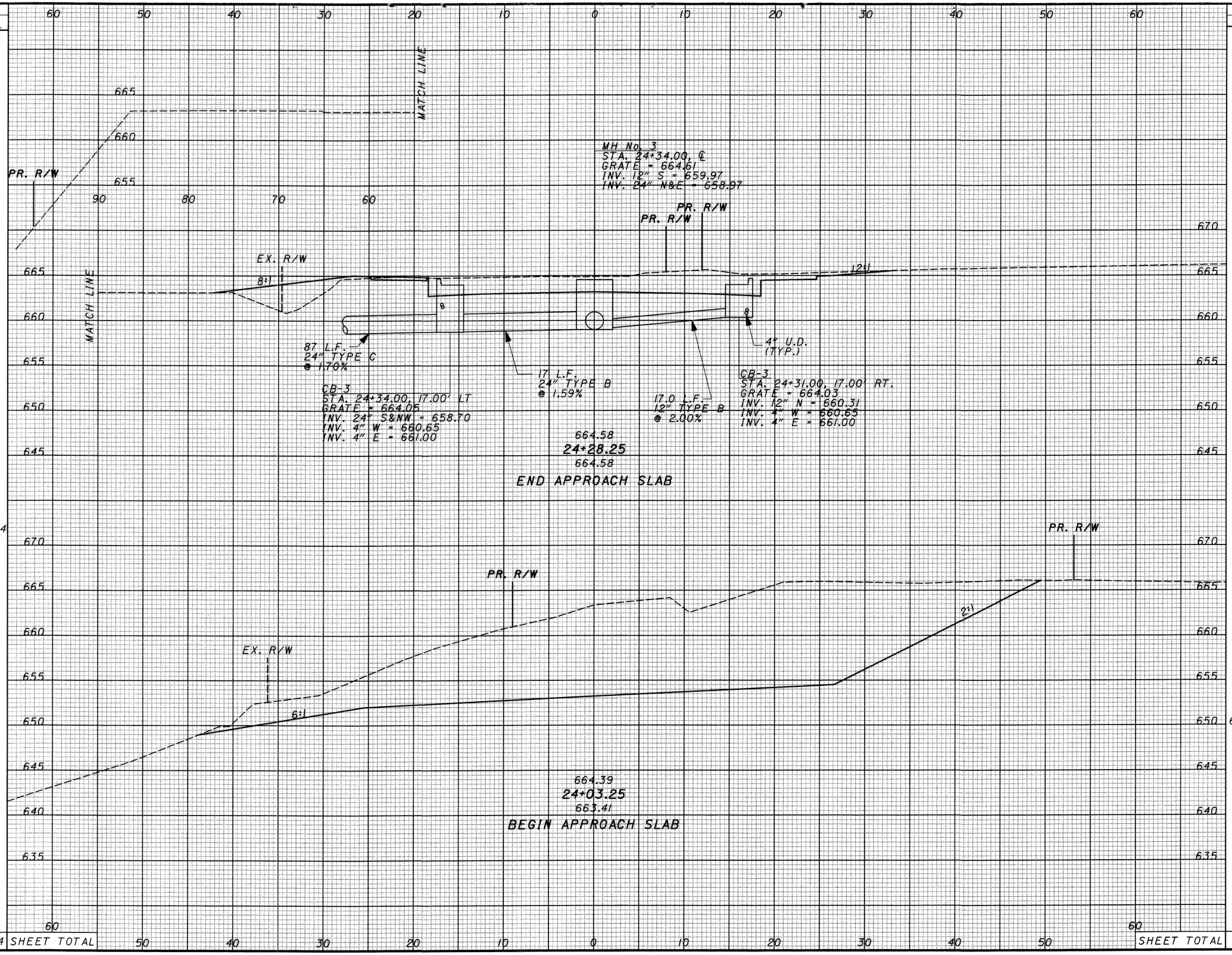

END AREA		VOLUME	
CUT	FILL	CUT	FILL
83	24		
		331	11
631	0		
		331	11

CALCULATED SAC
CHECKED DAK

CROSS SECTIONS - U.S.R. 20
STA. 24+03.25 TO STA. 24+28.25

ATB-20-26.19

18520CXA.dgn

SEEDING	
END WIDTH	SQ. YDS.

SEEDING	
END WIDTH	SQ. YDS.

SEEDING	
END WIDTH	SQ. YDS.
EX. R/W	
36	
	253
	55
	314
	567

END AREA		VOLUME	
CUT	FILL	CUT	FILL
74	20		
		131	46
68	30		
		132	62
SHEET TOTAL		263	108

CALCULATED SAC
CHECKED DAK

CROSS SECTIONS - U.S.R. 20
STA. 25+50.00 TO STA. 26+40.00

ATB-20-26.19

52
162

18520CXA.dgn

SEEDING END WIDTH	SEEDING SQ. YDS.
	29
	122
	15
	128
	31
	186
	436

END AREA CUT	END AREA FILL	VOLUME CUT	VOLUME FILL
72	14		
		139	36
78	25		
		151	34
85	12		
		147	30
		437	100

CALCULATED SAC
CHECKED DAK

CROSS SECTIONS - U.S.R. 20
STA. 26+50.00 TO STA. 27+50.00

ATB-20-26.19

53
162

60 50 40 30 20 10 0 10 20 30 40 50 60

675 670 665 660 655

TEMP. R/W
SH ESMT
EX. R/W
35:1
12:1
TELE.
TELE.
2" GAS
24" TYPE B, CONDUIT
18" EX. STORM TO BE REMOVED
666.75
27+50.00
666.52

666.08
51.74 LT
+0.04
666.47
36.91 LT
-0.09
666.61
26.91 LT
0.06
666.22
20.51 LT
14.8' V.C.
PVI 44.31' LT.
EL. 665.81
10' V.C.
PVI 31.91 LT.
EL. 666.92
DRIVEWAY, LT.
18" EX. STORM TO BE REMOVED
666.50
27+00.00
666.24
4" U.D. (TYP.)

MH No. 3
STA. 26+65.00, ℄
GRATE = 666.33
INV. 12" N&S = 661.87
INV. 24" E&W = 660.87
PROP. SIDE DITCH INLET
STA. 26+65.00, 38.90' LT
GRATE = 664.20
INV. 12" S = 662.35
6:1
4:1
664.2
19 L.F.
12" TYPE C
@ 1.00%
CB-3
STA. 26+65.00, 19.54' LT
GRATE = 665.79
INV. 12" S = 662.16
INV. 4" E = 662.76
18" EX. STORM TO BE REMOVED
20 L.F.
12" TYPE B
@ 1.45%
666.25
26+50.00
666.19
TO BE RELOCATED BY OTHERS
20 L.F.
12" TYPE B
@ 1.45%
CB-3
STA. 26+65.00, 19.62' RT.
GRATE = 665.79
INV. 12" N = 662.16
INV. 4" E = 662.79
PR. R/W
18:1

SHEET TOTAL

18520GXA.dgn

SEEDING	
END WIDTH	SQ. YDS.
2	9
14	119
128	SHEET TOTAL
3030	U.S. 20 TOATL

END AREA		VOLUME	
CUT	FILL	CUT	FILL
75	0		
		27	0
72	1		
		133	14
SHEET TOTAL		160	14
U.S. 20 TOTAL		3042	2765

CALCULATED SAC
CHECKED DAK

CROSS SECTIONS - U.S.R. 20
STA. 27+80.00 TO STA. 28+10.00

ATB-20-26.19

54
162

EX. M.H
STA. 28+35.8, 14.8' RT.
TOP ELEV 667.67
INV. 12" N = 662.67
INV. 12" S = 662.52
INV. 18" SE = 662.24
PROP. INV. 24" NW = 662.24

EX. R/W
SH ESMT
TEMP. R/W
TELE.
2" GAS
667.05
28+10.00
667.05
MEET EXISTING

EX. R/W
TEMP. R/W
SH ESMT
6:1
25:1
24" TYPE B, CONDUIT
18" EX. STORM
TO BE REMOVED
667.00
28+00.00
666.96

667.20
27.53 RT
R/W
668.34
41.69 RT
TEMP. R/W
+0.08
+0.04
668.93
51.69 RT
10' V.C.
PVI 46.69' RT.
EL. 668.74
4" U.D. (TYP.)
666.90
27+80.00
666.79
DRIVEWAY, RT.

60 50 40 30 20 10 0 10 20 30 40 50 60

675 670 665 660 655

I8520CXA.dgn

SEEDING	
END WIDTH	SQ. YDS.

END AREA		VOLUME	
CUT	FILL	CUT	FILL

CALCULATED SAC
CHECKED DAK

CROSS SECTIONS - U.S.R. 20
STA. 28+50.00 TO STA. 29+50.00

ATB-20-26.19

60 50 40 30 20 10 0 10 20 30 40 50 60

670
665
660
655

EX. R/W
TELE.
TELE.
2" GAS
18" EX. STORM

29+50.00
668.77

EX. R/W
EX. R/W
TELE.
TELE.
TELE.
2" GAS
18" EX. STORM
END RIGHT SIDEWALK
STA. 29+10

29+00.00
668.08

EX. R/W
TELE.
TELE.
TELE.
2" GAS
18" EX. STORM

28+50.00
667.47

SHEET TOTAL

18520CXA.dgn

SEEDING		END AREA		VOLUME	
END WIDTH	SQ. YDS.	CUT	FILL	CUT	FILL
6	13	10	0	5	1
9	25	7	2	6	1
9		6	0		
	38			11	2

CALCULATED SAC
CHECKED DAK

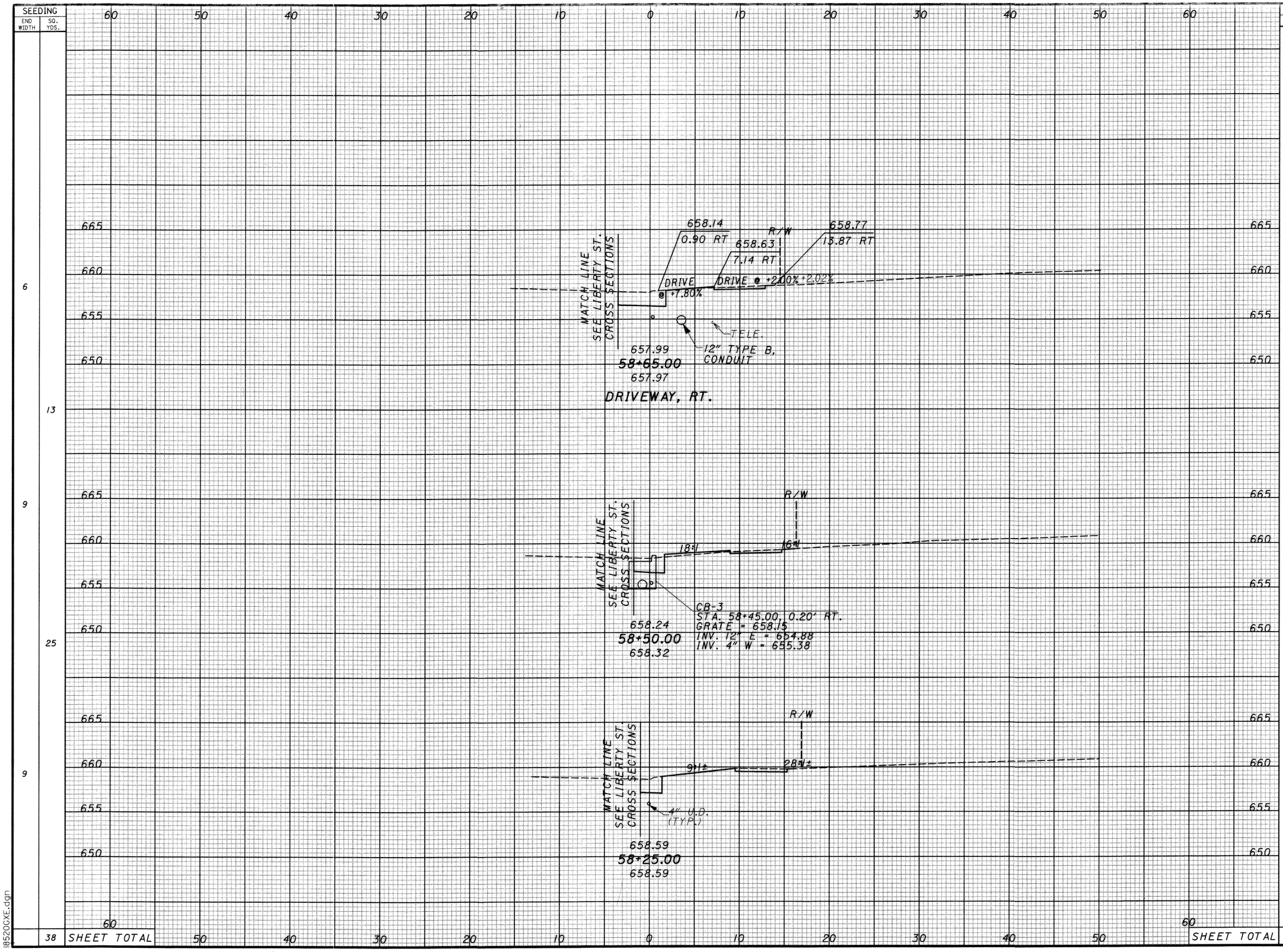

CROSS SECTIONS - TURN-LANE
STA. 58+25.00 TO STA. 58+65.00

ATB-20-26.19

18520CXE.dgn

SEEDING	
END WIDTH	SQ. YDS.
5	1
0	13
5	6
	20

END AREA		VOLUME	
CUT	FILL	CUT	FILL
30	0		
		5	0
28	0		
		33	1
12	1		
		4	0
		42	1

CALCULATED SAC
CHECKED DAK

CROSS SECTIONS - TURN-LANE
STA. 58+75.00 TO STA. 59+25.00

ATB-20-26.26

57
162

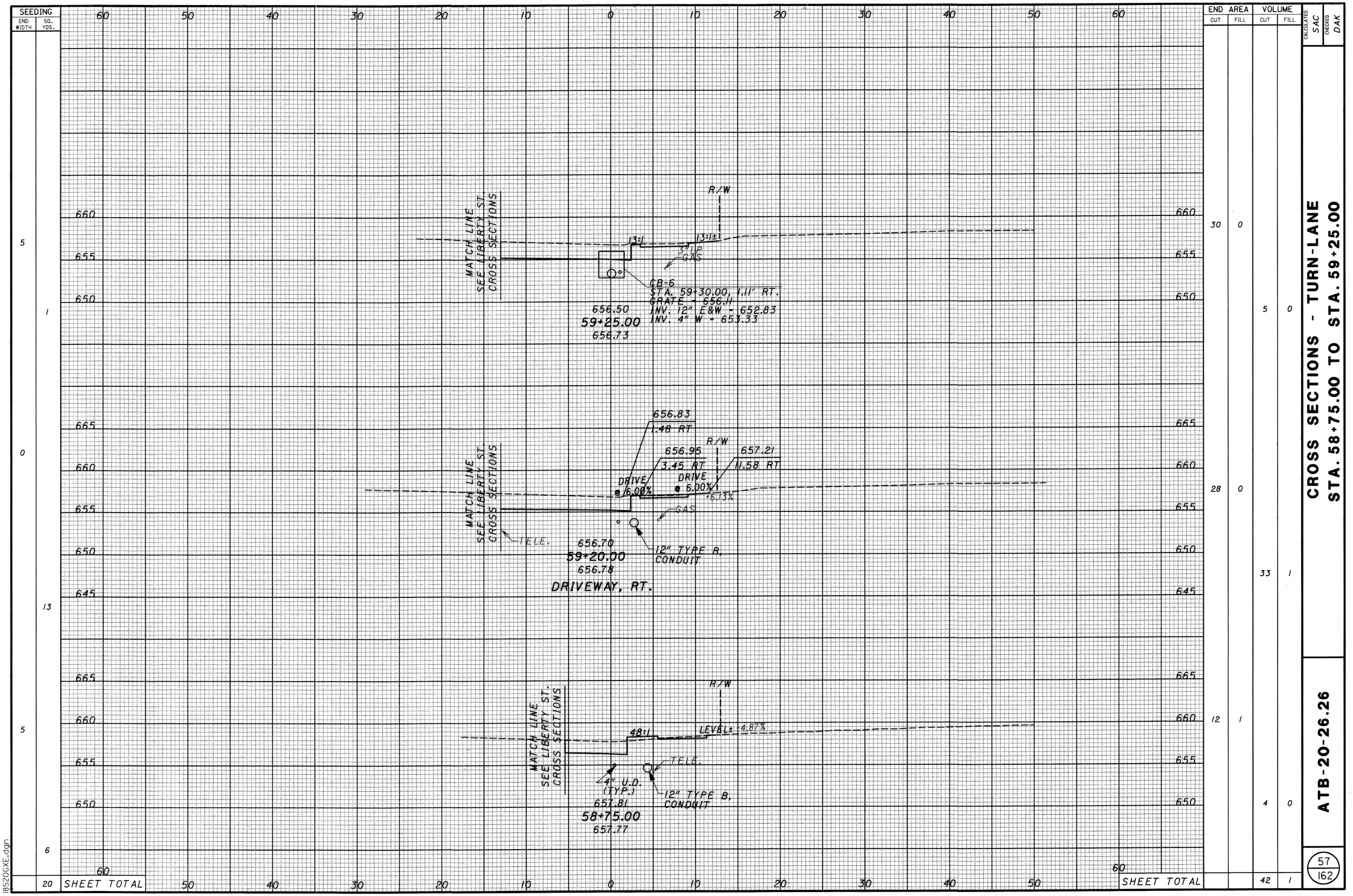

I8520GXE.dgn

SEEDING	
END WIDTH	SQ. YDS.
12	
	31
10	
	33
14	
	26
	90

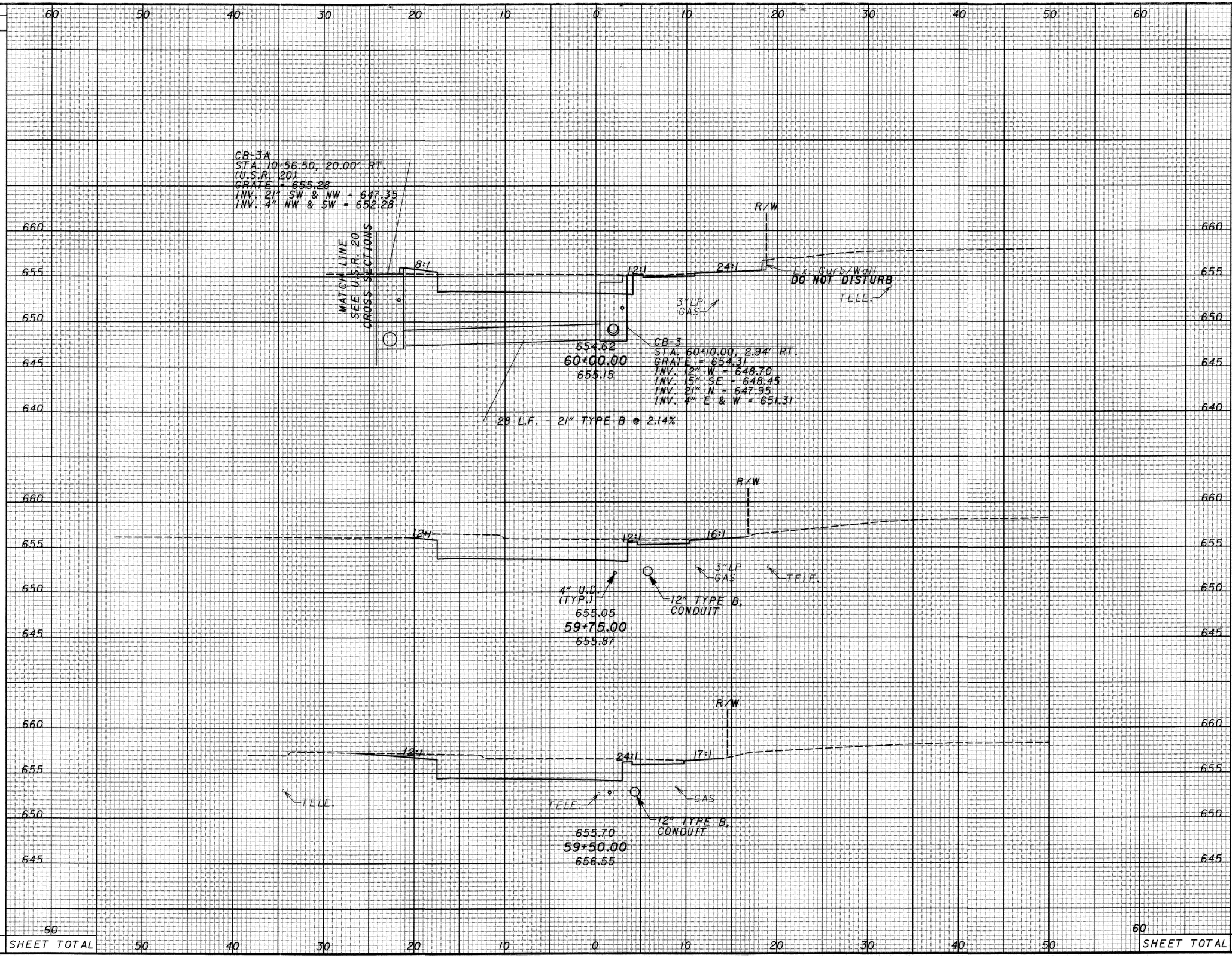

END AREA		VOLUME	
CUT	FILL	CUT	FILL
44	2		
56	0		
		46	1
51	0		
55	0		
		39	0
		136	1

CALCULATED SAC
CHECKED DAK

CROSS SECTIONS - TURN-LANE
STA. 59+50.00 TO STA. 60+00.00

ATB-20-26.19

58
162

I8520GXE.dgn

SEEDING END WIDTH	SEEDING SQ. YDS.
8	5
0	6
8	28
	39

END AREA CUT	END AREA FILL	VOLUME CUT	VOLUME FILL
16	2		
18	2		
		7	1
		11	1
22	3		
		31	2
		49	4

CALCULATED SAC
CHECKED DAK

CROSS SECTIONS - TURN-LANE
STA. 60+25.00 TO STA. 60+50.00

ATB-20-26.19

59
162

MATCH LINE
SEE U.S.R. 20
CROSS SECTIONS

R/W

DRIVE @ +1.00%
DRIVE @ -3.74%
+5.36%
DRIVEWAY, RT.
ABND. GAS
3"LP GAS
8" EX. STORM
TO BE REMOVED
6" WATER
UNK
UNK
8" EX. STORM
TO BE REMOVED
18" TYPE B, CONDUIT
654.73
60+50.00
654.63

654.87
19.45 RT
654.72
4.14 RT
654.74
6.11 RT
DRIVE @ +1.00%
+9.53%
ABND. GAS
8" EX. STORM
TO BE REMOVED
3"LP GAS
8" EX. STORM
TO BE REMOVED
18" TYPE B, CONDUIT
654.69
60+39.50
654.56
DRIVEWAY, RT.

LEVEL±
LEVEL±
Ex. Curb/Wall
DO NOT DISTRUB
3"LP GAS
4" U.D. (TYP.)
18" TYPE B, CONDUIT
654.65
60+25.00
654.47

SHEET TOTAL

18520CXE.dgn

SEEDING	
END WIDTH	SQ. YDS.
26	29
0	4

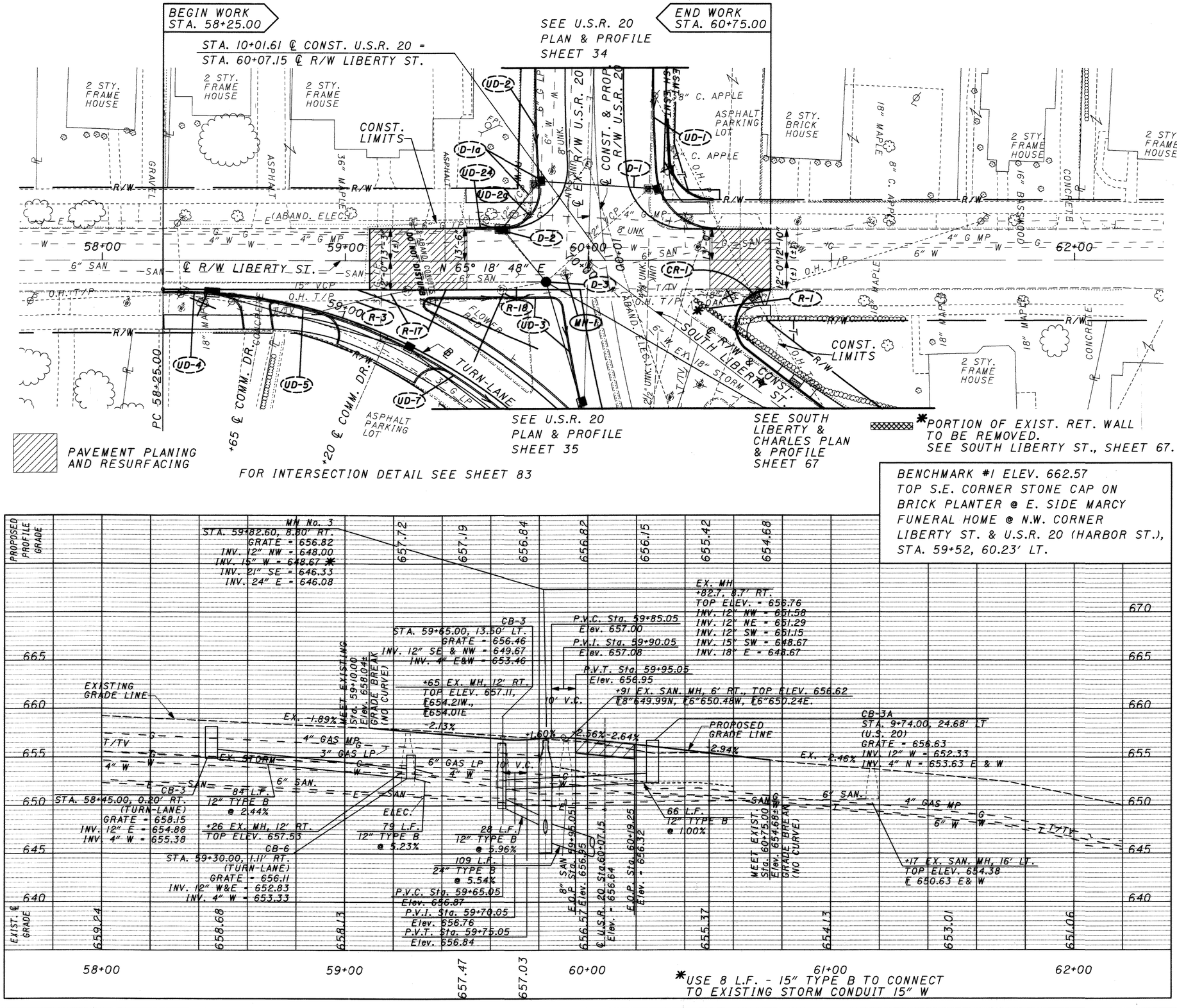

BENCHMARK #1 ELEV. 662.57
TOP S.E. CORNER STONE CAP ON BRICK PLANTER @ E. SIDE MARCY FUNERAL HOME @ N.W. CORNER LIBERTY ST. & U.S.R. 20 (HARBOR ST.), STA. 59+52, 60.23' LT.

REF NO.	STATION FROM	STATION TO	SIDE		
				604	MANHOLE ADJUSTED TO GRADE
				EACH	1
MH-1	59+91		RT		
TOTALS CARRIED TO GENERAL SUMMARY					1

CALCULATED CMK
CHECKED SAC

HORIZONTAL SCALE IN FEET
0 10 20 40

PLAN AND PROFILE LIBERTY STREET

ATB-20-26.19

61
162

I8520CPF.dgn

SEEDING	
END WIDTH	SQ. YDS.
0	

END AREA		VOLUME	
CUT	FILL	CUT	FILL
4	0		

CALCULATED SAC
CHECKED DAK

60 50 40 30 20 10 0 10 20 30 40 50 60

670
665
660
655
650

BEGIN TURN-LANE
STA. 58+25.00

MATCH LINE
SEE TURN-LANE CROSS SECTIONS

6"LP GAS
GAS
4" MP
ABND ELEC.
4" WATER
15" STORM
6" SAN.

58+25.00
658.96

58+00.00
659.24

57+50.00
659.87

EX. MH
STA. 56+74.9, 9.8' RT.
TOP ELEV. = 660.62
INV. 15" NE = 656.88

SHEET TOTAL

CROSS SECTIONS - LIBERTY STREET
STA. 57+50.00 TO STA. 58+25.00

ATB-20-26.19

62
162

18520CXB.dgn

SEEDING	
END WIDTH	SQ. YDS.
0	0
0	0
0	0
0	0
0	0
0	0

END AREA		VOLUME	
CUT	FILL	CUT	FILL
7	0		
18	0	5	0
4	0	20	0
		4	0
		29	0

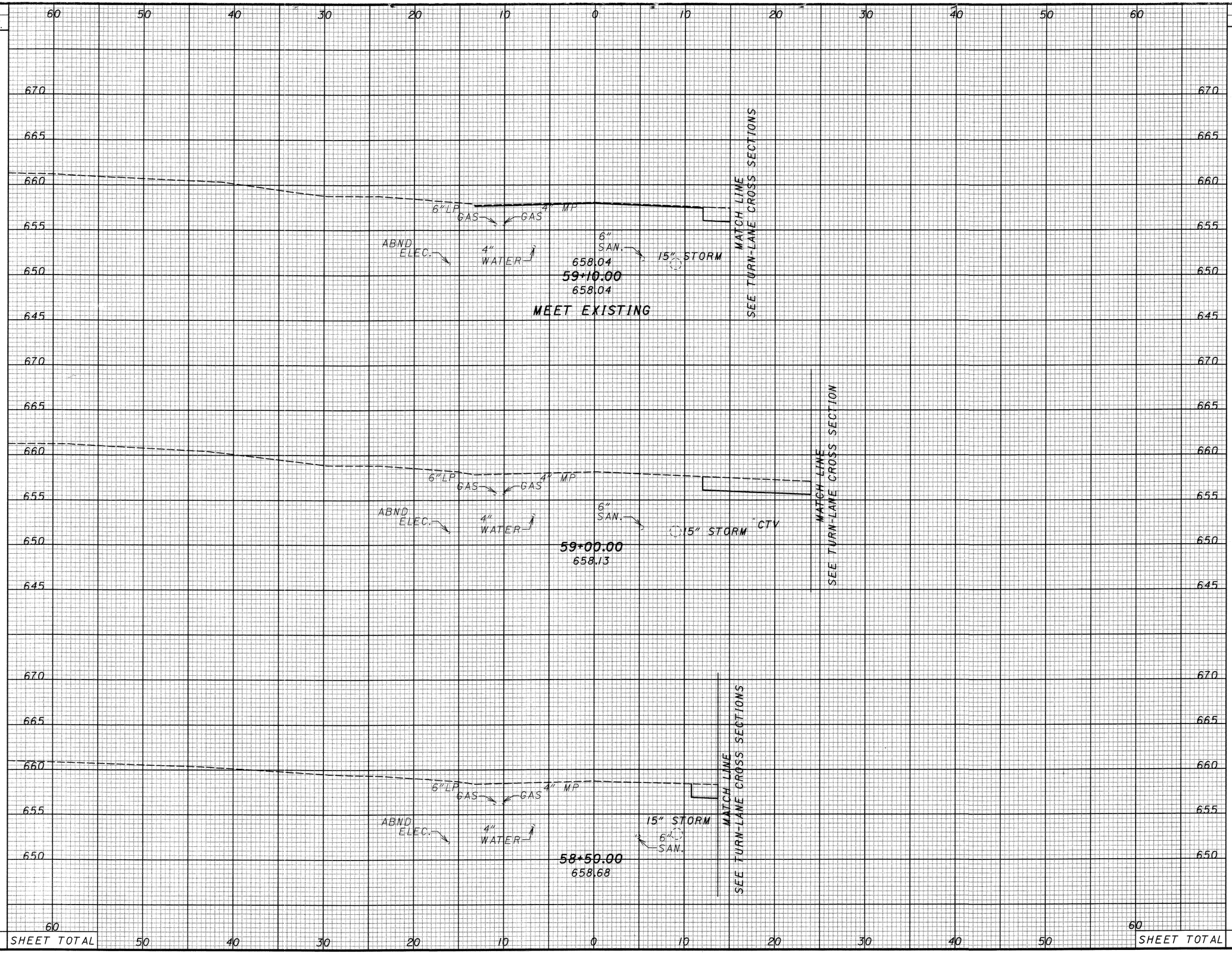

CALCULATED SAC
CHECKED DAK

CROSS SECTIONS - LIBERTY STREET
STA. 58+50.00 TO STA. 59+10.00

ATB-20-26.19

63
162

I8520GXB.dgn

SEEDING END WIDTH	SEEDING SQ. YDS.
0 BACK	
	40
16	
	36
	76

END AREA CUT	END AREA FILL	VOLUME CUT	VOLUME FILL
62 BACK	0		
		101	2
59 AHEAD	2		
8 BACK	1		
		11	1
SHEET TOTAL		112	3

CALCULATED SAC
CHECKED DAK

CROSS SECTIONS - LIBERTY STREET
STA. 59+50.00 TO STA. 59+95.05

ATB-20-26.19

64
162

EX. MH
STA. 59+82.7, 8.7' RT.
TOP ELEV. = 656.76
INV. 12" NW = 651.58
INV. 12" NE = 651.29
INV. 12" SW = 651.15
INV. 15" SW = 648.67
INV. 18" E = 648.67

MH No. 3
STA. 59+82.60, 8.80' RT.
GRATE = 656.82
INV. 12" NW = 648.00
INV. 15" W = 648.67
INV. 21" SE = 646.33
INV. 24" E = 646.08

MATCH LINE
SEE INTERSECTION DETAIL

8" UNK.
6" WATER
6" SAN.

656.95
59+95.05
656.66

28 L.F. - 12" TYPE B
@ 5.96%

CB-3
STA. 59+65.00, 13.50' LT.
GRATE = 656.46
INV. 12" NW & SE = 649.67
INV. 4" E&W = 653.46

12:1

6" LP GAS
TO BE RELOCATED BY OTHERS

GAS 4" MP

ABND ELEC.

6" SAN.

4" WATER

EX. 15" STM

CTV

657.19
59+50.00
657.47

28 L.F. - 12" TYPE B
@ 5.96%

BEGIN FULL DEPTH PAVEMENT REPLACEMENT

18520GXB.dgn

SEEDING END WIDTH	SEEDING SQ. YDS.
0	7
5	9
0 AHEAD	
16	SHEET TOTAL
92	LIBERTY ST. TOTAL

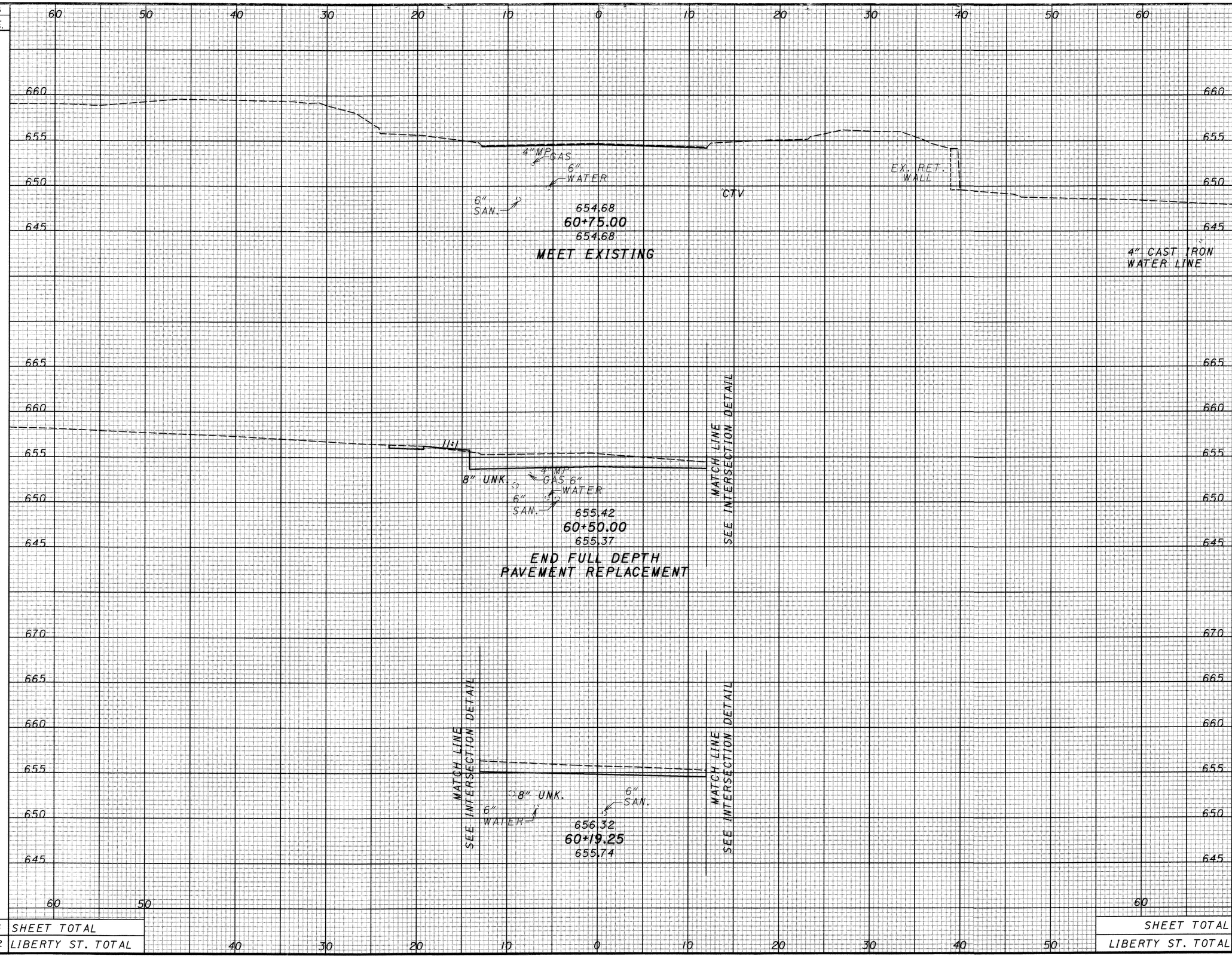

END AREA CUT	END AREA FILL	VOLUME CUT	VOLUME FILL
2	0		
		2	1
3 AHEAD	1		
36 BACK	1		
		48	1
48 AHEAD	0		
SHEET TOTAL		50	2
LIBERTY ST. TOTAL		191	5

CALCULATED SAC
CHECKED DAK

CROSS SECTIONS - LIBERTY STREET
STA. 60+19.25 TO STA. 60+75.00

ATB-20-26.19

65
162

18520CXB.dgn

SEEDING	
END WIDTH	SQ. YDS.

END AREA		VOLUME	
CUT	FILL	CUT	FILL

CALCULATED SAC
CHECKED DAK

60 50 40 30 20 10 0 10 20 30 40 50 60

655
650
645
660
655
650
645

4"MP GAS
6" WATER
61+50.00
653.01
4"MP GAS
6" SAN.
6" WATER
61+00.00
654.13
EX. RET. WALL

60 SHEET TOTAL 50 40 30 20 10 0 10 20 30 40 50 60 SHEET TOTAL

CROSS SECTIONS - LIBERTY STREET
STA. 61+00.00 TO STA. 61+50.00

ATB-20-26.19

66
162

18520GXB.dgn

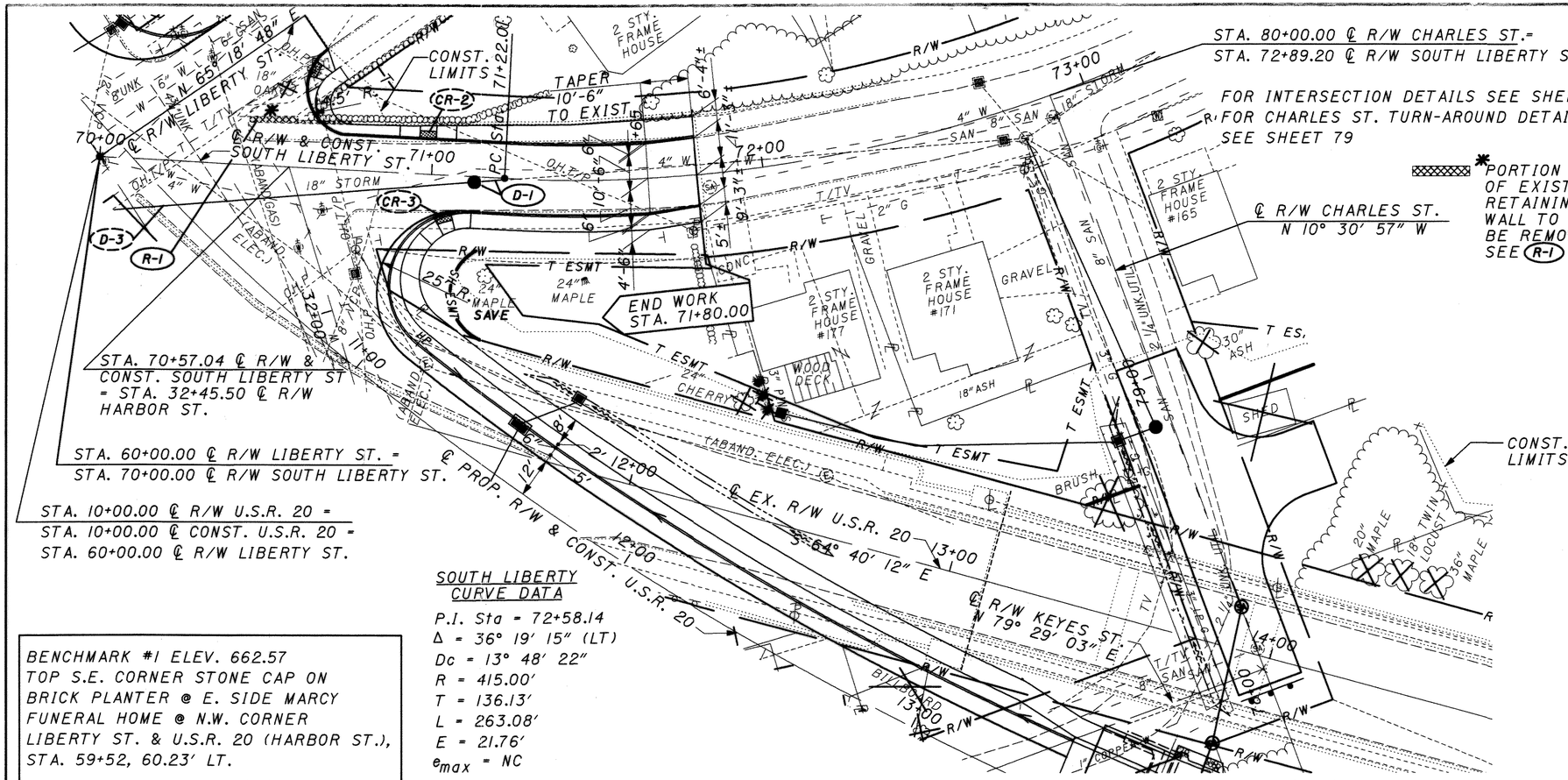

REF NO.	STATION FROM	STATION TO	SIDE	202 PORTIONS OF STRUCTURE REMOVED	603 18" CONDUIT, TYPE B	604 MANHOLE NO.3
				LUMP	LIN.FT.	EACH
R-1	70+44	70+75	LT	LUMP	10	1
D-1	71+13	71+13	RT			
TOTALS CARRIED TO GENERAL SUMMARY				LUMP	10	1

HORIZONTAL SCALE IN FEET
0 10 20 40

CALCULATED CMK
CHECKED SAC

PLAN AND PROFILE SOUTH LIBERTY STREET

ATB-20-26.19

I8520GPC.dgn

SEEDING	
END WIDTH	SQ. YDS.
0	
	0
0	
0	SHEET TOTAL

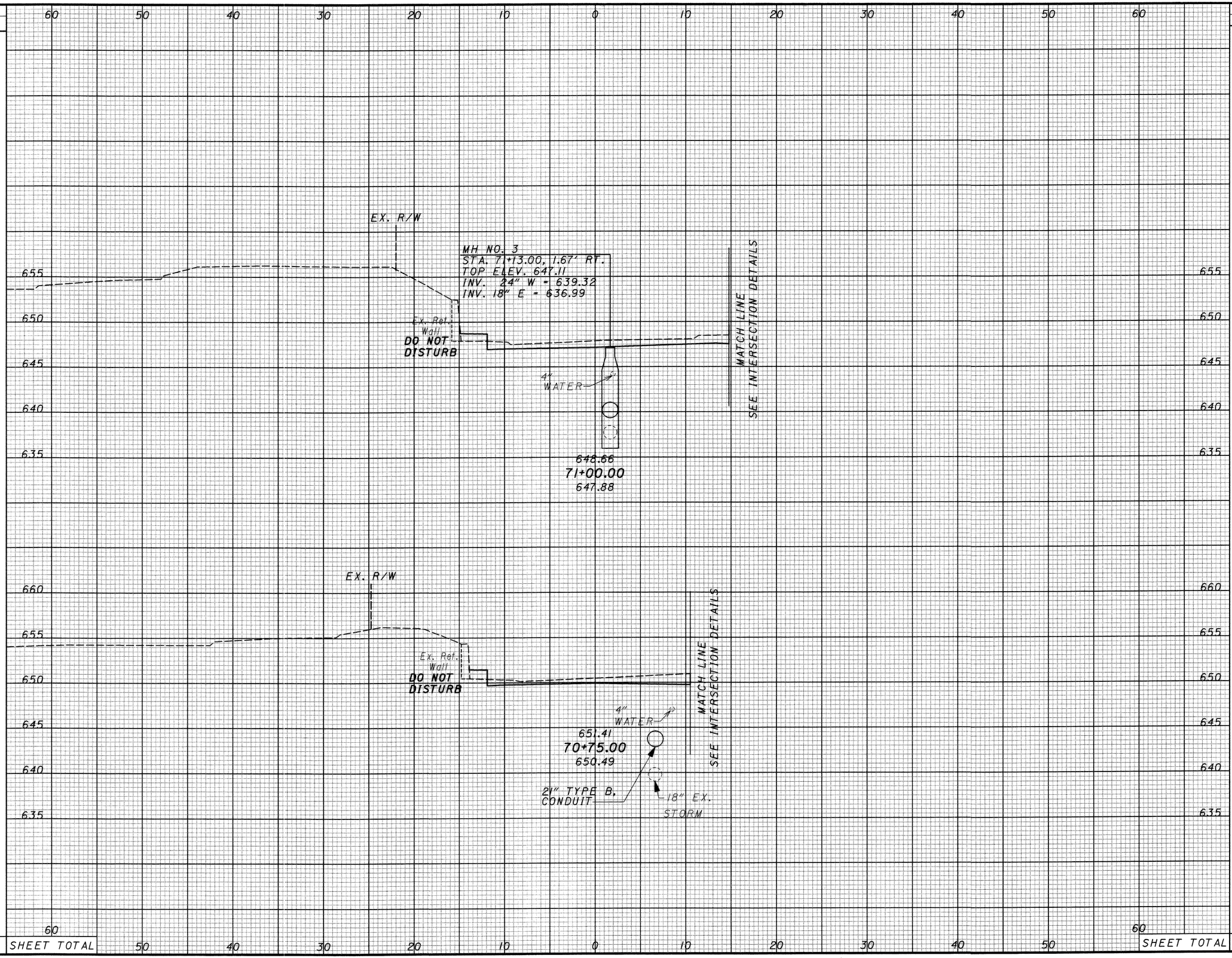

END AREA		VOLUME	
CUT	FILL	CUT	FILL
39	2		
		25	2
15	2		
		25	2

CALCULATED SAC
CHECKED DAK

CROSS SECTIONS - SOUTH LIBERTY STREET
STA. 70+75.00 TO STA. 71+00.00

ATB-20-26.19

68
162

I8520CXC.dgn

SEEDING END WIDTH	SEEDING SQ. YDS.
2	12
5	14
	26 SHEET TOTAL
	26 S. LIBERY ST. TOTAL

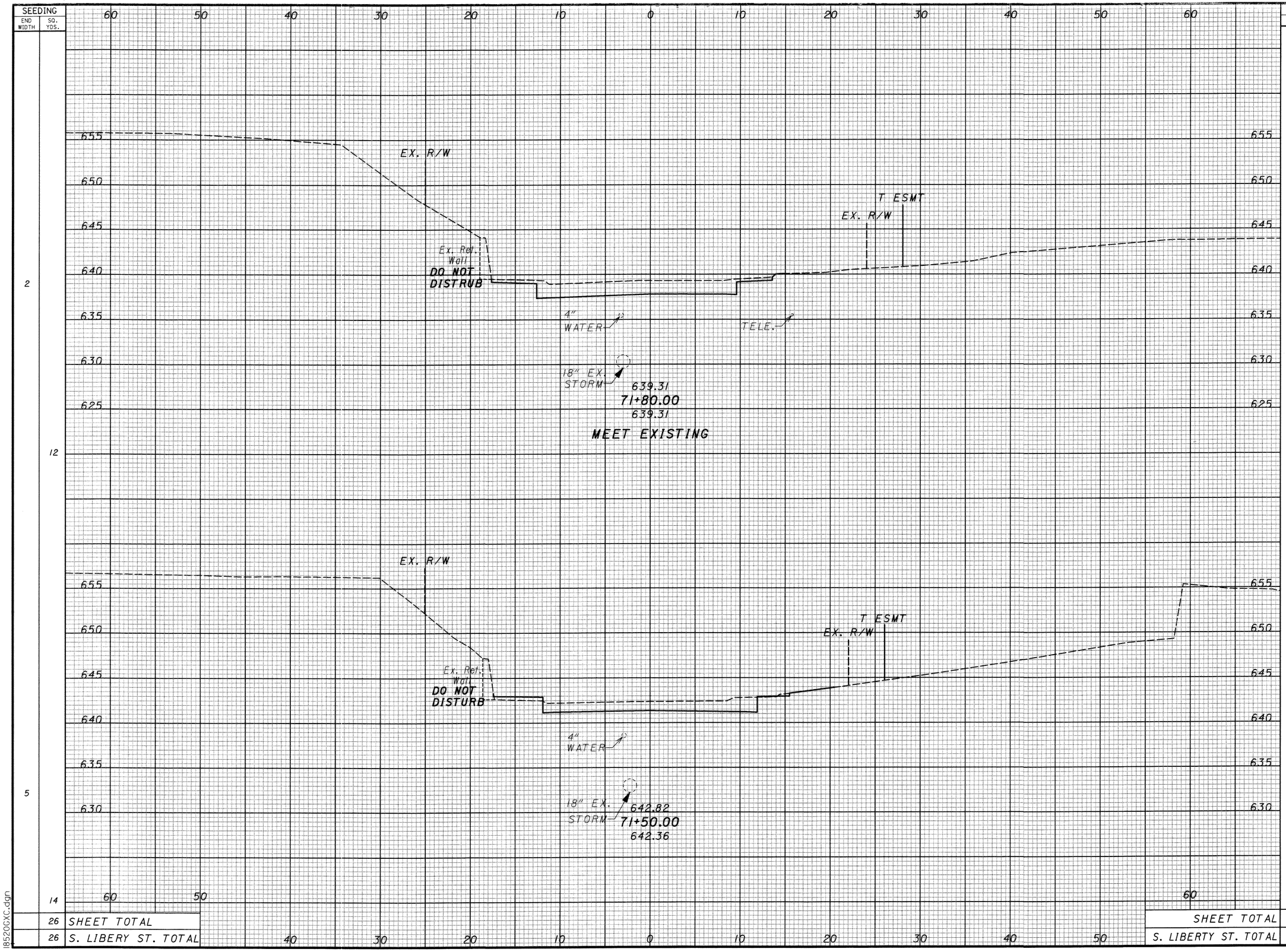

END AREA CUT	END AREA FILL	VOLUME CUT	VOLUME FILL
37	0		
		36	1
27	2		
		61	4
SHEET TOTAL		97	5
S. LIBERTY ST. TOTAL		122	7

CALCULATED SAC
CHECKED DAK

CROSS SECTIONS - SOUTH LIBERTY STREET STA. 71+50.00 TO STA. 71+80.00

ATB-20-26.19

69
162

I85200XC.dgn

SEEDING	
END WIDTH	SQ. YDS.

END AREA		VOLUME	
CUT	FILL	CUT	FILL

CALCULATED SAC
CHECKED DAK

CROSS SECTIONS - SOUTH LIBERTY STREET
STA. 72+00.00 TO STA. 72+50.00

ATB-20-26.19

70
162

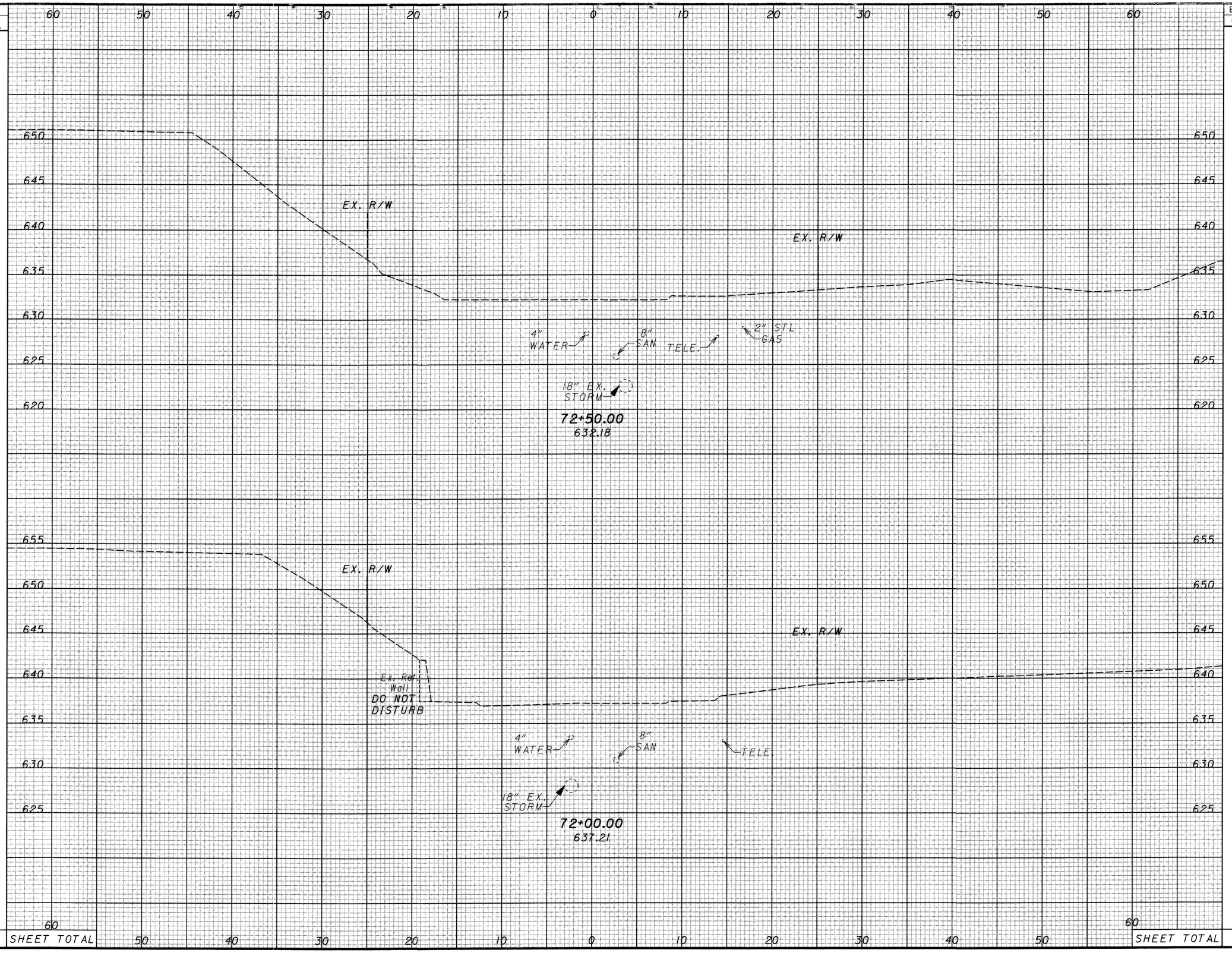

18520XC.dgn

FOR DRIVE DETAILS AND QUANTITIES SEE SHEETS 85, 86
FOR INTERSECTION DETAIL SEE SHEET 84
FOR U.S.R 20 PLAN & PROFILE SEE SHEET 35
FOR UNDERDRAIN QUANTITIES SEE SHEET 87
FOR HARBOR ST. PLAN & PROFILE SEE SHEET 76

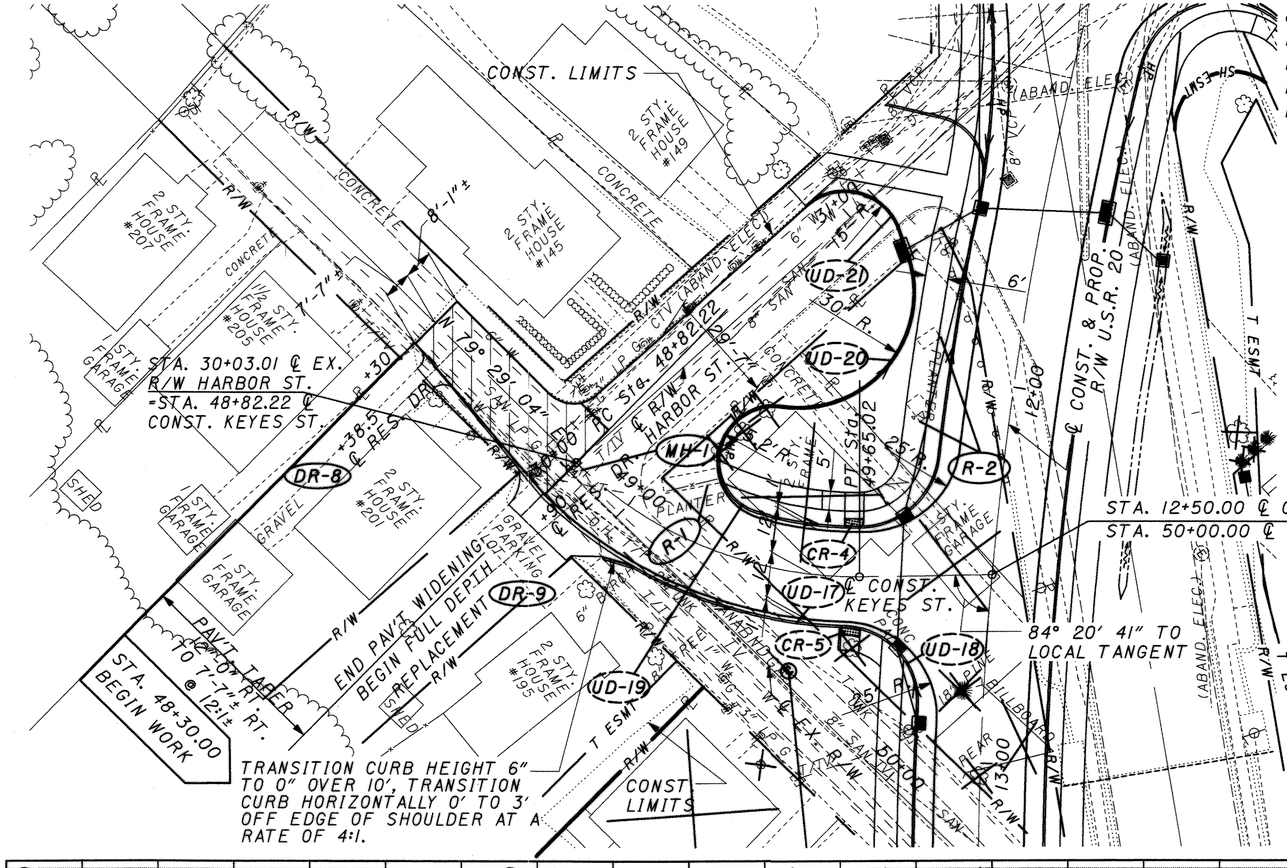

CURVE DATA KEYES ST.
P.I. Sta = 49+25.84
Δ = 44° 30' 18" (LT)
Dc = 53° 45' 00"
R = 106.60'
T = 43.62'
L = 82.80'
E = 8.58'
e_{max} = 0.029 (NDC = 0.040)

= PAVEMENT PLANING AND RESURFACING

BENCHMARK #1 ELEV. 662.57
TOP S.E. CORNER STONE CAP ON BRICK PLANTER @ E. SIDE MARCY FUNERAL HOME @ N.W. CORNER LIBERTY ST. & U.S.R. 20 (HARBOR ST.), STA. 59+52, 60.23' LT.

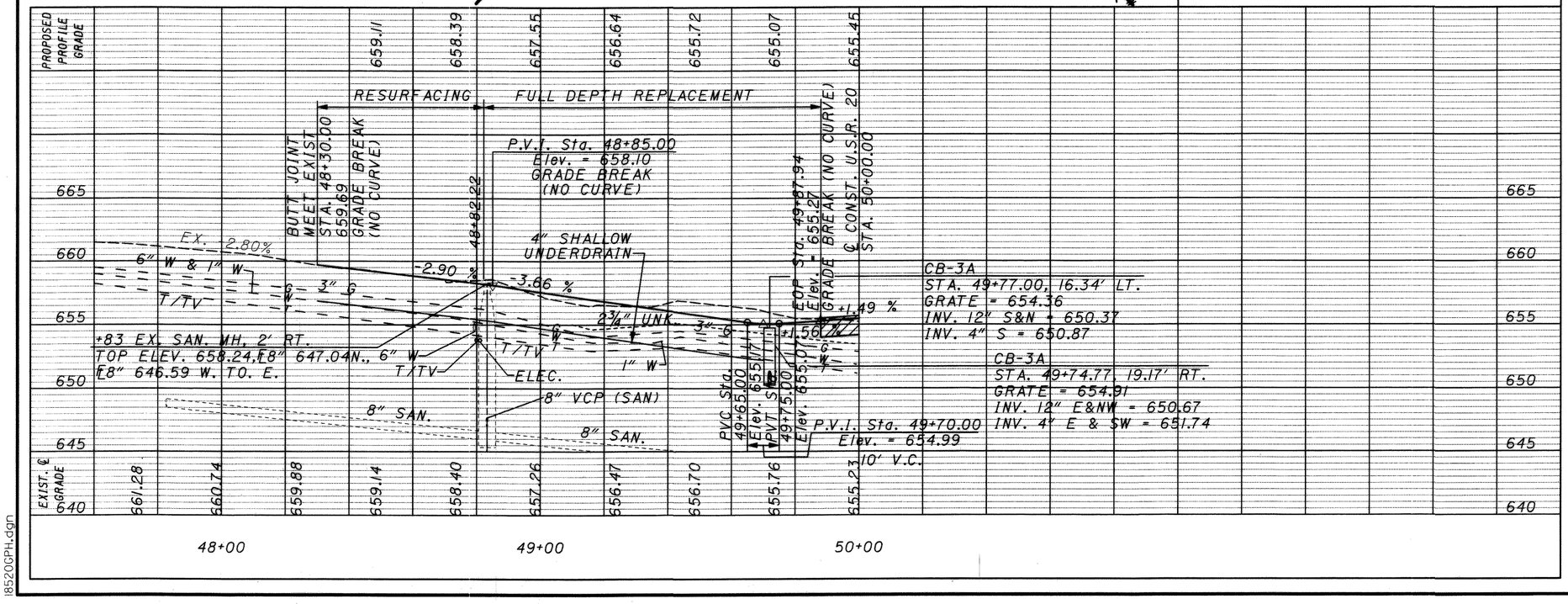

REF NO.	STATION FROM	STATION TO	SIDE	604 MANHOLE ADJUSTED TO GRADE EACH	202 FENCE REMOVED LIN FT	202 REMOVAL MISC.: PLANTER EACH
R-1	49+12.00		LT		14	1
R-2	49+81.00	49+84.00	LT	1		2
MH-1	48+83.00		RT			
TOTALS CARRIED TO GENERAL SUMMARY				1	14	3

HORIZONTAL SCALE IN FEET 0 10 20 40
CALCULATED CMK CHECKED SAC

PLAN AND PROFILE KEYES STREET

ATB-20-26.19

18520GPH.dgn

SEEDING	
END WIDTH	SQ. YDS.
3	
SHEET TOTAL	

END AREA		VOLUME	
CUT	FILL	CUT	FILL
		23	0

CALCULATED SAC
CHECKED DAK

60 50 40 30 20 10 0 10 20 30 40 50 60

665 660 655 650 645

659.70
8.25 RTR/W
659.85
12.00 RT
0.04
0.04
1" WATER
3" LP GAS
TELE.
6" WATER
8" SAN
659.45
48+38.50
659.42
DRIVEWAY, RT.

R/W
R/W
1" WATER
3" LP GAS
6" WATER
8" SAN
4" U.D. (TYP.)
659.69
48+30.00
659.69
MEET EXISTING

R/W
R/W
1" WATER
3" LP GAS
8" SAN
48+00.00
660.74

CROSS SECTIONS - KEYES STREET
STA. 48+00.00 TO STA. 48+38.50

ATB-20-26.19

72
162

I8520GXD.dgn

SEEDING	
END WIDTH	SQ. YDS.
7	29
9	13
	42

END AREA		VOLUME	
CUT	FILL	CUT	FILL
44	0		
		41	0
24	0		
		17	0
		58	0

CALCULATED SAC
CHECKED DAK

CROSS SECTIONS - KEYES STREET
STA. 48+50.00 TO STA. 48+90.00

ATB-20-26.19

73
162

185200XD.dgn

60 50 40 30 20 10 0 10 20 30 40 50 60

665 660 655 650 645 670

658.09
13.00 RT
0.04

658.43
21.15 RT
0.02

3"LP GAS
TELE.
ABAND. GAS
TELE.
TV
1" WATER
8" SAN

657.92
48+90.00
658.10

DRIVEWAY, RT.
(ALONG SKEW)

MATCH LINE
SEE INTERSECTION DETAILS

DRIVEWAY, RT.

TELE.
ABAND. GAS
3"LPGAS
1" TV
WATER
4" U.D.
(TYP.)
8" SAN
TELE.

658.18
48+82.22
658.51

WATER

R/W
R/W

1" WATER
3" GAS
TELE.
6" WATER
8" SAN

659.11
48+50.00
659.14

SHEET TOTAL
SHEET TOTAL

SEEDING	
END WIDTH	SQ. YDS.
12	22
4	11
	33

END AREA		VOLUME	
CUT	FILL	CUT	FILL
49	37		
		38	30
34	28		
		26	9
		64	39

CALCULATED SAC
CHECKED DAK

CROSS SECTIONS - KEYES STREET
STA. 49+00.00 TO STA. 49+25.00

ATB-20-26.19

74
162

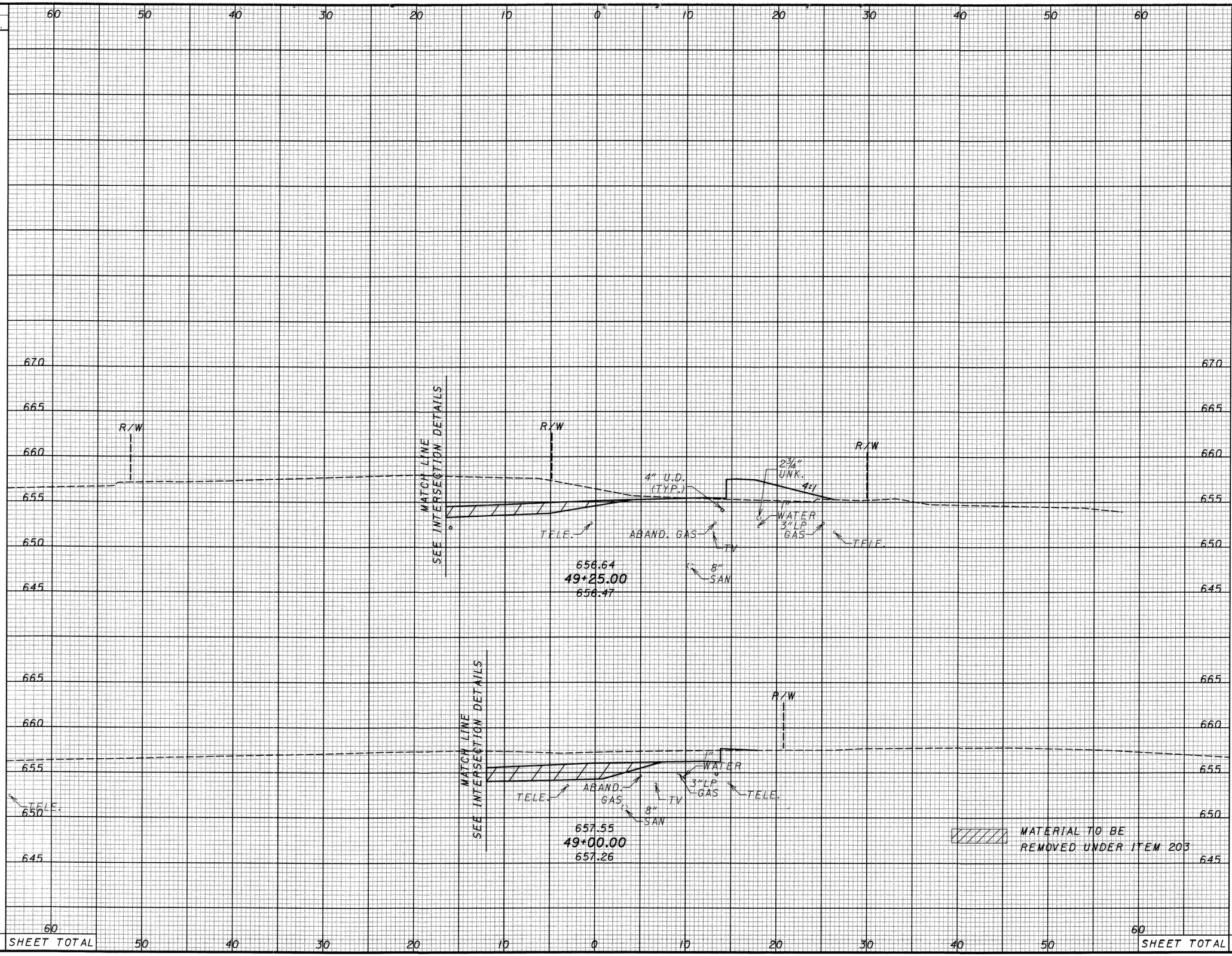

SHEET TOTAL

SHEET TOTAL

18520GXD.dgn

SEEDING	
END WIDTH	SQ. YDS.
0	
120	
57	
96	
216	SHEET TOTAL
291	KEYES ST. SHEET

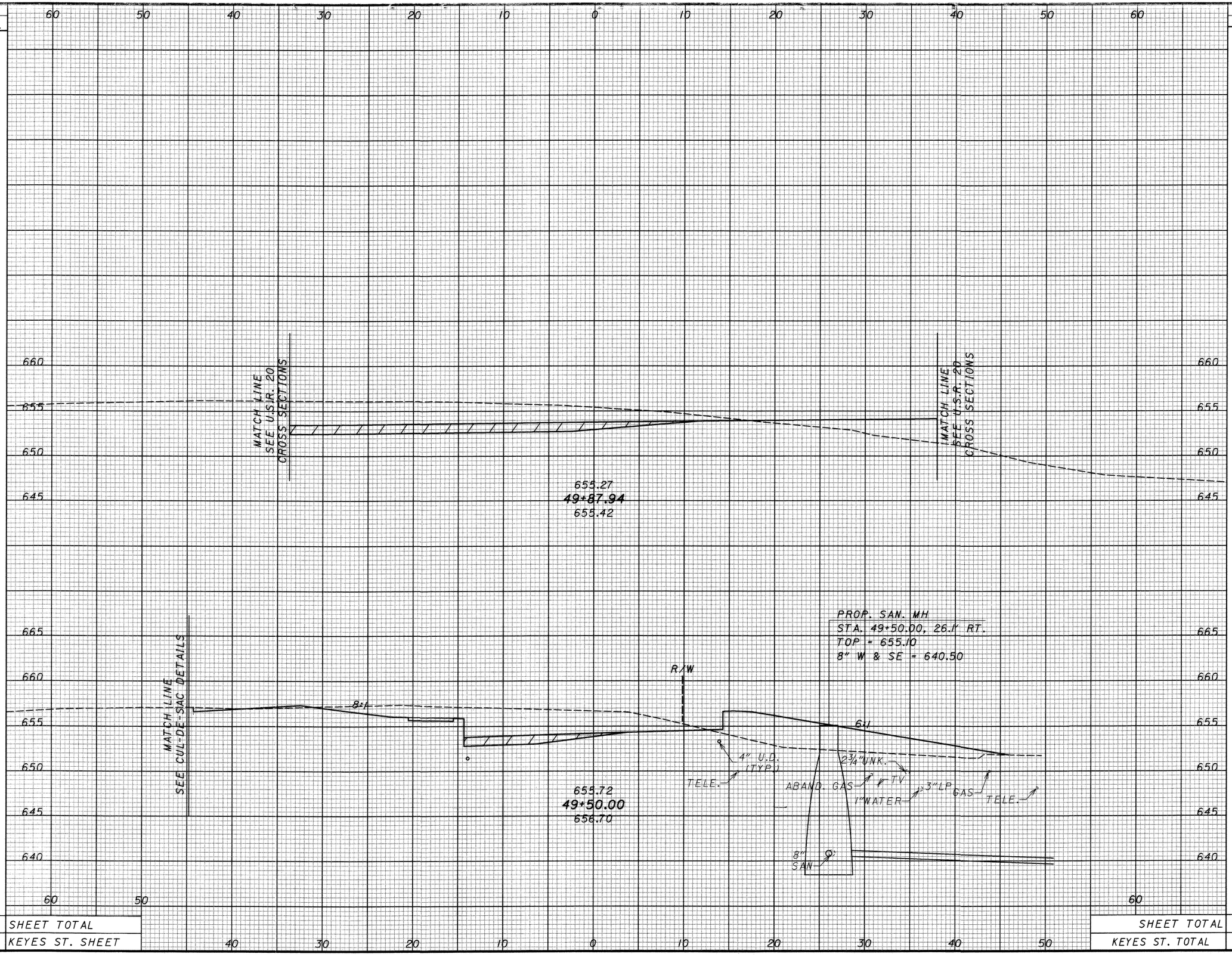

END AREA		VOLUME	
CUT	FILL	CUT	FILL
95	64		
		123	103
80	82		
		60	55
SHEET TOTAL		183	158
KEYES ST. TOTAL		305	197

CALCULATED SAC
CHECKED DAK

CROSS SECTIONS - KEYES STREET
STA. 49+50.00 TO STA. 49+87.94

ATB-20-26.19

75
162

18520CXD.dgn

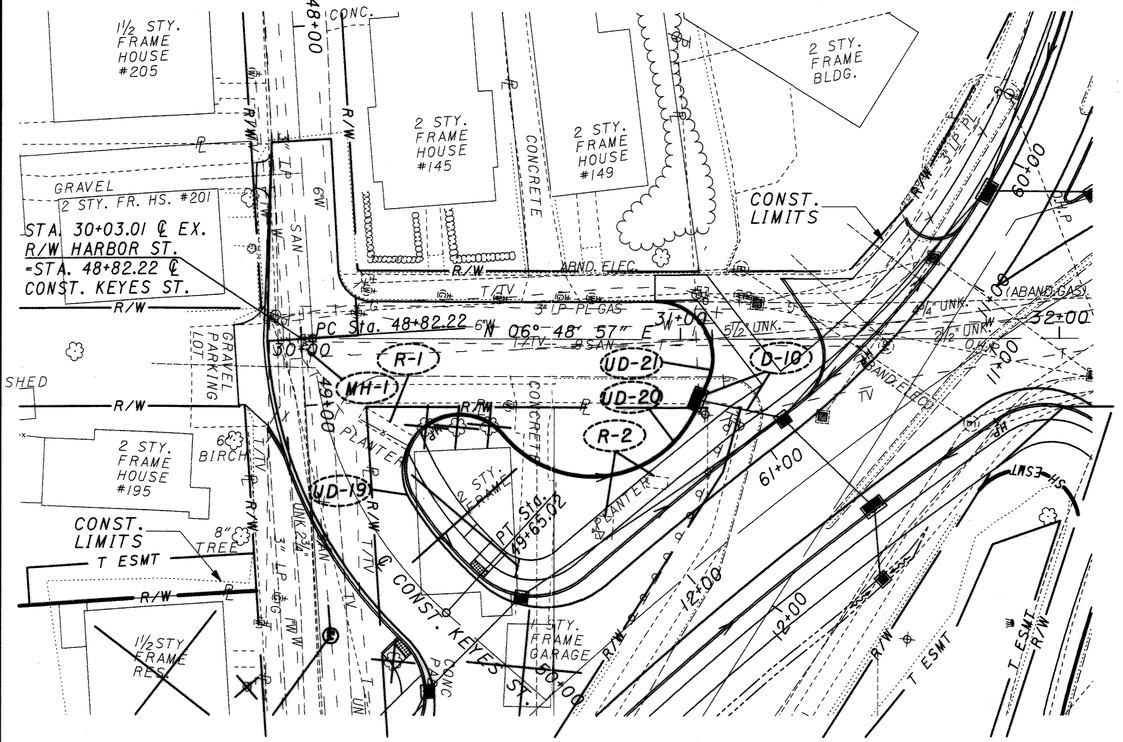

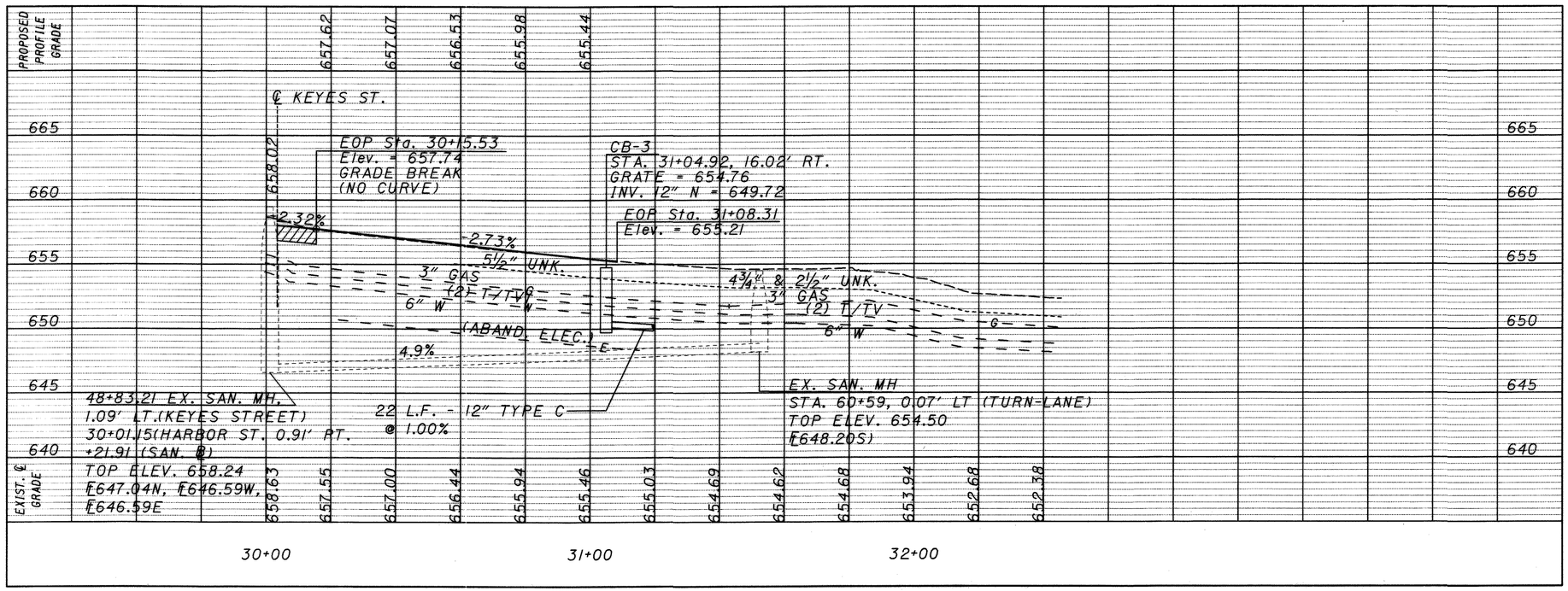

FOR INTERSECTION DETAILS SEE SHEET 84
FOR UNDERDRAIN QUANTITIES SEE SHEET 87
FOR KEYES ST. PLAN & PROFILE SEE SHEET 71

REF NO.	STATION FROM	STATION TO	SIDE

TOTALS CARRIED TO GENERAL SUMMARY

N

HORIZONTAL SCALE IN FEET
0 10 20 40

CALCULATED
CHECKED

PLAN AND PROFILE HARBOR STREET

ATB-20-26.19

I8520GPl.dgn

SEEDING	
END WIDTH	SQ. YDS.
16	22
0	0
0	0
0	0
	22

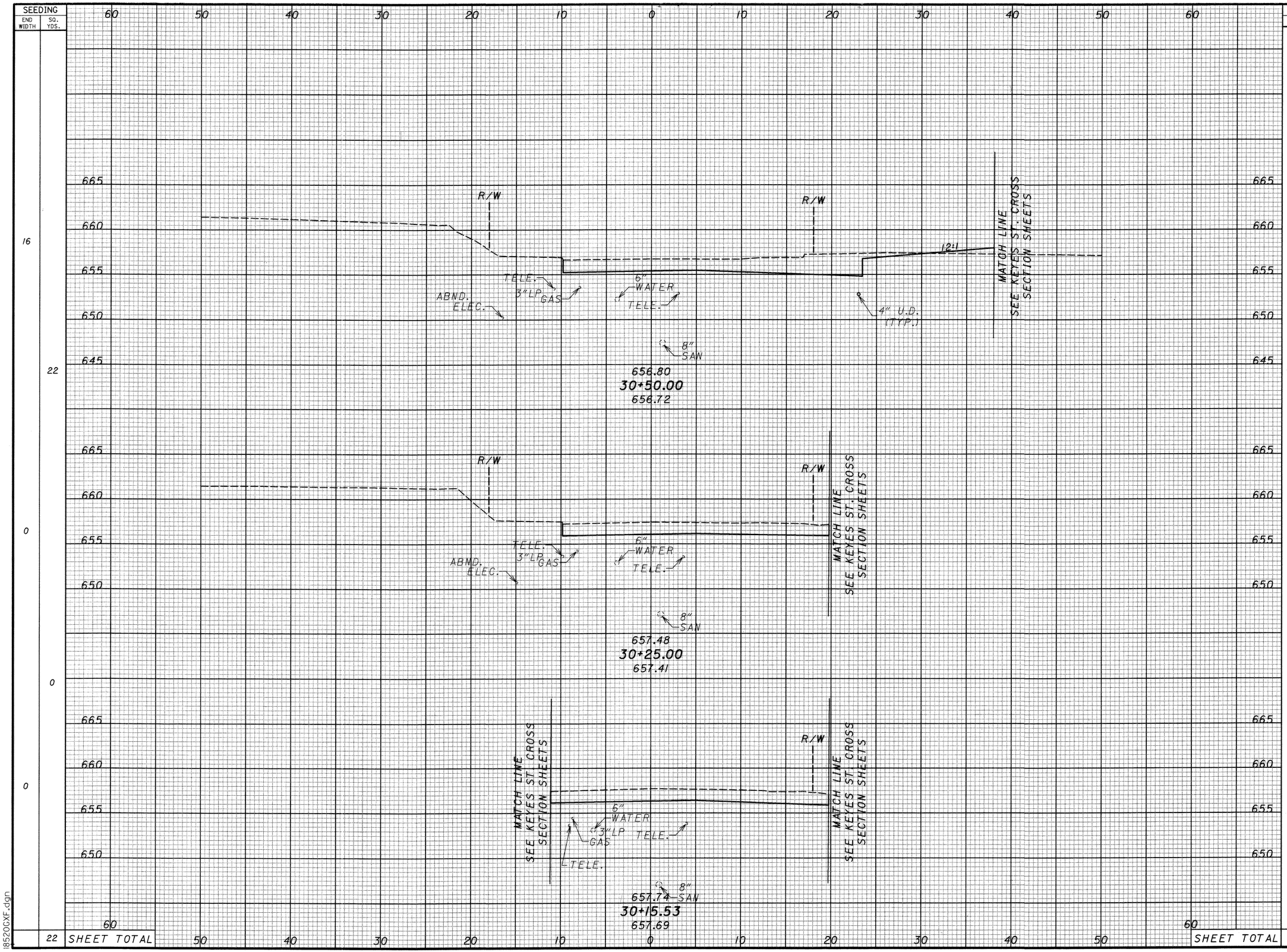

END AREA		VOLUME	
CUT	FILL	CUT	FILL
56	3		
		44	1
38	0		
		14	0
41	0		
SHEET TOTAL		58	1

CALCULATED SAC
CHECKED DAK

CROSS SECTIONS - HARBOR STREET STA. 30+15.53 TO STA. 30+50.00

ATB-20-26.19

77
162

18520GXF.dgn

SEEDING	
END WIDTH	SQ. YDS.
	4
	22
	12
	39
61	SHEET TOTAL
83	HARBOR ST. TOTAL

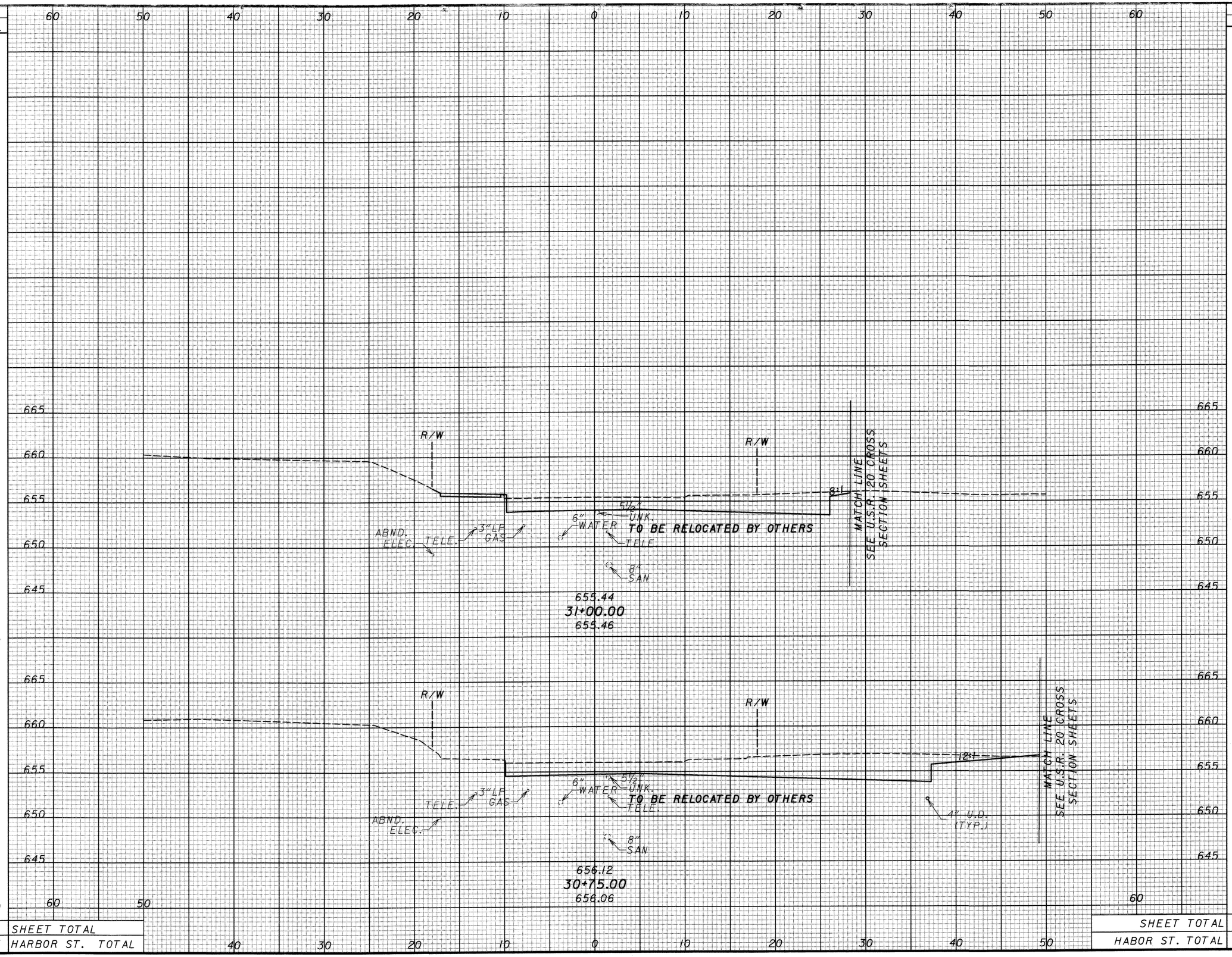

END AREA		VOLUME	
CUT	FILL	CUT	FILL
64	0		
		76	0
101	0		
		73	1
SHEET TOTAL		149	1
HABOR ST. TOTAL		207	2

CALCULATED SAC
CHECKED DAK

CROSS SECTIONS - HARBOR STREET
STA. 30+75.00 TO STA. 31+00.00

ATB-20-26.19

78
162

18520GXF.dgn

FOR SANITARY SEWER DETAILS
SEE SHEET 88

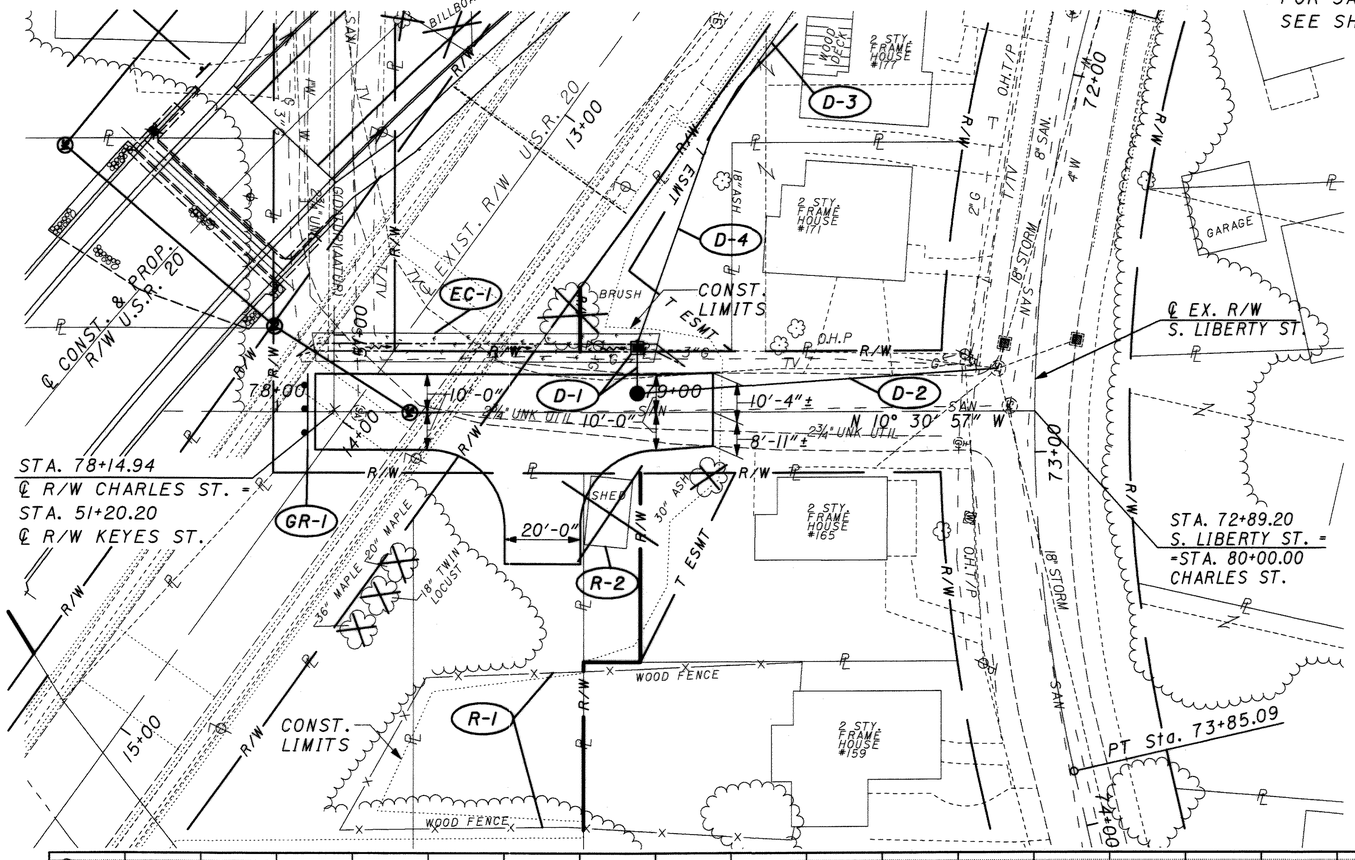

SPRING DRAIN DETAILS,
(D-3 & D-4)

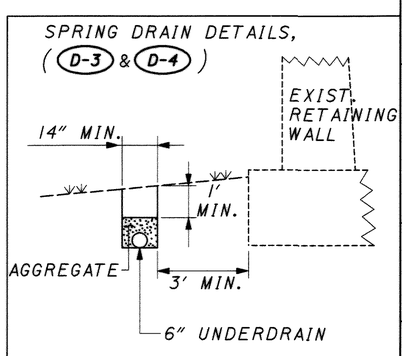

FOR MORE DETAILS SEE SCD DM-1.1

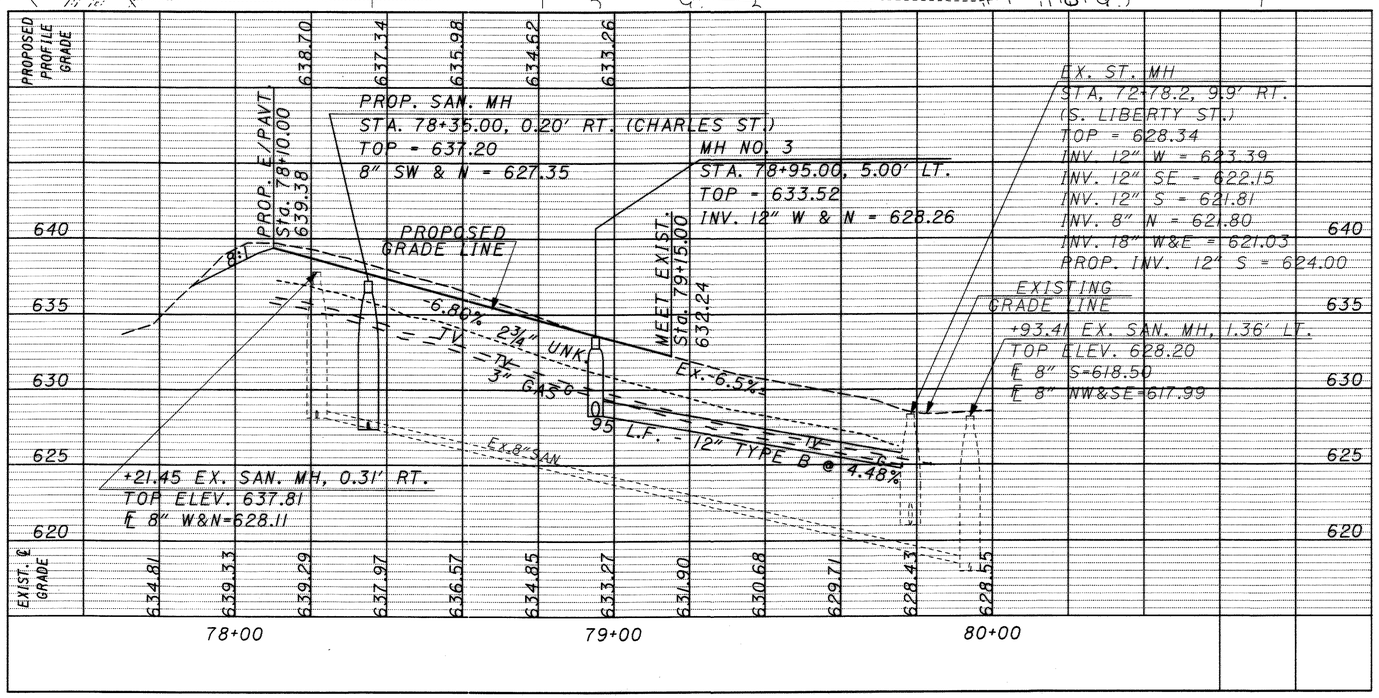

REF NO.	STATION FROM	STATION TO	SIDE	670 DITCH EROSION PROTECTION (7.5'WIDTH) SQ.YD.	606 FLARED END SECTION EACH	606 GUARDRAIL, TYPE 5 LIN FT	605 AGGREGATE DRAIN FOR SPRINGS LIN FT	605 6" UNCLASSIFIED PIPE UNDERDRAIN FOR SPRINGS LIN FT	604 MANHOLE, NO. 3 EACH	604 CATCH BASIN NO. 2-2B EACH	603 12" CONDUIT, TYPE B LIN FT	202 REMOVAL MISC.: SHED EACH	202 FENCE REMOVED EACH
D-1	78+95		LT							1	12		
D-2	78+95	72+78.2 (S. LIBERTY)	LT				42	42			95		
D-3	12+16, 63.5'LT (US 20)	12+59, 75.5'LT (US 20)	LT	75									
D-4	12+59 (US 20)	78+95	LT,LT		2	25	60	60					
EC-1	78+10	79+00	LT										
GR-1	78+08		LT,RT										
R-1	78+16.5!	78+80.94	RT									1	
R-2	78+88		RT										
TOTALS CARRIED TO GENERAL SUMMARY				75	2	25	102	102	1	1	107	1	153

N

0 10 20 40
HORIZONTAL SCALE IN FEET

CALCULATED CMK
CHECKED SAC

PLAN AND PROFILE
CHARLES STREET

ATB-20-26.19

79
162

18520GPl.dgn

SEEDING END WIDTH	SEEDING SQ. YDS.
	29
	88
	24
	88
	SHEET TOTAL

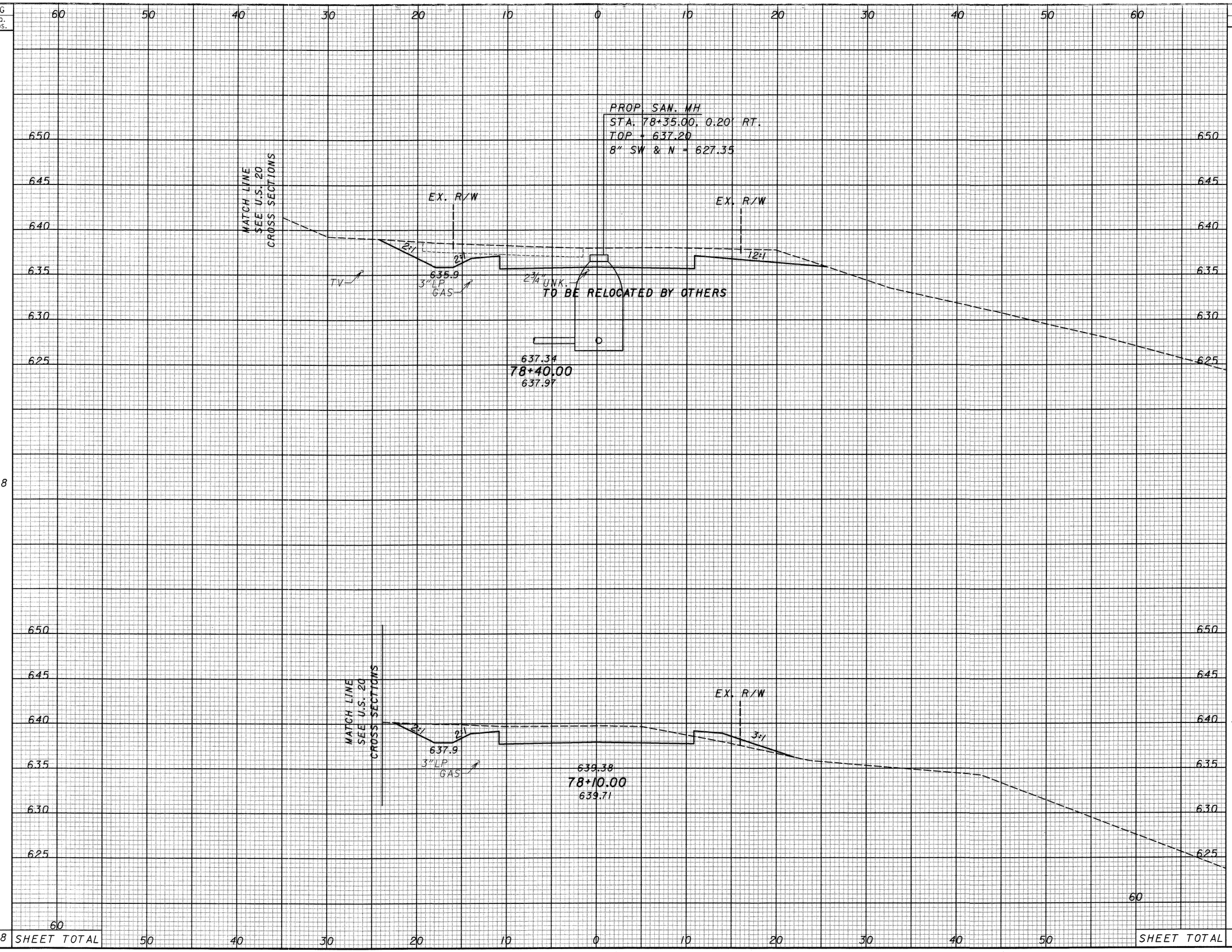

END AREA CUT	END AREA FILL	VOLUME CUT	VOLUME FILL
86	0		
52	6		
SHEET TOTAL		77	3

CALCULATED SAC
CHECKED DAK

CROSS SECTIONS - CHARLES STREET
STA. 78+10.00 TO STA. 78+40.00

ATB-20-26.19

80
162

18520GXG.dgn

SEEDING		END AREA		VOLUME	
END WIDTH	SQ. YDS.	CUT	FILL	CUT	FILL
	38	78	125		
	41	103	89		
	78			70	33
	166			137	112

SHEET TOTAL

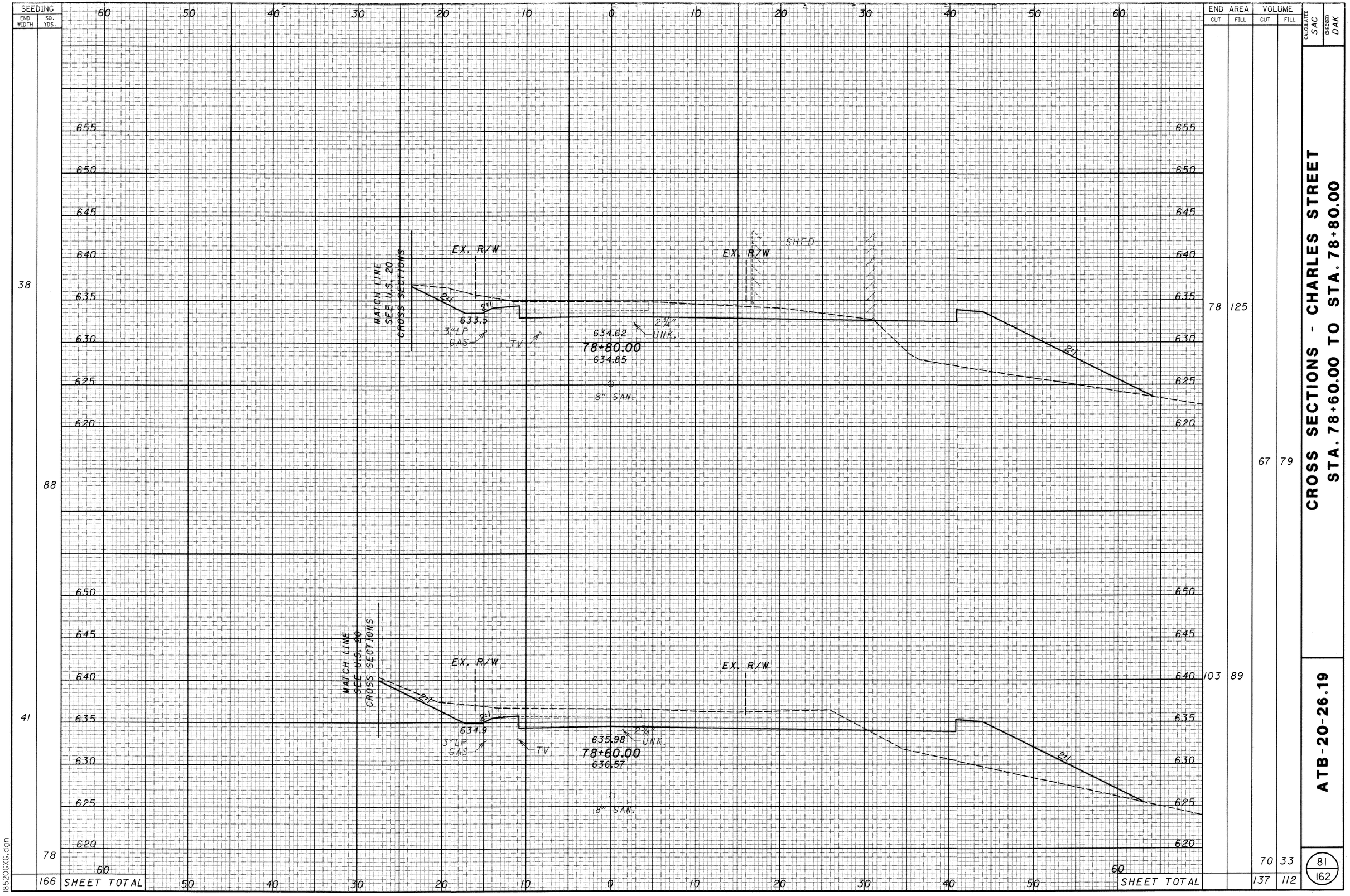

CALCULATED SAC
CHECKED DAK

CROSS SECTIONS - CHARLES STREET
STA. 78+60.00 TO STA. 78+80.00

ATB-20-26.19

81
162

I8520CXG.dgn

SEEDING	
END WIDTH	SQ. YDS.
9	34
32	32
78	
112	SHEET TOTAL
366	CHARLES ST. TOTAL

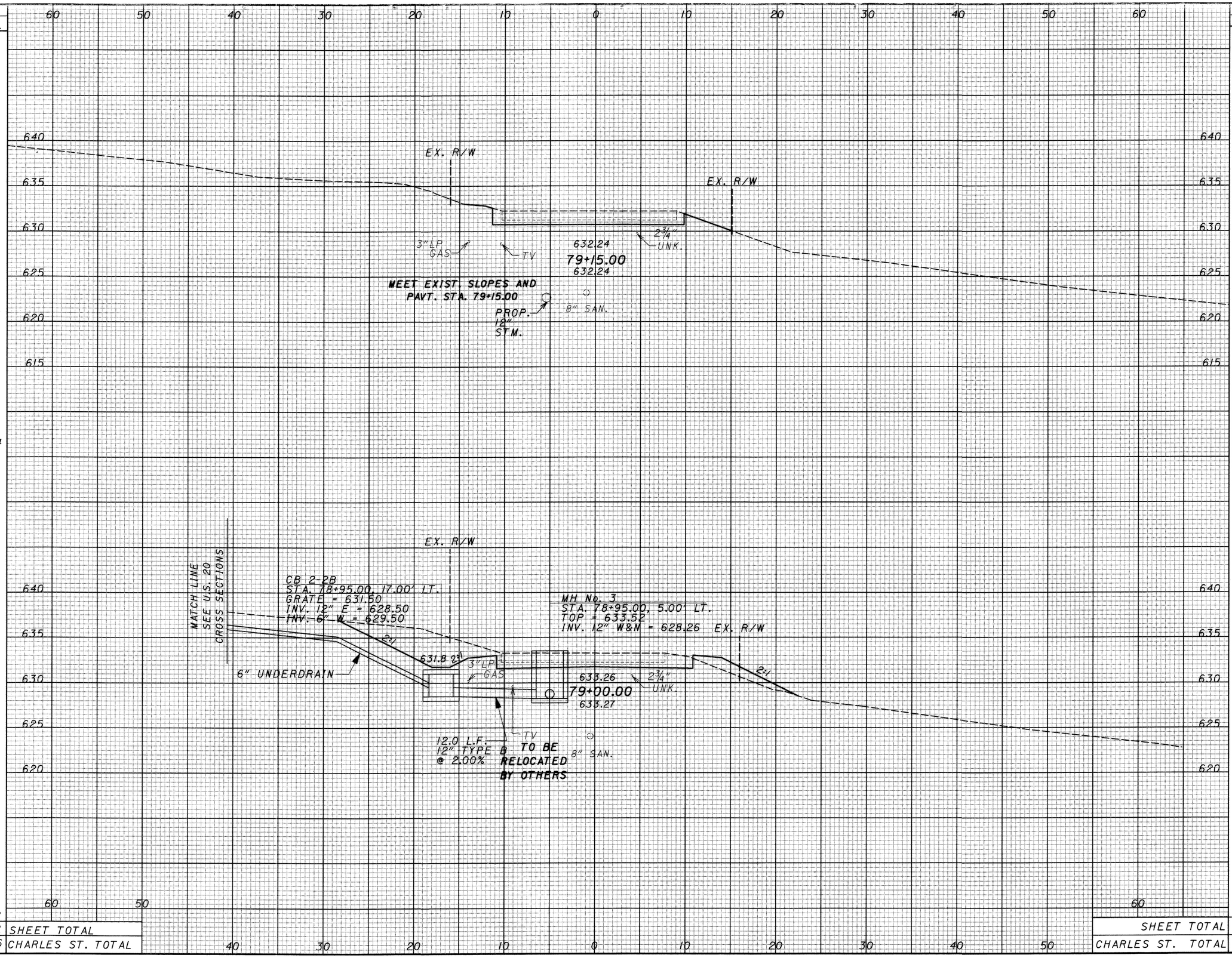

END AREA		VOLUME	
CUT	FILL	CUT	FILL
32	1		
		28	3
70	9		
		55	50
	SHEET TOTAL	83	53
	CHARLES ST. TOTAL	297	168

CALCULATED SAC
CHECKED DAK

CROSS SECTIONS - CHARLES STREET
STA. 79+00.00 TO STA. 79+15.00

ATB-20-26.19

18520GXG.dgn

RETURN 1
E/P:
CENTER -
9+65.92 37.00' LT. ℄ U.S. 20
60+40.61 38.00' LT. ℄ LIBERTY
PC = 9+65.92 12.00' LT. ℄ U.S. 20
PT = 60+40.61 13.00' LT. ℄ LIBERTY
Δ = 86°08'46"
R = 25.00'
T = 23.37'
L = 37.59'
CURB:
CENTER-
9+67.01 49.00' LT. ℄ U.S. 20
60+52.65 37.81' LT. ℄ LIBERTY
PC = 9+67.01 24.00' LT. ℄ U.S. 20
PT = 60+52.68 12.81' LT. ℄ LIBERTY
Δ = 86°05'40"
R = 25.00'
T = 23.35'
L = 37.57'

RETURN 2
E/P:
CENTER -
9+60.76 37.00' RT. ℄ U.S. 20
59+66.44 38.50' LT. ℄ LIBERTY
PC = 9+60.76 12.00' RT. ℄ U.S. 20
PT = 59+66.44 13.50' LT ℄ LIBERTY
Δ = 93°21'47"
R = 25.00'
T = 26.51'
L = 40.74'
CURB:
CENTER-
9+70.06 39.00' RT. ℄ U.S. 20
59+65.10 28.50' LT. ℄ LIBERTY
PC = 9+70.06 24.00' RT. ℄ U.S. 20
PT = 59+65.10 13.50' LT. ℄ LIBERTY
Δ = 94°14'48"
R = 15.00'
T = 16.16'
L = 24.67'

RETURN 3
CENTER -
60+75.00 26.52' RT. ℄ LIBERTY
70+75.59 24.68' LT. ℄ S. LIBERTY
PC = 60+75.00 12.02' RT. ℄ LIBERTY
PT = 70+72.56 10.50' LT. ℄ S. LIBERTY
Δ = 130°31'39"
R = 14.50'
T = 31.48'
L = 33.03'

RETURN 4
E/P:
CENTER -
11+10.49 37.00' LT. ℄ U.S. 20
71+10.35 35.50' RT. ℄ S. LIBERTY
PC = 11+10.49 12.00'LT. ℄ U.S. 20
PT = 71+10.35 10.50' RT. ℄ S. LIBERTY
Δ = 144°32'01"
R = 25.00'
T = 78.18'
L = 63.06'
CURB:
CENTER-
11+09.65 39.50' LT. ℄ U.S. 20
71+11.15 33.00' RT. ℄ S. LIBERTY
PC = 11+09.65 17.00' LT. ℄ U.S. 20
PT = 71+11.15 10.50' RT. ℄ S. LIBERTY
Δ = 144°29'01"
R = 22.50'
T = 70.26'
L = 56.74'

RETURN 5
CENTER -
59+35.08 18.00' RT. ℄ LIBERTY
59+30.09 19.00' LT. ℄ TURN-LANE
PC = 59+35.08 15.00' RT. ℄ LIBERTY
PT = 59+30.09 16.00' LT. ℄ TURN-LANE
Δ = 153°49'16"
R = 3.00'
T = 12.90'
L = 8.05'

RETURN 6
CENTER -
10+17.95 25.00' RT. ℄ U.S. 20
59+84.72 20.00' RT. ℄ LIBERTY
PC = 59+84.72 15.00' RT. ℄ LIBERTY
PT = 10+17.95 20.00' RT. ℄ U.S. 20
Δ = 81°12'20"
R = 5.00'
T = 4.29'
L = 7.09'

STA. 10+00.00 ℄ R/W U.S.R. 20 =
STA. 60+00.00 ℄ R/W LIBERTY ST.=
STA. 70+00.00 ℄ R/W S. LIBERTY ST.

CB-3A
STA. 9+67.00,
24.00' RT.
GRATE = 657.10

CB-3
STA. 59+65.00,
13.50' LT.
GRATE = 656.46

CB-3A
STA. 9+74.00
24.88' LT.
GRATE = 656.63

MH No. 3
STA. 59+82.60,
8.80' RT.
TOP = 656.82

CB-3A
STA. 10+56.50, 20.00' RT.
GRATE = 655.28

CB-6
STA. 59+30.00,
1.11' RT.
GRATE = 656.11

CB-3
STA. 58+45.00,
0.20' RT.
GRATE = 658.15

CB-3
STA. 60+10.00
2.94' RT.
GRATE = 654.31

CB-3
STA. 11+50.00
17.00' LT.
GRATE = 654.22

CB-3A
STA. 60+92.00 4.81' RT.
GRATE = 654.34

RETURN 7
CENTER -
60+01.38 17.50' LT. ℄ TURN-LANE
10+61.85 21.50' RT. ℄ U.S. 20
PC = 10+61.85 20.00'RT. ℄ U.S. 20
PT = 60+01.38 16.00' LT. ℄ TURN-LANE
Δ = 148°08'29"
R = 1.50'
T = 5.26'
L = 3.88'

STA. 10+01.61 ℄ CONST. U.S.R. 20 =
STA. 60+07.15 ℄ R/W LIBERTY ST.

STA. 70+57.04 ℄ R/W SOUTH LIBERTY =
STA. 32+45.50 ℄ R/W HARBOR ST.

℄ R/W S. LIBERTY ST.
S 77° 06' 59" E

℄ R/W HARBOR ST. S 90° 48' 57" E

℄ R/W SOUTH LIBERTY ST.

℄ R/W U.S.R. 20
S 64° 40' 12" E

℄ CONST. U.S.R. 20

℄ TURN-LANE

EX. RETAINING WALL

PORTION OF EX.RET. WALL TO BE REMOVED

SEE CUL-DE-SAC DETAILS FOR GRADING

NOTES:
ADD 600 TO THE ELEVATION SHOWN FOR ACTUAL ELEVATION.
ADD 6" IN AREAS OF FULL HEIGHT CURB AND 2" IN AREAS OF DROP CURB (AT DRIVEWAYS) TO OBTAIN TOP OF CURB ELEVATIONS AT FACE OF CURB.
(XX.XX) = EXISTING ELEVATIONS
FOR DRIVE DETAILS SEE SHEET 86
SEE PLAN & PROFILE SHEET FOR CURB-OFFSET TABLE FOR TURN-LANE

STA. (TURN-LANE)	CURB OFFSET (RT.)
58+25	0.00'
58+50	0.25'
58+75	0.50'
59+00	0.75'
59+25	1.00'
59+50	1.57'
59+75	2.14'
60+00	2.71'
60+25	3.28'
60+50	3.85'
60+75	4.42'
61+00	4.99'

HORIZONTAL SCALE IN FEET
0 5 10 20

CALCULATED CMK
DRAWN SMG

INTERSECTION DETAIL & PAVEMENT ELEVATIONS

ATB-20-26.19

I8520GIA.DGN

NOTES:

ADD 600 TO THE ELEVATION SHOWN FOR ACTUAL ELEVATION.

ADD 6" IN AREAS OF FULL HEIGHT CURB AND 2" IN AREAS OF DROP CURB (AT DRIVEWAYS) TO OBTAIN TOP OF CURB ELEVATIONS AT FACE OF CURB.

(XX.XX) = EXISTING ELEVATIONS

FOR DRIVE DETAILS SEE SHEET

RETURNS 1 AND 2 E/P ELEVATIONS ARE AT 1/4 POINTS.

CB-3
STA. 11+50.00
17.00' LT.(U.S.R. 20)
GRATE = 654.22

CB-3A
STA. 60+92.00 4.81' RT.
(U.S.R. 20)
GRATE = 654.34

STA. 11+55.00
16.76' RT.

℄ CONST. U.S.R. 20

℄ R/W U.S.R. 20
S 64° 40' 12" E

STA. 12+50.00 ℄ CONST. U.S.R. 20
STA. 50+00.00 ℄ CONST. KEYES ST.

STA. 11+48.19
59.03' RT.

CB-3A
STA. 31+04.92 16.02' RT.
GRATE = 654.76

STA. 11+58+32
67.25' RT.
MEET EXIST
SIDEWALK
STA. 30+93.93

CROWN LINE

℄ R/W HARBOR ST.
S 06° 48' 57" E

STA. 30+03.01 ℄ EX. R/W HARBOR ST.
STA. 48+82.22 ℄ CONST. KEYES ST.

CB-3A
STA. 49+77.00, 54.55
16.43' LT.
(KEYES ST.)
GRATE= 654.36

CB-3A
STA. 49+74.77, 19.17' RT.
(KEYES ST.)
GRATE= 654.91

CB-3A
STA. 12+90.00, 17.00' RT.
(U.S.R. 20)
GRATE= 655.24

KEYES CURVE

US20 CURVE

29'-7" MIN.

24'-0"

5'-5"

13'-1"

10' (TYP.)

6'-9"

6'

5'-0"

1'-0"

5'-7"

HP

LP

RETURN 1
E/P:
CENTER =
12+17.67 37.00' RT. ℄ U.S. 20
49+67.05 37.00' LT. ℄ KEYES
PC = 12+17.67 12.00' RT. ℄ U.S. 20
PT = 49+67.05 12.00' LT. ℄ KEYES
Δ = 82°24'18"
R = 25.00'
T = 21.89'
L = 35.96'
CURB:
CENTER=
12+20.48 38.27' RT. ℄ U.S. 20
49+65.41 34.27' LT. ℄ KEYES
PC = 12+20.48 17.00' RT. ℄ U.S. 20
PT = 49+65.17 13.00' LT. ℄ KEYES
Δ = 83°13'45"
R = 21.27'
T = 18.89'
L = 30.90'

RETURN 2
E/P:
CENTER =
12+89.13 37.00' RT. ℄ U.S. 20
49+61.61 37.00' RT. ℄ KEYES
PC = 49+61.61 12.00' RT. ℄ KEYES
PT = 12+88.77 12.00' RT. ℄ U.S. 20
Δ = 90°00'00"
R = 25.00'
T = 25.00'
L = 39.63'
CURB:
CENTER=
12+85.34 37.06' RT. ℄ U.S. 20
49+61.61 33.06' RT. ℄ KEYES
PC = 49+61.61 13.00' RT. ℄ KEYES
PT = 12+84.98 17.00' RT. ℄ U.S. 20
Δ = 90°00'00"
R = 20.06'
T = 20.06'
L = 31.88'

RETURN 3
E/P:
CENTER =
49+34.50 27.20' LT. ℄ KEYES
30+41.90 34.96' RT. ℄ HARBOR
PC = 49+34.50 12.00' LT. ℄ KEYES
PT = 30+53.57 25.21' RT. ℄ HARBOR
Δ = 171°54'41"
R = 15.20'
T = 214.98'
L = 45.61'
CURB:
CENTER=
49+33.75 27.67' LT. ℄ KEYES
30+42.01 34.24' RT. ℄ HARBOR
PC = 49+34.50 13.00' LT. ℄ KEYES
PT = 30+33.00 22.64' RT. ℄ HARBOR
Δ = 86°07'26"
R = 14.69'
T = 13.73'
L = 22.08'

℄ US20 CURVE 1 DATA
P.I. STA 12+96.47
Δ = 24°05'00" (LT.)
PC= 6°00'00"
R= 954.93'
T= 203.70'
L= 401.39'
E= 21.48'
e_{max} = NC

RETURN 4
E/P:
CENTER =
30+76.58 5.97' RT. ℄ HARBOR
PC = 30+53.57 25.21' RT ℄ HARBOR
PT = 31+04.16 17.78' RT ℄ HARBOR
Δ = 116°56'14"
R = 30.00'
T = 48.90'
L = 61.23'

℄ KEYES CURVE DATA
P.I. STA= 49+25.74
Δ =44°32'23" (LT.)
PC= 53°46'20" (NDC 16°30' MAX)
R= 106.55'
T= 43.63'
L= 82.83'
E= 8.59'
e_{max} = 0.029 (NDC 0.040)

RETURN 5
E/P:
CENTER =
30+93.31 5.03' RT. ℄ HARBOR
PC = 30+93.23 9.97' LT ℄ HARBOR
PT = 31+07.10 10.93' RT. ℄ HARBOR
Δ = 113°27'21"
R = 15.00'
T = 22.80'
L = 29.70'

HORIZONTAL SCALE IN FEET
0 5 10 20

CALCULATED SMG
CHECKED SAC

INTERSECTION DETAIL & PAVEMENT ELEVATIONS

ATB-20-26.19

18520GIB.DGN

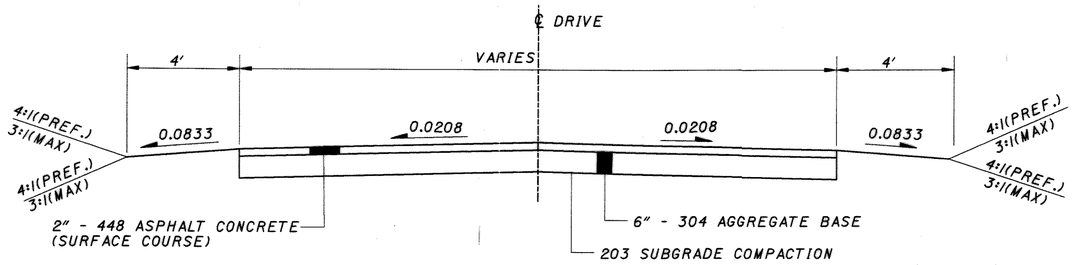

ASPHALT DRIVE AND APRONS - RESIDENTIAL

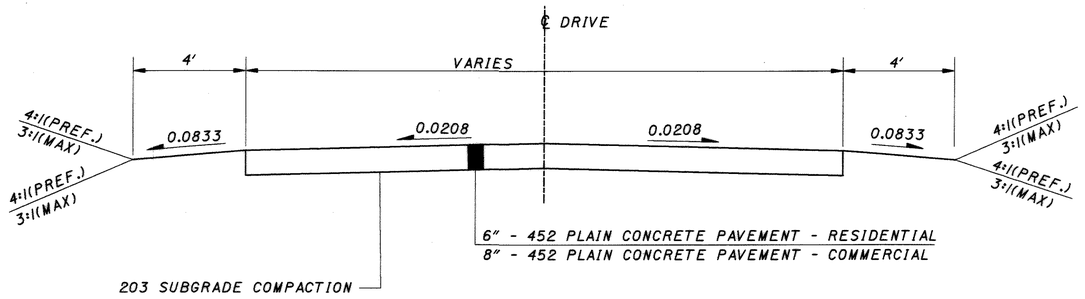

CONCRETE DRIVE AND APRONS

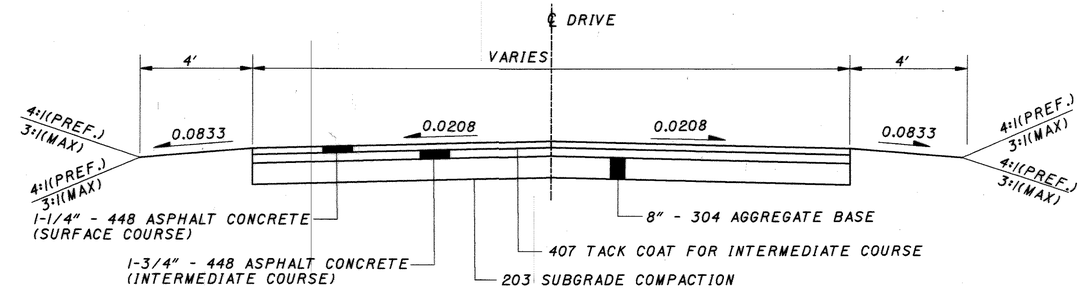

ASPHALT DRIVE AND APRONS - COMMERCIAL

REFERENCE NO.	DRIVEWAY & STATION	LOCATION	SIDE	DRIVE TYPE	EXISTING APRON MATERIAL	EXISTING DRIVEWAY MATERIAL	PROPOSED APRON MATERIAL	PROPOSED DRIVEWAY MATERIAL	REMARKS	APRON AREA	DRIVE AREA		304 AGGREGATE BASE 6"	304 AGGREGATE BASE 8"	407 TACK COAT FOR INTERMEDIATE COURSE	448 ASPHALT CONCRETE SURFACE COURSE, TYPE 1, PG64-22 (DRIVEWAYS) 1¼"	448 ASPHALT CONCRETE SURFACE COURSE, TYPE 1, PG64-22 (DRIVEWAYS) 2"	448 ASPHALT CONCRETE INTERMEDIATE COURSE, TYPE 2, PG64-22 (DRIVEWAYS) 1¾"	452 6" PLAIN CONCRETE PAVEMENT	452 8" PLAIN CONCRETE PAVEMENT	830 CURB, TYPE 6
										SQ.YD.	SQ.YD.		CU.YD.	CU.YD.	GAL.	CU.YD.	CU.YD.	CU.YD.	SQ.YD.	SQ.YD.	LIN.FT.
DR-1	58+65	TURN-LANE	RT	COMM	CONC	ASPH	CONC	-		16.45	-									16.45	31.40
DR-2	59+20	TURN-LANE	RT	COMM	CONC	ASPH	CONC	-		44.92	-									44.92	32.50
DR-3	60+39.5	TURN-LANE	RT	COMM	CONC	ASPH	CONC	-		74.49	-									74.49	56.30
DR-4	25+40	U.S.R. 20	LT	COMM	CONC	GRAV	CONC	ASPH		47.36	143.30			31.84	5.73	4.98		6.97		47.36	
DR-5	26+40	U.S.R. 20	LT	COMM	CONC	GRAV	CONC	ASPH		41.07	49.78			11.06	1.99	1.73		2.42		41.07	
DR-6	27+00	U.S.R. 20	LT	COMM	CONC	CONC	CONC	ASPH		44.16	33.81			7.51	1.35	1.17		1.64		44.16	
DR-7	27+80	U.S.R. 20	RT	COMM	CONC	ASPH	CONC	ASPH		12.34	53.81			11.95	2.45	1.87		2.61		12.34	
DR-8	48+38.5	KEYES ST.	RT	RES	GRAV	GRAV	CONC	-		3.24	-								3.24		
DR-9	48+90	KEYES ST.	RT	RES	GRAV	GRAV	CONC	-		23.68	-								23.68		
TOTALS CARRIED TO GENERAL SUMMARY													62		12	10		14	27	281	120

CALCULATED CMK
CHECKED DAK

TYPICAL SECTIONS AND QUANTITIES

DRIVEWAY TYPICAL SECTIONS AND QUANTITIES

ATB-20-26.19

22424GMA.dgn

NOTE: ALL ℄ DRIVE ANGLES ARE MEASURED TO THE ℄ CONSTRUCTION AND REMEASURED TO THE LOCAL TANGENT (FOR CURVED ℄ CONSTRUCTION).

CALCULATED CMK
CHECKED DAK

DRIVE DETAILS

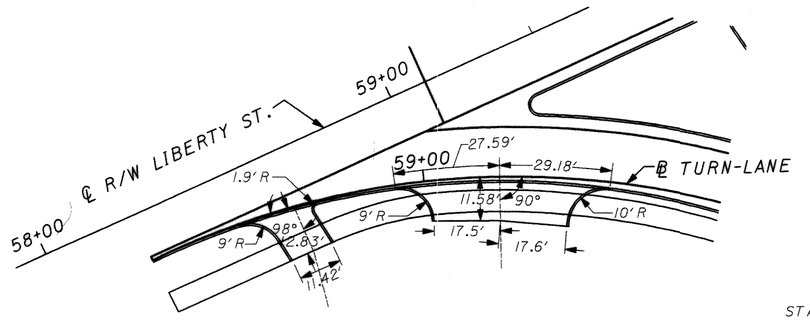

DR-1
STA. 58+65.00
TURN-LANE

DR-2
STA. 59+20.00
TURN-LANE

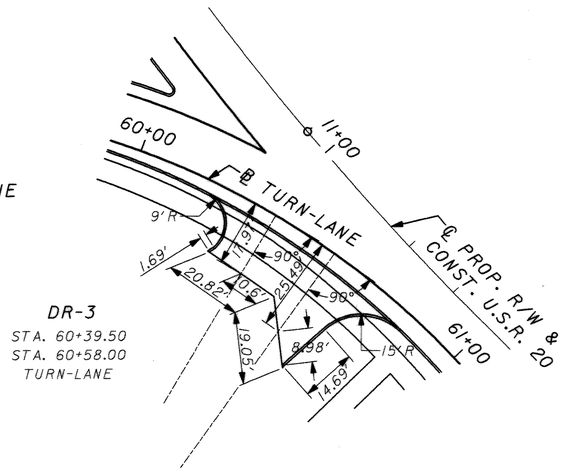

DR-3
STA. 60+39.50
STA. 60+58.00
TURN-LANE

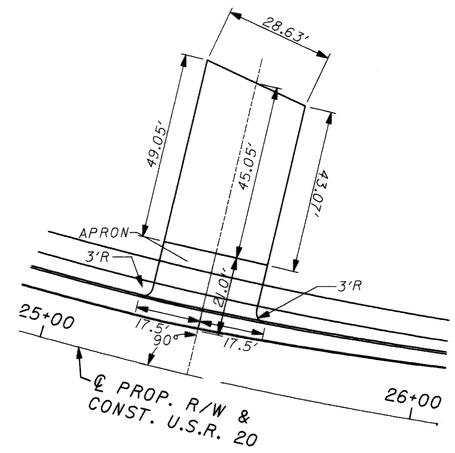

DR-4
STA. 25+40.00
U.S.R. 20

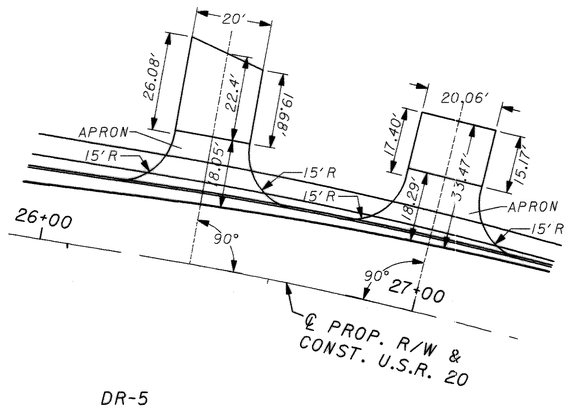

DR-5
STA. 26+40.00
U.S.R. 20

DR-6
STA. 27+00.00
U.S.R. 20

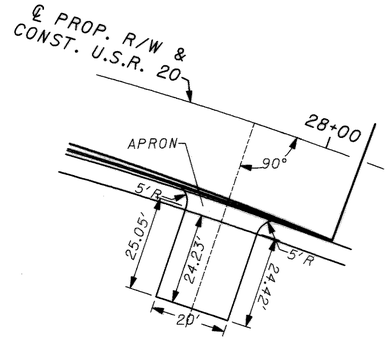

DR-7
STA. 27+80.00
U.S.R. 20

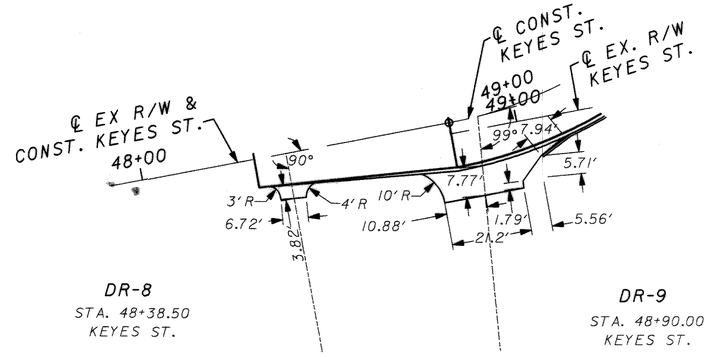

DR-8
STA. 48+38.50
KEYES ST.

DR-9
STA. 48+90.00
KEYES ST.

ATB-20-26.19

18520GMB.dgn

UNDERDRAIN LOCATIONS

REF NO	LOCATION				SHEET NO	BEGIN ELEVATION	END ELEVATION	OUTLET				603	603	604	605	605	605	FOR INFORMATION ONLY						
	BEGIN STATION	END STATION	ROAD	SIDE				STATION	ELEVATION	OFFSET		4" CONDUIT, TYPE B, 707.31	4" CONDUIT, TYPE F, 707.31	PRECAST REINFORCED CONCRETE OUTLET	4" SHALLOW PIPE UNDERDRAIN, 707.31	4" DEEP PIPE UNDERDRAIN 707.31	4" UNCLASSIFIED PIPE UNDERDRAIN, 707.31	OUTLET TO CATCH BASIN	BENDS AND BRANCHES					
																			4" X 4" TEE	4" X 45° BEND	4" X 45° WYE	4" X 90° BEND	4" X 30° BEND	END CAP
												LIN FT	LIN FT	EACH	LIN FT	LIN FT	LIN FT	EACH	EACH	EACH	EACH	EACH	EACH	EACH
UD-1	9+00.00	9+74.00	U.S.R. 20	LT.	34,35	655.56	653.63	9+74.00	653.63	24.88	LT.				74			1						1
UD-2	9+00.00	9+67.00	U.S.R. 20	RT.	34,35	656.06	653.50	9+67.00	653.50	24.00	RT.				66			1						1
UD-2a	9+72.00	59+65.00	U.S.R. 20/ LIBERTY	RT./LT.	35	654.10	653.46	59+65.00	653.46	13.50	LT.				29			1						1
UD-3	59+35.00	10+56.50	LIBERTY / U.S.R. 20	RT.	35,61	654.20	652.28	10+56.50	652.28	20.00	RT.				96			1						1
UD-4	58+25.00	58+45.00	TURN LANE	RT.	35,61	655.59	655.38	58+45.00	655.38	0.20	RT.					20		1						1
UD-5	58+50.00	59+30.00	TURN LANE	RT.	35,61	655.38	653.33	59+30.00	653.33		RT.					84		1						1
UD-6	NOT USED																							
UD-7	59+35.00	60+05.00	TURN LANE	RT.	35	653.10	651.31	60+05.00	651.31	2.94	RT.				81			1						1
UD-8	60+05.00	60+92.00	TURN LANE	RT.	35	651.31	651.34	60+92.00	651.34	4.81	RT.				81			1						
								60+05.00	651.31	2.94	RT.							1						
UD-9	11+10.00	11+50.00	U.S.R. 20	LT.	35	650.62	650.34	11+50.00	650.34	17.00	LT.				40			1						1
UD-10	11+50.00	13+70.00	U.S.R. 20	LT.	35	650.34	652.32	11+50.00	650.34	17.00	LT.				220			1						1
UD-11	60+92.00	49+77.00	TURN LANE / KEYES	RT./LT.	35	650.35	650.79	60+92.00	650.35	4.81	RT.				81			1						1
UD-12	12+90.00	13+70.00	U.S.R. 20	RT.	35	652.29	653.32	12+90.00	652.29	17.00	RT.				80			1						1
UD-13	24+33.00	26+60.00	U.S.R. 20	LT.	37,38	661.21	662.72	24+28.00	661.00	17.00	LT.				227			1						1
UD-14	24+33.00	26+60.00	U.S.R. 20	RT.	37,38	661.21	662.72	24+28.00	661.00	17.00	RT.				227			1						1
UD-15	26+65.00	28+10.00	U.S.R. 20	LT.	38	662.79	663.86	26+65.00	662.76	19.54	LT.				145			1						1
UD-16	26+65.00	28+10.00	U.S.R. 20	RT.	38	662.79	663.86	26+65.00	662.79	19.62	RT.				145			1						1
UD-17	48+30.00	49+74.77	KEYES	RT.	35,71	656.86	651.74	49+74.77	651.74	19.17	RT.				142			1						1
UD-18	49+72.00	12+85.00	KEYES / U.S.R. 20	RT.	35,71	651.74	652.40	49+72.00	651.74	16.73	RT.				15			1						1
UD-19	30+34.00	49+77.00	HARBOR / KEYES	RT./LT.	71,76	652.79	650.87	49+77.00	650.87	16.34	LT.				55			1						1
UD-20	30+34.00	31+05.00	HARBOR	RT.	71,76	652.79	650.76	31+05.00	650.76	16.02	RT.				85			1						1
UD-21	30+93.00	31+05.00	HARBOR	LT.	71,76	652.82	651.76	31+05.00	651.76	16.02	RT.				35			1						1
UD-22	24+05.00	24+34.00	U.S.R. 20	LT.	37	660.88	660.60	24+34.00	660.60	17.00	LT.						29	1						1
UD-23	24+05.00	24+31.00	U.S.R. 20	RT.	37	660.88	660.60	24+31.00	660.60	17.00	RT.						26	1						1
UD-24	59+50.00	59+65.00	LIBERTY	LT.	35,61	653.98	653.46	59+65.00	653.46	13.50	LT.				15			1						1
TOTALS CARRIED TO GENERAL SUMMARY															1939	104	55	25						23

STATION EQUATION: STA. 9+07.23 (BK) = STA. 9+08.67 (AH)

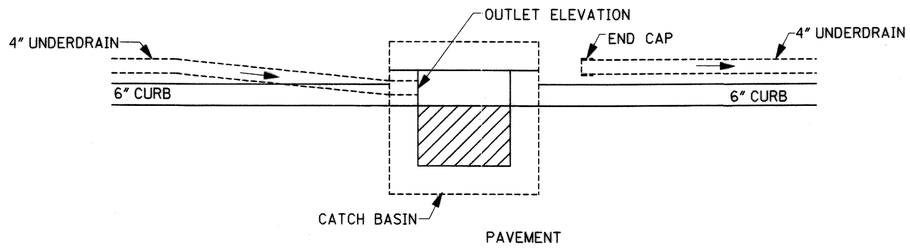

UNDERDRAIN OUTLET DETAIL:
CATCH BASIN CONNECTIONS

CALCULATED CMK
CHECKED SAC

UNDERDRAIN QUANTITIES AND DETAILS

ATB-20-26.19

22424DMA.dgn

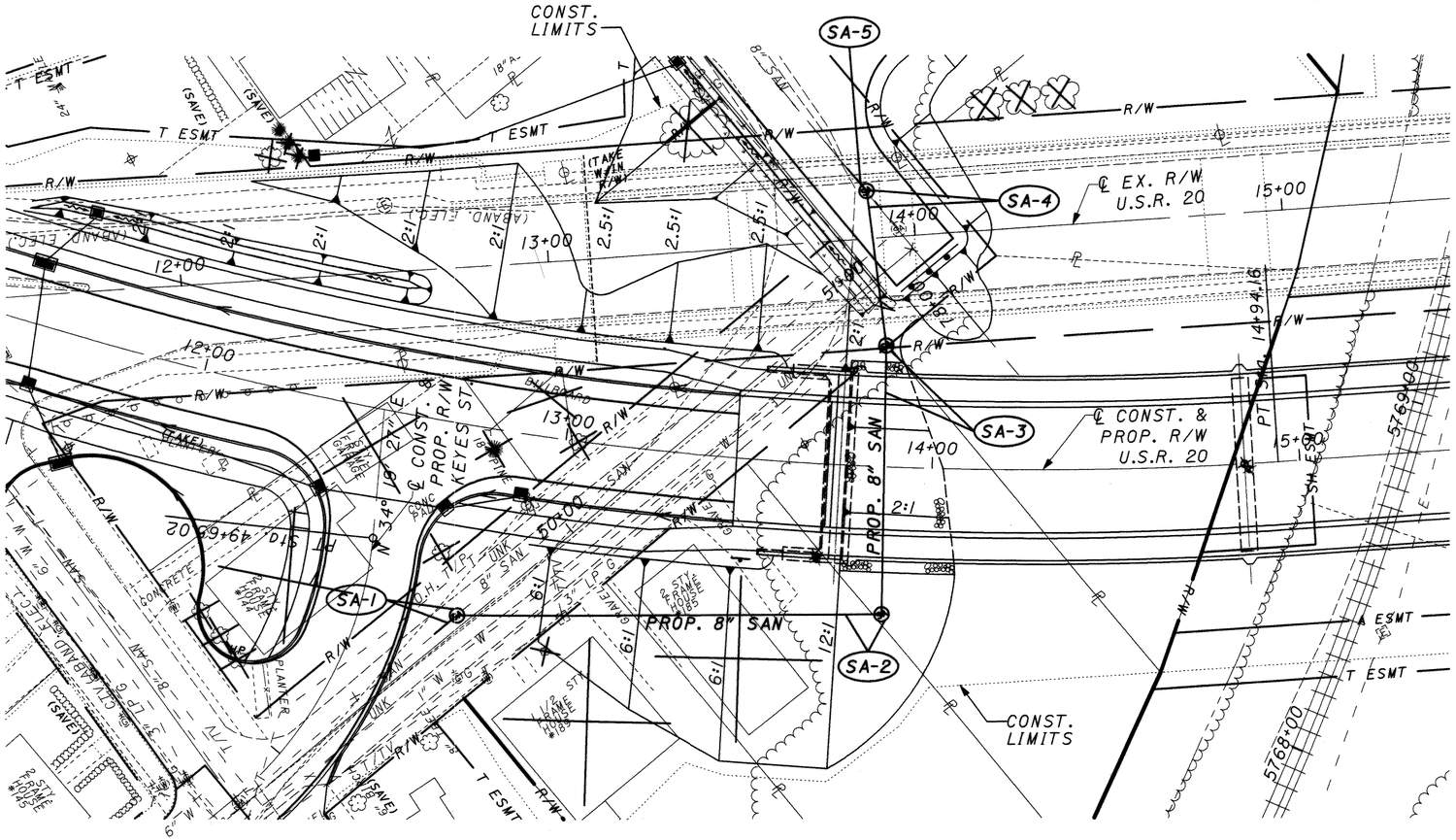

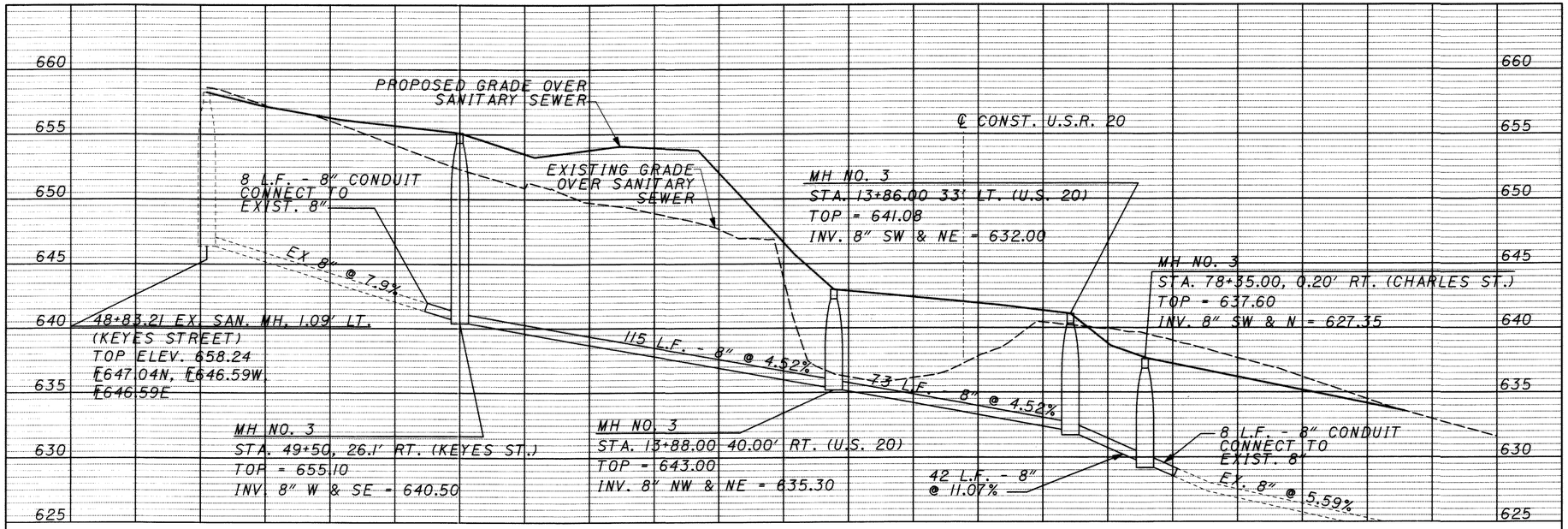

REF NO.	STATION FROM	STATION TO	SIDE	603 8" CONDUIT, TYPE B LIN. FT.	603 8" CONDUIT, TYPE C LIN. FT.	604 MANHOLE NO. 3 EACH
SA-1	49+44 (KEYES)	49+50 (KEYES)	RT		8	1
SA-2	49+50 (KEYES)	13+88 (U.S.R. 20)	RT/RT		115	1
SA-3	13+88 (U.S.R. 20)	13+86 (U.S.R. 20)	RT/LT		73	1
SA-4	13+86 (U.S.R. 20)	78+35 (CHARLES)	LT/RT	42		1
SA-5	78+35 (CHARLES)	78+43 (CHARLES)	RT	8		
TOTALS CARRIED TO GENERAL SUMMARY				50	196	4

SANITARY PLAN AND PROFILE

CALCULATED SAC
CHECKED SMG

0 10 20 40 HORIZONTAL SCALE IN FEET

ATB-20-26.19

SANITARY

88
162

I8520UPA.dgn

SIGN, FLAT SHEET, AS PER PLAN (D-8G-SPE)

IN ADDITION TO THE REQUIREMENTS OF ITEM 630 SIGN, FLAT SHEET, THIS ITEM SHALL HAVE SIX (6) INCH LETTERING AND A ONE (1) INCH BORDER INSTEAD OF THE FOUR (4) INCH LETTERING AND TWO (2) INCH BORDER SHOWN IN THE SIGN DESIGN MANUAL.

ITEM 642 - PAVEMENT MARKINGS, TYPE I, AS PER PLAN

ALL PAVEMENT MARKINGS (EDGE LINES, LANE LINES AND CENTERLINE), TYPE I, FOR THIS PROJECT SHALL BE WATER-BORNE FAST DRY TRAFFIC PAINTS, CHOSEN FROM NTPEP, 60 SECOND DRY TIME. THE PAINT SHALL BE CHOSEN FROM THE APPROVED LIST.

PAVEMENT MARKINGS, AS PER PLAN

IN LIEU OF THE REQUIREMENTS OF 642.03. THE APPLICATION RATES OF 614.10 SHALL BE USED IN PLACING PERMANENT PAVEMENT MARKINGS.

CALCULATED JMB
CHECKED JDP

TRAFFC CONTROL NOTES

ATB-20-26.19

I8520TNA.dgn

NOTE:

THE EXISTING POLE UPON WHICH SIGN GROUP (1) IS ATTACHED TO IS BEING RELOCATED. ATTACH THE NEW SIGNS TO THE RELOCATED POLE.

THE BORDER AND LETTERING OF BOTH R-SPEC-12 SIGNS SHALL MATCH THE EXISTING SIGNS.

PAVEMENT MARKING LEGEND

- (C) CENTER LINE, SOLID, DOUBLE
- (E) EDGE LINE, WHITE
- (EI) EDGE LINE, YELLOW
- (S) STOP LINE, 24 INCH
- (CM) CURB MARKING, WHITE

SIGNING LEGEND

- EXISTING SIGN TO REMAIN
- EXISTING SIGN TO BE REMOVED
- PROPOSED SIGN
- (1) REFERENCE NUMBER

HORIZONTAL SCALE IN FEET: 0, 25, 50, 100

CALCULATED JMB

CHECKED JDP

SIGNING & PAVEMENT MARKING PLAN STA. 6+00 TO STA. 19+50

ATB-20-26.19

90
162

18520TPA.dgn

PAVEMENT MARKING LEGEND

- (C) CENTER LINE, SOLID, DOUBLE
- (E) EDGE LINE, WHITE
- (EI) EDGE LINE, YELLOW
- (S) STOP LINE, 24 INCH

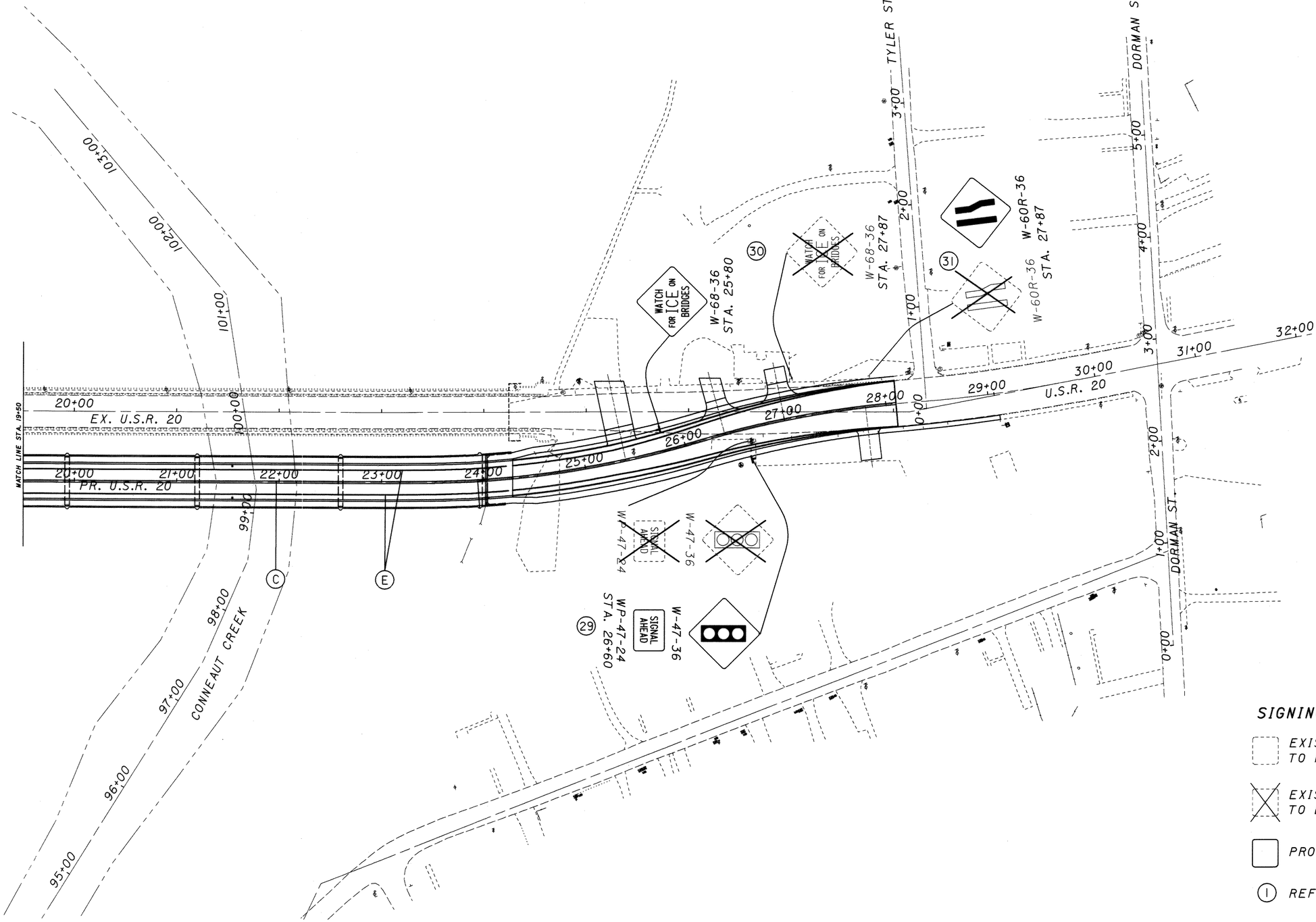

SIGNING LEGEND

- EXISTING SIGN TO REMAIN
- EXISTING SIGN TO BE REMOVED
- PROPOSED SIGN
- (1) REFERENCE NUMBER

HORIZONTAL SCALE IN FEET
0 25 50 100

CALCULATED JMB
CHECKED JDP

SIGNING & PAVEMENT MARKING PLAN
STA. 19+50 TO STA. 32+00

ATB-20-26.19

91
162

I85201TPB.dgn

PAVEMENT MARKING SUBSUMMARY

CALCULATED JMB | CHECKED JDP

642

SHEET NO.	LOCATION	SIDE	STATION FROM	STATION TO	(C) CENTER LINE, TYPE I, AS PER PLAN (SOLID DOUBLE)	(E) EDGE LINE, TYPE I, AS PER PLAN (WHITE)	(E1) EDGE LINE, TYPE I, AS PER PLAN (YELLOW)	(S) STOP LINE, (24 INCH)	(CM) CURB MARKING, WHITE
					MILE	MILE	MILE	LIN. FT.	LIN. FT.
90/91	U.S.R. 20	RT/LT	8+65	28+10	1724′	3647′			49
90	LIBERTY ST.	RT/LT	59+10	60+75	102′	330′			65
		RT	59+85					15	
		RT	60+47					12.5	
90	TURN-LANE	RT/LT	58+25	61+00		280′			75
90	SOUTH LIBERTY ST.	RT/LT	70+00	71+80		180′	180′		
90	KEYES ST.	RT/LT	48+30	50+00	78′	338′			
		RT	49+68					12.5	
90	HARBOR ST.	RT/LT	30+00	31+00		201′			
	TOTALS CARRIED TO GENERAL SUMMARY				1904′	4976′	180′		
					0.36	5156′ 0.98		40	189

ATB-20-26.19

18520TSA.dgn

SHEET NO.	REFERENCE NO.	STATION	SIDE	CODE	SIZE (INCHES)	630 REMOVAL OF POLE MOUNTED SIGN AND STORAGE	REMOVAL OF GROUND MOUNTED POST SUPPORT AND DISPOSAL	REMOVAL OF GROUND MOUNTED SIGN AND STORAGE			SIGN SUPPORT ASSEMBLY, POLE MOUNTED	GROUND MOUNTED SUPPORT, NO. 3 POST	SIGN, FLAT SHEET, TYPE G							
						EACH	EACH	EACH			EACH	LIN. FT.	SQ. FT.							
90	1	9+34 (US 20)	LT	M-1-24-2	24"X 24"	1					1		4							
			LT	M-55-24	24"X 24"	1					1		4							
			LT	R-SPEC-12	9"X 12"	1					1		0.75							
90	2	60+34 (LIBERTY ST.)	LT	R-1-30	30"X 30"							13	6.25							
		60+48 (LIBERTY ST.)	LT	R-1-30	30"X 30"		1	1												
90	3	9+84 (U.S. 20)	LT	D-8G-SPE								13	6.38							
				D-8G-SPE									6.66							
90	4	59+87 (LIBERTY ST.)	RT	R-1-30	30"X 30"							13	6.25							
				R-42-24	24"X 24"								4							
90	5	10+35 (U.S. 20)	LT	R-1-30	30"X 30"		1	1												
90	6	10+80 (U.S. 20)	LT	D-14			1	1												
				D-14				1												
90	7	10+88 (U.S. 20)	LT	D-8G-SPE								13	10							
90	8	59+63 (LIBERTY ST.)	RT	R-1-30	30"X 30"		1	1												
				R-42-24	24"X 24"			1												
90	9	10+35 (U.S. 20)	LT	R-41B-30	30"X 30"		1	1												
		10+52 (U.S. 20)	LT	R-41B-30	30"X 30"							13	6.25							
90	10	59+84 (℄ TURN LANE)	RT	R-1-30	30"X 30"		1	1												
90	11	59+96 (℄ TURN LANE)	RT	W-68-36	36"X 36"		1	1												
90	12	60+17 (℄ TURN LANE)	RT	R-2-36	36"X36"X36"							14	3.9							
90	13	10+94 FOR EXISTING (U.S. 20)	RT	M-55-24	24"X 24"		1	1				15	4							
		11+57 FOR PROPOSED (U.S. 20)		M-1-24	24"X 24"			1					4							
				M-28-21	21"X 15"			1												
90	14	31+09 (HARBOR ST.)	LT	W-SPEC-12	9"X 12"		1	1												
90	15	31+13 (HARBOR ST.)	RT	R-1-30	30"X 30"		1	1												
90	16	49+03 (KEYES ST.)	LT	D-14			1	1												
				D-14				1												
90	17	49+10 (KEYES ST.)	RT	D-8G-SPE								13	5.56							
				D-8G-SPE									7.50							
90	18	12+32 (U.S. 20)	RT	D-8G-SPE								13	6.38							
				D-8G-SPE									5.56							
90	19	49+68 (KEYES ST.)	LT	W-48-30	30"X 30"							14	6.25							
TOTALS CARRIED TO GENERAL SUMMARY						3	11	16			3	134	97.69							

CALCULATED JMB CHECKED JDP

SIGNING SUBSUMMARY

ATB-20-26.19

18520TSB.dgn

SHEET NO.	REFERENCE NO.	STATION	SIDE	CODE	SIZE (INCHES)	630 REMOVAL OF POLE MOUNTED SIGN AND STORAGE	REMOVAL OF GROUND MOUNTED POST SUPPORT AND DISPOSAL	REMOVAL OF GROUND MOUNTED SIGN AND STORAGE			SIGN SUPPORT ASSEMBLY, POLE MOUNTED	GROUND MOUNTED SUPPORT, NO. 3 POST	SIGN, FLAT SHEET, TYPE G						
						EACH	EACH	EACH			EACH	LIN. FT.	SQ. FT.						
90	20	11+48 (U.S. 20)	LT	W-76AP-36	36"X 36"		1	1				14	9						
				R-SPEC-12	9"X 12"			1					0.75						
90	21	12+31 (U.S. 20)	LT	M-55-24	24"X 24"							14	4						
90	22	12+51 (U.S. 20)	LT	R-10-24	24"X 30"		1	1											
		13+00 (U.S. 20)	RT	R-10-24	24"X 30"							13	5						
90	23	49+68 (KEYES ST.)	RT	R-1-30	30"X 30"							14	6.25						
90	24	11+64 (U.S. 20)	RT	D-14			1	1											
				D-14				1											
90	25	72+89 (SOUTH LIBERTY ST.)	LT	R-43R-36	36"X 12"							12	3						
90	26	72+78 (SOUTH LIBERTY ST.)	RT	W-48-30	30"X 30"							14	6.25						
90	27	SOUTH OF THE	RT	R-41B-30	30"X 30"							13	6.25						
		INTERSECTION OF OLD MAIN	LT	R-41B-30	30"X 30"							13	6.25						
		AND SOUTH LIBERTY ST.																	
90	28	12+17 (U.S. 20)	RT	W-68-36	36"X 36"							15	9						
91	29	26+60 (U.S. 20)	RT	W-47-36	36"X 36"		2	1				15+15	9						
				WP-47-24	24"X 12"			1					2						
91	30	27+87 (U.S. 20)	LT	W-68-36	36"X 36"		1	1											
		25+80 (U.S. 20)	LT	W-68-36	36"X 36"							15	9						
91	31	27+87 (U.S. 20)	LT	W-60R-36	36"X 36"		1	1				15	9						
90	32	58+06 (CHARLES ST.)	LT/RT	3@ X-4-18	3@ 18"X 18"							13+13+13	6.75						
90	33	73+06 (SOUTH LIBERTY ST.)	RT	R-1-30	30"X 30"							14	6.25						
TOTALS CARRIED TO GENERAL SUMMARY							7	9				235	97.75						

CALCULATED JMB CHECKED JDP

SIGNING SUBSUMMARY

ATB-20-26.19

18520TSC.dgn

18520LPA.dgn

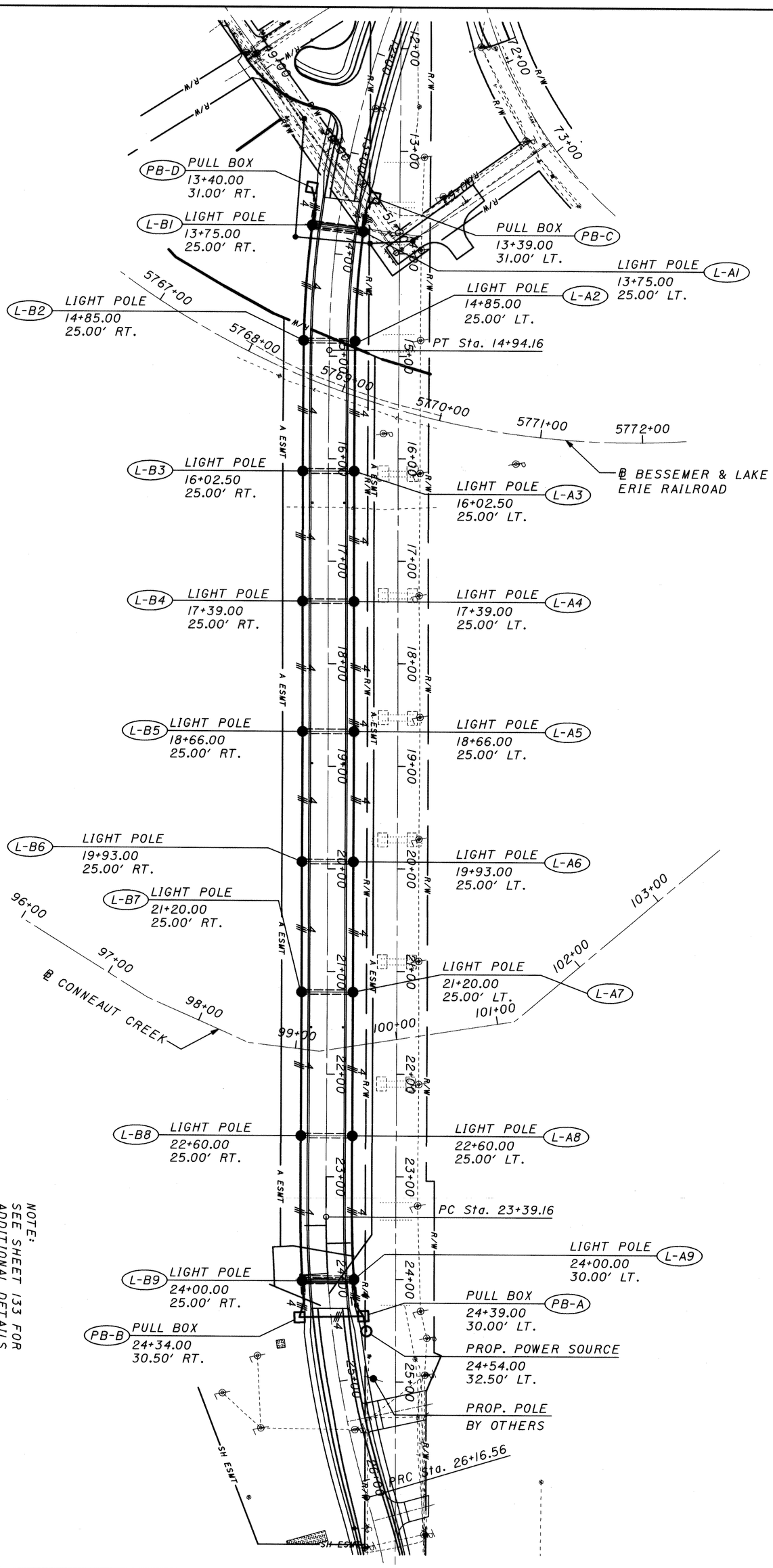

NOTE:
SEE SHEET 133 FOR ADDITIONAL DETAILS

LEGEND

- EXISTING POWER POLE
- PROPOSED 150W HPS LUMINARE MOUNTING HEIGHT 18'
- PROPOSED PULL BOX
- PROPOSED POWER SERVICE, AS PER PLAN
- PROPOSED POLE BY OTHERS

95 / 162

ATB-20-26.19

LIGHTING PLAN

CALCULATED JMB
CHECKED JBH

0 25 50 100
HORIZONTAL SCALE IN FEET

SPECIFICATIONS

THESE NOTES ARE SUPPLEMENTAL TO ITEMS 625 AND 713 OF THE STATE OF OHIO DEPARTMENT OF TRANSPORTATION CONSTRUCTION AND MATERIAL SPECIFICATIONS.

REFERENCE SHALL BE MADE TO STANDARD CONSTRUCTION DRAWINGS LISTED ON THE TITLE SHEET OF THESE PLANS.

GENERAL

THE POWER SUPPLYING AGENCY FOR THIS PROJECT IS:

FIRST ENERGY
P.O. BOX 570
YOUNGSTOWN, OHIO 44501
(330) 740-7635, x7635

THIS PROJECT HAS BEEN DESIGNED ON THE BASIS OF 5 PERCENT VOLTAGE DROP WITH A MINIMUM UNIFORMITY RATIO OF 4 TO 1 FOR CONVENTIONAL UNITS.

ITEM 625 - POWER SERVICE, AS PER PLAN

THE PROJECT WILL RECEIVE 120/240 VOLT, 3 WIRE, 3 PHASE GROUNDED NEUTRAL SERVICE FROM FIRST ENERGY.

ELECTRIC ENERGY FROM EXISTING POWER SERVICES SHALL CONTINUE TO BE CHARGED TO THE MAINTAINING AGENCY. THE CONTRACTOR SHALL PAY ELECTRICAL ENERGY CHARGES FOR NEW POWER SERVICES ESTABLISHED BY THIS PROJECT. UPON COMPLETION OF THIS PROJECT, POWER SERVICE ELECTRICAL ENERGY ACCOUNTS SHALL BE TRANSFERRED TO THE NEW MAINTAINING AGENCY, CITY OF CONNEAUT. THIS SHALL INCLUDE NEW POWER SERVICE ESTABLISHED BY THIS PROJECT AS WELL AS REASSIGNMENT OF EXISTING SERVICE DUE TO WORK PERFORMED BY THIS PROJECT.

IN ADDITION TO 625.18, THE POWER SERVICE POLE SHALL BE INSALLED AT STA. 24+54.00 (LT.), SEE DETAIL ON SHEET 97.

ITEM 625- LUMINAIRE, DECORATIVE, AS PER PLAN

THE 150W HPS LUMINAIRES SHALL BE HOLOPHANE CAT. #JF 15AHP 12BP3, HADCO CAT. #8911-A-B-R-D 150S-E-S OR AN EQUAL APPROVED BY THE ENGINEER. THE LUMINARES SHALL CONTAIN A PHOTOELECTRIC CONTROL RECEPTACLE THAT SHALL FACE NORTH WHEN INSTALLED.

ITEM 625- LIGHT POLE DECORATIVE

THE 12' FLUTED/TAPERED POLES SHALL BE SHAKESPEARE CAT. # AP17-12FS 1101 MAINSTREET LIGHTING CAT. # FF-802B OR AN EQUAL APPROVED BY THE ENGINEER.

LAMPS

HIGH PRESSURE SODIUM LAMPS SHALL BE GENERAL ELECTRIC" LUCALOX", PHILIPS "CERAMALUX", OSRAM SYLVANIA "LUMALUX" OR EQUAL AS APPROVED BY THE ENGINEER.

FINAL CONNECTION

THE CONTRACTOR SHALL COIL 10 FT. OF EACH CONDUCTOR AT THE PROPOSED SERVICE POLE AT STA. 24+54.00 (LT.) AND AT THE PROPOSED PULLBOX AT STA. 24+39.00 (LT.) FOR FINAL CONNECTION BY FIRST ENERGY.

ALL STREET/PEDESTRIAN LIGHTING WIRING OFF OF THE BRIDGE SHALL BE FURNISHED, PLACED AND ENERGIZED BY FIRST ENERGY THE CONTRACTOR SHALL BE RESPONSIBLE FOR CONTACTING FIRST ENERGY ONCE THE CONDUITS ARE IN PLACE TO COORDINATE THE ABOVE REFERENCED WORK.

CONTACT: WILLIAM M. SPEECE
FIRST ENERGY
(330) 704-7635, x7635

THE CONTRACTOR SHALL GIVE FIRST ENERGY 10 WORKING DAYS NOTICE IN ADVANCE OR AS DIRCTED BY THE ENGINEER.

UNDERDRAINS FOR PULL BOXES

EACH PULL BOX SHALL HAVE AN UNDER DRAIN, AS DETAILED ON THE STANDARD DRAWINGS. A QUANTITY OF ITEM 603, "4 INCH CONDUIT, TYPE E" HAS BEEN PROVIDED FOR THIS PURPOSE.

PADLOCKS AND KEYS

PADLOCKS OF CORROSION RESISTANT BRASS, BRONZE, AND STAINLESS STEEL CONSTRUCTION EQUAL TO WILSON BOHANNAN 660A OR MASTER 4BKA KEYED IN ACCORDANCE WITH 631.08 PARAGARAPH 3 SHALL BE INCLUDED WITH ALL LOCKABLE ENCLOSURES.

HIGH VOLTAGE TEST, AS PER PLAN

THE HIGH VOLTAGE CURRENT TEST, AS DESCRIBED IN SUPPLEMENTAL SPECIFICATION 1003, SHALL BE PERFORMED ON ALL DISTRIBUTION CABLE AND DUCT CABLE SYSTEMS TO BE INSTALLED ON THIS PROJECT. THE TEST SHALL NOT BE PERFORMED UNTIL AFTER ALL NEW CONSTRUCTION, SUCH AS GUARDRAIL, FENCE, DELINEATOR POSTS, SIGN SUPPORTS, ETC., IN THE IMMEDIATE VICINITY OF THE LOCATION OF THE CABLE RUN BEING TESTED. HAS BEEN COMPLETED.

ITEM 625 - CONDUIT JACKED OR DRILLED

THIS ITEM SHALL CONSIST OF FURNISHING AND INSTALLING CONDUIT OF THE SIZE OR SIZES INDICATED UNDER EXISTING PAVEMENT AND CONTIGUOUS SHOULDERS BY AN APPROVED METHOD SUCH AS "DRILLING" OR JACKING".

THE CONTRACTOR SHALL PLACE THE CONDUIT WITH THE LEAST AMOUNT OF DISTURBANCES TO THE EXISTING PAVEMENT, SUBBASE, BERM PAVEMENT, OR SHOULDERS OF THE ROADWAY. ALL PUSH PITS OR ANY NECESSARY EXCAVATIONS SHALL BE BACKFILLED AND RESTORED IN ACCORDANCE WITH 625.01.

MEASUREMENT OF THE CONDUIT SHALL BE THE ACTUAL AMOUNT OF LINEAR FEET INSTALLED UNDER PAVEMENT AND SHOULDERS, MEASURED IN PLACE, AS ACCEPTED BY THE ENGINEER. THE UNIT PRICE BID FOR ITEM 625 "CONDUIT JACKED OR DRILLED" SHALL BE COMPENSATION FOR EXCAVATION, DRILLING OR JACKING, BACKFILLING, COMPACTION, RESTORATION, AND ALL LABOR, MATERIAL, EQUIPMENT, AND INCIDENTALS NECESSARY TO COMPLETE THE WORK AS SPECIFIED.

ITEM SPECIAL - PLASTIC CAUTION TAPE

THE LOCATION OF UNDERGROUND DUCT CABLE OR NON-METALLIC CONDUIT WHEN INSTALLED IN LOCATIONS OTHER THAN THE NORMAL OR ALTERNATE TRENCH ALIGNMENT SHOWN ON STANDARD CONSTRUCTION DRAWING HL-20.11, SHALL BE MARKED BY THE USE OF A CONTINUOUS IDENTIFYING TAPE BURIED IN THE TRENCH ABOVE THE LINE. THE IDENTIFYING TAPE SHALL BE AN INERT MATERIAL, APPROXIMATELY 6" WIDE, COMPOSED OF POLYETHYLENE PLASTIC, HIGHLY RESISTANT TO ALKALIS, ACIDS OR OTHER CHEMICAL COMPONENTS LIKELY TO BE ENCOUNTERED IN SOILS. THE TAPE SHALL BE BRIGHT RED WITH IDENTIFYING PRINTING "ELECTRIC" IN BLACK LETTERS, ONE SIDE ONLY. TAPES SHALL BE SUPPLIED IN CONTINUOUS ROLLS WITH THE IDENTIFYING LETTERING REPEATED CONTINUOUSLY THE FULL LENGTH OF THE TAPE. IDENTIFYING TAPES SHALL BE BURIED IN THE ELECTRIC LINE TRENCH WITH ONE STRIP PLACED APPROXIMATELY 8" TO 12" BELOW THE FINAL FINISHED GRADE. THE TAPE SHALL BE PLACED IN THE TRENCH WITH PRINTED SIDE UP AND SHALL BE ESSENTIALLY PARALLEL WITH THE FINISHED SURFACE. THE CONTRACTOR SHALL TAKE NECESSARY PRECAUTIONS TO INSURE THAT THE TAPE IS NOT PULLED, DISTORTED, OR OTHERWISE MISPLACED IN COMPLETING THE TRENCH BACKFILL. TAPE SHALL BE ALLEN SYSTEM'S TERRA TAP OR EQUAL AS APPROVED BY THE ENGINEER.

THE TAPE SHALL BE PAID FOR PER LINEAR FOOT OF ITEM SPECIAL "PLASTIC CAUTION TAPE" COMPLETE AND IN PLACE.

CONDUIT ON STRUCTURE

EXPANSION FITTINGS FOR CONDUIT ON STRUCTURES SHALL BE OZ TYPE AX, CROUSE-HINDS TYPE XJ-4, APPLETON TYPE AX-4, OR EQUAL APPROVED BY THE ENGINEER. NO METAL CONDUIT OR FITTING.

EACH EXPANSION FITTING SHALL HAVE A COPPER EXTERNAL BONDING JUMPER.

ITEM 625 - LIGHT POLE ANCHOR BOLTS ON STRUCTURE

ANCHOR BOLTS FOR MOUNTING LIGHT POLES ON BRIDGES SHALL CONFORM TO THE REQUIREMENTS OF 713.01 AND DETAILS SHOWN ON THE PLANS AND STANDARD DRAWINGS, OR THE APPROVED SHOP DRAWINGS, FOR THE RESPECTIVE POLES TO BE PLACED THEREON.

PAYMENT SHALL BE MADE AT THE UNIT PRICE BID FOR EACH OF THE BOLT SIZE REQUIRED, AND THIS PAYMENT SHALL CONSTITUTE FULL COMPENSATION FOR FURNISHING AND PLACING THE BOLTS.

ITEM 625- STRUCTURE GROUNDING SYSTEM

THIS ITEM SHALL BE FURNISHED AND INSTALLED PER ODOT SCD HL- 50.22 AND 625.20 OF THE CMS.

CALCULATED JMB CHECKED JBH

LIGHTING GENERAL NOTES

ATB-20-26.19

18250in.dgn

ITEM SPECIAL- MAINTAIN EXISTING LIGHTING

EXISTING ROADWAYS WHICH ARE TO REMAIN OPEN TO TRAFFIC DURING CONSTRUCTION OF THIS PROJECT AND WHICH ARE LIGHTED SHALL HAVE THE LIGHTING MAINTAINED AS DESCRIBED HEREIN.

BEFORE ANY WORK IS STARTED IN THE IMMEDIATE VICINITY OF ANY EXISTING CIRCUITS, REPRESENTATIVES OF THE CITY, THE MAINTAINING AGENCY (CEI), AND THE CONTRACTOR SHALL MAKE A VISUAL INSPECTION OF THE EXISTING ROADWAY LIGHTING CIRCUITS TO BE MAINTAINED. DURING THIS INSPECTION, A WRITTEN RECORD OF THE CONDITION OF THE EXISTING LIGHTING SHALL BE MADE BY THE CITY'S REPRESENTATIVE. THIS REPORT SHALL NOTE INDIVIDUAL LUMINAIRES WHICH ARE NOT IN WORKING ORDER, INDIVIDUAL POLES WHICH ARE NOT STANDING, AND INDIVIDUAL CIRCUITS WHICH ARE NOT IN WORKING ORDER. THE COMPLETED REPORT SHALL BE SIGNED BY THE CONTRACTOR.

IF AS A RESULT OF THIS INSPECTION, IT IS DETERMINED THAT THE CONDITION OF THE EXISTING SYSTEM IS BELOW THAT REQUIRED FOR THE SAFETY OF THE TRAVELING PUBLIC, THE MAINTAINING AGENCY SHALL MAKE REPAIRS NECESSARY TO RETURN THE SYSTEM TO AN ACCEPTABLE CONDTION. FOLLOWING THESE REPAIRS, THE SYSTEM SHALL AGAIN BE INSPECTED AND A REPORT MADE AND SIGNED AS OUTLINED HEREIN.

WHEN THE EXISTING SYSTEM IS IN AN ACCEPTABLE CONDITION, IT SHALL BE TURNED OVER TO THE CONTRACTOR WHO SHALL THEN BE REQUIRED TO MAINTAIN THE EXISTING LIGHTING TO THE CONDITION OUTLINED IN THIS REPORT WITH THE EXCEPTION OF KNOCKDOWNS DUE TO TRAFFIC ACCIDENTS.

REPLACEMENT OF KNOCKED-DOWN UNITS SHALL BE DONE ONLY WHEN THE ENGINEER HAS DETERMINED THAT THE REPLACEMENT OF THE KNOCKED-DOWN UNIT IS NECESSARY AND SHALL BE PAID SEPARATELY ON A UNIT BASIS

BETTERMENTS SHALL BE COVERED IN ITEMS OF WORK PERTAINING TO THE CONSTRUCTION OF PERMANENT IMPROVEMENTS

SHOULD THE CONTRACTOR DESIRE THE REMOVAL OF THE EXISTING LIGHTING BEFORE THE NEW LIGHTING IS OPERATIONAL, THE CONTRACTOR SHALL THEN BE RESPONSIBLE FOR ADEQUATE TEMPORARY LIGHTING OF THAT PORTION OF EXISTING ROADWAY AFFECTED BY THE REMOVAL OF THE EXISTING LIGHTING.

PRIOR TO INSTALLING SUCH LIGHTING, THE CONTRACTOR SHALL PREPARE AND SUBMIT FOUR (4) SETS OF THE TEMPORARY LIGHTING PLAN TO DIRECTOR FOR REVIEW AND APPROVAL.

THIS PLAN SHALL SHOW POLE LOCATIONS, LENGTH OF BRACKET ARMS, STYLE OF LUMINARIES, MOUNTING HEIGHT WIRING METHODS, AND OTHER PERTINENT INFORMATION, THE TEMPORARY LIGHTING SHALL PROVIDE AN AVERAGE INITIAL INTENSITY OF 5 FOOTCANDLES WITH AN AVERAGE TO MINIMUM UNIFORMITY NOT TO EXCEED 3:1. MOUNTING HEIGHT FOR TEMPORARY LUMINAIRES SHALL NOT BE LESS THAN 8.2 METERS AND MINIMUM OVERHEAD CONDUCTOR CLEARANCE SHALL BE LESS THAN 6.1 METERS. TEMPORARY OVERHEAD CONSTRUCTION SHALL NOT BE LESS THAN GRADE "A" FOR STRENGTH REQUIREMENT AS DEFINED BY THE NATIONAL ELECTRIC SAFETY CODE. WOOD POLES WITH OVERHEAD WIRING MAY BE USED. HOWEVER, TEMPORARY LIGHTING SHALL MEET FEDERAL, STATE, AND CITY SAFETY CRITERIA IF BREAKAWAY POLES ARE USED TO MEET THESE CRITERIA THEN UNDERGROUND WIRING SHALL BE USED. RECONDITIONED OR USED MATERIALS MAY BE FURNISHED FOR TEMPORARY LIGHTING.

ALL MATERIALS NECESSARY TO COMPLETE THE TEMPORARY LIGHTING SHALL BE FURNISHED AND INSTALLED BY THE CONTRACTOR. WHEN NO LONGER NEEDED, THE TEMPORARY LIGHTING INSTALLATION SHALL BE REMOVED AND PROPERLY DISPOSED OF BY THE CONTRACTOR.

THE MAINTAINING AGENCY WILL PAY FOR ELECTRICAL ENERGY CONSUMED BY EXISTING POWER SERVICES AND BY PROPOSED PERMANENT POWER SERVICES AFTER ACCEPTANCE. THE CONTRACTOR WILL PAY FOR ELECTRICAL ENERGY, INSTALLATION, REMOVAL, AND MAINTENANCE OF ANY TEMPORARY POWER SERVICES.

THE LUMP SUM PRICE BID FOR ITEM SPECIAL- "MAINTAIN EXISTING LIGHTING", SHALL INCLUDE PAYMENT FOR ALL LABOR, EQUIPMENT, AND MATERIALS, AND INCIDENTALS NECESSARYTO MAINTAIN THE EXISTING LIGHTING AS SPECIFIED HEREIN.

LIGHT POLE REMOVED, AS PER PLAN

THIS ITEM OF WORK SHALL CONSIST OF THE REMOVAL OF EXISTING LIGHT POLES INCLUDING THE BRACKET ARM(S) AND TRANSFORMER BASES (IF ANY). THE POLE, BRACKET ARM(S), BASE, AND WIRING SHALL BECOME THE PROPERTY OF THE CONTRACTOR AND SHALL BE DISPOSED OFF THE PROJECT SITE.

PAYMENT SHALL BE MADE AT THE UNIT BID PRICE FOR EACH "ITEM 202 LIGHT POLE REMOVED AS PER PLAN".

ITEM 202- DISCONNECT EXISTING CIRCUIT

THIS ITEM OF WORK SHALL CONSIST OF THE DISCONNECTION OF THE EXISTING LIGHTING CIRCUITS.

DISCONNECTION AT A PULL BOX SHALL INVOLVE CUTTING THE EXISTING CIRCUIT AND REMOVING ALL SPLICE KITS. ANY CABLE THAT IS TO BE ABANDONED SHALL BE TERMINATED IN A MANNER SUCH THAT NO CABLE IS LEFT REMAINING IN THE PULL BOX

DISCONNECTION AT A LIGHT SHALL INVOLVE THE REMOVAL OF THE PART OF THE CABLE THAT IS TO BE ABANDONED FROM THE POLE. THOSE ENDS OF THE CONNECTOR KITS FROM WHICH ABANDONED IS REMOVED SHALL BE PLUGGED AND TAPED.

ANY CABLE THAT IS TO BE REUSED IN A PULL BOX OR LIGHT POLE SHALL BE CUT IN A MANNER SO THAT THERE IS SUFFICIENT LENGTH OF CABLE LEFT FOR RECONNECTION. CABLE SPLICE KITS AND CONNECTOR KITS WILL BE PAID FOR RESPECTIVELY UNDER EACH ITEM 625.

PAYMENT SHALL BE MADE AT UNIT BID PRICE FOR EACH ITEM 202 "DISCONNECT EXISTING CIRCUIT" AND SHALL BE FULL COMPENSATION INCLUDING ALL LABOR, MATERIALS, AND INCIDENTALS REQUIRED TO COMPLETE THE WORK.

ITEM 625- CONDUIT TYPE EB, AS PER PLAN

CONDUIT AND FITTINGS SHALL BE POLYVINYL CHLORIDE CONDUIT, TYPE EB 120 OR EQUAL, AS PER 713.07 OF SPECIFICATIONS. CONDUIT SHALL BE ENCASED WITH A MINIMUM 3-IN. ENVELOPE OF CLASS C CONCRETE (499 OR SPECIFICATIONS). LABOR AND MATERIAL FOR PROVIDING CONCRETE ENCASEMENT SHALL BE INCLUDED IN THE UNIT PRICE BID FOR ITEM 625 CONDUIT, TYPE EB, AS PER PLAN. ALL OTHER PORTIONS OF SECTION 625 OF THE SPECIFICATIONS SHALL APPLY.

ITEM 202- LUMINAIRE REMOVED, AS PER PLAN

THIS ITEM OF WORK SHALL CONSIST OF THE REMOVAL OF AN EXISTING LUMINAIRE FROM AN EXISTING LIGHT POLE AND DISPOSAL OFF THE PROJECT SITE BY THE CONTRACTOR.

PAYMENT SHALL BE MADE AT UNIT PRICE BID FOR EACH "ITEM 202 LUMINAIRE REMOVED, AS PER PLAN," WHICH SHALL INCLUDE FULL COMPENSATION FOR ALL LABOR, MATERIALS AND INCIDENTALS REQUIRED TO COMPLETE THE WORK SATISFACTORILY.

PROPOSED POLE BY OTHERS

FIRST ENERGY SHALL INSTALL THE PROPOSED POLE AT APPROXIMATE STA. 25+00.

CALCULATED JMB CHECKED JBH

LIGHTING GENERAL NOTES

ATB-20-26.19

96A / 162

18250ln.dgn

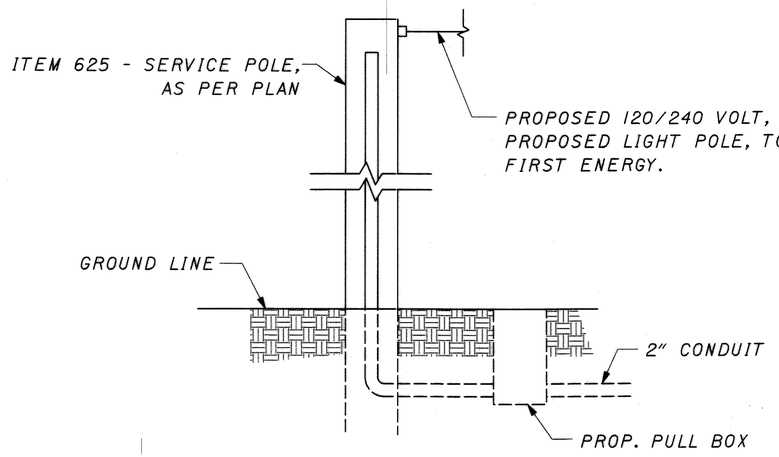

NOTE:
THE COST OF MAKING ELECTRICAL CONNECTIONS IS INCIDENTAL AND SHALL BE INCLUDED WITH THE UNIT PRICE FOR CABLE, SPLICING KITS, ETC.

NOTE:
SEE STANDARD DRAWING NO. HL-40.10 FOR ADDITIONAL DETAILS.

POWER SERVICE, AS PER PLAN

STA. 24+54.00 (LT.)

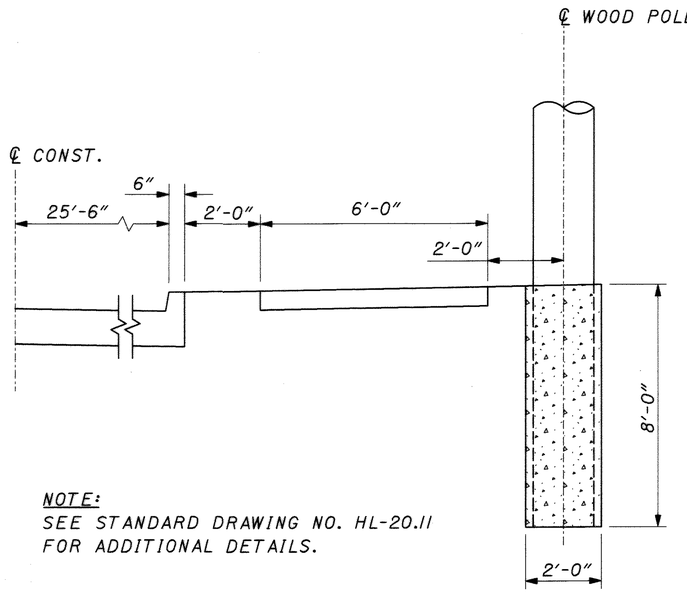

NOTE:
SEE STANDARD DRAWING NO. HL-20.11 FOR ADDITIONAL DETAILS.

WOOD LIGHT POLE FOUNDATION

STA. 24+54.00 (LT.)
INCLUDE WITH ITEM 625, POWER SERVICE, AS PER PLAN, FOR PAYMENT.

LIGHTING SUB-SUMMARY (QUANTITIES CARRIED TO GENERAL SUMMARY)

ITEM DESCRIPTION	ITEM NUMBER	UNIT	QUANTITY
4" CONDUIT, TYPE E	603	L.F.	80
LIGHT POLE, DECORATIVE	625	EACH	18
LUMINAIRE DECORATIVE, AS PER PLAN	625	EACH	18
CONDUIT, 2", 713.07	625	L.F.	4102
NO. 4 AWG 5000 VOLT DISTRIBUTION CABLE	625	L.F.	4399
NO. 10 AWG POLE AND BRACKET CABLE	625	L.F.	2052
STRUCTURE JUNCTION BOX	625	EACH	24
PULL BOX, 713.08, 18"	625	EACH	4
POWER SERVICE, AS PER PLAN	625	EACH	1
STRUCTURE GROUNDING SYSTEM	625	EACH	1
CONNECTOR KIT, TYPE II	625	EACH	36
CABLE SPLICING KIT	625	EACH	4
SPECIAL - PLASTIC CAUTION TAPE	625	L.F.	150
LIGHT POLE ANCHOR BOLTS ON STRUCTURE	625	EACH	72
SPECIAL- MAINTAIN EXISTING LIGHTING	625	LUMP	LUMP
LIGHT POLE REMOVED, AS PER PLAN	202	EACH	12
DISCONNECT EXISTING CIRCUIT	202	EACH	2
LUMINAIRE REMOVED, AS PER PLAN	202	EACH	12

CALCULATED JMB
CHECKED JBH

LIGHTING DETAILS

ATB-20-26.19

18520LDA.dgn

BENCHMARK #1 ELEV. 662.57
TOP S.E. CORNER STONE CAP ON BRICK PLANTER @ E. SIDE MARCY FUNERAL HOME @ N.W. CORNER LIBERTY ST. & U.S.R. 20 (HARBOR ST.), STA. 59+52, 60.23' LT.

BENCHMARK #2 ELEV. 672.08
CHS. □ ON N.W. CORNER 3'x3' CONC. PAD @ S.E. CORNER DORMAN RD. & E. MAIN RD., STA. 30+78, 29.19' RT.

BENCHMARK #3 ELEV. 660.28
STD. U.S.C. & G.S. DISK IN S. FACE @ S.E. CORNER BLDG. @ N.W. CORNER STATE ST. & CLEVELAND CT.

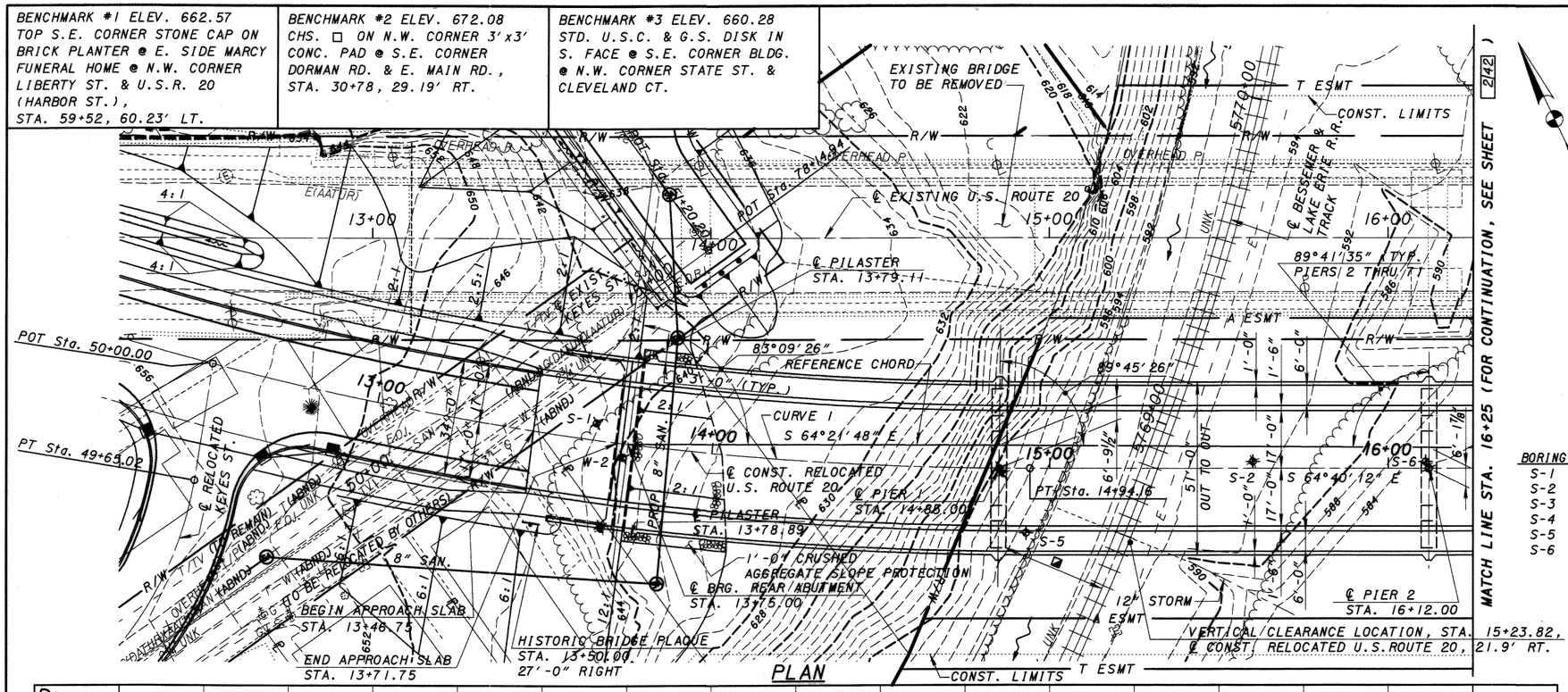

PLAN

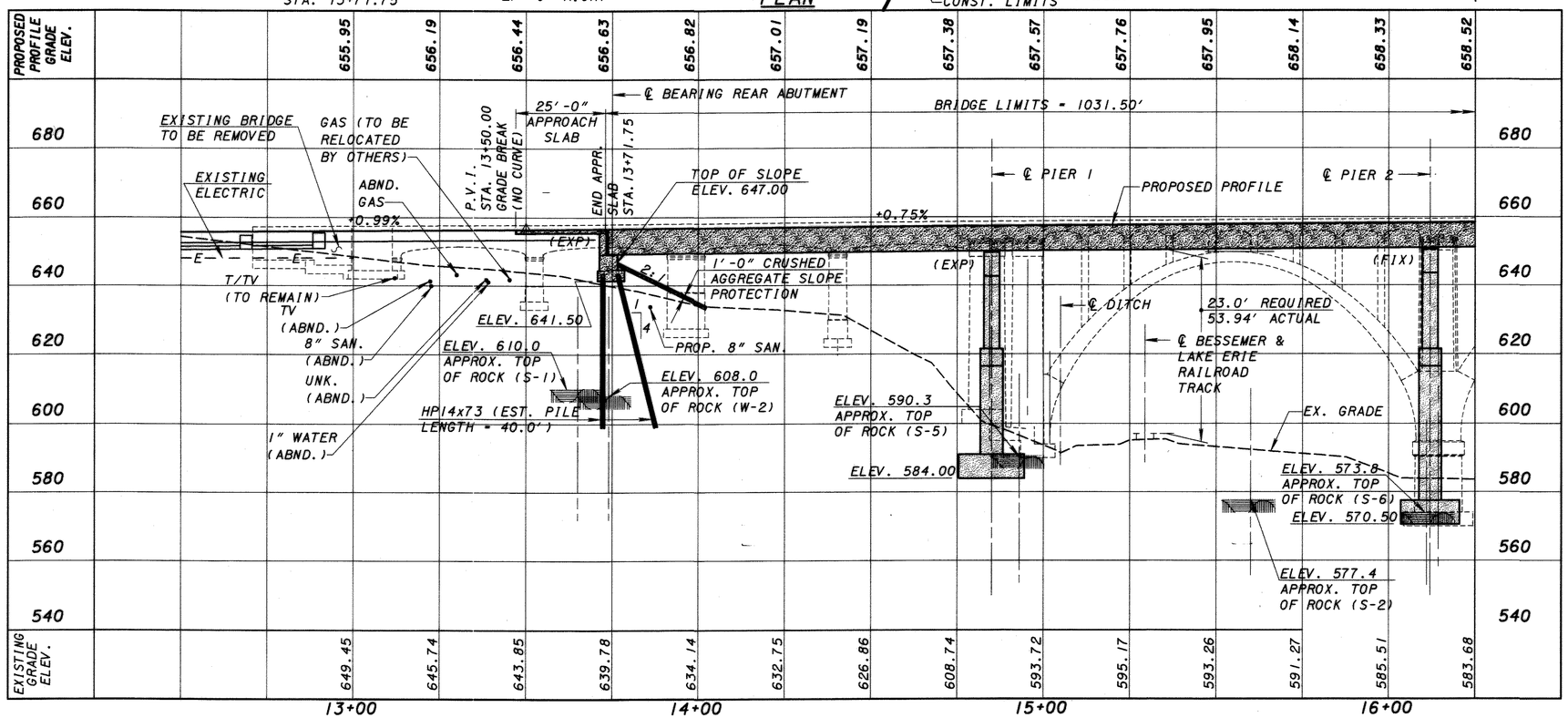

PROFILE ALONG ℄ CONSTRUCTION RELOCATED U.S. ROUTE 20

NOTES

1. EARTHWORK LIMITS SHOWN ARE APPROXIMATE. ACTUAL SLOPES SHALL CONFORM TO PLAN CROSS SECTIONS.
2. THE REFERENCE CHORD IS A LINE FROM ℄ BEARING REAR ABUTMENT TO ℄ BEARING FORWARD ABUTMENT, INTERSECTING AT ℄ CONSTRUCTION RELOCATED U.S. ROUTE 20.

LEGEND

■ HORIZONTAL CLEARANCE ℄ TRACK TO FACE OF PIER:
REQUIRED = 25'-0" MINIMUM
ACTUAL = 30'-10⅜"

PROPOSED U.S. ROUTE 20 CURVE I DATA

P.I. Sta = 12+96.47
Δ = 24° 05' 00" (LT.)
Dc = 6° 00' 00"
R = 954.93'
T = 203.70'
L = 401.39'
E = 21.48'
emax = NC

FOUNDATION INVESTIGATION LEGEND

◆ INDICATES BORING LOCATION

BORING	STATION	OFFSET	ELEVATION	BORING	STATION	OFFSET	ELEVATION
S-1	13+65	5' LT.	641.70	S-7	17+39	0	579.40
S-2	15+60	2' LT.	593.80	S-8	18+66	0	580.20
S-3	21+10	5' RT.	579.90	S-9	19+93	0	580.30
S-4	24+11	6' RT.	664.60	S-10	22+60	20' RT.	588.20
S-5	14+93	19' RT.	591.80	W-2	13+74	4' RT.	637.30
S-6	16+11	2' LT.	583.80	W-3	24+18	25' LT.	666.50

DRAINAGE DATA

DRAINAGE AREA	- 184 SQ. MI.
ESTIMATED Q_{25}	- 11,349 CFS
ESTIMATED Q_{100}	- 14,989 CFS
NORMAL WATER SURFACE ELEV.	- 576.76

TRAFFIC DATA

CURRENT ADT (2003)	- 10,290
DESIGN YEAR ADT (2023)	- 12,890
TRUCKS (24 HOUR B&C)	- 1,289

EXISTING STRUCTURE

TYPE: SEVEN (7) SPAN OPEN SPANDREL REINFORCED CONCRETE ARCH BRIDGE WITH SIX (6) REINFORCED CONCRETE VARIABLE DEPTH GIRDER APPROACH SPANS, SUPPORTED ON REINFORCED CONCRETE SUBSTRUCTURE.
SPAN: ARCH SPAN = 119'-0"(±) (C/C BEARINGS)
GIRDER SPAN = 4 @ 45'-6"(±) (C/C BEARINGS)
2 @ 44'-0"(±) (C/C BEARINGS)
DECK: ARCH SPAN = REINFORCED CONCRETE SLAB ON REINFORCED CONCRETE FLOORBEAMS.
GIRDER SPAN = INTEGRAL REINFORCED CONCRETE SLAB ON CONCRETE GIRDERS.
ROADWAY: 32'-0" (±) F/F CURB
LOADING: 60 TON INT. CAR (SINGLE TRACK) AND 20 TON TRUCK (T-20).
SKEW: NONE
ALIGNMENT: TANGENT
WEARING SURFACE: ASPHALT CONCRETE
STRUCTURE FILE NUMBER: 0402281
CONDITION: POOR
DATE BUILT: 1922-1923

PROPOSED STRUCTURE

TYPE: EIGHT (8) SPAN, CONTINUOUS, PRESTRESSED CONCRETE I-BEAM BRIDGE WITH COMPOSITE REINFORCED CONCRETE DECK, SUPPORTED ON REINFORCED CONCRETE SUBSTRUCTURE.
SPANS: 1 SPAN @ 110'-0", 5 SPANS @ 127'-0", 2 SPANS @ 140'-0" C/C PIERS
ROADWAY: 34'-0" F/F BARRIER CURB WITH 6'-0" SIDEWALKS.
LOADING: HS25 AND THE ALTERNATE MILITARY LOADING.
SKEW: VARIES
ALIGNMENT: 6° CURVE LT., TANGENT, 6° CURVE LT.
WEARING SURFACE: MONOLITHIC
APPROACH SLAB: 25'-0" (AS-1-81)
CROWN: 0.0156
LATITUDE: N 41°56'30"
LONGITUDE: W 80°33'06"

DESIGN AGENCY
McCOY ASSOCIATES, INC.
367 GHENT ROAD
AKRON, OHIO 44333

DATE 6-11-02
REVIEWED JBH
STRUCTURE FILE NUMBER 0402273
DRAWN WEB
REVISED
DESIGNED HK
CHECKED CLB

ASHTABULA COUNTY
STA. 13+71.75
STA. 24+03.25

SITE PLAN
BRIDGE NO. ATB-20-2628
OVER BESSEMER & LAKE ERIE R.R. & CONNEAUT CREEK

ATB-20-26.19

1/42

98/162

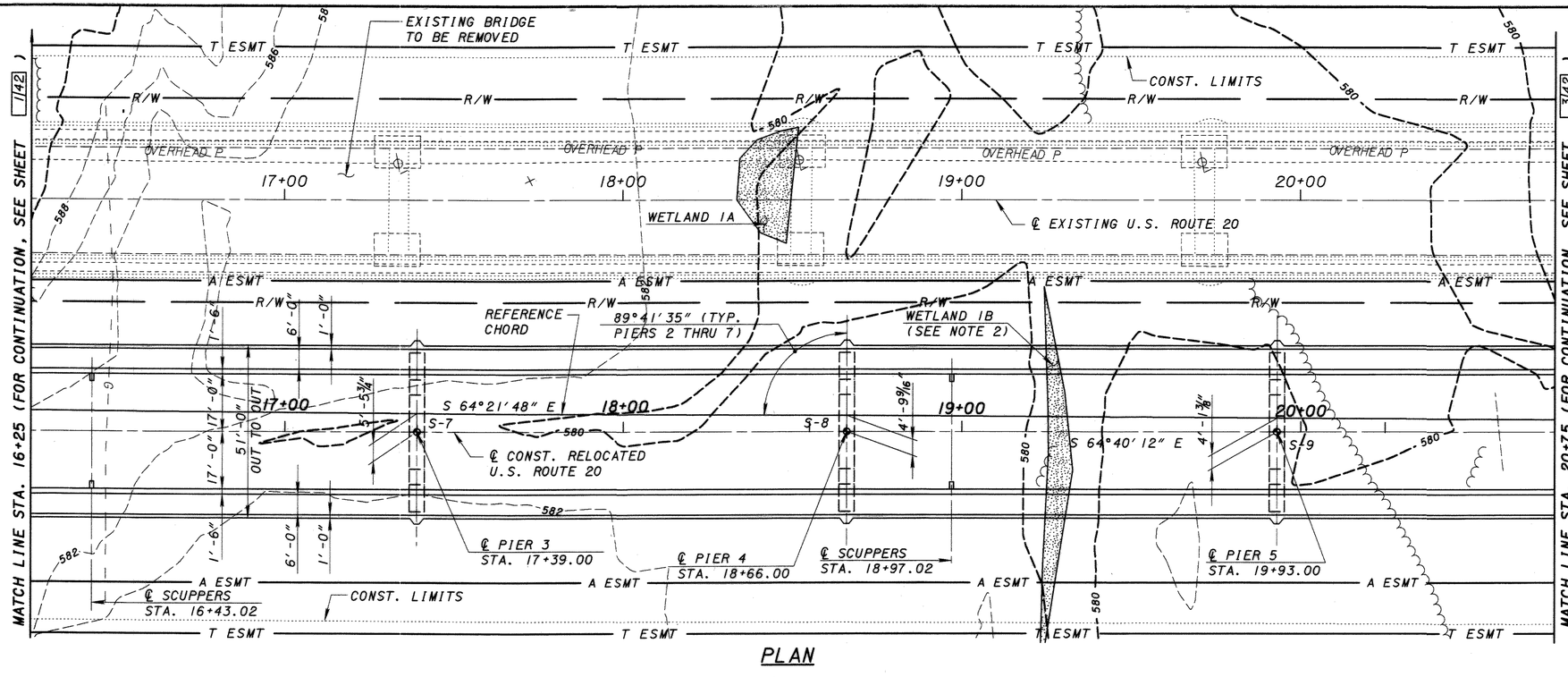

PLAN

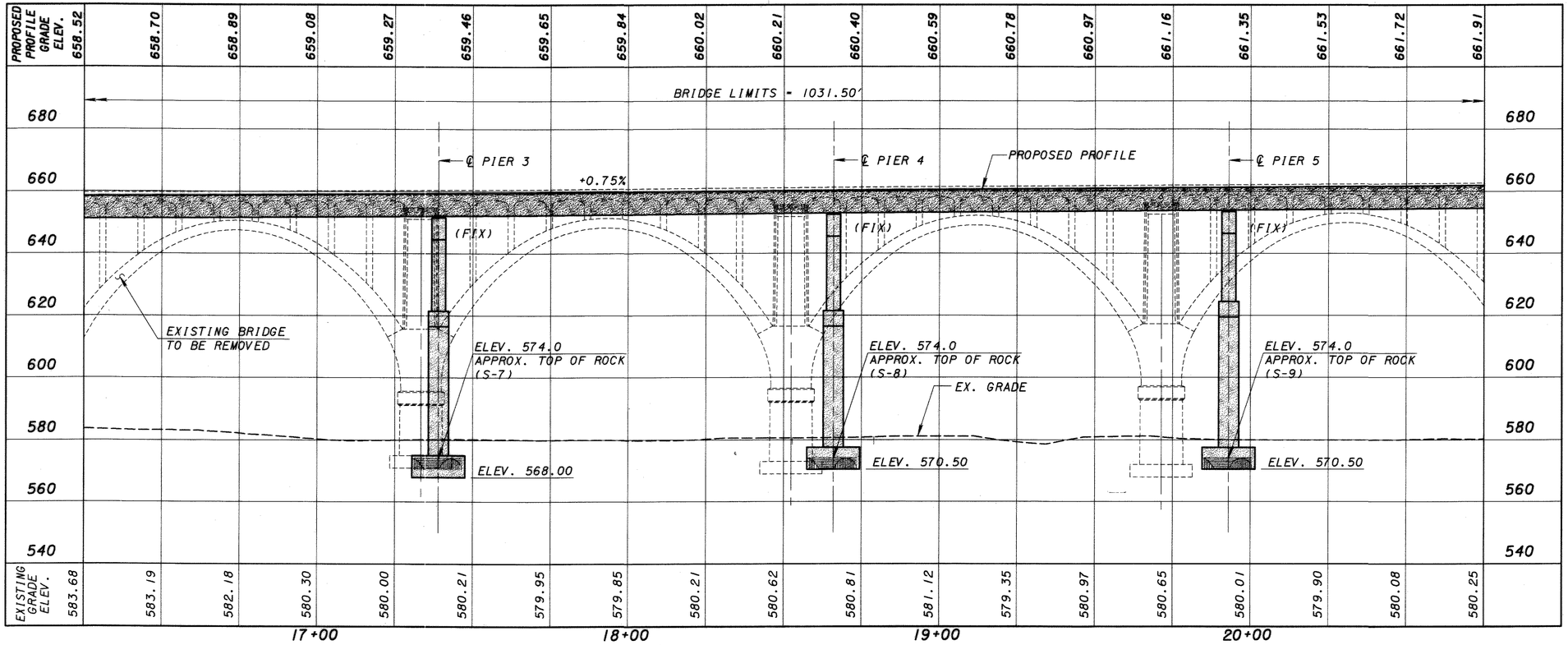

PROFILE ALONG ℄ CONSTRUCTION RELOCATED U.S. ROUTE 20

NOTES

1. FOR NOTES, SEE SHEET 1/42.
2. PORTIONS OF WETLANDS OUTSIDE OF CONSTRUCTION LIMITS ARE NOT TO BE DISTURBED.

DESIGN AGENCY
McCOY ASSOCIATES, INC.
367 GHENT ROAD
AKRON, OHIO 44333

DESIGNED	DRAWN	REVIEWED	DATE
HK	WEB	JBH	6-11-02
CHECKED	REVISED	STRUCTURE FILE NUMBER	
CLB		0402273	

ASHTABULA COUNTY
STA. 13+71.75
STA. 24+03.25

SITE PLAN

BRIDGE NO. ATB-20-2628
OVER BESSEMER & LAKE ERIE R.R. & CONNEAUT CREEK

ATB-20-26.19

MATCH LINE STA. 20+75 (FOR CONTINUATION, SEE SHEET 2/42)

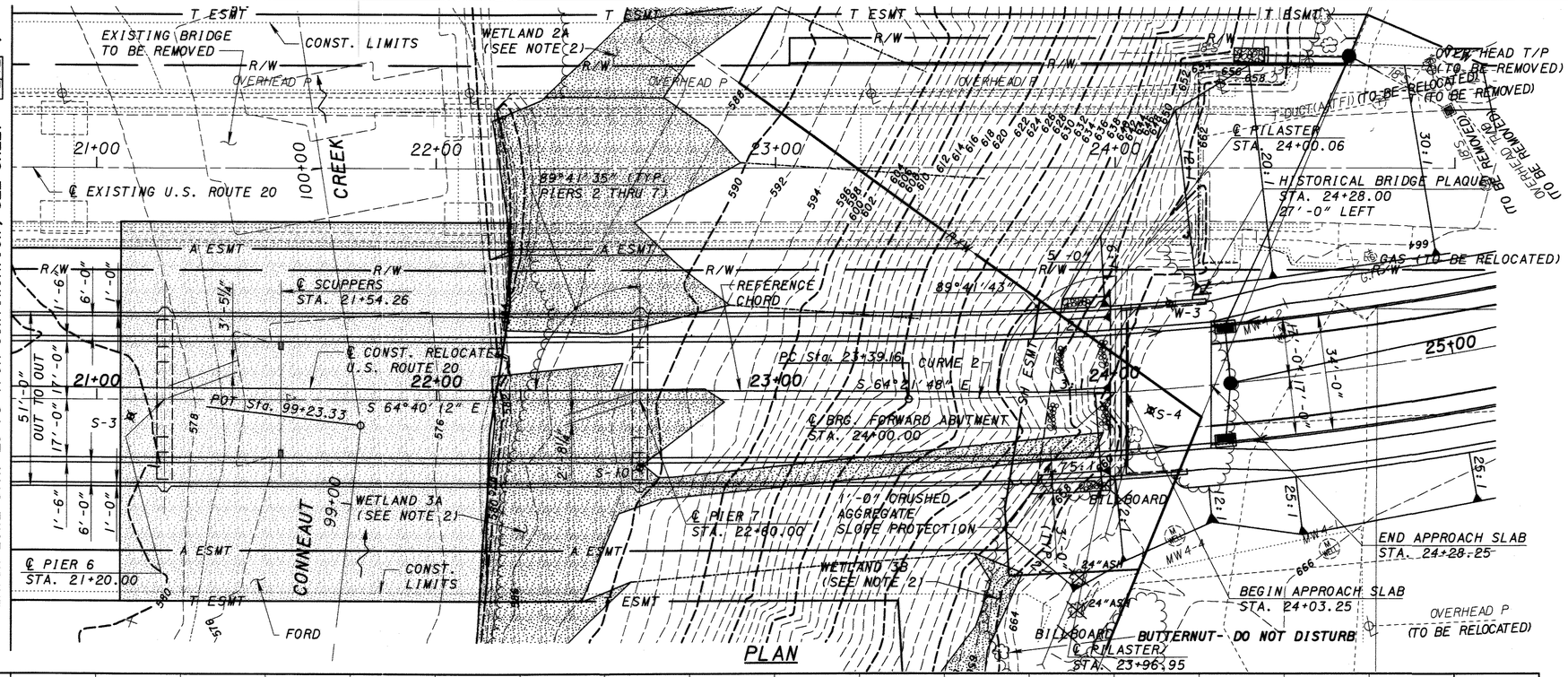

PLAN

NOTES

1. FOR NOTES, SEE SHEET 1/42.
2. PORTIONS OF WETLANDS OUTSIDE OF R/W OR TEMPORARY EASEMENTS ARE NOT TO BE DISTURBED.

PROPOSED U.S. ROUTE 20 CURVE 2 DATA

P.I. Sta = 24+78.85
Δ = 16° 38' 40" (LT)
Dc = 6° 00' 00"
R = 954.93'
T = 139.69'
L = 277.41'
E = 10.16'
e_{max} = NC

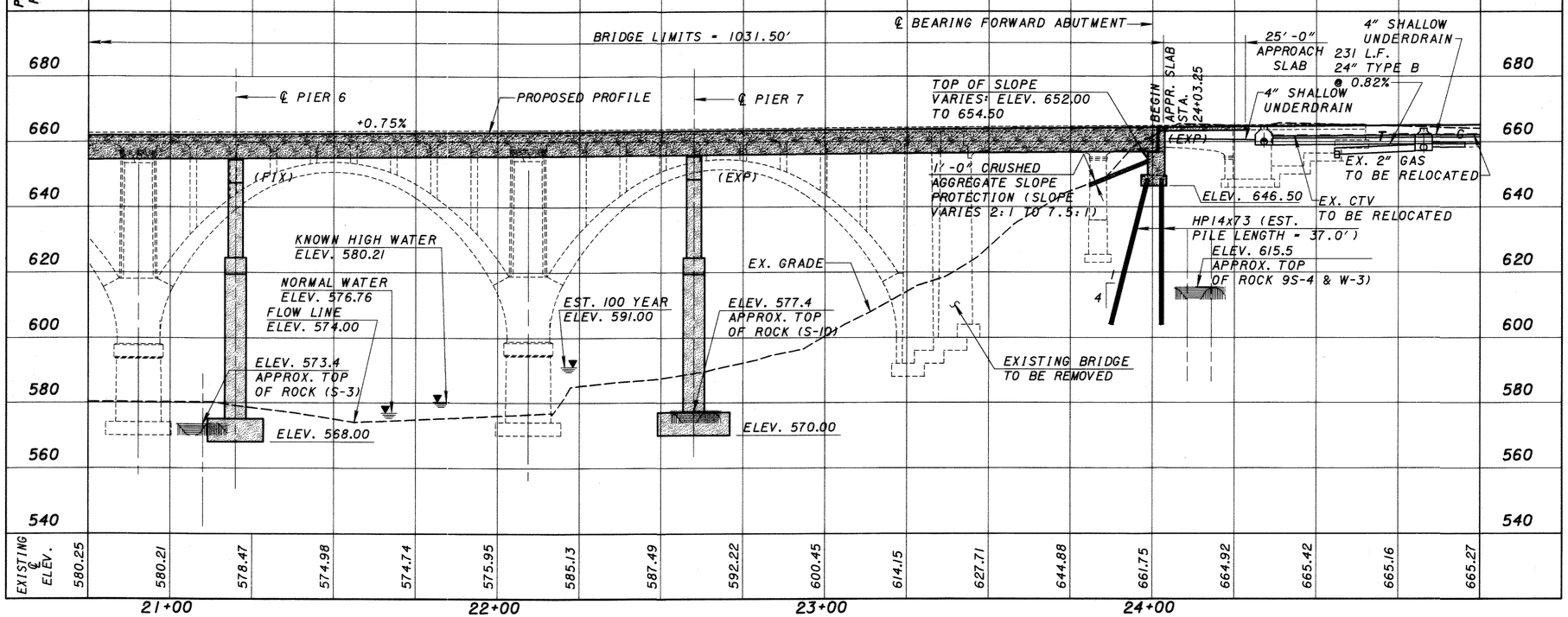

PROFILE ALONG ℄ CONSTRUCTION RELOCATED U.S. ROUTE 20

DESIGN AGENCY
McCOY ASSOCIATES, INC.
367 GHENT ROAD
AKRON, OHIO 44333

REVIEWED	DATE
JBH	6-11-02
DRAWN	REVISED
WEB	
DESIGNED	CHECKED
HK	CLB

STRUCTURE FILE NUMBER 0402273

ASHTABULA COUNTY
STA. 13+71.75
STA. 24+03.25

SITE PLAN

BRIDGE NO. ATB-20-2628
OVER BESSEMER & LAKE ERIE R.R. & CONNEAUT CREEK

ATB-20-26.19

NOTES

1. THE REFERENCE CHORD EXTENDS FROM ℄ BEARING REAR ABUTMENT TO ℄ BEARING FORWARD ABUTMENT, INTERSECTING AT ℄ CONSTRUCTION RELOCATED U.S. ROUTE 20.
2. FOR BRIDGE RAILING AND BARRIER CURB DETAILS SEE SHEETS 33/42 THRU 36/42.
3. FOR ABBREVIATIONS, SEE SHEET 5/42.
4. PORTIONS OF WETLANDS OUTSIDE OF CONSTRUCTION LIMITS ARE NOT TO BE DISTURBED.

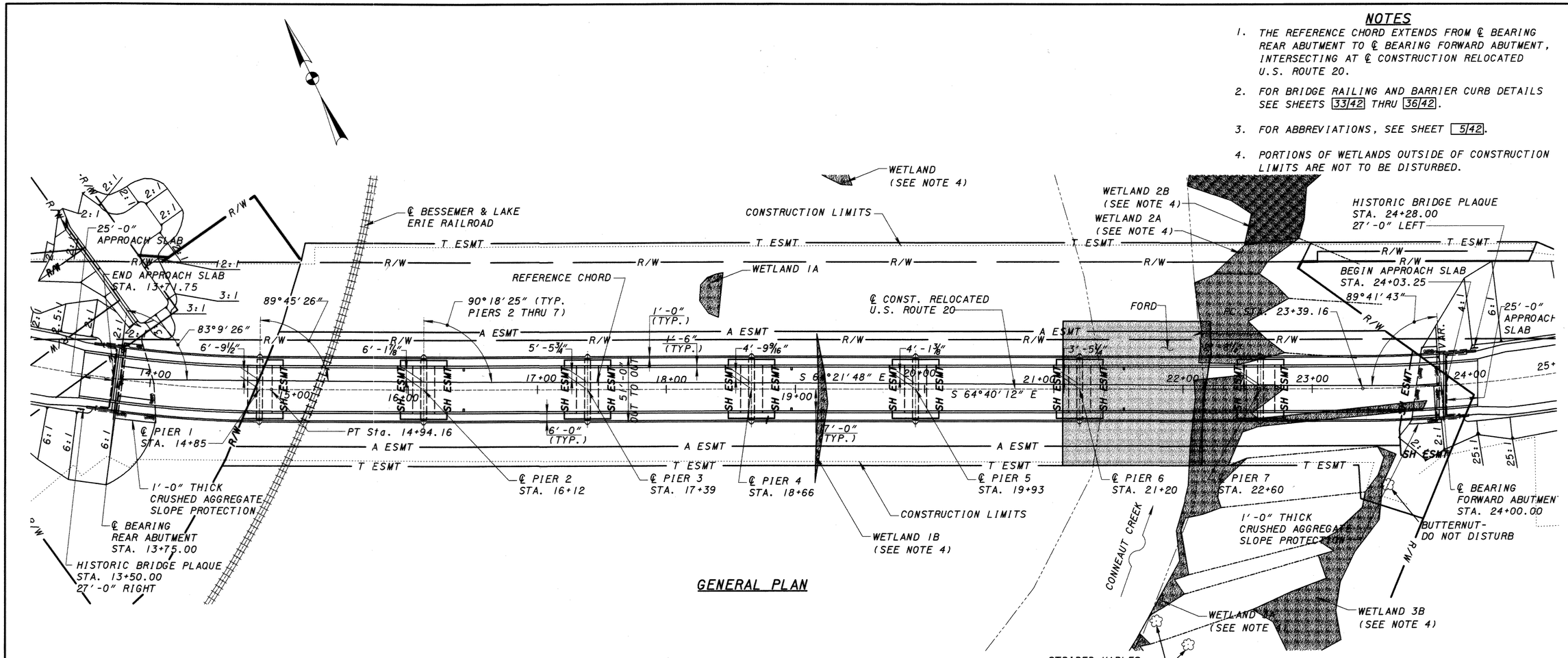

GENERAL PLAN

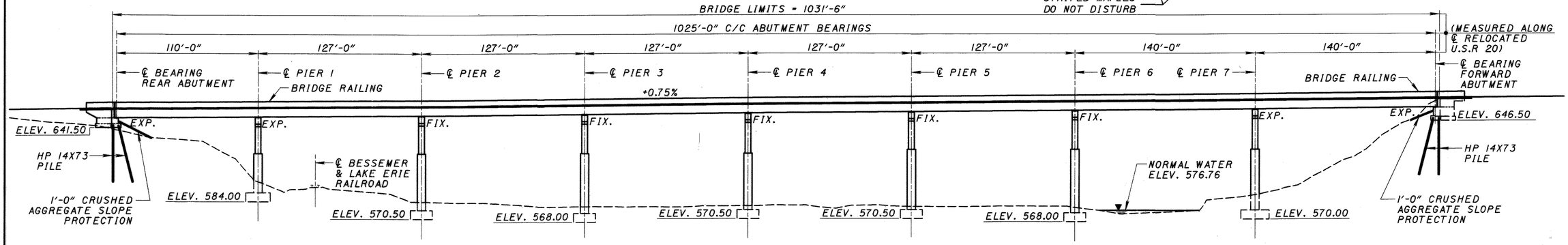

GENERAL ELEVATION

DESIGN AGENCY
McCOY ASSOCIATES, INC.
367 GHENT ROAD
AKRON, OHIO 44333

DESIGNED	DRAWN	REVIEWED	DATE
SL	SL	JBH	6-11-02
CHECKED	REVISED	REVISED	STRUCTURE FILE NUMBER
HK			0402273

GENERAL PLAN AND ELEVATION
BRIDGE NO. ATB-20-2628
OVER BESSEMER & LAKE ERIE RAILROAD AND CONNEAUT CREEK

ATB-20-26.19

4/42

101/162

STRUCTURAL GENERAL NOTES

REFERENCE

SHALL BE MADE TO STANDARD DRAWINGS:

AS-1-81	REVISED 4-20-01
BR-2-98	DATED 12-29-98
EXJ-6-95	REVISED 4-20-01
GSD-1-96	REVISED 4-20-01
PSID-1-99	REVISED 10-20-00

AND TO SUPPLEMENTAL SPECIFICATIONS:

842	DATED 1-6-99
846	DATED 9-9-97
863	DATED 10-12-99
864	DATED 7-11-00
865	DATED 2-22-00
899	DATED 10-21-98
905	DATED 4-1-98
907	DATED 4-19-02
954	DATED 9-9-97

DESIGN SPECIFICATIONS

THIS STRUCTURE CONFORMS TO "STANDARD SPECIFICATIONS FOR HIGHWAY BRIDGES" ADOPTED BY THE AMERICAN ASSOCIATION OF STATE HIGHWAY AND TRANSPORTATION OFFICIALS, 1996, INCLUDING THE 1997, 1998, 1999, 2000, 2001, AND 2002 INTERIM SPECIFICATIONS AND THE O.D.O.T. BRIDGE DESIGN MANUAL.

DESIGN LOADING

HS25 AND THE ALTERNATE MILITARY LOADING.
FUTURE WEARING SURFACE (FWS) OF 60 POUNDS PER SQUARE FOOT.

DESIGN DATA

CONCRETE CLASS S - COMPRESSIVE STRENGTH 4500 P.S.I. (PARAPET)
CONCRETE CLASS C - COMPRESSIVE STRENGTH 4000 P.S.I.
REINFORCING STEEL - ASTM A615, A616 OR A617 GRADE 60, MINIMUM YIELD STRENGTH 60,000 P.S.I.

CONCRETE FOR PRESTRESSED BEAMS:
COMPRESSIVE STRENGTH (FINAL)-7500 P.S.I.
COMPRESSIVE STRENGTH (REALEASE)-5500 P.S.I.
UNIT STRESS-2800 P.S.I. COMPRESSION
502 P.S.I. TENSION

PRESTRESSING STRAND ASTM A416
½" DIAMETER AREA = 0.153 IN^2
F'S =270 K.S.I.
INITIAL STRESS = 0.75 F's (LOW RELAXATION STRANDS)

DECK PROTECTION METHOD

EPOXY COATED REINFORCING STEEL AND 2½" CONCRETE COVER.

MONOLITHIC WEARING SURFACE

MONOLITHIC WEARING SURFACE IS ASSUMED, FOR DESIGN PURPOSES, TO BE 1" THICK.

ITEM 503, UNCLASSIFIED EXCAVATION, AS PER PLAN

UNCLASSIFIED EXCAVATION SHALL BE IN ACCORDANCE WITH 503 EXCEPT THAT THE BACKFILL MATERIAL BEHIND THE ABUTMENTS SHALL BE 203 MATERIAL PLACED IN 6 INCH LIFTS.

ITEM 507, STEEL POINTS, AS PER PLAN

STEEL PILE POINTS SHALL BE USED TO PROTECT THE TIPS OF THE PROPOSED STEEL "H" PILING. THE STEEL POINTS SHALL BE FURNISHED BY ASSOCIATED PILE AND FITTING CORPORATION, 262 RUTHERFORD BLVD., CLIFTON, NEW JERSEY 07014; INTERNATIONAL CONSTRUCTION EQUIPMENT, INC., 301 WAREHOUSE DRIVE, MATTHEWS, NORTH CAROLINA 28015; DOUGHERTY FOUNDATION PRODUCTS, INC., P.O. BOX 688, FRANKLIN LAKES, NEW JERSEY 07417; VERSA STEEL INC., 3601 N.W. YEON AVE., P.O. BOX 10559, PORTLAND, OREGON 97210; PILING ACCESSORIES, INC., 3467 GRIBBLE ROAD, MATTHEWS, NORTH CAROLINA 28105; OR BY A MANUFACTURER THAT CAN FURNISH A STEEL POINT THAT IS ACCEPTABLE TO THE DIRECTOR. THE MATERIAL USED FOR THE MANUFACTURING OF PILE POINTS SHALL CONFORM TO ASTM A27 65/35 - CLASS 2 - HEAT TREATED OR AASHTO M103 65/35 - HEAT TREATED. WELDING OF THE PILE POINTS TO THE PILE SHALL BE IN ACCORDANCE WITH AWS D1.5 OR THE MANUFACTURER'S WRITTEN WELDING PROCEDURE SUPPLIED THE ENGINEER BEFORE THE WELDING IS PERFORMED. A NOTARIZED COPY OF THE MILL TEST REPORT SHALL BE SUBMITTED TO THE ENGINEER.

BRIDGE SEAT ELEVATIONS

BRIDGE SEAT ELEVATIONS HAVE BEEN ADJUSTED UPWARD ⅛ INCH AT ABUTMENTS AND PIERS TO COMPENSATE FOR THE VERTICAL DEFORMATION OF THE BEARINGS.

PILE DRIVING CONSTRAINTS

PRIOR TO DRIVING PILES, THE SPILL THROUGH SLOPES AND THE BRIDGE APPROACH EMBANKMENT BEHIND THE ABUTMENTS SHALL BE CONSTRUCTED UP TO THE LEVEL OF THE SUBGRADE ELEVATION FOR A MINIMUM DISTANCE OF 50 FEET BEHIND EACH ABUTMENT. THE EXCAVATION FOR THE ABUTMENT FOOTINGS AND THE INSTALLATION OF THE ABUTMENT PILES SHALL NOT BEGIN UNTIL AFTER THE ABOVE REQUIRED EMBANKMENT HAS BEEN CONSTRUCTED.

PILE DESIGN LOADS (ULTIMATE BEARING VALUE)

PILES SHALL BE DRIVEN TO REFUSAL ON BEDROCK. REFUSAL SHALL BE CONSIDERED AS OBTAINED BY PENETRATING SOFT BEDROCK FOR SEVERAL INCHES WITH A MINIMUM RESISTANCE OF 20 BLOWS PER INCH OR REFUSAL SHALL BE CONSIDERED AS OBTAINED AFTER THE PILE HAS CONTACTED HARD BEDROCK AND THE PILE HAS THEN RECEIVED AT LEAST 20 BLOWS. THE CONTRACTOR IS RESPONSIBLE FOR SELECTING THE HAMMER SIZE TO ACHIEVE THE REQUIRED DEPTH TO BEDROCK AND REFUSAL.

THE ULTIMATE BEARING VALUE IS 169 TONS PER PILE FOR THE ABUTMENTS. THE CALCULATED DESIGN LOADING IS 84.5 TONS PER PILE.

REAR ABUT. PILES: 22 HP14X73 PILES, 40.0 FEET LONG,
28 PILES OF ORDER LENGTH, 40.0 FEET LONG
FWD. ABUT. PILES: 22 HP14X73 PILES, 37.0 FEET LONG,
22 PILES OF ORDER LENGTH, 37.00 FEET LONG
44 SPLICES PER BRIDGE

ITEM 630 SIGNING MISC. HISTORIC BRIDGE PLAQUE, AS PER PLAN

THE CONTRACTOR SHALL PURCHASE TWO (2) HISTORIC BRIDGE PLAQUES WITH POSTS FROM ONE OF THE FOLLOWING MANUFACTURERS:

SEWAH STUDIOS
P.O. BOX 298
MARIETTA, OH 45750
PH: (740) 373-2087

ADVANCED MARKING SYSTEMS
6000 MAHONING AVE.
YOUNGSTOWN, OH 44515
PH: (330) 792-8239

SMITH CORNELL IMPRESSIONS
1545 HOLLAND RD., SUITE K
MAUMEE, OH 43537
PH: 1-800-325-0248

AT THE LOCATIONS SHOWN IN THE PLAN TWO POST MOUNTED PLAQUES WILL BE PLACED. (SEE GENERAL PLAN & ELEVATION, SHEET 4/42.) THE SIGN, SUPPORT, LABOR, INSTALLATION AND INCIDENTALS REQUIRED TO PERFORM THIS WORK SHALL BE INCLUDED FOR PAYMENT ITEM 630 SIGNING MISC., HISTORIC BRIDGE PLAQUES, AS PER PLAN.

THE FOLLOWING QUANTITY HAS BEEN CARRIED OVER TO THE GENERAL SUMMARY:

ITEM 630 SIGNING MISC., HISTORIC BRIDGE PLAQUES, AS PER PLAN, 2 EACH.

ABBREVIATIONS

℄	- CENTERLINE	N.S.	- NEAR SIDE
BRG.	- BEARING	F.S.	- FAR SIDE
TYP.	- TYPICAL	E.S.	- EACH SIDE
@	- AT	RD.	- ROAD
SPA.	- SPACING	BOTT.	- BOTTOM
RT.	- RIGHT	EX.	- EXISTING
MIN.	- MINIMUM	STA.	- STATION
DIA.	- DIAMETER	FIX.	- FIXED
ELEV.	- ELEVATION	APPR.	- APPROACH
STR.	- STRAIGHT	NO.	- NUMBER
FT.	- FEET	F/F	- FACE TO FACE
ABUT.	- ABUTMENT	CONC.	- CONCRETE
FWD.	- FORWARD	VAR.	- VARIES
CONST.	- CONSTRUCTION	EQ.	- EQUAL
P.S.I.	- POUNDS PER SQUARE INCH	T.O.S.	- TOP OF SLOPE
EST.	- ESTIMATED	LT.	- LEFT
C/C	- CENTER TO CENTER	SER.	- SERIES
P.E.J.F.	- PREFORMED EXPANSION JOINT FILLER	EXP.	- EXPANSION
RELOC.	- RELOCATED		

CONSTRUCTION CLEARANCE

OF 14 FEET (MIN.) HORIZONTALLY FROM THE CENTER OF TRACKS AND 22 FEET (MIN.) VERTICALLY FROM A POINT LEVEL WITH THE TOP OF THE HIGHER RAIL, AND 6 FEET FROM THE CENTER OF TRACKS, SHALL BE MAINTAINED AT ALL TIMES.

FOOTINGS

SHALL BE PLACED IN BEDROCK AT THE ELEVATION SHOWN.

BEARING PAD SHIMS

⅛" THICK PREFORMED BEARING PAD SHIMS, PLAN AREAS LISTED (THE SAME SIZE OF THE ELASTOMERIC BEARING PAD SHOULD BE USED) SHALL BE PLACED UNDER THE ELASTOMERIC BEARING PADS WHERE REQUIRED FOR PROPER BEARING. THE AMOUNT SUPPLIED IS SUFFICIENT FOR TWO SHIMS PER BEAM. PAYMENT WILL BE MADE AT THE CONTRACT BID PRICE FOR ITEM 516 -⅛" PREFORMED BEARING PADS. ANY UNUSED SHIMS SHALL BECOME THE PROPERTY OF THE STATE.

FOUNDATION BEARING PRESSURE

PIER FOOTINGS, AS DESIGNED, PRODUCE A MAXIMUM BEARING PRESSURE OF 4.5 TONS PER SQAURE FOOT FOR PIER 1 THROUGH PIER 6 AND 4.6 TONS PER SQUARE FOOT FOR PIER 7. THE ALLOWABLE BEARING PRESSURE IS 5 TONS PER SQUARE FOOT.

ASBESTOS NOTIFICATION

AN ASBESTOS SURVEY OF THE ATB-20-2628 (2626) BRIDGE SCHEDULED FOR REPLACEMENT WAS CONDUCTED BY A CERTIFIED ASBESTOS HAZARD EVALUATION SPECIALIST. THE SURVEY DETERMINED THAT NO ASBESTOS IS PRESENT ON THE BRIDGE.

A COPY OF THE OHIO ENVIRONMENTAL PROTECTION AGENCY (OEPA) NOTIFICATION OF DEMOLITION AND RENOVATION FORM, PARTIALLY COMPLETED AND SIGNED BY THE BRIDGE OWNER, WILL BE PROVIDED TO THE SUCCESSFUL BIDDER. THE CONTRACTOR SHALL COMPLETE THE FORM AND SUBMIT IT TO:

OEPA-NEDO
2110 EAST AURORA ROAD
TWINSBURG, OHIO 44087
ATTENTION: MR. JIM VERES
TELEPHONE: 330-425-9171 OR 1-800-686-6330
FAX: 330-487-0769

AT LEAST TEN (10) WORKING DAYS PRIOR TO THE START OF THE DEMOLITION OF THE BRIDGE. THE CONTRACTOR SHALL PROVIDE A COPY OF THE COMPLETED FORM TO THE ENGINEER.

INFORMATION REQUIRED ON THE FORM WILL INCLUDE:

- THE NAME, ADDRESS, TELEPHONE/FAX NUMBERS AND CONTACT PERSON OF THE DEMOLITION/GENERAL CONTRACTOR.
- THE SCHEDULED DATES FOR THE START AND COMPLETION OF THE BRIDGE REMOVAL.
- A DESCRIPTION OF THE PLANNED DEMOLITION AND THE METHOD (S) TO BE USED.

A COPY OF THE OEPA FORM IS AVAILABLE FOR INSPECTION AT THE ODOT DISTRICT 4 OFFICE, 705 OAKWOOD STREET, RAVENA, OHIO, 44266.

BASIS OF PAYMENT:
THE CONTRACTOR SHALL FURNISH ALL FEES, LABOR, EQUIPMENT AND MATERIALS NECESSARY TO COMPLETE AND SUBMIT THE OEPA NOTIFICATION FORM. PAYMENT FOR THIS WORK SHALL BE MADE UNDER THE CONTRACT LUMP SUM PRICE BID FOR: ITEM 202 - STRUCTURE REMOVED, OVER 20 FOOT SPAN, AS PER PLAN.

ITEM 202, STRUCTURE REMOVED, OVER 20 FOOT SPAN, AS PER PLAN

WHEN NO LONGER NEEDED TO MAINTAIN TRAFFIC THE EXISTING STRUCTURE SHALL BE REMOVED UPON RECEIVING PERMISSION FROM THE ENGINEER.

THE CONTRACTOR SHALL SUBMIT THE METHOD OF DEMOLITION TO THE OHIO DEPARTMENT OF NATURAL RESOURCES FOR THEIR APPROVAL, A MINIMUM 60 DAYS PRIOR TO THE START OF ANY DEMOLITION ACTIVITIES.

FOR ENVIRONMENTAL CONSTRUCTION CONSTRAINTS SEE SHEET 14/162 AND 15/162.

THE NORTH RETAINING WALL AT THE EXISTING REAR ABUTMENT SHALL REMAIN AS SHOWN ON SHEETS 9/42 AND 9A/42. ABUTMENT REMOVAL, ADJACENT TO RETAINING WALL SHALL BE BY MEANS OF APPROVED PNEUMATIC HAMMERS EMPLOYING POINTED AND BLUNT CHISEL TOOLS. HYDRAULIC HOE-RAM TYPE HAMMERS WILL NOT BE PERMITTED. THE WEIGHT OF THE HAMMER SHALL NOT BE MORE THAN 35 POUNDS FOR REMOVAL WITHIN 18 INCHES OF PORTIONS TO BE PRESERVED. OUTSIDE THE 18 INCH LIMIT, HAMMERS NOT EXCEEDING 90 POUNDS, MAY BE USED UPON THE APPROVAL OF THE ENGINEER. PNEUMATIC HAMMERS SHALL NOT BE PLACED IN DIRECT CONTACT WITH REINFORCING STEEL THAT IS TO BE RETAINED IN THE REBUILT STRUCTURE.

THE CONTRACTOR SHALL SALVAGE EXISTING BRONZE PLAQUES AND DELIVER THEM TO THE CITY OF CONNEAUT (CITY OF CONNEAUT, 294 MAIN STREET, CONNEAUT, OH 44030) OR THE LOCAL HISTORICAL SOCIETY (CONNEAUT HISTORICAL SOCIETY, 402 SOUTH AMBOY ROAD, CONNEAUT, OH 44030, SUE HOWARD, (440) 593-4896) IF ANY SUCH PLAQUES ARE REQUESTED BY EITHER PARTY.

CONCRETE PARAPETS

AS SOON AS A CONCRETE SAW CAN BE OPERATED WITHOUT DAMAGING THE FRESHLY PLACED CONCRETE, 1" DEEP CONTROL JOINTS SHALL BE SAWED INTO THE PERIMETER OF THE CONCRETE PARAPET AND RAILING. THE SAW CUT SHALL BE MADE IN THE COMPLETE CIRCUMFERENCE OF THE PARAPET, STARTING AND ENDING AT THE ELEVATION OF THE CONCRETE DECK. THE SAWCUTS SHALL BE PLACED AT A MINIMUM OF 6 FEET AND A MAXIMUM OF 10 FEET CENTERS. THE USE OF AN EDGE GUIDE, FENCE, OR JIG IS REQUIRED TO INSURE THAT THE CUT JOINT IS STRAIGHT, TRUE, AND ALIGNED ON ALL FACES OF THE PARAPET AND RAILING. THE JOINT WIDTH SHALL BE THE WIDTH OF THE SAW BLADE, A NOMINAL WIDTH OF ¼ INCH. THE PERIMETER OF THE DEFLECTION CONTROL JOINT SHALL BE SEALED A CAULKING MATERIAL CONFORMING TO FEDERAL SPECIFICATION, TT-S-00227E TO A MINIMUM DEPTH OF 1 INCH. THE BOTTOM ½ INCH OF THE INSIDE AND OUTSIDE FACE SHOULD BE LEFT UNSEALED TO ALLOW WATER TO ESCAPE.

DESIGN AGENCY
McCOY ASSOCIATES, INC.
367 GHENT ROAD
AKRON, OHIO 44333

DESIGNED	DRAWN	REVISED	DATE
SL	SL	JBH	6-11-02
CHECKED	REVISED	STRUCTURE FILE NUMBER	
HK		0402273	

STRUCTURAL GENERAL NOTES
BRIDGE NO. ATB-20-2628
OVER BESSEMER & LAKE ERIE RAILROAD AND CONNEAUT CREEK

ATB-20-26.19

5/42

102/162

ESTIMATED QUANTITIES

ITEM	ITEM EXT.	TOTAL	UNIT	DESCRIPTION	ABUTS.	PIERS	SUPER.	GENERAL	AS PER PLAN
202	11003	LUMP		STRUCTURE REMOVED, OVER 20 FOOT SPAN, AS PER PLAN				LUMP	9/42 & 9A/42
503	11100	LUMP		COFFERDAMS, CRIBS AND SHEETING				LUMP	
503	21101	2223	CU. YD.	UNCLASSIFIED EXCAVATION, AS PER PLAN	458	1765			5/42
503	31120	893	CU. YD.	SHALE EXCAVATION		893			
505	11100	LUMP		PILE DRIVING EQUIPMENT MOBILIZATION				LUMP	
507	00300	1694	LIN. FT.	STEEL PILES HP14X73, FURNISHED	1694				
507	00350	1694	LIN. FT.	STEEL PILES HP14X73, DRIVEN	1694				
507	50500	22	EACH	STEEL PILE SPLICES	22				
507	93301	44	EACH	STEEL POINT (OR SHOE), AS PER PLAN	44				5/42
516	11210	98	LIN. FT.	STRUCTURAL EXPANSION JOINT INCLUDING ELASTOMERIC STRIP SEAL			98		
516	41100	96	EACH	1/8" PREFORMED BEARING PAD, 711.21 (1'-0" x 1'-10")		96			
516	41100	48	EACH	1/8" PREFORMED BEARING PAD, 711.21 (1'-0 1/2" x 1'-10")		48			
516	41100	24	EACH	1/8" PREFORMED BEARING PAD, 711.21 (1'-1" x 1'-8")	24				
516	41100	24	EACH	1/8" PREFORMED BEARING PAD, 711.21 (1'-3" x 1'-10")		24			
516	43200	48	EACH	ELASTOMERIC BEARING WITH INTERNAL LAMINATES ONLY (NEOPRENE) (2 3/4"x1'-0"x1'-10 1/2")		48			
516	43200	12	EACH	ELASTOMERIC BEARING WITH INTERNAL LAMINATES ONLY (NEOPRENE) (2 3/4"x1'-0 1/2"x1'-10")		12			
516	43300	12	EACH	ELASTOMERIC BEARING WITH INTERNAL LAMINATES ONLY (NEOPRENE) (3 5/16"x1'-3"x1'-10")		12			
516	43300	12	EACH	ELASTOMERIC BEARING WITH INTERNAL LAMINATES ONLY (NEOPRENE) (3 5/8"x1'-0 1/2"x1'-10")		12			
516	43300	12	EACH	ELASTOMERIC BEARING WITH INTERNAL LAMINATES ONLY (NEOPRENE) (3 3/4"x1'-1"x1'-8")	12				
517	76300	2141	LIN. FT.	RAILING, MISC. : ORNAMENTAL PEDESTRIAN RAILING (PRECAST - CONCRETE ALTERNATIVE)			2141		
517	76300	2141	LIN. FT.	RAILING, MISC. : ORNAMENTAL PESESTRIAN RAILING (CAST IN PLACE CONCRETE ALTERNATIVE)			2141		
517	76300	89	LIN. FT.	RAILING, MISC. : HAND RAILING				89	
518	12301	6	EACH	SCUPPER, INCLUDING SUPPORT, AS PER PLAN			6		38/42
518	21230	LUMP		POROUS BACKFILL WITH FILTER FABRIC	LUMP				
518	40000	129	LIN. FT.	6" PERFORATED CORRUGATED PLASTIC PIPE	129				
518	40010	55	LIN. FT.	6" NON-PERFORATED CORRUGATED PLASTIC PIPE, INCLUDING SPECIALS	55				
519	11101	64.5	SQ. FT.	PATCHING CONCRETE STRUCTURE, AS PER PLAN				64.5	9A/42
SPEC	53014000	LUMP		STRUCTURAL SURVEY AND MONITORING OF VIBRATION				LUMP	6/42
601	20000	295	SQ. YD.	CRUSHED AGGREGATE SLOPE PROTECTION	295				
630	97700	2	EACH	SIGNING MISC.: HISTORIC BRIDGE PLAQUE, AS PER PLAN				2	5/42
842	31510	1941	CU. YD.	CLASS S CONCRETE, SUPERSTRUCTURE			1941		
842	33403	180	CU. YD.	CLASS S CONCRETE, SUPERSTRUCTURE, AS PER PLAN			180		27/42
842	41000	1737	CU. YD.	CLASS C CONCRETE, PIER ABOVE FOOTING		1737			
842	44100	208	CU. YD.	CLASS C CONCRETE, ABUTMENT NOT INCLUDING FOOTING	208				
842	46000	5	CU. YD.	CLASS C CONCRETE, RETAINING WALL				5	
842	46500	1359	CU. YD.	CLASS C CONCRETE, FOOTING	150	1209			
846	73000	159	SQ. YD.	TREATING CONCRETE BRIDGE DECKS WITH HMWM RESIN			159		
864	10050	1375	SQ. YD.	SEALING OF CONCRETE SURFACES (NON-EPOXY)			1375		
864	10100	10362	SQ. YD.	SEALING OF CONCRETE SURFACES (EPOXY-URETHANE)	294	3139	6784	119	
865	16000	120	EACH	PRESTRESSED CONCRETE BRIDGE I-BEAM MEMBERS, MISC.: DIAPHRAGMS			120		

NOTE

1. FOR REINFORCED CONCRETE APPROACH SLAB QUANTITIES, SEE ROADWAY PLAN, SHEET (30/162).

STRUCTURAL GENERAL NOTES

ITEM 517, RAILING, MISC. : ORNAMENTAL PEDESTRIAN RAILING (PRECAST - CONCRETE ALTERNATIVE)

DESCRIPTION - THE CONTRACTOR SHALL HAVE THE OPTION OF ERECTING A PRE-CAST CONCRETE RAILING. THE FABRICATION OF THE RAILING SHALL COMPLY TO SUPPLEMENTAL SPECIFICATIONS (SS) 865 EXCEPT AS HEREIN PROVIDED.

THE RAILING SHALL HAVE THE GENERAL APPEARANCE AND DIMENSIONS IN ACCORDANCE WITH THE CONTRACT PLANS. THE CONTRACTOR SHALL SUBMIT SHOP DRAWINGS AS PER SS 865. SHOP DRAWINGS SHALL INCLUDE PANEL LENGTHS, CONNECTION DETAILS TO SUPERSTRUCTURE, CONNECTION DETAILS TO ADJACENT PANELS AND CONNECTION DETAILS TO ABUTMENT WING WALLS. PANEL LENGTH SHALL BE A MAXIMUM OF 10 FEET AND A MINIMUM OF 6 FEET.

PRECAST PANELS SHALL HAVE PROVISIONS FOR THE 2 INCH DIAMETER CONDUITS AND THE JUNCTION BOXES AS SHOWN IN THE CONTRACT PLANS.

METHOD OF MEASUREMENT - THE QUANTITY SHALL BE THE LENGTH OF PANELS IN LINEAR FEET.

THIS ITEM SHALL INCLUDE ALL INSERTS, CONNECTIONS, SLEEVES, FITTINGS, AND REINFORCING STEEL TO COMPLETE THIS ITEM.

BASIS OF PAYMENT - PAYMENT WILL BE MADE AT CONTRACT PRICE FOR ITEM 517 - RAILING, MISC.: ORNAMENTAL PEDESTRIAN RAILING (PRECAST - CONCRETE ALTERNATIVE).

UTILITY LINES

ALL EXPENSE INVOLVED IN RELOCATING THE AFFECTED UTILITY LINES SHALL BE BORNE BY THE UTILITIES. THE CONTRACTOR AND UTILITIES ARE TO COOPERATE BY ARRANGING THEIR WORK IN SUCH A MANNER THAT INCONVENIENCE TO EITHER WILL BE HELD TO A MINIMUM.

ITEM SPECIAL - STRUCTURAL SURVEY AND MONITORING OF VIBRATION

THE CONTRACTOR SHALL MONITOR BUILDINGS AT THE FOLLOWING ADDRESSES IN ACCORDANCE WITH PROPOSAL NOTE 530:

195 KEYES STREET
201 KEYES STREET
165 LIBERTY STREET
171 LIBERTY STREET
177 LIBERTY STREET
200 EAST MAIN ROAD
208 WOODLAND AVENUE

CALC. BY: S.L. DATE: 3/02
CHKD BY: H.K. DATE: 4/02

DESIGN AGENCY: McCOY ASSOCIATES, INC. 367 GHENT ROAD AKRON, OHIO 44333

DESIGNED	DRAWN	REVIEWED	DATE
SL	SL	JBH	6-11-02
CHECKED	REVISED	STRUCTURE FILE NUMBER	
HK		0402273	

ESTIMATED QUANTITIES & GENERAL NOTES
BRIDGE NO. ATB-20-2628
OVER BESSEMER & LAKE ERIE RAILROAD AND CONNEAUT CREEK

ATB-20-26.19

6/42

103/162

ESTIMATED QUANTITIES

ITEM	ITEM EXT.	TOTAL	UNIT	DESCRIPTION	ABUTS.	PIERS	SUPER.	GENERAL	AS PER PLAN
865	16000	1	EACH	PRESTRESSED CONCRETE BRIDGE I-BEAM MEMBERS, MISC.: DRAPED STRAND, LEVEL 3, TYPE 4 MODIFIED (78") (107.8')			1		
865	16000	1	EACH	PRESTRESSED CONCRETE BRIDGE I-BEAM MEMBERS, MISC.: DRAPED STRAND, LEVEL 3, TYPE 4 MODIFIED (78") (108.8')			1		
865	16000	1	EACH	PRESTRESSED CONCRETE BRIDGE I-BEAM MEMBERS, MISC.: DRAPED STRAND, LEVEL 3, TYPE 4 MODIFIED (78") (109.8')			1		
865	16000	1	EACH	PRESTRESSED CONCRETE BRIDGE I-BEAM MEMBERS, MISC.: DRAPED STRAND, LEVEL 3, TYPE 4 MODIFIED (78") (110.9')			1		
865	16000	1	EACH	PRESTRESSED CONCRETE BRIDGE I-BEAM MEMBERS, MISC.: DRAPED STRAND, LEVEL 3, TYPE 4 MODIFIED (78") (111.9')			1		
865	16000	1	EACH	PRESTRESSED CONCRETE BRIDGE I-BEAM MEMBERS, MISC.: DRAPED STRAND, LEVEL 3, TYPE 4 MODIFIED (78") (112.9')			1		
865	16000	6	EACH	PRESTRESSED CONCRETE BRIDGE I-BEAM MEMBERS, MISC.: DRAPED STRAND, LEVEL 3, TYPE 4 MODIFIED (78") (126.0')			6		
865	16000	24	EACH	PRESTRESSED CONCRETE BRIDGE I-BEAM MEMBERS, MISC.: DRAPED STRAND, LEVEL 3, TYPE 4 MODIFIED (78") (126.3')			24		
865	16000	6	EACH	PRESTRESSED CONCRETE BRIDGE I-BEAM MEMBERS, MISC.: DRAPED STRAND, LEVEL 3, TYPE 4 MODIFIED (78") (139.3')			6		
865	16000	6	EACH	PRESTRESSED CONCRETE BRIDGE I-BEAM MEMBERS, MISC.: DRAPED STRAND, LEVEL 3, TYPE 4 MODIFIED (78") (140.4')			6		
SPEC	51912600	23	LIN. FT.	CONCRETE REPAIR BY EPOXY INJECTION				23	

CALC. BY: S.L. DATE: 3/02

CHKD BY: H.K. DATE: 4/02

NOTE

1. FOR REINFORCED CONCRETE APPROACH SLAB QUANTITIES, SEE ROADWAY PLANS, SHEET (30/162).

DESIGN AGENCY
McCOY ASSOCIATES, INC.
367 GHENT ROAD
AKRON, OHIO 44333

REVISED	DATE	STRUCTURE FILE NUMBER
JBH	6-11-02	0402273

DRAWN	REVISED
SL	

DESIGNED	CHECKED
SL	HK

ESTIMATED QUANTITIES
BRIDGE NO. ATB-20-2628
OVER BESSEMER & LAKE ERIE RAILROAD AND CONNEAUT CREEK

ATB-20-26.19

7/42

(104/162)

NOTES

1. ALL PILES ARE HP14X73 STEEL PILES.
2. FOR ABBREVIATIONS, SEE SHEET 5/42.
3. FOR PILE NUMBERS & LOCATIONS SEE SHEETS 10/42 & 13/42.

LEGEND

- DENOTES BATTERED PILE (1:4)

PROPOSED U.S. ROUTE 20 CURVE 1 DATA

P.I. Sta = 12+96.47
Δ = 24° 05′ 00″ (LT.)
Dc = 6° 00′ 00″
R = 954.93′
T = 203.70′
L = 401.39′
E = 21.48′
e_{max} = NC

PROPOSED U.S. ROUTE 20 CURVE 2 DATA

P.I. Sta = 24+78.85
Δ = 16° 38′ 40″ (LT)
Dc = 6° 00′ 00″
R = 954.93′
T = 139.69′
L = 277.41′
E = 10.16′
e_{max} = NC

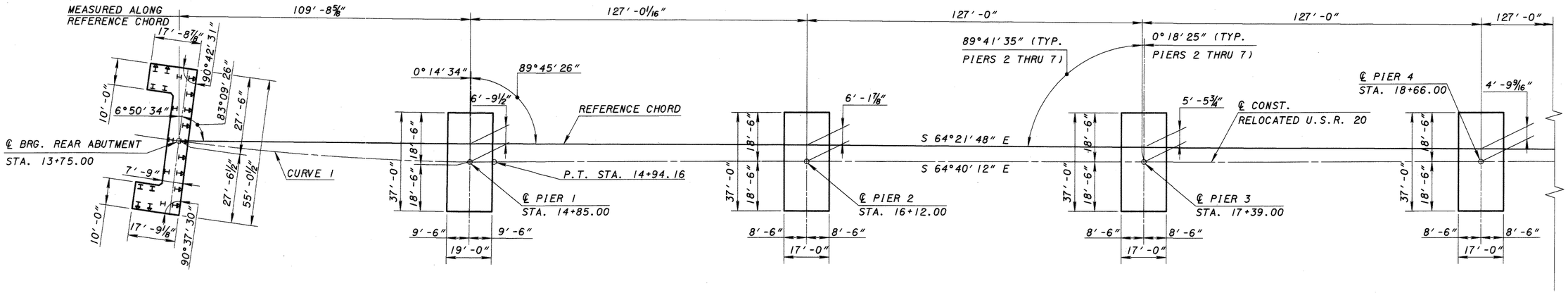

FOUNDATION LAYOUT PLAN

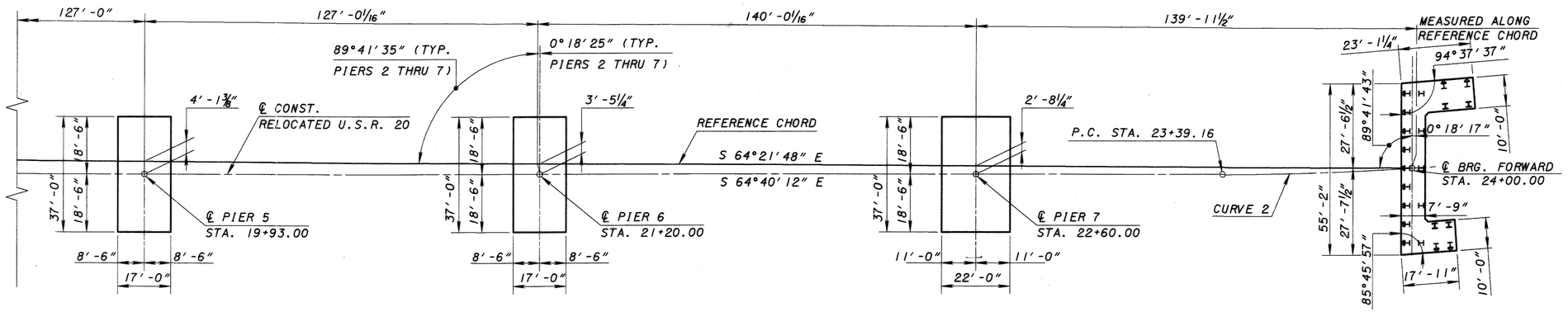

FOUNDATION LAYOUT PLAN

DESIGN AGENCY
McCOY ASSOCIATES, INC.
367 GHENT ROAD
AKRON, OHIO 44333

DESIGNED	DRAWN	REVIEWED	DATE
SL	SL	JBH	6-11-02
CHECKED	REVISED	STRUCTURE FILE NUMBER	
HK		0402273	

FOUNDATION LAYOUT
BRIDGE NO. ATB-20-2628
OVER BESSEMER & LAKE ERIE RAILROAD AND CONNEAUT CREEK

ATB-20-26.19

8/42

105/162

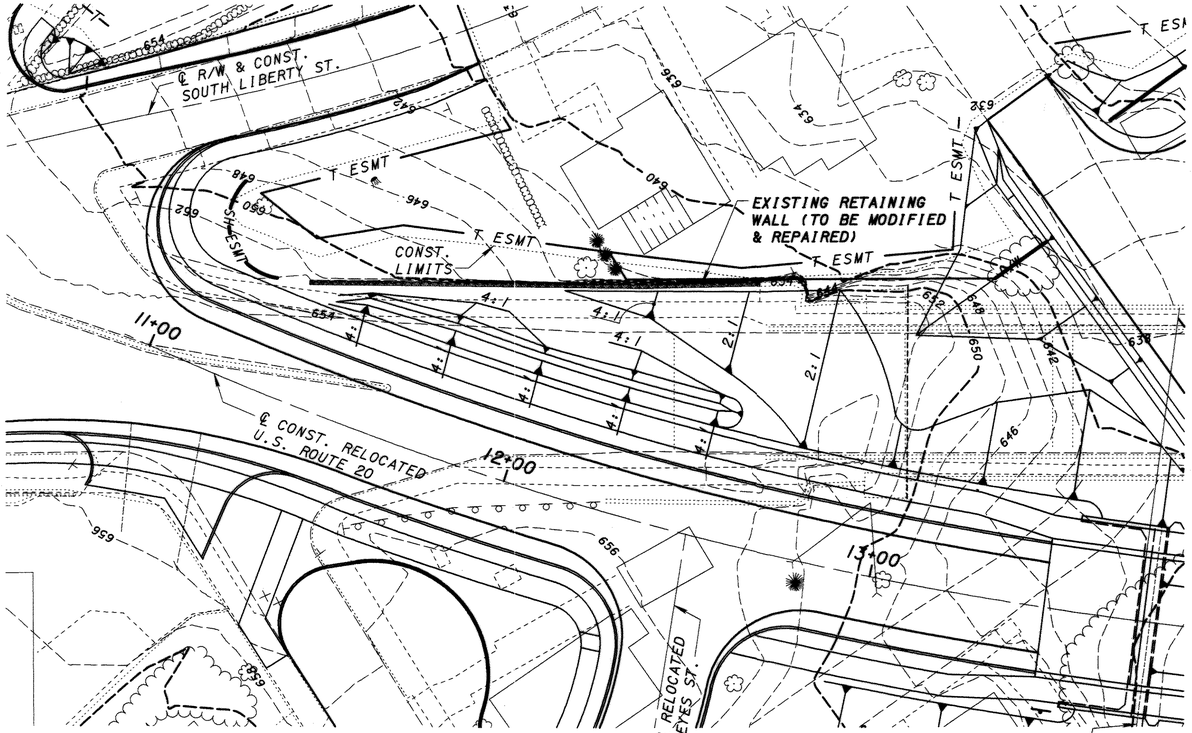

SITE PLAN

NOTES

1. CUT LINE CONSTRUCTION JOINT PREPARATION: SAW CUT BOUNDARIES OF PROPOSED CONCRETE REMOVALS ONE INCH DEEP. REMOVE CONCRETE TO A ROUGH SURFACE. THE EXISTING REINFORCING STEEL, IF REQUIRED IN THE PLANS, SHALL BE LEFT IN PLACE. INSTALL DOWEL BARS IF SPECIFIED. PRIOR TO CONCRETE PLACEMENT ABRASIVELY CLEAN JOINT SURFACES AND EXISTING EXPOSED REINFORCEMENT TO REMOVE LOOSE AND DISINTERGRATED CONCRETE AND LOOSE RUST. THE JOINT SURFACE AND EXPOSED REINFORCEMENT SHALL BE THOROUGHLY CLEANED OF ALL DIRT, DUST, RUST OR OTHER FOREIGN MATERIAL BY THE USE OF WATER, AIR UNDER PRESSURE, OR OTHER METHODS THAT PRODUCE SATISFACTORY RESULTS. EXISTING REINFORCING STEEL DOES NOT HAVE TO HAVE A BRIGHT STEEL FINISH BUT ALL PACK AND LOOSE RUST SHALL BE REMOVED. EXISTING CONCRETE SURFACES WHICH NEW CONCRETE WILL BE PLACED AGAINST SHALL BE WET, BUT WITHOUT FREE WATER, AT THE TIME OF CONCRETE PLACEMENT.
2. FOR MODIFICATION AND REPAIR DETAILS, AND ADDITIONAL NOTES, SEE SHEET 9A/42.

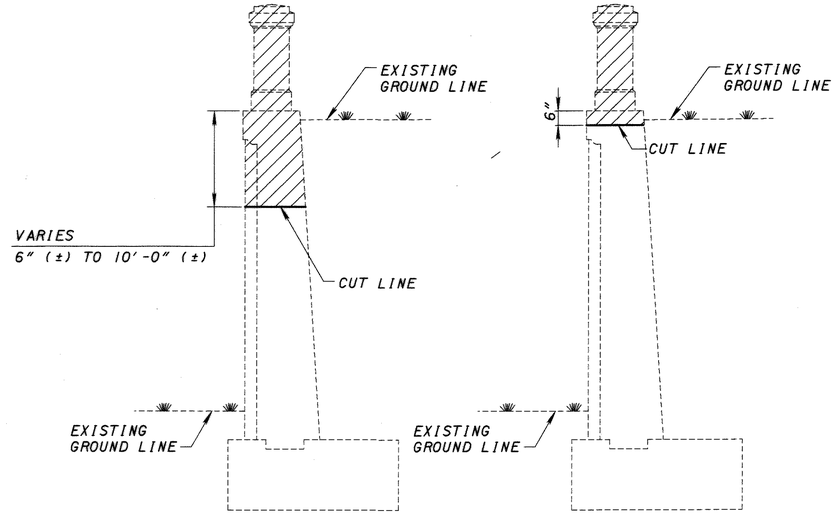

SECTION A-A
(REMOVE EXISTING REINFORCEMENT ABOVE THE CUT LINE)

SECTION B-B
(REMOVE EXISTING REINFORCEMENT ABOVE THE CUT LINE)

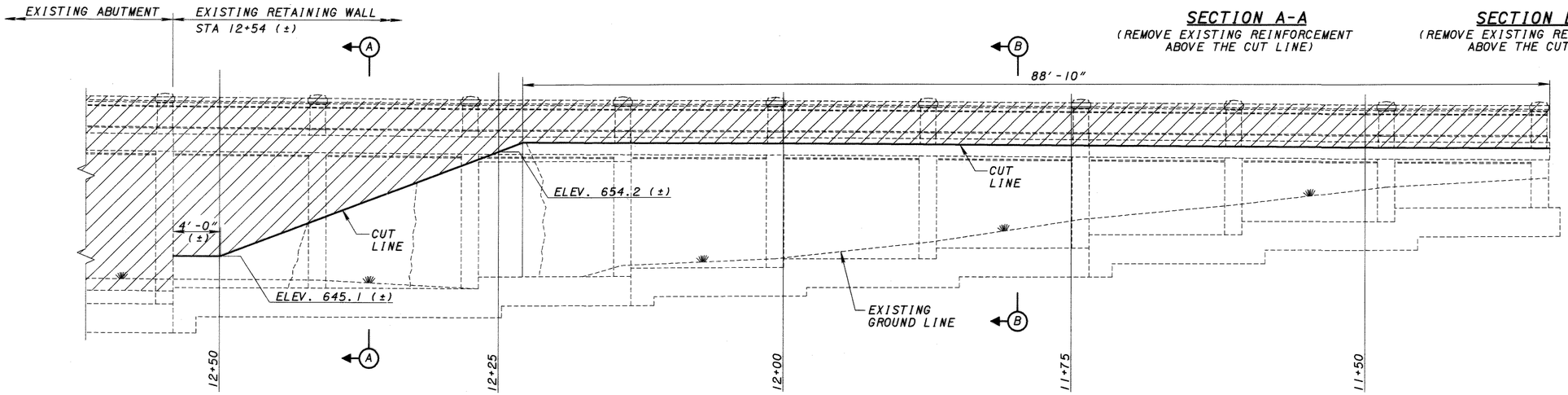

EXISTING RETAINING WALL REMOVAL
NORTH ELEVATION

LEGEND

DENOTES AREA TO BE REMOVED. REMOVAL SHALL BE PAID FOR UNDER ITEM 202 - STRUCTURE REMOVED, OVER 20 FOOT SPAN, AS PER PLAN.

DESIGN AGENCY
McCOY ASSOCIATES, INC.
367 GHENT ROAD
AKRON, OHIO 44333

DESIGNED	DRAWN	REVISED	DATE
HK	SL	JBH	6-11-02
CHECKED	REVISED	STRUCTURE FILE NUMBER	
SL		0402273	

RETAINING WALL REMOVAL
BRIDGE NO. ATB-20-2628
OVER BESSEMER & LAKE ERIE RAILROAD AND CONNEAUT CREEK

ATB-20-26.19

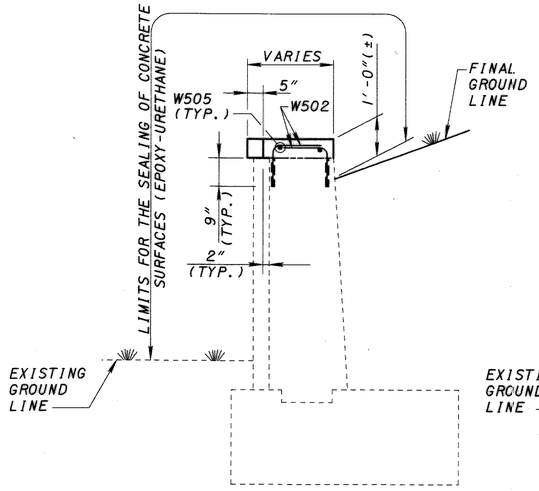

SECTION C-C

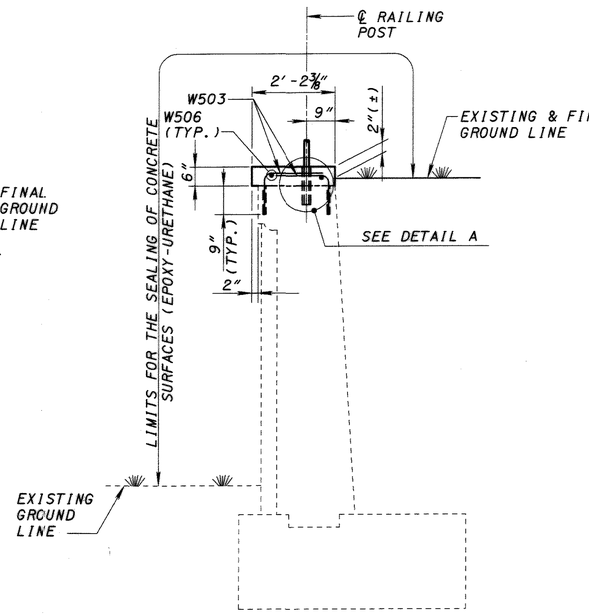

SECTION D-D

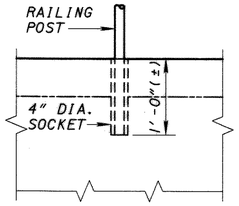

DETAIL A

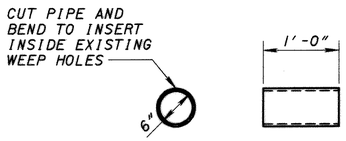

PLASTIC PIPE DETAIL

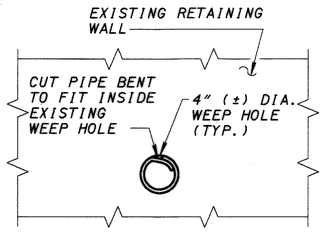

WEEP HOLE DETAIL

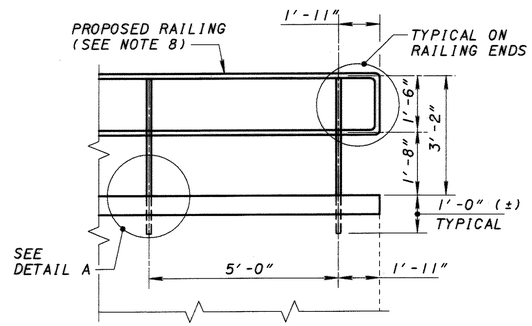

RAILING DETAIL

NOTES

1. FOR RETAINING WALL LOCATION, SEE PLAN, SHEET 9/42.
2. COST FOR EXCAVATION REQUIRED TO REPAIR PATCHING AREAS SHALL BE CONSIDERED INCIDENTAL AND INCLUDED IN ITEM 519 - PATCHING CONCRETE STRUCTURES, AS PER PLAN.
3. ALL SURFACES TO BE PATCHED AND THE EXPOSED REINFORCING STEEL WITHIN SHALL BE THOROUGHLY CLEANED BY ABRASIVE BLASTING PRIOR TO THE CLEANING SPECIFIED BY 519.04. CLEANING SHALL PRECEDE APPLICATION OF THE PATCHING MATERIAL OR ERECTION OF THE FORMS BY NOT MORE THAN 24 HOURS.
4. EXISTING WEEP HOLES SHALL BE CLEANED OF ALL DEBRIS. PLASTIC PIPE EXTENSION SHALL BE INSERTED INTO ALL WEEP HOLES. PLASTIC PIPE SHALL CONFORM TO 707.45. COST FOR THE CLEANING OF WEEP HOLES AND PLASTIC PIPE EXTENSION SHALL BE INCLUDED IN ITEM 519, PATCHING CONCRETE STRUCTURES FOR PAYMENT.
5. AREA OF PATCHING TOTAL:
   1.50 x 43.00 SQ. FT. = 64.5 SQ. FT.
6. LENGTH OF EPOXY INJECTION TOTAL: 23.00'
7. HAND RAILING SHALL BE PAID FOR UNDER ITEM 517-HAND RAILING, AND SHALL INCLUDE ALL MATERIALS, LABOR, AND INCIDENTALS NECESSARY TO COMPLETE THE WORK.
8. RAILING AND POST SHALL BE FABRICATED FROM NOMINAL SIZE 1½", 0.145" WALL THICKNESS STEEL PIPE MEETING THE REQUIREMENTS OF THE SPECIFICATION FOR WELDED AND SEAMLESS STEEL PIPE ASTM DESIGNATION: A53 STANDARD WEIGHT, SCHEDULE NO. 40. STEEL POSTS AND RAILS SHALL BE GALVANIZED AFTER FABRICATION IN ACCORDANCE WITH ASTM A123. SPLICES FOR STEEL RAILING SHALL BE FIELD WELDED. AREAS ON WHICH THE SPELTER COATING HAS BEEN DAMAGED BY WELDING OR OTHERWISE IN FABRICATION, SHALL BE REGALVANIZED IN ACCORDANCE W/ AASHTO M 36 SECTION 24 METALIZING PROCESS, OR THEY SHALL BE REPAIRED UNDER THE DIRECTION OF THE ENGINEER WITH STICK FORM GALVANIZING REPAIR COMPOUND MEETING THE REQUIREMENTS OF FEDERAL SPEC. O-G-93.

   POST SHALL BE SET IN SOCKETS FILLED WITH 1-3 CEMENT MORTAR. THE INSTALLED HANDRAILS SHALL BE FREE FROM BURRS OR SHARP PROJECTIONS.
9. ALL AREAS WHERE THE RETAINING WALL FOOTING IS EXPOSED SHALL BE REGRADED TO A 1' MINIMUM COVER. REGRADING SHALL TAKE PLACE AFTER ANY NECESSARY REPAIRS TO THE FOOTING HAVE BEEN COMPLETED. ALL LABOR AND MATERIALS NECESSARY TO COMPLETE THE ABOVE WORK SHALL BE CONSIDERED INCIDENTAL AND INCLUDED IN ITEM 202 - STRUCTURE REMOVED, OVER 20' SPAN, AS PER PLAN.
10. FOR ABBREVIATIONS, SEE SHEET 5/42.
11. MINIMUM REQUIRED LAP LENGTH:
    NO. 5 BAR = 2'-5"

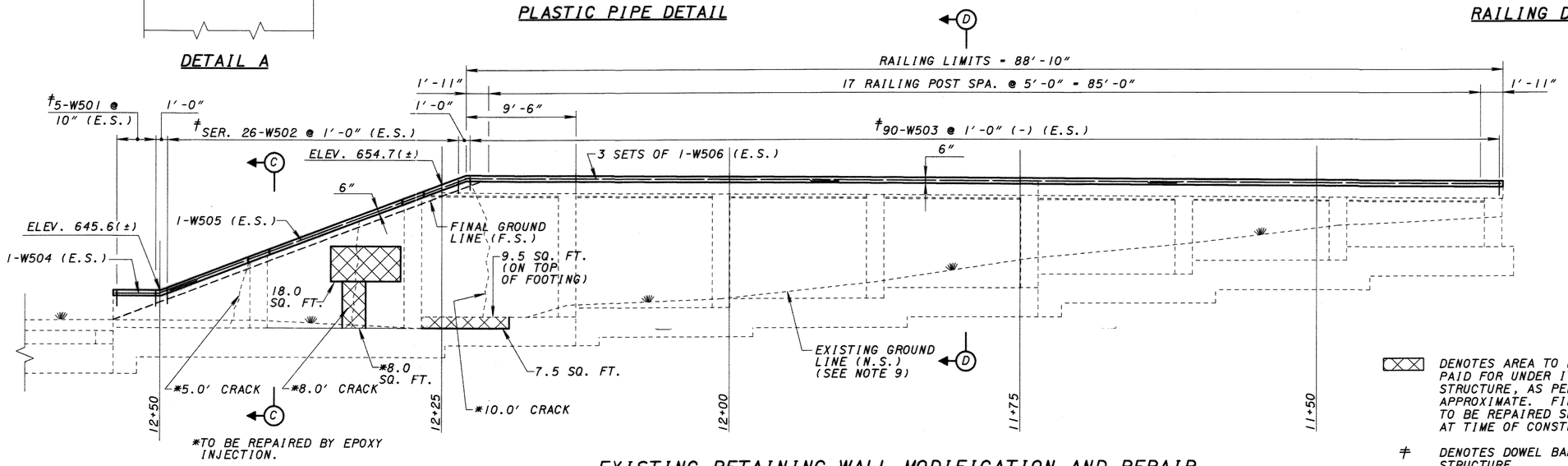

EXISTING RETAINING WALL MODIFICATION AND REPAIR NORTH ELEVATION

LEGEND

▨ DENOTES AREA TO BE PATCHED. REPAIRS SHALL BE PAID FOR UNDER ITEM 519 - PATCHING CONCRETE STRUCTURE, AS PER PLAN. THE AREAS SHOWN ARE APPROXIMATE. FINAL DETERMINATION OF THE AREA TO BE REPAIRED SHALL BE MADE BY THE ENGINEER AT TIME OF CONSTRUCTION.

≠ DENOTES DOWEL BAR GROUTED INTO THE EXISTING STRUCTURE.

DESIGN AGENCY
McCOY ASSOCIATES, INC.
367 GHENT ROAD
AKRON, OHIO 44333

DESIGNED	DRAWN	REVISED	DATE	STRUCTURE FILE NUMBER
HK	SL	JBH	6-11-02	0402273
CHECKED	REVISED			
SL				

RETAINING WALL MODIFICATION AND REPAIR
BRIDGE NO. ATB-20-2628
OVER BESSEMER & LAKE ERIE RAILROAD AND CONNEAUT CREEK

ATB-20-26.19

9A/42

106A/162

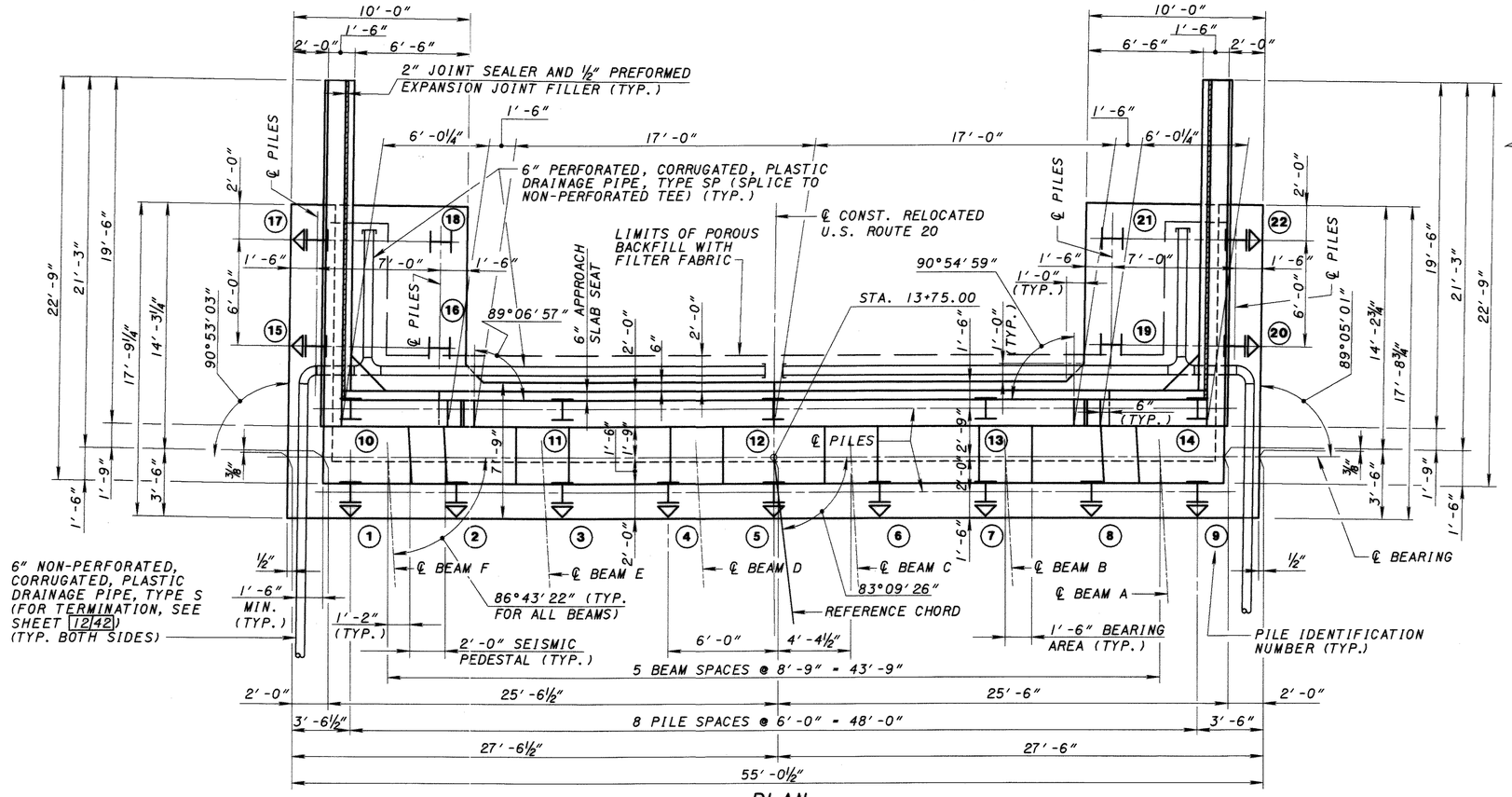

PLAN

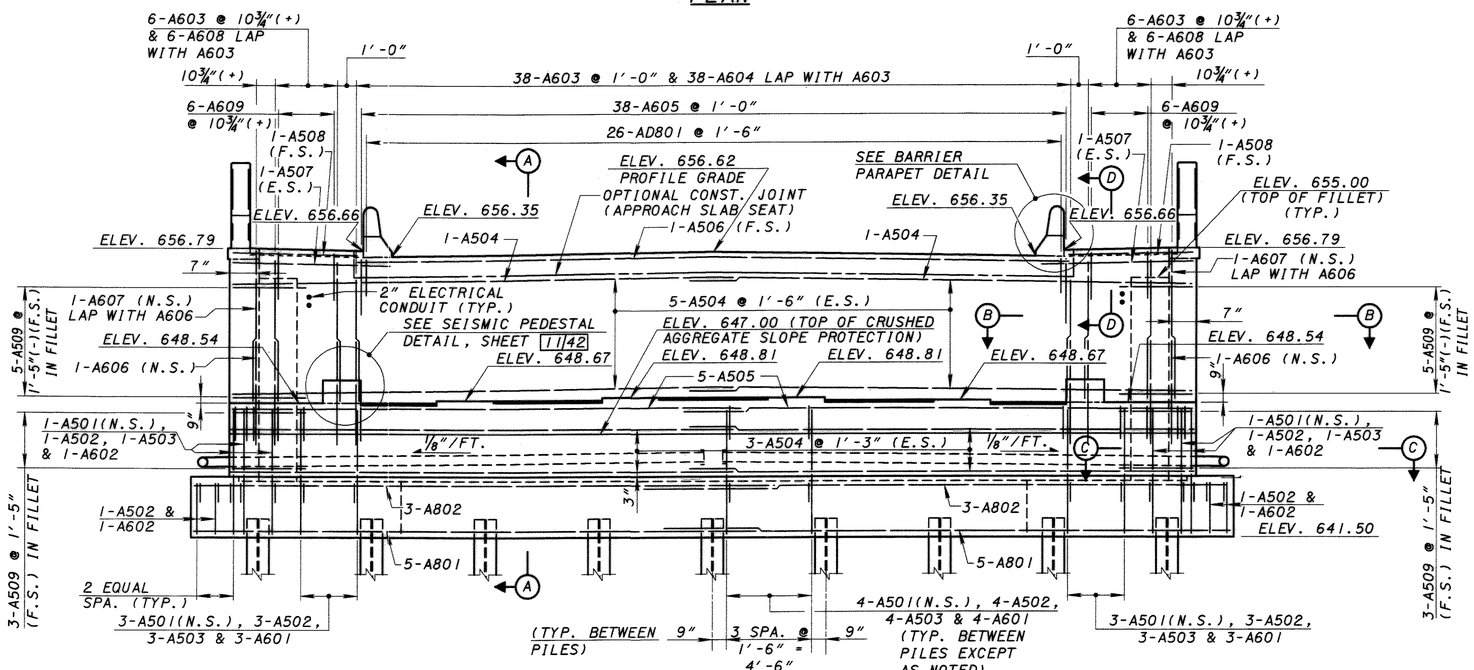

ELEVATION

NOTES

1. FOR SECTIONS A-A THRU D-D AND, SEE SHEET 11/42.
2. ALL PILES ARE HP14X73 STEEL PILES.
3. MINIMUM LAP UNLESS OTHERWISE NOTED:
   NO. 5 BARS = 2'-5"
   A505 BARS = 3'-5"
   NO. 6 BARS = 2'-11"
   NO. 7 BARS = 3'-8"
   NO. 8 BARS = 4'-11"
   A802 BARS = 6'-10"
4. IN ADDITION TO SS 842.08, BACKWALL CONCRETE ABOVE THE OPTIONAL CONSTRUCTION JOINT AT THE APPROACH SLAB SEAT SHALL NOT BE PLACED UNTIL AFTER THE DECK CONCRETE IN THE SPAN ADJACENT TO THE ABUTMENT HAS BEEN PLACED.
5. 2 INCH JOINT SEALER AND ½ INCH PREFORMED EXPANSION JOINT FILLER SHALL BE INCLUDED WITH ITEM 608 - CONCRETE WALK, AS PER PLAN, FOR PAYMENT.
6. FOR ELASTOMERIC BEARINGS, SEE SHEET 21/42.
7. SEISMIC PEDESTALS ARE PLACED PARALLEL TO BEAMS.
8. FOR ABBREVIATIONS, SEE SHEET 5/42.
9. FOR PLACEMENT OF 2" CONDUIT IN BACKWALL, SEE STANDARD DRAWING HL-30.31M.

LEGEND

DENOTES BATTERED PILE (1:4)

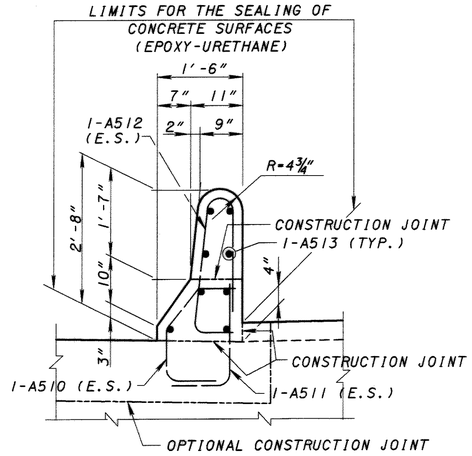

BARRIER PARAPET DETAIL

DESIGN AGENCY
McCOY ASSOCIATES, INC.
367 GHENT ROAD
AKRON, OHIO 44333

REVIEWED	DATE	STRUCTURE FILE NUMBER
JBH	6-11-02	0402273

DRAWN	REVISED
WEB	

DESIGNED	CHECKED
HK	SL

REAR ABUTMENT PLAN AND ELEVATION

BRIDGE NO. ATB-20-2628
OVER BESSEMER & LAKE ERIE RAILROAD AND CONNEAUT CREEK

ATB-20-26.19

10/42

107/162

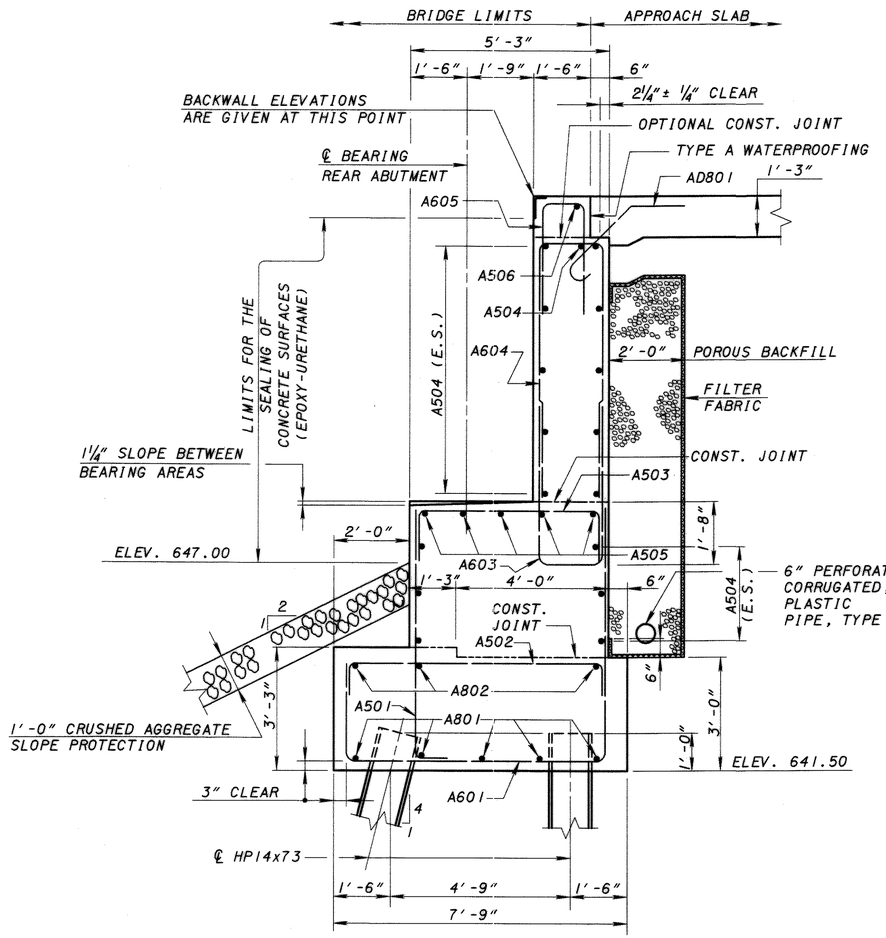

SECTION A-A

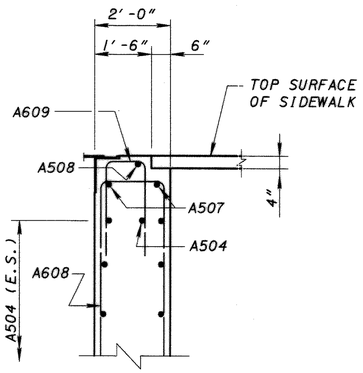

SECTION D-D

NOTES

1. FOR LOCATION OF SECTIONS A-A THRU D-D, SEE SHEET 10|42.
2. TYPE A WATERPROOFING SHALL BE INCLUDED WITH ITEM 611-REINFORCED CONCRETE APPROACH SLAB, AS PER PLAN, FOR PAYMENT.
3. POROUS BACKFILL WITH FILTER FABRIC, 2'-0" THICK, SHALL EXTEND UP TO THE PLANE OF THE SUBGRADE, TO 1'-0" BELOW THE EMBANKMENT SURFACE, AND LATERALLY AS SHOWN IN THE PLAN, SHEET 10|42.
4. FOR ADDITIONAL NOTES, SEE SHEET 10|42.

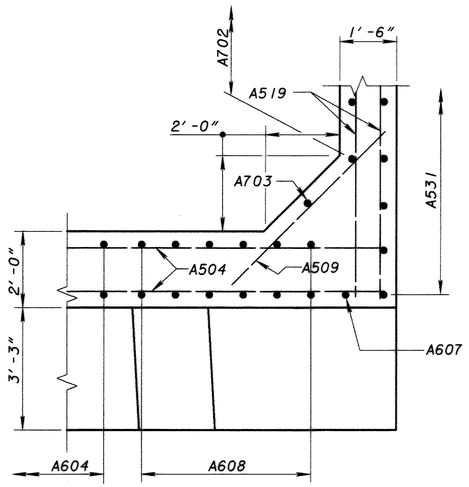

SECTION B-B

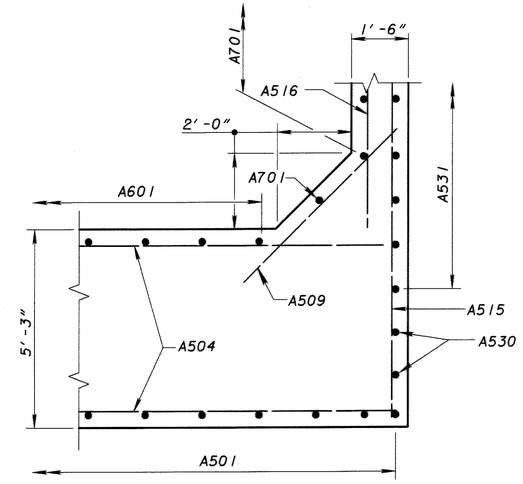

SECTION C-C

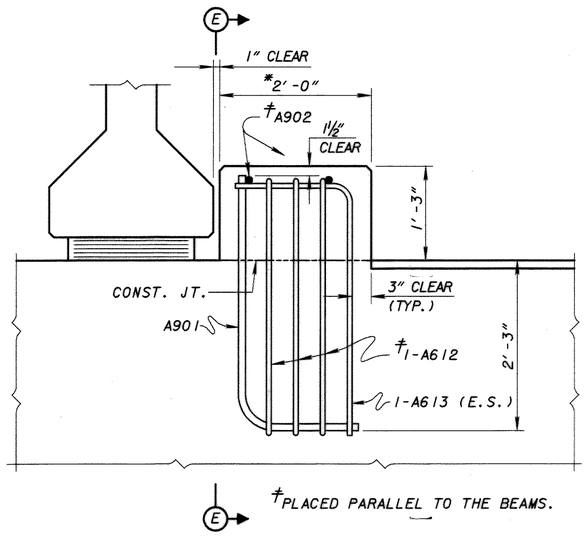

†PLACED PARALLEL TO THE BEAMS.

SEISMIC PEDESTAL DETAIL

(FRONT VIEW AT BEAM F SHOWN, FRONT VIEW AT BEAM A OPPOSITE HAND)

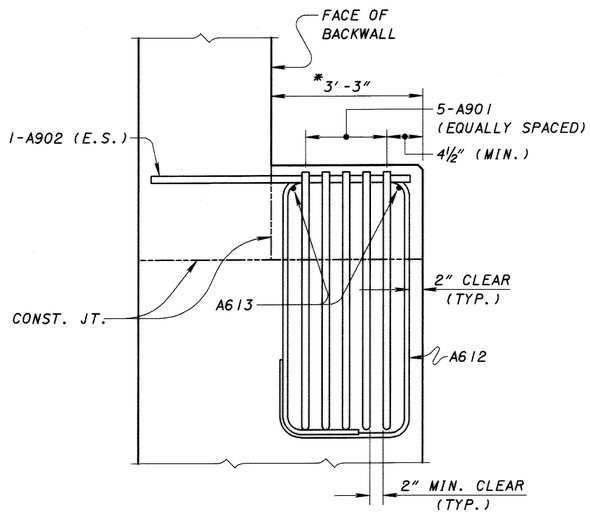

SECTION E-E

NOTES:
THE LOCATION OF THE MAIN REINFORCEMENT IN THE BEAM SEAT MAY BE ADJUSTED HORIZONTALLY ±1" TO ACCOMMODATE THE A901 BARS.

* - THE SURFACE OF THE BEAM SEAT IN THIS AREA SHALL BE FINISHED WITH A SERRATED TROWEL. THE SERRATIONS SHALL BE ¼" DEEP MINIMUM.

DESIGN AGENCY
McCOY ASSOCIATES, INC.
367 GHENT ROAD
AKRON, OHIO 44333

DESIGNED	DRAWN	REVIEWED	DATE
HK	WEB	JBH	6-11-02
CHECKED	REVISED	STRUCTURE FILE NUMBER	
SL		0402273	

REAR ABUTMENT DETAILS

BRIDGE NO. ATB-20-2628
OVER BESSEMER & LAKE ERIE RAILROAD AND CONNEAUT CREEK

ATB-20-26.19

11/42

108/162

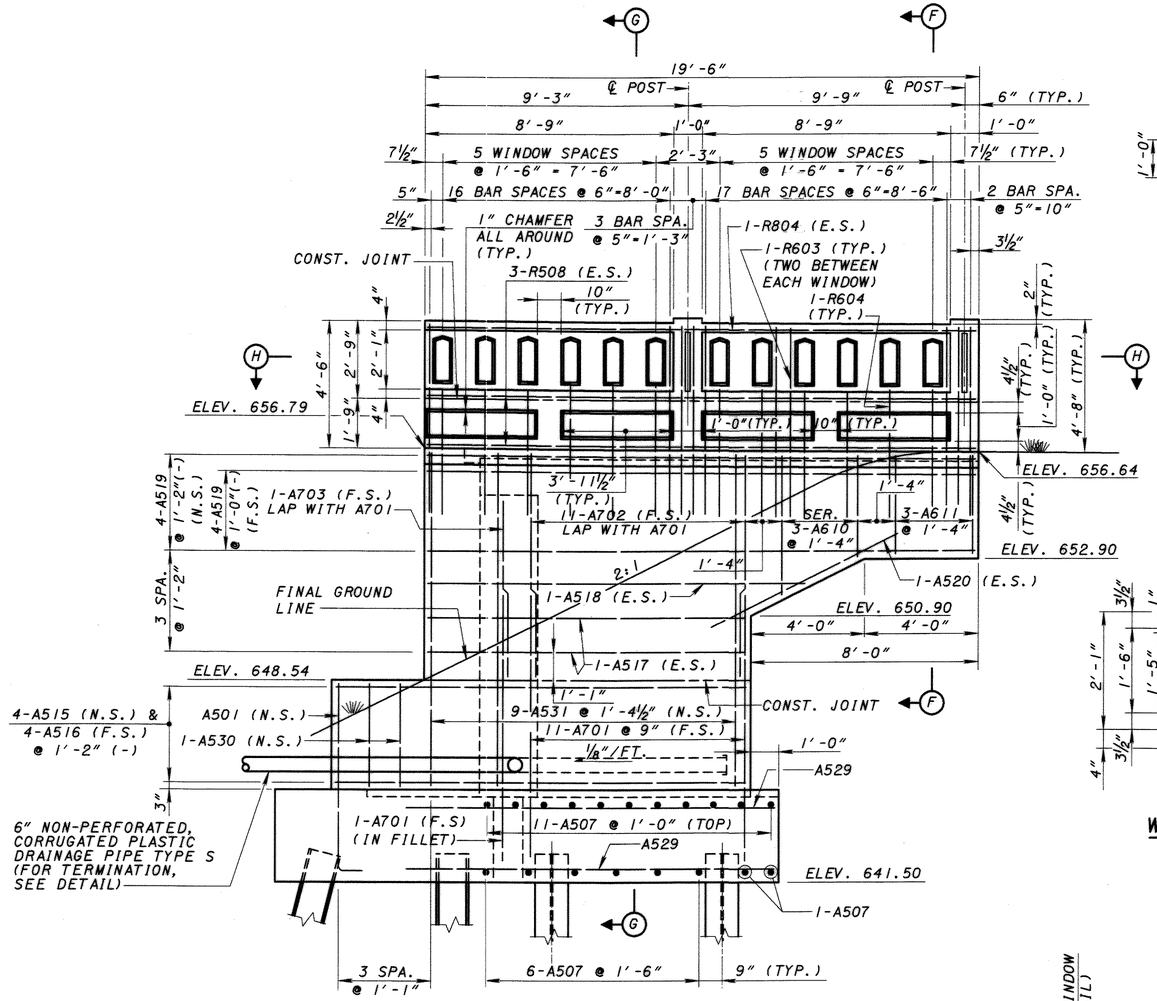

WINGWALL ELEVATION

(LEFT WINGWALL SHOWN, RIGHT WINGWALL OPPOSITE HAND)
(ELECTRICAL CONDUITS NOT SHOWN)

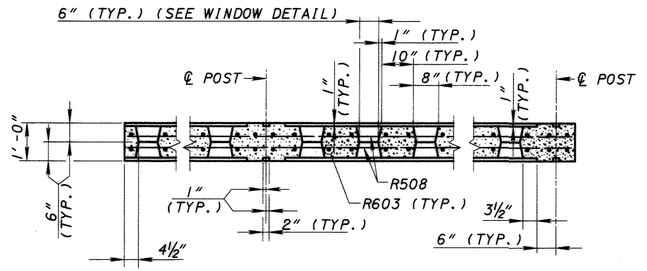

SECTION H-H

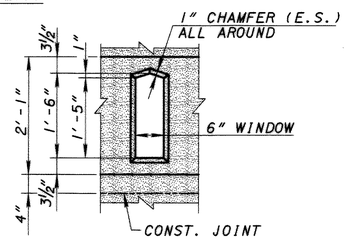

WINDOW DETAIL

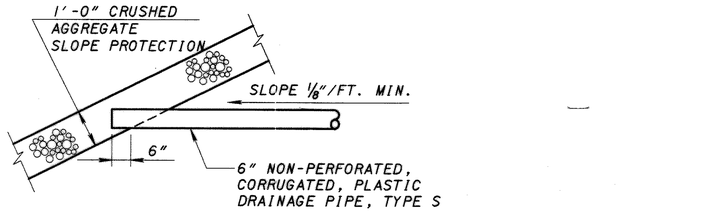

TERMINATION OF 6" PIPE AT THE FRONT SLOPE

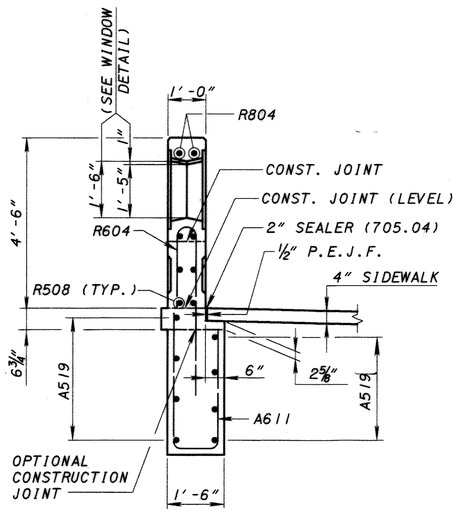

SECTION F-F

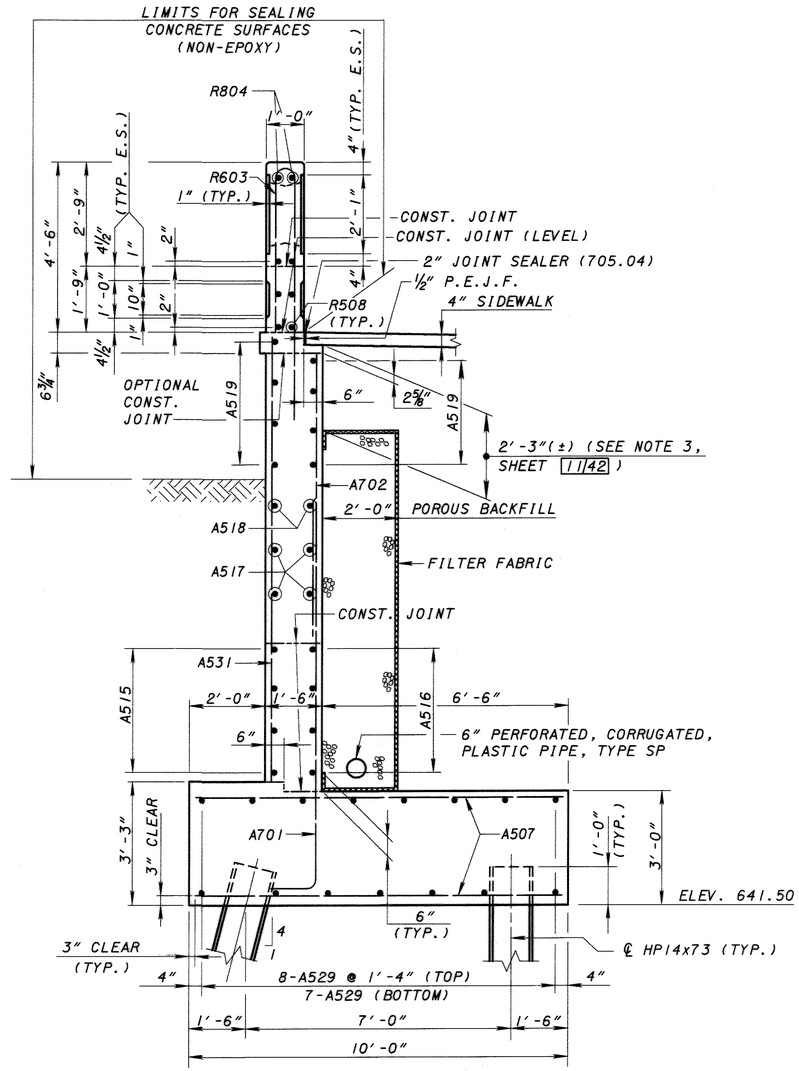

SECTION G-G

NOTE

1. FOR PLAN, ELEVATION AND ADDITIONAL NOTES, SEE SHEET 10/42.

DESIGN AGENCY
McCOY ASSOCIATES, INC.
367 GHENT ROAD
AKRON, OHIO 44333

DESIGNED	DRAWN	REVISED	DATE
HK	WEB	JBH	6-11-02
CHECKED	REVISED	STRUCTURE FILE NUMBER	
SL		0402273	

REAR ABUTMENT WINGWALLS
BRIDGE NO. ATB-20-2628
OVER BESSEMER & LAKE ERIE RAILROAD AND CONNEAUT CREEK

ATB-20-26.19

12/42

109/162

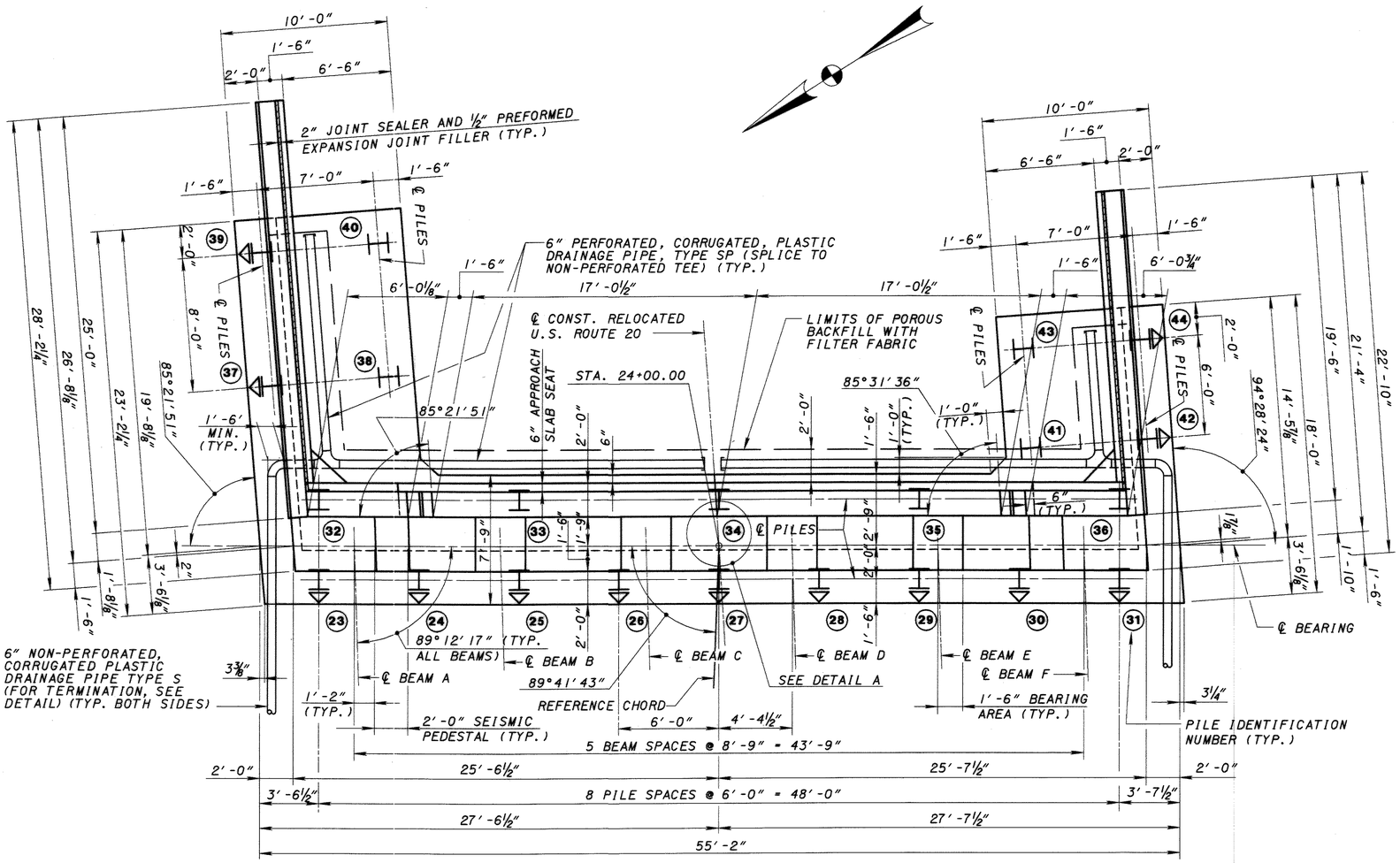

PLAN

NOTES

1. ALL PILES ARE HP14X73 STEEL PILES.
2. FOR ELEVATION, SEISMIC PEDESTAL DETAIL AND ADDITIONAL NOTES, SEE SHEET 14/42.
3. 2 INCH JOINT SEALER AND ½ INCH PREFORMED EXPANSION JOINT FILLER SHALL BE INCLUDED WITH ITEM 608 - CONCRETE WALK, AS PER PLAN, FOR PAYMENT.
4. SEISMIC PEDESTALS ARE PLACED PARALLEL TO BEAMS.
5. POROUS BACKFILL WITH FILTER FABRIC, 2'-0" THICK, SHALL EXTEND UP TO THE PLANE OF THE SUBGRADE, TO 1'-0" BELOW THE EMBANKMENT SURFACE, AND LATERALLY AS SHOWN IN THE PLAN.

LEGEND

DENOTES BATTERED PILE (1:4)

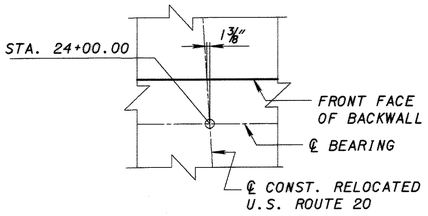

DETAIL A

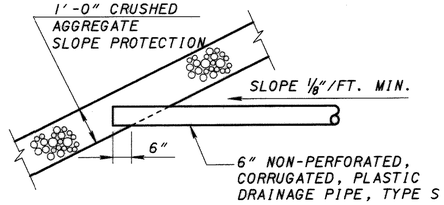

TERMINATION OF 6" PIPE AT THE FRONT SLOPE

DESIGN AGENCY
McCOY ASSOCIATES, INC.
367 GHENT ROAD
AKRON, OHIO 44333

DESIGNED	DRAWN	REVIEWED	DATE
HK	WEB	JBH	6-11-02
CHECKED	REVISED	STRUCTURE FILE NUMBER	
SL		0402273	

FORWARD ABUTMENT PLAN
BRIDGE NO. ATB-20-2628
OVER BESSEMER & LAKE ERIE RAILROAD AND CONNEAUT CREEK

ATB-20-26.19

13/42

110/162

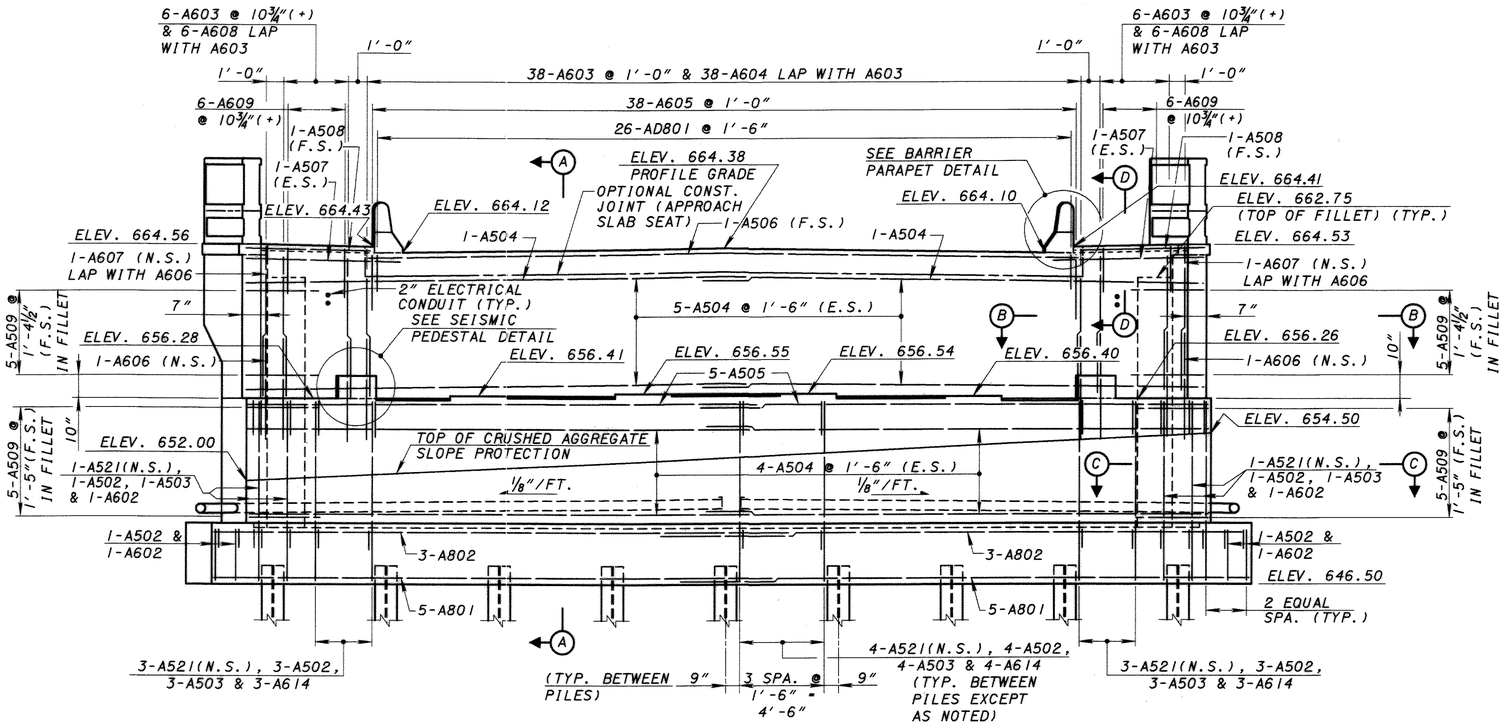

ELEVATION

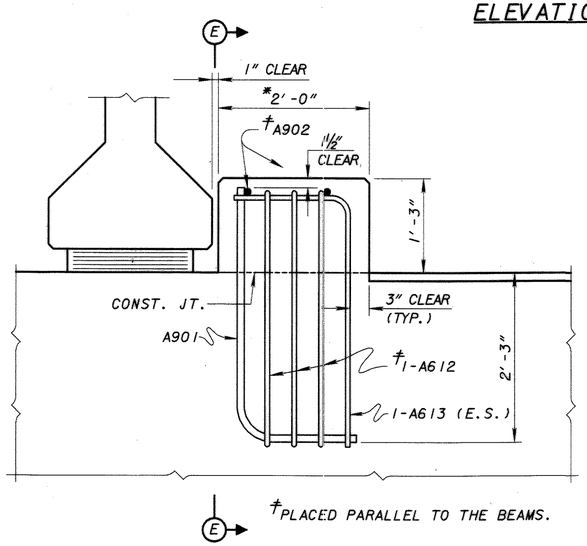

SEISMIC PEDESTAL DETAIL

(FRONT VIEW AT BEAM A SHOWN, FRONT VIEW AT BEAM F OPPOSITE HAND)

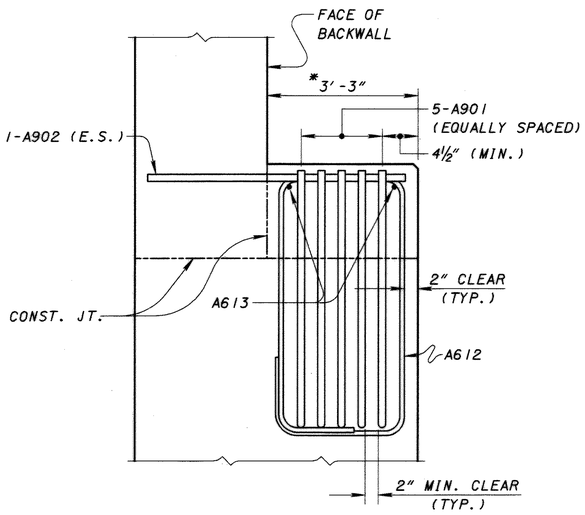

SECTION E-E

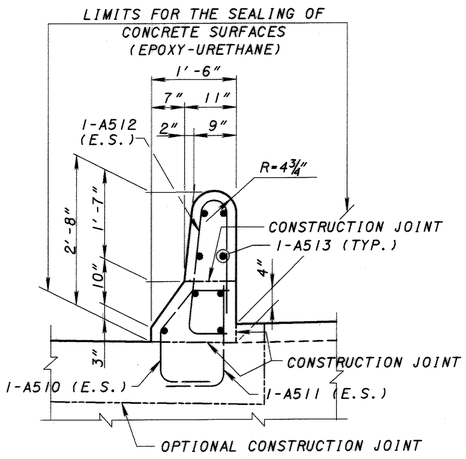

BARRIER PARAPET DETAIL

NOTES:
THE LOCATION OF THE MAIN REINFORCEMENT IN THE BEAM SEAT MAY BE ADJUSTED HORIZONTALLY ±1" TO ACCOMMODATE THE A901 BARS.

* - THE SURFACE OF THE BEAM SEAT IN THIS AREA SHALL BE FINISHED WITH A SERRATED TROWEL. THE SERRATIONS SHALL BE ¼" DEEP MINIMUM.

NOTES

1. FOR SECTIONS A-A THRU D-D AND, SEE SHEET 15/42 .
2. MINIMUM LAP UNLESS OTHERWISE NOTED:
   NO. 5 BARS - 2'-5"
   A505 BARS - 3'-5"
   NO. 6 BARS - 2'-11"
   NO. 7 BARS - 3'-8"
   NO. 8 BARS - 4'-11"
   A802 BARS - 6'-10"
3. IN ADDITION TO SS 842.08, BACKWALL CONCRETE ABOVE THE OPTIONAL CONSTRUCTION JOINT AT THE APPROACH SLAB SEAT SHALL NOT BE PLACED UNTIL AFTER THE DECK CONCRETE IN THE SPAN ADJACENT TO THE ABUTMENT HAS BEEN PLACED.
4. FOR ELASTOMERIC BEARINGS, SEE SHEET 21/42 .
5. FOR ABBREVIATIONS, SEE SHEET 5/42 .
6. FOR PLACEMENT OF 2" CONDUIT IN BACKWALL, SEE STANDARD DRAWING HL-30.31M.

DESIGN AGENCY
McCOY ASSOCIATES, INC.
367 GHENT ROAD
AKRON, OHIO 44333

DESIGNED HK | DRAWN WEB | CHECKED SL | REVIEWED JBH | REVISED | DATE 6-11-02 | REVISED | STRUCTURE FILE NUMBER 0402273

FORWARD ABUTMENT ELEVATION
BRIDGE NO. ATB-20-2628
OVER BESSEMER & LAKE ERIE RAILROAD AND CONNEAUT CREEK

ATB-20-26.19

14/42

111/162

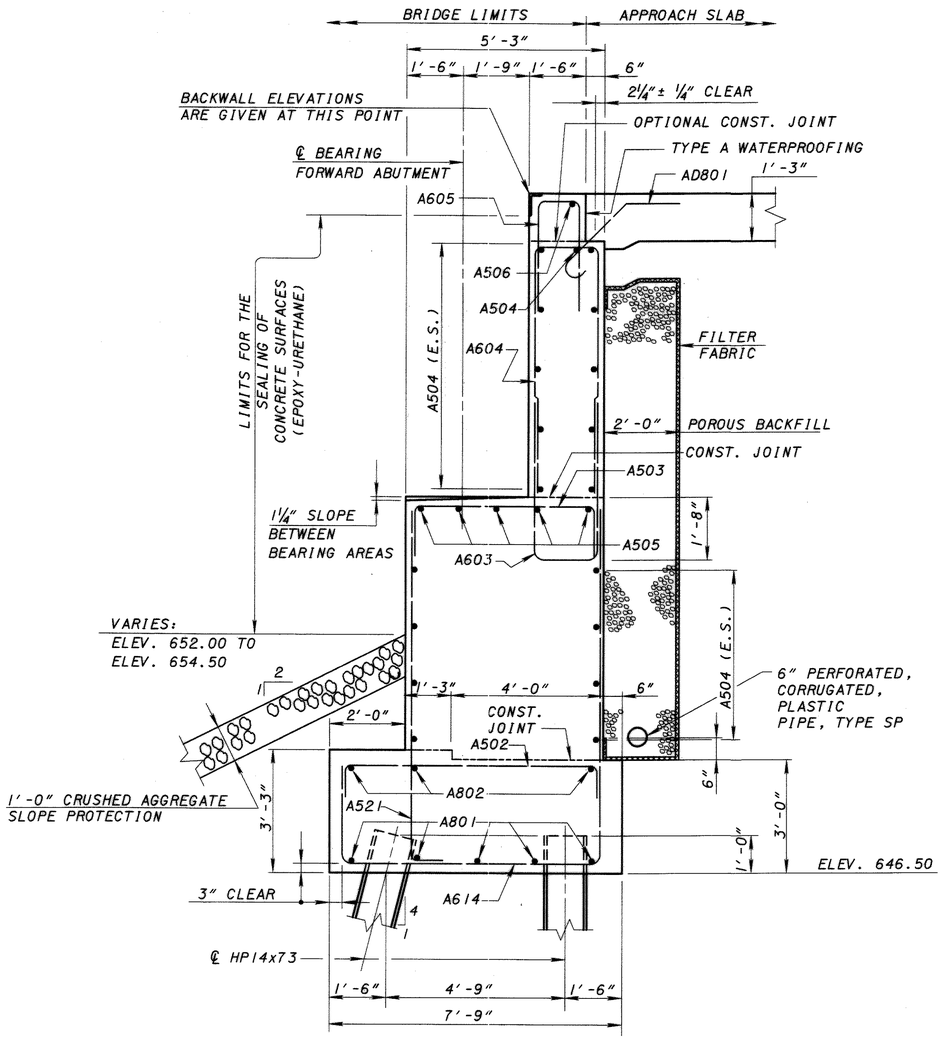

SECTION A-A

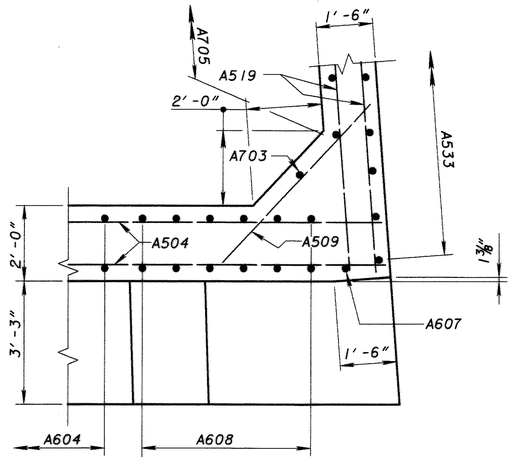

SECTION B-B

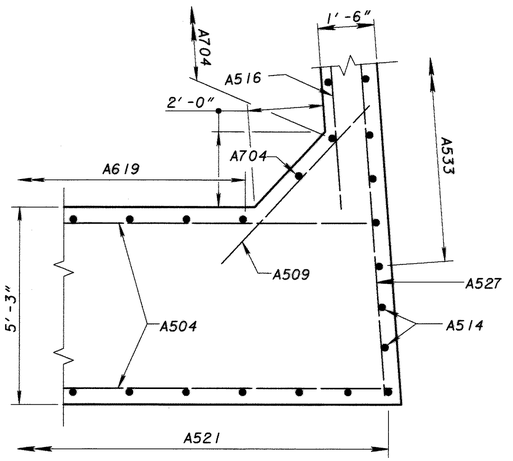

SECTION C-C

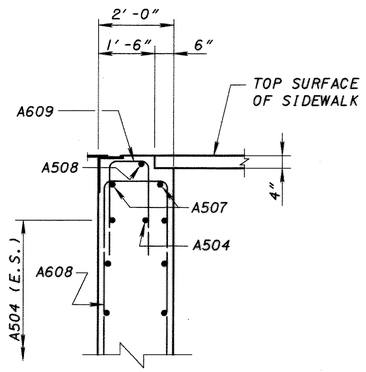

SECTION D-D

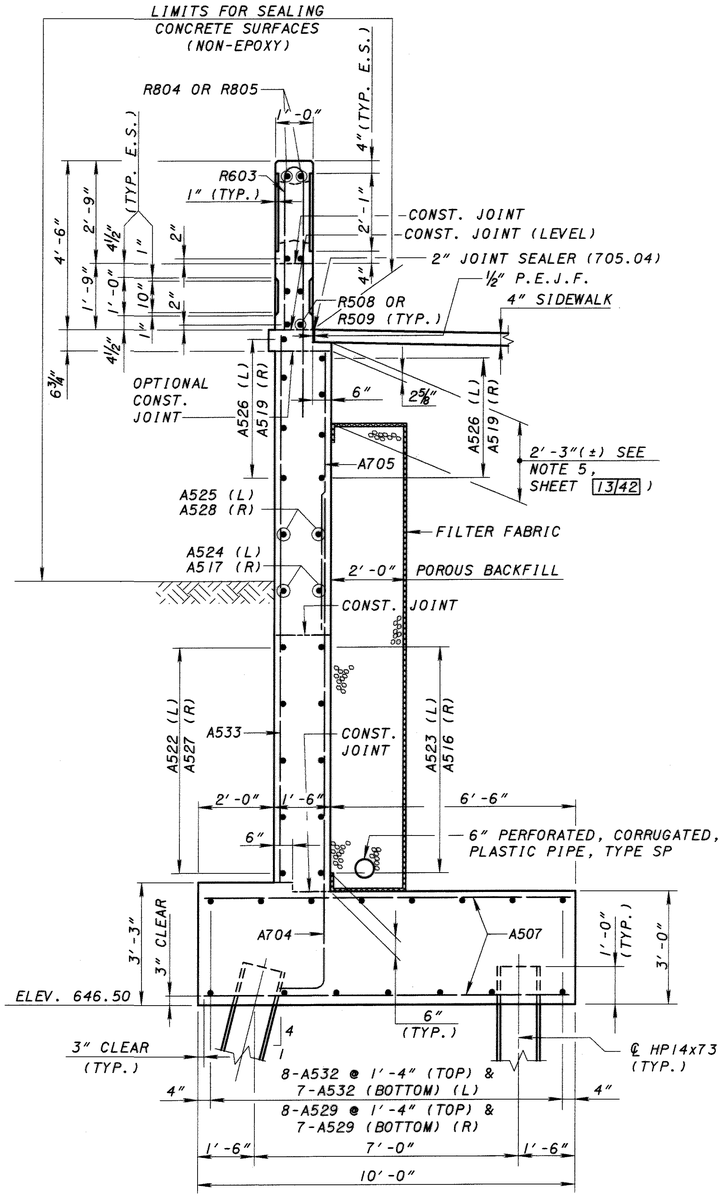

SECTION G-G

NOTES

1. FOR LOCATION OF SECTIONS A-A THRU D-D, SEE SHEET 14/42 .
2. FOR LOCATION OF SECTION G-G, SEE SHEET 16/42 .
3. FOR ADDITIONAL NOTES, SEE SHEETS 13/42 AND 14/42.
4. TYPE A WATERPROOFING SHALL BE INCLUDED WITH ITEM 611 - REINFORCED CONCRETE APPROACH SLAB, AS PER PLAN, FOR PAYMENT.

LEGEND

(L) DENOTES LEFT WINGWALL.

(R) DENOTES RIGHT WINGWALL.

DESIGN AGENCY
McCOY ASSOCIATES, INC.
367 GHENT ROAD
AKRON, OHIO 44333

DESIGNED	DRAWN	REVISED	DATE
HK	WEB	JBH	6-11-02
CHECKED	REVISED	STRUCTURE FILE NUMBER	
SL		0402273	

FORWARD ABUTMENT DETAILS
BRIDGE NO. ATB-20-2628
OVER BESSEMER & LAKE ERIE RAILROAD AND CONNEAUT CREEK

ATB-20-26.19

15/42

112/162

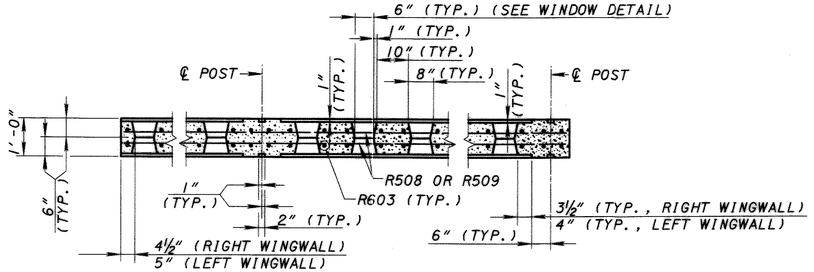

SECTION H-H

(RIGHT WINGWALL SHOWN, LEFT WINGWALL OPPOSITE HAND)

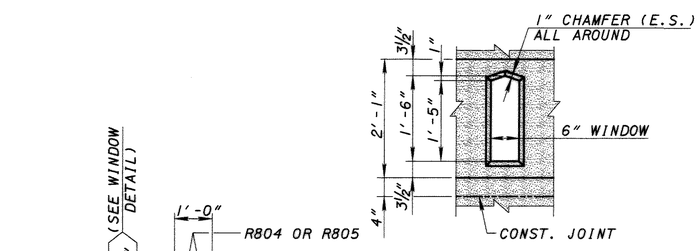

WINDOW DETAIL

SECTION F-F

NOTES

1. FOR SECTION G-G, SEE SHEET 15/42 .
2. FOR PLAN, SEE SHEET 13/42 .
3. FOR ELEVATION, SEE SHEET 14/42 .
4. FOR ADDITIONAL NOTES, SEE SHEETS 13/42 AND 14/42 .

LEGEND

(L) DENOTES LEFT WINGWALL.

(R) DENOTES RIGHT WINGWALL.

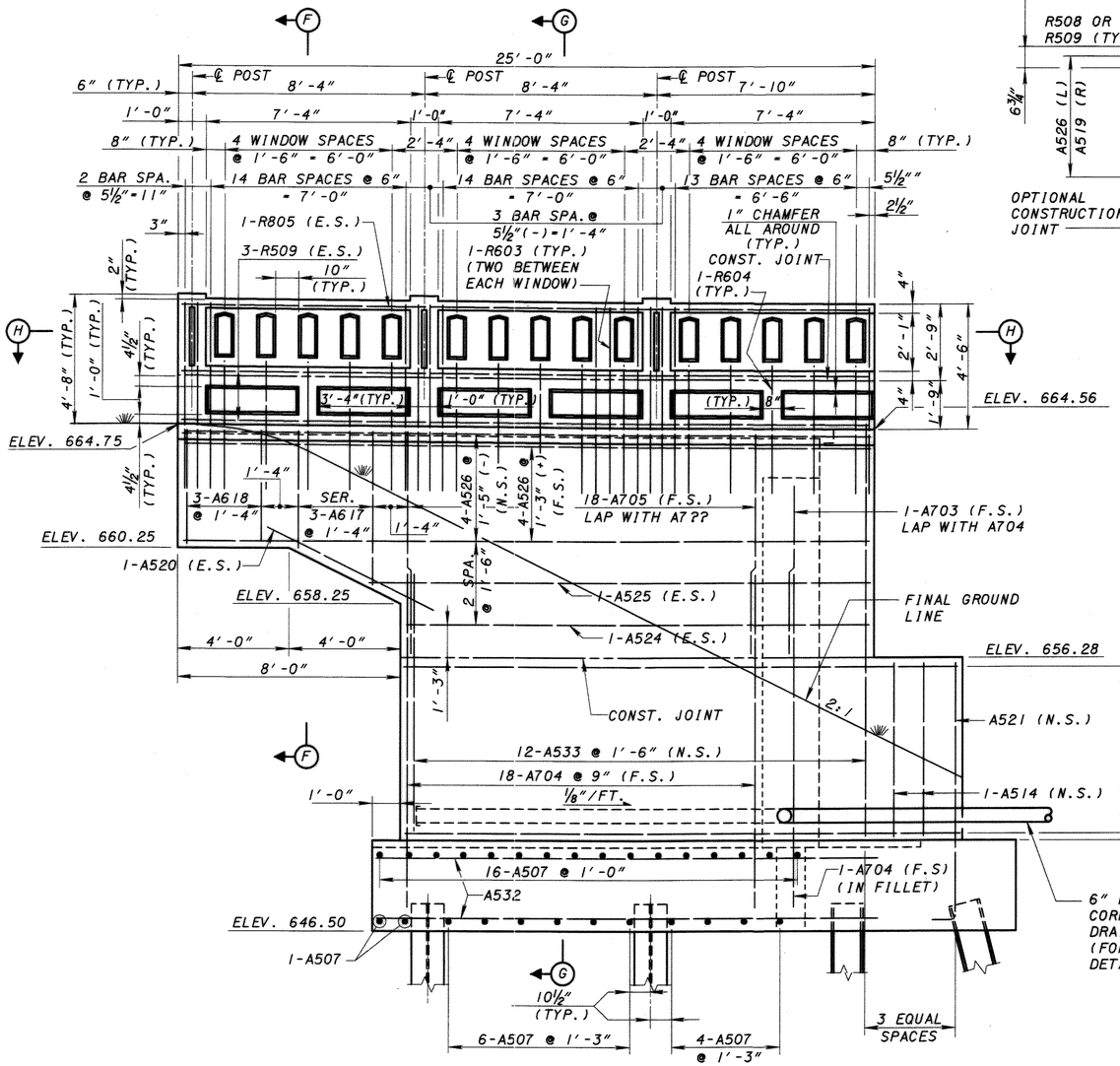

LEFT WINGWALL ELEVATION

(ELECTRICAL CONDUITS NOT SHOWN)

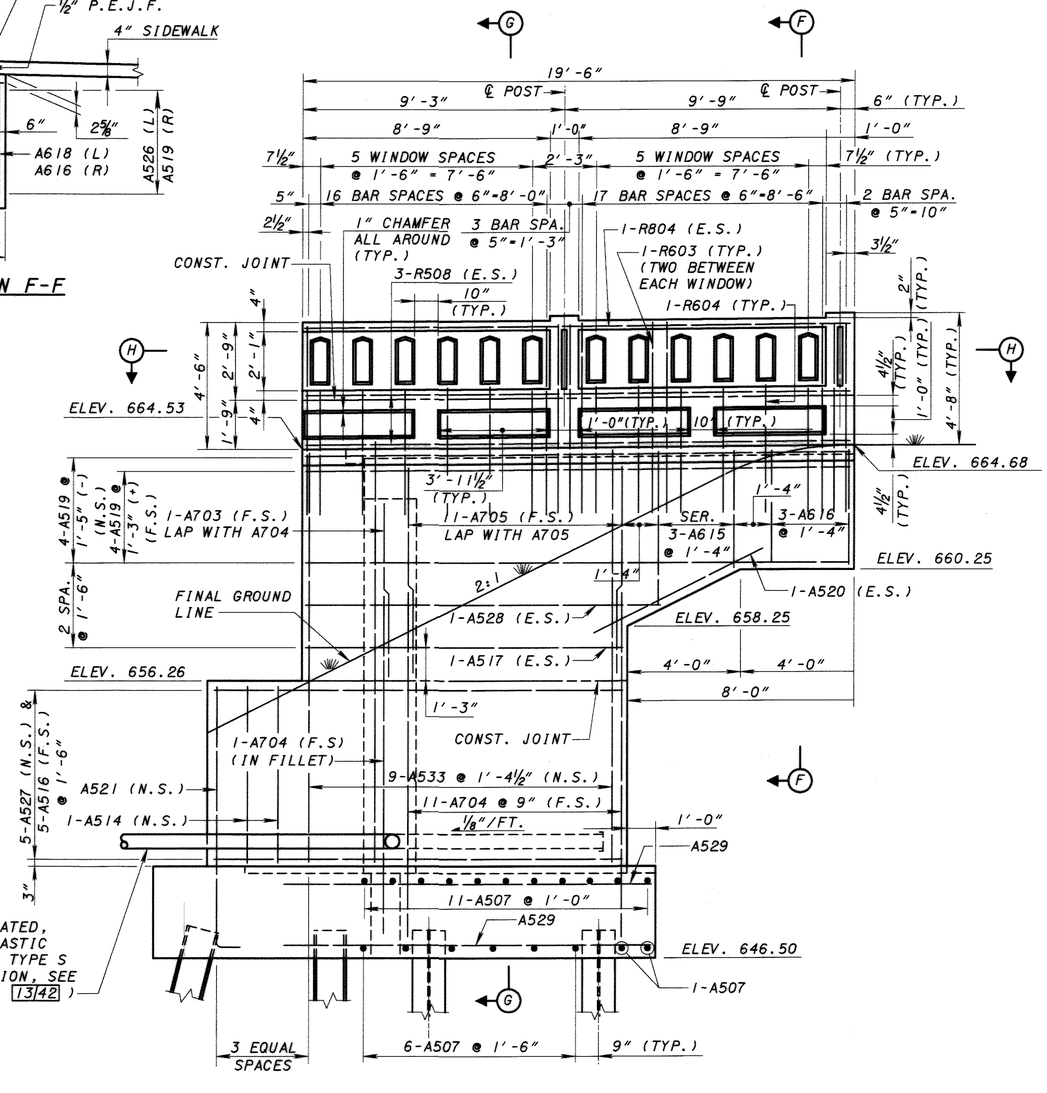

RIGHT WINGWALL ELEVATION

(ELECTRICAL CONDUITS NOT SHOWN)

DESIGN AGENCY
McCOY ASSOCIATES, INC.
367 GHENT ROAD
AKRON, OHIO 44333

DESIGNED	DRAWN	REVIEWED	DATE
HK	WEB	JBH	6-11-02
CHECKED	REVISED	STRUCTURE FILE NUMBER	
SL		0402273	

FORWARD ABUTMENT WINGWALLS

BRIDGE NO. ATB-20-2628

OVER BESSEMER & LAKE ERIE RAILROAD AND CONNEAUT CREEK

ATB-20-26.19

16/42

113/162

NOTES

1. MINIMUM LAP UNLESS OTHERWISE NOTED:
   NO. 4 BARS - 1'-11"
   NO. 5 BARS - 2'-5"
2. FOR ABBREVIATIONS, SEE SHEET 5/42.
3. FOR ELASTOMERIC BEARINGS, SEE SHEET 21/42.

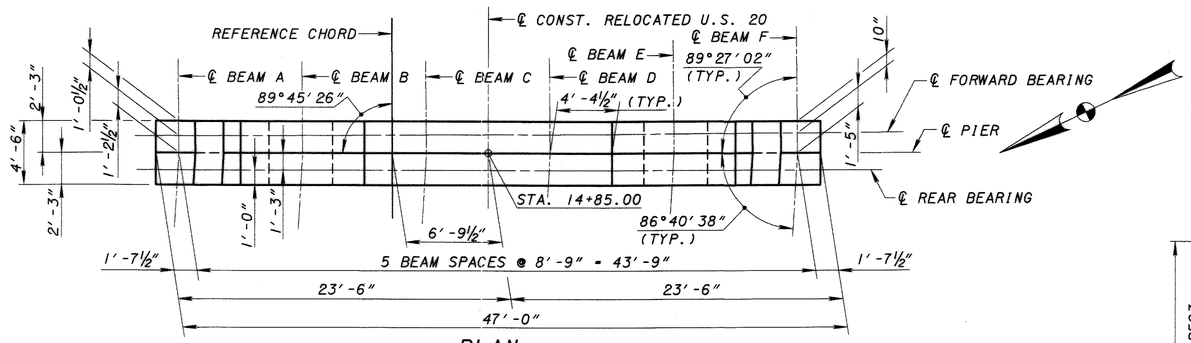

PLAN

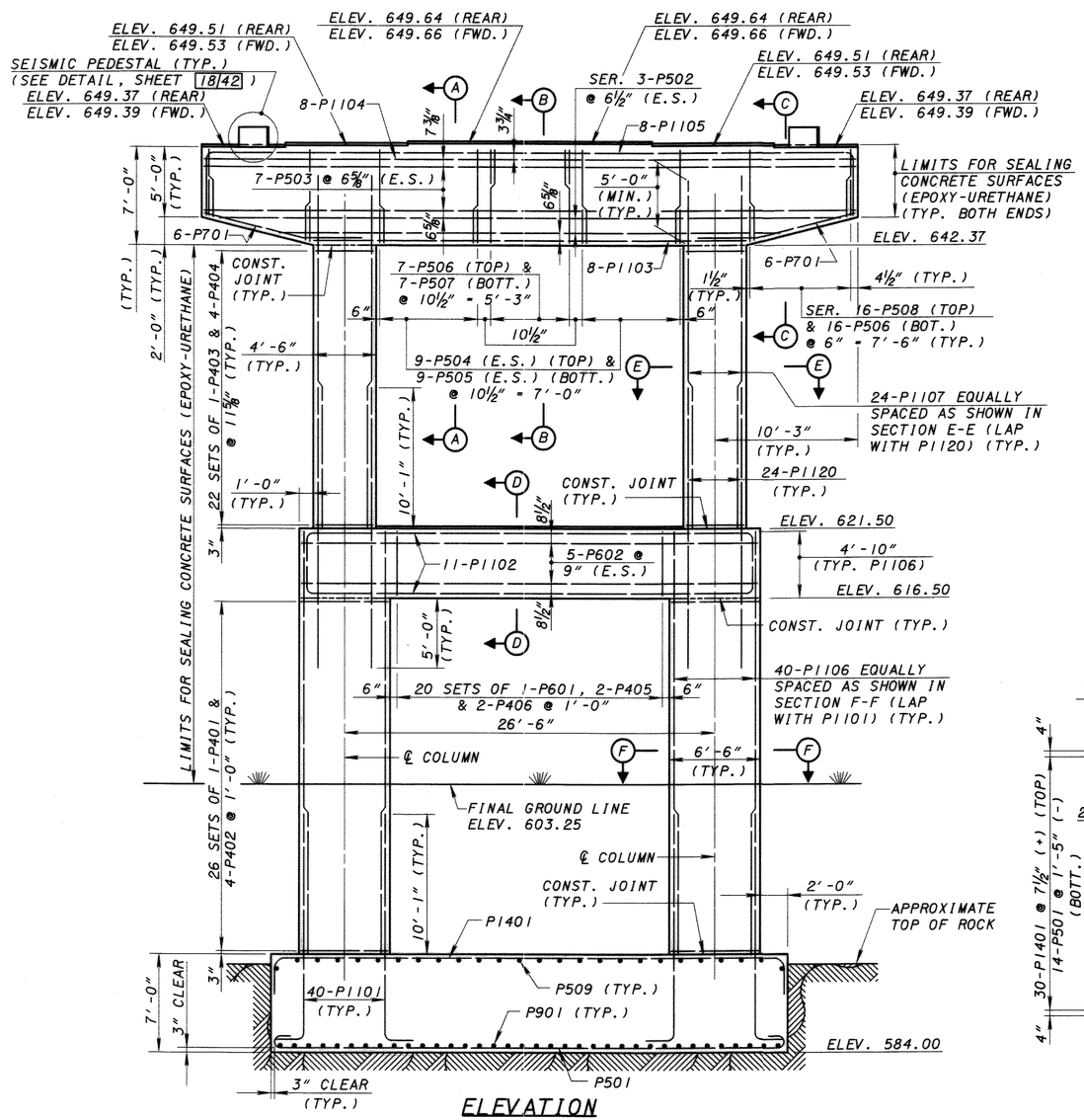

ELEVATION

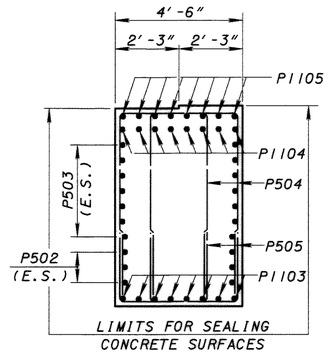

SECTION A-A

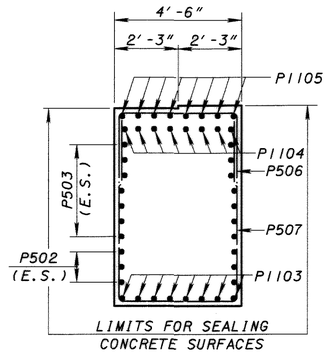

SECTION B-B

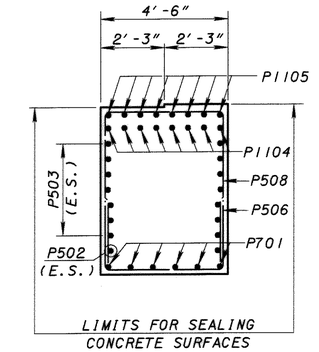

SECTION C-C

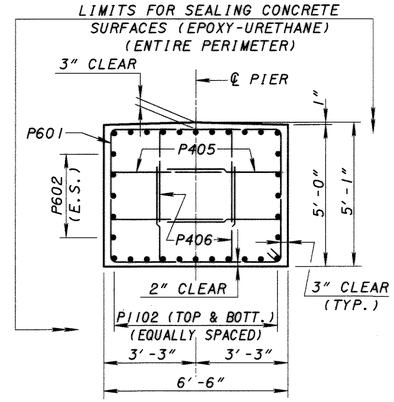

SECTION D-D

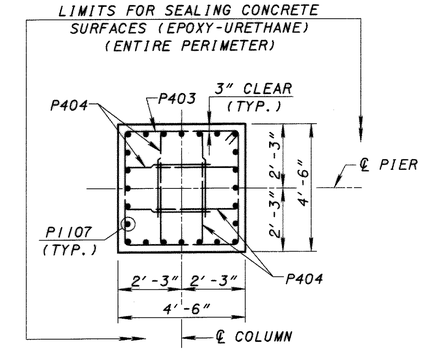

SECTION E-E

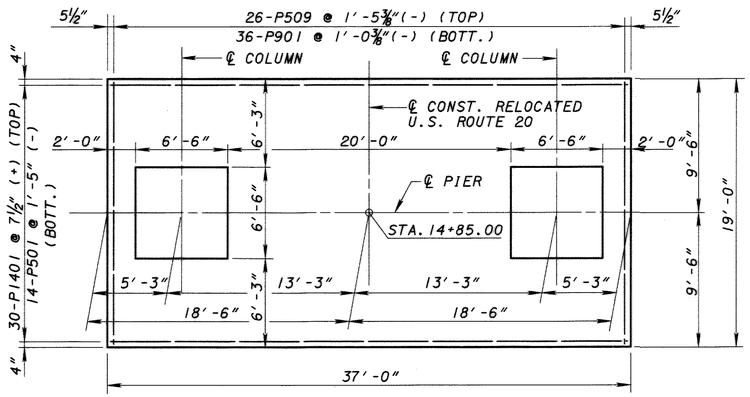

FOOTING PLAN

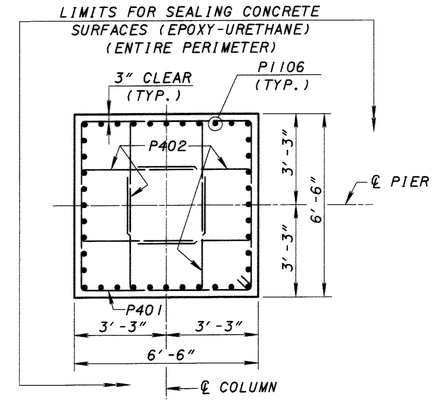

SECTION F-F

DESIGNED	DRAWN	REVISED	DATE
HK	WEB	JBH	6-11-02
CHECKED	REVISED	STRUCTURE FILE NUMBER	
SL		0402273	

DESIGN AGENCY
McCOY ASSOCIATES, INC.
367 GHENT ROAD
AKRON, OHIO 44333

PIER I
BRIDGE NO. ATB-20-2628
OVER BESSEMER & LAKE ERIE RAILROAD AND CONNEAUT CREEK

ATB-20-26.19

17/42

114/162

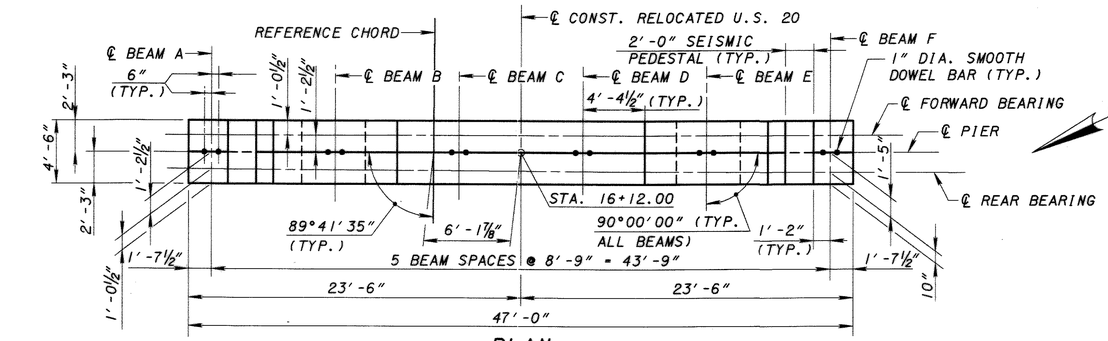

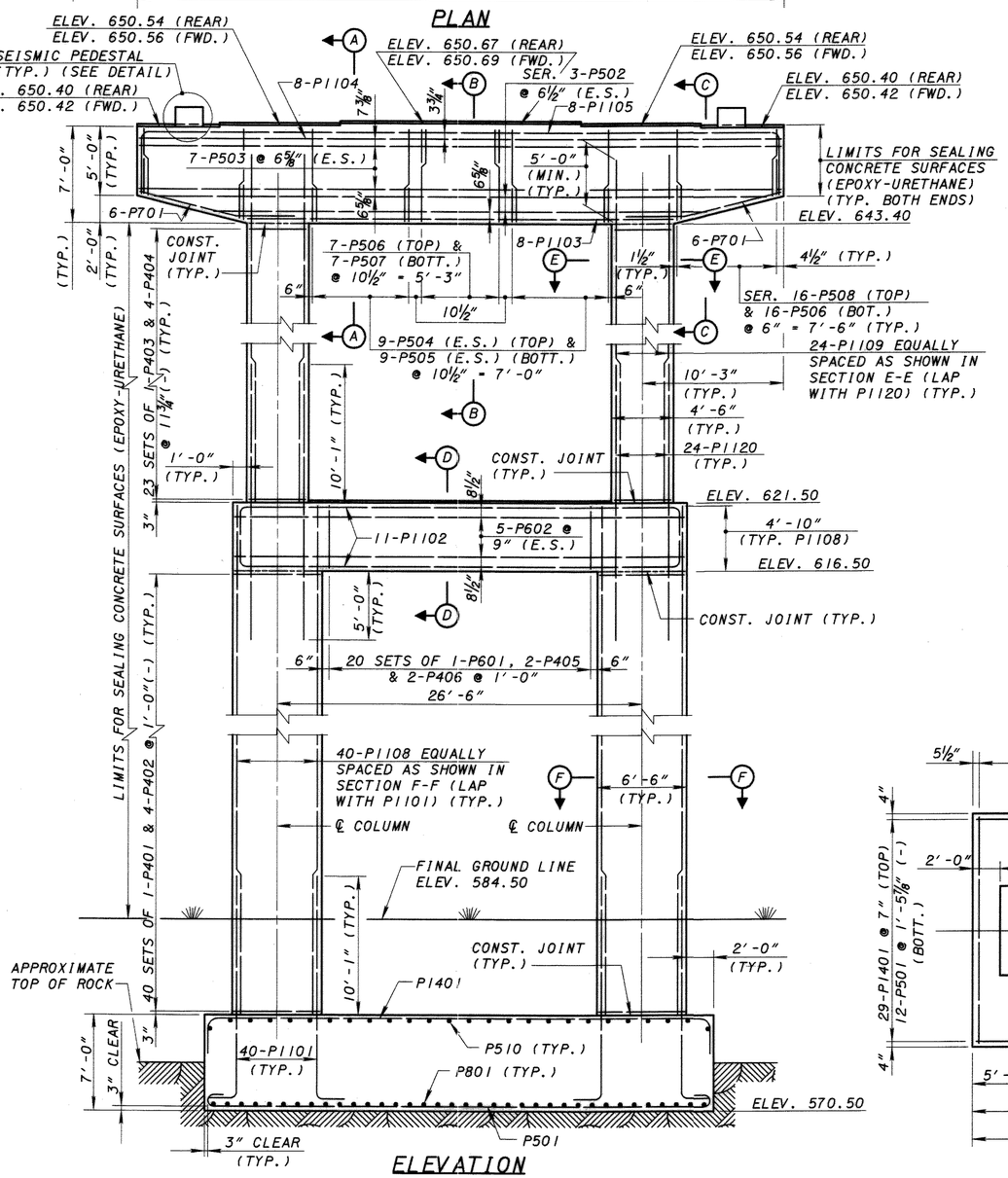

NOTES

1. BRIDGE SEAT REINFORCING, SETTING DOWELS: REINFORCING STEEL IN THE VICINITY OF THE BRIDGE SEAT SHALL BE ACCURATELY PLACED TO AVOID INTERFERENCE WITH THE DRILLING OF DOWEL HOLES OR THE PRE-SETTING OF DOWELS.
2. FOR DOWEL BAR DETAILS, SEE SHEET 21/42.
3. FOR SECTIONS A-A THRU D-D, SEE SHEET 19/42.
4. MINIMUM LAP UNLESS OTHERWISE NOTED: NO. 4 BARS = 1'-11" NO. 5 BARS = 2'-5"
5. FOR ABBREVIATIONS, SEE SHEET 5/42.
6. FOR ELASTOMERIC BEARINGS, SEE SHEET 21/42.

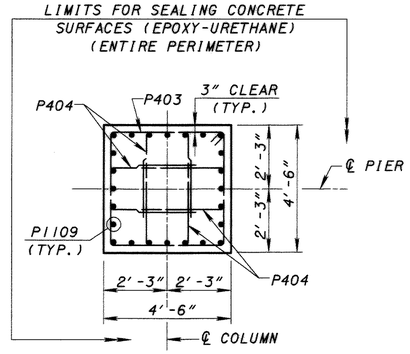

SECTION E-E

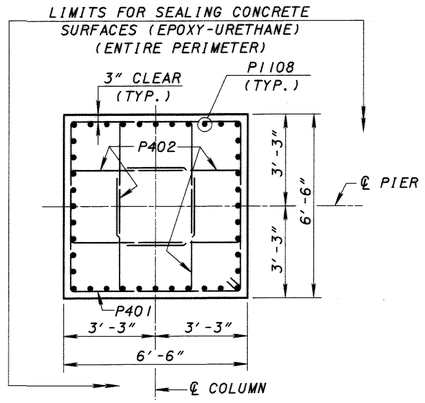

SECTION F-F

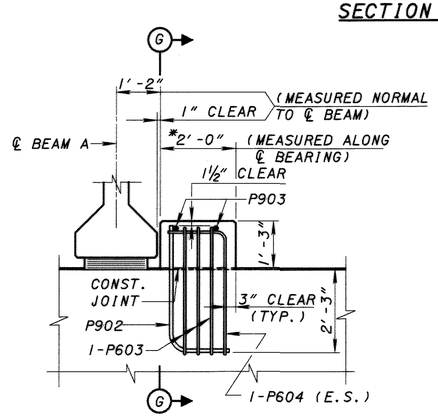

SEISMIC PEDESTAL DETAIL

(PEDESTAL AT BEAM F IS OPPOSITE HAND)

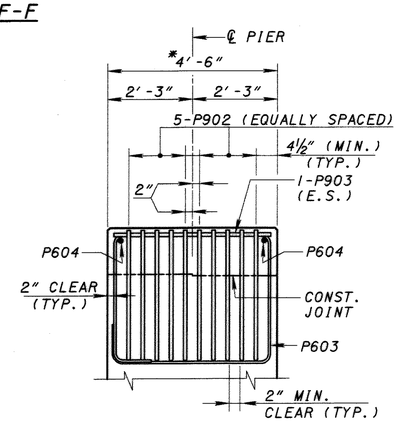

SECTION G-G

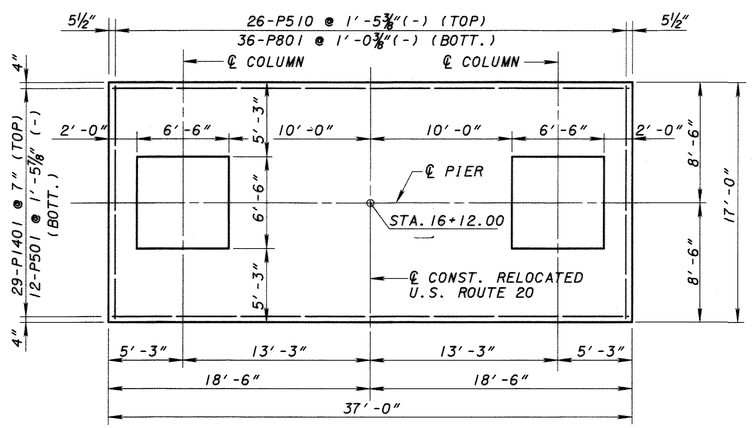

FOOTING PLAN

SEISMIC PEDESTAL NOTES:

THE P902 & P604 BARS SHALL BE PLACED PARALLEL TO THE CENTERLINE OF BEARING IN EACH SPAN. THE P903 & P603 BARS SHALL BE PLACED PARALLEL TO THE BEAMS IN THE FORWARD SPAN.

THE LOCATION OF THE MAIN REINFORCEMENT IN THE BEAM SEAT MAY BE ADJUSTED HORIZONTALLY ±1" TO ACCOMMODATE THE P902 BARS.

* - THE SURFACE OF THE BEAM SEAT IN THIS AREA SHALL BE FINISHED WITH A SERRATED TROWEL. THE SERRATIONS SHALL BE ¼" DEEP MINIMUM.

DESIGN AGENCY: McCOY ASSOCIATES, INC. 367 GHENT ROAD AKRON, OHIO 44333

DESIGNED	DRAWN	REVIEWED	DATE
HK	WEB	JBH	6-11-02
CHECKED	REVISED	STRUCTURE FILE NUMBER	
SL		0402273	

PIER 2
BRIDGE NO. ATB-20-2628
OVER BESSEMER & LAKE ERIE RAILROAD AND CONNEAUT CREEK

ATB-20-26.19

18/42

115/162

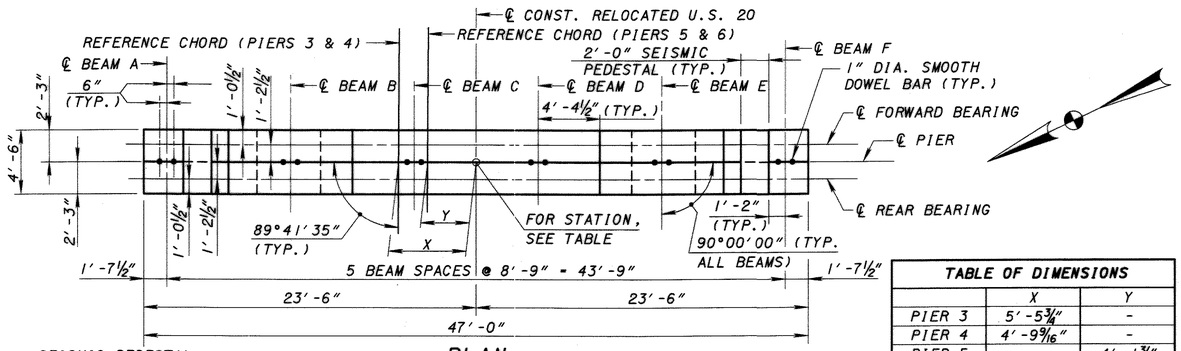

PLAN

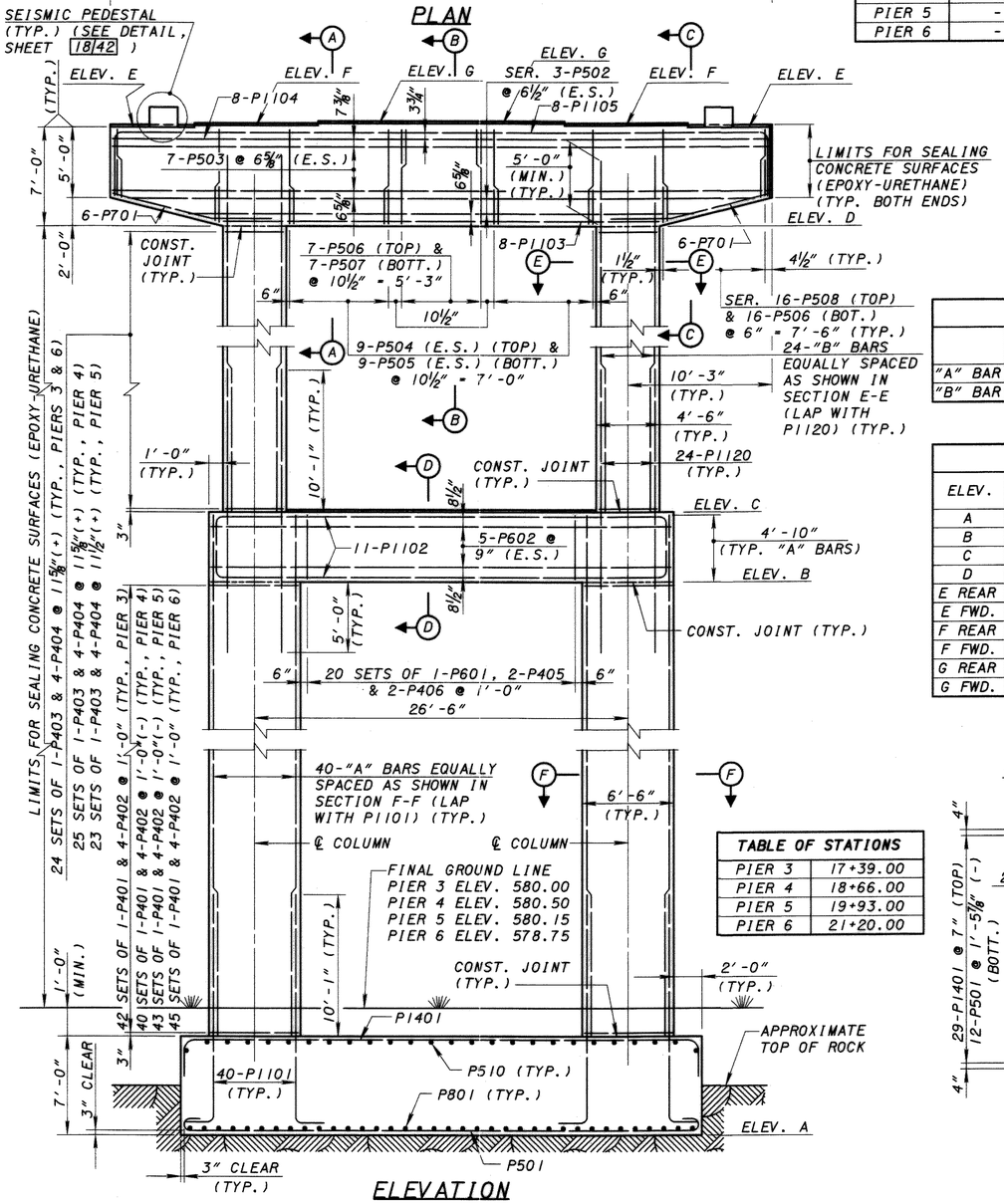

ELEVATION

TABLE OF DIMENSIONS		
	X	Y
PIER 3	5'-5¾"	-
PIER 4	4'-9⅝"	-
PIER 5	-	4'-1¾"
PIER 6	-	3'-5¼"

TABLE OF STATIONS	
PIER 3	17+39.00
PIER 4	18+66.00
PIER 5	19+93.00
PIER 6	21+20.00

REINFORCING BAR MARKS				
	PIER 3	PIER 4	PIER 5	PIER 6
"A" BAR	P1110	P1108	P1113	P1115
"B" BAR	P1111	P1112	P1114	P1116

TABLE OF ELEVATIONS				
ELEV.	PIER 3	PIER 4	PIER 5	PIER 6
A	568.00	570.50	570.50	568.00
B	616.50	616.50	619.50	619.50
C	621.50	621.50	624.50	624.50
D	644.36	645.32	646.27	647.23
E REAR	651.36	652.32	653.27	654.23
E FWD.	651.38	652.33	653.29	654.25
F REAR	651.50	652.45	653.41	654.37
F FWD.	651.51	652.47	653.43	654.39
G REAR	651.63	652.59	653.55	654.51
G FWD.	651.65	652.61	653.57	654.53

NOTES

1. BRIDGE SEAT REINFORCING, SETTING DOWELS: REINFORCING STEEL IN THE VICINITY OF THE BRIDGE SEAT SHALL BE ACCURATELY PLACED TO AVOID INTERFERENCE WITH THE DRILLING OF DOWEL HOLES OR THE PRE-SETTING OF DOWELS.
2. FOR DOWEL BAR DETAILS, SEE SHEET 21/42.
3. MINIMUM LAP UNLESS OTHERWISE NOTED: NO. 4 BARS - 1'-11" NO. 5 BARS - 2'-5"
4. FOR ABBREVIATIONS, SEE SHEET 5/42.
5. FOR ELASTOMERIC BEARINGS, SEE SHEET 21/42.
6. FOR SEISMIC PEDESTAL DETAILS, SEE SHEET 18/42.

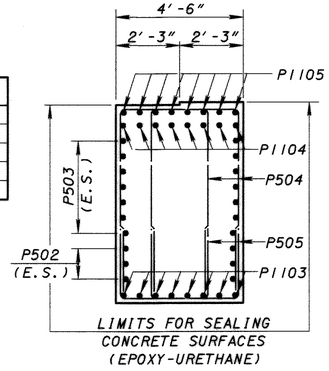

SECTION A-A
(DOWEL BAR NOT SHOWN)

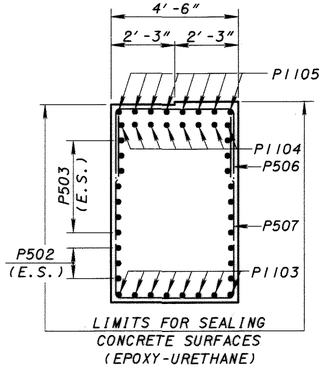

SECTION B-B
(DOWEL BAR NOT SHOWN)

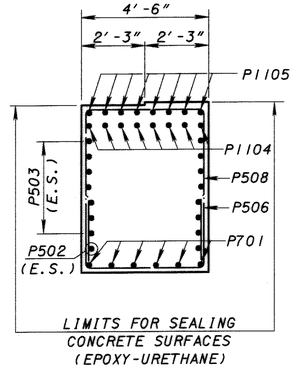

SECTION C-C
(DOWEL BAR NOT SHOWN)

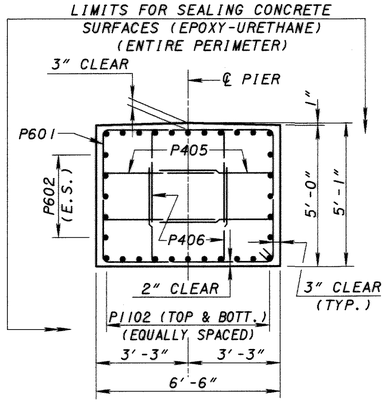

SECTION D-D

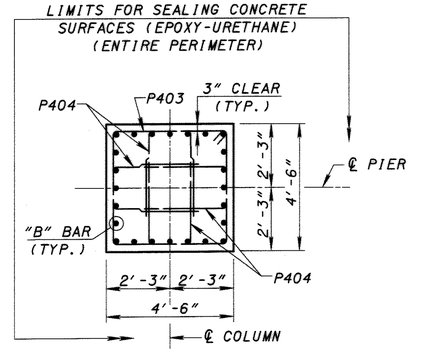

SECTION E-E

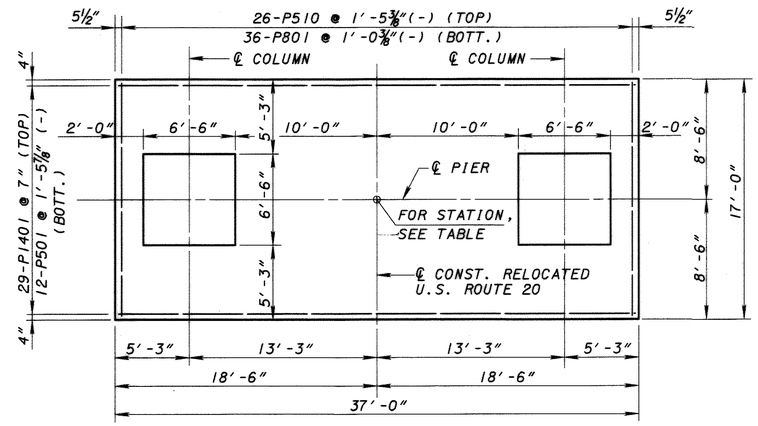

FOOTING PLAN

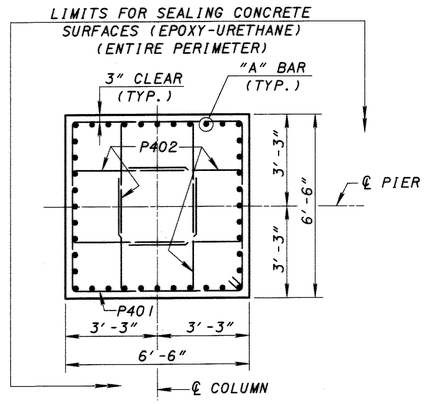

SECTION F-F

DESIGN AGENCY
McCOY ASSOCIATES, INC.
367 GHENT ROAD
AKRON, OHIO 44333

DRAWN	DESIGNED
WEB	HK
REVISED	CHECKED
	SL

DATE	REVISED
6-11-02	JBH

STRUCTURE FILE NUMBER
0402273

PIERS 3 THRU 6
BRIDGE NO. ATB-20-2628
OVER BESSEMER & LAKE ERIE RAILROAD AND CONNEAUT CREEK

ATB-20-26.19

19/42

116/162

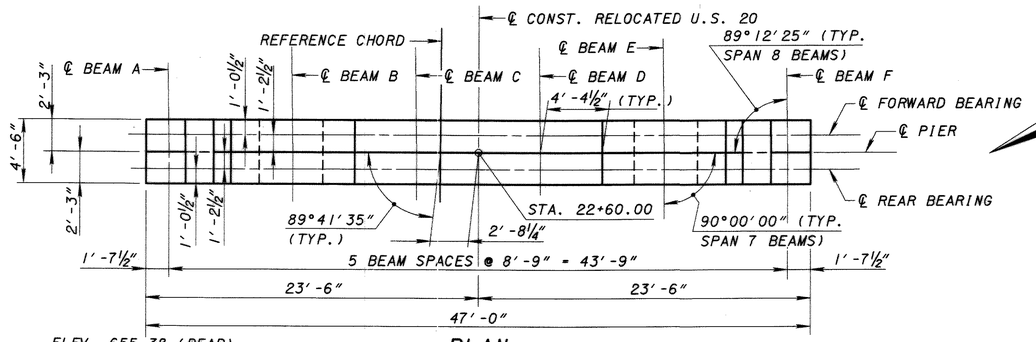

PLAN

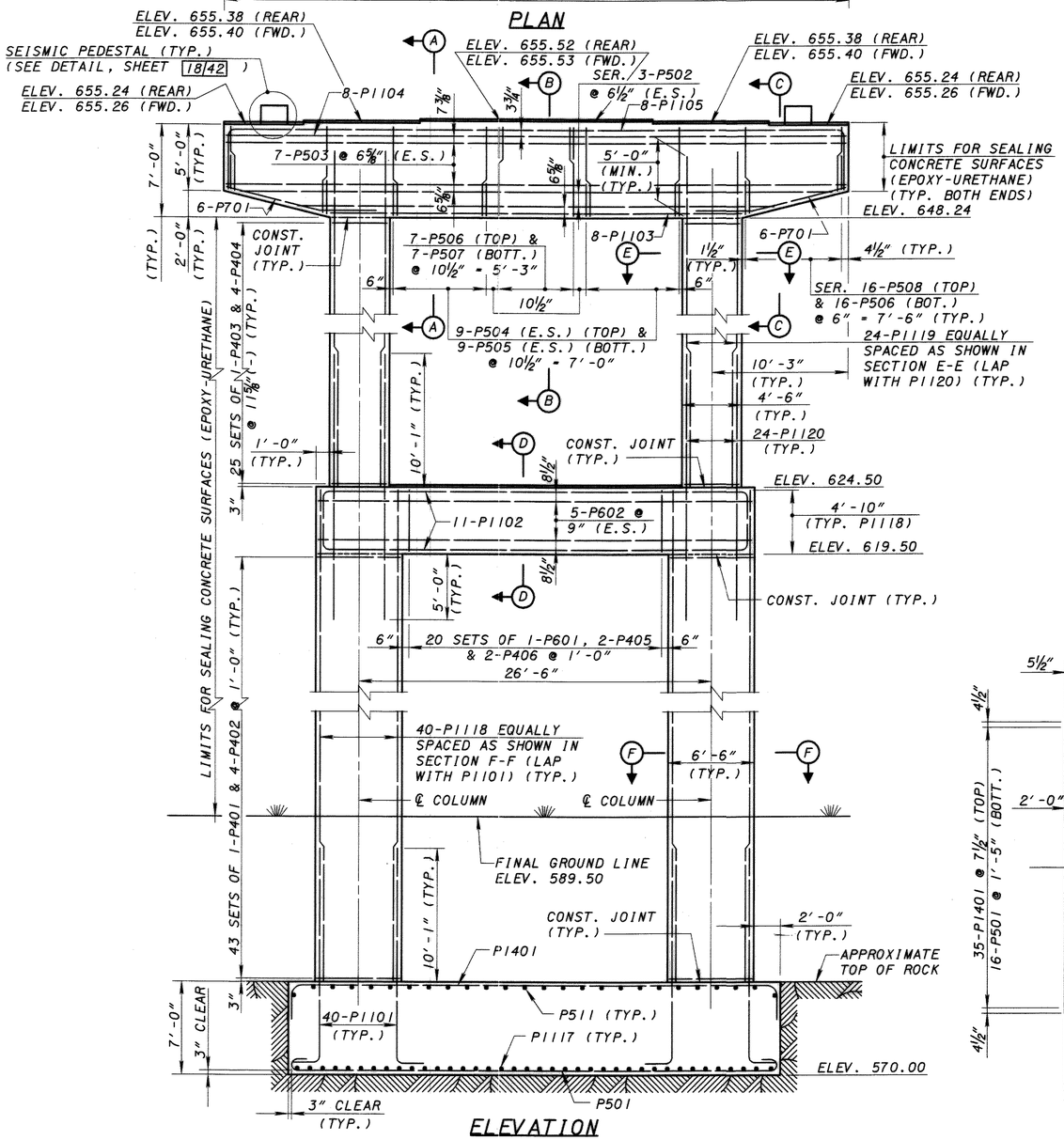

ELEVATION

NOTES

1. MINIMUM LAP UNLESS OTHERWISE NOTED:
   NO. 4 BARS = 1'-11"
   NO. 5 BARS = 2'-5"
2. FOR ABBREVIATIONS, SEE SHEET 5/42.
3. FOR ELASTOMERIC BEARINGS, SEE SHEET 21/42.

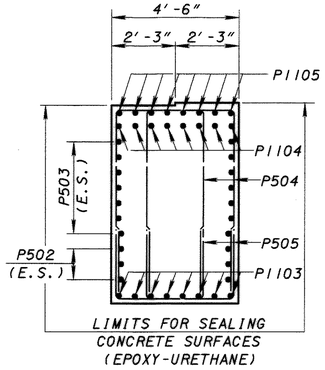

SECTION A-A

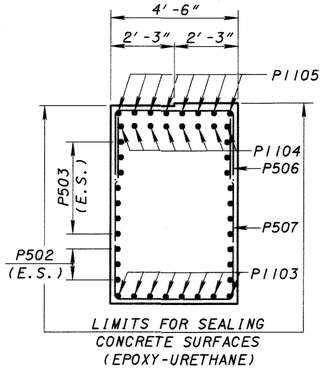

SECTION B-B

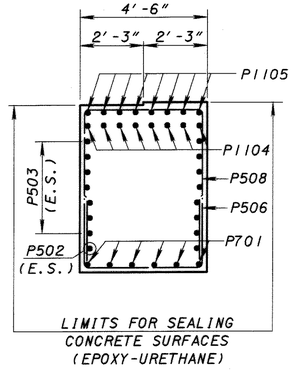

SECTION C-C

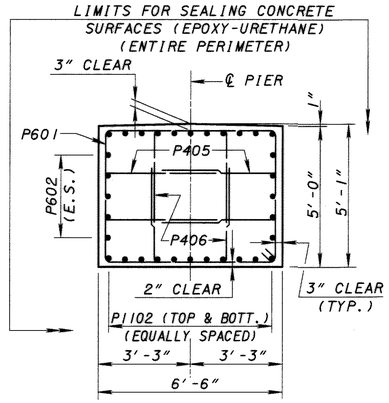

SECTION D-D

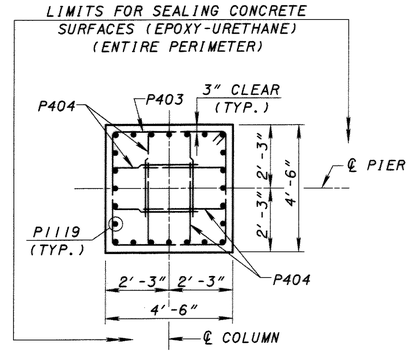

SECTION E-E

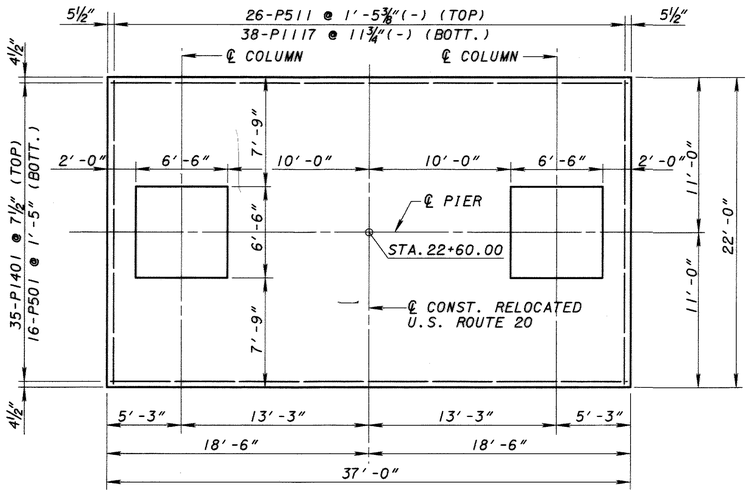

FOOTING PLAN

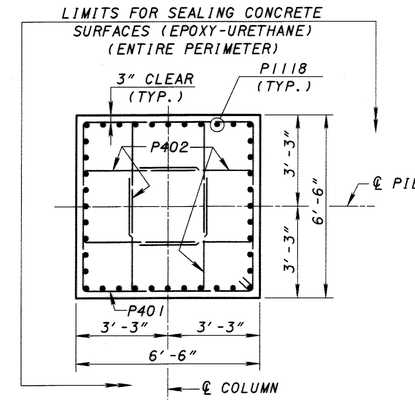

SECTION F-F

DESIGN AGENCY
McCOY ASSOCIATES, INC.
367 GHENT ROAD
AKRON, OHIO 44333

DESIGNED	DRAWN	REVIEWED	DATE
HK	WEB	JBH	6-11-02
CHECKED	REVISED	STRUCTURE FILE NUMBER	
SL		0402273	

CONNEAUT CREEK

PIER 7
BRIDGE NO. ATB-20-2628
OVER BESSEMER & LAKE ERIE RAILROAD AND CONNEAUT CREEK

ATB-20-26.19

20/42

117/162

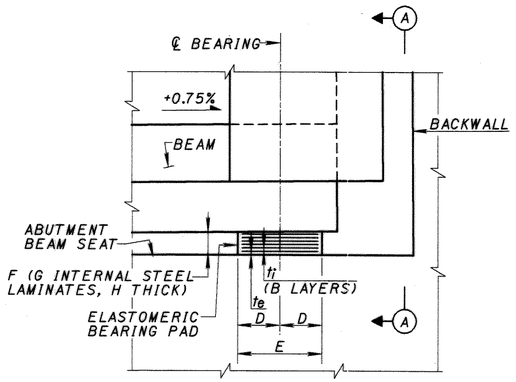

BEARING ELEVATION AT ABUTMENT

(FORWARD ABUTMENT SHOWN, REAR ABUTMENT SIMILAR)

TABLE OF BEARING LOAD REACTIONS

LOCATION	LOADS (KIPS)		
	DEAD LOAD	LIVE LOAD	TOTAL LOAD
REAR ABUTMENT	154.4	63.6	218.0
PIER 1	192.2	70.9	263.1
PIER 2	190.7	72.2	262.9
PIER 3	188.8	72.6	261.4
PIER 4	189.0	72.8	261.8
PIER 5	188.9	73.6	262.5
PIER 6	203.8	75.0	278.8
PIER 7	223.1	80.0	303.1
FORWARD ABUTMENT	196.3	65.5	261.8

NOTES

1. BEARING TOLERANCE: INDIVIDUAL ELASTOMERIC LAYER THICKNESS (±20 PERCENT OF DESIGN VALUE NOT TO EXCEED ±⅛")

PLAN DIMENSIONS	-0, +¼ INCH
DESIGN THICKNESS < =¼" INCH	-0, +⅛ INCH
DESIGN THICKNESS > =¼" INCH	-0, +¼ INCH
EDGE COVER OF EMBEDDED LAMINATES	-0, +⅛ INCH

2. ELASTOMERIC BEARINGS SHALL COMPLY WITH ITEM 516 AND AASHTO STANDARD SPECIFICATION FOR HIGHWAY BRIDGES, SECTION 18, BEARING DEVICES, DIVISION II, CONSTRUCTION, ARTICLES 18.4.5.1 AND 18.5.6.2. BEARINGS SHALL BE GRADE 3, 60 DUROMETER ELASTOMETER, AND SHALL BE SUBJECTED TO THE LOAD TESTING REQUIREMENTS DEFINED IN ARTICLE 18.7.4.5 OF THE AASHTO DOCUMENT LISTED ABOVE. BEARINGS WERE DESIGNED UNDER SECTION 14.6.6 OF SECTION 14, BEARINGS, DIVISION I, DESIGN. TESTING SHALL BE INCLUDED IN THE UNIT PRICE BID FOR THE BEARINGS, EACH.

3. BEARING REPOSITIONING: IF THE CONCRETE BEAMS ARE ERECTED AT AN AMBIENT TEMPERATURE HIGHER THAN 80° F OR LOWER THAN 40° F AND THE BEARING SHEAR DEFLECTION EXCEEDS 1/6 OF THE BEARING HEIGHT AT 60° F (±) 10° F, THE BEAMS SHALL BE RAISED TO ALLOW THE BEARINGS TO RETURN TO THEIR UNDEFORMED SHAPE AT 60° F (±) 10° F.

4. BASIS OF PAYMENT: THE UNIT BID PRICE SHALL INCLUDE ALL MATERIALS, LABOR, TESTING AND INCIDENTALS NECESSARY TO FURNISH AND INSTALL LAMINATED ELASTOMERIC BEARINGS. PAYMENT WILL BE MADE AT THE CONTRACT UNIT PRICE FOR ITEM 516, EACH, ELASTOMERIC BEARINGS WITH INTERNAL LAMINATES (NEOPRENE).

5. PAYMENT FOR POLSTYRENE, DOWEL HOLES, DOWELS AND BOND BREAKER SHALL BE INCLUDED IN ITEM 842 FOR PAYMENT.

6. FOR ABBREVIATIONS, SEE SHEET 5/42.

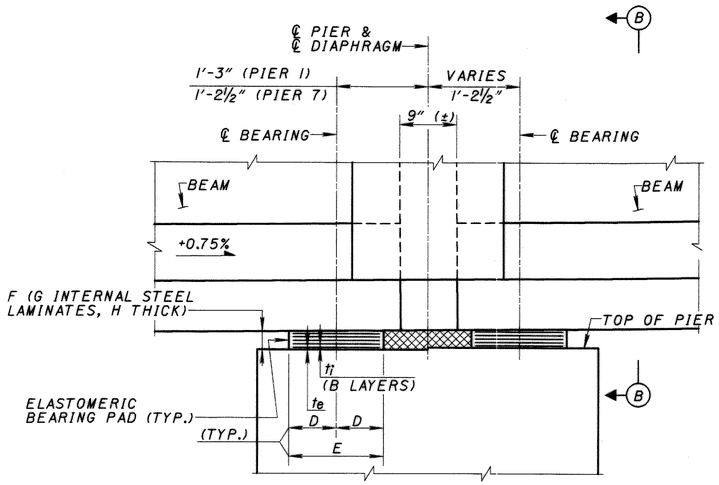

BEARING ELEVATION AT EXPANSION PIER

(LOOKING NORTH)

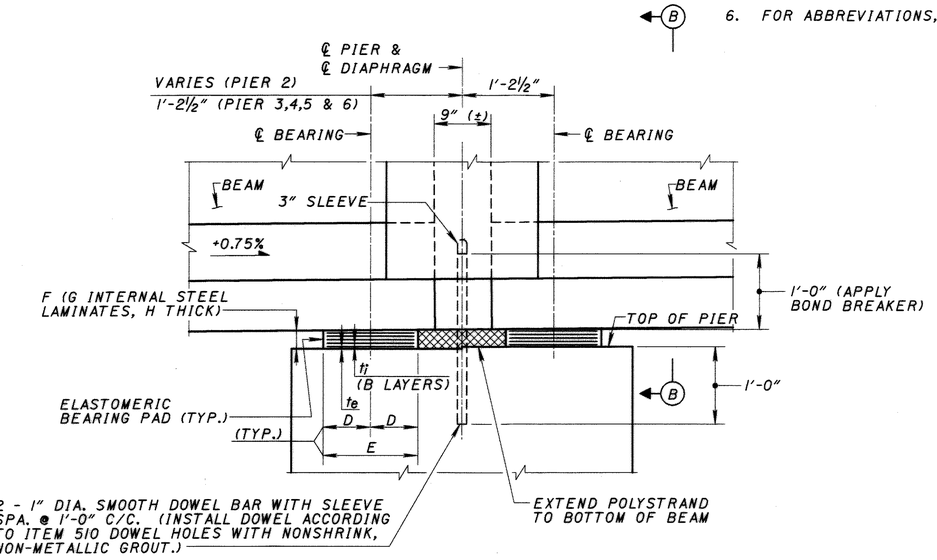

BEARING ELEVATION AT FIXED PIER

(LOOKING NORTH)

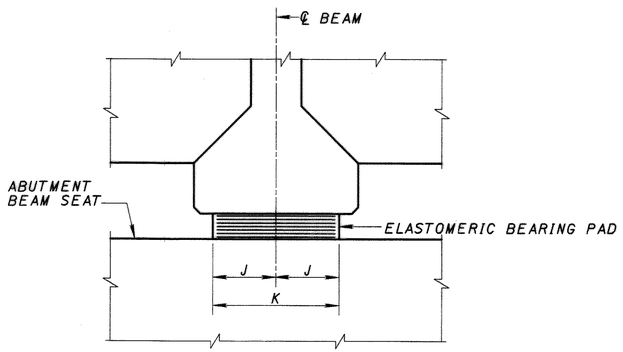

SECTION A-A

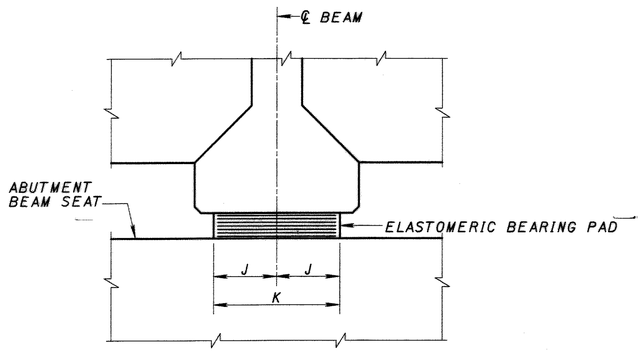

SECTION B-B

TABLE OF BEARING PAD AND PLATE DIMENSIONS

	LOCATION	LENGTH (INCH)									
		t_i	B	t_e	D	E	F	G	H	J	K
EXP.	ABUTMENTS	0.519	5	0.363	6.50	13.0	3.7692	6	0.0747	10.0	20.0
EXP.	PIER 1	0.542	4	0.379	6.25	12.5	3.5985	5	0.1345	11.0	22.0
FIX.	PIER 2 - 5	0.500	3	0.350	6.00	12.0	2.7380	4	0.1345	11.0	22.0
FIX.	PIER 6	0.500	3	0.350	6.25	12.5	2.7380	4	0.1345	11.0	22.0
EXP.	PIER 7	0.632	3	0.442	7.50	15.0	3.3180	4	0.1345	11.0	22.0

DESIGN AGENCY
McCOY ASSOCIATES, INC.
367 GHENT ROAD
AKRON, OHIO 44333

DESIGNED	DRAWN	REVIEWED	DATE
HK	SL	JBH	6-11-02
CHECKED	REVISED	STRUCTURE FILE NUMBER	
SL		0402273	

ELASTOMERIC BEARING DETAILS

BRIDGE NO. ATB-20-2628
OVER BESSEMER & LAKE ERIE RAILROAD AND CONNEAUT CREEK

ATB-20-26.19

NOTES

1. FOR BEAM DETAILS AND ADDITIONAL NOTES, SEE SHEET 24|42 THRU 26|42.
2. FOR DIAPHRAGM DETAILS, SEE SHEET 27|42 AND 27A|42.
3. FOR ABBREVIATIONS, SEE SHEET 5|42.

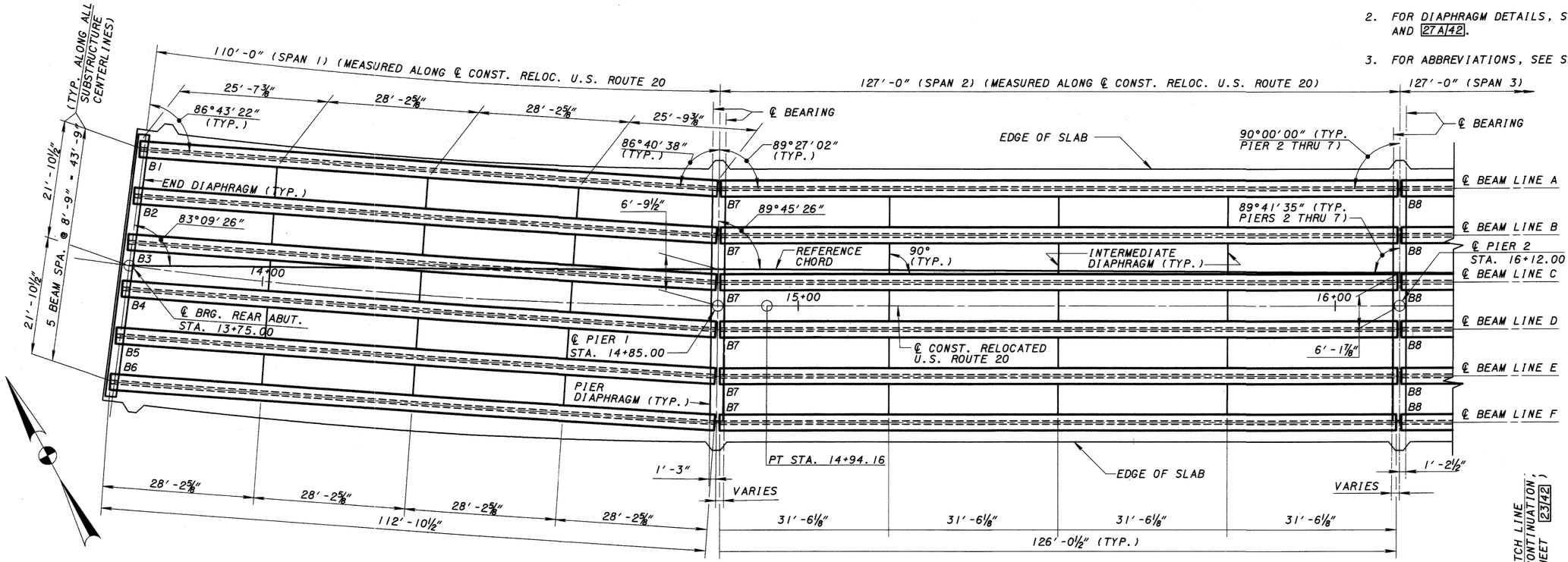

PART FRAMING PLAN

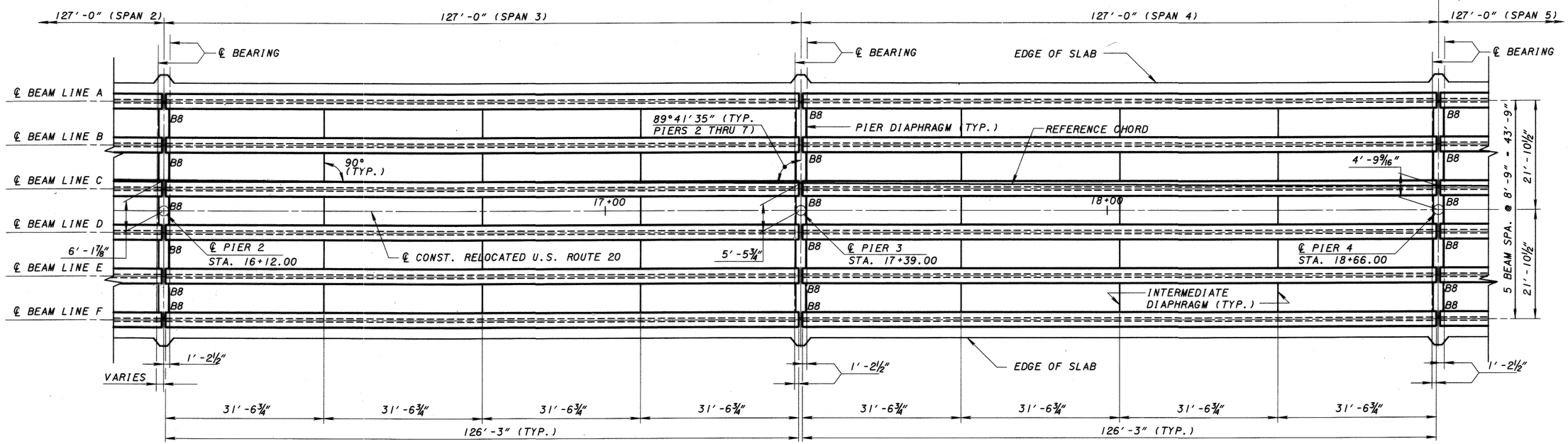

PART FRAMING PLAN

DESIGN AGENCY
McCOY ASSOCIATES, INC.
367 GHENT ROAD
AKRON, OHIO 44333

DESIGNED	DRAWN	REVIEWED	DATE
HK	SL	JBH	6-11-02
CHECKED	REVISED	STRUCTURE FILE NUMBER	
SL		0402273	

FRAMING PLAN - SPANS 1 THRU 4

BRIDGE NO. ATB-20-2628
OVER BESSEMER & LAKE ERIE RAILROAD AND CONNEAUT CREEK

ATB-20-26.19

22|42

119
162

NOTES

1. FOR BEAM DETAILS AND ADDITIONAL NOTES, SEE SHEET 24/42 THRU 26/42.
2. FOR DIAPHRAGM DETAILS, SEE SHEET 27/42 AND 27A/42.
3. FOR ABBREVIATIONS, SEE SHEET 5/42.

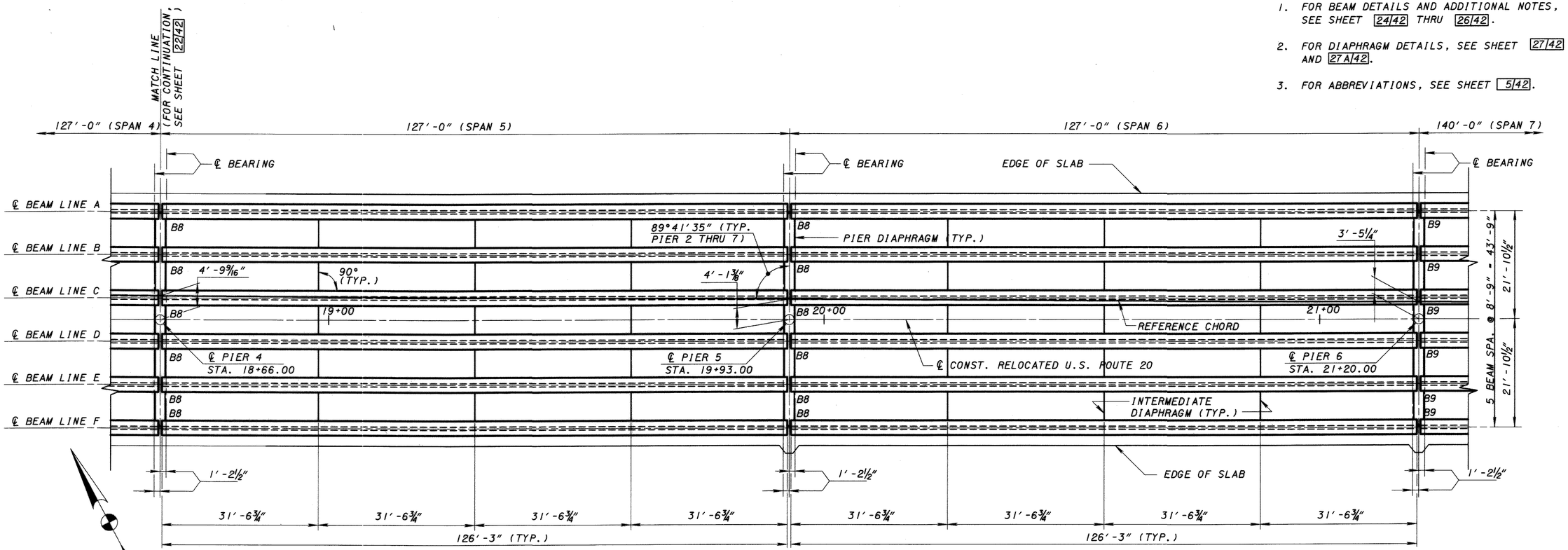

PART FRAMING PLAN

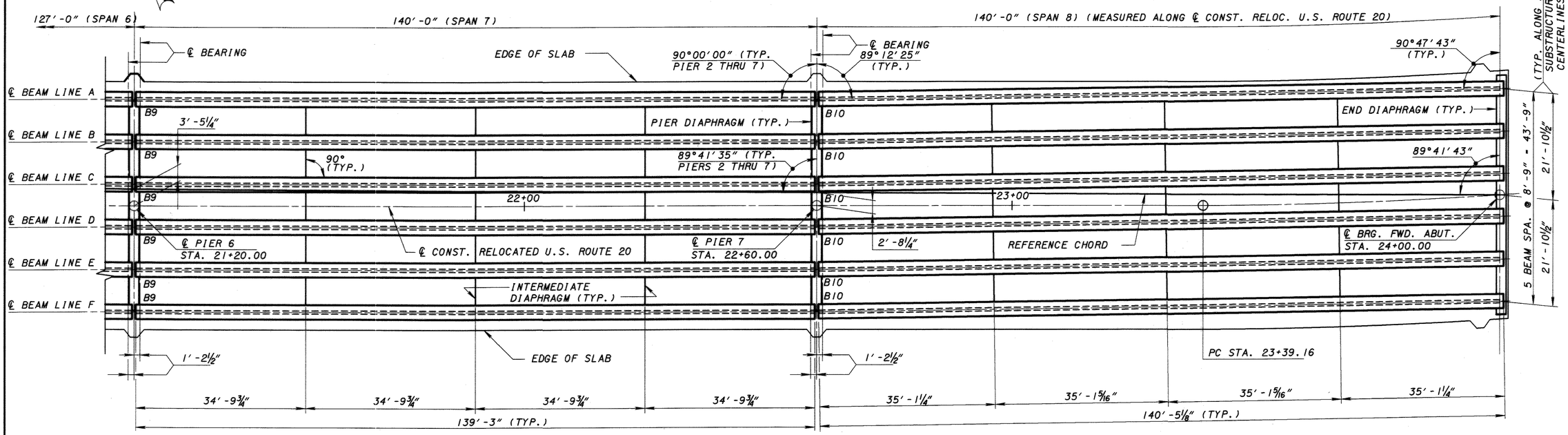

PART FRAMING PLAN

DESIGN AGENCY: McCOY ASSOCIATES, INC. 367 GHENT ROAD AKRON, OHIO 44333

DESIGNED	DRAWN	REVISED	DATE
HK	SL	JBH	'-'-'
CHECKED	REVISED	STRUCTURE FILE NUMBER	
SL		0402273	

FRAMING PLAN - SPANS 5 THRU 8

BRIDGE NO. ATB-20-2628

OVER BESSEMER & LAKE ERIE RAILROAD AND CONNEAUT CREEK

ATB-20-26.19

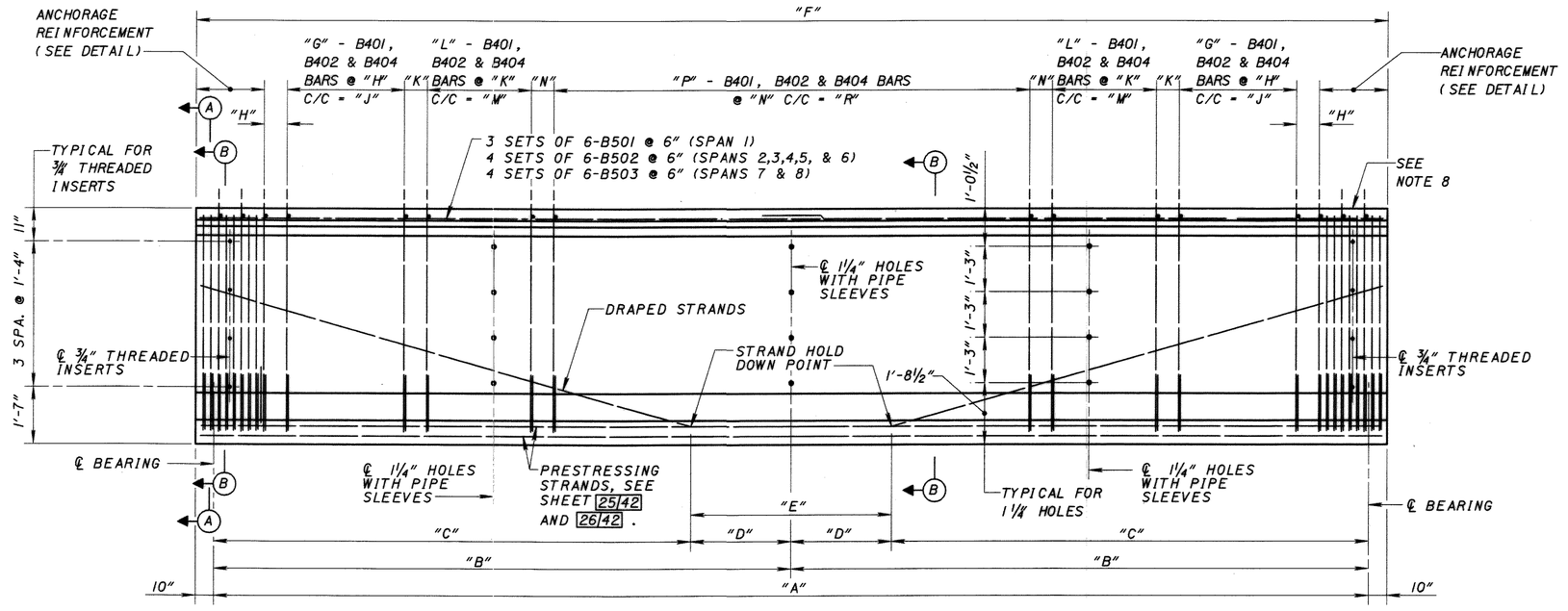

NOTE
ADJUST STIRRUPS OR INSERTS NEAR ENDS OF BEAMS TO AVOID INTERFERENCE.

BEAM ELEVATION
(DIAPHRAGMS NOT SHOWN)

1. FOR CAMBER DETAILS, SEE SHEET 29/42 .
2. FOR SECTIONS A-A AND B-B, SEE SHEETS 25/42 AND 26/42 .
3. FOR DIAPHRAGM DETAILS, SEE SHEET 27/42 AND 27A/42.
4. CONCRETE:
   MINIMUM COMPRESSIVE STRENGTH AT 28 DAYS: F'c = 7500 P.S.I.
   MINIMUM COMPRESSIVE STRENGTH AT TIME OF INITIAL PRESTRESS: F'ci = 5500 P.S.I.
5. PRESTRESSING STRAND:
   ASTM 416 GRADE 270K, 1/2" DIAMETER, SEVEN WIRE, UNCOATED LOW-RELAXATION STRANDS.
   AREA = 0.153 SQ. IN. EACH
   INITIAL STRESS: 0.75 F's = 202,500 P.S.I.
6. MINIMUM LAP UNLESS OTHERWISE NOTED: NO. 5 BARS - 2'-6"
7. FOR ADDITIONAL NOTES AND DETAILS, SEE STANDARD DRAWING PSID-I-99, SHEETS 1 THRU 8.
8. THE TOP SURFACE OF THE I-BEAM MEMBERS SHALL BE SCREEDED AND GIVEN A WIRE BROOM FINISH, IN A TRANSVERSE DIRECTION, PENETRATING THE FINISHED SURFACE APPROXIMATELY 1/4". ALL LAITANCE SHALL BE REMOVED.
9. FOR ABBREVIATIONS, SEE SHEET 5/42.
10. FOR BEARING DETAILS, SEE SHEET 21/42.

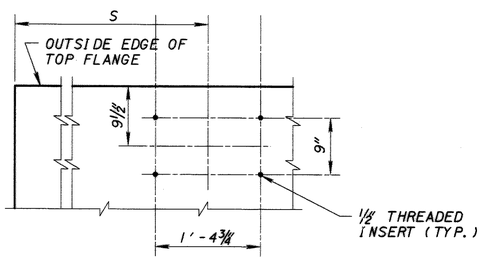

TYPICAL SCUPPER INSERT LOCATION PLAN
(BEAM LINE B SHOWN - BEAM LINE E OPPOSITE HAND)

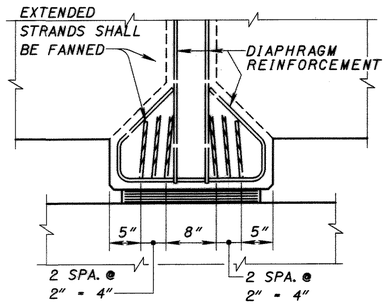

SECTION C-C

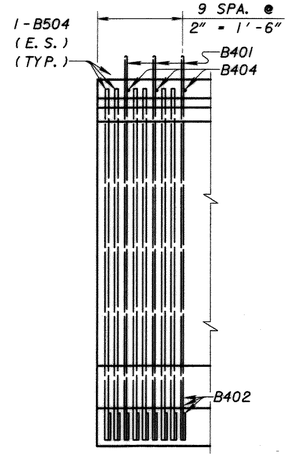

ANCHORAGE REINFORCEMENT DETAIL

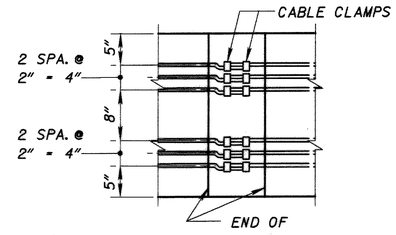

CABLE CLAMP PLAN

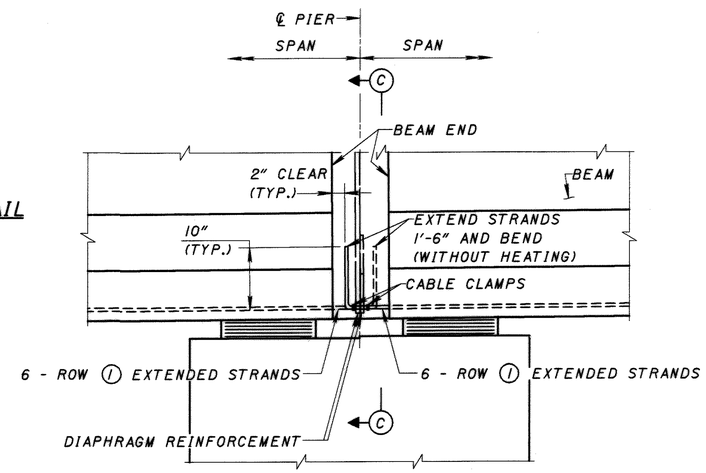

EXTENDED STRAND DETAIL
(EXTENDED STRANDS ARE AT PIERS ONLY)

SCUPPER INSERT LOCATIONS

	SPAN 3		SPAN 5		SPAN 7	
	BEAM LINE B	BEAM LINE E	BEAM LINE B	BEAM LINE E	BEAM LINE B	BEAM LINE E
DIMENSION "S"	30'-7 3/4"	30'-7 3/4"	30'-7 3/4"	30'-7 3/4"	33'-10 5/8"	33'-10 5/8"

BEAM DIMENSIONS

SPAN	BEAM MARK	NO. REQ'D.	DIMENSIONS A	B	C	D	E	F	G	H	J	K	L	M	N	P	R	APPROXIMATE WEIGHT (LBS.)
1	B1	1	106'-2 1/16"	53'-1" (+)	42'-5 5/8"	10'-7 3/8"	21'-2 3/4"	107'-10"	12	10 1/2"	9'-7 1/2"	1'-1"	32	33'-7"	1'-9 3/4"	7	10'-10 1/2"	112,794
1	B2	1	107'-2 3/16"	53'-7 1/8" (-)	42'-10 1/2"	10'-8 5/8"	21'-5 1/4"	108'-10 1/8"	12	10 1/2"	9'-7 1/2"	1'-1"	32	33'-7"	1'-11 1/4" (+)	7	11'-7 5/8"	113,851
1	B3	1	108'-2 1/4"	54'-1 1/8"	43'-3 1/4"	10'-9 1/8"	21'-7 3/4"	109"-10 1/4"	12	10 1/2"	9'-7 1/2"	1'-1"	32	33'-7"	1'-10" (+)	8	12'-10 1/4" (-)	114,907
1	B4	1	109'-2 3/8"	54'-7 3/16"	43'-8 1/8"	10'-11 1/16"	21'-10 1/8"	110'-10 3/8"	12	10 1/2"	9'-7 1/2"	1'-1"	33	34'-8"	1'-11" (+)	7	11'-6 1/4" (+)	115,964
1	B5	1	110'-2 1/16"	55'-1 1/4" (-)	44'-1"	11'-0 1/4"	22'-0 1/2"	111'-10 3/8"	12	10 1/2"	9'-7 1/2"	1'-1"	33	34'-8"	1'-9 7/8" (+)	8	12'-8 3/4"	117,010
1	B6	1	111'-2 1/2"	55'-7 1/4"	44'-5 3/4"	11'-1 1/2"	22'-3"	112'-10 1/2"	12	10 1/2"	9'-7 1/2"	1'-1"	34	35'-9"	1'-10 3/4" (+)	7	11'-4 7/8"	118,067
2	B7	6	124'-4 1/2"	62'-2 1/4"	49'-9"	12'-5 1/4"	24'-10 1/2"	126'-0 1/2"	14	10 1/2"	11'-4 1/2"	1'-1"	32	33'-7"	1'-11 3/8" (-)	14	25'-3 3/4" (+)	131,840
3,4,5, & 6	B8	24	124'-7"	62'-3 1/2"	49'-10"	12'-5 1/2"	24'-11"	126'-3"	15	10"	11'-8"	1'-1"	32	33'-7"	1'-10 7/8"	14	25'-0 3/4"	132,058
7	B9	6	137'-7"	68'-9 1/2"	55'-0 3/8"	13'-9 1/8"	27'-6 1/4"	139'-3"	20	8"	12'-8"	1'-1"	42	44'-5"	1'-10 1/4" (+)	9	14'-10 3/8" (+)	145,656
8	B10	6	138'-9 1/8"	69'-4 9/16"	55'-6"	13'-10 9/16"	27'-9 1/8"	140'-5 1/8"	22	7 1/2"	13'-1 1/2"	1'-1"	42	44'-5"	1'-10 3/4" (-)	9	15'-1 3/4" (-)	146,887

DESIGN AGENCY
McCOY ASSOCIATES, INC.
367 GHENT ROAD
AKRON, OHIO 44333

DESIGNED	DRAWN	REVISED	DATE
HK	SL	JBH	6-11-02
CHECKED	REVISED	STRUCTURE FILE NUMBER	
SL		0402273	

PRESTRESSED CONCRETE I-BEAM DETAILS
BRIDGE NO. ATB-20-2628
OVER BESSEMER & LAKE ERIE RAILROAD AND CONNEAUT CREEK

ATB-20-26.19

24/42

121/162

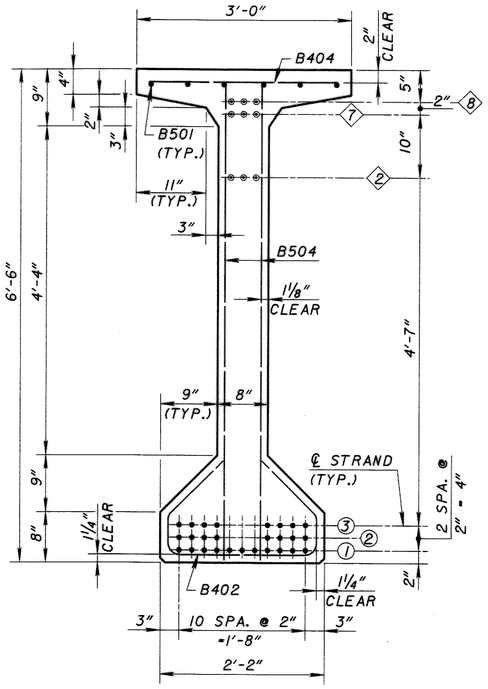

SECTION A-A, SPAN 1
BEAMS B1, B2, B3, B4, B5 & B6

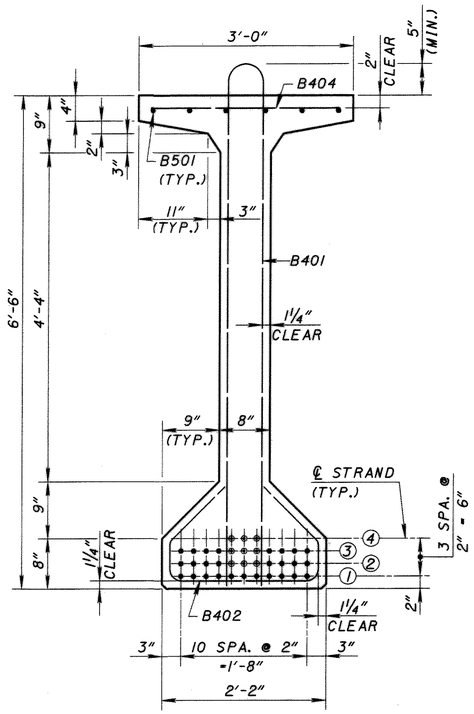

SECTION B-B, SPAN 1
BEAMS B1, B2, B3, B4, B5 & B6

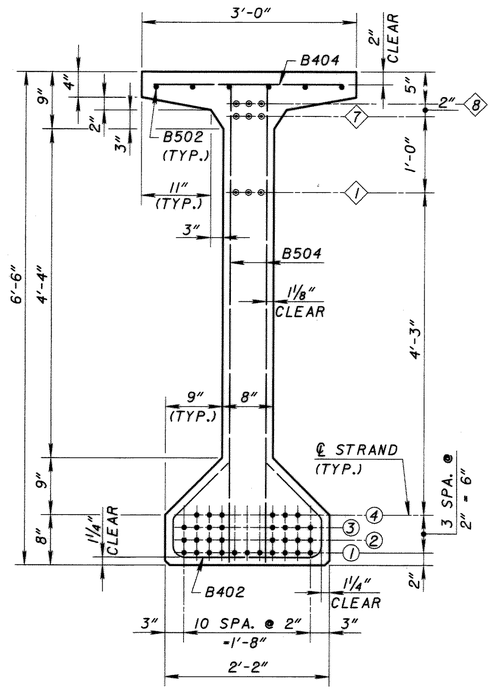

SECTION A-A, SPAN 2
BEAM B7

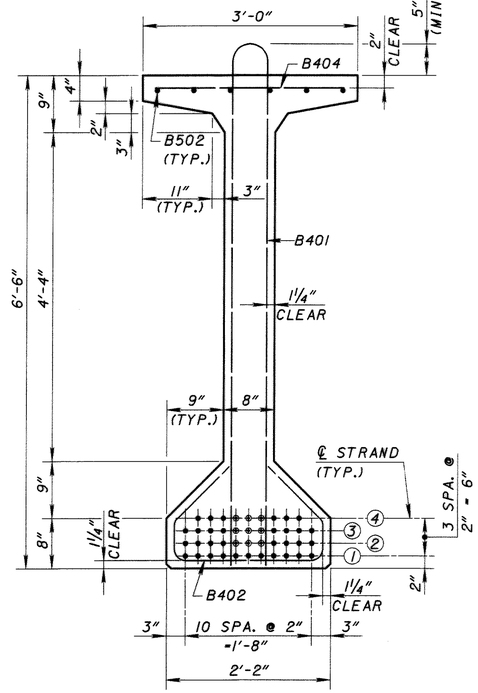

SECTION B-B, SPAN 2
BEAM B7

NUMBER OF STRANDS PER ROW																										TOTAL STRANDS (ONE BEAM)	HOLD-DOWN CAPACITY REQUIRED (K)	CONCRETE STRENGTHS (PSI)		B401 BARS REQ'D	B402 BARS REQ'D	B404 BARS REQ'D	B504 BARS REQ'D	CONCRETE UNIT STRESS (PSI)	
SPAN	BEAM MARK	END (SECTION A-A)														MIDSPAN (SECTION B-B)																		
		BOTTOM								TOP							BOTTOM																		
		ROW NUMBER																																
		①	②	③	④	⑤	⑥	⑦	⑧	◇	◇②	◇③	◇④	◇⑤	◇⑥	◇⑦	◇⑧	①	②	③	④	⑤	⑥	⑦	⑧			f'ci	f'c					COMPRESSION (SEE NOTE 2)	TENSION
1	B1 & B2	11	8	8	-	-	-	-	-	-	3	-	-	-	-	3	3	11	11	11	3	-	-	-	-	36	37.6	5500	7500	101	113	101	48	4500	520
1	B3	11	8	8	-	-	-	-	-	-	3	-	-	-	-	3	3	11	11	11	3	-	-	-	-	36	37.6	5500	7500	102	114	102	24	4500	520
1	B4	11	8	8	-	-	-	-	-	-	3	-	-	-	-	3	3	11	11	11	3	-	-	-	-	36	37.6	5500	7500	103	115	103	24	4500	520
1	B5	11	8	8	-	-	-	-	-	-	3	-	-	-	-	3	3	11	11	11	3	-	-	-	-	36	37.6	5500	7500	104	116	104	24	4500	520
1	B6	11	8	8	-	-	-	-	-	-	3	-	-	-	-	3	3	11	11	11	3	-	-	-	-	36	37.6	5500	7500	105	117	105	24	4500	520
2	B7	11	8	8	6	-	-	-	-	3	-	-	-	-	-	3	3	11	11	11	9	-	-	-	-	42	31.8	5500	7500	112	124	112	144	4500	520
3,4,5, & 6	B8	8	8	8	8	-	-	-	-	3	-	-	-	-	3	3	3	11	11	11	11	-	-	-	-	44	43.3	5500	7500	114	126	114	576	4500	520
7	B9	8	8	8	8	6	-	-	-	-	3	3	3	3	3	2		11	11	11	11	9	2	-	-	55	53.8	5500	7500	139	151	139	144	4500	520
8	B10	8	8	8	8	6	4	2	-	3	3	3	3	3	3	2		11	11	11	11	9	7	5	2	67	67.5	5500	7500	143	155	143	144	4500	520

DESIGN AGENCY
McCOY ASSOCIATES, INC.
367 GHENT ROAD
AKRON, OHIO 44333

DESIGNED	DRAWN	REVIEWED	DATE
HK	SL	JBH	6-11-02
CHECKED	REVISED	STRUCTURE FILE NUMBER	
SL		0402273	

PRESTRESSED CONCRETE I-BEAM SECTIONS
BRIDGE NO. ATB-20-2628
OVER BESSEMER & LAKE ERIE RAILROAD AND CONNEAUT CREEK

ATB-20-26.19

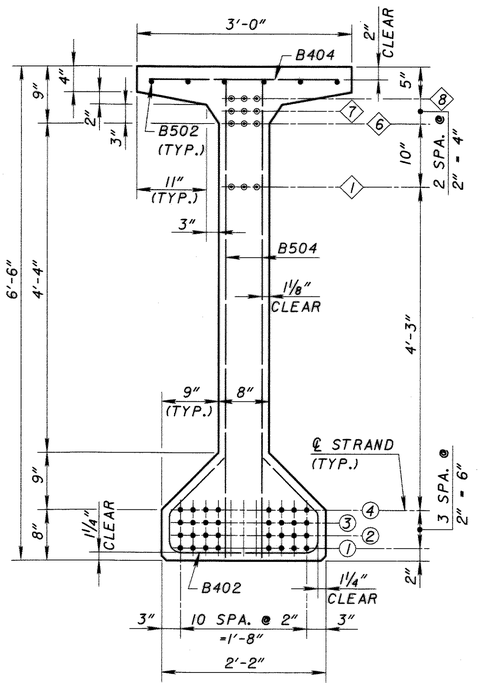

SECTION A-A, SPAN 3,4,5, & 6
BEAM B8

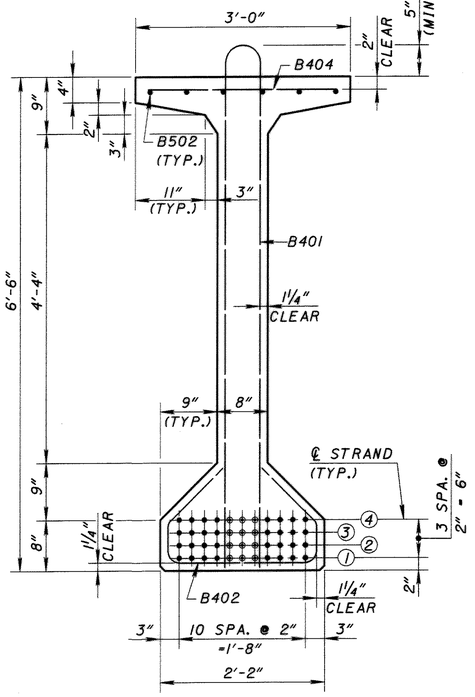

SECTION B-B, SPAN 3,4,5, & 6
BEAM B8

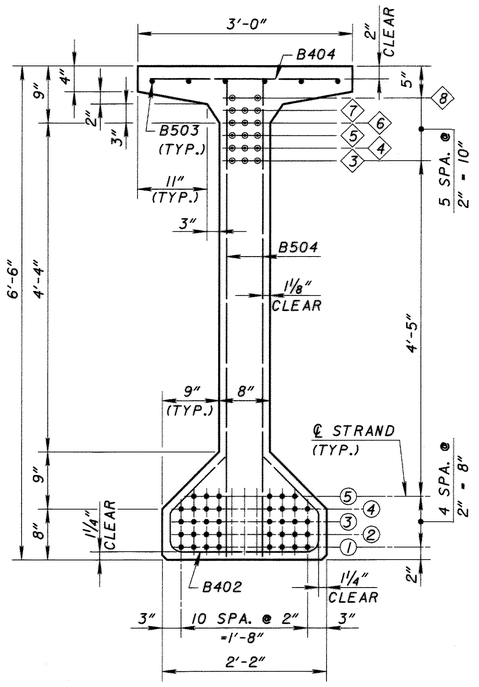

SECTION A-A, SPAN 7
BEAM B9

NOTES

1. FOR LOCATION OF SECTIONS A-A AND B-B AND ADDITIONAL NOTES, SEE SHEET 24/42 .

LEGEND

- • DENOTES STRAND UNLESS OTHERWISE NOTED.
- ⊛ DENOTES DRAPED STRAND.

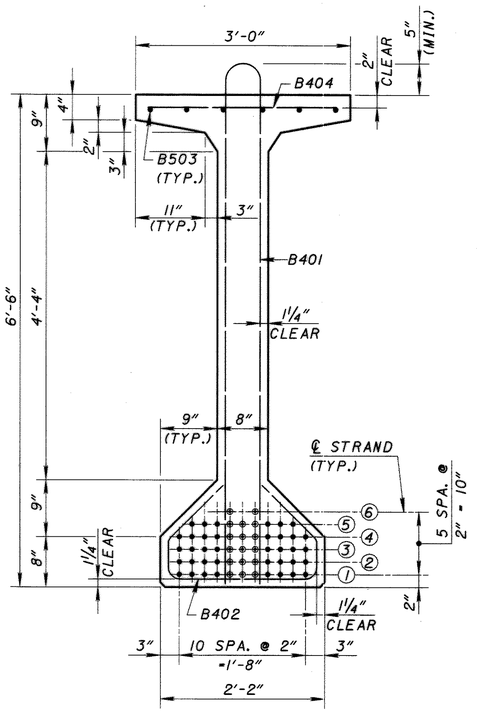

SECTION B-B, SPAN 7
BEAM B9

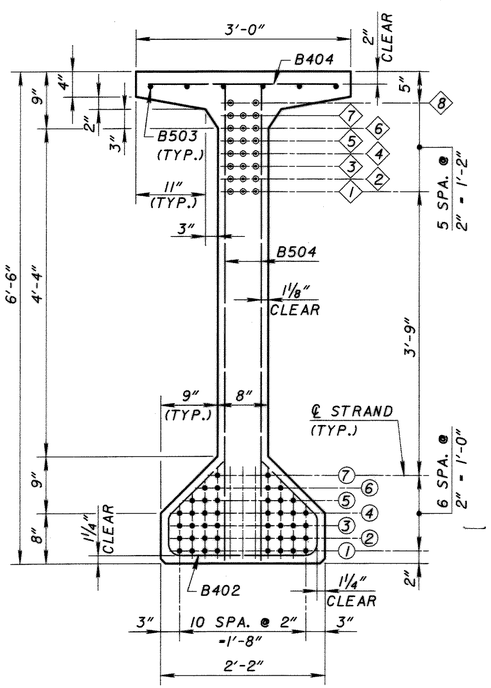

SECTION A-A, SPAN 8
BEAM B10

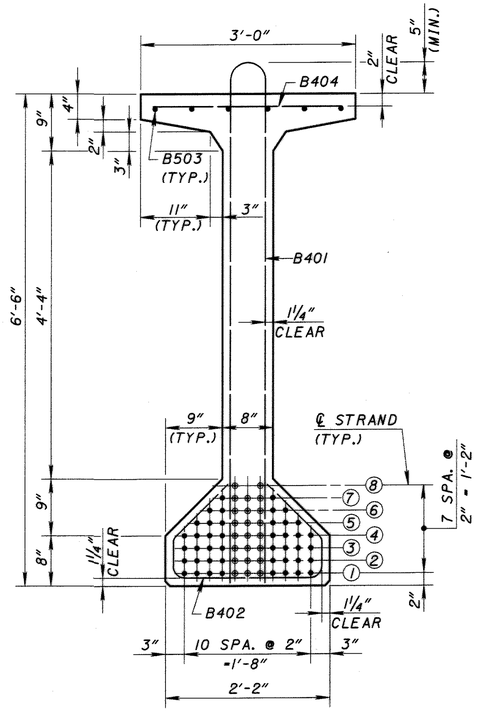

SECTION B-B, SPAN 8
BEAM B10

DESIGN AGENCY
McCOY ASSOCIATES, INC.
367 GHENT ROAD
AKRON, OH10 44333

DESIGNED	DRAWN	REVIEWED	DATE
HK	SL	JBH	6-11-02
CHECKED	REVISED	STRUCTURE FILE NUMBER	
SL		0402273	

PRESTRESSED CONCRETE I-BEAM SECTIONS
BRIDGE NO. ATB-20-2628
OVER BESSEMER & LAKE ERIE RAILROAD AND CONNEAUT CREEK

ATB-20-26.19

26/42

123/162

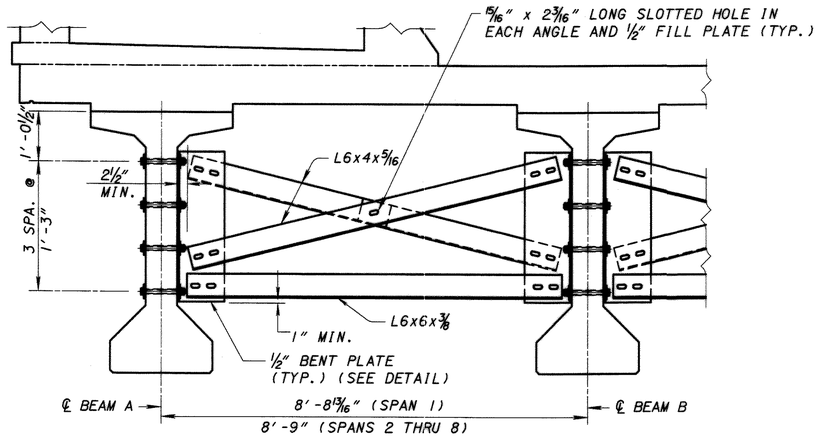

INTERMEDIATE DIAPHRAGM

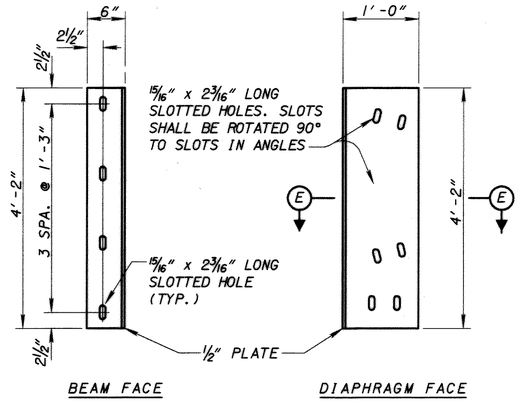

BENT PLATE DETAIL

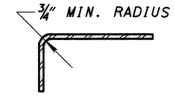

SECTION E-E

NOTES

1. FOR FRAMING PLAN, SEE SHEETS 22|42 AND 23|42 .
2. MINIMUM LAP UNLESS OTHERWISE NOTED:
   NO. 4 BARS - 1'-11"
   NO. 6 BARS - 2'-11"
3. THREADED INSERTS AND RODS SHALL BE GALVANIZED AS PER 711.02.
4. FOR SEISMIC PEDESTAL DETAILS, SEE SHEETS 11|42 AND 14|42 .
5. 1" EXPANDED POLYSTYRENE FILLER SHALL BE INCLUDED WITH ITEM 842 - CLASS S CONCRETE, SUPERSTRUCTURE, AS PER PLAN FOR PAYMENT.
6. FOR ADDITIONAL NOTES AND DETAILS, SEE STANDARD DRAWING PSID-1-99, SHEETS 1 THRU 8.
7. FOR BEARING DETAILS, SEE SHEET 21|42.

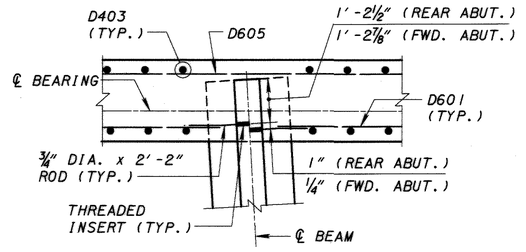

SECTION B-B

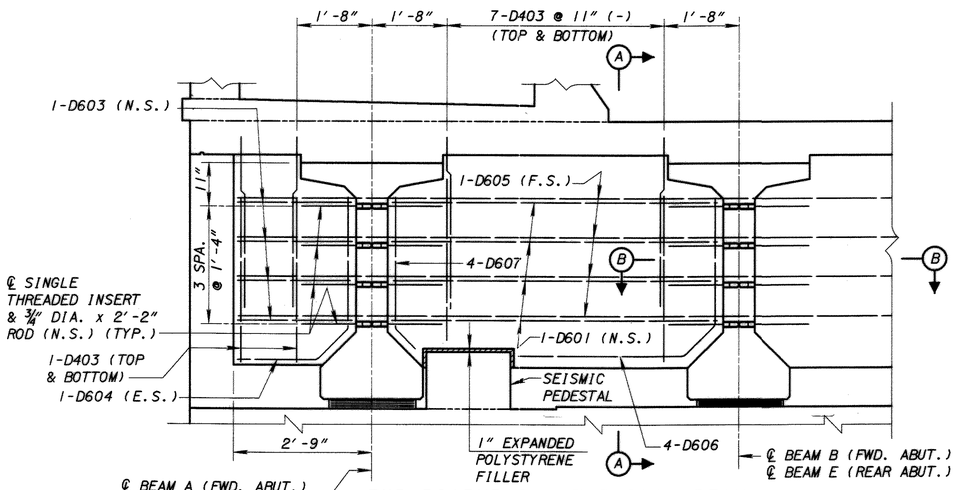

END DIAPHRAGM AT FASCIA BEAM

(LOOKING AT FRONT FACE OF ABUTMENT)
(BEAM AND SLAB REINFORCEMENT NOT SHOWN)

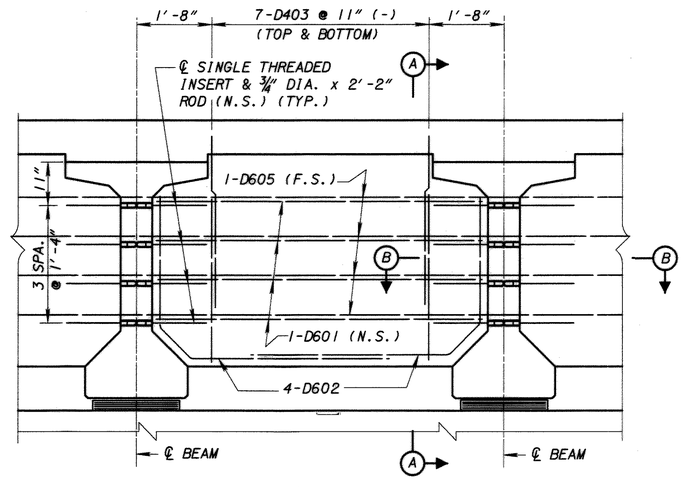

END DIAPHRAGM BETWEEN INTERIOR BEAMS

(LOOKING AT FRONT FACE OF ABUTMENT)
(BEAM AND SLAB REINFORCEMENT NOT SHOWN)

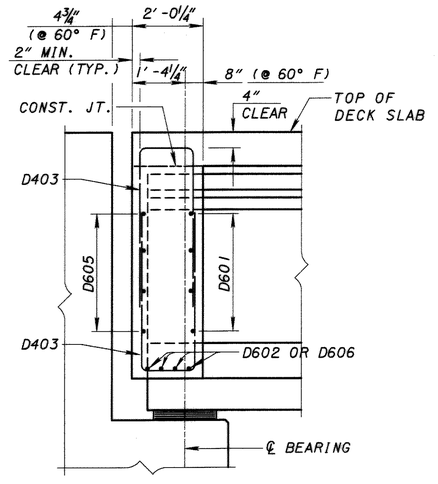

SECTION A-A

(PARTIAL ABUTMENT SHOWN)
(EXPANSION JOINT NOT SHOWN)

DESIGN AGENCY
McCOY ASSOCIATES, INC.
367 GHENT ROAD
AKRON, OHIO 44333

DESIGNED	DRAWN	REVIEWED	DATE
HK	WEB	JBH	6-11-02
CHECKED	REVISED	STRUCTURE FILE NUMBER	
SL		0402273	

INTERMEDIATE & END DIAPHRAGM DETAILS
BRIDGE NO. ATB-20-2628
OVER BESSEMER & LAKE ERIE RAILROAD AND CONNEAUT CREEK

ATB-20-26.19

27|42

124|162

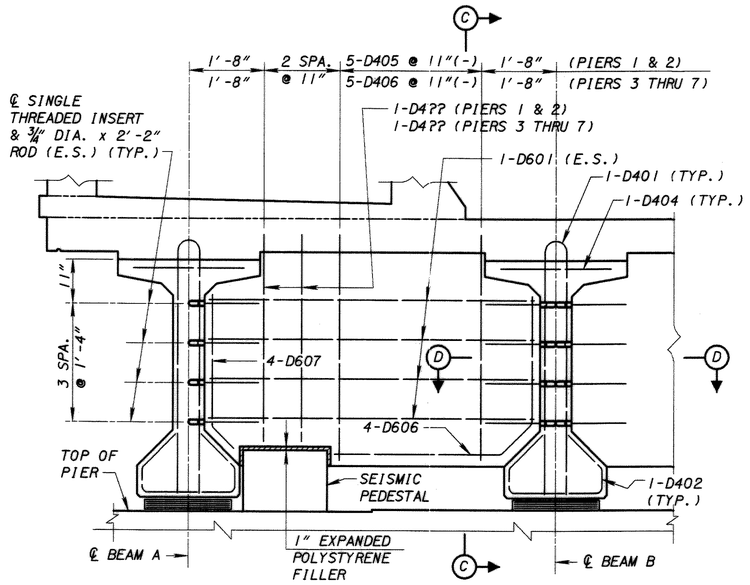

PIER DIAPHRAGM AT FASCIA BEAM

(DIAPHRAGM AT BEAM A SHOWN, DIAPHRAGM AT BEAM F IS OPPOSITE HAND)
(BEAM AND SLAB REINFORCEMENT NOT SHOWN)

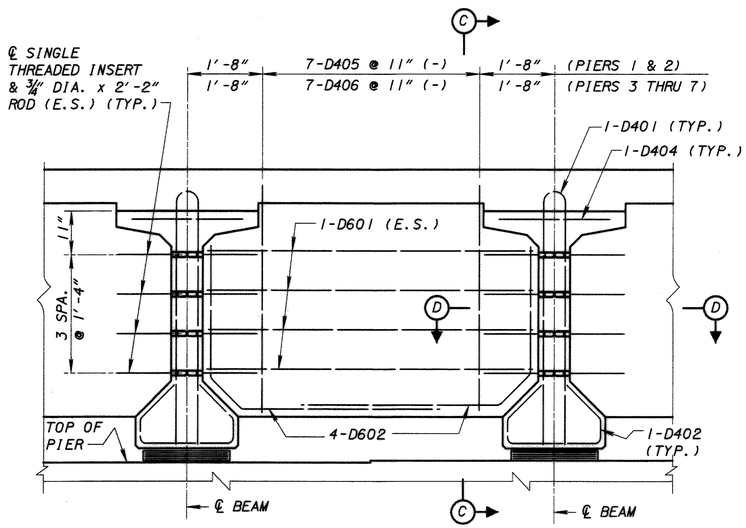

PIER DIAPHRAGM BETWEEN INTERIOR BEAMS

(BEAM AND SLAB REINFORCEMENT NOT SHOWN)

NOTES

1. FOR FRAMING PLAN, SEE SHEETS 22|42 AND 23|42 .
2. MINIMUM LAP UNLESS OTHERWISE NOTED:
   NO. 6 BARS = 2'-11"
3. THREADED INSERTS AND RODS SHALL BE GALVANIZED AS PER 711.02.
4. FOR SEISMIC PEDESTAL DETAILS, SEE SHEET 18|42.
5. FOR DETAILS OF DOWEL BARS REQUIRED AT FIXED PIERS, SEE SHEET 21|42.
6. 1" EXPANDED POLYSTYRENE FILLER SHALL BE INCLUDED WITH ITEM 842 - CLASS S CONCRETE, SUPERSTRUCTURE, AS PER PLAN FOR PAYMENT.
7. FOR ADDITIONAL NOTES AND DETAILS, SEE STANDARD DRAWING PSID-1-99, SHEETS 1 THRU 8.
8. FOR BEARING DETAILS, SEE SHEET 21|42.

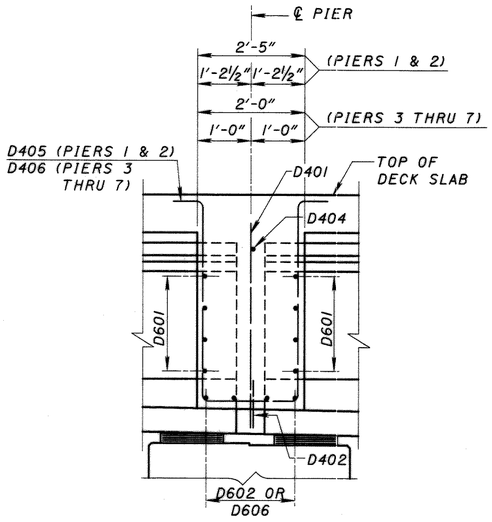

SECTION C-C

(PARTIAL PIER SHOWN)

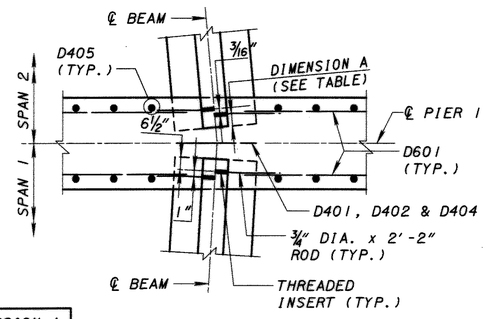

DIMENSION A	
BEAM	DIM.
A	7½"
B	7"
C	6½"
D	6"
E	5½"
F	5"

SECTION D-D

(PIER 1)

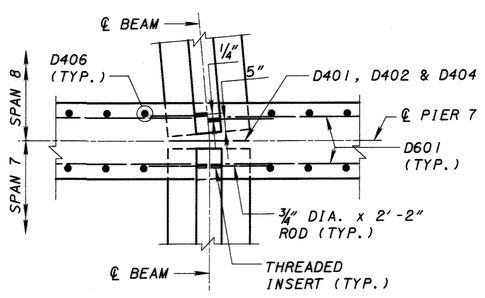

SECTION D-D

(PIER 7)

DESIGN AGENCY
McCOY ASSOCIATES, INC.
367 GHENT ROAD
AKRON, OHIO 44333

DESIGNED	DRAWN	REVIEWED	DATE
HK	WEB	JBH	6-11-02
CHECKED	REVISED	STRUCTURE FILE NUMBER	
SL		0402273	

PIER DIAPHRAGM DETAILS

BRIDGE NO. ATB-20-2628
OVER BESSEMER & LAKE ERIE RAILROAD AND CONNEAUT CREEK

ATB-20-26.19

27A|42

124A|162

	SCREED ELEVATIONS										
	POINT	STATION	PROFILE GRADE	BEAM LINE A	LEFT GUTTER LINE	BEAM LINE B	BEAM LINE C	BEAM LINE D	BEAM LINE E	RIGHT GUTTER LINE	BEAM LINE F
SPAN 1	℄ BRG. REAR ABUT.	13+75.00	656.63	656.29	656.36	656.42	656.56	656.56	656.42	656.36	656.29
	1/4 PT.	14+02.48	656.89	656.52	656.62	656.67	656.80	656.84	656.70	656.62	656.56
	1/2 PT.	14+30.00	657.12	656.75	656.85	656.89	657.02	657.07	656.94	656.85	656.79
	3/4 PT.	14+57.52	657.30	656.94	657.04	657.08	657.22	657.25	657.12	657.04	656.97
	℄ PIER 1	14+85.00	657.46	657.12	657.19	657.25	657.39	657.39	657.25	657.19	657.12
SPAN 2	1/8 PT.	15+00.88	657.62	657.28	657.35	657.42	657.55	657.55	657.42	657.35	657.28
	1/4 PT.	15+16.75	657.78	657.43	657.52	657.58	657.71	657.71	657.58	657.52	657.43
	3/8 PT.	15+32.63	657.92	657.57	657.66	657.72	657.85	657.85	657.72	657.66	657.57
	1/2 PT.	15+48.50	658.06	657.71	657.79	657.85	657.99	657.99	657.85	657.79	657.71
	5/8 PT.	15+64.38	658.16	657.81	657.90	657.96	658.09	658.09	657.96	657.90	657.81
	3/4 PT.	15+80.25	658.26	657.91	657.99	658.05	658.19	658.19	658.05	657.99	657.91
	7/8 PT.	15+96.13	658.34	657.99	658.07	658.13	658.27	658.27	658.13	658.07	657.99
	℄ PIER 2	16+12.00	658.42	658.08	658.15	658.21	658.35	658.35	658.21	658.15	658.08
SPAN 3	1/8 PT.	16+27.88	658.58	658.23	658.31	658.37	658.51	658.51	658.37	658.31	658.23
	1/4 PT.	16+43.75	658.74	658.39	658.47	658.53	658.67	658.67	658.53	658.47	658.39
	3/8 PT.	16+59.63	658.88	658.53	658.62	658.68	658.81	658.81	658.68	658.62	658.53
	1/2 PT.	16+75.50	659.02	658.67	658.75	658.81	658.95	658.95	658.81	658.75	658.67
	5/8 PT.	16+91.38	659.12	658.77	658.86	658.92	659.05	659.05	658.92	658.86	658.77
	3/4 PT.	17+07.25	659.22	658.87	658.95	659.01	659.15	659.15	659.01	658.95	658.87
	7/8 PT.	17+23.13	659.30	658.95	659.03	659.09	659.23	659.23	659.09	659.03	658.95
	℄ PIER 3	17+39.00	659.38	659.03	659.11	659.17	659.31	659.31	659.17	659.11	659.03
SPAN 4	1/8 PT.	17+54.88	659.54	659.19	659.27	659.33	659.47	659.47	659.33	659.27	659.19
	1/4 PT.	17+70.75	659.70	659.35	659.43	659.49	659.63	659.63	659.49	659.43	659.35
	3/8 PT.	17+86.63	659.84	659.49	659.57	659.64	659.77	659.77	659.64	659.57	659.49
	1/2 PT.	18+02.50	659.97	659.62	659.71	659.77	659.91	659.91	659.77	659.71	659.62
	5/8 PT.	18+18.38	660.08	659.73	659.81	659.87	660.01	660.01	659.87	659.81	659.73
	3/4 PT.	18+34.25	660.18	659.83	659.91	659.97	660.11	660.11	659.97	659.91	659.83
	7/8 PT.	18+50.13	660.26	659.91	659.99	660.05	660.19	660.19	660.05	659.99	659.91
	℄ PIER 4	18+66.00	660.33	659.99	660.07	660.13	660.27	660.27	660.13	660.07	659.99
SPAN 5	1/8 PT.	18+81.88	660.50	660.15	660.23	660.29	660.43	660.43	660.29	660.23	660.15
	1/4 PT.	18+97.75	660.66	660.31	660.39	660.45	660.59	660.59	660.45	660.39	660.31
	3/8 PT.	19+13.63	660.80	660.45	660.53	660.59	660.73	660.73	660.59	660.53	660.45
	1/2 PT.	19+29.50	660.93	660.58	660.67	660.73	660.86	660.86	660.73	660.67	660.58
	5/8 PT.	19+45.38	661.04	660.69	660.77	660.83	660.97	660.97	660.83	660.77	660.69
	3/4 PT.	19+61.25	661.14	660.78	660.87	660.93	661.07	661.07	660.93	660.87	660.78
	7/8 PT.	19+77.13	661.22	660.87	660.95	661.01	661.15	661.15	661.01	660.95	660.87
	℄ PIER 5	19+93.00	661.29	660.95	661.03	661.09	661.22	661.22	661.09	661.03	660.95
SPAN 6	1/8 PT.	20+08.88	661.45	661.11	661.19	661.25	661.39	661.39	661.25	661.19	661.11
	1/4 PT.	20+24.75	661.62	661.26	661.35	661.41	661.54	661.54	661.41	661.35	661.26
	3/8 PT.	20+40.63	661.76	661.41	661.49	661.55	661.69	661.69	661.55	661.49	661.41
	1/2 PT.	20+56.50	661.89	661.54	661.63	661.69	661.82	661.82	661.69	661.63	661.54
	5/8 PT.	20+72.38	662.00	661.65	661.73	661.79	661.93	661.93	661.79	661.73	661.65
	3/4 PT.	20+88.25	662.09	661.74	661.83	661.89	662.02	662.02	661.89	661.83	661.74
	7/8 PT.	21+04.13	662.17	661.83	661.91	661.97	662.10	662.10	661.97	661.91	661.83
	℄ PIER 6	21+20.00	662.25	661.91	661.98	662.05	662.18	662.18	662.05	661.98	661.91
SPAN 7	1/8 PT.	21+37.50	662.45	662.10	662.18	662.24	662.38	662.38	662.24	662.18	662.10
	1/4 PT.	21+55.00	662.63	662.28	662.37	662.43	662.57	662.57	662.43	662.37	662.28
	3/8 PT.	21+72.50	662.80	662.45	662.54	662.60	662.73	662.73	662.60	662.54	662.45
	1/2 PT.	21+90.00	662.96	662.60	662.69	662.75	662.89	662.89	662.75	662.69	662.60
	5/8 PT.	22+07.50	663.07	662.71	662.80	662.86	663.00	663.00	662.86	662.80	662.71
	3/4 PT.	22+25.00	663.16	662.81	662.90	662.96	663.09	663.09	662.96	662.90	662.81
	7/8 PT.	22+42.50	663.24	662.89	662.97	663.03	663.17	663.17	663.03	662.97	662.89
	℄ PIER 7	22+60.00	663.31	662.97	663.04	663.10	663.24	663.24	663.10	663.04	662.97

	SCREED ELEVATIONS										
	POINT	STATION	PROFILE GRADE	BEAM LINE A	LEFT GUTTER LINE	BEAM LINE B	BEAM LINE C	BEAM LINE D	BEAM LINE E	RIGHT GUTTER LINE	BEAM LINE F
SPAN 8	℄ PIER 7	22+60.00	663.31	662.97	663.04	663.10	663.24	663.24	663.10	663.04	662.97
	1/8 PT.	22+77.50	663.51	663.16	663.25	663.30	663.44	663.45	663.31	663.25	663.17
	1/4 PT.	22+95.00	663.71	663.35	663.44	663.49	663.63	663.65	663.51	663.44	663.36
	3/8 PT.	23+12.48	663.88	663.51	663.61	663.66	663.80	663.82	663.68	663.61	663.53
	1/2 PT.	23+29.98	664.03	663.66	663.77	663.83	663.95	663.98	663.84	663.77	663.69
	5/8 PT.	23+47.48	664.14	663.77	663.88	663.92	664.05	664.09	663.95	663.88	663.80
	3/4 PT.	23+64.98	664.23	663.87	663.97	664.02	664.15	664.18	664.04	663.97	663.90
	7/8 PT.	23+82.48	664.30	663.95	664.04	664.09	664.23	664.25	664.11	664.04	663.94

NOTES

1. SCREED ELEVATIONS SHOWN ARE FOR THE DECK SLAB SURFACE PRIOR TO CONCRETE PLACEMENT. ALLOWANCE HAS BEEN MADE FOR ANTICIPATED CALCULATED DEAD LOAD DEFLECTIONS.
2. SCREED ELEVATIONS IN THE HORIZONTAL CURVE PORTION OF SPANS 1, 2 AND 8 ARE CIRCUMFERENTIAL, RESULTING IN A VARIABLE OFFSET FROM THE CENTER LINES OF THE BEAMS.

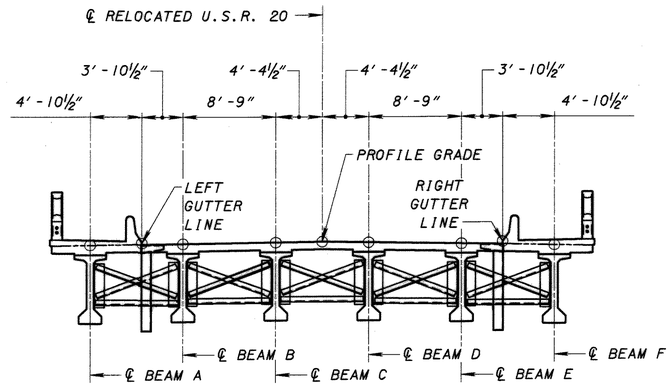

SCREED LOCATION KEY

○ - SIGNIFIES POINTS WHERE ELEVATIONS ARE GIVEN (AT TOP OF CONCRETE)

SCREED ELEVATIONS AT ℄ BRG. FWD. ABUT.			
	POINT	STATION	ELEVATION
SPAN 8	BEAM LINE A	24+01.43	664.03
	LEFT GUTTER LINE	24+01.10	664.10
	BEAM LINE B	24+00.85	664.16
	BEAM LINE C	24+00.28	664.29
	BEAM LINE D	23+99.72	664.29
	BEAM LINE E	23+99.18	664.15
	RIGHT GUTTER LINE	23+98.93	664.09
	BEAM LINE F	23+98.64	664.01
	PROFILE GRADE	24+00.00	664.36

DESIGN AGENCY
McCOY ASSOCIATES, INC.
367 GHENT ROAD
AKRON, OHIO 44333

DESIGNED	DRAWN	REVIEWED	DATE
HK	SL	JBH	6-11-02
CHECKED	REVISED	STRUCTURE FILE NUMBER	
SL		0402273	

SCREED ELEVATIONS
BRIDGE NO. ATB-20-2628
OVER BESSEMER & LAKE ERIE RAILROAD AND CONNEAUT CREEK

ATB-20-26.19

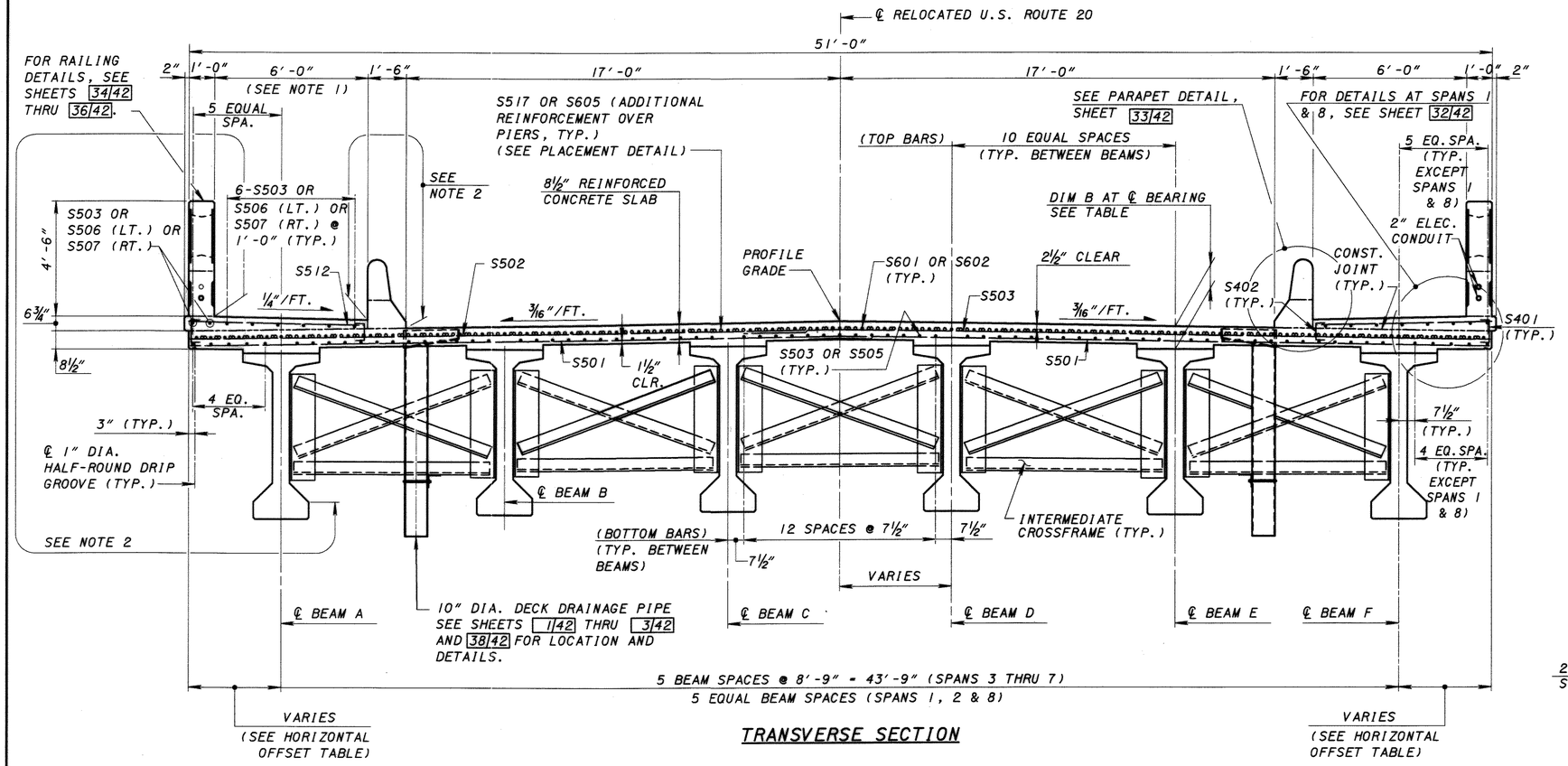

TRANSVERSE SECTION

NOTES

1. LIMITS FOR THE SEALING OF CONCRETE SURFACES (NON-EPOXY).
2. LIMITS FOR THE SEALING OF CONCRETE SURFACES (EPOXY-URETHANE).
3. MINIMUM LAP UNLESS OTHERWISE NOTED:
   NO. 5 BARS = 2'-5"
   NO. 6 BARS = 2'-11"
   NO. 9 BARS = 8'-1"
   NO. 10 BARS = 10'-3"
   S501 BARS = 3'-2"
4. FOR SCREED ELEVATIONS, SEE SHEET 28|42.
5. FOR PARAPET CONTROL JOINT DETAILS AND NOTES, SEE STANDARD DRAWING BR-1, SHEET 1 OF 2.
6. FOR DIAPHRAGM DETAILS, SEE SHEET 27|42 AND 27A|42.
7. FOR FRAMING PLAN SEE SHEETS 22|42 AND 23|42.
8. TRANSVERSE CONSTRUCTION JOINTS SHALL BE SEALED WITH A HIGH MOLECULAR WEIGHT METACRYLATE RESIN 2'-0" WIDE AND CENTERED OVER THE JOINT. PAYMENT SHALL BE INCLUDED IN ITEM 846, TREATING CONCRETE BRIDGE DECKS WITH HMWM RESIN.
9. THE TOPPING THICKNESSES SHOWN ARE NOMINAL DIMENSIONS. THE PAY QUANTITY FOR DECK CONCRETE SHALL BE BASED ON THE DESIGN SLAB THICKNESS AND THE AVERAGE OF THE NOMINAL HAUNCH DEPTHS AT MID-SPAN AND AT THE BEAM BEARINGS. THE HAUNCH DEPTH IS THE TOPPING THICKNESS MINUS THE DESIGN SLAB THICKNESS. DEVIATION FROM THIS AVERAGE MAY OCCUR BECAUSE THE TOP OF THE BEAM MAY NOT HAVE THE CAMBER ANTICIPATED BY DESIGN DUE TO CONTRACTOR'S TIME OF ERECTION, MIX DESIGN, AND OTHER FABRICATION FACTORS. ONCE ALL BEAMS ARE SET IN THEIR FINAL POSITION, THE CONTRACTOR SHALL RECORD THE TOP OF BEAM ELEVATIONS AT EACH BEARING AND AT MID-SPAN. THE ACTUAL CAMBER FOR EACH MEMBER SHALL BE THE MEASURED ELEVATION AT MID-SPAN MINUS THE AVERAGE ELEVATION AT EACH BEARING. THE ACTUAL HAUNCH DEPTH AT MID-SPAN SHALL BE THE NOMINAL DIMENSION PLUS OR MINUS THE DIFFERENCE BETWEEN THE ACTUAL AND ANTICIPATED CAMBER.
10. FOR SLAB PLAN SEE SHEETS 30|42 THRU 32|42.
11. FOR ABBREVIATIONS, SEE SHEET 5|42.

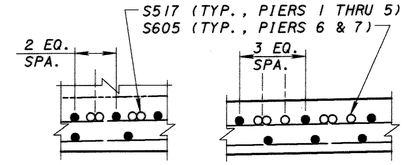

PLACEMENT DETAIL FOR ADDITIONAL REINFORCEMENT OVER PIERS

(FOR REINFORCEMENT DETAILS NOT SHOWN, SEE TRANSVERSE SECTION)

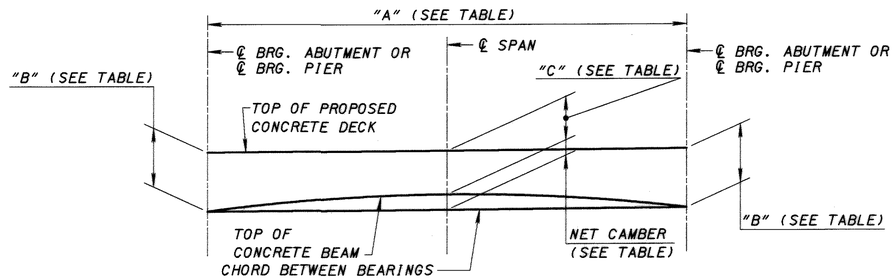

TOPPING THICKNESS DIAGRAM

DEFLECTION AND CAMBER TABLE

ITEM	BEAM B1	BEAM B2	BEAM B3	BEAM B4	BEAM B5	BEAM B6	BEAM B7	BEAM B8	BEAM B9	BEAM B10
INTERIOR BEAMS										
A	106'-2 1/16"	107'-2 3/16"	108'-2 1/4"	109'-2 3/8"	110'-2 7/16"	111'-2 1/2"	124'-4 1/2"	124'-7"	137'-7"	138'-9 1/8"
B	11 3/8"	11 3/8"	11 3/8"	11 3/8"	11 3/8"	11 3/8"	11 3/8"	11 3/8"	11 3/8"	11 3/8"
C	10 5/8"	10 5/8"	10 5/8"	10 5/8"	10 5/8"	10 5/8"	10 5/8"	10 5/8"	10 1/2"	9 3/4"
BEAM CAMBER (Dd)	2 1/16"	2 1/16"	2 1/16"	2 1/16"	2 1/16"	2 1/16"	3"	3 1/16"	4 3/8"	5"
DEFLECTION DUE TO DEAD LOAD (E)	7/8"	7/8"	7/8"	7/8"	7/8"	7/8"	1 7/16"	1 7/16"	2 1/8"	2 3/8"
NET CAMBER = Dd - E	1 3/16"	1 3/16"	1 3/16"	1 3/16"	1 3/16"	1 3/16"	1 9/16"	1 5/8"	2 1/4"	2 5/8"
EXTERIOR BEAMS										
A	106'-2 1/16"	107'-2 3/16"	108'-2 1/4"	109'-2 3/8"	110'-2 7/16"	111'-2 1/2"	124'-4 1/2"	124'-7"	137'-7"	138'-9 1/8"
B	11 3/8"	11 3/8"	11 3/8"	11 3/8"	11 3/8"	11 3/8"	11 3/8"	11 3/8"	11 3/8"	11 3/8"
C	10 3/8"	10 3/8"	10 3/8"	10 3/8"	10 3/8"	10 3/8"	10 1/2"	10 1/2"	10 1/4"	9 1/2"
BEAM CAMBER (Dd)	2 1/16"	2 1/16"	2 1/16"	2 1/16"	2 1/16"	2 1/16"	3"	3 1/16"	4 3/8"	5"
DEFLECTION DUE TO DEAD LOAD (E)	13/16"	13/16"	13/16"	13/16"	13/16"	13/16"	1 5/16"	1 5/16"	1 5/16"	2 3/16"
NET CAMBER = Dd - E	1 1/4"	1 1/4"	1 1/4"	1 1/4"	1 1/4"	1 1/4"	1 11/16"	1 3/4"	2 7/16"	2 13/16"

HORIZONTAL (RADIAL) OFFSETS TO EDGE OF SLAB

LOCATION	℄ BRG. REAR ABUT. STA. 13+75	1/4 POINT STA. 14+02.5	1/2 POINT STA. 14+30	3/4 POINT STA. 14+57.5	℄ BRG. PIER 1 STA. 14+85	P.T. STA. 14+94.16	℄ BRG. PIER 7 STA. 22+60	1/8 POINT STA. 22+77.5	1/4 POINT STA. 22+95	3/8 POINT STA. 23+12.5	1/2 POINT STA. 23+30	5/8 POINT STA. 23+47.5	3/4 POINT STA. 23+65	7/8 POINT STA. 23+82.5	℄ BRG. FWD. ABUT. STA. 24+00
℄ BEAM LINE A TO LEFT EDGE OF SLAB	3.63'	2.48'	2.10'	2.50'	3.67'	3.63'	3.63'	3.41'	3.17'	2.93'	2.69'	2.48'	2.55'	2.94'	3.67'
℄ BEAM LINE F TO RIGHT EDGE OF SLAB	3.63'	4.83'	5.23'	4.82'	3.58'	3.63'	3.63'	3.90'	4.14'	4.38'	4.62'	4.83'	4.76'	4.36'	3.67'

DESIGN AGENCY: McCOY ASSOCIATES, INC. 367 GHENT ROAD AKRON, OHIO 44333
DATE: 6-11-02
REVISED: JBH
DRAWN: SL
DESIGNED: HK
CHECKED: SL
STRUCTURE FILE NUMBER: 0402273

TRANSVERSE SECTION & CAMBER TABLE
BRIDGE NO. ATB-20-2628
OVER BESSEMER & LAKE ERIE RAILROAD AND CONNEAUT CREEK

ATB-20-26.19

NOTES

1. FOR PILASTER DETAILS AND ADDITIONAL BARS AT PILASTERS, SEE SHEET 36/42.
2. FOR TRANSVERSE SECTION, AND ADDITIONAL NOTES SEE SHEET 29/42 .
3. FOR SCUPPER DETAILS, SEE SHEET 38/42.
4. FOR SCREED ELEVATIONS SEE SHEET 28/42.
5. REINFORCING STEEL: NEW REINFORCING STEEL MAY REQUIRE FIELD CUTTING OR BENDING TO BE PROPERLY FITTED. PAYMENT SHALL BE INCLUDED IN ITEM 842.
6. FOR ADDITIONAL SLAB DETAILS, SEE SHEET 31/42 & 32/42.

LEGEND

⬡ DENOTES DECK POUR SEQUENCE

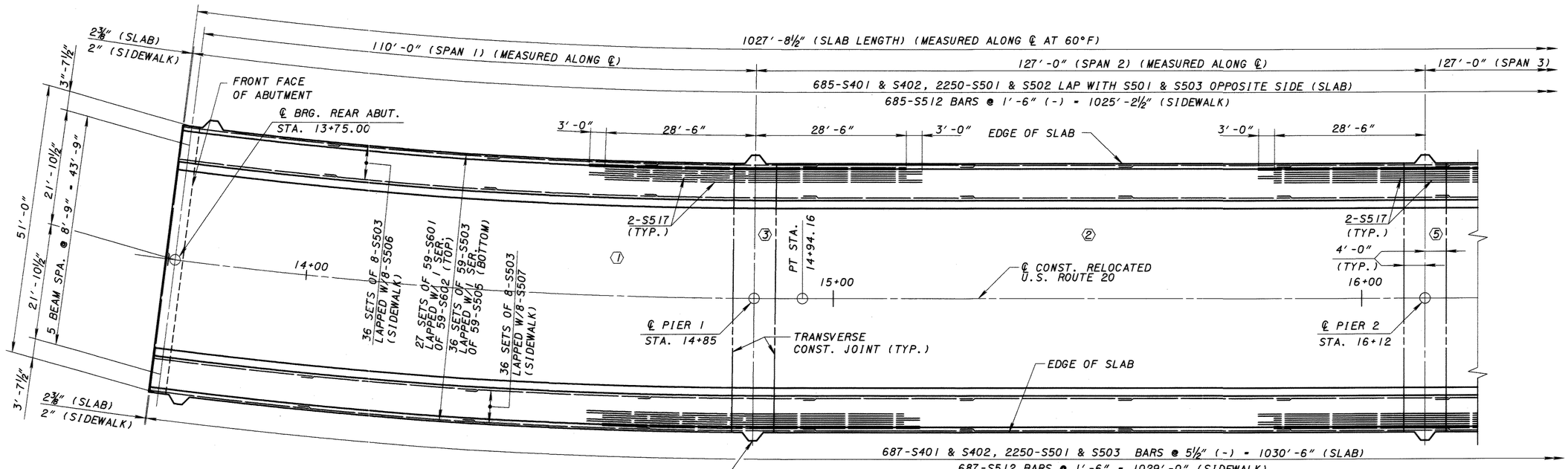

PART SLAB PLAN

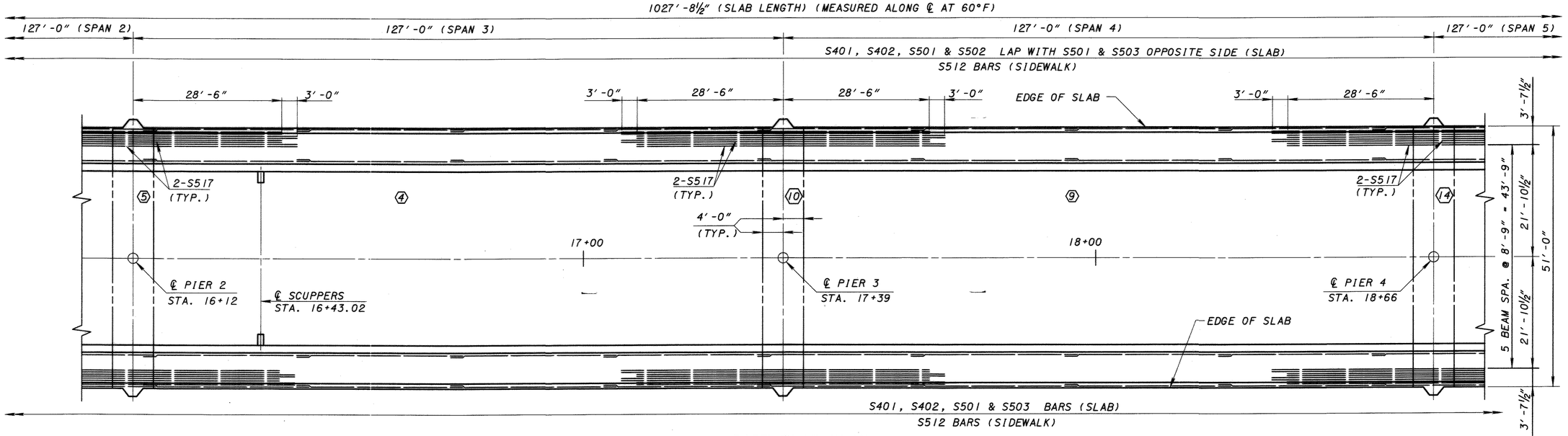

PART SLAB PLAN

DESIGN AGENCY
McCOY ASSOCIATES, INC.
367 GHENT ROAD
AKRON, OHIO 44333

DESIGNED	DRAWN	REVISED	DATE
SL	SL	JBH	6-11-02
CHECKED	REVISED	STRUCTURE FILE NUMBER	
HK		0402273	

SLAB PLAN - SPANS 1 THRU 4
BRIDGE NO. ATB-20-2628
OVER BESSEMER & LAKE ERIE RAILROAD AND CONNEAUT CREEK

ATB-20-26.19

30/42

127/162

NOTES

1. FOR NOTES SEE SHEET 30/42.

LEGEND

⬡ DENOTES DECK POUR SEQUENCE

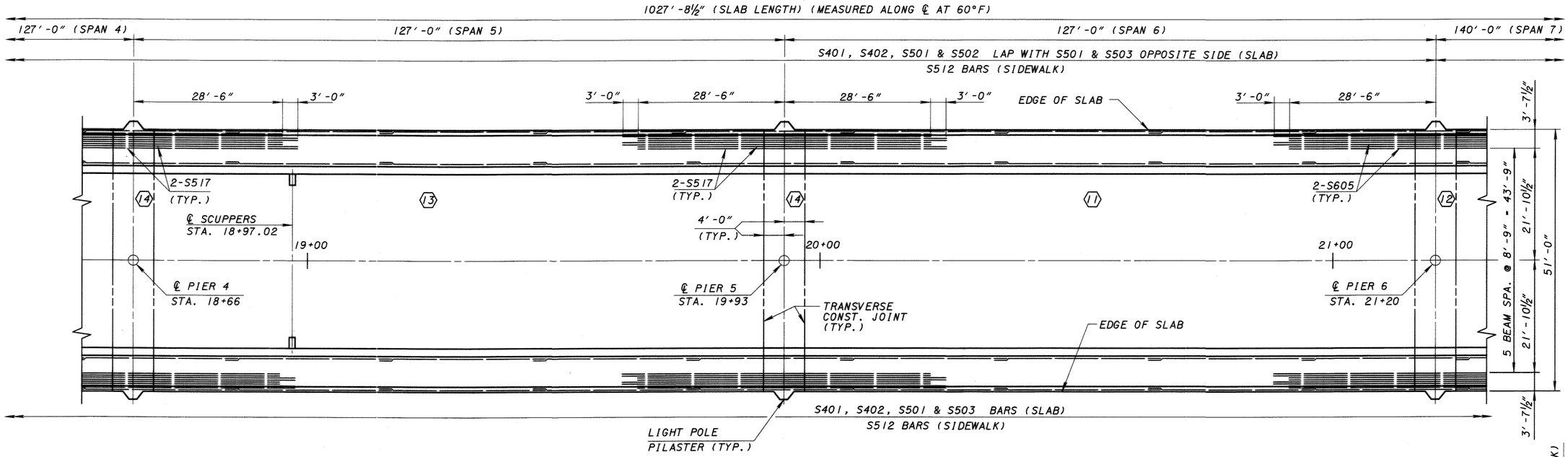

PART SLAB PLAN

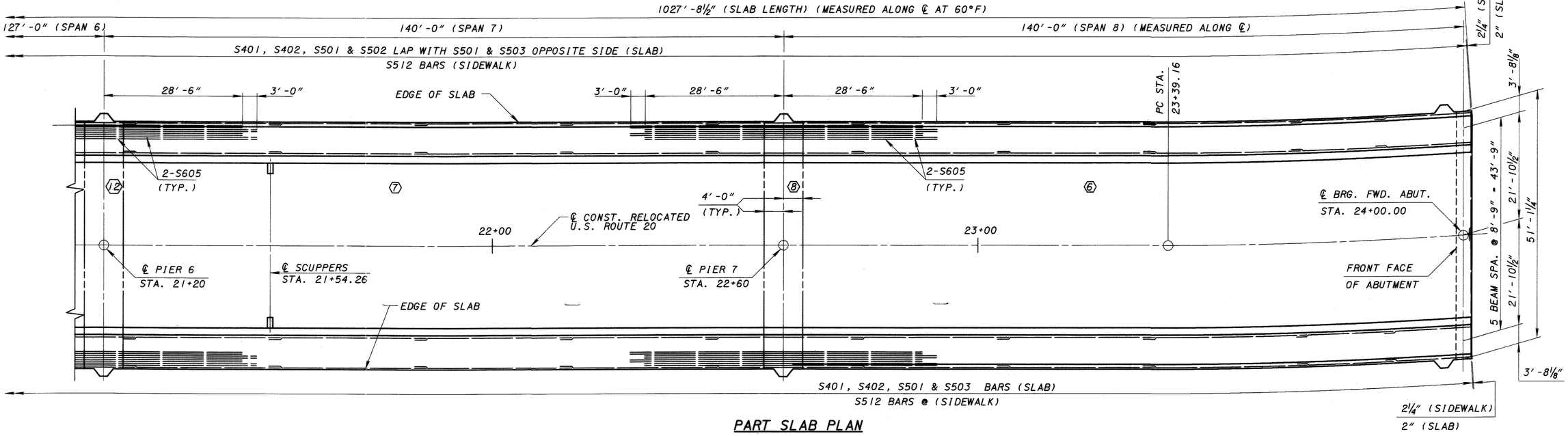

PART SLAB PLAN

DESIGN AGENCY
McCOY ASSOCIATES, INC.
367 GHENT ROAD
AKRON, OHIO 44333

DESIGNED	DRAWN	REVIEWED	DATE
SL	SL	JBH	6-11-02
CHECKED	REVISED	STRUCTURE FILE NUMBER	
HK		0402273	

SLAB PLAN - SPANS 5 THRU 8

BRIDGE NO. ATB-20-2628
OVER BESSEMER & LAKE ERIE RAILROAD AND CONNEAUT CREEK

ATB-20-26.19

31/42

128/162

NOTES

1. FOR ADDITIONAL SLAB DETAILS, SEE SHEETS 30/42 AND 31/42.
2. MINIMUM LAP UNLESS OTHERWISE NOTED:
   NO. 5 BARS = 2'-5"
   NO. 6 BARS = 4'-1"

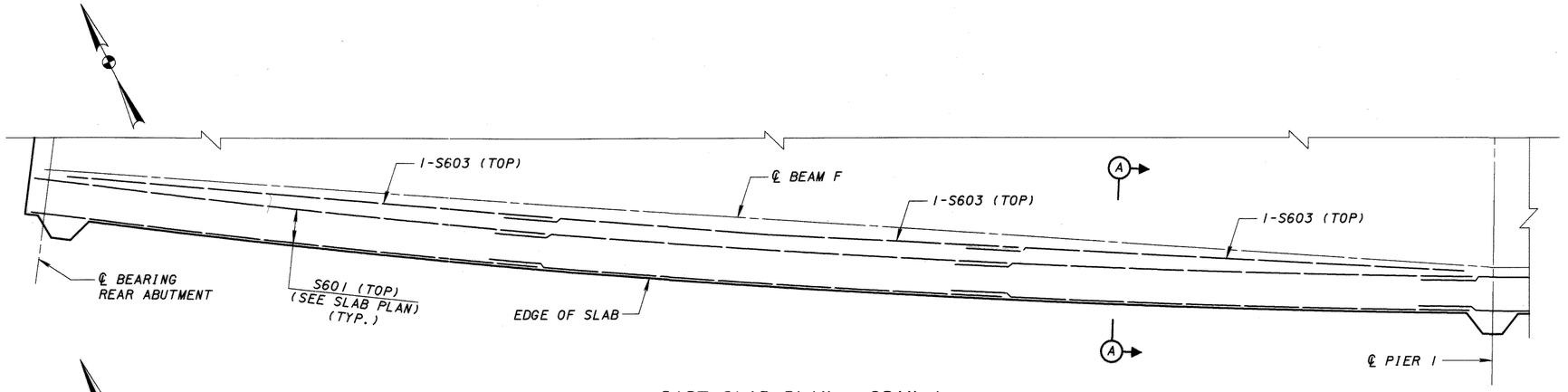

PART SLAB PLAN - SPAN 1
(ADDITIONAL REINFORCEMENT OVER PIER 1 NOT SHOWN)

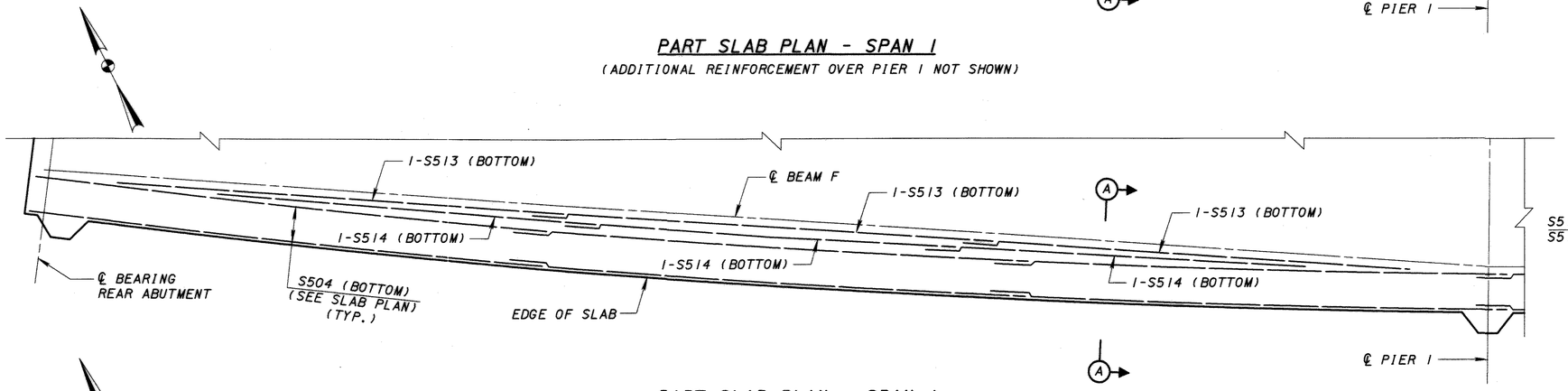

PART SLAB PLAN - SPAN 1

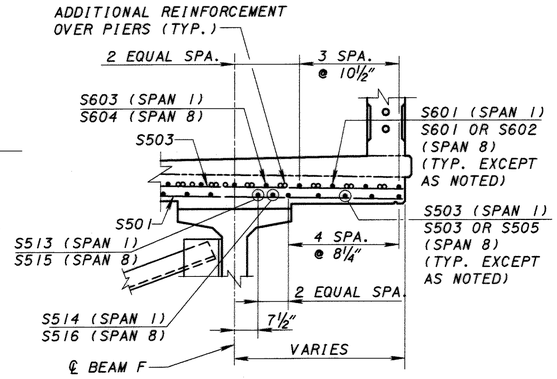

SECTION A-A
(SIDEWALK REINFORCEMENT NOT SHOWN)

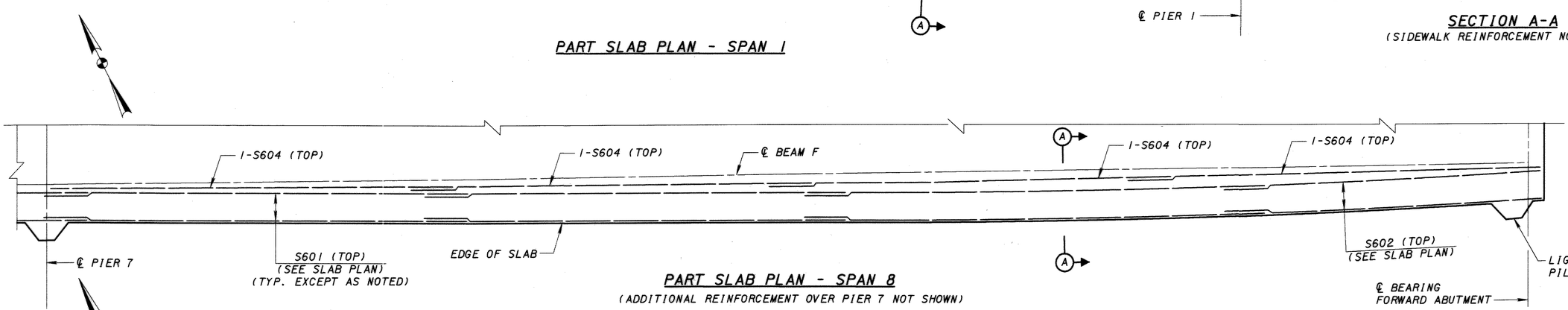

PART SLAB PLAN - SPAN 8
(ADDITIONAL REINFORCEMENT OVER PIER 7 NOT SHOWN)

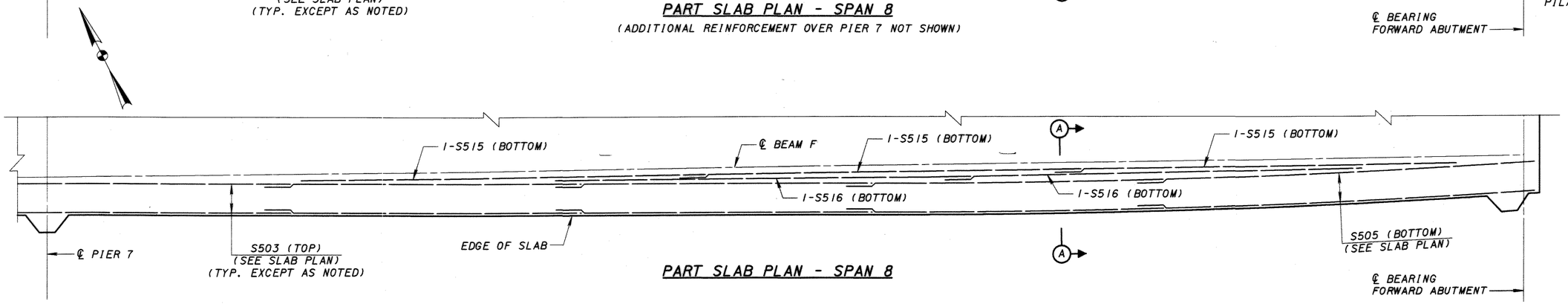

PART SLAB PLAN - SPAN 8

DESIGN AGENCY
McCOY ASSOCIATES, INC.
367 GHENT ROAD
AKRON, OHIO 44333

DESIGNED	DRAWN	REVISED	DATE
HK	WEB	JBH	6-11-02

CHECKED	REVISED	STRUCTURE FILE NUMBER
SL		0402273

SLAB DETAILS
BRIDGE NO. ATB-20-2628
OVER BESSEMER & LAKE ERIE RAILROAD AND CONNEAUT CREEK

ATB-20-26.19

32/42

129/162

NOTES

1. FOR TRANSVERSE SECTION AND ADDITIONAL NOTES SEE SHEET 29/42.
2. MINIMUM LAP - #5 BARS = 2'-5"
3. FOR SLAB PLAN SEE SHEETS 30/42 THRU 32/42.
4. SEE ODOT BRIDGE STANDARD DRAWING BR-2-98 FOR ADDITIONAL SAWCUT JOINT DETAILS & NOTES.

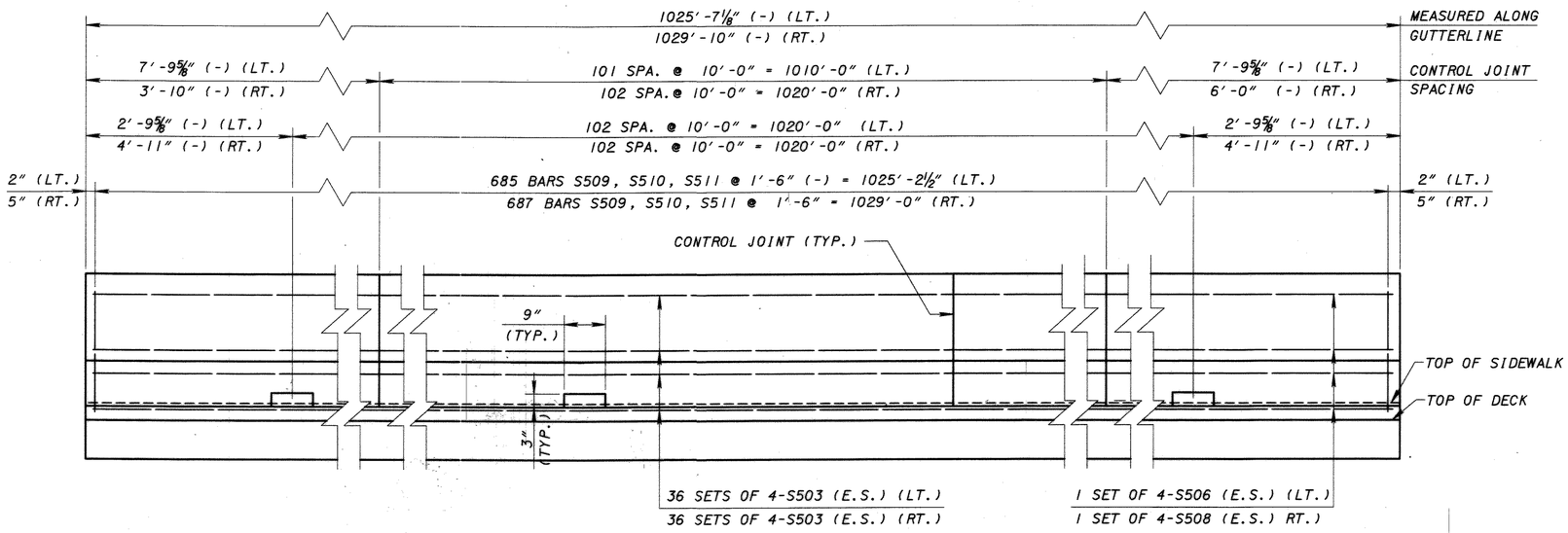

BARRIER PARAPET ELEVATION

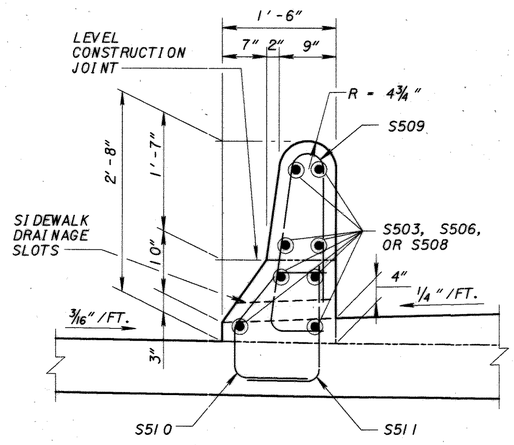

PARAPET DETAIL

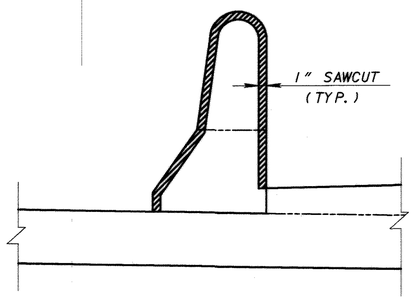

CONTROL JOINT DETAIL

DESIGN AGENCY
McCOY ASSOCIATES, INC.
367 GHENT ROAD
AKRON, OHIO 44333

DESIGNED	DRAWN	REVISED	DATE	STRUCTURE FILE NUMBER
HK	SL	JBH	6-11-02	0402273
CHECKED	REVISED			
SL				

PARAPET DETAILS
BRIDGE NO. ATB-20-2628
OVER BESSEMER & LAKE ERIE RAILROAD AND CONNEAUT CREEK

ATB-20-26.19

33/42

130/162

NOTES

1. ALL DIMENSIONS ARE MEASURED ALONG THE OUTSIDE FACE OF THE RAILING.
2. FOR DETAILS OF PANELS A, B AND C AND THE PILASTER, SEE SHEET 36/42.
3. CONDUIT SHALL BE PAID FOR UNDER ITEM 625, SEE SHEET (96/162).
4. MINIMUM LAP UNLESS OTHERWISE NOTED:
   NO. 5 BARS = 2'-5"
   NO. 8 BARS = 6'-4"
5. FOR ABRREVIATIONS, SEE SHEET 5/42.
6. ITEM 517 - RAILING MISC. : ORNAMENTAL PEDESTRAIN RAILING (CAST-IN-PLACE CONCRETE ALTERNATIVE). RAILING SHALL COMPLY WITH SUPPLEMENTAL SPECIFICATION 842. CONCRETE SHALL BE CLASS S. PAYMENT OF THIS ITEM IS PER LINEAR FOOT AND SHALL INCLUDE ALL MATERIALS, EQUIPMENT AND LOAD NECESSARY TO COMPLETE THE ABOVE WORK.

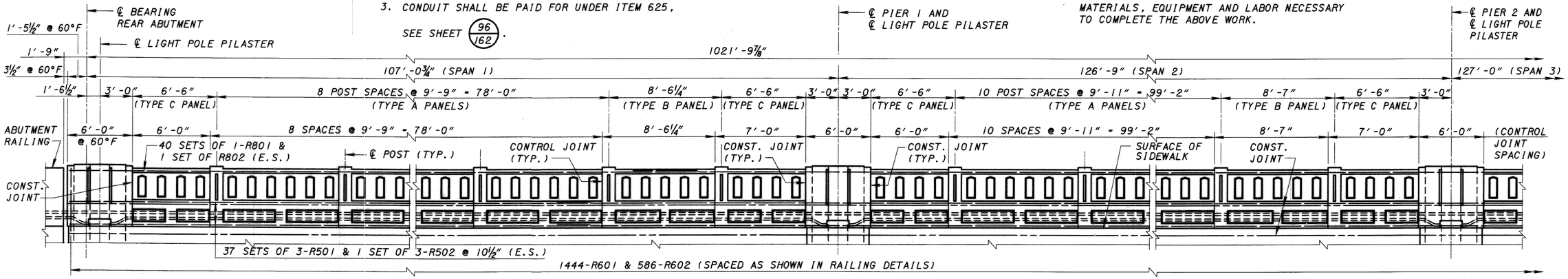

PART LEFT RAILING ELEVATION
(LOOKING NORTH)

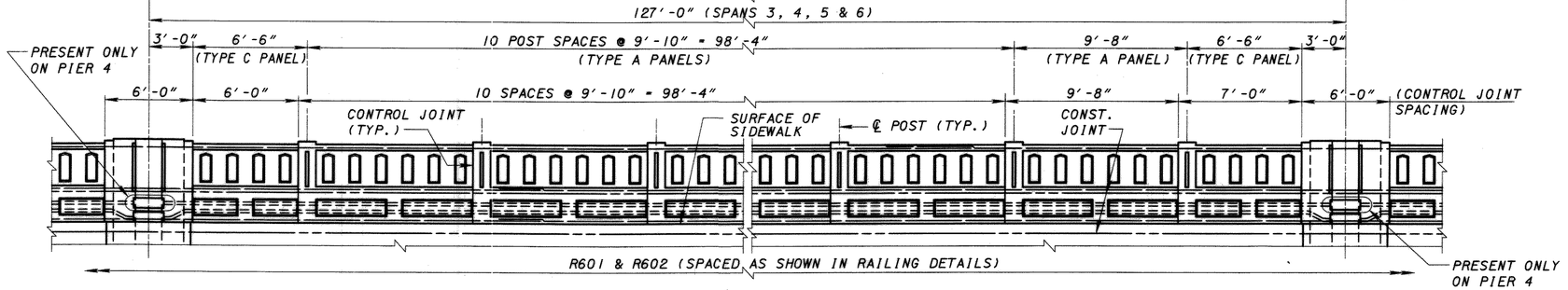

PART LEFT RAILING ELEVATION
(LOOKING NORTH)

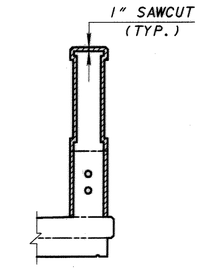

CONTROL JOINT DETAIL

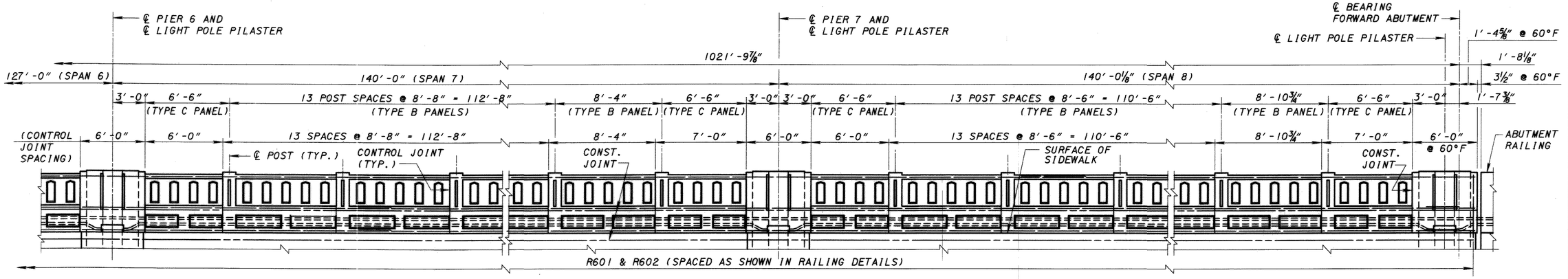

PART LEFT RAILING ELEVATION
(LOOKING NORTH)

DESIGN AGENCY
McCOY ASSOCIATES, INC.
367 GHENT ROAD
AKRON, OHIO 44333

DATE 6-11-02
REVIEWED JBH
STRUCTURE FILE NUMBER 0402273
DRAWN WEB
REVISED
DESIGNED HK
CHECKED SL

LEFT RAILING ELEVATION
BRIDGE NO. ATB-20-2628
OVER BESSEMER & LAKE ERIE RAILROAD AND CONNEAUT CREEK

ATB-20-26.19

34/42

(131/162)

NOTES

1. ALL DIMENSIONS ARE MEASURED ALONG THE OUTSIDE FACE OF THE RAILING.
2. FOR DETAILS OF PANELS A, B AND C AND THE PILASTER, SEE SHEET 36/42 .
3. CONDUIT SHALL BE PAID FOR UNDER ITEM 625, SEE SHEET (96/162).
3. MINIMUM LAP UNLESS OTHERWISE NOTED:
   NO. 5 BARS = 2'-5"
   NO. 8 BARS = 6'-4"
4. FOR CONTROL JOINT DETAIL, SEE SHEET 35/42.
5. FOR ABBREVIATIONS, SEE SHEET 5/42.
6. ITEM 517 - RAILING MISC. : ORNAMENTAL PEDESTRAIN RAILING (CAST-IN-PLACE CONCRETE ALTERNATIVE). RAILING SHALL COMPLY WITH SUPPLEMENTAL SPECIFICATION 842. CONCRETE SHALL BE CLASS S. PAYMENT OF THIS ITEM IS PER LINEAR FOOT AND SHALL INCLUDE ALL MATERIALS, EQUIPMENT AND LABOR NECESSARY TO COMPLETE THE ABOVE WORK.

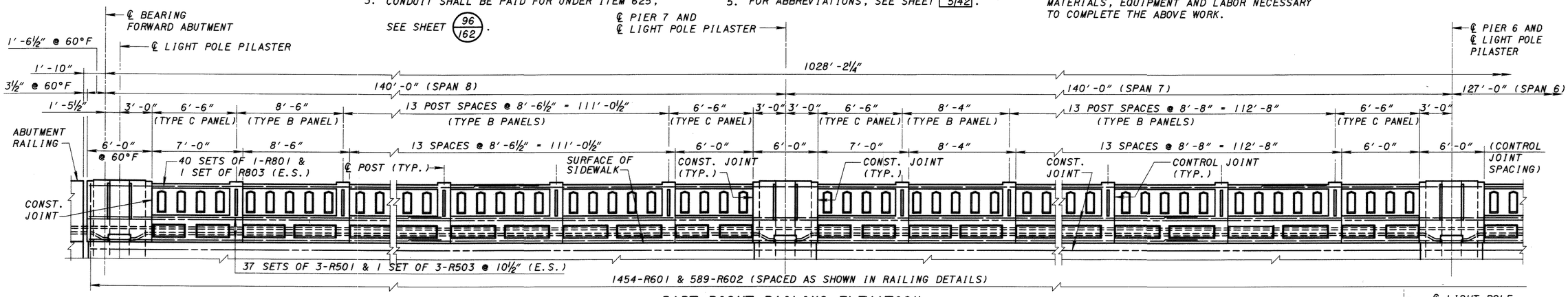

PART RIGHT RAILING ELEVATION
(LOOKING SOUTH)

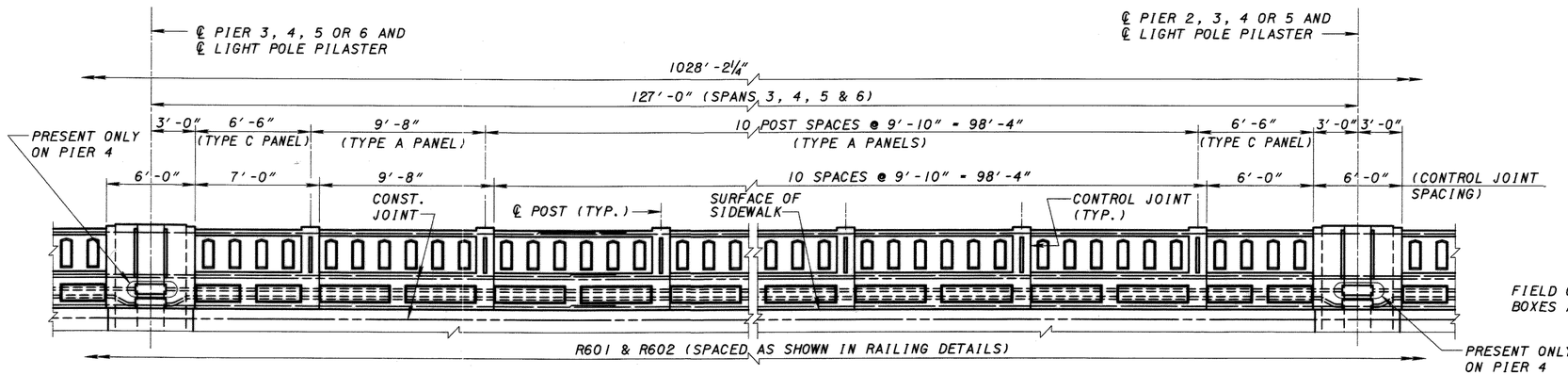

PART RIGHT RAILING ELEVATION
(LOOKING SOUTH)

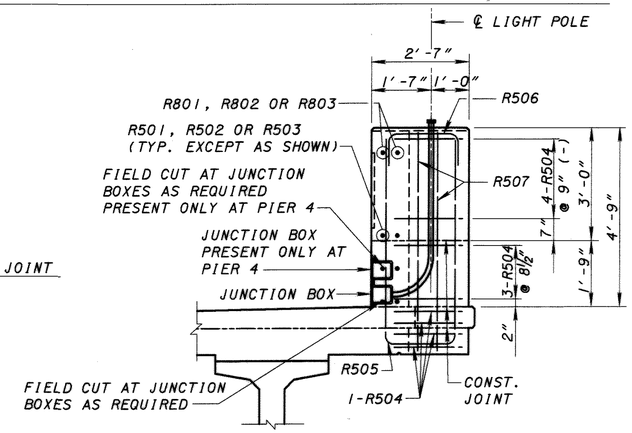

SECTION D-D
(AT PIER 4)

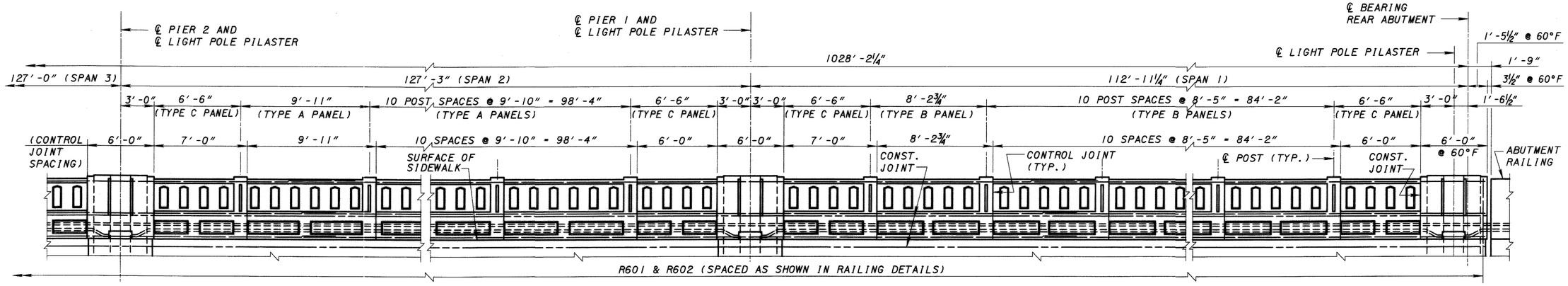

PART RIGHT RAILING ELEVATION
(LOOKING SOUTH)

DESIGN AGENCY
McCOY ASSOCIATES, INC.
367 GHENT ROAD
AKRON, OHIO 44333

DESIGNED	DRAWN	REVISED	DATE
HK	WEB	JBH	6-11-02
CHECKED	REVISED	STRUCTURE FILE NUMBER	
SL		0402273	

RIGHT RAILING ELEVATION
BRIDGE NO. ATB-20-2628
OVER BESSEMER & LAKE ERIE RAILROAD AND CONNEAUT CREEK

ATB-20-26.19

35/42

(132/162)

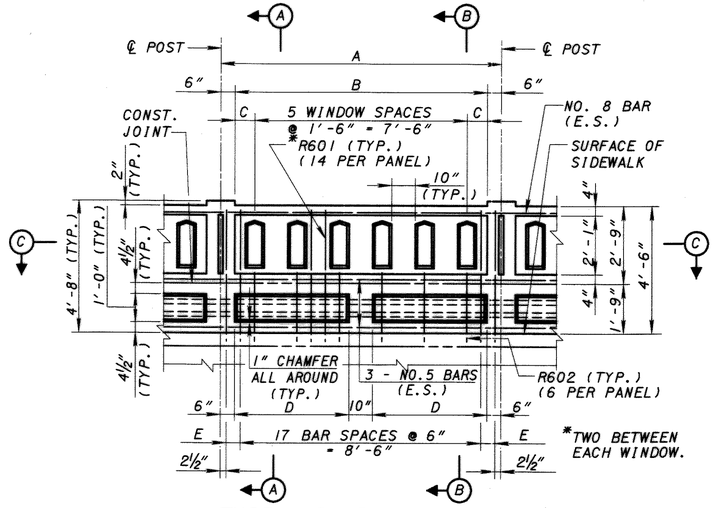

TYPE A PANEL ELEVATION

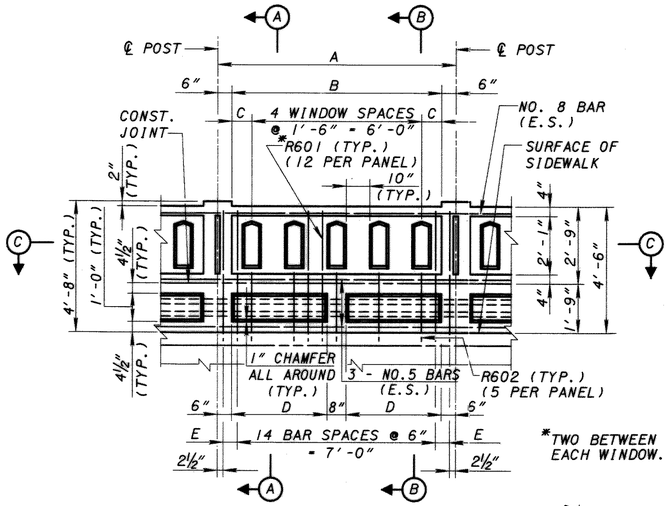

TYPE B PANEL ELEVATION

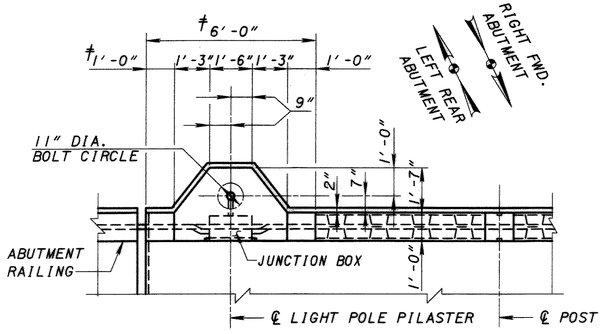

PLAN

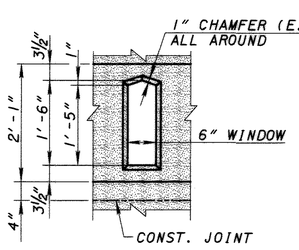

WINDOW DETAIL

NOTES

1. FOR LOCATION OF LIGHT POLE PILASTERS AND PANELS A, B AND C, SEE SHEETS 34/42 AND 35/42.
2. FOR ABBREVIATIONS, SEE SHEET 5/42.
3. FOR SECTION D-D (AT PIER 4), SEE SHEET 35/42.
4. FOR ADDITIONAL LIGHT POLE PILASTER AND LIGHTING DETAILS, SEE STANDARD CONSTRUCTION DRAWING HL-20.14M.
5. ITEM 517 - RAILING MISC. : ORNAMENTAL PEDESTRAIN RAILING (CAST-IN-PLACE CONCRETE ALTERNATIVE) RAILING SHALL COMPLY WITH SUPPLEMENTAL SPECIFICATION 842. CONCRETE SHALL BE CLASS S. PAYMENT OF THIS ITEM IS PER LINEAR FOOT AND SHALL INCLUDE ALL MATERIALS, EQUIPMENT AND LABOR NECESSARY TO COMPLETE THE ABOVE WORK.
6. CONDUIT SHALL BE PAID FOR UNDER ITEM 625,

   SEE SHEET 96/162.

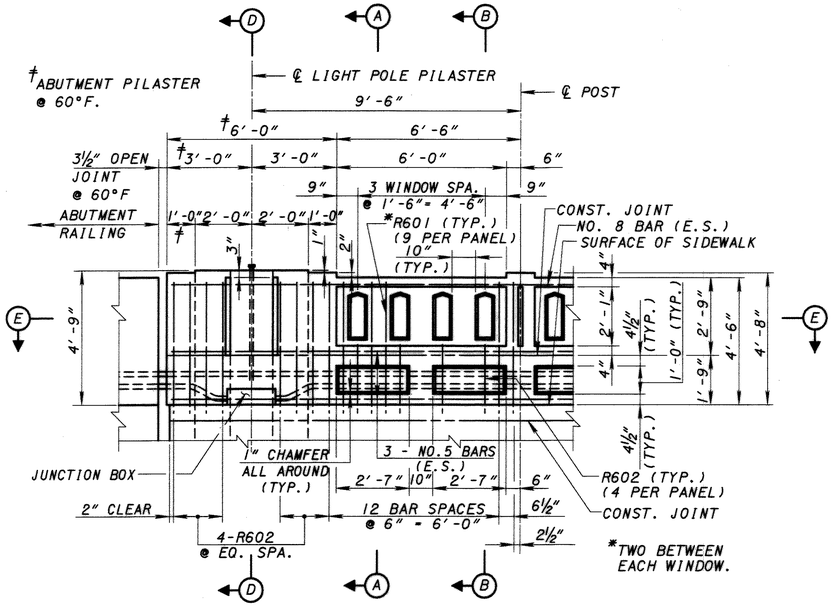

ELEVATION

LIGHT POLE PILASTER AND TYPE C PANEL PLAN AND ELEVATION

(LIGHT POLE NOT SHOWN)

NOTE: THE PILASTER AT THE LEFT REAR AND RIGHT FORWARD ABUTMENTS IS SHOWN; RIGHT REAR AND LEFT FORWARD ABUTMENTS ARE OPPOSITE HAND. PILASTERS AT PIERS ARE THE SAME EXCEPT A CONSTRUCTION JOINT SHALL BE USED ON BOTH SIDES OF THE PILASTER.

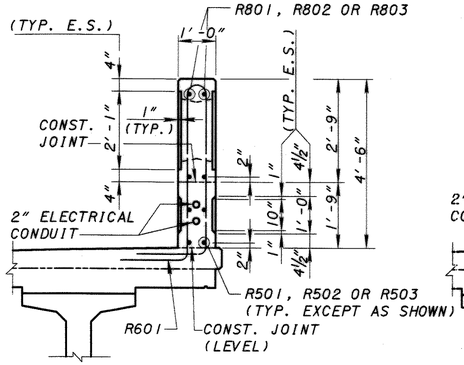

SECTION A-A

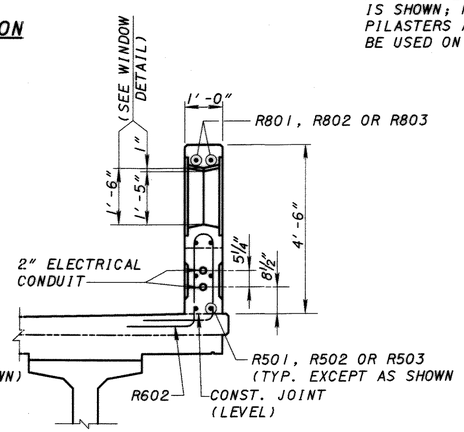

SECTION B-B

(FOR ADDITIONAL DETAILS, SEE SECTION A-A)

TABLE OF DIMENSIONS						
	A	B	C	D	E	F
PANEL A	9'-8"	8'-8"	7"	3'-11"	4½"	3"
	9'-9"	8'-9"	7½"	3'-11½"	5"	3½"
	9'-10"	8'-10"	8"	4'-0"	5½"	4"
	9'-11"	8'-11"	8½"	4'-0½"	6"	4½"
PANEL B	8'-2¾"	7'-2¾"	7⅞"	3'-3⅛"	4⅞"	3⅜"
	8'-4"	7'-4"	8"	3'-4"	5½"	4"
	8'-5"	7'-5"	8½"	3'-4½"	6"	4½"
	8'-6"	7'-6"	9"	3'-5"	6½"	5"
	8'-6¼"	7'-6¼"	9⅛"	3'-5⅛"	6⅝"	5⅛"
	8'-6½"	7'-6½"	9¼"	3'-5¼"	6¾"	5¼"
	8'-7"	7'-7"	9½"	3'-5½"	7"	5½"
	8'-8"	7'-8"	10"	3'-6"	7½"	6"
	8'-10¾"	7'-10¾"	11⅜"	3'-7⅞"	8⅛"	7⅞"

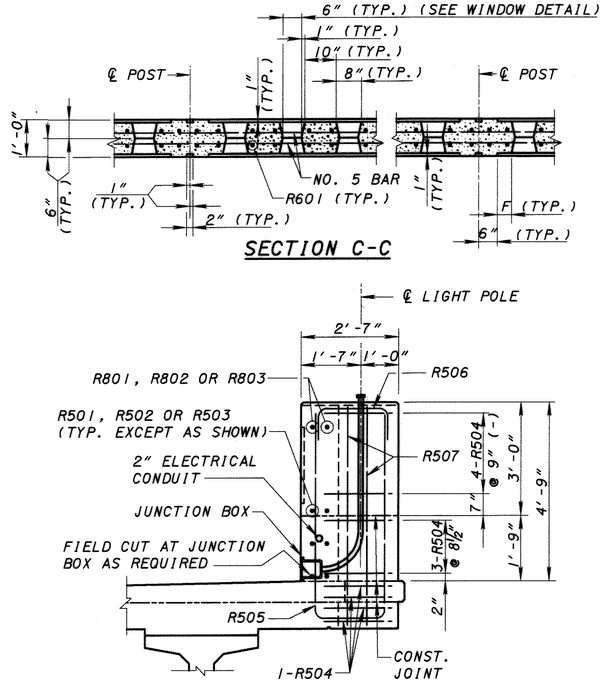

SECTION C-C

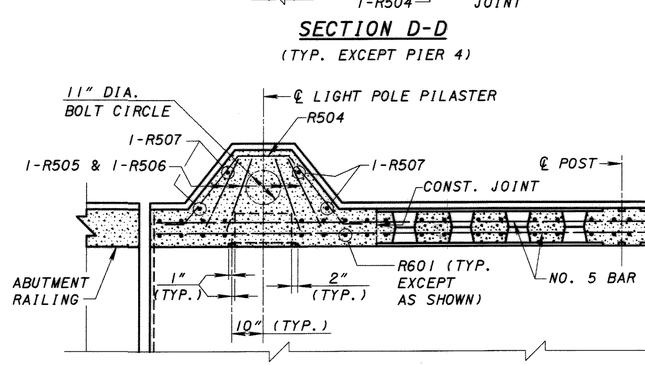

SECTION D-D

(TYP. EXCEPT PIER 4)

SECTION E-E

(FOR ADDITIONAL DETAILS, SEE SECTION C-C)

DESIGN AGENCY
McCOY ASSOCIATES, INC.
367 GHENT ROAD
AKRON, OHIO 44333

DESIGNED	DRAWN	REVIEWED	DATE
HK	WEB	JBH	6-11-02
CHECKED	REVISED	STRUCTURE FILE NUMBER	
SL		0402273	

RAILING DETAILS

BRIDGE NO. ATB-20-2628
OVER BESSEMER & LAKE ERIE RAILROAD AND CONNEAUT CREEK

ATB-20-26.19

36/42

133/162

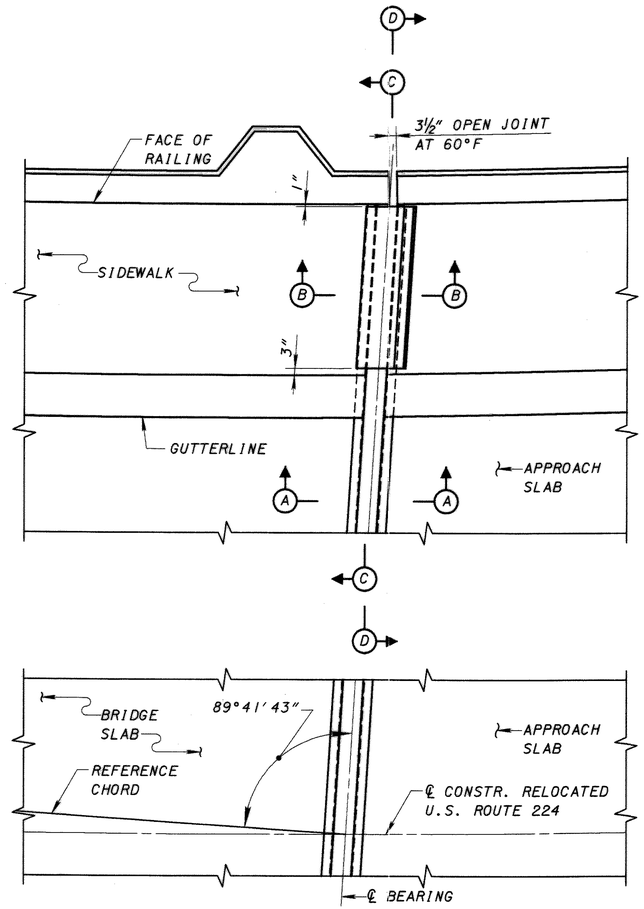

PART PLAN AT FORWARD ABUTMENT
(REAR ABUTMENT SIMILAR)

NOTE

1. FOR EXPANSION JOINT DETAILS NOT SHOWN SEE STANDARD DRAWING EXJ-6-95, SHEETS 1 THRU 5.

TEMPERATURE (°F)	30	40	50	60	70	80	90
DIMENSION "A" (in) REAR ABUTMENT	3 1/16	2 3/4	2 3/8	2	1 5/8	1 1/4	15/16
DIMENSION "A" (in) FORWARD ABUTMENT	3 1/8	2 3/4	2 3/8	2	1 5/8	1 1/4	7/8

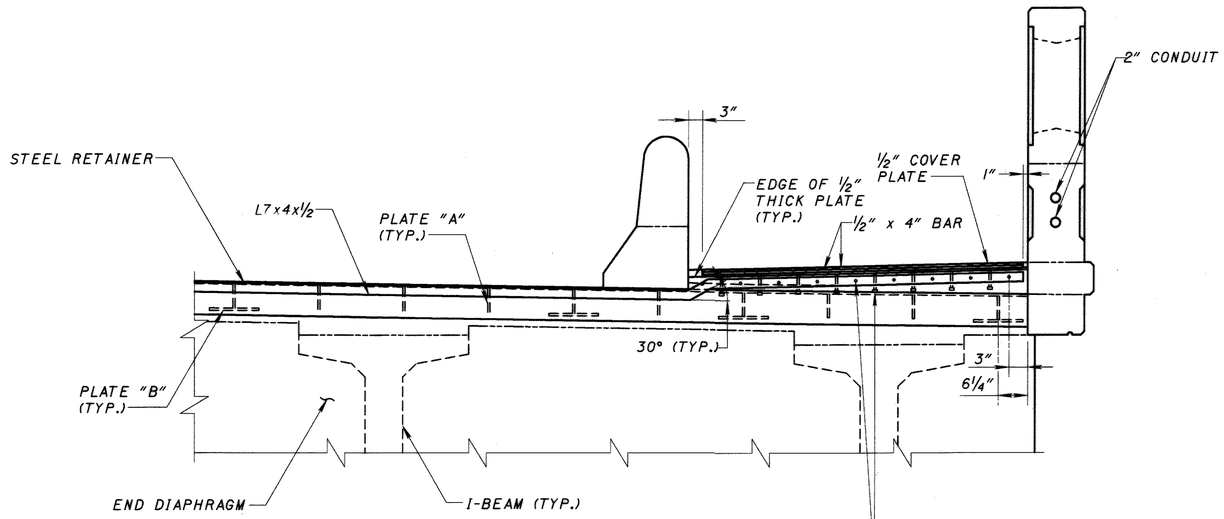

SECTION C-C

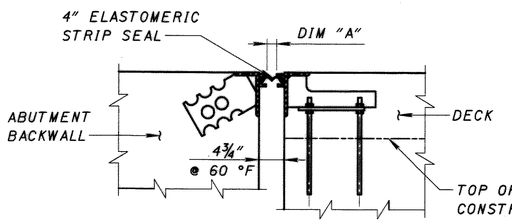

SECTION A-A

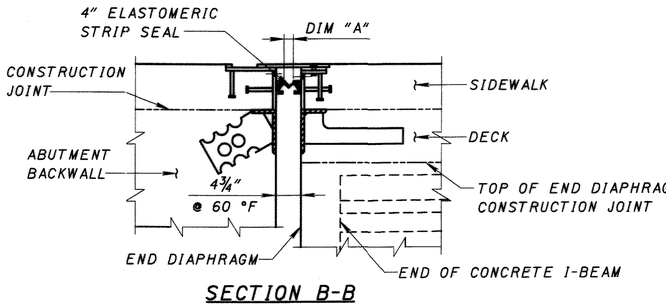

SECTION B-B

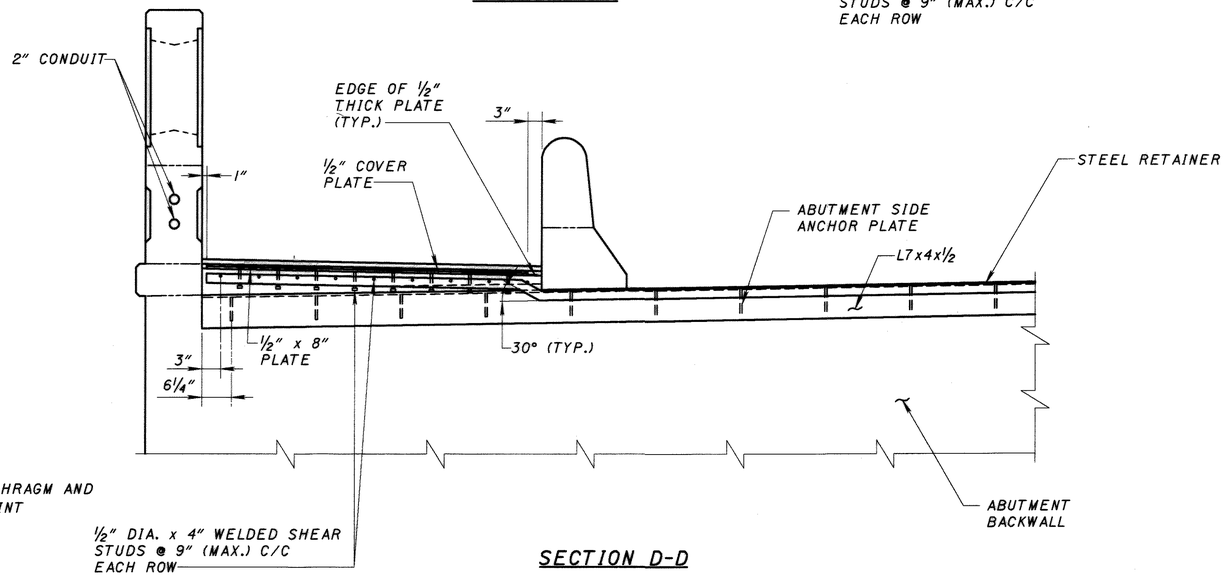

SECTION D-D

DESIGN AGENCY
McCOY ASSOCIATES, INC.
367 GHENT ROAD
AKRON, OHIO 44333

DESIGNED	DRAWN	REVIEWED	DATE
SL	SL	JBH	6-11-02
CHECKED	REVISED	STRUCTURE FILE NUMBER	
HK		0402273	

EXPANSION JOINT DETAILS
BRIDGE NO. ATB-20-2628
OVER BESSEMER & LAKE ERIE RAILROAD AND CONNEAUT CREEK

ATB-20-26.19

37/42

134/162

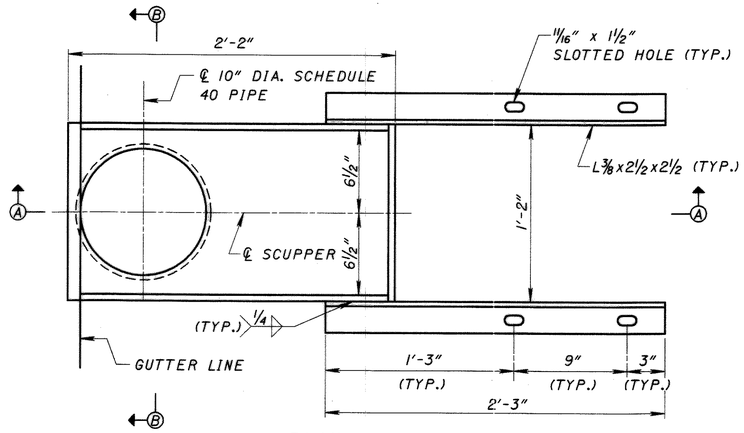

PLAN
(GRATE NOT SHOWN)
(SIX REQUIRED)

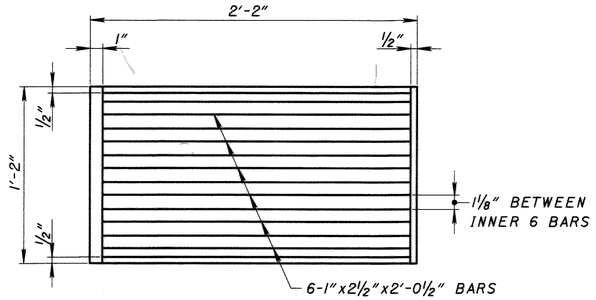

GRATE PLAN

NOTES

1. DOWNSPOUT PIPES SHALL BE STANDARD WEIGHT SCHEDULE 40, DIAMETER STEEL PIPE WITH A WALL THICKNESS OF 3/8". 5/8" DIA. U-BOLT, NUTS, WASHERS AND LEVELING BOLTS SHALL BE ASTM A307. ALL OTHER MATERIAL SHALL BE ASTM A709 GRADE 50.
2. SCUPPERS, DOWNSPOUTS, AND MOUNTING BRACKETS SHALL BE GALVANIZED PER 711.02, AFTER FABRICATION.
3. SCUPPER SUPPORT ANGLES, SUPPORT BOLTS, SCHEDULE 40 STEEL PIPE, MOUNTING BRACKETS AND HARDWARE ARE INCLUDED WITH ITEM 518 - SCUPPERS, INCLUDING SUPPORTS, AS PER PLAN FOR PAYMENT.
4. FOR SCUPPER LOCATIONS, SEE SHEETS 1|42 THRU 3|42.
5. ALL WELDS NOT SHOWN ARE A 1/4" FILLET.
6. FOR ABRREVIATIONS, SEE SHEET 5|42.

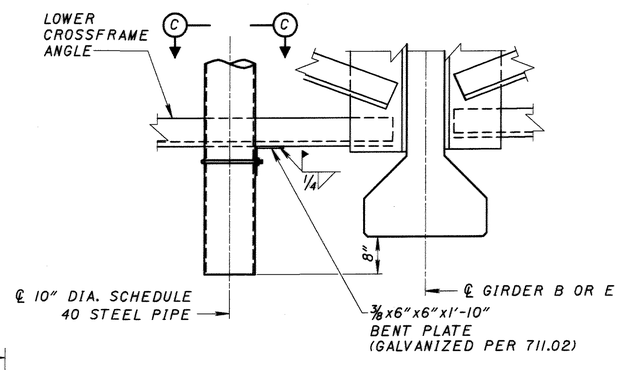

PIPE SUPPORT AT CROSSFRAMES

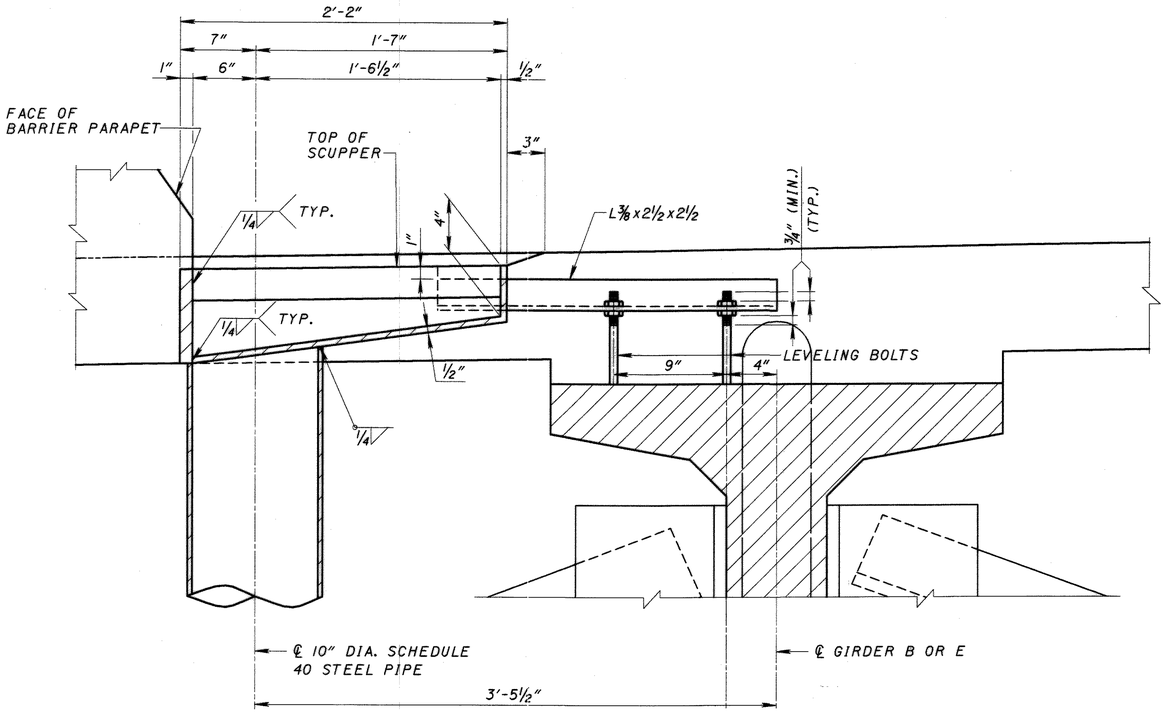

SECTION A-A

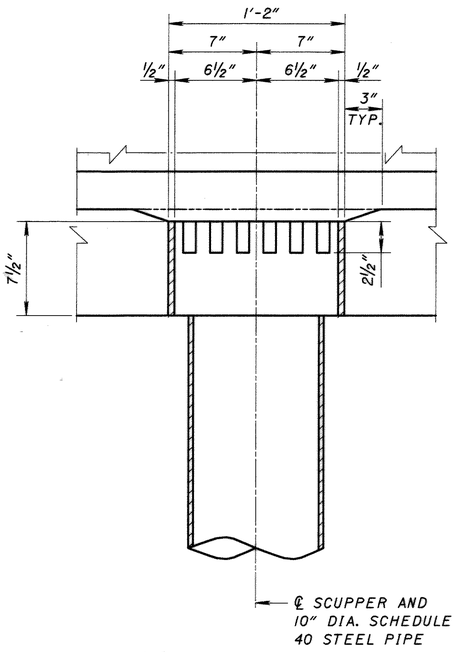

SECTION B-B

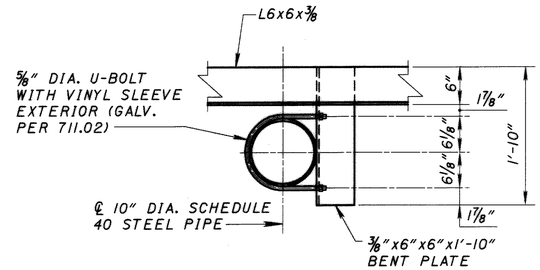

SECTION C-C

DESIGN AGENCY
McCOY ASSOCIATES, INC.
367 GHENT ROAD
AKRON, OHIO 44333

DESIGNED	DRAWN	REVISED	DATE
HK	SL	JBH	6-11-02
CHECKED	REVISED	STRUCTURE FILE NUMBER	
SL		0402273	

SCUPPER DETAILS
BRIDGE NO. ATB-20-2628 AND CONNEAUT CREEK
OVER BESSEMER & LAKE ERIE RAILROAD

ATB-20-26.19

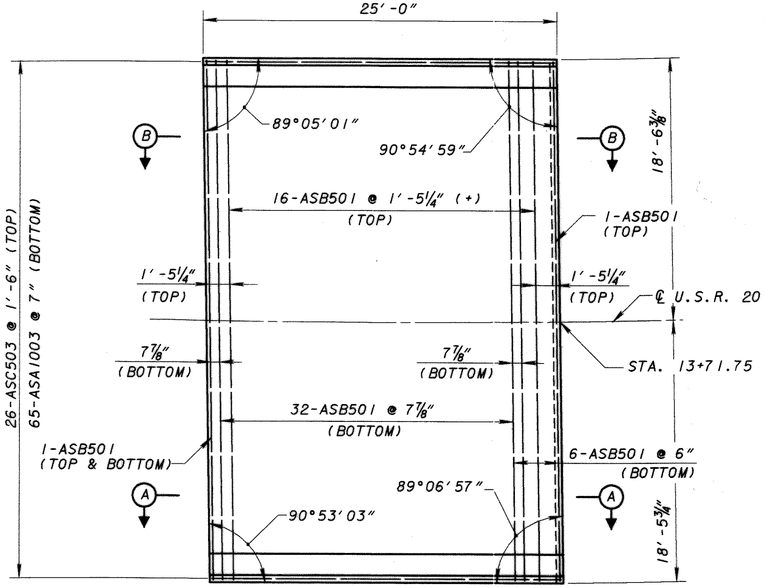

REAR APPROACH SLAB PLAN
(PARTIAL BACKWALL NOT SHOWN)

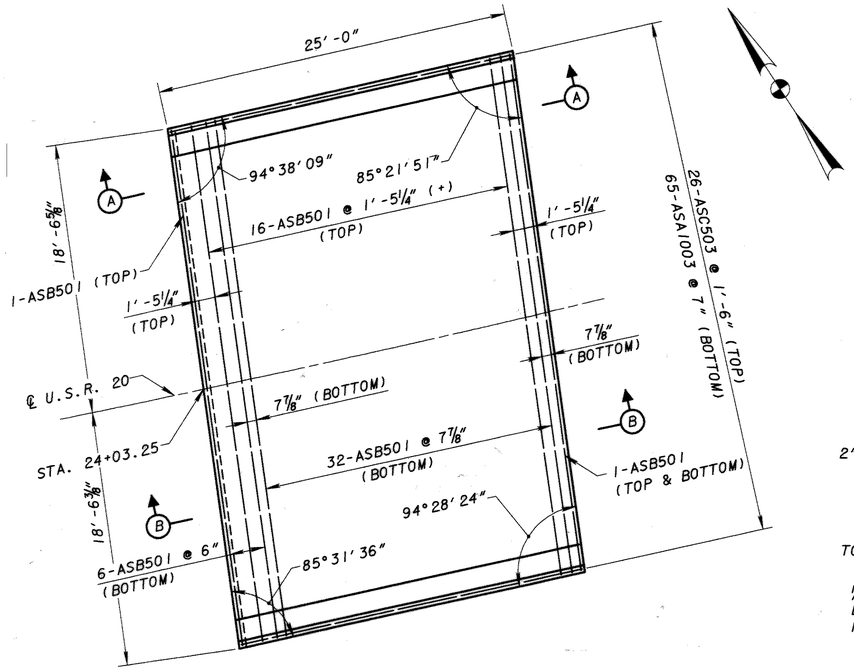

FORWARD APPROACH SLAB PLAN
(PARTIAL BACKWALL NOT SHOWN)

NOTES

1. FOR ADDITIONAL DETAILS SEE STANDARD DRAWING AS-1-81.
2. ALL REINFORCEMENT SHALL BE EPOXY COATED.
3. MINIMUM LAP UNLESS OTHERWISE NOTED:
   NO. 5 BARS - 2'-5"
4. 2 INCH JOINT SEALER AND ½ INCH PREFORMED EXPANSION JOINT FILLER SHALL BE INCLUDED WITH ITEM 608 - CONCRETE WALK, AS PER PLAN, FOR PAYMENT.
5. CONCRETE FOR BARRIER CURB ON APPROACH SLAB AND SEALING OF CONCRETE SURFACES (EPOXY-URETHANE) SHALL BE INCLUDED IN ITEM 611 - REINFORCED CONCRETE APPROACH SLAB, AS PER PLAN. FOR PAYMENT.

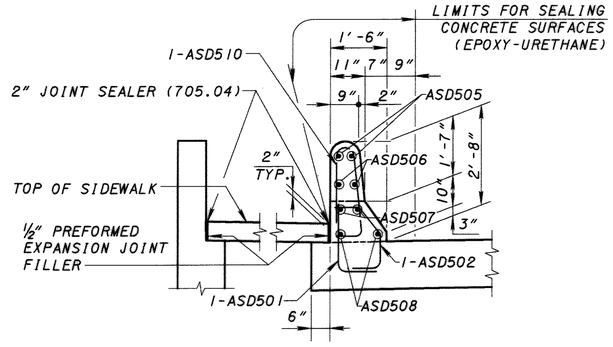

SECTION C-C

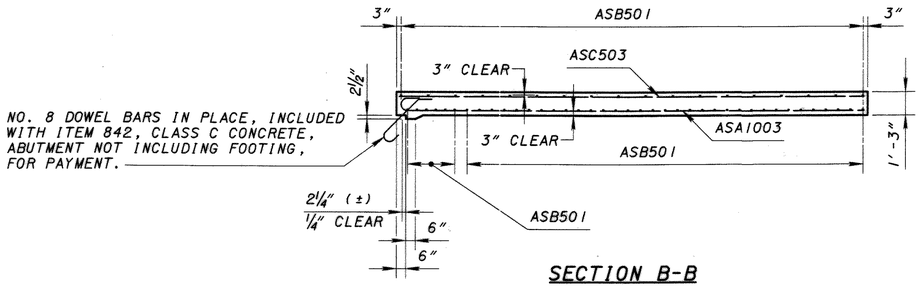

SECTION B-B

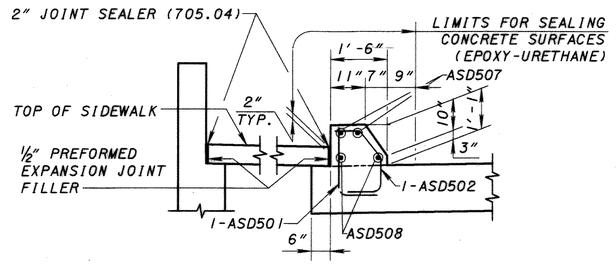

SECTION D-D

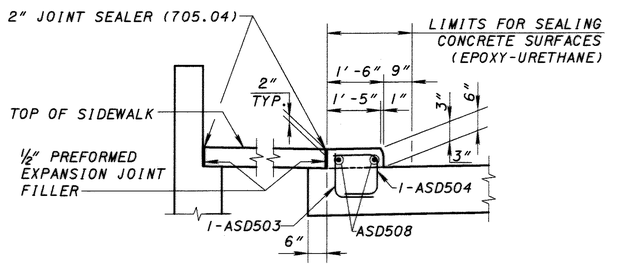

SECTION E-E

REINFORCING SCHEDULE

MARK	NO. REQ'D.	LENGTH	TYPE	DIMENSIONS A	B	C	D	E	INCRM.
ASA1003	65	25'-11"	16	24'-6"					
ASB501	57	37'-6"	STR.						
ASC503	26	24'-6"	STR.						
ASD501	38	2'-6"	1	11"	1'-9"				
ASD502	38	3'-5"	14	10½"	1'-0½"	8½"	6"	9"	
SERIES ASD503	2 SETS OF 7	1'-10" TO 2'-5"	1	11"	1'-1" TO 1'-8"				1¾6"
SERIES ASD504	2 SETS OF 7	2'-9" TO 3'-4"	2	1'-1"	1'-1" TO 1'-8"	10½"			1¾6"
ASD505	4	14'-9"	19	10"	13'-11"	9"			
ASD506	4	12'-1"	STR.						
ASD507	4	8'-0"	STR.						
ASD508	4	24'-8"	STR.						
ASD509	2	5'-3"	23	7½"	2'-5"	2'-2"			
SERIES ASD510	2 SETS OF 7	4'-1" TO 5'-1"	23	7½"	1'-10" TO 2'-4"	1'-7" TO 2'-1"			1"

NOTE: REINFORCEMENT SHOWN IS FOR ONE APPROACH SLAB. TWO APPROACH SLABS ARE REQUIRED.

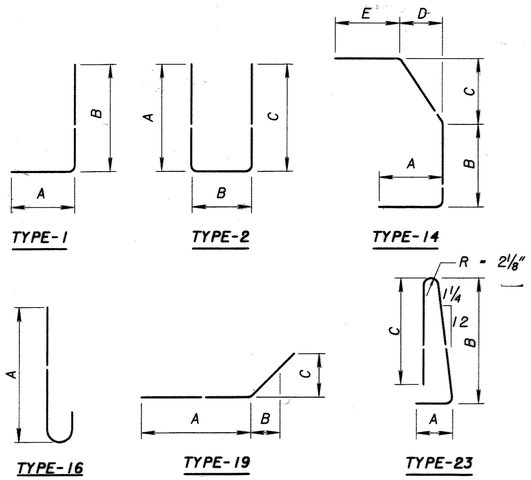

BENDING DIAGRAMS

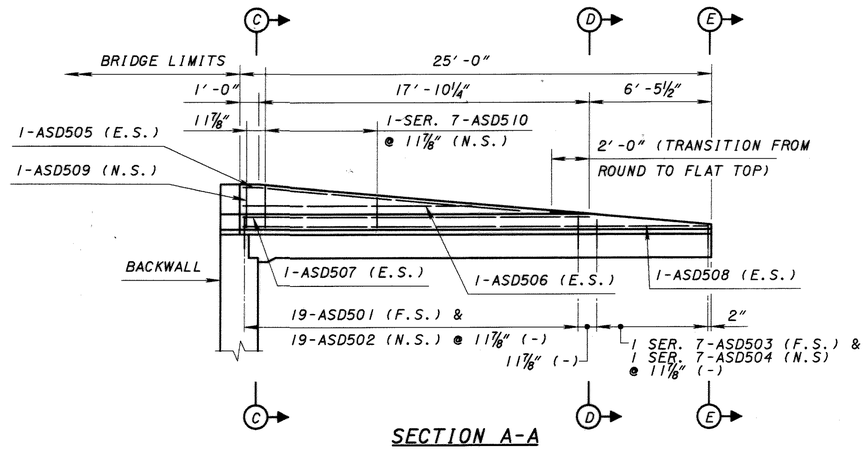

SECTION A-A

DESIGN AGENCY
McCOY ASSOCIATES, INC.
367 GHENT ROAD
AKRON, OHIO 44333

DESIGNED	DRAWN	REVIEWED	DATE
HK	SL	JBH	6-11-02
CHECKED	REVISED	STRUCTURE FILE NUMBER	
SL		0402273	

APPROACH SLABS
BRIDGE NO. ATB-20-2628
OVER BESSEMER & LAKE ERIE RAILROAD AND CONNEAUT CREEK

ATB-20-26.19

REINFORCING SCHEDULE

MARK	TOTAL NO. REQ'D.	LENGTH	TYPE	NUMBER		DIMENSIONS A	B	C	D	E	INCRM.	WEIGHT LBS.
ABUTMENTS												
				REAR	FWD.							
A501	36	7'-3"	1	36		10"	6'-6"					272
A502	80	8'-3"	2	40	40	10"	6'-10"	10"				688
A503	72	9'-6"	2	36	36	2'-5"	4'-11"	2'-5"				713
A504	72	26'-8"	STR.	34	38							2003
A505	20	27'-2"	STR.	10	10							567
A506	2	38'-0"	STR.	1	1							79
A507	89	9'-6"	STR.	42	47							882
A508	4	6'-6"	STR.	2	2							27
A509	36	5'-8"	STR.	16	20							213
A510	8	3'-2"	14	4	4	10½"	1'-0"	8½"	6"	7"		26
A511	8	2'-7"	1	4	4	11"	1'-9"					22
A512	8	5'-5"	23	4	4	8"	2'-5"	2'-2"				45
A513	32	1'-2"	STR.	16	16							39
A514	4	6'-4"	STR.		4							26
A515	8	14'-5"	STR.	8								120
A516	13	8'-9"	STR.	8	5							119
A517	10	11'-2"	STR.	8	2							116
A518	4	13'-2"	STR.	4								55
A519	24	19'-2"	STR.	16	8							480
A520	8	7'-4"	STR.	4	4							61
A521	36	9'-8"	1		36	10"	8'-11"					363
A522	5	19'-10"	STR.		5							103
A523	5	14'-3"	STR.		5							74
A524	2	16'-8"	STR.		2							35
A525	2	18'-0"	STR.		2							38
A526	8	24'-8"	STR.		8							206
A527	5	14'-6"	STR.		5							76
A528	2	12'-6"	STR.		2							26
A529	45	13'-0"	STR.	30	15							610
A530	4	3'-7"	STR.	4								15
A531	18	11'-8"	STR.	18								219
A532	15	18'-0"	STR.		15							282
A533	21	14'-7"	STR.		21							319
A601	30	15'-8"	2	30		2'-7"	6'-10"	6'-7"				706
A602	20	9'-3"	1	10	10	2'-7"	6'-10"					278
A603	100	10'-10"	2	50	50	4'-9"	1'-8"	4'-9"				1627
A604	76	14'-0"	2	38	38	6'-4"	1'-8"	6'-4"				1598
A605	76	6'-10"	2	38	38	3'-0"	1'-2"	3'-0"				780
A606	4	4'-9"	STR.	2	2							29
A607	4	7'-11"	STR.	2	2							48
A608	24	16'-6"	2	12	12	7'-7"	1'-8"	7'-7"				595
A609	24	7'-6"	2	12	12	3'-4"	1'-2"	3'-4"				270
SERIES A610	2 SETS OF 3	7'-6" TO 10'-2"	2	2 SETS OF 3		3'-6" TO 4'-10"	1'-2"	3'-2" TO 4'-6"			8"	80
A611	6	7'-2"	2	6		3'-4"	1'-2"	3'-0"				65
A612	12	13'-10"	40	6	6	2'-11"	3'-5"	1'-0"				249
A613	8	4'-10"	1	4	4	1'-7"	3'-4½"					58
A614	30	18'-5"	2		30	2'-7"	6'-10"	9'-4"				830
SERIES A615	1 SET OF 3	8'-10" TO 11'-6"	2		1 SET OF 3	4'-2" TO 5'-6"	1'-2"	3'-10" TO 5'-2"			8"	46
A616	3	8'-8"	2		3	4'-1"	1'-2"	3'-9"				39
SERIES A617	1 SET OF 3	9'-0" TO 11'-8"	2		1 SET OF 3	4'-3" TO 5'-7"	1'-2"	3'-11" TO 5'-3"			8"	47
A618	3	8'-10"	2		3	4'-2"	1'-2"	3'-10"				40
A701	24	11'-7"	1	24		1'-2"	10'-7"					568
A702	22	7'-6"	STR.	22								337
A703	4	6'-3"	STR.	2	2							51
A704	31	14'-4"	1		31							908
A705	29	7'-7"	STR.		29							450
A801	20	29'-11"	STR.	10	10							1598
A802	12	30'-10"	STR.	6	6							988
AD801	52	4'-11"	18	26	26	2'-7"	1'-0"	1'-0"				683
A901	20	4'-8"	1	10	10	1'-7"	3'-4½"					317
A902	8	4'-11"	STR.	4	4							134

REINFORCING SCHEDULE

MARK	TOTAL NO. REQ'D.	LENGTH	TYPE	NUMBER		DIMENSIONS A	B	C	D	E	INCRM.	WEIGHT LBS.
ABUTMENTS												
				REAR	FWD.							
R508	18	19'-2"	STR.	12	6							360
R509	6	24'-8"	STR.		6							154
R603	120	11'-3"	24	56	64	6"	6'-5"	4-1"				2028
R604	51	6'-11"	24	24	27	6"	4'-3"	1'-11"				530
R804	6	19'-2"	STR.	4	2							307
R805	2	24'-8"	STR.		2							132
											TOTAL -	25849
RETAINING WALL												
W501	10	2'-10"	1	-	-	1'-1"	1'-10"					30
SERIES W502	2 SETS OF 26	2'-3" TO 2'-10"	1	-	-	1'-1"	1'-3" TO 1'-10"				1/4"	138
W503	180	2'-8"	1			1'-1"	1'-8"					501
W504	2	6'-2"	19	-	-	3'-9"	2'-3"	10¼"				13
W505	2	28'-3"	STR.	-	-							59
W506	6	31'-2"	STR.	-	-							195
											TOTAL -	936

NOTES

1. ALL REINFORCING STEEL TO BE EPOXY COATED.
2. THE BAR SIZE NUMBER IS SPECIFIED ON THE PLANS IN THE BAR MARK COLUMN. THE FIRST DIGIT INDICATES THE BAR SIZE NUMBER. FOR EXAMPLE, A501 IS A NO. 5 BAR. BAR DIMENSIONS SHOWN ARE OUT TO OUT UNLESS OTHERWISE NOTED. R INDICATES INSIDE RADIUS UNLESS OTHERWISE NOTED.
3. THE WEIGHT OF REINFORCING IS GIVEN FOR INFORMATIONAL PURPOSES ONLY.

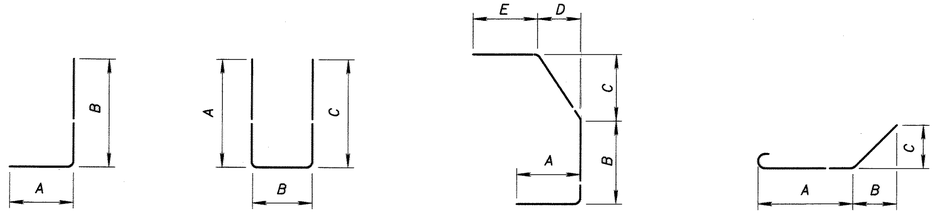

BENDING DIAGRAMS

DESIGN AGENCY: McCOY ASSOCIATES, INC. 367 GHENT ROAD AKRON, OHIO 44333

DATE 6-11-02 | REVISED JBH | DRAWN SL | DESIGNED HK | CHECKED SL | REVISED

STRUCTURE FILE NUMBER 0402273

REINFORCING SCHEDULE
BRIDGE NO. ATB-20-2628 AND CONNEAUT CREEK
OVER BESSEMER & LAKE ERIE RAILROAD

ATB-20-26.19

REINFORCING SCHEDULE

MARK	NO. REQ'D.	LENGTH	TYPE	NUMBER							DIMENSIONS					INCRM.	WEIGHT LBS.
											A	B	C	D	E		
PIERS																	
				PIER 1	PIER 2	PIER 3	PIER 4	PIER 5	PIER 6	PIER 7							
P401	558	24'-6"	3	52	80	84	80	86	90	86	6'-0"	6'-0"					9132
P402	2232	10'-3"	2	208	320	336	320	344	360	344	3'-11½"	2'-6"	3'-11½"				15282
P403	332	16'-6"	3	44	46	48	50	46	48	50	4'-0"	4'-0"					3659
P404	1328	7'-3"	2	176	184	192	200	184	192	200	2'-11½"	1'-6"	2'-11½"				6431
P405	280	9'-5"	2	40	40	40	40	40	40	40	3'-11½"	1'-8"	3'-11½"				1761
P406	280	8'-11"	2	40	40	40	40	40	40	40	3'-3½"	2'-6"	3'-3½"				1668
P501	90	37'-8"	17	14	12	12	12	12	12	16	36'-6"						3536
SERIES P502	14 SETS OF 3	36'-3" TO 44'-11"	STR.	2 SETS OF 3	2 SETS OF 3	2 SETS OF 3	2 SETS OF 3	2 SETS OF 3	2 SETS OF 3	2 SETS OF 3						4'-4"	1778
P503	98	46'-8"	STR.	14	14	14	14	14	14	14							4770
P504	252	16'-0"	2	36	36	36	36	36	36	36	6'-8"	2'-11"	6'-8"				4205
P505	252	8'-0"	2	36	36	36	36	36	36	36	2'-8"	2'-11"	2'-8"				2103
P506	273	9'-3"	2	39	39	39	39	39	39	39	2'-8"	4'-2"	2'-8"				2634
P507	49	17'-3"	2	7	7	7	7	7	7	7	6'-8"	4'-2"	6'-8"				882
SERIES P508	14 SETS OF 16	13'-5" TO 17'-2"	2	2 SETS OF 16	2 SETS OF 16	2 SETS OF 16	2 SETS OF 16	2 SETS OF 16	2 SETS OF 16	2 SETS OF 16	4'-9" TO 6'-7½"	4'-2"	4'-9" TO 6'-7½"			1½"	3573
P509	26	18'-6"	STR.	26													502
P510	130	16'-6"	STR.		26	26	26	26	26								2237
P511	26	21'-6"	STR.							26							583
P601	140	21'-11"	3	20	20	20	20	20	20	20	6'-0"	4'-8"					4609
P602	70	32'-8"	STR.	10	10	10	10	10	10	10							3435
P603	42	16'-4"	40	6	6	6	6	6	6	6	4'-2"	3'-5"	1'-0"				1030
P604	28	4'-10"	1	4	4	4	4	4	4	4	1'-7"	3'-4½"					203
P701	84	11'-9"	19	12	12	12	12	12	12	12	3'-8"	7'-10"	1'-11½"				2017
P801	180	16'-6"	STR.		36	36	36	36	36								7930
P901	36	18'-6"	STR.	36													2264
P902	140	4'-8"	1	20	20	20	20	20	20	20	1'-7"	3'-4½"					2221
P903	28	4'-2"	STR.	4	4	4	4	4	4	4							397
P1101	560	18'-6"	1	80	80	80	80	80	80	80	2'-0"	16'-10"					55043
P1102	154	35'-10"	2	22	22	22	22	22	22	22	2'-0"	32'-6"	2'-0"				29319
P1103	56	30'-6"	STR.	8	8	8	8	8	8	8							9075
P1104	56	46'-8"	STR.	8	8	8	8	8	8	8							13885
P1105	56	55'-4"	2	8	8	8	8	8	8	8	4'-8"	46'-8"	4'-8"				16463
P1106	80	30'-4"	STR.	80													12893
P1107	48	25'-11"	STR.	48													6609
P1108	160	43'-10"	STR.		80		80										37262
P1109	48	26'-11"	STR.		48												6864
P1110	80	46'-4"	STR.			80											19694
P1111	48	27'-11"	STR.			48											7119
P1112	48	28'-10"	STR.				48										7353
P1113	80	46'-10"	STR.					80									19906
P1114	48	26'-10"	STR.					48									6843
P1115	80	49'-4"	STR.						80								20969
P1116	48	27'-9"	STR.						48								7077
P1117	38	21'-6"	STR.							38							4341
P1118	80	47'-4"	STR.							80							20119
P1119	48	28'-9"	STR.							48							7332
P1120	336	20'-1"	STR.	48	48	48	48	48	48	48							35852
P1401	210	40'-8"	2	30	29	29	29	29	29	35	2'-7"	36'-6"	2'-7"				65331
																TOTAL =	498191

NOTES

1. ALL REINFORCING STEEL TO BE EPOXY COATED.
2. THE BAR SIZE NUMBER IS SPECIFIED ON THE PLANS IN THE BAR MARK COLUMN. THE FIRST DIGIT WHERE THREE DIGITS ARE USED, AND THE FIRST TWO DIGITS WHERE FOUR DIGITS ARE USED, INDICATES THE BAR SIZE NUMBER. FOR EXAMPLE, P401 IS A NO. 4 BAR. BAR DIMENSIONS SHOWN ARE OUT TO OUT UNLESS OTHERWISE INDICATED. R INDICATES INSIDE RADIUS UNLESS OTHERWISE NOTED.
3. THE WEIGHT OF REINFORCING IS GIVEN FOR INFORMATIONAL PURPOSES ONLY.

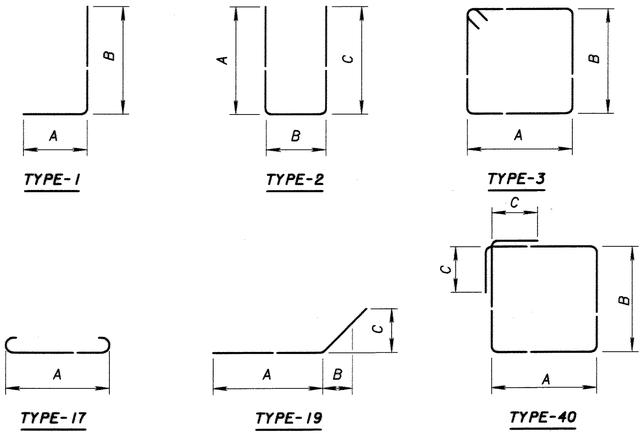

BENDING DIAGRAMS

DESIGN AGENCY
McCOY ASSOCIATES, INC.
367 GHENT ROAD
AKRON, OHIO 44333

DESIGNED HK | DRAWN SL | CHECKED SL | REVISED | REVISED JBH | DATE 6-11-02 | STRUCTURE FILE NUMBER 0402273

REINFORCING SCHEDULE
BRIDGE NO. ATB-20-2628
OVER BESSEMER & LAKE ERIE RAILROAD AND CONNEAUT CREEK

ATB-20-26.19

REINFORCING SCHEDULE

MARK	NO. REQ'D.	LENGTH	TYPE	DIMENSIONS A	B	C	D	E	INCRM.	WEIGHT LBS.
BEAMS										
* B401	5716	13'-11"	24	5½"	6'-7¾"	6'-7¾"				53138
* B402	6292	4'-10"	41	1'-11½"	6¼"	8½"	8½"			20315
* B404	5716	2'-8"	STR.							10182
* B501	108	39'-2"	STR.							4412
* B502	720	33'-5"	STR.							25095
* B503	288	36'-11"	STR.							11089
* B504	1152	6'-3"	STR.							7510
									TOTAL -	131740
DIAPHRAGMS										
D401	42	14'-0"	24	5½"	6'-7¾"	6'-7¾"				393
D402	42	4'-10"	41	1'-11½"	6¼"	8½"	8½"			136
D403	156	10'-0"	2	4'-3"	1'-8"	4'-3"				1042
D404	42	2'-8"	STR.							75
D405	62	15'-11"	6	2'-1"	6'-5"	8"				659
D406	155	15'-6"	6	1'-8"	6'-5"	8"				1605
D407	8	15'-3"	6	2'-1"	6'-1"	8"				81
D408	20	14'-10"	6	1'-8"	6'-1"	8"				198
D601	320	7'-7"	STR.							3645
D602	216	9'-11"	13	4'-3"	8"	8"	4'-9"			3217
D603	16	2'-0"	STR.							48
D604	8	6'-7"	13	4'-3"	8"	8"	1'-5"			79
D605	16	25'-11"	STR.							623
D606	72	9'-5"	13	4'-3"	8"	8"	4'-2"			1018
D607	72	4'-10"	19	4'-3"	5"	5"				523
									TOTAL -	13342
DECK SLAB										
S401	1372	2'-0"	2	11"	8"	8"				1833
S402	1372	1'-9"	2	8"	8"	8"				1604
S501	4500	26'-11"	STR.							126333
S502	2250	23'-1"	STR.							54171
S503	4950	30'-0"	STR.							154886
SERIES S505	1 SET OF 59	31'-3" TO 37'-9"	STR.						1 5/16"	2123
S506	16	32'-3"	STR.							538
S507	8	37'-7"	STR.							314
S508	8	36'-9"	STR.							307
S509	1372	5'-3"	23	7½"	2'-5"	2'-2"				7513
S510	1372	2'-11"	14	10½"	8½"	8½"	6"	9"		4174
S511	1372	2'-2"	1	11"	1'-5"					3100
S512	1372	6'-9"	STR.							9659
S513	3	35'-4"	STR.							111
S514	3	30'-1"	STR.							94
S515	3	38'-2"	STR.							119
S516	2	39'-6"	STR.							82
S517	910	60'-0"	STR.							56948
S601	1593	40'-0"	STR.							95707
SERIES S602	1 SET OF 59	22'-11" TO 29'-3"	STR.						1 5/16"	2311
S603	3	39'-0"	STR.							176
S604	4	38'-1"	STR.							229
S605	364	60'-0"	STR.							32804
									TOTAL -	555136
RAILING										
R501	444	30'-0"	STR.							13893
R502	6	3'-9"	STR.							23
R503	6	10'-4"	STR.							65
R504	198	6'-11"	21	1'-4"	1'-5"	6"	1'-10"			1428
R505	72	13'-1"	2	5'-8"	2'-0"	5'-8"				982
R506	72	3'-5"	2	10"	2'-0"	10"				257
R507	72	5'-8"	STR.							426
R601	2898	12'-9"	31	6"	1'-10"	4'-5"	4'-3"			55498
R602	1175	8'-5"	31	6"	1'-10"	2'-3"	2'-1"			14854

REINFORCING SCHEDULE

MARK	NO. REQ'D.	LENGTH	TYPE	DIMENSIONS A	B	C	D	E	INCRM.	WEIGHT LBS.
RAILING										
R801	160	30'-0"	STR.							12816
R802	2	21'-0"	STR.							112
R803	2	27'-7"	STR.							147
									TOTAL -	100502

LEGEND

* DENOTES REINFORCING STEEL INCLUDED FOR PAYMENT WITH ITEM 865, EACH, DRAPED STRAND PRESTRESSED CONCRETE BRIDGE I-BEAM MEMBERS, LEVEL 3, TYPE 4 MODIFIED.

NOTES

1. ALL REINFORCING STEEL TO BE EPOXY COATED.
2. THE BAR SIZE NUMBER IS SPECIFIED ON THE PLANS IN THE BAR MARK COLUMN. THE FIRST DIGIT WHERE THREE DIGITS ARE USED, AND THE FIRST TWO DIGITS WHERE FOUR DIGITS ARE USED, INDICATES THE BAR SIZE NUMBER. FOR EXAMPLE, B401 IS A NO. 4 BAR. BAR DIMENSIONS SHOWN ARE OUT TO OUT UNLESS OTHERWISE INDICATED. R INDICATES INSIDE RADIUS UNLESS OTHERWISE NOTED.
3. THE WEIGHT OF REINFORCING IS GIVEN FOR INFORMATIONAL PURPOSES ONLY.

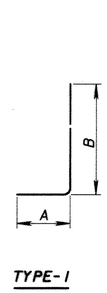

TYPE-1

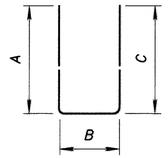

TYPE-2

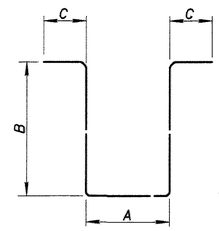

TYPE-6

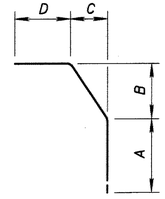

TYPE-13

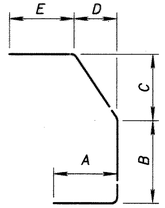

TYPE-14

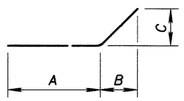

TYPE-19

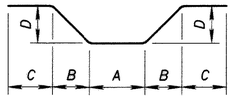

TYPE-21

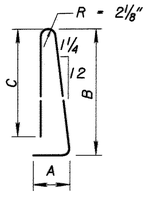

TYPE-23

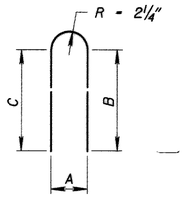

TYPE-24

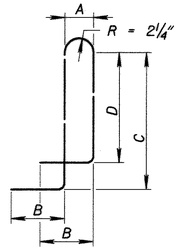

TYPE-31

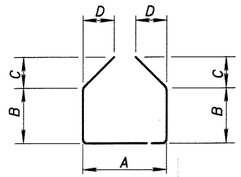

TYPE-41

BENDING DIAGRAMS

DESIGN AGENCY
McCOY ASSOCIATES, INC.
367 GHENT ROAD
AKRON, OHIO 44333

DESIGNED	DRAWN	REVISED	DATE
HK	SL	JBH	6-11-02
CHECKED	REVISED	STRUCTURE FILE NUMBER	
SL		0402273	

REINFORCING SCHEDULE
BRIDGE NO. ATB-20-2628
OVER BESSEMER & LAKE ERIE RAILROAD AND CONNEAUT CREEK

ATB-20-26.19

LOT 8, SEC. 1,
LOT 4, SEC. 2,
T-14-N, R-1-W,
IN THE CONNECTICUT WESTERN RESERVE
CITY OF CONNEAUT
ORIGINAL CONNEAUT TOWNSHIP
ASHTABULA COUNTY

PROPOSED U.S.R. 20 CURVE DATA

Vol. 18 Pg. 35

CURVE 1A
P.I. Sta = 10+01.44
Δ = 17° 29′ 00″ (LT)
Dc = 9° 29′ 48″
R = 603.32′
T = 92.77′
L = 184.10′
E = 7.09′
e_{max} = 0.023

CURVE 1
P.I. Sta = 12+96.47
Δ = 24° 05′ 00″ (LT)
Dc = 6° 00′ 00″
R = 954.93′
T = 203.70′
L = 401.39′
E = 21.48′
e_{max} = NC

CURVE 2
P.I. Sta = 24+78.85
Δ = 16° 38′ 40″ (LT)
Dc = 6° 00′ 00″
R = 954.93′
T = 139.69′
L = 277.41′
E = 10.16′
e_{max} = NC

CURVE 3
P.I. Sta = 27+21.15
Δ = 12° 30′ 00″ (RT)
Dc = 6° 00′ 00″
R = 954.93′
T = 104.58′
L = 208.33′
E = 5.71′
e_{max} = NC

NOTE: THE EXISTING R/W WIDTH AND LOCATION WERE DETERMINED USING:
ODOT ATB-20-26.26 R/W PLANS
S.H. 2, SEC. R,1 (1940)
DEEDS, TAX MAPS, MAPS OF SURVEY & PLATS: TYLER PLAT NO. 2 - VOL. 8, PG. 23
F.J. CHENEY PLAT - 25-1-54
MERRIAM PLAT - VOL. 4, PG. 38
LOTS 1, 2 & 3 MERRIAM PLAT - VOL. 27, PG. 220
CONNEAUT CREEK VIADUCT BRIDGE PLAN 102-6
BESSEMER & LAKE ERIE R.R. VALUATION MAP V7-2

CURVE 4
P.I. Sta = 28+98.77
Δ = 6° 49′ 47″ (LT)
Dc = 4° 37′ 41″
R = 1,237.99′
T = 73.87′
L = 147.56′
E = 2.20′
e_{max} = NC

ADJUSTABLE CENTERLINE MONUMENTS AND CENTERLINE REFERENCE MONUMENTS ARE SHOWN ON STANDARD CONSTRUCTION DRAWING RM-1.1 (REV. 4-29-99) OF THE OHIO DEPARTMENT OF TRANSPORTATION. THE PLACING OF THE MONUMENTS SHALL BE UNDER THE DIRECTION OF A REGISTERED SURVEYOR AND ARE TO BE SET, AS SHOWN BY THE HIGHWAY CONTRACTOR AT THE TIME OF CONSTRUCTION. ANY ALTERATIONS, WITH PRIOR APPROVAL OF THE OHIO DEPARTMENT OF TRANSPORTATION, SHALL BE NOTED AND O.D.O.T. SHALL BE NOTIFIED OF THE NEW LOCATIONS.

BASIS FOR BEARINGS:
ALL BEARINGS SHOWN ARE RELATIVE TO OHIO NORTH ZONE STATE PLANE COORDINATES, NAD83(95) AND ARE FOR PROJECT USE ONLY.

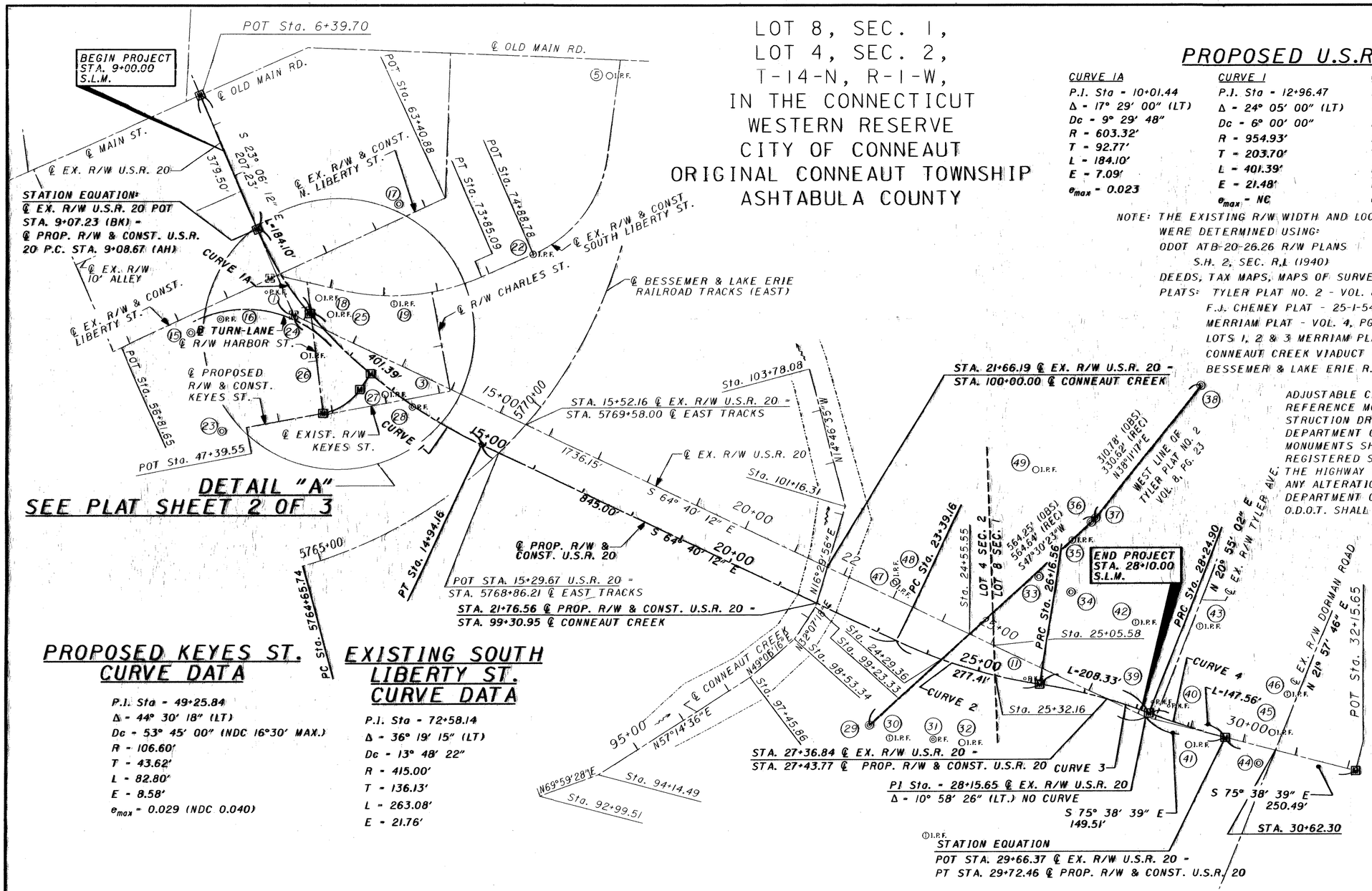

DETAIL "A"
SEE PLAT SHEET 2 OF 3

PROPOSED KEYES ST. CURVE DATA

P.I. Sta = 49+25.84
Δ = 44° 30′ 18″ (LT)
Dc = 53° 45′ 00″ (NDC 16°30′ MAX.)
R = 106.60′
T = 43.62′
L = 82.80′
E = 8.58′
e_{max} = 0.029 (NDC 0.040)

EXISTING SOUTH LIBERTY ST. CURVE DATA

P.I. Sta = 72+58.14
Δ = 36° 19′ 15″ (LT)
Dc = 13° 48′ 22″
R = 415.00′
T = 136.13′
L = 263.08′
E = 21.76′

PROPOSED TURN-LANE CURVE DATA

P.I. Sta = 59+85.33
Δ = 73° 25′ 28″ (LT)
Dc = 26° 38′ 57″
R = 215.00′
T = 160.33′
L = 275.52′
E = 53.20′
e_{max} = 0.025

EXISTING ℄ B. & L.E. R.R. CURVE DATA

P.I. Sta = 577+00.74
Δ = 74° 01′ 00″ (LT)
Dc = 6° 48′ 05″
R = 842.42′
T = 635.00′
L = 1088.27′
E = 212.52′

NOTE: SEE PLAT SHEET 3 OF 3 FOR EXISTING AND PROPOSED MONUMENT LOCATIONS AND DESCRIPTIONS.

MONUMENT LEGEND
- M EXISTING R/W MONUMENT BOX
- M PROPOSED R/W MONUMENT BOX
- ◎ EXISTING CONCRETE MONUMENT
- ○I.P.F. IRON PIN FOUND
- ⊙I.P.F. IRON PIN FOUND W/ ID CAP
- ●I.P.S. IRON PIN SET W/ ID CAP MARKED "ODOT R/W LELAND B. DILLWORTH, P.S. 7481"
- ◎P.F. IRON PIPE FOUND
- ◦P.K.F. P.K. NAIL FOUND

I HEREBY CERTIFY THAT THIS PLAT IS A TRUE DELINEATION OF A SURVEY MADE FOR THE OHIO DEPARTMENT OF TRANSPORTATION IN 2001 BY McCOY ASSOCIATES, INC.

THE ESTABLISHMENT OF THE PROPERTY LINES AND EXISTING RIGHT OF WAY LINES SHOWN ON THIS PLAN AS OF THIS DATE WERE PERFORMED BY ME OR UNDER MY DIRECT SUPERVISION.

BY Leland B. Dillworth
LELAND B. DILLWORTH
SURVEYOR NO. 7481 DATE 3-08-02

SURVEYOR'S SEAL

STATE OF OHIO · LELAND B. DILLWORTH · S-7481 · REGISTERED PROFESSIONAL SURVEYOR

No Transfer Necessary
Auditor, Ashtabula County, Ohio
JUL 10 2002

200200014193
Filed for Record in ASHTABULA COUNTY, OHIO
JUDITH A BARTA
07-10-2002 11:03 AM.
PLAT 112.20
OR Book 18 Page 35 - 37

200200014193
RICHARD BURROUGHS
1-800-462-1130 X31

RECEIVED JULY 10, 2002
RECORDED JULY 10, 2002
BOOK 18 PAGE 35-37
Judith A. Barta
COUNTY RECORDER

HORIZONTAL SCALE IN FEET
0 50 100 200

PID NO. 18520

R/W DESIGNER PKM
R/W REVIEWER LBD

CENTERLINE PLAT

ATB-20-26.26

1/3
1/23
140/162

I8520CRCA.DGN

VOL. 18
PG. 36

PROPOSED KEYES ST. CURVE DATA

P.I. Sta - 49+25.84
Δ - 44° 30' 18" (LT)
Dc - 53° 45' 00" (NDC 16°30' MAX.)
R - 106.60'
T - 43.62'
L - 82.80'
E - 8.58'
e_{max} - 0.029 (NDC 0.040)

EXISTING SOUTH LIBERTY ST. CURVE DATA

P.I. Sta - 72+58.14
Δ - 36° 19' 15" (LT)
Dc - 13° 48' 22"
R - 415.00'
T - 136.13'
L - 263.08'
E - 21.76'

PROPOSED TURN-LANE CURVE DATA

P.I. Sta - 59+85.33
Δ - 73° 25' 28" (LT)
Dc - 26° 38' 57"
R - 215.00'
T - 160.33'
L - 275.52'
E - 53.20'
e_{max} - 0.025

PROPOSED U.S.R. 20 CURVE DATA

CURVE IA	CURVE I
P.I. Sta - 10+01.44	P.I. Sta - 12+96.47
Δ - 17° 29' 00" (LT)	Δ - 24° 05' 00" (LT)
Dc - 9° 29' 48"	Dc - 6° 00' 00"
R - 603.32'	R - 954.93'
T - 92.77'	T - 203.70'
L - 184.10'	L - 401.39'
E - 7.09'	E - 21.48'
e_{max} - 0.023	e_{max} - NC

NOTE: THE EXISTING R/W WIDTH AND LOCATION WERE DETERMINED USING:
ODOT ATB-20-26.26 R/W PLANS
SH. 2, SEC. R,L (1940)
DEEDS, TAX MAPS, MAPS OF SURVEY & PLATS: TYLER PLAT NO. 2 - VOL. 8, PG. 23
F.J. CHENEY PLAT - 25-1-54
MERRIAM PLAT - VOL. 4, PG. 38
LOTS 1, 2 & 3 MERRIAM PLAT - VOL. 27, PG. 220
CONNEAUT CREEK VIADUCT BRIDGE PLAN 102-6
BESSEMER & LAKE ERIE R.R. VALUATION MAP V7-2

BASIS FOR BEARINGS:
ALL BEARINGS SHOWN ARE RELATIVE TO OHIO NORTH ZONE STATE PLANE COORDINATES, NAD83(95) AND ARE FOR PROJECT USE ONLY.

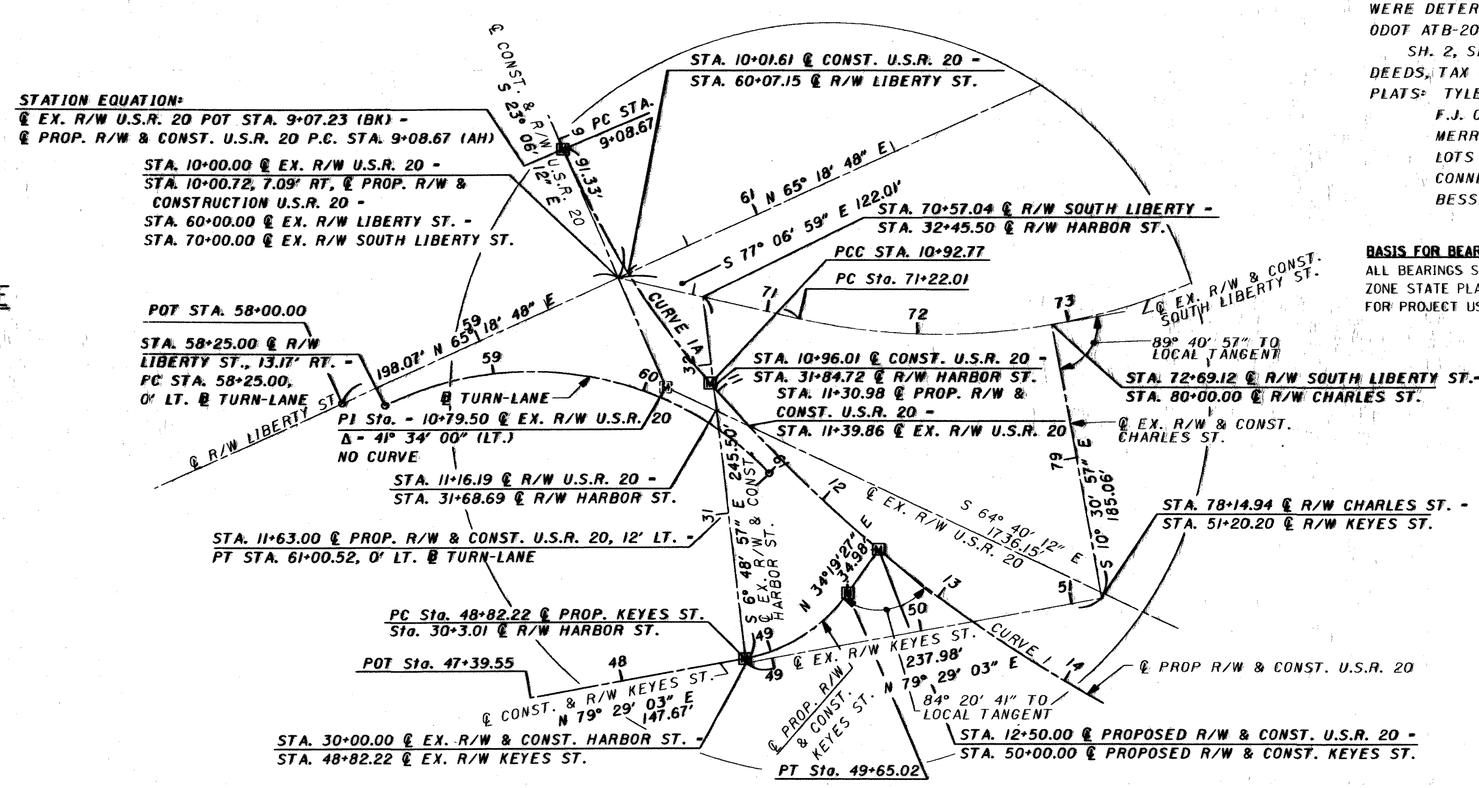

DETAIL "A"

MONUMENT LEGEND

- EXISTING R/W MONUMENT BOX
- PROPOSED R/W MONUMENT BOX
- EXISTING CONCRETE MONUMENT
- I.P.F. IRON PIN FOUND
- I.P.F. IRON PIN FOUND W/ ID CAP
- I.P.S. IRON PIN SET W/ ID CAP
- P.F. IRON PIPE FOUND
- P.K.F. P.K. NAIL FOUND

NOTE: SEE PLAT SHEET 3 OF 3 FOR EXISTING AND PROPOSED MONUMENT LOCATIONS AND DESCRIPTIONS.

HORIZONTAL SCALE IN FEET
0 50 100 200

PID NO. 18520

R/W DESIGNER PKM
R/W REVIEWER LBD

CENTERLINE PLAT

ATB-20-26.26

2/3
2/23
(141/162)

I8520CRCA.DGN

VOL. 18
PG. 37

(M) ADJUSTABLE MONUMENT BOXES TO BE SET DURING CONSTRUCTION					
Station		Distance From ℄ Of R/W		Adjustable ℄ Monument	Right of way monument
		LEFT	RIGHT		
U.S.R. 20	POT 6+39.70	ON ℄	ON ℄	I	
↑	PC 9+08.67	ON ℄	ON ℄	I	
	PCC 10+92.77	ON ℄	ON ℄	I	
	POT 12+50.00	ON ℄	ON ℄	I	
	PRC 26+16.56	ON ℄	ON ℄	I	
	PRC 28+24.90	ON ℄	ON ℄	I	
↓	PT 29+72.46	ON ℄	ON ℄	I	
U.S.R. 20	POT 32+15.65	ON ℄	ON ℄	I	
KEYES ST.	PC 48+82.22	ON ℄	ON ℄	I	
KEYES ST.	PT 49+65.02	ON ℄	ON ℄	I	
TOTALS				10	0

ADJUSTABLE CENTERLINE MONUMENTS AND CENTERLINE REFERENCE MONUMENTS ARE SHOWN ON STANDARD CONSTRUCTION DRAWING RM-1.1 (REV. 4-29-99) OF THE OHIO DEPARTMENT OF TRANSPORTATION. THE PLACING OF THE MONUMENTS SHALL BE UNDER THE DIRECTION OF A REGISTERED SURVEYOR AND ARE TO BE SET, AS SHOWN BY THE HIGHWAY CONTRACTOR AT THE TIME OF CONSTRUCTION. ANY ALTERATIONS, WITH PRIOR APPROVAL OF THE OHIO DEPARTMENT OF TRANSPORTATION, SHALL BE NOTED AND O.D.O.T. SHALL BE NOTIFIED OF THE NEW LOCATIONS.

EXISTING MONUMENTS FOUND AND USED TO ESTABLISH PROJECT CENTERLINES.
ALL VALUES ARE ENGLISH GROUND VALUES REFERENCED TO OHIO STATE PLANE NAD83(95).
COMBINED SCALE FACTOR FOR PROJECT (GROUND TO GRID) = 1.00002144
PROJECT ADJUSTMENT FACTOR (ENGLISH GROUND TO METRIC GRID) = 0.30480714453

				SURFACE CO-ORDINATES*		STATE PLANE CO-ORDINATES			
NUMBER	ROAD	STATION	OFFSET	NORTHING	EASTING	NORTHING	EASTING	ELEVATION	DESCRIPTION
15	Liberty Street	58+12.42	30.10' RT.	834,997.31	2,497,851.36	834,907.18	2,497,581.75	659.99	4" DIAMETER CONCRETE "X" 3" DEEP
16	Liberty Street	58+72.37	29.97' RT.	835,022.45	2,497,905.79	834,932.32	2,497,636.17	658.02	1" PIPE BENT 3" DEEP
17	Liberty Street	62+58.20	25.66' LT.	835,234.01	2,498,233.20	835,143.86	2,497,956.51	649.01	CONCRETE MONUMENT BTWN LOTS 5 & 6 ON F.J. CHENEY PLAT
18	South Liberty Street	70+84.54	23.40' RT.	835,061.28	2,498,086.46	834,971.14	2,497,816.82	652.14	#5 REBAR 2" DEEP
19	South Liberty Street	72+02.57	25.60' RT.	835,050.45	2,498,226.16	834960.32	2,497,956.51	635.49	CAP REBAR W/ "BENNET P.S. 6002" FLUSH
1	U.S.R. 20	10+15.77	39.55' RT.	835,072.30	2,497,990.32	X	X	X	1/2" IRON PIN FD
5	U.S.R. 20	11+95.45	702.24' LT.	835,467.73	2,498,621.67	X	X	X	BENCHMARK STAMED CONNEAUT 1934
6	U.S.R. 20	16+01.43	287.73' LT.	835,004.82	2,498,606.32	X	X	X	REBAR FOUND
20	U.S.R. 20	13+93.05	301.13' RT.	834,581.62	2,498,140.47	834,491.54	2,497,870.82	592.81	REBAR SET
21	↑	15+29.03	167.02' LT.	834,926.69	2,498,489.24	834,836.57	2,498,219.56	606.78	REBAR SET
22		13+91.38	353.53' LT.	835,140.77	2,498,480.94	835,050.63	2,498,211.26	607.41	1/2" IRON PIN FD
23		11+39.01	264.52' RT.	834,816.50	2,497,908.23	834,726.39	2,497,638.61	661.94	1/2" PIPE IN CONCRETE 4" DIAMETER 1' DEEP
24		10+76.48	24.11' RT.	835,029.82	2,498,040.46	834,939.69	2,497,770.83	654.21	MONUMENT BOX W/ 1" ROD
25		11+19.77	28.02' LT.	835,031.62	2,498,108.23	834,941.49	2,497,838.59	654.31	1/2" REBAR 1" DEEP
26		11+42.04	58.96' RT.	834,955.31	2,498,059.89	835,865.08	2,497,790.05	656.71	1 1/4" IRON ROD IN CONCRETE POSSIBLY ANCHOR BOLT
27		12+94.46	12.84' RT.	834,884.05	2,498,208.20	834,793.93	2,497,938.55	650.24	#4 REBAR 3" DEEP
28		13+48.36	2.36' RT.	834,860.87	2,498,258.43	834,770.76	2,497,988.77	644.17	1" IRON PIPE 1" DEEP
29		23+58.15	162.48' RT.	834,272.97	2,499,100.69	834182.92	2,498,830.94	666.38	CONCRETE MONUMENT W/ "X" FLUSH
30		23+95.27	169.64' RT.	834,249.30	2,499,137.97	834,159.25	2,498,868.22	667.03	CAP REBAR W/ "BENNET P.S. 6002"
31		24+60.59	144.76' RT.	834,246.65	2,499,217.95	834,156.60	2,498,948.19	668.55	3/4" PIPE 1" ABOVE
32		25+06.37	135.35' RT.	834,240.60	2,499,270.93	834,150.55	2,499,001.16	668.36	#4 REBAR 1" ABOVE
33		25+75.77	195.11' LT.	834,546.73	2,499,411.86	834,456.65	2,499,142.08	662.55	1/2" IRON ROD
11		25+88.23	5.48' LT.	834,358.56	2,499,387.42	X	X	X	PKF
34		26+42.14	176.96' LT.	834,518.22	2,499,471.00	834,428.14	2,499,201.21	663.43	CONCRETE MONUMENT W/ "X" FLUSH
35		26+30.77	271.59' LT.	834,613.86	2,499,473.40	834,523.77	2,499,203.61	660.53	CONCRETE MONUMENT W/ "X" FLUSH
36		26+52.93	309.63' LT.	834,646.18	2,499,508.58	834,556.09	2,499,238.79	659.96	CONCRETE MONUMENT
37		26+57.81	318.99' LT.	834,654.12	2,499,516.74	834,564.03	2,499,246.95	659.62	CONCRETE MONUMENT W/ "X" FLUSH
38		27+44.56	602.31' LT.	834,889.45	2,499,708.93	834,599.36	2,499,439.12	659.50	
39		28+24.38	21.24' LT.	834,314.68	2,499,622.45	834,224.63	2,499,352.64	666.26	MAG NAIL FD FLUSH
40		28+54.99	24.54' LT.	834,307.25	2,499,651.76	834,218.20	2,499,381.95	666.61	MAG NAIL FD FLUSH
41	↓	29+11.89	31.75' RT.	834,235.80	2,499,688.07	834,145.75	2,499,418.26	669.42	1/2" IRON ROD FLUSH
42	U.S.R. 20	27+52.67	150.21' LT.	834,461.99	2,499,590.55	834,371.92	2,499,320.75	664.96	CAP REBAR W/ "BENNET P.S. 6002"
43	Tyler Avenue	1+89.76	15.00' RT.	834,454.68	2,499,708.11	834,364.61	2,499,438.30	664.38	CAP REBAR W/ "BENNET P.S. 6002"
44	Dorman Road	2+41.44	19.57' LT.	834,201.75	2,499,817.80	834,111.71	2,499,547.97	670.94	CAP REBAR W/ "BENNET P.S. 6002"
45	Dorman Road	3+03.22	18.00' LT.	834,258.46	2,499,842.37	834,168.42	2,499,572.54	670.26	#5 REBAR 4' DEEP
46	Dorman Road	3+79.27	18.00' LT.	834,328.99	2,499,870.81	834,238.93	2,499,600.98	668.15	12"X12"3'H CONCRETE MARKER
47	U.S.R. 20	22+89.06	93.04' LT.	834,534.66	2,499,144.55	834,444.58	2,498,874.80	588.94	T-BAR
48	U.S.R. 20	22+91.45	98.11' LT.	834,538.22	2,499,148.88	834,448.14	2,498,879.13	589.95	T-BAR; S 77°13'47" W, 0.19' FROM PROP. CORNER
49	U.S.R. 20	25+02.33	384.95' LT	834,743.11	2,499,405.88	834,653.01	2,499,136.10	587.19	T-BAR W/ CAP "R.F."

HORIZONTAL SCALE IN FEET
0 50 100 200

PID NO. 18520

R/W DESIGNER PKM
R/W REVIEWER LBD

CENTERLINE PLAT

ATB-20-26.26

3/3
3/23
142/162

UTILITY OWNERS

EAST OHIO GAS COMPANY
7001 CENTER ROAD
ASHTABULA, OH 44004
(440) 599-8182

CONNEAUT TELEPHONE COMPANY
224 STATE STREET
P.O. BOX 579
CONNEAUT, OH 44030
(440) 593-7140

CITY OF CONNEAUT
PUBLIC WORKS DEPT.
285 16TH STREET
CONNEAUT, OH 44030
(440) 593-7430

THE ILLUMINATING COMPANY
2210 SOUTH RIDGE WEST
ASHTABULA, OH 44004
(440) 259-3737

CITY OF CONNEAUT
WATER & SEWER OFFICE
294 MAIN STREET
CONNEAUT, OH 44030
(440) 593-7420

NOTES:
THE LOCATION OF THE UNDERGROUND UTILITIES SHOWN ON THE PLANS ARE OBTAINED FROM THE OWNER OF THE UTILITIES AS REQUIRED BY SECTION 153.64 O.R.C.

BEGIN PROJECT
STA. 9+00.00
S.L.M. 0.17

BEGIN WORK
STA. 8+65.00

POT Sta. 6+39.70

BEGIN AQUISITION
STA. 8+96.00

STATION EQUATION:
STA. 9+07.23 (BK) =
P.C. STA. 9+08.67 (AH)
℄ PROP. R/W & CONST. U.S.R. 20

BEGIN WORK
STA. 58+25.00

END WORK
STA. 60+75.00

END WORK
STA. 71+65.00

BEGIN WORK
STA. 48+30.00

12-117-00-023-00
12-117-00-024-00
12-117-00-025-00
℄ OLD MAIN RD.

LOT 4, SEC. 2
LOT 7 & 8, SEC. 1,
T-14, R-1-W, IN THE
CONNECTICUT WESTERN RESERVE
BLOCKS 225 & 231
CITY OF CONNEAUT
ORIGINAL CONNEAUT TOWNSHIP
ASHTABULA COUNTY

℄ R/W U.S.R. 20 - 60' R/W (HARBOR ST.)

℄ MAIN ST. - 75' R/W

BLOCK 225

BLOCK 231

℄ R/W 10' ALLEY

℄ EX. R/W & CONST. LIBERTY ST. - 60' R/W

℄ TURN-LANE

℄ EX. R/W & CONST. HARBOR ST. - 36' R/W

℄ R/W & CONST. KEYES ST. - 26' R/W

℄ EX. R/W & CONST. N. LIBERTY ST. - 50' R/W

F.J. CHENEY PLAT
PLAT VOL. 25, PG. 1-54
LOTS 1-23

POT Sta. 63+40.88

PT Sta. 73+85.09

POT Sta. 74+88.78

℄ BESSEMER & LAKE ERIE RAILROAD TRACKS (EAST)

℄ EX. R/W & CONST. S. LIBERTY ST. - 50' R/W

℄ R/W CHARLES ST. - 32' R/W

MICHAEL C. HALL AND VALERIE L. HALL
12-117-00-032-00

POT Sta. 56+81.65

POT Sta. 47+39.55

MERRIAM PLAT
PLAT VOL. 4, PG. 38
LOTS 1 - 16
PLAT VOL. 27, PG. 220
LOTS 1, 2 & 3

PT Sta. 14+94.16

POT Sta. 15+30.67 U.S.R. 20
STA. 9+11.20 ℄ EAST TRACKS
℄ R/W KEYES ST. - 32' R/W

15+00

15+00

℄ EX. R/W U.S.R. 20

MATCH LINE STA. 18+00.00

℄ PROPOSED R/W & CONST. U.S.R. 20

(1) MARCY FUNERAL HOME, INC.
12-119-00-008-00

(2) A.J. BROWN, ANDY COPPOLA, AND CARL LEMKE, TRUSTEES OF THE FRATERNAL ORDER OF EAGLES, CONNEAUT AERIE NO. 408
12-117-00-022-00

(3) MARCY FUNERAL HOME, INC. AKA THE MARCY FUNERAL HOME, INC.

(4) ROBERT C. MARCY, TRUSTEE
12-119-00-007-00

(5) THE MARCY FUNERAL HOME, INC.
12-119-00-006-00

(6) BARBARA A. VAUGHN, KENNETH H. VAUGHN AND LYDIA R. VAUGHN
12-117-00-001-00

(7) CHARLES H. HERB AND CAROL A. HERB
12-117-00-055-00

(8) VIRGINIA H. RICHARDS
12-117-00-058-00

(9) BOARD OF COUNTY COMMISSIONERS
12-117-00-037-00

(10) IMELDA K. NOVINSKI
12-117-00-054-00

(11) BOARD OF COUNTY COMMISSIONERS
12-117-00-038-00

(12) REBECCA ANN POTTS
12-117-00-053-00

(13) HARRY D. BEALS AND MARTHA M. BEALS
12-117-00-039-00

(14) JOHN BREGAR
12-117-00-036-00

(15) SAMUEL L. LYONS
12-117-00-035-00

(16) RICHARD M. GLEASON
12-117-00-034-00

(17) OOAC, INC., AN OHIO CORPORATION
NO PP NO.

(18) OOAC, INC., AN OHIO CORPORATION
12-117-00-040-00

(19) SAMUEL L. LYONS
12-117-00-041-00

(20) SAMUEL L. LYONS, AKA PRETLOW LYONS
12-117-00-042-00

(37) BESSEMER & LAKE ERIE RAILROAD COMPANY, A CORPORATION UNDER THE LAWS OF THE COMMONWEALTH OF PENNSYLVANIA AKA PITTSBURG, BESSEMER & LAKE ERIE RAILROAD CO. CONVEYANCE
12-307-00-048-00

(40) DENNIS DREW
12-117-00-031-00

(21) JOSEPH DAHER
12-117-00-044-00

(22) ESTER S. ARMSTRONG
12-117-00-045-00

(23) HAROLD E. McCLINTOCK AND BETTY L. McCLINTOCK
12-117-00-046-00

(24) GREGORY A. HELMBRIGHT
12-117-00-047-00

(25) NICHOLAS A. IAROCCI AND WALLACE D. HEINONEN, JR.
12-117-00-048-00

(26) RICKY S. ALTMAN, AND KATHLEEN M. ALTMAN
12-117-00-049-00

(27) HOWARD A. BERNINI
12-117-00-050-00

(28) JAMES D. EVANS AND PATRICIA A. EVANS
12-117-00-051-00

CONVENTIONAL SIGNS

County Line
Township Line
Section Line
Corporation Line ——— or ———
Fence Line (existing) -x-x-x- - (proposed) -x-x-x-
Center Line
Trees ,Stumps (to be removed)
Utility Poles: Telephone, Power, Light
Limited Access (only) LA
Right of Way (only) R/W
Limited Access & Right of Way LA-R/W
Exist. Right of Way R/W
Temp. Right of Way T ESWT
Slope Easement SL ESWT
Utility Easement U ESWT
Property Line (in existing fence)
Railroad or
Guardrail (existing) (proposed)
Construction Limits Construction Limits

STRUCTURE KEY

RESIDENTIAL
COMMERCIAL
OUT-BUILDING

REV. BY	DATE	DESCRIPTION
PKM	5/6/02	40-T ADDED, 37-T REVISED
PKM	4/19/02	14-T REV'D, 19-T REM'D & 19-WD ADDED
PKM	4/19/02	6-T, 16-T & 16-WD ADDED
PKM	3/7/02	17, 18 & 37 NAMES REVISED

DATE COMPLETED 10/26/01

HORIZONTAL SCALE IN FEET
0 30 60 120

PID NO. 18520

P/W DESIGNER PKM
P/R REVIEWER LBD

PROPERTY MAP

ATB-20-26.26

4 / 23

(143 / 162)

19059RM.DGN

LOT 4, SEC. 2
LOT 7, SEC. 1,
AND LOT 8, SEC. 1,
T-14-N, R-1-W, IN THE
CONNECTICUT WESTERN RESERVE
BLOCKS 225 & 231
CITY OF CONNEAUT
ORIGINAL CONNEAUT TOWNSHIP
ASHTABULA COUNTY

MATCH LINE STA. 18+00.00

℄ EX. R/W U.S.R. 20

STA. 21+66.19 ℄ EX. R/W U.S.R. 20 = STA. 100+00.00 ℄ CONNEAUT CREEK

R.R. LOT #42

END PROJECT STA. 28+10.00 S.L.M. 0.53

12-334-00-109-00
12-334-00-108-00
12-334-00-107-00

STA. 25+05.58 ℄ EX. R/W U.S.R. 20

12-334-00-106-00
12-334-00-105-00
12-334-00-104-00
12-334-00-104-00

STA. 25+05.58 ℄ PROP. R/W & CONST. U.S.R. 20

PC Sta. 23+39.16

LOT 4 SEC. 2
LOT 8 SEC. 1

PRC Sta. 26+16.57

℄ R/W TYLER AVENUE

END ACQUISITION STA. 28+24.41

END WORK STA. 29+10.00

℄ PROP. ℄ CONST. U.S.R. 20

R.R. LOT #18

℄ CONNEAUT CREEK

TYLER PLAT VOL. 8 PG. 13

Sta. 28+24.90

℄ R/W DORMAN ROAD

12-334-00-102-00
12-334-00-101-00
12-334-00-100-00
12-334-00-099-00

LONGVIEW PLAT VOL. 4, PG. 18

12-334-00-123-00
12-334-00-124-00
12-334-00-125-00

POT Sta. 32+15.65

STA. 30+62.30

℄ R/W ORCHARD STREET

12-334-00-098-00
12-334-00-097-00
12-334-00-096-00
12-334-00-095-00
12-334-00-089-00
12-334-00-094-00

12-334-00-093-00
12-334-00-090-00

STA. 28+39.51 ℄ PROP. R/W U.S.R. 20

STA. 27+36.84 ℄ R/W U.S.R. 20 = STA. 27+43.77 ℄ CONST. U.S.R. 20

PI Sta. = 28+15.65 ℄ EX. R/W U.S.R. 20
Δ = 10° 58' 26" (LT.)
NO CURVE

STATION EQUATION
POT STA. 29+66.37 ℄ R/W U.S.R. 20 =
PT STA. 29+72.46 ℄ CONST. U.S.R. 20

STRUCTURE KEY
- RESIDENTIAL
- COMMERCIAL
- OUT-BUILDING

NOTE: ALL STATIONS SHOWN ARE FROM THE ℄ OF PROP. R/W AND CONSTRUCTION.

(29) SALVATORE P. SCROFANO AND LU ANN SCROFANO, AKA SALVATOR P. SCROFANO AND LUANN SCROFANO, AKA SAL SCROFANO AND LU ANN SCROFANO

(30) RICKY L. OSBORNE AND DIANE M. OSBORNE
12-334-00-103-00

(31) CHARLES A. MICHALOS

(32) JAMES R. DROESE AND MARILYN L. DROESE

(33) JAMES H. MARSHALL AND ROCHELLE J. MARSHALL

(34) NEAL H. HOSKINS AND MARTHA E. HOSKINS
12-334-00-110-00

(35) JAMES H. MARSHALL AND ROCHELLE J. MARSHALL

(36) LINDA J. JACKSON
12-334-00-092-00

(37) BESSEMER AND LAKE ERIE RAILROAD COMPANY, A CORPORATION UNDER THE LAWS OF THE COMMONWEALTH OF PENNSYLVANIA AKA PITTSBURG, BESSEMER & LAKE ERIE RAILROAD CO. CONVEYANCE
12-307-00-048-00

(38) OOAC, INC. AN OHIO CORPORATION
12-306-00-003-00

(39) CHERYL S. DAUB
12-306-00-001-00

(37) BESSEMER & LAKE ERIE RAILROAD COMPANY, A CORPORATION UNDER THE LAWS OF THE COMMONWEALTH OF PENNSYLVANIA

REV. BY	DATE	DESCRIPTION
PKM	5/6/02	PARCEL 29-WD CHANGED TO 29-SH
PKM	3/7/02	PARCEL 37 NAME REVISED
PKM	3/7/02	PARCELS 38 & 39 ADDED

DATE COMPLETED 10/26/01

HORIZONTAL SCALE IN FEET
0 30 60 120

PID NO. 18520

R/W DESIGNER PKM
R/W REVIEWER LBD

PROPERTY MAP

ATB-20-26.26

5 / 23

144 / 162

19059RM.DGN

TOTAL NUMBER OF :
22 OWNERSHIPS
40 PARCELS 7 OWNERSHIPS WITH STRUCTURES INVOLVED
11 TOTAL TAKES 0 OWNERSHIPS WITH "P" ITEMS

NET RESIDUE = RECORD AREA - TOTAL PRO - NET TAKE

ALL AREAS IN ACRES

GRANTEE:
ALL RIGHT OF WAY ACQUIRED IN THE NAME OF STATE OF OHIO, DEPARTMENT OF TRANSPORTATION, UNLESS OTHERWISE SHOWN.

PARCEL NO.	OWNER	SHEET NO.	OWNERS RECORD BOOK	OWNERS RECORD PAGE	AUDITOR'S PARCEL	RECORD AREA(AC.)	TOTAL P.R.O.	GROSS TAKE	P.R.O. IN TAKE	NET TAKE	STRUCTURE	NET RESIDUE LEFT	NET RESIDUE RIGHT	TYPE FUND	REMARKS AND PERSONALTY	AS ACQUIRED BOOK	AS ACQUIRED PAGE
														STATE			
1	MARCY FUNERAL HOME, INC.	10,11	76	5157	121190000800	0.093 (C)									NO RIGHT OF WAY REQUIRED - CITY BLOCK 225		
															ON AUDITOR'S CARD: THOMAS J. TAYLOR, JR. AND		
															TERRY MICHAEL TAYLOR		
2	RUDY PRYATELY, SR., TRUSTEE OF THE	10,11	-	586	121170002200	0.136 (C)									NO RIGHT OF WAY REQUIRED - CITY BLOCK 225		
	FRATERNAL ORDER OF EAGLES,														FORMERLY A.J. BROWN, ANDY COPPOLA, AND CARL LEMKE,		
	CONNEAUT AERIE NO. 408														TRUSTEES OF THE FRATERNAL ORDER OF EAGLES,		
															CONNEAUT AERIE NO. 408		
3-SH	MARCY FUNERAL HOME, INC. AKA	10,11,20,21	063	4072	121170002400	0.120	0	0.003	0	0.003					S.L. 2 - VOL. 25, PG. 1-54		
	THE MARCY FUNERAL HOME, INC.		051	1839	121170002500	0.100	0	0	0	0					S.L. 3 - VOL. 25, PG 1-54		
					121170002300	0.150	0	0	0	0					CITY BLOCK 225		
					TOTAL	0.370	0	0.003	0	0.003		0.367					
3-T		10,11,20,21					0	0.007	0	0.007					TO CONSTRUCT SIDEWALK		
4	ROBERT C. MARCY, TRUSTEE	10,11,12,13	88	3926	121190000700	0.320									NO RIGHT OF WAY REQUIRED - PART OF CITY BLOCK 231		
5	THE MARCY FUNERAL HOME, INC.		3	7840	121190000600	0.140									NO RIGHT OF WAY REQUIRED - PART OF CITY BLOCK 231		
6-T	BARBARA A. VAUGHN, KENNETH H. VAUGHN	21,22	22	4032	121170000100	0.130	0	0.001	0	0.001					S.L. 22 - VOL. 25, PG. 1-54		
	AND LYDIA R. VAUGHN														TO REGRADE		
7	CHARLES D. HERB AND CAROL A. HERB	12,13	13	1840	121170005500	0.300									NO RIGHT OF WAY REQUIRED		
8	VIRGINIA H. RICHARDS	12,13	859	116	121170005800	0.230									NO RIGHT OF WAY REQUIRED		
9-SH	BOARD OF COUNTY COMMISSIONERS	20,21	261	640	121170003700	0.079	0	0.009	0	0.009		0.070			S.L. 1 & 2, VOL. 27, PG. 220		
9-T		20,21						0.036		0.036					TO CONSTRUCT SIDEWALK		
10	IMELDA K. NOVINSKI	12,13	048	7225	121170005400	0.160									NO RIGHT OF WAY REQUIRED		
11-WD	BOARD OF COUNTY COMMISSIONERS	12,13	261	0542	121170003800	0.054	0	0.054	0	0.054		0	0		S.L. 3, VOL. 27, PG. 220		
															TOTAL TAKE		
12	REBECCA ANN POTTS	12,13	062	8361	121170005300	0.150									NO RIGHT OF WAY REQUIRED		
														STATE			

NOTE: ALL TEMPORARY PARCELS TO BE OF 18 MONTHS DURATION

UNDER NO CIRCUMSTANCES ARE TEMPORARY EASEMENTS ACQUIRED FOR THE PURPOSE OF STRUCTURE REMOVAL TO BE USED FOR STORAGE OF MATERIAL OR EQUIPMENT BY THE CONTRACTOR. UPON COMPLETION OF THE WORK REQUIRED FOR SUCH REMOVAL AND SUBSEQUENT RECLAMATION, THE EASEMENT SHALL BE VACATED IMMEDIATELY.

* DENOTES RIGHT OF WAY ENCROACHMENT
(C) = CALCULATED AREA

REV. BY	DATE	DESCRIPTION
DJH	6/27/02	REVISED THE REASON FOR PCL 6T
PKM	4/19/02	6-T ADDED
PKM	3/7/02	38WD & 39T ADDED; 37A, 37T & 37SH7 REV'D
PAT	2/19/02	PAR. 9 - REVISED RECORD AREA
FIELD REVIEW BY GLR		DATE: 10/15/01
OWNERSHIP VERIFIED BY GLR		DATE: 10/23/01
DATE COMPLETED: 10/26/01		

FEDERAL PROJECT NO. BRF-98C-0
PID NO. 18520
STATE JOB NO. 440460
R/W DESIGNER PKM
R/W REVIEWER LBD

SUMMARY OF ADDITIONAL RIGHT OF WAY

ATB-20-26.26

6/23

145/162

18520RSA.DGN 1OF 4

NET RESIDUE = RECORD AREA - TOTAL PRO - NET TAKE

ALL AREAS IN ACRES

GRANTEE:
ALL RIGHT OF WAY ACQUIRED IN THE NAME OF STATE OF OHIO, DEPARTMENT OF TRANSPORTATION, UNLESS OTHERWISE SHOWN.

PARCEL NO.	OWNER	SHEET NO.	OWNERS RECORD BOOK	OWNERS RECORD PAGE	AUDITOR'S PARCEL	RECORD AREA(AC.)	TOTAL P.R.O.	GROSS TAKE	P.R.O. IN TAKE	NET TAKE	STRUCTURE	NET RESIDUE LEFT	NET RESIDUE RIGHT	TYPE FUND	REMARKS AND PERSONALTY	AS ACQUIRED BOOK	AS ACQUIRED PAGE
														STATE			
13-WD	HARRY D. BEALS AND	12,13	748	91	121170003900	0.120	0	0.120	0	0.120	YES(2)		0		HOUSE AND GARAGE TO BE REMOVED-#144 S. HARBOR ST.		
	MARTHA M. BEALS														TOTAL TAKE		
															S.L. 4 - VOL. 4, PG. 38		
14-T	JOHN BREGAR	20,21	84	8382	121170003600	0.070	0	0.024	0	0.024					S.L. 6 & 7 - VOL. 4, PG. 38		
															TO DEMOLISH EXISTING STRUCTURE AND RECONSTRUCT		
															CHARLES ST.		
15	SAMUEL L. LYONS	20,21	045	6156	121170003500	0.080									NO RIGHT OF WAY REQUIRED		
16-SH	RICHARD M. GLEASON	20,21	057	2025	121170003400	0.100	0	0.017	0	0.017	S	0.083			ON AUDITOR'S CARD: EARL D. & SHAWN M. REIGHARD		
															S.L. 8 - VOL. 4, PG. 38		
16-T								0.014	0	0.014					TO DEMOLISH EXISTING STRUCTURE AND RECONSTRUCT		
															CHARLES ST.		
17-WD	OOAC, INC., AN OHIO CORPORATION	20,21	072	5983	N/A	0.002 (C)	0	0.002	0	0.002		0			TOTAL TAKE, S.L. 5 - VOL. 4 PG. 38		
															PRIOR DEED VOL. 045, PAGE 7275;		
															ALSO VOLUME 045, PAGE 2175 ON PRIOR DEED,		
															VOL. 072, PG. 5983 IS QUIT CLAIM DEED		
18-WD	OOAC, INC., AN OHIO CORPORATION	12,13,20,21	072	5983	121170004000	0.021	0	0.021	0	0.021	S		0		TOTAL TAKE, S.L. 5 - VOL. 4 PG. 38; BILLBOARD		
															VOL. 072, PG. 5983 IS QUIT CLAIM DEED,		
															VOL. 660, PG. 1066 IS PRIOR TO QUIT CLAIM DEED;		
															PRIOR DEED VOL. 045, PAGE 7275,		
															ALSO VOLUME 045, PAGE 2175 ON PRIOR DEED		
19-WD	SAMUEL L. LYONS	20,21	045	6163	121170004100	0.102(C)	0	0.102	0	0.102		0			TOTAL TAKE S.L. 10, VOL. 4, PG. 38		
															ON AUDITOR'S CARD: 0.100 AC.		
20-WD	SAMUEL L. LYONS AKA	14,15,20,21	117	6944	121170004200	0.110	0	0.110	0	0.110			0		TOTAL TAKE S.L. 11 - VOL. 4, PG. 38		
	PRETLOW LYONS																
21-WD	JOSEPH DAHER	12,13,14,15	084	7877	121170004400	0.130	0	0.130	0	0.130			0		TOTAL TAKE S.L. 12 - VOL. 4, PG. 38		
22-WD	ESTER S. ARMSTRONG	12,13,14,15	808	235	121170004500	0.170	0	0.170	0	0.170			0		TOTAL TAKE S.L. 13 - VOL. 4, PG. 38		
23-WD	HAROLD E. McCLINTOCK	12,13	047	0056	121170004600	0.170	0	0.170	0	0.170	YES		0		HOUSE TO BE REMOVED, TOTAL TAKE		
	AND BETTY L. McCLINTOCK														S.L. 14 - VOL. 4, PG. 38		
															#185 KEYES ST.		
24-WD	GREGORY A. HELMBRIGHT	12,13	086	7132	121170004700	0.190	0	0.190	0	0.190	YES (2)		0		HOUSE AND SHED TO BE REMOVED, TOTAL TAKE		
															S.L. 15 - VOL. 4, PG. 38		
															#189 KEYES ST.		
														STATE			

NOTE: ALL TEMPORARY PARCELS TO BE OF 18 MONTHS DURATION

UNDER NO CIRCUMSTANCES ARE TEMPORARY EASEMENTS ACQUIRED FOR THE PURPOSE OF STRUCTURE REMOVAL TO BE USED FOR STORAGE OF MATERIAL OR EQUIPMENT BY THE CONTRACTOR. UPON COMPLETION OF THE WORK REQUIRED FOR SUCH REMOVAL AND SUBSEQUENT RECLAMATION, THE EASEMENT SHALL BE VACATED IMMEDIATELY.

* DENOTES RIGHT OF WAY ENCROACHMENT
(C) = CALCULATED AREA

REV. BY	DATE	DESCRIPTION
DJH	11/14/02	CHANGED PCL 16-WD TO 16-SH
DJH	6/17/02	REVISED AREA FOR PCL 18-WD
PKM	5/3/02	PAR. 24 REVISED RECORD, GROSS & NET AREAS
PKM	4/19/02	14-T REVISED
PKM	4/19/02	16-WD, 16-T & 19-WD ADDED, 19-T REMOVED
PKM	3/7/02	PARCELS 17 & 18 NAME REVISED
FIELD REVIEW BY GLR		DATE: 10/15/01
OWNERSHIP VERIFIED BY GLR		DATE: 10/23/01
DATE COMPLETED 10/26/01		

FEDERAL PROJECT NO. BRF-98C-0
PID NO. 18520
STATE JOB NO. 440460
R/W DESIGNER PKM
R/W REVIEWER LBD

SUMMARY OF ADDITIONAL RIGHT OF WAY

ATB-20-26.26

7/23

146/162

18520RSA.DGN 2 OF 4

NET RESIDUE = RECORD AREA - TOTAL PRO - NET TAKE

GRANTEE:
ALL RIGHT OF WAY ACQUIRED IN THE NAME OF STATE OF OHIO, DEPARTMENT OF TRANSPORTATION, UNLESS OTHERWISE SHOWN.

ALL AREAS IN ACRES

PARCEL NO.	OWNER	SHEET NO.	OWNERS RECORD BOOK	OWNERS RECORD PAGE	AUDITOR'S PARCEL	RECORD AREA(AC.)	TOTAL P.R.O.	GROSS TAKE	P.R.O. IN TAKE	NET TAKE	STRUCTURE	NET RESIDUE LEFT	NET RESIDUE RIGHT	TYPE FUND	REMARKS AND PERSONALTY	AS ACQUIRED BOOK	AS ACQUIRED PAGE
														STATE			
25-T	NICHOLAS A. IAROCCI AND	12,13	88	4035	121170004800	0.250	0	0.014	0	0.014					TO REMOVE BUILDING ON PARCEL 24,		
	WALLACE D. HEINONEN, JR.														S.L. 16 - VOL. 4, PG. 38		
															ON AUDITOR'S CARD• VOL. 107, PG. 5223		
26	RICKY S. ALTMAN AND	12,13	29	2416	121170004900	0.200									NO RIGHT OF WAY REQUIRED		
	KATHLEEN M. ALTMAN																
27	HOWARD A. BERNINI	4	066	6281	121170005000	0.200									NO RIGHT OF WAY REQUIRED		
28	JAMES D. EVANS AND	18,19	044	9248	121170005100	0.380									NO RIGHT OF WAY REQUIRED		
	PATRICIA A. EVANS																
29-SH	SALAVATORE P. SCROFANO AND	16,17,18,19	88	1430	123340009900	0.120	0	0.120	0	0.120	YES(2)		0		S.L. 22, VOL. 8, PG. 23		
	LU ANN SCROFANO,				123340010000	0.070	0	0.070	0	0.070			0		S.L. 23, VOL. 8, PG. 23		
	AKA SALVATOR P. SCROFANO AND		61	6574	123340010100	0.070	0	0.070	0	0.070			0		S.L. 23, VOL. 8, PG. 23		
	LUANN SCROFANO,		46	8228	123340010200	0.670	0	0.670	0	0.670			0		S.L. 25, VOL. 8, PG. 23		
	AKA SAL SCROFANO AND LU ANN SCROFANO				TOTAL	0.930	0	0.930	0	0.930			0		2 COMMERCIAL BUILDINGS TO BE REMOVED, TOTAL TAKE		
															*195 & *201 U.S.R. 20		
30-T	RICKY L. OSBORNE AND DIANE M. OSBORNE	18,19	040	4746	123340010300	0.270	0	0.004	0	0.004					S.L. 16 & 17, VOL. 8, PG. 23		
															TO RECONSTRUCT DRIVEWAY		
															ON AUDITOR'S CARD• FMR ENTERPRISES		
31-T	CHARLES A. MICHALOS	18,19	076	3202	123340010400	0.120	0	0.005	0	0.005					S.L. 15, VOL. 8, PG. 23 RECONSTRUCT DRIVEWAY		
					123340010500	0.120	0	0	0	0					S.L. 14, VOL. 8, PG. 23		
					123340010600	0.110	0	0	0	0					S.L. 13, VOL. 8, PG. 23		
					TOTAL	0.510	0	0.005	0	0.005							
31-T-1		18,19			123340010600		0	0.030	0	0.030					TO CONSTRUCT HIGHWAY DITCHES		
32-SH	JAMES R. DROESE AND	18,19	602	216	123340008900	0.030									S.L. 35, VOL. 4, PG. 18		
	MARILYN L. DROESE				123340009000	0.020									S.L. 34, VOL. 4, PG. 18		
					123340009300	0.150											
					123340009400	0.020											
					123340009500	0.050									S.L. 18, VOL. 8, PG. 23		
					123340009600	0.060									S.L. 19, VOL. 8, PG. 23		
					123340009700	0.080	0	0.006	0	0.006					S.L. 20, VOL. 8, PG. 23		
					123340009800	0.100	0	0.016	0	0.016					S.L. 21, VOL. 8, PG. 23		
					TOTAL	0.510	0	0.022	0	0.022			0.488				
32-T		18,19			123340009500		0	0.003	0	0.003					TO RECONSTRUCT A DRIVEWAY AND GRADING		
					123340009600		0	0.017	0	0.017							
					123340009700		0	0.020	0	0.020							
					123340009800		0	0.016	0	0.016							
					TOTAL		0	0.056	0	0.056							
32-RVP		18,19												STATE	REVOCABLE PERMIT * 200200014909 2 STORY BLOCK COMM.		

* DENOTES RIGHT OF WAY ENCROACHMENT

NOTE: ALL TEMPORARY PARCELS TO BE OF 18 MONTHS DURATION

UNDER NO CIRCUMSTANCES ARE TEMPORARY EASEMENTS ACQUIRED FOR THE PURPOSE OF STRUCTURE REMOVAL TO BE USED FOR STORAGE OF MATERIAL OR EQUIPMENT BY THE CONTRACTOR. UPON COMPLETION OF THE WORK REQUIRED FOR SUCH REMOVAL AND SUBSEQUENT RECLAMATION, THE EASEMENT SHALL BE VACATED IMMEDIATELY.

REV. BY	DATE	DESCRIPTION
DJH	9/12/02	ADDED R.U.P. INSTRUMENT No. PCL 32 RVP
DS	11/26/01	PARCEL 29-WD CHANGED TO 29-SH
PKM	3/7/02	PARCELS 31-T-1& 32-T REVISED

FIELD REVIEW BY GLR DATE: 10/15/01
OWNERSHIP VERIFIED BY GLR DATE: 10/23/01
DATE COMPLETED: 10/26/01

R/W DESIGNER PKM
R/W REVIEWER LBD

FEDERAL PROJECT NO. BRF-98C-0
PID NO. 18520
STATE JOB NO. 440460

SUMMARY OF ADDITIONAL RIGHT OF WAY

ATB-20-26.26

NET RESIDUE = RECORD AREA - TOTAL PRO - NET TAKE

GRANTEE:
ALL RIGHT OF WAY ACQUIRED IN THE NAME OF STATE OF OHIO, DEPARTMENT OF TRANSPORTATION, UNLESS OTHERWISE SHOWN.

ALL AREAS IN ACRES

PARCEL NO.	OWNER	SHEET NO.	OWNERS RECORD BOOK	OWNERS RECORD PAGE	AUDITOR'S PARCEL	RECORD AREA(AC.)	TOTAL P.R.O.	GROSS TAKE	P.R.O. IN TAKE	NET TAKE	STRUCTURE	NET RESIDUE LEFT	NET RESIDUE RIGHT	TYPE FUND	REMARKS AND PERSONALTY	AS ACQUIRED BOOK	AS ACQUIRED PAGE
33-SH	JAMES H. MARSHALL AND	18,19	106	5295	123340010700	0.010	0	0.000	0	0.000				STATE	S.L. 13, VOL. 8, PG. 23		
	ROCHELLE J. MARSHALL				123340010800	0.120	0	0.003	0	0.003					S.L. 12, VOL. 8, PG. 23		
					123340010900	0.100	0	0.008	0	0.008					S.L. 11, VOL. 8, PG. 23		
					TOTAL	0.230	0	0.011	0	0.011		0.219			ON AUDITOR'S CARD: 123340010900 IS 0.236 AC.		
33-T		18,19			123340010700			0.001	0	0.001					S.L. 13, VOL. 8, PG. 23 FOR GRADING PURPOSES		
					123340010800			0.014	0	0.014					S.L. 12, VOL. 8, PG. 23		
					123340010900			0.004	0	0.004					S.L. 11, VOL. 8, PG. 23		
					TOTAL			0.019	0	0.019							
34	NEAL H. HOSKINS AND	18,19	659	548	123340011000	0.530									NO RIGHT OF WAY REQUIRED		
	MARTHA E. HOSKINS																
35	JAMES H. MARSHALL AND	18,19	106	5295	123340012300	0.160									NO RIGHT OF WAY REQUIRED		
	ROCHELLE J. MARSHALL				123340012400	0.190									ON AUDITOR'S CARD: 123340012400 IS 0.567 AC.		
					123340012500	0.180											
36	LINDA J. JACKSON	18,19	077	7581	123340009200	0.040									NO RIGHT OF WAY REQUIRED		
37-SH	BESSEMER AND LAKE ERIE RAILROAD	14,15,22,23	191	331	123070004800	16.750	0.143	0.023	0	0.023	S	16.356			NO ACREAGE ON DEED, R.R. LOT 18		
37-SH-1	COMPANY, A CORPORATION UNDER THE LAWS	14,15,22,23	191	331				0.038	0	0.038					2 BILLBOARDS		
37-SH-2	OF THE COMMONWEALTH OF PENNSYLVANIA	14,15,22,23	191	331				0.038	0	0.038							
37-SH-3	AKA PITTSBURG, BESSEMER & LAKE ERIE	14,15,22,23	191	331				0.038	0	0.038							
37-SH-4	RAILROAD CO. CONVEYANCE	16,17,22,23	191	331				0.038	0	0.038							
37-SH-5		16,17,22,23	191	331				0.038	0	0.038							
37-SH-6		16,17,22,23	191	331				0.038	0	0.038							
37-SH-7		16-17,22,23	860	223	120060033000	12.630	0.001	0.071	0	0.071			12.558		12.633 AC. ON DEED		
					TOTAL	29.380	0.144	0.322	0	0.322		16.356	12.558		TOTAL NET RESIDUE 28.914 AC.		
37-A		14-17,22,23			123070004800			1.888	0.126	1.762					TO RECONSTRUCT AND MAINTAIN A BRIDGE		
37-T		14-17,20,23			120060033000			0.009	0.001	0.008					TO DEMOLISH EXISTING BRIDGE, CONSTRUCT A HAUL		
					123070004800			3.897	1.125	2.772					ROAD & CONSTRUCT BRIDGE		
					TOTAL 37-T			3.906	1.126	2.780							
38-WD	OOAC, INC., AN OHIO CORPORATION	16-19	072	5983	123060000300	0.220	0.181	0.220	0.181	0.220			0		TOTAL TAKE		
															VOL. 072, PG. 5983 IS QUIT CLAIM DEED,		
															VOL. 660, PG. 1066 IS PRIOR TO QUIT CLAIM DEED;		
												4.219			PRIOR DEED VOL. 045, PAGE 7275,		
															ALSO VOLUME 045, PAGE 2175 ON PRIOR DEED		
39-T	CHERYL S. DAUB	16-19	177	0391	123060000100	4.343	0.094	0.030	0	0.030					TO CONSTRUCT A BRIDGE		
			161	1555											0.030 AC. P.R.O. IN S.R. 20 PLUS 0.644 AC. P.R.O.		
			30	8298											IN OLDMAN RD. AND TYLER AVE.		
															HIGHWAY EASEMENT RECORDED IN R/W PLAN		
															"SH2, SEC. R&L (1940)" AND DEED VOL. 438, PG. 304.		
															VOL. 161, PG. 1555 IS PRIOR TO QUIT CLAIM DEED		
40-T	DENNIS DREW	14,15,20,21	129	1649	121170003100	0.269 (C)		0.269	0	0.269				STATE	CONSTRUCT HAUL ROAD		
															0.110 AC. ON AUDITOR'S CARD		

* DENOTES RIGHT OF WAY ENCROACHMENT
(C) = CALCULATED AREA

NOTE: ALL TEMPORARY PARCELS TO BE OF 18 MONTHS DURATION

UNDER NO CIRCUMSTANCES ARE TEMPORARY EASEMENTS ACQUIRED FOR THE PURPOSE OF STRUCTURE REMOVAL TO BE USED FOR STORAGE OF MATERIAL OR EQUIPMENT BY THE CONTRACTOR. UPON COMPLETION OF THE WORK REQUIRED FOR SUCH REMOVAL AND SUBSEQUENT RECLAMATION, THE EASEMENT SHALL BE VACATED IMMEDIATELY.

REV. BY	DATE	DESCRIPTION
MAT	10/21/02	CHANGED SHEET No. REFERENCES FOR PCL 37
DJH	6/06/02	ADDED DEED REFERENCE PCL 39-T
PKM	5/6/02	ADDED PARCEL 40-T & REVISED 37-T AREA
PKM	3/11/02	REVISED "PRO" FOR PARCELS 37-A & 37-T
PKM	3/7/02	38WD & 39T ADDED; 37A, 37T & 37SH7 REV'D
FIELD REVIEW BY GLR		DATE: 10/15/01
OWNERSHIP VERIFIED BY GLR		DATE: 10/23/01
DATE COMPLETED: 10/26/01		

FEDERAL PROJECT NO. BRF-98C-0
PID NO. 18520
STATE JOB NO. 440460
D/A DESIGNER PKM
D/A REVIEWER LBD

SUMMARY OF ADDITIONAL RIGHT OF WAY

ATB-20-26.26

9/23

148/162

18520RSA.DGN 4 OF 4

LOT 8, SEC. 1,
LOT 4, SEC. 2,
T-14-N, R-1-W,
IN THE CONNECTICUT
WESTERN RESERVE
CITY OF CONNEAUT
ORIGINAL CONNEAUT TOWNSHIP
ASHTABULA COUNTY

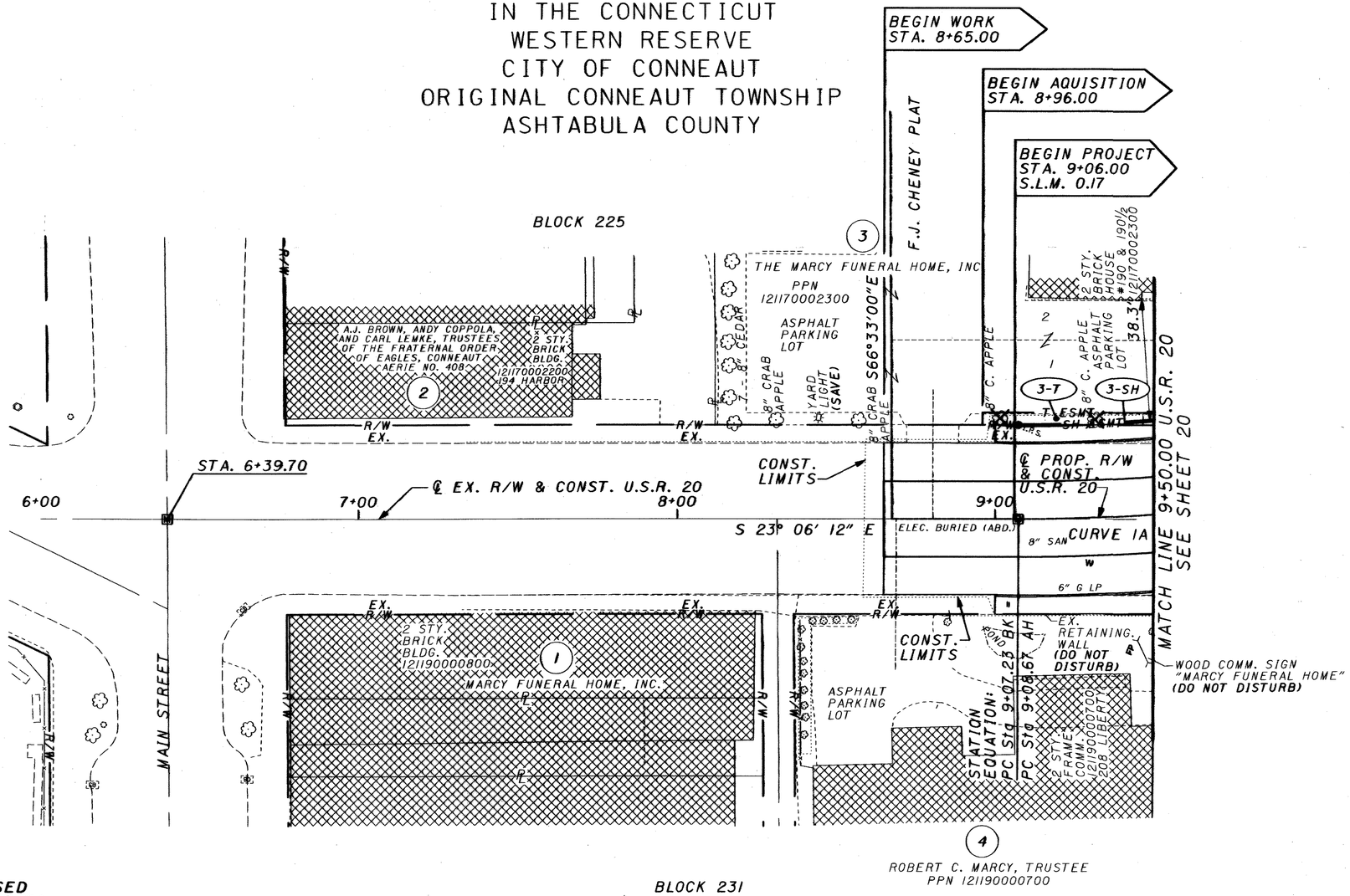

PROPOSED CURVE DATA - CURVE 1A

P.I. Sta = 10+01.44
Δ = 17° 29' 00" (LT)
Dc = 9° 29' 48"
R = 603.32'
T = 92.77'
L = 184.10'
E = 7.09'
$e_{max.}$ = 0.023

STRUCTURE KEY

- RESIDENTIAL
- COMMERCIAL
- OUT-BUILDING

NOTE: SEE NEXT SHEET FOR ALL RIGHT OF WAY DETAILS

REV. BY	DATE	DESCRIPTION

DATE COMPLETED: 10/26/01

SCALE IN FEET
0 10 20 40

PID NO. 18520

R/W DESIGNER PKM
R/W REVIEWER LBD

RIGHT OF WAY PLAN
STA. 6+00.00 TO STA. 9+50.00

ATB-20-26.26

10 / 23

149 / 162

LOT 8, SEC. 1,
LOT 4, SEC. 2,
T-14-N, R-1-W,
IN THE CONNECTICUT
WESTERN RESERVE
CITY OF CONNEAUT
ORIGINAL CONNEAUT TOWNSHIP
ASHTABULA COUNTY

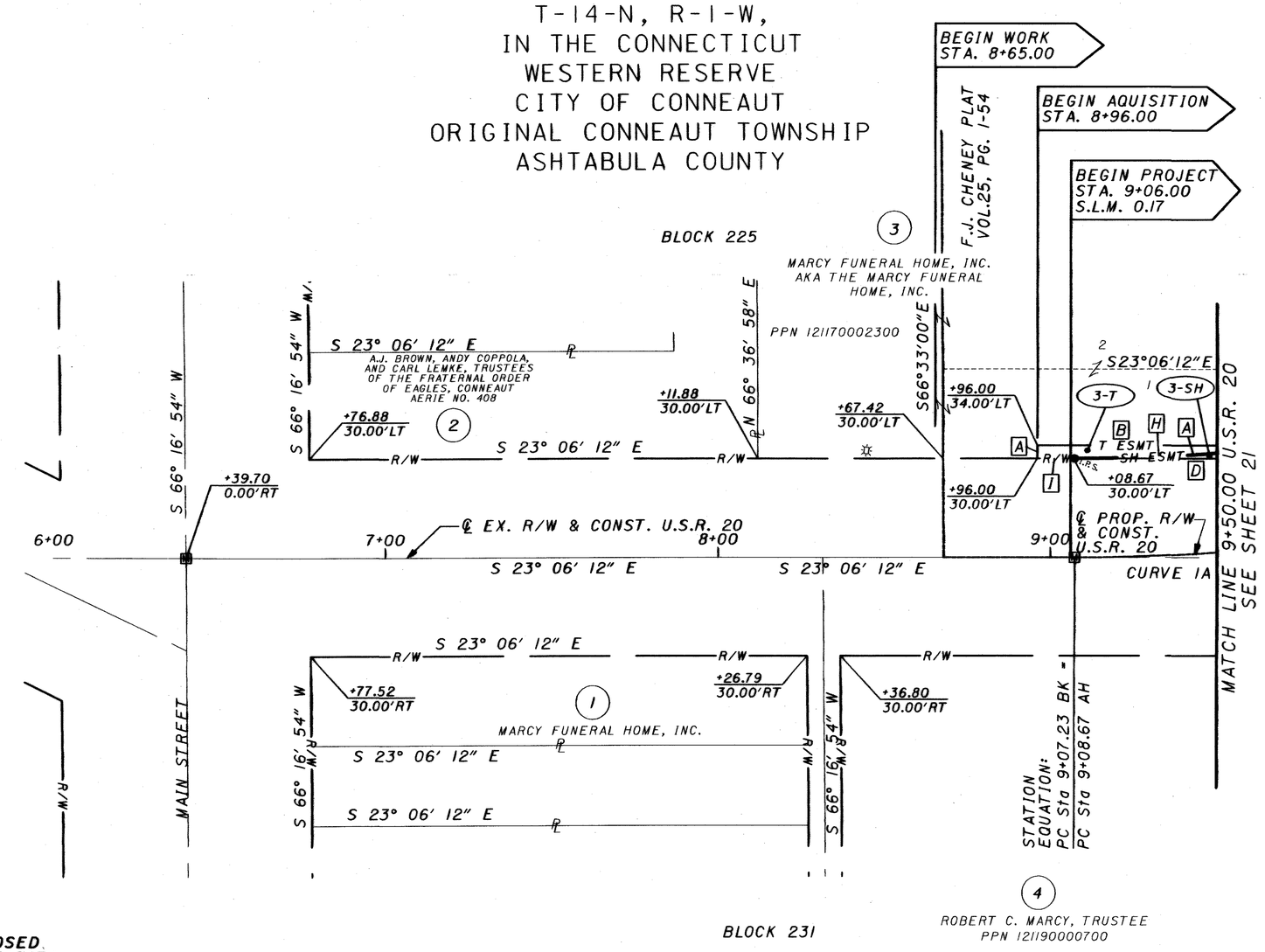

3-SH	BEARING	DISTANCE
A	Δ = 4°59'48" R = 573.32' L = 50.00' CH = 49.98' CH BRG = S25°36'07"E	
B	Δ = 86°35'10" R = 18.00' L = 27.20' CH = 24.69' CH BRG = S71°23'36"E	
C	S65°18'48"W	20.62'
D	N23°06'12"W	66.93'

3-T	BEARING	DISTANCE
A	N66°53'48"E	4.00'
B	S23°06'12"E	55.00'
C	S41°14'19"E	19.86'
D	N65°18'48"E	13.00'
E	S24°41'12"E	4.00'
F	S65°18'48"W	2.68'
G	Δ = 86°35'10" R = 18.00' L = 27.20' CH = 24.69' CH BRG = N71°23'36"W	
H	Δ = 4°59'48" R = 573.32' L = 50.00' CH = 49.98' CH BRG = N25°36'07"W	
I	N23°06'12"W	11.23'

PROPOSED CURVE DATA - CURVE 1A

P.I. Sta = 10+01.44
Δ = 17° 29' 00" (LT)
Dc = 9° 29' 48"
R = 603.32'
T = 92.77'
L = 184.10'
E = 7.09'
$e_{max.}$ = 0.023

MONUMENT LEGEND

- EXISTING R/W MONUMENT BOX
- PROPOSED R/W MONUMENT BOX
- EXISTING CONCRETE MONUMENT
- I.P.F. IRON PIN FOUND
- I.P.F. IRON PIN FOUND W/ ID CAP
- I.P.S. ¾" X 30" LONG REINFORCING ROD SET WITH 1½" ALUMINUM CAP STAMPED "ODOT R/W LELAND B. DILLWORTH, P.S. 7481"
- P.F. IRON PIPE FOUND
- P.K.F. P.K. NAIL FOUND

BASIS FOR BEARINGS:
ALL BEARINGS SHOWN ARE RELATIVE TO OHIO NORTH ZONE STATE PLANE COORDINATES, NAD83(95) AND ARE FOR PROJECT USE ONLY.

EXISTING R/W WIDTH AND LOCATION DETERMINED USING DEEDS, TAX MAPS, O.D.O.T. R/W PLAN ATB-20-26.26 S.H. 2, SEC. R,L (1940), AND TYLER, F.J.CHENEY, AND MERRIAM PLATS.

ALL STATION AND OFFSET CALL OUTS REFER TO ℄ PROPOSED R/W U.S. 20, UNLESS OTHERWISE INDICATED.

REV. BY	DATE	DESCRIPTION

DATE COMPLETED: 10/26/01

SCALE IN FEET
0 10 20 40

PID NO. 18520

R/A DESIGNER PKM
R/A REVIEWER LBD

RIGHT OF WAY PLAN
STA. 6+00.00 TO STA. 9+50.00

ATB-20-26.26

11 / 23

150
162

LOT 8, SEC. 1,
LOT 4, SEC. 2,
T-14-N, R-1-W,
IN THE CONNECTICUT
WESTERN RESERVE
CITY OF CONNEAUT
ORIGINAL CONNEAUT TOWNSHIP
ASHTABULA COUNTY

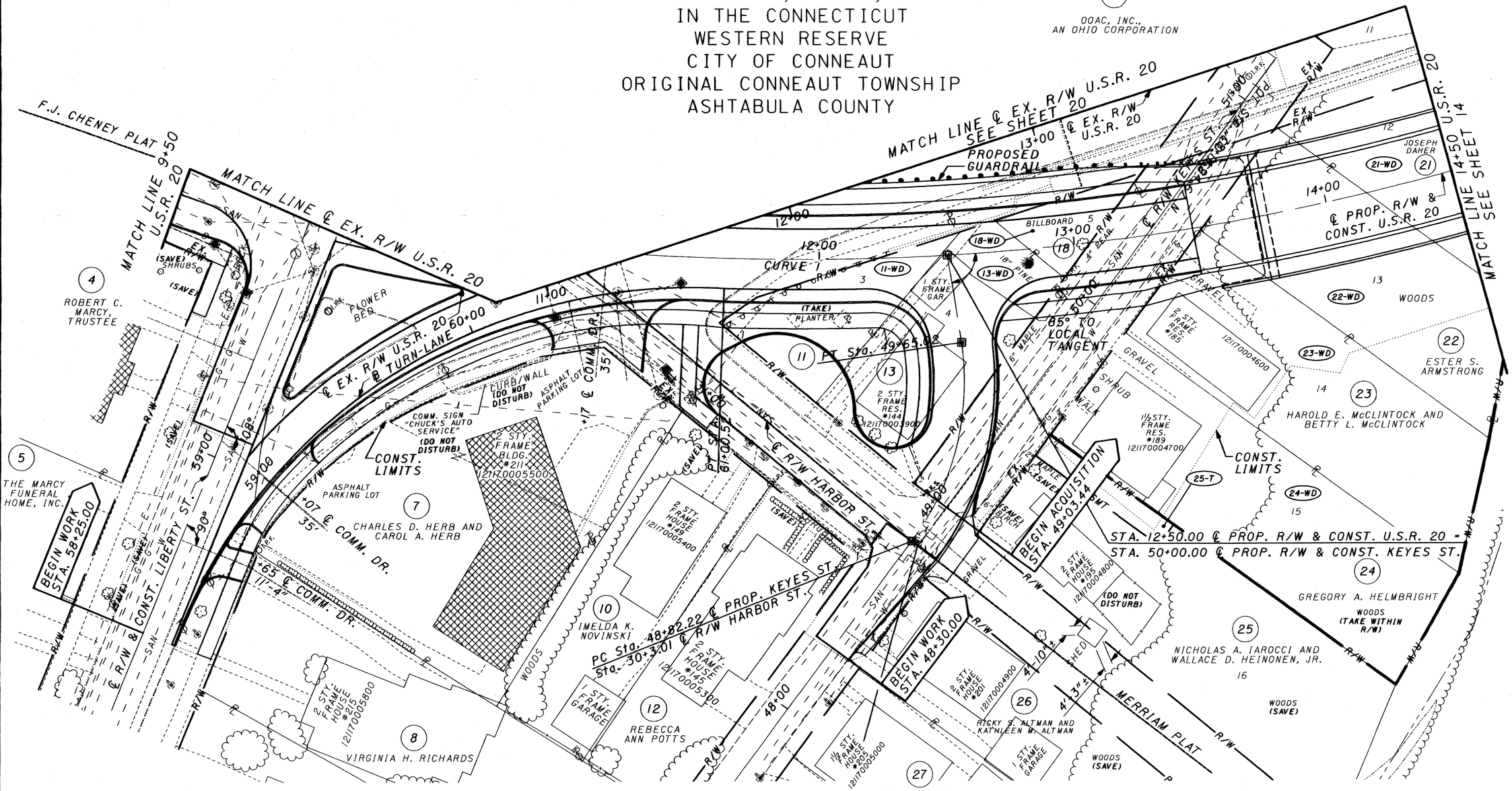

CURVE DATA-CURVE 1
P.I. Sta. = 12+96.47
Δ = 24° 05′ 00″ (LT.)
Dc = 6° 00′ 00″
R = 954.93′
T = 203.70′
L = 401.39′
E = 21.48′
e = NC

CURVE DATA - CURVE 1A
P.I. Sta = 10+01.44
Δ = 17° 29′ 00″ (LT)
Dc = 9° 29′ 48″
R = 603.32′
T = 92.77′
L = 184.10′
E = 7.09′

CURVE DATA KEYES ST.
P.I. Sta. = 49+25.84
Δ = 44° 30′ 18″ (LT.)
Dc = 53° 45′ 00″
R = 106.60′
T = 43.62′
L = 82.80′
E = 8.58′
e_{max} = 0.029 (NDC = 0.040)

(11) BOARD OF COUNTY COMMISSIONERS

(13) HARRY D. BEALS AND MARTHA M. BEALS

NOTE: SEE NEXT SHEET FOR ALL RIGHT OF WAY DETAILS

STRUCTURE KEY
- RESIDENTIAL
- COMMERCIAL
- OUT-BUILDING

REV. BY	DATE	DESCRIPTION
PKM	3/7/02	PARCEL 18 NAME REVISED
DATE COMPLETED: 10/26/01		

SCALE IN FEET: 0, 10, 20, 43

PID NO. 18520

R/W DESIGNER PKM
R/W REVIEWER LBD

RIGHT OF WAY PLAN
STA. 9+50.00 TO STA. 14+50.00

ATB-20-26.26

12 / 23

151 / 162

LOT 8, SEC. 1,
LOT 4, SEC. 2,
T-14-N, R-1-W,
IN THE CONNECTICUT
WESTERN RESERVE
CITY OF CONNEAUT
ORIGINAL CONNEAUT TOWNSHIP
ASHTABULA COUNTY

18-WD	BEARING	DISTANCE
A	S64°40'12"E	60.38'
B	N79°29'03"E	51.23'
C	S6°48'56"E	35.43

11-WD	BEARING	DISTANCE
A	S81°21'05"E	17.57'
B	S64°40'12"E	83.79'
C	N83°11'03"E	87.87'
D	S6°48'57"E	49.28'

13-WD	BEARING	DISTANCE
A	S64°40'12"W	14.31'
B	S6°48'56"E	35.43'
C	N79°29'03"E	100.21'
D	S6°48'57"E	49.50'
E	N83°11'03"E	87.87'

25-T	BEARING	DISTANCE
A	N79°29'03"E	10.00'
B	S10°30'57"E	60.00
C	S79°29'03"W	10.00'
D	N10°30'57"W	60.00

STA. 10+00.00 ℄ EX. R/W U.S.R. 20 =
STA. 10+00.72, 7.09' RT, ℄ PROP. R/W & CONSTRUCTION U.S.R. 20 =
STA. 60+00.00 ℄ EX. R/W LIBERTY ST. =
STA. 70+00.00 ℄ EX. R/W SOUTH LIBERTY ST.

STA. 12+50.00 ℄ PROP. R/W & CONST. U.S.R. 20 =
STA. 50+00.00 ℄ CONST. KEYES ST.

MATCH LINE 9+50 U.S.R. 20 SEE SHEET 11

MATCH LINE ℄ EX. R/W U.S.R. 20 SEE SHEET 21

MATCH LINE ℄ EX. R/W U.S.R. 20 SEE SHEET 21

MATCH LINE 14+50 U.S.R. 20 SEE SHEET 15

POT Sta. 78+14.94

S 57°55'43" E
+16.55
58.21'LT
(U.S. 20)

S 64°40'12" E
106.71'

+86.61
33.08'LT
(U.S. 20)

21-WD

12
JOSEPH DAHER
21

14+00

50.00'

℄ PROP. R/W & CONST. U.S.R. 20

S 10°30'57" E
116.00'

+49.67
1.28'RT
(U.S. 20)

N 79°29'03" E
50.00'

+15.34
36.98'RT
(U.S. 20)

13

22-WD

22
ESTER S. ARMSTRONG

23-WD

S 10°30'57" E
140.00'

14

23
HAROLD E. McCLINTOCK AND BETTY L. McCLINTOCK

S 10°30'57" E
162.00'

+38.17
105.67'RT
(U.S. 20)

55.46'
M/D
S 53°50'36" E

+69.65
12.30'LT

+55.61
8.85'LT

12+00 ℄ EX. R/W U.S.R. 20

13+00

+94.64
12.81'RT
(U.S. 20)

18-WD

5

18

O.P.F.

50+00

85° TO LOCAL TANGENT

+75.60
15.25'RT

CURVE I

11-WD

13-WD

3

4

11 PT Sta. 49+65.02

13

N 34° 19' 27" E

+15.98
18.00'RT
(HARBOR)

+44.56
18.00'LT
(HARBOR)

+17 ℄ COMM. DR. 35'

N 6° 48' 57" W
31+00

+04.87
18.00'LT
(HARBOR)

+66.70
18.00'RT
(HARBOR)

+38.65
58.66'RT
(LIBERTY)

S 19° 57' 03" E

+07 ℄ COMM. DR. 35'

+59.87
18.00'LT
(HARBOR)

+03.44
11.12'LT
(KEYES)

℄ R/W HARBOR ST.

49+00

+33.66
35.19'RT
(KEYES)

+26.78
30.83'RT
(KEYES)

BEGIN ACQUISITION
STA. 49+03.44

25-T

+18.53
90.31'RT
(KEYES)

+13.35
87.20'RT
(KEYES)

24-WD

15

+16.79
154.60'RT
(U.S. 20)

24
GREGORY A. HELMBRIGHT

S 55°44'05" E
54.63'

S 72°38'29" E
50.36'

+88.37
192.13'RT
(U.S. 20)

S 10°30'57" E
168.00'

S 65°57'44" E

+76.81
30.00'LT

59+00

90°

108°

+41 ℄ COMM. DR.

9.5'

N 65° 18' 48" E

+69.04
33.18'RT
(U.S. 20)

4
ROBERT C. MARCY, TRUSTEE

O.P.K.F.

℄ EX. R/W U.S.R. 20

11+00

S 23° 06' 12" E

BEGIN WORK
STA. 58+25.00

+26.82
30.00'LT

90°

℄ R/W & CONST. LIBERTY ST.

POT STA. 58+00.00

+71.02
30.00'RT

+65 ℄ COMM. DR. 11.5'

S 13°47'40" E

+12.41
30.00'RT

N 17° 18' 59" W

7
CHARLES D. HERB AND CAROL A. HERB

8
VIRGINIA H. RICHARDS

10
IMELDA K. NOVINSKI

N 75°17'07" E

N 77°16'55" E

12
REBECCA ANN POTTS

PC Sta. 48+82.22 ℄ PROP. KEYES ST.
Sta. 30+3.01 ℄ R/W HARBOR ST.

+73.36
13.00'RT
(KEYES)

+65.02
13.00'LT
(KEYES)

+96.40
20.12'RT
(KEYES)

BEGIN WORK
STA. 48+30.00

N 79° 29' 04" E

48+00 N 79° 29' 04" E

℄ R/W KEYES ST.
N 79° 29' 04" E

N 10°33'10" W

+29.30
13.00'RT
(KEYES)

27
HOWARD A. BERNINI

26
RICKY S. ALTMAN AND KATHLEEN M. ALTMAN

N 6° 48' 57" W

MERRIAM PLAT

25
NICHOLAS A. IAROCCI AND WALLACE D. HEINONEN, JR.

16

+88.37
192.13'RT
(U.S. 20)

11
BOARD OF COUNTY COMMISSIONERS

13
HARRY D. BEALS AND MARTHA M. BEALS

18
OOAC, INC., AN OHIO CORPORATION

Sta. 48+82.22 ℄ EX. R/W KEYES ST.=
Sta. 30+00.00 ℄ EX. R/W & CONST. HARBOR ST.

CURVE DATA-CURVE I
P.I. Sta. = 12+96.47
Δ = 24° 05' 00" (LT.)
Dc = 6° 00' 00"
R = 954.93'
T = 203.70'
L = 401.39'
E = 21.48'
e = NC

CURVE DATA - CURVE IA
P.I. Sta = 10+01.44
Δ = 17° 29' 00" (LT)
Dc = 9° 29' 48"
R = 603.32'
T = 92.77'
L = 184.10'
E = 7.09'

CURVE DATA KEYES ST.
P.I. Sta. = 49+25.84
Δ = 44° 30' 18" (LT.)
Dc = 53° 45' 00"
R = 106.60'
T = 43.62'
L = 82.80'
E = 8.58'
e_{max} = 0.029 (NDC = 0.040)

EXISTING R/W WIDTH AND LOCATION DETERMINED USING DEEDS, TAX MAPS, O.D.O.T. R/W PLAN ATB-20-26.26 S.H. 2, SEC. R,L (1940), AND PLATS TYLER, F.J. CHENEY, AND MERRIAM.

BASIS FOR BEARINGS:
ALL BEARINGS SHOWN ARE RELATIVE TO OHIO NORTH ZONE STATE PLANE COORDINATES, NAD83(95) AND ARE FOR PROJECT USE ONLY.

ALL STATION AND OFFSET CALL OUTS REFER TO ℄ PROPOSED R/W U.S. 20, UNLESS OTHERWISE INDICATED.

MONUMENT LEGEND

- EXISTING R/W MONUMENT BOX
- PROPOSED R/W MONUMENT BOX
- ◎ EXISTING CONCRETE MONUMENT
- ○I.R.F. IRON PIN FOUND
- ⓘI.R.F. IRON PIN FOUND W/ ID CAP
- ●I.R.S. ¾" X 30" LONG REBAR SET WITH 1½" ALUMINUM CAP STAMPED "ODOT R/W LELAND B. DILLWORTH, P.S. 7481"
- ◎P.F. IRON PIPE FOUND
- ▫P.K.F. P.K. NAIL FOUND

REV. BY	DATE	DESCRIPTION
PKM	3/7/02	PARCEL 18 NAME REVISED
DATE COMPLETED: 10/26/01		

SCALE IN FEET 0 10 20 40

PID NO. 18520

R/W DESIGNER PKM
R/W REVIEWER LBD

RIGHT OF WAY PLAN
STA. 9+50.00 TO STA. 14+50.00

ATB-20-26.26

13 / 23

152 / 162

LOT 8, SEC. 1, LOT 4, SEC. 2, T-14-N, R-1-W, IN THE CONNECTICUT WESTERN RESERVE CITY OF CONNEAUT ORIGINAL CONNEAUT TOWNSHIP ASHTABULA COUNTY

PARCEL	OVERLAP EASEMENT	TOTAL AREA	AREA OF OVERLAP
37-A	EX. R/W	1.888 AC.	0.126 AC.
	37-SH		0.023 AC.
	37-SH-1		0.038 AC.
	37-SH-2		0.038 AC.
	37-SH-3		0.038 AC.
	37-SH-4		0.038 AC.
	37-SH-5		0.038 AC.
	37-SH-6		0.038 AC.
	37-SH-7		0.071 AC.

PARCEL	OVERLAP EASEMENT	TOTAL AREA	AREA OF OVERLAP
37-T	37-A	3.906	1.888 AC.
	EX. R/W		1.126 AC.
	37-SH		0.023 AC.
	37-SH-1		0.038 AC.
	37-SH-2		0.038 AC.
	37-SH-3		0.038 AC.
	37-SH-4		0.038 AC.
	37-SH-5		0.038 AC.
	37-SH-6		0.038 AC.
	37-SH-7		0.071 AC.

MERRIAM PLAT
PLAT VOL. 4, PG. 38
LOTS 1 - 16

19 SAMUEL L. LYONS 12-117-00-041-00

20 SAMUEL L. LYONS AKA PRETLOW LYONS 12-117-00-042-00

21 JOSEPH DAHER 12-117-00-044-00

40 DENNIS DREW 12-117-00-031-00

MICHAEL C. HALL AND VALERIE L. HALL 12-117-00-032-00

MATCH LINE

MATCH LINE 14+50 U.S.R. 20 SEE SHEETS 12 & 20

MATCH LINE 19+50 U.S.R. 20 SEE SHEET 16

FENCE (TO BE REMOVED W/ IN R/W)

WOODS (TAKE W/ IN R/W)

WETLAND 1A

WETLAND 1B

STA. 15+52.16 ℄ EX. R/W U.S.R. 20 = STA. 5769+58.00 ℄ EAST TRACKS

STA. 15+29.67 ℄ PROP. R/W & CONST. U.S.R. 20 = STA. 5768+86.21 ℄ EAST TRACKS

℄ EX. R/W U.S.R. 20

℄ PROP. R/W & CONST. U.S.R. 20

CONST. LIMITS

BESSEMER AND LAKE ERIE RR 5768+00

5769+00

5770+00

5771+00

PT SH 14+94.16

37 BESSEMER AND LAKE ERIE RAILROAD COMPANY, A CORPORATION UNDER THE LAWS OF PENNSYLVANIA AKA PITTSBURG, BESSEMER & LAKE ERIE RAILROAD CO. CONVEYANCE 12-307-00-048-00

WETLAND AREA

NOTE: SEE NEXT SHEET FOR ALL RIGHT OF WAY DETAILS

REV. BY	DATE	DESCRIPTION
DJH	6/21/02	CHANGED AREA FOR PCL 37-A ON THE 37-T OVERLAP TABLE
PKM	5/6/02	TREES SHOWN ON PARCELS 37 & 40
PKM	5/6/02	40-T ADDED & 37-T REVISED
PKM	4/19/02	19-T REMOVED & 19-WD ADDED
PKM	3/7/02	ADDED WETLANDS
PKM	3/7/02	PARCEL 37 NAME REVISED
PKM	3/7/02	PARCELS 37-A & 37-T REVISED

DATE COMPLETED: 10/26/01

SCALE IN FEET 0 10 20 40

PID NO. 18520

R/W DESIGNER PKM

R/W REVIEWER LBD

RIGHT OF WAY PLAN
STA. 14+50.00 TO STA. 19+50.00

ATB-20-26.26

14 / 23

153 / 162

I:\Projects\18520\RW\atb20Rp2.dgn 14-NOV-2002 10:02AM dhouckl

MONUMENT LEGEND

- EXISTING R/W MONUMENT BOX
- PROPOSED R/W MONUMENT BOX
- EXISTING CONCRETE MONUMENT
- IRON PIN FOUND
- I.P.F. IRON PIN FOUND W/ ID CAP
- I.P.S. 3/4" X 30" LONG REINFORCING ROD SET WITH 1 1/2" ALUMINUM CAP STAMPED "ODOT R/W LELAND B. DILLWORTH, P.S. 7481"
- I.R.F. IRON PIPE FOUND
- P.K.F. P.K. NAIL FOUND

CURVE DATA C-3
R = 787.38'
Δ = 15°15'18"
L = 209.64'
T = 105.44'
CH = 209.02'
CHB = S 30°14'37" W

CURVE DATA C-2
R = 787.37'
Δ = 10°15'43"
L = 141.02'
T = 70.70'
CH = 140.84'
CHB = S 27°44'50" W

MERRIAM PLAT
PLAT VOL. 4, PG. 38
LOTS 1 - 16

LOT 8, SEC. 1, LOT 4, SEC. 2, T-14-N, R-1-W, IN THE CONNECTICUT WESTERN RESERVE CITY OF CONNEAUT ORIGINAL CONNEAUT TOWNSHIP ASHTABULA COUNTY

SEE SHEET 21 MATCH LINE

(19) SAMUEL L. LYONS 12-117-00-041-00

(20) SAMUEL L. LYONS AKA PRETLOW LYONS 12-117-00-042-00

(21) JOSEPH DAHER 12-117-00-044-00

(40) DENNIS DREW 12-117-00-031-00

MICHAEL C. HALL AND VALERIE L. HALL 12-117-00-032-00

(37) BESSEMER AND LAKE ERIE RAILROAD COMPANY, A CORPORATION UNDER THE LAWS OF PENNSYLVANIA AKA PITTSBURG, BESSEMER & LAKE ERIE RAILROAD CO. CONVEYANCE 12-307-00-048-00

MATCH LINE 14+50 U.S.R. 20 SEE SHEETS 13 & 21

MATCH LINE 19+50 U.S.R. 20 SEE SHEET 17

BESSEMER AND LAKE ERIE RR

R.R. STA. 5771+44.91

S 14° 59' 11" E 255.07'

T ESMT

5771+00

5770+00

5769+00

5768+00

N 11° 20' 56" W 178.69'

S10°30'57"E 45.00'

S 10°30'57" E 62.00'

N41°54'32"E 48.71' 50.00'

S 79°29'03" W 87.93'

S 57°55'43" E

S47°53'18"W 101.07'

MERRIAM PLAT S 53°50'36" E 55.46'

R/W S64°40'12"E 376.93'

107.22'

1.29'

106.71' S64°40'12"E

PT Sta. 14+94.16

+44.82 185.18'LT (U.S. 20)

+78.26 149.61'LT

15+29.03 167.01'LT U.S. 20 5770+52.03 43.69'LT R.R.

15+17.06 99.47'LT U.S. 20 5769+79.78 41.72'LT R.R.

15+16.70 98.23'LT U.S. 20 5769+78.42 41.78'LT R.R.

+02.80 51.55'LT

14+99.87 44.50'LT U.S. 20 5769+19.13 42.89'LT R.R.

+97.26 38.23'LT

14+90.86 99.99'LT U.S. 20 5768+94.63 44.30'LT RAILROAD

+03.22 23.00'LT

+02.78 23.00'RT

+72.36 23.25'RT

+64.30 44.99'RT

+60.45 55.74'RT

+58.35 60.21'RT

STA. 15+52.16 ℄ EX. R/W U.S.R. 20 = STA. 5769+58.00 ℄ EAST TRACKS

STA. 15+29.67 ℄ PROP. R/W & CONST. U.S.R. 20 = STA. 5768+86.21 ℄ EAST TRACKS

17+00.00 113.23'LT U.S. 20 5770+29.89 134.03'RT R.R.

℄ EX. R/W U.S.R. 20

℄ PROP. R/W & CONST. U.S.R. 20

S 64° 40' 12" E 598.95'

S 64° 40' 12" E 774.91'

S 64° 40' 12" E 856.49'

S 64° 40' 12" E 905.40'

S 64° 40' 12" E 880.04'

S 25°19'48" W 75.23'

+94.00 98.23'LT 709.80

+21.00 98.23'LT 582.80

+48.00 98.23'LT 455.80

15+94.00 23.00'LT U.S. 20 5769+27.69 53.28'RT R.R.

17+21.00 23.00'LT U.S. 20 5769+59.65 175.01'RT R.R.

18+48.00 23.00'LT U.S. 20 5769+84.75 297.89'RT R.R.

+94.00 23.00'RT

+30.00 23.00'RT

+21.00 23.00'RT

+57.00 23.00'RT

+48.00 23.00'RT

+84.00 23.00'RT

℄ PROP. R/W & CONST. U.S.R. 20

R/W

A ESMT

T ESMT

SH ESMT

37-SH	BEARING	DISTANCE
A	S64°40'12"E	12.28'
B	S25°52'46"W	46.00'
C	N64°40'12"W	30.95'
D	N47°53'18"E	49.81'

37-SH-1	BEARING	DISTANCE
A	S64°40'12"E	36.00'
B	S25°19'48"W	46.00'
C	N64°40'12"W	36.00'
D	N25°19'48"E	46.00'

37-SH-2	BEARING	DISTANCE
A	S64°40'12"E	36.00'
B	S25°19'48"W	46.00'
C	N64°40'12"W	36.00'
D	N25°19'48"E	46.00'

37-SH-3	BEARING	DISTANCE
A	S64°40'12"E	36.00'
B	S25°19'48"W	46.00'
C	N64°40'12"W	36.00'
D	N25°19'48"E	46.00'

37-A	BEARING	DISTANCE
J	N47°53'17"E	96.37'

37-T	BEARING	DISTANCE
L	S47°30'23"W	103.71'
M	N46°39'19"W	51.04'
N	N21°57'32"E	26.07'
P	N53°50'36"E	5.00'
Q	N47°53'18"E	115.49'
T	S51°25'18"W	22.48'
U	S28°52'02"E	168.06'

	BEARING	DISTANCE
Z	S47°53'18"W	30.91'

BASIS FOR BEARINGS: ALL BEARINGS SHOWN ARE RELATIVE TO OHIO NORTH ZONE STATE PLANE COORDINATES, NAD83(95) AND ARE FOR PROJECT USE ONLY.

EXISTING R/W WIDTH AND LOCATION DETERMINED USING DEEDS, TAX MAPS, O.D.O.T. R/W PLAN ATB-20-26.26 S.H. 2, SEC. R,L (1940), AND TYLER, F.J. CHENEY, AND MERRIAM PLATS.

ALL STATION AND OFFSET CALL OUTS REFER TO ℄ PROPOSED R/W U.S. 20, UNLESS OTHERWISE INDICATED.

SCALE IN FEET 0 10 20 40

PID NO. 18520

R/W DESIGNER PKM

R/W REVIEWER LBD

RIGHT OF WAY PLAN
STA. 14+50.00 TO STA. 19+50.00

ATB-20-26.26

REV. BY	DATE	DESCRIPTION
DJH	11/14/02	DELETED LINES "G" & "H" FROM TABLE
DJH	5/30/02	CHANGED DIST FOR LINE "Z" & ADDED SHEET 21 REF
PKM	5/6/02	40-T ADDED & 37-T REVISED
PKM	4/19/02	19-T REMOVED & 19-WD ADDED
PKM	3/7/02	PARCEL 37 NAME REVISED
PKM	3/7/02	PARCELS 37-A & 37-T REVISED

DATE COMPLETED: 10/26/01

15 / 23

154 / 162

I:\Projects\8520\RW\atb20Rd2.dgn 14-NOV-2002 10:00AM dhouck

LOT 8, SEC. 1,
LOT 4, SEC. 2,
T-14-N, R-1-W,
IN THE CONNECTICUT
WESTERN RESERVE
CITY OF CONNEAUT
ORIGINAL CONNEAUT TOWNSHIP
ASHTABULA COUNTY

37
BESSEMER AND LAKE ERIE RAILROAD CO.
12-006-00-330-00

39
CHERYL S. DAUB
12-306-00-001-00

38
OOAC, INC., AN OHIO CORPORATION
12-306-00-003-00

37
BESSEMER AND LAKE ERIE RAILROAD COMPANY, A CORPORATION UNDER THE LAWS OF PENNSYLVANIA AKA PITTSBURG, BESSEMER & LAKE ERIE RAILROAD CO. CONVEYANCE
12-307-00-048-00

29
SALVATORE P. SCROFANO AND LU ANN SCROFANO, AKA SALVATORE P. SCROFANO AND LUANN SCROFANO, AKA SAL SCROFANO AND LU ANN SCROFANO

MATCH LINE 19+50 U.S.R. 20
SEE SHEET 14

MATCH LINE 24+50 U.S.R. 20
SEE SHEET 18

℄ EX. R/W U.S.R. 20

℄ PROP. R/W & CONST. U.S.R. 20

CONST. LIMITS

PARCEL ACQUIRED UNDER SH 2, SEC R&L (1940)

18" STORM OUTFALL

PC Sta. 23+39.16

CURVE 2

WETLAND 2A

WETLAND 3A

WETLAND 3B

CONNEAUT CREEK

WETLAND AREA

37-T

39-T

38-WD

37-A

29-SH

37-SH-4

37-SH-5

37-SH-6

37-SH-7

20+00

21+00

22+00

23+00

24+00

T ESMT

A ESMT

SH ESMT

R/W

SB

MW4-2

MW4-4

MW4-5

18" POPLAR

24" ASH

BILLBOARD

BRUSH

36" BUTTERNUT SAVE

WOODS

24

25

26

27

43

44

PROPOSED
CURVE DATA-CURVE 2

P.I. Sta = 24+78.85
Δ = 16° 38′ 40″ (LT)
Dc = 6° 00′ 00″
R = 954.93′
T = 139.69′
L = 277.41′
E = 10.16′
e_{max} = NC

NOTE: SEE NEXT SHEET FOR ALL RIGHT OF WAY DETAILS

REV. BY	DATE	DESCRIPTION
PKM	5/6/02	37-T REVISED
PKM	5/6/02	MON. WELLS ON PARCEL 29 ADDED
DS	11/26/01	PARCEL 29-WD CHANGED TO 29-SH
PKM	3/7/02	PARCEL 37 NAME REVISED
PKM	3/7/02	ADDED PARCELS 38 & 39

DATE COMPLETED: 10/26/01

SCALE IN FEET
0 10 20 40

PID NO. 18520

R/W DESIGNER PKM
R/W REVIEWER LBD

RIGHT OF WAY PLAN
STA. 19+50.00 TO STA. 24+50.00

ATB-20-26.26

16 / 23

155 / 162

LOT 8, SEC. 1,
LOT 4, SEC. 2,
T-14-N, R-1-W,
IN THE CONNECTICUT
WESTERN RESERVE
CITY OF CONNEAUT
ORIGINAL CONNEAUT TOWNSHIP
ASHTABULA COUNTY

STA. 21+66.19 ℄ EX. R/W U.S.R. 20 =
STA. 100+00.00 ℄ CONNEAUT CREEK

	STATION	OFFSET
A	22+61.06	113.23'LT
B	22+81.86	98.23'LT
C	22+89.06	93.04'LT
D	22+91.60	98.23'LT
E	22+98.95	113.23'LT
F	23+03.80	106.23'LT
G	23+03.80	98.23'LT

(37) BESSEMER AND LAKE ERIE RAILROAD COMPANY, A CORPORATION UNDER THE LAWS OF PENNSYLVANIA AKA PITTSBURG, BESSEMER & LAKE ERIE RAILROAD CO. CONVEYANCE
12-006-00-330-00

(39) CHERYL S. DAUB
12-306-00-001-00

(38) OOAC, INC., AN OHIO CORPORATION
12-306-00-003-00

(37) BESSEMER AND LAKE ERIE RAILROAD COMPANY, A CORPORATION UNDER THE LAWS OF PENNSYLVANIA AKA PITTSBURG, BESSEMER & LAKE ERIE RAILROAD CO. CONVEYANCE
12-307-00-048-00

(29) SALVATORE P. SCROFANO AND LU ANN SCROFANO, AKA SALVATORE P. SCROFANO AND LUANN SCROFANO, AKA SAL SCROFANO AND LU ANN SCROFANO

MATCH LINE 19+50 U.S.R. 20 SEE SHEET 15

MATCH LINE 24+50 U.S.R. 20 SEE SHEET 19

PROPOSED
CURVE DATA-CURVE 2

P.I. Sta = 24+78.85
Δ = 16° 38′ 40″ (LT)
Dc = 6° 00′ 00″
R = 954.93′
T = 139.69′
L = 277.41′
E = 10.16′
e_{max} = NC

39-T	BEARING	DISTANCE
A	S47°30′23″W	7.56′
B	N64°40′12″W	167.02′
C	S25°19′48″W	8.00′
D	N64°40′12″E	12.19′
E	N51°25′18″E	16.70′
F	S64°40′12″E	174.72′

37-SH-4	BEARING	DISTANCE
A	S64°40′12″E	36.00′
B	S25°19′48″W	46.00′
C	N64°40′12″W	36.00′
D	N25°19′48″E	46.00′

37-SH-5	BEARING	DISTANCE
A	S64°40′12″E	36.00′
B	S25°19′48″W	46.00′
C	N64°40′12″W	36.00′
D	N25°19′48″E	46.00′

37-SH-6	BEARING	DISTANCE
A	S64°40′12″E	36.00′
B	S25°19′48″W	46.00′
C	N64°40′12″W	36.00′
D	N25°19′48″E	46.00′

38-WD	BEARING	DISTANCE
A	S47°30′08″W	111.78′
B	N28°52′00″W	168.07′
C	N51°25′18″E	5.78′
D	S64°40′12″E	175.95′

37-A	BEARING	DISTANCE
G	S47°30′23″W	48.53′
H	N67°25′32″W	38.34′
I	N21°57′32″E	7.57′
J	N47°53′18″E	96.37′

37-T	BEARING	DISTANCE
L	S47°30′23″W	103.71′
M	N46°39′19″W	51.04′
N	N21°57′32″E	26.07′
P	N53°50′36″E	5.00′
Q	N47°53′18″E	115.49′
R	N41°54′32″E	50.00′
S	N37°34′58″E	14.08′
T	S51°25′18″W	22.48′
U	S28°52′02″E	168.06′

37-SH-7	BEARING	DISTANCE
A	S47°30′23″W	48.53′
B	N67°25′32″W	38.34′
C	N21°57′32″E	20.00′
D	N34°39′53″E	62.06′
E	S28°52′02″E	58.85′

MONUMENT LEGEND

- Ⓜ EXISTING R/W MONUMENT BOX
- Ⓜ PROPOSED R/W MONUMENT BOX
- © EXISTING CONCRETE MONUMENT
- ○I.R.F. IRON PIN FOUND
- ⊙I.R.F. IRON PIN FOUND W/ ID CAP
- ●I.R.S. ¾" X 30" LONG REINFORCING ROD SET WITH 1½" ALUMINUM CAP STAMPED "ODOT R/W LELAND B. DILLWORTH, P.S. 7481"
- ◎P.F. IRON PIPE FOUND
- ⊙P.K.F. P.K. NAIL FOUND

BASIS FOR BEARINGS:
ALL BEARINGS SHOWN ARE RELATIVE TO OHIO NORTH ZONE STATE PLANE COORDINATES, NAD83(95) AND ARE FOR PROJECT USE ONLY.

EXISTING R/W WIDTH AND LOCATION DETERMINED USING DEEDS, TAX MAPS, O.D.O.T. R/W PLAN ATB-20-26.26 S.H. 2, SEC. R,L (1940), AND TYLER, F.J. CHENEY, AND MERRIAM PLATS.

ALL STATION AND OFFSET CALL OUTS REFER TO ℄ PROPOSED R/W U.S. 20, UNLESS OTHERWISE INDICATED.

REV. BY	DATE	DESCRIPTION
PKM	5/6/02	37-T REVISED
PKM	3/7/02	PARCEL 37 NAME REVISED
PKM	3/7/02	38-WD & 39-T ADDED
PKM	3/7/02	37-A, 37-T & 37-SH-7 REVISED
DS	11/26/01	PARCEL 29-WD CHANGED TO 29-SH

DATE COMPLETED: 10/26/01

SCALE IN FEET

PID NO. 18520

R/W DESIGNER PKM
R/W REVIEWER LBD

RIGHT OF WAY PLAN
STA. 19+50.00 TO STA. 24+50.00

ATB-20-26.26

17 / 23

156 / 162

LOT 8, SEC. 1, LOT 4, SEC. 2, T-14-N, R-1-W, IN THE CONNECTICUT WESTERN RESERVE CITY OF CONNEAUT ORIGINAL CONNEAUT TOWNSHIP ASHTABULA COUNTY

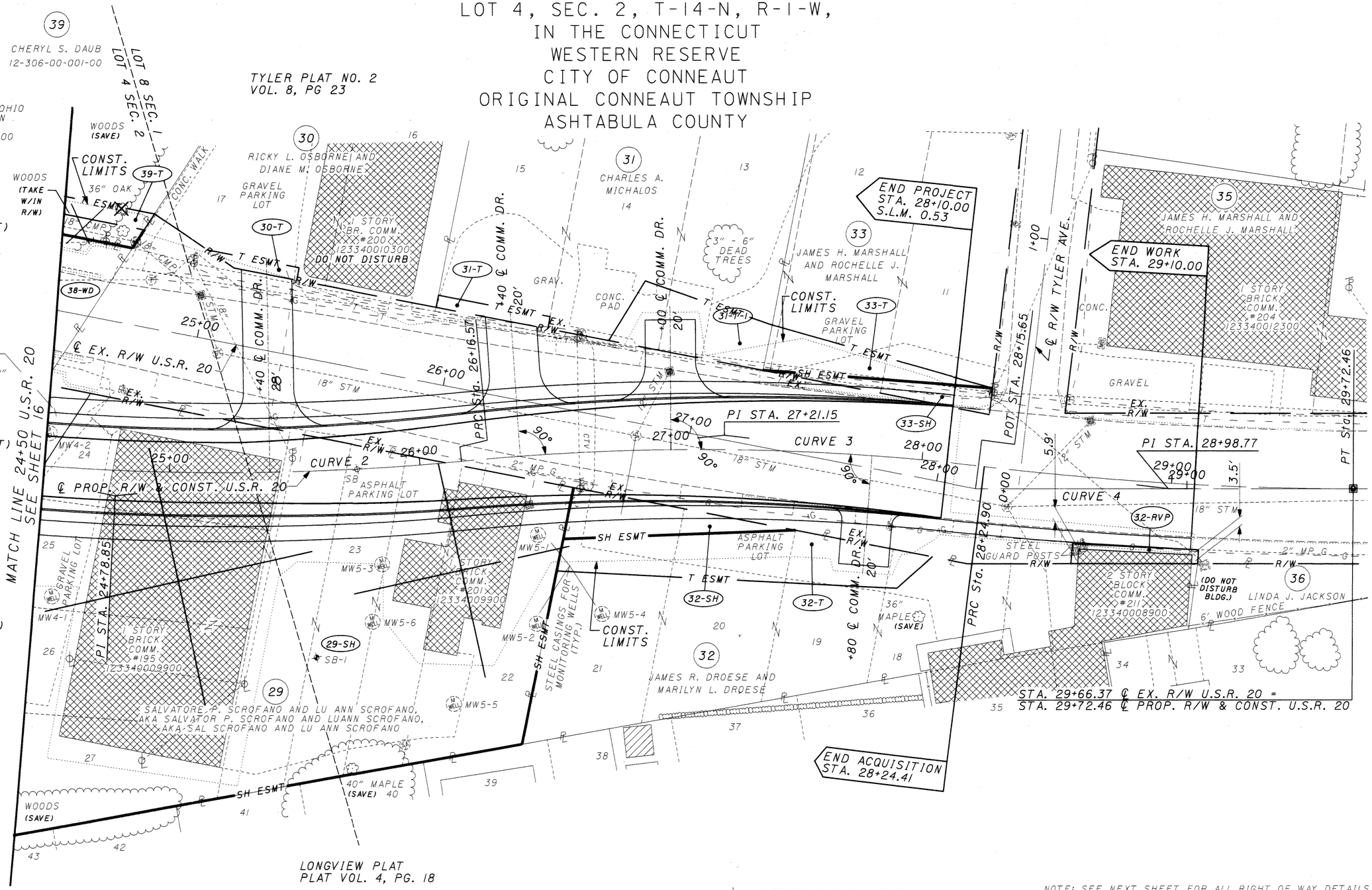

PROPOSED CURVE DATA

CURVE 2
P.I. Sta = 24+78.85
Δ = 16° 38′ 40″ (LT)
Dc = 6° 00′ 00″
R = 954.93′
T = 139.69′
L = 277.41′
E = 10.16′
e_{max} = NC

CURVE 3
P.I. Sta = 27+21.15
Δ = 12° 30′ 00″ (RT)
Dc = 6° 00′ 00″
R = 954.93′
T = 104.58′
L = 208.33′
E = 5.71′
e_{max} = NC

CURVE 4
P.I. Sta = 28+98.77
Δ = 6° 49′ 47″ (LT)
Dc = 4° 37′ 41″
R = 1,237.99′
T = 73.87′
L = 147.57′
E = 2.20′
e_{max} = NC

COMM. SIGN "AUTO VALUE SAL'S AUTO SHOP"

STRUCTURE KEY
- RESIDENTIAL
- COMMERCIAL
- OUT-BUILDING

NOTE: SEE NEXT SHEET FOR ALL RIGHT OF WAY DETAILS

REV. BY	DATE	DESCRIPTION
DJH	9/27/02	CHANGE DRIVE WIDTH TO 28' PCL 30
PKM	5/6/02	MON. WELLS & S.B.'S ON PAR. 29 & 32
PKM	3/7/02	PARCELS 31-T-1 & 32-T REVISED
PKM	3/7/02	ADDED PARCELS 38 & 39
DS	11/26/01	PARCEL 29-WD CHANGED TO 29-SH

DATE COMPLETED: 10/26/01

SCALE IN FEET

PID NO. 18520

R/W DESIGNER PKM
R/W REVIEWER LBD

RIGHT OF WAY PLAN
STA. 24+50.00 TO STA. 29+75.00

ATB-20-26.26

18 / 23

157 / 162

LOT 8, SEC. 1, LOT 4, SEC. 2, T-14-N, R-1-W, IN THE CONNECTICUT WESTERN RESERVE. CITY OF CONNEAUT ORGINAL CONNEAUT TOWNSHIP ASHTABULA COUNTY

30-T	BEARING	DISTANCE
A	N41°33'12"W	12.73'
B	S64°40'12"E	37.18'
C	S25°18'55"W	5.00'
D	N64°40'12"W	25.47'

31-T	BEARING	DISTANCE
A	N25°18'55"E	5.00'
B	S64°40'12"E	45.00'
C	S25°18'55"W	5.00'
D	S64°40'12"E	45.00'

31-T-1	BEARING	DISTANCE
A	N45°49'54"E	28.06'
B	S56°13'16"E	53.26'
C	S25°18'55"W	18.46'
D	N64°40'12"W	62.51'

32-SH	BEARING	DISTANCE
A	S64°40'12"E	90.00'
B	N77°48'15"W	92.42'
C	N25°19'48"E	21.00'

32-RVP	BEARING	DISTANCE
A	N19°25'20"E	7.97'
B	S72°51'22"E	50.30'
C	S17°08'36"W	5.50'
D	N75°38'39"W	50.68'

CONC. MONUMENT FOUND
W. LINE OF SUBLOT NO. 7
TYLER PLAT NO. 2
STA. 26+57.81 318.99'LT

394.73'
S 47° 30' 23" W
266.75'
282.95'

39 CHERYL S. DAUB 12-306-00-001-00

38 OOAC, INC., AN OHIO CORPORATION 12-306-00-003-00

30 RICKY L. OSBORNE AND DIANE M. OSBORNE

31 CHARLES A. MICHALOS

33 JAMES H. MARSHALL AND ROCHELLE J. MARSHALL

35 JAMES H. MARSHALL AND ROCHELLE J. MARSHALL

29 SALVATORE P. SCROFANO AND LU ANN SCROFANO, AKA SALVATOR P. SCROFANO AND LUANN SCROFANO, AKA SAL SCROFANO AND LU ANN SCROFANO

32 JAMES R. DROESE AND MARILYN L. DROESE

36 LINDA J. JACKSON

TYLER PLAT NO. 2
VOL. 8, PG. 23
LOTS 1-27

LOT 8 SEC. 1
LOT 4 SEC. 2

N 25° 18' 55" E

N 25° 18' 55" E

N 25° 18' 55" E

N 25° 18' 55" E

N 25° 18' 55" E

N 25° 19' 48" E

N 25° 19' 48" E

N 25° 19' 48" E

N 25° 19' 48" E

N 25° 19' 50" E

N 25° 19' 48" E

N 25° 19' 48" E

N 25° 19' 48" E

N 25° 19' 48" E

N 25° 19' 48" E

N 86°06'46" W

S 85° 49' 14" E

S 64° 40' 12" E

S 64° 40' 12" E

S 64° 40' 12" E

S 67° 41' 59" E

S 75°38'39" E

S 75°38'39" E

S 85°28'40" E

S 84°35'45" E

N22°27'41"E

N 69° 53' 26" W

S 47° 30' 23" W

S 47° 30' 23" W

N25°18'55"E

N25°19'48"E

N 25° 18' 55" E

N 25° 18' 55" E

N 25° 18' 55" E

N 25° 18' 55"

LOT 8, SEC. 1,
LOT 4, SEC. 2,
T-14-N, R-1-W,
IN THE CONNECTICUT
WESTERN RESERVE
CITY OF CONNEAUT
ORIGINAL CONNEAUT TOWNSHIP
ASHTABULA COUNTY

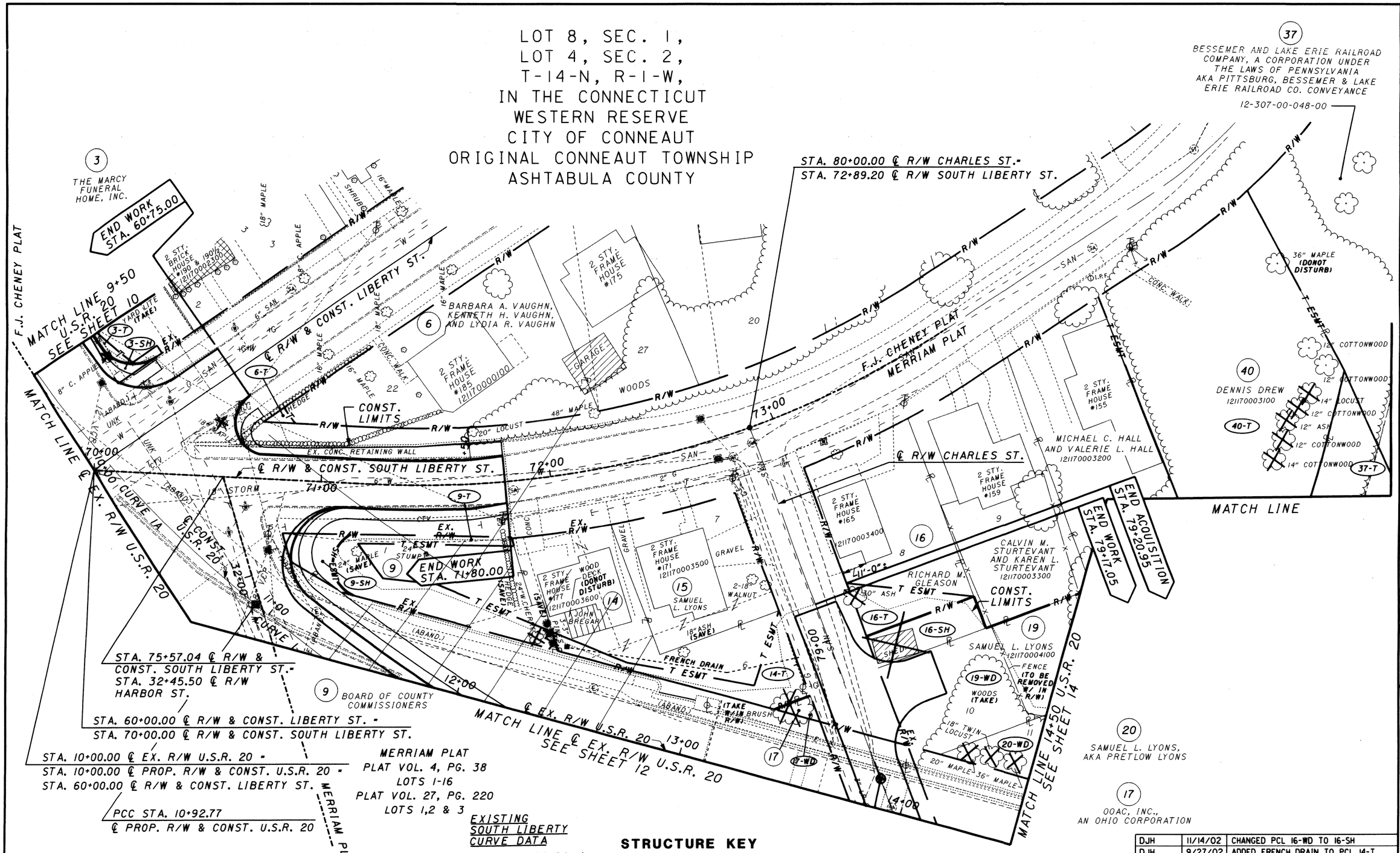

REV. BY	DATE	DESCRIPTION
DJH	11/14/02	CHANGED PCL 16-WD TO 16-SH
DJH	9/27/02	ADDED FRENCH DRAIN TO PCL 14-T
DJH	7/02/02	ADDED "DONOT DISTURB" TO 36" MAPLE ON PCL 40-T
DJH	6/06/02	REMOVED PROPOSED RETAINING WALL
PKM	5/6/02	TREES SHOWN ON PARCEL 40
PKM	5/6/02	40-T ADDED & 37-T REVISED
PKM	4/19/02	14-T REV'D, 19-T REM'D & 19-WD ADDED
PKM	4/19/02	6-T, 16-T & 16-WD ADDED
PKM	3/7/02	PARCEL 17 NAME REVISED

DATE COMPLETED: 10/26/01

SCALE IN FEET: 0, 10, 20, 40

PID NO. 18520

R/W DESIGNER PKM
R/W REVIEWER LBD

PLAN
RIGHT OF WAY PLAN
SOUTH LIBERTY STREET

ATB-20-26.26

20 / 23

159 / 162

3-SH	BEARING	DISTANCE
A	Δ = 4°59'48" R = 573.32' L = 50.00' CH = 49.98' CH BRG = S25°36'07"E	
B	Δ = 86°35'10" R = 18.00' L = 27.20' CH = 24.69' CH BRG = S71°23'36"E	
C	S65°18'48"W	20.62'
D	N23°06'12"W	66.93'

6-T	BEARING	DISTANCE
A	N65°18'48"E	11.00'
B	S25°20'03"E	8.54'
C	N77°06'59"W	14.00'

LOT 8, SEC. 1, LOT 4, SEC. 2, T-14-N, R-1-W, IN THE CONNECTICUT WESTERN RESERVE CITY OF CONNEAUT ORIGINAL CONNEAUT TOWNSHIP ASHTABULA COUNTY

14-T	BEARING	DISTANCE
A	N6°48'57"W	8.72'
B	S57°31'36"E	35.28'
C	S69°31'35"E	56.04'
D	N27°47'37"E	34.57'
E	S10°30'56"E	40.00'
F	S79°29'03"W	16.84'
G	N64°40'12"W	97.46'

16-WD	BEARING	DISTANCE
A	N10°30'57"W	15.00'
B	N79°29'03"E	50.00'
C	S10°30'57"E	15.00'
D	S79°29'03"W	50.00'

16-T	BEARING	DISTANCE
A	N10°30'57"W	25.00'
B	S73°57'02"E	55.90'
C	S79°29'03"W	50.00'

19-WD	BEARING	DISTANCE
A	N64°40'12"W	14.89'
B	N10°30'57"W	36.28'
C	N79°29'03"E	100.00'
D	S10°30'57"E	45.00'
E	S79°29'03"W	87.93'

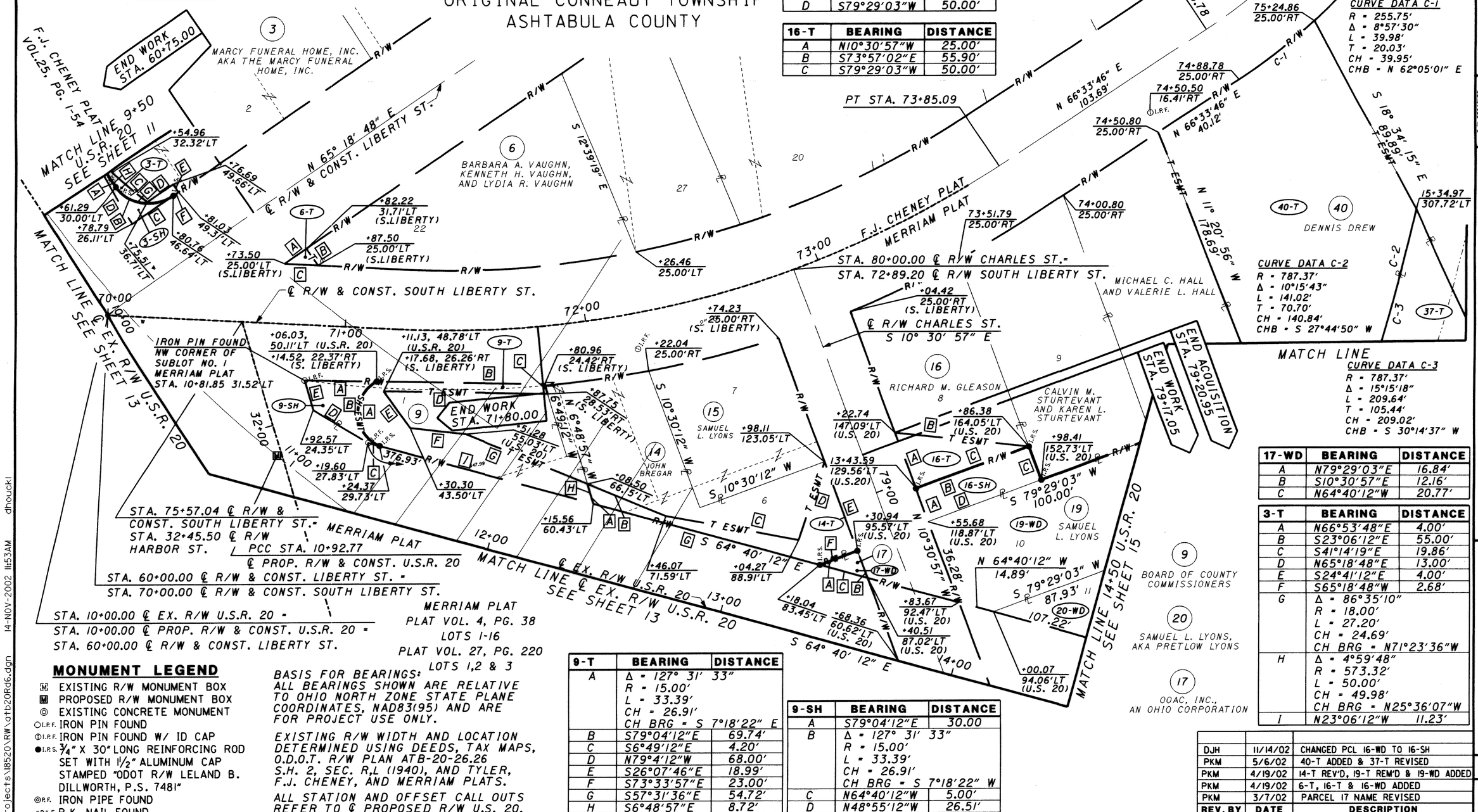

17-WD	BEARING	DISTANCE
A	N79°29'03"E	16.84'
B	S10°30'57"E	12.16'
C	N64°40'12"W	20.77'

3-T	BEARING	DISTANCE
A	N66°53'48"E	4.00'
B	S23°06'12"E	55.00'
C	S41°14'19"E	19.86'
D	N65°18'48"E	13.00'
E	S24°41'12"E	4.00'
F	S65°18'48"W	2.68'
G	Δ = 86°35'10" R = 18.00' L = 27.20' CH = 24.69' CH BRG = N71°23'36"W	
H	Δ = 4°59'48" R = 573.32' L = 50.00' CH = 49.98' CH BRG = N25°36'07"W	
I	N23°06'12"W	11.23'

MONUMENT LEGEND

- ▣ EXISTING R/W MONUMENT BOX
- ▣ PROPOSED R/W MONUMENT BOX
- ◎ EXISTING CONCRETE MONUMENT
- ○I.P.F. IRON PIN FOUND
- ⊙I.P.F. IRON PIN FOUND W/ ID CAP
- ●I.P.S. ¾" X 30" LONG REINFORCING ROD SET WITH 1½" ALUMINUM CAP STAMPED "ODOT R/W LELAND B. DILLWORTH, P.S. 7481"
- ◎P.F. IRON PIPE FOUND
- ○P.K.F. P.K. NAIL FOUND

BASIS FOR BEARINGS: ALL BEARINGS SHOWN ARE RELATIVE TO OHIO NORTH ZONE STATE PLANE COORDINATES, NAD83(95) AND ARE FOR PROJECT USE ONLY.

EXISTING R/W WIDTH AND LOCATION DETERMINED USING DEEDS, TAX MAPS, O.D.O.T. R/W PLAN ATB-20-26.26 S.H. 2, SEC. R,L (1940), AND TYLER, F.J. CHENEY, AND MERRIAM PLATS.

ALL STATION AND OFFSET CALL OUTS REFER TO ℄ PROPOSED R/W U.S. 20, UNLESS OTHERWISE INDICATED.

9-T	BEARING	DISTANCE
A	Δ = 127° 31' 33" R = 15.00' L = 33.39' CH = 26.91' CH BRG = S 7°18'22" E	
B	S79°04'12"E	69.74'
C	S6°49'12"E	4.20'
D	N79°4'12"W	68.00'
E	S26°07'46"E	18.99'
F	S73°33'57"E	23.00'
G	S57°31'36"E	54.72'
H	S6°48'57"E	8.72'
I	N64°40'12"W	92.11'

9-SH	BEARING	DISTANCE
A	S79°04'12"E	30.00
B	Δ = 127° 31' 33" R = 15.00' L = 33.39' CH = 26.91' CH BRG = S 7°18'22" W	
C	N64°40'12"W	5.00'
D	N48°55'12"W	26.51'
E	N6°48'57"W	12.91'

REV. BY	DATE	DESCRIPTION
DJH	11/14/02	CHANGED PCL 16-WD TO 16-SH
PKM	5/6/02	40-T ADDED & 37-T REVISED
PKM	4/19/02	14-T REV'D, 19-T REM'D & 19-WD ADDED
PKM	4/19/02	6-T, 16-T & 16-WD ADDED
PKM	3/7/02	PARCEL 17 NAME REVISED

DATE COMPLETED: 10/26/01

SCALE IN FEET 0 10 20 40

PID NO. 18520

R/W DESIGNER PKM
R/W REVIEWER LBD

RIGHT OF WAY PLAN
SOUTH LIBERTY STREET

ATB-20-26.26

21 / 23

160 / 162

C:\Projects\18520\RW\atb20Rd6.dgn 14-NOV-2002 11:53AM dhouck

BESSEMER & LAKE ERIE R.R

LOT 8, SEC. 1,
LOT 4, SEC. 2,
T-14-N, R-1-W,
IN THE CONNECTICUT
WESTERN RESERVE
CITY OF CONNEAUT
ORIGINAL CONNEAUT TOWNSHIP
ASHTABULA COUNTY

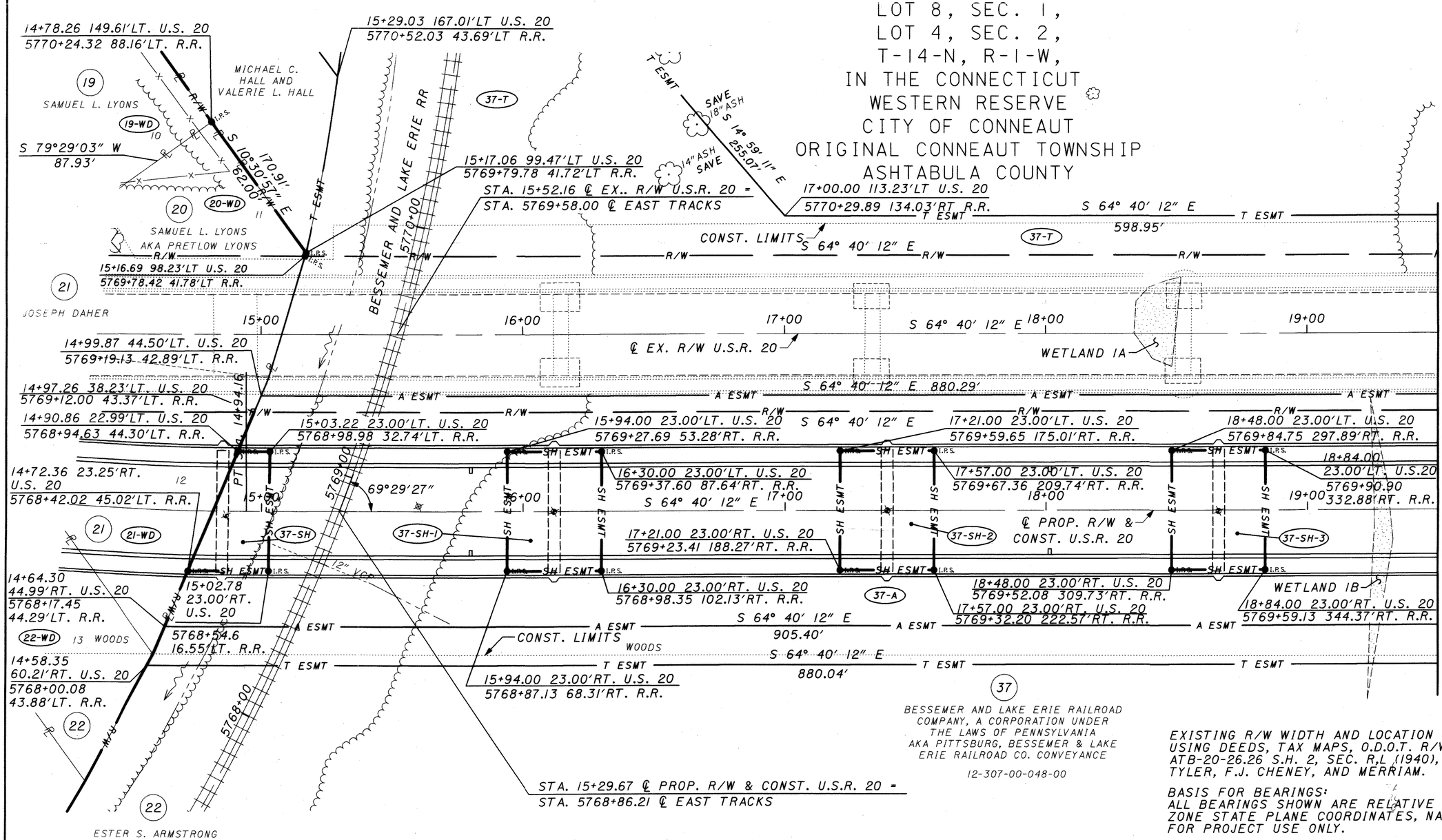

EXISTING B.&L.E. R.R. CURVE DATA

P.I. Sta = 5771+00.74
Δ = 74° 01' 00" (LT)
Dc = 6° 48' 05"
R = 842.42'
T = 635.00'
L = 1088.27'
E = 212.52'

PARCEL	OVERLAP EASEMENT	TOTAL AREA	AREA OF OVERLAP
37-A	EX. R/W	1.888 AC.	0.126 AC.
	37-SH		0.023 AC.
	37-SH-1		0.038 AC.
	37-SH-2		0.038 AC.
	37-SH-3		0.038 AC.
	37-SH-4		0.038 AC.
	37-SH-5		0.038 AC.
	37-SH-6		0.038 AC.
	37-SH-7		0.071 AC.

PARCEL	OVERLAP EASEMENT	TOTAL AREA	AREA OF OVERLAP
37-T	37-A	3.906	1.818 AC.
	EX. R/W		1.126 AC.
	37-SH		0.023 AC.
	37-SH-1		0.038 AC.
	37-SH-2		0.038 AC.
	37-SH-3		0.038 AC.
	37-SH-4		0.038 AC.
	37-SH-5		0.038 AC.
	37-SH-6		0.038 AC.
	37-SH-7		0.071 AC.

MONUMENT LEGEND

- ▣ EXISTING R/W MONUMENT BOX
- ▣ PROPOSED R/W MONUMENT BOX
- ◎ EXISTING CONCRETE MONUMENT
- ○I.R.F. IRON PIN FOUND
- ⊙I.R.F. IRON PIN FOUND W/ ID CAP
- ●I.R.S. 3/4" X 30" LONG REBAR SET WITH 1 1/2" ALUMINUM CAP STAMPED "ODOT R/W LELAND B. DILLWORTH, P.S. 7481"
- ◎P.R.F. IRON PIPE FOUND
- ○P.K.F. P.K. NAIL FOUND

WETLAND AREA

EXISTING R/W WIDTH AND LOCATION DETERMINED USING DEEDS, TAX MAPS, O.D.O.T. R/W PLAN ATB-20-26.26 S.H. 2, SEC. R,L (1940), AND PLATS TYLER, F.J. CHENEY, AND MERRIAM.

BASIS FOR BEARINGS:
ALL BEARINGS SHOWN ARE RELATIVE TO OHIO NORTH ZONE STATE PLANE COORDINATES, NAD83(95) AND ARE FOR PROJECT USE ONLY.

ALL STATION AND OFFSET CALL OUTS REFER TO ℄ PROPOSED R/W U.S. 20, UNLESS OTHERWISE INDICATED.

RAILROAD DATA FROM BESSEMER AND LAKE ERIE RAILROAD VALUATION MAP V7-2

REV. BY	DATE	DESCRIPTION
PKM	5/6/02	OVERLAP TABLES REVISED
PKM	5/6/02	40-T ADDED & 37-T REVISED
PKM	4/19/02	ADDED 19-WD
PKM	3/7/02	ADDED WETLANDS
PKM	3/7/02	PARCEL 37 NAME REVISED
PKM	3/7/02	PARCELS 37-A & 37-T REVISED

DATE COMPLETED: 10/26/01

SCALE IN FEET 0 10 20 40

PID NO. 18520

R/A DESIGNER PKM
R/A REVIEWER LBD

RAILROAD PLAT

ATB-20-26.26

22 / 23

161 / 162

BESSEMER & LAKE ERIE R.R.

LOT 8, SEC.
LOT 4, SEC.
T-14-N, R-1-W
IN THE CONNECTICUT WESTERN RESERVE
CITY OF CONNEAUT
ORIGINAL CONNEAUT TOWNSHIP
ASHTABULA COUNTY

PROPOSED
CURVE DATA-CURVE 2

P.I. Sta = 24+78.85
Δ = 16° 38′ 40″ (LT)
Dc = 6° 00′ 00″
R = 954.93′
T = 139.69′
L = 277.41′
E = 10.16′
e_{max} = NC

37
BESSEMER AND LAKE ERIE RAILROAD COMPANY, A CORPORATION UNDER THE LAWS OF PENNSYLVANIA AKA PITTSBURG, BESSEMER & LAKE ERIE RAILROAD CO. CONVEYANCE

12-006-00-330-00

39
CHERYL S. DAUB
12-306-00-001-00

PARCEL ACQUIRED UNDER SH 2, SEC R&L (1940) RR LOT. 42

STA. 21+66.19 ℄ EX. R/W U.S.R. 20 = STA. 100+00.00 ℄ CONNEAUT CREEK

MATCH LINE 19+50 U.S.R. 20 SEE SHEET 22

22+98.95 113.23′LT. U.S. 20
5770+89.86 726.47′RT. R.R.

WETLAND 2A

18″ STORM OUTFALL

+90.48
102.55′LT

+86.12
96.08′LT

CONST. LIMITS

22+91.60 98.23′LT. U.S. 20
5770+81.37 720.99′RT. R.R.

22+89.06 93.04′LT. U.S. 20
5770+78.42 719.13′RT. R.R.

24+81.22 88.66′LT. U.S. 20
5770+92.11 895.68′RT. R.R.

N 28° 52′ 02″ W

S 64° 40′ 12″ E

OOAC, INC., AN OHIO CORPORATION

+66.12
37.87′LT

23+78.82 28.35′LT. U.S. 20
5770+52.06 816.04′RT. R.R.

+57.19
44.34′LT

+46.97
32.36′LT

24+24.66 9.14′RT. U.S. 20
5770+39.10 868.87′RT. R.R.

19+75.00 23.00′LT. U.S. 20
5770+04.95 421.58′RT. R.R.

20+11.00 23.00′LT. U.S. 20
5770+09.98 456.76′RT. R.R.

21+02.00 23.00′LT. U.S. 20
5770+21.54 545.87′RT. R.R.

22+42.00 23.00′LT. U.S. 20
5770+36.70 683.40′RT. R.R.

22+78.00 23.00′LT. U.S. 20
5770+40.16 718.84′RT. R.R.

21+38.00 23.00′LT. U.S. 20
5770+25.72 581.19′RT. R.R.

℄ PROP. R/W & CONST. U.S.R. 20

POT Sta. 99+23.33

21+38.00 23.00′RT. U.S. 20
5769+99.17 590.69′RT. R.R.

22+78.00 23.00′RT. U.S. 20
5770+15.85 727.51′RT. R.R.

PC Sta. 23+39.16

CURVE 2

20+11.00 23.00′RT. U.S. 20
5769+81.04 467.17′RT. R.R.

21+02.00 23.00′RT. U.S. 20
5769+94.36 555.62′RT. R.R.

22+42.00 23.00′RT. U.S. 20
5770+11.85 692.27′RT. R.R.

23+66.63 32.50′RT. U.S. 20
5770+20.55 817.09′RT. R.R.

23+66.99 44.92′RT. U.S. 20
5770+14.46 820.29′RT. R.R.

24+67.20 52.50′RT. U.S. 20
5770+10.76 822.29′RT. R.R.

24+03.55 52.51′RT. U.S. 20
5770+15.60 859.39′RT. R.R.

19+75.00 23.00′RT. U.S. 20
5769+75.26 432.28′RT. R.R.

POT Sta. 98+53.34

RR LOT. 18

+36.15
59.50′RT

+37.68
85.53′RT

+81.67
102.36′RT

WETLAND 3A

WOODS

BILLBOARD

CONST. LIMITS

37
BESSEMER AND LAKE ERIE RAILROAD COMPANY, A CORPORATION UNDER THE LAWS OF PENNSYLVANIA AKA PITTSBURG, BESSEMER & LAKE ERIE RAILROAD CO. CONVEYANCE

12-307-00-048-00

CONNEAUT CREEK

29
SALVATORE P. SCROFANO AND LU ANN SCROFANO, AKA SALVATORE P. SCROFANO AND LUANN SCROFANO, AKA SAL SCROFANO AND LU ANN SCROFANO

STA. 21+76.56 ℄ PROP. R/W & CONST. U.S.R. 20 = STA. 99+30.95 ℄ CONNEAUT CREEK

RAILROAD DATA FROM BESSEMER AND LAKE ERIE RAILROAD VALUATION MAP V7-2

MONUMENT LEGEND

- EXISTING R/W MONUMENT BOX
- PROPOSED R/W MONUMENT BOX
- EXISTING CONCRETE MONUMENT
- I.R.F. IRON PIN FOUND
- I.R.F. IRON PIN FOUND W/ ID CAP
- I.R.S. ¾″ X 30″ LONG REBAR SET WITH 1½″ ALUMINUM CAP STAMPED "ODOT R/W LELAND B. DILLWORTH, P.S. 7481"
- P.F. IRON PIPE FOUND
- P.K.F. P.K. NAIL FOUND

PARCEL	OVERLAP EASEMENT	TOTAL AREA	AREA OF OVERLAP
37-A	EX. R/W	1.888 AC.	0.126 AC.
	37-SH		0.023 AC.
	37-SH-1		0.038 AC.
	37-SH-2		0.038 AC.
	37-SH-3		0.038 AC.
	37-SH-4		0.038 AC.
	37-SH-5		0.038 AC.
	37-SH-6		0.038 AC.
	37-SH-7		0.071 AC.

PARCEL	OVERLAP EASEMENT	TOTAL AREA	AREA OF OVERLAP
37-T	37-A	3.906	1.818 AC.
	EX. R/W		1.126 AC.
	37-SH		0.023 AC.
	37-SH-1		0.038 AC.
	37-SH-2		0.038 AC.
	37-SH-3		0.038 AC.
	37-SH-4		0.038 AC.
	37-SH-5		0.038 AC.
	37-SH-6		0.038 AC.
	37-SH-7		0.071 AC.

EXISTING R/W WIDTH AND LOCATION DETERMINED USING DEEDS, TAX MAPS, O.D.O.T. R/W PLAN ATB-20-26.26 S.H. 2, SEC. R,L (1940), AND PLATS TYLER, F.J. CHENEY, AND MERRIAM.

BASIS FOR BEARINGS:
ALL BEARINGS SHOWN ARE RELATIVE TO OHIO NORTH ZONE STATE PLANE COORDINATES, NAD83(95) AND ARE FOR PROJECT USE ONLY.

ALL STATION AND OFFSET CALL OUTS REFER TO ℄ PROPOSED R/W U.S. 20, UNLESS OTHERWISE INDICATED.

REV. BY	DATE	DESCRIPTION
PKM	5/6/02	OVERLAP TABLES REVISED
PKM	5/6/02	40-T ADDED & 37-T REVISED
PKM	3/7/02	PARCELS 37-A & 37-T REVISED
PKM	3/7/02	ADDED WETLANDS
PKM	3/7/02	PARCEL 37 NAME REVISED
PKM	3/7/02	ADDED PARCELS 38 & 39

DATE COMPLETED: 10/26/01

SCALE IN FEET

PID NO. 18520

R/W DESIGNER PKM
R/W REVIEWER LBD

RAILROAD PLAT

ATB-20-26.26

23/23

162/162

GENERAL INFORMATION

INTRODUCTION

IN CONNECTION WITH THE CONSTRUCTION OF A PLANNED REPLACEMENT STRUCTURE THAT WILL CARRY U.S. ROUTE 20 OVER CONNEAUT CREEK, KEYES STREET AND THE BESSEMER AND LAKE ERIE RAILROAD IN CONNEAUT, ASHTABULA COUNTY, OHIO, ROADWAY IMPROVEMENTS ARE PLANNED AT BOTH THE EAST AND WEST APPROACHES TO THE REPLACEMENT STRUCTURE. TO THE WEST OF THE PLANNED REPLACEMENT STRUCTURE, APPROXIMATELY 420 FEET OF ROADWAY ARE TO BE REALIGNED. THIS REALIGNMENT WILL REQUIRE THE CONSTRUCTION OF AN EMBANKMENT UP TO SEVENTEEN FEET HIGH ADJACENT TO THE PLANNED REAR ABUTMENT. TO THE EAST OF THE PLANNED REPLACEMENT STRUCTURE, APPROXIMATELY 410 FEET OF ROADWAY ARE TO BE REALIGNED. THIS REALIGNMENT WILL REQUIRE UP TO 6.5 FEET OF CUT AT THE CREST OF THE EXISTING SLOPE ADJACENT TO THE PLANNED FORWARD ABUTMENT. IT IS ALSO PLANNED TO RESURFACE APPROXIMATELY 110 FEET OF ROADWAY ALONG SOUTH LIBERTY STREET WHILE KEEPING THE HORIZONTAL AND VERTICAL ALIGNMENT UNCHANGED.

GEOLOGY

THE PROJECT AREA LIES ON THE ALLEGHENY PLATEAU IN A PORTION OF OHIO WHICH HAS BEEN GLACIATED. GEOLOGIC LITERATURE INDICATES THAT THE NEAR-SURFACE OVERBURDEN SOILS ARE PREDOMINANTLY LACUSTRINE PLAIN DEPOSITS CONSISTING PRIMARILY OF SILTS, FINE SANDS AND ALLUVIAL DEPOSITS NEAR CONNEAUT CREEK. THE UPPERMOST BEDROCK IN THIS AREA GENERALLY CONSISTS OF OLENTANGY AND OHIO SHALES OF THE DEVONIAN PERIOD. BEDROCK WAS ENCOUNTERED DURING THE REPLACEMENT STRUCTURE SUBSURFACE INVESTIGATION AT DEPTHS RANGING FROM 1.5 TO 29 FEET BELOW THE EXISTING GROUND SURFACE.

FIELD WORK

DURING THE PERIOD OF APRIL 16 THROUGH APRIL 19, 2001 AND NOVEMBER 19 THROUGH NOVEMBER 26, 2001, THREE ROADWAY BORINGS (BORINGS R-1, R-2, AND R-3) WERE DRILLED WITH A CME 550 ALL-TERRAIN-VEHICLE MOUNTED DRILL RIG TO A DEPTH OF 10.0 FEET BELOW EXISTING GRADE. BORINGS R-1 AND R-2 WERE DRILLED ALONG THE PROPOSED US 20 REALIGNMENT AND BORING R-3 WAS DRILLED ALONG THE PLANNED SOUTH LIBERTY STREET REALIGNMENT. THE BORINGS WERE ADVANCED BETWEEN SAMPLING ATTEMPTS USING A 2-1/4 INCH I.D. HOLLOW-STEM AUGER. AT REGULAR INTERVALS, DISTURBED BUT REPRESENTATIVE SOIL SAMPLES WERE OBTAINED BY LOWERING A 2-INCH O.D. SPLIT-BARREL SAMPLER TO THE BOTTOM OF THE BORING AND THEN DRIVING THE SAMPLER INTO THE SOIL WITH BLOWS FROM A 140-POUND HAMMER FREELY FALLING 30 INCHES (STANDARD PENETRATION TEST). THE NUMBER OF BLOWS REQUIRED TO ADVANCE THE SPLIT-BARREL IN 6 INCH INCREMENTS WERE RECORDED. SPLIT-BARREL SOIL SAMPLES WERE EXAMINED IMMEDIATELY AFTER RECOVERY AND REPRESENTATIVE PORTIONS WERE PRESERVED IN AIRTIGHT GLASS JARS.

FINDINGS OF THE INVESTIGATION

GENERALLY, THE SUBSURFACE CONDITIONS ENCOUNTERED IN THE THREE ROADWAY BORINGS ARE SUMMARIZED AS FOLLOWS WITH THE HRB CLASSIFICATIONS NOTED IN PARENTHESES:

ON THE EAST SIDE OF THE PLANNED REPLACEMENT STRUCTURE, BORING R-2 ENCOUNTERED 12 INCHES OF ASPHALT/GRANULAR BASE AND 9 FEET OF VERY-LOOSE TO MEDIUM-DENSE SAND (A-3) OVERLYING 1-FOOT OF VERY-STIFF TO HARD CLAYEY SILT (A-4b). ON THE WEST SIDE OF THE PLANNED REPLACEMENT STRUCTURE, BORING R-1 ENCOUNTERED 7 INCHES OF TOPSOIL AND 2.8 FEET OF LOOSE SILT INTERBEDDED WITH SILTY CLAY (A-4b) OVERLYING 7.2 FEET OF VERY-STIFF TO HARD SILTY CLAY (A-6a) AND CLAYEY SILT (A-4a AND A-4b). BORING R-3, PERFORMED IN THE EXISTING SOUTH LIBERTY STREET ALIGNMENT, ENCOUNTERED 11.5 INCHES OF PAVEMENT AND 6 INCHES OF ORGANIC FILL OVERLYING 8.5 FEET OF HARD CLAYEY SILT (A-4a AND A-4b).

DURING DRILLING, GROUNDWATER SEEPAGE WAS NOTED ONLY IN BORING R-2 AT A DEPTH OF 4.0 FEET BELOW EXISTING GRADE. UPON THE COMPLETION OF DRILLING, THE GROUNDWATER LEVEL IN BORING R-2 WAS MEASURED AT A DEPTH OF 5.6 FEET BELOW GRADE. THE REMAINING BORINGS WERE "DRY" AT THE COMPLETION OF DRILLING MEANING WATER DID NOT ACCUMULATE AT THE BOTTOM OF THE BOREHOLES.

LEGEND FOR PROJECT AVERAGE RESULTS OF TESTS - 4 SAMPLES TESTED

DESCRIPTION	OHIO CLASS.	% AGG.	% C. SAND	% F. SAND	% SILT	% CLAY	LIQUID LIMIT	PLASTICITY INDEX	GROUP INDEX	WATER CONTENT	SAMPLES TESTED
FINE SAND	A-3	1	11	84	2	2	--	--	0	--	1
SANDY SILT	A-4a	6	10	12	47	25	23	7	7	14	1
SILT AND CLAY	A-4b	2	4	5	66	23	31	8	8	24	2

TOPSOIL = "X" = APPROXIMATE DEPTH

AUGER BORING - PLAN VIEW

AUGER BORING PLOTTED TO VERTICAL SCALE ONLY

NUMBER OF BLOWS FOR "STANDARD PENETRATION TEST"
X = NUMBER OF BLOWS FOR FIRST 6 INCHES
Y = NUMBER OF BLOWS FOR SECOND 6 INCHES
Z = NUMBER OF BLOWS FOR THIRD 6 INCHES

W FREE WATER LEVEL

STATIC WATER LEVEL

NOTE: NUMERALS ADJACENT TO THE BORINGS IN PROFILE VIEW INDICATE THE NATURAL MOISTURE CONTENT IN PERCENT.

NOTE: THE LOCATIONS OF THE BORINGS ARE GIVEN WITH RESPECT TO STATIONING ALONG THE EXISTING CENTERLINE OF U.S. 20 AND S. LIBERTY STREET

SUMMARY OF SOIL TEST DATA

STATION & OFFSET		DEPTH (ft) FROM - TO	% AGG.	% C.S.	% F.S.	% SILT	% CLAY	LIQUID LIMIT	PLASTICITY INDEX	% W.C.	ODOT CLASS.
U.S. 20											
11+78	32' RT.	1.0 - 2.5	0	2	2	74	22	31	8	24	A-4b (8)
		3.5 - 5.0	--	--	--	--	--	--	--	22	Est. A-6a
25+81	3' RT.	1.0 - 2.5	1	11	84	2	2	--	--	--	A-3 (0)
S. LIBERTY STREET											
70+70	6' LT.	1.0 - 2.5	6	10	12	47	25	23	7	14	A-4a (7)
		3.5 - 5.0	--	--	--	--	--	--	--	13	Est. A-4a
		6.0 - 7.5	--	--	--	--	--	--	--	14	Est. A-4a
		8.5 - 10.0	3	6	8	59	24	--	--	--	Est. A-4b

NOTE

INFORMATION SHOWN ON THIS SUBGRADE PROFILE WAS OBTAINED SOLELY FOR USE IN ESTABLISHING DESIGN CONTROLS FOR THIS PROJECT. BBC&M ENGINEERING, INC. DOES NOT GUARANTEE THE ACCURACY OF THIS DATA AND IT IS NOT TO BE CONSTRUED AS A PART OF THE PLANS GOVERNING CONSTRUCTION OF THIS PROJECT.

THE SOIL PROFILE AND/OR STRUCTURE FOUNDATION INVESTIGATION SHEETS CONTAIN ALL AVAILABLE SOIL INFORMATION WHICH CAN BE CONVENIENTLY SHOWN. ADDITIONAL SUBSURFACE INVESTIGATIONS MAY HAVE BEEN MADE TO STUDY SOME ASPECT OF THE PROJECT. MORE INFORMATION, IF ANY, MAY BE OBTAINED FROM ODOT DISTRICT 4, THE BUREAU OF TESTS AT 1600 WEST BROAD STREET, THE BUREAU OF LOCATION AND DESIGN, OR THE BUREAU OF BRIDGES AND STRUCTURAL DESIGN AT 25 SOUTH FRONT STREET IN COLUMBUS, OHIO

LOCATION MAP

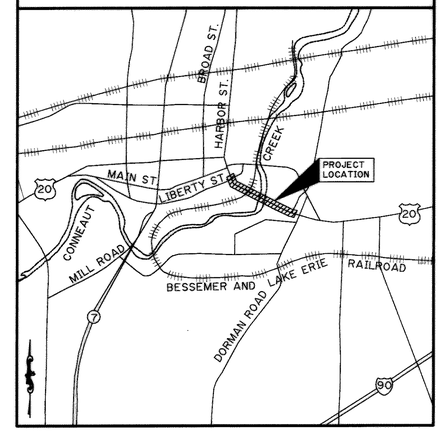

RECON - M.K.P. (10/99)

DRILLING - RIDGEWAY DRILLING - 4/16-19/01, 11/19-26/01)

DRAFTING - B.L.R. (2/11/02 - 3/27/02)

PROJECT INDEX				
STATION START	STATION END	PLAN AND PROFILE VIEW SHEET NUMBERS	CUT (MAXIMUM)	FILL (MAXIMUM)
U.S. 20				
10+00	14+00	2	0.5'	27.0'
24+00	28+00	2	1.0'	27.0'
S. LIBERTY STREET				
70+00	73+00	2	0.0'	1.0'

BBC&M ENGINEERING, INC.

CALCULATED | CHECKED M.K.P.

DATE 3/27/02

REVIEWED BY S.A.H.

DRAWN BY B.L.R.

SOIL PROFILE

ATB-20-26.26
ASHTABULA COUNTY, OHIO

1/2

BBC&M ENGINEERING, INC. DRAWING NUMBER: 011-08108-00B0010.DGN

BBC&M FILENAME: 011-08108-0080020.DGN

BBCM ENGINEERING, INC.

HORIZONTAL SCALE
0 50 100
1" = 50'

CALCULATED	CHECKED
	M.K.P.

DRAWN BY	REVIEWED BY	DATE
B.L.R.	S.A.H.	3/27/02

SOIL PROFILE

ATB-20-26.26
ASHTABULA COUNTY, OHIO

2 / 2

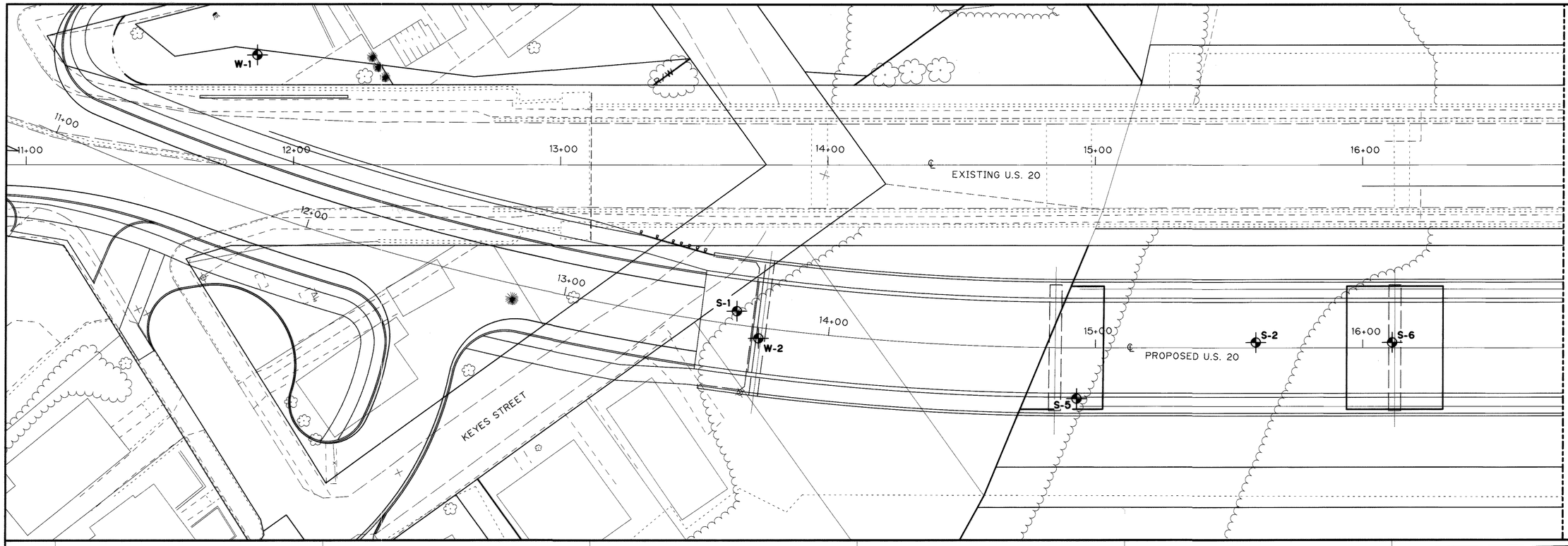

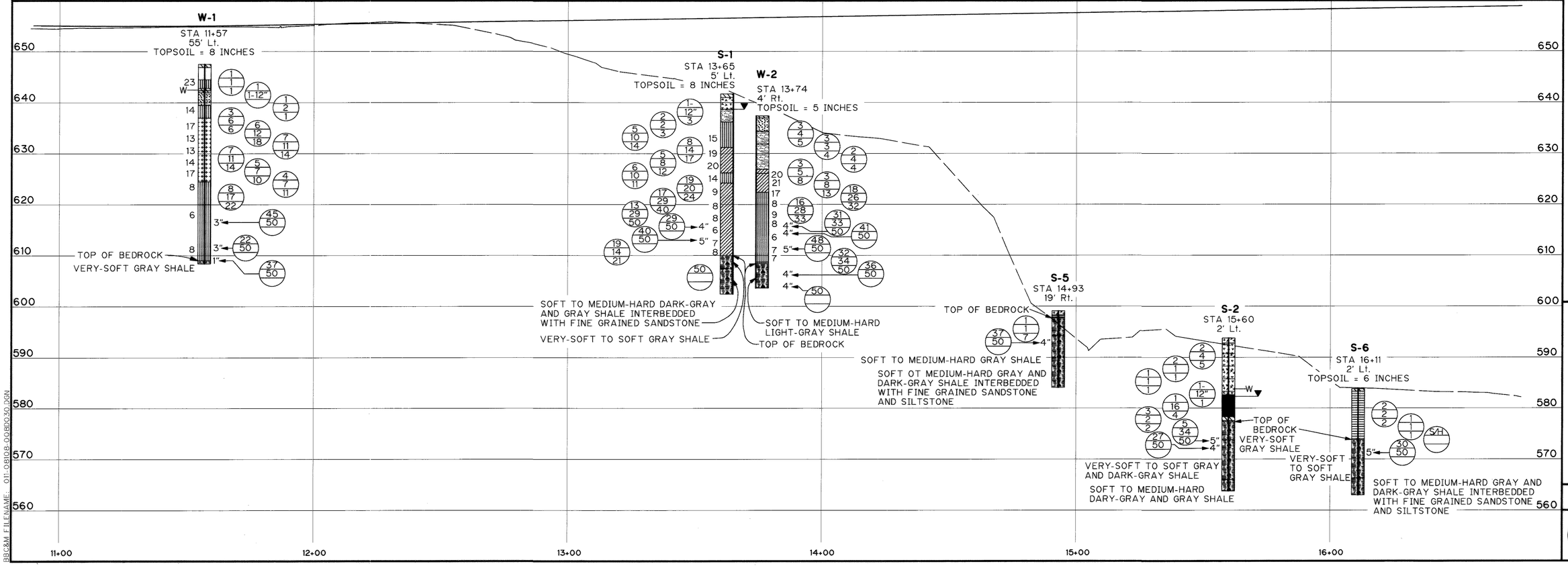

BBC&M FILENAME: 011-OBIO8-0080030.DGN

BBCM ENGINEERING, INC.

HORIZONTAL SCALE 1" = 20'

CALCULATED	DATE	REVIEWED BY	DRAWN BY
CHECKED M.K.P.	3/27/02	S.A.H.	B.L.R.

STRUCTURE FOUNDATION INVESTIGATION
ATB-20-2626 OVER CONNEAUT CREEK

ATB-20-26.26
ASHTABULA COUNTY, OHIO

1 / 7

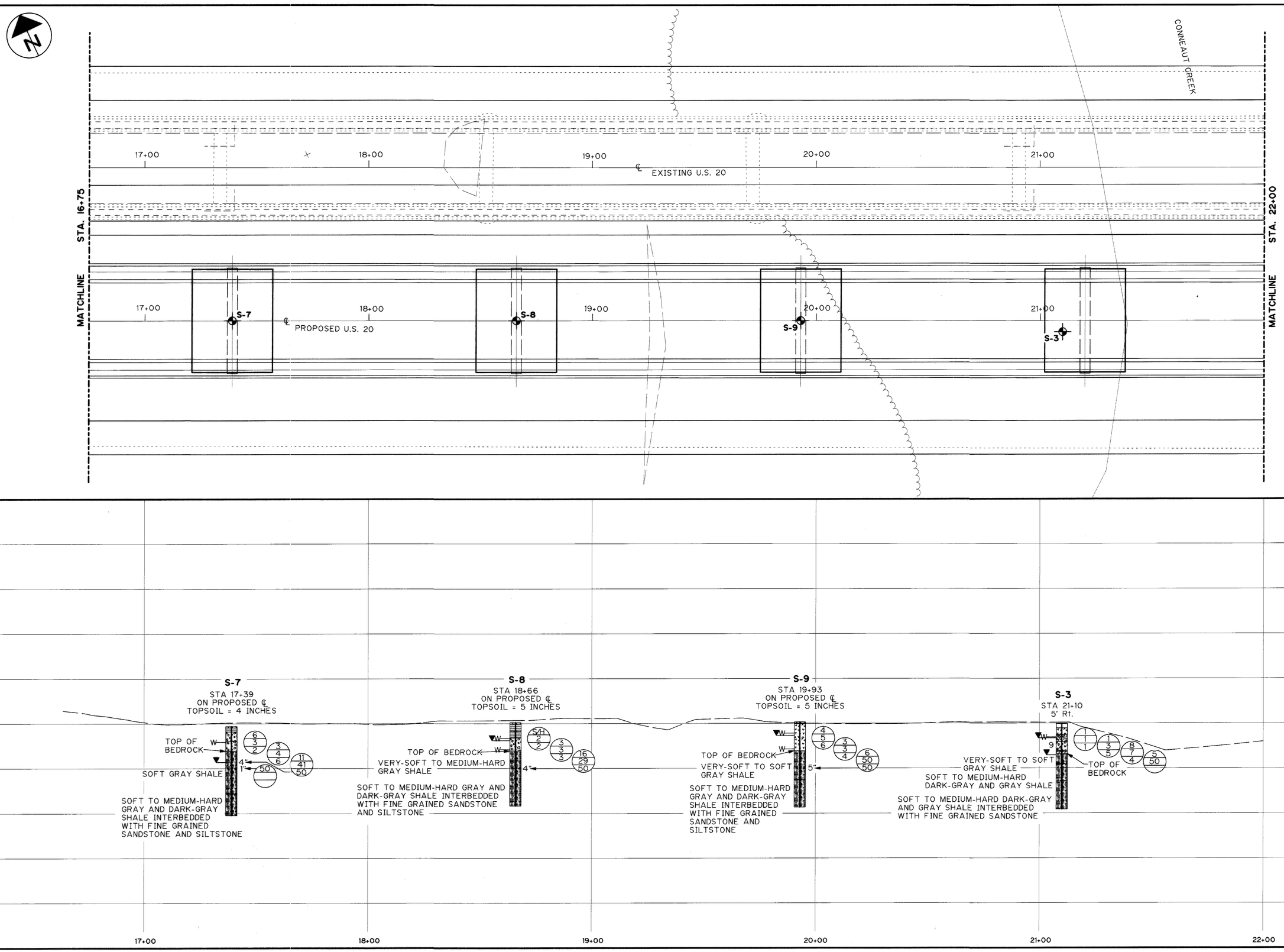

BBC&M FILENAME: 011-8108-008D040.DGN

BBCM ENGINEERING, INC.

0 20 40
HORIZONTAL SCALE
1" = 20'

DRAWN BY	REVIEWED BY	DATE	CALCULATED
B.L.R.	S.A.H.	3/27/02	CHECKED M.K.P.

STRUCTURE FOUNDATION INVESTIGATION
ATB-20-2626 OVER CONNEAUT CREEK

ATB-20-26.26
ASHTABULA COUNTY, OHIO

2 / 7

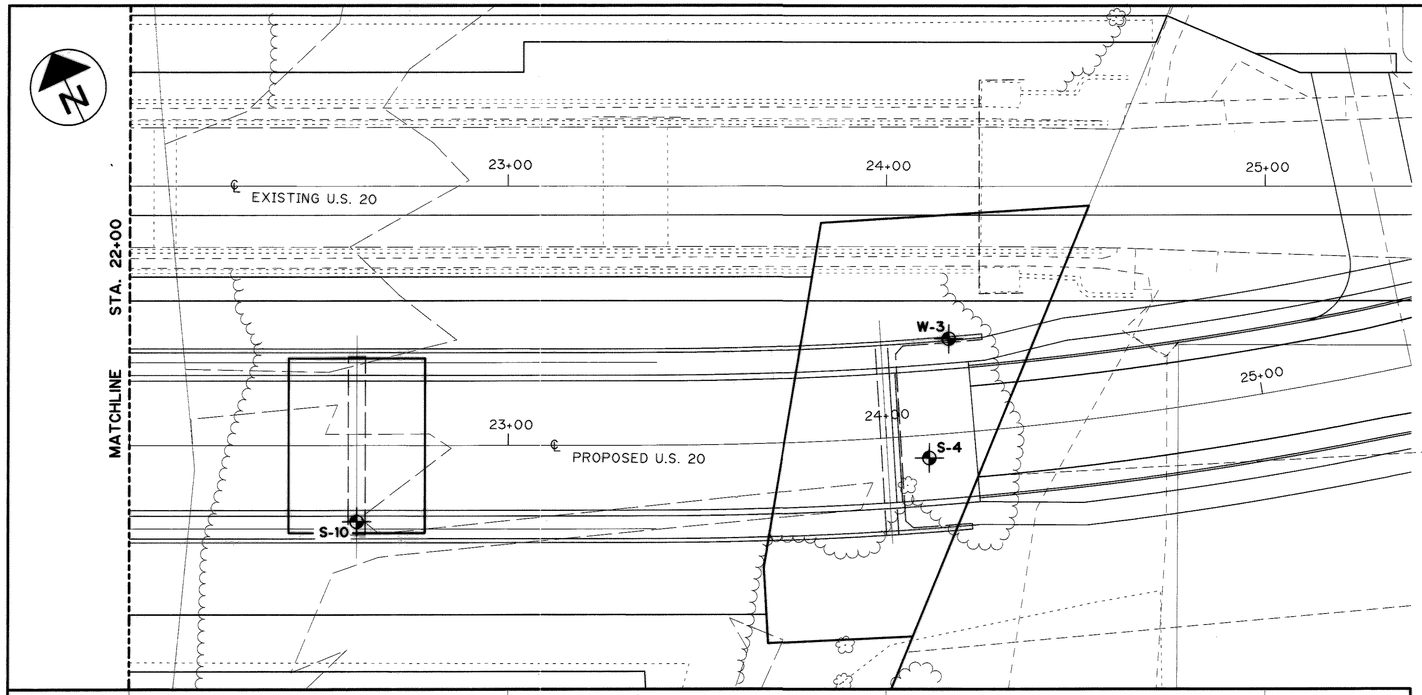

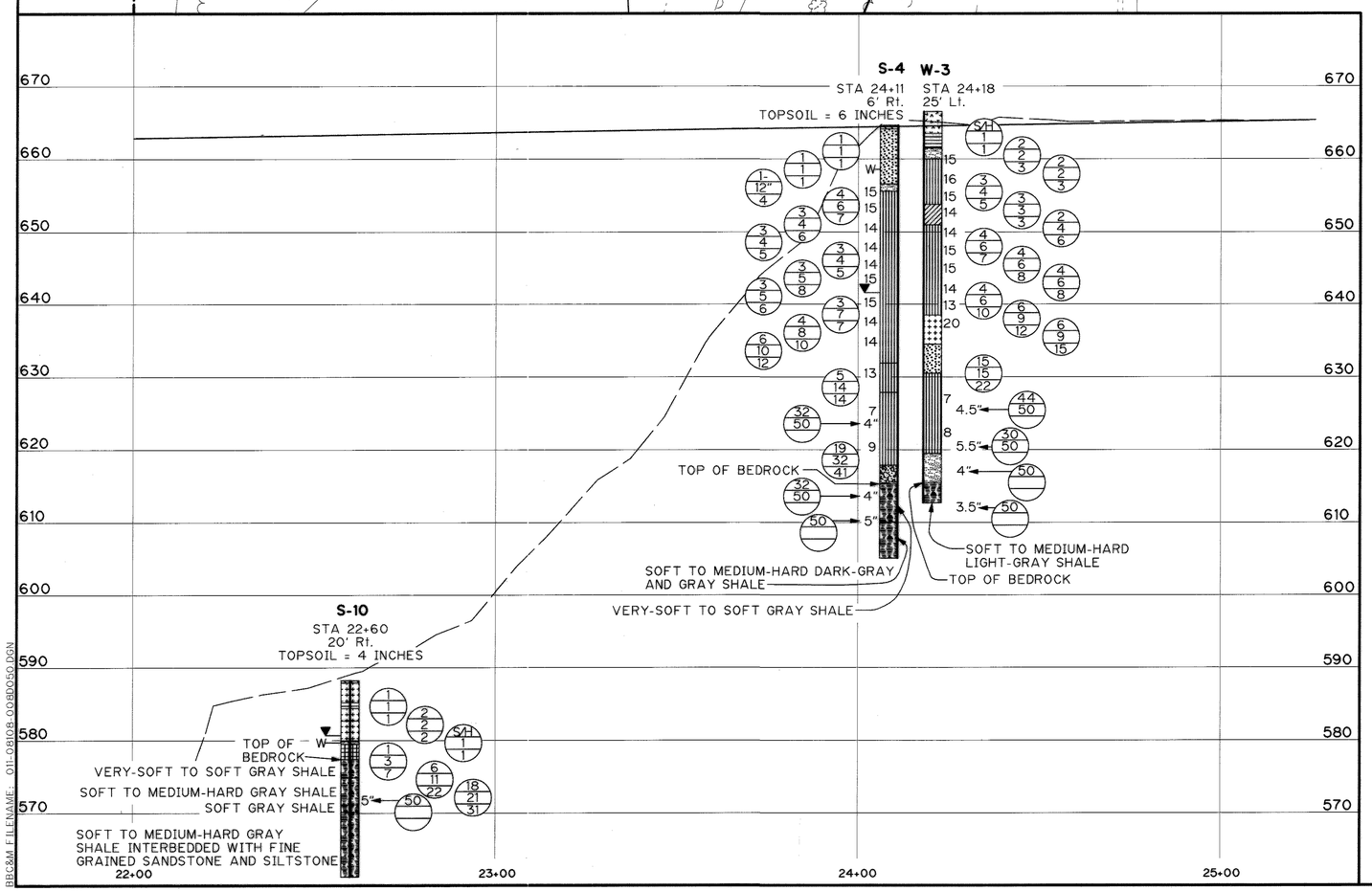

BBC&M FILENAME: 011-08108-0088050.DGN

GENERAL INFORMATION

INTRODUCTION

IT IS PROPOSED TO CONSTRUCT A REPLACEMENT STRUCTURE APPROXIMATELY 100 FEET TO THE SOUTH OF THE EXISTING STRUCTURE TO CARRY U.S. ROUTE 20 OVER CONNEAUT CREEK, KEYES STREET, AND THE BESSEMER AND LAKE ERIE RAILROAD, IN CONNEAUT, ASHTABULA COUNTY, OHIO. IT IS UNDERSTOOD THAT THE PROPOSED MULTI-SPAN REPLACEMENT STRUCTURE (BRIDGE NO. ATB-20-2626) WILL BE APPROXIMATELY 1,025 FEET LONG AND 51 FEET WIDE.

GEOLOGY

THE PROJECT AREA LIES ON THE ALLEGHENY PLATEAU IN A PORTION OF OHIO WHICH HAS BEEN GLACIATED. GEOLOGIC LITERATURE INDICATES THAT THE NEAR SURFACE OVERBURDEN SOILS ARE PREDOMINANTLY LACUSTRINE PLAIN DEPOSITS CONSISTING PRIMARILY OF SILTS, FINE SANDS AND ALLUVIAL DEPOSITS NEAR CONNEAUT CREEK. THE UPPERMOST BEDROCK IN THIS AREA CONSISTS OF OLENTANGY AND OHIO SHALES OF THE DEVONIAN PERIOD. BEDROCK WAS ENCOUNTERED DURING THE REPLACEMENT STRUCTURE SUBSURFACE INVESTIGATION AT DEPTHS RANGING FROM 1.4 TO 49.3 FEET BELOW THE EXISTING GROUND SURFACE.

FIELD WORK

DURING THE PERIOD OF APRIL 16 THROUGH APRIL 19, 2001 AND NOVEMBER 19 THROUGH NOVEMBER 26, 2001, THIRTEEN STRUCTURE BORINGS (BORINGS S-1 THROUGH S-10 AND BORINGS W-1 THROUGH W-3) WERE DRILLED WITH A CME 550 ALL-TERRAIN-VEHICLE MOUNTED DRILL RIG TO DEPTHS RANGING FROM 15.0 TO 59.5 FEET BELOW THE EXISTING GROUND SURFACE. BORINGS S-1, S-4, W-2 AND W-3 WERE DRILLED NEAR THE PROPOSED ABUTMENT LOCATIONS AND BORINGS S-2, S-3 AND S-5 THROUGH S-10 WERE DRILLED NEAR THE PROPOSED INTERMEDIATE PIER LOCATIONS. IN ADDITION, BORING W-1 WAS DRILLED APPROXIMATELY 200 FEET WEST OF THE REAR ABUTMENT OF THE PLANNED REPLACEMENT STRUCTURE AT THE LOCATION OF A PLANNED RETAINING WALL. THE BORINGS WERE ADVANCED BETWEEN SAMPLING ATTEMPTS USING A 3-1/4 INCH I.D. HOLLOW-STEM AUGER. AT REGULAR INTERVALS, DISTURBED BUT REPRESENTATIVE SOIL SAMPLES WERE OBTAINED BY LOWERING A 2-INCH O.D. SPLIT BARREL SAMPLER TO THE BOTTOM OF THE BORING AND THEN DRIVING THE SAMPLER INTO THE SOIL WITH BLOWS FROM A 140-POUND HAMMER FREELY FALLING 30 INCHES (STANDARD PENETRATION TEST). THE NUMBER OF BLOWS REQUIRED TO ADVANCE THE SPLIT-BARREL IN 6 INCH INCREMENTS WERE RECORDED. SPLIT-BARREL SOIL SAMPLES WERE EXAMINED IMMEDIATELY AFTER RECOVERY AND REPRESENTATIVE PORTIONS WERE PRESERVED IN AIRTIGHT GLASS JARS.

UPON ENCOUNTERING BEDROCK IN BORINGS S-1 THROUGH S-10, BETWEEN 5 AND 10 FEET OF BEDROCK WERE CORED USING A NXM ROCK CORE BARREL, WITH WATER AS A CIRCULATING/COOLING FLUID. RECOVERED CORE SAMPLES WERE STORED IN COMPARTMENTED CORE BOXES.

FINDINGS OF THE INVESTIGATION

THE GENERAL SUBSURFACE CONDITIONS ENCOUNTERED IN THIS STRUCTURE INVESTIGATION ARE SUMMARIZED AS FOLLOWS WITH THE HRB CLASSIFICATIONS NOTED IN PARENTHESES:

FORWARD ABUTMENT (BORINGS S-4 AND W-3):

BENEATH 6 INCHES TOPSOIL IN BORING S-4 AND 3.0 FEET OF FILL IN BORING W-3, BOTH BORINGS ENCOUNTERED 6.5 TO 9 FEET OF VERY-LOOSE TO MEDIUM-DENSE FINE TO MEDIUM SAND AND SILT (A-3 AND A-3a) CONTAINING A SEAM OF MEDIUM-STIFF SILTY CLAY (A-6b), OVERLYING 27.8 TO 41.5 FEET OF VERY-STIFF TO HARD CLAYEY SILT AND/OR SILTY CLAY (A-4a, A-4b AND A-6a) CONTAINING A FEW DENSE FINE TO COARSE SAND SEAMS (A-3a). BOTH BORINGS THEN ENCOUNTERED 2.6 TO 2.8 FEET OF VERY-DENSE SAND (A-3 AND A-1-b) AND SOFT TO MEDIUM-HARD SHALE INTERBEDDED WITH FINE-GRAINED SANDSTONE.

INTERMEDIATE BRIDGE PIERS (BORINGS S-2, S-3, S-5, S-6, S-7, S-8, S-9 AND S-10):

THESE BORINGS INITIALLY ENCOUNTERED BETWEEN 4 TO 6 INCHES OF TOPSOIL OR 1 TO 10 FEET OF FILL OVERLYING VERY-LOOSE TO LOOSE GRANULAR DEPOSITS (A-3, A-1-a AND A-1-b) AND/OR VERY-SOFT TO HARD CLAYEY SILT/SILTY CLAY (A-4b, A-6a, A-6b AND A-7-6) OCCASIONALLY CONTAINING ORGANICS. THESE BORINGS THEN ENCOUNTERED BEDROCK CONSISTING OF VERY-SOFT TO SOFT SHALE OVERLYING SOFT TO MEDIUM-HARD SHALE INTERBEDDED WITH FINE-GRAINED SANDSTONE AND SILTSTONE.

REAR ABUTMENT (BORINGS S-1 AND W-2):

BENEATH 5 INCHES TOPSOIL IN BORING W-2 AND 3.7 FEET OF TOPSOIL/FILL IN BORING S-1, BOTH BORINGS ENCOUNTERED 10.5 TO 17 FEET OF VERY-LOOSE TO MEDIUM-DENSE SAND AND SILT (A-3 AND A-3a) CONTAINING SEAMS OF VERY-STIFF TO HARD CLAYEY SILT/SILTY CLAY (A-4a AND A-6a) OVERLYING 14.5 TO 18.2 FEET OF HARD SILTY CLAY/CLAYEY SILT (A-4a AND A-6a). BOTH BORINGS THEN ENCOUNTERED BEDROCK CONSISTING OF VERY-SOFT TO MEDIUM-HARD SHALE INTERBEDDED WITH FINE-GRAINED SANDSTONE.

RETAINING WALL BORING (W-1):

BENEATH 8 INCHES OF TOPSOIL, BORING W-1 ENCOUNTERED 10.5 FEET OF VERY-LOOSE TO MEDIUM-DENSE SAND AND SILT (A-3a AND A-4a) CONTAINING SEAMS OF SOFT TO MEDIUM-STIFF CLAYEY SILT AND SILTY CLAY (A-4a AND A-5) OVERLYING 28.0 FEET OF HARD CLAYEY SILT (A-4a AND A-4b). THIS BORING WAS TERMINATED AFTER PENETRATING 0.6 FEET INTO VERY-SOFT SHALE.

DURING DRILLING, GROUNDWATER SEEPAGE WAS ENCOUNTERED IN BORINGS S-2, S-3, S-4, S-7, S-8, S-9, S-10 AND W-1 AT DEPTHS RANGING BETWEEN 2.5 AND 10.0 FEET BELOW THE EXISTING GROUND SURFACE. UPON THE COMPLETION OF DRILLING AND PRIOR TO INTRODUCING WATER INTO THE BORING TO ASSIST THE ROCK CORING PROCESS, THE GROUNDWATER LEVEL IN BORINGS S-2, S-3, S-7, S-8, S-9 AND S-10 WAS MEASURED AT DEPTHS RANGING BETWEEN 3.0 AND 11.5 FEET BELOW THE EXISTING GROUND SURFACE. THE REMAINING BORINGS WERE "DRY" AT THE COMPLETION OF DRILLING MEANING WATER DID NOT ACCUMULATE AT THE BOTTOM OF THE BOREHOLES.

NOTE
ALL SOIL INFORMATION ASSOCIATED WITH THIS INVESTIGATION WHICH CAN BE CONVENIENTLY SHOWN ON THE STRUCTURE FOUNDATION INVESTIGATION SHEETS HAS BEEN SO REPORTED. SEPARATE SUBSURFACE INVESTIGATIONS MAY HAVE BEEN PERFORMED PREVIOUSLY BY OTHERS FOR THE BRIDGE STRUCTURE. COPIES OF SUCH DATA, ALONG WITH ANY OTHER INVESTIGATIONS WHICH MAY HAVE BEEN PERFORMED, MAY BE INSPECTED IN THE DISTRICT 6 DEPUTY DIRECTOR'S OFFICE, THE OFFICE OF MATERIALS MANAGEMENT AT 1600 WEST BROAD STREET IN COLUMBUS, OHIO, THE OFFICE OF ROADWAY ENGINEERING OR THE OFFICE OF STRUCTURAL ENGINEERING AT 1980 WEST BROAD STREET IN COLUMBUS, OHIO.

BBCM ENGINEERING, INC.

HORIZONTAL SCALE 1" = 20'
0 20 40

CALCULATED
CHECKED M.K.P.
DATE 3/27/02
REVIEWED BY S.A.H.
DRAWN BY B.L.R.

STRUCTURE FOUNDATION INVESTIGATION
ATB-20-2626 OVER CONNEAUT CREEK

ATB-20-26.26
ASHTABULA COUNTY, OHIO

3 / 7

LOG OF BORING NO. S-1
REPLACEMENT STRUCTURE NO. ATB-20-2626
ASHTABULA, OHIO

BBCM ENGINEERING, INC.

TYPE: 3-1/4" I.D. Hollow-stem Auger; 2" O.D. Split-barrel Sampler; NX Rock Core Barrel
LOCATION: STA 13+65, 5' Left of Centerline
COMPLETION DEPTH: 39.3' ELEVATION: 641.7 DATE: 4/18/01

DEPTH, FEET	SAMPLE NO.	SAMPLES SAMPLING EFFORT	HAND PENE-TROMETER tsf	MOISTURE CONTENT %	LIQUID LIMIT %	PLASTIC LIMIT %	AGG.	C.S.	F.S.	SILT	CLAY	DESCRIPTION
0												TOPSOIL - 8 INCHES
	1	1=12"/3										FILL: SLAG: Very-loose gray and dark-gray fine to coarse gravel, some fine to coarse sand, trace silt.
	2	2/2/3										Very-loose fine sand, trace medium to coarse sand, little silt. Est. A-3
5	3	5/10/14	4.5+									Hard brown clayey silt, little fine to coarse sand, trace fine to coarse gravel.
	4	8/14/17	4.5+	15	29	21	3	7	9	48	33	A-4a(8)
10	5	5/8/12	3.8-4.0	19								Very-stiff brown to hard mottled with gray and red-brown silty clay, little fine to coarse sand, trace fine gravel, contains few thin seams and lenses of silt. Est. A-6a
	6	6/10/11	2.7	20								
15	7A 7B	19/20/24	4.5+	14 9								Dense brown and gray silt interbedded with fine sand and silty clay, some fine to coarse gravel, trace medium to coarse sand. Est. A-4a
	8	17/29/40	4.5+	8	24	13	12	12	14	36	26	Hard gray silty clay, some fine to coarse sand, trace to little fine to coarse gravel.
20	9	13/29/50	4.5+	8								
	10	29/50 4"R	4.5+	6								
25	11	40/50 5"R	4.5+	7								
	12	19/14/21	4.5+	8								A-6a(6)
	13	50										Very-soft to soft gray shale, fragmental structure, partly similar to hard silty clay.
30	14	REC 100% RQD 63%										Soft to medium-hard dark-gray and gray shale interbedded with fine-grained sandstone, nearly horizontally bedded, 1/4" to 7" core pieces, fissile, few diagonal and vertical fractures, fine-grained sandstone is well cemented (1/16" to 1" layers).
35												
40												- No water encountered prior to rock core.
45												
50												
55												
60												
65												

WATER LEVEL: ▽ "Dry" 4/18/01
WATER NOTE: ▼ 3.0 Caved at 30.0' 4/18/01

LOG OF BORING NO. S-2
REPLACEMENT STRUCTURE NO. ATB-20-2626
ASHTABULA, OHIO

BBCM ENGINEERING, INC.

TYPE: 3-1/4" I.D. Hollow-stem Auger; 2" O.D. Split-barrel Sampler; NX Rock Core Barrel
LOCATION: STA 15+60, 2' Left of Centerline
COMPLETION DEPTH: 30.0' ELEVATION: 593.8 DATE: 4/17/01

DEPTH, FEET	SAMPLE NO.	SAMPLES SAMPLING EFFORT	HAND PENE-TROMETER tsf	MOISTURE CONTENT %	LIQUID LIMIT %	PLASTIC LIMIT %	AGG.	C.S.	F.S.	SILT	CLAY	DESCRIPTION
0												FILL: Topsoil and slag.
	1	2/4/5										FILL: Loose brown, dark-gray, and gray fine to medium sand interbedded with silty clay and cinders, trace coarse sand, little fine gravel, contains slag.
	2	2/1/1					37	21	19	23		
5	3	1/1/1										FILL: Very-loose dark-brown and brown fine to coarse sand, some fine to coarse gravel, some silt, contains concrete and brick fragments.
	4	1=12"/1										
10	5A 5B	1/16/4										FILL: Very-loose brown and dark-gray fine to coarse sand interbedded with fine sand and silty clay, little fine gravel, contains cinders and slag.
	6	3/2/2										
15	7A 7B	5/34/50 5"R	0.0-0.5									FILL: Very-loose brown, gray, red, and dark-gray fine to coarse sand, little fine gravel, some silty clay, contains cinders and coal fragments.
	8	27/50 4"R										FILL: Very-loose brown and gray fine gravel (shale fragments), some fine to coarse sand, some silty clay.
20		REC RQD										
	9	80% 57%										Wood fragments.
25												Very-soft to medium-stiff gray mottled with dark-gray organic clayey silt, trace fine to medium sand, contains decayed organics, possible buried topsoil. Est. A-5
	10	88% 36%										Very-soft gray shale, fragmental structure, similar to hard clayey silt, contains iron oxide staining.
30												Very-soft to soft gray and dark-gray shale, partly fragmental structure, partly nearly horizontally bedded, 1" to 8" core pieces, few diagonal fractures, partly similar to hard clayey silt.
35												Soft to medium-hard dark-gray and gray shale, nearly horizontally bedded, 1/2" to 5" core pieces, fissile, few diagonal fractures.
40												
45												- Encountered water at 10.0'.
50												
55												
60												
65												

WATER LEVEL: ▽ 11.5
WATER NOTE:
DATE: 4/17/01

LOG OF BORING NO. S-3
REPLACEMENT STRUCTURE NO. ATB-20-2626
ASHTABULA, OHIO

BBCM ENGINEERING, INC.

TYPE: 3-1/4" I.D. Hollow-stem Auger; 2" O.D. Split-barrel Sampler; NX Rock Core Barrel
LOCATION: STA 21+10, 5' Right of Centerline
COMPLETION DEPTH: 19.0' ELEVATION: 579.9 DATE: 4/17/01

DEPTH, FEET	SAMPLE NO.	SAMPLES SAMPLING EFFORT	HAND PENE-TROMETER tsf	MOISTURE CONTENT %	LIQUID LIMIT %	PLASTIC LIMIT %	AGG.	C.S.	F.S.	SILT	CLAY	DESCRIPTION
0												Brown fine to coarse sand, some fine to coarse gravel.
	1	1/1/1										FILL: Very-loose brown fine to medium sand, trace coarse sand, little fine to coarse gravel (shale fragments), some clayey silt, contains wood fragments.
	2	1/3/5		NP	NP	NP	6	3	41	26	17	12 4
5	3	8/7/14		NP	NP	NP	6	3	15	8	10	4
	4A 4B 4C	5/50	4.5+	9	NP 35	NP 22	47 17	18 2	10 6	16 37	9 38	Loose brown fine to coarse sand, little silt, trace clay A-1-b(0)
10		REC RQD										Medium-dense fine to coarse gravel "and" fine to coarse sand, trace silt, trace clay. A-1-a(0)
	5	89% 22%										Medium-dense gray fine to coarse sand, some fine to coarse gravel, little silt, trace clay. A-1-b(0)
15												
	6	98% 56%										Hard gray silty clay, trace fine to coarse sand, structure similar to shale. A-6a(9)
20												Very-soft to soft gray shale, fragmental structure, mostly similar to hard silty clay.
												Soft to medium-hard dark-gray and gray shale, nearly horizontally bedded, 1/2" to 9" core pieces, fissile, few diagonal and vertical fractures, occasional very-soft shale seams.
25												
												Soft to medium-hard dark-gray and gray shale interbedded with fine-grained sandstone, nearly horizontally bedded, 1/2" to 8" core pieces, fissile, fine-grained sandstone is well-cemented (fine-grained sandstone layers 1/16" to 2.5" layers), few diagonal and vertical fractures.
30												
35												- Encountered water at 3.0'.
40												
45												
50												
55												
60												
65												

WATER LEVEL: ▽ 7.0
WATER NOTE: ▼ 3.2 After Rock Core
DATE: 4/17/01 4/17/01

BBCM ENGINEERING, INC.

HORIZONTAL SCALE 1" = 20'

CALCULATED
CHECKED M.K.P.
DATE 3/27/02
REVIEWED BY S.A.H.
DRAWN BY B.L.R.

STRUCTURE FOUNDATION INVESTIGATION
ATB-20-2626 OVER CONNEAUT CREEK

ATB-20-26.26
ASHTABULA COUNTY, OHIO

4/7

BBC&M FILENAME: 011-08108-0080060.DGN

LOG OF BORING NO. S-4
REPLACEMENT STRUCTURE NO. ATB-20-2626
ASHTABULA, OHIO

TYPE: 3-1/4" I.D. Hollow-stem Auger; 2" O.D. Split-barrel Sampler; NX Rock Core Barrel — LOCATION: STA 24+11, 6' Right of Centerline
COMPLETION DEPTH: 59.5' — ELEVATION: 664.6 — DATE: 4/16/01

DEPTH, FEET	SAMPLE NO.	SAMPLES	SAMPLING EFFORT	HAND PENE-TROMETER tsf	MOISTURE CONTENT %	LIQUID LIMIT %	PLASTIC LIMIT %	AGG.	C.S.	F.S.	SILT	CLAY	DESCRIPTION
0													TOPSOIL - 6 INCHES
	1		1/1/1										Very-loose brown and dark-brown fine sand, trace medium to coarse sand, trace fine to coarse gravel, little silt, few roots. Est. A-3a
5	2		1/1/1					1	6	69	17	7	
	3		1=12"/4										
	4A 4B		4/6/7	4.5+	15								Medium-dense brown fine to medium sand, trace coarse sand, trace fine gravel, some clayey silt. Est. A-3
	5		3/4/6	4.5+	15								
	6		3/4/5	4.5+	14	25	18	8	7	8	47	30	Very-stiff to hard gray clayey silt, little fine to coarse sand, trace fine to coarse gravel.
15	7		3/4/5	4.5+	14								
	8		3/5/8	4.5+	14								
20	9		3/5/6	4.5+	15								
	10		3/7/7	4.5+	15								
25	11		4/8/10	4.5+	14								
	12		6/10/12	4.5+	14								A-4a(8)
30	13		5/14/14	4.5+	13								Hard gray clayey silt, little fine to coarse sand, trace fine gravel, contains few silt seams. Est. A-4a
35	14		32/50-4"R	4.5+	7								Hard gray clayey silt, some fine to coarse sand, trace fine gravel.
40	15		19/32/41	4.5+	9	23	14	6	9	19	29	37	A-4a(6)
45	16		32/50-4"R										Very-dense gray fine to coarse sand "and" fine to coarse gravel, some clayey silt. Est. A-1-b
50	17		50-5"R										Very-soft to soft gray shale, fragmental structure, partly similar to hard clayey silt.
55			REC	RQD									
	18		95%	13%									Soft to medium-hard dark-gray and gray shale, nearly horizontally bedded, 1/4" to 6" core pieces, fissile, few diagonal and vertical fractures, few very-soft shale seams.
60													- Encountered water at 6.0'.
65													

WATER LEVEL: ▽ "Dry" 4/16/01 — ▽ 23.0 Caved at 45.0' 4/16/01
WATER NOTE:
DATE:

LOG OF BORING NO. S-5
REPLACEMENT STRUCTURE NO. ATB-20-2626
ASHTABULA, OHIO

TYPE: 3-1/4" I.D. Hollow-stem Auger; 2" O.D. Split-barrel Sampler; NX Rock Core Barrel — LOCATION: STA 14+93, 19' Right of Centerline
COMPLETION DEPTH: 15.0' — ELEVATION: 599.1 — DATE: 11/19/01 - 11/19/01

DEPTH, FEET	SAMPLE NO.	SAMPLES	SAMPLING EFFORT	HAND PENE-TROMETER tsf	MOISTURE CONTENT %	LIQUID LIMIT %	PLASTIC LIMIT %	DESCRIPTION
0	1A 1B		1/1/7	4.0				BENCH FILL: Loose dark brown silt, little fine to coarse sand, trace fine gravel.
	2		37/50-4"R					Hard brown mottled with gray silty clay, little fine to coarse gravel (shale fragments), trace fine to coarse sand, contains few roots. Est. A-6b
5			REC	RQD				
	3		99%	92%				Soft to medium-hard gray shale, contains iron staining.
10								Soft to medium-hard gray and dark gray shale interbedded with fine grained sandstone and siltstone, nearly horizontally bedded, 1/2"- 26" core pieces, few diagonal fractures, slightly fissile.
	4		99%	92%				Qu= 1,700 psi
15								
20								
25								
30								

WATER LEVEL: ▽ "Dry" — ▽ "Dry"
WATER NOTE: Before coring — At completion
DATE: 11/19/01 — 11/19/01

LOG OF BORING NO. S-6
REPLACEMENT STRUCTURE NO. ATB-20-2626
ASHTABULA, OHIO

TYPE: 3-1/4" I.D. Hollow-stem Auger; 2" O.D. Split-barrel Sampler; NX Rock Core Barrel — LOCATION: STA 16+11, 2' Left of Centerline
COMPLETION DEPTH: 20.8' — ELEVATION: 583.8 — DATE: 11/19/01 - 11/19/01

DEPTH, FEET	SAMPLE NO.	SAMPLES	SAMPLING EFFORT	HAND PENE-TROMETER tsf	MOISTURE CONTENT %	LIQUID LIMIT %	PLASTIC LIMIT %	DESCRIPTION
0								TOPSOIL- 6 INCHES
	1		2/2/2	0.5-1.5				Soft to stiff brown mottled with gray and orange-brown silty clay interbedded with silt, trace fine to medium sand, contains few roots. Est. A-6b
5	2A 2B		1/1/1	1.0-1.6 .75-1.5				Medium-stiff to stiff gray mottled with brown and dark-gray silty clay interbedded with silt, trace fine to medium sand, contains decayed wood fragments. Est. A-6b
	3		S/H					
	4		30/50-5"R					Very-soft to soft gray shale, nearly horizontally bedded, partly fragmental structure, partly similar to hard soil, 1/2" to 23" core pieces.
10			REC	RQD				
	5		93%	78%				
15								
20	6		100%	92%				Soft to medium-hard gray and dark gray shale interbedded with fine-grained sandstone and siltstone, nearly horizontally bedded, 1" to 17" core pieces. Qu= 280 psi
25								
30								

WATER LEVEL: ▽ "Dry" — ▽ "Dry"
WATER NOTE: Before coring — At completion
DATE: 11/19/01 — 11/19/01

LOG OF BORING NO. S-7
REPLACEMENT STRUCTURE NO. ATB-20-2626
ASHTABULA, OHIO

TYPE: 3-1/4" I.D. Hollow-stem Auger; 2" O.D. Split-barrel Sampler; NX Rock Core Barrel — LOCATION: STA 17+39, on Centerline
COMPLETION DEPTH: 19.8' — ELEVATION: 579.4 — DATE: 11/20/01 - 11/20/01

DEPTH, FEET	SAMPLE NO.	SAMPLES	SAMPLING EFFORT	HAND PENE-TROMETER tsf	MOISTURE CONTENT %	LIQUID LIMIT %	PLASTIC LIMIT %	AGG.	C.S.	F.S.	SILT	CLAY	DESCRIPTION
0													TOPSOIL- 4 INCHES
	1A 1B		6/3/2	.5-.75				52	20	14	14		Soft to medium-stiff brown mottled with gray and dark-gray silty clay interbedded with silt and fine sand, trace medium sand, few roots. Est. A-6b
5	2		3/4/6										Loose brown fine to coarse sand, some fine to coarse gravel, little silt. A-1-a(0)
	3		11/41/50-4"R										Loose dark-gray and brown fine to coarse gravel, some fine to coarse sand, little slightly organic silty clay. Est. A-1-a
10			50-1"R										
			REC	RQD									
	4		100%	87%									Soft gray shale, nearly horizontally bedded, partly fragmental structure, 1/4"-11" core pieces, few seams of siltstone.
15													Qu= 130 psi
	5		100%	87%									Soft to medium-hard gray and dark-gray shale interbedded with fine-grained sandstone and siltstone, nearly horizontally bedded, 1"-17" core pieces.
20													NOTE: - Seepage at 3.5' below grade.
25													
30													

WATER LEVEL: ▽ 8.0
WATER NOTE: At Completion
DATE: 11/20/01

LOG OF BORING NO. S-8
REPLACEMENT STRUCTURE NO. ATB-20-2626
ASHTABULA, OHIO

TYPE: 3-1/4" I.D. Hollow-stem Auger; 2" O.D. Split-barrel Sampler; NX Rock Core Barrel — LOCATION: STA 18+66, on Centerline
COMPLETION DEPTH: 18.5' — ELEVATION: 580.2 — DATE: 11/20/01 - 11/20/01

DEPTH, FEET	SAMPLE NO.	SAMPLES	SAMPLING EFFORT	HAND PENE-TROMETER tsf	MOISTURE CONTENT %	LIQUID LIMIT %	PLASTIC LIMIT %	AGG.	C.S.	F.S.	SILT	CLAY	DESCRIPTION
0													TOPSOIL - 5 INCHES
	1A 1B		S/H/2/2	.5-1.0 1.0-2.0									Medium-stiff to stiff brown silty clay interbedded with silt, little fine to medium sand, few roots. Est. A-6b
	2		3/3/3					55	19	11	15		Stiff brown mottled with gray and orange-brown silty clay interbedded with silt and fine sand, trace medium sand, contains fine to medium sand seams, few roots. Est. A-6b
5	3A 3B		16/29/50-4"R										Loose brown and gray fine to coarse gravel "and" fine to coarse sand, little to trace silt. A-1-a(0)
10			REC	RQD									Very-soft to medium-hard gray shale.
	4		100%	97%									
15													Soft to medium-hard gray and dark-gray shale interbedded with fine-grained sandstone and siltstone, nearly horizontally bedded, 1/2"-25" core pieces, slightly fissile. Qu= 545 psi
	5		98%	87%									
20													NOTE: - Seepage at 3.5' and 6.0' below grade.
25													
30													

WATER LEVEL: ▽ 4.0
WATER NOTE: At completion
DATE: 11/20/01

BBCM ENGINEERING, INC.

HORIZONTAL SCALE 1" = 20'

CALCULATED — CHECKED M.K.P.
DATE 3/27/02
REVIEWED BY S.A.H.
DRAWN BY B.L.R.

STRUCTURE FOUNDATION INVESTIGATION
ATB-20-2626 OVER CONNEAUT CREEK
ATB-20-26.26
ASHTABULA COUNTY, OHIO

5 / 7

BBC&M FILENAME: 011-08108-0080070.DGN

LOG OF BORING NO. S-9
REPLACEMENT STRUCTURE NO. ATB-20-2626
ASHTABULA, OHIO

BBCM ENGINEERING, INC.

TYPE: 3-1/4" I.D. Hollow-stem Auger; 2" O.D. Split-barrel Sampler; NX Rock Core Barrel
LOCATION: STA 19+93 on Centerline
COMPLETION DEPTH: 18.9' ELEVATION: 580.3 DATE: 11/20/01 - 11/20/01

DEPTH, FEET	SAMPLE NO.	SAMPLES	SAMPLING EFFORT	HAND PENE-TROMETER tsf	MOISTURE CONTENT %	LIQUID LIMIT %	PLASTIC LIMIT %	AGG.	C.S.	F.S.	SILT	CLAY	DESCRIPTION
0													TOPSOIL- 5 INCHES
	1		4/5/6										FILL: Medium-dense to loose brown and gray fine to coarse sand, "and" to some fine to coarse gravel, trace little silt, contains shale, brick, and glass fragments.
5	2		3/3/4										
	3A 3B		6/50 /50- 5"R										Very-soft to soft gray shale, mostly fragmental structure, mostly similar to hard soil, few diagonal fractures.
10			REC	RQD	10								
	4		100%	97%									Qu= 45 psi
15													Soft to medium-hard gray and dark gray shale interbedded with fine-grained sandstone and siltstone, nearly horizontally bedded, 1 1/2"-20" core pieces.
	5		98%	87%									
20													NOTE:
25													- Seppage at 2.5' and 6.0' below grade.
30													
35													
40													
45													
50													
55													
60													
65													

WATER LEVEL: ▽ 3.0
WATER NOTE: At completion
DATE: 11/20/01

LOG OF BORING NO. S-10
REPLACEMENT STRUCTURE NO. ATB-20-2626
ASHTABULA, OHIO

BBCM ENGINEERING, INC.

TYPE: 3-1/4" I.D. Hollow-stem Auger; 2" O.D. Split-barrel Sampler; NX Rock Core Barrel
LOCATION: STA 22+60 20' Right of Centerline
COMPLETION DEPTH: 27.0' ELEVATION: 588.2 DATE: 11/21/01 - 11/21/01

DEPTH, FEET	SAMPLE NO.	SAMPLES	SAMPLING EFFORT	HAND PENE-TROMETER tsf	MOISTURE CONTENT %	LIQUID LIMIT %	PLASTIC LIMIT %	AGG.	C.S.	F.S.	SILT	CLAY	DESCRIPTION
0													TOPSOIL- 4 INCHES
	1		1/1/1	0.0- 0.5									Very-loose brown mottled with gray silt, some fine to medium sand, trace silty clay, contains wood fragments and roots. Est. A-4b
5	2A 2B		2/2/2	1.0- 3.5	21	26	20	7	6	9	50	28	
	3		S/H		31								Very-soft brown mottled with dark brown and gray organic silty clay interbedded with silt and fine sand, little medium to coarse sand, trace fine gravel. Est. A-6b
10	4A 4B		1/3/7	0.25	44	41	29	1	2	8	54	35	
	5		6/11/22		8								Stiff to very-stiff gray mottled with brown clayey silt, little fine to coarse sand, trace fine gravel, contains many slightly organic silt lenses. A-4b(8)
15	6		18/21/3		13								
	7		50- 5"R										Very-loose brown mottled with gray slightly organic silt interbedded with silty clay, trace fine to medium sand, contains many wood fragments. Est. A-4b
20			REC	RQD									
	8		99%	79%	4								Loose brown fine to medium sand, trace silt. Est. A-3
25	9		100%	86%									Very-soft to soft dark gray mottled with gray organic clayey silt, little fine to coarse sand, trace fine gravel, contains many fine to medium sand and silt seams, few roots. A-7-6(9)
30													Very-soft to soft gray shale, partly similar to hard soil.
35													Soft to medium-hard gray shale.
40													Soft gray shale, nearly horizontally bedded, partly fragmental structure, 1"-6" core pieces, few diagonal fractures. Qu= 1,110 psi
45													Soft to medium-hard gray shale interbedded with fine-grained sandstone and siltstone, nearly horizontally bedded, 1 1/2"-26" core pieces, few diagonal fractures.
50													NOTE:
55													- Seepage at 8.5' below grade.
60													
65													

WATER LEVEL: ▽ 7.5
WATER NOTE: At completion
DATE: 11/21/01

LOG OF BORING NO. W-1
REPLACEMENT STRUCTURE NO. ATB-20-2626
ASHTABULA, OHIO

BBCM ENGINEERING, INC.

TYPE: 3-1/4" I.D. Hollow-stem Auger; 2" O.D. Split-barrel Sampler
LOCATION: STA 11+57 55' Left of Centerline
COMPLETION DEPTH: 39.1' ELEVATION: 647.5 DATE: 4/17/01 - 4/18/01

DEPTH, FEET	SAMPLE NO.	SAMPLES	SAMPLING EFFORT	HAND PENE-TROMETER tsf	MOISTURE CONTENT %	LIQUID LIMIT %	PLASTIC LIMIT %	AGG.	C.S.	F.S.	SILT	CLAY	DESCRIPTION
0													TOPSOIL - 8 INCHES
	1		1/1/1										Very-loose brown and dark-brown fine sand, trace medium to coarse sand, trace fine gravel, trace silt, few roots.
5	2A 2B		1/ 1=12"	0.6	23	27	19	2	5	26	42	25	
	3		1/2/1					8	9	5	12	10	Soft brown mottled with gray clayey silt, some fine sand, trace medium to coarse sand, trace fine gravel, contains few fine sand seams. A-4a(6)
10	4		3/6/6	4.5+	14	22	16	15	6	30	31	18	
	5		6/12/18	4.5+	17								Medium-stiff dark-gray mottled with gray organic silty clay "and" fine to medium sand, trace coarse sand, trace fine gravel. Est. A-5
15	6		7/11/14	4.5+	13								
	7		7/11/14	4.5+	13								Very-loose dark-gray fine to medium sand, trace coarse sand, trace fine gravel, some silt, trace clay. Est. A-3a
20	8		5/7/10	4.5+	14	26	19	6	5	7	50	32	Medium-dense gray fine to coarse sand, trace fine gravel, "and" clayey silt. A-4a(3)
	9		4/7/11	4.5+	17								Hard brown becoming gray clayey silt, little fine to coarse sand, trace fine gravel, contains silt lenses. A-4b(8)
25	10		8/17/22	4.5+	8	22	16	23	14	15	29	19	Hard gray clayey silt, little fine to coarse sand, little fine to coarse gravel, contains many silt lenses. A-4a(3)
30	11		45/50- 3"R	4.5+	6								Hard gray and brown clayey silt, some fine to coarse sand, trace fine gravel. Est. A-4a
35	12		22/50- 3"R	4.5+	8								Very-soft gray shale, fragmental structure, partly similar to hard clayey silt.
40	13		37/50- 1"R	4.5+									- Encountered slight seepage at 5.0'.
45													
50													
55													
60													
65													

WATER LEVEL: ▽ "Dry" ▽ "Dry"
WATER NOTE: Caved at 31.0'
DATE: 4/18/01 4/18/01

BBCM ENGINEERING, INC.
HORIZONTAL SCALE 1" = 20'
CALCULATED
CHECKED M.K.P.
DATE 3/27/02
REVIEWED BY S.A.H.
DRAWN BY B.L.R.

STRUCTURE FOUNDATION INVESTIGATION
ATB-20-2626 OVER CONNEAUT CREEK
ATB-20-26.26
ASHTABULA COUNTY, OHIO

6/7

BBC&M FILENAME: 011-08108-0080080.DGN

LOG OF BORING NO. W-2
REPLACEMENT STRUCTURE NO. ATB-20-2626
ASHTABULA, OHIO

BBCM ENGINEERING, INC.

TYPE: 3-1/4" I.D. Hollow-stem Auger; 2" O.D. Split-barrel Sampler
LOCATION: STA 13+74, 4' Right of Centerline
COMPLETION DEPTH: 33.8' ELEVATION: 637.3 DATE: 11/21/01 - 11/21/01

DEPTH, FEET	SAMPLE NO.	SAMPLES SAMPLING EFFORT	HAND PENE-TROMETER tsf	NATURAL MOISTURE CONTENT %	LIQUID LIMIT %	PLASTIC LIMIT %	AGG. %	C.S. %	F.S. %	SILT %	CLAY %	DESCRIPTION
0												TOPSOIL: Dark brown clayey silt, little fine to coarse sand, trace fine to coarse gravel, trace organics
1		3/4/5					22	10	54		14	
2		3/3/4										Loose brown mottled with dark brown fine to coarse sand, little fine gravel, little silt. Est. A-3a
3		2/4/4										Loose light brown fine to medium sand. Est. A-3
4		3/5/8										Loose to medium-dense brown fine sand, trace medium sand, trace silt. Est. A-3
5	5A	3/8/13	4.5+	20	32	21	2	4	6	53	35	Hard brown mottled with gray silty clay, trace fine to coarse sand, trace fine gravel. A-6a(8)
	5B			21	34	23	0	2	5	43	50	
6		18/26/32	4.5+	17								Hard light brown silty clay, trace fine to coarse sand. A-6a(8)
7		16/28/33	4.5+	8	23	16	14	13	14	35	24	Hard gray clayey silt, some fine to coarse sand, trace fine to coarse gravel (shale fragments). A-4a(5)
8		31/33/50-4"R	4.5+	9								
9		41/50-4"R	4.0	8								
10		48/50-5"R	4.5+	6								
11		32/34/50	4.5+	7								
12	12A	36/50-4"R	4.5+	7								Hard gray clayey silt, trace fine to coarse sand, trace fine gravel (shale fragments), partly similar to soft shale. Est. A-4a
	12B											
13		50-4"R										Soft to medium-hard light gray shale.
14												NOTE: - A borehole was offset and a Shelby tube was pushed from 10.2' to 12.2' below grade (Sample number 14).
15												
16												
17												

WATER LEVEL: ▽ "Dry"
WATER NOTE: At completion
DATE: 11/21/01

LOG OF BORING NO. W-3
REPLACEMENT STRUCTURE NO. ATB-20-2626
ASHTABULA, OHIO

BBCM ENGINEERING, INC.

TYPE: 3-1/4" I.D. Hollow-stem Auger; 2" O.D. Split-barrel Sampler
LOCATION: STA 24+18, 25' Left of Centerline
COMPLETION DEPTH: 53.8' ELEVATION: 666.5 DATE: 11/26/01 - 11/26/01

DEPTH, FEET	SAMPLE NO.	SAMPLES SAMPLING EFFORT	HAND PENE-TROMETER tsf	NATURAL MOISTURE CONTENT %	LIQUID LIMIT %	PLASTIC LIMIT %	AGG. %	C.S. %	F.S. %	SILT %	CLAY %	DESCRIPTION
0												BENCH FILL: Very-loose brown fine to medium sand, trace coarse sand, few roots.
1		S/H/1/1										
2		2/2/3										Medium-stiff brown mottled with gray and orange-brown silty clay interbedded with silt and fine sand, little medium to coarse sand, trace fine gravel. Est. A-6b
3	3A	2/2/3	4.0-4.5	15	25	19	8	6	8	48	30	
	3B											
4		3/4/5	4.0-4.5	16								Loose brown silt "and" fine to medium sand, trace coarse sand, trace fine gravel. Est. A-3
5		3/3/3	4.0-4.5	15								Hard gray clayey silt, little to some fine to coarse sand, little to trace fine to coarse gravel, contains silt lenses. A-4a(8)
6		2/4/6	4.0-4.5	14	24	13	6	8	8	49	29	
7		4/6/7	4.0-4.5	14								Hard gray silty clay, little fine to coarse sand, trace fine gravel. A-6a(8)
8		4/6/8	4.0-4.5	15								Hard gray clayey silt, come fine to coarse sand, little to trace fine gravel, contains silt lenses.
9		4/6/8	4.0-4.5	15								
10		4/6/10	4.0-4.5	14								
11		6/9/12	4.0-4.5	13								Est. A-4a
12		6/9/15	4.5+	20	29	19	1	1	3	60	35	Hard brown silty clay interbedded with fine sand and silt, trace fine to coarse sand. A-4b(8)
13		15/15/22	4.5+									Dense gray fine to coarse sand, some fine to coarse gravel, occasional cobbles, contains few hard clayey silt seams. Est. A-3a
14		44/50-4.5"R		7								Hard gray becoming red clayey silt, some fine to coarse, trace fine gravel, contains shale fragments. Est. A-4a
15		30/50-5.5"R	4.5+	8								
16		50-4"R	4.5+									Very-dense gray fine to medium sand, trace to coarse sand, little fine gravel. Est. A-3
17		50-3.5"R										Soft to medium-hard light gray shale. NOTE: - A borehole was offset and a Shelby tube was pushed from 9.0 to 10.9 feet below grade (Sample Number 18).

WATER LEVEL: ▽ "Dry" ▽ "Dry"
WATER NOTE: At completion Caved at 45.0'
DATE: 11/26/01 11/26/01

BBCM ENGINEERING, INC.

HORIZONTAL SCALE 1" = 20'

CALCULATED | DATE 3/27/02 | CHECKED M.K.P.

DRAWN BY B.L.R. | REVIEWED BY S.A.H.

STRUCTURE FOUNDATION INVESTIGATION
ATB-20-2626 OVER CONNEAUT CREEK

ATB-20-26.26
ASHTABULA COUNTY, OHIO

7/7

BBC&M FILENAME: 011-0810B-00B0090.DGN