STATE OF OHIO
DEPARTMENT OF TRANSPORTATION

D05-SIGN-FY2005

CITY OF COLUMBUS
CITY OF PICKERINGTON
FAIRFIELD COUNTY

VILLAGE OF KIRKERSVILLE
LICKING COUNTY

CITY OF ZANESVILLE
VILLAGE OF NEW CONCORD
MUSKINGUM COUNTY

CITY OF CAMBRIDGE
VILLAGE OF OLD WASHINGTON
GUERNSEY COUNTY

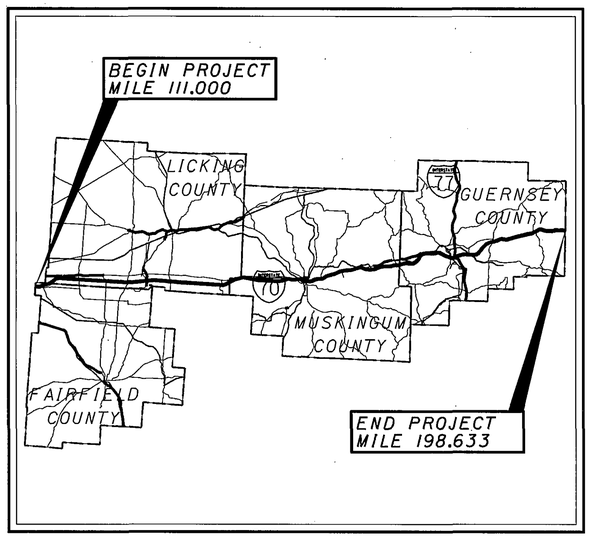

LOCATION MAP

LATITUDE: 39°56'57" N LONGITUDE: 82°01'23" W

SCALE IN MILES

0 12 24 36 48

N

PORTION TO BE IMPROVED
INTERSTATE & DIVIDED HIGHWAY
UNDIVIDED STATE & FEDERAL ROUTES
OTHER ROADS

LINE DATA

PROJECT LENGTH	87.633 MILES
BEGIN PROJECT	MILE 111.000
END PROJECT	MILE 198.633

INDEX OF SHEETS:

TITLE SHEET	1
GENERAL NOTES	2
TYPICAL GUIDE SIGN REPLACEMENT	3
TYPICAL EXIT GORE SIGN	4
GENERAL SUMMARY	5
SIGNING PLAN	6 - 136
SIGNING SUBSUMMARY	137 - 159
SIGN ELEVATIONS	160 - 165
OVERHEAD SIGN SUPPORT, TYPE 7.6	166

PROJECT DESCRIPTION

UPGRADING THE SIGNING ON INTERSTATE 70, THE INTERSTATE RAMPS, AND THE SIDEROADS INCLUDING THE REPLACEMENT OF SIGNS ON THEIR EXISTING/NEW SUPPORTS.

2002 SPECIFICATIONS

THE STANDARD SPECIFICATIONS OF THE STATE OF OHIO, DEPARTMENT OF TRANSPORTATION, INCLUDING CHANGES AND SUPPLEMENTAL SPECIFICATIONS LISTED IN THE PROPOSAL SHALL GOVERN THIS IMPROVEMENT.

I HEREBY APPROVE THESE PLANS AND DECLARE THAT THE MAKING OF THIS IMPROVEMENT WILL NOT REQUIRE THE CLOSING TO TRAFFIC OF THE HIGHWAY AND THAT PROVISIONS FOR THE MAINTENANCE AND SAFETY OF TRAFFIC WILL BE AS SET FORTH ON THE PLANS AND ESTIMATES.

PROJECT EARTH DISTURBED AREA = 0
ESTIMATED CONTRACTOR EARTH DISTURBED AREA = N/A
NOTIC OF INTENT EARTH DISTURBED AREA = N/A

STANDARD CONSTRUCTION DRAWINGS

TC-12.30	01-19-01	MT-35.10	04-20-01	GR-1.1	07-16-04		
TC-21.20	01-19-01	MT-95.30	07-16-04	GR-2.1	01-16-04		
TC-22.10	01-19-01	MT-95.31	07-16-04	GR-4.2	10-17-03		
TC-22.20	01-19-01	MT-97.10	04-19-02	GR-4.5	04-18-03		
TC-32.10	04-19-02	MT-98.12	04-19-02	GR-5.1	04-18-03		
TC-32.11	10-19-01	MT-98.13	04-19-02	GR-5.2	01-16-04		
TC-41.10	01-19-01	MT-98.14	04-19-02	GR-5.3	01-16-04		
TC-41.40	07-16-04						
TC-42.10	01-19-01						
TC-42.20	07-16-04						
TC-51.11	04-20-01						
TC-51.12	04-20-01						
TC-52.10	04-20-01						
TC-52.20	04-20-01						

SUPPLEMENTAL SPECIFICATIONS

832	4-17-04
833	2-12-03
1049	1-17-03

SPECIAL PROVISIONS

UNDERGROUND UTILITIES
TWO WORKING DAYS
BEFORE YOU DIG
CALL 1-800-362-2764 (TOLL FREE)
OHIO UTILITIES PROTECTION SERVICE
NON-MEMBERS
MUST BE CALLED DIRECTLY

ENGINEERS SEAL:

STATE OF OHIO
DANIEL C. BIEBERITZ
E-63002
REGISTERED
PROFESSIONAL ENGINEER

SIGNED: Daniel C. Bieberitz
DATE: 8-27-2004

PLAN PREPARED BY:

DLZ OHIO, INC.
6121 HUNTLEY ROAD
COLUMBUS, OH 43229-1003
(614) 888-0040

APPROVED Christopher T. Ryder
DATE 8/31/04 DISTRICT DEPUTY DIRECTOR

APPROVED Gordon Proctor Jr.
DATE 9-23-04 DIRECTOR, DEPARTMENT OF TRANSPORTATION

FEDERAL PROJECT NO. E040(662)
PID NO. 25044
CONSTRUCTION PROJECT NO.
RAILROAD INVOLVEMENT NONE
D05-SIGN-FY2005
1 / 166

D05 - Sign-FY2005/Various Sections (V
040611 PID - 25044
Dist 5 12/1/2004
08/26/2004
08:29:21 AM
M:\proj\0221\505\22 Sign Inventory\project plans\sheets\gt00l170.dgn

SCOPE OF WORK

THIS CONTRACT IS TO UPGRADE THE SIGNING ON THE INTERSTATE, THE INTERSTATE RAMPS, AND THE SIDEROADS. THE WORK CONSISTS OF REPLACING SIGNS ON THEIR NEW/ EXISTING SUPPORTS AND FABRICATED IN ACCORDANCE WITH SECTION 630.04.

IN ACCORDANCE TO THE REQUIREMENTS OF 630.03, THE CONTRACTOR SHALL SUBMIT PRIOR TO FABRICATION, TWO SETS OF SIGN LEGEND WORKING DRAWINGS TO THE OHIO DEPARTMENT OF TRANSPORTATION, OFFICE OF PRODUCTION, 1980 W. BROAD STREET, COLUMBUS, OH 43223.

IN NO CASE SHALL THE CONTRACTOR REMOVE ANY EXISTING SIGN UNTIL THE APPLICABLE REPLACEMENT SIGN CAN IMMEDIATELY THEREAFTER BE ERECTED. OVERHEAD SIGNS SHALL HAVE A CLEARANCE OF 17 FEET. IF PROPOSED SIGN CAUSES CLEARANCE TO BE LESS THAN 17 FEET, APPROVAL OF THE SIGN MUST BE MADE BY THE ENGINEER BEFORE PLACEMENT OF NEW SIGN

ALTHOUGH WE BELIEVE THE PLANS TO BE ESSENTIALLY COMPLETE, WE CANNOT GUARANTEE THEIR ACCURACY DUE TO CONTINUALLY CHANGING CONDITIONS OF THE SIGNING AND SUPPORTS. THE CONTRACTOR SHALL UNDER DIRECTIONS OF THE ENGINEER, MAKE CHANGES AS NECESSARY TO COMPLETE THE JOB.

THE FOLLOWING SIGNS ARE NOT INCLUDED IN THE PLANS:

I-H14 "ADOPT A HIGHWAY LITTER CONTROL"
D12-H15 "TARGET ENFORCEMENT AREA"
SPECIFIC SERVICE SIGNS (LOGO PROGRAM)

THESE SIGNS SHALL REMAIN IN PLACE.

EXISTING SIGN STRUCTURE VERIFICATION

DETAILS AND DIMENSIONS SHOWN ON THESE PLANS PERTAINING TO THE EXISTING SIGN STRUCTURES (SIGNS, POSTS, BEAMS AND OVERHEAD SIGN SUPPORTS) HAVE BEEN OBTAINED FROM EXISTING SIGNING PLANS AND FROM FIELD OBSERVATIONS AND MEASUREMENTS. CONSEQUENTLY, THEY ARE INDICATIVE OF THE EXISTING SIGN STRUCTURES AND THE PROPOSED WORK, BUT SHALL BE CONSIDERED TENTATIVE AND APPROXIMATE. THE CONTRACTOR IS REFERRED TO CMS SECTIONS 102.05 AND 105.02.

BASE CONTRACT BID PRICES UPON A RECOGNITION OF THE UNCERTAINTIES DESCRIBED ABOVE AND UPON A PREBID EXAMINATION OF THE EXISTING SIGN STRUCTURES (SIGNS, POSTS, BEAMS, AND OVERHEAD SIGN SUPPORTS). HOWEVER, THE DEPARTMENT WILL PAY FOR ALL PROJECT WORK BASED UPON ACTUAL DETAILS AND DIMENSIONS THAT HAVE BEEN VERIFIED IN THE FIELD.

ITEM 630: SIGNING, MISC.: CHECK TORQUE

WORK UNDER THIS ITEM SHALL CONSIST OF CHECKING TORQUE ON ALL EXISTING BREAKAWAY BEAM CONNECTIONS. THE NUT SHALL BE LOOSENED AND TORQUED IN ACCORDANCE WITH 630.06 (SECTION A.2). PAYMENT FOR THIS ITEM SHALL BE ONE EACH PER LOCATION FOR ITEM 630 - SIGNING, MISC,: CHECK TORQUE.

UTILITIES

BELOW IS A LIST OF UTILITY COMPANIES WHICH MAY HAVE UNDERGROUND INSTALLATIONS ALONG THE VARIOUS ROUTES AFFECTED BY THIS PROJECT. THIS IS NOT TO BE CONSTRUED AS A COMPLETE LIST, BUT RATHER A DIRECTORY OF THE MOST FREQUENTLY ENCOUNTERED COMPANIES.

COLUMBIA GAS OF OHIO
2429 LINDEN AVE.
ZANESVILLE, OH 43701
ATTN: DESI MOLINA
740-450-1205

AMERICAN ELECTRIC POWER TRANS
825 TECH CENTER DRIVE
GAHANNA, OH 43230
ATTN: MICHELLE ODOM
614-552-1108

AMERICAN ELECTRIC POWER CO. (DISTRIBUTION)
CENTRAL OHIO REGION
850 TECH CENTER DRIVE
GAHANNA, OH 43230
ATTN: RICK ECKLE
614-883-6829

COLUMBIA GAS TRANSMISSION
310 SOUTH MAPLE STREET
P.O. BOX 330
SUGAR GROVE, OH 43155
ATTN: JOHN RADER
740-746-2279

GUERNSEY-MUSKINGUM ELECTRIC COOPERATIVE, INC
17 S. LIBERTY ST.
NEW CONCORD, OH 43762
ATTN: JOHN MARSHALL
740-826-7661

SBC (AMERITECH)
3935 NORTH POINT RD
ZANESVILLE, OH 43710
ATTN: SANDI RANDOLPH
740-454-3455

VERIZON
9444 CAMPBELL ST.
P.O. BOX 190
CAMBRIDGE, OH 43725
ATTN: JEFF ARNOLD
740-432-7137

EDWARD F. SCHMELZER
DISTRICT 5 UTILITY COORDINATOR
ESCHMELZ@DOT.STATE.OH.US
740-323-5126

ITEM 614: MAINTAINING TRAFFIC

TWO LANES OF TRAFFIC IN EACH DIRECTION SHALL BE MAINTAINED ON IR 70 AT ALL TIMES, EXCEPT AS NOTED BELOW:

LANE CLOSURES SHALL ONLY BE IMPLEMENTED AT THE TIMES LISTED ON THE SITE WHICH IS LOCATED AT:

OHIO DEPARTMENT OF TRANSPORTATION'S PERMITTED LANE CLOSURE WEB SITE

https://dotaw100.dot.state.oh.us/plcm/plcm_web.jsp

THE PERMITTED CLOSURE TIMES LISTED ON THE WEBSITE, 14 CALENDAR DAYS PRIOR TO THE BID LETTING DATE, SHALL BE IN EFFECT FOR THIS PROJECT.

NO WORK WITHIN ACTIVE TRAVEL LANES OR WHICH WILL SLOW TRAFFIC IS PERMITTED AT ANY OTHER TIMES.

WHEN NECESSARY, LANE CLOSURES SHALL BE ACCOMPLISHED IN ACCORDANCE WITH THE STANDARD DRAWINGS. LENGTH AND DURATION OF LANE CLOSURES AND RESTRICTIONS SHALL BE AT THE APPROVAL OF THE ENGINEER.

ALL WORK AND TRAFFIC CONTROL DEVICES SHALL BE IN ACCORDANCE WITH CMS 614 AND OTHER APPLICABLE PORTIONS OF THE SPECIFICATIONS, AS WELL AS THE OHIO MANUAL OF UNIFORM TRAFFIC CONTROL DEVICES. PAYMENT FOR ALL LABOR, EQUIPMENT AND MATERIALS SHALL BE INCLUDED IN THE LUMP SUM CONTRACT PRICE FOR ITEM 614, MAINTAINING TRAFFIC.

ITEM 631: REMOVAL OF SIGN SERVICE AND DISPOSAL, AS PER PLAN

WORK UNDER THIS ITEM SHALL CONSIST OF REMOVING ALL CABLE AND OTHER EQUIPMENT FOR THE USE OF LIGHTING FROM THE LUMINAIRE TO THE TOP OF THE DISCONNECT SWITCH.
DISPOSAL OF ITEMS SHALL BE ACCORDING TO 105.17.
MEASUREMENT FOR THIS ITEM SHALL BE ONE EACH PER ILLUMINATED SIGN.
PAYMENT WILL BE MADE AT THE CONTRACT UNIT PRICE BID PER EACH OF ITEM 631 REMOVAL OF SIGN SERVICE AND DISPOSAL, AS PER PLAN.

ITEM 630: SIGNING, MISC.: GROUND MOUNTED SUPPORT

THIS ITEM SHALL INCLUDE ALL LABOR AND EQUIPMENT NECESSARY TO INSTALL A MULTI-DIRECTIONAL, BREAKAWAY TRAFFIC SIGN SUPPORT SYSTEM. THIS SYSTEM SHALL MEET OR EXCEED ALL REQUIREMENTS OF NCHRP REPORT #350.

THE SIGN SUPPORT SYSTEM SHALL INCLUDE THE FOLLOWING COMPONENTS: 1) A GROUND STUB, 3" SCHEDULE 40, HOT DIP GALVANIZED PIPE, 36" LONG WITH A TRIANGULAR PLATE WELDED TO IT; 2) A GALVANIZED STEEL BOLT RETAINER PLATE; 3) A ZINC PLATED STEEL SPLIT LOCKING COLLAR OR SIMILAR DEVISE TO KEEP THE SLIP BASE CASTING ON THE TRAFFIC POST; 4) A SLIP BASE CASTING WHICH SLIDES ONTO THE POST (ACTING AS THE POST SUPPORT); 5) A TRAFFIC POST, 2⅞" OUTSIDE DIAMETER. THE TRAFFIC POSTS SHALL BE ABLE TO SUPPORT AT A MINIMUM: 50 SQUARE FOOT OF SIGN AREA PER POST IN A 90 MPH WIND.

PAYMENT FOR THIS ITEM SHALL INCLUDE ALL LABOR, EQUIPMENT, MATERIALS AND INCIDENTALS NECESSARY TO INSTALL A MULTI-DIRECTIONAL BREAKAWAY TRAFFIC SIGN SUPPORT AT THE CONTRACT UNIT PRICE FOR ITEM 630 SIGNING, MISC.: GROUND MOUNTED SUPPORT.

ITEM 630: GROUND MOUNTED SUPPORT, W12X30 BEAM, AS PER PLAN
ITEM 630: SIGN SUPPORT ASSEMBLY, POLE MOUNTED, AS PER PLAN
ITEM 630: SIGN, OVERHEAD EXTRUSHEET, AS PER PLAN
ITEM 630: SIGNING, MISC.: GROUND MOUNTED SUPPORT FOR STORAGE
ITEM 630: SIGN ATTACHMENT ASSEMBLY, AS PER PLAN
ITEM 630: GROUND MOUNTED SUPPORT, W10X22 BEAM, AS PER PLAN
ITEM 630: BREAKAWAY CONNECTION, AS PER PLAN
ITEM 630: SIGN, FLAT SHEET, AS PER PLAN
ITEM 630: SIGN, GROUND MOUNTED EXTRUSHEET, AS PER PLAN
ITEM 630: GROUND MOUNTED SUPPORT, NO. 4 POST, AS PER PLAN

ALL MATERIALS REQUIRED TO INSTALL THESE ITEMS SHALL BE DELIVERED TO ODOT DISTRICT 5 (9600 JACKSONTOWN RD. JACKSONTOWN, OHIO, 43030 (CONTACT: TROY RODENISER, (740) 323-4400 x5285) FOR STORAGE. THESE MATERIALS SHALL BE INSPECTED AND APPROVED BY ODOT PRIOR TO DELIVERY TO THE STORAGE FACILITY. THE CONTRACTOR SHALL MAKE ARRANGEMENTS FOR DELIVERY THROUGH PROJECT ENGINEER WITH A 7 DAYS ADVANCE NOTICE TO TROY RODENISER.

THESE ITEMS WILL BE INSTALLED WITH A DIFFERENT PROJECT (OR BY OTHERS). IT SHALL BE NOTED THAT FOR SIGNING, MISC.: GROUND MOUNTED SUPPORT FOR STORAGE, THE OTHER REQUIREMENTS SPECIFIED ELSEWHERE FOR ITEM 630: SIGNING MISC.: GROUND MOUNTED SUPPORT SHALL APPLY EXCEPT THE INSTALLATION.

ALL OTHER RELATED ITEMS OF WORK BETWEEN IR-70 MILE MARKER 152.6 TO 156.7 WILL BE INCLUDED WITH THAT PROJECT (e .g. REMOVAL OF RELATED EXISTING SIGNS, SUPPORT FOUNDATION CONCRETE, ETC.) UNLESS DIRECTED OTHERWISE BY THE PROJECT ENGINEER.

DATE 9/13/04
Revised gen notes.dgn by NK

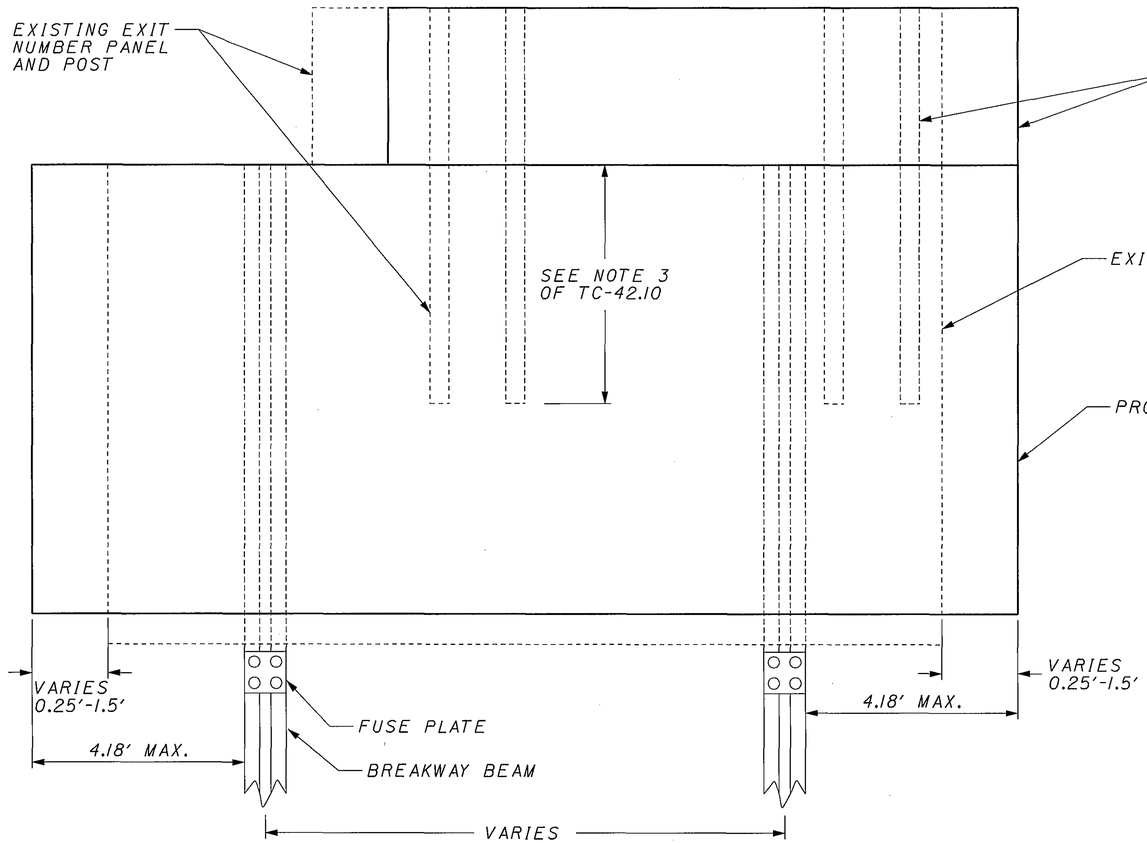

TYPICAL
PROPOSED SIGN WIDER THAN EXISTING SIGN

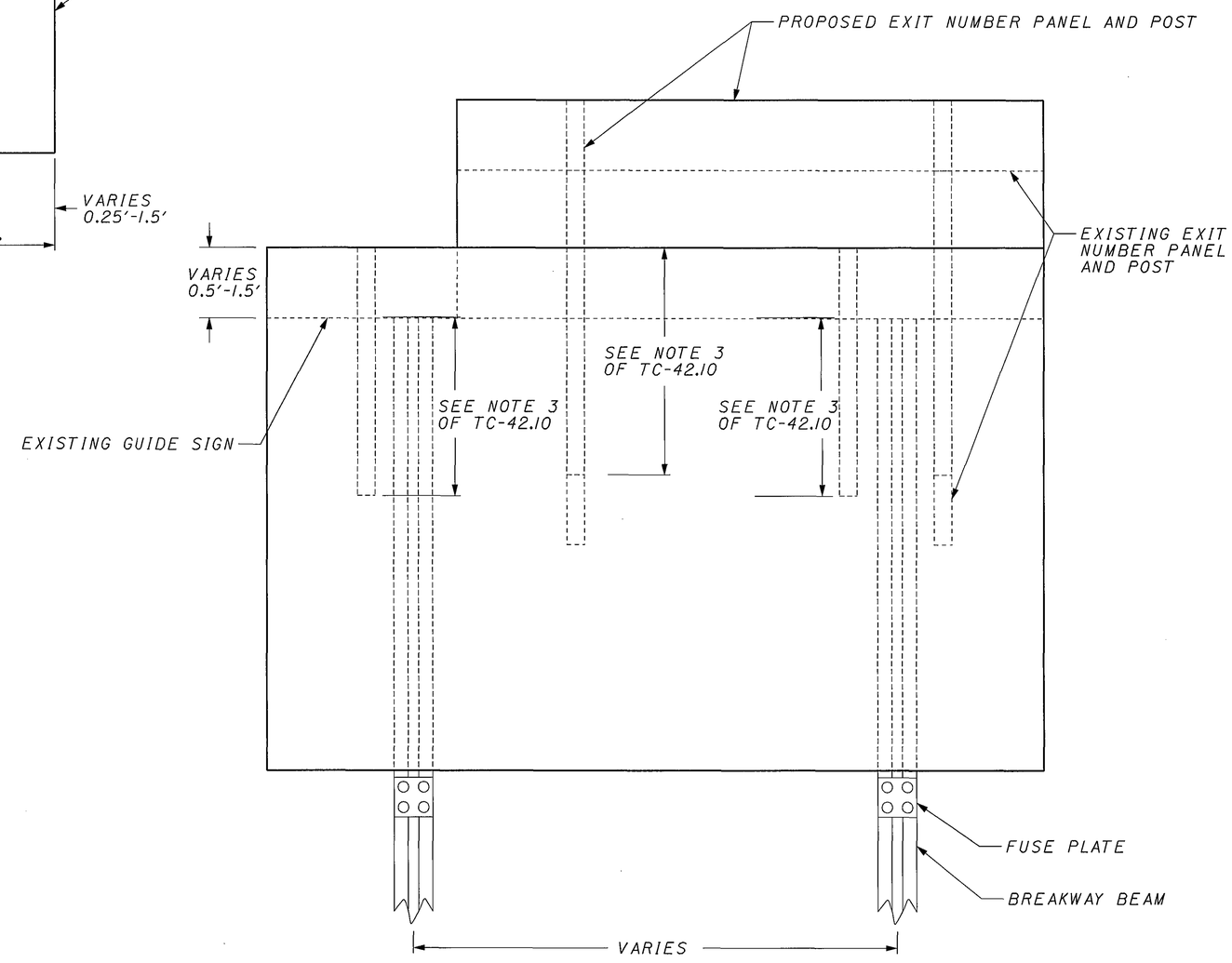

TYPICAL
PROPOSED SIGN HIGHER THAN EXISTING SIGN

NOT TO SCALE

CALCULATED DCB
CHECKED WEB

TYPICAL GUIDE SIGN REPLACEMENT

D05-SIGN-FY2005

08/25/2004
03:52:27 PM
M:\proj\02\1505\22 Sign Inventory\project plans\sheets\td002170.dgn

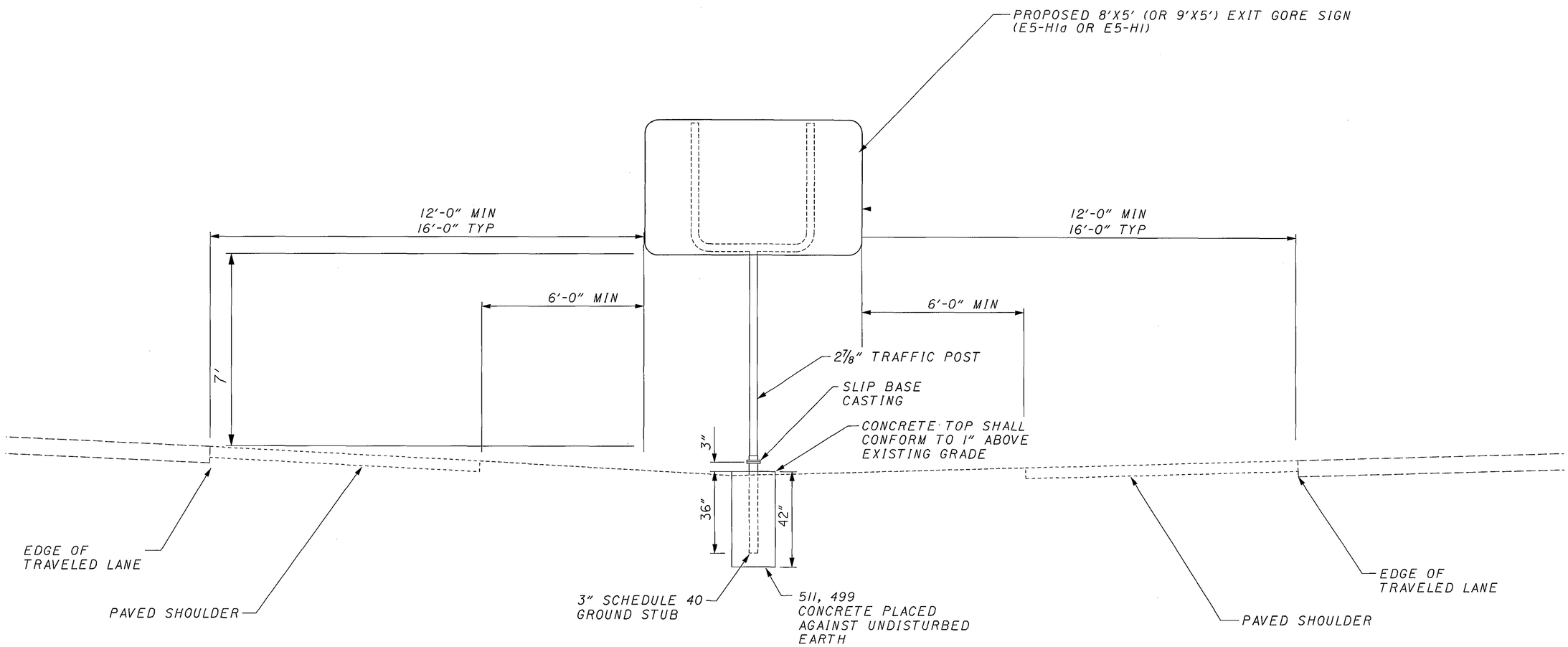

TYPICAL

"SIGNING, MISC.: GROUND MOUNTED SUPPORT"

MULTI-DIRECTIONAL BREAKAWAY TRAFFIC SIGN SUPPORT SYSTEM

SCALE IN FEET

0 1 2 4

CALCULATED DCB

CHECKED EHT

TYPICAL EXIT GORE SIGN

D05-SIGN-FY2005

08/25/2004
03:50:43 PM
M:\proj\022N505\22 Sign Inventory\project plans\sheets\td001170.dgn

SHEET NUMBER	ITEM	ITEM EXT.	GRAND TOTAL	UNIT	DESCRIPTION	SEE SHEET NO.
159						
					ROADWAY	
475	606	13000	475	FT	GUARDRAIL, TYPE 5	
550	606	14000	550	FT	GUARDRAIL, TYPE 8	
2	606	17500	2	EACH	POST END ANCHOR (OR CONCRETE BLOCK END ANCHOR)	
2	606	22000	2	EACH	ANCHOR ASSEMBLY, TYPE B-98	
4	606	26500	4	EACH	ANCHOR ASSEMBLY, TYPE T	
					EROSION CONTROL	
	832	30000	2,500	EACH	EROSION CONTROL	
					TRAFFIC CONTROL	
2,100	630	04100	2,100	FT	GROUND MOUNTED SUPPORT, NO. 4 POST	
241	630	04101	241	FT	GROUND MOUNTED SUPPORT, NO. 4 POST, AS PER PLAN	2
565	630	07500	565	FT	GROUND MOUNTED SUPPORT, W10X22 BEAM	
48	630	07501	48	FT	GROUND MOUNTED SUPPORT, W10X22 BEAM, AS PER PLAN	2
806	630	08000	806	FT	GROUND MOUNTED SUPPORT, W12X30 BEAM	
54	630	08001	54	FT	GROUND MOUNTED SUPPORT, W12X30 BEAM, AS PER PLAN	2
35	630	09000	35	EACH	BREAKAWAY BEAM CONNECTION	
4	630	09001	4	EACH	BREAKAWAY BEAM CONNECTION, AS PER PLAN	2
1	630	20400	1	EACH	OVERHEAD SIGN SUPPORT, TYPE TC-12.30, DESIGN 4	
6	630	21000	6	EACH	OVERHEAD SIGN SUPPORT, TYPE TC-12.30, DESIGN 10	
55	630	75000	55	EACH	SIGN ATTACHMENT ASSEMBLY	
32	630	75001	32	EACH	SIGN ATTACHMENT ASSEMBLY, AS PER PLAN	2
1	630	79501	1	EACH	SIGN SUPPORT ASSEMBLY, POLE MOUNTED, AS PER PLAN	2
1,923	630	80100	1,923	SQ FT	SIGN, FLAT SHEET	
303	630	80101	303	SQ FT	SIGN, FLAT SHEET, AS PER PLAN	2
29,831	630	80200	29,831	SQ FT	SIGN, GROUND MOUNTED EXTRUSHEET	2
2,135	630	80201	2,135	SQ FT	SIGN, GROUND MOUNTED EXTRUSHEET, AS PER PLAN	2
8,175	630	80224	8,175	SQ FT	SIGN, OVERHEAD EXTRUSHEET	
3,211	630	80225	3,211	SQ FT	SIGN, OVERHEAD EXTRUSHEET, AS PER PLAN	2
52	630	84500	52	EACH	GROUND MOUNTED BEAM SUPPORT FOUNDATION	
7	630	84510	7	EACH	RIGID OVERHEAD SIGN SUPPORT FOUNDATION	
378	630	84900	378	EACH	REMOVAL OF GROUND MOUNTED SIGN AND DISPOSAL	
337	630	85400	337	EACH	REMOVAL OF GROUND MOUNTED MAJOR SIGN AND DISPOSAL	
1	630	86002	1	EACH	REMOVAL OF GROUND MOUNTED POST SUPPORT AND DISPOSAL	
150	630	86102	150	EACH	REMOVAL OF GROUND MOUNTED BEAM SUPPORT AND DISPOSAL	
85	630	87400	85	EACH	REMOVAL OF OVERHEAD MOUNTED SIGN AND DISPOSAL	
41	630	97700	41	EACH	SIGNING, MISC.: GROUND MOUNTED SUPPORT	2
6	630	97700	6	EACH	SIGNING, MISC.: GROUND MOUNTED SUPPORT FOR STORAGE	2
143	630	97700	143	EACH	SIGNING, MISC.: CHECK TORQUE	2
79	631	94200	79	EACH	REMOVAL OF LUMINAIRE AND DISPOSAL	
79	631	94404	79	EACH	REMOVAL OF BALLAST AND DISPOSAL	
37	631	94413	37	EACH	REMOVAL OF SIGN SERVICE AND DISPOSAL, AS PER PLAN	2
					MAINTENANCE OF TRAFFIC	
	614	11000	LUMP		MAINTAINING TRAFFIC	2
	614	11100	40	HOUR	LAW ENFORCEMENT OFFICER WITH PATROL CAR	
	619	16000	6	MONTH	FIELD OFFICE, TYPE A	
	623	10000	LUMP		CONSTRUCTION LAYOUT STAKES	
	624	10000	LUMP		MOBILIZATION	

CALCULATED JAM CHECKED WEB

GENERAL SUMMARY

D05-SIGN-FY2005

DATE 9/13/04
$TIME$
revised gen sum.dgn by NK

08/16/2004
09:23:58 AM
M:\proj\022I\I505\22 Sign Inventory\project plans\plansheets\tp00II70.dgn

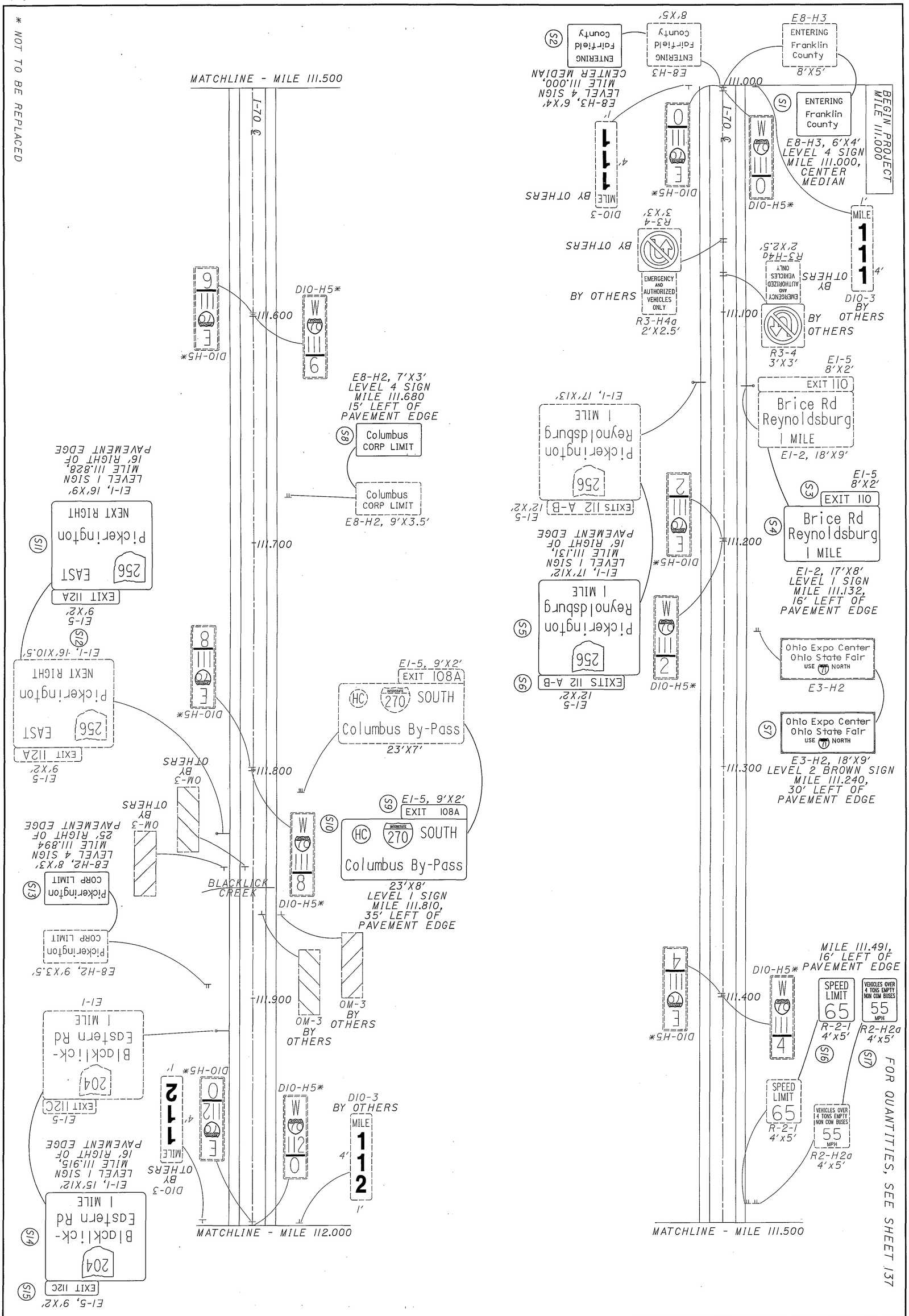

6 / 166	D05-SIGN-FY2005	FAIRFIELD COUNTY MILE 111.000 TO MILE 112.000	CALCULATED DCB CHECKED WEB 0 50 100 200 HORIZONTAL SCALE IN FEET

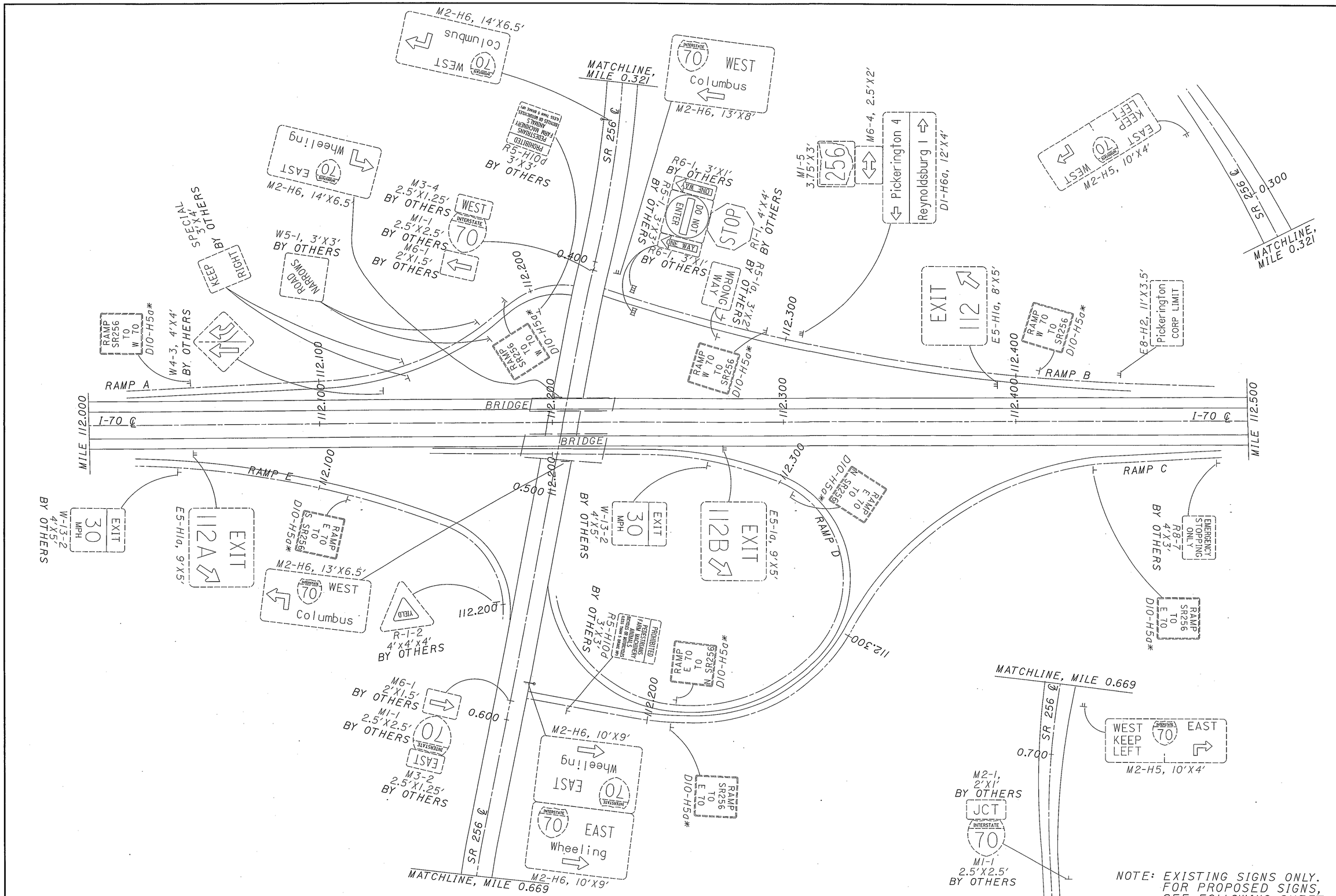

* NOT TO BE REPLACED

NOTE: EXISTING SIGNS ONLY. FOR PROPOSED SIGNS, SEE FOLLOWING SHEET.

N

0 50 100 200
HORIZONTAL SCALE IN FEET

CALCULATED DCB
CHECKED WEB

FAIRFIELD COUNTY
SR 256 INTERCHANGE

D05-SIGN-FY2005

08/13/2004
03:54:08 PM
m:\proj\022\1505\22 sign inventory\project plans\plansheets\tp002170.dgn

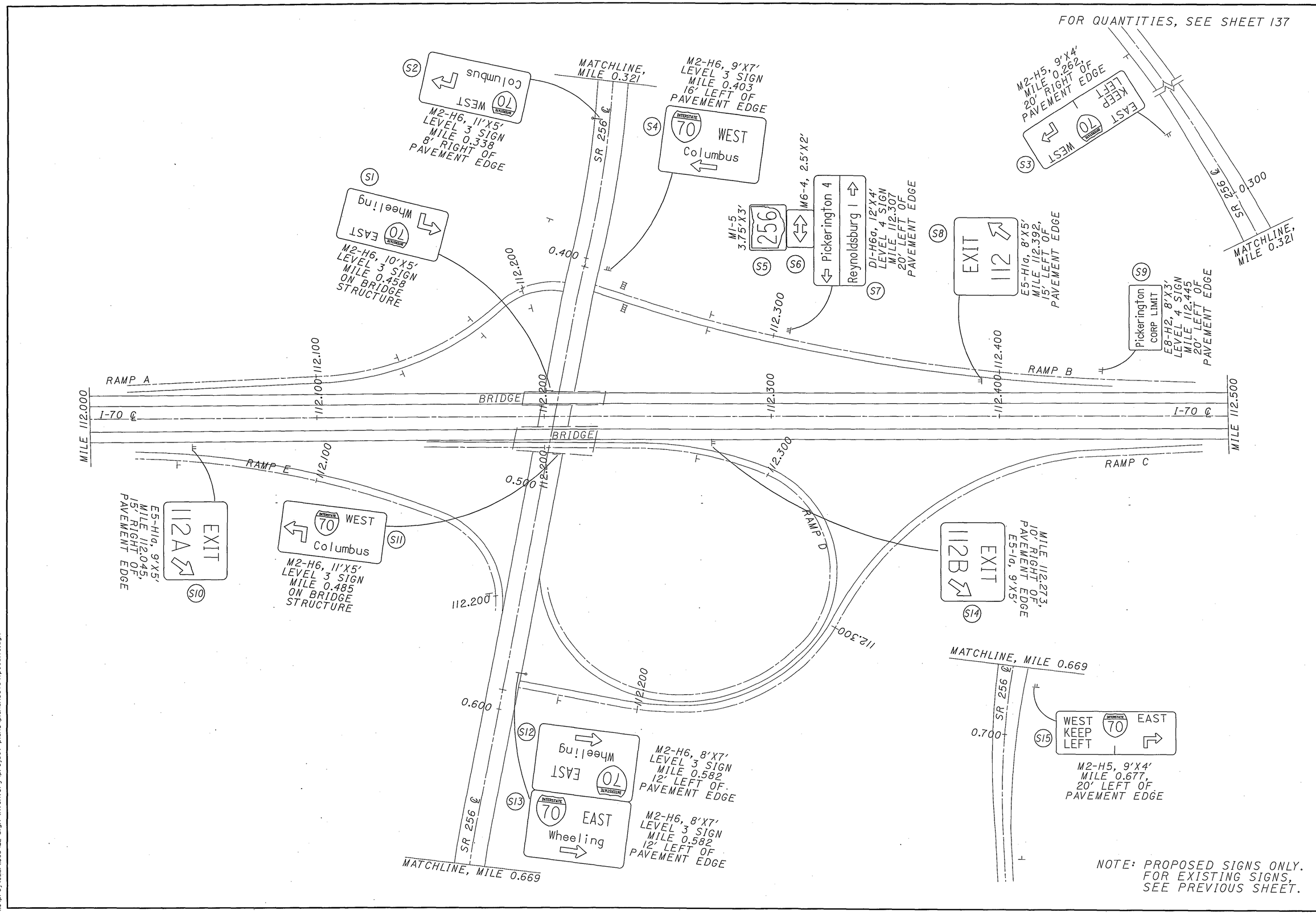

08/13/2004
03:54:08 PM
m:\proj\022N\505\22 sign inventory\project plans\plansheets\tp003170.dgn

HORIZONTAL SCALE IN FEET 0 50 100 200

CALCULATED DCB CHECKED WEB

FAIRFIELD COUNTY
MILE 112.000 TO MILE 113.000

D05-SIGN-FY2005

08/13/2004 03:54:08 PM mt:\proj\022t\505\22 sign inventory\project plans\plansheets\tp0041T0.dgn

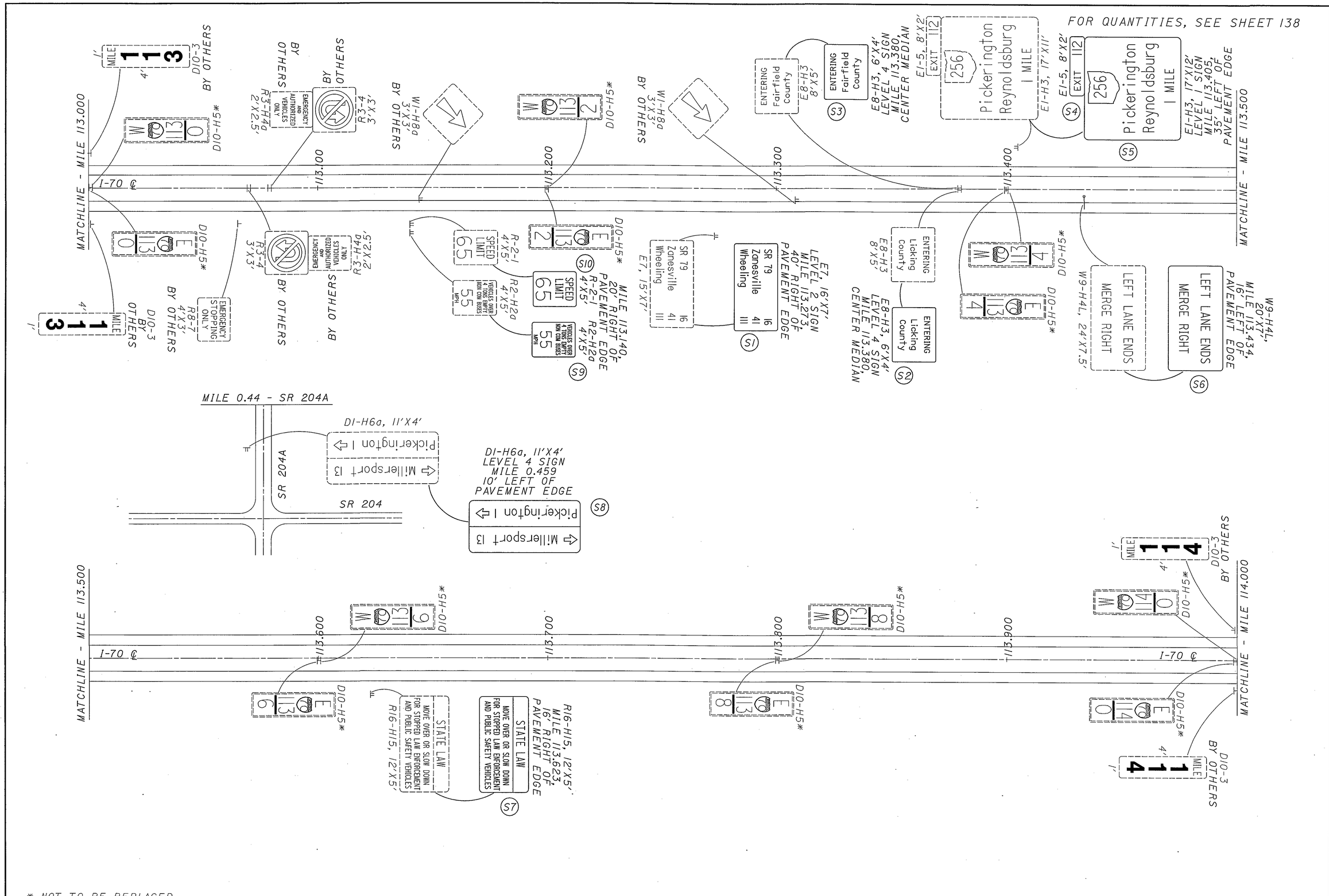

HORIZONTAL SCALE IN FEET 0 50 100 200

CALCULATED DCB
CHECKED WEB

FAIRFIELD & LICKING COUNTY
MILE 113.000 TO MILE 114.000

D05-SIGN-FY2005

08/13/2004
03:54:08 PM
m:\proj\022\\505\22 sign inventory\project plans\plansheets\tp005170.dgn

08/13/2004
03:54:09 PM
m:\proj\022N\505\22 sign inventory\project plans\plansheets\tp006170.dgn

* NOT TO BE REPLACED

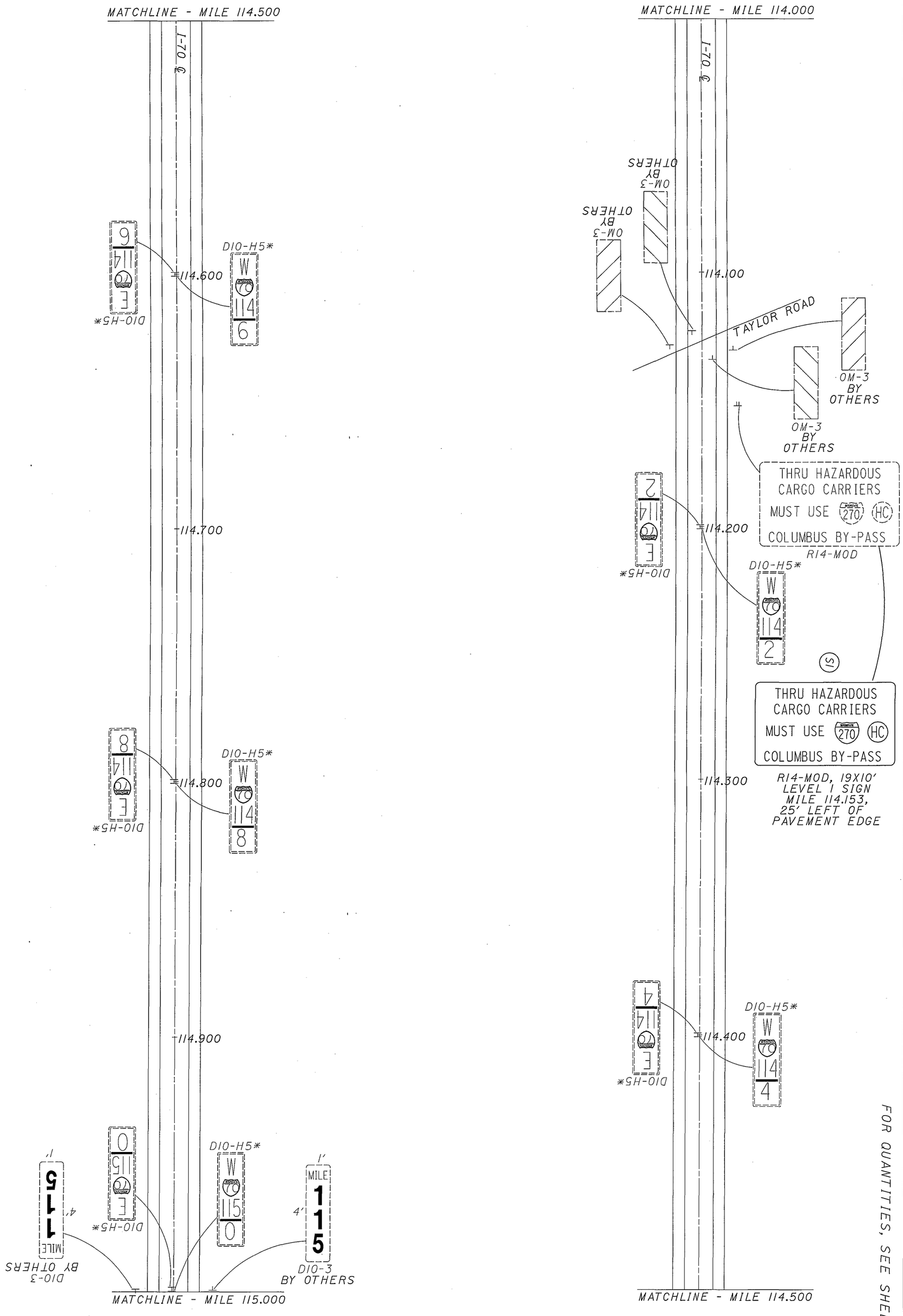

FOR QUANTITIES, SEE SHEET 138

166	D05-SIGN-FY2005	LICKING COUNTY MILE 114.000 TO MILE 115.000	CALCULATED DCB CHECKED WEB 0 50 100 200 HORIZONTAL SCALE IN FEET

08/13/2004
03:54:09 PM
m:\proj\022N\505\22 sign inventory\project plans\plansheets\tp007170.dgn

* NOT TO BE REPLACED

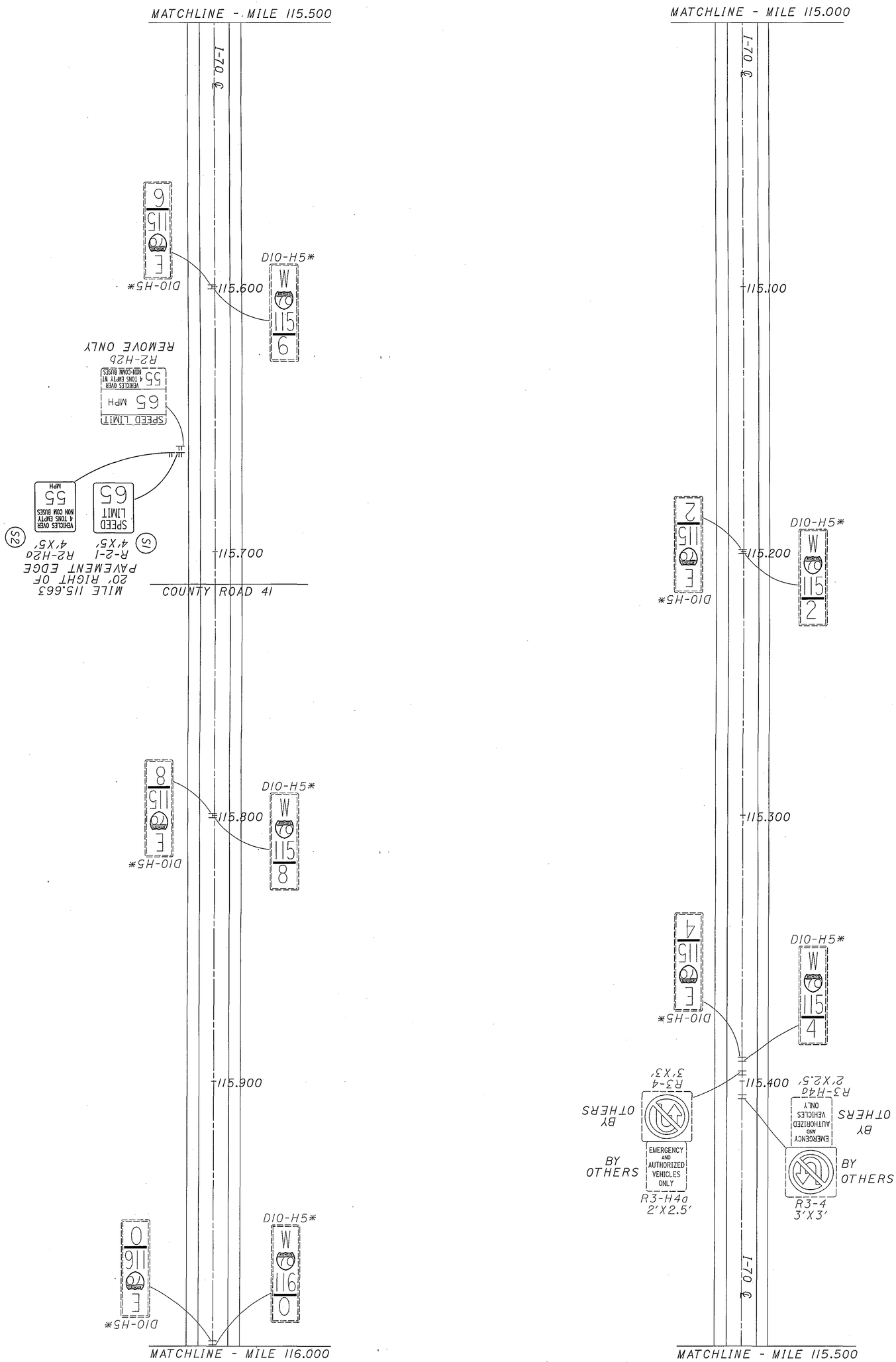

FOR QUANTITIES, SEE SHEET 138

12 / 166	D05-SIGN-FY2005	LICKING COUNTY MILE 115.000 TO MILE 116.000	CALCULATED DCB CHECKED WEB 0 50 100 200 HORIZONTAL SCALE IN FEET N

08/13/2004
03:54:09 PM
m:\proj\022IN505\22 sign inventory\project plans\plansheets\tp008170.dgn

* NOT TO BE REPLACED

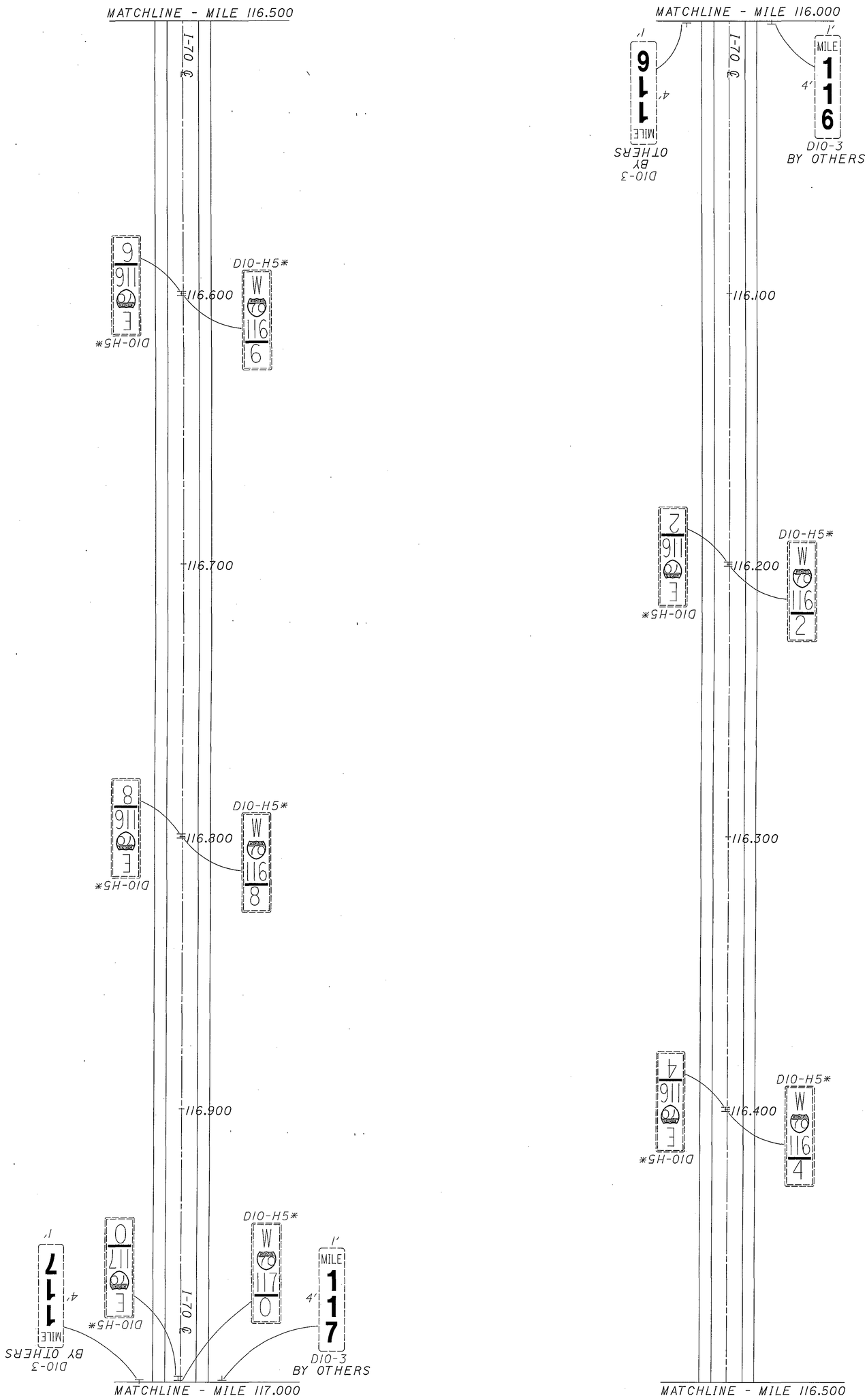

13 / 166	D05-SIGN-FY2005	LICKING COUNTY MILE 116.000 TO MILE 117.000	CALCULATED DCB CHECKED WEB 0 50 100 200 HORIZONTAL SCALE IN FEET

08/13/2004
03:54:10 PM
m:\proj\022N\505\22 sign inventory\project plans\plansheets\tp009170.dgn

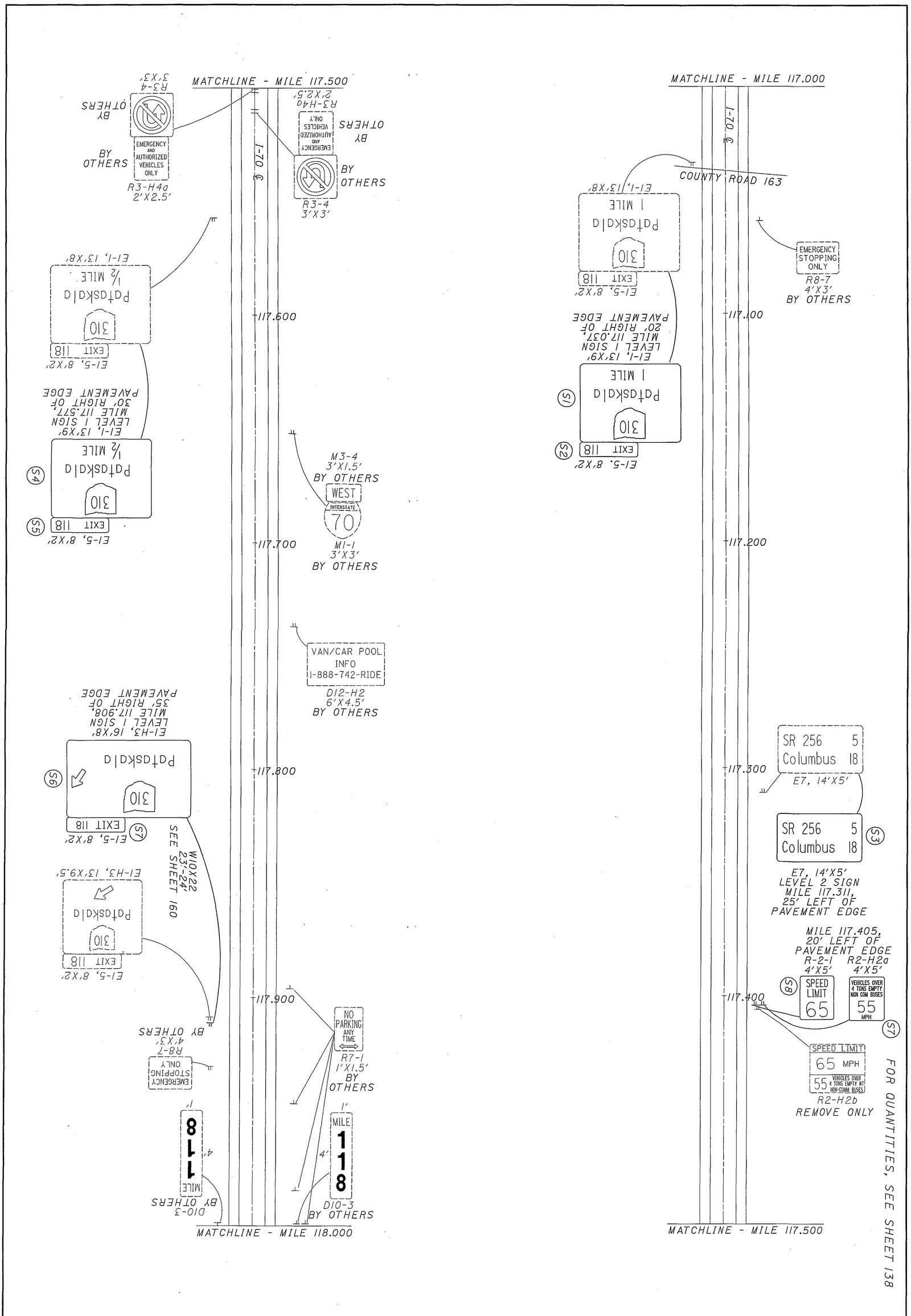

14 / 166	D05-SIGN-FY2005	LICKING COUNTY MILE 117.000 TO MILE 118.000	CALCULATED DCB CHECKED WEB	0 50 100 200 HORIZONTAL SCALE IN FEET

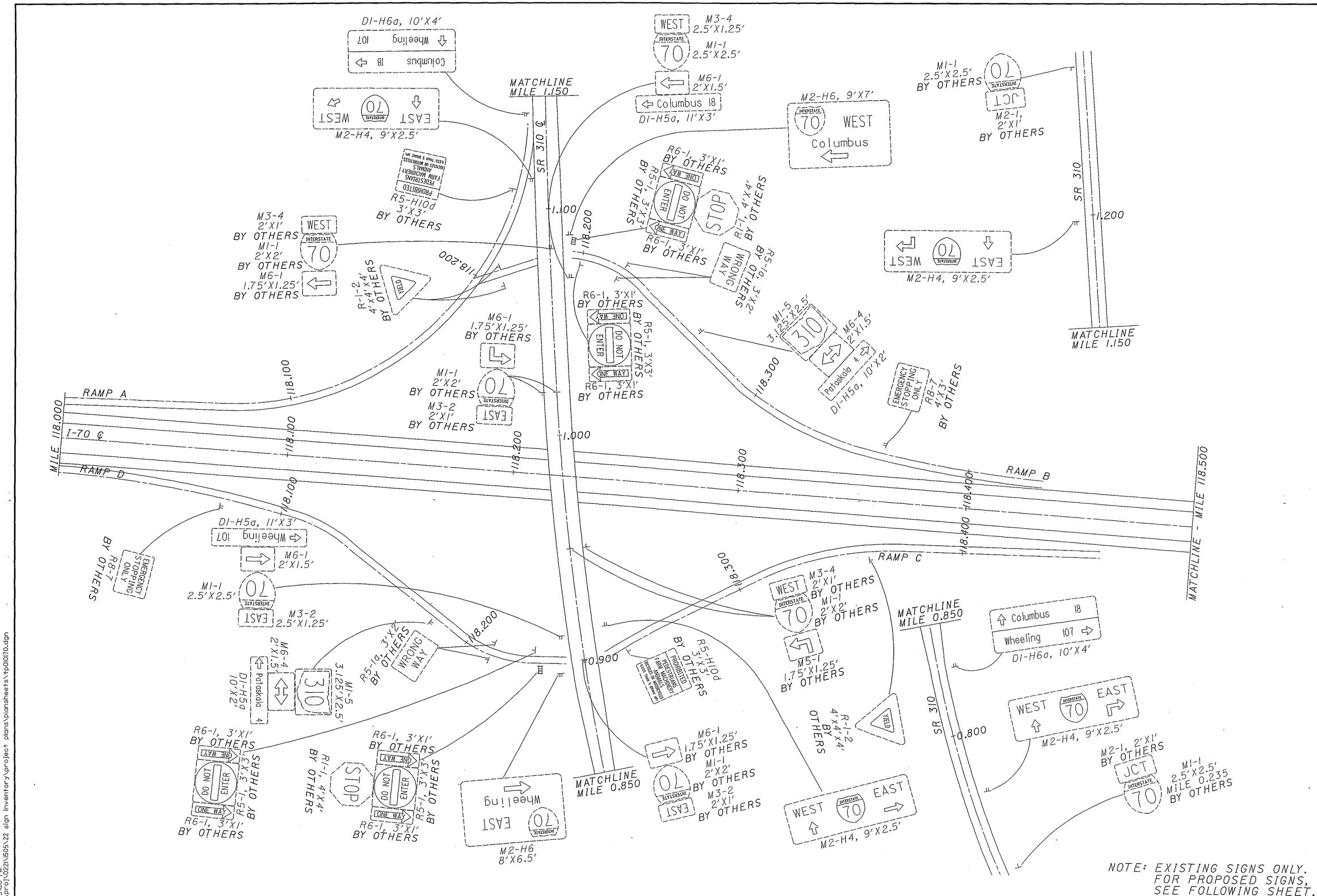

NOTE: EXISTING SIGNS ONLY. FOR PROPOSED SIGNS, SEE FOLLOWING SHEET.

08/13/2004
03:54:10 PM
m:\proj\022\1505\22 sign inventory\project plans\plansheets\rp0l0170.dgn

CALCULATED DCB
CHECKED WEB

0 50 100 200
HORIZONTAL SCALE IN FEET

LICKING COUNTY
SR 310 INTERCHANGE

D05-SIGN-FY2005

FOR QUANTITIES, SEE SHEET 139

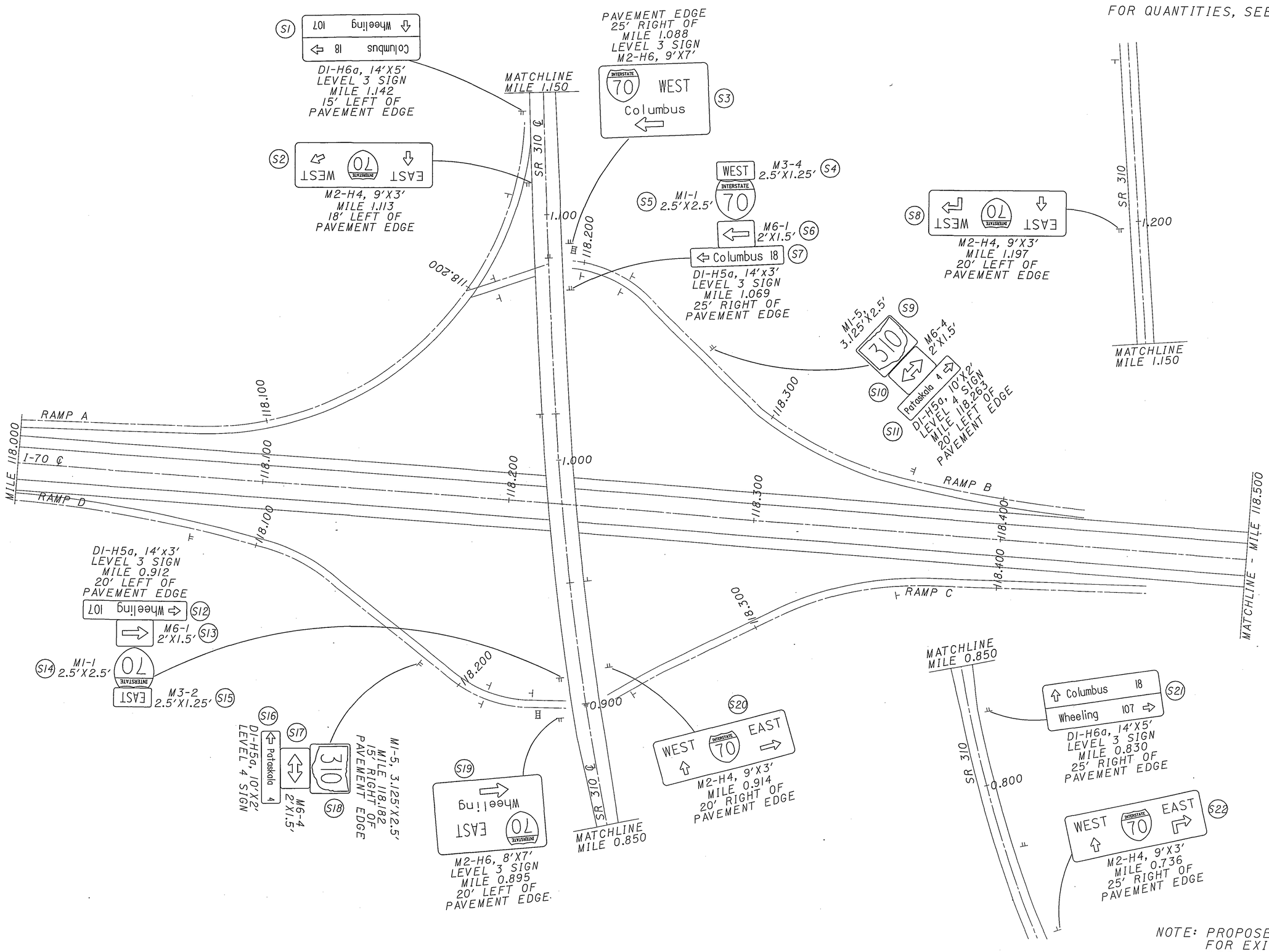

NOTE: PROPOSED SIGNS ONLY.
FOR EXISTING SIGNS,
SEE PREVIOUS SHEET.

HORIZONTAL SCALE IN FEET
0 50 100 200

CALCULATED DCB
CHECKED WEB

LICKING COUNTY
SR 310 INTERCHANGE

D05-SIGN-FY2005

08/13/2004
03:54:10 PM
m:\proj\022\1505\22 sign inventory\project plans\plansheets\tp0117O.dgn

08/13/2004
03:54:11PM
m:\proj\022\1505\22 sign inventory\project plans\plansheets\tp012170.dgn

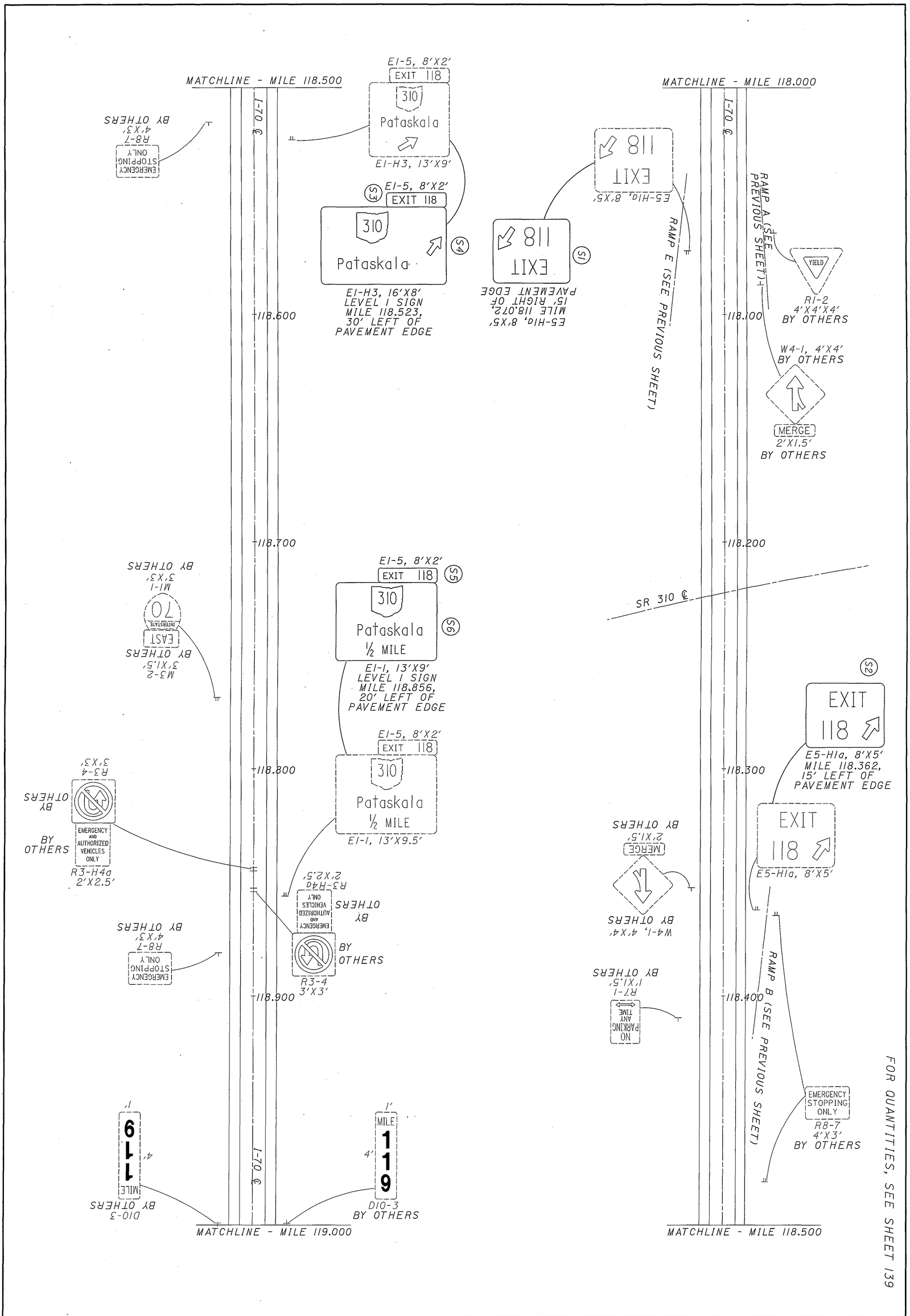

FOR QUANTITIES, SEE SHEET 139

169 / 11	D05-SIGN-FY2005	LICKING COUNTY MILE 118.000 TO MILE 119.000	CALCULATED DCB CHECKED WEB 0 50 100 200 HORIZONTAL SCALE IN FEET

N

0 50 100 200
HORIZONTAL SCALE IN FEET

CALCULATED DCB
CHECKED WEB

LICKING COUNTY
MILE 119.000 TO MILE 120.000

D05-SIGN-FY2005

08/13/2004
03:54:41PM
m:\proj\02\1\505\22 sign inventory\project plans\plansheets\tp013170.dgn

08/13/2004
03:54:41 PM
m:\proj\022N\505\22 sign inventory\project plans\plansheets\tp014170.dgn

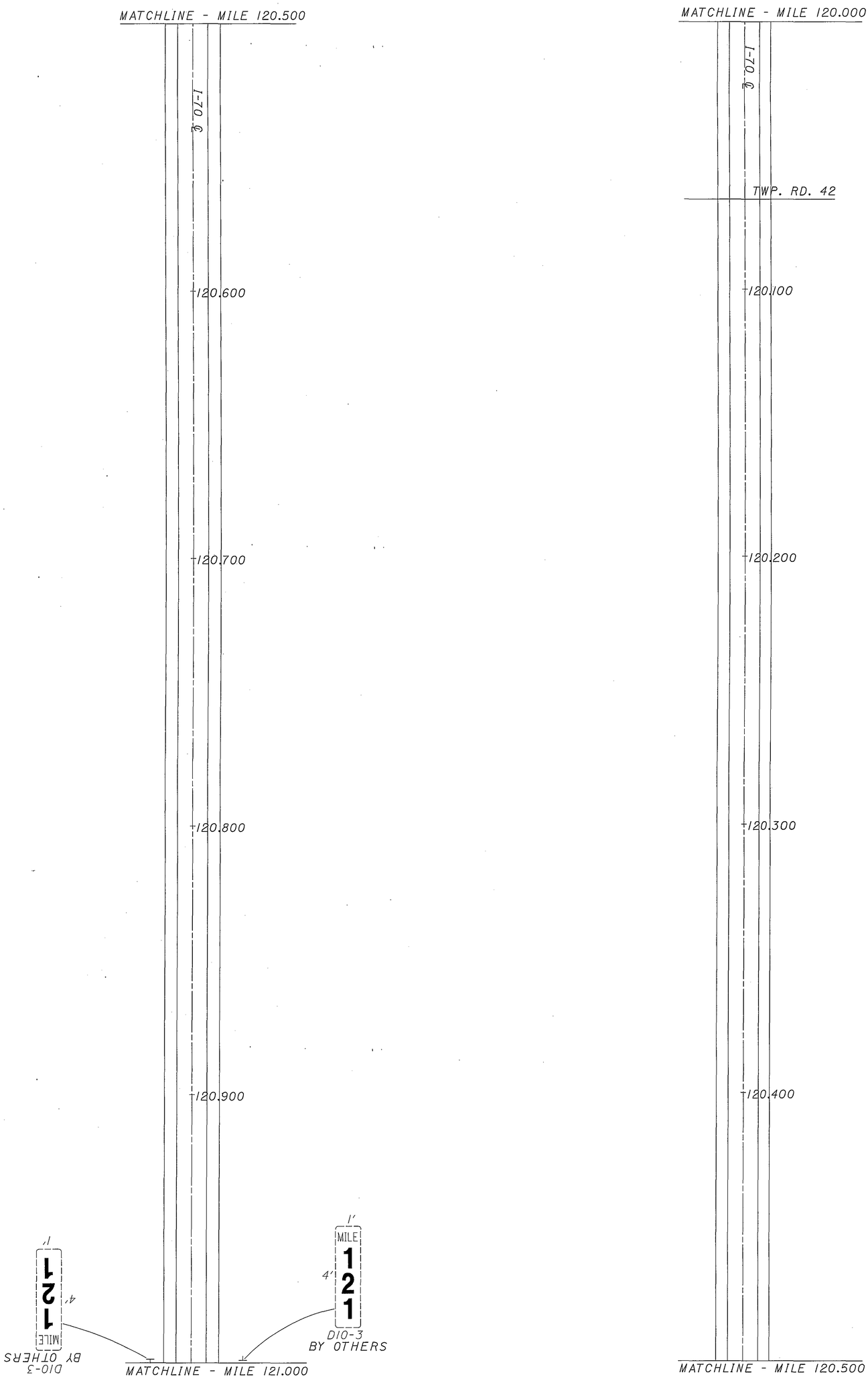

166 / 19	D05-SIGN-FY2005	LICKING COUNTY MILE 120.000 TO MILE 121.000	CALCULATED DCB CHECKED WEB 0 50 100 200 HORIZONTAL SCALE IN FEET N

08/13/2004
03:54:11PM
m:\proj\022N\505\22 sign inventory\project plans\plansheets\tp015170.dgn

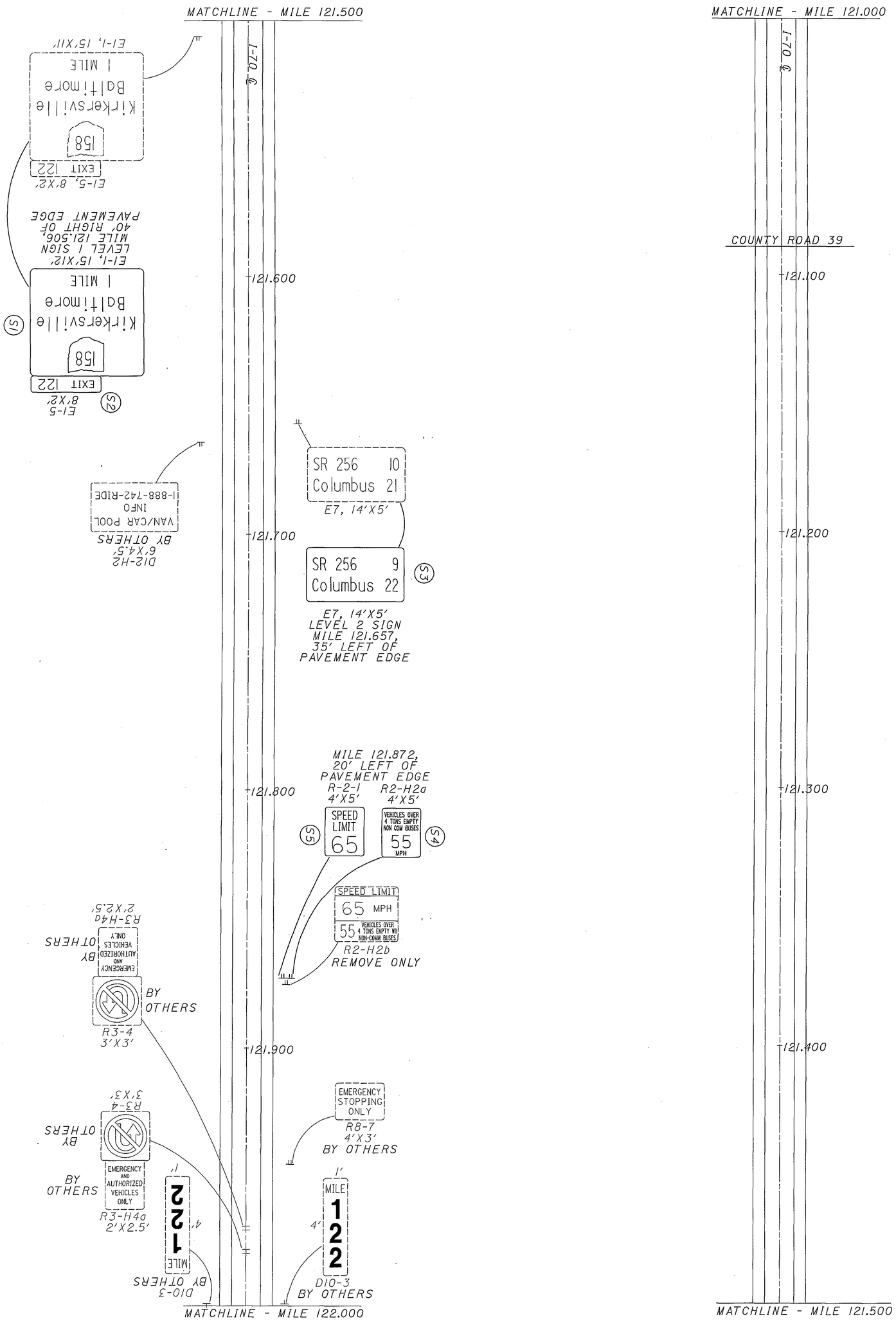

FOR QUANTITIES, SEE SHEET 139

D05-SIGN-FY2005

LICKING COUNTY
MILE 121.000 TO MILE 122.000

CALCULATED DCB
CHECKED WEB

0 50 100 200
HORIZONTAL SCALE IN FEET

N

HORIZONTAL SCALE IN FEET
0 50 100 200

CALCULATED DCB
CHECKED WEB

LICKING COUNTY
MILE 122.000 TO MILE 123.000

D05-SIGN-FY2005

08/13/2004
03:54:11PM
m:\proj\022h\505\22 sign inventory\project plans\plansheets\tp016170.dgn

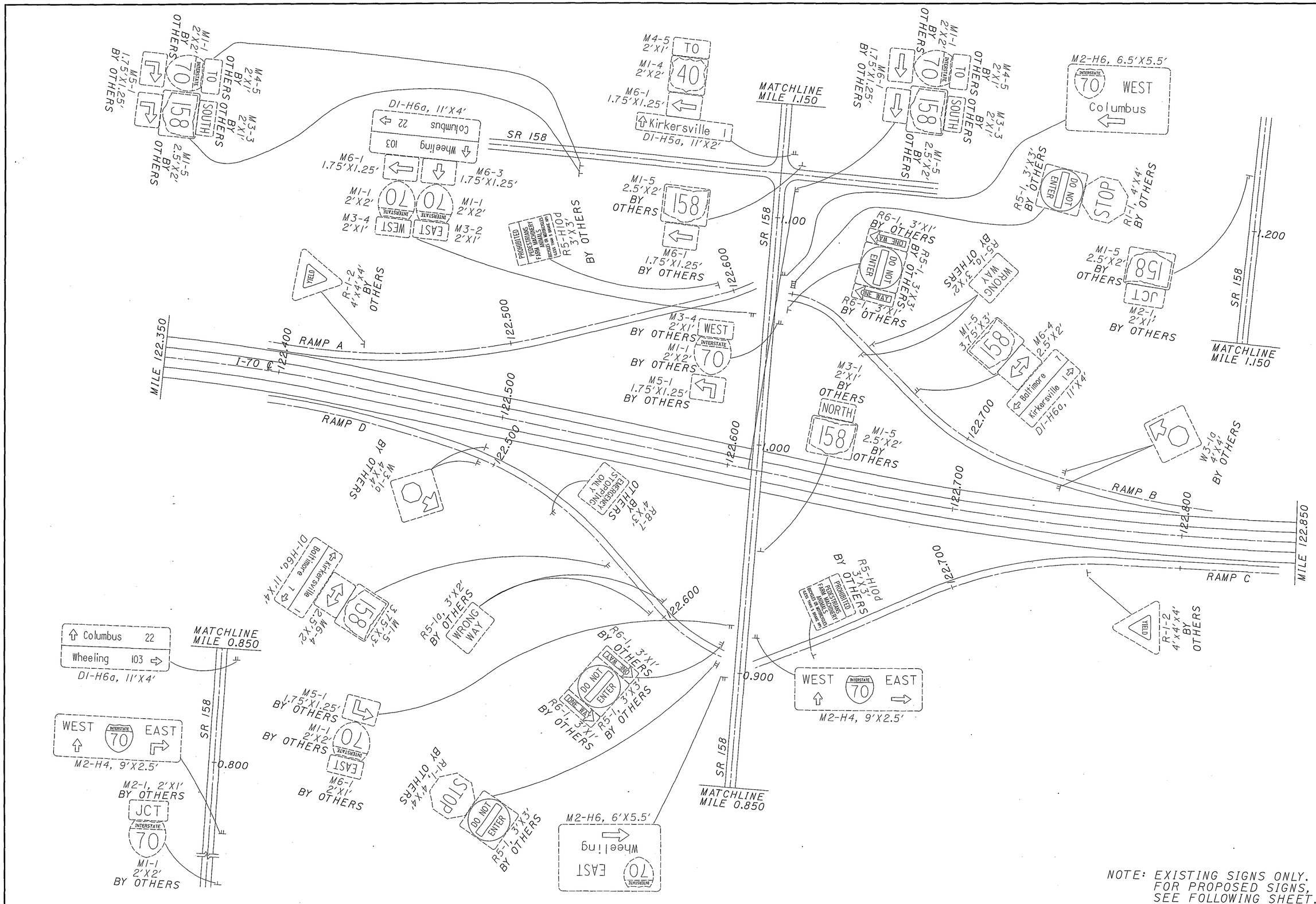

NOTE: EXISTING SIGNS ONLY. FOR PROPOSED SIGNS, SEE FOLLOWING SHEET.

CALCULATED DCB
CHECKED WEB

0 50 100 200
HORIZONTAL SCALE IN FEET

LICKING COUNTY
SR 158 INTERCHANGE

D05-SIGN-FY2005

08/13/2004
03:54:12 PM
m:\proj\022\\505\22 sign inventory\project plans\plansheets\tp01170.dgn

FOR QUANTITIES, SEE SHEET 140

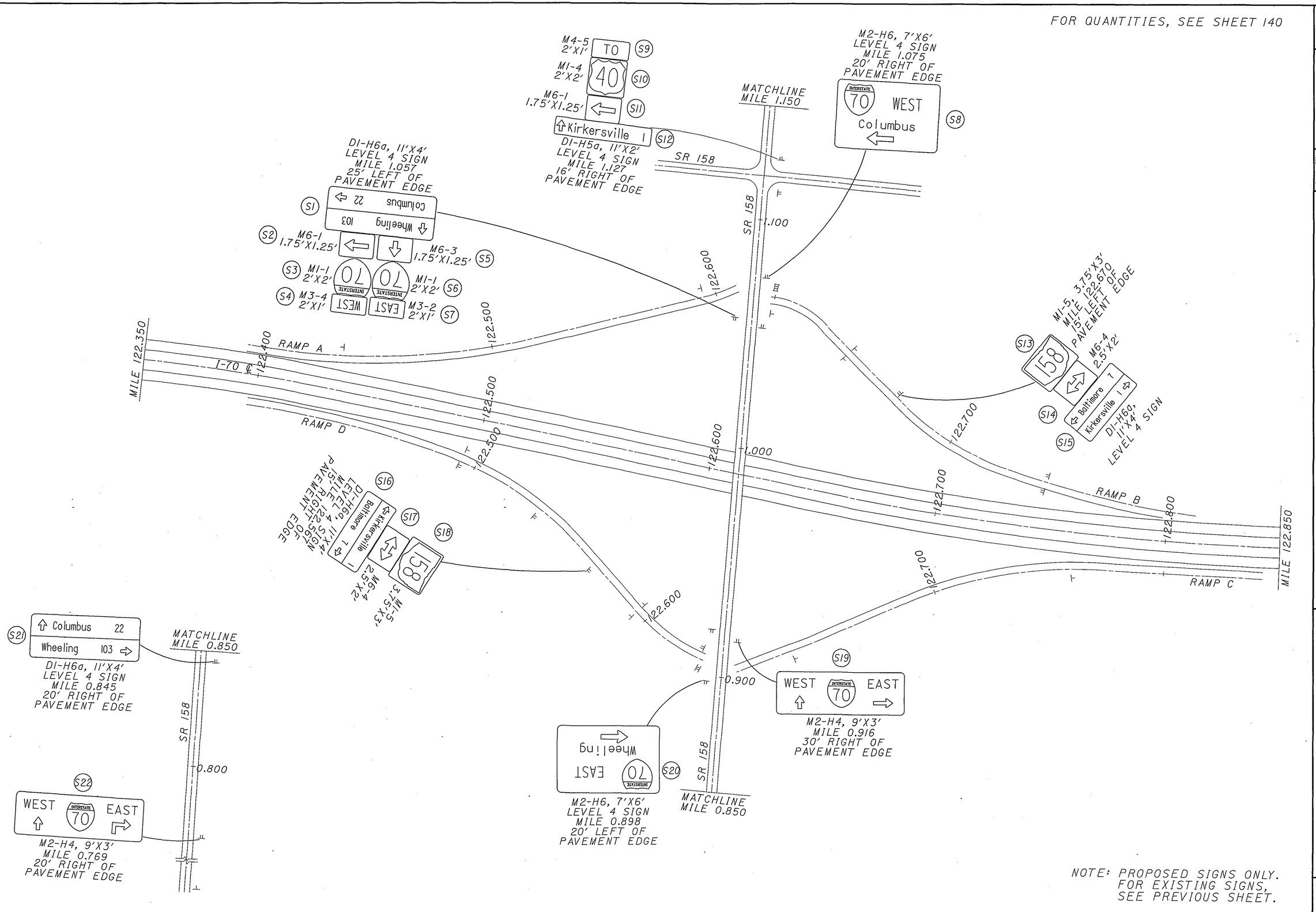

NOTE: PROPOSED SIGNS ONLY.
FOR EXISTING SIGNS,
SEE PREVIOUS SHEET.

N

0 50 100 200
HORIZONTAL
SCALE IN FEET

CALCULATED DCB
CHECKED WEB

LICKING COUNTY
SR 158 INTERCHANGE

D05-SIGN-FY2005

08/13/2004
03:54:12 PM
m:\proj\021\1505\22 sign inventory\project plans\plansheets\tp018170.dgn

08/13/2004
03:54:12 PM
m:\proj\022l\505\22 sign inventory\project plans\plansheets\tp019170.dgn

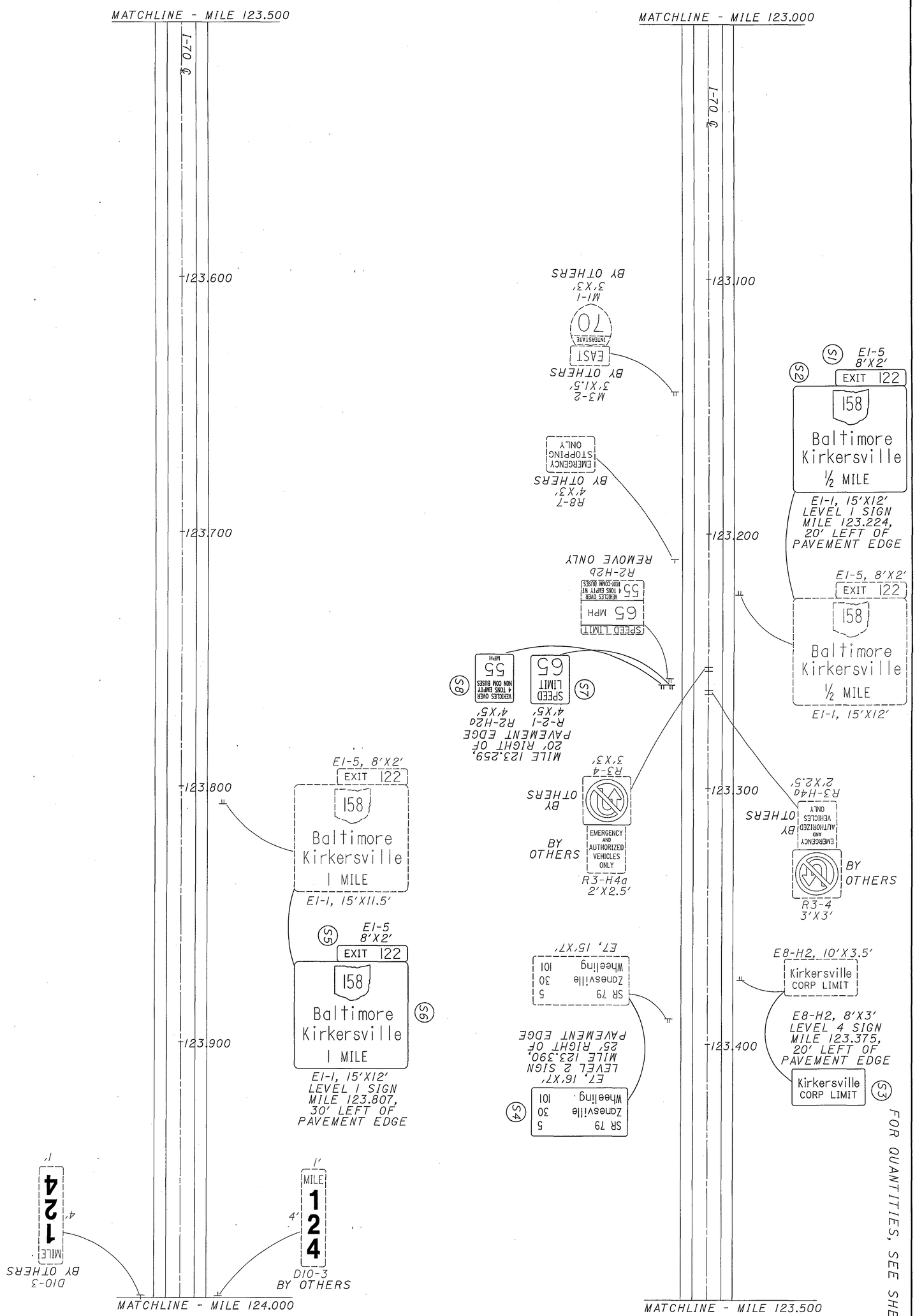

24 / 166	D05-SIGN-FY2005	LICKING COUNTY MILE 123.000 TO MILE 124.000	CALCULATED DCB CHECKED WEB 0 50 100 200 HORIZONTAL SCALE IN FEET

FOR QUANTITIES, SEE SHEET 140

HORIZONTAL SCALE IN FEET
0 50 100 200

CALCULATED DCB
CHECKED WEB

LICKING COUNTY
MILE 124.000 TO MILE 125.000

D05-SIGN-FY2005

08/13/2004
03:54:13 PM
m:\proj\022\1505\22 sign inventory\project plans\plansheets\tp020170.dgn

FOR QUANTITIES, SEE SHEET 140

CALCULATED TAH
CHECKED WEB

0 50 100 200
HORIZONTAL SCALE IN FEET

LICKING COUNTY
MILE 125.000 TO MILE 125.900

D05-SIGN-FY2005

08/13/2004
03:54:13 PM
m:\proj\022N\505\22 sign inventory\project plans\plansheets\tp021170.dgn

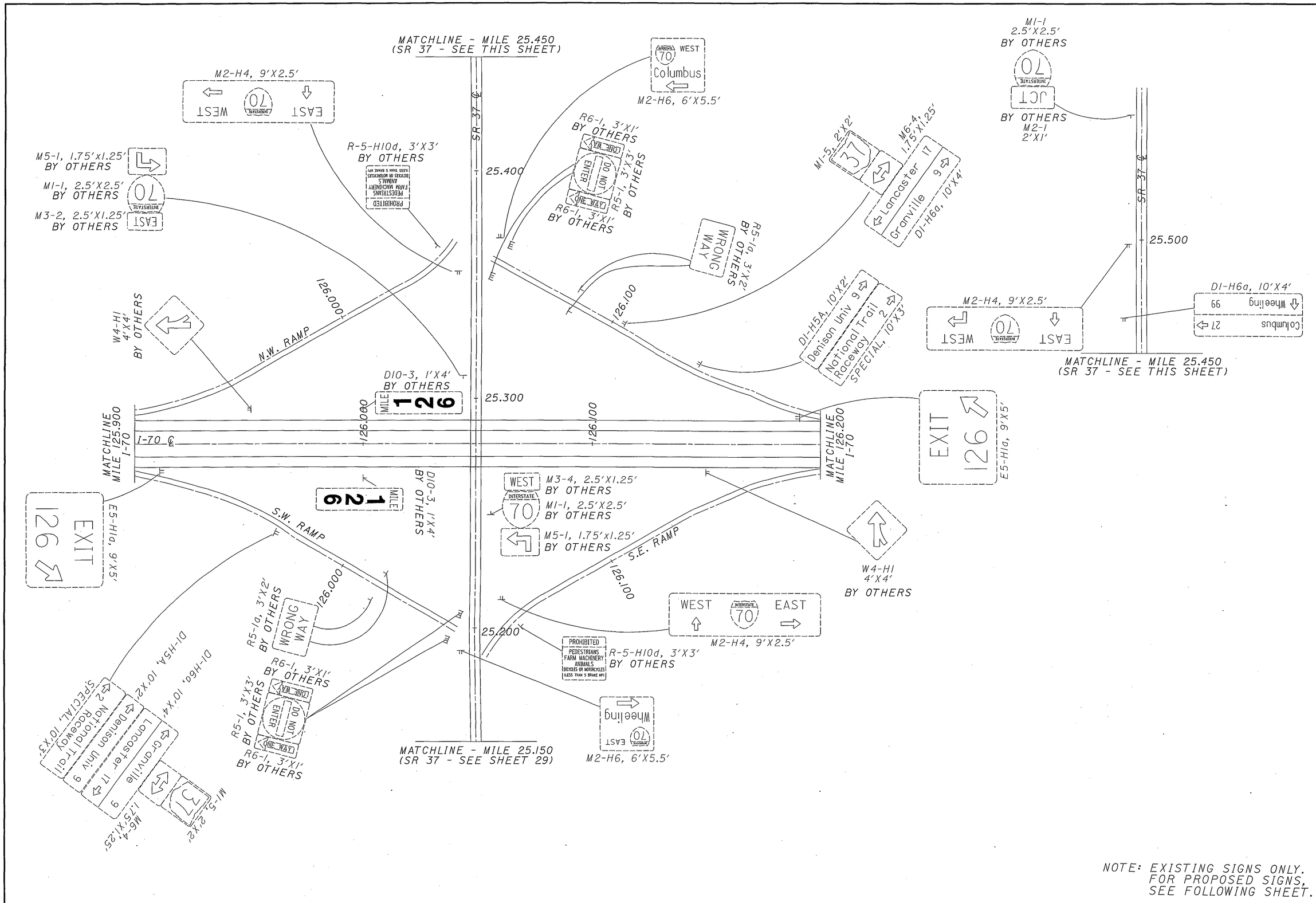

NOTE: EXISTING SIGNS ONLY.
FOR PROPOSED SIGNS,
SEE FOLLOWING SHEET.

N

HORIZONTAL SCALE IN FEET
0 50 100 200

CALCULATED TAH
CHECKED WEB

LICKING COUNTY
SR 37 INTERCHANGE

D05-SIGN-FY2005

08/13/2004
03:54:13 PM
m:\proj\022\1505\22 sign inventory\project plans\plansheets\tp022170.dgn

FOR QUANTITIES, SEE SHEET 141

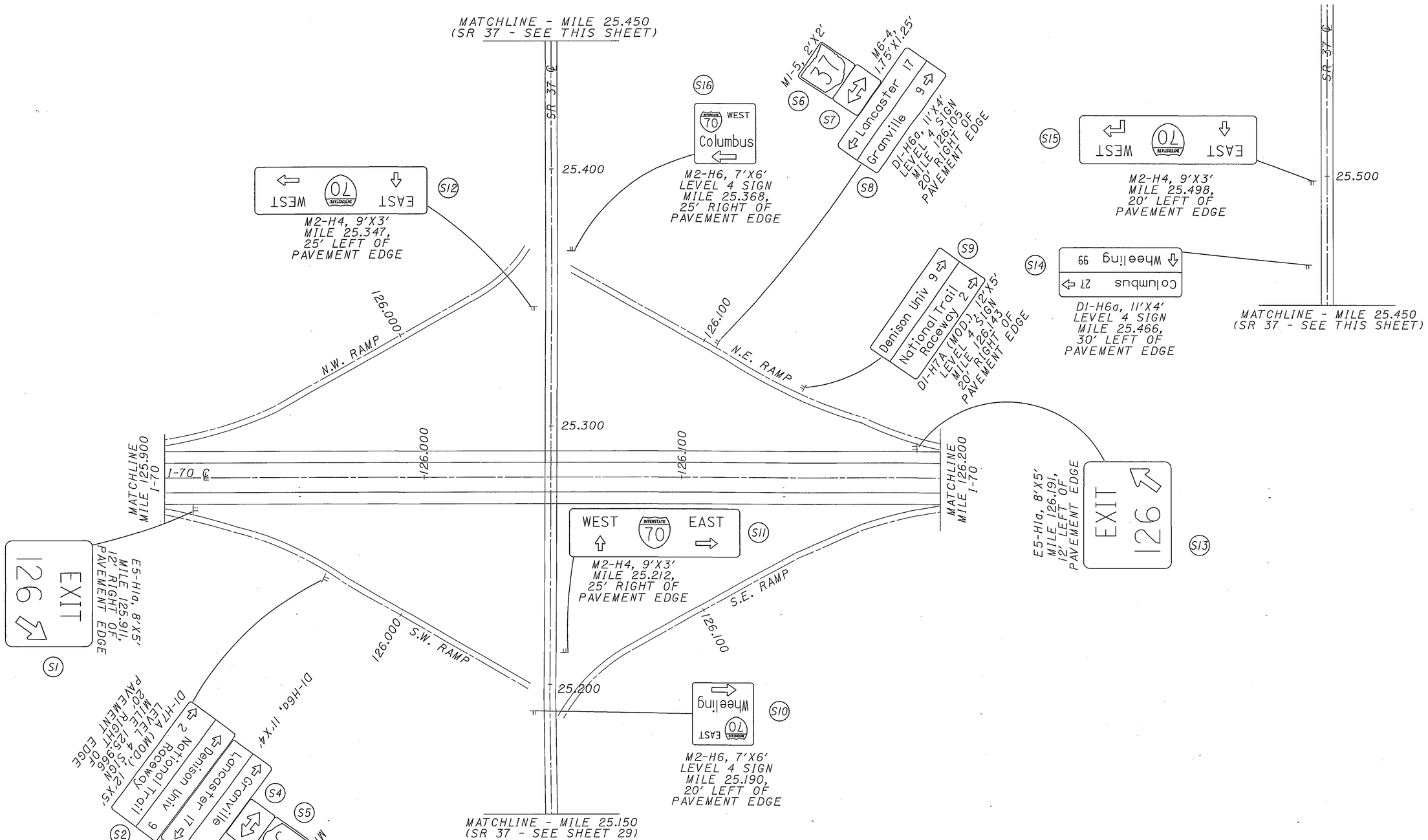

NOTE: PROPOSED SIGNS ONLY.
FOR EXISTING SIGNS,
SEE PREVIOUS SHEET.

HORIZONTAL SCALE IN FEET
0 50 100 200

CALCULATED TAH
CHECKED WEB

LICKING COUNTY
SR 37 INTERCHANGE

D05-SIGN-FY2005

08/13/2004
03:54:14 PM
m:\proj\022N\505\22 sign inventory\project plans\plansheets\tp023170.dgn

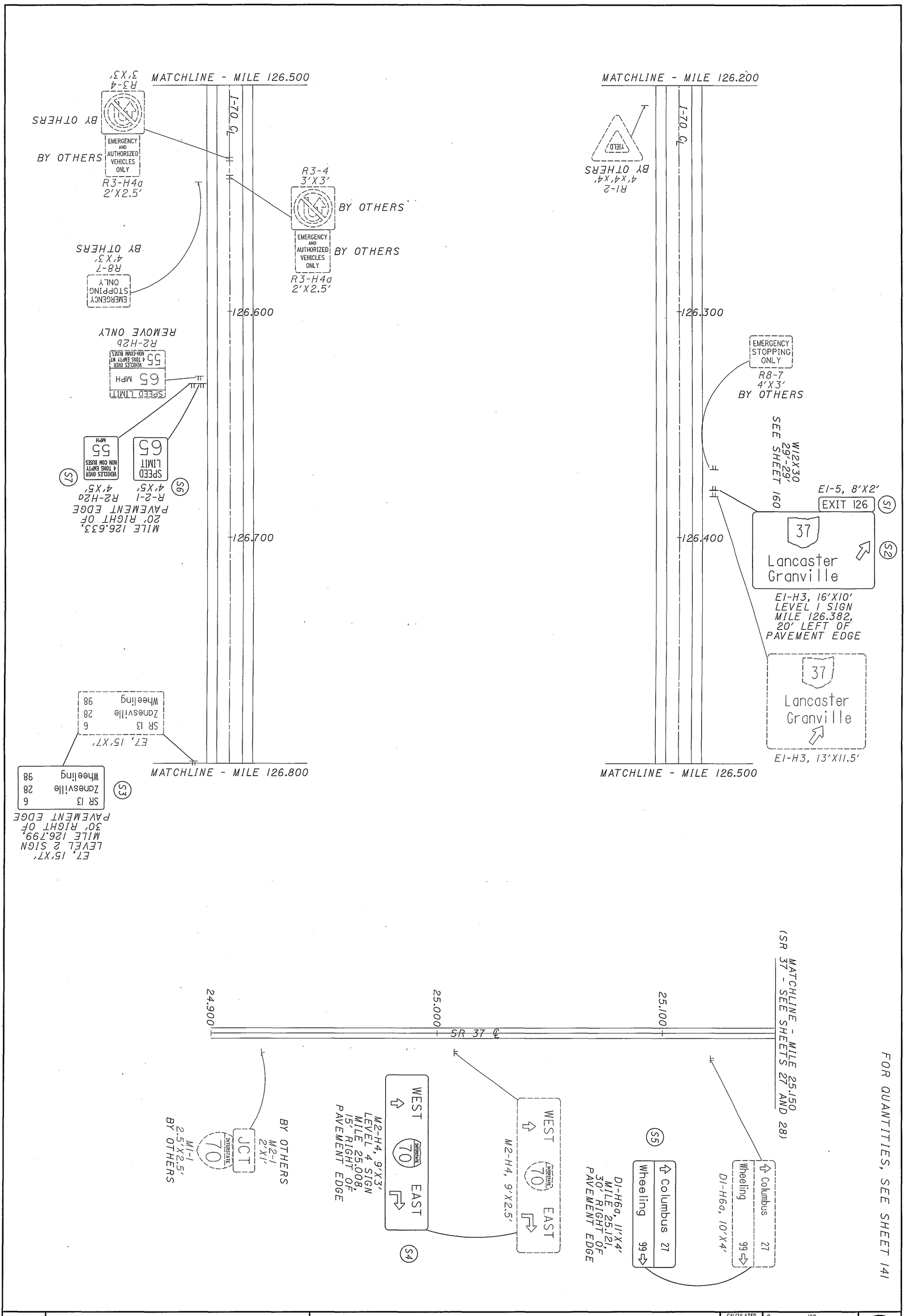

29 / 166	D05-SIGN-FY2005	LICKING COUNTY MILE 126.200 TO MILE 126.800	CALCULATED TAH CHECKED WEB 0 50 100 200 HORIZONTAL SCALE IN FEET

08/13/2004
03:54:14 PM
m:\proj\022171505\22 sign inventory\project plans\plansheets\tp025170.dgn

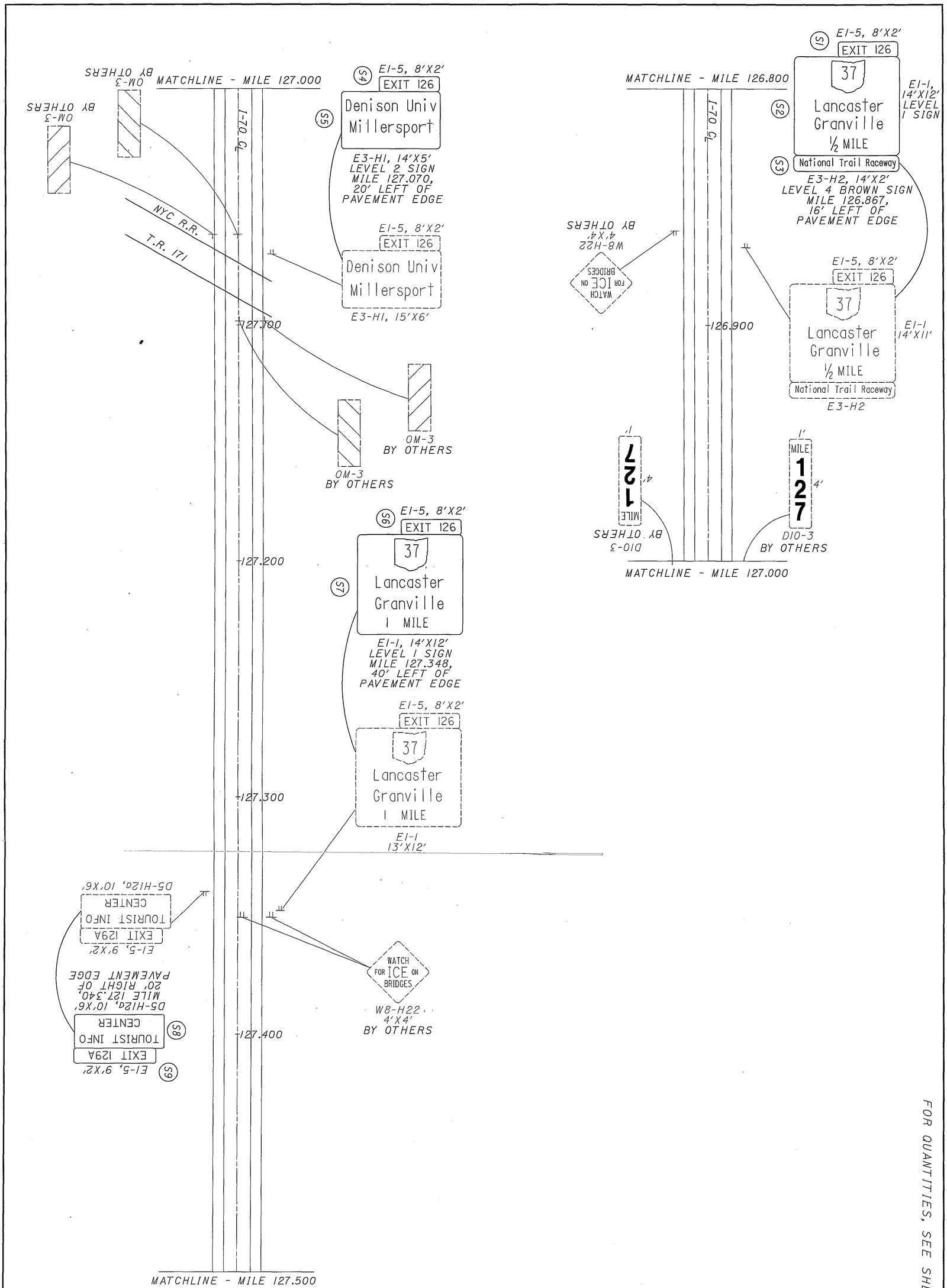

FOR QUANTITIES, SEE SHEET 141

D05-SIGN-FY2005

LICKING COUNTY
MILE 126.800 TO MILE 127.500

CALCULATED TAH
CHECKED WEB

0 50 100 200
HORIZONTAL SCALE IN FEET

N

FOR QUANTITIES, SEE SHEET 141

HORIZONTAL SCALE IN FEET
0 50 100 200

CALCULATED TAH
CHECKED WEB

LICKING COUNTY
MILE 127.500 TO MILE 128.500

D05-SIGN-FY2005

08/13/2004
03:54:14 PM
m:\proj\022N\505\22 sign inventory\project plans\plansheets\tp026170.dgn

FOR QUANTITIES, SEE SHEET 141

HORIZONTAL SCALE IN FEET
0 50 100 200

CALCULATED TAH
CHECKED WEB

LICKING COUNTY
MILE 128.500 TO MILE 128.800

D05-SIGN-FY2005

08/13/2004
03:54:15 PM
m:\proj\022\N\5505\22 sign inventory\project plans\plansheets\tb027170.dgn

NOTE: EXISTING SIGNS ONLY.
FOR PROPOSED SIGNS,
SEE FOLLOWING SHEET.

CALCULATED TAH
CHECKED WEB

HORIZONTAL SCALE IN FEET
0 50 100 200

LICKING COUNTY
SR 79 INTERCHANGE

D05-SIGN-FY2005

08/13/2004
03:54:45 PM
m:\proj\022\1505\22 sign inventory\project plans\plansheets\tp028170.dgn

FOR QUANTITIES, SEE SHEET 142

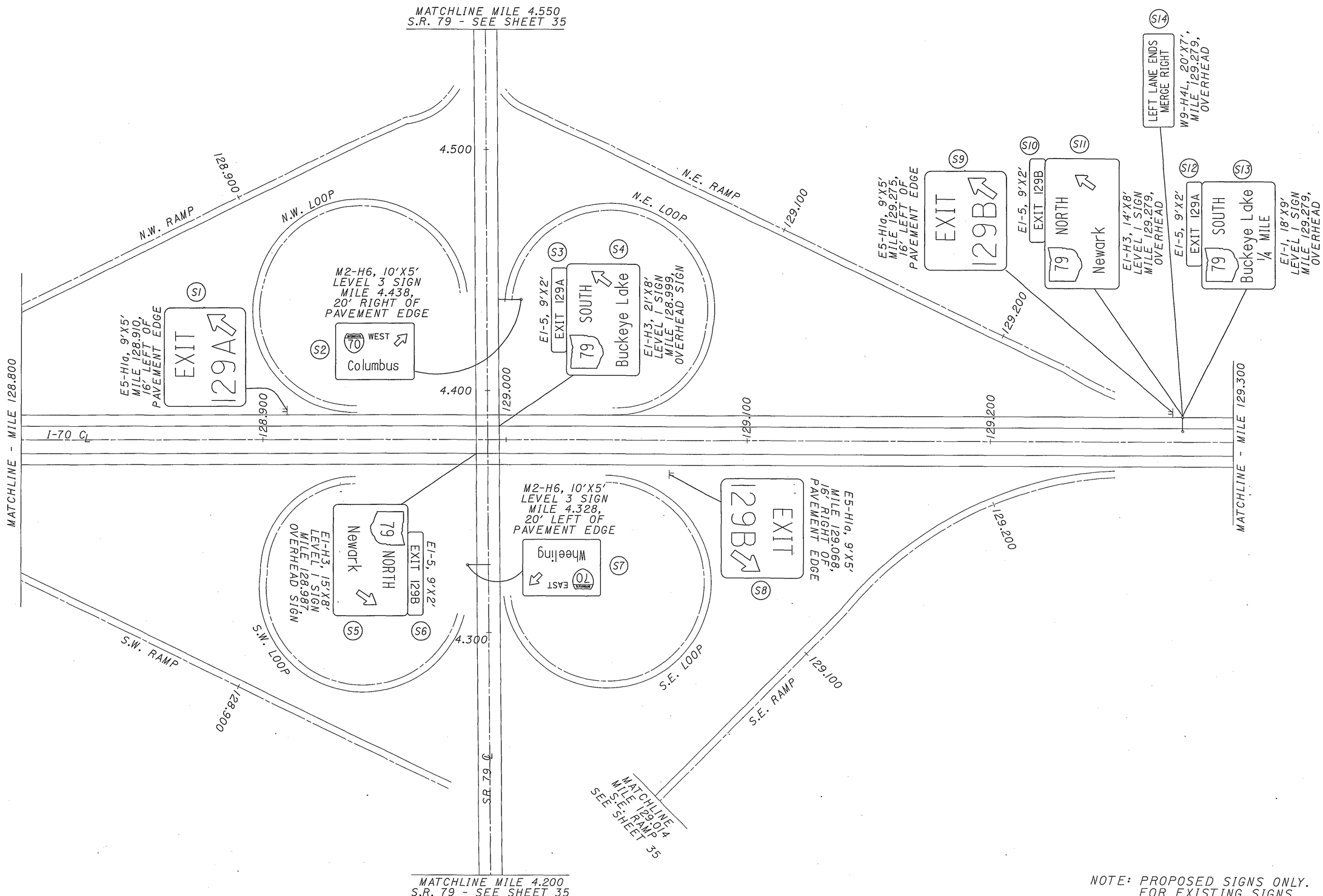

NOTE: PROPOSED SIGNS ONLY.
FOR EXISTING SIGNS,
SEE PREVIOUS SHEET.

0 50 100 200
HORIZONTAL
SCALE IN FEET

CALCULATED TAH
CHECKED WEB

LICKING COUNTY
SR 79 INTERCHANGE

D05-SIGN-FY2005

08/13/2004
03:54:15 PM
m:\proj\022N\1505\22 sign inventory\project plans\plansheets\tp029170.dgn

FOR QUANTITIES, SEE SHEET 142

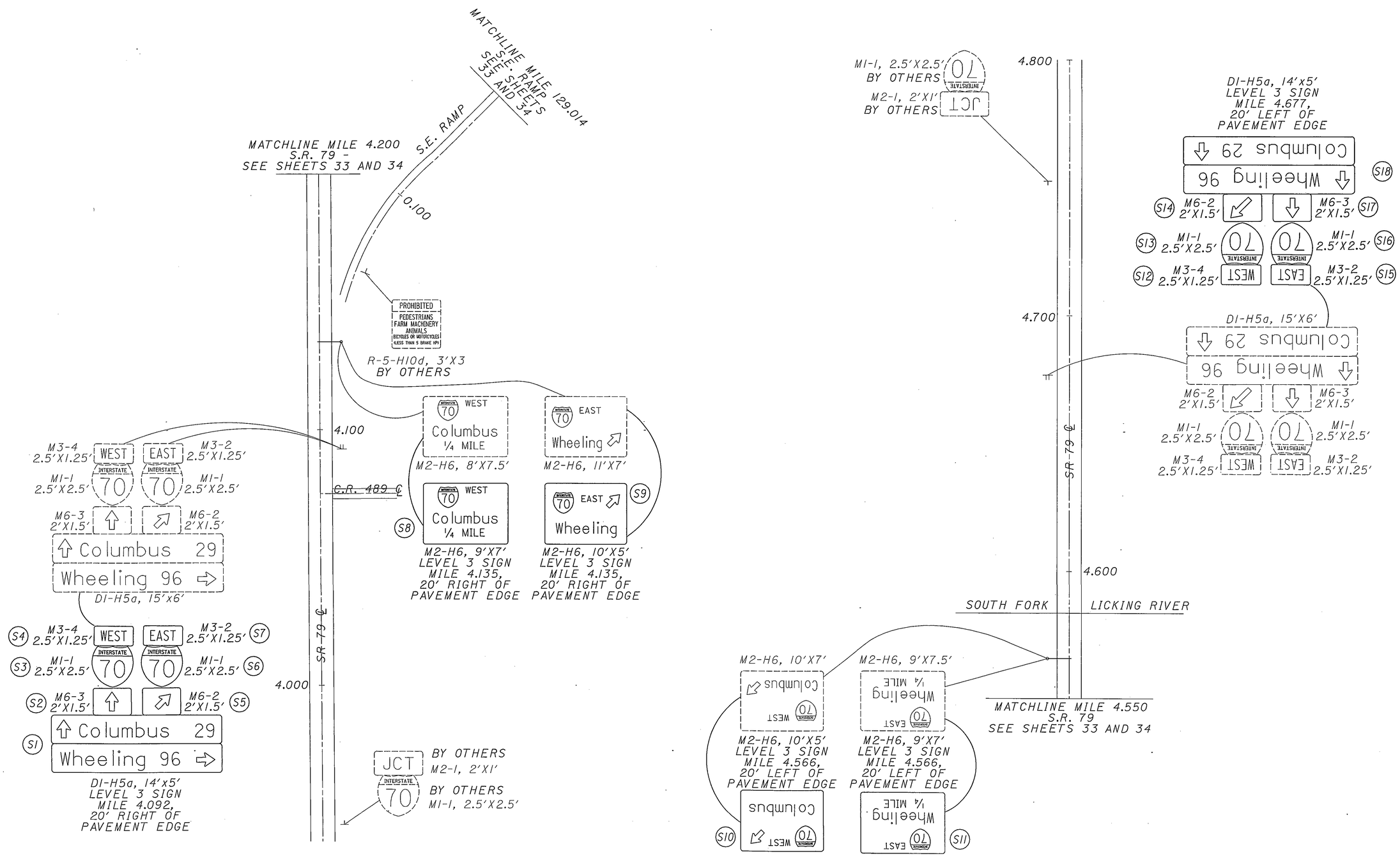

HORIZONTAL SCALE IN FEET
0 50 100 200

CALCULATED TAH
CHECKED WEB

LICKING COUNTY
SR 79 INTERCHANGE

D05-SIGN-FY2005

08/13/2004
03:54:46 PM
m:\proj\022\1505\22 sign inventory\project plans\plansheets\tp030170.dgn

08/13/2004
03:54:16 PM
m:\proj\022N\505\22 sign inventory\project plans\plansheets\tp03ll70.dgn

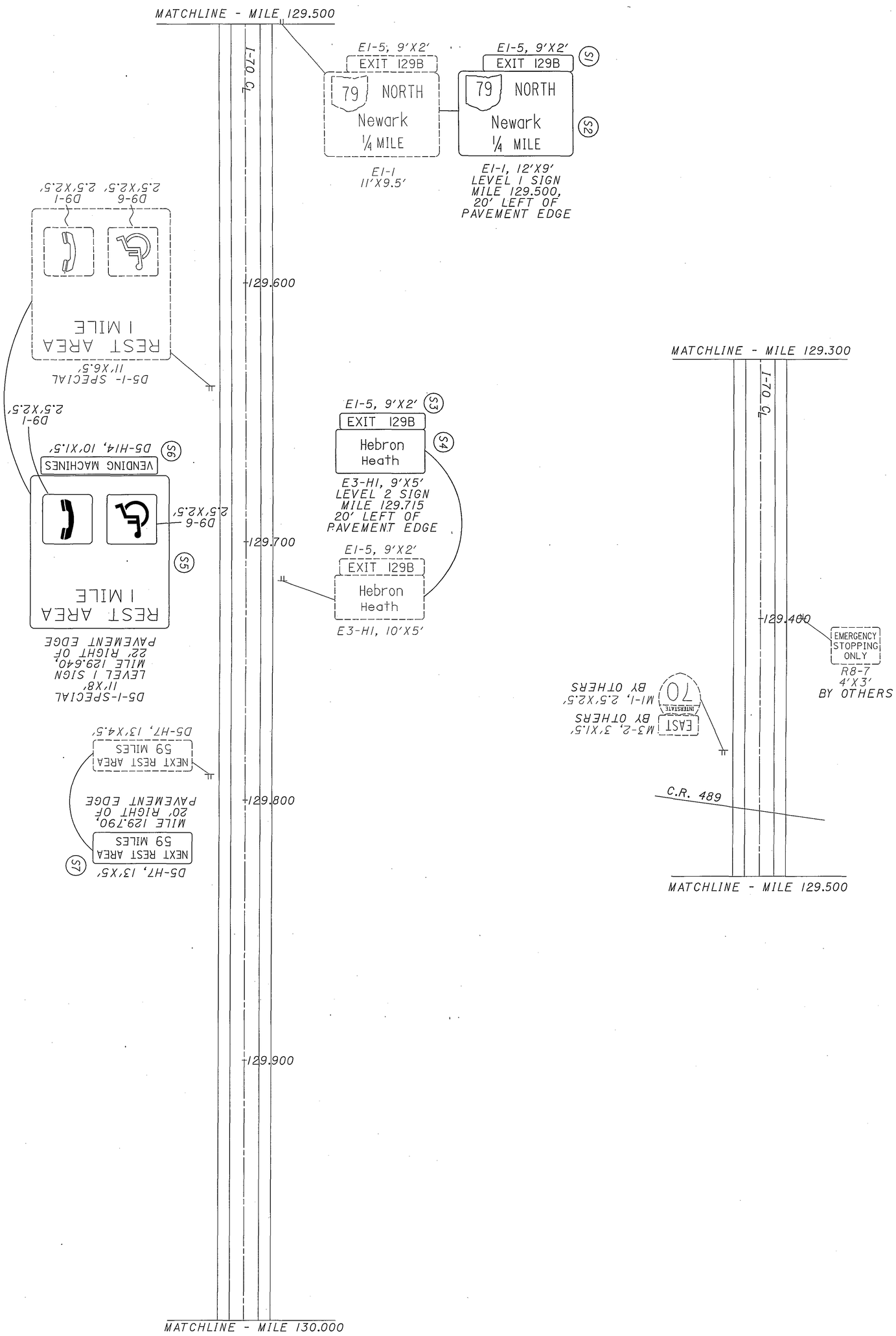

FOR QUANTITIES, SEE SHEET 142

D05-SIGN-FY2005

LICKING COUNTY
MILE 129.300 TO MILE 130.000

CALCULATED TAH
CHECKED WEB

0 50 100 200
HORIZONTAL SCALE IN FEET

N

08/13/2004
03:54:16 PM
m:\proj\022N\505\22 sign inventory\project plans\plansheets\tp032170.dgn

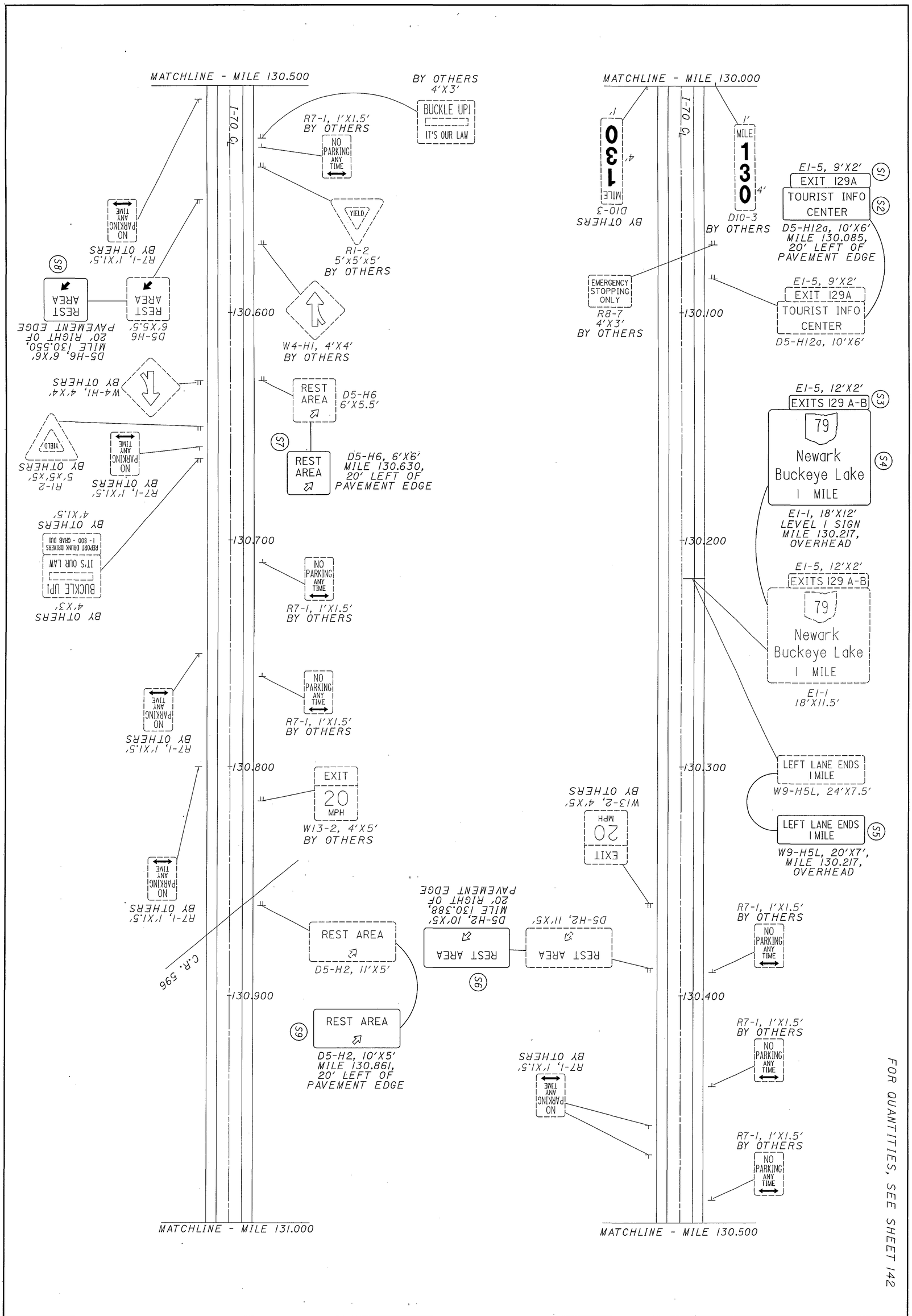

FOR QUANTITIES, SEE SHEET 142

37
166

D05-SIGN-FY2005

LICKING COUNTY
MILE 130.000 TO MILE 131.000

CALCULATED TAH
CHECKED WEB

0 50 100 200
HORIZONTAL SCALE IN FEET

08/13/2004
03:54:17 PM
m:\proj\022\\505\22 sign inventory\project plans\plansheets\tp033170.dgn

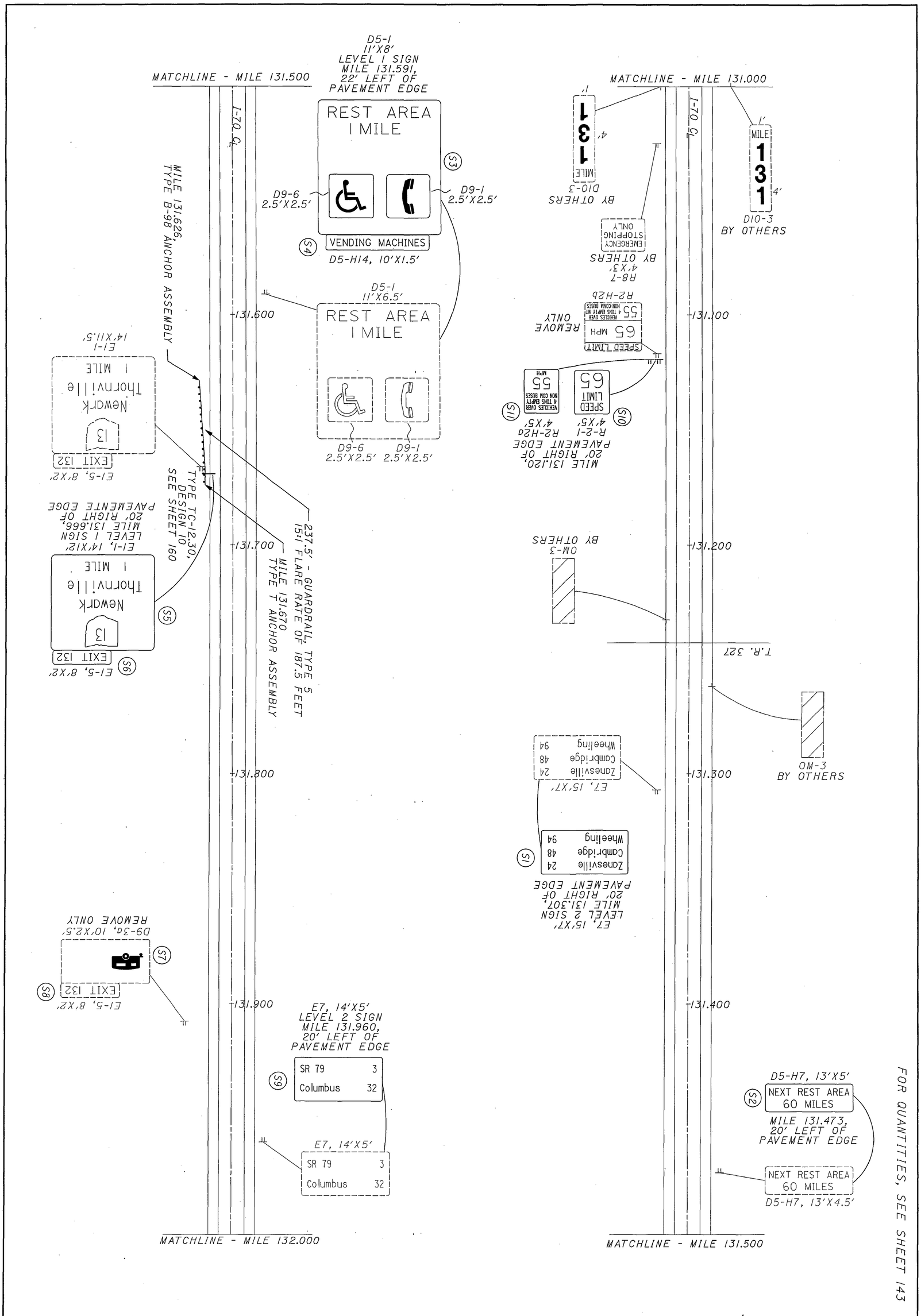

38
166

D05-SIGN-FY2005

LICKING COUNTY
MILE 131.000 TO MILE 132.000

CALCULATED TAH
CHECKED WEB

0 50 100 200
HORIZONTAL SCALE IN FEET

FOR QUANTITIES, SEE SHEET 143

HORIZONTAL SCALE IN FEET
0 50 100 200

CALCULATED TAH
CHECKED WEB

LICKING COUNTY
MILE 132.000 TO MILE 132.500

D05-SIGN-FY2005

08/13/2004
03:54:17 PM
m:\proj\022\\505\22 sign inventory\project plans\plansheets\tp034170.dgn

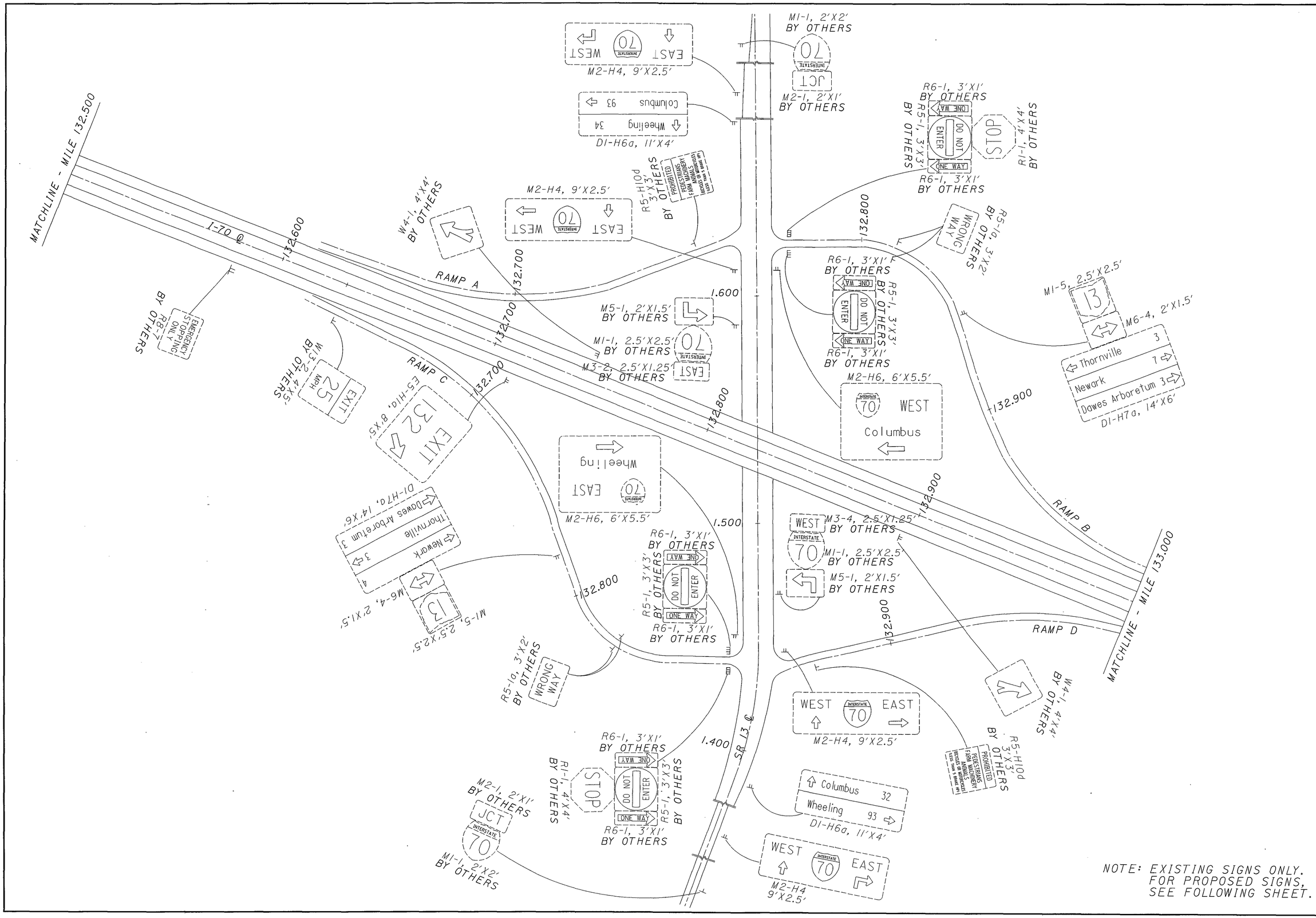

CALCULATED TAH
CHECKED WEB

HORIZONTAL SCALE IN FEET
0 50 100 200

LICKING COUNTY
SR 13 INTERCHANGE

D05-SIGN-FY2005

08/13/2004
03:54:17 PM
m:\proj\022k\505\22 sign inventory\project plans\plansheets\tp035170.dgn

FOR QUANTITIES, SEE SHEET 143

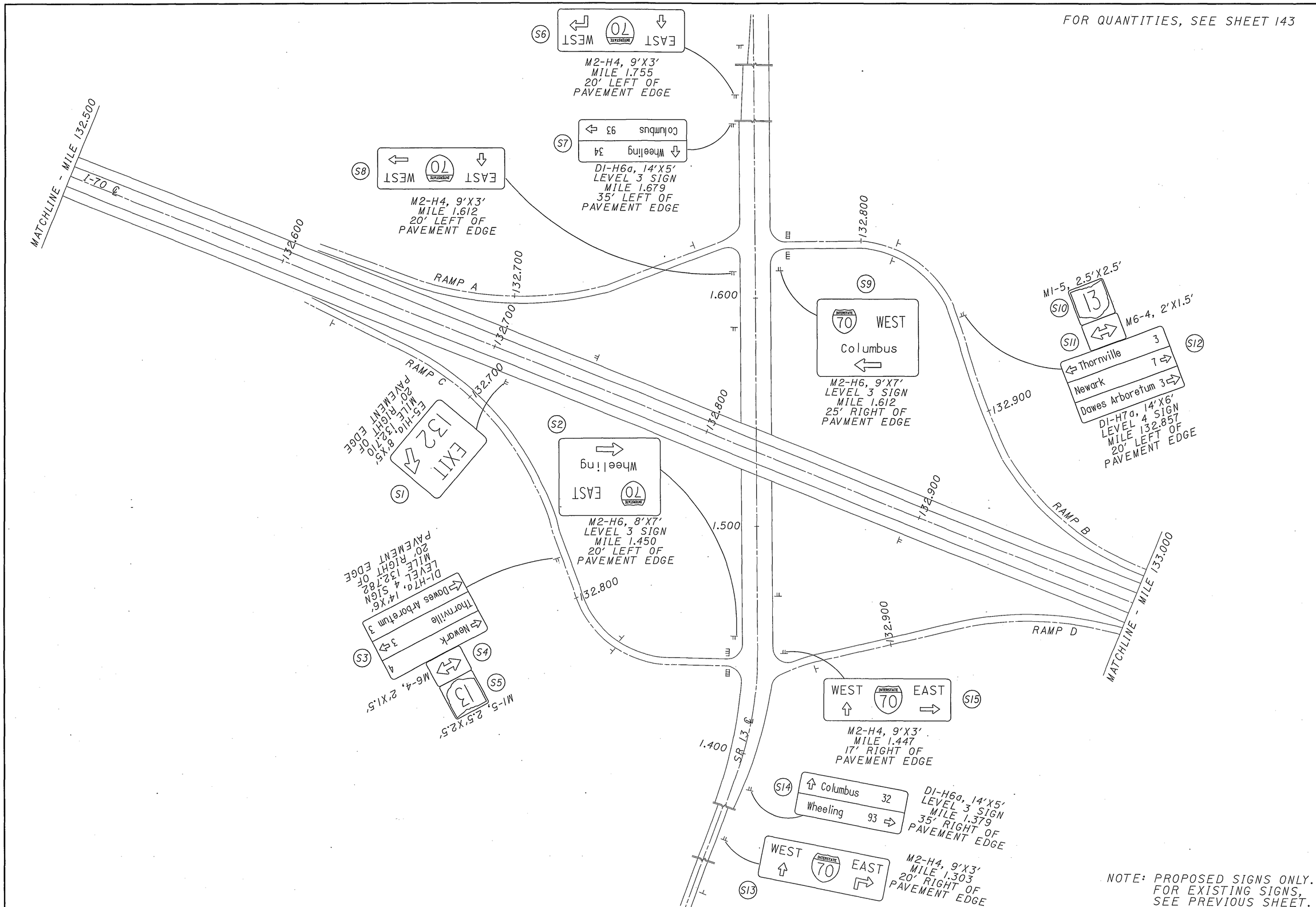

NOTE: PROPOSED SIGNS ONLY.
FOR EXISTING SIGNS,
SEE PREVIOUS SHEET.

N

0 50 100 200
HORIZONTAL SCALE IN FEET

CALCULATED TAH
CHECKED WEB

LICKING COUNTY
SR 13 INTERCHANGE

D05-SIGN-FY2005

08/13/2004
03:54:48 PM
m:\proj\022\1\505\22 sign inventory\project plans\plansheets\tp036170.dgn

08/13/2004
03:54:18 PM
m:\proj\0221\1505\22 sign inventory\project plans\plansheets\tp037170.dgn

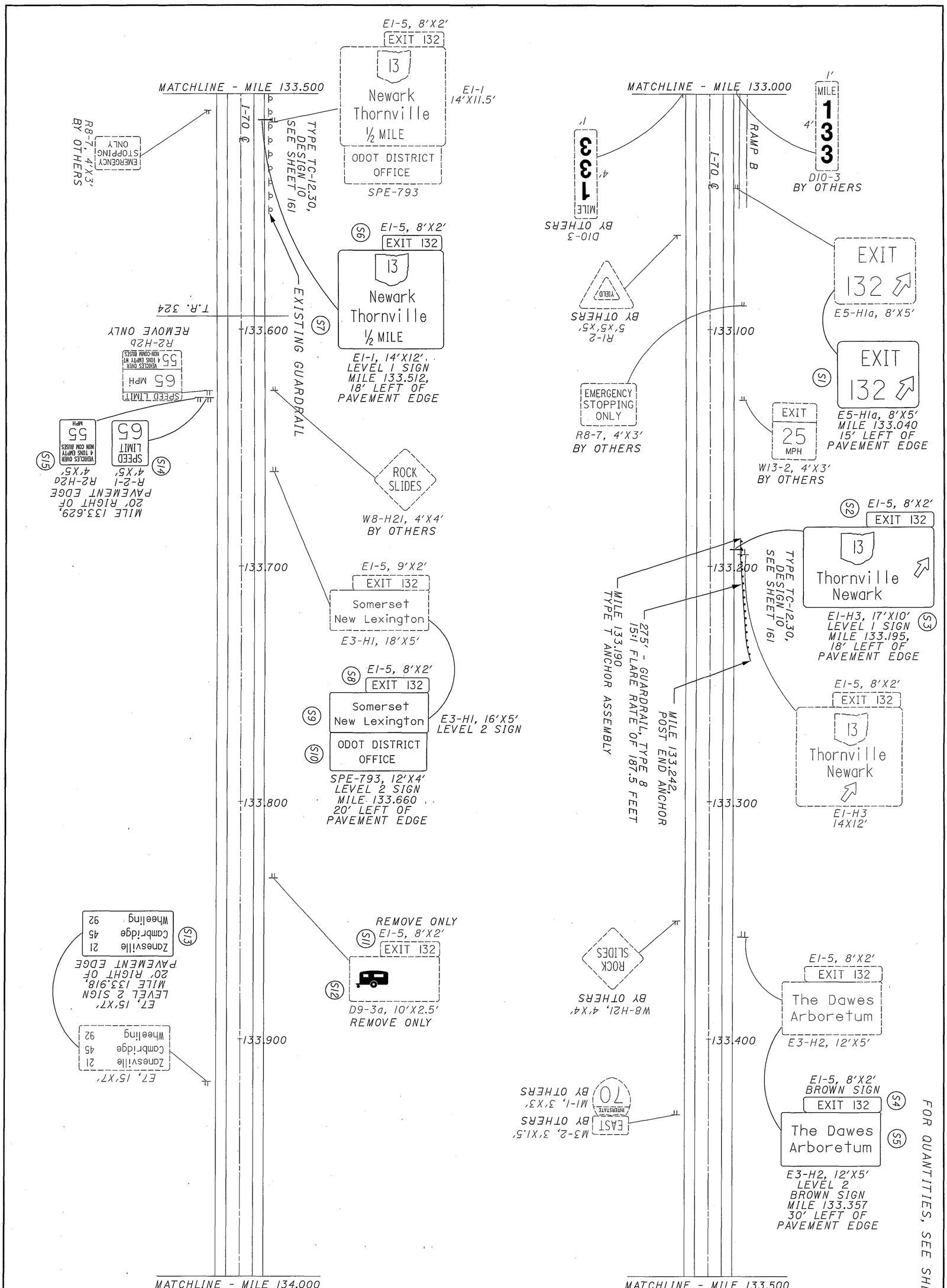

42 / 166	D05-SIGN-FY2005	LICKING COUNTY MILE 133.000 TO MILE 134.000	CALCULATED TAH CHECKED WEB 0 50 100 200 HORIZONTAL SCALE IN FEET

08/13/2004
03:54:18 PM
m:\proj\022i\505\22 sign inventory\project plans\plansheets\tp038170.dgn

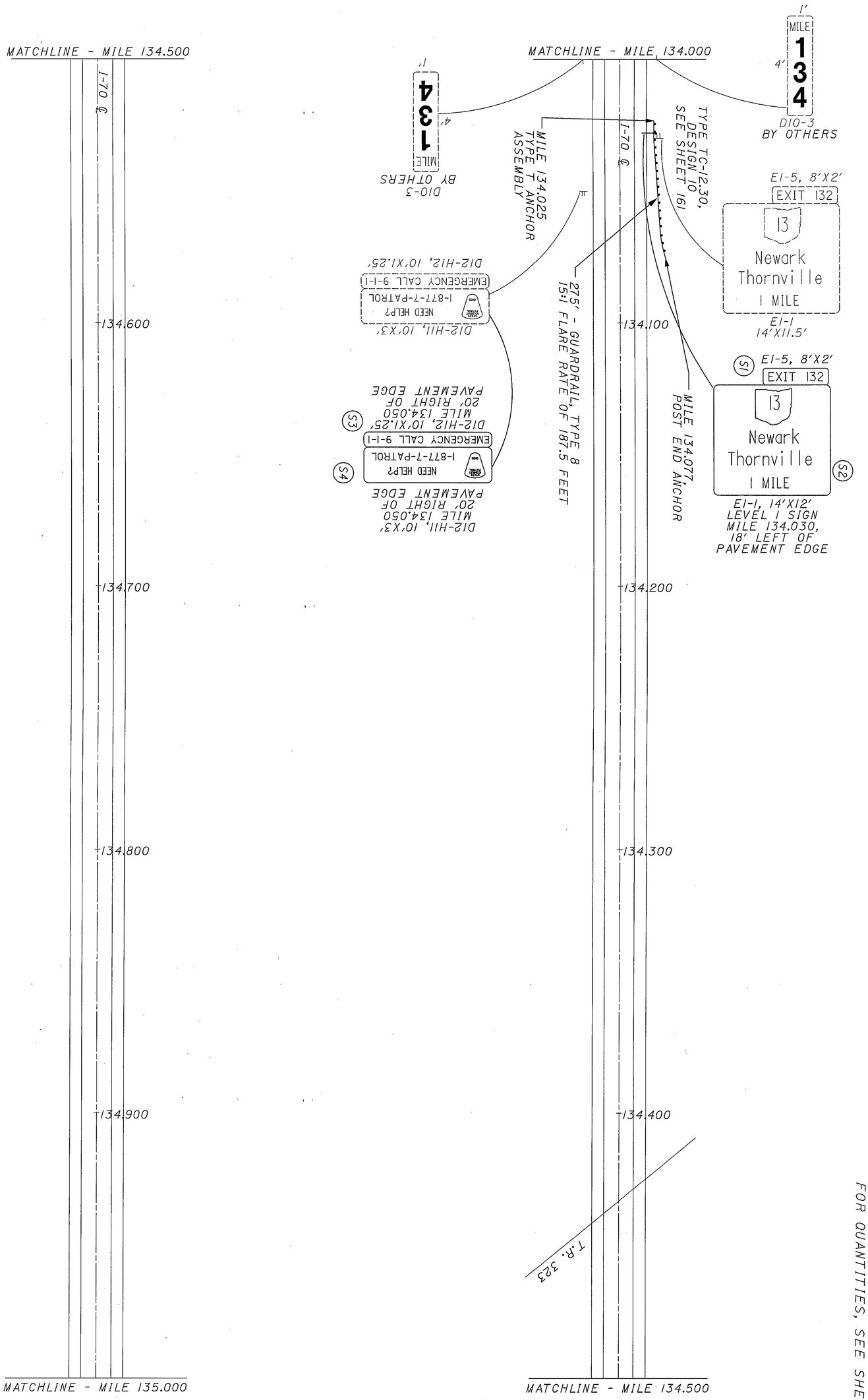

FOR QUANTITIES, SEE SHEET 144

D05-SIGN-FY2005

LICKING COUNTY
MILE 134.000 TO MILE 135.000

CALCULATED TAH
CHECKED WEB

0 50 100 200
HORIZONTAL SCALE IN FEET

08/13/2004
03:54:18 PM
m:\proj\022\1505\22 sign inventory\project plans\plansheets\tp039170.dgn

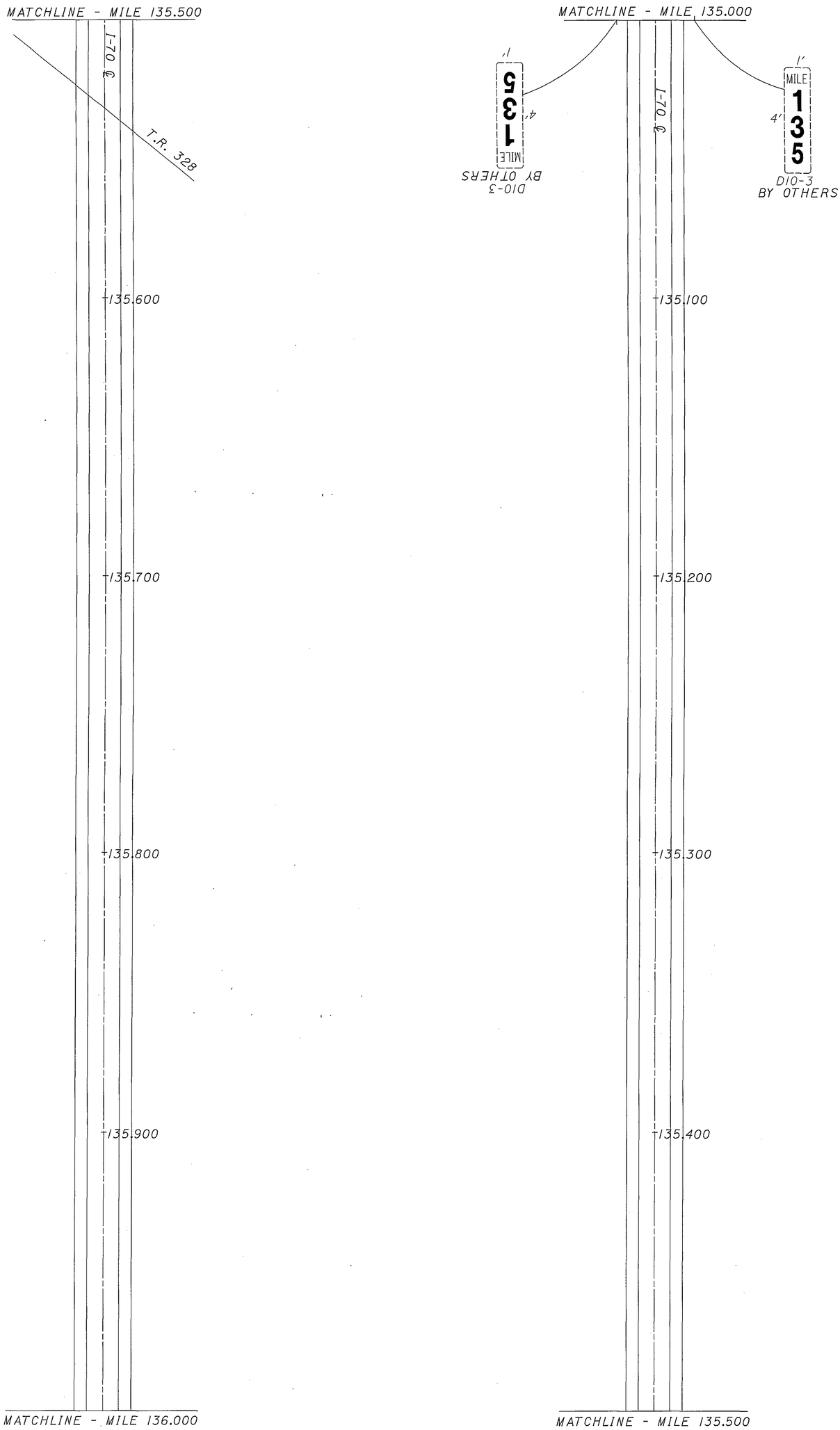

44 / 166	D05-SIGN-FY2005	LICKING COUNTY MILE 135.000 TO MILE 136.000	CALCULATED TAH CHECKED WEB 0 50 100 200 HORIZONTAL SCALE IN FEET

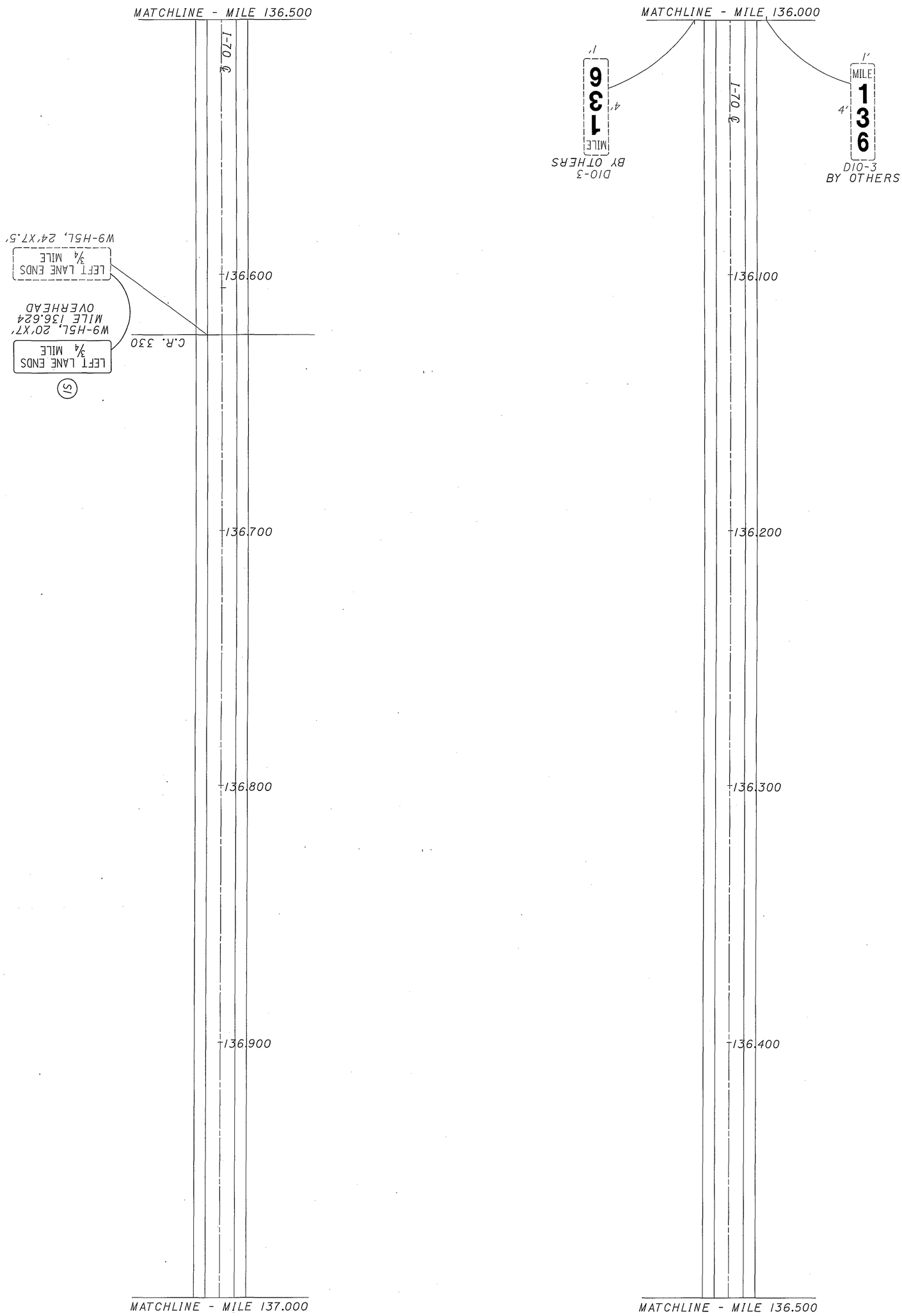

FOR QUANTITIES, SEE SHEET 144

D05-SIGN-FY2005

LICKING COUNTY
MILE 136.000 TO MILE 137.000

CALCULATED TAH
CHECKED WEB

0 50 100 200
HORIZONTAL SCALE IN FEET

N

FOR QUANTITIES, SEE SHEET 144

HORIZONTAL SCALE IN FEET 0 50 100 200

CALCULATED TAH
CHECKED WEB

LICKING COUNTY
MILE 137.000 TO MILE 138.000

D05-SIGN-FY2005

08/13/2004
03:54:19 PM
m:\proj\022\\505\22 sign inventory\project plans\plansheets\tp04ll70.dgn

08/13/2004
03:54:19 PM
m:\proj\022I\I505\22 sign inventory\project plans\plansheets\tp042I70.dgn

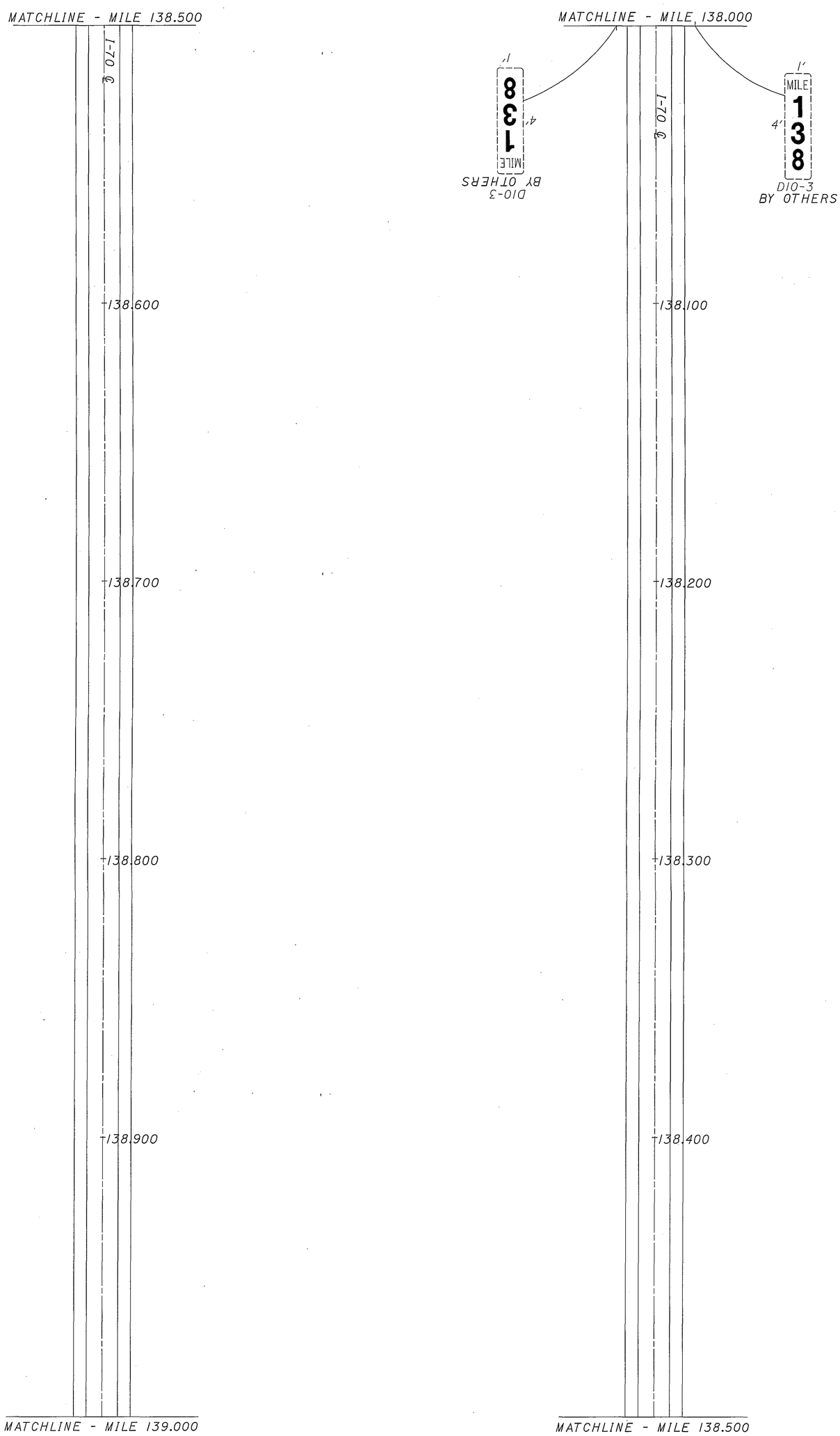

47 / 166	D05-SIGN-FY2005	LICKING COUNTY MILE 138.000 TO MILE 139.000	CALCULATED TAH CHECKED WEB 0 50 100 200 HORIZONTAL SCALE IN FEET N

08/13/2004
03:54:19 PM
m:\proj\0221\1505\22 sign inventory\project plans\plansheets\tp043170.dgn

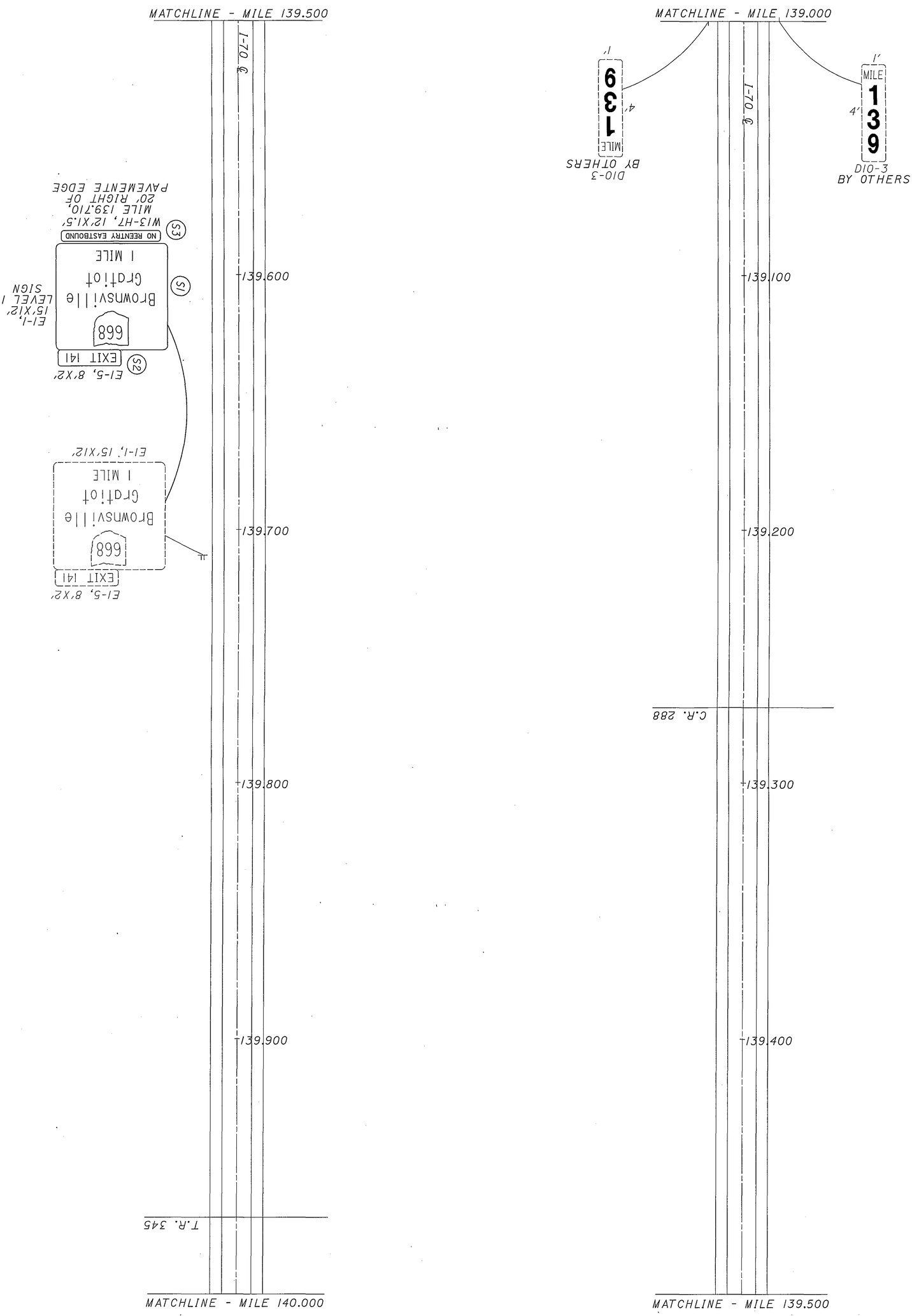

FOR QUANTITIES, SEE SHEET 144

48 / 166	D05-SIGN-FY2005	LICKING COUNTY MILE 139.000 TO MILE 140.000	CALCULATED TAH CHECKED WEB	0 50 100 200 HORIZONTAL SCALE IN FEET

FOR QUANTITIES, SEE SHEET 144

CALCULATED TAH
CHECKED WEB

0 50 100 200 HORIZONTAL SCALE IN FEET

LICKING COUNTY
MILE 140.000 TO MILE 140.800

D05-SIGN-FY2005

08/13/2004
03:54:20 PM
m:\proj\022\1505\22 sign inventory\project plans\plansheets\tp044170.dgn

FOR QUANTITIES, SEE SHEET 144

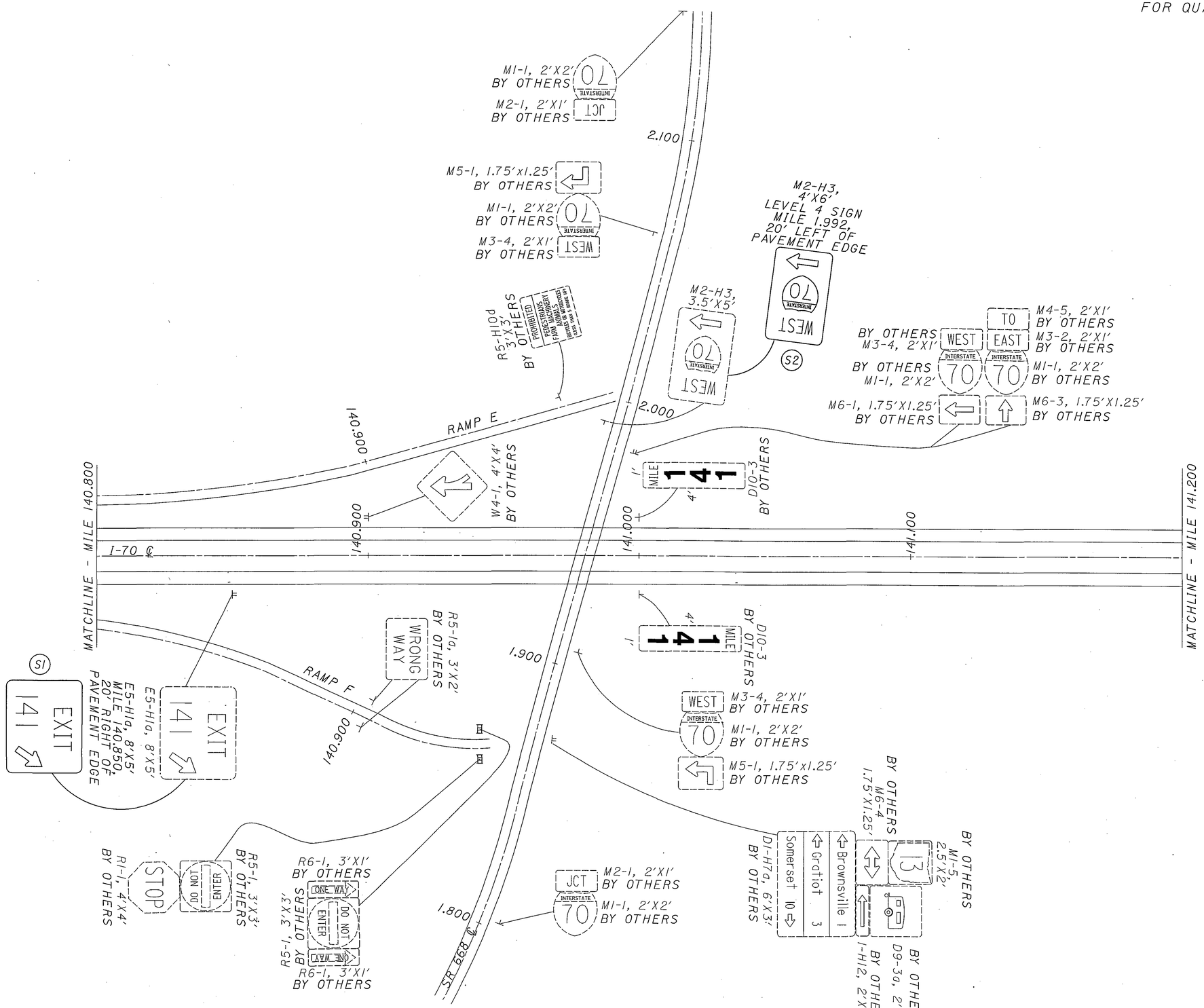

HORIZONTAL SCALE IN FEET 0 50 100 200

CALCULATED TAH
CHECKED WEB

LICKING COUNTY SR 668 INTERCHANGE

D05-SIGN-FY2005

08/13/2004
03:54:20 PM
m:\proj\022N\505\22 sign inventory\project plans\plansheets\tp045170.dgn

08/13/2004
03:54:20 PM
m:\proj\022I\I505\22 sign inventory\project plans\plansheets\tp046170.dgn

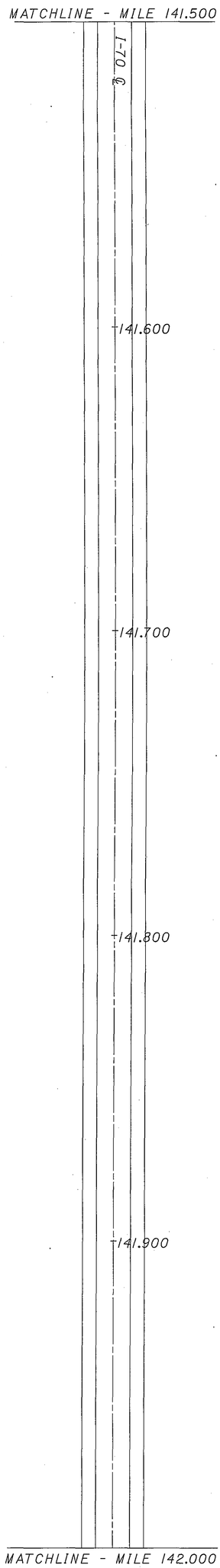

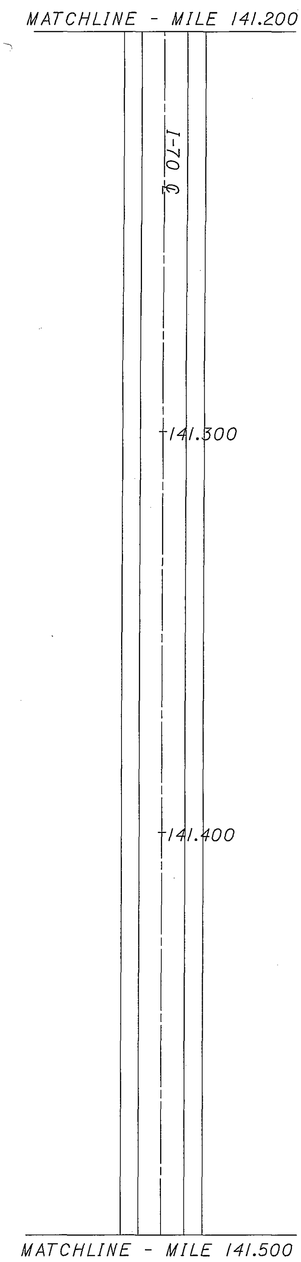

D05-SIGN-FY2005

LICKING COUNTY
MILE 141.200 TO MILE 142.000

CALCULATED TAH
CHECKED WEB

0 50 100 200
HORIZONTAL SCALE IN FEET

N

FOR QUANTITIES, SEE SHEET 144

HORIZONTAL SCALE IN FEET 0 50 100 200

CALCULATED TAH
CHECKED WEB

LICKING & MUSKINGUM COUNTY
MILE 142.000 TO MILE 142.800

D05-SIGN-FY2005

08/13/2004
03:54:21 PM
m:\proj\022\1\505\22 sign inventory\project plans\plansheets\tp047170.dgn

FOR QUANTITIES, SEE SHEET 144

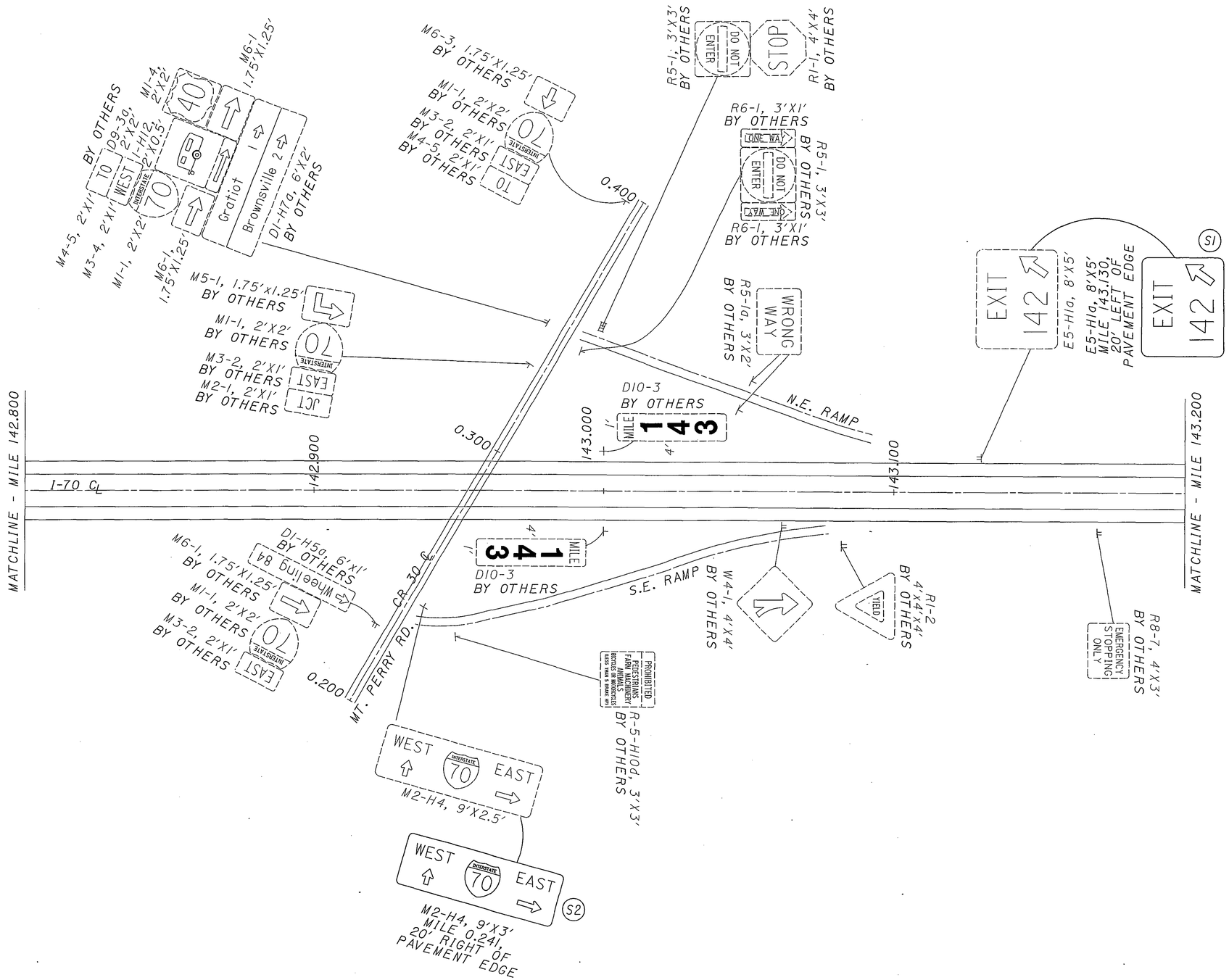

HORIZONTAL SCALE IN FEET
0 50 100 200

CALCULATED TAH
CHECKED WEB

MUSKINGUM COUNTY
CR 30 INTERCHANGE

D05-SIGN-FY2005

08/13/2004
03:54:21 PM
m:\proj\022N\505\22 sign inventory\project plans\plansheets\tp048170.dgn

08/13/2004
03:54:21 PM
m:\proj\022N\505\22 sign inventory\project plans\plansheets\tp049170.dgn

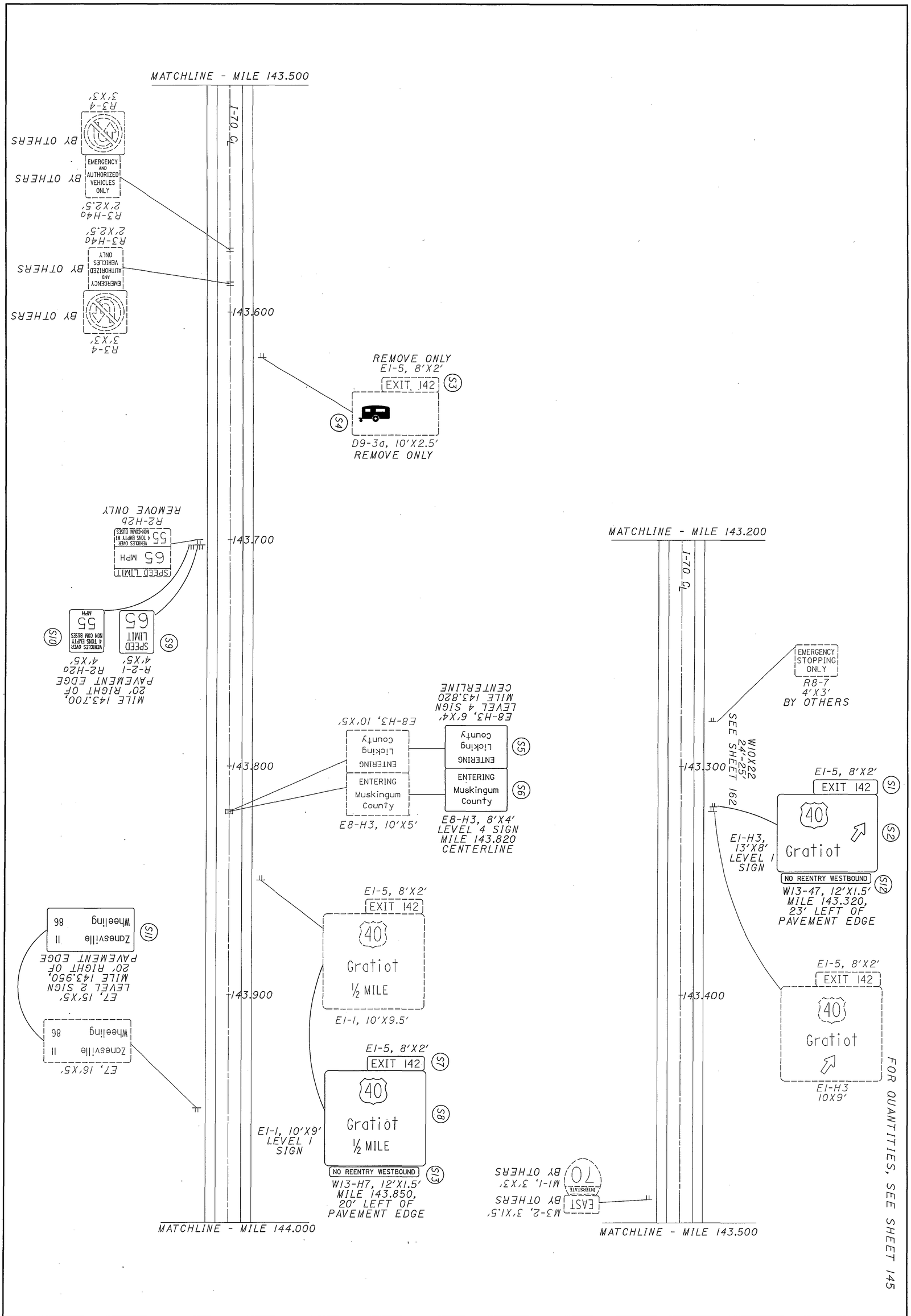

54 / 196	D05-SIGN-FY2005	MUSKINGUM & LICKING COUNTY MILE 143.200 TO MILE 144.000	CALCULATED TAH CHECKED WEB	0 50 100 200 HORIZONTAL SCALE IN FEET

08/13/2004
03:54:21PM
m:\proj\022i\i505\22 sign inventory\project plans\plansheets\tp050170.dgn

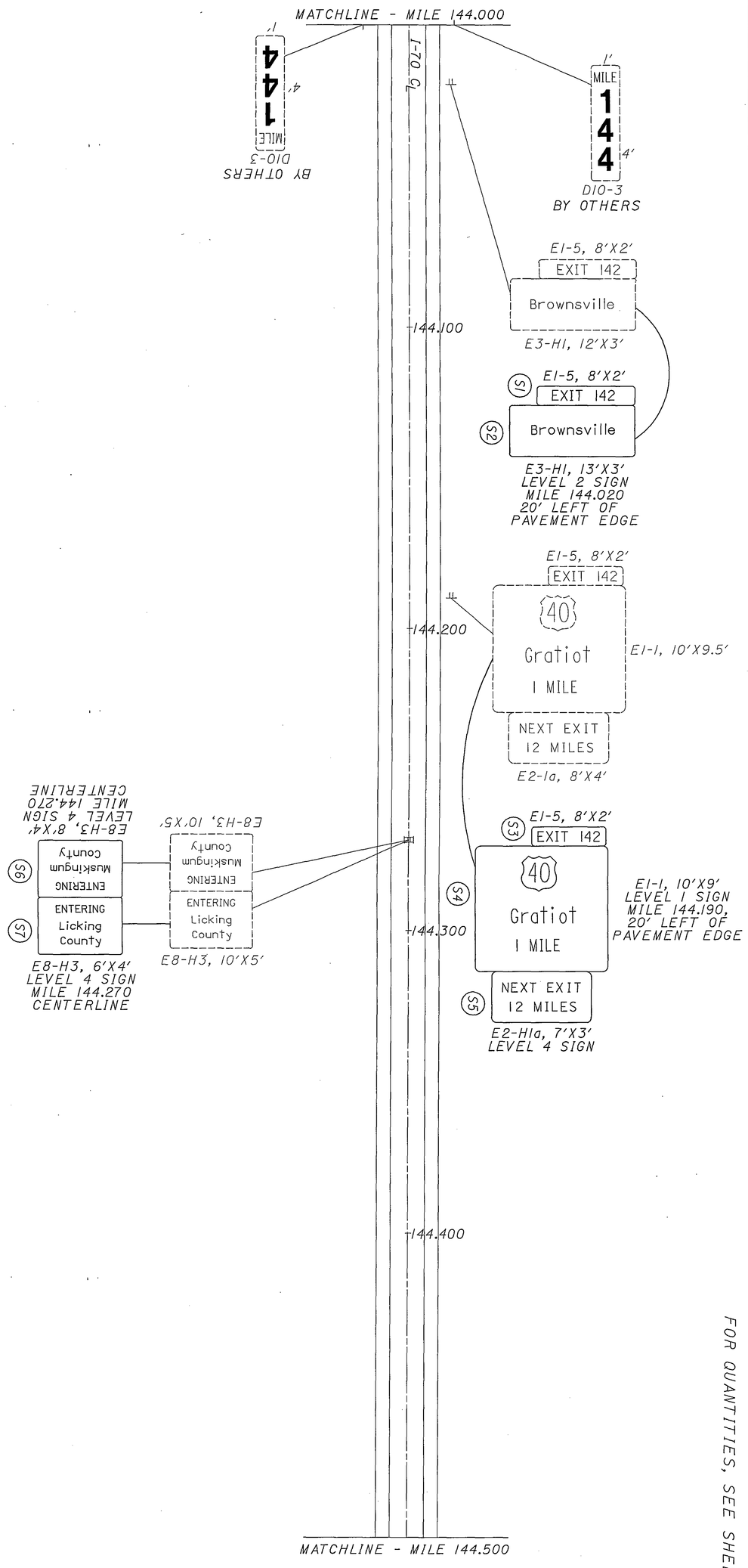

FOR QUANTITIES, SEE SHEET 145

D05-SIGN-FY2005

LICKING & MUSKINGUM COUNTY
MILE 144.000 TO MILE 144.500

CALCULATED TAH
CHECKED WEB

0 50 100 200
HORIZONTAL SCALE IN FEET

N

08/13/2004
03:54:22 PM
m:\proj\022I\I505\22 sign inventory\project plans\plansheets\tp05il70.dgn

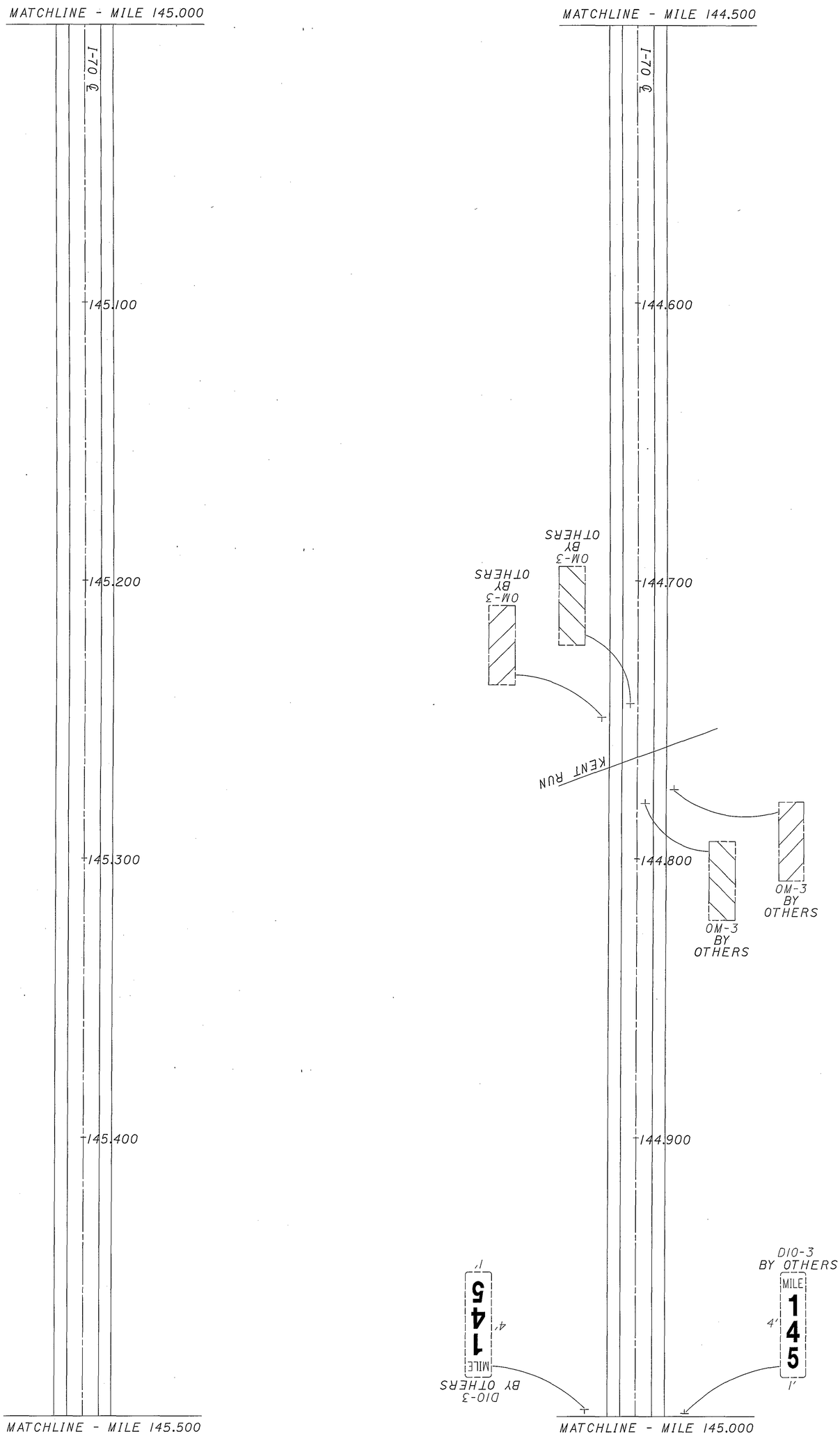

166 / 95	D05-SIGN-FY2005	MUSKINGUM COUNTY MILE 144.500 TO MILE 145.500	CALCULATED JAM CHECKED WEB	0 50 100 200 HORIZONTAL SCALE IN FEET

08/13/2004
03:54:22 PM
m:\proj\0221\1505\22 sign inventory\project plans\plansheets\tp052170.dgn

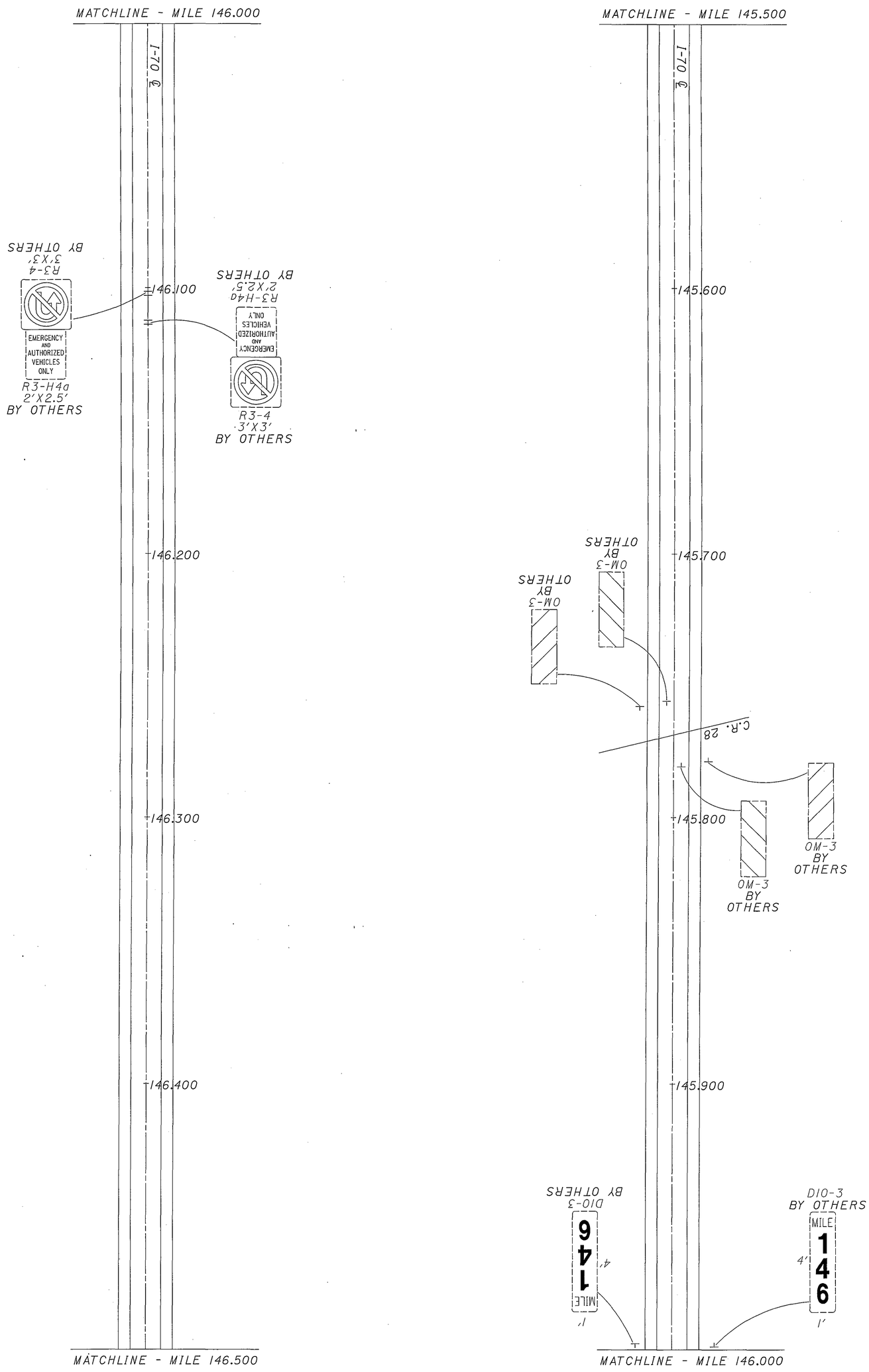

57 / 166	D05-SIGN-FY2005	MUSKINGUM COUNTY MILE 145.500 TO MILE 146.500	CALCULATED JAM CHECKED WEB	0 50 100 200 HORIZONTAL SCALE IN FEET

08/13/2004
03:54:22 PM
m:\proj\022N\505\22 sign inventory\project plans\plansheets\tp053170.dgn

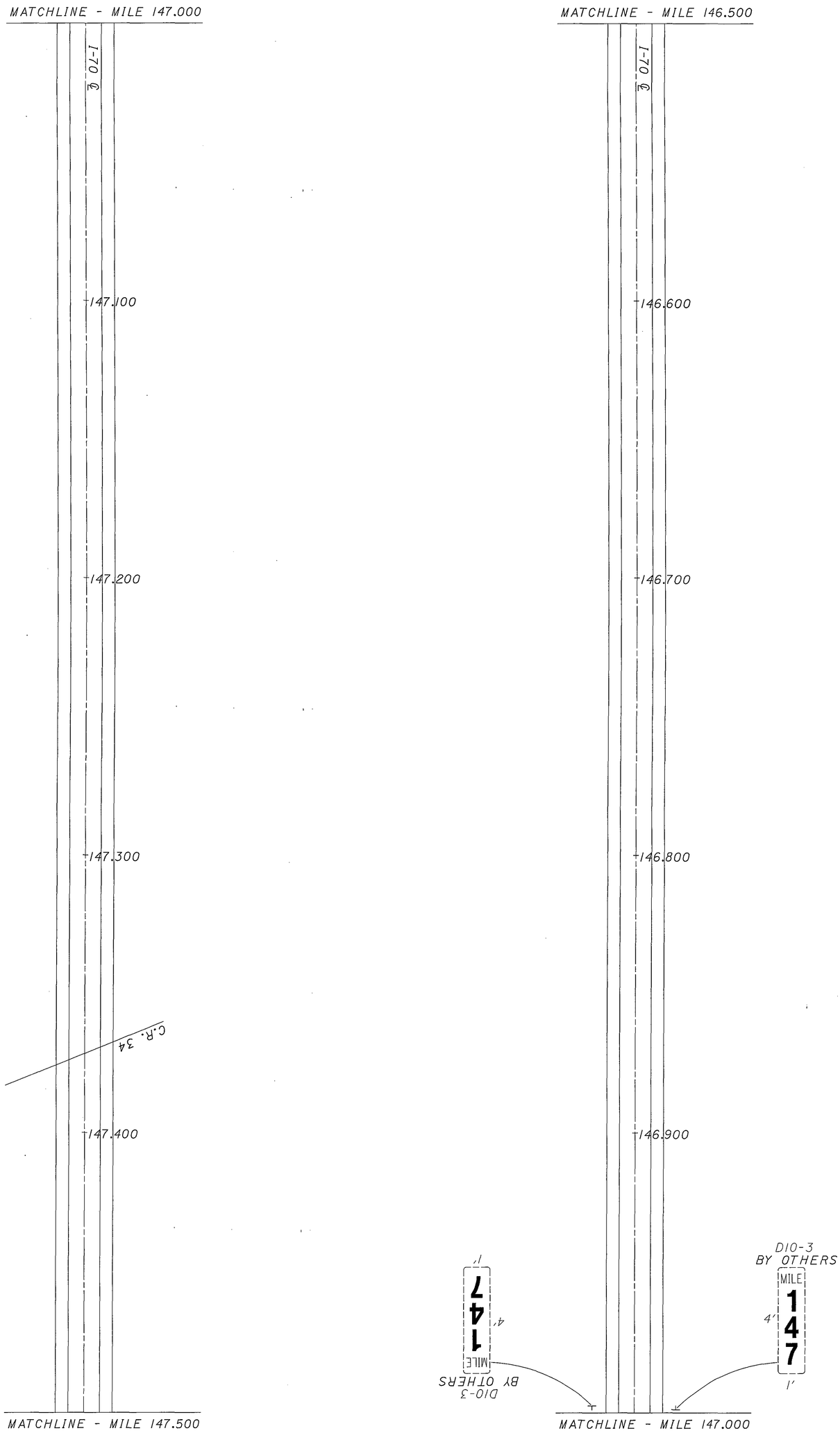

58 / 199	D05-SIGN-FY2005	MUSKINGUM COUNTY MILE 146.500 TO MILE 147.500	CALCULATED JAM CHECKED WEB	0 50 100 200 HORIZONTAL SCALE IN FEET

08/13/2004
03:54:22 PM
m:\proj\022i\i505\22 sign inventory\project plans\plansheets\tp054170.dgn

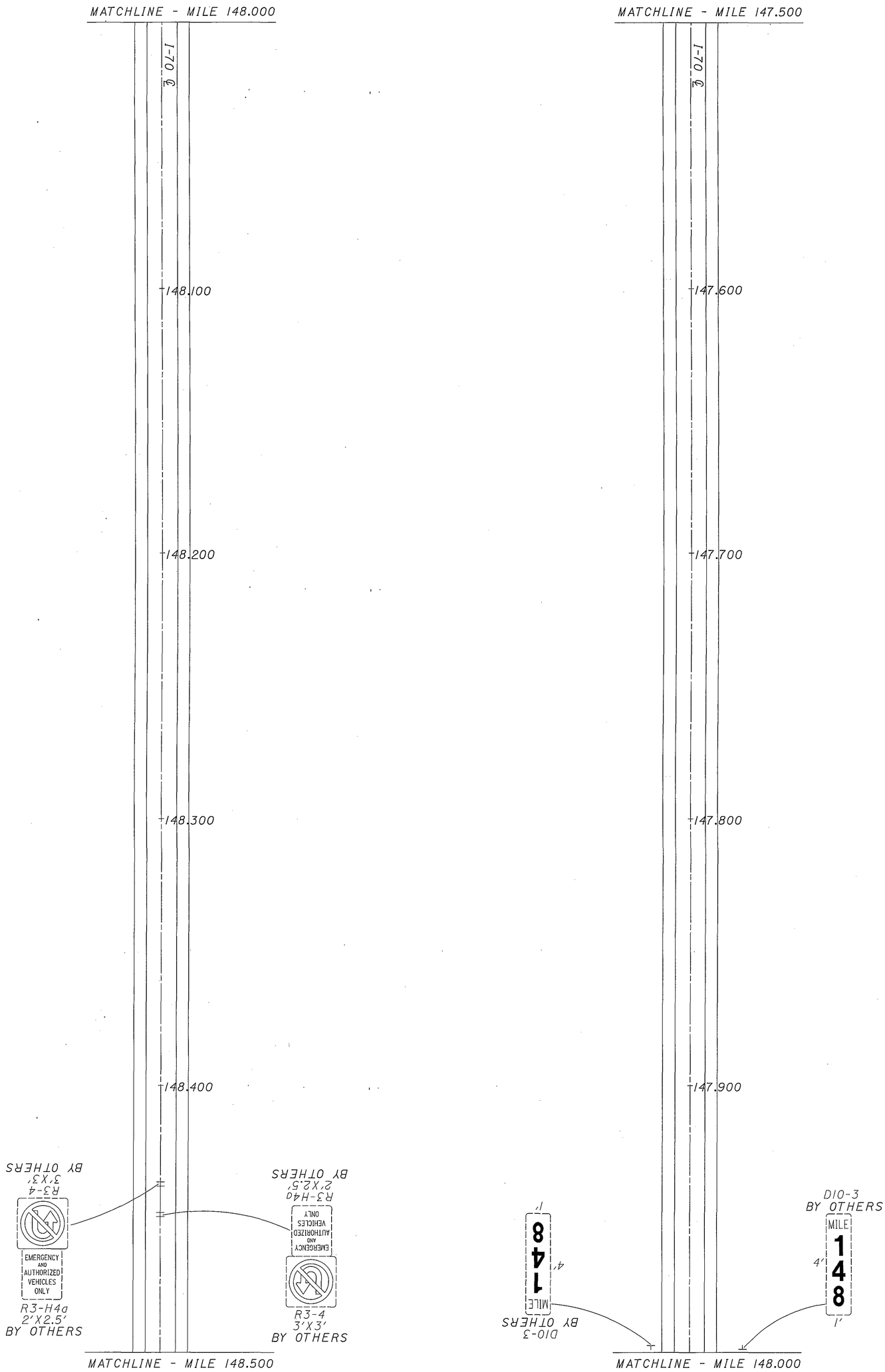

59 / 169	**D05-SIGN-FY2005**	**MUSKINGUM COUNTY** **MILE 147.500 TO MILE 148.500**	CALCULATED JAM CHECKED WEB 0 50 100 200 HORIZONTAL SCALE IN FEET N

08/13/2004
03:54:23 PM
m:\proj\022l\505\22 sign inventory\project plans\plansheets\tp055170.dgn

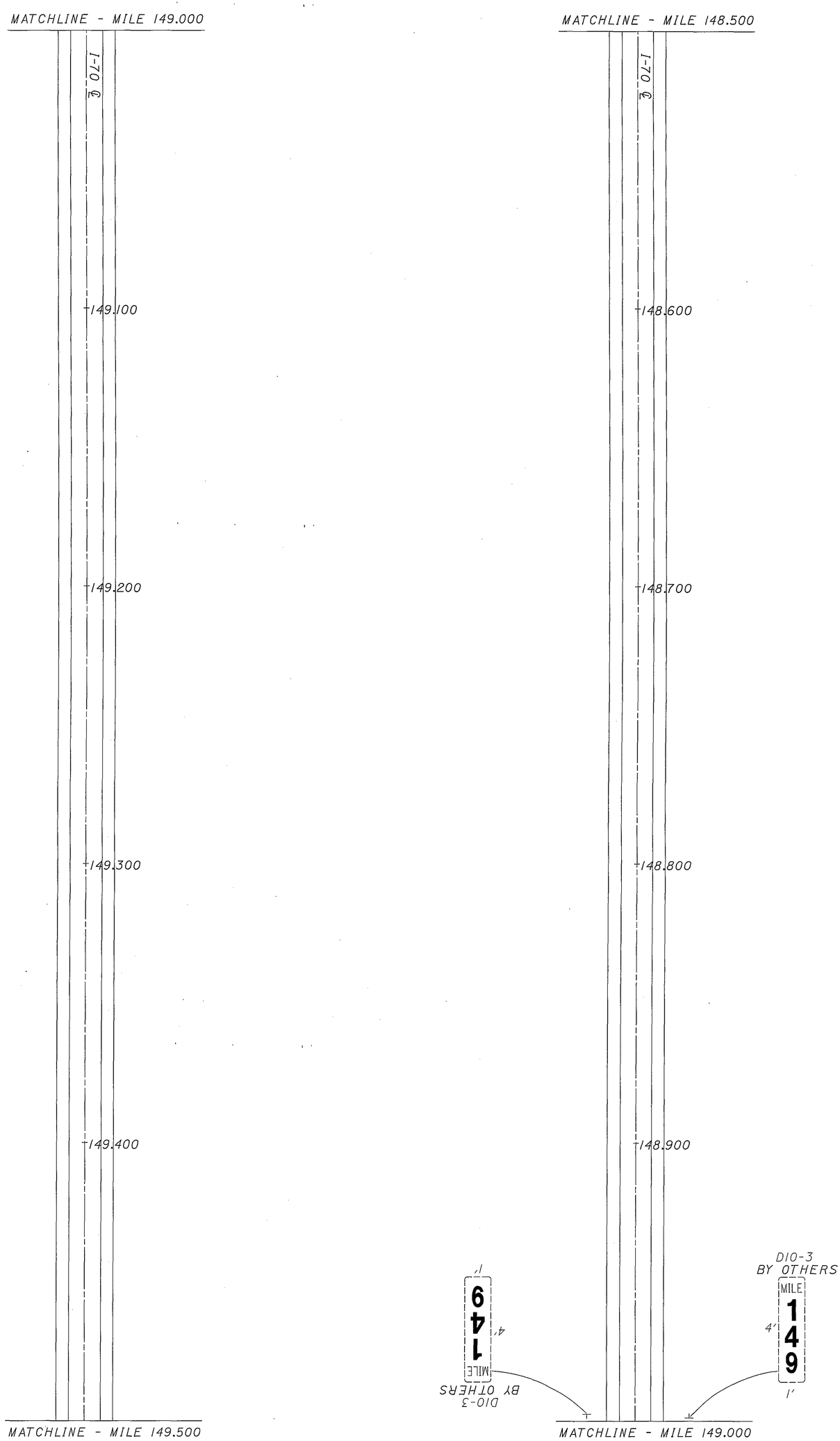

69 / 90	D05-SIGN-FY2005	MUSKINGUM COUNTY MILE 148.500 TO MILE 149.500	CALCULATED JAM CHECKED WEB 0 50 100 200 HORIZONTAL SCALE IN FEET N

08/13/2004
03:54:23 PM
m:\proj\022|\505\22 sign inventory\project plans\plansheets\tp056170.dgn

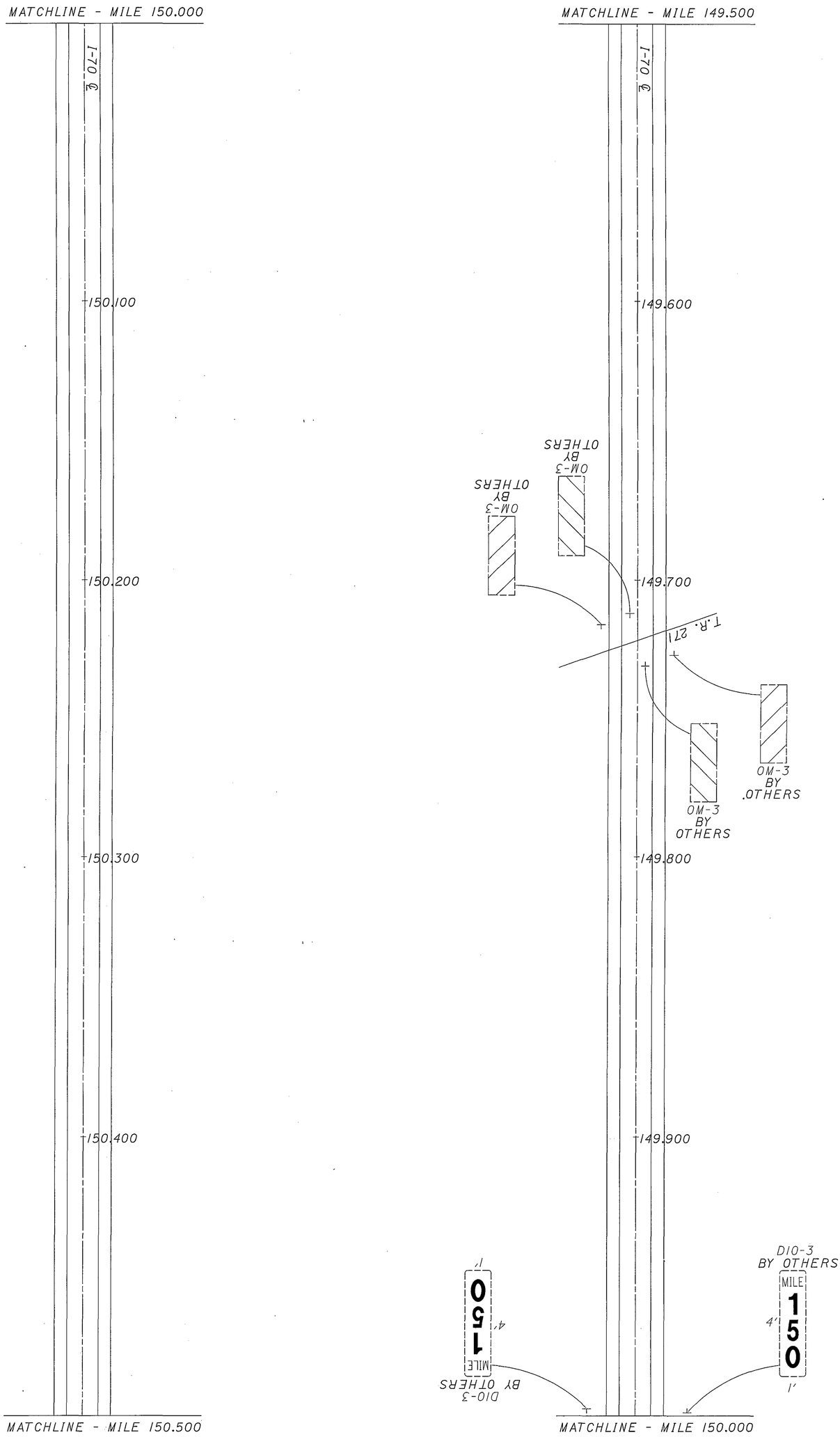

169 / 19	D05-SIGN-FY2005	MUSKINGUM COUNTY MILE 149.500 TO MILE 150.500	CALCULATED JAM CHECKED WEB 0 50 100 200 HORIZONTAL SCALE IN FEET N

08/13/2004
03:54:23 PM
m:\proj\022N\505\22 sign inventory\project plans\plansheets\tp057170.dgn

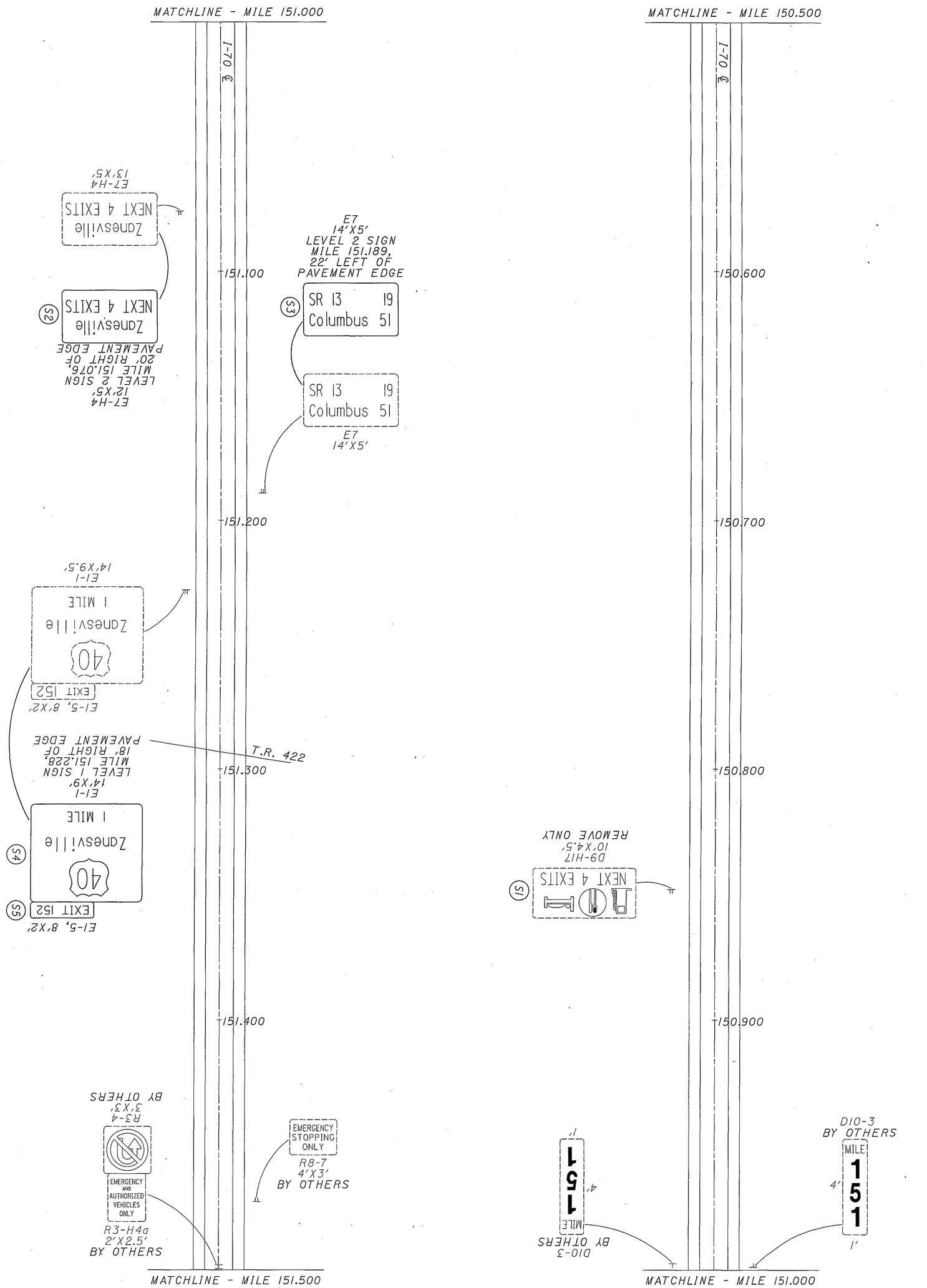

FOR QUANTITIES, SEE SHEET 145

62 / 166	D05-SIGN-FY2005	MUSKINGUM COUNTY MILE 150.500 TO MILE 151.500	CALCULATED JAM CHECKED WEB 0 50 100 200 HORIZONTAL SCALE IN FEET N

08/13/2004
03:54:23 PM
m:\proj\022\1505\22 sign inventory\project plans\plansheets\tp058170.dgn

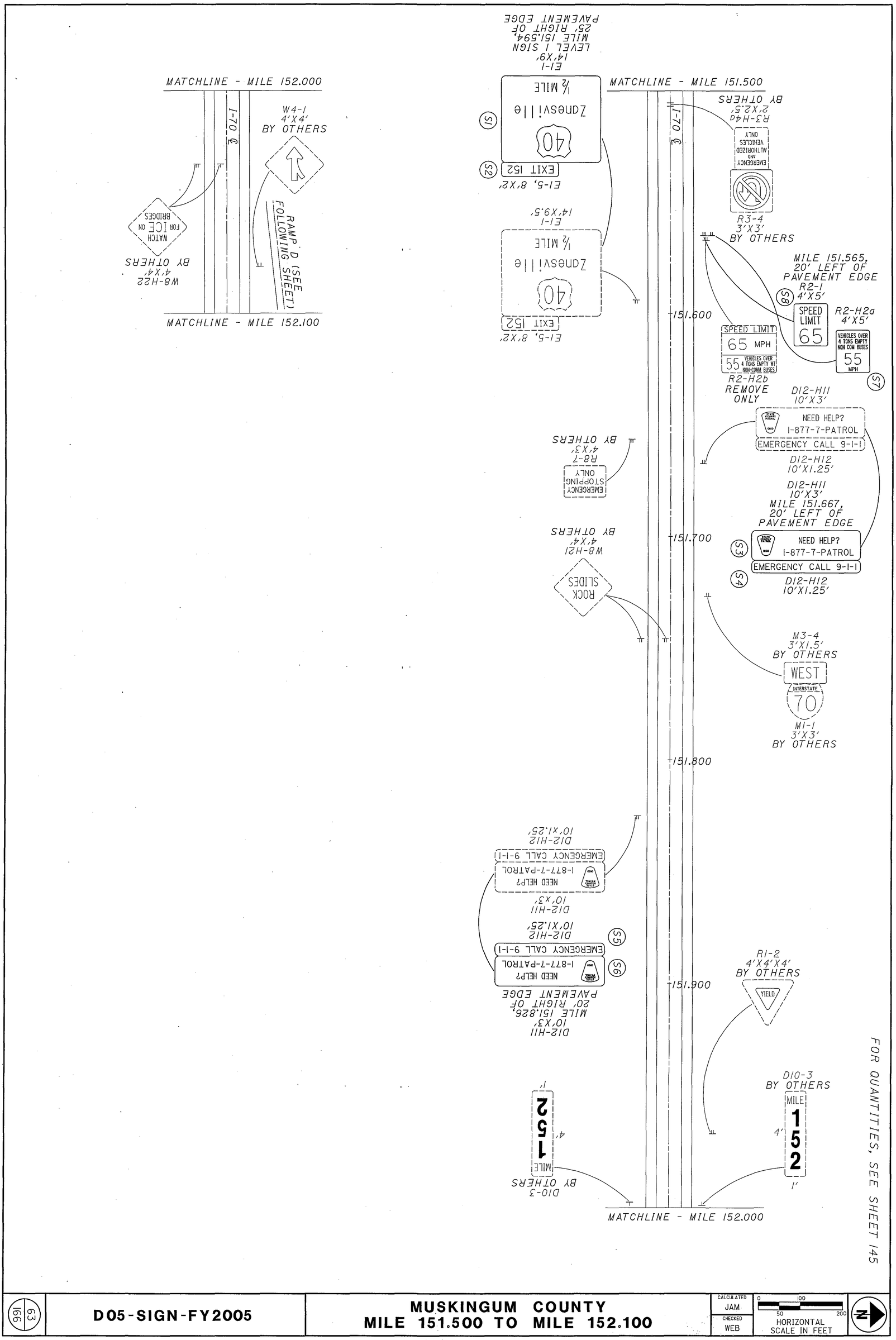

FOR QUANTITIES, SEE SHEET 145

63 / 166	D05-SIGN-FY2005	MUSKINGUM COUNTY MILE 151.500 TO MILE 152.100	CALCULATED JAM CHECKED WEB 0 50 100 200 HORIZONTAL SCALE IN FEET

08/13/2004
03:54:24 PM
m:\proj\022\1505\22 sign inventory\project plans\plansheets\tp059170.dgn

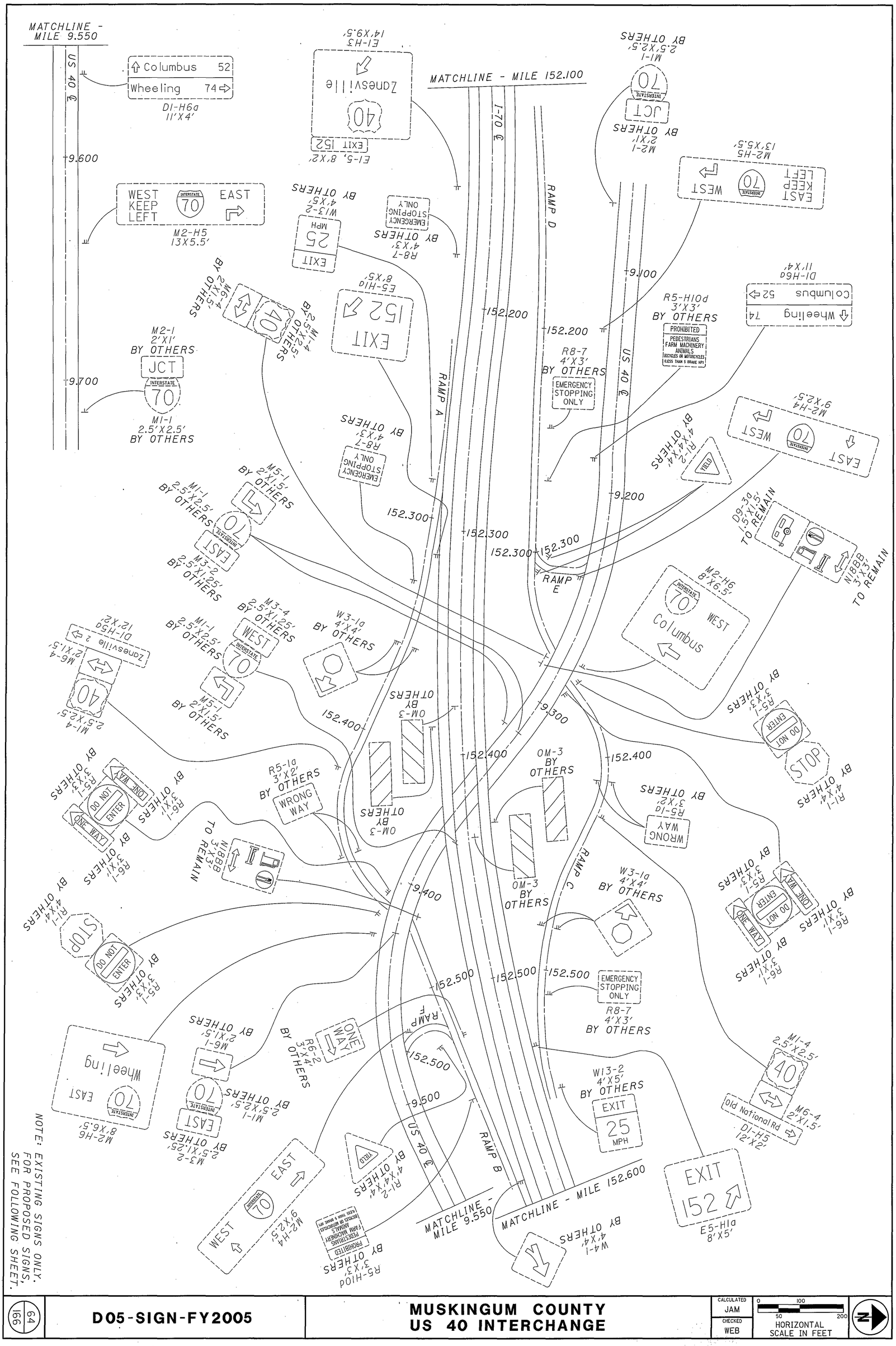

NOTE: EXISTING SIGNS ONLY. FOR PROPOSED SIGNS, SEE FOLLOWING SHEET.

64 / 166	D05-SIGN-FY2005	MUSKINGUM COUNTY US 40 INTERCHANGE	CALCULATED JAM CHECKED WEB	0 50 100 200 HORIZONTAL SCALE IN FEET

08/13/2004
03:54:24 PM
m:\proj\0221\1505\22 sign inventory\project plans\plansheets\tp060170.dgn

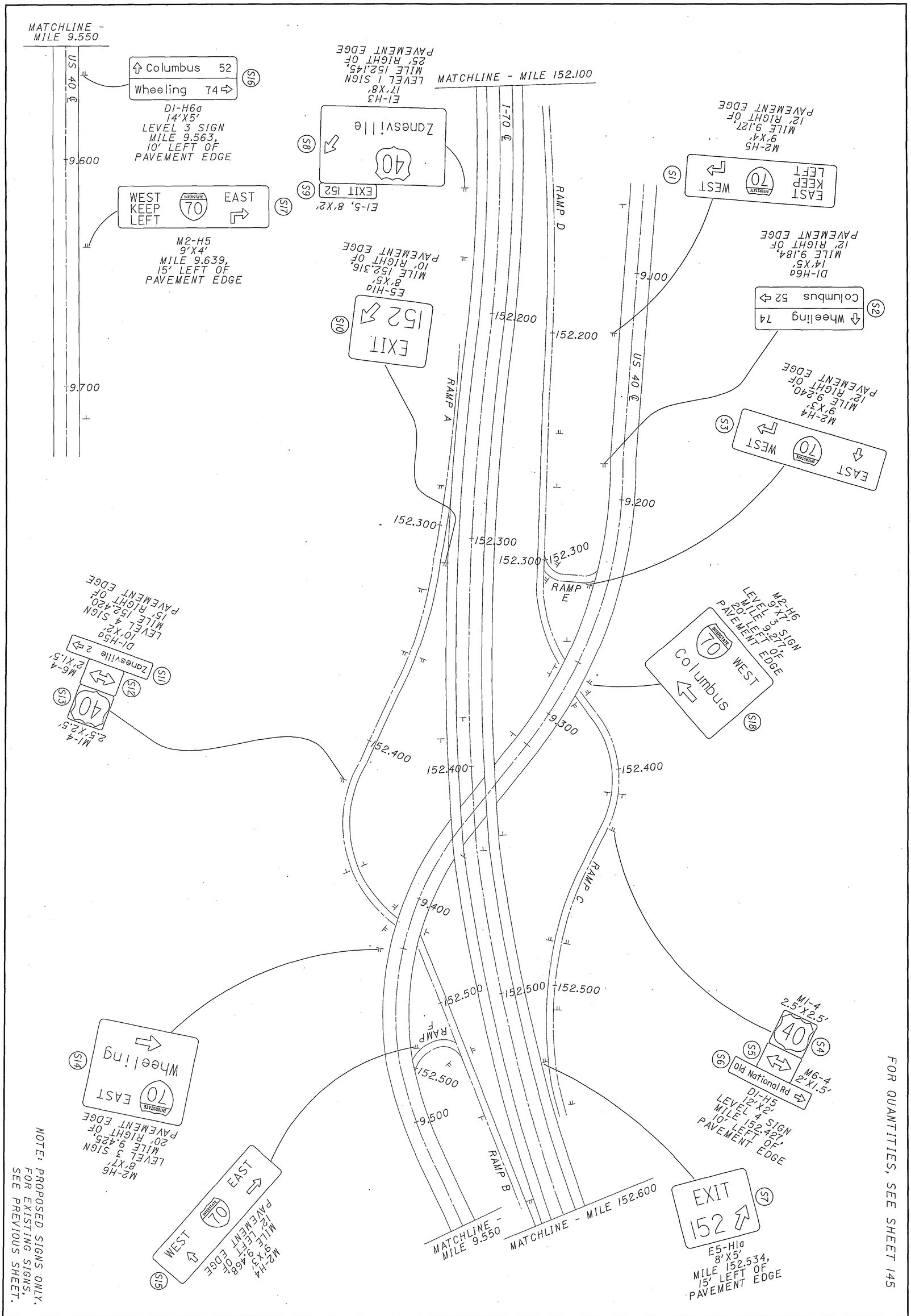

NOTE: PROPOSED SIGNS ONLY.
FOR EXISTING SIGNS,
SEE PREVIOUS SHEET.

FOR QUANTITIES, SEE SHEET 145

65 / 166	D05-SIGN-FY2005	MUSKINGUM COUNTY US 40 INTERCHANGE	CALCULATED JAM CHECKED WEB	0 50 100 200 HORIZONTAL SCALE IN FEET

08/13/2004
03:54:24 PM
m:\proj\022N\505\22 sign inventory\project plans\plansheets\tp06il70.dgn

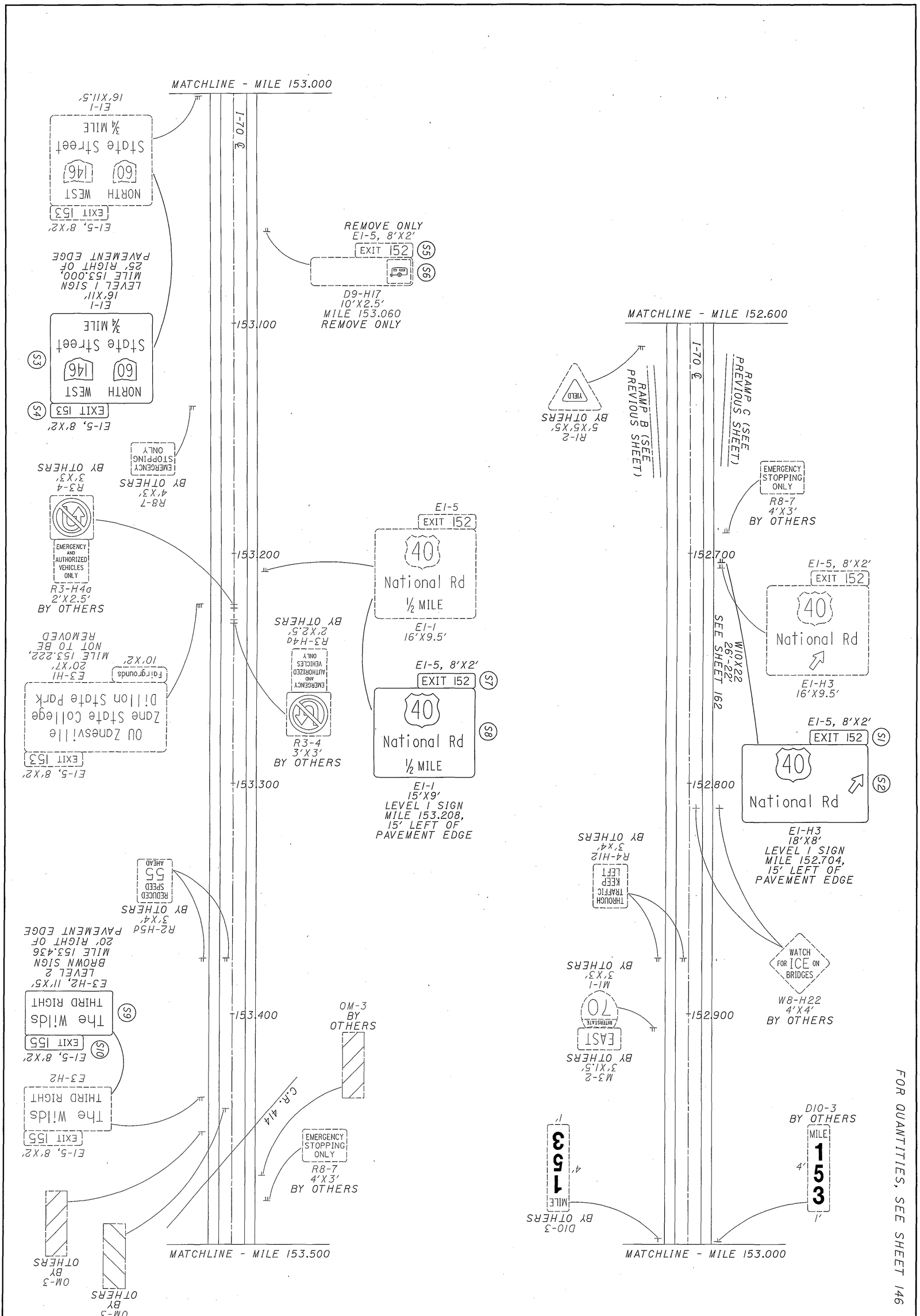

FOR QUANTITIES, SEE SHEET 146

166 / 66	D05-SIGN-FY2005	MUSKINGUM COUNTY MILE 152.600 TO MILE 153.500	CALCULATED JAM CHECKED WEB	0 50 100 200 HORIZONTAL SCALE IN FEET

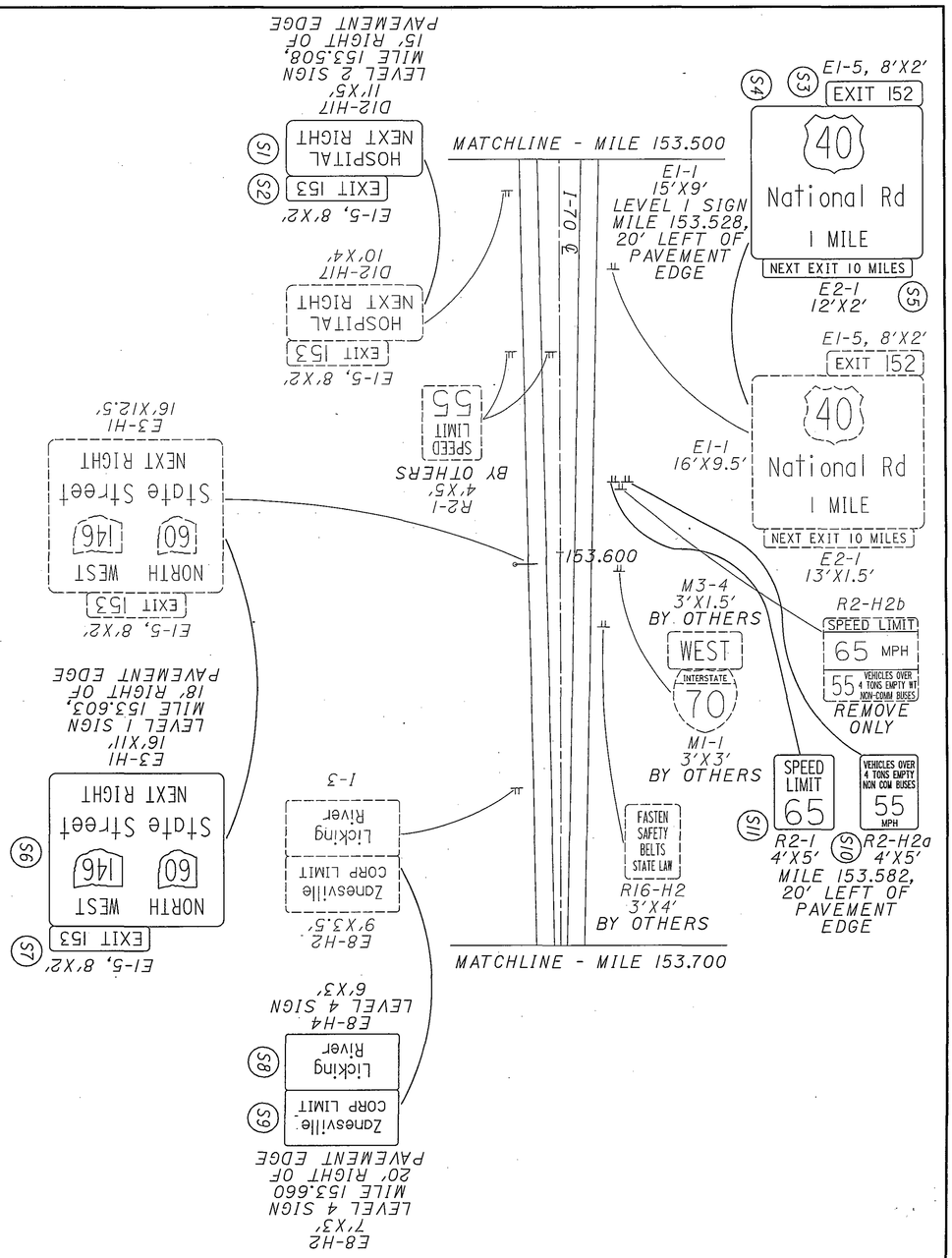

FOR QUANTITIES, SEE SHEET 146

D05-SIGN-FY2005

MUSKINGUM COUNTY
MILE 153.500 TO MILE 153.700

CALCULATED JAM
CHECKED WEB

0 50 100 200
HORIZONTAL SCALE IN FEET

N

NOTE: EXISTING SIGNS ONLY.
FOR PROPOSED SIGNS,
SEE FOLLOWING SHEET.

CALCULATED JAM
CHECKED WEB

HORIZONTAL SCALE IN FEET
0 50 100 200

MUSKINGUM COUNTY
SR 60G INTERCHANGE

D05-SIGN-FY2005

08/13/2004
03:54:25 PM
m:\proj\022\1505\22 sign inventory\project plans\plansheets\tp063170.dgn

REVISED BY n.k. 9/15/04

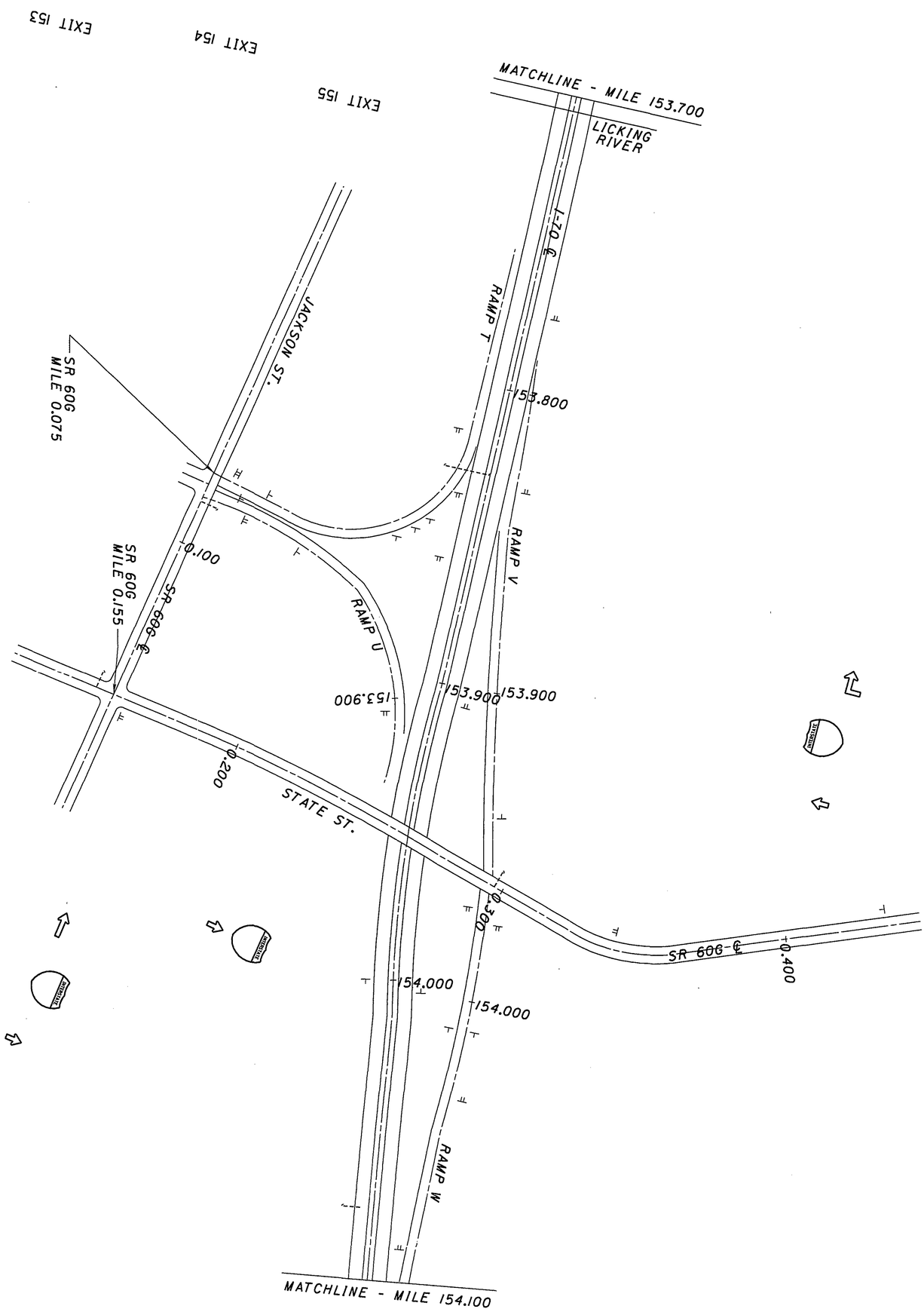

66 / 69	D05-SIGN-FY2005	MUSKINGUM COUNTY SR 60G INTERCHANGE	CALCULATED JAM CHECKED WEB 0 50 100 200 HORIZONTAL SCALE IN FEET

08/13/2004
03:54:25 PM
m:\proj\0221\505\22 sign inventory\project plans\plansheets\tp065170.dgn

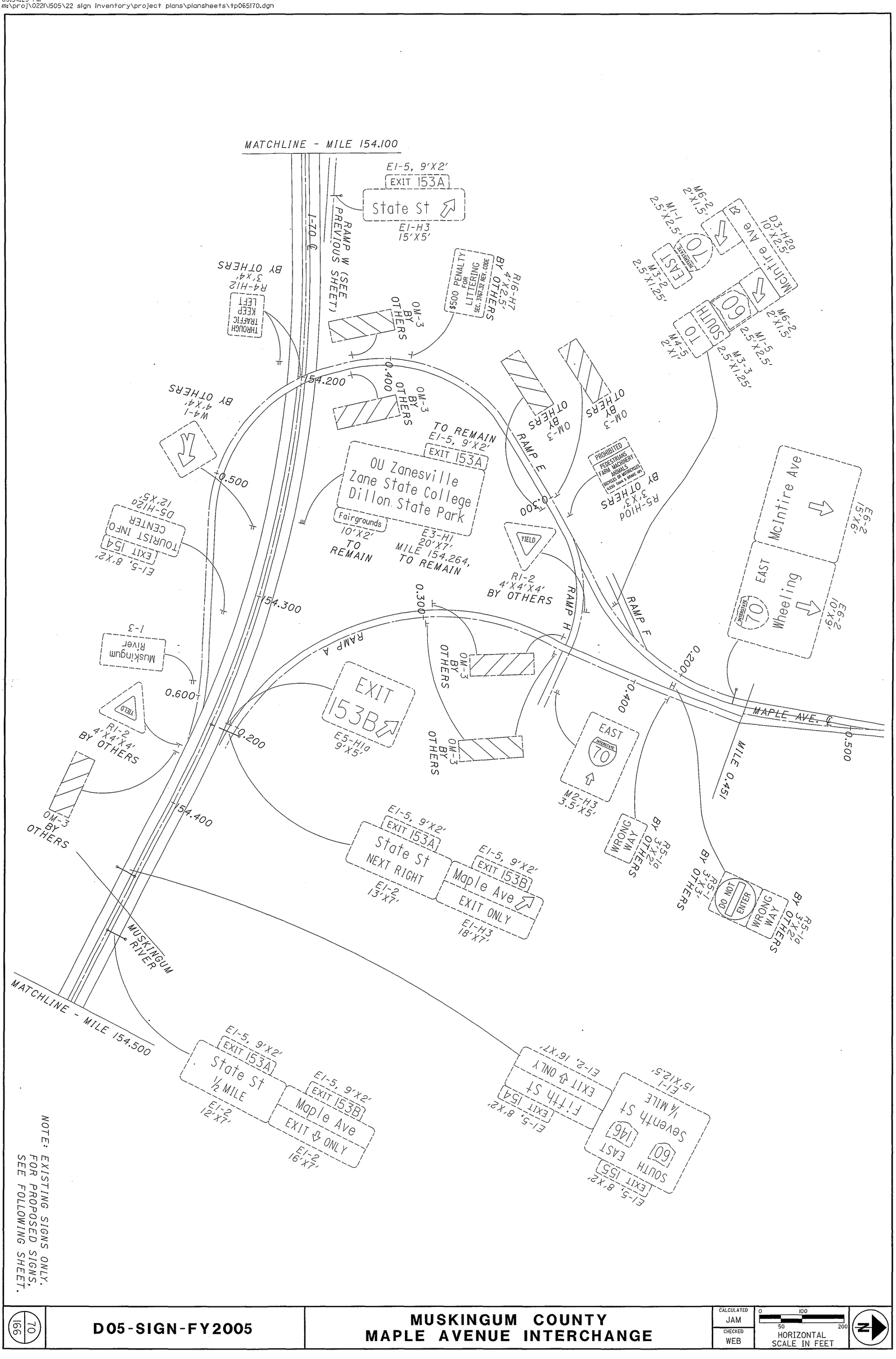

70 / 166	D05-SIGN-FY2005	MUSKINGUM COUNTY MAPLE AVENUE INTERCHANGE	CALCULATED JAM CHECKED WEB	0 50 100 200 HORIZONTAL SCALE IN FEET

FOR QUANTITIES, SEE SHEET 147

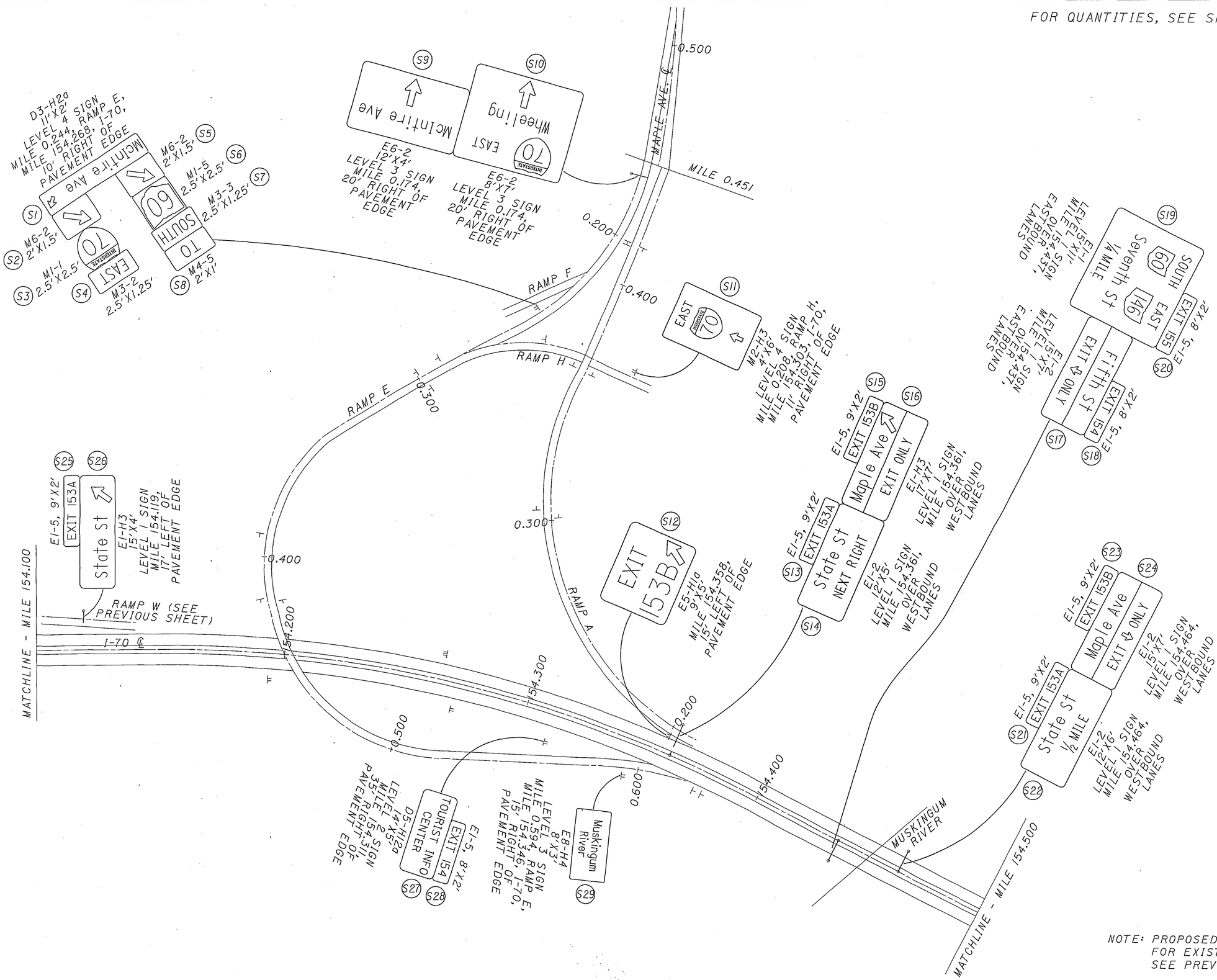

NOTE: PROPOSED SIGNS ONLY.
FOR EXISTING SIGNS,
SEE PREVIOUS SHEET.

HORIZONTAL SCALE IN FEET
0 50 100 200

CALCULATED JAM
CHECKED WEB

MUSKINGUM COUNTY
MAPLE AVENUE INTERCHANGE

D05-SIGN-FY2005

08/13/2004
03:54:26 PM
m:\proj\022\1505\22 sign inventory\project plans\plansheets\fp066170.dgn

08/13/2004
03:54:26 PM
m:\proj\022N\505\22 sign inventory\project plans\plansheets\tp067170.dgn

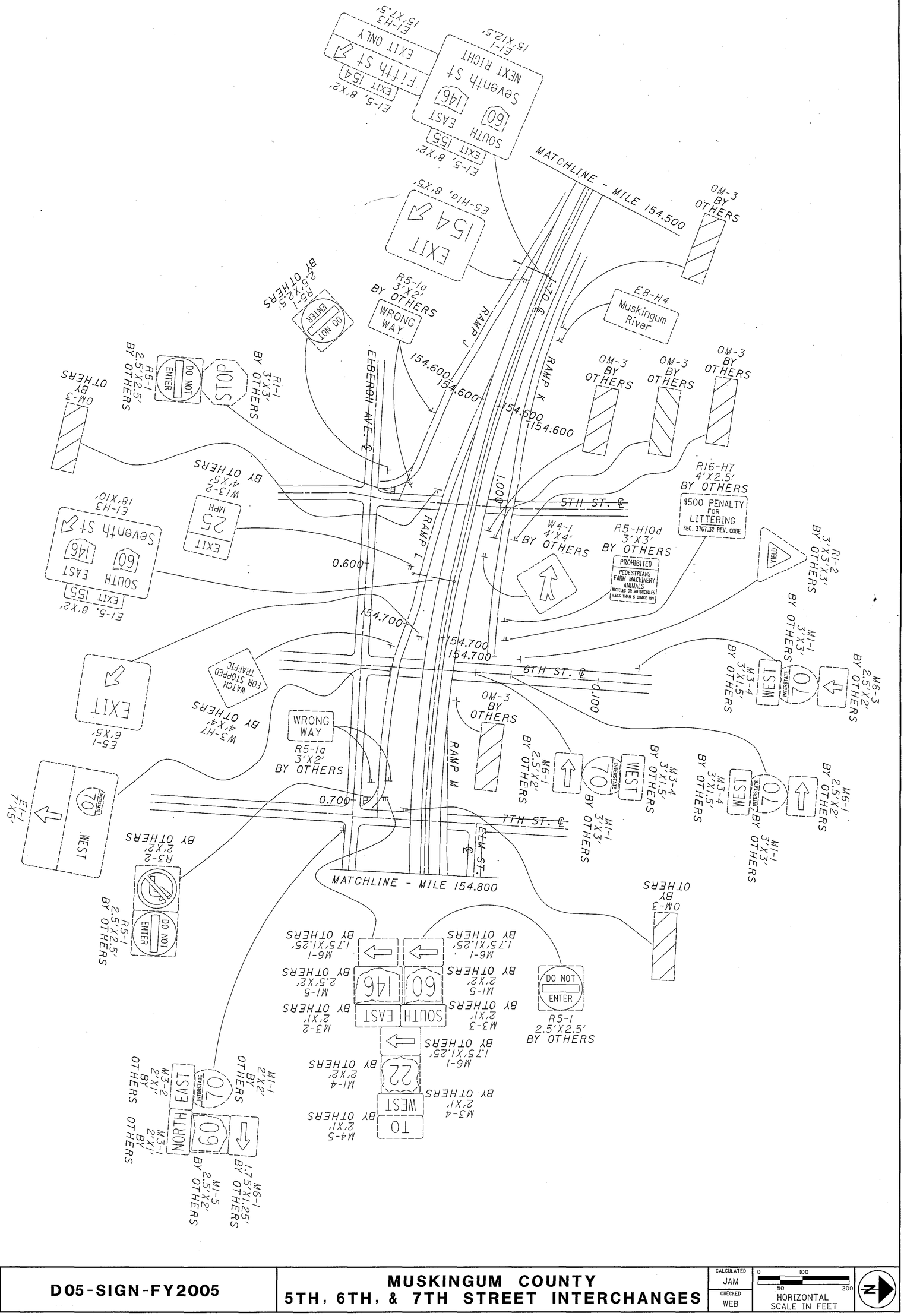

NOTE: EXISTING SIGNS ONLY. FOR PROPOSED SIGNS, SEE FOLLOWING SHEET.

72 / 166	D05-SIGN-FY2005	MUSKINGUM COUNTY 5TH, 6TH, & 7TH STREET INTERCHANGES	CALCULATED JAM CHECKED WEB	0 50 100 200 HORIZONTAL SCALE IN FEET

08/13/2004
03:54:26 PM
m:\proj\022\1\505\22 sign inventory\project plans\plansheets\tp068170.dgn

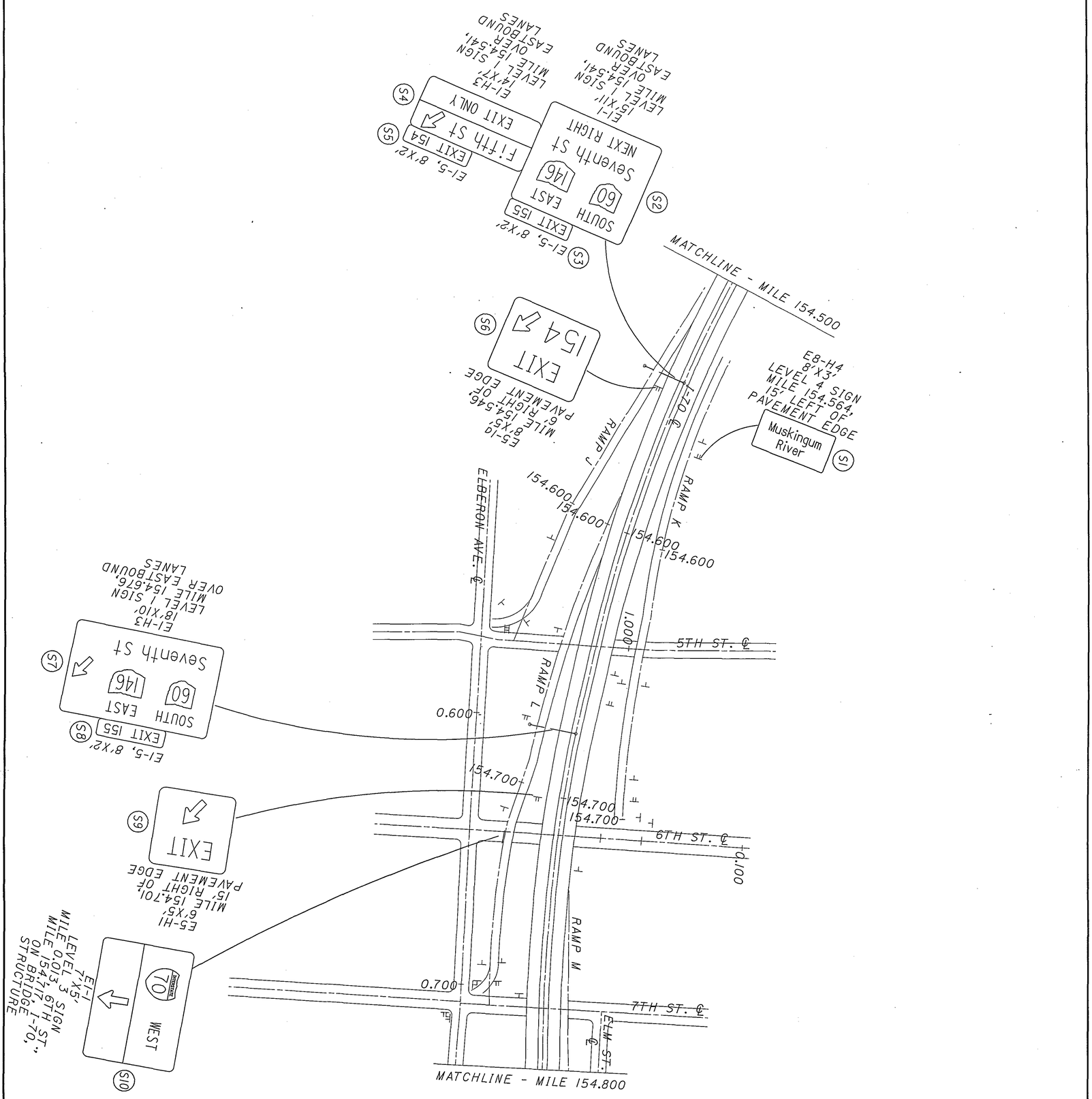

NOTE: PROPOSED SIGNS ONLY.
FOR EXISTING SIGNS,
SEE PREVIOUS SHEET.

FOR QUANTITIES, SEE SHEET 147

D05-SIGN-FY2005

MUSKINGUM COUNTY
5TH, 6TH, & 7TH STREET INTERCHANGES

CALCULATED JAM
CHECKED WEB

0 50 100 200
HORIZONTAL SCALE IN FEET

N

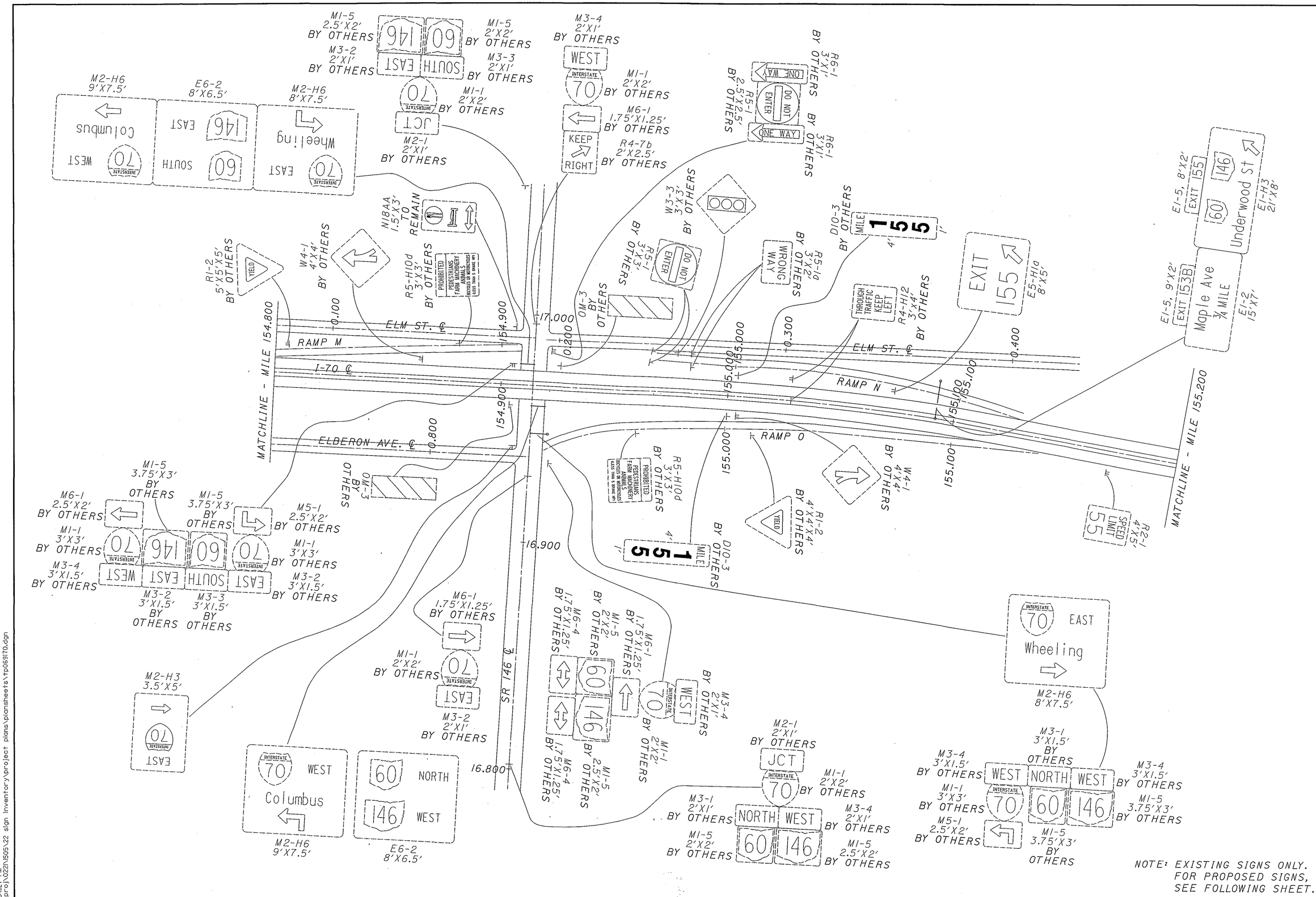

MUSKINGUM COUNTY
SR 146 INTERCHANGE

D05-SIGN-FY2005

CALCULATED JAM
CHECKED WEB

HORIZONTAL SCALE IN FEET 0 50 100 200

08/13/2004
09:46:22 AM
m:\proj\022\1505\22 sign inventory\project plans\plansheets\tp069170.dgn

FOR QUANTITIES, SEE SHEET 148

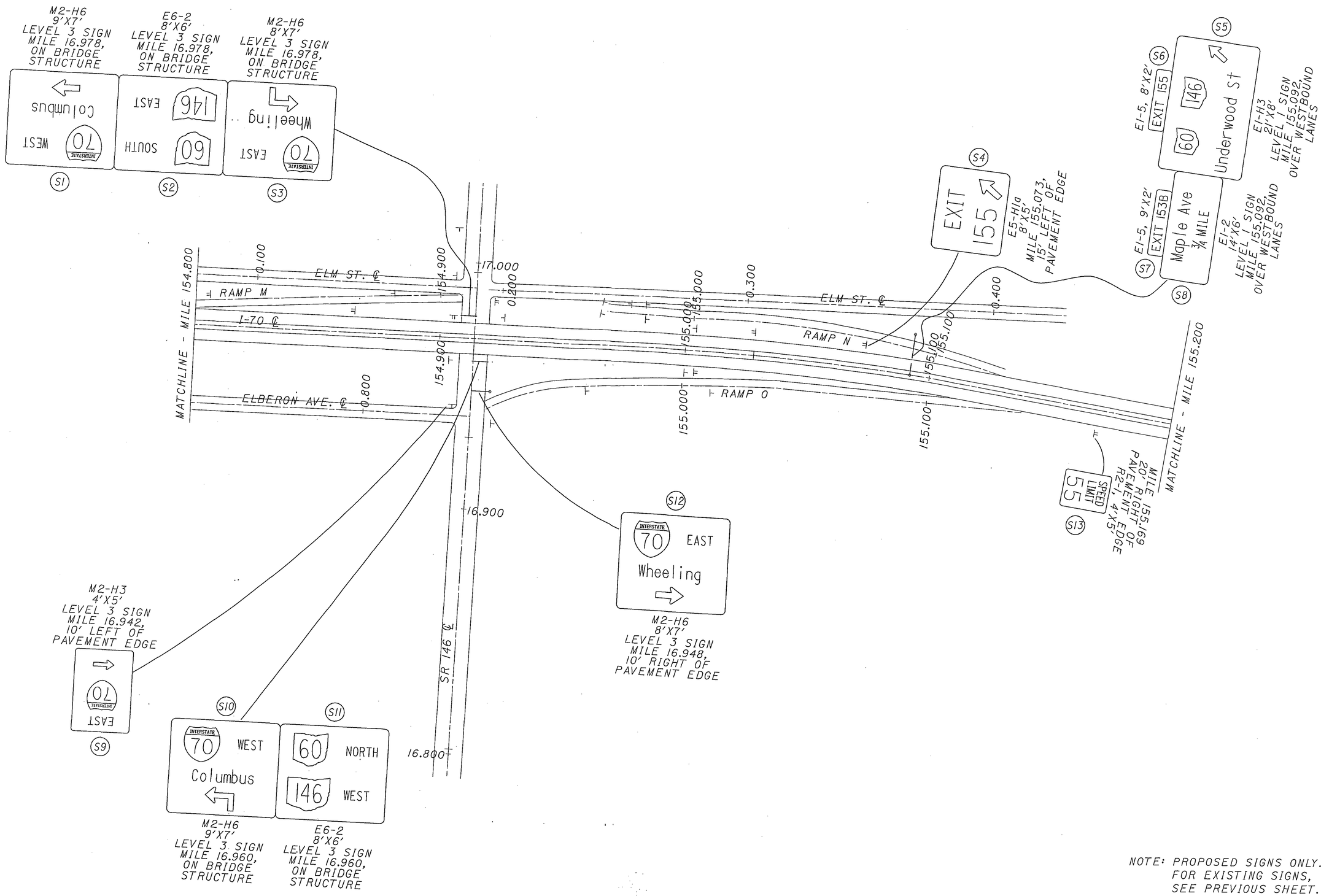

NOTE: PROPOSED SIGNS ONLY.
FOR EXISTING SIGNS,
SEE PREVIOUS SHEET.

N

0 50 100 200
HORIZONTAL
SCALE IN FEET

CALCULATED JAM
CHECKED WEB

MUSKINGUM COUNTY
SR 146 INTERCHANGE

D05-SIGN-FY2005

08/13/2004
03:46:27 PM
m:\proj\022\1505\22 sign inventory\project plans\plansheets\tp070170.dgn

08/13/2004
03:54:27 PM
m:\proj\022i\i505\22 sign inventory\project plans\plansheets\tp07ii70.dgn

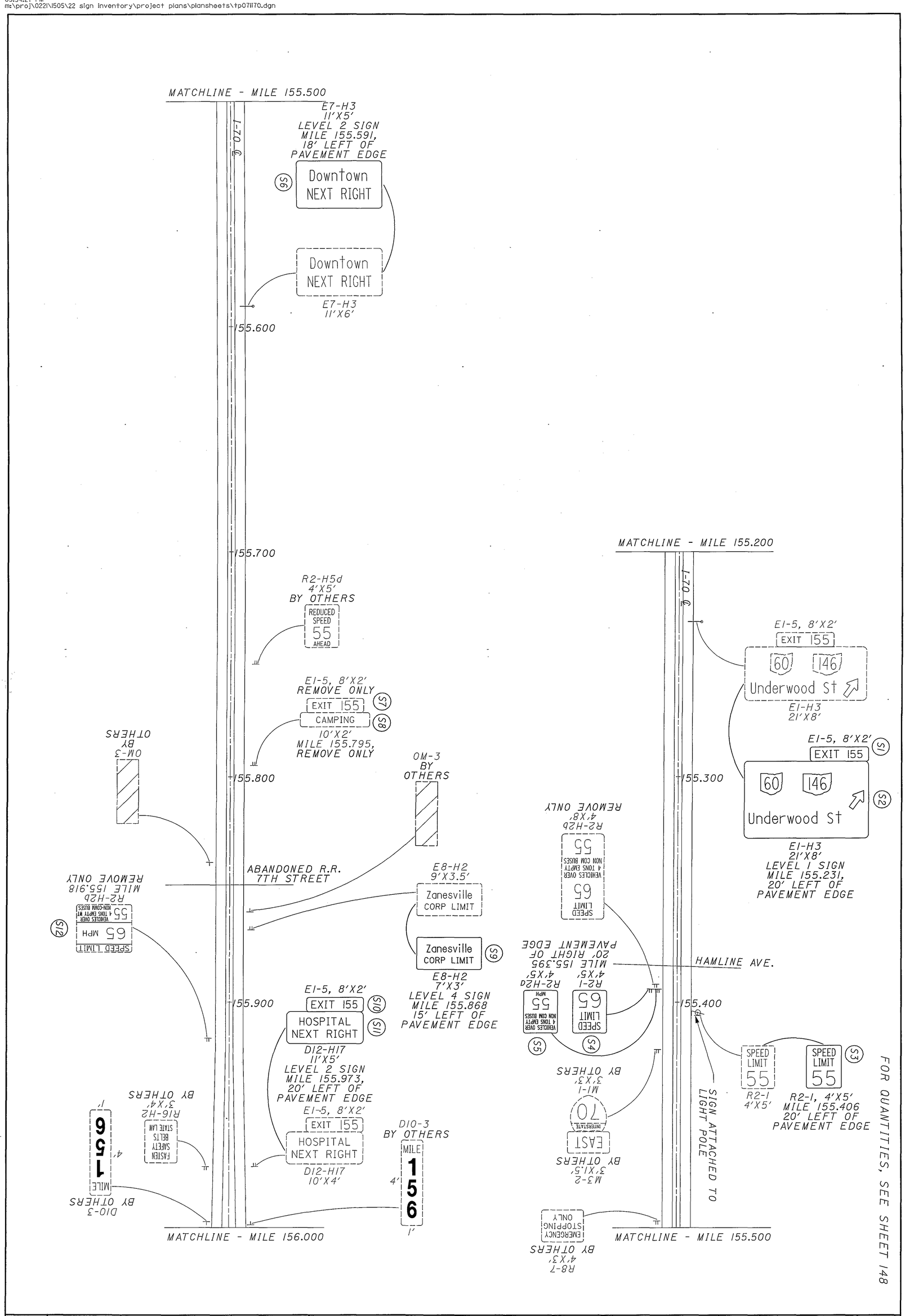

76 / 169	D05-SIGN-FY2005	MUSKINGUM COUNTY MILE 155.200 TO MILE 156.000	CALCULATED JAM CHECKED WEB	0 50 100 200 HORIZONTAL SCALE IN FEET

08/13/2004
03:54:28 PM
m:\proj\0221\1505\22 sign inventory\project plans\plansheets\tp072170.dgn

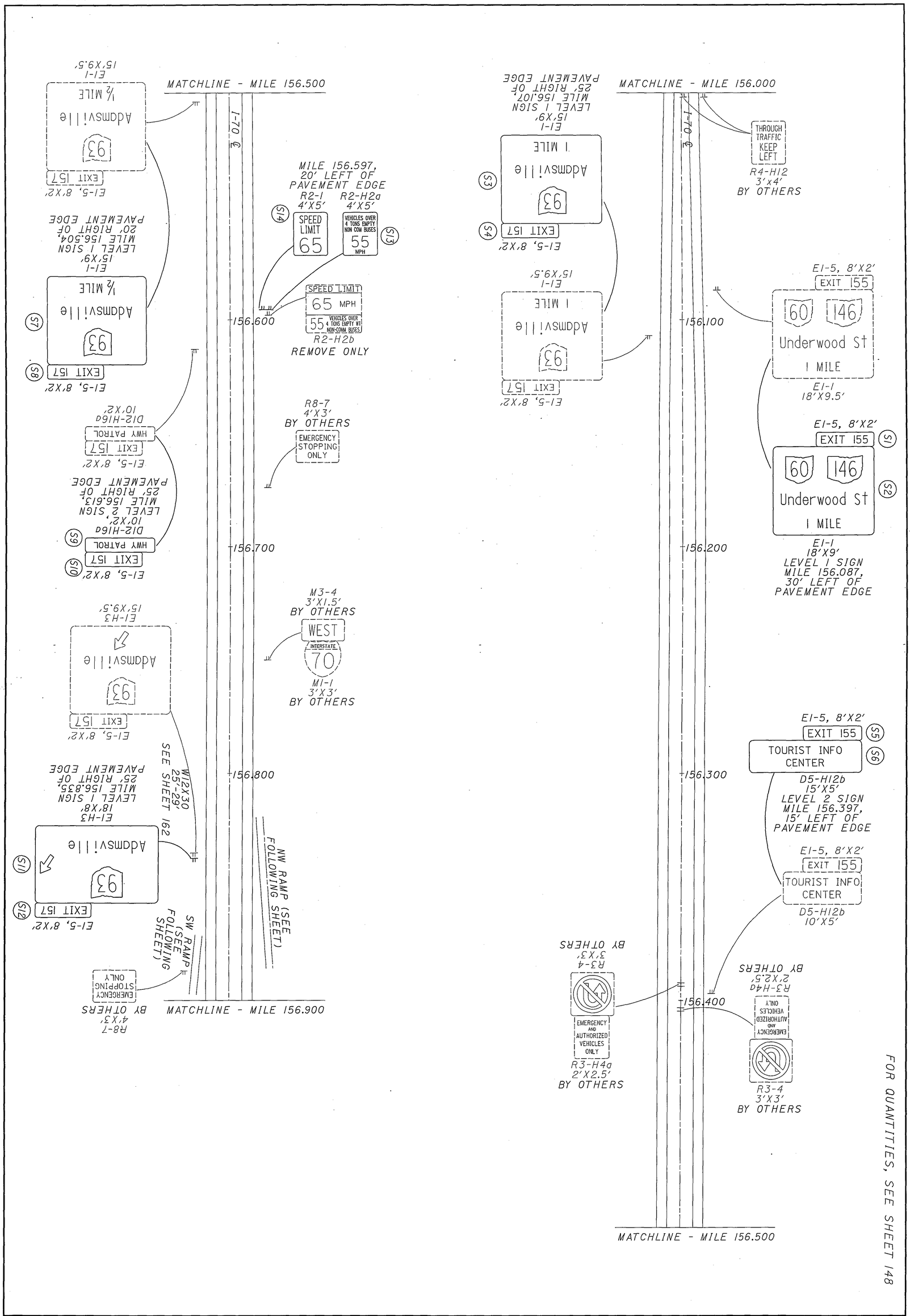

77 / 196	D05-SIGN-FY2005	MUSKINGUM COUNTY MILE 156.000 TO MILE 156.900	CALCULATED JAM CHECKED WEB 0 50 100 200 HORIZONTAL SCALE IN FEET

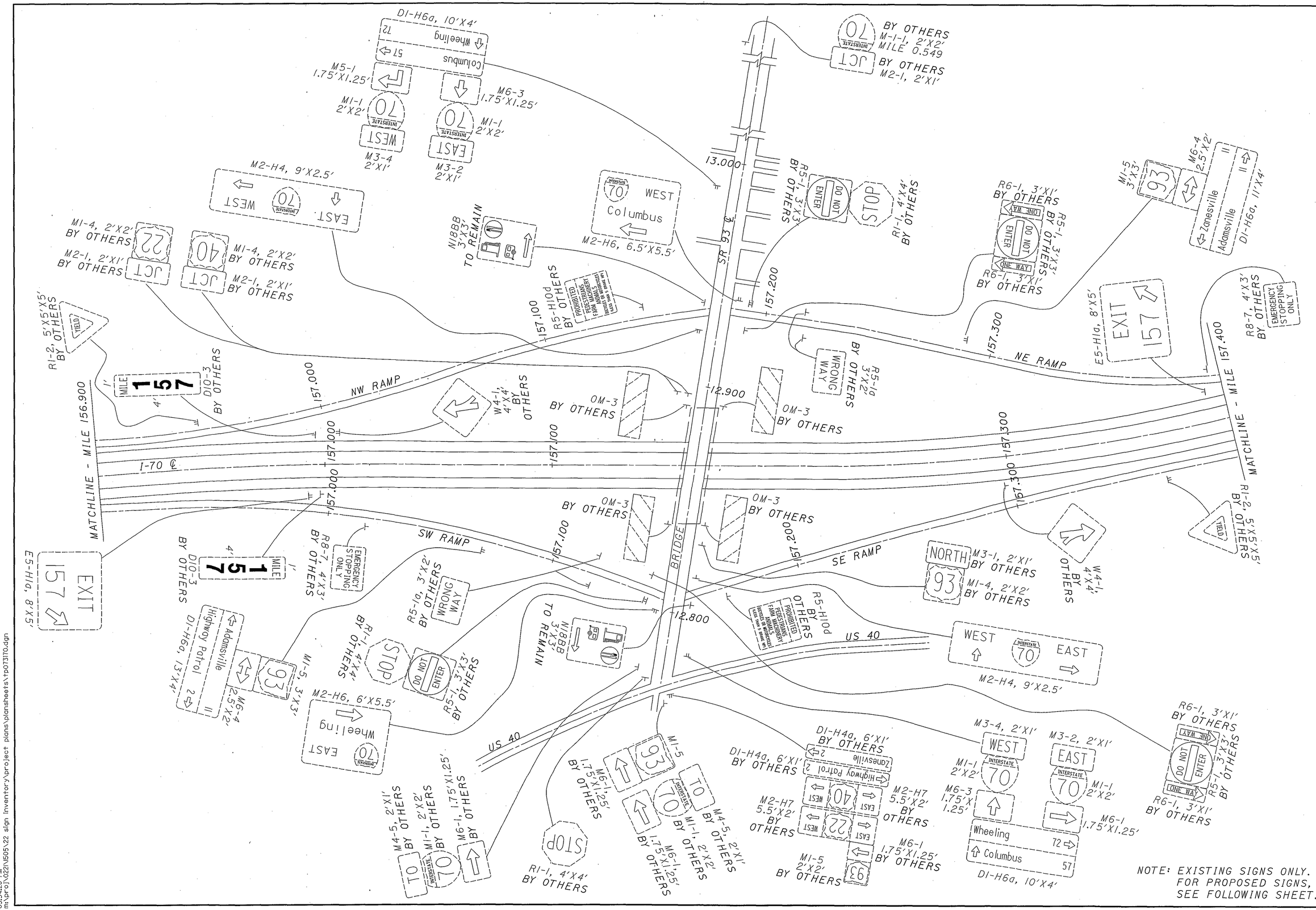

HORIZONTAL SCALE IN FEET 0 50 100 200

CALCULATED DAP
CHECKED WEB

MUSKINGUM COUNTY
SR 93 INTERCHANGE

D05-SIGN-FY2005

08/13/2004
03:54:28 PM
m:\proj\022N\505\22 sign inventory\project plans\plansheets\tp073170.dgn

FOR QUANTITIES, SEE SHEET 149

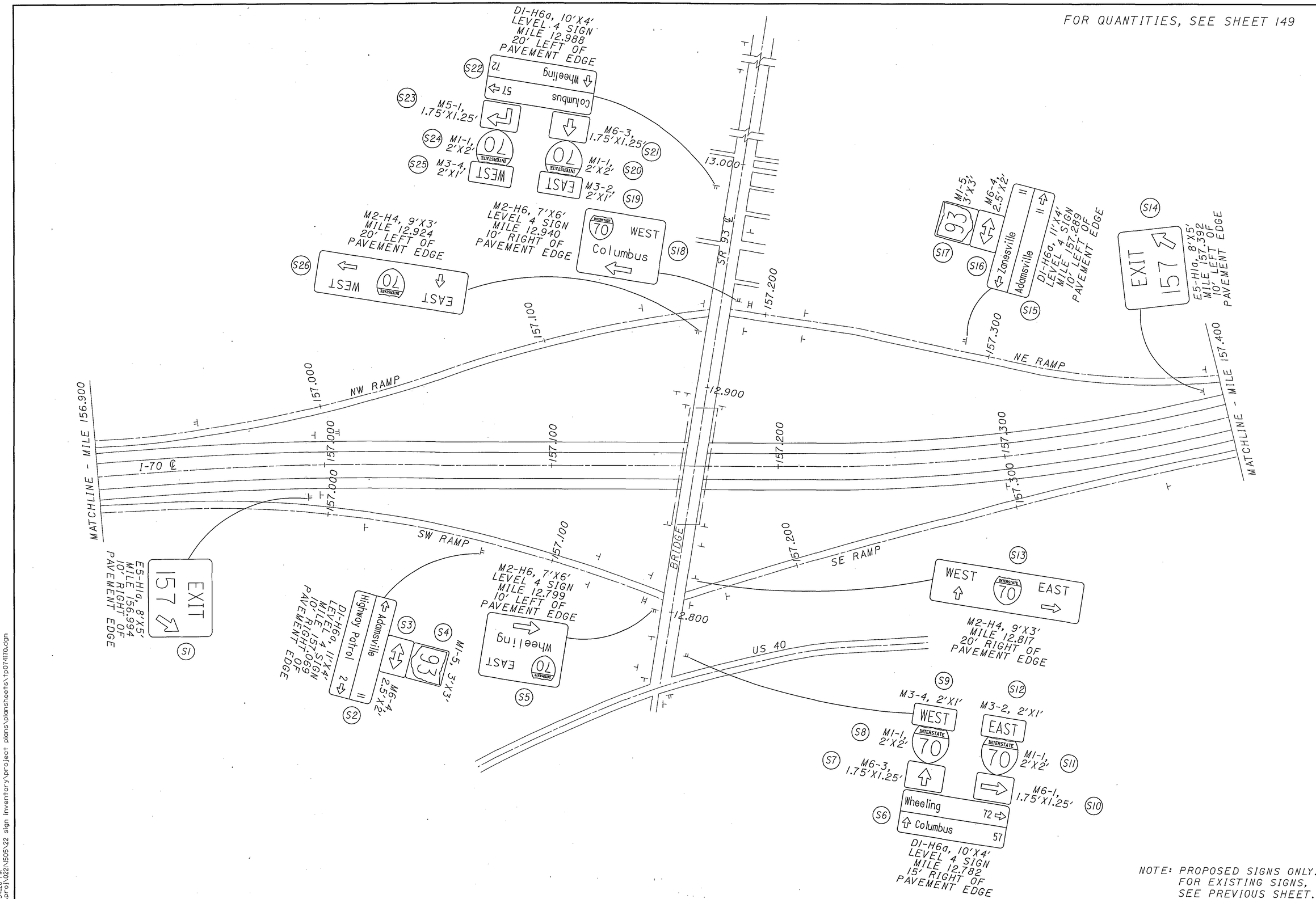

NOTE: PROPOSED SIGNS ONLY.
FOR EXISTING SIGNS,
SEE PREVIOUS SHEET.

N

HORIZONTAL SCALE IN FEET
0 50 100 200

CALCULATED DAP
CHECKED WEB

MUSKINGUM COUNTY
SR 93 INTERCHANGE

D05-SIGN-FY2005

08/13/2004
09:54:28 PM
m:\pro\1022\1505\22 sign inventory\project plans\plansheets\tp074170.dgn

08/13/2004
03:54:29 PM
m:\proj\0221\1505\22 sign inventory\project plans\plansheets\tp075170.dgn

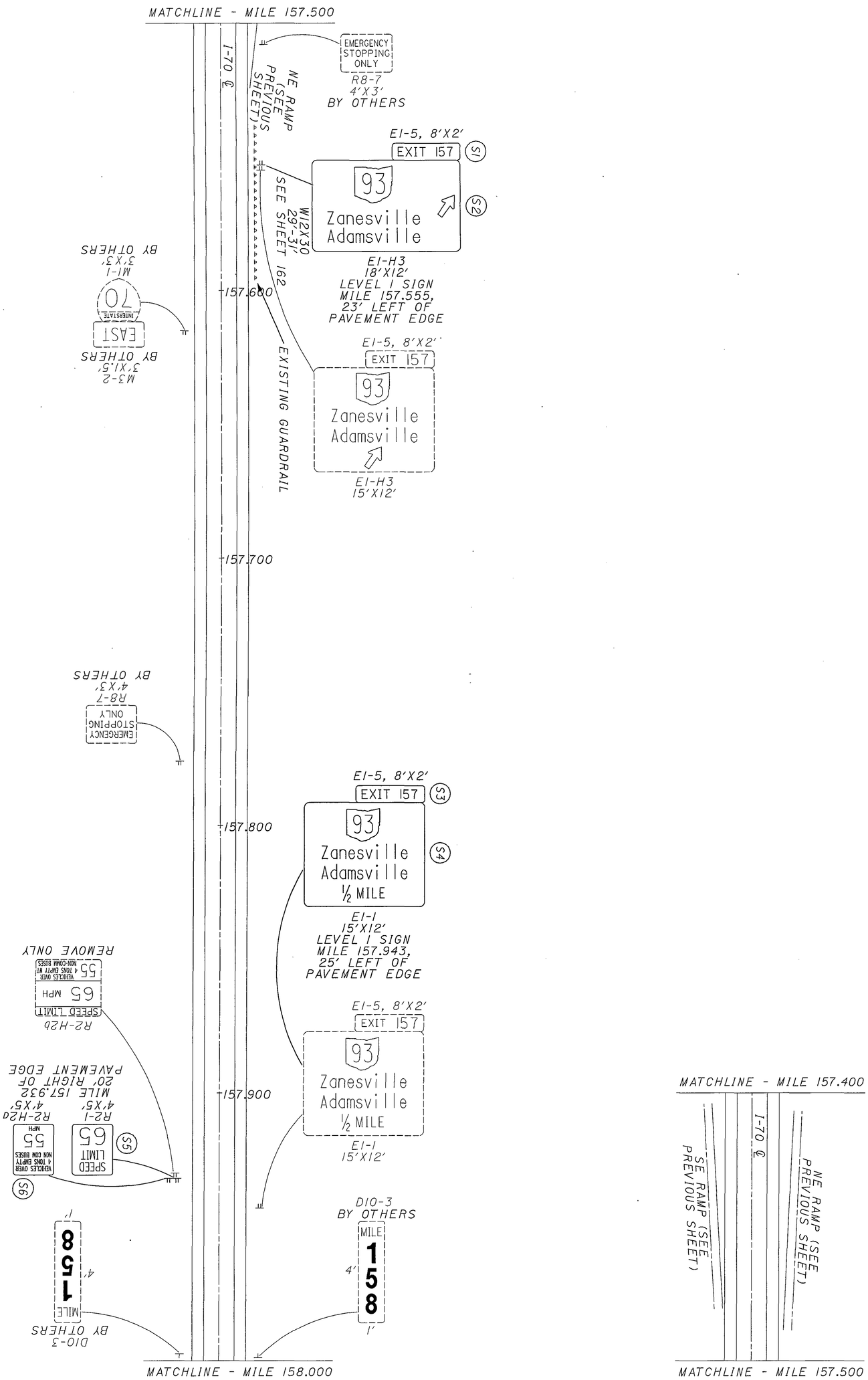

FOR QUANTITIES, SEE SHEET 149

80 / 199	D05-SIGN-FY2005	MUSKINGUM COUNTY MILE 157.400 TO MILE 158.000	CALCULATED JAM CHECKED WEB	0 50 100 200 HORIZONTAL SCALE IN FEET

08/13/2004
03:54:29 PM
m:\proj\022N\505\22 sign inventory\project plans\plansheets\tp076170.dgn

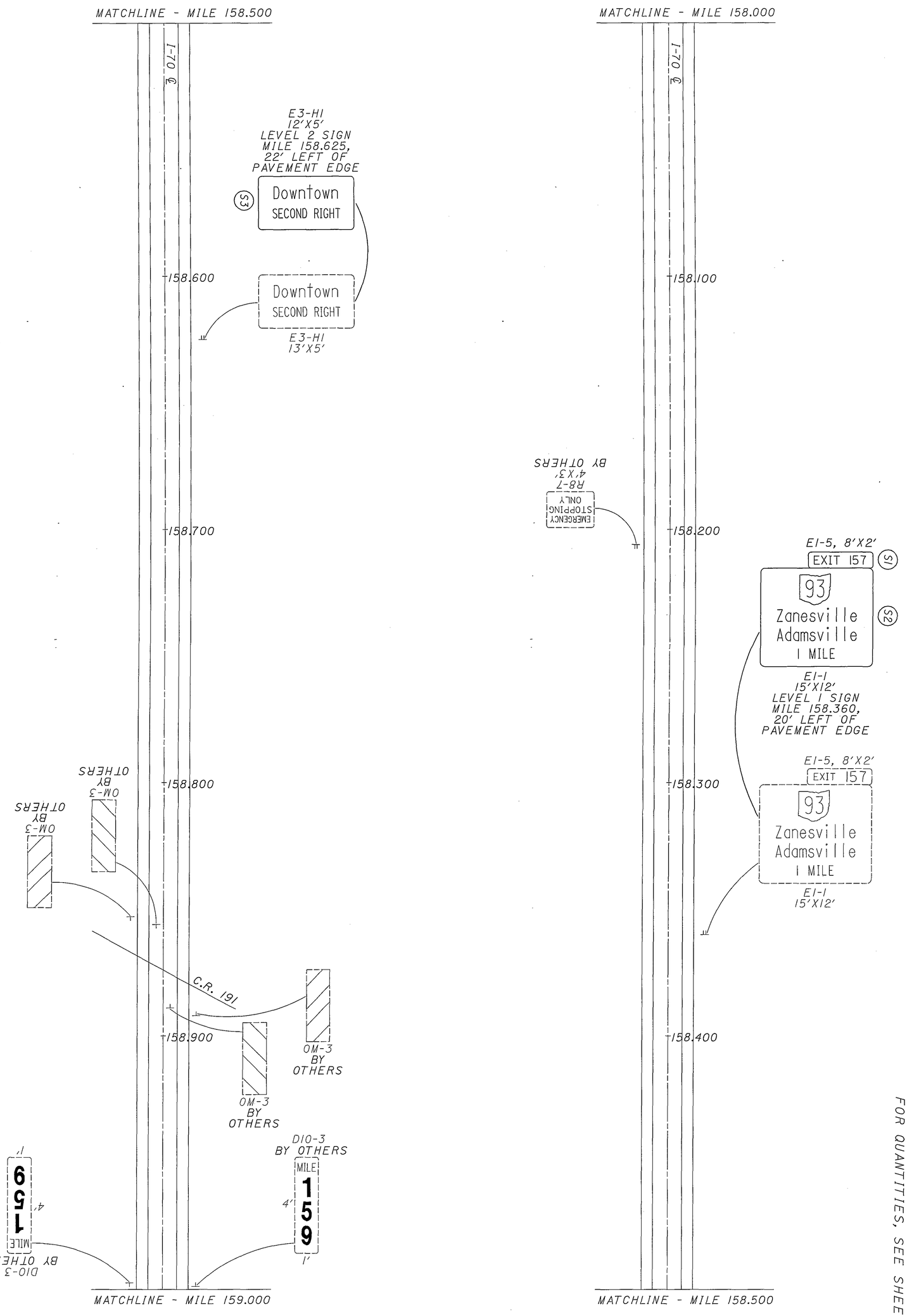

FOR QUANTITIES, SEE SHEET 149

D05-SIGN-FY2005

MUSKINGUM COUNTY
MILE 158.000 TO MILE 159.000

CALCULATED JAM
CHECKED WEB

0 50 100 200
HORIZONTAL SCALE IN FEET

N

08/13/2004
03:54:29 PM
m:\proj\0221\505\22 sign inventory\project plans\plansheets\tp077170.dgn

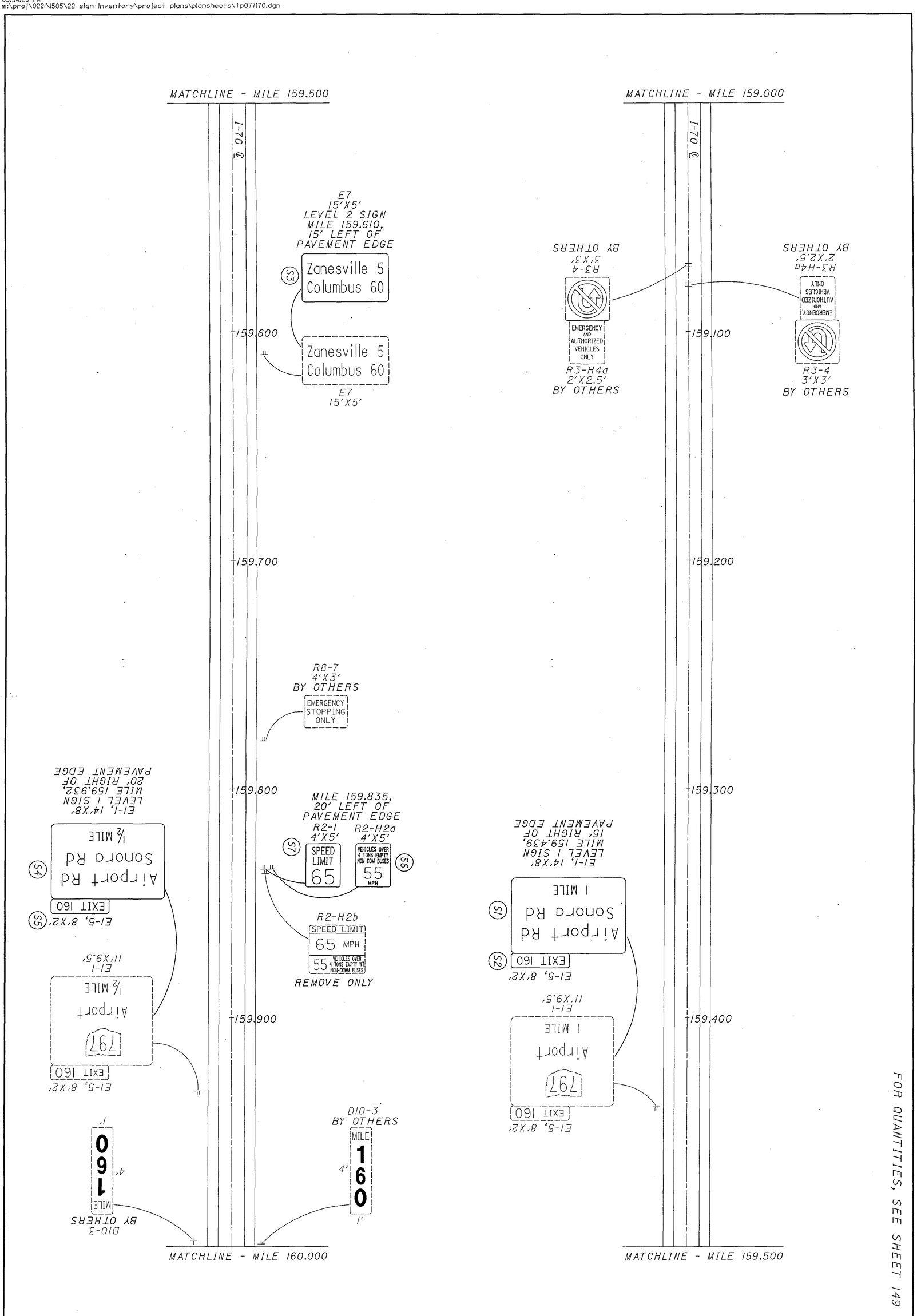

FOR QUANTITIES, SEE SHEET 149

D05-SIGN-FY2005

MUSKINGUM COUNTY
MILE 159.000 TO MILE 160.000

CALCULATED JAM
CHECKED WEB

0 50 100 200
HORIZONTAL SCALE IN FEET

08/13/2004
03:54:29 PM
m:\proj\0221\505\22 sign inventory\project plans\plansheets\tp078170.dgn

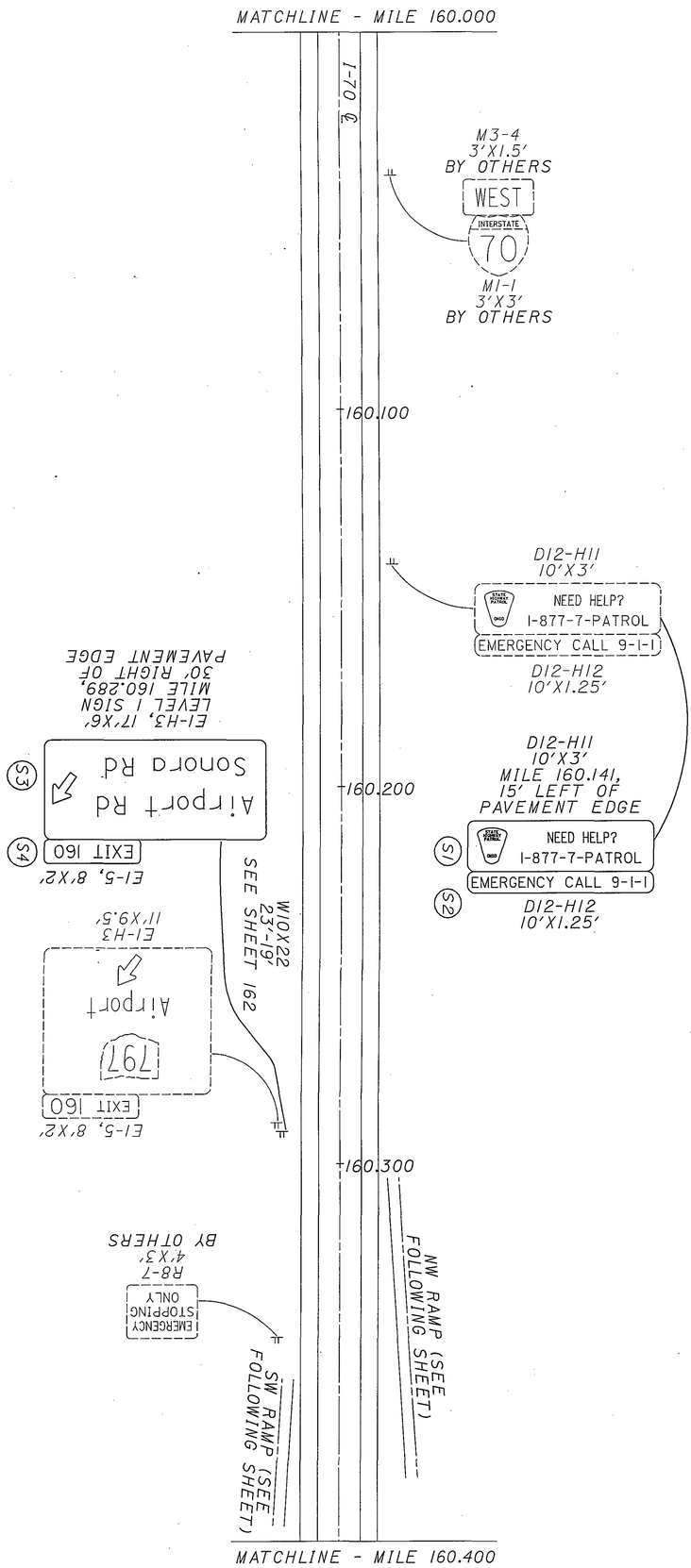

FOR QUANTITIES, SEE SHEET 149

83 / 166	D05-SIGN-FY2005	MUSKINGUM COUNTY MILE 160.000 TO MILE 160.400	CALCULATED JAM CHECKED WEB	0 50 100 200 HORIZONTAL SCALE IN FEET

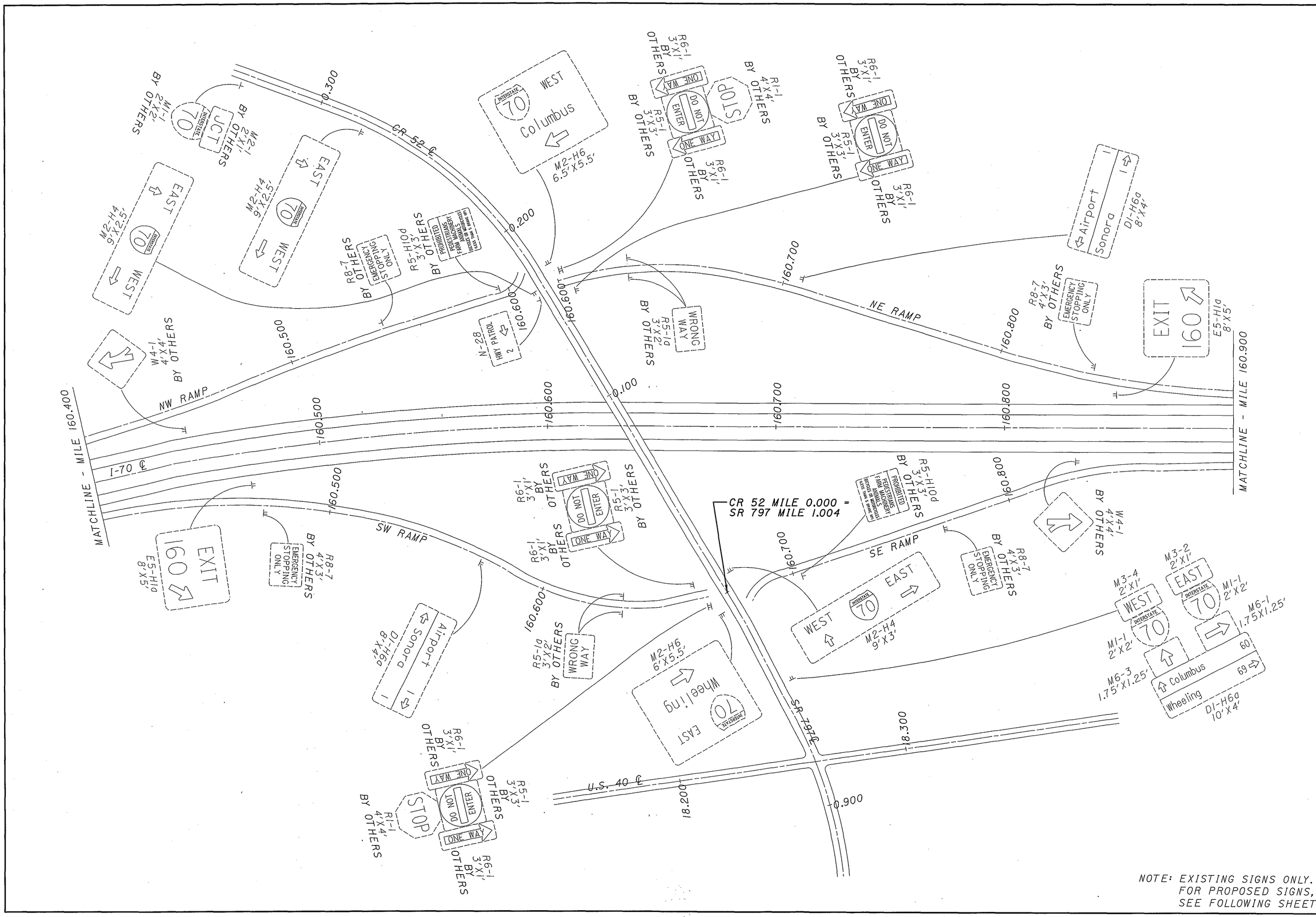

HORIZONTAL SCALE IN FEET 0 50 100 200

CALCULATED JAM
CHECKED WEB

MUSKINGUM COUNTY
CR 52 INTERCHANGE

D05-SIGN-FY2005

08/13/2004
08:54:20 AM
ms\proj\022\505\22 sign inventory\project plans\plansheets\tp079170.dgn

FOR QUANTITIES, SEE SHEET 150

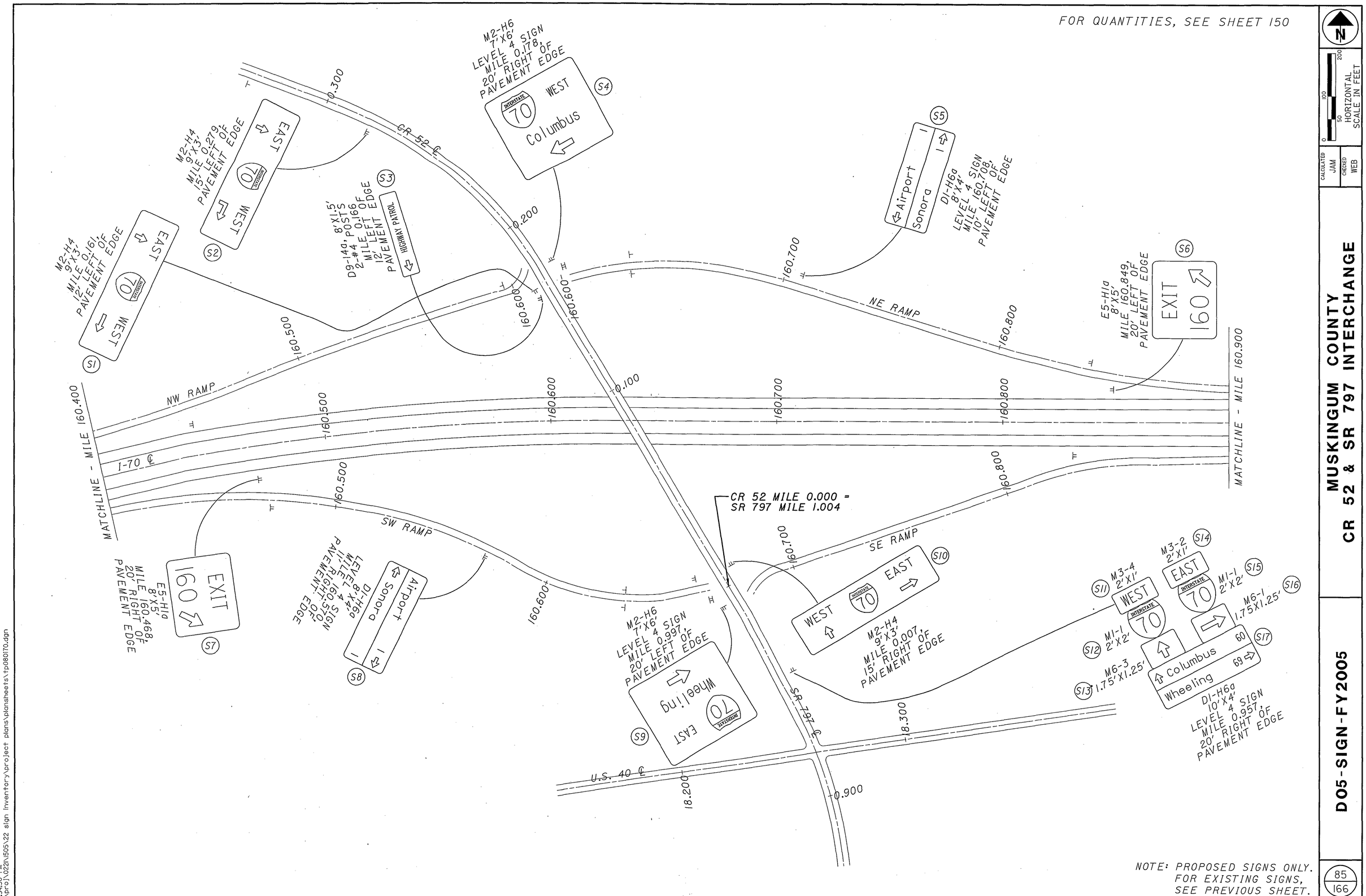

NOTE: PROPOSED SIGNS ONLY.
FOR EXISTING SIGNS,
SEE PREVIOUS SHEET.

HORIZONTAL SCALE IN FEET
0 50 100 200

CALCULATED JAM
CHECKED WEB

MUSKINGUM COUNTY
CR 52 & SR 797 INTERCHANGE

D05-SIGN-FY2005

08/13/2004
03:59:30 PM
m:\proj\022N\505\22 sign inventory\project plans\plansheets\tp080170.dgn

FOR QUANTITIES, SEE SHEET 150

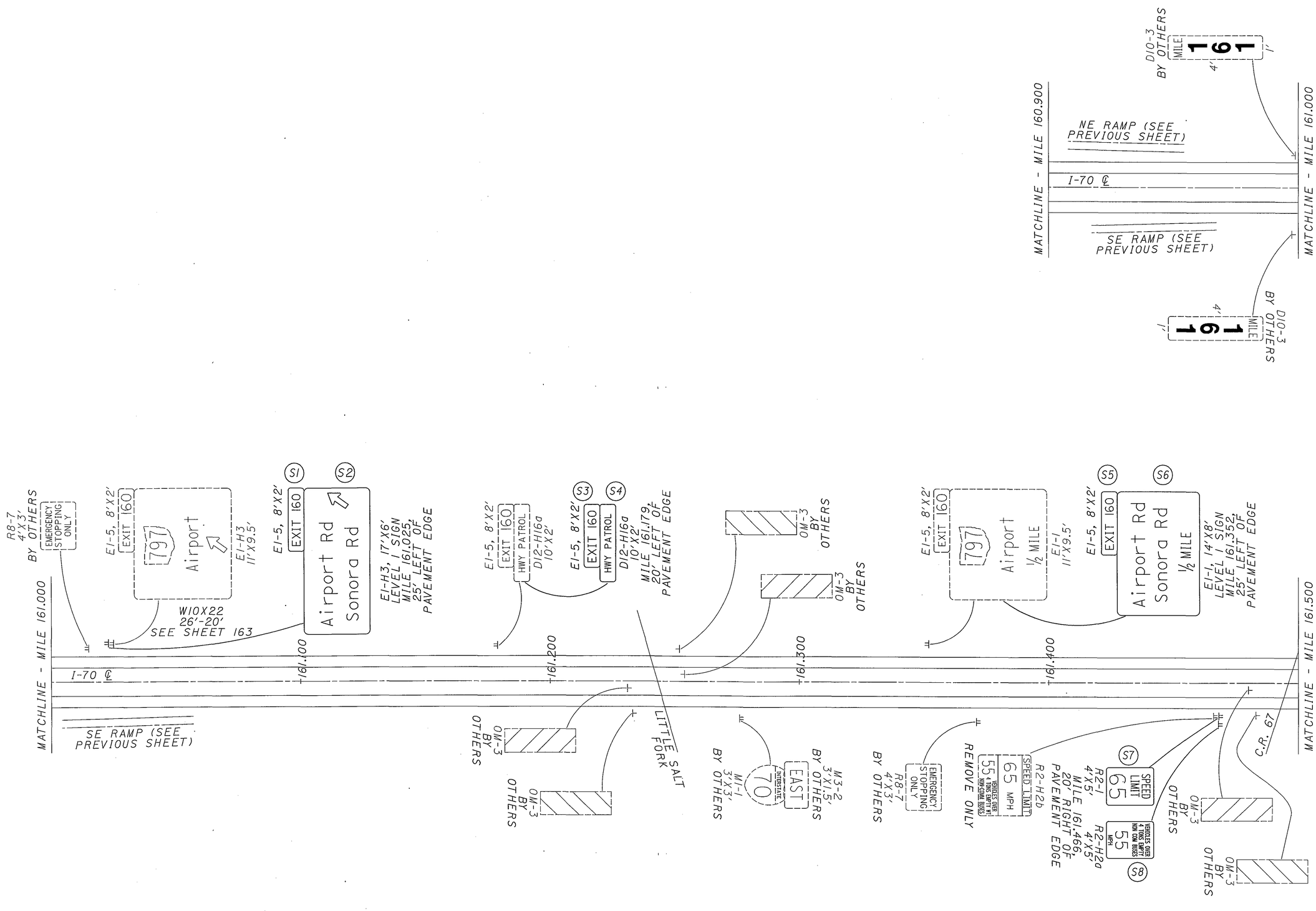

FOR QUANTITIES, SEE SHEET 150

HORIZONTAL SCALE IN FEET 0 50 100 200

CALCULATED JAM
CHECKED WEB

MUSKINGUM COUNTY
MILE 160.900 TO MILE 161.500

D05-SIGN-FY2005

08/13/2004
03:54:30 PM
m:\proj\022\1505\22 sign inventory\project plans\plansheets\tp08170.dgn

08/13/2004
03:54:31 PM
m:\proj\022IN505\22 sign inventory\project plans\plansheets\tp082170.dgn

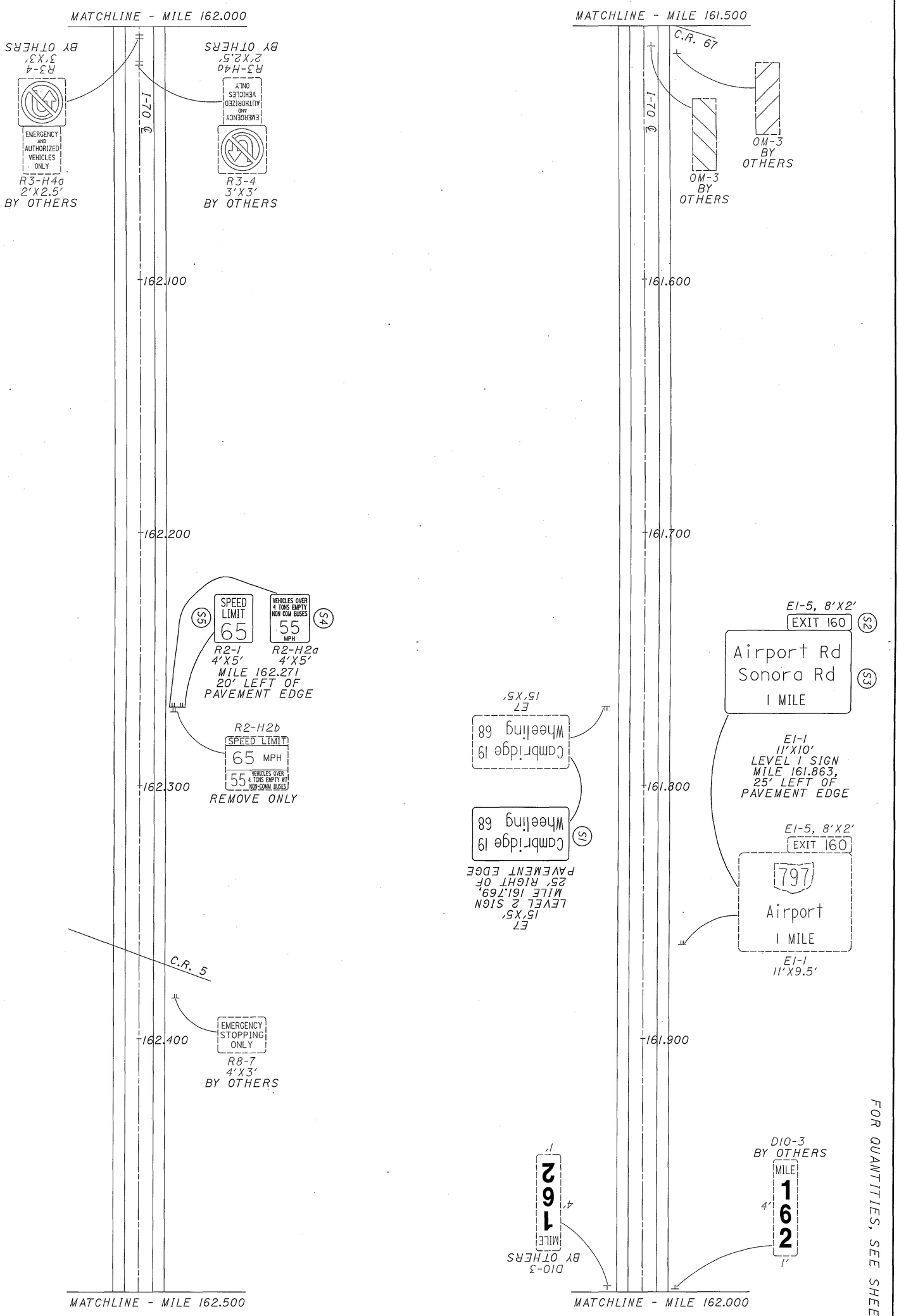

FOR QUANTITIES, SEE SHEET 150

D05-SIGN-FY2005

MUSKINGUM COUNTY
MILE 161.500 TO MILE 162.500

CALCULATED JAM
CHECKED WEB

0 50 100 200
HORIZONTAL SCALE IN FEET

N

08/13/2004
03:54:31PM
m:\proj\0221\505\22 sign inventory\project plans\plansheets\tp083170.dgn

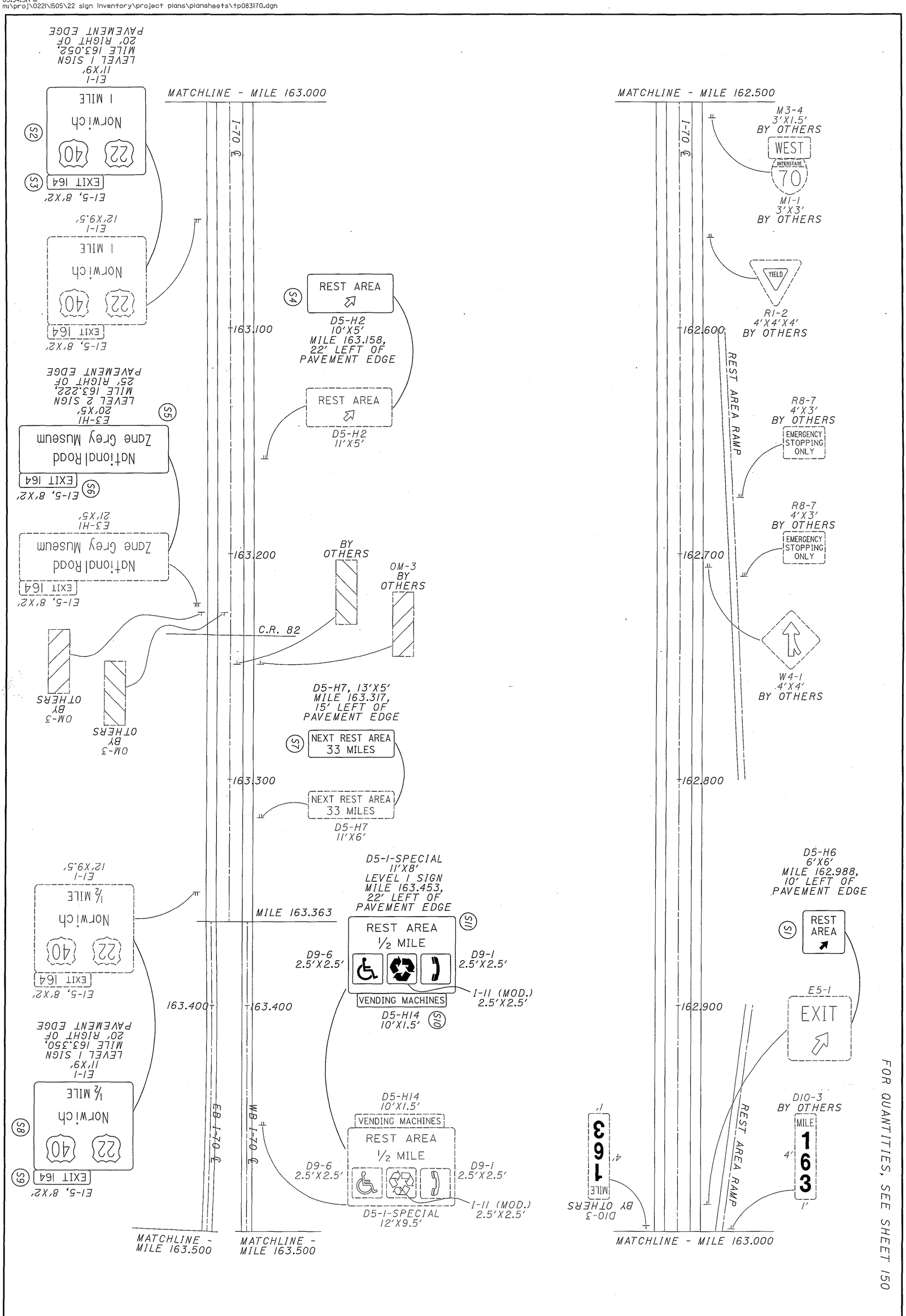

FOR QUANTITIES, SEE SHEET 150

88 / 166	D05-SIGN-FY2005	MUSKINGUM COUNTY MILE 162.500 TO MILE 163.500	CALCULATED JAM CHECKED WEB 0 50 100 200 HORIZONTAL SCALE IN FEET

08/16/2004
08:34:45 AM
m:\proj\022\1505\22 sign inventory\project plans\plansheets\tp084170.dgn

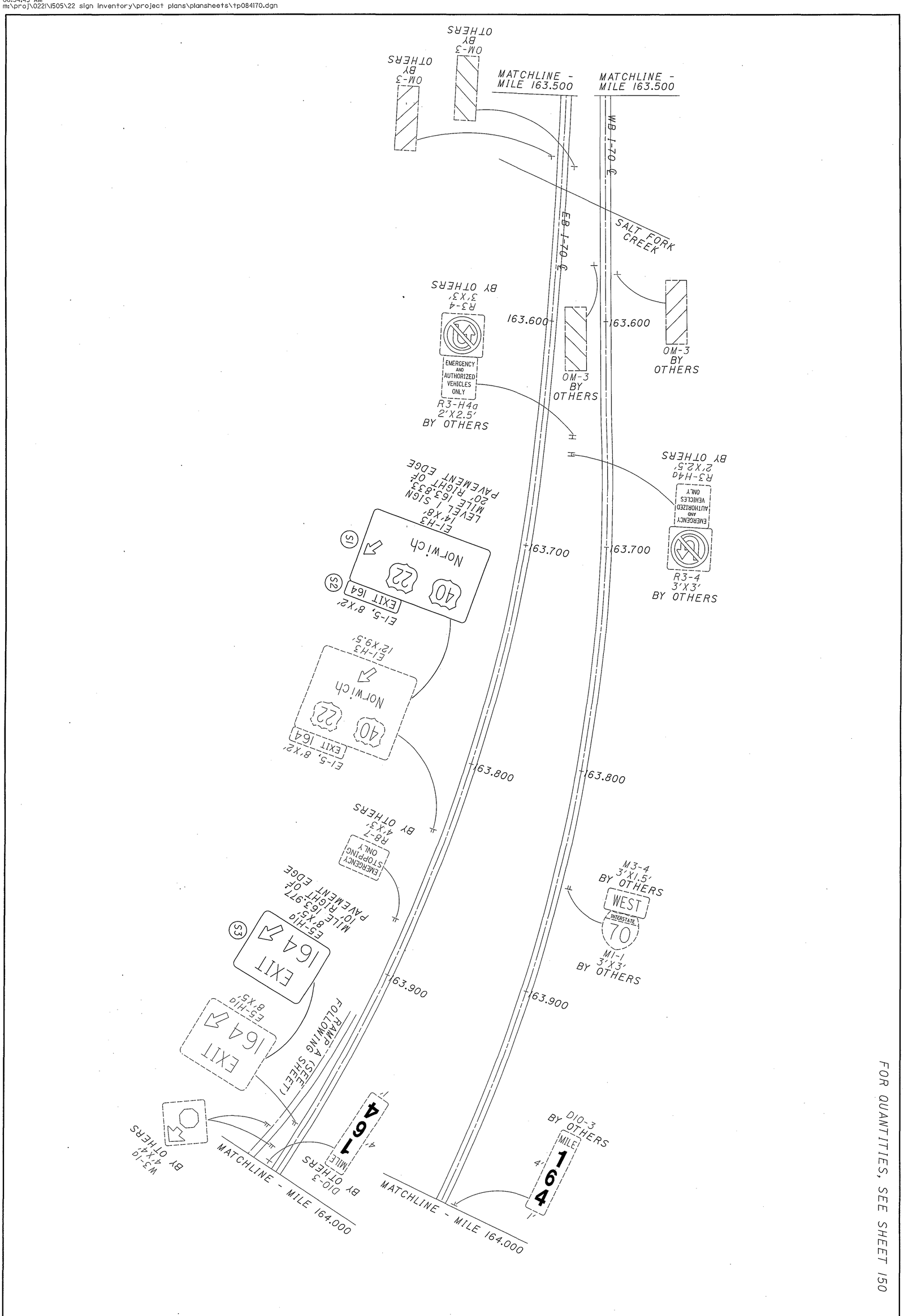

FOR QUANTITIES, SEE SHEET 150

89 / 166	D05-SIGN-FY2005	MUSKINGUM COUNTY MILE 163.500 TO MILE 164.000	CALCULATED JAM CHECKED WEB	0 100 50 200 HORIZONTAL SCALE IN FEET

08/16/2004
08:34:45 AM
m:\proj\022\1\505\22 sign inventory\project plans\plansheets\tp085170.dgn

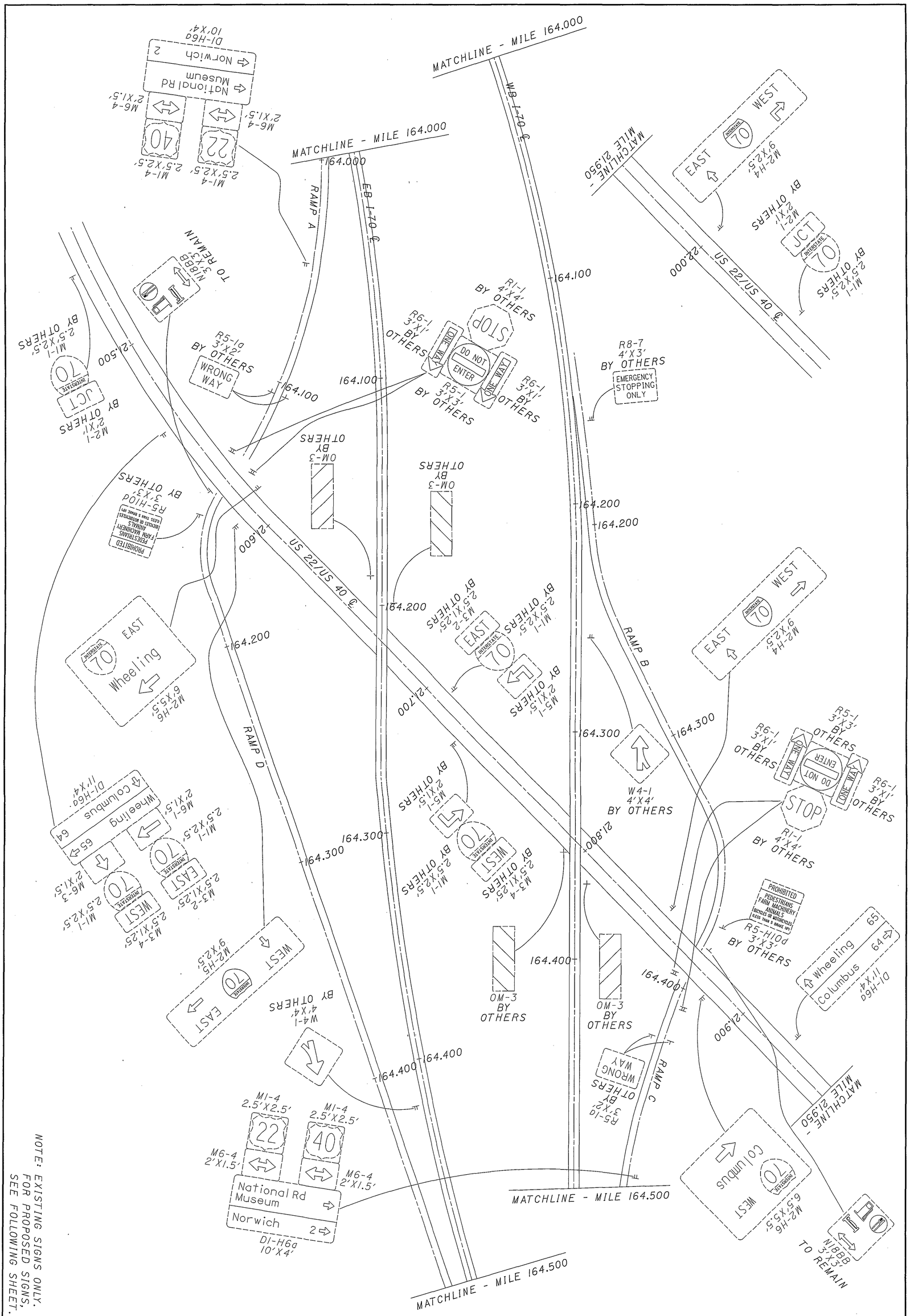

NOTE: EXISTING SIGNS ONLY.
FOR PROPOSED SIGNS,
SEE FOLLOWING SHEET.

90 / 166	D05-SIGN-FY2005	MUSKINGUM COUNTY US 22/US 40 INTERCHANGE	CALCULATED JAM CHECKED WEB	0 50 100 200 HORIZONTAL SCALE IN FEET

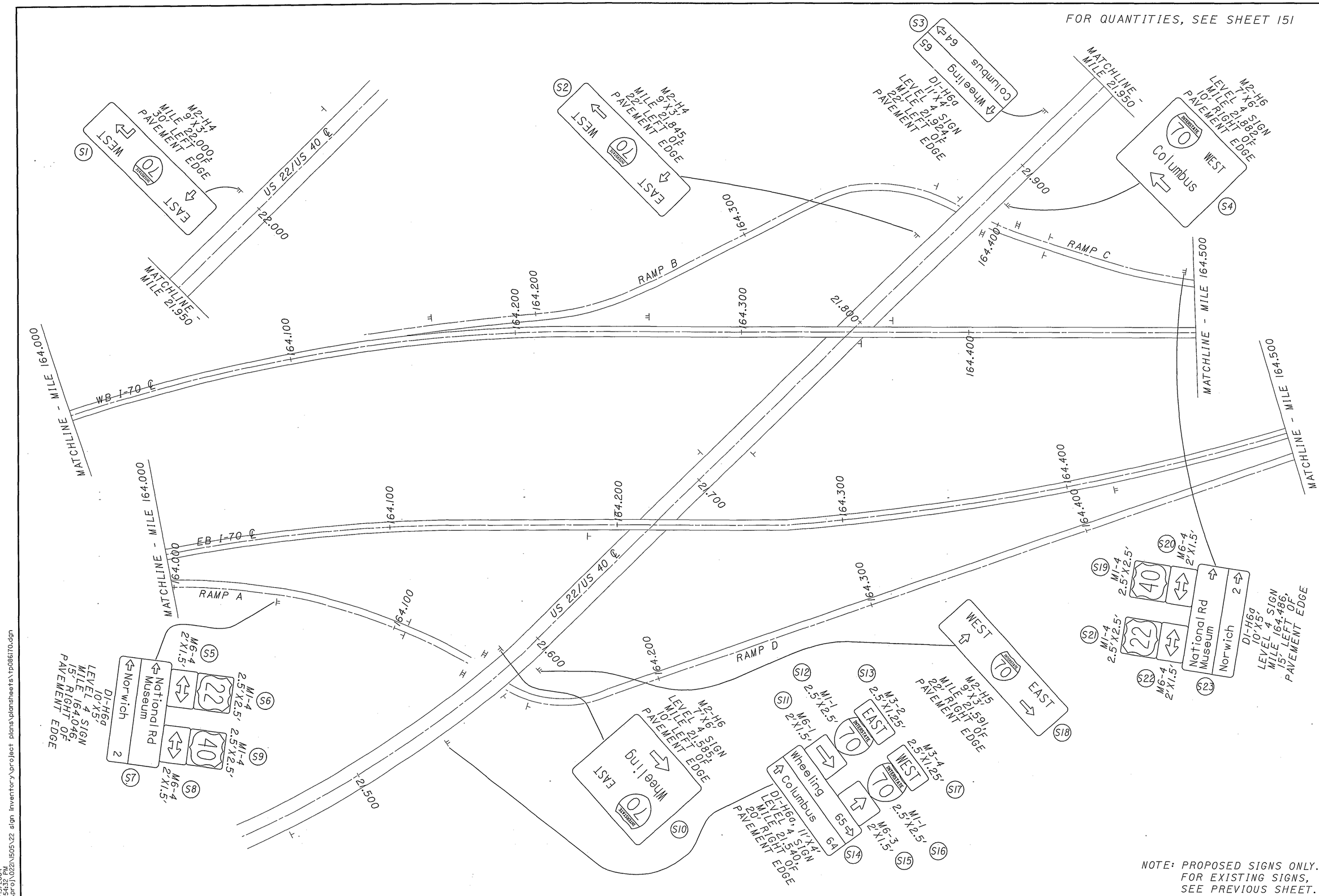
FOR QUANTITIES, SEE SHEET 151
S1
WEST
70
INTERSTATE
EAST
M2-H4
9'X3'
MILE 22.000
30' LEFT OF
PAVEMENT EDGE
US 22/US 40 ℄
22.000
MATCHLINE - MILE 21.950
S2
WEST
70
INTERSTATE
EAST
M2-H4
9'X3'
MILE 21.845
22' LEFT OF
PAVEMENT EDGE
S3
Wheeling
64
65
Columbus
D1-H6
11'X4'
LEVEL 4 SIGN
MILE 21.924
22' LEFT OF
PAVEMENT EDGE
MATCHLINE - MILE 21.950
S4
WEST
70
INTERSTATE
Columbus
M2-H6
7'X6'
LEVEL 4 SIGN
MILE 21.882
10' RIGHT OF
PAVEMENT EDGE
21.900
164.300
164.400
RAMP C
RAMP B
MATCHLINE - MILE 164.500
21.800
164.000
164.100
164.200
164.300
164.400
WB I-70 ℄
MATCHLINE - MILE 164.000
EB I-70 ℄
MATCHLINE - MILE 164.000
164.000
RAMP A
US 22/US 40 ℄
21.700
21.600
21.500
RAMP D
S5
M6-4
2'X1.5'
S6
M1-4
2.5'X2.5'
S7
National Rd
Museum
Norwich
2
D1-H6a
10'X5'
LEVEL 4 SIGN
MILE 164.046
15' RIGHT OF
PAVEMENT EDGE
S8
M6-4
2'X1.5'
S9
M1-4
2.5'X2.5'
S10
EAST
70
INTERSTATE
Wheeling
M2-H6
7'X6'
LEVEL 4 SIGN
MILE 21.585
10' LEFT OF
PAVEMENT EDGE
S11
M6-1
2'X1.5'
S12
M1-1
2.5'X2.5'
S13
M3-2
2.5'X1.25'
EAST
70
INTERSTATE
S14
Wheeling
Columbus
65
64
D1-H6a, 11'X4'
LEVEL 4 SIGN
MILE 21.540
20' RIGHT OF
PAVEMENT EDGE
S15
M6-3
2'X1.5'
S16
M1-1
2.5'X2.5'
S17
M3-4
2.5'X1.25'
WEST
70
INTERSTATE
S18
WEST
70
INTERSTATE
EAST
M2-H5
9'X3'
MILE 21.591
22' RIGHT OF
PAVEMENT EDGE
S19
M1-4
2.5'X2.5'
40
S20
M6-4
2'X1.5'
S21
M1-4
2.5'X2.5'
22
S22
M6-4
2'X1.5'
S23
National Rd
Museum
Norwich
2
D1-H6a
10'X5'
LEVEL 4 SIGN
MILE 164.486
15' LEFT OF
PAVEMENT EDGE
MATCHLINE - MILE 164.500
NOTE: PROPOSED SIGNS ONLY.
FOR EXISTING SIGNS,
SEE PREVIOUS SHEET.
N
0 50 100 200
HORIZONTAL
SCALE IN FEET
CALCULATED
JAM
CHECKED
WEB
MUSKINGUM COUNTY
US 22/US 40 INTERCHANGE
D05-SIGN-FY2005
91
166
08/13/2004
03:46:32 PM
m:\proj\022\1\505\22 sign inventory\project plans\plansheets\tp0861T0.dgn

08/13/2004
03:54:32 PM
m:\proj\022l\l505\22 sign inventory\project plans\plansheets\tp087170.dgn

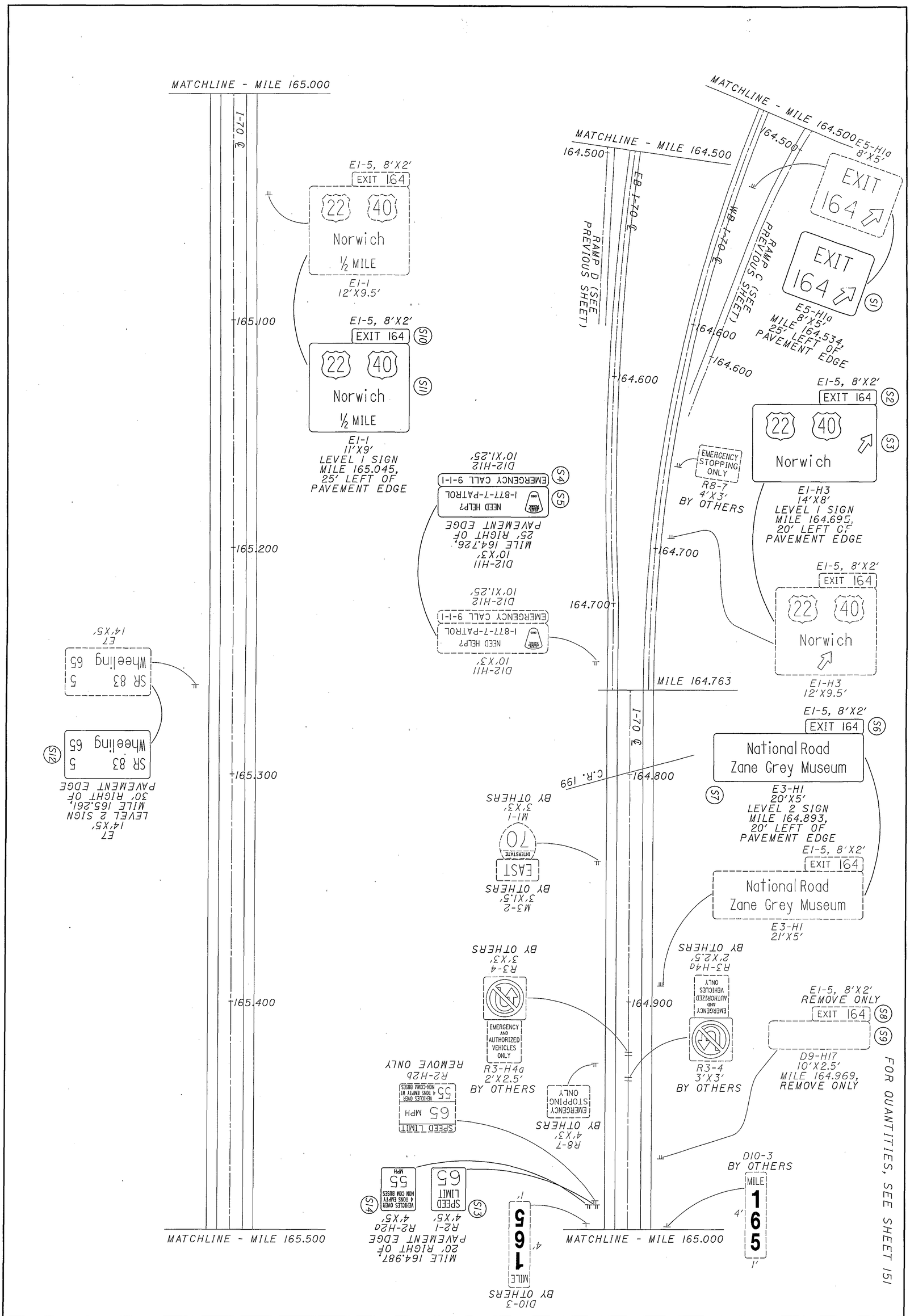

92 / 196	D05-SIGN-FY2005	MUSKINGUM COUNTY MILE 164.500 TO MILE 165.500	CALCULATED JAM CHECKED WEB 0 50 100 200 HORIZONTAL SCALE IN FEET N

08/13/2004
03:54:32 PM
m:\proj\022N\505\22 sign inventory\project plans\plansheets\tp088170.dgn

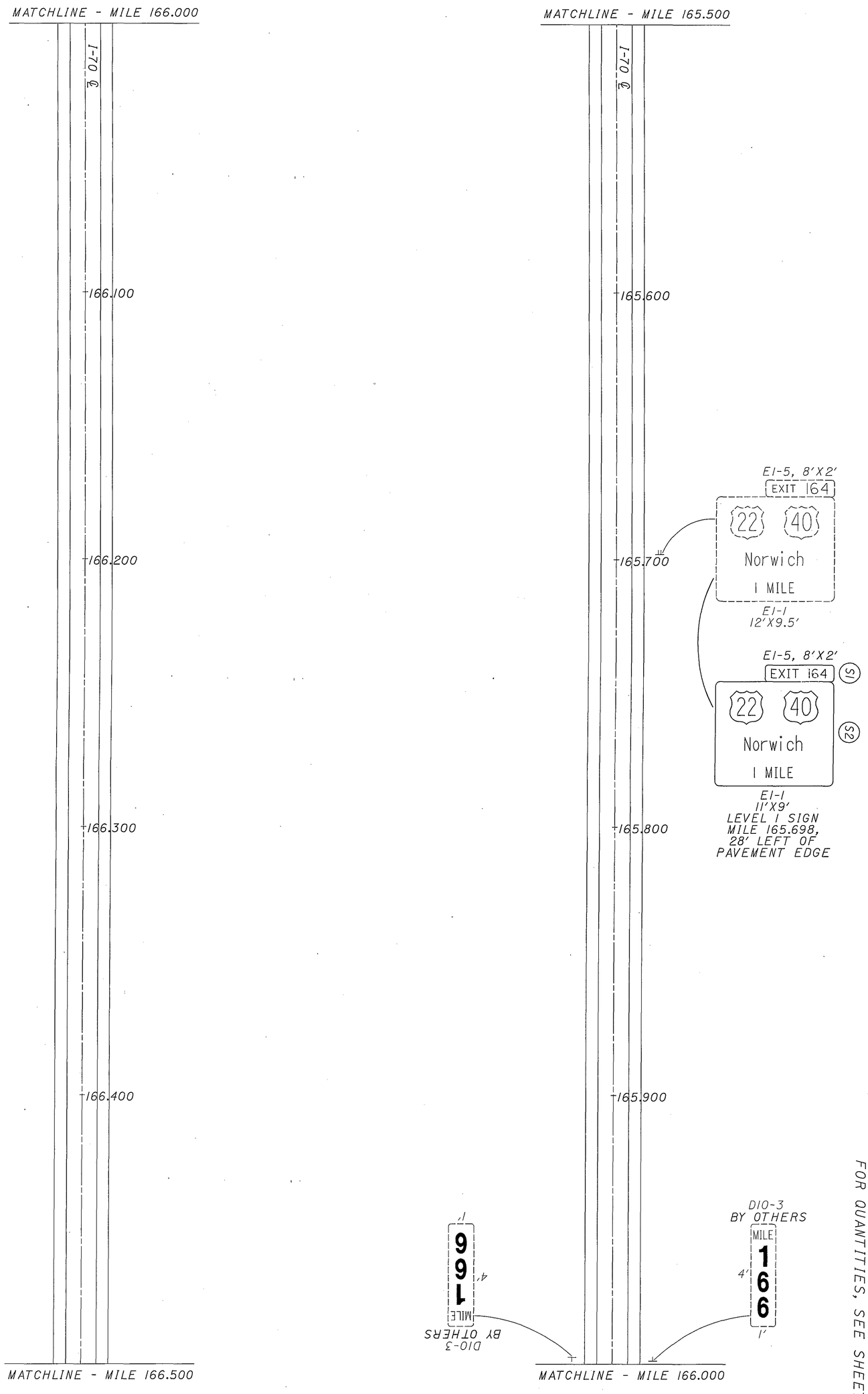

FOR QUANTITIES, SEE SHEET 151

D05-SIGN-FY2005

MUSKINGUM COUNTY
MILE 165.500 TO MILE 166.500

CALCULATED JAM
CHECKED WEB

0 50 100 200
HORIZONTAL SCALE IN FEET

N

08/13/2004
03:54:33 PM
m:\proj\022l\505\22 sign inventory\project plans\plansheets\tp089170.dgn

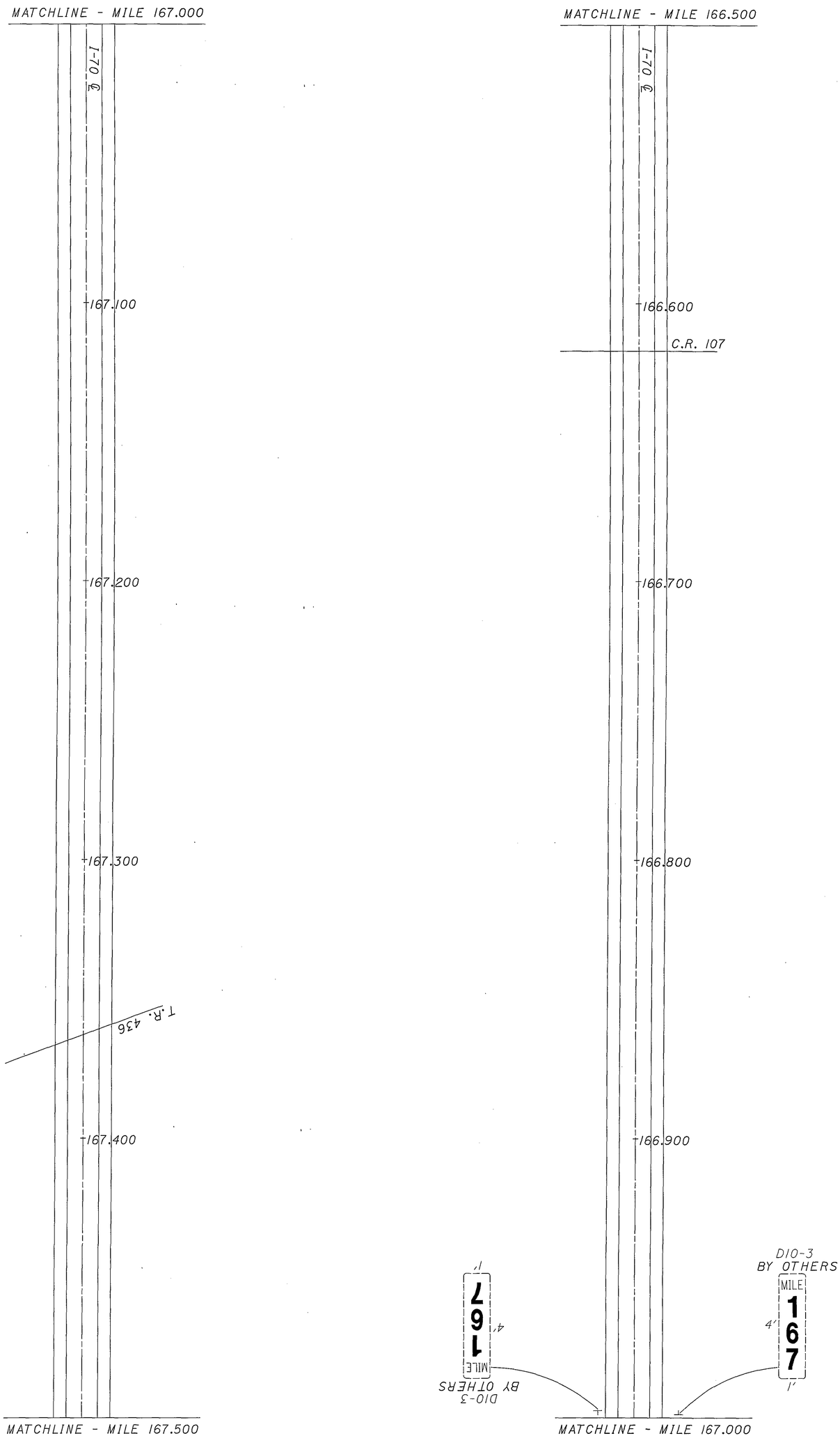

94 / 166	D05-SIGN-FY2005	MUSKINGUM COUNTY MILE 166.500 TO MILE 167.500	CALCULATED JAM CHECKED WEB	0 50 100 200 HORIZONTAL SCALE IN FEET

08/13/2004
03:54:33 PM
m:\proj\022l\l505\22 sign inventory\project plans\plansheets\tp090170.dgn

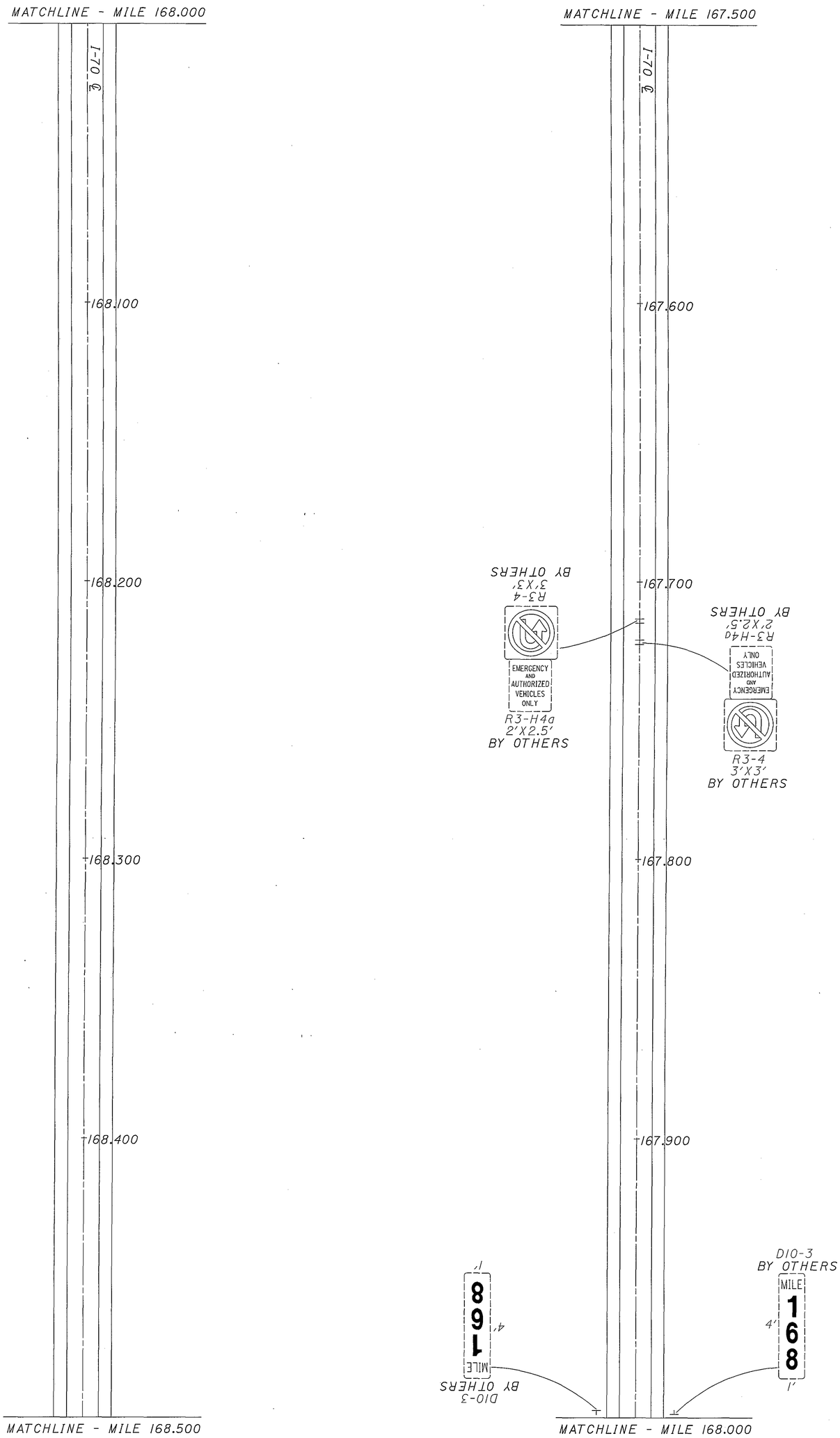

95 / 166	D05-SIGN-FY2005	MUSKINGUM COUNTY MILE 167.500 TO MILE 168.500	CALCULATED JAM CHECKED WEB	0 100 50 200 HORIZONTAL SCALE IN FEET

FOR QUANTITIES, SEE SHEET 151

HORIZONTAL SCALE IN FEET
0 50 100 200

CALCULATED JAM
CHECKED WEB

MUSKINGUM COUNTY
MILE 168.500 TO MILE 169.500

D05-SIGN-FY2005

08/13/2004
03:54:33 PM
m:\proj\022\1506\22 sign inventory\project plans\plansheets\tp09170.dgn

HORIZONTAL SCALE IN FEET
0 50 100 200

CALCULATED DAP
CHECKED WEB

MUSKINGUM COUNTY
SR 83 INTERCHANGE

D05-SIGN-FY2005

08/13/2004
03:54:33 PM
m:\proj\022\1505\22 sign inventory\project plans\plansheets\tp092170.dgn

FOR QUANTITIES, SEE SHEET 152

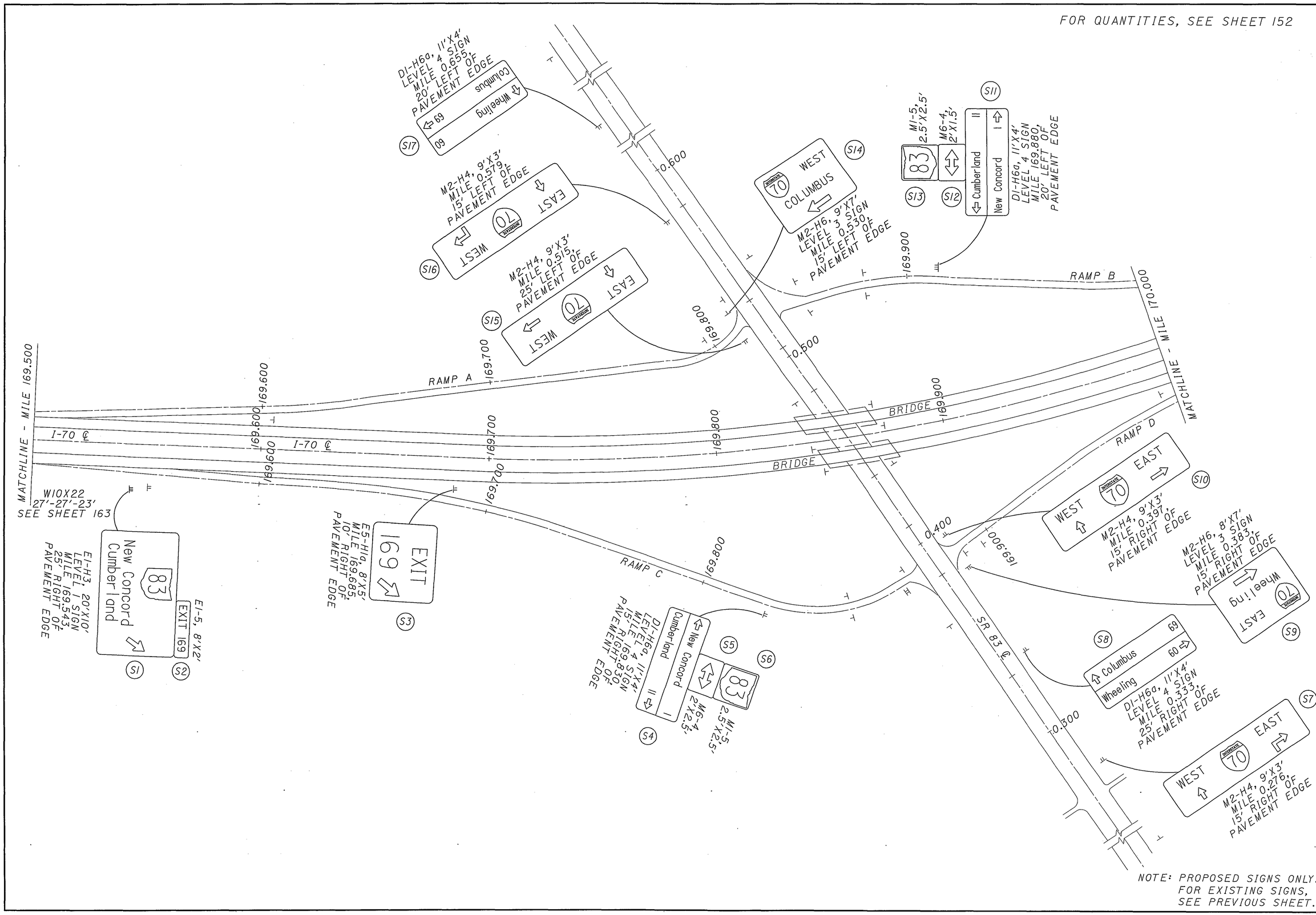

NOTE: PROPOSED SIGNS ONLY.
FOR EXISTING SIGNS,
SEE PREVIOUS SHEET.

N

0 50 100 200
HORIZONTAL
SCALE IN FEET

CALCULATED DAP
CHECKED WEB

MUSKINGUM COUNTY
SR 83 INTERCHANGE

D05-SIGN-FY2005

08/13/2004
03:54:34 PM
m:\proj\022\1505\22 sign inventory\project plans\plansheets\tp093170.dgn

08/13/2004
03:54:34 PM
m:\proj\0021\1505\22 sign inventory\project plans\plansheets\tp094170.dgn

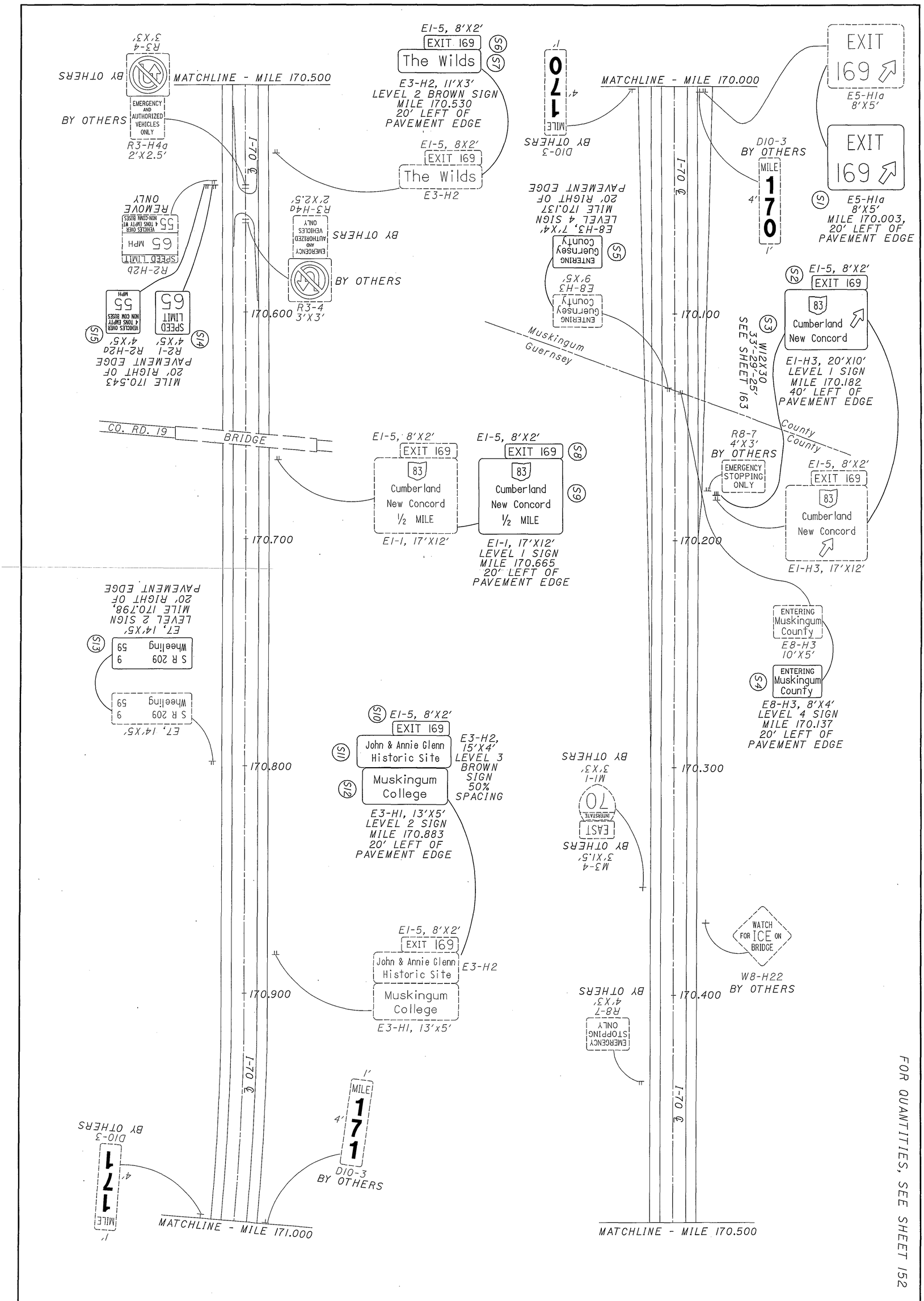

D05-SIGN-FY2005

MUSKINGUM & GUERNSEY COUNTY
MILE 170.000 TO MILE 171.000

CALCULATED KSD
CHECKED WEB

0 50 100 200
HORIZONTAL SCALE IN FEET

08/13/2004
03:54:34 PM
m:\proj\0221\1505\22 sign inventory\project plans\plansheets\tp095170.dgn

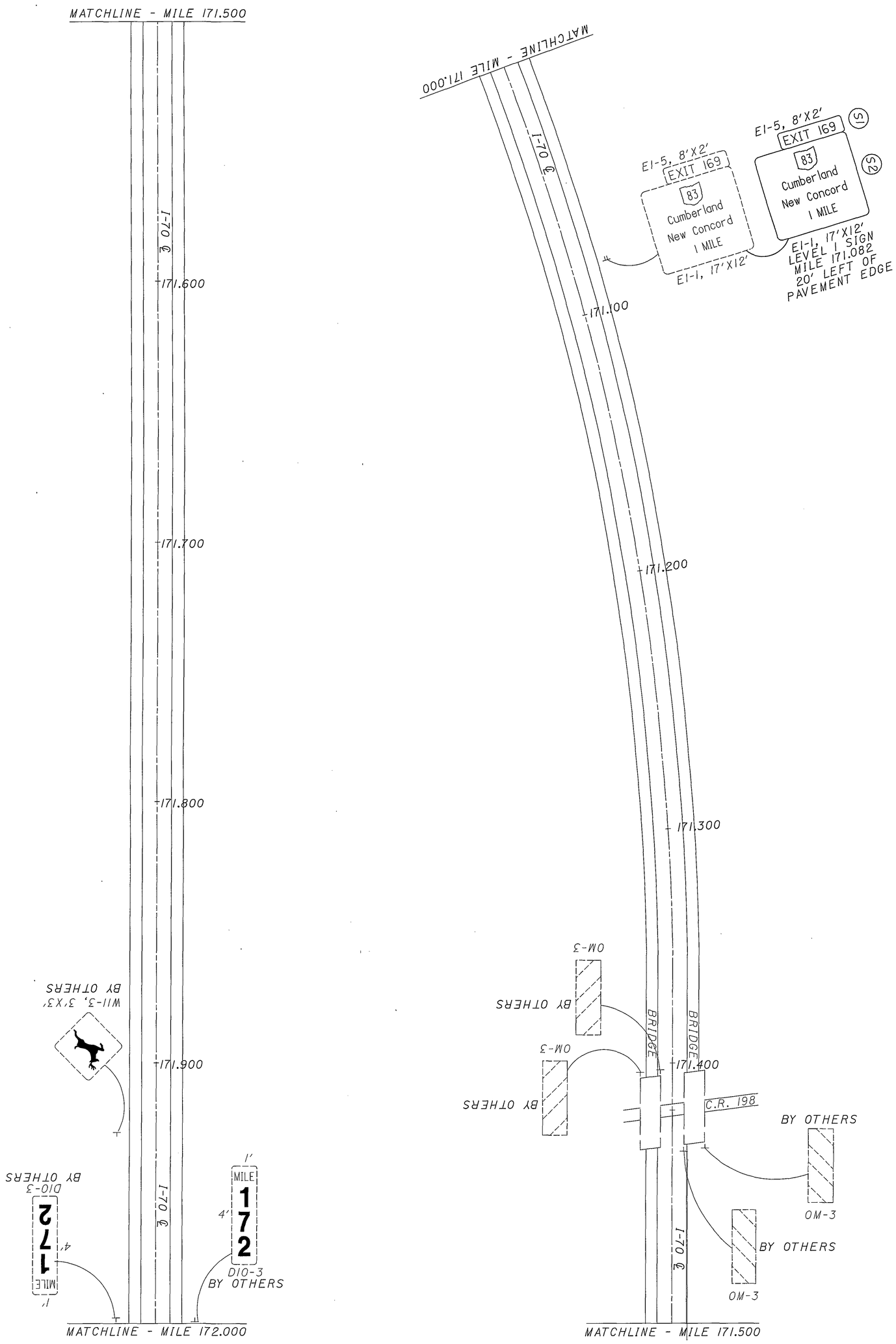

FOR QUANTITIES, SEE SHEET 152

08/13/2004
03:54:35 PM
m:\proj\022N\505\22 sign inventory\project plans\plansheets\tp096I70.dgn

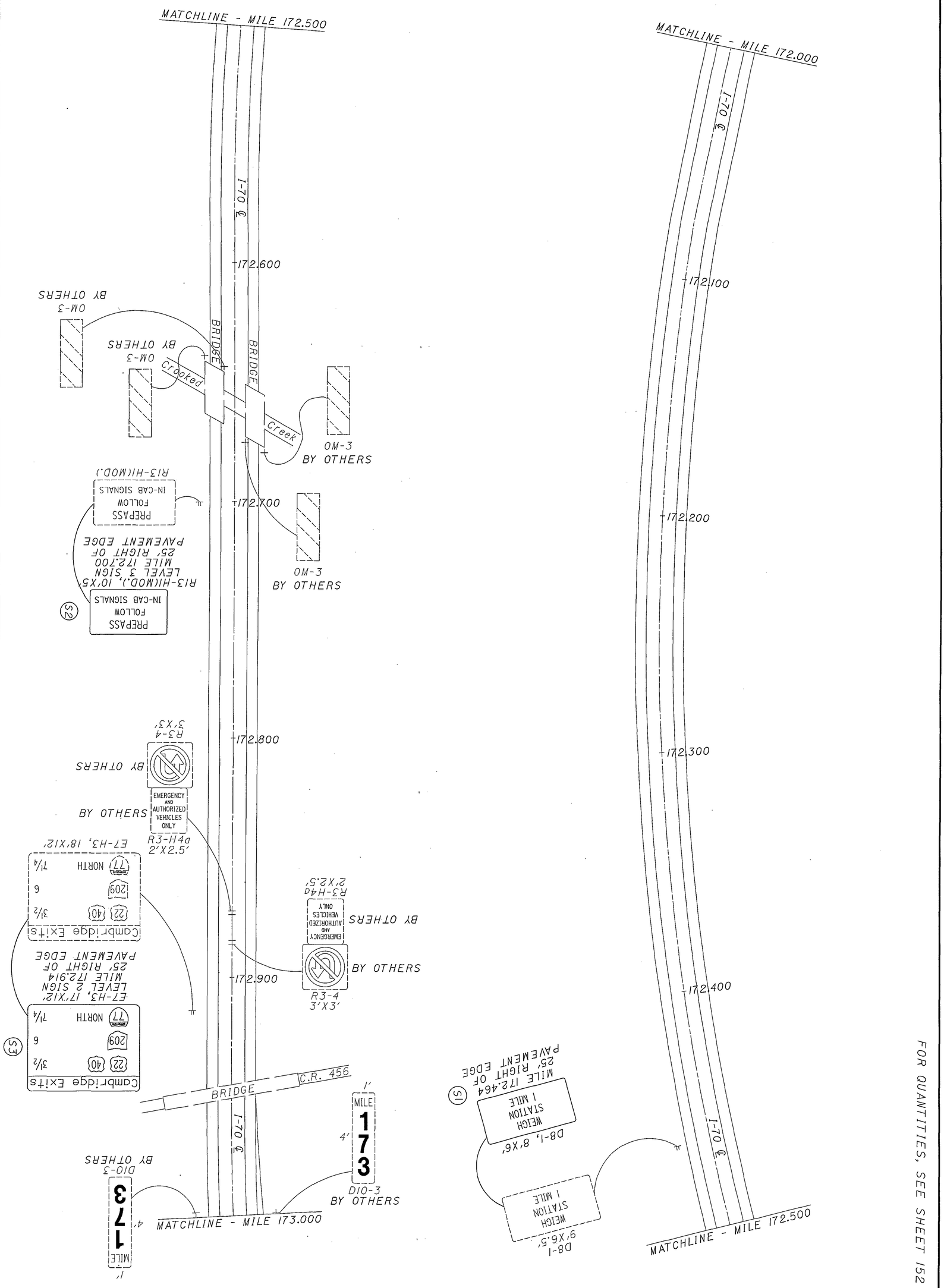

FOR QUANTITIES, SEE SHEET 152

166 / 101	D05-SIGN-FY2005	GUERNSEY COUNTY MILE 172.000 TO MILE 173.000	CALCULATED KSD CHECKED WEB 0 50 100 200 HORIZONTAL SCALE IN FEET

08/13/2004
03:54:35 PM
m:\proj\022\1\505\22 sign inventory\project plans\plansheets\tp097170.dgn

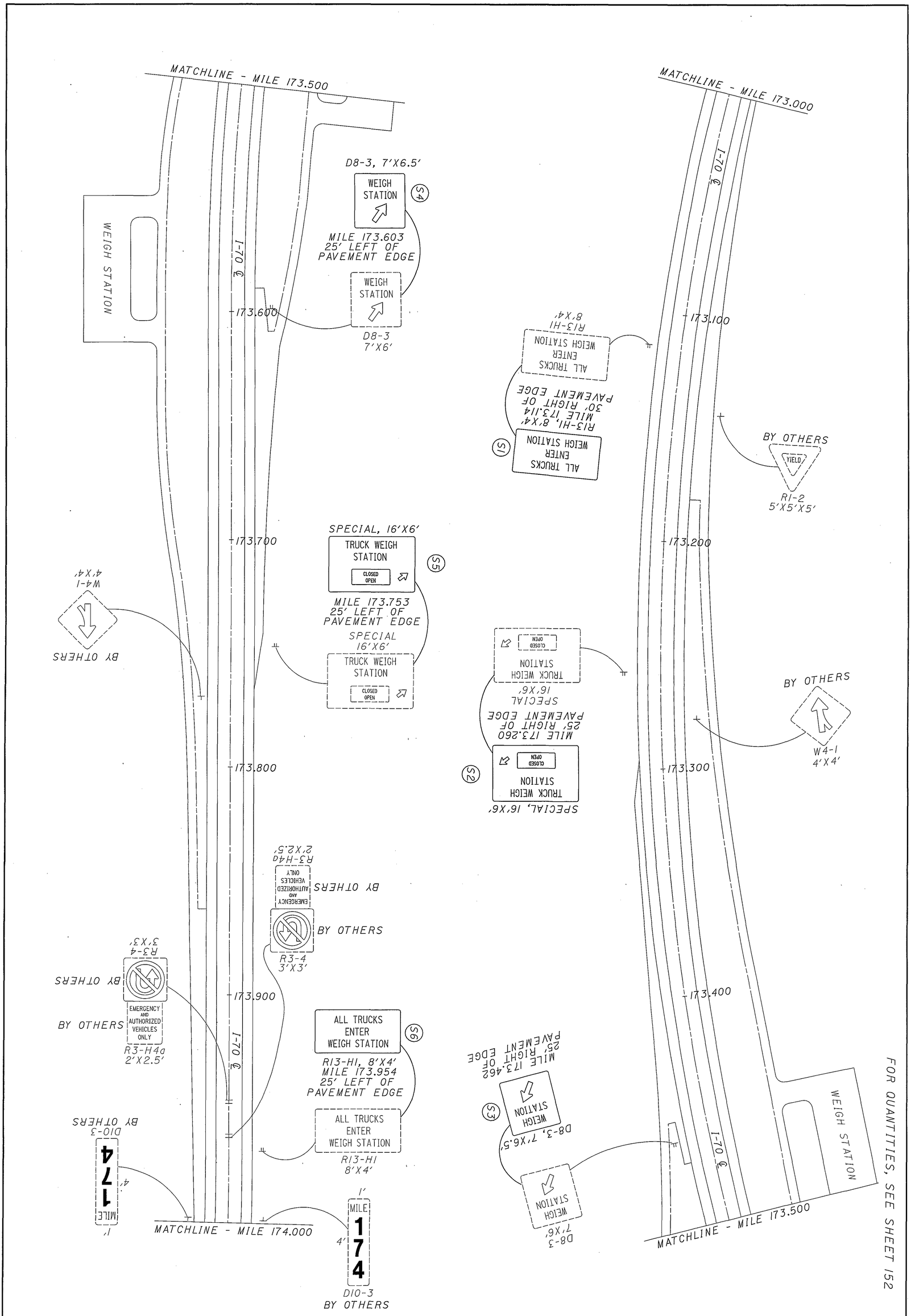

102
166

D05-SIGN-FY2005

GUERNSEY COUNTY
MILE 173.000 TO MILE 174.000

CALCULATED KSD
CHECKED WEB

0 50 100 200
HORIZONTAL SCALE IN FEET

08/13/2004
03:54:35 PM
m:\proj\022IN\505\22 sign inventory\project plans\plansheets\tp098170.dgn

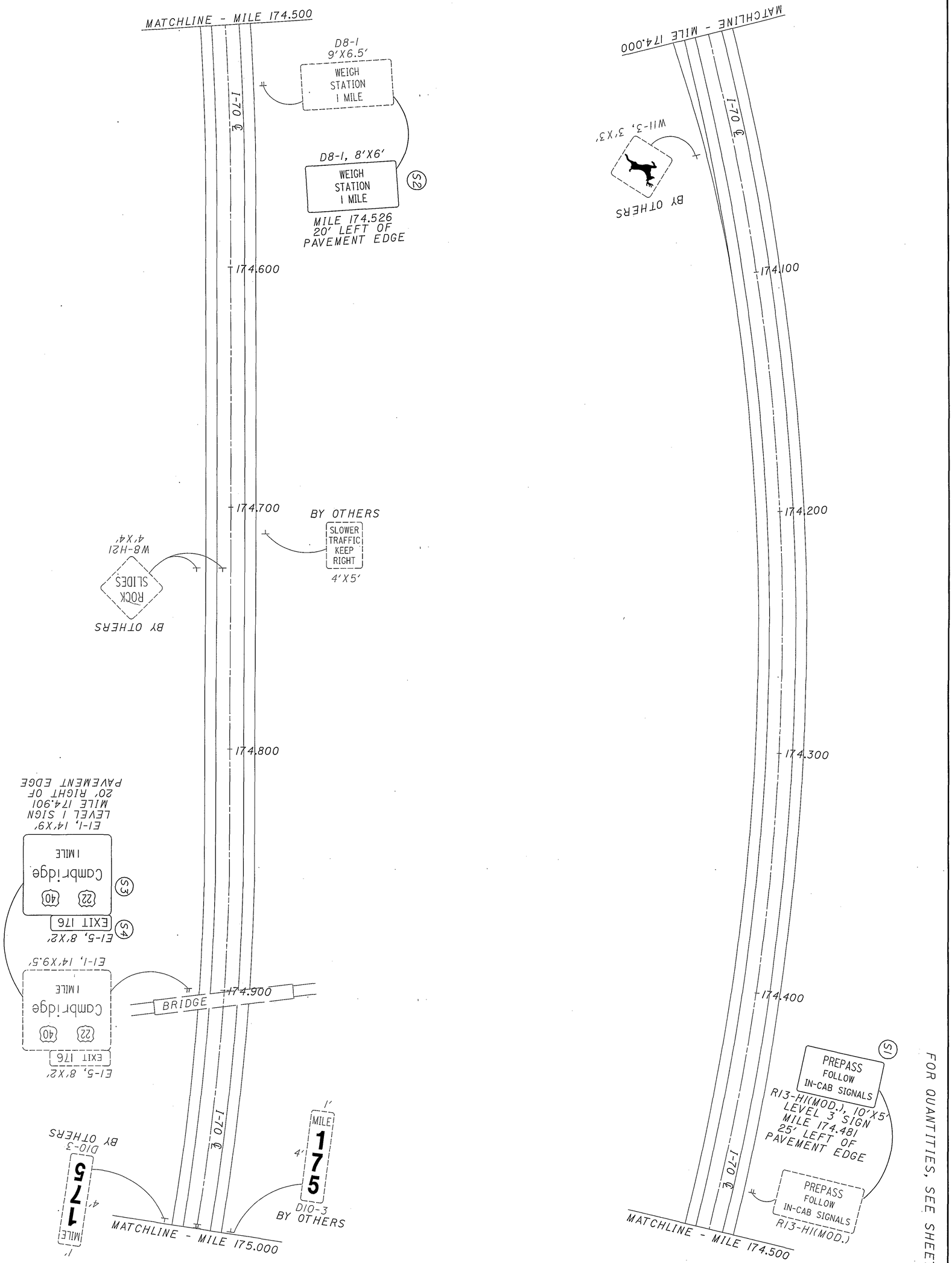

FOR QUANTITIES, SEE SHEET 152

D05-SIGN-FY2005

GUERNSEY COUNTY
MILE 174.000 TO MILE 175.000

CALCULATED KSD
CHECKED WEB

0 50 100 200
HORIZONTAL SCALE IN FEET

08/13/2004
03:54:35 PM
m:\proj\0221\1505\22 sign inventory\project plans\plansheets\tp099170.dgn

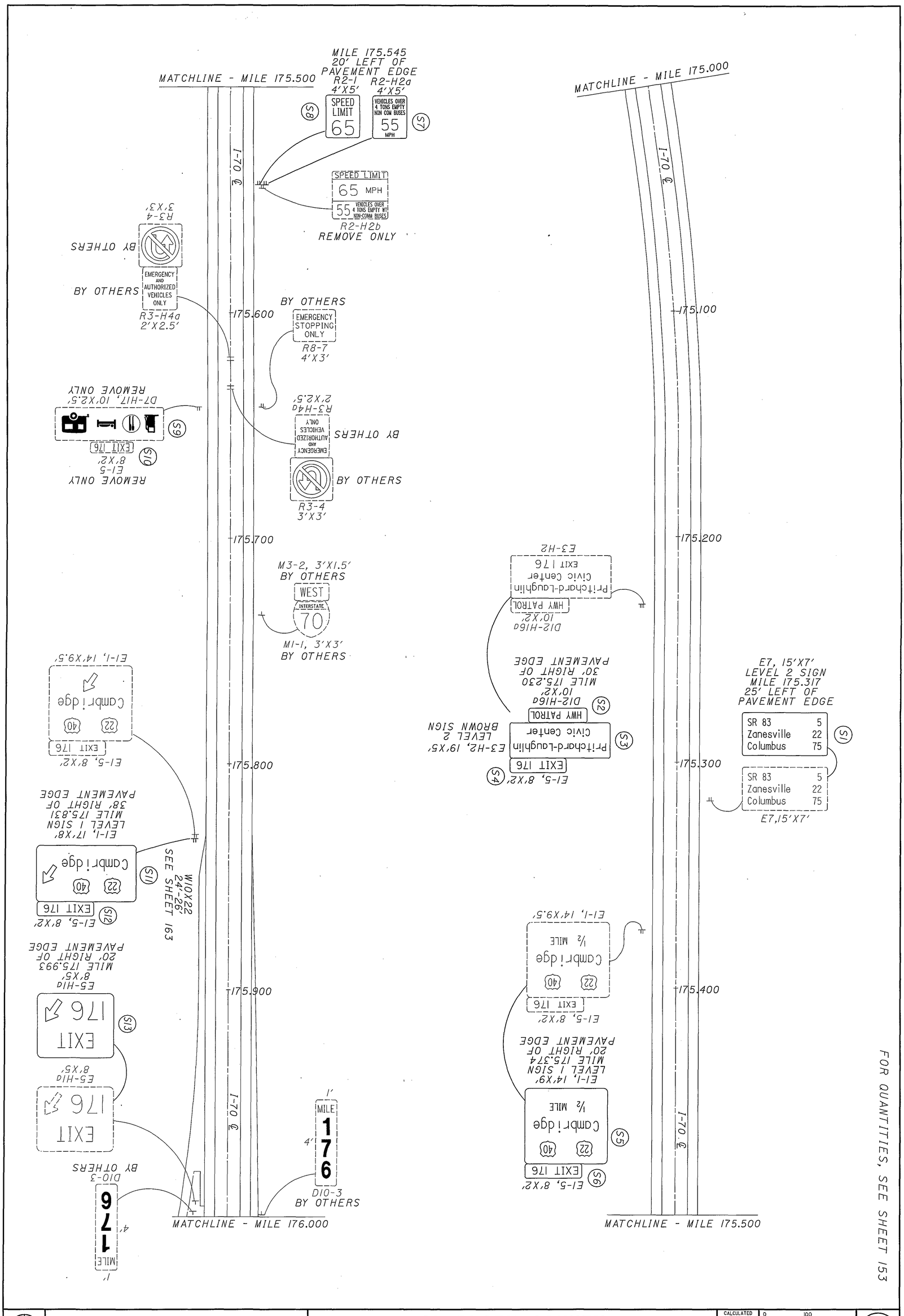

FOR QUANTITIES, SEE SHEET 153

104
166

D05-SIGN-FY2005

GUERNSEY COUNTY
MILE 175.000 TO MILE 176.000

CALCULATED KSD
CHECKED WEB

0 50 100 200
HORIZONTAL SCALE IN FEET

FOR QUANTITIES, SEE SHEET 153

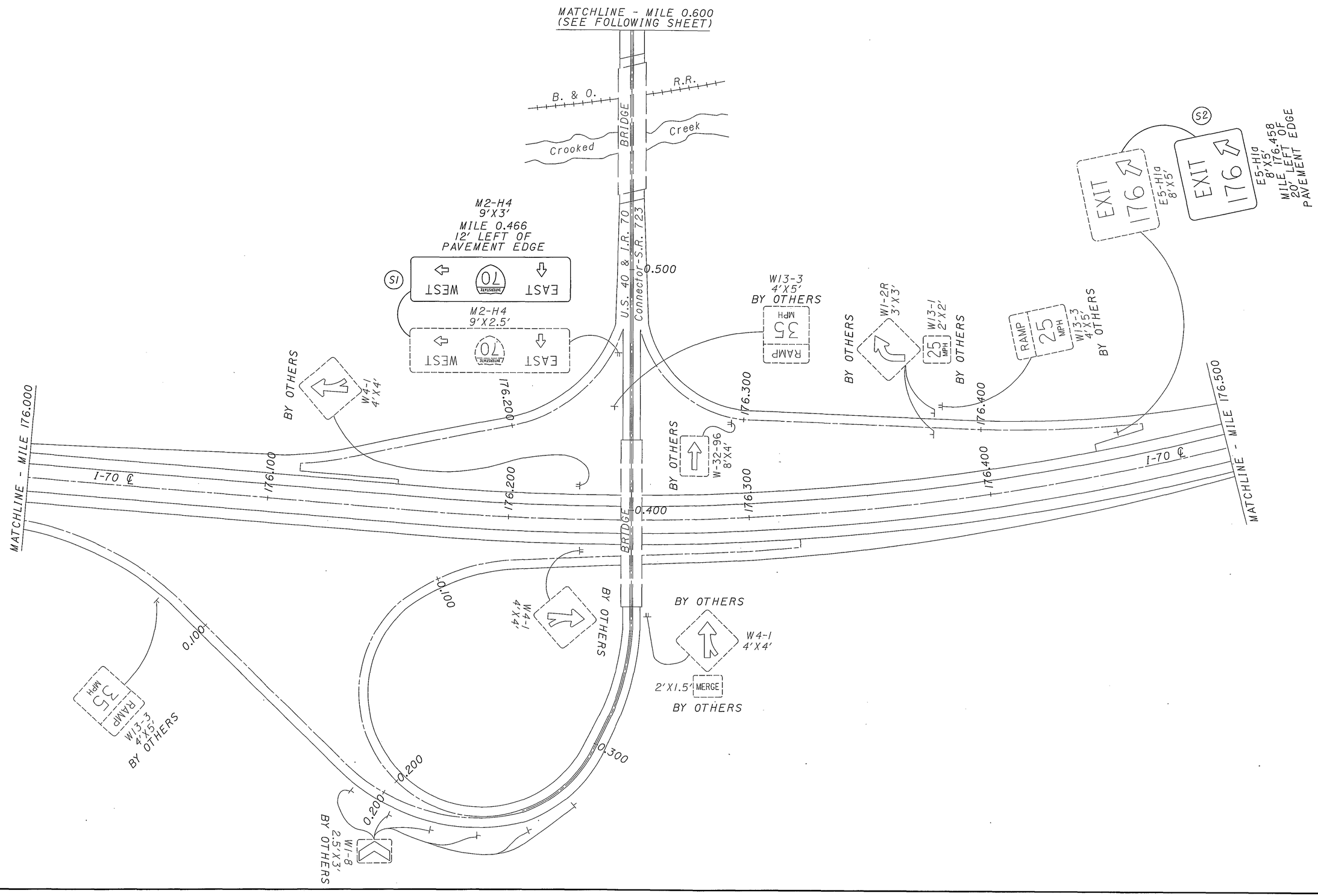

HORIZONTAL SCALE IN FEET
0 50 100 200

CALCULATED KSD
CHECKED WEB

GUERNSEY COUNTY
SR 723 INTERCHANGE

D05-SIGN-FY2005

08/13/2004
03:54:36 PM
m:\proj\022\1505\22 sign inventory\project plans\plansheets\tpl00170.dgn

FOR QUANTITIES, SEE SHEET 153

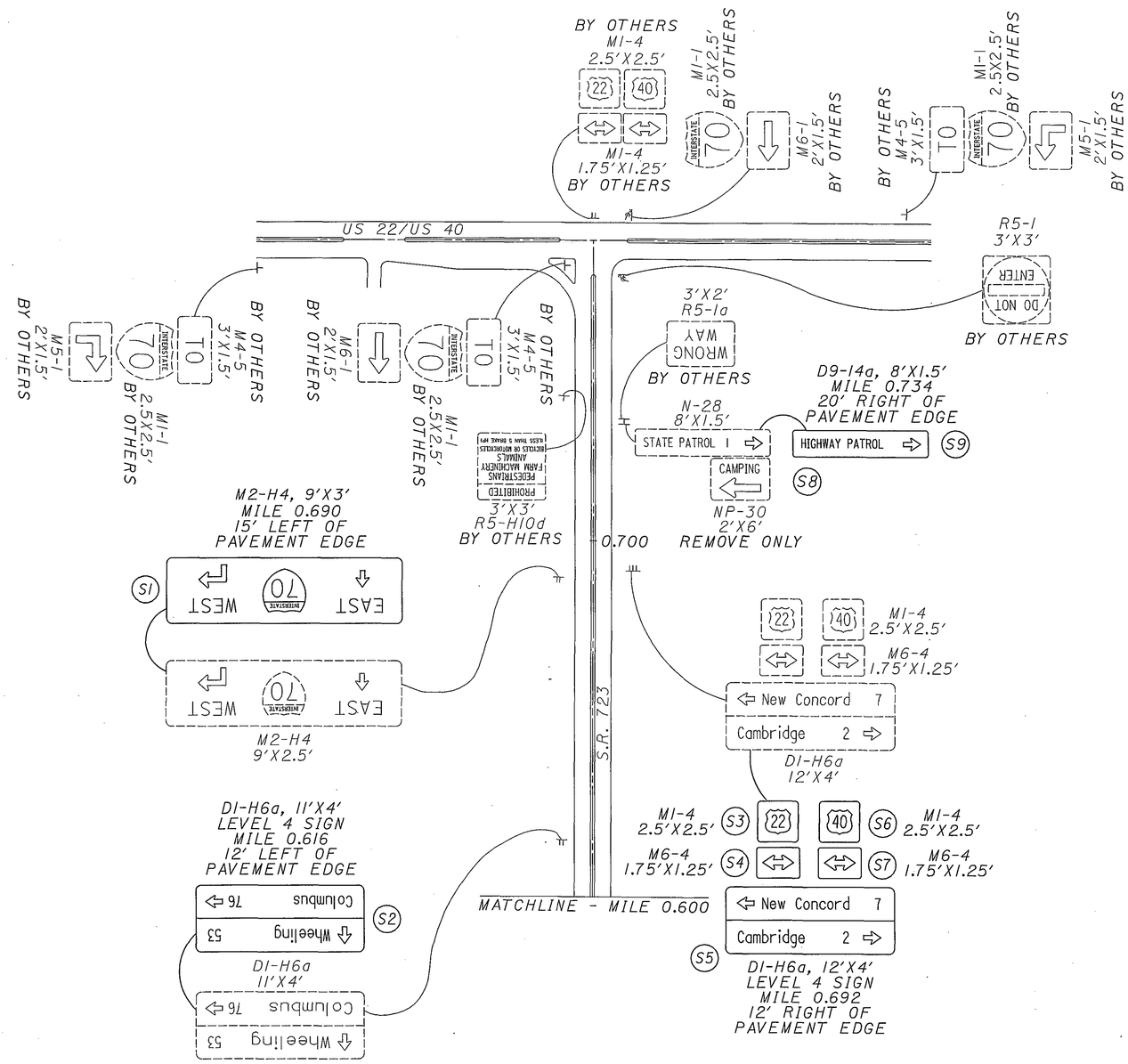

N

0 50 100 200
HORIZONTAL
SCALE IN FEET

CALCULATED KSD
CHECKED WEB

GUERNSEY COUNTY
SR 723 INTERCHANGE

D05-SIGN-FY2005

08/13/2004
03:54:36 PM
m:\proj\022n\1505\22 sign inventory\project plans\plansheets\tp101170.dgn

08/13/2004
03:54:36 PM
m:\proj\0221\1505\22 sign inventory\project plans\plansheets\tpl02170.dgn

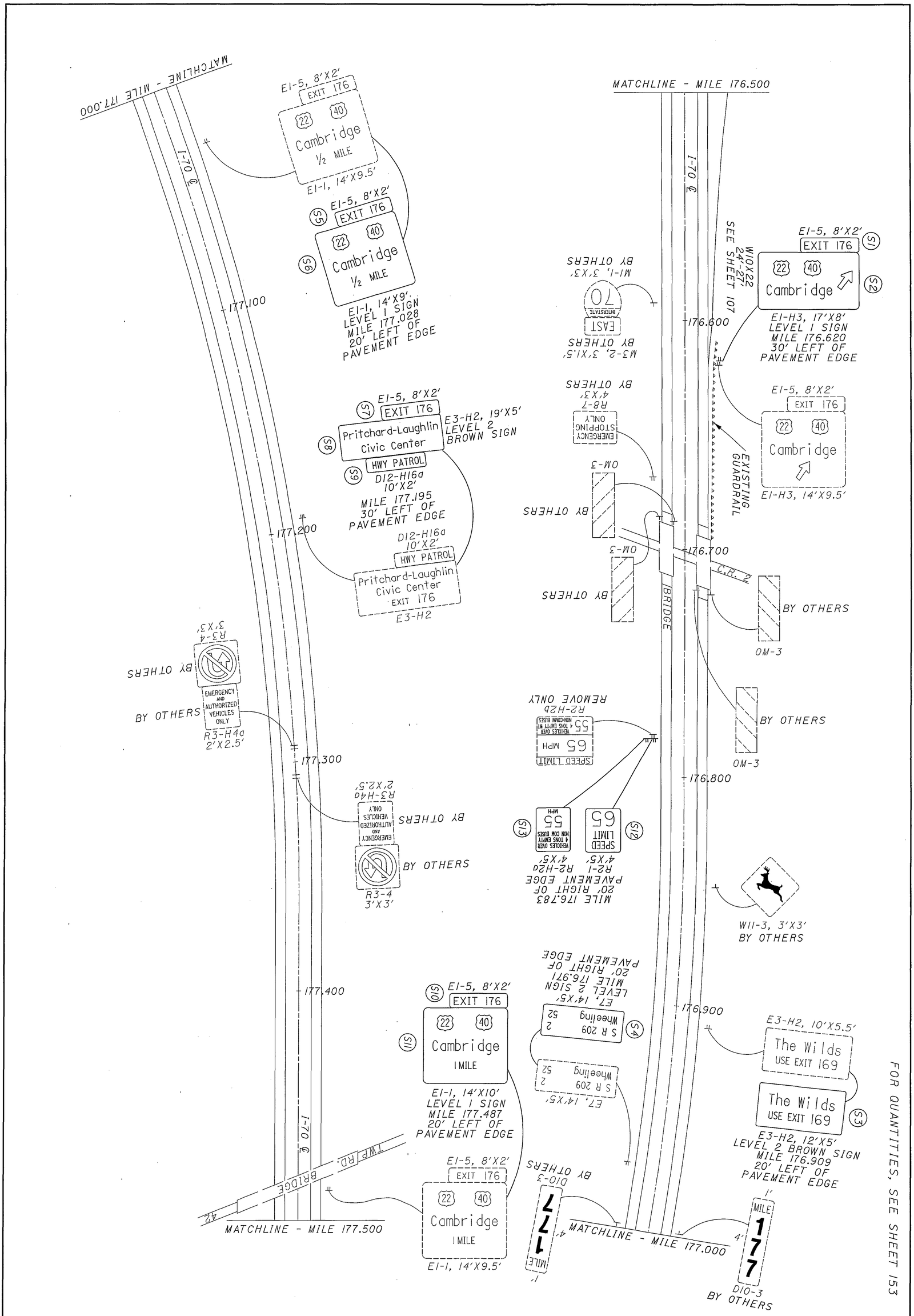

106 / 107	D05-SIGN-FY2005	GUERNSEY COUNTY MILE 176.500 TO MILE 177.500	CALCULATED KSD CHECKED WEB HORIZONTAL SCALE IN FEET (0, 50, 100, 200)

08/13/2004
03:54:37 PM
m:\proj\022I\I505\22 sign inventory\project plans\plansheets\tpl03170.dgn

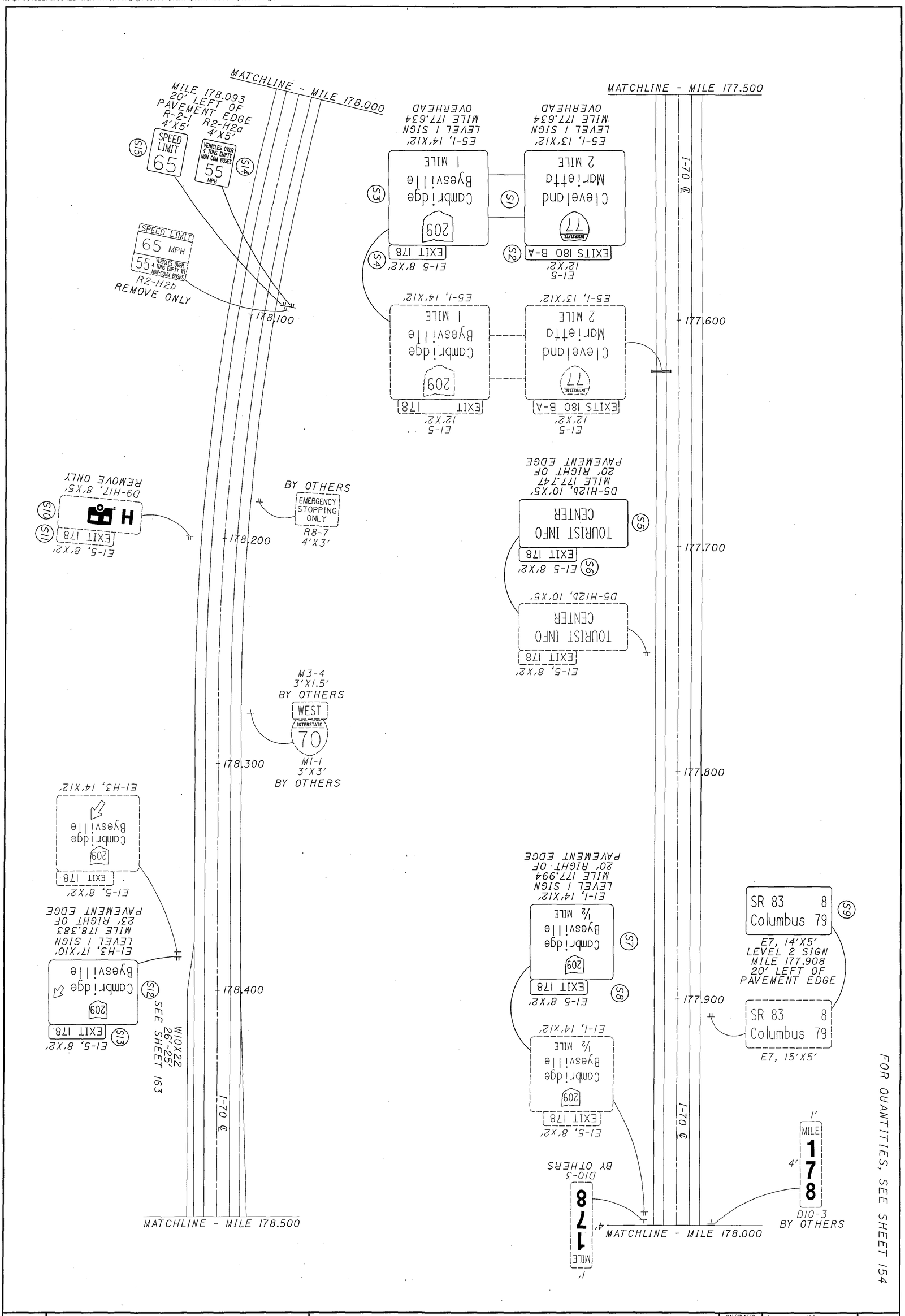

108
166

D05-SIGN-FY2005

GUERNSEY COUNTY
MILE 177.500 TO MILE 178.500

CALCULATED KXX
CHECKED WEB

0 100 200
50
HORIZONTAL SCALE IN FEET

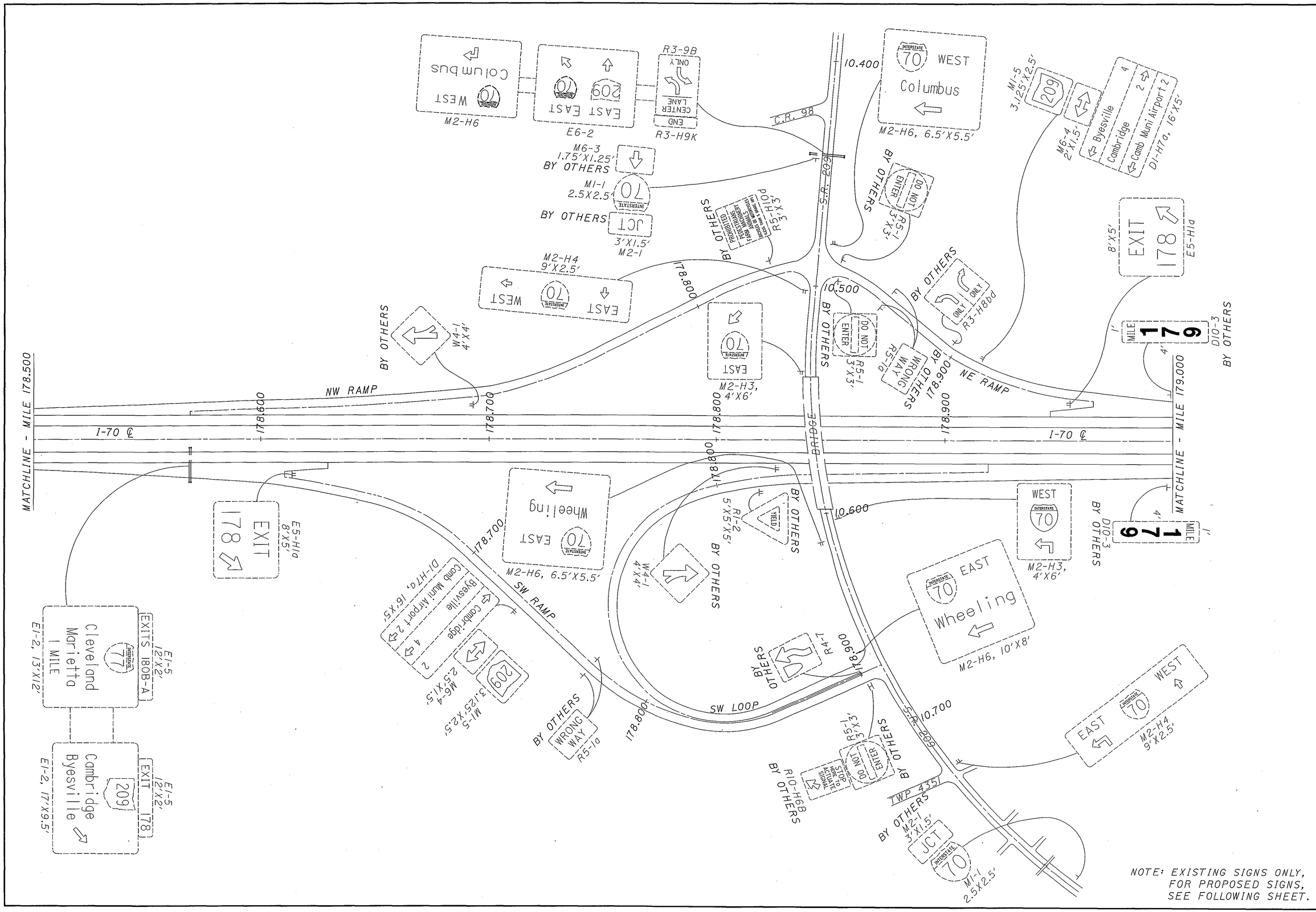

N

0 50 100 200
HORIZONTAL SCALE IN FEET

CALCULATED KSD
CHECKED WEB

GUERNSEY COUNTY
SR 209 INTERSECTION

D05-SIGN-FY2005

08/13/2004
03:54:37 PM
m:\proj\022\1505\22 sign inventory\project plans\plansheets\tpl04170.dgn

FOR QUANTITIES, SEE SHEET 154

NOTE: PROPOSED SIGNS ONLY, FOR EXISTING SIGNS, SEE PREVIOUS SHEET.

HORIZONTAL SCALE IN FEET 0 50 100 200

CALCULATED KSD
CHECKED WEB

GUERNSEY COUNTY
SR 209 INTERSECTION

D05-SIGN-FY2005

08/13/2004
03:54:38 PM
m:\proj\022\1505\22 sign inventory\project plans\plansheets\tp105170.dgn

08/13/2004
03:54:38 PM
m:\proj\022N\505\22 sign inventory\project plans\plansheets\tpl06170.dgn

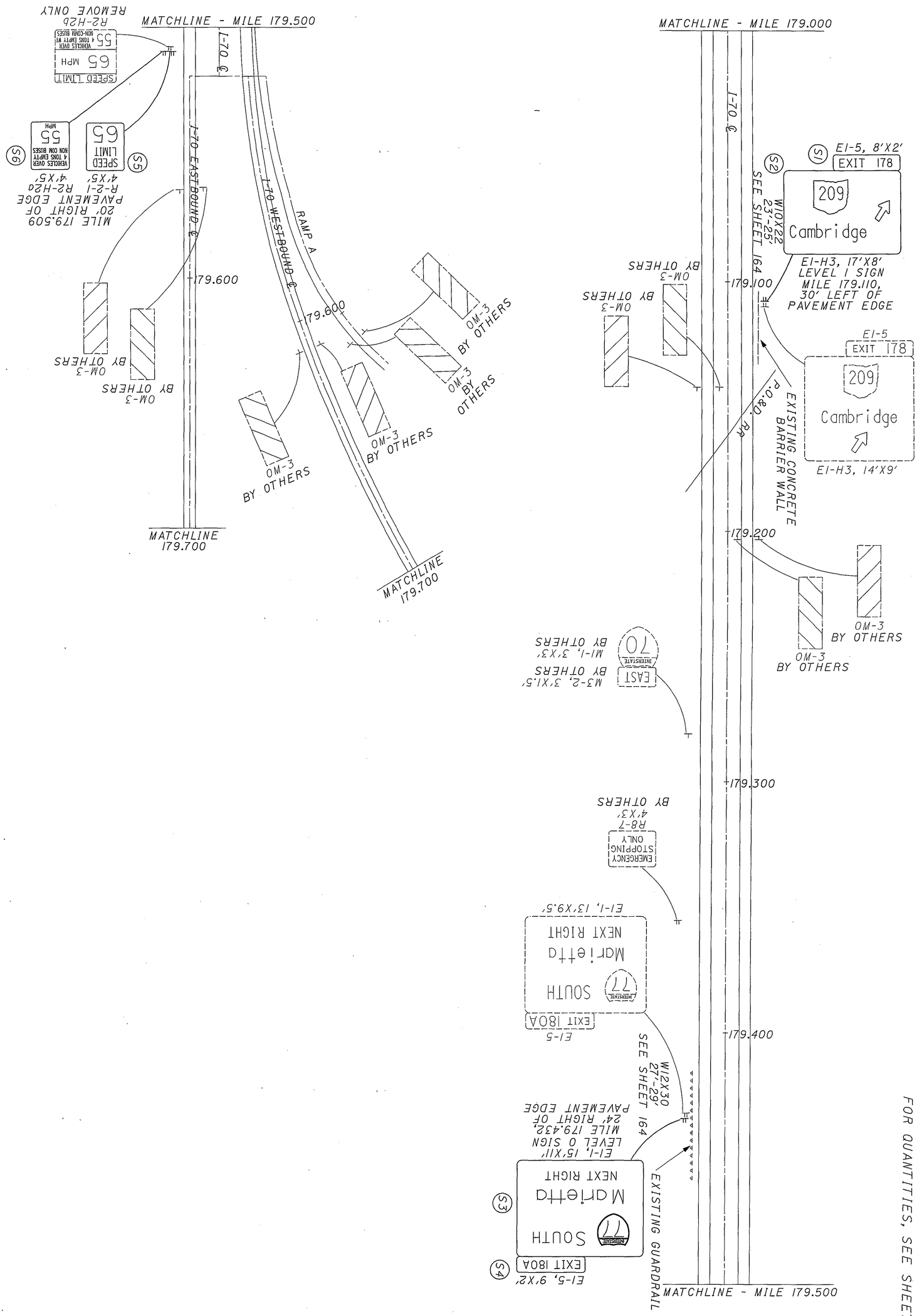

FOR QUANTITIES, SEE SHEET 155

169	D05-SIGN-FY2005	GUERNSEY COUNTY MILE 179.000 TO MILE 179.700	CALCULATED DCB CHECKED WEB	0 50 100 200 HORIZONTAL SCALE IN FEET

HORIZONTAL SCALE IN FEET

CALCULATED DCB
CHECKED WEB

GUERNSEY COUNTY
I-77 INTERCHANGE

D05-SIGN-FY2005

08/13/2004
03:54:38 PM
m:\proj\0221\1505\22 sign inventory\project plans\plansheets\tp107170.dgn

HORIZONTAL SCALE IN FEET 0 50 100 200

CALCULATED DCB
CHECKED WEB

GUERNSEY COUNTY I-77 INTERCHANGE

D05-SIGN-FY2005

08/13/2004
03:54:39 PM
m:\proj\022N\505\22 sign inventory\project plans\plansheets\tpl08170.dgn

08/13/2004
03:54:39 PM
m:\proj\022\1505\22 sign inventory\project plans\plansheets\tpl09170.dgn

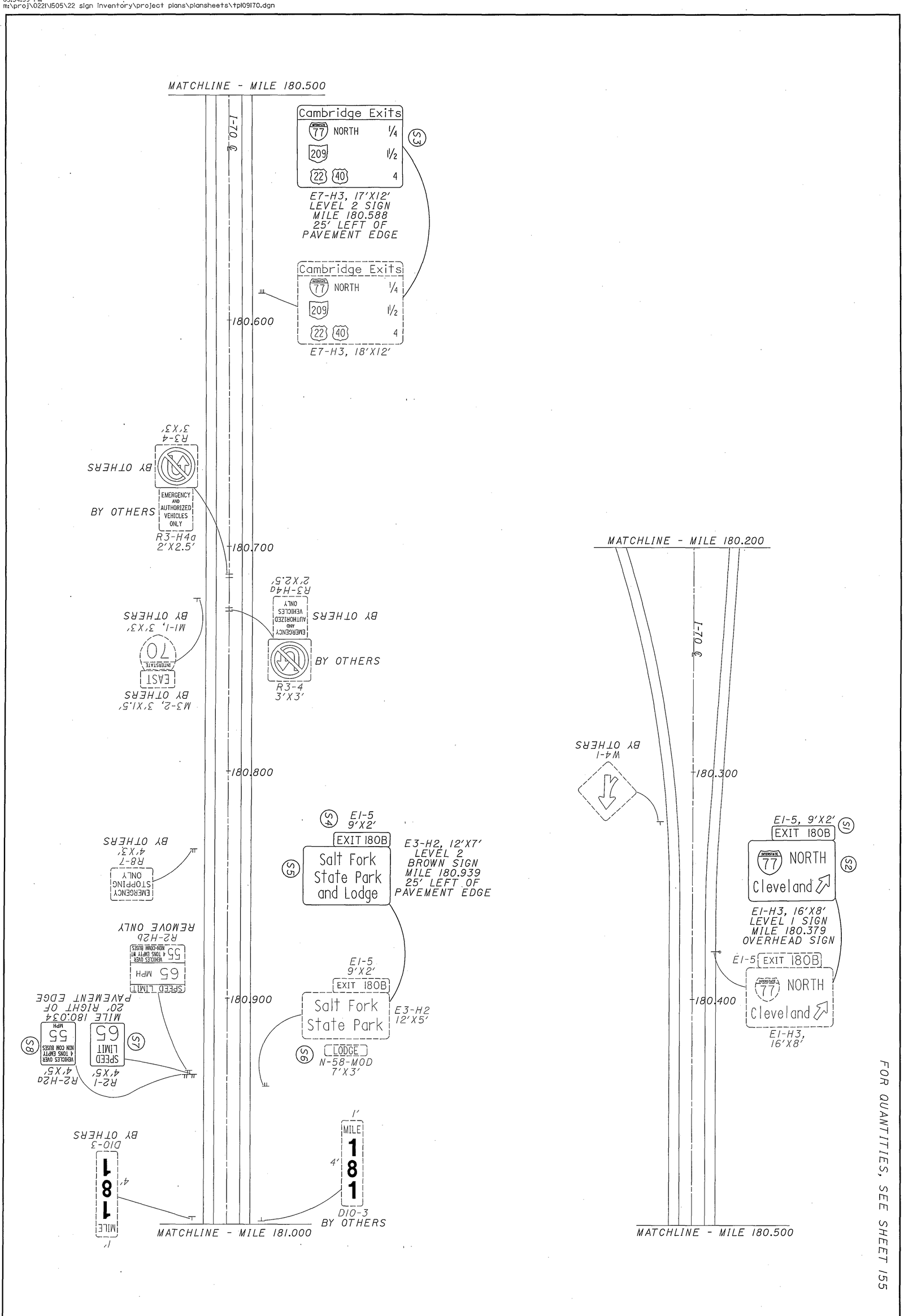

FOR QUANTITIES, SEE SHEET 155

D05-SIGN-FY2005

GUERNSEY COUNTY
MILE 180.200 TO MILE 181.000

CALCULATED DAP
CHECKED WEB

0 50 100 200
HORIZONTAL SCALE IN FEET

N

08/13/2004
03:54:39 PM
m:\proj\022I\505\22 sign inventory\project plans\plansheets\tpl10170.dgn

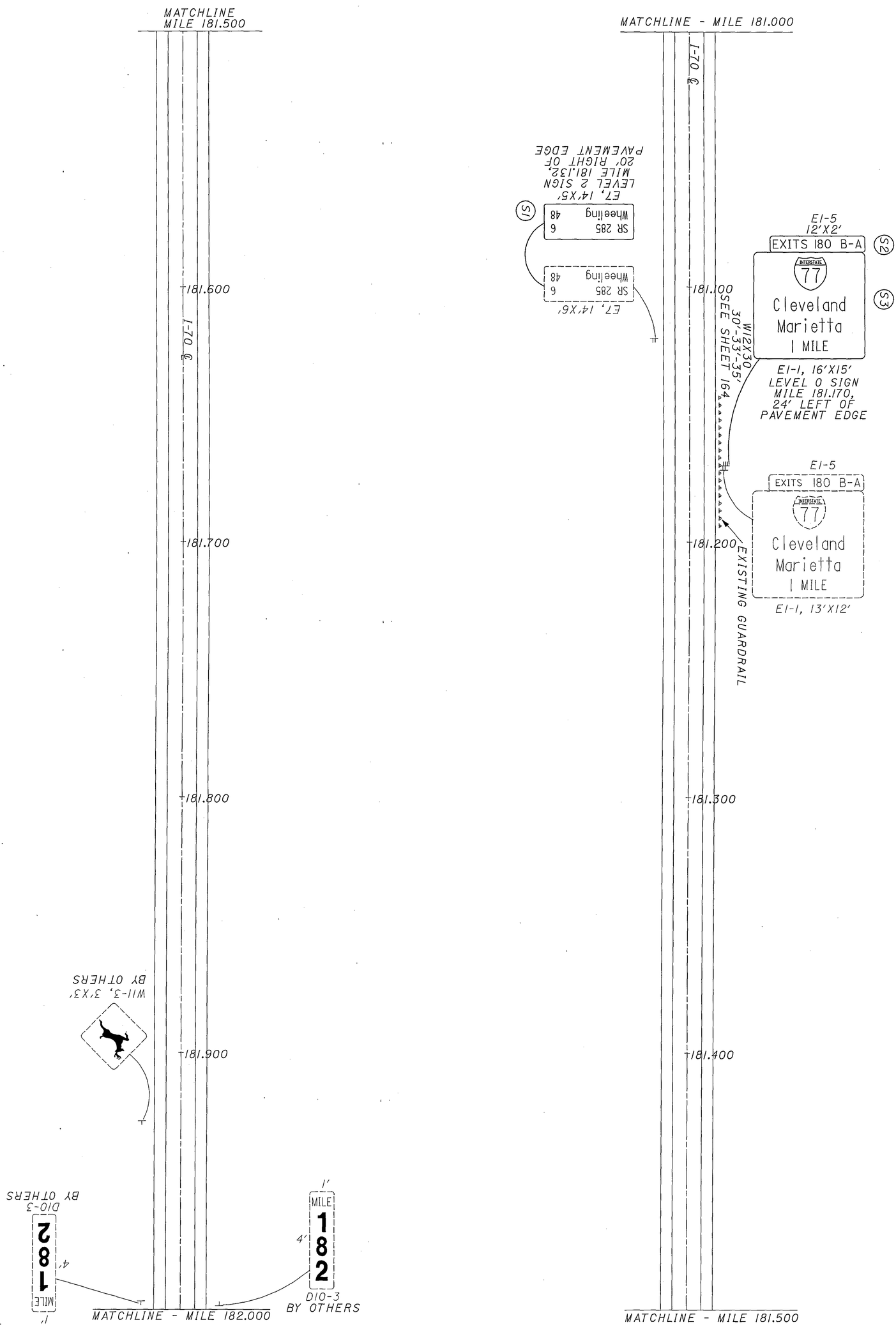

FOR QUANTITIES, SEE SHEET 156

115 / 166	D05-SIGN-FY2005	GUERNSEY COUNTY MILE 181.000 TO MILE 182.000	CALCULATED DAP CHECKED WEB	0 100 50 200 HORIZONTAL SCALE IN FEET

FOR QUANTITIES, SEE SHEET 156

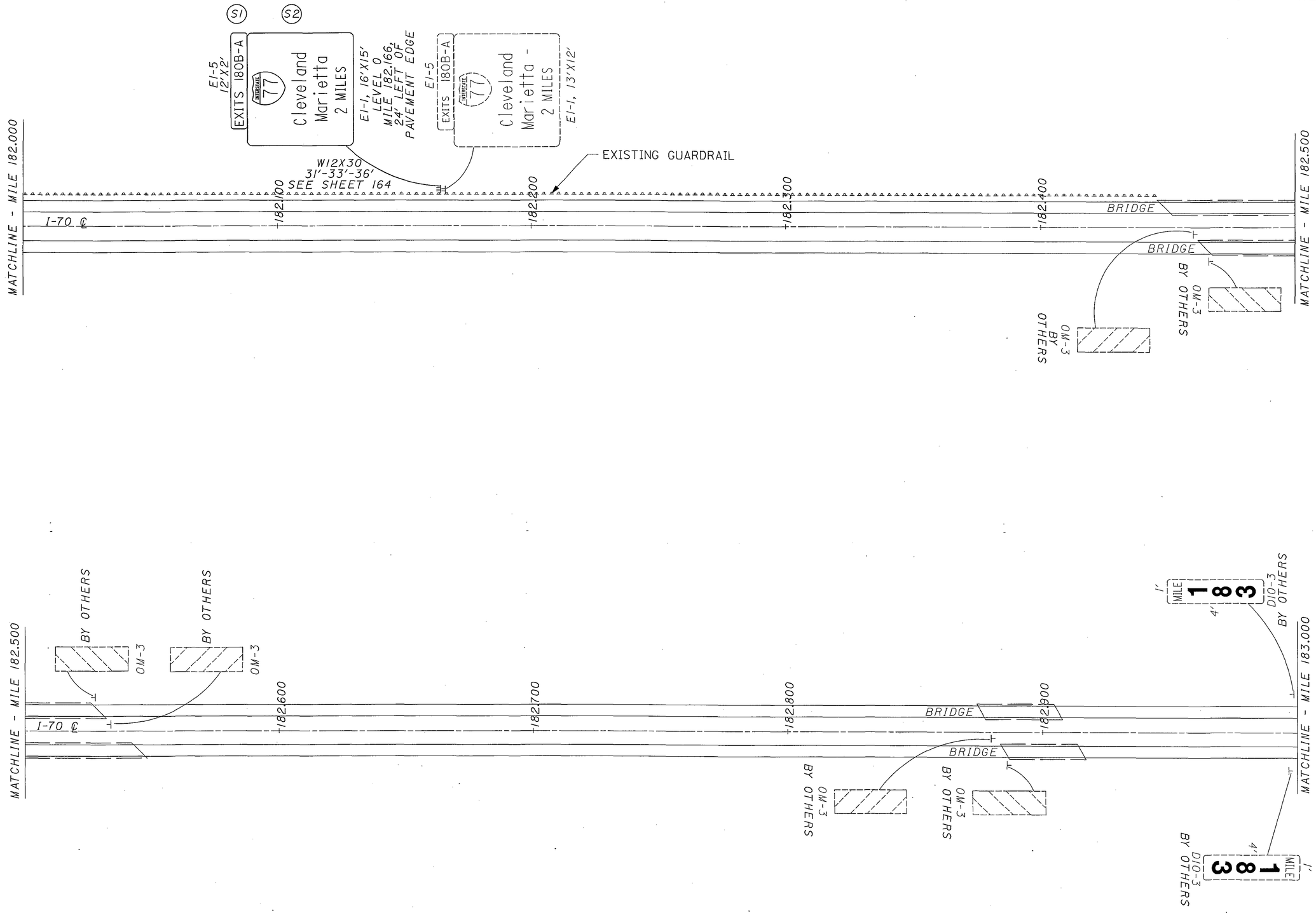

N

0 50 100 200
HORIZONTAL
SCALE IN FEET

CALCULATED DAP
CHECKED WEB

GUERNSEY COUNTY
MILE 182.000 TO MILE 183.000

D05-SIGN-FY2005

08/13/2004
03:54:39 PM
m:\proj\022l\l505\22 sign inventory\project plans\plansheets\tpilll70.dgn

08/13/2004
03:54:40 PM
m:\proj\022IN505\22 sign inventory\project plans\plansheets\tpli2170.dgn

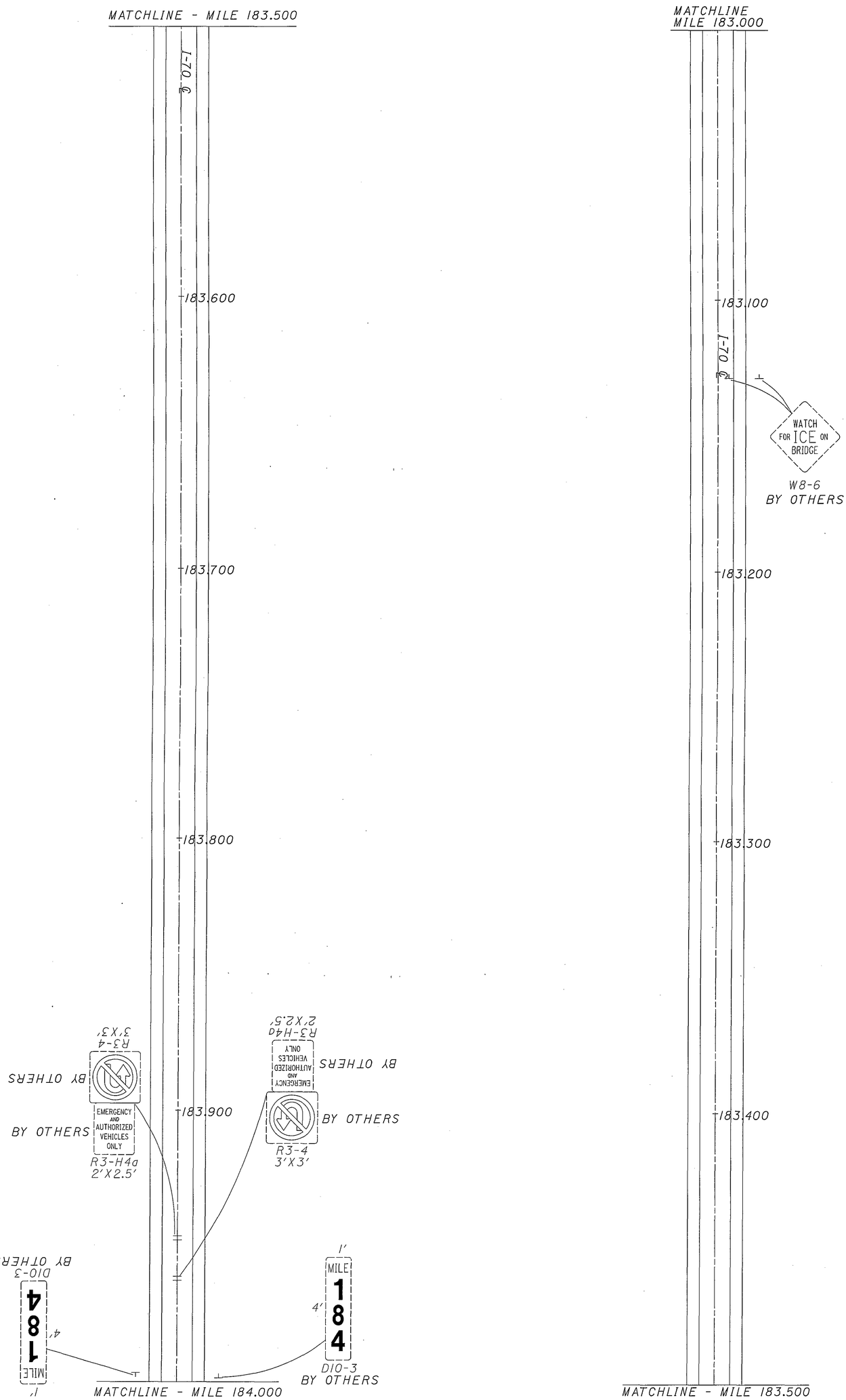

166 / 117	D05-SIGN-FY2005	GUERNSEY COUNTY MILE 183.000 TO MILE 184.000	CALCULATED DAP CHECKED WEB 0 50 100 200 HORIZONTAL SCALE IN FEET

08/13/2004
03:54:40 PM
m:\proj\022I\I505\22 sign inventory\project plans\plansheets\tpll3i70.dgn

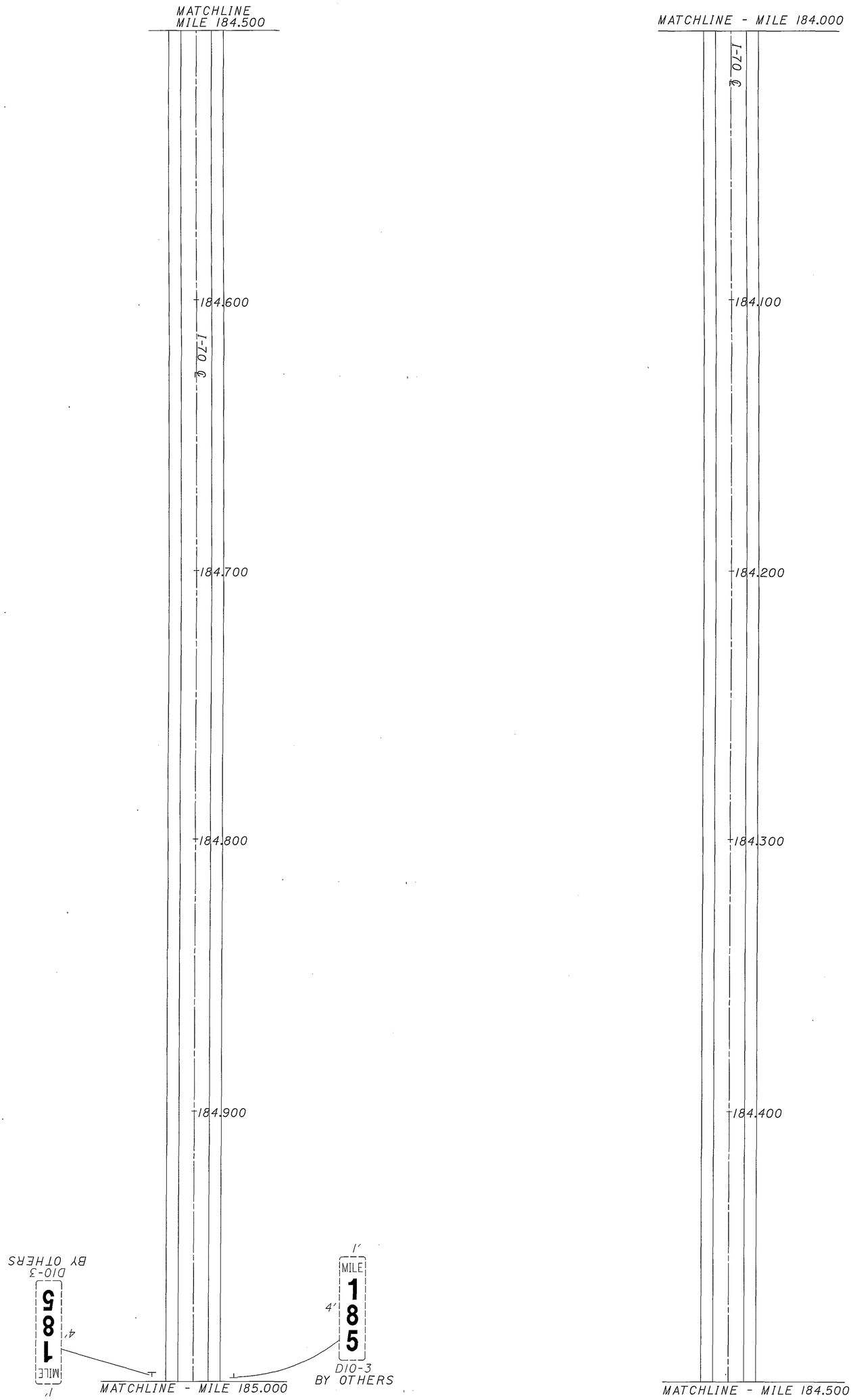

166 / 118	D05-SIGN-FY2005	GUERNSEY COUNTY MILE 184.000 TO MILE 185.000	CALCULATED DAP CHECKED WEB 0 50 100 200 HORIZONTAL SCALE IN FEET N

08/13/2004
03:54:40 PM
m:\proj\022l\505\22 sign inventory\project plans\plansheets\tpl4170.dgn

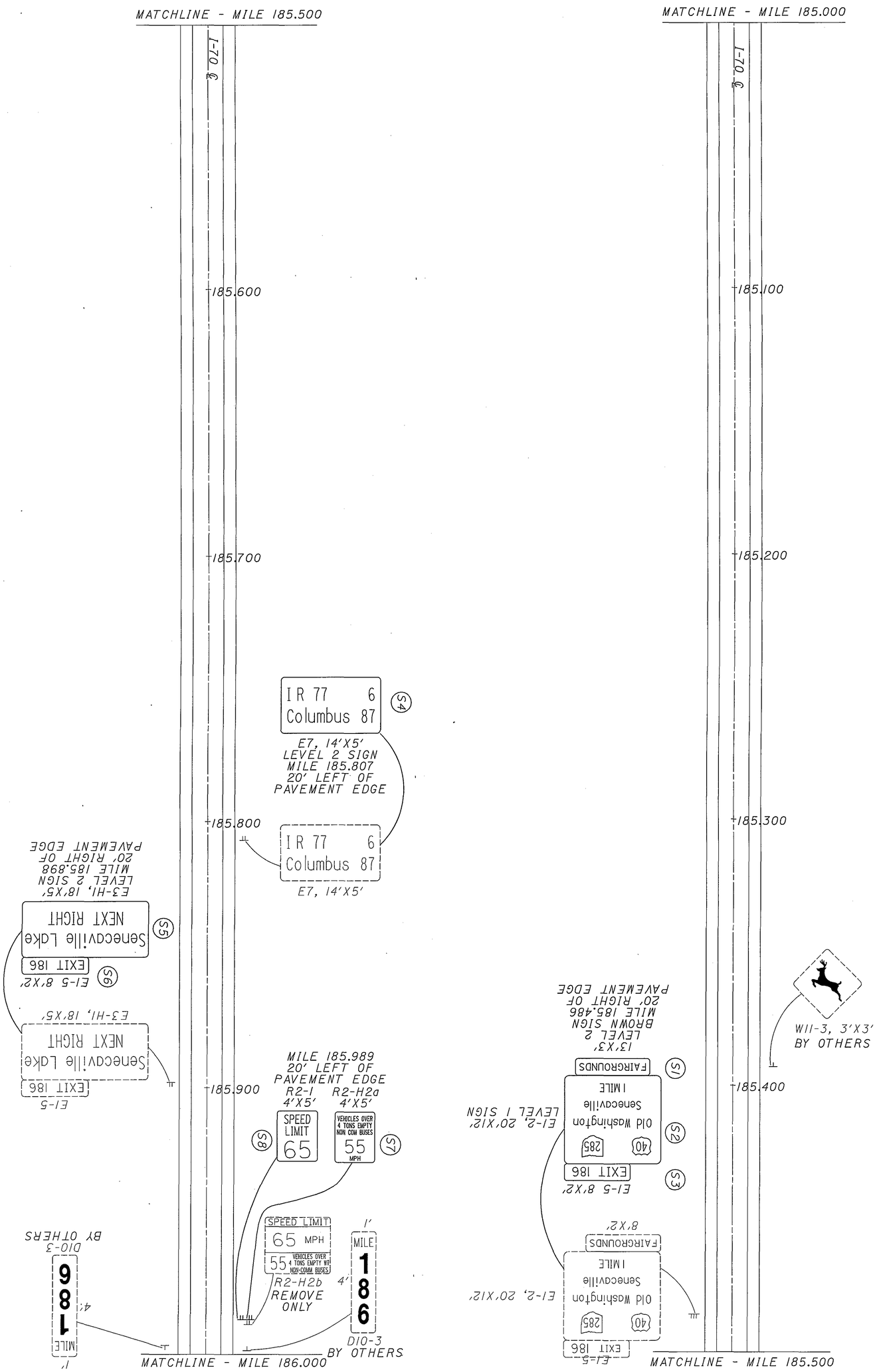

FOR QUANTITIES, SEE SHEET 156

D05-SIGN-FY2005

GUERNSEY COUNTY
MILE 185.000 TO MILE 186.000

CALCULATED DAP
CHECKED WEB

0 50 100 200
HORIZONTAL SCALE IN FEET

FOR QUANTITIES, SEE SHEET 156

N

0 50 100 200
HORIZONTAL SCALE IN FEET

CALCULATED DAP
CHECKED WEB

GUERNSEY COUNTY
MILE 186.000 TO MILE 186.500

D05-SIGN-FY2005

08/13/2004
03:54:40 PM
m:\proj\022\1505\22 sign inventory\project plans\plansheets\tpl15170.dgn

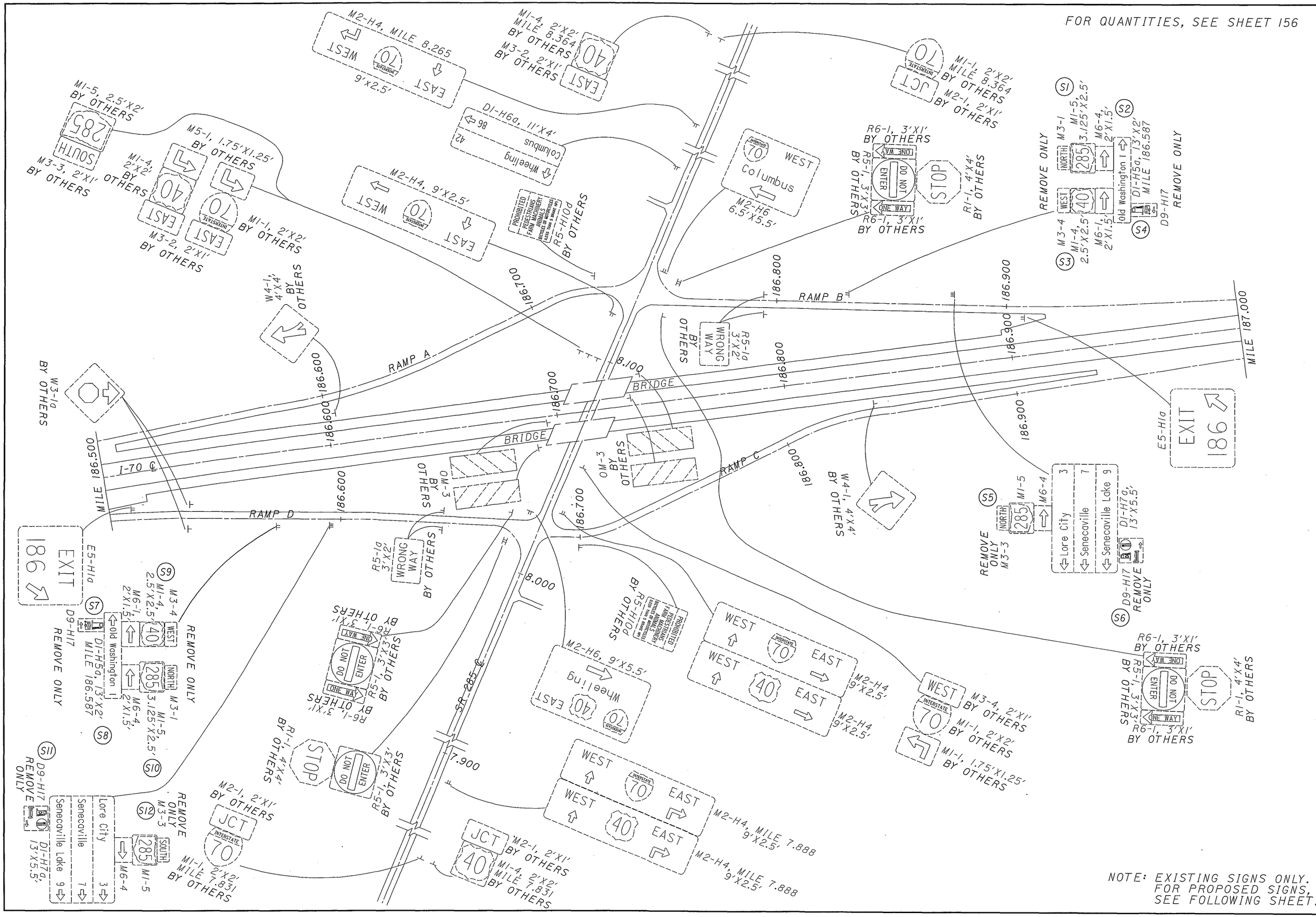

NOTE: EXISTING SIGNS ONLY. FOR PROPOSED SIGNS, SEE FOLLOWING SHEET.

HORIZONTAL SCALE IN FEET 0 50 100 200

CALCULATED DAP
CHECKED WEB

GUERNSEY COUNTY SR 285 INTERCHANGE

D05-SIGN-FY2005

08/13/2004
03:54:41PM
m:\proj\022\n505\22 sign inventory\project plans\plansheets\tpl61170.dgn

FOR QUANTITIES, SEE SHEETS 156 & 157

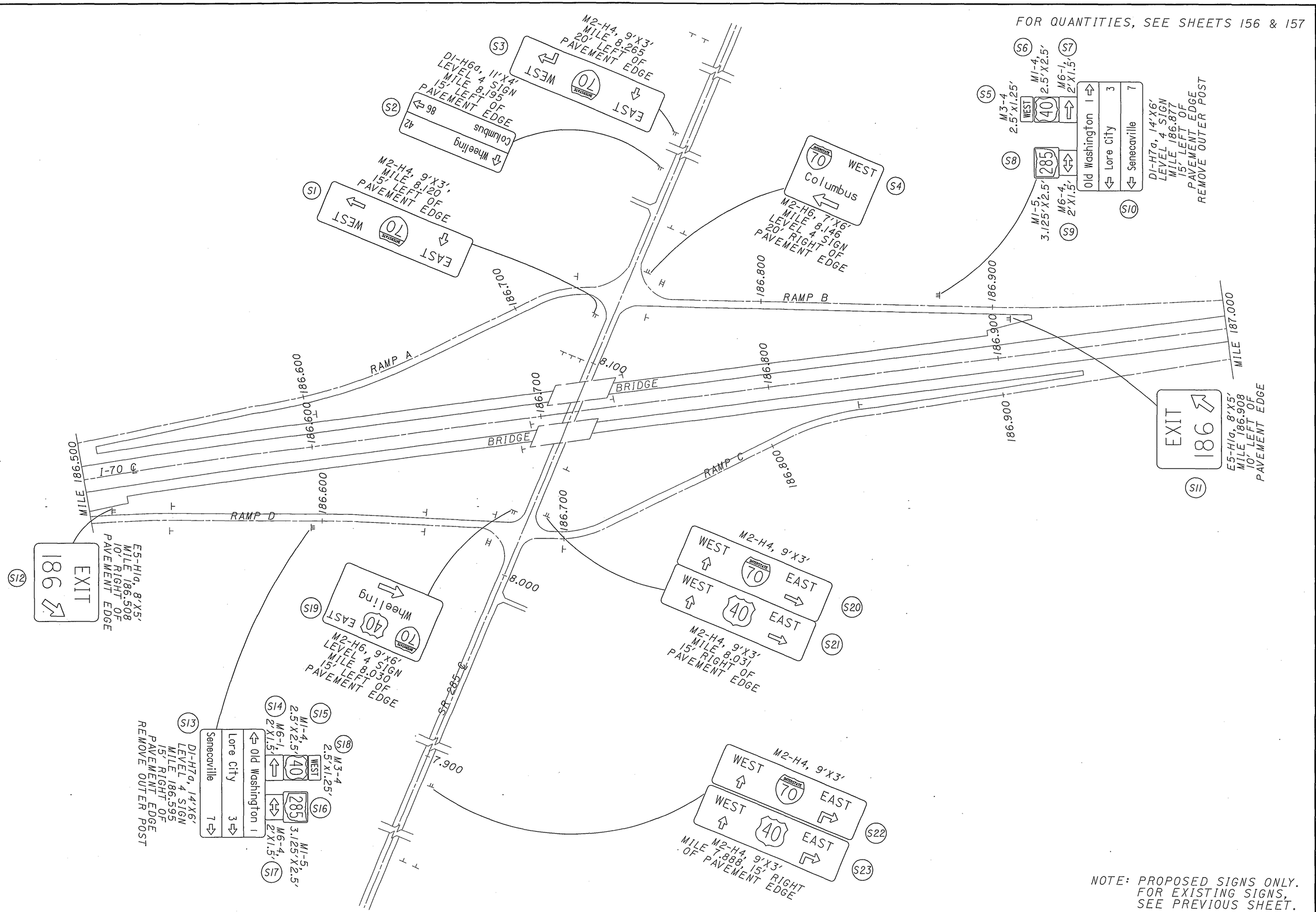

NOTE: PROPOSED SIGNS ONLY.
FOR EXISTING SIGNS,
SEE PREVIOUS SHEET.

N

0 50 100 200
HORIZONTAL
SCALE IN FEET

CALCULATED DAP
CHECKED WEB

GUERNSEY COUNTY
SR 285 INTERCHANGE

D05-SIGN-FY2005

08/13/2004
03:54:41 PM
m:\proj\022\1505\22 sign inventory\project plans\plansheets\tpll7170.dgn

08/13/2004
03:54:41PM
m:\proj\022\N505\22 sign inventory\project plans\plansheets\tpl8i70.dgn

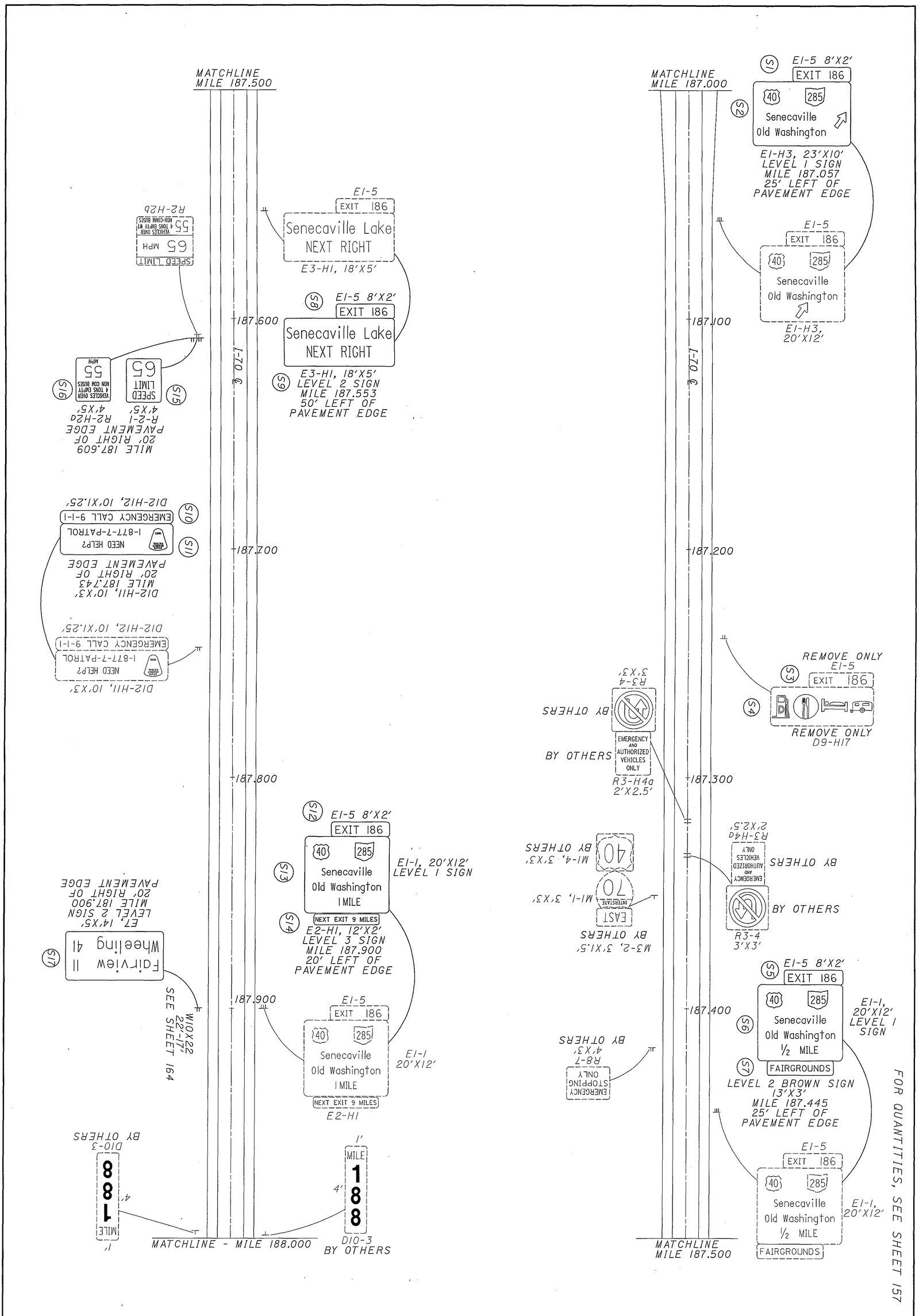

123
166

D05-SIGN-FY2005

GUERNSEY COUNTY
MILE 187.000 TO MILE 188.000

CALCULATED DAP
CHECKED WEB

0 100
50 200
HORIZONTAL SCALE IN FEET

N

08/13/2004
03:54:41 PM
m:\proj\022N\505\22 sign inventory\project plans\plansheets\tpll9170.dgn

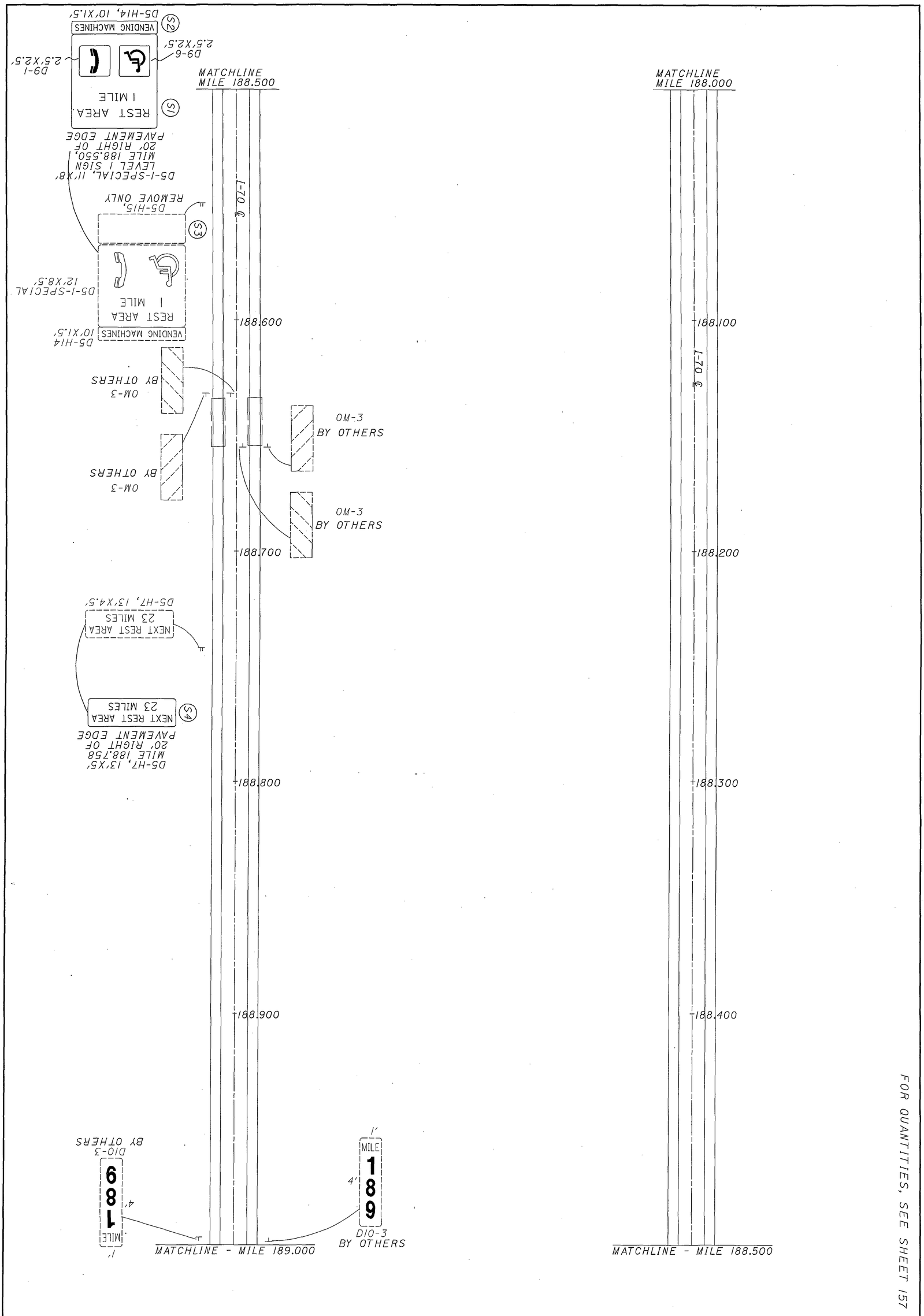

FOR QUANTITIES, SEE SHEET 157

124
166

D05-SIGN-FY2005

GUERNSEY COUNTY
MILE 188.000 TO MILE 189.000

CALCULATED DAP
CHECKED WEB

0 50 100 200
HORIZONTAL SCALE IN FEET

N

FOR QUANTITIES, SEE SHEET 157

0 50 100 200
HORIZONTAL SCALE IN FEET

CALCULATED DAP
CHECKED WEB

GUERNSEY COUNTY
MILE 189.000 TO MILE 190.000

D05-SIGN-FY2005

08/13/2004
03:54:42 PM
m:\proj\022N505\22 sign inventory\project plans\plansheets\tp20170.dgn

08/13/2004
03:54:42 PM
m:\proj\0221\1505\22 sign inventory\project plans\plansheets\tpl2ll70.dgn

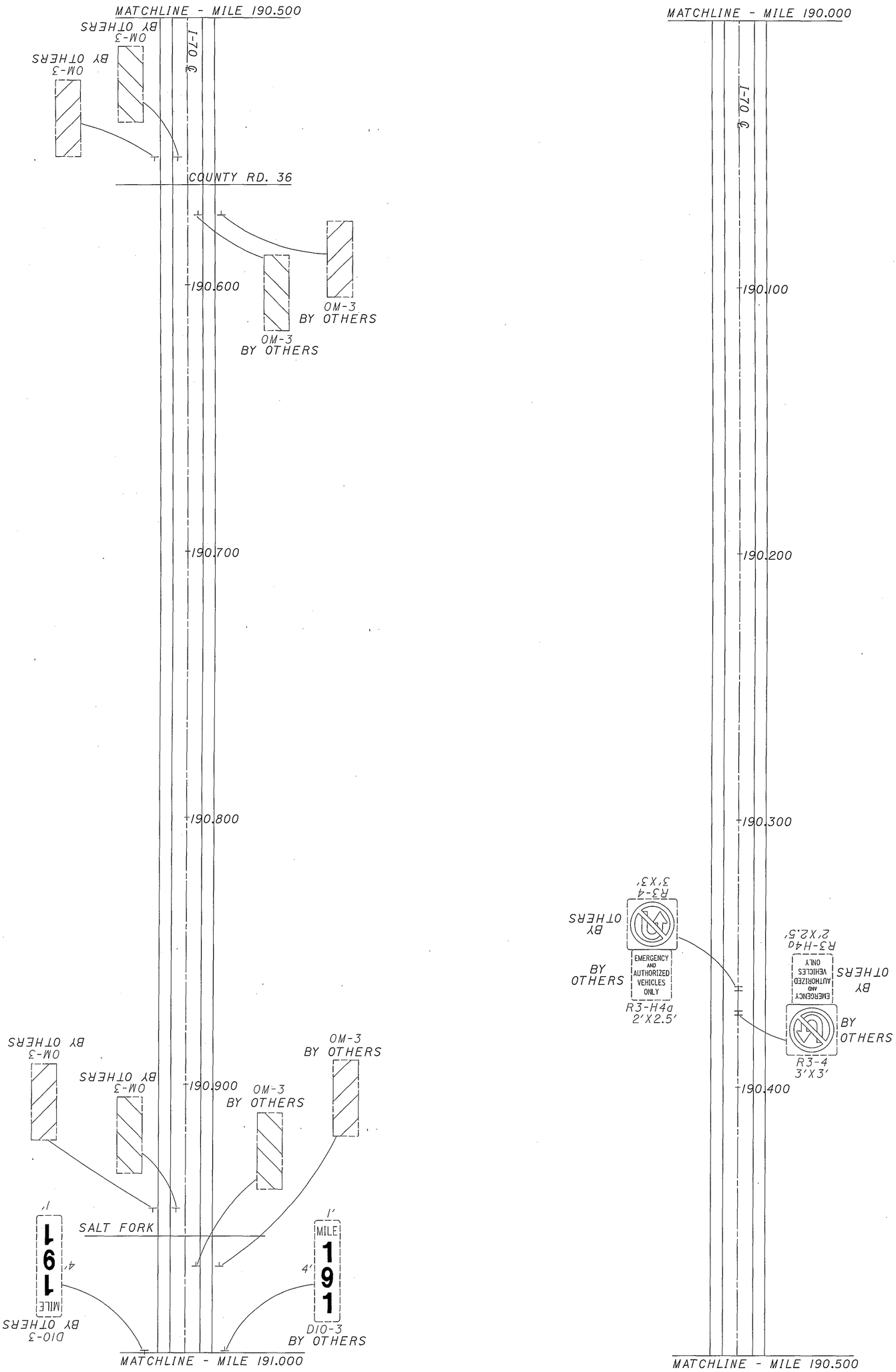

126 / 166	D05-SIGN-FY2005	GUERNSEY COUNTY MILE 190.000 TO MILE 191.000	CALCULATED DCB CHECKED WEB 0 50 100 200 HORIZONTAL SCALE IN FEET

08/13/2004
03:54:42 PM
m:\proj\022IN505\22 sign inventory\project plans\plansheets\tpl22170.dgn

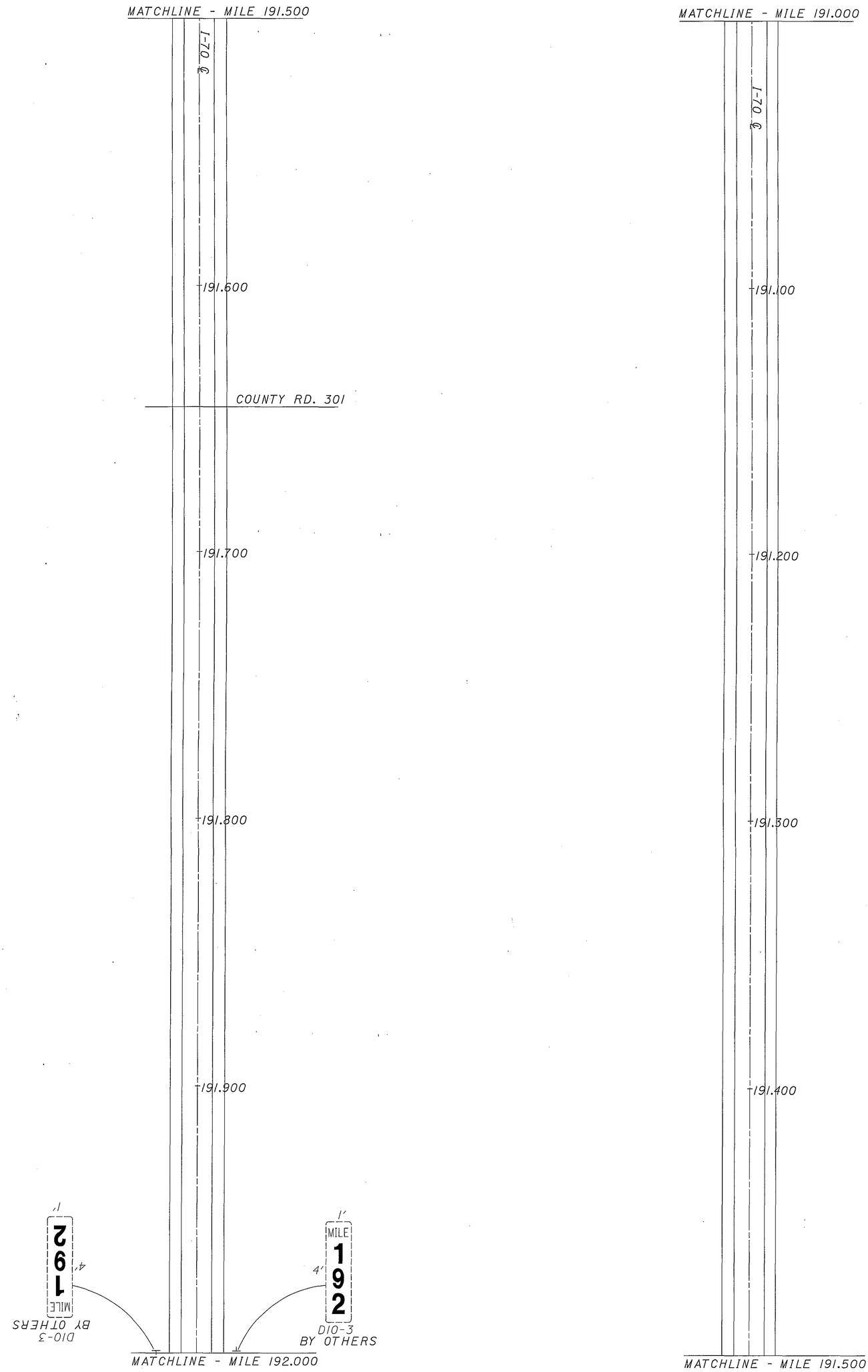

127
166

D05-SIGN-FY2005

GUERNSEY COUNTY
MILE 191.000 TO MILE 192.000

CALCULATED DCB
CHECKED WEB

0 50 100 200
HORIZONTAL SCALE IN FEET

N

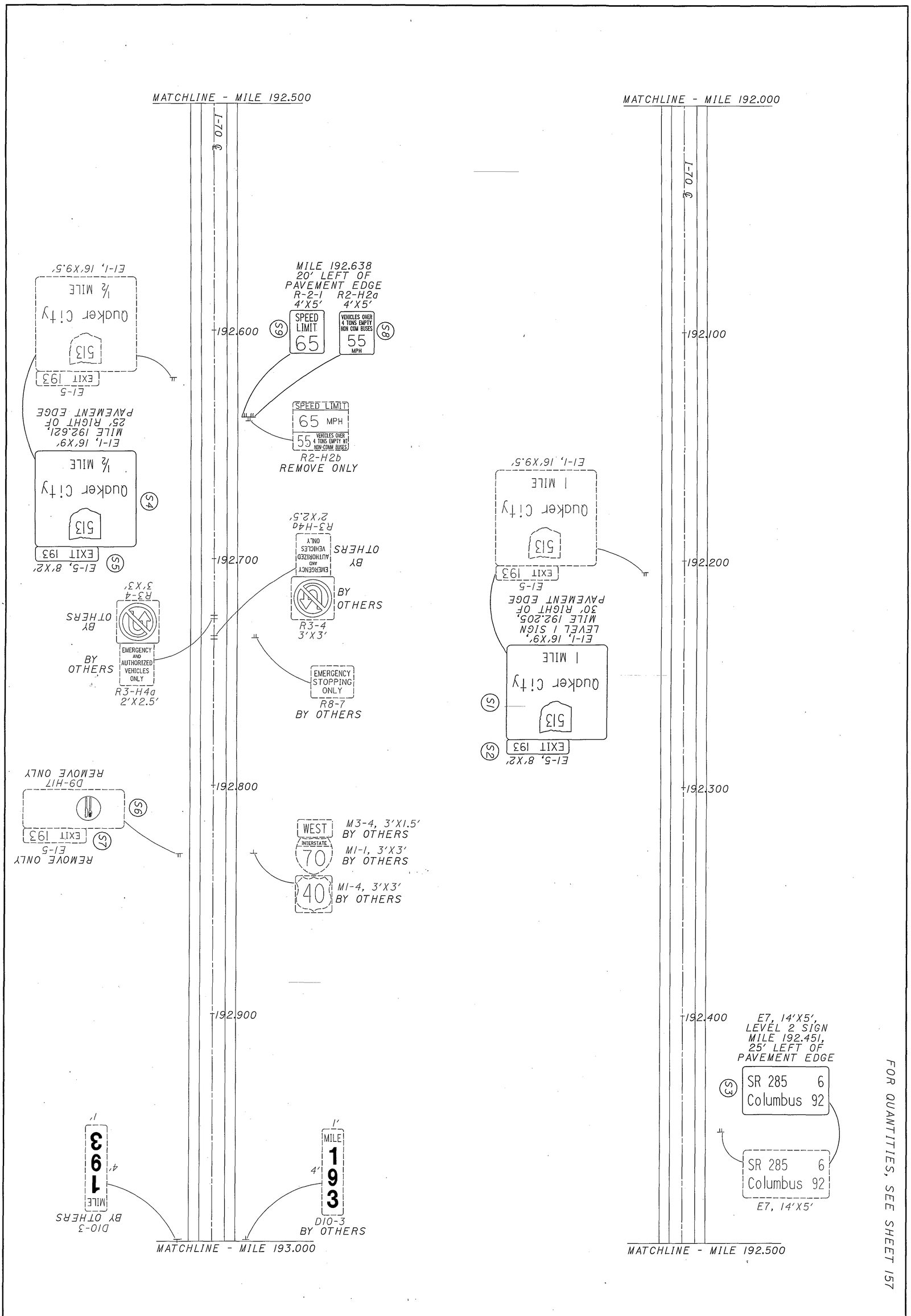

FOR QUANTITIES, SEE SHEET 157

FOR QUANTITIES, SEE SHEET 157

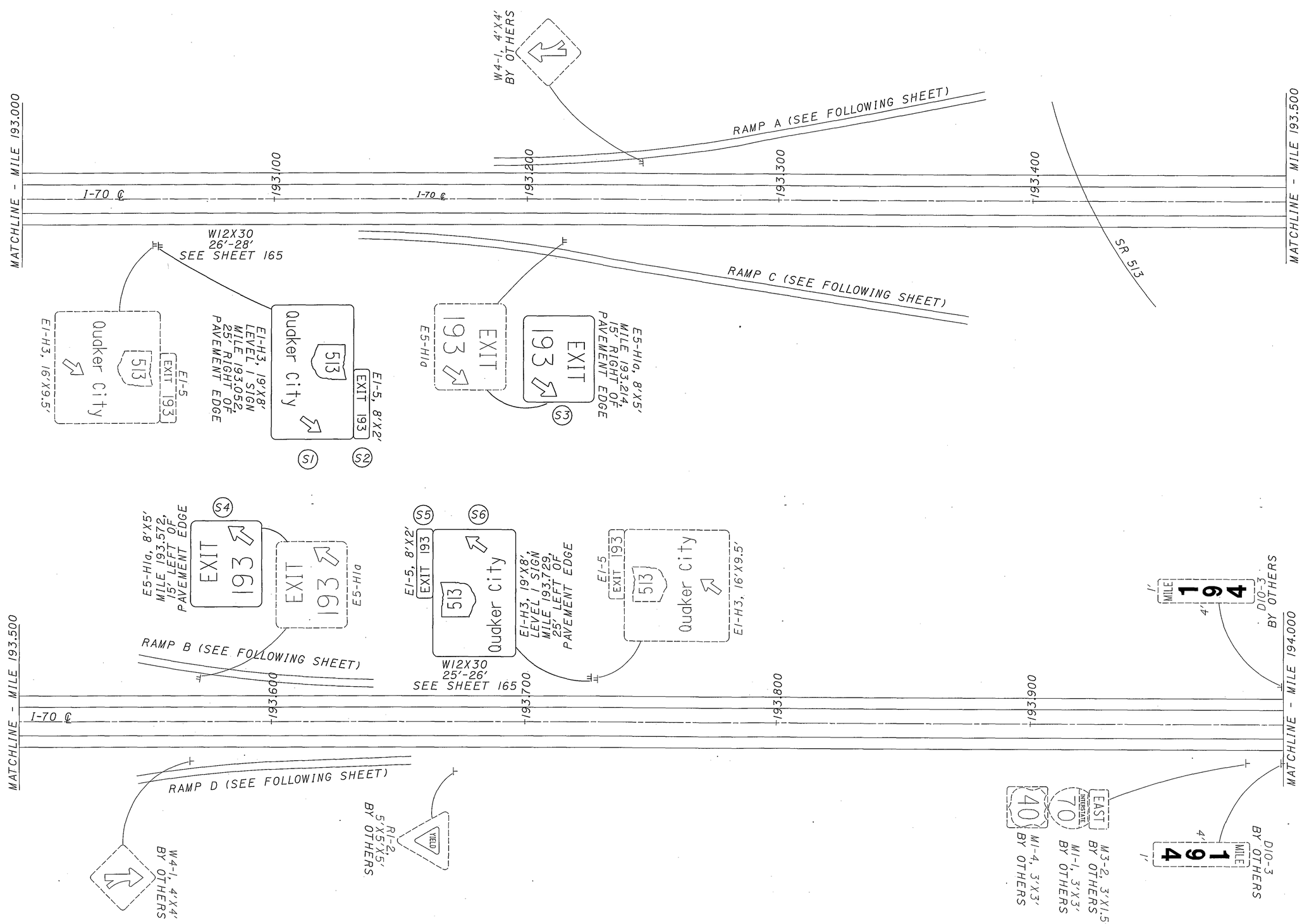

HORIZONTAL SCALE IN FEET 0 50 100 200

CALCULATED DCB
CHECKED WEB

GUERNSEY COUNTY
MILE 193.000 TO MILE 194.000

D05-SIGN-FY2005

08/13/2004
03:54:42 PM
m:\proj\022N\505\22 sign inventory\project plans\plansheets\tpl24170.dgn

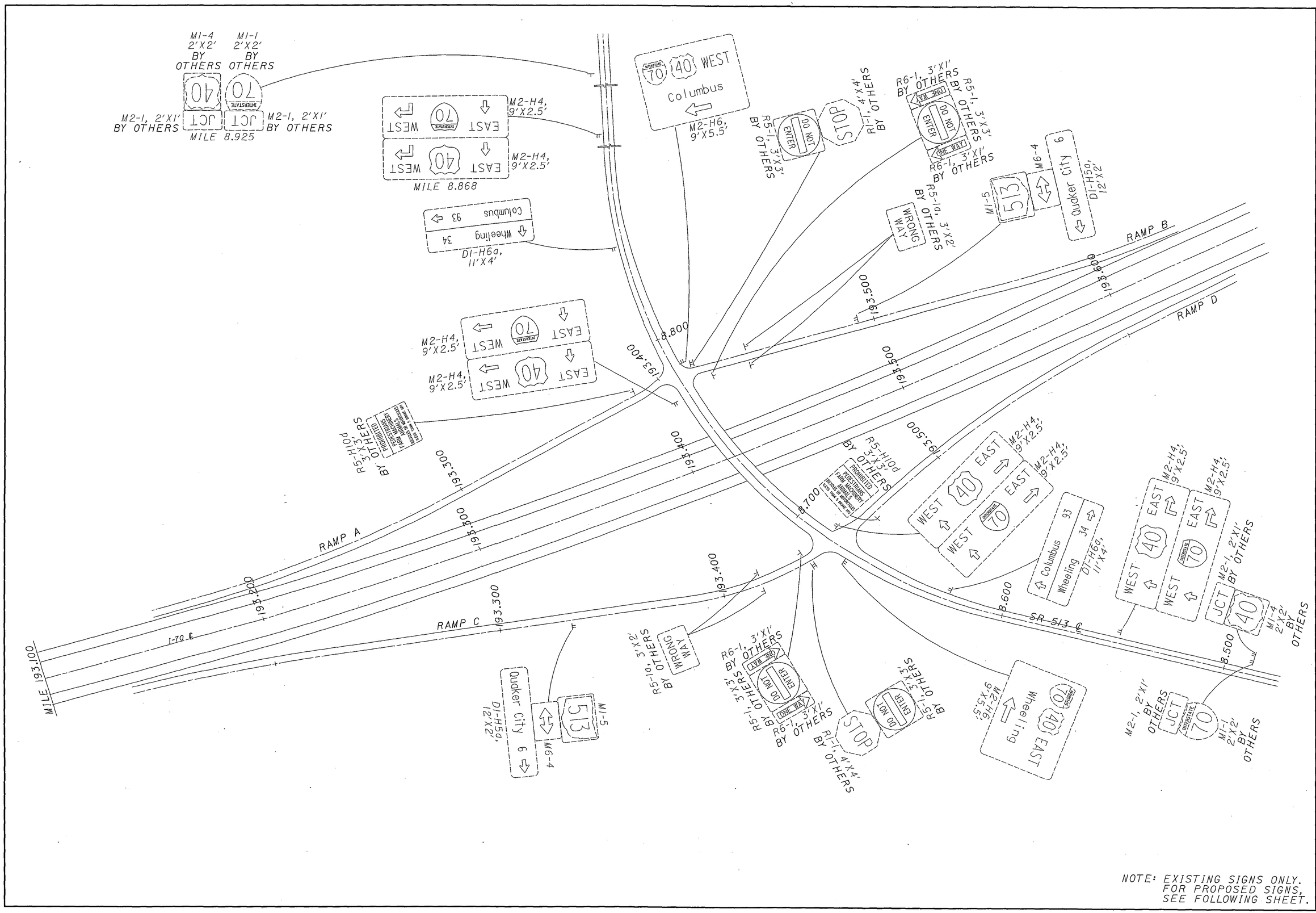

NOTE: EXISTING SIGNS ONLY.
FOR PROPOSED SIGNS,
SEE FOLLOWING SHEET.

HORIZONTAL SCALE IN FEET
0 50 100 200

CALCULATED DCB
CHECKED WEB

GUERNSEY COUNTY
SR 513 INTERCHANGE

D05-SIGN-FY2005

08/13/2004
02:54:43 PM
m:\proj\022\1505\22 sign inventory\project plans\plansheets\tpl25170.dgn

FOR QUANTITIES, SEE SHEET 158

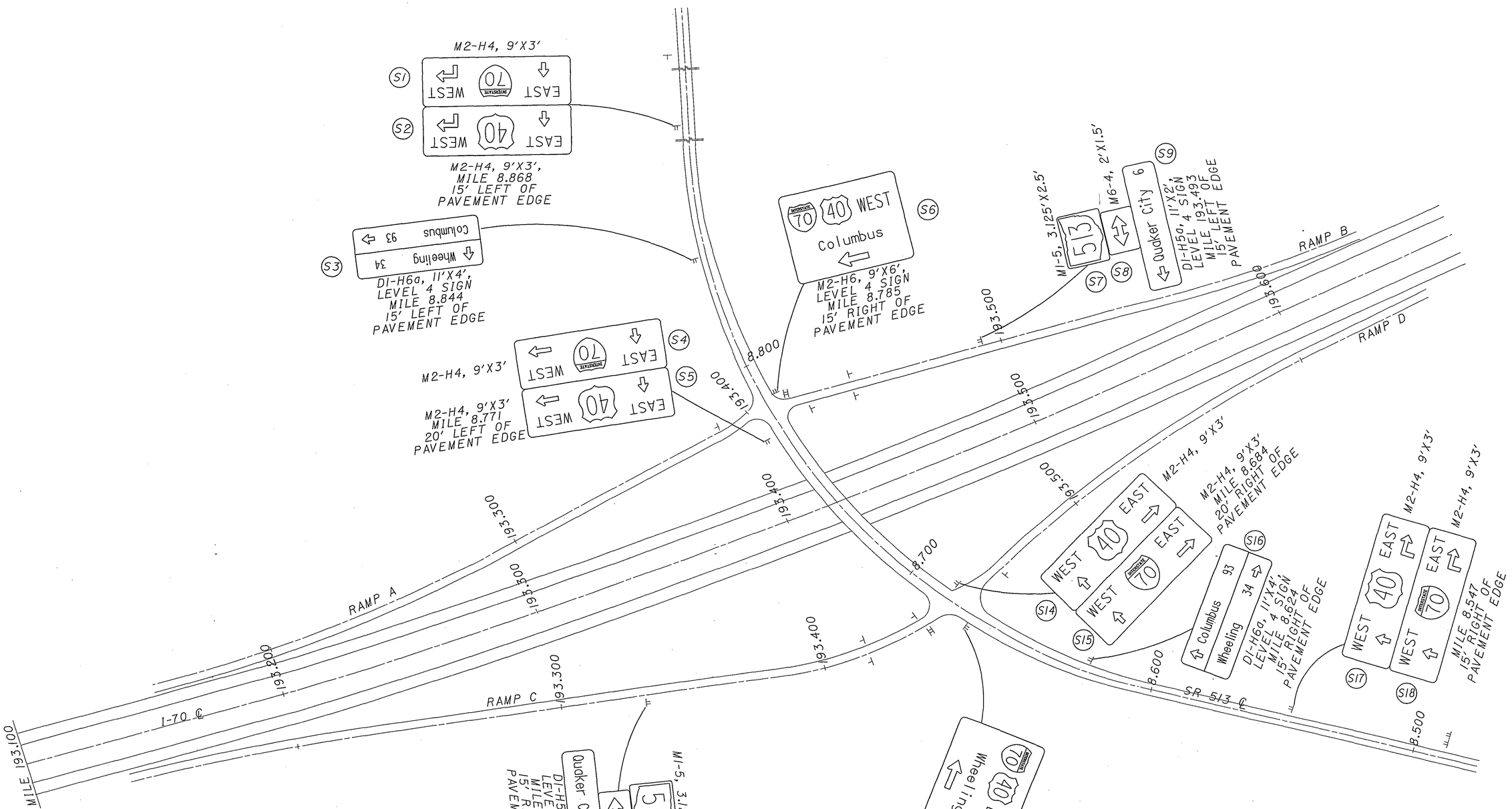

NOTE: PROPOSED SIGNS ONLY.
FOR EXISTING SIGNS,
SEE PREVIOUS SHEET.

N

0 50 100 200
HORIZONTAL
SCALE IN FEET

CALCULATED DCB
CHECKED WEB

GUERNSEY COUNTY
SR 513 INTERCHANGE

D05-SIGN-FY2005

08/13/2004
03:54:43 PM
m:\proj\022\1505\22 sign inventory\project plans\plansheets\tpl26170.dgn

08/13/2004
03:54:43 PM
m:\proj\022l\l505\22 sign inventory\project plans\plansheets\tpl27170.dgn

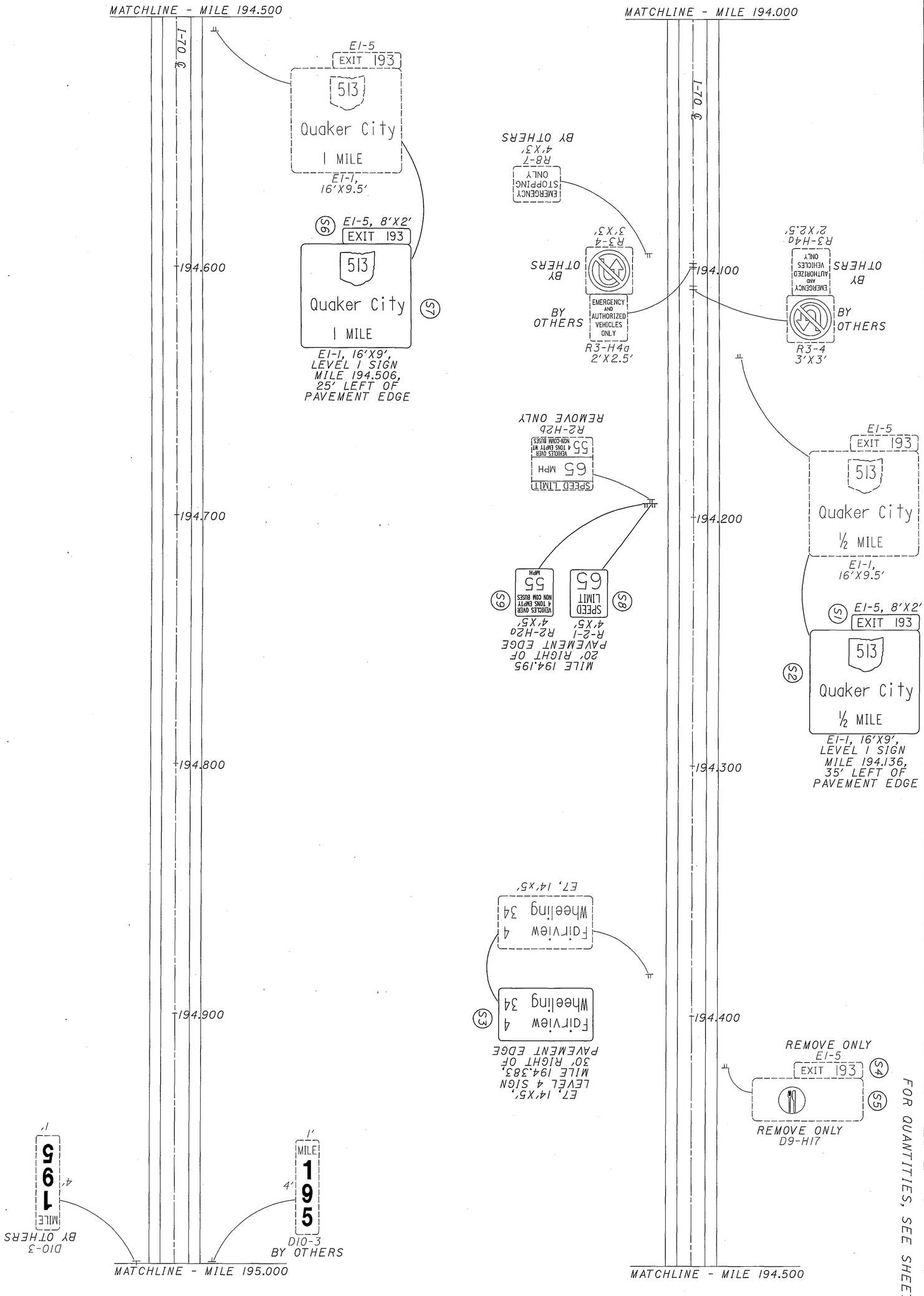

132
166

D05-SIGN-FY2005

GUERNSEY COUNTY
MILE 194.000 TO MILE 195.000

CALCULATED DCB
CHECKED WEB

0 50 100 200
HORIZONTAL SCALE IN FEET

N

08/13/2004
03:54:43 PM
m:\proj\0221\505\22 sign inventory\project plans\plansheets\tpl28170.dgn

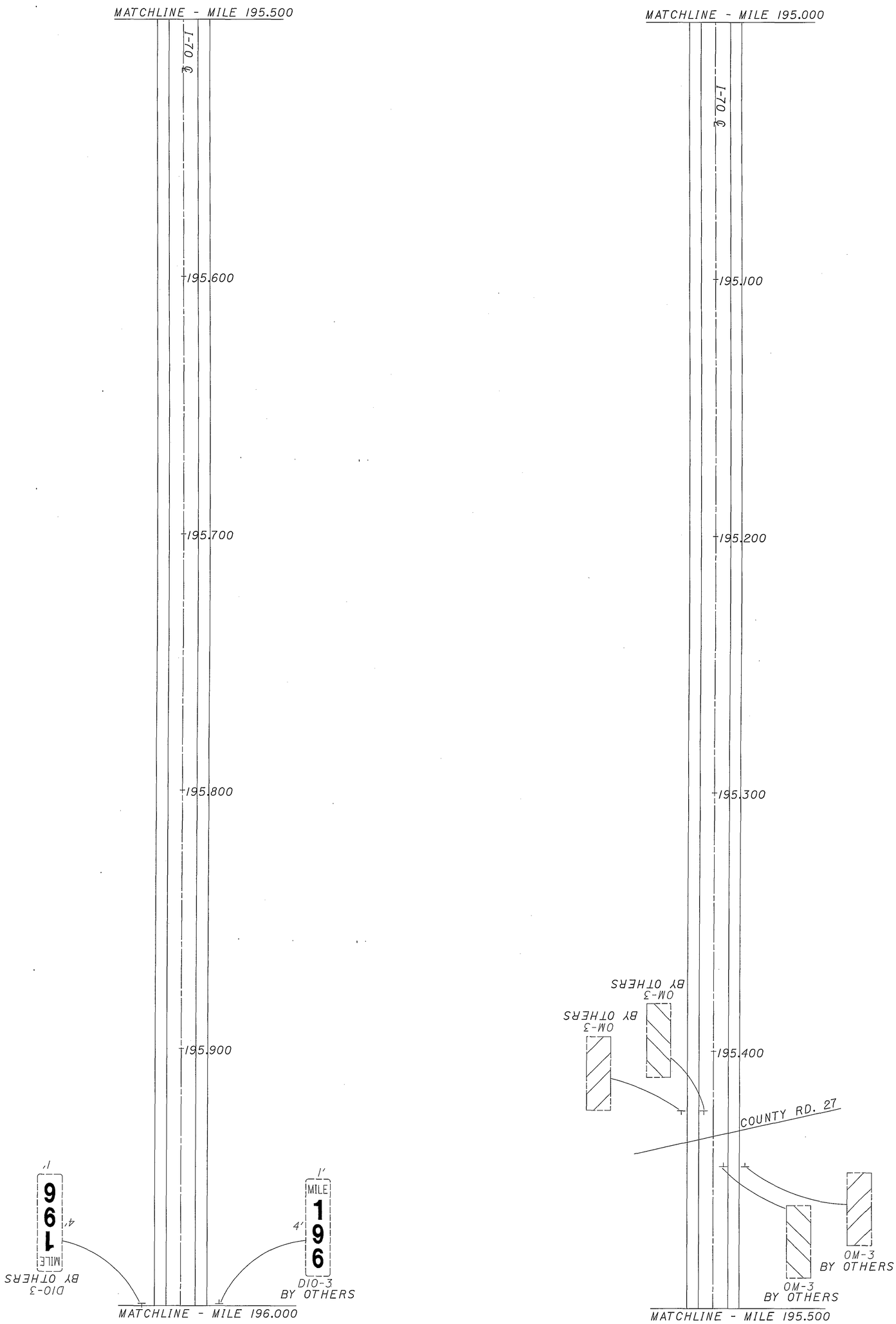

133 / 166	D05-SIGN-FY2005	GUERNSEY COUNTY MILE 195.000 TO MILE 196.000	CALCULATED DCB CHECKED WEB 0 50 100 200 HORIZONTAL SCALE IN FEET

08/13/2004
03:54:44 PM
m:\proj\022l\l505\22 sign inventory\project plans\plansheets\tpl29170.dgn

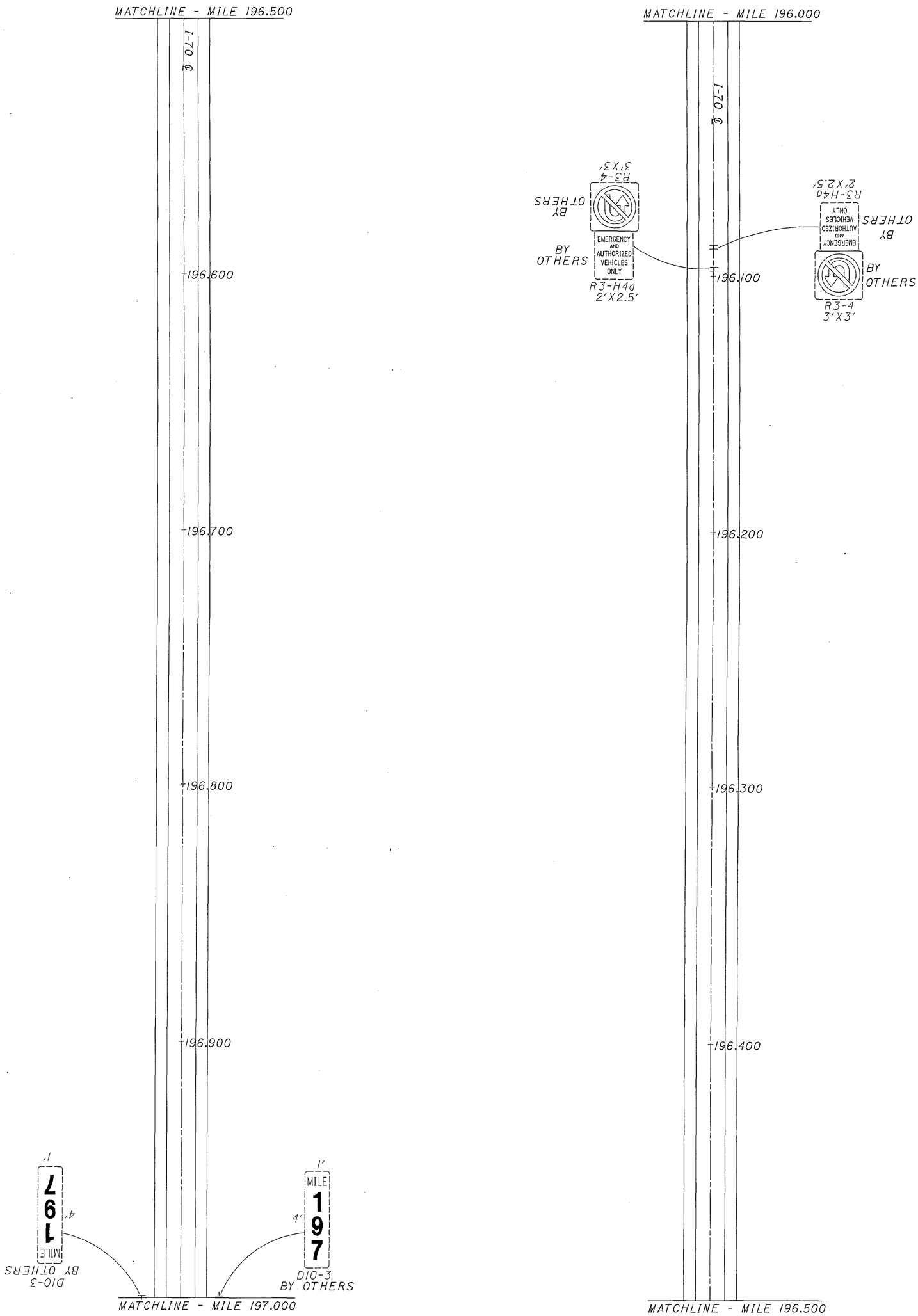

134 / 166	D05-SIGN-FY2005	GUERNSEY COUNTY MILE 196.000 TO MILE 197.000	CALCULATED DCB CHECKED WEB	0 100 50 200 HORIZONTAL SCALE IN FEET

FOR QUANTITIES, SEE SHEET 158

HORIZONTAL SCALE IN FEET
0 50 100 200

CALCULATED DCB
CHECKED WEB

GUERNSEY COUNTY
MILE 197.000 TO MILE 198.000

D05-SIGN-FY2005

08/13/2004
03:54:44 PM
m:\proj\022n\505\22 sign inventory\project plans\plansheets\tp130170.dgn

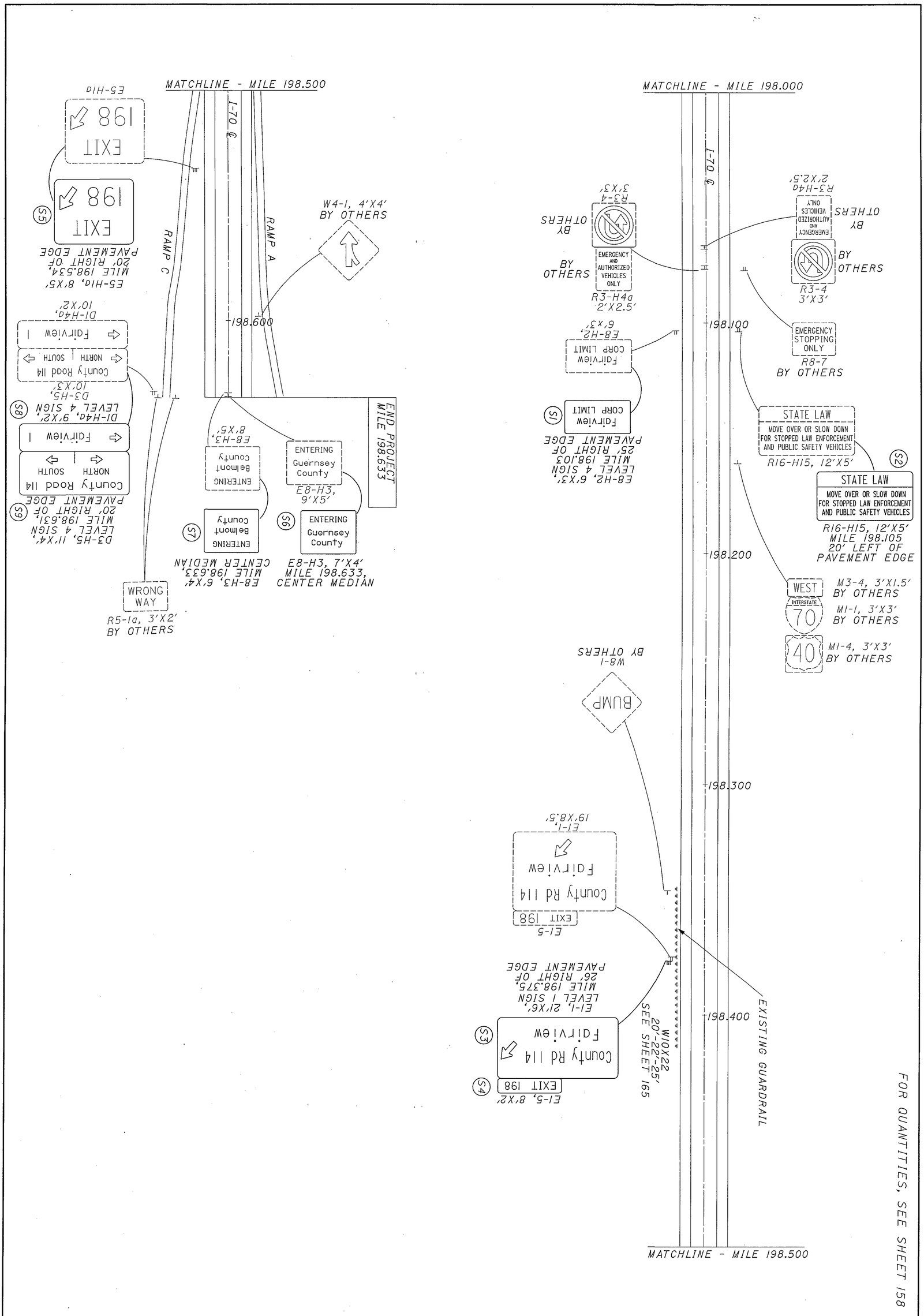

D05-SIGN-FY2005

GUERNSEY COUNTY
MILE 198.000 TO MILE 198.633

CALCULATED DCB
CHECKED WEB

0 50 100 200
HORIZONTAL SCALE IN FEET

N

SHEET NO.	REFERENCE NO.	LOCATION	STATION	SIDE	CODE	SIZE (FEET)	630 SIGN ATTACHEMENT ASSEMBLY EACH	630 GROUND MOUNTED SUPPORT, WI2X30 BEAM FT.	630 BREAKAWAY BEAM CONNECTION EACH	630 SIGN, FLAT SHEET SQ. FT.	630 SIGN, GROUND MOUNTED EXTRUSHEET SQ. FT.	630 SIGN, OVERHEAD EXTRUSHEET SQ. FT.	630 GROUND MOUNTED BEAM SUPPORT FOUNDATION EACH	630 GROUND MOUNTED SUPPORT NO. 4 POST FT.	630 REMOVAL OF GROUND MOUNTED SIGN AND DISPOSAL EACH	630 REMOVAL OF GROUND MOUNTED MAJOR SIGN AND DISPOSAL EACH	630 REMOVAL OF GROUND MOUNTED BEAM SUPPORT AND DISPOSAL EACH	630 REMOVAL OF OVERHEAD MOUNTED SIGN AND DISPOSAL EACH	630 SIGNING, MISC.: GROUND MOUNTED SUPPORT EACH	631 REMOVAL OF LUMINAIRE AND DISPOSAL EACH	631 REMOVAL OF BALLAST AND DISPOSAL EACH	631 REMOVAL OF SIGN SERVICE AND DISPOSAL, AS PER PLAN EACH	630 SIGNING, MISC.: CHECK TORQUE EACH
6	S1	I-70	111.000	℄	E8-H3	6'X4'					24					1							1
	S2	I-70	111.000	℄	E8-H3	6'X4'					24					1							
	S3	I-70	111.132	LT	E1-5	8'X2'						16						1					
	S4	I-70	111.132	LT	E1-2	17'X8'	1					136						1		2	2	1	
	S5	I-70	111.131	RT	E1-1	17'X12'	1					204						1		2	2	1	
	S6	I-70	111.131	RT	E1-5	12'X2'						24						1					
	S7	I-70	111.240	LT	E3-H2	18'X9'					162					1							1
	S8	I-70	111.680	LT	E8-H2	7'X3'					21				1								1
	S9	I-70	111.810	LT	E1-5	9'X2'					18				1								
	S10	I-70	111.810	LT	-	23'X8'					184					1							
	S11	I-70	111.828	RT	E1-1	16'X9'	1					144						1		2	2	1	
	S12	I-70	111.828	RT	E1-5	9'X2'						18						1					
	S13	I-70	111.894	RT	E8-H2	8'X3'					24				1								1
	S14	I-70	111.915	RT	E1-1	15'X12'	1					180						1		2	2	1	
	S15	I-70	111.915	RT	E1-5	9'X2'						18						1					
	S16	I-70	111.491	LT	R2-1	4'X5'				20					1								
	S17	I-70	111.491	LT	R2-H2a	4'X5'				20					1								
8	S1	SR 256	0.458	RT	M2-H6	10'X5'	1					50						1		2	2	1	
	S2	SR 256	0.338	RT	M2-H6	11'X5'	1					55						1		2	2	1	
	S3	SR 256	0.262	RT	M2-H5	9'X4'					36				1								
	S4	SR 256	0.403	LT	M2-H6	9'X7'					63					1							1
	S5	I-70 RAMP B	112.307	LT	M1-5	3.75'X3'				11.3					1								
	S6	I-70 RAMP B	112.307	LT	M6-4	2.5'X2'				5					1								
	S7	I-70 RAMP B	112.307	LT	D1-H6a	12'X4'					48					1							1
	S8	I-70	112.392	LT	E5-H1a	8'X5'					40					1			1				
	S9	I-70	112.445	LT	E8-H2	8'X3'					24				1								1
	S10	I-70	112.045	RT	E5-H1a	9'X5'					45					1			1				
	S11	SR 256	0.485	LT	M2-H6	11'X5'	1					55						1		2	2	1	
	S12	SR 256	0.582	LT	M2-H6	8'X7'	1					56						1		2	2	1	
	S13	SR 256	0.582	LT	M2-H6	8'X7'	1					56						1		2	2	1	
	S14	I-70	112.273	RT	E5-H1a	9'X5'					45					1			1				
	S15	SR 256	0.677	LT	M2-H5	9'X4'					36				1								
TOTALS CARRIED TO LAST SHEET OF SUBSUMMARY							9			56.3	794	1012			10	9		13	3	18	18	9	7

CALCULATED JAM
CHECKED WEB

SIGNING SUBSUMMARY

D05-SIGN-FY2005

08/25/2004
02200589 PM
M:\pro\j022\1505\22 Sign inventory\project plans\sheets\ts001170.dgn

SHEET NO.	REFERENCE NO.	LOCATION	STATION	SIDE	CODE	SIZE (FEET)	606 GUARDRAIL, TYPE 5 FT.	606 ANCHOR ASSEMBLY, TYPE B-98 EACH	606 ANCHOR ASSEMBLY, TYPE T EACH	630 SIGN ATTACHEMENT ASSEMBLY EACH	630 GROUND MOUNTED SUPPORT, WIOX22 BEAM FT.	630 BREAKAWAY BEAM CONNECTION EACH	630 SIGN, FLAT SHEET SQ. FT.	630 SIGN, GROUND MOUNTED EXTRUSHEET SQ. FT.	630 SIGN, OVERHEAD EXTRUSHEET SQ. FT.	630 GROUND MOUNTED BEAM SUPPORT FOUNDATION EACH	630 GROUND MOUNTED SUPPORT, NO. 4 POST FT.	630 REMOVAL OF GROUND MOUNTED SIGN AND DISPOSAL EACH	630 REMOVAL OF GROUND MOUNTED MAJOR SIGN AND DISPOSAL EACH	630 REMOVAL OF GROUND MOUNTED BEAM SUPPORT AND DISPOSAL EACH	630 REMOVAL OF OVERHEAD MOUNTED SIGN AND DISPOSAL EACH	630 SIGNING, MISC.: GROUND MOUNTED SUPPORT EACH	631 REMOVAL OF LUMINAIRE AND DISPOSAL EACH	631 REMOVAL OF BALLAST AND DISPOSAL EACH	631 REMOVAL OF SIGN SERVICE AND DISPOSAL, AS PER PLAN EACH	630 SIGNING, MISC.: CHECK TORQUE EACH
9	S1	I-70	112.012	RT	E1-1	17'X10'				1					170						1		2	2	1	
	S2	I-70	112.012	RT	E1-5	9'X2'									18						1					
	S3	I-70	112.012	RT	E1-1	19'X8'				1					152						1		3	3	1	
	S4	I-70	112.012	RT	E1-5	9'X2'									18						1					
	S5	I-70	112.237	RT	E1-1	20'X8'				1					160						1		3	3	1	
	S6	I-70	112.237	RT	E1-5	9'X2'									18						1					
	S7	I-70	112.237	RT	E6-2	16'X10'				1					160						1		2	2	1	
	S8	I-70	112.237	RT	W9-H5L	20'X7'				1					140						1		3	3	1	
	S9	I-70	112.402	RT	E1-1	15'X12'				1					180						1		2	2	1	
	S10	I-70	112.402	RT	E1-5	9'X2'									18						1					
	S11	I-70	112.553	LT	E1-5	8'X2'								16				1								
	S12	I-70	112.553	LT	E1-H3	20'X10'					25-25-25	3		200		3			1	2						
	S13	I-70	112.884	RT	W9-H5L	20'X7'				1					140						1		3	3	1	
	S14	I-70	112.884	RT	E1-H3	17'X10'				1					170						1		2	2	1	
	S15	I-70	112.884	RT	E1-5	8'X2'									16						1					
	S16	I-70	112.894	LT	E1-5	8'X2'								16				1								
	S17	I-70	112.894	LT	E1-1	17'X12'								204					1							
	S18	I-70	112.939	RT	E5-H1a	9'X5'								45					1			1				
10	S1	I-70	113.273	RT	E7	16'X7'								112					1							1
	S2	I-70	113.380	℄	E8-H3	6'X4'								24				1								1
	S3	I-70	113.380	℄	E8-H3	6'X4'								24				1								
	S4	I-70	113.405	LT	E1-5	8'X2'								16				1								
	S5	I-70	113.405	LT	E1-H3	17'X12'								204					1							1
	S6	I-70	113.434	RT	W9-H4L	20'X7'				1					140						1		3	3	1	
	S7	I-70	113.623	RT	R16-H15	12'X5'								60					1							1
	S8	SR 204A	0.459	RT	D1-H6a	11'X4'								44					1							1
	S9	I-70	113.140	RT	R2-H2a	4'X5'							20					1								
	S10	I-70	113.140	RT	R2-1	4'X5'							20					1								
11	S1	I-70	114.153	LT	R14-MOD	19'X10'								190					1							1
12	S1	I-70	115.663	RT	R2-1	4'X5'							20				34		1	2						
	S2	I-70	115.663	RT	R2-H2a	4'X5'							20				35									
14	S1	I-70	117.037	RT	E1-1	13'X9'								117					1							
	S2	I-70	117.037	RT	E1-5	8'X2'								16				1								
	S3	I-70	117.311	LT	E7	14'X5'								70					1							1
	S4	I-70	117.577	RT	E1-1	13'X9'								117					1							1
	S5	I-70	117.577	RT	E1-5	8'X2'								16				1								
	S6	I-70	117.908	RT	E1-H3	16'X8'					23-24	2		128		2			1	2						
	S7	I-70	117.908	RT	E1-5	8'X2'								16				1								
	S8	I-70	117.405	LT	R2-1	4'X5'							20				34		1	2						
	S9	I-70	117.405	LT	R2-H2a	4'X5'							20				35									
TOTALS CARRIED TO LAST SHEET OF SUBSUMMARY										9	122	5	120.0	1635	1500	5	138	10	14	8	14	1	23	23	9	8

CALCULATED JAM CHECKED WEB

SIGNING SUBSUMMARY

D05-SIGN-FY2005

09/25/2004 03:03:50 PM M:\proj\022\1505\22 Sign Inventory\project plans\sheets\ts002170.dgn

SHEET NO.	REFERENCE NO.	LOCATION	STATION	SIDE	CODE	SIZE (FEET)	630 SIGN ATTACHEMENT ASSEMBLY EACH	630 GROUND MOUNTED SUPPORT, W12X30 BEAM FT.	630 BREAKAWAY BEAM CONNECTION EACH	630 SIGN, FLAT SHEET SQ. FT.	630 SIGN, GROUND MOUNTED EXTRUSHEET SQ. FT.	630 SIGN, OVERHEAD EXTRUSHEET SQ. FT.	630 GROUND MOUNTED BEAM SUPPORT FOUNDATION EACH	630 GROUND MOUNTED SUPPORT NO. 4 POST FT.	630 REMOVAL OF GROUND MOUNTED SIGN AND DISPOSAL EACH	630 REMOVAL OF GROUND MOUNTED MAJOR SIGN AND DISPOSAL EACH	630 REMOVAL OF GROUND MOUNTED BEAM SUPPORT AND DISPOSAL EACH	630 REMOVAL OF OVERHEAD MOUNTED SIGN AND DISPOSAL EACH	630 SIGNING, MISC.: GROUND MOUNTED SUPPORT EACH	631 REMOVAL OF LUMINAIRE AND DISPOSAL EACH	631 REMOVAL OF BALLAST AND DISPOSAL EACH	631 REMOVAL OF SIGN SERVICE AND DISPOSAL, AS PER PLAN EACH	630 SIGNING, MISC.: CHECK TORQUE EACH
16	S1	SR 310	1.142	LT	D1-H6a	14'X5'					70					1							
	S2	SR 310	1.113	LT	M2-H4	9'X3'					27					1							
	S3	SR 310	1.088	RT	M2-H6	9'X7'					63					1							
	S4	SR 310	1.069	RT	M3-4	2.5'X1.25'				3.1					1								
	S5	SR 310	1.069	RT	M1-1	2.5'X2.5'				6.3					1								
	S6	SR 310	1.069	RT	M6-1	2'X1.5'				3					1								
	S7	SR 310	1.069	RT	D1-H5a	14'X3'					42					1							
	S8	SR 310	1.197	LT	M2-H4	9'X3'					27				1								
	S9	I-70 RAMP B	118.263	LT	M1-5	3.125'X2.5'				7.8					1								
	S10	I-70 RAMP B	118.263	LT	M6-4	2'X1.5'				3					1								
	S11	I-70 RAMP B	118.263	LT	D1-H5a	10'X2'					20				1								
	S12	SR 310	0.912	LT	D1-H5a	14'X3'					42					1							
	S13	SR 310	0.912	LT	M6-1	2'X1.5'				3					1								
	S14	SR 310	0.912	LT	M1-1	2.5'X2.5'				6.3					1								
	S15	SR 310	0.912	LT	M3-2	2.5'X1.25'				3.1					1								
	S16	I-70 RAMP D	118.182	RT	D1-H5a	10'X2'					20				1								
	S17	I-70 RAMP D	118.182	RT	M6-4	2'X1.5'				3					1								
	S18	I-70 RAMP D	118.182	RT	M1-5	3.125'X2.5'				7.8					1								
	S19	SR 310	0.895	LT	M2-H6	8'X7'					56					1							
	S20	SR 310	0.914	RT	M2-H4	9'X3'					27				1								
	S21	SR 310	0.830	RT	D1-H6a	14'X5'					70					1							1
	S22	SR 310	0.736	RT	M2-H4	9'X3'					27				1								
17	S1	I-70	118.072	RT	E5-H1a	8'X5'					40					1			1				
	S2	I-70	118.362	LT	E5-H1a	8'X5'					40					1			1				
	S3	I-70	118.523	LT	E1-5	8'X2'					16				1								
	S4	I-70	118.523	LT	E1-H3	16'X8'					128					1							1
	S5	I-70	118.856	LT	E1-5	8'X2'					16				1								
	S6	I-70	118.856	LT	E1-1	13'X9'					117					1							1
18	S1	I-70	119.222	RT	E7	16'X7'					112					1							1
	S2	I-70	119.356	LT	E1-5	8'X2'					16				1								
	S3	I-70	119.356	LT	E1-H3	13'X9'					117					1							1
	S4	I-70	119.033	RT	R2-1	4'X5'				20				34		1	2						
	S5	I-70	119.033	RT	R2-H2a	4'X5'				20				35									
20	S1	I-70	121.506	RT	E1-1	15'X12'					180					1							
	S2	I-70	121.506	RT	E1-5	8'X2'					16				1								
	S3	I-70	121.657	LT	E7	14'X5'					70					1							
	S4	I-70	121.872	LT	R2-H2a	4'X5'				20				34		1	2						
	S5	I-70	121.872	LT	R2-1	4'X5'				20				35									
21	S1	I-70	122.002	RT	E1-1	15'X12'					180					1							1
	S2	I-70	122.002	RT	E1-5	8'X2'					16				1								
	S3	I-70	122.103	RT	E8-H2	8'X3'					24				1								1
	S4	I-70	122.314	RT	E1-H3	18'X10'		22-24	2		180		2			1	2						
	S5	I-70	122.314	RT	E1-5	8'X2'					16				1								
	S6	I-70	122.473	RT	E5-H1a	8'X5'					40					1			1				
	S7	I-70	122.761	LT	E5-H1a	8'X5'					40					1			1				
	S8	I-70	122.918	LT	E1-5	8'X2'					16				1								
	S9	I-70	122.918	LT	E1-H3	18'X10'		28-30	2		180		2			1	2						
TOTALS CARRIED TO LAST SHEET OF SUBSUMMARY								104	4	126.4	2051		4	138	23	22	8		4				7

CALCULATED JAM CHECKED WEB

SIGNING SUBSUMMARY

D05-SIGN-FY2005

08/25/2004 03:04:43 PM
M:\proj\022\1505\22 Sign Inventory\project plans\sheets\ts003170.dgn

SHEET NO.	REFERENCE NO.	LOCATION	STATION	SIDE	CODE	SIZE (FEET)	630 SIGN ATTACHEMENT ASSEMBLY EACH	630 GROUND MOUNTED SUPPORT, WI2X30 BEAM FT.	630 BREAKAWAY BEAM CONNECTION EACH	630 SIGN, FLAT SHEET SQ. FT.	630 SIGN, GROUND MOUNTED EXTRUSHEET SQ. FT.	630 SIGN, OVERHEAD EXTRUSHEET SQ. FT.	630 GROUND MOUNTED BEAM SUPPORT FOUNDATION EACH	630 GROUND MOUNTED SUPPORT NO. 4 POST FT.	630 REMOVAL OF GROUND MOUNTED SIGN AND DISPOSAL EACH	630 REMOVAL OF GROUND MOUNTED MAJOR SIGN AND DISPOSAL EACH	630 REMOVAL OF GROUND MOUNTED BEAM SUPPORT AND DISPOSAL EACH	630 REMOVAL OF OVERHEAD MOUNTED SIGN AND DISPOSAL EACH	630 SIGNING, MISC.: GROUND MOUNTED SUPPORT EACH	631 REMOVAL OF LUMINAIRE AND DISPOSAL EACH	631 REMOVAL OF BALLAST AND DISPOSAL EACH	631 REMOVAL OF SIGN SERVICE AND DISPOSAL, AS PER PLAN EACH	630 SIGNING, MISC.: CHECK TORQUE EACH
23	S1	SR 158	1.057	LT	D1-H6a	11'X4'					44					1							1
	S2	SR 158	1.057	LT	M6-1	1.75'X1.25'				2.2					1								
	S3	SR 158	1.057	LT	M1-1	2'X2'				4					1								
	S4	SR 158	1.057	LT	M3-4	2'X1'				2					1								
	S5	SR 158	1.057	LT	M6-3	1.75'X1.25'				2.2					1								
	S6	SR 158	1.057	LT	M1-1	2'X2'				4					1								
	S7	SR 158	1.057	LT	M3-2	2'X1'				2					1								
	S8	SR 158	1.075	RT	M2-H6	7'X6'					42					1							1
	S9	SR 158	1.127	RT	M4-5	2'X1'				2					1								
	S10	SR 158	1.127	RT	M1-4	2'X2'				4					1								
	S11	SR 158	1.127	RT	M6-1	1.75'X1.25'				2.2					1								
	S12	SR 158	1.127	RT	D1-H5a	11'X2'					22				1								
	S13	I-70 RAMP B	122.670	LT	M1-5	3.75'X3'				11.3					1								
	S14	I-70 RAMP B	122.670	LT	M6-4	2.5'X2'				5					1								
	S15	I-70 RAMP B	122.670	LT	D1-H6a	11'X4'					44					1							1
	S16	I-70 RAMP D	122.567	RT	D1-H6a	11'X4'					44					1							1
	S17	I-70 RAMP D	122.567	RT	M6-4	2.5'X2'				5					1								
	S18	I-70 RAMP D	122.567	RT	M1-5	3.75'X3'				11.3					1								
	S19	SR 158	0.916	RT	M2-H4	9'X3'					27				1								
	S20	SR 158	0.898	LT	M2-H6	7'X6'					42					1							1
	S21	SR 158	0.845	RT	D1-H6a	11'X4'					44					1							1
	S22	SR 158	0.769	RT	M2-H4	9'X3'					27				1								
24	S1	I-70	123.224	LT	E1-5	8'X2'					16				1								
	S2	I-70	123.224	LT	E1-1	15'X12'					180					1							1
	S3	I-70	123.375	LT	E8-H2	8'X3'					24				1								1
	S4	I-70	123.390	RT	E7	16'X7'					112					1							1
	S5	I-70	123.807	LT	E1-5	8'X2'					16				1								
	S6	I-70	123.807	LT	E1-1	15'X12'					180					1							1
	S7	I-70	123.259	RT	R2-1	4'X5'				20				34		1	2						
	S8	I-70	123.259	RT	R2-H2a	4'X5'				20				35									
25	S1	I-70	124.905	RT	E1-1	14'X12'					168					1							1
	S2	I-70	124.905	RT	E1-5	8'X2'					16				1								
26	S1	I-70	125.280	LT	E7	14'X5'					70					1							1
	S2	I-70	125.230	RT	E3-H1	14'X5'					70					1							1
	S3	I-70	125.230	RT	E1-5	8'X2'					16				1								
	S4	I-70	125.298	RT	E3-H2	14'X2'					28				1								
	S5	I-70	125.298	RT	E1-1	14'X12'					168					1							1
	S6	I-70	125.298	RT	E1-5	8'X2'					16				1								
	S7	I-70	125.762	RT	E1-H3	16'X10'					160					1							
	S8	I-70	125.762	RT	E1-5	8'X2'					16				1								
	S9	I-70	125.460	LT	R2-1	4'X5'				20				34		1	2						
	S10	I-70	125.460	LT	R2-H2a	4'X5'				20				35									
TOTALS CARRIED TO LAST SHEET OF SUBSUMMARY										137.2	1592			138	24	16	4						14

CALCULATED JAM CHECKED WEB

SIGNING SUBSUMMARY

D05-SIGN-FY2005

08/25/2004
03:56:50 PM
M:\proj\022\1505\22 Sign Inventory\project plans\sheets\ts004170.dgn

SHEET NO.	REFERENCE NO.	LOCATION	STATION	SIDE	CODE	SIZE (FEET)	630 SIGN ATTACHEMENT ASSEMBLY EACH	630 GROUND MOUNTED SUPPORT, WI2X30 BEAM FT.	630 BREAKAWAY BEAM CONNECTION EACH	630 SIGN, FLAT SHEET SQ. FT.	630 SIGN, GROUND MOUNTED EXTRUSHEET SQ. FT.	630 SIGN, OVERHEAD EXTRUSHEET SQ. FT.	630 GROUND MOUNTED BEAM SUPPORT FOUNDATION EACH	630 GROUND MOUNTED SUPPORT NO. 4 POST FT.	630 REMOVAL OF GROUND MOUNTED SIGN AND DISPOSAL EACH	630 REMOVAL OF GROUND MOUNTED MAJOR SIGN AND DISPOSAL EACH	630 REMOVAL OF GROUND MOUNTED BEAM SUPPORT AND DISPOSAL EACH	630 REMOVAL OF OVERHEAD MOUNTED SIGN AND DISPOSAL EACH	630 SIGNING, MISC.: GROUND MOUNTED SUPPORT EACH	631 REMOVAL OF LUMINAIRE AND DISPOSAL EACH	631 REMOVAL OF BALLAST AND DISPOSAL EACH	631 REMOVAL OF SIGN SERVICE AND DISPOSAL, AS PER PLAN EACH	630 SIGNING, MISC.: CHECK TORQUE EACH
28	S1	I-70	125.911	RT	E5-H1a	8'X5'					40					1			1				
	S2	I-70	125.966	RT	D1-H7A (MOD.)	12'X5'					60					2							
	S3	I-70	125.966	RT	D1-H6A	11'X4'					44					1							
	S4	I-70	125.966	RT	M6-4	1.75'X1.25'				2.2					1								
	S5	I-70	125.966	RT	M1-5	2'X2'				4					1								
	S6	I-70	126.105	RT	M1-5	2'X2'				4					1								
	S7	I-70	126.105	RT	M6-4	1.75'X1.25'				2.2					1								
	S8	I-70	126.143	RT	D1-H6A	11'X4'					44					1							
	S9	I-70	126.143	RT	D1-H7A (MOD.)	12'X5'					60					2							
	S10	SR 37	25.190	LT	M2-H6	7'X6'					42					1							
	S11	SR 37	25.212	RT	M2-H4	9'X3'					27				1								
	S12	SR 37	25.347	LT	M2-H4	9'X3'					27				1								
	S13	I-70	126.191	LT	E5-H1a	8'X5'					40					1			1				
	S14	SR 37	25.466	LT	D1-H6a	11'X4'					44					1							
	S15	SR 37	25.498	LT	M2-H4	9'X3'					27				1								
	S16	SR 37	25.368	RT	M2-H6	7'X6'					42					1							
29	S1	I-70	126.382	LT	E1-5	8'X2'					16				1								
	S2	I-70	126.382	LT	E1-H3	16'X10'		29-29	2		160		2			1	2						
	S3	I-70	126.799	RT	E7	15'X7'					105					1							
	S4	SR 37	25.008	RT	M2-H4	9'X3'					27				1								
	S5	SR 37	25.121	RT	D1-H6a	11'X4'					44					1							
	S6	I-70	126.633	RT	R2-1	4'X5'				20				34		1	2						
	S7	I-70	126.633	RT	R2-H2a	4'X5'				20				35									
30	S1	I-70	126.867	LT	E1-5	8'X2'					16				1								
	S2	I-70	126.867	LT	E1-1	14'X12'					168					1							
	S3	I-70	126.867	LT	E3-2	15'X2'					30				1								
	S4	I-70	127.070	LT	E1-5	8'X2'					16				1								
	S5	I-70	127.070	LT	E3-H1	14'X5'					70					1							1
	S6	I-70	127.348	LT	E1-5	8'X2'					16				1								
	S7	I-70	127.348	LT	E1-1	14'X12'					168					1							1
	S8	I-70	127.340	RT	D5-H12a	10'X6'					60					1							1
	S9	I-70	127.340	RT	E1-5	9'X2'					18				1								
31	S1	I-70	127.584	RT	E1-1	18'X12'					216					1							1
	S2	I-70	127.584	RT	E1-5	12'X2'					24				1								
	S3	I-70	128.106	LT	E7	14'X5'					70					1							1
	S4	I-70	128.005	RT	E3-H1	9'X5'					45					1							1
	S5	I-70	128.005	RT	E1-5	9'X2'					18				1								
	S6	I-70	128.292	LT	R2-H2a	4'X5'				20				34		1	2						
	S7	I-70	128.292	LT	R2-1	4'X5'				20				35									
32	S1	I-70	128.513	RT	E1-H3	18'X9'					162					1	2						
	S2	I-70	128.513	RT	E1-5	9'X2'					18				1								
	S3	I-70	128.704	RT	E1-1	12'X9'	1					108						1					
	S4	I-70	128.704	RT	E1-5	9'X2'						18						1					
	S5	I-70	128.704	RT	E1-H3	8'X12'	1					96						1					
	S6	I-70	128.704	RT	E1-5	9'X2'						18						1					
	S7	I-70	128.709	RT	E5-H1a	9'X5'					45					1			1				
	S8	I-70	128.704	RT	E6-2	14'X10'	1					140											
TOTALS CARRIED TO LAST SHEET OF SUBSUMMARY							3	58	2	92.4	2009	380	2	138	17	25	8	4	3				6

CALCULATED JAM CHECKED WEB

SIGNING SUBSUMMARY

D05-SIGN-FY2005

08/25/2004
09:55:27 AM
M:\proj\022\1505\22 Sign Inventory\project plans\sheets\ts005170.dgn

SHEET NO.	REFERENCE NO.	LOCATION	STATION	SIDE	CODE	SIZE (FEET)	630 SIGN ATTACHEMENT ASSEMBLY EACH	630 GROUND MOUNTED SUPPORT, W12X30 BEAM FT.	630 BREAKAWAY BEAM CONNECTION EACH	630 SIGN, FLAT SHEET SQ. FT.	630 SIGN, GROUND MOUNTED EXTRUSHEET SQ. FT.	630 SIGN, OVERHEAD EXTRUSHEET SQ. FT.	630 GROUND MOUNTED BEAM SUPPORT FOUNDATION EACH	630 GROUND MOUNTED SUPPORT NO. 4 POST FT.	630 REMOVAL OF GROUND MOUNTED SIGN AND DISPOSAL EACH	630 REMOVAL OF GROUND MOUNTED MAJOR SIGN AND DISPOSAL EACH	630 REMOVAL OF GROUND MOUNTED BEAM SUPPORT AND DISPOSAL EACH	630 REMOVAL OF OVERHEAD MOUNTED SIGN AND DISPOSAL EACH	630 SIGNING, MISC.: GROUND MOUNTED SUPPORT EACH	631 REMOVAL OF LUMINAIRE AND DISPOSAL EACH	631 REMOVAL OF BALLAST AND DISPOSAL EACH	631 REMOVAL OF SIGN SERVICE AND DISPOSAL, AS PER PLAN EACH	630 SIGNING, MISC.: CHECK TORQUE EACH
34	S1	I-70	128.910	LT	E5-H1a	9'X5'					45					1			1				
	S2	I-70 NE LOOP	4.438	RT	M2-H6	10'X5'	1					50						1					
	S3	I-70	128.999	LT	E1-5	9'X2'						18						1					
	S4	I-70	128.999	LT	E1-H3	8'X12'	1					96						1					
	S5	I-70	128.987	RT	E1-H3	15'X8'	1					120						1					
	S6	I-70	128.987	RT	E1-5	9'X2'						18						1					
	S7	SR 79	4.328	LT	M2-H6	10'X5'	1					50						1					
	S8	I-70	129.068	RT	E5-H1a	9'X5'					45					1			1				
	S9	I-70	129.275	LT	E5-H1a	9'X5'					45					1			1				
	S10	I-70	129.279	LT	E1-5	9'X2'						18						1					
	S11	I-70	129.279	LT	E1-H3	14'X8'	1					112						1					
	S12	I-70	129.279	LT	E1-5	9'X2'						18						1					
	S13	I-70	129.279	LT	E1-1	18'X9'	1					162						1					
	S14	I-70	129.279	LT	W9-H4L	20'X7'	1					140						1					
35	S1	SR 79	4.092	RT	D1-H5a	14'X5'					70					1							1
	S2	SR 79	4.092	RT	M6-3	2'X1.5'				3					1								
	S3	SR 79	4.092	RT	M1-1	2.5'X2.5'				6.3					1								
	S4	SR 79	4.092	RT	M3-4	2.5'X1.25'				3.1					1								
	S5	SR 79	4.092	RT	M6-2	2'X1.5'				3					1								
	S6	SR 79	4.092	RT	M1-1	2.5'X2.5'				6.3					1								
	S7	SR 79	4.092	RT	M3-2	2.5'X1.25'				3.1					1								
	S8	SR 79	4.135	RT	M2-H6	9'X7'	1					63						1					
	S9	SR 79	4.135	RT	M2-H6	10'X5'	1					50						1					
	S10	SR 79	4.566	LT	M2-H6	10'X5'	1					50						1					
	S11	SR 79	4.566	LT	M2-H6	9'X7'	1					63						1					
	S12	SR 79	4.677	LT	M3-4	2.5'X1.25'				3.1					1								
	S13	SR 79	4.677	LT	M1-1	2.5'X2.5'				6.3					1								
	S14	SR 79	4.677	LT	M6-2	2'X1.5'				3					1								
	S15	SR 79	4.677	LT	M3-2	2.5'X1.25'				3.1					1								
	S16	SR 79	4.677	LT	M1-1	2.5'X2.5'				6.3					1								
	S17	SR 79	4.677	LT	M6-3	2'X1.5'				3					1								
	S18	SR 79	4.677	LT	D1-H5a	14'X5'					70					1							1
36	S1	I-70	129.500	LT	E1-5	9'X2'					18				1								
	S2	I-70	129.500	LT	E1-1	12'X9'					108					1							
	S3	I-70	129.715	LT	E1-5	9'X2'					18				1								
	S4	I-70	129.715	LT	E3-H1	9'X5'					45					1							1
	S5	I-70	129.640	RT	D5-1-SPECIAL	11'X8'					88					1							
	S6	I-70	129.790	RT	D5-H7	13'X5'					65					1							1
37	S1	I-70	130.085	LT	E1-5	9'X2'					18				1								
	S2	I-70	130.085	LT	D5-H12a	10'X6'					60					1							1
	S3	I-70	130.217	LT	E1-5	12'X2'						24						1					
	S4	I-70	130.217	LT	E1-1	18'X12'	1					216						1					
	S5	I-70	130.217	LT	W9-H5L	20'X7'	1					140						1					
	S6	I-70	130.388	RT	D5-H2	10'X5'					50					1							
	S7	I-70	130.630	LT	D5-H6	6'X6'					36				1								
	S8	I-70	130.550	RT	D5-H6	6'X6'					36				1								
	S9	I-70	130.861	LT	D5-H2	10'X5'					50					1							
TOTALS CARRIED TO LAST SHEET OF SUBSUMMARY							13			49.6	867	1408			17	12		18	3				5

CALCULATED JAM CHECKED WEB

SIGNING SUBSUMMARY

D05-SIGN-FY2005

08/25/2004
03:09:27 PM
M:\proj\022\1505\22 Sign inventory\project plans\sheets\ts006170.dgn

SHEET NO.	REFERENCE NO.	LOCATION	STATION	SIDE	CODE	SIZE (FEET)	606 GUARDRAIL, TYPE 5 FT.	606 ANCHOR ASSEMBLY, TYPE B-98 EACH		606 ANCHOR ASSEMBLY, TYPE T EACH	630 GROUND MOUNTED SUPPORT, W12X30 BEAM FT.	630 BREAKAWAY BEAM CONNECTION EACH	630 OVERHEAD SIGN SUPPORT, TYPE TC 12.30, DESIGN 10 EACH	630 SIGN, FLAT SHEET SQ. FT.	630 SIGN, GROUND MOUNTED EXTRUSHEET SQ. FT.	630 SIGN, OVERHEAD EXTRUSHEET SQ. FT.	630 GROUND MOUNTED BEAM SUPPORT FOUNDATION EACH	630 RIGID OVERHEAD SIGN SUPPORT FOUNDATION EACH	630 GROUND MOUNTED SUPPORT NO. 4 POST FT.	630 REMOVAL OF GROUND MOUNTED SIGN AND DISPOSAL EACH	630 REMOVAL OF GROUND MOUNTED MAJOR SIGN AND DISPOSAL EACH	630 REMOVAL OF GROUND MOUNTED BEAM SUPPORT AND DISPOSAL EACH	630 SIGNING, MISC.: GROUND MOUNTED SUPPORT EACH	630 SIGNING, MISC.: CHECK TORQUE EACH
38	S1	I-70	131.307	RT	E7	15'X7'									105						1			
	S2	I-70	131.473	LT	D5-H7	13'X5'									65						1			
	S3	I-70	131.591	LT	D5-I	11'X8'									88						1			1
	S4	I-70	131.591	LT	D5-H14	10'X1.5'									15					1				
	S5	I-70	131.666	RT	E1-1	14'X12'	237.5	1		1			1			168		1			1	2		
	S6	I-70	131.666	RT	E1-5	8'X2'										16				1				
	S7	I-70	131.910	RT	D9-3a	10'X2.5'															1	2		
	S8	I-70	131.910	RT	E1-5	8'X2'															1			
	S9	I-70	131.960	LT	E7	14'X5'									70						1			1
	S10	I-70	131.120	RT	R2-1	4'X5'								20					34		1	2		
	S11	I-70	131.120	RT	R2-H2a	4'X5'								20					35					
39	S1	I-70	132.070	LT	D12-H11	10'X3'									30						1			1
	S2	I-70	132.070	LT	D12-H12	10'X1.25'									12.5					1				
	S3	I-70	132.030	RT	E3-H1	16'X5'									80						1			1
	S4	I-70	132.030	RT	E1-5	8'X2'									16					1				
	S5	I-70	132.146	RT	E1-1	14'X12'	237.5	1		1			1			168		1			1	2		
	S6	I-70	132.146	RT	E1-5	8'X2'										16				1				
	S7	I-70	132.330	RT	SPE-793	12'X4'									48						1			
	S8	I-70	132.330	RT	E3-H2	12'X5'									60						1			1
	S9	I-70	132.330	RT	E1-5	8'X2'									16					1				
	S10	I-70	132.471	RT	E1-H3	14'X12'														1	1	2		
	S11	I-70	132.500	RT	E1-H3	17'X10'							1			170		1						
	S12	I-70	132.471	RT	E1-5	8'X2'										16								
	S13	I-70	132.147	LT	R2-H2a	4'X5'								20					34		1	2		
	S14	I-70	132.147	LT	R2-1	4'X5'								20					35					
41	S1	I-70	132.710	RT	E5-H1a	8'X5'									40						1		1	
	S2	SR 13	1.450	LT	M2-6	8'X7'									56						1			1
	S3	I-70 RAMP C	132.782	RT	D1-H7a	14'X6'									84						1			1
	S4	I-70 RAMP C	132.782	RT	M6-4	2'X1.5'								3						1				
	S5	I-70 RAMP C	132.782	RT	M1-5	2.5'X2.5'								6.3						1				
	S6	SR 13	1.755	LT	M2-H4	9'X3'									27					1				
	S7	SR 13	1.679	LT	D1-H6a	14'X5'									70						1			1
	S8	SR 13	1.612	LT	M2-H4	9'X3'									27					1				
	S9	SR 13	1.612	RT	M2-H6	9'X7'									63						1			1
	S10	I-70 RAMP B	132.857	LT	M1-5	2.5'X2.5'								6.3						1				
	S11	I-70 RAMP B	132.857	LT	M6-4	2'X1.5'								3						1				
	S12	I-70 RAMP B	132.857	LT	D1-H7a	14'X6'									84						1			1
	S13	SR 13	1.303	RT	M2-H4	9'X3'									27					1				
	S14	SR 13	1.379	RT	D1-H6a	14'X5'									70						1			1
	S15	SR 13	1.447	RT	M2-H4	9'X3'									27					1				
TOTALS CARRIED TO LAST SHEET OF SUBSUMMARY							475	2		2			3	98.6	1181	554		3	138	15	22	12	1	11

CALCULATED JAM CHECKED WEB

SIGNING SUBSUMMARY

D05-SIGN-FY2005

08/25/2004 03:15:07 PM M:\proj\022\1505\22 Sign Inventory\project plans\sheets\ts007170.dgn

SHEET NO.	REFERENCE NO.	LOCATION	STATION	SIDE	CODE	SIZE (FEET)	606 GUARDRAIL, TYPE 8 FT.	606 POST END ANCHOR (OR CONCRETE BLOCK END ANCHOR) EACH	606 ANCHOR ASSEMBLY, TYPE T EACH	630 SIGN ATTACHEMENT ASSEMBLY EACH	630 GROUND MOUNTED SUPPORT, W12X30 BEAM FT.	630 BREAKAWAY BEAM CONNECTION EACH	630 OVERHEAD SIGN SUPPORT, TYPE TC 12.30, DESIGN 10 EACH	630 SIGN, FLAT SHEET SQ. FT.	630 SIGN, GROUND MOUNTED EXTRUSHEET SQ. FT.	630 SIGN, OVERHEAD EXTRUSHEET SQ. FT.	630 GROUND MOUNTED BEAM SUPPORT FOUNDATION EACH	630 RIGID OVERHEAD SIGN SUPPORT FOUNDATION EACH	630 GROUND MOUNTED SUPPORT NO. 4 POST FT.	630 REMOVAL OF GROUND MOUNTED SIGN AND DISPOSAL EACH	630 REMOVAL OF GROUND MOUNTED MAJOR SIGN AND DISPOSAL EACH	630 REMOVAL OF GROUND MOUNTED BEAM SUPPORT AND DISPOSAL EACH	630 REMOVAL OF OVERHEAD MOUNTED SIGN AND DISPOSAL EACH	630 SIGNING, MISC.: GROUND MOUNTED SUPPORT EACH	630 SIGNING, MISC.: CHECK TORQUE EACH
42	S1	I-70	133.040	LT	E5-H1a	8'X5'									40						1			1	
	S2	I-70	133.195	LT	E1-5	8'X2'										16				1					
	S3	I-70	133.195	LT	E1-H3	17'X10'	275	1	1				1			170		1			1	2			
	S4	I-70	133.357	LT	E1-5	8'X2'									16					1					
	S5	I-70	133.357	LT	E3-H2	12'X5'									60						1				1
	S6	I-70	133.512	LT	E1-5	8'X2'										16				1					
	S7	I-70	133.512	LT	E1-1	14'X12'							1			168		1			2	2			
	S8	I-70	133.660	LT	E1-5	8'X2'									16					1					
	S9	I-70	133.660	LT	E3-H1	16'X5'									80						1				1
	S10	I-70	133.660	LT	SPE-793	12'X4'									48										
	S11	I-70	133.820	LT	E1-5	8'X2'														1					
	S12	I-70	133.820	LT	D9-3a	10'X2.5'														1		2			
	S13	I-70	133.918	RT	E7	15'X7'									105						1				1
	S14	I-70	132.147	LT	R2-1	4'X5'								20					34		1	2			
	S15	I-70	132.147	LT	R2-H2a	4'X5'								20					35						
43	S1	I-70	134.030	LT	E1-5	8'X2'										16				1					
	S2	I-70	134.030	LT	E1-1	14'X12'	275	1	1				1			168		1			1				
	S3	I-70	134.050	RT	D12-H12	10'X1.25'									12.5					1					
	S4	I-70	134.050	RT	D12-H11	10'X3'									30					1					1
45	S1	I-70	136.624	RT	W9-H5L	20'X7'				1						140							1		
46	S1	I-70	137.230	RT	W9-H4L	20'X7'				1						140							1		
48	S1	I-70	139.710	RT	E1-1	15'X12'									180						1				
	S2	I-70	139.710	RT	E1-5	8'X2'									16					1					
	S3	I-70	139.710	RT	W13-H7	12'X1.5'									18					1					
49	S1	I-70	140.060	LT	E7	14'X5'									70						1				1
	S2	I-70	140.050	RT	E1-1	15'X12'									180						1				
	S3	I-70	140.050	RT	E1-5	8'X2'									16					1					
	S4	I-70	140.050	RT	W13-H7	12'X1.5'																			
	S5	I-70	-	RT	D9-3a	10'X2.5'															1	2			
	S6	I-70	-	RT	E1-5	8'X2'															1				
	S7	I-70	140.583	RT	E1-H3	18'X10'					27-30	2			180		2				1	2			
	S8	I-70	140.583	RT	E1-5	8'X2'									16					1					
50	S1	I-70	140.850	RT	E5-H1a	8'X5'									40						1			1	
	S2	SR 668	1.992	LT	M2-H3	4'X6'								24						1					
52	S1	I-70	142.370	LT	E8-H3	6'X4'									24					1					1
	S2	I-70	142.320	RT	E8-H3	8'X4'									32					1					1
53	S1	I-70	143.130	LT	E5-H1a	8'X5'									40						1			1	
	S2	US 40	0.241	RT	M2-H4	9'X3'									27					1					
TOTALS CARRIED TO LAST SHEET OF SUBSUMMARY							550	2	2	2	57	2	3	64.0	1247	834	2	3	69	17	17	12	2	3	7

CALCULATED JAM CHECKED WEB

SIGNING SUBSUMMARY

D05-SIGN-FY2005

08/25/2004
03:45:25 PM
M:\proj\022\1505\22 Sign Inventory\project plans\sheets\fs008170.dgn

SHEET NO.	REFERENCE NO.	LOCATION	STATION	SIDE	CODE	SIZE (FEET)	630 SIGN ATTACHEMENT ASSEMBLY	630 GROUND MOUNTED SUPPORT, W10X22 BEAM	630 BREAKAWAY BEAM CONNECTION	630 SIGN, FLAT SHEET	630 SIGN, GROUND MOUNTED EXTRUSHEET	630 SIGN, OVERHEAD EXTRUSHEET	630 GROUND MOUNTED BEAM SUPPORT FOUNDATION	630 GROUND MOUNTED SUPPORT NO. 4 POST	630 REMOVAL OF GROUND MOUNTED SIGN AND DISPOSAL	630 REMOVAL OF GROUND MOUNTED MAJOR SIGN AND DISPOSAL	630 REMOVAL OF GROUND MOUNTED BEAM SUPPORT AND DISPOSAL	630 REMOVAL OF OVERHEAD MOUNTED SIGN AND DISPOSAL	630 SIGNING, MISC.: GROUND MOUNTED SUPPORT	631 REMOVAL OF LUMINAIRE AND DISPOSAL	631 REMOVAL OF BALLAST AND DISPOSAL	631 REMOVAL OF SIGN SERVICE AND DISPOSAL, AS PER PLAN	630 SIGNING, MISC.: CHECK TORQUE
							EACH	FT.	EACH	SQ. FT.	SQ. FT.	SQ. FT.	EACH	FT.	EACH	EACH	EACH	EACH	EACH	EACH	EACH	EACH	EACH
54	S1	I-70	143.320	LT	E1-5	8'X2'					16				1								
	S2	I-70	143.320	LT	E1-H3	13'X8'		24-25	2		104		2			1	2						
	S3	I-70	-	LT	E1-5	8'X2'										1							
	S4	I-70	-	LT	D9-3a	10'X2.5'										1	2						
	S5	I-70	143.820	℄	E8-H3	6'X4'					24				1								1
	S6	I-70	143.820	℄	E8-H3	8'X4'					32				1								
	S7	I-70	143.850	LT	E1-5	8'X2'					16				1								
	S8	I-70	143.820	LT	E1-1	10'X9'					90					1							1
	S9	I-70	143.700	RT	R2-1	4'X5'				20				34		1	2						
	S10	I-70	143.700	RT	R2-H2a	4'X5'				20				35									
	S11	I-70	143.950	RT	E7	15'X5'					75					1							1
	S12	I-70	143.320	LT	W13-H7	12'X1.5'					18												
	S13	I-70	143.850	LT	W13-H7	12'X1.5'					18												
55	S1	I-70	144.020	LT	E1-5	8'X2'					16				1								
	S2	I-70	144.020	LT	E3-H1	13'X3'					39				1								1
	S3	I-70	144.190	LT	E1-5	8'X2'					16				1								
	S4	I-70	144.190	LT	E1-1	10'X9'					90					1							
	S5	I-70	144.190	LT	E2-H1a	7'X3'					21				1								
	S6	I-70	144.270	℄	E8-H3	8'X4'					32				1								1
	S7	I-70	144.270	℄	E8-H3	6'X4'					24				1								
62	S1	I-70	-	RT	D9-H17	10'X4.5'										1	2						
	S2	I-70	151.076	RT	E7-H4	12'X5'					60					1							
	S3	I-70	151.189	LT	E7	14'X5'					70					1							
	S4	I-70	151.228	RT	E1-1	14'X9'					126					1							
	S5	I-70	151.228	RT	E1-5	8'X2'					16				1								
63	S1	I-70	151.594	RT	E1-1	14'X9'					126					1							
	S2	I-70	151.594	RT	E1-5	8'X2'					16				1								
	S3	I-70	151.667	LT	D12-H11	10'X3'					30				1								1
	S4	I-70	151.667	LT	D12-H12	10'X1.25'					12.5				1								
	S5	I-70	151.826	RT	D12-H12	10'X1.25'					12.5				1								
	S6	I-70	151.826	RT	D12-H11	10'X3'					30				1								1
	S7	I-70	151.565	LT	R2-H2a	4'X5'				20				35		1	2						
	S8	I-70	151.565	LT	R2-1	4'X5'				20				34									
65	S1	US 40	9.127	RT	M2-H5	9'X4'					36				1								
	S2	US 40	9.184	RT	D1-H6a	14'X5'					70					1							
	S3	US 40	9.240	RT	M2-H4	9'X3'					27				1								
	S4	I-70 RAMP C	152.427	LT	M1-4	2.5'X2.5'				6.3					1								
	S5	I-70 RAMP C	152.427	LT	M6-4	2'X1.5'				3					1								
	S6	I-70 RAMP C	152.427	LT	D1-H5	12'X2'					24				1								
	S7	I-70	152.534	LT	E5-H1a	8'X5'					40					1			1				
	S8	I-70	152.145	RT	E1-H3	17'X8'					136					1							1
	S9	I-70	152.145	RT	E1-5	8'X2'					16				1								
	S10	I-70	152.316	RT	E5-H1a	8'X5'					40					1			1				
	S11	I-70 RAMP A	152.420	RT	D1-H5a	10'X2'					20				1								
TOTALS CARRIED TO LAST SHEET OF SUBSUMMARY								49	2	89.3	1539		2	138	23	17	10		2				8

CALCULATED JAM CHECKED WEB

SIGNING SUBSUMMARY

D05-SIGN-FY2005

08/25/2004
03:20:12 PM
M:\proj\022\1505\22 Sign Inventory\project plans\sheets\ts009170.dgn

SHEET NO.	REFERENCE NO.	LOCATION	STATION	SIDE	A.P.P. = AS PER PLAN CODE	SIZE (FEET)	630 SIGNING, MISC.: GROUND MOUNTED SUPPORT FOR STORAGE EACH	630 BREAKAWAY BEAM CONNECTION, A.P.P. EACH	630 SIGN, FLAT SHEET SQ. FT.	630 SIGN, GROUND MOUNTED EXTRUSHEET SQ. FT.	630 SIGN, GROUND MOUNTED EXTRUSHEET, A.P.P. SQ. FT.				630 REMOVAL OF GROUND MOUNTED SIGN AND DISPOSAL EACH	630 REMOVAL OF GROUND MOUNTED MAJOR SIGN AND DISPOSAL EACH		630 SIGN, FLAT SHEET, A.P.P. SQ. FT.	630 SIGN, OVERHEAD EXTRUSHEET, A.P.P. SQ. FT.	630 GROUND MOUNTED SUPPORT NO. 4 POST, A.P.P. FT.	630 GROUND MOUNTED SUPPORT, W10X22 BEAM, A.P.P. FT.	630 SIGN ATTACHEMENT ASSEMBLY, A.P.P. EACH		630 SIGNING, MISC.: CHECK TORQUE EACH
65	S12	I-70 RAMP A	152.420	RT	M6-4	2'X1.5'			3						1									
	S13	I-70 RAMP A	152.420	RT	M1-4	2.5'X2.5'			6.3						1									
	S14	US 40	9.425	RT	M2-H6	8'X7'				56						1								
	S15	US 40	9.468	LT	M2-H4	9'X3'				27					1									
	S16	US 40	9.563	LT	D1-H6a	14'X5'				70						1								1
	S17	US 40	9.639	LT	M2-H5	9'X4'				36					1									
	S18	US 40	9.277	LT	M2-H6	9'X7'				63						1								1
66	S1	I-70	152.704	LT	E1-5	8'X2'					16													
	S2	I-70	152.704	LT	E1-H3	18'X8'		2			144										26-22			
	S3	I-70	153.000	RT	E1-1	16'X11'					176													
	S4	I-70	153.000	RT	E1-5	8'X2'					16													
	S5	I-70	153.060	LT	E1-5	8'X2'																		
	S6	I-70	153.060	LT	D9-H17	10'X2.5'																		
	S7	I-70	153.208	LT	E1-5	8'X2'					16													
	S8	I-70	153.208	LT	E1-1	15'X10'					150													
	S9	I-70	153.436	RT	E3-H2	11'X5'					55													
	S10	I-70	153.436	RT	E1-5	8'X2'					16													
67	S1	I-70	153.508	RT	D12-H17	11'X5'					55													
	S2	I-70	153.508	RT	E1-5	8'X2'					16													
	S3	I-70	153.528	LT	E1-5	8'X2'					16													
	S4	I-70	153.528	LT	E1-1	15'X9'					135													
	S5	I-70	153.528	LT	E2-1	12'X2'					24													
	S6	I-70	153.603	RT	E3-H1	16'X11'													176			1		
	S7	I-70	153.603	RT	E1-5	8'X2'													16					
	S8	I-70	153.660	RT	E8-H2	6'X3'					18													
	S9	I-70	153.660	RT	E8-H2	7'X3'					21													
	S10	I-70	153.582	LT	R2-H2a	4'X5'												20		35				
	S11	I-70	153.582	LT	R2-1	4'X5'												20		34				
69	S1	I-70	153.774	LT	E8-H4	6'X3'												18						
	S2	SR 60G	0.297	LT	M2-H6	9'X7'													63			1		
	S3	SR 60G	0.297	LT	M2-H6	9'X7'													63			1		
	S4	SR 60G	0.342	LT	M2-H4	9'X3'					27													
	S5	I-70	154.089	LT	E5-H1a	9'X5'	1				45													
	S6	I-70	153.829	RT	E1-1	15'X11'													165			1		
	S7	I-70	153.829	RT	E1-5	8'X2'													16					
	S8	I-70	153.829	RT	E1-2	11'X6'													66			1		
	S9	I-70	153.829	RT	E1-5	8'X2'													16					
	S10	I-70	153.829	RT	E1-5	8'X2'													16					
	S11	I-70	153.829	RT	E1-H3	15'X10'													150			1		
	S12	I-70	153.837	RT	E5-H1a	8'X5'	1				40													
	S13	SR 60G	0.085	LT	M2-H6	8'X7'													56					
	S14	SR 60G	0.149	RT	M2-H6	8'X7'													56			1		
	S15	I-70 RAMP U	153.816	RT	M2-H3	4'X6'												24				1		
	S16	SR 60G	0.160	RT	M2-H4	9'X3'					27													
	S17	I-70	154.076	RT	E7-H4	11'X5'													55			1		
TOTALS CARRIED TO LAST SHEET OF SUBSUMMARY							2	2	9.3	252	1013				4	3		82	914	69	48	9		2

CALCULATED JAM CHECKED WEB

SIGNING SUBSUMMARY

D05-SIGN-FY2005

ts010i70r.dgn revised by NK sept 21/04

SHEET NO.	REFERENCE NO.	LOCATION	STATION	SIDE	CODE	SIZE (FEET)	630 SIGN ATTACHEMENT ASSEMBLY, A. P. P. EACH			630 SIGN, FLAT SHEET, A. P. P. SQ. FT.	630 SIGN, GROUND MOUNTED EXTRUSHEET, A. P. P. SQ. FT.	630 SIGN, OVERHEAD EXTRUSHEET, A. P. P. SQ. FT.			630 SIGNING, MISC.: GROUND MOUNTED SUPPORT FOR STORAGE EACH								
71	S1	I-70 RAMP E	0.244	RT	D3-H2a	11'X2'					22												
	S2	I-70 RAMP E	0.244	RT	M6-2	2'X1.5'				3													
	S3	I-70 RAMP E	0.244	RT	M1-1	2.5'X2.5'				6.3													
	S4	I-70 RAMP E	0.244	RT	M3-2	2.5'X1.25'				3.1													
	S5	I-70 RAMP E	0.244	RT	M6-2	2'X1.5'				3													
	S6	I-70 RAMP E	0.244	RT	M1-5	2.5'X2.5'				6.3													
	S7	I-70 RAMP E	0.244	RT	M3-3	2.5'X1.25'				3.1													
	S8	I-70 RAMP E	0.244	RT	M4-5	2'X1'				2													
	S9	I-70 RAMP E	0.174	RT	E6-2	12'X4'	1					48											
	S10	I-70 RAMP E	0.174	RT	E6-2	8'X7'	1					56											
	S11	I-70 RAMP H	0.208	RT	M2-H3	4'X6'				24													
	S12	I-70	154.358	LT	E5-H1a	9'X5'					45				1								
	S13	I-70	154.361	LT	E1-5	9'X2'						18											
	S14	I-70	154.361	LT	E1-2	12'X5'	1					60											
	S15	I-70	154.361	LT	E1-5	9'X2'						18											
	S16	I-70	154.361	LT	E1-H3	17'X7'	1					119											
	S17	I-70	154.437	RT	E1-2	15'X7'	1					105											
	S18	I-70	154.437	RT	E1-5	8'X2'						16											
	S19	I-70	154.437	RT	E1-1	15'X11'	1					165											
	S20	I-70	154.437	RT	E1-5	8'X2'						16											
	S21	I-70	154.464	LT	E1-5	9'X2'						18											
	S22	I-70	154.464	LT	E1-2	12'X6'	1					72											
	S23	I-70	154.464	LT	E1-5	9'X2'						18											
	S24	I-70	154.464	LT	E1-2	15'X7'	1					105											
	S25	I-70 RAMP W	154.119	LT	E1-5	9'X2'						18											
	S26	I-70 RAMP W	154.119	LT	E1-H3	15'X4'	1					60											
	S27	I-70	154.311	RT	D5-H12a	14'X5'					70												
	S28	I-70	154.311	RT	E1-5	8'X2'					16												
	S29	I-70 RAMP E	0.594	RT	E8-H4	8'X3'				15													
73	S1	I-70 RAMP K	154.564	LT	E8-H4	8'X3'				15													
	S2	I-70	154.541	RT	E1-1	15'X11'	1					165											
	S3	I-70	154.541	RT	E1-5	8'X2'						16											
	S4	I-70	154.541	RT	E1-H3	14'X7'	1					98											
	S5	I-70	154.541	RT	E1-5	8'X2'						16											
	S6	I-70	154.546	RT	E5-H1a	8'X5'					40				1								
	S7	I-70	154.676	RT	E1-H3	18'X10'	1					180											
	S8	I-70	154.676	RT	E1-5	8'X2'						16											
	S9	I-70	154.701	RT	E5-H1	6'X5'					30				1								
	S10	6TH STREET	0.013	RT	E1-1	7'X5'	1					35											
TOTALS CARRIED TO LAST SHEET OF SUBSUMMARY							13			80.8	223	1438			3								

CALCULATED JAM
CHECKED WEB

SIGNING SUBSUMMARY

D05-SIGN-FY2005

REVISED BY N.K. 9-15-04

TS0117OR.DGN

$DATE$
$TIME$
$FILE$

SHEET NO.	REFERENCE NO.	LOCATION	STATION	SIDE	CODE	SIZE (FEET)	630 SIGN ATTACHEMENT ASSEMBLY, A. P. P. EACH	630 SIGN SUPPORT ASSEMBLY, POLE MOUNTED, A. P. P. EACH	630 GROUND MOUNTED SUPPORT, W12X30 BEAM, A. P. P. FT.	630 BREAKAWAY BEAM CONNECTION, A. P. P. EACH	630 SIGN, FLAT SHEET, A. P. P. SQ. FT.	630 SIGN, GROUND MOUNTED EXTRUSHEET, A. P. P. SQ. FT.	630 SIGN, OVERHEAD EXTRUSHEET, A. P. P. SQ. FT.		630 GROUND MOUNTED SUPPORT NO. 4 POST, A. P. P. FT.		630 SIGNING, MISC.: GROUND MOUNTED SUPPORT FOR STORAGE EACH
75	S1	SR 146	16.978	LT	M2-H6	9'X7'	1						63				
	S2	SR 146	16.978	LT	E6-2	8'X6'	1						48				
	S3	SR 146	16.978	LT	M2-H6	8'X7'	1						56				
	S4	I-70	155.073	LT	E5-H1a	8'X5'						40					
	S5	I-70	155.092	LT	E1-H3	21'X8'	1						168				
	S6	I-70	155.092	LT	E1-5	8'X2'							16				
	S7	I-70	155.092	LT	E1-5	9'X2'							18				
	S8	I-70	155.092	LT	E1-2	14'X6'	1						84				
	S9	SR 146	16.942	LT	M2-H3	4'X5'					20						
	S10	SR 146	16.960	RT	M2-H6	9'X7'	1						63				
	S11	SR 146	16.960	RT	E6-2	8'X6'	1						48				
	S12	SR 146	16.948	RT	M2-H6	8'X7'	1						56				
	S13	I-70	155.169	RT	R2-1	4'X5'					20				34		
76	S1	I-70	155.231	LT	E1-5	8'X2'							16				
	S2	I-70	155.231	LT	E1-H3	21'X8'	1						168				
	S3	I-70	155.406	LT	R2-1	4'X5'		1			20						
	S4	I-70	155.395	RT	R2-1	4'X5'					20				34		
	S5	I-70	155.395	RT	R2-H2a	4'X5'					20				35		
	S6	I-70	155.591	LT	E7-H3	11'X5'	1						55				
	S7	I-70	155.795	LT	E1-5	8'X2'											
	S8	I-70	155.795	LT	-	10'X2'											
	S9	I-70	155.868	LT	E8-H2	7'X3'						21					
	S10	I-70	155.973	LT	E1-5	8'X2'						16					
	S11	I-70	155.973	LT	D12-H17	11'X5'						55					
77	S1	I-70	156.087	LT	E1-5	8'X2'						16					
	S2	I-70	156.087	LT	E1-1	18'X9'						162					
	S3	I-70	156.107	RT	E1-1	15'X9'						135					
	S4	I-70	156.107	RT	E1-5	8'X2'						16					
	S5	I-70	156.397	LT	E1-5	8'X2'						16					1
	S6	I-70	156.397	LT	D5-H12b	15'X5'						75					
	S7	I-70	156.504	RT	E1-1	15'X9'						135					
	S8	I-70	156.504	RT	E1-5	8'X2'						16					
	S9	I-70	156.613	RT	D12-H16a	10'X2'						20					
	S10	I-70	156.613	RT	E1-5	8'X2'						16					
	S11	I-70	156.835	RT	E1-H3	18'X8'			25-29	2		144					
	S12	I-70	156.835	RT	E1-5	8'X2'						16					
	S13	I-70	156.597	LT	R2-H2a	4'X5'					20				35		
	S14	I-70	156.597	LT	R2-1	4'X5'					20				34		
TOTALS CARRIED TO LAST SHEET OF SUBSUMMARY							10	1	54	2	140.0	899	859		172		1

CALCULATED JAM
CHECKED WEB

SIGNING SUBSUMMARY

D05-SIGN-FY2005

ts0121170R.dgn Revised by N. K. 9/15/04

$DATE$
$TIME$
$FILE$

SHEET NO.	REFERENCE NO.	LOCATION	STATION	SIDE	CODE	SIZE (FEET)	630 GROUND MOUNTED SUPPORT, W10X22 BEAM FT.	630 GROUND MOUNTED SUPPORT, W12X30 BEAM FT.	630 BREAKAWAY BEAM CONNECTION EACH	630 SIGN, FLAT SHEET SQ. FT.	630 SIGN, GROUND MOUNTED EXTRUSHEET SQ. FT.	630 SIGN, OVERHEAD EXTRUSHEET SQ. FT.	630 GROUND MOUNTED BEAM SUPPORT FOUNDATION EACH	630 GROUND MOUNTED SUPPORT NO. 4 POST FT.	630 REMOVAL OF GROUND MOUNTED SIGN AND DISPOSAL EACH	630 REMOVAL OF GROUND MOUNTED MAJOR SIGN AND DISPOSAL EACH	630 REMOVAL OF GROUND MOUNTED BEAM SUPPORT AND DISPOSAL EACH	630 REMOVAL OF OVERHEAD MOUNTED SIGN AND DISPOSAL EACH	630 SIGNING, MISC.: GROUND MOUNTED SUPPORT EACH	631 REMOVAL OF LUMINAIRE AND DISPOSAL EACH	631 REMOVAL OF BALLAST AND DISPOSAL EACH	631 REMOVAL OF SIGN SERVICE AND DISPOSAL, AS PER PLAN EACH	630 SIGNING, MISC.: CHECK TORQUE EACH
79	S1	I-70	156.994	RT	E5-H1a	8'X5'					40					1			1				
	S2	I-70 SW RAMP	157.069	RT	D1-H6a	11'X4'					44					1							1
	S3	I-70 SW RAMP	157.069	RT	M6-4	2.5'X2'				5					1								
	S4	I-70 SW RAMP	157.069	RT	M1-5	3'X3'				9					1								
	S5	SR 93	12.799	LT	M2-H6	7'X6'					42					1							1
	S6	SR 93	12.782	RT	D1-H6a	10'X4'					40					1							1
	S7	SR 93	12.782	RT	M6-3	1.75'X1.25'				2.2					1								
	S8	SR 93	12.782	RT	M1-1	2'X2'				4					1								
	S9	SR 93	12.782	RT	M3-4	2'X1'				2					1								
	S10	SR 93	12.782	RT	M6-1	1.75'X1.25'				2.2					1								
	S11	SR 93	12.782	RT	M1-1	2'X2'				4					1								
	S12	SR 93	12.782	RT	M3-2	2'X1'				2					1								
	S13	SR 93	12.817	RT	M2-H4	9'X3'					27				1								
	S14	I-70	157.392	LT	E5-H1a	8'X5'					40					1			1				
	S15	I-70 NE RAMP	157.289	LT	D1-H6a	11'X4'					44					1							1
	S16	I-70 NE RAMP	157.289	LT	M6-4	2.5'X2'				5					1								
	S17	I-70 NE RAMP	157.289	LT	M1-5	3'X3'				9					1								
	S18	SR 93	12.940	RT	M2-H6	7'X6'					42					1							1
	S19	SR 93	12.988	LT	M3-2	2'X1'				2					1								
	S20	SR 93	12.988	LT	M1-1	2'X2'				4					1								
	S21	SR 93	12.988	LT	M6-3	1.75'X1.25'				2.2					1								
	S22	SR 93	12.988	LT	D1-H6a	10'X4'					40					1							1
	S23	SR 93	12.988	LT	M5-1	1.75'X1.25'				2.2					1								
	S24	SR 93	12.988	LT	M1-1	2'X2'				4					1								
	S25	SR 93	12.988	LT	M3-4	2'X1'				2					1								
	S26	SR 93	12.924	LT	M2-H4	9'X3'					27				1								
80	S1	I-70	157.555	LT	E1-5	8'X2'					16				1								
	S2	I-70	157.555	LT	E1-H3	18'X12'		29-31			216		2			1	2						
	S3	I-70	157.943	LT	E1-5	8'X2'					16				1								
	S4	I-70	157.943	LT	E1-1	15'X12'					180					1							
	S5	I-70	157.932	RT	R2-1	4'X5'				20				34		1	2						
	S6	I-70	157.932	RT	R2-H2a	4'X5'				20				35									
81	S1	I-70	158.360	LT	E1-5	8'X2'					16				1								
	S2	I-70	158.360	LT	E1-1	15'X12'					180					1							1
	S3	I-70	158.625	LT	E3-H1	12'X5'					60					1							
82	S1	I-70	159.439	RT	E1-1	14'X8'					112					1							
	S2	I-70	159.439	RT	E1-5	8'X2'					16				1								
	S3	I-70	159.610	LT	E7	15'X5'					75					1							1
	S4	I-70	159.932	RT	E1-1	14'X8'					112					1							
	S5	I-70	159.932	RT	E1-5	8'X2'					16				1								
	S6	I-70	159.835	LT	R2-H2a	4'X5'				20				35		1	2						
	S7	I-70	159.835	LT	R2-1	4'X5'				20				34									
83	S1	I-70	160.141	LT	D12-H11	10'X3'					30				1								1
	S2	I-70	160.141	LT	D12-H12	10'X1.25'					12.5				1								
	S3	I-70	160.289	RT	E1-H3	17'X6'	23-19		2		102		2			1							1
	S4	I-70	160.289	RT	E1-5	8'X2'					16				1								
TOTALS CARRIED TO LAST SHEET OF SUBSUMMARY							42	60	2	140.8	1562		4	138	26	18	6		2				10

CALCULATED JAM CHECKED WEB

SIGNING SUBSUMMARY

D05-SIGN-FY2005

08/25/2004 03:26:40 PM M:\proj\022\505\22 Sign Inventory\project plans\sheets\ts013170.dgn

SHEET NO.	REFERENCE NO.	LOCATION	STATION	SIDE	CODE	SIZE (FEET)	630 SIGN ATTACHEMENT ASSEMBLY EACH	630 GROUND MOUNTED SUPPORT, W10X22 BEAM FT.	630 BREAKAWAY BEAM CONNECTION EACH	630 SIGN, FLAT SHEET SQ. FT.	630 SIGN, GROUND MOUNTED EXTRUSHEET SQ. FT.	630 SIGN, OVERHEAD EXTRUSHEET SQ. FT.	630 GROUND MOUNTED BEAM SUPPORT FOUNDATION EACH	630 GROUND MOUNTED SUPPORT NO. 4 POST FT.	630 REMOVAL OF GROUND MOUNTED SIGN AND DISPOSAL EACH	630 REMOVAL OF GROUND MOUNTED MAJOR SIGN AND DISPOSAL EACH	630 REMOVAL OF GROUND MOUNTED BEAM SUPPORT AND DISPOSAL EACH	630 REMOVAL OF GROUND MOUNTED POST SUPPORT AND DISPOSAL EACH	630 SIGNING, MISC.: GROUND MOUNTED SUPPORT EACH	631 REMOVAL OF LUMINAIRE AND DISPOSAL EACH	631 REMOVAL OF BALLAST AND DISPOSAL EACH	631 REMOVAL OF SIGN SERVICE AND DISPOSAL, AS PER PLAN EACH	630 SIGNING, MISC.: CHECK TORQUE EACH
85	S1	CR 52	0.161	LT	M2-H4	9'X3'					27				1								
	S2	CR 52	0.279	LT	M2-H4	9'X3'					27				1								
	S3	CR 52	0.166	LT	D9-14a	8'X1.5'					12			30	1			1					
	S4	CR 52	0.178	RT	M2-H6	7'X6'					42					1							
	S5	I-70 NE RAMP	160.708	LT	D1-H6a	8'X4'					32				1								
	S6	I-70	160.849	LT	E5-H1a	8'X5'					40					1			1				
	S7	I-70	160.468	RT	E5-H1a	8'X5'					40					1			1				
	S8	I-70 SW RAMP	160.570	RT	D1-H6a	8'X4'					32				1								
	S9	SR 797	0.997	LT	M2-H6	7'X6'					42					1							
	S10	CR 52	0.007	RT	M2-H4	9'X3'					27				1								
	S11	SR 797	0.957	RT	M3-4	2'X1'				2					1								
	S12	SR 797	0.957	RT	M1-1	2'X2'				4					1								
	S13	SR 797	0.957	RT	M6-3	1.75'X1.25'				2.2					1								
	S14	SR 797	0.957	RT	M3-2	2'X1'				2					1								
	S15	SR 797	0.957	RT	M1-1	2'X2'				4					1								
	S16	SR 797	0.957	RT	M6-1	1.75'X1.25'				2.2					1								
	S17	SR 797	0.957	RT	D1-H6a	10'X4'					40					1							
86	S1	I-70	161.025	LT	E1-5	8'X2'					16				1								
	S2	I-70	161.025	LT	E1-H3	17'X6'		26-20	2		102		2			1	2						
	S3	I-70	161.179	LT	E1-5	8'X2'					16				1								
	S4	I-70	161.179	LT	D12-H16a	10'X2'					20				1								1
	S5	I-70	161.352	LT	E1-5	8'X2'					16				1								
	S6	I-70	161.352	LT	E1-1	14'X8'					112					1							
	S7	I-70	161.466	RT	R2-1	4'X5'				20				34		1	2						
	S8	I-70	161.466	RT	R2-H2a	4'X5'				20				35									
87	S1	I-70	161.769	RT	E7	15'X5'					75					1							
	S2	I-70	161.863	LT	E1-5	8'X2'					16				1								
	S3	I-70	161.863	LT	E1-1	14'X8'					112					1							
	S4	I-70	162.271	LT	R2-H2a	4'X5'				20				35		1	2						
	S5	I-70	162.271	LT	R2-1	4'X5'				20				34									
88	S1	I-70	162.988	LT	D5-H6	6'X6'					36				1								
	S2	I-70	163.052	RT	E1-1	11'X9'					99					1							
	S3	I-70	163.052	RT	E1-5	8'X2'					16				1								
	S4	I-70	163.158	LT	D5-H2	10'X5'					50					1							
	S5	I-70	163.222	RT	E3-H1	20'X5'					100					1							
	S6	I-70	163.222	RT	E1-5	8'X2'					16				1								
	S7	I-70	163.317	LT	D5-H7	13'X5'					65					1							
	S8	I-70	163.350	RT	E1-1	11'X9'					99					1							
	S9	I-70	163.350	RT	E1-5	8'X2'					16				1								
	S10	WB I-70	163.453	LT	D5-H14	10'X1.5'					15				1								
	S11	WB I-70	163.453	LT	D5-1-SPECIAL	11'X8'					88					1							
89	S1	EB I-70	163.833	RT	E1-H3	14'X8'					112					1							1
	S2	EB I-70	163.833	RT	E1-5	8'X2'					16				1								
	S3	EB I-70	163.977	RT	E5-H1a	8'X5'					40					1			1				
TOTALS CARRIED TO LAST SHEET OF SUBSUMMARY								46	2	96.4	1614		2	168	23	19	6	1	3				2

CALCULATED JAM CHECKED WEB

SIGNING SUBSUMMARY

D05-SIGN-FY2005

08/25/2004
03:27:33 PM
M:\proj\0221\505\22 Sign Inventory\project plans\sheets\ts04170.dgn

SHEET NO.	REFERENCE NO.	LOCATION	STATION	SIDE	CODE	SIZE (FEET)	630 SIGN ATTACHEMENT ASSEMBLY EACH	630 GROUND MOUNTED SUPPORT, W12X30 BEAM FT.	630 BREAKAWAY BEAM CONNECTION EACH	630 SIGN, FLAT SHEET SQ. FT.	630 SIGN, GROUND MOUNTED EXTRUSHEET SQ. FT.	630 SIGN, OVERHEAD EXTRUSHEET SQ. FT.	630 GROUND MOUNTED BEAM SUPPORT FOUNDATION EACH	630 GROUND MOUNTED SUPPORT NO. 4 POST FT.	630 REMOVAL OF GROUND MOUNTED SIGN AND DISPOSAL EACH	630 REMOVAL OF GROUND MOUNTED MAJOR SIGN AND DISPOSAL EACH	630 REMOVAL OF GROUND MOUNTED BEAM SUPPORT AND DISPOSAL EACH	630 REMOVAL OF OVERHEAD MOUNTED SIGN AND DISPOSAL EACH	630 SIGNING, MISC.: GROUND MOUNTED SUPPORT EACH	631 REMOVAL OF LUMINAIRE AND DISPOSAL EACH	631 REMOVAL OF BALLAST AND DISPOSAL EACH	631 REMOVAL OF SIGN SERVICE AND DISPOSAL, AS PER PLAN EACH	630 SIGNING, MISC.: CHECK TORQUE EACH
91	S1	US 22/US 40	22.000	LT	M2-H4	9'X3'					27				1								
	S2	US 22/US 40	21.845	LT	M2-H4	9'X3'					27				1								
	S3	US 22/US 40	21.924	LT	D1-H6a	11'X4'					44					1							1
	S4	US 22/US 40	21.882	RT	M2-H6	7'X6'					42					1							1
	S5	I-70 RAMP A	164.046	RT	M6-4	2'X1.5'				3					1								
	S6	I-70 RAMP A	164.046	RT	M1-4	2.5'X2.5'				6.3					1								
	S7	I-70 RAMP A	164.046	RT	D1-H6a	10'X5'					50					1							1
	S8	I-70 RAMP A	164.046	RT	M6-4	2'X1.5'				3					1								
	S9	I-70 RAMP A	164.046	RT	M1-4	2.5'X2.5'				6.3					1								
	S10	US 22/US 40	21.585	LT	M2-H6	7'X6'					42					1							1
	S11	US 22/US 40	21.540	RT	M6-1	2'X1.5'				3					1								
	S12	US 22/US 40	21.540	RT	M1-1	2.5'X2.5'				6.3					1								
	S13	US 22/US 40	21.540	RT	M3-2	2.5'X1.25'				3.1					1								
	S14	US 22/US 40	21.540	RT	D1-H6a	11'X4'					44					1							1
	S15	US 22/US 40	21.540	RT	M6-3	2'X1.5'				3					1								
	S16	US 22/US 40	21.540	RT	M1-1	2.5'X2.5'				6.3					1								
	S17	US 22/US 40	21.540	RT	M3-4	2.5'X1.25'				3.1					1								
	S18	US 22/US 40	21.591	RT	M2-H5	9'X3'					27				1								
	S19	I-70 RAMP C	164.486	LT	M1-4	2.5'X2.5'				6.3					1								
	S20	I-70 RAMP C	164.486	LT	M6-4	2'X1.5'				3					1								
	S21	I-70 RAMP C	164.486	LT	M1-4	2.5'X2.5'				6.3					1								
	S22	I-70 RAMP C	164.486	LT	M6-4	2'X1.5'				3					1								
	S23	I-70 RAMP C	164.486	LT	D1-H6a	10'X5'					50					1							
92	S1	WB I-70	164.534	LT	E5-H1a	8'X5'					40					1			1				
	S2	WB I-70	164.695	LT	E1-5	8'X2'					16				1								
	S3	WB I-70	164.695	LT	E1-H3	14'X8'					112					1							
	S4	EB I-70	164.726	RT	D12-H12	10'X1.25'					12.5					1							
	S5	EB I-70	164.726	RT	D12-H11	10'X3'					30				1								1
	S6	I-70	164.893	LT	E1-5	8'X2'					16				1								
	S7	I-70	164.893	LT	E3-H1	20'X5'					100					1							
	S8	I-70	164.969	LT	E1-5	8'X2'									1								
	S9	I-70	164.969	LT	D9-H17	10'X2.5'									1		2						
	S10	I-70	165.045	LT	E1-5	8'X2'					16				1								
	S11	I-70	165.045	LT	E1-1	11'X9'					99					1							
	S12	I-70	165.261	RT	E7	14'X5'					70					1							1
	S13	I-70	164.987	RT	RE-1	4'X5'				20				34		1	2						
	S14	I-70	164.987	RT	R2-H2a	4'X5'				20				35									
93	S1	I-70	165.698	LT	E1-5	8'X2'					16				1								
	S2	I-70	165.698	LT	E1-1	11'X9'					99					1							
96	S1	I-70	168.530	RT	E2-1	12'X2'					24				1								
	S2	I-70	168.530	RT	E1-1	17'X12'					204					1							
	S3	I-70	168.530	RT	E1-5	8'X2'					16				1								
	S4	I-70	168.757	LT	E7	15'X5'					75					1							
	S5	I-70	168.926	LT	R2-H2a	4'X5'				20				35	1		2						
	S6	I-70	168.926	LT	R2-1	4'X5'				20				34									
	S7	I-70	168.933	RT	E1-1	17'X12'					204					1							
	S8	I-70	168.933	RT	E1-5	8'X2'					16				1								
	S9	I-70	169.079	RT	E3-H1	13'X5'					65					1							1
	S10	I-70	169.079	RT	E3-H2	15'X4'					60					1							
	S11	I-70	169.079	RT	E1-5	8'X2'					16				1								
TOTALS CARRIED TO LAST SHEET OF SUBSUMMARY										142.0	1660			138	29	19	6		1				8

CALCULATED JAM CHECKED WEB

SIGNING SUBSUMMARY

D05-SIGN-FY2005

08/25/2004
03:28:26 PM
W:\proj\022\1505\22 Sign inventory\project plans\sheets\ts015170.dgn

SHEET NO.	REFERENCE NO.	LOCATION	STATION	SIDE	CODE	SIZE (FEET)	630 SIGN ATTACHEMENT ASSEMBLY EACH	630 GROUND MOUNTED SUPPORT, WI2X30 BEAM FT.	630 BREAKAWAY BEAM CONNECTION EACH	630 SIGN, FLAT SHEET SQ. FT.	630 SIGN, GROUND MOUNTED EXTRUSHEET SQ. FT.	630 SIGN, OVERHEAD EXTRUSHEET SQ. FT.	630 GROUND MOUNTED BEAM SUPPORT FOUNDATION EACH	630 GROUND MOUNTED SUPPORT NO. 4 POST FT.	630 REMOVAL OF GROUND MOUNTED SIGN AND DISPOSAL EACH	630 REMOVAL OF GROUND MOUNTED MAJOR SIGN AND DISPOSAL EACH	630 REMOVAL OF GROUND MOUNTED BEAM SUPPORT AND DISPOSAL EACH	630 REMOVAL OF OVERHEAD MOUNTED SIGN AND DISPOSAL EACH	630 SIGNING, MISC.: GROUND MOUNTED SUPPORT EACH	631 REMOVAL OF LUMINAIRE AND DISPOSAL EACH	631 REMOVAL OF BALLAST AND DISPOSAL EACH	631 REMOVAL OF SIGN SERVICE AND DISPOSAL, AS PER PLAN EACH	630 SIGNING, MISC.: CHECK TORQUE EACH
98	S1	I-70	169.543	RT	E1-H3	20'X10'		29-28-24	3		200		3			1	2						
	S2	I-70	169.543	RT	E1-5	8'X2'					16				1								
	S3	I-70	169.685	RT	E5-H1a	8'X5'					40					1			1				
	S4	I-70 RAMP C	169.830	RT	D1-H6a	11'X4'					44					1							1
	S5	I-70 RAMP C	169.830	RT	M6-4	2'X2.5'				5					1								
	S6	I-70 RAMP C	169.830	RT	M1-5	2.5'X2.5'				6.3					1								
	S7	SR 83	0.276	RT	M2-H4	9'X3'					27				1								
	S8	SR 83	0.333	RT	D1-H6a	11'X4'					44					1							1
	S9	SR 83	0.383	RT	M2-H6	8'X7'					56					1							1
	S10	SR 83	0.397	RT	M2-H4	9'X3'					27				1								
	S11	I-70 RAMP B	169.880	LT	D1-H6a	11'X4'					44					1							
	S12	I-70 RAMP B	169.880	LT	M6-4	2'X1.5'				3					1								
	S13	I-70 RAMP B	169.880	LT	M1-5	2.5'X2.5'				6.3					1								
	S14	SR 83	0.530	LT	M2-H6	9'X7'					63					1							1
	S15	SR 83	0.515	LT	M2-H4	9'X3'					27				1								
	S16	SR 83	0.579	LT	M2-H4	9'X3'					27				1								
	S17	SR 83	0.655	LT	D1-H6a	11'X4'					44					1							1
99	S1	I-70	170.003	LT	E5-H1a	8'X5'					40					1			1				
	S2	I-70	170.182	LT	E1-5	8'X2'					16				1								
	S3	I-70	170.182	LT	E1-H3	20'X10'		33-29-25	3		200		3			1	2						
	S4	I-70	170.137	℄	E8-H3	8'X4'					32				1								1
	S5	I-70	170.137	℄	E8-H3	7'X4'					28				1								1
	S6	I-70	170.530	LT	E1-5	8'X2'					16				1								
	S7	I-70	170.530	LT	E3-H2	11'X3'					33				1								1
	S8	I-70	170.665	LT	E1-5	8'X2'					16				1								
	S9	I-70	170.665	LT	E1-1	17'X12'					204					1							
	S10	I-70	170.883	LT	E1-5	8'X2'					16				1								
	S11	I-70	170.883	LT	E3-H2	15'X4'					60					1							
	S12	I-70	170.883	LT	E3-H1	13'X5'					65					1							
	S13	I-70	170.798	RT	E7	14'X5'					70					1							
	S14	I-70	170.543	RT	R2-1	4'X5'				20				34		1	2						
	S15	I-70	170.543	RT	R2-H2a	4'X5'				20				35									
100	S1	I-70	171.082	LT	E1-5	8'X2'					16				1								
	S2	I-70	171.082	LT	E1-1	17'X12'					204					1							
101	S1	I-70	172.464	RT	D8-1	8'X6'					48					1							
	S2	I-70	172.700	RT	R13-H1(MOD.)	10'X5'					50					1							1
	S3	I-70	172.914	RT	E7-H3	17'X12'					204					1							1
102	S1	I-70	173.114	RT	R13-H1	8'X4'					32				1								1
	S2	I-70	173.260	RT	SPECIAL	16'X6'					96					1							1
	S3	I-70	172.464	RT	D8-3	7'X6.5'					45.5					1							1
	S4	I-70	173.603	LT	D8-3	7'X6.5'					45.5					1							1
	S5	I-70	173.753	LT	SPECIAL	16'X6'					96					1							1
	S6	I-70	173.954	LT	R13-H1	8'X4'					32				1								
103	S1	I-70	174.481	LT	R13-H1(MOD.)	10'X5'					50					1							
	S2	I-70	174.526	LT	D8-1	8'X6'					48					1							
	S3	I-70	174.901	RT	E1-1	14'X9'					126					1							
	S4	I-70	174.901	RT	E1-5	8'X2'					16				1								
TOTALS CARRIED TO LAST SHEET OF SUBSUMMARY								168	6	60.6	2564		6	69	20	26	6		2				15

CALCULATED JAM CHECKED WEB

SIGNING SUBSUMMARY

D05-SIGN-FY2005

08/25/2004 03:29:26 PM M:\pro1\022\1505\22 Sign inventory\project plans\sheets\ts016170.dgn

SHEET NO.	REFERENCE NO.	LOCATION	STATION	SIDE	CODE	SIZE (FEET)	630 SIGN ATTACHEMENT ASSEMBLY EACH	630 GROUND MOUNTED SUPPORT, W10X22 BEAM FT.	630 BREAKAWAY BEAM CONNECTION EACH	630 SIGN, FLAT SHEET SQ. FT.	630 SIGN, GROUND MOUNTED EXTRUSHEET SQ. FT.	630 SIGN, OVERHEAD EXTRUSHEET SQ. FT.	630 GROUND MOUNTED BEAM SUPPORT FOUNDATION EACH	630 GROUND MOUNTED SUPPORT NO. 4 POST FT.	630 REMOVAL OF GROUND MOUNTED SIGN AND DISPOSAL EACH	630 REMOVAL OF GROUND MOUNTED MAJOR SIGN AND DISPOSAL EACH	630 REMOVAL OF GROUND MOUNTED BEAM SUPPORT AND DISPOSAL EACH	630 REMOVAL OF OVERHEAD MOUNTED SIGN AND DISPOSAL EACH	630 SIGNING, MISC.: GROUND MOUNTED SUPPORT EACH	631 REMOVAL OF LUMINAIRE AND DISPOSAL EACH	631 REMOVAL OF BALLAST AND DISPOSAL EACH	631 REMOVAL OF SIGN SERVICE AND DISPOSAL, AS PER PLAN EACH	630 SIGNING, MISC.: CHECK TORQUE EACH
104	S1	I-70	175.317	LT	E7	15'X7'					105					1							1
	S2	I-70	175.230	RT	D12-H16a	10'X2'					20				1								
	S3	I-70	175.230	RT	E3-H2	19'X5'					95					1							1
	S4	I-70	175.230	RT	E1-5	8'X2'					16				1								
	S5	I-70	175.374	RT	E1-1	14'X9'					126					1							1
	S6	I-70	175.374	RT	E1-5	8'X2'					16				1								
	S7	I-70	175.545	LT	R2-H2a	4'X5'				20				35		1	2						
	S8	I-70	175.545	LT	R2-1	4'X5'				20				34									
	S9	I-70	-	RT	D7-H17	10'X2.5'										1	2						
	S10	I-70	-	RT	E1-5	8'X2'										1							
	S11	I-70	175.831	RT	E1-1	17'X8'		24-26	2		136		2			1	2						
	S12	I-70	175.831	RT	E1-5	8'X2'					16				1								
	S13	I-70	175.993	RT	E5-H1a	8'X5'					40					1			1				
105	S1	SR 723	0.466	LT	M2-H4	9'X3'					27				1								
	S2	I-70	176.458	LT	E5-H1a	8'X5'					40					1			1				
106	S1	SR 723	0.690	LT	M2-H4	9'X3'					27				1								
	S2	SR 723	0.616	LT	D1-H6a	11'X4'					44					1							
	S3	SR 723	0.692	RT	M1-4	2.5'X2.5'				6.3					1								
	S4	SR 723	0.692	RT	M6-4	1.75'X1.25'				2.2					1								
	S5	SR 723	0.692	RT	D1-H6a	12'X4'					48					1							
	S6	SR 723	0.692	RT	M1-4	2.5'X2.5'				6.3					1								
	S7	SR 723	0.692	RT	M6-4	1.75'X1.25'				2.2					1								
	S8	SR 723	0.734	RT	NP-30	2'X6'									1								
	S9	SR 723	0.734	RT	D9-14a	8'X1.5'					12				1								
107	S1	I-70	176.620	LT	E1-5	8'X2'					16				1								
	S2	I-70	176.620	LT	E1-H3	17'X8'		24-27			136		2			1	2						
	S3	I-70	176.909	LT	E3-H2	12'X5'					60					1							
	S4	I-70	176.971	RT	E7	14'X5'					70					1							1
	S5	I-70	177.028	LT	E1-5	8'X2'					16				1								
	S6	I-70	177.028	LT	E1-1	14'X9'					126					1							1
	S7	I-70	177.195	LT	E1-5	8'X2'					16				1								
	S8	I-70	177.195	LT	E3-H2	19'X7'					133					1							1
	S9	I-70	177.195	LT	D12-H16a	10'X2'					20				1								
	S10	I-70	177.487	LT	E1-5	8'X2'					16				1								
	S11	I-70	177.487	LT	E1-1	14'X9'					126					1							
	S12	I-70	176.783	RT	R2-1	4'X5'				20				34		1	2						
	S13	I-70	176.783	RT	R2-H2a	4'X5'				20				35									
TOTALS CARRIED TO LAST SHEET OF SUBSUMMARY								101	2	97.0	1503		4	138	17	18	10		2				6

CALCULATED JAM CHECKED WEB

SIGNING SUBSUMMARY

D05-SIGN-FY2005

08/25/2004
03:30:21 PM
M:\proj\022\1505\22 Sign inventory\project plans\sheets\ts017170.dgn

SHEET NO.	REFERENCE NO.	LOCATION	STATION	SIDE	CODE	SIZE (FEET)	630 SIGN ATTACHEMENT ASSEMBLY EACH	630 GROUND MOUNTED SUPPORT, W10X22 BEAM FT.	630 BREAKAWAY BEAM CONNECTION EACH	630 OVERHEAD SIGN SUPPORT, TYPE TC 12.30, DESIGN 4 EACH	630 SIGN, FLAT SHEET SQ. FT.	630 SIGN, GROUND MOUNTED EXTRUSHEET SQ. FT.	630 SIGN, OVERHEAD EXTRUSHEET SQ. FT.	630 GROUND MOUNTED BEAM SUPPORT FOUNDATION EACH	630 GROUND MOUNTED SUPPORT NO. 4 POST FT.	630 RIGID OVERHEAD SIGN SUPPORT FOUNDATION EACH	630 REMOVAL OF GROUND MOUNTED SIGN AND DISPOSAL EACH	630 REMOVAL OF GROUND MOUNTED MAJOR SIGN AND DISPOSAL EACH	630 REMOVAL OF GROUND MOUNTED BEAM SUPPORT AND DISPOSAL EACH	630 REMOVAL OF OVERHEAD MOUNTED SIGN AND DISPOSAL EACH	630 SIGNING, MISC.: GROUND MOUNTED SUPPORT EACH	631 REMOVAL OF LUMINAIRE AND DISPOSAL EACH	631 REMOVAL OF BALLAST AND DISPOSAL EACH	631 REMOVAL OF SIGN SERVICE AND DISPOSAL, AS PER PLAN EACH	630 SIGNING, MISC.: CHECK TORQUE EACH
108	S1	I-70	177.634	RT	E5-1	13'X12'	1						156						2	1		2	2	1	
	S2	I-70	177.634	RT	E1-5	12'X2'							24							1					
	S3	I-70	177.634	RT	E5-1	14'X12'	1						168						2	1		2	2	1	
	S4	I-70	177.634	RT	E1-5	12'X2'							24							1					
	S5	I-70	177.747	RT	D5-H12b	10'X5'						50						1							
	S6	I-70	177.747	RT	E1-5	8'X2'						16					1								
	S7	I-70	177.994	RT	E1-1	14'X12'						168						1							1
	S8	I-70	177.994	RT	E1-5	8'X2'						16					1								
	S9	I-70	177.908	LT	E7	14'X5'						70						1							1
	S10	I-70	-	RT	D9-H17	8'X5'												1	2						
	S11	I-70	-	RT	E1-5	8'X2'												1							
	S12	I-70	178.383	RT	E1-H3	17'X10'		26-25	2			170		2				1	2						
	S13	I-70	178.383	RT	E1-5	8'X2'						16					1								
	S14	I-70	178.093	LT	R2-H2a	4'X5'					20				35			1	2						
	S15	I-70	178.093	LT	R2-1	4'X5'					20				34										
110	S1	SR 209	10.442	LT	M2-H6	9'X7'	1						63							1		2	2	1	
	S2	SR 209	10.442	LT	E6-2	9'X7'	1						63							1		2	2	1	
	S3	SR 209	10.442	℄	R3-9a	3'X3.5'	1						10.5							1		2	2	1	
	S4	SR 209	10.442	℄	R3-H9K	3'X1'							3							1		2	2	1	
	S5	SR 209	10.481	RT	M2-H6	7'X6'						42						1							
	S6	SR 209	10.503	LT	M2-H4	9'X3'						27					1								
	S7	I-70 NE RAMP	178.914	LT	M1-5	3.125'X2.5'					7.8						1								
	S8	I-70 NE RAMP	178.914	LT	M6-4	2'X1.5'					3						1								
	S9	I-70 NE RAMP	178.914	LT	D1-H4a	15'X6'						90						1							
	S10	I-70	178.955	LT	E5-H1a	8'X5'						40						1			1				
	S11	I-70	178.569	RT	E1-1	13'X12'	1						156							1		2	2	1	
	S12	I-70	178.569	RT	E1-5	12'X2'							24							1					
	S13	I-70	178.569	RT	E1-H3	17'X10'	1						170							1		2	2	1	
	S14	I-70	178.569	RT	E1-5	8'X2'							16							1					
	S15	I-70	178.610	RT	E5-H1a	8'X5'						40						1			1				
	S16	I-70 SW RAMP	178.734	RT	D1-H7a	15'X6'						90						1							
	S17	I-70 SW RAMP	178.734	RT	M6-4	2.5'X1.5'					3.8						1								
	S18	I-70 SW RAMP	178.734	RT	M1-5	3.125'X2.5'					7.8						1								
	S19	SR 209	10.612	LT	M2-H6	7'X6'						42						1							
	S20	SR 209	10.662	LT	M2-H6	8'X7'	1						56							1					
	S21	SR 209	10.726	RT	M2-H4	9'X3'						27					1								
	S22	SR 209	10.602	RT	M2-H3	4'X6'					24						1								
	S23	SR 209	10.536	LT	M2-H3	4'X6'					24						1								
	S24	SR 209	10.810	RT	M2-H6	8'X7'				1			56			1									
TOTALS CARRIED TO LAST SHEET OF SUBSUMMARY							8	51	2	1	110.4	904	990	2	69	1	11	13	10	13	2	16	16	8	2

CALCULATED JAM CHECKED WEB

SIGNING SUBSUMMARY

D05-SIGN-FY2005

08/25/2004 03:48:28 PM
M:\proj\022\1505\22 Sign Inventory\project plans\sheets\ts018170.dgn

SHEET NO.	REFERENCE NO.	LOCATION	STATION	SIDE	CODE	SIZE (FEET)	630 SIGN ATTACHEMENT ASSEMBLY EACH	630 GROUND MOUNTED SUPPORT, W10X22 BEAM FT.	630 GROUND MOUNTED SUPPORT, W12X30 BEAM FT.	630 SIGN, FLAT SHEET SQ. FT.	630 SIGN, GROUND MOUNTED EXTRUSHEET SQ. FT.	630 SIGN, OVERHEAD EXTRUSHEET SQ. FT.	630 GROUND MOUNTED BEAM SUPPORT FOUNDATION EACH	630 GROUND MOUNTED SUPPORT NO. 4 POST FT.	630 REMOVAL OF GROUND MOUNTED SIGN AND DISPOSAL EACH	630 REMOVAL OF GROUND MOUNTED MAJOR SIGN AND DISPOSAL EACH	630 REMOVAL OF GROUND MOUNTED BEAM SUPPORT AND DISPOSAL EACH	630 REMOVAL OF OVERHEAD MOUNTED SIGN AND DISPOSAL EACH	630 SIGNING, MISC.: GROUND MOUNTED SUPPORT EACH	631 REMOVAL OF LUMINAIRE AND DISPOSAL EACH	631 REMOVAL OF BALLAST AND DISPOSAL EACH	631 REMOVAL OF SIGN SERVICE AND DISPOSAL, AS PER PLAN EACH	630 SIGNING, MISC.: CHECK TORQUE EACH
111	S1	I-70	179.110	LT	E1-5	8'X2'					16				1								
	S2	I-70	179.110	LT	E1-H3	17'X8'		23-25			136		2			1	2						
	S3	I-70	179.432	RT	E1-1	15'X11'			27-29		165		2			1	2						
	S4	I-70	179.432	RT	E1-5	9'X2'					18				1								
	S5	I-70	179.509	RT	R2-1	4'X5'				20				34		1	2						
	S6	I-70	179.509	RT	R2-H2a	4'X5'				20				35									
113	S1	I-70 RAMP B	179.686	RT	W1-6	8'X4'					32				1								
	S2	WB I-70	179.735	LT	E5-H1a	9'X5'					45					1			1				
	S3	I-70 RAMP B	179.751	LT	W1-13	4'X4'				16					1								
	S4	WB I-70	179.826	LT	E1-5	9'X2'						18						1					
	S5	WB I-70	179.826	LT	E1-H3	15'X8'	1					120						1		2	2	1	
	S6	WB I-70	179.826	LT	E1-5	8'X2'						16						1					
	S7	WB I-70	179.826	LT	E1-1	14'X9'	1					126						1		2	2	1	
	S8	WB I-70	179.977	LT	E1-5	9'X2'						18						1					
	S9	WB I-70	179.977	LT	E1-H3	15'X8'	1					120						1		2	2	1	
	S10	WB I-70	180.133	LT	E5-H1a	9'X5'					45					1			1				
	S11	WB I-70	180.180	LT	E1-5	9'X2'						18						1					
	S12	WB I-70	180.180	LT	E1-H3	16'X8'	1					128						1		2	2	1	
	S13	WB I-70	180.180	LT	E1-5	9'X2'						18						1					
	S14	WB I-70	180.180	LT	E1-1	12'X9'	1					108						1		2	2	1	
	S15	EB I-70	179.748	RT	E6-2	12'X8'	1					96						1		2	2	1	
	S16	EB I-70	179.748	RT	E1-1	13'X9'	1					117						1		2	2	1	
	S17	EB I-70	179.748	RT	E1-5	9'X2'						18						1					
	S18	EB I-70	179.748	RT	E1-H3	15'X8'	1					120						1		2	2	1	
	S19	EB I-70	179.748	RT	E1-5	9'X2'						18						1					
	S20	EB I-70	179.780	RT	E5-H1a	9'X5'					45					1			1				
	S21	EB I-70	179.829	RT	D7-H6	10'X1.5'					15				1								
	S22	EB I-70	179.829	RT	N-58-MOD	7'X3'				21					1								
	S23	EB I-70	179.829	RT	E3-H2	12'X7'					84					1							1
	S24	EB I-70	179.829	RT	E1-5	9'X2'					18				1								
	S25	EB I-70	179.977	RT	E1-H3	16'X8'	1					128						1		2	2	1	
	S26	EB I-70	179.977	RT	E1-5	9'X2'						18						1					
	S27	EB I-70	180.110	RT	E1-H3	16'X8'	1					128						1		2	2	1	
	S28	EB I-70	180.110	RT	E1-5	9'X2'						18						1					
	S29	EB I-70	180.155	RT	E5-H1a	9'X5'					45					1			1				
	S30	I-70 RAMP F	180.192	RT	R16-H7	4'X2.5'				10					1								
	S31	I-70 RAMP F	180.145	RT	W1-13	4'X4'				16					1								
	S32	I-70 RAMP F	180.145	RT	W13-1	2'X2'				4					1								
	S33	I-70 RAMP F	180.283	LT	W1-6	8'X4'					32				1								
114	S1	I-70	180.379	LT	E1-5	9'X2'						18						1					
	S2	I-70	180.379	LT	E1-H3	16'X8'	1					128						1		2	2	1	
	S3	I-70	180.588	LT	E7-H3	17'X12'					204					1							1
	S4	I-70	180.939	LT	E1-5	9'X2'					18				1								
	S5	I-70	180.939	LT	E3-H2	12'X5'					60					1							1
	S6	I-70	180.939	LT	N-58-MOD	7'X3'					21				1								
	S7	I-70	180.034	RT	R2-1	4'X5'				20				34		1	2						
	S8	I-70	180.034	RT	R2-H2a	4'X5'				20				35									
TOTALS CARRIED TO LAST SHEET OF SUBSUMMARY							11	48	56	147.0	999	1497	4	138	13	11	8	21	4	22	22	11	3

CALCULATED JAM CHECKED WEB

SIGNING SUBSUMMARY

D05-SIGN-FY2005

08/25/2004
03:34:08 PM
M:\proj\022\N505\22 Sign inventory\project plans\sheets\ts09170.dgn

SHEET NO.	REFERENCE NO.	LOCATION	STATION	SIDE	CODE	SIZE (FEET)	630 SIGN ATTACHEMENT ASSEMBLY EACH	630 GROUND MOUNTED SUPPORT, W12X30 BEAM FT.	630 BREAKAWAY BEAM CONNECTION EACH	630 SIGN, FLAT SHEET SQ. FT.	630 SIGN, GROUND MOUNTED EXTRUSHEET SQ. FT.	630 SIGN, OVERHEAD EXTRUSHEET SQ. FT.	630 GROUND MOUNTED BEAM SUPPORT FOUNDATION EACH	630 GROUND MOUNTED SUPPORT NO. 4 POST FT.	630 REMOVAL OF GROUND MOUNTED SIGN AND DISPOSAL EACH	630 REMOVAL OF GROUND MOUNTED MAJOR SIGN AND DISPOSAL EACH	630 REMOVAL OF GROUND MOUNTED BEAM SUPPORT AND DISPOSAL EACH	630 REMOVAL OF OVERHEAD MOUNTED SIGN AND DISPOSAL EACH	630 SIGNING, MISC.: GROUND MOUNTED SUPPORT EACH	631 REMOVAL OF LUMINAIRE AND DISPOSAL EACH	631 REMOVAL OF BALLAST AND DISPOSAL EACH	631 REMOVAL OF SIGN SERVICE AND DISPOSAL, AS PER PLAN EACH	630 SIGNING, MISC.: CHECK TORQUE EACH
115	S1	I-70	181.132	RT	E7	14'X5'					70					1							1
	S2	I-70	181.170	LT	E1-5	12'X2'					24				1								
	S3	I-70	181.170	LT	E1-1	16'X15'		30-33-35			240		3			1	2						
116	S1	I-70	182.166	LT	E1-5	12'X2'					24				1								
	S2	I-70	182.166	LT	E1-1	16'X15'		31-33-36			240		3			1	2						
119	S1	I-70	185.486	RT	-	13'X3'					39				1								
	S2	I-70	185.486	RT	E1-2	20'X12'					240					1							
	S3	I-70	185.486	RT	E1-5	8'X2'					16				1								
	S4	I-70	185.807	LT	E7	14'X5'					70					1							
	S5	I-70	185.898	RT	E3-H1	18'X5'					90					1							1
	S6	I-70	185.898	RT	E1-5	8'X2'					16				1								
	S7	I-70	185.989	RT	R2-H2a	4'X5'				20				35		1	2						
	S8	I-70	185.989	RT	R2-1	4'X5'				20				34									
120	S1	I-70	186.042	RT	E1-2	20'X12'					240					1							1
	S2	I-70	186.042	RT	E1-5	8'X2'					16				1								
	S3	I-70	-	RT	D9-H17	-										1	2						
	S4	I-70	-	RT	E1-5	8'X2'										1							
	S5	I-70	186.295	LT	D12-H11	10'X3'					30				1								1
	S6	I-70	186.295	LT	D12-H12	10'X1.25'					12.5				1								
	S7	I-70	186.366	RT	E1-H3	23'X10'					230					1							1
	S8	I-70	186.366	RT	E1-5	8'X2'					16				1								
121	S1	I-70 RAMP B	186.587	LT	Assembly										3								
	S2	I-70 RAMP B	186.587	LT	D1-H5a	13'X2'									1		2						
	S3	I-70 RAMP B	186.587	LT	Assembly										3								
	S4	I-70 RAMP B	186.587	LT	D9-H17a										1								
	S5	I-70 RAMP B	186.877	LT	M3-3										1								
	S6	I-70 RAMP B	186.877	LT	D9-H17a										1								
	S7	I-70 RAMP D	186.877	LT	D9-H17a										1								
	S8	I-70 RAMP D	186.587	RT	D1-H5a	13'X2'									1		2						
	S9	I-70 RAMP D	186.587	RT	Assembly										3								
	S10	I-70 RAMP D	186.587	RT	Assembly										3								
	S11	I-70 RAMP D	186.587	RT	D9-H17a										1								
	S12	I-70 RAMP D	186.587	RT	M3-3										1								
122	S1	SR 285	8.120	LT	M2-H4	9'X3'					27				1								
	S2	SR 285	8.195	LT	D1-H6a	11'X4'					44					1							
	S3	SR 285	8.265	LT	M2-H4	9'X3'					27				1								
	S4	SR 285	8.146	RT	M2-H6	7'X6'					42					1							1
	S5	I-70 RAMP B	186.877	LT	M3-4	2.5'X1.25'				3.1													
	S6	I-70 RAMP B	186.877	LT	M1-4	2.5'X2.5'				6.3													
	S7	I-70 RAMP B	186.877	LT	M6-1	2'X1.5'				3													
	S8	I-70 RAMP B	186.877	LT	M1-5	3.125'X2.5'				7.8					1								
	S9	I-70 RAMP B	186.877	LT	M6-4	2'X1.5'				3					1								
	S10	I-70 RAMP B	186.877	LT	D1-H7a	14'X6'					84					1	1						1
	S11	I-70	186.908	LT	E5-H1a	8'X5'					40					1			1				
	S12	I-70	186.508	RT	E5-H1a	8'X5'					40					1			1				
TOTALS CARRIED TO LAST SHEET OF SUBSUMMARY								198		63.2	1918		6	69	33	16	13		2				7

CALCULATED JAM
CHECKED WEB

SIGNING SUBSUMMARY

D05-SIGN-FY2005

08/25/2004
03:35:07 PM
M:\proj\022N\505\22 Sign Inventory\project plans\sheets\ts020170.dgn

SHEET NO.	REFERENCE NO.	LOCATION	STATION	SIDE	CODE	SIZE (FEET)	630 GROUND MOUNTED SUPPORT, W10X22 BEAM FT.	630 GROUND MOUNTED SUPPORT, W12X30 BEAM FT.	630 BREAKAWAY BEAM CONNECTION EACH	630 SIGN, FLAT SHEET SQ. FT.	630 SIGN, GROUND MOUNTED EXTRUSHEET SQ. FT.	630 SIGN, OVERHEAD EXTRUSHEET SQ. FT.	630 GROUND MOUNTED BEAM SUPPORT FOUNDATION EACH	630 GROUND MOUNTED SUPPORT NO. 4 POST FT.	630 REMOVAL OF GROUND MOUNTED SIGN AND DISPOSAL EACH	630 REMOVAL OF GROUND MOUNTED MAJOR SIGN AND DISPOSAL EACH	630 REMOVAL OF GROUND MOUNTED BEAM SUPPORT AND DISPOSAL EACH	630 REMOVAL OF OVERHEAD MOUNTED SIGN AND DISPOSAL EACH	630 SIGNING, MISC.: GROUND MOUNTED SUPPORT EACH	631 REMOVAL OF LUMINAIRE AND DISPOSAL EACH	631 REMOVAL OF BALLAST AND DISPOSAL EACH	631 REMOVAL OF SIGN SERVICE AND DISPOSAL, AS PER PLAN EACH	630 SIGNING, MISC.: CHECK TORQUE EACH
122	S13	I-70 RAMP D	186.595	RT	D1-H7a	14'X6'					84					1	1						1
	S14	I-70 RAMP D	186.595	RT	M6-1	2'X1.5'				3													
	S15	I-70 RAMP D	186.595	RT	M1-4	2.5'X2.5'				6.3													
	S16	I-70 RAMP D	186.595	RT	M1-5	3.125'X2.5'				7.8					1								
	S17	I-70 RAMP D	186.595	RT	M6-4	2'X1.5'				3					1								
	S18	I-70 RAMP D	186.595	RT	M3-2	2.5'X1.25'				3.1													
	S19	SR 285	8.030	LT	M2-H6	9'X6'					54				1								1
	S20	SR 285	8.031	RT	M2-H4	9'X3'					27				1								
	S21	SR 285	8.031	RT	M2-H4	9'X3'					27				1								
	S22	SR 285	7.888	RT	M2-H4	9'X3'					27				1								
	S23	SR 285	7.888	RT	M2-H4	9'X3'					27				1								
123	S1	I-70	187.057	LT	E1-5	8'X2'					16				1								
	S2	I-70	187.057	LT	E1-H3	23'X10'					230					1							
	S3	I-70	187.240	LT	E1-5	-									1								
	S4	I-70	187.240	LT	D9-H17	-										1	2						
	S5	I-70	187.445	LT	E1-5	8'X2'					16				1								
	S6	I-70	187.445	LT	E1-1	20'X12'					240					1							
	S7	I-70	187.445	LT	-	13'X3'					39				1								
	S8	I-70	187.553	LT	E1-5	8'X2'					16				1								
	S9	I-70	187.553	LT	E3-H1	18'X5'					90					1							
	S10	I-70	187.743	RT	D12-H12	10'X1.25'					12.5				1								
	S11	I-70	187.743	RT	D12-H11	10'X3'					30				1								1
	S12	I-70	187.900	LT	E1-5	8'X2'					16				1								
	S13	I-70	187.900	LT	E1-1	20'X12'					240					1							1
	S14	I-70	187.900	LT	E2-1	13'X2'					26				1								
	S15	I-70	187.609	RT	R2-1	4'X5'				20				34		1	2						
	S16	I-70	187.609	RT	R2-H2a	4'X5'				20				35									
	S17	I-70	187.900	RT	E7	14'X5'	22-17		2		70		2										
124	S1	I-70	188.550	RT	D5-1-SPECIAL	11'X8'					88					1							
	S2	I-70	188.550	RT	D5-H14	10'X1.5'					15				1								
	S3	I-70	188.550	RT	D5-H15	-										1							
	S4	I-70	188.758	RT	D5-H7	13'X5'					65					1							1
125	S1	I-70	189.354	RT	D5-H2	10'X5'					50					1							
	S2	I-70	189.516	RT	D5-H6	6'X6'					36				1								
128	S1	I-70	192.205	RT	E1-1	16'X9'					144					1							1
	S2	I-70	192.205	RT	E1-5	8'X2'					16				1								
	S3	I-70	192.451	LT	E7	14'X5'					70					1							1
	S4	I-70	192.621	RT	E1-1	16'X9'					144					1							1
	S5	I-70	192.621	RT	E1-5	8'X2'					16				1								
	S6	I-70	192.830	RT	D9-H17	-										1	2						
	S7	I-70	192.830	RT	E1-5	-									1								
	S8	I-70	192.638	LT	R2-H2a	4'X5'				20				35		1	2						
	S9	I-70	192.638	LT	R2-1	4'X5'				20				34									
129	S1	I-70	193.052	RT	E1-H3	19'X8'		26-28	2		152		2			1	2						
	S2	I-70	193.052	RT	E1-5	8'X2'					16				1								
	S3	I-70	193.214	RT	E5-H1a	8'X5'					40					1			1				
	S4	I-70	193.572	LT	E5-H1a	8'X5'					40					1			1				
	S5	I-70	193.729	LT	E1-5	8'X2'					16				1								
TOTALS CARRIED TO LAST SHEET OF SUBSUMMARY							39	54	4	103.2	2196		4	138	23	19	11		2				8

CALCULATED JAM CHECKED WEB

SIGNING SUBSUMMARY

D05-SIGN-FY2005

08/25/2004
03:35:43 PM
M:\proj\022\1505\22 Sign Inventory\project plans\sheets\ts02i170.dgn

SHEET NO.	REFERENCE NO.	LOCATION	STATION	SIDE	CODE	SIZE (FEET)	630 GROUND MOUNTED SUPPORT, W10X22 BEAM FT.	630 GROUND MOUNTED SUPPORT, W12X30 BEAM FT.	630 BREAKAWAY BEAM CONNECTION EACH	630 SIGN, FLAT SHEET SQ. FT.	630 SIGN, GROUND MOUNTED EXTRUSHEET SQ. FT.	630 SIGN, OVERHEAD EXTRUSHEET SQ. FT.	630 GROUND MOUNTED BEAM SUPPORT FOUNDATION EACH	630 GROUND MOUNTED SUPPORT NO. 4 POST FT.	630 REMOVAL OF GROUND MOUNTED SIGN AND DISPOSAL EACH	630 REMOVAL OF GROUND MOUNTED MAJOR SIGN AND DISPOSAL EACH	630 REMOVAL OF GROUND MOUNTED BEAM SUPPORT AND DISPOSAL EACH	630 REMOVAL OF OVERHEAD MOUNTED SIGN AND DISPOSAL EACH	630 SIGNING, MISC.: GROUND MOUNTED SUPPORT EACH	631 REMOVAL OF LUMINAIRE AND DISPOSAL EACH	631 REMOVAL OF BALLAST AND DISPOSAL EACH	631 REMOVAL OF SIGN SERVICE AND DISPOSAL, AS PER PLAN EACH	630 SIGNING, MISC.: CHECK TORQUE EACH
129	S6	I-70	193.729	LT	E1-H3	19'X8'		25-26			152		2			1	2						
131	S1	SR 513	8.868	LT	M2-H4	9'X3'					27				1								
	S2	SR 513	8.868	LT	M2-H4	9'X3'					27				1								
	S3	SR 513	8.844	LT	D1-H6a	11'X4'					44					1							1
	S4	SR 513	8.771	LT	M2-H4	9'X3'					27				1								
	S5	SR 513	8.771	LT	M2-H4	9'X3'					27				1								
	S6	SR 513	8.785	RT	M2-H6	9'X6'					54					1							1
	S7	I-70 RAMP B	193.493	LT	M1-5	3.125'X2.5'				7.8					1								
	S8	I-70 RAMP B	193.493	LT	M6-4	2'X1.5'				3					1								
	S9	I-70 RAMP B	193.493	LT	D1-H5a	11'X2'					22				1								
	S10	I-70 RAMP C	193.332	RT	D1-H5a	11'X2'					22				1								
	S11	I-70 RAMP C	193.332	RT	M6-4	2'X1.5'				3					1								
	S12	I-70 RAMP C	193.332	RT	M1-5	3.125'X2.5'				7.8					1								
	S13	SR 513	8.672	LT	M2-H6	9'X6'					54					1							
	S14	SR 513	8.684	RT	M2-H4	9'X3'					27				1								
	S15	SR 513	8.684	RT	M2-H4	9'X3'					27				1								
	S16	SR 513	8.624	RT	D1-H6a	11'X4'					44					1							
	S17	SR 513	8.547	RT	M2-H4	9'X3'					27				1								
	S18	SR 513	8.547	RT	M2-H4	9'X3'					27				1								
132	S1	I-70	194.136	LT	E1-5	8'X2'					16				1								
	S2	I-70	194.136	LT	E1-1	16'X9'					144					1							1
	S3	I-70	194.383	RT	E7	14'X5'					70					1							
	S4	I-70	-	LT	E1-5	-										1							
	S5	I-70	-	LT	D9-H17	-										1	2						
	S6	I-70	194.506	LT	E1-5	8'X2'					16				1								
	S7	I-70	194.506	LT	E1-1	16'X9'					144					1							1
	S8	I-70	194.195	RT	R2-1	4'X5'				20				34		1	2						
	S9	I-70	194.195	RT	R2-H2a	4'X5'				20				35									
135	S1	I-70	197.417	RT	E1-2	18'X8'					144					1							1
	S2	I-70	197.417	RT	E1-5	8'X2'					16				1								
	S3	I-70	-	RT	D9-H17	-										1	2						
	S4	I-70	-	RT	E1-5	-										1							
	S5	I-70	197.815	LT	E7	14'X5'					70					1							1
	S6	I-70	197.886	RT	E1-2	18'X8'					144					1							
	S7	I-70	197.886	RT	E1-5	8'X2'					16				1								
	S8	I-70	180.034	RT	R2-H2a	4'X5'				20				35		1	2						
	S9	I-70	180.034	RT	R2-1	4'X5'				20				34									
136	S1	I-70	198.103	RT	E8-H2	6'X3'				18					1								
	S2	I-70	198.105	LT	R16-H15	12'X5'					60					1							
	S3	I-70	198.375	RT	E1-1	21'X6'	20-22-25				126		3			1	2						
	S4	I-70	198.375	RT	E1-5	8'X2'					16				1								
	S5	I-70	198.534	RT	E5-H1a	8'X5'					40					1			1				
	S6	I-70	198.633	℄	E8-H3	7'X4'					28				1								1
	S7	I-70	198.633	℄	E8-H3	6'X4'					24				1								
	S8	I-70	198.631	RT	D1-H4a	9'X2'					18				1								
	S9	I-70	198.631	RT	D3-H5	11'X4'					44					1							
TOTALS CARRIED TO LAST SHEET OF SUBSUMMARY							67	51	2	119.6	1744		5	138	23	21	12		1				7

CALCULATED JAM CHECKED WEB

SIGNING SUBSUMMARY

D05-SIGN-FY2005

08/25/2004 02:35:27 PM M:\proj\022\1505\22 Sign inventory\project plans\sheets\fs022170.dgn

SHEET NO.	606 GUARDRAIL, TYPE 5 FT.	606 GUARDRAIL, TYPE 8 FT.	606 POST END ANCHOR (OR CONCRETE BLOCK END ANCHOR) EACH	606 ANCHOR ASSEMBLY TYPE B-98 EACH	606 ANCHOR ASSEMBLY TYPE T EACH	630 GROUND MOUNTED SUPPORT, NO. 4 POST FT.	630 GROUND MOUNTED SUPPORT, W10X22 BEAM FT.	630 GROUND MOUNTED SUPPORT, W12X30 BEAM FT.	630 OVERHEAD SIGN SUPPORT, TYPE TC-12.30, DESIGN 4 EACH	630 OVERHEAD SIGN SUPPORT, TYPE TC-12.30, DESIGN 10 EACH	630 BREAKAWAY BEAM CONNECTION EACH	630 SIGN ATTACHEMENT ASSEMBLY EACH	630 SIGN SUPPORT ASSEMBLY, POLE MOUNTED EACH	630 SIGN, FLAT SHEET SQ. FT.	630 SIGN, GROUND MOUNTED EXTRUSHEET SQ. FT.	630 SIGN, OVERHEAD EXTRUSHEET SQ. FT.	630 GROUND MOUNTED BEAM SUPPORT FOUNDATION EACH	630 RIGID OVERHEAD SIGN SUPPORT FOUNDATION EACH	630 REMOVAL OF GROUND MOUNTED SIGN AND DISPOSAL EACH	630 REMOVAL OF GROUND MOUNTED MAJOR SIGN AND DISPOSAL EACH	630 REMOVAL OF GROUND MOUNTED POST SUPPORT AND DISPOSAL EACH	630 REMOVAL OF GROUND MOUNTED BEAM SUPPORT AND DISPOSAL EACH	630 REMOVAL OF OVERHEAD MOUNTED SIGN AND DISPOSAL EACH	630 SIGNING, MISC.: GROUND MOUNTED SUPPORT EACH	631 REMOVAL OF LUMINAIRE AND DISPOSAL EACH	631 REMOVAL OF BALLAST AND DISPOSAL EACH	631 REMOVAL OF SIGN SERVICE AND DISPOSAL, AS PER PLAN EACH	630 SIGNING, MISC.: CHECK TORQUE EACH
137												9		56.3	794	1012			10	9			13	3	18	18	9	7
138						138	122				5	9		120.0	1635	1500	5		10	14		8	14	1	23	23	9	8
139						138		104			4			126.4	2051		4		23	22		8		4				7
140						138								137.2	1592				24	16		4						14
141						138		58			2	3		92.4	2009	380	2		17	25		8	4	3				6
142												13		49.6	867	1408			17	12			18	3				5
143	475			2	2	138				3				98.6	1181	554		3	15	22		12		1				11
144		550	2		2	69		57		3	2	2		64.0	1247	834	2	3	17	17		12	2	3				7
145						138	49				2			89.3	1539		2		23	17		10		2				8
146														9.3	252				4	3								2
147																												
148																												
149						138	42	60			2			140.8	1562		4		26	18		6		2				10
150						168	46				2			96.4	1614		2		23	19	1	6		3				2
151						138								142.0	1660				29	19		6		1				8
152						69		168			6			60.6	2564		6		20	26		6		2				15
153						138	101				2			97.0	1503		4		17	18		10		2				6
154						69	51		1		2	8		110.4	904	990	2	1	11	13		10	13	2	16	16	8	2
155						138	48	56				11		147.0	999	1497	4		13	11		8	21	4	22	22	11	3
156						69		198						63.2	1918		6		33	16		13		2				7
157						138	39	54			4			103.2	2196		4		23	19		11		2				8
158						138	67	51			2			119.6	1744		5		23	21		12		1				7
TOTALS CARRIED TO GENERAL SUMMARY																												
	475	550	2	2	4	2100	565	806	1	6	35	55		1,923	29,831	8,175	52	7	378	337	1	150	85	41	79	79	37	143

A.P.P. = AS PER PLAN

SHEET NO.	630 GROUND MOUNTED SUPPORT, NO. 4 POST, A.P.P. FT.	630 GROUND MOUNTED SUPPORT, W10X22 BEAM, A.P.P. FT.	630 GROUND MOUNTED SUPPORT, W12X30 BEAM, A.P.P. FT.	630 BREAKAWAY BEAM CONNECTION, A.P.P. EACH	630 SIGN ATTACHEMENT ASSEMBLY, A.P.P. EACH	630 SIGN SUPPORT ASSEMBLY, POLE MOUNTED, A.P.P. EACH	630 SIGN, FLAT SHEET, A.P.P. SQ. FT.	630 SIGN, GROUND MOUNTED EXTRUSHEET, A.P.P. SQ. FT.	630 SIGN, OVERHEAD EXTRUSHEET, A.P.P. SQ. FT.	630 SIGNING, MISC.: GROUND MOUNTED SUPPORT FOR STORAGE EACH
146	69	48		2	9		82	1013	914	2
147					13		80.8	223	1438	3
148	172		54	2	10	1	140	899	859	1
TOTALS CARRIED TO GENERAL SUMMARY										
	241	48	54	4	32	1	302.8	2,135	3,211	6

CALCULATED JAM
CHECKED WEB

SIGNING SUBSUMMARY

D05-SIGN-FY2005

$DATE$ $TIME$ $FILE$ ts02317OR.dgn Revised by N.K. 9/21/04

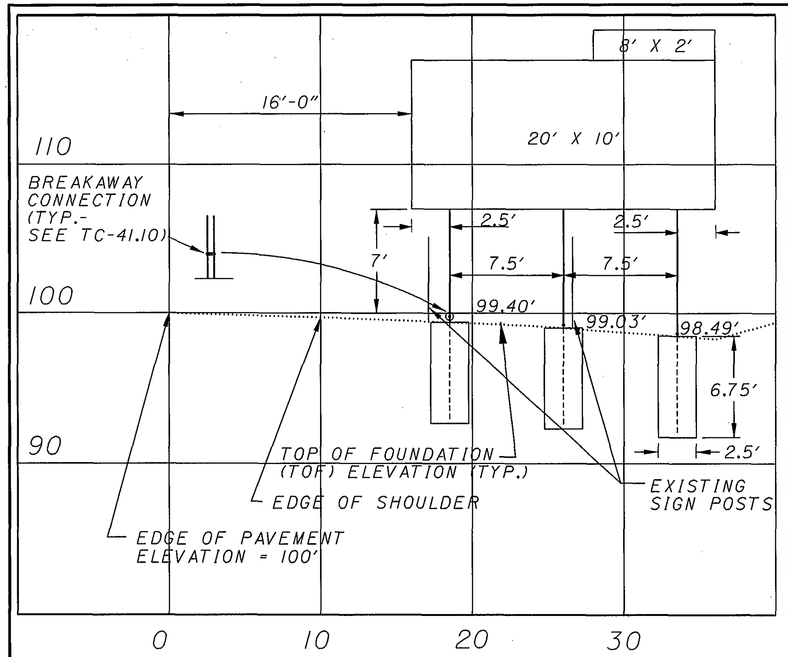

MILE 112.553, IR 70 WB
W10X22, 25'-25'-25'
SHEET 9, S12

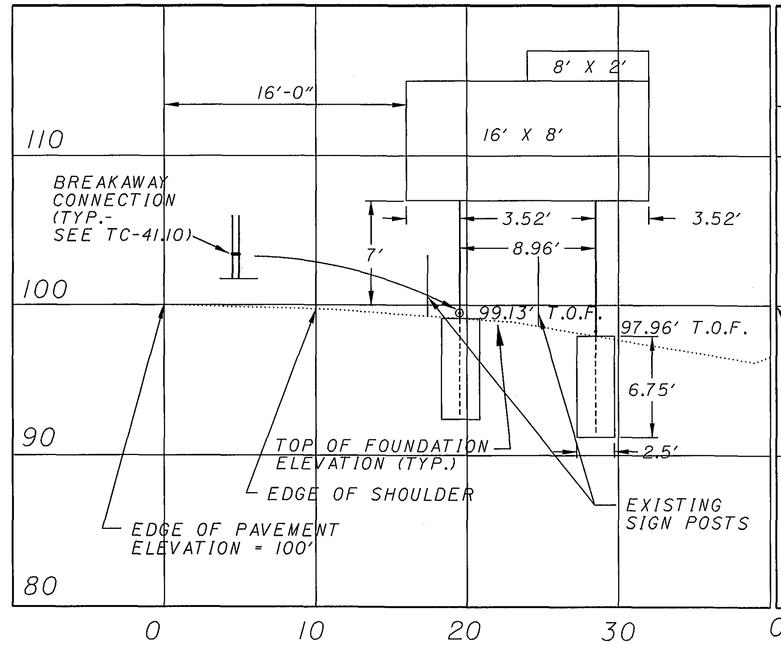

MILE 117.908, IR 70 EB
W10X22, 23'-24'
SHEET 14, S6

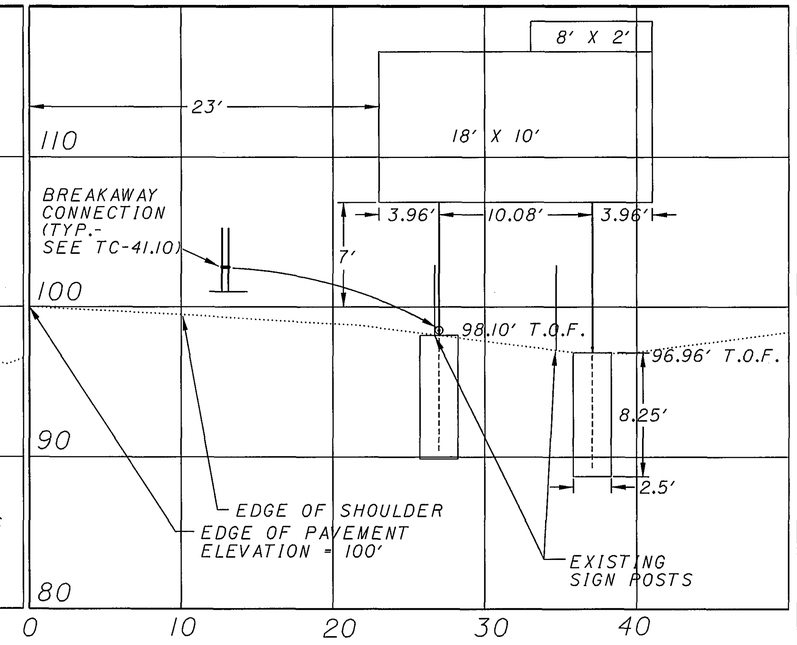

MILE 122.314, IR 70 EB
W12X30, 22'-24'
SHEET 21, S4

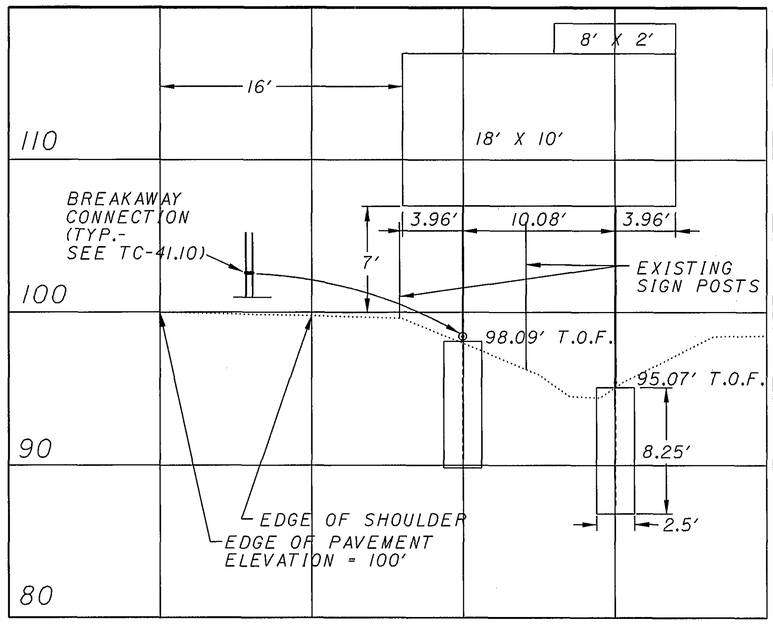

MILE 122.918, IR 70 WB
W12X30, 28'-30'
SHEET 21, S9

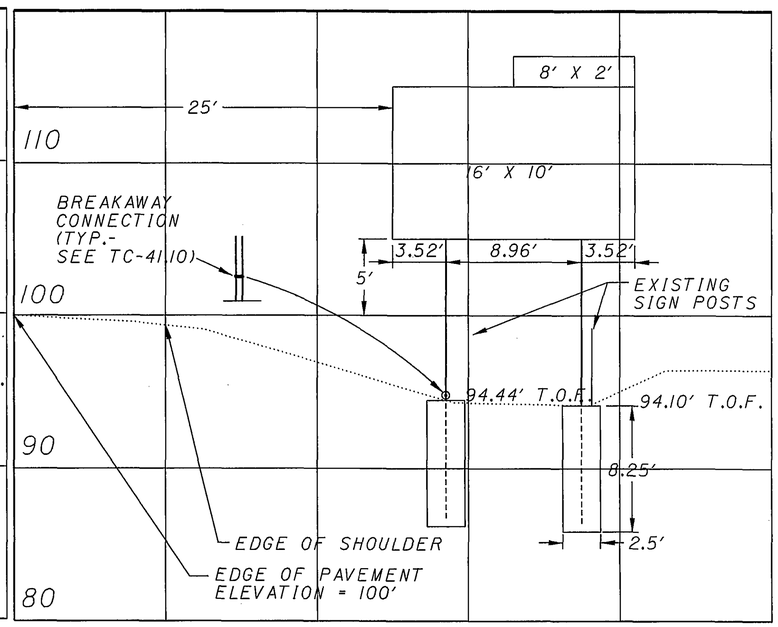

MILE 126.382, IR 70 WB
W12X30, 29'-29'
SHEET 29, S2

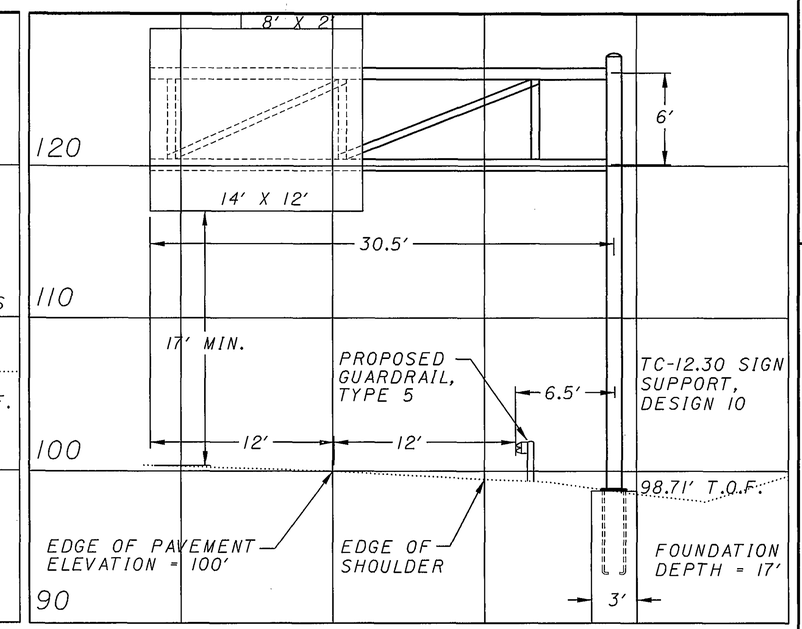

MILE 131.666, IR 70 EB
TC-12.30, DESIGN 10
SHEET 38, S5

T.O.F. = TOP OF FOUNDATION ELEVATION

SCALE IN FEET
0 2.5 5 10

CALCULATED DCB
CHECKED KO

SIGN ELEVATIONS

D05-SIGN-FY2005

08/25/2004
10:27:59 AM
M:\proj\0221\505\22 Sign Inventory\project plans\sheets\rd0041T0.dgn

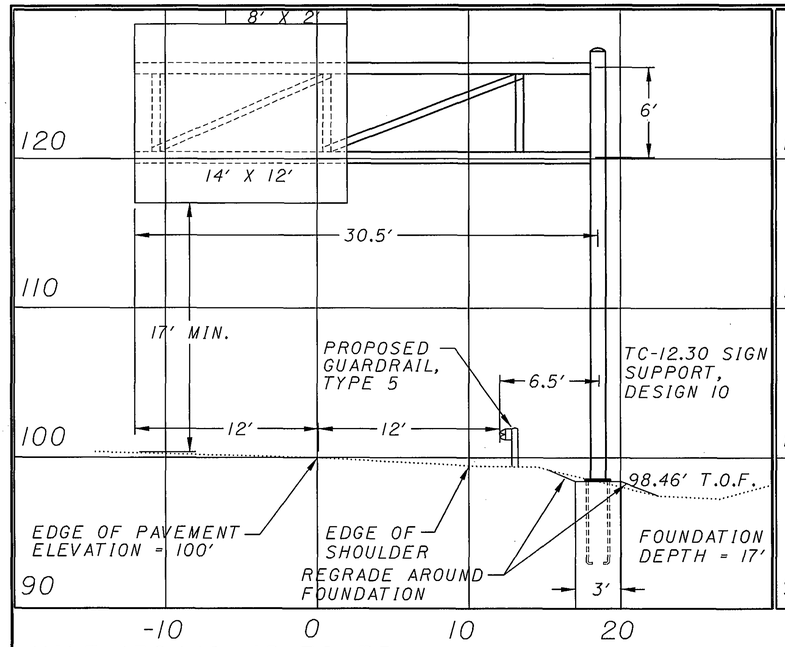

MILE 132.146, IR 70 EB
TC-12.30, DESIGN 10
SHEET 39, S5

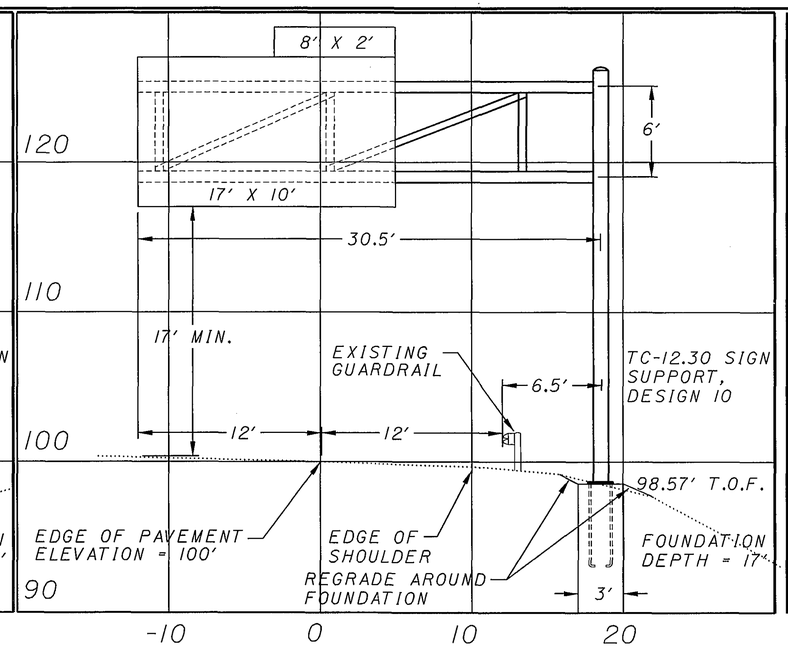

MILE 132.500, IR 70 EB
TC-12.30, DESIGN 10
SHEET 39, S11

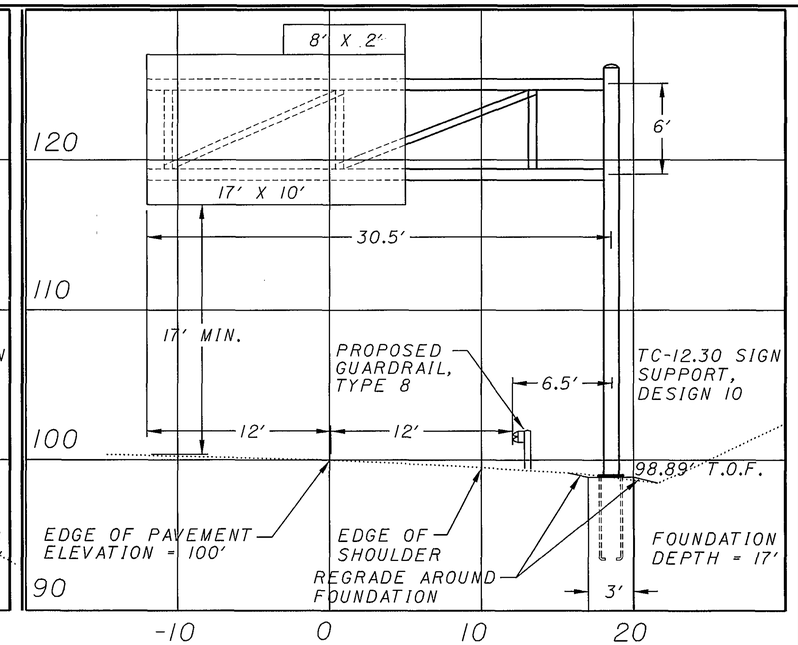

MILE 133.195, IR 70 WB
TC-12.30, DESIGN 10
SHEET 42, S3

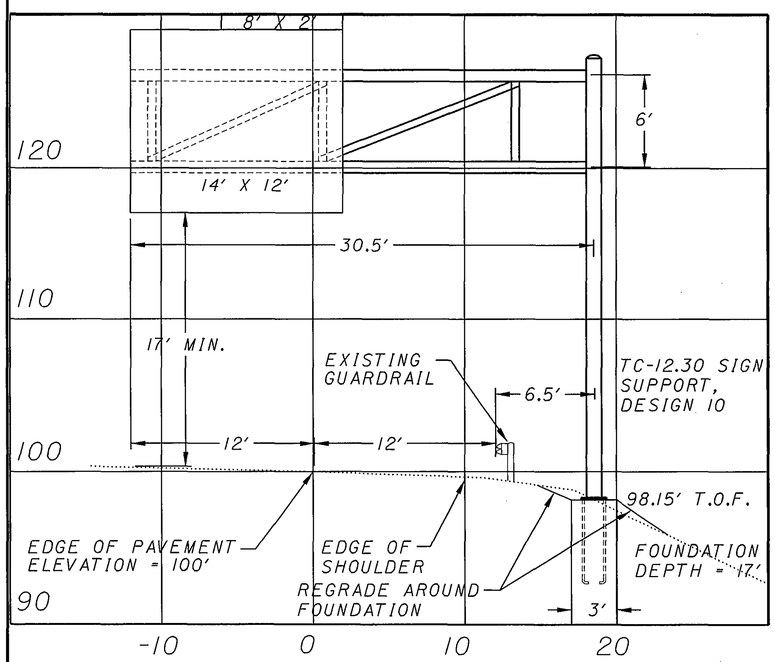

MILE 133.512, IR 70 WB
TC-12.30, DESIGN 10
SHEET 42, S7

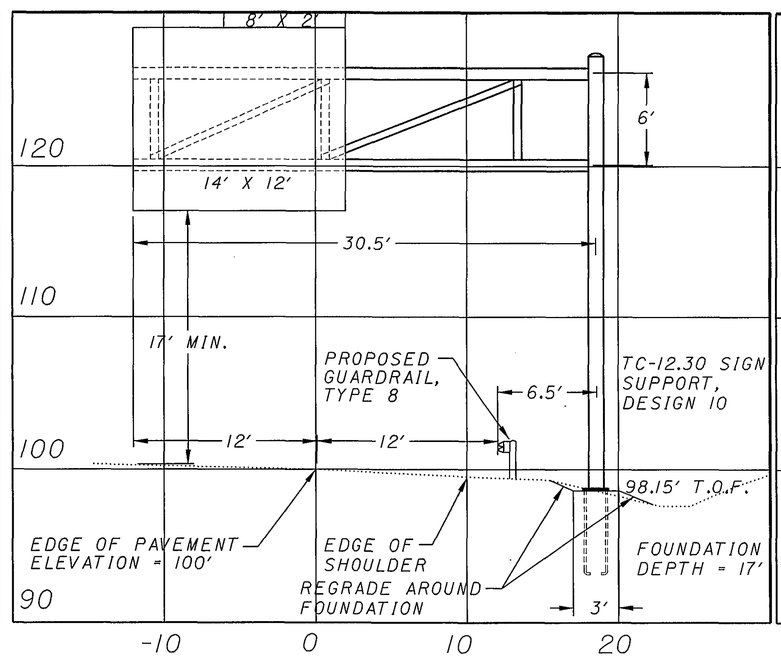

MILE 134.030, IR 70 WB
TC-12.30, DESIGN 10
SHEET 43, S2

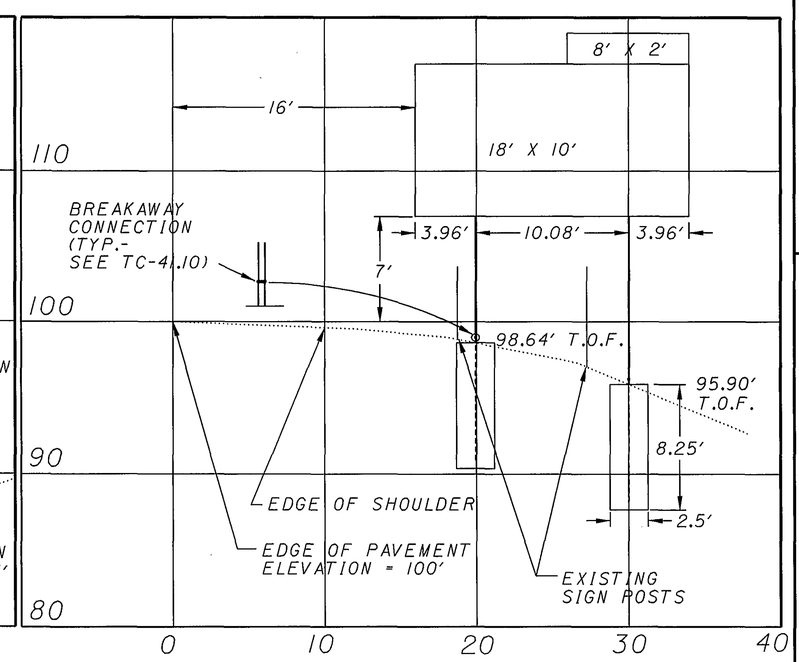

MILE 140.583, IR 70 EB
W12X30, 27'-30'
SHEET 49, S7

T.O.F. = TOP OF FOUNDATION ELEVATION

SCALE IN FEET
0 2.5 5 10

CALCULATED DCB
CHECKED KO

SIGN ELEVATIONS

D05-SIGN-FY2005

08/25/2004
10:08:36 AM
M:\proj\022\1505\22 Sign Inventory\project plans\sheets\1d0051T0.dgn

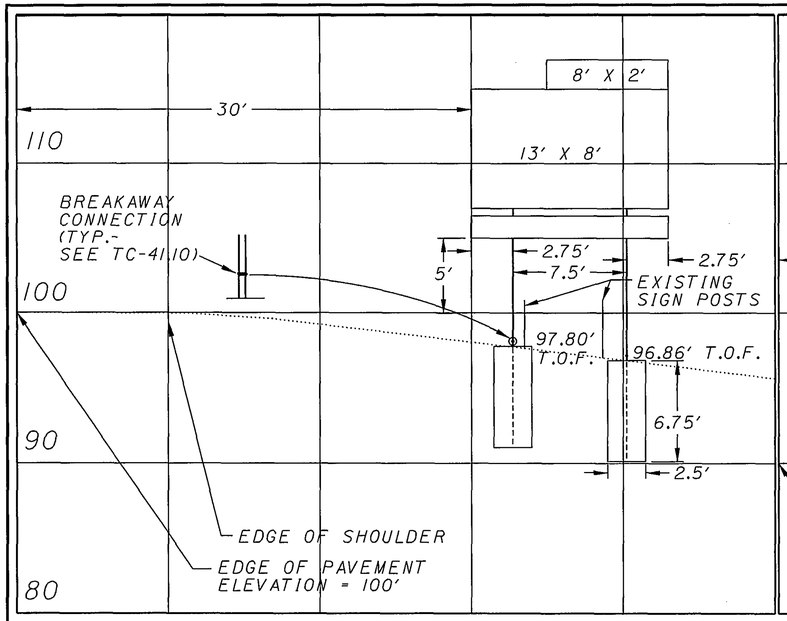

MILE 143.320, IR 70 WB
W10X22, 24'-25'
SHEET 54, S2

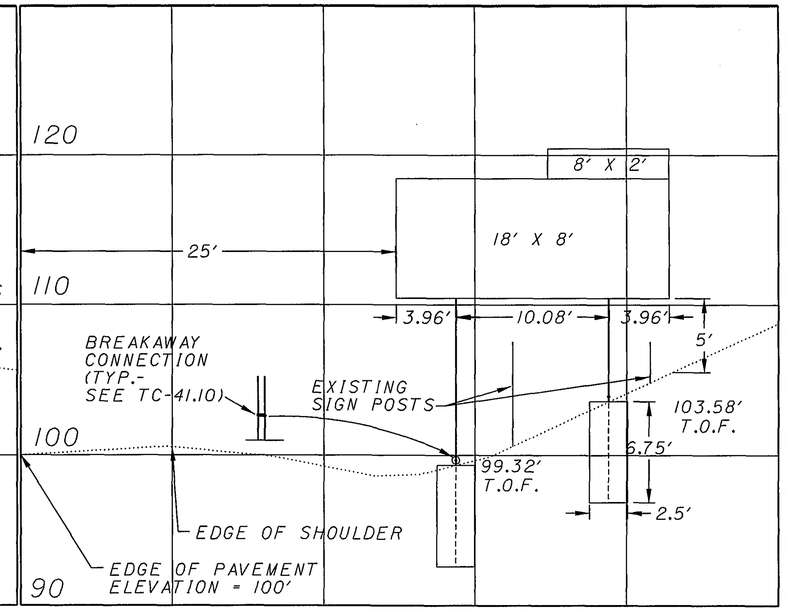

MILE 152.704, IR 70 WB
W10X22, 26'-22'
SHEET 66, S2

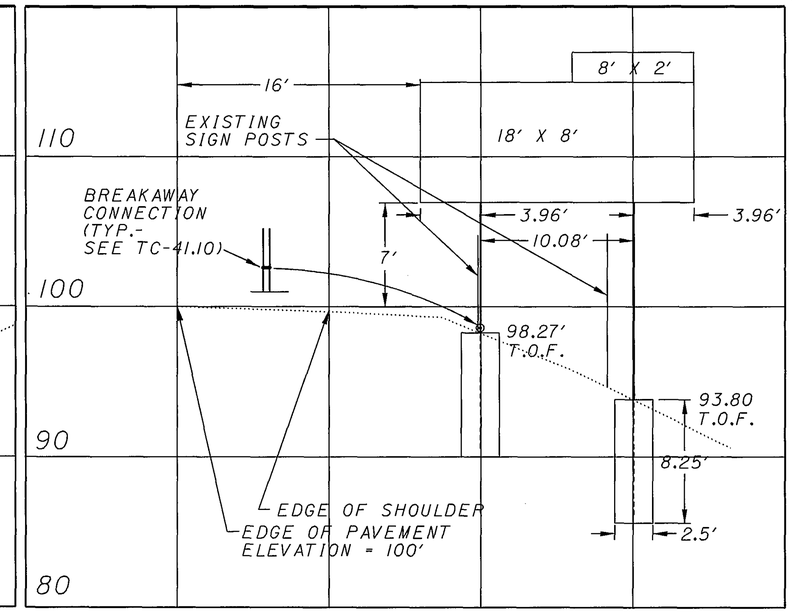

MILE 156.835, IR 70 WB
W12X30, 25'-29'
SHEET 77, S11

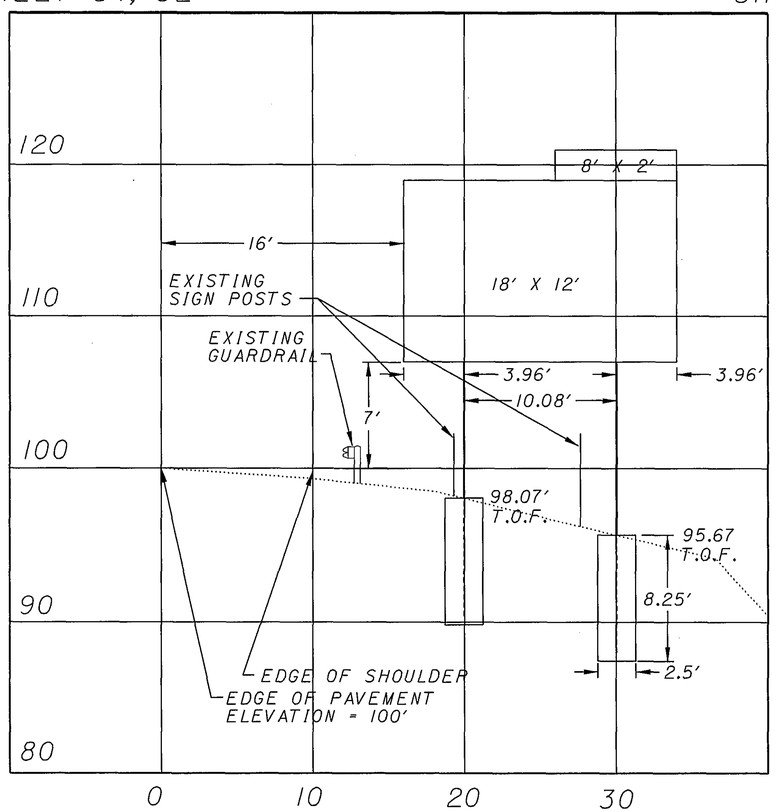

MILE 157.555, IR 70 WB
W12X30, 29'-31', SHEET 80, S2

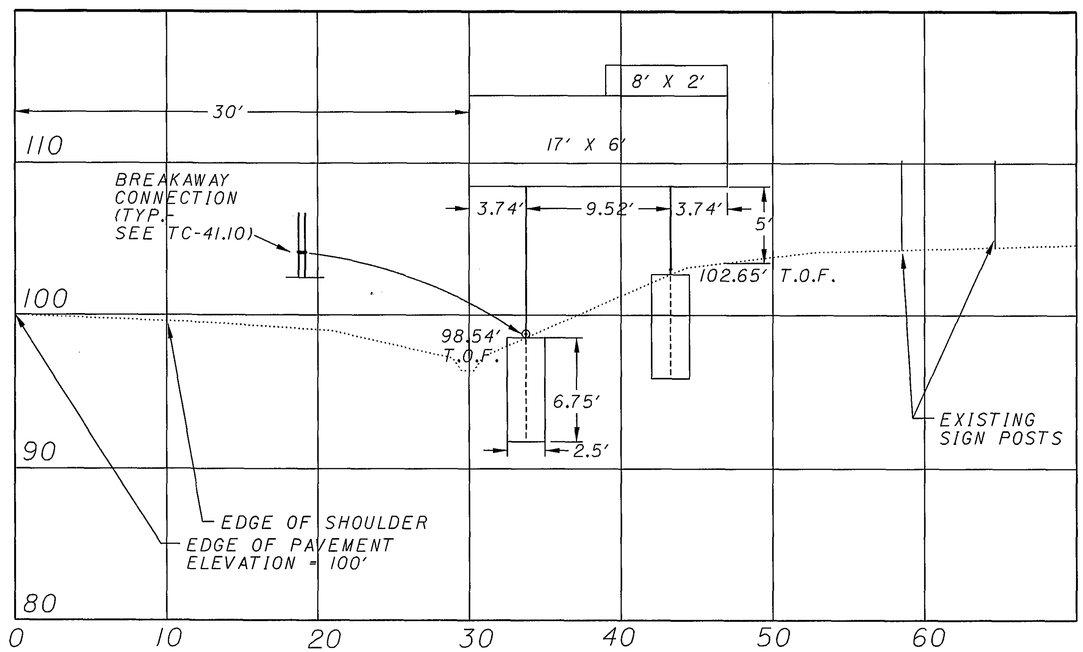

MILE 160.289, IR 70 WB
W10X22, 23'-19', SHEET 83, S3

T.O.F. = TOP OF FOUNDATION ELEVATION

SCALE IN FEET: 0, 2.5, 5, 10

CALCULATED DCB
CHECKED KO

SIGN ELEVATIONS

D05-SIGN-FY2005

08/25/2004
10:17:47 AM
M:\proj\022\1505\22 Sign Inventory\project plans\sheets\td006170.dgn

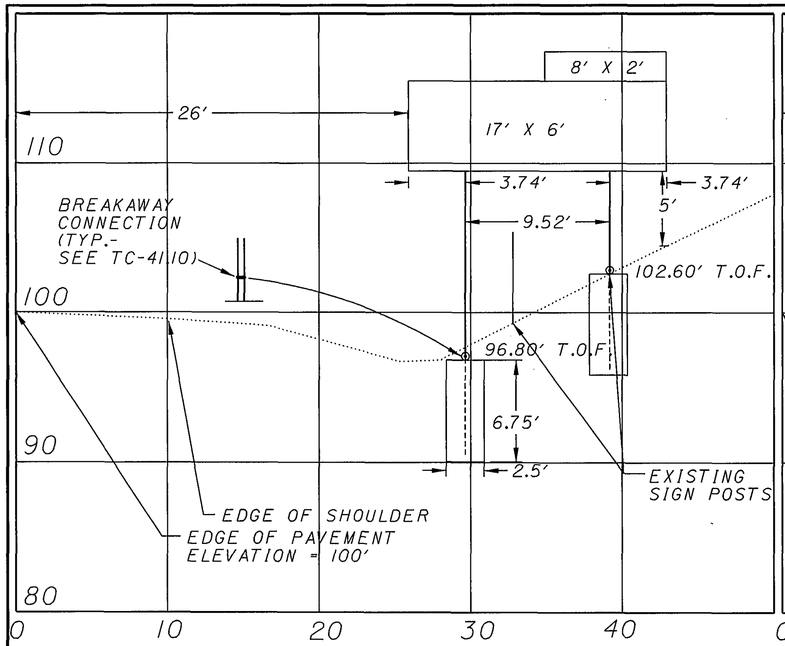

MILE 161.025, IR 70 WB
W10X22, 26'-20'
SHEET 86, S2

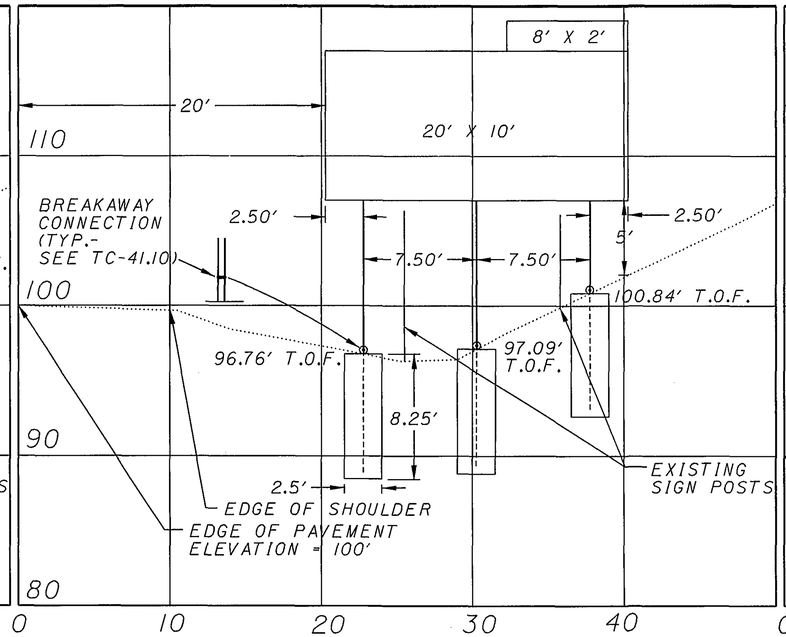

MILE 169.543, IR 70 EB
W12X30, 29'-28'-24'
SHEET 98, S1

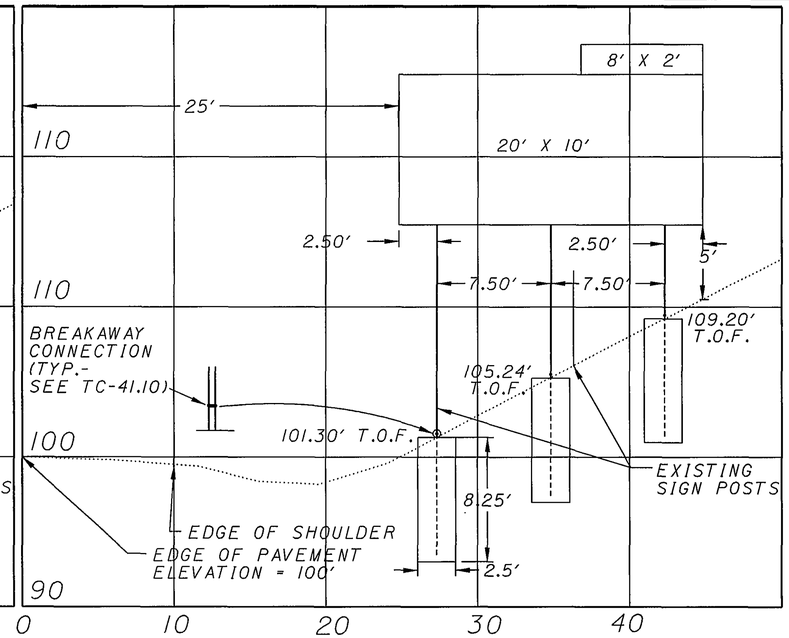

MILE 170.182, IR 70 WB
W12X30, 33'-29'-25'
SHEET 99, S3

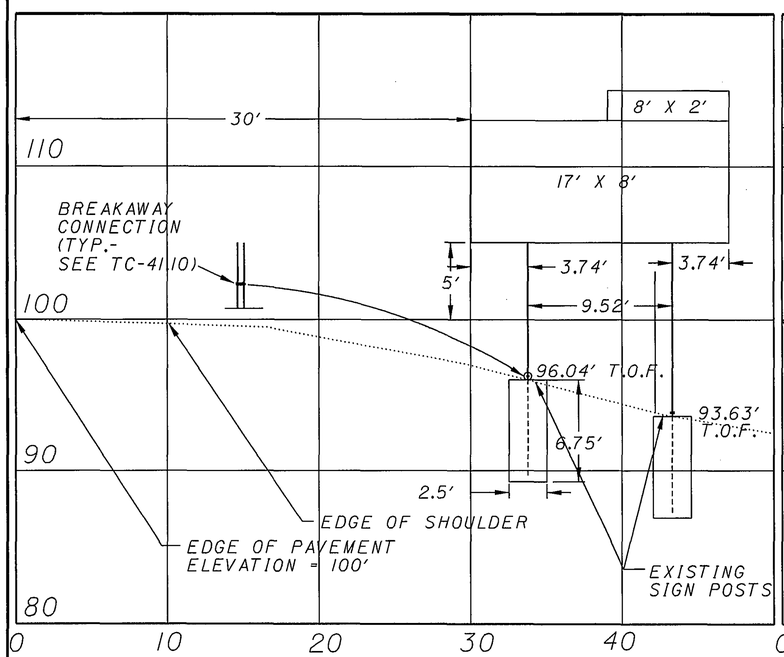

MILE 175.831, IR 70 EB
W10X22, 24'-26'
SHEET 104, S11

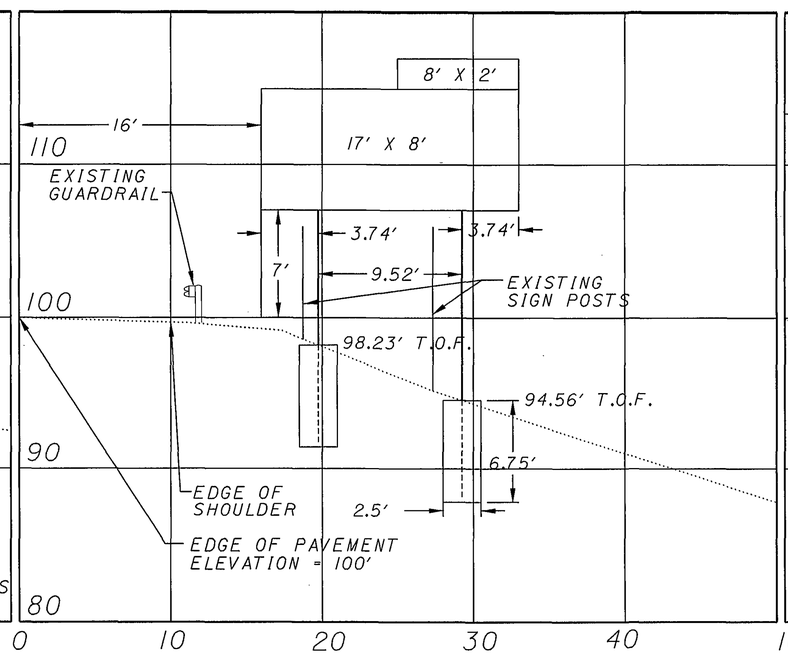

MILE 176.620, IR 70 WB
W10X22, 24'-27'
SHEET 107, S2

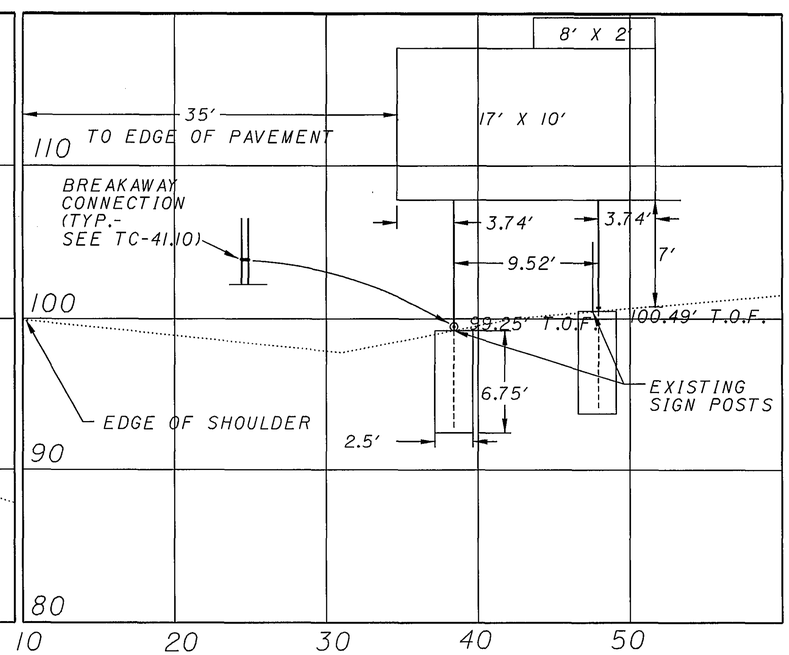

MILE 178.383, IR 70 EB
W10X22, 26'-25'
SHEET 108, S12

T.O.F. = TOP OF FOUNDATION ELEVATION

SCALE IN FEET
0 2.5 5 10

CALCULATED SGC
CHECKED DCB

SIGN ELEVATIONS

D05-SIGN-FY2005

08/25/2004
09:45:22 AM
M:\proj\022\1505\22 Sign Inventory\project plans\sheets\td001170.dgn

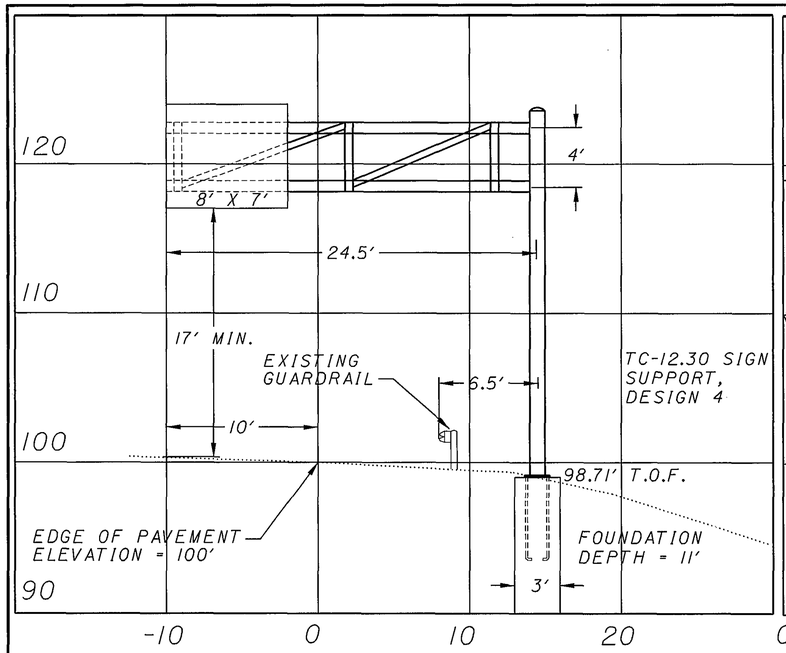

MILE 10.810, SR 209 NB
TC-12.30, DESIGN 4
SHEET 110, S24

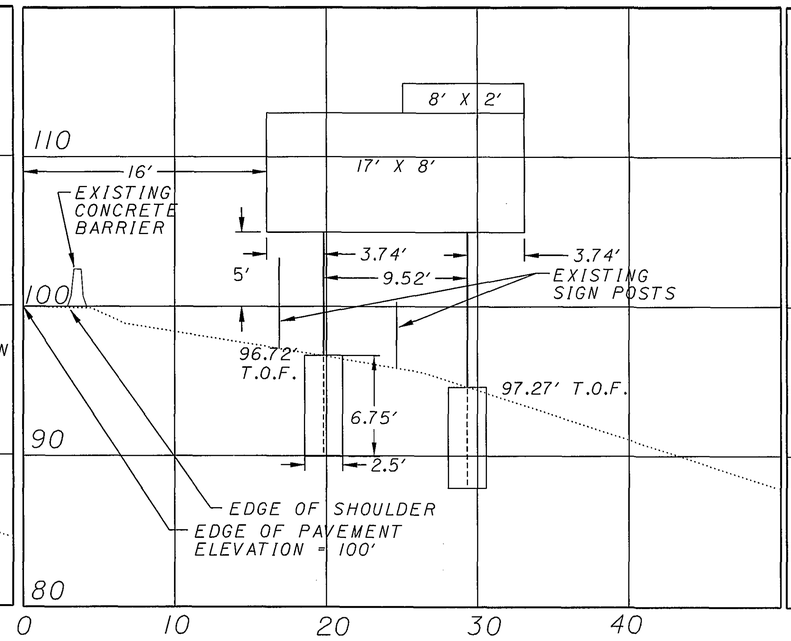

MILE 179.110, IR 70 WB
W10X22, 23'-25'
SHEET 111, S2

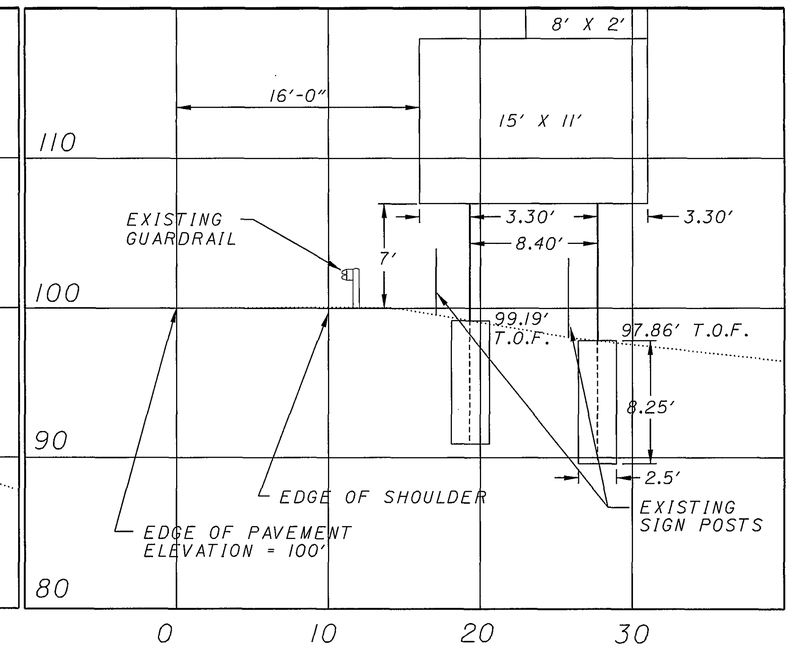

MILE 179.432, IR 70 EB
W12X30, 27'-29'
SHEET 111, S3

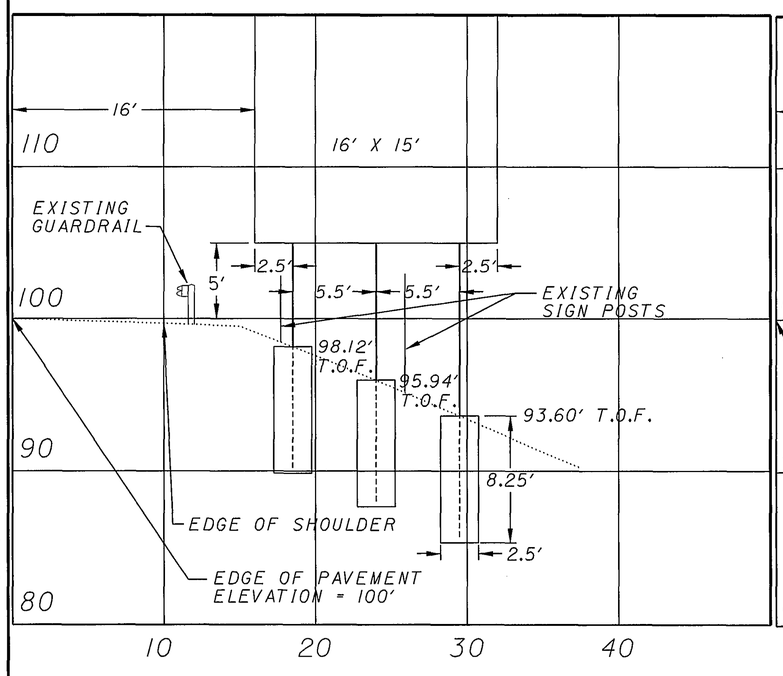

MILE 181.170, IR 70 WB
W12X30, 30'-33'-35'
SHEET 115, S3
T.O.F. = TOP OF FOUNDATION ELEVATION

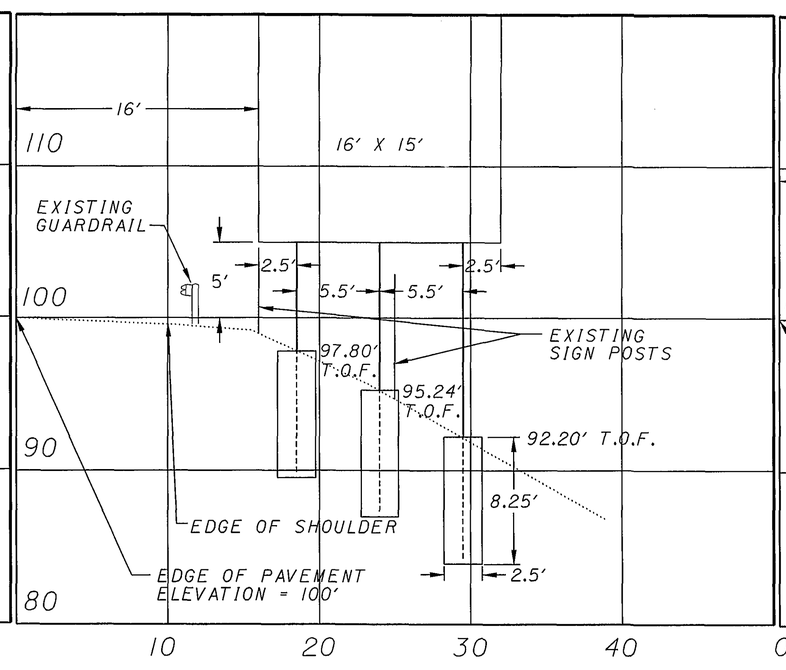

MILE 182.166, IR 70 WB
W12X30, 31'-33'-36'
SHEET 116, S2

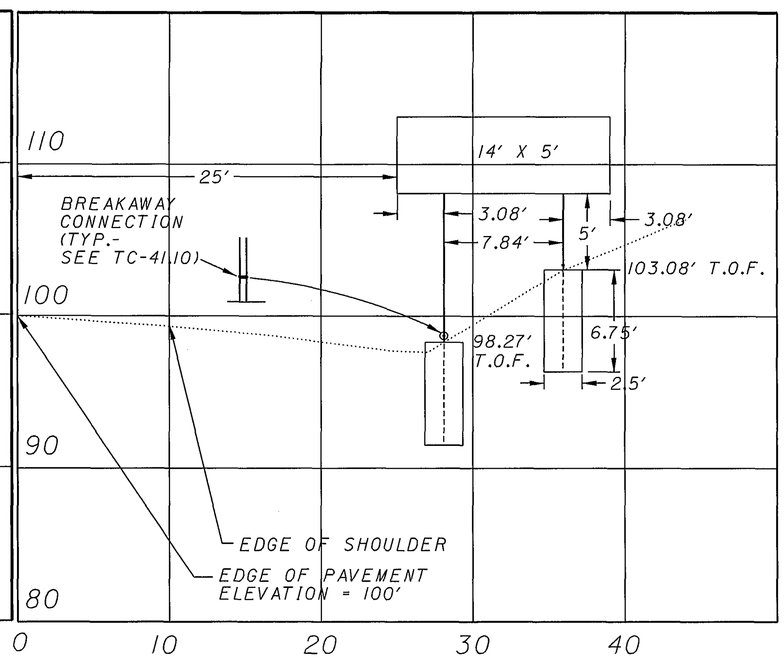

MILE 187.900, IR 70 WB
W10X22, 22'-17'
SHEET 123, S17

SCALE IN FEET
0 2.5 5 10

DCB
CHECKED KO

SIGN ELEVATIONS

D05-SIGN-FY2005

08/25/2004
10:56:02 AM
M:\proj\022N\505\22 Sign Inventory\project plans\sheets\td008170.dgn

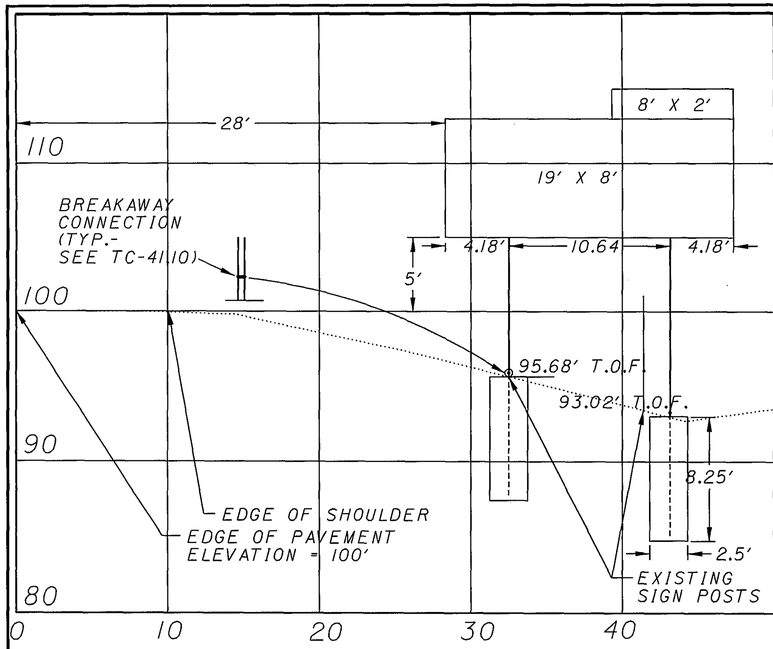

MILE 193.052, IR 70 EB
W12X30, 26'-28'
SHEET 129, S1

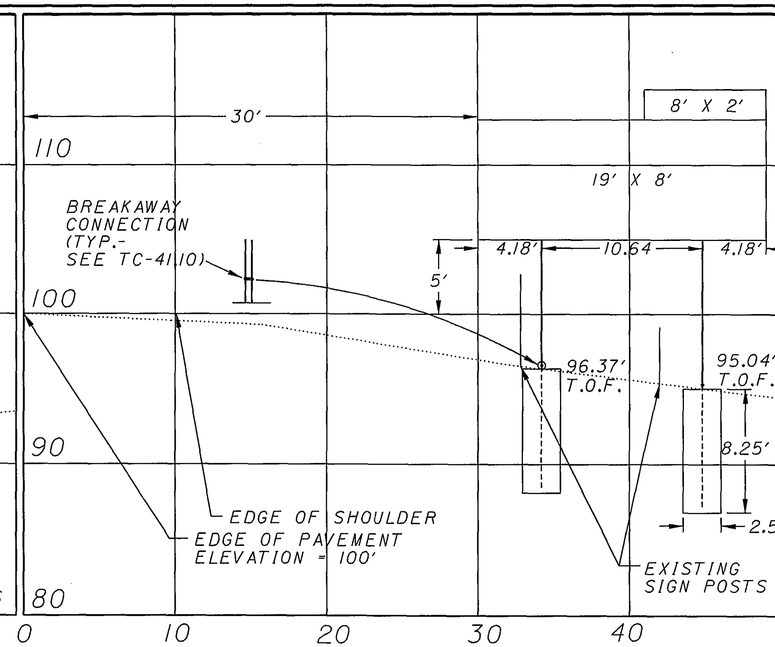

MILE 193.729, IR 70 WB
W12X30, 25'-26'
SHEET 129, S6

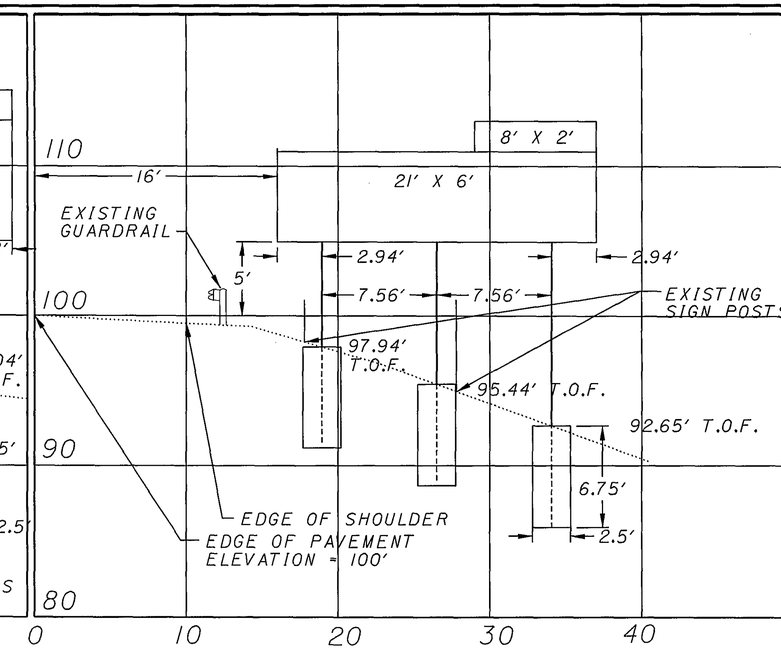

MILE 198.375, IR 70 EB
W10X22, 20'-22'-25'
SHEET 136, S3

T.O.F. = TOP OF FOUNDATION ELEVATION

SCALE IN FEET
0 2.5 5 10

CALCULATED SGG
CHECKED DCB

SIGN ELEVATIONS

D05-SIGN-FY2005

08/25/2004
09:49:46 AM
M:\proj\022\1505\22 Sign Inventory\project plans\sheets\1d009170.dgn

FED. RD. DIVISION	STATE	PROJECT	
2	OHIO		

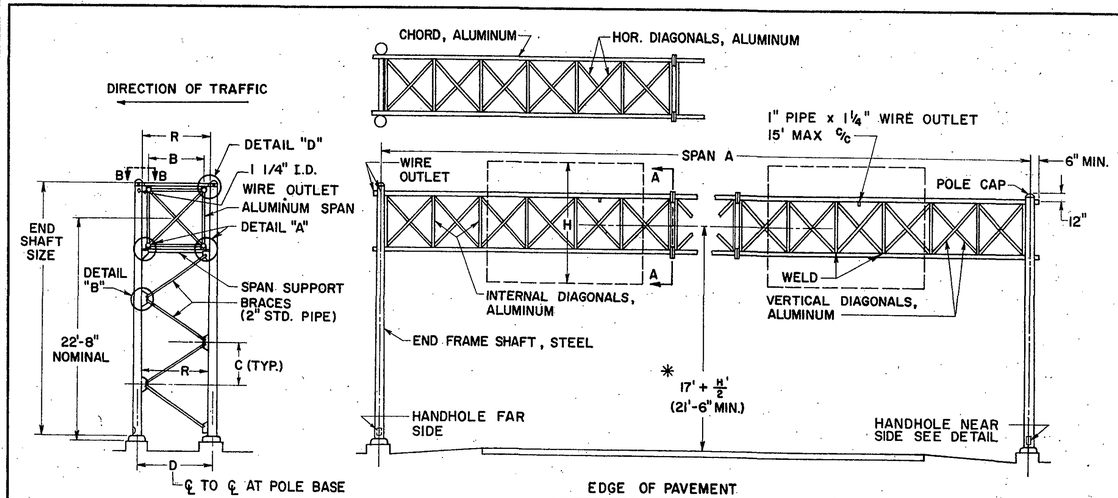

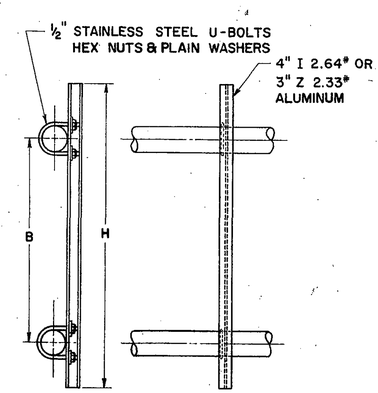

SIGN BRACKET

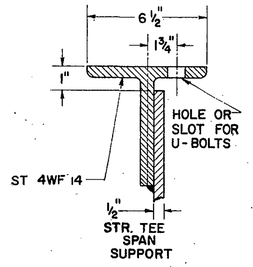

SECTION D-D

NOTES

MATERIALS

THE OVERHEAD SPAN TRUSS SHALL BE ALUMINUM AND THE END FRAMES SHALL BE STEEL.

SPAN TRUSS AND END FRAMES, INCLUDING HARDWARE, SHALL BE IN ACCORDANCE WITH SUPPLEMENTAL SPECIFICATION 816 UNLESS OTHERWISE NOTED.

STEEL POLE BASES AND GUSSETS SHALL CONFORM TO THE REQUIREMENTS OF ASTM SPECIFICATION A-373.

AFTER FABRICATION THE TAPERED POLES SHALL HAVE A MINIMUM YIELD STRENGTH OF 48,000 PSI.

FABRICATION

THE ENTIRE STEEL END FRAME SHALL BE HOT DIP GALVANIZED IN ACCORDANCE WITH SEC. 711.02.

MAXIMUM LENGTH OF SPAN SECTIONS IS 30 FT.

ERECTION

USE A MINIMUM OF 1" CAMBER IN SPAN TRUSS MEMBER FOR A 50' SPAN; ADD 1/4" OF CAMBER FOR EACH 5' OF INCREASE IN SPAN OVER 50'.

PAYMENT

PAYMENT FOR THE GALVANIZED CONDUIT SHALL BE INCLUDED IN THE UNIT PRICE BID FOR OVERHEAD SIGN SUPPORTS.

SOILS

THE FOUNDATION DETAILS SHOWN ARE FOR AVERAGE SOIL CONDITIONS (MEDIUM CLAY, CEMENTED SAND AND GRAVEL, SANDY CLAY, OR STIFF CLAY).

FOR POOR SOIL CONDITIONS, INCREASE "D" MIN. BY: 50% IN DRY OR WET SAND, 60% IN SILTY CLAY, 100% IN SOFT CLAY, AND FROM 75% TO 150% IN WET SILT, DEPENDING ON QUICKSAND ACTION.

REINFORCING STEEL

COST OF REINFORCING STEEL SHALL BE INCLUDED IN THE UNIT PRICE FOR ITEM 816 CONCRETE FOR SIGN SUPPORT FOUNDATIONS.

BAR SIZE IS INDICATED IN THE BAR MARK. THE FIRST DIGIT WHERE THREE DIGITS ARE USED AND THE FIRST TWO DIGITS WHERE FOUR DIGITS ARE USED, INDICATE THE BAR SIZE NUMBER.

*FOUNDATION ELEVATION

ELEVATION OF TOPS OF FOUNDATIONS SHALL BE BUILT UP SO THAT 17' CLEARANCE IS MAINTAINED OVER THE ENTIRE WIDTH OF THE PAVEMENT AND SHOULDERS.

DESIGN

THE DESIGN OF OVERHEAD SUPPORTS IS IN ACCORDANCE WITH A.A.S.H.O. SPECIFICATION FOR THE DESIGN AND CONSTRUCTION OF STRUCTURAL SUPPORTS FOR HIGHWAY SIGNS, ADOPTED JUNE 12, 1961.

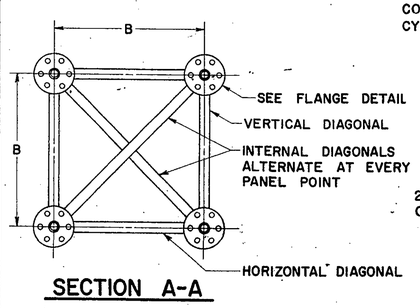

SECTION A-A

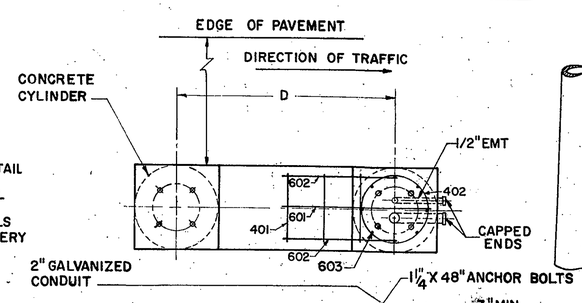

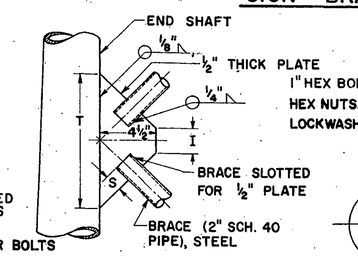

DETAIL "B"

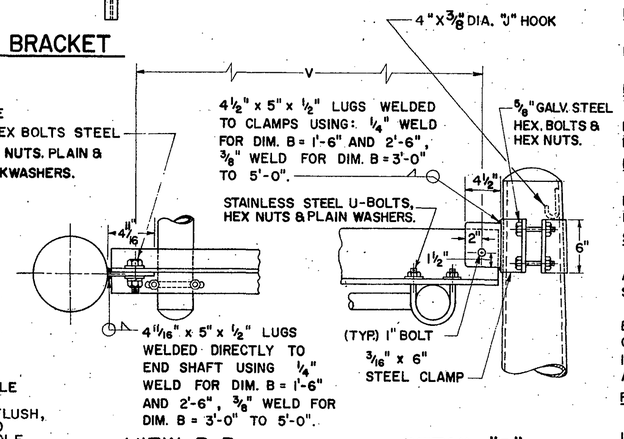

VIEW B-B

DETAIL "D"

UPPER SPAN SUPPORT (ALTERNATE METHODS)

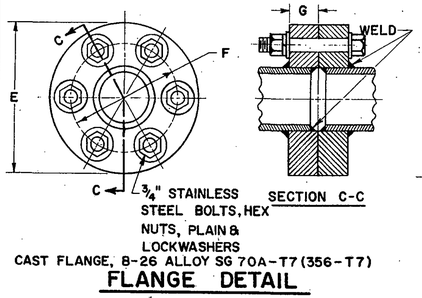

FLANGE DETAIL

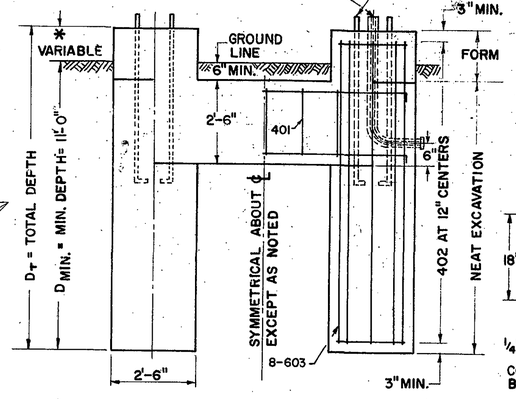

FOUNDATION DETAIL

(RIGHT HAND SHOWN—LEFT HAND OPPOSITE)

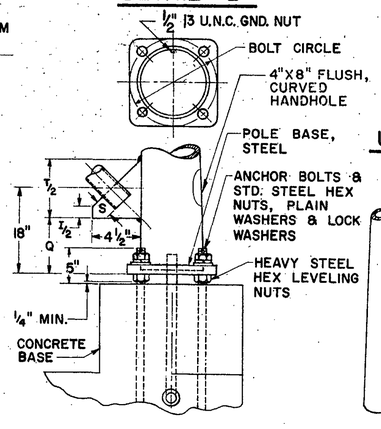

POLE BASE DETAIL

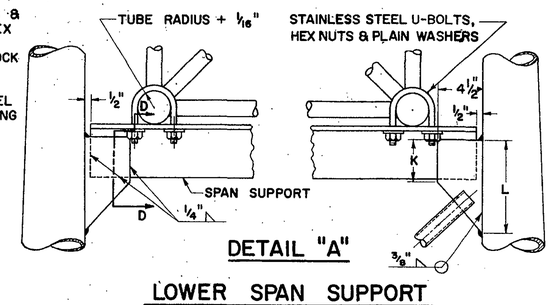

DETAIL "A"

LOWER SPAN SUPPORT

DESIGN NO.	SPAN A	B	C	D	E	END SHAFT	BRACE LENGTH	F	G	I	K	L	P	Q	R	S	T	U BOLTS	V	BOLT CIRCLE	SPAN SUPPORT SECTION D-D	CHORDS	HORIZONTAL AND INTERNAL DIAGONAL	VERTICAL DIAGONAL
1.	50' thru 65'	3'-0"	4'-11 3/4"	4'-5"	9 1/4"	8"X4.5 X25'-0",3GA	5'-10 13/16"	7 7/16"	1 3/8"	3 1/2"	4 3/4"	8"	12"	6 5/8"	3'-9"	1 1/2"	10"	5/8"	3'-3 5/8"	11"	Split Tee 3'-8"	4 3/4" X .188"	2" X .188"	1.660"X.140"
2.	70' thru 75'	4'-0"	4'-10 1/4"	5'-7"	9 1/4"	8"X6.22X25'-6",3GA	6'-7 1/8"	7 7/16"	1 3/8"	5/8"	4 3/4"	7 3/4"	12"	6 1/4"	4'-11"	1 1/2"	9 1/2"	5/8"	4'-5 5/8"	11"	Split Tee 4'-10"	4 3/4" X .188"	2' X .188"	1.900"X.145"
3.	76' thru 80'	4'-0"	4'-10 1/4"	5'-7"	11"	8"X6.22X25'-6",3GA	6'-7 1/8"	8 1/2"	1 1/2"	5/8"	4 3/8"	7 3/4"	12"	6 1/4"	4'-11"	1 1/2"	9 1/2"	5/8"	4'-5 5/8"	11"	Split Tee 4'-10"	5 1/2"X .250	2 1/2"X .188"	1.900"X.145"
4.	81' thru 110'	5'-0"	4'-8 1/2"	6'-7"	11"	8"X6.18 X26'-0",3GA	7'-3 1/4"	8 1/2"	1 1/2"	—	3 1/2"	7 3/4"	12"	7 1/4"	5'-11"	1 3/4"	11 1/4"	3/4"	5'-5 5/8"	11"	Split Tee 5'-10"	5 1/2"X .250	2 1/2"X .188	2 1/2" X .188

REINFORCEMENT SCHEDULE			
MARK	NO.	LENGTH	TYPE
401	12"C/C	8'-6"	102
402	12"C/C	7'-6"	103
601	4	D+4'-0"	101
602	8	D+2'-0"	101
603	32	D_T - 6"	STR.

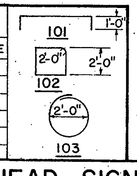

600 SQ. FT. SIGN AREA

OVERHEAD SIGN SUPPORT, 816 NO.7.6

BUREAU OF TRAFFIC
OHIO DEPARTMENT OF HIGHWAYS

OVERHEAD SIGN SUPPORTS

816 No.7.6

DATE 5-6-64 5-5-64 6-20-60

APPROVED _____ ENGINEER OF TRAFFIC

CALCULATED | CHECKED

OVERHEAD SIGN SUPPORT, TYPE 7.6

D05-SIGN-FY2005

08/25/2004 10:14:45 AM M:\proj\0221\505\22 Sign Inventory\project plans\sheets\td010170.dgn