MICROFILMED
MAR 8 1994

F.H.W.A. REGION	STATE	PROJECT	
5	OHIO		

1/26

STATE OF OHIO
DEPARTMENT OF TRANSPORTATION
CLA - 40 - 05.30
BETHEL TOWNSHIP
VILLAGE OF DONNELSVILLE
CLARK COUNTY

CLA-40-05.30
CLARK COUNTY
BHS-717(8)

CONVENTIONAL SIGNS

CENTER LINE
COUNTY LINE
TOWNSHIP LINE
SECTION LINE
CORPORATION LINE
FENCE LINE
RIGHT OF WAY — LA R/W — R/W — LA
RAILROAD
PROPOSED GUARDRAIL
EXISTING GUARDRAIL
SEWERS & DRAINS — Existing — Proposed
STREAMS
POLE LINE — Service — Power — Telephone — Light
TREES & STUMPS — (To be Removed)
MAILBOX
EXISTING RIGHT OF WAY
PROPERTY LINE
CATCH BASIN — Existing — Proposed
MANHOLE — Existing — Proposed

INDEX OF SHEETS

	SHEET NO.
TITLE SHEET	1
SCHEMATIC PLAN	2
TYPICAL SECTION	3
GENERAL NOTES	4
MAINTENANCE OF TRAFFIC	5-7
ESTIMATED QUANTITIES	8
GENERAL SUMMARY	9
PLAN	10
PROFILE	11
TRAFFIC CONTROL	12
CROSS SECTION	13-15
STRUCTURE OVER 20' SPAN	16-26

END PROJECT STA. 280+72.21

BEGIN PROJECT STA. 279+55.79

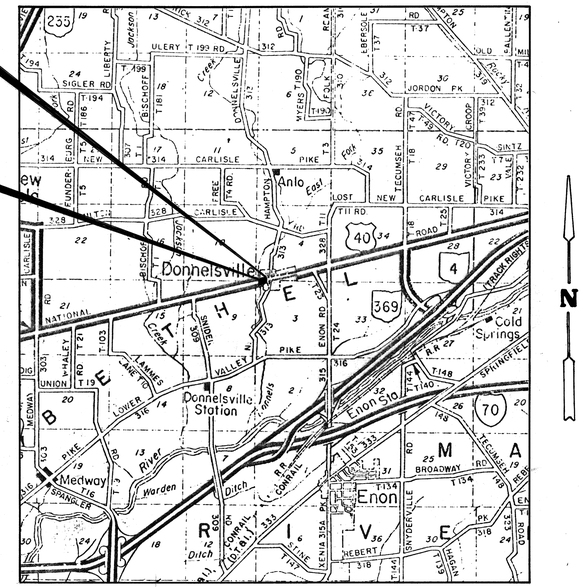

LOCATION MAP

SCALE IN MILES
1 0 1 2

DESIGN DESIGNATION

CURRENT ADT (1989)	= 3560
DESIGN YEAR ADT (2010)	= 4620
DHV	= 462
D	= 55%
T	= 3%
DESIGN SPEED	= 35 MPH
LEGAL SPEED	= 35 MPH
FUNCTIONAL CLASSIFICATION	= MAJOR COLLECTOR (RURAL)

DESIGN EXCEPTION — APPROVAL — DATE
NONE

1989 SPECIFICATIONS

The standard specifications of the State of Ohio, Department of Transportation, including changes and supplemental specifications listed in the proposal shall govern this improvement.

I hereby approve these plans and declare that the making of this improvement will not require the closing to traffic of the highway and that provisions for the maintenance and safety of traffic will be as set forth on the plans and estimates.

APPROVED J. Kenneth Capella, P.E.
DATE 11/21/89 — DISTRICT DEPUTY DIRECTOR OF TRANSPORTATION

B&N Reviewed

APPROVED B.D. Hawkslamm/WTR
DATE 1/24/90 — ENGINEER, BUREAU OF BRIDGES AND STRUCTURAL DESIGN

APPROVED Charles J. Stitt
DATE 2/9/90 — CHIEF ENGINEER, PLANNING AND DESIGN

APPROVED Bernard B. Hunt
DATE 2/9/90 — DIRECTOR, DEPARTMENT OF TRANSPORTATION

LINE DATA	LENGTH PROJECT	LENGTH WORK
Begin Work Sta. 276+23		
		332.79
Begin Project Sta. 279+55.79		
	116.42 L.F.	116.42 L.F.
End Project Sta. 280+72.21		
		271.79 L.F.
End Work Sta. 283+44		
Totals	116.42 L.F. or 0.022 Miles	721 L.F. or 0.137 Miles

STRUCTURE PLANS REVIEWED BY:
Burgess & Niple, Limited
Columbus, Ohio

PORTION TO BE IMPROVED
STATE AND FEDERAL ROADS
OTHER ROADS

SCALE OF DRAWINGS

PLAN 20 10 0 20
PROFILE HORIZONTAL 20 10 0 20
VERTICAL 5 0 5
CROSS SECTIONS 5 0 5

UNDERGROUND UTILITIES
2 WORKING DAYS
BEFORE YOU DIG
Call...800-362-2764 (Toll Free)
OHIO UTILITIES PROTECTION SERVICE
NON-MEMBERS
MUST BE CALLED DIRECTLY

PLANS PREPARED BY
KING & GAVARIS
CONSULTING ENGINEERS, INC.
216 East Ninth Street, Cincinnati, Ohio 45202 • Tel (513) 421-7040
A STEGO CORPORATION SUBSIDIARY

SUPPLEMENTAL SPECIFICATIONS

847	10-17-83	853	6-26-78
947	10-17-83	956	6-26-78
802	5-4-88	942	11-27-89
836	11-12-85	949	6-24-89
849	12-24-85		
949	9-26-86		

SUPPLEMENTAL PRINTS OF STANDARD CONSTRUCTION DRAWINGS

MT-99.10	11-14-86	GR-1	1-11-85
MT-96.11	9-9-88	GR-2B	2-5-82
MT-96.20	9-9-88	GR-3	1-21-85
MT-96.25	9-9-88	GR-4	2-5-82
		GR-4A	1-30-84
		CB-2-3, 2-4	5-1-79
TC-41.20	3-26-79		
TC-42.20	3-26-79	MC-4	7-26-76
TC-52.20	4-3-79	MC-9A ✓	1-11-85
		MC-11	8-1-78

AS-1-81	11-27-81	
PSBD-1-81	6-20-89	
DBR-2-73	4-10-73	
EXJ-3-82	8-1-84	
BR5	10-1-87	

FILE NO. CLA-40-05.30
DATE OF LETTING
CONTRACT NO.

DEPARTMENT OF TRANSPORTATION
FEDERAL HIGHWAY ADMINISTRATION

APPROVED:
DIVISION ADMINISTRATOR — DATE

TITLE SHEET

F.H.W.A. REGION	STATE	PROJECT	
5	OH10		

16/26

CLA - 40 - 05.30

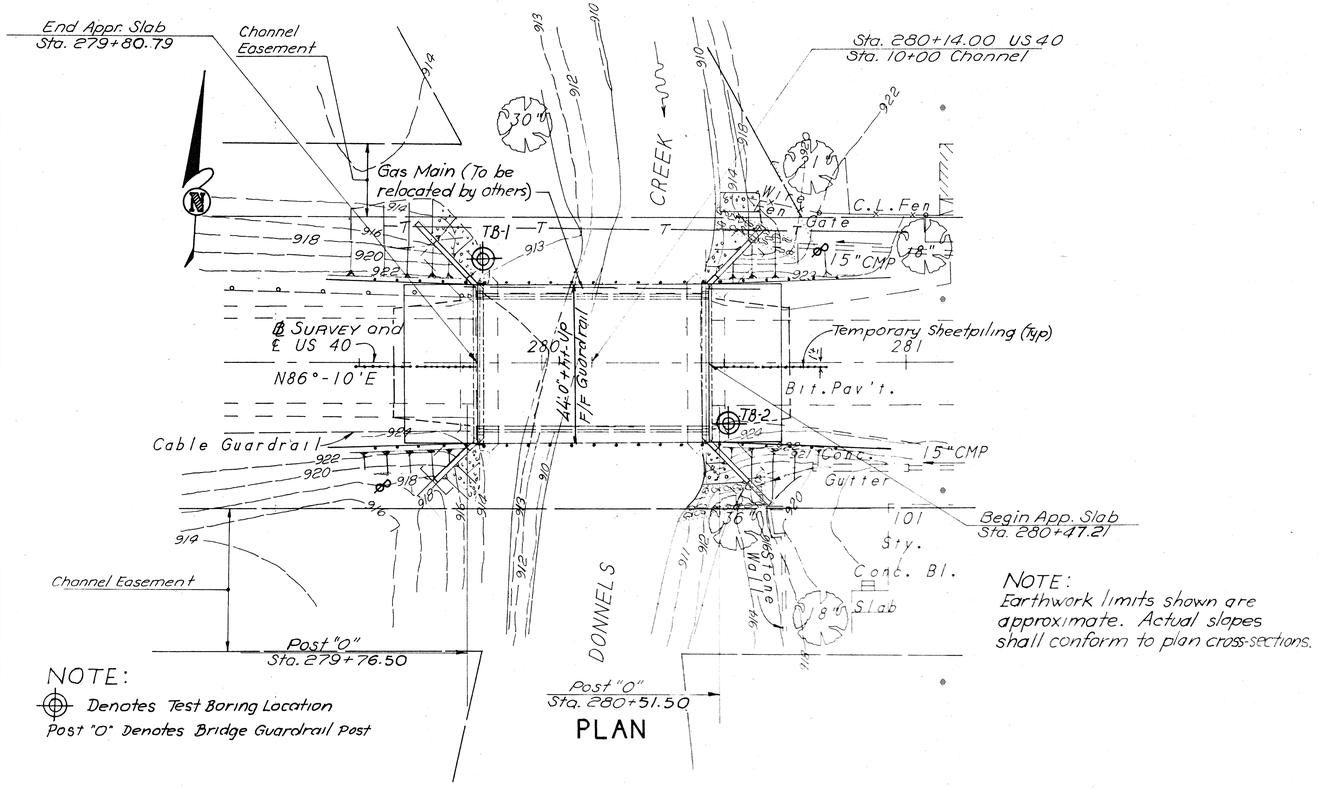

NOTE:
Denotes Test Boring Location
Post "0" Denotes Bridge Guardrail Post

PLAN

NOTE:
Earthwork limits shown are approximate. Actual slopes shall conform to plan cross-sections.

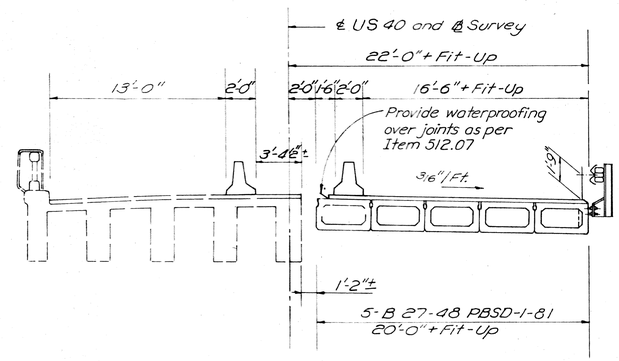

STAGE I CONSTRUCTION

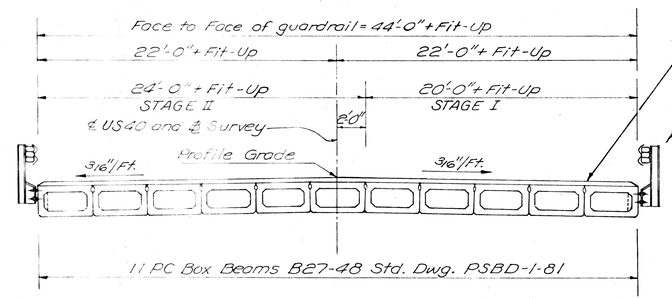

SECTION THRU BRIDGE

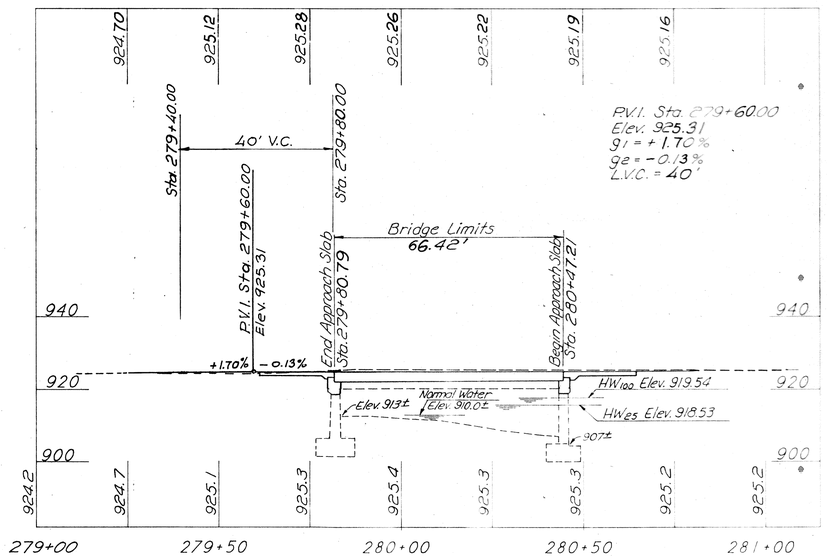

PROFILE ALONG ℄ SURVEY US-40

United States Geological Survey
Quadrangle Sheet - Donnelsville
Latitude 39°-54'-59"±
Longitude 85°-57'-0"±

DRAINAGE:
AREA = 24 Sq. miles
Q_{25} = 3306 ; V_{25} = 6.28
Q_{100} = 4560 ; V_{100} = 7.77

BENCHMARK: North east Corner of concrete step to Furniture Store Sta. 283+43, 39.5' Rt. Elev. 929.42

REVIEWED BY BURGESS & NIPLE LTD
T.D.T. 11-13-89

2010 ADT = 4620

EXISTING STRUCTURE TO BE PARTIALLY REMOVED

TYPE: Reinforced Concrete Beam & Slab on Reinforced Concrete Substructure

SPAN: 60'± Clear Span
ROADWAY: 35'±
SKEW: None
WEARING SURFACE: Bituminous
ALIGNMENT: Tangent
STRUCTURE FILE NUMBER: 1200844

PROPOSED STRUCTURE

TYPE: Prestressed Concrete Box Beams on Modified Existing Reinforced Concrete Substructure

SPAN: 62'-3" c/c Bearings
ROADWAY: 44'-0"
LOADING: HS20-44 and Alternate Military Loading
SKEW: None
WEARING SURFACE: 2½" Min. Asph. Conc.
APPROACH SLABS: 25'-0" Long (AS-1-81)
ALIGNMENT: Tangent
CROWN: 3/16"/Foot

KING & GAVARIS
CONSULTING ENGINEERS, INC.
CINCINNATI OHIO

1 / 11

SITE PLAN

BRIDGE NO. CLA.-40-0530
OVER DONNELS CREEK

CLARK COUNTY

STA. 279+80.79
STA. 280+47.21

DESIGNED	DRAWN	TRACED	CHECKED	REVIEWED	DATE	REVIEWED
		JRJ	CMM	ZEH	3/9/89	

F.H.W.A. REGION	STATE	PROJECT	
5	OHIO		

17/26

CLA-40-5.30

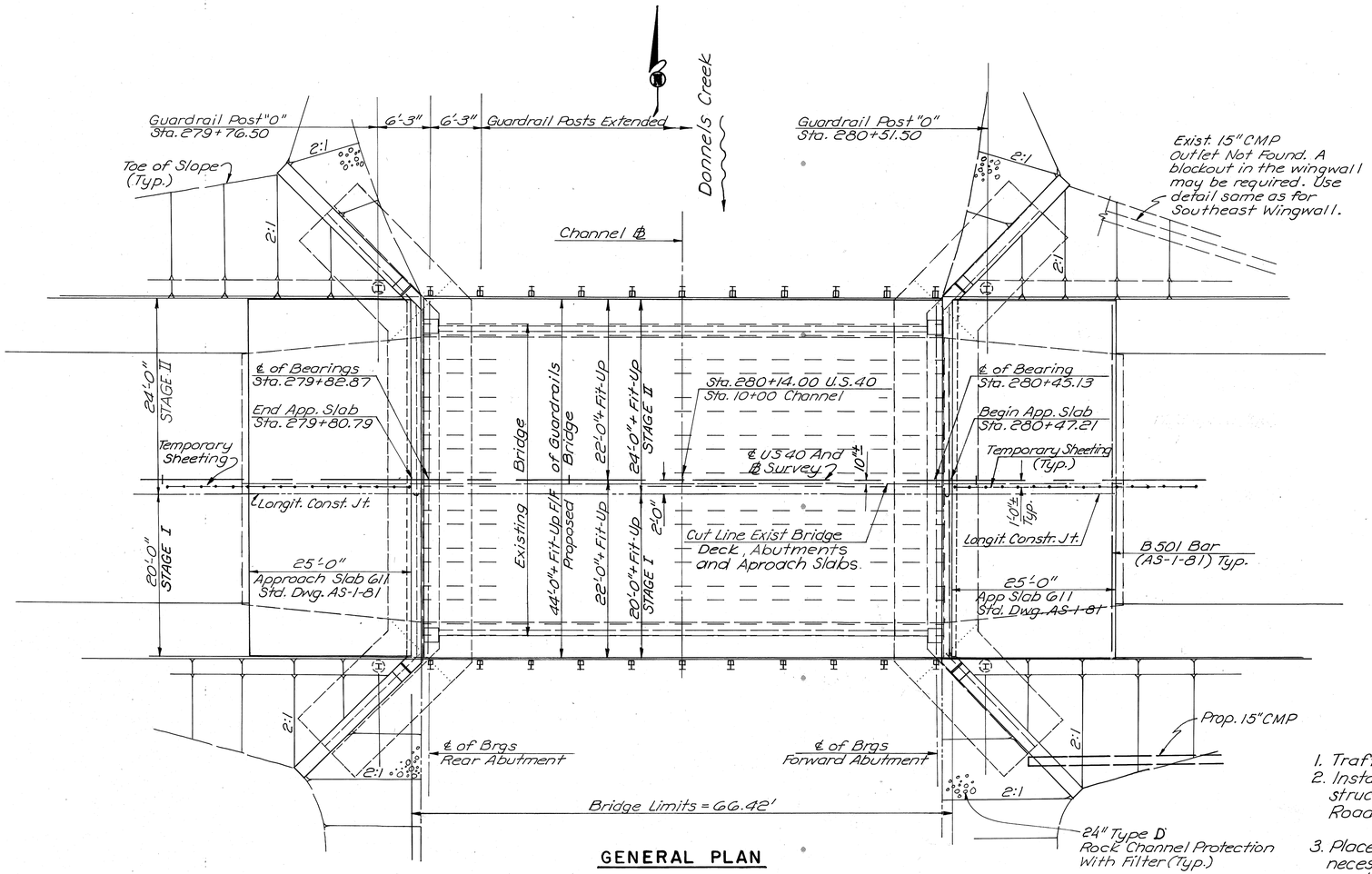

GENERAL PLAN

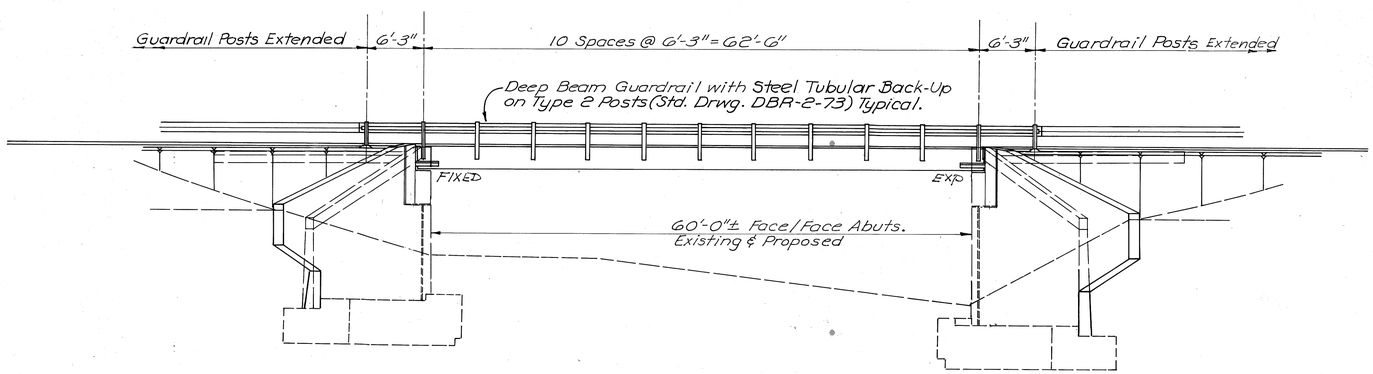

ELEVATION

ESTIMATED QUANTITIES

CALC. Jun. 1/89
CHK. 9-12/89

ITEM	ITEM EXT.	TOTAL	UNIT	DESCRIPTION	SUP'R.	ABUT.	GEN'L.
202		Lump		Portions of Structure removed			Lump
403		14	Cu.Yd.	Asphalt Concrete, AC-20	14		
404		11	Cu.Yd.	Asphalt Concrete, AC-20	11		
503		Lump		Cofferdams, Cribs & Sheeting			Lump
509		5067	Lb.	Epoxy Coated Reinforcing Steel Grade 60		5067	
509		12636	Lb.	Reinforcing Steel, Grade 60		12036	600
510		254	Ea.	Dowel Holes		240	14
511		162	Cu.Yd.	Class C Concrete, Abutments		162	
511		4	Cu.Yd.	Class S Concrete, Superstructure, High Early Strength	4		
512		33	Sq.Yd.	Type B Waterproofing		33	
512		300	Sq.Yd.	Type D Waterproofing	300		
512		14	Sq.Yd.	Type A Waterproofing		14	
515		11	Ea.	Prestressed Concrete Bridge Member (B21-8)*	11		
516		44	Ea.	6"x12"x14" Elastomeric Bearing Pad	44		
516		89	Lin.ft.	Structural Expansion Joints, Including Elastomeric Compression Seals and Concrete Protection	89		
517		150	Lin.ft.	Railing (Deep Beam Rail With Steel Tubular Back-Up, Type 2 Steel Posts And Bolts)*	150		
518		125	Cu.Yd.	Porous Backfill, As Per Plan		125	
519		537	Sq.Ft.	Patching Concrete Structures		537	
Special		96	Sq.Ft.	Steel Drip Strip	96		
Special		39	Sq.Yd.	Sealing of Concrete Surfaces *	39		
Special		41	Sq.Yd.	Sealing Of Concrete Surfaces, Epoxy *		41	

* See Proposal Note

PROPOSED WORK

1. Traffic shall be maintained.
2. Install Concrete Barrier on existing structure and the approaches as per Roadway Plan Sheet 5/26 & 6/26 & 7/26
3. Place cofferdams, cribs & sheeting as necessary to permit removals and construction.
4. Remove the southerly portion of the existing structure.
5. Construct the southerly portion of the Proposed Structure, including waterproofing, 403 Course and railing. The 404 Wearing Course Shall not be Constructed at this time.
6. Install Concrete Barrier on the new southerly portion of the structure and approaches as per Roadway Plan Sheet 5/26 & 6/26 & 7/26; divert traffic.
7. Remove the northerly portion of existing structure.
8. Construct the northerly portion of proposed structure including waterproofing, 403 Asphalt Concrete Course and railing. The 404 Wearing Course Shall not be Constructed at this time.
9. Remove Concrete Barrier and construct 404 Wearing Course.

NOTES:

1.- For General Notes See Sheet 3/11 & 4/11

2.- Temporary Sheeting is shown Schematic only. Contractor Shall determine actual Sheeting position and extent.

3.- Earthwork Limits shown are Approximate. Actual slopes Shall conform to plan Cross Sections. Representation of existing Structure is approximate.

4.- Any excavation necessary For the construction of this project shall be considered incidental and included with Items 202 and 518 For payment.

KING & GAVARIS
CONSULTING ENGINEERS, INC.
CINCINNATI OHIO

2/11

GENERAL PLAN & ELEVATION

BRIDGE No. CLA-40-0530

US 40 OVER DONNELS CREEK

CLARK COUNTY

STA. 279+80.79
STA. 280+47.21

DESIGNED	DRAWN	TRACED	CHECKED	REVIEWED	DATE	REVISED
		JRJ	A.P.		7/25/90	

FEDD WAGNER 200 5-74 MC 2479+

GENERAL NOTES

REFERENCE SHALL BE MADE TO THE STANDARD DRAWINGS:

AS-1-81	SHEETS 1 AND 2	11-27-81
PSBD-1-81	SHEETS 1 THRU 3	6-20-89
DBR-2-73	SHEET 1 OF 1	4-10-73
EXJ-3-82	SHEETS 1 THRU 4	8-01-84

AND SUPPLEMENTAL SPECIFICATIONS:

836	11-12-85
849	12-24-85
949	9-26-86

DESIGN SPECIFICATIONS:
THIS STRUCTURE CONFORMS TO THE "STANDARD SPECIFICATIONS FOR HIGHWAY BRIDGES" THIRTEENTH EDITION 1983, ADOPTED BY THE AMERICAN ASSOCIATION OF STATE HIGHWAY AND TRANSPORTATION OFFICIALS. ADDITIONALLY THIS STRUCTURE CONFORMS TO THE INTERIM SPECIFICATIONS FOR BRIDGES 1984, 1985, 1986, 1987 & 1988 DEVELOPED BY AASHTO. THIS STRUCTURE CONFORMS TO THE OHIO "SUPPLEMENT" TO THESE SPECIFICATIONS.

DESIGN DATA:

DESIGN LOADING:
HS20-44 AND THE ALTERNATE MILITARY LOADING.

DESIGN STRESSES:
CONCRETE CLASS S - COMPRESSIVE STRENGTH 4500 PSI, UNIT STRESS 1500 PSI (SUPERSTRUCTURE).
CONCRETE CLASS C - COMPRESSIVE STRENGTH 4000 PSI, UNIT STRESS 1333 PSI (ABUTMENTS).

REINFORCING STEEL ASTM A615, A616, A617, GRADE 60 MINIMUM YIELD STRENGTH 60,000 PSI.

CONCRETE FOR PRESTRESSED BEAMS - UNIT STRESS 2200 PSI COMPRESSION; 444 PSI TENSION.

REINFORCING STEEL - PRESTRESSED BEAMS - ASTM A 615, A616, A617, GRADE 40 (MINIMUM).
MINIMUM YIELD STRENGTH 40,000 PSI.

PRESTRESSING STEEL ASTM A416 GRADE 270, 1/2" DIAMETER, SEVEN-WIRE, UNCOATED, STRESS RELIEVED STRAND.
F'S = 270,000 PSI.
INITIAL STRESS = 0.70 F'S.

UTILITY LINES:
ALL EXPENSE INVOLVED IN RELOCATING (INSTALLING) THE AFFECTED UTILITY LINES SHALL BE BORNE BY THE OWNERS. THE CONTRACTOR AND OWNERS ARE REQUESTED TO COOPERATE BY ARRANGING THEIR WORK IN SUCH A MANNER THAT INCONVENIENCE TO EITHER WILL BE HELD TO A MINIMUM.

MAINTENANCE OF TRAFFIC:
TRAFFIC WILL BE MAINTAINED. SEE ROADWAY PLANS

EXISTING STRUCTURE VERIFICATION:
DETAILS AND DIMENSIONS SHOWN ON THESE PLANS PERTAINING TO THE EXISTING STRUCTURE HAVE BEEN OBTAINED FROM PLANS OF THE EXISTING STRUCTURE AND/OR FROM FIELD OBSERVATIONS AND MEASUREMENTS. CONSEQUENTLY, THEY ARE INDICATIVE OF THE EXISTING STRUCTURE AND THE PROPOSED WORK BUT THEY SHALL BE CONSIDERED TENTATIVE AND APPROXIMATE. THE CONTRACTOR IS REFERRED TO CMS SECTIONS 102.05 AND 105.02.

CONTRACT BID PRICES SHALL BE BASED ON A RECOGNITION OF THE UNCERTAINTIES DESCRIBED ABOVE AND ON A PREBID EXAMINATION OF THE EXISTING STRUCTURE BY THE CONTRACTOR. HOWEVER, ALL PROJECT WORK SHALL BE BASED ON ACTUAL DETAILS AND DIMENSIONS WHICH HAVE BEEN VERIFIED BY THE CONTRACTOR IN THE FIELD.

PROPOSED WORK:
THE MAJOR PORTIONS OF THIS WORK INCLUDE:

1. REMOVING EXISTING DECK AND SUPERSTRUCTURE.
2. REMOVING ABUTMENT BACKWEALLS, APPROACH SLABS, AND PORTIONS OF WINGWALLS.
3. CONSTRUCTING NEW ABUTMENT BACKWALLS, WINGWALLS, AND BRIDGE SEATS.
4. CONSTRUCTING PRECAST PRESTRESSED BOX BEAMS, DECK AND DEEP BEAM GUARDRAIL.
5. PATCHING DESIGNATED CONCRETE SURFACES OF THE ABUTMENTS.
6. DISPOSING OF REMOVED MATERIAL AWAY FROM THE BRIDGE SITE.

PORTIONS OF STRUCTURES REMOVED:
WHEN NO LONGER NEEDED TO MAINTAIN TRAFFIC, PORTIONS OF THE EXISTING STRUCTURE SHALL BE REMOVED AND BE REPLACED. THIS ITEM INCLUDES THE REMOVAL OF THE SUPERSTRUCTURE, PORTIONS OF THE ABUTMENTS, APPROACH SLABS, AND ALL OTHER REMOVAL THAT IS NECESSARY TO MODIFY THE STRUCTURE ACCORDING TO THE PLANS. REMOVED MATERIALS SHALL BECOME THE PROPERTY OF THE CONTRACTOR.

DECK PROTECTION METHOD: TYPE D WATERPROOFING, ASPHALT CONCRETE WEARING SURFACE, STEEL DRIP STRIP & SEALING OF CONCRETE SURFACES.

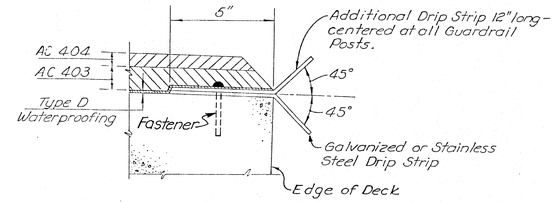

DRIP STRIP

DRIP STRIP: PRIOR TO APPLYING DECK TYPE 'D' WATERPROOFING, A BENT DRIP STRIP SHALL BE INSTALLED ALONG THE EDGES OF THE DECK AS SHOWN. THE STRIPS SHALL BE FASTENED AT 1'6" C/C MAXIMUM WITH 1-1/4" x 5/32" x 1/4" FLAT HEAD DRIVE PIN AND WASHER (LENGTH x SHANK DIA. x HEAD DIA.) OR #10 GALVANIZED SCREWS AND EXPANSION ANCHORS, SUBJECT TO THE APPROVAL OF THE ENGINEER. THE STRIPS SHALL BE PLACED THE FULL LENGTH OF THE DECK, ENDING AT THE FACE OF THE ABUTMENT WINGWALL OR STEEL END DAM ANGLE. WHERE SPLICES ARE REQUIRED A 3" (MIN.) LAP SHALL BE USED WITH A FASTENER THROUGH THE LAP. STEEL FOR GALVANIZED STRIPS SHALL BE 8" x 0.105" AND SHALL MEET THE REQUIREMENTS OF ASTM A568. GALVANIZING SHALL BE IN ACCORDANCE WITH 711.02. STAINLESS STEEL SHALL BE 20 GAUGE ASTM A167, TYPE 304, MILL FINISH. PAYMENT SHALL BE AT THE CONTRACT PRICE BID FOR ITEM SPECIAL, SQ. FT., STEEL DRIP STRIP, WHICH SHALL INCLUDE ALL MATERIALS, LABOR, TOOLS, AND INCIDENTALS NECESSARY TO COMPLETE THE ITEM.

SEALING OF CONCRETE SURFACES:
SPECIFIED CONCRETE SURFACES SHALL BE SEALED USING EITHER A SILANE OR AN EPOXY LIQUID SEALANT. SEE THE PROPOSAL FOR SURFACE PREPARATION REQUIREMENTS, APPLICATION RATES, MATERIAL REQUIREMENTS AND APPLICATION PROCEDURES. THE LIQUID SEALANT SHALL BE APPLIED TO THE FOLLOWING AREAS:

SUPERSTRUCTURE

A. FULL LENGTH OF BRIDGE ON AREA DEFINED BY DETAIL A (THIS SHEET) ON FASCIA LONGITUDINAL PC BOX BEAMS.

ABUTMENTS: HORIZONTAL BRIDGE SEATS. FACE OF BREASTWALLS DOWN TO 1'-0" BELOW BRIDGE SEAT. FRONT FACE OF WINGWALLS AND IN AREA DEFINED BY DETAIL B, THIS SHEET.

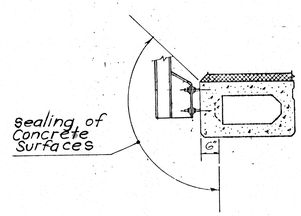

DETAIL A

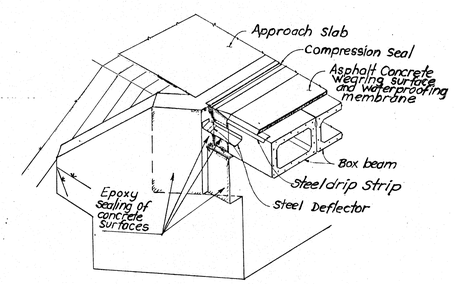

DETAIL B

PATCHING CONCRETE STRUCTURES:
FOR LIMITS OF PATCHING, SEE SHEET 4/11. OTHER DISINTEGRATED SURFACES NOT DESIGNATED HEREIN BUT DELINEATED BY THE ENGINEER AFTER FIELD EXAMINATION SHALL BE PATCHED AS DIRECTED. PREPARATION SHALL INCLUDE ABRASIVE BLASTING OF ALL SURFACES TO BE PATCHED INCLUDING ALL EXPOSED REINFORCING STEEL (STEEL CLEANED TO SA-1 QUALITY).

BAR SPLICES:
UNLESS OTHERWISE SHOWN, THE REINFORCING STEEL SPLICE LENGTHS SHALL BE AS SHOWN IN THE CMS 509.08.

SUPERSTRUCTURE NOTES

1. REFERENCE IS MADE TO STANDARD DRAWING PSBD-1-81, SHEETS 1 THROUGH 3, 6-20-89 THE FOLLOWING APPLY:

   BEAM LIFTING INSERTS DETAIL
   REINFORCEMENT OF BEAM ENDS DETAIL (WITH NOTCH)
   TRANSVERSE TIE-ROD ANCHORAGE DETAIL
   BEAM DIMENSIONAL TOLERANCE DETAIL
   B27-48 BEAM CROSS SECTION
   BENT REINFORCING BARS SCHEDULE
   TRANSVERSE TIE-ROD NOTE
   END OF BEAMS BITUMINOUS COATING NOTE
   MORTARING OF SHEAR KEYS NOTE
   GALVANIZING NOTE
   FIXED AND EXPANSION ANCHOR DOWEL DETAILS

2. THE FABRICATOR'S SHOP DRAWINGS SHALL SHOW COMPLETE DETAILS OF THE BEAM REINFORCING.

3. PRESTRESSING STEEL, ASTM A416 GRADE 270, 1/2" DIAMETER, SEVEN WIRE, UNCOATED, STRESS RELIEVED STRAND.

   AREA = 0.153 SQUARE INCHES.
   INITIAL TENSION = 28,900 POUNDS PER STRAND.
   TENSION AT RELEASE = 26,025 POUNDS PER STRAND.
   TENSION AFTER LOSSES = 22,032 POUNDS PER STRAND.

4. SOME STRANDS SHOWN IN BOX BEAM SECTION B27-48 SHALL BE DEBONDED AS INDICATED. DEBONDING OF STRANDS SHALL BE BY MEANS OF APPROVED PLASTIC SHEATHS.

5. NON-SHRINKING MORTAR: MORTAR OR GROUT FOR KEYWAYS BETWEEN PRESTRESSED CONCRETE BOX BEAMS, FOR TIE ROD RECESSES AND FOR ANCHOR DOWEL HOLES SHALL BE A NON-SHRINKING NON-METALLIC MORTAR HAVING A MINIMUM COMPRESSIVE STRENGTH AT 28 DAYS OF 5,000 PSI ACCORDING TO THE CORPS OF ENGINEERS SPECIFICATION CRD-C621-83 WHEN PREPARED TO A MODERATE FLUIDITY (124-145% FLOW TABLE FLOW). THE MORTAR OR GROUT SHALL ALSO MEET ALL OTHER REQUIREMENTS OF SPECIFICATION CRD-C621-83. THE MORTAR SHALL BE PREPARED, PLACED AND CURED IN ACCORDANCE WITH THE MANUFACTURER'S RECOMMENDATIONS, AGAINST SURFACES AS SPECIFIED BELOW.

   PREPARATION OF CONCRETE SURFACES IN CONTACT WITH NON-SHRINKING MORTAR: THE KEYWAY SURFACES SHALL BE GIVEN A MEDIUM SANDBLAST AT THE PLANT WITHIN FOUR DAYS BEFORE THE BEAMS LEAVE THE PLANT. BEFORE MORTARING, THE KEYWAYS SHALL BE THOROUGHLY CLEAN OF ALL DIRT, DUST AND OTHER FOREIGN MATTER. THE KEYWAY SURFACES SHALL BE WETTED, BUT NO FREE WATER SHALL BE ALLOWED TO REMAIN IN THE KEYWAYS.

6. CALCULATED CAMBER AT TIME OF PAVING INCLUDING ALLOWANCE FOR CAMBER GROWTH DUE TO CREEP, IS 1/2".

   CALCULATED DEFLECTION DUE TO WEIGHT OF SURFACE COURSE AND RAILING IS 5/16"
   CAMBER OF 0" AT CENTER OF SPANS IS REQUIRED FOR CREST VERTICAL CURVE.

   NET FINAL CAMBER OF BEAMS IS 1 3/16". THIS IS 1 3/16" IN EXCESS OF THE AMOUNT REQUIRED TO PLACE THE TOP OF THE BEAM PARALLEL TO PROFILE GRADE. THIS EXCESS AMOUNT SHALL BE COMPENSATED FOR BY THICKENING THE 403 LEVELING COURSE FROM 1/4" AT CENTER OF SPANS TO 2 7/16" AT ENDS OF SPANS.

7. ASPHALT CONCRETE SURFACE COURSE SHALL CONSIST OF A VARIABLE THICKNESS OF 403 AND 1-1/4" THICKNESS OF 404. THE 403 SHALL BE PLACED IN TWO OPERATIONS. THE FIRST COURSE SHALL BE OF 1-1/4" UNIFORM THICKNESS. THE SECOND COURSE SHALL BE FEATHERED TO PLACE THE SURFACE PARALLEL TO AND 1-1/4" BELOW FINAL PAVEMENT SURFACE ELEVATION.

More NOTES In Sh. 4/11

KING & GAVARIS
CONSULTING ENGINEERS, INC.
CINCINNATI OHIO

3/11

GENERAL NOTES

BRIDGE NO. CLA.-40-0530
OVER DONNELS CREEK

CLARK COUNTY

DESIGNED	DRAWN	TRACED	CHECKED	REVIEWED	DATE	REVISED
		JRJ	A.P.			

SUPERSTRUCTURE NOTES (CONTINUE)

PRESTRESSED CONCRETE BRIDGE MEMBERS:
FOR PAY PURPOSES, BEAM LENGTHS SHALL BE MEASURED ALONG CENTERLINE OF BEAMS.

STRUCTURAL STEEL ARMOR FOR SEALED EXPANSION JOINTS:
ITEM 516, SHALL INCLUDE ALL LABOR, MATERIAL, TOOLS, AND EQUIPMENT NECESSARY TO COMPLETE THE JOINT IN PLACE INCLUDING THE ELASTOMERIC COMPRESSION SEAL, JOINT ARMOR, PAINTING, AND ANCHORS. THE 5/8" THREADED RODS, NUTS, AND SUPPORT PLATE C (STANDARD DRAWING EXJ-3-82) SHALL BE INCLUDED IN ITEM 515, PRESTRESSED CONCRETE BRIDGE MEMBERS FOR PAYMENT. PAINTING OF EXPOSED STEEL SHALL BE SYSTEM B.

BOX BEAM ANCHOR DOWELS:
ANCHOR DOWELS ARE REQUIRED AT THE ENDS OF ALL BEAMS. FOR LOCATION OF FIXED AND EXPANSION ANCHOR DOWELS, SEE SHEET 8/11

EXISTING PLANS:
EXISTING PLANS MAY BE INSPECTED AT THE BUREAU OF BRIDGES AND STRUCTURAL DESIGN IN COLUMBUS, OHIO OR IN THE DISTRICT OFFICE IN SIDNEY, OHIO.

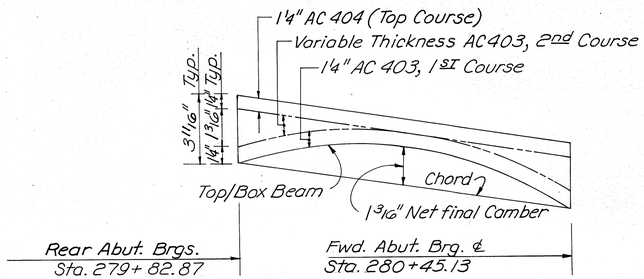

CAMBER & SURFACE COURSE DIAGRAM

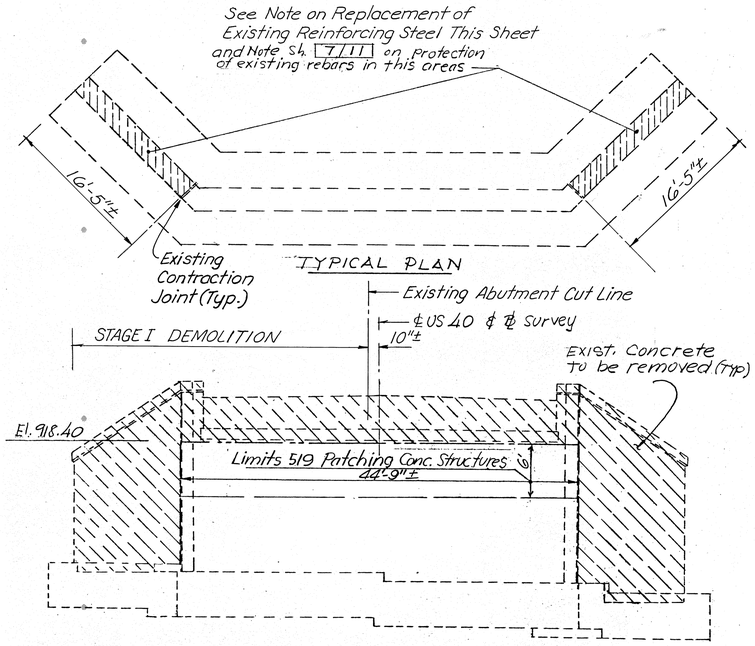

ELEVATION
CONCRETE REMOVALS, REAR ABUTMENT

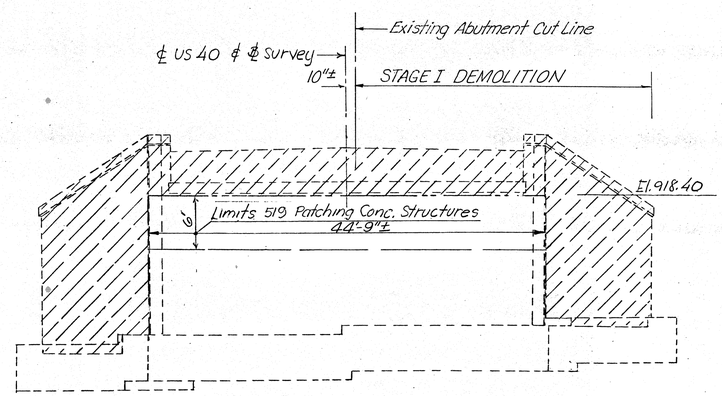

ELEVATION
CONCRETE REMOVALS, FORWARD ABUTMENT

CONSTRUCTION JOINT PREPARATION:
SAW CUT BOUNDARIES OF PROPOSED CONCRETE REMOVALS 1 INCH DEEP. REMOVE CONCRETE TO A ROUGH SURFACE. WHERE PRACTICABLE, AT LEAST 1'-4" LENGTH OF PROTRUDING REINFORCING STEEL SHALL BE LEFT IN PLACE. INSTALL DOWEL BARS AS SPECIFIED. PRIOR TO CONCRETE PLACEMENT, ABRASIVELY CLEAN JOINT SURFACE AND EXPOSED REINFORCEMENT TO REMOVE LOOSE AND DISINTEGRATED CONCRETE AND LOOSE RUST. THEN, THE JOINT SURFACE AND EXPOSED REINFORCEMENT SHALL BE THOROUGHLY CLEANED OF ALL DIRT, DUST, OR OTHER FOREIGN MATERIALS BY THE USE OF WATER, AIR UNDER PRESSURE, OR OTHER METHOD THAT PRODUCES RESULTS SATISFACTORY TO THE ENGINEER. THE CONCRETE BONDING SURFACE SHALL BE WET WITHOUT FREE WATER AS CONCRETE IS PLACED.

CONDITIONS AT TOP OF EXIST. FOOTING AT WINGWALLS
(ASSUMED)

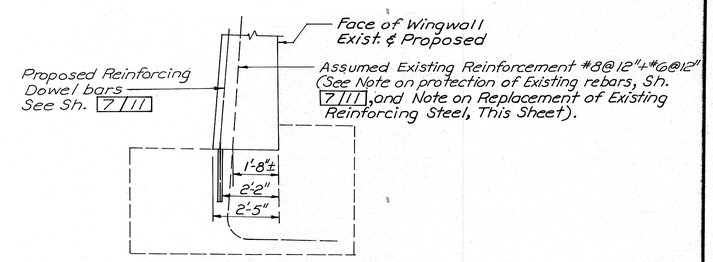

REPLACEMENT OF EXISTING REINFORCING STEEL:
Any existing reinforcing bars which are to be incorporated into the new work and which are made unusable because of the Contractor's concrete removal operations shall be replaced with new No. 9 rebars at his cost.
Any existing reinforcing bars deemed by the Engineer to be unusable because of corrosion shall be replaced with new rebars.
In the area of wingwall reconstruction the new vertical rebars shall be No. 9 dowel bars of the same length as the proposed bar mark RA901 (or FA901) spaced @ 6"± along the same line as the usable existing bars. A Quantity of 600 lbs. in Item 509 Reinforcing Steel Grade 60 and 14 Ea. Item 510 Dowel Holes has been Included in the Estimated Quantities Sh. 2/11 for This Purpose.

CONCRETE REMOVAL: Shall be by means of approved pneumatic hammers employing pointed and blunt chisel tools. Hydraulic hoe-ram type hammers will not be permitted. The weight of the hammer shall not be more than 35 pounds for removal within 18-inches of portions to be preserved. Outside the 18-inch limit, a hammer heavier than 35 pounds, but not to exceed 85 pounds, may be used at the approval of the Engineer. Pneumatic hammers shall not be placed in direct contact with reinforcing steel that is to be retained in the rebuilt structure.

LEGEND

- Existing Structure to Remain
- Existing Concrete to be Removed

KING & GAVARIS
CONSULTING ENGINEERS, INC.
CINCINNATI OHIO

4/11

CONCRETE REMOVALS AND NOTES

BRIDGE NO. CLA-40-0530
US 40 OVER DONNELS CREEK
CLARK COUNTY

DESIGNED	DRAWN	TRACED	CHECKED	REVIEWED	DATE	REVISED
		JRJ	A.P.			

32473

F.H.W.A. REGION	STATE	PROJECT	
5	OHIO		

20/26

CLA - 40 - 5.30

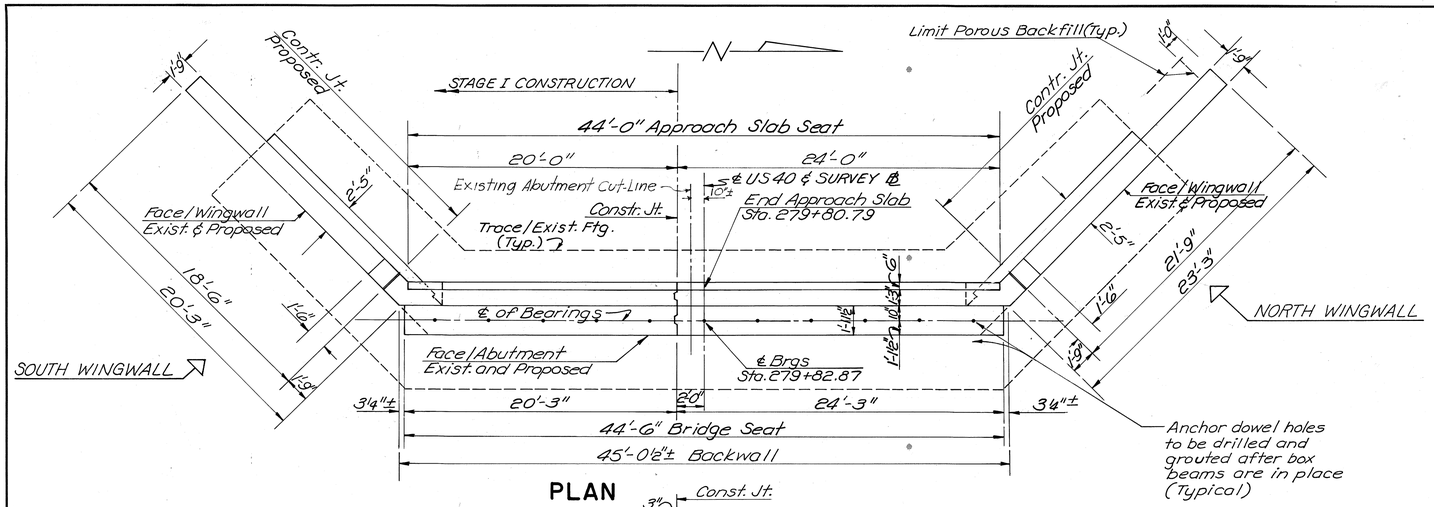

PLAN

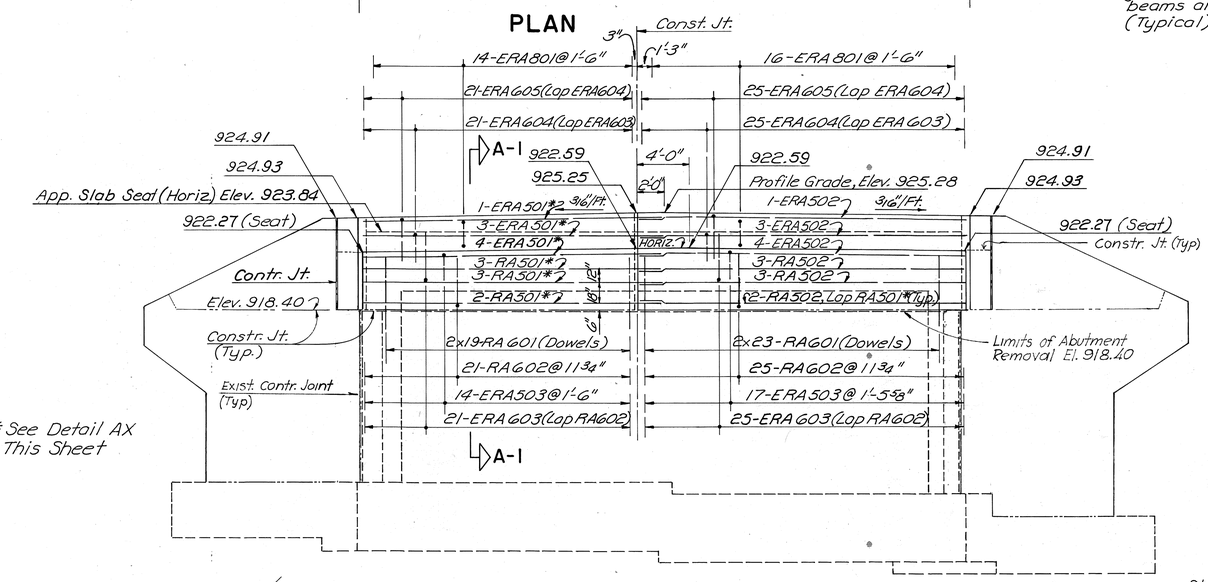

ELEVATION

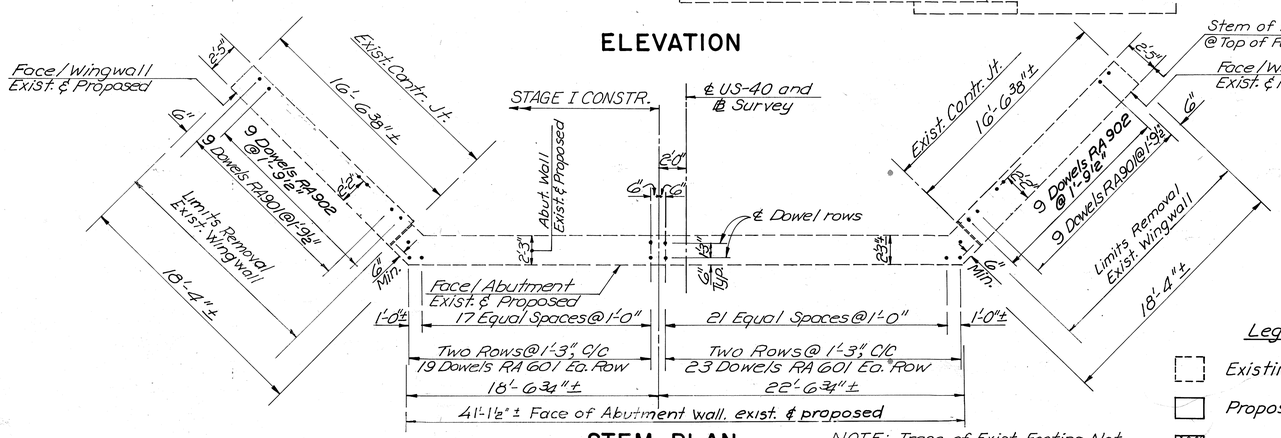

STEM PLAN

NOTE: Trace of Exist. Footing Not Shown in plan of Stem for Simplicity.

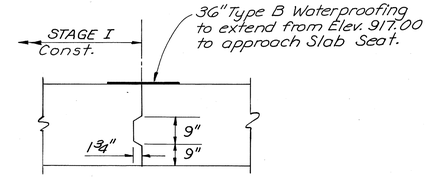

CONSTRUCTION JOINT
AT ABUTMENT WALL CAP
(TYPICAL)

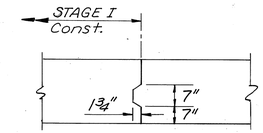

CONSTRUCTION JOINT
AT BACKWALL
(TYPICAL)

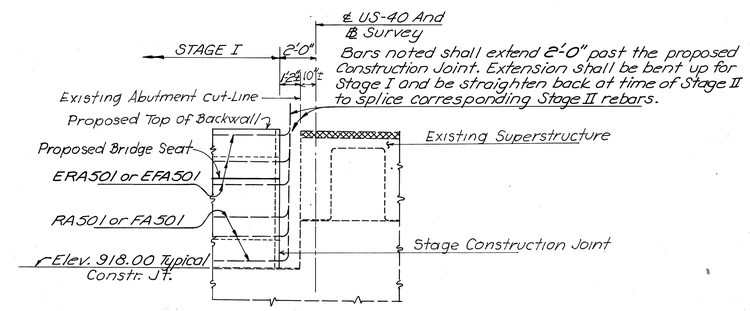

TYPICAL DETAIL AX

WORK THIS SHEET WITH SH. 6/11 AND SH. 7/11

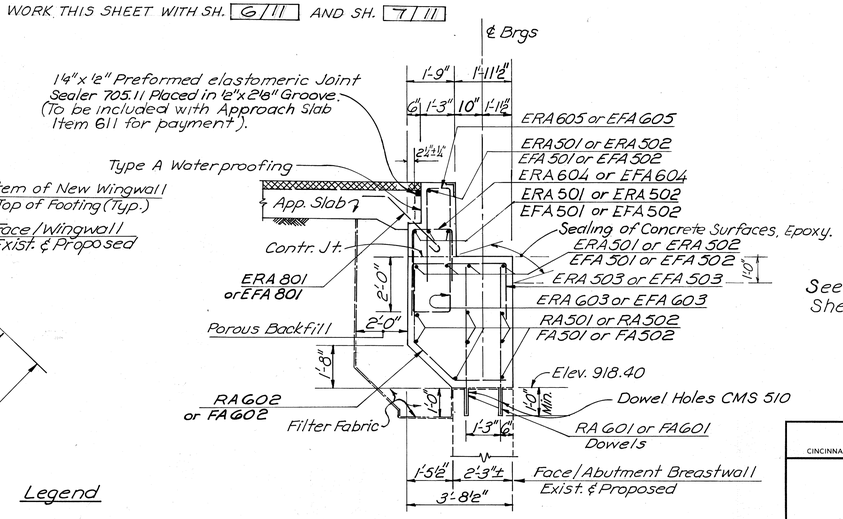

See Substructure Typical Notes Sheet 6/11

TYPICAL SECTION A1-A1

Legend

- Existing Structure to remain
- Proposed New Work
- Asphalt Concrete

KING & GAVARIS CONSULTING ENGINEERS, INC. — CINCINNATI — 216 East Ninth Street, Cincinnati, Ohio 45202 — OHIO

5/11

REAR ABUTMENT

BRIDGE NO. CLA.-40-0530
OVER DONNELS CREEK

CLARK COUNTY

DESIGNED	DRAWN	TRACED	CHECKED	REVIEWED	DATE	REVISED
		JRJ	A.P.		7/20/89	

F.H.W.A. REGION	STATE	PROJECT	
5	OHIO		

21/26

CLA - 40 - 5.30

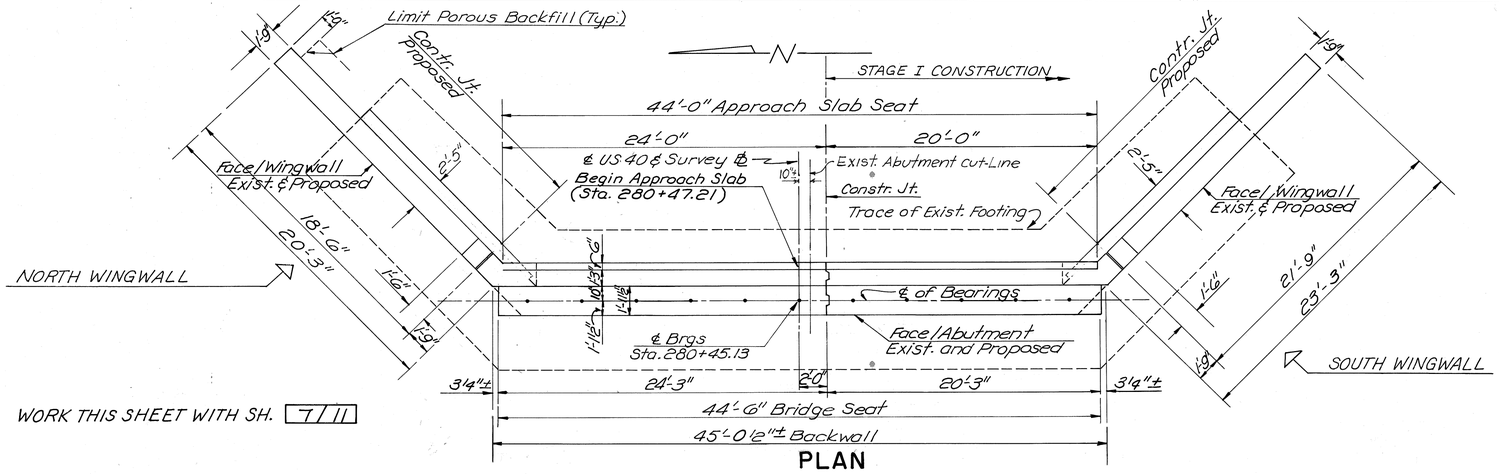

WORK THIS SHEET WITH SH. 7/11

PLAN

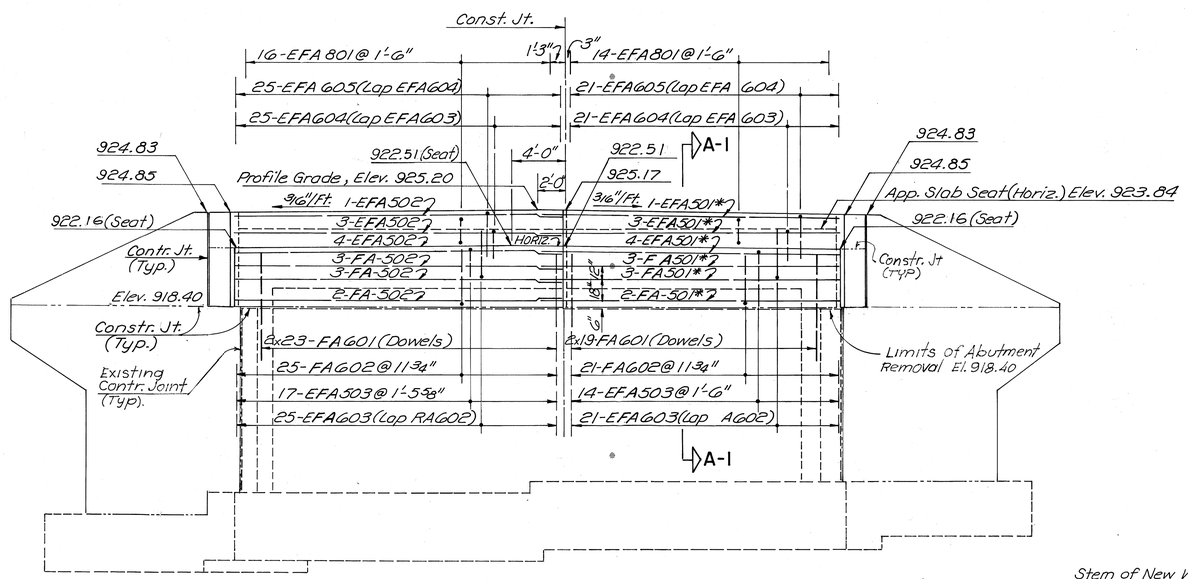

* See Detail AX, Sh. 5/11

ELEVATION

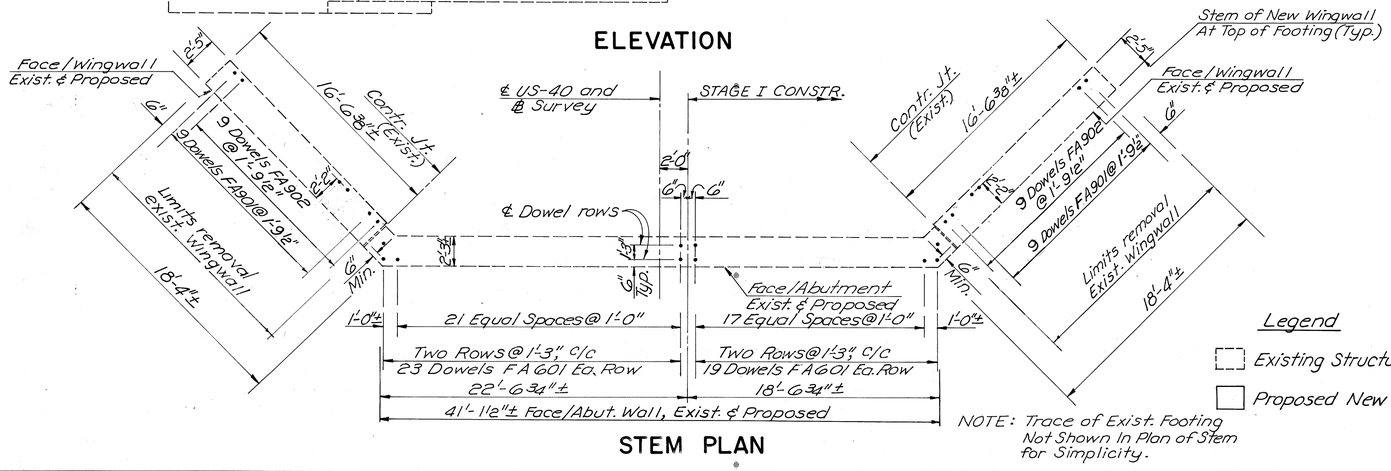

STEM PLAN

NOTE: Trace of Exist. Footing Not Shown In Plan of Stem for Simplicity.

SUBSTRUCTURE TYPICAL NOTES

1.- For Reinforcing Steel Bar List, See Sheet 10/11 & 11/11

2.- FILTER FABRIC: Shall Conform to 712.09 Type A and Shall be Included with Porous Backfill for Payment.

3.- POROUS BACKFILL: 2.0 Ft. Thick Shall extend up to the plane of the subgrade to 1 ft. below the embankment surface, and laterally to the ends of the wingwalls.

4.- BRIDGE SEAT REINFORCING: Reinforcing Steel in the vicinity of the bridge seat shall be accurately placed to avoid interference with the drilling of the Anchor Dowel holes.

5.- SPACING OF BARS: Is center to center unless otherwise noted. Spacing variation is permitted to clear pipes, wall pockets, etc.

6.- BACKWALL CONCRETE: above the bridge seat construction joint shall not be placed until after the beams are set.

Legend

- Existing Structure to remain
- Proposed New Work

KING & GAVARIS CONSULTING ENGINEERS, INC. 216 East Ninth Street, Cincinnati, Ohio 45202 — CINCINNATI — OHIO

6/11

FORWARD ABUTMENT

BRIDGE NO. CLA.-40-0530
OVER DONNELS CREEK

CLARK COUNTY

DESIGNED	DRAWN	TRACED	CHECKED	REVIEWED	DATE	REVISED
		JRJ	A.P.		7/21/09	

F.H.W.A. REGION	STATE	PROJECT	
5	OHIO		

22/26

CLA - 40 - 5.30

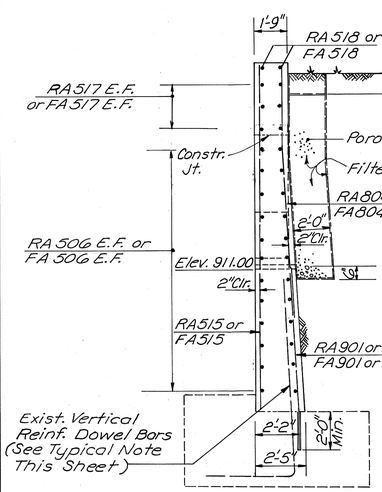

TYPICAL SECTION A3-A3

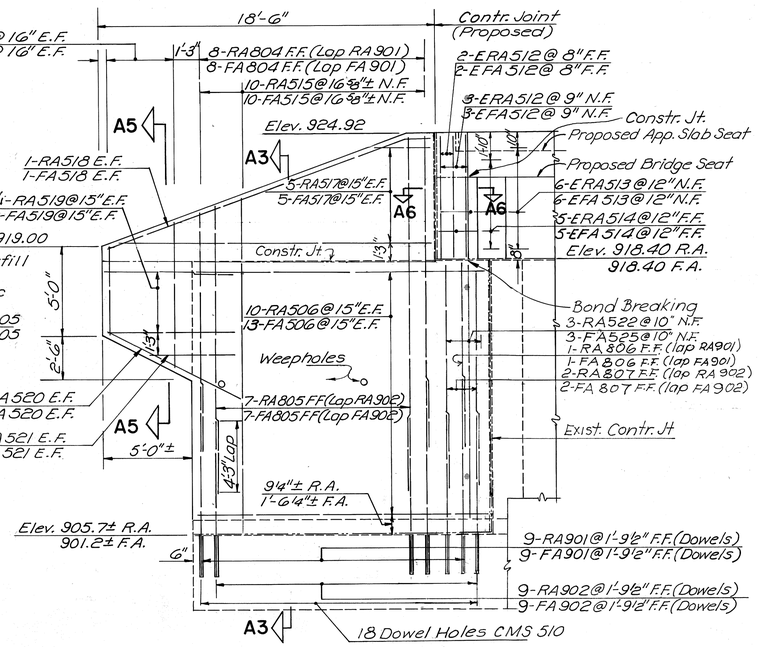

REAR ABUTMENT SOUTH WINGWALL
FORWARD ABUTMENT NORTH WINGWALL

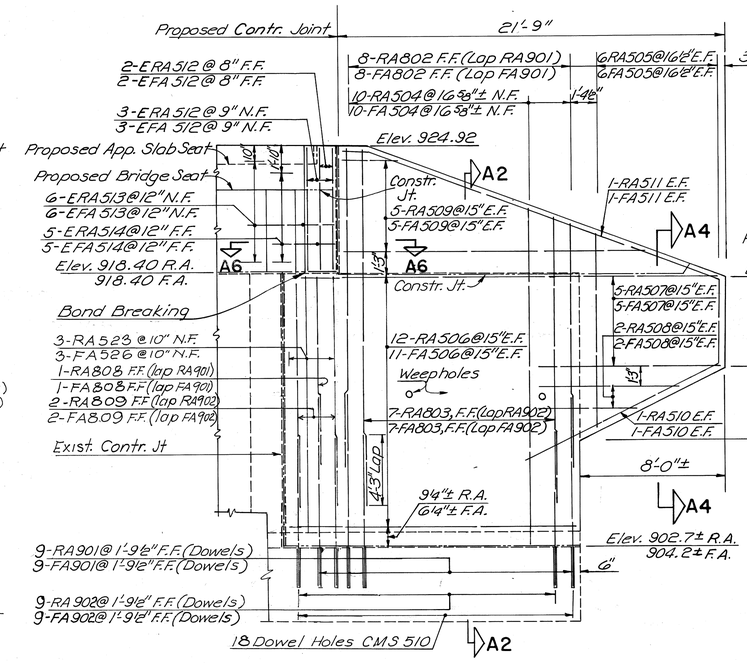

REAR ABUTMENT NORTH WINGWALL
FORWARD ABUTMENT SOUTH WINGWALL

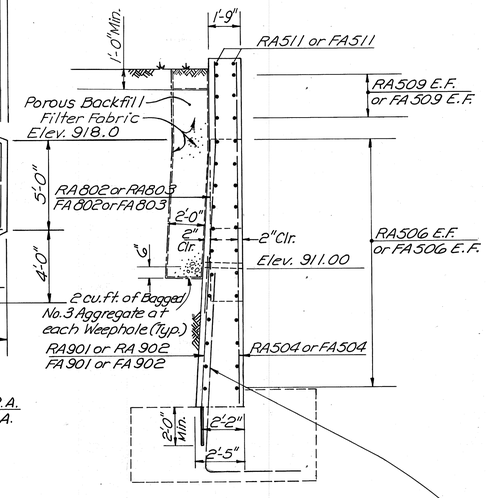

TYPICAL SECTION A2-A2

TYPICAL NOTE

Assumed Existing Vertical Reinforcing Dowel bars #8 @ 12" ± + #6 @ 12" ± In The Area Of Wingwall Reconstruction Are To Be Incorporated Into The New Work In All Their Length **And Therefore Shall Be Protected** During Concrete Removals. See Note on Replacement of Existing Reinforcing Steel Sh. 4/11.

N.F.	Denotes	Near Face
F.F.	"	For "
E.F.	"	Each "
R.A.	"	Rear Abutment
F.A.	"	Forward Abutment

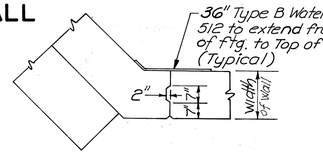

CONTRACTION JOINT DETAIL
(TYPICAL)

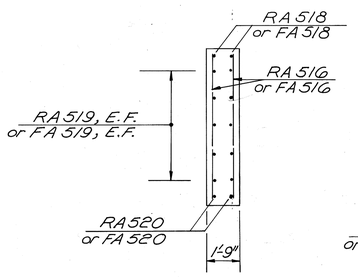

SECTION A5-A5

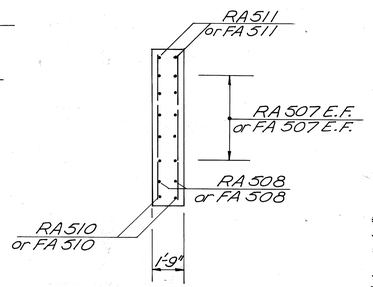

SECTION A4-A4

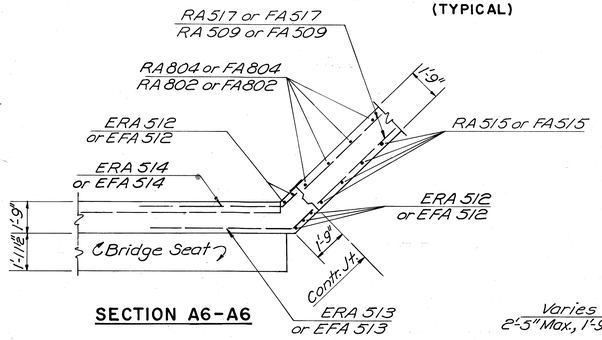

SECTION A6-A6

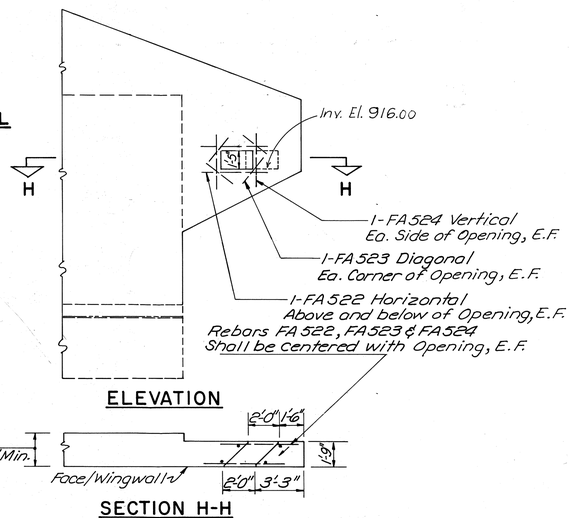

ELEVATION

SECTION H-H

BLOCKOUT IN FWD. ABUTMENT SOUTH WINGWALL

NOTE: A Similar Detail May be Req'd in North Wingwall

KING & GAVARIS CONSULTING ENGINEERS, INC.
CINCINNATI — 216 East Ninth Street Cincinnati, Ohio 45202 — OHIO

7/11

ABUTMENT WINGWALLS

BRIDGE NO. CLA.-40-0530
OVER DONNELS CREEK

CLARK COUNTY

DESIGNED	DRAWN	TRACED	CHECKED	REVIEWED	DATE	REVISED
		JRJ	A.P.		7/23/99	

F.H.W.A. REGION	STATE	PROJECT	
5	OHIO		

23/26

CLA-40-5.30

NOTES
1.- Work This Sheet with Sh. 9/11
2.- For General Notes, See Sh. 3/11 & 4/11

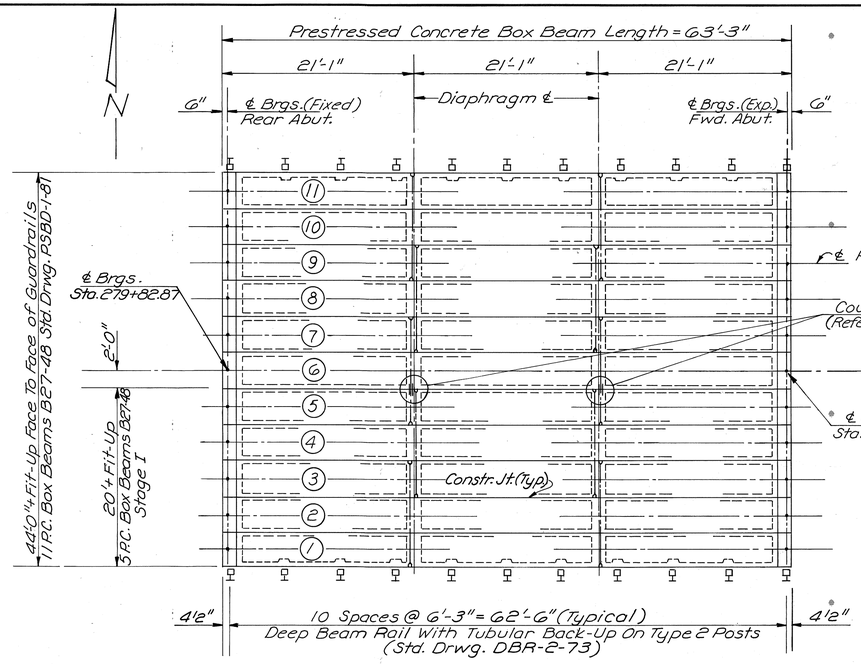

P.C. BOX BEAMS LAYOUT PLAN

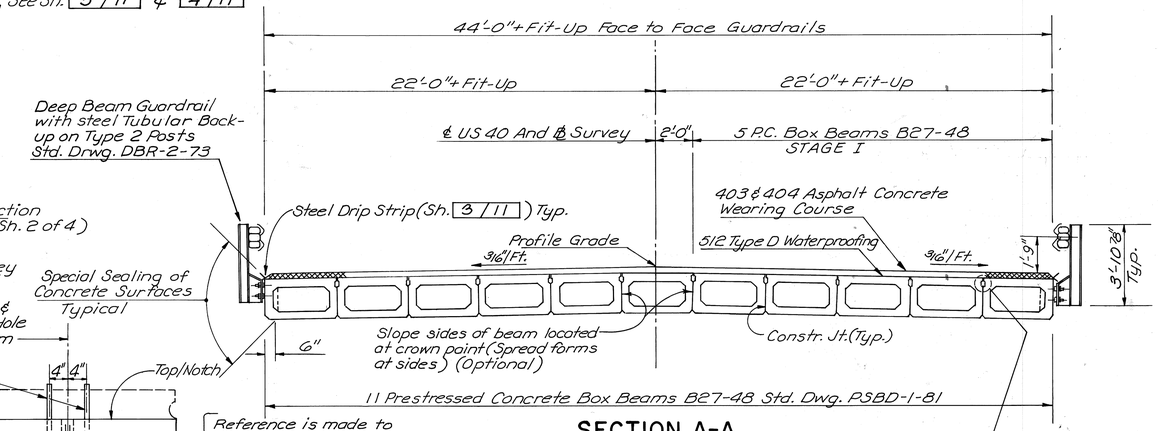

SECTION A-A

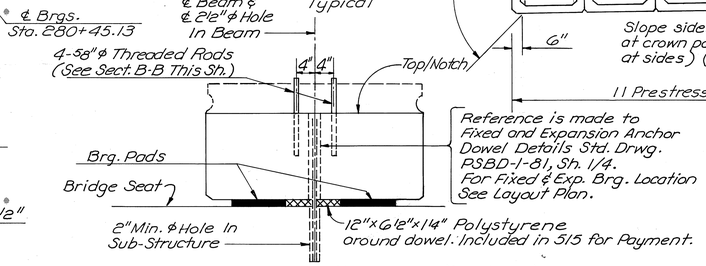

ANCHOR DOWEL END VIEW (TYPICAL)

POST PLATE VIEW (TYP.)

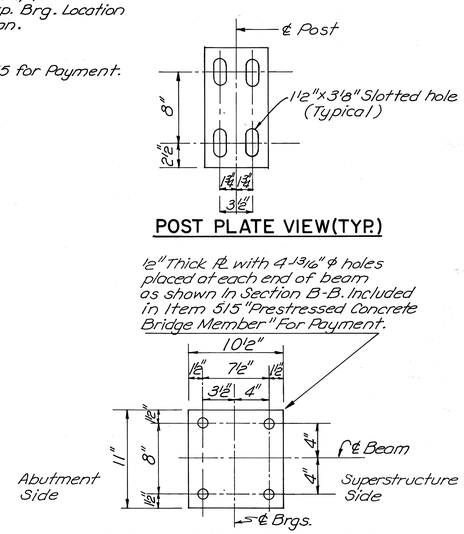

DETAIL SUPPORT PLATE C

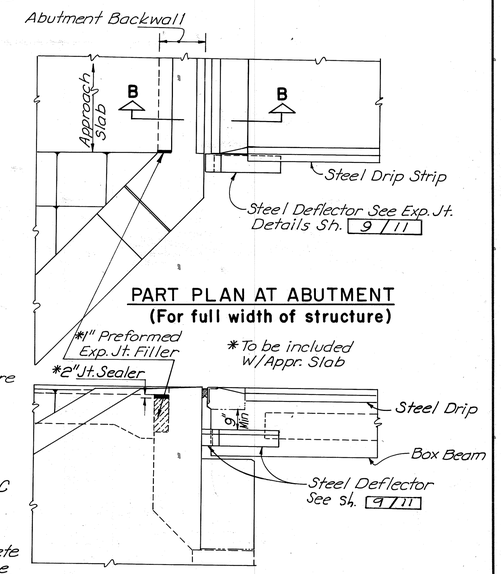

PART PLAN AT ABUTMENT
(For full width of structure)

ELEVATION

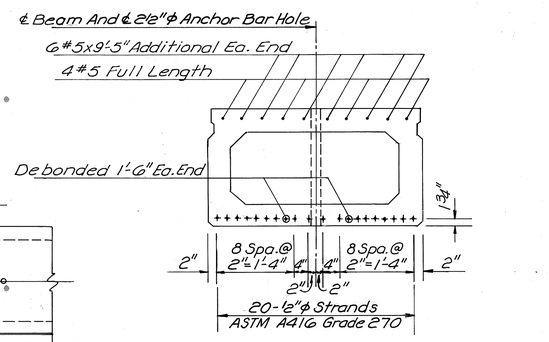

INTERIOR PC BOX BEAMS 2 THRU 10
TYPE B27-48 STD. DWG. PSBD-1-81 Sh. 3/4

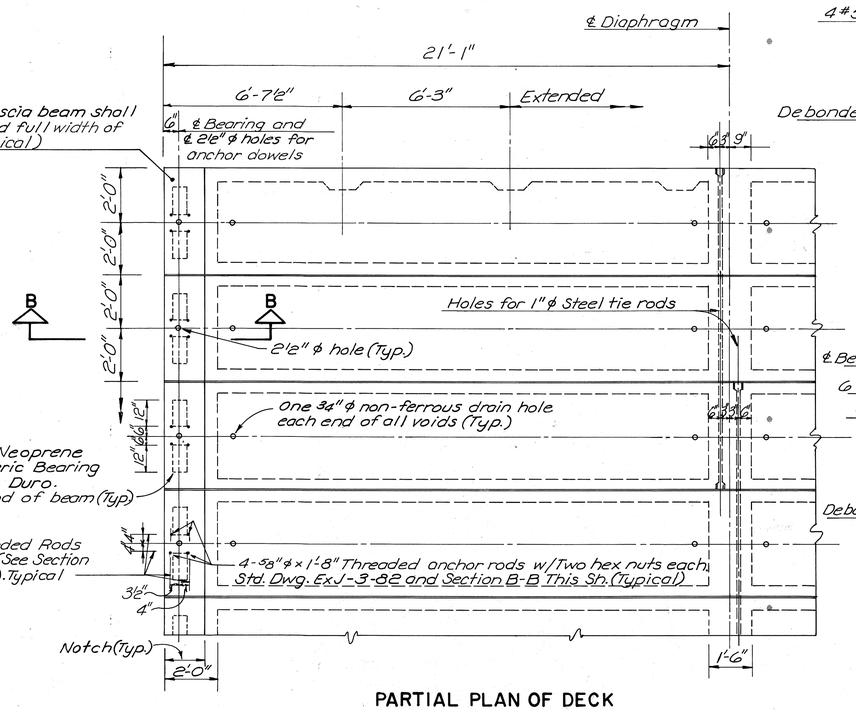

PARTIAL PLAN OF DECK
(For the full deck)

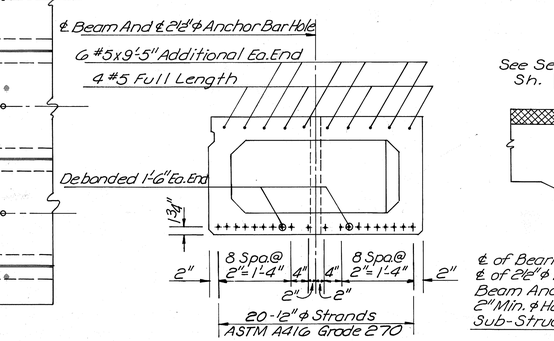

FASCIA PC BOX BEAMS 1 & 11
TYPE B27-48 STD. DWG. PSBD-1-81 Sh. 3/4

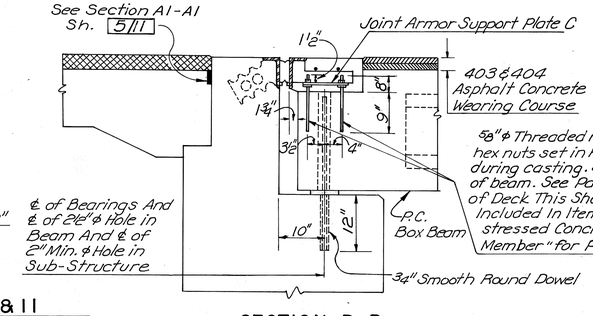

SECTION B-B
Typical

KING & GAVARIS CONSULTING ENGINEERS INC. 216 East Ninth Street, Cincinnati, Ohio 45202 — CINCINNATI & OHIO — 8/11

SUPERSTRUCTURE DETAILS

BRIDGE NO. CLA-40-0530
US 40 OVER DONNELS CREEK
CLARK COUNTY

DESIGNED	DRAWN	TRACED	CHECKED	REVIEWED	DATE	REVISED
		JRJ	A.P.		7/21/89	

F.H.W.A. REGION	STATE	PROJECT	
5	OHIO		

24/26

CLA-40-5.30

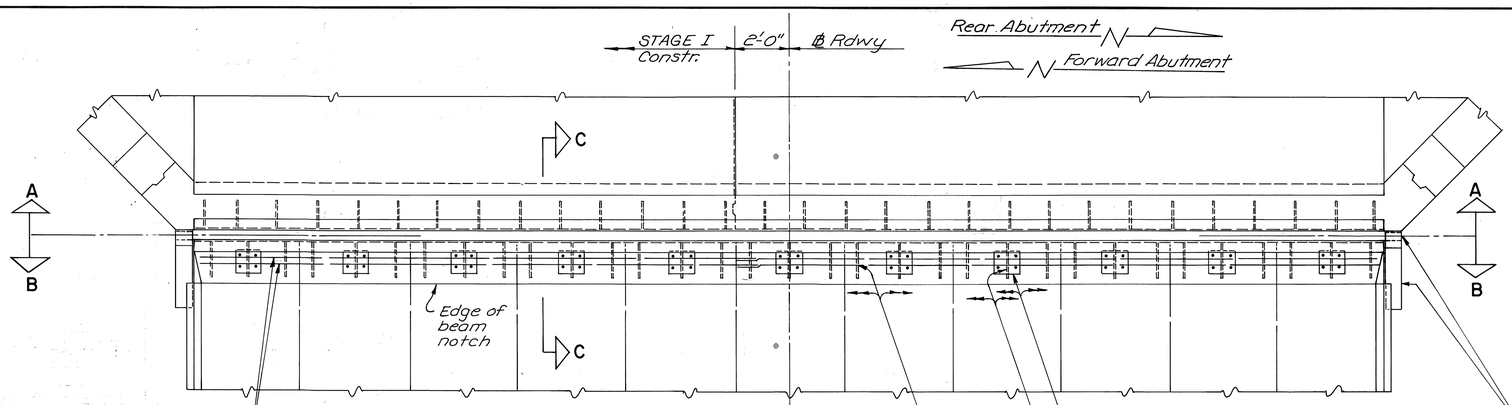

JOINT PLAN

At Rear Abutment Shown.
(Plan Forward Abutment Opposite Hand)

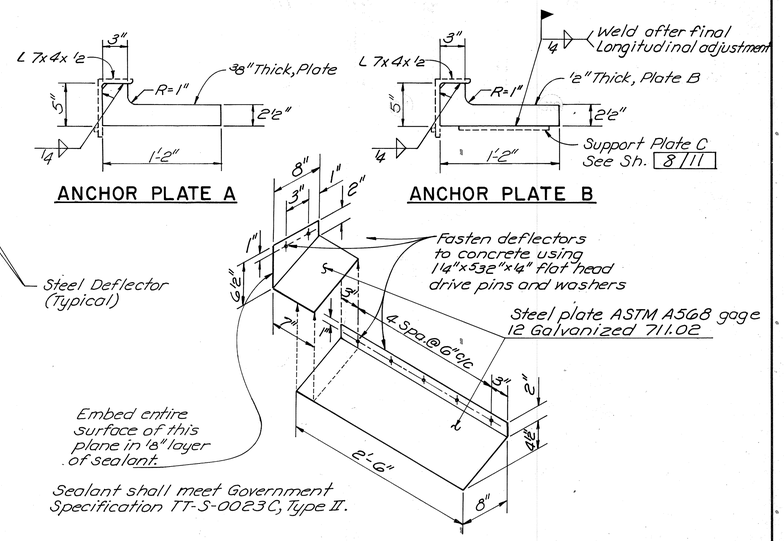

STEEL DEFLECTOR TYPICAL DETAILS
(MODIFIED)

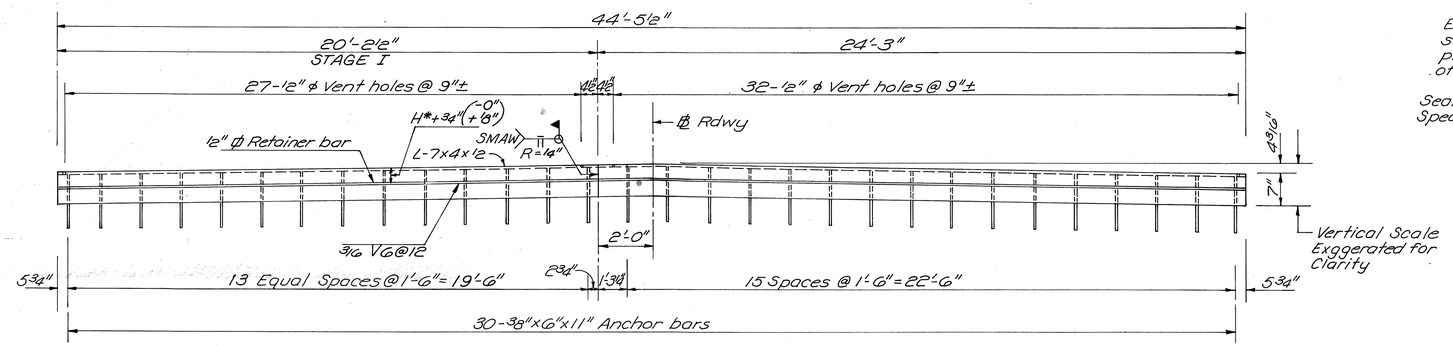

JOINT ARMOR ELEVATION A-A

Work This Sheet with Sh. 8/11

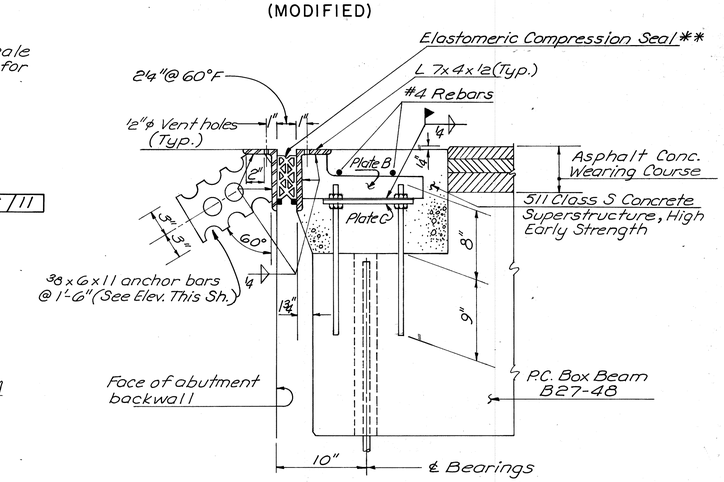

TYPICAL SECTION C-C

** D.S. Brown's CV4000 ACME'S J400 Watson Bowman's WD400 or an approved alternate.

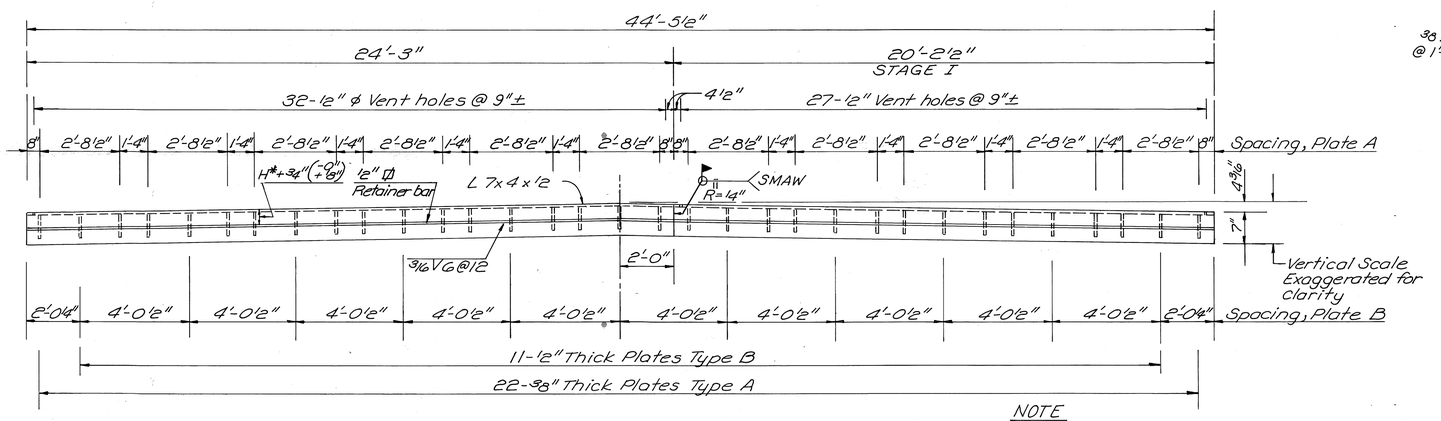

JOINT ARMOR ELEVATION B-B

* Dimension H corresponds to seal depth as per manufacturer's catalog for seal actually chosen for use.

NOTE

Elevations A-A and B-B shown correspond to the Rear Abutment and rear end of the superstructure respectively.
Corresponding elevations for the Forward Abutment and forward end of the superstructure are the reverse equal.

KING & GAVARIS CONSULTING ENGINEERS, INC.
CINCINNATI — 216 East Ninth Street, Cincinnati, Ohio 45202 — OHIO

9/11

COMPRESSION SEAL EXPANSION JOINT AT ABUTMENTS

BRIDGE NO. CLA.-40-0530
OVER DONNELS CREEK
CLARK COUNTY

DESIGNED	DRAWN	TRACED	CHECKED	REVIEWED	DATE	REVISED
		JRJ	A.P.			

FED. RD. DIVISION	STATE	PROJECT	
5	OHIO		

25 / 26

CLA - 40 - 5.30

REINFORCING STEEL BAR LIST

MARK	NO.	LENGTH	WT.	TYPE	A	B	C	D	E	F	G	H	J	K	O	R	NOTES
						REAR ABUTMENT											
RA501	8	22'-1"	184	Str.													
RA502	8	24'-1"	201	Str.													
RA504	10	Var. Fr. 17'-5" To 21'-11" By 0'-6"	205	24		17'-5"	21'-11"	0'-6"									
RA505	12	Var. Fr. 8'-2" To 11'-10" By 1'-0"	98	24		4'-8"	11'-0"	1'-2"									2 of Ea.
RA506	44	16'-4"	750	Str.													
RA507	10	10'-0"	104	Str.													
RA508	4	Var. Fr. 3'-0" To 7'-6" By 2'-6"	26	24		5'-0"	7'-6"	2'-6"									2 of Ea.
RA509	10	Var. Fr. 1'-3" To 15'-4" By 3'-6"	86	24		1'-3"	15'-4"	3'-6"									2 of Ea.
RA510	2	11'-0"	23	Str.													
RA511	2	22'-5"	47	22			1'-3"	21'-2"				0'-5"		1'-4"			2 of Ea.
RA515	10	Var. Fr. 14'-10" To 19'-0" By 1'-6"	177	24		14'-10"	19'-0"	0'-5½"									
RA516	8	Var. Fr. 4'-8" To 8'-4" By 1'-3"	54	24		4'-8"	8'-4"	1'-3"									2 of Ea.
RA517	10	Var. Fr. 1'-3" To 16'-2" By 3'-9"	91	24		1'-3	16'-2"	3'-9"									2 of Ea.
RA518	2	19'-1"	40	22			1'-3"	17'-10"				0'-5"		1'-4"			
RA519	8	7'-0"	58	Str.													
RA520	2	7'-6"	16	Str.													
RA521	2	4'-6"	9	Str.													
RA522	3	12'-6"	39	Str.													
RA523	3	15'-6"	48	Str.													
RA601	84	4'-7"	578	Str.													Dowel
RA602	46	6'-9"	466	25	2'-10"	2'-4"	1'-8"	1'-8"	1'-7"								
RA802	8	Var. Fr. 13'-0" To 17'-8" By 0'-8"	328	24		13'-0"	17'-8"	0'-8"									
RA803	7	Var. Fr. 19'-3" To 19'-0" By 0'-8"	318	24		15'-0"	19'-0"	0'-8"									
RA804	8	Var. Fr. 10'-3" To 14'-8" By 0'-7½"	266	24		10'-3"	14'-8"	0'-7½"									
RA805	7	Var. Fr. 12'-3" To 16'-0" By 0'-7½"	264	24		12'-3"	16'-0"	0'-7½"									
RA806	1	8'-0"	21	Str.													
RA807	2	10'-0"	53	Str.													
RA808	1	11'-0"	30	Str.													
RA809	2	13'-0"	69	Str.													
RA901	18	11'-0"	673	Str.													Dowel
RA902	18	9'-0"	550	Str.													Dowel
		SUB-TOTAL	5872	LBS. REINFORCING STEEL GRADE 60													
				EPOXY COATED REINFORCING STEEL GRADE 60													
ERA501	8	22'-1"	184	Str.													
ERA502	8	24'-1"	201	Str.													
ERA503	31	6'-6"	210	17			1'-8"	3'-4½"	1'-8"								
ERA512	10	6'-4"	66	Str.													
ERA513	12	4'-6"	56	22			1'-6"	3'-0"									
ERA514	10	3'-10"	40	22			0'-10"	3'-0"									
ERA603	46	8'-5"	582	S10		3'-8"	1'-5"	3'-8"									
ERA604	46	5'-1"	351	S10		2'-0"	1'-5"	2'-0"									
ERA605	46	6'-11"	478	S10		3'-2"	0'-11"	3'-2"									
ERA801	30	4'-6"	360	12	0'-11"	2'-4"	1'-5"					1'-0"		1'-0"			
		SUB-TOTAL	2528	lbs EPOXY COATED REINFORCING STEEL GRADE 60													

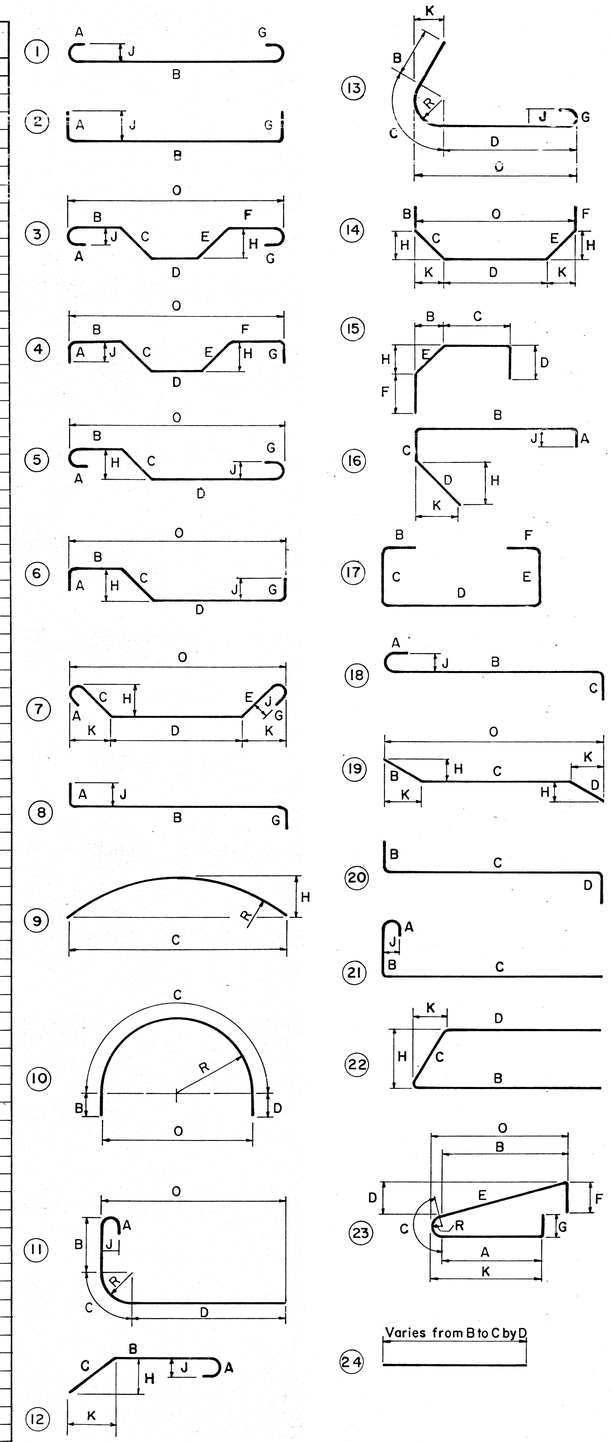

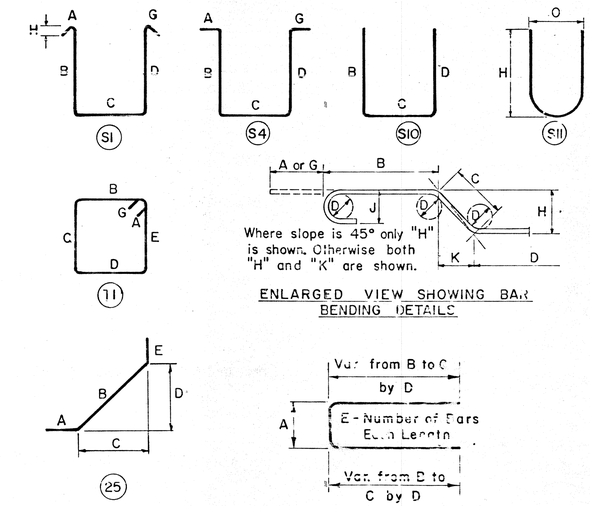

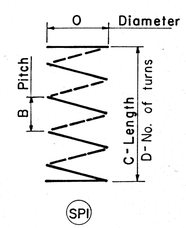

NOTES

1. Bar size is indicated in the bar mark. The first digit where three digits are used and the first two digits where four are used, indicate the bar size numbers. For example, A601 is a No. 6 size bar and P1004 is a No. 10 size.
2. All dimensions are out to out of bar.
3. Radius dimension "R" is to outside of bar.
4. The length of bent bars is measured along the centerline.
5. For standard hook dimensions, see Sect. 509.05 of the specifications.
6. For bar type SP1, the No. of turns "D" is the length "C" divided by the pitch "B", plus 3 turns (total number of closed coils), expressed as the nearest whole number. 1½ Closed coils shall be provided at the ends of each spiral unit.
7. Figures in circles show bar types.
8. "J" Dimension on hooks is shown only where necessary to restrict hook size. Otherwise standard hooks are to be used.
9. Where "J" is not shown, "J" will be kept equal to or less than "H". Where "J" can exceed "H" it will be shown.
10. "H" Dimension on stirrups will be shown where necessary to restrict hooks.
11. All bends shown are bent around a standard mandrel, except stirrups S11, ties T3, spirals SP1 and where radius "R" is indicated.
12. Four steel channel, tee or angle spacers, weighing approximately 0.80 lb. per lin. ft. of spacer, shall be provided for each spiral unit. They shall be equally spaced along the periphery of the coil. The number of pounds of these spacers, based on 0.80 lb. per lin. ft., will be paid for as reinforcing steel and is included in the tabulated quantity of spiral bars.
13. For additional bars see sheet 11/11

14. See Replacement of Existing Reinforcing Steel Note, Sh. 4/11

KING & GAVARIS CONSULTING ENGINEERS, INC.
CINCINNATI OHIO
10/11

REINFORCING STEEL BAR LIST

BRIDGE NO. CLA.-40-0530
OVER DONNELS CREEK

CLARK COUNTY

DESIGNED	DRAWN	TRACED	CHECKED	REVIEWED	DATE	REVISED
		JRJ	A.P.			

FERD WAGNER 200 5-74 MC 2479+

F.H.W.A. REGION	STATE	PROJECT	
5	OHIO		

26/26

CLA - 40 - 5.30

MARK	NO.	LENGTH	WT.	TYPE	A	B	C	D	E	F	G	H	J	K	O	R	NOTES
							FORWARD		ABUTMENT								
FA501	8	22'-1"	184	Str.													
FA502	8	24'-1"	201	Str.													
FA504	10	Var. Ff. 16'-1" To 20'-7" By 0'-6"	191	24		16'-1"	20'-7"	0'-6"									
FA505	12	Var. Ff. 4'-3" To 11'-0" By 1'-2"	98	24		4'-8"	11'-0"	1'-2"									2 of Ea.
FA506	48	16'-4"	818	Str.													
FA507	10	10'-0"	104	Str.													
FA508	4	Var. Ff. 5'-0" To 7'-6" By 0'-6"	26	24		5'-0"	7'-6"	2'-6"									2 of Ea.
FA509	10	Var. Ff. 1'-3" To 15'-4" By 3'-6"	86	24		1'-3"	15'-4"	3'-6"									2 of Ea.
FA510	2	11'-0"	23	Str.													
FA511	2	22'-5"	47	22			1'-3"	21'-2"				0'-5"		1'-4"			2 of Ea.
FA515	10	Var. Ff. 19'-4" To 25'-6" By 0'-3"	224	24		19'-4"	23'-6"	0'-5 3/4"									
FA516	8	Var. Ff. 4'-8" To 8'-4" By 1'-3"	54	24		4'-8"	8'-4"	1'-3"									2 of Ea.
FA517	10	Var. Ff. 1'-3" To 16'-2" By 3'-9"	91	24		1'-3"	16'-2"	3'-9"									2 of Ea.
FA518	2	19'-1"	40	22			1'-3"	17'-10"				0'-5"		1'-4"			
FA519	8	7'-0"	58	Str.													
FA520	2	7'-6"	16	Str.													
FA521	2	4'-6"	9	Str.													
FA522	4	4'-0"	17	Str.													
FA523	8	2'-0"	17	Str.													
FA524	4	3'-6"	15	Str.													
FA525	3	17'-0"	53	Str.													
FA526	3	14'-0"	44	Str.													
FA601	84	4'-7"	578	Str.													Dowels
FA602	46	6'-9"	466	25	2'-10"	2'-4"	1'-8"	1'-8"	1'-7"								
FA802	8	Var. Ff. 11'-4" To 16'-0" By 0'-6"	292	24		11'-4"	16'-0"	0'-8"									
FA803	7	Var. Ff. 13'-3" To 17'-6" By 0'-8"	287	24		13'-4"	17'-4"	0'-8"									
FA804	8	Var. Ff. 14'-5" To 19'-0" By 0'-7 1/2"	359	24		14'-7"	19'-0"	0'-7 1/2"									
FA805	7	Var. Ff. 16'-7" To 20'-7" By 0'-7 1/2"	347	24		16'-7"	20'-7"	0'-7 1/2"									
FA806	1	12'-6"	33	Str.													
FA807	2	14'-6"	77	Str.													
FA808	1	9'-6"	25	Str.													
FA809	2	11'-6"	61	Str.													
FA901	18	11'-0"	673	Str.													Dowels
FA902	18	9'-0"	550	Str.													Dowels
	SUB-TOTAL		6164	LBS	REINFORCING STEEL GRADE 60												
			EPOXY COATED REINFORCING STEEL GRADE 60														
EFA501	8	22'-1"	184	Str.													
EFA502	8	24'-1"	201	Str.													
EFA503	31	6'-10"	221	17			1'-8"	3'-6"	1'-8"								
EFA512	10	6'-4"	66	Str.													
EFA513	12	4'-6"	56	22			1'-6"	3'-0"									
EFA514	10	3'-10"	40	22			0'-10"	3'-0"									
EFA603	46	8'-5"	582	S10		3'-8"	1'-5"	3'-8"									
EFA604	46	5'-1"	351	S10		2'-0"	1'-5"	2'-0"									
EFA605	46	6'-11"	478	S10		3'-2"	0'-11"	3'-2"									
EFA801	30	4'-6"	360	12	0'-11"	2'-4"	1'-5"					1'-0"		1'-0"			
	SUB-TOTAL		2539	lbs	EPOXY COATED REINFORCING STEEL GRADE 60												
		TOTAL	12036	lbs	REINFORCING STEEL GRADE 60												
		TOTAL	5067	lbs	EPOXY COATED REINFORCING STEEL GRADE 60												

MARK	NO.	LENGTH	WT.	TYPE	A	B	C	D	E	F	G	H	J	K	O	R	NOTES

NOTES:

1. Bar size is indicated in the bar mark. The first digit where three digits are used and the first two digits where four are used, indicate the bar size numbers. For example, A601 is a No. 6 size bar and P1004 is a No. 10 size.
2. For bar types see sheet 10/11
3. All dimensions are out to out of bar.
4. Radius dimension "R" is to outside of bar.
5. The length of bent bars is measured along the centerline.
6. For additional notes see sheet 10/11

KING & GAVARIS
CONSULTING ENGINEERS, INC.
CINCINNATI OHIO

11/11

REINFORCING STEEL BAR LIST

BRIDGE NO. CLA.-40-0530
OVER DONNELS CREEK

CLARK COUNTY

DESIGNED	DRAWN	TRACED	CHECKED	REVIEWED	DATE	REVISED
SD	SD	JRJ	A.P.	GK	7/25/89	