MICROFILMED
DEC 23 1997

FED. RD. DIVISION	STATE	PROJECT	TYPE FUNDS
2	OHIO	I-1103(20)	

292
333

7.97 MI.± NORTH OF MAYFIELD HTS.
LAKE COUNTY
LAK-I-4.02

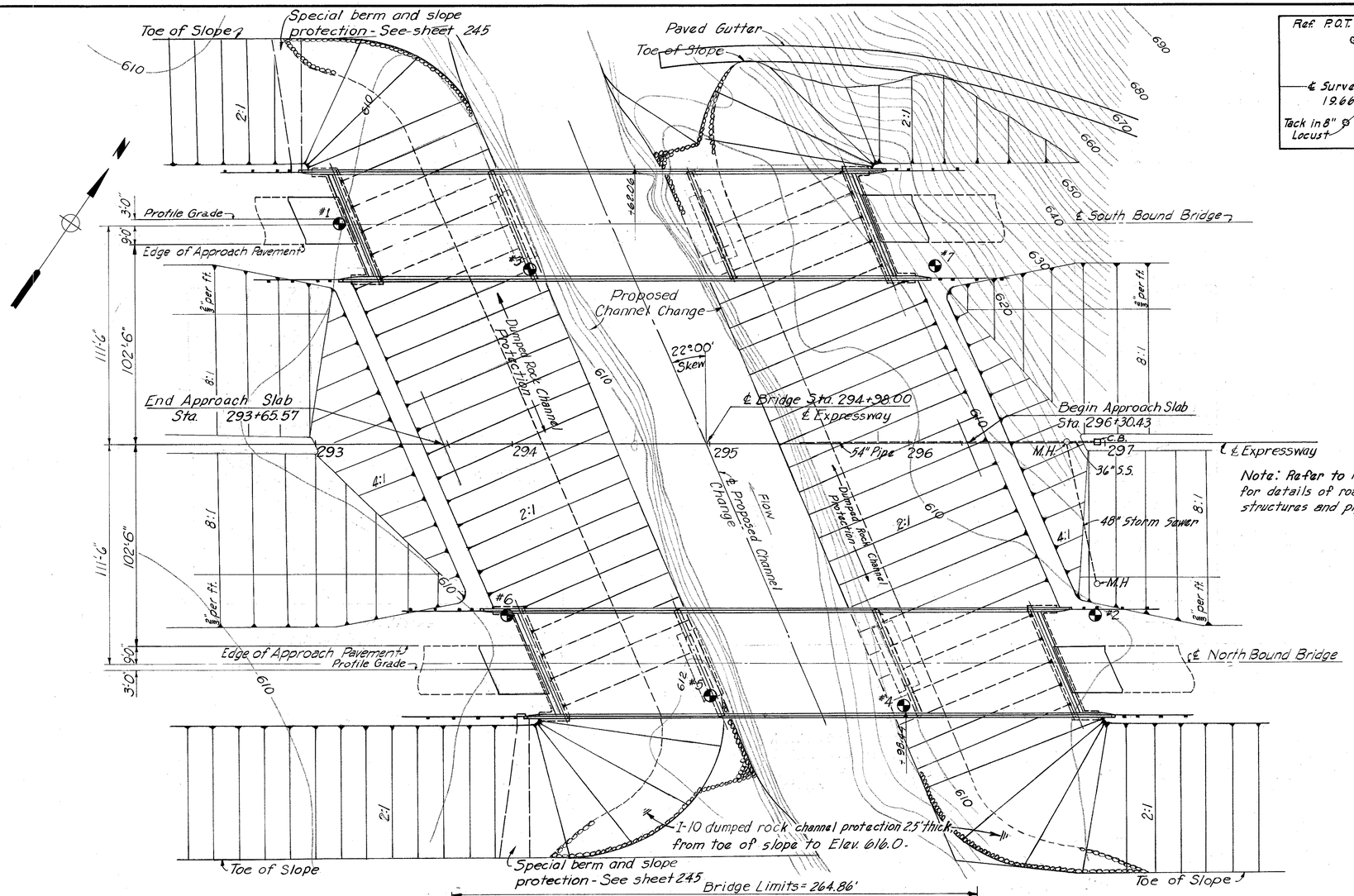

Foundation Elevations shown thus ( ) are for North bound Bridge.

NOTE:

FOUNDATION SOUNDINGS: Foundation design and foundation quantities are based on a study of borings and soil-sampling soundings made at the site. This sounding information may be inspected in the Bureau of Bridges in Columbus or in the Division Office, but the State does not guarantee the accuracy thereof.

⊕ Denotes Boring Location.

Note: Refer to Roadway plans for details of roadway drainage structures and pipes.

EXISTING STRUCTURE
TYPE: 2 Span Steel Truss.
SPAN: 2@85'
ROADWAY: 20'±
DATE BUILT:
CONDITION:

B.M. #40 El. 621.117
Bolt in base of 18" Maple
250' Lt. of Sta. 295+50

▲ Denotes Bridge Delineator

Drainage Area = 53 sq.mi.

Preliminary Design
8-9-57 Y.G.

PROPOSED STRUCTURES
Type: Continuous steel girders with reinforced concrete deck & substructure.
SPANS: 80'-100'-80' % Bearings
ROADWAY: 54' f/f parapets
LOAD FREQUENCY: CF = 2000 (57) ⊕
APPROACH SLAB: A 5-1-54 (25' Long)
SKEW: 22°-00'-00" R.F.
ALIGNMENT: Tangent
SUPERELEVATION: None
(Two Bridges)

⊕ Adequate for AASHO alternate loading.

MICHAEL BAKER, JR., CONSULTING ENGINEERS
ROCHESTER, PENNSYLVANIA

SITE PLAN

BRIDGE NO. LAK-I-0541
OVER EAST BRANCH CHAGRIN RIVER
LAKE COUNTY
SCALE 1" = 30' STA. 294+98.00

PRESENT TOPOGRAPHY		PROPOSED WORK			
Surveyed	Drawn C.R.H. C.V.P.	Designed A.A.	Drawn C.M.C. C.V.P.	Checked D.W.S.	Reviewed K.A. 11-57

MICROFILMED
DEC 23 1987

FED. RD. DIVISION	STATE	PROJECT	TYPE FUNDS
2	OHIO	I-1103(20)	

LAKE COUNTY
LAK-I-4.02

293
333

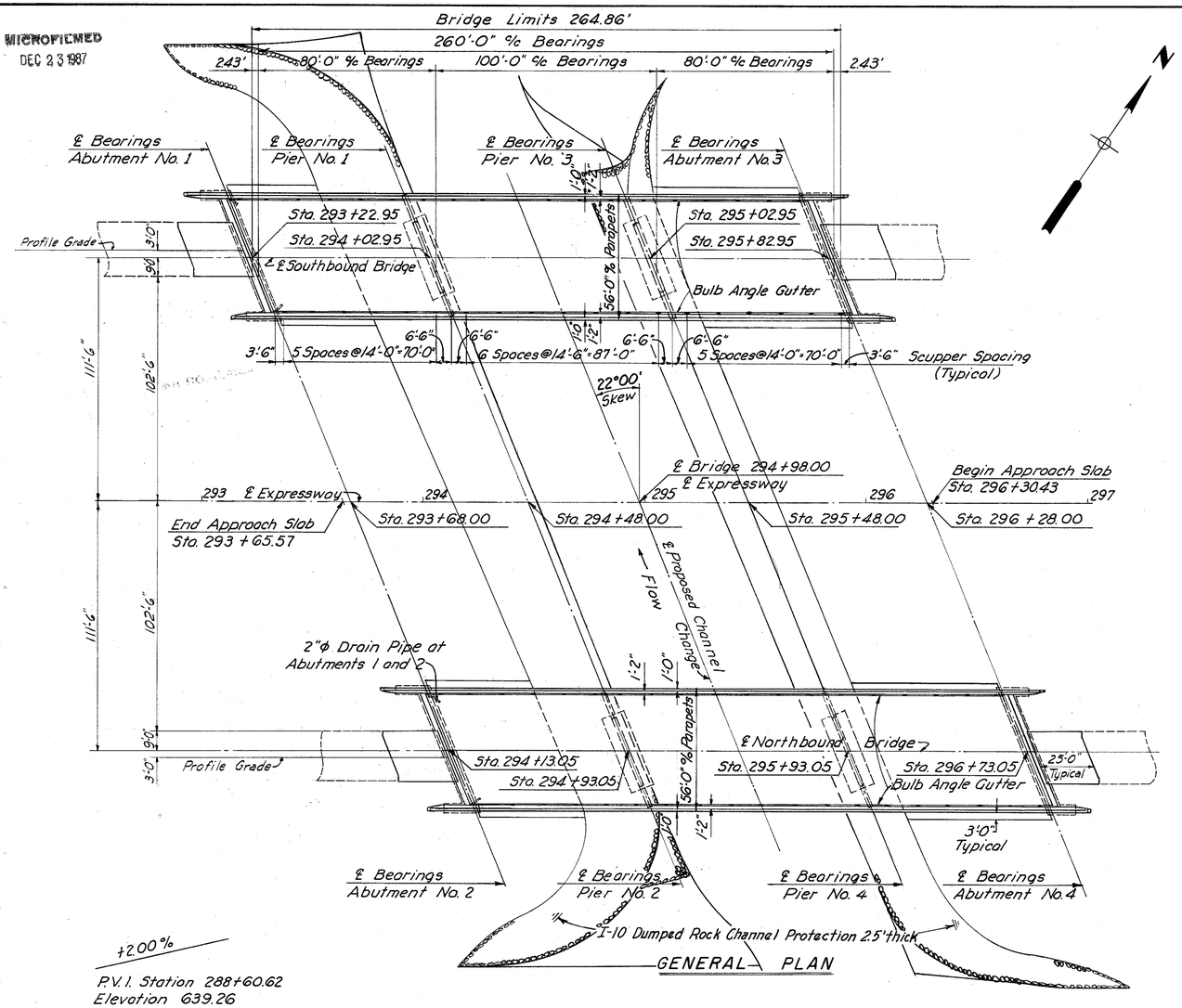

GENERAL PLAN

+2.00%

P.V.I. Station 288+60.62
Elevation 639.26
V.C. = 600'

GRADE DATA

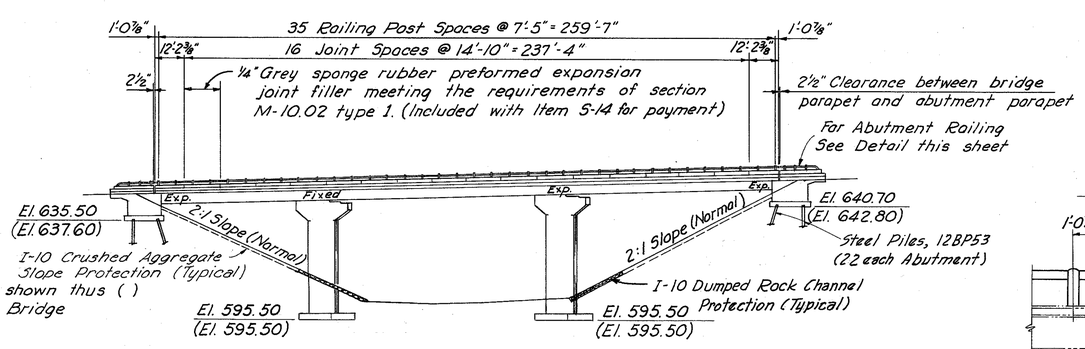

Foundation Elevations shown thus ( ) are for Northbound Bridge

ELEVATION

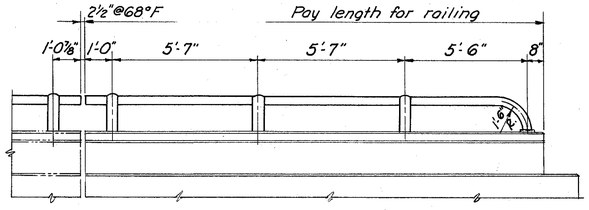

ABUTMENT RAILING DETAIL

GENERAL NOTES

- REFERENCE shall be made to Standard Drawings CSB-2-56, Sheets 2 & 3 of 6, revised 2-2-59, RB-1-55 dated 2-2-59, AR-1-57, revised 2-2-59, and to Supplemental Specification 1-127 revised 11-16-57.
- DESIGN SPECIFICATIONS: This structure conforms to the requirements of "Design Specifications for Highway Structures" of the State of Ohio, Department of Highways, dated 9-1-57, revised 2-21-58.
- LOADING: C.F. = 2,000 (57), Adequate for A.A.S.H.O. Alternate Loading.
- WELDING of structural steel shall be Class "A" except as otherwise shown. Any welds shown as field welds may, at the option of the Contractor, be made in shop.
- SLOPE PROTECTION shall be dumped rock channel protection meeting the requirements of Section I-10.06. The dumped rock channel protection shall extend from the toe of slope to Elevation 616.0 and across the slope area as shown on the General Plan and the Site Plan.
- EXCAVATION QUANTITY includes the removal of fill material between surface of proposed embankment and bottom of abutment. Backfill behind the abutments shall be made with material meeting the requirements of Sec. I-22 and shall be compacted in accordance with requirements for embankment compaction. Payment for the backfill shall be included with unclassified excavation.
- FOUNDATION BEARING PRESSURE: Footings are designed for a maximum bearing pressure of 4.5 tons per sq. ft. for the piers.

- PILES shall be driven with a hammer of not less than 11000 ft. lbs. per blow to firm contact with shale. If the length of penetration is approximately equal to the depth to shale according to bridge foundation investigation report, the firm contact shall be considered as attained when the capacity according to the formula in Sec. 5-18.05 is not less than the following value for a pile hammer of the indicated energy rating:
  For Abutment Piles:
  45 tons per pile using a 11000 ft. lb. hammer.
  45 tons per pile using a 15000 ft. lb. hammer or greater.
  If the energy rating of the hammer is between the ratings as shown above, the required formula capacity shall be determined by interpolation. The design load is 45 tons per pile for the abutment piles.
  FOOTINGS shall extend a minimum of 3" into shale, or to the elevation shown, whichever is lower.

MICHAEL BAKER, JR., CONSULTING ENGINEERS
ROCHESTER, PENNSYLVANIA

GENERAL PLAN & ELEVATION

BRIDGE NO. LAK-I-0541
OVER EAST BRANCH CHAGRIN RIVER

LAKE COUNTY — STA. 294+98.00

Designed	Drawn	Traced	Checked	Reviewed-Date	Revised
A.A.	P.W	P.W., I.N.	D.W.S.	K.A. 11-57	

MICROFILMED
DEC 23 1987

FED. RD. DIVISION	STATE	PROJECT	TYPE FUNDS
2	OHIO	I-1103(20)	

297
333

LAKE COUNTY
LAK-I-4.02

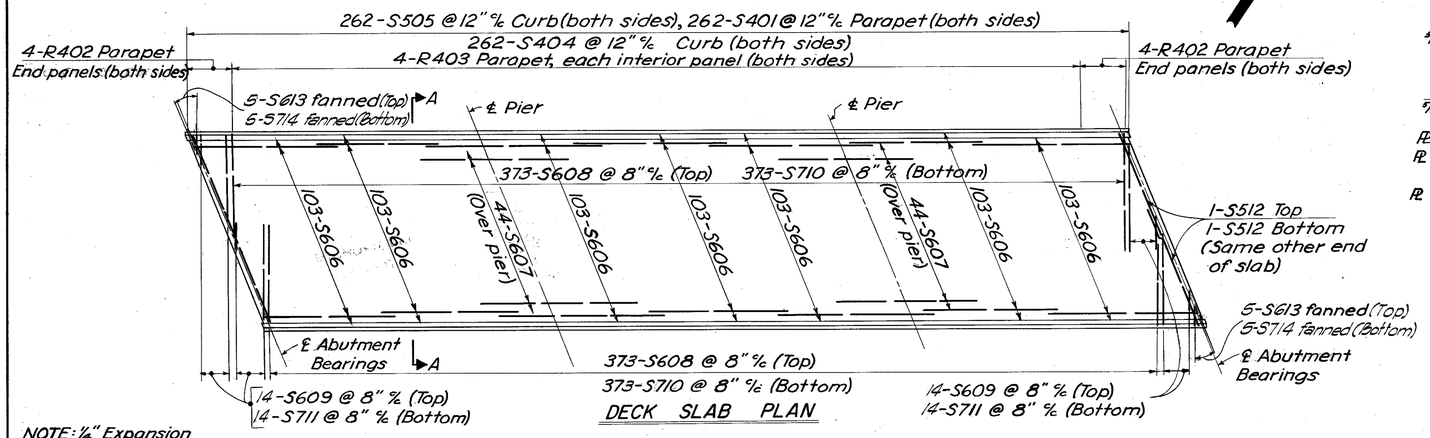

DECK SLAB PLAN

NOTE: ¼" Expansion joint in parapet. See General Plan & Elevation for spacing.

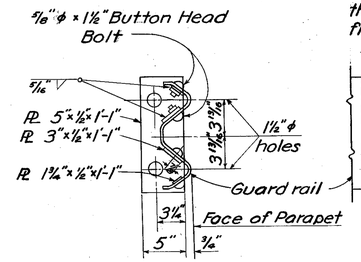

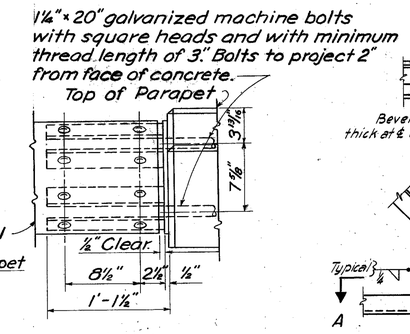

GUARD RAIL DETAIL

NOTE: Guard rail end connection assembly shall be galvanized after welding. Guard rail end connection to be included in cost of Bridge Railing.

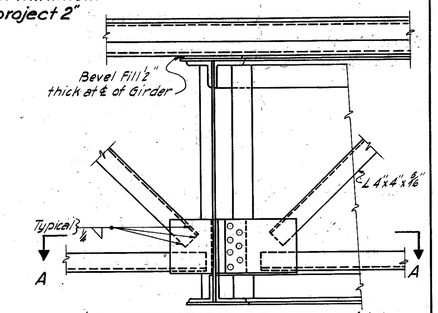

PART ELEVATION OF END DAM

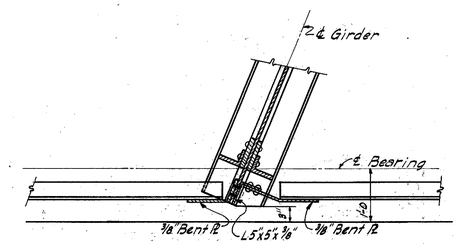

SECTION A-A

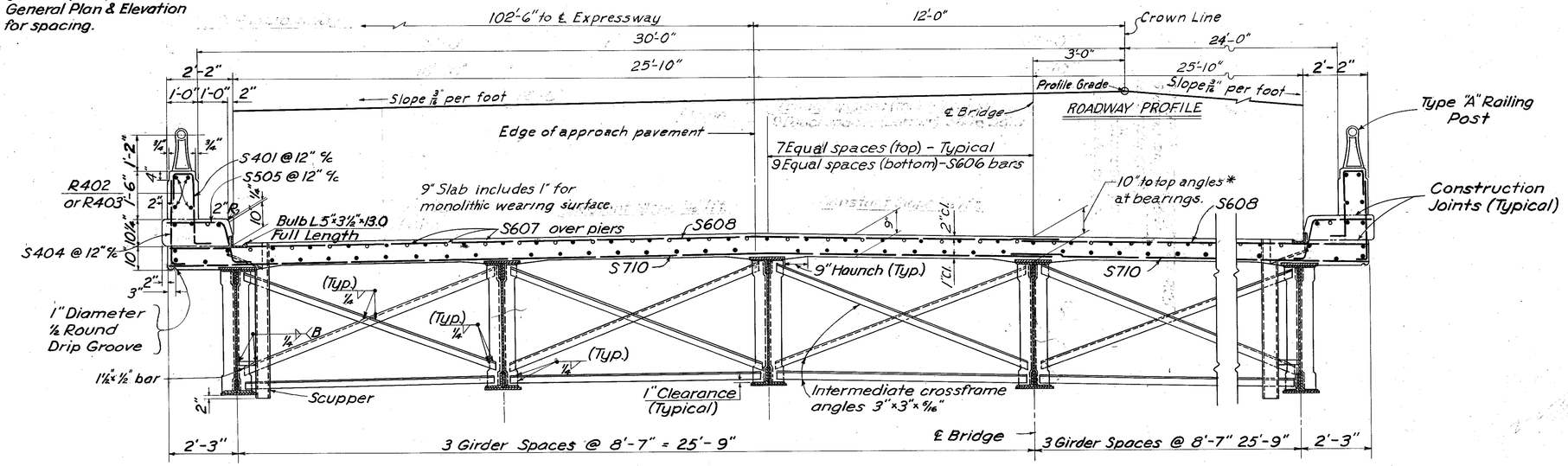

PART SECTION A-A

NOTES

- Refer to standard drawing CSB-2-56, sheets 2 & 3 of 6, revised 2-2-59, for details of End Dam, Gutters, Scuppers, Curb Plates and Pipe Drains.
- Refer to standard drawing AR-1-57, revised 2-2-59, for Aluminum Railing (Type A) and concrete parapet details.
- Concrete and reinforcing steel above parapet construction joints included with railing for payment.
- Concrete shall be class "C".
- See General Plan for spacing of scuppers and railing.

DECK PLACING PROCEDURE

In placing the deck concrete, construction joints will be permitted, parallel to the transverse reinforcing steel and near the middle of any span. Because of the flow of curing water from the surface of previously-placed deck concrete, the sequence of pours shall be upgrade, starting at the lowest end (or ends) on an inclined grade or verticle curve (or at an intermediate low point for a sagged verticle curve).

* This is the nominal dimension. The quantity of deck concrete to be paid for shall be based on this dimension, even though deviation from it may be necessary because the top flange of the beam may not have the exact camber or configuration required to place it parallel to the finished grade.

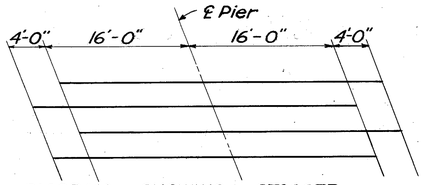

DIAGRAM SHOWING STAGGER OF S607 BARS OVER PIERS

MICHAEL BAKER, JR., CONSULTING ENGINEERS
ROCHESTER, PENNSYLVANIA

SUPERSTRUCTURE

BRIDGE NO. LAK-I-0541
OVER EAST BRANCH CHAGRIN RIVER

LAKE COUNTY — STA. 294+98.00

Designed	Drawn	Traced	Checked	Reviewed-Date	Revised
A.A	W.H. Jr.	F.E.H	D.W.S.	K.O. 11-57	

Sheet 6 of 7

MICROFILMED
DEC 23 1987

FED. RD. DIVISION	STATE	PROJECT	TYPE FUNDS
2	OHIO	I-1103(20)	

298/333

LAKE COUNTY
LAK-I-4.02

REINFORCING STEEL BAR SCHEDULE

Bending diagram types - All dimensions are out to out

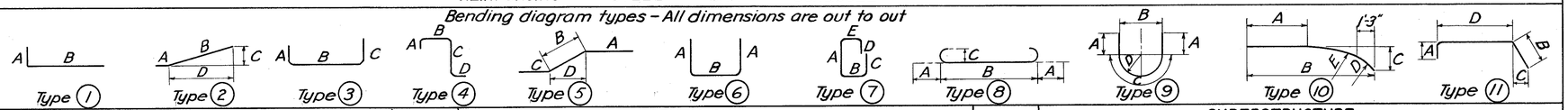

PIERS

MARK	TOTAL	SIZE	LENGTH	TYPE	A	B	C	D	E	WEIGHT
P701	288	7	12'-2"	8	10"	10'-6"	7			7164
P602	40	6	35'-6"	Str.						2133
P603	264	6	5'-6"	1	10"	4'-8"				2181
P504	206	5	35'-0"	9	15'-5"	2'-8"	4'-2"	1'-4"		7520
P605	264	6	21'-0"	Str.						8327
P506	6	5	17'-2"	Str.						107
P507	66	5	18'-11"	Str.						1302
P508	126	5	20'-11"	Str.						2749
P509	76	5	23'-2"	Str.						1837
P510	8	5	31'-11"	Str.						266
P611	24	6	15'-9"	2	1'-9"	14'-0"	4'-5"	13'-4"		568
P512	16	5	30'-6"	Str.						509
P513	16 Sets of 13	5	7'-5" to 10'-7"	6	2'-6" to 4'-7"	2'-8"				1952
P514	16 Sets of 8	5	10'-11" to 11'-9"	6	4'-3" to 4'-8"	2'-8"				1513
P515	84	5	17'-7"	6	7'-7"	2'-8"				1540
P1116	16	11	34'-0"	1	2'-8"	31'-4"				2890
P1117	48	11	31'-4"	Str.						7990
P518	168	5	5'-8"	6	1'-6"	2'-8"				994
P519	6	5	19'-2"	Str.						120

MARK	TOTAL	SIZE	LENGTH	PITCH	NO. of TURN	CORE DIA.	WEIGHT
	None Required						

Total Weight 51,662

ABUTMENTS

MARK	TOTAL	SIZE	LENGTH	TYPE	A	B	C	D	E	WEIGHT
A601	228	6	9'-9"	1	4'-6"	5'-5"				3339
A602	224	6	21'-6"	7	8'-10"	1'-5"	7'-6"	2'-10"	11"	7233
A503	32	5	31'-9"	Str.						1060
A504	20	5	15'-8"	Str.						327
A505	12	5	11'-0"	Str.						138
A506	8	5	16'-6"	Str.						138
A507	88	5	12'-9"	6	5'-11"	1'-2"				1170
A508	176	5	7'-1"	6	2'-2"	3'-0"				1300
A509	240	5	2'-6"	Str.						626
A510	112	5	30'-9"	Str.						3592
A511	168	5	6'-8"	6	1'-6"	3'-8"				1169
A512	228	5	3'-0"	Str.						713
A513	52	5	9'-11"	Str.						538
A514	52	5	9'-3"	Str.						502
A515	24	5	14'-6"	Str.						363
A516	24	5	14'-2"	Str.						355
A517	96	5	4'-0"	Str.						400
A518	24	5	8'-1"	Str.						202
A519	24	5	7'-8"	Str.						192
A520	24	5	12'-3"	Str.						307
A521	32	5	19'-3"	Str.						642
A522	16	5	3'-9"	Str.						63
A523	112	5	2'-6"	Str.						292
A524	80	5	2'-3"	1	6"	1'-9"				188
A525	8 Sets of 4	5	1'-10" to 2'-1"	1	6"	B=1'-4" to		1'-7"		67
A526	8 Sets of 5	5	1'-4" to 1'-10"	1	6"	B=10" to		1'-4"		66
A527	80	5	3'-4"	11	6"	1'-2"	2"	1'-8"		278
A528	8 Sets of 4	5	3'-0" to 3'-3"	11	6"	1'-2"	2"	1'-4" to 1'-7"		106
A529	8 Sets of 5	5	2'-6" to 3'-0"	11	6"	1'-2"	2"	10" to 1'-4"		115
A530	8	5	18'-10"	10	6'-1"	18'-10"	1'-0"		72'R	157
A531	8	5	19'-6"	10	5'-4"	19'-6"	1'-0"		72'R	163
A532	8	5	18'-0"	Str.						150
R433	32	4	18'-0"	Str.	Included with railing for payment					
A434	112	4	3'-0"	1	5"	2'-7"				224
A435	112	4	3'-9"	4	1'-0"	8"	1'-8"	5"		280

Total Weight 26,455

SUPERSTRUCTURE

MARK	TOTAL	SIZE	LENGTH	TYPE	A	B	C	D	E	WEIGHT
S401	1048	4	4'-6"	4	1'-2"	8"	2'-2"	6"		3150
R402	32	4	12'-1"	Str.	Included with railing for Payment.					
R403	256	4	14'-6"	Str.						
S404	1048	4	3'-0"	1	5"	2'-7"				2100
S505	1048	5	3'-5"	5	1'-7"	6"	1'-4"	6"		3738
S606	1442	6	39'-0"	Str.						84469
S607	176	6	36'-0"	Str.						9517
S608	1492	6	28'-10"	Str.						64615
S609	112	6	8'-6" to 30'-2"	Str.	Each Varies by 1'-8"					3252
S710	1492	7	29'-0"	Str.						88440
S711	112	7	8'-4" to 30'-2"	Str.	Each Varies by 1'-8"					4426
S512	16	5	30'-10"	Str.						515
S613	20	6	7'-0"	Str.						210
S714	20	7	7'-0"	Str.						286

Total Weight 264,718

ESTIMATED QUANTITIES

ITEM	TOTAL	UNIT	DESCRIPTION	SUPERSTR.	ABUTS.	PIERS	GENERAL
E-2	1540	Cu.Yd.	Unclassified Excavation		660	950	
E-2	Lump Sum		Cofferdams, Cribs & Sheeting				Lump Sum
E-3	2,200	Cu.Yd.	Channel Excavation				2,200
S-1	906	Cu.Yd.	Class "C" Concrete, Superstructure	906			
S-1	723	Cu.Yd.	Class "C" Concrete, Piers above Footings			723	
S-1	299	Cu.Yd.	Class "E" Concrete, Abutments above footings		299		
S-1	381	Cu.Yd.	Class "E" Concrete, Footings		205	176	
S-4	342,855	Lbs.	Reinforcing Steel	264,718	26,455	51,662	
S-7	1,197,600	Lbs.	Structural Steel	1,197,600			
S-8	1197,600	Lbs.	Field Painting of Structural Steel	1,197,600			
S-14	1,194	Lin.Ft.	Railing (Aluminum Rail & Supports, Concrete Parapet).				1,194
S-29	117	Cu.Yd.	Porous Backfill		117		
I-10	1,836	Sq.Yd.	Crushed Aggregate Slope Protection				1,836
I-10	2,400	Cu.Yd.	Dumped Rock Channel Protection				2,400
S-16	Lump Sum		First Test Pile				Lump Sum
S18	3,740	Lin.Ft.	Steel Piles, 12 BP 53		3,740		
I-127	4	Ea.	Bridge Delineators				4

REPLACEMENT BARS

MARK	NO.	SIZE	LENGTH	TYPE	WEIGHT
RE 401	1	4	5'-3"	Str.	
RE 501	2	5	5'-7"	Str.	
RE 601	10	6	5'-11"	Str.	
RE 701	6	7	6'-3"	Str.	
RE 1101	2	11	7'-6"	Str.	

REPLACEMENT BARS

If reinforcing bars are fabricated from stock which has been previously tested and approved by the Ohio Highway Testing Laboratory, test samples as provided in section S-4.02 need not be furnished and replacement bars will not be required.

BAR SIZE

Bar size is indicated in the bar mark. The first digit where three digits are used, and first two digits where four are used, indicate the bar size number. For example A401 is a no. 4 size bar and A1114 is a no. 11 size bar.

MICHAEL BAKER, JR., CONSULTING ENGINEERS
ROCHESTER, PENNSYLVANIA

REINFORCING STEEL LIST & ESTIMATED QUANTITIES

BRIDGE NO. LAK-I-0541
OVER EAST BRANCH CHAGRIN RIVER
LAKE COUNTY STA. 294+98.00

Designed	Drawn	Traced	Checked	Reviewed-Date	Revised
A.A. D.W.S.	P.W.	F.E.H.	D.W.S. C.S.A.	KA 11-57	

GENERAL NOTES

ITEM 513 – STRUCTURAL STEEL, MISC.: MISCELLANEOUS STRUCTURAL STEEL REPAIR, AS PER PLAN

THIS ITEM SHALL PROVIDE FOR REPLACEMENT OF DETERIORATED STRUCTURAL STEEL MEMBERS, PRINCIPALLY ALL CROSSFRAME ANGLES AND NOTED GUSSET PLATES AT THE INTERMEDIATE TRANSVERSE DECK JOINTS.

STRUCTURAL STEEL UNDER THIS ITEM WILL NOT REQUIRE SHOP DRAWINGS PRIOR TO FABRICATION. THE CONTRACTOR SHALL MAKE NECESSARY MEASUREMENTS AND PREPARE SKETCHES, DRAWINGS, TABLES, ETC. THE ENGINEER SHALL HAVE AUTHORITY AND RESPONSIBILITY FOR ENSURING THAT THE FABRICATED STEEL IS ACCEPTABLE. TECHNICAL ASSISTANCE WILL BE PROVIDED ON REQUEST BY THE BUREAU OF BRIDGES. MILL TEST REPORTS AND SHIPPING DOCUMENTS SHALL BE SUBMITTED TO THE ENGINEER FOR REVIEW AND APPROVAL PRIOR TO INCORPORATING STEEL ITEMS INTO THE WORK, AS REQUIRED BY 501.07. AFTER FABRICATION THE CONTRACTOR SHALL SUBMIT SHOP DRAWINGS TO THE ENGINEER FOR REVIEW AND APPROVAL TO ENSURE THAT THE DRAWINGS DEPICT THE STEEL AS ACTUALLY INCORPORATED INTO THE WORK. THE ENGINEER WILL THEN SEND ONE APPROVED SET TO THE BUREAU OF BRIDGES FOR INFORMATION. PAY WEIGHTS SHALL BE COMPUTED IN COMPLIANCE WITH 513 OF THE CONSTRUCTION AND MATERIAL SPECIFICATIONS AND SUBMITTED TO THE ENGINEER FOR HIS REVIEW AND APPROVAL. THE FABRICATOR SHALL FURNISH A 35 MILLIMETER MICROFILM COPY OF EACH SHOP DRAWING, WHICH SHALL BE MOUNTED ON A APERTURE CARD AS SPECIFIED IN 501.05.

COST BID FOR THIS ITEM SHALL INCLUDE ALL LABOR, MATERIAL AND EQUIPMENT REQUIRED TO REMOVE THE DETERIORATED MEMBER, PREPARE EXISTING STEEL FOR ATTACHMENT OF THE NEW MEMBER, WELDING, AND PAINTING UTILIZING SYSTEM OZEU. PAYMENT SHALL BE MADE UNDER:

ITEM	UNIT	DESCRIPTION
513	LBS.	STRUCTURAL STEEL MISC.: MISCELLANEOUS STRUCTURAL STEEL REPAIR, AS PER PLAN

ITEM 516 – STRUCTURAL EXPANSION JOINT INCLUDING ELASTOMERIC STRIP SEAL, AS PER PLAN

THIS ITEM SHALL PROVIDE FOR THE REMOVAL OF THE EXISTING INTERMEDIATE EXPANSION JOINT AND THE INSTALLATION OF A REPLACEMENT JOINT ASSEMBLY WHICH INCLUDES AN ELASTOMERIC STRIP SEAL. REMOVAL AND INSTALLATION SHALL BE IN CONFORMANCE WITH THE DETAILS SHOWN IN THE PLANS AND STD. DWG. EXJ-4-87.

COST BID FOR THIS ITEM SHALL INCLUDE ALL LABOR, MATERIAL AND EQUIPMENT NECESSARY TO REMOVE THE EXISTING JOINT ASSEMBLY AND TO INSTALL THE NEW SEALED JOINT ASSEMBLY INCLUDING REMOVAL AND REPLACEMENT OF PORTIONS OF THE EXISTING DECK AND PARAPET USING CLASS S CONCRETE, SEALING OF NEW PARAPET CONCRETE, AND PAINTING OF THE STRUCTURAL STEEL USING SYSTEM OZEU. PAYMENT SHALL BE MADE UNDER:

ITEM	UNIT	DESCRIPTION
516	L.F.	STRUCTURAL EXPANSION JOINT INCLUDING ELASTOMERIC STRIP SEAL, AS PER PLAN

ITEM SPECIAL – ROADWAY, MISC.: CHANNEL CLEANOUT

THIS ITEM PROVIDES FOR THE REMOVAL AND DISPOSAL OF DEBRIS LODGED AT THE STREAM PIERS OF BRIDGES NO. LAK-90-0605 L & R AND LAK-90-0645 L & R.

COST BID FOR THIS ITEM SHALL INCLUDE ALL LABOR AND EQUIPMENT NECESSARY TO COLLECT, REMOVE AND DISPOSE OF DEBRIS AS DIRECTED BY THE ENGINEER. PAYMENT SHALL BE MADE UNDER:

ITEM	UNIT	DESCRIPTION
SPECIAL	LUMP SUM	ROADWAY MISC.: CHANNEL CLEANOUT

QUANTITY LISTED IN PROJECT GENERAL SUMMARY.

ITEM 519 – PATCHING CONCRETE STRUCTURES, AS PER PLAN

THIS ITEM SHALL CONSIST OF PATCHING EXISTING CONCRETE (TYPICALLY CURBS) AT THE LOCATIONS AS SHOWN IN THE PLANS AS DIRECTED BY THE ENGINEER IN ACCORDANCE WITH ITEM 519 AND THE FOLLOWING ADDITIONAL REQUIREMENTS:

1. SURFACE PREPARATION SHALL INCLUDE THE THOROUGH SANDBLASTING AND AIR CLEANING OF ALL SURFACES WHICH ARE TO BE IN CONTACT WITH THE PATCHING MATERIAL.
2. REMOVAL DEPTH SHALL BE 3 INCHES MINIMUM OR TO SOUND CONCRETE
3. NO STEEL WIRE FABRIC SHALL BE REQUIRED.
4. THE CONCRETE MAY BE TROWELLED IN PLACE, PROVIDING THAT AN ACCEPTABLE SMOOTH APPEARANCE CAN BE ACHIEVED AS DETERMINED BY THE ENGINEER.

PAYMENT SHALL BE MADE UNDER THE SQUARE FOOT UNIT PRICE FOR ITEM 519–PATCHING CONCRETE STRUCTURES, AS PER PLAN.

ITEM SPECIAL – SEALING OF CONCRETE SURFACES (EPOXY) (SEE PROPOSAL)

A SEALER SHALL BE APPLIED TO THE EXPOSED CONCRETE SURFACES OF THE BRIDGES AS LISTED BELOW. SEE THE PROPOSAL FOR SEALER MATERIAL AND SURFACE PREPARATION REQUIREMENTS AND APPLICATION RATES AND PROCEDURES.

1. PARAPETS (ALL FACES).
2. DECK EDGES AND THE UDERSIDE IN ANY BAY LOCATED ADJACENT TO AN OPEN OR SEALED JOINT FOR A MINIMUM DISTANCE OF FIVE FEET FROM THE JOINT INCLUDING DECK UNDERSIDE BETWEEN INTERIOR BEAMS.
3. PIERS, INCLUDING CAPS AND COLUMNS.
4. ABUTMENTS, INCLUDING BACKWALLS AND WINGWALLS.

ITEM 516 – RESET BEARING, AS PER PLAN

THE FOLLOWING PROCEDURE SHALL BE USED TO RESET TILTED ROCKERS:

1. RAISE ALL THE BEAMS UNIFORMLY, AT THE SUPPORT UNTIL THERE IS NO CONTACT BETWEEN THE SOLE PLATE AND THE ROCKER (1/4" MAXIMUM).
2. CLEAN AND RESET THE ROCKER AND BASE PLATE IN FINAL POSITION BY CENTERING THE BASE PLATE UNDER THE SOLE PLATE BOTH LONGITUDINALLY AND TRANSVERSELY. BEARINGS SHOULD BE VERTICAL AT 60° (+) F.
3. LOWER BEAM.
4. PAINT BEARINGS AS DIRECTED BY ENGINEER UTILIZING SYSTEM OZEU.

COST OF ALL LABOR, MATERIAL, AND EQUIPMENT NECESSARY TO CLEAN, PAINT AND RESET THE BEARINGS SHALL BE INCLUDED IN THE PRICE BID FOR ITEM 516; RESET BEARING, AS PER PLAN.

ITEM SPECIAL – MICRO SILICA MODIFIED CONCRETE OVERLAY, (2.0" THICK)

THIS ITEM SHALL INCLUDE THE COST OF THE 2 INCH SCARIFICATION REMOVAL OF THE EXISTING 1-3/4 INCH CONCRETE OVERLAY AND 1/4 INCH OF THE ORIGINAL DECK.

ITEM 518 – STRUCTURE DRAINAGE, MISC.: SCUPPER PLUGGING

THIS ITEM SHALL PROVIDE FOR PLUGGING EXISTING SCUPPERS AS CALLED FOR IN THE PLANS. THE FOLLOWING PROCEDURES SHALL BE IMPLEMENTED TO PLUG THE SCUPPER:

A. REMOVE THE EXISTING 1 1/2"X 1/2" BAR DIRECTLY ABOVE THE 6 INCH DIA. PIPE OUTLET.

B. PLUG THE OUTLET PIPE WITH A STEEL PLATE WELDED INTO THE PIPE.

C. FILL THE SCUPPER BOX WITH CLASS S CONCRETE OR MSMC CONCRETE FLUSH WITH THE TOP OF SCUPPER.

COST BID FOR THIS ITEM SHALL INCLUDE ALL MATERIAL, LABOR AND EQUIPMENT NECESSARY TO COMPLETE THE ITEM. PAYMENT SHALL BE MADE UNDER:

ITEM	UNIT	DESCRIPTION
518	EACH	STRUCTURE DRAINAGE, MISC.

ITEM 518 – SCUPPER MODIFICATION, AS PER PLAN

THIS ITEM PROVIDES FOR MODIFICATION OF EXISTING SCUPPERS, WHICH ARE TO REMAIN IN SERVICE, IN ACCORDANCE WITH THE DETAIL SHOWN BELOW:

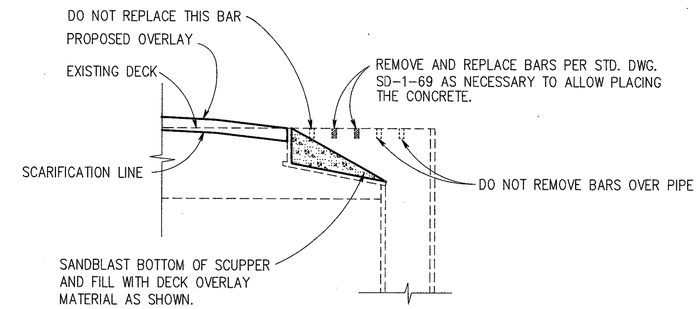

DETAIL SHOWN TYPICAL FOR DECKS RECEIVING NEW OVERLAY.

FOR BRIDGE DECKS WHICH RECEIVE WEARING SURFACE TREATMENT INSTEAD OF A NEW OVERLAY, THE FILL MATERIAL SHALL BE CLASS S OR MSMC CONCRETE.

COST OF ALL LABOR, MATERIAL, AND EQUIPMENT NECESSARY TO MODIFY THE SCUPPERS IN ACCORDANCE WITH THESE PROVISIONS SHALL BE INCLUDED IN THE PRICE BID FOR:

ITEM	UNIT	DESCRIPTION
518	EACH	SCUPPER MODIFICATION, AS PER PLAN

STILSON & ASSOCIATES, INC.
CONSULTING ENGINEERING AND ARCHITECTURE
COLUMBUS AND CLEVELAND

STRUCTURE
GENERAL NOTES
LAK-90/271-1.88/0.00

LAKE COUNTY

DESIGNED	DRAWN	TRACED	CHECKED	REVIEWED	DATE	REVISED
W.M.	R.T.P.		V.S.	G.W.M.	2/21/92	

ESTIMATED QUANTITIES

PARTICIPATION CODE
I = IM-271-6(74)252
II = IM-90-1(167)45
IV = 100% STATE
** = 50% FEDERAL
* = CONTINGENCY QUANTITY, SUBJECT TO NON-PERFORMANCE AT NO PENALTY TO THE STATE

CALC. BY V.S. DATE 2.20.92
CHKD. BY D.A.G. DATE 2/19/92

LAKE COUNTY
LAK-90/271-1.88/0.00

OHIO
FHWA REGION 5

ITEM	STRUCTURE NO. LAK-271- 0001 I	0001 IV	0105 II	0105 IV	0127 E II	0127 E IV	0145 SW II	0145 SW IV	STRUCTURE NO. LAK-90- 0243 R II	0243 R IV	0380 II	0380 IV	0528 L II	0528 L IV	0528 R II	0528 R IV	0599 L II	0599 L IV	0599 R II	0599 R IV	0605 L II	0605 L IV	0605 R II	0605 R IV	0645 L II	0645 L IV	0645 R II	0645 R IV	PARTICIPATION I	PARTICIPATION II	PARTICIPATION IV	ITEM	ITEM EXT.	GRAND TOTAL	UNIT	DESCRIPTION
202					500																									500		202	23500	500	S.Y.	WEARING COURSE REMOVED
509																													100	900		509	11401	1000*	LB.	REINFORCING STEEL, AS PER PLAN, GRADE 60
SPEC	1590			1924	749							2496		1074		1230	820			891	1725		1724		1637		1663		1590	8318	7615	SPEC	51267502	17523	S.Y.	SEALING OF CONCRETE SURFACES (EPOXY) (SEE PROPOSAL NOTE)
SPEC				1629				2166				1744		1061		1213				835											8648	SPEC	51273000	8648	S.Y.	TREATING CONCRETE BRIDGE DECKS WITH HMWM RESIN (SEE PROPOSAL NOTE)
513								1050	1050			4200																		1050	5250	513	16590	6300	LB.	‡STRUCTURAL STEEL, MISC.: MISCELLANEOUS STRUCTURAL STEEL REPAIR (SEE PROPOSAL NOTE)
513								5	5			4																		5	9	513	16800	14	EACH	STRUCTURAL STEEL, MISC.: RETROFIT PIN AND HANGER ASSEMBLY (SEE PROPOSAL NOTE)
513												4																			4	513	16800	4	EACH	STRUCTURAL STEEL, MISC.: REPLACE PIN AT FIXED HINGE (SEE PORPOSAL NOTE)
516								35	35																					35	35	516	11211	70	L.F.	STRUCTURAL EXPANSION JOINT INCLUDING ELASTOMERIC STRIP SEAL, AS PER PLAN
SPEC	59			81	68			68	68			178		146		174	115			128	116		116		111		111		59	705	775	SPEC	51614010	1539	L.F.	POURED POLYURETHANE JOINT SEAL
516																					8		8				7			23		516	46701	23*	EACH	RESET BEARING, AS PER PLAN
517					334																									334		517	76201	334	L.F.	RAILING FACED, AS PER PLAN, TYPE A
517													434		502		316		348		639		639		602		602			4082		517	76201	4082	L.F.	RAILING FACED, AS PER PLAN, TYPE B
518	8			12	3			7	6			12		8		8	4			4	16		16		14		14		8	73	51	518	12801	132	EACH	SCUPPER MODIFICATION, AS PER PLAN
518	4			4	4			10	10			12		8		12	6			8	16		16		24		24		4	100	54	518	62200	158	EACH	STRUCTURE DRAINAGE, MISC.: SCUPPER PLUGGING
519	285			5								1743																	285		1748	519	11101	2033*	S.F.	PATCHING CONCRETE STRUCTURE, AS PER PLAN **
SPEC	633			363	138							534		27		48		50		35	111		62		78		25		633	414	1057	SPEC	51911502	2104*	S.F.	PATCHING CONCRETE STRUCTURE WITH TROWELABLE MORTAR ** (SEE PROPOSAL NOTE)
SPEC								4						2		2				2											10	SPEC	51912510	10*	S.Y.	PATCHING CONCRETE BRIDGE DECK OVERLAYS
SPEC								1908						1431		1080				747											5166	SPEC	51912602	5166*	S.F.	LOW PRESSURE EPOXY INJECTING OF DELAMINATED CONCRETE - BRIDGE DECK TOP SURFACE
SPEC		244		86		180		440		580		262		18		4		72													1886	SPEC	51912602	1886*	S.F.	LOW PRESSURE EPOXY INJECTING OF DELAMINATED CONCRETE - BRIDGE DECK BOTTOM SURFACE
SPEC					500																									500		SPEC	51922006	500	S.Y.	MICRO SILICA MODIFIED CONCRETE OVERLAY (1.50" THICK)(SEE PROPOSAL NOTE)
SPEC	1067								2193								758				1665		1665		1504		1504		1067	9289		SPEC	51922006	10356	S.Y.	MICRO SILICA MODIFIED CONCRETE OVERLAY (2.00" THICK), (SEE PROPOSAL NOTE)
SPEC	49				13				64								25				42		56		50		38		49	288		SPEC	51922100	337*	C.Y.	MICRO SILICA MODIFIED CONCRETE OVERLAY (VARIABLE THICKNESS) (SEE PROPOSAL NOTE)
SPEC	LUMP																												LUMP			SPEC	51922300	LUMP		TEST SLAB (SEE PROPOSAL NOTE)
601		8		243		11		12				82						9		13		12				101		7			498	601	20001	498	S.Y.	CRUSHED AGGREGATE SLOPE PROTECTION, AS PER PLAN (SEE SHT. 15B)
SPEC	792		969								1300																		792	2269		SPEC	60739910	3061	L.F.	VANDAL PROTECTION FENCE, 8' STRAIGHT, COATED FABRIC
SPEC								2166						1061		1213				835											5275	SPEC	85050070	5275	S.Y.	BRIDGE DECK GROOVING (SEE PROPOSAL NOTE)

‡ AS PER PLAN

STILSON & ASSOCIATES, INC.
CONSULTING ENGINEERING AND ARCHITECTURE
COLUMBUS AND CLEVELAND

ESTIMATED QUANTITIES
LAK-90/271-1.88/0.00

LAKE COUNTY

DESIGNED	DRAWN	TRACED	CHECKED	REVIEWED	DATE	REVISED
W.M.	R.T.P.		V.S.	G.W.M.	2/21/92	

CALC. BY ____ DATE ____	LAKE COUNTY	OHIO
CHKD. BY ____ DATE ____	LAK-90/271-1.88/0.00	FHWA REGION 5

173/185

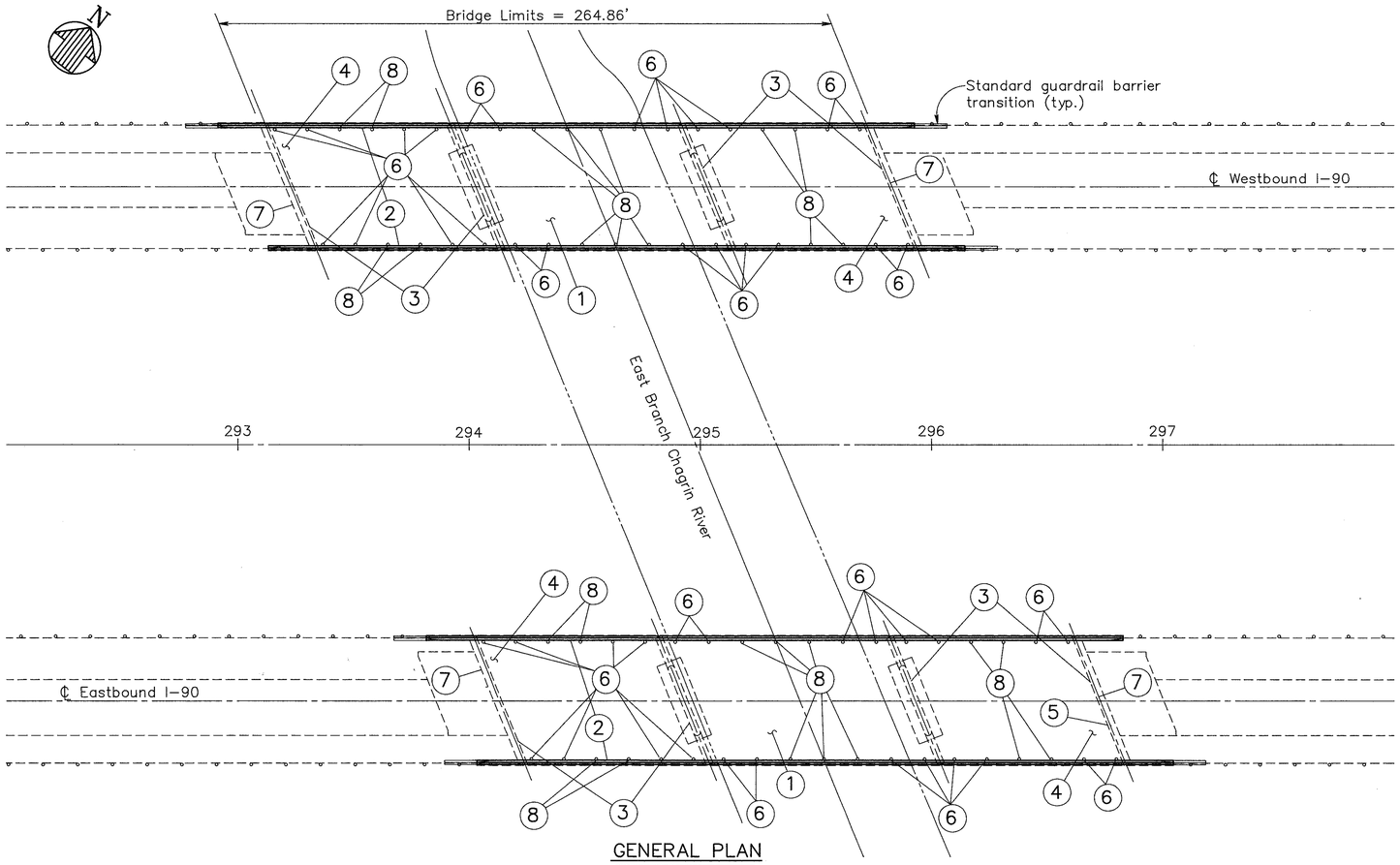

GENERAL PLAN

0 20 40
SCALE IN FEET

Item Special – Patching Concrete with Trowelable Mortar		
Location	Estimated Quantity – SQ. FT.	
	LAK90-0645 L	LAK90-0645 R
Curbs		
Parapets		
Piers		
Abutments	51	15
Wingwalls	2	2
50% Expansion Factor	27	8
Total	**80**	25

Survey date: 2-17-92

INDEX OF PROPOSED WORK ITEMS

Item	Description	Detail Location
1	Replace existing concrete overlay with 2 inch microsilica modified concrete overlay	Gen. Notes & Trans. Section
2	Install safety shape parapet	Gen. Notes & sheet 18/22
3	Patch and seal concrete surfaces	Gen. Notes
4	Slope repair and protection	Gen. Notes
5	Reset bearings	Gen. Notes
6	Plug existing scupper	Gen. Notes
7	Seal expansion joint with poured polyurethane joint seal	Gen. Notes
8	Modify existing scupper	Gen. Notes

EXISTING STRUCTURES

TYPE: Continuous steel girders with reinforced concrete deck & substructure.
SPANS: 80'-100'-80' c/c bearings
ROADWAY: 54'-0" f/f of parapets
LOAD FREQUENCY: C.F. = 2000(57) Adequate for AASHTO alternate loading.
SKEW: 22°00'00" R.F.
WEARING SURFACE: 1" monolithic concrete + 1¾" concrete overlay
APPROACH SLAB: AS-1-54 (25' long)
ALIGNMENT: Tangent
SUPERELEVATION: None

MODIFIED STRUCTURES

TYPE: Continuous steel girders with reinforced concrete deck & substructure.
SPANS: 80'-100'-80' c/c bearings
ROADWAY: 51'-8" t/t deflector parapets
LOAD FREQUENCY: C.F. = 2000(57) Adequate for AASHTO alternate loading.
SKEW: 22°00'00" R.F.
WEARING SURFACE: 2" microsilica modified concrete
APPROACH SLAB: AS-1-54 (25' long)
ALIGNMENT: Tangent
SUPERELEVATION: None

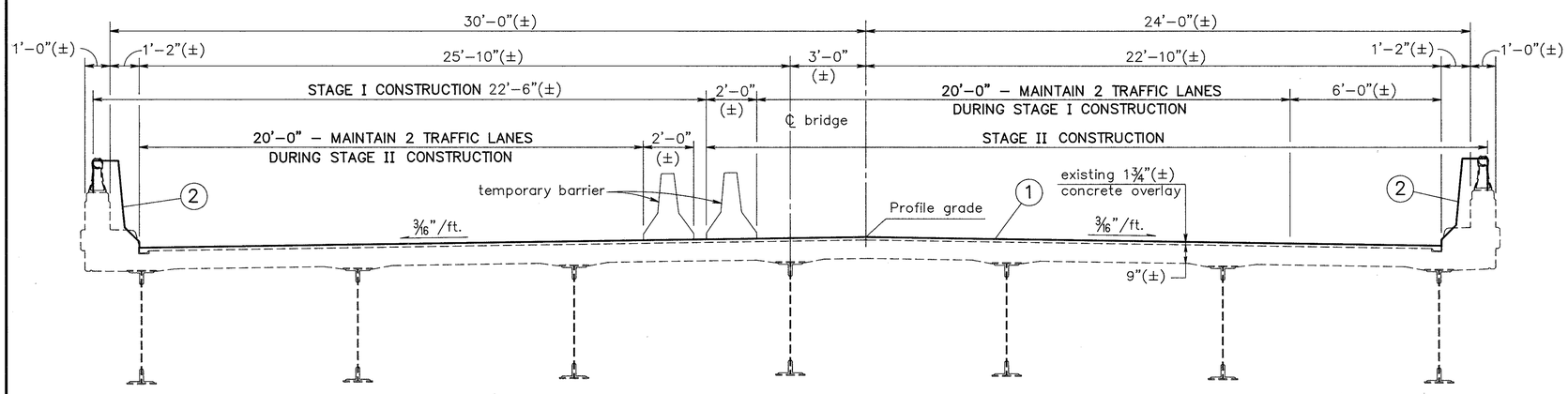

TRANSVERSE SECTION

0 2 4 8
SCALE IN FEET

16/22

STILSON & ASSOCIATES, INC.
CONSULTING ENGINEERING AND ARCHITECTURE
COLUMBUS AND CLEVELAND

GENERAL PLAN & TRANSVERSE SECTION

BRIDGE NO. LAK-90-0645 L&R
OVER EAST BRANCH CHAGRIN RIVER

LAKE COUNTY — STA. 293+65.57 TO STA. 296+30.43

DESIGNED	DRAWN	TRACED	CHECKED	REVIEWED	DATE	REVISED
W.M.	R.T.P.		V.S.	G.W.M.	2/21/92	