| FED. RD. DIVISION | STATE | PROJECT | |
|---|---|---|---|
| 2 | OHIO | | |

85
174

CUYAHOGA COUNTY
CUY-290-0.27

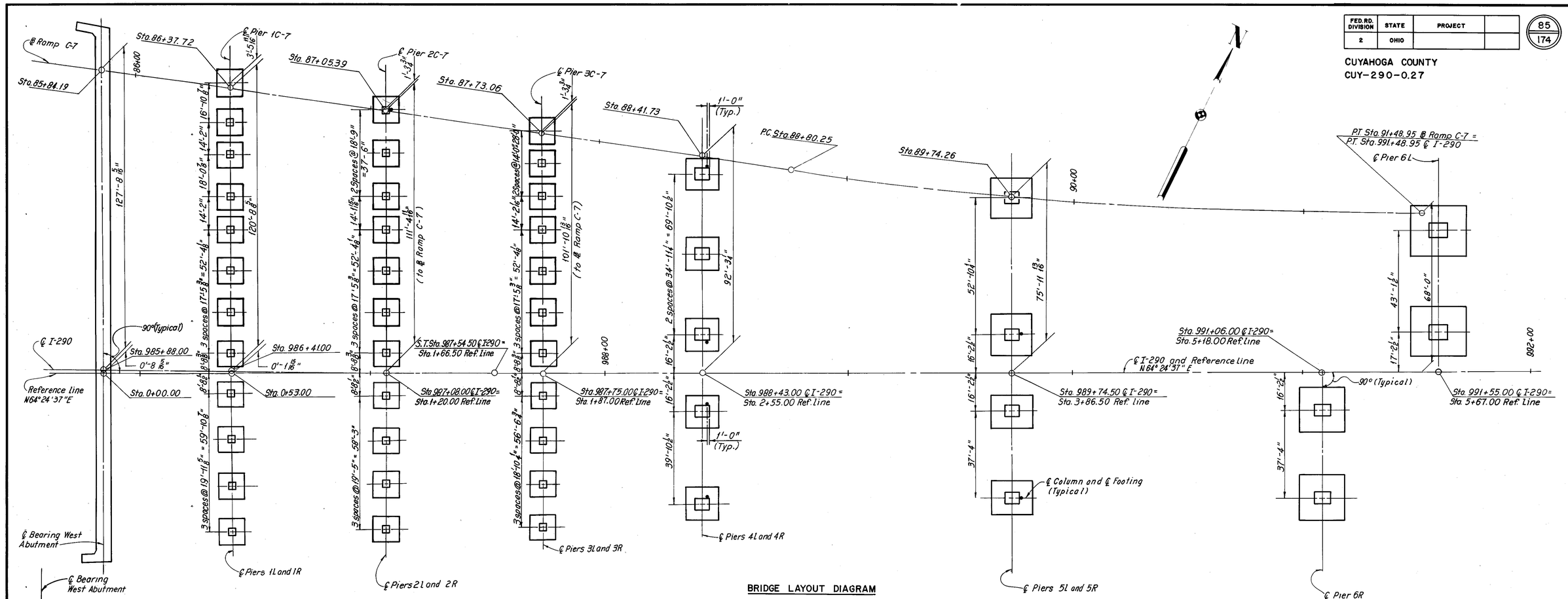


BRIDGE LAYOUT DIAGRAM

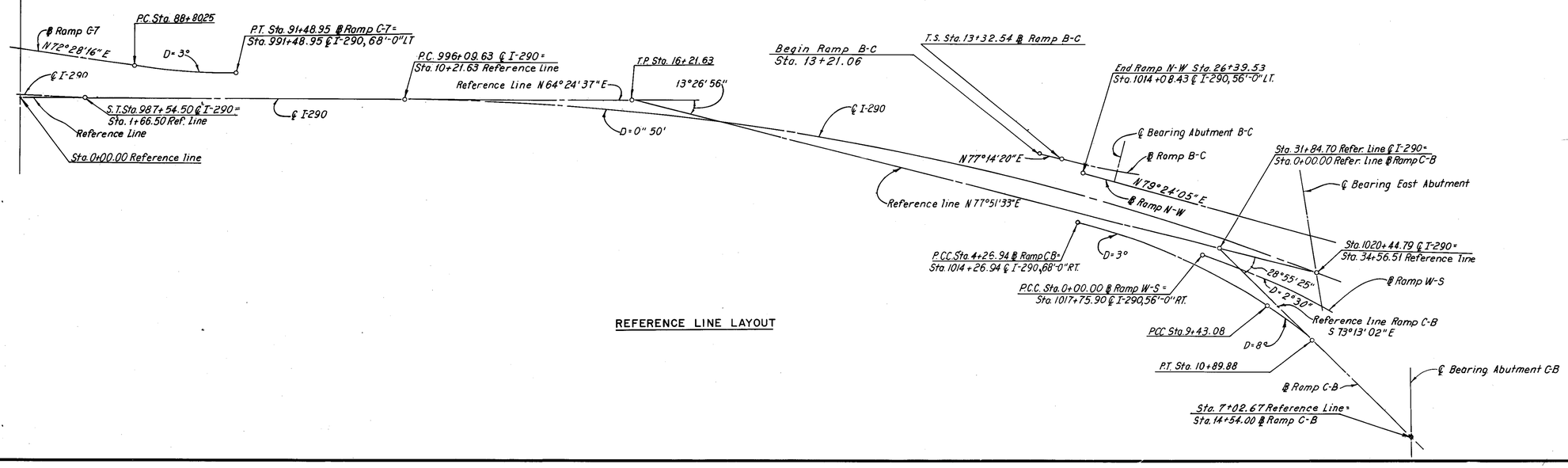


REFERENCE LINE LAYOUT

Note:
• Indicates scupper pipe location.

H.N.T.B. BR. NO. 9 PART I - SUBSTRUCTURE

HOWARD, NEEDLES, TAMMEN & BERGENDOFF
CONSULTING ENGINEERS
KANSAS CITY CLEVELAND NEW YORK

# BRIDGE LAYOUT DIAGRAM
# WEST ABUTMENTS THRU PIER 6L

I-290 OVER CUYAHOGA RIVER

BR. NO. CUY-290-0110 STA. 985+85.75 TO STA. 1020+47.57 (℄ I-290)

CLEVELAND CUYAHOGA COUNTY OHIO

| DRAWN N.C.B. | TRACED H.C.H. | CHECKED D.W. | REVIEWED C.A.B. | REVISED |
|---|---|---|---|---|
| DATE 3-3-70 | DATE 5-18-70 | DATE 5-8-70 | DATE 10-18-85 | SHEET 12/80 |

| FED. RD. DIVISION | STATE | PROJECT | |
|---|---|---|---|
| 2 | OHIO | | |

86
174

CUYAHOGA COUNTY
CUY-290-0.27

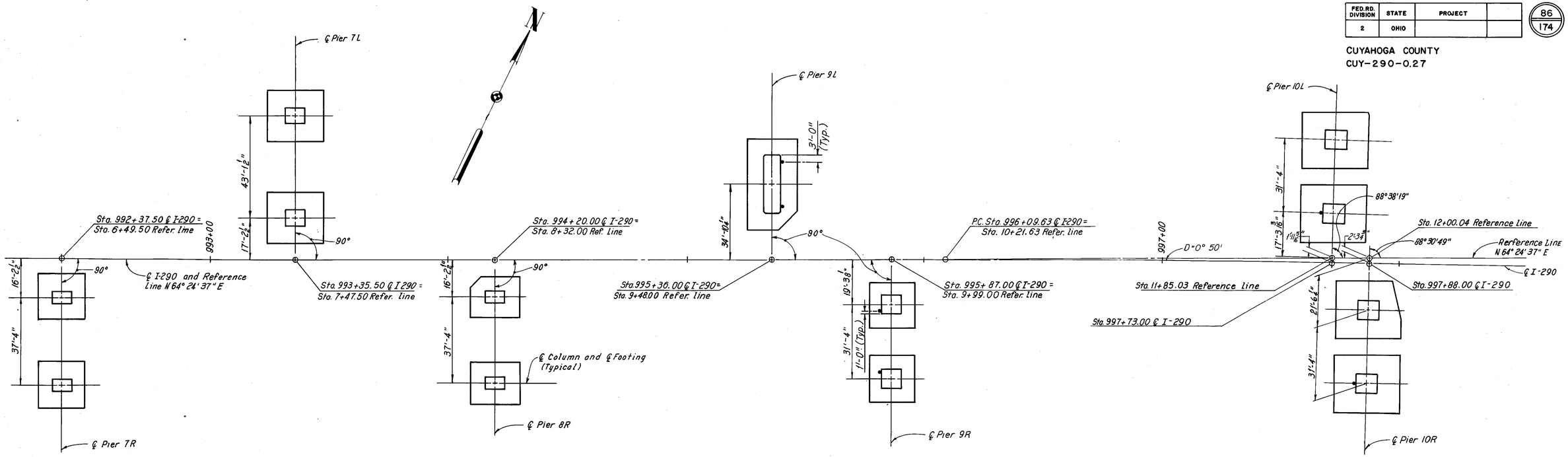


BRIDGE LAYOUT DIAGRAM

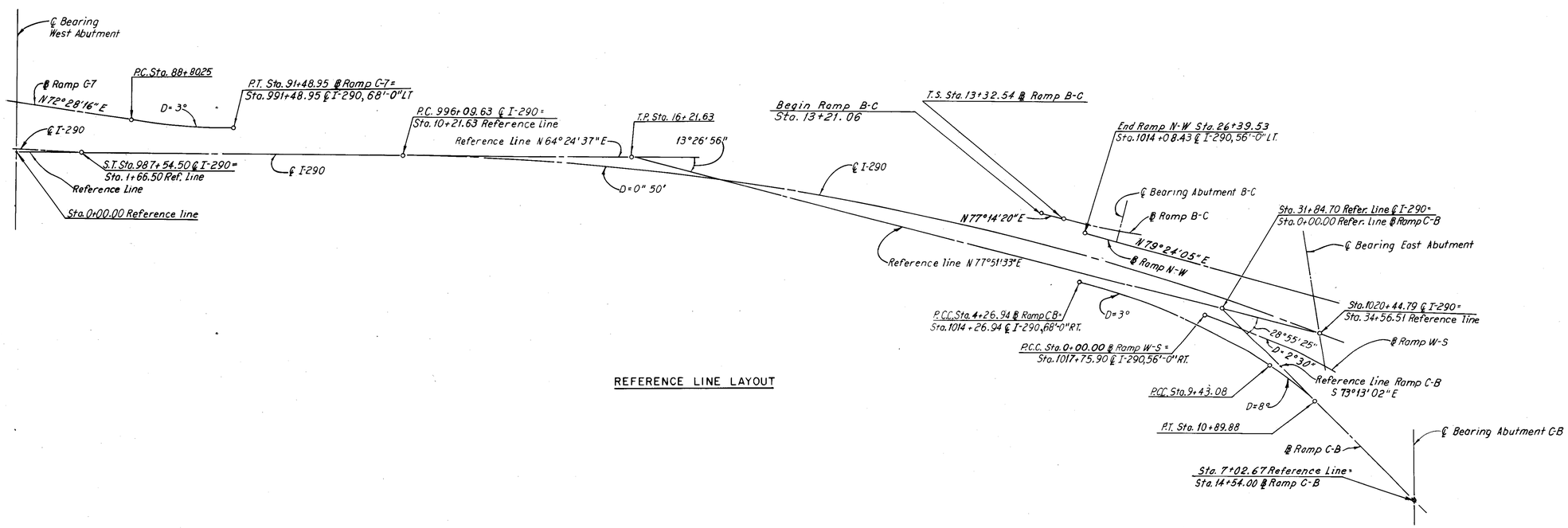


REFERENCE LINE LAYOUT

Note:
• Indicates scupper pipe location.

H.N.T.B. BR. NO. 9 PART I - SUBSTRUCTURE

HOWARD, NEEDLES, TAMMEN & BERGENDOFF
CONSULTING ENGINEERS
KANSAS CITY CLEVELAND NEW YORK

## BRIDGE LAYOUT DIAGRAM
## PIER 7R THRU PIER 10R

I-290 OVER CUYAHOGA RIVER

BR. NO. CUY-290-0110 STA. 985+85.75 TO STA. 1020+47.57 (℄ I-290)

CLEVELAND CUYAHOGA COUNTY OHIO

| DRAWN M.C.B | TRACED H.C.H | CHECKED DMP | REVIEWED DAB | REVISED |
|---|---|---|---|---|
| DATE 3-6-70 | DATE 5-16-70 | DATE 5-11-70 | DATE 10-18-85 | SHEET 13/80 |

| FED. RD. DIVISION | STATE | PROJECT | |
|---|---|---|---|
| 2 | OHIO | | |

87
174

CUYAHOGA COUNTY
CUY-290-0.27

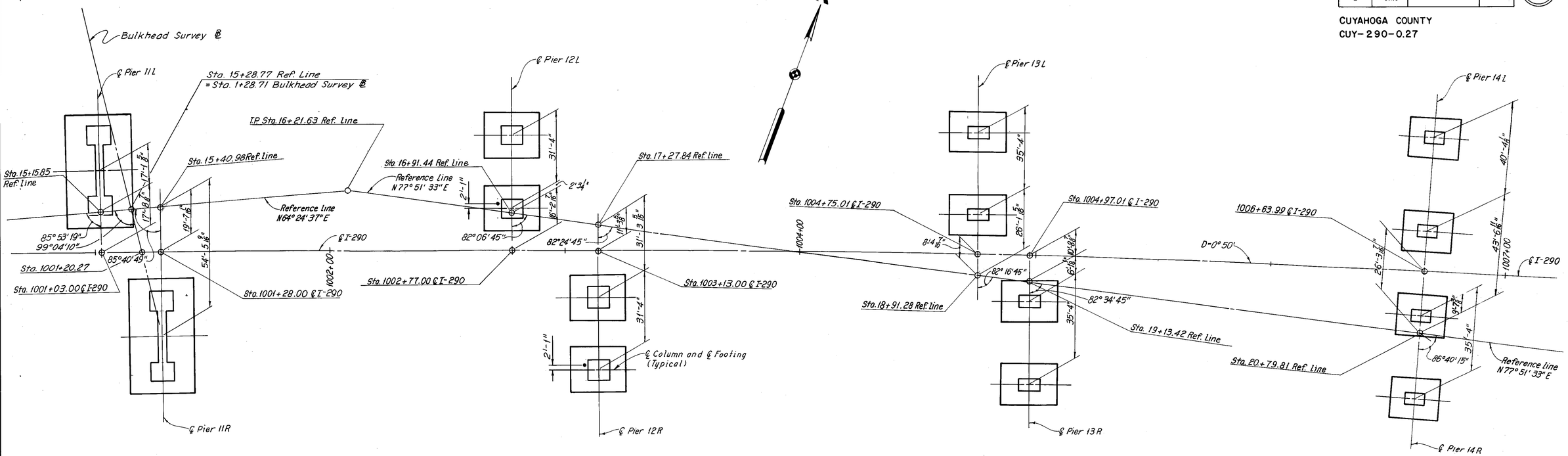


BRIDGE LAYOUT DIAGRAM

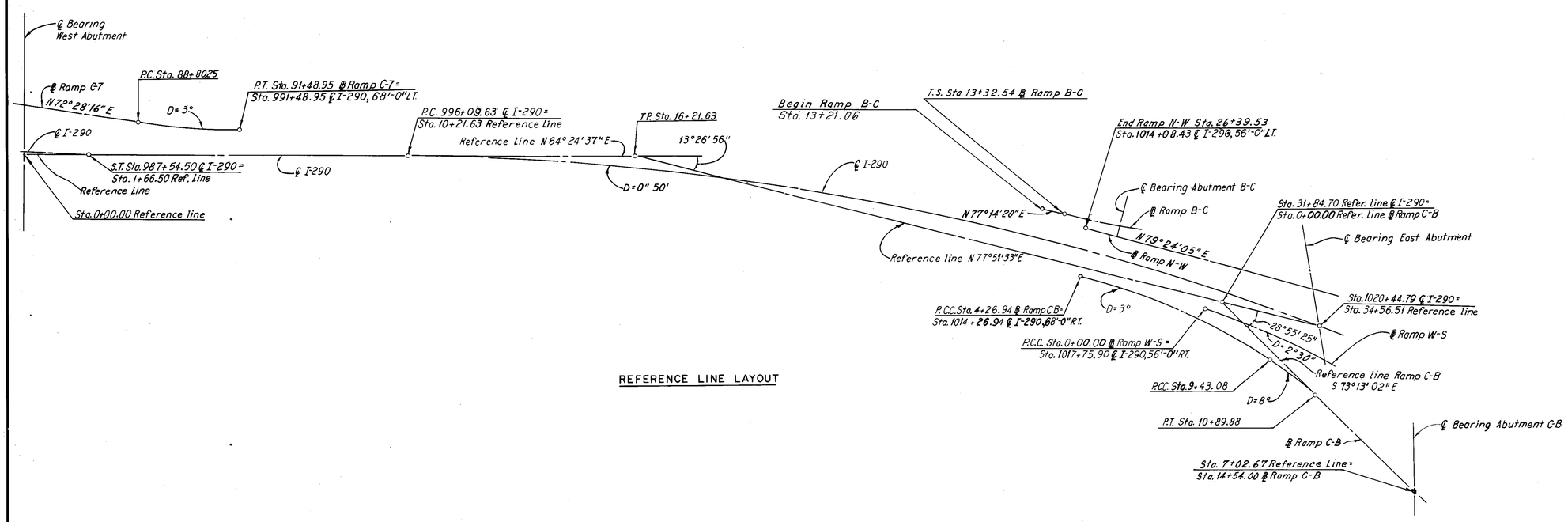


REFERENCE LINE LAYOUT

Note:
• Indicates scupper pipe location.

H.N.T.B. BR. NO. 9 PART I - SUBSTRUCTURE

HOWARD, NEEDLES, TAMMEN & BERGENDOFF
CONSULTING ENGINEERS
KANSAS CITY CLEVELAND NEW YORK

## BRIDGE LAYOUT DIAGRAM
## PIER 11L THRU PIER 14

I-290 OVER CUYAHOGA RIVER

BR. NO. CUY-290-0110 STA. 985+85.75 TO STA. 1020+47.57 (℄ I-290)

CLEVELAND CUYAHOGA COUNTY OHIO

| DRAWN MCB | TRACED HCH | CHECKED DMK | REVIEWED CMB | REVISED |
|---|---|---|---|---|
| DATE 6-20-70 | DATE 6-29-70 | DATE 7-1-70 | DATE 10-18-85 | SHEET 14/80 |

| FED. RD. DIVISION | STATE | PROJECT | |
|---|---|---|---|
| 2 | OHIO | | |



CUYAHOGA COUNTY
CUY-290-0.27

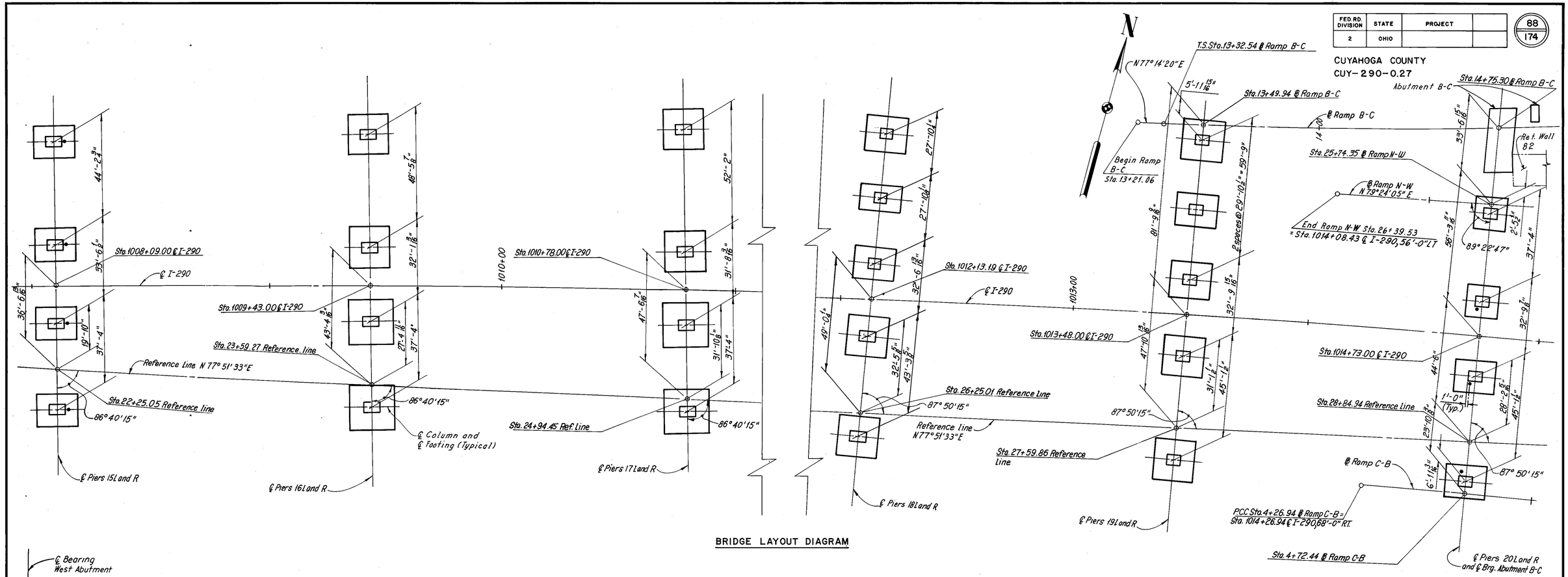


BRIDGE LAYOUT DIAGRAM

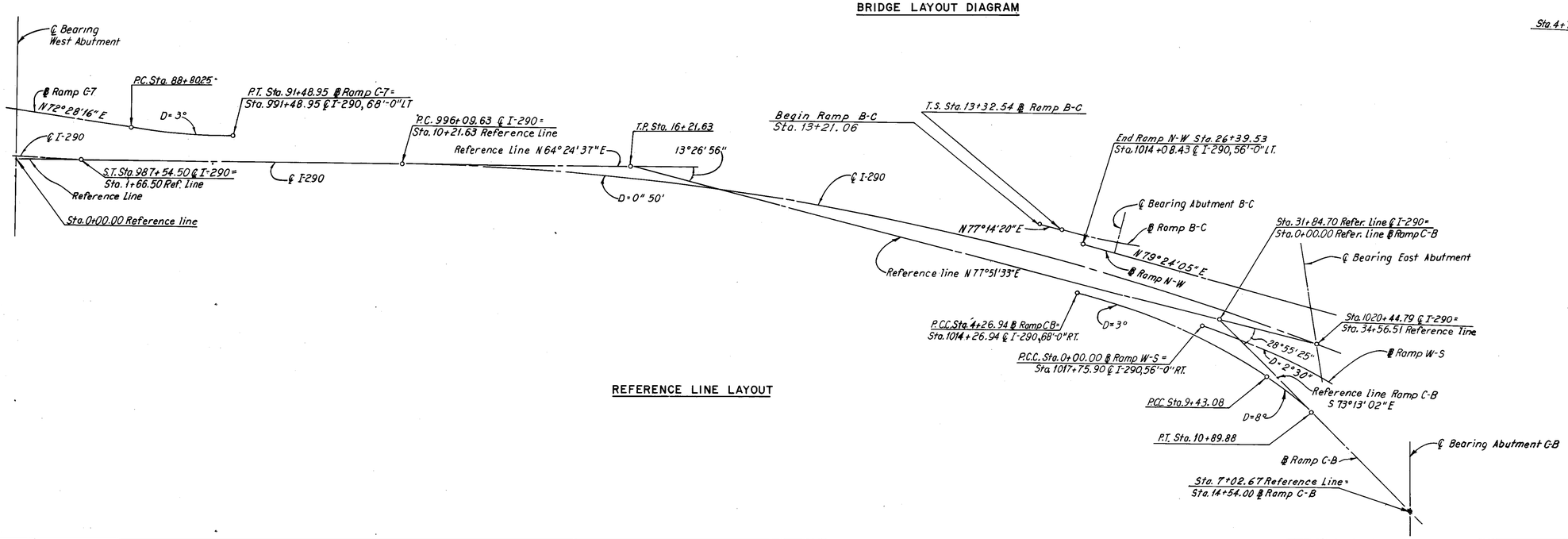


REFERENCE LINE LAYOUT

Note:
• Indicates scupper pipe location

H.N.T.B. BR. NO. 9 PART I - SUBSTRUCTURE

HOWARD, NEEDLES, TAMMEN & BERGENDOFF
CONSULTING ENGINEERS
KANSAS CITY CLEVELAND NEW YORK

BRIDGE LAYOUT DIAGRAM
PIER 15 THRU PIER 20
AND ABUTMENT B-C

I-290 OVER CUYAHOGA RIVER

BR. NO. CUY-290-0110 STA. 985+85.75 TO STA. 1020+47.57 (℄ I-290)

CLEVELAND CUYAHOGA COUNTY OHIO

| DRAWN M.C.B. | TRACED H.C.H. | CHECKED D.M.P. | REVIEWED LAB | REVISED |
|---|---|---|---|---|
| DATE 4-9-70 | DATE 6-23-70 | DATE 6-25-70 | DATE 10-18-85 | SHEET 15/80 |

| FED. RD. DIVISION | STATE | PROJECT | |
|---|---|---|---|
| 2 | OHIO | | |

89 / 174

CUYAHOGA COUNTY
CUY-290-0.27

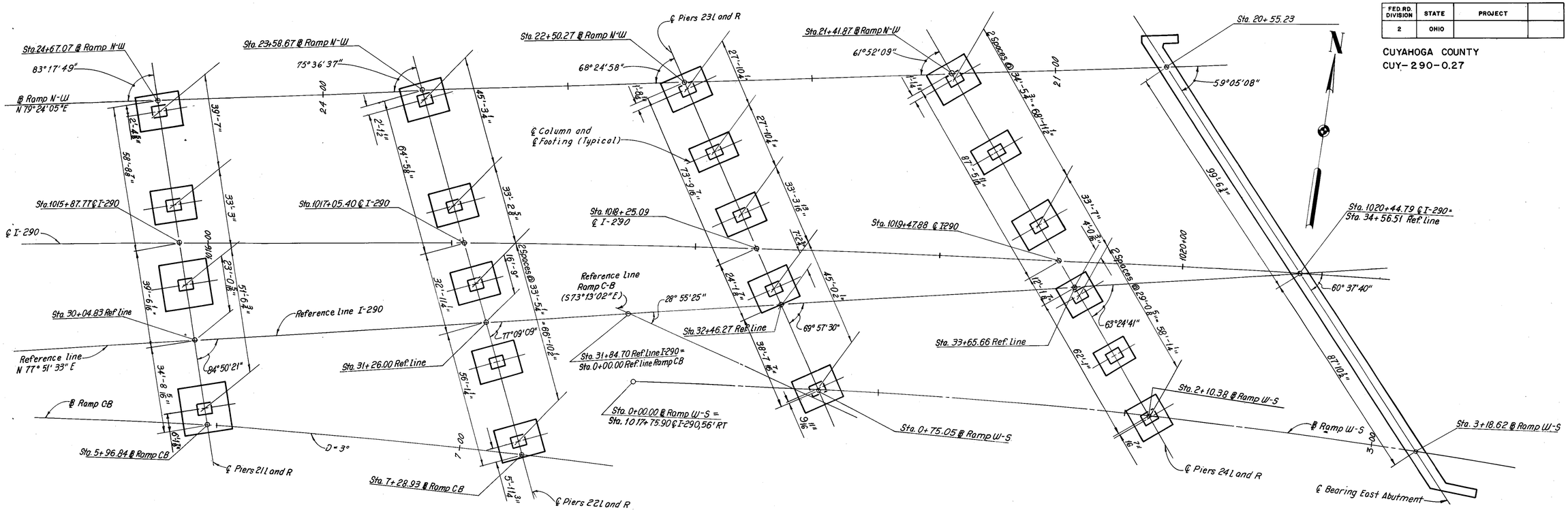


BRIDGE LAYOUT DIAGRAM

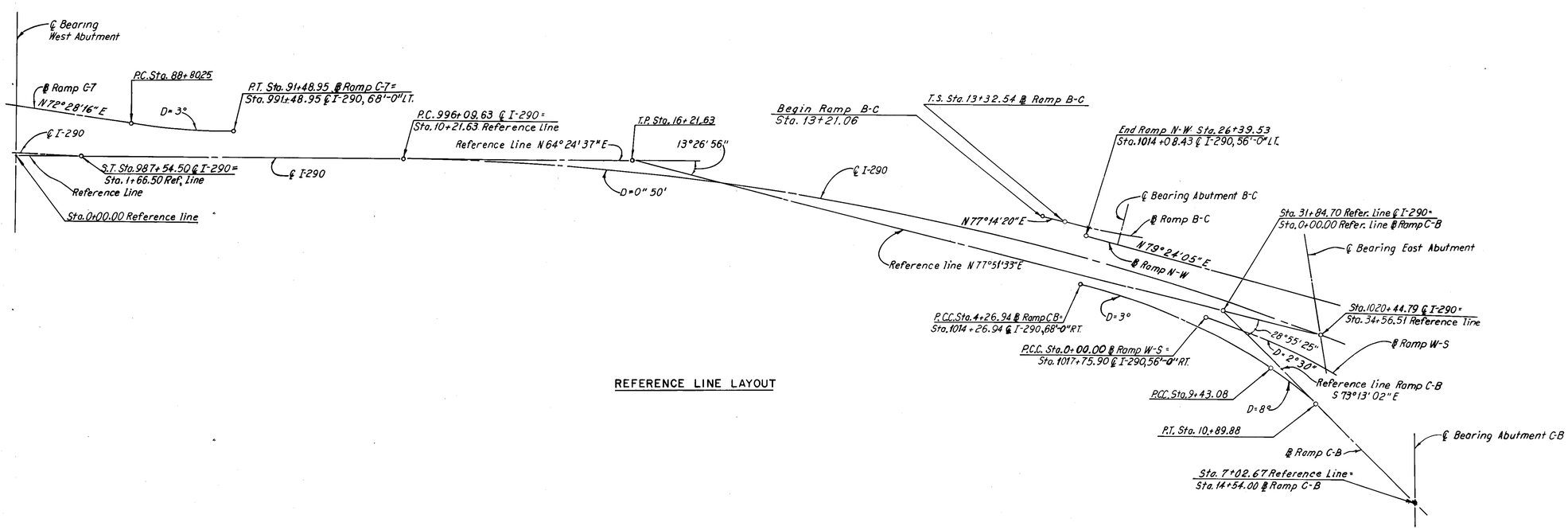


REFERENCE LINE LAYOUT

Note:
For scupper pipe locations at East Abutment see Sheets 23/80 and 24/80

H.N.T.B. BR. NO. 9 PART I - SUBSTRUCTURE

HOWARD, NEEDLES, TAMMEN & BERGENDOFF
CONSULTING ENGINEERS
KANSAS CITY CLEVELAND NEW YORK

# BRIDGE LAYOUT DIAGRAM
# PIER 21 THRU EAST ABUTMENT

I-290 OVER CUYAHOGA RIVER

BR. NO. CUY-290-0110 STA. 985+85.75 TO STA. 1020+47.57 (℄ I-290)

CLEVELAND CUYAHOGA COUNTY OHIO

| DRAWN M.C.B. | TRACED HCH | CHECKED DMB | REVIEWED CAB | REVISED |
|---|---|---|---|---|
| DATE 3-12-70 | DATE 6-17-70 | DATE 6-9-70 | DATE 10-18-85 | SHEET 16/80 |

| FED.RD. DIVISION | STATE | PROJECT | |
|---|---|---|---|
| 2 | OHIO | | |

90
174

CUYAHOGA COUNTY
CUY-290-0.27

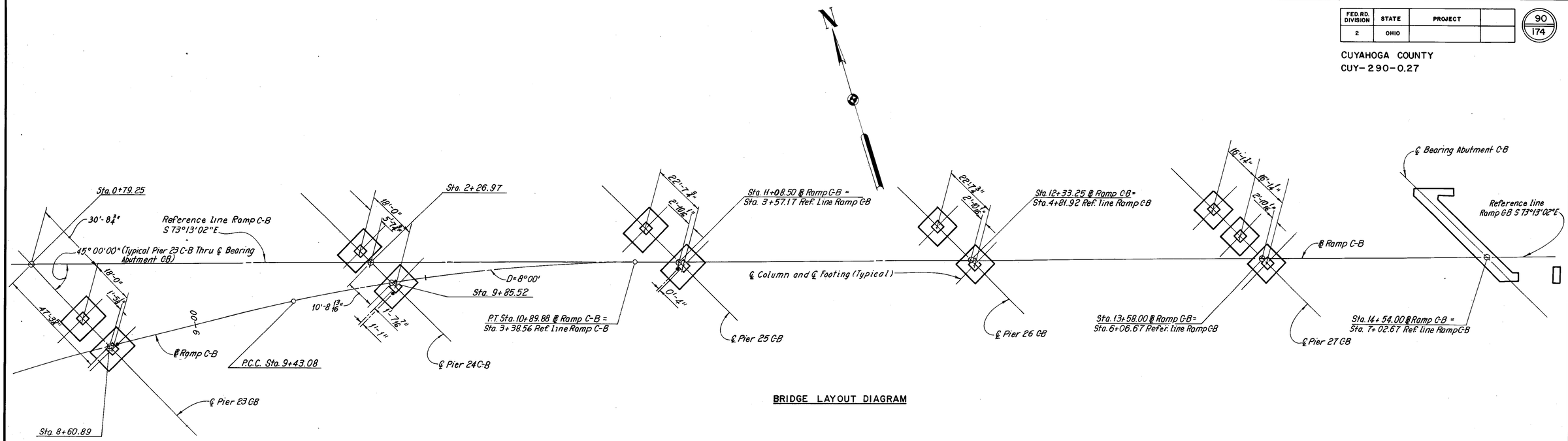


BRIDGE LAYOUT DIAGRAM

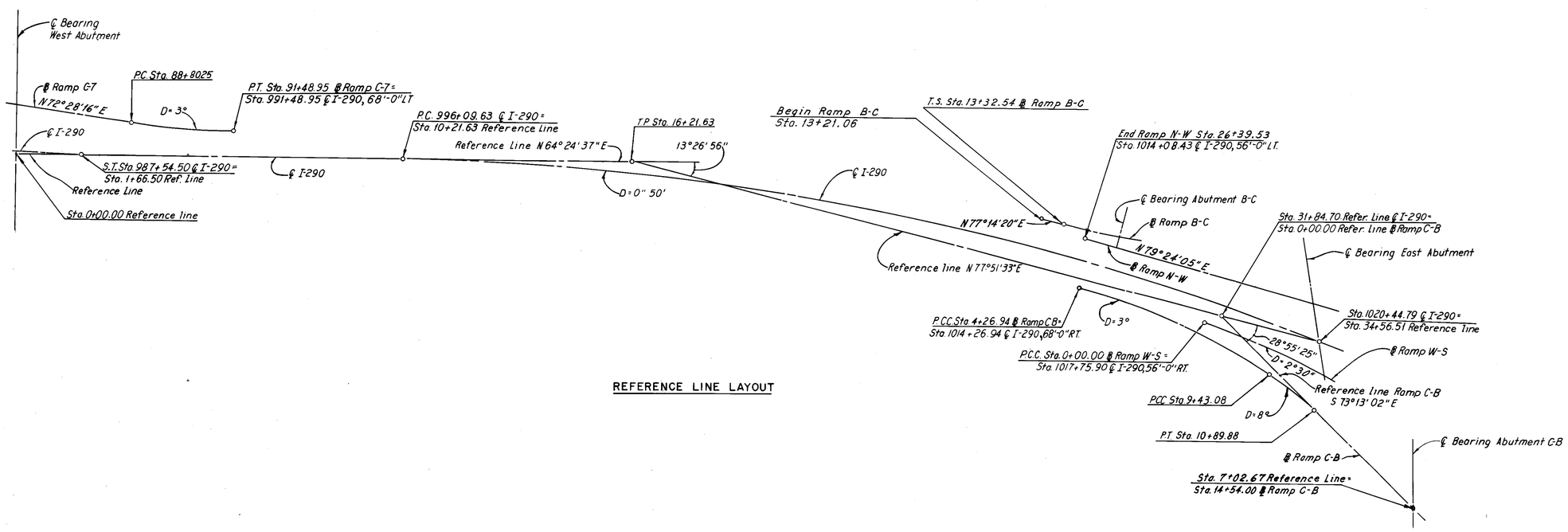


REFERENCE LINE LAYOUT

Note:
• Indicates scupper pipe location.

H.N.T.B. BR. NO. 9 PART I - SUBSTRUCTURE

HOWARD, NEEDLES, TAMMEN & BERGENDOFF
CONSULTING ENGINEERS
KANSAS CITY CLEVELAND NEW YORK

# BRIDGE LAYOUT DIAGRAM
# PIER 23 CB THRU ABUTMENT CB

I-290 OVER CUYAHOGA RIVER

BR. NO. CUY-290-0110 STA. 985+85.75 TO STA. 1020+47.57

CLEVELAND CUYAHOGA COUNTY (℄ I-290) OHIO

| DRAWN M.C.B. | TRACED H.C.H. | CHECKED D.W.C. | REVIEWED C.H.B. | REVISED |
|---|---|---|---|---|
| DATE 3-12-70 | DATE 6-16-70 | DATE 6-9-70 | DATE 10-18-85 | SHEET 17/80 |

| FHWA REGION | STATE | PROJECT | |
|---|---|---|---|
| 2 | OHIO | | |

140/174

CUYAHOGA COUNTY
CUY- 290-027

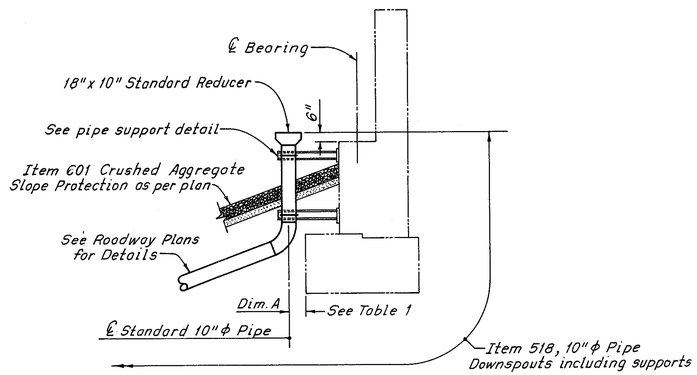


DRAINAGE PIPE DETAIL AT EAST ABUTMENT

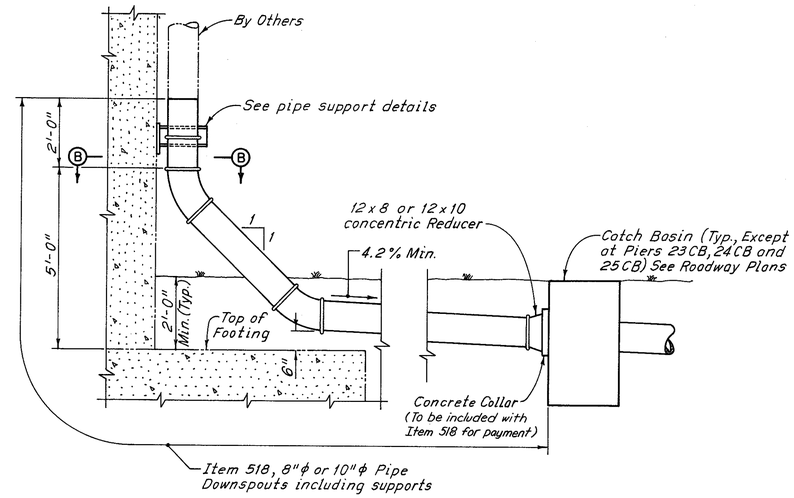


DRAINAGE PIPE DETAIL AT PIERS

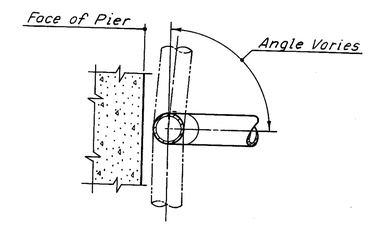


SECTION B-B

| TABLE I | |
|---|---|
| Location | Dim. A |
| N. Gtr. Ramp NW | 2'-5 3/8" |
| N. Median | 2'-6 1/4" |
| S. Median | 9" |
| S. Gutter | 1'-11 1/2" |

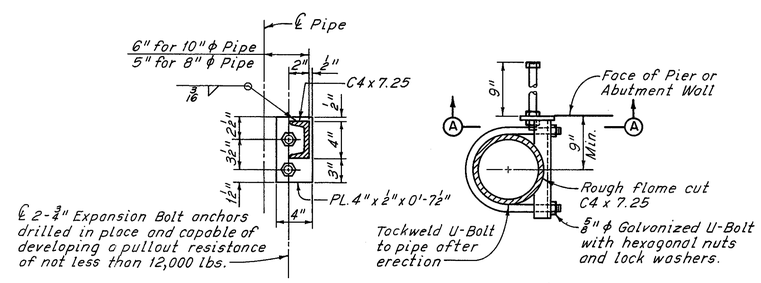


SECTION A-A PLAN

PIPE SUPPORT DETAIL ON PIERS AND EAST ABUTMENT

Support angles, expansion bolts, and U-bolts shall be included with Item 518, 8" ϕ Pipe Downspouts, for payment.

Note:
For locations of downspout pipes see Bridge Layout Diagrams sheets 12/80 thru 17/80.
The minimum radius on all pipe bends shall be 18".

H.N.T.B. BR. NO. 9 PART I - SUBSTRUCTURE

HOWARD, NEEDLES, TAMMEN & BERGENDOFF
CONSULTING ENGINEERS CLEVELAND
HNTB

SUBSTRUCTURE DRAINAGE DETAILS

I-290 OVER CUYAHOGA RIVER

BR. NO. CUY-290-0110
STA. 985+85.75 TO STA. 1020+47.57 (℄ I-290)

CLEVELAND CUYAHOGA COUNTY OHIO

| DRAWN | TRACED | CHECKED | REVIEWED | REVISED |
|---|---|---|---|---|
| B.B. | D.L.R | R.H.W. | C.A.B. | |
| DATE 7-22-85 | DATE 7-22-85 | DATE 7-23-85 | DATE 10-18-86 | SHEET 67/80 |

| FHWA REGION | STATE | PROJECT | |
|---|---|---|---|
| 5 | OHIO | | |

86/193

CUYAHOGA COUNTY
CUY-290-027

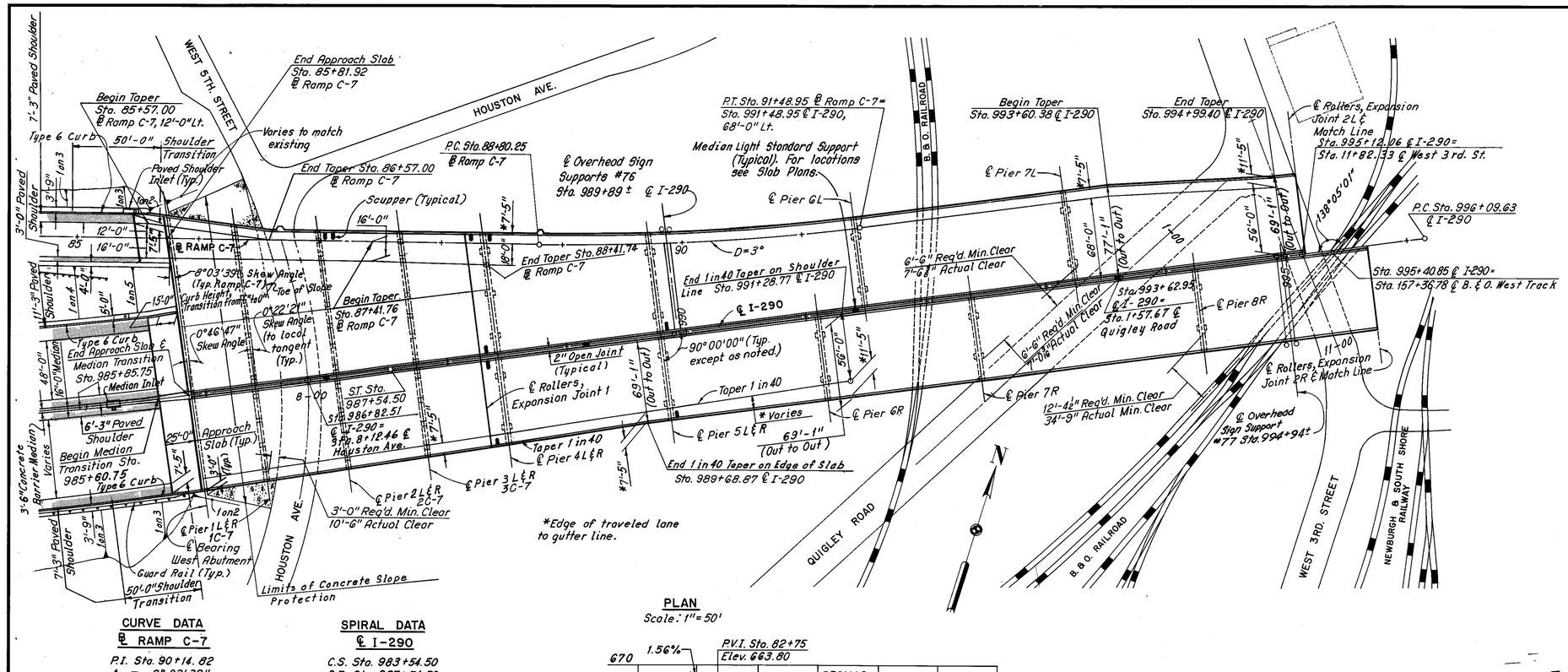


PLAN
Scale: 1" = 50'

## CURVE DATA

℄ RAMP C-7

P.I. Sta. 90+14.82
Δ = 8° 03'39"
D = 3° 00'00" Left
R = 1,909.86'
T = 134.57'
L = 268.70'
E = 4.74'

## SPIRAL DATA

℄ I-290

C.S. Sta. 983+54.50
S.T. Sta. 987+54.50
θs = 4° 00'00"
Ts = 590.53'
Ls = 400.00'
P = 2.33'
K = 199.97'
S.T. = 133.40'
L.T. = 266.74'
Es = 28.81'

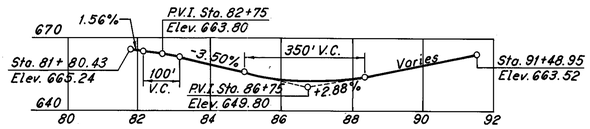


PROFILE RAMP C-7
Scale: Horiz. 1" = 200'
Vert. 1" = 30'

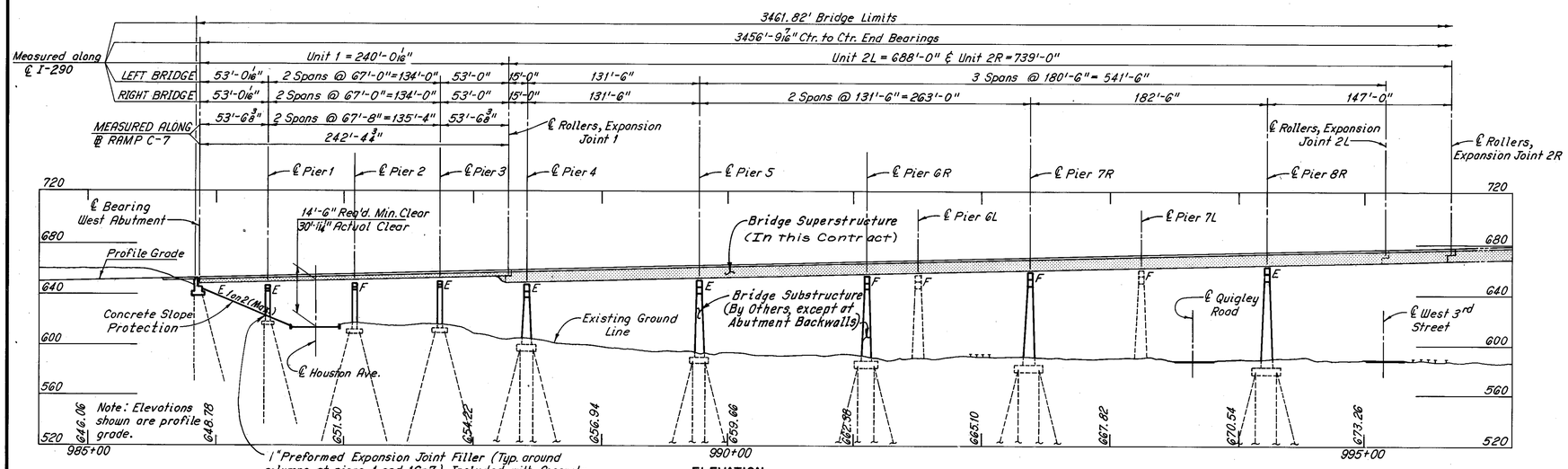


ELEVATION
Scale: 1" = 50'

## PROPOSED STRUCTURE

TYPE: Continuous steel beam (Unit 1) continuous welded steel girder with floor system (Units 2, 3 and 4), continuous multiple welded steel girder (Units 5, 6 and C-B) with reinforced concrete deck and substructure.

SPANS: Spans are measured along ℄ I-290:
Unit 1 - 53'-0 1/16", 67'-0", 67'-0", 53'-0"
Unit 2L - 151'-0" Cantilever, 131'-6", 180'-6", 180'-6", 180'-6", 180'-6".
Unit 3L - 201'-0" Cantilever, 237'-0", 330'-0", 174'-0", 201'-0" Cantilever.
Unit 4L - 178'-0 1/4", 188'-11 5/8", 145'-0 1/4", 151'-0" Cantilever.
Unit 2R - 151'-0" Cantilever, 131'-6", 131'-6", 131'-6", 182'-6", 147'-0".
Unit 3R - 201'-0" Cantilever, 201'-0", 340'-0", 185'-0", 201'-0" Cantilever.
Unit 4R - 164'-0 1/4", 166'-11 5/8", 145'-0 1/4", 151'-0" Cantilever.
Unit 5 - 119'-0", 135'-0", 135'-2 1/4", 134'-9 13/16", 124'-1 3/16", 101'-0" Cantilever.
Unit 6 - 104'-0 1/4", 117'-7 1/2", 119'-8 5/16", 122'-9 1/2", 96'-10 1/4".
Spans are measured along ℄ Ramp C-B:
Unit 6C-B - 114'-6 1/4", 122'-11 1/2", 124'-9", 124'-9" 96'-0".

ROADWAYS: I-290 - Width Varies face to face of parapets, 67'-0" to 143'-5 1/2" Left Bridge and 67'-0" to 103'-9 1/2" Right Bridge. There is an 2" open joint between Left and Right Bridge.

Ramp C-B - Width Varies, 28'-0" to 36'-0" face to face of parapets.

LOADING: HS 20-44 CASE I and Interstate Alternate Loading.

SKEW: Unit 1 - None with respect to local tangent at S.T. Sta. 987+54.50
Unit 2 - None
Unit 3 - None
Units 4, 5 and 6 - Varies (See Plan)
Unit 6C-B - 45° Right Forward with respect to local tangent at P.T. Sta. 10+89.88

WEARING SURFACE: 1 1/4" Latex Modified Concrete

APPROACH SLABS: AS-1-81 (25' long)

ALIGNMENT: Units 1 thru 6 - Spiral left, Tangent and 0°50' Curve Right.
Unit 6C-B - 3° Curve Right, 8° Curve Right and Tangent.

SUPERELEVATION: Unit 1 - Varies: -0.0156 ft. per ft. to +0.169 ft. per ft.
Unit 2 - Varies level to .0156 ft. per ft.
Unit 3 - Varies .0156 ft. per ft. to .02 ft. per ft.
Units 4, 5 and 6 - .02 ft. per ft.
Unit 6C-B - Varies .0156 ft. per ft. to .064 ft. per ft.

TRAFFIC DATA: (2005)
I-290 87,120 A.D.T.
8,172 D.H.V.
TRUCK 5 %

Maintenance of Traffic

Two lanes of traffic with minimum vertical clearances of 14'-6" and minimum horizontal widths of 18'-0" at Houston Avenue, 35'-0" at Quigley Road and 30'-0" at West 3rd Street and Independence Road shall be maintained at all times.

Note:
For existing contours, buildings and underground utilities see Site Plan.

H.N.T.B. BR. NO. 9 PART II - SUPERSTRUCTURE

HOWARD, NEEDLES, TAMMEN & BERGENDOFF
CONSULTING ENGINEERS CLEVELAND
HNTB

# GENERAL PLAN AND ELEVATION UNITS 1 AND 2

## I-290 OVER CUYAHOGA RIVER

BR. NO. CUY-290-0110
STA. 985+85.75 ~~TO~~
STA. 1020+47.57 (℄ I-290)

CLEVELAND CUYAHOGA COUNTY OHIO

| DRAWN JWC | TRACED DLR | CHECKED D.H.S. | REVIEWED C.A.B. | REVISED |
|---|---|---|---|---|
| DATE 3-10-70 | DATE 4-1-70 | DATE 10-8-70 | DATE 2-24-86 | SHEET 1 of 106 |

| FED. RD. DIVISION | STATE | PROJECT | |
|---|---|---|---|
| 2 | OHIO | | |

87
193

CUYAHOGA COUNTY
CUY-290-0.27

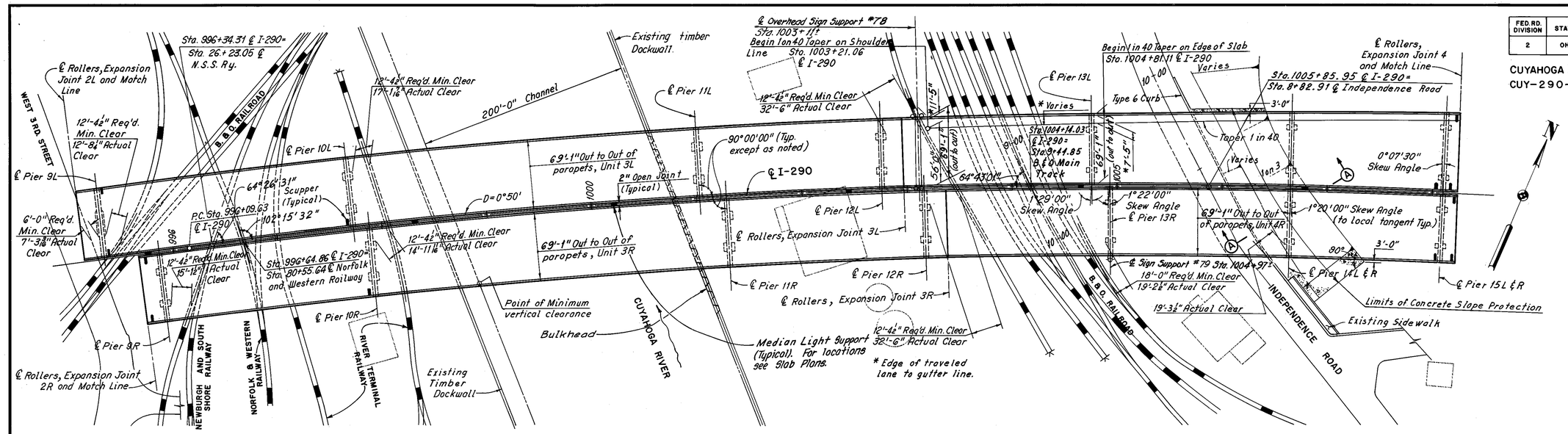


**PLAN**
Scale: 1" = 50'

**CURVE DATA**
**℄ I-290**

P.I. Sta. 1009+47.08
Δ = 22°00'57"
D = 0°50'00" Right
R = 6,875.49'
T = 1,337.45'
L = 2,641.90'
E = 128.88'

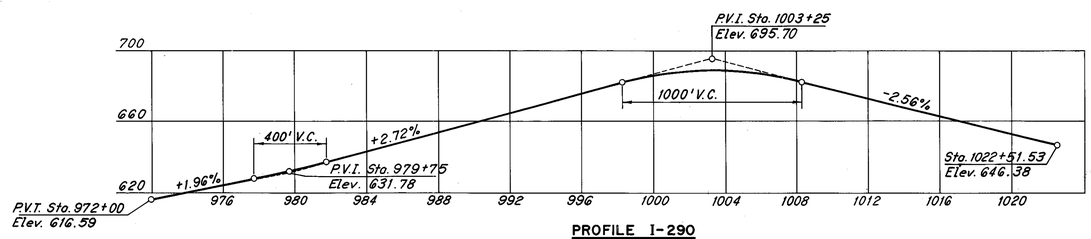


**PROFILE I-290**
Scale: Horiz. 1" = 400'
Vert. 1" = 40'

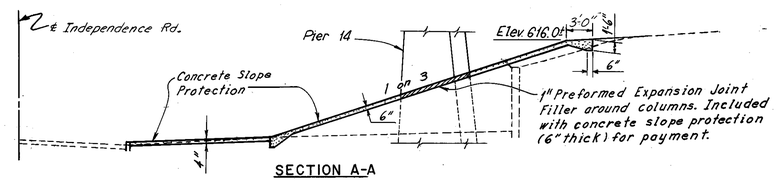


**SECTION A-A**

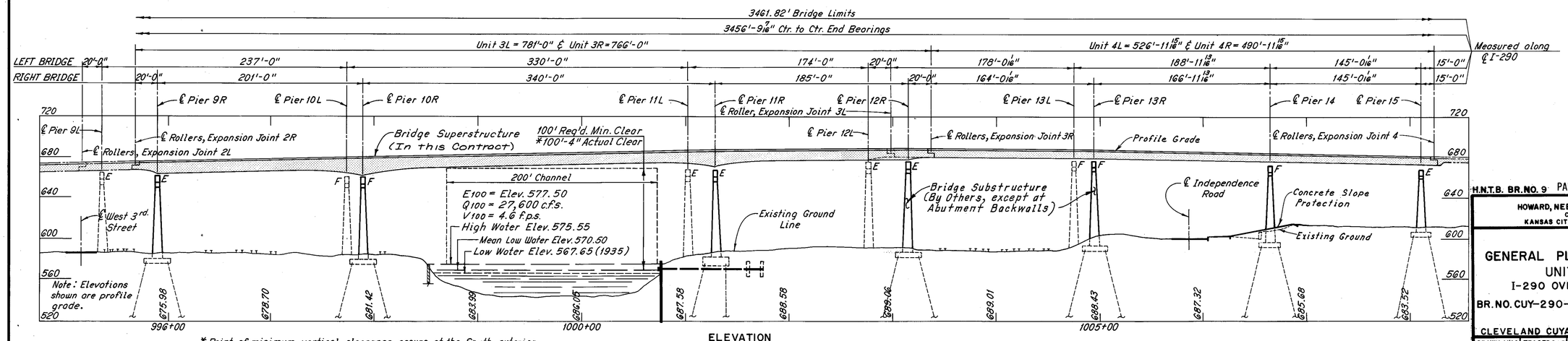


* Point of minimum vertical clearance occurs at the South exterior girder and West edge of 200' channel.

**ELEVATION**
Scale: 1" = 50'

H.N.T.B. BR. NO. 9 PART II - SUPERSTRUCTURE

HOWARD, NEEDLES, TAMMEN & BERGENDOFF
CONSULTING ENGINEERS
KANSAS CITY CLEVELAND NEW YORK

# GENERAL PLAN AND ELEVATION
## UNITS 3 AND 4
## I-290 OVER CUYAHOGA RIVER

BR. NO. CUY-290-0110 STA. 985+85.75 TO STA. 1020+47.57

CLEVELAND CUYAHOGA COUNTY (℄ I-290) OHIO

| DRAWN J.W.C. | TRACED D.L.P. | CHECKED D.H.S. | REVIEWED C.A.B. | REVISED |
|---|---|---|---|---|
| DATE 3-1970 | DATE 4-1-70 | DATE 10-8-70 | DATE 2-24-86 | SHEET 2 108 |

| FED. RD. DIVISION | STATE | PROJECT | |
|---|---|---|---|
| 2 | OHIO | | |

88/193

CUYAHOGA COUNTY
CUY-290-0.27

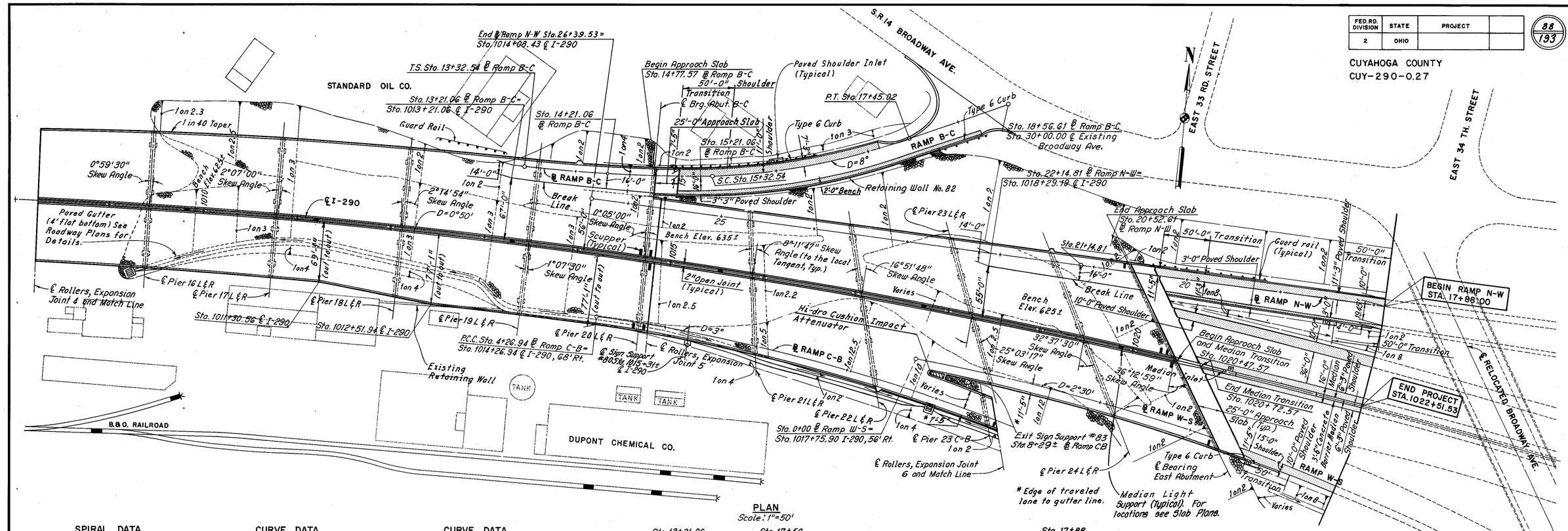


PLAN
Scale: 1"=50'

**SPIRAL DATA**
℄ RAMP B-C

T.S. Sta. 13+32.54
S.C. Sta. 15+32.54
$\theta s$ = 8°00'00"
Ts = 253.71'
Ls = 200.00'
P = 2.32'
K = 99.94'
S.T. = 66.79'
L.T. = 133.47'
Es = 18.60'

**CURVE DATA**
℄ RAMP B-C

P.I Sta. 16+39.57
Δ = 16°59'53"
D = 8°00'00"
R = 716.20'
T = 107.02'
L = 212.48'
E = 7.95'

**CURVE DATA**
℄ RAMP W-S

P.I. Sta. 4+02.12
Δ = 19°54'12"
D = 2°30'00"
R = 2,291.83'
T = 402.12'
L = 796.13'
E = 35.01'

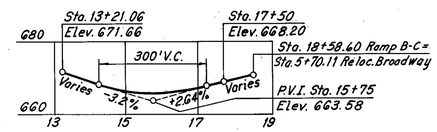


**PROFILE RAMP B-C**
Scale: Horiz. 1"=200'
Vert. 1"=20'

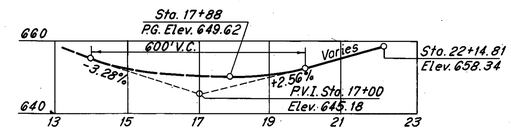


**PROFILE RAMP N-W**
Scale: Horiz. 1"=200'
Vert. 1"=20'

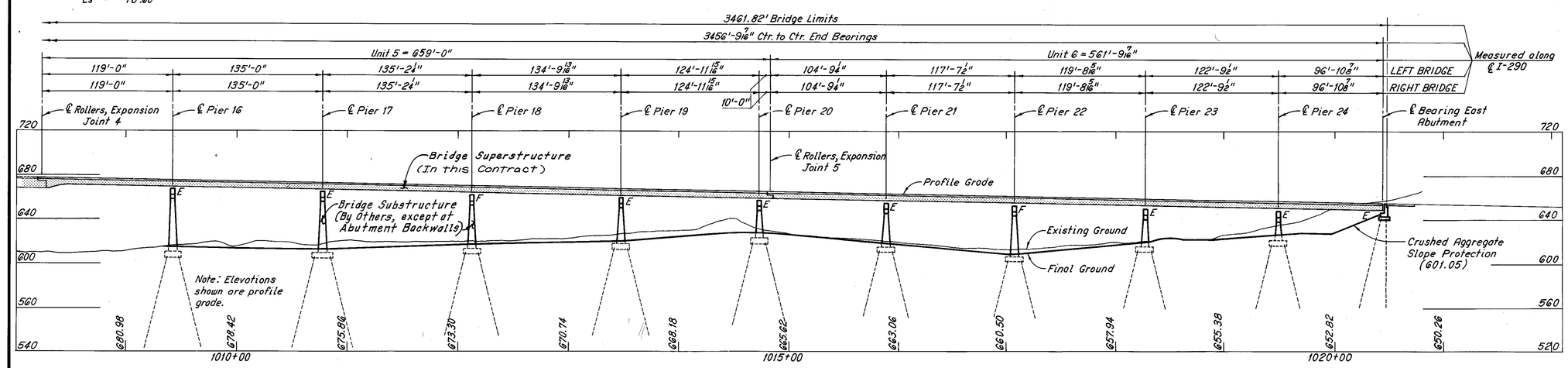


ELEVATION
Scale: 1"=50'

H.N.T.B. BR. NO. 9 PART II - SUPERSTRUCTURE

HOWARD, NEEDLES, TAMMEN & BERGENDOFF
CONSULTING ENGINEERS
KANSAS CITY CLEVELAND NEW YORK

# GENERAL PLAN AND ELEVATION
## UNITS 5 AND 6
I-290 OVER CUYAHOGA RIVER

BR. NO. CUY-290-0110 STA. 985+85.75 TO STA. 1020+47.57 (℄ I-290)

CLEVELAND CUYAHOGA COUNTY OHIO

| DRAWN J.W.C. | TRACED D.L.R. | CHECKED D.H.S. | REVIEWED C.A.B. | REVISED |
|---|---|---|---|---|
| DATE 3-10-70 | DATE 4-1-70 | DATE 10-8-70 | DATE 2-24-86 | SHEET 3/108 |

| FED. RD. DIVISION | STATE | PROJECT | |
|---|---|---|---|
| 2 | OHIO | | |

89
193

CUYAHOGA COUNTY
CUY-290-0.27

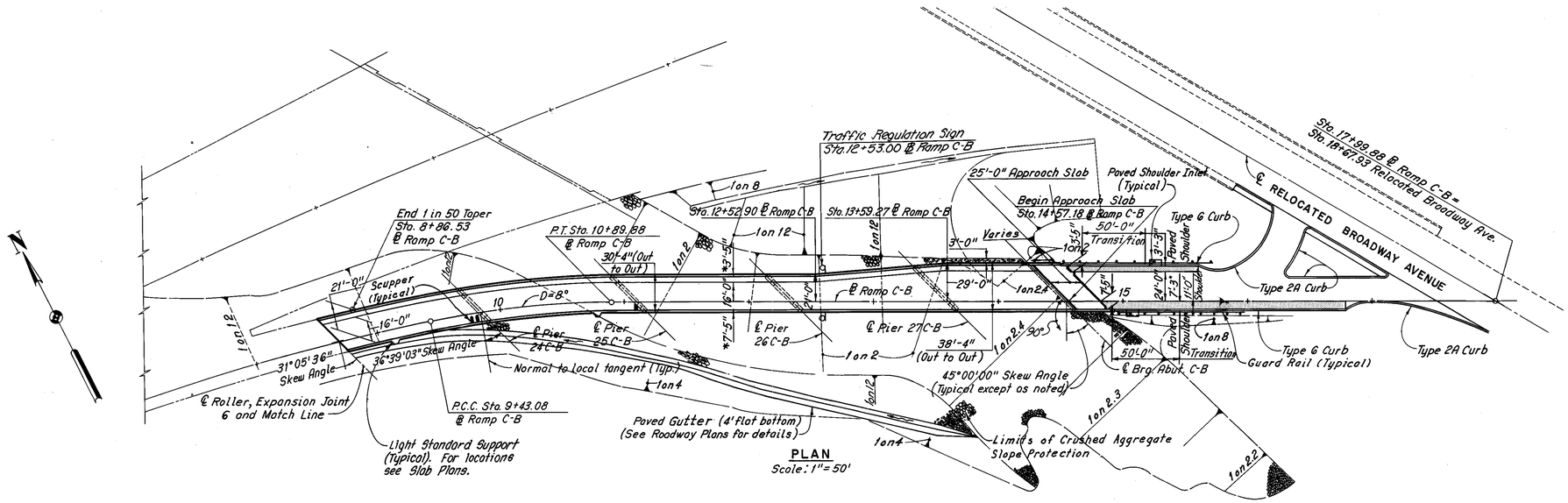


PLAN
Scale: 1" = 50'

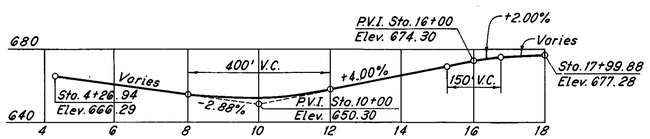


PROFILE RAMP C-B
Scale: Horiz. 1" = 200'
Vert. 1" = 40'
Direction of Traffic

## CURVE DATA

### ℄ RAMP C-B

| P.I. Sta. 6+86.60 | | P.I. Sta. 10+16.74 | |
|---|---|---|---|
| Δ = | 15°29'03" | Δ = | 11°44'38" |
| D = | 3°00'00" Right | D = | 8°00'00" Right |
| R = | 1,909.86' | R = | 716.20' |
| T = | 259.65' | T = | 73.66' |
| L = | 516.14' | L = | 146.80' |
| E = | 17.57' | E = | 3.78' |

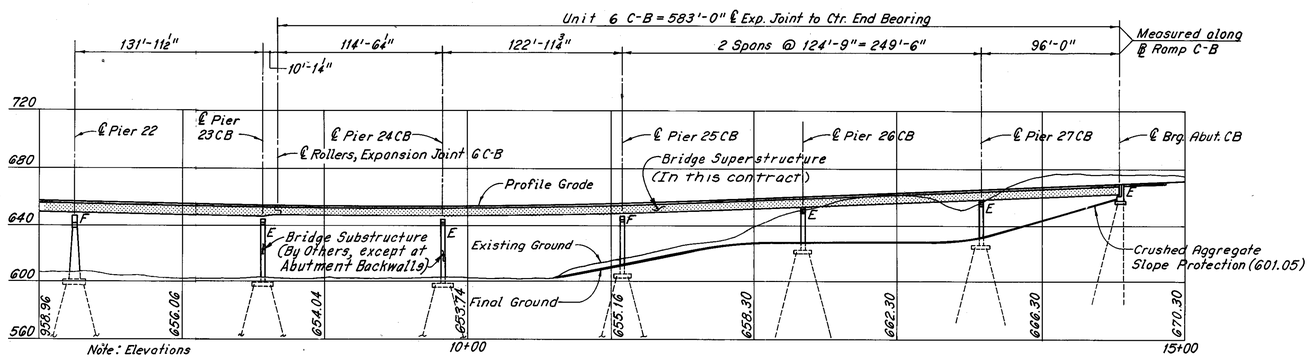


Note: Elevations shown are profile grade.

ELEVATION RAMP C-B
Scale: 1" = 50'

H.N.T.B. BR. NO. 9 PART II - SUPERSTRUCTURE

HOWARD, NEEDLES, TAMMEN & BERGENDOFF
CONSULTING ENGINEERS
KANSAS CITY CLEVELAND NEW YORK

# GENERAL PLAN AND ELEVATION RAMP C-B

I-290 OVER CUYAHOGA RIVER

BR. NO. CUY-290-0110 STA. 985+85.75 TO STA. 1020+47.57

CLEVELAND CUYAHOGA COUNTY (℄ I-290) OHIO

| DRAWN J.W.C. | TRACED D.L.R. | CHECKED D.W.S. | REVIEWED G.A.B. | REVISED |
|---|---|---|---|---|
| DATE 3-10-70 | DATE 4-1-70 | DATE 10-8-70 | DATE 2-24-86 | SHEET 4/108 |

| FED.RD. DIVISION | STATE | PROJECT | |
|---|---|---|---|
| 2 | OHIO | | |

90/193

CUYAHOGA COUNTY
CUY-290-0.27

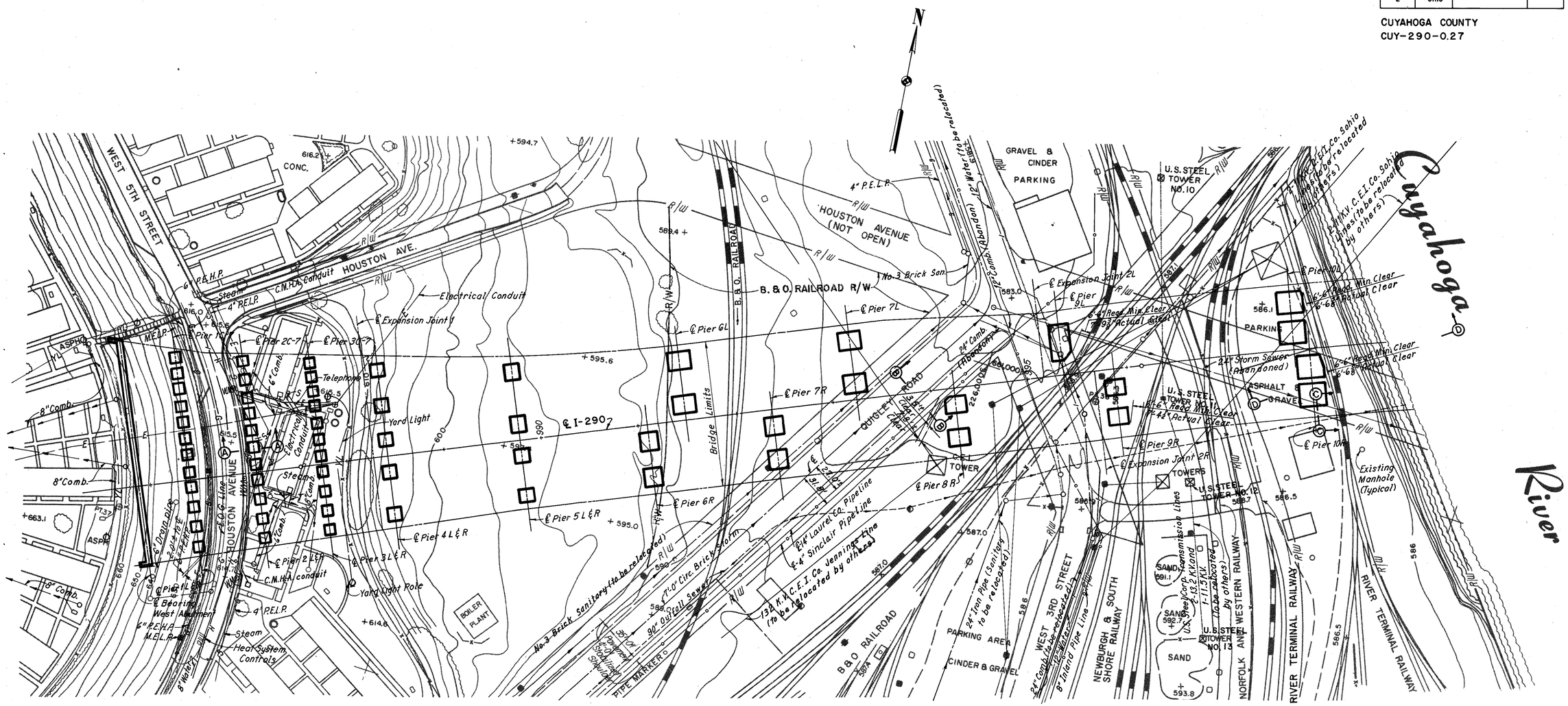


Note: The utilities shown west of Pier 4L and R, with the exception of the gas and water line under Houston Avenue, the gas lines on both sides of Houston Avenue and the Cleveland Metropolitan Housing Authority's electrical duct west of Pier 2, are abandoned.

SITE PLAN
Scale: 1" = 50'-0"

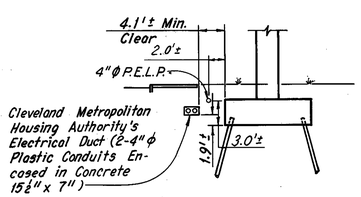


SECTION A-A

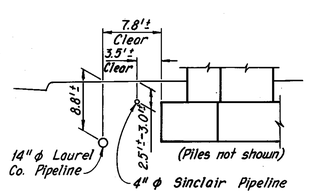


SECTION B-B

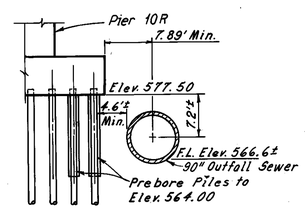


SECTION C-C

Notes:

The information shown on this drawing concerning type and location of underground utilities is not guaranteed to be accurate or all inclusive. The Contractor is responsible for making his own determinations as to the type and location of underground utilities as may be necessary to avoid damage thereto.

Railroad aerial lines will be relocated by the Railroad. The Contractor shall use all precautions necessary to see that the lines are not disturbed during the construction stage and shall cooperate with the Railroad in the relocation of these lines. The cost of the relocation shall be included in the railroad force account work.

For Section D-D see Sheet 6/108.

FOR INFORMATION ONLY

H.N.T.B. BR. NO. 9 PART II - SUPERSTRUCTURE

HOWARD, NEEDLES, TAMMEN & BERGENDOFF
CONSULTING ENGINEERS
KANSAS CITY CLEVELAND NEW YORK

SITE PLAN

I-290 OVER CUYAHOGA RIVER

BR. NO. CUY-290-0110 STA. 985+85.75 TO STA. 1020+47.57 (℄ I-290)

CLEVELAND CUYAHOGA COUNTY OHIO

| DRAWN J.W.C. | TRACED DLR | CHECKED R.H.B. | REVIEWED C.A.B. | REVISED |
|---|---|---|---|---|
| DATE 3-10-70 | DATE 4-1-70 | DATE 10-8-70 | DATE 2-24-86 | SHEET 5/108 |

| FED. RD. DIVISION | STATE | PROJECT | |
|---|---|---|---|
| 2 | OHIO | | |

91
193

CUYAHOGA COUNTY
CUY-290-0.27

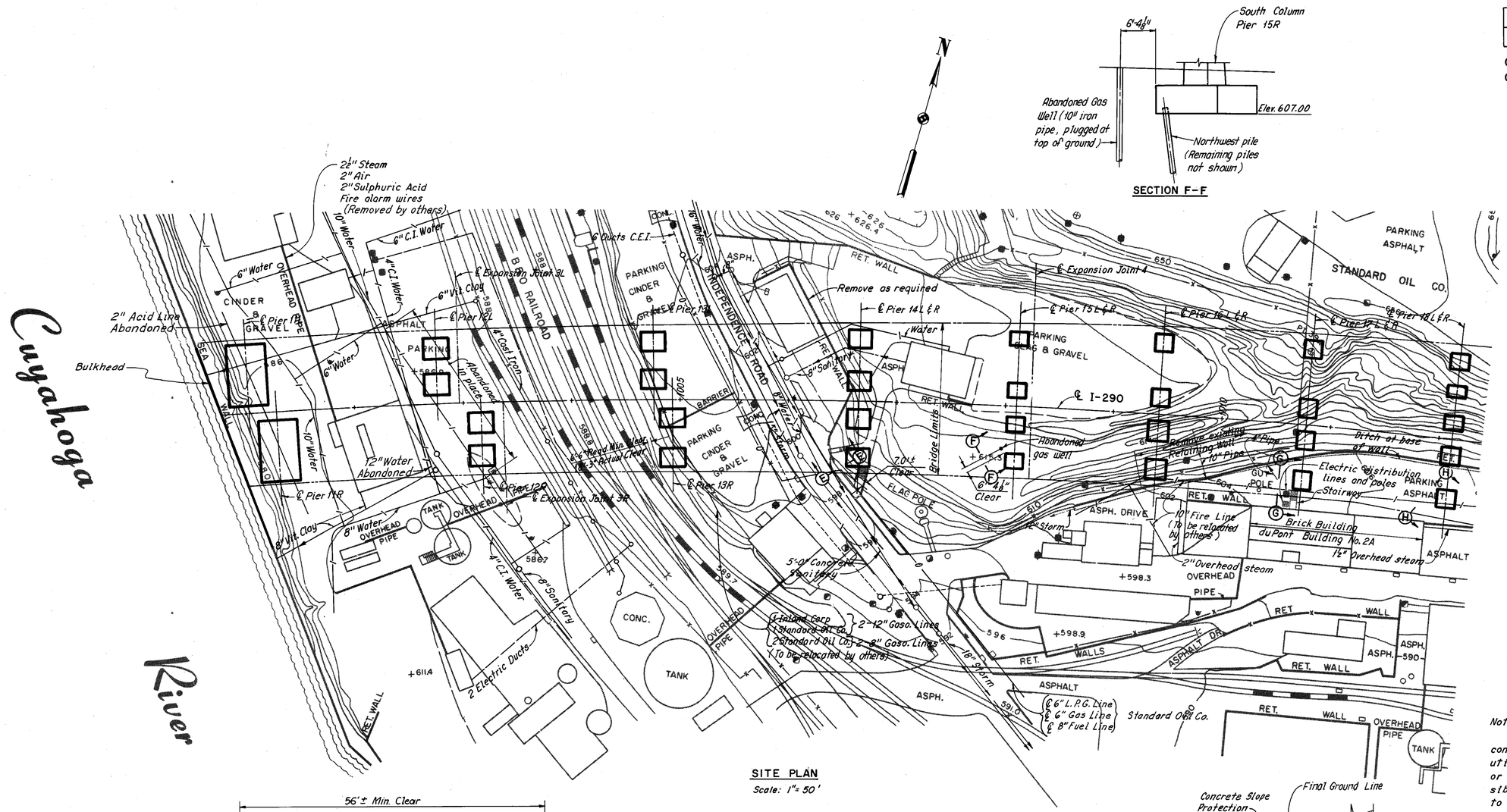


SITE PLAN
Scale: 1" = 50'




SECTION F-F

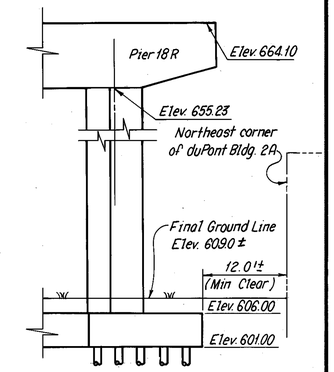


SECTION H-H

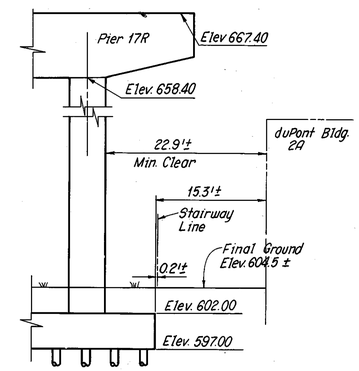


SECTION G-G

Notes:

The information shown on this drawing concerning type and location of underground utilities is not guaranteed to be accurate or all inclusive. The Contractor is responsible for making his own determinations as to the type and location of underground utilities as may be necessary to avoid damage thereto.

Existing timber dockwall tie rods and anchorages are not shown. Locations of tie rods and anchorages shall be determined by the Contractor. See Notes pertaining to work in and over the Cuyahoga River on the General Note Sheet.

FOR INFORMATION ONLY

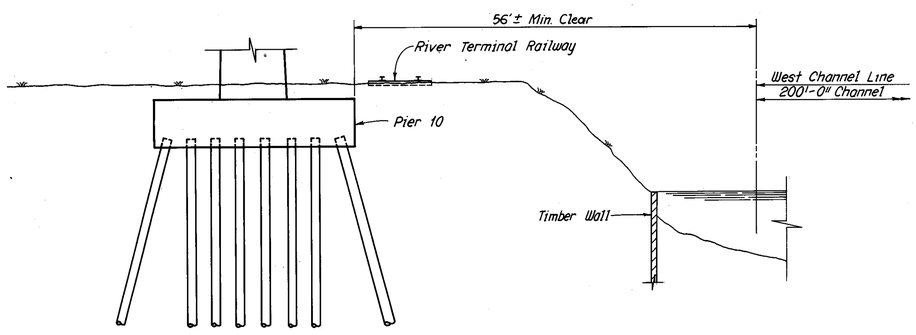


SECTION D-D

Note: For location of Section D-D see sheet 5/108.

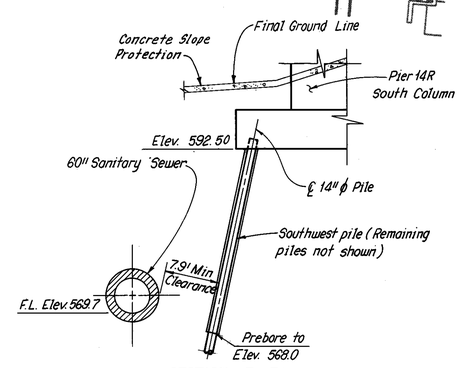


SECTION E-E

Note: Standard Oil Co. gas lines not shown.

H.N.T.B. BR. NO. 9 PART II - SUPERSTRUCTURE

HOWARD, NEEDLES, TAMMEN & BERGENDOFF
CONSULTING ENGINEERS
KANSAS CITY CLEVELAND NEW YORK

## SITE PLAN

I-290 OVER CUYAHOGA RIVER

BR. NO. CUY-290-0110 STA. 985+85.75 TO STA. 1020+47.57 (℄ I-290)

CLEVELAND CUYAHOGA COUNTY OHIO

| DRAWN T.W.C. | TRACED D.L.A. | CHECKED R.D.B. | REVIEWED C.A.B. | REVISED |
|---|---|---|---|---|
| DATE 3-10-70 | DATE 4-1-70 | DATE 10-8-70 | DATE 5-24-86 | SHEET 6/108 |

| FED. RD. DIVISION | STATE | PROJECT | |
|---|---|---|---|
| 2 | OHIO | | |

92
193

CUYAHOGA COUNTY
CUY-290-0.27

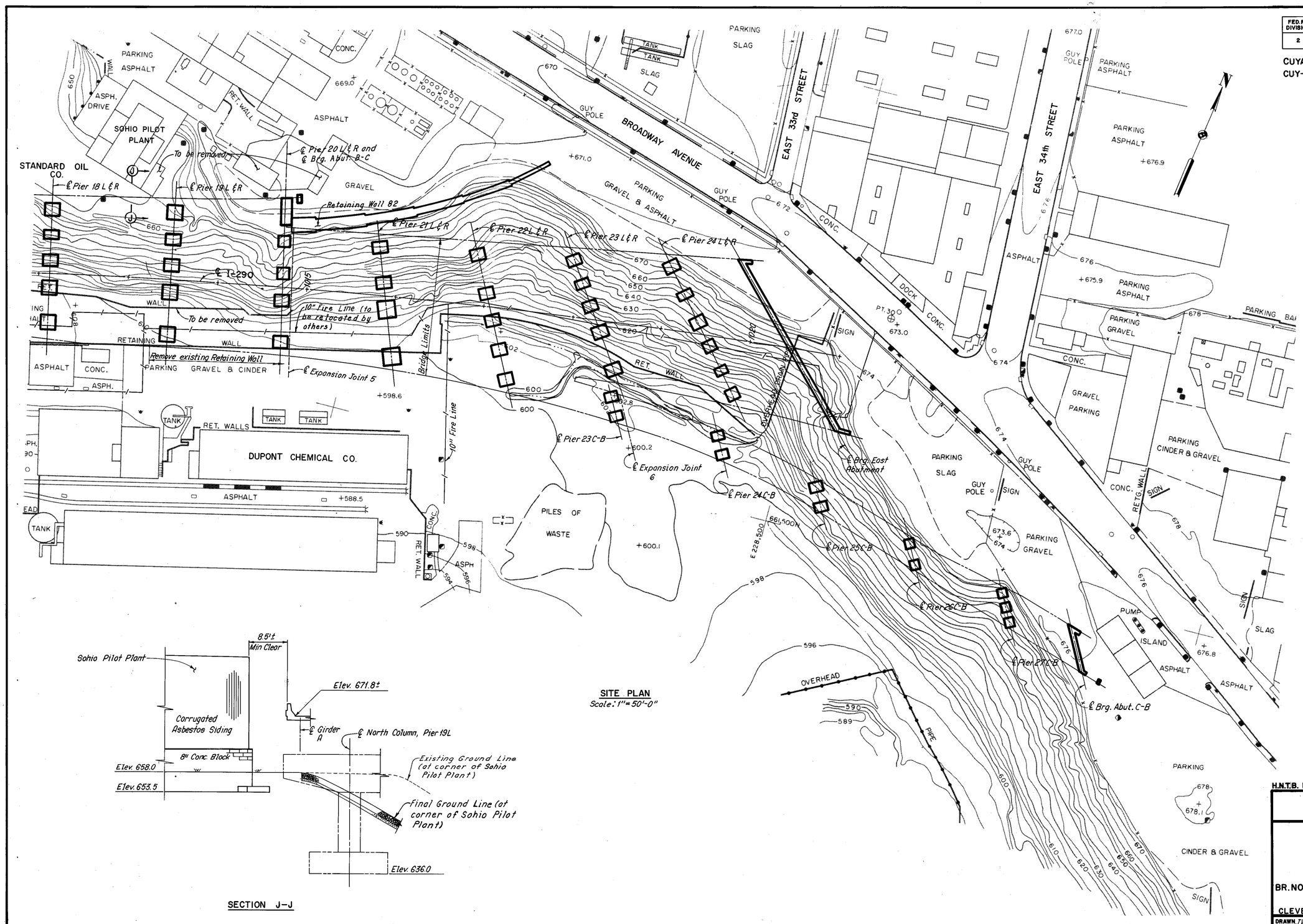


SITE PLAN
Scale: 1" = 50'-0"




SECTION J-J

*Notes:*

*The information shown on this drawing concerning type and location of underground utilities is not guaranteed to be accurate or all inclusive. The Contractor is responsible for making his own determinations as to the type and location of underground utilities as may be necessary to avoid damage thereto.*

*The existing underground utilities in Broadway Avenue are not shown. For details see Roadway Plans.*

FOR INFORMATION ONLY

H.N.T.B. BR. NO. 9 PART II - SUPERSTRUCTURE

HOWARD, NEEDLES, TAMMEN & BERGENDOFF
CONSULTING ENGINEERS
KANSAS CITY CLEVELAND NEW YORK

## SITE PLAN

I-290 OVER CUYAHOGA RIVER

BR. NO. CUY-290-0110 STA. 985+85.75 TO STA. 1020+47.57 (℄ I-290)

CLEVELAND CUYAHOGA COUNTY OHIO

| DRAWN T.W.C. | TRACED D.L.R. | CHECKED RPB | REVIEWED C.A.B. | REVISED |
|---|---|---|---|---|
| DATE 3-10-70 | DATE 4-1-70 | DATE 10-1-70 | DATE 2-24-86 | SHEET 7/108 |

# GENERAL NOTES - STRUCTURES OVER 20 - FT SPAN

| FHWA REGION | STATE | PROJECT | |
|---|---|---|---|
| 2 | OHIO | | |

93/193

CUYAHOGA COUNTY
CUY- 290-027

| ITEM | TOTAL | UNIT | DESCRIPTION | ABUTMENTS | SUPER-STRUCTURE | GENERAL | | |
|---|---|---|---|---|---|---|---|---|
| 511 | 14,071 | CU.YD. | CLASS S CONCRETE, SUPERSTRUCTURE (SEE PROPOSAL NOTE) | 2 | 14,069 | -- | | |
| **511 | 14,071 | CU.YD. | CLASS S CONCRETE, SUPERSTRUCTURE, USING SHRINKAGE COMPENSATING CEMENT | | | -- | | |
| | | | (SEE PROPOSAL NOTE) | 2 | 14,069 | -- | | |
| | | | | | | -- | | |
| 513 | 21,436,000 | LBS. | STRUCTURAL STEEL, AISC CATEGORY III (ASTM A-572) | | 21,436,000 | | | |
| 514 | 21,436,000 | LBS. | FIELD PAINTING OF NEW STRUCTURAL STEEL, SYSTEM A, AS PER PLAN | -- | 21,436,000 | -- | | |
| | | | | | | | | |
| 516 | 250 | LIN.FT. | STRUCTURAL EXPANSION JOINTS, INCLUDING ELASTOMERIC STRIP SEALS | -- | 250 | -- | | |
| 516 | 293 | LIN.FT. | JOINT SEALER, AS PER PLAN | -- | 293 | -- | | |
| | | | | | | | | |
| 518 | 35 | EACH | SCUPPERS, INCLUDING SUPPORTS | -- | 35 | -- | | |
| 518 | 235 | LIN.FT. | 8"Ø STD. PIPE DOWNSPOUT, GALVANIZED STEEL 707.08, INCLUDING SPECIALS | -- | 235 | -- | | |
| 518 | 1,861 | LIN.FT. | 10"Ø STD. PIPE DOWNSPOUT, GALVANIZED STEEL 707.08, INCLUDING SPECIALS | -- | 1,861 | -- | | |
| 601 | 17,727 | SQ.YD. | Crushed aggregate slope protection, as per plan | | | | | |
| 607 | 8,160 | LIN.FT. | FENCE, 4'-0" HIGH, TYPE CL, AS PER PLAN | -- | 8,160 | -- | | |
| 607 | 5 | EACH | GATE, TYPE CL, AS PER PLAN | -- | 5 | -- | | |
| | | | | | | | | |
| 625 | | | FOR LIGHTING QUANTITIES, SEE LIGHTING PLANS | | | | | |
| | | | | | | | | |
| 824 | 5,247,288 | LBS. | EPOXY COATED REINFORCING STEEL, GRADE 60 | -- | 5,247,288 | -- | | |
| | | | | | | | | |
| 845 | 57,569 | SQ.YD. | LATEX MODIFIED CONCRETE OVERLAY OF PROPOSED CONCRETE DECK | -- | -- | -- | | |
| | | | (SEE PROPOSAL NOTE) | | 57,569 | -- | | |
| 845 | 157 | CU.YD. | LATEX MODIFIED CONCRETE, AS PER PLAN | 33 | 124 | -- | | |
| | | | | | | | | |
| SPECIAL | 12,900 | SQ.YD. | SEALING OF CONCRETE SURFACES, SEE PROPOSAL NOTE | 10 | 12,890 | -- | | |
| SPECIAL | 760 | LIN.FT. | NEOPRENE DRAINAGE TROUGH | -- | 760 | -- | | |
| SPECIAL | 266 | LIN.FT. | EXPANSION JOINT SEAL (8"X4" BITUMEN IMPREGNATED FOAM) | -- | 266 | -- | | |
| SPECIAL | 3,360 | LIN.FT. | MEDIAN BARRIER SEAL | -- | 3,360 | -- | | |
| SPECIAL | LUMP SUM | LUMP SUM | SAFETY CLIMBING SYSTEM | -- | -- | LUMP SUM | | |
| SPECIAL | 32,358 | LIN.FT. | 5/8"Ø SAFETY CABLE SYSTEM | -- | 32,358 | -- | | |
| SPECIAL | 1 | EACH | IMPACT ATTENUATOR | -- | 1 | -- | | |
| | | | | | | | | |

*ITEM 513, STRUCTURAL STEEL INCLUDES 248,500 POUNDS OF ASTM A668 - CLASS H, STEEL FORGINGS AND 216,300 POUNDS OF ASTM A486 - CLASS 90, STEEL CASTINGS.
**ALTERNATE BID ITEM

1. DESIGN SPECIFICATIONS
STANDARD SPECIFICATIONS FOR HIGHWAY BRIDGES ADOPTED BY THE AMERICAN ASSOCIATION OF STATE HIGHWAY AND TRANSPORTATION OFFICIALS, DATED 1969, INCLUDING THE 1970 INTERIM SPECIFICATIONS AND THE OHIO "SUPPLEMENT" TO THESE SPECIFICATIONS. THE DESIGN LOADING IS HS20-44 CASE I AND THE ALTERNATE MILITARY LOADING.

(LOAD FACTOR DESIGN USED FOR THE DESIGN OF THE DECK SLAB)

THE CLASSES OF CONCRETE AND THE GRADES OF REINFORCING STEEL, TOGETHER WITH THE STRENGTH FOR EACH ARE AS FOLLOWS:

CONCRETE CLASS S - COMPRESSIVE STRENGTH 4,500 PSI FOR SUPERSTRUCTURE
REINFORCING STEEL - ASTM A615, A616, A617 - GRADE 60, MIN. YIELD STRENGTH 60,000 PSI
STRUCTURAL STEEL - ASTM A36 - UNIT STRESS 20,000 PSI
ASTM A572, GRADE 50 - UNIT STRESS 27,000 PSI
ASTM A668, CLASS H - MIN. YIELD POINT 55,000 PSI
ASTM A486, CLASS 90 - MIN. YIELD POINT 60,000 PSI

2. SUPPLEMENTAL SPECIFICATIONS
REFERENCE SHALL BE MADE TO SUPPLEMENTAL SPECIFICATIONS 824 DATED 10-8-82 , 845 DATED 2-25-86, 953 DATED 8-21-80.

3. REFERENCE DRAWINGS
REFERENCE SHALL BE MADE TO STANDARD DRAWINGS AS-1-81 DATED 11-27-81 (SHEETS 1 AND 2), RB-1-55 REVISED 2-2-59, AND SD-1-69 (SHEET 1 AND 2 OF 4) DATED 6-12-69.

4. DECK PROTECTION METHOD
EPOXY COATED REINFORCED STEEL (BOTH MATS), AND LATEX MODIFIED CONCRETE OVERLAY. A 1-IN. MONOLITHIC WEARING SURFACE IS ASSUMED FOR DESIGN PURPOSES.

5. REINFORCING STEEL
ALL BAR DIMENSIONS ARE GIVEN OUT TO OUT.

ALL BARS ARE DESIGNATED ON PLANS BY BAR NUMBERS. THE BAR SIZE IS DESIGNATED BY THE FIRST DIGIT.

ALL BARS OF A SERIES SHALL VARY BY A CONSTANT INCREMENT.

6. SEALING OF CONCRETE SURFACES
A SEALER SHALL BE APPLIED TO THE FOLLOWING EXPOSED CONCRETE SURFACES:
A. THE ENTIRE PERIMETER OF THE EXTERIOR PARAPET, EDGE OF SLAB AND THE UNDERSIDE OF THE DECK OUTSIDE THE EXTERIOR GIRDER OR BEAM.

B. THE TOP AND FRONT FACES OF THE MEDIAN PARAPET.

C. THE PERIMETER OF ALL BARRIERS AT ABUTMENTS INCLUDED WITH THIS CONTRACT.

7. STRUCTURAL STEEL TYPE
ALL STRUCTURAL STEEL SHALL BE ASTM-A572 GRADE 50 EXCEPT THE ELEMENTS NOTED BELOW MAY BE ASTM A36 STRUCTURAL STEEL.

1) ROCKER AND BOLSTER ELEMENTS AS NOTED IN THE PLANS.
2) ALL CROSSFRAMES IN UNITS 1,5, 6 AND 6CB INCLUDING THE SLIDING PLATE TYPE END DAMS AT THE EAST ABUTMENT AND ABUTMENT CB.
3) ALL TRANSVERSE STIFFENER AND LONGITUDINAL STIFFENER PLATES.
4) SUPPORT CHANNELS AND BRACKETS FOR THE SAFETY CABLE SYSTEM.
5) FRAMING AND LADDERS FOR THE PIER ACCESS DETAILS.

8. PAINTING STRUCTURAL STEEL
STRUCTURAL STEEL SHALL BE PAINTED IN ACCORDANCE WITH SECTION 514 SYSTEM A WITH THE FOLLOWING ADDITIONS:

AN INTERMEDIATE COAT
SHALL BE APPLIED PRIOR TO THE FINAL TOP COAT. THE VINYL INTERMEDIATE STRUCTURAL STEEL PAINT COAT SHALL BE WHITE IN COLOR, A MINIMUM OF 2 MILS THICK AND RECOMMENDED BY THE MANUFACTURER. ALL COATING MATERIALS SHALL BE SUPPLIED BY THE SAME MANUFACTURER TO INSURE COMPATIBILITY. TOTAL DRY FILM THICKNESS OF THE THREE-COAT SYSTEM SHALL BE NOT LESS THAN 8 MILS.

Revised 12-24-86
Rev. 9-22-86

H.N.T.B. BR. NO. 9 PART II - SUPERSTRUCTURE

HOWARD, NEEDLES, TAMMEN & BERGENDOFF CONSULTING ENGINEERS CLEVELAND HNTB

ESTIMATED QUANTITIES AND GENERAL NOTES
I-290 OVER CUYAHOGA RIVER
BR. NO. CUY-290-0110 STA. 985+85.75 TO STA. 1020+47.57 (℄ I-290)
CLEVELAND CUYAHOGA COUNTY OHIO

| DRAWN | TRACED | CHECKED | REVIEWED | REVISED 9/22/86 |
|---|---|---|---|---|
| R.H.W. DATE 2-14-86 | C.P. DATE 2-14-86 | B.B.&C.A.B. DATE 2-17-86 | C.A.B. DATE 2-24-86 | SHEET 8 /108 |

| FED. RD. DIVISION | STATE | PROJECT | |
|---|---|---|---|
| 2 | OHIO | | |

109
193

CUYAHOGA COUNTY
CUY-290-0.27

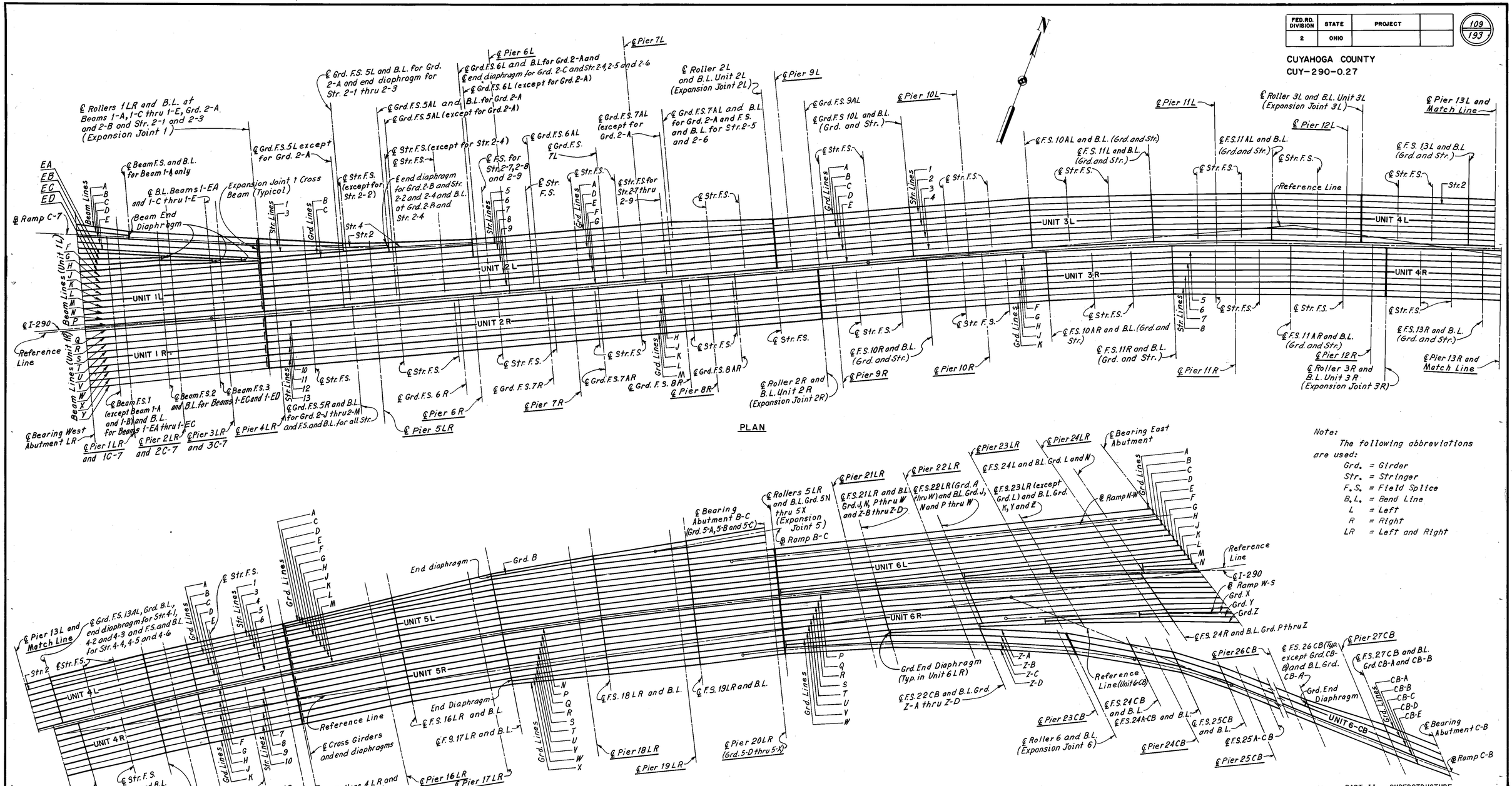


PLAN

Note:
The following abbreviations are used:

Grd. = Girder
Str. = Stringer
F.S. = Field Splice
B.L. = Bend Line
L = Left
R = Right
LR = Left and Right




PLAN

H.N.T.B. BR. NO. 9 PART II - SUPERSTRUCTURE

HOWARD, NEEDLES, TAMMEN & BERGENDOFF
CONSULTING ENGINEERS
KANSAS CITY CLEVELAND NEW YORK

SCHEMATIC FRAMING PLAN

I-290 OVER CUYAHOGA RIVER

BR. NO. CUY-290-0110

STA. 985+85.75 TO STA. 1020+47.57 (℄ I-290)

CLEVELAND CUYAHOGA COUNTY OHIO

| DRAWN D.M.P. | TRACED J.S.C. | CHECKED MB | REVIEWED G.A.B. | REVISED |
|---|---|---|---|---|
| DATE 11-14-69 | DATE 11-25-69 | DATE 3-26-70 | DATE 2-24-86 | SHEET 24/108 |

| FED. RD. DIVISION | STATE | PROJECT | |
|---|---|---|---|
| 2 | OHIO | | |

110
193

CUYAHOGA COUNTY
CUY-290-0.27

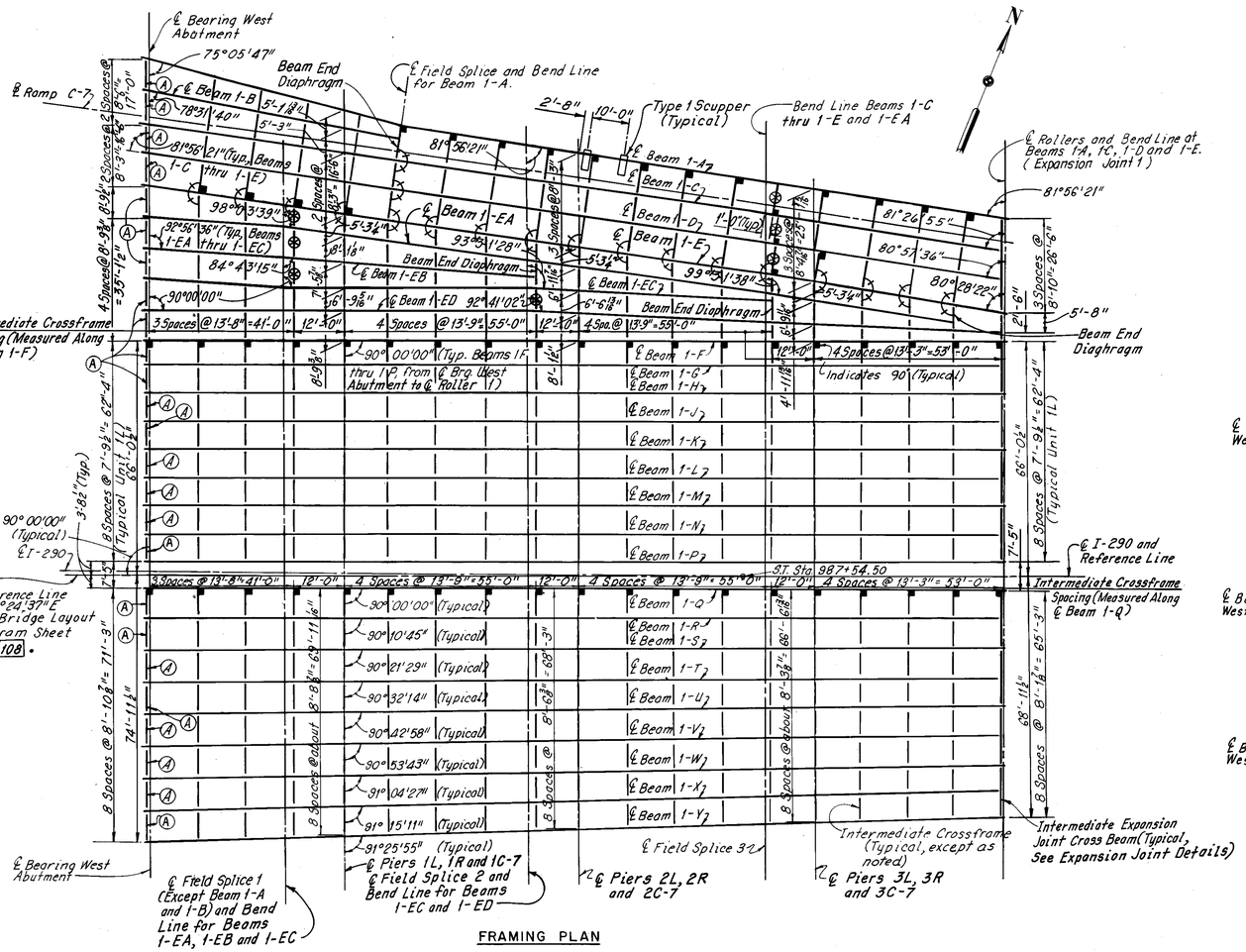


FRAMING PLAN

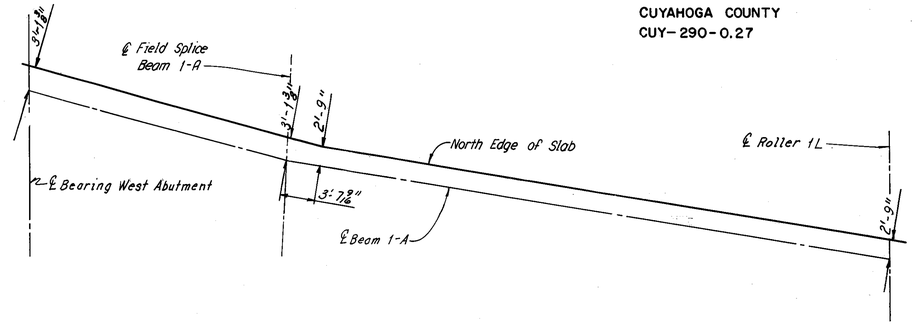


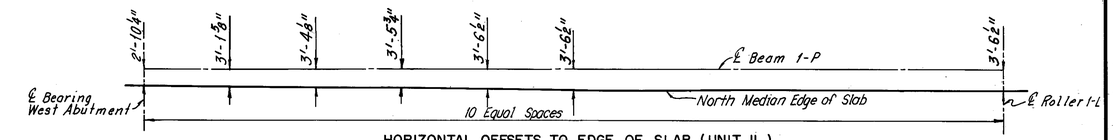


HORIZONTAL OFFSETS TO EDGE OF SLAB (UNIT IL)

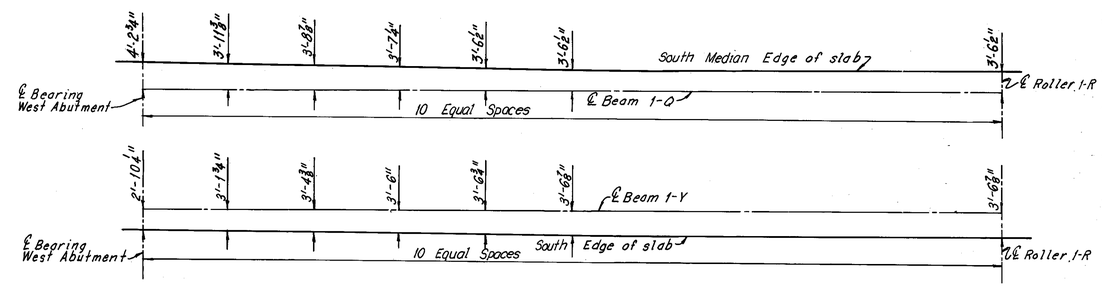


HORIZONTAL OFFSETS TO EDGE OF SLAB ( UNIT IR )

LEGEND:

- Indicates bend point crossframe.
- Indicates 90°.
- Indicates crossframe direction change.
- Indicates end crossframe at abutment.

Notes:
Horizontal offsets are measured perpendicular to the beams.
For Beam End Diaphragm Details see Sheet 26/108

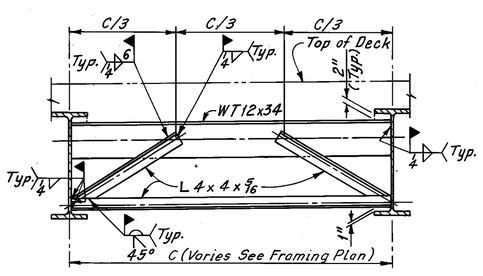


ABUTMENT

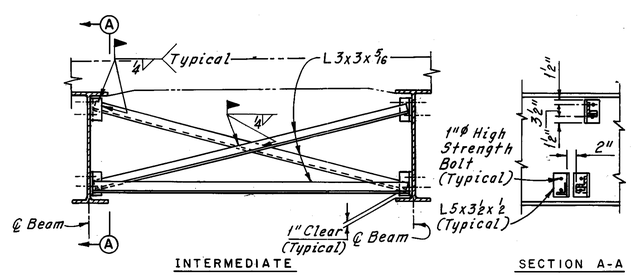


INTERMEDIATE

SECTION A-A

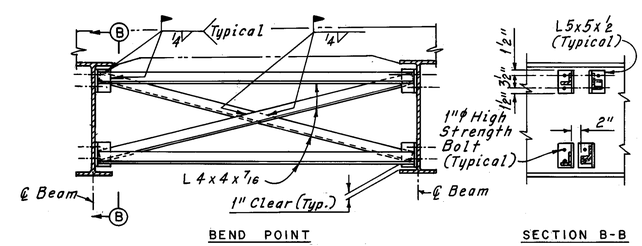


BEND POINT

SECTION B-B

CROSSFRAMES

H.N.T.B. BR. NO. 9 PART II - SUPERSTRUCTURE

HOWARD, NEEDLES, TAMMEN & BERGENDOFF
CONSULTING ENGINEERS
KANSAS CITY CLEVELAND NEW YORK

FRAMING PLAN - UNIT I

I-290 OVER CUYAHOGA RIVER

BR. NO. CUY-290-0110 STA. 985+85.75 TO STA. 1020+47.57 (℄ I-290)

CLEVELAND CUYAHOGA COUNTY OHIO

| DRAWN GEM | TRACED | CHECKED MCB | REVIEWED C.A.B. | REVISED |
|---|---|---|---|---|
| DATE 11-30-65 | DATE | DATE 1-27-70 | DATE 2-20-96 | SHEET 25/108 |

| FED. RD. DIVISION | STATE | PROJECT | |
|---|---|---|---|
| 2 | OHIO | | |

112
193

CUYAHOGA COUNTY
CUY-290-0.27

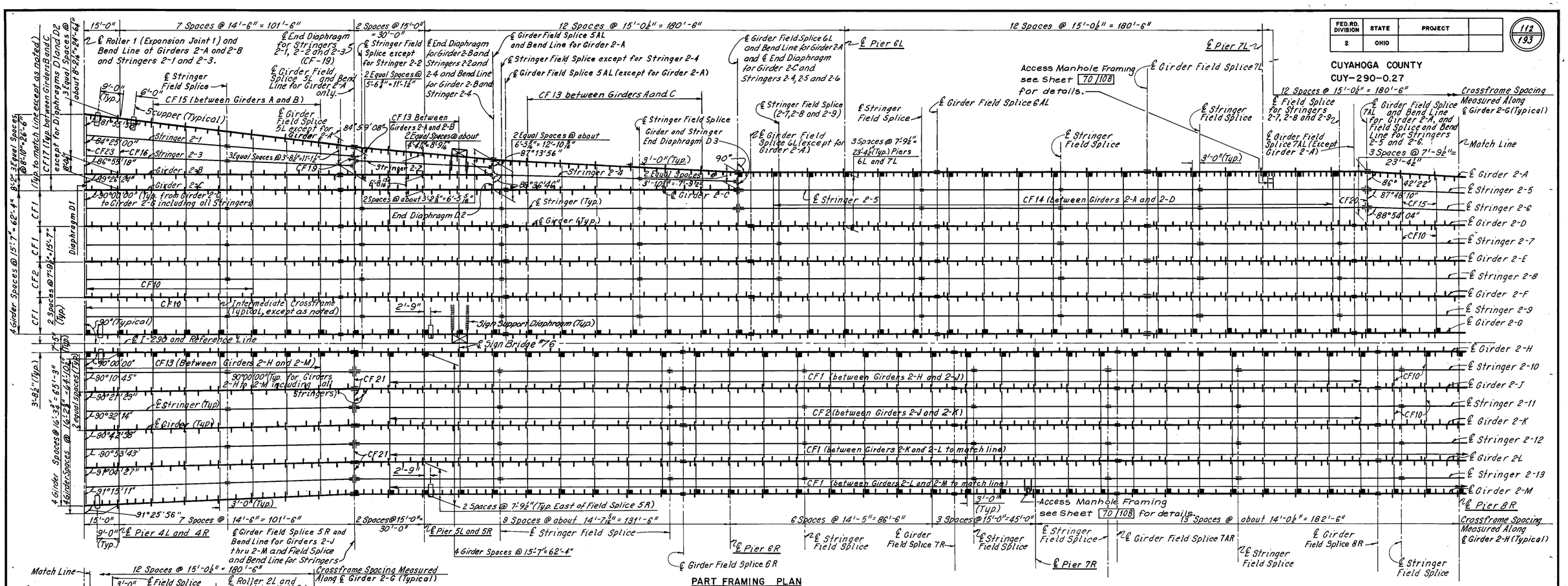


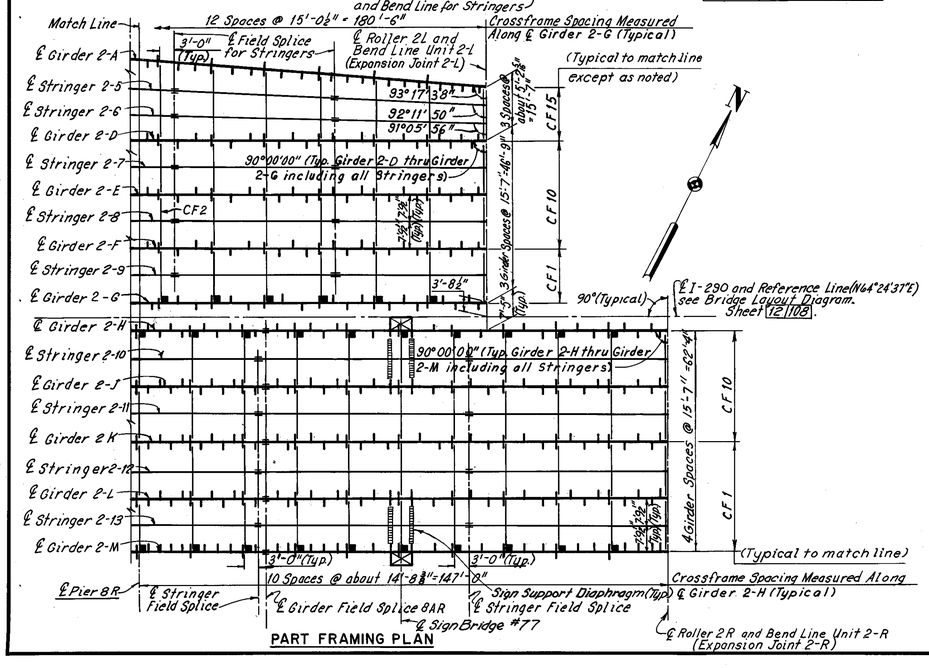


## HORIZONTAL OFFSETS TO EDGE OF SLAB

| | | Girder A to North Edge of Slab | | | | | | Girder G to North Median Edge of Slab | Girder H to South Median Edge of Slab | Girder M to South Edge of Slab | |
|---|---|---|---|---|---|---|---|---|---|---|---|
| From | | ℄ Roller 1 | Field Splice 5L | Field Splice 5AL | Field Splice 6L | Field Splice 6AL | Field Splice 7AL | ℄ Roller 1 | ℄ Roller 1 | ℄ Roller 1 | Field Splice 5R |
| To | | Field Splice 5L | Field Splice 5AL | Field Splice 6L | Field Splice 6AL | Field Splice 7AL | ℄ Roller 2L | ℄ Roller 2L | ℄ Roller 2R | Field Splice 5R | ℄ Roller 2R |
| 10 Equal Spaces | 0 | 2'-9" | 3'-9¾" | 3'-6⅝" | 3'-6⅞" | 3'-2" | 2'-0" | 3'-6½" | 3'-6½" | 3'-6¾" | 3'-6¾" |
| | 1 | | 3'-8⅜" | 3'-3¼" | 3'-5" | | | | | | 2'-11¼" |
| | 2 | | 3'-7¼" | 3'-1⅞" | 3'-3⅛" | | | | | | |
| | 3 | | 3'-6⅜" | 2'-11⅜" | 3'-2⅝" | | | | | | |
| | 4 | 2'-9" | 3'-5¾" | 2'-10⅜" | 3'-2⅛" | | | | | | |
| | 5 | 2'-9⅛" | 3'-5⅜" | 2'-10" | 3'-2" | | | | | | |
| | 6 | 2'-9⅞" | 3'-5⅛" | 2'-10⅜" | | | | | | | |
| | 7 | 2'-11¼" | 3'-5⅛" | 2'-11⅜" | | | | | | | |
| | 8 | 3'-2⅛" | 3'-5⅛" | 3'-1⅛" | | 3'-2" | 2'-0" | | | | |
| | 9 | 3'-5½" | 3'-6" | 3'-3⅝" | | 3'-0¾" | 2'-2¼" | | | | |
| | 10 | 3'-9¾" | 3'-6⅝" | 3'-6⅞" | 3'-2" | 2'-0" | 2'-11⅝" | 3'-6½" | 3'-6½" | 3'-6¾" | 2'-11¼" |

Note: Horizontal offsets are measured perpendicular to ℄ of Girders.

For Crossframes see Sheet 55/108 Thru 57/108.

Notes:

For Girder End Diaphragm Details, see Sheet 31/108.
For Girder Notes, see Sheet 28/108.
For Stringer Notes, see Sheet 30/108.
For Sign No. 76 Support Details, see Sheet 98/108.
For Sign No. 77 Support Details see Sheet 99/108.

### FRAMING PLAN LEGEND

CF Indicates Crossframe Type in Units 2, 3 and 4.
■ Indicates 90°.
⊕ Indicates a scupper. All scuppers are Type 1. For scupper details see Sheet 65/108.

H.N.T.B. BR. NO. 9 PART II - SUPERSTRUCTURE

HOWARD, NEEDLES, TAMMEN & BERGENDOFF
CONSULTING ENGINEERS
KANSAS CITY CLEVELAND NEW YORK

# FRAMING PLAN - UNIT 2

I-290 OVER CUYAHOGA RIVER

BR. NO. CUY-290-0110
STA. 985+85.75 TO STA. 1020+47.57 (℄ I-290)

CLEVELAND CUYAHOGA COUNTY OHIO

| DRAWN D.M.P. | TRACED G.E.M. | CHECKED D.D.S. | REVIEWED E.A.B. | REVISED |
|---|---|---|---|---|
| DATE 10-7-69 | DATE 11-6-69 | DATE 3-26-70 | DATE 2-24-86 | SHEET 27/108 |

| FED. RD. DIVISION | STATE | PROJECT | |
|---|---|---|---|
| 2 | OHIO | | |



CUYAHOGA COUNTY
CUY-290-0.27

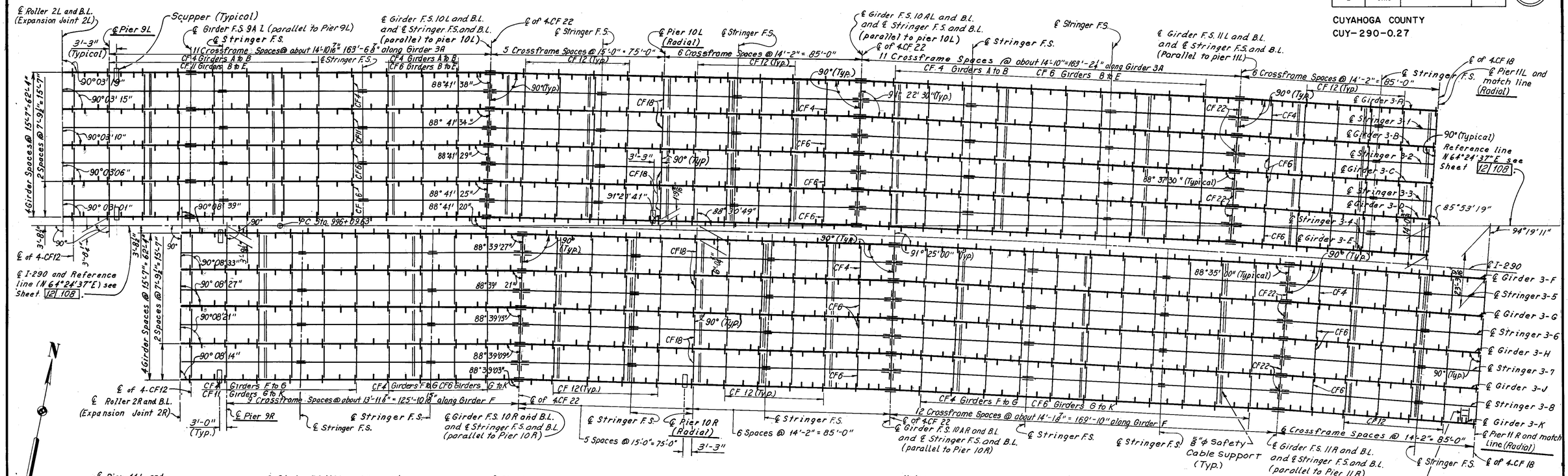


PART FRAMING PLAN

Note:
Spacing of Girders along ℄ of Piers is 4 spaces @ 15'-7" = 62'-4". Spacing of Stringers between Girders along ℄ of Piers is 2 spaces @ 7'-9 1/2" = 15'-7".
All crossframes are placed perpendicular to Girder C in Unit 3L and to Girder H in Unit 3R except for crossframe lines adjacent to Rollers and along Pier or Field Splices.

PART FRAMING PLAN

| GIRDER | | HORIZONTAL OFFSETS TO EDGE OF SLAB | | | | | | | | | | | | | | | | | | | | | GIRDER | |
|---|---|---|---|---|---|---|---|---|---|---|---|---|---|---|---|---|---|---|---|---|---|---|---|---|
| SLAB | | GIRDER 3-A | | | | | GIRDER 3-E | | | | | GIRDER 3-F | | | | | GIRDER 3-K | | | | | | SLAB | |
| | | NORTH EDGE OF SLAB | | | | | NORTH MEDIAN EDGE OF SLAB | | | | | SOUTH MEDIAN EDGE OF SLAB | | | | | SOUTH EDGE OF SLAB | | | | | | | |
| FROM | | Roller 2L | FS10L | FS10AL | FS11L | FS11AL | Roller 2L | FS10L | FS10AL | FS11L | FS11AL | Roller 2R | FS10R | FS10AR | FS11R | FS11AR | Roller 2R | FS10R | FS10AR | FS11R | FS11AR | | FROM | |
| TO | | FS10L | FS10AL | FS11L | FS11AL | Roller 3L | FS10L | FS10AL | FS11L | FS11AL | Roller 3L | FS10R | FS10AR | FS11R | FS11AR | Roller 3R | FS10R | FS10AR | FS11R | FS11AR | Roller 3R | | TO | |
| 10 EQUAL SPACES | 0 | 21'-11 1/4" | 21'-6 5/8" | 21'-5 1/4" | 21'-5 1/4" | 21'-6 5/8" | 31'-6 1/4" | 31'-11 5/8" | 41'-0 3/4" | 41'-0 3/4" | 31'-11 3/8" | 31'-6 1/4" | 31'-1 5/8" | 31'-0 1/4" | 31'-0 1/4" | 31'-1 5/8" | 21'-11 1/2" | 31'-4 1/2" | 31'-5 7/8" | 31'-5 7/8" | 31'-4 1/2" | 0 | 10 EQUAL SPACES | |
| | .1 | 21'-11 3/4" | 21'-8 1/8" | 21'-7 1/8" | 21'-7 3/8" | 21'-9 1/4" | 31'-6 3/8" | 31'-9 1/2" | 31'-10 3/4" | 31'-10 5/8" | 31'-8 1/2" | 31'-7" | 31'-3 1/2" | 31'-2 1/4" | 31'-2 3/8" | 31'-4 3/4" | 21'-11 1/4" | 31'-2 3/4" | 31'-3 5/8" | 31'-3 3/8" | 31'-1 3/4" | .1 | | |
| | .2 | 21'-11 1/4" | 21'-9 1/4" | 21'-9" | 21'-9 1/4" | 21'-11 1/2" | 31'-6 5/8" | 31'-8 1/8" | 31'-9 1/4" | 31'-9" | 31'-6 1/2" | 31'-7 1/8" | 31'-4 1/8" | 31'-4 1/4" | 31'-4" | 31'-6 5/8" | 21'-10 5/8" | 31'-1 1/4" | 31'-2" | 31'-2" | 21'-11 1/4" | .2 | | |
| | .3 | 31'-0 1/8" | 21'-10 7/16" | 21'-10 1/8" | 21'-10 1/4" | 31'-1 5/8" | 31'-6" | 31'-1 3/8" | 31'-8 1/8" | 31'-7 3/4" | 31'-4 1/2" | 31'-7 7/8" | 31'-5 3/8" | 31'-5 1/2" | 31'-5 1/4" | 31'-9" | 21'-10 1/4" | 31'-0 1/8" | 31'-0 3/4" | 31'-0 3/8" | 21'-9 1/8" | .3 | | |
| | .4 | 31'-0 3/8" | 21'-11 3/16" | 21'-10 3/4" | 21'-11 1/8" | 31'-3 1/8" | 31'-5 3/4" | 31'-6 5/8" | 31'-7 3/8" | 31'-6 3/8" | 31'-2 5/8" | 31'-8" | 31'-6 3/8" | 31'-6 1/4" | 31'-6 1/2" | 31'-10 7/8" | 21'-10" | 21'-11 5/8" | 21'-0" | 21'-11 7/8" | 21'-7 1/4" | .4 | | |
| | .5 | 31'-0 5/8" | 21'-11 1/4" | 21'-11" | 21'-11 1/4" | 31'-5" | 31'-5 1/2" | 31'-6 1/2" | 31'-7 1/4" | 31'-6 1/2" | 31'-1 1/8" | 31'-7 1/8" | 31'-6 1/2" | 31'-6 1/2" | 31'-6 1/2" | 41'-0 1/2" | 21'-10 1/4" | 21'-11 1/2" | 21'-11 3/4" | 21'-11 1/2" | 21'-5 5/8" | .5 | | |
| | .6 | 31'-0 1/2" | 21'-11 1/4" | 21'-10 3/4" | 21'-11 1/8" | 31'-6 1/4" | 31'-5 5/8" | 31'-6 1/8" | 31'-7 1/8" | 31'-6 5/8" | 31'-1 1/4" | 31'-7 1/8" | 31'-6 1/8" | 31'-6 1/4" | 31'-6 5/8" | 41'-1 3/8" | 21'-10 3/4" | 21'-11 1/2" | 21'-0" | 21'-11 5/8" | 21'-4 5/8" | .6 | | |
| | .7 | 31'-0" | 21'-10 1/4" | 21'-10 1/8" | 21'-10 7/16" | 31'-7 5/8" | 31'-6 1/4" | 31'-7 1/4" | 31'-8 1/4" | 31'-7 1/8" | 21'-10 3/8" | 31'-6 1/2" | 31'-5 1/4" | 31'-5 1/2" | 31'-5 3/8" | 41'-2 3/8" | 21'-11 5/8" | 31'-0 3/4" | 31'-0 3/4" | 31'-0 1/8" | 21'-3 3/8" | .7 | | |
| | .8 | 21'-10 3/4" | 21'-9 1/4" | 21'-9" | 21'-9 7/16" | 31'-8 1/4" | 31'-7 5/8" | 31'-9" | 31'-9 1/4" | 31'-8 1/8" | 21'-9 3/8" | 31'-5 1/4" | 31'-4" | 31'-4 1/4" | 31'-4 1/4" | 41'-3 1/2" | 31'-0 3/4" | 31'-2" | 31'-2" | 31'-1 1/8" | 21'-2 5/8" | .8 | | |
| | .9 | 21'-9" | 21'-7 1/8" | 21'-7 1/8" | 21'-8 1/2" | 31'-8 3/4" | 31'-9 1/8" | 31'-10 3/8" | 31'-10 3/4" | 31'-9 1/2" | 21'-9 3/8" | 31'-3 5/8" | 31'-2 5/8" | 31'-2 1/2" | 31'-3 1/2" | 41'-3 1/8" | 31'-2 1/4" | 31'-3 3/4" | 31'-2 3/8" | 31'-2 1/4" | 21'-2 1/8" | .9 | | |
| | 1.0 | 21'-6 5/8" | 21'-5 1/4" | 21'-5 1/4" | 21'-6 5/8" | 31'-9" | 31'-11 3/8" | 41'-0 3/4" | 41'-0 3/4" | 31'-11 3/8" | 21'-9" | 31'-1 5/8" | 31'-0 1/4" | 31'-0 1/4" | 31'-1 5/8" | 41'-4" | 31'-4 1/2" | 31'-5 7/8" | 31'-5 7/8" | 31'-4 1/2" | 21'-2" | 1.0 | | |

Note: Horizontal offsets are measured perpendicular to ℄ of Girders.

Note:
The following abbreviations are used:
F.S. = Field Splice
B.L. = Bend Line
CF = Crossframe
⊕ Indicates a scupper. All scuppers are Type 1.
For scupper details see Sheet 65/108.

Notes:
For 5/8" diameter Safety Cable see Sheet 72/108.
For Girder Notes see Sheet 28/108.
For Stringer Notes see Sheet 30/108.
For location and details of Navigation Light Supports see Lighting Plans. The Supports are included with the lighting quantities for payment.

H.N.T.B. BR. NO. 9 PART II - SUPERSTRUCTURE

HOWARD, NEEDLES, TAMMEN & BERGENDOFF
CONSULTING ENGINEERS
KANSAS CITY CLEVELAND NEW YORK

FRAMING PLAN-UNIT 3

I-290 OVER CUYAHOGA RIVER

BR. NO. CUY-290-0110 STA. 985+85.75 TO STA. 1020+47.57 (℄ I-290)

CLEVELAND CUYAHOGA COUNTY OHIO

| DRAWN J.D.S. | TRACED J.S.C. | CHECKED | REVIEWED | REVISED |
|---|---|---|---|---|
| DATE 7-30-68 | DATE 8-13-69 | DATE 3-30-70 | DATE C.A.B. 2-24-86 | SHEET 32/108 |

| FED. RD. DIVISION | STATE | PROJECT | |
|---|---|---|---|
| 2 | OHIO | | |

119
193

CUYAHOGA COUNTY
CUY-290-0.27

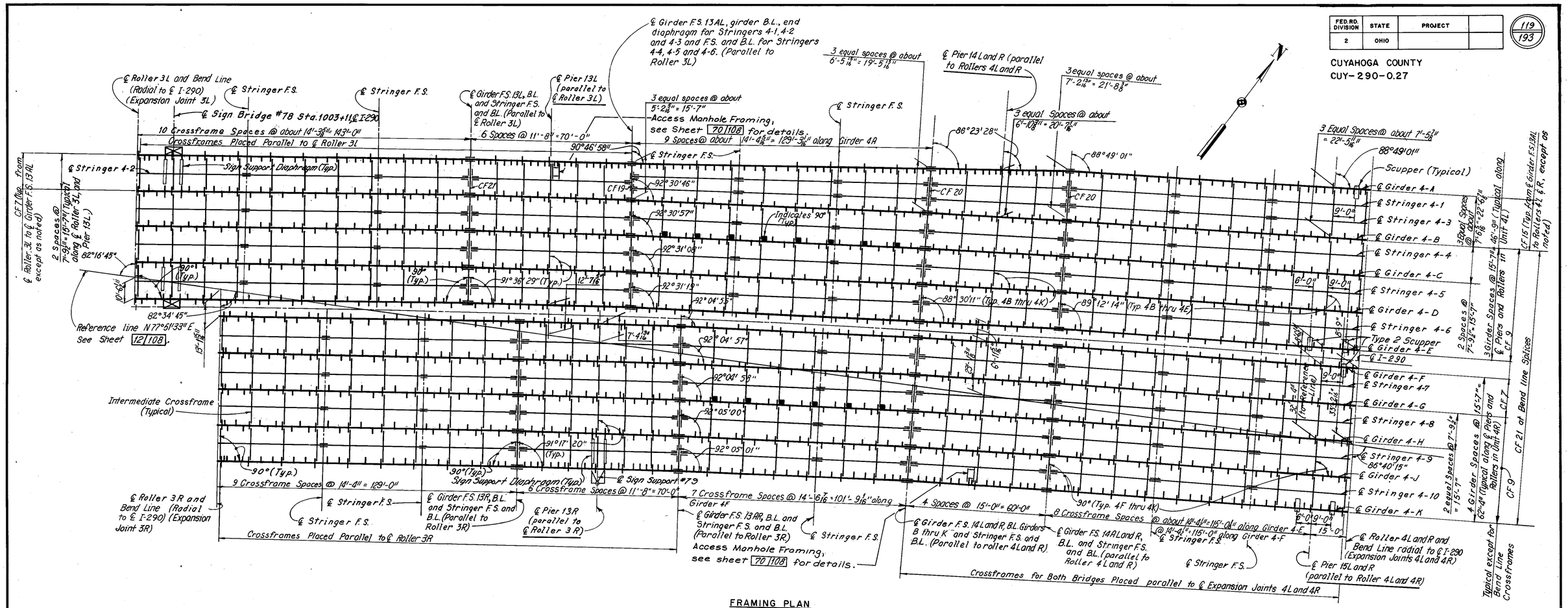


FRAMING PLAN

Notes:

Indicates a scupper. All scuppers are Type 1 unless otherwise specified. For scupper details see Sheet 65|108.

For Girder Notes see Sheet 28|108.

For Stringer Notes see Sheet 30|108.

The following abbreviations are used:

CF = Crossframe
B.L. = Bend Line
F.S. = Field Splice

For Sign Support Details see Sheets 100|108 and 101|108.

HORIZONTAL OFFSETS TO EDGE OF SLAB

| GIRDER | | GIRDER 4-A | | | | | GIRDER 4-E | | | | | GIRDER 4-F | | | | | GIRDER 4-K | | | | | | GIRDER |
|---|---|---|---|---|---|---|---|---|---|---|---|---|---|---|---|---|---|---|---|---|---|---|---|
| SLAB | | NORTH EDGE OF SLAB | | | | | NORTH MEDIAN EDGE OF SLAB | | | | | SOUTH MEDIAN EDGE OF SLAB | | | | | SOUTH EDGE OF SLAB | | | | | | SLAB |
| FROM | | Roller 3L | F.S. 13L | F.S. 13AL | F.S. 14LR | F.S. 14ALR | Roller 3L | F.S. 13L | F.S. 13AL | F.S. 14LR | F.S. 14ALR | Roller 3R | F.S. 13R | F.S. 13AR | F.S. 14LR | F.S. 14ALR | Roller 3R | F.S. 13R | F.S. 13AR | F.S. 14LR | F.S. 14ALR | | FROM |
| TO | | F.S. 13L | F.S. 13AL | F.S. 14LR | F.S. 14ALR | Roller 4LR | F.S. 13L | F.S. 13AL | F.S. 14LR | F.S. 14ALR | Roller 4LR | F.S. 13R | F.S. 13AR | F.S. 14LR | F.S. 14ALR | Roller 4LR | F.S. 13R | F.S. 13AR | F.S. 14LR | F.S. 14ALR | Roller 4LR | | TO |
| 10 EQUAL SPACES | .0 | 31'-9" | 21'-3 5/8" | 31'-1 3/8" | 21'-11" | 21'-0" | 21'-9" | 41'-2 7/8" | 41'-1" | 31'-7" | 31'-9 1/8" | 41'-4" | 31'-1 1/2" | 31'-0 3/8" | 31'-0 1/4" | 21'-10 1/4" | 21'-2" | 31'-4 5/8" | 31'-6" | 31'-6" | 31'-7 5/8" | .0 | 10 EQUAL SPACES |
| | .1 | 31'-8 7/8" | 21'-3 7/8" | 31'-2 1/4" | 21'-10 1/8" | 21'-3 5/8" | 21'-9 1/4" | 41'-2 1/4" | 31'-11 1/8" | 31'-6 7/8" | 31'-8 3/8" | 41'-3 7/8" | 31'-1 3/8" | 31'-1 1/4" | 31'-0 3/8" | 31'-1" | 21'-2 6/8" | 31'-4 3/8" | 31'-5 1/8" | 31'-5 7/8" | 31'-5 1/8" | .1 | |
| | .2 | 31'-8 1/4" | 21'-4 3/8" | 31'-3 1/4" | 21'-9 1/4" | 21'-6 1/4" | 21'-9 3/8" | 41'-1 3/8" | 31'-9 3/8" | 31'-6 7/8" | 31'-8 1/8" | 41'-3 3/8" | 31'-1 7/8" | 31'-1 3/8" | 31'-0 3/8" | 31'-3 1/2" | 21'-2 5/8" | 31'-4 1/4" | 31'-4 3/8" | 31'-5 7/8" | 31'-2 1/2" | .2 | |
| | .3 | 31'-7 3/8" | 21'-4 7/8" | 31'-3 3/8" | 21'-8 3/8" | 21'-9 3/8" | 21'-10 1/8" | 41'-1 3/8" | 31'-8 3/8" | 31'-7" | 31'-8" | 41'-2 3/8" | 31'-2" | 31'-2 1/4" | 31'-0 3/8" | 31'-5 3/4" | 21'-3 3/8" | 31'-4 1/8" | 31'-4 1/4" | 31'-5 7/8" | 31'-0 1/4" | .3 | |
| | .4 | 31'-6 1/4" | 21'-5 1/8" | 31'-3 7/8" | 21'-7 5/8" | 21'-11 7/8" | 21'-11 7/8" | 41'-1 1/8" | 31'-7 3/8" | 31'-7 1/4" | 31'-8 1/4" | 41'-1 5/8" | 31'-2" | 31'-2 1/4" | 31'-0 1/4" | 31'-7 3/4" | 21'-4 5/8" | 31'-4 1/8" | 31'-4" | 31'-6" | 21'-10 3/8" | .4 | |
| | .5 | 31'-4 5/8" | 21'-5 3/8" | 31'-3 3/4" | 21'-6 1/4" | 21'-2 1/4" | 31'-1 1/2" | 41'-0 7/8" | 31'-6 5/8" | 31'-7 1/4" | 31'-8 7/8" | 41'-0 3/8" | 31'-2" | 31'-2 5/8" | 31'-0" | 31'-9 3/8" | 21'-5 5/8" | 31'-4 1/4" | 31'-3 7/8" | 31'-6 1/4" | 21'-8 3/4" | .5 | |
| | .6 | 31'-2 5/8" | 21'-5 1/4" | 31'-3 3/8" | 21'-5 1/4" | 21'-4 1/4" | 31'-3 3/8" | 41'-0 3/4" | 31'-6 1/4" | 31'-7 1/4" | 31'-9 3/4" | 41'-10 3/4" | 31'-1 3/8" | 31'-2 1/4" | 2'-11 1/8" | 31'-9 5/8" | 21'-7 1/4" | 31'-4 3/8" | 31'-4" | 31'-6 5/8" | 21'-7 5/8" | .6 | |
| | .7 | 31'-0 5/8" | 21'-7 1/4" | 31'-2 3/4" | 21'-4" | 31'-5 3/4" | 31'-5 3/4" | 41'-0 5/8" | 31'-6" | 31'-7 3/4" | 3'-10 7/8" | 31'-8 7/8" | 31'-1 5/8" | 31'-2 1/4" | 2'-11 1/8" | 31'-11 5/8" | 21'-9 1/4" | 31'-4 3/4" | 31'-4 1/4" | 31'-6 5/8" | 21'-6 3/8" | .7 | |
| | .8 | 21'-9 3/4" | 21'-9 1/4" | 31'-1 3/4" | 21'-2 3/4" | 31'-7 1/4" | 31'-8 3/8" | 41'-0 3/8" | 31'-6" | 31'-8 1/4" | 41'-0 1/4" | 31'-6 3/4" | 31'-1 1/4" | 31'-1 3/4" | 2'-11 1/4" | 41'-0 3/8" | 21'-11 3/8" | 31'-5" | 31'-4 5/8" | 31'-7" | 21'-5 3/8" | .8 | |
| | .9 | 21'-6 3/4" | 21'-11 1/4" | 31'-0 1/4" | 21'-1 3/8" | 31'-8 1/4" | 31'-11 1/2" | 41'-0 3/4" | 31'-6 3/4" | 31'-8 3/8" | 41'-2" | 31'-4 1/4" | 31'-0 3/8" | 31'-1 1/4" | 2'-10 3/4" | 41'-0 3/8" | 31'-1 5/8" | 31'-5 1/4" | 31'-5 1/4" | 31'-7 3/4" | 21'-5 1/8" | .9 | |
| | 1.0 | 21'-3 3/4" | 31'-1 3/4" | 21'-11" | 21'-0" | 31'-9" | 41'-2 7/8" | 41'-1" | 31'-7" | 31'-9 1/8" | 41'-4" | 31'-1 1/2" | 31'-0 3/8" | 31'-0 1/4" | 2'-10 1/4" | 41'-1" | 31'-4 5/8" | 31'-6" | 31'-6" | 31'-7 7/8" | 21'-5" | 1.0 | |

Note: Horizontal offsets are measured perpendicular to ℄ of girders.

H.N.T.B. BR. NO. 9 PART II - SUPERSTRUCTURE

HOWARD, NEEDLES, TAMMEN & BERGENDOFF
CONSULTING ENGINEERS
KANSAS CITY CLEVELAND NEW YORK

FRAMING PLAN-UNIT 4

I-290 OVER CUYAHOGA RIVER

BR. NO. CUY-290-0110 STA. 985+85.75 TO STA. 1020+47.57 (℄ I-290)

CLEVELAND CUYAHOGA COUNTY OHIO

| DRAWN JDS | TRACED JSC | CHECKED DWA | REVIEWED | REVISED |
|---|---|---|---|---|
| DATE 3/4/69 | DATE 3/18/69 | DATE 3/6/70 | DATE 2-24-86 | SHEET 34|108 |

| FED. RD. DIVISION | STATE | PROJECT | |
|---|---|---|---|
| 2 | OHIO | | |

122
193

**CUYAHOGA COUNTY**
**CUY. -290-0.27**

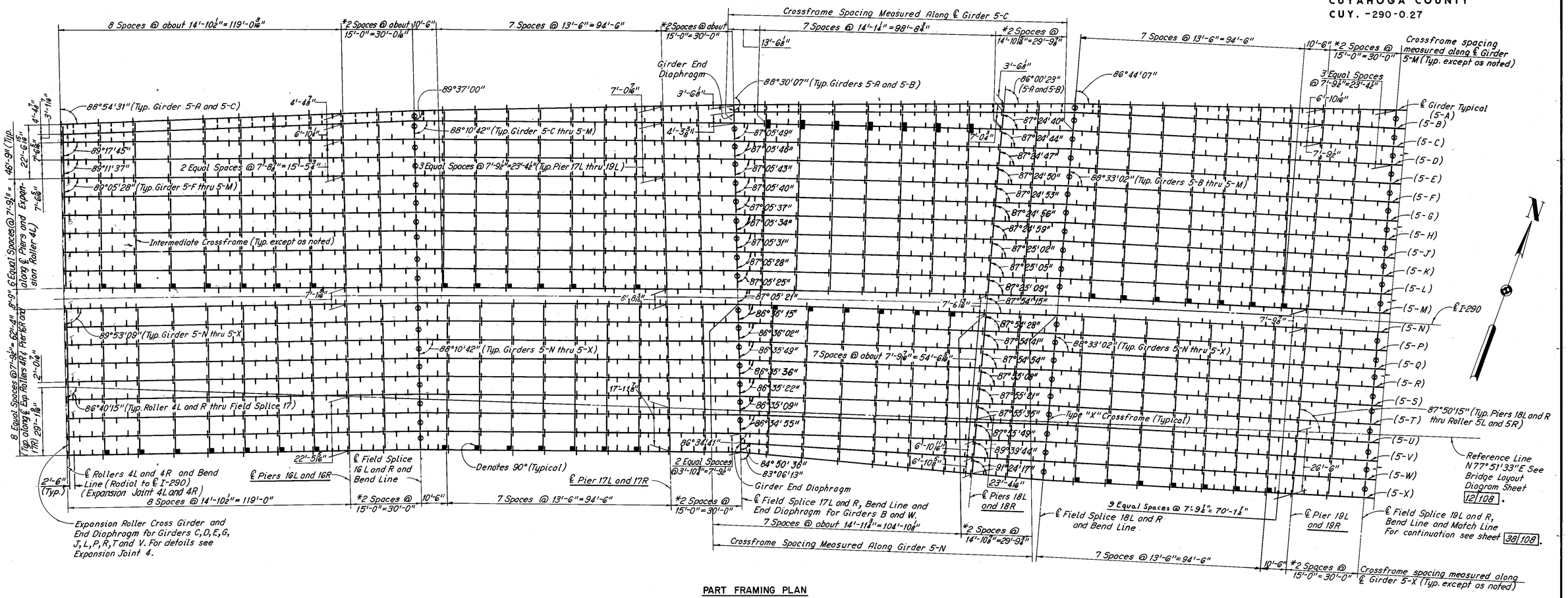


## PART FRAMING PLAN

* Note:
Crossframes placed parallel to adjacent pier.

| HORIZONTAL OFFSETS TO EDGE OF SLAB | | | | | | | | | | | | | | | | | | | | | | | | | | | |
|---|---|---|---|---|---|---|---|---|---|---|---|---|---|---|---|---|---|---|---|---|---|---|---|---|---|---|---|
| | | NORTH EDGE OF SLAB | | | | | NORTH MEDIAN EDGE OF SLAB | | | | | SOUTH MEDIAN EDGE OF SLAB | | | | | SOUTH EDGE OF SLAB | | | | | | |
| FROM | | ℄ Rollers 4 | F.S. 16L | F.S. 17L | F.S. 18L | F.S. 19L | ℄ Rollers 4 | F.S. 16L | F.S. 17L | F.S. 18L | F.S. 19L | ℄ Rollers 4 | F.S. 16R | F.S. 17R | F.S. 18R | F.S. 19R | ℄ Rollers 4 | F.S. 16R | F.S. 17R | F.S. 18R | F.S. 19R | FROM | |
| TO | | F.S. 16L | F.S. 17L | F.S. 18L | F.S. 19L | ℄ Brg. Abut. B-C | F.S. 16L | F.S. 17L | F.S. 18L | F.S. 19L | ℄ Rollers 5 | F.S. 16R | F.S. 17R | F.S. 18R | F.S. 19R | ℄ Rollers 5 | F.S. 16R | F.S. 17R | F.S. 18R | F.S. 19R | ℄ Rollers 5 | TO | |
| GIRDER | | 5-A | | | | | 5-M | | | | | 5-N | | | | | 5-X | | | | | GIRDER | |
| 10 EQUAL SPACES | 0 | 3'-9" | 3'-0" | 3'-0½" | 3'-0" | 2'-3¾" | 4'-4" | 3'-7" | 3'-6½" | 3'-7" | 3'-7⅜" | 4'-1" | 2'-9½" | 2'-9⅝" | 3'-10¾" | 3'-10½" | 2'-5" | 3'-9" | 3'-9⅛" | 2'-0" | 2'-10½" | 0 | 10 EQUAL SPACES |
| | .1 | 3'-9⅞" | 3'-1½" | 3'-2" | 3'-0¼" | 2'-2½" | 4'-1⅜" | 3'-5½" | 3'-5⅛" | 3'-5⅝" | 3'-6⅞" | 4'-1⅛" | 2'-10⅜" | 3'-0⅝" | 4'-0¼" | 3'-1" | 2'-4⅞" | 3'-7½" | 3'-9⅛" | 2'-8⅛" | 2'-9⅜" | .1 | |
| | .2 | 3'-10⅛" | 3'-2⅝" | 3'-3¼" | 3'-0⅛" | 2'-1⅞" | 3'-11⅛" | 3'-4⅜" | 3'-4" | 3'-4½" | 3'-6⅝" | 4'-1" | 2'-11⅞" | 3'-2⅝" | 4'-1¼" | 3'-1¼" | 2'-5⅛" | 3'-6⅜" | 2'-0" | 2'-7⅝" | 2'-9⅜" | .2 | |
| | .3 | 3'-10⅜" | 3'-3⅜" | 3'-4" | 2'-11⅝" | 2'-1⅜" | 3'-9¼" | 3'-3½" | 3'-3¼" | 3'-3⅜" | 3'-6⅝" | 4'-0⅜" | 3'-0⅜" | 3'-4⅞" | 4'-2" | 3'-1¼" | 2'-5⅜" | 3'-5⅜" | 2'-0" | 2'-6⅜" | 2'-9¼" | .3 | |
| | .4 | 3'-10" | 3'-4" | 3'-4⅜" | 2'-10⅜" | 2'-2¼" | 3'-7⅜" | 3'-3" | 3'-2⅞" | 3'-3⅜" | 3'-6⅝" | 3'-11⅜" | 3'-1¼" | 3'-6⅜" | 4'-2½" | 3'-1¼" | 2'-6⅜" | 3'-5⅛" | 2'-0" | 2'-6¼" | 2'-9⅜" | .4 | |
| | .5 | 3'-9¼" | 3'-4⅛" | 3'-4⅜" | 2'-9⅜" | 2'-3⅜" | 3'-6⅝" | 3'-2⅜" | 3'-2⅜" | 3'-3¼" | 3'-7" | 3'-10" | 3'-1⅜" | 3'-8⅛" | 4'-2⅝" | 3'-10⅞" | 2'-8⅛" | 3'-5" | 2'-0" | 2'-6⅛" | 2'-9⅜" | .5 | |
| | .6 | 3'-8¼" | 3'-4" | 3'-4⅜" | 2'-8½" | 2'-5⅛" | 3'-6" | 3'-2⅞" | 3'-3" | 3'-3⅜" | 3'-7½" | 3'-8⅛" | 3'-1¼" | 3'-9⅜" | 4'-2½" | 3'-10⅜" | 2'-9⅞" | 3'-5⅛" | 2'-0" | 2'-6¼" | 2'-10½" | .6 | |
| | .7 | 3'-6⅜" | 3'-3⅝" | 3'-3⅜" | 2'-7⅛" | 2'-7½" | 3'-5⅝" | 3'-3¼" | 3'-3½" | 3'-3⅜" | 3'-8⅛" | 3'-6" | 3'-0⅞" | 3'-10½" | 4'-1⅜" | 3'-9⅜" | 3'-0⅛" | 3'-5⅜" | 2'-0" | 2'-6⅜" | 3'-0⅛" | .7 | |
| | .8 | 3'-4⅛" | 3'-2⅞" | 3'-2⅜" | 2'-5⅜" | 2'-10⅜" | 3'-5⅜" | 3'-4" | 3'-4⅜" | 3'-4⅜" | 3'-9" | 3'-3½" | 3'-0" | 3'-10⅜" | 4'-1½" | 3'-8⅞" | 3'-2⅝" | 3'-6⅜" | 2'-0" | 2'-7½" | 3'-2⅜" | .8 | |
| | .9 | 3'-2⅜" | 3'-1⅛" | 3'-1⅜" | 2'-4⅜" | 3'-2" | 3'-6⅛" | 3'-5⅛" | 3'-5½" | 3'-5⅜" | 3'-10⅛" | 3'-0½" | 2'-11" | 3'-10⅞" | 4'-0" | 3'-7⅜" | 3'-5⅝" | 3'-7½" | 2'-0" | 2'-8⅛" | 3'-5⅜" | .9 | |
| | 1.0 | 3'-0" | 3'-0½" | 3'-0" | 2'-3¾" | 3'-6⅞" | 3'-7" | 3'-6½" | 3'-7" | 3'-7⅜" | 3'-11⅜" | 2'-9⅛" | 2'-9⅝" | 3'-10⅜" | 3'-10½" | 3'-6½" | 3'-9" | 3'-9" | 2'-0" | 2'-10⅛" | 3'-9" | 1.0 | |

Note: Horizontal offsets are measured perpendicular to Girders 5A, 5-M, 5-N or 5X
F.S. Denotes Field Splice.

Notes:
For Girder Notes see Sheet 28/108.
For Girder End Diaphragm details see Sheet 42/108.
For Crossframe details see Sheet 57/108.

H.N.T.B. BR. NO. 9 PART II - SUPERSTRUCTURE

HOWARD, NEEDLES, TAMMEN & BERGENDOFF
CONSULTING ENGINEERS
KANSAS CITY CLEVELAND NEW YORK

**FRAMING PLAN**
**UNIT 5**

I-290 OVER CUYAHOGA RIVER

BR. NO. CUY-290-0110 STA. 985+85.75 TO STA. 1020+47.57

CLEVELAND CUYAHOGA COUNTY (℄ I-290) OHIO

| DRAWN T.D.S. | TRACED J.S.C. | CHECKED M.B. | REVIEWED C.A.B. | REVISED |
|---|---|---|---|---|
| DATE 9-9-69 | DATE 9-18-69 | DATE 2-18-70 | DATE 2-24-86 | SHEET 37/108 |

| FED. RD. DIVISION | STATE | PROJECT | |
|---|---|---|---|
| 2 | OHIO | | |



CUYAHOGA COUNTY
CUY-290-0.27

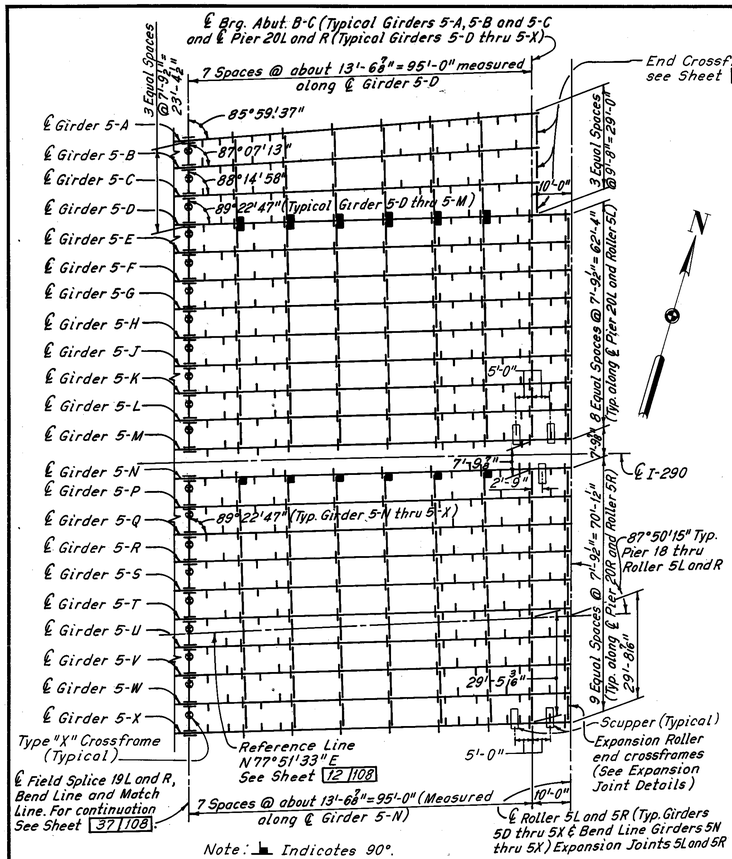


Note: ⊥ Indicates 90°.

PART FRAMING PLAN

*Note: Dimensions measured from Pier 18 to Girder End Diaphragm at Field Splice 17.

Note: M in Bearing Columns indicate Standard Rocker with modified dowels. (See Note below)

TABLE OF DIMENSIONS, PLATES AND BEARINGS - GIRDER A THRU X

| DIMENSIONS | GIRDER A | GIRDER B | GIRDER C | GIRDER D | GIRDER E | GIRDER F | GIRDER G | GIRDER H | GIRDER J | GIRDER K | GIRDER L | GIRDER M | GIRDER N | GIRDER P | GIRDER Q | GIRDER R | GIRDER S | GIRDER T | GIRDER U | GIRDER V | GIRDER W | GIRDER X |
|---|---|---|---|---|---|---|---|---|---|---|---|---|---|---|---|---|---|---|---|---|---|---|
| A | 119'-0 1/4" | — | — | — | — | 119'-0 9/16" | — | 119'-0 9/16" | — | 119'-0 9/16" | — | 119'-0 9/16" | 119'-0" | — | 119'-0" | — | 119'-0" | — | 119'-0" | — | — | 119'-0" |
| B | 30'-0 1/16" | — | 30'-0 1/16" | 30'-0" | 30'-0 1/16" | 30'-0 1/16" | ← | | | | | 30'-0 1/16" | 30'-0" | ← | | | | | → | 30'-0" | — | 30'-0" |
| C | 134'-11 7/16" | — | 135'-0 7/16" | 135'-0" | ← | | | | | | | | | | | | | | → | 135'-0" | — | 135'-0" |
| D | 29'-11 7/16" | — | 30'-0" | ← | | | | | | | | | | | | | | | → | 30'-0" | — | 30'-0" |
| E | 143'-1 5/8" | *112'-9 3/4" | 142'-2 7/8" | 141'-5 5/16" | 140'-9" | 140'-0" | 139'-3 1/16" | 138'-6 1/8" | 137'-9 1/8" | 137'-0 9/16" | 136'-3 1/4" | 135'-6 1/4" | 134'-10 1/8" | 134'-1 3/16" | 133'-4 1/4" | 132'-7 5/16" | 131'-10 5/16" | 131'-1 3/8" | 130'-4 3/8" | 129'-7 7/16" | *99'-2 1/4" | 128'-10 11/16" |
| F | 29'-10 7/8" | 29'-10 7/8" | 29'-9 7/8" | ← | | | | | | | | 29'-9 7/8" | 29'-9 3/4" | ← | | | | | → | 29'-9 3/4" | 29'-9 1/2" | 29'-9 5/8" |
| G | 135'-0" | 134'-10 7/8" | 134'-9 7/8" | ← | | | | | | | | 134'-9 7/8" | 134'-9 3/4" | ← | | | | | → | 134'-9 3/4" | 134'-9 1/2" | 134'-9 5/8" |
| H | 30'-0 7/16" | 30'-0" | ← | | | | | | | | | | | | | | | | | | → | 30'-0" |
| J | 125'-3 7/16" | 125'-1 7/8" | 125'-0 7/16" | 125'-0" | ← | | | | | | | | | | | | | | | | → | 125'-0" |
| K | — | — | 117'-0 1/2" | 117'-0 3/8" | 117'-0 3/8" | — | 117'-0 7/16" | — | 117'-0 7/16" | — | 117'-0 7/16" | — | — | 117'-0 1/4" | — | 117'-0 1/4" | — | 117'-0 1/4" | — | 117'-0 1/4" | — | — |
| PLATE PA | 1" | — | 7/8" | 1" | 1-1/4" | ← | | | | → | 1-1/4" | 1-3/8" | 1-1/4" | ← | | | | → | 1-1/4" | 1-1/4" | — | 1-1/4" |
| PLATE PB | 1-3/4" | — | 1-1/2" | 1-7/8" | 2-1/4" | ← | | | | | | | | | | | | → | 2-1/4" | 2-1/4" | — | 2-1/2" |
| PLATE PC | 1" | — | 7/8" | 1-1/8" | ← | | | | | | → | 1-1/8" | 1-1/4" | ← | | | → | 1-1/4" | 1-1/4" | 1-1/4" | — | 1-1/4" |
| PLATE PD | 7/8" | — | 7/8" | 1-1/8" | ← | | | | | | → | 1-1/8" | 1" | ← | | | | → | 1" | 1-1/4" | — | 1-1/4" |
| PLATE PE | 1-1/8" | — | 1-1/8" | ← | | | | | | | → | 1-1/8" | 1" | ← | | | | → | 1" | 1-1/4" | — | 1-1/4" |
| PLATE PF | 2-1/4" | — | 2-1/4" | ← | | | | | | | → | 2-1/4" | 2" | ← | | | | → | 2" | 2-1/4" | — | 2-1/4" |
| PLATE PG | 1-1/8" | 7/8" | 1-1/8" | ← | | | | | | | → | 1-1/8" | 1" | ← | | | | → | 1" | 1-1/8" | 7/8" | 1-1/8" |
| PLATE PH | 2-1/4" | 1-1/4" | 2-1/4" | ← | | | | | | | → | 2-1/4" | 2" | ← | | | | | → | 2" | 1-1/2" | 2" |
| PLATE PJ | 1-1/8" | 7/8" | 1-1/8" | ← | | | | | | | | | | | | | | → | 1-1/8" | 1-1/4" | 1-1/2" | 1-1/4" |
| PLATE PK | 1-1/8" | 7/8" | 1-1/8" | ← | | | | | | | | | | | | | | → | 1-1/8" | 1-1/4" | 1-1/8" | 1-1/4" |
| PLATE PL | 1-1/2" | 1-1/4" | 1-1/2" | 1-5/8" | 1-1/8" | ← | | | | | | | | | | | | → | 1-1/8" | 1-1/4" | 1-1/8" | 1-1/4" |
| PLATE PM | 2-1/2" | 2-1/4" | 2-1/2" | 2-1/2" | 2-1/4" | ← | | | | | → | 2 1/4" | 2 1/2" | 2 1/4" | ← | | | → | 2-1/4" | 2-1/2" | 2-1/4" | 2-1/2" |
| PLATE PN | 2-1/2" | 2-1/4" | 2-1/2" | 2-1/2" | 1-1/4" | ← | | | | | | | | | | | | → | 1-1/4" | 1-1/4" | 1-1/4" | 1-1/4" |
| PLATE PP | 1-7/8" | 1-7/8" | 1-7/8" | 1-5/8" | 1-1/4" | ← | | | | | | | | | | | | → | 1-1/4" | 1-1/4" | 1-1/4" | 1-1/4" |
| BEARING A | R250 | — | R250 | R300 | ← | | | | | | → | R300 | R300M | ← | | | | | → | R300M | — | R350M |
| BEARING B | R350 | — | R350 | R350 | R300 | ← | | | | | | | | | | | | → | R300 | R350 | — | R350* |
| BEARING C | R350 | ← | | | | | | | | | | | | | | | | | | | → | R350 |
| BEARING D | R150M | R150M | R150M | R250 | R225 | ← | | | | → | R225 | R250 | R250M | R225M | ← | | | → | R225M | R250M | R250M | R250M |

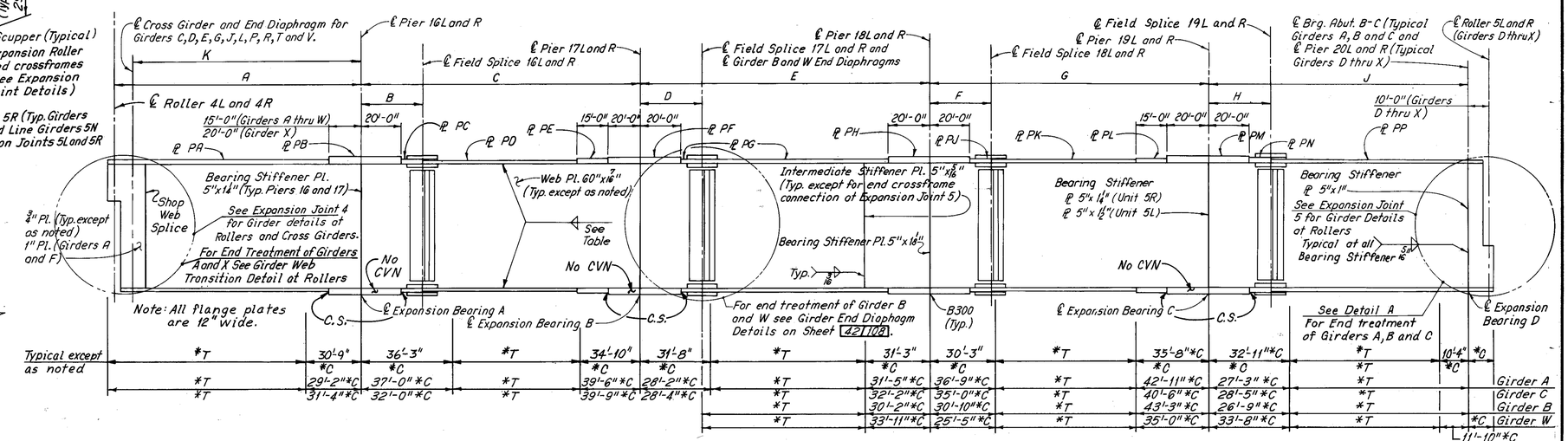


GIRDER ELEVATIONS GIRDERS A THRU X
(All flange and web plates shall be CVN except as shown)

Notes:
For Girder Notes see Sheet 28/108.
For Crossframe Details see Sheet 57/108.

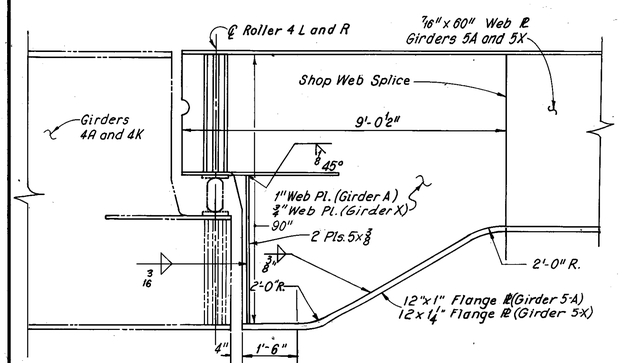


GIRDER WEB TRANSITION DETAIL AT ROLLERS
(Girders 5-A and 5-X)

Note:
For additional details of Girders 5-A and 5-X at Expansion Joint 4 see Section B-B on Sheet 51/108.
⊕ Indicates a scupper. All scuppers are Type 1.
For scupper Details see Sheet 65/108.

Note:
For Bearings B300 and R150 thru R300 see Ohio Standard Drawing RB-1-55 and the dowel modification on Sheet 59/108 for the Modified Rockers. Bevel top sole plates to match grade. Dimension C shall be measured at the ℄ of shoe. For details of the R350 and R350M Bearings see Sheet 59/108.

Omit the 1/2" side plates on the following Rockers and Bolsters:
Piers 16 and 17L and R - Girders A, C, L, M, N and X
Piers 18, 19 and 20L and R and Abutment B-C - Girders A, B, L, M, N and X

| WELD SIZE WEB TO FLANGE | |
|---|---|
| Flange Plate Thickness | Fillet Weld Size |
| 7/8" Thru 2 1/4" | 3/8" |
| 2 1/2" | 1/2" |

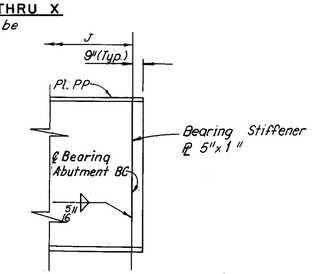


DETAIL A

H.N.T.B. BR. NO. 9 PART II - SUPERSTRUCTURE

HOWARD, NEEDLES, TAMMEN & BERGENDOFF
CONSULTING ENGINEERS
KANSAS CITY CLEVELAND NEW YORK

GIRDER ELEVATION
UNIT 5
I-290 OVER CUYAHOGA RIVER

BR. NO. CUY-290-0110 STA. 985+85.75 TO STA. 1020+47.57 (℄ I-290)

CLEVELAND CUYAHOGA COUNTY OHIO

| DRAWN JDS | TRACED A.J.T. | CHECKED M.B. | REVIEWED C.A.B. | REVISED |
|---|---|---|---|---|
| DATE 12/16/68 | DATE 12/21/68 | DATE 1-7-70 | DATE 2-24-86 | SHEET 38/108 |

| FED. RD. DIVISION | STATE | PROJECT | |
|---|---|---|---|
| 2 | OHIO | | |

124/193

CUYAHOGA COUNTY
CUY-290-0.27

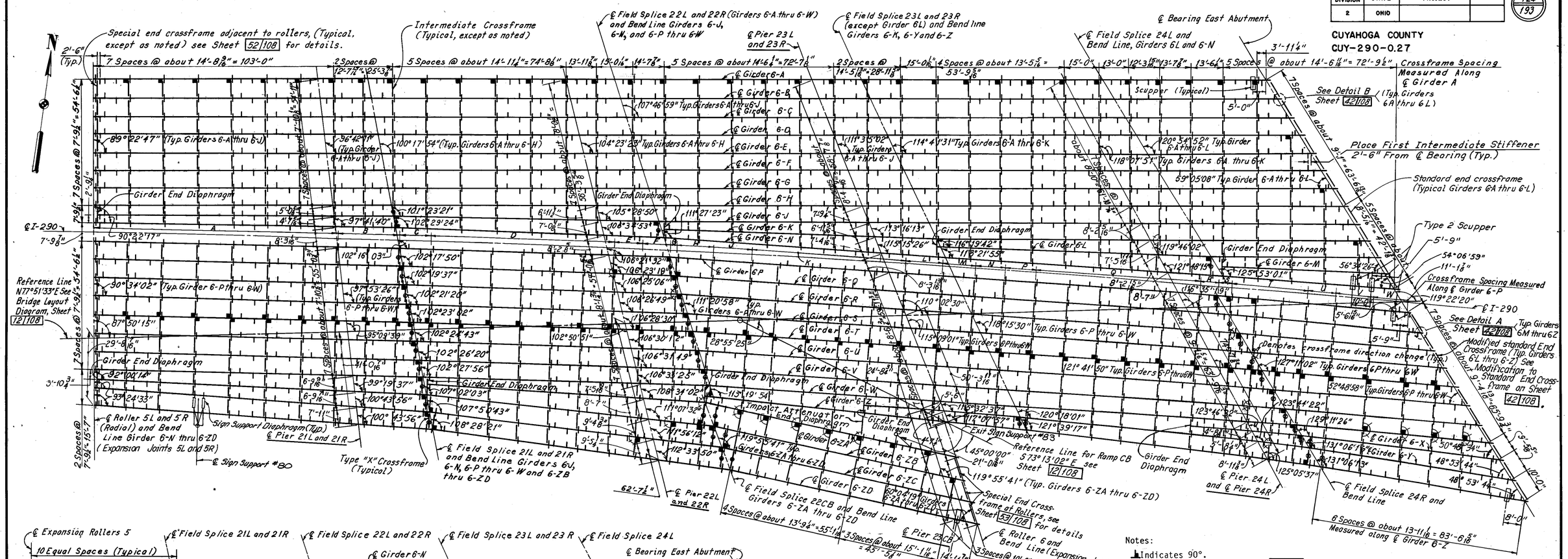
Special end crossframe adjacent to rollers, (Typical, except as noted) see Sheet 52/108 for details.
Intermediate Crossframe (Typical, except as noted)
℄ Field Splice 22L and 22R (Girders 6-A thru 6-W) and Bend Line Girders 6-J, 6-N, and 6-P thru 6-W
℄ Pier 23L and 23R
℄ Field Splice 23L and 23R (except Girder 6L) and Bend line Girders 6-K, 6-Y and 6-Z
℄ Bearing East Abutment
℄ Field Splice 24L and Bend Line, Girders 6L and 6-N
Crossframe Spacing Measured Along ℄ Girder A
See Detail B Sheet 42/108 (Typ. Girders 6A thru 6L)
Place First Intermediate Stiffener 2'-6" From ℄ Bearing (Typ.)
Standard end crossframe (Typical Girders 6A thru 6-L)
Type 2 Scupper
Crossframe Spacing Measured Along ℄ Girder 6-P
See Detail A Sheet 42/108
Typ. Girders 6M thru 6Z
Modified standard End Crossframe (Typ. Girders 6L thru 6-Z) See Modification to Standard End Cross-frame on Sheet 42/108.
Denotes crossframe direction change
℄ I-290
Girder End Diaphragm
Reference Line N77°51'33"E See Bridge Layout Diagram, Sheet 12/108
℄ Roller 5L and 5R (Radial) and Bend Line Girder 6-N thru 6-ZD (Expansion Joints 5L and 5R)
Sign Support Diaphragm (Typ)
℄ Pier 21L and 21R
℄ Sign Support #80
Type "X" Crossframe (Typical)
℄ Field Splice 21L and 21R and Bend Line Girders 6-J, 6-N, 6-P thru 6-W and 6-ZB thru 6-ZD
℄ Pier 22L and 22R
℄ Field Splice 22CB and Bend Line Girders 6-ZA thru 6-ZD
Impact Attenuator End Diaphragm
Exit Sign Support #83
Reference Line for Ramp CB S73°13'02"E see Sheet 12/108
Special End Cross-frame at Rollers, see Sheet 53/108 for details
℄ Roller 6 and Bend Line (Expansion Joint 6)
Crossframe Spacing Measured Along ℄ Girder 6-ZD
℄ Pier 24L and ℄ Pier 24R
℄ Field Splice 24R and Bend Line
Scupper (Typical)
Typ. Girders 6-A thru 6-J
Typ. Girders 6-A thru 6-H
Typ. Girders 6-A thru 6-K
Typ. Girders 6-A thru 6-L
Typ. Girders 6-P thru 6-W
Typ. Girders 6-ZA thru 6-ZD
Typ. Girders 6-ZA thru 6-ZD (Typ.)
Typ. Girder 6-P thru 6-W
Typ. Girders 6-P thru 6-W
Typ. Girders 6-P thru 6-W
Typ. Girders

| FED. RD. DIVISION | STATE | PROJECT | |
|---|---|---|---|
| 2 | OHIO | | |

126/193

CUYAHOGA COUNTY
CUY-290-0.27

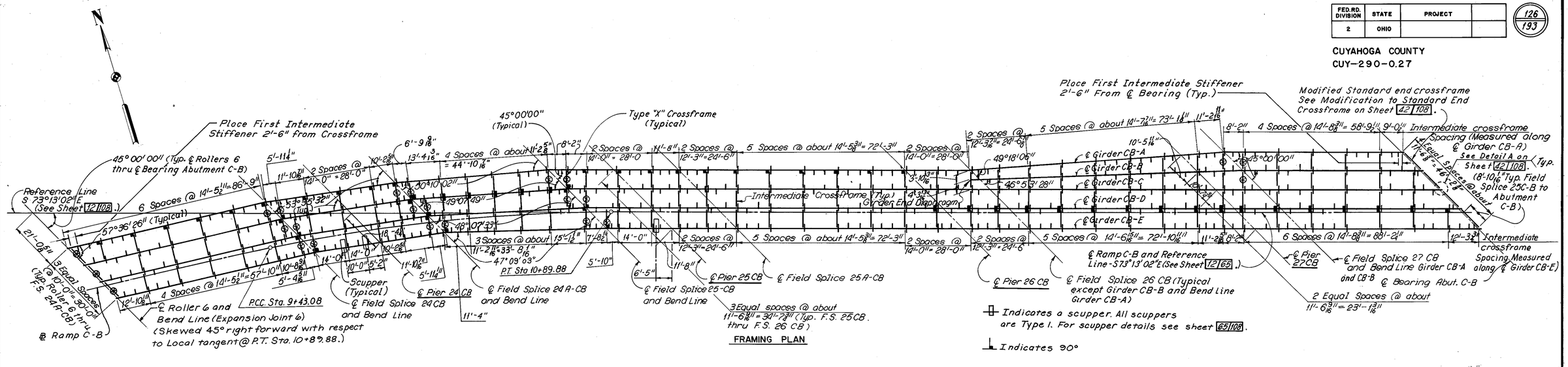


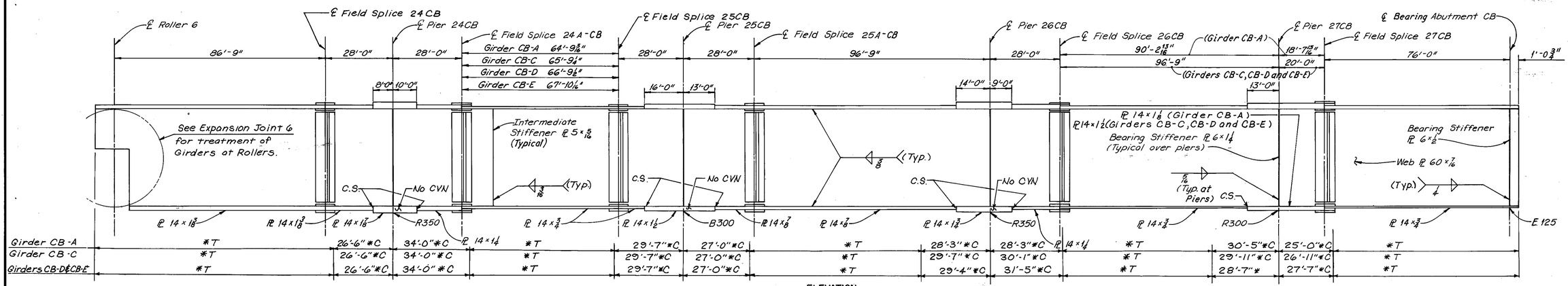


ELEVATION
Girder CB-A, CB-C, CB-D, CB-E
Note: All flange and web plates shall be CVN except as shown.

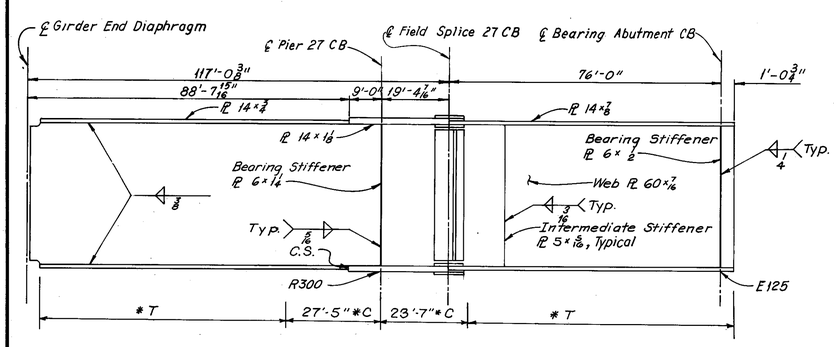


ELEVATION
Girder CB-B

HORIZONTAL OFFSETS TO EDGE OF SLAB

| Span | | Girder CB-A to North Edge of Slab | | | | | | Girder CB-E to South Edge of Slab | | | | | | Span |
|---|---|---|---|---|---|---|---|---|---|---|---|---|---|---|
| From | | Roller 6 | F.S. 24CB | F.S. 24A-CB | F.S. 25CB | F.S. 26CB | F.S. 27CB | Roller 6 | F.S. 24CB | F.S. 24A-CB | F.S. 25CB | F.S. 26CB | F.S. 27CB | From |
| To | | F.S. 24CB | F.S. 24A-CB | F.S. 25CB | F.S. 26CB | F.S. 27CB | ℄ Bearing Abut. CB | F.S. 24CB | F.S. 24A-CB | F.S. 25CB | F.S. 26CB | F.S. 27CB | ℄ Bearing Abut. CB | To |
| 10 Equal Spaces | 0 | 2'-0" | 2'-0" | 2'-9 3/8" | 2'-2 3/4" | 2'-9 1/8" | 2'-0" | 2'-9 3/8" | 3'-1 7/8" | 3'-9" | 2'-9 1/8" | 2'-9" | 2'-9" | 0 |
| | .1 | 2'-0 3/8" | 2'-3 1/4" | 2'-11 3/8" | 2'-8 1/4" | 2'-0" | 2'-6 7/8" | 2'-8" | 3'-0 1/4" | 3'-4 3/8" | 2'-9" | 2'-9" | 2'-9" | .1 |
| | .2 | 2'-1" | 2'-6" | 3'-1 1/2" | 2'-9" | 2'-0" | 2'-7" | 2'-6 3/8" | 2'-11" | 3'-0 3/8" | 2'-9" | 2'-9" | 2'-9" | .2 |
| | .3 | 2'-0 3/8" | 2'-8 1/4" | 3'-0 5/8" | 2'-9" | 2'-0" | 2'-7" | 2'-5 1/8" | 2'-10 1/4" | 2'-9 1/4" | 2'-9" | 2'-9" | 2'-9" | .3 |
| | .4 | 2'-1 3/8" | 2'-9 7/8" | 3'-3" | 2'-9" | 2'-0" | 2'-7" | 2'-5" | 2'-10 3/8" | 2'-5 3/8" | 2'-9" | 2'-9" | 2'-9" | .4 |
| | .5 | 2'-2 5/8" | 2'-11 1/8" | 3'-0 5/8" | 2'-9" | 2'-0" | 2'-7" | 2'-5" | 2'-10 3/8" | 2'-5 3/8" | 2'-9" | 2'-9" | 2'-9" | .5 |
| | .6 | 2'-3" | 2'-11 3/8" | 3'-1 3/8" | 2'-9" | 2'-0" | 2'-7" | 2'-5 1/8" | 2'-11 3/8" | 2'-4 1/2" | 2'-9" | 2'-9" | 2'-9" | .6 |
| | .7 | 2'-3" | 3'-0" | 3'-0" | 2'-9" | 2'-0" | 2'-7" | 2'-6 3/8" | 3'-1 1/4" | 2'-4 1/2" | 2'-9" | 2'-9" | 2'-9" | .7 |
| | .8 | 2'-2 1/8" | 2'-11 5/8" | 2'-9 5/8" | 2'-9" | 2'-0" | 2'-7" | 2'-7 3/4" | 3'-3 3/8" | 2'-5 1/4" | 2'-9" | 2'-9" | 2'-9" | .8 |
| | .9 | 2'-1 1/4" | 2'-10 3/4" | 2'-6 1/2" | 2'-9" | 2'-0" | 2'-7" | 2'-10 1/4" | 3'-6" | 2'-6 3/4" | 2'-9" | 2'-9" | 2'-9" | .9 |
| | 1.0 | 2'-0" | 2'-9 3/8" | 2'-2 3/4" | 2'-9" | 2'-0" | 2'-7" | 3'-1 7/8" | 3'-9" | 2'-9 1/8" | 2'-9" | 2'-9" | 2'-9" | 1.0 |

Note:
Horizontal offsets are measured perpendicular to ℄ Girders.
F. S. denotes Field Splice.

Notes:

For Girder Notes see Sheet 28/108.

For Girder End Diaphragm Details see sheet 42/108.

For Crossframe Details see sheet 57/108.

For Roadway End Dam Details and Details of End Crossframes see Ohio Standard Drawing SD-1-69, Sheets 1 and 2 of 4 and the Modification to Standard End Crossframes on Sheet 42/108.

For details of R300 and B300 see Ohio Standard Drawing RB-1-55. Bevel top sole plates to match grade. Dimension C shall be measured at centerline of sole plate. For details of R350 shoes see Sheet 58/108. For details of E 125 see Sheet 58/108.

H.N.T.B. BR. NO. 9 PART II - SUPERSTRUCTURE

HOWARD, NEEDLES, TAMMEN & BERGENDOFF
CONSULTING ENGINEERS
KANSAS CITY CLEVELAND NEW YORK

FRAMING PLAN AND
GIRDER ELEVATIONS
UNIT 6-CB
I-290 OVER CUYAHOGA RIVER

BR. NO. CUY-290-0110 STA. 985+85.75 TO STA. 1020+47.57

CLEVELAND CUYAHOGA COUNTY (℄ I-290) OHIO

| DRAWN D.H.S. | TRACED A.J.T. | CHECKED M.B. | REVIEWED | REVISED |
|---|---|---|---|---|
| DATE 10-2-69 | DATE 10-15-69 | DATE 12-23-69 | DATE C.A.B. 2-24-86 | SHEET 41/108 |

| FHWA REGION | STATE | PROJECT | |
|---|---|---|---|
| 2 | OHIO | | |

150/193

CUYAHOGA COUNTY
CUY- 290-027

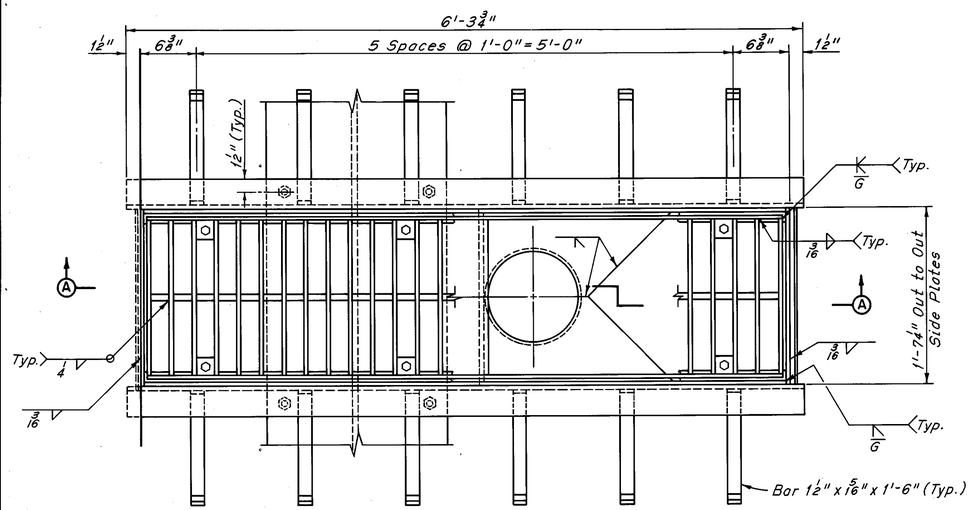


PLAN

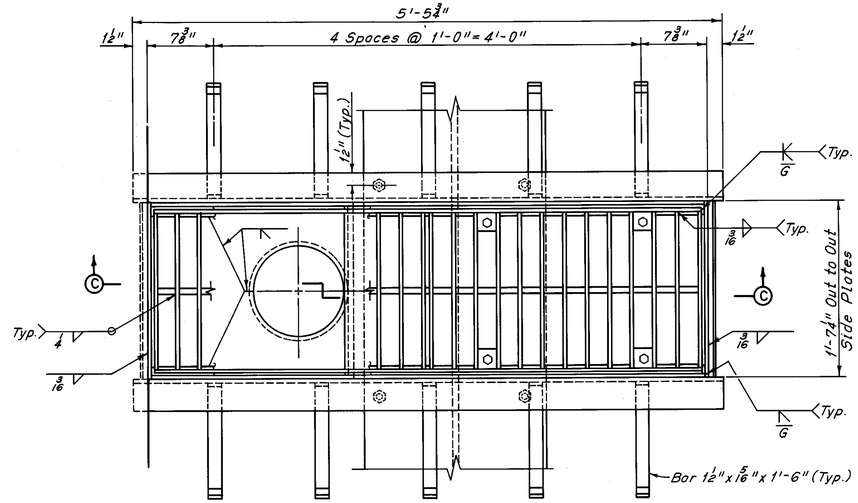


PLAN

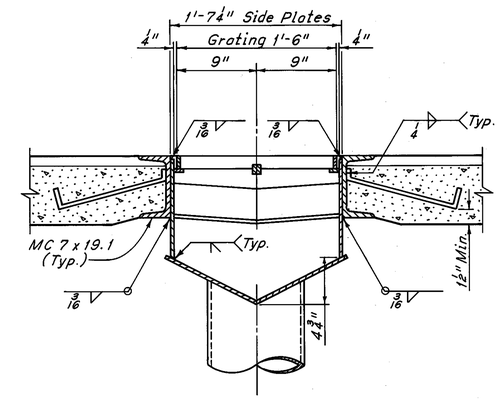


SECTION B-B
(Girder Flange not shown)

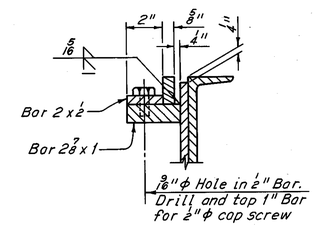


SECTION THRU GRATING FASTENING

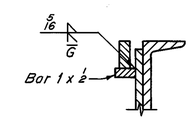


SECTION THRU GRADING SUPPORT

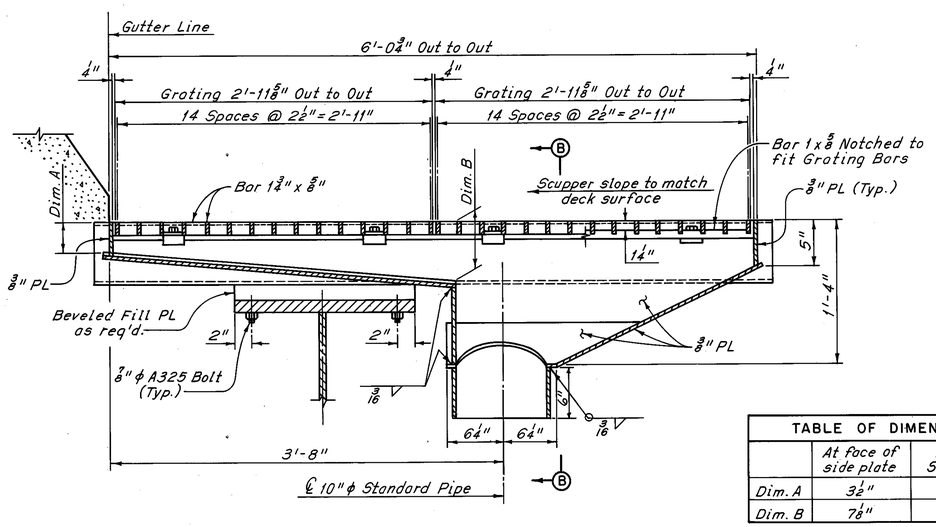


SECTION A-A

TYPE 1 SCUPPER

| TABLE OF DIMENSIONS | | |
|---|---|---|
| | At face of side plate | At ℄ Scupper |
| Dim. A | 3½" | 3¾" |
| Dim. B | 7⅛" | 7⅜" |

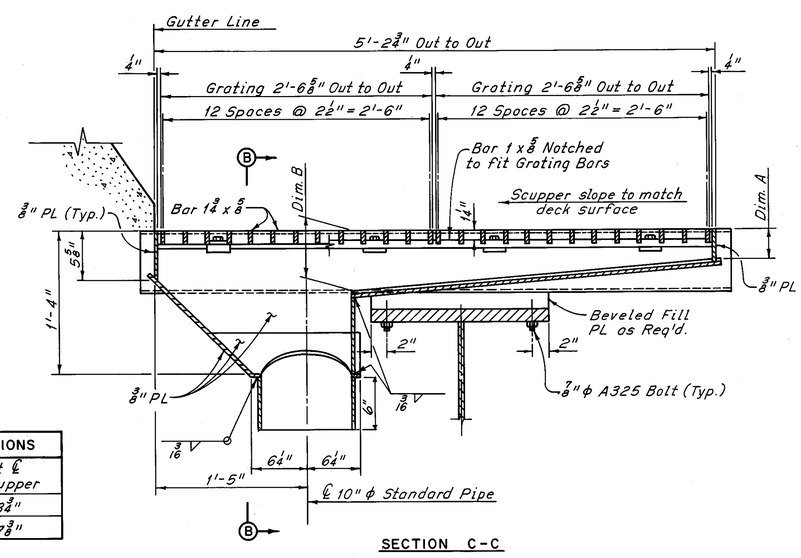


SECTION C-C

TYPE 2 SCUPPER

Note: Deck slab reinforcement shall be field cut as required to place the scuppers. Transverse slab bars that have been cut shall be placed as shown in Detail A. The cost of field cutting reinforcing shall be included in Item 824 for payment.

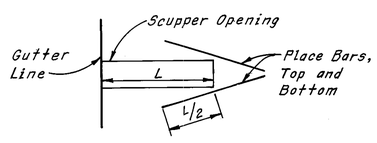


DETAIL A

Notes:

The scuppers and supports shall be hot-dip galvanized ASTM A36 steel.

The support channels, 7/8" diameter bolts and attached 10" diameter pipe are included with Item 518, Scuppers including supports for payment.

For scupper locations see framing plans.

H.N.T.B. BR. NO. 9 PART II - SUPERSTRUCTURE

HOWARD, NEEDLES, TAMMEN & BERGENDOFF CONSULTING ENGINEERS CLEVELAND — HNTB

SCUPPER DETAILS

I-290 OVER CUYAHOGA RIVER

BR. NO. CUY-290-0110 — STA. 985+85.75 TO STA. 1020+47.57 (℄ I-290)

CUYAHOGA COUNTY — OHIO

| DRAWN | TRACED | CHECKED | REVIEWED | REVISED |
|---|---|---|---|---|
| B.B. | D.L.R | R.H.W. | C.A.B. | |
| DATE 7-10-85 | DATE 8-2-85 | DATE 8-8-85 | DATE 8-24-86 | SHEET 65/108 |

| FHWA REGION | STATE | PROJECT | |
|---|---|---|---|
| 2 | OHIO | | |

151/193

CUYAHOGA COUNTY
CUY-290-027

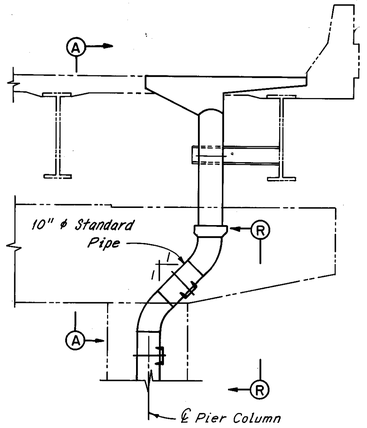


PIER 2C-7 (LOOKING WEST)

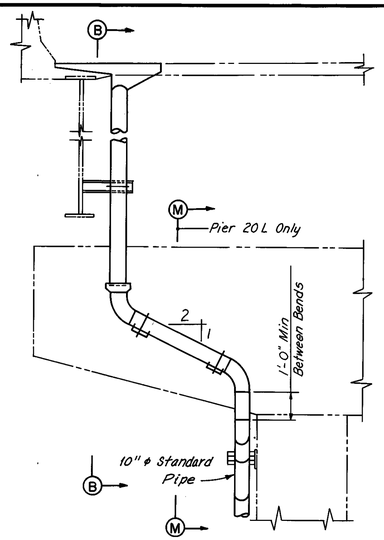


PIER 4L NORTH GUTTER (LOOKING EAST)
PIER 4L NORTH MEDIAN (OPPOSITE HAND, LOOKING EAST)
PIER 4R SOUTH MEDIAN (LOOKING EAST)
PIER 20L NORTH MEDIAN (LOOKING WEST)

Note: For Pier 4R South Gutter See Sheet 67/108.

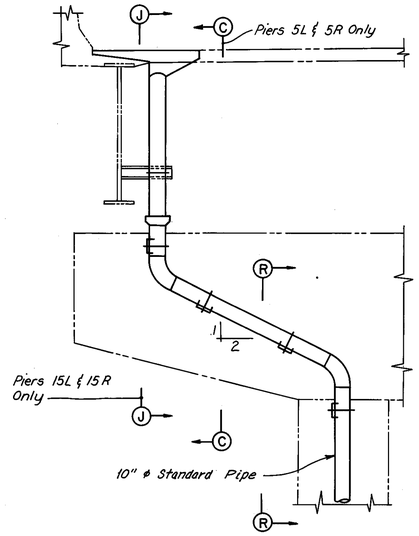


PIERS 5L & 5R (LOOKING WEST)
PIER 15R SOUTH GUTTER (LOOKING WEST)
PIER 15L NORTH GUTTER (OPPOSITE HAND, LOOKING WEST)

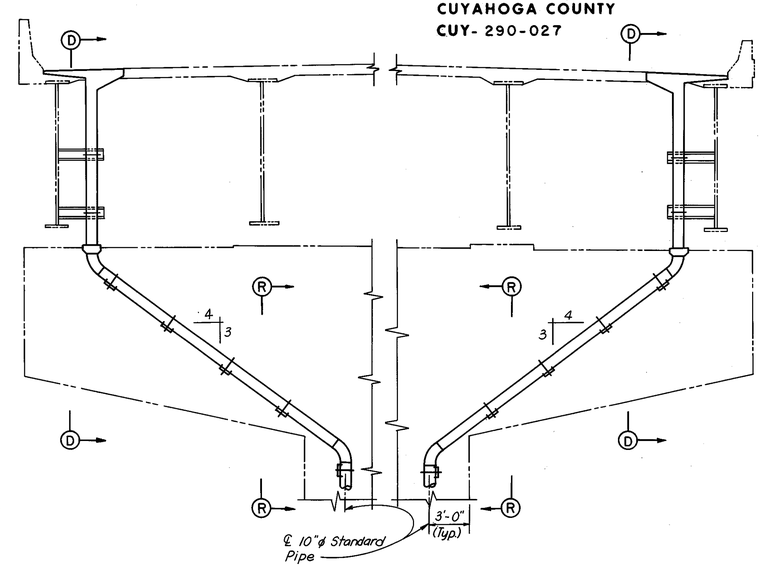


PIER 9L (LOOKING WEST)

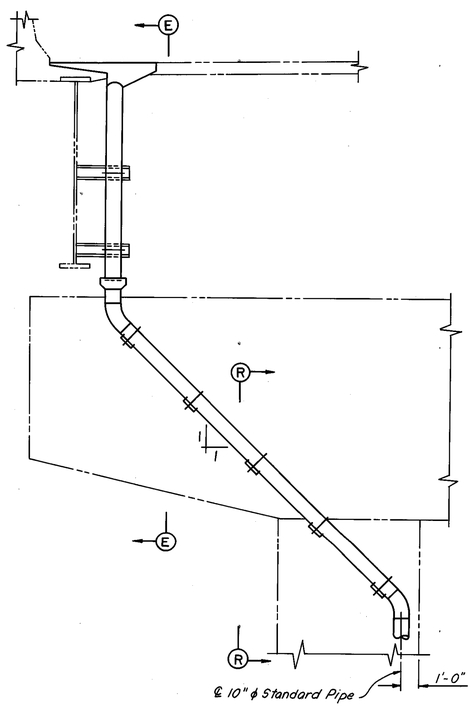


PIER 9R SOUTH MEDIAN (LOOKING EAST)
PIER 9R SOUTH GUTTER (OPPOSITE HAND, LOOKING EAST)

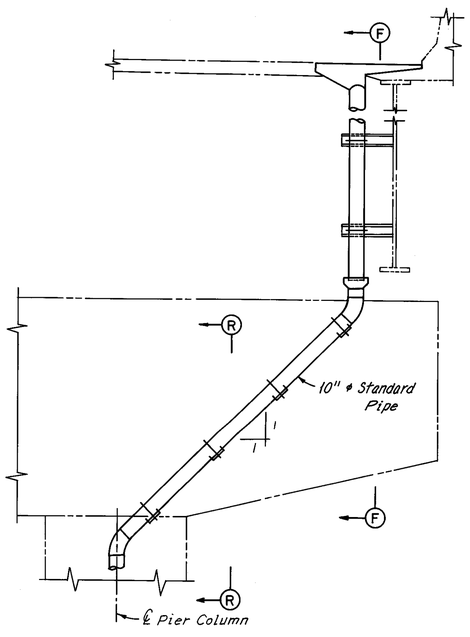


PIERS 10L & 10R (LOOKING EAST)

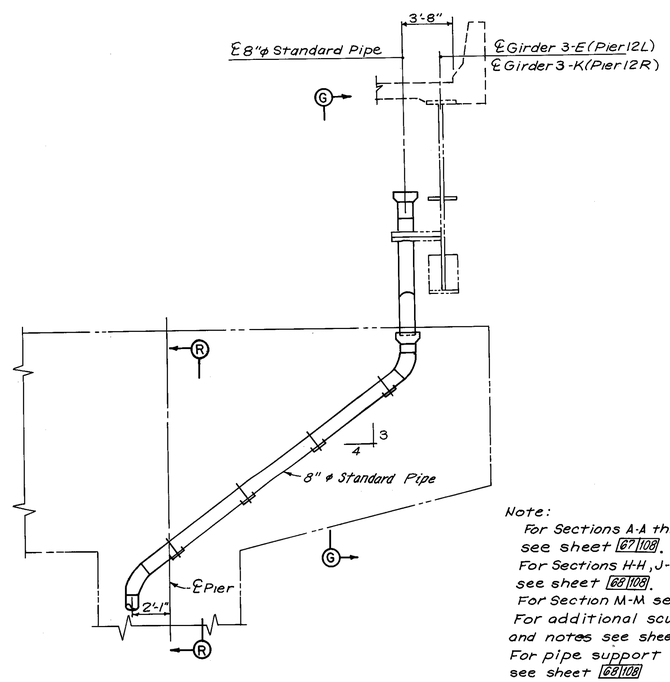


PIERS 12L & 12R (LOOKING EAST)

Note:
For Sections A-A thru G-G see sheet 67/108.
For Sections H-H, J-J and R-R see sheet 68/108.
For Section M-M see sheet 67/108.
For additional scupper details and notes see sheet 65/108.
For pipe support details see sheet 68/108
The minimum radius on all pipe bends shall be 18" to ℄

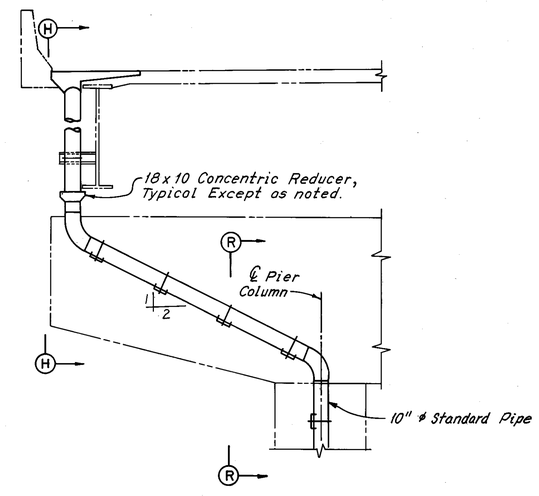


PIER 15L NORTH MEDIAN (LOOKING WEST)
PIER 15R SOUTH MEDIAN (OPPOSITE HAND, LOOKING WEST)

H.N.T.B. BR. NO. 9 PART II - SUPERSTRUCTURE

HOWARD, NEEDLES, TAMMEN & BERGENDOFF
CONSULTING ENGINEERS CLEVELAND
HNTB

DRAINAGE DETAILS

I-290 OVER CUYAHOGA RIVER

BR. NO. CUY-290-0110
STA. 985+85.75 TO STA. 1020+47.57 (℄ I-290)

CUYAHOGA COUNTY OHIO

| DRAWN | TRACED | CHECKED | REVIEWED | REVISED |
|---|---|---|---|---|
| B.B. | T.D. | R.H.W. | C.A.B. | |
| DATE 7-24-85 | DATE 8-6-85 | DATE 8-8-85 | DATE 8-24-88 | SHEET 66/108 |

| FHWA REGION | STATE | PROJECT | |
|---|---|---|---|
| 2 | OHIO | | |



CUYAHOGA COUNTY
CUY- 290-027

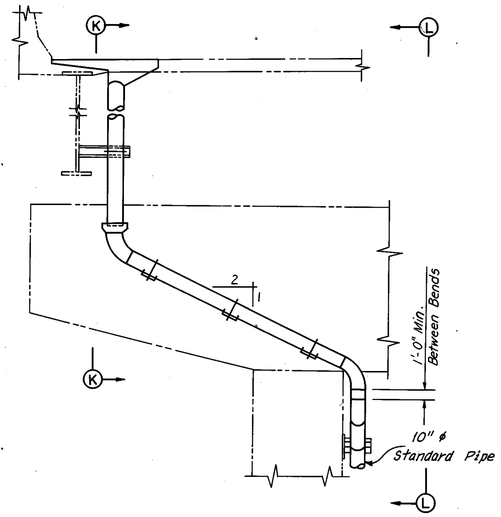


PIER 20R SOUTH GUTTER (LOOKING WEST)
PIER 20R SOUTH MEDIAN (OPPOSITE HAND, LOOKING WEST)
PIER 4R SOUTH GUTTER (OPPOSITE HAND, LOOKING EAST)

Note: For Pier 20L North Median See Sheet 66/108.

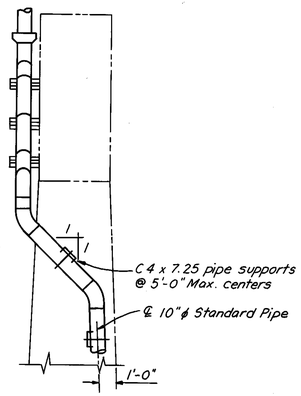


SECTION L-L (PIER 20R SOUTH GUTTER)
SECTION L-L (PIER 20R SOUTH MEDIAN, OPPOSITE HAND)
SECTION M-M (PIER 20L NORTH MEDIAN, OPPOSITE HAND)

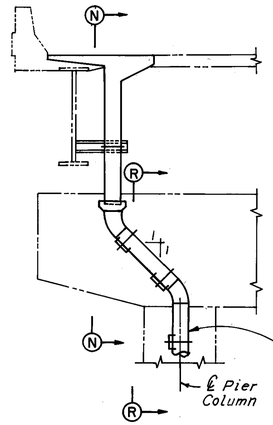


PIER 23-CB (LOOKING WEST)

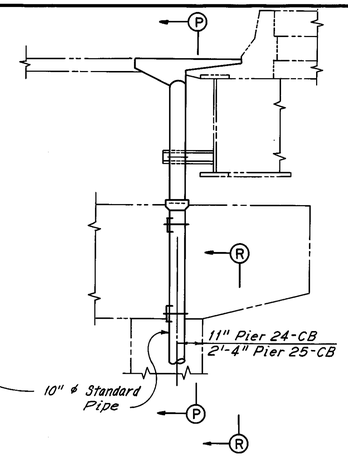


PIER 24-CB & 25-CB (LOOKING EAST)

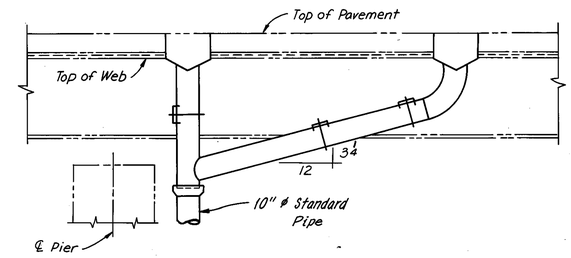


SECTION A-A (PIER 2C-7)

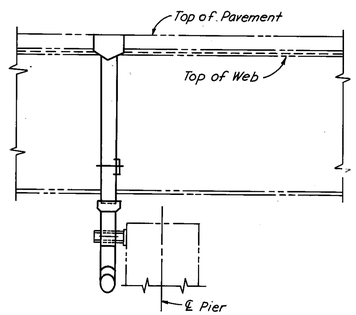


SECTION C-C (PIERS 5L & 5R)

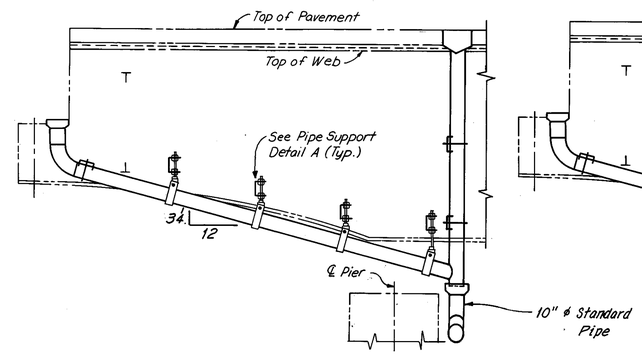


SECTION D-D (PIER 9L)

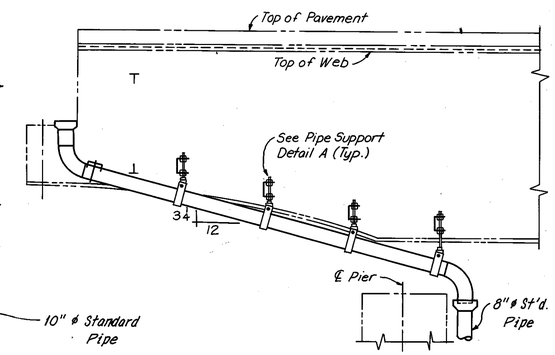


SECTION G-G (PIERS 12L & 12R)

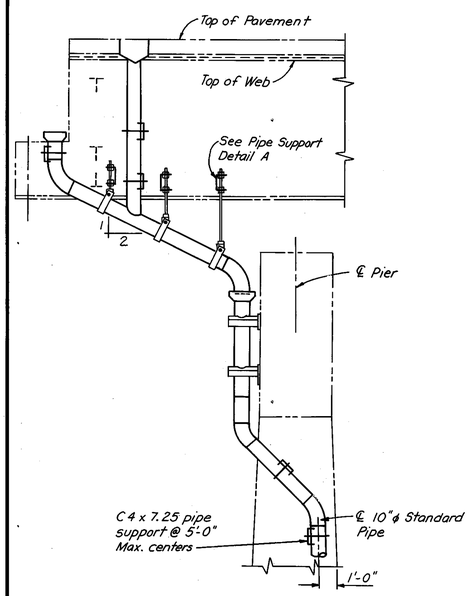


SECTION B-B (PIER 4L NORTH MEDIAN)
SECTION B-B (PIER 4R SOUTH MEDIAN, OPPOSITE HAND)
SECTION L-L (PIER 4R SOUTH GUTTER, OPPOSITE HAND

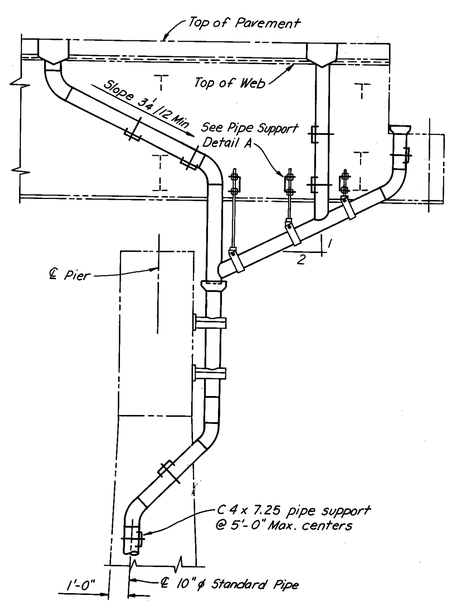


SECTION B-B (PIER 4L NORTH GUTTER)

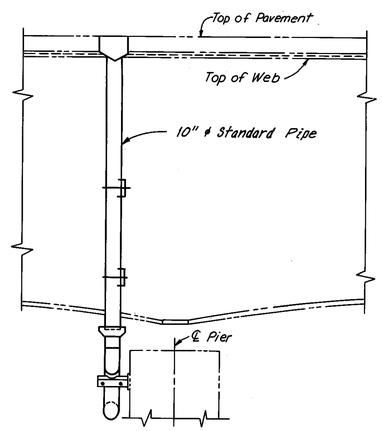


SECTION F-F (PIERS 10L & 10R)

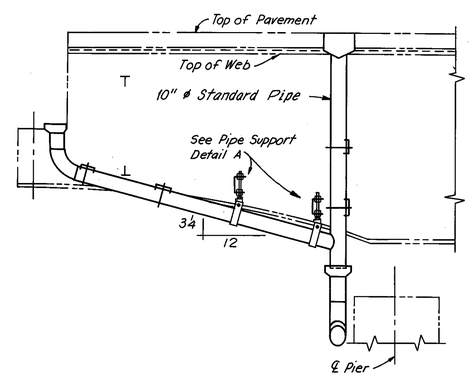


SECTION E-E (PIER 9R)

Notes:
For locations of sections A-A thru G-G, and location of section M-M see sheet 66/108.
For sections K-K, N-N, P-P, and R-R see sheet 68/108.
For additional scupper details and notes see sheet 65/108.
For pipe support details see sheet 68/108.
The minimum radius on all pipe bends shall be 18" to ℄.

H.N.T.B. BR. NO. 9 PART II - SUPERSTRUCTURE

HOWARD, NEEDLES, TAMMEN & BERGENDOFF
CONSULTING ENGINEERS CLEVELAND
HNTB

DRAINAGE DETAILS

I-290 OVER CUYAHOGA RIVER

BR. NO. CUY-290-0110
STA. 985+85.75 TO STA. 1020+47.57 (℄ I-290)

CUYAHOGA COUNTY OHIO

| DRAWN B.B. | TRACED T.D. | CHECKED R.H.W. | REVIEWED C.A.B. | REVISED |
|---|---|---|---|---|
| DATE 7-8-85 | DATE 7-10-85 | DATE 7-11-85 | DATE 8-24-86 | SHEET 67/108 |

| FHWA REGION | STATE | PROJECT | |
|---|---|---|---|
| 2 | OHIO | | |

153/193

CUYAHOGA COUNTY
CUY- 290-027

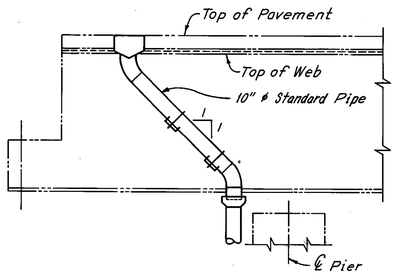


SECTION H-H (PIER 15R SOUTH MEDIAN)
SECTION J-J (PIER 15L NORTH GUTTER)

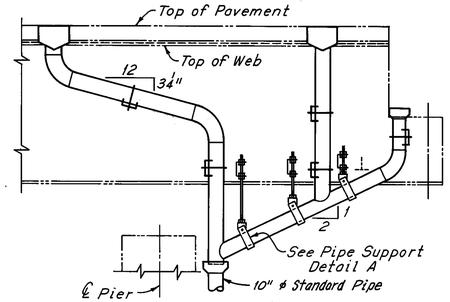


SECTION H-H (PIER 15L NORTH MEDIAN)
SECTION J-J (PIER 15R SOUTH GUTTER)

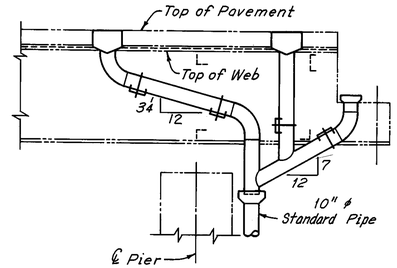


SECTION B-B (PIER 20L NORTH MEDIAN)
SECTION K-K (PIER 20R SOUTH GUTTER)

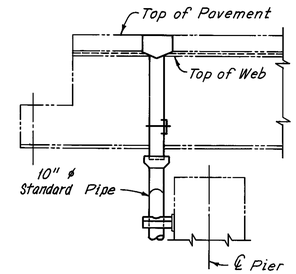


SECTION K-K (PIER 20R SOUTH MEDIAN)

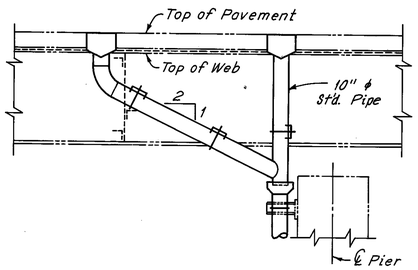


SECTION P-P (PIER 24-CB)

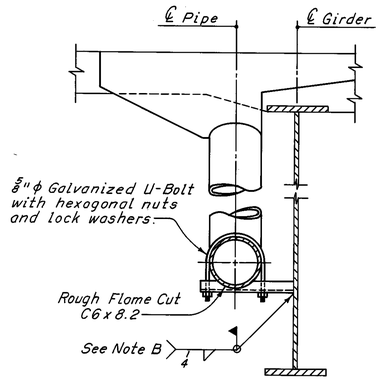


PIPE SUPPORT DETAIL ON GIRDERS

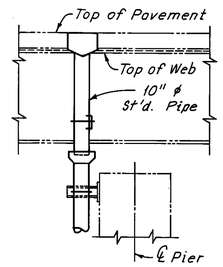


SECTION P-P (PIER 25-CB)

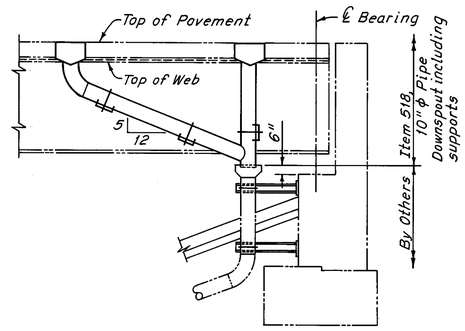


EAST ABUTMENT (NORTH MEDIAN)

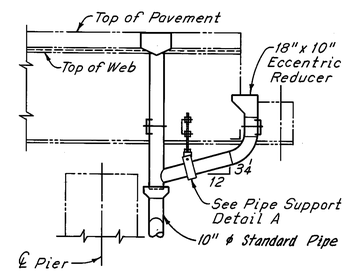


SECTION N-N (PIER 23-CB)

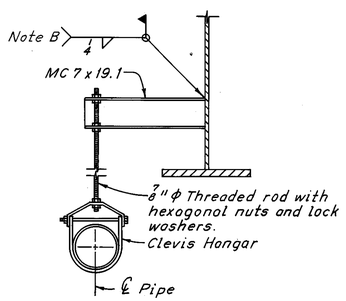


PIPE SUPPORT DETAIL A

Note B: All pipe support welds shall be located in the region between mid depth of the web and the bottom flange of the Girder or Beam.

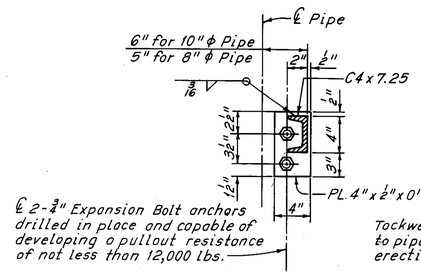


SECTION A-A

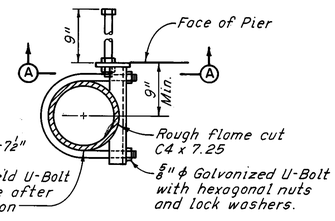


PLAN

PIPE SUPPORT DETAIL AT PIERS

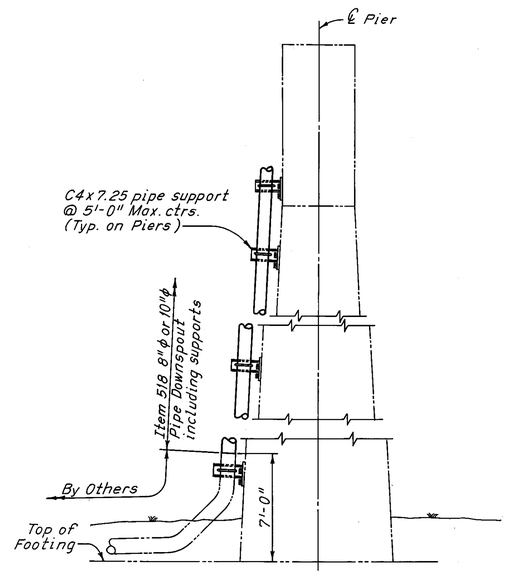


SECTION R-R

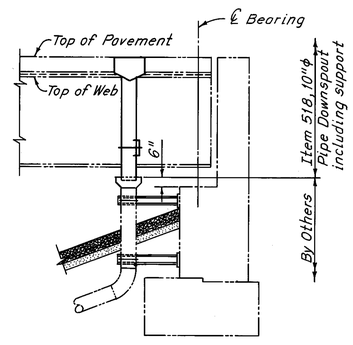


EAST ABUTMENT (EXCEPT NORTH MEDIAN)

Notes:
For locations of sections B-B, H-H, and J-J see sheet 66/108.
For locations of sections K-K, N-N, and P-P see sheet 67/108.
For location of section R-R see sheets 66/108 and 67/108.
For additional scupper details and notes see sheet 65/108.
The minimum radius on all pipe bends shall be 18" to ℄.

H.N.T.B. BR. NO. 9 PART II - SUPERSTRUCTURE

HOWARD, NEEDLES, TAMMEN & BERGENDOFF CONSULTING ENGINEERS CLEVELAND — HNTB

DRAINAGE DETAILS

I-290 OVER CUYAHOGA RIVER

BR. NO. CUY-290-0110 — STA. 985+85.75 TO STA. 1020+47.57 (℄ I-290)

CUYAHOGA COUNTY — OHIO

| DRAWN | TRACED | CHECKED | REVIEWED | REVISED |
|---|---|---|---|---|
| B.B. | D.L.R. | R.H.W. | C.A.B. | |
| DATE 7-9-85 | DATE 8-2-85 | DATE 8-8-85 | DATE 8-24-86 | SHEET 68/108 |

| FHWA REGION | STATE | PROJECT | |
|---|---|---|---|
| 2 | OHIO | | |

154/193

CUYAHOGA COUNTY
CUY- 290-027

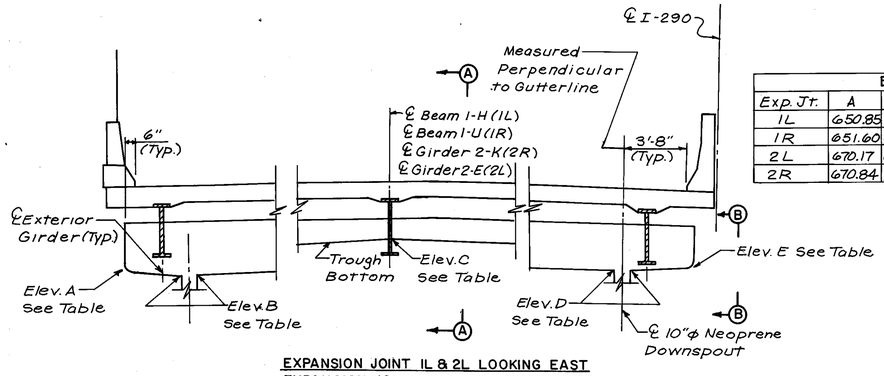


EXPANSION JOINT 1L & 2L LOOKING EAST
EXPANSION JOINT 1R & 2R LOOKING WEST

| ELEVATION | | | | | |
|---|---|---|---|---|---|
| Exp. Jt. | A | B | C | D | E |
| 1L | 650.85 | 649.10 | 651.58 | 649.81 | 651.40 |
| 1R | 651.60 | 650.02 | 652.02 | 649.81 | 651.44 |
| 2L | 670.17 | 668.67 | 670.56 | 668.43 | 669.93 |
| 2R | 670.84 | 669.28 | 671.38 | 669.81 | 671.30 |

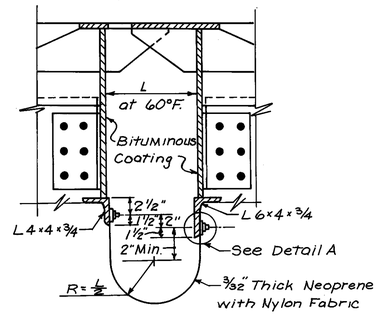


SECTION A-A

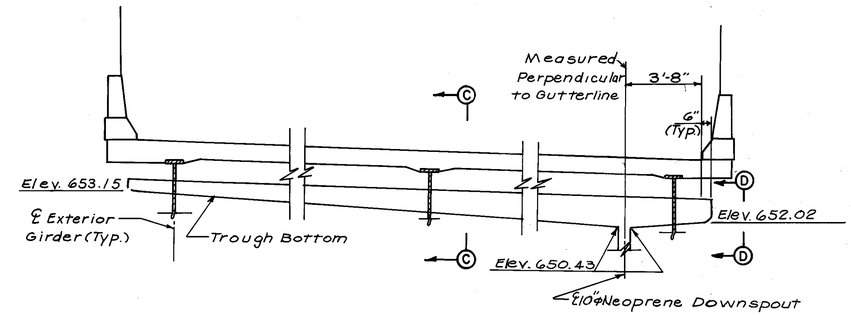


EXPANSION JOINT 6-LOOKING EAST
(For Section C-C see sheet 53/108)

| TABLE OF DIMENSIONS | |
|---|---|
| EXP. JT. | L |
| 1L & 1R | 1'-1 1/2" |
| 2L & 2R | 1'-6 1/2" |
| 3L & 3R | 1'-6 1/2" |
| 4L & 4R | 1'-1 1/2" |
| 5L & 5R | 1'-1 1/2" |

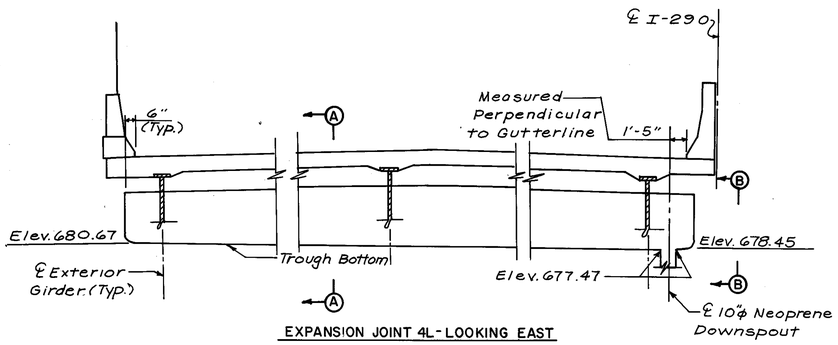


EXPANSION JOINT 4L-LOOKING EAST

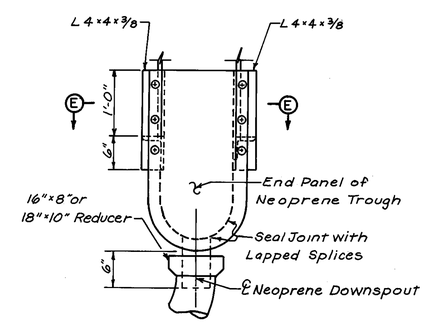


VIEW B-B

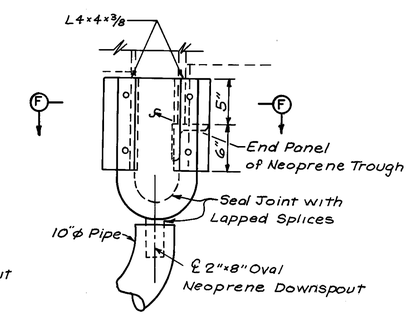


VIEW D-D

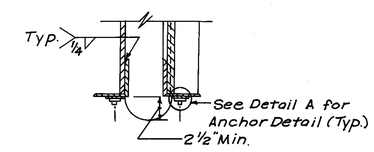


SECTION F-F

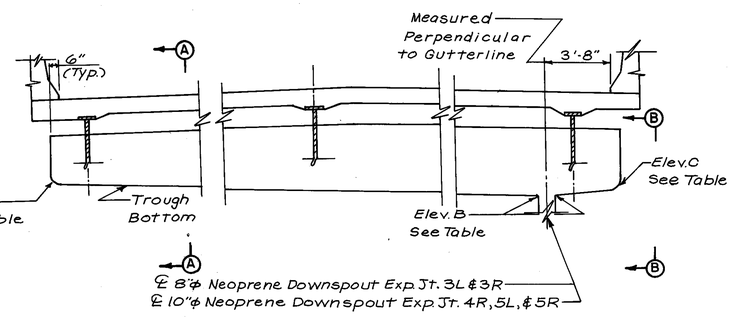


EXPANSION JOINT 3L, 3R, 4R, 5L, & 5R. LOOKING EAST

| ELEVATION | | | |
|---|---|---|---|
| Exp. Jt. | A | B | C |
| 3L | 686.19 | 683.75 | 685.20 |
| 3R | 685.34 | 682.84 | 684.42 |
| 4R | 679.36 | 676.56 | 678.42 |
| 5L | 663.95 | 662.04 | 662.46 |
| 5R | 662.49 | 660.87 | 661.39 |

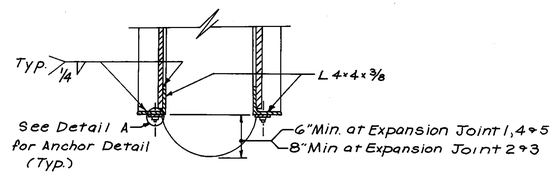


SECTION E-E

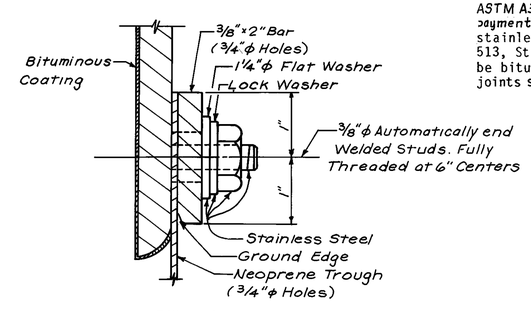


DETAIL A

Note:

Trough clamp bars (2"×3/8") shall be hot dipped galvanized, ASTM A36 steel and shall be included with Item 513 for payment. Trough fastening studs, nuts, and washers shall be stainless steel ASTM A-240 and shall be included with Item 513, Structural Steel ASTM A572 Portions, as shown, shall be bituminous coated. For details of intermediate expansion joints see Sheet 47/108 through 53/108.

H.N.T.B. BR. NO. 9 PART II - SUPERSTRUCTURE

HOWARD, NEEDLES, TAMMEN & BERGENDOFF CONSULTING ENGINEERS CLEVELAND — HNTB

EXPANSION JOINT
DRAINAGE DETAILS
I-290 OVER CUYAHOGA RIVER

BR. NO. CUY-290-0110
STA. 985+85.75 TO STA. 1020+47.57 (℄ I-290)

CLEVELAND CUYAHOGA COUNTY OHIO

| DRAWN D.H.S. | TRACED J.E. | CHECKED B.B. | REVIEWED C.A.B. | REVISED |
|---|---|---|---|---|
| DATE 10-20-85 | DATE 1-16-86 | DATE 11-20-85 | DATE 2-24-86 | SHEET 69/108 |

| FED. RD. DIVISION | STATE | PROJECT | |
|---|---|---|---|
| 2 | OHIO | | |

159/193

CUYAHOGA COUNTY
CUY-290-0.27

Note:
A typical haunch width of 9" shall be used for computing quantity of concrete. However, the haunch width may vary between 6" and 12" provided that the slope shall be not more than 1:4 for a haunch less than 9" in width.

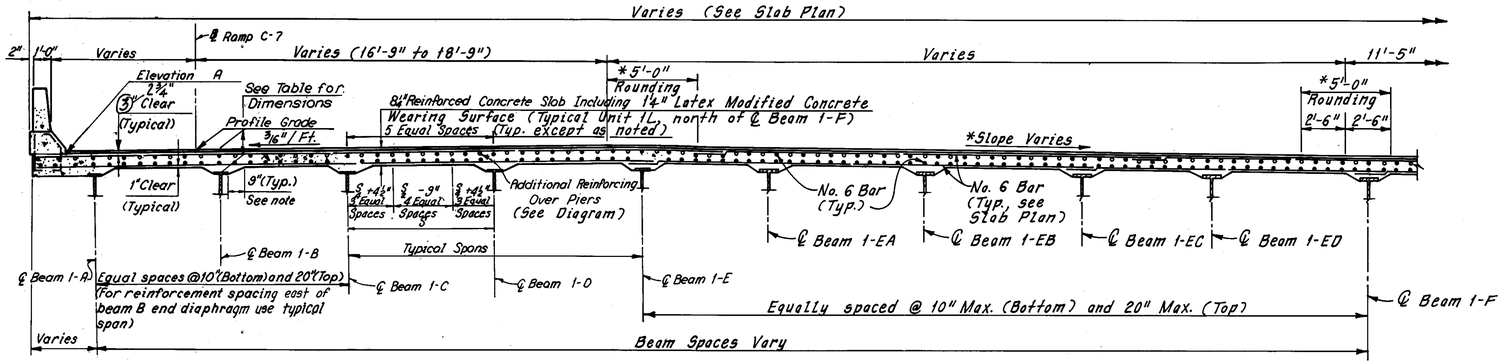


PART CROSS SECTION

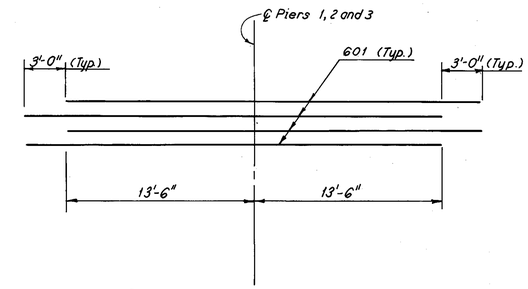


ADDITIONAL REINFORCEMENT OVER PIERS

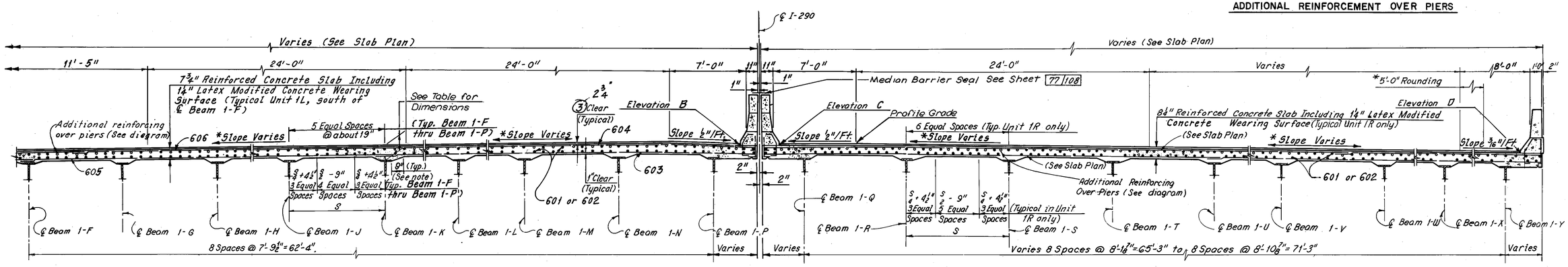


PART CROSS SECTION

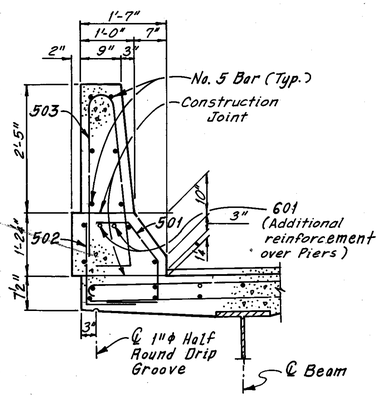


EXTERIOR CURB AND PARAPET DETAIL
(4'-0" Chain Link fence not shown)

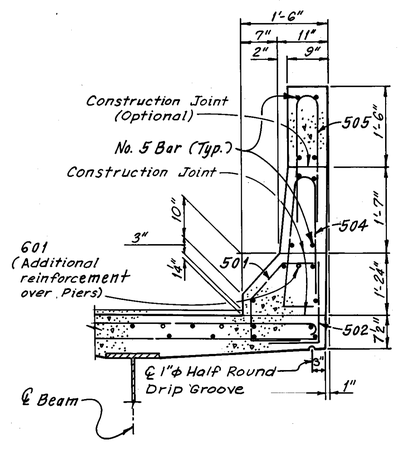


MEDIAN CURB AND PARAPET DETAIL

| TOP OF PORTLAND CEMENT CONCRETE (GIVEN AT QUARTER SPAN POINTS) | | | | | | | | | | | | | | | | | | |
|---|---|---|---|---|---|---|---|---|---|---|---|---|---|---|---|---|---|---|
| | ℄ BRG. W.ABUT | 1/4 | 1/2 | 3/4 | ℄ PIER 1 | 1/4 | 1/2 | 3/4 | ℄ PIER 2 | 1/4 | 1/2 | 3/4 | ℄ PIER 3 | 1/4 | 1/2 | 3/4 | EXP. ROLLERS | |
| ELEV A | 653.32 | 653.10 | 652.91 | 652.73 | 652.60 | 652.50 | 652.43 | 652.39 | 652.37 | 652.43 | 652.55 | 652.72 | 652.94 | 653.15 | 653.39 | 653.67 | 653.95 | ELEV A |
| ELEV B | 648.08 | 648.46 | 648.82 | 649.18 | 649.53 | 650.00 | 650.46 | 650.91 | 651.35 | 651.82 | 652.29 | 652.73 | 653.17 | 653.54 | 653.90 | 654.25 | 654.59 | ELEV B |
| ELEV C | 648.09 | 648.47 | 648.83 | 649.18 | 649.53 | 650.00 | 650.46 | 650.91 | 651.35 | 651.82 | 652.29 | 652.73 | 653.17 | 653.53 | 653.89 | 654.24 | 654.57 | ELEV C |
| ELEV D | 649.91 | 650.19 | 650.45 | 650.71 | 650.96 | 651.31 | 651.66 | 651.97 | 652.23 | 652.62 | 652.96 | 653.30 | 653.67 | 653.98 | 654.29 | 654.59 | 654.88 | ELEV D |

Note:
The top of Portland Cement Concrete elevations shown at the gutter lines are those which are required before concrete is placed. Proper allowance has been made for the dead load deflections caused by the weight of the concrete and wearing surface.

| TOP OF WEARING SURFACE TO TOP OF BEAM FLANGE | | | | | | | |
|---|---|---|---|---|---|---|---|
| Beams | West Abutment | Field Splice 1 | Beam End Diaphragm | Field Splice Beam 1-A | Field Splice 2 | Field Splice 3 | Expansion Rollers 1 |
| A | 9 5/16" | | | 9 1/4" | | | |
| B | 9 3/8" | | - | | | | |
| C thru E | 9 5/16" | 9 1/8" | | | | | |
| EA thru ED | 10" | | | | | | |
| F thru P | 8 3/4" | 8 3/4" | | | | | |
| Q thru Y | 9 7/16" | 9 1/4" | | | | | |

The above haunch dimensions are measured from top of Pavement to top of flange at ℄ Bearings.

Note: All reinforcing bar marks shall be prefixed ESA.

Note:
Required reinforcing bar lap lengths shall be 30 bar diameters minimum.

Note:
For Fence Details, see Sheet 105/108.

Revised 12-24-86

H.N.T.B. BR. NO. 9 PART II - SUPERSTRUCTURE

HOWARD, NEEDLES, TAMMEN & BERGENDOFF
CONSULTING ENGINEERS
KANSAS CITY CLEVELAND NEW YORK

TYPICAL CROSS SECTION
UNIT 1

I-290 OVER CUYAHOGA RIVER

BR. NO. CUY-290-0110 STA. 985+85.75 TO STA. 1020+47.57 (℄ I-290)

CLEVELAND CUYAHOGA COUNTY OHIO

| DRAWN D.M.P. | TRACED J.T. | CHECKED T.A. | REVIEWED C.A.B. | REVISED |
|---|---|---|---|---|
| DATE 7-30-69 | DATE 8-6-69 | DATE 3-27-70 | DATE 12-24-86 | SHEET 74/108 |

| FED. RD. DIVISION | STATE | PROJECT | |
|---|---|---|---|
| 2 | OHIO | | |



CUYAHOGA COUNTY
CUY-290-0.27

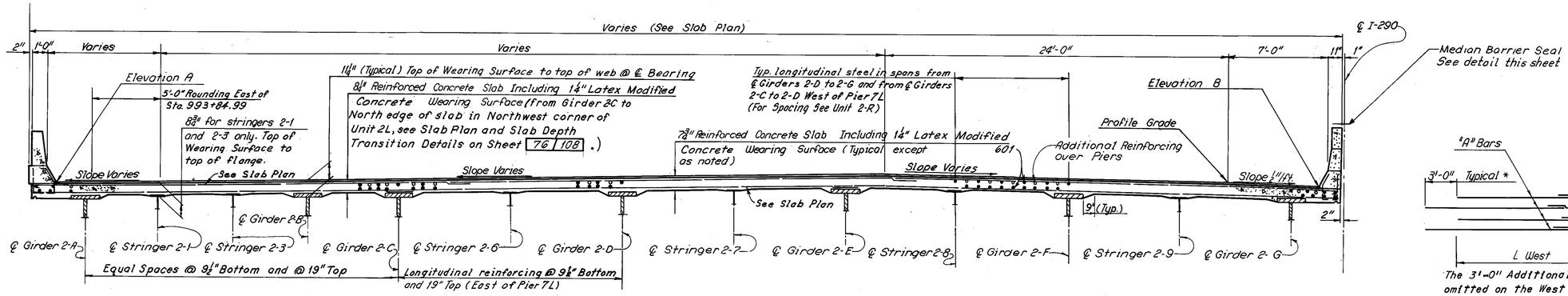


TYPICAL CROSS- SECTION (UNIT 2L)

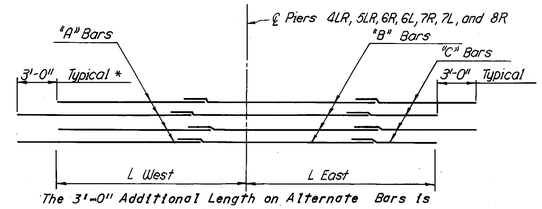


*The 3'-0" Additional Length on Alternate Bars is omitted on the West Side of Piers 4L and 4R*

## ADDITIONAL REINFORCEMENT OVER PIERS

*Note: For additional reinforcement over Piers in Northwest corner of slab at Pier 4L see Slab Plan.*

| ADDITIONAL REINFORCING OVER PIERS (SEE DIAGRAM ABOVE) | | | | | |
|---|---|---|---|---|---|
| Pier | L West | L East | A Bars | B Bars | C Bars |
| 4L | 12'-8" | 27' | *661 / 653 | 601 | — |
| 4R | 12'-8" | 27' | *661 / 653 | 601 | — |
| 5L | 27' | 37' | 659 | 601 | — |
| 5R | 27' | 27' | 649 | 642 | — |
| 6L | 37' | 37' | 601 | 657 | 642 |
| 6R | 27' | 27' | 649 | 642 | — |
| 7L | 37' | 45' | 652 | 659 | 601 |
| 7R | 27' | 37' | 659 | 601 | — |
| 8R | 37' | 37' | 601 | 657 | 642 |

*Alternate placement to give 3'-0" stagger between ends of bar.

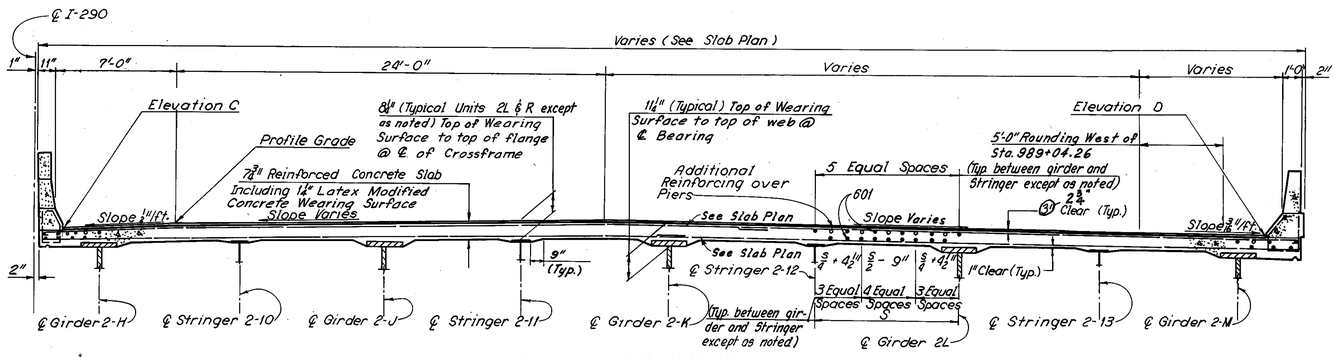


TYPICAL CROSS SECTION (UNIT 2R)

*Note: All reinforcing bar marks shall be prefixed ESB.*

*Note:*
*Required reinforcing bar lap lengths shall be 30 bar diameters minimum.*

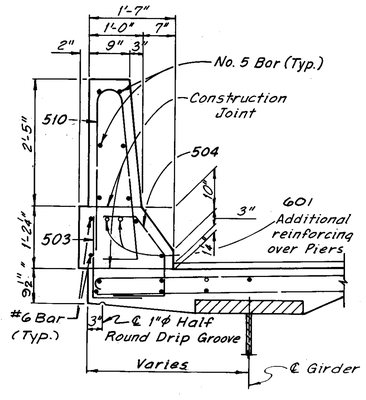


EXTERIOR CURB AND PARAPET DETAIL
*(4'-0" Chain Link fence not shown.)*

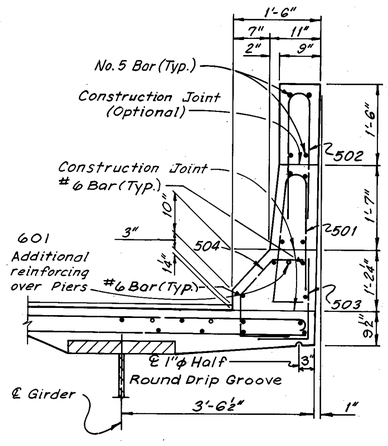


MEDIAN CURB AND PARAPET DETAIL

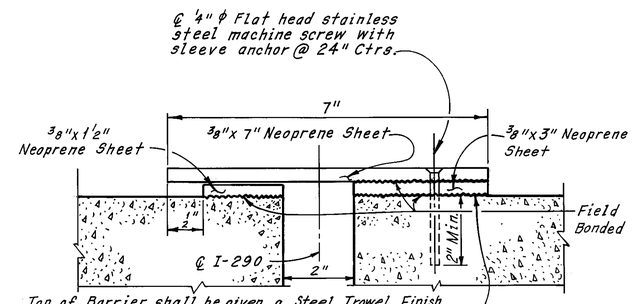


MEDIAN BARRIER SEAL

*Note:*
*Barrier Seal shall be continuous, except at sign supports, light and pull box blisters and at expansion joints.*
*Payment for stainless steel screws shall be included in the unit price bid for Item Special, Median Barrier Seal, for payment.*

*Notes:*
*For details of Stringer haunch transitions see CF-19 detail on Sheet 56/108.*
*A typical haunch width of 9" shall be used for computing quantity of concrete. However, the haunch width may vary between 6" and 12" provided that the slope shall not be more than 1:4 for a haunch less than 9" in width.*
*For Elevations A thru D see Sheet 78/108.*
*For cross slope details see Superelevation Transition Diagram, Sheet 94/108.*
*For Fence Details, see Sheet 105/108.*

*Revised 12-24-86*

H.N.T.B. BR. NO. 9 PART II - SUPERSTRUCTURE

HOWARD, NEEDLES, TAMMEN & BERGENDOFF
CONSULTING ENGINEERS
KANSAS CITY CLEVELAND NEW YORK

TYPICAL CROSS SECTIONS
UNIT 2

I-290 OVER CUYAHOGA RIVER
BR. NO. CUY-290-0110 STA. 985+85.75 TO STA. 1020+47.57 (℄ I-290)
CLEVELAND CUYAHOGA COUNTY OHIO

| DRAWN D.M.P. | TRACED L.J.T. | CHECKED J.D.S. | REVIEWED C.N.B. | REVISED |
|---|---|---|---|---|
| DATE 9-5-69 | DATE 9-10-69 | DATE 3-27-70 | DATE 12-24-86 | SHEET 77/108 |

| FED. RD. DIVISION | STATE | PROJECT | |
|---|---|---|---|
| 2 | OHIO | | |



CUYAHOGA COUNTY
CUY-290-0.27

* See Superelevation Transition Diagram, Sheet 94/108.

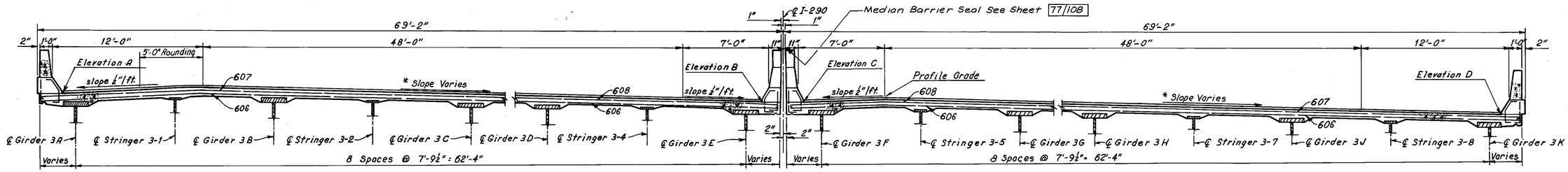


TYPICAL CROSS SECTION, (UNIT THREE)

TOP OF PORTLAND CEMENT CONCRETE ELEVATIONS (UNIT 3)

| | ℄ ROLLERS 2L OR 2R | ℄ PIER 9L OR 9R | .1 | .2 | .3 | .4 | .5 | .6 | .7 | .8 | .9 | ℄ PIER 10L OR 10R | 1 | 2 | 3 | 4 | 5 | 6 | 7 | 8 | 9 | 10 | 11 | 12 | 13 | 14 | ℄ PIER 11L OR 11R | .1 | .2 | .3 | .4 | .5 | .6 | .7 | .8 | .9 | ℄ PIER 12L OR 12R | ℄ ROLLERS 3L OR 3R |
|---|---|---|---|---|---|---|---|---|---|---|---|---|---|---|---|---|---|---|---|---|---|---|---|---|---|---|---|---|---|---|---|---|---|---|---|---|---|---|
| ELEV A | 673.57 | 674.18 | 674.97 | 675.78 | 676.59 | 677.35 | 678.06 | 678.68 | 679.28 | 679.90 | 680.55 | 681.23 | 681.88 | 682.55 | 683.23 | 683.90 | 684.53 | 685.12 | 685.65 | 686.12 | 686.54 | 686.90 | 687.21 | 687.48 | 687.72 | 687.95 | 688.17 | 688.33 | 688.49 | 688.65 | 688.81 | 688.96 | 686.10 | 689.23 | 689.35 | 689.45 | 689.55 | 689.65 |
| ELEV B | 673.30 | 673.86 | 674.54 | 675.23 | 675.89 | 676.53 | 677.15 | 677.75 | 678.35 | 678.98 | 679.63 | 680.31 | 680.95 | 681.62 | 682.30 | 682.97 | 683.60 | 684.19 | 684.73 | 685.20 | 685.62 | 685.98 | 686.29 | 686.56 | 686.79 | 687.02 | 687.24 | 687.41 | 687.57 | 687.73 | 687.88 | 688.03 | 688.17 | 688.31 | 688.42 | 688.52 | 688.62 | 688.73 |
| ELEV C | 674.73 | 675.25 | 675.78 | 676.32 | 676.85 | 677.38 | 677.90 | 678.43 | 678.99 | 679.53 | 680.12 | 680.71 | 681.40 | 682.11 | 682.81 | 683.49 | 684.13 | 684.70 | 685.22 | 685.68 | 686.07 | 686.41 | 686.69 | 686.93 | 687.14 | 687.34 | 687.54 | 687.68 | 687.82 | 687.97 | 682.11 | 688.75 | 688.36 | 688.47 | 688.56 | 688.64 | 688.71 | 688.77 |
| ELEV D | 674.30 | 674.72 | 675.14 | 675.56 | 675.99 | 676.47 | 676.99 | 677.53 | 678.07 | 678.63 | 679.21 | 679.81 | 680.50 | 681.21 | 681.91 | 682.59 | 683.22 | 683.80 | 684.32 | 684.77 | 685.17 | 685.50 | 685.79 | 686.02 | 686.24 | 686.44 | 686.63 | 686.77 | 686.92 | 687.06 | 687.20 | 687.33 | 687.45 | 687.57 | 687.65 | 687.73 | 687.80 | 687.87 |

Note:
The top of Portland Cement Concrete elevations shown at the gutter lines are those which are required before concrete is placed. Proper allowance has been made for the dead load deflections caused by the weight of the concrete and wearing surface.

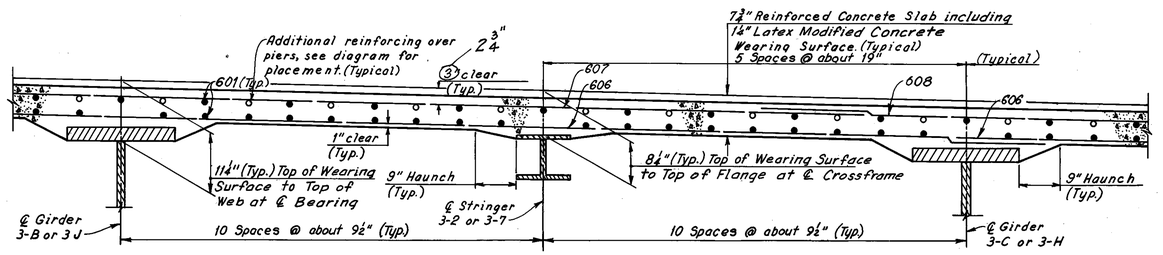


TYPICAL SLAB REINFORCEMENT DETAIL
(Unit 3L shown, Unit 3R opposite hand)

Note:
A haunch width of 9" shall be used for computing quantity of concrete. However the haunch width may vary between 6" and 12" provided that the slope shall be not more than 1:4 for a haunch less than 9" in width.

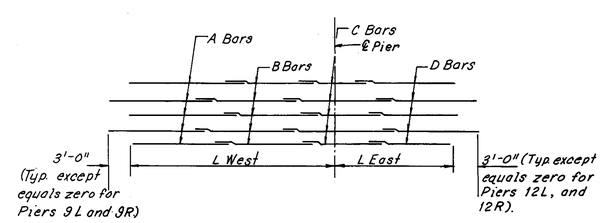


PLACEMENT DIAGRAM FOR ADDITIONAL REINFORCEMENT OVER PIERS

| ADDITIONAL REINFORCING OVER PIERS | | | | | | |
|---|---|---|---|---|---|---|
| Pier | L West | L East | A Bars | B Bars | C Bars | D Bars |
| 9L | 17'-6" | 48' | *609 ~~610~~ | 601 | 601 | —— |
| 9R | 17'-6" | 43' | *601 ~~614~~ | 614 | —— | —— |
| 10L | 48' | 66' | 601 | 601 | 601 | 614 |
| 10R | 41' | 68' | 616 | 601 | 601 | 601 |
| 11L | 66' | 35' | 601 | 601 | 601 | 615 |
| 11R | 68' | 37' | 601 | 601 | 601 | 617 |
| 12L | 38' | 17'-6" | 618 ~~612~~ | 601 | —— | —— |
| 12R | 37' | 17'-6" | 618 ~~601~~ | 601 | —— | —— |

* Alternate placement to give 3'-0" Stagger between ends of bar.

Note:
Required reinforcing bar lap lengths shall be 30 bar diameters minimum.

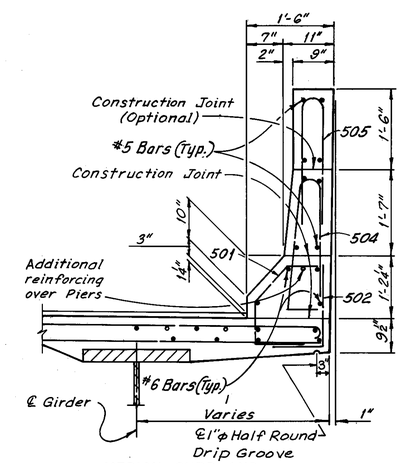


MEDIAN CURB AND PARAPET DETAIL

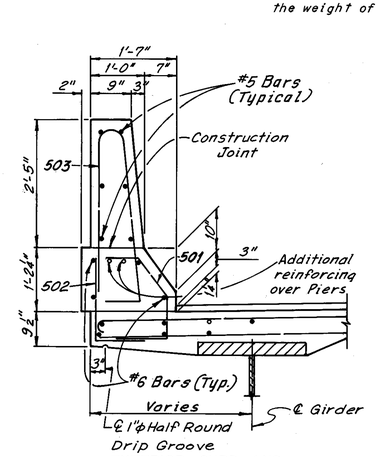


EXTERIOR CURB AND PARAPET DETAIL
(4'-0" Chain Link fence not shown)

Note: All reinforcing bar marks shall be prefixed ESC.

Note:
For Fence Details, see Sheet 105/108.

Revised 12-24-86

H.N.T.B. BR. NO. 9 PART II - SUPERSTRUCTURE

HOWARD, NEEDLES, TAMMEN & BERGENDOFF
CONSULTING ENGINEERS
KANSAS CITY CLEVELAND NEW YORK

TYPICAL CROSS SECTION
UNIT—3

I-290 OVER CUYAHOGA RIVER

BR. NO. CUY-290-0110 STA. 985+85.75 TO STA. 1020+47.57

CLEVELAND CUYAHOGA COUNTY (℄ I-290) OHIO

| DRAWN JDS | TRACED JSC | CHECKED DMM | REVIEWED CAB | REVISED |
|---|---|---|---|---|
| DATE 7-11-63 | DATE 8-6-69 | DATE 3-4-70 | DATE 2-24-86 | SHEET 80/108 |

CUYAHOGA COUNTY
CUY-290-0.27

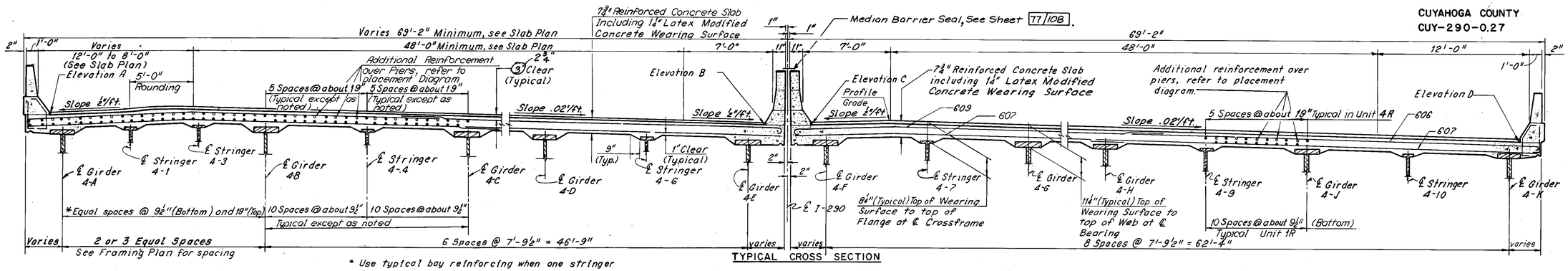


* Use typical bay reinforcing when one stringer between Girders 4A and 4B (see Slab Plan).

TYPICAL CROSS SECTION

TOP OF PORTLAND CEMENT CONCRETE ELEVATIONS (UNIT 4L)

| | ℄ ROLLERS 3L | .1 | .2 | .3 | .4 | .5 | .6 | .7 | .8 | .9 | ℄ PIER 13L | .1 | .2 | .3 | .4 | .5 | .6 | .7 | .8 | .9 | ℄ PIER 14L | .1 | .2 | .3 | .4 | .5 | .6 | .7 | .8 | .9 | ℄ PIER 15L | ℄ ROLLER 4L |
|---|---|---|---|---|---|---|---|---|---|---|---|---|---|---|---|---|---|---|---|---|---|---|---|---|---|---|---|---|---|---|---|---|
| ELEV A | 689.65 | 689.75 | 689.85 | 689.86 | 689.94 | 689.92 | 689.87 | 689.77 | 689.66 | 689.54 | 689.42 | 689.30 | 689.18 | 689.05 | 688.91 | 688.72 | 688.48 | 688.19 | 687.87 | 687.53 | 687.19 | 686.95 | 686.72 | 686.48 | 686.23 | 685.95 | 685.66 | 685.33 | 684.99 | 684.63 | 684.26 | 683.87 |
| ELEV B | 688.73 | 688.85 | 688.92 | 688.96 | 688.95 | 688.91 | 688.82 | 688.69 | 688.56 | 688.40 | 688.25 | 688.10 | 687.97 | 687.83 | 687.67 | 687.47 | 687.23 | 686.94 | 686.62 | 686.29 | 685.96 | 685.71 | 685.46 | 685.21 | 684.95 | 684.67 | 684.36 | 684.03 | 683.68 | 683.31 | 682.92 | 682.52 |

TOP OF PORTLAND CEMENT CONCRETE ELEVATIONS (UNIT 4R)

| | ℄ ROLLER 3R | .1 | .2 | .3 | .4 | .5 | .6 | .7 | .8 | .9 | ℄ PIER 13R | .1 | .2 | .3 | .4 | .5 | .6 | .7 | .8 | .9 | ℄ PIER 14R | .1 | .2 | .3 | .4 | .5 | .6 | .7 | .8 | .9 | ℄ PIER 15R | ℄ ROLLER 4R |
|---|---|---|---|---|---|---|---|---|---|---|---|---|---|---|---|---|---|---|---|---|---|---|---|---|---|---|---|---|---|---|---|---|
| ELEV C | 688.77 | 688.84 | 688.87 | 688.88 | 688.84 | 688.78 | 688.68 | 688.56 | 688.40 | 688.24 | 688.08 | 687.92 | 687.76 | 687.60 | 687.43 | 687.24 | 687.02 | 686.77 | 686.51 | 686.23 | 685.96 | 685.72 | 685.49 | 685.24 | 684.99 | 684.71 | 684.40 | 684.06 | 683.70 | 683.32 | 682.92 | 682.51 |
| ELEV D | 687.87 | 687.94 | 687.97 | 687.98 | 687.96 | 687.89 | 687.78 | 687.65 | 687.49 | 687.33 | 687.16 | 687.00 | 686.85 | 686.69 | 686.53 | 686.34 | 686.12 | 685.88 | 685.62 | 685.35 | 685.08 | 684.84 | 684.61 | 684.36 | 684.11 | 683.82 | 683.51 | 683.17 | 682.81 | 682.42 | 682.02 | 681.61 |

Note:
The top of Portland Cement Concrete elevations shown at the gutter lines are those which are required before concrete is placed. Proper allowance has been made for the dead load deflections caused by the weight of the concrete and wearing surface.

Note:
Required reinforcing bar lap lengths shall be 30 bar diameters minimum.

Note: All reinforcing bar marks shall be prefixed ESD.

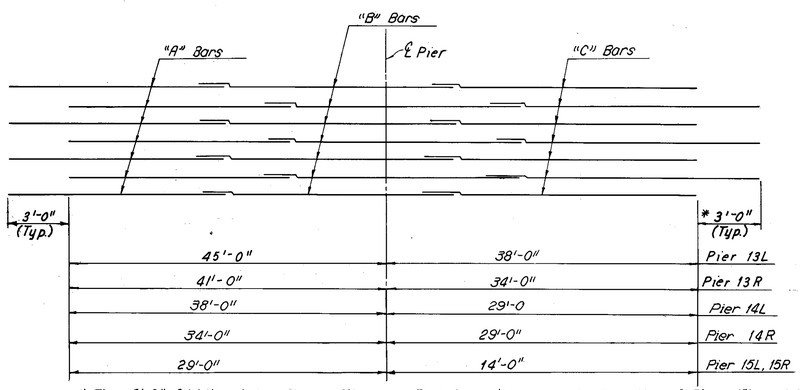


* The 3'-0" Additional Length on Alternate Bars is omitted on the East Side of Piers 15L and 15R.

PLACEMENT DIAGRAM FOR ADDITIONAL REINFORCEMENT OVER PIERS

| ADDITIONAL REINFORCING OVER PIERS | Pier 13L | Pier 13R | Pier 14L | Pier 14R | Piers 15L & 15R |
|---|---|---|---|---|---|
| "A" Bars | 601 | 601 | 601 | 601 | 601 |
| "B" Bars | 601 | 601 | 601 | 627 | ‡628 / 629 |
| "C" Bars | 601 | 602 | 603 | — | — |

‡ Alternate placement to give 3'-0" Stagger between ends of bar.

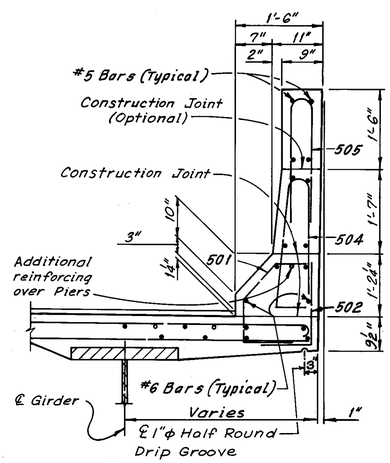


MEDIAN CURB AND PARAPET DETAIL

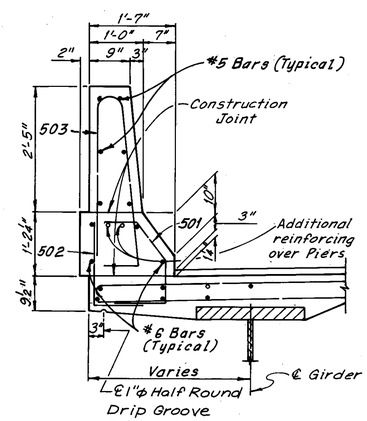


EXTERIOR CURB AND PARAPET DETAIL
(4'-0" Chain Link fence not shown)

Notes:
A haunch width of 9" shall be used for computing quantity of concrete. However, the haunch width may vary between 6" and 12" provided that the slope shall be not more than 1:4 for a haunch less than 9" in width.

For Fence Details, see Sheet 105/108.

Revised 12-24-86

H.N.T.B. BR.NO. 9 PART II - SUPERSTRUCTURE

HOWARD, NEEDLES, TAMMEN & BERGENDOFF
CONSULTING ENGINEERS
KANSAS CITY CLEVELAND NEW YORK

**TYPICAL CROSS SECTION**
**UNIT 4**

I-290 OVER CUYAHOGA RIVER

BR. NO. CUY-290-0110 STA. 985+85.75 TO STA. 1020+47.57

CLEVELAND CUYAHOGA COUNTY (℄ I-290) OHIO

| DRAWN T.D.S. | TRACED C.L.M. | CHECKED D.W.K. | REVIEWED C.A.B. | REVISED |
|---|---|---|---|---|
| DATE 7-21-89 | DATE 9-25-89 | DATE 11-5-89 | DATE 12-24-86 | SHEET 82/108 |

| FED. RD. DIVISION | STATE | PROJECT | |
|---|---|---|---|
| 2 | OHIO | | |

169/193

CUYAHOGA COUNTY
CUY-290-0.27

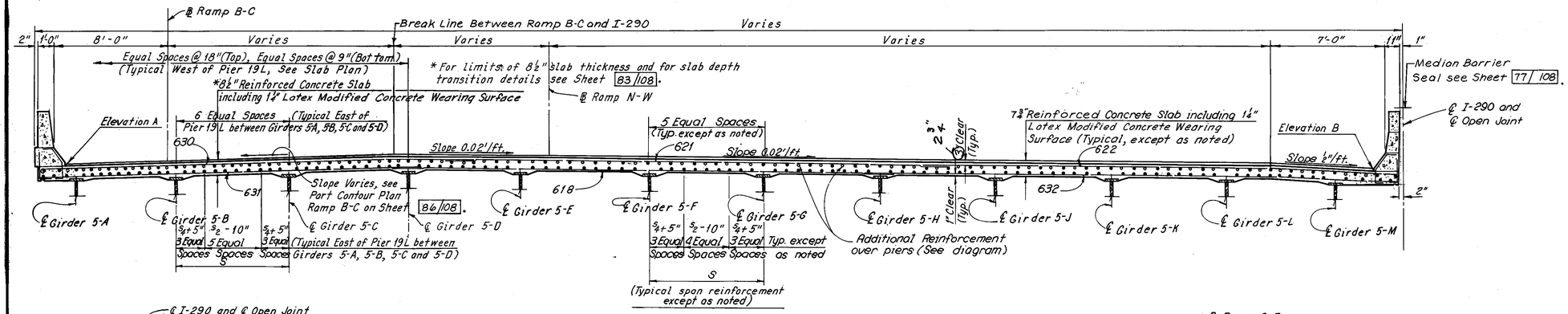


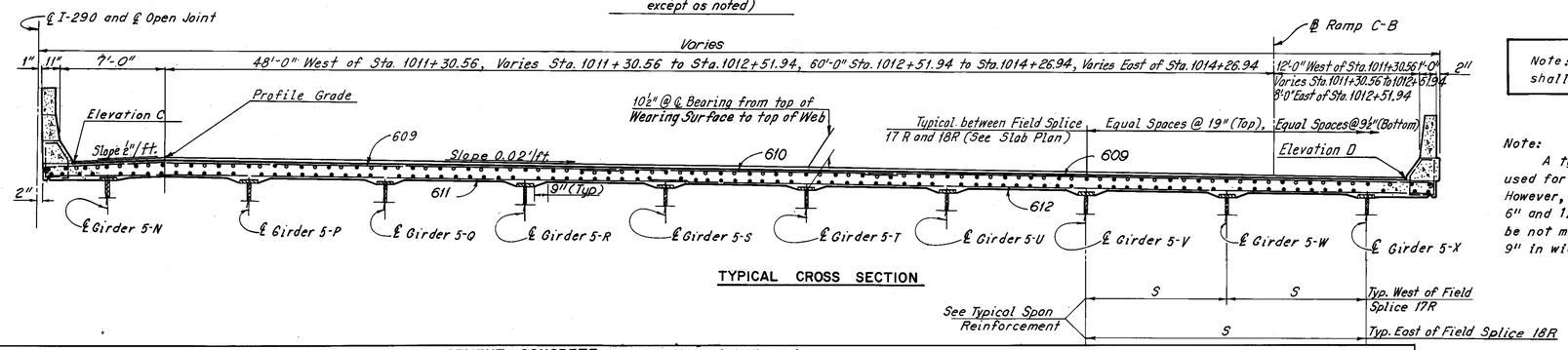


TYPICAL CROSS SECTION

Note: All reinforcing bar marks shall be prefixed ESE.

Note:
A typical haunch width of 9" shall be used for computing quantity of concrete. However, the haunch width may vary between 6" and 12" provided that the slope shall be not more than 1:4 for a haunch less than 9" in width.

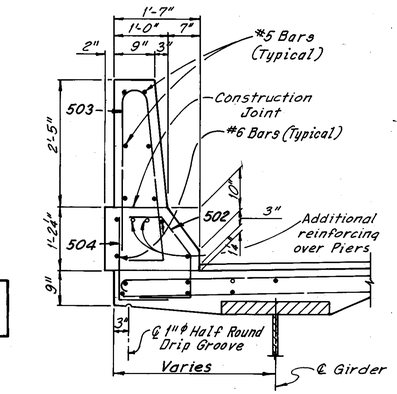


EXTERIOR CURB AND PARAPET DETAIL
(4'-0" Chain Link fence not shown)

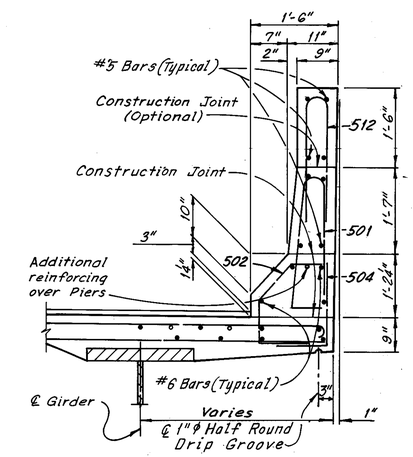


MEDIAN CURB AND PARAPET DETAIL

Note:
Required reinforcing bar lap lengths shall be 30 bar diameters minimum.

Notes:
For Fence Details, see Sheet 105/108.

Revised 12-24-86

H.N.T.B. BR. NO. 9 PART II - SUPERSTRUCTURE

HOWARD, NEEDLES, TAMMEN & BERGENDOFF
CONSULTING ENGINEERS
KANSAS CITY CLEVELAND NEW YORK

TYPICAL CROSS SECTION
UNIT 5

I-290 OVER CUYAHOGA RIVER

BR. NO. CUY-290-0110 STA. 985+85.75 TO STA. 1020+47.57

CLEVELAND CUYAHOGA COUNTY (℄ I-290) OHIO

| DRAWN D.H.S. | TRACED J.J.T. | CHECKED H.W.C. | REVIEWED C.A.B. | REVISED |
|---|---|---|---|---|
| DATE 9-19-69 | DATE 10-7-69 | DATE 10-30-69 | DATE 2-24-86 | SHEET 84/108 |

TOP OF PORTLAND CEMENT CONCRETE ELEVATIONS (UNIT 5L)

| | ℄ EXPAN. ROLLERS 4L | 0.2 | 0.4 | 0.6 | 0.8 | ℄ PIER 16L | 0.1 | 0.2 | 0.3 | 0.4 | 0.5 | 0.6 | 0.7 | 0.8 | 0.9 | ℄ PIER 17L | 0.1 | 0.2 | 0.3 | 0.4 | 0.5 | 0.6 | 0.7 | 0.8 | 0.9 |
|---|---|---|---|---|---|---|---|---|---|---|---|---|---|---|---|---|---|---|---|---|---|---|---|---|---|
| ELEV A | 683.87 | 683.39 | 682.85 | 682.23 | 681.58 | 680.94 | 680.60 | 680.27 | 679.95 | 679.63 | 679.30 | 678.96 | 678.61 | 678.26 | 677.92 | 677.59 | 677.26 | 676.94 | 676.62 | 676.29 | 675.94 | 675.58 | 675.19 | 674.80 | 674.42 |
| ELEV B | 682.52 | 682.01 | 681.45 | 680.82 | 680.16 | 679.50 | 679.16 | 678.82 | 678.50 | 678.17 | 677.84 | 677.49 | 677.13 | 676.76 | 676.40 | 676.05 | 675.72 | 675.40 | 675.08 | 674.76 | 674.41 | 674.06 | 673.69 | 673.32 | 672.94 |

TOP OF PORTLAND CEMENT CONCRETE ELEVATIONS (UNIT 5L)

| | ℄ PIER 18L | 0.1 | 0.2 | 0.3 | 0.4 | 0.5 | 0.6 | 0.7 | 0.8 | 0.9 | ℄ PIER 19L | 0.2 | 0.4 | 0.6 | 0.8 | ℄ BRG. ABUT. B-C OR ℄ PIER 20L | ℄ EXPAN. ROLLERS 5L |
|---|---|---|---|---|---|---|---|---|---|---|---|---|---|---|---|---|---|
| ELEV A | 674.04 | 673.70 | 673.37 | 673.04 | 672.72 | 672.38 | 672.04 | 671.70 | 671.35 | 670.88 | 670.49 | 669.75 | 669.02 | 668.15 | 667.33 | 666.58 | |
| ELEV B | 672.58 | 672.25 | 671.92 | 671.59 | 671.26 | 670.92 | 670.57 | 670.21 | 669.84 | 669.48 | 669.13 | 668.54 | 667.96 | 667.34 | 666.65 | 665.93 | 665.65 |

Note:
The top of Portland Cement Concrete elevations shown at the gutter lines are those which are required before concrete is placed. Proper allowance has been made for the dead load deflections caused by the weight of the concrete and wearing surface.

TOP OF PORTLAND CEMENT CONCRETE ELEVATIONS (UNIT 5R)

| | ℄ EXPAN. ROLLERS 4R | 0.2 | 0.4 | 0.6 | 0.8 | ℄ PIER 16R | 0.1 | 0.2 | 0.3 | 0.4 | 0.5 | 0.6 | 0.7 | 0.8 | 0.9 | ℄ PIER 17R | 0.1 | 0.2 | 0.3 | 0.4 | 0.5 | 0.6 | 0.7 | 0.8 | 0.9 |
|---|---|---|---|---|---|---|---|---|---|---|---|---|---|---|---|---|---|---|---|---|---|---|---|---|---|
| ELEV C | 681.51 | 682.01 | 681.45 | 680.82 | 680.15 | 679.50 | 679.15 | 678.82 | 678.50 | 678.17 | 677.83 | 677.48 | 677.12 | 676.75 | 676.39 | 676.04 | 675.71 | 675.39 | 675.08 | 674.76 | 674.42 | 674.06 | 673.69 | 673.31 | 672.94 |
| ELEV D | 681.61 | 681.09 | 680.51 | 679.88 | 679.21 | 678.56 | 678.23 | 677.90 | 677.57 | 677.25 | 676.91 | 676.56 | 676.19 | 675.81 | 675.43 | 675.07 | 674.74 | 674.42 | 674.10 | 673.78 | 673.44 | 673.08 | 672.72 | 672.35 | 671.99 |

TOP OF PORTLAND CEMENT CONCRETE ELEVATIONS (UNIT 5R)

| | ℄ PIER 18R | 0.1 | 0.2 | 0.3 | 0.4 | 0.5 | 0.6 | 0.7 | 0.8 | 0.9 | ℄ PIER 19R | 0.2 | 0.4 | 0.6 | 0.8 | ℄ PIER 20R | ℄ EXPAN. ROLLERS 5R |
|---|---|---|---|---|---|---|---|---|---|---|---|---|---|---|---|---|---|
| ELEV C | 672.59 | 672.25 | 671.93 | 671.60 | 671.27 | 670.94 | 670.58 | 670.21 | 669.85 | 669.48 | 669.13 | 668.54 | 667.97 | 667.35 | 666.66 | 665.93 | 665.64 |
| ELEV D | 671.65 | 671.29 | 670.95 | 670.61 | 670.27 | 669.92 | 669.56 | 669.19 | 668.82 | 668.46 | 668.10 | 667.50 | 666.92 | 666.29 | 665.59 | 664.86 | 664.57 |

ADDITIONAL REINFORCEMENT OVER PIERS

| | PIER 16 | | PIER 17 | | PIER 18 | | PIER 19 | | PIER 20 | |
|---|---|---|---|---|---|---|---|---|---|---|
| | L | R | L | R | L | R | L | R | L | R |
| Bar A | 601 | ← | | | | | → | 601 | 643 | 643 |
| Bar B | 636 | 636 | 639 | 637 | 639 | 637 | 638 | 638 | 642 | 642 |
| a | 30'-0" | 30'-0" | 27'-0" | 27'-0" | 29'-0" | 27'-0" | 27'-0" | 27'-0" | — | — |
| b | 27'-0" | 27'-0" | 29'-0" | 27'-0" | 27'-0" | 27'-0" | 25'-0" | 25'-0" | — | — |
| Bar C | — | — | — | — | — | → | — | — | 640 | — |
| Bar D | — | — | — | — | — | — | — | — | 645 | — |

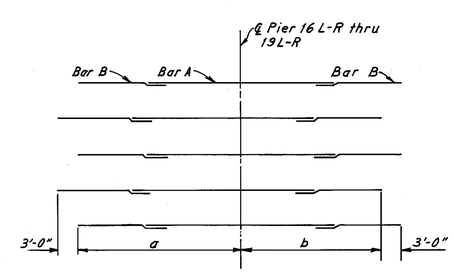


ADDITIONAL REINFORCEMENT OVER PIERS

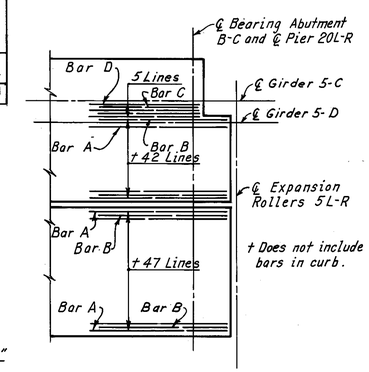


† Does not include bars in curb.

| FED. RD. DIVISION | STATE | PROJECT | |
|---|---|---|---|
| 2 | OHIO | | |



CUYAHOGA COUNTY
CUY-290-0.27

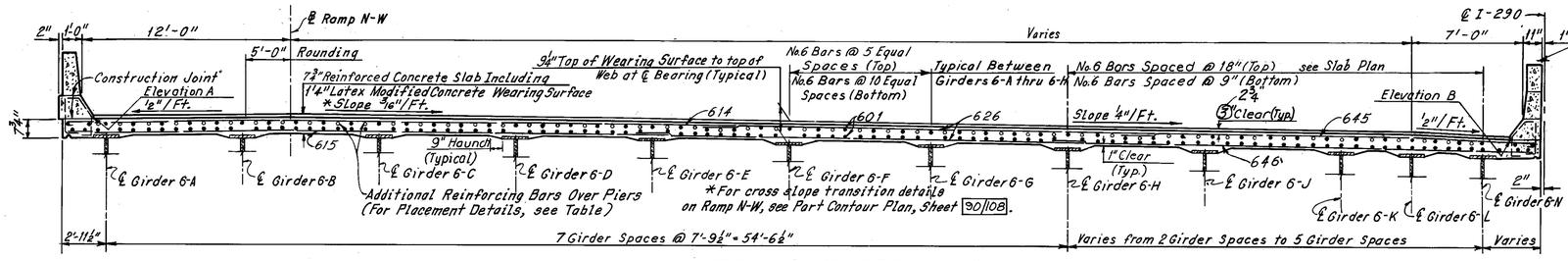


TYPICAL CROSS SECTION UNIT 6L

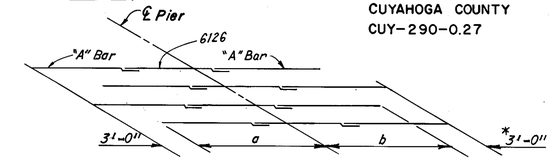


*Note: Typical except at Pier 23 CB this dimension changes to 0.

Note:
Required reinforcing bar lap lengths shall be 30 bar diameters minimum.

Note: All reinforcing bar marks shall be prefixed E5F.

Note:
A typical haunch width of 9" shall be used for computing quantity of concrete. However, the haunch width may vary between 6" and 12" provided that the slope shall be not more than 1:4 for a haunch less than 9" in width.

TABLE OF ADDITIONAL REINFORCEMENT OVER PIERS

| | Pier 21L | Pier 22L | Pier 23L | Pier 24L | Pier 21R | Pier 22R | Pier 23R | Pier 23CB | Pier 24R |
|---|---|---|---|---|---|---|---|---|---|
| a | 26'-0" | 23'-6" | 24'-0" | 24'-6" | 29'-0" | 26'-9" | 25'-6" | 29'-6" | 27'-6" |
| b | 23'-6" | 24'-0" | 24'-6" | 24'-0" | 26'-9" | 25'-6" | 27'-6" | 9'-9" | 27'-3" |
| *"A" Bars | 632 | 630 | 6119 | 6119 | 638 | 687 | 6120 | 6122 | 6121 |

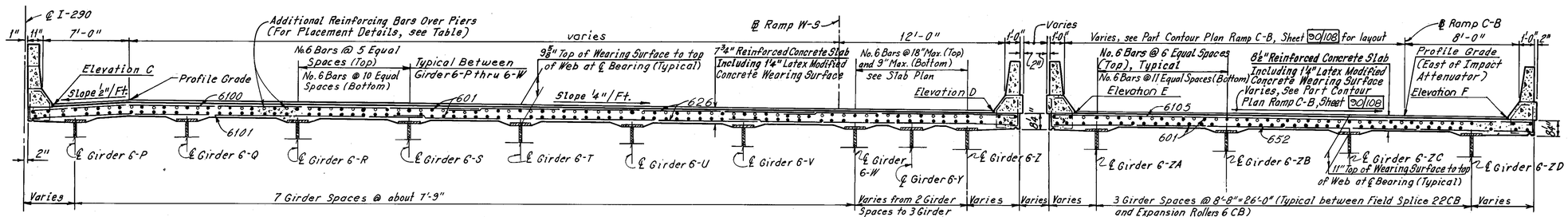


TYPICAL CROSS SECTION UNIT 6R

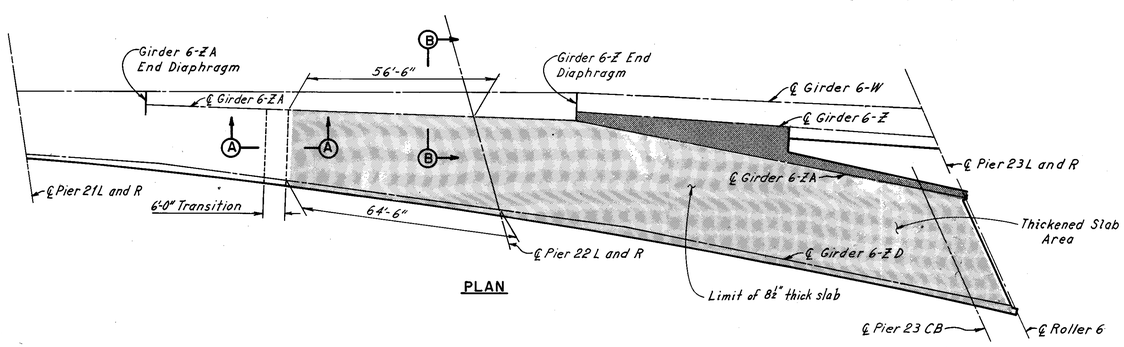


PLAN

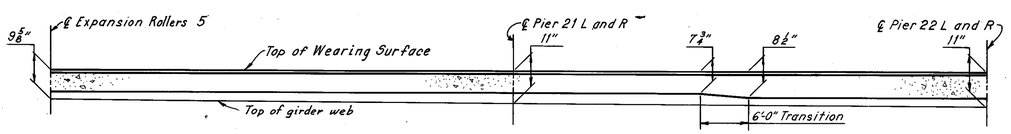


HAUNCH TRANSITION, GIRDERS ZB THRU ZD

(Use constant 9⅜" haunch for Girder 6-Z and 11" haunch for Girder 6-ZA)

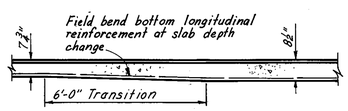


SECTION A-A

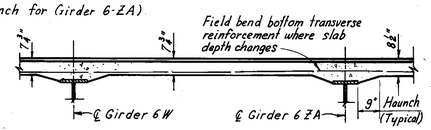


SECTION B-B

SLAB DEPTH TRANSITION DETAILS

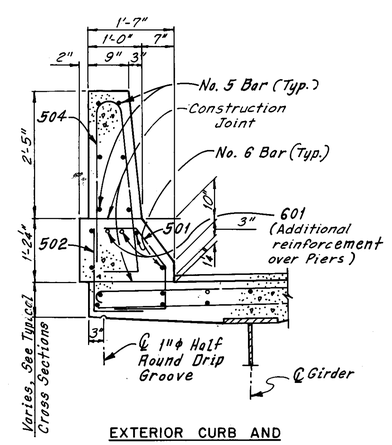


EXTERIOR CURB AND PARAPET DETAIL

(4'-0" Chain Link fence not shown)

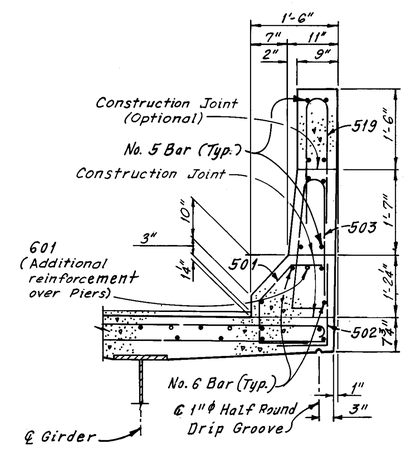


MEDIAN CURB AND PARAPET DETAIL

Notes:
For Fence Details, see Sheet 105/108.
For Elevations A thru F, see Sheet 90/108.

Revised 12-24-86

H.N.T.B. BR. NO. 9 PART II - SUPERSTRUCTURE

HOWARD, NEEDLES, TAMMEN & BERGENDOFF
CONSULTING ENGINEERS
KANSAS CITY CLEVELAND NEW YORK

TYPICAL CROSS SECTIONS
UNIT 6

I-290 OVER CUYAHOGA RIVER

BR. NO. CUY-290-0110 STA. 985+85.75 TO STA. 1020+47.57 (℄ I-290)

CLEVELAND CUYAHOGA COUNTY OHIO

| DRAWN K.Y.H. | TRACED H.C.M. | CHECKED J.W. | REVIEWED G.A.B. | REVISED |
|---|---|---|---|---|
| DATE 10-6-69 | DATE 11-1-69 | DATE 11-18-69 | DATE 12-24-86 | SHEET 88/108 |

| FED. RD. DIVISION | STATE | PROJECT | |
|---|---|---|---|
| 2 | OHIO | | |

178/193

CUYAHOGA COUNTY
CUY-290-0.27

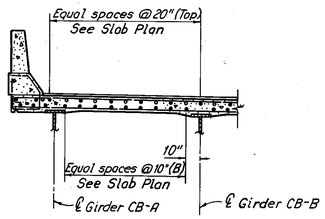


PART SECTION B-B
(For additional details see Section A-A)

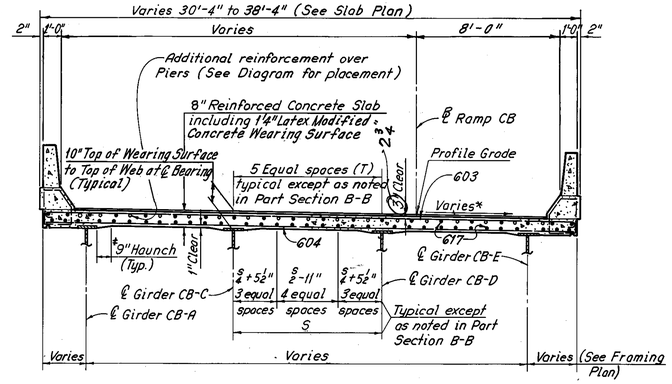


SECTION A-A

* See Superelevation Transition Diagram Sheet 94/108

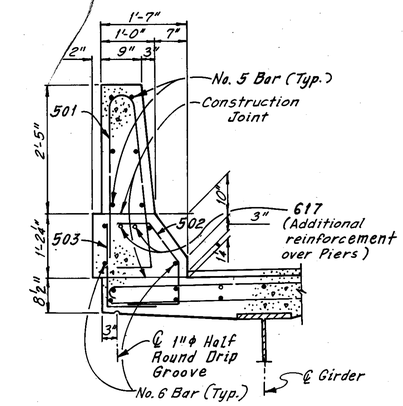


EXTERIOR CURB AND PARAPET DETAIL
(4'-0" Chain Link fence not shown)

*Note:
A typical haunch width of 9" shall be used for computing quantity of concrete. However, the haunch width may vary between 6" and 12" provided that the slope shall be not more than 1:4 for a haunch less than 9" in width.

Note: All reinforcing bar marks shall be prefixed E56.

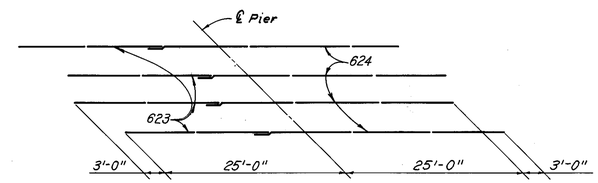


PLACEMENT OF 623 AND 624 BARS OVER PIERS 25CB, 26CB AND 27CB

Note:
Required reinforcing bar lap lengths shall be 30 bar diameters minimum.

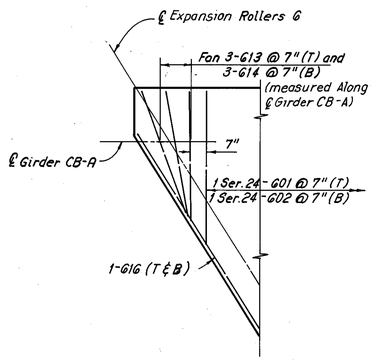


DETAIL "A"

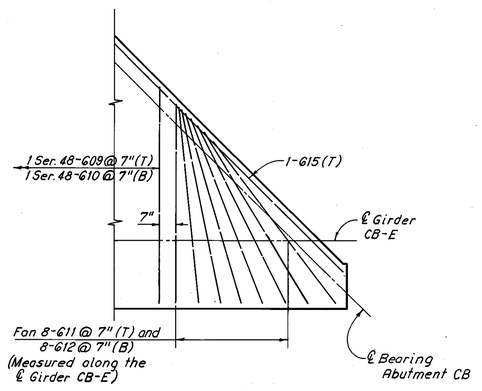


DETAIL "B"

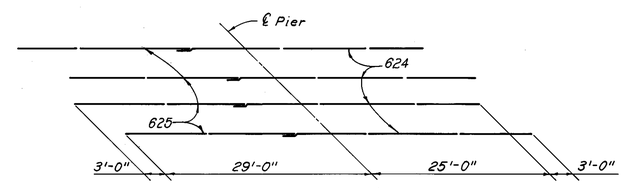


PLACEMENT OF 624 AND 625 BARS OVER PIER 24CB

Note:
For location of Sections A-A and B-B and Details A-A and B-B see Sheet 92/108.
The following abbreviations are used:
(T) = Top
(B) = Bottom
For Fence Details, see Sheet 105/108.

TOP OF PORTLAND CEMENT CONCRETE ELEVATIONS AT GUTTER LINE

| Curb | ℄ Exp. Rollers 6 | .2 | .4 | .6 | .8 | ℄ Pier 24 CB | .2 | .4 | .6 | .8 | ℄ Pier 25 CB | .2 | .4 | .6 | .8 | ℄ Pier 26 CB | .2 | .4 | .6 | .8 | ℄ Pier 27 CB | ¼ | ½ | ¾ | ℄ Brg. Abut. CB. |
|---|---|---|---|---|---|---|---|---|---|---|---|---|---|---|---|---|---|---|---|---|---|---|---|---|---|
| North | 655.15 | 654.84 | 654.58 | 654.37 | 654.28 | 654.34 | 654.55 | 654.71 | 654.83 | 655.00 | 655.29 | 655.77 | 656.47 | 657.24 | 658.10 | 659.06 | 660.03 | 661.01 | 661.98 | 662.94 | 663.90 | 664.90 | 665.88 | 666.81 | 667.70 |
| South | 654.01 | 653.77 | 653.58 | 653.41 | 653.29 | 653.26 | 653.43 | 653.79 | 654.22 | 654.72 | 655.31 | 656.05 | 656.88 | 657.79 | 658.74 | 659.71 | 660.74 | 661.78 | 662.77 | 663.73 | 664.70 | 665.68 | 666.68 | 667.63 | 668.54 |

Note:
The top of Portland Cement Concrete elevations shown at the gutter lines are those which are required before concrete is placed. Proper allowance has been made for the dead load deflections caused by the weight of the concrete and wearing surface.

Revised 12-24-86

H.N.T.B. BR. NO. 9 PART II - SUPERSTRUCTURE

HOWARD, NEEDLES, TAMMEN & BERGENDOFF
CONSULTING ENGINEERS
KANSAS CITY CLEVELAND NEW YORK

UNIT 6CB
TYPICAL CROSS SECTION

I-290 OVER CUYAHOGA RIVER

BR. NO. CUY-290-0110 STA. 985+85.75 TO STA. 1020+47.57 (℄ I-290) OHIO

CLEVELAND CUYAHOGA COUNTY

| DRAWN DLR | TRACED DLR | CHECKED MLB | REVIEWED C.A.B. | REVISED |
|---|---|---|---|---|
| DATE 10-15-69 | DATE 10-18-69 | DATE 11-26-69 | DATE 12-24-86 | SHEET 93/108 |