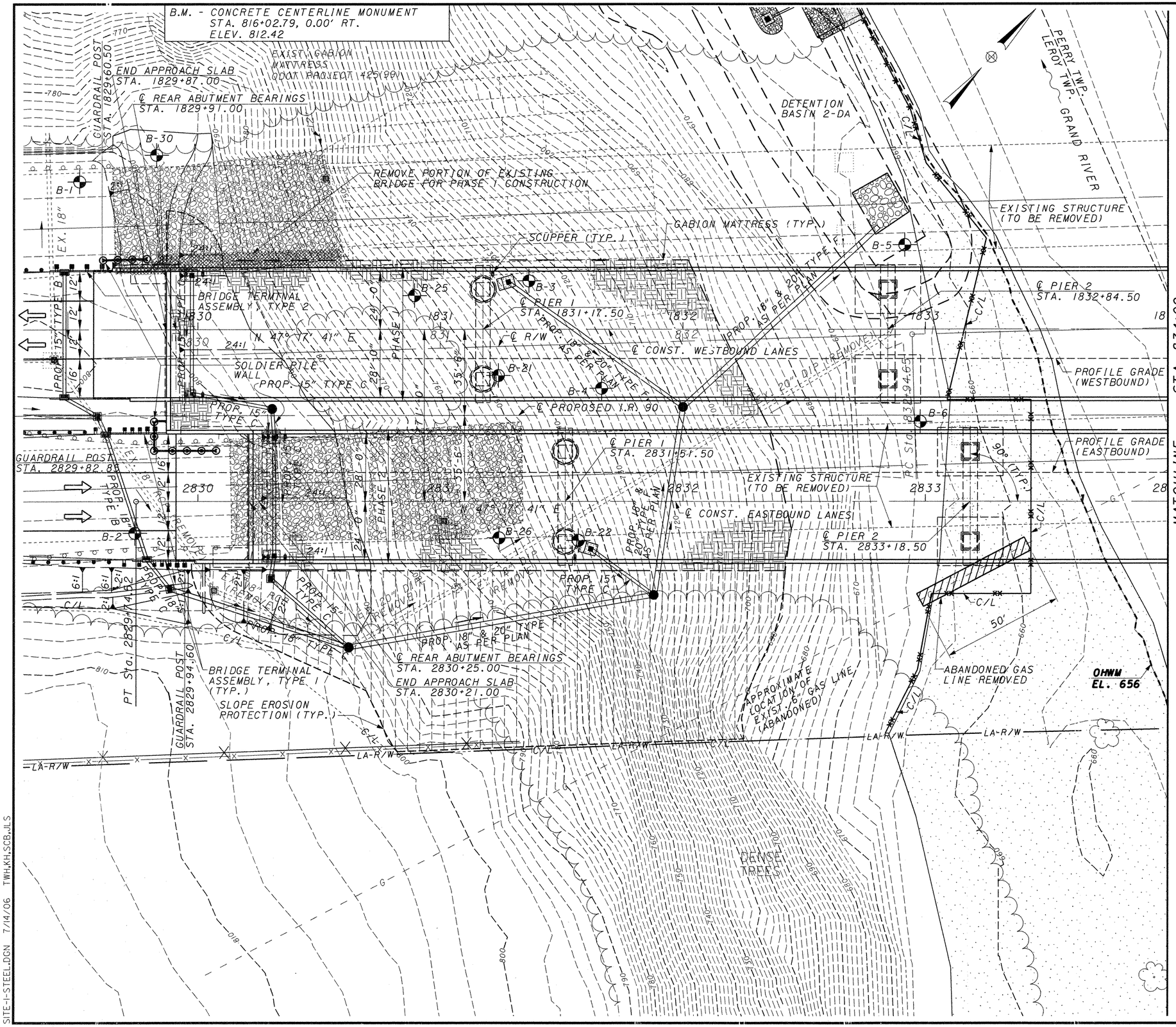

EARTHWORK LIMITS SHOWN ARE APPROXIMATE. ACTUAL SLOPES SHALL CONFORM TO PLAN CROSS SECTIONS.

EXISTING STRUCTURE

TYPE: CANTILEVER STEEL TRUSS WITH STRINGERS AND FLOORBEAMS MAIN SPANS AND SIMPLE SPAN STEEL GIRDER APPROACH SPANS WITH REINFORCED CONCRETE DECK AND SUBSTRUCTURE

SPANS: 75'-0"±; 208'-0"±; 297'-0"±; 208'-0"±; 75'-0"± c/c BEARINGS

ROADWAY: 39'-8" TOE TO TOE OF DEFLECTOR PARAPET

APPROACH SLABS: 25'-0"± LONG

LOADING: EQUIVALENT HS13.1 (130% OHIO LEGAL LOADS)

SKEW: 0°±

WEARING SURFACE: 1½" 404 ASPHALT WITH VERGLIMIT ADDITIVE AND TYPE D WATERPROOFING

ALIGNMENT: TANGENT TO 0°28' CURVE RT.

YEAR BUILT: 1960

STRUCTURE FILE NUMBER: 4304950 (LEFT) 4304985 (RIGHT)

DISPOSITION: COMPLETE REMOVAL

PROPOSED STRUCTURE

TYPE: CONTINUOUS STEEL HYBRID A709 GRADE 50W/HPS70W GIRDER COMPOSITE WITH REINFORCED CONCRETE DECK ON REINFORCED CONCRETE PIERS AND ABUTMENTS.

SPANS: c/c BEARINGS 126'-6"; 167'-0"; 2 @ 220'-0"; 167'-6" (LEFT AND RIGHT)

ROADWAY: 52'-0" TOE TO TOE OF DEFLECTOR PARAPET

LOADING: HS 25 (CASE I) AND THE ALTERNATE MILITARY LOADING. FUTURE WEARING SURFACE = 60 psf

SKEW: 0°00'00"

WEARING SURFACE: MONOLITHIC CONCRETE

ALIGNMENT: TANGENT

APPROACH SLABS: AS-1-81 (30'-0" LONG)

LATITUDE: N 41°44'05"

LONGITUDE: W 81°06'15"

CROWN RATE: 0.016

CURRENT YEAR AVERAGE DAILY TRAFFIC: 37,260 (2006)

DESIGN YEAR AVERAGE DAILY TRAFFIC: 52,600 (2026)

DESIGN YEAR AVERAGE DAILY TRUCK TRAFFIC: 14,200 (2026)

LEGEND

- INDICATES BORING LOCATION
- INDICATES WETLANDS
- GABION MATTRESS
- SLOPE EROSION PROTECTION
- WETLAND PROTECTION FENCE

RICHLAND ENGINEERING LIMITED
29 NORTH PARK STREET
MANSFIELD, OHIO 44902

DESIGNED	DRAWN	REVIEWED	DATE
JDB	JLS	DAP	2/24/06
CHECKED	REVISED	STRUCTURE FILE NUMBER	
BLN		4304969(L) 4304993(R)	

LAKE COUNTY STA. 2830+21.00 STA. 2839+30.00 (RIGHT)

LAKE COUNTY STA. 1829+87.00 STA. 1838+96.00 (LEFT)

SITE PLAN 1 - STEEL
BRIDGE NO. LAK-90-2342 L & R
OVER GRAND RIVER

LAK-90-23.42
PID 23456

SITE-1-STEEL.DGN 7/14/06 TWH,KH,SCB,JLS

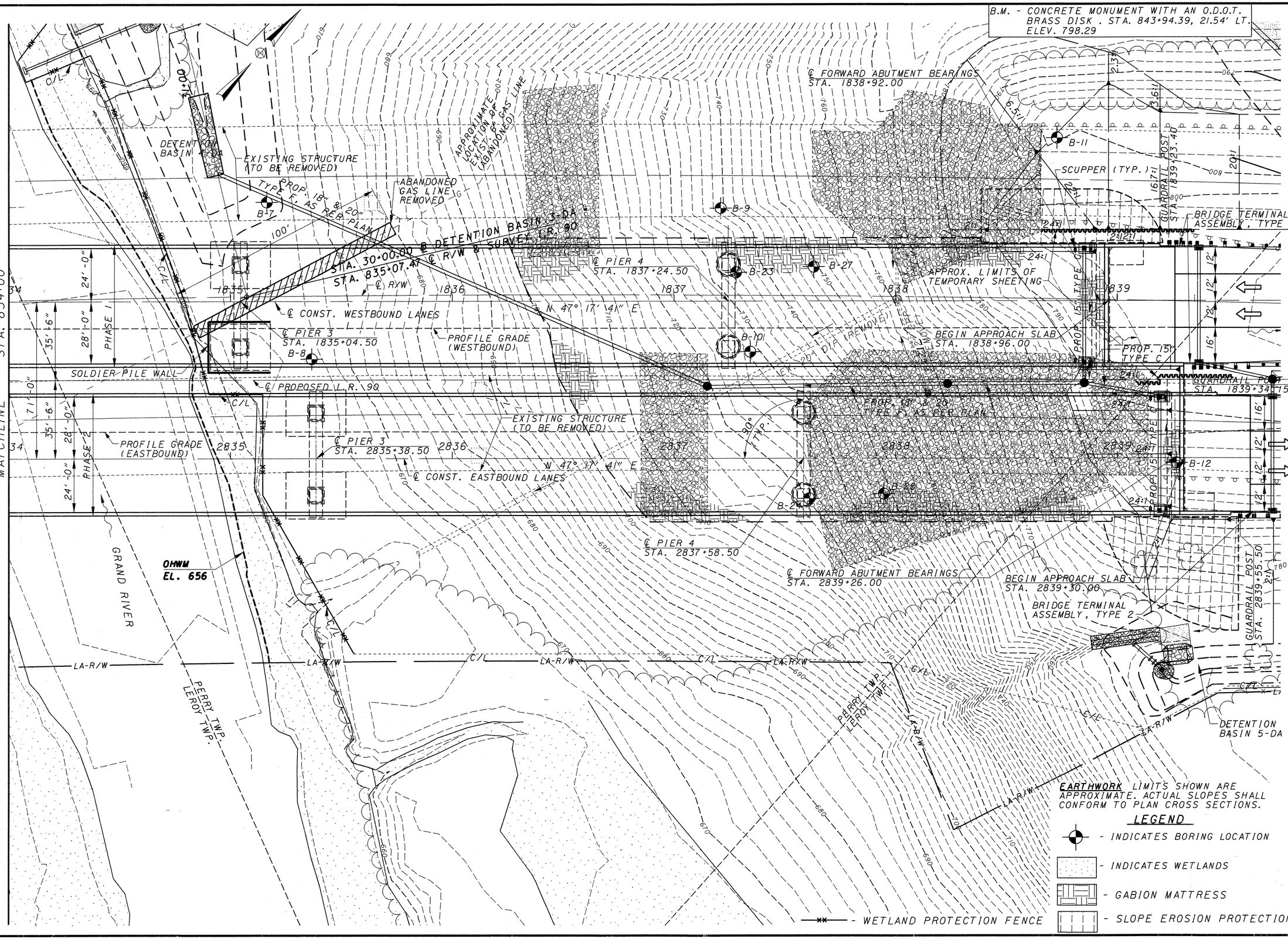

RICHLAND ENGINEERING LIMITED
29 NORTH PARK STREET
MANSFIELD, OHIO 44902

DATE	REVIEWED	STRUCTURE FILE NUMBER
2/24/06	DAP	4304969(L) 4304993(R)

DRAWN	REVISED
JLS	

DESIGNED	CHECKED
JDB	BLN

LAKE COUNTY STA. 2830+21.00 STA. 2839+30.00 (RIGHT)

LAKE COUNTY STA. 1829+87.00 STA. 1838+96.00 (LEFT)

SITE PLAN 2 - STEEL
BRIDGE NO. LAK-90-2342 L & R
OVER GRAND RIVER

LAK-90-23.42
PID 23456

2/72

255/408

SITE-2-STEEL.DGN 5/15/06 TWH,SCB,JLS,KH

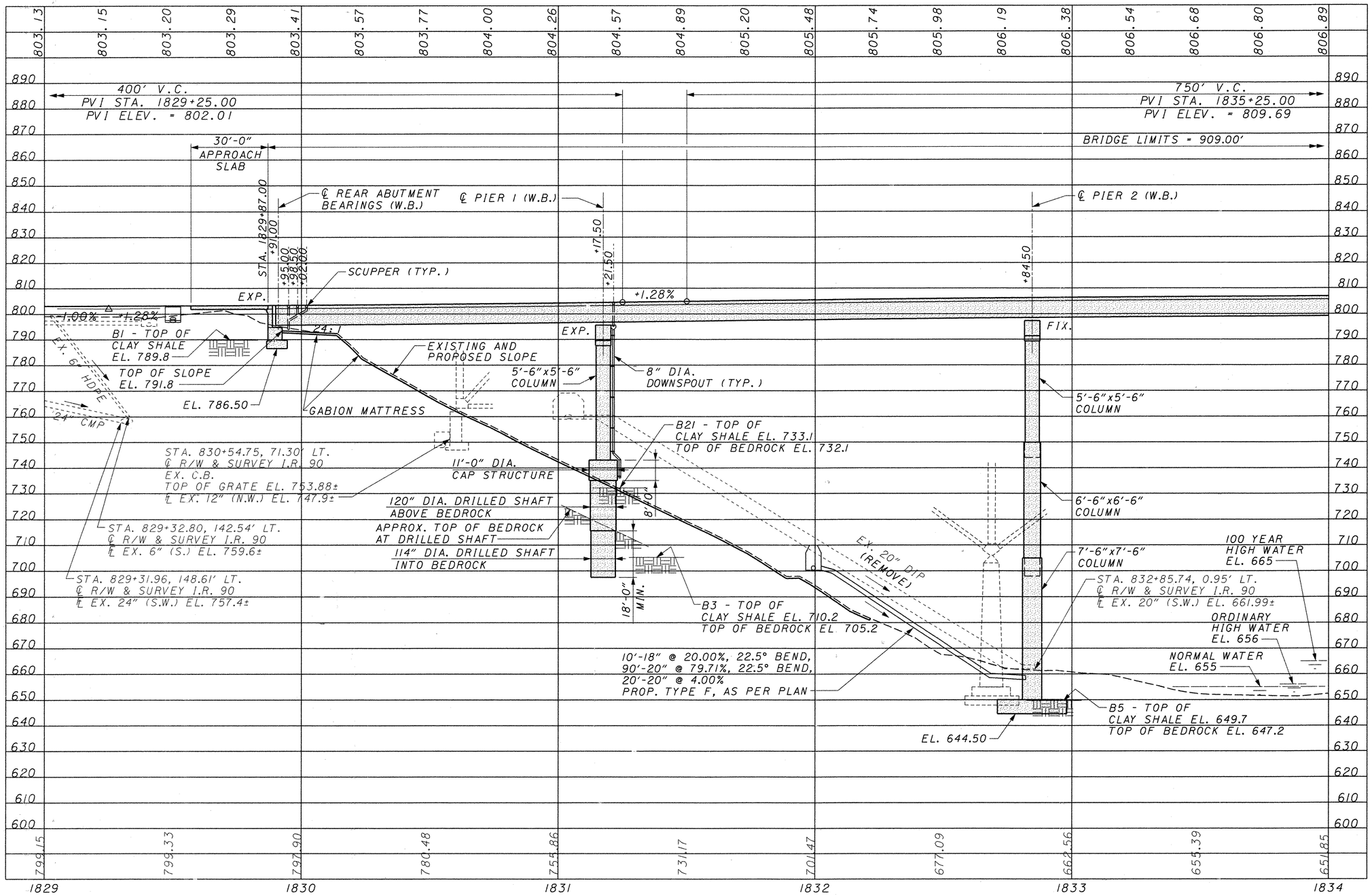

PROFILE GRADE WESTBOUND LANES

LEGEND

EXP. - EXPANSION BEARINGS
FIX. - FIXED BEARING

SITE-3-STEEL 4/27/06 TWH,KH,JLS

RICHLAND ENGINEERING LIMITED
29 NORTH PARK STREET
MANSFIELD, OHIO 44902

DESIGNED	DRAWN	REVIEWED	DATE
JDB	JLS	DAP	2/24/06
CHECKED	REVISED	STRUCTURE FILE NUMBER	
BLN		4304969	

SITE PLAN 3 - STEEL
BRIDGE NO. LAK-90-2342 L
OVER GRAND RIVER

LAK-90-23.42
PID 23456

3/72

256/408

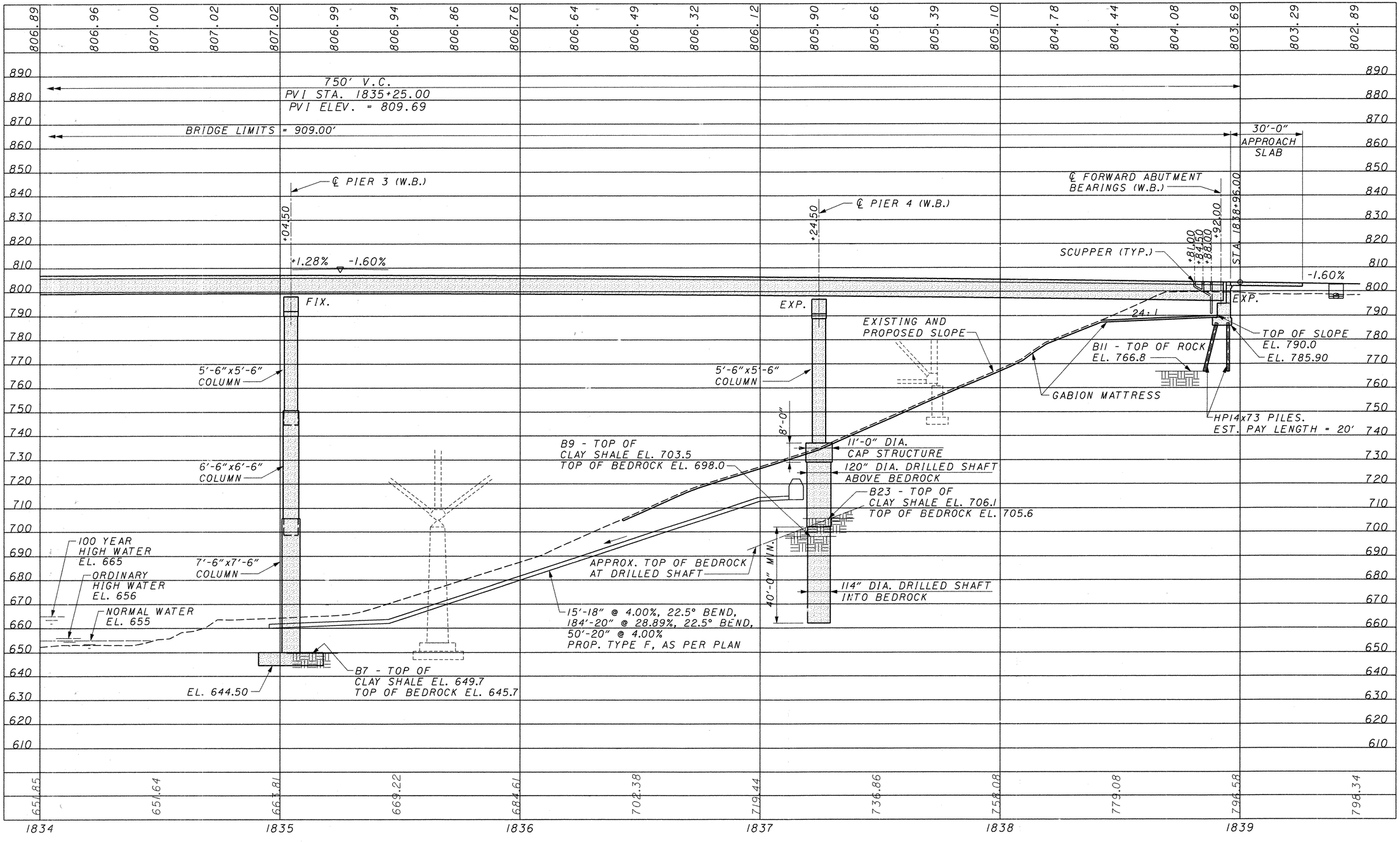

PROFILE GRADE WESTBOUND LANES

LEGEND

EXP. - EXPANSION BEARINGS
FIX. - FIXED BEARING

SITE-4-STEEL.DGN 4/27/06 TWH,KH,JLS

RICHLAND ENGINEERING LIMITED
29 NORTH PARK STREET
MANSFIELD, OHIO 44902

DESIGNED	DRAWN	REVIEWED	DATE
JDB	JLS	DAP	2/24/06
CHECKED	REVISED	STRUCTURE FILE NUMBER	
BLN		4304969	

SITE PLAN 4 - STEEL
BRIDGE NO. LAK-90-2342 L
OVER GRAND RIVER

LAK-90-23.42
PID 23456

4/72

257/408

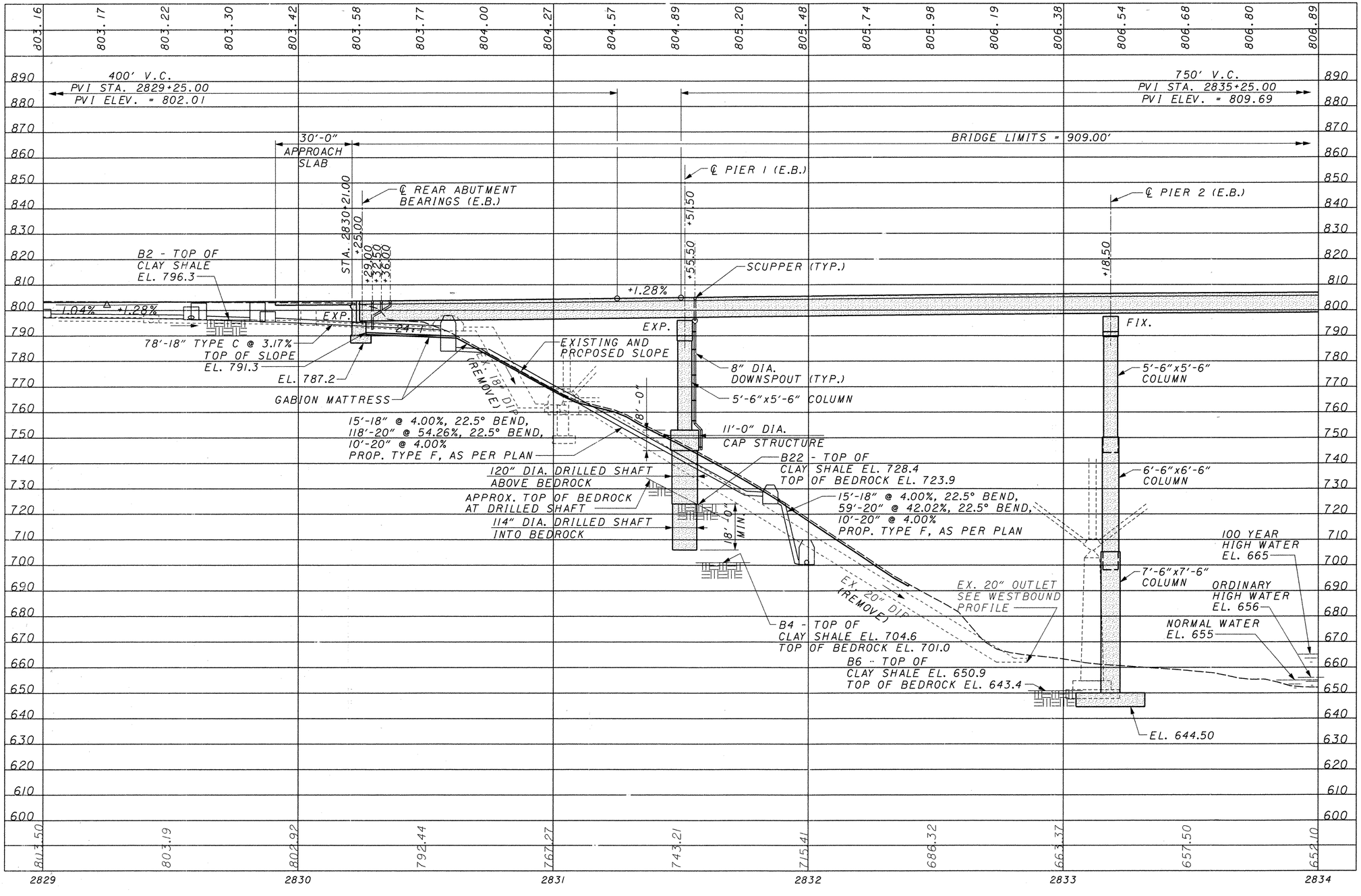

PROFILE GRADE EASTBOUND LANES

LEGEND

EXP. - EXPANSION BEARINGS
FIX. - FIXED BEARING

RICHLAND ENGINEERING LIMITED
29 NORTH PARK STREET
MANSFIELD, OHIO 44902

DESIGNED	DRAWN	REVIEWED	DATE
JDB	JLS	DAP	2/24/06
CHECKED	REVISED	STRUCTURE FILE NUMBER	
BLN		4304993	

SITE PLAN 5 - STEEL
BRIDGE NO. LAK-90-2342 R
OVER GRAND RIVER

LAK-90-23.42
PID 23456

5/72

258/408

SITE-5-STEEL.DGN 4/27/06 TWH,KH,JLS

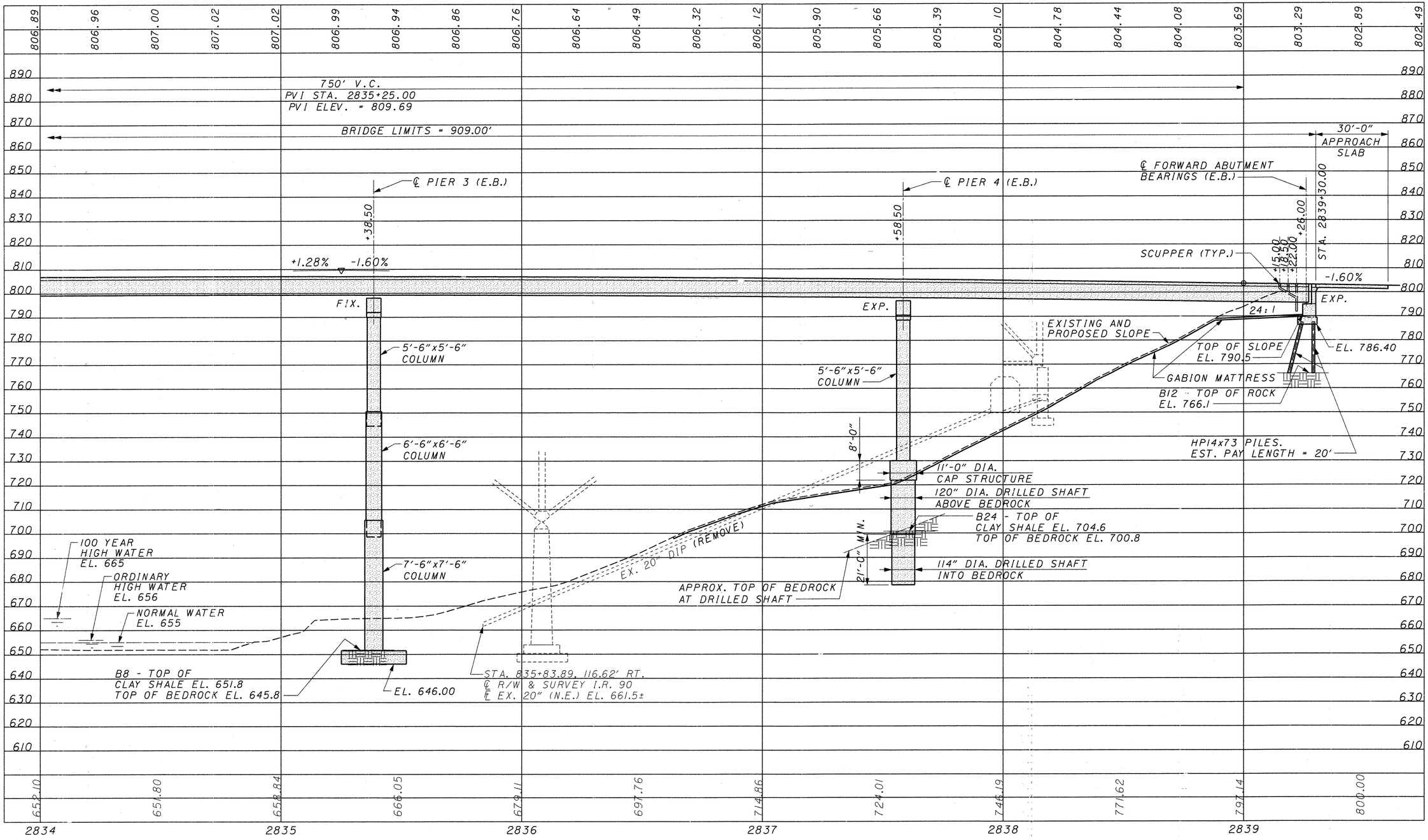

PROFILE GRADE EASTBOUND LANES

LEGEND

EXP. - EXPANSION BEARINGS
FIX. - FIXED BEARING

RICHLAND ENGINEERING LIMITED
29 NORTH PARK STREET
MANSFIELD, OHIO 44902

DESIGNED	DRAWN	REVIEWED	DATE
JDB	JLS	DAP	2/24/06
CHECKED	REVISED	STRUCTURE FILE NUMBER	
BLN		4304993	

SITE PLAN 6 - STEEL
BRIDGE NO. LAK-90-2342 R
OVER GRAND RIVER

LAK-90-23.42
PID 23456

6/72

259/408

SITE-6-STEEL.DGN 6/15/06 TWH,JLS,KH

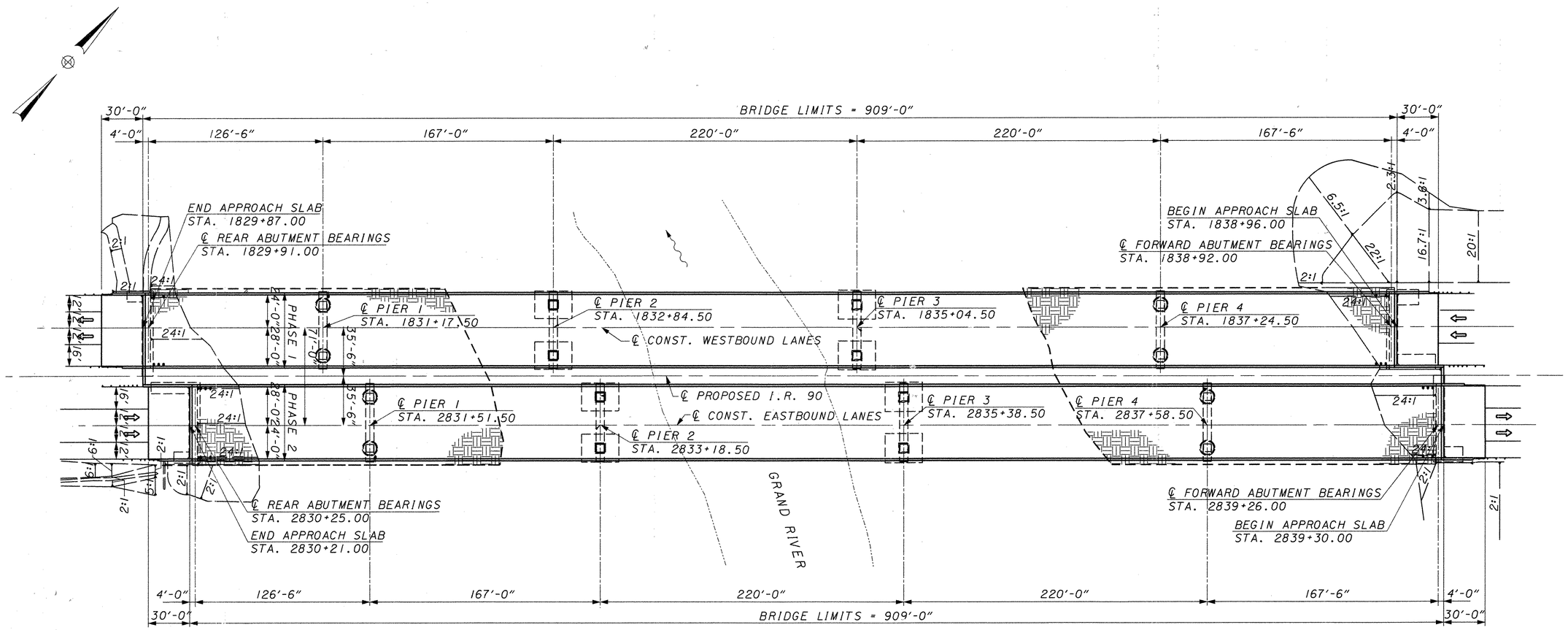

PLAN

SCUPPER LOCATIONS			
LEFT STRUCTURE (WESTBOUND)		RIGHT STRUCTURE (EASTBOUND)	
STATION	SIDE	STATION	SIDE
1829+95.00	RIGHT	2830+29.00	RIGHT
1829+95.00	LEFT	2830+29.00	LEFT
1829+98.50	RIGHT	2830+32.50	LEFT
1830+02.00	RIGHT	2830+36.00	RIGHT
1830+02.00	LEFT	2830+36.00	LEFT
1831+21.50	LEFT	2831+55.50	RIGHT
1838+81.00	RIGHT	2839+15.00	RIGHT
1838+81.00	LEFT	2839+15.00	LEFT
1838+84.50	RIGHT	2839+18.50	LEFT
1838+88.00	RIGHT	2839+22.00	RIGHT
1838+88.00	LEFT	2839+22.00	LEFT

RICHLAND ENGINEERING LIMITED
29 NORTH PARK STREET
MANSFIELD, OHIO 44902

DESIGNED	DRAWN	REVIEWED	DATE
JDB	JLS	DAP	2/24/06
CHECKED	REVISED	STRUCTURE FILE NUMBER	
BLN		4304969(L) 4304993(R)	

GENERAL PLAN - STEEL
BRIDGE NO. LAK-90-2342 L & R
OVER GRAND RIVER

LAK-90-23.42
PID 23456

LK090GP.DGN 4/27/06 TWH,CEO,KH,JLS

ESTIMATED QUANTITIES (STEEL)

CALCULATED JDB DATED 4/06
CHECKED JLS DATED 4/06

ITEM	ITEM EXT.	TOTAL LEFT STRUCTURE	TOTAL RIGHT STRUCTURE	UNIT	DESCRIPTION	LEFT STRUCTURE (WESTBOUND) SUPER.	ABUTS.	PIERS	GEN'L	RIGHT STRUCTURE (EASTBOUND) SUPER.	ABUTS.	PIERS	GEN'L	SEE SHEET
202	11003	LUMP	LUMP		STRUCTURE REMOVED, OVER 20 FOOT SPAN, AS PER PLAN				LUMP				LUMP	8/72
202	11203	LUMP			PORTIONS OF STRUCTURE REMOVED, OVER 20 FOOT SPAN, AS PER PLAN				LUMP					13/72
202	23500	4047	4047	SQ.YD.	WEARING COURSE REMOVED				4047				4047	
503	11101	LUMP	LUMP		COFFERDAMS, CRIBS AND SHEETING, AS PER PLAN				LUMP				LUMP	9/72
503	21102	2644	2644	CU.YD.	UNCLASSIFIED EXCAVATION, INCLUDING SHALE		801	1843			832	1812		
505	11100	LUMP	LUMP		PILE DRIVING EQUIPMENT MOBILIZATION		LUMP				LUMP			
507	00300	600	475	FT.	STEEL PILES HP14x73, FURNISHED		600				475			
507	00350	480	380	FT.	STEEL PILES HP14x73, DRIVEN		480				380			
509	10000	998,010	998,994	POUND	EPOXY COATED REINFORCING STEEL	525,110	35,563	437,337		525,110	34,166	439,718		
511	50001	1675	1675	CU.YD.	CLASS HP CONCRETE, BRIDGE DECK, AS PER PLAN	1675				1675				9/72
511	50101	298	298	CU.YD.	CLASS HP CONCRETE, BRIDGE DECK (PARAPET), AS PER PLAN	298				298				9/72
511	50201	1864	1841	CU.YD.	CLASS HP CONCRETE, SUBSTRUCTURE, AS PER PLAN		438	1426			404	1437		9/72
511	50201	850	845	CU.YD.	CLASS HP CONCRETE, SUBSTRUCTURE (MASS CONCRETE), AS PER PLAN *			850				845		9/72
511	52500	LUMP	LUMP		CLASS HP CONCRETE, TESTING				LUMP				LUMP	
512	10101	5516	5526	SQ.YD.	SEALING OF CONCRETE SURFACES (EPOXY-URETHANE), AS PER PLAN	2224	373	2905	14	2224	366	2922	14	10/72
512	33000		9	SQ.YD.	TYPE 2 WATERPROOFING						9			
513	10401	1,768,480	1,768,480	POUND	STRUCTURAL STEEL MEMBERS, HYBRID GIRDER, LEVEL SIX FABRICATION, AS PER PLAN	1,768,480				1,768,480				10&51/72
513	17001	54	54	FT.	STRUCTURAL STEEL MEMBERS, MODULAR EXPANSION JOINT, LEVEL UF, AS PER PLAN	54				54				11/72
513	20000	10,988	10,988	EACH	WELDED STUD SHEAR CONNECTORS	10,988				10,988				
514	00061	2650	2650	SQ.FT.	FIELD PAINTING STRUCTURAL STEEL, INTERMEDIATE COAT, AS PER PLAN	2650				2650				10/72
514	00067	2650	2650	SQ.FT.	FIELD PAINTING STRUCTURAL STEEL, FINISH COAT, AS PER PLAN	2650				2650				10/72
514	10000	2	2	EACH	FINAL INSPECTION REPAIR	2				2				
516	11210	55	55	FT.	STRUCTURAL EXPANSION JOINT INCLUDING ELASTOMERIC STRIP SEAL	55				55				
516	13600	109	152	SQ.FT.	1" PREFORMED EXPANSION JOINT FILLER				109		46		106	
516	44400	5	5	EACH	ELASTOMERIC BEARING WITH INTERNAL LAMINATES AND LOAD PLATE (NEOPRENE), (16"x35"x5" WITH 17"x46" BEVELED LOAD PLATE) (F-831)			5				5		
516	44400	5	5	EACH	ELASTOMERIC BEARING WITH INTERNAL LAMINATES AND LOAD PLATE (NEOPRENE), (16"x35"x5" WITH 17"x46" BEVELED LOAD PLATE) (F-918)			5				5		
516	44400	5	5	EACH	ELASTOMERIC BEARING WITH INTERNAL LAMINATES AND LOAD PLATE (NEOPRENE), (15½"x35"x5⅛" WITH 16½"x36" BEVELED LOAD PLATE) (E-654)			5				5		
516	44400	5	5	EACH	ELASTOMERIC BEARING WITH INTERNAL LAMINATES AND LOAD PLATE (NEOPRENE), (15½"x16"x6⅜" WITH 16½"x19" BEVELED LOAD PLATE) (E-239)		5				5			
516	44400	5	5	EACH	ELASTOMERIC BEARING WITH INTERNAL LAMINATES AND LOAD PLATE (NEOPRENE), (18"x35"x6½" WITH 19"x36" BEVELED LOAD PLATE) (E-894)			5				5		
516	44400	5	5	EACH	ELASTOMERIC BEARING WITH INTERNAL LAMINATES AND LOAD PLATE (NEOPRENE), (17½"x17½"x7¾" WITH 18½"x19" BEVELED LOAD PLATE) (E-279)		5				5			
518	12301	11	11	EACH	SCUPPERS, INCLUDING SUPPORTS, AS PER PLAN	11				11				64/72
518	21200	165	154	CU.YD.	POROUS BACKFILL WITH FILTER FABRIC		165				154			
518	40000	169	167	FT.	6" PERFORATED CORRUGATED PLASTIC PIPE		169				167			
518	40010	197	188	FT.	6" NON-PERFORATED CORRUGATED PLASTIC PIPE, INCLUDING SPECIALS		197				188			
518	51100	63	53	FT.	8" PIPE DOWNSPOUT, INCLUDING SPECIALS			63				53		
524	95000	116	78	FT.	DRILLED SHAFTS, MISC.:114" DIAMETER, INTO BEDROCK *			116				78		
524	95000	86	83	FT.	DRILLED SHAFTS, MISC.:120" DIAMETER, ABOVE BEDROCK *			86				83		
526	30001	351	351	SQ.YD.	REINFORCED CONCRETE APPROACH SLAB (T=17"), AS PER PLAN				351				351	70/72

INDEX OF SHEETS

DRAWING	SHEET NO.'S
SITE PLANS	1-6
GENERAL PLAN	7
GENERAL NOTES	8-11
ESTIMATED QUANTITIES	12
REMOVAL DETAILS	13-16
TEMPORARY SHEETING DETAILS	17-20
PILE NUMBERING	21
ABUTMENTS	22-32
PIERS	33-45
TRANSVERSE SECTION	46
FRAMING PLANS	47-48
GIRDER ELEVATION	49
GIRDER DETAILS	50-51
CAMBER TABLES	52-53
BEARINGS	54
SLAB PLANS	55-56
STAY-IN-PLACE DECK FORMS	57
SCREED ELEVATIONS	58-59
EXPANSION JOINTS	60-62
BRIDGE DRAINAGE	63-65
REINFORCING STEEL LISTS	66-69
APPROACH SLABS	70-72

* SEE SPECIAL PROVISION "MASS CONCRETE"

RICHLAND ENGINEERING LIMITED
29 NORTH PARK STREET
MANSFIELD, OHIO 44902

DATE 2/24/06 | REVIEWED DAP | STRUCTURE FILE NUMBER 4304969 (L) 4304993 (R)
DESIGNED JDB | CHECKED BLN | DRAWN SJK | REVISED

ESTIMATED QUANTITIES - STEEL
BRIDGE NO. LAK-90-2342 L & R
OVER GRAND RIVER

LAK-90-23.42
PID 23456

LK090EQ.DGN 7/10/06 SJK,MLB,KH

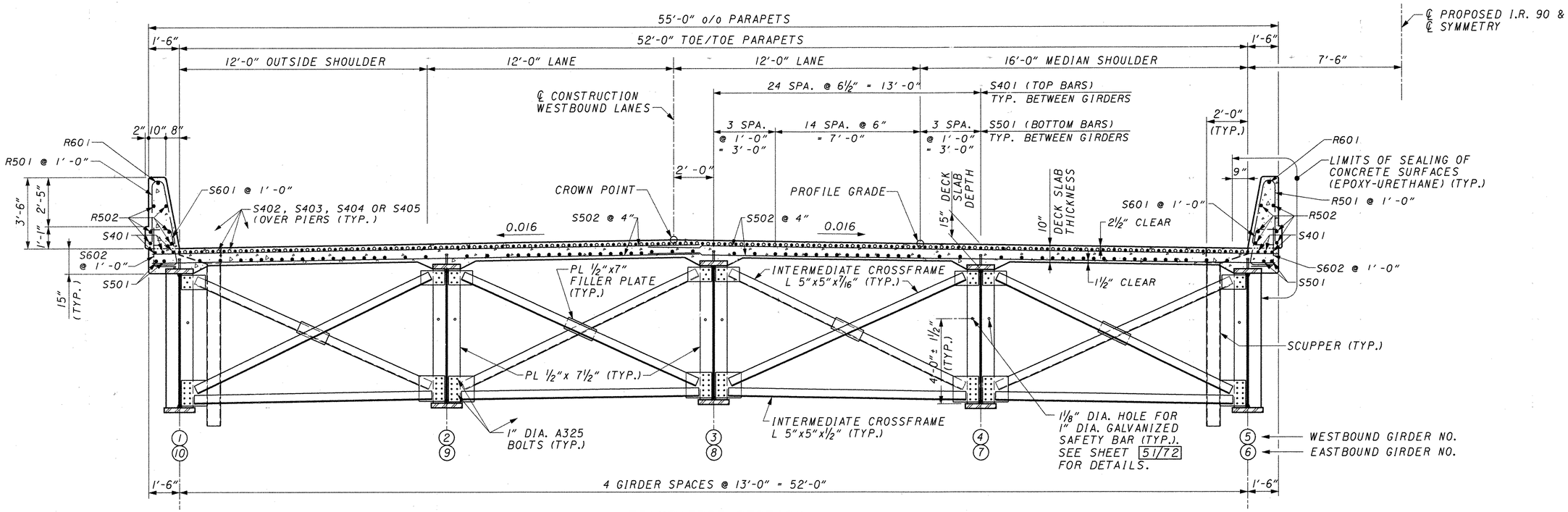

TRANSVERSE SECTION

(WESTBOUND BRIDGE SHOWN)
(EASTBOUND BRIDGE OPPOSITE HAND)

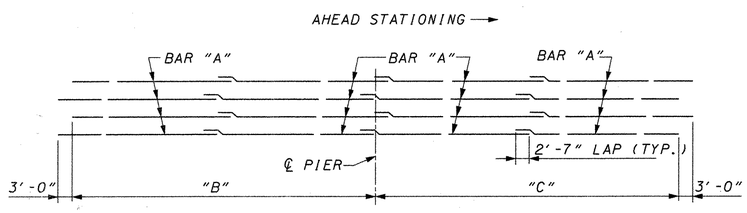

STAGGER BARS OVER PIERS

TABLE OF STAGGERED REINFORCING BARS OVER PIERS (LEFT)			
PIER	"A"	"B"	"C"
1	S402	39'-4"	45'-10"
2	S403	67'-0"	57'-1"
3	S404	65'-8"	68'-2"
4	S405	65'-7"	60'-10"

NOTES

WELD ATTACHMENT OF SUPPORTS FOR CONCRETE DECK FINISHING MACHINE TO AREAS OF THE FASCIA GIRDER FLANGES DESIGNATED "COMPRESSION". DO NOT WELD ATTACHMENTS TO AREAS DESIGNATED "TENSION". FILLET WELDS TO COMPRESSION FLANGES SHALL BE AT LEAST 1" FROM EDGE OF FLANGE, BE NO MORE THAN 2" LONG, AND BE AT LEAST ¼" FOR THICKNESSES UP TO ¾" OR 5/16" FOR GREATER THAN ¾" THICK.

DECK SLAB CONCRETE QUANTITY: THE ESTIMATED QUANTITY OF DECK SLAB CONCRETE IS BASED ON THE CONSTANT DECK SLAB THICKNESS, AS SHOWN, PLUS THE QUANTITY OF CONCRETE THAT FORMS EACH GIRDER HAUNCH. THE ESTIMATE ASSUMES A CONSTANT HAUNCH THICKNESS OF 5 INCHES AND A CONSTANT HAUNCH WIDTH OUTSIDE THE EDGE OF EACH GIRDER FLANGE OF 9 INCHES. DEVIATE FROM THIS HAUNCH THICKNESS AS NECESSARY TO PLACE THE DECK SURFACE AT THE FINISHED GRADE. THE ALLOWABLE TOLERANCE FOR THE HAUNCH WIDTH OUTSIDE THE EDGE OF EACH GIRDER FLANGE IS ± 3 INCHES.

THE HAUNCH THICKNESS WAS MEASURED AT THE CENTERLINE OF THE GIRDER, FROM THE SURFACE OF THE DECK TO THE BOTTOM OF THE TOP FLANGE MINUS THE DECK SLAB THICKNESS. THE AREA OF ALL EMBEDDED STEEL PLATES HAS BEEN DEDUCTED FROM THE HAUNCH QUANTITY IN ACCORDANCE WITH 511.24.

REINFORCING STEEL SPLICE LENGTHS SHALL BE 2'-7" FOR #4 BARS, 2'-6" FOR LONGITUDINAL #5 BARS, 2'-10" FOR TRANSVERSE #5 BARS AND 3'-0" FOR #6 BARS.

HIGH STRENGTH BOLTS SHALL BE 1" DIAMETER A325, TYPE 3, UNLESS OTHERWISE NOTED.

CROSSFRAME DETAILS: SEE SHEET 51/72.

CONCRETE PARAPET: SEE STANDARD DRAWING SBR-1-99.

SCUPPER DETAILS: SEE SHEET 65/72.

DECK PLACEMENT SEQUENCE: SEE SHEETS 58/72 AND 59/72.

RICHLAND ENGINEERING LIMITED
29 NORTH PARK STREET
MANSFIELD, OHIO 44902

DESIGNED	DRAWN	REVIEWED	DATE
JDB	TWH	DAP	2/24/06
CHECKED	REVISED	STRUCTURE FILE NUMBER	
BLN		4304969(L) 4304993(R)	

TRANSVERSE SECTION - STEEL
BRIDGE NO. LAK-90-2342 L & R
OVER GRAND RIVER

LAK-90-23.42
PID 23456

TRANS-STEEL.DGN 2/22/06 TWH,JLS,MLB,JLS,KH

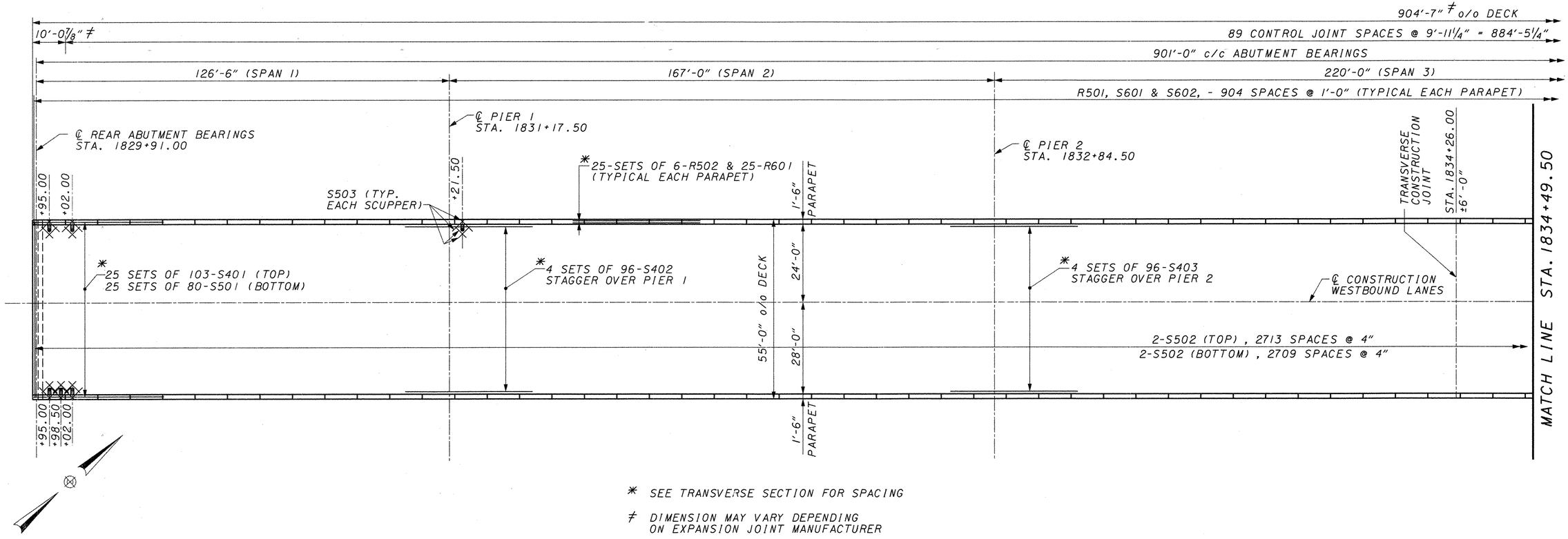

* SEE TRANSVERSE SECTION FOR SPACING

≠ DIMENSION MAY VARY DEPENDING ON EXPANSION JOINT MANUFACTURER

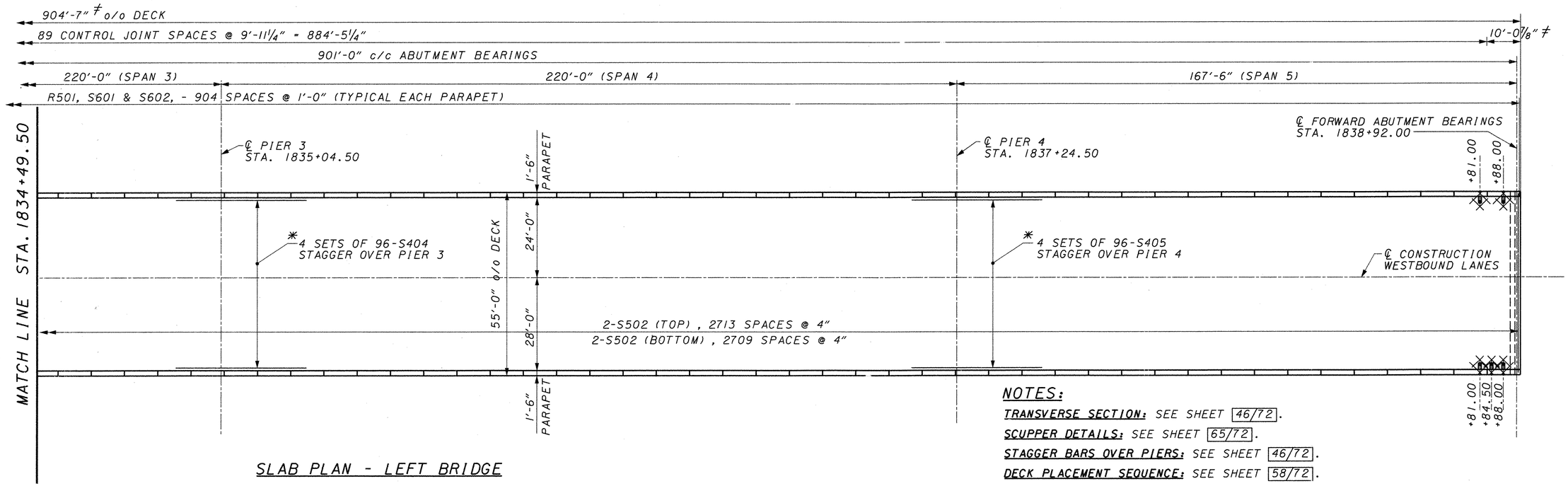

SLAB PLAN - LEFT BRIDGE

NOTES:

TRANSVERSE SECTION: SEE SHEET 46/72.

SCUPPER DETAILS: SEE SHEET 65/72.

STAGGER BARS OVER PIERS: SEE SHEET 46/72.

DECK PLACEMENT SEQUENCE: SEE SHEET 58/72.

SUPPLEMENTAL REINFORCEMENT: REINFORCE THE CONCRETE DECK AT THE SCUPPER CORNERS WITH S503 BARS, 5'-0" LONG ORIENTED AT 45° TO THE LONG AXIS OF THE SCUPPER AND LOCATED JUST BELOW THE TRANSVERSE BARS IN THE TOP MAT OF STEEL. WORK INCLUDED IN ITEM 509 - EPOXY COATED REINFORCING STEEL.

RICHLAND ENGINEERING LIMITED
29 NORTH PARK STREET
MANSFIELD, OHIO 44902

DESIGNED	DRAWN	REVIEWED	DATE
JDB	TWH	DAP	2/24/06
CHECKED	REVISED	STRUCTURE FILE NUMBER	
BLN		4304969	

LEFT SLAB PLAN - STEEL
BRIDGE NO. LAK-90-2342 L
OVER GRAND RIVER

LAK-90-23.42
PID 23456

LK090SDB.DGN 04/27/06 KH,TWH,JLS,RC,MLB

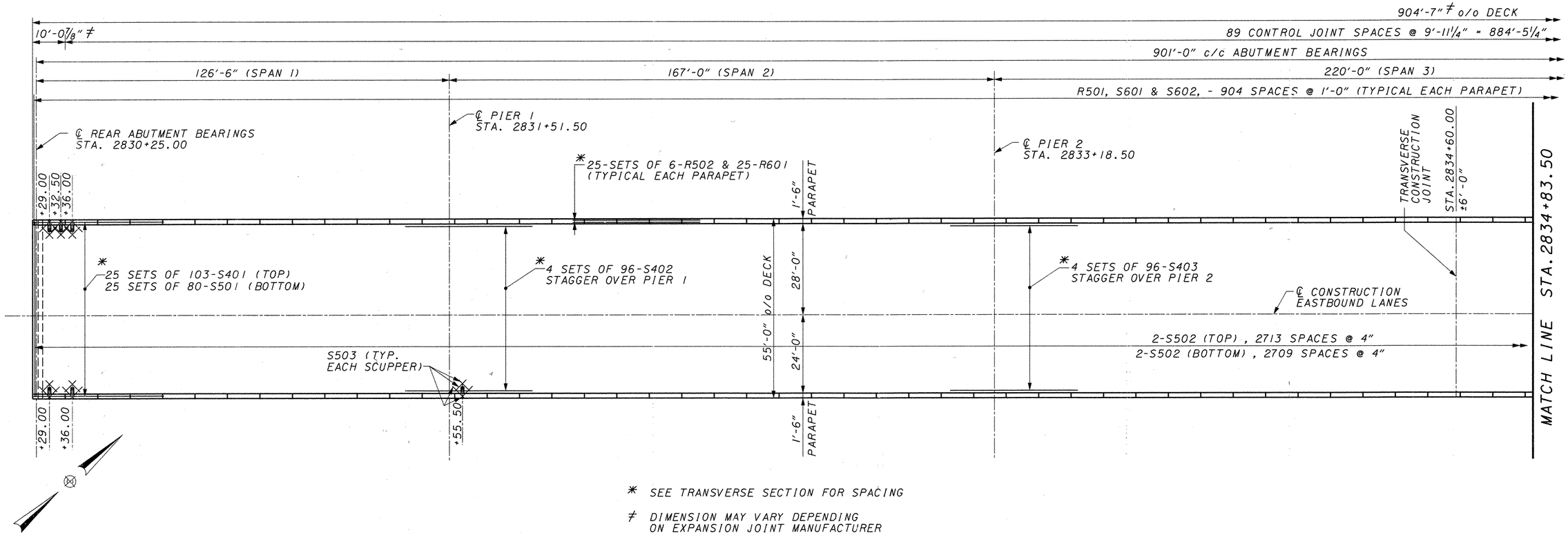

* SEE TRANSVERSE SECTION FOR SPACING

≠ DIMENSION MAY VARY DEPENDING ON EXPANSION JOINT MANUFACTURER

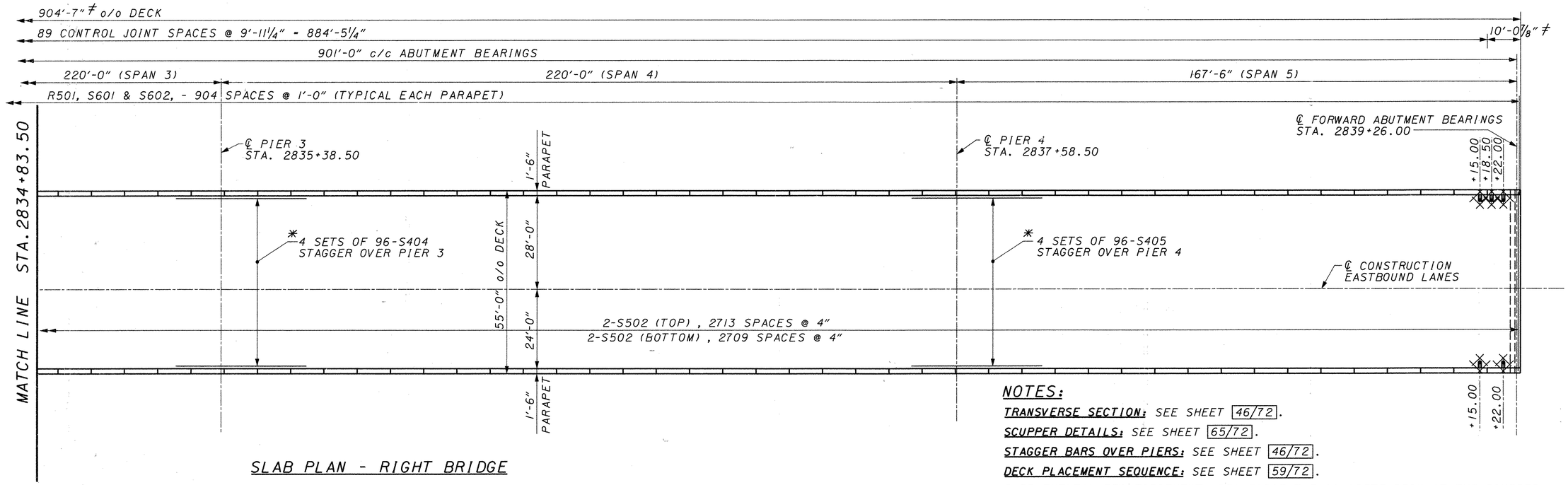

SLAB PLAN - RIGHT BRIDGE

NOTES:

TRANSVERSE SECTION: SEE SHEET 46/72.

SCUPPER DETAILS: SEE SHEET 65/72.

STAGGER BARS OVER PIERS: SEE SHEET 46/72.

DECK PLACEMENT SEQUENCE: SEE SHEET 59/72.

SUPPLEMENTAL REINFORCEMENT: REINFORCE THE CONCRETE DECK AT THE SCUPPER CORNERS WITH S503 BARS, 5'-0" LONG ORIENTED AT 45° TO THE LONG AXIS OF THE SCUPPER AND LOCATED JUST BELOW THE TRANSVERSE BARS IN THE TOP MAT OF STEEL. WORK INCLUDED IN ITEM 509 - EPOXY COATED REINFORCING STEEL.

RICHLAND ENGINEERING LIMITED
29 NORTH PARK STREET
MANSFIELD, OHIO 44902

DESIGNED	DRAWN	REVIEWED	DATE
JDB	TWH	DAP	2/24/06
CHECKED	REVISED	STRUCTURE FILE NUMBER	
BLN		4304993	

RIGHT SLAB PLAN - STEEL
BRIDGE NO. LAK-90-2342 R
OVER GRAND RIVER

LAK-90-23.42
PID 23456

LK090SDB.DGN 04/27/06 KH,TWH,JLS,RC,MLB

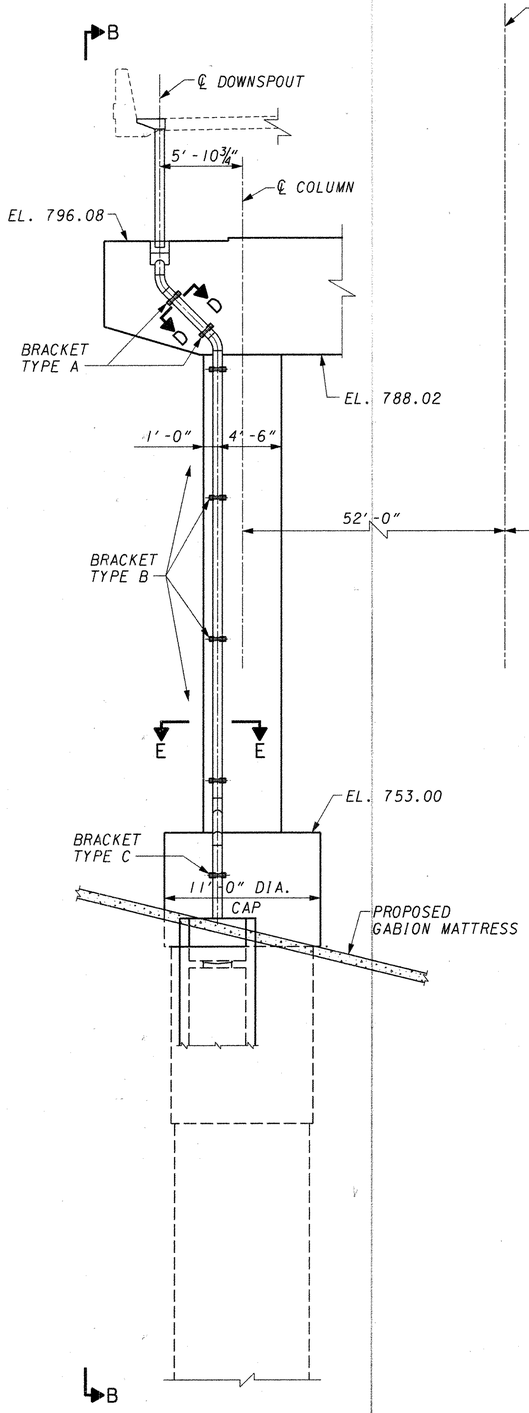

PIER 1 RIGHT
RIGHT COLUMN

ELEVATION
(LOOKING BACK)

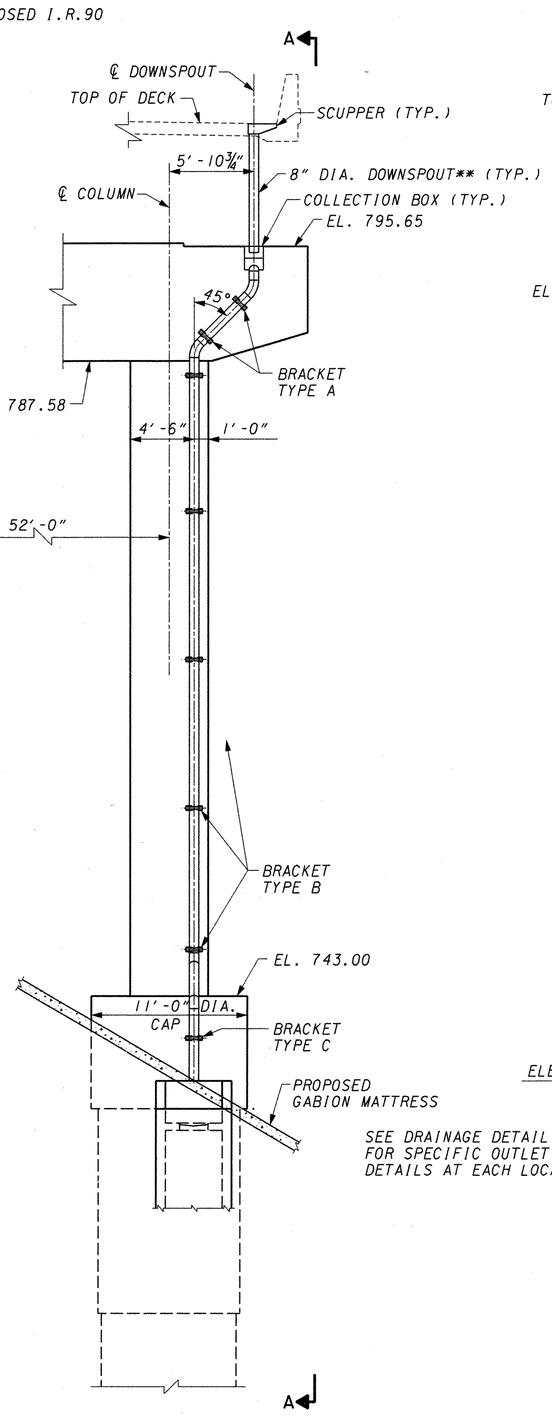

PIER 1 LEFT
LEFT COLUMN

ELEVATION
(LOOKING BACK)

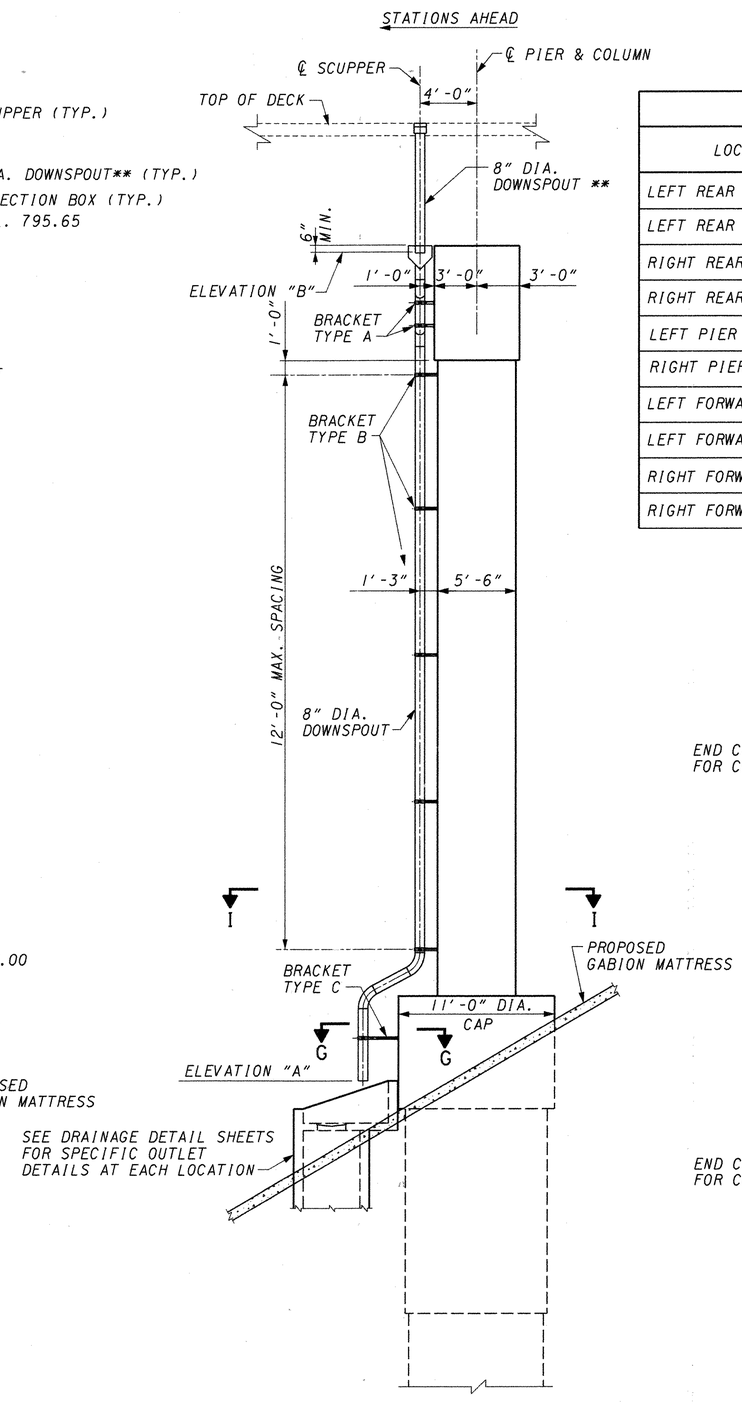

VIEW A-A SHOWN
VIEW B-B SIMILAR

** INCLUDED WITH ITEM 518 - SCUPPER, INCLUDING SUPPORTS FOR PAYMENT

DOWNSPOUT END ELEVATIONS				
LOCATION	SIDE	NO. OF SCUPPERS	ELEVATION "A"	ELEVATION "B"
LEFT REAR ABUTMENT	LEFT	2	N.A.	793.3
LEFT REAR ABUTMENT	RIGHT	3	N.A.	793.3
RIGHT REAR ABUTMENT	LEFT	3	N.A.	794.0
RIGHT REAR ABUTMENT	RIGHT	2	N.A.	794.0
LEFT PIER 1	LEFT	1	737.0	795.1
RIGHT PIER 1	RIGHT	1	747.0	795.5
LEFT FORWARD ABUTMENT	LEFT	1	N.A.	792.7
LEFT FORWARD ABUTMENT	RIGHT	3	N.A.	792.7
RIGHT FORWARD ABUTMENT	LEFT	3	N.A.	793.2
RIGHT FORWARD ABUTMENT	RIGHT	1	N.A.	793.2

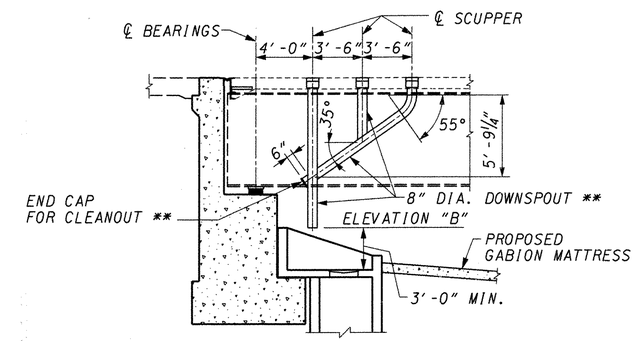

LEFT REAR ABUTMENT
(RIGHT SIDE SHOWN)
(OTHER ABUTMENTS SIMILAR)

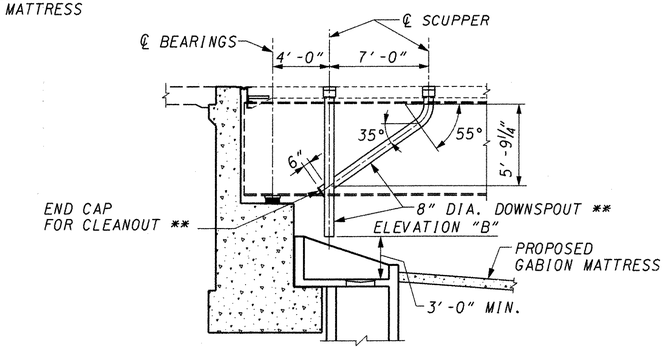

LEFT REAR ABUTMENT
(LEFT SIDE SHOWN)
(OTHER ABUTMENTS SIMILAR)

NOTES

DOWNSPOUT DETAILS: SEE SHEET 64/72.

SCUPPER DETAILS: SEE SHEET 65/72.

SECTIONS D-D, E-E, G-G & I-I: SEE SHEET 64/72.

RICHLAND ENGINEERING LIMITED
29 NORTH PARK STREET
MANSFIELD, OHIO 44902

DATE	REVIEWED	STRUCTURE FILE NUMBER
2/24/06	DAP	4302969 (L) 4302993 (R)

DRAWN	REVISED
TWH	

DESIGNED	CHECKED
JDB	BLN

DRAINAGE DETAILS 1 - STEEL

BRIDGE NO. LAK-90-2342 L & R
OVER GRAND RIVER

LAK-90-23.42
PID 23456

LK090SDJ.DGN 6/16/06 TWH,JLS,SJK,MLB,KH

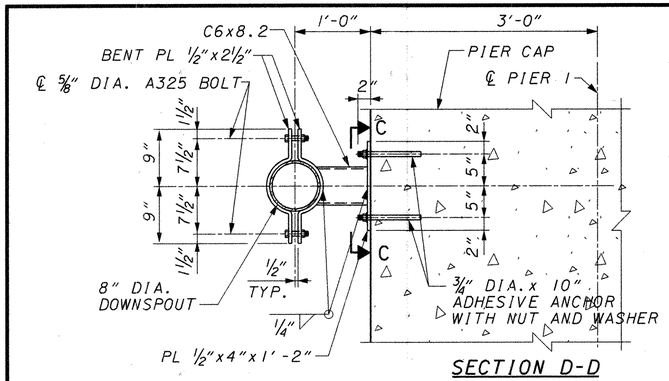

SECTION D-D

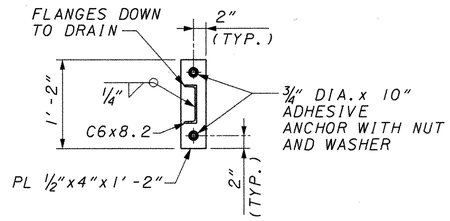

SECTION C-C

DOWNSPOUT MOUNTING BRACKET TYPE A

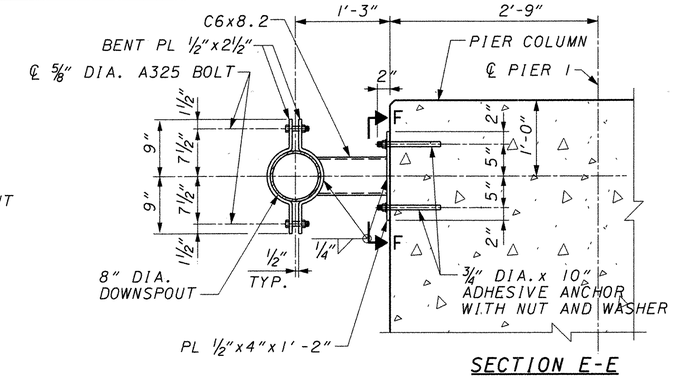

SECTION E-E

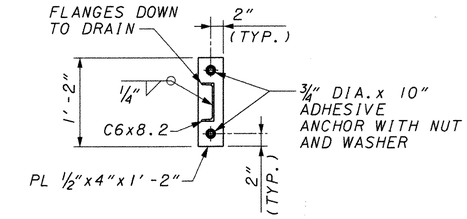

SECTION F-F

DOWNSPOUT MOUNTING BRACKET TYPE B

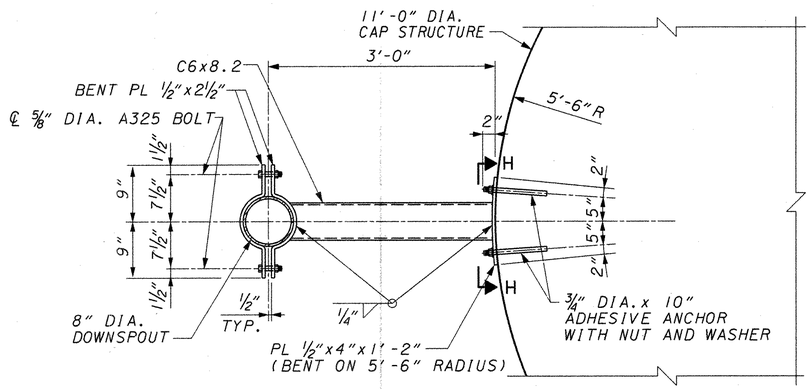

SECTION G-G

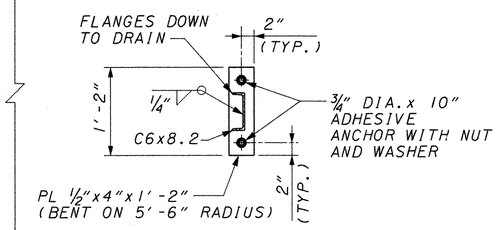

SECTION H-H

DOWNSPOUT MOUNTING BRACKET TYPE C

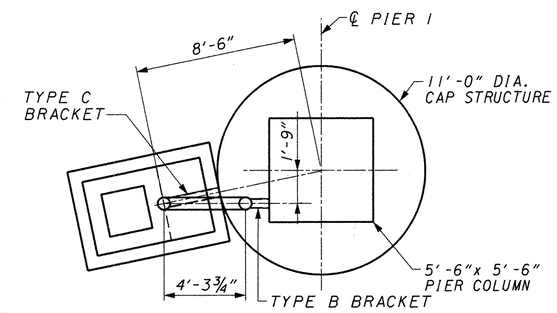

SECTION I-I

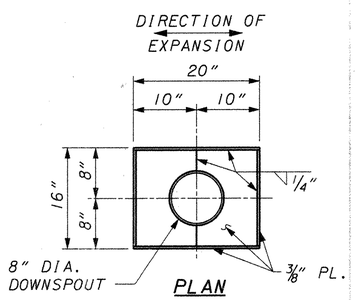

PLAN

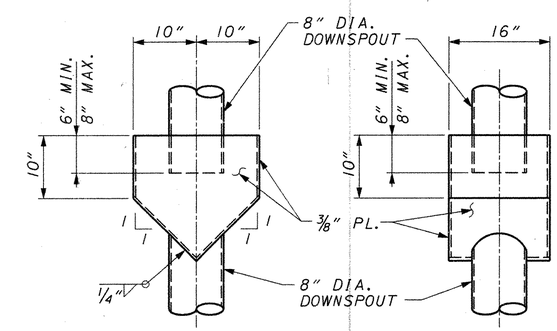

ELEVATION SIDE VIEW

COLLECTION BOX

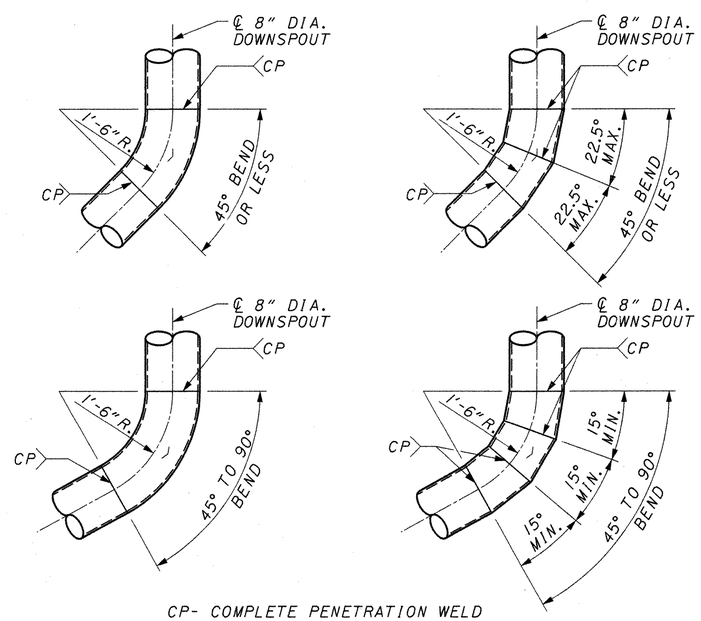

CP- COMPLETE PENETRATION WELD

SMOOTH RADIUS BEND MITERED BEND

DOWNSPOUT BEND DETAILS

DOWNSPOUT: SHALL BE STANDARD WEIGHT (28.55 P.L.F.) SCHEDULE 40, 8" DIAMETER STEEL PIPE WITH A WALL THICKNESS OF 0.322". ELBOWS SHALL BE SCHEDULE 40 WELDED FITTINGS WITH FULL PENETRATION BUTT WELDS. ELBOW AND COLLECTION BOXES SHALL BE SHOP FABRICATED WITH THE DOWNSPOUTS. FIELD SPLICES IN THE DOWNSPOUTS SHALL BE VICTAULIC COUPLING STYLE 99, DRESSER COUPLING STYLE 38, OR EQUAL.

ELBOWS AND BENDS SHALL BE STANDARD LONG RADIUS OR DOUBLE MITERED. THE CENTERLINE RADIUS SHALL BE 1'-6".

MATERIALS FOR SCUPPERS, DOWNSPOUTS, COLLECTION BOXES, MOUNTING BRACKETS, COUPLINGS AND HARDWARE SHALL BE GALVANIZED PER 711.02 AFTER FABRICATION. TOUGHNESS TESTING IN ACCORDANCE WITH ASTM E436 IS NOT REQUIRED.

SEE SHEET 65/72 FOR ADDITIONAL SCUPPER DETAILS.

PAYMENT: SCUPPER SUPPORT ANGLES, SUPPORT BOLTS, PIPE OUTLETS, GIRDER MOUNTING BRACKETS AND HARDWARE ARE INCLUDED FOR PAYMENT WITH ITEM 518 - SCUPPERS, INCLUDING SUPPORTS, AS PER PLAN.

NOTES

ADHESIVE ANCHORS SHALL BE HVA ADHESIVE ANCHORS AS MANUFACTURED BY HILTI CORPORATION, MOLLY PARABOND CAPSULE ANCHOR AS MANUFACTURED BY EMHART CORPORATION, OR AN APPROVED EQUAL. CARE SHALL BE TAKEN NOT TO DAMAGE REINFORCING STEEL WHILE DRILLING FOR ADHESIVE ANCHORS.

COLLECTION BOXES SHALL BE INCLUDED FOR PAYMENT WITH ITEM 518 - 8" PIPE DOWNSPOUT, INCLUDING SPECIALS.

DOWNSPOUT MOUNTING BRACKETS SHALL BE INCLUDED FOR PAYMENT WITH ITEM 518 - 8" PIPE DOWNSPOUT, INCLUDING SPECIALS.

SECTIONS D-D, E-E, G-G & I-I: FOR LOCATIONS SEE SHEET 63/72.

RICHLAND ENGINEERING LIMITED
29 NORTH PARK STREET
MANSFIELD, OHIO 44902

DESIGNED	DRAWN	REVIEWED	DATE
JDB	SJK	DAP	2/24/06
CHECKED	REVISED	STRUCTURE FILE NUMBER	
BLN		4304969 (L) 4304993 (R)	

DRAINAGE DETAILS 2 - STEEL
BRIDGE NO. LAK-90-2342 L & R
OVER GRAND RIVER

LAK-90-23.42
PID 23456

LK090SDG.DGN 04/27/06 SJK,RC,KH,MLB

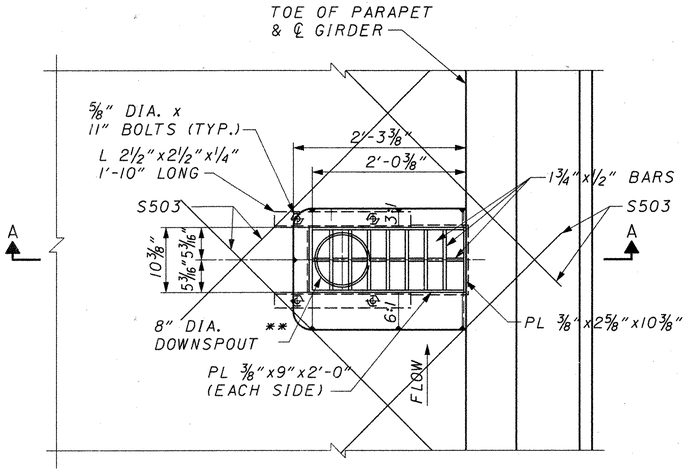

PLAN

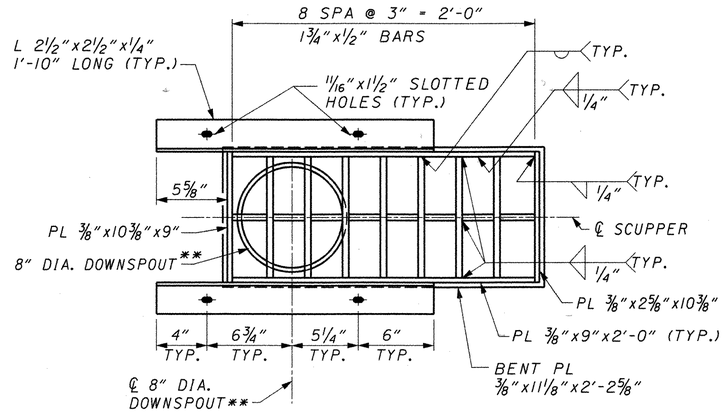

PLAN

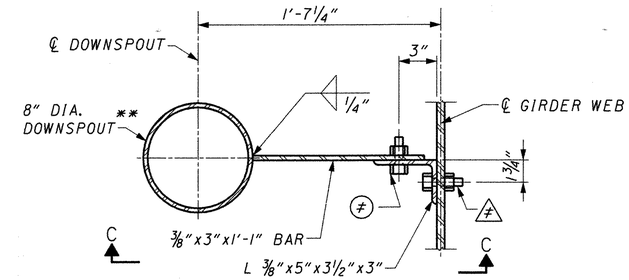

SECTION B-B

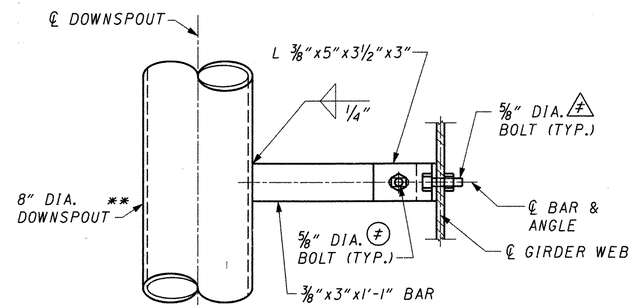

VIEW C-C

GIRDER MOUNTING BRACKET DETAILS **

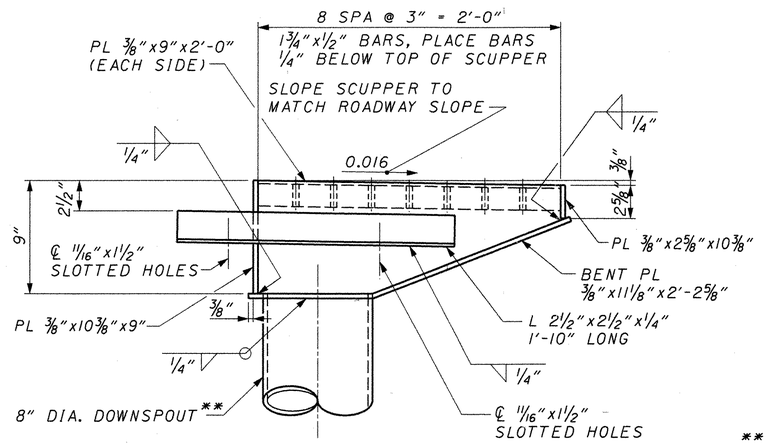

ELEVATION

SCUPPER DETAILS

** INCLUDED WITH ITEM 518- SCUPPER, INCLUDING SUPPORTS, AS PER PLAN FOR PAYMENT.

* EXTEND CONCRETE HAUNCH AS SHOWN TO PROVIDE ADEQUATE CONCRETE COVER FOR SCUPPERS. ADDITIONAL HAUNCH WIDTH SHALL BE A MINIMUM OF 2'-0" LONG LONGITUDINALLY, CENTERED ON THE SCUPPER.

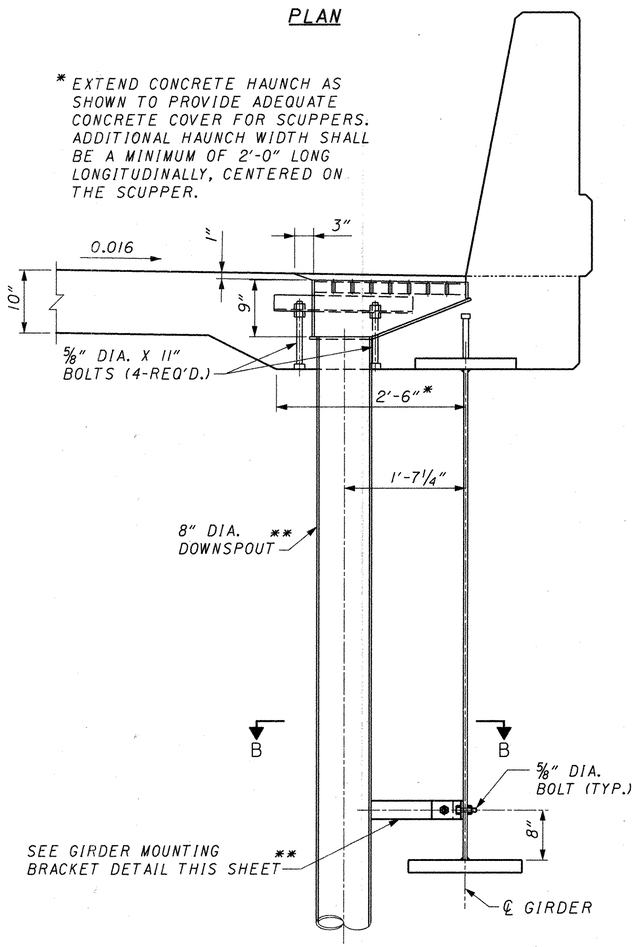

SECTION A-A

SCUPPER LAYOUT

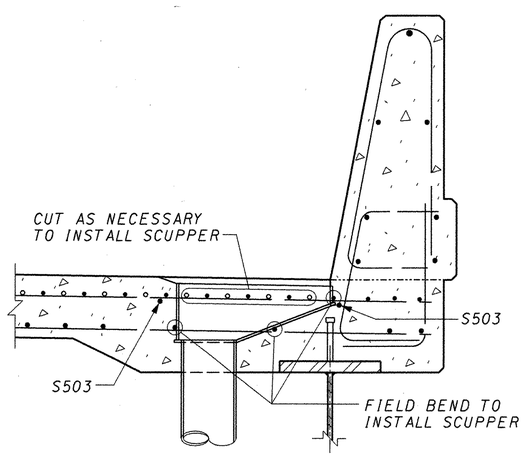

DECK REINFORCEMENT AT SCUPPER

FASTENER NOTES:

(≠) THE SIZE OF THE SLOTTED HOLES SHALL BE 11/16" x 1 9/16". THE SLOT SHALL BE HORIZONTAL IN THE 3/8"x3" BAR AND VERTICAL IN THE ANGLE. BOLTS SHALL BE 5/8" DIA. A325 TYPE 1, GALVANIZED, WITH HEX NUT AND TWO WASHERS. TIGHTEN ACCORDING TO 513.

(≠) THE BOLTS SHALL BE 5/8" DIA. A325 TYPE 1, GALVANIZED FOR GALVANIZED OR PAINTED STRUCTURES OR A325 TYPE 3, FOR BARE WEATHERING STEEL STRUCTURES. EACH ASSEMBLY SHALL INCLUDE A BOLT, NUT AND TWO WASHERS. TIGHTEN ACCORDING TO 513. FOR WEATHERING STEEL STRUCTURES, PROVIDE A 3 1/2" x 3 1/2" x 1/8" PREFORMED BEARING PAD, 711.21, WITH A 13/16" DIA. HOLE BETWEEN THE GIRDER WEB AND THE ANGLE. AFTER THE CONCRETE DECK HAS BEEN POURED, FIELD DRILL THE 13/16" DIA. HOLE IN THE WEB.

ADDITIONAL NOTES: SEE SHEET 64/72 .

RICHLAND ENGINEERING LIMITED
29 NORTH PARK STREET
MANSFIELD, OHIO 44902

DESIGNED	DRAWN	REVIEWED	DATE
JDB	SJK	DAP	2/24/06
CHECKED	REVISED	STRUCTURE FILE NUMBER	
BLN		4304969 (L) 4304993 (R)	

DRAINAGE DETAILS 3 - STEEL
BRIDGE NO. LAK-90-2342 L & R
OVER GRAND RIVER

LAK-90-23.42
PID 23456

LK090SDC.DGN 7/10/06 SJK,TWH,RC,KH