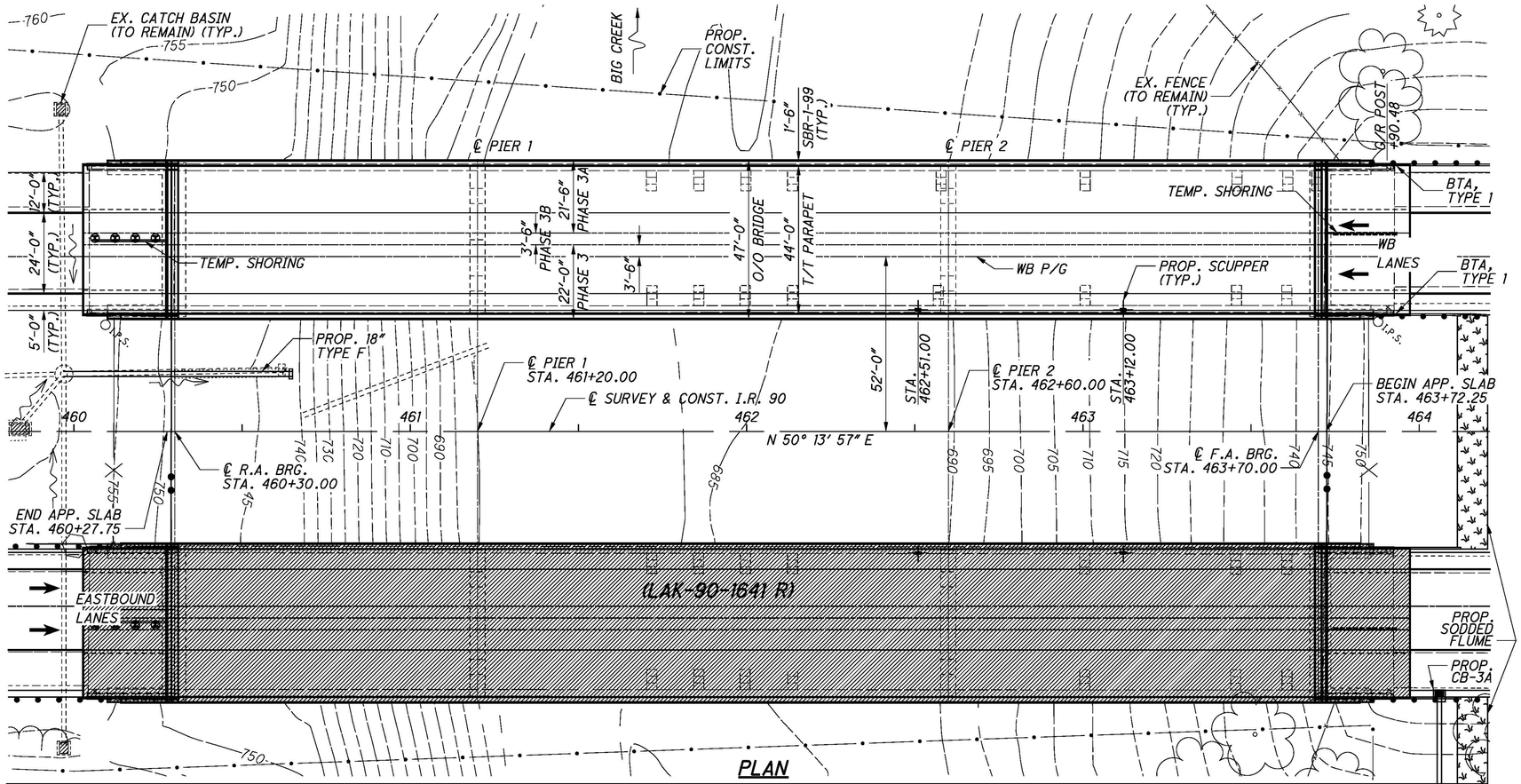

PLAN

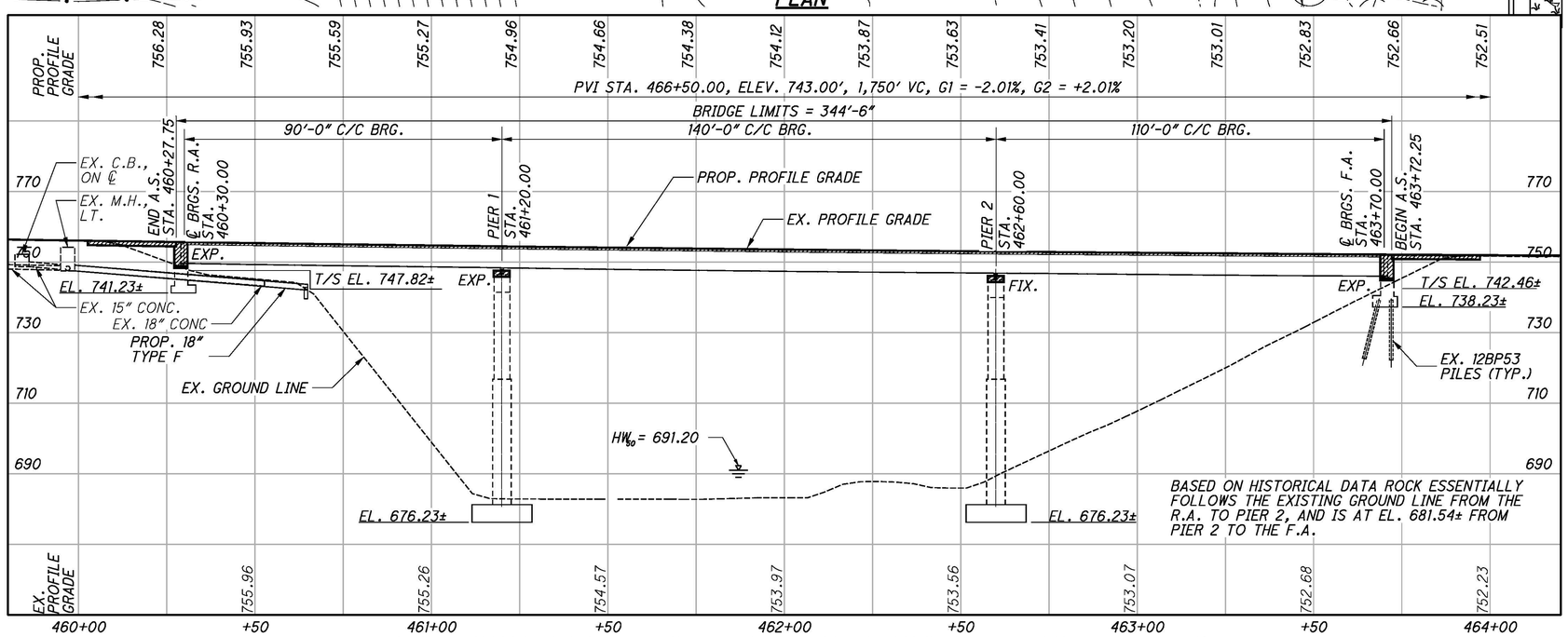

PROFILE SHOWN ALONG PROFILE GRADE OF WESTBOUND I.R. 90 OVER BIG CREEK

BENCHMARK ELEV.			
MARK	STATION	OFFSET	ELEV.
NAIL SET	460+00.29	30.97' RT.	756.36
NAIL SET	464+06.81	34.95' RT.	752.11

BORING LOCATIONS			
MARK	STATION	OFFSET	ELEV.
BORING	457+72.04	46.76' LT.	760.95
BORING	464+94.76	46.04' RT.	751.72

FOR ADDITIONAL BENCHMARK INFORMATION. SEE ROADWAY PLAN SHEETS 2/1141 3/1141

NOTES

EARTHWORK LIMITS SHOWN ARE APPROXIMATE. ACTUAL SLOPES SHALL CONFORM TO PLAN CROSS SECTIONS.

PROPOSED WORK:

1. REMOVE EXISTING DECK, SCUPPERS, END CROSS FRAMES, EXPANSION JOINTS, RAILING, BACKWALLS, APPROACH SLABS IN PHASES AND OTHER ITEMS NOTED ON PLANS.
2. JACK EXISTING GIRDERS, REMOVE EXISTING BEARINGS, REHABILITATE AND RAISE PIER CAPS AND INSTALL ELASTOMERIC BEARINGS.
3. REHABILITATE PORTIONS OF ABUTMENTS USING SEMI-INTEGRAL DESIGN AND REPLACE DECK. REPLACE APPROACH SLABS. PROVIDE SINGLE SLOPE PARAPETS FOR NEW SUPERSTRUCTURE.
4. SEAL EXPOSED CONCRETE SURFACES AS PER PLAN.
5. FIELD PAINT EXISTING STRUCTURAL STEEL.

HYDRAULIC DATA (EXISTING PLANS)

DRAINAGE AREA = 31 SQ. MILES
Q (50) = 3470 CFS
HIGH WATER (50 YR) = EL. 691.20
STRUCTURE CLEARS THE 50 YEAR

DESIGN TRAFFIC:
2012 ADT = 48,210
2032 ADT = 54,680 2032 ADTT = 13,120

EXISTING STRUCTURE

TYPE: TWIN CONTINUOUS PLATE GIRDER WITH REINFORCED CONCRETE DECK AND SUBSTRUCTURE
SPANS: 90'-0", 140'-0", 110'-0"± C/C BEARINGS
ROADWAY: 42'-0"± F/F PARAPET
LOADING: C.F. 2000 - ADEQUATE FOR AASHTO ALTERNATE LOADING
SKEW: NONE
WEARING SURFACE: 1.0"± MONOLITHIC CONCRETE
APPROACH SLABS: AS-1-54 (25' LONG)
ALIGNMENT: TANGENT
CROWN: 0.016±
STRUCTURAL FILE NUMBERS: 4304624 (L)
DATE BUILT: 1960

PROPOSED STRUCTURE

PROPOSED WORK: NEW WIDENED NON-COMPOSITE REINFORCED CONCRETE DECK ON EXISTING STEEL GIRDERS.
TYPE: TWIN CONTINUOUS STEEL PLATE GIRDER BRIDGES WITH REINFORCED CONCRETE DECK AND SUBSTRUCTURE WITH SEMI-INTEGRAL ABUTMENTS
SPANS: 90'-0", 140'-0", 110'-0"± C/C BEARINGS
ROADWAY: 44'-0"± T/T PARAPET
LOADING: HS20 CASE I AND ALTERNATE MILITARY
FWS: 60 PSF
SKEW: NONE
WEARING SURFACE: MONOLITHIC CONCRETE
APPROACH SLABS: 25'-0" LONG (AS-1-81)
ALIGNMENT: TANGENT
CROWN: 0.016
COORDINATES: LATITUDE N 41°-40'-59"
LONGITUDE W 81°-13'-05"

DESIGN AGENCY
BARR & PREVOST
2800 CORPORATE EXCHANGE DR., STE 240
COLUMBUS, OH 43231
(614) 714-0270 FAX (614) 714-0323

DATE	REVISED
02/2011	

REVIEWED	STRUCTURE FILE NUMBER
JEP	4304624

DRAWN	REVISED
SBH	

DESIGNED	CHECKED
JAD	JGM

LAK-90-1641 L&R
STA. 460+27.75
STA. 463+72.25

SITE PLAN
BRIDGE NO. LAK-90-1641 L
OVER BIG CREEK

LAK-90-13.10
PID No. 75479

F:\LAK\75479\structures\LAK090_1641L\sheets\090_1641LSP001.dgn 4/14/2011 9:45:31 AM jeudaily

ITEM 516, JACKING AND TEMPORARY SUPPORT OF SUPERSTRUCTURE, AS PER PLAN: (CONT.)

IF, DURING THE JACKING OPERATIONS, CRACKING OF THE CONCRETE SUPERSTRUCTURE, SEPARATION OF THE CONCRETE DECK FROM THE STEEL STRINGERS, OR OTHER DAMAGE TO THE STRUCTURE IS VISUALLY OBSERVED, IMMEDIATELY CEASE THE JACKING OPERATION AND INSTALL SUPPORTS TO THE SATISFACTION OF THE ENGINEER. ANALYZE THE DAMAGE AND SUBMIT A METHOD OF CORRECTION TO THE ENGINEER FOR APPROVAL. EPOXY INJECT ALL BEAMS THAT SEPARATE FROM THE DECK FOR THE DISTANCE OF THE SEPARATION IN ACCORDANCE WITH CMS 512.07. THE DEPARTMENT WILL NOT PAY FOR THE COST OF THIS EPOXY INJECTION OR OTHER REQUIRED REPAIRS. THE BRIDGE BEARINGS SHALL BE FULLY SEATED AT ALL CONTACT AREAS. IF FULL SEATING IS NOT ATTAINED, SUBMIT A REPAIR PLAN TO THE ENGINEER. THE DEPARTMENT WILL NOT PAY FOR THE REPAIR COSTS TO ENSURE FULL SEATING ON BEARINGS.

THE DEPARTMENT WILL MEASURE THIS WORK ON A LUMP SUM BASIS.

THE DEPARTMENT WILL PAY FOR THE ACCEPTED QUANTITIES AT THE CONTRACT PRICE FOR ITEM 516, JACKING AND TEMPORARY SUPPORT OF SUPERSTRUCTURE, AS PER PLAN.

ITEM 516, SEMI-INTEGRAL ABUTMENT EXPANSION JOINT SEAL, AS PER PLAN:

INSTALL A 3 FOOT WIDE NEOPRENE SHEET AT LOCATIONS SHOWN IN THE PLANS. SECURE THE NEOPRENE SHEETING TO THE CONCRETE WITH 1¼" X #10 GAGE (LENGTH X SHANK DIAMETER) GALVANIZED BUTTON HEAD SPIKES THROUGH A 1 INCH OUTSIDE DIAMETER, #10 GAGE GALVANIZED WASHER. MAXIMUM FASTENER SPACING IS 9 INCHES. USE OF OTHER SIMILAR GALVANIZED DEVICES, WHICH WILL NOT DAMAGE EITHER THE NEOPRENE OF THE CONCRETE, WILL BE SUBJECT TO THE APPROVAL OF THE ENGINEER.

CENTER THE NEOPRENE STRIPS ON ALL JOINTS. FOR HORIZONTAL JOINTS, SECURE THE HORIZONTAL NEOPRENE STRIP BY USING A SINGLE LINE OF FASTENERS, STARTING AT 6 INCHES, +/-, FROM THE TOP OF THE NEOPRENE STRIP. FOR THE VERTICAL JOINTS SECURE THE VERTICAL NEOPRENE STRIP BY USING A SINGLE VERTICAL LINE OF FASTENERS, STARTING AT 6 INCHES, +/-, FROM THE VERTICAL EDGE OF THE NEOPRENE STRIP NEAREST TO THE CENTERLINE OF ROADWAY. FOR VERTICAL JOINTS, INSTALL 2 ADDITIONAL FASTENERS AT 6 INCHES, CENTER TO CENTER, ACROSS THE TOP OF THE NEOPRENE STRIP ON THE SAME SIDE OF THE VERTICAL JOINT AS THE SINGLE VERTICAL ROW OF FASTENERS IS LOCATED.

THE VERTICAL NEOPRENE STRIPS SHALL COMPLETELY OVERLAP THE HORIZONTAL STRIPS. LAP LENGTHS OF THE HORIZONTAL STRIPS THAT ARE NOT VULCANIZED OR ADHESIVE BONDED, SHALL BE AT LEAST 1 FOOT IN LENGTH, OR 6 INCHES IN LENGTH IF THE LAP IS VULCANIZED OR ADHESIVE BONDED. NO LAPS ARE ACCEPTABLE IN VERTICALLY INSTALLED NEOPRENE STRIPS.

THE NEOPRENE SHEETING SHALL BE 3/32" THICK GENERAL PURPOSE, HEAVY-DUTY NEOPRENE SHEET WITH NYLON FABRIC REINFORCEMENT. THE SHEETING SHALL BE "FAIRPRENE NUMBER NN-0003", BY E.I. DUPONT DE NEMOURS AND COMPANY, INC., "WINGPRENE" BY THE GOODYEAR TIRE AND RUBBER COMPANY, OR AN APPROVED ALTERNATE. THE NEOPRENE SHEETING SHALL CONFORM TO THE FOLLOWING:

DESCRIPTION OF TEST	ASTM METHOD
THICKNESS, INCHES	
BREAKING STRENGTH, GRAB, LBS MINIMUM (LONG.X TRANS.)	
ADHESIVE STRIP, 1" WIDE X 2" LONG, LBS MINIMUM	
BURST STRENGTH, PSI MINIMUM	
HEAT AGING, 70 HR, 212°F, 180 BEND WITHOUT CRACKING	
LOW TEMP. BRITTLENESS, 1 HR, -40 F BEND AROUND 1¼" MANDREL	

METHOD OF MEASUREMENT: THE DEPARTMENT WILL MEASURE THE TOTAL LENGTH OF JOINT TO BE SEALED BY THE NUMBER OF FEET.

BASIS OF PAYMENT: THE DEPARTMENT WILL PAY FOR ACCEPTED QUANTITIES AT THE CONTRACT PRICE FOR ITEM 516, SEMI-INTEGRAL ABUTMENT EXPANSION JOINT SEAL, AS PER PLAN.

ABBREVIATIONS:

A.S. - APPROACH SLAB
BRG. - BEARING
B.T.A. - BRIDGE TERMINAL ASSEMBLY
BTW. - BETWEEN
C.J. - CONSTRUCTION JOINT
CONN. - CONNECTOR
CONST.- CONSTRUCTION
DIMEN. -DIMENSION
EB - EASTBOUND
E.F. - EACH FACE
EL. - ELEVATION
EX. - EXISTING
F.A. - FORWARD ABUTMENT
F/F - FACE TO FACE
F.F. - FAR FACE
INCR. - INCREMENT
MECH - MECHANICAL
MIN. - MINIMUM
M.O.T. - MAINTENANCE OF TRAFFIC
N.F. - NEAR FACE
NE - NORTHEAST
NO. - NUMBER
NPCPP - NON-PERFORATED CORRUGATED PLASTIC PIPE
NW - NORTHWEST
PCB - PORTABLE CONCRETE BARRIER
PCPP - PERFORATED CORRUGATED PLASTIC PIPE
P/G - PROFILE GRADE
PROP. - PROPOSED
PVMT. - PAVEMENT
R.A. - REAR ABUTMENT
REQ'D - REQUIRED
SUPER. - SUPERSTRUCTURE
TEMP. - TEMPORARY
T/S - TOE OF SLOPE
T/T - TOE TO TOE
TYP. - TYPICAL
VC - VERTICAL CLEARANCE
WB - WESTBOUND

ESTIMATED QUANTITIES

CALC BY: JWE DATE: 1/25/2011
CHCK BY: TML DATE: 1/27/2011

ITEM	EXT.	QUANTITY	UNIT	DESCRIPTION	ABUT.	PIER	SUPER.	GENERAL	SHEET NO.
202	11203	LUMP		PORTIONS OF STRUCTURE REMOVED, OVER 20 FOOT SPAN, AS PER PLAN				LUMP	2
202	22900	133	SQ YD	APPROACH SLAB REMOVED				133	
503	11101	LUMP		COFFERDAMS AND EXCAVATION BRACING, AS PER PLAN				LUMP	2
503	21101	172	CU YD	UNCLASSIFIED EXCAVATION, AS PER PLAN	172				2
509	10001	174899	POUND	EPOXY COATED REINFORCING STEEL, AS PER PLAN	10082	18745	146072		2
509	20001	200	POUND	REINFORCING STEEL, REPLACEMENT OF EXISTING REINFORCING STEEL, AS PER PLAN	200				2
510	09951	308	EACH	DOWEL HOLES WITH CEMENT GROUT, AS PER PLAN	196	112			2
511	50001	556	CU YD	CLASS HP CONCRETE, BRIDGE DECK, AS PER PLAN				556	2
511	50101	109	CU YD	CLASS HP CONCRETE, BRIDGE DECK (PARAPET), AS PER PLAN			109		2
511	50201	172	CU YD	CLASS HP CONCRETE, SUBSTRUCTURE, AS PER PLAN	118	54			2
512	10101	550	SQ YD	SEALING OF CONCRETE SURFACES (EPOXY-URETHANE), AS PER PLAN	112	106	332		2
512	10600	50	FT	CONCRETE REPAIR BY EPOXY INJECTION		50			
513	10201	3648	POUND	STRUCTURAL STEEL MEMBERS, LEVEL UF, AS PER PLAN			3648		2
514	00050	35612	SQ FT	SURFACE PREPARATION OF EXISTING STRUCTURAL STEEL			35612		
514	00056	35612	SQ FT	FIELD PAINTING OF EXISTING STRUCTURAL STEEL, PRIME COAT			35612		
514	00060	37230	SQ FT	FIELD PAINTING STRUCTURAL STEEL, INTERMEDIATE COAT			37230		
514	00066	37230	SQ FT	FIELD PAINTING STRUCTURAL STEEL, FINISH COAT			37230		2
514	10000	16	EACH	FINAL INSPECTION REPAIR			16		
516	13600	17	SQ FT	1" PREFORMED EXPANSION JOINT FILLER	17				
516	13900	99	SQ FT	2" PREFORMED EXPANSION JOINT FILLER	99				
516	14021	114	FT	SEMI-INTEGRAL ABUTMENT EXPANSION JOINT SEAL, AS PER PLAN		114			3
516	44201	12	EACH	ELASTOMERIC BEARING WITH INTERNAL LAMINATES AND LOAD PLATE (NEOPRENE) , (1'-0" x 1'-2" x 3.614"), AS PER PLAN	12				20
516	44201	12	EACH	ELASTOMERIC BEARING WITH INTERNAL LAMINATES AND LOAD PLATE (NEOPRENE) , (1'-6" x 1'-6" x 3.614"), AS PER PLAN		12			20
516	47001	LUMP		JACKING AND TEMPORARY SUPPORT OF SUPERSTRUCTURE, AS PER PLAN				LUMP	2
518	12301	2	EACH	SCUPPERS, INCLUDING SUPPORTS, AS PER PLAN			2		19
518	21200	92	CU YD	POROUS BACKFILL WITH FILTER FABRIC	92				
518	40000	136	FT	6" PERFORATED CORRUGATED PLASTIC PIPE	136				
518	40011	56	FT	6" NON-PERFORATED CORRUGATED PLASTIC PIPE, INCLUDING SPECIALS, AS PER PLAN	56				12,13
519	11101	2	SQ FT	PATCHING CONCRETE STRUCTURE, AS PER PLAN	2				3, 12
526	25001	262	SQ YD	REINFORCED CONCRETE APPROACH SLABS (T=15"), AS PER PLAN			262		
843	50000	23	SQ FT	PATCHING CONCRETE STRUCTURES WITH TROWELABLE MORTAR		23			11

ITEM 519 - PATCHING CONCRETE STRUCTURES, AS PER PLAN:

PRIOR TO THE SURFACE CLEANING SPECIFIED IN 519.04 AND WITHIN 24 HOURS OF PLACING PATCHING MATERIAL, BLAST CLEAN ALL SURFACES TO BE PATCHED INCLUDING THE EXPOSED REINFORCING STEEL. ACCEPTABLE METHODS INCLUDE HIGH-PRESSURE WATER BLASTING WITH OR WITHOUT ABRASIVES IN THE WATER, ABRASIVE BLASTING WITH CONTAINMENT, OR VACUUM ABRASIVE BLASTING.

ITEM 526 - REINFORCED CONCRETE APPROACH SLAB, (T=15"), AS PER PLAN:

CONCRETE SHALL BE ITEM 511 - CLASS HP CONCRETE, MIX HP4, AS PER PLAN. PAYMENT FOR PARAPETS ON APPROACH SLABS SHALL BE INCLUDED IN THIS ITEM.

DESIGN AGENCY
BARR & PREVOST
2800 CORPORATE EXCHANGE DR., STE 240
COLUMBUS, OH 43221
(614) 714-0270 FAX (614) 714-0323

REVIEWED JEP DATE 02/2011
STRUCTURE FILE NUMBER 4304624
DRAWN JAD REVISED
DESIGNED JAD CHECKED JGM

GENERAL NOTES & ESTIMATED QUANTITIES
BRIDGE NO. LAK-90-1641 L
OVER BIG CREEK

LAK-90-13.10
PID No. 75479

F:\LAK\75479\structures\LAK090_1641L\sheets\090_1641LGN002.dgn 5/12/2011 8:54:42 AM jeudaily

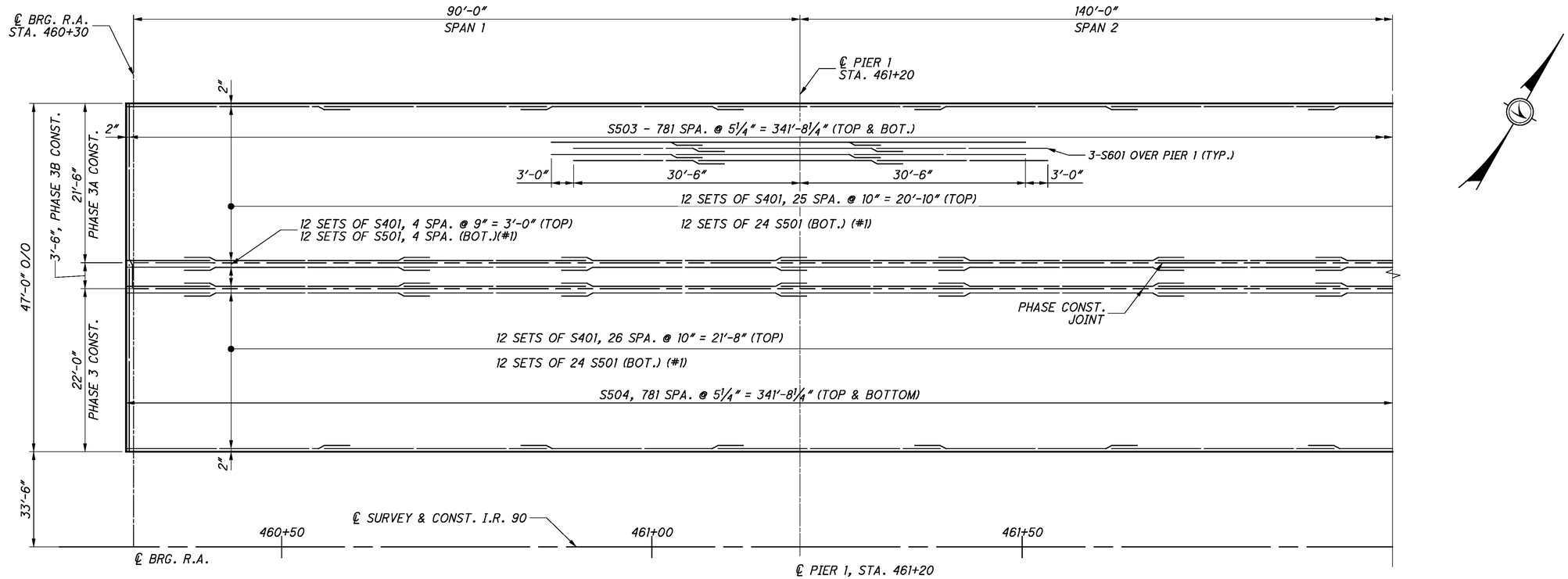

DECK REINFORCING PLAN

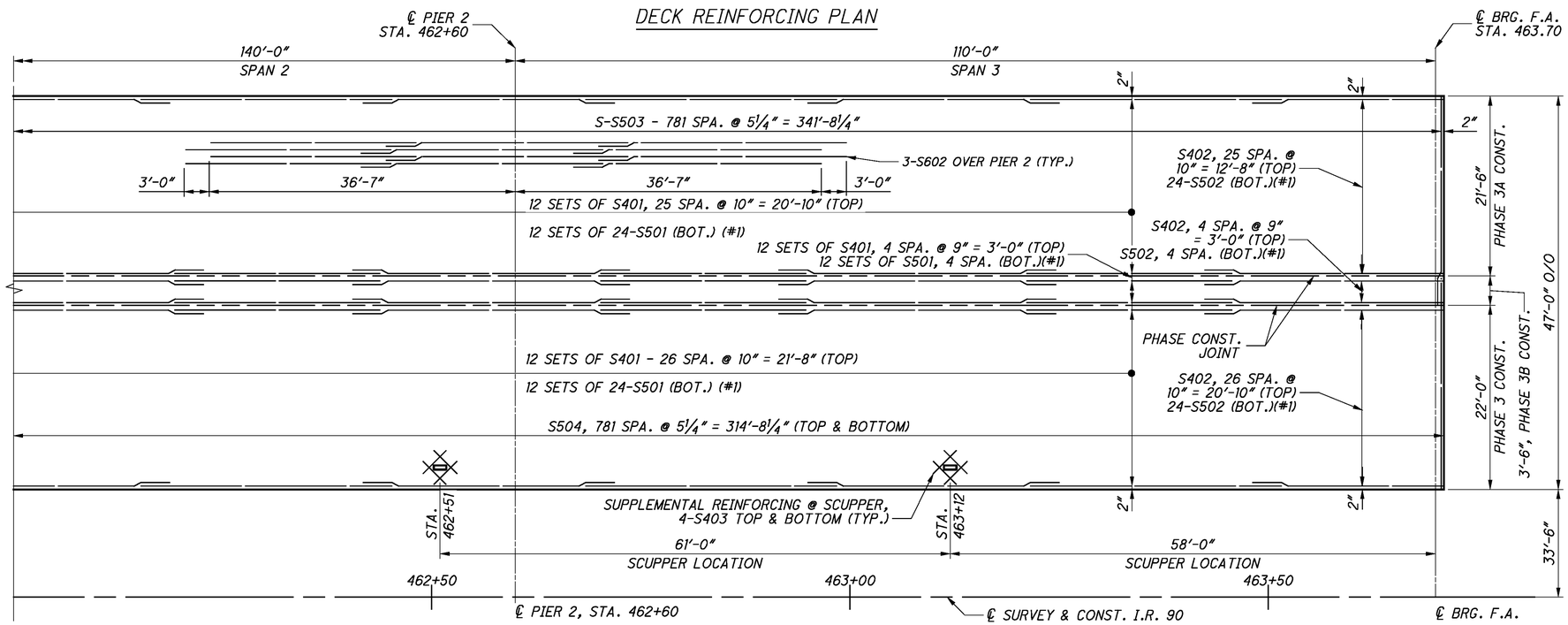

DECK REINFORCING PLAN

MINIMUM LAP LENGTHS:
LAP #4 BARS - 2'-9"
LAP #5 BARS - 3'-4"
LAP #6 BARS - 4'-4"

NOTE:
(#1) SEE TRANSVERSE SECTION FOR ADDITIONAL SPACING DETAILS ON SHEET 17/23.

DESIGN AGENCY
BARR & PREVOST
2800 CORPORATE EXCHANGE DR., STE 240
COLUMBUS, OH 43231
(614) 714-0270 FAX (614) 714-0323

DESIGNED	DRAWN	REVIEWED	DATE
JAD	SBH	JEP	02/2011
CHECKED	REVISED	STRUCTURE FILE NUMBER	
JGM		4304624	

DECK REINFORCING PLAN
BRIDGE NO. LAK-90-1641 L
OVER BIG CREEK

LAK-90-13.10
PID No. 75479

F:\LAK\75479\structures\LAK090_1641L\sheets\090_1641LDP001.dgn 4/14/2011 9:46:01 AM jeudaily

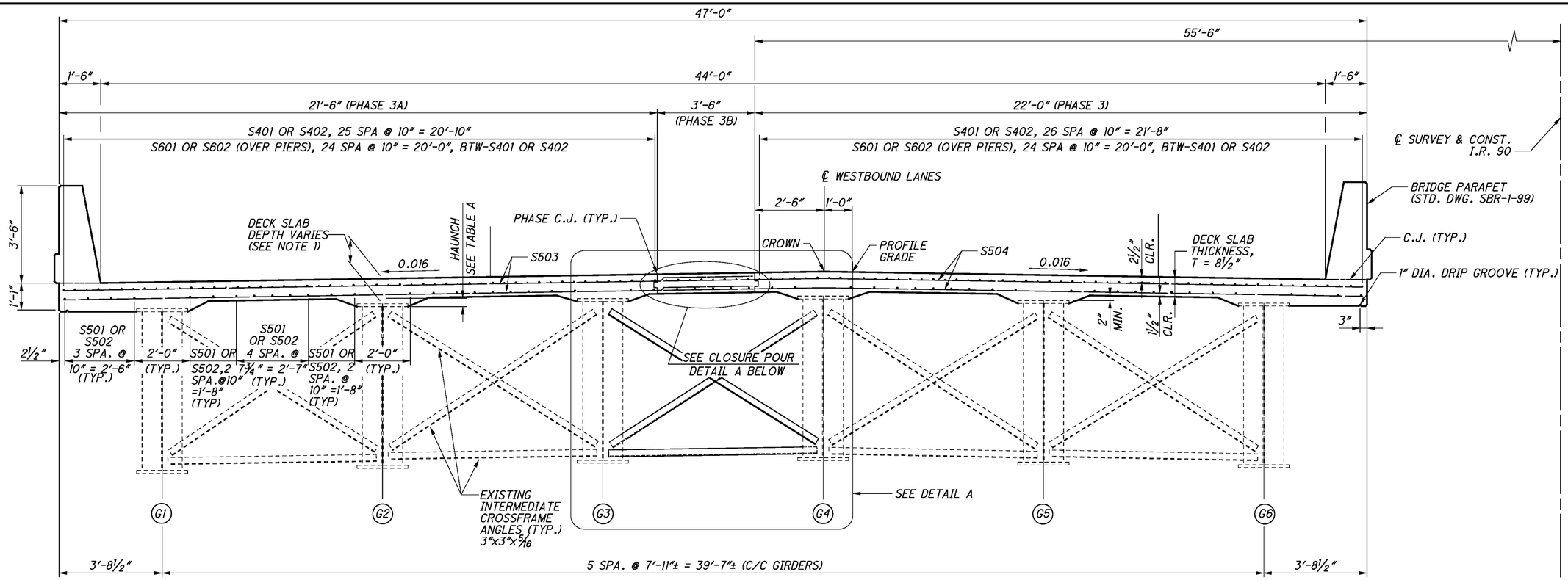

TRANSVERSE SECTION

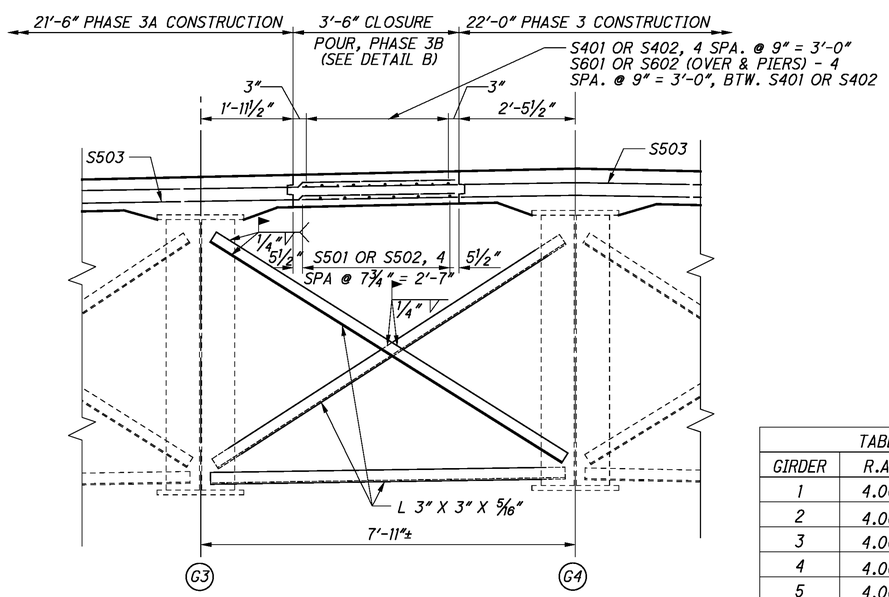

DETAIL A

(TYP. OF 23, MATCH EXISTING CROSS FRAMES)

TABLE A: HAUNCH (INCHES)				
GIRDER	R.A.	PIER 1	PIER 2	F.A.
1	4.00	4.00	3.00	5.00
2	4.00	5.00	2.00	5.00
3	4.00	5.00	2.00	5.00
4	4.00	5.00	2.00	5.00
5	4.00	5.00	2.00	5.00
6	4.00	4.00	3.00	5.00

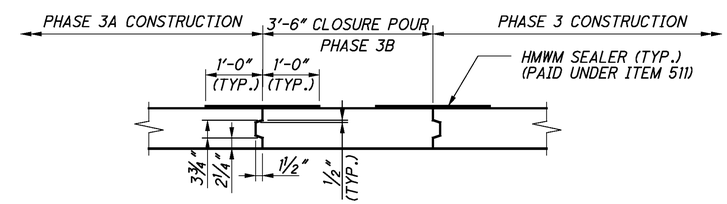

DETAIL B - CLOSURE POUR JOINT DETAIL

(BARS NOT SHOWN FOR CLARITY)

NOTES:

1. DECK SLAB CONCRETE QUANTITY: THE ESTIMATED QUANTITY OF DECK SLAB CONCRETE IS BASED ON THE CONSTANT DECK SLAB THICKNESS, AS SHOWN, PLUS THE QUANTITY OF CONCRETE THAT FORMS EACH GIRDER HAUNCH. THE ESTIMATE USES THE HAUNCH THICKNESS PROVIDED IN TABLE A AND A CONSTANT HAUNCH WIDTH OUTSIDE THE EDGE OF EACH GIRDER FLANGE OF 9 INCHES. DEVIATE FROM THIS HAUNCH THICKNESS AS NECESSARY TO PLACE THE DECK SURFACE AT THE FINISHED GRADE. THE ALLOWABLE TOLERANCE FOR THE HAUNCH WIDTH OUTSIDE THE EDGE OF EACH GIRDER FLANGE IS ±3 INCHES.

   THE HAUNCH THICKNESS WAS MEASURED AT THE CENTERLINE OF THE GIRDER, FROM THE SURFACE OF THE DECK TO THE BOTTOM OF THE TOP FLANGE MINUS THE DECK SLAB THICKNESS. THE AREA OF ALL EMBEDDED STEEL PLATES HAS BEEN DEDUCTED FROM THE HAUNCH QUANTITY IN ACCORDANCE WITH 511.24.

3. MINIMUM LAP LENGTHS:
   LAP NO. 4 BARS 2'-0"
   LAP NO. 5 BARS 3'-4"
   LAP NO. 6 BARS 3'-0"

4. FOR CONCRETE SEALING LIMITS, PARAPET REINFORCING DETAILS, AND SCUPPER DETAILS SEE SHEET 19/23.

5. FOR BAR STAGGER DIAGRAM OVER PIERS SEE SHEET 16/23.

6. TRANSVERSE BAR SPACING IS MEASURED ALONG THE PROFILE GRADE.

7. SEE STD. DWG. GSD-1-96 FOR INTERMEDIATE CROSSFRAME NOTES.

8. WELD ATTACHMENT OF SUPPORTS FOR CONCRETE DECK FINISHING MACHINE TO AREAS OF THE FASCIA STRINGER FLANGES DESIGNATED "COMPRESSION". DO NOT WELD ATTACHMENTS TO AREAS DESIGNATED "TENSION". FILLET WELDS TO COMPRESSION FLANGES SHALL BE AT LEAST 1" FROM EDGE OF FLANGE, BE NO MORE THAN 2" LONG, AND BE AT LEAST 1/4" FOR THICKNESSES UP TO 3/4" OR 5/16" FOR GREATER THAN 3/4" THICK.

DESIGN AGENCY
BARR & PREVOST
2800 CORPORATE EXCHANGE DR., STE 240
COLUMBUS, OH 43231
(614) 714-0270 FAX (614) 714-0323

DESIGNED	DRAWN	REVIEWED	DATE
JAD	SBH	JEP	02/2011
CHECKED	REVISED	STRUCTURE FILE NUMBER	
JGM		4304624	

SUPERSTRUCTURE DETAILS
BRIDGE NO. LAK-90-1641 L
OVER BIG CREEK

LAK-90-13.10
PID No. 75479

F:\LAK\75479\structures\LAK090_1641L\sheets\090_1641LTS001.dgn 5/12/2011 8:54:52 AM jeudaily

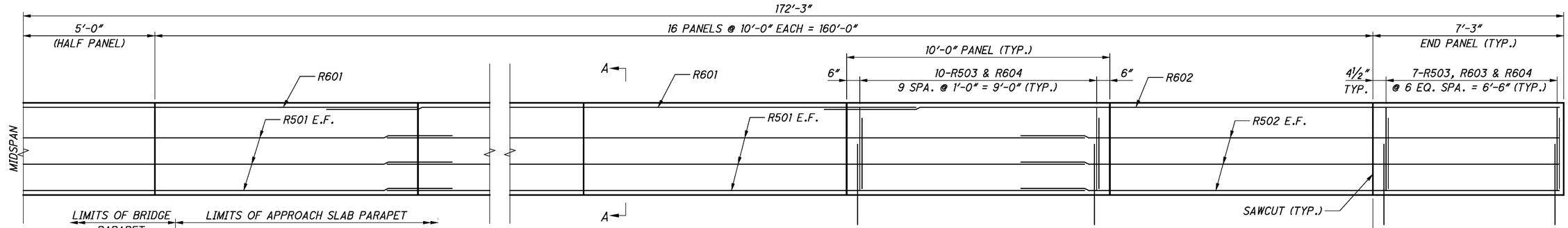

HALF PARAPET REINFORCING DETAIL
(SYMMETRICAL ABOUT MIDSPAN)

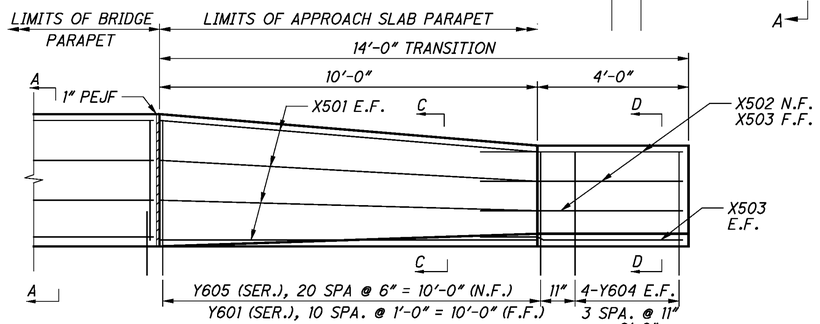

PARAPET TRANSITION DETAIL
(AT FORWARD ABUTMENT)

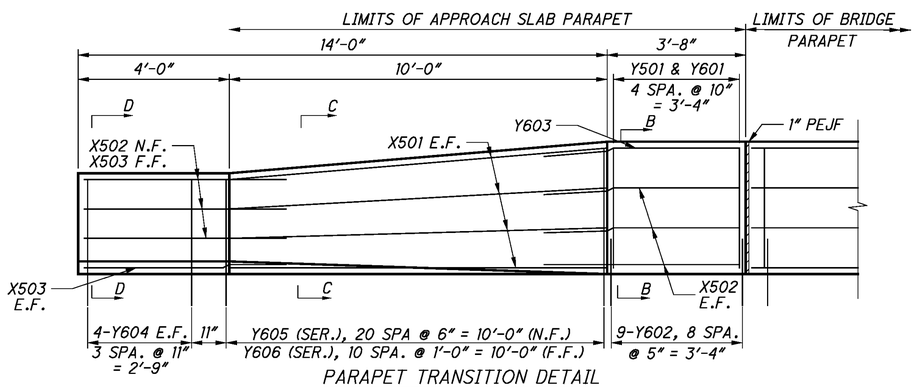

PARAPET TRANSITION DETAIL
(AT REAR ABUTMENT)

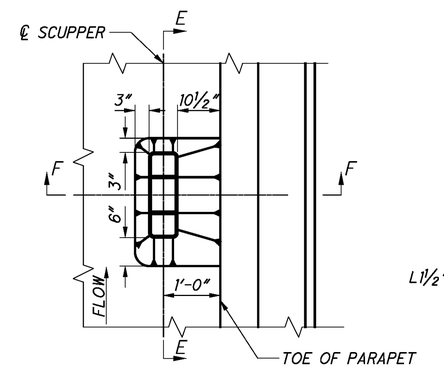

SCUPPER PLAN

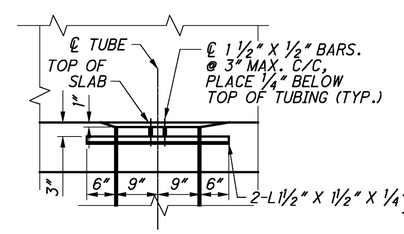

SECTION E-E

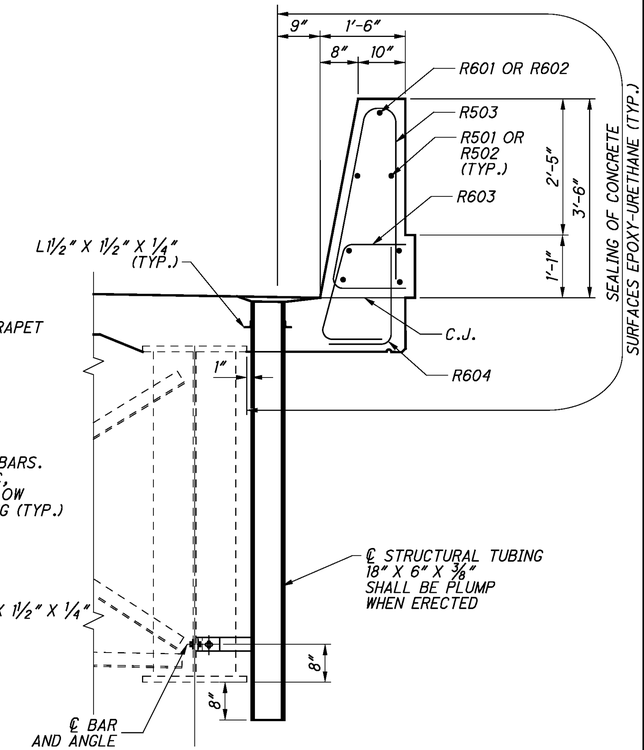

SECTION A-A & SCUPPER DETAIL

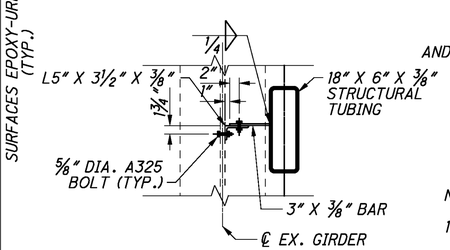

SECTION F-F

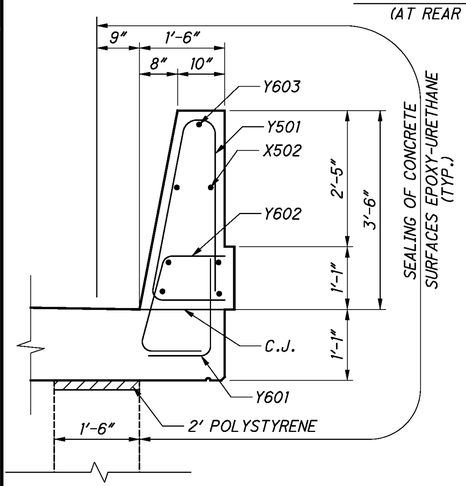

SECTION B-B

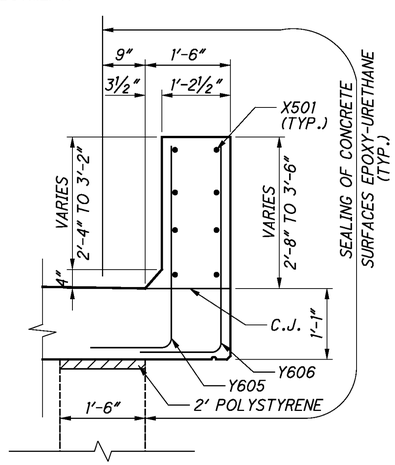

SECTION C-C

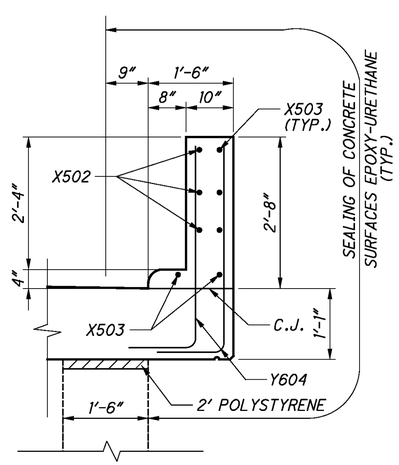

SECTION D-D

NOTES:

1. QUANTITY FOR APPROACH SLAB PARAPET INCLUDED WITH ITEM 526, REINFORCED CONCRETE APPROACH SLAB (T=15"), AS PER PLAN
2. FOR NOTES AND ADDITIONAL DETAILS OF THE CONCRETE PARAPET, REFERENCE STANDARD DRAWING SBR-1-99.
3. MINIMUM LAP LENGTHS:
   LAP #5 BARS 3'-7"
   LAP #6 BARS 4'-2"
4. REFER TO SCUPPER NOTES, STD. DWG. GSD-1-99.

DESIGN AGENCY
BARR & PREVOST
2800 CORPORATE EXCHANGE DR., STE 240
COLUMBUS, OH 43221
(614) 714-0270 FAX (614) 714-0322

DESIGNED	DRAWN	REVIEWED	DATE
JAD	SBH	JEP	02/2011
CHECKED	REVISED	STRUCTURE FILE NUMBER	
JWE		4304624	

PARAPET AND SCUPPER DETAILS
BRIDGE NO. LAK-90-1641 L
OVER BIG CREEK

LAK-90-13.10
PID No. 75479

F:\LAK\75479\structures\LAK090_1641L\sheets\090_1641LSD001.dgn 5/12/2011 8:54:55 AM jeudaily