FED. RD. DIVISION	STATE	PROJECT	
2	OHIO		

CUYAHOGA COUNTY
CUY-80-21.40

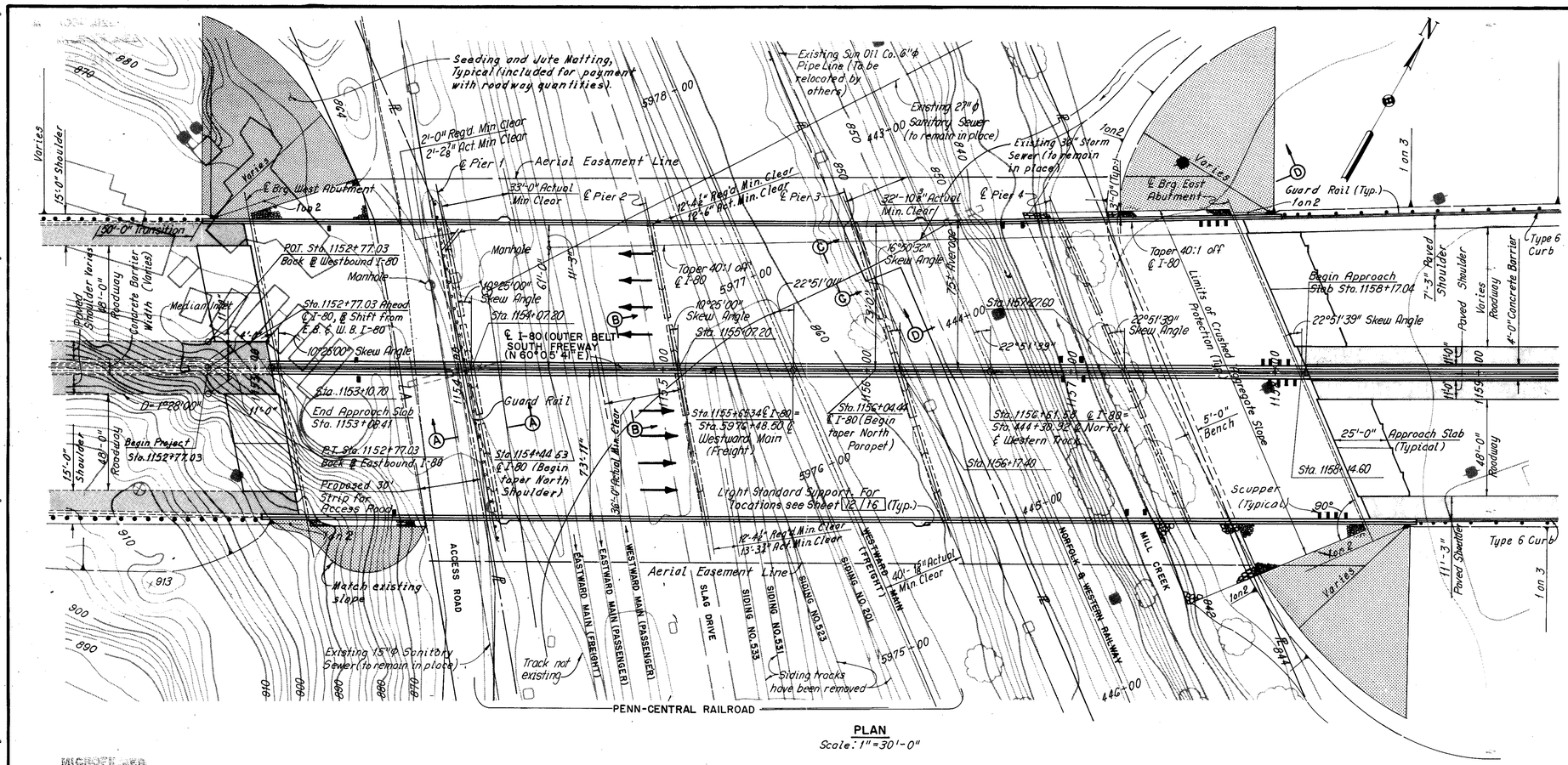

PLAN
Scale: 1" = 30'-0"

Note: Earthwork limits shown are schematic.
Actual slopes shall conform to plan cross-sections.

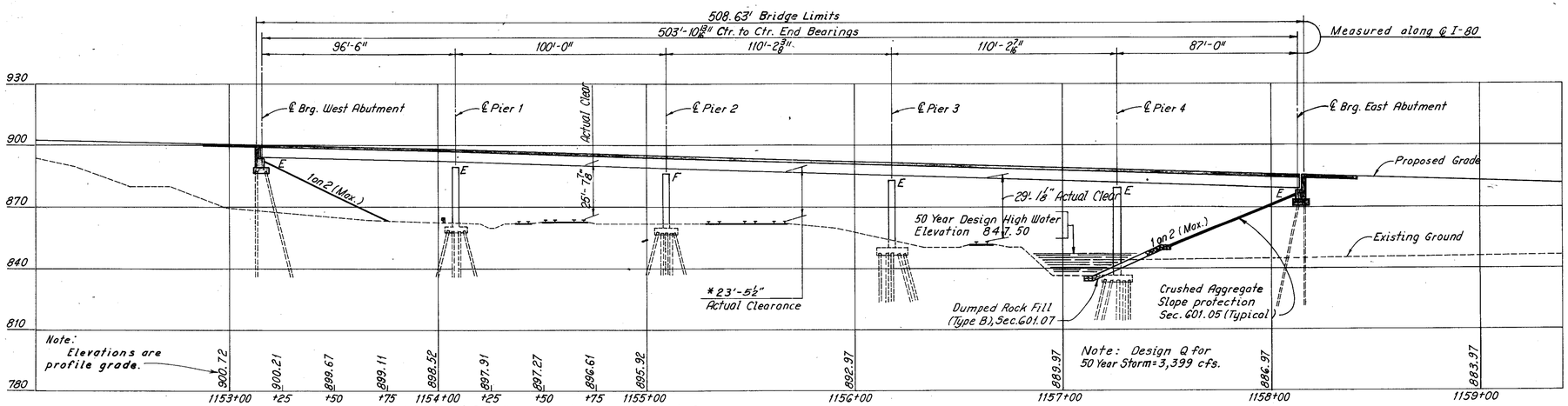

*Note: 23'-0" is the required minimum vertical clearance. Minimum vertical clearance occurs at the north rail of Westward main freight track and the outside edge of south exterior girder.

ELEVATION
Scale: Horiz. 1" = 30'-0"
Vert. 1" = 30'-0"

MICROFILMED
DEC 21 1982

PROPOSED STRUCTURE

TYPE: Continuous steel girder with reinforced concrete deck and substructure.
SPAN: 96'-6", 100'-0", 110'-2⅜", 110'-2⅜", 87'-0" (All spans are measured along ℄ I-80).
ROADWAY: Width varies - 146'-0" to 150'-5½" face to face of parapets with Concrete Barrier.
LOADING: HS 20-44 and Interstate Alternate Loading.
SKEW: Varies (See Plan).
WEARING SURFACE: 2½" Asphalt concrete
APPROACH SLABS: AS-1-67 (25 feet long).
ALIGNMENT: Tangent.
SUPERELEVATION: 0.0156 ft. per ft. and varies.

TRAFFIC DATA

1991: 60,364 A.D.T.
3,320 D.D.H.V.

MAINTENANCE OF TRAFFIC - ACCESS ROAD

Two lanes of traffic with a minimum horizontal width of 20'-0" and a minimum vertical clearance of 13'-6" shall be maintained on the access road at all times.

CURVE DATA

℄ EASTBOUND I-80

P.I. Sta. = 1149+00.85
Δ = 11°04'08"
D = 1°28'00" Right
R = 3,906.53'
T = 378.53'
L = 754.71'
E = 18.30'

Notes: The embankments shall be constructed to the finish spill-thru slopes and to the level of the subgrades for a minimum distance of 200 feet back of the abutments before excavating or driving piles for the abutments and Pier 4.

All piles except at Pier 4 are 12" ϕ cast-in-place reinforced concrete. All piles at Pier 4 are HP 12x53.

Piles at the abutments shall be driven to a minimum bearing capacity of 35 tons per pile and piles at the piers shall be driven to a minimum bearing capacity of 40 tons per pile.

The estimated average pay length of the piles are as follows:

West Abutment	= 53 feet
Pier 1 and Pier 2	= 23 feet
Pier 3 (North)	= 20 feet
Pier 3 (Middle)	= 23 feet
Pier 3 (South)	= 25 feet
Pier 4	= 20 feet
East Abutment	= 48 feet

For Section A-A thru D-D see Sheet 2/16.

H.N.T.B. BR. NO. 6

HOWARD, NEEDLES, TAMMEN & BERGENDOFF
CONSULTING ENGINEERS
KANSAS CITY CLEVELAND NEW YORK

SITE PLAN

I-80 OVER PENN-CENTRAL RAILROAD, NORFOLK & WESTERN RAILWAY AND MILL CREEK

BR. NO. CUY-80-21 40 — STA. 1153+08.41 TO STA. 1158+17.04

CUYAHOGA COUNTY — OHIO

DRAWN C.A.G.	TRACED D.L.R.	CHECKED D.H.S.	REVIEWED	REVISED
DATE 8-21-67	DATE 8-30-67	DATE 5-22-70	DATE	SHEET 1/16

MICROFILMED
DEC 21 1982

FED. RD. DIVISION	STATE	PROJECT	
2	OHIO		

292
390

CUYAHOGA COUNTY
CUY-80-21.40

Quantity Calculations
Made By CAB Date 8-67
Checked By DHS Date 5-70

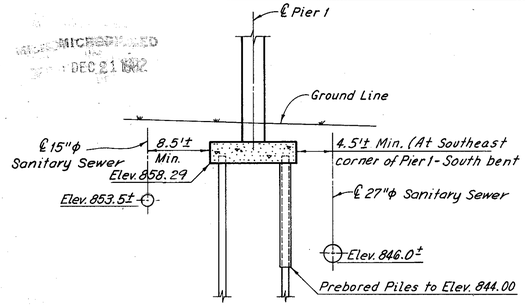

SECTION A-A

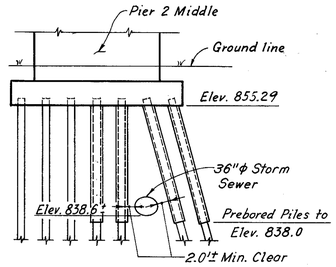

SECTION B-B

South row of piles shown.

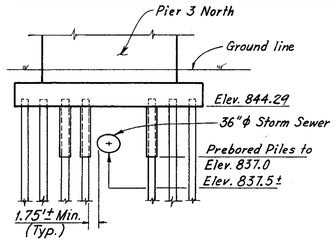

SECTION C-C

South row of piles shown

Notes:
For location of Sections A-A thru D-D see Sheet 7/16.
See Sheet 7/16 for pile locations and batter.

ESTIMATED QUANTITIES									
				H.N.T.B. Bridge No. 6					
ITEM	TOTAL	UNIT	DESCRIPTION	ABUT-MENTS	PIERS	SUPER-STRUCTURE	GENERAL		
503	2,014	Cu. Yd.	Unclassified Excavation	819	1,195				
503	Lump	Lump	Cofferdams, cribs and sheeting		Lump				
505	Lump	Lump	Test Pile				Lump		
506	Lump	Lump	Pile Test Load				Lump		
506	One	Each	Subsequent Pile Test Load				One		
507	12,450	Lin. Ft.	12" φ C.I.P. Reinforced Concrete Piles	5,600	6,850				
507	2,320	Lin. Ft.	Steel Piles, HP 12x53		2,320				
507	533	Lin. Ft.	Prebored Holes		533				
509	981,402	Pounds	Reinforcing Steel	49,075	240,988	691,339			
511	2,321	Cu. Yd.	Class "C" Concrete, Superstructure			2,321			
511	1,184	Cu. Yd.	Class "C" Concrete, Piers Above Footing		1,184				
511	394	Cu. Yd.	Class "C" Concrete, Abutments Above Footing	394					
511	771	Cu. Yd.	Class "C" Concrete, Footings	241	530				
512	72	Lin. Ft.	Premolded Sealing Strip	72					
513	1,997,200	Pounds	Structural Steel, ASTM A 588 Unpainted			1,997,200			
516	72	Sq. Ft.	1" Preformed Expansion Joint Filler	72					
518	2020	Lin. Ft.	Subdrainage for wearing course, as per plan			2,020			
518	238	Cu. Yd.	Porous Backfill	238					
518	298	Lin. Ft.	6" Perforated, Helical C.M.P., 707.01	298					
518	146	Lin. Ft.	6" Non-Perforated Helical C.M.P.						
			including specials, 707.01	146					
518	28	Each	Scuppers Including Supports			28			
601	2,500	Sq. Yd.	Crushed Aggregate Slope Protection				2,500		
601	469	Cu. Yd.	Dumped Rock Fill, Type B				469		
808	2321	Units	Chemical Admixture for Concrete, Type A, B or D			2321			
Spec.	3238	Sq. Yd.	Protective coating of concrete surfaces (see Note A)	364	2874				
404	444	Cu. Yd.	Asphalt concrete (70-85 or AC-20)			444			
Spec.	111	Cu. Yd.	Sand Asphalt (see Proposal Note)			111			
Spec.	8043	Sq. Yd.	Membrane Waterproofing, sheet type (see Proposal Note)			8043			

Note A:

All surfaces of the piers above footings and visible surfaces of the abutments which will be exposed to rust-laden water from corrosion resistant steel during initial weathering shall receive a clear vinyl resin coating to protect against absorptive staining. The coating shall be applied after the concrete has received a final surface finish including any grout cleaning or rubbing and before the erection of the structural steel.

Waterproof membrane curing compound and concrete curing and protective membrane, Supplemental Specification 836, shall not be used on the surfaces coated with clear protective coating. Such surfaces shall be water cured or, at the Contractor's option, two full coats of clear protective coating, each approximately 1-1/3 mils dry film thickness, may be applied to act as a combination curing compound and anti-staining agent.

The agent shall be applied by brush or roller, or by spraying, so that the surface of the concrete is completely and uniformly coated at the rate of one gallon per 200 square feet. This rate of application will provide a dry film thickness of 1-1/3 mils. If running or sagging occurs, the material shall be applied in two or more coats of approximately equal thickness. Not less than 10 minutes shall elapse between applications. When applied by spraying, the coating material may be thinned with not more than 10 percent toluene.

The composition of the clear protective coating shall be as follows:

	Percent by Weight
Vinyl Resin‡	25.0 min.
Methyl Ethyl Ketone Solvent	37.0 min.
Toluene Solvent	37.0 min.

‡The resin shall be a vinyl chloride-acetate copolymer containing 86 percent vinyl chloride and 14 percent vinyl acetate. The viscosity of a 22 percent by weight solution of resin in a solvent, consisting of equal parts of Methyl Isobutyl Ketone and Toluene, shall be 250-500 centipoises at 77° F. The resin shall be Union Carbide's VYHH grade, or approved equal.

Coating Properties:		
Weight per gallon at 77° F,	lb.	7.6 min.
Consistency, Viscosity at 77° F,	KU	60-70
Color		Clear and Colorless
Drying Time, hr.		½ max.

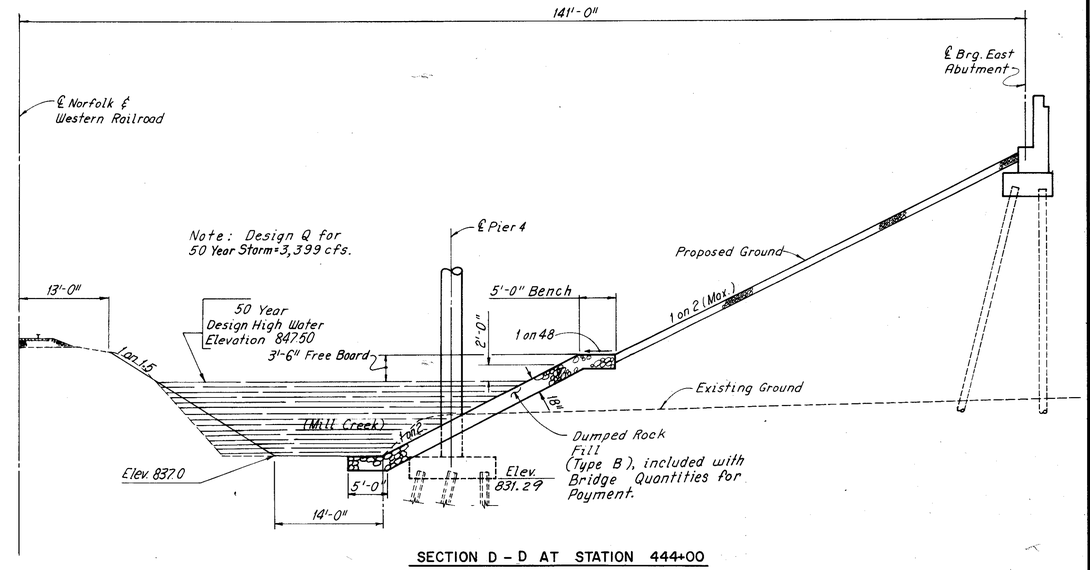

SECTION D - D AT STATION 444+00

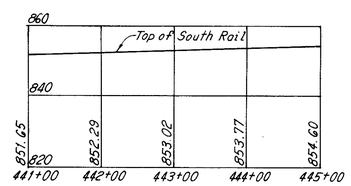

PROFILE NORFOLK & WESTERN RAILWAY

Scale: Horiz. 1" = 100'-0"
Vert. 1" = 20'-0"

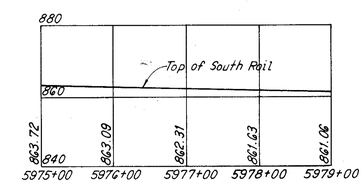

WESTWARD MAIN (FREIGHT)

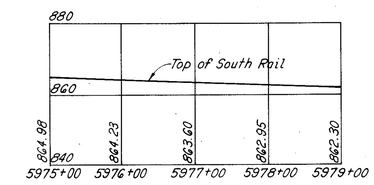

WESTWARD MAIN (PASSENGER)

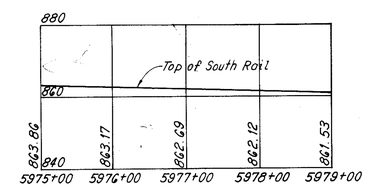

EASTWARD MAIN (FREIGHT)

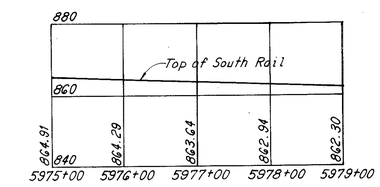

EASTWARD MAIN (PASSENGER)

PROFILES - PENN-CENTRAL RAILROAD

Scale: Horiz. 1" = 100'-0"
Vert. 1" = 20'-0"

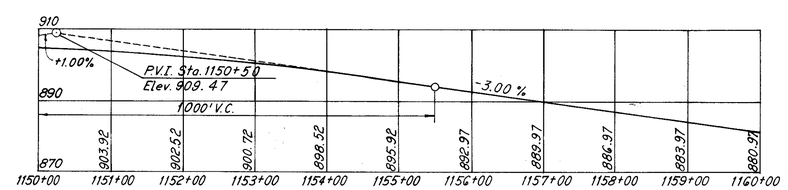

PROFILE I-80

H.N.T.B. BR. NO. 6

HOWARD, NEEDLES, TAMMEN & BERGENDOFF
CONSULTING ENGINEERS
KANSAS CITY CLEVELAND NEW YORK

ESTIMATED QUANTITIES AND PROFILES
I-80 OVER PENN-CENTRAL RAILWAY
NORFOLK & WESTERN RAILWAY
AND MILL CREEK

BR. NO. CUY-80-21.40 STA. 1153+08.41 TO STA. 1158+17.04

CUYAHOGA COUNTY OHIO

DRAWN CAB	TRACED DLA	CHECKED DHS	REVIEWED	REVISED
DATE 8-21-67	DATE 8-30-67	DATE 5-22-70	DATE	SHEET 2/16

MICROFILMED
DEC 21 1982

FED.RD. DIVISION	STATE	PROJECT	
2	OHIO		

CUYAHOGA COUNTY
CUY-80-21.40

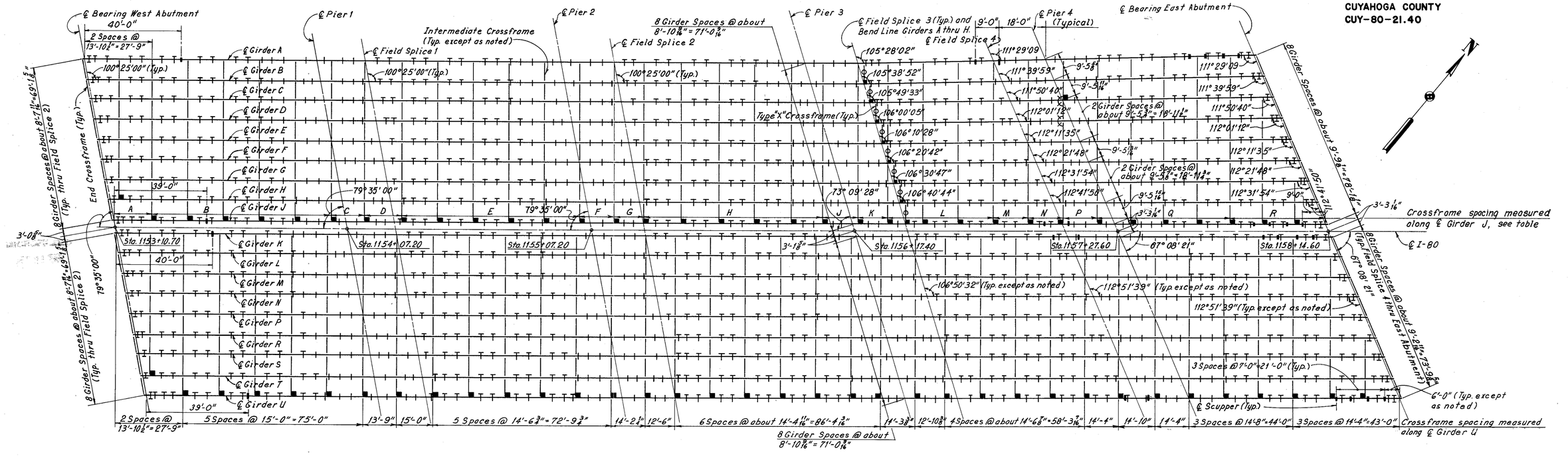

FRAMING PLAN

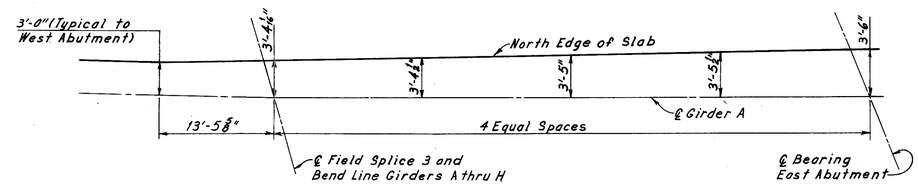

HORIZONTAL OFFSETS TO NORTH EDGE OF SLAB

Note: Offsets are measured perpendicular to Girder.

Note:

Intermediate stiffeners located at crossframes are shown in the "Framing Plan" only if contact bearing with the flange changes adjacent to the crossframe.

FRAMING PLAN LEGEND

- Indicates point at which crossframe changes direction.
- Indicates 90°
- Indicates intermediate stiffeners having contact bearing with the bottom flange.
- Indicates intermediate stiffeners having contact bearing with the top flange.
- Indicates intermediate stiffeners at one-half normal stiffener spacing.

(See Girder Notes Sheet 10/16 for stiffener spacing.)

Intermediate stiffeners shall have contact bearing with top and bottom flanges.
Stiffeners shall be located at all crossframes.

CROSSFRAME SPACING ALONG GIRDER J	
Dimension	Line Description
A	15'-3"
B	5 Spaces @ 15'-0" = 75'-0"
C	13'-9"
D	15'-0"
E	5 Spaces @ 14'-6 3/8" = 72'-9 3/8"
F	14'-2 1/4"
G	12'-6"
H	5 Spaces @ about 15'-0" = 74'-11 3/8"
J	14'-3 3/8"
K	12'-10 3/8"
L	3 Spaces @ about 14'-9 1/4" = 44'-3 3/4"
M	14'-7 3/8"
N	14'-7 3/8"
P	14'-7 1/2"
Q	4 Spaces @ about 13'-9" = 55'-0"
R	3 Spaces @ 13'-1 1/2" = 39'-4 1/2"

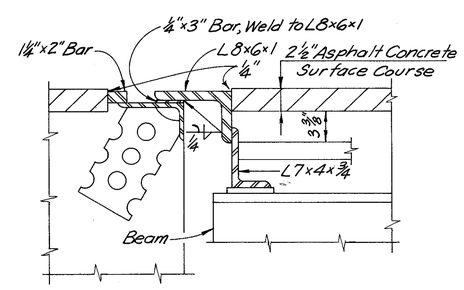

For additional end dam details see Standard Drawing SD-1-69, Sheet 1 of 4.

END DAM DETAILS

Note:

For details of End Crossframes, Roadway End Dams and curb plates see Ohio Standard Drawing SD-1-69, Sheets 1 and 2 of 4.

For Girder Notes see Sheet 10/16.
For details of Intermediate and Type "X" Crossframes and Drainage Details see Sheet CD1 and CD2.

H.N.T.B. BR. NO. 6

HOWARD, NEEDLES, TAMMEN & BERGENDOFF
CONSULTING ENGINEERS
KANSAS CITY CLEVELAND NEW YORK

FRAMING PLAN

I-80 OVER PENN-CENTRAL RAILROAD, NORFOLK & WESTERN RAILWAY AND MILL CREEK

BR. NO. CUY-80-2140 STA. 1153+08.41 TO STA. 1158+17.04

CLEVELAND CUYAHOGA COUNTY OHIO

DRAWN S.M.S.	TRACED J.S.C.	CHECKED	REVIEWED	REVISED
DATE 5-7-70	DATE 5-13-70	DATE 6-30-70	DATE	SHEET 9/16

MICROFILMED
DEC 21 1982

FED.RD. DIVISION	STATE	PROJECT	
2	OHIO		

303
340

CUYAHOGA COUNTY
CUY-80-21.40

Note:
A typical haunch width of 9" shall be used for computing quantity of concrete. However, the haunch width may vary between 6" and 12" provided the slope shall be not more than 1:4 for a haunch less than 9" in width.

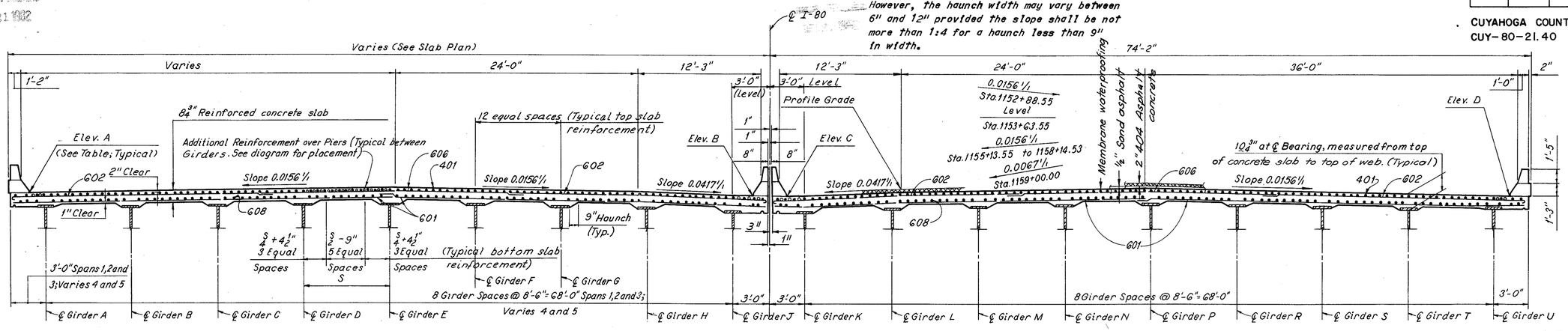

TYPICAL CROSS SECTION

For subdrainage details see sheet CD2

DECK REINFORCING BARS: At the Contractor's option, a portion (not to exceed 25%) of the upper longitudinal bars (S401) in the deck slab may be placed beneath the upper transverse bars for support of the top mat.

Note:
All reinforcing bar marks shall be prefixed S.

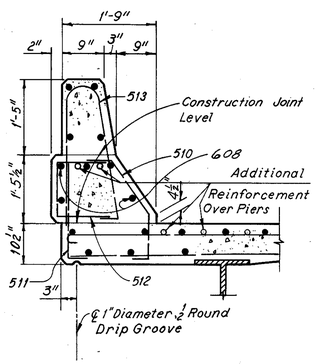

EXTERIOR CURB AND PARAPET DETAIL
(Wearing surface not shown)

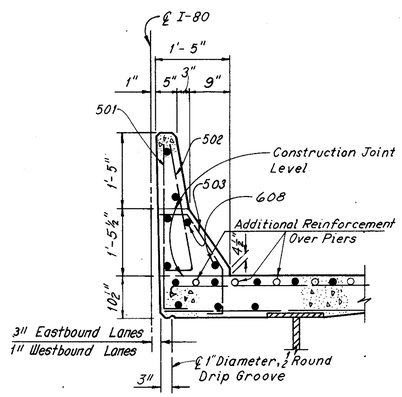

MEDIAN CURB AND PARAPET DETAIL
(Wearing surface not shown)

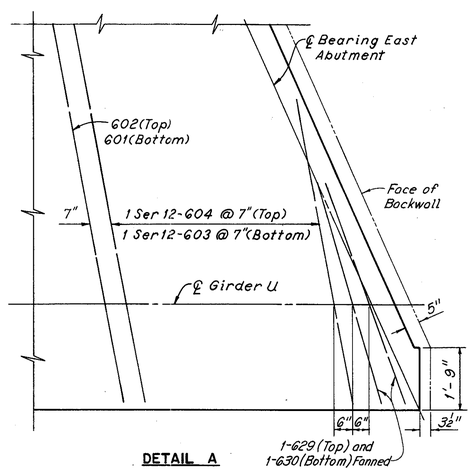

DETAIL A

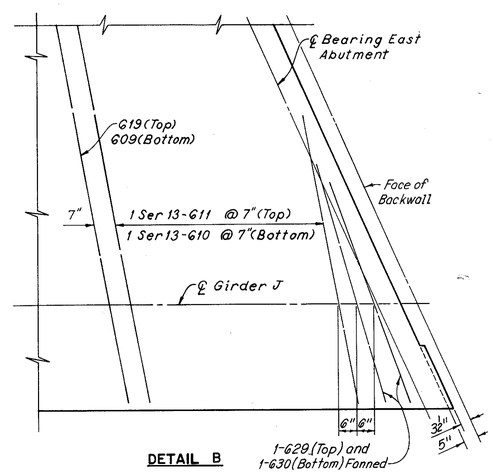

DETAIL B

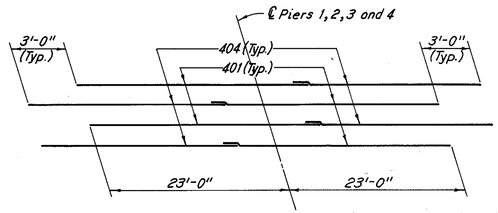

ADDITIONAL REINFORCEMENT OVER PIERS

FACE OF CURB ELEVATIONS - TOP OF CONCRETE SLAB

CURB ELEV.	℄ WEST ABUTMENT	0.20	0.40	0.60	0.80	℄ PIER 1	0.20	0.40	0.60	0.80	℄ PIER 2	0.20	0.40	0.60	0.80	℄ PIER 3	0.20	0.40	0.60	0.80	℄ PIER 4	0.20	0.40	0.60	0.80	℄ EAST ABUTMENT
Elev. A	900.39	900.05	899.67	899.23	898.76	898.28	897.80	897.32	896.81	896.26	895.70	895.16	894.60	893.99	893.35	892.73	892.13	891.55	890.94	890.30	889.68	889.17	888.68	888.16	887.62	887.06
Elev. B	899.88	899.54	899.15	898.70	898.22	897.73	897.23	896.74	896.22	895.66	895.10	894.50	893.89	893.22	892.52	891.83	891.19	890.56	889.90	889.21	888.52	888.01	887.52	887.00	886.47	885.91
Elev. C	899.87	899.52	899.13	898.69	898.21	897.71	897.22	896.72	896.20	895.64	895.08	894.48	893.86	893.19	892.50	891.81	891.17	890.54	889.88	889.19	888.51	888.00	887.50	886.99	886.45	885.90
Elev. D	899.27	899.01	898.70	898.31	897.86	897.40	896.95	896.49	896.00	895.48	894.94	894.30	893.63	892.91	892.15	891.40	890.71	890.04	889.33	888.58	887.83	887.32	886.82	886.30	885.74	885.14

Note:
The elevations shown at the face of curb are those which are required before concrete is placed. Proper allowance has been made for the dead load deflections caused by the weight of the concrete.

H.N.T.B. BR. NO. 6

HOWARD, NEEDLES, TAMMEN & BERGENDOFF
CONSULTING ENGINEERS
KANSAS CITY CLEVELAND NEW YORK

TYPICAL CROSS SECTION

I-80 OVER PENN-CENTRAL RAILROAD, NORFOLK & WESTERN RAILWAY AND MILL CREEK

BR. NO. CUY-80-2140 STA. 1153+08.41 TO STA. 1158+17.04

CLEVELAND CUYAHOGA COUNTY OHIO

DRAWN S.M.S.	TRACED R.C.A.	CHECKED W.C.B.	REVIEWED	REVISED
DATE 4-1-70	DATE 4-9-70	DATE 4-10-70	DATE	SHEET 13/16

MISCELLANEOUS DETAILS

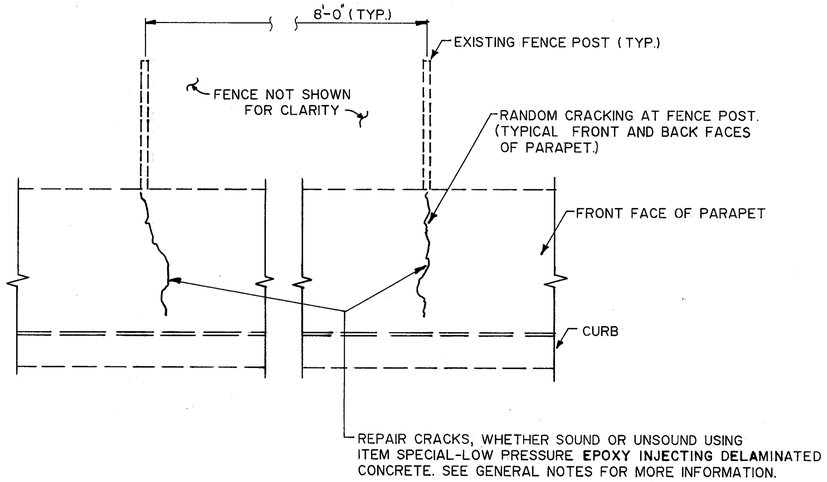

TYPICAL PARAPET CRACK REPAIR (AT FENCE POST)

CUY-480-1955 CUY-480-2016

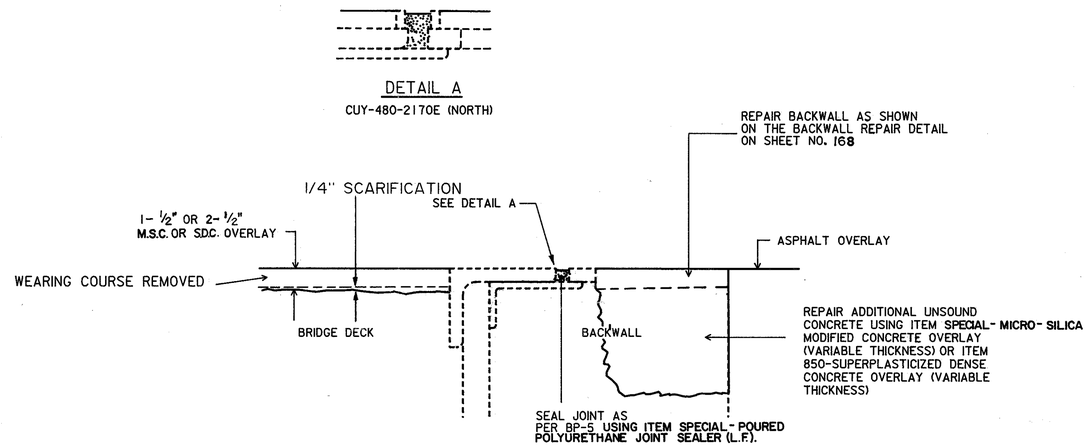

TRANSVERSE SEALING OF STRUCTURAL EXPANSION JOINTS

CUY-480-1955
CUY-480-2016
CUY-480-2071 R
CUY-480-2071 L
CUY-480-2154
CUY-480-2169
CUY-480-2170 E (SOUTH)
CUY-480-2140

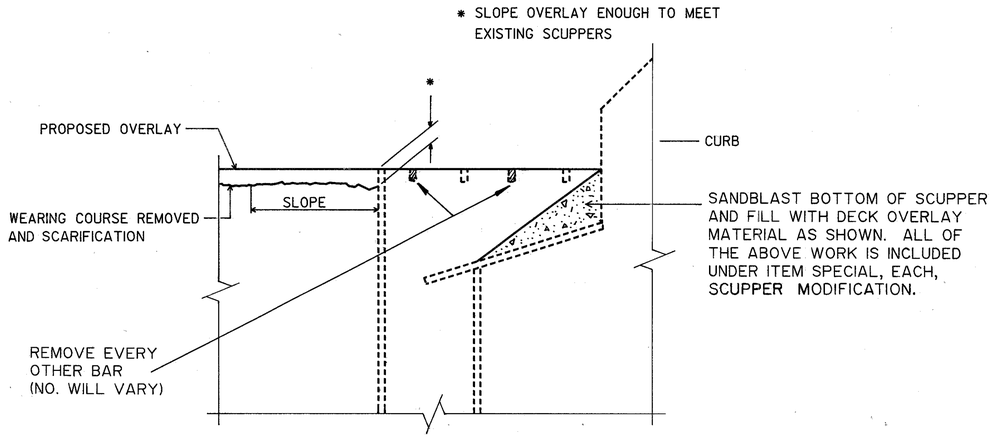

TYPICAL OVERLAY AT SCUPPERS

CUY-480-2016
CUY-480-2071R
CUY-480-2071L
CUY-480-2140
CUY-480-2154
CUY-480-2163 W
CUY-480-2165
CUY-480-2169
CUY-480-2170 E

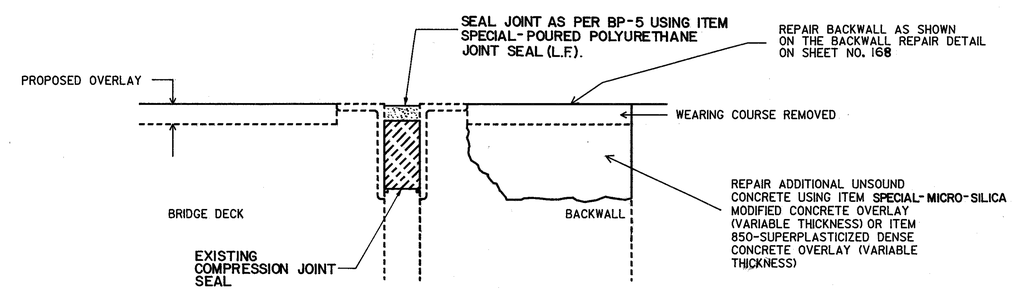

TRANSVERSE SEALING OF STRUCTURAL EXPANSION JOINTS WITH COMPRESSION SEAL

CUY-480-2163 W

STATE OF OHIO
DEPARTMENT OF TRANSPORTATION
DISTRICT 12 LOCATION & DESIGN

MISCELLANEOUS DETAILS

CUYAHOGA COUNTY OHIO

DESIGNED	TRACED	CHECKED	REVIEWED	REVISED
DATE	DATE	DATE	DATE	SHEET 16 / 18

ZFA2:[00323]BRIDGE .DGN;1