STATE OF OHIO
DEPARTMENT OF TRANSPORTATION

D3/D4/D12 ITS

CAMERA ADDITIONS

ASHTABULA, CUYAHOGA, ERIE, LORAIN, MAHONING, MEDINA, PORTAGE, RICHLAND, & SUMMIT COUNTIES

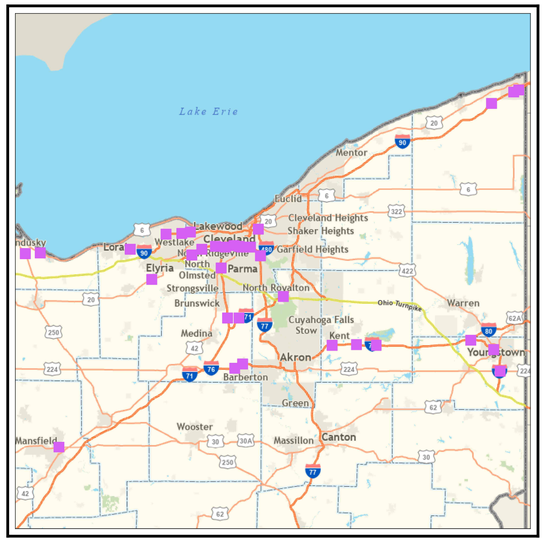

LOCATION MAP

LATITUDE: ° ' " LONGITUDE: ° ' "

PORTION TO BE IMPROVED _____
INTERSTATE HIGHWAY _____
FEDERAL ROUTES _____
STATE ROUTES _____
COUNTY & TOWNSHIP ROADS _____
OTHER ROADS _____

DESIGN DESIGNATION

CURRENT ADT (20) _____
DESIGN YEAR ADT (20) _____
DESIGN HOURLY VOLUME (20) _____
DIRECTIONAL DISTRIBUTION _____
TRUCKS (24 HOUR B&C) _____
DESIGN SPEED _____
LEGAL SPEED _____
DESIGN FUNCTIONAL CLASSIFICATION:

NHS PROJECT _____

DESIGN EXCEPTIONS

NONE

ADA DESIGN WAIVERS

NONE

UNDERGROUND UTILITIES
Contact Two Working Days Before You Dig
OHIO811.org Before You Dig
OHIO811, 8-1-1, or 1-800-362-2764
(Non members must be called directly)

PLAN PREPARED BY:
WSP USA, INC.
2 MIRANOVA PL, SUITE 450
COLUMBUS, OH 43215

INDEX OF SHEETS:

TITLE SHEET	*1*	*I-480 & GRAYTON ROAD*	*35*
ITS SITE MAPS	*2 - 4*	*I-480 & WEST 150TH STREET*	*36*
GENERAL NOTES	*5*	*I-480 & RIDGE ROAD*	*37*
MOT	*6 - 7*	*I-480 & SR 176*	*38*
GENERAL SUMMARY	*8*	*I-480 & GREAT NORTHERN BOULEVARD*	*39*
ITS NOTES	*9-11*	*I-480 & STEARNS ROAD*	*40*
ITS SUBSUMMARY	*12-13*	*I-77 SOUTH OF ROCKSIDE ROAD*	*41*
ELECTRICAL DETAILS	*14-22*	*I-490 & EAST 55TH STREET*	*42*
ITS LEGEND	*23*	*I-71 & US 42/PEARL ROAD*	*43*
US 250 & SR 2	*24*	*I-90 & CROCKER ROAD*	*44*
SR 2/SR 6 & RYE BEACH ROAD	*25*	*I-271 & BOSTON MILLS ROAD*	*45*
SR 2 & SR 58	*26*	*I-76 & SR 43*	*46*
US 20 & SR 301	*27*	*I-76 & SR 44*	*47*
I-90 & SR 611	*28*	*I-76 & SR 14*	*48*
I-90 & NAGEL ROAD	*29*	*I-680 & I-80/SR 11*	*49*
I-71 & SR 3	*30*	*I-680 & US 224*	*50*
I-76 & SR 57	*31*	*I-680 & US 62 SPLIT*	*51*
I-76 & SR 94	*32*	*I-90 & SR 193*	*52*
I-271 & SR 94	*33*	*I-90 & SR 7*	*53*
US 30 & SR 13	*34*	*I-90 & WEST BOUND REST AREA MM 241*	*54*
		I-480 & WARRENSVILLE CENTER RD	*55*

FEDERAL PROJECT

NON-FEDERAL

PROJECT DESCRIPTION

THIS PROJECT INCLUDES THE CONSTRUCTION OF CONCRETE CCTV CAMERA POLES INCLUDING POWER SERVICE AND CONDUIT AT VARIOUS SITES IN ODOT DISTRICTS 3, 4, AND 12.

RAILROAD INVOLVEMENT

NONE

EARTH DISTURBED AREAS

PROJECT EARTH DISTURBED AREA:	*N/A*
ESTIMATED CONTRACTOR EARTH DISTURBED AREA:	*N/A*
NOTICE OF INTENT EARTH DISTURBED AREA:	*N/A*

LIMITED ACCESS

THIS IMPROVEMENT IS ESPECIALLY DESIGNED FOR THROUGH TRAFFIC AND HAS BEEN DECLARED A LIMITED ACCESS HIGHWAY OR FREEWAY BY ACTION OF THE DIRECTOR IN ACCORDANCE WITH THE PROVISIONS OF SECTION 5511.02 OF THE OHIO REVISED CODE.

2023 SPECIFICATIONS

THE STANDARD SPECIFICATIONS OF THE STATE OF OHIO, DEPARTMENT OF TRANSPORTATION, INCLUDING SUPPLEMENTAL SPECIFICATIONS LISTED IN THE PLANS, CHANGES LISTED IN THE PROPOSAL, AND THE SUPPLEMENTAL SPECIFICATION 800 VERSION INDICATED ON THE PROPOSAL SHALL GOVERN THIS IMPROVEMENT.

I HEREBY APPROVE THESE PLANS AND DECLARE THAT THE MAKING OF THIS IMPROVEMENT WILL NOT REQUIRE THE CLOSING TO TRAFFIC OF THE HIGHWAY AND THAT

PROVISIONS FOR THE MAINTENANCE AND SAFETY OF TRAFFIC WILL BE AS SET FORTH ON THE PLANS AND ESTIMATES.

Robert Weaver
District 3, Deputy Director

Arthur G. Noirot, P.E
District 4, Deputy Director

John Picuri, P.E, P.S.
District 12, Deputy Director

Jack Marchbanks, PhD
Director, Department of Transportation

ENGINEER'S SEAL

STATE OF OHIO
BRANDON TOTMAN
E-86172
REGISTERED
PROFESSIONAL ENGINEER

Digitally signed by Brandon.Totman@wsp.com
Date: 2024.03.27 12:11:59-04'00'

STANDARD CONSTRUCTION DRAWINGS

HL-30.11	*7/21/23*	*MT-95.30*	*7/19/19*	*ITS-10.10*	*1/20/23*	*TC-83.20*	*7/15/22*		
HL-30.21	*4/17/20*	*MT-95.31*	*7/19/19*	*ITS-10.11*	*1/20/23*				
HL-30.22	*1/15/21*	*MT-101.90*	*7/17/20*	*ITS-12.10*	*7/15/22*				
HL-40.10	*7/21/23*			*ITS-13.10*	*1/15/21*				
HL-40.20	*7/21/23*			*ITS-14.10*	*4/21/23*				
HL-50.11	*1/16/15*			*ITS-14.11*	*1/20/23*				
				ITS-15.10	*1/20/23*				
F-1.1	*7/19/13*			*ITS-15.11*	*1/20/23*				
				ITS-18.00	*7/16/21*				
				ITS-50.10	*7/15/22*				
				ITS-50.11	*4/21/23*				
				ITS-50.12	*7/15/22*				

SUPPLEMENTAL SPECIFICATIONS		*SPECIAL PROVISIONS*
800	*10/20/23*	
804	*1/20/23*	
809	*10/20/23*	
821	*4/20/12*	
832	*7/21/23*	
904	*7/15/22*	
909	*10/20/23*	
921	*4/20/12*	

1 3-27-24 I-480 & WARRENSVILLE CENTER RD SITE

TITLE SHEET

DESIGN AGENCY
WSP USA, Inc.
2 Miranova Pl,
Suite 450
Columbus, OH 43215

DESIGNER BPT
REVIEWER NWA 03/26/24
PROJECT ID 118895
SHEET P.1 TOTAL 55

D3/D4/D12 ITS CAMERA ADDITIONS

MODEL: Sheet_SurvFt PAPERSIZE: 34x22 (in.) DATE: 3/26/2024 TIME: 3:35:16 PM USER: USBT726326
pw:\\wsp-us-pw.bentley.com:wsp-us-pw-02\Documents\OH - OHIO Projects\118895400-Engineering\Roadway\Sheets\118895_GT001.dgn

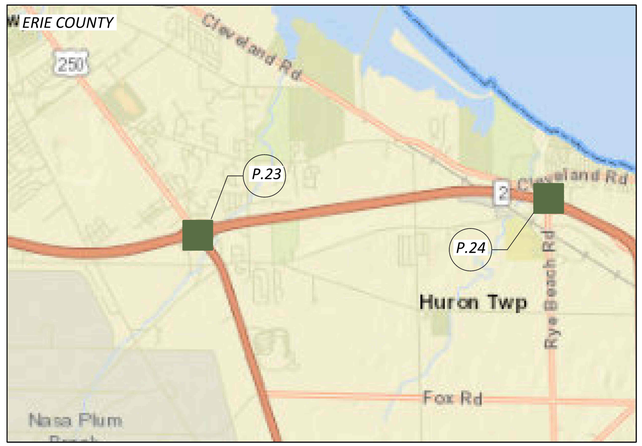

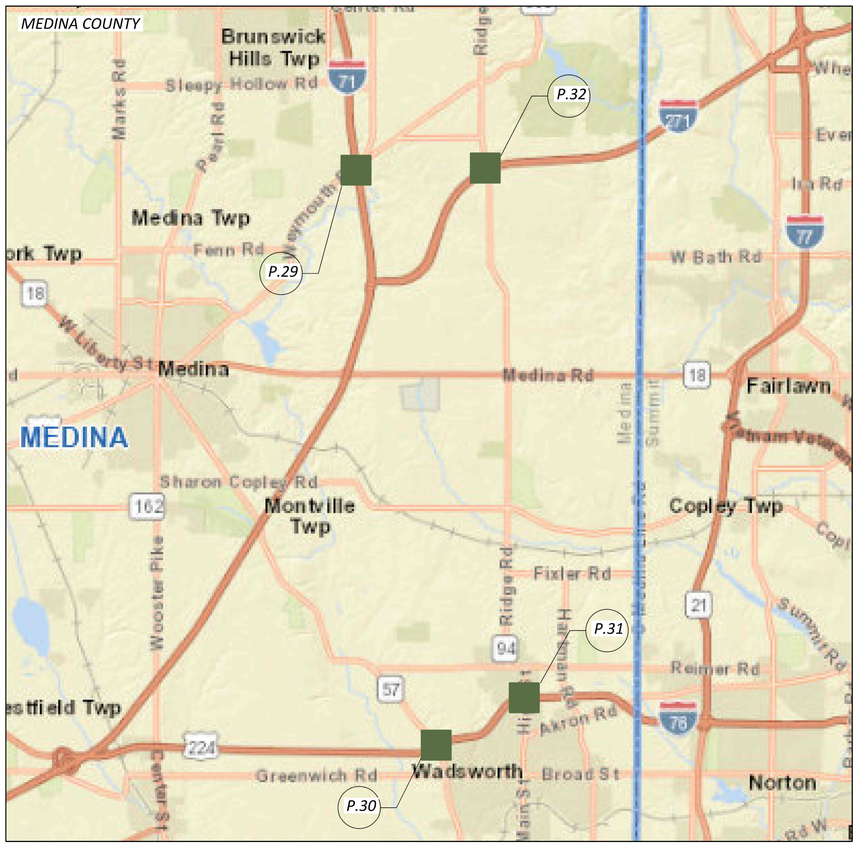

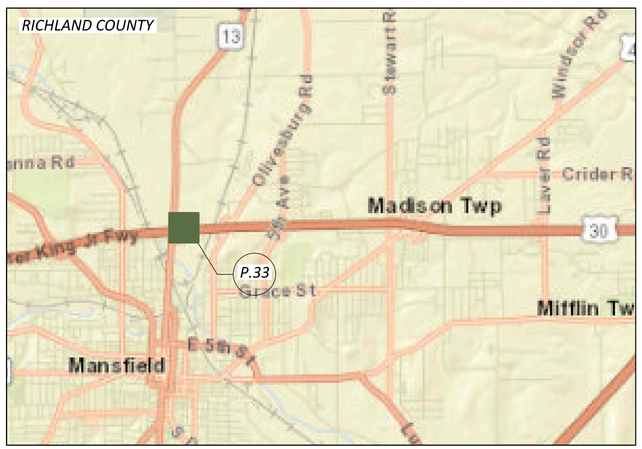

D3/D4/D12 ITS CAMERA ADDITIONS

DISTRICT 3 ITS SITES

MODEL: Sheet_SurvFt PAPERSIZE: 34x22 (in.) DATE: 3/26/2024 TIME: 3:35:34 PM USER: USBT726326
pw:\\wsp-us-pw.bentley.com:wsp-us-pw-02\Documents\OH - OHIO Projects\118895\400-Engineering\Signals\Sheets\118895_CM002.dgn

DESIGN AGENCY
WSP USA, Inc.
2 Miranova Pl,
Suite 450
Columbus, OH 43215

DESIGNER ELK
REVIEWER BPT 02/02/24
PROJECT ID 118895
SHEET P.2 TOTAL 55

D3/D4/D12 ITS CAMERA ADDITIONS

DISTRICT 4 ITS SITES

MODEL: Sheet_SurvFt PAPERSIZE: 34x22 (in.) DATE: 3/26/2024 TIME: 3:36:04 PM USER: USBT726326
pw:\\wsp-us-pw.bentley.com:wsp-us-pw-02\Documents\OH - OHIO Projects\118895\400-Engineering\Signals\Sheets\118895_CM003.dgn

DESIGN AGENCY
WSP USA, Inc.
2 Miranova Pl,
Suite 450
Columbus, OH 43215

DESIGNER NWA

REVIEWER BPT 02/02/24

PROJECT ID 118895

SHEET P.3 TOTAL 55

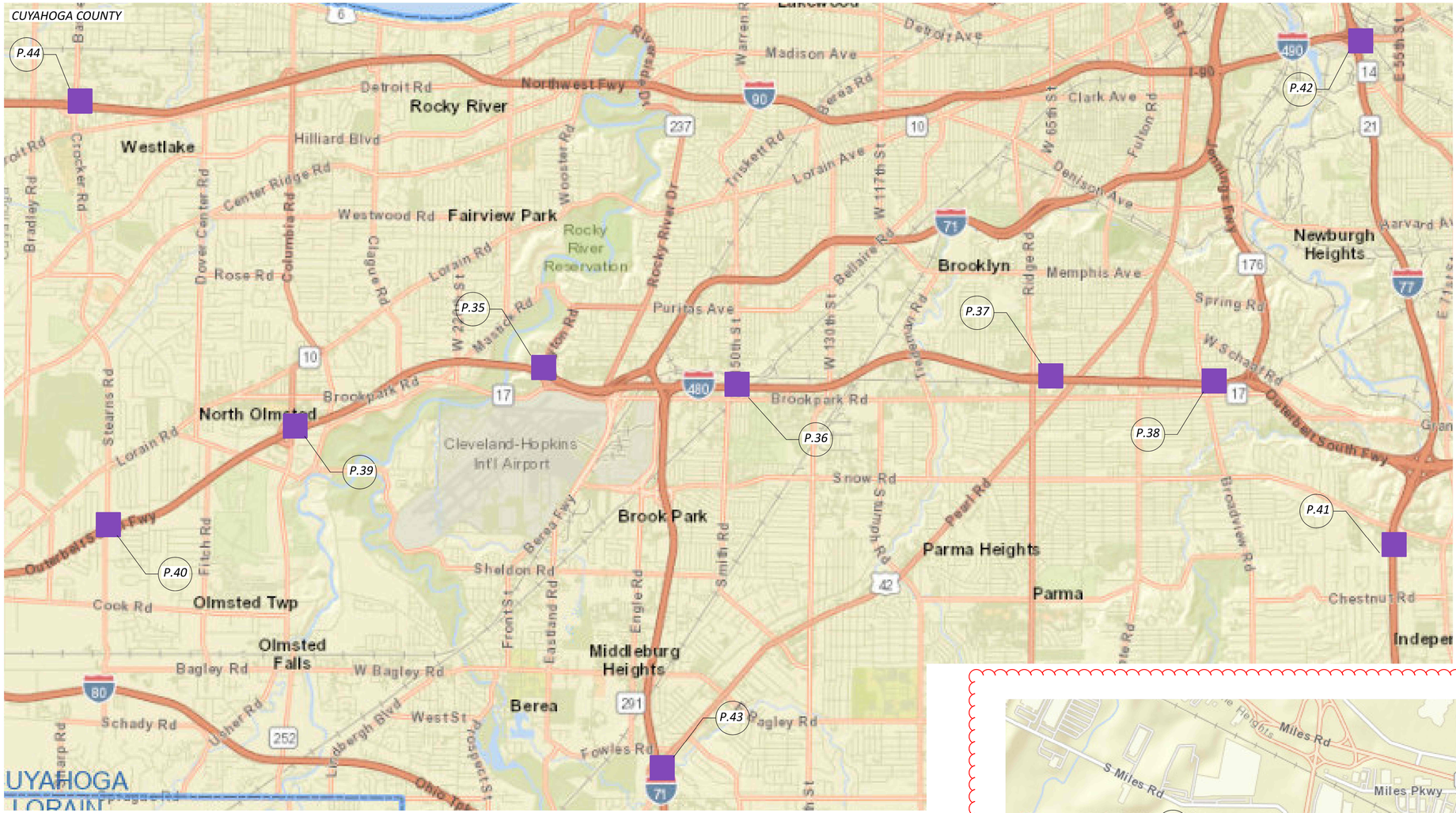

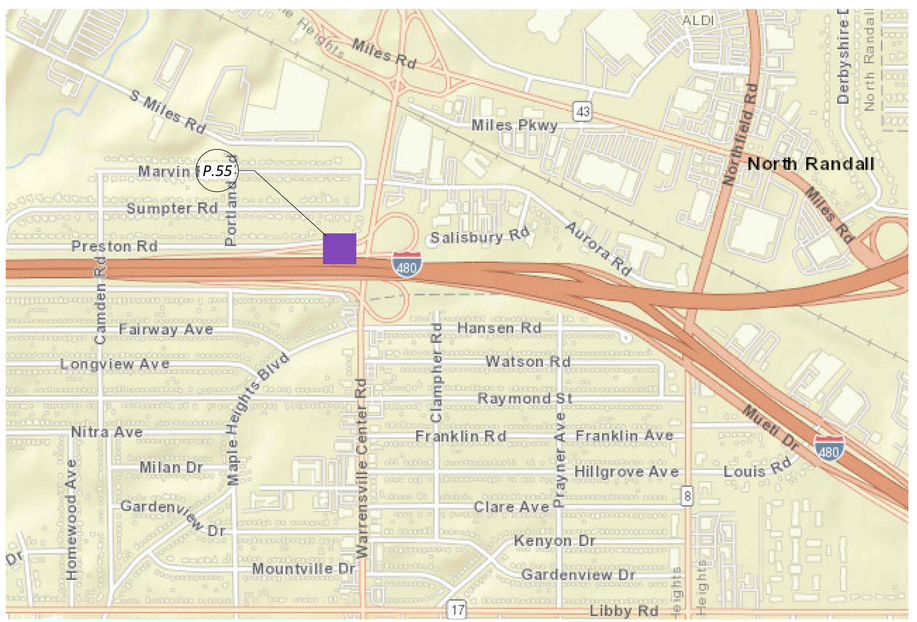

DISTRICT 12 ITS SITES

D3/D4/D12 ITS CAMERA ADDITIONS

MODEL: Sheet_SurvFt PAPERSIZE: 34x22 (in.) DATE: 3/26/2024 TIME: 3:36:31 PM USER: USBT7226326
pw:\\wsp-us-pw.bentley.com:wsp-us-pw-02\Documents\OH - OHIO Projects\118895400-Engineering\Signals\Sheets\118895_CM004.dgn

DESIGN AGENCY

WSP USA, Inc.
2 Miranova Pl,
Suite 450
Columbus, OH 43215

DESIGNER ELK

REVIEWER BPT 03/26/24

PROJECT ID 118895

SHEET P.4 TOTAL 55

WORK AREAS
THE WORK AREAS SHOWN IN THESE PLANS ARE SPREAD OUT IN DIFFERENT AREAS OF THE STATE. THE WORK AREAS SHOWN ON THESE PLANS ARE FOR PHYSICAL CONSTRUCTION ONLY. THE INSTALLATION AND OPERATION OF ALL WORK ZONE TRAFFIC CONTROL AND WORK ZONE TRAFFIC CONSTROL DEVICES REQUIRED BY THESE PLANS SHALL BE PROVIDED BY THE CONTRACTOR WHETHERE INSIDE OR OUTSIDE OF THESE WORK AREAS.

GENERAL
THE CONTRATOR SHALL INSTALL TRAFFIC SURVEILLANCE CAMERAS AT THE LOCATIONS SPECIFIED IN THE PLANS UNLESS CHANGES ARE APPROVED BY THE PROJECT ENGINEER.

PROTECTION OF RIGHT-OF-WAY LANDSCAPING
PRIOR TO BEGINNING WORK, THE CONTRACTOR, THE PROJECT ENGINEER, AND A REPRESENTATIVE OF THE MAINTAINING AGENCY WILL REVIEW AND RECORD ALL LANDSCAPING ITEMS WITHIN THE RIGHT-OF-WAY (BOTH WITHIN AND OUTSIDE THE CONSTRUCTION LIMITS). A RECORD OF THIS REVIEW WILL BE KEPT IN THE PROJECT ENGINEER'S FILES. PRIOR TO FINAL ACCEPTANCE, A FINAL REVIEW OF LANDSCAPING ITEMS WILL BE MADE.

CONSTRICT ALL ACTIVITIES, EQUIPMENT STORAGE, AND STAGING TO WITHIN THE CONSTRUCTION LIMITS. UNLESS OTHERWISE IDENTIFIED IN THE PLANS OR PROPOSAL, THE CONSTRUCTION LIMITS ARE IDENTIFIED AS 30 FEET FROM THE EDGE OF PAVEMENT.

SUBMIT A WRITTEN REQUEST TO THE PROJECT ENGINEER TO USE ANY AREA OUTSIDE THESE LIMITS. THE DOCUMENT SUBMITTED MUST CLEARLY IDENTIFY THE AREA AND EXPLAIN THE PROPOSED USE AND RESTORATION OF THE AREA.
USE OF THESE AREAS FOR DISPOSAL OF WASTE MATERIAL AND CONSTRUCTION DEBRIS, EXCAVATION OF BORROW MATERIAL AND PLACEMENT OF PORTABLE PLANTS IS PROHIBITED. THE REQUEST MUST BE APPROVED, IN WRITING, BEFORE THE CONTRACTOR HAS PERMISSION TO USE THE AREA.

ANY ITEMS DAMAGED BEYOND THE CONSTRUCTION LIMITS, AS DEFINED ABOVE, WILL BE REPLACED IN KIND OR AS APPROVED BY THE PROJECT ENGINEER.

CLEARING AND GRUBBING
ALTHOUGH THERE ARE NO TREES OR STUMPS SPECIFICALLY MARKED FOR REMOVAL WITHIN THE LIMITS OF THE PROJECT, A LUMP SUM QUANTITY IS INCLUDED IN THE GENERAL SUMMARY FOR ITEM 201, CLEARING AND GRUBBING. CLEARING AND GRUBBING SHOULD ONLY BE PERFORMED IN THE AREAS WHERE CALLED FOR IN THE PLANS UNLESSS OTHERWISE APPROVED BY THE ENGINEER. ALL PROVISIONS AS SET FORTH IN THE SPECIFICATIONS UNDER THIS ITEM ARE INCLUDED IN THE LUMP SUM PRICE BID FOR ITEM 201, CLEARING AND GRUBBING.

ITEM 204 - PROOF ROLLING
THE FOLLOWING QUANTITY IS PROVIDED IN THE GENERAL SUMMARY TO ADDRESS LOCATIONS REQUIRING PROOF ROLLING.

ITEM 204 - PROOF ROLLING 8 HOURS.

ITEM 832 - EROSION CONTROL
THE FOLLOWING QUANTITY IS PROVIDED IN THE GENERAL SUMMARY TO ADDRESS EROSION CONTROL.

ITEM 832 - EROSION CONTROL 11,760 EACH.

UTILITIES
THE CONTRACTOR SHALL GIVE NOTICE OF INTENT TO CONSTRUCT THE OHIO UTILITIES PROTECTION SERVICE (OUPS), AND ANY NON-MEMBERS OF A REGISTERED PROTECTION SERVICE AT LEAST TWO (2) WORKING DAYS BEFORE CONSTRUCTION AND IN ACCORDANCE WITH SECTION 153.64 OF THE OHIO REVISED CODE.

THE ODOT CONTRACTOR WILL TAKE ALL UTILITY MARKINGS INTO CONSIDERATION PRIOR TO INSTALLING ANY NEW EQUIPMENT TO AVOID ANY CONFLICTS. IT IS ODOT'S EXPECTATION THAT A MODIFICATION OF PLACEMENT OF NEW EQUIPMENT BE MADE TO ACCOMMODATE EXISTING UTILITIES SO THEY ARE NOT IMPACTED, IF POSSIBLE. IF THERE IS A CONFLIC THAT CANNOT BE AVOIDED, THE ODOT CONTRACTOR IS REQUIRED TO CONTACT THE IMPACATED UTILITY PRIOR TO INSTALLING THE EQUIPMENT AND FURTHER REVIEW OPTIONS WITH HTE IMPACTED UTILITY OWNER FOR RESOLUTION.

IT IS REQUIRED OF THE ODOT CONTRACT TO SCHEDULE A FIELD REVIEW A MINIMUM OF TWO (2) WEEKS PRIOR TO EQUIPMENT INSTALLATION TO INSURE ALL UTILITIES ARE CLEAR AND ALL CURRENT LOCATIONS ARE KNOWN. IF ANY UTILITY ISSUES ARISE IT IS THE RESPONSIBILITY OF THE ODOT CONTRACTOR TO WORK OUT AN ACCEPTABLE SOLUTION WITH THE UTILITY AND ODOT TO KEEP THE PROJECT MOVING FORWARD.

OHIO UTILITY PROTECTION SERVICE (OUPS): 1-800-362-2764
NON-MEMBERS MUST BE CALLED DIRECTLY, INCLUDING ODOT DISTRICTS WHO CAN BE CONTACTED THROUGH THE PROJECT ENGINEER.

FIRST ENERGY, REGIONAL EXTERNAL AFFAIRS
NIKETAS KATSAROS
440-824-3211
NKATSAROS@FIRSTENERGYCORP.COM
6326 LAKE AVENUE
ELYRIA, OH 44035

FIRST ENERGY
JOHN ZASSICK
440-546-8706
JMZASSICK@FIRSTENERGYCORP.COM
6896 MILLER RD., SUITE 101
BRECKSVILLE, OH 44141

FIRST ENERGY, MANAGER, ENGINEERING SERVICES
JEFFERY HEURING, PE
440-853-3309
JHEURING@FIRSTENERGYCORP.COM
6326 LAKE AVENUE
ELYRIA, OH 44035

FIRST ENERGY, MANAGER, ENGINEERING SERVICES
BRINTON MCINTOSH
330-835-4202
BMCINTOSH@FIRSTENERGYCORP.COM
6326 LAKE AVENUE
ELYRIA, OH 44035

CITY OF AMHERST, UTILITIES
440-988-2083
480 PARK AVENUE, LOWER LEVEL
AMHERST, OH 44001

CITY OF WADSWORTH PUBLIC POWER
330-335-2700
365 BROAD STREET
WADSWORTH, OH 44281

CITY OF CLEVELAND
DIVISION OF CLEVELAND PUBLIC POWER (MELP)
CHRIOSTOPHER M HIRZEL
216-563-7212
CHIRZEL@CPP.ORG
1300 LAKESIDE AVE, ROOM 152
CLEVELAND, OH 44114

SEEDING AND MULCHING
THE FOLLOWING QUANTITIES ARE PROVIDED TO PROMOTE GROWTH AND CARE OF PERMANENT SEEDED AREAS:

659, SEEDING AND MULCHING __7000__ SQ. YD.
659, COMMERCIAL FERTILIZER __1__ TON
659, WATER __40__ M. GAL.

SEEDING AND MULCHING SHALL BE APPLIED TO ALL AREAS OF EXPOSED SOIL BETWEEN THE RIGHT-OF-WAY LINES, AND WITHIN THE CONSTRUCTION LIMITS FOR AREAS OUTSIDE THE RIGHT-OF-WAY LINES COVERED BY WORK AGREEMENT OR SLOPE EASEMENT. QUANTITY CALCULATIONS FOR SEEDING AND MULCHING ARE BASED ON THESE LIMITS.

AIRWAY/HIGHWAY CLEARANCE FOR AIRPORTS AND HELIPORTS
THIS PROJECT HAS BEEN IDENTIFIED AS BEING WITHIN THE INFLUENCE AREA OF A PUBLIC USE AIRPORT OR HELIPORT. NO TEMPORARY STRUCTURES OR CONSTRUCTION EQUIPMENT AT MAXIMUM OPERATING HEIGHT SHALL EXCEED A HEIGHT OF 100 FT. IF ANY TEMPORARY STRUCTURES OR CONSTRUCTION EQUIPMENT WILL EXCEED THIS HEIGHT, FURTHER COORDINATION WITH THE FEDERAL AVIATION ADMINISTRATION (FAA), AND THE ODOT OFFICE OF AVIATION, WILL BE NECESSARY PRIOR TO ERECTING SUCH TEMPORARY STRUCTURES OR OPERATING SUCH EQUIPMENT ON THE PROJECT. THE CONTRACTOR WILL BE REQUIRED TO FILE A NEW FAA FORM 7460-1, ADVISING THE FAA THAT THE AERONAUTICAL STUDY NO. (ASN) FOR THE APPROPRIATE SITE LOCATION BELOW IS BEING RESUBMITTED AND THAT AN ALTERATION TO THE ORIGINAL SUBMISSION IS REQUESTED.

NOTIFY THE ODOT OFFICE OF AVIATION WHEN RESUBMITTING FAA FORM 7460-1. NO TEMPORARY STRUCTURES OR CONSTRUCTION EQUIPMENT SHALL EXCEED THE PERMISSIBLE HEIGHT, UNTIL A COPY OF THE FAA APPROVAL AND THE ODOT OFFICE OF AVIATION PERMIT HAS BEEN FURNISHED TO THE PROJECT ENGINEER.

WITHIN 2 DAYS AFTER INSTALLATION OF A CAMERA POLE AT EACH OF THE LOCATIONS ABOVE, THE CONTRACTOR SHALL SEND WRITTEN NOTIFICATION VIA EMAIL TO THE PROJECT ENGINEER AND ODOT TRAFFIC OPERATIONS, TO INFORM THE CONSTRUCTION HAS REACHED ITS GREATEST HEIGHT AND FAA FORM 7460-2, PART 2, IS REQUIRED TO BE SUBMITTED TO THE FAA. IF ODOT IS UNABLE TO E-FILE/SUBMIT THIS FORM, THE CONTRACTOR SHALL SUBMIT FORM 7460-2 WITHIN 5 DAYS AFTER INSTALLATION OF THE CAMERA POLE.

ENDANGERED BAT SPECIES HABITAT REMOVAL
THE PROJECT IS LOCATED WITHIN THE KNOWN HABITAT RANGES OF THE FEDERALLY ENDANGERED NORTHERN LONG-EARED AND INDIANA BAT, AND THE STATE ENDANGERED LITTLE BROWN AND TRICOLORED BATS. NO TREES SHALL BE REMOVED UNDER THIS PROJECT FROM APRIL 1 THROUGH SEPTEMBER 30. ALL NECESSARY TREE REMOVAL SHALL OCCUR FROM OCTOBER 1 THROUGH MARCH 31. THIS REQUIREMENT IS NECESSARY TO AVOID AND MINIMIZE IMPACTS TO THESE SPECIES AS REQUIRED BY THE ENDANGERED SPECIES ACT AND ORC 1531.25. FOR THE PURPOSES OF THIS NOTE, A TREE IS DEFINED AS A LIVE, DYING, OR DEAD WOODY PLANT, WITH A TRUNK THREE INCHES OR GREATER IN DIAMETER AT A HEIGHT OF 4.5 FEET ABOVE THE GROUND SURFACE, AND WITH A MINIMUM HEIGHT OF 13 FEET.

ACCESS DRIVE

AGGREGATE ACCESS DRIVES WILL BE UTILIZED ON VARIOUS SITES TO ACCESS CCTV SITE. SEE PLAN SHEETS FOR ADDITIONAL DETAILS. SEE TYPICAL BELOW FOR BUILDUP.

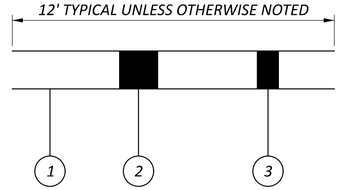

AGGREGATE
ACCESS DRIVEWAY

LEGEND

1 ITEM 204 - SUBGRADE COMPACTION
2 ITEM 304 - 8" AGGREGATE BASE
3 ITEM 203 - EXCAVATION

GENERAL NOTES

D3/D4/D12 ITS CAMERA ADDITIONS

MODEL: Sheet_SurvFl PAPERSIZE: 34x22 (in.) DATE: 3/26/2024 TIME: 3:36:51 PM USER: USBT726326
pw:\\wsp-us-pw.bentley.com:wsp-us-pw-02\Documents\OH - OHIO Projects\118895\400-Engineering\Roadway\Sheets\118895_GN001.dgn

DESIGN AGENCY
WSP USA, Inc.
2 Miranova Pl,
Suite 450
Columbus, OH 43215

DESIGNER REM
REVIEWER BPT 02/02/24
PROJECT ID 118895
SHEET P.5 TOTAL 55

ITEM 614, MAINTAINING TRAFFIC

LENGTH AND DURATION OF LANE CLOSUES AND RESTRICTIONS SHALL BE AT THE APPROVAL OF THE ENGINEER. IT IS THE INTENT TO MINIMIZE THE IMPACT TO THE TRAVELING PUBLIC. LANE CLOSURES OR RESTRICTIONS OVER SEGMENTS OF THE PROJECT IN WHICH NO WORK IS ANTICIPATED WITHIN A REASONABLE TIME FRAME, AS DETERMINED BY THE ENGINEER, SHALL NOT BE PERMITTED. THE LEVEL OF UTILIZATION OF MAINTENANCE OF TRAFFIC DEVICES SHALL BE COMMENSURATE WITH THE WORK IN PROGRESS.

ALL WORK AND TRAFFIC CONTROL DEVICES SHALL BE IN ACCORDANCE WITH C&MS 614 AND OTHER APPLICABLE PORTIONS OF THE SPECIFICATIONS, AS WELL AS THE OHIO MANUAL OF UNIFORM TRAFFIC CONTROL DEVICES. PAYMENT FOR ALL LABOR, EQUIPMENT AND MATERIALS SHALL BE INCLUDED IN THE LUMP SUM CONTRACT PRICE FOR ITEM 614, MAINTAINING TRAFFIC, UNLESS SEPARATELY ITEMIZED IN THE PLAN.

ITEM 614, MAINTAINING TRAFFIC (NOTICE OF CLOSURE SIGN)

IF REQUIRED NOTICE OF CLOSURE SIGNS (W20-H13) SHALL BE ERECTED BY THE CONTRACTOR PRIOR TO THE SCHEDULED ROAD OR RAMP CLOSURE IN ACCORDANCE WITH THE NOTICE OF CLOSURE TIME TABLE BELOW. AT THE APPROVAL OF THE ENGINEER, PORTABLE CHANGEABLE MESSAGE SIGNS MAY BE USED IN LIEU OF THE STANDARD FLATSHEET SIGN FOR CLOSURE DURATIONS OF LESS THAN 1 WEEK.

THE SIGNS SHALL BE ERECTED ON THE RIGHT-HAND SIDE OF THE ROAD/RAMP FACING TRAFFIC. THEY SHALL BE PLACED SO AS NOT TO INTERFERE WITH THE VISIBILITY OF ANY OTHER TRAFFIC CONTROL SIGNS. ON ROADWAYS, THEY SHOULD BE ERECTED AT OR NEAR THE POINT OF CLOSURE. THE SIGNS MAY BE ERECTED ANYWHERE ON RAMPS AS LONG AS THEY ARE VISIBLE TO THE MOTORISTS USING THE RAMP. ON ENTRANCE RAMPS, THE SIGN SHALL BE ERECTED WELL IN ADVANCE OF THE MERGE AREA TO AVOID DISTRACTING MOTORISTS.

NOTICE OF CLOSURE SIGN TIME TABLE

ITEM	*DURATION OF CLOSURE*	*SIGN DISPLAYED TO THE PUBLIC*
RAMP &	*>=2 WEEKS*	*14 CALENDAR DAYS PRIOR TO CLOSURE*
ROAD	*> 12 HOURS & < 2 WEEKS*	*7 CALENDAR DAYS PRIOR TO CLOSURE*
CLOSURES <= 12 HOURS		*2 BUSINESS DAYS PRIOR TO CLOSURE*

THE SIGN SHALL DISPLAY THE DATE OF THE CLOSURE IN MMM-DD FORMAT AND THE NUMBER OF DAYS OF THE CLOSURE. THE LAST LINE OF THE W20-H13 SIGN LISTS A PHONE NUMBER WHICH A MOTORIST MAY CALL FOR ADDITIONAL INFORMATION. THIS IS TO BE A SPECIFIC OFFICE WITHIN THE DISTRICT RATHER THAN THE GENERAL SWITCHBOARD NUMBER.

DUST CONTROL

THE CONTRACTOR SHALL FURNISH AND APPLY WATER FOR DUST CONTROL AS DIRECTED BY THE ENGINEER. THE FOLLOWING ESTIMATED QUANTITIES HAVE BEEN INCLUDED FOR DUST CONTROL PURPOSES:

ITEM 616, WATER 1.0 M. GAL.

FLOODLIGHTING

FLOODLIGHTING OF THE WORK SITE FOR OPERATIONS CONDUCTED DURING NIGHTTIME PERIODS SHALL BE ACCOMPLISHED SO THAT THE LIGHTS DO NOT CAUSE GLARE TO THE DRIVERS ON THE ROADWAY. TO ENSURE THE ADEQUACY OF THE FLOODLIGHT PLACEMENT, THE CONTRACTOR AND THE ENGINEER SHALL DRIVE THROUGH THE WORK SITE EACH NIGHT WHEN THE LIGHTING IS IN PLACE AND OPERATIVE PRIOR TO COMMENCING ANY WORK. IF GLARE IS DETECTED, THE LIGHT PLACEMENT AND SHIELDING SHALL BE ADJUSTED TO THE SATISFACTION OF THE ENGINEER BEFORE WORK PROCEEDS.

PAYMENT FOR ALL LABOR, EQUIPMENT AND MATERIALS SHALL BE INCLUDED IN THE LUMP SUM CONTRACT PRICE FOR ITEM 614, MAINTAINING TRAFFIC.

ITEM 614, MAINTAINING TRAFFIC (SIGNS AND BARRICADES)

THE CONTRACTOR SHALL PROVIDE, ERECT AND MAINTAIN SIGNS AND SIGN SUPPORTS, AS DETAILED IN THE OHIO MANUAL OF UNIFORM TRAFFIC CONTROL DEVICES, AND TYPE III BARRICADES OF THE TYPE AND LOCATION AS NEEDED.

ITEM 614, MAINTAINING TRAFFIC (LANE/SHOULDER CLOSURE OR REDUCTION REQUIRED)

LENGTH AND DURATION OF LANE/SHOULDER CLOSURES AND RESTRICTIONS SHALL BE A THE APPROVAL OF THE ENGINEER. IT IS THE INTENT TO MINIMIZE THE IMPACT TO THE TRAVELING PUBLIC. LANE CLOSURES OR RESTRICTIONS OVER SEGMENTS OR THE PROJECT IN WHICH NO WORK IS ANTICIPATED WITHIN A REASONABLE TIME FRAME, AS DETERMINED BY THE ENGINEER, SHALL NOT BE PERMITTED. THE LEVEL OF UTILIZATION OF MAINTENANCE OF TRAFFIC DEVICES SHALL BE COMMENSURATE WITH THE WORK IN PROGRESS. (SEE ODOT STANDARD CONSTRUCTION FOR DETAILS).

ITEM 614, PORTABLE CHANGEABLE MESSAGE SIGNS, AS PER PLAN

THE CONTRACTOR SHALL FURNISH, INSTALL, MAINTAIN AND REMOVE, WHEN NO LONGER NEEDED, A CHANGEABLE MESSAGE SIGN. THE SIGN SHALL BE OF A TYPE SHOWN ON A LIST OF APPROVED PCMS UNITS AVAILABLE ON THE OFFICE OF MATERIALS MANAGEMENT WEB PAGE. THE LIST CONTAINS CLASS A AND B UNITS WITH MINIMUM LEGIBILITY DISTANCES OF 800 FEET AND 650 FEET, RESPECTIVELY.

EACH SIGN SHALL BE TRAILER-MOUNTED AND EQUIPPED WITH A FUNCTIONAL DIMMING MECHANISM, TO DIM THE SIGN DURING DARKNESS, AND A TAMPER AND VANDAL PROOF ENCLOSURE. EACH SIGN SHALL BE PROVIDED WITH APPROPRIATE TRAINING AND OPERATION INSTRUCTIONS TO ENABLE ON-SITE PERSONNEL TO OPERATE AND TROUBLESHOOT THE UNIT. THE SIGN SHALL ALSO BE CAPABLE OF BEING POWERED BY AN ELECTRICAL SERVICE DROP FROM A LOCAL UTILITY COMPANY. THE PCMS SHALL BE DELINEATED IN ACCORDANCE WITH C&MS 614.03.

ITEM 614, PORTABLE CHANGEABLE MESSAGE SIGNS, AS PER PLAN

PLACEMENT, OPERATION, MAINTENANCE AND ALL ACTIVATION OF THE SIGNS BY THE CONTRACTOR SHALL BE AS DIRECTED BY THE ENGINEER. THE PCMS SHALL BE LOCATED IN A HIGHLY VISIBLE POSITION YET PROTECTED FROM TRAFFIC. THE CONTRACTOR SHALL, AT THE DIRECTION OF THE ENGINEER, RELOCATE THE PCMS TO IMPROVE VISIBILITY OR ACCOMMODATE CHANGED CONDITIONS. WHEN NOT IN USE, THE PCMS SHALL BE TURNED OFF. ADDITIONALLY, WHEN NOT IN USE FOR EXTENDED PERIODS OF TIME, THE PCMS SHALL BE TURNED AWAY FROM ALL TRAFFIC.

THE ENGINEER SHALL BE PROVIDED ACCESS TO EACH SIGN UNIT AND SHALL BE PROVIDED WITH APPROPRIATE TRAINING AND OPERATION INSTRUCTIONS TO ENABLE ODOT PERSONNEL TO OPERATE AND TROUBLESHOOT THE UNIT, AND TO REVISE SIGN MESSAGES, IF NECESSARY.

ALL MESSAGES TO BE DISPLAYED ON THE SIGN WILL BE PROVIDED BY THE ENGINEER. A LIST OF ALL REQUIRED PRE-PROGRAMMED MESSAGES WILL BE GIVEN TO THE CONTRACTOR AT THE PROJECT PRECONSTRUCTION CONFERENCE. THE SIGN SHALL HAVE THE CAPABILITY TO STORE UP TO 99 MESSAGES. MESSAGE MEMORY OR PRE-PROGRAMMED DISPLAYS SHALL NOT BE LOST AS A RESULT OF POWER FAILURES TO THE ON-BOARD COMPUTER. THE SIGN LEGEND SHALL BE CAPABLE OF BEING CHANGED IN THE FIELD. THREE-LINE PRESENTATION FORMATS WITH UP TO SIX MESSAGE PHASES SHALL BE SUPPORTED. PCMS FORMAT SHALL PERMIT THE COMPLETE MESSAGE FOR EACH PHASE TO BE READ AT LEAST TWICE.

THE PCMS SHALL CONTAIN AN ACCURATE CLOCK AND PROGRAMMING LOGIC WHICH WILL ALLOW THE SIGN TO BE ACTIVATED, DEACTIVATED OR MESSAGES CHANGED AUTOMATICALLY AT DIFFERENT TIMES OF THE DAY FOR DIFFERENT DAYS OF THE WEEK.

(THE PCMS SHALL CONTAIN A CELLULAR TELEPHONE DATA LINK WHICH WILL (IN ACTIVE CELLULAR PHONE AREAS) ALLOW REMOTE SIGN ACTIVATION, MESSAGE CHANGES, MESSAGE ADDITIONS AND REVISIONS TO TIME OF DAY PROGRAMS. THE SYSTEM SHALL ALSO PERMIT VERIFICATION OF CURRENT AND PROGRAMMED MESSAGES. ONE REMOTE DATA INPUT DEVICE (LAPTOP COMPUTER PLUS MODEM OR EQUIVALENT) SHALL BE FURNISHED FOR USE BY THE DISTRICT TRAFFIC ENGINEER, OR EQUIVALENT, AND SHALL BE INSURED AGAINST THEFT.)THE PCMS UNIT SHALL BE MAINTAINED IN GOOD WORKING ORDER BY THE CONTRACTOR IN ACCORDANCE WITH THE PROVISIONS OF C&MS 614.07. THE CONTRACTOR SHALL, PRIOR TO ACTIVATING THE UNIT, MAKE ARRANGEMENTS, WITH AN AUTHORIZED SERVICE AGENT FOR THE PCMS, TO ASSURE PROMPT SERVICE IN THE EVENT OF FAILURE. ANY FAILURE SHALL NOT RESULT IN THE SIGN BEING OUT OF SERVICE FOR MORE THAN 12 HOURS, INCLUDING WEEKENDS. FAILURE TO COMPLY MAY RESULT IN AN ORDER TO STOP WORK AND OPEN ALL TRAFFIC LANES AND/OR IN THE DEPARTMENT TAKING APPROPRIATE ACTION TO SAFELY CONTROL TRAFFIC. THE ENTIRE COST TO CONTROL TRAFFIC, ACCRUED BY THE DEPARTMENT DUE TO THE CONTRACTOR'S NONCOMPLIANCE, WILL BE DEDUCTED FROM MONEYS DUE, OR TO BECOME DUE THE CONTRACTOR ON HIS CONTRACT.

THE CONTRACTOR SHALL BE RESPONSIBLE FOR 24-HOUR-PER-DAY OPERATION AND MAINTENANCE OF THESE SIGNS ON THE PROJECT FOR THE DURATION OF THE PHASES WHEN THE PLAN REQUIRES THEIR USE.

PAYMENT FOR THE ABOVE DESCRIBED ITEM SHALL BE AT THE CONTRACT UNIT PRICE. PAYMENT SHALL INCLUDE ALL LABOR, MATERIALS, EQUIPMENT, FUELS, LUBRICATING OILS, SOFTWARE, HARDWARE AND INCIDENTALS TO PERFORM THE ABOVE DESCRIBED WORK.

ITEM 614, PORTABLE CHANGEABLE MESSAGE SIGN, AS PER PLAN
2 SIGN MONTHS

ASSUMING 1 SIGN FOR 2 DAYS PER SITE

ITEM 809: MAINTAINING ITS DURING CONSTRUCTION

THE CONTRACTOR SHALL REFER TO SUPPLEMENTAL SPECIFICATION 809 FOR REQUIREMENTS ON MAINTAINING ITS DURING CONSTRUCTION AND INFORMATION ON LOCATING ODOT ITS INFRASTRUCTURE. THIS SHALL INCLUDE MAINTAINING ALL EXISTING ODOT ITS, TRAFFIC SIGNALS, AND HIGHWAY LIGHTING INFRASTRUCTURE. THE CONTRACTOR SHALL COORDINATE WITH ODOT ITS.

ODOT ITS LAB
1606 W. BROAD ST.
COLUMBUS, OH 43223
MAIN LINE: (614) 387-4113
CEN.ITS.LAB@DOT.OHIO.GOV

SEQUENCE OF CONSTRUCTION

TOTAL CONSTRUCTION DURATION IS ONE (1) CONSTRUCTION SEASON.

CONSTRUCTION:
- PRIOR TO CONSTRUCTION OF CONCRETE CCTV CAMERA POLES, VARIOUS SITES WILL REQUIRE CONSTRUCTION OF ACCESS DRIVES
- CONSTRUCT CCTV CAMERA POLES INCLUDING POWER SERVICE AND CONDUIT AT VARIOUS SITES, ONE SITE AT A TIME

TRAFFIC:
- TRAFFIC WILL REMAIN IN EXISTING LANES WITH SHOULDER CLOSURES
- SHORT TERM SHOULDER CLOSURES SHALL FOLLOW MT-95.45 UTILIZING DRUMS AND INCLUDE SIGN W8-H6A AT ACCESS POINTS

MAINTENANCE OF TRAFFIC NOTES

D3/D4/D12 ITS CAMERA ADDITIONS

MODEL: MOT Notes Sheet 1 PAPERSIZE: 34x22 (in.) DATE: 3/26/2024 TIME: 3:36:59 PM USER: USBT726326
pw:\\wsp-us-pw.bentley.com:wsp-us-pw-02\Documents\OH - OHIO Projects\118895\400-Engineering\MOT\Sheets\118895_MN001.dgn

DESIGN AGENCY
WSP USA, Inc.
2 Miranova Pl,
Suite 450
Columbus, OH 43215

DESIGNER
REM

REVIEWER
BPT 02/02/24

PROJECT ID
118895

SHEET P.6 TOTAL 55

ITEM 614, LAW ENFORCEMENT OFFICER (WITH PATROL CAR) FOR ASSISTANCE DURING CONSTRUCTION OPERATIONS

USE OF LAW ENFORCEMENT OFFICERS (LEOS) BY CONTRACTORS OTHER THAN THE USES SPECIFIED BELOW WILL NOT BE PERMITTED AT PROJECT COST. LEOS SHOULD NOT BE USED WHERE THE OMUTCD INTENDS THAT FLAGGERS BE USED.

IN ADDITION TO THE REQUIREMENTS OF C&MS 614 AND THE OMUTCD, A UNIFORMED LEO WITH AN OFFICIAL PATROL CAR (CAR WITH TOP-MOUNTED EMERGENCY FLASHING LIGHTS AND COMPLETE MARKINGS OF THE APPROPRIATE LAW ENFORCEMENT AGENCY) SHALL BE PROVIDED FOR THE FOLLOWING TRAFFIC CONTROL TASKS:

- DURING THE ENTIRE ADVANCE PREPARATION AND CLOSURE SEQUENCE WHERE COMPLETE BLOCKAGE OF TRAFFIC IS REQUIRED.
- DURING CONSTRUCTION WHEN IMPACTING THE NORMAL FUNCTION OF THE SIGNAL OR THE FLOW OF TRAFFIC, OR WHEN TRAFFIC NEEDS TO BE DIRECTED THROUGH AN ENERGIZED TRAFFIC SIGNAL CONTRARY TO THE SIGNAL DISPLAY (E.G., DIRECTING MOTORISTS THROUGH A RED LIGHT) AND REQUIRES THE APPROVAL OF THE PROEJCT ENGINEER

IN ADDITION TO THE REQUIREMENT OF C&MS 614 AND THE OMUTCD, A UNIFORMED LEO WITH AN OFFICIAL PATROL CAR (CAR WITH TOP-MOUNTED EMERGENCY FLASHING LIGHTS AND COMPLETE MARKINGS OF THE APPROPRIATE LAW ENFORCEMENT AGENCY) SHOULD BE PROVIDED FOR THE FOLLOWING TRAFFIC CONTROL TASKS AS APPROVED BY THE ENGINEER:

- FOR LANE CLOSURES: DURING INITIAL SET-UP PERIODS, TEAR DOWN PERIODS, SUBSTANTIAL SHIFTS OF A CLOSURE POINT OR WHEN NEW LANE CLOSURE ARRANGEMENTS ARE INITIATED FOR LONG-TERM LANE CLOSURES/SHIFTS (FOR THE FIRST AND LAST DAY OF MAJOR CHANGES IN TRAFFIC CONTROL SETUP).

FOR OPERATIONS WITHOUT POSITIVE PROTECTION OCCURRING WITHIN 10 FEET OF AN OPEN TRAVELED LANE THAT MEET ALL OF THE FOLLOWING CRITERIA:

- ON A MULTI-LANE DIVIDED INTERSTATE, OTHER FREEWAY OR EXPRESSWAY; AND
- AN AUTHORIZED SPEED LIMIT OF 45 MPH OR GREATER THAT IS IN EFFECT AT THE TIME OF THE OPERATION; AND,
- AADT OF 50,000 (OR AADT OF 30,000 WITH 25% OR HIGHER PERCENT TRUCKS)

"WITHOUT POSITIVE PROTECTION" MEANS USE OF DRUMS, CONES, SHADOW VEHICLE, ETC, WITHOUT PROTECTION FROM PORTABLE BARRIER OR OTHER RIGID BARRIER ALONG THE WORK AREA. THIS PHRASE DOES NOT APPLY TO CASES WHERE POSITIVE PROTECTION IS REQUIRED. MOBILE OPERATIONS ARE REGARDED AS "WITHOUT POSITIVE PROTECTION". FOR WORK ZONES USING A COMBINATION OF BARRIER AND TEMPORARY TRAFFIC CONTROL DEVICES (CONES, DRUMS, ETC), THE DESIGNATION SHALL BE BASED UPON THE TYPE OF DEVICES USED IN THE AREA THAT WORKERS ARE LOCATED.

ITEM 614, LAW ENFORCEMENT OFFICER (WITH PATROL CAR) FOR ASSISTANCE DURING CONSTRUCTION OPERATIONS CONT.

- IF MULTIPLE ACTIVE LOCALIZED QUALIFYING WORK AREAS OCCUR WITHOUT POSITIVE PROTECTION, PER MAINLINE TRAFFIC DIRECTION, PROVIDE A UNIFORMED LEO AND OFFICIAL PATROL CAR IN ADVANCE OF:
  - THE FIRST ACTIVE WORK AREA THAT DRIVERS WILL ENCOUNTER; OR
  - THE ACTIVE WORK AREA LATERALLY CLOSEST TO THE OPEN TRAVELED LANE; OR
  - OTHER LOCATION AS APPROVED BY THE ENGINEER.
- THE UNIFORMED LEO AND OFFICIAL PATROL CAR MAY RELOCATE AMONG THE LISTED LOCATIONS AS APPROPRIATE AS THE OPERATIONS PROCEED IN THE LOCALIZED QUALIFYING WORK AREAS.

IN GENERAL, LEOS SHOULD BE POSITIONED IN ADVANCE OF AND ON THE SAME SIDE AS THE LANE RESTRICTION (OR AT THE POINT OF ROAD CLOSURE), AND TO MANUALLY CONTROL TRAFFIC MOVEMENTS THROUGH SIGNALIZED INTERSECTIONS IN WORK ZONES.

LEOS SHOULD NOT FORGO THEIR TRAFFIC CONTROL RESPONSIBILITIES TO APPREHEND MOTORISTS FOR ROUTINE TRAFFIC VIOLATIONS. HOWEVER, IF A MOTORIST'S ACTIONS ARE CONSIDERED TO BE RECKLESS, THEN PURSUIT OF THE MOTORIST IS APPROPRIATE.

THE LEOS WORK AT THE DIRECTION OF THE CONTRACTOR. THE CONTRACTOR IS RESPONSIBLE FOR SECURING THE SERVICES OF THE LEOS WITH THE APPROPRIATE AGENCIES AND COMMUNICATING THE INTENTIONS OF THE PLANS WITH RESPECT TO DUTIES OF THE LEOS. THE ENGINEER SHALL HAVE FINAL CONTROL OVER THE LEOS' DUTIES AND PLACEMENT, AND WILL RESOLVE ANY ISSUES THAT MAY ARISE BETWEEN THE TWO PARTIES.

ENSURE PROVIDED LEOS HAVE BEEN TRAINED APPROPRIATE TO THE JOB DECISIONS THEY ARE REQUIRED TO MAKE WHILE ON THE PROJECT, IN ACCORDANCE WITH C&MS 614.03.

THE LEO SHALL REPORT IN TO THE CONTRACTOR PRIOR TO THE START OF THE SHIFT, IN ORDER TO RECEIVE INSTRUCTIONS REGARDING SPECIFIC WORK ASSIGNMENTS DURING HIS/HER SHIFT. THE LEO IS EXPECTED TO STAY AT THE PROJECT SITE FOR THE ENTIRE DURATION OF HIS/HER SHIFT. THE LEO SHALL REPORT TO THE CONTRACTOR AT THE END OF HIS/HER SHIFT. SHOULD IT BE NECESSARY TO LEAVE THE PROJECT SITE, THE LEO SHALL NOTIFY THE ENGINEER. THE CONTRACTOR SHALL PROVIDE THE LEO WITH A TWO-WAY COMMUNICATION DEVICE THAT SHALL BE RETURNED TO THE CONTRACTOR AT THE END OF HIS/HER SHIFT.

LEOS (WITH PATROL CAR) REQUIRED BY THE TRAFFIC MAINTENANCE TASKS ABOVE SHALL BE PAID FOR ON A UNIT PRICE (HOURLY) BASIS UNDER ITEM 614, LAW ENFORCEMENT OFFICER (WITH PATROL CAR) FOR ASSISTANCE. THE FOLLOWING ESTIMATED QUANTITIES HAVE BEEN CARRIED TO THE GENERAL SUMMARY.

ITEM 614, LAW ENFORCEMENT OFFICER WITH PATROL CAR FOR ASSISTANCE	64 HOURS ASSUMING 2 HOURS PER ITS SITE	

THE HOURS PAID SHALL INCLUDE ANY MINIMUM SHOW-UP TIME REQUIRED BY THE LAW ENFORCEMENT AGENCY INVOLVED.

ANY ADDITIONAL COSTS (ADMINISTRATIVE OR OTHERWISE) INCURRED BY THE CONTRACTOR TO OBTAIN THE SERVICES OF A LEO ARE INCLUDED WITH THE BID UNIT PRICE FOR ITEM 614, LAW ENFORCEMENT OFFICER WITH PATROL CAR FOR ASSISTANCE.

ITEM 614, MAINTAINING TRAFFIC (LANES OPEN DURING HOLIDAYS OR SPECIAL EVENTS)

NO WORK SHALL BE PERFORMED AND ALL EXISTING LANES SHALL BE OPEN TO TRAFFIC DURING THE FOLLOWING DESIGNATED HOLIDAYS OR SPECIAL EVENTS:

NEW YEAR'S (OBSERVED)	GENERAL/REGULAR ELECTION DAY ((NOV)
TOTAL SOLAR ECLIPSE (4/8/24)	THANKSGIVING
MEMORIAL DAY	CHRISTMAS (OBSERVED)
FOURTH OF JULY (OBSERVED)	(OTHER HOLIDAY OR SPECIAL EVENT)
LABOR DAY	

THE PERIOD OF TIME THAT THE LANES ARE TO BE OPEN DEPENDS ON THE DAY OF THE WEEK ON WHICH THE HOLIDAY OR SPECIAL EVENT FALLS. THE FOLLOWING SCHEDULE SHALL BE USED TO DETERMINE THIS PERIOD:

DAY OF HOLIDAY OR SPECIAL EVENT	TIME ALL LANES MUST BE OPEN TO TRAFFIC
SUNDAY	12:00N FRIDAY THROUGH 6:00 AM MONDAY
MONDAY	12:00N FRIDAY THROUGH 6:00 AM TUESDAY
MONDAY (TOTAL SOLAR ECLIPSE)	12:00N MONDAY THROUGH 6:00 AM WEDNESDAY
TUESDAY	12:00N MONDAY THROUGH 6:00 AM WEDNESDAY
TUESDAY (GEN./REG. ELECTION)	5:00 AM TUESDAY THROUGH 12:00 AM WEDNESDAY
WEDNESDAY	12:00N TUESDAY THROUGH 6:00 AM THURSDAY
THURSDAY	12:00N WEDNESDAY THROUGH 6:00 AM FRIDAY
THURSDAY (THANKSGIVING ONLY)	6:00 AM WEDNESDAY THROUGH 6:00 AM MONDAY
FRIDAY	12:00N THURSDAY THROUGH 6:00 AM MONDAY
SATURDAY	12:00N FRIDAY THROUGH 6:00 AM MONDAY

DURING THE SAME PERIODS, MAINTAIN PEDESTRAIN ACCESS IF PEDESTRIAN ACCESS WAS PRESENT PRIOR TO CONSTRUCTION.

SHOULD THE CONTRACTOR FAIL TO MEET ANY OF THESE REQUIREMENTS, THE CONTRACTOR SHALL BE ASSESSED A DISINCENTIVE PER THE LANE VALUE CONTRACT (PN 127).

MAINTENANCE OF TRAFFIC NOTES

DESIGN AGENCY
WSP USA, Inc.
2 Miranova Pl,
Suite 450
Columbus, OH 43215

DESIGNER REM
REVIEWER BPT 03/26/24
PROJECT ID 118895
SHEET P.7 TOTAL 55

D3/D4/D12 ITS CAMERA ADDITIONS

MODEL: MOT Notes Sheet 2 PAPERSIZE: 34x22 (in.) DATE: 3/26/2024 TIME: 3:37:00 PM USER: USBT726326
pw:\\wsp-us-pw.bentley.com:wsp-us-pw-02\Documents\OH - OHIO Projects\118895\400-Engineering\MOT\Sheets\118895_MN001.dgn

SHEET NUM.											PART.			ITEM	ITEM EXT	GRAND TOTAL	UNIT	DESCRIPTION	SEE SHEET NO.
P.5	P.6	P.7	P.9	P.12	P.13						01/NFP/44								
																		ROADWAY	
				LS							LS			201	11000	LS		CLEARING AND GRUBBING	
				14							14			202	75000	14	FT	FENCE REMOVED	
				6,145							6,145			204	10000	6,145	SY	SUBGRADE COMPACTION	
8											8			204	45000	8	HOUR	PROOF ROLLING	
				1,375							1,375			304	20000	1,375	CY	AGGREGATE BASE	
				112.5							112.5			606	15050	112.5	FT	GUARDRAIL, TYPE MGS	
				4							4			606	26500	4	EACH	ANCHOR ASSEMBLY, TYPE T	
				1							1			607	61200	1	EACH	GATE, TYPE CLT	
																		EROSION CONTROL	
7,000											7,000			659	10000	7,000	SY	SEEDING AND MULCHING	
1											1			659	20000	1	TON	COMMERCIAL FERTILIZER	
40											40			659	35000	40	MGAL	WATER	
11,760											11,760			832	30000	11,760	EACH	EROSION CONTROL	
																		TRAFFIC SURVEILLANCE	
				4,207							4,207			625	22900	4,207	FT	NO. 1/0 AWG 2400 VOLT DISTRIBUTION CABLE	
				8,940							8,940			625	22990	8,940	FT	NO. 6 AWG 600 VOLT DISTRIBUTION CABLE	
				510							510			625	23000	510	FT	NO. 4 AWG 600 VOLT DISTRIBUTION CABLE	
				2,090							2,090			625	23100	2,090	FT	NO. 2 AWG 600 VOLT DISTRIBUTION CABLE	
				222							222			625	25408	222	FT	CONDUIT, 2", 725.051	
				9,985							9,985			625	25410	9,985	FT	CONDUIT, 2", 725.052	
				704							704			625	25504	704	FT	CONDUIT, 3", 725.051	
				3,632							3,632			625	25900	3,632	FT	CONDUIT, JACKED OR DRILLED, 2"725.052, SCHEDULE 80	
				10,502							10,502			625	29010	10,502	FT	TRENCH, 30" DEEP	
				103							103			625	30700	103	EACH	PULL BOX, 725.08, 18"	
				152							152			625	32001	152	EACH	GROUND ROD, AS PER PLAN	P.9
				6							6			625	34001	6	EACH	POWER SERVICE, AS PER PLAN, A	P.10
				11							11			625	34001	11	EACH	POWER SERVICE, AS PER PLAN, B	P.10
				1							1			625	34001	1	EACH	POWER SERVICE, AS PER PLAN, C	P.10
				3							3			625	34001	3	EACH	POWER SERVICE, AS PER PLAN, D	P.10
				2							2			625	34001	2	EACH	POWER SERVICE, AS PER PLAN, E	P.10
				1							1			625	34001	1	EACH	POWER SERVICE, AS PER PLAN, F	P.10
					1						1			625	34001	1	EACH	POWER SERVICE, AS PER PLAN, G	P.10
					2						2			625	34001	2	EACH	POWER SERVICE, AS PER PLAN, H	P.10
					1						1			625	34001	1	EACH	POWER SERVICE, AS PER PLAN, I	P.10
					1						1			625	34001	1	EACH	POWER SERVICE, AS PER PLAN, J	P.10
					1						1			625	34001	1	EACH	POWER SERVICE, AS PER PLAN, K	P.10
					1						1			625	34001	1	EACH	POWER SERVICE, AS PER PLAN, L	P.10
					1						1			625	34001	1	EACH	POWER SERVICE, AS PER PLAN, M	P.10
					660						660			625	36010	660	FT	UNDERGROUND WARNING/MARKING TAPE	
					875						875			625	36011	875	FT	UNDERGROUND WARNING/MARKING TAPE, AS PER PLAN	P.9
					9						9			625	98000	9	EACH	LIGHTING, MISC.:STEP-DOWN TRANSFORMER AND SUPPORT	P.9
					7						7			632	70400	7	EACH	CONDUIT RISER, 2" DIAMETER	
					32						32			633	67101	32	EACH	CABINET FOUNDATION, AS PER PLAN	P.9
					38						38			809	02000	38	EACH	32" ITS PULL BOX WITH PAD AND STANDARD LID ASSEMBLY	
					2						2			809	02002	2	EACH	32" ITS PULL BOX WITH PAD AND HINGED LID ASSEMBLY	
					384						384			809	24500	384	FT	CONDUIT, 4", MULTICELL, HDPE WITH 4 – 1" INNERDUCTS	
					32						32			809	60040	32	EACH	CCTV IP-CAMERA SYSTEM, QUAD MULTI-VIEW FIXED WITH PTZ	
					32						32			809	61002	32	EACH	CCTV CONCRETE POLE, 70 FEET	
					4						4			809	61090	4	EACH	CCTV LOWERING UNIT	
					32						32			809	65000	32	EACH	ITS CABINET - GROUND MOUNTED	
					3						3			809	65990	3	EACH	ITS DEVICE, MISC.: REMOVAL OF POLE OR DEVICE	P.9
			LS								LS			809	70050	LS		AS-BUILT CONSTRUCTION PLANS	
																		MAINTENANCE OF TRAFFIC	
		64									64			614	11110	64	HOUR	LAW ENFORCEMENT OFFICER WITH PATROL CAR FOR ASSISTANCE	
2											2			614	18601	2	SNMT	PORTABLE CHANGEABLE MESSAGE SIGN, AS PER PLAN	P.6
1											1			616	10000	1	MGAL	WATER	
											LS			809	70000	LS		MAINTAINING ITS DURING CONSTRUCTION	

GENERAL SUMMARY

D3/D4/D12 ITS CAMERA ADDITIONS

MODEL: Sheet_SurvFt PAPERSIZE: 34x22 (in.) DATE: 3/27/2024 TIME: 11:53:30 AM USER: USBT726326
pw:\\wsp-us-pw.bentley.com:wsp-us-pw-02\Documents\OH - OHIO Projects\118895\400-Engineering\Roadway\Sheets\118895_GG001.dgn

DESIGN AGENCY
WSP USA, Inc.
2 Miranova Pl,
Suite 450
Columbus, OH 43215

DESIGNER ELK

REVIEWER BPT 03/26/24

PROJECT ID 118895

SHEET P.8 TOTAL 55

GENERAL CCTV SITE LAYOUT

THE CONTRACTOR SHALL INSTALL THE CCTV 70 FOOT CONCRETE POLE, GROUND MOUNTED ITS CABINET, PULL BOXES, AND CONDUIT ACCORDING TO STANDARD CONSTRUCTION DRAWING ITS-10.11. THE LAYOUT MAY BE SHIFTED ACCORDING TO SITE SPECIFIC NEEDS BUT SHOULD TYPICALLY FOLLOW SCD ITS-10.11. EXAMPLE, A SITE MAY HAVE THE PULL BOXES REVERSED OR ON THE OPPOSITE SIDE OF THE WORK PAD BUT SHOULD STILL BE NEAREST THE CABINET. THE CCTV LOWERING UNIT ARM MAY ALSO BE ORIENTED SLIGHTLY DIFFERENT (AS DESCRIBED ON EACH PLAN SHEET) BUT SHALL NOT BE POSSIBLE TO BE LOWERED ON TOP OF THE CABINET OR TECHNICIAN OPERATING THE LOWERING DEVICE.

ELECTRICAL NOTE

A MINIMUM OF 10 FEET SLACK CABLE SHALL BE COILED IN EACH ELECTRICAL PULL BOX. THE DISTRIBUTION CABLE QUANTITIES ACCOUNTS FOR THREE CABLES BUNDLED (HOT, NEUTRAL, AND GROUND) FROM POWER SERVICE TO CCTV GROUND MOUNTED ITS CABINET. 10 FEET OF CABLE AT ALL SERVICE TERMINATIONS, 10 FEET OF CABLE FOR EACH PULL BOX, AND 15 FEET OF CABLE BETWEEN ODOT CABINETS AND NEAREST PULL BOX HAS BEEN ACCOUNTED FOR IN THE CABLE QUANTITIES.

THE DISCONNECT SHALL BE CAPABLE OF BEING PADLOCKED IN BOTH THE ON AND OFF POSITIONS AND SHALL ALSO BE CAPABLE OF SEPARATELY LOCKING THE DOOR SHUT. ONE PADLOCK SHALL BE USED TO LOCK THE DISCONNECT SWITCH IN THE APPROPRIATE POSITION AND ONE SHALL BE USED TO LOCK THE DOOR SHUT. PADLOCKS FURNISHED SHALL BE BRASS, EQUAL TO WILSON BOHANNAN 660A, AND SHALL BE KEYED IN ACCORDANCE WITH CMS 631.06 OR ODOT TYPE A.

ITEM 625: UNDERGROUND WARNING/MARKING TAPE, AS PER PLAN

IN ADDITION TO THE REQUIREMENTS OF CMS 725.22 AND SS 804 AND 809, THE CONTRACTOR SHALL FURNISH AND INSTALL UNDERGROUND WARNING/MARKING TAPE WHERE COMMUNICATION CONDUIT IS TO BE INSTALLED. THE TAPE SHALL INCLUDE AN INTEGRAL TRACER WIRE WHICH SHALL BE CONNECTED AND INSTALLED INTO 32" PULL BOXES PER SS 804.

COMMUNICATION CABLE MARKERS SHALL ALSO BE PROVIDED AND INSTALLED PER SS 809 WHICH SHALL HAVE THE TRACER WIRE CONNECTED FROM THE TOP OF TYPE 2 COMMUNICATION CABLE MARKERS AND INTO THE 32" PULL BOXES AND TO THE INTEGRAL TRACER WIRE IN THE TAPE. THE TAPE AND TRACER WIRE SHALL BE INSTALLED NEXT TO THE CONDUIT THROUGH THE PULL BOX SIDE WALL KNOCKOUTS AND THE PULL BOX SHALL THEN BE MORTARED AND SEALED TO PREVENT MUD AND DEBRIS FROM ENTERING THE BOX.

PAYMENT FOR UNDERGROUND WARNING/MAARKING TAPE SHALL BE MADE FOR THE ACCEPTED LINER FOOT QUANTITIES AT THE CONTRACT BID PRICE FOR ITEM 625, UNDERGROUND WARNING/MARKING TAPE, APP.

ITEM 625: GROUND ROD, AS PER PLAN

THE CONTRACTOR SHALL INSTALL GROUND RODS PER STANDARD CONSTRUCTION DRAWING ITS-50.10. IN ADDITION, A GROUND ROD SHALL BE INSTALLED AT EACH ELECTRIC PULL BOX INSTALLED ON THIS PROJECT AND CONNECTED TO THE PULL BOX FRAME. AT EACH PULL BOX LOCATION, THE GROUND ROD SHALL ALSO BE TIED INTO THE DISTRIBUTION CABLE USED AS THE GROUND WIRE TO SERVICE THE CAMERA CABINET, IN ORDER TO PROVIDE A COMPLETE GROUNDING SYSTEM.

ITEM 625: LIGHTING, MISC: STEP-DOWN TRANSFORMER AND SUPPORT

THE CONTRACTOR SHALL FURNISH AND INSTALL ALL MATERIALS NECESSARY FOR A POWER SERVICE PER ODOT CONSTRUCTION AND MATERIAL SPECIFICATION SECTION 625.15.

A 3.0 KVA, 480 VOLT TO 120/240 VOLT TRANSFORMER SHALL BE INCIDENTAL TO THIS PAY ITEM. AN EQUIPMENT STAND SHALL ALSO BE INCLUDED AND SHALL HAVE THE TRANSFORMER AND DISCONNECT MOUNTED UPON IT. THIS ITEM SHALL BE INSTALLED PER STANDARD CONSTRUCTION DRAWING ITS-50.11. THIS ITEM SHALL ALSO INCLUDE ALL CONDUIT AND MATERIALS NECESSARY TO RUN POWER WIRING OUT/IN THE NEAREST 18 INCH ELECTRIC PULL BOX, IN ORDER TO PROVIDE 120 VOLT POWER TO THE ITS CABINET AND A COMPLETE AND FUNCTIONAL POWER SERVICE.

THE CCTV RELATED POWER SERVICES SHALL BE MARKED WITH "ITS". SEPARATE DISCONNECT SWITCHES SHALL BE FUSIBLE, RATED FOR 60 AMPS WITH NEMA 4X ENCLOSURE, AND SHALL BE FUSED AT 30 AMPS. THIS SERVICE SHALL PROVIDE 120 VOLTS TO EACH RELATED SITE

ITEM 633: CABINET FOUNDATION, AS PER PLAN

THE CONTRACTOR SHALL INSTALL A CABINET FOUNDATION FOR EACH ITS GROUND MOUNTED CABINET. SEE SUPPLEMENTAL SPECIFICATION 809 FOR CONDUIT REQUIREMENTS ENTERING THE ITS GROUND MOUNTED CABINET.

ITEM 809: ITS DEVICE, MISC: REMOVAL OF POLE OR DEVICE

THE CONTRACTOR SHALL REMOVE ANY POLE OR DEVICE REFERENCED IN THE PLANS. THE CONTRACTOR SHALL REMOVE FOUNDATIONS TO A DEPTH OF AT LEAST ONE FOOT BELOW GRADE AND RESTORE THE AREA. THE CONTRACTOR SHALL RELOCATE DEVICE IF PLAN NOTES CALL FOR. THE CONTRACTOR SHALL STORE AND DELIVER REMOVED POLES OR DEVICES TO ODOT ITS IF DESIRED BY ODOT. THE CONTRACTOR SHALL COORDINATE WITH THE PROJECT ENGINEER TO DECIDE IF IT IS DESIRED TO BE RETURNED TO ODOT OR NOT. IF NOT, THE CONTRACTOR SHALL DISPOSE OF THE POLE OR DEVICE. ANY UNDERGROUND CONDUIT OR CABLING THAT IS NO LONGER BEING UTILIZIED, SHALL BE ABANDONED IN PLACE.

ITEM 809: AS-BUILT CONSTRUCTION PLANS / GPS COORDINATES

PRIOR TO THE FINAL ACCEPTANCE OF THE PROJECT, THE CONTRACTOR SHALL PROVIDE AS-BUILT PLANS AND GPS COORDINATES PER THE REQUIREMENTS IN SUPPLEMENTAL SPECIFICATION 809.

ITEM 809: CCTV CONCRETE POLE, 70 FEET

THE CONTRACTOR SHALL FURNISH AND INSTALL THIS ITEM ACCORDING TO ODOT SUPPLEMENTAL SPECIFICATION 809, AS WELL AS ANY STANDARD CONSTRUCTION DRAWINGS NOTED ON THE PLANS. IN ADDITION, THE CONTRACTOR SHALL INCLUDE A 1/2" ISOLATION JOINT MATERIAL BETWEEN THE CONCRETE POLE AND CONCRETE WORK PAD. THE CONTRACTOR SHALL PROVIDE 1 COMPLETE LOWERING UNIT TOOL/WINCH ASSEMBLY PER EVERY 10 POLE-TOP LOWERING UNITS INSTALLED FOR A TOTAL OF 4 LOWERING UNIT TOOLS PER SUPPLEMENTAL SPECIFICATION 809 TO ODOT AT THE END OF THE PROJECT.

ODOT AND THE OFFICE OF GEOTECHNICAL ENGINEERING HAVE OBTAINED AND ANALYZED THE SOIL BORING DATA FOR THESE SITES AND DETERMINED THE POLE HEIGHT ABOVE THE GROUND AND EMBEDMENT DEPTH AS NOTED ON THE PLAN SHEETS. THE CONTRACTOR SHALL FURNISH/INSTALL POLES WITH THE CORRECT LENGTH/EMBEDMENT AND ALL COUPLINGS, HANDHOLES, ETC., IN THE APPROPRIATE LOCATION ABOVE GROUND ACCORDING TO SCD ITS-12.10. THE CONTRACTOR MAY FURNISH/INSTALL LONGER OVERALL LENGTH POLES AT A DEEPER EMBEDMENT DEPTH IF IT IS MORE BENEFICIAL FOR MANUFACTURING, SHIPPING, ETC., AS LONG AS ALL ABOVE GROUND COMPONENTS MAINTAIN APPROPRIATE HEIGHT LEVEL. IF NEEDED DUE TO UNFORESEEN CIRCUMSTANCES ARISING WITH BEDROCK, ETC., AND WITH APPROVAL FROM THE ODOT PROJECT ENGINEER, THE CONTRACTOR MAY FIELD CUT AN APPROPRIATE AMOUNT FROM THE BASE OF THE CONCRETE POLE WHICH WOULD REQUIRE LESS EMBEDMENT DEPTH IN ORDER TO MAINTAIN APPROPRIATE LEVELS ABOVE GROUND. IF A POLE IS CUT, THE CONTRACTOR SHALL TAKE ALL PRECAUTIONS NECESSARY TO NOT DAMAGE THE INTEGRITY OF THE POLE PER MANUFACTURER RECOMMENDATIONS AND ANY EXPOSED STEEL STRANDS SHALL BE COATED WITH EPOXY.

THE CONTRACTOR SHALL SUBMIT ALL POLE MANUFACTURER FABRICATION DRAWING SUBMITTALS, AS WELL AS INSTALLATION PROCEDURES AND BACKFILL MATERIAL, TO THE ODOT PROJECT ENGINEER FOR ACCEPTANCE BEFORE ORDERING.

PAYMENT FOR EACH POLE COMPLETE, INSTALLED, AND ACCEPTED CONCRETE POLE, SHALL BE MADE AT THE UNIT BID PRICE FOR ITEM 809, CCTV CONCRETE POLE, 70 FEET

ITEM 625: ARC FLASH CALCULATIONS AND LABELS FOR ITS SITES

THIS ITEM SHALL INCLUDE PROVIDING ARC FLASH HAZARD CALCULATIONS AND LABELS PER SUPPLEMENTAL SPECIFICIATION 825. A SINGLE ARC FLASH HAZARD STUDY SHALL BE PERFORMED FOR EACH SITE CALLED OUT BELOW FROM UTILITY INTERCONNECTION TO ALL DOWNSTREAM DEVICES. LABELS FOR SITES CALLED OUT BELOW SHALL BE APPLIED TO THE OUTSIDE OF EACH ITS CABINET ON BOTH DOORS AND ALL DISCONNECTS/SAFETY SWITCHES. LABELS SHALL NOT COVER ANY EXISTING NAMEPLATES OR LABELS ON DISCONNECTS/SAFETY SWITCHES WHEN APPLIED. LABELS SHALL BE PROVIDED BY THE CONTRACTOR. CALCULATIONS SHALL BE GIVEN TO THE PROJECT ENGINEER AND ITS ENGINEER AS DESCRIBED IN THE SUPPLEMENTAL SPECIFICATION.
USE LABEL 825.08.A, ODOT VERSION "A".

PAYMENT WILL BE MADE AT THE UNIT PRICE BID FOR EACH ITEM 625-ARC FLASH CALCULATIONS AND LABELS FOR EACH SITE INCLUDING ALL LABOR, MATERIALS AND INCIDENTALS NECESSARY.

Site #	Sheet #	Name	Latitude	Longitude	Expected Conditions	Boring ID	Embedment
1	P.24	US-250 & SR-2	41.39983	-82.65588	Expected Soil Profile Cohesive, Dry Installation per CMS 524	TH-2	14
2	P.25	SR-2/US-6 & Rye Beach Rd	41.40502	-82.59086			25
3	P.26	SR-2 & SR-58	41.41446	-82.20872	Expected Soil Profile Primarily Cohesive, Bedrock anticipated at EL. 630.9, Minimum Rock Embedment Length 5', Dry Installation Per CMS 524	B-16	10
4	P.27	US 20 & SR-301	41.31798	-82.11728	12 for 12' by observation, Expected Soil Profile Primarily Cohesive, Dry Installation Per CMS 524	B-1 & B-8	12
5	P.28	I-90 & SR-611	41.46331	-82.05508	Expected Soil Profile Cohesive, Dry Installation per CMS 524	B-2	12
6	P.29	I-90 & Nagel Rd	41.46491	-81.98921	Expected cohesive soil conditions, Bedrock Anticipated at EL. 625.3, Dry Installation per CMS 524	B-013-1-10 and B-13-3-10	15
7	P.30	I-71 & SR-3	41.19308	-81.7911	12 for 12' by observation, Expected Soil Profile Primarily Cohesive, Dry Installation Per CMS 524	B-6-1	12
8	P.31	I-76 & SR-57	41.03372	-81.76166			25
9	P.32	I-76 & SR-94	41.04698	-81.72925			25
10	P.33	I-271 & SR-94	41.19341	-81.74352			25
11	P.34	US-30 & SR-13	40.77871	-82.51188	Expected Soil Profile Cohesive, Dry Installation per CMS 524	B-10	20
12	P.35	I-480 & Grayton Rd	41.42365	-81.84625			25
13	P.36	I-480 & W150th St	41.42087	-81.80141			25
14	P.37	I-480 & Ridge Rd	41.42155	-81.73409	Shallow Bedrock - Minimum Rock Embedment 10'	B-005-0-23	10
15	P.38	I-480 & SR-176	41.42173	-81.68494	Varying Profile Cohesive and Granular Conditions, Possible Cobbles/Boulders approximately 10' below existing grade, bedrock anticpated at elevation 745.6, Minimum bedrock embedment 2'	B-10	15
16	P.39	I-480 & Great Northern Blvd	41.41349	-81.90225	Expected Soil Profile Cohesive, Dry Installation per CMS 524	B-8	14
17	P.40	I-480 & Stearns Rd	41.39662	-81.94428	12 for 12' by observation, Expected Soil Profile Cohesive, Dry Installation Per CMS 524	B-16, B-26	12
18	P.41	I-77 & Rockside Rd	41.39703	-81.65338			25
19	P.42	I-490 & E 55th St	41.4793	-81.66057	Expected Soil Profile Primarily Granular, Wet or Cased Installation Per CMS 524	C-4	18
20	P.43	I-71 & US-42/Pearl Rd	41.3569	-81.81887			25
21	P.44	I-90 & Crocker Rd	41.4678	-81.95042	Bedrock anticipated at Elevation 651.6', Minimum Rock Embedment 10', Dry Installation Per CMS 524	B-1	11
22	P.45	I-271 & Boston Mills Rd	41.26354	-81.55358	12 for 12' by observation, Expected Soil Profile Primarily Cohesive, Dry Installation Per CMS 524		12
23	P.46	I-76 & SR-43	41.10779	-81.3479	Expected Granular Soil Conditions, Wet or Cased Installation Per CMS 524	TH-10	25
24	P.47	I-76 & SR-44	41.10964	-81.24208	Varying Profile Cohesive and Granular Conditions, anticipate Wet or Cased Installation Per CMS 524	TH-9	25
25	P.48	I-76 & SR-14	41.10558	-81.15638	Expected Granular Soil Conditions, Wet or Cased Installation Per CMS 524	B-2	20
26	P.49	I-680 & I-80/SR-11	41.12436	-80.75194	12 for 12' by observation, Expected Soil Profile Primarily Cohesive, Dry Installation Per CMS 524	B-8, B-1	12
27	P.50	I-680 & US-224	41.02388	-80.62602	Expected Granular Soil Conditions, Wet or Cased Installation Per CMS 524	B-007-0-09	14
28	P.51	I-680 & Market St	41.09121	-80.65057	Expected Granular Soil Conditions, Wet or Cased Installation Per CMS 524	B-7 & B-9	18
29	P.52	I-90 & SR-193	41.88094	-80.66666	Expected Soil Profile Cohesive, Dry Installation per CMS 524	B-8	12
30	P.53	I-90 & SR-7	41.9167	-80.56828	Expected Soil Profile Cohesive, Bedrock anticipated at EL. 703.4, 5' Rock Embedment, Dry Installation CMS 524	B-7	10
31	P.54	I-90 & WB Rest Area - MM241	41.92381	-80.5475			25
32	P.55	I-480 & WarrensvilleCenter Rd	41.42522	-81.53757	12 for 12' by overservation, Expected Soil Prifile Cohesive, Dry Installation Per CMS 524	B-007-0-08 & B-002-0-65	12

ITS NOTES

D3/D4/D12 ITS CAMERA ADDITIONS

MODEL: Sheet_SurvFt PAPERSIZE: 34x22 (in.) DATE: 3/26/2024 TIME: 3:37:17 PM USER: USBT726326
pw:\\wsp-us-pw.bentley.com:wsp-us-pw-02\Documents\OH - OHIO Projects\118895\400-Engineering\Signals\Sheets\118895_CN001.dgn

DESIGN AGENCY
WSP USA, Inc.
2 Miranova Pl,
Suite 450
Columbus, OH 43215

DESIGNER NWA
REVIEWER BPT 03/26/24
PROJECT ID 118895
SHEET P.9 TOTAL 55

ITEM 632: POWER SERVICE, AS PER PLAN A

THE CONTRACTOR SHALL FURNISH AND INSTALL ALL MATERIALS NECESSARY FOR A POWER SERVICE PER ODOT CONSTRUCTION AND MATERIAL SPECIFICATION SECTION 625.15.

THE POWER SERVICE SHALL BE A 120/240 VOLT SERVICE, GROUND MOUNTED WITH UNDERGROUND POWER COMPANY FEED PER ODOT STANDARD CONSTRUCTION DRAWING ITS-15.10.

THE CCTV RELATED POWER SERVICE SHALL BE MARKED WITH "ITS". DISCONNECT SWITCHES SHALL BE FUSIBLE, RATED FOR 60 AMP WITH NEMA 4X ENCLOSURE, AND SHALL BE FUSED AT 30 AMPS. THIS SERVICE SHALL PROVIDE 120 VOLTS TO REACH RELATED SITE.

THE CONTRACTOR SHALL COORDINATE WITH THE POWER COMPANY AND PROVIDE APPROPRIATE INSPECTIONS AND/OR SELF INSPECTION FORMS TO POWER COMPANY IN ORDER TO ENERGIZE SERVICE. SEE UTILITIES NOTE FOR CONTACTS.

ITEM 632: POWER SERVICE, AS PER PLAN B

THE CONTRACTOR SHALL FURNISH AND INSTALL ALL MATERIALS NECESSARY FOR A POWER SERVICE PER ODOT CONSTRUCTION AND MATERIAL SPECIFICATION SECTION 625.15.

THE POWER SERVICE SHALL BE A 120/240 VOLT SERVICE, POLE MOUNTED, WITH AERIAL POWER COMPANY FEED PER ODOT STANDARD CONSTRUCTION DRAWING ITS-15.11.

THE CCTV RELATED POWER SERVICE SHALL BE MARKED WITH "ITS". DISCONNECT SWITCHES SHALL BE FUSIBLE, RATED FOR 60 AMP WITH NEMA 4X ENCLOSURE, AND SHALL BE FUSED AT 30 AMPS. THIS SERVICE SHALL PROVIDE 120 VOLTS TO REACH RELATED SITE.

THE CONTRACTOR SHALL COORDINATE WITH THE POWER COMPANY AND PROVIDE APPROPRIATE INSPECTIONS AND/OR SELF INSPECTION FORMS TO POWER COMPANY IN ORDER TO ENERGIZE SERVICE. SEE UTILITIES NOTE FOR CONTACTS.

ITEM 632: POWER SERVICE, AS PER PLAN C

THE CONTRACTOR SHALL FURNISH AND INSTALL ALL MATERIALS NECESSARY FOR A POWER SERVICE PER ODOT CONSTRUCTION AND MATERIAL SPECIFICATION SECTION 625.15.

THE POWER SERVICE SHALL BE A 480 VOLT SERVICE, GROUND MOUNTED, WITH UNDERGROUND POWER COMPANY FEED PER ODOT STANDARD CONSTRUCTION DRAWING ITS-15.10. THE CONTRACTOR SHALL COORDINATE WITH THE POWER COMPANY TO DETERMINE IF THEY HAVE ANY SPECIAL REQUIREMENTS FOR METERED 480 VOLT SERVICE DROP, SUCH AS BUT NOT LIMITED TO AN ADDITIONAL ENCLOSURE OR DISCONNECT AHEAD OF THE METER, CURRENT TRANSFORMERS, OR CONDUIT BOXES. IF SO THE CONTRACTOR SHALL MODIFY THE POLE MOUNTED SERVICE PARTS PER ITS-15.10 AS NEEDED AND APPROVED BY THE ENGINEER.

THE CCTV RELATED POWER SERVICE SHALL BE MARKED WITH "ITS". DISCONNECT SWITCHES SHALL BE FUSIBLE, RATED FOR 60 AMPS WITH NEMA 4X ENCLOSURE, AND SHALL BE FUSED AT 30 AMPS. THIS SERVICE SHALL PROVIDE 480 VOLTS TO REACH RELATED SITE WHERE IT WILL THEN BE STEPPED DOWN TO 120 VOLTS VIA SEPARATE PAY ITEM.

THE CONTRACTOR SHALL COORDINATE WITH THE POWER COMPANY AND PROVIDE APPROPRIATE INSPECTIONS AND/OR SELF INSPECTION FORMS TO POWER COMPANY IN ORDER TO ENERGIZE SERVICE. SEE UTILITIES NOTE FOR CONTACTS.

ITEM 632: POWER SERVICE, AS PER PLAN D

THE CONTRACTOR SHALL FURNISH AND INSTALL ALL MATERIALS NECESSARY FOR A POWER SERVICE PER ODOT CONSTRUCTION AND MATERIAL SPECIFICATION SECTION 625.15.

THE POWER SERVICE SHALL BE A 480 VOLT SERVICE, POLE MOUNTED, WITH AERIAL POWER COMPANY FEED PER ODOT STANDARD CONSTRUCTION DRAWING ITS-15.11. THE CONTRACTOR SHALL COORDINATE WITH THE POWER COMPANY TO DETERMINE IF THEY HAVE ANY SPECIAL REQUIREMENTS FOR METERED 480 VOLT SERVICE DROP, SUCH AS BUT NOT LIMITED TO AN ADDITIONAL ENCLOSURE OR DISCONNECT AHEAD OF THE METER, CURRENT TRANSFORMERS, OR CONDUIT BOXES. IF SO THE CONTRACTOR SHALL MODIFY THE POLE MOUNTED SERVICE PARTS PER ITS-15.11 AS NEEDED AND APPROVED BY THE ENGINEER.

THE CCTV RELATED POWER SERVICE SHALL BE MARKED WITH "ITS". DISCONNECT SWITCHES SHALL BE FUSIBLE, RATED FOR 60 AMPS WITH NEMA 4X ENCLOSURE, AND SHALL BE FUSED AT 30 AMPS. THIS SERVICE SHALL PROVIDE 480 VOLTS TO REACH RELATED SITE WHERE IT WILL THEN BE STEPPED DOWN TO 120 VOLTS VIA SEPARATE PAY ITEM.

THE CONTRACTOR SHALL COORDINATE WITH THE POWER COMPANY AND PROVIDE APPROPRIATE INSPECTIONS AND/OR SELF INSPECTION FORMS TO POWER COMPANY IN ORDER TO ENERGIZE SERVICE. SEE UTILITIES NOTE FOR CONTACTS.

ITEM 632: POWER SERVICE, AS PER PLAN E

THE CONTRACTOR SHALL FURNISH AND INSTALL ALL MATERIALS NECESSARY FOR A POWER SERVICE PER ODOT CONSTRUCTION AND MATERIAL SPECIFICATION SECTION 625.15.

THE POWER SERVICE SHALL BE TIED INTO THE EXISTING TRAFFIC SIGNAL POWER SERVICE. THE EXISTING POWER SERVICE FOR THE TRAFFIC SIGNALS SHALL BE MAINTAINED. THIS PAY ITEMS SHALL INCLUDE THE REPLACEMENT OF THE EXISTING METER BASE, DISCONNECT AND ALL CONDUIT, FITTINGS AND MATERIALS NECESSARY TO TIE INTO THE TRAFFIC SIGNAL POWER IN ORDER TO COMPLETE AND FUNCTIONAL POWER SERVICE.THE NEW EQUIPMENT SHALL BE INSTALLED IN THE SAME LOCATION ON THE EXISTING STRAIN POLE AND ALSO INCLUDE THE NEW DISCONNECT SWITCH FOR THE CCTV AS SHOWN IN THE PLANS.

THE CCTV RELATED POWER SERVICE SHALL BE MARKED WITH "ITS". DISCONNECT SWITCHES SHALL BE FUSIBLE, RATED FOR 60 AMP WITH NEMA 4X ENCLOSURE, AND SHALL BE FUSED AT 30 AMPS. THIS SERVICE SHALL PROVIDE 120 VOLTS TO REACH RELATED SITE.

ITEM 632: POWER SERVICE, AS PER PLAN F

THE CONTRACTOR SHALL FURNISH AND INSTALL ALL MATERIALS NECESSARY FOR A POWER SERVICE PER ODOT CONSTRUCTION AND MATERIAL SPECIFICATION SECTION 625.15.

THE EXISTING POWER SERVICE FOR THE TRAFFIC SIGNAL SHALL BE MAINTAINED. THE ITS POWER SERVICE SHALL BE TIED INTO THE EXISTING TRAFFIC SIGNAL METER BASE AND BYPASS THE TRAFFIC SIGNAL DISCONNECT. THE EXISTING METER BASE AND TRAFFIC SIGNAL DISCONNECT SHALL REMAIN UNLESS OTHERWISE APPROVED BY THE ENGINEER. THIS ITEM SHALL INCLUDE THE NEW ITS DISCONNECT AND ALL CONDUIT, FITTINGS AND MATERIALS NECESSARY TO TIE INTO THE TRAFFIC SIGNAL POWER IN ORDER TO COMPLETE AND FUNCTIONAL POWER SERVICE.

THE CCTV RELATED POWER SERVICE SHALL BE MARKED WITH "ITS". DISCONNECT SWITCHES SHALL BE FUSIBLE, RATED FOR 60 AMP WITH NEMA 4X ENCLOSURE, AND SHALL BE FUSED AT 30 AMPS. THIS SERVICE SHALL PROVIDE 120 VOLTS TO REACH RELATED SITE.

ITEM 632: POWER SERVICE, AS PER PLAN G

THE CONTRACTOR SHALL FURNISH AND INSTALL ALL MATERIALS NECESSARY FOR A POWER SERVICE PER ODOT CONSTRUCTION AND MATERIAL SPECIFICATION SECTION 625.15.

THE EXISTING POWER SERVICE FOR THE HIGHWAY LIGHTING SHALL BE MAINTAINED. THE ITS POWER SERVICE SHALL BE TIED INTO THE EXISTING HIGHWAY LIGHTING METER BASE AND BYPASS THE PHOTOCELL. THE EXISTING METER BASE AND DISCONNECT SHALL REMAIN UNLESS OTHERWISE APPROVED BY THE ENGINEER. THIS ITEM SHALL INCLUDE THE NEW ITS DISCONNECT AND ALL CONDUIT, FITTINGS AND MATERIALS NECESSARY TO TIE INTO THE HIGHWAY LIGHTING POWER IN ORDER TO PROVIDE COMPLETE AND FUNCTIONAL POWER SERVICE.

THE CCTV RELATED POWER SERVICE SHALL BE MARKED WITH "ITS". DISCONNECT SWITCHES SHALL BE FUSIBLE, RATED FOR 60 AMP WITH NEMA 4X ENCLOSURE, AND SHALL BE FUSED AT 30 AMPS. THIS SERVICE SHALL PROVIDE 480 VOLTS TO REACH RELATED SITE WHERE IT WILL THEN BE STEPPED DOWN TO 120 VOLTS VIA SEPARATE PAY ITEM.

ITEM 632: POWER SERVICE, AS PER PLAN H

THE CONTRACTOR SHALL FURNISH AND INSTALL ALL MATERIALS NECESSARY FOR A POWER SERVICE PER ODOT CONSTRUCTION AND MATERIAL SPECIFICATION SECTION 625.15.

THE EXISTING POWER SERVICE FOR THE ITS SHALL BE MAINTAINED. THIS PAY ITEM SHALL INCLUDE THE REPLACEMENT OF THE EXISTING METER BASE, DISCONNECT AND ALL CONDUIT, FITTINGS AND MATERIALS UP TO THE ADJACENT PULL BOX NECESSARY FOR COMPLETE FUNCTIONAL POWER SERVICE.THE NEW EQUIPMENT SHALL BE INSTALLED IN THE SAME LOCATION ON THE EXISTING WOOD POLE PER SCD ITS-15.11.

THE CCTV RELATED POWER SERVICE SHALL BE MARKED WITH "ITS". DISCONNECT SWITCHES SHALL BE FUSIBLE, RATED FOR 60 AMP WITH NEMA 4X ENCLOSURE, AND SHALL BE FUSED AT 30 AMPS. THIS SERVICE SHALL PROVIDE 120 VOLTS TO REACH RELATED SITE.

ITEM 632: POWER SERVICE, AS PER PLAN I

THE CONTRACTOR SHALL FURNISH AND INSTALL ALL MATERIALS NECESSARY FOR A POWER SERVICE PER ODOT CONSTRUCTION AND MATERIAL SPECIFICATION SECTION 625.15.

THE CONTRACTOR SHALL FURNISH AND INSTALL ALL MATERIALS NECESSARY FOR A POWER SERVICE PER ODOT CONSTRUCTION AND MATERIAL SPECIFICATION SECTION 625.15.

THE EXISTING POWER SERVICE FOR THE HIGHWAY LIGHTING AND TRAFFIC SIGNAL SHALL BE MAINTAINED. THE ITS POWER SERVICE SHALL BE TIED INTO THE EXISTING METER BASE ON THE EXISTING GROUND MOUNT RACK. THE EXISTING METER BASE AND DISCONNECT SHALL REMAIN UNLESS OTHERWISE APPROVED BY THE ENGINEER. THIS ITEM SHALL INCLUDE THE NEW ITS DISCONNECT AND ALL CONDUIT, FITTINGS, AND MATERIALS NECESSARY TO TIE INTO THE EXISTING METER BASE IN ORDER TO PROVIDE A COMPLETE AND FUNCTIONAL POWER SERVICE.

THE CCTV RELATED POWER SERVICE SHALL BE MARKED WITH “ITS”. ALL DISCONNECT SWITCHES SHALL BE FUSIBLE, RATED FOR 60 AMP WITH NEMA 4X ENCLOSURE, AND SHALL BE FUSED AT 30 AMPS. THIS SERVICE SHALL PROVIDE 240 VOLTS TO REACH THE RELATED SITE WHERE IT WILL THEN BE STEPPED DOWN TO 120 VOLTS VIA SEPARATE PAY ITEM.

ITEM 632: POWER SERVICE, AS PER PLAN J

THE CONTRACTOR SHALL FURNISH AND INSTALL ALL MATERIALS NECESSARY FOR A POWER SERVICE PER ODOT CONSTRUCTION AND MATERIAL SPECIFICATION SECTION 625.15.

THE EXISTING POWER SERVICE FOR THE TRAFFIC SIGNAL SHALL BE MAINTAINED. THE ITS POWER SERVICE SHALL BE TIED INTO THE EXISTING TRAFFIC SIGNAL POWER SERVICE. THE EXISTING TRAFFIC SIGNAL DISCONNECT SHALL REMAIN UNLESS OTHERWISE APPROVED BY THE ENGINEER. THIS ITEM SHALL INCLUDE THE REPLACEMENT OF THE EXISTING METER BASE, THE NEW ITS DISCONNECT AND ALL CONDUIT, FITTINGS, AND MATERIALS NECESSARY TO TIE INTO THE EXISTING METER BASE IN ORDER TO PROVIDE A COMPLETE AND FUNCTIONAL POWER SERVICE.

THE CCTV RELATED POWER SERVICE SHALL BE MARKED WITH “ITS”. ALL DISCONNECT SWITCHES SHALL BE FUSIBLE, RATED FOR 60 AMP WITH NEMA 4X ENCLOSURE, AND SHALL BE FUSED AT 30 AMPS. THIS SERVICE SHALL PROVIDE 240 VOLTS TO REACH THE RELATED SITE WHERE IT WILL THEN BE STEPPED DOWN TO 120 VOLTS VIA SEPARATE PAY ITEM.

ITEM 632: POWER SERVICE, AS PER PLAN K

THE CONTRACTOR SHALL FURNISH AND INSTALL ALL MATERIALS NECESSARY FOR A POWER SERVICE PER ODOT CONSTRUCTION AND MATERIAL SPECIFICATION SECTION 625.15.

THE EXISTING POWER SERVICE FOR THE HIGHWAY LIGHTING SHALL BE MAINTAINED. THE ITS POWER SERVICE SHALL BE TIED INTO THE EXISTING METER BASE ON THE EXISTING HIGHWAY LIGHTING GROUND MOUNT RACK. THE EXISTING METER BASE AND ALL DISCONNECTS SHALL REMAIN UNLESS OTHERWISE APPROVED BY THE ENGINEER. THIS ITEM SHALL INCLUDE THE NEW ITS DISCONNECT AND ALL CONDUIT, FITTINGS, AND MATERIALS NECESSARY TO TIE INTO THE EXISTING METER BASE IN ORDER TO PROVIDE A COMPLETE AND FUNCTIONAL POWER SERVICE.

THE CCTV RELATED POWER SERVICE SHALL BE MARKED WITH “ITS”. ALL DISCONNECT SWITCHES SHALL BE FUSIBLE, RATED FOR 60 AMP WITH NEMA 4X ENCLOSURE, AND SHALL BE FUSED AT 30 AMPS. THIS SERVICE SHALL PROVIDE 480 VOLTS TO REACH THE RELATED SITE WHERE IT WILL THEN BE STEPPED DOWN TO 120 VOLTS VIA SEPARATE PAY ITEM.

ITEM 632: POWER SERVICE, AS PER PLAN L

THE CONTRACTOR SHALL FURNISH AND INSTALL ALL MATERIALS NECESSARY FOR A POWER SERVICE PER ODOT CONSTRUCTION AND MATERIAL SPECIFICATION SECTION 625.15.

THE EXISTING POWER SERVICE FOR THE HIGHWAY LIGHTING SHALL BE MAINTAINED. THE ITS POWER SERVICE SHALL BE TIED INTO THE EXISTING HIGHWAY LIGHTING DISCONNECT CABINET AND BYPASS THE PHOTOCELL. A NEW ITS DISCONNECT SHALL BE GROUND MOUNTED ADJACENT TO THE EXISTING HIGHWAY LIGHTING DISCONNECT CABINET. ALL EXISTING EQUIPMENT SHALL REMAIN UNLESS OTHERWISE APPROVED BY THE ENGINEER. THIS ITEM SHALL INCLUDE THE NEW ITS DISCONNECT AND ALL CONDUIT, FITTINGS, AND MATERIALS NECESSARY TO TIE INTO THE HIGHWAY LIGHTING DISCONNECT CABINET IN ORDER TO PROVIDE A COMPLETE AND FUNCTIONAL POWER SERVICE.

THE CCTV RELATED POWER SERVICE SHALL BE MARKED WITH “ITS”. ALL DISCONNECT SWITCHES SHALL BE FUSIBLE, RATED FOR 60 AMP WITH NEMA 4X ENCLOSURE, AND SHALL BE FUSED AT 30 AMPS. THIS SERVICE SHALL PROVIDE 480 VOLTS TO REACH THE RELATED SITE WHERE IT WILL THEN BE STEPPED DOWN TO 120 VOLTS VIA SEPARATE PAY ITEM.

ITEM 632: POWER SERVICE, AS PER PLAN M

THE CONTRACTOR SHALL FURNISH AND INSTALL ALL MATERIALS NECESSARY FOR A POWER SERVICE PER ODOT CONSTRUCTION AND MATERIAL SPECIFICATION SECTION 625.15.

THE EXISTING POWER SERVICE FOR THE HIGHWAY LIGHTING SHALL BE MAINTAINED. THE ITS POWER SERVICE SHALL BE TIED INTO THE EXISTING METER BASE ON THE EXISTING HIGHWAY LIGHTING GROUND MOUNT RACK. THE EXISTING METER BASE AND ALL DISCONNECTS SHALL REMAIN UNLESS OTHERWISE APPROVED BY THE ENGINEER. THIS ITEM SHALL INCLUDE THE NEW ITS DISCONNECT AND ALL CONDUIT, FITTINGS, AND MATERIALS NECESSARY TO TIE INTO THE EXISTING METER BASE IN ORDER TO PROVIDE A COMPLETE AND FUNCTIONAL POWER SERVICE.

THE CCTV RELATED POWER SERVICE SHALL BE MARKED WITH “ITS”. ALL DISCONNECT SWITCHES SHALL BE FUSIBLE, RATED FOR 60 AMP WITH NEMA 4X ENCLOSURE, AND SHALL BE FUSED AT 30 AMPS. THIS SERVICE SHALL PROVIDE 480 VOLTS TO REACH THE RELATED SITE WHERE IT WILL THEN BE STEPPED DOWN TO 120 VOLTS VIA SEPARATE PAY ITEM.

ITS NOTES

D3/D4/D12 ITS CAMERA ADDITIONS

MODEL: Sheet_SurvFt PAPERSIZE: 34x22 (in.) DATE: 3/26/2024 TIME: 3:37:25 PM USER: USBT726326
pw:\\wsp-us-pw.bentley.com:wsp-us-pw-02\Documents\OH - OHIO Projects\118895\400-Engineering\Signals\Sheets\118895_CN002.dgn

DESIGN AGENCY
WSP USA, Inc.
2 Miranova Pl,
Suite 450
Columbus, OH 43215

DESIGNER
NWA

REVIEWER
BPT 02/02/24

PROJECT ID
118895

SHEET P.10 TOTAL 55

POWER SERVICE DETAILS

Site #	Sheet #	Name	Latitude	Longitude	Power Service Note	New or Existing	Power Service Provider	Voltage Supplied	Step Down Transformer	Fuse Rating	Fuse	Power Service Type	ITS SCD	ARC FLASH LABEL AND CALCULATIONS
1	P.24	US-250 & SR-2	41.39983	-82.65588	I	EXISTING	FIRST ENERGY METER #: S310484666	120/ 240 VOLT		60 AMP	30 AMPS	GROUND MOUNTED	ITS-15.10	YES
2	P.25	SR-2/US-6 & Rye Beach Rd	41.40502	-82.59086	B	NEW	FIST ENERGY	120/ 240 VOLT		60 AMP	30 AMPS	POLE MOUNTED	ITS-15.11	YES
3	P.26	SR-2 & SR-58	41.41446	-82.20872	B	NEW	CITY OF AMHERST UTILITIES	120/ 240 VOLT		60 AMP	30 AMPS	POLE MOUNTED	ITS-15.11	YES
4	P.27	US 20 & SR-301	41.31798	-82.11728	J	EXISTING	FIRST ENERGY METER #: 950962039	120/ 240 VOLT		60 AMP	30 AMPS	SIGNAL STRAIN POLE MOUNTED	ITS-15.11	YES
5	P.28	I-90 & SR-611	41.46331	-82.05508	B	NEW	FIRST ENERGY	120/ 240 VOLT		60 AMP	30 AMPS	POLE MOUNTED	ITS-15.11	YES
6	P.29	I-90 & Nagel Rd	41.46491	-81.98921	K	EXISTING	FIRST ENERGY	240/ 480 VOLT	YES	60 AMP	30 AMPS	GROUND MOUNTED	ITS-15.10	YES
7	P.30	I-71 & SR-3	41.19308	-81.7911	E	EXISTING	FIRST ENERGY	120/ 240 VOLT		60 AMP	30 AMPS	SIGNAL STRAIN POLE MOUNTED	ITS-15.11	YES
8	P.31	I-76 & SR-57	41.03372	-81.76166	F	EXISTING	FIRST ENERGY	120/ 240 VOLT		60 AMP	30 AMPS	SIGNAL STRAIN POLE MOUNTED	ITS-15.11	YES
9	P.32	I-76 & SR-94	41.04698	-81.72925	A	NEW	WADSWORTH	120/ 240 VOLT		60 AMP	30 AMPS	GROUND MOUNTED	ITS-15.10	YES
10	P.33	I-271 & SR-94	41.19341	-81.74352	E	EXISTING	FIST ENERGY METER #: S313509589	120/ 240 VOLT		60 AMP	30 AMPS	SIGNAL STRAIN POLE MOUNTED	ITS-15.11	YES
11	P.34	US-30 & SR-13	40.77871	-82.51188	A	NEW	FIRST ENERGY	120/ 240 VOLT		60 AMP	30 AMPS	GROUND MOUNTED	ITS-15.10	YES
12	P.35	I-480 & Grayton Rd	41.42365	-81.84625	B	NEW	FIRST ENERGY	120/ 240 VOLT		60 AMP	30 AMPS	POLE MOUNTED	ITS-15.11	YES
13	P.36	I-480 & W150th St	41.42087	-81.80141	A	NEW	FIRST ENERGY	120/ 240 VOLT		60 AMP	30 AMPS	GROUND MOUNTED	ITS-15.10	YES
14	P.37	I-480 & Ridge Rd	41.42155	-81.73409	A	NEW	FIRST ENERGY	120/ 240 VOLT		60 AMP	30 AMPS	GROUND MOUNTED	ITS-15.10	YES
15	P.38	I-480 & SR-176	41.42173	-81.68494	D	NEW	FIRST ENERGY	240/ 480 VOLT	YES	60 AMP	30 AMPS	POLE MOUNTED	ITS-15.11	YES
16	P.39	I-480 & Great Northern Blvd	41.41349	-81.90225	C	NEW	FIRST ENERGY	240/ 480 VOLT	YES	60 AMP	30 AMPS	GROUND MOUNTED	ITS-15.10	YES
17	P.40	I-480 & Stearns Rd	41.39662	-81.94428	B	NEW	FIRST ENERGY	120/ 240 VOLT		60 AMP	30 AMPS	POLE MOUNTED	ITS-15.11	YES
18	P.41	I-77 & Rockside Rd	41.39703	-81.65338	A	NEW	FIRST ENERGY	120/ 240 VOLT		60 AMP	30 AMPS	GROUND MOUNTED	ITS-15.10	YES
19	P.42	I-490 & E 55th St	41.4793	-81.66057	G	EXISTING	CLEVELAND PUBLIC POWER METER #: 56479680	240/ 480 VOLT	YES	60 AMP	30 AMPS	GROUND MOUNTED	ITS-15.10	YES
20	P.43	I-71 & US-42/Pearl Rd	41.3569	-81.81887	H	EXISTING	FIRST ENERGY	120/ 240 VOLT		60 AMP	30 AMPS	POLE MOUNTED	ITS-15.11	YES
21	P.44	I-90 & Crocker Rd	41.4678	-81.95042	L	EXISTING	FIRST ENERGY	240/ 480 VOLT	YES	60 AMP	30 AMPS	GROUND MOUNTED	ITS-15.10	YES
22	P.45	I-271 & Boston Mills Rd	41.26354	-81.55358	A	NEW	FIRST ENERGY	120/ 240 VOLT		60 AMP	30 AMPS	GROUND MOUNTED	ITS-15.10	YES
23	P.46	I-76 & SR-43	41.10779	-81.3479	B	NEW	FIRST ENERGY	120/ 240 VOLT		60 AMP	30 AMPS	POLE MOUNTED	ITS-15.11	YES
24	P.47	I-76 & SR-44	41.10964	-81.24208	B	NEW	FIRST ENERGY	120/ 240 VOLT		60 AMP	30 AMPS	POLE MOUNTED	ITS-15.11	YES
25	P.48	I-76 & SR-14	41.10558	-81.15638	B	NEW	FIRST ENERGY	120/ 240 VOLT		60 AMP	30 AMPS	POLE MOUNTED	ITS-15.11	YES
26	P.49	I-680 & I-80/SR-11	41.12436	-80.75194	M	EXISTING	FIRST ENERGY	240/ 480 VOLT	YES	60 AMP	30 AMPS	GROUND MOUNTED	ITS-15.10	YES
27	P.50	I-680 & US-224	41.02388	-80.62602	B	NEW	FIRST ENERGY	120/ 240 VOLT		60 AMP	30 AMPS	POLE MOUNTED	ITS-15.11	YES
28	P.51	I-680 & Market St	41.09121	-80.65057	D	NEW	FIRST ENERGY	240/ 480 VOLT	YES	60 AMP	30 AMPS	POLE MOUNTED	ITS-15.11	YES
29	P.52	I-90 & SR-193	41.88094	-80.66666	B	NEW	FIRST ENERGY	120/ 240 VOLT		60 AMP	30 AMPS	POLE MOUNTED	ITS-15.11	YES
30	P.53	I-90 & SR-7	41.9167	-80.56828	D	NEW	FIRST ENERGY	240/ 480 VOLT	YES	60 AMP	30 AMPS	POLE MOUNTED	ITS-15.11	YES
31	P.54	I-90 & WB Rest Area - MM241	41.92381	-80.5475	B	NEW	FIRST ENERGY	120/ 240 VOLT		60 AMP	30 AMPS	POLE MOUNTED	ITS-15.11	YES
32	P.55	I-480 & Warrensville Rd	41.42522	-81.53757	H	Existing	First Energy	120/ 240 VOLT		60 AMP	30 AMPS	POLE MOUNTED	ITS-15.11	YES

ITS NOTES

D3/D4/D12 ITS CAMERA ADDITIONS

MODEL: Sheet_SurvFt PAPERSIZE: 34x22 (in.) DATE: 3/26/2024 TIME: 4:21:37 PM USER: USBT7726326
pw:\\wsp-us-pw.bentley.com:wsp-us-pw-02\Documents\OH - OHIO Projects\118895\400-Engineering\Signals\Sheets\118895_CN003.dgn

DESIGN AGENCY
WSP USA, Inc.
2 Miranova Pl,
Suite 450
Columbus, OH 43215

DESIGNER NWA
REVIEWER BPT 03/26/24
PROJECT ID 118895
SHEET P.11 TOTAL 55

SHEET NO.	LOCATION	201 CLEARING AND GRUBBING LS	202 FENCE REMOVED FT	204 SUBGRADE COMPACTION SY	304 AGGREGATE BASE CY	606 ANCHOR ASSEMBLY, TYPE T EACH	606 GUARDRAIL, TYPE MGS FT	607 GATE, TYPE CLT EACH	625 NO. 1/0 AWG 2400 VOLT DISTRIBUTION CABLE FT	625 NO. 6 AWG 600 VOLT DISTRIBUTION CABLE FT	625 NO. 4 AWG 600 VOLT DISTRIBUTION CABLE FT	625 NO. 2 AWG 600 VOLT DISTRIBUTION CABLE FT	625 CONDUIT, 2", 725.051 FT	625 CONDUIT, 2", 725.052 FT	625 CONDUIT, 3", 725.051 FT	625 CONDUIT, JACKED OR DRILLED, 2" 725.052, SCHEDULE 80 FT	625 TRENCH, 30" DEEP FT	625 PULL BOX, 725.08, 18" EACH	625 GROUND ROD, AS PER PLAN EACH	625 POWER SERVICE, AS PER PLAN, A EACH	625 POWER SERVICE, AS PER PLAN, B EACH	625 POWER SERVICE, AS PER PLAN, C EACH	625 POWER SERVICE, AS PER PLAN, D EACH	625 POWER SERVICE, AS PER PLAN, E EACH	625 POWER SERVICE, AS PER PLAN, F EACH
P.24	US-250 & SR-2			138	31				525					370	22	565	185	4	5						
P.25	SR-2/SR-6 & RYE BEACH ROAD			452	101						250			205	22		205	2	4		1				
P.26	SR-2 &SR-58			198	44					120				75	22		75	2	4		1				
P.27	US-20 & SR-301			137	31				520					310	22		310	1	2						
P.28	I-90 & SR-611			128	29				470					265	22	150	265	3	5		1				
P.29	I-90 & NAGEL ROAD			137	31					65				30	22		30	1	2						
P.30	I-71 & SR-3			304	68							332	30	378	22	321	432	3	4					1	
P.31	I-76 & SR-57			134	30					236			122	85	22	120	113	4	6						1
P.32	I-76 & SR-94			134	30	2	37.5			159				64	22		64	2	4	1					
P.33	I-271 & SR-94			134	30					135			30	150	22		180	2	4					1	
P.34	US-30 & SR-13			203	45				681					495	22	71	495	4	6	1					
P.35	I-480 & GRAYTON ROAD			189	42				726				40	0	22	51	585	4	6		1				
P.36	I-480 & WEST 150TH STREET			134	30					198				18	22	85	18	2	4	1					
P.37	I-480 & RIDGE ROAD			134	30	2	75		645					82	22	438	82	5	7	1					
P.38	I-480 & SR-176	1		134	30					918				733	22	85	733	4	6					1	
P.39	I-480 & GREAT NORTHERN BOULEVARD			157	35					871				528	22	193	528	8	6				1		
P.40	I-480 & STEARNS ROAD		14	190	43			1				511		431	22		431	3	5		1				
P.41	I-77 SOUTH OF ROCKSIDE ROAD			150	34					252				59	22	113	59	2	4	1					
P.42	I-490 & E 55TH STREET			242	54							1247		1024	22	65	1024	6	5						
P.43	I-71 & US-42/PEARL ROAD			324	72					162				102	22		102	1	3						
P.44	I-90 & CROCKER ROAD			180	40					780				530	22	165	530	6	7						
P.45	I-271 & BOSTON MILLS ROAD			134	30					439				344	22		344	2	4	1					
P.46	I-76 & SR-43	1		169	38					60				15	22		15	1	3		1				
P.47	I-76 & SR-44			134	30					190					22	145		2	4		1				
P.48	I-76 & SR-14	1		134	30						260			80	22	125	80	3	5		1				
P.49	I-680 & I-80/SR-11	1		401	90					790				555	22	170	555	4	5						
P.50	I-680 & US-224			454	101					180					22	135		2	4		1				
P.51	I-680 & US-62 (EAST OF MARKET STREET)			238	53					1225				1080	22	70	1080	5	7					1	
P.52	I-90 & SR-193			138	31					45				10	22		10	1	3		1				
P.53	I-90 & SR-7			138	31					1940				1410	22	415	1410	9	11					1	
P.54	I-90 & WEST BOUND REST AREA MM 241			138	31				640					425	22	150	425	4	6		1				
P.55	I-480 & WARRENSVILLE CENTER RD			134	30					175				132	22		137	1	1						
		LS	14	6145	1375	4	112.5	1	4207	8940	510	2090	222	9985	704	3632	10502	103	152	6	11	1	3	2	1

D3/D4/D12 ITS CAMERA ADDITIONS

ITS SUBSUMMARY

MODEL: Sheet_SurvFt PAPERSIZE: 34x22 (in.) DATE: 3/26/2024 TIME: 3:37:42 PM USER: USBT7263326
pw:\\wsp-us-pw.bentley.com:wsp-us-pw-02\Documents\OH - OHIO Projects\118895\400-Engineering\Signals\Sheets\118895_CS001.dgn

DESIGN AGENCY
WSP USA, Inc.
2 Miranova Pl,
Suite 450
Columbus, OH 43215

DESIGNER NWA
REVIEWER BPT 03/26/24
PROJECT ID 118895
SHEET P.12 TOTAL 55

SHEET NO.	STATION TO STATION	625 POWER SERVICE, AS PER PLAN, G EACH	625 POWER SERVICE, AS PER PLAN, H EACH	625 POWER SERVICE, AS PER PLAN, I EACH	625 POWER SERVICE, AS PER PLAN, J EACH	625 POWER SERVICE, AS PER PLAN, K EACH	625 POWER SERVICE, AS PER PLAN, L EACH	625 POWER SERVICE, AS PER PLAN, M EACH	625 UNDERGROUND WARNING/MARKING TAPE FT	625 UNDERGROUND WARNING/MARKING TAPE, AS PER PLAN FT	625 LIGHTING, MISC.: STEP-DOWN TRANSFORMER AND SUPPORT EACH	632 CONDUIT RISER, 2" DIAMETER EACH	633 CABINET FOUNDATION, AS PER PLAN EACH	809 32" ITS PULL BOX WITH PAD AND STANDARD LID ASSEMBLY EACH	809 32" ITS PULL BOX WITH PAD AND HINGED LID ASSEMBLY EACH	809 CONDUIT, 4", MULTICELL, HDPE WITH 4-1" INNERDUCTS EACH	809 CCTV IP-CAMERA SYSTEM, QUAD MULTI-VIEW FIXED WITH PTZ EACH	809 CCTV LOWERING UNIT EACH	809 CCTV CONCRETE POLE, 70 FEET EACH	809 ITS CABINET - GROUND MOUNTED EACH	809 ITS DEVICE, MISC.: REMOVAL OF POLE OR DEVICE EACH
P.24	US-250 & SR-2			1					22	470			1	4		12	1	1	1	1	
P.25	SR-2/SR-6 & RYE BEACH ROAD								22				1	1		12	1		1	1	
P.26	SR-2 &SR-58								22				1	1		12	1		1	1	
P.27	US-20 & SR-301				1				22				1	1		12	1		1	1	1
P.28	I-90 & SR-611								22				1	1		12	1		1	1	
P.29	I-90 & NAGEL ROAD					1			22		1		1	1		12	1		1	1	
P.30	I-71 & SR-3								22	207			1	4		12	1		1	1	
P.31	I-76 & SR-57								22	113			1	1	2	12	1		1	1	
P.32	I-76 & SR-94								22			1	1	1		12	1		1	1	
P.33	I-271 & SR-94								22	85			1	1		12	1		1	1	
P.34	US-30 & SR-13								22				1	1		12	1	1	1	1	
P.35	I-480 & GRAYTON ROAD								22			1	1	1		12	1		1	1	
P.36	I-480 & WEST 150TH STREET								22			1	1	1		12	1		1	1	
P.37	I-480 & RIDGE ROAD								22			1	1	1		12	1		1	1	
P.38	I-480 & SR-176								22		1	1	1	1		12	1		1	1	
P.39	I-480 & GREAT NORTHERN BOULEVARD								22		2		1	1		12	1		1	1	
P.40	I-480 & STEARNS ROAD								22			1	1	1		12	1		1	1	
P.41	I-77 SOUTH OF ROCKSIDE ROAD								22				1	1		12	1		1	1	
P.42	I-490 & E 55TH STREET	1							22		1		1	1		12	1		1	1	
P.43	I-71 & US-42/PEARL ROAD		1						22				1	1		12	1		1	1	1
P.44	I-90 & CROCKER ROAD						1		22		1		1	1		12	1	1	1	1	
P.45	I-271 & BOSTON MILLS ROAD								22			1	1	1		12	1		1	1	
P.46	I-76 & SR-43								22				1	1		12	1		1	1	
P.47	I-76 & SR-44												1	1		12	1		1	1	
P.48	I-76 & SR-14								22				1	1		12	1		1	1	
P.49	I-680 & I-80/SR-11							1	22		1		1	1		12	1		1	1	
P.50	I-680 & US-224												1	1		12	1		1	1	
P.51	I-680 & US-62 (EAST OF MARKET STREET)								22		1		1	1		12	1		1	1	
P.52	I-90 & SR-193								22				1	1		12	1		1	1	
P.53	I-90 & SR-7								22		1		1	1		12	1		1	1	
P.54	I-90 & WEST BOUND REST AREA MM 241								22				1	1		12	1	1	1	1	
P.55	I-480 & WARRENSVILLE CENTER RD		1						22				1	1		12	1		1	1	1
		1	2	1	1	1	1	1	660	875	9	7	32	38	2	384	32	4	32	32	3

ITS SUBSUMMARY

D3/D4/D12 ITS CAMERA ADDITIONS

MODEL: Sheet_SurvFt PAPERSIZE: 34x22 (in.) DATE: 3/26/2024 TIME: 3:37:51 PM USER: USBT726326
pw:\\wsp-us-pw.bentley.com:wsp-us-pw-02\Documents\OH - OHIO Projects\118895\400-Engineering\Signals\Sheets\118895_CS002.dgn

DESIGN AGENCY
WSP USA, Inc.
2 Miranova Pl,
Suite 450
Columbus, OH 43215

DESIGNER
NWA

REVIEWER
BPT 03/26/24

PROJECT ID
118895

SHEET P.13 TOTAL 55

EX. ODOT
MODIFIED POWER SERVICE
US-250 & SR-2 P.24

GROUND MOUNTED POWER SERVICE
FRONT VIEW

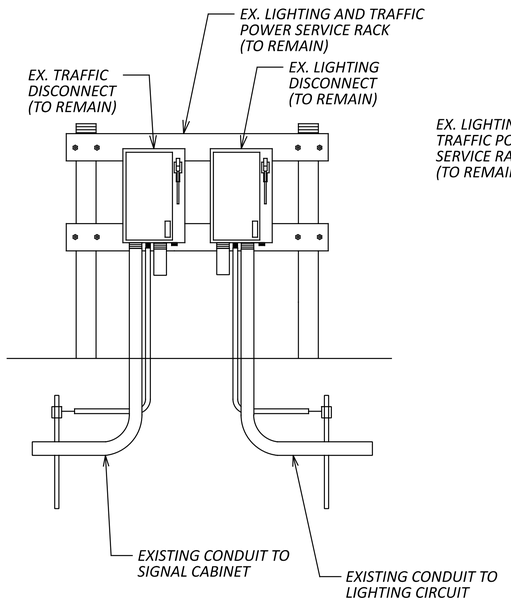

GROUND MOUNTED POWER SERVICE
BACK VIEW

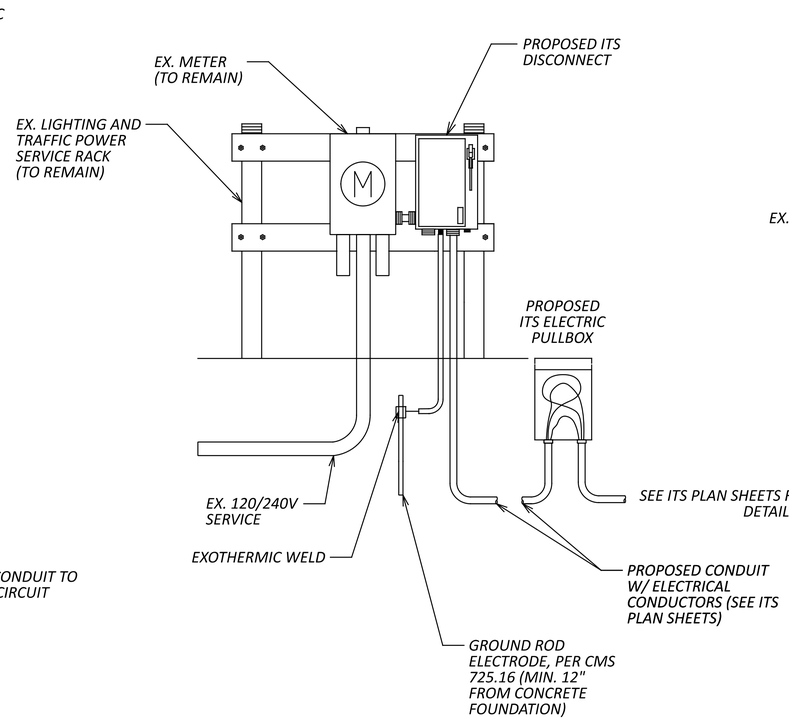

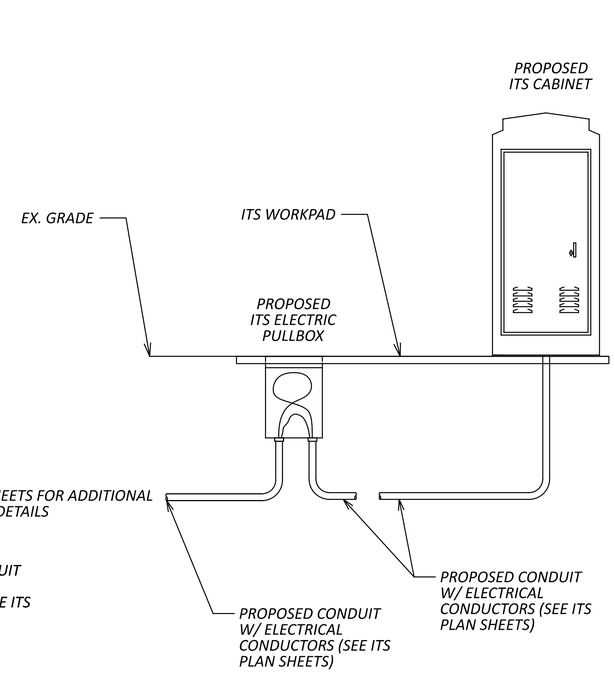

NOTES:
1. THE ITS POWER SERVICE SHALL FOLLOW THE SCD'S ITS-15.10 OR 15.11.

2. THE GROUNDING AND BONDING SHALL FOLLOW SCD ITS-50.10 AND OTHER APPLICABLE STANDARDS.

D3/D4/D12 ITS CAMERA ADDITIONS

MODEL: Sheet_SurvFt PAPERSIZE: 34x22 (in.) DATE: 3/26/2024 TIME: 3:37:58 PM USER: USBT7726326
pw:\\wsp-us-pw.bentley.com:wsp-us-pw-02\Documents\OH - OHIO Projects\118895\400-Engineering\Signals\Sheets\118895_CD001.dgn

ITS POWER SERVICE ELECTRICAL DETAILS

DESIGN AGENCY
ARCADIS
1111 SUPERIOR AVENUE SUITE 1300
CLEVELAND, OHIO 44114
(216) 781-5477
www.arcadis.com

DESIGNER
KAH

REVIEWER
CRE 02/02/24

PROJECT ID
118895

SHEET P.14 TOTAL 55

EX. ODOT SIGNAL
MODIFIED POWER SERVICE
US-20 & SR-301 P.27

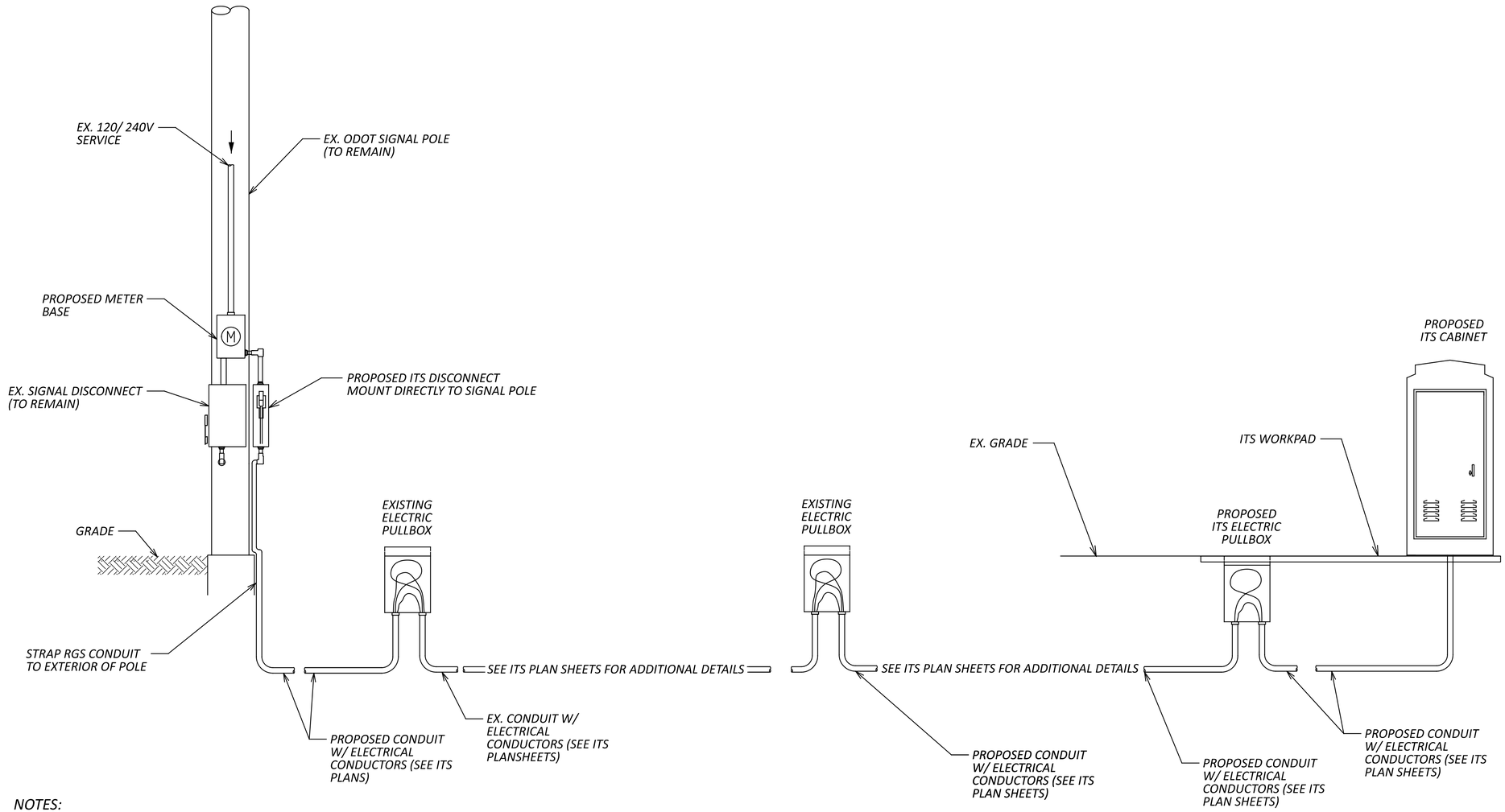

NOTES:
1. THE ITS POWER SERVICE SHALL FOLLOW THE SCD'S ITS-15.10 OR 15.11.

2. THE GROUNDING AND BONDING SHALL FOLLOW SCD ITS-50.10 AND OTHER APPLICABLE STANDARDS.

D3/D4/D12 ITS CAMERA ADDITIONS

MODEL: Sheet_SurvFt PAPERSIZE: 34x22 (in.) DATE: 3/26/2024 TIME: 3:38:06 PM USER: USBT726326
pw:\\wsp-us-pw.bentley.com:wsp-us-pw-02\Documents\OH - OHIO Projects\118895\400-Engineering\Signals\Sheets\118895_CD004.dgn

ITS POWER SERVICE ELECTRICAL DETAILS

DESIGN AGENCY
ARCADIS
1111 SUPERIOR AVENUE, SUITE 1300
CLEVELAND, OHIO 44114
(216) 736-7500
www.arcadis.com

DESIGNER
KAH

REVIEWER
CRE 02/02/24

PROJECT ID
118895

SHEET P.15 TOTAL 55

EX. ODOT SIGNAL
MODIFIED POWER SERVICE
I-90 & NAGEL RD P.29

GROUND MOUNTED POWER SERVICE FRONT VIEW

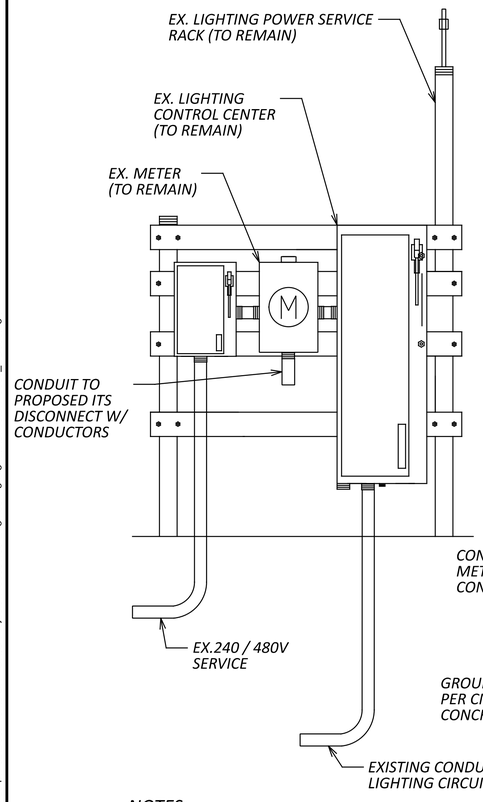

GROUND MOUNTED POWER SERVICE BACK VIEW

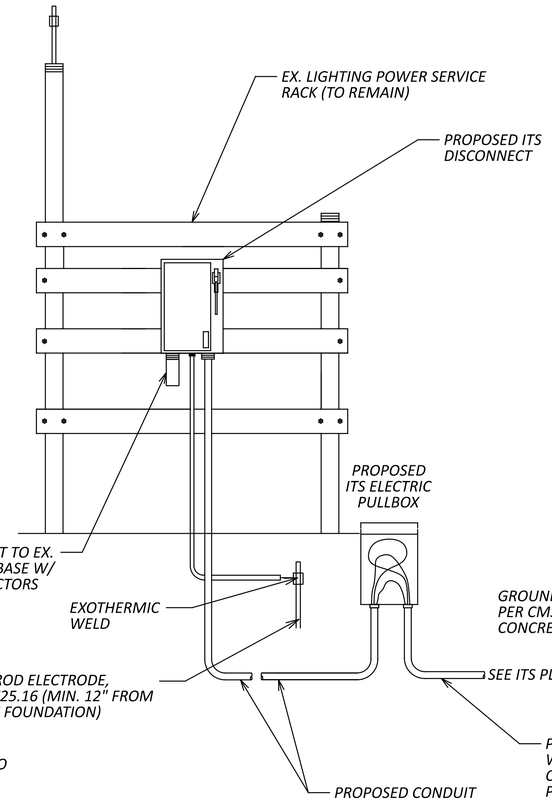

GROUND MOUNTED STEP-DOWN TRANSFORMER

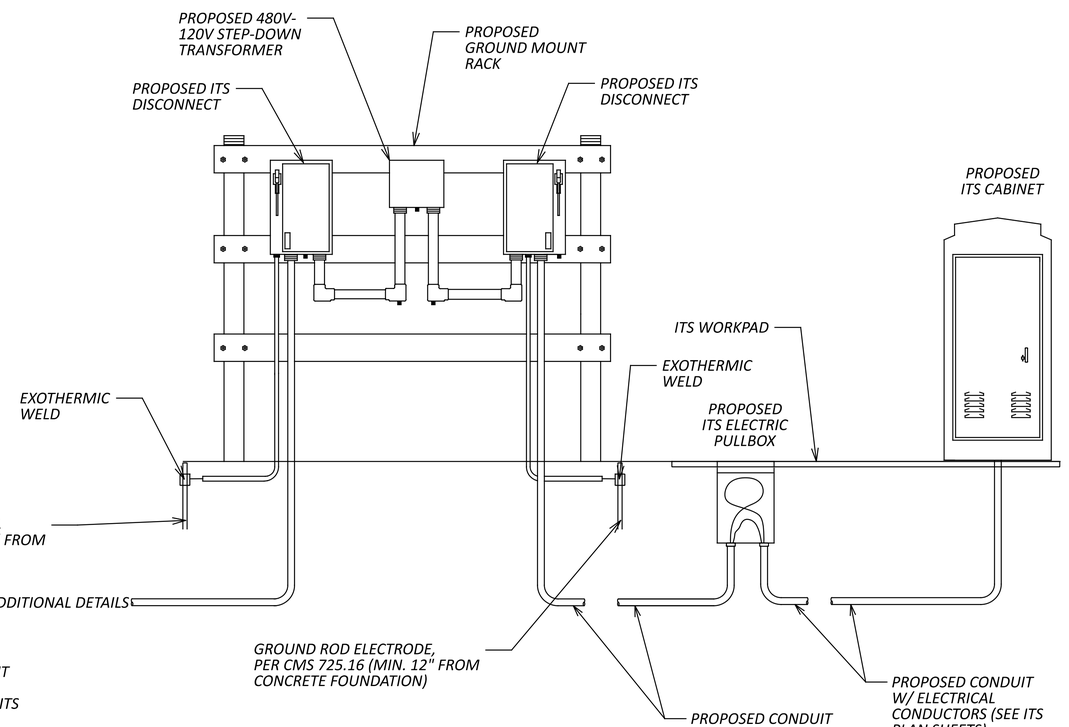

NOTES:
1. THE ITS POWER SERVICE SHALL FOLLOW THE SCD'S ITS-15.10 OR 15.11.

2. THE GROUNDING AND BONDING SHALL FOLLOW SCD ITS-50.10 AND OTHER APPLICABLE STANDARDS.

D3/D4/D12 ITS CAMERA ADDITIONS

MODEL: Sheet_SurvFt PAPERSIZE: 34x22 (in.) DATE: 3/26/2024 TIME: 3:38:14 PM USER: USBT726326
pw:\\wsp-us-pw.bentley.com:wsp-us-pw-02\Documents\OH - OHIO Projects\118895400-Engineering\Signals\Sheets\118895_CD006.dgn

ITS POWER SERVICE ELECTRICAL DETAILS

DESIGN AGENCY
ARCADIS
1111 SUPERIOR AVENUE SUITE 1300
CLEVELAND, OHIO 44114
(216) 781-7377
www.arcadis.com

DESIGNER
KAH

REVIEWER
CRE 02/02/24

PROJECT ID
118895

SHEET P.16 TOTAL 55

MODEL: Sheet_Surf1 PAPERSIZE: 34x22 (in.) DATE: 3/26/2024 TIME: 3:38:26 PM USER: USBT726326
pw:\\wsp-us-pw.bentley.com:wsp-us-pw-02\Documents\OH - OHIO Projects\118895\400-Engineering\Signals\Sheets\118895_CD007.dgn

EX. ODOT SIGNAL MODIFIED POWER SERVICE

I-71 & SR-3 P.30

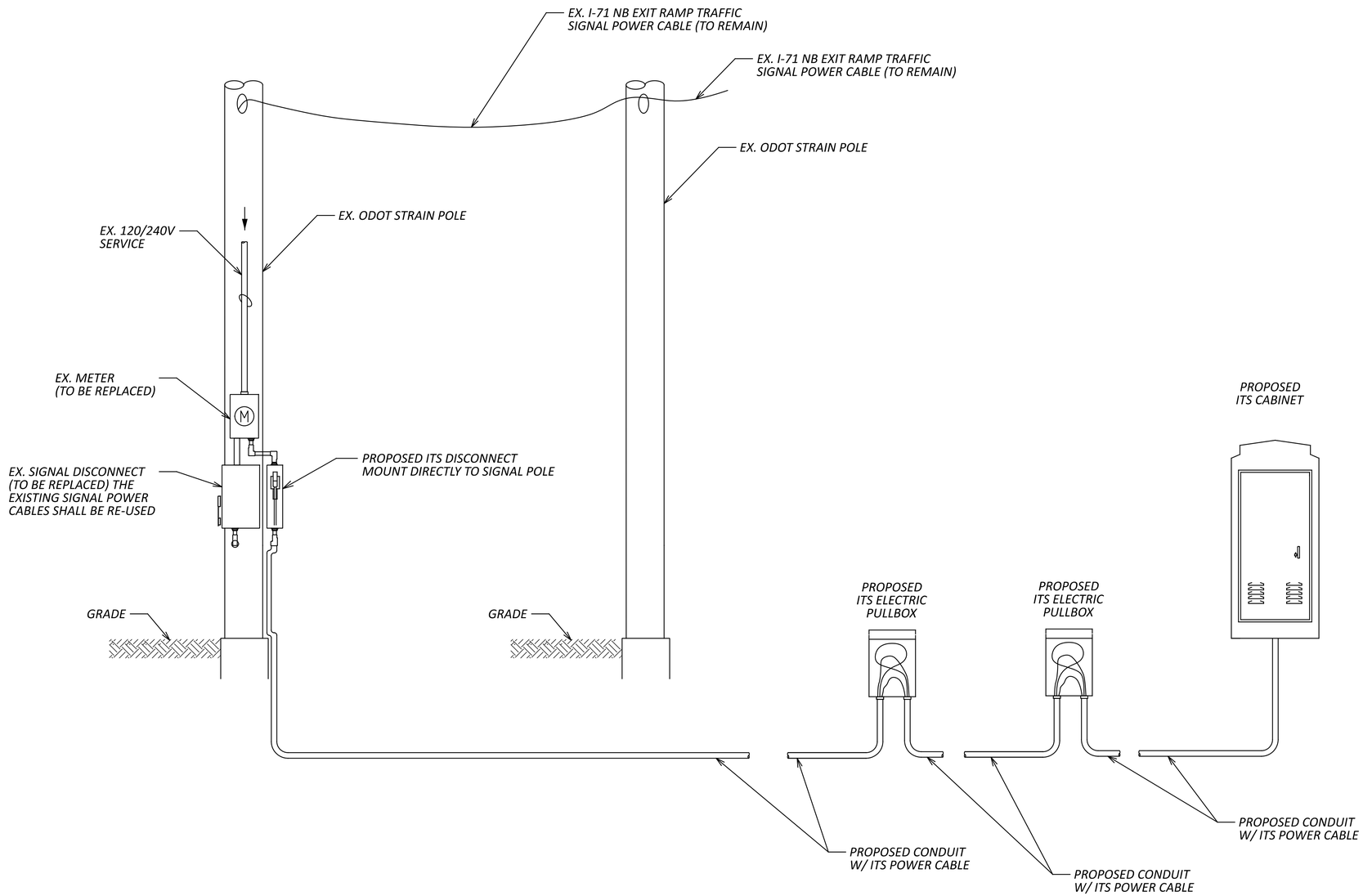

NOTES:
1. THE ITS POWER SERVICE SHALL FOLLOW THE SCD'S ITS-15.10 OR 15.11.

2. THE GROUNDING AND BONDING SHALL FOLLOW SCD ITS-50.10 AND OTHER APPLICABLE STANDARDS.

ITS POWER SERVICE ELECTRICAL DETAILS

DESIGN AGENCY
WSP USA, Inc.
2 Miranova Pl,
Suite 450
Columbus, OH 43215

DESIGNER BPT

REVIEWER NWA 02/02/24

PROJECT ID 118895

D3/D4/D12 ITS CAMERA ADDITIONS

MODEL: Sheet_SurvFt PAPERSIZE: 34x22 (in.) DATE: 3/26/2024 TIME: 3:38:35 PM USER: USBT726326
pw:\\wsp-us-pw.bentley.com:wsp-us-pw-02\Documents\OH - OHIO Projects\118895\400-Engineering\Signals\Sheets\118895_CD008.dgn

EX. ODOT SIGNAL
MODIFIED POWER SERVICE
I-76 & SR-57 P.31

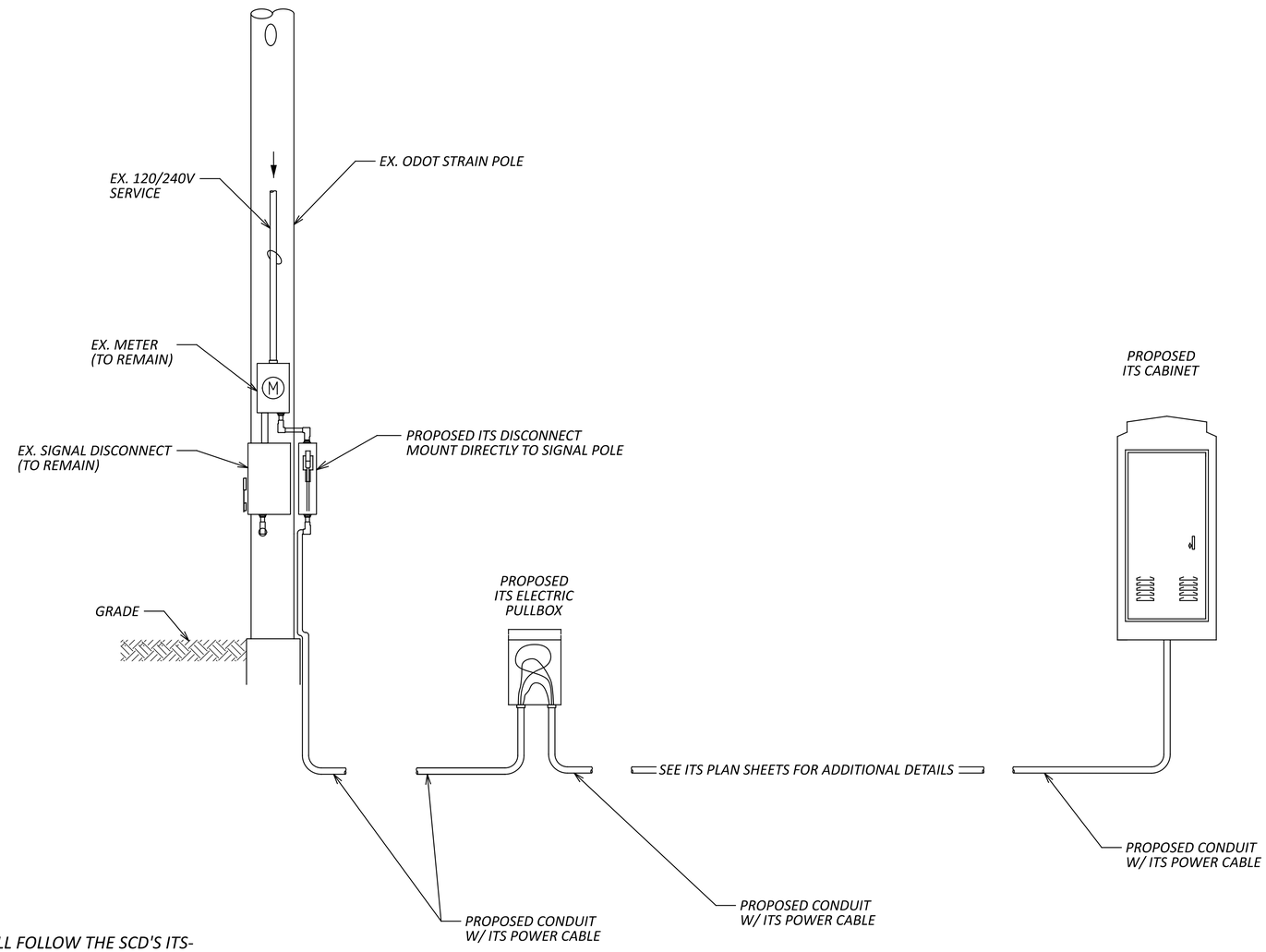

NOTES:
1. THE ITS POWER SERVICE SHALL FOLLOW THE SCD'S ITS-15.10 OR 15.11.

2. THE GROUNDING AND BONDING SHALL FOLLOW SCD ITS-50.10 AND OTHER APPLICABLE STANDARDS.

ITS POWER SERVICE ELECTRICAL DETAILS

DESIGN AGENCY
WSP USA, Inc.
2 Miranova Pl,
Suite 450
Columbus, OH 43215

DESIGNER BPT
REVIEWER NWA 02/02/24
PROJECT ID 118895
SHEET P.18 TOTAL 55

EX. ODOT SIGNAL
MODIFIED POWER SERVICE
I-271 & SR-94 P.33

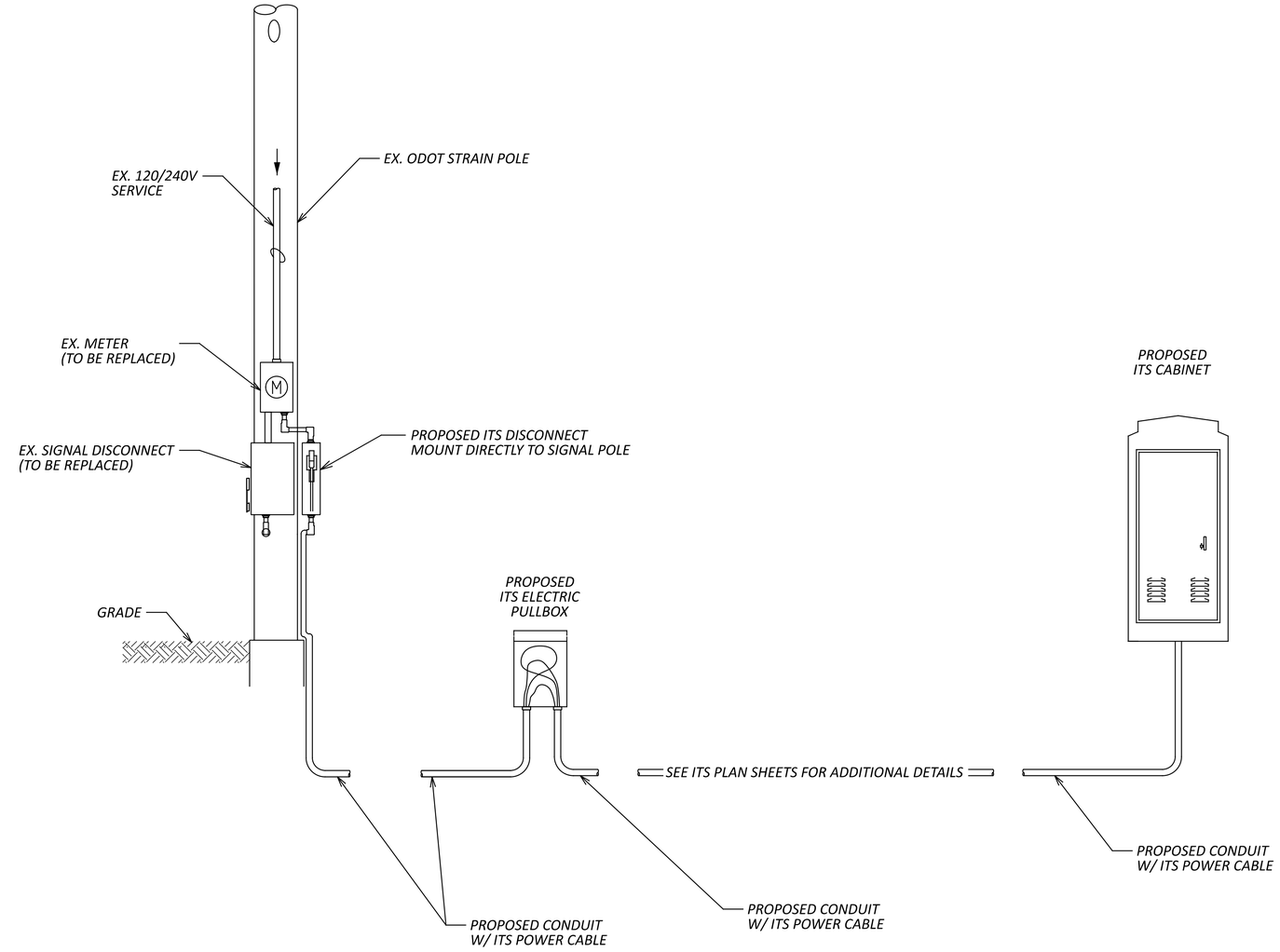

NOTES:
1. THE ITS POWER SERVICE SHALL FOLLOW THE SCD'S ITS-15.10 OR 15.11.

2. THE GROUNDING AND BONDING SHALL FOLLOW SCD ITS-50.10 AND OTHER APPLICABLE STANDARDS.

D3/D4/D12 ITS CAMERA ADDITIONS

MODEL: Sheet_SurvFt PAPERSIZE: 34x22 (in.) DATE: 3/26/2024 TIME: 3:38:44 PM USER: USBT726326
pw:\\wsp-us-pw.bentley.com:wsp-us-pw-02\Documents\OH - OHIO Projects\118895400-Engineering\Signals\Sheets\118895_CD010.dgn

ITS POWER SERVICE ELECTRICAL DETAILS

DESIGN AGENCY
WSP USA, Inc.
2 Miranova Pl,
Suite 450
Columbus, OH 43215

DESIGNER BPT
REVIEWER NWA 02/02/24
PROJECT ID 118895
SHEET P.19 TOTAL 55

SPLICED POWER SERVICE
I-490 & EAST 55TH ST P.42

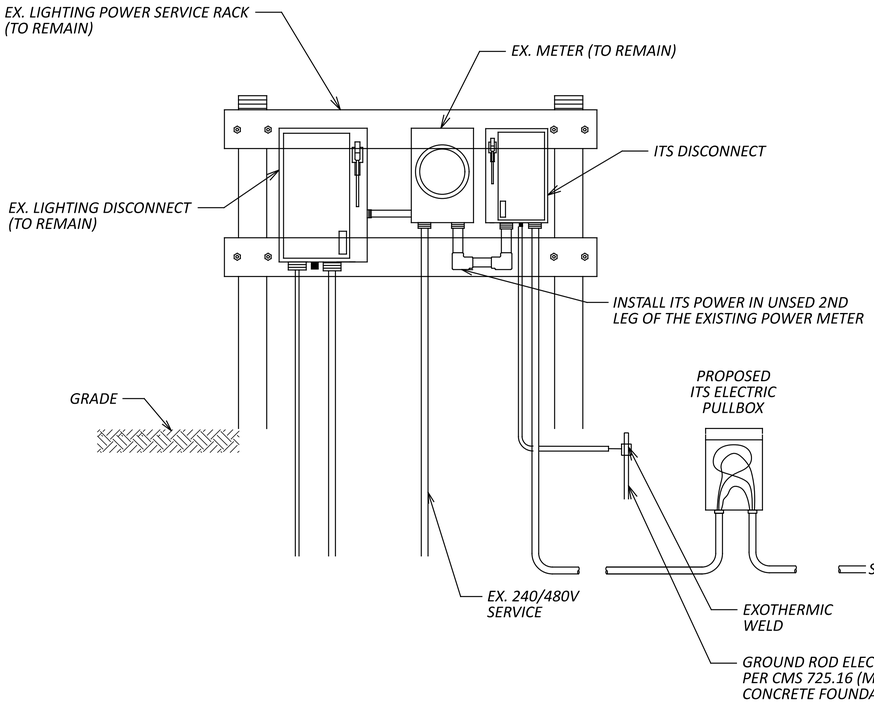

GROUND MOUNTED
STEP-DOWN TRANSFORMER

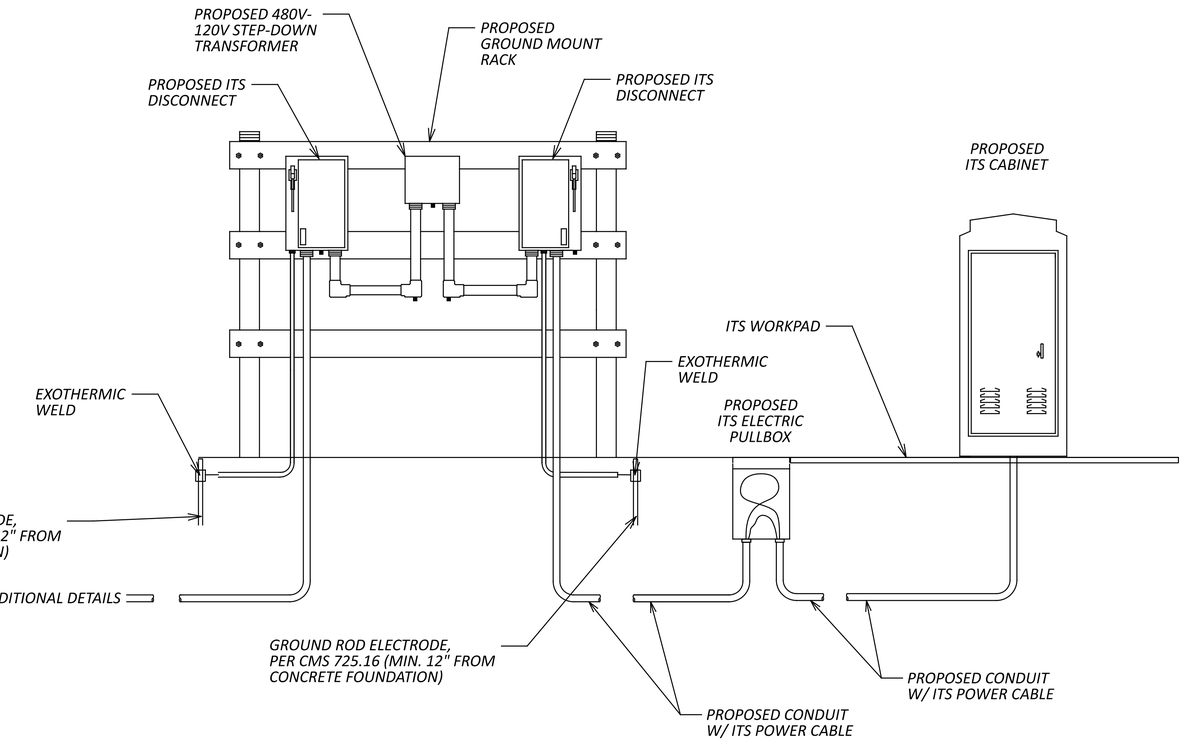

NOTES:
1. THE ITS POWER SERVICE SHALL FOLLOW THE SCD'S ITS-15.10 OR 15.11.

2. FOR POWER SERVICE DETAILS. THE GROUNDING AND BONDING SHALL FOLLOW SCD ITS-50.10.

D3/D4/D12 ITS CAMERA ADDITIONS

MODEL: Sheet_SurvFt PAPERSIZE: 34x22 (in.) DATE: 3/26/2024 TIME: 3:38:53 PM USER: USBT7226326
pw:\\wsp-us-pw.bentley.com:wsp-us-pw-02\Documents\OH - OHIO Projects\118895\400-Engineering\Signals\Sheets\118895_CD021.dgn

ITS POWER SERVICE ELECTRICAL DETAILS

DESIGN AGENCY
WSP USA, Inc.
2 Miranova Pl,
Suite 450
Columbus, OH 43215

DESIGNER BPT
REVIEWER NWA 02/02/24
PROJECT ID 118895
SHEET P.20 TOTAL 55

EX. ODOT LIGHTING
MODIFIED POWER SERVICE
I-90 & CROCKER RD P.44

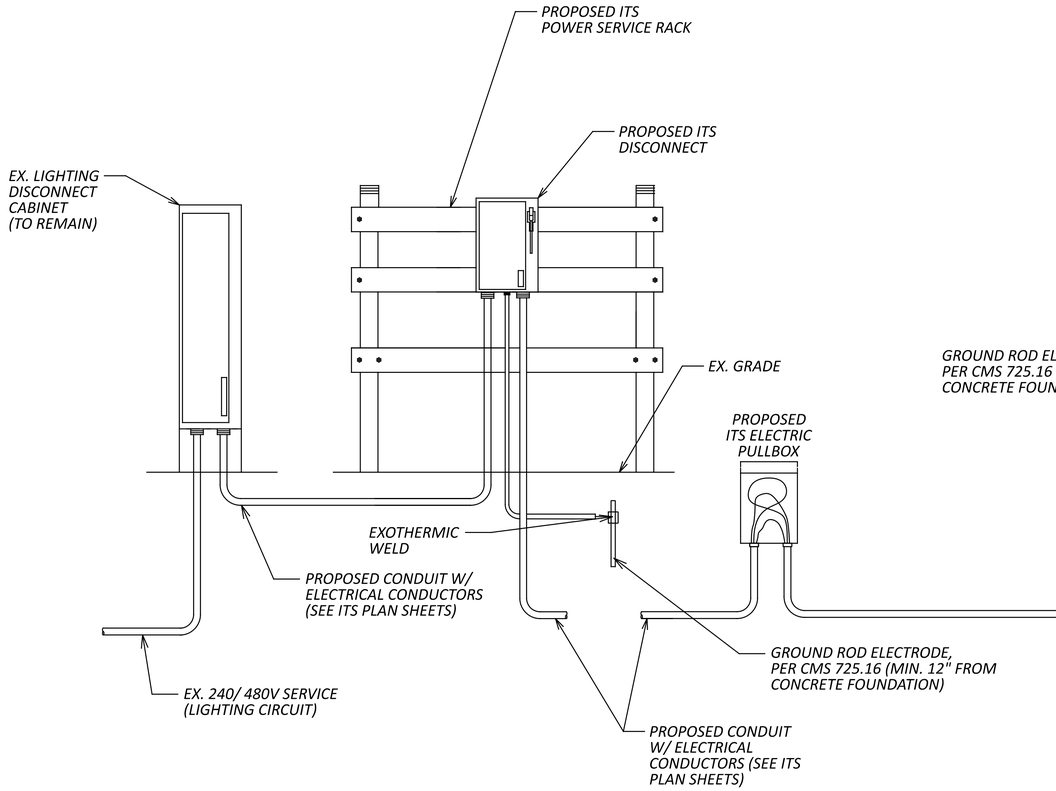

SEE ITS PLAN SHEETS FOR ADDITIONAL DETAILS

GROUND MOUNTED
STEP-DOWN TRANSFORMER

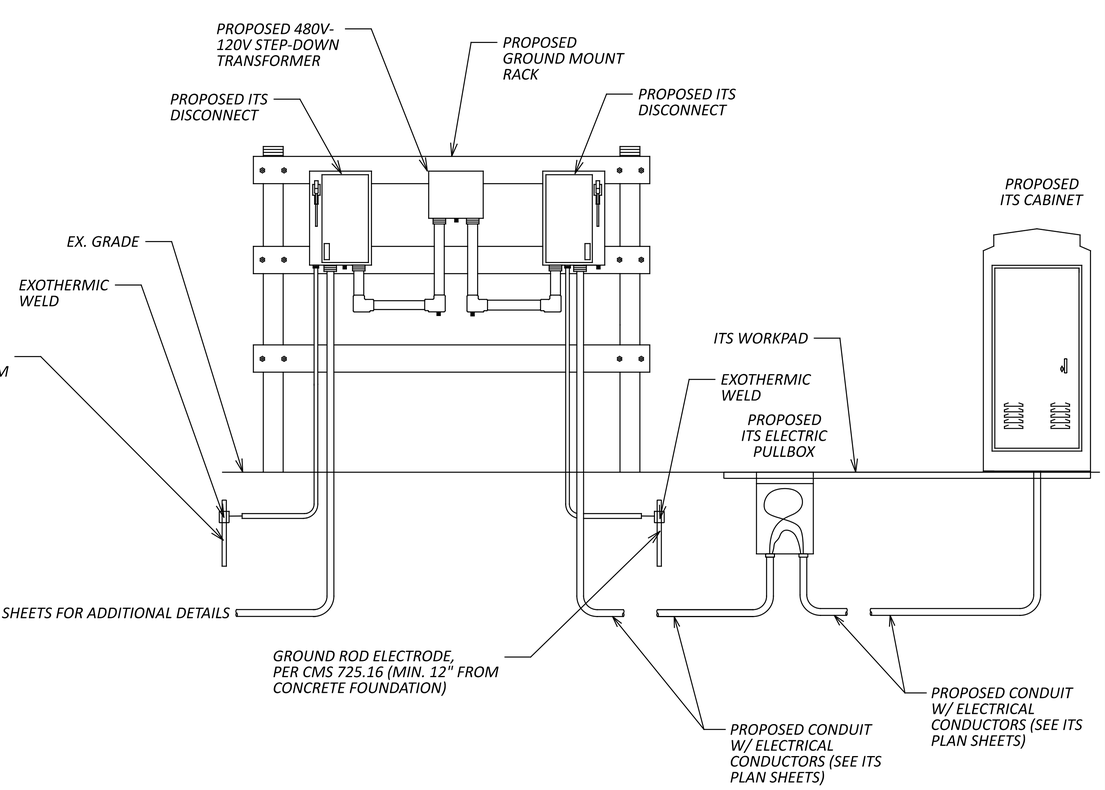

NOTES:
1. THE ITS POWER SERVICE SHALL FOLLOW THE SCD'S ITS-15.10 OR 15.11.

2. THE GROUNDING AND BONDING SHALL FOLLOW SCD ITS-50.10, ITS-50.11, AND OTHER APPLICABLE STANDARDS.

D3/D4/D12 ITS CAMERA ADDITIONS

MODEL: Sheet_Surv Ft PAPERSIZE: 34x22 (in.) DATE: 3/26/2024 TIME: 3:39:01 PM USER: USBT726326
pw:\\wsp-us-pw.bentley.com:wsp-us-pw-02\Documents\OH - OHIO Projects\118895400-Engineering\Signals\Sheets\118895_CD023.dgn

ITS POWER SERVICE ELECTRICAL DETAILS

DESIGN AGENCY
ARCADIS
1111 SUPERIOR AVENUE SUITE 1300
CLEVELAND, OHIO 44114
(216) 781-7277
www.arcadis.com

DESIGNER
KAH

REVIEWER
CRE 02/02/24

PROJECT ID
118895

SHEET P.21 TOTAL 55

GROUND MOUNTED POWER SERVICE FRONT VIEW

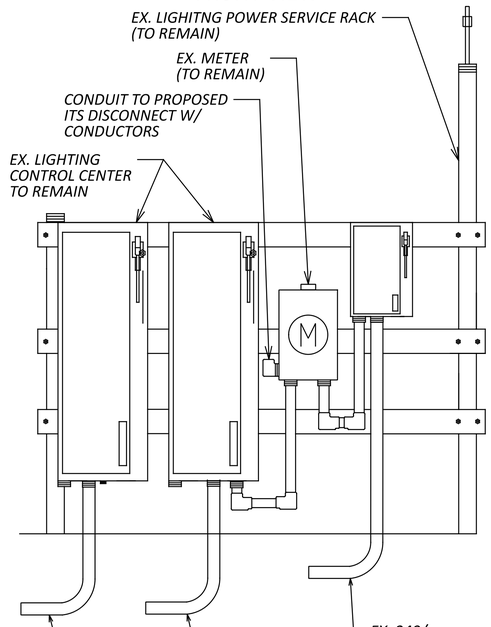

GROUND MOUNTED POWER SERVICE BACK VIEW

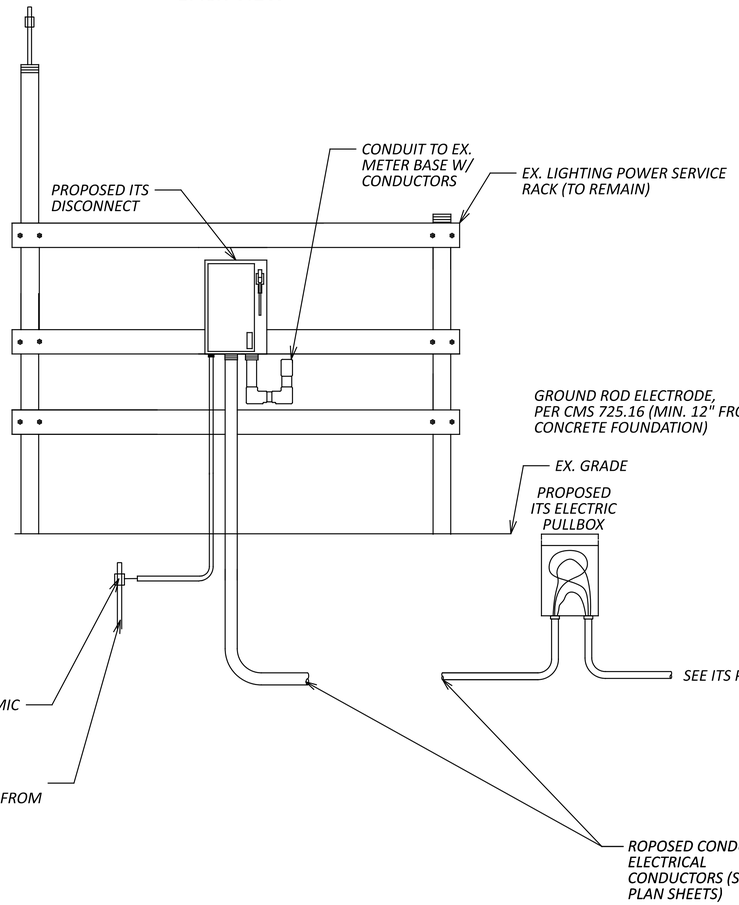

GROUND MOUNTED STEP-DOWN TRANSFORMER

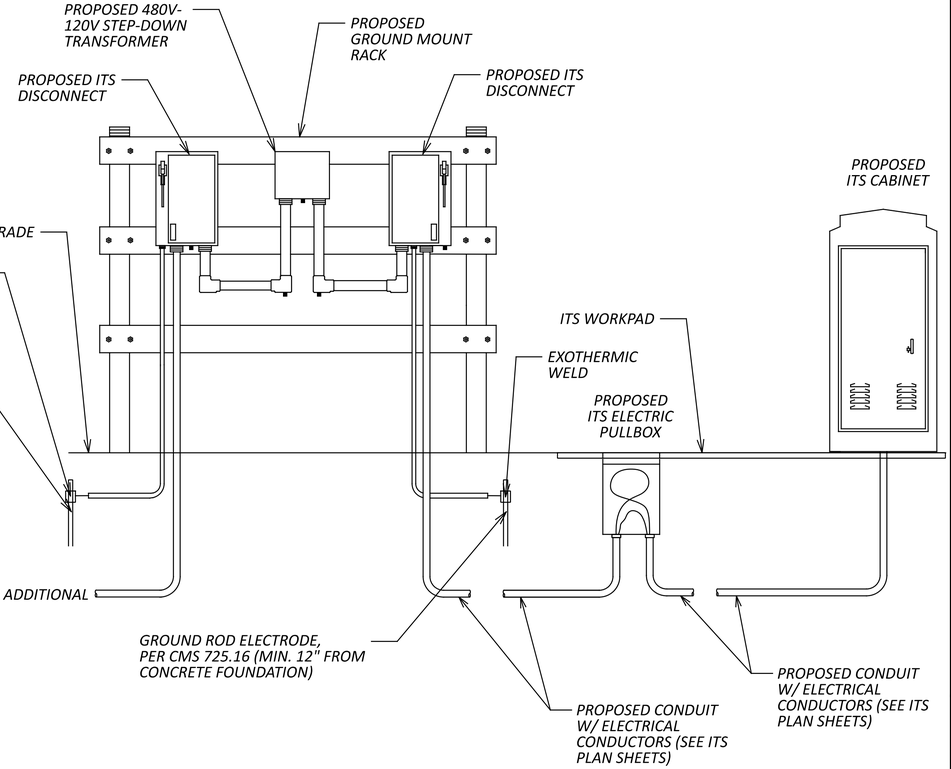

NOTES:
1. THE ITS POWER SERVICE SHALL FOLLOW THE SCD'S ITS-15.10 OR 15.11.

2. THE GROUNDING AND BONDING SHALL FOLLOW SCD ITS-50.10, ITS-50.11, AND OTHER APPLICABLE STANDARDS.

D3/D4/D12 ITS CAMERA ADDITIONS

MODEL: Sheet_SurvFt PAPERSIZE: 34x22 (in.) DATE: 3/26/2024 TIME: 3:39:09 PM USER: USBT7263326
pw:\\wsp-us-pw.bentley.com:wsp-us-pw-02\Documents\OH - OHIO Projects\118895\400-Engineering\Signals\Sheets\118895_CD028.dgn

ITS POWER SERVICE ELECTRICAL DETAILS

DESIGN AGENCY
ARCADIS
1111 SUPERIOR AVENUE SUITE 1300
CLEVELAND, OHIO 44114
(216) 781-7377
www.arcadis.com

DESIGNER KAH

REVIEWER CRE 02/02/24

PROJECT ID 118895

SHEET P.22 TOTAL 55

LEGEND

EXISTING	PROPOSED	DESCRIPTION
△	▲	GROUND MOUNTED POWER SERVICE
	P	POLE MOUNTED POWER SERVICE
		TRAFFIC SIGNAL CABINET
		ITS CABINET
E	E	ELECTRIC PULL BOX
		STEP-UP/DOWN TRANSFORMER
P		UTILITY POLE
	P	WOOD POLE
		WIRELESS RADIO
		SIGNAL POLE
TR	TR	TRAFFIC PULL BOX
		CONCRETE WORKPAD
		3-WIRE SERVICE CABLE AERIAL (UTILITY COMPANY OWNED)
		2-WIRE SERVICE CABLE AERIAL (UTILITY COMPANY OWNED)
		CONDUIT
		CONDUIT, JACKED OR DRILLED
— — — —OH-E— —		EX. OVERHEAD ELECTRIC
— — — — —FO— —		EX UNDERGROUND COMMUNICATIONS
— — — —OH-FO— —		EX OVERHEAD COMMUNICATIONS
— — — —E— — —		EX. UNDERGROUND POWER
		CLEARING AND GRUBBING
		ACCESS DRIVE

NOTE: UTILITIES SHOWN ARE FOR INFORMATIONAL PURPOSE ONLY,
CONTRACTOR SHALL COORDINATE WITH OUPS TO VERIFY LOCATION OF ALL EXISTING UTILITIES

ITS SITE DETAIL

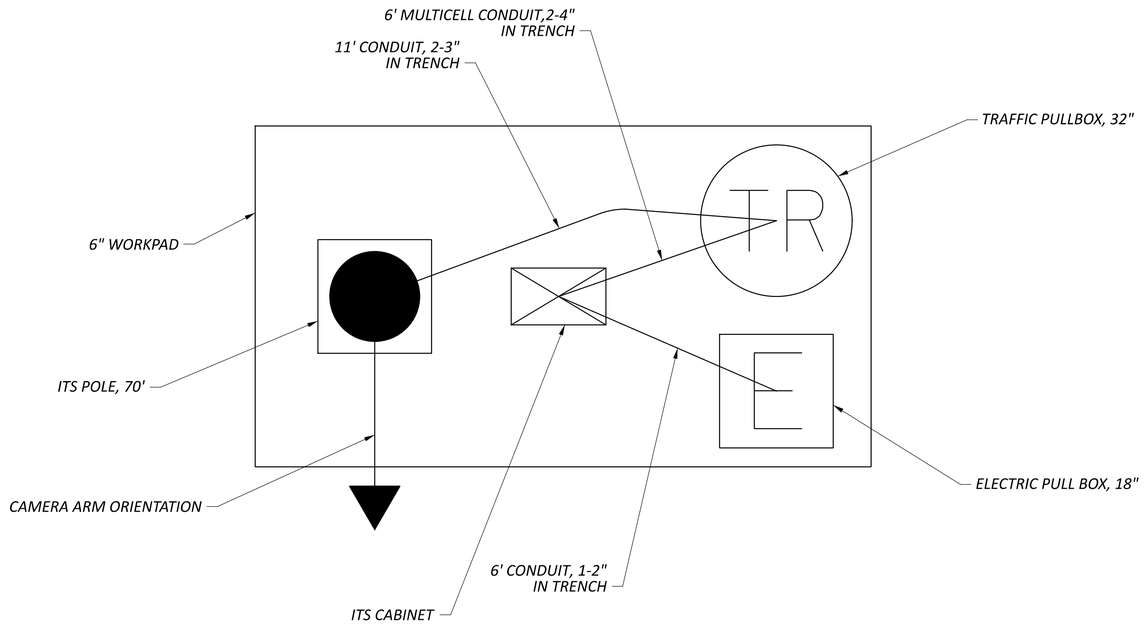

NOTE: THIS DETAIL IS FOR PLAN SHEET REFERENCE PURPOSES ONLY. THE SITE SHALL BE CONSTRUCTED PER SCD ITS-10.11 AND ANY OTHER APPLICABLE ITS SERIES SCD'S.

ITS LEGEND

D3/D4/D12 ITS CAMERA ADDITIONS

MODEL: Sheet_Survft PAPERSIZE: 34x22 (in.) DATE: 3/26/2024 TIME: 3:39:20 PM USER: USBT726326
pw:\\wsp-us-pw.bentley.com:wsp-us-pw-02\Documents\OH - OHIO Projects\118895\400-Engineering\Signals\Sheets\118895_CM001.dgn

DESIGN AGENCY
WSP USA, Inc.
2 Miranova Pl,
Suite 450
Columbus, OH 43215

DESIGNER
BPT

REVIEWER
NWA 02/02/24

PROJECT ID
118895

SHEET P.23 TOTAL 55

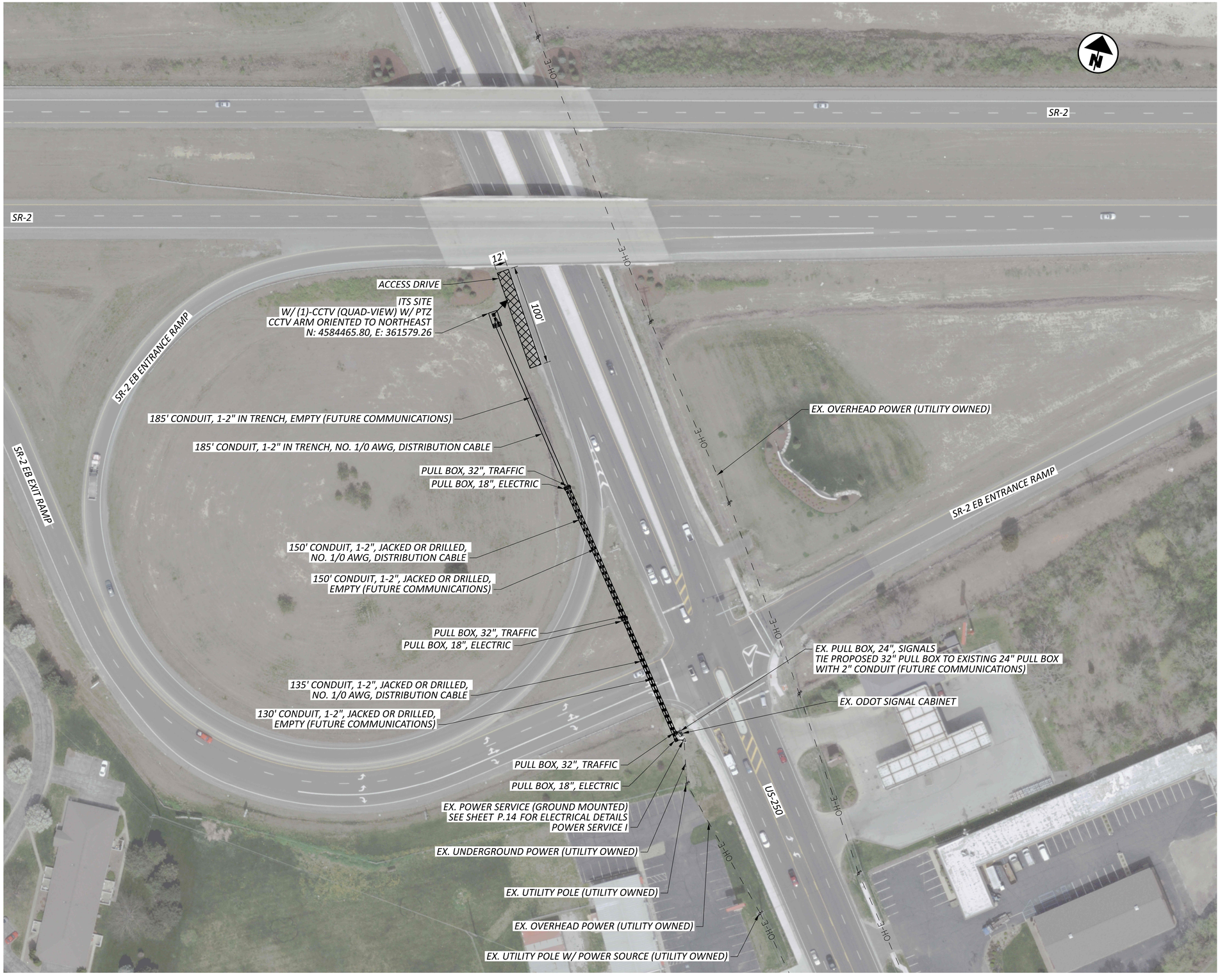

HORIZONTAL SCALE IN FEET
0 25 50 100

ITS PLANS
US-250 & SR-2

D3/D4/D12 ITS CAMERA ADDITIONS

MODEL: WSP ITS Locations - Site 01 PAPERSIZE: 34x22 (in.) DATE: 3/26/2024 TIME: 3:39:47 PM USER: USBT726326
pw:\\wsp-us-pw.bentley.com:wsp-us-pw-02\Documents\OH - OHIO Projects\118895\400-Engineering\Signals\Sheets\118895_CP001.dgn

DESIGN AGENCY
ARCADIS
1111 SUPERIOR AVENUE, SUITE 1300
CLEVELAND, OHIO 44114
(216) 736-6777
www.arcadis.com

DESIGNER
KAH

REVIEWER
CRE 02/02/24

PROJECT ID
118895

SHEET P.24 TOTAL 55

D3/D4/D12 ITS CAMERA ADDITIONS

MODEL: WSP ITS Locations - Site 02 PAPERSIZE: 34x22 (in.) DATE: 3/26/2024 TIME: 3:40:12 PM USER: USBT726326
pw:\\wsp-us-pw.bentley.com:wsp-us-pw-02\Documents\OH - OHIO Projects\118895\400-Engineering\Signals\Sheets\118895_CP002.dgn

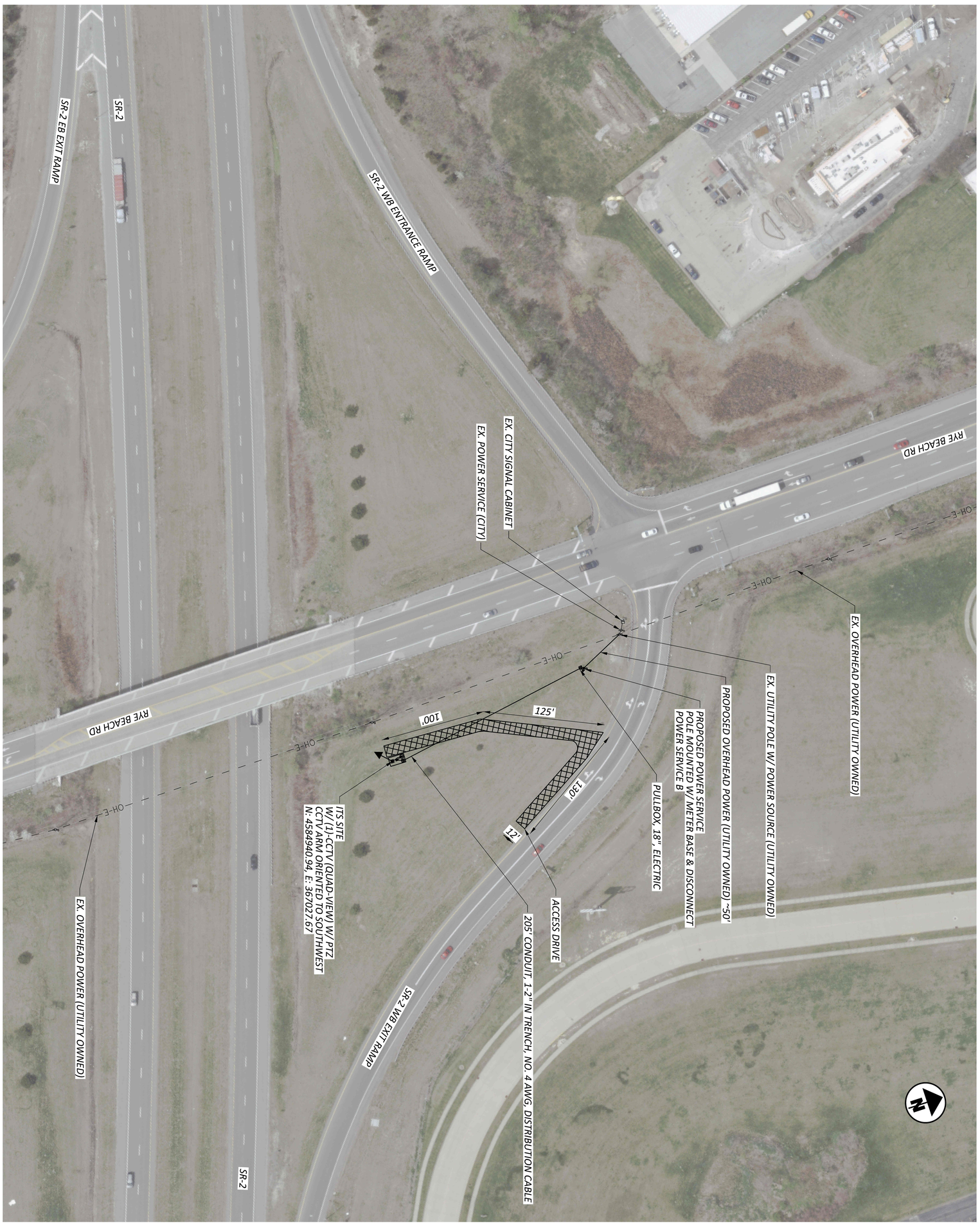

SHEET	PROJECT ID	REVIEWER	DESIGNER	DESIGN AGENCY
P 25 OF 55 TOTAL	118895	CRE 02/02/24	KAH	ARCADIS 1111 SUPERIOR AVENUE SUITE 1300 CLEVELAND, OHIO 44114 (216) 781-6177 www.arcadis.com

ITS PLAN
SR-2/US-6 & RYE BEACH RD

HORIZONTAL SCALE IN FEET
0 50
25 100

D3/D4/D12 ITS CAMERA ADDITIONS

MODEL: WSP ITS Locations - Site 03 PAPERSIZE: 34x22 (in.) DATE: 3/26/2024 TIME: 3:40:34 PM USER: USBT726326
pw:\\wsp-us-pw.bentley.com:wsp-us-pw-02\Documents\OH - OHIO Projects\118895\400-Engineering\Signals\Sheets\118895_CP003.dgn

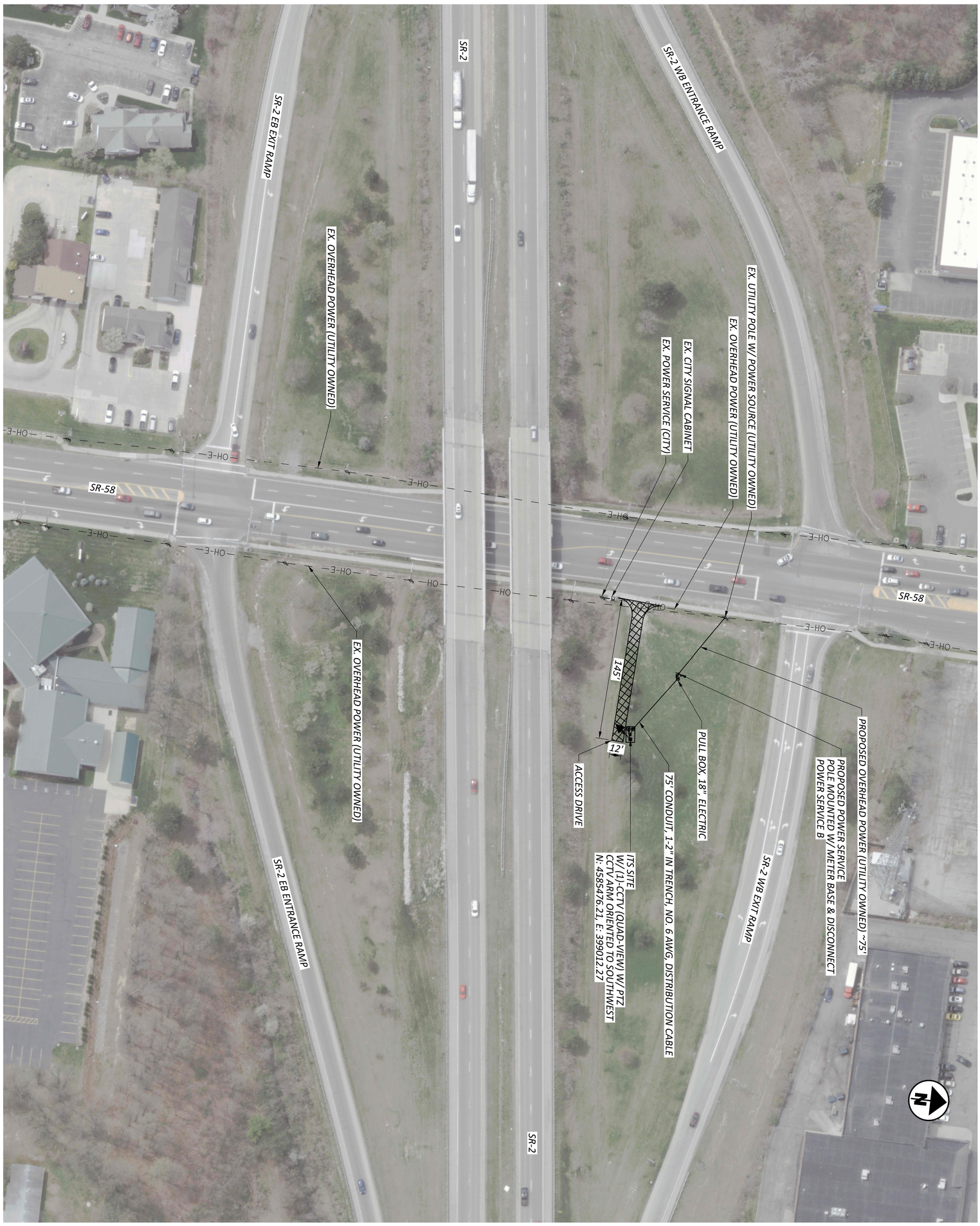

SHEET P.26 OF 55	PROJECT ID 118895	REVIEWER CRE 02/02/24	DESIGNER KAH	ARCADIS 1111 SUPERIOR AVENUE SUITE 1300 CLEVELAND, OHIO 44114 (216) 781-8177 www.arcadis.com DESIGN AGENCY	ITS PLAN SR-2 & SR-58

HORIZONTAL SCALE IN FEET
0 50
25 100

MATCHLINE A

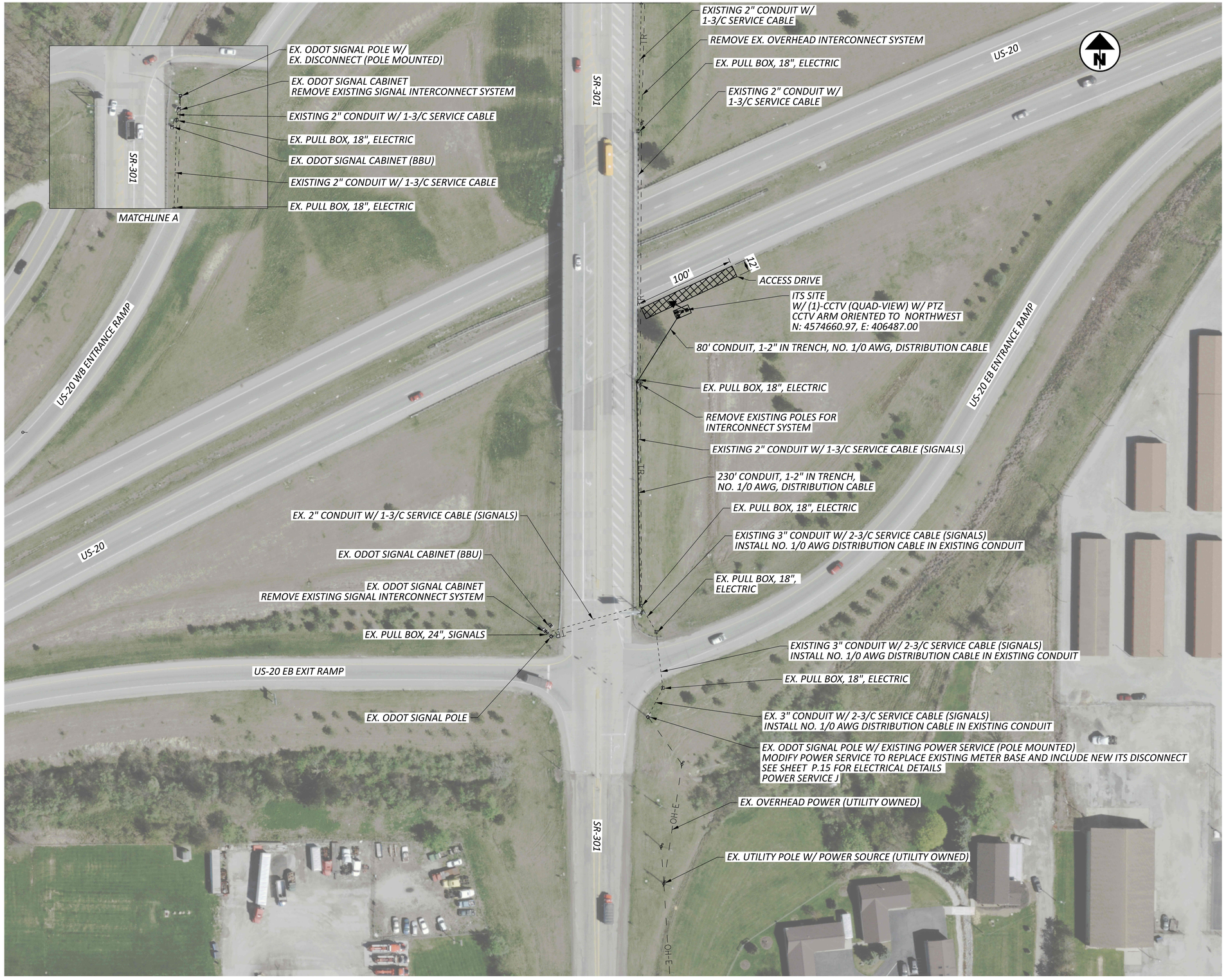

HORIZONTAL SCALE IN FEET
0 25 50 100

ITS PLAN
US-20 & SR-301

D3/D4/D12 ITS CAMERA ADDITIONS

MODEL: WSP ITS Locations - Site 04 PAPERSIZE: 34x22 (in.) DATE: 3/26/2024 TIME: 3:41:02 PM USER: USBT726326
pw:\\wsp-us-pw.bentley.com:wsp-us-pw-02\Documents\OH - OHIO Projects\118895\400-Engineering\Signals\Sheets\118895_CP004.dgn

DESIGN AGENCY
ARCADIS
1111 SUPERIOR AVENUE SUITE 1300
CLEVELAND, OHIO 44114
(216) 781-7377
www.arcadis.com

DESIGNER
KAH

REVIEWER
CRE 02/02/24

PROJECT ID
118895

SHEET P.27 TOTAL 55

D3/D4/D12 ITS CAMERA ADDITIONS

MODEL: WSP ITS Locations - Site 05 PAPERSIZE: 34x22 (in.) DATE: 3/26/2024 TIME: 3:41:26 PM USER: USBT726326
pw:\\wsp-us-pw.bentley.com:wsp-us-pw-02\Documents\OH - OHIO Projects\118895\400-Engineering\Signals\Sheets\118895_CP005.dgn

SHEET P.28 OF 55	PROJECT ID 118895	REVIEWER CRE 02/02/24	DESIGNER KAH	ARCADIS 1111 SUPERIOR AVENUE SUITE 1300 CLEVELAND, OHIO 44114 (216) 781-8177 www.arcadis.com DESIGN AGENCY	ITS PLAN I-90 & SR-611

HORIZONTAL SCALE IN FEET
0 50
25 200

D3/D4/D12 ITS CAMERA ADDITIONS

MODEL: WSP ITS Locations - Site 06 PAPERSIZE: 34x22 (in.) DATE: 3/26/2024 TIME: 3:41:54 PM USER: USBT726326
pw:\\wsp-us-pw.bentley.com:wsp-us-pw-02\Documents\OH - OHIO Projects\118895\400-Engineering\Signals\Sheets\118895_CP006.dgn

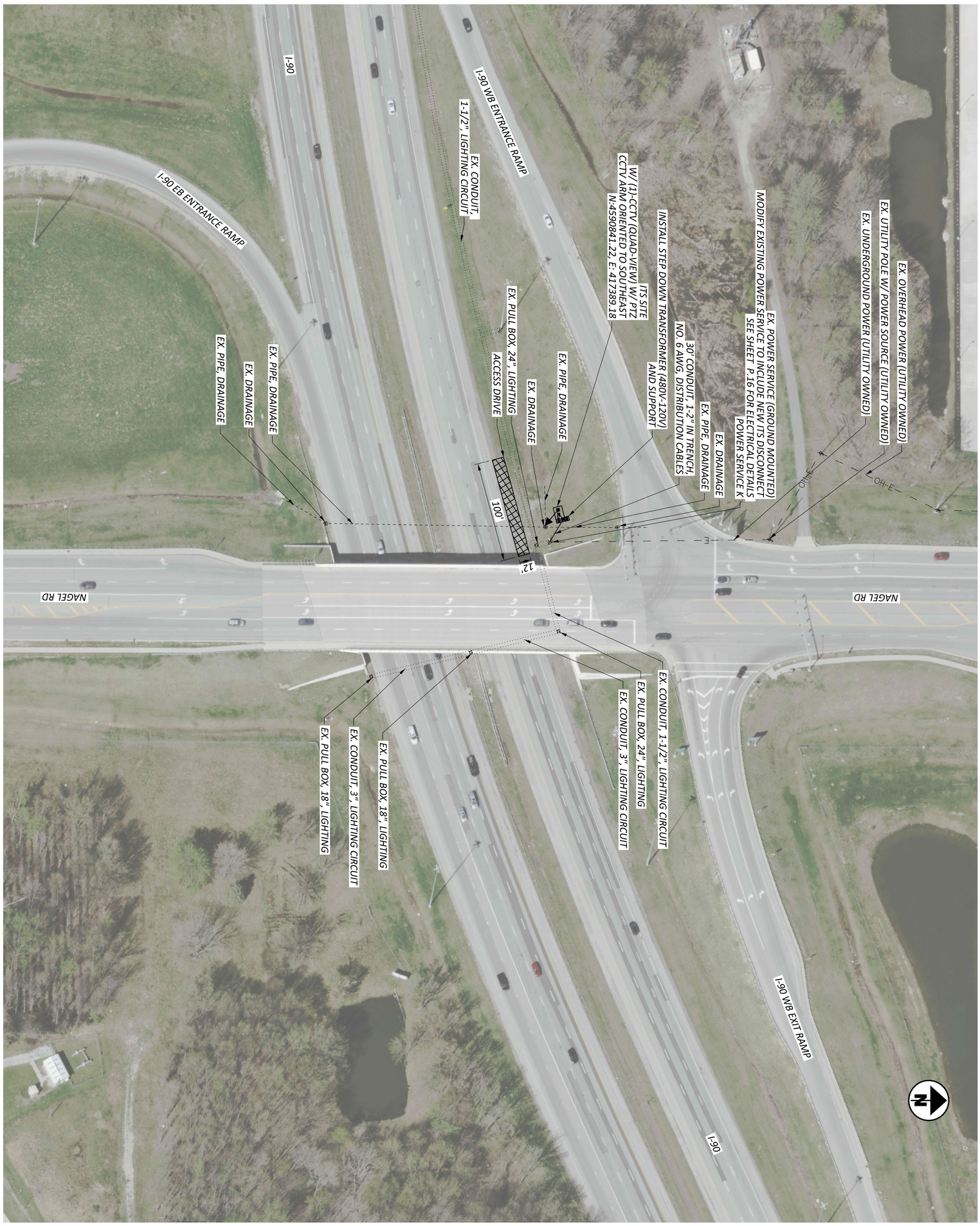

SHEET P.29 OF 55	PROJECT ID 118895	REVIEWER CRE 02/02/24	DESIGNER KAH	ARCADIS 1111 SUPERIOR AVENUE SUITE 1300 CLEVELAND, OHIO 44114 (216) 781-8177 www.arcadis.com DESIGN AGENCY	ITS PLAN I-90 & NAGEL RD

HORIZONTAL SCALE IN FEET
0 50
25 100

HORIZONTAL SCALE IN FEET
0 25 50 100

ITS PLAN
I-71 & SR-3

D3/D4/D12 ITS CAMERA ADDITIONS

MODEL: Unnamed Plan - 07 I-71 @ SR 3 PAPERSIZE: 34x22 (in.) DATE: 3/26/2024 TIME: 3:42:21 PM USER: USBT726326
pw:\\wsp-us-pw.bentley.com:wsp-us-pw-02\Documents\OH - OHIO Projects\118895\400-Engineering\Signals\Sheets\118895_CP007.dgn

DESIGN AGENCY
WSP USA, Inc.
2 Miranova Pl,
Suite 450
Columbus, OH 43215

DESIGNER
BPT

REVIEWER
NWA 02/02/24

PROJECT ID
118895

SHEET
P.30

TOTAL
55

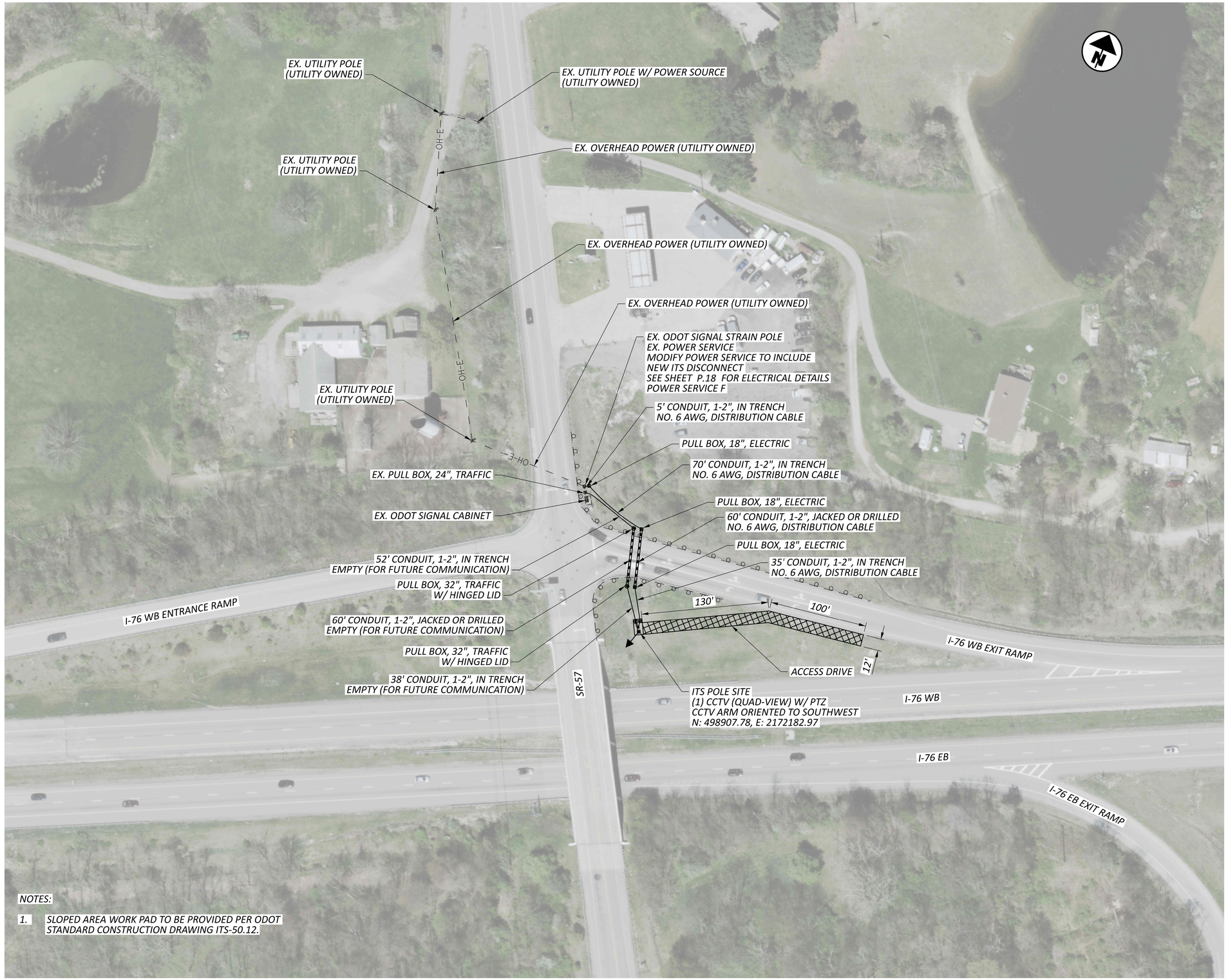

NOTES:

1. SLOPED AREA WORK PAD TO BE PROVIDED PER ODOT STANDARD CONSTRUCTION DRAWING ITS-50.12.

HORIZONTAL SCALE IN FEET
0 25 50 100

ITS PLAN
I-76 & SR-57

D3/D4/D12 ITS CAMERA ADDITIONS

MODEL: Unnamed Plan - 08 I-76 @ SR 57 PAPERSIZE: 34x22 (in.) DATE: 3/26/2024 TIME: 3:42:45 PM USER: USBT7263 26
pw:\\wsp-us-pw.bentley.com:wsp-us-pw-02\Documents\OH - OHIO Projects\118895\400-Engineering\Signals\Sheets\118895_CP008.dgn

DESIGN AGENCY
WSP USA, Inc.
2 Miranova Pl,
Suite 450
Columbus, OH 43215

DESIGNER BPT
REVIEWER NWA 02/02/24
PROJECT ID 118895
SHEET P.31 TOTAL 55

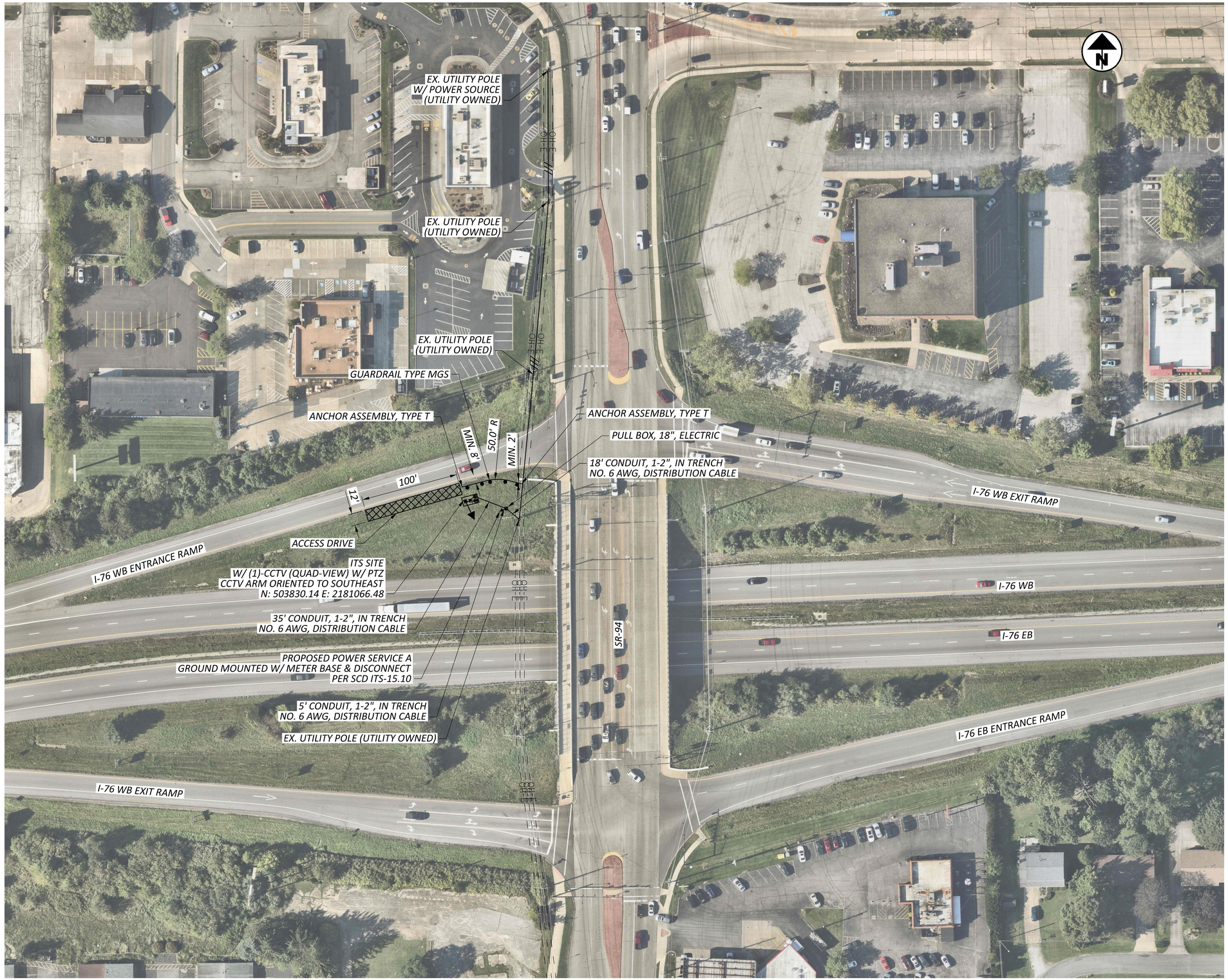

HORIZONTAL
SCALE IN FEET
0 25 50 100

ITS PLAN
I-76 & SR-94

D3/D4/D12 ITS CAMERA ADDITIONS

MODEL: Unnamed Plan - 09 I-76 @ SR 94 PAPERSIZE: 34x22 (in.) DATE: 3/26/2024 TIME: 3:43:14 PM USER: USBT726326
pw:\\wsp-us-pw.bentley.com:wsp-us-pw-02\Documents\OH - OHIO Projects\118895\400-Engineering\Signals\Sheets\118895_CP009.dgn

DESIGN AGENCY
WSP USA, Inc.
2 Miranova Pl,
Suite 450
Columbus, OH 43215

DESIGNER
BPT

REVIEWER
NWA 02/02/24

PROJECT ID
118895

SHEET P.32 TOTAL 55

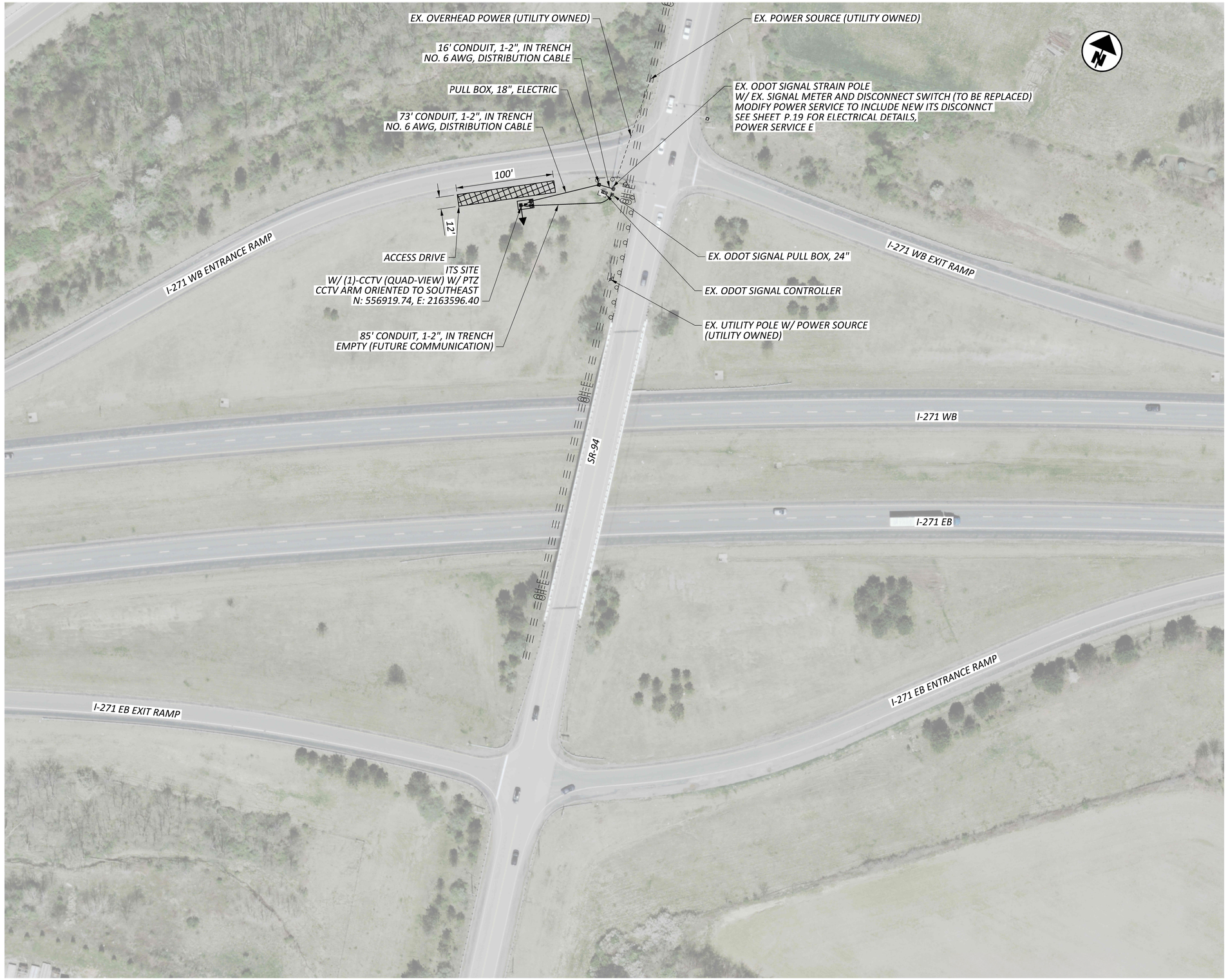

HORIZONTAL SCALE IN FEET
0 25 50 100

ITS PLAN
I-271 & SR-94

D3/D4/D12 ITS CAMERA ADDITIONS

MODEL: Unnamed Plan - 10 I-271 @ SR 94 PAPERSIZE: 34x22 (in.) DATE: 3/26/2024 TIME: 3:43:44 PM USER: USBT726326
pw:\\wsp-us-pw.bentley.com:wsp-us-pw-02\Documents\OH - OHIO Projects\118895\400-Engineering\Signals\Sheets\118895_CP010.dgn

DESIGN AGENCY
WSP USA, Inc.
2 Miranova Pl,
Suite 450
Columbus, OH 43215

DESIGNER
BPT

REVIEWER
NWA 02/02/24

PROJECT ID
118895

SHEET P.33 TOTAL 55

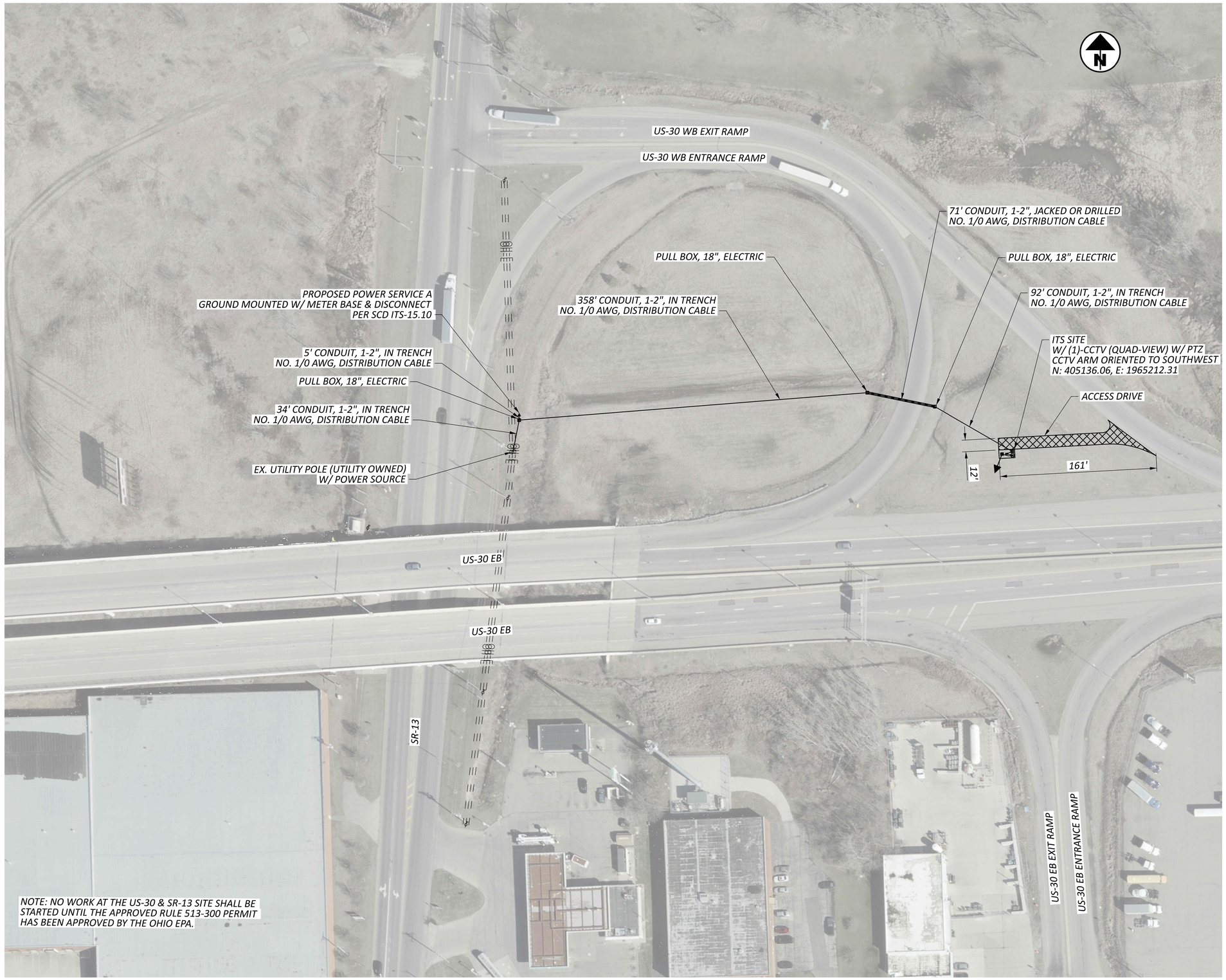

HORIZONTAL SCALE IN FEET
0 25 50 100

ITS PLAN
US-30 & SR-13

D3/D4/D12 ITS CAMERA ADDITIONS

MODEL: Unnamed Plan - 11 US 30 @ SR 13 PAPERSIZE: 34x22 (in.) DATE: 3/26/2024 TIME: 3:44:12 PM USER: USBT726326
pw:\\wsp-us-pw.bentley.com:wsp-us-pw-02\Documents\OH - OHIO Projects\118895\400-Engineering\Signals\Sheets\118895_CP011.dgn

DESIGN AGENCY
WSP USA, Inc.
2 Miranova Pl,
Suite 450
Columbus, OH 43215

DESIGNER
BPT

REVIEWER
NWA 02/02/24

PROJECT ID
118895

SHEET
P.34

TOTAL
55

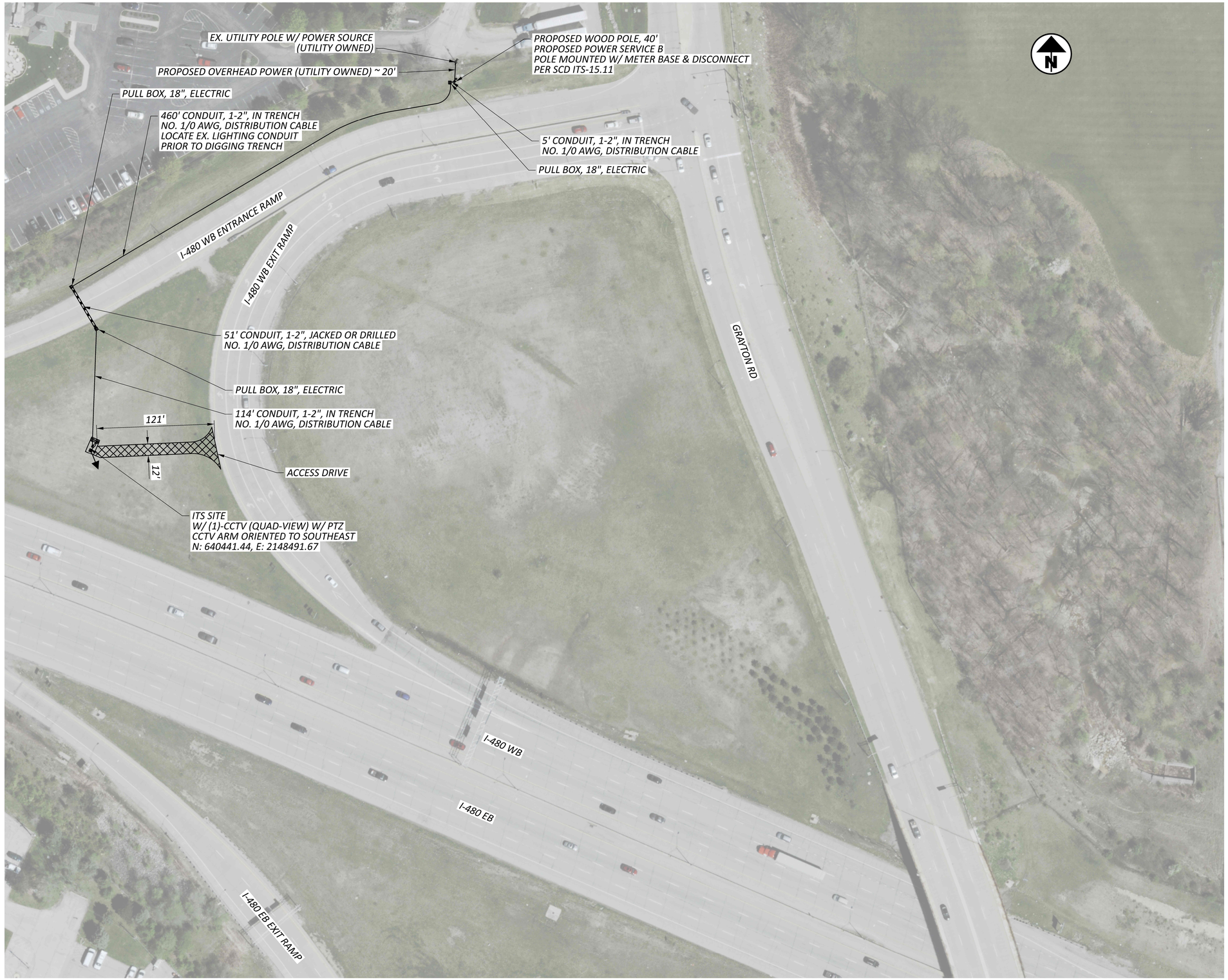

HORIZONTAL SCALE IN FEET
0 25 50 100

ITS PLAN
I-480 & GRAYTON RD

D3/D4/D12 ITS CAMERA ADDITIONS

MODEL: Unnamed Plan - 12 I-480 @ GRAYTON RD PAPERSIZE: 34x22 (in.) DATE: 3/26/2024 TIME: 3:44:40 PM USER: USBT726326
pw:\\wsp-us-pw.bentley.com:wsp-us-pw-02\Documents\OH - OHIO Projects\118895\400-Engineering\Signals\Sheets\118895_CP012.dgn

DESIGN AGENCY
WSP USA, Inc.
2 Miranova Pl,
Suite 450
Columbus, OH 43215

DESIGNER
BPT

REVIEWER
NWA 02/02/24

PROJECT ID
118895

SHEET
P.35

TOTAL
55

D3/D4/D12 ITS CAMERA ADDITIONS

MODEL: Unnamed Plan - 13 I-480 @ W 150TH PAPERSIZE: 34x22 (in.) DATE: 3/26/2024 TIME: 3:45:00 PM USER: USBT726326
pw:\\wsp-us-pw.bentley.com:wsp-us-pw-02\Documents\OH - OHIO Projects\118895\400-Engineering\Signals\Sheets\118895_CP013.dgn

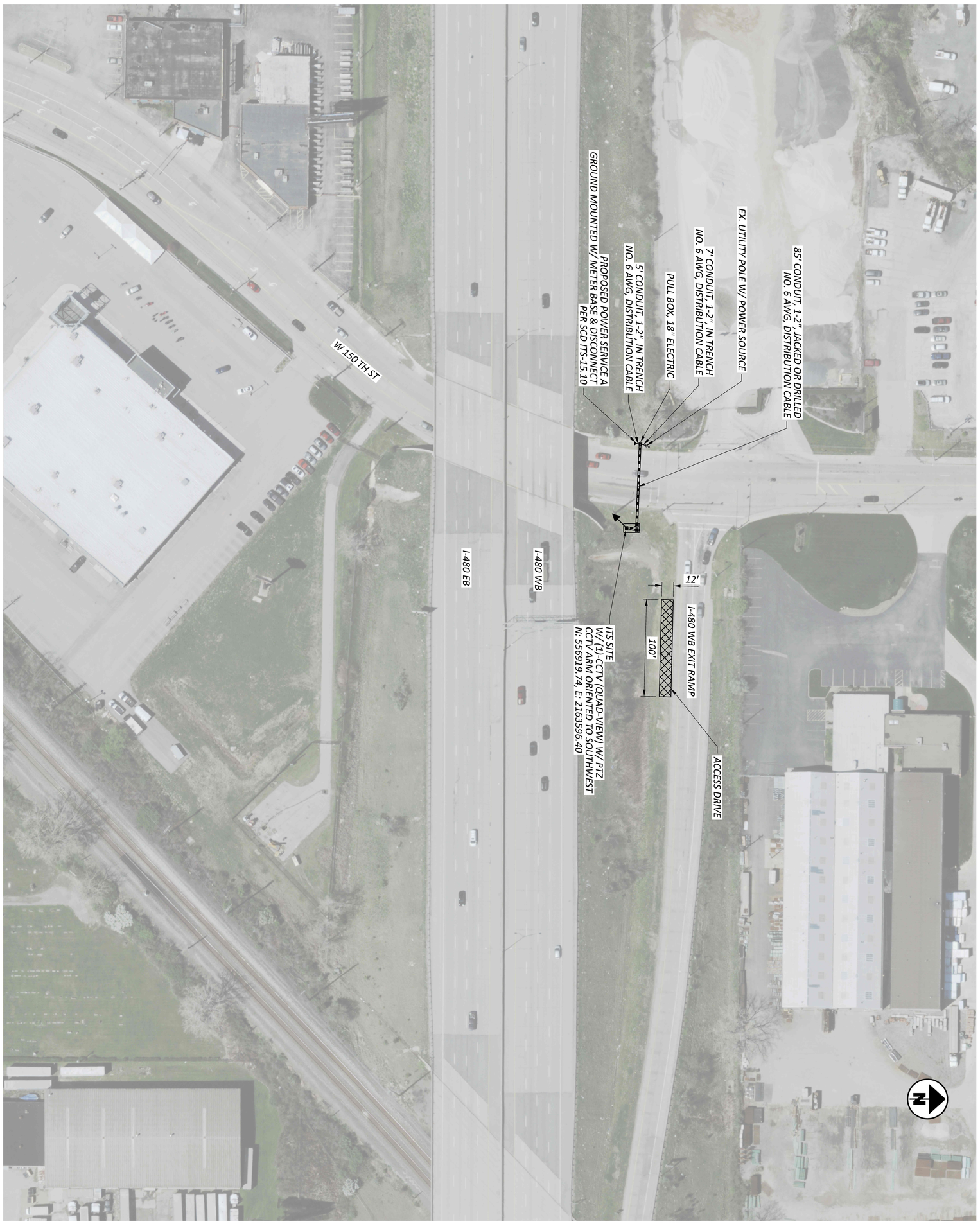

ITS PLAN
I-480 & W 150TH ST

DESIGN AGENCY
WSP USA Inc.
2 Miranova Pl,
Suite 450
Columbus, OH 43215

DESIGNER BPT
REVIEWER NWA 02/02/24
PROJECT ID 118895
SHEET P 36 OF 55

HORIZONTAL SCALE IN FEET
0 50
25 100

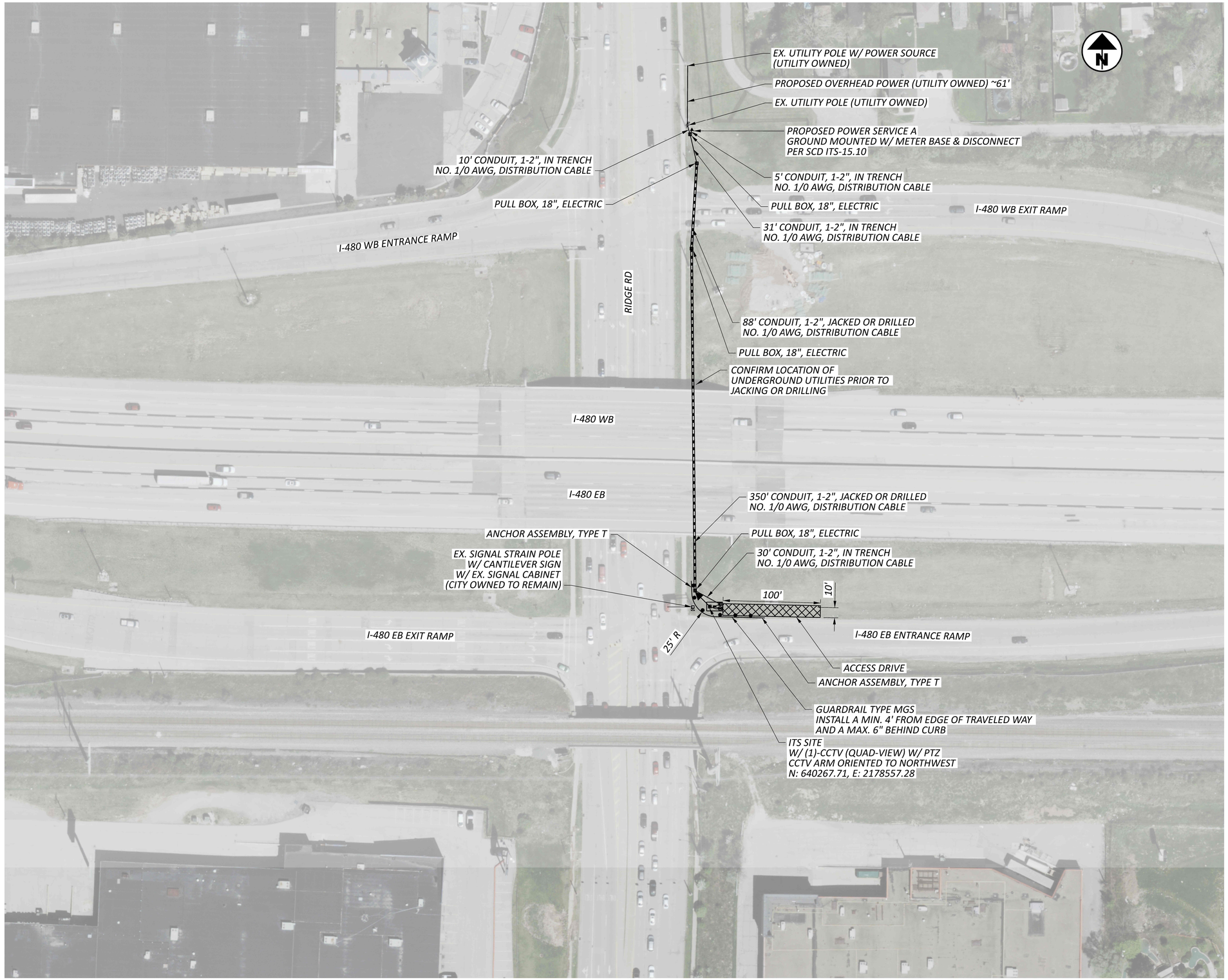

HORIZONTAL SCALE IN FEET
0 25 50 100

ITS PLAN
I-480 & RIDGE RD

D3/D4/D12 ITS CAMERA ADDITIONS

MODEL: Unnamed Plan - 16 I-480 @ RIDGE RD-1 PAPERSIZE: 34x22 (in.) DATE: 3/26/2024 TIME: 3:45:27 PM USER: USBT726326
pw:\\wsp-us-pw.bentley.com:wsp-us-pw-02\Documents\OH - OHIO Projects\118895\400-Engineering\Signals\Sheets\118895_CP016.dgn

DESIGN AGENCY
WSP USA, Inc.
2 Miranova Pl,
Suite 450
Columbus, OH 43215

DESIGNER BPT
REVIEWER NWA 02/02/24
PROJECT ID 118895
SHEET P.37 TOTAL 55

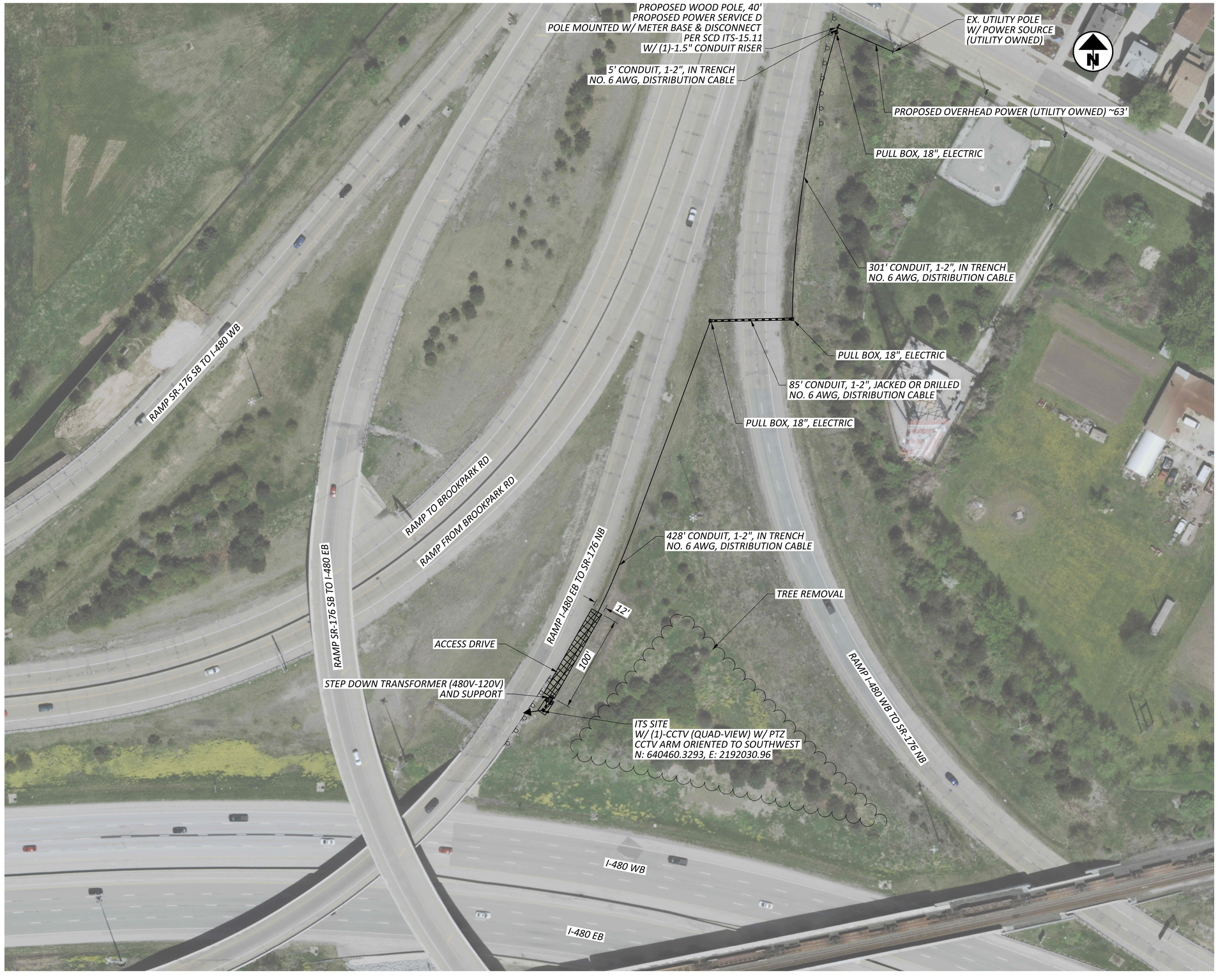

HORIZONTAL SCALE IN FEET
0 25 50 100

ITS PLAN
I-480 & SR-176

D3/D4/D12 ITS CAMERA ADDITIONS

MODEL: Unnamed Plan - 17 I-480 @ SR 176 PAPERSIZE: 34x22 (in.) DATE: 3/26/2024 TIME: 3:45:57 PM USER: USBT726326
pw:\\wsp-us-pw.bentley.com:wsp-us-pw-02\Documents\OH - OHIO Projects\118895\400-Engineering\Signals\Sheets\118895_CP017.dgn

DESIGN AGENCY
WSP USA, Inc.
2 Miranova Pl,
Suite 450
Columbus, OH 43215

DESIGNER
BPT

REVIEWER
NWA 02/02/24

PROJECT ID
118895

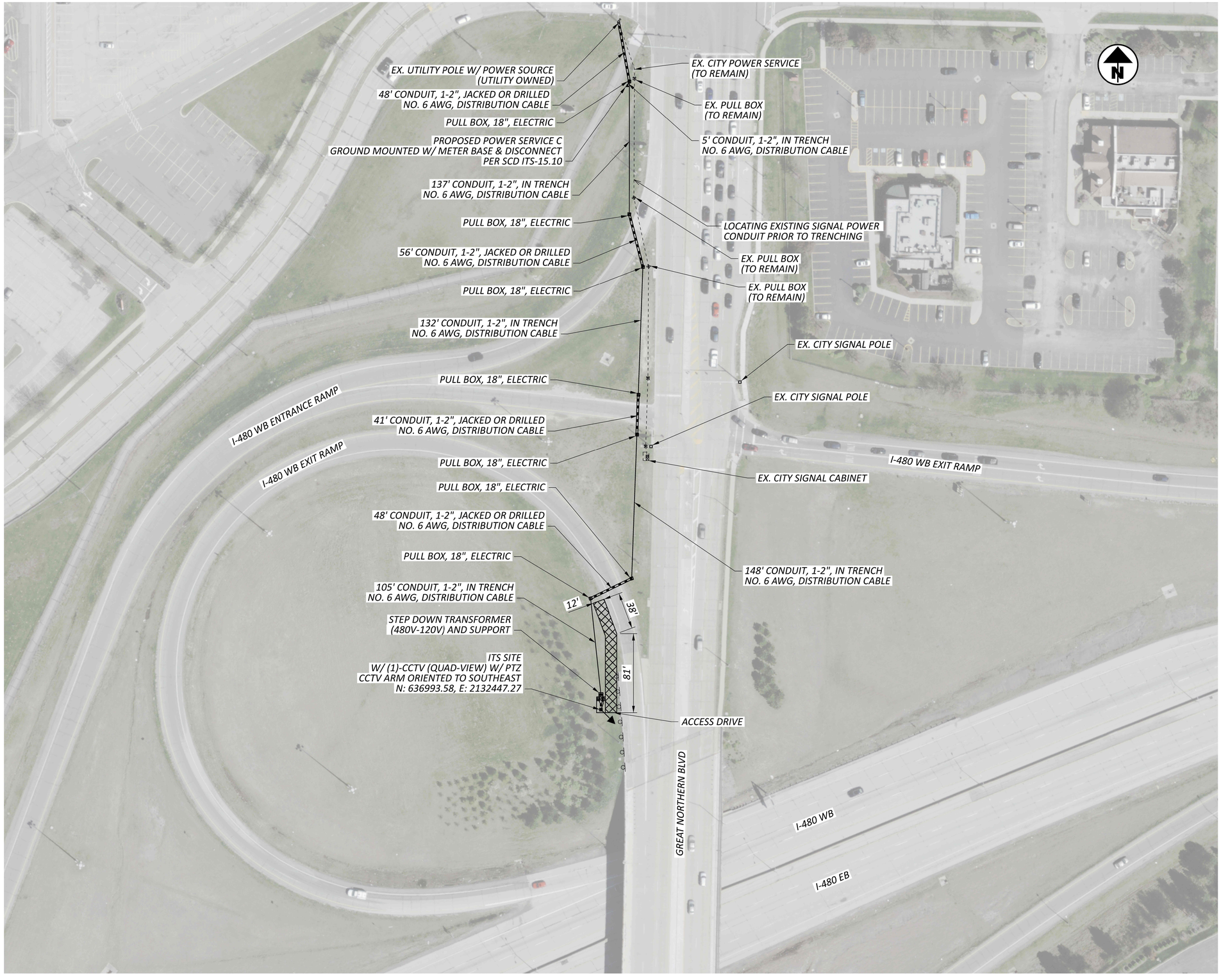

HORIZONTAL SCALE IN FEET
0 25 50 100

ITS PLAN
I-480 & GREAT NORTHERN BLVD

D3/D4/D12 ITS CAMERA ADDITIONS

MODEL: Unnamed Plan - 18 I-480 @ GREAT NORTHERN PAPERSIZE: 34x22 (in.) DATE: 3/26/2024 TIME: 3:46:25 PM USER: USBT726326
pw:\\wsp-us-pw.bentley.com:wsp-us-pw-02\Documents\OH - OHIO Projects\118895\400-Engineering\Signals\Sheets\118895_CP018.dgn

DESIGN AGENCY
WSP USA, Inc.
2 Miranova Pl,
Suite 450
Columbus, OH 43215

DESIGNER: BPT
REVIEWER: NWA 02/02/24
PROJECT ID: 118895
SHEET: P.39
TOTAL: 55

HORIZONTAL SCALE IN FEET
0 25 50 100

ITS PLAN
I-480 & STEARNS RD

D3/D4/D12 ITS CAMERA ADDITIONS

MODEL: Unnamed Plan - 19 I-480 @ STEARNS PAPERSIZE: 34x22 (in.) DATE: 3/26/2024 TIME: 3:46:53 PM USER: USBT726326
pw:\\wsp-us-pw.bentley.com:wsp-us-pw-02\Documents\OH - OHIO Projects\118895\400-Engineering\Signals\Sheets\118895_CP019.dgn

DESIGN AGENCY
WSP USA, Inc.
2 Miranova Pl,
Suite 450
Columbus, OH 43215

DESIGNER
BPT

REVIEWER
NWA 02/02/24

PROJECT ID
118895

SHEET
P.40

TOTAL
55

D3/D4/D12 ITS CAMERA ADDITIONS

MODEL: Unnamed Plan - 20 I-77 SOUTH OF ROCKSIDE RD PAPERSIZE: 34x22 (in.) DATE: 3/26/2024 TIME: 3:47:21 PM USER: USBT726326
pw:\\wsp-us-pw.bentley.com:wsp-us-pw-02\Documents\OH - OHIO Projects\118895\400-Engineering\Signals\Sheets\118895_CP020.dgn

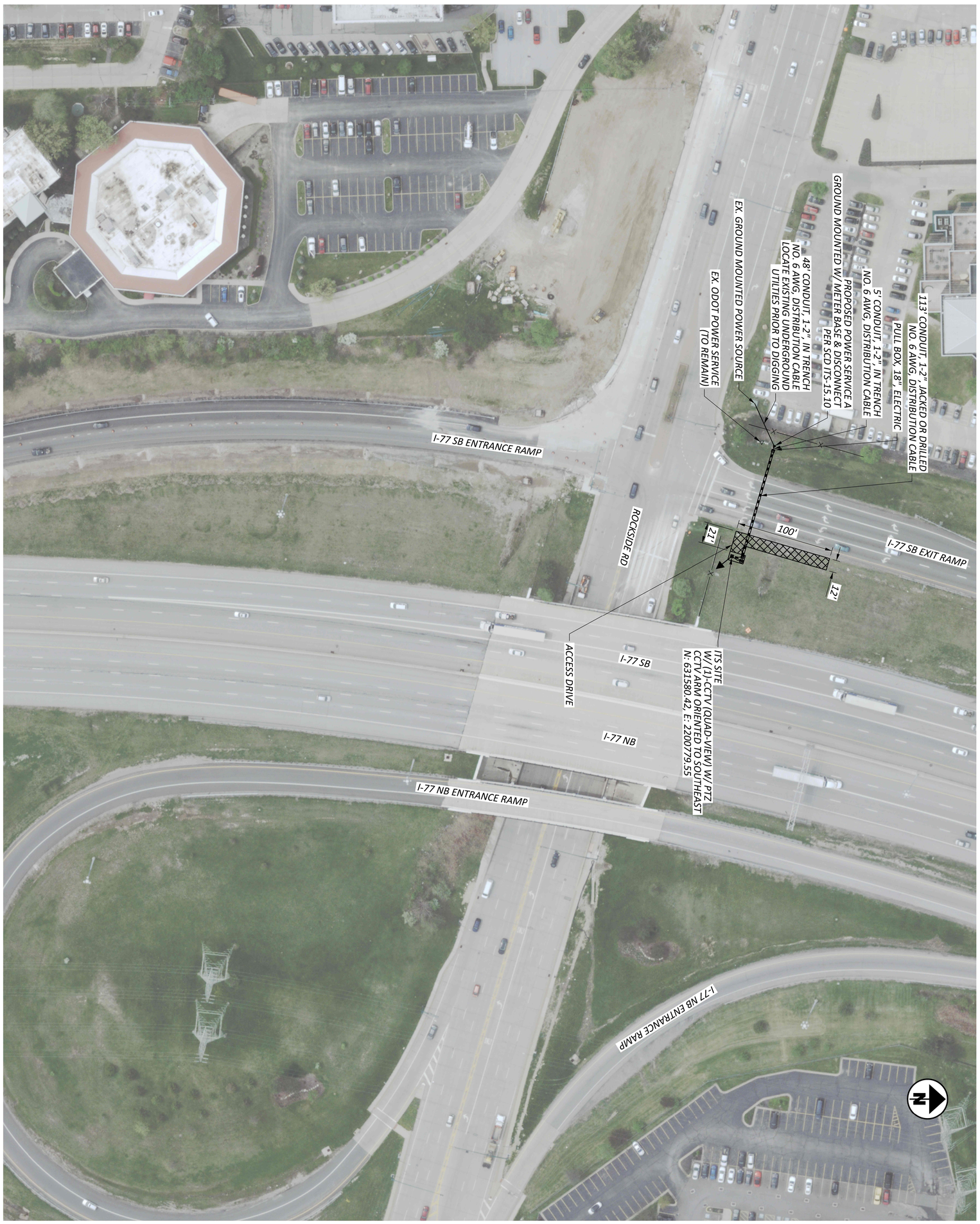

SHEET P 41 OF 55	PROJECT ID 118895	REVIEWER NWA 02/02/24	DESIGNER BPT	DESIGN AGENCY WSP USA Inc. 2 Miranova Pl, Suite 450 Columbus, OH 43215	ITS PLAN I-77 & ROCKSIDE RD

HORIZONTAL SCALE IN FEET
0 50
25 100

HORIZONTAL SCALE IN FEET
0 25 50 100

ITS PLAN
I-490 & E 55TH ST

D3/D4/D12 ITS CAMERA ADDITIONS

MODEL: Unnamed Plan - 21 I-490 @55TH PAPERSIZE: 34x22 (in.) DATE: 3/26/2024 TIME: 3:47:49 PM USER: USBT726326
pw:\\wsp-us-pw.bentley.com:wsp-us-pw-02\Documents\OH - OHIO Projects\118895\400-Engineering\Signals\Sheets\118895_CP021.dgn

DESIGN AGENCY
WSP USA, Inc.
2 Miranova Pl,
Suite 450
Columbus, OH 43215

DESIGNER BPT
REVIEWER NWA 02/02/24
PROJECT ID 118895
SHEET P.42 TOTAL 55

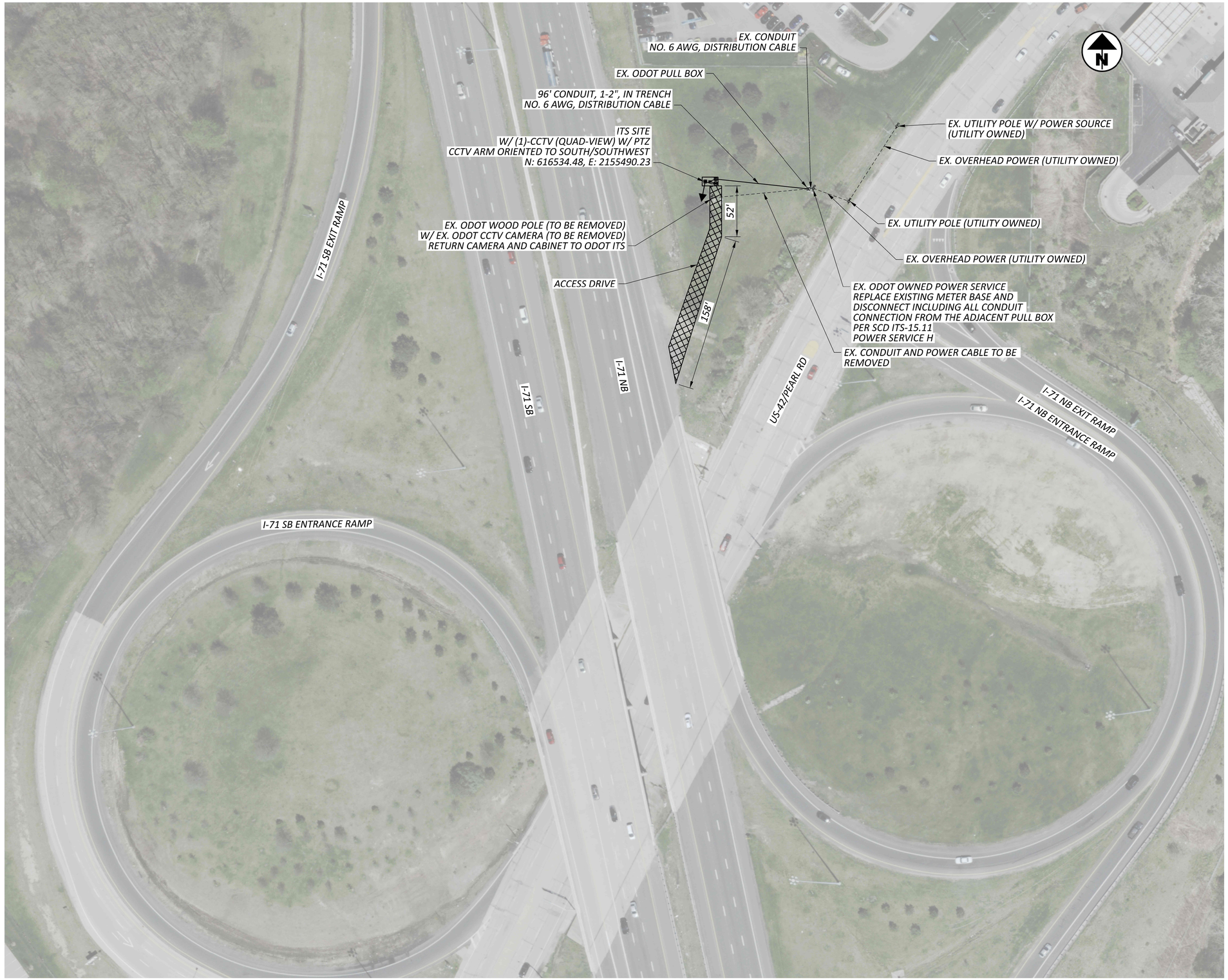

HORIZONTAL
SCALE IN FEET
0 25 50 100

ITS PLAN
I-71 & US-42/PEARL RD

D3/D4/D12 ITS CAMERA ADDITIONS

MODEL: Unnamed Plan - 20 I-77 SOUTH OF ROCKSIDE RD-1 PAPERSIZE: 34x22 (in.) DATE: 3/26/2024 TIME: 3:48:17 PM USER: USBT726326
pw:\\wsp-us-pw.bentley.com:wsp-us-pw-02\Documents\OH - OHIO Projects\118895\400-Engineering\Signals\Sheets\118895_CP022.dgn

DESIGN AGENCY
WSP USA, Inc.
2 Miranova Pl,
Suite 450
Columbus, OH 43215

DESIGNER
BPT

REVIEWER
NWA 02/02/24

PROJECT ID
118895

SHEET
P.43

TOTAL
55

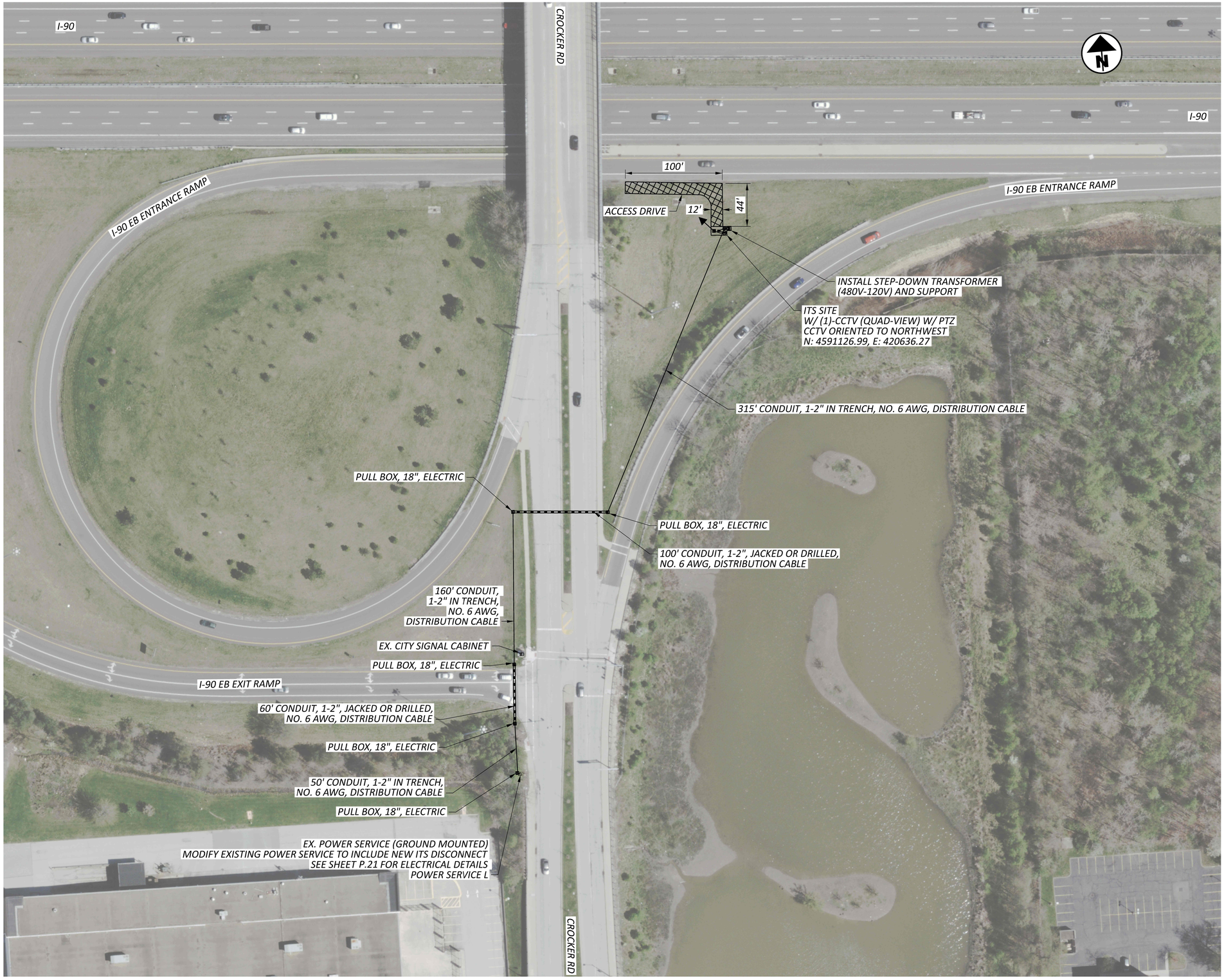

HORIZONTAL SCALE IN FEET
0 25 50 100

ITS PLAN
I-90 & CROCKER RD

D3/D4/D12 ITS CAMERA ADDITIONS

MODEL: WSP ITS Locations - Site 23 PAPERSIZE: 34x22 (in.) DATE: 3/26/2024 TIME: 3:48:45 PM USER: USBT726326
pw:\\wsp-us-pw.bentley.com:wsp-us-pw-02\Documents\OH - OHIO Projects\118895\400-Engineering\Signals\Sheets\118895_CP023.dgn

DESIGN AGENCY
ARCADIS
1111 SUPERIOR AVENUE, SUITE 1300
CLEVELAND, OHIO 44114
(216) 752-4577
www.arcadis.com

DESIGNER
KAH

REVIEWER
CRE 02/02/24

PROJECT ID
118895

SHEET P.44 TOTAL 55

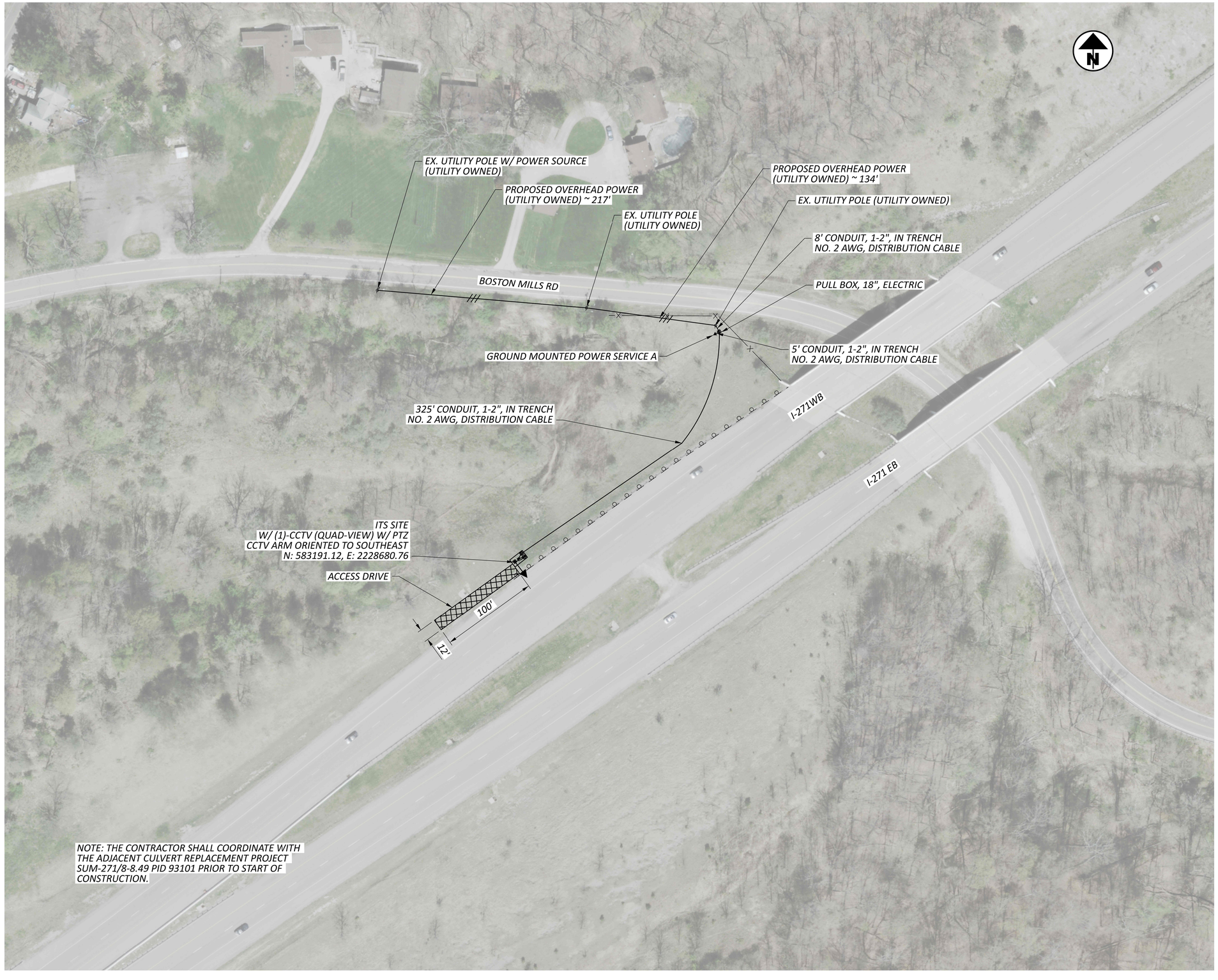

HORIZONTAL
SCALE IN FEET
0 50 100
25

ITS PLAN
I-271 & BOSTON MILLS RD

D3/D4/D12 ITS CAMERA ADDITIONS

MODEL: Unnamed Plan - 24 I-271 @ BOSTON MILLS RD PAPERSIZE: 34x22 (in.) DATE: 3/26/2024 TIME: 3:49:13 PM USER: USBT726326
pw:\\wsp-us-pw.bentley.com:wsp-us-pw-02\Documents\OH - OHIO Projects\118895\400-Engineering\Signals\Sheets\118895_CP024.dgn

DESIGN AGENCY
WSP USA, Inc.
2 Miranova Pl,
Suite 450
Columbus, OH 43215

DESIGNER
BPT

REVIEWER
NWA 02/02/24

PROJECT ID
118895

SHEET
P.45

TOTAL
55

D3/D4/D12 ITS CAMERA ADDITIONS

MODEL: WSP ITS Locations - Site 25 PAPERSIZE: 34x22 (in.) DATE: 3/26/2024 TIME: 3:49:40 PM USER: USBT726326
pw:\\wsp-us-pw.bentley.com:wsp-us-pw-02\Documents\OH - OHIO Projects\118895\400-Engineering\Signals\Sheets\118895_CP025.dgn

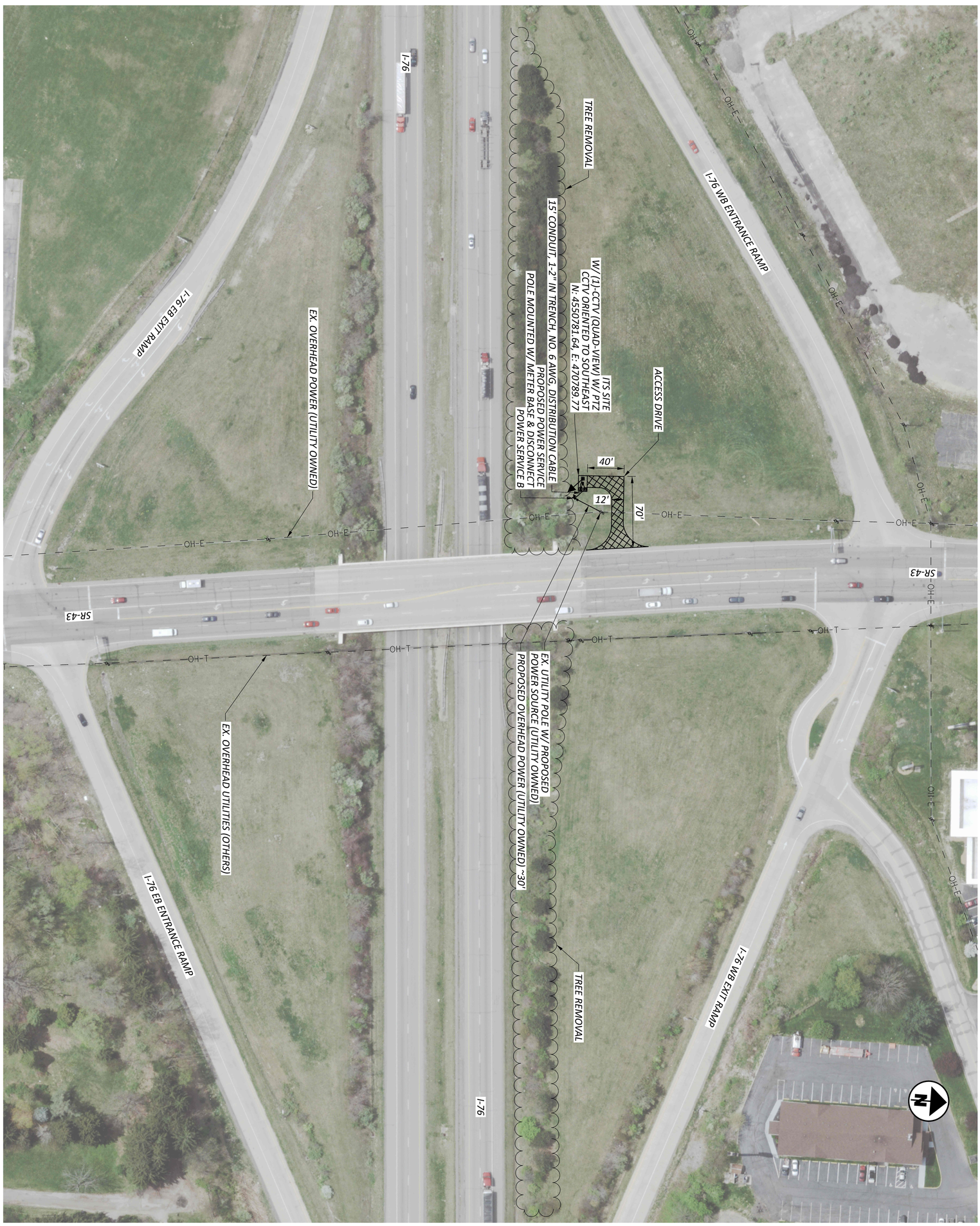

SHEET P.46 OF 55	PROJECT ID 118895	REVIEWER CRE 02/02/24	DESIGNER KAH	ARCADIS 1111 SUPERIOR AVENUE SUITE 1300 CLEVELAND, OHIO 44114 (216) 781-8177 www.arcadis.com	DESIGN AGENCY

ITS PLAN
I-76 & SR-43

HORIZONTAL SCALE IN FEET
0 50
25 100

D3/D4/D12 ITS CAMERA ADDITIONS

MODEL: WSP ITS Locations - Site 26 PAPERSIZE: 34x22 (in.) DATE: 3/26/2024 TIME: 3:50:09 PM USER: USBT726326
pw:\\wsp-us-pw.bentley.com:wsp-us-pw-02\Documents\OH - OHIO Projects\118895\400-Engineering\Signals\Sheets\118895_CP026.dgn

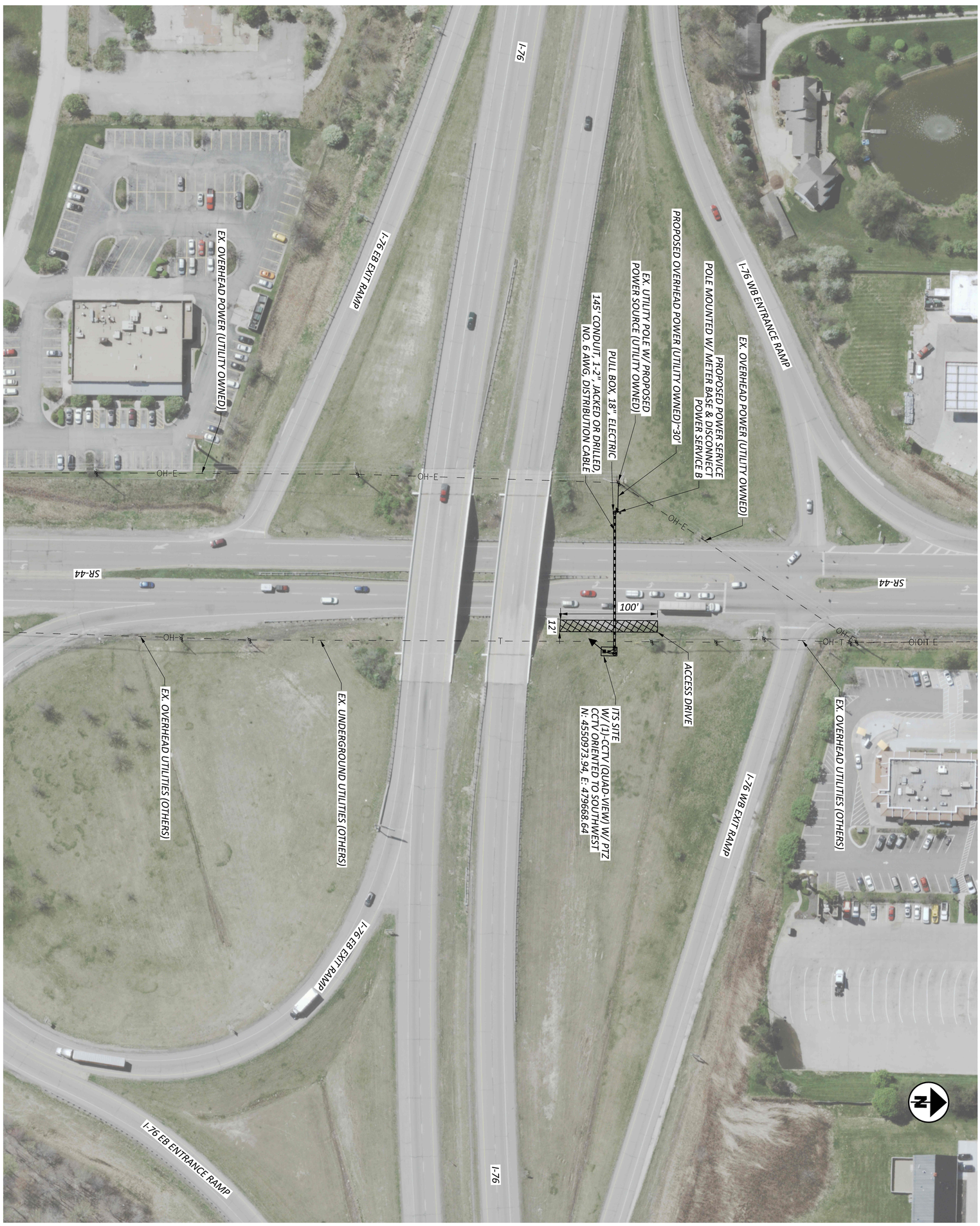

SHEET P 47 OF 55 TOTAL	PROJECT ID 118895	REVIEWER CRE 02/02/24	DESIGNER KAH	ARCADIS 1111 SUPERIOR AVENUE SUITE 1300 CLEVELAND, OHIO 44114 (216) 781-8177 www.arcadis.com DESIGN AGENCY	ITS PLAN I-76 & SR-44

HORIZONTAL SCALE IN FEET
0 50
25 100

D3/D4/D12 ITS CAMERA ADDITIONS

MODEL: WSP ITS Locations - Site 27 PAPERSIZE: 34x22 (in.) DATE: 3/26/2024 TIME: 3:50:35 PM USER: USBT726326
pw:\\wsp-us-pw.bentley.com:wsp-us-pw-02\Documents\OH - OHIO Projects\118895\400-Engineering\Signals\Sheets\118895_CP027.dgn

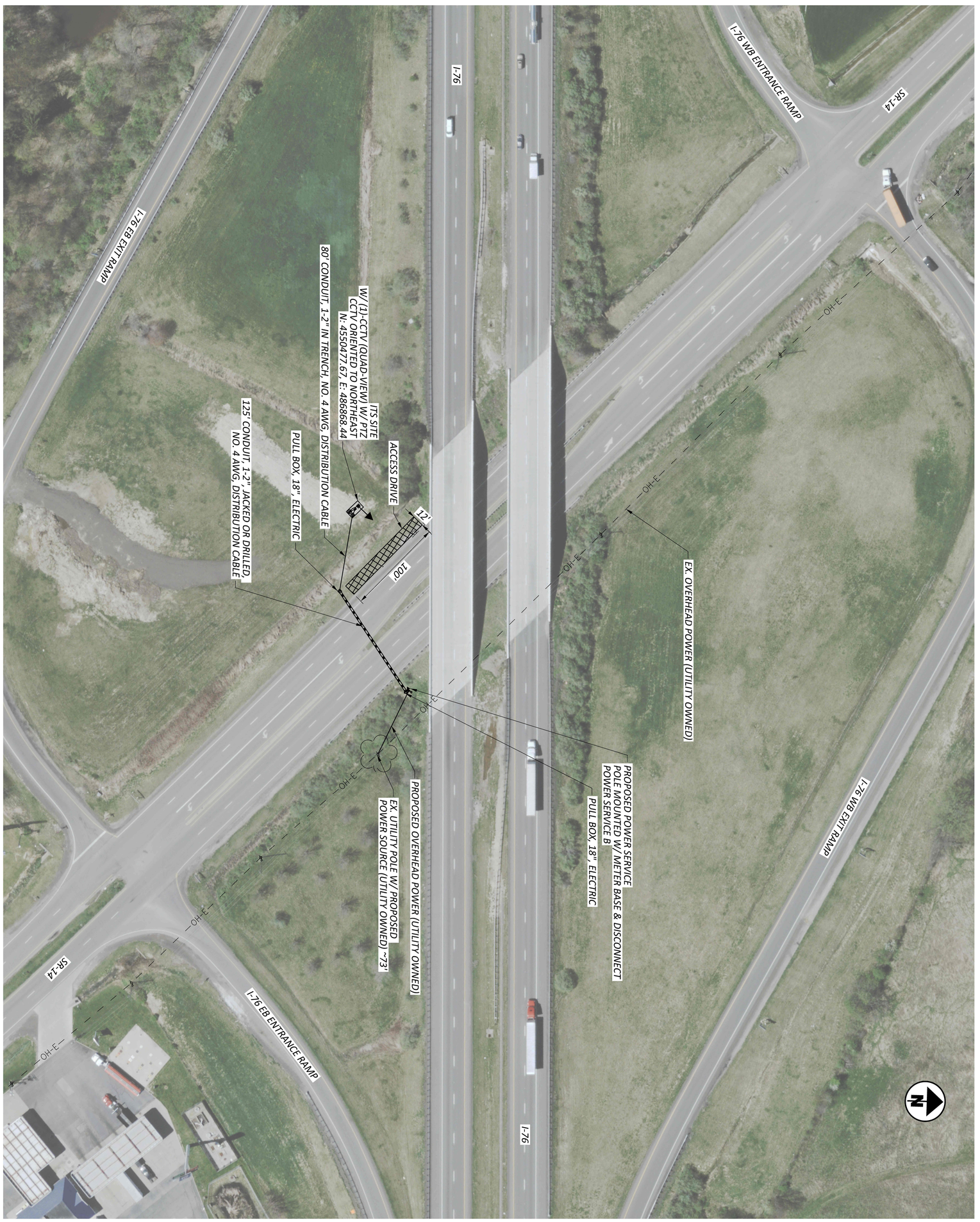

SHEET P 48 OF 55	PROJECT ID 118895	REVIEWER CRE 02/02/24	DESIGNER KAH	ARCADIS 1111 SUPERIOR AVENUE SUITE 1300 CLEVELAND, OHIO 44114 (216) 781-8177 www.arcadis.com	DESIGN AGENCY

ITS PLAN
I-76 & SR-14

HORIZONTAL SCALE IN FEET
0 50
25 100

HORIZONTAL SCALE IN FEET
0 25 50 100

ITS PLAN
I-680 & I-80/SR-11

D3/D4/D12 ITS CAMERA ADDITIONS

MODEL: WSP ITS Locations - Site 28 PAPERSIZE: 34x22 (in.) DATE: 3/26/2024 TIME: 3:51:02 PM USER: USBT726326
pw:\\wsp-us-pw.bentley.com:wsp-us-pw-02\Documents\OH - OHIO Projects\118895\400-Engineering\Signals\Sheets\118895_CP028.dgn

DESIGN AGENCY
ARCADIS
1111 SUPERIOR AVENUE SUITE 1300
CLEVELAND, OHIO 44114
(470) 734-4777
www.arcadis.com

DESIGNER KAH
REVIEWER CRE 02/02/24
PROJECT ID 118895
SHEET P.49 TOTAL 55

D3/D4/D12 ITS CAMERA ADDITIONS

MODEL: WSP ITS Locations - Site 29 PAPERSIZE: 34x22 (in.) DATE: 3/26/2024 TIME: 3:51:30 PM USER: USBT726326
pw:\\wsp-us-pw.bentley.com:wsp-us-pw-02\Documents\OH - OHIO Projects\118895\400-Engineering\Signals\Sheets\118895_CP029.dgn

SHEET P.50 OF 55	PROJECT ID 118895	REVIEWER CRE 02/02/24	DESIGNER KAH	DESIGN AGENCY ARCADIS 1111 SUPERIOR AVENUE SUITE 1300 CLEVELAND, OHIO 44114 (216) 781-8177 www.arcadis.com	ITS PLAN I-680 & US-244

HORIZONTAL SCALE IN FEET
0 50
25 100

HORIZONTAL SCALE IN FEET
0 25 50 100

ITS PLAN
I-680 & US-62 SPLIT (EAST OF MARKET ST)

D3/D4/D12 ITS CAMERA ADDITIONS

MODEL: WSP ITS Locations - Site 30 PAPERSIZE: 34x22 (in.) DATE: 3/26/2024 TIME: 3:51:56 PM USER: USBT726326
pw:\\wsp-us-pw.bentley.com:wsp-us-pw-02\Documents\OH - OHIO Projects\118895\400-Engineering\Signals\Sheets\118895_CP030.dgn

DESIGN AGENCY
ARCADIS
1111 SUPERIOR AVENUE SUITE 1300
CLEVELAND, OHIO 44114
(216) 781-7377
www.arcadis.com

DESIGNER KAH
REVIEWER CRE 02/02/24
PROJECT ID 118895
SHEET P.51 TOTAL 55

D3/D4/D12 ITS CAMERA ADDITIONS

MODEL: WSP ITS Locations - Site 31 PAPERSIZE: 34x22 (in.) DATE: 3/26/2024 TIME: 3:52:24 PM USER: USBT726326
pw:\\wsp-us-pw.bentley.com:wsp-us-pw-02\Documents\OH - OHIO Projects\118895\400-Engineering\Signals\Sheets\118895_CP031.dgn

SHEET	PROJECT ID	REVIEWER	DESIGNER	DESIGN AGENCY
P.52 OF 55	118895	CRE 02/02/24	KAH	ARCADIS 1111 SUPERIOR AVENUE SUITE 1300 CLEVELAND, OHIO 44114 (216) 781-8177 www.arcadis.com

ITS PLAN
I-90 & SR-193

HORIZONTAL SCALE IN FEET
0 50
25 100

D3/D4/D12 ITS CAMERA ADDITIONS

MODEL: WSP ITS Locations - Site 32 PAPERSIZE: 34x22 (in.) DATE: 3/26/2024 TIME: 3:52:51 PM USER: USBT726326
pw:\\wsp-us-pw.bentley.com:wsp-us-pw-02\Documents\OH - OHIO Projects\118895\400-Engineering\Signals\Sheets\118895_CP032.dgn

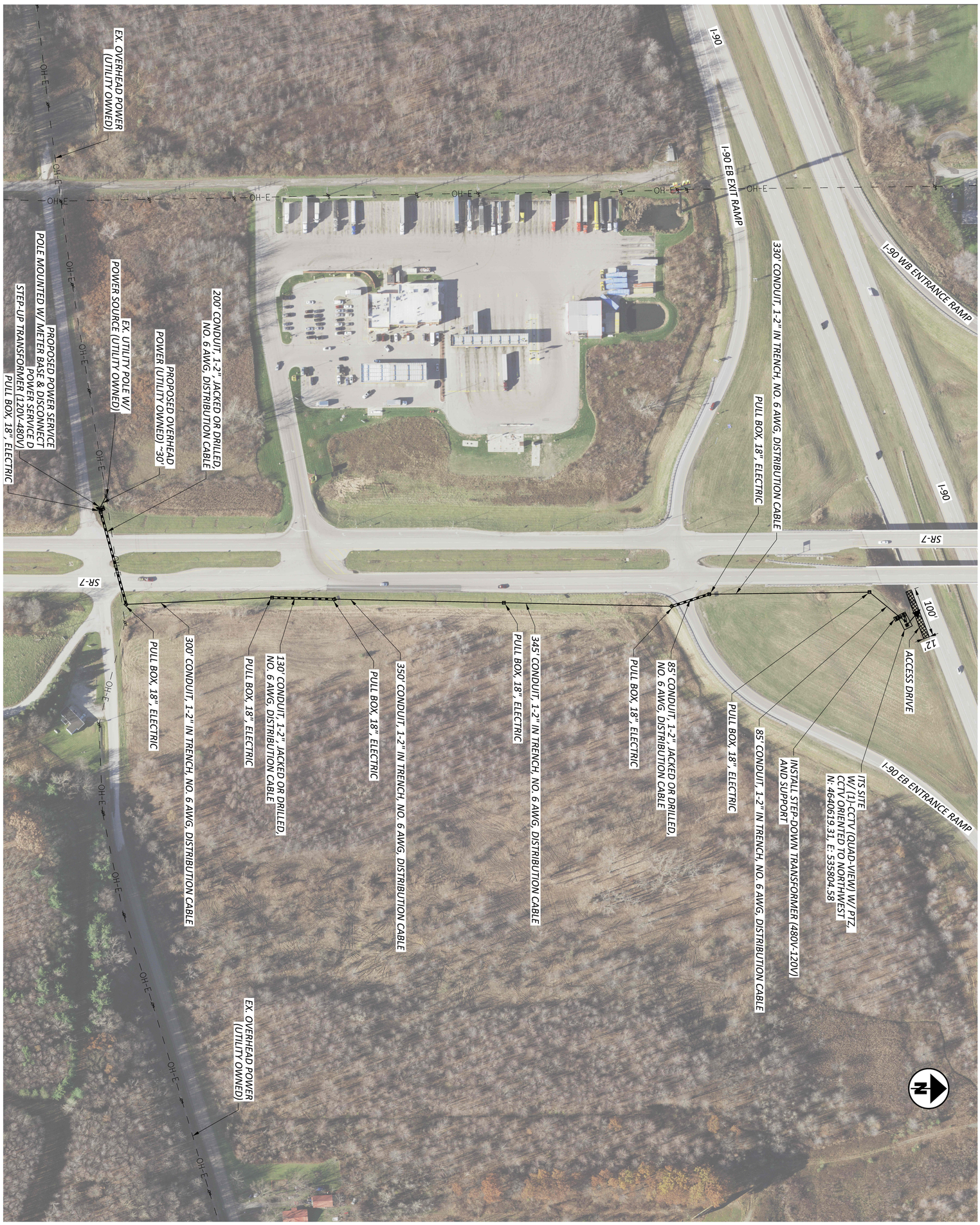

ITS PLAN
I-90 & SR-7

HORIZONTAL SCALE IN FEET
0 100
50 200

DESIGNER	REVIEWER	PROJECT ID	SHEET
KAH	CRE 02/02/24	118895	P.53 of 55

DESIGN AGENCY
ARCADIS
1111 SUPERIOR AVENUE SUITE 1300
CLEVELAND, OHIO 44114
(216) 781-8177
www.arcadis.com

EX. POLE, LIGHTING
EX. CONDUIT , LIGHTING CIRCUIT
EX. PULL BOX, LIGHTING CIRCUIT
65' CONDUIT, 1-2", JACKED OR DRILLED, NO. 1/0 AWG, DISTRIBUTION CABLE
PULL BOX, 18", ELECTRIC
EX. CONDUIT, LIGHTING CIRCUIT
PROPOSED POWER SERVICE POLE MOUNTED W/ METER BASE & DISCONNECT POWER SERVICE B
EX. CONDUIT, ELECTRICAL
PROPOSED OVERHEAD POWER (UTILITY OWNED) ~30'
EX. UTILITY POLE W/ POWER SOURCE (UTILITY OWNED)
EX. CONDUIT, LIGHTING CIRCUIT
EX. PULL BOX, ELECTRICAL
EX. PULL BOX, ELECTRICAL
EX. CONDUIT, ELECTRICAL
EX. CONDUIT, ELECTRICAL
EX. CONDUIT, WEIGHT STATION
EX. PIPE, DRAINAGE
EX. DRAINAGE
I-90 WB ENTRANCE RAMP
ITS SITE W/ (1)-CCTV (QUAD-VIEW) W/ PTZ CCTV ORIENTED TO SOUTHWEST N: 4641418.00, E: 537533.00
EX. DMS, WEIGHT STATION
425' CONDUIT, 1-2" IN TRENCH, NO. 1/0 AWG, DISTRIBUTION CABLE
EX. PIPE, DRAINAGE
EX. DRAINAGE
PULL BOX, 18", ELECTRIC
85' CONDUIT, 1-2", JACKED OR DRILLED, NO. 1/0 AWG, DISTRIBUTION CABLE
I-90 WB EXIT RAMP
ACCESS DRIVE
12'
100'
I-90
EX. CAMERA 16' POLE W/ CAMERAS (OTHERS)
EX. PIPE, DRAINAGE
PULL BOX, 18", ELECTRIC
EX. PULL BOX, CAMERA SYSTEM
EX. CONDUIT, 2" CAMERA SYSTEM EQUIPMENT
EX. UNDERGROUND ELECTRIC (OTHERS)
EX. PIPE, DRAINAGE
I-90

HORIZONTAL SCALE IN FEET
0 25 50 100

ITS PLAN
I-90 & WB REST AREA MM 241

D3/D4/D12 ITS CAMERA ADDITIONS

MODEL: WSP ITS Locations - Site 33 PAPERSIZE: 34x22 (in.) DATE: 3/26/2024 TIME: 3:53:20 PM USER: USBT726326
pw:\\wsp-us-pw.bentley.com:wsp-us-pw-02\Documents\OH - OHIO Projects\118895\400-Engineering\Signals\Sheets\118895_CP033.dgn

DESIGN AGENCY
ARCADIS
1111 SUPERIOR AVENUE, SUITE 1300
CLEVELAND, OHIO 44114
(216) 736-6577
www.arcadis.com

DESIGNER KAH
REVIEWER CRE 02/02/24
PROJECT ID 118895
SHEET P.54 TOTAL 55

HORIZONTAL
SCALE IN FEET
0 25 50 100

ITS PLAN
I-480 & WARRENSVILLE CENTER RD

D3/D4/D12 ITS CAMERA ADDITIONS

MODEL: WSP ITS Locations - Site 34 PAPERSIZE: 34x22 (in.) DATE: 3/26/2024 TIME: 3:53:48 PM USER: USBT726326
pw:\\wsp.ctx.pw.bentley.com:wsp-pw-02\Documents\OH - OHIO Projects\118895\400 Engineering\Signals\Sheets\118895_CP034.dgn

DESIGN AGENCY
WSP USA, Inc.
2 Miranova Pl,
Suite 450
Columbus, OH 43215

DESIGNER
BPT

REVIEWER
NWA 03/26/24

PROJECT ID
118895

SHEET P.55 TOTAL 55