8-1 U-8

FILMED 5 1978 REPRODUCTION

MICROFILMED FEB 2 1981

FED. RD. DIVISION	STATE	PROJECT	
2	OHIO	I-480-4(32)176	

1 / 407

CUYAHOGA COUNTY
CUY-480—22.16

STATE OF OHIO
DEPARTMENT OF HIGHWAYS
CUY-480 - 22.16
CUYAHOGA COUNTY
CITY OF GARFIELD HEIGHTS
CITY OF CLEVELAND
CITY OF MAPLE HEIGHTS
CITY OF WARRENSVILLE HEIGHTS

LIMITED ACCESS

THIS IMPROVEMENT IS ESPECIALLY DESIGNED FOR THROUGH TRAFFIC AND HAS BEEN DECLARED A LIMITED ACCESS HIGHWAY OR FREEWAY BY ACTION OF THE DIRECTOR OF HIGHWAYS IN ACCORDANCE WITH THE PROVISIONS OF SECTION 5511.02, REVISED CODE OF OHIO.

Sheet No. 365 revised 1-18-71 EBL
Sheet No. 120, 125, 126 & 127 revised 5-7-71 EBL

I-480-4(32)176

1971 SPECIFICATIONS

THE STANDARD SPECIFICATIONS OF THE STATE OF OHIO, DEPARTMENT OF HIGHWAYS, INCLUDING CHANGES AND SUPPLEMENTAL SPECIFICATIONS LISTED IN THE PROPOSAL SHALL GOVERN THIS IMPROVEMENT.

THE RIGHT OF WAY FOR THIS IMPROVEMENT WILL BE PROVIDED BY THE STATE OF OHIO.

I HEREBY APPROVE THESE PLANS AND DECLARE THAT THE MAKING OF THIS IMPROVEMENT WILL NOT REQUIRE THE CLOSING OF THE HIGHWAY TO TRAFFIC AND THAT PROVISIONS FOR THE MAINTENANCE AND SAFETY OF TRAFFIC WILL BE AS SET FORTH ON THE PLANS AND ESTIMATES.

APPROVED DATE 1-27-70	Charles M. Yurick — DIVISION DEPUTY DIRECTOR
APPROVED DATE 1-30-70	C. H. Detwiler — ENGINEER OF BRIDGES
APPROVED DATE 1-30-70	R. E. Gatlin — ENGINEER OF LOCATION AND DESIGN
APPROVED DATE 1-30-70	George J. Hammond — DEPUTY DIRECTOR OF DESIGN AND CONSTRUCTION
APPROVED DATE 2-25-70	[illegible] — DEPUTY DIRECTOR OF RIGHT OF WAY
APPROVED DATE 2-25-70	Thomas M. Major — DEPUTY DIRECTOR OF PLANNING AND PROGRAMMING
APPROVED DATE 2-25-70	[illegible] — FIRST ASSISTANT DIRECTOR
APPROVED DATE 2-25-70	[illegible] — DIRECTOR OF HIGHWAYS
APPROVED DATE 1-20-70	Ralph C. Stigler — DIRECTOR OF PUBLIC SERVICE CITY OF CLEVELAND
APPROVED DATE 1/26/70	A. S. Porter — CUYAHOGA COUNTY ENGINEER

CONVENTIONAL SIGNS

PROPERTY LINE
EXISTING RIGHT OF WAY
SUBDIVISION LINE
SUBLOT LINE OR EXISTING EASEMENT — Z
ORIGINAL TOWNSHIP LOT LINE
CORPORATION LINE
LIMITED ACCESS LINE — LA
RIGHT OF WAY LINE — R/W
TEMPORARY RIGHT OF WAY — T
SEWER EASEMENT LINE — S
SLOPE EASEMENT LINE — SL
CHANNEL EASEMENT — X
PARTICIPATION LINE — P
CENTER LINE
FENCE LINE
GUARD RAIL (EXISTING)
GUARD RAIL (PROPOSED)
RAILROAD
POWER POLES
TELEPHONE POLES
POWER AND TELEPHONE POLES
LIGHT POLES
TREES (EXISTING)
ELECTRICAL TOWER
WATER LINE
GAS LINE — G
TELEPHONE CONDUIT — T
SEWER (EXISTING) — S
OIL LINE
FIRE HYDRANT (EXISTING)
FIRE HYDRANT (PROPOSED)
MANHOLE (EXISTING)
MANHOLE (PROPOSED STORM)
MANHOLE (PROPOSED SANITARY)
CATCH BASIN OR INLET (EXISTING)
CATCH BASIN OR INLET (PROPOSED)
LIMITED ACCESS—RIGHT OF WAY LINE — LA/RW

INDEX OF SHEETS

Title Sheet	1	Miscellaneous Details	131-143, 145-149
Design Designation and Schematic Plan	2	Temporary Warrensville Road	150
Geometric Plan and Tables	3-8	Driveway Profiles	151-155
Traverse Ties	9-10	Cross-Section Layout	156
General Notes	11-12	Cross Sections	157-236
Typical Sections	13-22	Water Work Plans	237-265, 265-A
Computations and Sub-Summaries	23-32	Retaining Wall Ramp WN-W	266-267
General Summary	33-38	Bridge Approach Slab Details	268-270
Pavement Plans	41-55	Traffic Control Plans	271-311
Profiles	56-71	Lighting Plans	312-340
Grading and Drainage Plans	72-89	Traffic Signal Plans	341-348, 348A
Storm Sewer Profiles	90-115	Structures over 20' Span	349-385
Sanitary Sewer Profiles	116-119	Right of Way Plans	386-407
Mill Creek Retention Basin Details	120-130	Sheets 39, 40 & 44 omitted from plan	

Revised 11-27-70

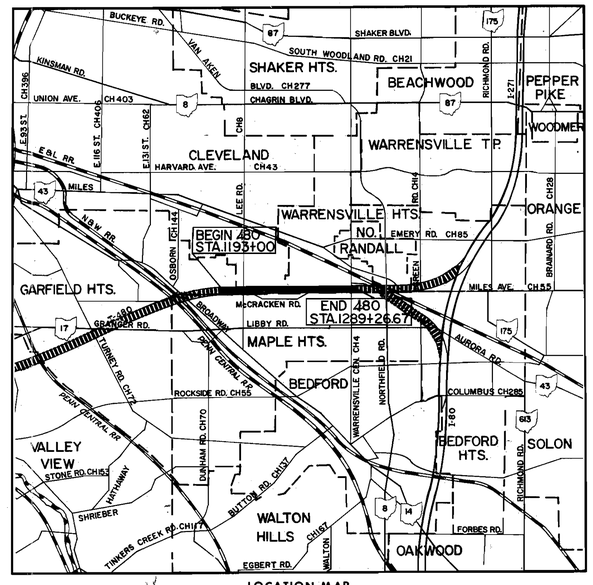

LOCATION MAP
SCALE FEET
0 5,000 10,000 15,000

PORTION TO BE IMPROVED
STATE ROADS
OTHER ROADS
FUTURE CONSTRUCTION
UNDER CONSTRUCTION

SCALE
PLAN 1"=20',50' PROFILE HOR 1"= 100'
CROSS SECTIONS 1"=10' PROFILE VERT 1"= 10'

LINE DATA

BEGIN PROJECT. . . . . STA. 1193+00.00
END PROJECT. . . . . STA. 1289+26.67
NET LENGTH OF PROJECT. . . . . 9626.67 LIN. FT. or 1.823 MILES

ADD FOR APPROACHES

ADD WORK STA. 1191+00 TO STA. 1193+00	200.00 LIN. FT.
ADD WORK STA. 1289+26.67 TO STA. 1290+75	148.33 LIN. FT.
LEE ROAD STA. 37+10 TO STA. 52+53	1543.00 LIN. FT.
CAMDEN ROAD STA. STA. 10+09 TO STA. 19+96	987.00 LIN. FT.
WARRENSVILLE ROAD STA. 9+00 TO STA. 20+42.57	1142.57 LIN. FT.
NET LENGTH OF WORK.	13,647.57 LIN. FT. or 2.584 MILES

SUPPLEMENTAL SPECIFICATIONS

NUMBER	DATE	NUMBER	DATE
801	1-1-69	836	6-17-69
806	1-1-69		
808	11-14-69		
815	1-1-69	934	1-1-69
816	1-1-69	1001	1-1-69

STANDARD DRAWINGS

NUMBER	DATE	NUMBER	DATE
BP-1	6-1-65	HL-2	11-1-65
BP-2	12-1-68	HL-3	11-1-65
BP-3	1-1-71	HL-4	1-1-66
BP-4	1-1-71	HW-E	6-1-65
BP-5	1-1-71	I-2	6-6-69
BP-6	6-1-65	I-2A	6-6-69
BP-7	1-1-66	L-1	6-1-65
CB-2-2-A&B	6-1-65	MC-1	6-13-69
CB-3	6-1-65	MC-3	6-20-69
CB-3A	6-1-65	MC-4	6-13-69
CB-5	9-1-69	MC-5	6-1-65
CB-6	6-1-65	MC-6	6-1-65
F-1	3-10-69	MC-7	10-1-68
F-3	3-10-69	MH-1	10-1-68
FACI-1	9-15-67	MH-1A	10-1-68
FACI-2	6-1-65	MH-2	10-1-68
GR-4	1-1-71	MH-2A	10-1-68
GR-2A	1-1-71	AS-1-67	6-12-69
GR-2B	1-1-71	BR-1-65 Sh. 1	11-24-65
GR-5	1-1-71	RB-1-55	2-2-59
GR-6	1-1-71	SD-1-65 Sh. 1,2,3,4	6-12-69
CB-458A	6-6-68	I-1	6-1-65
HL-1	11-1-65	SP-53	6-30-61
I-3	1-20-70	GR-3	1-1-71
		BR-2-67	1-1-71

PREPARED AND RECOMMENDED BY

HOWARD NEEDLES TAMMEN & BERGENDOFF — **H.G. SOURS**
CONSULTING ENGINEERS — **ASSOCIATE**
KANSAS CITY CLEVELAND NEW YORK — **COLUMBUS**

Browning Crow
BROWNING CROW

STATE OF OHIO — BROWNING CROW 18873 — REGISTERED PROFESSIONAL ENGINEER

FILE NO.	CUYAHOGA COUNTY 00353 DATE OF LETTING CONTRACT NO.

DEPARTMENT OF TRANSPORTATION
FEDERAL HIGHWAY ADMINISTRATION

APPROVED

DIVISION ENGINEER — DATE

Rev. 12-7-70

NOV 3 1970

SCHEMATIC PLAN

MICROFILMED
OCT 5 1978
REPRODUCTION

FED. RD. DIVISION	STATE	PROJECT	
2	OHIO		

2
407

CUYAHOGA COUNTY
CUY-480-22.16

PROPOSED STRUCTURE
LEE ROAD AT MILL CREEK

TYPE: Simple Span Prestressed Composite Concrete Box-Beam Supported on Reinforced Concrete Abutments.
SPAN: 29'-11¾" (28'-0" Normal Clear Span)
ROADWAY: Width Varies: 69'-1¼" to 70'-4¼" face to face curbs with two 13'-0" sidewalks.
LOADING: HS 20-44
SKEW: 10°00' Right Forward
WEARING SURFACE: 1" Monolithic Concrete
APPROACH SLABS: AS-1-67 (20'-0" Long)
ALIGNMENT: Tangent

PARTICIPATION LIMITS

(I) Remainder of Project not described in II, III and IV.
(II) All work within the city limits of Cleveland with the exception of the area described in III.
(III) Area bounded by the west corporation line of the City of Cleveland, the north limited access line and the west edge of new pavement on Lee Road which is Sta. 99+56 ℄ Relocated McCracken Road.
(IV) Area bounded by the west corporation line of the City of Cleveland, the north limited access line and the west work limits of the project which is Sta. 1192+15 ℄ I-480.

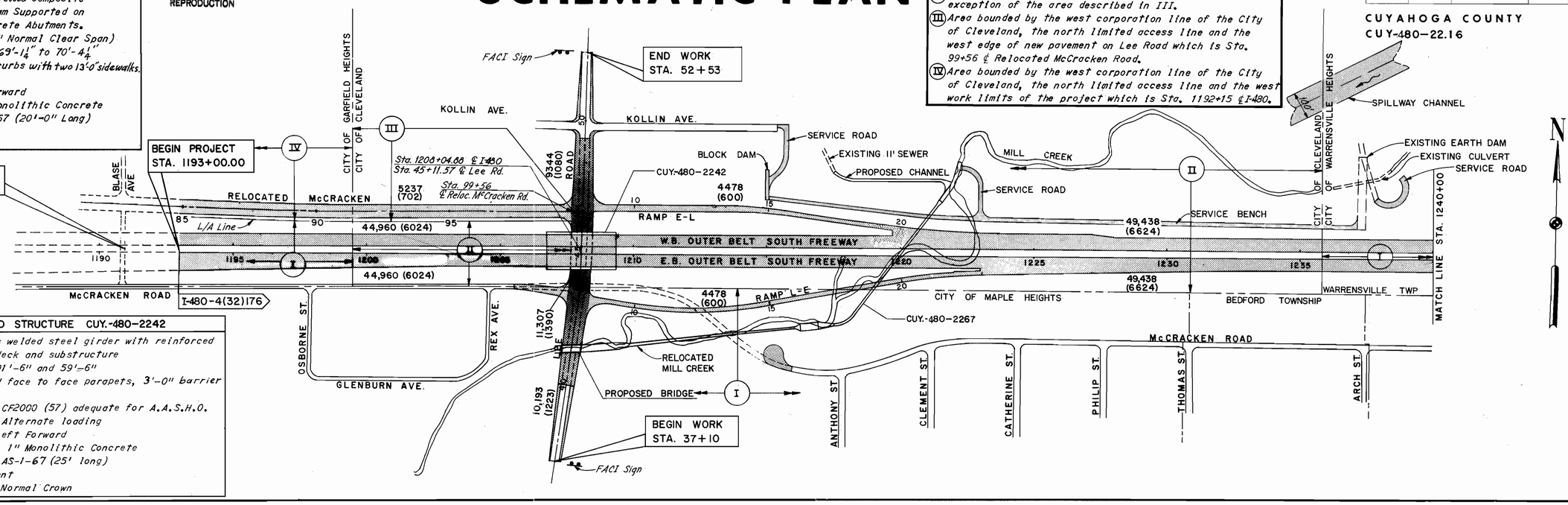

PROPOSED STRUCTURE CUY.-480-2242

TYPE: Continuous welded steel girder with reinforced concrete deck and substructure
SPANS: 59'-6", 91'-6" and 59'-6"
ROADWAY: 144'-0" face to face parapets, 3'-0" barrier median
LOAD FREQUENCY: CF2000 (57) adequate for A.A.S.H.O. Alternate loading
SKEW: 1°33'45" Left Forward
WEARING SURFACE: 1" Monolithic Concrete
APPROACH SLABS: AS-1-67 (25' long)
ALIGNMENT: Tangent
SUPERELEVATION: Normal Crown

DESIGN DESIGNATION	I-480 West of Lee Rd.	I-480 East of Lee Rd.
Current A.D.T.	0	0
Design Year A.D.T.	89,920	98,876
D.D.H.V.	6,624	6,624
D. (Directional Distribution)	67%—33%	67%—33%
V. (Design Speed)	60 m.p.h.	60 m.p.h.

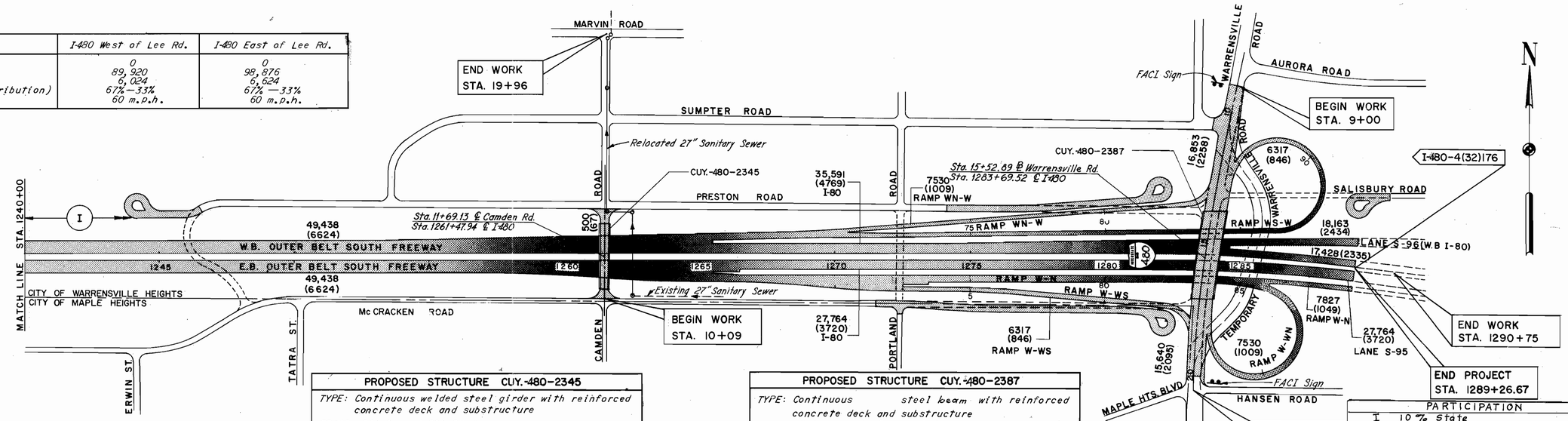

PROPOSED STRUCTURE CUY.-480-2345

TYPE: Continuous welded steel girder with reinforced concrete deck and substructure
SPANS: 94'-6" and 90'-9"
ROADWAY: 28'-0" curb to curb with two 4'-0" sidewalks
LOAD FREQUENCY: CF130 (57)

SKEW: None
WEARING SURFACE: 1" Monolithic Concrete
APPROACH SLABS: AS-1-67 (30' long)
ALIGNMENT: Tangent
SUPERELEVATION: Normal Crown

PROPOSED STRUCTURE CUY.-480-2387

TYPE: Continuous steel beam with reinforced concrete deck and substructure
SPANS: 70'-0", 86'-0¾", 63'-8¼" and 71'-6"
ROADWAY: 76'-0" curb to curb with two 6'-0" sidewalks
LOAD FREQUENCY: CF2000 (57) Adequate for A.A.S.H.O. Alternate loading
SKEW: Varies
WEARING SURFACE: 1" Monolithic Concrete
APPROACH SLABS: AS-1-67 (20' long)
ALIGNMENT: 1°30'00" Left
SUPERELEVATION: Normal Crown

100 0 100 200 300 400
SCALE IN FEET

PARTICIPATION

I	10 %	State	
	90 %	Federal	
II	5 %	City	
	5 %	State	
	90 %	Federal	
III	30 %	Local (100%) County	= 30.0%
	70 %	Project (5%) City	= 3.5%
		Project (5%) State	= 3.5%
		Project (90%) Federal	= 63.0%
IV	30 %	Local (100%) County	= 30.0%
	70 %	Project (10%) State	= 7.0%
		Project (90%) Federal	= 63.0%

SCALE 1"=200'
MADE DDS DATE 2-18-67
TRCD. ____ DATE ____
CKD. ____ DATE ____
HOWARD, NEEDLES, TAMMEN & BERGENDOFF
CONSULTING ENGINEERS
KANSAS CITY CLEVELAND NEW YORK

TRAFFIC LEGEND
00,000 = A.D.T. (1989)
(00,000) = D.D.H.V. (1989)

NOV 3 1970

DESIGN DESIGNATION AND SCHEMATIC PLAN

MICROFILMED
OCT 5 1978
REPRODUCTION

FED. RD DIVISION	STATE	PROJECT	
2	OHIO		

350 / 407

CUYAHOGA COUNTY
CUY-480-22.16

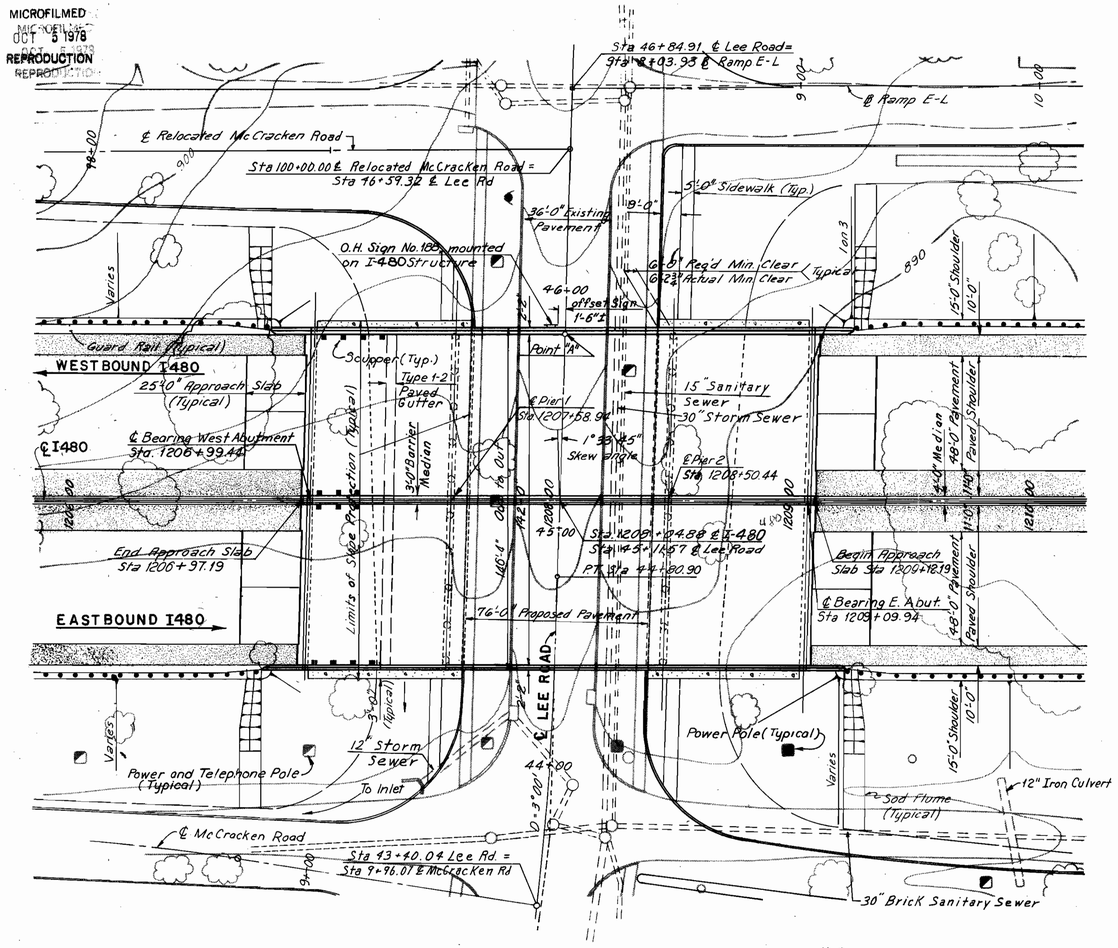

PLAN
Scale 1" = 30'

Note:
Type 1-2 paved gutter is included for payment with roadway quantities.

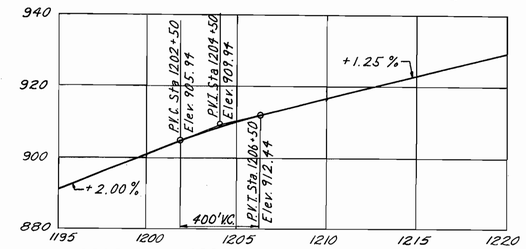

PROFILE - I 480 (OUTER BELT SOUTH FREEWAY)
Scale: Horiz: 1" = 400'
Vert: 1" = 20'

PROPOSED STRUCTURE

TYPE: Continuous welded steel girder with reinforced concrete deck and substructure.
SPANS: 59'-6", 91'-6" and 59'-6"
ROADWAY: 144'-0" face to face parapets, 3'-0" barrier median
LOAD FREQUENCY: CF 2000 (57) adequate for A.A.S.H.O. Alternate loading
SKEW: 1°33'45" Left forward
WEARING SURFACE: 1" Monolithic Concrete
APPROACH SLABS: AS-1-67 (25' long)
ALIGNMENT: Tangent
SUPERELEVATION: Normal Crown

TRAFFIC DATA
1986 - 46,626 A.D.T. (Each way)
3,124 D.D.H.V.

ESTIMATED QUANTITIES - PARTICIPATION LIMIT II

CUY-480-2216 H.N.T.B. BRIDGE NO. 16

ITEM	TOTAL	UNIT	DESCRIPTION	ABUTMENTS	PIERS	SUPER-STRUCTURE	GENERAL		
503	1014	Cu. Yd.	Unclassified Excavation	656	358				
505	Lump Sum	Lump Sum	Test pile				Lump Sum		
507	4400	Lin. Ft.	Steel Pile HP12x53		4,400				
507	4080	Lin. Ft.	Steel Pile HP10x42	4,080					
509	384,769	Pounds	Reinforcing Steel	43,288	65,527	275,954			
511	986	Cu. Yd.	Class "C" Concrete, Superstructure			986			
511	208	Cu. Yd.	Class "C" Concrete, Pier Caps and Columns		208				
511	308	Cu. Yd.	Class "C" Concrete, Abutment (Above footing)	308					
511	404	Cu. Yd.	Class "C" Concrete, Footings	225	179				
512	59	Lin. Ft.	Waterproofing, Premolded Sealing Strip	59					
513	822,672	Pounds	Structural Steel			822,672			
514	822,672	Pounds	Field Painting of Structural Steel			822,672			
516	227	Sq. Ft.	2" Preformed Expansion Joint Filler	164			63		
516	93	Sq. Ft.	1" Preformed Expansion Joint Filler	93					
517	486.50	Lin. Ft.	Railing (Type 1)	62.67		423.83			
518	137	Cu. Yd.	Porous Backfill	137					
518	242	Lin. Ft.	6" Helical C.M.P. (Sec. 707.01) Non-Perforated	242					
518	277	Lin. Ft.	6" Perfor. Hel. C.M.P. (Sec. 707.01) (Including Specials)	277					
518	14	Each	Scuppers, Including Supports			14			
601	1201	Sq. Yd.	Concrete, Slope protection (4" Thick)				1201		
601	1040	Sq. Yd.	Concrete, Slope Protection (6" Thick)				1040		
625			For Lighting Quantities see Lighting Plans						
808	986	Units	Chemical Admixtures for Concrete, Type A, Bar D			986			

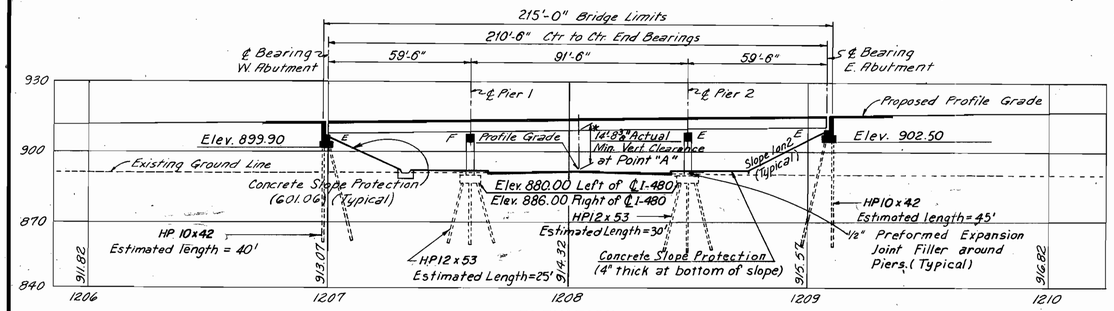

ELEVATION
Scale: 1" = 30'

*Note:
14'-6" Required minimum vertical clearance. Minimum vertical clearance occurs at ℄ Lee Road and the outside edge of the north exterior girder.

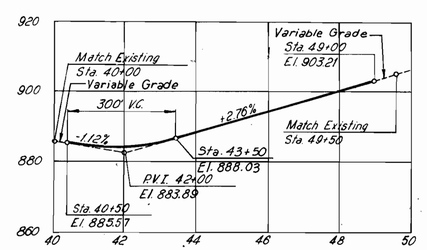

PROFILE - LEE ROAD
Scale Horiz. 1" = 200'
Vert. 1" = 20'

H.N.T.B. BR. NO. 16

HOWARD, NEEDLES, TAMMEN & BERGENDOFF
CONSULTING ENGINEERS
KANSAS CITY CLEVELAND NEW YORK

SITE PLAN

I - 480 OVER LEE ROAD

BR. NO. CUY-480-2242 STA. 1206+97.19 TO STA. 1209+12.19

CUYAHOGA COUNTY OHIO

DRAWN O.J.H. DATE 1-9-67	TRACED DATE	CHECKED KPB DATE 1-10-67	REVIEWED WF DATE 12-9-69	REVISED 5-25-70 SHEET 1/8

NOV 3 1970

MICROFILMED
OCT 5 1978
REPRODUCTION

FED. RD. DIVISION	STATE	PROJECT	
2	OHIO		

355/407

CUYAHOGA COUNTY
CUY-480-22.16

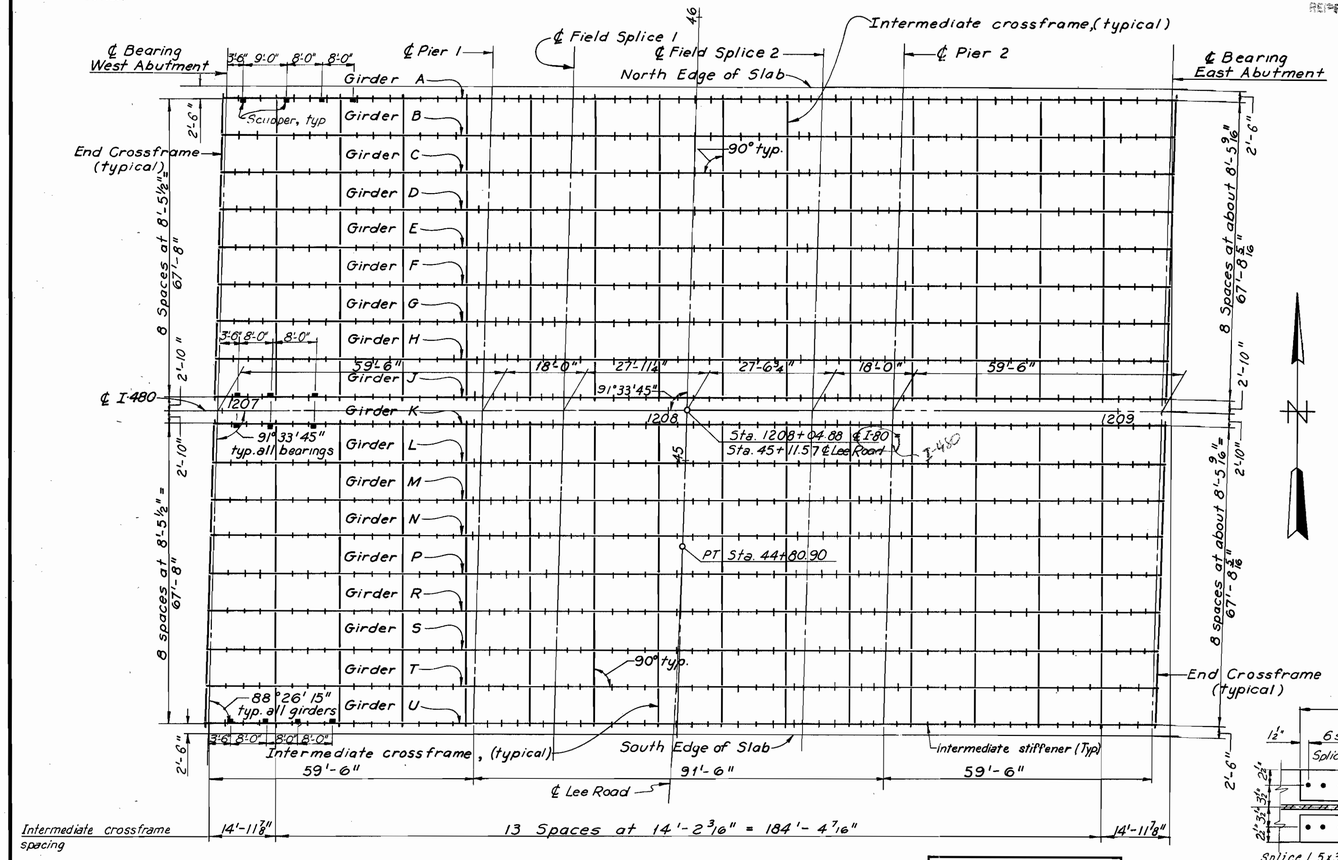

FRAMING PLAN

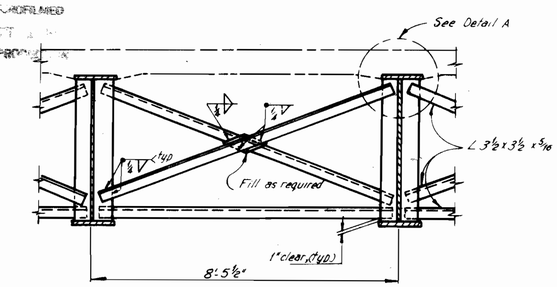

TYPICAL INTERMEDIATE CROSSFRAME

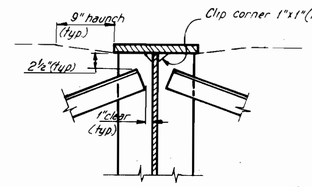

DETAIL A

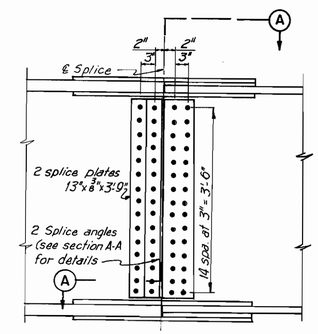

TYPICAL WEB FIELD SPLICE

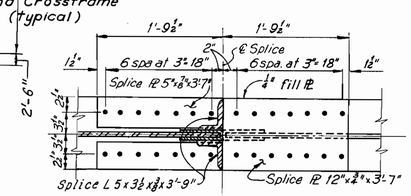

SECTION A-A

GIRDER NOTES:

The Girders shall be fabricated to compensate for the effects of dead load deflection, and under full dead load shall parallel the profiles formed by the top of pavement elevations directly over the girders.

Top and bottom flange plates are to be the same and shall be spliced at points shown on the girder elevation.

The web plates may be shop spliced as required by available plate lengths.

The locations of shop web splices and the locations and details at any additional shop flange splices shall be submitted to the Director for approval prior to ordering of materials.

Intermediate stiffeners shall be placed as shown on the framing plan, equally spaced between crossframes, or crossframes and bearing stiffeners, or crossframes and field splices. Stiffeners shall be placed in pairs and shall have contact bearing with the flange as indicated in the girder elevation.*

Bearing stiffeners at piers and abutments shall be placed in pairs on all girders.

Intermediate stiffeners and bearing stiffeners at piers shall be set normal to girder flange.

Bearing stiffeners at abutments shall be set vertical.

All girder field splices shall be made with 1" diameter high strength steel bolts. The bolts shall be placed with their heads on the outside face of the exterior girders and on the bottom of all flange plates.

For details of rockers and bolsters see Ohio Standard Drawing RB-1-55.

The contractor shall submit to the Director for approval, three prints showing his proposed erection procedure.

For end crossframe details see Ohio Standard Drawing SD-1-69, Sheet 1 of 4.

For roadway end dam details and for curb plate details at the safety curbs and barrier median see Ohio Standard Drawing SD-1-69, Sheets 1 and 2 of 4. The supporting angle shown in Section A-A on Sheet 1 of 4 shall be increased from 7x4x3/8 to 8x4x3/8 and the main angle shall be 8x4x1.

For details of scuppers see Sheet CD 1.

For underpass lighting details and for lighting details at Sign No. 188 see Lighting Plans.

For attachment details of O.H. Sign No. 188 to structure see Signing Plans.

* clearance of 1 1/4" from tension flange.

WELD SIZE WEB TO FLANGE	
Flange Plate thickness	Fillet weld size
7/8 and 1 1/2"	5/16"
1 3/4"	3/8"

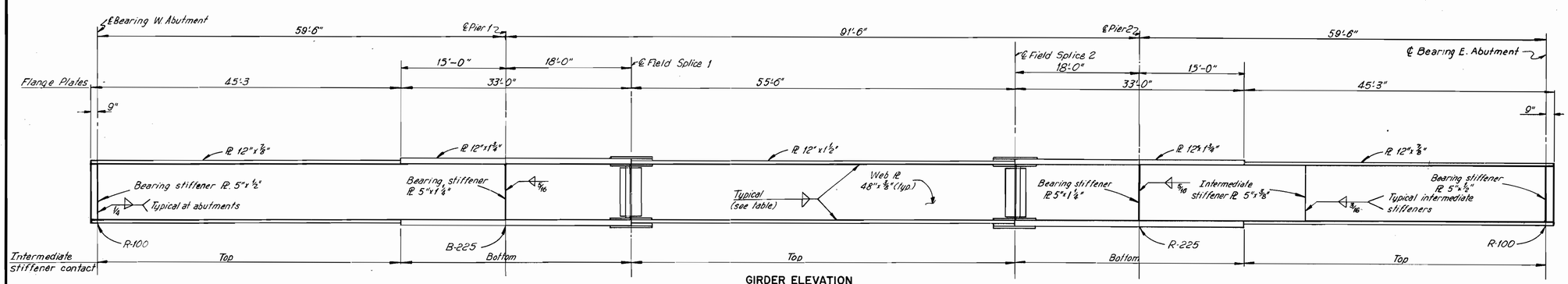

GIRDER ELEVATION

NOV 3 1970

H.N.T.B. BR.NO.16

HOWARD, NEEDLES, TAMMEN & BERGENDOFF
CONSULTING ENGINEERS
KANSAS CITY CLEVELAND NEW YORK

FRAMING PLAN

I-480 OVER LEE RD.

BR. NO. CUY-480-2242 STA. 1206+97.19 TO STA. 1209+12.19

CUYAHOGA COUNTY OHIO

DRAWN DLP DATE 10-3-66	TRACED DATE	CHECKED BNP DATE 10-13-66	REVIEWED WF DATE 12-9-67	REVISED	SHEET 6/8

FED. RD. DIVISION	STATE	PROJECT	
2	OHIO		

356/407

CUYAHOGA COUNTY
CUY 480-22.16

MICROFILMED
OCT 5 1978
REPRODUCTION

TOP OF PAVEMENT ELEVATIONS

GIRDER	SPAN 1: ℄ BRG. W. ABUT.	SPAN 1: ¼ POINT a	SPAN 1: ½ POINT b	SPAN 1: ¾ POINT c	SPAN 1: ℄ PIER 1	SPAN 2: ℄ FIELD SPLICE 1	SPAN 2: ¼ POINT a	SPAN 2: ½ POINT b	SPAN 2: ¾ POINT c	SPAN 2: ℄ FIELD SPLICE 2	SPAN 2: ℄ PIER 2	SPAN 3: ¼ POINT a	SPAN 3: ½ POINT b	SPAN 3: ¾ POINT c	SPAN 3: ℄ BRG. E. ABUT.
A	912.93	913.12	913.30	913.49	913.68	913.90	913.96	914.25	914.54	914.60	914.82	915.01	915.19	915.38	915.56
B	913.06	913.25	913.43	913.62	913.81	914.03	914.09	914.38	914.66	914.72	914.95	915.14	915.32	915.51	915.69
C	913.19	913.38	913.56	913.75	913.94	914.16	914.22	914.51	914.79	914.85	915.08	915.26	915.45	915.64	915.82
D	913.32	913.51	913.69	913.88	914.06	914.29	914.35	914.64	914.92	914.98	915.21	915.39	915.58	915.77	915.95
E	913.44	913.62	913.81	914.00	914.18	914.41	914.47	914.76	915.04	915.10	915.33	915.51	915.70	915.88	916.07
F	913.30	913.49	913.68	913.86	914.05	914.27	914.33	914.62	914.91	914.97	915.19	915.38	915.56	915.75	915.94
G	913.17	913.36	913.54	913.73	913.91	914.14	914.20	914.48	914.77	914.83	915.06	915.24	915.43	915.62	915.80
H	913.04	913.22	913.41	913.59	913.78	914.00	914.06	914.35	914.64	914.70	914.92	915.11	915.29	915.48	915.67
J	912.90	913.09	913.27	913.46	913.64	913.87	913.93	914.22	914.50	914.56	914.79	914.97	915.16	915.34	915.53
K	912.90	913.08	913.27	913.46	913.64	913.87	913.93	914.21	914.50	914.56	914.78	914.97	915.16	915.34	915.53
L	913.03	913.21	913.40	913.58	913.77	914.00	914.06	914.34	914.63	914.69	914.92	915.10	915.29	915.47	915.66
M	913.16	913.34	913.53	913.71	913.90	914.12	914.19	914.47	914.76	914.82	915.04	915.23	915.42	915.60	915.79
N	913.28	913.47	913.66	913.84	914.03	914.25	914.32	914.60	914.89	914.95	915.17	915.36	915.54	915.73	915.92
P	913.41	913.60	913.79	913.97	914.16	914.38	914.44	914.73	915.02	915.08	915.30	915.49	915.67	915.86	916.05
R	913.29	913.48	913.66	913.85	914.03	914.26	914.32	914.61	914.89	914.95	915.18	915.36	915.55	915.74	915.92
S	913.16	913.34	913.53	913.71	913.90	914.12	914.18	914.47	914.76	914.82	915.04	915.23	915.41	915.60	915.79
T	913.02	913.21	913.39	913.58	913.76	913.99	914.05	914.34	914.62	914.68	914.91	915.09	915.28	915.47	915.65
U	912.88	913.07	913.26	913.44	913.63	913.85	913.92	914.20	914.49	914.55	914.77	914.96	915.14	915.33	915.52

ELEVATION A

		SPAN 1: ℄ BRG. W. ABUT	SPAN 1: ¼ POINT a	SPAN 1: ½ POINT b	SPAN 1: ¾ POINT c	SPAN 1: ℄ PIER 1	SPAN 2: ¼ POINT a	SPAN 2: ½ POINT b	SPAN 2: ¾ POINT c	SPAN 2: ℄ PIER 2	SPAN 3: ¼ POINT a	SPAN 3: ½ POINT b	SPAN 3: ¾ POINT c	SPAN 3: ℄ BRG. E. ABUT
Westbound Lanes	North Curb	912.93	913.12	913.30	913.48	913.67	913.98	914.28	914.55	914.81	915.00	915.19	915.38	915.56
	South Curb	912.90	913.09	913.28	913.46	913.65	913.96	914.25	914.53	914.79	914.98	915.17	915.35	915.53
Eastbound Lanes	North Curb	912.90	913.09	913.28	913.46	913.64	913.96	914.25	914.53	914.79	914.97	915.16	915.35	915.53
	South Curb	912.88	913.07	913.25	913.44	913.62	913.93	914.23	914.50	914.76	914.95	915.14	915.33	915.51

Note: The ¼, ½ and ¾ points of the spans are indicated by a, b and c respectively.
Deflections are given to the nearest 1/16". No convexity correction is required.

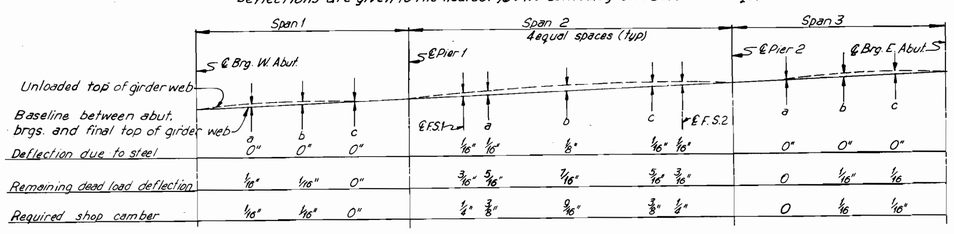

CAMBER DIAGRAM
(Dimensions are typical for all girders)

Note:
The elevations shown at the face of curbs (Elevation A) are those which are required before concrete is placed. Proper allowance has been made for the dead load deflection caused by the weight of concrete.

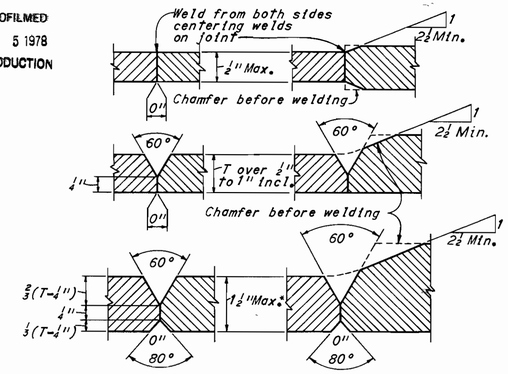

Note:
All of the above full penetration welds shall be back-gouged and welded after welding far side.
Butt welds on girder flange plates shall be ground flush, the finish grinding being parallel to the direction of stress.
* For plate thickness over 1½", use joint preparation conforming to B-U3a-S or B-U7-S, Figure 216, A.W.S. Specifications.

GIRDER SHOP WELDING DETAILS

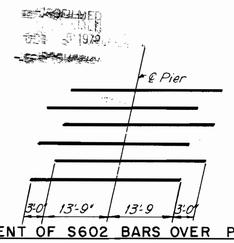

PLACEMENT OF S602 BARS OVER PIERS

Notes:
For railing post and parapet joint spacing and longitudinal reinforcement in the parapet, see Sheet CD 2.
All transverse bars shall be placed parallel to ℄ bearings of the piers and abutments. Spacings are given along ℄ I-480
Each line of longitudinal deck reinforcement shall consist of 7-S601 and 1-S604.

Deflection joint ¼" gray sponge rubber or polyvinyl chloride joint filler from top of median to first construction joint , included with Superstructure Concrete for payment. (Typical)

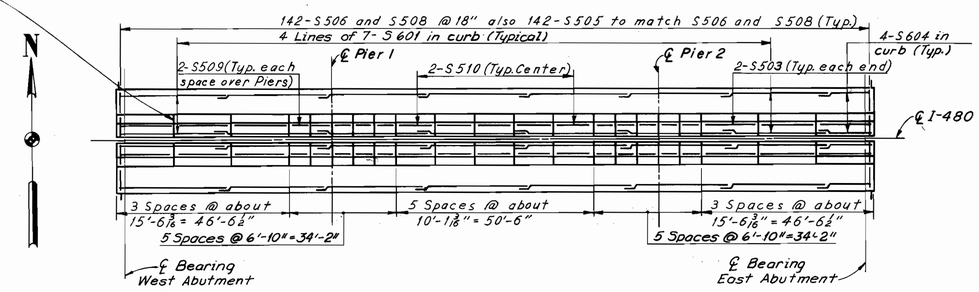

CONCRETE BARRIER MEDIAN PLAN

Note:
A typical haunch width of 9" shall be used for computing quantity of concrete. However the haunch width may vary between 6" and 12" provided that the slope shall be not more than 1:4 for a haunch less than 9" in width.

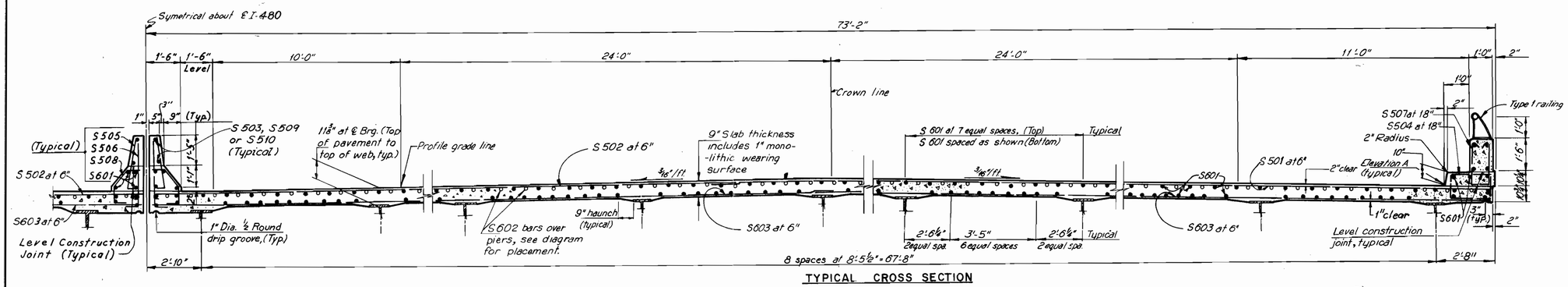

TYPICAL CROSS SECTION

NOV 3 1970

H.N.T.B. BR. NO. 16

HOWARD, NEEDLES, TAMMEN & BERGENDOFF
CONSULTING ENGINEERS
KANSAS CITY CLEVELAND NEW YORK

DECK DETAILS

I-480 OVER LEE ROAD

BR. NO. CUY-480-2242 STA 1206+97.19 TO STA. 1209+12.19

CUYAHOGA COUNTY OHIO

DRAWN D.L.B. DATE 9-22-66	TRACED DATE	CHECKED PNP DATE 1-16-67	REVIEWED W.F. DATE 12-9-69	REVISED
				SHEET 7/8