MICROFILMED
FEB 27 1981

AUG 21 1984

STATE OF OHIO
DEPARTMENT OF HIGHWAYS

CUY-480-8.00
CUY-17-7.59

CITY OF CLEVELAND
CITY OF BROOKPARK
CUYAHOGA COUNTY

I-480-4(17)161
U-683 (23)

FED. RD. DIVISION	STATE	PROJECT	
2	OHIO	I-480-4(17)161 U-683(23)	

1/526

CUYAHOGA COUNTY
CUY-480-8.00
CUY-17-7.59

CONVENTIONAL SIGNS

Center Line
Existing R/W
Proposed R/W
Limited Access Line — LA
Temporary R/W — T
Work Agreement Line
Property Line — PL
Original Lot Line — O.L. 78 / O.L. 79
Water Line — W
Water Valve
Water Hydrant
Gas Line — G
Gas Valve
Telephone Underground — T
Electric Underground — E
Power Pole
Existing Sewer
Proposed Sewer
Existing Manhole
Proposed Manhole
Existing Catch Basin
Proposed Catch Basin
Manhole Abandoned
Catch Basin Abandoned
Existing Guard Rail
Proposed Guard Rail
Fence
Existing Retaining Wall
Railroad
Light Pole
Telephone Pole
Existing Tree Removed

INDEX OF SHEETS

Title Sheet 1
Schematic Plans 2-4
Typical Sections 5-19
Interchange Geometrics 20-21
General Notes 22-24
General Summary 25-33
Pavement Calculations 34-39
Superelevation Tables 40-42

S.R. 237 Interchange Plan-Profile Index 43
Plan-Profile Sheets 44-75
Pavement Detail Sheets 76-87
Rocky River Drive Plans 88-103
Brookpark Road (S.R. 17) Plans 104-114
Sewer Profiles 115-139

Special Details ..... 140-151 & 151A
Culvert Details 152
Sanitary Sewer Relocation 153-156
S.R. 17 & S.R. 237 Temporary Pavement 157-160
Water Work & Notes 161-204
Cross Section Index 205-207

Cross Sections 208-340
Lighting Plans ..... 341-343 & 358A
Traffic Control Plans 364-408
Structures over 20 feet in Length 409-495
Right-of-Way Plans 496-526

Revised Sheets 341, 347, 348, 349, 350, 351, 353 ~ 6/15/72 A.W.G.
Sheets 411 & 423 revised 7-28-72 EBL

LINE DATA

I-480-4(17)161

Begin Project ..... Sta. 447+98.81
End Project ..... Sta. 461+00.00
Net Length of Project ..... 1,301.19 L.F. or 0.246 mi.

Begin Work ..... Sta. 475+00.00
Station Equation ..... Sta. 495+01.76 Back = Sta. 420+30.02 Ahead

End Work ..... Sta. 463+20.00
Length of Work ..... 6291.74 L.F.

ADDS FOR APPROACHES
S.R. 237 & Airport Freeway ..... Sta. 562+80 - Sta. 615+55 = 5,275.00 L.F.
Reloc. Rock River Dr. ..... Sta. 0+16.07 - Sta. 39+00 = 3,883.93 L.F.
Brookpark Rd. (S.R. 17) ..... Sta. 274+90 - Sta. 287+75 = 1,285.00 L.F.
Net Length of Work = ... 16,735.67 L.F. or 3.169 mi.

U-683 (23)

Begin Project ..... Sta. 253+45
End Project ..... Sta. 274+90
Net Length of Project = ... 2,145.00 L.F. or 0.406 mi.
Begin Work ..... Sta. 253+05
End Work ..... Sta. 274+90
Net Length of Work = ... 2,185.00 L.F. or 0.414 mi.
Total Net Length of Project, I & U = ... 3,446.19 L.F. or 0.652 mi.
Total Net Length of Work, I & U = ... 18,920.67 L.F. or 3.583 mi.

FILMER	CUYAHOGA COUNTY CUY-480-8.00 & CUY-17-7.59
	DATE OF LETTING
	CONTRACT NUMBER

00382

Begin Project
Sta. 447+98.81
CUY-480-8.00

End Project
Sta. 461+00.00
CUY-480-8.00

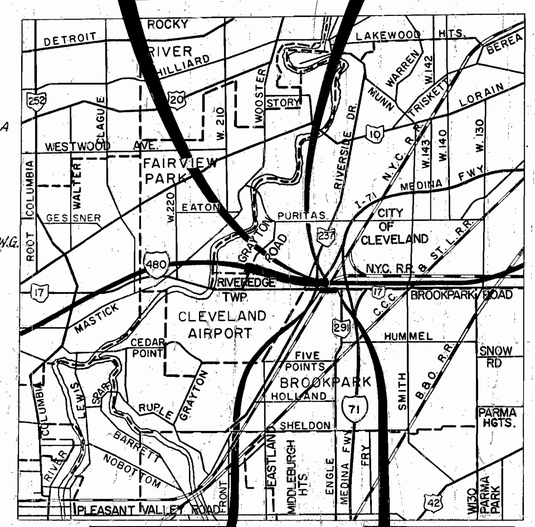

End Project
Sta. 274+90
CUY-17-7.59

Begin Project
Sta. 253+45
CUY-17-7.59

N

LOCATION MAP

0 1 2 3
SCALE OF MILES

Portion To Be Improved
State Routes
U.S. Routes
Interstate Routes
City Streets

SCALES

PLAN	0 50	1" = 50'
PROFILE: HORIZ.	0 50	1" = 50'
VERT.	0 10 20	1" = 20'
CROSS SECTIONS	0 10	1" = 10'
PAVEMENT DETAILS	0 20	1" = 20'

SUPPLEMENTAL SPECIFICATIONS

NUMBER	DATE
801	1-1-69
808	1-1-71
839	11-25-70
815	1-1-69
816	1-1-69
836	1-1-71
934	1-1-69
1001	1-1-69
939	12-15-69
941	11-25-70

STANDARD DRAWINGS

NUMBER	DATE
AS-1-67	6-12-69
BP-1	6-1-65
BP-2	12-1-68
BP-3	1-1-71
BP-4	1-1-71
BP-5	1-1-71
BP-6	6-1-65
BP-7	1-1-66
CB 2-2-A & B	6-1-65
CB 2-3 & 2-4	6-1-65
CB 2-5 & 2-6	6-1-65
CB-3	6-1-65
CB-3-A	6-1-65
CB-5	9-1-69
CB-6	6-1-65
BR-1-65 Sht. 1	11-24-65
F-1	3-10-69
F-2	1-1-71
F-3	3-10-69
F-6	10-1-66
F-5	3-10-69
BP-9	1-1-71
FACI-1	4-20-71
FACI-2	4-20-71
GR-2B	11-9-71
GR-4	11-9-71
GR-5	1-1-71
HL-1	11-1-65
HL-2	11-1-65
HL-3	11-1-65
HL-4	1-1-66
HW-3	6-1-65
HW-4	1-1-70
I-3	1-20-70
BR-2-67	10-15-71
I-2A	6-6-69
L-1	6-1-65
GR-6	1-1-71
MC-1	6-13-69
MC-3	6-20-69
MC-4	6-13-69
MC-5	6-1-65
MC-6	6-1-65
MC-7	10-1-68
MH-2A	10-1-68
MH-1	10-1-68
MH-1A	10-1-68
MH-2	10-1-68
RB-1-55	2-2-59
SD-1-69	6-12-69
SP-53	6-30-61

"LIMITED ACCESS"

This improvement is especially designed for thru traffic and has been declared a Limited Access Highway or Freeway by action of the Director of Highways, in accordance with the provisions of Sec. 5511.02 of The Revised Code of Ohio.

1971 SPECIFICATIONS

The Standard Specifications of the State of Ohio, Department of Highways, including changes and supplemental specifications listed in the proposal, shall govern this improvement.

The Right of Way for this improvement will be provided by the State of Ohio.

I hereby approve these plans and declare that the making of this improvement will require the part time closing of the highway to traffic, as noted in the plans, during which time detours will be provided as shown hereon. Provisions for the maintenance and safety of traffic will be as set forth on the plans and estimates.

Approved ..... Ralph C. Taylor
Date 3-2-72 ..... Director of Public Service, City of Cleveland

Approved ..... Joseph F. Sewell
Date 3-2-72 ..... Division Deputy Director

Approved ..... C. H. Gelvister
Date 3-20-72 ..... Engineer of Bridges

Approved ..... E. J. Schaefer
Date 3-20-72 ..... Engineer of Location and Design

Approved ..... H. Krause
Date 3-20-72 ..... Deputy Director of Design and Construction

Approved ..... C. R. Neulinger
Date 4/3/72 ..... Deputy Director of Right of Way

Approved ..... William Sunkley
Date 4/4/72 ..... Deputy Director of Planning and Programming

Approved ..... William P. McKenna
Date 4/4/72 ..... First Assistant Director

Approved ..... Rolf Ruhly
Date 4/4/72 ..... Director of Highways

NOTE:
Any reference to I-80 Appearing Throughout This Plan Shall Be Considered to Read I-480.

DESIGN DESIGNATION

1969 A.D.T. =	50,240
1975 A.D.T. =	67,044
D.H.V.	4,030
D. (directional distribution)	67 %
T. (percent B&C trucks)	4 %
V. (design speed)	60 M.P.H.

PLANS PREPARED BY
ALDEN E. STILSON & ASSOCIATES, LIMITED
CONSULTING ENGINEERS
75 PUBLIC SQUARE
CLEVELAND, OHIO
FOR
STATE OF OHIO

DEPARTMENT OF TRANSPORTATION
FEDERAL HIGHWAY ADMINISTRATION

APPROVED

DIVISION ENGINEER ..... DATE:

SCHEMATIC PLAN

MICROFILMED
AUG 21 1984

FED. RD. DIVISION	STATE	PROJECT	
2	OHIO		

3/526

CUYAHOGA COUNTY
CUY-480-8.00
CUY-17-7.59

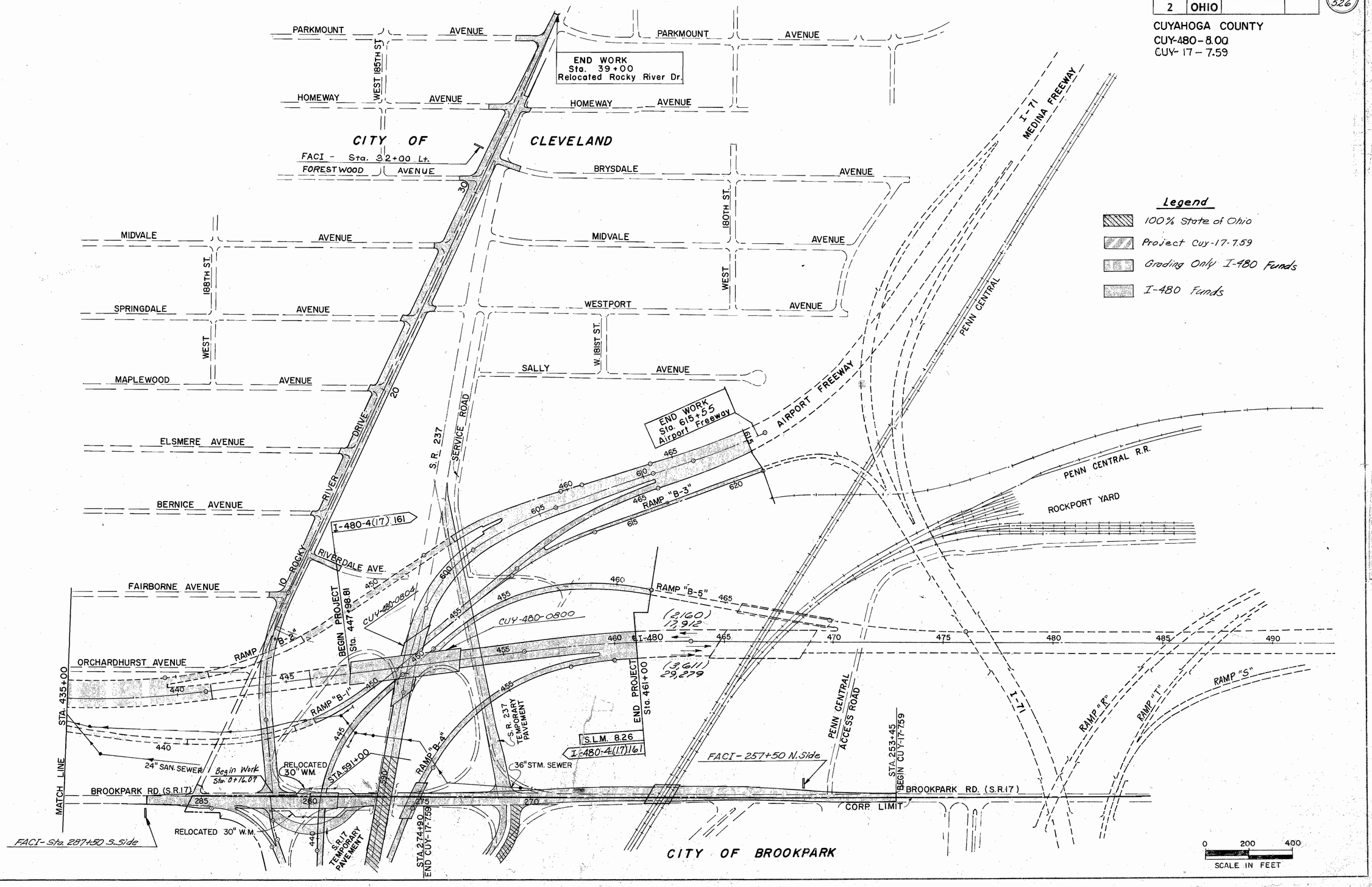

MICROFILMED
AUG 2 1984

FED. RD. DIVISION	STATE	PROJECT	TYPE FUNDS
2	OHIO		

409/526

CUYAHOGA COUNTY
CUY.-480-8.00
CUY-17-7.59

CURVE DATA

℄ RAMP B-1
P.I. = Sta. 446+85.16
Δ = 33° 08'-09"
D = 5° 00'-00"
R = 1145.92'
Lc = 537.71'
T = 345.07'
Ts = 462.38'
Ls = 250.00'
θs = 6°-15'-00"
Δc = 26°-53'-09"

℄ RAMP B-5
P.I. = Sta. 444+46.57
Δ = 48°-55'-40"
D = 7°-30'-00"
R = 763.94'
Lc = 352.37'
Ts = 433.61'
Ls = 300.00'
θs = 11°-15'-00"

℄ RAMP B-5
P.I. = Sta. 456+45.30
Δ = 43°-45'-03"
D = 6° 00'-00"
R = 954.93'
Lc = 573.18'
Ts = 568.96'
Ls = 250.00'
θs = 7° 30'-00"

CURVE DATA AIRPORT FREEWAY

P.I. = Sta. 600+44.34
Δ = 58°-45'-29"
D = 7°-30'-00"
R = 763.94'
Lc = 371.00'
Ts = 635.68 ℄ 621.41'
Ls = 400.00'
θs = 15° ℄ 15°-56'

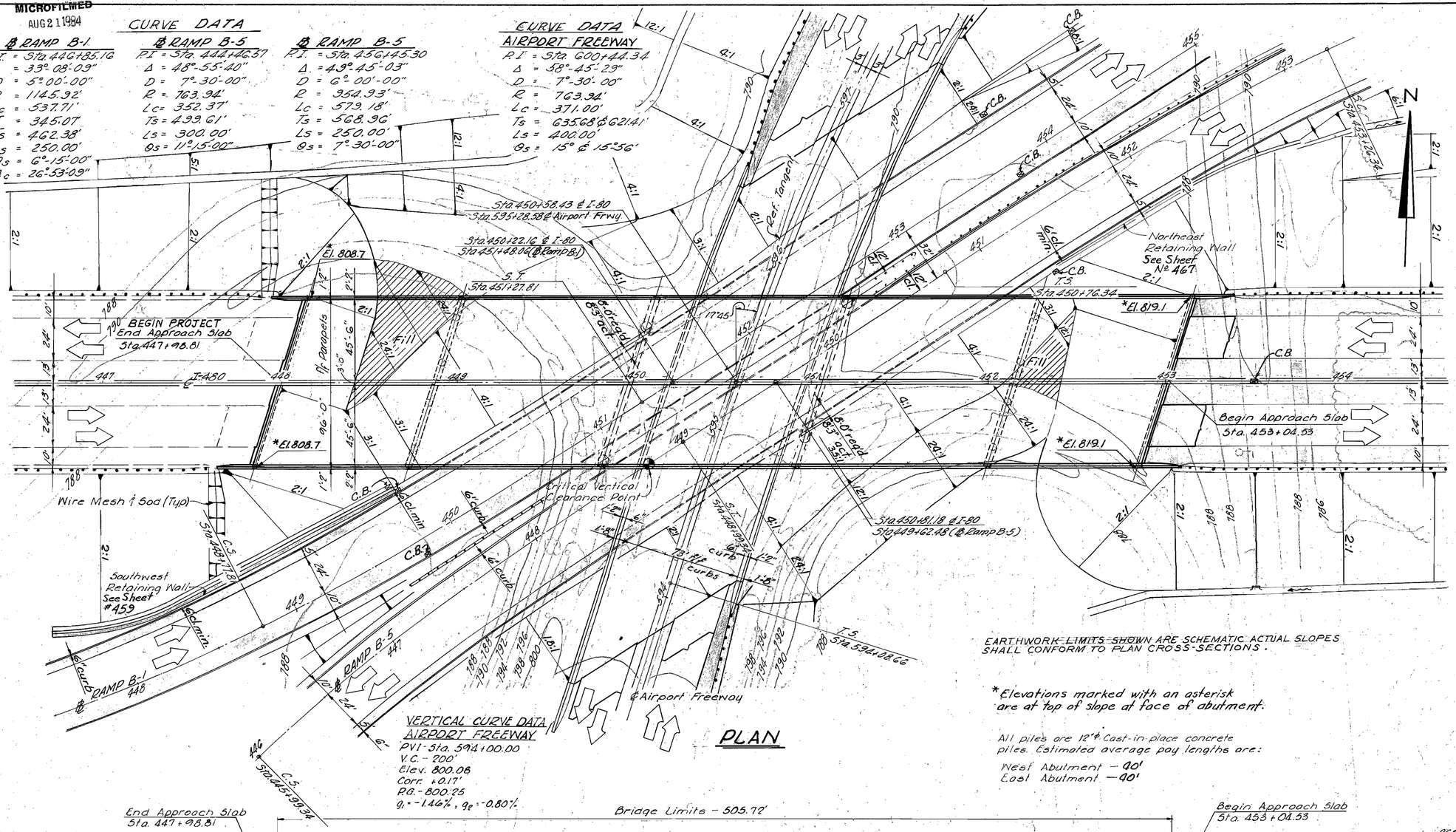

EARTHWORK LIMITS SHOWN ARE SCHEMATIC ACTUAL SLOPES SHALL CONFORM TO PLAN CROSS-SECTIONS.

*Elevations marked with an asterisk are at top of slope at face of abutment.

All piles are 12"ϕ Cast-in-place concrete piles. Estimated average pay lengths are:
West Abutment — 90'
East Abutment — 90'

PLAN

VERTICAL CURVE DATA AIRPORT FREEWAY

PVI - Sta. 594+00.00
V.C. - 200'
Elev. 800.08
Corr. +0.17'
P.G. - 800.25
g_1 = -1.46%, g_2 = -0.80%

PROPOSED STRUCTURE

TYPE: Superstructure - Continuous steel plate girder with reinforced concrete deck.
Substructure - Reinforced concrete at Abutment and Piers 1 & 4. Steel box girder cap on reinforced concrete columns and footing Piers 2 & 3.
SPANS: 87'-0", 109'-0", 109'-0", 109'-0", 87'-0" ℄ brg.
ROADWAY: 96'-0" ℄ parapets with Type 1 Railing and concrete Barrier Median.
LOADING: C.F.-2000 (1957) Adequate for A.A.S.H.O. alternate loading
WEARING SURFACE: 1" Monolithic concrete
SKEW: 17°-45' Lt. Fwd. with respect to Ref. Tan.
ALIGNMENT: Tangent
APPROACH SLABS: AS-1-67 (25' long)

TRAFFIC ESTIMATE

Design Year - 1987
Total ADT - 48,695
D.D.H.V. - 3,060

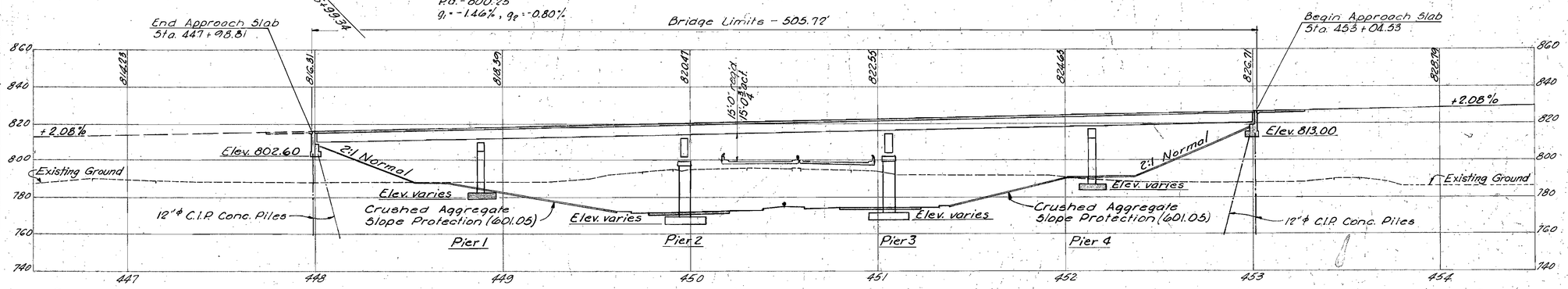

PROFILE along ℄ I-480

1/24

ALDEN E. STILSON & ASSOCIATES, LIMITED
CONSULTING ENGINEERS
CLEVELAND, OHIO COLUMBUS, OHIO WHEELING, W. VA.

SITE PLAN

BRIDGE № CUY.-480-0800
I-480 over AIRPORT FREEWAY and RAMPS B-1 & B-5
CUYAHOGA COUNTY STA. 447+98.81 STA. 453+04.53

DESIGNED	DRAWN	TRACED	CHECKED	REVIEWED	DATE	REVISED
R.C.	R.C.		DLM	JEV	1/9/67	
pwd	pwd					

MICROFILMED
AUG 21 1969

FED. RD. DIVISION	STATE	PROJECT	TYPE FUNDS
2	OHIO		

423/526

CUYAHOGA COUNTY
CUY-480-8.00 / CUY-17-7.59

Note: All longitudinal steel shall be S501 or S502 except as otherwise shown.

Slab thickness shown includes 1" for monolithic wearing surface.

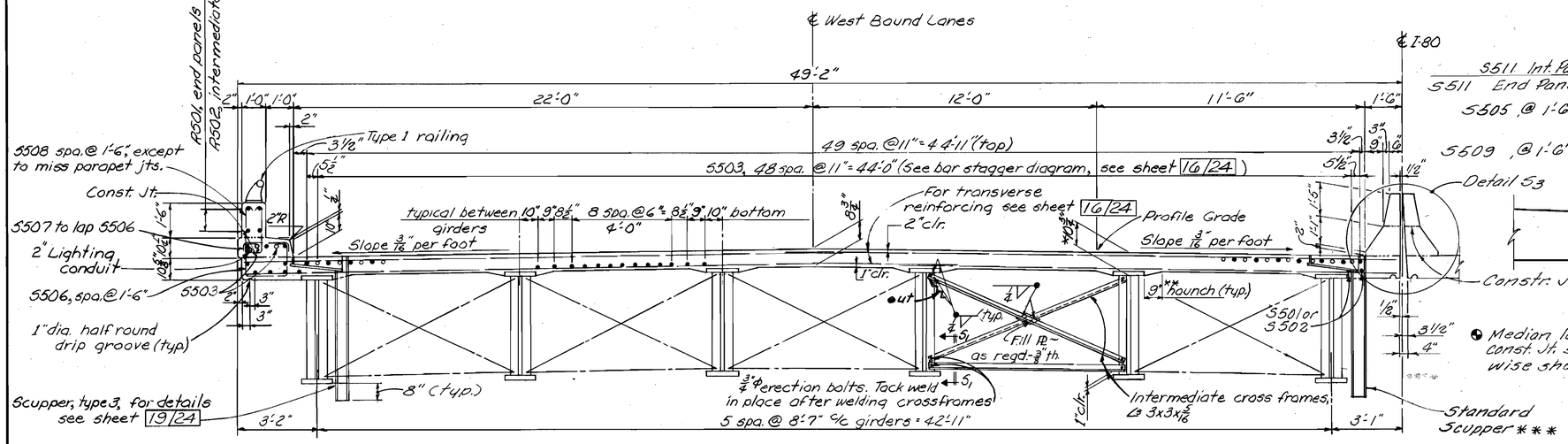

TRANSVERSE SECTION ~ WEST BOUND LANES

*** Note that location of face of curb and slope of top of scupper is opposite to that shown on Std. Dwg. SD-1-69

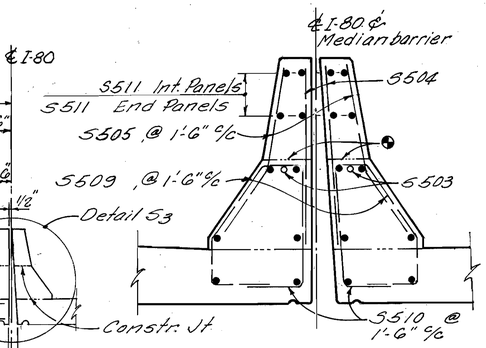

DETAIL S3

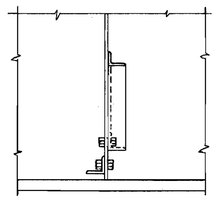

SECT. S1-S1

Median longitudinal reinforcement below this Const. Jt. shall be S501 or S502, unless otherwise shown.

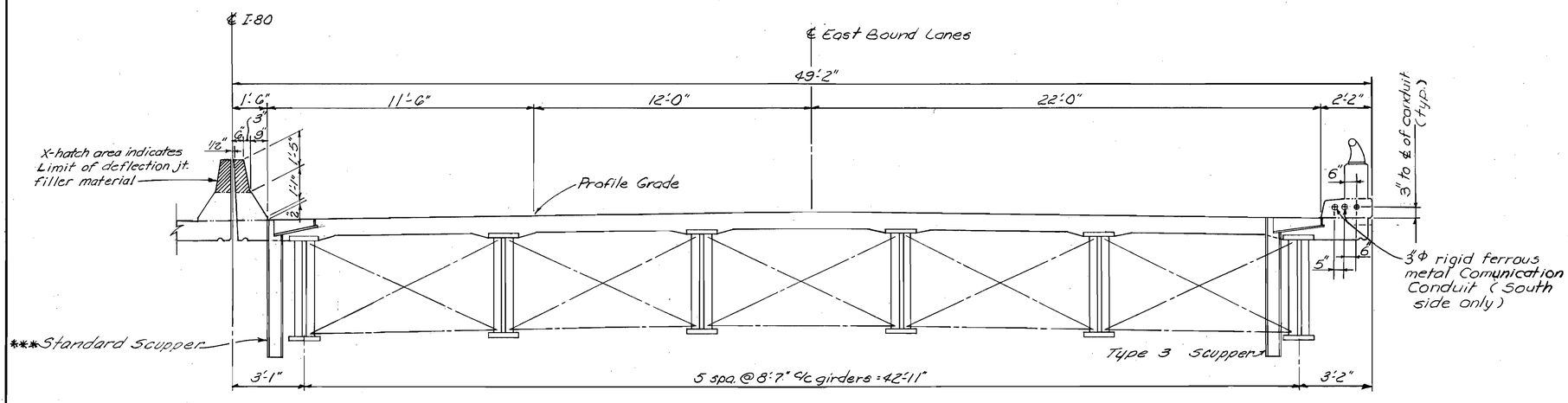

TRANSVERSE SECTION ~ EAST BOUND LANES
(Details, dimensions, and reinforcing not shown opp. hand to W. B. Lanes.)

*This is the nominal dimension. The quantity of deck concrete to be paid for shall be based upon this dimension, even though deviation from it may be necessary because the top flange of the girder may not have the exact camber or conformation required to place it parallel to the finished grade. Deduction shall be made for volume of encased steel plates as per Sec. 511.19 of the Construction and Material Specifications.

** A typical haunch width of 9" shall be used for computing quantity of concrete. However, the haunch width may vary between 6" and 12" provided that the slope shall be not more than 1:4 for a haunch less than 9" in width.

Concrete parapet to be included with Item 517 for payment.

Field bend transverse bars to fit crown. Field bending to be included in Item 509 for payment.

Longitudinal reinforcing steel shall be field cut as necessary to avoid interference with scuppers.

Lap longitudinal bars 1'-7" min.

For additional notes and details see sheets 16/24, 17/24, 18/24, 19/24 and 20/24

Concrete and reinforcing steel for Median Barrier shall be included for payment with their respective Items, Item 511 Superstructure concrete and Item 509 Reinforcing Steel.

ALDEN E. STILSON & ASSOCIATES, LIMITED
CONSULTING ENGINEERS
COLUMBUS, OHIO

15/24

SUPERSTRUCTURE DETAILS
BRIDGE No. CUY-480-0800
I-480 OVER AIRPORT FREEWAY
AND RAMPS B-1 & B-5

CUYAHOGA COUNTY — STA. 447+98.81 / STA. 453+04.53

DESIGNED	DRAWN	TRACED	CHECKED	REVIEWED	DATE	REVISED
S.B.P.	G.T.R.		ANA	JEV	1/9/67	7-28-72

MICROFILMED
AUG 21 1984

FED. RD. DIVISION	STATE	PROJECT	TYPE FUNDS
2	OHIO		

428
526

CUYAHOGA COUNTY
CUY-480-8.00/CUY-17-7.59

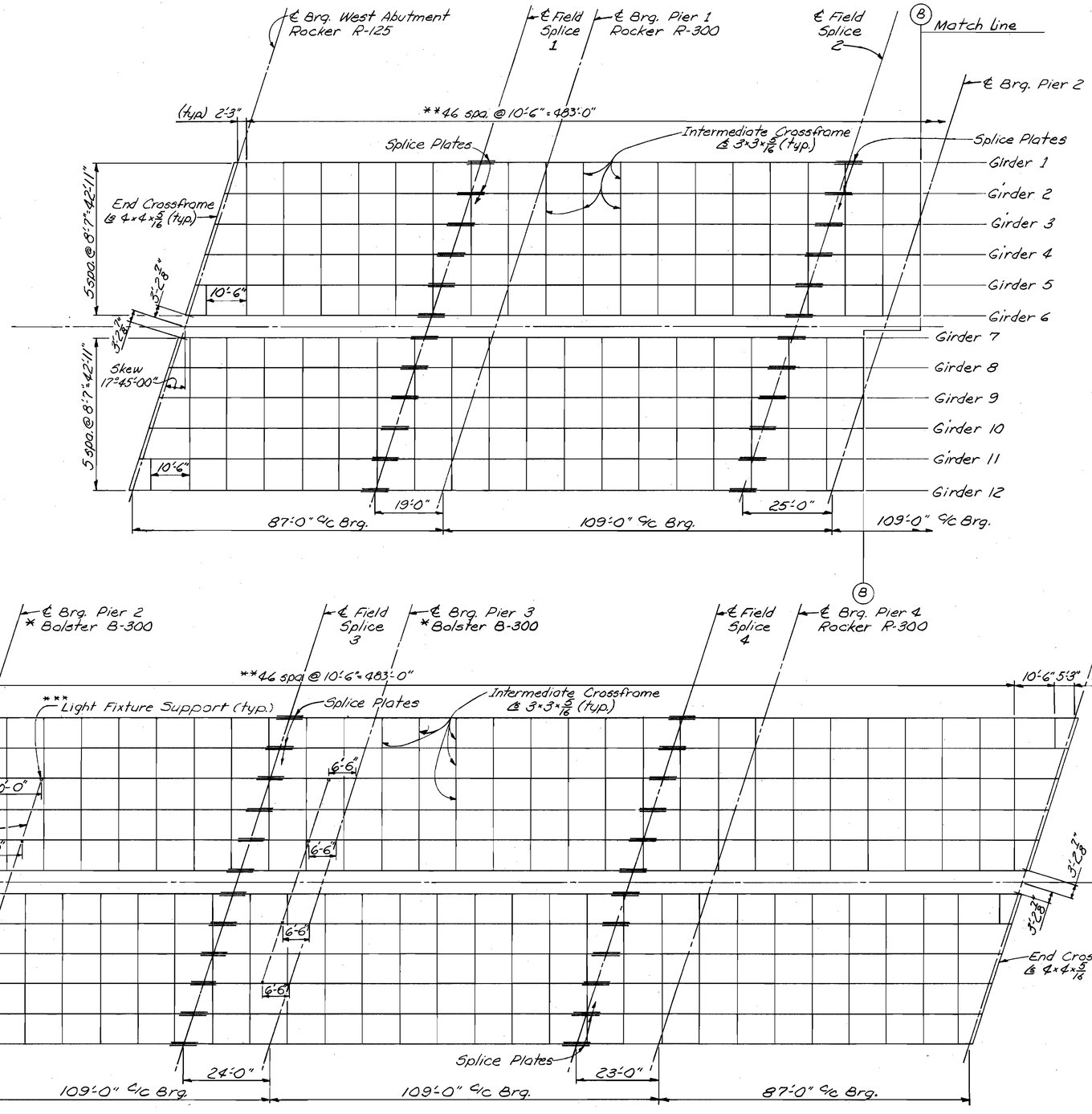

N

NOTES:

All intermediate crossframes shall be normal to girders.

* These Bolsters are standard bolsters with the exception of the bottom bearing plate. For details see sheet 12/24

Rockers: For details see Std. Dwg. RB-1-55.

For additional notes and details see sheets 18/24 and 19/24

** In case the intermediate crossframes intersect field web splice, the C 3×3×5/16 shall be attached to a special stiffener angle as shown in Detail "P."

*** The location of the underpass lighting brackets may be field adjusted to clear the intermediate cross-frames. For underpass lighting bracket details see Miscellaneous Details, Sheet 21/24

**** Conduit Support ∠ 5×3×5/16 (to be included with Item 513 for payment), see Underpass Lighting Details, Sheet 36

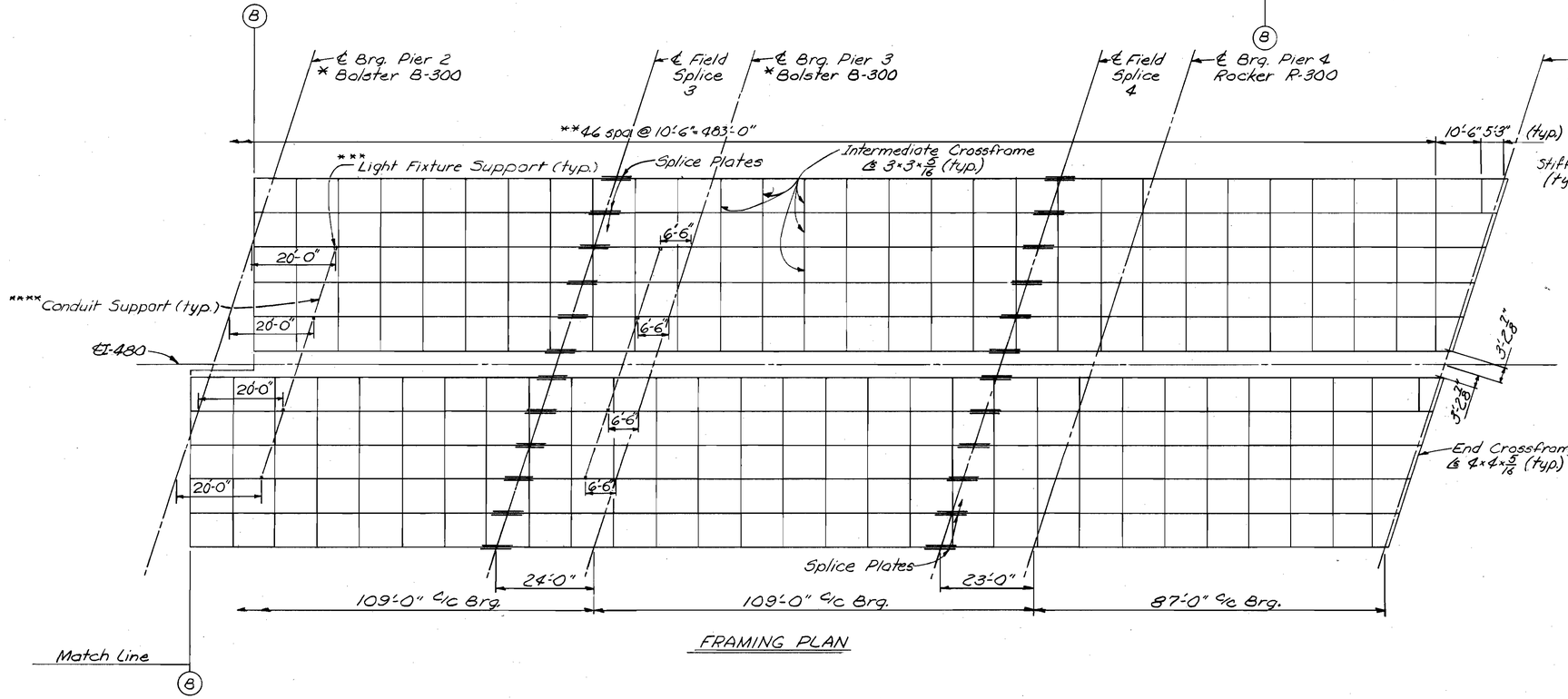

FRAMING PLAN

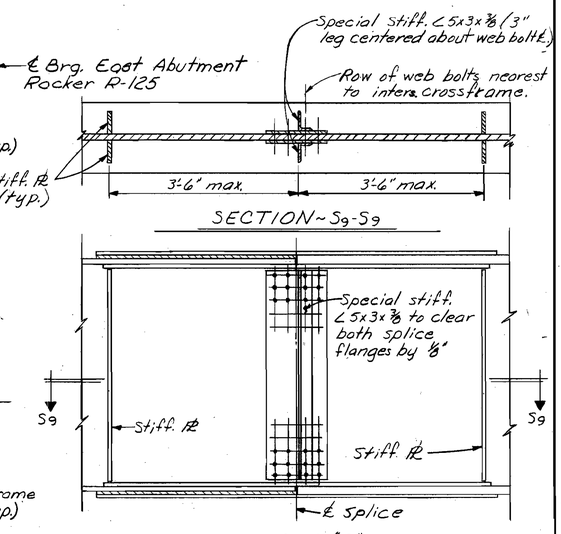

DETAIL "P"

ALDEN E. STILSON & ASSOCIATES, LIMITED
CONSULTING ENGINEERS
COLUMBUS, OHIO

17/24

SUPERSTRUCTURE DETAILS.
BRIDGE Nº CUY-480-0800
I-480 OVER AIRPORT FREEWAY
AND RAMPS B-1 & B-5
CUYAHOGA COUNTY
STA. 447+98.81
STA. 453+04.53

DESIGNED	DRAWN	TRACED	CHECKED	REVIEWED	DATE	REVISED
S.B.P	G.T.R		ANA	JEV	1/9/67	