6-L

S

MICROFILMED SEP 10 1991

I-480-4(9)163
Proj 783 (83)

FHWA REGION	STATE	PROJECT	
5	OHIO	I-480-4(9)163	

1/500

CUYAHOGA COUNTY
CUY-480-10.39

STATE OF OHIO
DEPARTMENT OF TRANSPORTATION

CUY-480-10.39

Sheets 313, 373, 398, 403, 404, 406, 407, 408, 409, 411, 458, & 472 revised 1-5-84 EBL

CUYAHOGA COUNTY

CITY OF CLEVELAND
CITY OF BROOKLYN

GRADE SEPARATIONS WITH THE CONSOLIDATED RAIL CORPORATION AND THE BALTIMORE AND OHIO RAILROAD COMPANY

CONVENTIONAL SIGNS

Center Line	Existing Sewer
Existing R/W	Proposed Sewer
Proposed R/W	Existing Manhole
Limited Access Line —LA—	Proposed Manhole
Temporary R/W —T—	Existing Catch Basin
Work Agreement Line	Proposed Catch Basin
Property Line —PL—	Manhole Abandoned
Original Lot Line O.L. 78 / O.L. 79	Catch Basin Abandoned
Water Line —W—	Guard Rail (Existing) (Proposed)
Water Valve	Retaining Wall (Existing) (Proposed)
Water Hydrant	Fence (Existing) (Proposed)
Gas Line —G—	Trees
Gas Valve	Railroad
Telephone Underground —T—	
Electric Underground —E—	
Power Pole	
Light Pole	
Telephone Pole	

INDEX OF SHEETS

Sheets 31 & 32 deleted

Title Sheet	1	Detention Basin Access Rd.	102-103
Schematic Plan & Design Designation	2-4	Detention Basin & Culvert Details	104-110
Temporary Erosion & Sediment Control	5	Relocated Big Creek Plan & Profile	111
Typical Sections	6-10	Grading Plan & Cross Section Index	112
General Notes	11-15	I-480 Cross Sections	113-150
General Summary	16-22	W 130th St. Interchange Cross Sections	151-162
Pavement Calculations	23-26	Tiedeman Rd. Interchange Cross Sections	163-179
Miscellaneous Details	27-40	W 130th St. Cross Sections	180-183
Superelevation Tables	41-43	Tiedeman Rd. Cross Sections	184-191
I-480 Plan & Profile	44-56	Summer Lane Cross Sections	192-193
W. 130th St. Ramps-Plan & Profile	57-59	Service Rd. "A" Cross Sections	194-196
Tiedeman Rd. Ramps-Plan & Profile	60-63	Southwood Dr. Cross Sections	197-200
W 130th St. Plan & Profile	64-66	Autumn Lane Cross Sections	201
Tiedeman Rd. Plan & Profile	67-70	Idlewood Dr. Cross Sections	202-208
Summer Lane Plan & Profile	71	Relocated Big Creek Cross Sections	209-211
Service Rd. "A" Plan & Profile	72	Landscape Plans	212-213
Southwood Dr. Plan & Profile	73-74	Water Work Plans	214-252
Autumn Lane Plan & Profile	75-76	Lighting Plans	253-282
Idlewood Dr. Plan & Profile	77-80	Traffic Control Plans	283-308
W 139th St. Interchange	81	Retaining Wall	309-311
Tiedeman Rd. Temporary-Plan & Profile	82	Structures Over 20'	312-477,477A
Pavement Details	83-94	Right-Of-Way Plans	478-500
Storm Sewer Profiles	95-101		

BEGIN PROJECT
STA. 573+50
S.L.M. 10.39

END PROJECT
STA. 698+50
S.L.M. 12.75

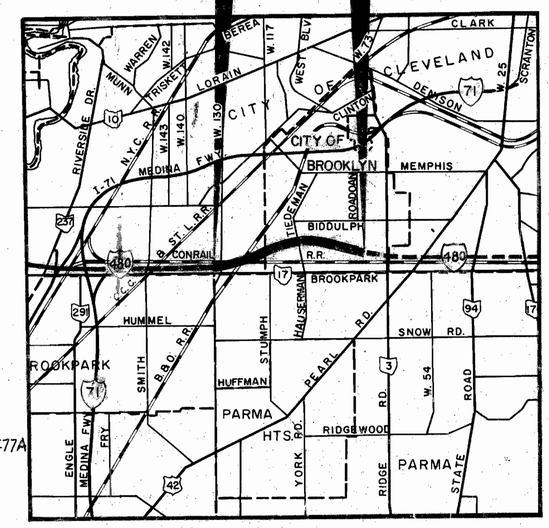

LINE DATA

	CLEVELAND	BROOKLYN	TOTAL
BEGIN PROJECT	573+50.00	616+15.52	573+50.00
END PROJECT	616+15.52	698+50.00	698+50.00
LENGTH OF PROJECT	4265.52 L.F. 0.808 Mi.	8234.48 L.F. 1.559 Mi	12500.00 L.F. OR 2.367 Mi
ADDITIONAL WORK			
I-480 STA. 484+00.00 TO STA. 573+50.00	8950.00 L.F.		8950.00 L.F.
STA. 698+50.00 TO STA. 700+00.00		150.00 L.F.	150.00 L.F.
W130th ST. STA. 48+00.00 TO STA. 64+90.00	1690.00 L.F.		1690.00 L.F.
TIEDEMAN RD. STA. 42+80.00 TO STA. 82+00.00		3920.00 L.F.	3920.00 L.F.
IDLEWOOD DR. STA. 8+75.00 TO STA. 21+63.21		1288.21 L.F.	1288.21 L.F.
SOUTHWOOD DR. STA. 7+25.00 TO STA. 12+75.00		550.00 L.F.	550.00 L.F.
LENGTH OF WORK	14,905.52 L.F. OR 2.823 Mi	14,142.69 L.F. OR 2.679 Mi	29,048.21 L.F. OR 5.502 Mi

FILE NUMBER	CUYAHOGA COUNTY CUY-480-10.39
	DATE OF LETTING
	CONTRACT NUMBER

00384

SUPPLEMENTAL SPECIFICATIONS	
NUMBER	DATE
803	5-27-83
843	10-25-76
847	4-3-76
848	2-17-83
939	6-28-82
934	1-1-69
948	2-19-74
839	11-25-70
936	4-19-82
824	10-8-82
836	3-12-75
845	3-2-81
849	10-19-81
953	8-21-80

LOCATION MAP

0 1 2 3
SCALE OF MILES

Portion To Be Improved
State Routes
U.S. Routes
Interstate Routes
City Streets
To Be Improved Under Separate Contract

SCALE

PLAN	0 50	1" = 50'
PROFILE: HORIZ.	0 50	1" = 50'
VERT.	0 10-20	1" = 10' / 1" = 20'
CROSS SECTIONS	0 10	1" = 10'
PAVEMENT DETAILS	0 20	1" = 20'

"LIMITED ACCESS"

This improvement is especially designed for thru traffic and has been declared a Limited Access Highway or Freeway by action of the Director of Transportation, in accordance with the provisions of Sec. 5511.02 of The Revised Code of Ohio.

1983 SPECIFICATIONS

The Standard Specifications of the State of Ohio, Department of Transportation, including changes and supplemental specifications listed in the proposal, shall govern this improvement.

I hereby approve these plans and declare that the making of this improvement will not require the closing of the highway to traffic and that provisions for maintenance and safety of traffic will be as set forth on the plans and estimates.

Approved Joseph L. Stamps
Date 3/15/83 Director of Public Service, City of Cleveland

Approved Martin A. Gallik
Date 3-16-83 District Deputy Director of Transportation

Approved Robert B. Pfeifer
Date 6-6-83 Engineer, Bureau of Bridges and Structural Design

Approved Wayne H. Kauble
Date 6-6-83 Chief Engineer, Planning and Design

Approved Warren J. Smith
Date 6-6-83 Director, Department of Transportation

STANDARD			CONSTRUCTION		DRAWINGS			
BP-1	6-1-65		GR-5	2-5-82	MH-1	6-12-75	TC 7.65 3-1-79	TC 42.20 3-26-79
BP-2	12-6-76	CB-3A	HW-3	6-1-65	MH-3	6-12-75	TC 9.30 4-24-80	TC 51.10 3-20-79
BP-3	12-6-76	CB-4	HW-4A	4-1-80	MH-5	6-12-75	TC 12.30 6-10-81	
BP-4	7-16-81	CB-5	HW-4B	4-1-80	MH-2	6-12-75	TC 16.20 3-1-79	TC 52.10 4-3-79
BP-5	7-16-81	CB-6			HL-1	9-6-73	TC 18.26 5-31-79	TC 52.20 4-3-79
BP-6	6-1-65	CB-458A	5-1-79		HL-2	7-27-73	TC 21.10 5-24-79	TC 61.10 4-5-82
BP-7	12-6-76		I-3 A&B	4-1-80	HL-3	7-27-73	TC 21.20 5-31-79	TC 71.10 4-9-81
BP-9	12-6-76		MC-9A	5-1-81	HL-4	1-21-76	TC 21.40 3-1-79	TC 72.20 2-26-82
BP-10	1-3-75	F-1	5-1-76		LA-1	6-1-79	HL-5	9-6-73 TC 22.10 3-1-79
		F-3	5-1-76		LA-2	6-1-79	HL-6	3-22-77 TC 22.20 3-1-79 TC 81.20 4-8-80
		F-5	5-1-76		MC-1	6-13-69	HL-7	1-21-76 TC 31.21 3-6-79 TC 82.10 4-11-79
TS-EXJ-2-81	9-1-81	F-6	5-1-76		MC-3	6-1-73	HL-8	1-21-76 TC 32.10 3-8-79 TC 83.10 4-18-79
BR-1	5-29-79				MC-4	7-26-76	HL-9	3-22-77 TC 32.11 3-21-79 TC 83.20 4-18-79
AS-1-81	11-27-81	GR-6	2-5-82		MC-5	6-12-75	HL-10	6-1-79 TC 33.10 10-5-77
SD-1-69	6-12-69	GR-1	2-5-82		MC-6	6-1-65	HL-11	6-1-79 TC 41.10 12-23-81 TC 85.20 4-18-79
RB-1-55	2-2-59	GR-2B	2-5-82		MC-7	10-15-76	HL-12	4-6-73 TC 41.20 3-26-79
		GR-3	2-5-82		MC-9	11-1-77	HL-15	1-21-76
CB 2-2-A&B	5-1-79				MC-10	5-1-76	HL-16	4-6-73 TC 41.50 3-26-79
CB2-3&2-4	5-1-79	GR-4	2-5-82		MC-11	8-1-78	HL-19	3-22-77 TC 42.10 8-19-79
CB2-5&2-6	5-1-79	GR-4A	2-5-82		MH-4	6-12-75	HL-22	11-9-77

NOTE:
Project Designation CUY-80 Appearing Throughout This Plan Shall Be Considered To Read CUY-480.

PLANS PREPARED BY
ALDEN E. STILSON & ASSOCIATES
CONSULTING ENGINEERS
75 PUBLIC SQUARE
CLEVELAND, OHIO
FOR
STATE OF OHIO

DEPARTMENT OF TRANSPORTATION
FEDERAL HIGHWAY ADMINISTRATION

APPROVED:

DIVISION ADMINISTRATOR DATE

MICROFILMED
JAN 17 1991

SCHEMATIC PLAN

FED. RD. DIVISION	STATE	PROJECT	
2	OHIO	I 480-4(9)163	

2/500

CUYAHOGA COUNTY
CUY-480-10.39

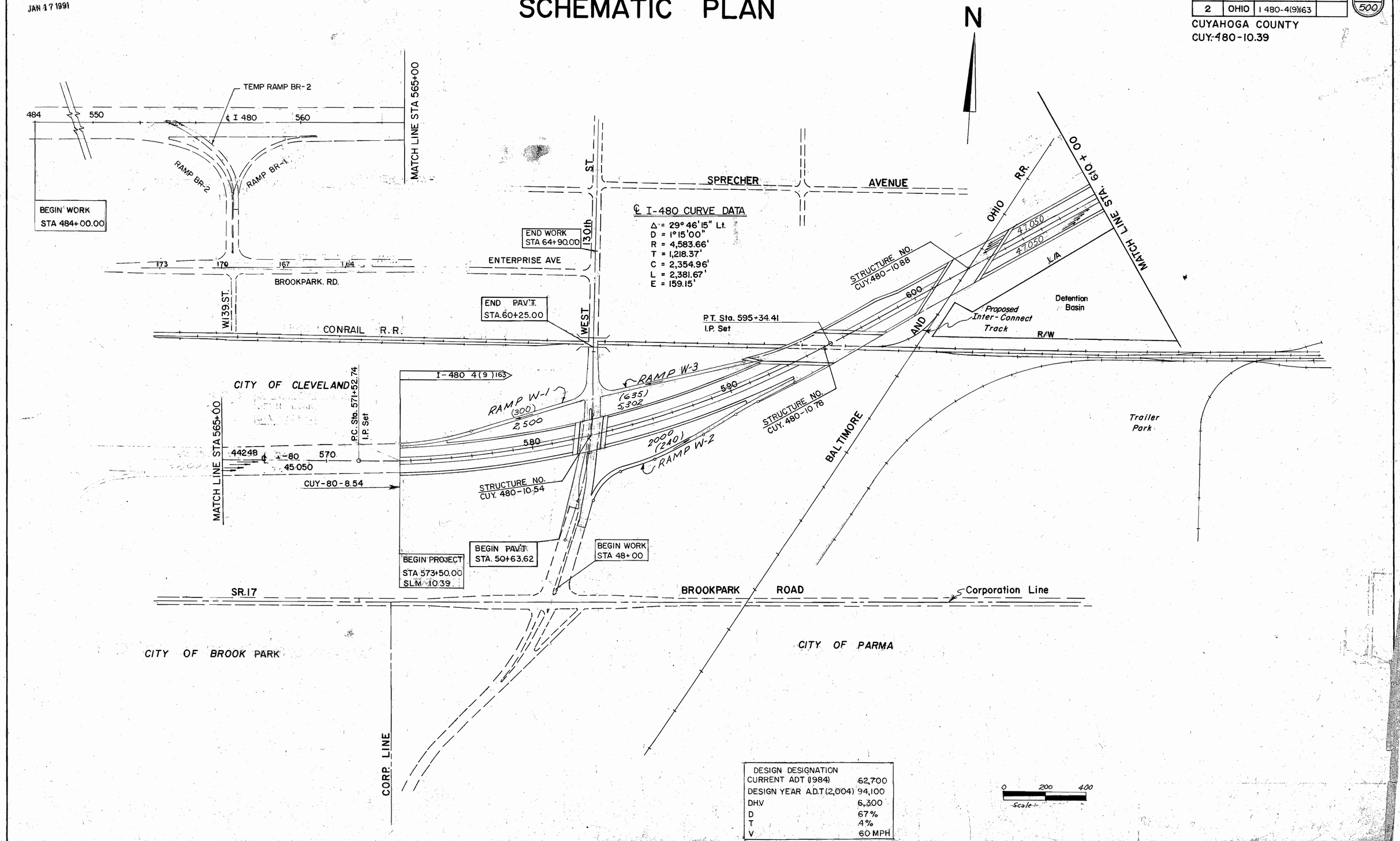

DESIGN DESIGNATION	
CURRENT ADT (1984)	62,700
DESIGN YEAR A.D.T (2,004)	94,100
DHV	6,300
D	67%
T	4%
V	60 MPH

MICROFILMED
JAN 22 1991

FED. RD. DIVISION	STATE	PROJECT	TYPE FUNDS
2	OHIO		

425/500

CUYAHOGA COUNTY
CUY-480-10.39

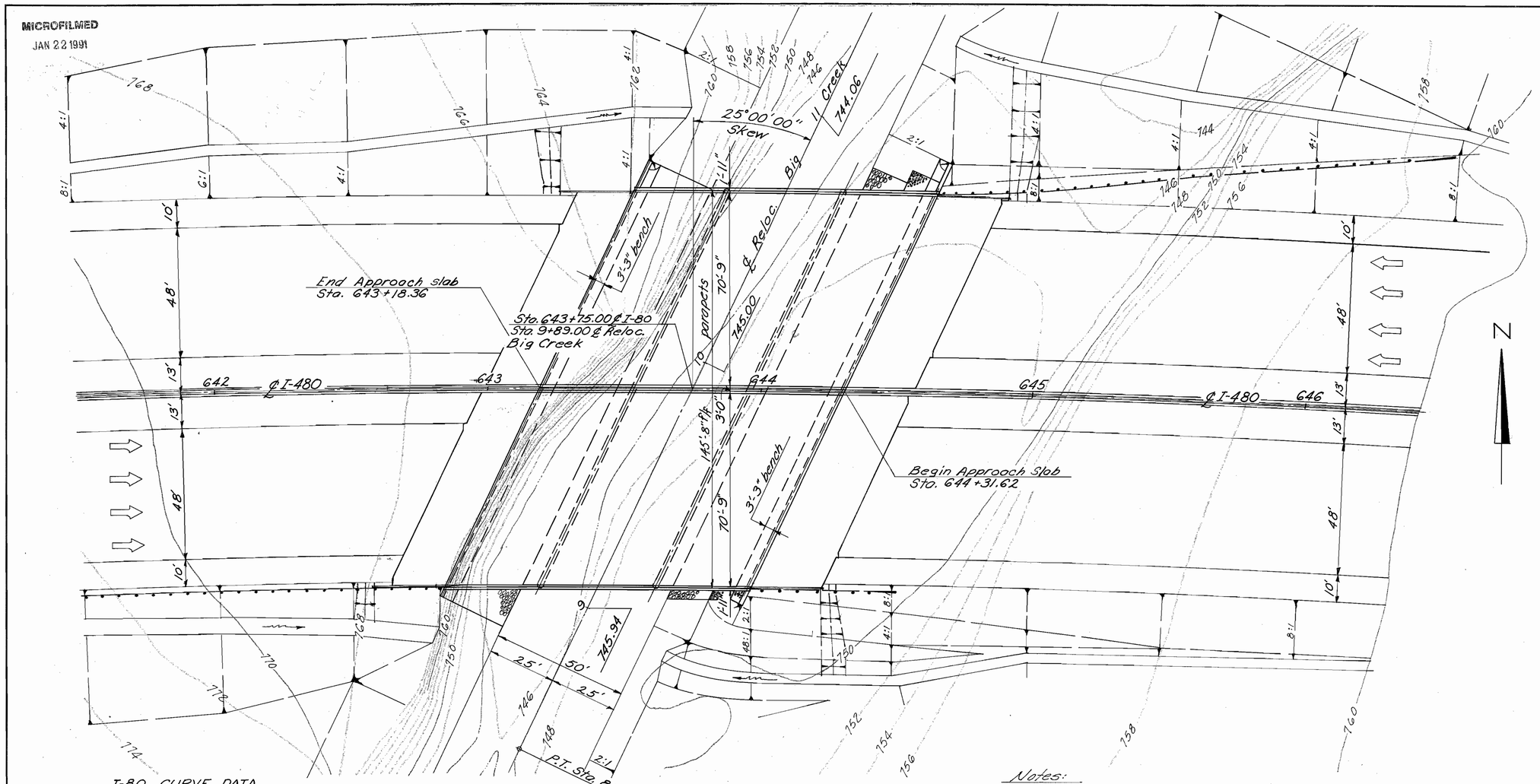

PLAN

I-80 CURVE DATA

P.I. Sta. 634+64.70
Δ = 44°06' 29"
Dc = 1° 00' 00"
R = 5,729.58'
T = 2,321.19'
L = 4,410.86'
C = 4,302.69'

Notes:

Earthwork limits shown are schematic. Actual slopes shall conform to plan cross-sections.

For limits of Type "B" Dumped Rock Fill see Channel Relocation plan and sections.

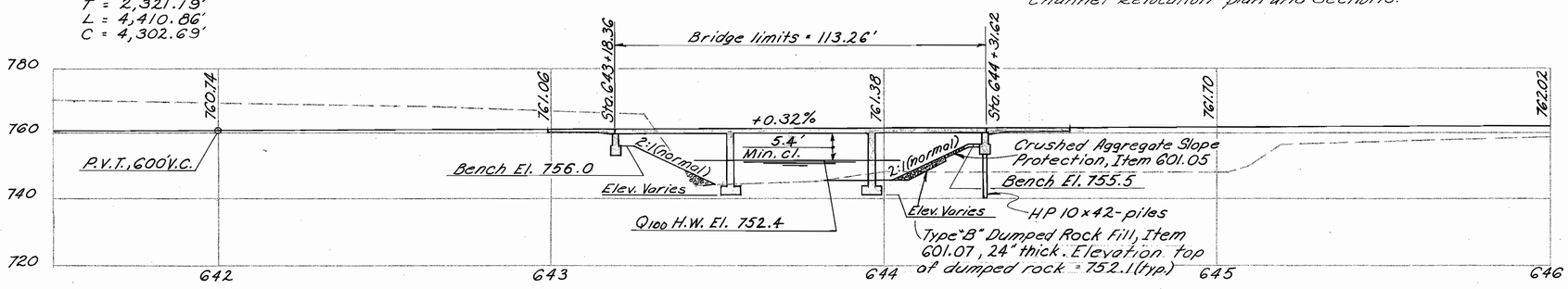

PROFILE ALONG ℄ I-480

Note: Piling Estimated Average Pay Length East Abutment - 12'-0"

EXISTING STRUCTURE DATA

LOCATION: Approx. 1500' downstream - Biddulph Road over Big Creek
TYPE: Concrete arch - earth fill
SPAN: 50'-0"
RISE: 20'-0"
ROADWAY: 26'-0"
SKEW: 0°00'
CONDITION:
DATE BUILT: 1945

LOCATION: Approx. 600' upstream - Golf course drive over Big Creek
TYPE: Steel truss
SPAN: 45'-0" (±)
ROADWAY: 17' (±)
SKEW: 0°00'

PROPOSED STRUCTURE

TYPE: Continuous reinforced concrete slab with reinforced concrete substructure.
SPANS: 34'-0", 42'-6", 34'-0" on ℄
ROADWAY: 145'-8" P/P parapets, BR-1 railing, conc. barrier median.
LOADING: HS 20-44 and the Interstate Alternate Loading.
WEARING SURFACE: 1¼" Latex mod. conc.
SKEW: 25°-00'-00" Lt. Forward with reference chord.
ALIGNMENT: 1°-00'-00" curve rt.
APPROACH SLABS: AS-1-81 20' lg. rear, 25' lg. forward.
SUPERELEVATION: 0.024 ft/ft.

TRAFFIC ESTIMATE

Design Year - 2000
Total A.D.T. - 90,792

HYDROLOGICAL DATA

Drainage Area = 14.1 sq. Mi.
Q_{100} = 5496 c.f.s.
V_{100} = 13.7 ft./sec.

1/15

ALDEN E. STILSON & ASSOCIATES, LIMITED
CONSULTING ENGINEERS
COLUMBUS, OHIO

SITE PLAN

BRIDGE NO. CUY-480-1169
I-480 OVER RELOCATED BIG CREEK

CUYAHOGA COUNTY
STA. 643+18.36
STA. 644+31.62
SCALE: 1" = 20'

DESIGNED	DRAWN	TRACED	CHECKED	REVIEWED	DATE	REVISED
G.W.M.	G.W.M.	D.L.	B.I.P.	G.W.M.	12/2/71	

MICROFILMED
JAN 22 1991
MICROFILMED

FED. RD. DIVISION	STATE	PROJECT	TYPE FUNDS
2	OHIO		

436/500

CUYAHOGA COUNTY
CUY-480-10.39

NOTE:
Field bend transverse bars to fit crown. Field bending to be included in Item 509 for payment.

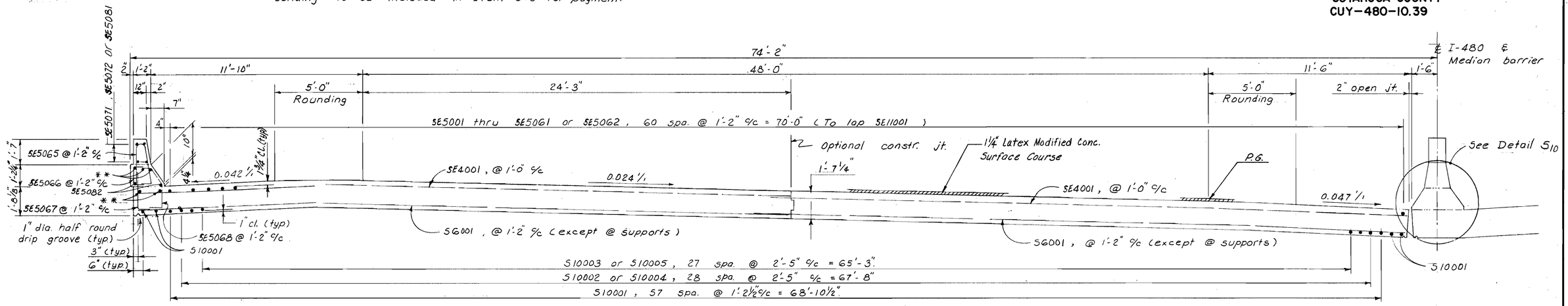

SECTION S1-S1 & S3-S3 13/15

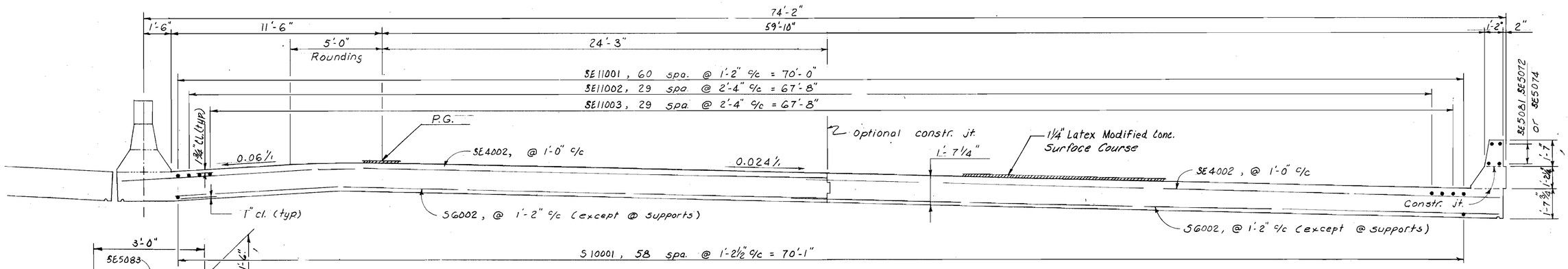

SECTION S2-S2 13/15

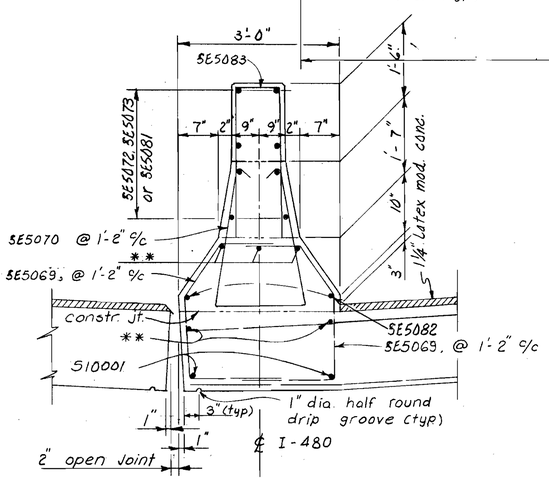

DETAIL S10

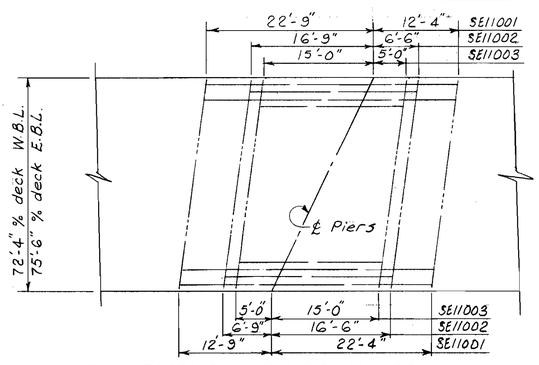

PLACEMENT DIAGRAM FOR SE11001, SE11002 & SE11003 BARS.

NOTES:

Parapets shall be placed after the shoring under the slab has been released sufficiently to permit full dead load deflection.

Concrete and reinforcing steel for parapets shall be included for payment with their respective items; Item 511 Superstructure concrete and Item 509 Reinforcing steel.

For optional construction joint detail see sht. 13/15

** Each longitudinal run of reinforcing steel thus indicated shall consist of the following sequence of bars: 1-SE5063, 1-SE11001, 1-SE5062, 1-SE11001 & 1-SE5064

SE11001 in lower part of median and parapet shall be placed as shown in placement diagram.

Details, dimensions and reinforcing not shown are same as for opposite parapet.

12/15

ALDEN E. STILSON & ASSOCIATES, LIMITED
CONSULTING ENGINEERS
CLEVELAND, OHIO COLUMBUS, OHIO WHEELING, W. VA.

SUPERSTRUCTURE DETAILS

BRIDGE No. CUY-480-1169
I-480 OVER RELOCATED BIG CREEK
CUYAHOGA COUNTY STA. 643+18.36 STA. 644+31.62

DESIGNED	DRAWN	TRACED	CHECKED	REVIEWED	DATE	REVISED
B.I.P.	B.I.P.		R.S.S.	G.W.M.	12/11/71	