PLAN NO. BR-27-85

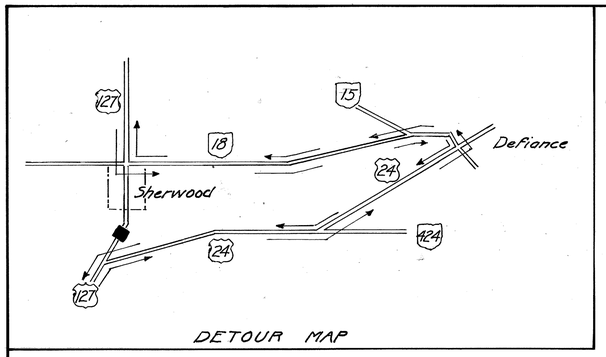

DETOUR MAP

STATE OF OHIO
DEPARTMENT OF TRANSPORTATION

DEF-127-0053

DELAWARE TOWNSHIP
DEFIANCE COUNTY
BRIDGE Nº. DEF-127-0053
STRUCTURE REPAIRS

MICROFILMED
NOV 21 1991

CONVENTIONAL SIGNS

County Line
Township Line
Section Line
Corporation Line or
Fence Line (existing) (proposed)
Center Line 352 353
Trees, Stumps, (to be removed)
Utility Poles: Telephone, Power, Light.

Limited Access (only) LA
Right of Way (only) RW
Limited Access & Right of Way LA & RW
Existing Right of Way
Property Line (in existing fence)
Railroad or
Guardrail (existing) (proposed)

INDEX OF SHEETS

Title	1
General Notes, General Summary, Proposed Grades	2
Superstructure Details (Cross-Section)	3
Superstructure Details (Plan)	4
Superstructure (Elevation)	5
South Abutment Removal	6
South Abutment Proposed	7
North Abutment Removal	8
North Abutment Proposed	9
Expansion Joint Details	10-12
Substructure Drainge	13
Approach Slab with Parapets	14
Guardrail	15
Temporary Pavement Markings	16

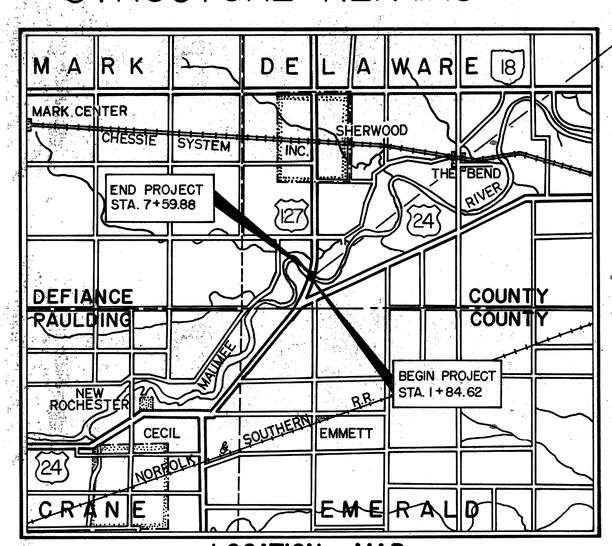

LOCATION MAP

SCALE IN MILES
0 1 2 3 4

Portion to be improved
State & Federal Routes
Other Roads

1985 SPECIFICATIONS

The standard specifications of the State of Ohio, Department of Transportation, including changes and supplemental specifications listed in the proposal shall govern this improvement.

I hereby approve these plans and declare that the making of this improvement will *require the closing to traffic of the highway and that detours will be provided as indicated on the plans.*

CMX Approved *James L. Schmenk*
Date *7-27-85* District Deputy Director of Transportation

JDR Approved *Walter J. Fetinger* JDR
Date *7-31-85* Engineer, Bureau of Bridges and Structural Design

Approved *James R. Longenecker*
Date *8/2/85* Deputy Director, Operations

Approved *Warren J. Smith*
Date *8-2-85* Director, Department of Transportation

LINE DATA

Begin Project Sta. 1+84.62
Suspend Project Sta. 2+09.62 Length = 25.00 L.F.

Resume Project Sta. 7+34.88
End Project Sta. 7+59.88 Length = 25.00 L.F.
Total Length of Project = 50.00 L.F.

Begin Work Sta. 1+00.00
End Work Sta. 8+75.00
Total Length of Work = 775.00 L.F.

UNDERGROUND UTILITIES
48 HOURS
BEFORE YOU DIG
Call ··· 800-362-2764 (Toll free)
OHIO UTILITIES PROTECTION SERVICE

NON-MEMBERS
MUST BE CALLED DIRECTLY

SCALES

Plan
Profile: Horizontal, Vertical
Cross Section: Horizontal, Vertical

SUPPLEMENTAL SPECIFICATIONS		
824	10-8-82	
845	1-13-84	
849	10-19-81	
953	8-21-80	

SUPPLEMENTAL PRINTS OF STANDARD CONSTRUCTION DRAWINGS					
RS-1-81	11-27-81				
BP-1.1	5-29-79				
BP-5	1-11-85				
GR-1	1-11-85				
GR-2B	2-5-82				
GR-3	1-21-85				
SD-1-89	6-12-69				

Plan Prepared By:
DISTRICT 1
John M. Shanahan P.E.

SEAL

Rev. 8-27-85 RLE

DEPARTMENT OF TRANSPORTATION
FEDERAL HIGHWAY ADMINISTRATION
APPROVED:
DIVISION ADMINISTRATOR DATE

Project: DEF-127-0053
Date of Letting _____ 19__, Contract No. _____

LD0300 Rev. 1-1-81

GENERAL NOTES

PORTIONS OF STRUCTURE REMOVED ~ Care shall be taken while removing the abutment concrete shown in the plans to preserve in tact the vertical reinforcing steel. Any existing vertical reinforcing steel which is damaged during the removal operations shall be replaced at the contractors expense. If doweling is deemed necessary by the Engineer it will be done in accordance with Item 510 of the C.M.S. and at the contractors expense.

The concrete removed from the bridge substructure and superstructure may be placed on the slopes beneath the bridge to be used as slope protection. If this option is to be exercised it will be done at no cost to the State and will be subject to the requirements of Item 601.07 of the C.M.S., and the approval of the Engineer.

PAVEMENT REMOVED ~ This item will require the removal and disposal of the existing asphalt concrete wearing course, approach slabs, rigid pavement, granular base and earthwork necessary to construct the proposed Item 304-Aggregate Base and Item 611-Reinforced Concrete Approach Slab (Modified as per plan)

Any portland cement concrete may be disposed of as mentioned in the previous note. No bituminous concrete or a material containing excess fines (as outlined in Item 601.07, C.M.S.) may be placed on the slopes beneath the bridge.

UNCLASSIFIED EXCAVATION ~ This item is to include all earthwork necessary to remove and rebuild the abutment backwalls as shown on the plans. This item will include both the excavation and subsequent backfilling.

SHOULDER PREPARATION ~ This item is to include backfilling and compacting the shoulder areas adjacent to the proposed approach slabs.

MAINTAINING TRAFFIC ~ The road is to be closed for the duration of the work. Road closure is not to exceed 49 calender days. Failure to comply with this limitation shall result in liquidated damages as per section 108.07 of the C.M.S.

WEARING COURSE REMOVED ~ This item will require the removal of the bituminous concrete wearing course 2½" below the proposed grades shown on the plans from Sta. 1+00.00 to Sta. 1+84.62, 1½" below the proposed grades shown on the plans from Sta. 7+59.88 to Sta. 8+75.00. This item also will require the removal of the bituminous concrete wearing course and waterproofing membrane from the bridge deck.

GUARDRAIL REMOVED FOR STORAGE ~ This item will include the removal of the four existing Bridge Terminal Assemblies.

PATCHING CONCRETE STRUCTURES ~ A quantity of 200 sq.ft. of Item 519 is set up for the repair of those areas of the structure which the Engineer finds in need of such repair.

PROPOSED GRADES

Station	12' Lt.	℄	12' Rt.	
1+00	703.77	703.94	703.77	Existing
+25	703.74	703.92	703.74	
+50	703.72	703.91	703.72	
+72.62			703.70	Rt. edge begin A.S.
+75	703.70	703.89	703.70	
+84.62		703.88		℄ begin A.S.
+96.62	703.67			Lt. edge begin A.S.
+97.62			703.67	Rt. edge end A.S.
+99			703.67	Rt. edge end dam
2+00	703.67	703.86	703.67	
+09.62		703.84		℄ end A.S.
+11		703.84		℄ end dam
+21.62	703.63			Lt. edge end A.S.
+23	703.63			Lt. edge end dam
+25	703.63	703.82	703.63	
+50	703.57	703.76	703.57	
+75	703.51	703.70	703.51	
3+00	703.45	703.64	703.45	
+25	703.39	703.58	703.39	
+50	703.33	703.52	703.33	
+75	703.27	703.46	703.27	
4+00	703.21	703.40	703.21	
+25	703.15	703.34	703.15	
+50	703.09	703.28	703.09	
+75	703.03	703.22	703.03	
5+00	702.97	703.16	702.97	
+25	702.91	703.10	702.91	
+50	702.85	703.04	702.85	
+75	702.79	702.98	702.79	
6+00	702.73	702.92	702.73	
+25	702.67	702.86	702.67	
+50	702.63	702.82	702.63	
+75	702.59	702.78	702.59	
7+00	702.55	702.74	702.55	
+21.50	702.52			Rt. edge end dam
+22.88	702.52			Rt. edge begin A.S.
+25	702.52	702.71	702.52	
+33.50		702.70		℄ end dam
+34.88		702.70		℄ begin A.S.
+45.50	702.50			Lt. edge end dam
+46.88	702.50			Lt. edge begin A.S.
+47.88			702.50	Rt. edge end A.S.
+50	702.50	702.69	702.50	
+59.88		702.68		℄ end A.S.
+71.88	702.48			Lt. edge end A.S.
+75	702.48	702.67	702.48	
8+00	702.46	702.65	702.46	
+25	702.41	702.62	702.41	
+50	702.34	702.57	702.34	
+75	702.23	702.48	702.23	Existing

ROAD CLOSURE ~ U.S. Route 127 shall not be closed for work to commence before March 1, 1986

BENCH MARKS ~ Bench marks used for the preparation of these plans are the existing wing walls, locations and elevations are shown on sheet No. 6 and sheet No. 8.

GENERAL SUMMARY

ITEM	TOTAL	UNIT	DESCRIPTION
202	550	L.F.	Guardrail Removed for Storage
202	2281	Sq.Yd.	Wearing Course Removed
202	197	Sq.Yd.	Pavement Removed
202	Lump	Lump	Portions of Structure Removed
304	30	Cu.Yd.	Aggregate Base
404	32	Cu.Yd.	Asphalt Concrete, AC-20
407	68	Gal.	Tack Coat
407	2	Tons	Cover Aggregate
503	Lump	Lump	Unclassified Excavation
509	2262	Lbs.	Reinforcing Steel
824	19168	Lbs.	Reinforcing Steel, Epoxy Coated
510	4	Ea.	Dowel Holes, Abutment
510	1672	Ea.	Dowel Holes, Superstructure
511	29	Cu.Yd.	Class C Concrete, Abutments
511	11	Cu.Yd.	Class C Concrete, Approach Slab Deflector Parapet
511	20	Cu.Yd.	Class S Concrete Bridge Deck
511	120	Cu.Yd.	Class S Concrete, Deflector Parapet
516	100.40	L.F.	Expansion and Contraction Joints
518	57	Ea.	Scuppers
518	210	L.F.	6" PVC Drain Pipe, Perforated
518	40	Cu.Yd.	Porous Backfill
519	200	Sq.Yd.	Patching Concrete Structures
606	330.5	L.F.	Guardrail, Type 5
606	4	Ea.	Bridge Terminal Assembly, Type A
611	197	Sq.Yd.	Reinforced Concrete Approach Slab, Modified as per plan
614	Lump	Lump	Maintaining Traffic
617	6	Cu.Yd.	Compacted Aggregate
617	25	Sq.Yd.	Shoulder Preparation
619	Lump	Lump	Field Office
621	0.15	Mi.	Pavement Markings
624	Lump	Lump	Mobilization
623	Lump	Lump	Construction Layout Stakes
845	1861	Sq.Yd.	Latex Modified Concrete Overlay (1½" Thick)
845	67	Cu.Yd.	Latex Modified Concrete Overlay (Variable Thickness)
Special	573	Sq.Yd.	Sealing Concrete Structures

SEALING CONCRETE STRUCTURES ~ The portions of the structure to be sealed are:
- The abutment back wall and wingwalls above the beam seat, (front, sides and top)
- The superstructure and approach slab deflector parapet, (roadway side and top))

FHWA REGION	STATE	PROJECT	
5	OHIO		

3/16

DEFIANCE COUNTY
DEF-127-0053

PLAN NO. BR-27-85

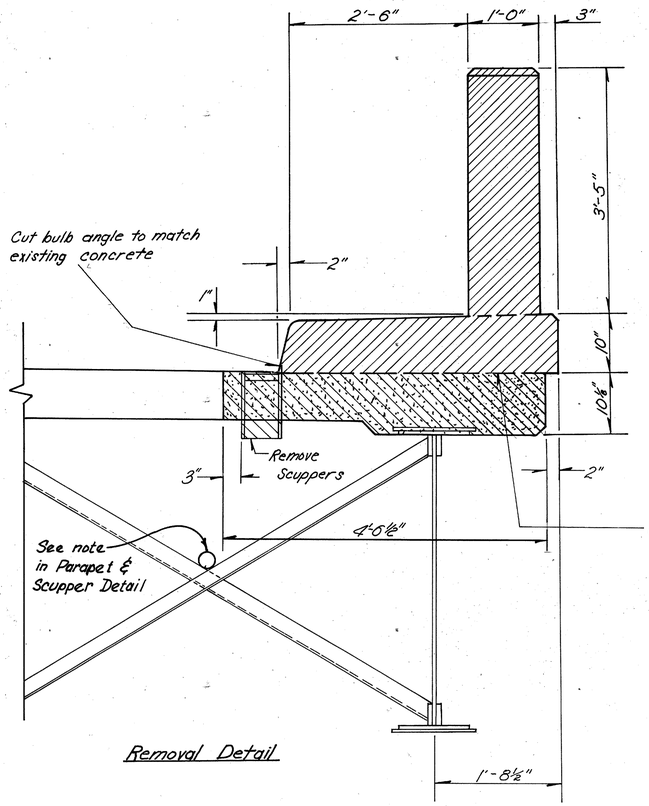

Removal Detail

Concrete removed for scupper replacement

Concrete Removed

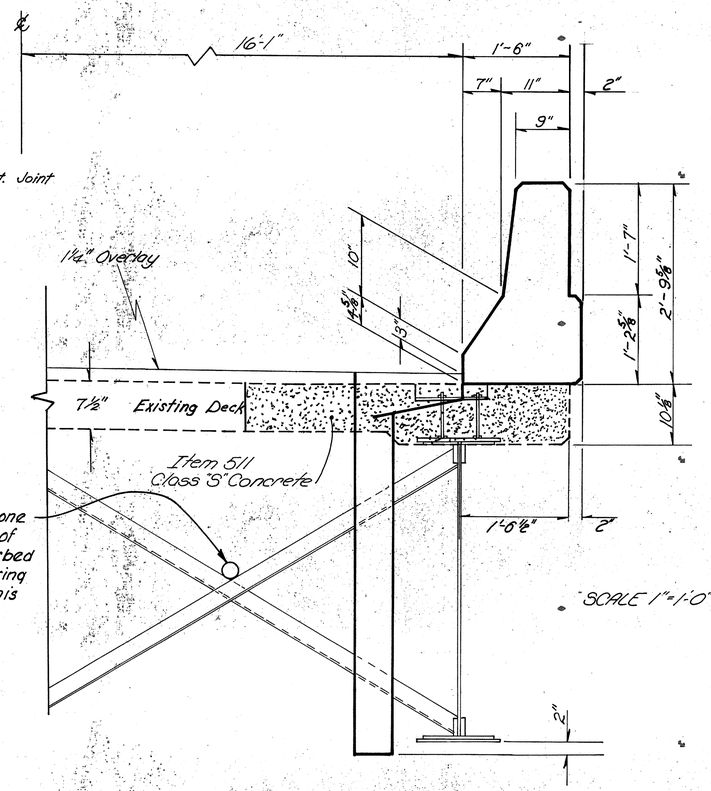

SCALE 1"=1'-0"

Parapet & Scupper Detail

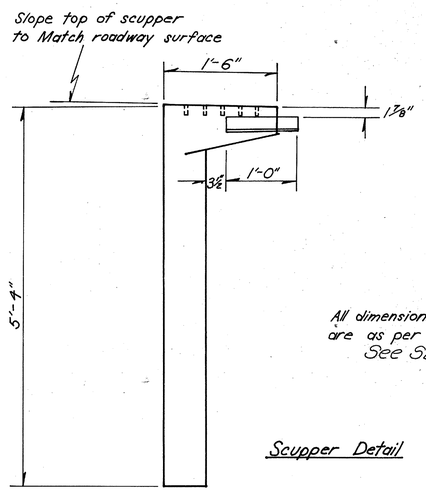

All dimensions except those shown are as per standard scupper
See SD-1-69 Sheet No. 3

Scupper Detail

Scupper Schedule

Scupper Numbers		Station	Elevation
1	—	2 + 96.75	703.40
2	—	3 + 10.75	703.37
3	—	3 + 24.75	703.33
4	30	3 + 38.75	703.30
5	31	3 + 52.75	703.27
6	32	3 + 66.75	703.23
7	33	3 + 80.75	703.20
8	34	3 + 94.75	703.17
—	35	4 + 08.75	703.13
9	—	4 + 09.25	703.13
—	36	4 + 22.75	703.10
10	—	4 + 23.25	703.10
11	37	4 + 37.25	703.06
12	38	4 + 51.25	703.03
13	39	4 + 65.25	703.00
14	40	4 + 79.25	702.96
15	41	4 + 93.25	702.93
16	42	5 + 07.25	702.89
—	43	5 + 21.25	702.87
17	—	5 + 21.75	702.87
—	44	5 + 35.25	702.83
18	—	5 + 35.75	702.83
19	45	5 + 49.75	702.79
20	46	5 + 63.75	702.76
21	47	5 + 77.75	702.72
22	48	5 + 91.75	702.69
23	49	6 + 05.75	702.66
24	50	6 + 19.75	702.62
—	51	6 + 33.75	702.60
—	52	6 + 47.75	702.58
25	—	6 + 49.50	702.57
26	—	6 + 64.50	702.55
—	53	6 + 77.50	702.53
27	—	6 + 79.50	702.52
—	54	6 + 92.50	702.50
28	—	6 + 94.50	702.50
—	55	7 + 07.50	702.48
29	—	7 + 09.50	702.48
—	56	7 + 22.50	702.46
—	57	7 + 37.50	702.45

Rev. 10-3-85 RLE

STATE OF OHIO
DEPARTMENT OF TRANSPORTATION
DISTRICT ONE — BRIDGE

SUPER STRUCTURE DETAILS

BRIDGE NO. DEF-127-0053
OVER
MAUMEE RIVER

DESIGNED	DRAWN	TRACED	CHECKED	REVIEWED	DATE	REVISED

FHWA REGION	STATE	PROJECT	
5	OHIO		

4/16

DEFIANCE COUNTY
DEF-127-00.53

PLAN NO. BR-27-85

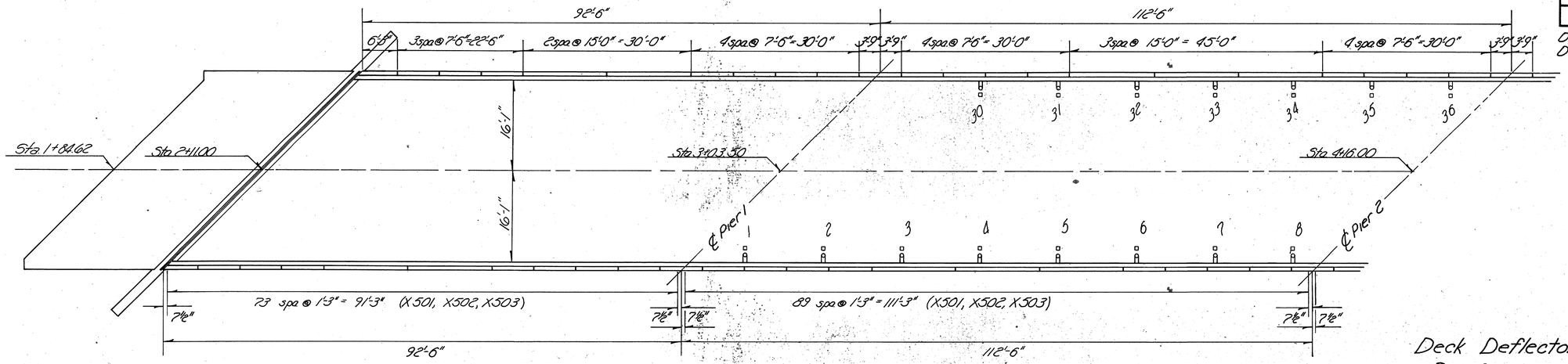

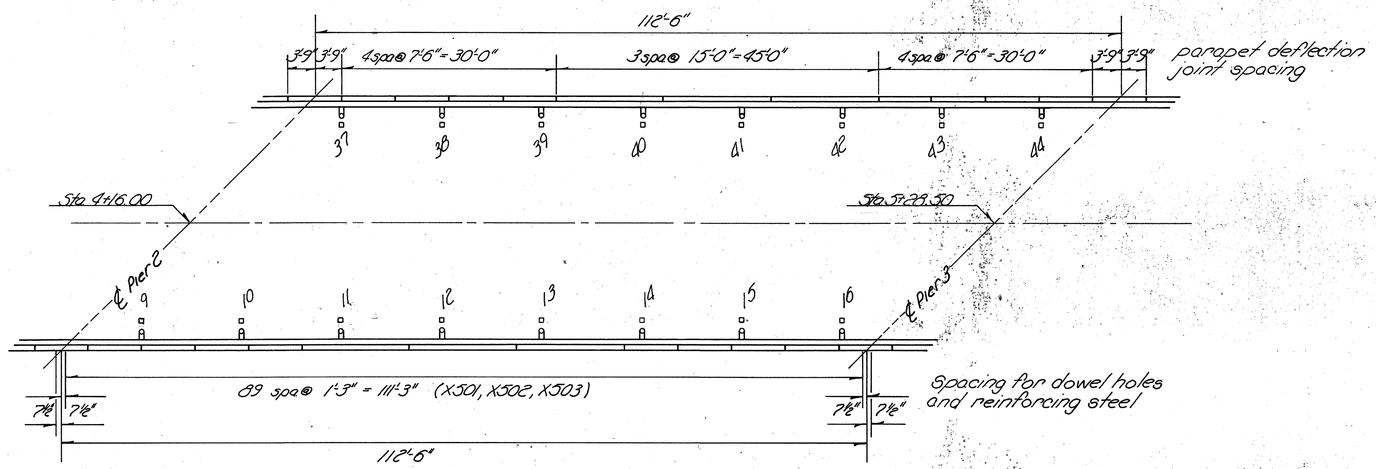

parapet deflection joint spacing

Spacing for dowel holes and reinforcing steel

Deck Deflector Parapet Reinforcing Schedule
(Epoxy Coated Steel)

BAR NUMBER	LT. SIDE	RT. SIDE	TOTAL	LENGTH	LB/FT.	WEIGHT
X501	418	418	836	2'-0"	1.043	1744
X502	418	418	836	2'-5⅛"	1.043	2171
X503	418	418	836	5'-5"	1.043	4578
X504	80	80	160	27'-8¼"	1.043	4620
X505	168	168	336	7'-0"	1.043	2453
X506	52	52	104	14'-6"	1.043	1523
X507	8	8	16	5'-9"	1.043	96
					TOTAL	17,235

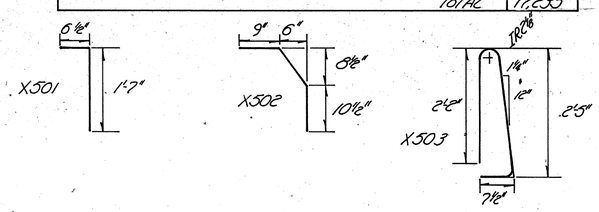

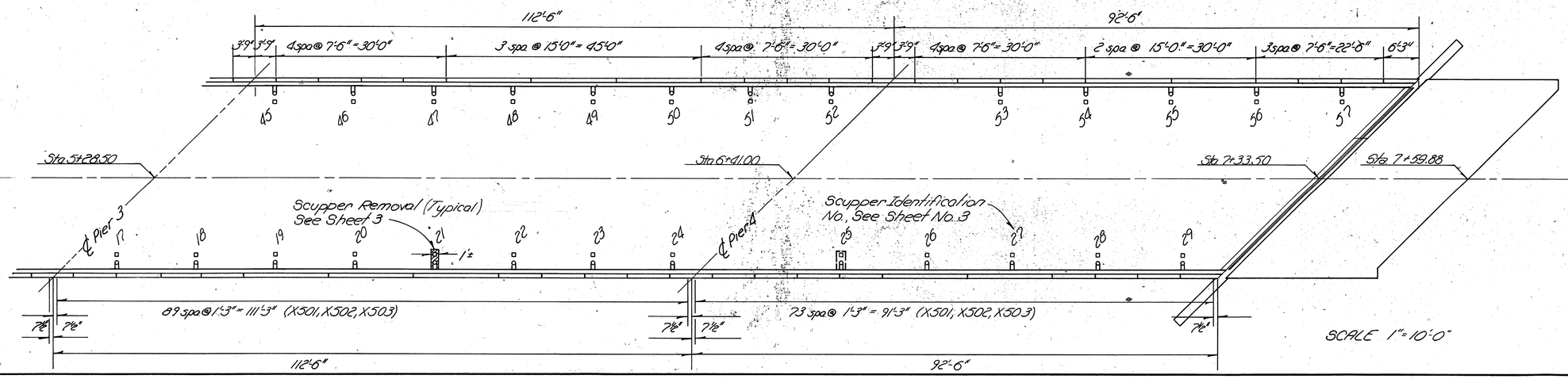

SCALE 1" = 10'-0"

STATE OF OHIO
DEPARTMENT OF TRANSPORTATION
DISTRICT ONE — BRIDGE

SUPER STRUCTURE DETAILS

BRIDGE NO. DEF-127-00.53
OVER
MAUMEE RIVER

DESIGNED	DRAWN	TRACED	CHECKED	REVIEWED	DATE	REVISED

FHWA REGION	STATE	PROJECT	
5	OHIO		

5/16

DEFIANCE COUNTY
DEF-127-0053

PLAN NO. BR-27-85

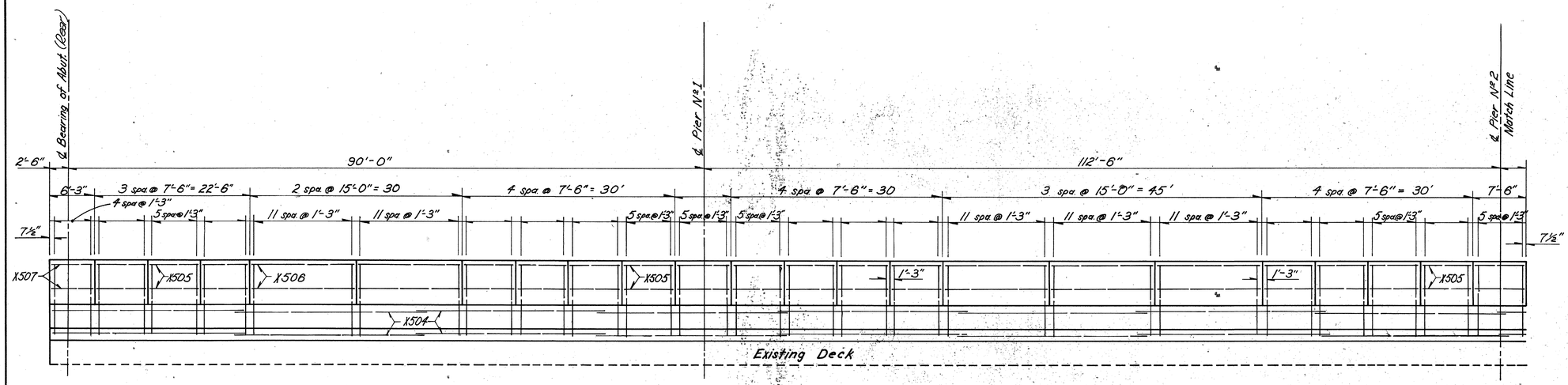

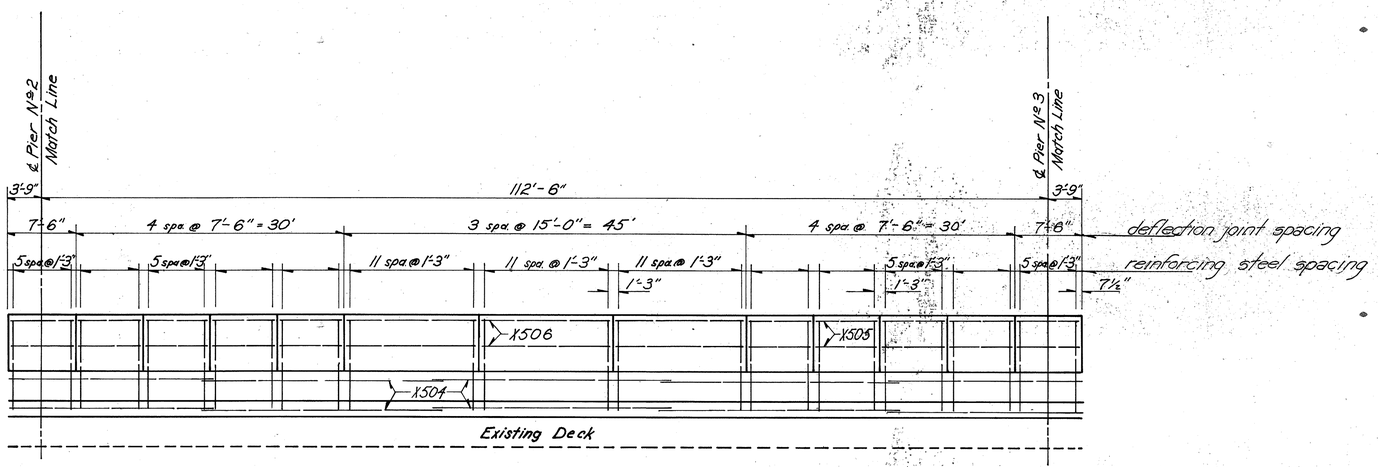

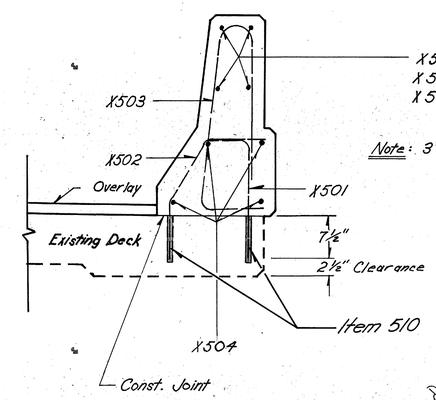

Note: 3" Clearance on ends of all longitudinal steel.

Scales: Vertical: ⅛" = 1'-0"
Horizontal: ⅛" = 1'-0"

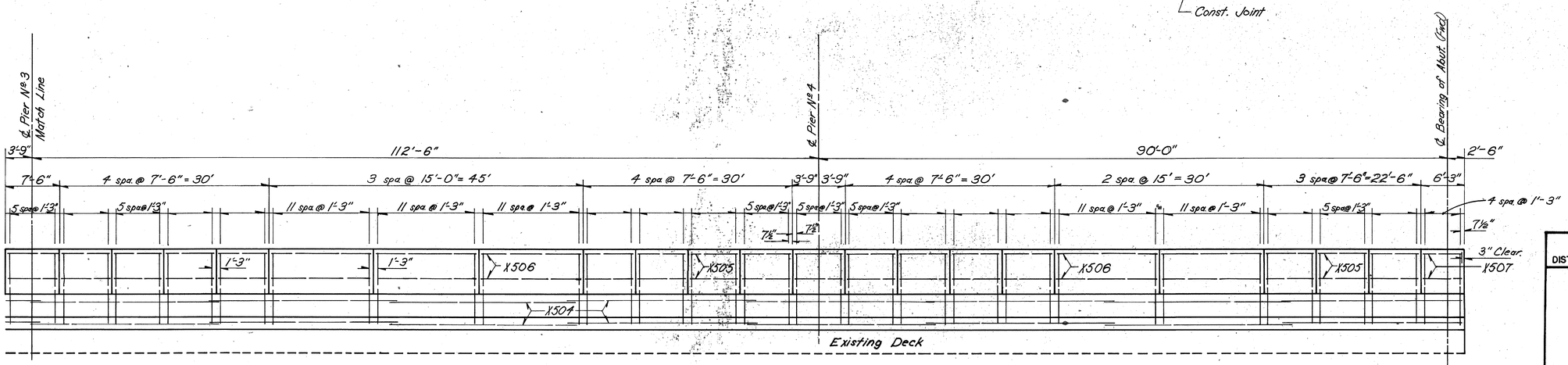

STATE OF OHIO
DEPARTMENT OF TRANSPORTATION
DISTRICT ONE — BRIDGE

SUPER STRUCTURE DETAILS

BRIDGE NO. DEF-127-0053
OVER
MAUMEE RIVER

DESIGNED	DRAWN	TRACED	CHECKED	REVIEWED	DATE	REVISED

FHWA REGION	STATE	PROJECT	
5	OHIO		

6/16

DEFIANCE COUNTY
DEF-127-00 53

PLAN NO. BR-27-85

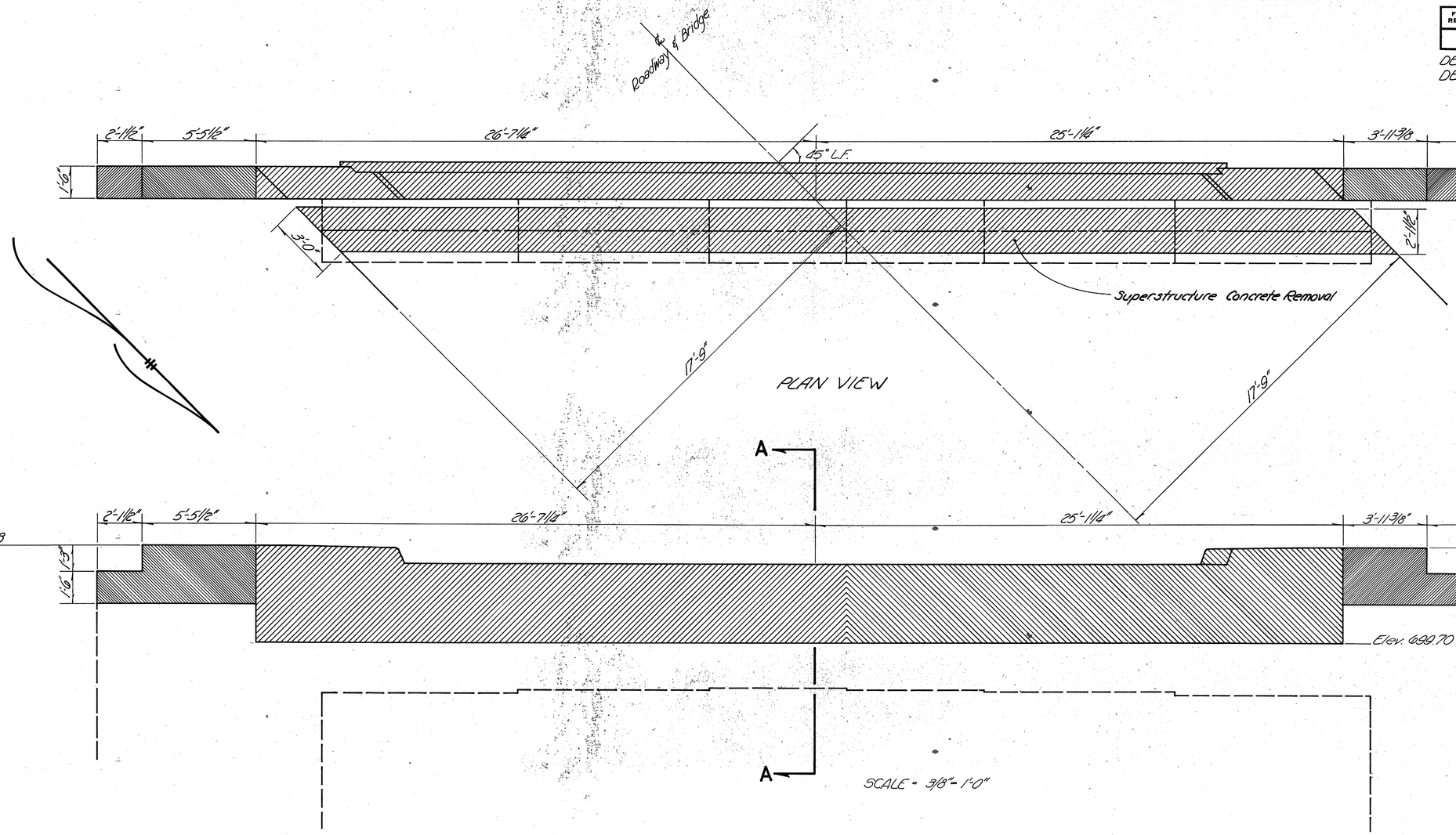

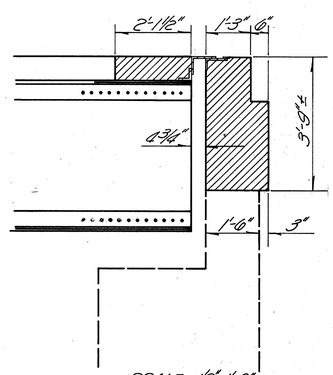

SCALE = 1/2" = 1'-0"
SECTION A-A

Note: The South Abutment is the Rear Abutment

STATE OF OHIO
DEPARTMENT OF TRANSPORTATION
DISTRICT ONE — BRIDGE

SOUTH ABUTMENT CONC. REMOVAL DETAILS

BRIDGE NO. DEF-127-00 53
OVER
MAUMEE RIVER

DESIGNED	DRAWN	TRACED	CHECKED	REVIEWED	DATE	REVISED

FHWA REGION	STATE	PROJECT	
5	OHIO		

7/16

DEFIANCE COUNTY
DEF-127-00 53

PLAN NO. BR-27-85

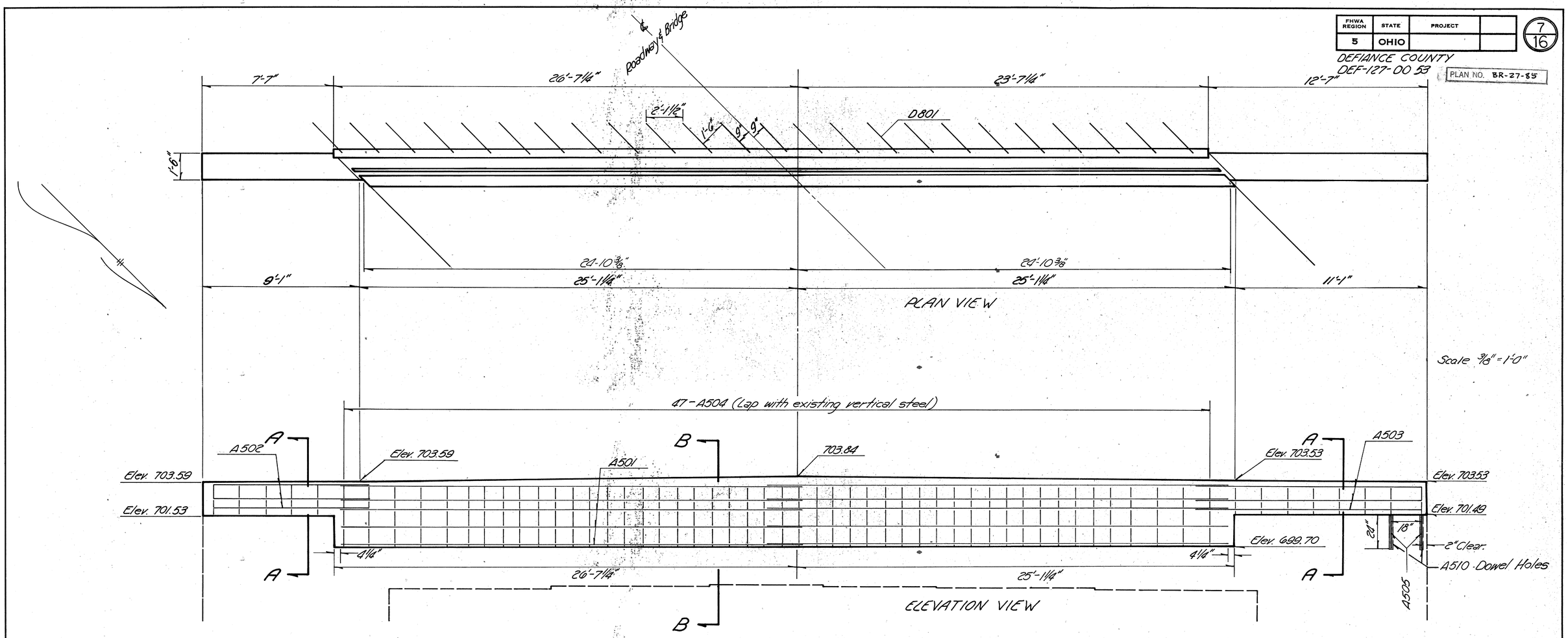

Scale 3/8" = 1'-0"

For Structural Expansion Joint with Elastomeric Strip Seal Details See Sheet No. 10-12.

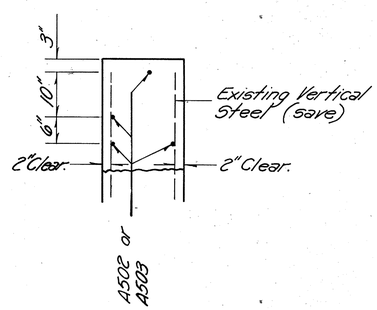

Section A-A

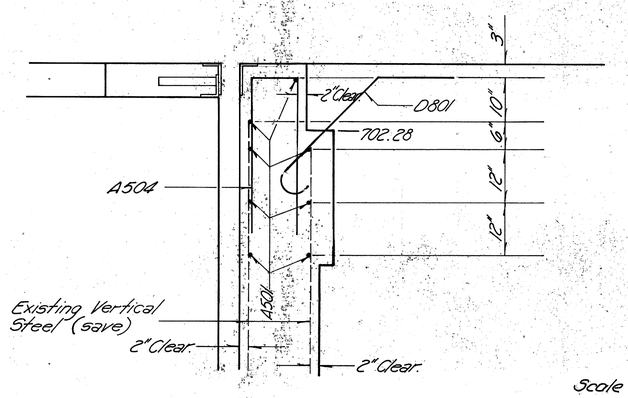

Section B-B

Scale 3/4" = 1'-0"

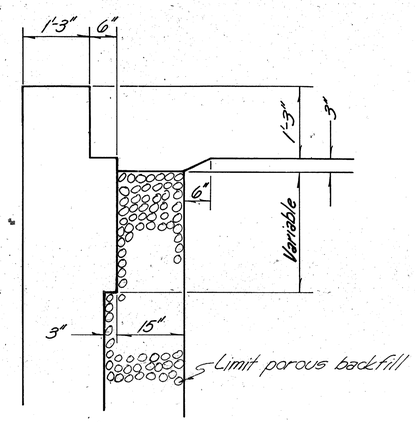

Section A-A

Note: South Abutment is the Rear Abutment.

STATE OF OHIO
DEPARTMENT OF TRANSPORTATION
DISTRICT ONE
BRIDGE

SOUTH ABUTMENT

BRIDGE NO. DEF-127-0053
OVER
MAUMEE RIVER

DESIGNED	DRAWN	TRACED	CHECKED	REVIEWED	DATE	REVISED

FHWA REGION	STATE	PROJECT	
5	OHIO		

8/16

DEFIANCE COUNTY
DEF-127-00.53

PLAN NO. BR-27-85

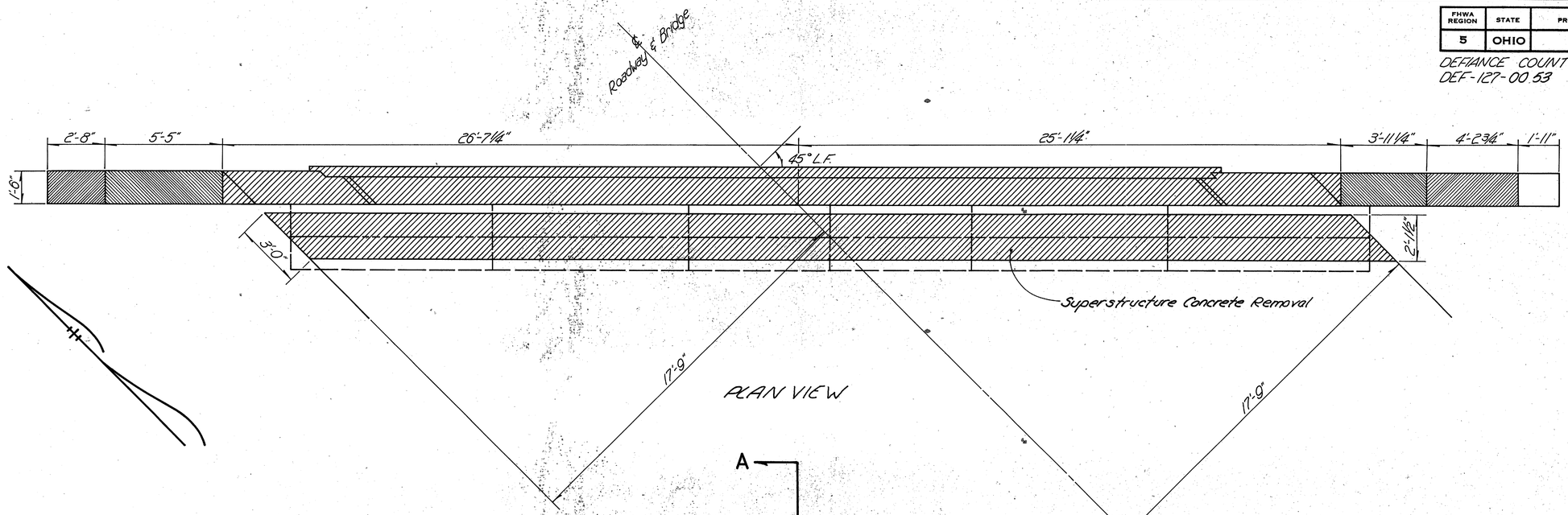

PLAN VIEW

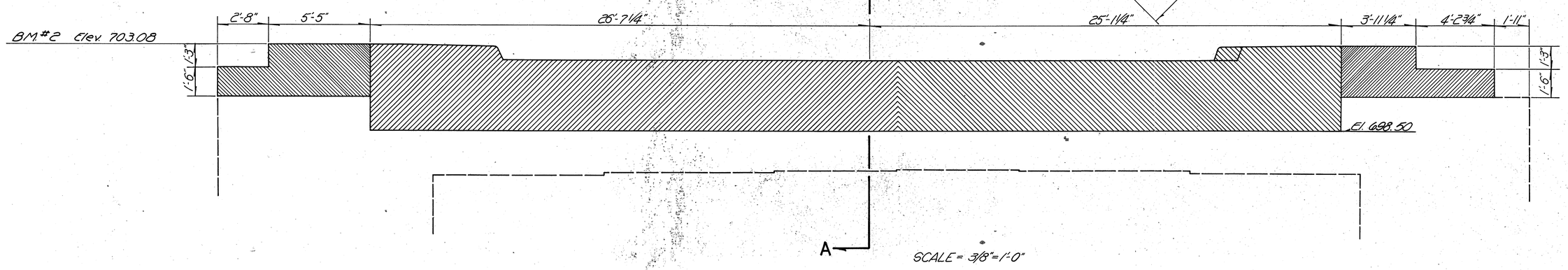

ELEVATION VIEW

Concrete Removal

Note: The North Abutment is the Forward Abutment.

STATE OF OHIO
DEPARTMENT OF TRANSPORTATION
DISTRICT ONE — BRIDGE

NORTH ABUTMENT CONC. REMOVAL DETAILS

BRIDGE NO. DEF-127-0053
OVER
MAUMEE RIVER

DESIGNED	DRAWN	TRACED	CHECKED	REVIEWED	DATE	REVISED

FHWA REGION	STATE	PROJECT	
5	OHIO		

9/16

DEFIANCE COUNTY
DEF-127-0053

PLAN NO. BR-27-85

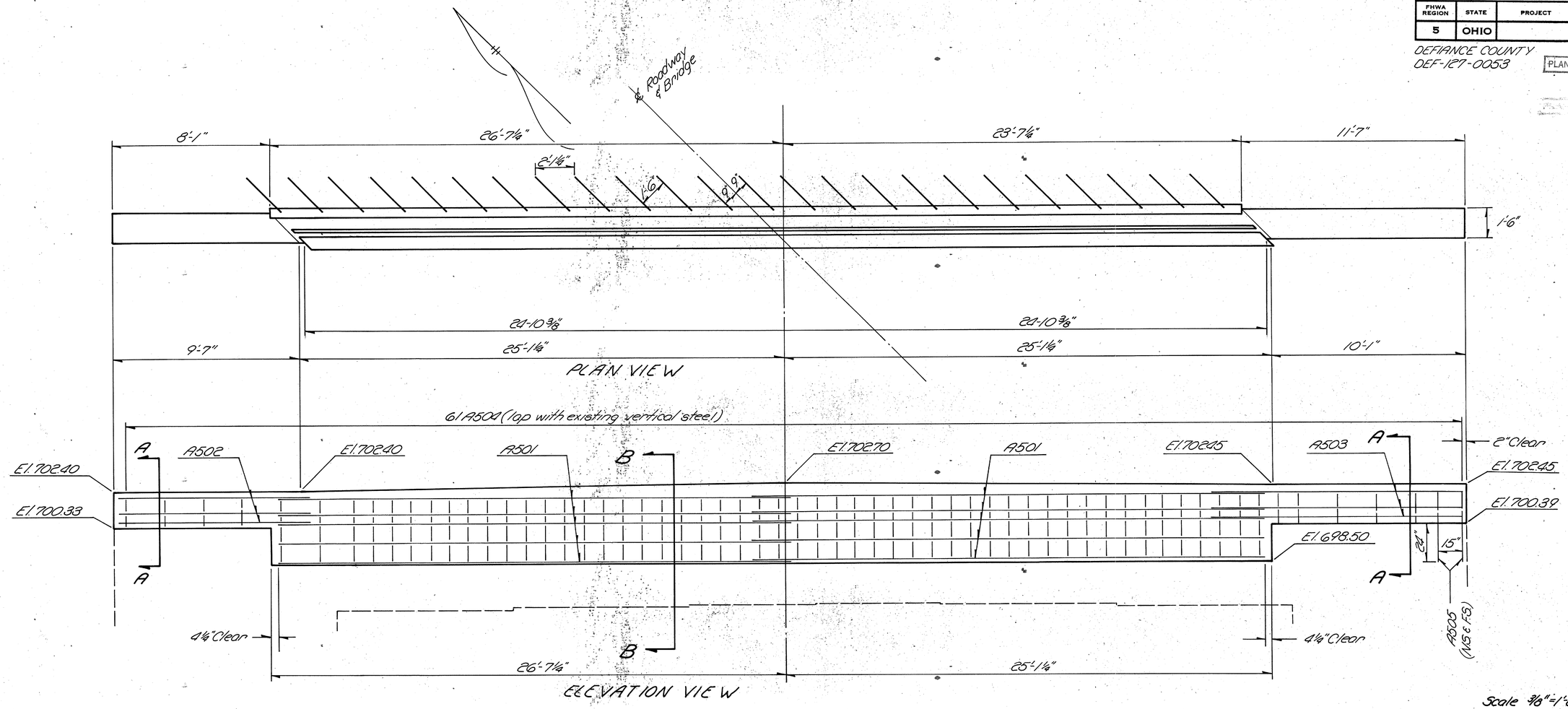

Scale 3/8"=1'-0"

Bar Number	Rear Abut.	Fwd Abut	Total	Length	Wt/Ft (Lbs)	Weight (Lbs)
A501	16	16	32	26'-6"	1.043	884
A502	4	4	8	10'-0"	1.043	83
A503	4	4	8	13'-0"	1.043	108
A504	60	61	121	4'-2"	1.043	526
A505	4	4	8	3'-9"	1.043	31
D801	24	24	48	4'-11"	2.670	630
				TOTAL		2262

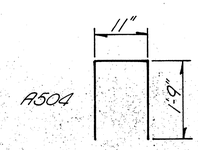

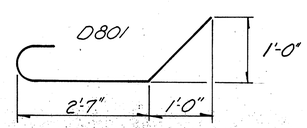

NOTE:
For Sections A-A & B-B, See Sheet 7 (South Abutment)

Note: The North Abutment is the Forward Abutment.

STATE OF OHIO
DEPARTMENT OF TRANSPORTATION
DISTRICT ONE
BRIDGE

NORTH ABUTMENT

BRIDGE NO. DEF-127-0053
OVER
MAUMEE RIVER

DESIGNED	DRAWN	TRACED	CHECKED	REVIEWED	DATE	REVISED

FHWA REGION	STATE	PROJECT	
5	OHIO		

10/16

DEFIANCE COUNTY
DEF-127-0053

PLAN NO. BR-27-85

END CROSSFRAME DETAIL

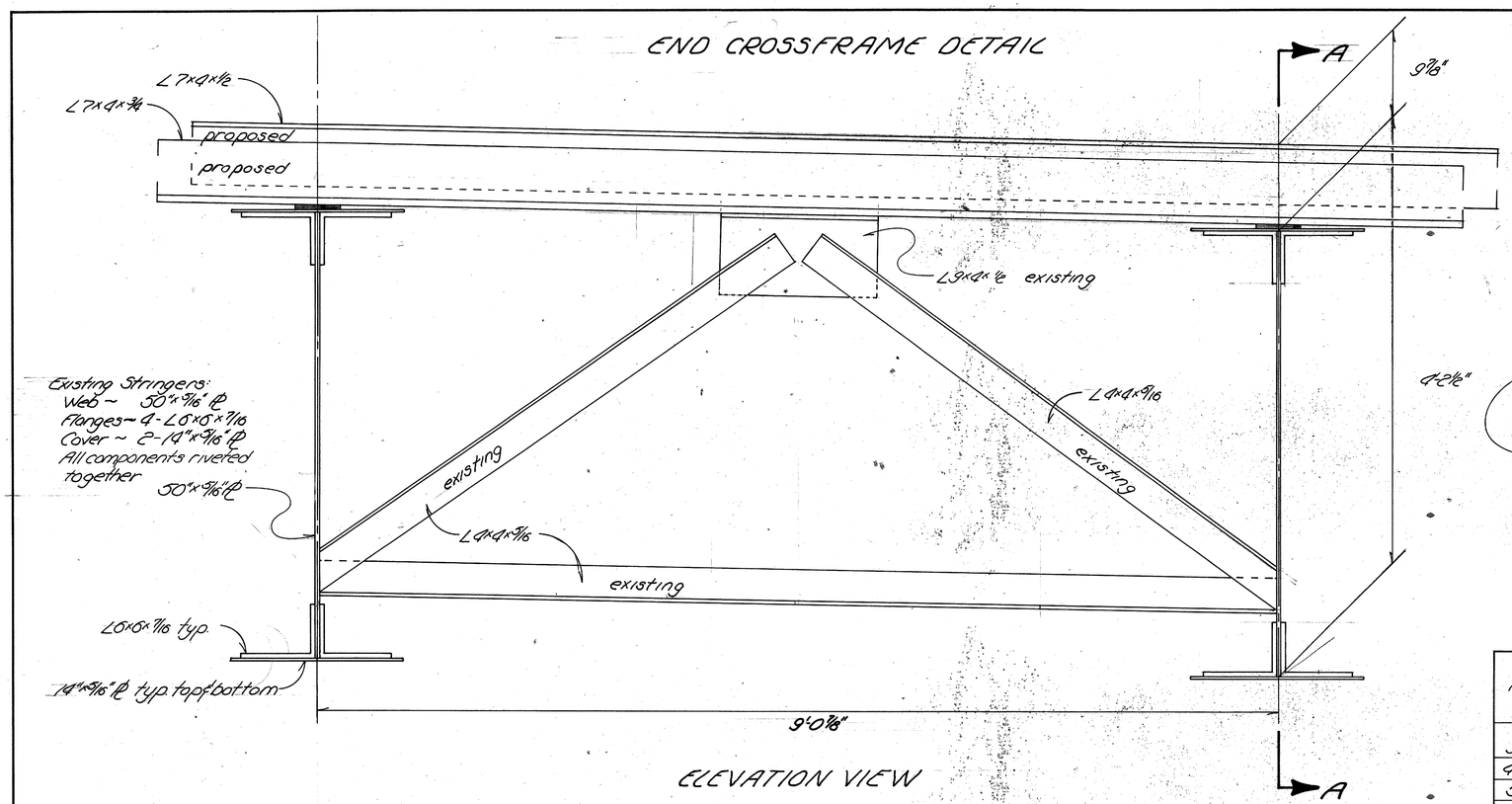

ELEVATION VIEW

Scale 1 1/2"=1'-0"

SECTION A-A

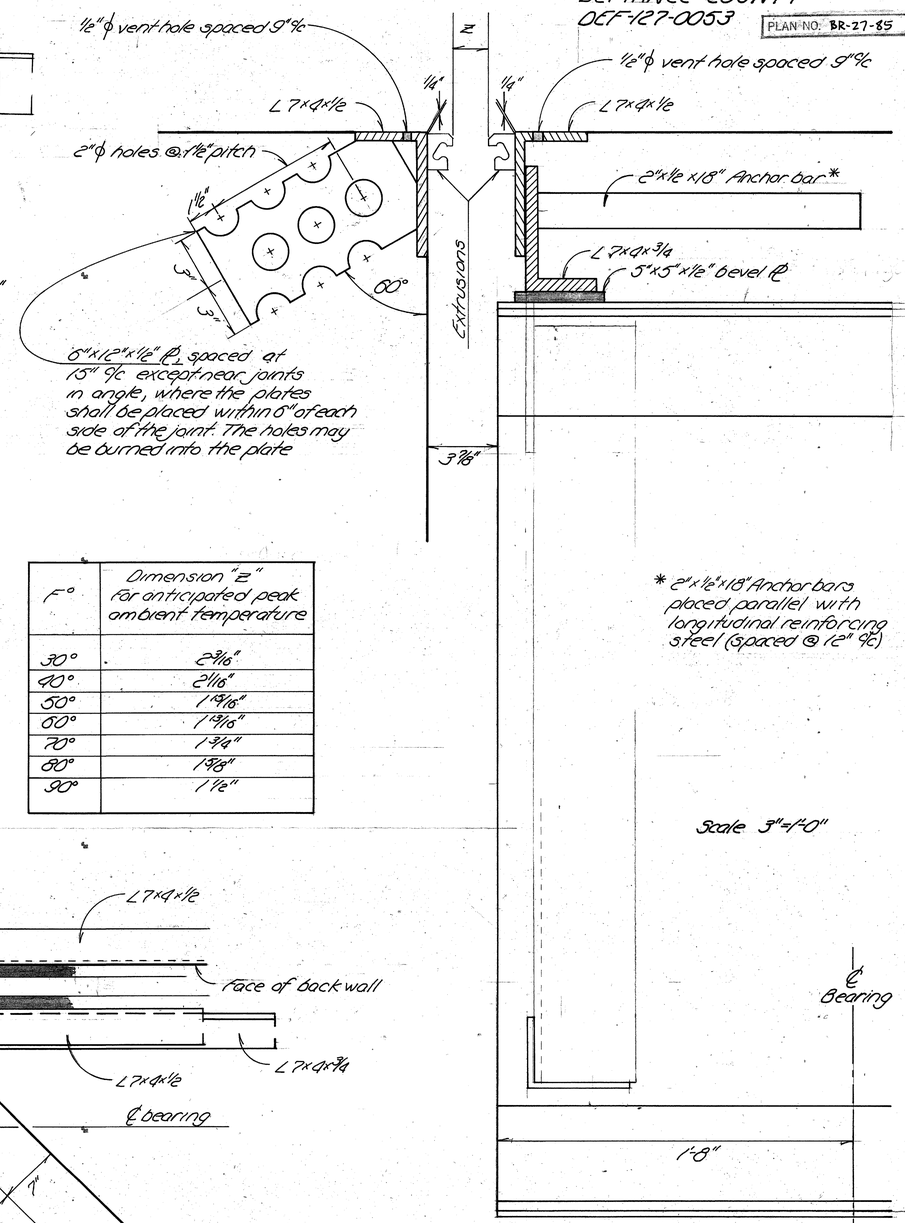

F°	Dimension "Z" for anticipated peak ambient temperature
30°	2 9/16"
40°	2 1/16"
50°	1 15/16"
60°	1 13/16"
70°	1 3/4"
80°	1 5/8"
90°	1 1/2"

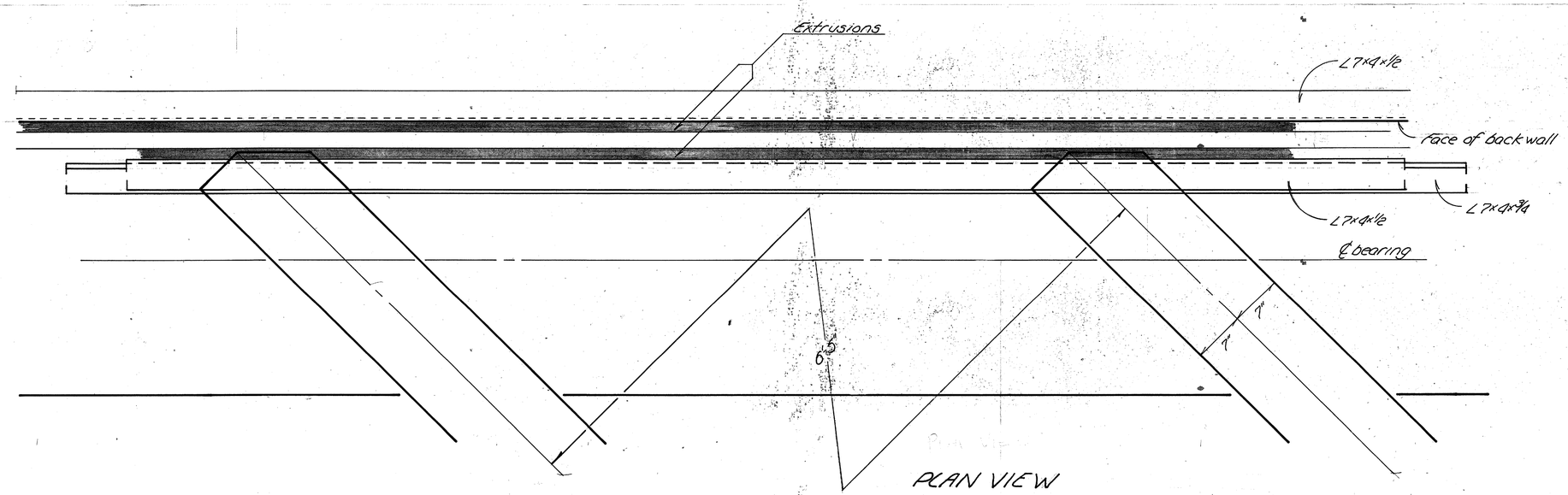

PLAN VIEW

STATE OF OHIO
DEPARTMENT OF TRANSPORTATION
DISTRICT ONE BRIDGE

EXPANSION JOINT DETAILS

BRIDGE NO. DEF-127-0053
OVER MAUMEE RIVER

Designed	Drawn	Traced	Checked	Reviewed	Date	Revised

FHWA REGION	STATE	PROJECT	
5	OHIO		

11/16

DEFIANCE COUNTY
DEF-127-0053

PLAN NO. BR-27-85

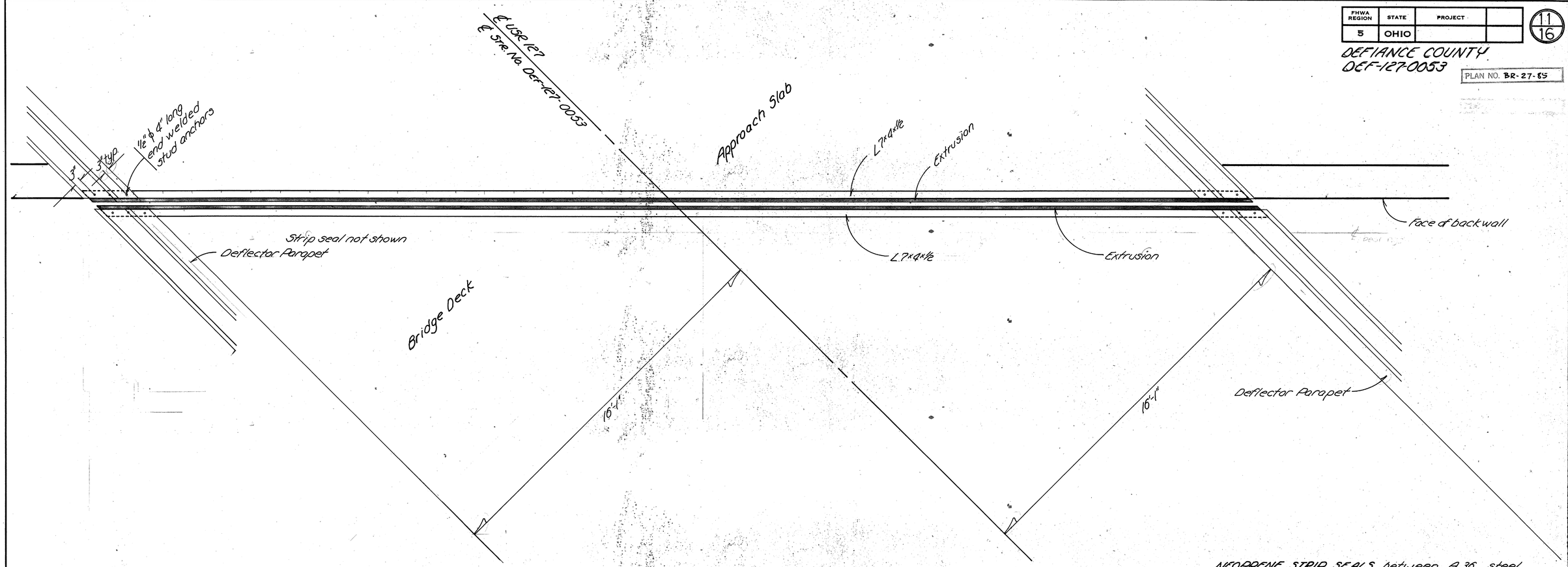

NEOPRENE STRIP SEALS between A36 steel extrusions shall conform to:

D.S. Brown No. 300 strip seal & Type SS extrusions
Watson-Bowman S-300 strip seal & Type "A" extrusions
Acme AS-300 strip seal & Type "A" extrusions

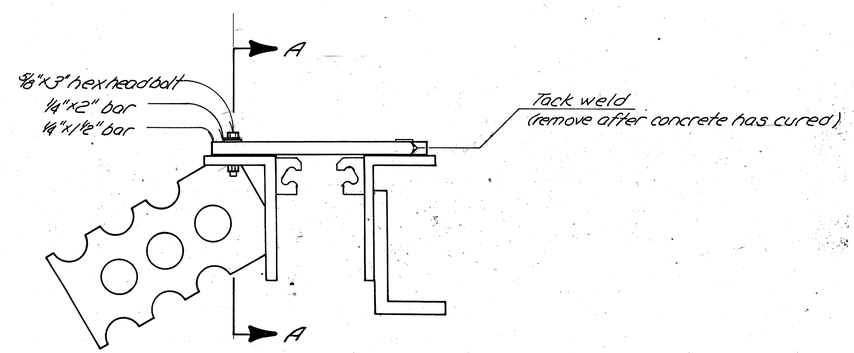

TEMPORARY SUPPORT DETAIL OF EXPANSION JOINT

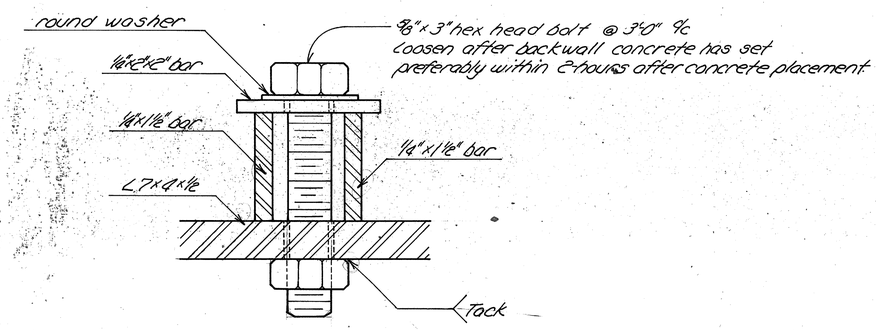

SECTION A-A

STATE OF OHIO
DEPARTMENT OF TRANSPORTATION
DISTRICT ONE — BRIDGE

EXPANSION JOINT DETAILS

BRIDGE NO. DEF-127-0053
OVER MAUMEE RIVER

Designed	Drawn	Traced	Checked	Reviewed	Date	Revised

FHWA REGION	STATE	PROJECT	
5	OHIO		

12/16

DEFIANCE COUNTY
DEF-127-0053

PLAN NO. BR-27-85

STRUCTURAL EXPANSION JOINTS INCLUDING ELASTOMERIC STRIP SEAL

DESCRIPTION: THIS ITEM SHALL CONSIST OF FURNISHING, FABRICATING AND INSTALLING STRUCTURAL STEEL EXPANSION JOINTS WITH ELASTOMERIC STRIP SEALS.

MATERIALS: STEEL PORTIONS OF THE JOINTS SHALL BE A36 STEEL. ELASTOMERIC STRIP SEALS SHALL BE NEOPRENE MEETING THE REQUIREMENTS GIVEN UNDER "MATERIAL PROPERTIES".THE ELASTOMERIC STRIP SEAL AND THE STEEL EXTRUSIONS SHALL BE AS MANUFACTURED BY:

THE ACME HIGHWAY PRODUCTS CORPORATION AMHERST, NEW YORK.
WATSON-BOWMAN ASSOCIATES, INC. AMHERST, NEW YORK.
D.S. BROWN

ADHESIVE SHALL BE:
SILKASTL X 360 BY THE SIKA CHEMICAL CORPORATION LYNDHURST, NEW JERSEY.
FEL-POXY FP-101 BY THE FELT PRODUCTS MANUFACTURING COMPANY SKOKIE, ILLINOIS.
OR AN APPROVED ALTERNATE.

SIZE: STRIP SEALS SHALL HAVE THE MOVEMENT RATING OF 3 INCHES. THE SEAL FOR EACH JOINT SHALL BE FURNISHED IN ONE COMPLETE PIECE. CUTS, TEARS, CRACKS OR OTHER IRREGULARITIES SHALL BE CAUSE FOR REJECTION.

MATERIAL PROPERTIES: THE NEOPRENE STRIP SEALS SHALL MEET THE REQUIREMENTS OF ASTM D2628 (MODIFIED TO OMIT THE RECOVERY TEST) AND SHALL HAVE THE PROPERTIES SPECIFIED BELOW:

PHYSICAL PROPERTIES		
PROPERTY	REQUIREMENTS	ASTM METHOD
TENSILE STRENGTH, MIN. PSI	2000	D412
ELONGATION AT BREAK, MINIMUM %	250	D412
HARDNESS, TYPE A DUROMETER	60 + 7	D2240 (MODIFIED)
OVEN AGING, 70 HRS. @ 212 F TENSILE STRENGTH, LOSS, MAX. ELONGATION, LOSS, MAX. HARDNESS, TYPE A DUROMETER (POINTS CHANGE)	 20% 20% 0 TO + 10%	D573
OZONE RESISTANCE 20 PERCENT STRAIN, 300 PPHM, IN AIR AT 140 F (WIPED WITH TOLUENE TO REMOVE SURFACE CONTAMINATION)	NO CRACKS	D1149

TESTING: EACH LOT OF STRIP SEALS SHALL BE TESTED BY THE MANUFACTURER OR AN ACCREDITED LABORATORY TO ENSURE COMPLIANCE WITH THESE PROVISIONS. TWO COPIES OF THE CERTIFIED TEST DATA INDICATING THAT THE TESTED MATERIALS COMPLY WITH THESE PROVISIONS SHALL BE SUBMITTED. MATERIAL ACCEPTANCE WILL BE BASED UPON LABORATORY EVALUATION OF CERTIFIED TEST DATA.

PREPARATIONS FOR INSTALLATION: TO AVOID THE SUBSEQUENT CONTAMINATION OF PREPARED SURFACES, ALL SURFACES OF ELASTOMERIC STRIP SEALS SHALL BE CLEANED WITH METHYL ETHYL KEYTONE (MEK), TOLUENE (T) OR OTHER APPROVED SOLVENT USING CLEAN CLOTH RAGS. THEN NOT MORE THAN 7 DAYS PRIOR TO THE SEAL INSTALLATION, A THIN COATING OF CYCLIZING* PASTE SHALL BE APPLIED TO THE BONDING SURFACES (BULBED EDGES). AFTER 25 TO 40 MINUTES THE PASTE SHALL BE WASHED FROM THE SURFACES WITH CLEAN WATER.

*CYCLIZING PASTE IS A MIXTURE OF 1 POUND OF PITTSBURGH PLATE AND GLASS INDUSTRIES' H1S11 233 OR AN APPROVED ALTERNATE AND 6 POUNDS OF CONCENTRATED SULFURIC ACID (18 MOLAR).
TO MIX THE PASTE, ADD H1S11 TO ACID SLOWLY WHILE STIRRING THE MIXTURE TO ACHIEVE A SMOOTH VISCOUS PASTE.
NOTE:SINCE CONCENTRATED SULFURIC ACID IS AN VERY CORROSIVE AND H1S11 IS AN EXTREMELY FINE NONTOXIC POWDER, RUBBER GLOVES AND SAFETY GLASSES SHALL BE USED. RUBBER GLOVES, SAFETY GLASSES AND A RESPIRATOR SHALL BE USED BY THOSE MIXING THE PASTE.

THE BONDING SURFACES OF THE STEEL EXTRUSIONS (THE INTERIOR OF THE ANCHOR GROVES) SHALL BE PREPARED TO GRADE SA 3, ASTM D2200. PREPARATION SHALL BE ACCOMPLISHED NOT MORE THAN 24 HOURS PRIOR TO THE ADHESIVE BONDING.

INSTALLATION: IMMEDIATELY PRIOR TO ADHESIVE APPLICATION, BONDING SURFACES SHALL BE CLEAN, DRY AND WARMER THAN 45 F. THE BONDING SURFACES SHALL BE MAINTAINED AT OR ABOVE THIS TEMPERATURE UNTIL THE ADHESIVE HAS CURED. ADHESIVE SHALL BE APPLIED LIBERALLY TO BOTH THE STEEL AND ELASTOMERIC BONDING SURFACES USING A STIFF BRUSH IF NECESSARY TO ACHIEVE A COMPLETE AND RELATIVELY UNIFORM COATING. THEN THE BULBED EDGES OF THE ELASTOMERIC SEAL SHALL BE INSET INTO THE ANCHOR GROVES. AFTER INSTALLATION, EXCESS ADHESIVE SHALL BE REMOVED FROM THE EXPOSED SEAL SURFACES.

SHOP DRAWINGS: SHOP DRAWINGS FOR THE EXPANSION JOINTS ARE REQUIRED. THE MANUFACTURER OF THE EXPANSION JOINTS SHALL SUBMIT COMPLETE DIMENSIONAL DETAILS OF THE PROPOSED JOINT EXTRUSIONS, FOR APPROVAL. THE CONTRACTOR SHALL COORDINATE THE PREPARATIONS OF THE STRUCTURAL STEEL AND EXPANSION JOINT SHOP DRAWINGS TO ENSURE COMPLETE GEOMETRICAL AND DIMENSIONAL COMPATIBILITY.

PAINTING: THE EXPOSED PORTIONS OF THE EXPANSION JOINTS SHALL BE PAINTED WITH SYSTEM A SHOP PRIME COAT OF PAINT, 708.17.

MEASUREMENT: MEASUREMENT FOR PAY PURPOSES SHALL BE BASED ON THE SEALED LENGTH OF JOINTS MEASURED ALONG THE JOINT CENTERLINE. PAYMENT PER LINEAL FOOT FOR ITEM 516 "STRUCTURAL EXPANSION JOINTS INCLUDING 3" ELASTOMERIC STRIP SEALS" INCLUDES ALL LABOR, MATERIALS AND EQUIPMENT NECESSARY TO COMPLETE THE JOINTS IN PLACE INCLUDING THE ELASTOMERIC AND STEEL EXTRUSIONS, THE STEEL END DAM, INCLUDING PLATES BARS AND CROSS FRAME GUSSET PLATES.

DEPARTMENT OF TRANSPORTATION
STATE OF OHIO
DISTRICT ONE BRIDGE

EXPANSION JOINT NOTE

BRIDGE NO. DEF-127-0053
OVER MAUMEE RIVER

DESIGN	DRAWN	TRACED	CHECKED	REVIEWED	DATE	REVISED

FHWA REGION	STATE	PROJECT	
5	OHIO		

13/16

DEFIANCE COUNTY
DEF-127-00.53

PLAN NO. BR-27-85

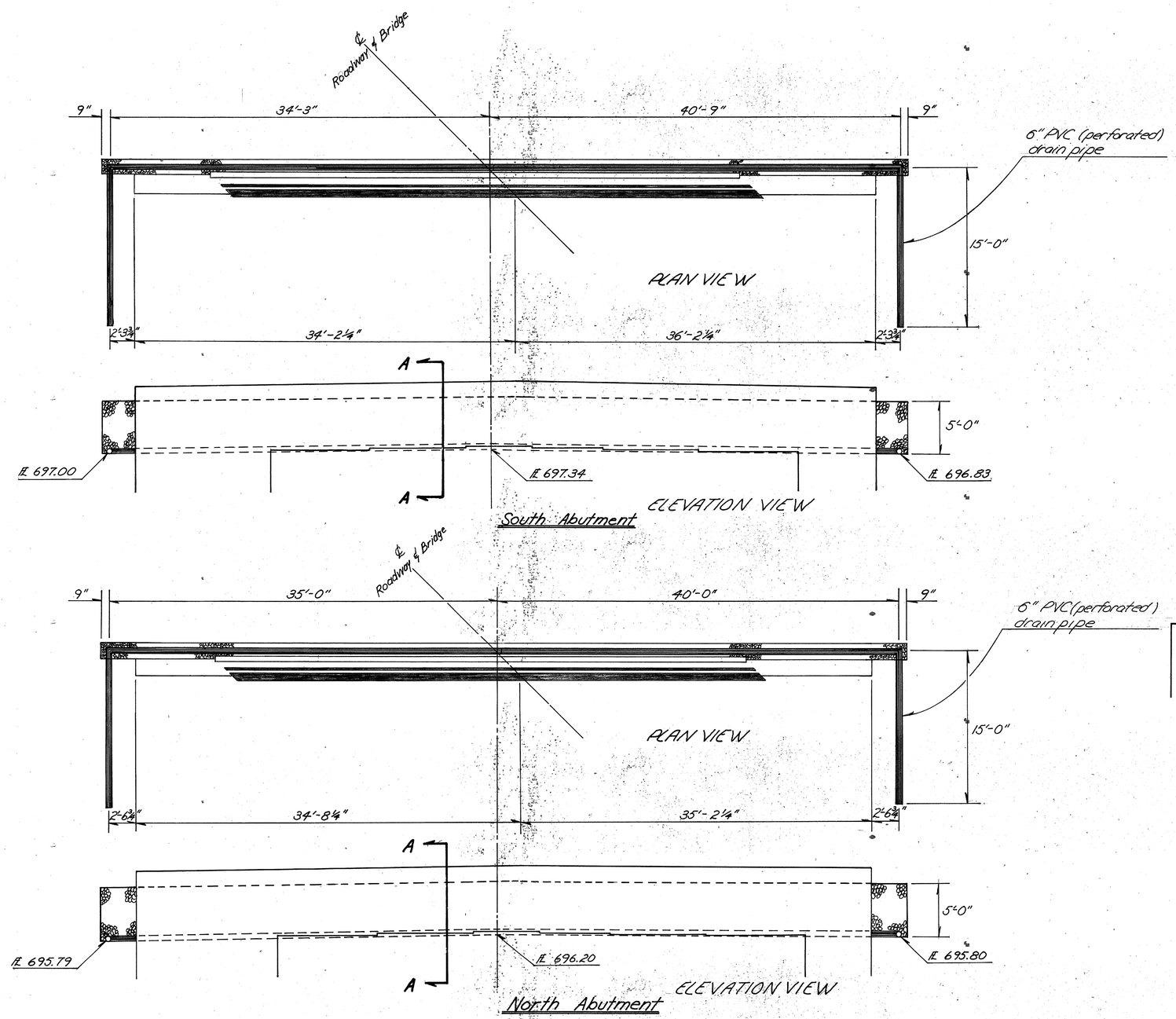

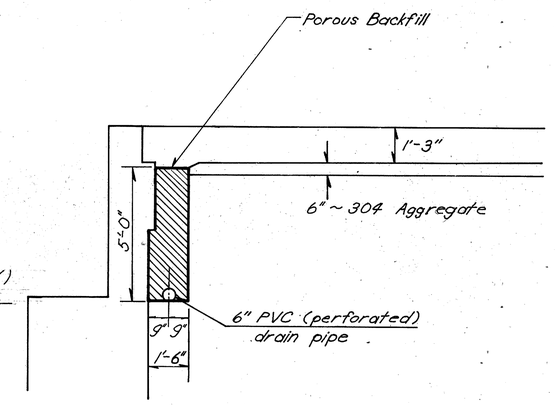

Section A-A

3/8" = 1'-0"

STATE OF OHIO
DEPARTMENT OF TRANSPORTATION
DISTRICT ONE — BRIDGE

SUB STRUCTURE DRAINAGE

BRIDGE NO. DEF-127-0053
OVER
MAUMEE RIVER

DESIGNED	DRAWN	TRACED	CHECKED	REVIEWED	DATE	REVISED

FHWA REGION	STATE	PROJECT	
5	OHIO		

14/16

DEFIANCE COUNTY
DEF-127-00.53

PLAN NO. BR-27-85

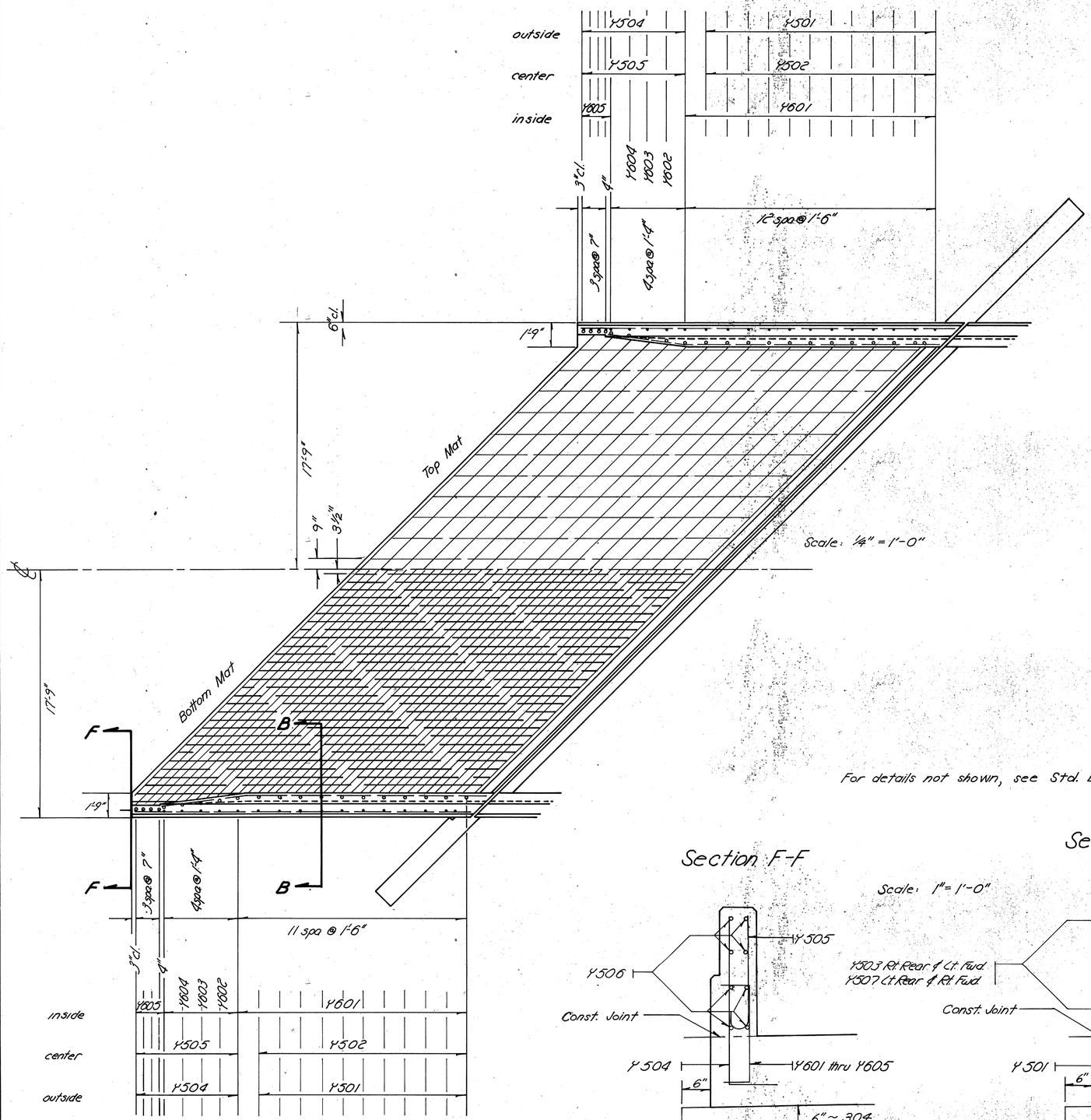

Approach Slab Deflector Parapet Reinforcing Schedule (Epoxy Coated)

Bar Number	Rear Lt.	Rear Rt.	Fwd. Lt.	Fwd. Rt.	Total	Length	lbs/ft.	Weight
Y501	12	11	11	12	46	2'-6"	1.043	120
Y502	12	11	11	12	46	5'-3"	1.043	252
Y503		8	8		16	23'-0"	1.043	384
Y504	9	9	9	9	36	3'-9"	1.043	141
Y505	9	9	9	9	36	2'-8"	1.043	100
Y506	8	8	8	8	32	4'-4"	1.043	145
Y507	8			8	16	24'-6"	1.043	409
Y601	13	12	12	13	50	3'-4 7/16"	1.502	253
Y602	1	1	1	1	4	3'-2 3/16"	1.502	19
Y603	1	1	1	1	4	3'-1 3/16"	1.502	19
Y604	1	1	1	1	4	2'-11 1/16"	1.502	18
Y605	5	5	5	5	20	2'-5"	1.502	73
						Total		1,933

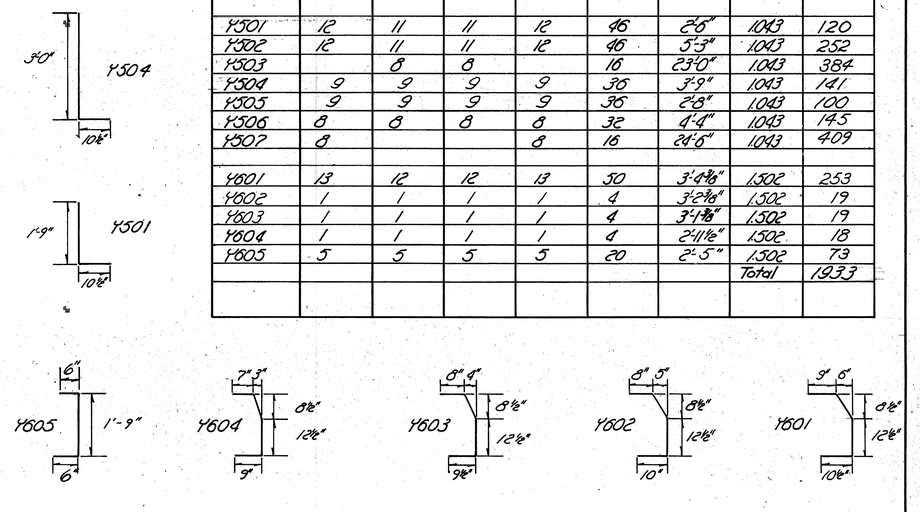

Approach Slab

Length ~ 25' Thickness ~ 15" Skew ~ 45° L.F.

Bar Number	Spacing	Rear	Fwd.	Total	Length
A1003	7"	60	60	120	24'-6"
B501 (bottom)	8"	39	39	78	49'-6"
B501 (top)	1'-6"	18	18	36	49'-6"
C503	1'-6"	12	12	24	24'-6"

For details not shown, see Std. Drawing BR-1

250 ft x 35.5 ft x 1 yd²/9 ft² = 98.61 s/y

Rear Approach Slab = 98.61 s/y
Fwd Approach Slab = 98.61 s/y

TOTAL = 197.22 s/y

Section F-F

Scale: 1" = 1'-0"

Section B-B

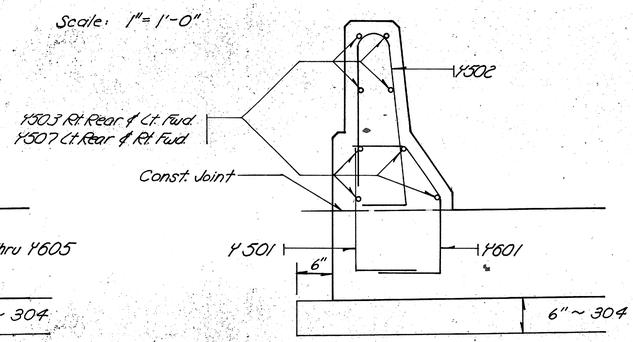

STATE OF OHIO
DEPARTMENT OF TRANSPORTATION
DISTRICT ONE BRIDGE

APPROACH SLABS

BRIDGE NO. DEF-127-0053
OVER
MAUMEE RIVER

DESIGNED	DRAWN	TRACED	CHECKED	REVIEWED	DATE	REVISED

FHWA REGION	STATE	PROJECT	
5	OHIO		

15/16

DEFIANCE COUNTY
DEF-127-0053

PLAN NO. BR-27-85

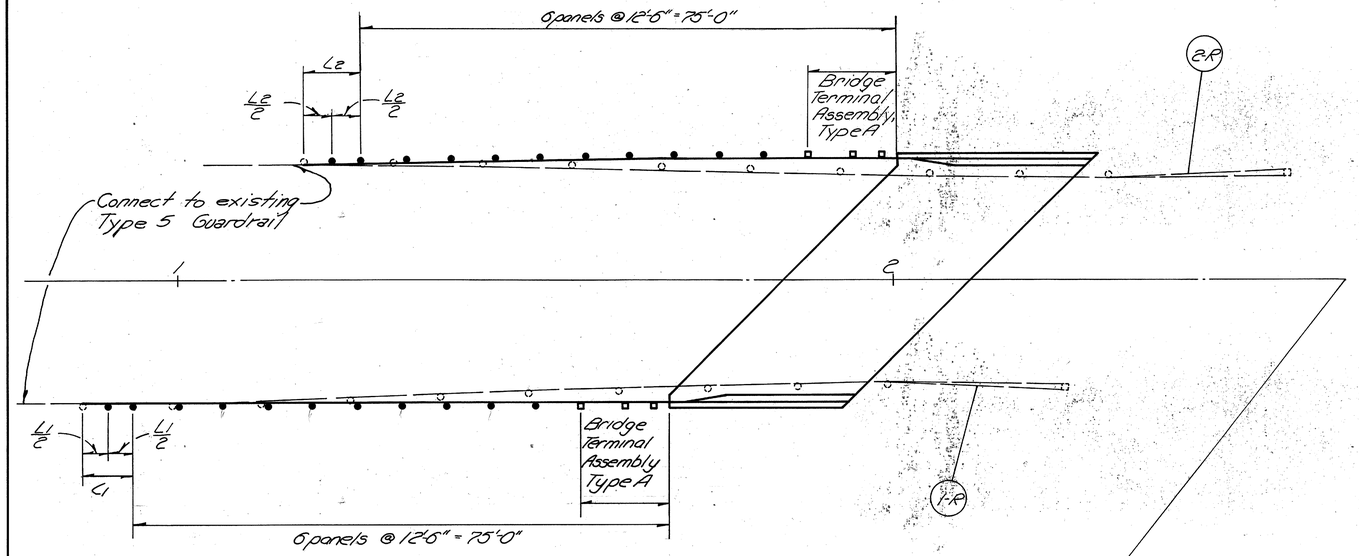

Scale 1" = 10'-0"

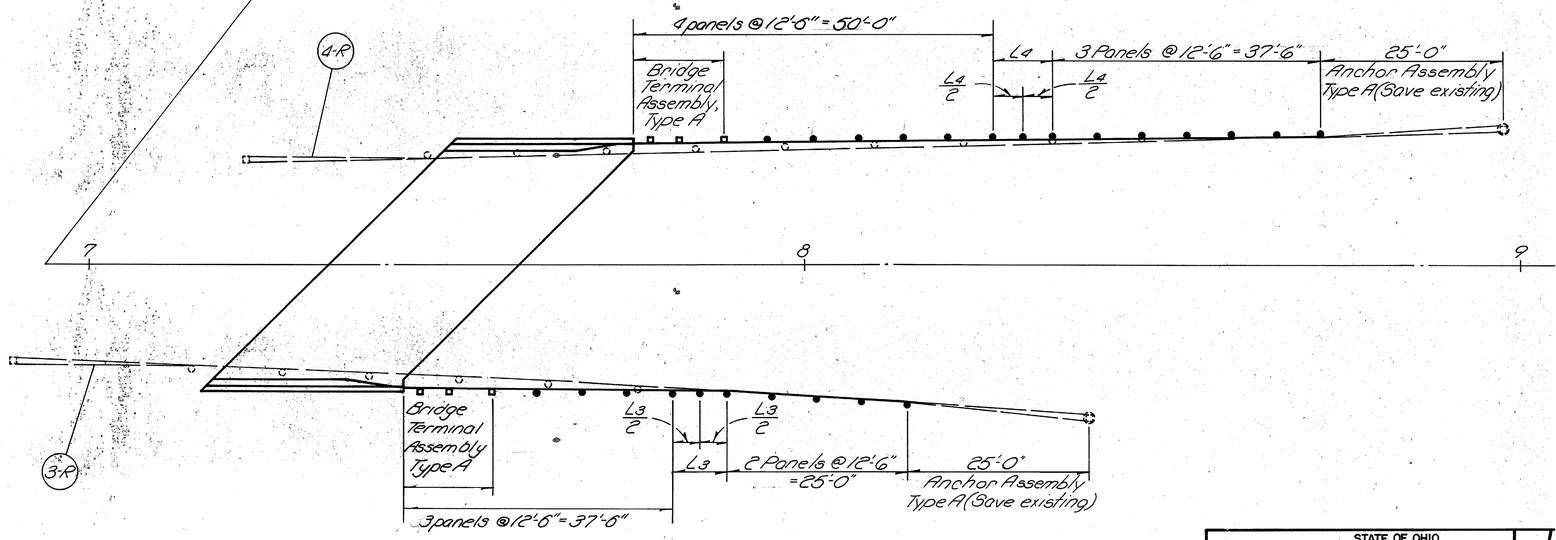

Ref. No.	Station From	Station To	Side	202 Guardrail Removed Lin. Ft.	606 Guardrail Type 5 Lin. Ft.	606 Bridge Terminal Assembly Type A Each	
1-R	0+86.5	2+24	Rt.	137.5	82	1	L1 = 70'
2-R	1+17.5	2+60	Lt.	137.5	83	1	L2 = 80'
3-R	6+89	8+14.5	Rt.	125.0	70	1	L3 = 75'
4-R	7+22	8+72		150.0	95.5	1	L4 = 80'
	Totals			550.0	330.5	4	

L1, L2, L3 & L4 are estimates of the lengths needed to make the proposed guardrail match the existing guardrail. The cost of furnishing and field fabricating the panels to the exact lengths needed, and providing and driving the additional post called for in the drawing is to be included in the cost of Item 606 Guardrail Type 5, final payment will be made on the basis of actual field measurements.

STATE OF OHIO
DEPARTMENT OF TRANSPORTATION
DISTRICT ONE — BRIDGE

GUARDRAIL DETAILS

BRIDGE NO. DEF-127-0053
OVER
MAUMEE RIVER

DESIGNED	DRAWN	TRACED	CHECKED	REVIEWED	DATE	REV

614 WORK ZONE PAVEMENT MARKINGS

GENERAL

THE CONTRACTOR SHALL FURNISH, INSTALL, MAINTAIN AND WHEN NECESSARY, REMOVE WORK ZONE RETROREFLECTIVE PAVEMENT MARKINGS ON EXISTING, RECONSTRUCTED, RESURFACED OR TEMPORARY ROADS WITHIN THE WORK LIMITS, IN ACCORDANCE WITH THE FOLLOWING REQUIREMENTS.

THE MARKINGS SHALL BE MAINTAINED IN GOOD CONDITION TO PROVIDE DAY AND NIGHT VISIBILITY. THE MARKINGS SHALL BE REPAIRED OR REPLACED AS DIRECTED BY THE ENGINEER TO MAINTAIN REQUIRED VISUAL EFFECTIVENESS AND NIGHT VISIBILITY AT NO ADDITIONAL COST TO THE STATE.

THE CONTRACTOR SHALL, IN ADVANCE OF ANY SECTION OF ROADWAY LACKING OMUTCD FULL PATTERN STANDARD DIMENSION EDGE LINE OR CENTER LINE MARKINGS, ERECT A "NO EDGE LINES" (OW-167) SIGN OR "UNMARKED NO PASSING ZONES" (OW-168) SIGN OR BOTH AS MAY BE APPROPRIATE. THESE SIGNS SHALL BE IN PLACE PRIOR TO EXPOSING THE ROADWAY TO TRAFFIC. THESE SIGNS SHALL BE REPEATED EVERY 1 TO 2 MILES AND AT OTHER LOCATIONS AS NECESSARY. THESE SIGNS SHALL BE REMOVED WHEN THEY NO LONGER APPLY. THE COST FOR FURNISHING AND ERECTING AND SUBSEQUENTLY REMOVING THESE SIGNS SHALL BE INCLUDED IN 614 MAINTAINING TRAFFIC, UNLESS SPECIFICALLY ITEMIZED.

TEMPORARY PAVEMENT MARKING MATERIALS

UNLESS OTHERWISE INDICATED ON THE PLANS, TEMPORARY PAVEMENT MARKINGS MAY BE EITHER 621.02 PAINT OR 947.03 TYPE B OR C PREFORMED MATERIAL.

PAINT

PAINTED MARKINGS SHALL BE IN ACCORDANCE WITH 621 EXCEPT THAT THE INCREASE OF 25 PERCENT IN THE APPLICATION RATE FOR NEW BITUMINOUS PAVEMENT AND PARAGRAPH 621.14 SHALL NOT APPLY.

TYPE B AND TYPE C PREFORMED MATERIAL

PREFORMED MATERIAL SHALL COMPLY WITH 947.03 EXCEPT THAT NO PREFORMED MATERIAL CONTAINING METAL SHALL BE PLACED ON ANY SURFACE UNLESS IT WILL BE REMOVED LATER BY THE CONTRACTOR. TEMPORARY PAVEMENT MARKINGS OF 947.03 PREFORMED MATERIAL SHALL BE REMOVED PRIOR TO PLACEMENT OF 621 OR 847 SURFACE COURSE MARKINGS AT THAT LOCATION. PREFORMED MATERIAL SHALL BE APPLIED IN ACCORDANCE WITH 847 EXCEPT AS MODIFIED HEREIN.

PLACEMENT

TEMPORARY MARKINGS SHALL BE COMPLETE AND IN PLACE ON ALL PAVEMENT PRIOR TO EXPOSING IT TO TRAFFIC. WHEN TEMPORARY MARKINGS CONFLICT WITH THE TRAFFIC PATTERN, THEY SHALL BE REMOVED BY THE CONTRACTOR IN ACCORDANCE WITH 621.134.

TEMPORARY MARKING CLASSES

CLASS I MARKINGS

CLASS I MARKINGS SHALL BE APPLIED TO THE FULL DIMENSIONS AS DEFINED IN 621 WITH THE FOLLOWING ADDITIONS OR EXCEPTIONS:

1) LANE LINES SHALL BE 4-INCHES IN WIDTH.
2) TRANSVERSE LINES SHALL BE 8-INCHES IN WIDTH.
3) STOP LINES SHALL BE 12-INCHES IN WIDTH.
4) CROSS WALK LINES SHALL BE 8-INCHES IN WIDTH.

CLASS II MARKINGS

CLASS II MARKINGS (ABBREVIATED) SHALL BE DEFINED AS FOLLOWS:

CENTER LINES SHALL CONSIST OF SINGLE, YELLOW 4-INCH WIDE BY A MINIMUM OF 48-INCH LONG DASHES SPACED AT A MAXIMUM OF 40-FOOT INTERVALS.

LANE LINES SHALL CONSIST OF WHITE 4-INCH WIDE BY A MINIMUM OF 48-INCH LONG DASHES SPACED AT A MAXIMUM OF 40-FOOT INTERVALS.

GORE MARKINGS SHALL BE TWO CONTINUOUS, WHITE 4-INCH LINES PLACED AT THE THEORETICAL GORE OF AN EXIT RAMP OR DIVERGING ROADWAYS.

THE PAINT APPLICATION RATE SHALL BE NOT LESS THAN 1.6 GALLONS PER MILE FOR LANE LINE AND CENTER LINE AND 16 GALLONS PER MILE FOR GORE MARKINGS.

CONFLICTING EXISTING MARKINGS

THE CONTRACTOR SHALL, PRIOR TO PLACING TEMPORARY MARKINGS, REMOVE ALL CONFLICTING EXISTING MARKINGS VISIBLE TO THE TRAVELING PUBLIC DURING DAYLIGHT OR NIGHTTIME HOURS IN ACCORDANCE WITH 621.134. THE COST FOR REMOVAL OF CONFLICTING MARKINGS SHALL BE INCLUDED IN 614 MAINTAINING TRAFFIC UNLESS SPECIFICALLY ITEMIZED.

THE CONTRACTOR SHALL ALSO REMOVE THE PRISMATIC RETRO-REFLECTOR WITHIN ANY RAISED PAVEMENT MARKER (RPM) WHICH IS IN CONFLICT WITH THE TEMPORARY PAVEMENT MARKINGS. WHEN THE TEMPORARY PAVEMENT MARKINGS ARE REMOVED AND THE RPM IS NO LONGER IN CONFLICT, THE CONTRACTOR SHALL THOROUGHLY CLEAN THE RECESSED REFLECTOR ATTACHMENT AREA OF THE CASTING AND INSTALL A NEW PRISMATIC RETRO-REFLECTOR OF THE SAME KIND AND COLOR. THE COST FOR THIS WORK SHALL BE INCIDENTAL TO THE VARIOUS PAY ITEMS.

INTERIM MARKINGS

WITHIN 21 CALENDAR DAYS AFTER OPENING ANY LENGTH OF PAVEMENT TO TRAFFIC, THE 621 OR 847 PAVEMENT MARKINGS CALLED FOR IN THE PLANS OR EQUIVALENT 614 CLASS I, PAINT MARKINGS SHALL BE APPLIED. THE CONTRACTOR SHALL FURNISH ALL LABOR, EQUIPMENT, AND MATERIAL NECESSARY TO PLACE AND MAINTAIN 614 CLASS I PAINT MARKINGS AS PART OF THE LUMP SUM BID FOR 614 MAINTAINING TRAFFIC.

FOR EACH CALENDAR DAY BEYOND 21 DAYS THAT THIS WORK SHALL REMAIN UNCOMPLETED, THE PROVISIONS OF 108.07 WILL BE INVOKED, EXCEPT THAT BETWEEN NOVEMBER 15 AND APRIL 15 WEATHER CONDITIONS SHALL NOT BE AN ACCEPTABLE REASON FOR EXTENSION.

METHOD OF MEASUREMENT

TEMPORARY PAVEMENT MARKINGS WILL BE MEASURED COMPLETE IN PLACE, BY CLASS AND MATERIAL, IN THE UNITS DESIGNATED. LINE QUANTITIES WILL BE THE LENGTH OF THE COMPLETED STRIPE, INCLUDING GAPS, INTERSECTIONS, AND OTHER SECTIONS OF PAVEMENT NOT NORMALLY MARKED, IN ACCORDANCE WITH 621.15.

TEMPORARY PAVEMENT MARKINGS WILL INCLUDE THE LAYOUT, APPLICATION AND REMOVAL OF THE MARKINGS, WHEN REQUIRED.

BASIS OF PAYMENT

PAYMENT FOR ACCEPTED QUANTITIES COMPLETE IN PLACE WILL BE MADE AT THE CONTRACT UNIT PRICE. PAYMENT SHALL BE FULL COMPENSATION FOR ALL MATERIALS, LABOR, INCIDENTALS AND EQUIPMENT FOR PLACEMENT, MAINTENANCE AND NECESSARY REMOVAL OF THE MARKINGS.

ITEM	UNIT	DESCRIPTION
614	MILES	TEMPORARY LANE LINES, CLASS ____, *
614	MILES	TEMPORARY CENTER LINES, CLASS II, 15
614	LIN. FT.	TEMPORARY CHANNELIZING LINES, CLASS I, *
614	MILES	TEMPORARY EDGE LINES, CLASS I, *
614	LIN. FT.	TEMPORARY GORE MARKINGS, CLASS II, *
614	LIN. FT.	TEMPORARY STOP LINES, CLASS I, *
614	LIN. FT.	TEMPORARY CROSSWALK LINES, CLASS I, *
614	EACH	TEMPORARY LANE ARROWS, CLASS I, *
614	EACH	TEMPORARY RAILROAD SYMBOL MARKINGS, CLASS I, *
614	EACH	TEMPORARY WORD "ONLY" ON PAVEMENT, 72-INCH, CLASS I, *
614	LIN. FT.	TEMPORARY TRANSVERSE LINES, CLASS I, *
614	LIN. FT.	TEMPORARY DOTTED LINES, CLASS I, *

*621 PAINT, 947.03 TYPE B OR 947.03 TYPE C

fh4