632 POWER SERVICE, AS PER PLAN

THE CONTRACTOR SHALL CONTACT THE METER SECTION OF FIRST ENERGY CORPORATION FOR INFORMATION REGARDING THE METER BASE INSTALLATION PRIOR TO ORDERING POLES. THE CONTRACTOR WILL BE RESPONSIBLE FOR REQUESTING AND SCHEDULING ANY INSPECTIONS THE POWER COMPANY MAY REQUIRE FOR THE POWER SERVICE HOOK UP. THE CONTRACTOR SHALL BE RESPONSIBLE TO CONTACT THE POWER COMPANY FOR THE ELECTRICAL SERVICE CONNECTION. UNDER NO CIRCUMSTANCES SHALL THE CONTRACTOR SPLICE POWER CABLE INTO THE POWER COMPANY'S CIRCUITS.

THE CONTRACTOR IS RESPONSIBLE FOR OBTAINING ANY NECESSARY PERMITS AND THE PAYING OF ALL FEES WITH THE EXCEPTION OF NORMAL MONTHLY ENERGY CHARGES. WHERE THERE IS AN EXISTING TRAFFIC SIGNAL THAT IS BEING REPLACED, THE CONTRACTOR SHALL COORDINATE WITH THE POWER COMPANY TO CONTINUE BILLING ON THE EXISTING DISTRICT 6 ACCOUNT.

POWER SUPPLIED SHALL BE 240 VOLTS (240 VOLTS TO DISCONNECT SWITCH AND 2-120 VOLTS INTO THE CABINET ALLOWING ONE TO BE USED FOR THE SIGNAL AND THE SECOND TO BE USE FOR THE LIGHTING (IF APPLICABLE OR FOR FUTURE USE).

632 REUSE OF TRAFFIC CONTROL ITEM, WIRELESS COMMUNICATIONS EQUIPMENT

THIS ITEM OF WORK INCLUDES THE REMOVAL & REINSTALLATION OF EXISTING RADIO INTERCONNECT SYSTEM COMPONENTS WHERE IMPACTED BY CONSTRUCTION AND/OR SHOWN IN THE PLANS. ANY DEVICE, WIRING, ATTACHMENT HARDWARE, OR MISCELLANEOUS EQUIPMENT NEEDED TO RENDER A FULLY FUNCTIONAL RELOCATED WIRELESS COMMUNICATIONS SYSTEM SHALL BE FURNISHED AND INSTALLED AND CONSIDERED INCIDENTAL TO THIS ITEM OF WORK. ALL NEWLY FURNISHED EQUIPMENT AND CABLING SHALL MEET THE REQUIREMENTS OF SUPPLEMENTAL SPECIFICATION 809.

PRIOR TO THE DEACTIVATION OR REMOVAL OF ANY EQUIPMENT, THE CONTRACTOR AND THE ENGINEER SHALL INSPECT THE EQUIPMENT FOR THE PURPOSE OF DOCUMENTING ANY EXISTING DAMAGE. ANY DAMAGE IDENTIFIED AFTER RELOCATION AND NOT DOCUMENTED PRIOR TO THE RELOCATION PROCESS WILL BE PRESUMED TO HAVE BEEN CAUSED BY THE CONTRACTOR . THE CONTRACTOR WILL BE REQUIRED TO REPAIR OR REPLACE THE DAMAGED EQUIPMENT AT THE OPTION OF THE ENGINEER. NO ADDITIONAL COMPENSATION WILL BE AWARDED.

PAYMENT FOR THIS ITEM WILL INCLUDE ALL SUPPORT & MOUNTING HARDWARE, MATERIALS, AND LABOR REQUIRED TO REINSTALL THE COMMUNICATIONS EQUIPMENT.

633 CONTROLLER UNIT, TYPE TS2/A2, WITH CABINET, TYPE TS2, AS PER PLAN

THE ELECTRICAL TRAFFIC CONTROL EQUIPMENT PROVIDED SHALL MEET THE FOLLOWING SPECIFICATIONS AND BE MANUFACTURED BY ECONOLITE. THE EQUIPMENT PROVIDED AS PART OF THIS CONTRACT SHALL BE THE LATEST MODEL, CURRENTLY UNDER PRODUCTION AND NEW. THE CONTROLLER CABINET AND ACCESSORIES SHALL MEET THE NEMA TS-2, 1992 STANDARD FOR ACTUATED CONTROLLER UNITS. THE CABINET SHALL HAVE A MINIMUM OF THREE SHELVES. THE CABINET SHALL BE ALUMINUM WITH THE NATURAL ALUMINUM FINISH INSIDE AND OUTSIDE. THE LOAD BAY SHALL BE THE TF5016 OR NEWER, WITH 16 LOAD SWITCH POSITIONS. PROVIDE ONLY THE EXACT NUMBER OF LOAD SWITCHES REQUIRED. EACH LOAD SWITCH SHALL HAVE LIGHT EMITTING DIODES (LEDS) FOR THE CONTROLLER OUTPUT AND LOAD SWITCH OUTPUT. ALSO PROVIDE 8 FLASH RELAY POSITIONS (BUT ONLY SUPPLY THE EXACT NUMBER OF

TS-2 SIZE 6/7 CABINET DETAIL (TYP.)

CABINET & WORK PAD DETAIL

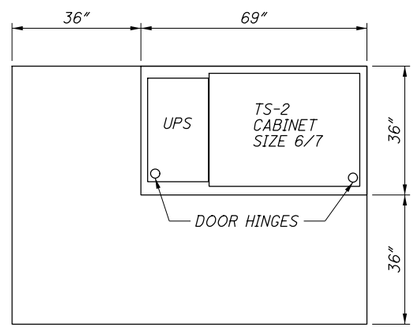

PLAN VIEW

CABINET FOUNDATION DETAIL

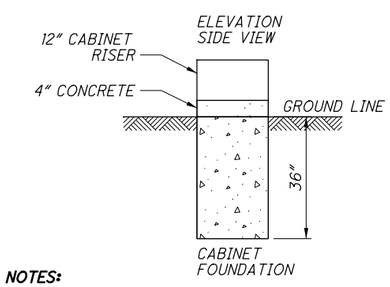

NOTES:

1) THE SIZE OF THE UPS FOUNDATION MAY VARY BASED ON THE CABINET SIZE PROVIDED.

2) UPS FOUNDATION ELEVATION SHOULD MATCH CABINET FOUNDATION ELEVATION.

3) THE UPS CABINET SHALL BE MOUNTED FLUSH UP AGAINST THE SIGNAL CABINET AND SEALED.

4) CONDUIT AND WIRING FROM THE SIGNAL CABINET TO THE UPS SHALL BE INSTALLED THROUGH THE CABINET RISER.

633 CONTROLLER UNIT, TYPE TS2/A2, WITH CABINET, TYPE TS2, AS PER PLAN (CONTINUED)

RELAYS NEEDED FOR EACH SPECIFIC INTERSECTION), 1 NEMA 2-CIRCUIT FLASHER, AND AN MMU MONITOR. THE MALFUNCTION MANGEMENT UNIT (MMU) SHALL BE MANUFACTURED BY EDI AND BE ETHERNET CAPABLE. EACH CABINET SHALL COME EQUIPPED WITH TWO 16-CHANNEL CABINET DETECTOR RACKS (CDR) INCLUDING BUS INTERFACE UNITS (BIU). THE LOOP DETECTOR TERMINATION PANEL FOR THE SECOND DETECTOR RACK SHALL BE OMITTED. WHERE LOOP DETECTORS ARE SPECIFIED, THE CABINET SHALL INCLUDE THE EXACT NUMBER OF FOUR CHANNEL DETECTOR CARDS WITH SOFTWARE REQUIRED FOR EACH INTERSECTION. THE CABINET SHALL BE EQUIPPED WITH A CABINET POWER SUPPLY (CPS). THE POLICE PANEL ON THE OUTSIDE OF THE CABINET DOOR SHALL HAVE A FLASH SWITCH, A SWITCH FOR AUTOMATIC/MANUAL OPERATION, SIGNAL ON/OFF SWITCH AND A MANUAL PUSH BUTTON WITH A MINIMUM CORD LENGTH OF 10 FEET. THE TECHNICIAN PANEL ON THE INSIDE OF THE CABINET DOOR SHALL INCLUDE A FLASH SWITCH, A STOP TIME SWITCH, AND AN EQUIPMENT ON/OFF SWITCH. A CABINET DOOR OPEN SWITCH AND A CABINET LIGHT ON / OFF SWITCH SHALL ALSO BE SUPPLIED.

THE CONTROLLER CABINET SHALL ALSO INCLUDE:

A. SLIDE-OUT LAPTOP SHELF
B. INTERIOR, UNDERSHELF LED CABINET LIGHTING, INCLUDING A MINIMUM OF 2 PANELS OF 6 HIGH-INTENSITY LED'S EACH AND A DOOR-ACTIVATED SWITCH. THE LED PANELS SHALL BE MOUNTED IN LOCATIONS TO MAXIMIZE LIGHT ON THE CABINET EQUIPMENT.
C. A GOOSENECK/ADJUSTABLE LIGHT FIXTURE WITH AN LED LAMP. THE ADJUSTABLE LIGHT FIXTURE SHALL BE MOUNTED ON THE LOWER RIGHT SIDE OF THE CONTROLLER CABINET.
D. A MINIMUM OF TWO (2) GFCI PROTECTED RECEPTACLES
E. A MINIMUM OF SIX (6) SURGE PROTECTED (NON-GFCI) RECEPTACLES
F. THE MMU SHALL HAVE A RJ-45 PORT FOR PC/NETWORK COMMUNICATIONS

CONTROLLER CABINET LABELING TO IDENTIFY THE WIRING AND FUNCTION
DETECTOR LEAD-IN CABLE:
PHASE NUMBER SERVICE, DIRECTION, MOVEMENT TYPE, AND LOOP PLAN NUMBER.

SIGNAL HEAD FIELD WIRING:
PHASE NUMBER, DIRECTION, MOVEMENT TYPE, AND COLOR (RED, YELLOW, GREEN, YELLOW ARROW, GREEN ARROW) OR PEDESTRIAN MOVEMENT.

THE CONTROLLER TIMER SHALL BE THE ECONOLITE COBALT (OR MOST CURRENT MODEL) NEMA TS-2 TYPE 2 AND COME EQUIPPED WITH ALL INTERNAL COMPONENTS TO MAKE IT FULLY SYSTEM READY FOR THE CENTRAC (OR LATEST) SYSTEM, INCLUDING THE INTERNAL MODEM. EACH CONTROLLER TIMER SHALL HAVE 6 NODES OF COORDINATION, ADAPTIVE TRAFFIC CONTROL, REPORTS, PREEMPTION/PRIORITY, DIAGNOSTICS AND INTERNAL TIME BASE CONTROL.

EACH CONDUIT ENTRANCE TO THE CABINET SHALL BE SEALED WITH A RUBBER PIPE/CONDUIT SEAL GASKET. THE SEAL SHALL BE OF A MATERIAL AND TYPE TIGHTLY FITTING AND ABLE TO SEAL OUT WATER, INSECTS, RODENTS, AND DIRT. THE SEAL SHALL BE EASILY REMOVED FOR SERVICE INSTALLATIONS OR CABLE REPLACEMENTS.

THE CONTRACTOR SHALL PROVIDE THE CABINET WIRING DIAGRAM/PLANS IN .PDF FORMAT TO ODOT DISTRICT 6 TRAFFIC.

PAYMENT FOR ITEM 633 CONTROLLER UNIT, TYPE TS2/A2, WITH CABINET, TYPE TS2, AS PER PLAN, WILL BE AT THE CONTRACT BID PRICE COMPLETE AND IN PLACE AND CONNECTIONS TESTED AND ACCEPTED.

633 UNINTERRUPTIBLE POWER SUPPLY (UPS), 1000 WATT, AS PER PLAN

IN ADDITION TO THE REQUIREMENTS OF C&MS 633 AND 733, POLE ATTACHMENT HARDWARE WILL BE INCLUDED FOR POLE-MOUNTED CABINETS, AND A CABINET RISER (8 INCH MINIMUM) AND ANCHOR BOLTS WILL BE PROVIDED FOR BASE-MOUNTED CABINETS. BEFORE PERFORMING THE WORK, THE CONTRACTOR, THE DISTRICT TRAFFIC ENGINEER AND THE PROJECT ENGINEER WILL PERFORM A SITE INSPECTION TO ESTABLISH THE LOCATION OF THE UPS CABINET AND FOUNDATION.

THE UPS CABINET SHALL INCLUDE A GENERATOR POWER PANEL WITH A HEAVY DUTY POWER RELAY VERSUS THE LINE VOLTAGE GENERATOR SWITCH. THE GENERATOR INLET SHALL BE A RECESSED PANEL WITH A DOOR THAT IS FLUSH WITH THE EXTERNAL SIDE OF THE UPS CABINET. IT SHALL INCLUDE A RECESSED PLUG, AUTOMATIC TRANSFER SWITCH AND A DOOR THAT SECURELY CLOSES OVER THE POWER CORD.

THE UPS OUTPUT NOTIFICATIONS FOR ON BATTERY, BATTERY 2-HOUR TIMER, AND LOW BATTERY SHALL BE WIRED INTO THE TRAFFIC SIGNAL CABINET BACK PANEL TO PROVIDE SPECIAL STATUS ALARMS FOR EACH OUTPUT INTO THE SIGNAL CONTROLLER.

THIS ITEM SHALL INCLUDE A RED LED STATUS INDICATOR LAMP TO ALLOW MAINTENANCE PERSONNEL AND LAW ENFORCEMENT TO QUICKLY ASSESS WHETHER A TRAFFIC SIGNAL CABINET IS BEING POWERED BY A UPS. THE LED HOUSING SHALL BE NEMA 4X, IP65 OR IP66, RATED FOR OUTDOOR USE AND BE TAMPER/SHATTER RESISTANT. IT SHALL BE A DOMED ENCLOSURE CONTAINING A RED LENS WITH LED THAT IS VISIBLE FROM 100 FOOT MINIMUM. THE ENCLOSURE AND LED MODULE SHOULD BE PLACED AND CENTERED ON THE TOP SURFACE OF THE UPS CABINET AND SEALED FROM WATER INTRUSION. IT SHOULD BE WIRED USING MINIMUM 20GA STRANDED, INSULATED HOOKUP WIRE TO THE STATUS RELAY OUTPUTS OF THE UPS. THE WIRES SHALL BE TERMINATED BY LUGS AT THE DISPLAY END AND PERMANENTLY LABELED "BACKUP POWER STATUS DISPLAY," WITH WIRE POLARITY INDICATED. THE RED LED SHALL ONLY ILLUMINATE TO INDICATE THE CABINET IS OPERATING UNDER UPS BACKUP POWER (THE "BACKUP" OPERATING CONDITION). THIS ITEM INCLUDES PROGRAMMING THE UPS STATUS RELAY OUTPUTS TO PRODUCE THE LAMP STATUS DISPLAYS. THESE STATUS DISPLAYS WILL BE SOLID 100% DUTY CYCLE (NOT FLASHING) DISPLAYS. THE OPERATING VOLTAGE OF THE LED LAMP SHALL BE 120V AC UNLESS OTHERWISE INDICATED.

A BATTERY BALANCER SHALL BE FURNISHED AND INSTALLED WITH THE SYSTEM.

REV. BY	DATE	DESCRIPTION
JMK	01/21/20	CONTROLLER NOTE MODIFIED

DATE COMPLETED

CALCULATED NDE
CHECKED ADL

TRAFFIC SIGNAL GENERAL NOTES

DEL-42-1.41

\\10.120.108.5\ibishare\116558_D6 CO GES\5.0 Design (Work) Phase\Task 6-E_DEL-42-1.56 Safety Improvements\108685\Design\Signals\Sheets\108685_CN003.dgn Sheet 2020-01-21 8:50:17 AM jennifer.kelley