D05 - SR FY2017 Signal Upgrade
170355 PID - 95383
Dist 5 5/25/2017

Contract Proposal Available @ www.
Contracts.dot.state.oh.us/home

SEE SHEET 2

STATE OF OHIO

DEPARTMENT OF TRANSPORTATION

D05-FY2017-
SIGNAL UPGRADE

VARIOUS LOCATIONS

PROJECT DESCRIPTION

DISTRICT WIDE SIGNAL UPGRADE TO ADD BACKPLATES, UPS, AND OTHER UPGRADES TO REACH CURRENT STANDARDS.

PROJECT EARTH DISTURBED AREA = N/A (MAINT.)
ESTIMATED CONTRACTOR EARTH DISTURBED AREA = N/A
NOTICE OF INTENT EARTH DISTURBED AREA = N/A

INDEX OF SHEETS

TITLE SHEET 1
LOCATION MAP 2
GENERAL NOTES 3-4
MAINTENANCE OF TRAFFIC 5-6
GENERAL SUMMARY 7-8
LOCATION SUMMARIES 9-11
TRAFFIC SIGNALS
NOTES 12-19
U.S. 22 & PINKERTON RD 20-24
U.S. 22 & S.R. 93 25-29
U.S. 40 & COLUMBIA RD 30-34
U.S. 40 & WATKINS RD 35-39
S.R. 13 & BLACKBIRD LN 40-44
S.R. 13 & DORSEY MILL RD 45-49
S.R. 37 & U.S. 40 50-54
S.R. 37 & S.R. 256 55-59
S.R. 209 & PARKWAY PLAZA DR 60-64
S.R. 209 & WALMART ENTRANCE 65-69
S.R. 229 & EDGEWOOD DR 70-74
RIGHT-OF-WAY 75-83

2016 SPECIFICATIONS

THE STANDARD SPECIFICATIONS OF THE STATE OF OHIO, DEPARTMENT OF TRANSPORTATION, INCLUDING CHANGES LISTED IN THE PROPOSAL SHALL GOVERN THIS IMPROVEMENT.

I HEREBY APPROVE THESE PLANS AND DECLARE THAT THE MAKING OF THIS IMPROVEMENT WILL NOT REQUIRE THE CLOSING TO TRAFFIC OF THE HIGHWAY AND THAT PROVISIONS FOR THE MAINTENANCE AND SAFETY OF TRAFFIC WILL BE AS SET FORTH ON THE PLANS AND ESTIMATES.

DESIGN DESIGNATION (SEE SHEET 2)

NHS PROJECT ..... NO

DESIGN EXCEPTIONS

NONE

UNDERGROUND UTILITIES
CONTACT BOTH SERVICES TWO WORKING DAYS BEFORE YOU DIG.
Ohio Utilities Protection Service — Call Before You Dig 1-800-362-2764
(Non-members must be called directly)
OIL & GAS PRODUCERS UNDERGROUND PROTECTION SERVICE 1-800-925-0988

PLAN PREPARED BY:
OHIO DEPARTMENT OF TRANSPORTATION
DISTRICT 5 PLANNING & ENGINEERING

ENGINEER'S SEAL

STATE OF OHIO — JASON SCOTT LUTZ E-77397 — REGISTERED PROFESSIONAL ENGINEER

SIGNED: Jason S. Lutz
DATE: 2/24/17

STANDARD CONSTRUCTION DRAWINGS						SUPPLEMENTAL SPECIFICATIONS	
HL-10.12	1/20/17	TC-12.30	1/20/17	TC-84.21	10/16/13	800	1/20/17
HL-30.11	1/20/17	TC-21.20	7/15/16	TC-85.10	7/15/16	805	7/16/10
HL-60.11	1/15/16	TC-22.20	1/17/14	TC-85.20	1/15/16	809	4/15/16
HL-60.12	7/15/16	TC-41.10	7/19/13	TC-85.21	1/20/17	832	1/17/14
		TC-41.30	10/18/13	TC-85.22	7/15/16	903	7/20/12
MT-95.30	7/15/16	TC-41.40	10/18/13			916	4/15/16
MT-95.31	1/20/17	TC-42.10	10/18/13				
MT-95.32	1/20/17	TC-42.20	10/18/13				
MT-97.10	7/18/14	TC-52.10	10/18/13				
MT-105.10	7/19/13	TC-52.20	7/15/16			SPECIAL PROVISIONS	
		TC-81.10	7/15/16				
		TC-81.21	7/15/16				
		TC-83.10	7/15/16				
		TC-83.20	7/15/16				
		TC-84.20	10/18/13				

APPROVED: [signature]
DATE: 2/23/17 DISTRICT DEPUTY DIRECTOR

APPROVED: Jerry Wray
DATE: 3-7-17 DIRECTOR, DEPARTMENT OF TRANSPORTATION

FEDERAL PROJECT NO. E130(565)
PID NO. 95383
CONSTRUCTION PROJECT NO.
RAILROAD INVOLVEMENT NONE
D05-FY2017-SIGNAL UPGRADE

I:\Projects\Dotp\D05\95383\D

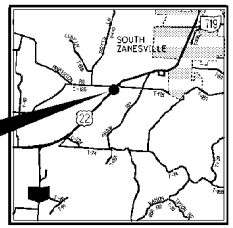

LOCATION 1
U.S. 22 & PINKERTON RD.
MUSKINGUM COUNTY

	U.S. 22	PINKERTON RD.
OPENING ADT (2017)	20,000	1,900
TRUCKS (24 HOUR B&C)	4%	N/A
DESIGN/LEGAL SPEED	45 MPH	35 MPH
DESIGN FUNCTIONAL CLASSIFICATION	URBAN PRINCIPAL ARTERIAL	LOCAL

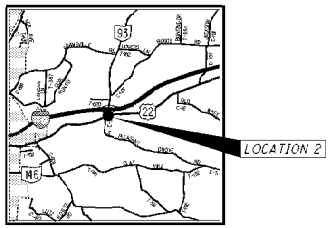

LOCATION 2
U.S. 22 & S.R. 93
MUSKINGUM COUNTY

	U.S. 22	S.R. 93
OPENING ADT (2017)	7,800	13,000
TRUCKS (24 HOUR B&C)	8%	11%
DESIGN/LEGAL SPEED	45 MPH	45 MPH
DESIGN FUNCTIONAL CLASSIFICATION	URBAN PRINCIPAL ARTERIAL	URBAN COLLECTOR

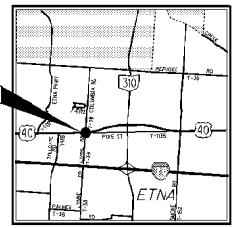

LOCATION 3
U.S. 40 & COLUMBIA RD.
LICKING COUNTY

	U.S. 40	COLUMBIA RD.
OPENING ADT (2017)	14,000	625
TRUCKS (24 HOUR B&C)	5%	N/A
DESIGN/LEGAL SPEED	55 MPH	45 MPH
DESIGN FUNCTIONAL CLASSIFICATION	URBAN PRINCIPAL ARTERIAL	LOCAL

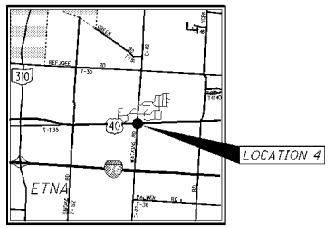

LOCATION 4
U.S. 40 & WATKINS RD.
LICKING COUNTY

	U.S. 40	WATKINS RD.
OPENING ADT (2017)	13,000	1,900
TRUCKS (24 HOUR B&C)	3%	N/A
DESIGN/LEGAL SPEED	55 MPH	45 MPH
DESIGN FUNCTIONAL CLASSIFICATION	RURAL MAJOR COLLECTOR	LOCAL

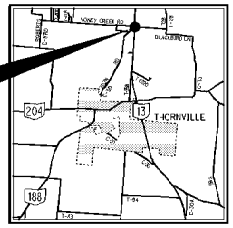

LOCATION 5
S.R. 13 & BLACKBIRD LN.
PERRY COUNTY

	S.R. 13	BLACKBIRD LN.
OPENING ADT (2017)	12,000	1,300
TRUCKS (24 HOUR B&C)	4%	N/A
DESIGN/LEGAL SPEED	55 MPH	40 MPH
DESIGN FUNCTIONAL CLASSIFICATION	RURAL MINOR ARTERIAL	RURAL MINOR COLLECTOR

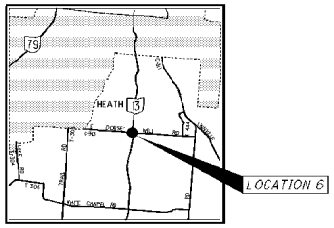

LOCATION 6
S.R. 13 & DORSEY MILL RD.
LICKING COUNTY

	S.R. 13	DORSEY MILL RD.
OPENING ADT (2017)	9,900	1,900
TRUCKS (24 HOUR B&C)	8%	N/A
DESIGN/LEGAL SPEED	55 MPH	35 MPH
DESIGN FUNCTIONAL CLASSIFICATION	RURAL MINOR ARTERIAL	RURAL MINOR COLLECTOR

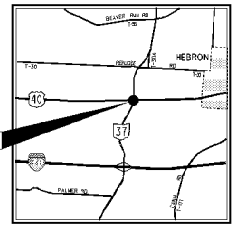

LOCATION 7
U.S. 40 & S.R. 37
LICKING COUNTY

	U.S. 40	S.R. 37
OPENING ADT (2017)	3,300	12,000
TRUCKS (24 HOUR B&C)	4%	5%
DESIGN/LEGAL SPEED	55 MPH	55 MPH
DESIGN FUNCTIONAL CLASSIFICATION	RURAL MAJOR COLLECTOR	RURAL MAJOR COLLECTOR

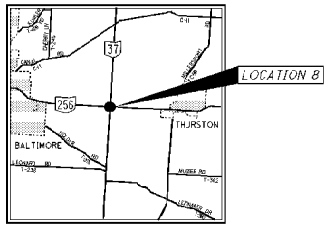

LOCATION 8
S.R. 37 & S.R. 256
FAIRFIELD COUNTY

	S.R. 37	S.R. 256
OPENING ADT (2017)	7,800	3,500
TRUCKS (24 HOUR B&C)	6%	6%
DESIGN/LEGAL SPEED	55 MPH	55 MPH
DESIGN FUNCTIONAL CLASSIFICATION	RURAL MINOR ARTERIAL	RURAL MAJOR COLLECTOR

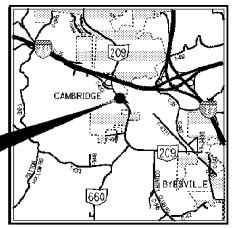

LOCATION 9
S.R. 209 & PARKWAY PLAZA DR.
GUERNSEY COUNTY

	S.R. 209	PARKWAY PLAZA DR.
OPENING ADT (2017)	30,000	N/A
TRUCKS (24 HOUR B&C)	9%	N/A
DESIGN/LEGAL SPEED	45 MPH	N/A
DESIGN FUNCTIONAL CLASSIFICATION	URBAN PRINCIPAL ARTERIAL	BUSINESS DRIVE

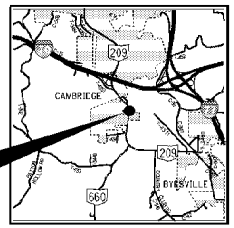

LOCATION 10
S.R. 209 & WALMART ENTRANCE
GUERNSEY COUNTY

	S.R. 209	WALMART ENTRANCE
OPENING ADT (2017)	30,000	N/A
TRUCKS (24 HOUR B&C)	9%	N/A
DESIGN/LEGAL SPEED	45 MPH	N/A
DESIGN FUNCTIONAL CLASSIFICATION	URBAN PRINCIPAL ARTERIAL	BUSINESS DRIVE

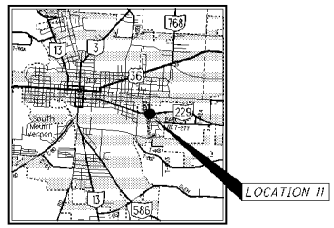

LOCATION 11
S.R. 229 & EDGEWOOD DR.
KNOX COUNTY

	S.R. 229	EDGEWOOD DR.
OPENING ADT (2017)	4,700	8,000
TRUCKS (24 HOUR B&C)	8%	N/A
DESIGN/LEGAL SPEED	45 MPH	25 MPH
DESIGN FUNCTIONAL CLASSIFICATION	URBAN MINOR ARTERIAL	URBAN MINOR ARTERIAL

SCALE IN MILES
0 1 2

LOCATION	LATITUDE	LONGITUDE
1. U.S. 22/PINKERTON RD.	39° 53′ 44″	-82° 02′ 27″
2. U.S. 22/S.R. 93	39° 56′ 54″	-81° 57′ 38″
3. U.S. 40/COLUMBIA RD.	39° 57′ 26″	-82° 41′ 43″
4. U.S. 40/WATKINS RD.	39° 57′ 29″	-82° 38′ 50″
5. S.R. 13/BLACKBIRD LN.	39° 54′ 56″	-82° 24′ 32″
6. S.R. 13/DORSEY MILL RD.	40° 00′ 50″	-82° 24′ 13″
7. U.S. 40/S.R. 37	39° 57′ 28″	-82° 31′ 57″
8. S.R. 37/S.R. 256	39° 50′ 27″	-82° 34′ 07″
9. S.R. 209/PARKWAY PLAZA DR.	39° 59′ 41″	-81° 34′ 33″
10. S.R. 209/WALMART ENTRANCE	39° 59′ 25″	-81° 34′ 24″
11. S.R. 229/EDGEWOOD DR.	40° 23′ 17″	-82° 27′ 50″

CALCULATED BRH
CHECKED JSL

LOCATION MAP

D05-FY2017-
SIGNAL UPGRADE

I:\Project\Dula\D05\95363\Design\Roadway\Sheets\95363_GT002.dgn 22-FEB-2017 2:31PM julx1

UTILITIES

LISTED BELOW ARE ALL UTILITIES LOCATED WITHIN THE PROJECT CONSTRUCTION LIMITS FOR EACH LOCATION TOGETHER WITH THEIR RESPECTIVE OWNERS:

U.S. 22/Pinkerton Rd. & U.S. 22/S.R. 93

AEP Distribution
850 Tech Center Drive
Gahanna, Ohio 43230
Attn: Paul Paxton
614-883-6831

AT&T Ohio
160 North Sixth Street
Zanesville, Ohio 43701
Attn: Barrett Tamasovich
740-454-3552

Columbia Gas of Ohio
2429 Linden Ave.
P.O. Box 310
Zanesville, Ohio 43702
Attn: Dan Shonk
740-450-1208

Muskingum County Water and Sewer
375 Richards Road
Zanesville, Ohio 43701
Attn: Don Madden
740-453-0678

Time Warner Cable
4547 North Leedom Road
Chandlersville, Ohio 43727
Attn: Brad St. Clair
740-303-3100

U.S. 40 Columbia Rd. & U.S. 40/Watkins Rd.

AEP Distribution
850 Tech Center Drive
Gahanna, Ohio 43230
Attn: Paul Paxton
614-883-6831

CenturyLink Telephone
441 West Broad Street
Pataskala, Ohio 43062
Attn: Dee Reed
740-927-8282

Columbia Gas of Ohio
2429 Linden Ave.
P.O. Box 310
Zanesville, Ohio 43702
Attn: Dan Shonk
740-450-1208

National Gas and Oil Corp.
120 O'Neil Drive
Hebron, Ohio 43025
Attn: Greg Wilson
740-348-1254

Time Warner Cable
3760 Interchange Drive
Columbus, Ohio 43204
Attn: Ray Maurer
614-481-5262

S.R. 13/Blackbird Ln.

AEP Distribution
850 Tech Center Drive
Gahanna, Ohio 43230
Attn: Paul Paxton
614-883-6831

AT&T Ohio
160 North Sixth Street
Zanesville, Ohio 43701
Attn: Barrett Tamasovich
740-454-3552

Buckeye Lake Waste Water
5192 Walnut Road SE
P.O. Box 27
Buckeye Lake, Ohio 43008
Attn: Ken Salsbury
740-349-6540

National Gas and Oil Corp.
120 O'Neil Drive
Hebron, Ohio 43025
Attn: Greg Wilson
740-348-1254

Northern Perry County Water
600 West Broadway Street
New Lexington, Ohio 43764
Attn: Kelly Green
740-342-1065

Time Warner Cable
3760 Interchange Drive
Columbus, Ohio 43204
Attn: Ray Maurer
614-481-5262

S.R. 13/Dorsey Mill Rd.

AEP Distribution
850 Tech Center Drive
Gahanna, Ohio 43230
Attn: Paul Paxton
614-883-6831

AT&T Ohio
160 North Sixth Street
Zanesville, Ohio 43701
Attn: Barrett Tamasovich
740-454-3552

National Gas and Oil Corp.
120 O'Neil Drive
Hebron, Ohio 43025
Attn: Greg Wilson
740-348-1254

Windstream
66 North Fourth Street
Newark, Ohio 43055
Attn: Maurice Jones
740-349-8865

Time Warner Cable
3760 Interchange Drive
Columbus, Ohio 43204
Attn: Ray Maurer
614-481-5262

U.S. 40/S.R. 37

AEP Distribution
850 Tech Center Drive
Gahanna, Ohio 43230
Attn: Paul Paxton
614-883-6831

CenturyLink Telephone
441 West Broad Street
Pataskala, Ohio 43062
Attn: Dee Reed
740-927-8282

Time Warner Cable
3760 Interchange Drive
Columbus, Ohio 43204
Attn: Brian Amende
740-322-6703

S.R. 37/S.R. 256

AEP Distribution
850 Tech Center Drive
Gahanna, Ohio 43230
Attn: Paul Paxton
614-883-6831

AT&T Ohio
160 North Sixth Street
Zanesville, Ohio 43701
Attn: Barrett Tamasovich
740-454-3552

Columbia Gas Transmission
301 Maple Street
Sugar Grove, Ohio 43155
Attn: Jim Scott
740-746-2225

South Central Power Co.
2780 Coonpath Road NE
Lancaster, Ohio 43130
Attn: Phil Stringer
740-689-6237

Time Warner Cable
3760 Interchange Drive
Columbus, Ohio 43204
Attn: Brian Amende
740-322-6703

Village of Baltimore
Water and Sewer Dept.
103 West Market Street
Baltimore, Ohio 43105
Attn: Donald Morrison
740-862-4491

S.R. 209/Parkway Plaza Dr. & S.R. 209/Walmart Entrance

AEP Distribution
850 Tech Center Drive
Gahanna, Ohio 43230
Attn: Paul Paxton
614-883-6831

Frontier Telephone
9444 Campbell Street
Cambridge, Ohio 43725
Attn: Ashley Miller
740-432-3339

Guernsey County Water and Sewer Dept.
11272 East Pike
Cambridge, Ohio 43725
Attn: Clearance Ridgley
740-439-1269

Columbia Gas of Ohio
2429 Linden Ave.
P.O. Box 310
Zanesville, Ohio 43702
Attn: Dan Shonk
740-450-1250

Time Warner Cable
3760 Interchange Drive
Columbus, Ohio 43204
Attn: Ray Maurer
614-481-5262

Columbia Gas Transmission
301 Maple Street
Sugar Grove, Ohio 43155
Attn: Jim Scott
740-746-2225

S.R. 229/Edgewood Dr.

AEP Distribution
850 Tech Center Drive
Gahanna, Ohio 43230
Attn: Paul Paxton
614-883-6831

CenturyLink Telephone
701 Harcourt Road
Mount Vernon, Ohio 43050
Attn: Casper Schmidt
740-397-3609

City of Mount Vernon
Water and Sewer Dept.
40 Public Square
Mount Vernon, Ohio 43050
Attn: Cameron Keaton
740-393-9528

Columbia Gas of Ohio
2429 Linden Ave.
P.O. Box 310
Zanesville, Ohio 43702
Attn: William Rich
740-450-1250

Time Warner Cable
3760 Interchange Drive
Columbus, Ohio 43204
Attn: Ray Maurer
614-481-5262

THE LOCATION OF THE UNDERGROUND UTILITIES SHOWN ON THE PLANS ARE AS OBTAINED FROM THE OWNERS AS REQUIRED BY SECTION 153.64 O.R.C.

UTILITY COOPDINATON

THE CONTRACTOR SHALL COORDINATE WITH THE UTILITY COMPANIES PRIOR TO CONSTRUCTION TO VERIFY THAT ALL UTILITIES IN CONFLICT HAVE BEEN RAISED OR RELOCATED.

THE FOLLOWING SIGNAL LOCATIONS HAVE UTILITIES THAT NEED TO BE RAISED OR RELOCATED BEFORE CONSTRUCTION CAN BEGIN:

U.S. 40 & COLUMBIA RD.
U.S. 40 & WATKINS RD.
U.S. 40 & S.R. 37
S.R. 37 & S.R. 256

CONSTRUCTION NOTIFICATION

THE CONTRACTOR WILL ADVISE THE PROJECT ENGINEER A MINIMUM OF TWENTY-ONE (21) DAYS PRIOR TO THE FOLLOWING: THE START OF CONSTRUCTION ACTIVITIES, LANE RESTRICTIONS, LANE CLOSURES, AND OR ROAD CLOSURES. THE PROJECT ENGINEER WILL FORWARD THIS INFORMATION TO THE FOLLOWING:

DISTRICT PUBLIC INFORMATION OFFICER (PIO)
BY FAX: (614) 887-4510 OR
BY EMAIL: D05.PIO@dot.ohio.gov

DISTRICT PERMIT SECTION
BY FAX: (614) 887-4525 OR
BY EMAIL: Brian.Bosch@dot.ohio.gov

CENTRAL OFFICE SPECIAL HAUL PERMITS SECTION
BY FAX: (614) 728-4099 OR
BY EMAIL: Hauling.Permits@dot.ohio.gov

THE PIO WILL, IN TURN, NOTIFY THE PUBLIC, THE LOCAL EMERGENCY SERVICES, AFFECTED SCHOOLS AND BUSINESSES, AND ANY OTHER IMPACTED LOCAL PUBLIC AGENCY OF ANY OF THE ABOVE MENTIONED ITEMS, VIA MEDIA SOURCES.

COOPERATION BETWEEN CONTRACTORS

THE STATE OF OHIO HAS CONTRACTED PROJECT: LIC-13-0.00, PID: 92958, WHICH WILL BE CONSTRUCTED CONCURRENTLY WITH THIS PROJECT, SPECIFICALLY, LOCATION 6: S.R. 13 & DORSEY MILL RD. IT IS IMPERATIVE THAT THE CONTRACTORS COOPERATE FULLY WITH EACH OTHER AS OUTLINED IN SECTION 105.08 OF THE C&MS. ALL MAINTENANCE SHALL BE COORDINATED BETWEEN PROJECTS AND NOT CONFLICT WITH ONE ANOTHER.

PLAN SPLIT LOCATIONS

THERE ARE 3 PLAN SPLITS FOR THIS PROJECT. THE WORK LOCATIONS ARE DIVIDED AS SHOWN BELOW:

PLAN SPLIT 01/NHS/OT
LOCATION 1 - U.S. 22 & PINKERTON RD.
LOCATION 3 - U.S. 40 & COLUMBIA RD.
LOCATION 9 - S.R. 209 & PARKWAY PLAZA DR.
LOCATION 10 - S.R. 209 & WALMART DR.

PLAN SPLIT 02/STR/OT
LOCATION 4 - U.S. 40 & WATKINS RD.
LOCATION 5 - S.R. 13 & BLACKBIRD LN.
LOCATION 7 - U.S. 40 & S.R. 37
LOCATION 8 - S.R. 37 & S.R. 256

PLAN SPLIT 03/SK2/OT
LOCATION 2 - U.S. 22 & S.R. 93
LOCATION 6 - S.R. 13 & DORSEY MILL RD.
LOCATION 11 - S.R. 229 & EDGEWOOD DR.

CALCULATED BRH
CHECKED JSL

GENERAL NOTES

D05-FY2017-
SIGNAL UPGRADE

I:\Project\Data\D05\95363\Design\Roadway\Sheets\95363_GN001.dgn 27-FEB-2017 1:10PM julz

SURVEYING PARAMETERS

PROJECT CONTROL:

FOR LOCATIONS 1,2,5-10
NORTH AMERICAN VERTICAL DATUM (NAVD88)
OHIO STATE PLANE COORDINATE SYSTEM, SOUTH ZONE
GRID COORDINATES, NAD 83 (CONUS), GEOID 12A (OHIO)

FOR LOCATIONS 3 & 4
NORTH AMERICAN VERTICAL DATUM (NAVD88)
OHIO STATE PLANE COORDINATE SYSTEM, SOUTH ZONE
GROUND COORDINATES, NAD 83 (CONUS)
(SEE APPROPRIATE SCALE FACTOR IN TABLE BELOW)

FOR LOCATION 11
NORTH AMERICAN VERTICAL DATUM (NAVD88)
OHIO STATE PLANE COORDINATE SYSTEM, NORTH ZONE
GRID COORDINATES, NAD 83 (CONUS), GEOID 12A (OHIO)

CONTROL POINTS:

LOCATION		POINT	NORTHING	EASTING	ELEVATION	SCALE FACTOR	DESCRIPTION
1	U.S. 22 & PINKERTON RD.	SV1	690,657.17	2,097,325.14	816.98	-	1" REBAR W/ALUM. CAP
		SV2	690,889.56	2,097,548.70	812.95	-	1" REBAR W/ALUM. CAP
2	U.S. 22 & S.R. 93	SV1	710,140.30	2,119,782.12	898.31	-	1" REBAR W/ALUM. CAP
		SV2	710,144.68	2,120,157.97	907.98	-	1" REBAR W/ALUM. CAP
3	U.S. 40 & COLUMBIA RD.	SV1	712,919.36	1,913,823.50	1079.68	1.00006042	5/8" REBAR W/ALUM. CAP
		SV2	713,007.76	1,914,425.25	1079.65		5/8" REBAR W/ALUM. CAP
4	U.S. 40 & WATKINS RD.	SV10	713,174.10	1,927,412.02	1012.30	1.00005710	5/8" REBAR W/ALUM. CAP
		SV11	713,210.98	1,927,007.68	1016.52		5/8" REBAR W/ALUM. CAP
5	S.R. 13 & BLACKBIRD LN.	SV1	697,656.58	1,993,981.03	897.57	-	1" REBAR W/ALUM. CAP
		SV2	697,184.78	1,993,990.29	895.97	-	1" REBAR W/ALUM. CAP
6	S.R. 13 & DORSEY MILL RD.	SV1	733,443.65	1,995,530.54	1021.16	-	1" REBAR W/ALUM. CAP
		SV2	733,776.44	1,995,495.62	1036.83	-	1" REBAR W/ALUM. CAP
7	U.S. 40 & S.R. 37	SV1	713,137.94	1,959,484.10	924.20	-	5/8" REBAR W/ODOT CAP
		SV2	713,535.74	1,959435.86	928.55	-	5/8" REBAR W/ODOT CAP
8	S.R. 37 & S.R. 256	SV1	670,472.59	1,949,229.42	868.05	-	5/8" REBAR W/ODOT CAP
		SV2	670,531.73	1,949,426.44	869.76	-	5/8" REBAR W/ODOT CAP
9	S.R. 209 & PARKWAY PLAZA DR.	SV1	727,825.68	2,227,379.04	816.10	-	5/8" REBAR W/ODOT CAP
		SV2	728,072.45	2,227,169.54	813.56	-	5/8" REBAR W/ODOT CAP
10	S.R. 209 & WALMART ENTRANCE	SV1	725,843.81	2,228,167.44	804.37	-	5/8" REBAR W/ODOT CAP
		SV2	726,161.28	2,228,198.65	807.17	-	5/8" REBAR W/ODOT CAP
11	S.R. 229 & EDGEWOOD DR.	SV1	262,813.05	1,975,587.25	1022.45	-	5/8" REBAR W/ODOT CAP
		SV2	262,904.66	1,978,867.09	1038.08	-	5/8" REBAR W/ODOT CAP

CROSSING AND CONNECTIONS TO EXISTING PIPES/UTILITIES

WHERE PLANS PROVIDE FOR A PROPOSED CONDUIT TO BE CONNECTED TO, OR CROSS OVER OR UNDER AN EXISTING SEWER OR UNDERGROUND UTILITY, THE CONTRACTOR SHALL LOCATE THE EXISTING PIPES OR UTILITIES BOTH AS TO LINE AND GRADE BEFORE STARTING TO LAY THE PROPOSED CONDUIT.

IF IT IS DETERMINED THAT THE PROPOSED CONDUIT WILL INTERSECT AN EXISTING SEWER OR UNDERGROUND UTILITY IF CONSTRUCTED AS SHOWN IN THE PLAN, THE ENGINEER HALL BE NOTIFIED BEFORE STARTING CONSTRUCTION OF ANY PORTION OF THE PROPOSED CONDUIT WHICH WOULD BE AFFECTED BY THE INTERFERENCE WITH AN EXISTING FACILITY.

IN ORDER TO AVOID THE INTERSECTION OF THE PROPOSED CONDUIT AND EXISTING PIPES AND UTILITIES, THE DEPTH AND/OR LOCATION OF THE PROPOSED CONDUIT SHALL BE ADJUSTED.

PAYMENT FOR ALL THE OPERATIONS DESCRIBED ABOVE SHALL BE INCLUDED IN THE CONTRACT PRICE FOR THE PERTINENT 625 CONDUIT ITEM.

CONTIGENCY QUANTITIES

THE FOLLOWING CONTIGENCY QUANTITIES ARE PROVIDED TO BE USED AS NECESSARY THROUGHOUT THE LOCATIONS OF THE PRJECT AS DETERMINED BY THE PROJECT ENGINEER.

SEEDING AND MULCHING

THE FOLLOWING QUANTITIES HAVE BEEN CARRIED TO THE GENERAL SUMMARY AND SHALL BE APPLIED TO ALL DISTURBED EARTH DUE TO INSTALLATION OR REMOVAL OF PULL BOXES, SIGNAL POLES, CONDUIT, AND CABINET FOUNDATIONS.

ITEM 659 SEEDING AND MULCHING, CLASS 2	**1500 SY**
ITEM 659 COMMERCIAL FERTILIZER	**0.20 TON**
ITEM 659 WATER	**8 M GAL**

PAVEMENT MARKINGS

PAVEMENT MARKING SHALL BE PERFORMED AT LOCATIONS SHOWN IN THE SIGNAL PLAN FOR EACH LOCATION OF THE PROJECT.

ITEM 642 CENTER LINE	**0.03 MILE**
ITEM 642 CHANNELIZING LINE, 8"	**165 FT**
ITEM 642 STOP LINE	**410 FT**
ITEM 642 REMOVAL OF PAVEMENT MARKING	**110 FT**

PAVEMENT MARKINGS

VARIOUS SIGNAL LOCATIONS MAY REQUIRE THE REMOVAL OR RELOCATION OF SIGNS NOT PERTAINING TO THE TRAFFIC SIGNAL. THE FOLLOWING QUANTITIES SHALL BE USED TO PERFORM THE REMOVAL AND/OR REERECTION OF THESE SIGNS AT THE APPROVAL OF THE PROJECT ENGINEER.

ITEM 630 GROUND MOUNTED SUPPORT, NO. 3 POST	**100 FT**
ITEM 630 REMOVAL OF GROUND MOUNTED SIGN AND DISPOSAL	**5 EACH**
ITEM 630 REMOVAL OF GROUND MOUNTED SIGN AND REERECTION	**5 EACH**
ITEM 630 REMOVAL OF POLE MOUNTED SIGN AND DISPOSAL	**5 EACH**
ITEM 630 REMOVAL OF POLE MOUNTED SIGN AND REERECTION	**16 EACH**

ENVIRONMENTAL WORK

ENVIRONMENTAL STUDIES HAVE SHOWN THAT THERE IS A POTENTIAL OF ENCOUNTERING PETROLEUM-CONTAMINATED MATERIALS WHEN EXCAVATING IN THE FOLLOWING AREAS:

LOCATION 2: U.S. 22 & S.R. 93 (SE CORNER)
SHELL GAS STATION
10 CY - (16 TON)

NOTE: 120 LB/FT^3 USED FOR WEIGHT OF CONTAMINATED SOILS

LOCATION 5: S.R. 13 & BLACKBIRD LN. (SW CORNER)
FORMERLY THORNPORT ASHLAND STATION
5 CY - (8 TON)

LOCATION 8: S.R. 37 & S.R. 256 (NW & NE CORNER)
SUNOCO GAS STATION, FAST MAX CONVENIENCE STORE
5 CY - (8 TON)
WEIDNER'S CORNER
5 CY - (8 TON)

IN THE EVENT PETROLEUM-CONTAMINATED MATERIALS ARE ENCOUNTERED, THE CONTRACTOR SHALL MANAGE THIS MATERIAL ACCORDING TO THE FOLLOWING NOTES. THE ESTIMATED QUANTITIES HAVE BEEN INCLUDED IN THE GENERAL SUMMARY FOR THIS WORK. ALL EXCAVATIONS WITHIN THE AFOREMENTIONED LIMITS SHALL BE PAID UNDER THE ORIGINAL PLAN BID ITEMS.

ALL MATERIAL EXCAVATED BY THE CONTRACTOR BETWEEN THESE LIMITS MAY BE STOCKPILED IN AN AREA PROVIDED BY THE CONTRACTOR AND APPROVED BY THE ENGINEER. THE ENGINEER MAY PERMIT TEMPORARY STORAGE OF THE EXCAVATED MATERIAL IN A LINED AND COVERED ROLL-OFF BOX. THE ENGINEER MAY PERMIT TEMPORARY STORAGE OF THE EXCAVATED MATERIAL ON AN IMPERMEABLE MEMBRANE. THE MEMBRANE SHALL BE SURROUNDED BY BALES OF STAW TO PREVENT THE SUSPECTED SOILS FROM COMING IN CONTACT WITH THE ORIGINAL SOILS. AN IMPERMEABLE MEMBRANE SHALL BE PLACED OVER THE STOCKPILE TO PREVENT CONTACT WITH PRECIPITATION AND/OR SURFACE RUN-OFF. THE ENGINEER MAY PERMIT THE CONTRACTOR TO DIRECT LOAD THE EXCAVATED CONTAMINATED MATERIAL INTO TRUCKS.

THIS MATERIAL SHALL BE PROPERLY TESTED, TRANSPORTED, ABD DISPOSED OF IN A LICENSED (BY THE LOCAL HEALTH DEPARTMENT) AND PERMITTED (BY THE OHIO ENVIRONMENTAL PROTECTION AGENCY) SOLID WASTE FACILITY.

THE CONTRACTOR SHALL COMPLETE ALL MANIFEST FOR MATERIAL TO BE TRANSPORTED AND PROVIDE TO THE ENGINEER FOR SIGNATURE. THE CONTRACTOR IS TO OBTAIN ALL NECESSARY PERMITS AND APPROVALS TO TRANSPORT THE MATERIAL TO A LICENSED AND PERMITTED DISPOSAL FACILITY. THE CONTRACTOR IS TO CONTACT THE DISPOSAL FACILITY TO DETERMINE IF ANY ADDITIONAL TESTING IS REQUIRED BY THE DISPOSAL FACILITY. THE CONTRACTOR SHALL OBTAIN ALL SIGNATURES ON THE MANIFEST AFTER TRANSPORTING AND DISPOSAL OF THE MATERIAL AND PROVIDE A FINAL COPY TO THE ENGINEER.

THE CONTRACTOR SHALL FURNISH ALL THE LABOR, EQUIPMENT, AND MATERIALS NECESSARY TO PROPERLY HANDLE, STORE (IF NECESSARY), TEST FOR DISPOSAL, TRANSPORT, AND DISPOSE OF REGULATED MATERIALS, INCLUDING ANY REQUIRED PERMITS, APPROVALS, OR FEES WITHIN THE LIMITS IDENTIFIED ABOVE. PAYMENT FOR THIS WORK SHALL BE MADE AT THE CONTRACT PRICE BID PER TON. THE FOLLOWING ESTIMATED QUANTITY HAS BEEN INCLUDED IN THE GENERAL SUMMARY FOR THIS WORK:

ITEM 690 SPECIAL - WORK INVOLVING PETROLEUM CONTAMINATED SOILS	**40 TON**

CALCULATED BRH
CHECKED JSL

GENERAL NOTES

D05-FY2017-
SIGNAL UPGRADE

I:\Project\Dulo\D05\95363\Design\Roadway\Sheets\95363_GN002.dgn 27-FEB-2017 1:46PM jlulz1

ITEM 614 MAINTAINING TRAFFIC

A MINIMUM OF ONE LANE OF TRAFFIC IN EACH DIRECTION SHALL BE MAINTAINED AT ALL TIMES BY USE OF THE EXISTING PAVEMENT AND STANDARD CONSTRUCTION DRAWINGS MT-95.30, MT-95.31, MT-95.32, OR MT-97.10.

LENGTH AND DURATION OF LANE CLOSURES AND RESTRICTIONS SHALL BE AT THE APPROVAL OF THE ENGINEER. IT IS THE INTENT TO MINIMIZE THE IMPACT TO THE TRAVELING PUBLIC. LANE CLOSURES OR RESTRICTIONS OVER SEGMENTS OF THE PROJECT, IN WHICH NO WORK IS ANTICIPATED WITHIN A REASONABLE TIME FRAME, AS DETERMINED BY THE ENGINEER, SHALL NOT BE PERMITTED. THE LEVEL OF UTILIZATION OF MAINTENANCE OF TRAFFIC DEVICES SHALL BE COMMENSURATE WITH THE WORK IN PROGRESS.

THE CONTRACTOR SHALL BE RESPONSIBLE FOR MAINTAINING TRAFFIC DURING THE INSTALLATION OF ALL INTERSECTION WORK ITEMS. ALL TRAFFIC CONTROL DEVICES SHALL BE FURNISHED, ERECTED, MAINTAINED, AND REMOVED BY THE CONTRACTOR. THE FOLLOWING REQUIREMENTS APPLY:

1. LANE CLOSURES ON ANY CITY STREET, RAMP, OR BUSINESS ENTRANCE IN THE PROJECT SHALL NOT OCCUR DURING THE PEAK VOLUME HOURS OF 7 AM TO 9 AM, AND 4 PM TO 6 PM.

2. WHEN NO LONGER NEEDED TO MAINTAIN TRAFFIC, THE CONTRACTOR SHALL MAKE PREPARATIONS TO REMOVE THE EXISTING SIGNAL INSTALLATIONS AT THE LOCATIONS SHOWN IN THESE PLANS. ONCE THE EXISTING SIGNAL HAS BEEN SHUT DOWN, THE CONTRACTOR SHALL CONTINUE WORKING AT THE INTERSECTION UNTIL ALL OF THE NEW SIGNAL EQUIPMENT IS IN PLACE AND THE SIGNAL IS FULLY OPERATIONAL.

3. WHEN AN EXISTING DETECTOR LOOP MUST BE TAKEN OUT OF SERVICE DURING CONSTRUCTION, THE CONTRACTOR SHALL PUT THE CORRESPONDING DETECTOR LOOP PHASE ON RECALL FOR THE DURATION OF THE EXISTING SIGNAL OPERATION.

4. ANY VEHICULAR TRAFFIC SIGNAL HEAD, EITHER NEW OR EXISTING WHICH WILL BE OUT OF OPERATION SHALL BE COVERED IN THE MANNER DESCRIBED IN 632.25.

5. THE USE OF A LAW ENFORCEMENT OFFICER WITH PATROL CAR IS1 REQUIRED IF THE CONTRACTOR TURNS THE INTER-SECTION SIGNAL OFF OR PUTS THE INTERSECTION INTO A FLASHING OPERATION. THE INTERSECTION SHALL REMAIN UNDER THE DIRECTION OF THE LAW ENFORCEMENT OFFICER UNTIL THE SIGNAL IS PLACED BACK INTO OPERATION.

ALL WORK AND TRAFFIC CONTROL DEVICES SHALL BE IN ACCORDANCE WITH C&MS 614 AND OTHER APPLICABLE PORTIONS OF THE SPECIFICATIONS, AS WELL AS THE OHIO MANUAL OF UNIFORM TRAFFIC CONTROL DEVICES. PAYMENT FOR ALL LABOR, EQUIPMENT, AND MATERIALS SHALL BE INCLUDED IN THE LUMP SUM CONTRACT PRICE FOR ITEM 614 MAINTAINING TRAFFIC, UNLESS SEPARATELY ITEMIZED IN THE PLAN.

IF THE CONTRACTOR SO ELECTS, HE/SHE MAY SUBMIT ALTERNATIVE METHODS FOR MAINTAINING TRAFFIC, PROVIDED THE INTENT OF THE ABOVE PROVISIONS IS FOLLOWED AND NO ADDITIONAL INCONVENIENCE TO THE PUBLIC RESULTS THERE FROM. NO ALTERNATE PLAN SHALL BE PLACED INTO EFFECT UNTIL APPROVAL HAS BEEN GRANTED, IN WRITING, BY THE PROJECT ENGINEER.

ITEM 614, MAINTAINING TRAFFIC (LANES OPEN DURING HOLIDAYS OR SPECIAL EVENTS)

NO WORK SHALL BE PERFORMED AND ALL EXISTING LANES SHALL BE OPEN TO TRAFFIC DURING THE FOLLOWING DESIGNATED HOLIDAYS OR EVENTS:

CHRISTMAS	FOURTH OF JULY
NEW YEARS	LABOR DAY
MEMORIAL DAY	THANKSGIVING

THE PERIOD OF TIME THAT THE LANES ARE TO BE OPEN DEPENDS ON THE DAY OF THE WEEK ON WHICH THE HOLIDAY OR EVENT FALLS. THE FOLLOWING SCHEDULE SHALL BE USED TO DETERMINE THIS PERIOD:

DAY OF HOLIDAY OR EVENT	TIME ALL LANES MUST BE OPEN TO TRAFFIC
SUNDAY	12:00N FRIDAY THROUGH 6:00 AM MONDAY
MONDAY	12:00N FRIDAY THROUGH 6:00 AM TUESDAY
TUESDAY	12:00N MONDAY THROUGH 6:00 AM WEDNESDAY
WEDNESDAY	12:00N TUESDAY THROUGH 6:00 AM THURSDAY
THURSDAY	12:00N WEDNESDAY THROUGH 6:00 AM FRIDAY
FRIDAY	12:00N THURSDAY THROUGH 6:00 AM MONDAY
SATURDAY	12:00N FRIDAY THROUGH 6:00 AM MONDAY

SHOULD THE CONTRACTOR FAIL TO MEET ANY OF THESE REQUIREMENTS, THE CONTRACTOR SHALL BE ASSESSED LIQUIDATED DAMAGES IN ACCORDANCE WITH CMS 108.07.

FLOODLIGHTING

FLOODLIGHTING OF THE WORK SITE FOR OPERATIONS CONDUCTED DURING NIGHTTIME PERIODS SHALL BE ACCOMPLISHED SO THAT THE LIGHTS DO NOT CAUSE GLARE TO THE DRIVERS ON THE ROADWAY. TO ENSURE THE ADEQUACY OF THE FLOODLIGHT PLACEMENT, THE CONTRACTOR AND THE ENGINEER SHALL DRIVE THROUGH THE WORK SITE EACH NIGHT WHEN THE LIGHTING IS IN PLACE AND OPERATIVE PRIOR TO COMMENCING ANY WORK. IF GLARE IS DETECTED, THE LIGHT PLACEMENT AND SHIELDING SHALL BE ADJUSTED TO THE SATISFACTION OF THE ENGINEER BEFORE WORK PROCEEDS.

PAYMENT FOR ALL LABOR, EQUIPMENT AND MATERIALS SHALL BE INCLUDED IN THE LUMP SUM CONTRACT PRICE FOR ITEM 614, MAINTAINING TRAFFIC.

MAINTENANCE OF TRAFFIC SIGNAL/FLASHER INSTALLATION

THE CONTRACTOR SHALL BE RESPONSBLE FOR MAINTAINING TRAFFIC SIGNAL/FLASHER INSTALLATIONS WITHIN THE PROJECT UNDER THE FOLLOWING CONDITIONS:

1. EXISTING SIGNAL/FLASHER INSTALLATIONS WHICH THE PLANS REQUIRE THE CONTRACTOR TO ADJUST, MODIFY, ADD ONTO OR REMOVE, OR WHICH THE CONTRACTOR ACTUALLY ADJUSTS, MODIFIES OR OTHERWISE DISTURBS. THE CONTRACTOR SHALL BE RESPONSIBLE FOR THE ENTIRE INSTALLATION (AT AN INTERSECTION) FROM THE TIME HIS OPERATIONS FIRST DISTURB THE INSTALLATION UNTIL THE INSTALLATION HAS BEEN SUBSEQUENTLY REMOVED OR MODIFIED AND THE WORK ACCEPTED.

2. NEW OR REUSED SIGNAL/FLASHER INSTALLATIONS OR DEVICES, INSTALLED BY THE CONTRACTOR. THE CONRACTOR SHALL BE RESPONSBILE FOR MAINTENANCE OF THESE FROM THE TIME OF INSTALLATION UNTIL THE WOPK IS ACCEPTED.

THE CONTRACTOR SHALL CORRECT AS QUICKLY AS POSSIBLE ALL OUTAGES OR MALFUNCTIONS. HE SHALL PROVIDE THE MAINTAINING AGENCY AND THE ENGINEER SUCH ADDRESSES AND PHONE NUMBERS WHERE HIS MAINTENANCE FORCES CAN BE CONTACTED. THE CONTRACTOR SHALL PROVIDE ONE OR MORE PERSONS TO RECEIVE ALL CALLS AND DISPATCH THE NECESSARY MAINTENANCE FORCES TO CORRECT OUTAGES. SUCH A PERSON OR PERSONS MAY BE USED TO PERFORM OTHER DUTIES AS LONG AS PROMPT ATTENTION IS GIVEN TO THESE CALLS AND A PERSON IS READILY AVAILABLE CONTINUOUSLY 24 HOURS A DAY, 7 DAYS A WEEK. ALL LAMP OUTAGES, CABLE OUTAGES, ELECTRICAL FAILURES, EQUIPMENT MALFUNCTIONS AND MISALIGNED SIGNAL HEADS SHALL BE CORRECTED TO THE SATISFACTION OF THE ENGINEER WITH THE SIGNAL BACK TO SERVICE WITHIN FOUR HOURS AFTER THE CONTRACTOR HAS BEEN NOTIFIED OF THE OUTAGE.

IN THE EVENT NEW SIGNALS ARE DAMAGED PRIOR TO ACCEPTANCE, ALL DAMAGED EQUIPMENT EXCEPT POLES AND CONTROL EQUIPMENT SHALL BE REPLACED BY THE CONTRACTOR TO THE SATISFACTION OF THE ENGINEER WITH THE SIGNAL BACK IN SERVICE WITHIN 8 HOURS AFTER THE CONTRACTOR'S NOTIFICATION OF THE OUTAGE. THE CONTRACTOR SHALL ARRANGE FOR FULL TRAFFIC CONTROL UNTIL THE SIGNAL IS BACK IN OPERATION.

IF POLES AND/OR CONTROL EQUIPMENT ARE DAMAGED AND MUST BE REPLACED, THE CONTRACTOR SHALL MAKE TEMPORARY REPAIRS AS NECESSARY TO BRING THE SIGNAL BACK INTO FULL OPERATION WITHIN THE ALLOWED 8-HOUR PERIOD, AND SHALL MAKE PERMANENT REPAIRS OR REPLACEMENT AS SOON THEREAFTER AS POSSIBLE.

NONE OF THE ABOVE SHALL BE CONSTRUED AS COLLECTIVE OR CONSECUTIVE OUTAGE TIME PERIODS AT ANY ONE LOCATION. THAT IS, WHERE MORE THAN ONE OUTAGE OCCURS AT ANY ONE LOCATION THEN THE ALLOTTED TIME LIMIT SHALL BE FOR THE WORST SINGLE OUTAGE.

WHERE OUTAGES ARE THE DIRECT RESULT OF A VEHICLE ACCIDENT, THE RESPONSE OF THE CONTRACTOR SHALL BE AS OUTLINED ABOVE. THE CONTRACTOR SHALL BE RESPONSIBLE FOR COLLECTION OF ANY COMPENSATION FOR THIS WORK FROM THOSE PARTIES RESPONSIBLE FOR THE DAMAGE.

WHERE THE CONTRACTOR HAS FAILED TO, OR CANNOT RESPOND TO, AN OUTAGE OR SIGNAL EQUIPMENT MALFUNCTION, AT THESE LOCATIONS WITHIN HIS RESPONSIBILITY, WITHIN PERIODS AS SPECIFIED ABOVE, THE ENGINEER MAY INVOKE THE PROVISIONS OF SECTION 105.15 AND ANY SUBSEQUENT BILLINGS TO THE STATE FOR POLICE SERVICES AND MAINTENANCE SERVICES BY CITY FORCES SHALL BE DEDUCTED FROM MONIES DUE OR TO BECOME DUE THE CONTRACTOR IN ACCORDANCE WITH PROVISIONS OF SECTION 105.15.

THE CONTRACTOR SHALL PROVIDE THE MAINTENANCE SERVICE ENTIRELY WITH HIS FORCES OR HE MAY CHOOSE TO ENTER INTO A COOPERATIVE UNDERSTANDING WITH THE LOCAL MAINTAINING AGENCY TO PROVIDE THE MAINTENANCE. THE CONTRACTOR SHALL INFORM THE ENGINEER, IN WRITING, OF THE MAINTENANCE METHOD SELECTED.

THE CONTRACTOR SHALL BE RESPONSIBLE FOR ANY DAMAGE TO ANY TRAFFIC SIGNAL COMPONENTS REQUIRED TO BE HANDLED DURING THE RELOCATION OF POLES AND REVISIONS TO THE SIGNAL SYSTEM.

ANY SIGNALIZED INTERSECTION, WHERE THE SIGNAL IS OUT OF SERVICE DUE TO CONSTRUCTION PROCEDURES, OR DUE TO AN OUTAGE OR MALFUNCTION OF EQUIPMENT AS DESCRIBED ABOVE, SHALL BE PROTECTED, BY THE CONTRACTOR, BY THE INSTALLATION OF TEMPORARY "STOP" SIGNS.

ANY VEHICULAR TRAFFIC SIGNAL HEAD, EITHER NEW OR EXISTING WHICH WILL BE OUT OF OPERATION SHALL BE COVERED IN THE MANNER DESCRIBED IN 632.25. THE CONTRACTOR SHALL MAINTAIN COMPLETE RECORDS OF MALFUNCTIONS INCLUDING:

1. TIME OF NOTIFICATION OF MALFUNCTION;
2. TIME OF WORK CREWS ARRIVAL TO CORRECT THE MALFUNCTION;
3. ACTIONS TAKEN TO CORRECT THE MALFUNCTION, INCLUDING A LIST OF PARTS REPAIRED OR REPLACED;
4. A DIAGNOSIS OF REASON FOR THE MALFUNCTION AND PROBABILITY OF REOCCURRENCE;
5. TIME OF COMPLETION OF THE REPAIR AND SYSTEM RESTORED TO FULL SERVICE.

A COPY OF THESE RECORDS SHALL BE PROVIDED TO THE ENGINEER WITHIN THREE (3) WORKING DAYS FOLLOWING COMPLETION OF EACH REPAIR.

ALL COSTS RESULTING FROM THE ABOVE REQUIREMENTS SHALL BE CONSIDERED TO BE INCLUDED IN THE LUMP SUM PRICE BID FOR ITEM 614, MAINTAINING TRAFFIC.

CALCULATED BRH
CHECKED JSL

MAINTENANCE OF TRAFFIC NOTES

D05-FY2017-
SIGNAL UPGRADE

s:\Projects\Dist 6\D05\95383\Design\MOT\Sheets\95383_MN30.dgn 22-FEB-2017 2:31PM jlu121

ITEM 614, PORTABLE CHANGEABLE MESSAGE SIGNS, AS PER PLAN

THE CONTRACTOR SHALL FURNISH, INSTALL, MAINTAIN AND REMOVE, WHEN NO LONGER NEEDED, A CHANGEABLE MESSAGE SIGN. THE SIGN SHALL BE OF A TYPE SHOWN ON A LIST OF APPROVED PCMS UNITS AVAILABLE ON THE OFFICE OF MATERIALS MANAGEMENT WEB PAGE. THE LIST CONTAINS CLASS A AND B UNITS WITH MINIMUM LEGIBILITY DISTANCES OF 650 FEET AND 475 FEET, RESPECTIVELY.

EACH SIGN SHALL BE TRAILER-MOUNTED AND EQUIPPED WITH A FUNCTIONAL DIMMING MECHANISM, TO DIM THE SIGN DURING DARKNESS, AND A TAMPER AND VANDAL PROOF ENCLOSURE. EACH SIGN SHALL BE PROVIDED WITH APPROPRIATE TRAINING AND OPERATION INSTRUCTIONS TO ENABLE ON-SITE PERSONNEL TO OPERATE AND TROUBLESHOOT THE UNIT. THE SIGN SHALL ALSO BE CAPABLE OF BEING POWERED BY AN ELECTRICAL SERVICE DROP FROM A LOCAL UTILITY COMPANY. THE PCMS SHALL BE DELINEATED IN ACCORDANCE WITH C&MS 614.03.

THE PROBABLE PCMS LOCATIONS AND WORK LIMITS FOR THOSE LOCATIONS ARE SHOWN ON SHEET(S) OF THE PLAN. PLACEMENT, OPERATION, MAINTENANCE AND ALL ACTIVATION OF THE SIGNS BY THE CONTRACTOR SHALL BE AS DIRECTED BY THE ENGINEER. THE PCMS SHALL BE LOCATED IN A HIGHLY VISIBLE POSITION YET PROTECTED FROM TRAFFIC. THE CONTRACTOR SHALL, AT THE DIRECTION OF THE ENGINEER, RELOCATE THE PCMS TO IMPROVE VISIBILITY OR ACCOMMODATE CHANGED CONDITIONS. WHEN NOT IN USE, THE PCMS SHALL BE TURNED OFF. ADDITIONALLY, WHEN NOT IN USE FOR EXTENDED PERIODS OF TIME, THE PCMS SHALL BE TURNED AWAY FROM ALL TRAFFIC.

THE ENGINEER SHALL BE PROVIDED ACCESS TO EACH SIGN UNIT AND SHALL BE PROVIDED WITH APPROPRIATE TRAINING AND OPERATION INSTRUCTIONS TO ENABLE ODOT PERSONNEL TO OPERATE AND TROUBLESHOOT THE UNIT, AND TO REVISE SIGN MESSAGES, IF NECESSARY.

(THE CONTRACTOR SHALL IMPLEMENT A SYSTEM WHEREBY CHANGEABLE MESSAGES WILL BE IMPLEMENTED WITHIN TWO HOURS FOLLOWING TELEPHONE NOTIFICATION FROM THE PROJECT ENGINEER TO A DESIGNATED PHONE.)

ALL MESSAGES TO BE DISPLAYED ON THE SIGN WILL BE PROVIDED BY THE ENGINEER. A LIST OF ALL REQUIRED PRE-PROGRAMMED MESSAGES WILL BE GIVEN TO THE CONTRACTOR AT THE PROJECT PRECONSTRUCTION CONFERENCE. THE SIGN SHALL HAVE THE CAPABILITY TO STORE UP TO 99 MESSAGES. MESSAGE MEMORY OR PRE-PROGRAMMED DISPLAYS SHALL NOT BE LOST AS A RESULT OF POWER FAILURES TO THE ON-BOARD COMPUTER. THE SIGN LEGEND SHALL BE CAPABLE OF BEING CHANGED IN THE FIELD. THREE-LINE PRESENTATION FORMATS WITH UP TO SIX MESSAGE PHASES SHALL BE SUPPORTED. PCMS FORMAT SHALL PERMIT THE COMPLETE MESSAGE FOR EACH PHASE TO BE READ AT LEAST TWICE. THE PCMS SHALL CONTAIN AN ACCURATE CLOCK AND PROGRAMMING LOGIC WHICH WILL ALLOW THE SIGN TO BE ACTIVATED, DEACTIVATED OR MESSAGES CHANGED AUTOMATICALLY AT DIFFERENT TIMES OF THE DAY FOR DIFFERENT DAYS OF THE WEEK.

(THE PCMS SHALL CONTAIN A CELLULAR TELEPHONE DATA LINK WHICH WILL (IN ACTIVE CELLULAR PHONE AREAS) ALLOW REMOTE SIGN ACTIVATION, MESSAGE CHANGES, MESSAGE ADDITIONS AND REVISIONS TO TIME OF DAY PROGRAMS. THE SYSTEM SHALL ALSO PERMIT VERIFICATION OF CURRENT AND PROGRAMMED MESSAGES. ONE REMOTE DATA INPUT DEVICE (LAPTOP COMPUTER PLUS MODEM OR EQUIVALENT) SHALL BE FURNISHED FOR USE BY THE DISTRICT TRAFFIC ENGINEER, OR EQUIVALENT, AND SHALL BE INSURED AGAINST THEFT.) THE PCMS UNIT SHALL BE MAINTAINED IN GOOD WORKING ORDER BY THE CONTRACTOR IN ACCORDANCE WITH THE PROVISIONS OF C&MS 614.07. THE CONTRACTOR SHALL, PRIOR TO ACTIVATING THE UNIT, MAKE ARRANGEMENTS, WITH AN AUTHORIZED SERVICE AGENT FOR THE PCMS, TO ASSURE PROMPT SERVICE IN THE EVENT OF FAILURE. ANY FAILURE SHALL NOT RESULT IN THE SIGN BEING OUT OF SERVICE FOR MORE THAN 12 HOURS, INCLUDING WEEKENDS. FAILURE TO COMPLY MAY RESULT IN AN ORDER TO STOP WORK AND OPEN ALL TRAFFIC LANES AND/OR IN THE DEPARTMENT TAKING APPROPRIATE ACTION TO SAFELY CONTROL TRAFFIC. THE ENTIRE COST TO CONTROL TRAFFIC, ACCRUED BY THE DEPARTMENT DUE TO THE CONTRACTOR'S NONCOMPLIANCE, WILL BE DEDUCTED FROM MONEYS DUE, OR TO BECOME DUE THE CONTRACTOR ON HIS CONTRACT.

THE CONTRACTOR SHALL BE RESPONSIBLE FOR 24-HOUR-PER-DAY OPERATION AND MAINTENANCE OF THESE SIGNS ON THE PROJECT FOR THE DURATION OF THE PHASES WHEN THE PLAN REQUIRES THEIR USE.

PAYMENT FOR THE ABOVE DESCRIBED ITEM SHALL BE AT THE CONTRACT UNIT PRICE. PAYMENT SHALL INCLUDE ALL LABOR, MATERIALS, EQUIPMENT, FUELS, LUBRICATING OILS, SOFTWARE, HARDWARE AND INCIDENTALS TO PERFORM THE ABOVE DESCRIBED WORK.

(4 SIGNS PER WORK LOCATION AT A TIME,
4 SIGNS X 7 DAYS X 11 WORK LOCATIONS = 308 DAY)

ITEM 614, PORTABLE CHANGEABLE MESSAGE SIGN, AS PER PLAN 308 DAY

ITEM 614 - LAW ENFORCEMENT OFFICER (WITH PATROL CAR) FOR ASSISTANCE DURING CONSTRUCTION OPERATIONS

USE OF LAW ENFORCEMENT OFFICERS (LEOS) BY CONTRACTORS OTHER THAN THE USES SPECIFIED BELOW WILL NOT BE PERMITTED AT PROJECT COST. LEOS SHOULD NOT BE USED WHERE THE OMUTCD INTENDS THAT FLAGGERS BE USED. IN ADDITION TO THE REQUIREMENTS OF C&MS 614 AND THE OMUTCD, A UNIFORMED LEO WITH AN OFFICIAL PATROL CAR (CAR WITH TOP-MOUNTED EMERGENCY FLASHING LIGHTS AND COMPLETE MARKINGS OF THE APPROPRIATE LAW ENFORCEMENT AGENCY) SHALL BE PROVIDED FOR THE FOLLOWING TRAFFIC CONTROL TASKS:

DURING THE ENTIRE ADVANCE PREPARATION AND CLOSURE SEQUENCE WHERE COMPLETE BLOCKAGE OF TRAFFIC IS REQUIRED.
DURING A TRAFFIC SIGNAL INSTALLATION WHEN IMPACTING THE NORMAL FUNCTION OF THE SIGNAL OR THE FLOW OF TRAFFIC OR WHEN TRAFFIC NEEDS TO BE DIRECTED THROUGH AN ENERGIZED TRAFFIC SIGNAL CONTRARY TO THE SIGNAL DISPLAY (E.G., DIRECTING MOTORISTS THROUGH A RED LIGHT).

IN ADDITION TO THE REQUIREMENT OF C&MS 614 AND THE OMUTCD, A UNIFORMED LEO WITH AN OFFICIAL PATROL CAR (CAR WITH TOP-MOUNTED EMERGENCY FLASHING LIGHTS AND COMPLETE MARKINGS OF THE APPROPRIATE LAW ENFORCEMENT AGENCY) SHOULD BE PROVIDED FOR THE FOLLOWING TRAFFIC CONTROL TASKS:

FOR LANE CLOSURES: DURING INITIAL SET-UP PERIODS, TEAR DOWN PERIODS, SUBSTANTIAL SHIFTS OF A CLOSURE POINT OR WHEN NEW LANE CLOSURE ARRANGEMENTS ARE INITIATED FOR LONG-TERM LANE CLOSURES/SHIFTS (FOR THE FIRST AND LAST DAY OF MAJOR CHANGES IN TRAFFIC CONTROL SETUP). IN GENERAL, LEOS SHOULD BE POSITIONED AT THE POINT OF LANE RESTRICTION OR ROAD CLOSURE AND TO MANUALLY CONTROL TRAFFIC MOVEMENTS THROUGH INTERSECTIONS IN WORK ZONES. WHEN CONSTRUCTION VEHICLES ARE ENTERING/EXITING THE ZONE DIRECTLY FROM/INTO AN OPEN LANE OF TRAFFIC. IF A LANE HAS BEEN CLOSED TO PROVIDE AN ACCELERATION/DECELERATION LANE FOR THE VEHICLE, THE LEO WILL NOT BE REQUIRED.

LEOS SHOULD NOT FORGO THEIR TRAFFIC CONTROL RESPONSIBILITIES TO APPREHEND MOTORISTS FOR ROUTINE TRAFFIC VIOLATIONS. HOWEVER, IF A MOTORIST'S ACTIONS ARE CONSIDERED TO BE RECKLESS, THEN PURSUIT OF THE MOTORIST IS APPROPRIATE.

THE LEOS WORK AT THE DIRECTION OF THE CONTRACTOR. THE CONTRACTOR IS RESPONSIBLE FOR SECURING THE SERVICES OF THE LEOS WITH THE APPROPRIATE AGENCIES AND COMMUNICATING THE INTENTIONS OF THE PLANS WITH RESPECT TO DUTIES OF THE LEOS. THE ENGINEER SHALL HAVE FINAL CONTROL OVER THE LEOS' DUTIES AND PLACEMENT, AND WILL RESOLVE ANY ISSUES THAT MAY ARISE BETWEEN THE TWO PARTIES.

THE LEO SHALL REPORT IN TO THE CONTRACTOR PRIOR TO THE START OF THE SHIFT, IN ORDER TO RECEIVE INSTRUCTIONS REGARDING SPECIFIC WORK ASSIGNMENTS DURING HIS/HER SHIFT. THE LEO IS EXPECTED TO STAY AT THE PROJECT SITE FOR THE ENTIRE DURATION OF HIS/HER SHIFT. THE LEO SHALL REPORT TO THE CONTRACTOR AT THE END OF HIS/HER SHIFT. ONCE THE LEO HAS COMPLETED THE DUTIES DESCRIBED ABOVE AND STILL HAS TIME REMAINING ON HIS/HER SHIFT, THE LEO MAY BE ASKED TO PATROL THROUGH THE WORK ZONE (WITH FLASHING LIGHTS OFF) OR BE PLACED AT A LOCATION TO DETER MOTORISTS FROM SPEEDING. SHOULD IT BE NECESSARY TO LEAVE THE PROJECT SITE, THE LEO SHALL NOTIFY THE ENGINEER. THE CONTRACTOR SHALL PROVIDE THE LEO WITH A TWO-WAY COMMUNICATION DEVICE WHICH SHALL BE RETURNED TO THE CONTRACTOR AT THE END OF HIS/HER SHIFT. LEOS (WITH PATROL CAR) REQUIRED BY THE TRAFFIC MAINTENANCE TASKS ABOVE SHALL BE PAID FOR ON A UNIT PRICE (HOURLY) BASIS UNDER ITEM 614, LAW ENFORCEMENT OFFICER (WITH PATROL CAR) FOR ASSISTANCE.

THE HOURS PAID SHALL INCLUDE ANY MINIMUM SHOW-UP TIME REQUIRED BY THE LAW ENFORCEMENT AGENCY INVOLVED. ANY ADDITIONAL COSTS (ADMINISTRATIVE OR OTHERWISE) INCURRED BY THE CONTRACTOR TO OBTAIN THE SERVICES OF AN LEO ARE INCLUDED WITH THE BID UNIT PRICE FOR ITEM 614, LAW ENFORCEMENT OFFICER WITH PATROL CAR FOR ASSISTANCE.

THE FOLLOWING ESTIMATED QUANTITIES HAVE BEEN CARRIED TO THE GENERAL SUMMARY:

ITEM 614, LAW ENFORCEMENT OFFICER WITH PATROL CAR FOR ASSISTANCE 300 HOUR

SEQUENCE OF CONSTRUCTION

THE LOCATIONS OF THIS PROJECT MAY BE CONSTRUCTED IN ANY ORDER DURING THE ALOTTED CONSTRUCTION TIMEFRAME WITH TWO EXCEPTIONS:

LOCATION 4: U.S. 40 & WATKINS RD. SHALL BE COMPLETED DURING THE SUMMER WHEN THE SOUTHWEST LICKING SCHOOLS ARE OUT OF SESSION.

LOCATION 6: S.R. 13 & DORSEY MILL RD. SHALL BE COMPLETED BEFORE PAVING BEGINS WITH THE PROJECT ON S.R. 13 STATED IN THE "COOPERATION BETWEEN CONTRACTORS" NOTE TO INSURE THE PROPOSED ITEM 642 PAVEMENT MARKINGS ARE NOT INSTALLED ON THE NEW PAVEMENT.

CALCULATED BRH
CHECKED JSL

MAINTENANCE OF TRAFFIC NOTES

D05-FY2017-SIGNAL UPGRADE

I:\Projects\D05\95383\Design\MOT\Sheets\95383_MN302.dgn 27-FEB-2017 1:51PM jlu121

SHEET NUMBERS										PLAN SPLITS			ITEM	ITEM EXT	GRAND TOTAL	UNIT	DESCRIPTION	SEE SHEET NO.
4	6		9	10	11		15	17		01/NHS/OT	02/STR/OT	03/S&2/OT						
																	ROADWAY	
				1							1		201	26500	1	EACH	STUMP REMOVED, 18"	
40											24	16	SPECIAL	69065016	40	TON	WORK INVOLVING PETROLEUM CONTAMINATED SOIL	4
																	EROSION CONTROL	
1,500										545	545	410	659	00510	1,500	SY	SEEDING AND MULCHING, CLASS 2	
0.2										0.07	0.07	0.06	659	20000	0.2	TON	COMMERCIAL FERTILIZER	
8										3	3	2	659	35000	8	MGAL	WATER	
																	DRAINAGE	
							500			180	180	140	611	00400	500	FT	4" CONDUIT, TYPE E	
																	TRAFFIC CONTROL	
100								30			98	32	630	03100	130	FT	GROUND MOUNTED SUPPORT, NO. 3 POST	
								2			2		630	08500	2	EACH	SIGN POST REFLECTOR	
				4				18			22		630	80100	22	SF	SIGN, FLAT SHEET	
5										2	2	1	630	84900	5	EACH	REMOVAL OF GROUND MOUNTED SIGN AND DISPOSAL	
5										2	2	1	630	85100	5	EACH	REMOVAL OF GROUND MOUNTED SIGN AND REERECTION	
5										2	2	1	630	87500	5	EACH	REMOVAL OF POLE MOUNTED SIGN AND DISPOSAL	
16											12	4	630	87520	16	EACH	REMOVAL OF POLE MOUNTED SIGN AND REERECTION	
								1			1		630	97700	1	EACH	SIGNING, MISC.: SIGNAL AHEAD SIGN WITH FLASHING BEACONS REMOVED	17
								2			1	1	630	97700	2	EACH	SIGNING, MISC.: SIGNAL AHEAD SIGN WITH FLASHING BEACONS RETROFITTED	17
0.03										0.01	0.01	0.01	642	00290	0.03	MILE	CENTER LINE	
165										48		117	642	00390	165	FT	CHANNELIZING LINE, 8"	
410										140	95	175	642	00490	410	FT	STOP LINE	
110												110	642	30000	110	FT	REMOVAL OF PAVEMENT MARKING	
																	TRAFFIC SIGNALS	
				4	4						4	4	625	00450	8	EACH	CONNECTION, FUSED PULL APART	
					8							8	625	00480	8	EACH	CONNECTION, UNFUSED PERMANENT	
					2							2	625	18201	2	EACH	BRACKET ARM, 15', AS PER PLAN	16
				2	4						2	4	625	18400	6	EACH	BRACKET ARM, 20'	
			95	104	57					95	104	57	625	25402	256	FT	CONDUIT, 2", 725.05	
			92		80					92		80	625	25500	172	FT	CONDUIT, 3", 725.04	
			38		258					38		258	625	25502	296	FT	CONDUIT, 3", 725.05	
			25	52	12					25	52	12	625	25602	89	FT	CONDUIT, 4", 725.05	
			100		446					100		446	625	25902	546	FT	CONDUIT, JACKED OR DRILLED, 725.04, 3"	
				2	2						2	2	625	26253	4	EACH	LUMINAIRE, CONVENTIONAL, SOLID STATE (LED), AS PER PLAN (150W, 120V, TYPE II)	15
			88	52	203					88	52	203	625	29002	343	FT	TRENCH, 24" DEEP	
			92		80					92		80	625	29600	172	FT	TRENCH IN PAVED AREA, TYPE B	
			5	4	10					5	4	10	625	30706	19	EACH	PULL BOX, 725.08, 24"	
			14	18	12					14	18	12	625	32000	44	EACH	GROUND ROD	
				1							1		630	79000	1	EACH	SIGN HANGER ASSEMBLY, SPAN WIRE	
			32	33	17					32	33	17	632	05007	82	EACH	VEHICULAR SIGNAL HEAD, (LED), 3-SECTION, 12" LENS, 1-WAY, POLYCARBONATE, AS PER PLAN	12
			4	3	7					4	3	7	632	05087	14	EACH	VEHICULAR SIGNAL HEAD, (LED), 5-SECTION, 12" LENS, 1-WAY, POLYCARBONATE, AS PER PLAN	12
			36	36	24					36	36	24	632	25000	96	EACH	COVERING OF VEHICULAR SIGNAL HEAD	
			750	1,475	435					750	1,475	435	632	30300	2,660	FT	MESSENGER WIRE, 7 STRAND, 7/16" DIAMETER WITH ACCESSORIES	
			1,215	1,475	435					1,215	1,475	435	632	30601	3,125	FT	TETHER WIRE, WITH ACCESSORIES, AS PER PLAN	15

CALCULATED BRH
CHECKED JSL

GENERAL SUMMARY

D05-FY2017-SIGNAL UPGRADE

i:\Projects\Data\D05\95383\Design\Roadway\Sheets\95383_GG001.dgn 23-FEB-2017 1:27PM jlu121

SHEET NUMBERS										PLAN SPLITS			ITEM	ITEM EXT	GRAND TOTAL	UNIT	DESCRIPTION	SEE SHEET NO.
4	6		9	10	11		15	17		01/NHS/OT	02/STR/OT	03/S<2/OT						
																	TRAFFIC SIGNAL CONT.	
			1,416	446	585					1,416	446	585	632	40500	2,447	FT	SIGNAL CABLE, 5 CONDUCTOR, NO. 14 AWG	
			1,465	2,197	1,764					1,465	2,197	1,764	632	40700	5,426	FT	SIGNAL CABLE, 7 CONDUCTOR, NO. 14 AWG	
			8	14	4					8	14	4	632	64000	26	EACH	STRAIN POLE FOUNDATION	
			3		6					3		6	632	64010	9	EACH	SIGNAL SUPPORT FOUNDATION	
			65	372	316					65	372	316	632	67300	753	FT	POWER CABLE, 3 CONDUCTOR, NO. 8 AWG	
			3	4	3					3	4	3	632	70001	10	EACH	POWER SERVICE, AS PER PLAN	13
			1							1			632	75410	1	EACH	SIGNAL SUPPORT, TYPE TC-12.30 DESIGN 8 POLE, WITH MAST ARMS TC-81.21 DESIGN 13	
																	AND DESIGN 11	
					1							1	632	76209	1	EACH	COMBINATION SIGNAL SUPPORT, TYPE TC-12.30 DESIGN 7 POLE, WITH MAST ARMS TC-81.21	16
																	DESIGN 13 AND DESIGN 3, AS PER PLAN	
					1							1	632	77053	1	EACH	COMBINATION SIGNAL SUPPORT, TYPE TC-81.21 DESIGN 4 POLE, WITH MAST ARMS TC-81.21	16
																	DESIGN 3 AND DESIGN 3, AS PER PLAN	
			1		1					1		1	632	80202	2	EACH	SIGNAL SUPPORT, TYPE TC-81.21, DESIGN 2	
					2							2	632	80302	2	EACH	SIGNAL SUPPORT, TYPE TC-81.21, DESIGN 3	
			1							1			632	80502	1	EACH	SIGNAL SUPPORT, TYPE TC-81.21, DESIGN 11	
			8	10						8	10		632	83000	18	EACH	STRAIN POLE, TYPE TC-81.10, DESIGN 10	
				2	4						2	4	632	85000	6	EACH	COMBINATION STRAIN POLE, TYPE TC-81.10, DESIGN 10	
			4	4	3					4	4	3	632	90101	11	EACH	REMOVAL OF TRAFFIC SIGNAL INSTALLATION, AS PER PLAN	12
				2							2		632	90208	2	EACH	REUSE OF STRAIN POLE	
			465							465			632	90500	465	FT	SIGNALIZATION, MISC.: UNLASH AND RELASH MESSENGER WIRE	13
			2				2			2	2		633	45000	4	EACH	GPS (GLOBAL POSITIONING SYSTEM) CLOCK ASSEMBLY	
			3	4	3					3	4	3	633	67100	10	EACH	CABINET FOUNDATION	
			3	4	3					3	4	3	633	67201	10	EACH	CONTROLLER WORK PAD, AS PER PLAN	15
			3	4	3					3	4	3	633	75001	10	EACH	UNINTERRUPTIBLE POWER SUPPLY (UPS), 1000 WATT, AS PER PLAN	14
			3	4	3					3	4	3	633	99000	10	EACH	CONTROLLER ITEM, MISC.: CONTROLLER UNIT, TYPE 2070E, WITH CABINET, TYPE 332	16
			9	13	9					9	13	9	809	69000	31	EACH	ADVANCE RADAR DETECTION	
			16	12	11					16	12	11	809	69100	39	EACH	STOP-BAR RADAR DETECTION	
																	MAINTENANCE OF TRAFFIC	
	300									110	110	80	614	11110	300	HOUR	LAW ENFORCEMENT OFFICER WITH PATROL CAR FOR ASSISTANCE	
	308									112	112	84	614	18401	308	DAY	PORTABLE CHANGEABLE MESSAGE SIGN, AS PER PLAN	6
																	INCIDENTALS	
	LS									LS	LS	LS	614	11000	LS		MAINTAINING TRAFFIC	
										LS	LS	LS	623	10000	LS		CONSTRUCTION LAYOUT STAKES AND SURVEYING	
										LS	LS	LS	624	10000	LS		MOBILIZATION	

CALCULATED BRH
CHECKED JSL

GENERAL SUMMARY

D05-FY2017-SIGNAL UPGRADE

i:\Projects\Dallas\D05\95383\Design\Roadway\Sheets\95383_GG002.dgn 23-FEB-2017 12:25PM jlu12

SHEET NUMBERS												PLAN SPLIT	ITEM	ITEM EXT	GRAND TOTAL	UNIT	DESCRIPTION
20		30		60		65						01/NHS/OT					
																	TRAFFIC SIGNALS
45				20		30						95	625	25402	95	FT	CONDUIT, 2", 725.05
92												92	625	25500	92	FT	CONDUIT, 3", 725.04
38												38	625	25502	38	FT	CONDUIT, 3", 725.05
				10		15						25	625	25602	25	FT	CONDUIT, 4", 725.05
100												100	625	25902	100	FT	CONDUIT, JACKED OR DRILLED, 725.04, 3"
63				10		15						88	625	29002	88	FT	TRENCH, 24" DEEP
92												92	625	29600	92	FT	TRENCH IN PAVED AREA, TYPE B
3				1		1						5	625	30706	5	EACH	PULL BOX, 725.08, 24"
4				5		5						14	625	32000	14	EACH	GROUND ROD
10		10		6		6						32	632	05007	32	EACH	VEHICULAR SIGNAL HEAD, (LED), 3-SECTION, 12" LENS, 1-WAY, POLYCARBONATE, AS PER PLAN
				2		2						4	632	05087	4	EACH	VEHICULAR SIGNAL HEAD, (LED), 5-SECTION, 12" LENS, 1-WAY, POLYCARBONATE, AS PER PLAN
10		10		8		8						36	632	25000	36	EACH	COVERING OF VEHICULAR SIGNAL HEAD
				350		400						750	632	30300	750	FT	MESSENGER WIRE, 7 STRAND, 7/16" DIAMETER WITH ACCESSORIES
		465		350		400						1,215	632	30601	1,215	FT	TETHER WIRE, WITH ACCESSORIES, AS PER PLAN
453		335		322		306						1,416	632	40500	1,416	FT	SIGNAL CABLE, 5 CONDUCTOR, NO. 14 AWG
440		376		320		329						1,465	632	40700	1,465	FT	SIGNAL CABLE, 7 CONDUCTOR, NO. 14 AWG
				4		4						8	632	64000	8	EACH	STRAIN POLE FOUNDATION
3												3	632	64010	3	EACH	SIGNAL SUPPORT FOUNDATION
30				15		20						65	632	67300	65	FT	POWER CABLE, 3 CONDUCTOR, NO. 8 AWG
1				1		1						3	632	70001	3	EACH	POWER SERVICE, AS PER PLAN
1												1	632	75410	1	EACH	SIGNAL SUPPORT, TYPE TC-12.30 DESIGN 8 POLE, WITH MAST ARMS TC-81.21 DESIGN 13 AND DESIGN 11
1												1	632	80202	1	EACH	SIGNAL SUPPORT, TYPE TC-81.21, DESIGN 2
1												1	632	80502	1	EACH	SIGNAL SUPPORT, TYPE TC-81.21, DESIGN 11
				4		4						8	632	83000	8	EACH	STRAIN POLE, TYPE TC-81.10, DESIGN 10
1		1		1		1						4	632	90101	4	EACH	REMOVAL OF TRAFFIC SIGNAL INSTALLATION, AS PER PLAN
		465										465	632	90500	465	FT	SIGNALIZATION, MISC.: UNLASH AND RELASH MESSENGER WIRE
				1		1						2	633	45000	2	EACH	GPS (GLOBAL POSITIONING SYSTEM) CLOCK ASSEMBLY
1				1		1						3	633	67100	3	EACH	CABINET FOUNDATION
1				1		1						3	633	67201	3	EACH	CONTROLLER WORK PAD, AS PER PLAN
1				1		1						3	633	75001	3	EACH	UNINTERRUPTIBLE POWER SUPPLY (UPS), 1000 WATT, AS PER PLAN
1				1		1						3	633	99000	3	EACH	CONTROLLER ITEM, MISC.: CONTROLLER UNIT, TYPE 2070E, WITH CABINET, TYPE 332
2		3		2		2						9	609	69000	9	EACH	ADVANCE RADAR DETECTION
4		4		4		4						16	609	69100	16	EACH	STOP-BAR RADAR DETECTION
												QUANTITIES CARRIED TO GENERAL SUMMARY					

CALCULATED BRH
CHECKED JSL

TRAFFIC SIGNAL SUMMARY
PLAN SPLIT 01/NHS/OT

D05-FY2017-
SIGNAL UPGRADE

23-FEB-2017 12:25PM jlul21
:\Projects\D05\95383\Design\Signals\Sheets\95383_CS012.dgn

SHEET NUMBERS												PLAN SPLIT	ITEM	ITEM EXT	GRAND TOTAL	UNIT	DESCRIPTION
35		40		50		55						02/STR/OT					
																	ROADWAY
				1								1	201	26500	1	EACH	STUMP REMOVED, 18"
																	TRAFFIC SIGNALS
		4										4	625	00450	4	EACH	CONNECTION, FUSED PULL APART
		2										2	625	18400	2	EACH	BRACKET ARM, 20'
40		20		24		20						104	625	25402	104	FT	CONDUIT, 2", 725.05
20		10		12		10						52	625	25602	52	FT	CONDUIT, 4", 725.05
		2										2	625	26253	2	EACH	LUMINAIRE, CONVENTIONAL, SOLID STATE (LED), AS PER PLAN (150W, 120V, TYPE II)
20		10		12		10						52	625	29002	52	FT	TRENCH, 24" DEEP
1		1		1		1						4	625	30706	4	EACH	PULL BOX, 725.08, 24"
3		5		5		5						18	625	32000	18	EACH	GROUND ROD
		1										1	630	79000	1	EACH	SIGN HANGER ASSEMBLY, SPAN WIRE
		4										4	630	80100	4	SF	SIGN, FLAT SHEET
9		7		9		8						33	632	05007	33	EACH	VEHICULAR SIGNAL HEAD, (LED), 3-SECTION, 12" LENS, 1-WAY, POLYCARBONATE, AS PER PLAN
1		2										3	632	05087	3	EACH	VEHICULAR SIGNAL HEAD, (LED), 5-SECTION, 12" LENS, 1-WAY, POLYCARBONATE, AS PER PLAN
10		9		9		8						36	632	25000	36	EACH	COVERING OF VEHICULAR SIGNAL HEAD
420		440		335		280						1,475	632	30300	1,475	FT	MESSENGER WIRE, 7 STRAND, 7/16" DIAMETER WITH ACCESSORIES
420		440		335		280						1,475	632	30601	1,475	FT	TETHER WIRE, WITH ACCESSORIES, AS PER PLAN
128		318										446	632	40500	446	FT	SIGNAL CABLE, 5 CONDUCTOR, NO. 14 AWG
628		346		711		512						2,197	632	40700	2,197	FT	SIGNAL CABLE, 7 CONDUCTOR, NO. 14 AWG
2		4		4		4						14	632	64000	14	EACH	STRAIN POLE FOUNDATION
25		315		17		15						372	632	67300	372	FT	POWER CABLE, 3 CONDUCTOR, NO. 8 AWG
1		1		1		1						4	632	70601	4	EACH	POWER SERVICE, AS PER PLAN
		2		4		4						10	632	83000	10	EACH	STRAIN POLE, TYPE TC-81.10, DESIGN 10
		2										2	632	85000	2	EACH	COMBINATION STRAIN POLE, TYPE TC-81.10, DESIGN 10
1		1		1		1						4	632	90101	4	EACH	REMOVAL OF TRAFFIC SIGNAL INSTALLATION, AS PER PLAN
2												2	632	90208	2	EACH	REUSE OF STRAIN POLE
1		1		1		1						4	633	67100	4	EACH	CABINET FOUNDATION
1		1		1		1						4	633	67201	4	EACH	CONTROLLER WORK PAD, AS PER PLAN
1		1		1		1						4	633	75001	4	EACH	UNINTERRUPTIBLE POWER SUPPLY (UPS), 1000 WATT, AS PER PLAN
1		1		1		1						4	633	99000	4	EACH	CONTROLLER ITEM, MISC.: CONTROLLER UNIT, TYPE 2070E, WITH CABINET, TYPE 332
3		2		4		4						13	809	69000	13	EACH	ADVANCE RADAR DETECTION
4		4		2		2						12	809	69100	12	EACH	STOP-BAR RADAR DETECTION
												QUANTITIES CARRIED TO GENERAL SUMMARY					

CALCULATED BRH
CHECKED JSL

TRAFFIC SIGNAL SUMMARY
PLAN SPLIT 02/STR/OT

D05-FY2017-
SIGNAL UPGRADE

I:\Projects\D05\95383\Design\Signals\Sheets\95383_CS013.dgn 23-FEB-2017 12:25PM jlu121

SHEET NUMBERS												PLAN SPLIT	ITEM	ITEM EXT	GRAND TOTAL	UNIT	DESCRIPTION
25		45		70								03/S&2/OT					
																	TRAFFIC SIGNALS
				4								4	625	00450	4	EACH	CONNECTION, FUSED PULL APART
				8								8	625	00480	8	EACH	CONNECTION, UNFUSED PERMANENT
				2								2	625	18201	2	EACH	BRACKET ARM, 15', AS PER PLAN
		4										4	625	18400	4	EACH	BRACKET ARM, 20'
33		24										57	625	25402	57	FT	CONDUIT, 2", 725.05
80												80	625	25500	80	FT	CONDUIT, 3", 725.04
82				176								258	625	25502	258	FT	CONDUIT, 3", 725.05
		12										12	625	25602	12	FT	CONDUIT, 4", 725.05
170				276								446	625	25902	446	FT	CONDUIT, JACKED OR DRILLED, 725.04, 3"
				2								2	625	26253	2	EACH	LUMINAIRE, CONVENTIONAL, SOLID STATE (LED), AS PER PLAN (150W, 120V, TYPE II)
97		12		94								203	625	29002	203	FT	TRENCH, 24" DEEP
80												80	625	29600	80	FT	TRENCH IN PAVED AREA, TYPE B
5		1		4								10	625	30706	10	EACH	PULL BOX, 725.08, 24"
4		5		3								12	625	32000	12	EACH	GROUND ROD
7		6		4								17	632	05007	17	EACH	VEHICULAR SIGNAL HEAD, (LED), 3-SECTION, 12" LENS, 1-WAY, POLYCARBONATE, AS PER PLAN
1		2		4								7	632	05087	7	EACH	VEHICULAR SIGNAL HEAD, (LED), 5-SECTION, 12" LENS, 1-WAY, POLYCARBONATE, AS PER PLAN
8		8		8								24	632	25000	24	EACH	COVERING OF VEHICULAR SIGNAL HEAD
		435										435	632	30300	435	FT	MESSENGER WIRE, 7 STRAND, 7/16" DIAMETER WITH ACCESSORIES
		435										435	632	30601	435	FT	TETHER WIRE, WITH ACCESSORIES, AS PER PLAN
585												585	632	40500	585	FT	SIGNAL CABLE, 5 CONDUCTOR, NO. 14 AWG
205		714		845								1,764	632	40700	1,764	FT	SIGNAL CABLE, 7 CONDUCTOR, NO. 14 AWG
		4										4	632	64000	4	EACH	STRAIN POLE FOUNDATION
4				2								5	632	64010	5	EACH	SIGNAL SUPPORT FOUNDATION
20		17		379								416	632	67300	416	FT	POWER CABLE, 3 CONDUCTOR, NO. 8 AWG
1		1		1								3	632	70001	3	EACH	POWER SERVICE, AS PER PLAN
				1								1	632	76209	1	EACH	COMBINATION SIGNAL SUPPORT, TYPE TC-12.30 DESIGN 7 POLE, WITH MAST ARMS TC-81.21
																	DESIGN 13 AND DESIGN 3, AS PER PLAN
				1								1	632	77053	1	EACH	COMBINATION SIGNAL SUPPORT, TYPE TC-81.21 DESIGN 4 POLE, WITH MAST ARMS TC-81.21
																	DESIGN 3 AND DESIGN 3, AS PER PLAN
1												1	632	80202	1	EACH	SIGNAL SUPPORT, TYPE TC-81.21, DESIGN 2
2												2	632	80302	2	EACH	SIGNAL SUPPORT, TYPE TC-81.21, DESIGN 3
1												1	632	80502	1	EACH	SIGNAL SUPPORT, TYPE TC-81.21, DESIGN 11
		4										4	632	85000	4	EACH	COMBINATION STRAIN POLE, TYPE TC-81.10, DESIGN 10
1		1		1								3	632	90101	3	EACH	REMOVAL OF TRAFFIC SIGNAL INSTALLATION, AS PER PLAN
1		1		1								3	633	67100	3	EACH	CABINET FOUNDATION
1		1		1								3	633	67201	3	EACH	CONTROLLER WORK PAD, AS PER PLAN
1		1		1								3	633	75001	3	EACH	UNINTERRUPTIBLE POWER SUPPLY (UPS), 1000 WATT, AS PER PLAN
1		1		1								3	633	99000	3	EACH	CONTROLLER ITEM, MISC.: CONTROLLER UNIT, TYPE 2070E, WITH CABINET, TYPE 332
3		4		2								9	809	69000	9	EACH	ADVANCE RADAR DETECTION
3		4		4								11	809	69100	11	EACH	STOP-BAR RADAR DETECTION

QUANTITIES CARRIED TO GENERAL SUMMARY

CALCULATED BRH
CHECKED JSL

TRAFFIC SIGNAL SUMMARY
PLAN SPLIT 03/S&2/OT

D05-FY2017-
SIGNAL UPGRADE

s:\Projects\Dallas\D05\95383\Design\Signals\Sheets\95383_CS014.dgn 23-FEB-2017 12:25PM jlul21

GENERAL

THE CONTRACTOR SHALL FURNISH AND INSTALL TRAFFIC CONTROL EQUIPMENT AND MATERIALS IN CONFORMANCE TO THESE PLANS AND SPECIFICATIONS, THE STATE OF OHIO DEPARTMENT OF TRANSPORTATION CONSTRUCTION AND MATERIAL SPECIFICATIONS (CMS), SUPPLEMENTAL SPECIFICATIONS (SS), STANDARD CONSTRUCTION DRAWINGS (SCD), AND PLAN INSERT SHEETS (PIS).

BEFORE ANY EQUIPMENT IS ORDERED OR INSTALLATION HAS BEGUN, THREE SETS OF A COMPLETE SCHEDULE OF EQUIPMENT INCLUDING CATALOG CUTS, DIAGRAMS, DRAWINGS, BROCHURES, OR OTHER DESCRIPTIVE DATA SHALL BE SUBMITTED TO THE ENGINEER. ONE COPY WILL BE RETURNED MARKED "APPROVED" IF FOUND SATISFACTORY. WORK MAY BEGIN WHEN THE APPROVED COPY IS RECEIVED BY THE CONTRACTOR.

THE CONTRACTOR SHALL SUBMIT IN WRITING A SCHEDULE OF WORK FOR THE PROJECT TO THE PROJECT ENGINEER FOR APPROVAL. THIS SCHEDULE SHALL BE SUBMITTED NOT LESS THAN TWO WEEKS IN ADVANCE OF STARTING WORK.

ANY EQUIPMENT OR MATERIAL NOT SPECIFICALLY CALLED FOR IN THESE SPECIFICATIONS BUT NECESSARY TO PROVIDE A COMPLETE AND SUCCESSFULLY OPERATING SYSTEM SHALL BE FURNISHED AS INCIDENTAL TO THE CONTRACT. PAYMENT FOR SUCH ITEMS WILL BE MADE UNDER THE APPROPRIATE RELATED ITEM AT THE CONTRACT BID PRICE, COMPLETE AND IN PLACE.

ALL NECESSARY PERMANENT SIGNS AND PAVEMENT MARKINGS SHALL BE IN PLACE BEFORE ANY SIGNAL MAY BE PLACED IN OPERATION UNLESS OTHERWISE DIRECTED BY THE ENGINEER.

GUARANTEE

THE CONTRACTOR SHALL GUARANTEE THAT THE TRAFFIC CONTROL SYSTEM INSTALLED AS PART OF THIS CONTRACT SHALL OPERATE SATISFACTORILY FOR A PERIOD OF 180 DAYS FOLLOWING COMPLETION OF THE 10-DAY PERFORMANCE TEST. IN THE EVENT OF UNSATISFACTORY OPERATION THE CONTRACTOR SHALL CORRECT FAULTY INSTALLATIONS, MAKE REPAIRS AND REPLACE DEFECTIVE PARTS WITH NEW PARTS OF EQUAL OR BETTER QUALITY. EQUIPMENT, MATERIAL AND LABOR COSTS INCURRED IN CORRECTING AN UNSATISFACTORY OPERATION SHALL BE BORNE BY THE CONTRACTOR.

THE GUARANTEE SHALL COVER THE FOLLOWING ITEMS OF THE TRAFFIC CONTROL SYSTEM: CONTROLLERS AND ASSOCIATED EQUIPMENT, DETECTOR UNITS, INTERCONNECTION ITEMS AND MASTER CONTROL EQUIPMENT.

CUSTOMARY MANUFACTURER'S GUARANTEES FOR THE FOREGOING ITEMS SHALL BE TURNED OVER TO THE STATE OR THE MAINTAINING AGENCY FOLLOWING ACCEPTANCE OF THE EQUIPMENT.

THE COST OF GUARANTEEING THE TRAFFIC CONTROL SYSTEM WILL BE INCIDENTAL TO AND INCLUDED IN THE CONTRACT UNIT PRICE OF THE VARIOUS ITEMS MAKING UP THE SYSTEM.

ITEM 632 REMOVAL OF TRAFFIC SIGNAL INSTALLATION, AS PER PLAN

TRAFFIC SIGNAL INSTALLATIONS SHALL BE REMOVED IN ACCORDANCE WITH C&MS 632.26 AND SHALL DISPOSE OR SALVAGE EQUIPMENT AS DESCRIBED BELOW FOR EACH PROJECT LOCATION.

LOCATION 1: U.S. 22 & PINKERTON RD.

REMOVE ALL EXISTING STRAIN POLES, SIGNAL HEADS, PULL BOXES, MESSENGER WIRE, CONDUITS, SIGNAL CABLE, CONTROLLER, CABINET, WORK PAD, AND FOUNDATIONS.

SALVAGE: NOTHING

LOCATION 2: U.S. 22 & S.R. 93

REMOVE ALL EXISTING STRAIN POLES, SIGNAL HEADS, PULL BOXES, MESSENGER WIRE, CONDUITS, SIGNAL CABLE, CONTROLLER, CABINET, WORK PAD, AND FOUNDATIONS.

SALVAGE: NOTHING

LOCATION 3: U.S. 40 & COLUMBIA RD.

REMOVE ALL SIGNAL HEADS, MESSENGER WIRE, SIGNAL CABLE, CONTROLLER, CABINET, AND UPS CABINET.

SALVAGE: CONTROLLER, CABINET, AND UPS CABINET FOR ODOT, AND MESSENGER WIRE TO BE RE-LASHED.

LOCATION 4: U.S. 40 & WATKINS RD.

REMOVE ALL SIGNAL HEADS, MESSENGER WIRE, SIGNAL CABLE, PULL BOXES, STRAIN POLES (DESIGNATED FOR REMOVAL), CONDUIT, CONTROLLER, CABINET, UPS CABINET, WORK PAD, AND FOUNDATIONS.

SALVAGE: CONTROLLER, CABINET, AND UPS CABINET FOR ODOT.

LOCATION 5: S.R. 13 & BLACKBIRD LN.

REMOVE ALL EXISTING STRAIN POLES, SIGNAL HEADS, PULL BOXES, MESSENGER WIRE, CONDUITS, SIGNAL CABLE, CONTROLLER, CABINET, WORK PAD, AND FOUNDATIONS.

SALVAGE: DISCONNECT FOR ODOT

LOCATION 6: S.R. 13 & DORSEY MILL RD.

REMOVE ALL EXISTING STRAIN POLES, SIGNAL HEADS, PULL BOXES, MESSENGER WIRE, CONDUITS, SIGNAL CABLE, CONTROLLER, CABINET, WORK PAD, AND FOUNDATIONS.

SALVAGE: CONTROLLER, CABINET, AND UPS CABINET FOR ODOT.

LOCATION 7: U.S. 40 & S.R. 37

REMOVE ALL EXISTING STRAIN POLES, SIGNAL HEADS, PULL BOXES, MESSENGER WIRE, CONDUITS, SIGNAL CABLE, CONTROLLER, CABINET, WORK PAD, AND FOUNDATIONS.

SALVAGE: UPS CABINET AND RISER FOR ODOT

LOCATION 8: S.R. 37 & S.R. 256

REMOVE ALL EXISTING STRAIN POLES, SIGNAL HEADS, PULL BOXES, MESSENGER WIRE, CONDUITS, SIGNAL CABLE, CONTROLLER, CABINET, WORK PAD, AND FOUNDATIONS.

SALVAGE: UPS CABINET AND RISER FOR ODOT

LOCATION 9: S.R. 209 & PARKWAY PLAZA DR.

REMOVE ALL EXISTING STRAIN POLES, SIGNAL HEADS, PULL BOXES, MESSENGER WIRE, CONDUITS, SIGNAL CABLE, CONTROLLER, CABINET, WORK PAD, AND FOUNDATIONS.

SALVAGE: NOTHING

LOCATION 10: S.R. 209 & WALMART ENTRANCE

REMOVE ALL EXISTING STRAIN POLES, SIGNAL HEADS, PULL BOXES, MESSENGER WIRE, CONDUITS, SIGNAL CABLE, CONTROLLER, CABINET, WORK PAD, AND FOUNDATIONS.

SALVAGE: UPS CABINET FOR ODOT

LOCATION 11: S.R. 229 & EDGEWOOD DR.

REMOVE ALL EXISTING STRAIN POLES, SIGNAL HEADS, PULL BOXES, MESSENGER WIRE, CONDUITS, SIGNAL CABLE, CONTROLLER, CABINET, WORK PAD, AND FOUNDATIONS.

SALVAGE: STRAIN POLES, SIGNAL HEADS, CONTROLLER, CABINET, AND UPS CABINET FOR THE CITY OF MOUNT VERNON.

CONTACT RON MILLER AT 740-323-5286 TO ARRANGE FOR PICKUP OF THESE ITEMS FROM THE JOB SITE FOR ODOT. CONTACT TOM HINKLE AT 740-393-9501 TO ARRANGE FOR PICKUP OF THESE ITEMS FROM THE JOB SITE FOR THE CITY OF MOUNT VERNON. IN THE EVENT THE ITEMS STORED ON THE PROJECT FOR SALVAGE ARE NOT REMOVED, THE CONTRACTOR SHALL, WHEN DIRECTED BY THE ENGINEER IN WRITING, REMOVE AND DISPOSE OF THE ITEMS AT NO ADDITIONAL COST TO THE PROJECT.

REMOVAL OF ITEMS MENTIONED ABOVE SHALL BE INCLUDED WITH PAYMENT FOR ITEM 632 REMOVAL OF TRAFFIC SIGNAL INSTALLATION, AS PER PLAN. PAYMENT SHALL MADE AT THE UNIT PRICE BID AND INCLUDE ALL LABOR, EQUIPMENT, AND INCIDENTALS NECESSARY TO COMPLETE THE ITEM.

VARMINT GUARDS

VARMINT GUARDS SHALL BE INSTALLED ON ALL SIGNAL SUPPORTS. ATTACH VARMINT SCREEN WITH STAINLESS STEEL BAND AND MINIMUM 2" OVERLAP. TIE OVERLAPPING SCREEN WITH STAINLESS STEEL WIRE TIES. SCREEN SHALL BE WELDED WIRE MESH OR EXPANDED METAL SHEET, STAINLESS STEEL OR GALVANIZED, WITH OPENINGS NO LARGER THAN 3/8", OR APPROVED EQUAL. SEE SCD HL-10.31 FOR DETAILS. PAYMENT SHALL BE CONSIDERED INCIDENTAL TO THE COST OF THE SUPPORT.

ITEM 632 VEHICULAR SIGNAL HEAD, (LED), BY SECTION, 12" LENS, 1-WAY, POLYCARBONATE, AS PER PLAN

IN ADDITION TO THE REQUIREMENTS OF C&MS 632 AND 732, THE FOLLOWING REQUIREMENTS SHALL APPLY:

1. SIGNAL HEADS AND VISORS SHALL BE CONSTRUCTED OF BLACK POLYCARBONATE PLASTIC WITH VISORS AS SPECIFIED AND MEET ITE SPECIFICATIONS.

2. PROPER EXTERIOR COLORS SHALL BE OBTAINED BY USE OF COLORED PLASTIC MATERIAL RATHER THAN PAINTING.

3. ALL UPPER SIGNAL SUPPORT HARDWARE AND PIPING UP TO AND INCLUDING THE WIRE INLET FITTING SHALL BE FERROUS METAL.

4. THE ENTRANCE FITTING SHALL BE OF THE TRI-STUD DESIGN WITH SERRATED RINGS IN ORDER TO ACHIEVE POSITIVE LOCKING.

5. ALL SIGNAL HEADS SHALL BE RIGIDLY MOUNTED TO THE MAST ARM WITH THE (COLOR) MODULE LOCATED IN FRONT OF THE MAST ARM.

6. ALUMINUM BACK-PLATES SHALL BE IN ACCORDANCE WITH THE C&MS AND INCLUDE A FLUORESCENT YELLOW REFLECTIVE BORDER.

7. THE LIGHT EMITTING DIODE (LED) MODULES SHALL MEET THE REQUIREMENTS OF C&MS 732.04-C. THE CONTRACTOR SHALL PROVIDE ODOT, IN WRITING, WITH THE LED MANUFACTURER NAME, SERIAL NUMBER, PART NUMBER, DESCRIPTION OF LAMP, AND DATE OF MANUFACTURE FOR ALL LED UNITS THAT ARE TO BE USED IN THE SIGNAL HEAD PRIOR TO INSTALLATION, FOR ACCEPTANCE AND WARRANTY PURPOSES.

8. SIGNAL HEADS SHALL HAVE A MINIMUM WALL THICKNESS OF 0.117 INCHES.

9. SIGNAL HEADS SHALL INCLUDE CUTAWAY TYPE VISORS UNLESS OTHERWISE SPECIFIED IN THE PLANS.

10. APPLY A BEAD OF SILICONE TO THE SIGNAL HEAD, WASHER, AND ENTRANCE ADAPTER SERRATIONS TO PREVENT WATER INTRUSION. ALSO, FILL THE SPACE BETWEEN CONCENTRIC SERRATION RINGS ON THE TOP OF THE SIGNAL HEAD TO COMPLETELY EXCLUDE WATER FROM THE SPACE BETWEEN THE CONCENTRIC RINGS.

11. BALANCE ADJUSTERS SHALL NOT BE USED ON ONE-WAY HEADS OR TETHERED HEADS.

PAYMENT FOR ITEM 632 VEHICULAR SIGNAL HEAD, LED, BLACK, (BY TYPE), WITH BACKPLATE, AS PER PLAN SHALL BE MADE FOR COMPLETE SIGNAL HEAD FURNISHED AND INSTALLED, INCLUDING ALL LABOR, EQUIPMENT, MATERIALS, AND NEW ATTACHMENT HARDWARE.

CALCULATED BRH CHECKED JSL

TRAFFIC SIGNAL NOTES

D05-FY2017-
SIGNAL UPGRADE

I:\Projects\D05\95383\Design\Signals\Sheets\95383_CN001.dgn 22-FEB-2017 2:36PM jlulzi

ITEM 632 POWER SERVICE, AS PER PLAN

ELECTRIC POWER SHALL BE OBTAINED FROM THE RESPECTIVE OWNER OF EACH SIGNAL LOCATION (SEE GENERAL NOTES FOR THE CORRECT POWER SUPPLYING AGRENCY) AND SHALL BE 120V FOR EACH OF THE ELEVEN (11) SIGNAL LOCATIONS.

POWER SERVICE SHALL BE AS PER CMS 632.24, 732.20, & SCD TC-83.10 WITH THE FOLLOWING EXCEPTIONS:

1. THE CONTRACTOR SHALL SUPPLY THE NECESSARY METER BASE. THE METER BASE MOUNTING HEIGHT SHALL BE NO MORE THAN 5 FEET HIGH TO THE CENTER OF THE METER BASE FROM THE GROUND. THE METER SHALL HAVE A LEVER OPERATED BYPASS.

2. THE CONTRACTOR SHALL SUPPLY 120 VOLT, SINGLE PHASE, 3-WIRE POWER SERVICE FOR EACH TRAFFIC SIGNAL SHOWN IN THE PLANS.

3. THE CONTRACTOR SHALL SUPPLY A 30 AMP WATER-PROOF DISCONNECT SWITCH FOR EACH TRAFFIC SIGNAL LOCATION.

4. POWER CABLE AND CONDUIT QUANTITIES FOR UNDER-GROUND SERVICE HAVE BEEN ITEMIZED SEPARATELY IN THE PLANS FOR THE CONNECTION BETWEEN THE DISCONNECT SWITCH AND THE CONTROLLER CABINET.

DISCONNECT SWITCH ENCLOSURES SHALL BE PER CMS 732.21 AND INCLUDE A PADLOCK EQUAL TO MASTER NO. 49KA OR WILSON BOHANNAN 660, WITH LOCK BODY OF BRONZE OR BRASS AND KEYING SHALL BE TO THE STATE MASTER. EACH ENCLOSURE SHALL HAVE A SAFETY SWITCH DISCONNECT.

THE CONTRACTOR WILL BE RESPONSIBLE FOR REQUESTING AND SCHEDULING ANY INSPECTIONS THE POWER COMPANY MAY REQUIRE FOR THE POWER SERVICE HOOK UP. THE CONTRACTOR SHALL BE RESPONSIBLE TO CONTACT THE POWER COMPANY FOR THE ELECTRICAL SERVICE CONNECTION. UNDER NO CIRCUMSTANCES SHALL THE CONTRACTOR SPLICE POWER CABLE INTO THE POWER COMPANY'S CIRCUITS. THE CONTRACTOR IS RESPONSIBLE FOR OBTAINING ANY NECESSARY PERMITS AND THE PAYING OF ALL FEES ASSOCIATED WITH THE SERVICE. THE CONTRACTOR SHALL PAY ALL POWER CHARGES UNTIL THE SIGNAL IS ACCEPTED BY THE MAINTAINING AGENCY.

POWER SERVICE SHALL BE SET-UP SPECIFIC TO EACH WORK LOACATION AS SPECIFIED BELOW:

LOCATION 1: U.S. 22 & PINKERTON RD.

METER & DISCONNECT ON EXISTING POWER POLE AS SHOWN IN THE SIGNAL PLAN.

LOCATION 2: U.S. 22 & S.R. 93

METER & DISCONNECT ON PROPOSED WOOD POLE AS SHOWN IN THE SIGNAL PLAN.

LOCATION 3: U.S. 40 & COLUMBIA RD.

NO CHANGES TO EXISTING POWER SERVICE.

LOCATION 4: U.S. 40 & WATKINS RD.

NO CHANGES TO EXISTING POWER SERVICE.

LOCATION 5: S.R. 13 & BLACKBIRD LN.

METER & DISCONNECTS (1 SIGNAL, 1 LIGHTING) ON PROPOSED STRAIN POLE (P-3) AS SHOWN IN THE SIGNAL PLAN.

LOCATION 6: S.R. 13 & DORSEY MILL RD.

METER & DISCONNECT ON PROPOSED STRAIN POLE (P-4) AS SHOWN IN THE SIGNAL PLAN.

LOCATION 7: U.S. 40 & S.R. 37

METER & DISCONNECT ON PROPOSED STRAIN POLE (P-1) AS SHOWN IN THE SIGNAL PLAN.

LOCATION 8: S.R. 37 & S.R. 256

METER & DISCONNECT ON PROPOSED STRAIN POLE (P-1) AS SHOWN IN THE SIGNAL PLAN.

LOCATION 9: S.R. 209 & PARKWAY PLAZA DR.

METER & DISCONNECT ON PROPOSED STRAIN POLE (P-1) AS SHOWN IN THE SIGNAL PLAN.

LOCATION 10: S.R. 209 & WALMART ENTRANCE

METER & DISCONNECT ON PROPOSED STRAIN POLE (P-3) AS SHOWN IN THE SIGNAL PLAN.

LOCATION 11: S.P. 229 & EDGEWOOD DR.

METER & DISCONNECT ON PROPOSED GROUND MOUNTED FRAME (SEE CONTROL CENTER DETAIL ON THIS SHEET) FOR SIGNAL AND LIGHTING.

PAYMENT SHALL BE MADE AT THE UNIT PRICE BID FOR EACH POWER SERVICE, COMPLETE IN PLACE, INCLUDING WEATHER-HEAD, CONDUIT RISER, FITTINGS, CLAMPS, DISCONNECT SWITCH WITH ENCLOSURE, METER BASE, SERVICE CABLE AND FITTINGS, AND ALL OTHER INCIDENTALS NECESSARY FOR COMPLETE SERVICE, ALL CONNECTIONS TESTED AND ACCEPTED.

CONTROL CENTER DETAIL (S.R. 229 & EDGEWOOD DR.)

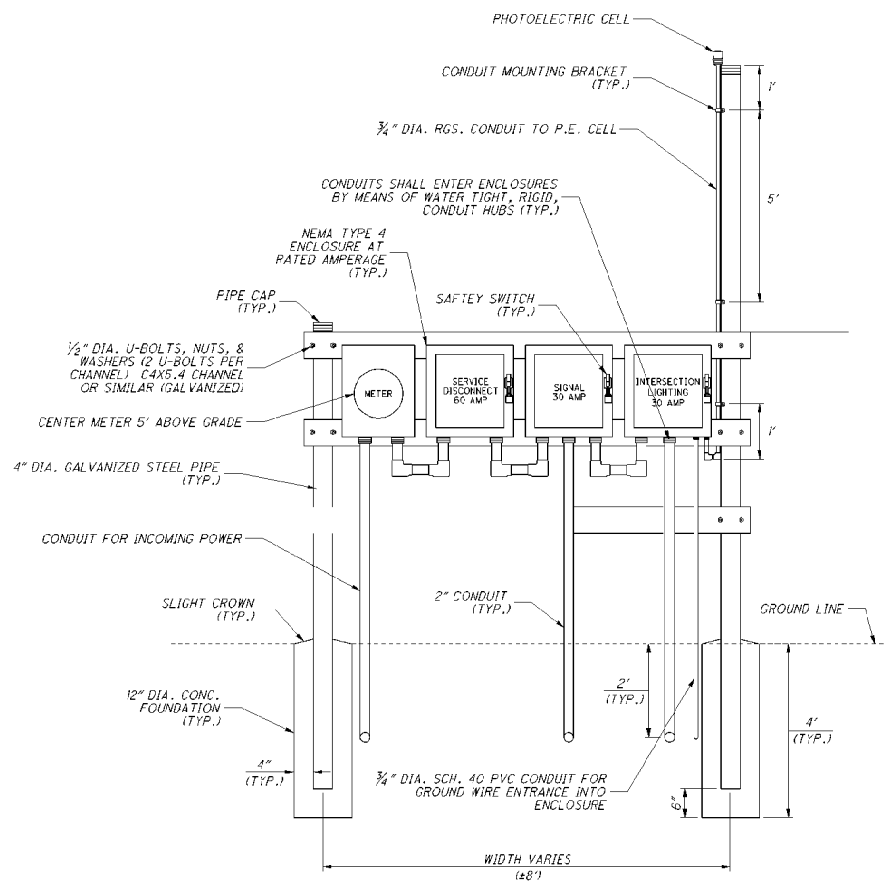

CALCULATED BRH
CHECKED JSL

TRAFFIC SIGNAL NOTES

D05-FY2017-
SIGNAL UPGRADE

I:\Projects\D05\95383\Design\Signals\Sheets\95383_CN002.dgn 27-FEB-2017 2:24PM jlu121

ITEM 633 UNINTERRUPTIBLE POWER SUPPLY (UPS), 1000 WATT, AS PER PLAN

IN ADDITION TO THE REQUIREMENTS OF C&MS 633 AND 733, THE CONTRACTOR SHALL PROVIDE A 12" CABINET RISER AND ANCHOR BOLTS FOR THE GROUND MOUNTED UNINTERRUPTIBLE POWER SUPPLY (UPS). SEE PIS 208320 FOR MOUNTING DETAILS.

THE CONTRACTOR SHALL FURNISH, INSTALL AND TEST UNINTERRUPTIBLE POWER SUPPLY (UPS) STATUS INDICATOR LAMPS THAT ALLOW MAINTENANCE PERSONNEL AND LAW ENFORCEMENT TO QUICKLY ASSESS WHETHER A TRAFFIC SIGNAL CABINET IS BEING POWERED BY A UPS. A 1-INCH WATERPROOF NEMA 4X OR IP66 LAMP WITH A DOMED RED LENS SHALL BE USED TO INDICATE THE CABINET IS OPERATING UNDER UPS BACKUP POWER (THE "BACKUP" OPERATING CONDITION). THIS LAMP SHALL BE WIRED USING MINIMUM 20GA STRANDED, INSULATED HOOKUP WIRE TO THE STATUS RELAY OUTPUTS OF THE UPS. THE WIRES SHALL BE TERMINATED BY LUGS AT THE DISPLAY END AND PERMANENTLY LABELED "BACKUP POWER STATUS DISPLAY," WITH WIRE POLARITY INDICATED. THIS ITEM INCLUDES PROGRAMMING THE UPS STATUS RELAY OUTPUTS TO PRODUCE THE LAMP STATUS DISPLAYS. THE STATUS DISPLAY SHALL BE SOLID 100% DUTY CYCLE (NOT FLASHING). THE LAMP SHALL BE PLACED IN THE UPS CABINET WALL (NOT THE ROOF) IN SUCH A MANNER AS TO BE SEALED FROM WATER INTRUSION AND VISIBLE FROM A VEHICLE AT THE STOP LINE IN THE CLOSEST LANE OF AT LEAST ONE APPROACH TO THE SIGNALIZED INTERSECTION. THE OPERATING VOLTAGE OF THE LED LAMP SHALL BE 120V.

THE GENERATOR POWER PANEL SHALL BE CONSTRUCTED IN ACCORDANCE WITH PIS 203012.

THE UPS SHALL BE PROGRAMMED TO RUN THE INTERSECTION UNTIL THE POWER RUNS OUT. (THE UPS SHALL NOT GO TO FLASH.)

PAYMENT SHALL BE MADE AT THE UNIT PRICE BID FOR EACH UNIT, COMPLETE IN PLACE, INCLUDING WIRE FOR ALARM OUTPUT TO CONTROLLER AND ALL OTHER INCIDENTALS NECESSARY FOR A FULLY OPERATIONAL UPS, ALL CONNECTIONS TESTED AND ACCEPTED.

ITEM 632 SIGNALIZATION, MISC.: UNLASH AND RELASH MESSENGER WIRE

THE CONTRACTOR SHALL REMOVE EXISTING MESSENGER WIRE LASHING RODS AND REINSTALL THEM AS NECESSARY FOR THE INSTALLATION OF ANY NEW CABLES ON THE EXISTING INTERSECTION SIGNAL SPANS. THE CABLES SHALL ENTER THE EXISTING STRAIN POLE THROUGH THE POLE CABLE ENTRANCE FITTING AND USE THE EXISTING CONDUIT SYSTEM TO GET TO THE CONTROLLER CABINET. THE NEW CABLES SHALL BE SUPPORTED BY A NEW CABLE SUPPORT ASSEMBLY AT THE TOP OF THE STRAIN POLE.

THE NEW SIGNAL CABLES SHALL BE BID BY SEPARATE BID ITEMS.

PAYMENT FOR ITEM 632 "SIGNALIZATION MISC.: UNLASH AND RELASH MESSENGER WIRE" SHALL BE MADE AT THE CONTRACT UNIT PRICE PER PER FOOT AND SHALL INCLUDE ALL LABOR, MATERIALS, CABLE SUPPORT ASSEMBLIES AND EQUIPMENT TO INSTALL NEW CABLES ON EXISTING SIGNAL SPAN WIRE INSTALLATIONS.

GROUNDING AND BOUNDING

IN ADDITION TO THE REQUIREMENTS OF CMS 625& 725, THE FOLLOWING SHALL APPLY:

1. ALL METALLIC PARTS CONTAINING ELECTRICAL CONDUCTORS SHALL BE PERMANENTLY JOINED TO FORM AN EFFECTIVE GROUND FAULT CURRENT PATH BACK TO THE GROUNDED CONDUCTOR IN THE POWER SERVICE DISCONNECT SWITCH.

   A. PROVIDE AN EQUIPMENT GROUNDING CONDUCTOR IN METALLIC CONDUITS (725.04) IN ADDITION TO THE CONDUCTORS SPECIFIED AND BOND THE CONDUIT TO THIS GROUNDING CONDUCTOR.

   B. WHEN AN EQUIPMENT GROUNDING CONDUCTOR IS REQUIRED IN PLASTIC CONDUIT (725.05), THE INSTALLATION SHALL INCLUDE A SEPARATE EQUIPMENT GROUNDING CONDUCTOR IN ADDITION TO THE CONDUCTORS SPECIFIED.

   C. METALLIC CONDUIT CARRYING THE LOOP WIRES FROM IN THE PAVEMENT TO THE PULL BOX SPLICE LOCATION WILL ONLY BE BONDED AT THE PULL BOX END, AND WILL NOT CONTAIN AN EQUIPMENT GROUNDING CONDUCTOR.

   D. IF MULTIPLE CONDUIT RUNS BEGIN AND END AT THE SAME POINTS, ONLY ONE EQUIPMENT GROUNDING CONDUCTOR IS REQUIRED.

   E. IF AN EQUIPMENT GROUNDING CONDUCTOR IS NEEDED IN CONDUIT BETWEEN SIGNALIZED INTERSECTIONS FOR UNDERGROUND INTERCONNECT CABLE, THE GROUNDING SYSTEM FOR EACH SIGNALIZED INTERSECTION WILL BE SEPARATED ABOUT MIDWAY BETWEEN THE INTERSECTIONS.

   F. THE MESSENGER WIRE AT SIGNALIZED INTERSECTIONS WILL BE USED AS THE CONDUCTIVE PATH FROM CORNER TO CORNER IF CONDUIT IS NOT PROVIDED UNDER THE ROADWAY. WHEN CONDUIT CONNECTS THE CORNERS OF AN INTERSECTION, AN EQUIPMENT GROUNDING CONDUCTOR SHALL BE USED IN THE CONDUIT.

2. CONDUITS.

   A. THE 725.04 CONDUIT SHALL HAVE GROUNDING BUSHINGS INSTALLED AT ALL TERMINATION POINTS. THE BUSHING MATERIAL SHALL BE COMPATIBLE WITH GALVANIZED STEEL CONDUIT AND THE GROUNDING LUG MATERIAL SHALL BE COMPATIBLE FOR USE WITH COPPER WIRE. THREADED OR COMPRESSION TYPE BUSHINGS MAY BE USED.

   B. THE 725.05 CONDUIT SHALL HAVE THE INSIDE AND OUTSIDE DIAMETERS OF THE CONDUIT DEBURRED AT ALL TERMINATION POINTS.

   C. BOTH ENDS OF METALLIC CONDUIT SHALL BE BONDED TO THE EQUIPMENT GROUNDING CONDUCTOR.

   D. METALLIC CONDUIT MAY BE BONDED TO METALLIC BOXES THROUGH THE USE OF CONDUIT FITTINGS UL APPROVED FOR THIS TYPE OF CONNECTION, WITH THE BOX BONDED TO THE EQUIPMENT GROUNDING CONDUCTOR.

3. WIRE FOR GROUNDING AND BONDING.

   A. USE INSULATED, COPPER WIRE FOR THE EQUIPMENT GROUNDING CONDUCTOR. BONDING JUMPERS IN BOXES AND ENCLOSURES MAY BE BARE OR INSULATED COPPER WIRE. WIRE SIZE SHALL BE AS FOLLOWS:

      I. USE 4 AWG BETWEEN THE POWER SERVICE AND SUPPORTS, POLES, PEDESTALS, CONTROLLER OR FLASHER CABINETS.

      II. USE A MINIMUM 8 AWG BETWEEN LOOP DETECTOR PULL BOXES AND THE FIRST CONDUIT THAT REQUIRES A LARGER SIZE AS SPECIFIED IN 3.A.I ABOVE.

      III. USE A MINIMUM 8 AWG BETWEEN THE "PREPARE TO STOP WHEN FLASHING" INSTALLATION (INCLUDING SUPPORT) AND THE FIRST CONDUIT THAT REQUIRES A LARGER SIZE AS SPECIFIED IN 3.A.I ABOVE.

      IV. THE INSULATION SHALL BE GREEN OR GREEN WITH YELLOW STRIPE(S). FOR 4 AWG OR LARGER, INSULATION MAY ALSO BE BLACK WITH GREEN TAPE/LABELS INSTALLED AT ALL ACCESS POINTS.

   B. IN A HIGHWAY LIGHTING SYSTEM, THE EQUIPMENT GROUNDING CONDUCTOR SHALL BE THE SAME WIRE SIZE AS THE DUCT CABLE OR DISTRIBUTION CABLE CIRCUIT CONDUCTORS, WITH THE MINIMUM CONDUCTOR SIZE OF 4 AWG. BONDING JUMPERS WILL BE MINIMUM SIZE 4 AWG.

4. GROUND ROD.

   A. A INCH SCHEDULE 40 PVC CONDUIT WILL BE USED IN FOUNDATIONS AND CONCRETE WALLS FOR THE GROUNDING CONDUCTOR (GROUND WIRE) RACEWAY TO THE GROUND ROD. SHOULD METALLIC CONDUIT BE USED, BOTH ENDS OF THE CONDUIT SHALL BE BONDED TO THE GROUNDING CONDUCTOR.

   B. THE TYPICAL GROUNDING CONDUCTOR (GROUND WIRE) SHALL BE 4 AWG INSULATED, COPPER.

5. THE GREEN CONDUCTOR IN SIGNAL CABLES (CONDUCTOR #4) SHALL NOT BE USED TO SUPPLY POWER TO A SIGNAL INDICATION. IT WILL BE CONNECTED TO THE SIGNAL BODY AS AN EQUIPMENT GROUND IN ALUMINUM HEADS AND IT WILL BE UNUSED IN PLASTIC HEADS. UNUSED CONDUCTORS SHALL BE GROUNDED IN THE CABINET. TYPICAL USE OF CONDUCTORS IS AS FOLLOWS:

COND. NO.	COLOR	VEHICLE SIGNAL	PEDESTRIAN SIGNAL
1	BLACK	GREEN BALL	#1 WALK
2	WHITE	AC NEUTRAL	AC NEUTRAL
3	RED	RED BALL	#1 DW/FDW
4	GREEN	GROUND	GROUND
5	ORANGE	YELLOW BALL	#2 DW/FDW
6	BLUE	GREEN ARROW	#2 WALK
7	WHITE/ BLACK STRIPE	YELLOW ARROW	NOT USED

6. POWER SERVICE AND DISCONNECT SWITCH.

   A. AT THE POWER SERVICE LOCATION, THE GROUNDING CONDUCTOR (GROUND WIRE) FROM THE DISCONNECT SWITCH NEUTRAL (AC-) BAR TO THE GROUND ROD SHALL BE A CONTINUOUS, UNSPLICED CONDUCTOR. IF SPLICED, IT SHALL BE AN EXOTHERMIC WELD BUTT SPLICE.

   B. THE SERVICE NEUTRAL (AC-) SHALL ONLY BE CONNECTED TO GROUND AT THE PRIMARY POWER SERVICE DISCONNECT SWITCH.

      I. NEMA CONTROLLER CABINETS: IF A POWER SERVICE DISCONNECT SWITCH IS LOCATED BEFORE THE CONTROLLER CABINET, THE NEUTRAL (AC-) AND THE GROUNDING BARS IN THE CONTROLLER CABINET SHALL NOT BE CONNECTED TOGETHER AS SHOWN IN NEMA TS-2, FIGURE 5-4.

      II. IF SECONDARY DISCONNECT SWITCHES ARE CONNECTED AFTER THE PRIMARY DISCONNECT SWITCH, THE NEUTRAL (AC-) SHALL ONLY BE GROUNDED AT THE PRIMARY SWITCH. EQUIPMENT GROUNDING CONDUCTORS SHALL BE BROUGHT TO THE PRIMARY SWITCH, BUT SHALL BE GROUNDED AT BOTH SECONDARY AND PRIMARY SWITCHES.

7. PAYMENT

ALL MATERIALS AND WORK REQUIRED TO COMPLETE THE EFFECTIVE GROUND FAULT CURRENT PATH SYSTEM ARE INCIDENTAL TO THE CONDUCTORS INSTALLED BY CONTRACT.

SIGNAL ACTIVATION

PRIOR TO ACTIVATING THE NEW TRAFFIC SIGNAL TO STOP AND GO MODE AND/OR REMOVING THE EXISTING TRAFFIC SIGNAL FROM SERVICE, ALL ITEMS IN THE PROPOSED SIGNAL PLAN SHALL BE FULLY COMPLETED, (I.E., VEHICLE DETECTION, PEDESTRIAN SIGNAL HEADS, ETC). IF THERE ARE CONSTRUCTABILITY ISSUES (I.E., ROADWAY WIDENING, ETC.) THAT PREVENT THE SIGNAL FROM BEING COMPLETED PRIOR TO ACTIVATION, IT SHALL BE BROUGHT TO THE ATTENTION OF THE PROJECT ENGINEER AND DISTRICT TRAFFIC ENGINEER. THE DISTRICT TRAFFIC ENGINEER WILL THEN REVIEW, APPROVE OR REJECT PROPOSALS TO ACTIVATE THE TRAFFIC SIGNAL PRIOR TO COMPLETION.

THE CONTRACTOR SHALL NOTIFY THE PROJECT ENGINEER AND DISTRICT TRAFFIC ENGINEER AT LEAST 10 WORKING DAYS PRIOR TO SCHEDULING THE FINAL INSPECTION OF THE SIGNAL INSTALLATION. FINAL INSPECTION IS NOT CONSIDERED COMPLETE UNTIL DESIGNATED DISTRICT TRAFFIC PERSONNEL INSPECT THE TRAFFIC SIGNAL AND ISSUE WRITTEN APPROVAL. IF ISSUES ARE FOUND DURING THE FINAL INSPECTION THAT EFFECT THE SAFETY OF THE TRAVELING PUBLIC AND/OR THE EFFICIENCY OF THE INTERSECTION, THE SIGNAL SHALL NOT BE ACTIVATED ON THE PROPOSED DATE. ANY PUNCH LIST ITEMS THAT ARE FOUND SHALLBE CORRECTED AND REINSPECTED BY DISTRICT TRAFFIC PERSONNEL PRIOR TO FINAL ACCEPTANCE. ODOT FORCES SHALL ONLY ASSUME DAY TO DAY MAINTENANCE OF THE TRAFFIC SIGNAL AFTER FINAL WRITTEN ACCEPTANCE HAS BEEN ISSUED.

ITEM 809 ADVANCE RADAR DETECTION
ITEM 809 STOP BAR DETECTION

THIS ITEM OF WORK SHALL CONSIST OF FURNISHING AND INSTALLING A WAVETRONIX SMARTSENSOR MATRIX AND A SMARTSENSOR ADVANCE DETECTION UNIT (MODEL SS-200E). THE DETECTION UNITS SHALL INCLUDE THE FOLLOWING:

1. POWER SHALL BE PROVIDED FROM THE TRAFFIC CABINET.

2. ALL REQUIRED INPUTS CARDS SHALL BE INCLUDED IN THE TRAFFIC CABINET AND SHALL BE COMPATIBLE WITH CALTRANS, NEMA TS1 AND NEMA TS2 DETECTOR RACKS. THE CARDS SHALL PROVIDE TRUE PRESENCE DETECTOR CALLS OR CONTACT CLOSURE TO THE TRAFFIC CONTROLLER.

3. THE UNIT SHALL BE MOUNTED DIRECTLY TO A POLE OR MAST ARM, AS RECOMMENDED BY THE MANUFACTURER. CABLE(S) SHALL BE PROVIDED AS REQUIRED AND RECOMMENDED BY THE MANUFACTURER.

4. SURGE PROTECTION DEVICES, AS RECOMMENDED BY THE MANUFACTURER SHALL BE INCLUDED BOTH AT THE POLE WHERE THE UNIT IS LOCATED TO PROTECT THE UNIT AND IN THE TRAFFIC CABINET TO PROTECT THE CABINET ELECTRONICS.

5. THE MANUFACTURER'S REPRESENTATIVE SHALL BE ON SITE DURING INSTALLATION AND TESTING AND SHALL PROVIDE ON-SITE TRAINING ON THE SETUP, OPERATION AND MAINTENANCE OF THE UNIT.

6. A SERIAL TO ETHERNET COMMUNICATIONS MODULE AND ETHERNET CABLE (MINIMUM 7 FEET).

7. THE POWER SUPPLY AND COMMUNICATION MODULES SHALL BE SECURED TO A SINGLE PANEL THAT CAN BE MOUNTED INTERIOR TO THE TRAFFIC CABINET. THE PANEL SHALL INCLUDE MODULAR-PLUG STYLE CONNECTIONS FOR UP TO FOUR (4) SENSOR CABLES. ADDITIONAL SENSORS MAY BE HARD-WIRED TO THE COMMUNICATION MODULES, AS NECESSARY.

PAYMENT FOR ITEM 809 STOP-BAR RADAR DETECTION AND ITEM 809 ADVANCE RADAR DETECTION SHALL BE MADE AT THE CONTRACT UNIT PRICE FOR EACH UNIT, COMPLETE AND IN PLACE INCLUDING ALL REQUIRED CABINET HARDWARE, MOUNTING BRACKETS, CABLES, CONDUIT AND CONNECTIONS TESTED AND ACCEPTED, AND ANY OTHER NECESSARY HARDWARE TO ESTABLISH A FULLY FUNCTIONAL DETECTION SYSTEM.

DETECTION MAINTENANCE

IF VEHICLE DETECTION BECOMES UNEXPECTEDLY DISABLED, REQUIRES MODIFICATION, OR IS SCHEDULED TO BE TEMPORARILY REMOVED DURING THE CONSTRUCTION PROJECT, THE CONTRACTOR SHALL IMMEDIATELY NOTIFY THE PROJECT ENGINEER AND DISTRICT TRAFFIC ENGINEER.

IF THE LOSS OF VEHICLE DETECTION IS KNOWN PRIOR TO THE START OF CONSTRUCTION, IT SHALL BE DISCUSSED AT THE PRE-CONSTRUCTION MEETING. AT SUCH TIME, THE DISTRICT TRAFFIC ENGINEER SHALL ADVISE THE PROJECT ENGINEER AND CONTRACTOR ON THE APPROPRIATE ACTION TO RECTIFY ANY LOSS OF VEHICLE DETECTION. THIS MAY INCLUDE PLACING THE TRAFFIC SIGNAL ON MINIMUM OR MAXIMUM RECALL, MODIFYING THE MINIMUM GREEN TIMES, AND REMOVING THE MALFUNCTIONING DETECTION FROM SERVICE. WHERE NON-INTRUSIVE DETECTION (I.E. VIDEO, RADAR) ALREADY EXISTS, THE CONTRACTOR SHALL INSURE THAT DETECTION IS OPERATING AND MAINTAINED BY RECONFIGURING THE DETECTION UNITS ACCORDINGLY DURING ALL CONSTRUCTION PHASES. THIS IS TO AVOID THE SIGNAL FROM MAXING OUT THE EFFECTED SIGNAL PHASE AND CREATING UNNECESSARY DELAYS.

LOCATIONS WHERE NON-INTRUSIVE DETECTION IS PROPOSED AND THE EXISTING VEHICLE DETECTION IS TO BE ABANDON, THE NON-INTRUSIVE VEHICLE DETECTION SHALL BE INSTALLED, CONFIGURED AND MADE FULLY FUNCTIONAL PRIOR TO THE EXISTING DETECTION BEING DISABLED. THE CONTRACTOR SHALL CONTINUE TO MAINTAIN AND MODIFY THE DETECTION UNTIL FINAL ACCEPTANCE OF THE TRAFFIC SIGNAL. THIS IS TO ENSURE VEHICLE DETECTION REMAINS FULLY FUNCTIONAL THROUGHOUT CONSTRUCTION.

ITEM 632 TETHER WIRE WITH ACCESSORIES, AS PER PLAN

INSTALLATION OF THE TETHER WIRE SHALL BE IN ACCORDANCE WITH THE PIS 208521 AND CMS 632.225 & 732.185 WITH THE FOLLOWING EXCEPTIONS:

1. SHIM WASHERS SHALL BE INSTALLED INSIDE THE SPAN WIRE CLAMP ON THE PIN ON WHICH THE SIGNAL HEAD WIRE ENTRANCE HANGS WHEN NECESSARY TO MINIMIZE TWISTING OF THE SIGNAL HEAD.

2. BALANCE ADJUSTERS SHALL NOT BE USED.

3. ON ALL SPANS, BOTH SIMPLE AND COMPLEX, THE TETHER SPAN SHALL BE TIGHTENED BETWEEN 500 AND 800 LBS OF TENSION BEFORE ATTACHING SIGNAL HEAD CLAMPS TO PROVIDE A HORIZONTAL SPAN. SIGNAL HEAD DROP PIPES ON THE TOP SHALL BE USED TO KEEP THE TETHER WIRE SPAN IN A TIGHT HORIZONTAL POSITION.

4. DO NOT TETHER FLAT SHEET SIGNS.

IF EXTERNAL CONDUIT RISERS ATTACHED TO THE SUPPORT INTERFERE WITH THE ATTACHMENT OF THE TETHER WIRE POLE CLAMP, THE CONTRACTOR SHALL LOOSEN AND REATTACH THE CONDUIT RISER TO ALLOW INSTALLATION OF THE POLE CLAMP. THE CONTRACTOR SHALL INSTALL THE PROPOSED SIGNAL HEADS THEN HANG THE BOTTOM TETHER WIRE. THE BOTTOM TETHER WIRE SHOULD BE HORIZONTAL WITH NO SLACK PRIOR TO ATTACHING SIGNAL HEADS.

THE DEPARTMENT WILL MEASURE ITEM 632 TETHER WIRE WITH ACCESSORIES, AS PER PLAN, AS CALLED OUT IN CMS 632.29.

ITEM 632 COVERING OF VEHICULAR SIGNAL HEAD

COVER VEHICULAR SIGNAL HEADS IF ERECTED AT INTERSECTIONS WHERE TRAFFIC IS MAINTAINED BEFORE ENERGIZING THE SIGNALS. USE A STURDY OPAQUE COVERING MATERIAL SPECIFICALLY MADE FOR USE WITH TRAFFIC SIGNALS, AND ENSURE THAT THE COLOR OF THE COVER IS DIFFERENT THAN THE SIGNAL HEAD, TAN OR BEIGE, SO THAT IT IS CLEAR TO DRIVERS THE HEADS ARE COVERED, NOT DARK. USE A METHOD OF COVERING TO COVER ATTACHMENT AND MATERIALS, INCLUDING BACK-PLATES, AS APPROVED BY THE ENGINEER. COVERS ARE TO BE FREE OF TEXT, PICTURES, OR ANY TYPE OF ADVERTISING. MAINTAIN COVERS, AND REMOVE THEM WHEN DIRECTED BY THE ENGINEER.

UNDERDRAINS FOR PULL BOXES

REFERENCE TRAFFIC SCD HL-30.11 FOR DETAILS ABOUT DRAINING PULL-BOXES. UNDER-DRAINS FOR PULL-BOXES SHALL BE USED AS DIRECTED BY THE ENGINEER AND SHALL BE PROVIDED WHERE THE LENGTH REQUIRED FOR A SATISFACTORY OUTLET DOES NOT EXCEED 20 FEET. THE FOLLOWING ESTIMATED QUANTITY IS CARRIED TO THE GENERAL SUMMARY FOR THIS PURPOSE:

ITEM 611 4" CONDUIT, TYPE E 500 FT.

ITEM 633 GPS (GLOBAL POSITION SYSTEM) CLOCK ASSEMBLY

THE FOLLOWING QUANTITIES HAVE BEEN INCLUDED IN THE GENERAL SUMMARY:

ITEM 633 GPS (GLOBAL POSITION SYSTEM) CLOCK ASSEMBLY 2 EACH

THE CONTRACTOR SHALL DELIVER THE GPS CLOCKS TO THE ODOT DISTRICT 5 OFFICE AT:

9600 JACKSONTOWN RD.
JACKSONTOWN, OHIO 43030
ATTENTION: BRIAN BOSCH

WORK INSPECTION

THE CONTRACTOR SHALL PROVIDE THE PROJECT ENGINEER AND DISTRICT TRAFFIC ENGINEER WITH 72 HOUR NOTICE OF ANY SIGNAL WORK TO BE PERFORMED AT THE INTERSECTION SITE(S) SO THAT INSPECTION SERVICES CAN BE SUPPLIED.

ITEM 633 CONTROLLER WORK PAD, AS PER PLAN

THE CONTROLLER WORK PAD SHALL BE IN ACCORDANCE WITH CMS 633.11, SCD TC-83.20, AND PIS 208320.

THIS ITEM SHALL INCLUDE THE ADDITIONAL EXCAVATION, EMBANKMENT, AND CONCRETE NECESSARY TO EXTEND THE CONTROLLER WORK PAD TO THE DIMENSIONS BELOW AND PROVIDE A LEVEL WORK PAD.

THE CONTRACTOR SHALL CONSTRUCT THE WORK PAD AS FOLLOWS:

- EXCAVATE A MINIMUM OF 9" BELOW GRADE
- PLACE AND COMPACT 6" OF MATERIAL CONFORMING TO 304.02
- INSTALL A CAST-IN-PLACE WORK PAD THAT IS A MINIMUM OF 4" THICK
- INSTALL 8" CABINET RISER AT ALL LOCATIONS

PAYMENT SHALL BE MADE AT THE UNIT BID PRICE FOR ITEM 633 CONTROLLER WORK PAD, AS PER PLAN AND INCLUDE ALL LABOR, EQUIPMENT, MATERIAL, AND INCIDENTALS NECESSARY TO CONSTRUCT THE CONCRETE WORK PAD.

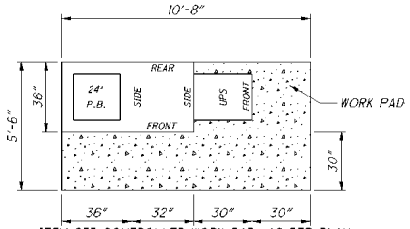

ITEM 633 CONTROLLER WORK PAD, AS PER PLAN
(FOR LOCATION 1 ONLY)
U.S. 22 AND PINKERTON RD.

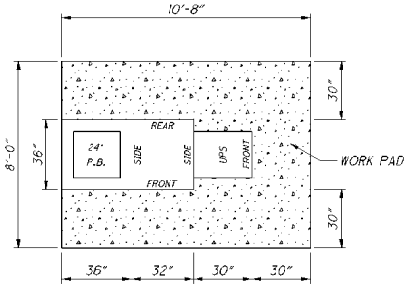

ITEM 633 CONTROLLER WORK PAD, AS PER PLAN
(FOR ALL OTHER LOCATIONS)

CALCULATED BRH
CHECKED JSL

TRAFFIC SIGNAL NOTES

D05-FY2017-
SIGNAL UPGRADE

I:\Projects\D05\95383\Design\Signals\Sheets\95383_CN004.dgn 27-FEB-2017 2:55PM jlu121

ITEM 633 CONTROLLER ITEM MISC.: CONTROLLER UNIT, TYPE 2070E, WITH CABINET, TYPE 332

IN ADDITION TO THE REQUIREMENTS OF C&MS 633 AND 733, THE FOLLOWING REQUIREMENTS SHALL APPLY:

THE CONTROLLER UNIT SHALL BE EQUIPMENT MANUFACTURED IN CONFORMANCE TO THE CALIFORNIA DEPARTMENT OF TRANSPORTATION (CALTRANS) SPECIFICATIONS TITLES BE COMPLIANT WITH THE 2070E MANUFACTURER AND BUILD AS PER THE TRAFFIC AUTHORIZED PRODUCTS (TAP) LIST.

THE 2070E CONTROLLER UNIT SHALL INCLUDE THE FOLLOWING:

1. UNIT CHASSIS
2. 2070-1C CPU MODULE
3. 2070-2A FIELD I/O MODULE
4. 2070-3B FRONT PANEL
5. 2070-4A POWER SUPPLY
6. 2070-7A SERIAL COMMUNICATION MODULE

THE CONTROLLER SHALL BE SUPPLIED WITH THE FOLLOWING TRAFFIC SIGNAL INTERSECTION CONTROL SOFTWARE: ASC/3. THE CONTROLLER SHALL BE SUPPLIED WITH MICRO-WARE EMBEDDED OS-9 RELEASE 1.3 OR LATER WITH KERNEL EDITION #376 OR LATER, AS REQUIRED BY CALTRANS TEES. FOR WARRANTY PURPOSES, A VENDOR-SPECIFIC DECAL, AS PER ODOT C&MS 733.02 SHALL BE APPLIED TO EACH CONTROLLER UNIT AT TIME OF DELIVERY TO THE PROJECT.

THE TIMING PLAN SHALL BE INSTALLED MAKING THE CONTROLLER FULLY FUNCTIONAL AND READY FOR INSTALLATION.

PAYMENT SHALL BE MADE AT THE UNIT PRICE BID FOR EACH UNIT, COMPLETE IN PLACE, AND SHALL INCLUDE ALL LABOR, EQUIPMENT, MATERIAL, CABINET AND MOUNTING HARDWARE, AND ALL OTHER INCIDENTALS NECESSARY FOR A FULLY OPERATIONAL CONTROLLER CABINET. ALL CONNECTIONS TESTED AND ACCEPTED.

ITEM 625 LUMINAIRE, CONVENTIONAL, SOLID STATE (LED), AS PER PLAN (150W, 120V, TYPE II)

THE CONVENTIONAL LUMINAIRE SPECIFIED ABOVE SHALL CONFORM TO SUPPLEMENTAL SPECIFICATION 813 AND 913 AND SELECTED FROM THE APPROVED LIST OF LED LUMINAIRES:

HTTP://WWW.DOT.STATE.OH.US/DIVISIONS/CONSTRUCTIONMGT/MATERIALS/APPROVED%2OLIST/SOLID-STATE LUMINAIRES_SS_813.PDF

IF THE SIGNAL SUPPORT/BRACKET ARM IS BEING PAINTED THE LUMINAIRE HOUSING SHALL BE POWDER COATED TO MATCH.

A PHOTOCELL SHALL BE INCLUDED TO BE MOUNTED ON THE STRAIN POLE TO CONTROL ALL LUMINAIRES AT THE INTERSECTION.

THE CONTRACTOR SHALL SUBMIT THE LUMINAIRE TO THE ENGINEER FOR ACCEPTANCE PRIOR TO ORDERING.

ITEM 625 BRACKET ARM, 15', AS PER PLAN

THE 15' BRACKET ARMS AT LOCATION 11, S.R. 229 AND EDGEWOOD DR. SHALL BE PAINTED IN ACCORDANCE WITH S.S. 916 AND BE PAINTED DARK GREEN (FED-STD-595b 14066).

PAYMENT FOR PAINTING OF BRACKET ARMS SHALL BE INCIDENTAL TO THE UNIT PRICE BID FOR ITEM 625 BRACKET ARM, 15', AS PER PLAN.

SIGNAL SUPPORT SHOP DRAWINGS

THE SIGNAL SUPPORT DESIGNER SHALL PROVIDE DRAWINGS OF A SIGNAL SUPPORT WITH STRUCTURAL ASPECTS OF THE DESIGN AND MATERIALS IN COMPLIANCE WITH THE 2001 AASHTO STANDARD SPECIFICATIONS, WITH 2006 INTERIM REVISIONS, FOR STRUCTURAL SUPPORTS FOR HIGHWAY SIGNS, LUMINAIRES, AND TRAFFIC SIGNALS. THE SIGNAL SUPPORT SHALL BE ASTM A595 GRADE A WITH A MINIMUM YIELD STRENGTH OF 50 KSI. THE FOLLOWING DESIGN PARAMETERS SHALL BE USED:

1. BASIC WIND SPEED = 90 MPH
2. DESIGN LIFE = 25 YEARS
3. FATIGUE CATEGORY = III
4. GALLOPING: NO
5. TRUCK INDUCED GUST: NO

SUBMIT, TO THE ENGINEER PRIOR TO INCORPORATION: TWO COPIES OF THE SIGNAL SUPPORT DRAWINGS AND SHOP DRAWINGS, WHICH IDENTIFY AND DESCRIBE EACH MANUFACTURED SIGNAL SUPPORT AND SIGNAL SUPPORT ITEM WHICH IS BEING INCORPORATED INTO THE CONSTRUCTION. THE SIGNAL SUPPORT DRAWINGS AND SHOP DRAWINGS SHALL EACH BE REVIEWED, SEALED, STAMPED, AND DATED BY TWO OHIO REGISTERED PROFESSIONAL ENGINEERS.

PAYMENT FOR SHALL BE MADE AT THE CONTRACT UNIT PRICE PER EACH COMPLETE AND IN PLACE SIGNAL SUPPORT AND SHALL INCLUDE ALL SIGNAL SUPPORT DESIGN, LABOR, MATERIALS, AND EQUIPMENT NECESSARY TO COMPLETE THE WORK.

ITEM 632 COMBINATION SIGNAL SUPPORT, BY TYPE, BY DESIGN, WITH MAST ARMS BY DESIGN, AS PER PLAN

COMBINATION SIGNAL SUPPORTS AT LOCATION 11, S.R. 229 AND EDGEWOOD DR. SHALL BE PAINTED IN ACCORDANCE WITH S.S. 916 AND BE PAINTED DARK GREEN (FED-STD-595b 14066).

PAYMENT FOR PAINTING OF SIGNAL SUPPORTS SHALL BE INCIDENTAL TO THE UNIT PRICE BID FOR THE FOLLOWING ITEMS:

ITEM 632 COMBINATION SIGNAL SUPPORT, TYPE TC-12.30 DESIGN 7 POLE, WITH MAST ARMS TC-81.21 DESIGN 13 AND DESIGN 3, AS PER PLAN

ITEM 632 COMBINATION SIGNAL SUPPORT, TYPE TC-81.21 DESIGN 4 POLE, WITH MAST ARMS TC-81.21 DESIGN 3 AND DESIGN 3, AS PER PLAN.

STRAIN POLE FOUNDATION DETAILS

STRAIN POLE FOUNDATIONS, EXCEPT FOR THE FOUNDATION CLOSEST TO THE CABINET, SHALL INCLUDE A MINIMUM OF ONE CAPPED CONDUIT ELL AS PER SCD TC-21.20. INSTALL P-K NAIL FOR FUTURE LOCATION CONSIDERATIONS. PAYMENT FOR CAPPED CONDUIT ELL AND P-K NAIL SHALL BE CONSIDERED INCIDENTAL TO THE COST OF THE STRAIN POLE FOUNDATION.

ELEVATIONS SHOWN IN THE PLANS FOR STRAIN POLE FOUNDATIONS ARE FOR COMPUTATIONAL PURPOSES ONLY. THE ACTUAL ELEVATION OF THE FOUNDATION SHALL BE IN ACCORDANCE WITH TRAFFIC SCD TC-21.20 PROVIDED THE EXISTING SLOPE IS LESS THAN 6:1.

AT LOCATIONS WHERE THE EXISTING SLOPE IS 6:1 OR GREATER, THE BURIED DEPTH OF FOUNDATION, AS SHOWN IN SCD TC-21.20 SHALL APPLY TO THE LOW SIDE OF THE SLOPE. THE TOP OF THE FOUNDATION SHALL BE SET 2 INCHES ABOVE THE EXISTING SURFACE ON THE HIGH SIDE OF THE SLOPE. THE ADDITIONAL DEPTH OF FOUNDATION NECESSARY TO MEET THESE REQUIREMENTS SHALL BE ADDED TO THE FORMED TOP.

SIGNAL SUPPORT TABLE (FOR INFORMATION ONLY)

POLE HEIGHT (FT)	21.5	27	27	22	21.5	22.5	22.5	32	32	34	36	40
STATION	SIGNAL SUPPORT, TYPE TC-12.30 DESIGN 8 POLE, WITH MAST ARMS TC-81.21 DESIGN 13 AND DESIGN 11	COMBINATION SIGNAL SUPPORT, TYPE TC-12.30 DESIGN 7 POLE, WITH MAST ARMS TC-81.21 DESIGN 13 AND DESIGN 3, AS PER PLAN	COMBINATION SIGNAL SUPPORT, TYPE TC-81.21 DEISGN 4 POLE, WITH MAST ARMS TC-81.21 DESIGN 3 AND DESIGN 3, AS PER PLAN	SIGNAL SUPPORT, TYPE TC-81.21, DESIGN 2	SIGNAL SUPPORT, TYPE TC-81.21, DESIGN 3	SIGNAL SUPPORT, TYPE TC-81.21, DESIGN 3	SIGNAL SUPPORT, TYPE TC-81.21, DESIGN 11	STRAIN POLE, TYPE TC-81.10, DESIGN 10	COMBINATION STRAIN POLE, TYPE TC-81.10, DESIGN 10	COMBINATION STRAIN POLE, TYPE TC-81.10, DESIGN 10	COMBINATION STRAIN POLE, TYPE TC-81.10, DESIGN 10	COMBINATION STRAIN POLE, TYPE TC-81.10, DESIGN 10
	EACH	EACH	EACH	EACH	EACH	EACH	EACH	EACH	EACH	EACH	EACH	EACH
1 - U.S. 22 & PINKERTON RD.	1			1			1					
2 - U.S. 22 & S.R. 93				1	1	1	1					
3 - U.S. 40 & COLUMBIA RD.												
4 - U.S. 40 & WATKINS RD.												
5 - S.R. 13 & BLACKBIRD LN.								2			2	
6 - S.R. 13 & DORSEY MILL RD.									2	1		1
7 - U.S. 40 & S.R. 37								4				
8 - S.R. 37 & S.R. 256								4				
9 - S.R. 209 & PARKWAY PLAZA DR.								4				
10 - S.R. 209 & WALMART ENTRANCE								4				
11 - S.R. 229 & EDGEWOOD DR.		1	1									
TOTALS	1	1	1	2	1	1	2	18	2	1	2	1

CALCULATED BRH
CHECKED JSL

TRAFFIC SIGNAL NOTES

D05-FY2017-
SIGNAL UPGRADE

I:\Projects\D05\95383\Design\Signals\Sheets\95383_CN005.dgn 27-FEB-2017 2:56PM jlu121

ITEM 630 SIGNING MISC.: SIGNAL AHEAD SIGN WITH FLASHING BEACONS REMOVED

THIS ITEM SHALL INCLUDE THE REMOVAL OF AN EXISTING SIGNAL AHEAD SIGN WITH FLASHING BEACONS AT LOCATION 7: U.S. 40 & S.R. 37. THE SIGN IS LOCATED AT THE 23.51 MILE MARKER OF S.R. 37.

N: 713804.60
E: 1959384.40

(COORDINATES ARE APPROXIMATE AND SHALL BE FIELD VERIFIED.)

REMOVE BEACONS, SIGN SHEETING, SIGN SUPPORT, PULL BOX, CONDUIT, AND ALL POWER CABLE WHICH IS SUPPLIED TO THE SIGN. REMOVED COMPONENTS SHALL BE SALVAGED FOR ODOT. CONTACT RON MILLER AT 740-323-5286 TO ARRANGE FOR PICKUP OF THESE ITEMS FROM THE JOB SITE.

ALL LABOR, MATERIAL, AND EQUIPMENT NEEDED TO REMOVE THE SIGN ASSEMBLY SHALL BE INCLUDED IN THE UNIT PRICE BID FOR EACH SIGN ASSEMBLY TO BE REMOVED UNDER ITEM 630 SIGNING MISC.: SIGNAL AHEAD SIGN WITH FLASHING BEACONS REMOVED.

ITEM 630 SIGNING, MISC.: SIGNAL AHEAD SIGN WITH FLASHING BEACONS REMOVED 1 EACH

ITEM 630 GROUND MOUNTED SUPPORT, NO. 3 POST
ITEM 630 SIGN, FLAT SHEET

THE FOLLOWING QUANTITIES ARE INCLUDED IN THE GENERAL SUMMARY IN ORDER TO ERECT A NEW 36" X 36" W3-3-36 GROUND MOUNTED SIGN AT THE FOLLOWING LOCATIONS:

8.32 MILE MARKER OF S.R. 13 AT
LOCATION 6: S.R. 13 & DORSEY MILL RD.

N: 732693.29
E: 1995474.79

(COORDINATES ARE APPROXIMATE AND SHALL BE FIELD VERIFIED.)

23.39 MILE MARKER OF S.R. 37 AT
LOCATION 7: U.S. 40 & S.R. 37.

N: 714407.38
E: 1959388.80

(COORDINATES ARE APPROXIMATE AND SHALL BE FIELD VERIFIED.)

ITEM 630 GROUND MOUNTED SUPPORT, NO. 3 POST 30 FT
ITEM 630 SIGN POST REFLECTOR 2 EACH
ITEM SIGN, FLAT SHEET 18 SF

ITEM 630 SIGNING MISC.: SIGNAL AHEAD SIGN WITH FLASHING BEACONS RETROFITTED

THIS ITEM SHALL INCLUDE THE REMOVAL OF AN EXISTING FLASHING BEACON SIGNAL AHEAD ASSEMBLY (INCLUDES SIGN, BEACONS, AND EXISTING POWER CABLE) AND RETROFITTING THE EXISTING SIGN PEDESTAL WITH A NEW SOLAR POWERED FLASHING LED BEACON ASSEMBLY. THE NEW ASSEMBLY SHALL INCLUDE A W3-3-36 SIGN, TWO (2) LED ALTERNATING FLASHING BEACONS WITH SOLAR PANEL AND CABINET AT THE LOCATIONS BELOW AND PER THE DETAILS ON THIS SHEET.

THE SOLAR POWERED LED FLASHING BEACONS SHALL ADHERE TO THE "GENERAL ELECTRICAL REQUIREMENTS FOR SOLAR-POWERED DEVICES" NOTE ON THIS SHEET.

LOCATION 6: S.R. 13 & DORSEY MILL DR AT THE 8.62 MILE MARKER OF S.R. 13.
N: 734226.00
E: 1995452.04

LOCATION 7: U.S. 40 & S.R. 37 AT THE 23.78 MILE MARKER OF S.R. 37.
N: 712398.47
E: 1959166.43

(COORDINATES ARE APPROXIMATE AND SHALL BE FIELD VERFIED.)

ALL LABOR, MATERIAL, AND EQUIPMENT NEEDED TO REMOVE THE EXISTING SIGN ASSEMBLY AND INSTALL THE NEW SIGN ASSEMBLY SHALL BE INCLUDED IN THE UNIT PRICE BID FOR ITEM 630 SIGNING MISC.: SIGNAL AHEAD SIGN WITH FLASHING BEACONS RETROFITTED.

ITEM 630 SIGNING, MISC.: SIGNAL AHEAD SIGN WITH FLASHING BEACONS RETROFITTED 2 EACH

GENERAL ELECTRICAL REQUIREMENTS FOR SOLAR-POWERED DEVICES

RUN REQUIREMENTS OF THIS DEVICE ARE 24 HOURS PER DAY, 7 DAYS PER WEEK.

UTILIZE ENVIRONMENTALLY-SEALED, HIGH-EFFICIENCY LED LIGHT SOURCES FOR THIS SOLAR-POWERED APPLICATION.

HOUSE THE SOLAR POWER SUPPLY CONTROLLER AND BATTERY IN ONE OR TWO STAINLESS STEEL OR ALUMINUM ENCLOSURES WITH A MINIMUM NEMA 3 OR 3X RATING.

IF THE EXTERIOR SIZE OF THE ENCLOSURE NECESSARY TO MEET THE REQUIREMENTS BELOW IS LESS THAN 1000 CUBIC INCHES, A SINGLE POLYMER ENCLOSURE RATED NEMA 4 AND LISTED AS SUNLIGHT-RESISTANT MAY BE INSTALLED, WITH APPROVAL OF THE ENGINEER.

SEAL ENCLOSURE CONDUIT ENTRIES TO PREVENT INSECT AND/OR RODENT ENTRY.

PROVIDE METAL ENCLOSURES WITH AN EXTERIOR OF BARE OR POWDER-COATED ALUMINUM, OR STAINLESS STEEL.

PROVIDE A LOCKING ENCLOSURE USING EITHER AN INTEGRATED LOCKING MECHANISM OR A PADLOCK PER C&MS 631.06.

GENERAL ELECTRICAL REQUIREMENTS FOR SOLAR-POWERED DEVICES CONT'D.

SMALL ENCLOSURES OF 300 CUBIC INCHES OR LESS (EXTERIOR) MAY BE PROVIDED WITH SECURITY FASTENERS IN LIEU OF A LOCKING MECHANISM OR PADLOCK.

SEPARATE THE CONTROL ELECTRONICS AND BATTERY, IF CONTAINED WITHIN A SINGLE ENCLOSURE, TO PREVENT DAMAGE TO THE CONTROL ELECTRONICS IF THE BATTERY ENVELOPE IS COMPROMISED.

PROVIDE SEALED GEL-CELL OR AGM (ABSORBED GLASS MAT) LEAD-ACID BATTERIES FOR ALL INSTALLATIONS WITH INSTANTANEOUS LOAD REQUIREMENTS OF 4 WATTS OR ABOVE, REGARDLESS OF DUTY CYCLE.

FOR INSTALLATIONS WITH INSTANTANEOUS LOAD REQUIREMENTS OF LESS THAN 4 WATTS, RECHARGEABLE NiCD, LI-ION, OR NIMH BATTERIES MAY BE USED INSTEAD OF AGM OR GEL-CELL, IF APPROVED BY THE ENGINEER.

PROVIDE SIGNED COPIES FROM THE SOLAR PANEL AND/OR CONTROLLER MANUFACTURER OF ALL CALCULATIONS USED TO SIZE THE SOLAR PANEL AND BATTERIES.

INCLUDE IN THESE CALCULATIONS THE ISOLATION VALUE USED AND ITS REFERENCE SOURCE, THE SOLAR PANEL EFFICIENCY, CHARGER/CONTROLLER EFFICIENCY, INVERTER EFFICIENCY, PROPOSED LED LAMP AND/OR EQUIPMENT LOAD, AND A FIGURE REPRESENTING ANTICIPATED MISCELLANEOUS LOSSES.

SHOW CALCULATIONS DOCUMENTING A RESERVE CAPACITY OF TWO WEEKS OPERATION UNDER CONTINUOUS WORST-CASE (MINIMUM) ISOLATION FIGURES (USUALLY DECEMBER) FOR THE PROPOSED GEOGRAPHIC LOCATION, USING A PANEL ELEVATION ANGLE APPROPRIATE TO THE SITE, AT A SUSTAINED TEMPERATURE OF 25 DEGREES FAHRENHEIT (-4 DEGREES CELSIUS).

DELIVER A COPY OF THE CALCULATIONS TO THE ENGINEER AND ANOTHER COPY TO THE OFFICE OF ROADWAY ENGINEERING FOR APPROVAL.

PROVIDE DOCUMENTATION SHOWING THAT THE SOLAR PANEL MANUFACTURER TESTED THE PANEL ACCORDING TO IEC61215 OR EQUIVALENT APPROVED STANDARD.

PROVIDE DOCUMENTATION SHOWING THAT SOLAR PANEL MOUNTING IS RATED FOR 90 MPH DESIGN WIND AND DESIGNED TO RESIST VANDALISM.

ENSURE NEC GROUNDING AND BONDING REQUIREMENTS ARE MET IF VOLTAGES OVER 50V AC OR DC ARE PRESENT.

PROVIDE A TIMER (IF REQUIRED) THAT SATISFIES THE REQUIREMENTS OF C&MS 731.10 AND IS LISTED ON THE ODOT QUALIFIED PRODUCTS LIST.

PROVIDE COMPLETE PHOTO-CONTROLLER SPECIFICATIONS, INCLUDING ON/OFF PHOTOMETRIC SWITCH POINTS (TYPICALLY GIVEN IN FOOT-CANDLES), IF A PHOTO-CONTROLLER IS UTILIZED.

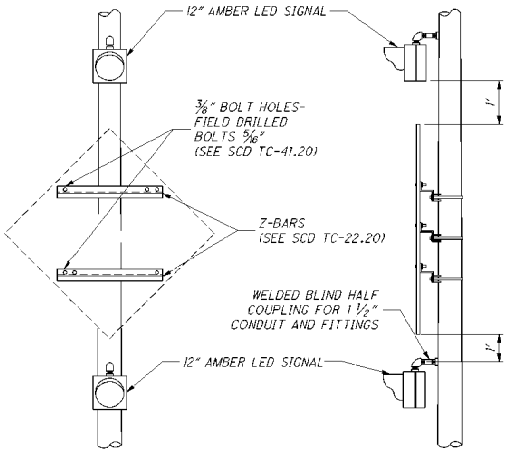

SIGN AND BEACON DETAILS

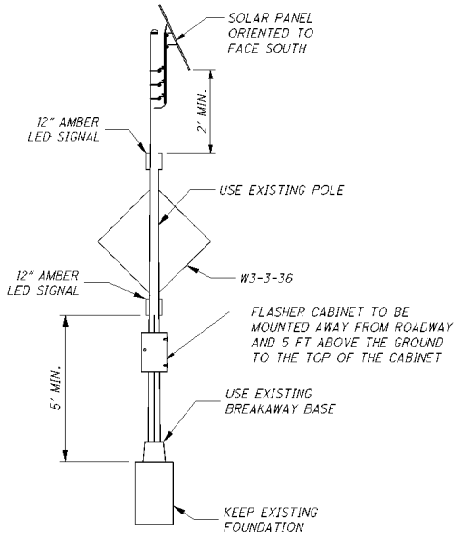

SOLAR POWER ASSEMBLY DETAILS

CALCULATED BRH
CHECKED JSL

TRAFFIC SIGNAL NOTES

D05-FY2017-SIGNAL UPGRADE

J:\Projects\D05\95383\Design\Signals\Sheets\95383_CN006.dgn 27-FEB-2017 3:44PM JLutzi

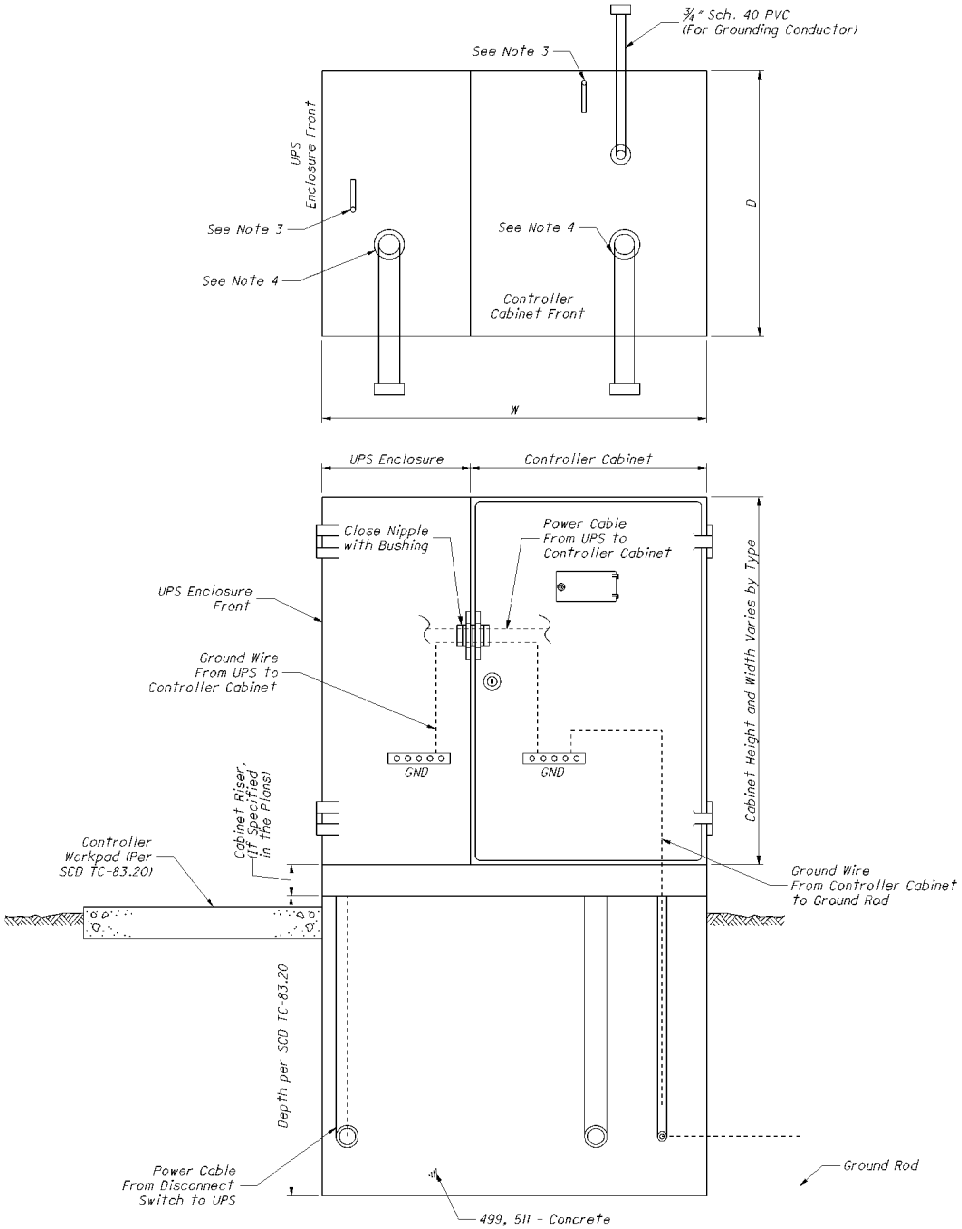

NOTES:

1. The Uninterruptible Power Supply (UPS) enclosure shall be mounted flush up against the traffic signal cabinet and sealed with silicone. The Contractor shall be responsible for providing the necessary power cable between the UPS unit and signal cabinet.

2. The UPS should be placed on the opposite side of the pull box on a 332/335 cabinet (per Standard Construction Drawing (SCD) TC-83.20). The UPS placement for a NEMA cabinet varies, placement should provide adequate access with respect to slope, guardrail spacing, etc.

3. The size, number, and location of anchor bolts shall be in accordance with the manufacturer's recommendations.

4. The size, number, and orientation of conduit ells shall be as shown in the plan, except that a 3/4" schedule 40 PVC shall be installed in each foundation.

5. 1/2" preformed joint filler as per CMS 705.03 shall be used between foundations and adjacent paved areas.

6. See SCD TC-83.20 for further details.

TYPE	W (IN.)	D (IN.)	FOUNDATION CONCRETE (CU. YD.)
TS-1	60	24	1.23
TS-2	70	36	2.16
2070/170	50	36	1.54

PLAN INSERT SHEET 208320

UNINTERRUPTIBLE POWER SUPPLY (UPS) AND CONTROLLER CABINET FOUNDATION

REVISION DATE 7/18/2014 | DESIGNED XXX | REVIEWED XXX | CHECKED CHECKED

OFFICE OF ROADWAY ENGINEERING

D05-FY2017-SIGNAL UPGRADE

1/1

18/83

I:\Projects\D05\35383\Design\Signals\Sheets\35383_CN007.dgn 22-FEB-2017 2:36PM Jlu121

MATERIAL SPECIFICATIONS FOR BBS GENERATOR POWER PANEL EQUIPMENT

GENERATOR INLET - The inlet shall be 30 amp, 125/250V, locking, four (4) wire grounding and meet the NEMA configuration number L14-30-P 30A 125/250V specification. The inlet shall be a Hubbell catalog #2715.

LINE VOLTAGE GENERATOR SWITCH - The switch shall be 30 amp, 125/250V AC, two (2) pole, three (3) position (On, Off, On). The switch shall be a Hubbell catalog #1388.

LINE VOLTAGE INDICATOR LIGHT - The indicator light shall be 125V AC light emitting diode with a red lens.

LINE VOLTAGE CIRCUIT BREAKER - The circuit breaker shall be single pole single throw and a minimum of 30 amps. The amperage shall be increased to accomodate greater loads, if necessary. The gauge of the power cable shall be of proper size per N.E.C.

EXTERNAL LINE VOLTAGE INDICATOR LIGHT - The indicator light shall be a 1" waterproof NEMA 4X or IP66 LED lamp with a green lens.

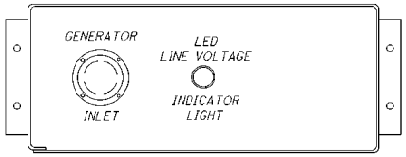

FRONT VIEW OF GENERATOR POWER PANEL

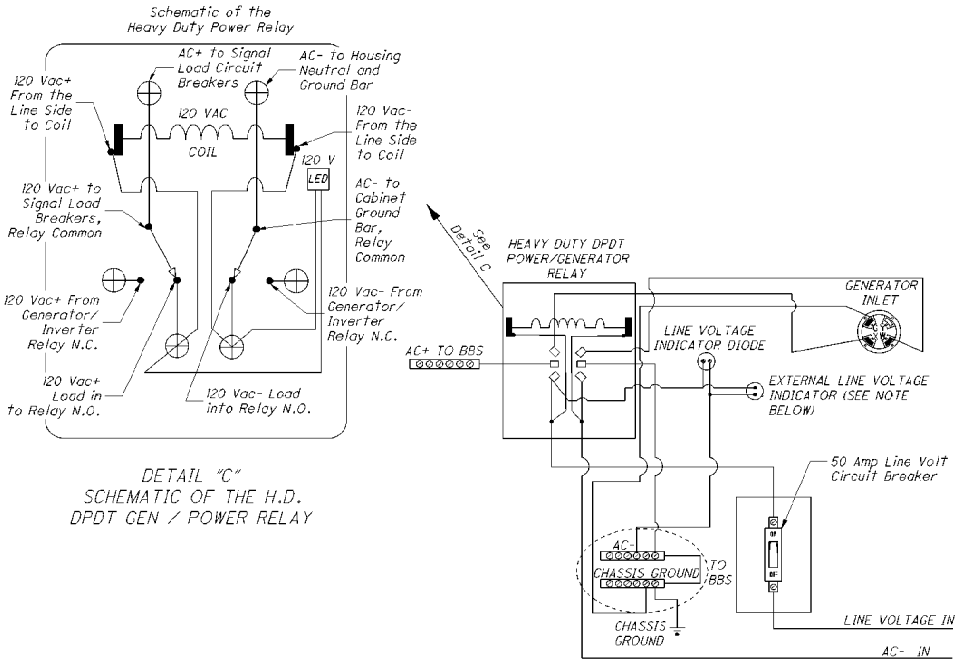

DETAIL "C"
SCHEMATIC OF THE H.D.
DPDT GEN / POWER RELAY

ELECTRICAL HOOKUP DETAIL FOR THE BBS GENERATOR POWER PANEL

NOTE: EXTERNAL LINE VOLTAGE INDICATOR LIGHT required when called for in the plans.
EXTERNAL LINE VOLTAGE INDICATOR LIGHT shall be located on the enclosure exterior for visibility from the adjacent roadway when all cabinet, and generator panel doors are closed.

GENERATOR POWER PANEL ENCLOSURE

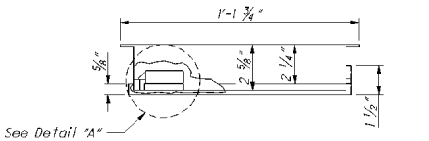

TOP VIEW

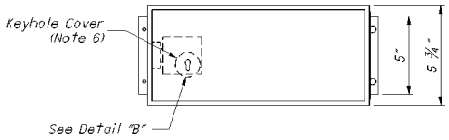

FRONT VIEW CLOSED DOOR

NOTES:

1. The enclosure shall be constructed of 1/8" thick aluminum.
2. The lock shall be the standard police door type, keyed with the standard flasher door skeleton key.
3. The door shall be sealed with a foam rubber gasket to prevent moisture from entering the enclosure.
4. The enclosure shall be mounted onto the outside of the controller cabinet with non-accessible bolts and sealed with a high quality silicon caulk at all surfaces touching the cabinet.
5. The hinge shall be of stainless steel or equivalent corrosive-resistant material.
6. Keyhole shall be covered with a movable circular aluminum or brass cover with top pivot pin.

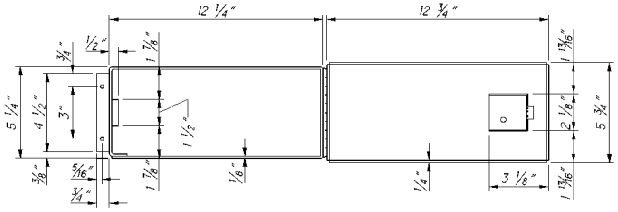

FRONT VIEW OPEN DOOR

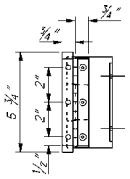

RIGHT SIDE VIEW
CLOSED DOOR

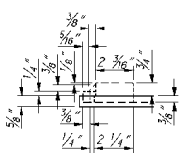

DETAIL "A"

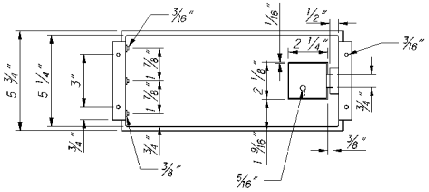

BACK VIEW CLOSED DOOR

DETAIL "B"

THIS DRAWING REPLACES PIS 203012 DATED 04-20-2012.

REVISION DATE	DESIGNED	OFFICE OF ROADWAY ENGINEERING
7/18/2014	XXX	
CHECKED	REVIEWED	
CHECKED	XXX	

PLAN INSERT SHEET 203012

BATTERY BACKUP SYSTEM (BBS)
GENERATOR POWER PANEL

D05-FY2017-
SIGNAL UPGRADE

1/1

19/83

I:\Projects\Dallas\D05\35383\Design\Signals\Sheets\35383_CN008.dgn 22-FEB-2017 2:56PM Jlu121

REF NO.	SHEET NO.	LOCATION	CONDUIT, 2", 725.05	CONDUIT, 3", 725.04	CONDUIT, 3", 725.05	CONDUIT, JACKED OR DRILLED, 725.04, 3"	TRENCH, 24" DEEP	TRENCH IN PAVED AREA, TYPE B	PULL BOX, 725.08, 24"	GROUND ROD	VEHICULAR SIGNAL HEAD, (LED), 3-SECTION, 12" LENS, 1-WAY, POLYCARBONATE, AS PER PLAN	COVERING OF VEHICULAR SIGNAL HEAD	SIGNAL CABLE, 5 CONDUCTOR, NO. 14 AWG	SIGNAL CABLE, 7 CONDUCTOR, NO. 14 AWG	SIGNAL SUPPORT FOUNDATION	POWER CABLE, 3 CONDUCTOR, NO. 8 AWG	POWER SERVICE, AS PER PLAN	SIGNAL SUPPORT, TYPE TC-12.30 DESIGN 8 POLE, WITH MAST ARMS TC-81.21 DESIGN 13 AND DESIGN 11	SIGNAL SUPPORT, TYPE TC-81.21, DESIGN 2	SIGNAL SUPPORT, TYPE TC-81.21, DESIGN 11	REMOVAL OF TRAFFIC SIGNAL INSTALLATION, AS PER PLAN	CABINET FOUNDATION	CONTROLLER WORK PAD, AS PER PLAN	UNINTERRUPTIBLE POWER SUPPLY (UPS), 1000 WATT, AS PER PLAN	CONTROLLER ITEM, MISC.: CONTROLLER UNIT, TYPE 2070E, WITH CABINET, TYPE 332	ADVANCE RADAR DETECTION	STOP-BAR RADAR DETECTION
			625	625	625	625	625	625	625	625	632	632	632	632	632	632	632	632	632	632	632	633	633	633	633	809	809
			FT	FT	FT	FT	FT	FT	EACH	EACH	EACH	EACH	FT	FT	EACH	FT	EACH	EACH	EACH	EACH	EACH	EACH	EACH	EACH	EACH	EACH	EACH
		U.S. 22 & PINKERTON RD																			1						
C-1	21	GROUND MOUNTED CABINET								1												1	1	1	1		
PS-1	21	POWER SERVICE															1										
P-1	21	SIGNAL SUPPORT								1					1			1									
P-2	21	SIGNAL SUPPORT								1					1				1								
P-3	21	SIGNAL SUPPORT								1					1					1							
2A	21	SIGNAL HEAD									1	1															
2B	21	SIGNAL HEAD									1	1															
2C	21	SIGNAL HEAD									1	1															
4A	21	SIGNAL HEAD									1	1															
4B	21	SIGNAL HEAD									1	1															
6A	21	SIGNAL HEAD									1	1															
6B	21	SIGNAL HEAD									1	1															
6C	21	SIGNAL HEAD									1	1															
8A	21	SIGNAL HEAD									1	1															
8B	21	SIGNAL HEAD									1	1															
D-1	21	STOP BAR RADAR																									1
D-2	21	DILEMMA ZONE RADAR																								1	
D-4	21	STOP BAR RADAR																									1
D-5	21	STOP BAR RADAR																									1
D-6	21	DILEMMA ZONE RADAR																								1	
D-8	21	STOP BAR RADAR																									1
PB-1	21	PULL BOX							1																		
PB-2	21	PULL BOX							1																		
PB-3	21	PULL BOX							1																		
CONDUIT	21	PS-1 TO PB-3	25				25									30											
	21	PB-3 TO P-3	20		20		20																				
	21	PB-3TO P-2		92				92																			
	21	P-2 TO TO PB-2			6		6																				
	21	PB-2 TO TO PB-1				100																					
	21	PB-1 TO P-1			12		12																				
SIGNAL CABLE	21	PB-3 TO 2A,2B,2C												123													
	21	PB-3 TO 4A,4B											161														
	21	PB-3 TO 6A,6B,6C												317													
	21	PB-3 TO 8A,8B											292														
		TOTALS CARRIED TO SHEET 9	45	92	38	100	63	92	3	4	10	10	453	440	3	30	1	1	1	1	1	1	1	1	1	2	4

CALCULATED BRH
CHECKED JSL

TRAFFIC SIGNAL SUBSUMMARY
U.S. 22 & PINKERTON RD.

D05-FY2017-
SIGNAL UPGRADE

I:\Projec1\Data\D05\95383\Design\Signals\Sheets\95383_CS001.dgn 27-FEB-2017 3:57PM jlul.t

LEGEND

	PROP	EXIST
TRAFFIC SIGNAL, 3 UNIT HEAD, 12"		
TRAFFIC SIGNAL, 3 UNIT HEAT, 12" WITH ARROWS		
SIGNAL SUPPORT POLE		
CONTROLLER CABINET AND WORK PAD (332)		
TRAFFIC PULL BOX		
DILEMMA ZONE RADAR DETECTION UNIT		
STOP BAR RADAR DETECTION UNIT		
RADAR UNIT DETECTION ZONE		

SIGNAL INDICATIONS

SIGNAL 2B, 2C, 4A, 4B, 6B, 6C, 6A, 8B

SIGNAL 1,5

NOTE: PHASE NUMBERING REVERSED TO MATCH EXISTING PLAN OF U.S. 22 & WALMART ENTRANCE

CROSS REFERENCES	
SHEETS	DESCRIPTION
22-24	SIGNAL DETAILS
20	SIGNAL QUANTITIES

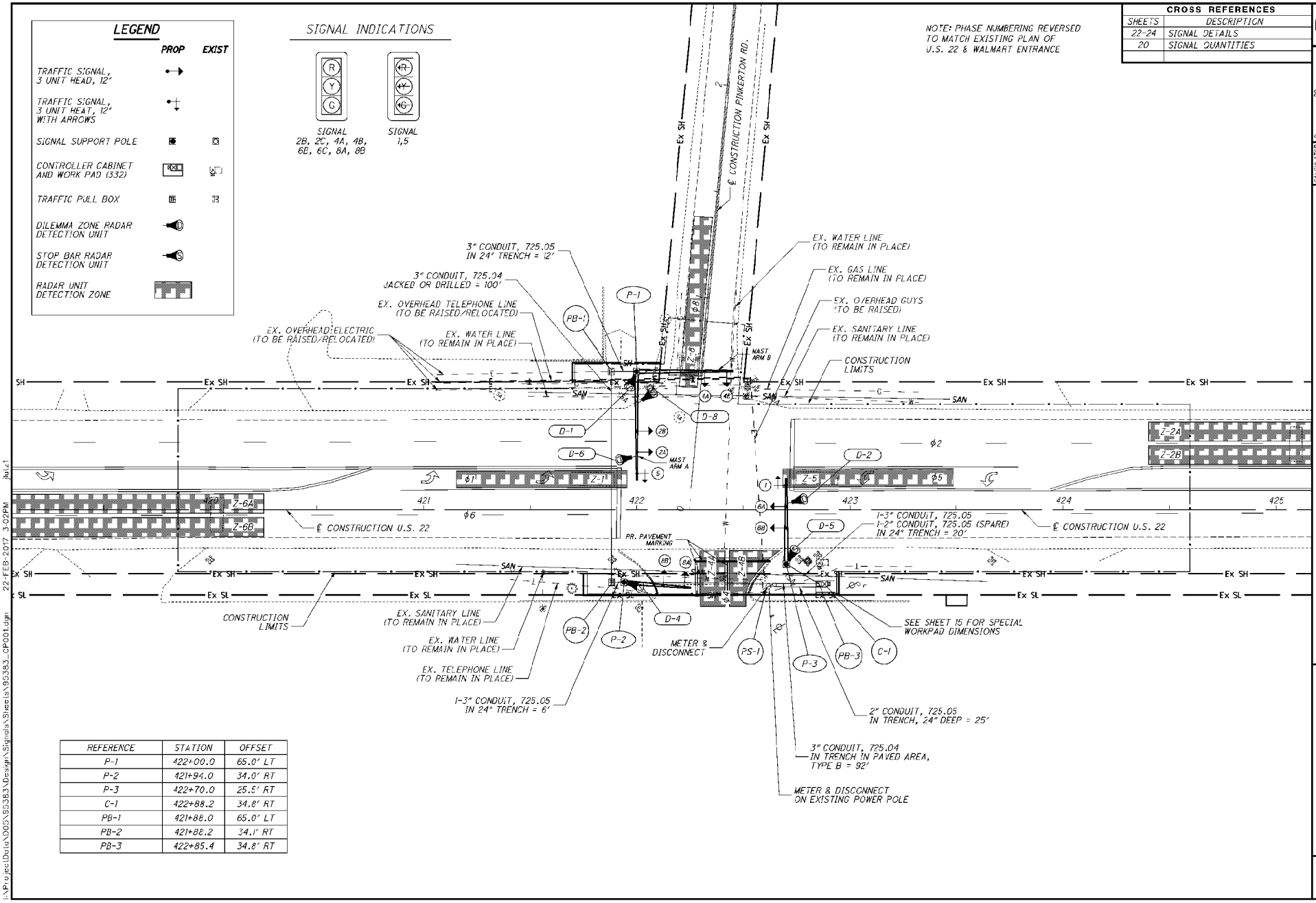

REFERENCE	STATION	OFFSET
P-1	422+00.0	65.0' LT
P-2	421+94.0	34.0' RT
P-3	422+70.0	25.5' RT
C-1	422+88.2	34.8' RT
PB-1	421+88.0	65.0' LT
PB-2	421+88.2	34.1' RT
PB-3	422+85.4	34.8' RT

HORIZONTAL SCALE IN FEET 0 10 20 40

CALCULATED BRH
CHECKED JSL

TRAFFIC SIGNAL PLAN
U.S. 22 & PINKERTON RD.

D05-FY2017-
SIGNAL UPGRADE

I:\Projects\Data\D05\95383\Design\Signals\Sheets\95383_GP001.dgn 22-FEB-2017 3:02PM jlu.z1

SIGNAL TIMING CHART

INTERSECTION: U.S. 22 & Pinkerton Rd. MAINTAINING AGENCY: ODOT										
START UP			DUAL ENTRY: ϕ2 & ϕ6							
START IN		Y/R FLASH								
TIME FOR FLASH OR ALL RED		5 (SEC.)								
FIRST PHASES		2 & 6	OVERLAP				A	B	C	D
COLOR DISPLAYED		GREEN	PHASE							
INTERVAL OR FEATURE			ϕ1	ϕ2	ϕ3	ϕ4	ϕ5	ϕ6	ϕ7	ϕ8
INTERSECTION MOVEMENT		(SEC)	NBLT	SB		WB	SBLT	NB		EB
MINIMUM GREEN (INITIAL)		(SEC)	10.0	25.0		12.0	10.0	25.0		12.0
ADDED INITIAL		(SEC/ACTUATION)		0.5				0.5		
MAXIMUM INITIAL		(SEC)		35.0				35.0		
PASSAGE TIME		(SEC)	3.0	4.0		3.0	3.0	4.0		3.0
TIME BEFORE REDUCTION		(SEC)								
MINIMUM GAP		(SEC)								
TIME TO REDUCE		(SEC)								
MAXIMUM GREEN I		(SEC)	20.0	50.0		30.0	20.0	50.0		30.0
MAXIMUM GREEN II		(SEC)								
YELLOW CHANGE		(SEC)	4.5	4.5		4.0	4.5	4.5		4.0
ALL RED CLEARANCE		(SEC)	1.0	1.0		1.0	1.0	1.0		1.0
WALK		(SEC)								
PEDESTRIAN CLEARANCE		(SEC)								
RECALL	MAXIMUM	(ON/OFF)								
	MINIMUM	(ON/OFF)								
	PEDESTRIAN	(ON/OFF)								
MEMORY		(ON/OFF)								

PHASING DIAGRAM

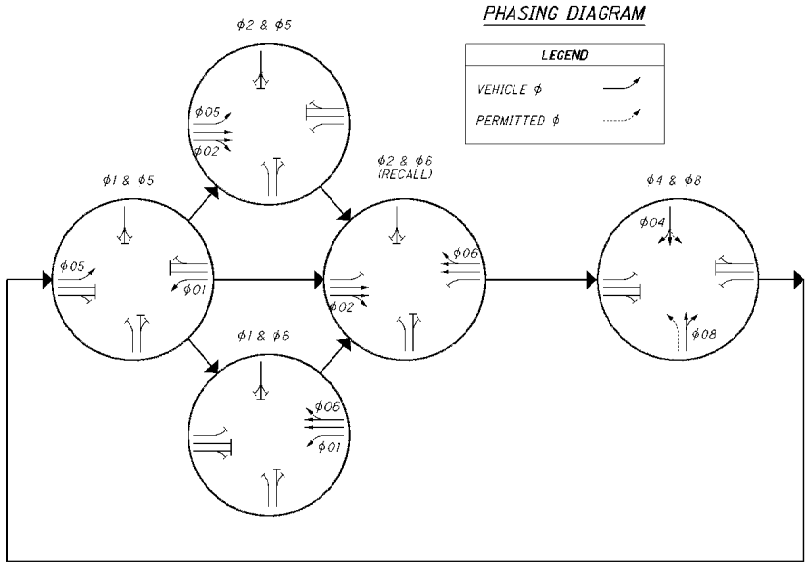

NOTES:

- ALL MOVEMENTS SHALL BE ACTUATED. THE PRIMARY THRU MOVEMENT SHOULD HAVE MIN RECALL ACTIVE TO REST IN GREEN.
- RADAR DETECTION UNITS FOR DILEMMA ZONE DETECTION SHALL PLACE A CONSTANT CALL TO THE CONTROLLER WHEN VEHICLES TRAVEL TIMES TO THE STOP BAR ARE BETWEEN 2.5 AND 6 SECONDS. SPEED TRIGGER SHALL BE SET FOR VEHICLES TRAVELING 35 MPH AND GREATER.
- RADAR SHALL HAVE QUEUE DETECTION CONFIGURED AND A ZONE PLACED AT 100-200 FEET FROM STOP BAR FOR SLOW MOVING VEHICLE EXTENSIONS. SPEED TRIGGER SHALL BE SET AT 1-35 MPH.
- ALL DETECTOR DELAYS SHALL BE PLACED IN THE CONTROLLER.

RADAR DETECTION CHART

RADAR DETECTION UNIT	RADAR DETECTION ZONE	RADAR TYPE	DELAY (SEC.)	MIN. EXTENSION (SEC.)	ASSOCIATED CONTROLLER PHASE
D-1	Z-1	STOP BAR			ϕ1
D-2	Z-2A Z-2B	DILEMMA		2.0-7.5	ϕ2
D-4	Z-4	STOP BAR	8		ϕ4
D-5	Z-5	STOP BAR			ϕ5
D-6	Z-6A Z-5B	DILEMMA		2.0-7.5	ϕ6
D-8	Z-8A Z-8B	STOP BAR	8		ϕ8

CALCULATED BRH
CHECKED JSL

TRAFFIC SIGNAL PLAN DETAILS
U.S. 22 & PINKERTON RD.

D05-FY2017-
SIGNAL UPGRADE

I:\Projec\Cola\D05\95383\Design\Signals\Sheets\95383_CD001.dgn 22-FEB-2017 2:35PM jlulz1

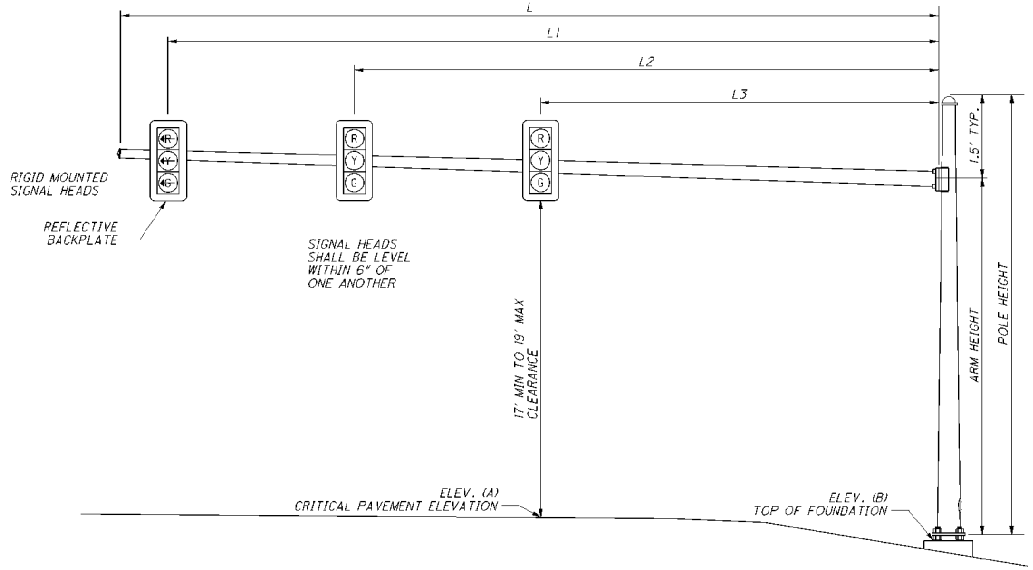

SIGNAL SUPPORT ELEVATION

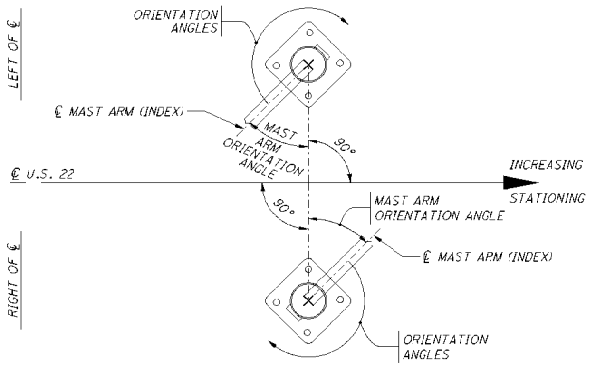

POLE ORIENTATION

MAST ARM TABLE

STATION	OFFSET	ELEVATION		SIGNAL SUPPORT DETAILS											ORIENTATION ANGLES FROM MAST ARM			
		A	B	DESIGN TYPE	DESIGN NO.	MAST ARM DESIGN NO.	POLE HEIGHT	ARM HEIGHT	L	L1	L2	L3	MAST ARM A ANGLE	MAST ARM B ANGLE	POWER SERVICE	CONTROLLER	HANDHOLE	CABLE ENTRANCE 12" FROM TOP
							FT	FT	FT	FT	FT	FT	DEG	DEG	DEG	DEG	DEG	DEG
422+00.0	65.0' LT	817.5	818.5	TC-12.30	8	13	20	20	49.5	46.5	36.5	26.5	0				135	315
						11		19	43.5	40.5	30.5			90				
421+94.0	34.0' RT	816.0	815.2	TC-81.21	2		22	21.5	30	26.8	16.8		94.5				130.5	0
422+70.0	25.5' RT	817.0	816.3	TC-81.21	11		22	21.5	45	42.2	33.7	26.4	0		218	120	135	0

CALCULATED BRH
CHECKED JSL

TRAFFIC SIGNAL PLAN DETAILS
U.S. 22 & PINKERTON RD.

D05-FY2017-
SIGNAL UPGRADE

:\Project\Data\D05\95363\Design\Signals\Sheets\95383_CD002.dgn 22-FEB-2017 2:36PM jjuL21

WIRING DIAGRAM (TYPICAL)

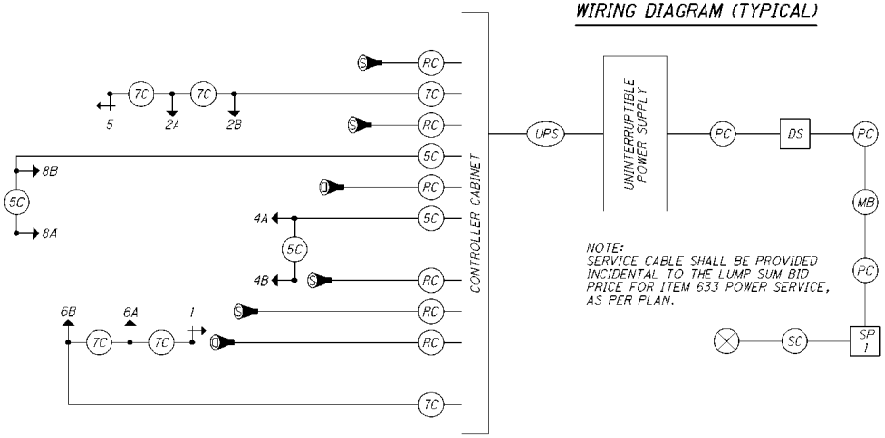

NOTE:
SERVICE CABLE SHALL BE PROVIDED INCIDENTAL TO THE LUMP SUM BID PRICE FOR ITEM 633 POWER SERVICE, AS PER PLAN.

FIELD WIRING HOOK-UP CHART

SIGNAL HEAD	INDICATION	FIELD TERMINAL	FLASH
2A	<--R---	ϕ2 R	Y
	<--Y---	ϕ2 Y	
	<--G---	ϕ2 G	
2B	R	ϕ2 R	Y
	Y	ϕ2 Y	
	G	ϕ2 G	
2C	R	ϕ2 R	Y
	Y	ϕ2 Y	
	G	ϕ2 G	
4A	R	ϕ4 R	R
	Y	ϕ4 Y	
	G	ϕ4 G	
4B	R	ϕ4 R	R
	Y	ϕ4 Y	
	G	ϕ4 G	
6A	<--R---	ϕ6 R	Y
	<--Y---	ϕ6 Y	
	<--G---	ϕ6 G	
6B	R	ϕ6 R	Y
	Y	ϕ6 Y	
	G	ϕ6 G	
6C	R	ϕ6 R	Y
	Y	ϕ6 Y	
	G	ϕ6 G	
8A	R	ϕ8 R	R
	Y	ϕ8 Y	
	G	ϕ8 G	
8B	R	ϕ8 R	R
	Y	ϕ8 Y	
	G	ϕ8 G	

WIRING DIAGRAM LEGEND

- 3 SECTION VEHICULAR SIGNAL HEAD, 1-WAY
- 3 SECTION VEHICULAR SIGNAL HEAD, TURN ARROWS, 1-WAY
- DILEMMA ZONE RADAR DETECTION UNIT
- STOP BAR RADAR DETECTION UNIT
- POWER SOURCE
- (5C) SIGNAL CABLE, 5 CONDUCTOR, NO. 14 AWG
- (RC) RADAR DETECTION CABLE
- (SC) SERVICE CABLE, 3 CONDUCTOR, NO. 8 AWG
- (PC) POWER CABLE, 3 CONDUCTOR, NO. 8 AWG
- (SP 1) EXISTING WOOD POWER POLE
- (MB) METER BASE
- (DS) SIGNAL DISCONNECT SWITCH
- (UPS) UNINTERRUPTIBLE POWER SUPPLY CABLE

CALCULATED BRH
CHECKED JSL

TRAFFIC SIGNAL PLAN DETAILS
U.S. 22 & PINKERTON RD.

D05-FY2017-
SIGNAL UPGRADE

s:\Projects\Dallas\D05\95383\Design\Signals\Sheets\95383_CD003.dgn 22-FEB-2017 2:36PM jlulzi

REF NO.	SHEET NO.	LOCATION	CONDUIT, 2", 725.05	CONDUIT, 3", 725.04	CONDUIT, 3", 725.05	CONDUIT, JACKED OR DRILLED, 725.04, 3"	TRENCH, 24" DEEP	TRENCH IN PAVED AREA, TYPE B	PULL BOX, 725.08, 24"	GROUND ROD	VEHICULAR SIGNAL HEAD, (LED), 3-SECTION, 12" LENS, 1-WAY, POLYCARBONATE, AS PER PLAN	VEHICULAR SIGNAL HEAD, (LED), 5-SECTION, 12" LENS, 1-WAY, POLYCARBONATE, AS PER PLAN	COVERING OF VEHICULAR SIGNAL HEAD	SIGNAL CABLE, 5 CONDUCTOR, NO. 14 AWG	SIGNAL CABLE, 7 CONDUCTOR, NO. 14 AWG	SIGNAL SUPPORT FOUNDATION	POWER CABLE, 3 CONDUCTOR, NO. 8 AWG	POWER SERVICE, AS PER PLAN	SIGNAL SUPPORT, TYPE TC-81.21, DESIGN 2	SIGNAL SUPPORT, TYPE TC-81.21, DESIGN 3	SIGNAL SUPPORT, TYPE TC-81.21, DESIGN 11	REMOVAL OF TRAFFIC SIGNAL INSTALLATION, AS PER PLAN	CABINET FOUNDATION	CONTROLLER WORK PAD, AS PER PLAN	UNINTERRUPTIBLE POWER SUPPLY (UPS), 1000 WATT, AS PER PLAN	CONTROLLER ITEM, MISC.: CONTROLLER UNIT, TYPE 2070E, WITH CABINET, TYPE 332	ADVANCE RADAR DETECTION	STOP-BAR RADAR DETECTION
			625	625	625	625	625	625	625	625	632	632	632	632	632	632	632	632	632	632	632	632	633	633	633	633	809	809
			FT	FT	FT	FT	FT	FT	EACH	EACH	EACH	EACH	EACH	FT	FT	EACH	FT	EACH	EACH	EACH	EACH	EACH	EACH	EACH	EACH	EACH	EACH	EACH
		U.S. 22 & S.R. 93																				1						
C-1	26	GROUND MOUNTED CABINET																					1	1	1	1		
PS-1	26	POWER SERVICE																1										
P-1	26	SIGNAL SUPPORT								1						1				1								
P-2	26	SIGNAL SUPPORT								1						1			1									
P-3	26	SIGNAL SUPPORT								1						1					1							
P-4	26	SIGNAL SUPPORT								1						1				1								
2	26	SIGNAL HEAD									1		1															
4A	26	SIGNAL HEAD									1		1															
4B	26	SIGNAL HEAD									1		1															
5	26	SIGNAL HEAD										1	1															
6A	26	SIGNAL HEAD									1		1															
6B	26	SIGNAL HEAD									1		1															
8A	26	SIGNAL HEAD									1		1															
8B	26	SIGNAL HEAD									1		1															
D-2	26	RADAR DETECTION																									1	
D-4A	26	RADAR DETECTION																										1
D-4B	26	RADAR DETECTION																									1	
D-5	26	RADAR DETECTION																										1
D-6	26	RADAR DETECTION																									1	
D-8	26	RADAR DETECTION																										1
PB-1	26	PULL BOX							1																			
PB-2	26	PULL BOX							1																			
PB-3	26	PULL BOX							1																			
PB-4	26	PULL BOX							1																			
PB-5	26	PULL BOX							1																			
CONDUIT	26	PS-1 TO PB-1	15				15										20											
	26	PB-1 TO P-2	18		18		18																					
	26	P-2 TO PB-3			20		20																					
	26	PB-3 TO PB-4		80				80																				
	26	PB-4 TO P-4			10		10																					
	26	PB-3 TO PB-2				77																						
	26	PB-2 TO TO P-1			22		22																					
	26	PB-2 TO PB-5				93																						
	26	PB-5 TO P-3			12		12																					
SIGNAL CABLE	26	PB-1 TO 2,5													205													
	26	PB-1 TO 4A,4B												87														
	26	PB-1 TO 6A,6B												203														
	26	PB-1 TO 8A,8B												295														
		TOTALS CARRIED TO SHEET 11	33	80	82	170	97	80	5	4	7	1	8	585	205	4	20	1	1	2	1	1	1	1	1	1	3	3

CALCULATED BRH
CHECKED JSL

TRAFFIC SIGNAL SUBSUMMARY
U.S. 22 & S.R. 93

D05-FY2017-
SIGNAL UPGRADE

27-FEB-2017 3:57PM Jlu121
n:\Projects\D05\95383\Design\Signals\Sheets\95383_CS002.dgn

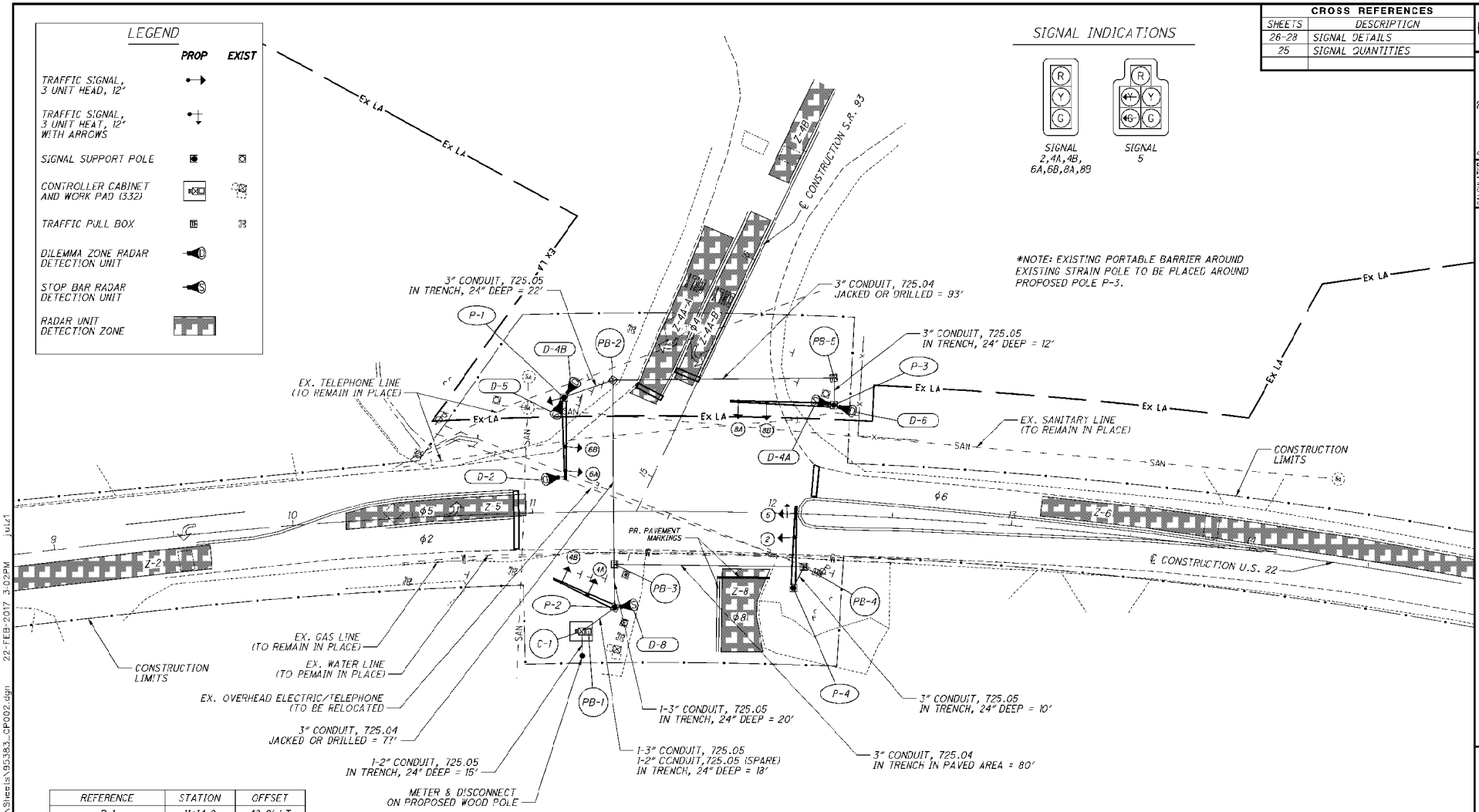

REFERENCE	STATION	OFFSET
P-1	11+14.0	48.0' LT
P-2	11+34.0	41.4' RT
P-3	12+24.0	46.0' LT
P-4	12+10.0	31.0' RT
C-1	11+19.8	49.8' RT
PB-1	11+22.7	49.9' RT
PB-2	11+34.0	55.0' LT
PB-3	11+34.0	22.0' RT
PB-4	12+14.0	22.0' RT
PB-5	12+23.5	57.3' LT
PR. WOOD POLE	11+20.0	60.0' RT

CROSS REFERENCES	
SHEETS	DESCRIPTION
26-28	SIGNAL DETAILS
25	SIGNAL QUANTITIES

HORIZONTAL SCALE IN FEET 0 10 20 40

CALCULATED BRH
CHECKED JSL

TRAFFIC SIGNAL PLAN
U.S. 22 & S.R. 93

D05-FY2017-SIGNAL UPGRADE

I:\Projects\Data\D05\95383\Design\Signals\Sheets\95383_GP002.dgn 22-FEB-2017 3:02PM JULZ1

SIGNAL TIMING CHART

INTERSECTION: U.S. 22 & S.R. 93 MAINTAINING AGENCY: ODOT										
START UP			DUAL ENTRY: ϕ2 & ϕ6							
START IN		Y/R FLASH								
TIME FOR FLASH OR ALL RED		5 (SEC.)								
FIRST PHASES		2 & 6	OVERLAP				A	B	C	D
COLOR DISPLAYED		GREEN	PHASE							
INTERVAL OR FEATURE			ϕ1	ϕ2	ϕ3	ϕ4	ϕ5	ϕ6	ϕ7	ϕ8
INTERSECTION MOVEMENT		(SEC)		EB		SB	EBLT	WB		NB
MINIMUM GREEN (INITIAL)		(SEC)		15.0		12.0	8.0	15.0		12.0
ADDED INITIAL		(SEC/ACTUATION)								
MAXIMUM INITIAL		(SEC)								
PASSAGE TIME		(SEC)		3.5		4.0	3.0	4.0		4.0
TIME BEFORE REDUCTION		(SEC)								
MINIMUM GAP		(SEC)								
TIME TO REDUCE		(SEC)								
MAXIMUM GREEN I		(SEC)		30.0		25.0	15.0	30.0		25.0
MAXIMUM GREEN II		(SEC)								
YELLOW CHANGE		(SEC)		4.0		4.0	4.0	4.0		4.0
ALL RED CLEARANCE		(SEC)		1.5		1.5	1.5			1.5
WALK		(SEC)								
PEDESTRIAN CLEARANCE		(SEC)								
RECALL	MAXIMUM	(ON/OFF)								
	MINIMUM	(ON/OFF)								
	PEDESTRIAN	(ON/OFF)								
MEMORY		(ON/OFF)								

NOTES:

- ALL MOVEMENTS SHALL BE ACTUATED. THE PRIMARY THRU MOVEMENT SHOULD HAVE MIN RECALL ACTIVE TO REST IN GREEN.
- RADAR DETECTION UNITS FOR DILEMMA ZONE DETECTION SHALL PLACE A CONSTANT CALL TO THE CONTROLLER WHEN VEHICLES TRAVEL TIMES TO THE STOP BAR ARE BETWEEN 2.5 AND 5 SECONDS. SPEED TRIGGER SHALL BE SET FOR VEHICLES TRAVELING 35 MPH AND GREATER.
- RADAR SHALL HAVE QUEUE DETECTION CONFIGURED AND A ZONE PLACED AT 100-200 FEET FROM STOP BAR FOR SLOW MOVING VEHICLE EXTENSIONS. SPEED TRIGGER SHALL BE SET AT 1-35 MPH.
- ALL DETECTOR DELAYS SHALL BE PLACED IN THE CONTROLLER.

PHASING DIAGRAM

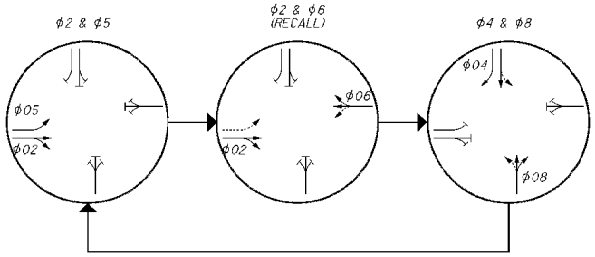

RADAR DETECTION CHART

RADAR DETECTION UNIT	RADAR DETECTION ZONE	RADAR TYPE	DELAY SEC.)	MIN. EXTENSION (SEC.)	ASSOCIATED CONTROLLER PHASE
D-2	Z-2	DILEMMA		2.0-7.5	ϕ2
D-4A	Z-4A-A	STOP BAR	8		ϕ4
	Z-4A-B				
D-4B	Z-4B	DILEMMA		2.0-7.5	ϕ4
D-5	Z-5	STOP BAR			ϕ5
D-6	Z-6	DILEMMA		2.0-7.5	ϕ6
D-8	Z-9	STOP BAR	8		ϕ8

CALCULATED BRH
CHECKED JSL

TRAFFIC SIGNAL PLAN DETAILS
U.S. 22 & S.R. 93

D05-FY2017-
SIGNAL UPGRADE

I:\Projects\D05\95383\Design\Signals\Sheets\95383_CD004.dgn 22-FEB-2017 2:36PM jlu121

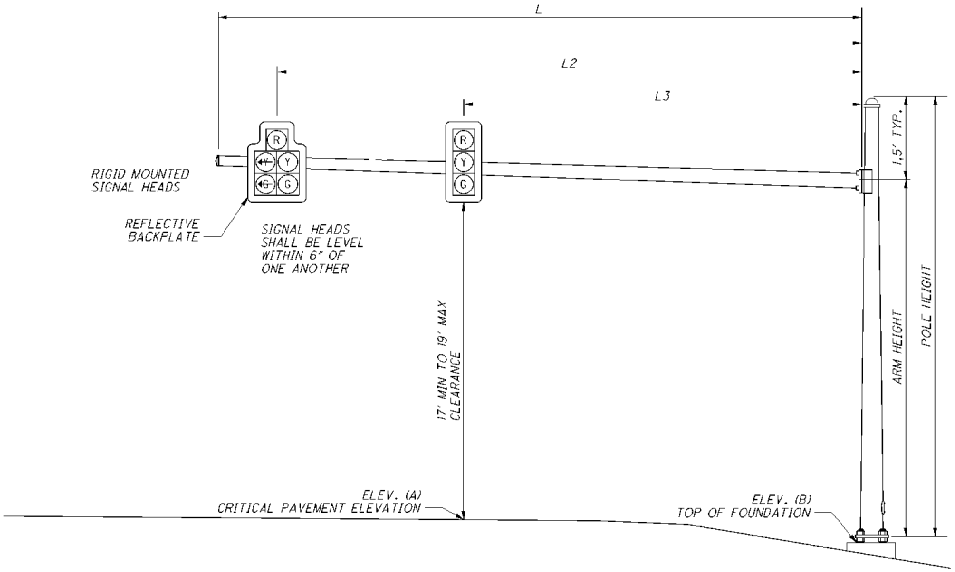

SIGNAL SUPPORT ELEVATION

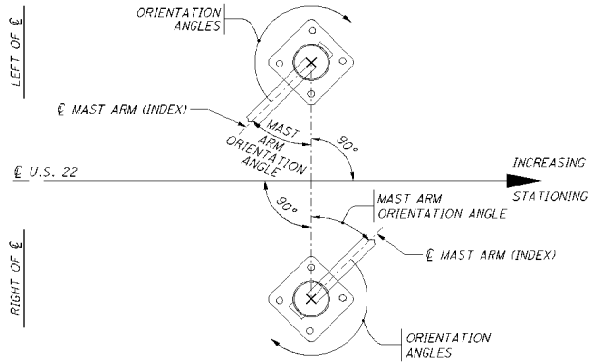

POLE ORIENTATION

MAST ARM TABLE

SUPPORT NO.	STATION	OFFSET	ELEVATION		SIGNAL SUPPORT DETAILS								ORIENTATION ANGLES FROM MAST ARM			
			A	B	DESIGN TYPE	DESIGN NO.	POLE HEIGHT	ARM HEIGHT	L	L1	L2	MAST ARM ANGLE	POWER SERVICE	CONTROLLER	HANDHOLE	CABLE ENTRANCE 12" FROM TOP
							FT	FT	FT	FT	FT	DEG	DEG	DEG	DEG	DEG
P-1	11+14.0	48.0' LT	900.4	899.6	TC-81.21	3	21.5	20.0	32.5	29.0	18.9	0			135	0
P-2	11+34.0	40.0' RT	898.5	899.0	TC-81.21	2	22.0	21.0	26.5	22.9	10.9	64	278	299	289	0
P-3	12+24.0	46.0' LT	898.8	899.4	TC-81.21	11	22.5	21.0	41.5	38.5	26.5	90			135	0
P-4	12+10.0	31.0' RT	897.4	898.5	TC-81.21	3	22.5	21.5	32.5	29.6	19.6	0			135	0

CALCULATED BRH
CHECKED JSL

TRAFFIC SIGNAL PLAN DETAILS
U.S. 22 & S.R. 93

D05-FY2017-
SIGNAL UPGRADE

I:\Projects\D05\95383\Design\Signals\Sheets\95383_CD005.dgn 22-FEB-2017 2:36PM jlu121

WIRING DIAGRAM (TYPICAL)

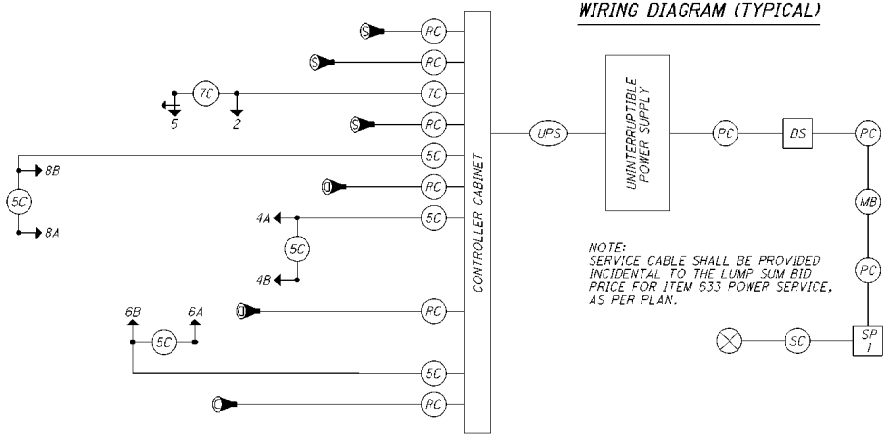

NOTE:
SERVICE CABLE SHALL BE PROVIDED INCIDENTAL TO THE LUMP SUM BID PRICE FOR ITEM 633 POWER SERVICE, AS PER PLAN.

FIELD WIRING HOOK-UP CHART

SIGNAL HEAD	INDICATION	FIELD TERMINAL	FLASH
2	R	ϕ2 R	Y
	Y	ϕ2 Y	
	G	ϕ2 G	
4A	R	ϕ4 R	R
	Y	ϕ4 Y	
	G	ϕ4 G	
4B	R	ϕ4 R	R
	Y	ϕ4 Y	
	G	ϕ4 G	
5	R	ϕ5 R	Y
	Y	ϕ5 Y	
	G	ϕ5 G	
	<--Y---	ϕ5 R	
	<--G---	ϕ5 Y	
6A	R	ϕ6 R	Y
	Y	ϕ6 Y	
	G	ϕ6 G	
6B	R	ϕ6 R	Y
	Y	ϕ6 Y	
	G	ϕ6 G	
8A	R	ϕ8 R	R
	Y	ϕ8 Y	
	G	ϕ8 G	
8B	R	ϕ8 R	R
	Y	ϕ8 Y	
	G	ϕ8 G	

WIRING DIAGRAM LEGEND

- 3 SECTION VEHICULAR SIGNAL HEAD, 1-WAY
- 5 SECTION VEHICULAR SIGNAL HEAD, 1-WAY
- DILEMMA ZONE RADAR DETECTION UNIT
- STOP BAR RADAR DETECTION UNIT
- POWER SOURCE
- 5C — SIGNAL CABLE, 5 CONDUCTOR, NO. 14 AWG
- 7C — SIGNAL CABLE, 7 CONDUCTOR, NO. 14 AWG
- RC — RADAR DETECTION CABLE
- SC — SERVICE CABLE, 3 CONDUCTOR, NO. 8 AWG
- PC — POWER CABLE, 3 CONDUCTOR, NO. 8 AWG
- SP 1 — PROPOSED WOOD POLE
- MB — METER BASE
- DS — SIGNAL DISCONNECT SWITCH
- UPS — UNINTERRUPTIBLE POWER SUPPLY CABLE

CALCULATED BRH
CHECKED JSL

TRAFFIC SIGNAL PLAN DETAILS
U.S. 22 & S.R. 93

D05-FY2017-
SIGNAL UPGRADE

I:\Projects\D05\95383\Design\Signals\Sheets\95383_CD006.dgn 22-FEB-2017 2:36PM Tulzi

REF NO.	SHEET NO.	LOCATION	632 VEHICULAR SIGNAL HEAD, (LED), 3-SECTION, 12" LENS, 1-WAY, POLYCARBONATE, AS PER PLAN (EACH)	632 COVERING OF VEHICULAR SIGNAL HEAD (EACH)	632 TETHER WIRE, WITH ACCESSORIES, AS PER PLAN (FT)	632 SIGNAL CABLE, 5 CONDUCTOR, NO. 14 AWG (FT)	632 SIGNAL CABLE, 7 CONDUCTOR, NO. 14 AWG (FT)	632 REMOVAL OF TRAFFIC SIGNAL INSTALLATION, AS PER PLAN (EACH)	632 SIGNALIZATION, MISC.: UNLASH AND RELASH MESSENGER WIRE (FT)	809 ADVANCE RADAR DETECTION (EACH)	809 STOP-BAR RADAR DETECTION (EACH)
		U.S. 40 & COLUMBIA RD.			465			1	465		
1	31	SIGNAL HEAD	1	1							
2A	31	SIGNAL HEAD	1	1							
2B	31	SIGNAL HEAD	1	1							
4A	31	SIGNAL HEAD	1	1							
4B	31	SIGNAL HEAD	1	1							
5	31	SIGNAL HEAD	1	1							
6A	31	SIGNAL HEAD	1	1							
6B	31	SIGNAL HEAD	1	1							
8A	31	SIGNAL HEAD	1	1							
8B	31	SIGNAL HEAD	1	1							
D-1	31	RADAR DETECTION									1
D-2	31	RADAR DETECTION								1	
D-4A	31	RADAR DETECTION									1
D-4B	31	RADAR DETECTION								1	
D-5	31	RADAR DETECTION									1
D-6	31	RADAR DETECTION								1	
D-8	31	RADAR DETECTION									1
SIGNAL CABLE	31	CABINET TO 1,6A,6B					129				
	31	CABINET TO 2A,2B,5					247				
	31	CABINET TO 4A,4B				197					
	31	CABINET TO 8A,8B				138					
		TOTALS CARRIED TO SHEET 9	10	10	465	335	376	1	465	3	4

CALCULATED BRH
CHECKED JSL

TRAFFIC SIGNAL SUBSUMMARY
U.S. 40 & COLUMBIA RD.

D05-FY2017-
SIGNAL UPGRADE

27-FEB-2017 3:57PM jlu1zl
s:\Projects\D05\95383\Design\Signals\Sheets\95383_CS003.dgn

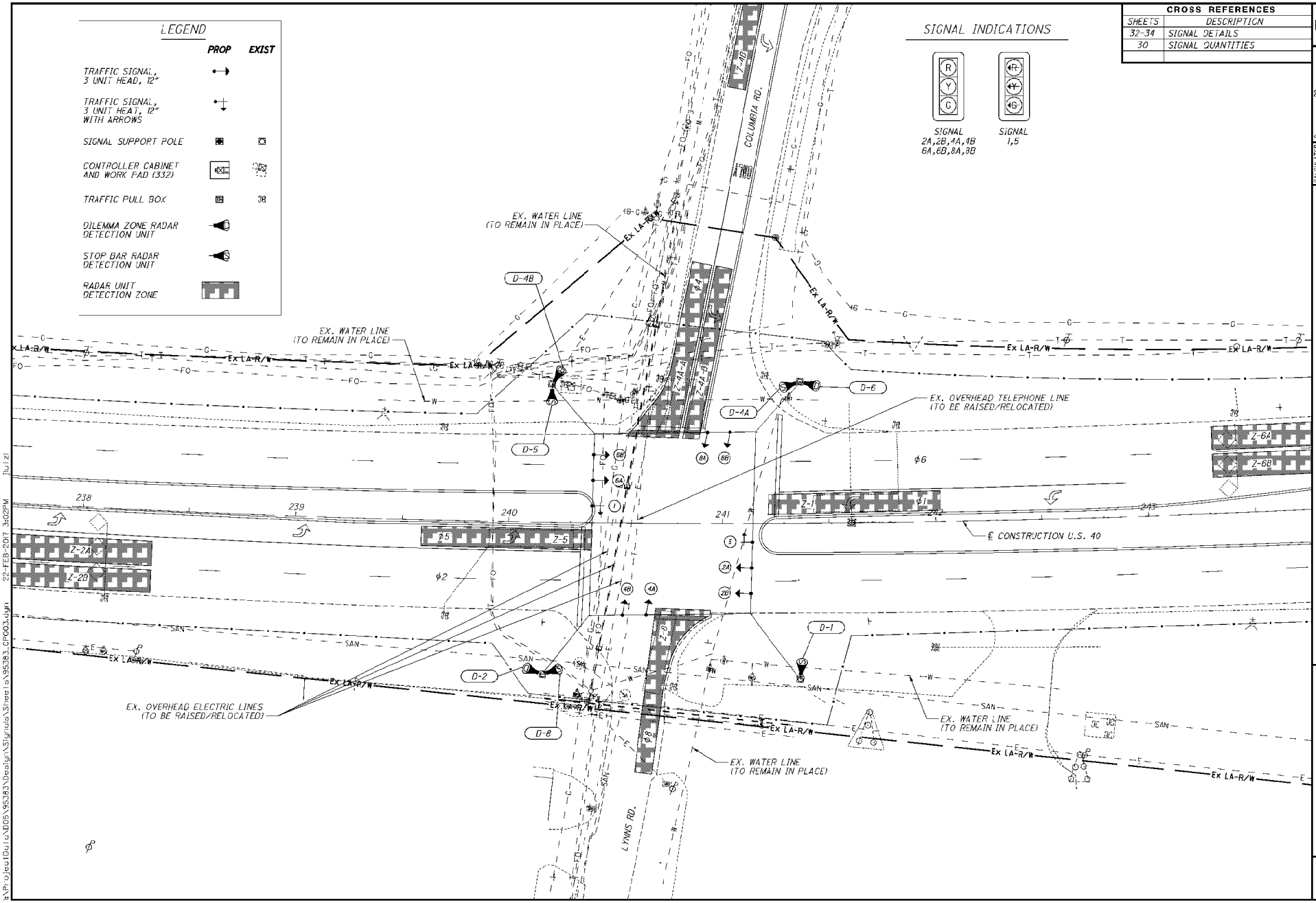

CROSS REFERENCES	
SHEETS	DESCRIPTION
32-34	SIGNAL DETAILS
30	SIGNAL QUANTITIES

HORIZONTAL SCALE IN FEET 0 10 20 40

CALCULATED BRH
CHECKED JSL

TRAFFIC SIGNAL PLAN
U.S. 40 & COLUMBIA RD.

D05-FY2017-
SIGNAL UPGRADE

31
83

22-FEB-2017 3:02PM JLU21

s:\Projects\D05\95383\Design\Signals\Sheets\95383_CP003.dgn

SIGNAL TIMING CHART

INTERSECTION: U.S. 40 & Columbia Rd. MAINTAINING AGENCY: ODOT										
START UP			DUAL ENTRY: #2 & #6							
START IN		Y/R FLASH								
TIME FOR FLASH OR ALL RED		5 (SEC.)								
FIRST PHASES		2 & 6	OVERLAP				A	B	C	D
COLOR DISPLAYED		GREEN	PHASE							
INTERVAL OR FEATURE			ϕ1	ϕ2	ϕ3	ϕ4	ϕ5	ϕ6	ϕ7	ϕ8
INTERSECTION MOVEMENT		(SEC)	WBLT	EB		SB	EBLT	WB		NB
MINIMUM GREEN (INITIAL)		(SEC)	8.0	15.0		10.0	8.0	15.0		10.0
ADDED INITIAL		(SEC/ACTUATION)		0.5				0.5		
MAXIMUM INITIAL		(SEC)		20.0				20.0		
PASSAGE TIME		(SEC)	3.0	3.5		4.0	3.0	3.5		3.0
TIME BEFORE REDUCTION		(SEC)								
MINIMUM GAP		(SEC)								
TIME TO REDUCE		(SEC)								
MAXIMUM GREEN I		(SEC)	15.0	50.0		35.0	15.0	50.0		25.0
MAXIMUM GREEN II		(SEC)								
YELLOW CHANGE		(SEC)	4.0	5.0		4.5	4.0	5.0		4.5
ALL RED CLEARANCE		(SEC)	1.5	1.5		1.5	1.5	1.5		1.5
WALK		(SEC)								
PEDESTRIAN CLEARANCE		(SEC)								
RECALL	MAXIMUM	(ON/OFF)								
	MINIMUM	(ON/OFF)								
	PEDESTRIAN	(ON/OFF)								
MEMORY		(ON/OFF)								

PHASING DIAGRAM

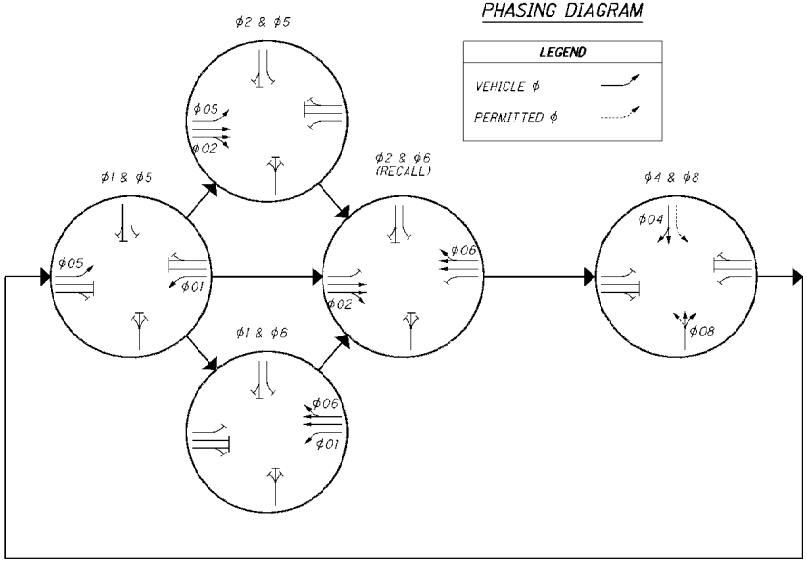

NOTES:

- ALL MOVEMENTS SHALL BE ACTUATED. THE PRIMARY THRU MOVEMENT SHOULD HAVE MIN RECALL ACTIVE TO REST IN GREEN.
- RADAR DETECTION UNITS FOR DILEMMA ZONE DETECTION SHALL PLACE A CONSTANT CALL TO THE CONTROLLER WHEN VEHICLES TRAVEL TIMES TO THE STOP BAR ARE BETWEEN 2.5 AND 6 SECONDS. SPEED TRIGGER SHALL BE SET FOR VEHICLES TRAVELING 35 MPH AND GREATER.
- RADAR SHALL HAVE QUEUE DETECTION CONFIGURED AND A ZONE PLACED AT 100-200 FEET FROM STOP BAR FOR SLOW MOVING VEHICLE EXTENSIONS. SPEED TRIGGER SHALL BE SET AT 1-35 MPH.
- ALL DETECTOR DELAYS SHALL BE PLACED IN THE CONTROLLER.

RADAR DETECTION CHART

RADAR DETECTION UNIT	RADAR DETECTION ZONE	RADAR TYPE	DELAY SEC.)	MIN. EXTENSION (SEC.)	ASSOCIATED CONTROLLER PHASE
D-1	Z-1	STOP BAR			ϕ1
D-2	Z-2A	DILEMMA		2.0-7.5	ϕ2
	Z-2B				
D-4A	Z-4A-A	STOP BAR	8		ϕ4
	Z-4A-B				
D-4B	Z-4B	DILEMMA		2.0-7.5	ϕ4
D-5	Z-5	STOP BAR		2.0-7.5	ϕ5
D-6	D-6A	DILEMMA			ϕ6
	D-6B				
D-8	Z-8	STOP BAR	8		ϕ8

CALCULATED BRH
CHECKED JSL

TRAFFIC SIGNAL PLAN DETAILS
U.S. 40 & COLUMBIA RD.

D05-FY2017-
SIGNAL UPGRADE

I:\Projects\D05\95383\Design\Signals\Sheets\95383_CD007.dgn 22-FEB-2017 2:36PM jlu121

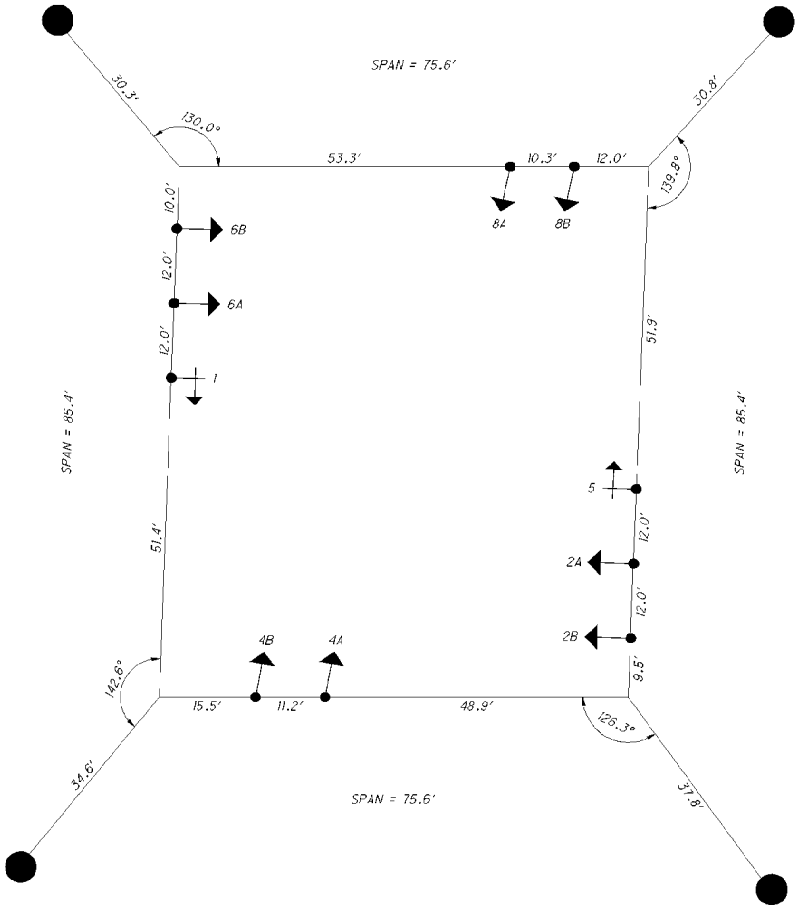

SPAN WIRE PLAN VIEW DETAILS

CALCULATED BRH
CHECKED JSL

TRAFFIC SIGNAL PLAN DETAILS
U.S. 40 & COLUMBIA RD.

D05-FY2017-
SIGNAL UPGRADE

33
83

I:\Projects\D0\D05\95383\Design\Signals\Sheets\95383_CD008.dgn 22-FEB-2017 2:36PM jlu121

WIRING DIAGRAM (TYPICAL)

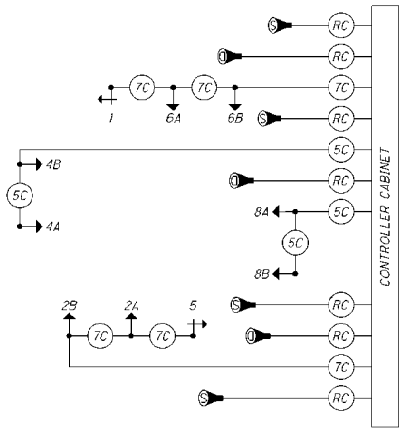

WIRING DIAGRAM LEGEND

- 3 SECTION VEHICULAR SIGNAL HEAD, 1-WAY
- 5 SECTION VEHICULAR SIGNAL HEAD, 1-WAY
- DILEMMA ZONE RADAR DETECTION UNIT
- STOP BAR RADAR DETECTION UNIT
- POWER SOURCE
- 5C — SIGNAL CABLE, 5 CONDUCTOR, NO. 14 AWG
- 7C — SIGNAL CABLE, 7 CONDUCTOR, NO. 14 AWG
- RC — RADAR DETECTION CABLE

FIELD WIRING HOOK-UP CHART

SIGNAL HEAD	INDICATION	FIELD TERMINAL	FLASH
1	<--R---	ϕ1 R	Y
	<--Y---	ϕ1 Y	
	<--G---	ϕ1 G	
2A	R	ϕ2 R	Y
	Y	ϕ2 Y	
	G	ϕ2 G	
2B	R	ϕ2 R	Y
	Y	ϕ2 Y	
	G	ϕ2 G	
4A	R	ϕ4 R	R
	Y	ϕ4 Y	
	G	ϕ4 G	
4B	R	ϕ4 R	R
	Y	ϕ4 Y	
	G	ϕ4 G	
5	<--R---	ϕ5 R	Y
	<--Y---	ϕ5 Y	
	<--G---	ϕ5 G	
6A	R	ϕ6 R	Y
	Y	ϕ6 Y	
	G	ϕ6 G	
6B	R	ϕ6 R	Y
	Y	ϕ6 Y	
	G	ϕ6 G	
8A	R	ϕ8 R	R
	Y	ϕ8 Y	
	G	ϕ8 G	
8B	R	ϕ8 R	R
	Y	ϕ8 Y	
	G	ϕ8 G	

CALCULATED XXX
CHECKED XXX

TRAFFIC SIGNAL PLAN DETAILS
U.S. 40 & COLUMBIA RD.

D05-FY2017-
SIGNAL UPGRADE

s:\Projects\D05\95383\Design\Signals\Sheets\95383_CD009.dgn 22-FEB-2017 2:36PM jlulzi

REF NO.	SHEET NO.	LOCATION	625 CONDUIT, 2", 725.05	625 CONDUIT, 4", 725.05	625 TRENCH, 24" DEEP	625 PULL BOX, 726.08, 24"	625 GROUND ROD	632 VEHICULAR SIGNAL HEAD, (LED), 3-SECTION, 12" LENS, 1-WAY, POLYCARBONATE, AS PER PLAN	632 VEHICULAR SIGNAL HEAD, (LED), 5-SECTION, 12" LENS, 1-WAY, POLYCARBONATE, AS PER PLAN	632 COVERING OF VEHICULAR SIGNAL HEAD	632 MESSENGER WIRE, 7 STRAND, 7/16" DIAMETER WITH ACCESSORIES	632 TETHER WIRE, WITH ACCESSORIES, AS PER PLAN	632 SIGNAL CABLE, 5 CONDUCTOR, NO. 14 AWG	632 SIGNAL CABLE, 7 CONDUCTOR, NO. 14 AWG	632 STRAIN POLE FOUNDATION	632 POWER CABLE, 3 CONDUCTOR, NO. 8 AWG	632 REMOVAL OF TRAFFIC SIGNAL INSTALLATION, AS PER PLAN	632 REMOVE OF STRAIN POLE	633 CABINET FOUNDATION	633 CONTROLLER WORK PAD, AS PER PLAN	633 UNINTERRUPTIBLE POWER SUPPLY (UPS), 1000 WATT, AS PER PLAN	633 CONTROLLER ITEM, MISC.: CONTROLLER UNIT, TYPE 2070E, WITH CABINET, TYPE 332	809 ADVANCE RADAR DETECTION	809 STOP-BAR RADAR DETECTION
			FT	FT	FT	EACH	EACH	EACH	EACH	EACH	FT	FT	FT	FT	EACH	FT	EACH	EACH	EACH	EACH	EACH	EACH	EACH	EACH
		U.S. 40 & WATKINS RD.									420	420					1							
C-1	36	GROUND MOUNTED CABINET					1												1	1	1	1		
P-2	36	SIGNAL SUPPORT					1								1			1						
P-4	36	SIGNAL SUPPORT					1								1			1						
1	36	SIGNAL HEAD						1		1														
2A	36	SIGNAL HEAD						1		1														
2B	36	SIGNAL HEAD						1		1														
4A	36	SIGNAL HEAD							1	1														
4B	36	SIGNAL HEAD						1		1														
5	36	SIGNAL HEAD						1		1														
6A	36	SIGNAL HEAD						1		1														
6B	36	SIGNAL HEAD						1		1														
8A	36	SIGNAL HEAD						1		1														
8B	36	SIGNAL HEAD						1		1														
D-1	36	RADAR DETECTION																						1
D-2	36	RADAR DETECTION																					1	
D-4A	36	RADAR DETECTION																						1
D-4B	36	RADAR DETECTION																					1	
D-5	36	RADAR DETECTION																						1
D-6	36	RADAR DETECTION																					1	
D-8	36	RADAR DETECTION																						1
PB-1	36	PULL BOX				1																		
CONDUIT	36	P-3 TO PB-1	40	20	20											25								
SIGNAL CABLE	36	PB-1 TO 1,6A,6B												204										
	36	PB-1 TO 2A,2B,5												175										
	36	PB-1 TO 4A,4B												248										
	36	PB-1 TO 8A,8B											128											
TOTALS CARRIED TO SHEET 10			40	20	20	1	3	9	1	10	420	420	128	628	2	25	1	2	1	1	1	1	3	4

CALCULATED BRH
CHECKED JSL

TRAFFIC SIGNAL SUBSUMMARY
U.S. 40 & WATKINS RD.

D05-FY2017-
SIGNAL UPGRADE

I:\Projects\D05\95383\Design\Signals\Sheets\95383_CS004.dgn 27-FEB-2017 3:57PM Jul 21

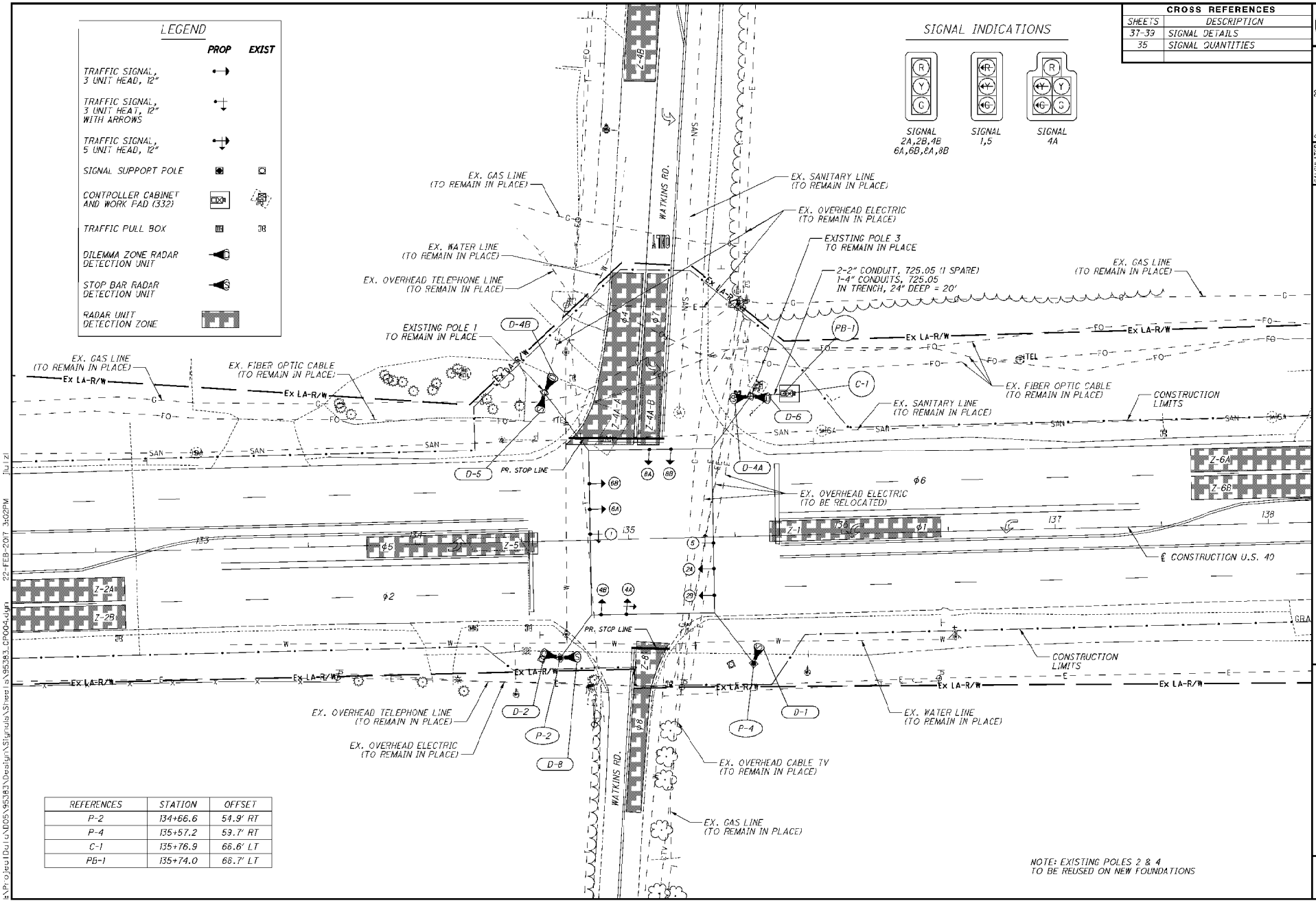

REFERENCES	STATION	OFFSET
P-2	134+66.6	54.9' RT
P-4	135+57.2	59.7' RT
C-1	135+76.9	66.6' LT
PB-1	135+74.0	66.7' LT

CROSS REFERENCES	
SHEETS	DESCRIPTION
37-39	SIGNAL DETAILS
36	SIGNAL QUANTITIES

HORIZONTAL SCALE IN FEET 0 10 20 40

CALCULATED BRH CHECKED JSL

TRAFFIC SIGNAL PLAN
U.S. 40 & WATKINS RD.

D05-FY2017-
SIGNAL UPGRADE

22-FEB-2017 3:02PM
jlu121
s:\Projects\Dalia\D05\95383\Design\Signals\Sheets\95383_CP004.dgn

SIGNAL TIMING CHART

INTERSECTION: U.S. 40 & Watkins Rd. MAINTAINING AGENCY: ODOT										
START UP			DUAL ENTRY: ϕ2 & ϕ6							
START IN		Y/R FLASH								
TIME FOR FLASH OR ALL RED		5 (SEC.)								
FIRST PHASES		2 & 6	OVERLAP				A	B	C	D
COLOR DISPLAYED		GREEN	PHASE							
INTERVAL OR FEATURE			ϕ1	ϕ2	ϕ3	ϕ4	ϕ5	ϕ6	ϕ7	ϕ8
INTERSECTION MOVEMENT		(SEC)	WBLT	EB		SB	EBLT	WB	SBLT	NB
MINIMUM GREEN (INITIAL)		(SEC)	8.0	18.0		12.0	8.0	18.0	8.0	12.0
ADDED INITIAL		(SEC/ACTUATION)		0.5				0.5		
MAXIMUM INITIAL		(SEC)		20.0				20.0		
PASSAGE TIME		(SEC)	3.0	4.0		3.0	3.0	4.0	3.0	3.0
TIME BEFORE REDUCTION		(SEC)								
MINIMUM GAP		(SEC)								
TIME TO REDUCE		(SEC)								
MAXIMUM GREEN I		(SEC)	15.0	28.0		15.0	17.0	26.0	15.0	15.0
MAXIMUM GREEN II		(SEC)	15.0	20.0		35.0	17.0	20.0	20.0	15.0
YELLOW CHANGE		(SEC)	4.0	5.0		4.5	4.0	5.0	4.5	4.5
ALL RED CLEARANCE		(SEC)	1.5	1.5		2.0	1.5	1.5	1.5	2.0
WALK		(SEC)								
PEDESTRIAN CLEARANCE		(SEC)								
RECALL	MAXIMUM	(ON/OFF)								
	MINIMUM	(ON/OFF)								
	PEDESTRIAN	(ON/OFF)								
MEMORY		(ON/OFF)								

PHASING DIAGRAM

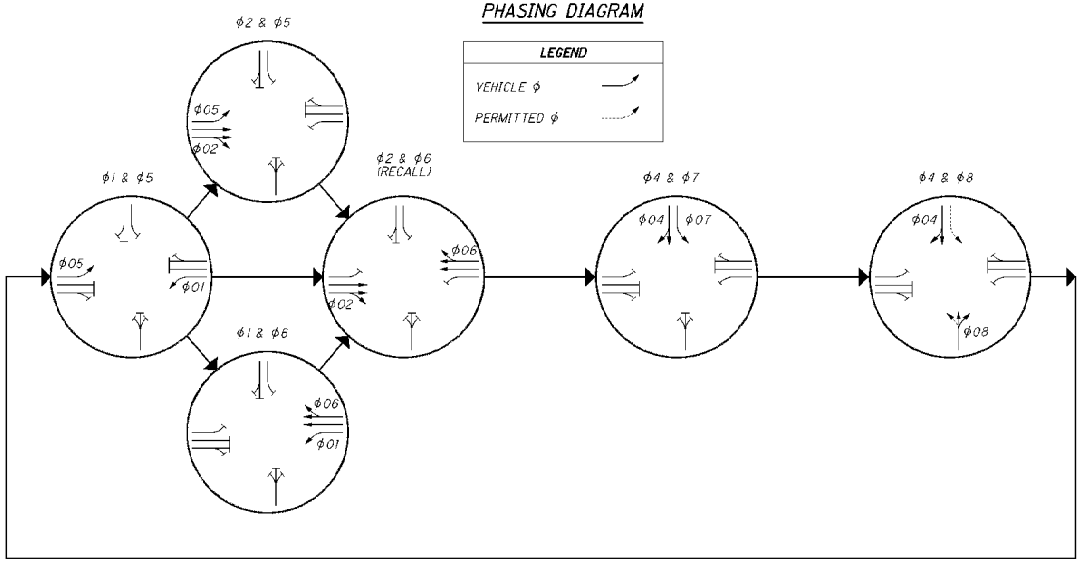

NOTES:

- ALL MOVEMENTS SHALL BE ACTUATED. THE PRIMARY THRU MOVEMENT SHOULD HAVE MIN RECALL ACTIVE TO REST IN GREEN.
- RADAR DETECTION UNITS FOR DILEMMA ZONE DETECTION SHALL PLACE A CONSTANT CALL TO THE CONTROLLER WHEN VEHICLES TRAVEL TIMES TO THE STOP BAR ARE BETWEEN 2.5 AND 6 SECONDS. SPEED TRIGGER SHALL BE SET FOR VEHICLES TRAVELING 35 MPH AND GREATER.
- RADAR SHALL HAVE QUEUE DETECTION CONFIGURED AND A ZONE PLACED AT 100-200 FEET FROM STOP BAR FOR SLOW MOVING VEHICLE EXTENSIONS. SPEED TRIGGER SHALL BE SET AT 1-35 MPH.
- ALL DETECTOR DELAYS SHALL BE PLACED IN THE CONTROLLER.

RADAR DETECTION CHART

RADAR DETECTION UNIT	RADAR DETECTION ZONE	RADAR TYPE	DELAY (SEC.)	MIN. EXTENSION (SEC.)	ASSOCIATED CONTROLLER PHASE
D-1	Z-1	STOP BAR			ϕ1
D-2	Z-2A	DILEMMA		2.0-7.5	ϕ2
	Z-2B				
D-4A	Z-4A-A	STOP BAR	8		ϕ4
	Z-4A-B				
D-4B	Z-4B	DILEMMA		2.0-7.5	ϕ4
D-5	Z-5	STOP BAR			ϕ5
D-6	D-6A	DILEMMA		2.0-7.5	ϕ6
	D-6B				
D-8	Z-8	STOP BAR	8		ϕ8

CALCULATED BRH
CHECKED JSL

TRAFFIC SIGNAL PLAN DETAILS
U.S. 40 & WATKINS RD.

D05-FY2017-
SIGNAL UPGRADE

s:\Projects\D05\95383\Design\Signals\Sheets\95383_CD010.dgn 22-FEB-2017 2:36PM jlulzi

PLAN DETAILS FOR STRAIN POLES

POLE NO.	STATION & OFFSET	DESIGN NO. (REUSED STRAIN POLES)	POLE HEIGHT	FOUNDATION ELEVATION	SPAN WIRE ATTACHMENT HEIGHT (FT.)	INDEX LINE ANGLE DEGREES
P-2	Sta. 134+66.6, 54.9' RT	10	32	1013.7	26.6	235
P-4	Sta. 135+57.2, 59.7' RT	10	32	1014.3	26.1	145

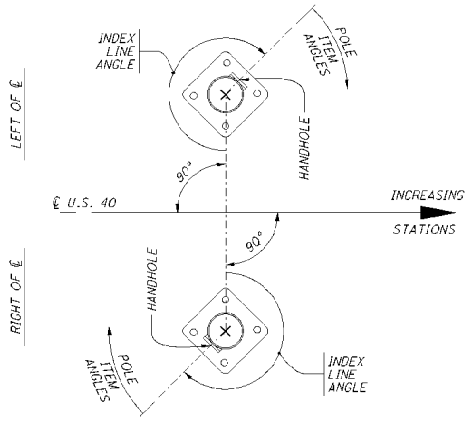

NOTES:

- ALL ANGLES ARE MEASURED CLOCKWISE.
- THE INDEX LINE GOES THROUGH THE CENTER OF THE HANDHOLE.

POLE DIAGRAM

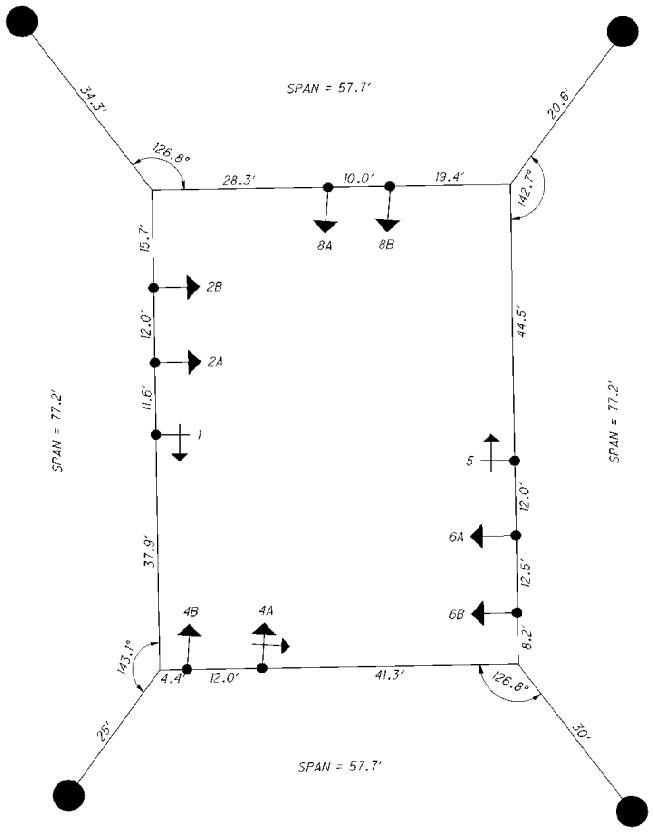

SPAN WIRE PLAN VIEW DETAILS

CALCULATED BRH
CHECKED JSL

TRAFFIC SIGNAL PLAN DETAILS
U.S. 40 & WATKINS RD.

D05-FY2017-
SIGNAL UPGRADE

s:\Projects\D05\95383\Design\Signals\Sheets\95383_CD011.dgn 22-FEB-2017 2:36PM jlu1z1

WIRING DIAGRAM (TYPICAL)

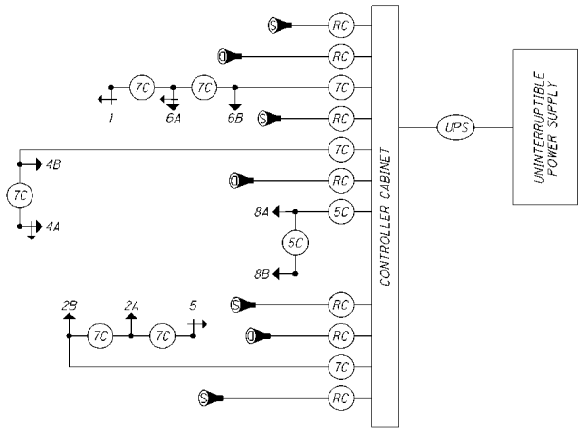

WIRING DIAGRAM LEGEND

- 3 SECTION VEHICULAR SIGNAL HEAD, 1-WAY
- 5 SECTION VEHICULAR SIGNAL HEAD, 1-WAY
- DILEMMA ZONE RADAR DETECTION UNIT
- STOP BAR RADAR DETECTION UNIT
- POWER SOURCE
- UPS — UNINTERRUPTIBLE POWER SUPPLY CABLE
- 5C — SIGNAL CABLE, 5 CONDUCTOR, NO. 14 AWG
- 7C — SIGNAL CABLE, 7 CONDUCTOR, NO. 14 AWG
- RC — RADAR DETECTION CABLE

FIELD WIRING HOOK-UP CHART

SIGNAL HEAD	INDICATION	FIELD TERMINAL	FLASH
1	<--R---	ϕ1 R	Y
	<--Y---	ϕ1 Y	
	<--G---	ϕ1 G	
2A	R	ϕ2 R	Y
	Y	ϕ2 Y	
	G	ϕ2 G	
2B	R	ϕ2 R	Y
	Y	ϕ2 Y	
	G	ϕ2 G	
4A	R	ϕ4 R	R
	Y	ϕ4 Y	
	G	ϕ4 G	
	<--Y---	ϕ7 Y	
	<--G---	ϕ7 G	
4B	R	ϕ4 R	R
	Y	ϕ4 Y	
	G	ϕ4 G	
5	<--R---	ϕ5 R	Y
	<--Y---	ϕ5 Y	
	<--G---	ϕ5 G	
6A	R	ϕ6 R	Y
	Y	ϕ6 Y	
	G	ϕ6 G	
6B	R	ϕ6 R	Y
	Y	ϕ6 Y	
	G	ϕ6 G	
8A	R	ϕ8 R	R
	Y	ϕ8 Y	
	G	ϕ8 G	
8B	R	ϕ8 R	R
	Y	ϕ8 Y	
	G	ϕ8 G	

CALCULATED BRH
CHECKED JSL

TRAFFIC SIGNAL PLAN DETAILS
U.S. 40 & WATKINS RD.

D05-FY2017-
SIGNAL UPGRADE

s:\Projects\D05\95383\Design\Signals\Sheets\95383_CD012.dgn 22-FEB-2017 2:36PM jlulzi

REF NO.	SHEET NO.	LOCATION	625 CONNECTION, FUSED PULL APART (EACH)	625 BRACKET ARM, 20' (EACH)	625 CONDUIT, 2", 725.05 (FT)	625 CONDUIT, 4", 725.05 (FT)	625 LUMINAIRE, CONVENTIONAL, SOLID STATE (LED), AS PER PLAN (150W, 120V, TYPE III) (EACH)	625 TRENCH, 24" DEEP (FT)	625 PULL BOX, 725.08, 24" (EACH)	625 GROUND ROD (EACH)	630 SIGN HANGER ASSEMBLY, SPAN WIRE (EACH)	630 SIGN, FLAT SHEET (SF)	632 VEHICULAR SIGNAL HEAD, (LED), 3-SECTION, 12" LENS, 1-WAY, POLYCARBONATE, AS PER PLAN (EACH)	632 VEHICULAR SIGNAL HEAD, (LED), 5-SECTION, 12" LENS, 1-WAY, POLYCARBONATE, AS PER PLAN (EACH)	632 COVERING OF VEHICULAR SIGNAL HEAD (EACH)	632 MESSENGER WIRE, 7 STRAND, 7/16" DIAMETER WITH ACCESSORIES (FT)	632 TETHER WIRE, WITH ACCESSORIES, AS PER PLAN (FT)	632 SIGNAL CABLE, 5 CONDUCTOR, NO. 14 AWG (FT)	632 SIGNAL CABLE, 7 CONDUCTOR, NO. 14 AWG (FT)	632 STRAIN POLE FOUNDATION (EACH)	632 POWER CABLE, 3 CONDUCTOR, NO. 8 AWG (FT)	632 POWER SERVICE, AS PER PLAN (EACH)	632 STRAIN POLE, TYPE TC-81.10, DESIGN 10 (EACH)	632 COMBINATION STRAIN POLE, TYPE TC-81.10, DESIGN 10 (EACH)	632 REMOVAL OF TRAFFIC SIGNAL INSTALLATION, AS PER PLAN (EACH)	633 CABINET FOUNDATION (EACH)	633 CONTROLLER WORK PAD, AS PER PLAN (EACH)	633 UNINTERRUPTIBLE POWER SUPPLY (UPS), 1000 WATT, AS PER PLAN (EACH)	633 CONTROLLER ITEM, MISC.: CONTROLLLER UNIT, TYPE 2070E, WITH CABINET, TYPE 332 (EACH)	809 ADVANCE RADAR DETECTION (EACH)	809 STOP-BAR RADAR DETECTION (EACH)
		S.R. 13 & BLACKBIRD LN.														440	440									1						
C-1	41	GROUND MOUNTED CABINET								1																	1	1	1	1		
PS-1	41	POWER SERVICE																				1										
P-1	41	SIGNAL SUPPORT								1										1			1									
P-2	41	SIGNAL SUPPORT		1						1										1				1								
P-3	41	SIGNAL SUPPORT		1						1										1				1								
P-4	41	SIGNAL SUPPORT								1										1			1									
1	41	SIGNAL HEAD												1	1																	
2	41	SIGNAL HEAD											1		1																	
4A	41	SIGNAL HEAD											1		1																	
4B	41	SIGNAL HEAD											1		1																	
4C	41	SIGNAL HEAD											1		1																	
5	41	SIGNAL HEAD												1	1																	
6	41	SIGNAL HEAD											1		1																	
8A	41	SIGNAL HEAD											1		1																	
8B	41	SIGNAL HEAD											1		1																	
D-1	41	RADAR DETECTION																														1
D-2	41	RADAR DETECTION																													1	
D-4	41	RADAR DETECTION																														1
D-5	41	RADAR DETECTION																														1
D-6	41	RADAR DETECTION																													1	
D-8	41	RADAR DETECTION																														1
PB-1	41	PULL BOX							1																							
CONDUIT	41	P-3 TO C-1			20	10		10														15										
SIGNAL CABLE	41	PB-1 TO 1,6																	195													
	41	PB-1 TO 2,5																	151													
	41	PB-1 TO 4A,4B																203														
	41	PB-1 TO 8A,8B																115														
L1,L2	41	LED LIGHTING	4				2															300										
S1	41	SIGNING									1	4.00																				
		TOTALS CARRIED TO SHEET 10	4	2	20	10	2	10	1	5	1	4	7	2	9	440	440	318	346	4	315	1	2	2	1	1	1	1	1	2	4

CALCULATED BRH
CHECKED JSL

TRAFFIC SIGNAL SUBSUMMARY
S.R. 13 & BLACKBIRD LN.

D05-FY2017-
SIGNAL UPGRADE

27-FEB-2017 3:57PM JluIZI
s:\Projects\D05\95383\Design\Signals\Sheets\95383_CS005.dgn

CROSS REFERENCES	
SHEETS	DESCRIPTION
42-44	SIGNAL DETAILS
40	SIGNAL QUANTITIES

LEGEND

	PROP	EXIST
TRAFFIC SIGNAL, 3 UNIT HEAD, 12"		
TRAFFIC SIGNAL, 5 UNIT HEAT, 12"		
SIGNAL SUPPORT POLE		
CONTROLLER CABINET AND WORK PAD (332)		
TRAFFIC PULL BOX		
DILEMMA ZONE RADAR DETECTION UNIT		
STOP BAR RADAR DETECTION UNIT		
RADAR UNIT DETECTION ZONE		

SIGN LEGEND

NO TURN ON RED

R10-11b-24
S1

SIGNAL INDICATIONS

SIGNAL 2,4A,4B,4C 6,8A,8B

SIGNAL 1,5

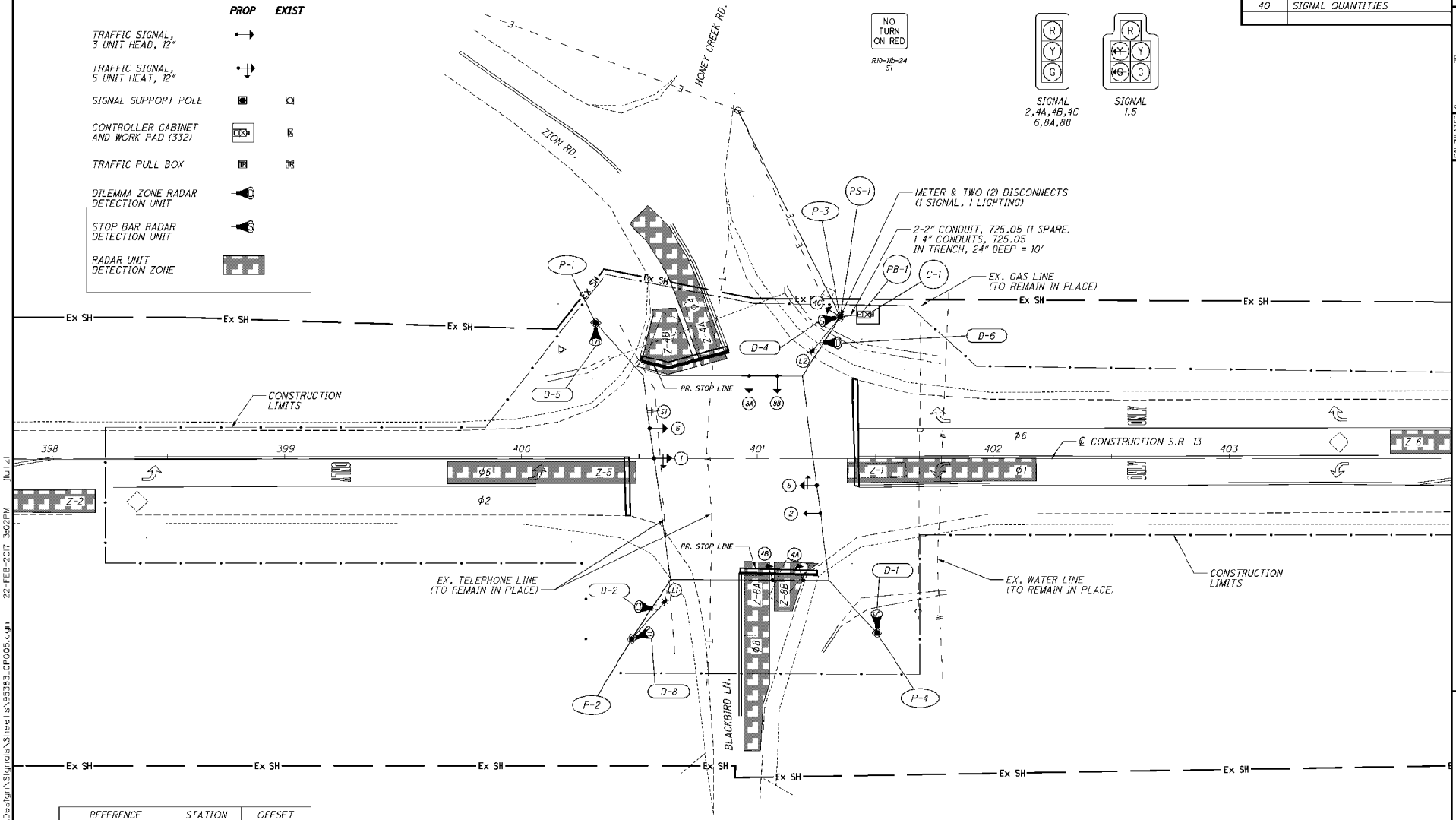

REFERENCE	STATION	OFFSET
P-1	400+31.5	57.7' LT
P-2	400+46.9	76.3' RT
P-3	401+35.3	60.3' LT
P-4	401+50.7	73.7' RT
C-1	401+46.6	61.3' LT
PB-1	401+43.8	61.3' LT

HORIZONTAL SCALE IN FEET 0 10 20 40

CALCULATED BRH
CHECKED JSL

TRAFFIC SIGNAL PLAN
S.R. 13 & BLACKBIRD LN.

D05-FY2017-
SIGNAL UPGRADE

I:\Projects\D05\95383\Design\Signals\Sheets\95383_CP005.dgn 22-FEB-2017 3:02PM JLU121

SIGNAL TIMING CHART

INTERSECTION: S.R. 13 & Blackbird Ln. MAINTAINING AGENCY: ODOT										
START UP										
START IN		Y/R FLASH	DUAL ENTRY: ϕ2 & ϕ6							
TIME FOR FLASH OR ALL RED		5 (SEC.)								
FIRST PHASES		2 & 6	OVERLAP				A	B	C	D
COLOR DISPLAYED		GREEN	PHASE							
INTERVAL OR FEATURE			ϕ1	ϕ2	ϕ3	ϕ4	ϕ5	ϕ6	ϕ7	ϕ8
INTERSECTION MOVEMENT		(SEC)	SBLT	NB		EB	NBLT	SB		WB
MINIMUM GREEN (INITIAL)		(SEC)	8.0	25.0		12.0	8.0	25.0		12.0
ADDED INITIAL		(SEC/ACTUATION)		0.5				0.5		
MAXIMUM INITIAL		(SEC)		35.0				35.0		
PASSAGE TIME		(SEC)	3.0	3.0		3.2	3.0	3.0		3.2
TIME BEFORE REDUCTION		(SEC)								
MINIMUM GAP		(SEC)								
TIME TO REDUCE		(SEC)								
MAXIMUM GREEN I		(SEC)	12.0	50.0		25.0	12.0	50.0		25.0
MAXIMUM GREEN II		(SEC)								
YELLOW CHANGE		(SEC)	4.5	5.0		4.5	4.5	5.0		4.5
ALL RED CLEARANCE		(SEC)	1.0	1.0		1.0	1.0	1.0		1.0
WALK		(SEC)								
PEDESTRIAN CLEARANCE		(SEC)								
RECALL	MAXIMUM	(ON/OFF)								
	MINIMUM	(ON/OFF)								
	PEDESTRIAN	(ON/OFF)								
MEMORY		(ON/OFF)								

PHASING DIAGRAM

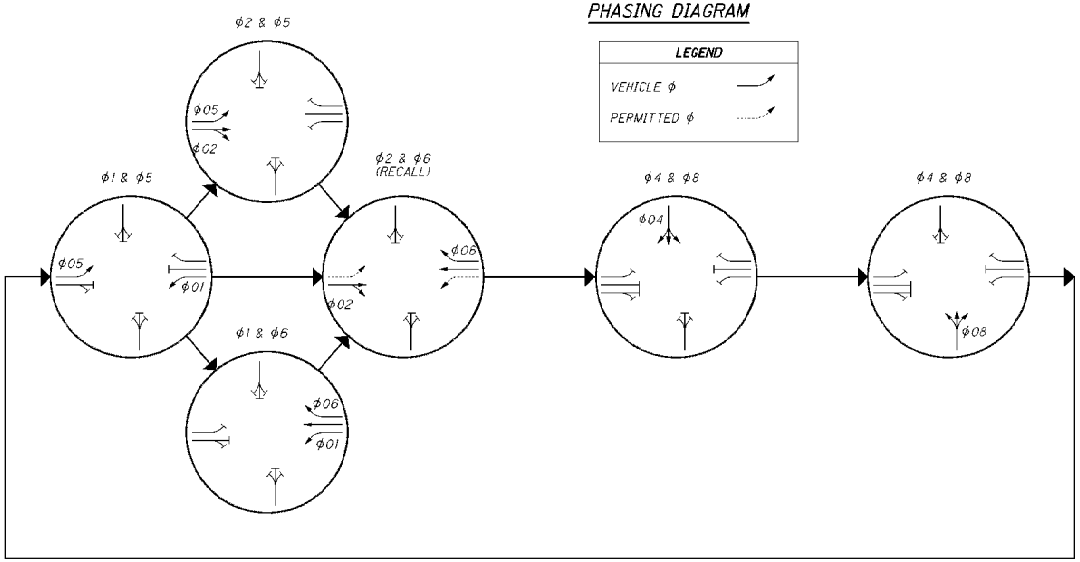

NOTES:

- ALL MOVEMENTS SHALL BE ACTUATED. THE PRIMARY THRU MOVEMENT SHOULD HAVE MIN RECALL ACTIVE TO REST IN GREEN.
- FOR PROTECTED/PERMISSIVE PHASES, IMPLEMENT CALL OMITS TO AVOID YELLOW BALL TRAP.
- RADAR DETECTION UNITS FOR DILEMMA ZONE DETECTION SHALL PLACE A CONSTANT CALL TO THE CONTROLLER WHEN VEHICLES TRAVEL TIMES TO THE STOP BAR ARE BETWEEN 2.5 AND 6 SECONDS. SPEED TRIGGER SHALL BE SET FOR VEHICLES TRAVELING 35 MPH AND GREATER.
- RADAR SHALL HAVE QUEUE DETECTION CONFIGURED AND A ZONE PLACED AT 100-200 FEET FROM STOP BAR FOR SLOW MOVING VEHICLE EXTENSIONS. SPEED TRIGGER SHALL BE SET AT 1-35 MPH.
- ALL DETECTOR DELAYS SHALL BE PLACED IN THE CONTROLLER.

RADAR DETECTION CHART

RADAR DETECTION UNIT	RADAR DETECTION ZONE	RADAR TYPE	DELAY SEC.)	MIN. EXTENSION (SEC.)	ASSOCIATED CONTROLLER PHASE
D-1	Z-1	STOP BAR			ϕ1
D-2	Z-2	DILEMMA		2.0-7.5	ϕ2
D-4	Z-4A	STOP BAR			ϕ4
	Z-4B	STOP BAR	8		
D-5	Z-5	STOP BAR			ϕ5
D-6	Z-6	DILEMMA		2.0-7.5	ϕ6
D-8	Z-8A	STOP BAR			ϕ8
	Z-8B	STOP BAR	8		

CALCULATED BRH
CHECKED JSL

TRAFFIC SIGNAL PLAN DETAILS
S.R. 13 & BLACKBIRD LN.

D05-FY2017-
SIGNAL UPGRADE

s:\Projects\D05\95383\Design\Signals\Sheets\95383_CD013.dgn 22-FEB-2017 2:36PM jlulzi

STRAIN POLE DETAILS

POLE NO.	STATION & OFFSET	DESIGN NO.	POLE HEIGHT (FT.)	FOUNDATION ELEVATION	SPAN WIRE ATTACHMENT HEIGHT (FT.)	BRACKET ARM ATTACHMENT HEIGHT (FT.)	CABLE ENTRANCE DISTANCE FROM TOP (IN.)	INDEX LINE ANGLE	CONTROLLER	POWER SERVICE	CABLE ENTRANCE	20' BRACKET ARM
								DEG.	DEG.	DEG.	DEG.	DEG.
P-1	Sta. 400+31.5, 57.7' LT	10	32	897.3	27.2			138				
P-2	Sta. 400+46.9, 76.3' RT	10	36	895.4	28.9	33.0		222				180
P-3	Sta. 401+35.3, 60.3' LT	10	36	897.2	27.8	33.0	6	218	48	296	180	180
P-4	Sta. 401+50.7, 73.7' RT	10	32	897.2	27.7			138				

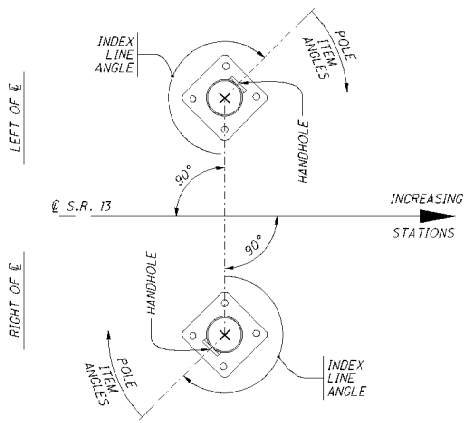

NOTES:

- ALL ANGLES ARE MEASURED CLOCKWISE.
- THE INDEX LINE GOES THROUGH THE CENTER OF THE HANDHOLE.

POLE DIAGRAM

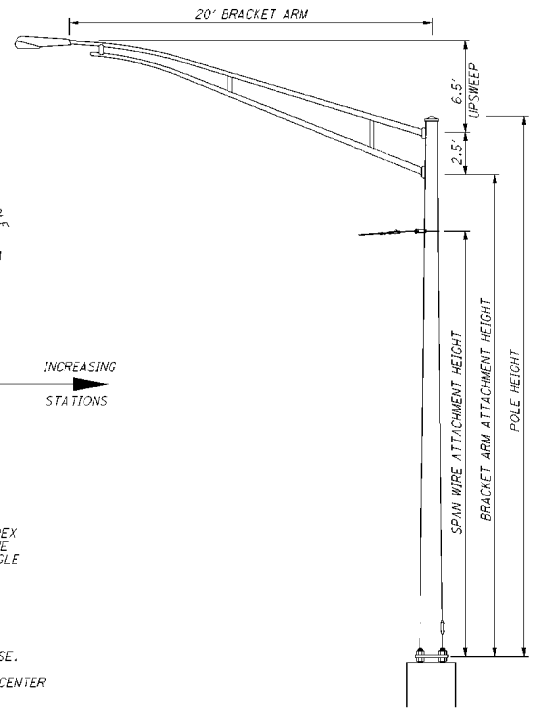

COMBINATION STRAIN POLE DETAILS

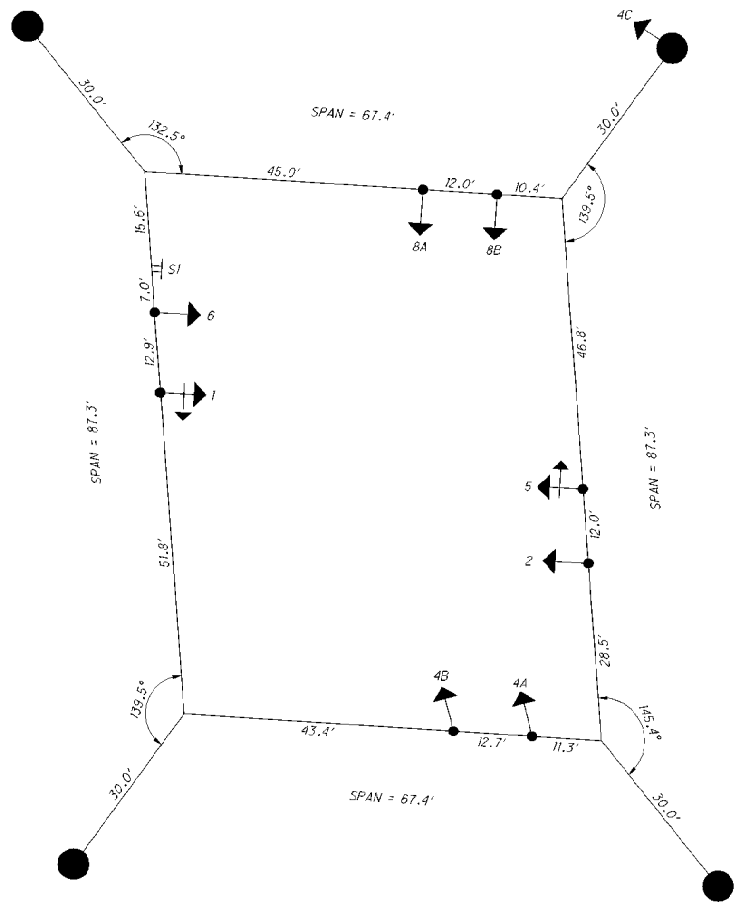

SPAN WIRE DETAILS

CALCULATED BRH
CHECKED JSL

TRAFFIC SIGNAL PLAN DETAILS
S.R. 13 & BLACKBIRD LN.

D05-FY2017-
SIGNAL UPGRADE

I:\Projects\D05\95383\Design\Signals\Sheets\95383_CD014.dgn 22-FEB-2017 2:36PM jlulz

WIRING DIAGRAM (TYPICAL)

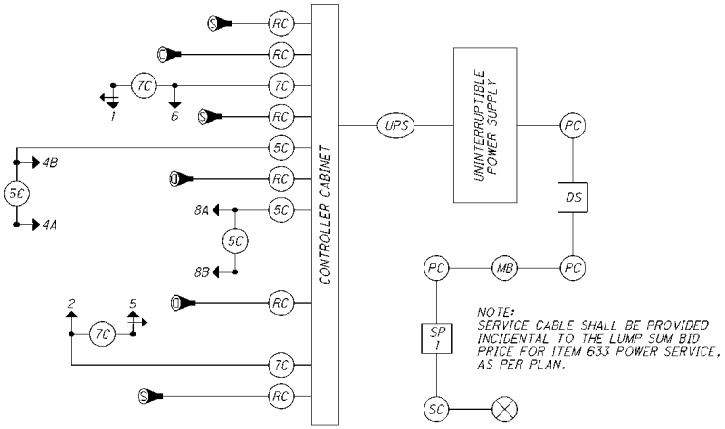

WIRING DIAGRAM LEGEND

- 3 SECTION VEHICULAR SIGNAL HEAD, 1-WAY
- 5 SECTION VEHICULAR SIGNAL HEAD, 1-WAY
- DILEMMA ZONE RADAR DETECTION UNIT
- STOP BAR RADAR DETECTION UNIT
- POWER SOURCE
- 5C — SIGNAL CABLE, 5 CONDUCTOR, NO. 14 AWG
- 7C — SIGNAL CABLE, 7 CONDUCTOR, NO. 14 AWG
- RC — RADAR DETECTION CABLE
- SC — SERVICE CABLE, 3 CONDUCTOR, NO. 8 AWG
- PC — POWER CABLE, 3 CONDUCTOR, NO. 8 AWG
- SP 1 — EXISTING WOOD POWER POLE
- MB — METER BASE
- DS — SIGNAL DISCONNECT SWITCH
- UPS — UNINTERRUPTIBLE POWER SUPPLY CABLE

FIELD WIRING HOOK-UP CHART

SIGNAL HEAD	INDICATION	FIELD TERMINAL	FLASH
1	R	ϕ1 R	Y
	Y	ϕ1 Y	
	G	ϕ1 G	
	<--Y---	ϕ1 Y	
	<--R---	ϕ1 G	
2	R	ϕ2 R	Y
	Y	ϕ2 Y	
	G	ϕ2 G	
4A	R	ϕ4 R	R
	Y	ϕ4 Y	
	G	ϕ4 G	
4B	R	ϕ4 R	R
	Y	ϕ4 Y	
	G	ϕ4 G	
4C	R	ϕ4 R	R
	Y	ϕ4 Y	
	G	ϕ4 G	
5	R	ϕ5 R	Y
	Y	ϕ5 Y	
	G	ϕ5 G	
	<--Y---	ϕ5 Y	
	<--R---	ϕ5 G	
6	R	ϕ6 R	R
	Y	ϕ6 Y	
	G	ϕ6 G	
8A	R	ϕ8 R	R
	Y	ϕ8 Y	
	G	ϕ8 G	
8B	R	ϕ8 R	R
	Y	ϕ8 Y	
	G	ϕ8 G	

CALCULATED BRH
CHECKED JSL

TRAFFIC SIGNAL PLAN DETAILS
S.R. 13 & BLACKBIRD LN.

D05-FY2017-
SIGNAL UPGRADE

s:\Projects\D05\95383\Design\Signals\Sheets\95383_CD015.dgn 22-FEB-2017 2:36PM jlulzi

REF NO.	SHEET NO.	LOCATION	625 BRACKET ARM, 20'	625 CONDUIT, 2", 725.05	625 CONDUIT, 4", 725.05	625 TRENCH, 24" DEEP	625 PULL BOX, 725.08, 24"	625 GROUND ROD	632 VEHICULAR SIGNAL HEAD, (LED), 3-SECTION, 12" LENS, 1-WAY, POLYCARBONATE, AS PER PLAN	632 VEHICULAR SIGNAL HEAD, (LED), 5 SECTION, 12" LENS, 1-WAY, POLYCARBONATE, AS PER PLAN	632 COVERING OF VEHICULAR SIGNAL HEAD	632 MESSENGER WIRE, 7 STRAND, 7/16" DIAMETER WITH ACCESSORIES	632 TETHER WIRE, WITH ACCESSORIES, AS PER PLAN	632 SIGNAL CABLE, 7 CONDUCTOR, NO. 14 AWG	632 STRAIN POLE FOUNDATION	632 POWER CABLE, 3 CONDUCTOR, NO. 8 AWG	632 POWER SERVICE, AS PER PLAN	632 COMBINATION STRAIN POLE, TYPE TC-81.10, DESIGN 10	632 REMOVAL OF TRAFFIC SIGNAL INSTALLATION, AS PER PLAN	633 CABINET FOUNDATION	633 CONTROLLER WORK PAD, AS PER PLAN	633 UNINTERRUPTIBLE POWER SUPPLY (UPS), 1000 WATT, AS PER PLAN	633 CONTROLLER UNIT, TYPE 332, MISC.: CONTROLLER UNIT, TYPE 2070E, WITH CABINET, TYPE 332	809 ADVANCE RADAR DETECTION	809 STOP-BAR RADAR DETECTION
			EACH	FT	FT	FT	EACH	EACH	EACH	EACH	EACH	FT	FT	FT	EACH	FT	EACH	EACH	EACH	EACH	EACH	EACH	EACH	EACH	EACH
		S.R. 13 & DORSEY MILL RD.										435	435						1						
C-1	46	GROUND MOUNTED CABINET						1												1	1	1	1		
PS-1	46	POWER SERVICE															1								
P-1	46	SIGNAL SUPPORT	1					1							1			1							
P-2	46	SIGNAL SUPPORT	1					1							1			1							
P-3	46	SIGNAL SUPPORT	1					1							1			1							
P-4	46	SIGNAL SUPPORT	1					1							1			1							
1	46	SIGNAL HEAD								1	1														
2	46	SIGNAL HEAD							1		1														
4A	46	SIGNAL HEAD							1		1														
4B	46	SIGNAL HEAD							1		1														
5	46	SIGNAL HEAD								1	1														
6	46	SIGNAL HEAD							1		1														
8A	46	SIGNAL HEAD							1		1														
8B	46	SIGNAL HEAD							1		1														
D-1	46	RADAR DETECTION																							1
D-2	46	RADAR DETECTION																						1	
D-4A	46	RADAR DETECTION																							1
D-4B	46	RADAR DETECTION																						1	
D-5	46	RADAR DETECTION																							1
D-6	46	RADAR DETECTION																						1	
D-8A	46	RADAR DETECTION																							1
D-8B	46	RADAR DETECTION																						1	
PB-1	46	PULL BOX					1																		
CONDUIT	46	PS-1 TO PB-1		24	12	12										17									
SIGNAL CABLE	46	PB-1 TO 1,6												226											
	46	PB-1 TO 2,5												137											
	46	PB-1 TO 3,8												203											
	46	PB-1 TO 4,7												148											
		TOTALS CARRIED TO SHEET 11	4	24	12	12	1	5	6	2	8	435	435	714	4	17	1	4	1	1	1	1	1	4	4

CALCULATED BRH
CHECKED JSL

TRAFFIC SIGNAL SUBSUMMARY
S.R. 13 & DORSEY MILL RD.

D05-FY2017-
SIGNAL UPGRADE

27-FEB-2017 3:57PM jluiz
s:\Projects\D05\95383\Design\Signals\Sheets\95383_CS006.dgn

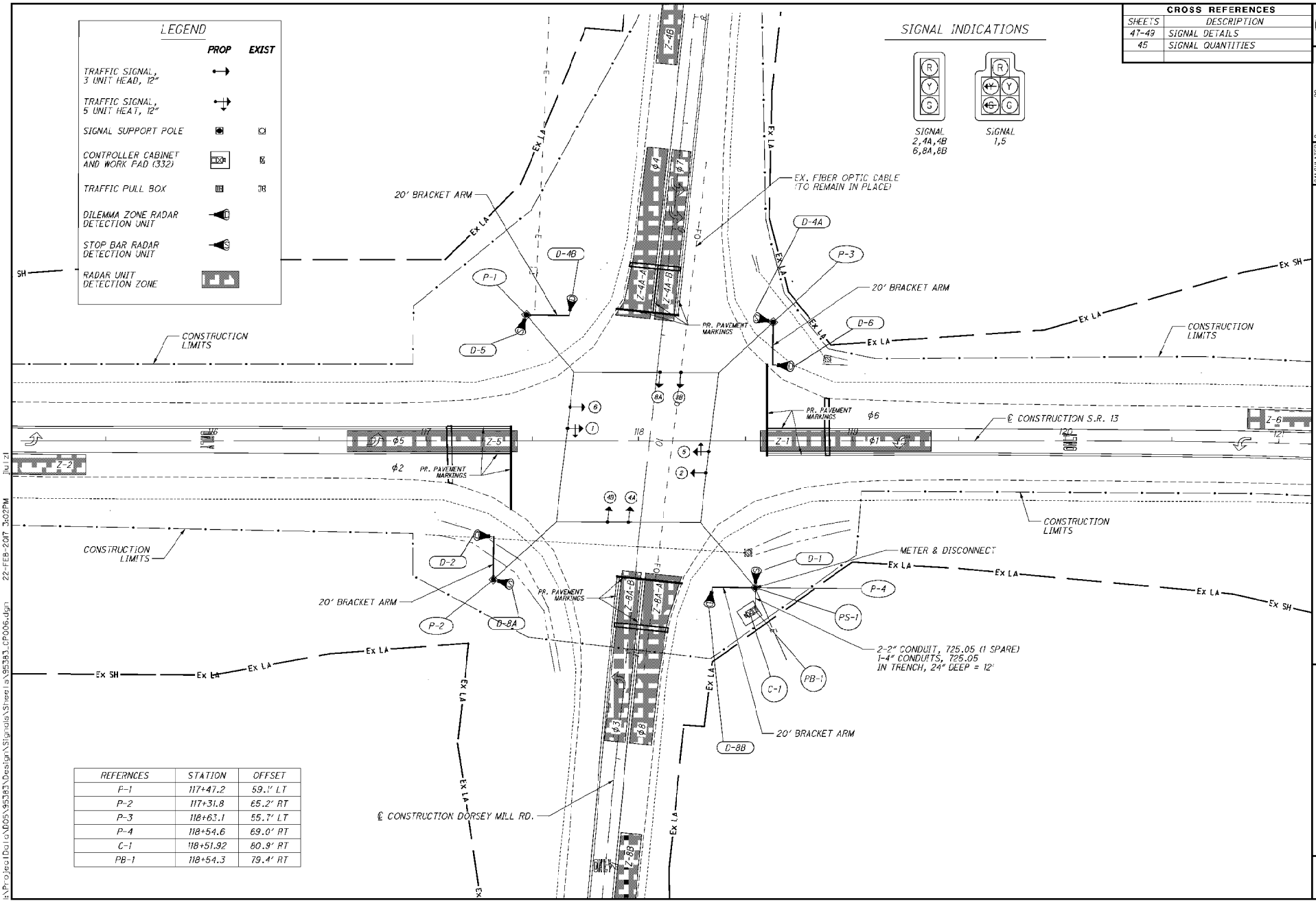

CROSS REFERENCES	
SHEETS	DESCRIPTION
47-49	SIGNAL DETAILS
45	SIGNAL QUANTITIES

REFERNCES	STATION	OFFSET
P-1	117+47.2	59.1' LT
P-2	117+31.8	65.2' RT
P-3	118+63.1	55.7' LT
P-4	118+54.6	69.0' RT
C-1	118+51.92	80.9' RT
PB-1	118+54.3	79.4' RT

CALCULATED BRH
CHECKED JSL

TRAFFIC SIGNAL PLAN
S.R. 13 & DORSEY MILL RD.

D05-FY2017-
SIGNAL UPGRADE

i:\Project Data\D05\95383\Design\Signals\Sheets\95383_CP006.dgn 22-FEB-2017 3:02PM Jul 21

SIGNAL TIMING CHART

INTERSECTION: S.R. 13 & Dorsey Mill Rd. MAINTAINING AGENCY: ODOT									
START UP									
START IN		Y/R FLASH	DUAL ENTRY: ϕ2 & ϕ6						
TIME FOR FLASH OR ALL RED		5 (SEC.)							
FIRST PHASES		2 & 6	OVERLAP			A	B	C	D
COLOR DISPLAYED		GREEN	PHASE						
INTERVAL OR FEATURE			ϕ1	ϕ2	ϕ3	ϕ4	ϕ5	ϕ6	ϕ7	ϕ8
INTERSECTION MOVEMENT		(SEC)	SBLT	NB		EB	NBLT	SB		WB
MINIMUM GREEN (INITIAL)		(SEC)	8.0	18.0		12.0	8.0	18.0		12.0
ADDED INITIAL		(SEC/ACTUATION)		1.0				1.0		
MAXIMUM INITIAL		(SEC)		22.0				22.0		
PASSAGE TIME		(SEC)	3.0	4.0		4.0	3.0	4.0		4.0
TIME BEFORE REDUCTION		(SEC)								
MINIMUM GAP		(SEC)								
TIME TO REDUCE		(SEC)								
MAXIMUM GREEN I		(SEC)	20.0	30.0		20.0	20.0	30.0		20.0
MAXIMUM GREEN II		(SEC)								
YELLOW CHANGE		(SEC)	5.0	5.0		4.0	5.0	5.0		4.0
ALL RED CLEARANCE		(SEC)	1.5	1.5		1.5	1.5	1.5		1.5
WALK		(SEC)								
PEDESTRIAN CLEARANCE		(SEC)								
RECALL	MAXIMUM	(ON/OFF)								
	MINIMUM	(ON/OFF)								
	PEDESTRIAN	(ON/OFF)								
MEMORY		(ON/OFF)								

PHASING DIAGRAM

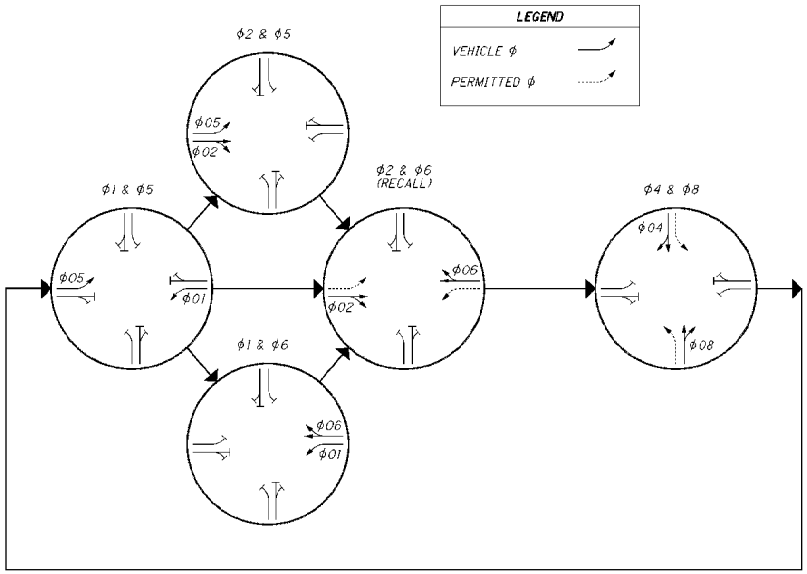

NOTES:

- ALL MOVEMENTS SHALL BE ACTUATED. THE PRIMARY THRU MOVEMENT SHOULD HAVE MIN RECALL ACTIVE TO REST IN GREEN.
- FOR PROTECTED/PERMISSIVE PHASES, IMPLEMENT CALL OMITS TO AVOID YELLOW BALL TRAP.
- RADAR DETECTION UNITS FOR DILEMMA ZONE DETECTION SHALL PLACE A CONSTANT CALL TO THE CONTROLLER WHEN VEHICLES TRAVEL TIMES TO THE STOP BAR ARE BETWEEN 2.5 AND 6 SECONDS. SPEED TRIGGER SHALL BE SET FOR VEHICLES TRAVELING 35 MPH AND GREATER.
- RADAR SHALL HAVE QUEUE DETECTION CONFIGURED AND A ZONE PLACED AT 100-200 FEET FROM STOP BAR FOR SLOW MOVING VEHICLE EXTENSIONS. SPEED TRIGGER SHALL BE SET AT 1-35 MPH.
- ALL DETECTOR DELAYS SHALL BE PLACED IN THE CONTROLLER.

RADAR DETECTION CHART

RADAR DETECTION UNIT	RADAR DETECTION ZONE	RADAR TYPE	DELAY (SEC.)	MIN. EXTENSION (SEC.)	ASSOCIATED CONTROLLER PHASE
D-1	Z-1	STOP BAR			ϕ1
D-2	Z-2	DILEMMA		2.0-7.5	ϕ2
D-4A	Z-4A-A	STOP BAR	8		ϕ4
	Z-4A-B	STOP BAR			
D-4B	Z-4B	DILEMMA		2.0-7.5	ϕ4
D-5	Z-5	STOP BAR			ϕ5
D-6	Z-6	DILEMMA		2.0-7.5	ϕ6
D-8A	Z-8A-A	STOP BAR	8		ϕ8
	Z-8A-B	STOP BAR			
D-8	Z-8B	DILEMMA		2.0-7.5	ϕ8

CALCULATED BRH
CHECKED JSL

TRAFFIC SIGNAL PLAN DETAILS
S.R. 13 & DORSEY MILL RD.

D05-FY2017-
SIGNAL UPGRADE

s:\Projects\D05\95383\Design\Signals\Sheets\95383_CD016.dgn 22-FEB-2017 2:36PM jla zl

PLAN DETAILS FOR STRAIN POLES

POLE NO.	STATION & OFFSET	DESIGN NO.	POLE HEIGHT (FT.)	FOUNDATION ELEVATION	SPAN WIRE ATTACHMENT HEIGHT (FT.)	BRACKET ARM ATTACHMENT HEIGHT (FT.)	CABLE ENTRANCE DISTANCE FROM TOP (IN.)	INDEX LINE ANGLE	20' BRACKET ARM	CONTROLLER	POWER SERVICE	CABLE ENTRANCE
								DEG.	DEG.	DEG.	DEG.	DEG.
P-1	Sta. 117+47.2, 59.1' RT	10	40	1016.1	34.7	37.0		140	131			
P-2	Sta. 117+31.8, 65.2' RT	10	34	1020.9	29.9	31.0		227	133			
P-3	Sta. 118+63.1, 55.7' LT	10	32	1024.4	26.0	29.0		227	133			
P-4	Sta. 118+54.6, 69.0' RT	10	32	1025.8	25.7	29.0	42	140	131	41	71	180

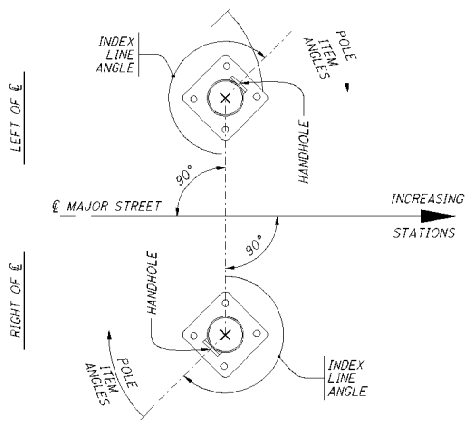

NOTES:

- ALL ANGLES ARE MEASURED CLOCKWISE.
- THE INDEX LINE GOES THROUGH THE CENTER OF THE HANDHOLE.

POLE DIAGRAM

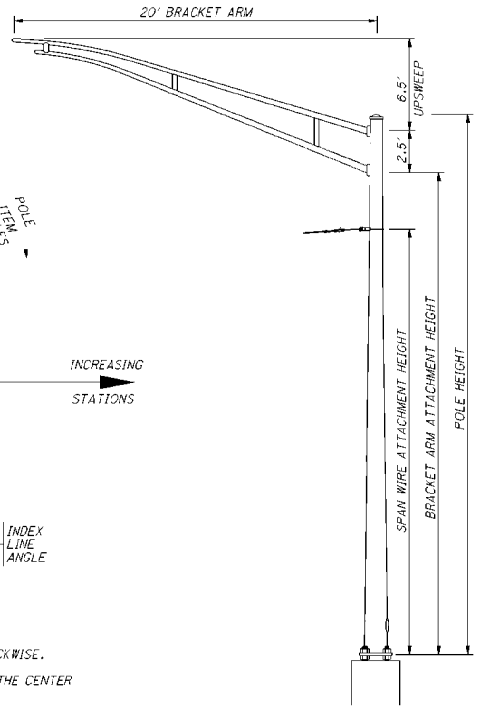

COMBINATION STRAIN POLE DETAILS

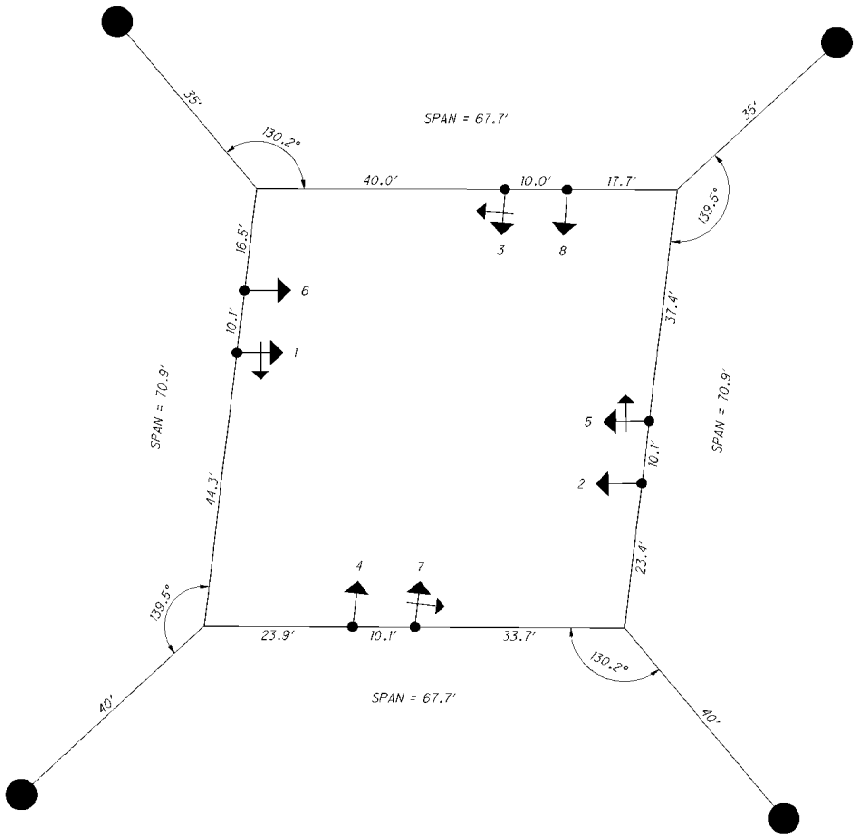

SPAN WIRE DETAILS

CALCULATED BRH
CHECKED JSL

TRAFFIC SIGNAL PLAN DETAILS
S.R. 13 & DORSEY MILL RD.

D05-FY2017-
SIGNAL UPGRADE

I:\Projects\D05\95383\Design\Signals\Sheets\95383_CD017.dgn 22-FEB-2017 2:36PM jlulzi

WIRING DIAGRAM (TYPICAL)

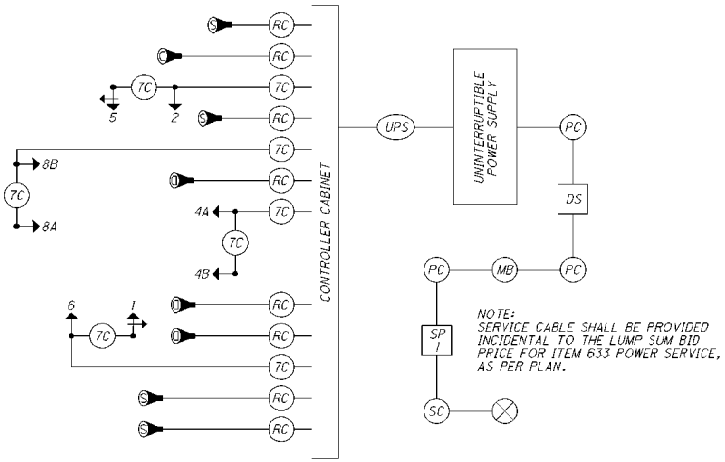

FIELD WIRING HOOK-UP CHART

SIGNAL HEAD	INDICATION	FIELD TERMINAL	FLASH
1	R	*1 R	Y
	Y	*1 Y	
	G	*1 G	
	<--Y---	*1 Y	
	<--R---	*1 G	
2	R	*2 R	Y
	Y	*2 Y	
	G	*2 G	
4A	R	*4 R	R
	Y	*4 Y	
	G	*4 G	
4B	R	*4 R	R
	Y	*4 Y	
	G	*4 G	
5	R	*5 R	Y
	Y	*5 Y	
	G	*5 G	
	<--Y---	*5 Y	
	<--R---	*5 G	
6	R	*6 R	Y
	Y	*6 Y	
	G	*6 G	
8A	R	*8 R	R
	Y	*8 Y	
	G	*8 G	
8B	R	*8 R	R
	Y	*8 Y	
	G	*8 G	

WIRING DIAGRAM LEGEND

- 3 SECTION VEHICULAR SIGNAL HEAD, 1-WAY
- 5 SECTION VEHICULAR SIGNAL HEAD, 1-WAY
- DILEMMA ZONE RADAR DETECTION UNIT
- STOP BAR RADAR DETECTION UNIT
- POWER SOURCE
- 7C — SIGNAL CABLE, 7 CONDUCTOR, NO. 14 AWG
- RC — RADAR DETECTION CABLE
- SC — SERVICE CABLE, 3 CONDUCTOR, NO. 8 AWG
- PC — POWER CABLE, 3 CONDUCTOR, NO. 8 AWG
- SP 1 — SIGNAL SUPPORT P-4
- MB — METER BASE
- DS — SIGNAL DISCONNECT SWITCH
- UPS — UNINTERRUPTIBLE POWER SUPPLY CABLE

CALCULATED BRH
CHECKED JSL

TRAFFIC SIGNAL PLAN DETAILS
S.R. 13 & DORSEY MILL RD.

D05-FY2017-
SIGNAL UPGRADE

I:\Projects\D05\95383\Design\Signals\Sheets\95383_CD018.dgn 22-FEB-2017 2:36PM jlulzi

REF NO.	SHEET NO.	LOCATION	201 STUMP REMOVED, 18" (EACH)	625 CONDUIT, 2", 725.05 (FT)	625 CONDUIT, 4", 725.05 (FT)	625 TRENCH, 24" DEEP (FT)	625 PULL BOX, 725.08, 24" (EACH)	625 GROUND ROD (EACH)	632 VEHICULAR SIGNAL HEAD, (LED), 3-SECTION, 12" LENS, 1-WAY, POLYCARBONATE, AS PER PLAN (EACH)	632 COVERING OF VEHICULAR SIGNAL HEAD (EACH)	632 MESSENGER WIRE, 7 STRAND, 7/16" DIAMETER WITH ACCESSORIES (FT)	632 TETHER WIRE, WITH ACCESSORIES, AS PER PLAN (FT)	632 SIGNAL CABLE, 7 CONDUCTOR, NO. 14 AWG (FT)	632 STRAIN POLE FOUNDATION (EACH)	632 POWER CABLE, 3 CONDUCTOR, NO. 8 AWG (FT)	632 POWER SERVICE, AS PER PLAN (EACH)	632 STRAIN POLE, TYPE TC-81.10, DESIGN 10 (EACH)	632 REMOVAL OF TRAFFIC SIGNAL INSTALLATION, AS PER PLAN (EACH)	633 CABINET FOUNDATION (EACH)	633 CONTROLLER WORK PAD, AS PER PLAN (EACH)	633 UNINTERRUPTIBLE POWER SUPPLY (UPS), 1000 WATT, AS PER PLAN (EACH)	633 CONTROLLER ITEM, MISC.: CONTROLLER UNIT, TYPE 2070E, WITH CABINET, TYPE 332 (EACH)	809 ADVANCE RADAR DETECTION (EACH)	809 STOP-BAR RADAR DETECTION (EACH)
		U.S. 40 & S.R. 37									335	335						1						
C-1	51	GROUND MOUNTED CABINET						1											1	1	1	1		
PS-1	51	POWER SERVICE														1								
P-1	51	SIGNAL SUPPORT						1						1			1							
P-2	51	SIGNAL SUPPORT						1						1			1							
P-3	51	SIGNAL SUPPORT						1						1			1							
P-4	51	SIGNAL SUPPORT						1						1			1							
2A	51	SIGNAL HEAD							1	1														
2B	51	SIGNAL HEAD							1	1														
4A	51	SIGNAL HEAD							1	1														
4B	51	SIGNAL HEAD							1	1														
6A	51	SIGNAL HEAD							1	1														
6B	51	SIGNAL HEAD							1	1														
8A	51	SIGNAL HEAD							1	1														
8B	51	SIGNAL HEAD							1	1														
8C	51	SIGNAL HEAD							1	1														
D-2A	51	RADAR DETECTION																						1
D-2B	51	RADAR DETECTION																					1	
D-4	51	RADAR DETECTION																					1	
D-6A	51	RADAR DETECTION																						1
D-6B	51	RADAR DETECTION																					1	
D-8	51	RADAR DETECTION																					1	
PB-1	51	PULL BOX					1																	
CONDUIT	51	PB-1 TO P-1		24	12	12									17									
SIGNAL CABLE	51	PB-1 TO 2A,2B											185											
	51	PB-1 TO 4A,4B											166											
	51	PB-1 TO 6A,6B											120											
	51	PB-1 TO 8A,8B,8C											240											
R-1	51	STUMP REMOVED	1																					
		TOTALS CARRIED TO SHEET 10	1	24	12	12	1	5	9	9	335	335	711	4	17	1	4	1	1	1	1	1	4	2

CALCULATED BRH
CHECKED JSL

TRAFFIC SIGNAL SUBSUMMARY
U.S. 40 & S.R. 37

D05-FY2017-
SIGNAL UPGRADE

27-FEB-2017 3:57PM jlu121
I:\Projects\D05\95383\Design\Signals\Sheets\95383_CS007.dgn

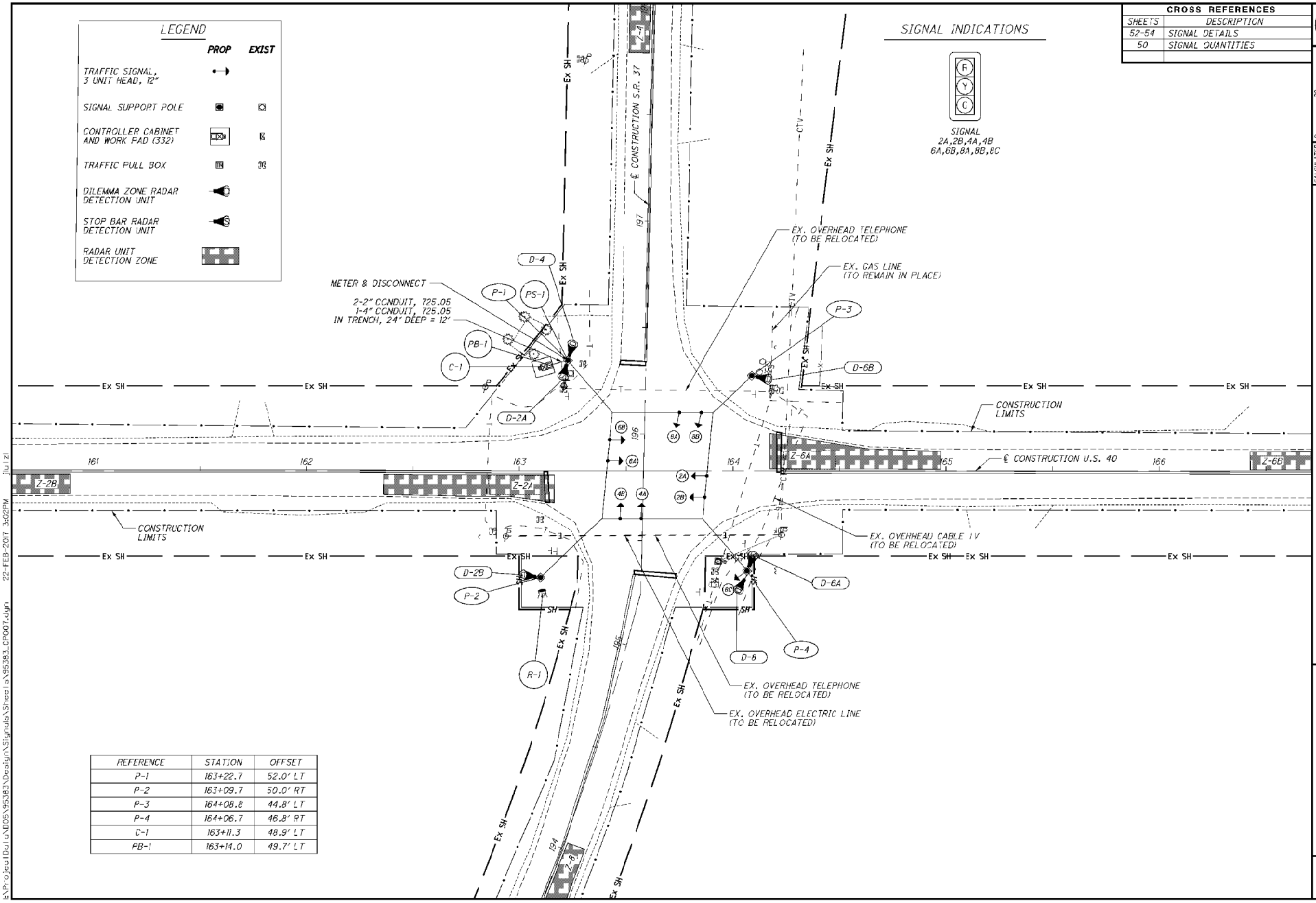

REFERENCE	STATION	OFFSET
P-1	163+22.7	52.0' LT
P-2	163+09.7	50.0' RT
P-3	164+08.8	44.8' LT
P-4	164+06.7	46.8' RT
C-1	163+11.3	48.9' LT
PB-1	163+14.0	49.7' LT

CROSS REFERENCES	
SHEETS	DESCRIPTION
52-54	SIGNAL DETAILS
50	SIGNAL QUANTITIES

HORIZONTAL SCALE IN FEET 0 10 20 40

CALCULATED BRH
CHECKED JSL

TRAFFIC SIGNAL PLAN
U.S. 40 & S.R. 37

D05-FY2017-
SIGNAL UPGRADE

s:\Projects\Dulo\D05\95383\Design\Signals\Sheets\95383_CP007.dgn 22-FEB-2017 3:02PM Dulzi

SIGNAL TIMING CHART

INTERSECTION: U.S. 40 & S.R. 37 MAINTAINING AGENCY: ODOT										
START UP			DUAL ENTRY: ϕ2 & ϕ6							
START IN		Y/R FLASH								
TIME FOR FLASH OR ALL RED		5 (SEC.)								
FIRST PHASES		2 & 6	OVERLAP				A	B	C	D
COLOR DISPLAYED		GREEN	PHASE							
INTERVAL OR FEATURE			ϕ1	ϕ2	ϕ3	ϕ4	ϕ5	ϕ6	ϕ7	ϕ8
INTERSECTION MOVEMENT		(SEC)		EB		SB		WB		NB
MINIMUM GREEN (INITIAL)		(SEC)		15.0		15.0		15.0		15.0
ADDED INITIAL		(SEC/ACTUATION)		0.5				0.5		
MAXIMUM INITIAL		(SEC)		25.0				25.0		
PASSAGE TIME		(SEC)		4.0		4.0		4.0		4.0
TIME BEFORE REDUCTION		(SEC)								
MINIMUM GAP		(SEC)								
TIME TO REDUCE		(SEC)								
MAXIMUM GREEN I		(SEC)		50.0		30.0		50.0		30.0
MAXIMUM GREEN II		(SEC)								
YELLOW CHANGE		(SEC)		4.0		4.0		4.0		4.0
ALL RED CLEARANCE		(SEC)		1.0		1.0		1.0		1.0
WALK		(SEC)								
PEDESTRIAN CLEARANCE		(SEC)								
RECALL	MAXIMUM	(ON/OFF)								
	MINIMUM	(ON/OFF)								
	PEDESTRIAN	(ON/OFF)								
MEMORY		(ON/OFF)								

NOTES:

- ALL MOVEMENTS SHALL BE ACTUATED. THE PRIMARY THRU MOVEMENT SHOULD HAVE MIN RECALL ACTIVE TO REST IN GREEN.
- RADAR DETECTION UNITS FOR DILEMMA ZONE DETECTION SHALL PLACE A CONSTANT CALL TO THE CONTROLLER WHEN VEHICLES TRAVEL TIMES TO THE STOP BAR ARE BETWEEN 2.5 AND 6 SECONDS. SPEED TRIGGER SHALL BE SET FOR VEHICLES TRAVELING 35 MPH AND GREATER.
- RADAR SHALL HAVE QUEUE DETECTION CONFIGURED AND A ZONE PLACED AT 100-260 FEET FROM STOP BAR FOR SLOW MOVING VEHICLE EXTENSIONS. SPEED TRIGGER SHALL BE SET AT 1-35 MPH.
- ALL DETECTOR DELAYS SHALL BE PLACED IN THE CONTROLLER.

PHASING DIAGRAM

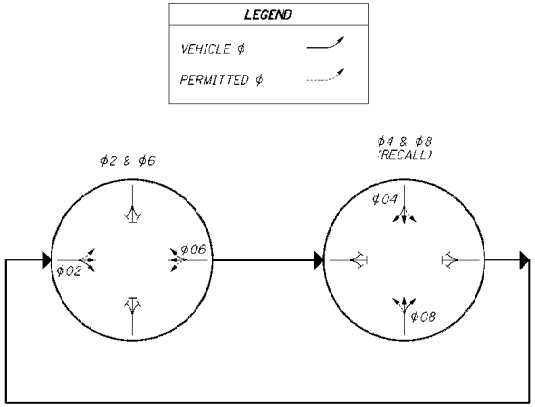

RADAR DETECTION CHART

RADAR DETECTION UNIT	RADAR DETECTION ZONE	RADAR TYPE	DELAY (SEC.)	MIN. EXTENSION (SEC.)	ASSOCIATED CONTROLLER PHASE
D-2A	Z-2A	STOP BAR	8		ϕ2
D-2B	Z-2B	DILEMMA		2.0-7.5	ϕ2
D-4	Z-4	DILEMMA		2.0-7.5	ϕ4
D-6A	Z-6A	STOP BAR	8		ϕ6
D-6B	Z-6B	DILEMMA		2.0-7.5	ϕ6
D-8	Z-8	DILEMMA		2.0-7.5	ϕ8

CALCULATED BRH
CHECKED JSL

TRAFFIC SIGNAL PLAN DETAILS
U.S. 40 & S.R. 37

D05-FY2017-
SIGNAL UPGRADE

s:\Projects\D05\95383\Design\Signals\Sheets\95383_CD019.dgn 22-FEB-2017 2:36PM jhulzi

PLAN DETAILS FOR STRAIN POLES

POLE NO.	STATION & OFFSET	DESIGN NO.	POLE HEIGHT (FT.)	FOUNDATION ELEVATION	SPAN WIRE ATTACHMENT HEIGHT (FT.)	CABLE ENTRANCE DISTANCE FROM TOP (IN.)	INDEX LINE ANGLE	CONTROLLER	POWER SERVICE	CABLE ENTRANCE
							DEG.	DEG.	DEG.	DEG.
P-1	Sta. 163+22.7, 52.0' LT	10	32	923.3	26.5		140			
P-2	Sta. 163+09.7, 50.0' RT	10	32	923.0	27.6	6	226	349	0	180
P-3	Sta. 164+08.8, 44.8' LT	10	32	923.9	25.4		226			
P-4	Sta. 164+06.7, 46.8' RT	10	32	923.0	27.0		140			

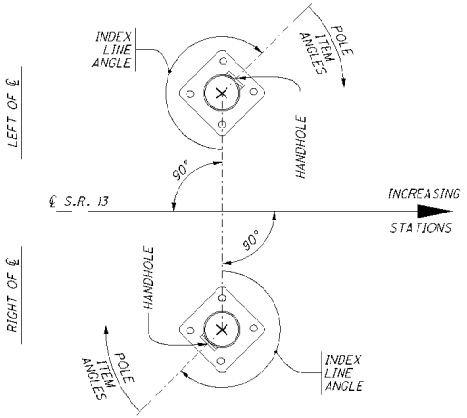

NOTES:

- ALL ANGLES ARE MEASURED CLOCKWISE.
- THE INDEX LINE GOES THROUGH THE CENTER OF THE HANDHOLE.

POLE DIAGRAM

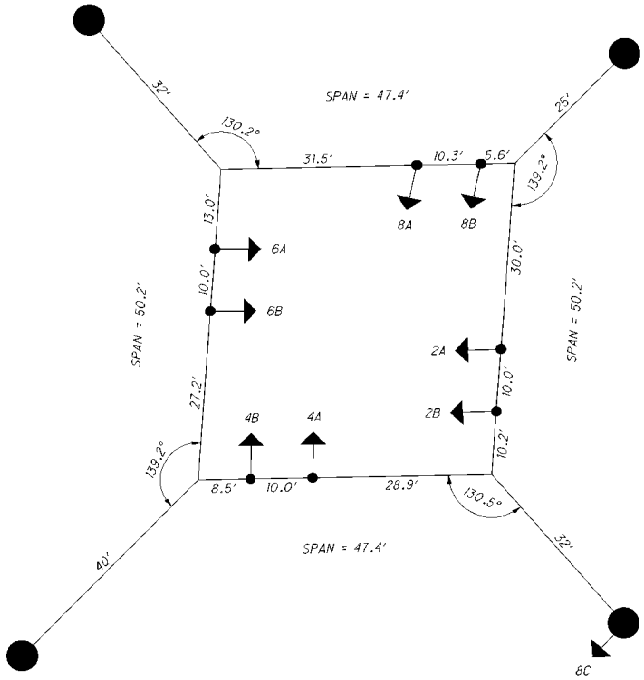

SPAN WIRE DETAILS

CALCULATED BRH
CHECKED JSL

TRAFFIC SIGNAL PLAN DETAILS
U.S. 40 & S.R. 37

D05-FY2017-
SIGNAL UPGRADE

s:\Projects\Dulo\D05\95383\Design\Signals\Sheets\95383_CD020.dgn 22-FEB-2017 2:36PM jlu121

WIRING DIAGRAM (TYPICAL)

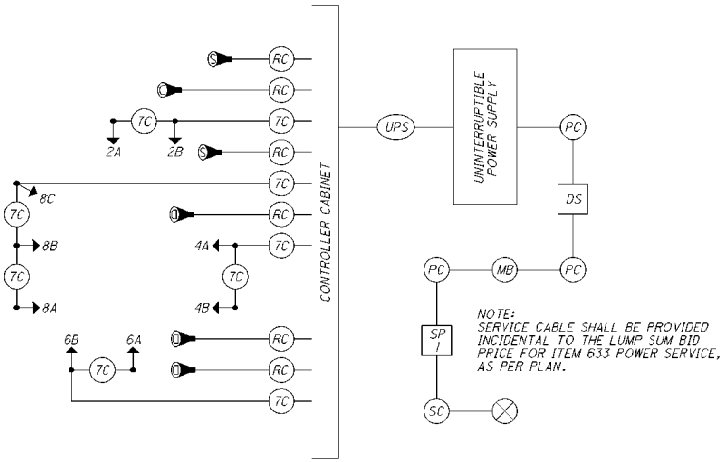

WIRING DIAGRAM LEGEND

- 3 SECTION VEHICULAR SIGNAL HEAD, 1-WAY
- 5 SECTION VEHICULAR SIGNAL HEAD, 1-WAY
- DILEMMA ZONE RADAR DETECTION UNIT
- STOP BAR RADAR DETECTION UNIT
- POWER SOURCE
- 7C — SIGNAL CABLE, 7 CONDUCTOR, NO. 14 AWG
- RC — RADAR DETECTION CABLE
- SC — SERVICE CABLE, 3 CONDUCTOR, NO. 8 AWG
- PC — POWER CABLE, 3 CONDUCTOR, NO. 8 AWG
- SP 1 — SIGNAL SUPPORT P-1
- MB — METER BASE
- DS — SIGNAL DISCONNECT SWITCH
- UPS — UNINTERRUPTIBLE POWER SUPPLY CABLE

FIELD WIRING HOOK-UP CHART

SIGNAL HEAD	INDICATION	FIELD TERMINAL	FLASH
2A	R	#2 R	R
	Y	#2 Y	
	G	#2 G	
2B	R	#2 R	R
	Y	#2 Y	
	G	#2 G	
4A	R	#4 R	R
	Y	#4 Y	
	G	#4 G	
4B	R	#4 R	R
	Y	#4 Y	
	G	#4 G	
6A	R	#6 R	R
	Y	#6 Y	
	G	#6 G	
6B	R	#6 R	R
	Y	#6 Y	
	G	#6 G	
8A	R	#8 R	R
	Y	#8 Y	
	G	#8 G	
8B	R	#8 R	R
	Y	#8 Y	
	G	#8 G	
8C	R	#8 R	R
	Y	#8 Y	
	G	#8 G	

CALCULATED BRH
CHECKED JSL

TRAFFIC SIGNAL PLAN DETAILS
U.S. 40 & S.R. 37

D05-FY2017-
SIGNAL UPGRADE

I:\Projects\D05\95383\Design\Signals\Sheets\95383_CD021.dgn 22-FEB-2017 2:36PM jlulzi

REF NO.	SHEET NO.	LOCATION	625 CONDUIT, 2", 725.05	625 CONDUIT, 4", 725.05	625 TRENCH, 24" DEEP	625 PULL BOX, 725.08, 24"	625 GROUND ROD	632 VEHICULAR SIGNAL HEAD, (LED), 3-SECTION, 12" LENS, 1-WAY, POLYCARBONATE, AS PER PLAN	632 COVERING OF VEHICULAR SIGNAL HEAD	632 MESSENGER WIRE, 7 STRAND, 7/16" DIAMETER WITH ACCESSORIES	632 TETHER WIRE, WITH ACCESSORIES, AS PER PLAN	632 SIGNAL CABLE, 7 CONDUCTOR, NO. 14 AWG	632 STRAIN POLE FOUNDATION	632 POWER CABLE, 3 CONDUCTOR, NO. 8 AWG	632 POWER SERVICE, AS PER PLAN	632 STRAIN POLE, TYPE TC-81.10, DESIGN 10	632 REMOVAL OF TRAFFIC SIGNAL INSTALLATION, AS PER PLAN	633 CABINET FOUNDATION	633 CONTROLLER WORK PAD, AS PER PLAN	633 UNINTERRUPTIBLE POWER SUPPLY (UPS), 1000 WATT, AS PER PLAN	633 CONTROLLER ITEM, MISC.: CONTROLLER UNIT, TYPE 2070E, WITH CABINET, TYPE 332	809 ADVANCE RADAR DETECTION	809 STOP-BAR RADAR DETECTION
			FT	FT	FT	EACH	EACH	EACH	EACH	FT	FT	FT	EACH	FT	EACH	EACH	EACH	EACH	EACH	EACH	EACH	EACH	EACH
		S.P. 37 & S.R. 256								280	280						1						
C-1	56	GROUND MOUNTED CABINET					1											1	1	1	1		
PS-1	56	POWER SERVICE													1								
P-1	56	SIGNAL SUPPORT					1						1			1							
P-2	56	SIGNAL SUPPORT					1						1			1							
P-3	56	SIGNAL SUPPORT					1						1			1							
P-4	56	SIGNAL SUPPORT					1						1			1							
2A	56	SIGNAL HEAD						1	1														
2B	56	SIGNAL HEAD						1	1														
4A	56	SIGNAL HEAD						1	1														
4B	56	SIGNAL HEAD						1	1														
6A	56	SIGNAL HEAD						1	1														
6B	56	SIGNAL HEAD						1	1														
8A	56	SIGNAL HEAD						1	1														
8B	56	SIGNAL HEAD						1	1														
D-2A	56	RADAR DETECTION																					1
D-2B	56	RADAR DETECTION																				1	
D-4	56	RADAR DETECTION																				1	
D-6A	56	RADAR DETECTION																					1
D-6B	56	RADAR DETECTION																				1	
D-8	56	RADAR DETECTION																				1	
PB-1	56	PULL BOX				1																	
CONDUIT	56	PS-1 TO PB-1	20	10	10									15									
	56	PB-1 TO 2A,2B										156											
SIGNAL CABLE	56	PB-1 TO 4A,4B										138											
	56	PB-1 TO 6A,6B										103											
	56	PB-1 TO 8A,8B										115											
		TOTALS CARRIED TO SHEET 10	20	10	10	1	5	8	8	280	280	512	4	15	1	4	1	1	1	1	1	4	2

CALCULATED BRH
CHECKED JSL

TRAFFIC SIGNAL SUBSUMMARY
S.R. 37 & S.R. 256

D05-FY2017-
SIGNAL UPGRADE

27-FEB-2017 3:57PM jlu121
n:\Projects\D05\95383\Design\Signals\Sheets\95383_CS008.dgn

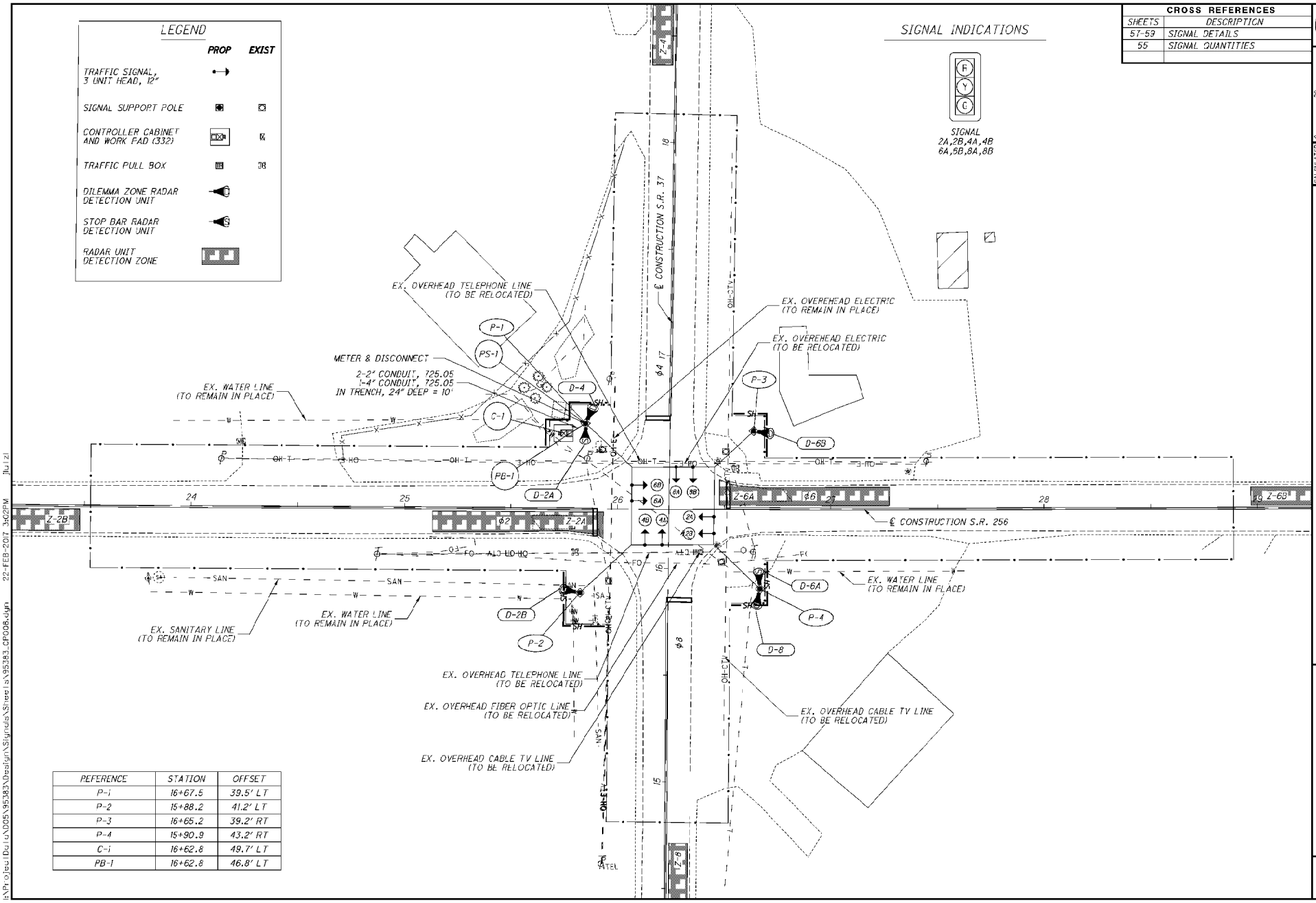

REFERENCE	STATION	OFFSET
P-1	16+67.5	39.5' LT
P-2	15+88.2	41.2' LT
P-3	16+65.2	39.2' RT
P-4	15+90.9	43.2' RT
C-1	16+62.8	49.7' LT
PB-1	16+62.8	46.8' LT

CROSS REFERENCES	
SHEETS	DESCRIPTION
57-59	SIGNAL DETAILS
55	SIGNAL QUANTITIES

HORIZONTAL SCALE IN FEET 0 10 20 40

CALCULATED BRH
CHECKED JSL

TRAFFIC SIGNAL PLAN
S.R. 37 & S.R. 256

D05-FY2017-SIGNAL UPGRADE

I:\Projects\D05\95383\Design\Signals\Sheets\95383_CP008.dgn 22-FEB-2017 3:02PM JLU121

SIGNAL TIMING CHART

INTERSECTION: S.R. 37 & S.R. 256 MAINTAINING AGENCY: ODOT										
START UP										
START IN		Y/R FLASH	DUAL ENTRY: ϕ2 & ϕ6							
TIME FOR FLASH OR ALL RED		5 (SEC.)								
FIRST PHASES		2 & 6	OVERLAP				A	B	C	D
COLOR DISPLAYED		GREEN	PHASE							
INTERVAL OR FEATURE			ϕ1	ϕ2	ϕ3	ϕ4	ϕ5	ϕ6	ϕ7	ϕ8
INTERSECTION MOVEMENT		(SEC)		EB		SB		WB		NB
MINIMUM GREEN (INITIAL)		(SEC)		18.0		12.0		18.0		12.0
ADDED INITIAL		(SEC/ACTUATION)		0.3				0.3		
MAXIMUM INITIAL		(SEC)		20.0				20.0		
PASSAGE TIME		(SEC)		3.0		3.0		3.0		3.0
TIME BEFORE REDUCTION		(SEC)								
MINIMUM GAP		(SEC)								
TIME TO REDUCE		(SEC)								
MAXIMUM GREEN I		(SEC)		30.0		25.0		30.0		25.0
MAXIMUM GREEN II		(SEC)								
YELLOW CHANGE		(SEC)		4.8		4.8		4.8		4.8
ALL RED CLEARANCE		(SEC)		1.0		1.0		1.0		1.0
WALK		(SEC)								
PEDESTRIAN CLEARANCE		(SEC)								
RECALL	MAXIMUM	(ON/OFF)								
	MINIMUM	(ON/OFF)								
	PEDESTRIAN	(ON/OFF)								
MEMORY		(ON/OFF)								

NOTES:

- ALL MOVEMENTS SHALL BE ACTUATED. THE PRIMARY THRU MOVEMENT SHOULD HAVE MIN RECALL ACTIVE TO REST IN GREEN.
- RADAR DETECTION UNITS FOR DILEMMA ZONE DETECTION SHALL PLACE A CONSTANT CALL TO THE CONTROLLER WHEN VEHICLES TRAVEL TIMES TO THE STOP BAR ARE BETWEEN 2.5 AND 6 SECONDS. SPEED TRIGGER SHALL BE SET FOR VEHICLES TRAVELING 35 MPH AND GREATER.
- RADAR SHALL HAVE QUEUE DETECTION CONFIGURED AND A ZONE PLACED AT 100-200 FEET FROM STOP BAR FOR SLOW MOVING VEHICLE EXTENSIONS. SPEED TRIGGER SHALL BE SET AT 1-35 MPH.
- ALL DETECTOR DELAYS SHALL BE PLACED IN THE CONTROLLER.

PHASING DIAGRAM

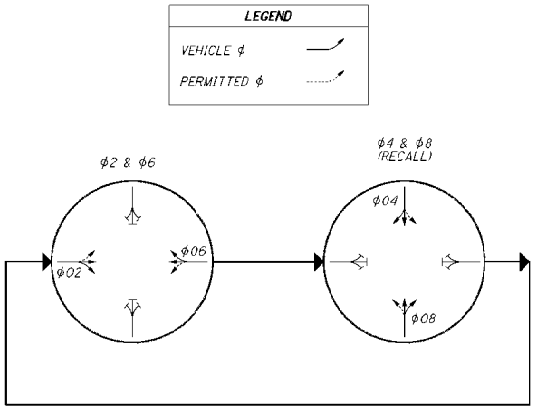

RADAR DETECTION CHART

RADAR DETECTION UNIT	RADAR DETECTION ZONE	RADAR TYPE	DELAY (SEC.)	MIN. EXTENSION (SEC.)	ASSOCIATED CONTROLLER PHASE
D-2A	Z-2A	STOP BAR	8		ϕ2
D-2B	Z-2B	DILEMMA		2.0-7.5	ϕ2
D-4	Z-4	DILEMMA		2.0-7.5	ϕ4
D-6A	Z-6A	STOP BAR	8		ϕ6
D-6B	Z-6B	DILEMMA		2.0-7.5	ϕ6
D-8	Z-8	DILEMMA		2.0-7.5	ϕ8

CALCULATED BRH
CHECKED JSL

TRAFFIC SIGNAL PLAN DETAILS
S.R. 37 & S.R. 256

D05-FY2017-
SIGNAL UPGRADE

I:\Projects\D05\95383\Design\Signals\Sheets\95383_CD022.dgn 22-FEB-2017 2:57PM jlu121

PLAN DETAILS FOR STRAIN POLES

POLE NO.	STATION & OFFSET	DESIGN NO.	POLE HEIGHT (FT.)	FOUNDATION ELEVATION	SPAN WIRE ATTACHMENT HEIGHT (FT.)	CABLE ENTRANCE DISTANCE FROM TOP (IN.)	INDEX LINE ANGLE	CONTROLLER	POWER SERVICE	CABLE ENTRANCE
							DEG.	DEG.	DEG.	DEG.
P-1	Sta. 16+67.5, 39.5' LT	10	32	923.3	26.5	6	133	293	0	180
P-2	Sta. 15+88.2, 41.2' LT	10	32	923.0	27.7		227			
P-3	Sta. 16+65.2, 39.2' RT	10	32	923.9	25.0		227			
P-4	Sta. 15+90.9, 43.2' RT	10	32	923.0	26.6		134			

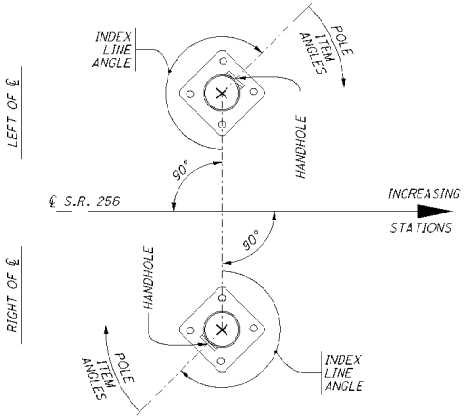

NOTES:

- ALL ANGLES ARE MEASURED CLOCKWISE.
- THE INDEX LINE GOES THROUGH THE CENTER OF THE HANDHOLE.

POLE DIAGRAM

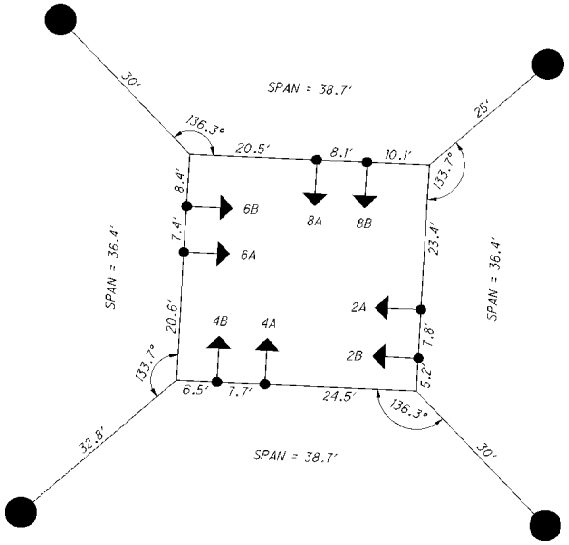

SPAN WIRE DETAILS

CALCULATED BRH
CHECKED JSL

TRAFFIC SIGNAL PLAN DETAILS
S.R. 37 & S.R. 256

D05-FY2017-SIGNAL UPGRADE

s:\Projects\Data\D05\95383\Design\Signals\Sheets\95383_CD023.dgn 22-FEB-2017 2:37PM jlu121

WIRING DIAGRAM (TYPICAL)

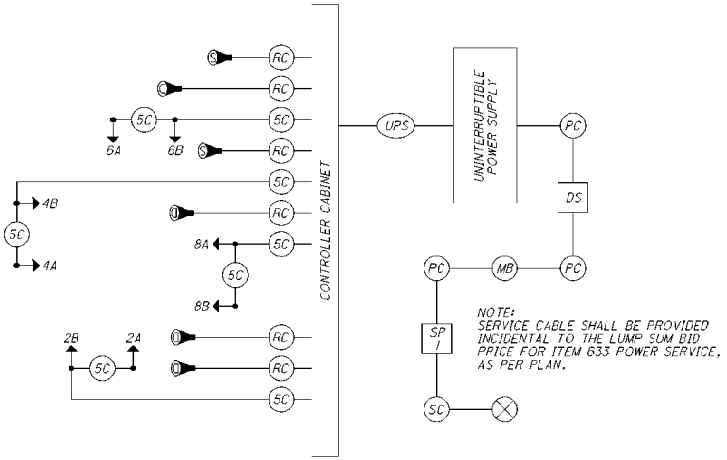

FIELD WIRING HOOK-UP CHART

SIGNAL HEAD	INDICATION	FIELD TERMINAL	FLASH
2A	R	#2 R	R
	Y	#2 Y	
	G	#2 G	
2B	R	#2 R	R
	Y	#2 Y	
	G	#2 G	
4A	R	#4 R	R
	Y	#4 Y	
	G	#4 G	
4B	R	#4 R	R
	Y	#4 Y	
	G	#4 G	
6A	R	#6 R	R
	Y	#6 Y	
	G	#6 G	
6B	R	#6 R	R
	Y	#6 Y	
	G	#6 G	
8A	R	#8 R	R
	Y	#8 Y	
	G	#8 G	
8B	R	#8 R	R
	Y	#8 Y	
	G	#8 G	

WIRING DIAGRAM LEGEND

- 3 SECTION VEHICULAR SIGNAL HEAD, 1-WAY
- 5 SECTION VEHICULAR SIGNAL HEAD, 1-WAY
- DILEMMA ZONE RADAR DETECTION UNIT
- STOP BAR RADAR DETECTION UNIT
- POWER SOURCE
- 5C — SIGNAL CABLE, 7 CONDUCTOR, NO. 14 AWG
- RC — RADAR DETECTION CABLE
- SC — SERVICE CABLE, 3 CONDUCTOR, NO. 8 AWG
- PC — POWER CABLE, 3 CONDUCTOR, NO. 8 AWG
- SP 1 — SIGNAL SUPPORT P-1
- MB — METER BASE
- DS — SIGNAL DISCONNECT SWITCH
- UPS — UNINTERRUPTIBLE POWER SUPPLY CABLE

CALCULATED BRH
CHECKED JSL

TRAFFIC SIGNAL PLAN DETAILS
S.R. 37 & S.R. 256

D05-FY2017-
SIGNAL UPGRADE

I:\Projects\Dallas\D05\95383\Design\Signals\Sheets\95383_CD024.dgn 22-FEB-2017 2:37PM jlu121

REF NO.	SHEET NO.	LOCATION	625 CONDUIT, 2", 725.05	625 CONDUIT, 4", 725.05	625 TRENCH, 24" DEEP	625 PULL BOX, 725.08, 24"	625 GROUND ROD	632 VEHICULAR SIGNAL HEAD, (LED), 3-SECTION, 12" LENS, 1-WAY, POLYCARBONATE, AS PER PLAN	632 VEHICULAR SIGNAL HEAD, (LED), 5-SECTION, 12" LENS, 1-WAY, POLYCARBONATE, AS PER PLAN	632 COVERING OF VEHICULAR SIGNAL HEAD	632 MESSENGER WIRE, 7 STRAND, 7/16" DIAMETER WITH ACCESSORIES	632 TETHER WIRE, WITH ACCESSORIES, AS PER PLAN	632 SIGNAL CABLE, 5 CONDUCTOR, NO. 14 AWG	632 SIGNAL CABLE, 7 CONDUCTOR, NO. 14 AWG	632 STRAIN POLE FOUNDATION	632 POWER CABLE, 3 CONDUCTOR, NO. 8 AWG	632 POWER SERVICE, AS PER PLAN	632 STRAIN POLE, TYPE TC-81.10, DESIGN 10	632 REMOVAL OF TRAFFIC SIGNAL INSTALLATION, AS PER PLAN	633 GPS (GLOBAL POSITIONING SYSTEM) CLOCK ASSEMBLY	633 CABINET FOUNDATION	633 CONTROLLER WORK PAD, AS PER PLAN	633 UNINTERRUPTIBLE POWER SUPPLY (UPS), 1000 WATT, AS PER PLAN	633 CONTROLLER ITEM, MISC.: CONTROLLER UNIT, TYPE 2070E, WITH CABINET, TYPE 332	809 ADVANCE RADAR DETECTION	809 STOP-BAR RADAR DETECTION
			FT	FT	FT	EACH	EACH	EACH	EACH	EACH	FT	FT	FT	FT	EACH	FT	EACH	EACH	EACH	EACH	EACH	EACH	EACH	EACH	EACH	EACH	EACH
		S.R. 209 & PARKWAY PLAZA DR.									350	350							1								
C-1	61	GROUND MOUNTED CABINET					1													1	1	1	1	1			
PS-1	61	POWER SERVICE															1										
P-1	61	SIGNAL SUPPORT					1								1			1									
P-2	61	SIGNAL SUPPORT					1								1			1									
P-3	61	SIGNAL SUPPORT					1								1			1									
P-4	61	SIGNAL SUPPORT					1								1			1									
1	61	SIGNAL HEAD							1	1																	
2	61	SIGNAL HEAD						1		1																	
4A	61	SIGNAL HEAD						1		1																	
4B	61	SIGNAL HEAD						1		1																	
5	61	SIGNAL HEAD							1	1																	
6	61	SIGNAL HEAD						1		1																	
8A	61	SIGNAL HEAD						1		1																	
8B	61	SIGNAL HEAD						1		1																	
D-1	61	RADAR DETECTION																									1
D-2	61	RADAR DETECTION																							1		
D-4	61	RADAR DETECTION																									1
D-5	61	RADAR DETECTION																									1
D-6	61	RADAR DETECTION																							1		
D-8	61	RADAR DETECTION																									1
PB-1	61	PULL BOX				1																					
CONDUIT	61	PS-1 TO PB-1	20	10	10											15											
SIGNAL CABLE	61	PB-1 TO 1,6												116													
	61	PB-1 TO 2,5												204													
	61	PB-1 TO 4A,4B											186														
	61	PB-1 TO 8A,8B											136														
		TOTALS CARRIED TO SHEET 9	20	10	10	1	5	6	2	8	350	350	322	320	4	15	1	4	1	1	1	1	1	1	2	4	

CALCULATED BRH
CHECKED JSL

TRAFFIC SIGNAL SUBSUMMARY
S.R. 209 & PARKWAY PLAZA DR.

D05-FY2017-
SIGNAL UPGRADE

27-FEB-2017 3:57PM jlu121
s:\Projects\D05\95383\Design\Signals\Sheets\95383_CS009.dgn

CROSS REFERENCES	
SHEETS	DESCRIPTION
62-64	SIGNAL DETAILS
60	SIGNAL QUANTITIES

LEGEND

	PROP	EXIST
TRAFFIC SIGNAL, 3 UNIT HEAD, 12"		
TRAFFIC SIGNAL, 5 UNIT HEAT, 12"		
SIGNAL SUPPORT POLE		
CONTROLLER CABINET AND WORK PAD (332)		
TRAFFIC PULL BOX		
DILEMMA ZONE RADAR DETECTION UNIT		
STOP BAR RADAR DETECTION UNIT		
RADAR UNIT DETECTION ZONE		

SIGNAL INDICATIONS

SIGNAL 2,4A,4B 6,8A,8B

SIGNAL 1,5

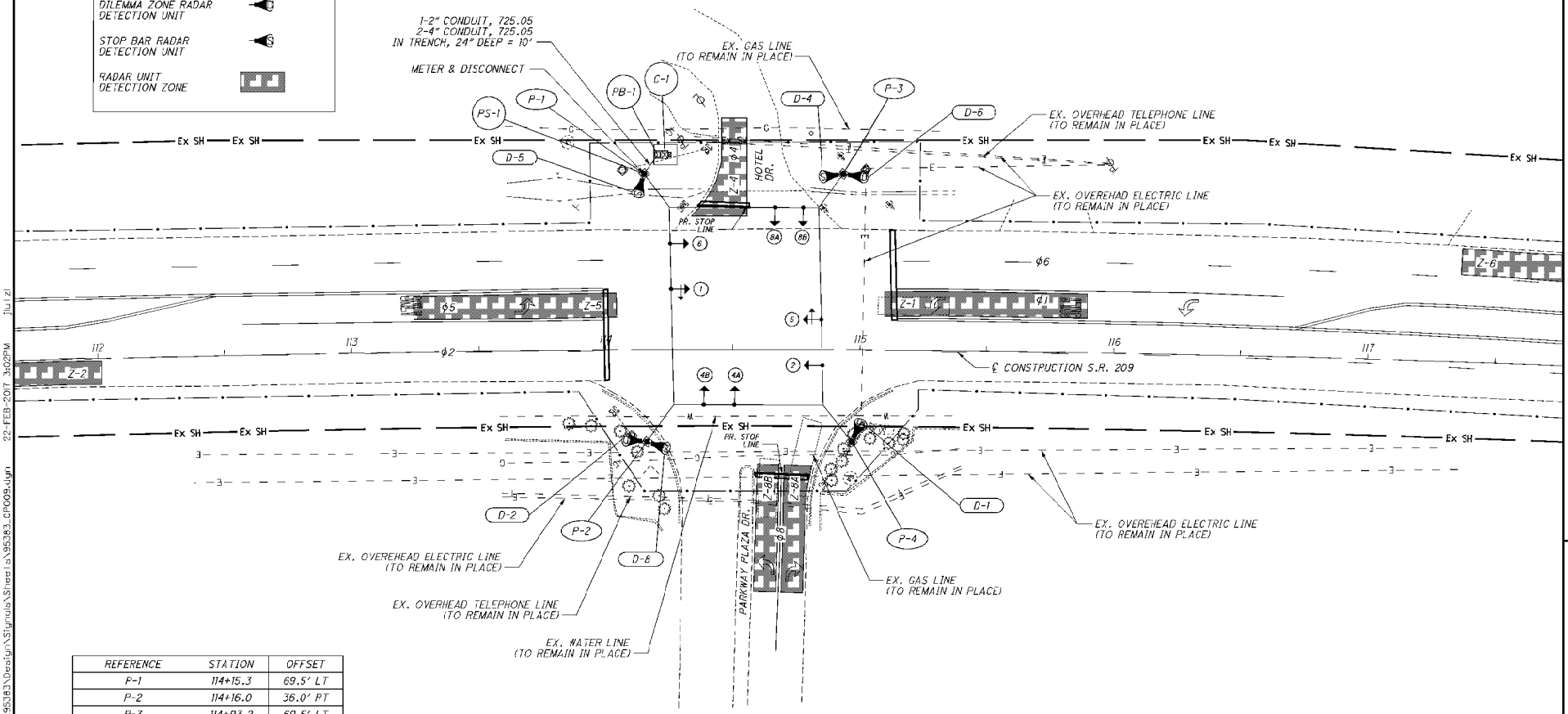

REFERENCE	STATION	OFFSET
P-1	114+15.3	69.5' LT
P-2	114+16.0	36.0' RT
P-3	114+93.2	69.5' LT
P-4	114+97.0	36.0' RT
C-1	114+23.5	77.0' LT
PB-1	114+20.7	77.0' LT

HORIZONTAL SCALE IN FEET 0 10 20 40

CALCULATED BRH
CHECKED JSL

TRAFFIC SIGNAL PLAN
S.R. 209 & PARKWAY PLAZA DR.

D05-FY2017-
SIGNAL UPGRADE

s:\Projects\D05\95383\Design\Signals\Sheets\95383_CP009.dgn 22-FEB-2017 3:02PM JULIZI

SIGNAL TIMING CHART

INTERSECTION: S.R. 209 & Parkway Plaza Dr. MAINTAINING AGENCY: ODOT										
START UP			DUAL ENTRY: ϕ2 & ϕ6							
START IN		Y/R FLASH								
TIME FOR FLASH OR ALL RED		5 (SEC.)								
FIRST PHASES		2 & 6	OVERLAP				A	B	C	D
COLOR DISPLAYED		GREEN	PHASE							
INTERVAL OR FEATURE			ϕ1	ϕ2	ϕ3	ϕ4	ϕ5	ϕ6	ϕ7	ϕ8
INTERSECTION MOVEMENT		(SEC)	SBLT	NB		EB	NBLT	SB		WB
MINIMUM GREEN (INITIAL)		(SEC)	5.0	25.0		10.0	5.0	25.0		10.0
ADDED INITIAL		(SEC/ACTUATION)								
MAXIMUM INITIAL		(SEC)								
PASSAGE TIME		(SEC)	2.5	2.5		2.5	2.5	2.5		2.5
TIME BEFORE REDUCTION		(SEC)								
MINIMUM GAP		(SEC)								
TIME TO REDUCE		(SEC)								
MAXIMUM GREEN I		(SEC)	18.0	35.0		25.0	18.0	35.0		25.0
MAXIMUM GREEN II		(SEC)								
YELLOW CHANGE		(SEC)	4.0	4.0		3.0	4.0	4.0		3.0
ALL RED CLEARANCE		(SEC)	2.0	2.0		2.5	2.0	2.0		2.5
WALK		(SEC)								
PEDESTRIAN CLEARANCE		(SEC)								
RECALL	MAXIMUM	(ON/OFF)								
	MINIMUM	(ON/OFF)								
	PEDESTRIAN	(ON/OFF)								
MEMORY		(ON/OFF)								

PHASING DIAGRAM

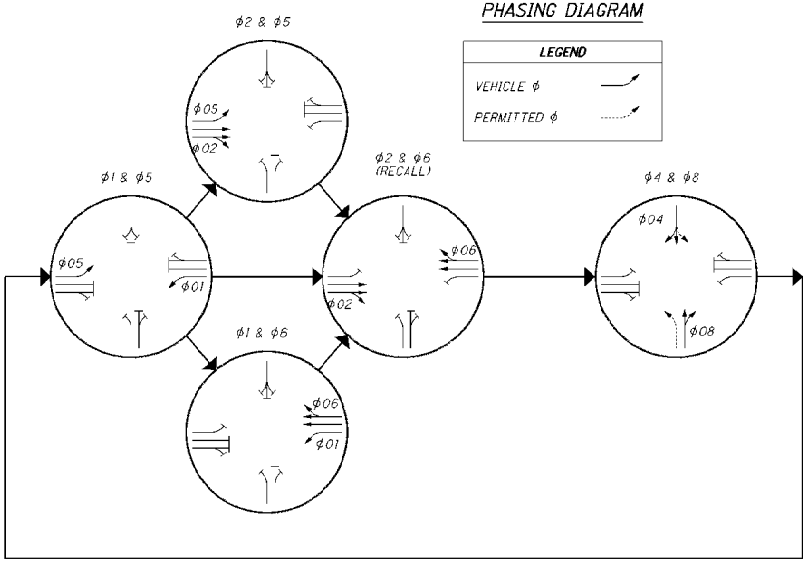

NOTES:

- ALL MOVEMENTS SHALL BE ACTUATED. THE PRIMARY THRU MOVEMENT SHOULD HAVE MIN RECALL ACTIVE TO REST IN GREEN.
- FOR PROTECTED/PERMISSIVE PHASES, IMPLEMENT CALL OMITS TO AVOID YELLOW BALL TRAP.
- RADAR DETECTION UNITS FOR DILEMMA ZONE DETECTION SHALL PLACE A CONSTANT CALL TO THE CONTROLLER WHEN VEHICLES TRAVEL TIMES TO THE STOP BAR ARE BETWEEN 2.5 AND 6 SECONDS. SPEED TRIGGER SHALL BE SET FOR VEHICLES TRAVELING 35 MPH AND GREATER.
- RADAR SHALL HAVE QUEUE DETECTION CONFIGURED AND A ZONE PLACED AT 100-200 FEET FROM STOP BAR FOR SLOW MOVING VEHICLE EXTENSIONS. SPEED TRIGGER SHALL BE SET AT 1-35 MPH.
- ALL DETECTOR DELAYS SHALL BE PLACED IN THE CONTROLLER.

RADAR DETECTION CHART

RADAR DETECTION UNIT	RADAR DETECTION ZONE	RADAR TYPE	DELAY SEC.)	MIN. EXTENSION (SEC.)	ASSOCIATED CONTROLLER PHASE
D-1	Z-1	STOP BAR			ϕ1
D-2	Z-2	DILEMMA		2.0-7.5	ϕ2
D-4	Z-4	STOP BAR	8		ϕ4
D-5	Z-5	STOP BAR			ϕ5
D-6	Z-6	DILEMMA		2.0-7.5	ϕ6
D-8	Z-8A	STOP BAR	8		ϕ8
	Z-8B				

CALCULATED BRH
CHECKED JSL

TRAFFIC SIGNAL PLAN DETAILS
S.R. 209 & PARKWAY PLAZA DR.

D05-FY2017-
SIGNAL UPGRADE

I:\Projects\Data\D05\95383\Design\Signals\Sheets\95383_CD025.dgn 22-FEB-2017 2:57PM jlu121

PLAN DETAILS FOR STRAIN POLES

POLE NO.	STATION & OFFSET	DESIGN NO.	POLE HEIGHT (FT.)	FOUNDATION ELEVATION	SPAN WIRE ATTACHMENT HEIGHT (FT.)	CABLE ENTRANCE DISTANCE FROM TOP (IN.)	INDEX LINE ANGLE	CONTROLLER	POWER SERVICE	CABLE ENTRANCE
							DEG.	DEG.	DEG.	DEG.
P-1	Sta. 114+15.3, 69.5' LT	10	32	812.5	25.9	6	142	86	74	180
P-2	Sta. 114+16.0, 36.0' RT	10	32	810.0	28.6		216			
P-3	Sta. 114+93.2, 69.5' LT	10	32	813.3	25.1		216			
P-4	Sta. 114+97.0, 36.0' RT	10	32	810.5	27.9		142			

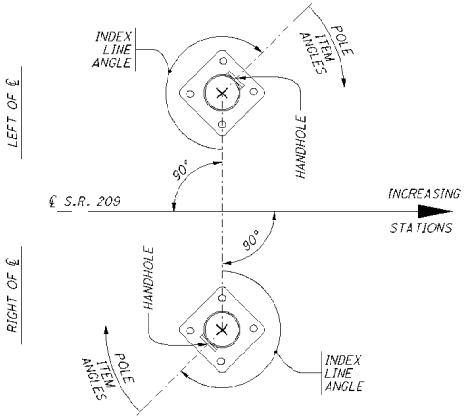

NOTES:

- ALL ANGLES ARE MEASURED CLOCKWISE.
- THE INDEX LINE GOES THROUGH THE CENTER OF THE HANDHOLE.

POLE DIAGRAM

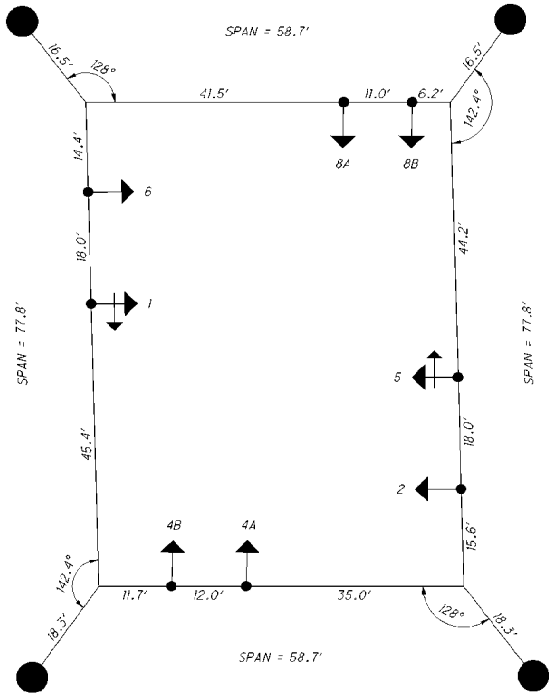

SPAN WIRE DETAILS

CALCULATED BRH
CHECKED JSL

TRAFFIC SIGNAL PLAN DETAILS
S.R. 209 & PARKWAY PLAZA DR.

D05-FY2017-
SIGNAL UPGRADE

I:\Projects\D05\95383\Design\Signals\Sheets\95383_CD026.dgn 22-FEB-2017 2:37PM jlu121

WIRING DIAGRAM (TYPICAL)

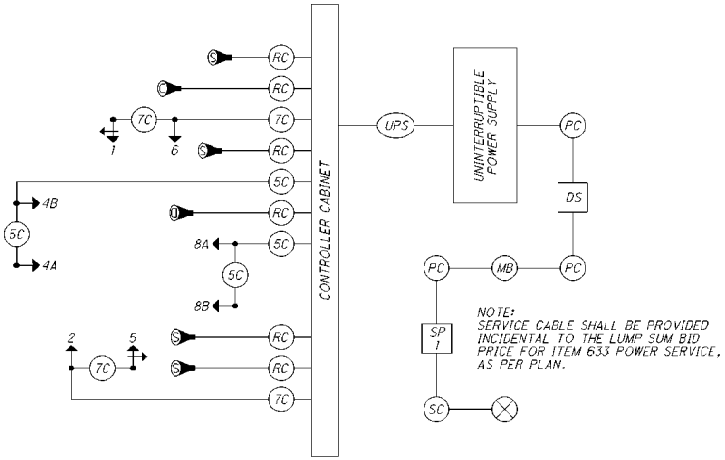

WIRING DIAGRAM LEGEND

- 3 SECTION VEHICULAR SIGNAL HEAD, 1-WAY
- 5 SECTION VEHICULAR SIGNAL HEAD, 1-WAY
- DILEMMA ZONE RADAR DETECTION UNIT
- STOP BAR RADAR DETECTION UNIT
- POWER SOURCE
- (5C) SIGNAL CABLE, 5 CONDUCTOR, NO. 14 AWG
- (7C) SIGNAL CABLE, 7 CONDUCTOR, NO. 14 AWG
- (RC) RADAR DETECTION CABLE
- (SC) SERVICE CABLE, 3 CONDUCTOR, NO. 8 AWG
- (PC) POWER CABLE, 3 CONDUCTOR, NO. 8 AWG
- (SP 1) SIGNAL SUPPORT P-1
- (MB) METER BASE
- (DS) SIGNAL DISCONNECT SWITCH
- (UPS) UNINTERRUPTIBLE POWER SUPPLY CABLE

FIELD WIRING HOOK-UP CHART

SIGNAL HEAD	INDICATION	FIELD TERMINAL	FLASH
1	R	ϕ1 R	Y
	Y	ϕ1 Y	
	G	ϕ1 G	
	<--Y---	ϕ1 Y	
	<--G---	ϕ1 G	
2	R	ϕ2 R	Y
	Y	ϕ2 Y	
	G	ϕ2 G	
4A	R	ϕ4 R	R
	Y	ϕ4 Y	
	G	ϕ4 G	
4B	R	ϕ4 R	R
	Y	ϕ4 Y	
	G	ϕ4 G	
5	R	ϕ5 R	Y
	Y	ϕ5 Y	
	G	ϕ5 G	
	<--Y---	ϕ5 Y	
	<--G---	ϕ5 G	
6	R	ϕ6 R	Y
	Y	ϕ6 Y	
	G	ϕ6 G	
8A	R	ϕ8 R	R
	Y	ϕ8 Y	
	G	ϕ8 G	
8B	R	ϕ8 R	R
	Y	ϕ8 Y	
	G	ϕ8 G	

CALCULATED BRH
CHECKED JSL

TRAFFIC SIGNAL PLAN DETAILS
S.R. 209 & PARKWAY PLAZA DR.

D05-FY2017-
SIGNAL UPGRADE

s:\Projects\Dallas\D05\95383\Design\Signals\Sheets\95383_CD027.dgn 22-FEB-2017 2:37PM jlu121

REF NO.	SHEET NO.	LOCATION	625 CONDUIT, 2", 725.05	625 CONDUIT, 4", 725.05	625 TRENCH, 24" DEEP	625 PULL BOX, 725.08, 24"	625 GROUND ROD	632 VEHICULAR SIGNAL HEAD, (LED), 3-SECTION, 12" LENS, 1-WAY, POLYCARBONATE, AS PER PLAN	632 VEHICULAR SIGNAL HEAD, (LED), 5-SECTION, 12" LENS, 1-WAY, POLYCARBONATE, AS PER PLAN	632 COVERING OF VEHICULAR SIGNAL HEAD	632 MESSENGER WIRE, 7 STRAND, 7/16" DIAMETER WITH ACCESSORIES	632 TETHER WIRE, WITH ACCESSORIES, AS PER PLAN	632 SIGNAL CABLE, 5 CONDUCTOR, NO. 14 AWG	632 SIGNAL CABLE, 7 CONDUCTOR, NO. 14 AWG	632 STRAIN POLE FOUNDATION	632 POWER CABLE, 3 CONDUCTOR, NO. 8 AWG	632 POWER SERVICE, AS PER PLAN	632 STRAIN POLE, TYPE TC-81.10, DESIGN 10	632 REMOVAL OF TRAFFIC SIGNAL INSTALLATION, AS PER PLAN	633 GPS (GLOBAL POSITIONING SYSTEM) CLOCK ASSEMBLY	633 CABINET FOUNDATION	633 CONTROLLER WORK PAD, AS PER PLAN	633 UNINTERRUPTIBLE POWER SUPPLY (UPS), 1000 WATT, AS PER PLAN	633 CONTROLLER ITEM, MISC.: CONTROLLER UNIT, TYPE 2070E, WITH CABINET, TYPE 332	809 ADVANCE RADAR DETECTION	809 STOP-BAR RADAR DETECTION
			FT	FT	FT	EACH	EACH	EACH	EACH	EACH	FT	FT	FT	FT	EACH	FT	EACH	EACH	EACH	EACH	EACH	EACH	EACH	EACH	EACH	EACH	EACH
		S.R. 209 & WALMART ENTRANCE									400	400							1								
C-1	66	GROUND MOUNTED CABINET					1													1	1	1	1	1			
PS-1	66	POWER SERVICE															1										
P-1	66	SIGNAL SUPPORT					1								1			1									
P-2	66	SIGNAL SUPPORT					1								1			1									
P-3	66	SIGNAL SUPPORT					1								1			1									
P-4	66	SIGNAL SUPPORT					1								1			1									
1	66	SIGNAL HEAD							1	1																	
2	66	SIGNAL HEAD						1		1																	
4A	66	SIGNAL HEAD						1		1																	
4B	66	SIGNAL HEAD						1		1																	
5	66	SIGNAL HEAD							1	1																	
6	66	SIGNAL HEAD						1		1																	
8A	66	SIGNAL HEAD						1		1																	
8B	66	SIGNAL HEAD						1		1																	
D-1	66	RADAR DETECTION																									1
D-2	66	RADAR DETECTION																							1		
D-4	66	RADAR DETECTION																									1
D-5	66	RADAR DETECTION																									1
D-6	66	RADAR DETECTION																							1		
D-8	66	RADAR DETECTION																									1
PB-1	66	PULL BOX				1																					
CONDUIT	66	PS-1 TO PB-1	30	15	15											20											
SIGNAL CABLE	66	PB-1 TO 1,6												181													
	66	PB-1 TO 2,5												148													
	66	PB-1 TO 4A,4B											198														
	66	PB-1 TO 8A,8B											108														
		TOTALS CARRIED TO SHEET 9	30	15	15	1	5	6	2	8	400	400	306	329	4	20	1	4	1	1	1	1	1	1	2	4	

CALCULATED BRH
CHECKED JSL

TRAFFIC SIGNAL SUBSUMMARY
S.R. 209 & WALMART ENTRANCE

D05-FY2017-
SIGNAL UPGRADE

jlu12
27-FEB-2017 3:57PM
s:\Projects\D05\95383\Design\Signals\Sheets\95383_CS010.dgn

LEGEND

	PROP	EXIST
TRAFFIC SIGNAL, 3 UNIT HEAD, 12"		
TRAFFIC SIGNAL, 5 UNIT HEAT, 12"		
SIGNAL SUPPORT POLE		
CONTROLLER CABINET AND WORK PAD (332)		
TRAFFIC PULL BOX		
DILEMMA ZONE RADAR DETECTION UNIT		
STOP BAR RADAR DETECTION UNIT		
RADAR UNIT DETECTION ZONE		

SIGNAL INDICATIONS

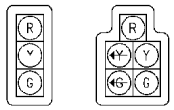

SIGNAL 2,4A,4B 6,8A,8B — SIGNAL 1,5

CROSS REFERENCES	
SHEETS	DESCRIPTION
67-69	SIGNAL DETAILS
65	SIGNAL QUANTITIES

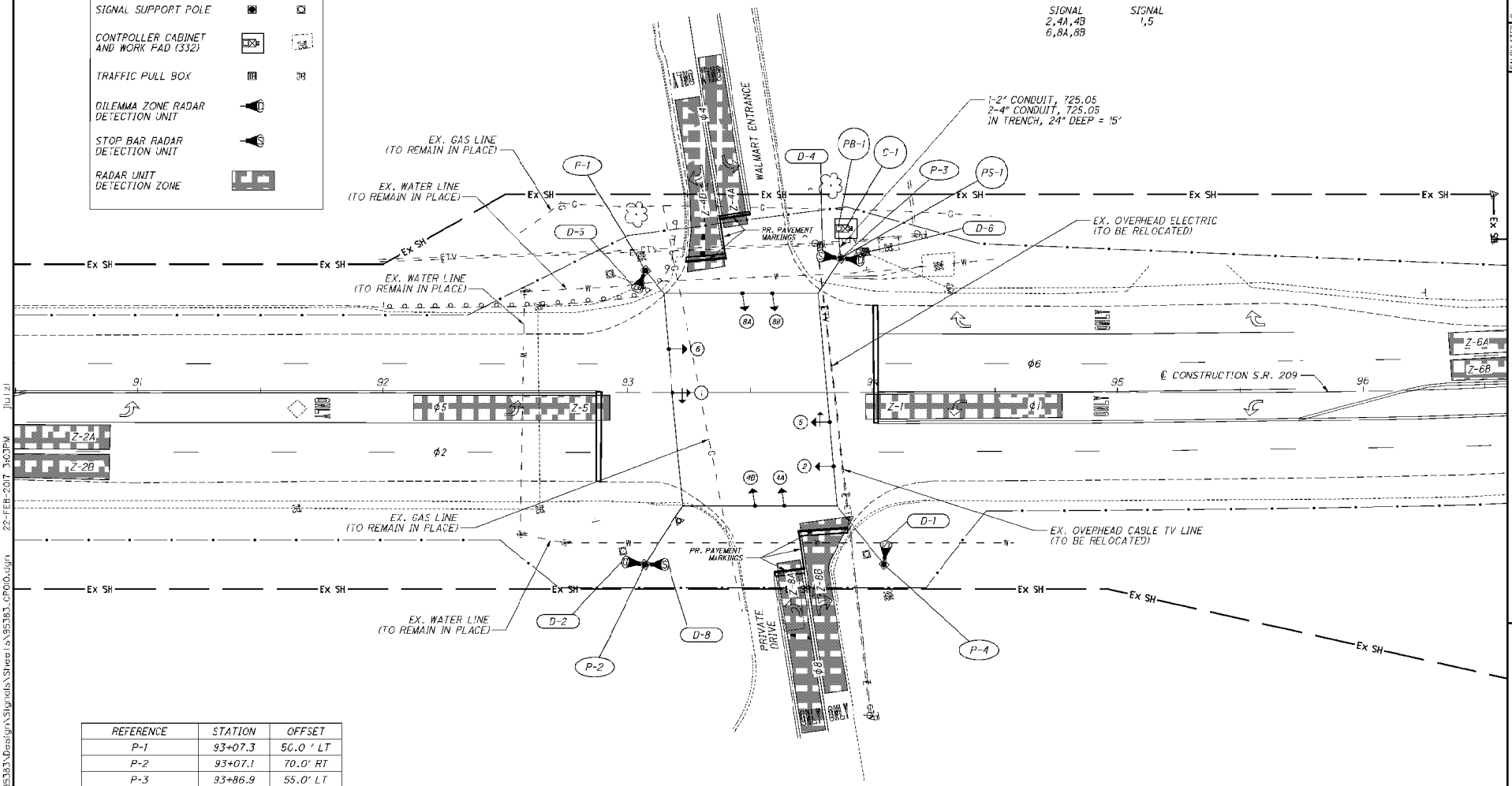

REFERENCE	STATION	OFFSET
P-1	93+07.3	50.0' LT
P-2	93+07.1	70.0' RT
P-3	93+86.9	55.0' LT
P-4	94+04.7	70.0' RT
C-1	93+88.8	67.1' LT
PB-1	93+85.9	67.1' LT

HORIZONTAL SCALE IN FEET 0 10 20 40

CALCULATED BRH
CHECKED JSL

TRAFFIC SIGNAL PLAN
S.R. 209 & WALMART ENTRANCE

D05-FY2017-
SIGNAL UPGRADE

i:\Project Data\D05\95383\Design\Signals\Sheets\95383_CP010.dgn 22-FEB-2017 3:03PM jlulzi

SIGNAL TIMING CHART

INTERSECTION: S.R. 209 & Walmart Entrance MAINTAINING AGENCY: ODOT										
START UP			DUAL ENTRY: ϕ2 & ϕ6							
START IN		Y/R FLASH								
TIME FOR FLASH OR ALL RED		5 (SEC.)								
FIRST PHASES		2 & 6	OVERLAP				A	B	C	D
COLOR DISPLAYED		GREEN	PHASE							
INTERVAL OR FEATURE			ϕ1	ϕ2	ϕ3	ϕ4	ϕ5	ϕ6	ϕ7	ϕ8
INTERSECTION MOVEMENT		(SEC)	SBLT	NB		EB	NBLT	SB		WB
MINIMUM GREEN (INITIAL)		(SEC)	5.0	25.0		10.0	5.0	25.0		10.0
ADDED INITIAL		(SEC/ACTUATION)								
MAXIMUM INITIAL		(SEC)								
PASSAGE TIME		(SEC)	3.0	3.0		3.0	3.0	3.0		3.0
TIME BEFORE REDUCTION		(SEC)								
MINIMUM GAP		(SEC)								
TIME TO REDUCE		(SEC)								
MAXIMUM GREEN I		(SEC)	18.0	50.0		30.0	18.0	50.0		30.0
MAXIMUM GREEN II		(SEC)	30.0	50.0		50.0	30.0	50.0		50.0
YELLOW CHANGE		(SEC)	4.0	4.0		3.0	4.0	4.0		3.0
ALL RED CLEARANCE		(SEC)	2.0	2.0		2.5	2.0	2.0		2.5
WALK		(SEC)								
PEDESTRIAN CLEARANCE		(SEC)								
RECALL	MAXIMUM	(ON/OFF)								
	MINIMUM	(ON/OFF)								
	PEDESTRIAN	(ON/OFF)								
MEMORY		(ON/OFF)								

PHASING DIAGRAM

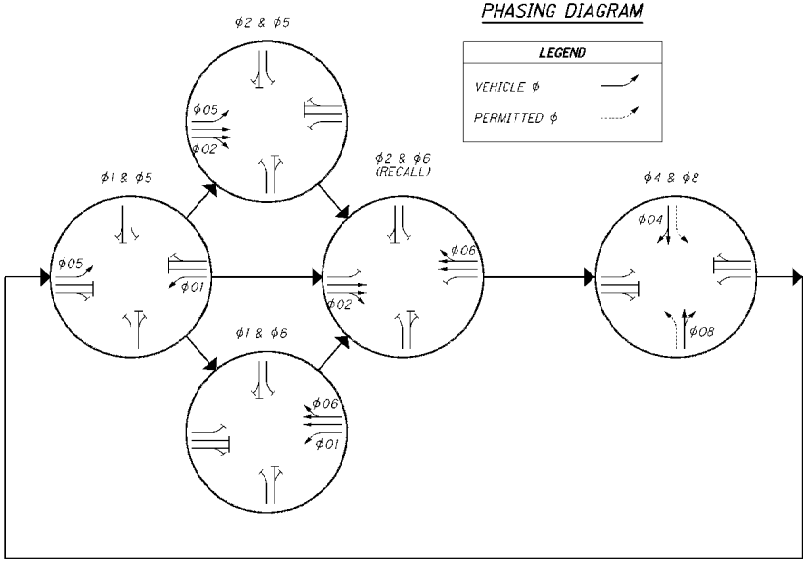

NOTES:

- ALL MOVEMENTS SHALL BE ACTUATED. THE PRIMARY THRU MOVEMENT SHOULD HAVE MIN RECALL ACTIVE TO REST IN GREEN.
- FOR PROTECTED/PERMISSIVE PHASES, IMPLEMENT CALL OMITS TO AVOID YELLOW BALL TRAP.
- RADAR DETECTION UNITS FOR DILEMMA ZONE DETECTION SHALL PLACE A CONSTANT CALL TO THE CONTROLLER WHEN VEHICLES TRAVEL TIMES TO THE STOP BAR ARE BETWEEN 2.5 AND 6 SECONDS. SPEED TRIGGER SHALL BE SET FOR VEHICLES TRAVELING 35 MPH AND GREATER.
- RADAR SHALL HAVE QUEUE DETECTION CONFIGURED AND A ZONE PLACED AT 100-200 FEET FROM STOP BAR FOR SLOW MOVING VEHICLE EXTENSIONS. SPEED TRIGGER SHALL BE SET AT 1-35 MPH.
- ALL DETECTOR DELAYS SHALL BE PLACED IN THE CONTROLLER.

RADAR DETECTION CHART

RADAR DETECTION UNIT	RADAR DETECTION ZONE	RADAR TYPE	DELAY SEC.)	MIN. EXTENSION (SEC.)	ASSOCIATED CONTROLLER PHASE
D-1	Z-1	STOP BAR			ϕ1
D-2	Z-2	DILEMMA		2.0-7.5	ϕ2
D-4	Z-4A	STOP BAR			ϕ4
	Z-4B		8		
D-5	Z-5	STOP BAR			ϕ5
D-6	Z-6	DILEMMA		2.0-7.5	ϕ6
D-8	Z-8A	STOP BAR			ϕ8
	Z-8B		8		

CALCULATED BRH
CHECKED JSL

TRAFFIC SIGNAL PLAN DETAILS
S.R. 209 & WALMART ENTRANCE

D05-FY2017-
SIGNAL UPGRADE

s:\Projects\Dalia\D05\95383\Design\Signals\Sheets\95383_CD028.dgn 22-FEB-2017 2:37PM jjul121

PLAN DETAILS FOR STRAIN POLES

POLE NO.	STATION & OFFSET	DESIGN NO.	POLE HEIGHT (FT.)	FOUNDATION ELEVATION	SPAN WIRE ATTACHMENT HEIGHT (FT.)	CABLE ENTRANCE DISTANCE FROM TOP (IN.)	INDEX LINE ANGLE	CONTROLLER	POWER SERVICE	CABLE ENTRANCE
							DEG.	DEG.	DEG.	DEG.
P-1	Sta. 93+07.3, 50.0' LT	10	32	807.0	26.3		141			
P-2	Sta. 93+07.1, 70.0' RT	10	32	804.3	30.3		213			
P-3	Sta. 93+86.9, 55.0' LT	10	32	808.0	25.7	6	213	339	0	180
P-4	Sta. 94+04.7, 70.0' RT	10	32	804.5	30.7		141			

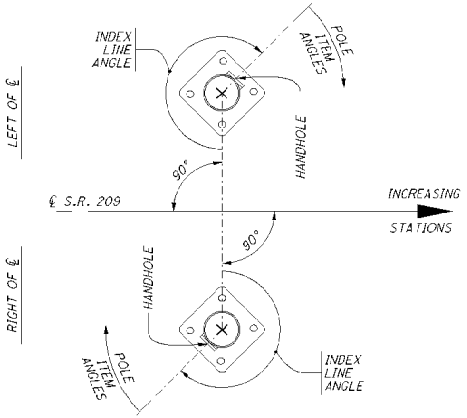

NOTES:

- ALL ANGLES ARE MEASURED CLOCKWISE.
- THE INDEX LINE GOES THROUGH THE CENTER OF THE HANDHOLE.

POLE DIAGRAM

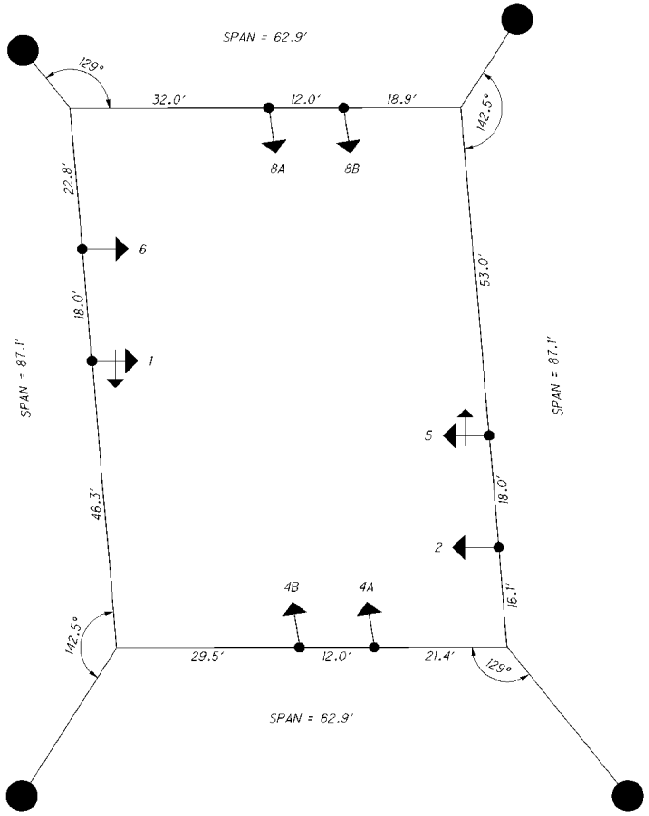

SPAN WIRE DETAILS

CALCULATED BRH
CHECKED JSL

TRAFFIC SIGNAL PLAN DETAILS
S.R. 209 & WALMART ENTRANCE

D05-FY2017-
SIGNAL UPGRADE

s:\Projects\Dalton\D05\95383\Design\Signals\Sheets\95383_CD029.dgn 22-FEB-2017 2:37PM jlu121

WIRING DIAGRAM (TYPICAL)

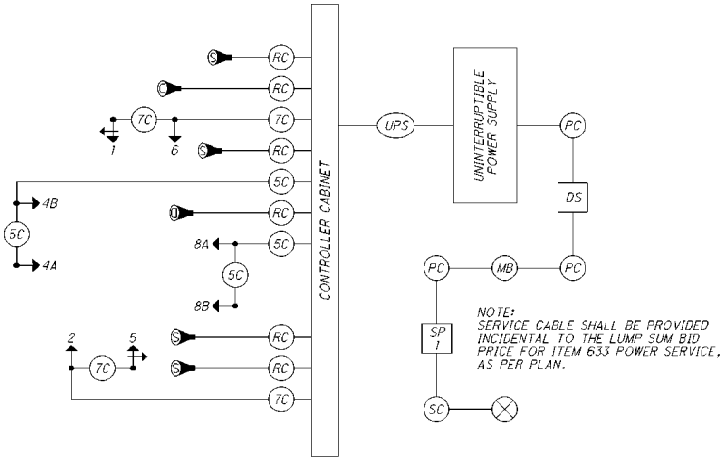

WIRING DIAGRAM LEGEND

- 3 SECTION VEHICULAR SIGNAL HEAD, 1-WAY
- 5 SECTION VEHICULAR SIGNAL HEAD, 1-WAY
- DILEMMA ZONE RADAR DETECTION UNIT
- STOP BAR RADAR DETECTION UNIT
- POWER SOURCE
- (5C) SIGNAL CABLE, 5 CONDUCTOR, NO. 14 AWG
- (7C) SIGNAL CABLE, 7 CONDUCTOR, NO. 14 AWG
- (RC) RADAR DETECTION CABLE
- (SC) SERVICE CABLE, 3 CONDUCTOR, NO. 8 AWG
- (PC) POWER CABLE, 3 CONDUCTOR, NO. 8 AWG
- (SP 1) SIGNAL SUPPORT P-3
- (MB) METER BASE
- (DS) SIGNAL DISCONNECT SWITCH
- (UPS) UNINTERRUPTIBLE POWER SUPPLY CABLE

FIELD WIRING HOOK-UP CHART

SIGNAL HEAD	INDICATION	FIELD TERMINAL	FLASH
1	P	ϕ1 R	Y
	Y	ϕ1 Y	
	G	ϕ1 G	
	<--Y---	ϕ1 Y	
	<--G---	ϕ1 G	
2	P	ϕ2 R	Y
	Y	ϕ2 Y	
	G	ϕ2 G	
4A	P	ϕ4 R	R
	Y	ϕ4 Y	
	G	ϕ4 G	
4B	P	ϕ4 R	R
	Y	ϕ4 Y	
	G	ϕ4 G	
5	P	ϕ5 R	Y
	Y	ϕ5 Y	
	G	ϕ5 G	
	<--Y---	ϕ5 Y	
	<--G---	ϕ5 G	
6	P	ϕ6 R	Y
	Y	ϕ6 Y	
	G	ϕ6 G	
8A	P	ϕ8 R	R
	Y	ϕ8 Y	
	G	ϕ8 G	
8B	P	ϕ8 R	R
	Y	ϕ8 Y	
	G	ϕ8 G	

CALCULATED BRH
CHECKED JSL

TRAFFIC SIGNAL PLAN DETAILS
S.R. 209 & WALMART ENTRANCE

D05-FY2017-
SIGNAL UPGRADE

s:\Projects\D05\95383\Design\Signals\Sheets\95383_CD030.dgn 22-FEB-2017 2:37PM jlu121

REF NO.	SHEET NO.	LOCATION	625 CONNECTION, FUSED PULL APART (EACH)	625 CONNECTION, UNFUSED PERMANENT (EACH)	625 BRACKET ARM, 15', AS PER PLAN (EACH)	625 CONDUIT, 3", 725.05 (FT)	625 CONDUIT, JACKED OR DRILLED, 725.04, 3" (FT)	625 LUMINAIRE, CONVENTIONAL, SOLID STATE (LED), AS PER PLAN (150W, 120V, TYPE II) (EACH)	625 TRENCH, 24" DEEP (FT)	625 PULL BOX, 725.08, 24" (EACH)	625 GROUND ROD (EACH)	632 VEHICULAR SIGNAL HEAD, (LED), 3-SECTION, 12" LENS, 1-WAY, POLYCARBONATE, AS PER PLAN (EACH)	632 VEHICULAR SIGNAL HEAD, (LED), 5-SECTION, 12" LENS, 1-WAY, POLYCARBONATE, AS PER PLAN (EACH)	632 COVERING OF VEHICULAR SIGNAL HEAD (EACH)	632 SIGNAL CABLE, 7 CONDUCTOR, NO. 14 AWG (FT)	632 SIGNAL SUPPORT FOUNDATION (EACH)	632 POWER CABLE, 3 CONDUCTOR, NO. 8 AWG. (FT)	632 POWER SERVICE, AS PER PLAN (EACH)	632 COMBINATION SIGNAL SUPPORT, TYPE TC-12.30 DESIGN 7 POLE, WITH MAST ARMS TC-81.21 DESIGN 13 AND DESIGN 3, AS PER PLAN (EACH)	632 COMBINATION SIGNAL SUPPORT, TYPE TC-81.21 DESIGN 4 POLE, WITH MAST ARMS TC-81.21 DESIGN 3 AND DESIGN 3, AS PER PLAN (EACH)	632 REMOVAL OF TRAFFIC SIGNAL INSTALLATION, AS PER PLAN (EACH)	633 CABINET FOUNDATION (EACH)	633 CONTROLLER WORK PAD, AS PER PLAN (EACH)	633 UNINTERRUPTIBLE POWER SUPPLY (UPS), 1000 WATT, AS PER PLAN (EACH)	633 CONTROLLER ITEM, MISC.: CONTROLLER UNIT, TYPE 2070E, WITH CABINET, TYPE 332 (EACH)	809 ADVANCE RADAR DETECTION (EACH)	809 STOP-BAR RADAR DETECTION (EACH)
		S.R. 229 & EDGEWOOD DR.																			1						
C-1	71	GROUND MOUNTED CABINET									1											1	1	1	1		
PS-1	71	POWER SERVICE															1										
P-1	71	SIGNAL SUPPORT									1					1			1								
P-2	71	SIGNAL SUPPORT									1					1				1							
1	71	SIGNAL HEAD											1	1													
2	71	SIGNAL HEAD										1		1													
3	71	SIGNAL HEAD											1	1													
4	71	SIGNAL HEAD										1		1													
5	71	SIGNAL HEAD											1	1													
6	71	SIGNAL HEAD										1		1													
7	71	SIGNAL HEAD											1	1													
8	71	SIGNAL HEAD										1		1													
D-1	71	RADAR DETECTION																									1
D-2	71	RADAR DETECTION																								1	
D-3	71	RADAR DETECTION																									1
D-5	71	RADAR DETECTION																									1
D-6	71	RADAR DETECTION																								1	
D-7	71	RADAR DETECTION																									1
PB-1	71	PULL BOX								1																	
PB-2	71	PULL BOX								1																	
PB-3	71	PULL BOX								1																	
PB-4	71	PULL BOX								1																	
CONDUIT	71	PS-1 TO PB-3				12			12							17											
	71	PB-3 TO PB-2				25			25																		
	71	PB-2 TO PB-1					63																				
	71	PB-1 TO P-1				42			42																		
	71	PB-3 TO PB-4					75																				
	71	PB-4 TO P-2				15			15																		
SIGNAL CABLE	71	PB-1 TO 1,6													233												
	71	PB-1 TO 2,5													180												
	71	PB-1 TO 3,8													248												
	71	PB-1 TO 4,7													184												
LIGHTING	71	PS-1 TO PB-3		2												17											
	71	PB-3 TO PB-2		2		25										30											
	71	PB-2 TO PB-1		2			63									68											
	71	PB-1 TO P-1	2			42										47											
	71	P-1 TO L1			1			1								50											
	71	PB-3 TO PB-4		2			75									80											
	71	PB-4 TO P-2	2			15										20											
	71	P-2 TO L2			1			1								50											
TOTALS CARRIED TO SHEET 11			4	8	2	176	276	2	94	4	3	4	4	8	845	2	379	1	1	1	1	1	1	1	1	2	4

CALCULATED BRH
CHECKED JSL

TRAFFIC SIGNAL SUBSUMMARY
S.R. 229 & EDGEWOOD DR.

D05-FY2017-
SIGNAL UPGRADE

I:\Projects\D0\D05\95383\Design\Signals\Sheets\95383_CS01.dgn 27-FEB-2017 3:57PM Jul 21

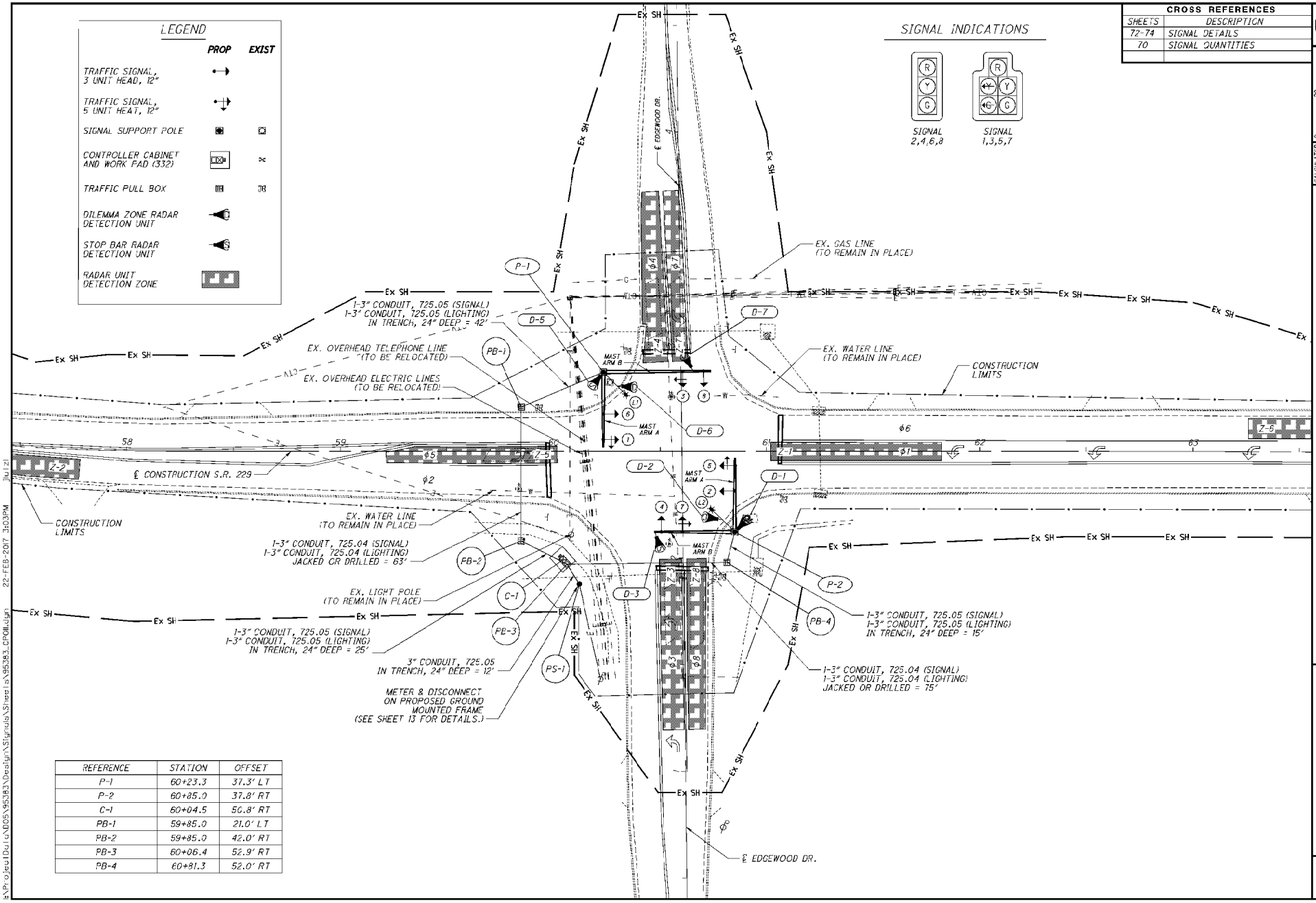

REFERENCE	STATION	OFFSET
P-1	60+23.3	37.3' LT
P-2	60+85.0	37.8' RT
C-1	60+04.5	50.8' RT
PB-1	59+85.0	21.0' LT
PB-2	59+85.0	42.0' RT
PB-3	60+06.4	52.9' RT
PB-4	60+81.3	52.0' RT

CROSS REFERENCES	
SHEETS	DESCRIPTION
72-74	SIGNAL DETAILS
70	SIGNAL QUANTITIES

HORIZONTAL SCALE IN FEET 0 10 20 40

CALCULATED BRH
CHECKED JSL

TRAFFIC SIGNAL PLAN
S.R. 229 & EDGEWOOD DR.

D05-FY2017-
SIGNAL UPGRADE

s:\Projects\D05\95383\Design\Signals\Sheets\95383_CP01.dgn 22-FEB-2017 3:03PM JULIZ

SIGNAL TIMING CHART

INTERSECTION: S.R. 229 & Edgewood Dr. MAINTAINING AGENCY: ODOT										
START UP			DUAL ENTRY: ϕ2 & ϕ6							
START IN		Y/R FLASH								
TIME FOR FLASH OR ALL RED		5 (SEC.)								
FIRST PHASES		2 & 6	OVERLAP				A	B	C	D
COLOR DISPLAYED		GREEN	PHASE							
INTERVAL OR FEATURE			ϕ1	ϕ2	ϕ3	ϕ4	ϕ5	ϕ6	ϕ7	ϕ8
INTERSECTION MOVEMENT		(SEC)	WBLT	EB	NBLT	SB	EBLT	WB	SBLT	NB
MINIMUM GREEN (INITIAL)		(SEC)	7.0	15.0	7.0	12.0	7.0	15.0	7.0	12.0
ADDED INITIAL		(SEC/ACTUATION)								
MAXIMUM INITIAL		(SEC)								
PASSAGE TIME		(SEC)	2.0	3.0	2.0	2.0	2.0	3.0	2.0	2.0
TIME BEFORE REDUCTION		(SEC)								
MINIMUM CAP		(SEC)								
TIME TO PEDUCE		(SEC)								
MAXIMUM GREEN I		(SEC)	15.0	38.0	15.0	36.0	15.0	38.0	15.0	36.0
MAXIMUM GREEN II		(SEC)								
YELLOW CHANGE		(SEC)	4.5	4.5	4.0	4.0	4.5	4.5	4.0	4.0
ALL RED CLEARANCE		(SEC)	1.5	1.5	1.5	1.5	1.5	1.5	1.5	1.5
WALK		(SEC)								
PEDESTRIAN CLEARANCE		(SEC)								
RECALL	MAXIMUM	(ON/OFF)								
	MINIMUM	(ON/OFF)								
	PEDESTRIAN	(ON/OFF)								
MEMORY		(ON/OFF)								

PHASING DIAGRAM

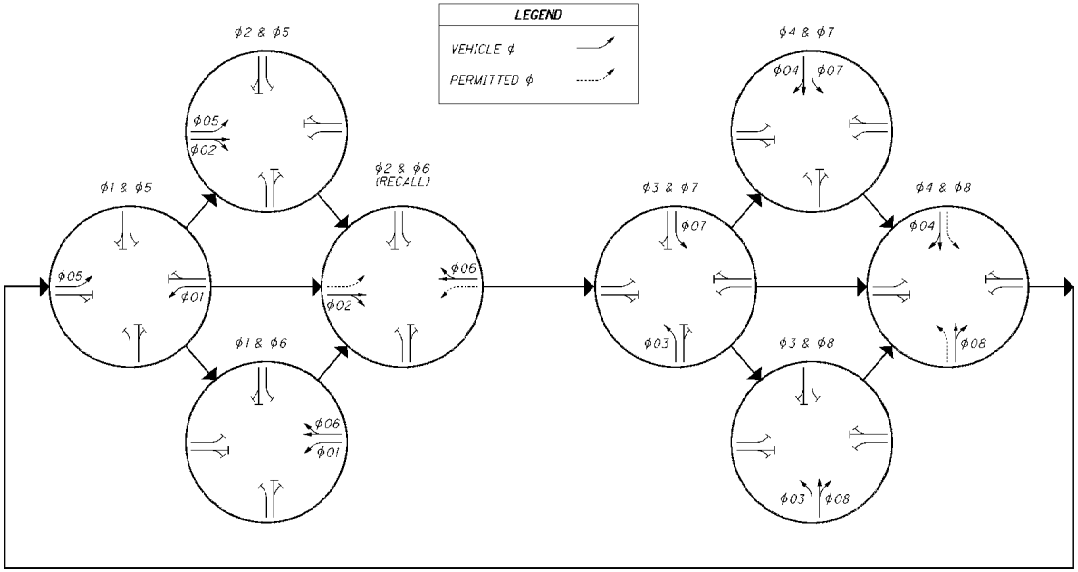

NOTES:

- ALL MOVEMENTS SHALL BE ACTUATED. THE PRIMARY THRU MOVEMENT SHOULD HAVE MIN RECALL ACTIVE TO REST IN GREEN.
- FOR PROTECTED/PERMISSIVE PHASES, IMPLEMENT CALL OMITS TO AVOID YELLOW BALL TRAP.
- ENABLE ϕ3 & ϕ7 DETECTOR SWITCHING TO ALLOW ϕ3 & ϕ7 TO EXTEND ϕ4 & ϕ8 WHEN ALLOCATED GREEN TIME FOR LEFT TURN PHASES ARE EXHAUSTED.
- ENABLE DETECTOR SWITCHING TO EXTEND ϕ4 & ϕ8 WITH ϕ3 & ϕ7 LOOPS ONCE LEFT TURN PHASES ARE EXHAUSTED.
- RADAR DETECTION UNITS FOR DILEMMA ZONE DETECTION SHALL PLACE A CONSTANT CALL TO THE CONTROLLER WHEN VEHICLES TRAVEL TIMES TO THE STOP BAR ARE BETWEEN 2.5 AND 6 SECONDS. SPEED TRIGGER SHALL BE SET FOR VEHICLES TRAVELING 35 MPH AND GREATER.
- RADAR SHALL HAVE QUEUE DETECTION CONFIGURED AND A ZONE PLACED AT 100-200 FEET FROM STOP BAR FOR SLOW MOVING VEHICLE EXTENSIONS. SPEED TRIGGER SHALL BE SET AT 1-35 MPH.
- ALL DETECTOR DELAYS SHALL BE PLACED IN THE CONTROLLER.

RADAR DETECTION CHART

RADAR DETECTION UNIT	RADAR DETECTION ZONE	RADAR TYPE	DELAY (SEC.)	MIN. EXTENSION (SEC.)	ASSOCIATED CONTROLLER PHASE
D-1	Z-1	STOP BAR			ϕ1
D-2	Z-2	DILEMMA		2.0-7.5	ϕ2
D-3	Z-3	STOP BAR			ϕ3
D-4	Z-4	STOP BAR	8		ϕ4
D-5	Z-5	STOP BAR			ϕ5
D-6	Z-6	DILEMMA		2.0-7.5	ϕ6
D-7	Z-7	STOP BAR			ϕ7
D-8	Z-8	STOP BAR	8		ϕ8

CALCULATED BRH
CHECKED JSL

TRAFFIC SIGNAL PLAN DETAILS
S.R. 229 & EDGEWOOD DR.

D05-FY2017-
SIGNAL UPGRADE

I:\Projects\Dallas\D05\95383\Design\Signals\Sheets\95383_D003.dgn 22-FEB-2017 2:38PM jlulzi

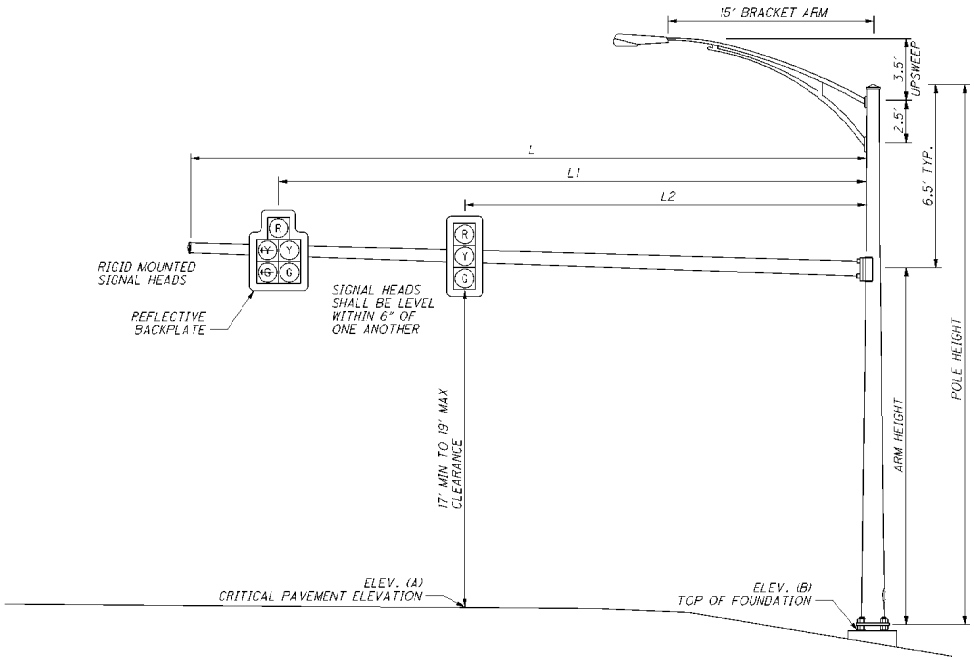

SIGNAL SUPPORT ELEVATION

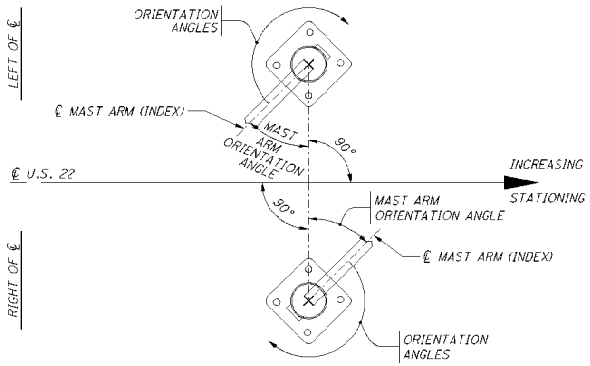

POLE ORIENTATION

MAST ARM TABLE

SUPPORT NO.	STATION	OFFSET	ELEVATION		SIGNAL SUPPORT DETAILS										ORIENTATION ANGLES FROM MAST ARM				
			A	B	DESIGN TYPE	DESIGN NO.	MAST ARM DESIGN NO.	POLE HEIGHT	ARM HEIGHT	L	L1	L2	MAST ARM A ANGLE	MAST ARM B ANGLE	BRACKET ARM	POWER SERVICE	CONTROLLER	HANDHOLE	CABLE ENTRANCE 12" FROM TOP
								FT	FT	FT	FT	FT	DEG	DEG	DEG	DEG	DEG	DEG	DEG
P-1A	60+23.3	37.3' LT	1021.4	1021.2	TC-12.30	7	3	27	20.5	33.5	30.1	18.1	0		315			135	315
P-1B			1022.4				13		20.5	49	45.8	35.8		90					
P-2A	60+85.0	37.8' RT	1023.6	1022.7	TC-81.21	12	3	27	20.5	33	29.7	17.7	0		315			135	315
P-2B			1022.3				3		20.5	36	33.0	23.0		90					

CALCULATED BRH
CHECKED JSL

TRAFFIC SIGNAL PLAN DETAILS
S.R. 229 & EDGEWOOD DR.

D05-FY2017-
SIGNAL UPGRADE

I:\Projects\D05\95383\Design\Signals\Sheets\95383_CD032.dgn 22-FEB-2017 2:58PM jlu121

WIRING DIAGRAM (TYPICAL)

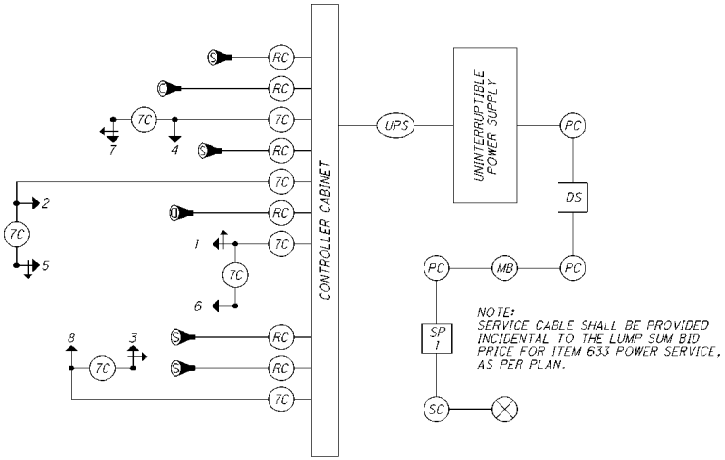

WIRING DIAGRAM LEGEND

- 3 SECTION VEHICULAR SIGNAL HEAD, 1-WAY
- 5 SECTION VEHICULAR SIGNAL HEAD, 1-WAY
- DILEMMA ZONE RADAR DETECTION UNIT
- STOP BAR RADAR DETECTION UNIT
- POWER SOURCE
- 7C — SIGNAL CABLE, 7 CONDUCTOR, NO. 14 AWG
- RC — RADAR DETECTION CABLE
- SC — SERVICE CABLE, 3 CONDUCTOR, NO. 8 AWG
- PC — POWER CABLE, 3 CONDUCTOR, NO. 8 AWG
- SP 1 — EXISTING POWER POLE
- MB — METER BASE
- DS — SIGNAL DISCONNECT SWITCH
- UPS — UNINTERRUPTIBLE POWER SUPPLY CABLE

FIELD WIRING HOOK-UP CHART

SIGNAL HEAD	INDICATION	FIELD TERMINAL	FLASH
1	R	ϕ1 R	Y
	Y	ϕ1 Y	
	G	ϕ1 G	
	<--Y---	ϕ1 Y	
	<--R---	ϕ1 G	
2	R	ϕ2 R	Y
	Y	ϕ2 Y	
	G	ϕ2 G	
3	R	ϕ3 R	R
	Y	ϕ3 Y	
	G	ϕ3 G	
	<--Y---	ϕ3 Y	
	<--R---	ϕ3 G	
4	R	ϕ4 R	R
	Y	ϕ4 Y	
	G	ϕ4 G	
5	R	ϕ5 R	Y
	Y	ϕ5 Y	
	G	ϕ5 G	
	<--Y---	ϕ5 Y	
	<--R---	ϕ5 G	
6	R	ϕ6 R	Y
	Y	ϕ6 Y	
	G	ϕ6 G	
7	R	ϕ7 R	R
	Y	ϕ7 Y	
	G	ϕ7 G	
	<--Y---	ϕ7 Y	
	<--R---	ϕ7 G	
8	R	ϕ8 R	R
	Y	ϕ8 Y	
	G	ϕ8 G	

CALCULATED BRH
CHECKED JSL

TRAFFIC SIGNAL PLAN DETAILS
S.R. 229 & EDGEWOOD DR.

D05-FY2017-
SIGNAL UPGRADE

s:\Projects\D05\95383\Design\Signals\Sheets\95383_CD033.dgn 22-FEB-2017 2:38PM jlu121

STATE OF OHIO
DEPARTMENT OF TRANSPORTATION

RIGHT OF WAY LEGEND SHEET

D05-FY2017-SIGNAL UPGRADE

U.S. 22 & PINKERTON RD.

SECTION 2, T15N, R14W, NEWTON TOWNSHIP MUSKINGUM COUNTY

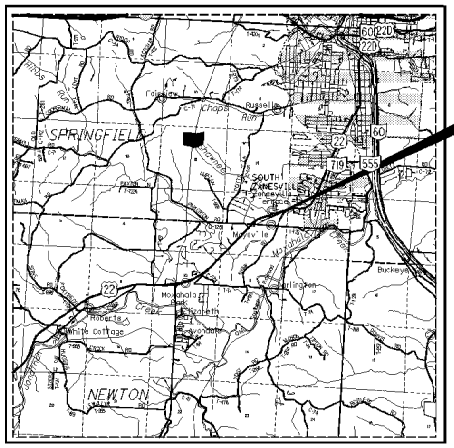

SCALE IN MILES
0 1 2 3 4

NOTE:
THE LOCATION OF THE UNDERGROUND UTILITES SHOWN ON THE PLANS ARE OBTAINED FROM THE OWNER OF THE UTILITIES AS REQUIRED BY SECTION 153.64 O.R.C.

PROJECT DESCRIPTION

DISTRICT WIDE SIGNAL UPGRADE TO ADD BACKPLATES, UPS & OTHER UPGRADES TO REACH CURRENT STANDARDS.

PROJECT CONTROL

NORTH AMERICAN VERTICAL DATUM (NAVD 88)
OHIO STATE PLANE GRID COORDINATE SYSTEM, SOUTH ZONE, GRID COORDINATES, NAD 83 (CONUS), GEOID 12A (OHIO).

PLAN PREPARED BY:

FIRM NAME: ODOT, DISTRICT 5
PLANS PREPARED BY: CANDY SHOEMAKER
FIELD REVIEW BY: CHARLES PRICE, JR. & CANDY SHOEMAKER
OWNERSHIP VERIFIED BY: CHARLES PRICE, JR.
DATE COMPLETED: 11/09/15

UNDERGROUND UTILITIES

CONTACT BOTH SERVICES
CALL TWO WORKING DAYS
BEFORE YOU DIG

CALL
1-800-362-2764
(TOLL FREE)

OHIO UTILITIES PROTECTION SERVICE
NON-MEMBERS
MUST BE CALLED DIRECTLY

OIL & GAS PRODUCERS PROTECTIVE SERVICE CALL: 1-800-925-0988

INDEX OF SHEETS:

PROPERTY MAP & SUMMARY OF ADDITIONAL RIGHT OF WAY. . 2
DETAIL SHEET 3

UTILITY OWNERS

LISTED BELOW ARE ALL UTILITIES LOCATED WITHIN THE PROJECT CONSTRUCTION LIMITS TOGETHER WITH THEIR RESPECTIVE OWNERS:

AT&T OHIO
160 NORTH SIXTH STREET
ZANESVILLE, OHIO 43701
ATTN: BARRETT TAMASOVICH
740-454-3552

TIME WARNER CABLE
4547 NORTH LEEDOM ROAD
CHANDLERSVILLE, OHIO 43727
ATTN: BRAD ST. CLAIR
740-303-3100

AEP DISTRIBUTION
850 TECH CENTER DRIVE
GAHANNA, OHIO 43230
ATTN: PAUL PAXTON
614-883-6831

COLUMBIA GAS OF OHIO
2429 LINDEN AVE.
P.O. BOX 310
ZANESVILLE, OHIO 43702
ATTN: DAN SHONK
740-450-1208

MUSKINGUM COUNTY WATER AND SEWER
375 RICHARDS ROAD
ZANESVILLE, OHIO 43701
ATTN: DON MADDEN
740-453-0678

STRUCTURE KEY

RESIDENTIAL
COMMERCIAL
OUT-BUILDING

LEGEND:
SH = STANDARD HIGHWAY EASEMENT
SL = SLOPE EASEMENT
T = TEMPORARY EASEMENT
CH = CHANNEL EASEMENT

CONVENTIONAL SYMBOLS

County Line
Township Line
Section Line
Corporation Line or
Fence Line (Ex) (Pr)
Center Line
Right of Way (Ex) Ex R/W
Right of Way (Pr) R/W
Standard Highway Ease.(Ex) Ex SH
Standard Highway Ease.(Pr) SH
Slope Ease.(Ex) Ex SL
Slope Ease.(Pr) SL
Temporary Right of Way TMP
Channel Ease. (Pr) CH
Utility Ease. (Ex) Ex U
Railroad or
Guardrail (Ex) (Pr)
Construction Limits
Edge of Pavement (Ex)
Edge of Pavement (Pr)
Edge of Shoulder (Ex)
Edge of Shoulder (Pr)
Ditch / Creek (Ex)
Ditch / Creek (Pr)
Tree Line (Ex)
Ownership Hook Symbol , Example
Property Line Symbol , Example
Break Line Symbol , Example
Tree (Pr) , Tree (Ex) , Shrub (Ex)
Tree (Remove) , Shrub (Remove)
Evergreen (Ex) , Stump
Evergreen (Remove) , Stump (Remove)
Wetland (Pr) , Grass (Pr) , Aerial Target
Post (Ex) , Mailbox (Ex) , Mailbox (Pr)
Light (Ex) , Telephone Marker (Ex) TEL
Fire Hydrant (Ex) , Water Meter (Ex)
Water Valve (Ex) , Utility Valve Unknown (Ex)
Telephone Pole (Ex) , Power Pole (Ex)
Light Pole (Ex)

I, Charles W. Price, Jr., P. S. have conducted a survey of the existing conditions for the Ohio Department of Transportation in May, 2015. The results of that survey are contained herein.

Underground utility locations are shown for informational purposes only. Though they are believed to be accurate, their location is as marked on the ground by the utility company per OUPS Confirmation Number A512604092 & OGPUFS #119752 & #119779 and those markings subsequently being surveyed as a part of this project.

The horizontal coordinates expressed herein are based on North American Vertical Datum (NAVD 88) Ohio State Plane Grid Coordinate System, South Zone, Grid Coordinates, NAD 83 (Conus), Geoid 12A (Ohio).

As a part of this project I have reestablished the locations of the existing property lines and centerline of existing Right of Way for property takes contained herein.

As a part of this project I have established the proposed property lines, calculated the Gross Take, present roadway occupied (PRO), Net Take and Net Residue; as well as prepared the legal descriptions necessary to acquire the parcels as shown herein.

As a part of this work I have set monuments at the proposed property corners, and other points shown herein. The iron pins and caps will be 3/4" x 30" rebar with aluminum cap stamped "Odot R/W District 5". All of my work contained herein was conducted in accordance with Ohio Administrative Code 4733-37 commonly known as "A Minimum Standards for Boundary Surveys in the State of Ohio" unless so noted.

The words I and my as used herein are to mean that either myself or someone working under my direct supervision.

Charles W. Price, Jr., Professional Land Surveyor # 7825

Date: 11/09/15

SURVEYORS SEAL
STATE OF OHIO
CHARLES W. PRICE, JR.
S-7825
REGISTERED
PROFESSIONAL SURVEYOR
SIGNED:
DATE: 11/09/15

FEDERAL PROJECT NO. 0
PID NO. 95383
CALCULATED CS
CHECKED CP

RIGHT OF WAY LEGEND SHEET

D05-FY2017-SIGNAL UPGRADE

1/3

75/83

\\Project\Data\D05\95383\Design\RW\Sheets\95383_RL001.dgn 23-FEB-2017 12:31PM jlulz1

U.S. 22 & PINKERTON RD.
SECTION 2, T15N, R14W,
NEWTON TOWNSHIP
MUSKINGUM COUNTY

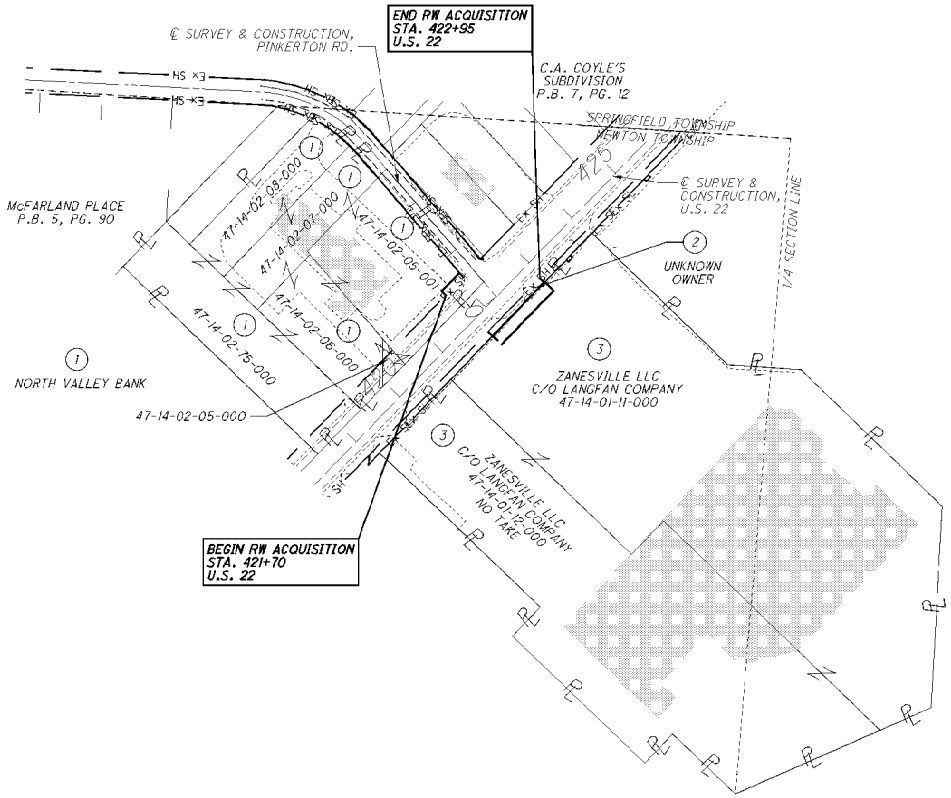

STRUCTURE KEY

- RESIDENTIAL
- COMMERCIAL
- OUT-BUILDING

REV. BY	DATE	DESCRIPTION
CS	10/27/16	ADDED PARCEL 3-T
CS	08/08/16	ADDED PARCELS 2 & 3

FIELD REVIEW BY: CS & CP
OWNERSHIP VERIFIED BY: CP
DATE COMPLETED: 11/09/15

TOTAL NUMBER OF :

3 OWNERSHIPS — 0 TOTAL TAKES
2 PARCELS — 0 OWNERSHIPS W/ STRUCTURES INVOLVED

RECORD AREA - TOTAL PRO - NET TAKE = NET RESIDUE

ALL AREAS IN ACRES

GRANTEE:

ALL RIGHT OF WAY ACQUIRED IN THE NAME OF THE STATE OF OHIO UNLESS OTHERWISE SHOWN.

* DENOTES RIGHT OF WAY ENCROACHMENT
** SURVEYED AREA

PARCEL NO.	OWNER	OWNERS RECORD DEED BOOK & PG.	AUDITOR'S PARCEL	RECORD AREA	TOTAL P.R.O.	GROSS TAKE	P.R.O. IN TAKE	NET TAKE	STRUCTURE	NET RESIDUE LEFT	NET RESIDUE RIGHT	TYPE FUND	REMARKS	AS ACQUIRED DEED BOOK & PG.
												STATE		
1-SH	NORTH VALLEY BANK	DV 1150 PG. 559	47-14-02-05-001	1.012	0.221	0.008	0.000	0.008	NO	0.783				
		DV 1157 PG. 265	47-14-02-05-000	0.27									NO RW REQUIRED	
		DV 1157 PG. 265	47-14-02-06-000	0.61									NO RW REQUIRED	
		DV 1157 PG. 265	47-14-02-07-000	0.55									NO RW REQUIRED	
		DV 1128 PG. 523	47-14-02-08-000	0.67									NO RW REQUIRED	
2-SH	UNKNOWN OWNER	UNKNOWN	UNKNOWN	6.41	0.000	0.028	0.000	0.028	NO		6.382			
3-T	ZANESVILLE LLC C/O LANGFAN COMPANY	DV 1156 PG. 442	47-14-01-11-000	6.41		0.055	0.000	0.055	NO				AREA FOR BORING MACHINE	
		DV 1155 PG. 175	47-14-01-12-000	4.33								STATE	NO RW REQUIRED	

NOTE: ALL TEMPORARY PARCELS TO BE OF 12 MONTH DURATION.

RW DESIGNER CS
RW REVIEWER CP

HORIZONTAL SCALE IN FEET 0 50 100 200

PROPERTY MAP & SUMMARY OF ADDITIONAL RIGHT OF WAY

PID NO. 95383

D05-FY2017-
SIGNAL UPGRADE

2 / 3

76 / 83

23-FEB-2017 12:31PM

I:\Projec\Coln\D05\95383\Design\RW\Sheets\95383_RW001.dgn

U.S. 22 & PINKERTON RD.
SECTION 2, T15N, R14W,
NEWTON TOWNSHIP
MUSKINGUM COUNTY

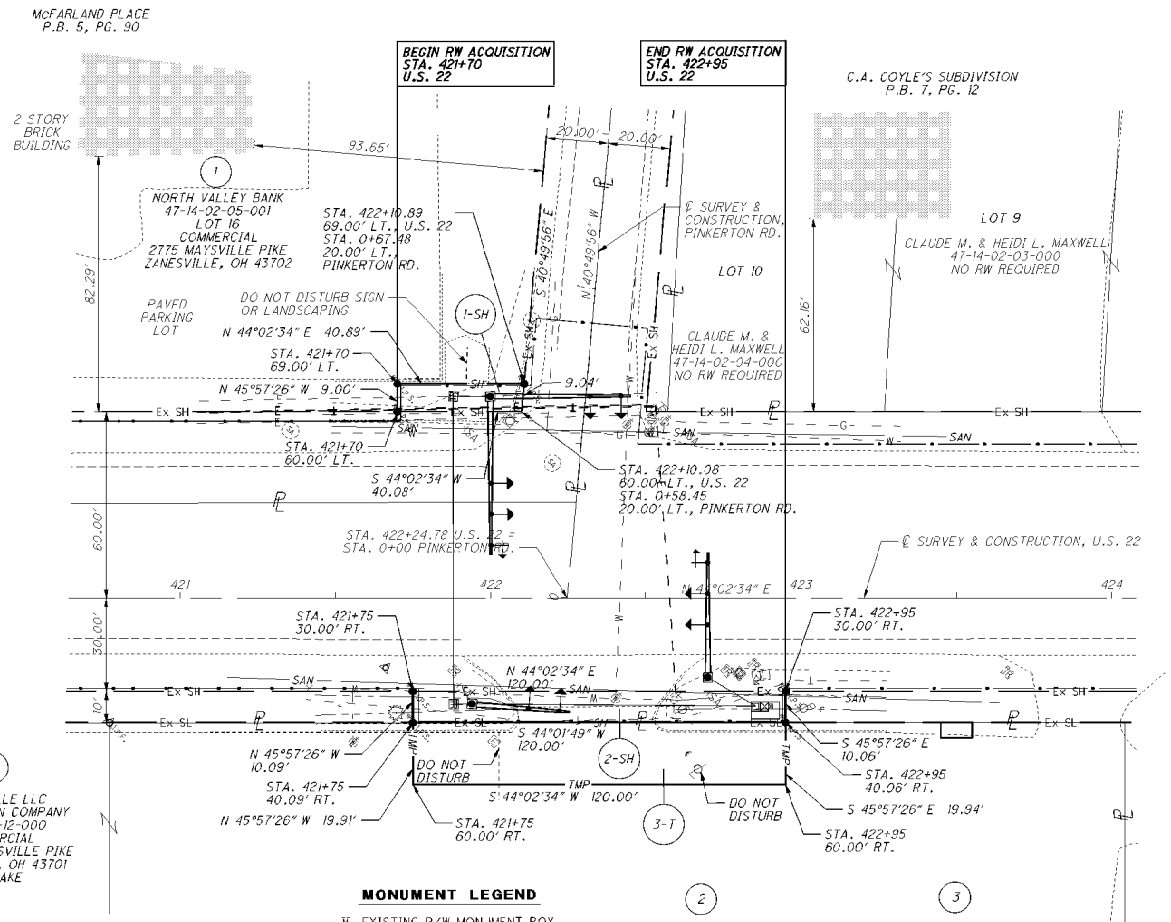

NOTE:
THE EXISTING RIGHT OF WAY WIDTH AND LOCATION WERE DETERMINED USING DOCUMENTATION ON FILE FROM THE OHIO DEPARTMENT OF TRANSPORTATION, DISTRICT 5 OFFICE, JACKSONTOWN, OHIO.

MUS-22-3.26-8.12
MUS-22-8.12

CO. RD. AND TWP RD. RIGHT OF WAY DETERMINED FROM THE MUSKINGUM COUNTY ENGINEERS OFFICE MUSKINGUM COUNTY, OHIO

NOTES:
ALL EXISTING FENCE LOCATED INSIDE OF PROPOSED RIGHT OF WAY IS TO BE REMOVED.

THE DISPOSITION OF EXISTING CONSTRUCTION ITEMS WITHIN WORK LIMITS ARE SHOWN ON THE CONSTRUCTION PLANS.

NOTE:
ALL STATIONS AND OFFSETS ARE FROM THE CENTERLINE OF SURVEY AND CONSTRUCTION, U.S. 22 UNLESS OTHERWISE STATED.

MONUMENT LEGEND

- EXISTING R/W MONUMENT BOX
- PROPOSED R/W MONUMENT BOX
- EXISTING CONCRETE MONUMENT
- PROPOSED CONCRETE MONUMENT
- RAILROAD SPIKE FOUND
- RAILROAD SPIKE SET
- IRON PIN FOUND
- IRON PIN FOUND W/ ID CAP
- IRON PIN SET W/ ID CAP
- IRON PIPE FOUND
- IRON PIPE SET
- P.K. NAIL FOUND
- P.K. NAIL SET

REV	DATE	DESCRIPTION
CS	10/27/16	ADDED PARCEL 3-T
CS	08/08/16	ADDED PARCELS 2 & 3

COMPLETION DATE: 11/09/15

HORIZONTAL SCALE IN FEET 0 10 20 40

PID NO. 95383

R/W DESIGNER CS
R/W REVIEWER CP

RIGHT OF WAY DETAIL SHEET
22 & PINKERTON RD

D05-FY2017-
SIGNAL UPGRADE

3 / 3

77 / 83

I:\Project\Gold\D05\95383\Design\RW\Sheets\95383_RC001.dgn 23-FEB-2017 12:31PM jlulz1

STATE OF OHIO
DEPARTMENT OF TRANSPORTATION

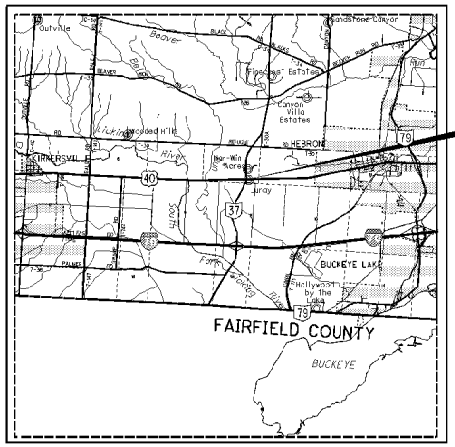

RIGHT OF WAY LEGEND SHEET

D05-FY2017-SIGNAL UPGRADE

S.R. 37 & U.S. 40

SECTION 4, T17N, R18W, REFUGEE LANDS
UNION TOWNSHIP
LICKING COUNTY

PROJECT DESCRIPTION

DISTRICT WIDE SIGNAL UPGRADE TO ADD BACKPLATES, UPS & OTHER UPGRADES TO REACH CURRENT STANDARDS.

PROJECT CONTROL

NORTH AMERICAN VERTICAL DATUM (NAVD 88)
OHIO STATE PLANE GRID COORDINATE SYSTEM, SOUTH ZONE, GRID COORDINATES, NAD 1983 (CONUS), GEOID 12A (OHIO).

PLAN PREPARED BY:

FIRM NAME: ODOT, DISTRICT 5
PLANS PREPARED BY: CANDY SHOEMAKER
FIELD REVIEW BY: CHARLES PRICE, JR. & CANDY SHOEMAKER
OWNERSHIP VERIFIED BY: CHARLES PRICE, JR.
DATE COMPLETED: 11/09/15

UNDERGROUND UTILITIES

CONTACT BOTH SERVICES
CALL TWO WORKING DAYS
BEFORE YOU DIG

CALL
1-800-362-2764
(TOLL FREE)

OHIO UTILITIES PROTECTION SERVICE
NON-MEMBERS
MUST BE CALLED DIRECTLY

OIL & GAS PRODUCERS PROTECTIVE SERVICE CALL: 1-800-925-0988

SCALE IN MILES
0 1 2 3 4

NOTE:
THE LOCATION OF THE UNDERGROUND UTILITES SHOWN ON THE PLANS ARE OBTAINED FROM THE OWNER OF THE UTILITIES AS REQUIRED BY SECTION 153.64 O.R.C.

INDEX OF SHEETS:

PROPERTY MAP & SUMMARY OF ADDITIONAL RIGHT OF WAY . . 2
DETAIL SHEET 3

UTILITY OWNERS

LISTED BELOW ARE ALL UTILITIES LOCATED WITHIN THE PROJECT CONSTRUCTION LIMITS TOGETHER WITH THEIR RESPECTIVE OWNERS:

TIME WARNER CABLE
3760 INTERCHANGE DRIVE
COLUMBUS, OHIO 43204
ATTN: RAY MAURER
614-481-5262

CENTURYLINK TELEPHONE
441 WEST BROAD STREET
PATASKALA, OHIO 43062
ATTN: DEE REED
740-927-8282

AEP DISTRIBUTION
850 TECH CENTER DRIVE
GAHANNA, OHIO 43230
ATTN: PAUL PAXTON
614-883-6831

STRUCTURE KEY

- RESIDENTIAL
- COMMERCIAL
- OUT-BUILDING

LEGEND:
SH = STANDARD HIGHWAY EASEMENT
SL = SLOPE EASEMENT
T = TEMPORARY EASEMENT
CH = CHANNEL EASEMENT

I, Charles W. Price, Jr., P. S. have conducted a survey of the existing conditions for the Ohio Department of Transportation in September, 2012. The results of that survey are contained herein.

Underground utility locations are shown for informational purposes only. Though they are believed to be accurate, their location is as marked on the ground by the utility company per OUPS Confirmation Number A226102045 & OGPUPS #98726 and those markings subsequently being surveyed as a part of this project.

The horizontal coordinates expressed herein are based on North American Vertical Datum (NAVD 88) Ohio State Plane Grid Coordinate System, South Zone, Grid Coordinates, NAD 83 (Conus), Geoid 12A (Ohio).

As a part of this project I have reestablished the locations of the existing property lines and centerline of existing Right of Way for property takes contained herein.

As a part of this project I have established the proposed property lines, calculated the Gross Take, present roadway occupied (PRO), Net Take and Net Residue; as well as prepared the legal descriptions necessary to acquire the parcels as shown herein.

As a part of this work I have set monuments at the proposed property corners, and other points shown herein. The iron pins and caps will be 3/4" x 30" rebar with aluminum cap stamped "Odot R/W District 5". All of my work contained herein was conducted in accordance with Ohio Administrative Code 4733-37 commonly known as "A Minimum Standards for Boundary Surveys in the State of Ohio" unless so noted.

The words I and my as used herein are to mean that either myself or someone working under my direct supervision.

Charles W. Price, Jr., Professional Land Surveyor # 7825

Date: 11/09/15

SURVEYORS SEAL

STATE OF OHIO
CHARLES W. PRICE, JR.
S-7825
REGISTERED
PROFESSIONAL SURVEYOR

SIGNED:
DATE: 11/09/15

CONVENTIONAL SYMBOLS

County Line
Township Line
Section Line
Corporation Line
Fence Line (Ex) (Pr)
Center Line
Right of Way (Ex) Ex R/W
Right of Way (Pr) R/W
Standard Highway Ease.(Ex) Ex SH
Standard Highway Ease.(Pr) SH
Slope Ease.(Ex) Ex SL
Slope Ease.(Pr) SL
Temporary Right of Way TMP
Channel Ease. (Pr) CH
Utility Ease. (Ex) Ex U
Railroad
Guardrail (Ex) (Pr)
Construction Limits
Edge of Pavement (Ex)
Edge of Pavement (Pr)
Edge of Shoulder (Ex)
Edge of Shoulder (Pr)
Ditch / Creek (Ex)
Ditch / Creek (Pr)
Tree Line (Ex)
Ownership Hook Symbol, Example
Property Line Symbol, Example
Break Line Symbol, Example
Tree (Pr), Tree (Ex), Shrub (Ex)
Tree (Remove), Shrub (Remove)
Evergreen (Ex), Stump
Evergreen (Remove), Stump (Remove)
Wetland (Pr), Grass (Pr), Aerial Target
Post (Ex), Mailbox (Ex), Mailbox (Pr)
Light (Ex), Telephone Marker (Ex) TEL
Fire Hydrant (Ex), Water Meter (Ex)
Water Valve (Ex), Utility Valve Unknown (Ex.)
Telephone Pole (Ex), Power Pole (Ex)
Light Pole (Ex)

FEDERAL PROJECT NO.	PID NO.	CALCULATED	CHECKED
0	95383	CS	CP

RIGHT OF WAY LEGEND SHEET

D05-FY2017-SIGNAL UPGRADE

1/3

78/83

I:\Project\Data\D05\95383\Design\RW\Sheets\95383_RL002.dgn 23-FEB-2017 12:39PM Jul.1

S.R. 37 & U.S. 40
SECTION 4, T17N, R18W, REFUGEE LANDS
UNION TOWNSHIP
LICKING COUNTY

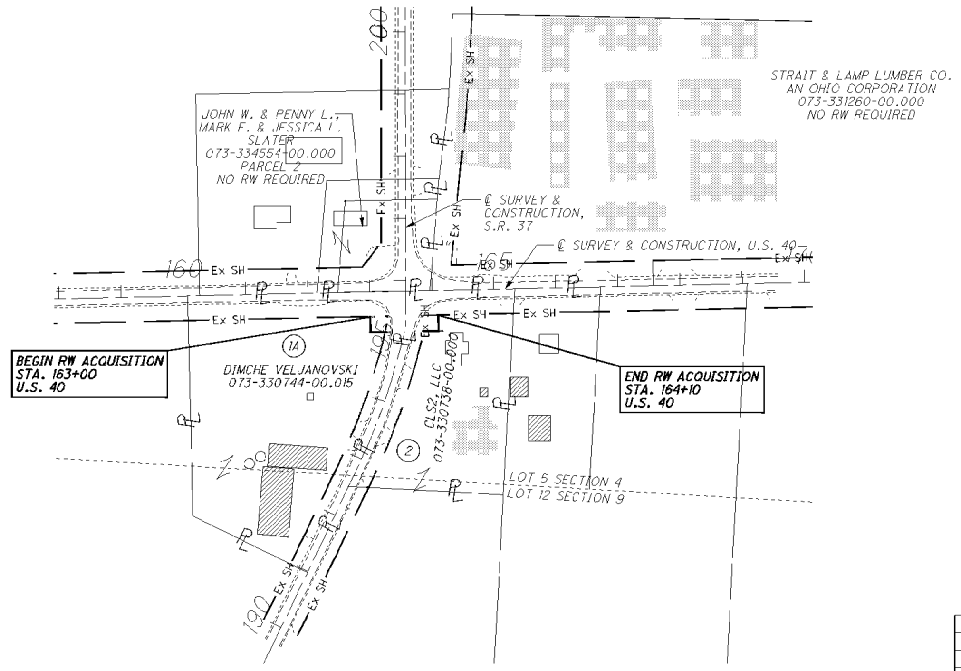

STRUCTURE KEY

- RESIDENTIAL
- COMMERCIAL
- OUT-BUILDING

REV. BY	DATE	DESCRIPTION

FIELD REVIEW BY: CS & CP
OWNERSHIP VERIFIED BY: CP
DATE COMPLETED: 11/09/15

TOTAL NUMBER OF :

2 OWNERSHIPS — 0 TOTAL TAKES
2 PARCELS — 0 OWNERSHIPS W/ STRUCTURES INVOLVED

RECORD AREA - TOTAL PRO - NET TAKE = NET RESIDUE

ALL AREAS IN ACRES

GRANTEE:

ALL RIGHT OF WAY ACQUIRED IN THE NAME OF THE STATE OF OHIO UNLESS OTHERWISE SHOWN.

* DENOTES RIGHT OF WAY ENCROACHMENT
** SURVEYED AREA

PARCEL NO.	OWNER	OWNERS RECORD DEED BOOK & PG.	AUDITOR'S PARCEL	RECORD AREA	TOTAL P.R.O.	GROSS TAKE	P.R.O. IN TAKE	NET TAKE	STRUCTURE	NET RESIDUE LEFT	NET RESIDUE RIGHT	TYPE FUND	REMARKS	AS ACQUIRED DEED BOOK & PG.
												STATE		
1-SH	DMS2, LLC SOLD TO PARCEL 1A	OR 1494 PG. 2966												
1A-SH	DIMCHE VELJANOVSKI	201508100016810	073-330744-00.015	2.77	0.524	0.015	0.000	0.015	NO		2.131			
2-SH	CLS2, LLC	OR 1494 PG. 2969	073-330738-00.000	1.40	0.361	0.013	0.000	0.013	NO		1.026			
												STATE		

NOTE: ALL TEMPORARY PARCELS TO BE OF 12 MONTH DURATION.

R/W DESIGNED: CS
R/W REVIEWER: CP

0 50 100 200 HORIZONTAL SCALE IN FEET

PROPERTY MAP & SUMMARY OF ADDITIONAL RIGHT OF WAY

PID NO. 95383

D05-FY2017-SIGNAL UPGRADE

2 / 3

79 / 83

I:\Project\Data\D05\95383\Design\RW\Sheets\95383_RM002.dgn 23-FEB-2017 12:31PM jluk1

S.R. 37 & U.S. 40
SECTION 4, T17N, R18W, REFUGEE LANDS
UNION TOWNSHIP
LICKING COUNTY

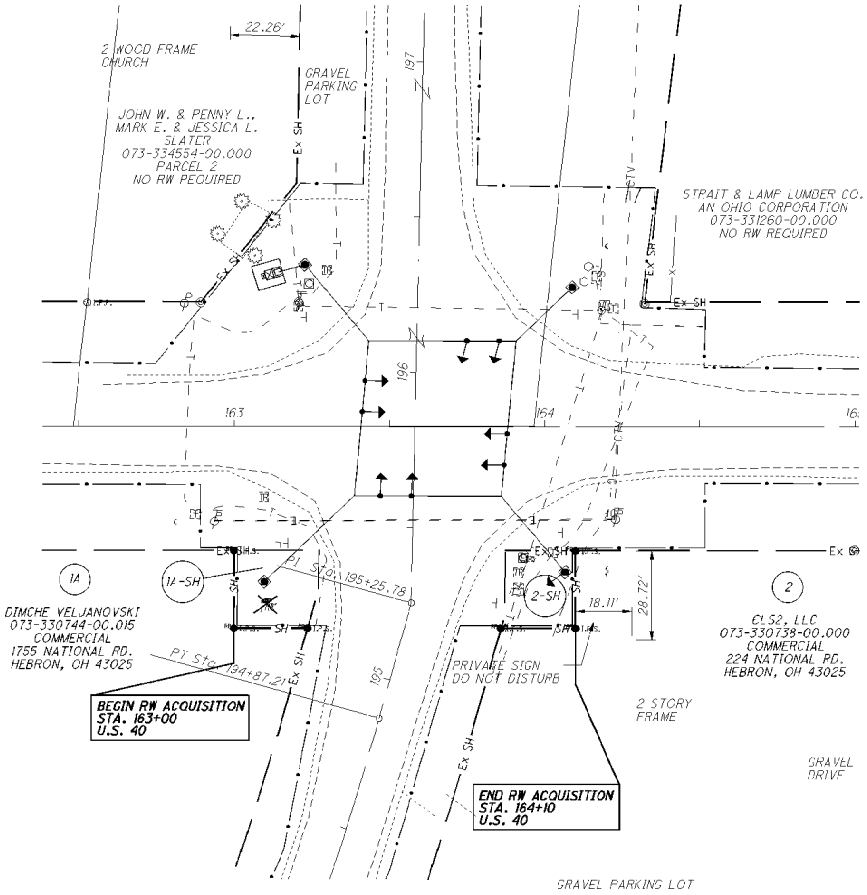

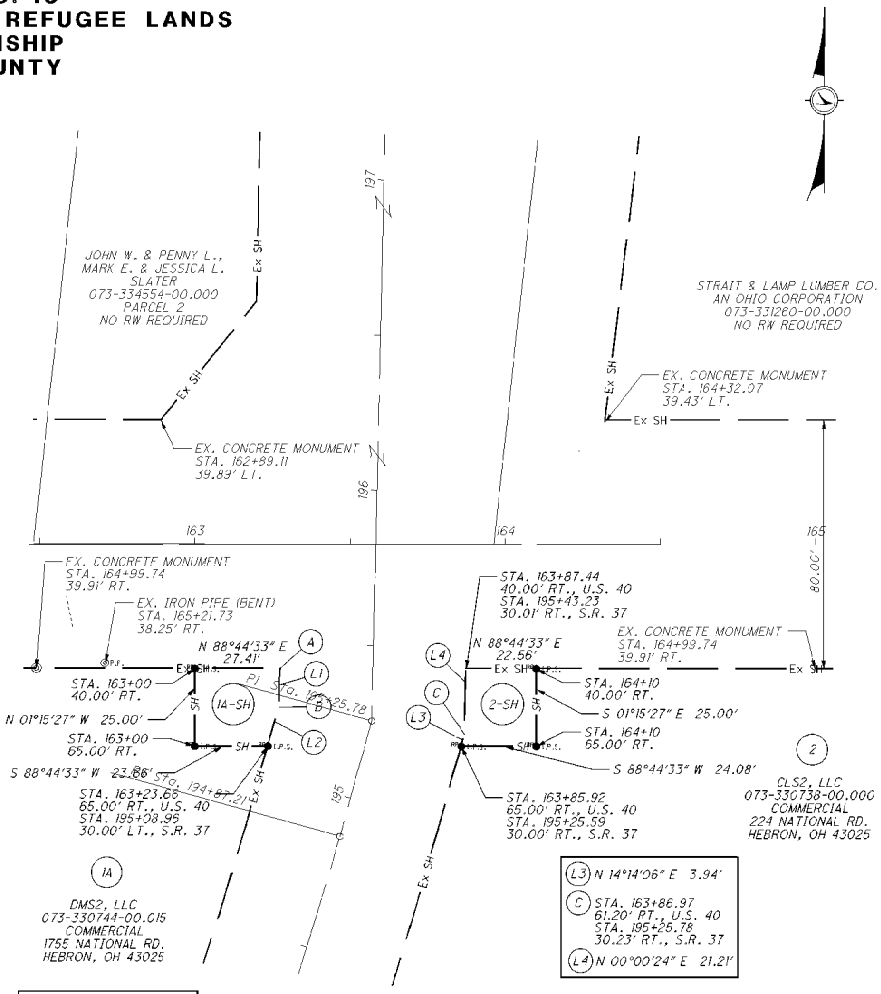

(A) STA. 163+27.41
40.00' RT., U.S. 40
STA. 195+41.95
30.00' LT., S.R. 37

(L1) S 00°01'55" E 12.41'

(B) STA. 163+27.15
52.41' RT., U.S. 40
STA. 195+22.03
30.00' LT., S.R. 37

(L2) S 14°14'06" W 13.06'

(L3) N 14°14'06" E 3.94'

(C) STA. 163+86.97
61.20' RT., U.S. 40
STA. 195+26.78
30.23' RT., S.R. 37

(L4) N 00°00'24" E 21.21'

MONUMENT LEGEND

- EXISTING R/W MONUMENT BOX
- PROPOSED R/W MONUMENT BOX
- EXISTING CONCRETE MONUMENT
- PROPOSED CONCRETE MONUMENT
- RAILROAD SPIKE FOUND
- RAILROAD SPIKE SET
- I.P.F. IRON PIN FOUND
- I.P.F. IRON PIN FOUND W/ ID CAP
- I.P.S. IRON PIN SET W/ ID CAP
- I.P.F. IRON PIPE FOUND
- I.P.S. IRON PIPE SET
- P.K. P.K. NAIL FOUND
- P.K.S. P.K. NAIL SET

NOTE:
THE EXISTING RIGHT OF WAY WIDTH AND LOCATION WERE DETERMINED USING DOCUMENTATION ON FILE FROM THE OHIO DEPARTMENT OF TRANSPORTATION, DISTRICT 5 OFFICE, JACKSONTOWN, OHIO.

LIC-37-21.74

CO. RD. AND TWP RD. RIGHT OF WAY DETERMINED FROM THE LICKING COUNTY ENGINEERS OFFICE LICKING COUNTY, OHIO

NOTES:
ALL EXISTING FENCE LOCATED INSIDE OF PROPOSED RIGHT OF WAY IS TO BE REMOVED.

THE DISPOSITION OF EXISTING CONSTRUCTION ITEMS WITHIN WORK LIMITS ARE SHOWN ON THE CONSTRUCTION PLANS.

NOTE:
ALL STATIONS AND OFFSETS ARE FROM THE CENTERLINE OF SURVEY AND CONSTRUCTION, U.S. 40 UNLESS OTHERWISE STATED.

REV	DATE	DESCRIPTION

COMPLETION DATE: 1/09/15

HORIZONTAL SCALE IN FEET 0 10 20 40

PID NO. 95383

R/W DESIGNER CS
R/W REVIEWER CP

RIGHT OF WAY DETAIL SHEET
S.R. 37 & U.S. 40

D05-FY2017-
SIGNAL UPGRADE

3 / 3

80 / 83

I:\Project\Data\D05\95383\Design\RW\Sheets\95383_RD002.dgn 23-FEB-2017 12:31PM Tul.1

STATE OF OHIO
DEPARTMENT OF TRANSPORTATION

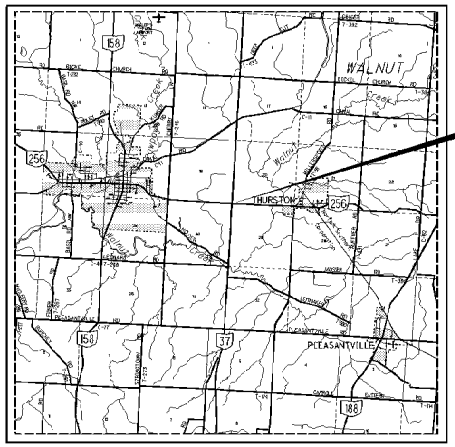

RIGHT OF WAY LEGEND SHEET

D05-FY2017-SIGNAL UPGRADE

S.R. 37 & S.R 256

SECTIONS 19, 20, 29 & 30, T16N, R18W, WALNUT TOWNSHIP FAIRFIELD COUNTY

SCALE IN MILES
0 1 2 3 4

NOTE:
THE LOCATION OF THE UNDERGROUND UTILITES SHOWN ON THE PLANS ARE OBTAINED FROM THE OWNER OF THE UTILITIES AS REQUIRED BY SECTION 153.64 O.R.C.

PROJECT DESCRIPTION

DISTRICT WIDE SIGNAL UPGRADE TO ADD BACKPLATES, UPS & OTHER UPGRADES TO REACH CURRENT STANDARDS.

PROJECT CONTROL

NORTH AMERICAN VERTICAL DATUM (NAVD 88)
OHIO STATE PLANE GRID COORDINATE SYSTEM, SOUTH ZONE, GRID COORDINATES, NAD 83 (CONUS), GEOID 12A (OHIO).

PLAN PREPARED BY:

FIRM NAME: ODOT, DISTRICT 5
PLANS PREPARED BY: CANDY SHOEMAKER
FIELD REVIEW BY: CHARLES PRICE, JR. & CANDY SHOEMAKER
OWNERSHIP VERIFIED BY: CHARLES PRICE, JR.
DATE COMPLETED: 11/12/15

UNDERGROUND UTILITIES

CONTACT BOTH SERVICES
CALL TWO WORKING DAYS
BEFORE YOU DIG

CALL
1-800-362-2764
(TOLL FREE)

OHIO UTILITIES PROTECTION SERVICE
NON-MEMBERS
MUST BE CALLED DIRECTLY

OIL & GAS PRODUCERS PROTECTIVE SERVICE CALL: 1-800-925-0988

INDEX OF SHEETS:

PROPERTY MAP & SUMMARY OF ADDITIONAL RIGHT OF WAY . . 2
DETAIL SHEET 3

UTILITY OWNERS

LISTED BELOW ARE ALL UTILITIES LOCATED WITHIN THE PROJECT CONSTRUCTION LIMITS TOGETHER WITH THEIR RESPECTIVE OWNERS:

TIME WARNER CABLE 3760 INTERCHANGE DRIVE COLUMBUS, OHIO 43204 ATTN: BRIAN AMENDE 740-322-6703	AT&T OHIO 2932 SOUTH 6TH STREET IRONTON, OHIO 45638 ATTN: DAVE MALONE 740-532-9927	AEP DISTRIBUTION 850 TECH CENTER DRIVE GAHANNA, OHIO 43230 ATTN: PAUL PAXTON 614-883-6831
COLUMBIA GAS TRANSMISSION 301 MAPLE STREET SUGAR GROVE, OHIO 43155 ATTN: JIM SCOTT 740-746-2225	SOUTH CENTRAL POWER CO. 2780 COONPATH ROAD, NE LANCASTER, OHIO 43130 ATTN: PHIL STRINGER 740-689-5237	VILLAGE OF BALTIMORE WATER/SEWER DEPARTMENT 103 WEST MARKET STREET BALTIMORE, OHIO 43105 ATTN: DONALD MORRISON 740-862-4491

STRUCTURE KEY

- RESIDENTIAL
- COMMERCIAL
- OUT-BUILDING

LEGEND:
SH = STANDARD HIGHWAY EASEMENT
SL = SLOPE EASEMENT
T = TEMPORARY EASEMENT
CH = CHANNEL EASEMENT

I, Charles W. Price, Jr., P. S. have conducted a survey of the existing conditions for the Ohio Department of Transportation in October, 2012. The results of that survey are contained herein.

Underground utility locations are shown for informational purposes only. Though they are believed to be accurate, their location is as marked on the ground by the utility company per OUPS Confirmation Number A227502629 & OGPUPS #99028 and those markings subsequently being surveyed as a part of this project.

The horizontal coordinates expressed herein are based on North American Vertical Datum (NAVD 88) Ohio State Plane Grid Coordinate System, South Zone, Grid Coordinates, NAD 83 (Conus), Geoid 12A (Ohio).

As a part of this project I have reestablished the locations of the existing property lines and centerline of existing Right of Way for property takes contained herein.

As a part of this project I have established the proposed property lines, calculated the Gross Take, present roadway occupied (PRO), Net Take and Net Residue; as well as prepared the legal descriptions necessary to acquire the parcels as shown herein.

As a part of this work I have set monuments at the proposed property corners, and other points shown herein. The iron pins and caps will be 3/4" x 30" rebar with aluminum cap stamped "Odot R/W District 5". All of my work contained herein was conducted in accordance with Ohio Administrative Code 4733-37 commonly known as "A Minimum Standards for Boundary Surveys in the State of Ohio" unless so noted.

The words I and my as used herein are to mean that either myself or someone working under my direct supervision.

Charles W. Price, Jr., Professional Land Surveyor # 7825

Date: 11/12/15

SURVEYORS SEAL

STATE OF OHIO
CHARLES W. PRICE, JR.
S-7825
REGISTERED
PROFESSIONAL SURVEYOR

SIGNED:
DATE: 11/12/15

CONVENTIONAL SYMBOLS

County Line
Township Line
Section Line
Corporation Line
Fence Line (Ex)
Fence Line (Pr)
Center Line
Right of Way (Ex) — Ex R/W
Right of Way (Pr) — R/W
Standard Highway Ease.(Ex) — Ex SH
Standard Highway Ease.(Pr) — SH
Slope Ease.(Ex) — Ex SL
Slope Ease.(Pr) — SL
Temporary Right of Way — TMP
Channel Ease. (Pr) — CH
Utility Ease. (Ex) — Ex U
Railroad — CR
Guardrail (Ex)
Guardrail (Pr)
Construction Limits
Edge of Pavement (Ex)
Edge of Pavement (Pr)
Edge of Shoulder (Ex)
Edge of Shoulder (Pr)
Ditch / Creek (Ex)
Ditch / Creek (Pr)
Tree Line (Ex)
Ownership Hook Symbol, Example
Property Line Symbol, Example
Break Line Symbol, Example
Tree (Pr), Tree (Ex), Shrub (Ex)
Tree (Remove), Shrub (Remove)
Evergreen (Ex), Stump
Evergreen (Remove), Stump (Remove)
Wetland (Pr), Grass (Pr), Aerial Target
Post (Ex), Mailbox (Ex), Mailbox (Pr)
Light (Ex), Telephone Marker (Ex) TEL
Fire Hydrant (Ex), Water Meter (Ex)
Water Valve (Ex), Utility Valve Unknown (Ex.)
Telephone Pole (Ex), Power Pole (Ex)
Light Pole (Ex)

FEDERAL PROJECT NO. 0
PID NO. 95383
CALCULATED CS
CHECKED CP

RIGHT OF WAY LEGEND SHEET

D05-FY2017-SIGNAL UPGRADE

1/3

81/83

I:\Project\Data\D05\95383\Design\RW\Sheets\95383_RL003.dgn 23-FEB-2017 12:39PM JulA1

S.R. 37 & S.R 256
SECTIONS 19, 20, 29 & 30,
T16N, R18W,
WALNUT TOWNSHIP
FAIRFIELD COUNTY

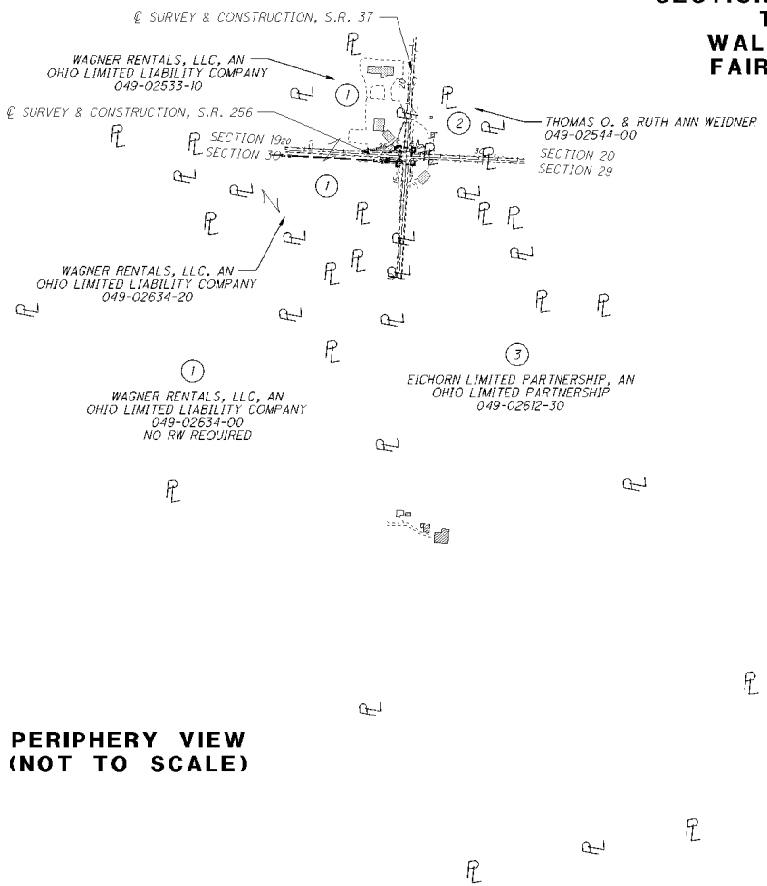

PERIPHERY VIEW
(NOT TO SCALE)

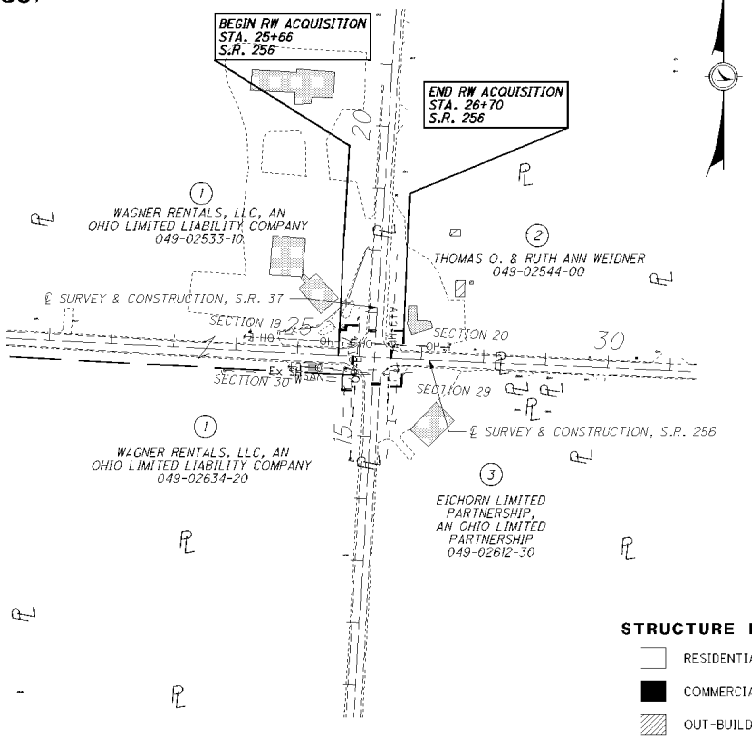

REV. BY	DATE	DESCRIPTION

FIELD REVIEW BY: CS & CP
OWNERSHIP VERIFIED BY: CP
DATE COMPLETED: 11/12/15

TOTAL NUMBER OF :

3 OWNERSHIPS — 0 TOTAL TAKES
4 PARCELS — 0 OWNERSHIPS W/ STRUCTURES INVOLVED

RECORD AREA - TOTAL PRO - NET TAKE = NET RESIDUE

ALL AREAS IN ACRES

GRANTEE:
ALL RIGHT OF WAY ACQUIRED IN THE NAME OF THE STATE OF OHIO UNLESS OTHERWISE SHOWN.

* DENOTES RIGHT OF WAY ENCROACHMENT
** SURVEYED AREA

PARCEL NO.	OWNER	OWNERS RECORD DEED BOOK & PG.	AUDITOR'S PARCEL	RECORD AREA	TOTAL P.R.O.	GROSS TAKE	P.R.O. IN TAKE	NET TAKE	STRUCTURE	NET RESIDUE LEFT	NET RESIDUE RIGHT	TYPE FUND	REMARKS	AS ACQUIRED DEED BOOK & PG.
												STATE		
1-SH1	WAGNER RENTALS, LLC, AN OHIO LIMITED LIABILITY COMPANY	OR 1434 PG. 2874	049-02533-10	6.94	0.715	0.011	0.000	0.011	NO	5.214			*ENCROACHING FENCE & PRIVATE SIGN	
1-SH2		OR 1434 PG. 2868	049-02634-20	6.91	0.760	0.011	0.000	0.011	NO	5.139				
		OR 1434 PG. 2871	049-02634-00	62.33									NO RW REQUIRED	
2-SH	THOMAS O. & RUTH ANN WEIDNER	VOL. 628 PG. 248	049-02544-00	3.12	0.441	0.007	0.000	0.007	NO	2.672				
3-SH	EICHORN LIMITED PARTNERSHIP, AN OHIO LIMITED PARTNERSHIP	OR 1477 PG. 2270	049-02612-30	113.854	2.703	0.008	0.000	0.008	NO		111.143			
												STATE		

NOTE: ALL TEMPORARY PARCELS TO BE OF 12 MONTH DURATION.

R/W DESIGNER CS
R/W REVIEWER CP

HORIZONTAL SCALE IN FEET 0 50 100 200

PROPERTY MAP & SUMMARY OF ADDITIONAL RIGHT OF WAY

PID NO. 95383

D05-FY2017-SIGNAL UPGRADE

2 / 3

82 / 83

I:\Project\Dists\D05\95383\Design\RW\Sheets\95383_RW003.dgn 23-FEB-2017 12:31PM jlutz1

S.R. 37 & S.R 256
SECTIONS 19, 20, 29 & 30,
T16N, R18W,
WALNUT TOWNSHIP
FAIRFIELD COUNTY

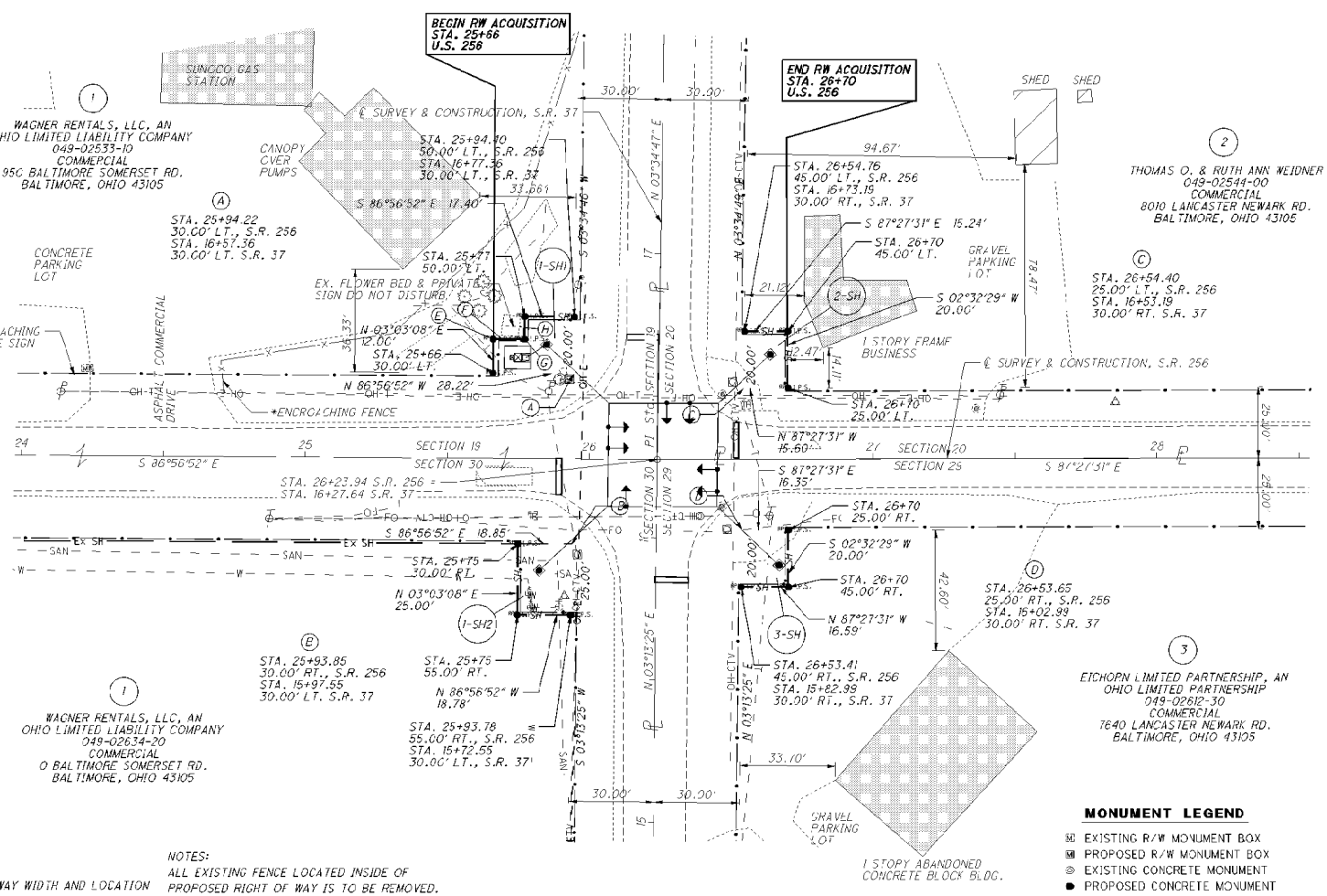

NOTE:
THE EXISTING RIGHT OF WAY WIDTH AND LOCATION WERE DETERMINED USING DOCUMENTATION ON FILE FROM THE OHIO DEPARTMENT OF TRANSPORTATION, DISTRICT 5 OFFICE, JACKSONTOWN, OHIO.

CO. RD. AND TWP RD. RIGHT OF WAY DETERMINED FROM THE FAIRFIELD COUNTY ENGINEERS OFFICE FAIRFIELD COUNTY, OHIO

NOTES:
ALL EXISTING FENCE LOCATED INSIDE OF PROPOSED RIGHT OF WAY IS TO BE REMOVED.

THE DISPOSITION OF EXISTING CONSTRUCTION ITEMS WITHIN WORK LIMITS ARE SHOWN ON THE CONSTRUCTION PLANS.

NOTE:
ALL STATIONS AND OFFSETS ARE FROM THE CENTERLINE OF SURVEY AND CONSTRUCTION, S.R. 256 UNLESS OTHERWISE STATED.

MONUMENT LEGEND

- EXISTING R/W MONUMENT BOX
- PROPOSED R/W MONUMENT BOX
- EXISTING CONCRETE MONUMENT
- PROPOSED CONCRETE MONUMENT
- RAILROAD SPIKE FOUND
- RAILROAD SPIKE SET
- IRON PIN FOUND
- IRON PIN FOUND W/ ID CAP
- IRON PIN SET W/ ID CAP
- IRON PIPE FOUND
- IRON PIPE SET
- P.K. NAIL FOUND
- P.K. NAIL SET

REV	DATE	DESCRIPTION

COMPLETION DATE: 1/12/15

N

HORIZONTAL SCALE IN FEET 0 10 20 40

PID NO. 95383

R/W DESIGNED CS
R/W REVIEWER CP

RIGHT OF WAY DETAIL SHEET
S.R. 37 & S.R. 256

D05-FY2017-
SIGNAL UPGRADE

3/3

83
83

I:\Project\Data\D05\95383\Design\RW\Sheets\95383_RD003.dgn 23-FEB-2017 12:31PM TuLi