STATE OF OHIO

DEPARTMENT OF TRANSPORTATION

D05-TSG-FY2005

2005 SIGNAL

SIGNAL UPGRADE CONTRACT

SEE SHEET 2 FOR LOCATION MAP

PROJECT DESCRIPTION

UPGRADE A MAXIMUM OF EIGHTEEN (18) EXISTING TRAFFIC SIGNAL LOCATIONS IN DISTRICT 5. ALSO INSTALLATION OF ONE (1) NEW TRAFFIC SIGNAL (LOCATION TO BE DETERMINED).

2002 SPECIFICATIONS

THE STANDARD SPECIFICATIONS OF THE STATE OF OHIO, DEPARTMENT OF TRANSPORTATION, INCLUDING CHANGES AND SUPPLEMENTAL SPECIFICATIONS LISTED IN THE PROPOSAL SHALL GOVERN THIS IMPROVEMENT.

I HEREBY APPROVE THESE PLANS AND DECLARE THAT THE MAKING OF THIS IMPROVEMENT WILL NOT REQUIRE THE CLOSING TO TRAFFIC OF THE HIGHWAYS AND THAT PROVISIONS FOR THE SAFETY AND MAINTENANCE OF TRAFFIC WILL BE AS SET FORTH ON THE PLANS AND ESTIMATES.

INDEX OF SHEETS:

TITLE SHEET	1
LOCATION MAP	2
GENERAL NOTES	3 - 7
CONTROLLER DETAILS	8 & 9
GENERAL SUMMARY	10
INTERSECTION WORK DETAILS	11 - 15
SIGN FLASHER ASSEMBLY DETAIL	16

PROJECT EARTH DISTURBED AREA: (MAINTENANCE PROJECT)	N/A
ESTIMATED CONTRACTOR EARTH DISTURBED AREA: (MAINTENANCE PROJECT)	N/A
NOTICE OF INTENT EARTH DISTURBED AREA: (MAINTENANCE PROJECT)	N/A

UNDERGROUND UTILITIES
TWO WORKING DAYS
BEFORE YOU DIG
CALL 1-800-362-2764 (TOLL FREE)
OHIO UTILITIES PROTECTION SERVICE
NON-MEMBERS
MUST BE CALLED DIRECTLY

PLAN PREPARED BY:

OFFICE OF PLANNING
DISTRICT 5
9600 JACKSONTOWN RD.
JACKSONTOWN, OHIO 43030

ENGINEERS SEAL:

STATE OF OHIO
BRIAN F. BOSCH
E-61548
REGISTERED
PROFESSIONAL ENGINEER

SIGNED: Brian F. Bosch
DATE: 8-6-04

STANDARD CONSTRUCTION DRAWINGS								SUPPLEMENTAL SPECIFICATIONS	
HL-10.11	1-16-04	TC-17.10	1-19-01	MT-35.10	4-20-01			872	10-30-03
HL-10.13	1-17-03	TC-21.20	1-19-01	MT-95.31	7-16-04			832	04-17-04
HL-20.11	4-19-02	TC-41.41	1-19-01	MT-95.32	7-16-04			833	02-12-03
HL-30.11	4-19-02	TC-52.10	4-20-01	MT-97.10	4-19-02				
HL-30.21	4-19-02	TC-52.20	4-20-01	MT-105.10	10-18-02				
HL-30.22	4-19-02	TC-81.10	5-01-00	MT-105.11	10-18-02				
		TC-82.10	4-19-02	MT-120.00	3-01-00				
DM-4.3	7-19-02	TC-83.10	1-16-04						
DM-4.4	7-19-02	TC-83.20	5-01-00						
		TC-84.20	5-01-00						
		TC-84.21	3-06-00						
		TC-85.20	5-01-00						

APPROVED Christopher T. Ryle
DATE 8/6/04 DISTRICT DEPUTY DIRECTOR

APPROVED Gordon Proctor
DATE 8/26/04 DIRECTOR, DEPARTMENT OF TRANSPORTATION

FEDERAL PROJECT NO. NON-FEDERAL

PID NO. 75295

CONSTRUCTION PROJECT NO.

RAILROAD INVOLVEMENT NONE

D05-TSG-FY2005

1 / 16

D05 - TSG-FY2005\Various Sections
040571 PID - 75295
Dist 5 11/3/2004

INTERSECTION LOCATIONS

1. SR 16 & SR 83
2. US 36 & SR 83/CR 1A
3. US 36 & SR 16/83
4. US 33 & PICKERINGTON RD.
5. SR 37 & SR 256
6. US 22 & SR 723
7. SR 13 & DORCEY MILL RD.
8. SR 16 & OWENS CORNING ENT.
9. SR 16 & MARNE RD.
10. SR 37 & SR 161/YORK RD.
11. US 40 & SR 310
12. US 40 & SR 37
13. US 40 & SR 13
14. SR 60 & OLD SR 16
15. US 22 & PINKERTON RD.
16. US 22 & RICHARDS RD.
17. US 22/40 & SR 93
18. US 40 & REHL RD.
19. NEW SIGNAL - TBA

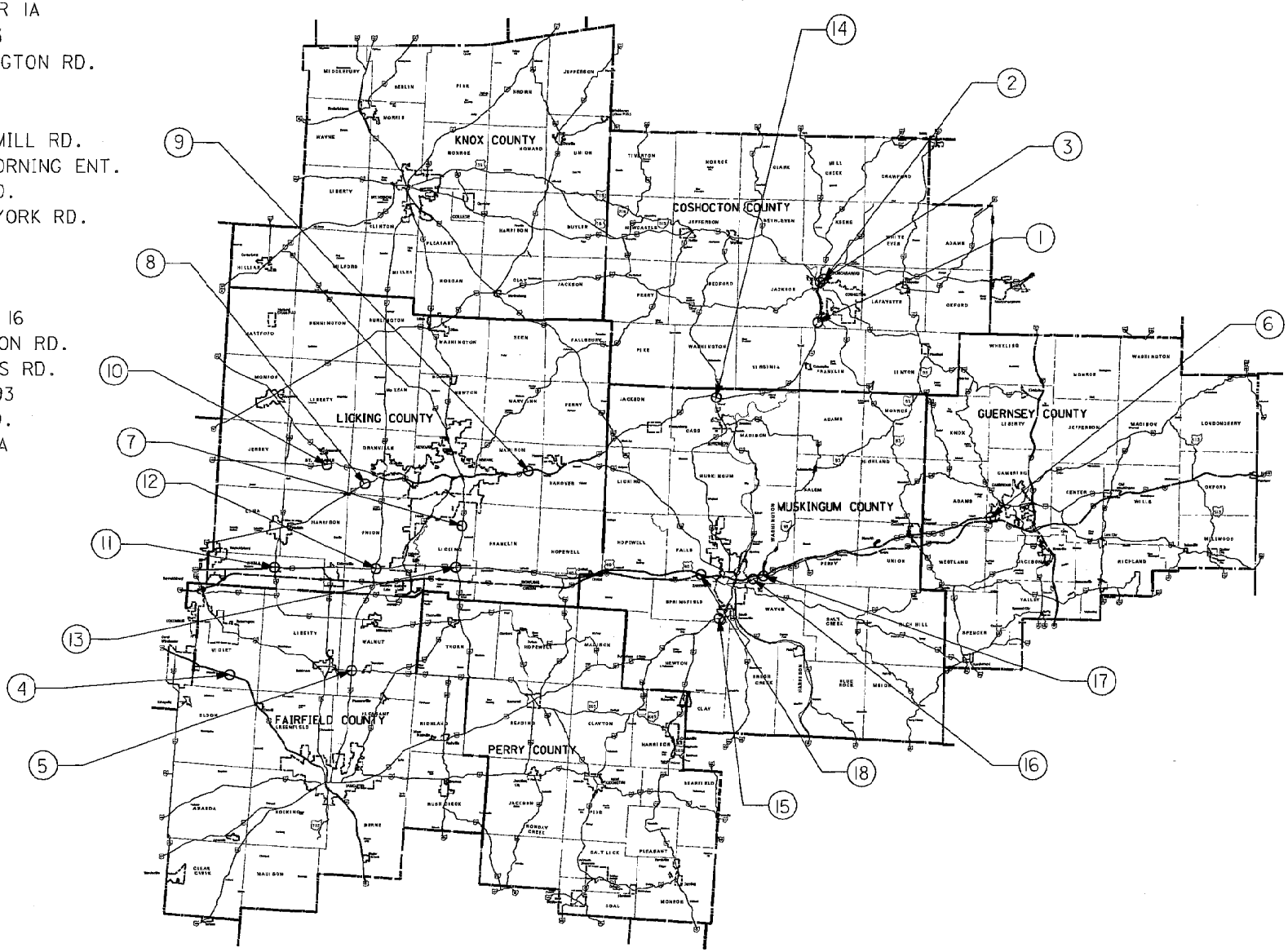

CALCULATED BFB
CHECKED

LOCATION MAP

D05-TSG-FY2005

2/6

districtmap.dgn 8-06-04

SCOPE

THE PURPOSE OF THIS CONTRACT IS TO UPGRADE UP TO EIGHTEEN (18) TRAFFIC SIGNALS AND THE ADDITION OF ONE (1) NEW SIGNAL AT VARIOUS INTERSECTIONS WITHIN THE OHIO DEPARTMENT OF TRANSPORTATION DISTRICT 5.
THE CONTRACTOR WILL BE FURNISHED AN OPERATIONAL PLAN THAT WILL INCLUDE THE ESTIMATED QUANTITIES FOR EACH SIGNAL.
NO MORE THAN TWO SIGNAL INTERSECTIONS WILL BE GIVEN TO THE CONTRACTOR IN ANY GIVEN FOUR (4) WEEK PERIOD.
UPON RECEIPT OF A LIST OF INTERSECTIONS THE CONTRACTOR SHALL HAVE A PERIOD OF FOUR (4) WEEKS TO COMPLETE THE NECESSARY WORK AND HAVE THE SIGNALS BACK IN FULL OPERATION.
THIS DOES NOT ABSOLVE THE CONTRACTOR FROM LIQUIDATED DAMAGES IF THE PROJECT WORK HAS NOT BEEN COMPLETED TO THE SATISFACTION OF THE ENGINEER, AS SPECIFIED IN THE CONSTRUCTION AND MATERIAL SPECIFICATIONS 105.01, 105.04, 105.09, 105.10, 108.06, 108.07. THE ENGINEER SHALL RECORD THE DATE THAT THE PLANS WERE RECEIVED BY THE CONTRACTOR. THIS DATE WILL THEN BE USED TO ESTABLISH AN INTERIM COMPLETION DATE SUBJECT TO LIQUIDATED DAMAGES OF $700.00 /DAY.

TERM OF THE CONTRACT

THE TERM OF THE CONTRACT SHALL BE FROM THE DATE OF AWARD FOR A PERIOD OF EIGHTEEN (18) MONTHS, OR UNTIL EIGHTEEN (18) SIGNALS HAVE BEEN UPGRADED, WHICHEVER COMES FIRST.

SUBMITTALS

THE FOLLOWING SHALL BE SUBMITTED TO THE ENGINEER FOR APPROVAL AT THE PRE-CONSTRUCTION MEETING:

A COMPLETE INVENTORY LIST OF THE MATERIALS THE CONTRACTOR INTENDS TO KEEP ON HAND AT ALL TIMES FOR THE DURATION OF THE CONTRACT. THIS SHALL INCLUDE REQUIRED CATALOG CUTS FOR APPROVAL.

GENERAL SUMMARY ESTIMATED QUANTITIES

QUANTITIES SHOWN IN THE GENERAL SUMMARY WERE ESTIMATED QUANTITIES BASED ON THE UPGRADING OF EIGHTEEN (18) TRAFFIC SIGNALS AND THE ADDITION OF ONE (1) NEW SIGNAL OF VARIOUS TYPES.
THEY ARE NOT TO BE CONSTRUED AS EXACT AND VARIANCE CAN BE EXPECTED IN THE ACTUAL QUANTITIES USED DURING THE LIFE OF THE CONTRACT.

REMOVED TRAFFIC SIGNAL ITEMS

ANY TRAFFIC SIGNAL ITEMS REMOVED AS PART OF THIS CONTRACT SHALL BE REMOVED IN ACCORDANCE WITH CMS 632.26.
THE REMOVED ITEMS SHALL BE STORED ON THE PROJECT FOR SALVAGE BY DISTRICT 5.

IN THE EVENT THE ITEMS STORED ON THE PROJECT FOR SALVAGE BY DISTRICT 5 ARE NOT REMOVED, THE CONTRACTOR SHALL, WHEN DIRECTED BY THE ENGINEER IN WRITING, REMOVE AND DISPOSE OF THE ITEMS AT NO ADDITIONAL COST TO THE PROJECT.

MATERIALS

ALL MATERIALS FURNISHED FOR THIS CONTRACT SHALL BE IN ACCORDANCE WITH THE REQUIREMENTS OF THE STATE OF OHIO, DEPARTMENT OF TRANSPORTATION CONSTRUCTION AND MATERIALS SPECIFICATIONS DATED JANUARY 1, 2002. NO USED MATERIAL WILL BE PERMITTED.

THE CONTRACTOR SHALL FURNISH ALL NECESSARY LABOR, TOOLS, EQUIPMENT AND MATERIALS NECESSARY TO UPGRADE A MINIMUM OF TEN (10) TRAFFIC SIGNALS UP TO A MAXIMUM OF EIGHTEEN (18) TRAFFIC SIGNALS.

MATERIALS (CONT'D)

THE CONTRACTOR SHALL MAINTAIN AN INVENTORY OF SUFFICIENT QUANTITY TO UPGRADE A MINIMUM OF TWO (2) SIGNALS UP TO THE LAST SIXTY (60) DAYS OF THE CONTRACT, AT WHICH TIME HE SHALL MAINTAIN ENOUGH STOCK TO FINISH THE CONTRACT. INVENTORY IS SUBJECT TO INSPECTION BY THE ENGINEER. MATERIALS ARE TO INCLUDE, BUT ARE NOT LIMITED TO SIGNAL HEADS, SIGNAL CABLE, CONTROLLER CABINET, MESSENGER WIRE, HARDWARE, AND ALL MATERIAL NECESSARY TO COMPLETE WORK ITEMS.

ALL MATERIAL IN CONTRACTOR'S STOCK AT THE END OF THE CONTRACT WILL REMAIN THE PROPERTY OF THE CONTRACTOR AND WILL NOT BE PURCHASED BY THE STATE, UNLESS OTHERWISE SPECIFIED IN THE PLAN.

GUARANTEE

THE CONTRACTOR SHALL GUARANTEE THAT THE TRAFFIC CONTROL SYSTEM INSTALLED AS PART OF THIS CONTRACT SHALL OPERATE SATISFACTORILY FOR A PERIOD OF 180 DAYS FOLLOWING THE SUCCESSFUL COMPLETION OF THE 10 DAY PERFORMANCE TEST. IN THE EVENT OF UNSATISFACTORY OPERATION, THE CONTRACTOR SHALL CORRECT FAULTY INSTALLATIONS, MAKE REPAIRS, AND REPLACE DEFECTIVE PARTS WITH NEW PARTS OF EQUAL OR BETTER QUALITY. EQUIPMENT, MATERIAL AND LABOR COSTS INCURRED IN CORRECTING AN UNSATISFACTORY OPERATION SHALL BE BORNE BY THE CONTRACTOR.

THE GUARANTEE SHALL COVER THE FOLLOWING ITEMS OF THE TRAFFIC CONTROL SYSTEM: CONTROLLERS AND ASSOCIATED EQUIPMENT, DETECTOR UNITS, AND TIME-BASED ITEMS, LED SIGNAL.

CUSTOMARY MANUFACTURER'S GUARANTEES FOR THE FOREGOING ITEMS SHALL BE TURNED OVER TO THE STATE OR THE MAINTAINING AGENCY FOLLOWING ACCEPTANCE OF THE EQUIPMENT.

THE COST OF GUARANTEEING THE TRAFFIC CONTROL SYSTEM WILL BE INCIDENTAL TO AND INCLUDED IN THE CONTRACT UNIT PRICE OF THE VARIOUS ITEMS MAKING UP THE SYSTEM.

ITEM 623 CONSTRUCTION LAYOUT STAKES, AS PER PLAN

CONSTRUCTION LAYOUT STAKES FOR THIS PROJECT SHALL ONLY BE USED AT LOCATIONS THAT REQUIRE THEIR USE.
IF SOME OF THE LOCATIONS ARE NON-PERFORMED THE FUNDS SHALL BE PRO-RATED ACCORDINGLY. A MIMIMUM OF 50% WILL BE PAID REGARDLESS OF THE AMOUNT OF WORK PERFORMED.

ELECTRICAL INSPECTION BY STATE LISCENCED INSPECTOR

MOST ELECTRIC COMPANYS REQUIRE THAT ALL NEW OR RELOCATED ELECTRIC SERVICE ENCLOSURES ARE TO BE INSPECTED BY A LICENSED STATE INSPECTOR PRIOR TO CONNECTION TO A UTILITY DISTRIBUTION LINE. THIS IS A NEW SITUATION FOR ODOT BECAUSE INSPECTIONS ARE NOW BEING REQUIRED FOR TRAFFIC CONTROL DEVICES AND LIGHTING INSTALLATIONS.

THE CONTRACTOR SHALL HIRE A LISCENCED ELECTRICAL INSPECTOR; PAY THE APPROPRIATE FEE(S), AND ADVISE THE DISTRICT ROADWAY SERVICES MANAGER OF THE TIME OF THE INSPECTION(S) SO THAT HE MAY HAVE A REPRESENTATIVE IN ATTENDANCE. IT IS TO BE NOTED THAT THE INSPECTION DOES NOT SUBSTITUTE FOR ODOT'S FINAL INSPECTION, NOR DOES IT SUPERCEDE REQUIREMENTS OF THE PLANS AND SPECIFICATIONS.

THE COST OF THE INSPECTIONS SHALL BE CONSIDERED AS INCIDENTAL TO AND INCLUDED IN THE CONTRACT UNIT PRICE OF THE VARIOUS ITEMS MAKING UP THE LIGHTING INSTALLATIONS OR TRAFFIC CONTROL DEVICES.

INSPECTION

FOLLOWING COMPLETION OF THE SIGNAL UPGRADE, THE CONTRACTOR SHALL PLACE THE SIGNAL IN STOP-N-GO OPERATION FOR A PERIOD OF THREE (3) DAYS UNLESS OTHERWISE DIRECTED BY THE ENGINEER. AT THIS TIME, THE ENGINEER WILL CONDUCT AN OPERATIONAL AND ELECTRICAL INSPECTION OF THE TRAFFIC SIGNAL. ANY DEFICIENCIES SHALL BE CORRECTED BY THE CONTRACTOR PRIOR TO ACCEPTANCE OF THE WORK.

ONCE THE CONTRACTOR PLACES THE TRAFFIC SIGNAL IN "STOP-AND-GO" OPERATION. THE SIGNAL SHALL THEN BE SUBJECT TO A TEN (10) DAY BURN TEST PER 633.06. SEE "SCOPE" PLAN SHEET 3 FOR LIQUIDATED DAMAGES.

ITEM 633 CONTROLLER WORKPAD, AS PER PLAN

IN ADDITION TO THE REQUIREMENTS OF 633 THIS ITEM SHALL INCLUDE ALL WORK REQUIRED TO INSTALL A CONTROLLER WORK PAD THAT MATCHES THE LENGTH OF EXISTING CABINET FOUNDATION. THE WIDTH OF CONTROLLER WORKPAD SHALL BE 30".

ITEM 630 SIGNING

THE CONTRACTOR SHALL PROVIDE AND INSTALL ALL GROUND AND SPAN WIRE MOUNTED SIGNS AS INDICATED ON THE SIGNAL PLAN. ALL SIGNS SHALL BE INSTALLED PRIOR TO PLACING A SIGNAL IN "STOP-AND-GO" OPERATION.

PAYMENT FOR THIS ITEM WILL BE MADE AT THE CONTRACT UNIT PRICE PER SQUARE FEET.

ITEM 632 VEHICULAR SIGNAL HEAD WITH LED LAMP UNITS, BY TYPE, AS PER PLAN

IN ADDITION TO THE REQUIREMENTS OF CMS 632 AND 732, THE FOLLOWING REQUIREMENTS SHALL ALSO APPLY :

LAMPS :

LED, LIGHT EMITTING DIODE, SIGNAL LAMP UNITS SHALL MEET THE REQUIREMENTS OF SUPPLEMENTAL SPECIFICATION 872. ALL LAMP UNITS SHALL BE THE 12 INCH SIZE. LED SIGNAL LAMP UNITS SHALL BE PROVIDED FOR ALL SIGNAL LENS TYPES.

MOUNTING HARDWARE:

BALANCE ADJUSTERS, SHOWN ON TC-85.20 OF THE STANDARD CONSTRUCTION DRAWINGS SHALL NOT BE USED .

ALL WIRE ENTRANCES SHALL UTILIZE TRI-STUD TYPE HARDWARE TO MOUNT THE SIGNAL HEAD TO THE WIRE ENTRANCE MOUNTING BRACKET.

ADJUSTABLE SIGNAL HANGERS SHALL BE USED IN PLACE OF DROP PIPE TO MAINTAIN UNIFORM SIGNAL HEAD CLEARANCES WHEN REQUIRED. THE ADJUSTABLE SIGNAL HANGER SHALL UTILIZE TRI-STUD TYPE MOUNTING HARDWARE TO ATTACH THE SIGNAL HEAD TO THE HANGER .
THIS ITEM SHALL CONFORM TO ITEM 632 EXCEPT THE ENTRANCE FITTING SHALL BE OF THE TRI-STUD DESIGN WITH SERRATED RINGS IN ORDER TO ACHIEVE POSITIVE LOCKING.

THE DEPARTMENT WILL MEASURE "VEHICULAR SIGNAL HEADS WITH LED LENSES BY THE NUMBER OF COMPLETE UNITS FURNISHED AND INSTALLED, AND WILL INCLUDE ALL SUPPORT AND MOUNTING HARDWARE, DISCONNECT HANGERS, CLOSURE CAPS, DIMMERS, AND LAMPS AS SPECIFIED.

ITEM 614 MAINTAINING TRAFFIC

IN ADDITION TO THE REQUIREMENTS OF ITEM 614 MAINTAINING TRAFFIC, THE FOLLOWING SHALL APPLY:

NO LANE CLOSURE SHALL BE IMPLEMENTED DURING THE HOURS, OF 6:00 A.M. TO 9:00 A.M. OR 3:00 P.M. TO 6:00 P.M. WEEKDAYS. WHEN IT IS NECESSARY TO CLOSE ONE LANE OF TRAFFIC ADJACENT TO THE WORK, THE CLOSURE SHALL BE ACCOMPLISHED BY THE APPLICATION OF TRAFFIC CONTROL DEVICES AS SHOWN ON ODOT STANDARD DRAWING MT-97.10. ALL ADVANCE WARNING SIGNS FOR ANY CONDITION WHICH RESTRICTS TRAFFIC SHALL BE ERECTED BEFORE ANY SUCH RESTRICTION IS PUT INTO EFFECT. ALL SUCH SIGNS SHALL BE COVERED OR REMOVED FROM THE VIEW OF TRAFFIC WHEN THEY ARE NOT APPLICABLE, AS DETERMINED BY THE ENGINEER. FOR WORK WHICH IS CONFINED TO THE SHOULDER, TRAFFIC CONTROL SHALL CONFORM TO FIGURE 6H-6 OF THE OHIO MANUAL OF UNIFORM TRAFFIC CONTROL DEVICES (OMUTCD).

IF THE CONTRACTOR FAILS TO COMPLY WITH THE PROVISIONS FOR TRAFFIC CONTROL AS SET FORTH IN THESE PLANS AND PROVISIONS OF THE OMUTCD AND THE FAILURE RESULTS IN A CONDITION AT THE WORK SITE WHICH IS UNSAFE FOR TRAFFIC, THE ENGINEER SHALL SUSPEND WORK UNTIL THE CONTRACTOR COMPLIES WITH THE NECESSARY REQUIREMENTS.

PRIOR TO ACTIVATION OF A NEW SIGNAL, THE REQUIREMENTS OF STANDARD CONSTRUCTION DRAWING MT-120.00 SHALL BE FOLLOWED.

TWO-WAY TRAFFIC SHALL BE MAINTAINED BY USE OF THE EXISTING PAVEMENT. ONE-WAY TRAFFIC MAY BE PERMITTED DURING PLACEMENT OF LOOPS, SIGNAL SUPPORTS, OVERHEAD SIGNS, AND TRAFFIC SIGNAL HEADS, SUBJECT TO THE APPROVAL OF THE ENGINEER. SHORT DURATION CLOSURE (15 MINUTES) MAY BE PERMITTED UNDER THE DIRECTION OF FLAGGER(S) OR LAW ENFORCEMENT OFFICER(S) TO ERECT SPAN WIRE. PAYMENTS FOR ALL OF THE ABOVE SHALL BE INCLUDED IN THE CONTRACT LUMP SUM BID PRICE FOR ITEM 614 MAINTAINING TRAFFIC.

ITEM 633 CONTROLLER UNIT, TYPE 170E WITH TYPE xxx CABINET, AS PER PLAN

IN ADDITION TO THE REQUIREMENTS OF 633, THIS ITEM SHALL ALSO INCLUDE THE REMOVAL OF THE EXISTING CABINET AND ALL INCIDENTALS REQUIRED TO CHANGE THE CABINET INCLUDING ALL EQUIPMENT, LABOR, AND MATERIALS REQUIRED TO REMOVE THE EXISTING CABINET AND REPLACE IT WITH ITEM 633 CONTROLLER UNIT, TYPE 170E WITH TYPE xxx CABINET, AS PER PLAN.

THE DETAILS FOR THE CABINET FOUNDATION, AS PER PLAN AND CONTROLLER WORKPAD, AS PER PLAN AS SHOWN ON SHEETS 8 AND 9 ARE NOT APPLICABLE UNLESS NOTED UNDER INTERSECTION DETAILS.

THIS ITEM ALSO INCLUDES ANY MODIFICATIONS REQUIRED TO THE EXISTING FOUNDATION IN ORDER TO INSTALL THE TYPE 332 CABINET.

UNDERDRAINS FOR PULLBOXES

REFERENCE IS MADE TO STANDARD CONSTRUCTION DRAWINGS FOR DETAILS OF DRAINING PULLBOXES. UNDERDRAINS FOR PULLBOXES SHALL BE USED AS DIRECTED BY THE ENGINEER AND SHALL BE PROVIDED WHERE THE LENGTH REQUIRED FOR A SATISFACTORY OUTLET DOES NOT EXCEED APPROXIMATELY 20 FEET.

IN ADDITION, THIS ITEM IS TO ALSO INCLUDE THE INSTALLATION OF UNDERDRAINS TO EXISTING PULLBOXES AT THE VARIOUS INTERSECTIONS TO BE UPGRADED. THIS SHALL INCLUDE ALL EQUIPMENT, LABOR, MATERIALS, AND INCIDENTALS TO INSTALL ITEM 603 4" CONDUIT, TYPE E.

AN ESTIMATED QUANTITY OF 200 LIN.FT. OF ITEM 603 4" CONDUIT, TYPE E IS INCLUDED IN THE GENERAL SUMMARY FOR THIS PURPOSE.

CONTRACTOR'S COMMITMENT

IF AT ANY TIME THE CONTRACTOR IS UNABLE TO MEET HIS COMMITMENT UNDER THE TERMS OF THIS CONTRACT, AS DETERMINED SOLELY BY THE DISTRICT TRAFFIC ENGINEER, THE STATE WILL PROCEED BY ANY MEANS NECESSARY TO COMPLETE THE SIGNAL INSTALLATION. ANY EXPENSE INCURRED BY O.D.O.T. IN CONNECTION

WITH THE COMPLETION OF THE SIGNAL INSTALLATION WHICH EXCEEDS THE ORIGINAL CONTRACT BID SHALL BE CHARGED AGAINST ANY AMOUNTS DUE THE CONTRACTOR.

UTILITIES NOTIFICATION

AT LEAST TWO (2) WORKING DAYS PRIOR TO COMMENCING CONSTRUCTION OPERATIONS IN AN AREA WHICH MAY INVOLVE UNDERGROUND UTILITIES, THE CONTRACTOR SHALL NOTIFY THE PROJECT ENGINEER, THE REGISTERED UTILITY PROTECTION SERVICE AND THE OWNERS OF EACH UNDERGROUND UTILITY AFFECTED.

THE OWNER OF THE UNDERGROUND UTILITY SHALL, WITHIN FORTY-EIGHT (48) HOURS, EXCLUDING SATURDAYS, SUNDAYS, AND LEGAL HOLIDAYS, AFTER NOTICE IS RECEIVED, STAKE, MARK OR OTHERWISE DESIGNATE THE LOCATION OF THE UNDERGROUND UTILITY IN THE CONSRUCTION AREA IN SUCH A MANNER AS TO INDICATE THEIR COURSE TOGETHER WITH THE APPROXIMATE DEPTH AT WHICH THEY WERE INSTALLED. THE MARKING OR LOCATING SHALL BE COORDINATED TO STAY APPROXIMATELY TWO DAYS AHEAD OF THE PLANNED CONSTRUCTION.

ITEM 633 CABINET FOUNDATION, AS PER PLAN

ALL REQUIREMENTS OF ITEM 633 CONCRETE FOR CABINET FOUNDATION, AS PER PLAN SHALL APPLY EXCEPT THAT THE FOUNDATION HEIGHT SHALL BE REDUCED FROM 12" TO 4" FROM THE GROUND LINE.

ITEM 632 MESSENGER WIRE, 7 STRAND, 3/8" DIAMETER WITH ACCESSORIES, AS PER PLAN

IN ADDITION TO THE REQUIREMENTS OF 632, THIS ITEM SHALL INCLUDE THE REMOVAL OF THE EXISTING MESSENGER WIRE AND HARDWARE THAT ATTACHES THE MESSENGER WIRE TO THE STRAIN POLES AS PER THE STANDARD CONSTRUCTION DRAWINGS. THIS ITEM SHALL INCLUDE ALL EQUIPMENT, LABOR, AND INCIDENTALS TO REMOVE AND REPLACE MESSENGER WIRE.

ITEM 614 MAINTENANCE OF TRAFFIC SIGNAL INSTALLATIONS

THE CONTRACTOR SHALL BE RESPONSIBLE FOR MAINTAINING TRAFFIC SIGNAL INSTALLATIONS UNDER THE FOLLOWING CONDITIONS:

NEW SIGNAL INSTALLATIONS OR DEVICES, INSTALLED BY THE CONTRACTOR. THE CONTRACTOR SHALL BE RESPONSIBLE FOR THE MAINTENANCE OF THESE FROM THE TIME OF INSTALLATION UNTIL THE WORK IS ACCEPTED.

THE CONTRACTOR SHALL CORRECT AS QUICKLY AS POSSIBLE ALL OUTAGES OR MALFUNCTIONS. HE SHALL PROVIDE TO THE ENGINEER ADDRESSES AND PHONE NUMBERS WHERE HIS MAINTENANCE FORCES CAN BE CONTACTED. THE CONTRACTOR SHALL PROVIDE ONE OR MORE PERSONS TO RECEIVE CALLS AND DISPATCH THE NECESSARY MAINTENANCE FORCES TO CORRECT OUTAGES. SUCH A PERSON OR PERSONS MAY BE USED TO PERFORM OTHER DUTIES AS LONG AS PROMPT ATTENTION IS GIVEN TO THESE CALLS AND A PERSON IS READILY AVAILABLE CONTINUOUSLY 24 HOURS A DAY, 7 DAYS A WEEK. ALL LAMP OUTAGES, ELECTRICAL FAILURES, EQUIPMENT MALFUNCTIONS, CABLE OUTAGES AND MISALIGNED HEADS SHALL BE CORRECTED TO THE SATISFACTION OF THE ENGINEER WITH THE SIGNAL BACK TO SERVICE WITHIN TWO HOURS AFTER THE CONTRACTOR HAS BEEN NOTIFIED OF THE OUTAGE.

COMMUNICATION ARRANGEMENT MUST BE ESTABLISHED WITH THE DEPARTMENT'S HEADQUARTERS AND WITH THE ENGINEER FOR EMERGENCY CALL-OUT. THIS CAN BE BY TELEPHONE BETWEEN THE CONTRACTOR'S OFFICE AND THE DEPARTMENT'S OFFICE. THE CONTRACTOR SHALL PROVIDE NAMES AND TELEPHONE NUMBERS OF PERSONS WHICH CAN BE CONTACTED TWENTY-FOUR (24) HOURS A DAY IN CASE OF EMERGENCIES.

IN THE EVENT NEW SIGNALS ARE DAMAGED PRIOR TO ACCEPTANCE, ALL DAMAGED EQUIPMENT EXCEPT POLES AND CONTROL EQUIPMENT SHALL BE REPLACED BY THE CONTRACTOR TO THE SATISFACTION OF THE ENGINEER WITH THE SIGNAL BACK IN SERVICE WITHIN 8 HOURS AFTER THE CONTRACTOR'S NOTIFICATION OF THE OUTAGE. THE CONTRACTOR SHALL ARRANGE FOR FULL TRAFFIC CONTROL UNTIL THE SIGNAL IS BACK IN OPERATION.

IF POLES AND/OR CONTROL EQUIPMENT ARE DAMAGED AND MUST BE REPLACED, THE CONTRACTOR SHALL MAKE TEMPORARY REPAIRS AS NECESSARY TO BRING THE SIGNAL BACK INTO FULL OPERATION WITHIN THE ALLOWED 8-HOUR PERIOD, AND SHALL MAKE PERMANENT REPAIRS OR REPLACEMENT AS SOON THEREAFTER AS POSSIBLE.

NONE OFTHE ABOVE SHALL BE CONSTRUED AS COLLECTIVE OR CONSECUTIVE OUTAGE PERIODS AT ANY ONE LOCATION. THAT IS WHERE MORE THAN ONE OUTAGE OCCURS AT ANY ON LOCATION, THEN THE ALLOTTED TIME LIMIT SHALL BE FOR THE WORST SINGLE OUTAGE.

WHERE OUTAGES ARE THE DIRECT RESULT OF A VEHICLE ACCIDENT THE RESPONSE OF THE CONTRACTOR SHALL BE AS OUTLINED ABOVE. THE CONTRACTOR SHALL BE RESPONSIBLE FOR COLLECTION OF ANY COMPENSATION FOR THIS WORK FROM THOSE PARTIES RESPONSIBLE FOR THE DAMAGE IN ACCORDANCE WITH SECTION 107.15.

WHERE THE CONTRACTOR HAS FAILED TO, OR CANNOT RESPOND TO, AN OUTAGE OR SIGNAL EQUIPMENT MALFUNCTION, AT THESE LOCATIONS WITHIN HIS RESPONSIBILITY, WITHIN PERIODS AS SPECIFIED ABOVE, THE ENGINEER MAY INVOKE THE PROVISIONS OF SECTION 105.15 AND ANY SUBSEQUENT BILLINGS TO THE STATE FOR POLICE SERVICES AND MAINTENANCE SERVICES BY STATE FORCES SHALL BE DEDUCTED FROM MONIES DUE OR TO BECOME DUE THE CONTRACTOR IN ACCORDANCE WITH PROVISIONS OF SECTION 105.15.

WHEN A TRAFFIC SIGNAL MUST BE TAKEN OUT OF SERVICE BY THE CONTRACTOR, DUE TO CONSTRUCTION PROCEDURES, THIS OUTAGE SHALL NOT EXCEED 4 HOURS AND SHALL NOT INCLUDE THE HOURS OF 6:00 A.M. TO 9:00 A.M. AND 3:00 P.M. TO 6:00 P.M. ANY SIGNALIZED INTERSECTION, WHERE THE SIGANL IS OUT OF SERVICE DURE TO CONSTRUCTION PROCEDURES, OR DUE TO AN OUTAGE OR MALFUNCTION OF EQUIPMENT AS DESCRIBED ABOVE, SHALL BE PROTECTED BY AN LAW ENFORCEMENT OFFICER, HIRED BY THE CONTRACTOR. ANY VEHICULAR TRAFFIC SIGNAL HEAD, EITHER NEW OR EXISTING WHICH WILL BE OUT OF OPERATION SHALL BE COVERED IN THE MANNER DESCRIBED IN 632.24.

THE CONTRACTOR SHALL MAINTAIN COMPLETE RECORDS OF MALFUNCTIONS INCLUDING:

1. TIME OF NOTIFICATION OF MALFUNCTION;
2. TIME OF WORK CREWS ARRIVAL TO CORRECT THE MALFUNCTION;
3. ACTIONS TAKEN TO CORRECT THE MALFUNCTION, INCLUDING A LIST OF PARTS REPAIRED OR REPLACED;
4. A DIAGNOSIS OF REASON FOR THE MALFUNCTION AND PROBABILITY OF REOCCURRENCE;
5. TIME OF COMPLETION OF THE REPAIR AND SYSTEM RESTORED TO FULL SERVICE.

A COPY OF THESE RECORDS SHALL BE PROVIDED TO THE ENGINEER WITHIN THREE (3) WORKING DAYS FOLLOWING COMPLETION OF EACH REPAIR.

ALL COSTS RESULTING FROM THE ABOVE REQUIREMENTS SHALL BE CONSIDERED TO BE INCLUDED IN THE LUMP SUM BID FOR ITEM 614 MAINTAINING TRAFFIC.

ITEM 633 CONTROLLER ITEM, MISC.: EXTRA EQUIPMENT

THIS ITEM CONSISTS OF SUPPLYING FOUR (4) 170E CONTROLLERS, WITH MODEM CARDS AND ONE (1) COMPLETE CABINET, TYPE 332 INCLUDING A 170E CONTROLLER AND 2010 CONFLICT MONITOR WITH CARD.

THESE ITEMS SHALL BE DELIVERED TO THE DISTRICT 5 OFFICE AT 9600 JACKSTOWN ROAD, JACKSTOWN, OHIO 43030 WITHIN THE FIRST THREE (3) MONTHS OF THE CONTRACT. CONTACT MR. BRIAN BOSCH, DISTRICT TRAFFIC ENGINEER AT 740-323-5182 AT LEAST 48 HOURS BEFORE DELIVERY.

SIGNAL CABINET INSPECTION

ALL SIGNAL CABINETS SHALL BE DELIVERED TO THE ODOT, SIGNAL SHOP LOCATED AT 1606 WEST BROAD STREET, COLUMBUS, OHIO 43223 AT LEAST 45 DAYS PRIOR TO INSTALLATION IN THE FIELD. THE ODOT SIGNAL SHOP SHALL INSPECT AND APPROVE ALL SIGNAL CABINETS PRIOR TO INSTALLING THEM IN THE FIELD. EACH CABINET SHALL REQUIRE 30 DAYS FOR INSPECTION/TESTING BY THE ODOT SIGNAL SHOP. CONTACT THE ODOT SIGNAL SHOP SUPERVISOR AT 614-351-2856 TO SCHEDULE DELIVERY AND/OR PICKUP.

IT WILL BE THE RESPONSIBILITY OF THE CONTRACTOR TO MAKE ALL ARRANGEMENTS FOR THE DELIVERY AND PICKUP OF THE SIGNAL CABINETS.

THE COST FOR DELIVERY TO AND PICK UP FROM THE ODOT SIGNAL SHOP SHALL BE CONSIDERED INCIDENTAL TO AND INCLUDED IN THE COSTS FOR ITEM 633 CONTROLLER UNIT, TYPE 170E, WITH CABINET TYPE XXX, AS PER PLAN.

ITEM 632 SIGNAL CABLE, x CONDUCTOR, NO. 14 AWG., AS PER PLAN

IN ADDITION TO THE REQUIREMENTS OF 632, THIS ITEM SHALL REQUIRE ALL EXISTING SIGNAL CABLE RUNS TO BE REMOVED AND REPLACED AS COMPLETE UNITS FROM THE CABINET TERMINALS TO THE SIGNAL HEADS AS PER STANDARD CONSTRUCTION DRAWINGS. THIS ITEM SHALL INCLUDE ALL EQUIPMENT, LABOR, AND INCIDENTALS TO REMOVE AND REPLACE SIGNAL CABLE.

IF ANY SIGNAL HEADS OR OTHER HARDWARE IS DAMAGED DURING THE COMPLETION OF THIS ITEM, IT SHALL BE THE RESPONSIBLILITY OF THE CONTRACTOR TO REPLACE THE DAMAGED ITEMS AT THE CONTRACTORS EXPENSE.

ITEM 202 REMOVAL MISC.: SIGNAL AHEAD FLASHING SIGN ASSEMBLY

IN ADDITION TO THE REQUIREMENTS OF ITEM 202 THE FOLLOWING SHALL APPLY:

THIS ITEM SHALL INCLUDE THE COMPLETE REMOVAL OF THE SIGN ASSEMBLY INCLUDING THE POWER SERVICE. REMOVAL OF THE POWER SERVICE INCLUDES ALL WIRING, DISCONNECT (IF INSTALLED), AND METER BASE.

THIS ITEM SHALL ALSO INCLUDE THE REMOVAL OF THE SIGN FOUNDATION AT LEAST 1' BELOW EXISTING GRADE.

ALL WIRING, CONDUIT, PULL BOXES, ETC. THAT COMPRISE THE RACEWAY FROM THE SIGN TO THE CABINET SHALL BE ABDANDONED IN PLACE, EXCEPT FOR THE WIRING IN THE CABINET SHALL BE REMOVED TO THE FIRST PULL BOX.

PAYMENT FOR THIS ITEM SHALL INCLUDE ALL EQUIPMENT, LABOR, MATERIAL AND INCLIDENTALS NEEDED TO COMPLETE THE REQUIRED WORK.

ITEM 625 PULL BOX, 725.08, 18", AS PER PLAN

IN ADDITION TO THE REQUIREMENTS OF ITEM 625 THIS ITEM SHALL ALSO INCLUDE THE REMOVAL OF AN EXISTING PULL BOX AND THE SPLICING OF EXISTING LOOP DETECTOR LEAD-IN CABLES AS REQUIRED.

PAYMENT FOR THIS ITEM SHALL INCLUDE ALL EQUIPMENT, LABOR, MATERIAL AND INCLIDENTALS NEEDED TO COMPLETE THE REQUIRED WORK.

ITEM 632 POWER SERVICE, AS PER PLAN

IN ADDITION TO THE REQUIREMENTS OF ITEM 632 THIS ITEM SHALL ALSO INCLUDE THE REMOVAL OF THE EXISTING POWER SERVICE INCLUDING THE CONDUIT RISER, DISCONNECT SWITCH, AND OR THE METER BASE AS REQUIRED.

THIS ITEM SHALL ALSO INCLUDE ANY AND ALL COORDINATION THAT IS REQUIRED WITH THE POWER COMPANY IN ORDER TO CHANGE THE POWER SERVICE. THIS ITEM SHALL ALSO REQUIRE THE USE OF A TEMPORARY POWER SOURCE TO KEEP THE SIGNAL IN OPERATION DURING THE WORK IF DIRECTED BY ENGINEER.

PAYMENT FOR THIS ITEM SHALL INCLUDE ALL EQUIPMENT, LABOR, MATERIAL AND INCLIDENTALS NEEDED TO COMPLETE THE REQUIRED WORK.

ITEM 632 WOOD POLE, AS PER PLAN

THIS ITEM SHALL CONFORM TO ALL THE REQUIREMENTS OF ITEM 632 WOOD POLE EXCEPT THE POLES SHALL BE CLASS 5 AND 35' LONG. THIS ITEM SHALL ALSO INCLUDE ALL LABOR, EQUIPMENT, AND MATERIALS NECCESSARY FOR DOWN GUY ANCHORS IF REQUIRED BY THE PROJECT ENGINEER.

ITEM 625 TRENCH, 24" DEEP, AS PER PLAN

IN ADDITION TO THE REQUIREMENTS OF 625 AND THE STANDARD CONSTRUCTION DRAWINGS, WITHIN EACH TRENCH, THE LOCATION OF UNDERGROUND CABLE OR CONDUIT SHAL BE MARKED BY THE USE OF A CONTINUOUS IDENTIFYING TAPE BURIED IN THE TRENCH ABOVE THE LINE. THE IDENTIFYING TAPE SHALL BE AN INERT MATERIAL, APPROXIMATELY 6" WIDE, COMPOSED OF POLYETHYLENE PLASTIC, HIGHLY RESISTANT TO ALKALIC ACIDS OR OTHER CHEMICAL COMPONENTS LIKELY TO BE ENCOUNTERED IN SOILS.

THE TAPE SHALL BE BRIGHT RED WITH IDENTIFYING PRINTING "ELECTRIC" IN BLACK LETTERS, ONE SIDE ONLY. TAPES SHALL BE SUPPLIED IN CONTINUOUS ROLLS WITH THE IDENTIFYING LETTERING REPEATED CONTINUOUSLY THE FULL LENGTH OF THE TAPE. IDENTIFYING TAPES SHALL BE BURIED IN THE ELECTRIC LINE TRENCH WITH ONE STRIP PLACED APPROXIMATELY 8" TO 12" BELOW THE FINISHED GRADE. THE TAPE SHALL BE PLACED PARALLEL WITH THE FINISHED SURFACE. THE CONTRACTOR SHALL TAKE NECESSARY PRECAUTIONS TO INSURE THAT THE TAPE IS NOT PULLED, DISTORTED OR OTHERWISE MISPLACED IN COMPLETING THE TRENCH BACKFILL. THE TAPE SHALL BE ALLEN SYSTEM'S, TERRA TAPE OR EQUAL, AS APPROVED BY THE ENGINEER.

THIS ITEM SHALL BE PAID FOR PER LINEAR FOOT OF ITEM 625 TRENCH, 24" DEEP, AS PER PLAN COMPLETE AND IN PLACE.

ITEM 630 SIGN HANGER ASSEMBLY, SPAN WIRE, AS PER PLAN

THIS ITEM SHALL INCLUDE ALL WORK REQUIED TO REMOVE THE EXISTING SPAN WIRE SIGN AND HANGER AND INSTALL A TYPE 2 SIGN HANGER ASSEMBLY. FOR ADDITONAL DETAILS REFER TO STANDARD CONSTRUCTION DRAWING TC-41.41.

PAYMENT FOR THIS ITEM SHALL INCLUDE ALL EQUIPMENT, LABOR, MATERIAL AND INCIDENTALS NEEDED TO COMPLETE THE REQUIRED WORK.

ITEM 632 SIGNALIZATION, MISC.: SIGNAL AHEAD FLASHER ASSEMBLY

THIS ITEM SHALL INCLUDE ALL WORK REQUIED TO REMOVE AND REPLACE THE EXISTING SIGNAL AHEAD FLASHING SIGNS. THIS ITEM SHALL INCLUDE THE SCREW-IN BASE, AT-X BASE, POLE, SIGN, AND ALL LIGHTING EQUIPMENT TO CONSTRUCT THE SIGNS DETAILED ON SHEET 16.

PAYMENT FOR THIS ITEM SHALL INCLUDE ALL EQUIPMENT, LABOR, MATERIAL AND INCIDENTALS NEEDED TO COMPLETE THE REQUIRED WORK.

ITEM 632 SERVICE CABLE, 3 CONDUCTOR, NO. 6 AWG., AS PER PLAN

THIS ITEM SHALL INCLUDE ALL WORK REQUIED TO REMOVE AND REPLACE THE EXISTING SERVICECABLE FOR THE SIGNAL AHEAD FLASHING SIGNS. THIS ITEM SHALL INCLUDE THE REMOVAL OF THE EXISTING CABLE, INSTALLATION OF THE NEW CABLE INCLUDING ANY HARDWARE REQUIRED TO ATTACH THE CABLE TO THE EXISTING AND PROPOSED WOOD POLES AND SPAN WIRE AS PER THE DETAIL ON SHEET 15.

PAYMENT FOR THIS ITEM SHALL INCLUDE ALL EQUIPMENT, LABOR, MATERIAL AND INCIDENTALS NEEDED TO COMPLETE THE REQUIRED WORK.

633 ITEM CONTROLLER UNIT, TYPE 170E, WITH TYPE 332 CABINET, AS PER PLAN

THE CONTROLLER SUPPLIED SHALL BE COMPLETE WITH THE SPECIFIED CABINET INCLUDING ALL NECESSARY COMPONENTS AND CABLES NOT SPECIFICALLY MENTIONED BELOW. ALL EQUIPMENT AND CABINETS SHALL CONFORM TO ODOT SPECIFICATIONS 633, 733 AND THE FOLLOWING:

TYPE 170E CONTROLLERS:

SPECIFICATIONS FOR THESE CONTROLLERS SHALL BE 'TRANSPORTATION ELECTRICAL EQUIPMENT SPECIFICATIONS', CALIFORNIA DEPARTMENT OF TRANSPORTATION, NOVEMBER 19, 1998, INCLUDING ALL ADDENDA. THE CONTROLLER UNITS SHALL CURRENTLY BE LISTED ON THE CALTRANS 'QUALIFIED PRODUCTS LIST'.

IN ADDITION:

1. THE CONTROLLER UNIT SHALL NOT BE SUPPLIED WITH THE M170E BOARD.

2. FOR CABINETS THAT ARE TO BE INCLUDED IN A HARDWIRE (TWISTED PAIR) INTERCONNECTED SIGNAL SYSTEM, THE CONTROLLER UNIT SHALL INCLUDE A MODEL 400 MODEM AND COMMUNICATION SYSTEM INTERFACE AS SPECIFIED IN THE CALTRANS SPECIFICATIONS. IN ADDITION TO THE CALTRANS SPECIFICATION, MODEMS SHALL BE DESIGNED SUCH THAT IF ONE MODEM LOSES COMMUNICATION WITH THE MASTER, SUBSEQUENT MODEMS SHALL STILL BE ABLE TO COMMUNICATE.

3. A 412C PROM MODULE SHALL BE SUPPLIED FOR MEMORY SELECT #4 CONFIGURATION WITHOUT CONTROLLER SOFTWARE TO THE ODOT CENTRAL OFFICE SIGNAL SHOP WITH THE CABINET.
THE ODOT CENTRAL OFFICE SIGNAL SHOP WILL PROVIDE THE REQUIRED LOCAL PROGRAM TO THE CONTRACTOR FOR HIS USE ON THE 412C PROM MODULE. IT SHALL BE THE CONTRACTORS RESPONSIBILITY TO USE THE RETURNED 412C MODULE WITH THE CONTROLLER SOFTWARE TO PROGRAM THE SIGNAL PER THE PLANS.

4. AS PER CALTRANS REQUIREMENTS, ALL MEMORY, MICROPROCESSOR AND ACIA DEVICES SHALL BE SOCKET MOUNTED. SOCKETS SHALL HAVE MACHINED BERYLLIUM COPPER CONTACTS WITH GOLD PLATING.

5. A CABLE HARNESS, APPROXIMATELY 4 FT. LONG, SHALL BE SUPPLIED TO CONNECT A LAPTOP COMPUTER WITH THE CONTROLLER FOR THE TRANSFER OF DATA. THE CABLE SHALL HAVE A DB-9 CONNECTOR ON ONE END, AND A CONNECTOR ON THE OTHER END TO MATE WITH THE C2 ON THE BACK OF THE CONTROLLER.

6. ALL CIRCUIT BOARDS SHALL BE VERTICALLY MOUNTED.

7. THE POWER SUPPLY SHALL BE MODULAR AND EASILY REMOVABLE FROM THE CHASSIS.

8. THE UNIT SHALL CONTAIN SEPARATE INPUT AND OUTPUT MODULES.

9. IF A TELEPHONE DROP IS SHOWN IN THE PLANS, ALL NECESSARY COMMUNICATION MODULES, MODEM, LIGHTNING PROTECTION AND CABLES FOR AUTO DIAL/ANSWER TELEPHONE CONNECTION SHALL BE PROVIDED.

10. IF THE CONTROLLER IS PART OF AN INTERCONNECTED SIGNAL SYSTEM, THE CONTROLLER SHALL INCLUDE MODEMS, PORTS AND CABLES FOR SYSTEM COMMUNICATION.

2 SETS OF CONTROLLER SCHEMATICS AND SERVICE MANUALS SHALL BE SUPPLIED WITH EACH CONTROLLER.

CONFLICT MONITORS, TYPE 2010:

CONFLICT MONITORS SHALL BE ON THE ODOT PRE-APPROVED LIST (S.S. 962). TWO SETS OF OPERATIONS INSTRUCTIONS AND MONITOR SCHEMATICS SHALL BE SUPPLIED WITH EACH MONITOR. PERMISSIVE CHANNELS SHALL BE PROGRAMMED WITH THE USE OF A DIODE CARD (CALTRANS STANDARD) WHICH SHALL BE INCLUDED WITH THE MONITOR.

CABINET, TYPE 332:

MODEL 332 CABINETS SHALL MEET THE SPECIFICATIONS 'TRAFFIC SIGNAL CONTROL EQUIPMENT SPECIFICATIONS', CALIFORNIA DEPARTMENT OF TRANSPORTATION, JANUARY 1986, OR LATEST EDITION, AND SHALL CURRENTLY BE ON THE CALTRANS 'QUALIFIED PRODUCTS LIST' (QPL) FOR 332 CABINETS.

CABINETS SHALL BE CONSTRUCTED OF ALUMINUM AND SHALL BE SUPPLIED UNPAINTED. ANODIC COATING IS NOT REQUIRED. CABINETS SHALL BE FULLY EQUIPPED WITH CONFLICT MONITOR, FLASHERS, AC ISOLATORS, DC ISOLATORS, AND FLASH TRANSFER RELAYS. THE APPROPRIATE NUMBER OF SWITCH PACKS AND MODEL 222 LOOP DETECTOR SENSOR UNITS SHALL BE SUPPLIED TO OPERATE THE INTERSECTION AS SHOWN IN THE PLANS. ALL COMPONENTS SHALL MEET CALTRANS SPECIFICATIONS AND SHALL BE ON THE QPL AS APPLICABLE.

CABINETS SHALL BE FITTED WITH A PDA-2 POWER DISTRIBUTION ASSEMBLY. CABINETS SHALL BE EQUIPPED WITH AN EDCO SHA12-10 OR APPROVED EQUAL SURGE PROTECTOR IN LIEU OF THE CALTRANS SPECIFIED SURGE PROTECTION. THE SHA12-10 UNIT SHALL BE INSTALLED IN AN ENCLOSURE WITHIN THE CABINET.

THE FRONT OF THE INPUT AND OUTPUT FILES SHALL BE LABELED USING A WRITABLE TAPE. IN THE CASE OF THE OUTPUT FILE, THE TAPE SHALL CLEARLY DESIGNATE THE PURPOSE OF THE CORRESPONDING SWITCH PACK. AN EXAMPLE OF SWITCH PACK LABELING IS 'PHASE 2' OR 'PHASE 2 PED'. IN THE CASE OF THE INPUT FILE, THE TAPE SHALL CLEARLY DESIGNATE THE PURPOSE OF THE CORRESPONDING DETECTOR UNIT. EVERY USED CHANNEL OF THE 222 DETECTOR SHALL BE LABELED. AN EXAMPLE OF DETECTOR UNIT LABELING IS 'PHASE 2 C' OR 'PHASE 2 EC' OR 'PHASE 2 EXT' WHERE:

C - IS A CALL INPUT ONLY DURING RED
EC - IS EXTEND AND CALL DURING RED, YELLOW AND GREEN
EXT - IS AN EXTENSION ONLY DURING GREEN

CABINET WIRING SHALL COMPLY WITH THE FOLLOWING:
1. OUTPUT FILES SHALL BE 'HARDWIRED'. NO PRINTED CIRCUIT WIRING SHALL BE USED IN THE OUTPUT FILE EXCEPT FOR THE RED MONITOR BOARD.

2. CABINETS SHALL HAVE RED MONITOR CABLING INSTALLED. A PROGRAM BOARD SHALL BE INSTALLED TO ENABLE/DISABLE RED MONITORING. CABINETS SHALL BE SHIPPED WITH THE RED MONITOR JUMPERS SET IN THE 'ENABLE' POSITION.

3. PEDESTRIAN YELLOW LOADSWITCH OUTPUTS SHALL NOT BE CONNECTED TO THE CONFLICT MONITOR CARD-EDGE CONNECTOR.

4. FIELD WIRING FOR LOOP DETECTOR LEAD-IN CABLES AND PEDESTRIAN DETECTORS SHALL BE TERMINATED ON A LOWER LOOP INPUT PANEL. EDCO MODEL SRA-6LCA, SRA-6LCB OR SRA-6LC SURRESTORS SHALL BE PROVIDED ON THE LOWER INPUT PANEL FOR PROTECTION AGAINST INCOMING ELECTRICAL SURGES AND LIGHTNING. FIELD WIRING TERMINALS ON THE LOWER INPUT PANEL SHALL BE LABELED BY A PERMANENT SCREENING PROCESS TO IDENTIFY THE INPUT FILE (I OR J), THE INPUT FILE SLOT NUMBER (1-14) AND THE CHANNEL TERMINAL (D, E, J OR K). AN EXAMPLE IS '14-K' STANDING FOR INPUT FILE 'I'; SLOT 4; CHANNEL TERMINAL 'K'. ALL TERMINALS ON THESE DETECTOR PANELS SHALL BE EASILY ACCESSIBLE WITHOUT REMOVING EQUIPMENT FROM THE MOUNTING RACK. TAGGING OF WIRES SHALL NOT BE CONSIDERED ACCEPTABLE TO SATISFYING TERMINAL LABELING.

5. FOR CABINETS THAT ARE TO BE INCLUDED IN A HARDWIRE (TWISTED PAIR) INTERCONNECTED SIGNAL SYSTEM, INCOMING INTERCONNECT CABLE SHALL BE TERMINATED ON AN APPROPRIATE TERMINAL BASE THAT IS MOUNTED ON THE SIDE OF THE CABINET. PROTECTION FROM INCOMING ELECTRICAL SURGES/LIGHTNING ON INTERCONNECT PAIRS SHALL BE PROVIDED BY INSTALLATION OF EDCO PG642 SURGE ARRESTORS ON THE TERMINAL BASE. THE PROTECTED OUTPUTS FROM THE TERMINAL BASE SHALL THEN BE ROUTED THROUGH TO THE CONTROLLER.

5. ON THE OUTPUT FILE, PIN NUMBER 11 OF EACH SWITCHPACK SHALL BE WIRED TO AC-. SO THAT THE OUTPUT INDICATORS ON DUAL INDICATOR SWITCHPACKS WILL DISPLAY PROPERLY. SWITCHPACKS SHALL HAVE BOTH INPUT AND OUTPUT INDICATORS FOR EACH SWITCH.

THE FOLLOWING AUXILIARY ITEMS SHALL BE SUPPLIED:

1. CABINETS SHALL HAVE TWO FLUORESCENT LIGHTS (FRONT AND REAR) WITH DOOR SWITCHES.

2. A RACK MOUNTED DETECTOR TEST PANEL SHALL BE FURNISHED WITH SEPARATE TEST SWITCHES FOR ALL POSSIBLE VEHICLE AND PEDESTRIAN PHASES. THE SWITCHES SHALL BE THREE (3) POSITION 'ON/OFF/MOMENTARY ON' SWITCHES.

3. EACH CABINET SHALL BE PROVIDED WITH A POLICE PANEL WHICH WILL INCLUDE A PUSHBUTTON WITH CORD AND THREE SWITCHES LABELED AUTO/FLASH, SIGNALS ON/OFF, AND AUTO/MANUAL. THE PUSHBUTTON CORD SHALL NOT BE WIRED THROUGH AN AC ISOLATOR, BUT SHALL BE CONNECTED TO THE CONTROLLER HARNESS WIRING BY A MOLEX PLUG CONNECTION. WHEN PLACED IN THE MANUAL POSITION, MANUAL CONTROL ENABLE SHALL BE APPLIED TO THE CONTROLLER AND 'RECALL' SHALL BE APPLIED TO ALL PHASES. ACTIVATION OF THE PUSHBUTTON SHALL 'ADVANCE' THE CONTROLLER EXCEPT THAT MANUAL ADVANCEMENT WILL BE PROHIBITED IN THE MINIMUM GREEN, YELLOW AND RED INTERVALS.

4. AN ALUMINUM SHELF WITH INTEGRAL STORAGE COMPARTMENT SHALL BE PROVIDED IN THE RACK BELOW THE CONTROLLER. THE STORAGE COMPARTMENT WILL HAVE TELESCOPING DRAWER GUIDES FOR FULL EXTENSION. THE COMPARTMENT TOP SHALL HAVE A NON-SLIP PLASTIC LAMINATE ATTACHED.

5. CABINETS SHALL BE SUPPLIED WITH GALVANIZED ANCHOR BOLTS WITH NUTS AN WASHERS. ANCHOR BOLTS SHALL BE 3/4" (19mm) DIAM. BY 16" (406mm) MINIMUM LENGTH WITH AN "L" BEND ON THE UNTHREADED END.

TWO SETS OF CABINET WIRING DIAGRAMS, SERVICE MANUALS, PROGRAMING AND MAINTENANCE INSTRUCTIONS SHALL BE FURNISHED FOR EACH CABINET AND EQUIPMENT ITEM. THE CABINET WIRING DIAGRAMS SHALL BE SUPPLIED IN A CLEAR PLASTIC POUCH FASTENED TO THE INSIDE OF THE CONTROLLER CABINET.

GENERATOR POWER PANEL:
THIS ITEM SHALL ALLOW SIGNAL ELECTRICIANS TO OPERATE THE TRAFFIC SIGNAL DURING POWER OUTAGES, WITHOUT OPENING THE CABINET DOOR OR CONNECTING OR DISCONNECTING PERMANENT POWER CABLES. THE ENCLOSURE SHALL BE INSTALLED ON THE POWER PANEL SIDE OF THE CONTROLLER CABINET. DESIGN AND LAYOUT OF THE CONTROLLER CABINET SHALL DETERMINE EXACT PLACEMENT OF THE ENCLOSURE BUT IT SHOULD BE PLACED NEAR THE TOP OF GROUND MOUNTED CABINETS AND ABOUT 5 FEET FROM THE GROUND ON POLE MOUNTED CABINETS. THE ENCLOSURE SHALL BE SEALED WITH A HIGH QUALITY SILICON CAULK AND ALL HOLES DRILLED INTO THE SIDE OF THE CONTROLLER CABINET SHALL BE CAULKED AND SEALED AFTER THE ELECTRICAL EQUIPMENT IS INSTALLED. ALL ELECTRICAL CONNECTIONS, SOLDERED OR SCREW TYPE TERMINALS, SHALL BE COVERED WITH A CLEAR SILICON CAULK.

THE GENERATOR INLET SHALL BE 30 AMP, LOCKING, FOUR WIRE GROUNDING AND MEET THE NEMA L14-30-P 30A 125/250V SPECIFICATION. THE INLET SHALL BE A HUBBLE CATALOG #2715.

THE LINE VOLTAGE GENERATOR SWITCH SHALL BE 30 AMP. 125/250V AC. TWO (2) POLE, THREE (3) POSITION, (ON, OFF, ON HUBBLE #1388).
THE LINE VOLTAGE INDICATOR LIGHT SHALL BE 125V AC LIGHT EMITTING DIODE WITH A RED LENS.
THE LINE VOLTAGE CIRCUIT BREAKER SHALL BE SINGLE POLE SINGLE THROW AND A MINIMUM OF 30 AMPS. THE AMPERAGE SHALL BE INCREASED TO ACCOMMODATE GREATER LOADS, IF NECESSARY. THE GAUGE OF THE POWER CABLE SHALL BE OF PROPER SIZE PER THE NATIONAL ELECTRICAL CODE (NEC).

CABINET RISER:
AN ALUMINUM RISER SHALL BE PROVIDED WITH EACH BASE MOUNTED CABINET WHICH WILL RAISE THE CABINET APPROXIMATELY 8" (203mm) ABOVE THE CONCRETE FOUNDATION. THE BOTTOM OF THE RISER SHALL BOLT TO THE STANDARD CABINET FOUNDATION ANCHOR BOLTS AND THE TOP OF THE RISER SHALL BOLT TO THE BOTTOM OF THE CABINET. ALL NECESSARY BOLTS, WASHERS AND NUTS SHALL BE SUPPLIED.

PAYMENT:
COST FOR ALL OF THE ABOVE INCLUDING LABOR, MATERIAL, TOOLS AND EQUIPMENT TO PROVIDE AND INSTALL A COMPLETELY OPERATIONAL CABINET AND CONTROLLER SHALL BE INCLUDED IN THE BID ITEM PRICE FOR ITEM 633 CONTROLLER UNIT, TYPE 170E, WITH TYPE 332 CABINET, AS PLAN PLAN.

332 CABINET FOUNDATION

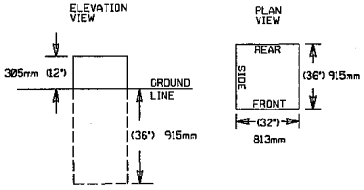

332 CONTROLLER WORK PAD

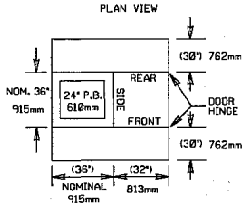

NOTE: PULLBOX SHALL BE PLACED ON OPPOSITE SIDE OF DOOR HINGE

INPUT FILE ASSIGNMENT FOR 332 CABINET

	SLOT 1	SLOT 2	SLOT 3	SLOT 4	SLOT 5	SLOT 6	SLOT 7	SLOT 8	SLOT 9	SLOT 10	SLOT 11	SLOT 12	SLOT 13	SLOT 14
Channel #1	1 EC	2 EC	2 EC	2 C	3 EC	4 EC	4 EC	4 C	1 EC	SPARE	MAN. CTRL. ADV.	2 PPB	6 PPB	FLSH
Field Term.	I 1-D,E	I 2-D,E	I 3-D,E	I 4-D,E	I 5-D,E	I 6-D,E	I 7-D,E	I 8-D,E	I 9-D,E	I 10-D,E	I 11-D,E	I 12-D,E	I 13-D,E	I 14-D,E
Channel #2	(1 EC)	2 EC	2 EXT	(2 C)	(3 EC)	4 EC	4 EXT	(4 C)	3 EC	SPARE	ADV. ENAB.	4 PPB	8 PPB	STOP TIME
Field Term.	I 1-J,K	I 2-J,K	I 3-J,K	I 4-J,K	I 5-J,K	I 6-J,K	I 7-J,K	I 8-J,K	I 9-J,K	I 10-J,K	I 11-J,K	I 12-J,K	I 13-J,K	I 14-J,K

FRONT VIEW OF TOP INPUT FILE I

	SLOT 1	SLOT 2	SLOT 3	SLOT 4	SLOT 5	SLOT 6	SLOT 7	SLOT 8	SLOT 9	SLOT 10	SLOT 11	SLOT 12	SLOT 13	SLOT 14
Channel #1	5 EC	5 EC	5 EC	5 C	7 EC	8 EC	8 EC	8 C	5 EC	SPARE	SPARE	EV-A	EV-B	RR-1
Field Term.	J 1-D,E	J 2-D,E	J 3-D,E	J 4-D,E	J 5-D,E	J 6-D,E	J 7-D,E	J 8-D,E	J 9-D,E	J 10-D,E	J 11-D,E	J 12-D,E	J 13-D,E	J 14-D,E
Channel #2	(5 EC)	5 EC	5 EXT	(5 C)	(7 EC)	8 EC	8 EXT	(8 C)	7 EC	SPARE	SPARE	EV-C	EV-D	RR-2
Field Term.	J 1-J,K	J 2-J,K	J 3-J,K	J 4-J,K	J 5-J,K	J 6-J,K	J 7-J,K	J 8-J,K	J 9-J,K	J 10-J,K	J 11-J,K	J 12-J,K	J 13-J,K	J 14-J,K

FRONT VIEW OF BOTTOM INPUT FILE J

INPUT FILE TERMINAL ASSIGNMENT

TERM.	PIN	FUNCTION
1	SP	SPARE
2	F	CHANNEL 1 OUTPUT
3	W	CHANNEL 2 OUTPUT
4	D	CHANNEL 1 INPUT
5	E	CHANNEL 1 INPUT
6	J	CHANNEL 2 INPUT
7	K	CHANNEL 2 INPUT
8	L	EQUIPMENT GROUND

( ) - JUMPERED TO UPPER CHANNEL.
C - INPUT ONLY DURING RED
EC - EXTEND AND CALL (RED, YELLOW, GREEN)
EXT - INPUT ONLY DURING GREEN

TERMINATION OF FIELD WIRING SHALL CONFORM TO THE ABOVE CHART. THE CONTRACTOR SHALL DUPLICATE THE INPUT ASSIGNMENT CHART AND INCLUDE IT IN THE CABINET DOCUMENTATION. THE CHART SHALL CLEARLY INDICATE WHICH INPUT FILE SLOTS AND CHANNEL TERMINALS ARE USED IN THE CABINET. A RED PEN SHALL BE USED TO CIRCLE SLOT NUMBERS AND CHANNEL TERMINALS THAT ARE USED.

SEPARATE BID ITEMS:
625 PULLBOX, 713.08, 24"
633 CONTROLLER WORK PAD
633 CABINET FOUNDATION, AS PER PLAN

CALCULATED BY: D
CHECKED: JC

MODEL 170E CONTROLLER WITH
MODEL 332 CABINET AND ACCESSORIES

D05-TSG-FY2005

633 ITEM CONTROLLER UNIT, TYPE 170E, WITH TYPE 336 CABINET, AS PER PLAN (POLE OR BASE MOUNTED)

THE CONTROLLER SUPPLIED SHALL BE COMPLETE WITH THE SPECIFIED CABINET INCLUDING ALL NECESSARY COMPONENTS AND CABLES NOT SPECIFICALLY MENTIONED BELOW. ALL EQUIPMENT AND CABINETS SHALL CONFORM TO ODOT SPECIFICATIONS 633, 733 AND THE FOLLOWING:

TYPE 170E CONTROLLERS:

SPECIFICATIONS FOR THESE CONTROLLERS SHALL BE "TRANSPORTATION ELECTRICAL EQUIPMENT SPECIFICATIONS", CALIFORNIA DEPARTMENT OF TRANSPORTATION, NOVEMBER 19, 1998, INCLUDING ALL ADDENDA. THE CONTROLLER UNITS SHALL CURRENTLY BE LISTED ON THE CALTRANS "QUALIFIED PRODUCTS LIST".

IN ADDITION:

1. THE CONTROLLER UNIT SHALL NOT BE SUPPLIED WITH THE M170E BOARD.

2. FOR CABINETS THAT ARE TO BE INCLUDED IN A HARDWIRE (TWISTED PAIR) INTERCONNECTED SIGNAL SYSTEM, THE CONTROLLER UNIT SHALL INCLUDE A MODEL 408 MODEM AND COMMUNICATION SYSTEM INTERFACE AS SPECIFIED IN THE CALTRANS SPECIFICATIONS. IN ADDITION TO THE CALTRANS SPECIFICATION, MODEMS SHALL BE DESIGNED SUCH THAT IF ONE MODEM LOSES COMMUNICATION WITH THE MASTER, SUBSEQUENT MODEMS SHALL STILL BE ABLE TO COMMUNICATE.

3. A 412C PROM MODULE SHALL BE SUPPLIED FOR MEMORY SELECT #4 CONFIGURATION WITHOUT CONTROLLER SOFTWARE TO THE ODOT CENTRAL OFFICE SIGNAL SHOP WITH THE CABINET.
THE ODOT CENTRAL OFFICE SIGNAL SHOP WILL PROVIDE THE REQUIRED LOCAL PROGRAM TO THE CONTRACTOR FOR HIS USE ON THE 412C PROM MODULE. IT SHALL BE THE CONTRACTORS RESPONSIBILITY TO USE THE RETURNED 412C MODULE WITH THE CONTROLLER SOFTWARE TO PROGRAM THE SIGNAL PER THE PLANS.

4. AS PER CALTRANS REQUIREMENTS, ALL MEMORY, MICROPROCESSOR AND ACIA DEVICES SHALL BE SOCKET MOUNTED. SOCKETS SHALL HAVE MACHINED BERYLLIUM COPPER CONTACTS WITH GOLD PLATING.

5. A CABLE HARNESS, APPROXIMATELY 4 FT. LONG, SHALL BE SUPPLIED TO CONNECT A LAPTOP COMPUTER WITH THE CONTROLLER FOR THE TRANSFER OF DATA. THE CABLE SHALL HAVE A DB-9 CONNECTOR ON ONE END, AND A CONNECTOR ON THE OTHER END TO MATE WITH THE C2 ON THE BACK OF THE CONTROLLER.

6. ALL CIRCUIT BOARDS SHALL BE VERTICALLY MOUNTED.

7. THE POWER SUPPLY SHALL BE MODULAR AND EASILY REMOVABLE FROM THE CHASSIS.

8. THE UNIT SHALL CONTAIN SEPARATE INPUT AND OUTPUT MODULES.

9. IF A TELEPHONE DROP IS SHOWN IN THE PLANS, ALL NECESSARY COMMUNICATION MODULES, MODEM, LIGHTNING PROTECTION AND CABLES FOR AUTO DIAL/ANSWER TELEPHONE CONNECTION SHALL BE PROVIDED.

10. IF THE CONTROLLER IS PART OF AN INTERCONNECTED SIGNAL SYSTEM, THE CONTROLLER SHALL INCLUDE MODEMS, PORTS AND CABLES FOR SYSTEM COMMUNICATION.

2 SETS OF CONTROLLER SCHEMATICS AND SERVICE MANUALS SHALL BE SUPPLIED WITH EACH CONTROLLER.

CONFLICT MONITORS, TYPE 2010:

CONFLICT MONITORS SHALL BE ON THE ODOT PRE-APPROVED LIST (S.S. 962). TWO SETS OF OPERATIONS INSTRUCTIONS AND MONITOR SCHEMATICS SHALL BE SUPPLIED WITH EACH MONITOR. PERMISSIVE CHANNELS SHALL BE PROGRAMMED WITH THE USE OF A DIODE CARD (CALTRANS STANDARD) WHICH SHALL BE INCLUDED WITH THE MONITOR.

CABINET, TYPE 336:

MODEL 336 CABINETS SHALL MEET THE SPECIFICATIONS "TRAFFIC SIGNAL CONTROL EQUIPMENT SPECIFICATIONS", CALIFORNIA DEPARTMENT OF TRANSPORTATION, JANUARY 1989, OR LATEST EDITION. THE MANUFACTURER OF 336 CABINETS SHALL CURRENTLY BE ON THE CALTRANS "QUALIFIED PRODUCTS LIST" (QPL) FOR 332 CABINETS.

THE CALTRANS SPECIFICATION FOR MODEL 336 CABINETS SHALL BE MODIFIED SO THAT THE CABINETS PROVIDED FOR THIS ITEM ARE THE STRETCH TYPE THAT PROVIDES AN ADDITIONAL 10 INCHES (250mm) CABINET HEIGHT.

CABINETS SHALL BE CONSTRUCTED OF ALUMINUM AND SHALL BE SUPPLIED UNPAINTED. ANODIC COATING IS NOT REQUIRED. CABINETS SHALL BE FULLY EQUIPPED WITH CONFLICT MONITOR, FLASHERS, AC ISOLATORS, DC ISOLATORS, AND FLASH TRANSFER RELAYS. THE APPROPRIATE NUMBER OF SWITCH PACKS AND MODEL 222 LOOP DETECTOR SENSOR UNITS SHALL BE SUPPLIED TO OPERATE THE INTERSECTION AS SHOWN IN THE PLANS. ALL COMPONENTS SHALL MEET CALTRANS SPECIFICATIONS AND SHALL BE ON THE QPL AS APPLICABLE.

FOR POLE MOUNTED CABINETS, MOUNTING BRACKETS AND BOTTOM PLATES SHALL BE SUPPLIED AND INSTALLED, UNLESS OTHERWISE SHOWN IN THE PLANS. THE MOUNTING BRACKET AND DOOR HINGE SHALL BE ON THE SAME SIDE. FOR BASE MOUNTED CABINETS, GALVANIZED ANCHOR BOLTS WITH NUTS AN WASHERS SHALL BE SUPPLIED. ANCHOR BOLTS SHALL BE 3/4" (19mm) DIAM. BY 16" (406mm) MINIMUM LENGTH WITH AN "L" BEND ON THE UNTHREADED END.

CABINETS SHALL BE FITTED WITH A PDA-2 POWER DISTRIBUTION ASSEMBLY. CABINETS SHALL BE EQUIPPED WITH AN EDCO SHA12-10 OR APPROVED EQUAL SURGE PROTECTOR IN LIEU OF THE CALTRANS SPECIFIED SURGE PROTECTION. THE SHA12-10 UNIT SHALL BE INSTALLED IN AN ENCLOSURE WITHIN THE CABINET.

THE FRONT OF THE INPUT AND OUTPUT FILES SHALL BE LABELED USING A WRITABLE TAPE. IN THE CASE OF THE OUTPUT FILE, THE TAPE SHALL CLEARLY DESIGNATE THE PURPOSE OF THE CORRESPONDING SWITCH PACK. AN EXAMPLE OF SWITCH PACK LABELING IS "PHASE 2" OR "PHASE 2 PED". IN THE CASE OF THE INPUT FILE, THE TAPE SHALL CLEARLY DESIGNATE THE PURPOSE OF THE CORRESPONDING DETECTOR UNIT. EVERY USED CHANNEL OF THE 222 DETECTOR SHALL BE LABELED. AN EXAMPLE OF DETECTOR UNIT LABELING IS "PHASE 2 C" OR "PHASE 2 EC" OR "PHASE 2 EXT" WHERE:

C - IS A CALL INPUT ONLY DURING RED
EC - IS EXTEND AND CALL DURING RED, YELLOW AND GREEN
EXT - IS AN EXTENSION ONLY DURING GREEN

CABINET WIRING SHALL COMPLY WITH THE FOLLOWING:

1. OUTPUT FILES SHALL BE "HARDWIRED". NO PRINTED CIRCUIT WIRING SHALL BE USED IN THE OUTPUT FILE EXCEPT FOR THE RED MONITOR BOARD.

2. CABINETS SHALL HAVE RED MONITOR CABLING INSTALLED. A PROGRAM BOARD SHALL BE INSTALLED TO ENABLE/DISABLE RED MONITORING. CABINETS SHALL BE SHIPPED WITH THE RED MONITOR JUMPERS SET IN THE "ENABLE" POSITION.

3. PEDESTRIAN YELLOW LOADSWITCH OUTPUTS SHALL NOT BE CONNECTED TO THE CONFLICT MONITOR CARD-EDGE CONNECTOR.

4. FIELD WIRING FOR LOOP DETECTOR LEAD-IN CABLES AND PEDESTRIAN DETECTORS SHALL BE TERMINATED ON A LOWER LOOP INPUT PANEL. EDCO MODEL SRA-6LCA, SRA-6LCB OR SRA-6LC SURRESTORS SHALL BE PROVIDED ON THE LOWER INPUT PANEL FOR PROTECTION AGAINST INCOMING ELECTRICAL SURGES AND LIGHTNING. FIELD WIRING TERMINALS ON THE LOWER INPUT PANEL SHALL BE LABELED BY A PERMANENT SCREENING PROCESS TO IDENTIFY THE INPUT FILE (I OR J), THE INPUT FILE SLOT NUMBER (1-14) AND THE CHANNEL TERMINAL (D, E, J OR K). AN EXAMPLE IS "14-K" STANDING FOR INPUT FILE "I"; SLOT 4; CHANNEL TERMINAL "K". ALL TERMINALS ON THESE DETECTOR PANELS SHALL BE EASILY ACCESSIBLE WITHOUT REMOVING EQUIPMENT FROM THE MOUNTING RACK. TAGGING OF WIRES SHALL NOT BE CONSIDERED ACCEPTABLE TO SATISFYING TERMINAL LABELING.

5. FOR CABINETS THAT ARE TO BE INCLUDED IN A HARDWIRE (TWISTED PAIR) INTERCONNECTED SIGNAL SYSTEM, INCOMING INTERCONNECT CABLE SHALL BE TERMINATED ON AN APPROPRIATE TERMINAL BASE THAT IS MOUNTED ON THE SIDE OF THE CABINET. PROTECTION FROM INCOMING ELECTRICAL SURGES/LIGHTNING ON INTERCONNECT PAIRS SHALL BE PROVIDED BY INSTALLATION OF EDCO PCG42 SURGE ARRESTORS ON THE TERMINAL BASE. THE PROTECTED OUTPUTS FROM THE TERMINAL BASE SHALL THEN BE ROUTED THROUGH TO THE CONTROLLER.

6. ON THE OUTPUT FILE, PIN NUMBER 11 OF EACH SWITCHPACK SHALL BE WIRED TO AC-, SO THAT THE OUTPUT INDICATORS ON DUAL INDICATOR SWITCHPACKS WILL DISPLAY PROPERLY. SWITCHPACKS SHALL HAVE BOTH INPUT AND OUTPUT INDICATORS FOR EACH SWITCH.

THE FOLLOWING AUXILIARY ITEMS SHALL BE SUPPLIED:

1. CABINETS SHALL HAVE TWO FLUORESCENT LIGHTS (FRONT AND REAR) WITH DOOR SWITCHES.

2. A RACK MOUNTED DETECTOR TEST PANEL SHALL BE FURNISHED WITH SEPARATE TEST SWITCHES FOR ALL POSSIBLE VEHICLE AND PEDESTRIAN PHASES. THE SWITCHES SHALL BE THREE (3) POSITION "ON/OFF/MOMENTARY ON" SWITCHES.

3. EACH CABINET SHALL BE PROVIDED WITH A POLICE PANEL WHICH WILL INCLUDE A PUSHBUTTON WITH CORD AND THREE SWITCHES LABELED AUTO/FLASH, SIGNALS ON/OFF, AND AUTO/MANUAL. THE PUSHBUTTON CORD SHALL NOT BE WIRED THROUGH AN AC ISOLATOR, BUT SHALL BE CONNECTED TO THE CONTROLLER HARNESS WIRING BY A MOLEX PLUG CONNECTION. WHEN PLACED IN THE MANUAL POSITION, MANUAL CONTROL ENABLE SHALL BE APPLIED TO THE CONTROLLER AND "RECALL" SHALL BE APPLIED TO ALL PHASES. ACTIVATION OF THE PUSHBUTTON SHALL "ADVANCE" THE CONTROLLER EXCEPT THAT MANUAL ADVANCEMENT WILL BE PROHIBITED IN THE MINIMUM GREEN, YELLOW AND RED INTERVALS.

4. AN ALUMINUM SHELF WITH INTEGRAL STORAGE COMPARTMENT SHALL BE PROVIDED IN THE RACK BELOW THE CONTROLLER. THE STORAGE COMPARTMENT WILL HAVE TELESCOPING DRAWER GUIDES FOR FULL EXTENSION. THE COMPARTMENT TOP SHALL HAVE A NON-SLIP PLASTIC LAMINATE ATTACHED.

TWO SETS OF CABINET WIRING DIAGRAMS, SERVICE MANUALS, PROGRAMING AND MAINTENANCE INSTRUCTIONS SHALL BE FURNISHED FOR EACH CABINET AND EQUIPMENT ITEM. THE CABINET WIRING DIAGRAMS SHALL BE SUPPLIED IN A CLEAR PLASTIC POUCH FASTENED TO THE INSIDE OF THE CONTROLLER CABINET.

GENERATOR POWER PANEL:

THIS ITEM SHALL ALLOW SIGNAL ELECTRICIANS TO OPERATE THE TRAFFIC SIGNAL DURING POWER OUTAGES, WITHOUT OPENING THE CABINET DOOR OR CONNECTING OR DISCONNECTING PERMANENT POWER CABLES. THE ENCLOSURE SHALL BE INSTALLED ON THE POWER PANEL SIDE OF THE CONTROLLER CABINET. DESIGN AND LAYOUT OF THE CONTROLLER CABINET SHALL DETERMINE EXACT PLACEMENT OF THE ENCLOSURE BUT IT SHOULD BE PLACED NEAR THE TOP OF GROUND MOUNTED CABINETS AND ABOUT 5 FEET FROM THE GROUND ON POLE MOUNTED CABINETS. THE ENCLOSURE SHALL BE SEALED WITH A HIGH QUALITY SILICON CAULK AND ALL HOLES DRILLED INTO THE SIDE OF THE CONTROLLER CABINET SHALL BE CAULKED AND SEALED AFTER THE ELECTRICAL EQUIPMENT IS INSTALLED. ALL ELECTRICAL CONNECTIONS, SOLDERED OR SCREW TYPE TERMINALS, SHALL BE COVERED WITH A CLEAR SILICON CAULK.

THE GENERATOR INLET SHALL BE 30 AMP, LOCKING, FOUR WIRE GROUNDING AND MEET THE NEMA 114-30-P 30A 125/250V SPECIFICATION. THE INLET SHALL BE A HUBBLE CATALOG #2715.

THE LINE VOLTAGE GENERATOR SWITCH SHALL BE 30 AMP, 125/250V AC, TWO (2) POLE, THREE (3) POSITION, (ON, OFF, ON HUBBLE #1388).

THE LINE VOLTAGE INDICATOR LIGHT SHALL BE 125V AC LIGHT EMITTING DIODE WITH A RED LENS.

THE LINE VOLTAGE CIRCUIT BREAKER SHALL BE SINGLE POLE SINGLE THROW AND A MINIMUM OF 30 AMPS. THE AMPERAGE SHALL BE INCREASED TO ACCOMMODATE GREATER LOADS, IF NECESSARY. THE GAUGE OF THE POWER CABLE SHALL BE OF PROPER SIZE PER THE NATIONAL ELECTRICAL CODE (NEC).

CABINET RISER:

AN ALUMINUM RISER SHALL BE PROVIDED WITH EACH BASE MOUNTED CABINET WHICH WILL RAISE THE CABINET APPROXIMATELY 8" (203mm) ABOVE THE CONCRETE FOUNDATION. THE BOTTOM OF THE RISER SHALL BOLT TO THE STANDARD CABINET FOUNDATION ANCHOR BOLTS AND THE TOP OF THE RISER SHALL BOLT TO THE BOTTOM OF THE CABINET. ALL NECESSARY BOLTS, WASHERS AND NUTS SHALL BE SUPPLIED.

PAYMENT:

COST FOR ALL OF THE ABOVE INCLUDING LABOR, MATERIAL, TOOLS AND EQUIPMENT TO PROVIDE AND INSTALL A COMPLETELY OPERATIONAL CABINET AND CONTROLLER SHALL BE INCLUDED IN THE BID ITEM PRICE FOR 633 ITEM CONTROLLER UNIT, TYPE 170E, WITH TYPE 336 CABINET, AS PER PLAN.

(WHEN GROUND MOUNTING SPECIFIED)
336 CABINET FOUNDATION

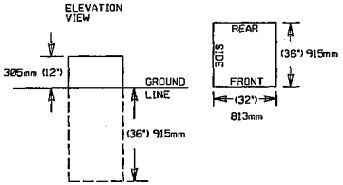

336 CONTROLLER WORK PAD

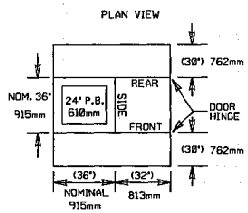

NOTE: PULLBOX SHALL BE PLACED ON OPPOSITE SIDE OF DOOR HINGE

SEPARATE BID ITEMS:
625 PULLBOX, 713.08, 24'
633 CONTROLLER WORK PAD
633 CABINET FOUNDATION, AS PER PLAN

INPUT FILE TERMINAL ASSIGNMENT

TERM.	PIN	FUNCTION
1	SP	SPARE
2	F	CHANNEL 1 OUTPUT
3	W	CHANNEL 2 OUTPUT
4	D	CHANNEL 1 INPUT
5	E	CHANNEL 1 INPUT
6	J	CHANNEL 2 INPUT
7	K	CHANNEL 2 INPUT
8	L	EQUIPMENT GROUND

FRONT VIEW OF TOP INPUT FILE I

	SLOT 1	SLOT 2	SLOT 3	SLOT 4	SLOT 5	SLOT 6	SLOT 7	SLOT 8	SLOT 9	SLOT 10	SLOT 11	SLOT 12	SLOT 13	SLOT 14
Channel #1	1 EC	2 EC	3 EC	4 EC	5 EC	6 EC	7 EC	8 EC	PED. INHIB	EV-A	EV-B	2 PPB	6 PPB	FLSH
Field Term.	I 1-D,E	I 2-D,E	I 3-D,E	I 4-D,E	I 5-D,E	I 6-D,E	I 7-D,E	I 8-D,E	I 9-D,E	I 10-D,E	I 11-D,E	I 12-D,E	I 13-D,E	I 14-D,E
Channel #2	2 C	2 EC	4 C	4 EC	6 C	6 EC	8 C	8 EC	RR	EV-C	EV-D	4 PPB	8 PPB	STOP TIME
Field Term.	I 1-J,K	I 2-J,K	I 3-J,K	I 4-J,K	I 5-J,K	I 6-J,K	I 7-J,K	I 8-J,K	I 9-J,K	I 10-J,K	I 11-J,K	I 12-J,K	I 13-J,K	I 14-J,K

FRONT VIEW OF BOTTOM INPUT FILE J

C - INPUT ONLY DURING RED
EC - EXTEND AND CALL (RED, YELLOW, GREEN)
EXT - INPUT ONLY DURING GREEN

TERMINATION OF FIELD WIRING SHALL CONFORM TO THE ABOVE CHART. THE CONTRACTOR SHALL DUPLICATE THE INPUT ASSIGNMENT CHART AND INCLUDE IT IN THE CABINET DOCUMENTATION. THE CHART SHALL CLEARLY INDICATE WHICH INPUT FILE SLOTS AND CHANNEL TERMINALS ARE USED IN THE CABINET. A RED PEN SHALL BE USED TO CIRCLE SLOT NUMBERS AND CHANNEL TERMINALS THAT ARE USED.

CALCULATED BFB
CHECKED JC

MODEL 170E CONTROLLER WITH
MODEL 336 CABINET AND ACCESSORIES

D05-TSG-FY2005

SHEET NUMBER 5	6			11	12	13	14	New Signal	ITEM	ITEM EXT.	GRAND TOTAL	UNIT	DESCRIPTION	SEE SHEET NO.
					2				202	98100	2	EACH	REMOVAL MISC.: SIGNAL AHEAD FLASHING SIGN ASSEMBLY	7
200								220	603	00400	420	FT	4" CONDUIT, TYPE E	5
				36	24	12	28	8	614	11100	108	HOUR	LAW ENFORCEMENT OFFICER WITH PATROL CAR	
				55		504	375	1700	625	25402	2634	FT	CONDUIT, 2", 725.05	
								20	625	25502	20	FT	CONDUIT, 3", 725.05	
				55		504	375	1700	625	29003	2634	FT	TRENCH, 24" DEEP, AS PER PLAN	7
					2	2		10	625	30701	14	EACH	PULL BOX, 725.06, 18", AS PER PLAN	7
								1	625	30706	1	EACH	PULL BOX, 725.06, 24"	
								5	625	32000	5	EACH	GROUND ROD	
								2	630	79001	2	EACH	SIGN HANGER ASSEMBLY, SPAN WIRE, AS PER PLAN	7
								10	630	80100	10	SQ FT	SIGN, FLAT SHEET	
								100	630	84900	100	EACH	REMOVAL OF GROUND MOUNTED SIGN AND DISPOSAL	
				3	2		12	10	632	05001	27	EACH	VEHICULAR SIGNAL HEAD, WITH LED LAMP UNITS, 3 SECTION, 12" LENS, 1-WAY, AS PER PLAN	4
				1	2		1		632	05021	4	EACH	VEHICULAR SIGNAL HEAD, WITH LED LAMP UNITS, 3 SECTION, 12" LENS, 2-WAY, AS PER PLAN	4
							2		632	05041	2	EACH	VEHICULAR SIGNAL HEAD, WITH LED LAMP UNITS, 3 SECTION, 12" LENS, 3-WAY, AS PER PLAN	4
				1			2		632	05081	3	EACH	VEHICULAR SIGNAL HEAD, WITH LED LAMP UNITS, 5 SECTION, 12" LENS, 1-WAY, AS PER PLAN	4
					1				632	05101	1	EACH	VEHICULAR SIGNAL HEAD, WITH LED LAMP UNITS, 5 SECTION, 12" LENS, 2-WAY, AS PER PLAN	4
								10	632	25000	10	EACH	COVERING OF VEHICULAR SIGNAL HEAD	
							1	10	632	26500	11	EACH	DETECTOR LOOP	
				142			137	500	632	30201	779	FT	MESSENGER WIRE, 7 STRAND, 3/16" DIAMETER WITH ACCESSORIES, AS PER PLAN	5
				260	1197	840		1980	632	40501	4277	FT	SIGNAL CABLE, 5 CONDUCTOR, NO. 14 AWG, AS PER PLAN	6
				94	319			350	632	40701	763	FT	SIGNAL CABLE, 7 CONDUCTOR, NO. 14 AWG, AS PER PLAN	6
								4	632	64000	4	EACH	STRAIN POLE FOUNDATION	
				700			565	2974	632	65200	4239	FT	LOOP DETECTOR LEAD-IN CABLE	
								100	632	68200	100	FT	POWER CABLE, 2 CONDUCTOR, NO. 6 AWG	
								200	632	69500	200	FT	SERVICE CABLE, 2 CONDUCTOR, NO. 6 AWG	
						1660			632	69801	1660	FT	SERVICE CABLE, 3 CONDUCTOR, NO. 6 AWG, AS PER PLAN	7
				1	2		1	1	632	70001	5	EACH	POWER SERVICE, AS PER PLAN	7
								4	632	83000	4	EACH	STRAIN POLE, TYPE TC-81.10, DESIGN 10	
				1		1		1	632	89301	3	EACH	WOOD POLE, AS PER PLAN	7
						2			632	90400	2	EACH	SIGNALIZATION, MISC.: SIGNAL AHEAD FLASHER ASSEMBLY	7
				2	2	2	2	1	633	01601	9	EACH	CONTROLLER UNIT, TYPE 170E, WITH CABINET TYPE 332, AS PER PLAN	5
				2	2	1	2		633	01651	7	EACH	CONTROLLER UNIT, TYPE 170E, WITH CABINET, TYPE 336, AS PER PLAN	5
								1	633	67101	1	EACH	CABINET FOUNDATION, AS PER PLAN	5
				4	2	1	1	1	633	67201	9	EACH	CONTROLLER WORK PAD, AS PER PLAN	4
	LUMP								633	99300	LUMP		CONTROLLER ITEM, MISC.: EXTRA EQUIPMENT	5
								100	644	00500	100	FT	STOP LINE	
									832	30000	3000	EACH	EROSION CONTROL	
LUMP									614	11000	LUMP		MAINTAINING TRAFFIC	
									623	10001	LUMP		CONSTRUCTION LAYOUT STAKES, AS PER PLAN	3
									624	10000	LUMP		MOBILIZATION	

CALCULATED BFB CHECKED JS

GENERAL SUMMARY

D05-TSG-FY2005

08/06/04

75295gs.dgn

COSHOCTON COUNTY LOCATIONS

INTERSECTION DETAIL FOR SR 16 & SR 83

THE EXISTING MESSENGER WIRE SHALL BE REMOVED AND REPLACED FOR THIS SPAN USING THE EXISTING STRAIN POLES. THIS SHALL INCLUDE ALL NEW CLAMPS AND HARDWARE TO ATTACH THE MESSENGER WIRE TO THE STRAIN POLES AS PER THE STANDARD CONSTRUCTION DRAWINGS.

ALSO REMOVE AND REPLACE ALL VEHICULAR SIGNAL HEADS INCLUDING SIGNAL CABLE. SIGNAL CABLE RUNS SHALL BE COMPLETE FROM THE SIGNAL CABINET TERMINALS TO THE SIGNAL HEADS, AS PER STANDARD CONSTRUCTION DRAWINGS.

FINALLY, A QUANTITY OF LOOP DETECTOR LEAD-IN CABLE, TRENCH, AND CONDUIT HAS BEEN INCLUDED FOR USE, AS DIRECED BY THE ENGINEER, TO REPLACE THE LOOP LEAD-IN CABLES ON THE SPAN IF REQUIRED BY THE PROJECT ENGINEER UPON VISUAL INSPECTION.

THIS WORK SHALL BE PERFORMED WHILE TRAFFIC IS MAINTAINED BY AN LEO AND OR FLAGGERS. FOR TIME RESTRICTIONS REFER TO MOT NOTES.

THE FOLLOWING QUANTITIES HAVE BEEN INCLUDED IN THE GENERAL SUMMARY FOR THIS INTERSECTION:

ITEM 614	LAW ENFORCEMENT OFFICER WITH PATROL CAR	16 HOURS
ITEM 625	CONDUIT, 2", 725.05	55 FT.
ITEM 625	TRENCH, 24" DEEP, AS PER PLAN	55 FT.
ITEM 632	VEHICULAR SIGNAL HEAD WITH LED LAMP UNITS, 3 SECTION, 12" LENS, 1-WAY, AS PER PLAN	3 EACH
ITEM 632	VEHICULAR SIGNAL HEAD WITH LED LAMP UNITS, 3 SECTION, 12" LENS, 2-WAY, AS PER PLAN	1 EACH
ITEM 632	VEHICULAR SIGNAL HEAD WITH LED LAMP UNITS, 5 SECTION, 12" LENS, 1-WAY, AS PER PLAN	1 EACH
ITEM 632	MESSENGER WIRE, 7 STRAND, 3/8" DIAMETER WITH ACCESSORIES, AS PER PLAN	142 FT.
ITEM 632	SIGNAL CABLE, 5 CONDUCTOR, NO. 14 AWG., AS PER PLAN	260 FT.
ITEM 632	SIGNAL CABLE, 7 CONDUCTOR, NO. 14 AWG., AS PER PLAN	94 FT.
ITEM 632	LOOP DETECTOR LEAD-IN CABLE	700 FT.

INTERSECTION DETAIL FOR US 36 & SR 83/CR 1A

THE EXISTING GROUND MOUNTED NEMA CABINET AND CONTROLLER SHALL BE REMOVED AND REPLACED WITH A GROUND MOUNTED TYPEL 332 CABINET AND 170E CONTROLLER. ALSO INSTALL A CONTROLLER WORK PAD.

ALSO, THE EXISTING WOOD POLE AND POWER SERVICE FOR THIS SIGNAL SHALL BE REMOVE AND REPLACED WITH A NEW WOOD POLE AND POWER SERVICE. ALL COORDINATION WITH THE POWER COMPANY, INCLUDING ANY FEES, SHALL BE CONSIDERED INCIDENTAL TO AND INCLUDED IN THE BID ITEMS FOR THIS WORK.

THIS WORK SHALL BE PERFORMED WHILE TRAFFIC IS MAINTAINED BY AN LEO AND OR FLAGGERS. FOR TIME RESTRICTIONS REFER TO MOT NOTES.

THE FOLLOWING QUANTITIES HAVE BEEN INCLUDED IN THE GENERAL SUMMARY FOR THIS INTERSECTION:

ITEM 614	LAW ENFORCEMENT OFFICER WITH PATROL CAR	8 HOURS
ITEM 632	WOOD POLE, AS PER PLAN	1 EACH
ITEM 632	POWER SERVICE, AS PER PLAN	1 EACH
ITEM 633	CONTROLLER UNIT, TYPE 170E WITH TYPE 332 CABINET, AS PER PLAN	1 EACH
ITEM 633	CONTROLLER WORKPAD, AS PER PLAN	1 EACH

INTERSECTION DETAIL FOR US 36 & SR 16/83

THE EXISTING POLE MOUNTED NEMA CABINET AND CONTROLLER SHALL BE REMOVED AND REPLACED WITH A POLE MOUNTED MODEL 336 CABINET AND 170E CONTROLLER. THE CABINET SHALL BE MOUNTED AS PER THE DETAIL SHOWN ON THIS SHEET. ALSO INSTALL A CONTROLLER WORK PAD.

THIS WORK SHALL BE PERFORMED WHILE TRAFFIC IS MAINTAINED BY AN LEO AND OR FLAGGERS. FOR TIME RESTRICTIONS REFER TO MOT NOTES.

THE FOLLOWING QUANTITIES HAVE BEEN INCLUDED IN THE GENERAL SUMMARY FOR THIS INTERSECTION:

ITEM 614	LAW ENFORCEMENT OFFICE WITH PATROL CAR	4 HOURS
ITEM 633	CONTROLLER UNIT, TYPE 170E WITH TYPE 336 CABINET, AS PER PLAN	1 EACH
ITEM 633	CONTROLLER WORKPAD, AS PER PLAN	1 EACH

FAIRFIELD COUNTY LOCATIONS

INTERSECTION DETAIL FOR US 33 & PICKERINGTON RD.

THE EXISTING GROUND MOUNTED NEMA CABINET AND CONTROLLER SHALL BE REMOVED AND REPLACED WITH A GROUND MOUNTED TYPEL 332 CABINET AND 170E CONTROLLER. ALSO INSTALL A CONTROLLER WORK PAD.

THIS WORK SHALL BE PERFORMED WHILE TRAFFIC IS MAINTAINED BY AN LEO AND OR FLAGGERS. FOR TIME RESTRICTIONS REFER TO MOT NOTES.

THE FOLLOWING QUANTITIES HAVE BEEN INCLUDED IN THE GENERAL SUMMARY FOR THIS INTERSECTION:

ITEM 614	LAW ENFORCEMENT OFFICE WITH PATROL CAR	4 HOURS
ITEM 633	CONTROLLER UNIT, TYPE 170E WITH TYPE 332 CABINET, AS PER PLAN	1 EACH
ITEM 633	CONTROLLER WORKPAD, AS PER PLAN	1 EACH

INTERSECTION DETAIL FOR SR 37 & SR 256

THE EXISTING POLE MOUNTED NEMA CABINET AND CONTROLLER SHALL BE REMOVED AND REPLACED WITH A POLE MOUNTED TYPE 336 CABINET AND 170E CONTROLLER. THE CABINET SHALL BE MOUNTED AS PER THE DETAIL SHOWN ON SHEET 13. ALSO INSTALL A CONTROLLER WORK PAD.

THIS WORK SHALL BE PERFORMED WHILE TRAFFIC IS MAINTAINED BY AN LEO AND OR FLAGGERS. FOR TIME RESTRICTIONS REFER TO MOT NOTES.

THE FOLLOWING QUANTITIES HAVE BEEN INCLUDED IN THE GENERAL SUMMARY FOR THIS INTERSECTION:

ITEM 614	LAW ENFORCEMENT OFFICE WITH PATROL CAR	4 HOURS
ITEM 633	CONTROLLER UNIT, TYPEL 170E WITH TYPEL 336 CABINET, AS PER PLAN	1 EACH
ITEM 633	CONTROLLER WORKPAD, AS PER PLAN	1 EACH

GUERNSEY COUNTY LOCATION

INTERSECTION DETAIL FOR US 22 & SR 723

THE EXISTING POLE MOUNTED NEMA CABINET AND CONTROLLER SHALL BE REMOVED AND REPLACED WITH A POLE MOUNTED TYPEL 336 CABINET AND 170E CONTROLLER. THE CABINET SHALL BE MOUNTED AS PER THE DETAIL SHOWN ON SHEET 13. ALSO INSTALL A CONTROLLER WORK PAD.

REMOVE THE TWO EXISTING SIGNAL AHEAD SIGNS INCLUDING THE POWER SERVICE.

THIS WORK SHALL BE PERFORMED WHILE TRAFFIC IS MAINTAINED BY AN LEO AND OR FLAGGERS. FOR TIME RESTRICTIONS REFER TO MOT NOTES.

THE FOLLOWING QUANTITIES HAVE BEEN INCLUDED IN THE GENERAL SUMMARY FOR THIS INTERSECTION:

ITEM 202	REMOVAL MISC.: SIGNAL AHEAD FLASHING SIGN ASSEMBLY	2 EACH
ITEM 614	LAW ENFORCEMENT OFFICER WITH PATROL CAR	4 HOURS
ITEM 633	CONTROLLER UNIT, TYPE 170E WITH TYPE 336 CABINET, AS PER PLAN	1 EACH
ITEM 633	CONTROLLER WORKPAD, AS PER PLAN	1 EACH

LICKING COUNTY LOCATIONS

INTERSECTION DETAIL FOR SR 13 & DORSEY MILL RD.

THE EXISTING GROUND MOUNTED NEMA CABINET AND CONTROLLER SHALL BE REMOVED AND REPLACED WITH A GROUND MOUNTED TYPE 332 CABINET AND 170E CONTROLLER.

REMOVE AND REPLACE ALL SIGNAL HEADS INCLUDING THE HANGERS AND ADJUSTERS. ALL COSTS FOR THE REMOVAL, STORAGE, AND TRANSPORTATION TO ODOT, DISTRICT 5 OFFICE OF THE EXISTING VEHICULAR TRAFFIC SIGNALS, SHALL BE INCIDENTAL TO AND INCLUDED IN THE VARIOUS QUANTITIES FOR TRAFFIC ITEMS.

ALSO REMOVE AND REPLACE ALL SIGNAL CABLE. THIS INCLUDES ALL RUNS COMPLETE FROM THE CABINET TERMINALS TO THE SIGNAL HEADS AS PER STANDARD CONSTRUCTION DRAWINGS.

THIS WORK SHALL BE PERFORMED WHILE TRAFFIC IS MAINTAINED BY AN LEO AND OR FLAGGERS. FOR TIME RESTRICTIONS REFER TO MOT NOTES.

THE FOLLOWING QUANTITIES HAVE BEEN INCLUDED IN THE GENERAL SUMMARY FOR THIS INTERSECTION:

ITEM 614	LAW ENFORCEMENT OFFICER WITH PATROL CAR	8 HOURS
ITEM 632	VEHICULAR SIGNAL HEAD WITH LED LAMP UNITS, 3 SECTION, 12' LENS, 1-WAY, AS PER PLAN	2 EACH
ITEM 632	VEHICULAR SIGNAL HEAD WITH LED LAMP UNITS, 3 SECTION, 12' LENS, 2-WAY, AS PER PLAN	2 EACH
ITEM 632	VEHICULAR SIGNAL HEAD WITH LED LAMP UNITS, 5 SECTION, 12' LENS, 2-WAY, AS PER PLAN	1 EACH
ITEM 632	SIGNAL CABLE, 5 CONDUCTOR, NO. 14 AWG., AS PER PLAN	315 FT.
ITEM 632	SIGNAL CABLE, 7 CONDUCTOR, NO. 14 AWG., AS PER PLAN	319 FT.
ITEM 633	CONTROLLER UNIT, TYPE 170E WITH TYPE 332 CABINET, AS PER PLAN	1 EACH

INTERSECTION DETAIL FOR SR 16 & OWENS CORNING ENT.

THE EXISTING POLE MOUNTED NEMA CABINET AND CONTROLLER SHALL BE REMOVED AND REPLACED WITH A POLE MOUNTED TYPE 336 CABINET AND 170E CONTROLLER. THE CABINET SHALL BE MOUNTED AS PER THE DETAIL SHOWN ON SHEET 13. ALSO INSTALL A CONTROLLER WORK PAD.

ALSO REMOVE AND REPLACE THE TWO CONDUIT RISERS, THE TWO DISCONNECT SWITCHES AND INSTALL TWO NEW 18" PULL BOXES.
(ONE POWER SERVICE AND PULL BOX SHALL BE LOCATED ON THE STRAIN POLE ON THE OWENS CORNING ENTRANCE SIDE AND THE OTHER POWER SERVCE AND PULL BOX SHALL BE LOCATED AT THE STRAIN POLE WITH THE POLE MOUNTED CONTROLLER.)
ALL NECCESSARY MATERIALS TO COMPLETE THIS WORK SHALL BE INCIDENTAL TO AND INCLUDED IN THE VARIOUS BID ITEMS AT THIS LOCATION.

THIS WORK SHALL BE PERFORMED WHILE TRAFFIC IS MAINTAINED BY AN LEO AND OR FLAGGERS. FOR TIME RESTRICTIONS REFER TO MOT NOTES.

THE FOLLOWING QUANTITIES HAVE BEEN INCLUDED IN THE GENERAL SUMMARY FOR THIS INTERSECTION:

ITEM 614	LAW ENFORCEMENT OFFICER WITH PATROL CAR	4 HOURS
ITEM 625	PULL BOX, 725.08, 18", AS PER PLAN	2 EACH
ITEM 632	POWER SERVICE, AS PER PLAN	2 EACH
ITEM 633	CONTROLLER UNIT, TYPE 170E WITH TYPE 336 CABINET, AS PER PLAN	1 EACH
ITEM 633	CONTROLLER WORKPAD, AS PER PLAN	1 EACH

INTERSECTION DETAIL FOR SR 16 & MARNE RD.

THE EXISTING GROUND MOUNTED NEMA CABINET AND CONTROLLER SHALL BE REMOVED AND REPLACED WITH A GROUND MOUNTED TYPEL 332 CABINET AND 170E CONTROLLER.

ALSO REMOVE AND REPLACE ALL SIGNAL CABLE. THIS INCLUDES ALL RUNS COMPLETE FROM THE CABINET TERMINALS TO THE SIGNAL HEADS AS PER STANDARD CONSTRUCTION DRAWINGS.

THIS WORK SHALL BE PERFORMED WHILE TRAFFIC IS MAINTAINED BY AN LEO AND OR FLAGGERS. FOR TIME RESTRICTIONS REFER TO MOT NOTES.

THE FOLLOWING QUANTITIES HAVE BEEN INCLUDED IN THE GENERAL SUMMARY FOR THIS INTERSECTION:

ITEM 614	LAW ENFORCEMENT OFFICER WITH PATROL CAR	8 HOURS
ITEM 632	SIGNAL CABLE, 5 CONDUCTOR, NO. 14 AWG., AS PER PLAN	882 FT.
ITEM 633	CONTROLLER UNIT, TYPE 170E WITH TYPE 332 CABINET, AS PER PLAN	1 EACH

CALCULATED BFB CHECKED JC

INTERSECTION WORK DETAILS

D05-TSG-FY2005

LICKING COUNTY LOCATIONS - CONTINUED

INTERSECTION DETAIL FOR SR 37 & SR 161/YORK RD.

THE EXISTING GROUND MOUNTED NEMA CABINET AND CONTROLLER SHALL BE REMOVED AND REPLACED WITH A GROUND MOUNTED TYPE 332 CABINET AND 170E CONTROLLER.

THIS WORK SHALL BE PERFORMED WHILE TRAFFIC IS MAINTAINED BY AN LEO AND OR FLAGGERS. FOR TIME RESTRICTIONS REFER TO MOT NOTES.

THE FOLLOWING QUANTITIES HAVE BEEN INCLUDED IN THE GENERAL SUMMARY FOR THIS INTERSECTION:

ITEM 614	LAW ENFORCEMENT OFFICER WITH PATROL CAR	4 HOURS
ITEM 633	CONTROLLER UNIT, TYPE 170E WITH TYPE 332 CABINET, AS PER PLAN	1 EACH

INTERSECTION DETAIL FOR US 40 & SR 310

REMOVE AND REPLACE ALL SIGNAL CABLE. THIS INCLUDES ALL RUNS COMPLETE FROM THE CABINET TERMINALS TO THE SIGNAL HEADS AS PER STANDARD CONSTRUCTION DRAWINGS.

THIS WORK SHALL BE PERFORMED WHILE TRAFFIC IS MAINTAINED BY AN LEO AND OR FLAGGERS. FOR TIME RESTRICTIONS REFER TO MOT NOTES.

THE FOLLOWING QUANTITIES HAVE BEEN INCLUDED IN THE GENERAL SUMMARY FOR THIS INTERSECTION:

ITEM 632	SIGNAL CABLE, 5 CONDUCTOR, NO. 14 AWG., AS PER PLAN	840 FT.

INTERSECTION DETAIL FOR US 40 & SR 37

REMOVE AND REPLACE THE TWO SIGNAL AHEAD FLASHING SIGN ASSEMBLIES (SEE DETAIL ON SHEET 16). THIS INCLUDES THE EXISTING OVERHEAD POWER SERVICE AND WOOD POLES.

INSTALL NEW UNDERGROUND POWER CABLE IN CONDUIT INCLUDING PULL BOX INTALLATIONS AS REQUIRED.

REFER TO DETAIL ON SHEET 15 FOR DETAILS OF THE REQUIRED WORK AT THIS INTERSECTION.

THIS WORK SHALL BE PERFORMED WHILE TRAFFIC IS MAINTAINED BY AN LEO AND OR FLAGGERS. FOR TIME RESTRICTIONS REFER TO MOT NOTES.

THE FOLLOWING QUANTITIES HAVE BEEN INCLUDED IN THE GENERAL SUMMARY FOR THIS INTERSECTION:

ITEM 625	CONDUIT, 2", 725.05	504 FT.
ITEM 625	TRENCH, 24" DEEP, AS PER PLAN	504 FT.
ITEM 625	PULL BOX, 725.08, 18", AS PER PLAN	2 EACH
ITEM 632	SERVICE CABLE, 3 CONDUCTOR, NO. 6 AWG., AS PER PLAN	1660 FT.
ITEM 632	WOOD POLE, AS PER PLAN	1 EACH
ITEM 632	SIGNALIZATION, MISC.: SIGNAL AHEAD FLASHER ASSEMBLY	2 EACH

INTERSECTION DETAIL FOR US 40 & SR 13

THE EXISTING POLE MOUNTED NEMA CABINET AND CONTROLLER SHALL BE REMOVED AND REPLACED WITH A POLE MOUNTED TYPE 336 CABINET AND 170E CONTROLLER. THE CABINET SHALL BE MOUNTED AS PER THE DETAIL SHOWN ON THIS SHEET. ALSO INSTALL A CONTROLLER WORK PAD.

THIS WORK SHALL BE PERFORMED WHILE TRAFFIC IS MAINTAINED BY AN LEO AND OR FLAGGERS. FOR TIME RESTRICTIONS REFER TO MOT NOTES.

THE FOLLOWING QUANTITIES HAVE BEEN INCLUDED IN THE GENERAL SUMMARY FOR THIS INTERSECTION:

ITEM 614	LAW ENFORCEMENT OFFICER WITH PATROL CAR	4 HOURS
ITEM 633	CONTROLLER UNIT, TYPE 170E WITH TYPE 336 CABINET, AS PER PLAN	1 EACH
ITEM 633	CONTROLLER WORKPAD, AS PER PLAN	1 EACH

MUSKINGUM COUNTY LOCATIONS

INTERSECTION DETAIL FOR SR 16 & SR 60

THE EXISTING GROUND MOUNTED NEMA CABINET AND CONTROLLER SHALL BE REMOVED AND REPLACED WITH A GROUND MOUNTED TYPE 332 CABINET AND 170E CONTROLLER.

THIS WORK SHALL BE PERFORMED WHILE TRAFFIC IS MAINTAINED BY AN LEO AND OR FLAGGERS. FOR TIME RESTRICTIONS REFER TO MOT NOTES.

THE FOLLOWING QUANTITIES HAVE BEEN INCLUDED IN THE GENERAL SUMMARY FOR THIS INTERSECTION:

ITEM 614	LAW ENFORCEMENT OFFICER WITH PATROL CAR	4 HOURS
ITEM 633	CONTROLLER UNIT, TYPE 170E WITH TYPE 332 CABINET, AS PER PLAN	1 EACH

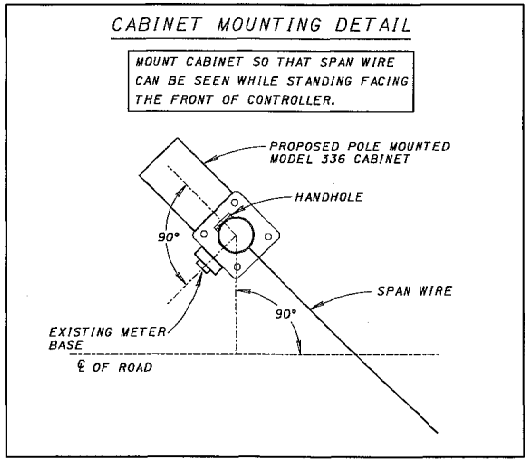

CALCULATED SFB
CHECKED JC

INTERSECTION WORK DETAILS

D05-TSG-FY2005

MUSKINGUM COUNTY LOCATIONS - CONTINUED

INTERSECTION DETAIL FOR US 22 & PINKERTON RD.

THE EXISTING GROUND MOUNTED NEMA CABINET AND CONTROLLER SHALL BE REMOVED AND REPLACED WITH A GROUND MOUNTED TYPE 332 CABINET AND 170E CONTROLLER.

THE EXISTING MESSENGER WIRE SHALL BE REMOVED AND REPLACED FOR THIS SPAN USING THE EXISTING STRAIN POLES. THIS SHALL INCLUDE ALL NEW CLAMPS AND HARDWARE TO ATTACH THE MESSENGER WIRE TO THE STRAIN POLES AS PER THE STANDARD CONSTRUCTION DRAWINGS.

REMOVE AND REPLACE ALL SIGNAL HEADS INCLUDING THE HANGERS AND ADJUSTERS.

ALSO REMOVE AND REPLACE THE EXISTING CONDUIT RISER AND DISCONNECT SWITCH

THIS WORK SHALL BE PERFORMED WHILE TRAFFIC IS MAINTAINED BY AN LEO AND OR FLAGGERS. FOR TIME RESTRICTIONS REFER TO MOT NOTES.

THE FOLLOWING QUANTITIES HAVE BEEN INCLUDED IN THE GENERAL SUMMARY FOR THIS INTERSECTION:

ITEM 614	LAW ENFORCEMENT OFFICER WITH PATROL CAR	8 HOURS
ITEM 632	POWER SERVICE, AS PER PLAN	1 EACH
ITEM 632	MESSENGER WIRE, 7 STRAND, 3/8" DIAMETER WITH ACCESSORIES, AS PER PLAN	137 FT.
ITEM 632	VEHICULAR SIGNAL HEAD WITH LED LAMP UNITS, 3 SECTION, 12" LENS, 1 WAY, AS PER PLAN	2 EACH
ITEM 632	VEHICULAR SIGNAL HEAD WITH LED LAMP UNITS, 3 SECTION, 12" LENS, 2-WAY, AS PER PLAN	1 EACH
ITEM 632	VEHICULAR SIGNAL HEAD WITH LED LAMP UNITS, 3 SECTION, 12" LENS, 3-WAY, AS PER PLAN	2 EACH
ITEM 633	CONTROLLER UNIT, TYPE 170E WITH TYPE 332 CABINET, AS PER PLAN	1 EACH

INTERSECTION DETAIL FOR US 22 & RICHARDS RD.

THE EXISTING GROUND MOUNTED NEMA CABINET AND CONTROLLER SHALL BE REMOVED AND REPLACED WITH A POLE MOUNTED TYPE 336 CABINET AND 170E CONTROLLER. ALSO INSTALL A CONTROLLER WORK PAD.

REMOVE AND REPLACE ALL SIGNAL HEADS INCLUDING THE HANGERS AND ADJUSTERS. NEW SIGNAL HEADS SHALL HAVE ADJUSTABLE HANGERS. NOTE: THIS IS A MAST ARM LOCATON.

REPLACE LOOP 3 (9' x 7') INCLUDING LOOP LEAD-IN CABLE BACK TO CONTROL CABINET.

THIS WORK SHALL BE PERFORMED WHILE TRAFFIC IS MAINTAINED BY AN LEO AND OR FLAGGERS. FOR TIME RESTRICTIONS REFER TO MOT NOTES.

THE FOLLOWING QUANTITIES HAVE BEEN INCLUDED IN THE GENERAL SUMMARY FOR THIS INTERSECTION:

ITEM 614	LAW ENFORCEMENT OFFICER WITH PATROL CAR	8 HOURS
ITEM 625	CONDUIT, 2", 725.05	375 FT.
ITEM 625	TRENCH, 24" DEEP, AS PER PLAN	375 FT.
ITEM 632	VEHICULAR SIGNAL HEAD WITH LED LAMP UNITS, 3 SECTION, 12" LENS, 1-WAY, AS PER PLAN	5 EACH
ITEM 632	VEHICULAR SIGNAL HEAD WITH LED LAMP UNITS, 5 SECTION, 12" LENS, 1-WAY, AS PER PLAN	1 EACH

INTERSECTION DETAIL FOR US 22 & RICHARDS RD. - CONTINUED

ITEM 632	DETECTOR LOOP	1 EACH
ITEM 632	LOOP DETECTOR LEAD-IN CABLE	565 FT.
ITEM 633	CONTROLLER UNIT, TYPE 170E WITH TYPE 336 CABINET, AS PER PLAN	1 EACH

INTERSECTION DETAIL FOR US 22/40 & SR 93

THE EXISTING GROUND MOUNTED NEMA CABINET AND CONTROLLER SHALL BE REMOVED AND REPLACED WITH A GROUND MOUNTED TYPE 332 CABINET AND 170E CONTROLLER.

REMOVE AND REPLACE ALL SIGNAL HEADS INCLUDING THE HANGERS AND ADJUSTERS.

THIS WORK SHALL BE PERFORMED WHILE TRAFFIC IS MAINTAINED BY AN LEO AND OR FLAGGERS. FOR TIME RESTRICTIONS REFER TO MOT NOTES.

THE FOLLOWING QUANTITIES HAVE BEEN INCLUDED IN THE GENERAL SUMMARY FOR THIS INTERSECTION:

ITEM 614	LAW ENFORCEMENT OFFICER WITH PATROL CAR	8 HOURS
ITEM 632	VEHICULAR SIGNAL HEAD WITH LED LAMP UNITS, 3 SECTION, 12" LENS, 1 WAY, AS PER PLAN	5 EACH
ITEM 632	VEHICULAR SIGNAL HEAD WITH LED LAMP UNITS, 5 SECTION, 12" LENS, 1 WAY, AS PER PLAN	1 EACH
ITEM 633	CONTROLLER UNIT, TYPE 170E WITH TYPE 332 CABINET, AS PER PLAN	1 EACH

INTERSECTION DETAIL FOR US 40 & REHL RD.

THE EXISTING POLE MOUNTED NEMA CABINET AND CONTROLLER SHALL BE REMOVED AND REPLACED WITH A POLE MOUNTED TYPE 336 CABINET AND 170E CONTROLLER. THE CABINET SHALL BE MOUNTED AS PER THE DETAIL SHOWN ON SHEET 13. ALSO INSTALL A CONTROLLER WORK PAD.

THIS WORK SHALL BE PERFORMED WHILE TRAFFIC IS MAINTAINED BY AN LEO AND OR FLAGGERS. FOR TIME RESTRICTIONS REFER TO MOT NOTES.

THE FOLLOWING QUANTITIES HAVE BEEN INCLUDED IN THE GENERAL SUMMARY FOR THIS INTERSECTION:

ITEM 614	LAW ENFORCEMENT OFFICER WITH PATROL CAR	4 HOURS
ITEM 633	CONTROLLER UNIT, TYPE 170E WITH TYPE 336 CABINET, AS PER PLAN	1 EACH
ITEM 633	CONTROLLER WORKPAD, AS PER PLAN	1 EACH

WORK DETAIL FOR US 40 & SR 37 INTERSECTION

(NOT TO SCALE)

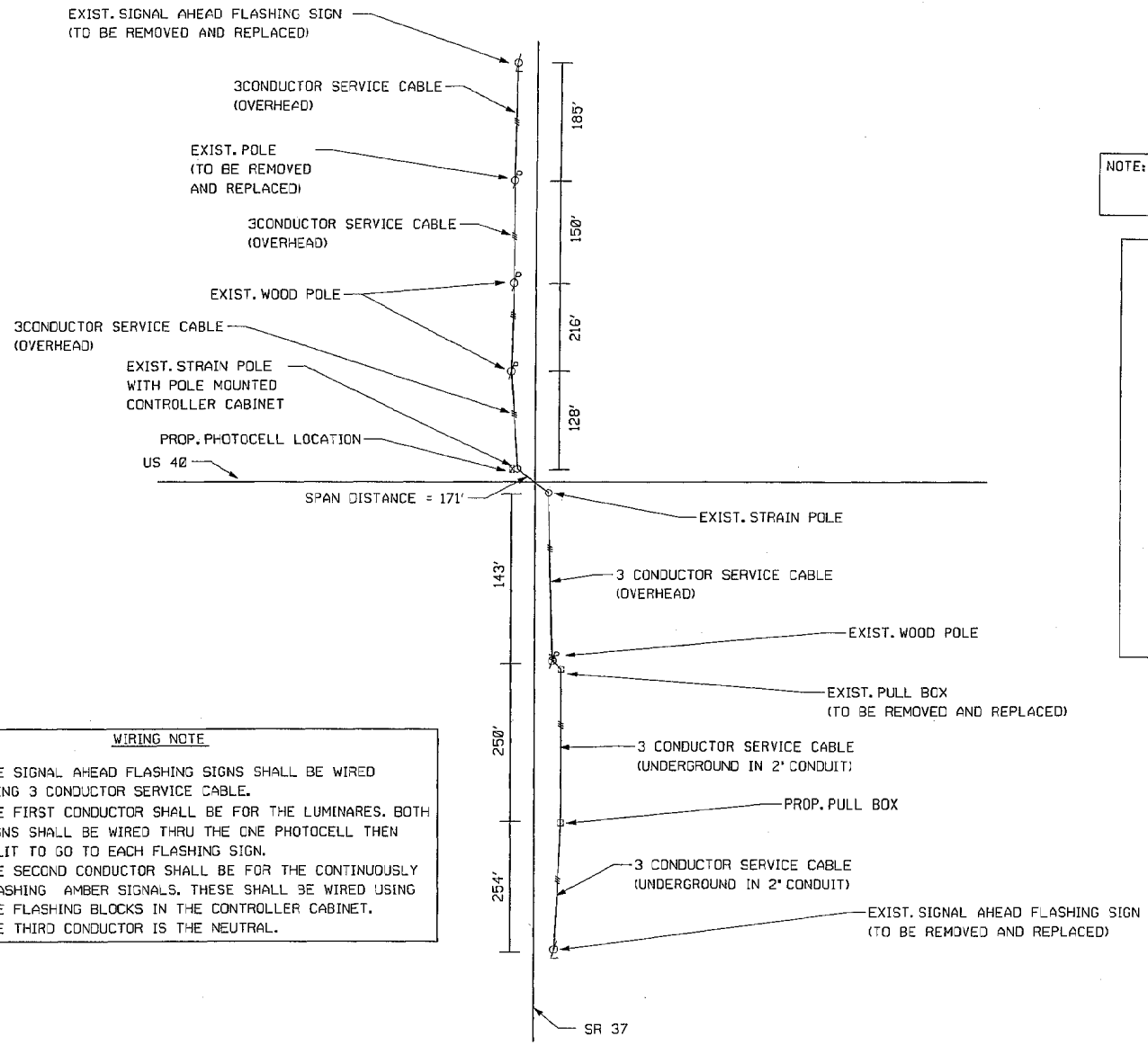

NOTE: REMOVE EXISTING OVERHEAD WIRING AND REPLACE WITH 3 CONDUCTOR SERVICE CABLE BOTH OVERHEAD AND UNDERGROUND.

PHOTOCELL LOCATION DETAIL

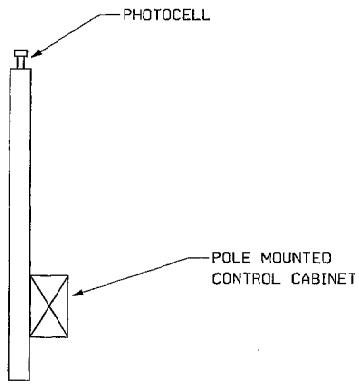

WIRING NOTE

THE SIGNAL AHEAD FLASHING SIGNS SHALL BE WIRED USING 3 CONDUCTOR SERVICE CABLE.
THE FIRST CONDUCTOR SHALL BE FOR THE LUMINARES. BOTH SIGNS SHALL BE WIRED THRU THE ONE PHOTOCELL THEN SPLIT TO GO TO EACH FLASHING SIGN.
THE SECOND CONDUCTOR SHALL BE FOR THE CONTINUOUSLY FLASHING AMBER SIGNALS. THESE SHALL BE WIRED USING THE FLASHING BLOCKS IN THE CONTROLLER CABINET.
THE THIRD CONDUCTOR IS THE NEUTRAL.

CALCULATED
DTD
CHECKED

INTERSECTION WORK DETAILS

D05-TSG-FY2005

PHOTOCELL HOOK-UP

THIS ITEM SHALL INCLUDE THE PHOTOCELL AND INCIDENTAL MATERIALS REQUIRED TO INSTALL A SIGNLE PHOTOCELL ON THE TOP OF THE EXISTING STRAIN POLE (THE POLE WITH THE CONTROLLER CABINET MOUNTED ON IT, SEE DETAIL ON SHEET 15).
THE SINGLE PHOTOCELL SHALL OPERATE BOTH DOWN LIGHTS.

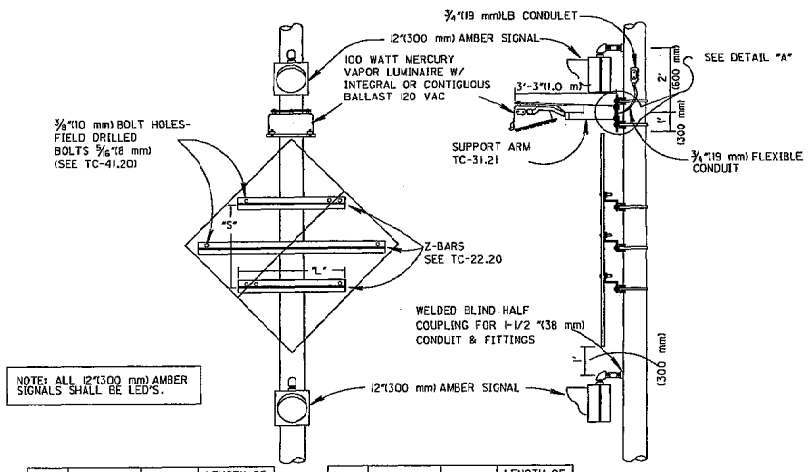

NOTE: ALL 12"(300 mm) AMBER SIGNALS SHALL BE LED'S.

SIGN SIZE	NO. OF BRACKETS	SPACING "S"	LENGTH OF BRACKETS "L"
1800	3	1050	350(2), 2250
1500	2	900	1150
1350	2	800	1000

ALL DIMENSIONS ARE IN MILLIMETERS.

SIGN SIZE	NO. OF BRACKETS	SPACING "S"	LENGTH OF BRACKETS "L"
72"	3	42"	54"(2), 90"
60"	2	36"	46"
36"	2	32"	40"

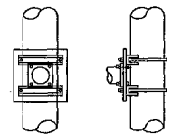

DETAIL "A"

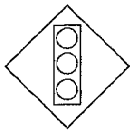

W3-3-36

TYPICAL

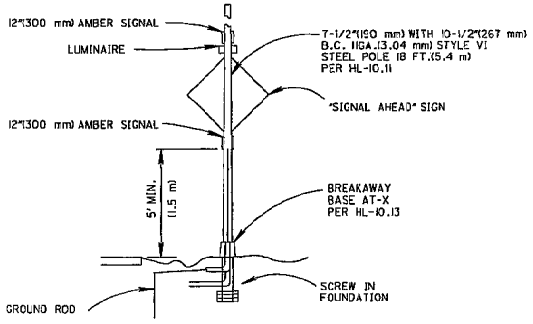

NOTES

1. MAKE ELECTRICAL CONNECTIONS INSIDE AT-X BASE WITH 15 AMP FUSED 713.15 TYPE VIII CONNECTOR KITS (GROUND RETURN-UNFUSED).
2. CONTACT BETWEEN ALUMINUM AND GALVANIZED PARTS SHALL BE PREVENTED WITH A MINIMUM 1/16"(1.6 mm) THICK CHLOROPRENE GASKET OR APPROVED SUBSTITUTE. GASKETS ARE NOT REQUIRED BETWEEN STAINLESS STEEL AND ALUMINUM.

THIS ITEM SHALL INCLUDE THE PHOTOCELL, AMBER SIGNALS, LUMINRE SIGN, BRACKETS, STEEL POLE, BREAKAWAY BASE, GROUND ROD, AND SCREW IN FOUNDATION INCLUDING ALL INCIDENTALS REQUIRED FOR THE INSTALLATION OF THE SIGN FLASHER ASSEMBLIES AS A COMPLETE UNIT, INSTALLED.

SIGN FLASHER ASSEMBLY DETAIL

D05-TSG-FY2005