STATE OF OHIO
DEPARTMENT OF TRANSPORTATION

FAI-204/ 204A-0.00/ 0.00

CITY OF PICKERINGTON
VIOLET AND LIBERTY TOWNSHIPS
FAIRFIELD COUNTY

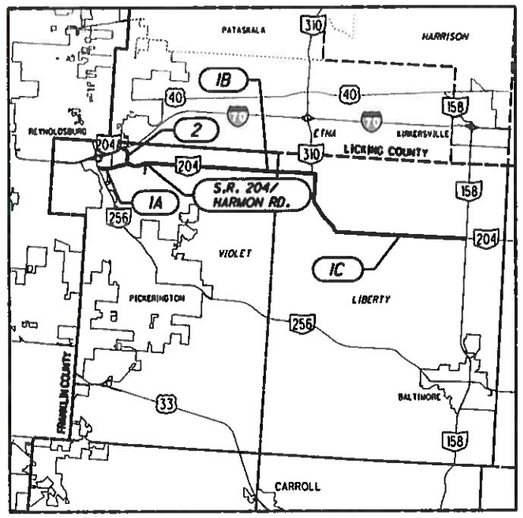

LOCATION MAP

LATITUDE: 39° 55' 37" LONGITUDE: 82° 40' 43"

PORTION TO BE IMPROVED ---------- ▬▬▬

PROJECT DESCRIPTION

ASPHALT CONCRETE RESURFACING AND RELATED WORK ON S.R. 204 AND S.R. 204A IN FAIRFIELD COUNTY. WORK INCLUDES WIDENING FOR RIGHT TURN LANE AT HARMON RD. (T.R. 221) WITH NEW TRAFFIC SIGNAL.

PROJECT EARTH DISTURBED AREA = 0.60 ACRES
ESTIMATED CONTRACTOR EARTH DISTURBED AREA = 0.25 ACRES
NOTICE OF INTENT EARTH DISTURBED AREA = (NOI NOT REQUIRED)

LOCATION	PLAN SPLIT	COUNTY	ROUTE	BEGIN SLM	END SLM	LENGTH MILES	CITY/ VILLAGE
IA	1	FAI	204	0.00	0.36	0.36	PICKERINGTON
IB	2	FAI	204	0.36	6.93	6.57	
IC	3	FAI	204	6.93	11.16	4.23	
2	2	FAI	204A	0.00	0.49	0.49	

INDEX OF SHEETS

TITLE SHEET 1
GENERAL NOTES 2-3
MAINTENANCE OF TRAFFIC NOTES 4-6
PAVEMENT DATA 7-8
SHOULDER DATA 9
EXTRA AREA DATA 10-11
BRIDGE TREATMENT DATA 12-13
PAVEMENT MARKING DATA 14-17
PAVEMENT MARKING DETAILS 18-24
RAISED PAVEMENT MARKER DATA 25
LOCATION SUB-SUMMARIES 26-30
GENERAL SUMMARY 31-33

S.R. 204 / HARMON RD.
TYPICAL SECTIONS 34
GENERAL NOTES 35-36
MAINTENANCE OF TRAFFIC 37-39
CALCULATIONS 40-42
PLAN SHEETS 43
CROSS SECTIONS 44-48
INTERSECTION DETAIL 49
TRAFFIC SIGNAL
S.R. 204 / HARMON RD. 50-61
SOIL BORINGS
RIGHT-OF-WAY

DESIGN DESIGNATION	S.R. 204 (0.00-3.36)	S.R. 204 (3.36-7.66)	S.R. 204 (7.66-11.16)	S.R. 204A
FUNCTIONAL CLASSIFICATION	UMA	UMA	RMC	UMA
OPENING YEAR ADT (2020)	11,500	4,400	4,800	5,200
DESIGN YEAR ADT (2032)	14,000	5,000	6,400	6,500
DESIGN HOURLY VOLUME (2032)	1,800	600	800	800
DIRECTIONAL DISTRIBUTION	60%	57%	65%	58%
TRUCKS (24 HOUR B&C)	2%	4%	7%	2%
DESIGN SPEED	45 MPH	55 MPH	55 MPH	45 MPH
LEGAL SPEED	45 MPH	55 MPH	55 MPH	45 MPH

UMA= URBAN MINOR ARTERIAL RMC= RURAL MAJOR COLLECTOR

2019 SPECIFICATIONS

THE STANDARD SPECIFICATIONS OF THE STATE OF OHIO, DEPARTMENT OF TRANSPORTATION, INCLUDING CHANGES AND SUPPLEMENTAL SPECIFICATIONS LISTED IN THE PROPOSAL SHALL GOVERN THIS IMPROVEMENT.

I HEREBY APPROVE THESE PLANS AND DECLARE THAT THE MAKING OF THIS IMPROVEMENT WILL NOT REQUIRE THE CLOSING TO TRAFFIC OF THE HIGHWAY AND THAT THAT PROVISIONS FOR THE MAINTENANCE AND SAFETY OF TRAFFIC WILL BE AS SET FORTH ON THE PLANS AND ESTIMATES.

APPROVED _____
DATE 2/21/20 *CITY MANAGER*
CITY OF PICKERINGTON

APPROVED _____
DATE 2/21/2020 *DISTRICT DEPUTY DIRECTOR*

APPROVED _____
DATE 3/5/20 *DIRECTOR, DEPARTMENT OF TRANSPORTATION*

CONFORMED SET

DESIGN EXCEPTIONS

NONE

UNDERGROUND UTILITIES
Contact Two Working Days Before You Dig
OHIO811.org Before You Dig
OHIO811, 8-1-1, or 1-800-362-2764
(Non-members must be called directly)

PLAN PREPARED BY:
OHIO DEPARTMENT OF TRANSPORTATION
DISTRICT 5 PLANNING & ENGINEERING

ENGINEER'S SEAL

STATE OF OHIO
JASON SCOTT LUTZ
E-77397
REGISTERED PROFESSIONAL ENGINEER

SIGNED: _____
DATE: 2/24/2019

STANDARD CONSTRUCTION DRAWINGS

BP-3.1	1/17/20	TC-21.20	7/20/18	TC-81.10	7/15/16	
BP-3.2	1/18/19	TC-22.10	10/18/13	TC-82.10	7/19/19	
BP-4.1	7/19/13	TC-41.20	10/18/13	TC-83.10	1/19/18	
		TC-41.41	7/19/19	TC-83.20	7/21/17	
RM-4.2	1/17/20	TC-42.20	10/18/13	TC-84.20	10/18/13	
		TC-52.10	10/18/13	TC-85.21	1/20/17	
MT-97.10	4/19/19	TC-52.20	7/20/18	TC-85.22	1/19/18	
MT-97.12	1/20/17	TC-61.10	1/17/14			
MT-98.28	1/20/17	TC-65.10	1/17/14	HL-10.12	1/20/17	
MT-99.20	4/19/19	TC-65.11	7/21/17	HL-60.11	7/21/17	
MT-101.60	1/20/17	TC-71.10	1/19/18			
MT-101.70	7/20/18					
MT-101.75	7/15/16					
MT-101.90	7/21/17					
MT-105.10	7/19/13					

SUPPLEMENTAL SPECIFICATIONS	
800	4/17/20
809	1/17/20
813	10/19/18
832	10/19/18
913	4/21/17

SPECIAL PROVISIONS
FAIRFIELD CO. UTILITIES
DATE: 2/19/20

FEDERAL PROJECT NO. E170(049)
PID NO. 95506
CONSTRUCTION PROJECT NO.
RAILROAD INVOLVEMENT NONE
FAI-204/ 204A - 0.00/ 0.00

FAI - SR 204/SR 204A-00.00/00.00
200316 PID - 95506
Dist 5 6/4/2020
Contract Proposal Available @
www.contracts.dot.state.oh.us/home
i:\Project\Data\FAI\95506\Design\Roadway\Sheets\95506_GT001.dgn Shee

UTILITIES

THE RESURFACING WORK ON THIS PROJECT WILL NOT AFFECT ANY KNOWN UNDERGROUND UTILITIES THAT EXIST UNDER OR ADJACENT TO THE WORK AREA.

SEE **SHEET 34** FOR THE UNDERGROUND UTILITIES AT THE S.R. 204/ HARMON RD. INTERSECTION.

CONTINGENCY QUANTITIES

THE CONTRACTOR SHALL NOT ORDER MATERIALS OR PERFORM WORK FOR ITEMS DESIGNATED BY PLAN NOTE TO BE USED "**AS DIRECTED BY THE ENGINEER**" UNLESS AUTHORIZED BY THE ENGINEER. THE ACTUAL WORK LOCATIONS AND QUANTITIES USED FOR SUCH ITEMS SHALL BE INCORPORATED INTO THE FINAL CHANGE ORDER GOVERNING COMPLETION OF THIS PROJECT.

PAVEMENT MARKINGS

AUXILIARY MARKINGS (STOP LINES, CROSSWALK LINES, CHANNELIZING LINES, ETC.) SHOWN IN THE PLANS ARE TAKEN FROM EXISTING LOCATIONS. THE CONTRACTOR SHALL DOCUMENT ALL AUXILIARY MARKING LOCATIONS THAT WILL BE REMOVED/OBLITERATED DURING THIS PROJECT AND PLACE NEW AUXILIARY MARKINGS AT THE LOCATION OF THE EXISTING MARKINGS UNLESS OTHERWISE SHOWN IN THE PLANS OR DIRECTED BY THE ENGINEER.

CENTER LINE MARKINGS SHALL BE PLACED PER THE PASSING/ NO PASSING LOGS FOUND ON THE WEBSITE BELOW. ANY DISCREPANCIES BETWEEN THE EXISTING MARKINGS AND THE LOGS SHALL BE BROUGHT TO THE ATTENTION OF THE ENGINEER PRIOR TO PLACEMENT. THE ENGINEER SHALL THAN NOTIFY THE OFFICE OF PLANNING AND ENGINEERING TO UPDATE THE LOGS. **THESE PLANS HAVE CENTER LINE CORRECTIONS.**

HTTP://WWW.DOT.STATE.OH.US/DISTRICTS/D05/PRODUCTION/PAGES/CENTERLINEPASSINGANDNOPASSINGZONELOGS.ASPX,

THE CONTRACTOR SHALL NOTIFY THE PROJECT ENGINEER A MINIMUM OF 24 HOURS PRIOR TO APPLYING PAVEMENT MARKING MATERIALS ON ANY ROUTES SO THAT ODOT PERSONNEL MAY BE PRESENT DURING PAVEMENT MARKING OPERATIONS. AS PER CMS 641.04, THE CONTRACTOR SHALL PROVIDE ODOT PERSONNEL A COPY OF THE DLS SHORT REPORT AT THE END OF EVERY WORK DAY OR AS REQUESTED THROUGHOUT THE DAY. THE CONTRACTOR SHALL NOT RECEIVE PAYMENT FOR ANY WORK DONE WITHOUT NOTIFICATION AS STATED ABOVE OR IF DSL SHORT REPORTS ARE NOT PROVIDED DAILY.

ITEM 254, PAVEMENT PLANING, ASPHALT CONCRETE, BY DEPTH

DEPTH OF PLANING SHALL BE AS SHOWN ON THE PAVEMENT AND SHOULDER DATA TABLES. PLANING SHALL BE THE FULL WIDTH OF THE EXISTING PAVEMENT, INCLUDING PAVED SHOULDERS. THE ROADWAY SHALL BE PLANED SUCH THAT POSITIVE DRAINAGE IS CREATED FROM THE CENTER LINE TO THE EDGE OF PAVEMENT IN TANGENT SECTIONS AND SHALL FOLLOW EXISTING SUPERELEVATIONS WHERE APPLICABLE. ALL REQUIREMENTS OF ITEM 254 SHALL APPLY.

THE PLANING DEPTH FOR THE EASTBOUND LANES OF S.R. 204 AT THE HARMON RD. INTERSECTION SHALL BE VARIABLE TO ACHIEVE PAVEMENT SLOPES AS SHOWN ON THE CROSS-SECTION SHEETS.

IF DURING PLANING OPERATIONS EXCESSIVE RIDGES OR OTHER IRREGULARITIES ARE FOUND, PLANING DEPTH ADJUSTMENTS SHALL BE MADE UP TO 3/8 INCH AS DIRECTED BY THE ENGINEER. PAYMENT SHALL BE INCLUDED IN THE UNIT PRICE BID PER CMS 254.07.

ITEM 253, PAVEMENT REPAIR

AN ESTIMATED QUANTITY FOR PAVEMENT REPAIR HAS BEEN INCLUDED IN THE PLAN TO BE USED **AS DIRECTED BY THE ENGINEER**. REPAIRS SHALL TAKE PLACE PRIOR TO ANY PLANING OPERATIONS.

THE INTENT OF THIS OPERATION IS TO REPAIR THOSE AREAS OF PAVEMENT WHICH HAVE COMPLETELY FAILED (PUMPING OF SUB-BASE MATERIAL) AND NOT TO CORRECT SURFACE IRREGULARITIES. **DEPTH OF EXCAVATION SHALL BE 7". THE MINIMUM WIDTH SHALL BE 4 FT**. AFTER EXCAVATION HAS BEEN COMPLETED, THE FACE OF THE REPAIR SHALL BE COATED WITH 407 TACK COAT. REPLACEMENT MATERIAL WILL BE **7"** OF ITEM 301 ASPHALT CONCRETE BASE, PG64-22 (PLACED, COMPACTED, AND TACKED IN TWO LIFTS).

REPAIR QUANTITIES MAY BE USED ON THE MAINLINE PAVEMENT OR ON PAVED SHOULDERS. ALL EXCAVATION, MATERIALS, LABOR, EQUIPMENT, TOOLS, TRAFFIC CONTROL AND INCIDENTALS NEEDED TO COMPLETE THE WORK DESCRIBED ABOVE SHALL BE PAID FOR UNDER ITEM 253, PAVEMENT REPAIR.

THE FOLLOWING QUANTITIES HAVE BEEN CARRIED TO THE LOCATION SUB-SUMMARIES FOR THE ABOVE DESCRIBED PURPOSE.

ITEM 253, PAVEMENT REPAIR
LOCATION 1A: 10 CY
LOCATION 1B: 50 CY
LOCATION 1C: 50 CY
LOCATION 2: 10 CY

ITEM 407, NON-TRACKING TACK COAT

THE RATE OF APPLICATION OF THE ITEM 407, NON-TRACKING TACK COAT SHALL BE PER **CMS TABLE 407.06-1** AND SUBJECT TO ADJUSTMENT AS DIRECTED BY THE ENGINEER. PLAN QUANTITIES INDICATE AN AVERAGE APPLICATION RATE OF **0.08 GAL/SY** FOR TACK COAT UNDER THE INTERMEDIATE AND **0.05 GAL/SY** UNDER THE SURFACE COURSE, (FOR ESTIMATING PURPOSES ONLY).

ITEM 408, PRIME COAT, AS PER PLAN

THE CONTRACTOR SHALL APPLY ONE COAT OF MC-70 (AS PER CMS 702) AT A RATE OF **0.40 GAL/SY** TO THE COMPLETED AGGREGATE SHOULDER. TO REDUCE AGGREGATE LOSS, **THE PRIME COAT SHALL BE APPLIED WITHIN SEVEN (7) DAYS AFTER PLACEMENT OF THE AGGREGATE SHOULDER OR LIQUATED DAMAGES PER CMS 108.07 WILL BE ASSESSED.** THE CONTRACTOR SHALL PROVIDE A SHIELD TO PREVENT THE SPRAYING OR DRIFTING OF LIQUID BITUMINOUS MATERIAL ONTO THE EDGE OF PAVEMENT OR EDGE LINE. THE ATTENTION OF THE CONTRACTOR IS DIRECTED TO 107.10 OF THE SPECIFICATIONS.

ITEM 516, 2" DEEP JOINT SEALER, AS PER PLAN

THE CONTRACTOR SHALL PLACE A **1" X 2" DEEP** BEAD OF JOINT SEALER (AS PER 705.04) AT THE LOCATIONS SHOWN IN PLANS. THE CONTRACTOR SHALL SAW CUT A CHANNEL FOR THE JOINT SEALER. THE COST FOR SAW CUTTING THE CHANNEL FOR THE JOINT SEALER SHALL BE INCLUDED FOR PAYMENT WITH ITEM 516, 2" DEEP JOINT SEALER, AS PER PLAN.

ITEM 617, COMPACTED AGGREGATE, AS PER PLAN

ALL AGGREGATE SHALL BE 100% CRUSHED LIMESTONE. ALL QUALITY REQUIREMENTS EXCEPT SHALE SHALL BE WAIVED. OTHER GRADATION REQUIREMENTS SHALL BE AS SPECIFIED EXCEPT THE INDEX SHALL BE WAIVED. IF SO PERMITTED, THE CONTRACTOR MAY USE ASPHALT CONCRETE PAVEMENT (RACP MEETING REQUIREMENTS OF 617.02) IN LIEU OF CRUSHED LIMESTONE.

ALL AREAS SHALL BE LOOSENED AND FREE OF VEGETATION PER 617.04 PRIOR TO PLACEMENT OF COMPACTED AGGREGATE. AGGREGATE SHOULDERS SHALL BE SLOPED TO PROVIDE POSITIVE DRAINAGE AWAY FROM THE ROADWAY. AGGREGATE SHOULDERS MAY BE REDUCED TO ONE (1) FOOT WIDE WHERE NECESSARY AND MAY BE OMITTED ON SLOPES STEEPER THAN 4:1 AT THE APPROVAL OF THE ENGINEER.

IN AREAS WHERE TOPSOIL IS ENCOUNTERED, THE WIDTH OF THE COMPACTED AGGREGATE SHALL BE REDUCED TO THE WIDTH OF THE EXISTING BERM. IF NO EXISTING BERM EXISTS THAN THE COMPACTED AGGREGATE SHALL BE NON-PERFORMED.

SHOULDER PREPARATION SHALL BE INCLUDED FOR PAYMENT IN THE UNIT PRICE BID FOR ITEM 617, COMPACTED AGGREGATE, AS PER PLAN.

ITEM 621, RAISED PAVEMENT MARKER REMOVED

RPM REMOVAL SHALL NOT OCCUR SOONER THAN 10 DAYS PRIOR TO RESURFACING OF THE ROADWAY. ALL RPM'S REMOVED SHALL BECOME THE PROPERTY OF THE CONTRACTOR.

ITEM 611, CATCH BASIN ADJUSTED TO GRADE
ITEM 611, MANHOLE ADJUSTED TO GRADE
ITEM 623, MONUMENT BOX ADJUSTED TO GRADE
ITEM 638, VALVE BOX ADJUSTED TO GRADE

THE FOLLOWING ITEMS HAVE BEEN CARRIED TO THE LOCATION SUB-SUMMARIES AND SHALL BE USED TO ADJUST THE FOLLOWING ITEMS.

ANY GAS VALVES AND TELEPHONE COMPANY MANHOLES ON THIS PROJECT SHALL BE ADJUSTED TO GRADE BY THE RESPECTIVE OWNER.

ITEM 611, CATCH BASIN ADJUSTED TO GRADE
LOCATION 1A: 1 EACH
LOCATION 2: 2 EACH

ITEM 611, MANHOLE ADJUSTED TO GRADE
LOCATION 1A: 5 EACH
LOCATION 1B: 1 EACH
LOCATION 2: 1 EACH

ITEM 623, MONUMENT BOX ADJUSTED TO GRADE
LOCATION 1A: 2 EACH

ITEM 638, VALVE BOX ADJUSTED TO GRADE
LOCATION 1B: 5 EACH

CALCULATED PTB
CHECKED JSL

GENERAL NOTES

FAI-204/204A-0.00/0.00

I:\ProjectData\FAI\95506\Design\Roadway\Sheets\95506_GN001.dgn Sheet 2/19/2020 4:16:01 PM jlutzi

RESIDENTIAL AND COMMERCIAL DRIVES

AN ESTIMATED QUANTITY OF ITEM 441, ASPHALT CONCRETE, HAS BEEN INCLUDED IN THE PLAN TO BE USED AS DIRECTED BY THE ENGINEER TO PAVE APPROACH AREAS TO EXISTING DRIVEWAYS. PAVING SHALL EXTEND AN AVERAGE OF 4' INTO THE DRIVEWAY (MEASURED FROM THE EDGE OF PAVEMENT OR PAVED SHOULDER IF PRESENT). THE ENGINEER MAY EXTEND PAVING DISTANCE FOR ASPHALT DRIVEWAYS IN ORDER TO PROVIDE A SMOOTH TRANSITION AND/OR ELIMINATE SHORT DISTANCES OF UNDESIRABLE PROFILE. ABRUPT CHANGES IN DRIVEWAY PROFILE ARE NOT PERMITTED.

AN ESTIMATED QUANTITY OF ITEM 202, WEARING COURSE REMOVED HAS BEEN INCLUDED IN THE PLAN TO BE USED AS DIRECTED BY THE ENGINEER TO CREATE BUTT JOINTS FOR ALL EXISTING ASPHALT, CONCRETE, AND GRAVEL DRIVES/APRONS. FIELD DRIVES AND OIL WELL DRIVES SHALL NOT BE PAVED.

IF AN EXISTING APRON CANNOT BE PAVED OVER (FOR EXAMPLE, BROKEN INTO SMALL PIECES) AS DETERMINED BY THE ENGINEER, IT SHALL BE REMOVED BEFORE BEING PAVED BACK 4' INTO THE DRIVEWAY. ALL GRADING, PRIME OR TACK COAT, MATERIALS, LABOR, EQUIPMENT TOOLS AND INCIDENTALS NECESSARY TO COMPLETE THE DRIVES SHALL BE INCLUDED IN THE UNIT PRICE BID FOR THE ITEMS LISTED BELOW.

BUTT JOINTS AT THE END OF ALL DRIVEWAYS SHALL BE **1.25"** IN DEPTH TO ACCOMMODATE THE SURFACE COURSE. NO WORK SHALL BE PERFORMED ON DRIVEWAYS LOCATED IN CURB SECTIONS UNLESS OTHERWISE DIRECTED BY THE ENGINEER.

THE FOLLOWING QUANTITIES HAVE BEEN CARRIED TO THE LOCATION SUB-SUMMARIES FOR THE ABOVE DESCRIBED PURPOSE:

ITEM 254, PAVEMENT PLANING, ASPHALT CONCRETE, 1.25"
LOCATION 1B: 1,770 SY
LOCATION 1C: 690 SY

ITEM 202, WEARING COURSE REMOVED
LOCATION 1B: 250 SY
LOCATION 1C: 100 SY

ITEM 441, ASPHALT CONCRETE SURFACE COURSE, TYPE 1, (448), PG 70-22M
LOCATION 1B: 71 CY
LOCATION 1C: 28 CY

MAIL BOX TURN OUTS

A QUANTITY OF ASPHALT CONCRETE HAS BEEN PROVIDED IN THE PLAN TO COVER MAIL BOX TURN OUTS. PAVING SHALL EXTEND TO THE MATCH THE EXISTING WIDTH OF THE TURN OUT. THE ENGINEER MAY EXTEND PAVING TO MATCH STANDARD DRAWING **BP-4.1** IF NECESSARY.

ANY EXTRA GRADING OF THE SHOULDERS, PRIME OR TACK COAT, MATERIALS, LABOR, EQUIPMENT, TOOLS AND INCIDENTALS NECESSARY TO COMPLETE MAIL BOX TURN OUTS SHALL BE INCLUDED IN THE UNIT PRICE BID FOR THE ITEMS LISTED BELOW.

.

ITEM 254, PAVEMENT PLANING, ASPHALT CONCRETE, 2.25"
LOCATION 1B: 1,480 SY
LOCATION 1C: 640 SY

ITEM 441, ASPHALT CONCRETE INTERMEDIATE COURSE, TYPE 1, (448)
LOCATION 1B: 42 CY
LOCATION 1C: 18 CY

ITEM 441, ASPHALT CONCRETE SURFACE COURSE, TYPE 1, (448), PG 70-22M
LOCATION 1B: 52 CY
LOCATION 1C: 23 CY

ITEM 209, PREPARING SUBGRADE FOR SHOULDER PAVING, AS PER PLAN

AFTER PLACEMENT OF THE INTERMEDIATE COURSE, WHILE PERFORMING LINEAR GRADING, THE CONTRACTOR SHALL EXCAVATE AN AREA **10 INCHES WIDE** OUTSIDE THE EXISTING PAVED SHOULDER TO PROVIDE A LEVEL SURFACE FREE OF VEGETATION FOR CONSTRUCTION OF THE SAFETY EDGE.

DURING LINEAR GRADING, THE CONTRACTOR SHALL PROVIDE POSITIVE DRAINAGE FROM THE ROADWAY SURFACE TO THE SHOULDER BREAK, THE EXISTING SHOULDERS SHALL BE GRADED AND SHAPED USING A GRADER OF ADEQUATE SIZE TO PERFORM THE WORK TO THE SATISFACTION OF THE ENGINEER.

ALL EXCESS MATERIAL REMAINING AFTER LINEAR GRADING IS COMPLETED THAT HAS NOT BEEN DISPOSED OF ON-SITE, SHALL BE REMOVED AND DISPOSED OFF-SITE BY THE CONTRACTOR PRIOR TO PLACEMENT OF THE SURFACE COURSE AND SAFETY EDGE.

GRADED SHOULDERS OF 12 INCHES OR LESS WHERE THE SAFETY EDGE CAN BE OMITTED, THE PREPARING SUBGRADE FOR SHOULDER PAVING CAN ALSO BE OMITTED. THE CONTRACTOR WILL ONLY BE PAID FOR AREAS WHERE THE ABOVE WORK IS BEING PREFORMED.

ALL EQUIPMENT, LABOR, AND INCIDENTALS REQUIRED TO PERFORM LINEAR GRADING AND EXCAVATION OF SHOULDER SHALL BE INCLUDED FOR PAYMENT IN THE UNIT PRICE BID FOR ITEM 209, PREPARING SUBGRADE FOR SHOULDER PAVING, AS PER PLAN.

ITEM 620, DELINEATOR MISC.: RAISED CURB CHANNELIZING SYSTEM REMOVAL

THIS ITEM SHALL CONSIST OF REMOVAL OF AN EXISTING RAISED CURB CHANNELIZING SYSTEM. ALL MATERIALS REMOVED SHALL BECOME PROPERTY OF THE CONTRACTOR AND DISPOSED OF OFF-SITE.

REMOVAL SHALL NOT OCCUR SOONER THAN 10 DAYS PRIOR TO RESURFACING OF THE ROADWAY. **AFTER REMOVAL, DRUMS SHALL BE USED UNTIL THE NEW RAISED CURB SYSTEM IS IN PLACE.**

ALL MATERIALS, LABOR, TOOLS, EQUIPMENT, TRAFFIC CONTROL AND INCIDENTALS NECESSARY TO PERFORM THE WORK DESCRIBED ABOVE SHALL BE INCLUDED IN THE UNIT BID PRICE FOR ITEM 620, DELINEATOR MISC.: RAISED CURB CHANNELIZING SYSTEM REMOVAL.

ITEM 620, DELINEATOR MISC.: RAISED CURB CHANNELIZING SYSTEM

THIS ITEM SHALL CONSIST OF INSTALLATION OF A NEW RAISED CURB CHANNELIZING SYSTEM TO BE PLACED AFTER RESURFACING OF THE ROADWAY.

THE NEW RAISIED CURB CHANNELIZING SYSTEM SHALL BE CONTINUOUS, INTERLOCKING, MOUNTABLE, AND SECURLY FASTENED TO THE ROADWAY MEETING MASH OR NCHRP 350 TL-3 REQUIREMENTS. IT SHALL MATCH THE CENTER LINE (YELLOW) COLOR AND ADHERE TO **CMS 730.19** REFLECTIVITY REQUIREMENTS ON ALL SIDES OF THE DEVICE. THE DELINEATOR PANELS OR BOLLARDS SHALL BE REBOUNDABLE AND A MINIMUM OF 42 INCHES IN HEIGHT (FROM ROADWAY) WITH THE SPACING MATCHING THE HEIGHT OF THE DELINEATOR. **SEE SHEET 24 FOR LOCATION.**

THE SYSTEM SHALL BE SENT TO THE PROJECT ENGINEER FOR APPROVAL PRIOR TO ORDERING.

ALL MATERIALS, LABOR, TOOLS, EQUIPMENT, TRAFFIC CONTROL AND INCIDENTALS NECESSARY TO PERFORM THE WORK DESCRIBED ABOVE SHALL BE INCLUDED IN THE UNIT BID PRICE FOR ITEM 620, DELINEATOR MISC.: RAISED CURB CHANNELIZING SYSTEM.

ITEM 632, DETECTOR LOOP, AS PER PLAN

ALL STOP LINE INDUCTOR LOOPS SHALL BE THE POWER HEAD CONFIGURATION SHOWN ON **TC-82.10** AND THE LENGTH SHALL BE **20'** OR AS DIRECTED. THE STOP LINE DETECTOR LOOPS SHALL NOT BE WIRED TO ANY OTHER LOOPS AND SHALL HAVE ITS OWN DETECTOR CHANNEL. ALL STOP LINE DETECTION SHALL BE TESTED FOR A BICYCLE TARGET AND ALL DILEMMA DETECTION ZONES SHALL BE TESTED FOR A MOTORCYCLE TARGET.

ALL DILEMMA ZONE INDUCTANCE LOOPS CALLED FOR IN THE PLANS SHALL BE ANGULAR DESIGN DETECTION (ADD) LOOP AS SHOWN ON **TC-82.10**. DIMENSIONS SHALL BE AS SPECIFIED ON TC-82.10.

ALL DETECTOR LOOPS SHALL BE CUT INTO THE PLANED SURFACE OR THE PROPOSED INTERMEDIATE COURSE AT A DEPTH OF 4" FROM THE PROPOSED SURFACE ELEVATION. THE CONTRACTOR SHALL TEST ALL LEAD-IN CABLES PRIOR TO MAKING THE FINAL SPLICE. PLACEMENT SHALL BE AS PER SPECIFICATION 632.10.

ALL MATERIALS, LABOR, TOOLS, EQUIPMENT, TRAFFIC CONTROL AND INCIDENTALS NECESSARY TO PERFORM THE WORK DESCRIBED ABOVE SHALL BE INCLUDED IN THE UNIT BID PRICE FOR ITEM 632, DETECTOR LOOP AS PER PLAN.

THE CONTRACTOR SHALL CONFIRM ALL EXISITNG DETECTOR LOOP LOCATIONS WITH THE CITY OF PICKERINGTON PRIOR TO INSTALLATION OF PROPOSED DETECTOR LOOPS. SEE SHEETS 18-19 FOR LOCATIONS.

THE FOLLOWING QUANTITIES HAVE BEEN CARRIED TO THE LOCATION SUB-SUMMARIES FOR THE ABOVE PURPOSES.

LOCATION 1A:
S.R. 204 AT S.R. 256
NO DETECTOR LOOPS (VIDEO)

S.R. 204 AT FREEDOM WAY/ HUNTERS RUN – 14 EACH
8 DILEMMA/ 2 SECOND VEHICLE (S.R. 204)
2 POWERHEAD (FREEDOM WAY)
2 POWERHEAD (HUNTER RUN)

S.R. 204 AT YARMOUTH DR. – 1 EACH
1 SECOND VEHICLE (ON S.R. 204)

LOCATION 1B:
S.R. 204 AT S.R. 204A (TAYLOR RD.)
NO DETECTOR LOOPS (RADAR)

S.R. 204 AT HARMON RD
NO DETECTOR LOOPS (RADAR)

S.R. 204 AT MILNOR RD
NO DETECTOR LOOPS (RADAR)

LOCATION 2:
S.R. 204A AT S.R. 204
NO DETECTOR LOOPS (RADAR DETECTION)

ITEM 632 DETECTOR LOOP, AS PER PLAN
LOCATION 1A: 15 EACH

CALCULATED PTB
CHECKED JSL

GENERAL NOTES

FAI-204/ 204A - 0.00/ 0.00

I:\ProjectData\FAI\95506\Design\Roadway\Sheets\95506_GN002.dgn Sheet 2/20/2020 12:24:57 PM jlutz

ITEM 614, MAINTAINING TRAFFIC

A MINIMUM OF 1-LANE OF TRAFFIC IN EACH DIRECTION SHALL BE MAINTAINED AT ALL TIMES ON **S.R. 204** AND **S.R. 204A** BY USE OF THE EXISTING PAVEMENT AND STANDARD DRAWINGS LISTED ON THE TITLE SHEET.

TWO-WAY TRAFFIC SHALL BE MAINTAINED AT ALL TIMES EXCEPT THAT ONE-WAY TRAFFIC WILL BE PERMITTED FOR MINIMUM PERIODS OF TIME CONSISTENT WITH THE REQUIREMENTS OF THE SPECIFICATIONS FOR PROTECTION OF COMPLETED ASPHALT CONCRETE COURSES INCLUDING REPAIRS.

AT NO TIME SHALL TRAFFIC BE MAINTAINED ON THE PLANED SURFACE, AT LEAST ONE COURSE OF ASPHALT CONCRETE SHALL BE IN PLACE BEFORE OPENING TO TRAFFIC. THIS RULE DOES NOT APPLY TO PLANING AT BRIDGES OR ACROSS BRIDGES UNLESS THE BRIDGE IS BEING TREATED THE SAME AS THE ROADWAY.

LENGTH AND DURATION OF LANE CLOSURES AND RESTRICTIONS SHALL BE AT THE APPROVAL OF THE ENGINEER. THE MAXIMUM LANE CLOSURE LENGTH SHALL BE PER MT-97.12 **EXCEPT BETWEEN S.R. 256 (SLM 0.00) AND FAI-204-0346 BRIDGE WHERE THE MAX CLOSURE LENGTH SHALL BE ONE MILE AND DURATION SHALL BE BETWEEN THE HOURS OF 7:00 A.M. AND 3:30 P.M.**

IT IS THE INTENT TO MINIMIZE THE IMPACT TO THE TRAVELING PUBLIC. LANE CLOSURES OR RESTRICTIONS OVER SEGMENTS OF THE PROJECT, IN WHICH NO WORK IS ANTICIPATED WITHIN A REASONABLE TIME FRAME, AS DETERMINED BY THE ENGINEER, SHALL NOT BE PERMITTED. THE LEVEL OF UTILIZATION OF MAINTENANCE OF TRAFFIC DEVICES SHALL BE COMMENSURATE WITH THE WORK IN PROGRESS.

ALL WORK AND TRAFFIC CONTROL DEVICES SHALL BE IN ACCORDANCE WITH CMS 614 AND OTHER APPLICABLE PORTIONS OF THE SPECIFICATIONS, AS WELL AS THE OHIO MANUAL OF UNIFORM TRAFFIC CONTROL DEVICES. PAYMENT FOR ALL LABOR, EQUIPMENT AND MATERIALS SHALL BE INCLUDED IN THE LUMP SUM CONTRACT PRICE FOR ITEM 614, MAINTAINING TRAFFIC, UNLESS SEPARATELY ITEMIZED IN THE PLAN.

SOUTHBOUND HARMON RD. CLOSURE

THE CLOSURE OF SOUTHBOUND HARMON RD. (T.R. 221) FROM S.R. 204 WILL BE REQUIRED FOR INSTALLATION OF A RIGHT TURN LANE. TRAFFIC SHALL BE DETOURED AS SHOWN ON **SHEET 38**. AN INCENTIVE/ DISINCENTIVE WILL BE APPLIED TO THIS WORK AS SHOWN IN THE TABLE BELOW.

INCENTIVE/ DISINCENTIVE CONTRACT TABLE

CRITICAL WORK – TIME WHEN ROAD MAY BE CLOSED	SOUTHBOUND HARMON RD. (T.R. 221)
DAYS	14
INCENTIVE/ DISINCENTIVE PER DAY	$900
MAXIMUM INCENTIVE	$4,500

INTERIM COMPLETION DATE

ALL RESURFACING AND RELATED WORK (EXTRA AREAS, COMPACTED AGGREGATE, RPM'S, AND FINAL MARKINGS) FROM **FAI-204-0346 BRIDGE** TO END OF PROJECT **SLM 11.16 (S.R. 158)** SHALL BE COMPLETED BY **OCTOBER 15TH, 2020.**

NOTIFICATION OF ROAD CLOSURE OR RESTRICTION

THE CONTRACTOR WILL ADVISE THE PROJECT ENGINEER A MINIMUM OF TWENTY ONE (21) DAYS PRIOR TO THE FOLLOWING: THE START OF CONSTRUCTION ACTIVITIES, LANE RESTRICTIONS, LANE CLOSURES, AND OR ROAD CLOSURES. THE PROJECT ENGINEER WILL FORWARD THIS INFORMATION TO THE FOLLOWING:

DISTRICT PUBLIC INFORMATION OFFICER (PIO) BY FAX AT (614) 887-4510 OR EMAIL AT D05.PIO@DOT.STATE.OH.US

DISTRICT PERMIT SECTION BY FAX AT (614) 887-4525 OR EMAIL AT BRIAN.BOSCH@DOT.STATE.OH.US

CENTRAL OFFICE SPECIAL HAUL PERMITS SECTION BY FAX AT (614) 728-4099 OR EMAIL AT HAULING.PERMITS@DOT.STATE.OH.US

THE PIO WILL, IN TURN, NOTIFY THE PUBLIC, THE LOCAL EMERGENCY SERVICES, AFFECTED SCHOOLS AND BUSINESSES, AND ANY OTHER IMPACTED LOCAL PUBLIC AGENCY OF ANY OF THE ABOVE MENTIONED ITEMS, VIA MEDIA SOURCES.

BUTT JOINT

A BUTT JOINT WILL BE REQUIRED AT THE LOCATIONS SPECIFIED BELOW AND PER STANDARD DRAWING **BP-3.1** UNLESS OTHERWISE SHOWN IN THE PLANS.

THE MINIMUM ASPHALT WEDGE LENGTH AT BUTT JOINTS SHALL BE **10'**. THE GRINDING FOR BUTT JOINTS SHALL BE INCLUDED WITH ITEM 254, PAVEMENT PLANING, ASPHALT CONCRETE.

LOC.	ROUTE	DESCRIPTION	S.L.M.	ITEM 614 ASPHALT CONCRETE FOR MAINTAINING TRAFFIC CU. YD.
1A	S.R. 204	BEGIN WORK	0.00	2.2
		LOCATION 1A TOTAL		**3.0**
1B	S.R. 204	FAI-204-0346	3.46	2.2
		LOCATION 1B TOTAL		**3.0**
1C	S.R. 204	END WORK	11.16	1.1
		LOCATION 1C TOTAL		**2.0**
2	S.R. 204A	BEGIN WORK	0.00	0.8
		END WORK	0.49	1.4
		LOCATION 2 TOTAL		**3.0**

DROPOFFS IN WORK ZONES

DROPOFFS THAT DEVELOP DURING CONSTRUCTION OPERATIONS AND THAT ARE NOT OTHERWISE PROVIDED FOR IN THE PLANS SHALL BE TREATED AS SHOWN ON STANDARD DRAWING **MT-101.90**. WHERE THE PLANS DO NOT PROVIDE SPECIFIC ITEMS FOR LABOR, EQUIPMENT, OR MATERIALS TO IMPLEMENT THE DROP-OFF TREATMENTS SPECIFIED, THEY SHALL BE INCLUDED FOR PAYMENT IN THE **LUMP SUM** BID FOR **ITEM 614, MAINTAINING TRAFFIC**.

ITEM 614, WORK ZONE PAVEMENT MARKINGS

THE CONTRACTOR SHALL PLACE ALL WORK ZONE PAVEMENT MARKINGS IN ACCORDANCE WITH **CMS 614.11** AND STANDARD DRAWING **MT-99.20** UNLESS OTHERWISE DIRECTED BY THE ENGINEER. THE QUANTITIES BELOW ARE FOR PLACEMENT OF TEMPORARY MARKINGS ON THE SURFACE AND INTERMEDIATE COURSES.

ITEM 614, WORK ZONE LANE LINE, CLASS I, 4", 642 PAINT (INTERMEDIATE)
LOCATION 1A: 0.60 MILE

ITEM 614, WORK ZONE LANE LINE, CLASS III, 4", 642 PAINT (SURFACE)
LOCATION 1A: 0.60 MILE

ITEM 614, WORK ZONE CENTER LINE, CLASS I, 642 PAINT (INTERMEDIATE)
LOCATION 1A: 0.56 MILE
LOCATION 1B: 7.01 MILE
LOCATION 1C: 4.65 MILE
LOCATION 2: 0.16 MILE

ITEM 614, WORK ZONE CENTER LINE, CLASS III, 642 PAINT (SURFACE)
LOCATION 1A: 0.56 MILE
LOCATION 1B: 7.01 MILE
LOCATION 1C: 4.65 MILE
LOCATION 2: 0.16 MILE

ITEM 614, WORK ZONE CHANNELIZING LINE, CLASS I, 8", 642 PAINT (INTERMEDIATE)
LOCATION 1A: 1,738 FT
LOCATION 1B: 860 FT
LOCATION 2: 660 FT

ITEM 614, WORK ZONE CHANNELIZING LINE, CLASS III, 8", 642 PAINT (SURFACE)
LOCATION 1A: 1,738 FT
LOCATION 1B: 860 FT
LOCATION 2: 660 FT

ITEM 614, WORK ZONE STOP LINE, CLASS I, 642 PAINT (INTERMEDIATE)
LOCATION 1A: 168 FT
LOCATION 1B: 132 FT
LOCATION 1C: 32 FT
LOCATION 2: 40 FT

ITEM 614, WORK ZONE STOP LINE, CLASS III, 642 PAINT (SURFACE)
LOCATION 1A: 168 FT
LOCATION 1B: 132 FT
LOCATION 1C: 32 FT
LOCATION 2: 40 FT

COOPERATION BETWEEN CONTRACTORS

THE STATE OF OHIO HAS CONTRACTED PROJECT **FAI-204-3.46/4.32 PID 96015** WHICH MAY BE CONSTRUCTED CONCURRENTLY WITH THIS PROJECT. IT IS IMPERATIVE THAT THE CONTRACTORS COOPERATE FULLY WITH EACH OTHER AS OUTLINED IN SECTION 105.08 OF THE CMS MANUAL. ALL MAINTENANCE OF TRAFFIC SHALL BE COORDINATED BETWEEN PROJECTS AND NOT CONFLICT WITH ONE ANOTHER.

S.R. 204 WILL BE CLOSED AT TOLL GATE RD. FOR COMPLETION OF BRIDGE FAI-204-0346 UNTIL AUGUST 15TH, 2020.

I:\ProjectData\FAI\95506\Design\MOT\Sheets\95506_MN001.dgn Sheet 5/22/2020 1:06:37 PM jlutzi

ITEM 614, LAW ENFORCEMENT OFFICER WITH PATROL CAR FOR ASSISTANCE

USE OF LAW ENFORCEMENT OFFICERS (LEOS) BY CONTRACTORS OTHER THAN THE USES SPECIFIED IN THIS NOTE WILL NOT GENERALLY BE PERMITTED AT PROJECT COST. LEOS SHOULD NOT BE USED WHERE THE OHIO MANUAL OF UNIFORM TRAFFIC CONTROL DEVICES (OMUTCD) INTENDS THAT FLAGGERS BE USED.

IN ADDITION TO THE REQUIREMENTS OF C&MS 614 AND THE OMUTCD, A UNIFORMED LEO WITH AN OFFICIAL PATROL CAR (CAR WITH TOP-MOUNTED EMERGENCY FLASHING LIGHTS AND COMPLETE MARKINGS OF THE APPROPRIATE LAW ENFORCEMENT AGENCY) SHOULD BE PROVIDED FOR CONTROLLING TRAFFIC FOR THE FOLLOWING TASKS, ***AS DIRECTED BY THE ENGINEER****:*

- *FOR LANE CLOSURES: DURING INITIAL SET-UP PERIODS, TEAR DOWN PERIODS, SUBSTANTIAL SHIFTS OF A CLOSURE POINT OR WHEN NEW LANE CLOSURE ARRANGEMENTS ARE INITIATED.*
- *DURING A TRAFFIC SIGNAL INSTALLATION WHEN IMPACTING THE NORMAL FUNCTION OF THE SIGNAL ORTHE FLOW OF TRAFFIC, OR WHEN TRAFFIC NEEDS TOBE DIRECTED THROUGH AN ENERGIZED TRAFFIC SIGNAL CONTRARY TO THE SIGNAL DISPLAY (E.G. DIRECTING MOTORISTS THROUGH A RED LIGHT).*

IN GENERAL, LEOS SHOULD BE POSITIONED IN ADVANCE OF AND ON THE SAME SIDE AS THE LANE RESTRICTION OR AT THE POINT OF ROAD CLOSURE, AND TO MANUALLY CONTROL TRAFFIC MOVEMENTS THROUGH SIGNALIZED INTERSECTIONS IN WORK ZONES.

LEOS SHOULD NOT FORGO THEIR TRAFFIC CONTROL RESPONSIBILITIES TO APPREHEND MOTORISTS FOR ROUTINE TRAFFIC VIOLATIONS. HOWEVER, IF A MOTORIST'S ACTIONS ARE CONSIDERED TO BE RECKLESS, THEN PURSUIT OF THE MOTORIST IS APPROPRIATE.

THE LEOS WORK AT THE DIRECTION OF THE CONTRACTOR. THE CONTRACTOR IS RESPONSIBLE FOR SECURING THE SERVICES OF THE LEOS AND COMMUNICATING THE INTENTIONS OF THE PLANS WITH RESPECT TO DUTIES OF THE LEOS. THE ENGINEER SHALL HAVE FINAL CONTROL OVER THE LEOS' DUTIES AND PLACEMENT, AND WILL RESOLVE ANY ISSUES THAT MAY ARISE BETWEEN THE TWO PARTIES.

THE LEO SHALL REPORT IN TO THE CONTRACTOR PRIOR TO THE START OF THE SHIFT TO RECEIVE INSTRUCTIONS REGARDING SPECIFIC WORK ASSIGNMENTS DURING HIS/HER SHIFT. THE LEO IS EXPECTED TO STAY AT THE PROJECT SITE FOR THE ENTIRE DURATION OF HIS/HER SHIFT. THE LEO SHALL REPORT TO THE CONTRACTOR AT THE END OF HIS/HER SHIFT. ONCE THE LEO HAS COMPLETED THE DUTIES DESCRIBED ABOVE AND STILL HAS TIME REMAINING ON HIS/HER SHIFT, THE LEO MAY BE ASKED TO PATROL THROUGH THE WORK ZONE (WITH FLASHING LIGHTS OFF) OR BE PLACED AT A LOCATION TO DETER MOTORISTS FROM SPEEDING. SHOULD IT BE NECESSARY TO LEAVE THE PROJECT SITE, THE LEO SHALL NOTIFY THE ENGINEER. THE CONTRACTOR SHALL PROVIDE THE LEO WITH A TWO-WAY COMMUNICATION DEVICE WHICH SHALL BE RETURNED TO THE CONTRACTOR AT THE END OF HIS/HER SHIFT.

LAW ENFORCEMENT OFFICERS (WITH PATROL CAR) REQUIRED BY THE TRAFFIC MAINTENANCE TASKS ABOVE SHALL BE PAID FOR ON A UNIT PRICE (HOURLY) BASIS UNDER ITEM 614, LAW ENFORCEMENT OFFICER (WITH PATROL CAR) FOR ASSISTANCE. THE HOURS PAID SHALL INCLUDE MINIMUM SHOW-UP TIME REQUIRED BY THE LAW ENFORCEMENT AGENCY INVOLVED.

ANY ADDITIONAL COSTS (ADMINISTRATIVE OR OTHERWISE) INCURRED BY THE CONTRACTOR TO OBTAIN THE SERVICES OF A LEO ARE INCLUDED WITH THE BID UNIT PRICE FOR ITEM 614, LAW ENFORCEMENT OFFICER WITH PATROL CAR FOR ASSISTANCE.

ITEM 614 LAW ENFORCEMENT OFFICER WITH PATROL CAR FOR ASSISTANCE
LOCATION 1A: 100 HOUR LOCATION 1B: 100 HOUR

ITEM 614, PORTABLE CHANGEABLE MESSAGE SIGN, AS PER PLAN

THE CONTRACTOR SHALL FURNISH, INSTALL, MAINTAIN AND REMOVE, WHEN NO LONGER NEEDED, A CHANGEABLE MESSAGE SIGN, ON SITE, FOR THE DURATION OF THE PROJECT. THE SIGN SHALL BE OF A TYPE SHOWN ON A LIST OF APPROVED PCMS UNITS AVAILABLE ON THE OFFICE OF MATERIALS MANAGEMENT WEB PAGE. THE LIST CONTAINS CLASS A AND B UNITS WITH MINIMUM LEGIBILITY DISTANCES OF 650 FEET AND 475 FEET, RESPECTIVELY.

EACH SIGN SHALL BE TRAILER-MOUNTED AND EQUIPPED WITH A FUNCTIONAL DIMMING MECHANISM, TO DIM THE SIGN DURING DARKNESS, AND A TAMPER AND VANDAL PROOF ENCLOSURE. EACH SIGN SHALL BE PROVIDED WITH APPROPRIATE TRAINING AND OPERATION INSTRUCTIONS TO ENABLE ON-SITE PERSONNEL TO OPERATE AND TROUBLESHOOT THE UNIT. THE SIGN SHALL ALSO BE CAPABLE OF BEING POWERED BY AN ELECTRICAL SERVICE DROP FROM A LOCAL UTILITY COMPANY. THE PCMS SHALL BE DELINEATED IN ACCORDANCE WITH C&MS 614.03.

THE PROBABLE PCMS LOCATIONS AND WORK LIMITS FOR THOSE LOCATIONS ARE SHOWN ON SHEET(S) OF THE PLAN. PLACEMENT, OPERATION, MAINTENANCE AND ALL ACTIVATION OF THE SIGNS BY THE CONTRACTOR SHALL BE AS DIRECTED BY THE ENGINEER. THE PCMS SHALL BE LOCATED IN A HIGHLY VISIBLE POSITION YET PROTECTED FROM TRAFFIC. THE CONTRACTOR SHALL, AT THE DIRECTION OF THE ENGINEER, RELOCATE THE PCMS TO IMPROVE VISIBILITY OR ACCOMMODATE CHANGED CONDITIONS. WHEN NOT IN USE, THE PCMS SHALL BE TURNED OFF. ADDITIONALLY, WHEN NOT IN USE FOR EXTENDED PERIODS OF TIME, THE PCMS SHALL BE TURNED, FACING AWAY FROM ALL TRAFFIC.

THE ENGINEER SHALL BE PROVIDED ACCESS TO EACH SIGN UNIT AND SHALL BE PROVIDED WITH APPROPRIATE TRAINING AND OPERATION INSTRUCTIONS TO ENABLE ODOT PERSONNEL TO OPERATE AND TROUBLESHOOT THE UNIT, AND TO REVISE SIGN MESSAGES, IF NECESSARY.

THE CONTRACTOR SHALL IMPLEMENT A SYSTEM WHEREBY CHANGEABLE MESSAGES WILL BE IMPLEMENTED WITHIN 2 HOURS FOLLOWING TELEPHONE NOTIFICATION FROM THE PROJECT ENGINEER TO A DESIGNATED PHONE.

ALL MESSAGES TO BE DISPLAYED ON THE SIGN WILL BE PROVIDED BY THE ENGINEER. A LIST OF ALL REQUIRED PRE-PROGRAMMED MESSAGES WILL BE GIVEN TO THE CONTRACTOR AT THE PROJECT PRECONSTRUCTION CONFERENCE. THE SIGN SHALL HAVE THE CAPABILITY TO STORE UP TO 99 MESSAGES. MESSAGE MEMORY OR PRE-PROGRAMMED DISPLAYS SHALL NOT BE LOST AS A RESULT OF POWER FAILURES TO THE ON-BOARD COMPUTER. THE SIGN LEGEND SHALL BE CAPABLE OF BEING CHANGED IN THE FIELD. THREE-LINE PRESENTATION FORMATS WITH UP TO SIX MESSAGE PHASES SHALL BE SUPPORTED. PCMS FORMAT SHALL PERMIT THE COMPLETE MESSAGE FOR EACH PHASE TO BE READ AT LEAST TWICE.

THE PCMS SHALL CONTAIN AN ACCURATE CLOCK AND PROGRAMMING LOGIC WHICH WILL ALLOW THE SIGN TO BE ACTIVATED, DEACTIVATED OR MESSAGES CHANGED AUTOMATICALLY AT DIFFERENT TIMES OF THE DAY FOR DIFFERENT DAYS OF THE WEEK.

THE PCMS UNIT SHALL BE MAINTAINED IN GOOD WORKING ORDER BY THE CONTRACTOR IN ACCORDANCE WITH THE PROVISIONS OF C&MS 614.07. THE CONTRACTOR SHALL, PRIOR TO ACTIVATING THE UNIT, MAKE ARRANGEMENTS, WITH AN AUTHORIZED SERVICE AGENT FOR THE PCMS, TO ASSURE PROMPT SERVICE IN THE EVENT OF FAILURE. ANY FAILURE SHALL NOT RESULT IN THE SIGN BEING OUT OF SERVICE FOR MORE THAN 12 HOURS, INCLUDING WEEKENDS. FAILURE TO COMPLY MAY RESULT IN AN ORDER TO STOP WORK AND OPEN ALL TRAFFIC LANES AND/OR IN THE DEPARTMENT TAKING APPROPRIATE ACTION TO SAFELY CONTROL TRAFFIC. THE ENTIRE COST TO CONTROL TRAFFIC, ACCRUED BY THE DEPARTMENT DUE TO THE CONTRACTOR'S NONCOMPLIANCE, WILL BE DEDUCTED FROM MONEYS DUE, OR TO BECOME DUE THE CONTRACTOR ON HIS CONTRACT.

ITEM 614, PORTABLE CHANGEABLE MESSAGE SIGN, AS PER PLAN (CONT'D.)

THE CONTRACTOR SHALL BE RESPONSIBLE FOR 24-HOUR-PER-DAY OPERATION AND MAINTENANCE OF THESE SIGNS ON THE PROJECT FOR THE DURATION OF THE PHASES WHEN THE PLAN REQUIRES THEIR USE.

PAYMENT FOR THE ABOVE DESCRIBED ITEM SHALL BE AT THE CONTRACT UNIT PRICE. PAYMENT SHALL INCLUDE ALL LABOR, MATERIALS, EQUIPMENT, FUELS, LUBRICATING OILS, SOFTWARE, HARDWARE AND INCIDENTALS TO PERFORM THE ABOVE DESCRIBED WORK.

A TOTAL OF ***2 PCMS*** *MAY BE REQUIRED FOR THIS PROJECT.*
2 SIGNS X 4 MONTH = 8 SNMT (HARMON RD. WIDENING/ RESURFACING)

ITEM 614, PORTABLE CHANGEABLE MESSAGE SIGN, AS PER PLAN
LOCATION 1A: 4 SNMT
LOCATION 1B: 4 SNMT

ITEM 614, WORK ZONE MARKING SIGN

THE CONTRACTOR SHALL PLACE ALL WORK ZONE MARKING SIGNS IN ACCORDANCE WITH CMS SECTION ***614.04****, UNLESS OTHERWISE DIRECTED BY THE ENGINEER.*

R4-1 (DO NOT PASS):
LOCATION 1B: 18 EACH
LOCATION 1C: 11 EACH

R4-2 (PASS WITH CARE):
LOCATION 1B: 9 EACH
LOCATION 1C: 8 EACH

W8-H12A (NO EDGE LINES):
LOCATION 1B: 14 EACH
LOCATION 1C: 13 EACH

ALL "NO EDGE LINES" SIGN LOCATIONS SHALL BE APPROVED BY THE ENGINEER PRIOR TO INSTALLATION.

ANY REVISIONS TO THE CENTER LINE PASSING/NO PASSING LOGS SHALL BE REFLECTED IN THE WORK ZONE SIGNING.

IN ADDITION, THE CONTRACTOR SHALL ERECT A "GROOVED PAVEMENT" SIGN 250 FEET IN ADVANCE OF ANY SECTION OF ROADWAY WHERE TRAFFIC MUST TRAVEL ON A PLANED SURFACE. "GROOVED PAVEMENT" SIGNS SHALL BE INCLUDED FOR PAYMENT WITH THE LUMP SUM BID FOR ITEM 614 MAINTAINING TRAFFIC AS PER CMS SECTION 614.055.

ITEM 614, WORK ZONE MARKING SIGN
LOCATION 1B: 41 EACH
LOCATION 1C: 32 EACH

CALCULATED PTB CHECKED JSL

MAINTENANCE OF TRAFFIC NOTES

FAI-204/204A-0.00/0.00

I:\ProjectData\FAI\95506\Design\MOT\Sheets\95506_MN002.dgn Sheet 2/19/2020 4:16:17 PM jlutz

MAINTENANCE OF TRAFFIC SIGNAL/FLASHER INSTALLATION

THE CONTRACTOR SHALL BE RESPONSIBLE FOR MAINTAINING TRAFFIC SIGNAL/FLASHER INSTALLATIONS WITHIN THE PROJECT UNDER THE FOLLOWING CONDITIONS:

1. EXISTING SIGNAL/FLASHER INSTALLATIONS WHICH THE PLANS REQUIRE THE CONTRACTOR TO ADJUST, MODIFY, ADD ONTO OR REMOVE, OR WHICH THE CONTRACTOR ACTUALLY ADJUSTS, MODIFIES OR OTHERWISE DISTURBS. THE CONTRACTOR SHALL BE RESPONSIBLE FOR THE ENTIRE INSTALLATION (AT AN INTERSECTION) FROM THE TIME HIS OPERATIONS FIRST DISTURB THE INSTALLATION UNTIL THE INSTALLATION HAS BEEN SUBSEQUENTLY REMOVED OR MODIFIED AND THE WORK ACCEPTED.

2. NEW OR REUSED SIGNAL/ FLASHER INSTALLATIONS OR DEVICES INSTALLED BY THE CONTRACTOR. THE CONTRACTOR SHALL BE RESPONSIBLE FOR MAINTENANCE OF THESE FROM THE TIME OF INSTALLATION UNTIL THE WORK IS ACCEPTED.

THE CONTRACTOR SHALL CORRECT AS QUICKLY AS POSSIBLE ALL OUTAGES OR MALFUNCTIONS. HE SHALL PROVIDE THE MAINTAINING AGENCY AND THE ENGINEER SUCH ADDRESSES AND PHONE NUMBERS WHERE HIS MAINTENANCE FORCES CAN BE CONTACTED. THE CONTRACTOR SHALL PROVIDE ONE OR MORE PERSONS TO RECEIVE ALL CALLS AND DISPATCH THE NECESSARY MAINTENANCE FORCES TO CORRECT OUTAGES. SUCH A PERSON OR PERSONS MAY BE USED TO PERFORM OTHER DUTIES AS LONG AS PROMPT ATTENTION IS GIVEN TO THESE CALLS AND A PERSON IS READILY AVAILABLE CONTINUOUSLY 24 HOURS A DAY, 7 DAYS A WEEK. ALL LAMP OUTAGES, CABLE OUTAGES, ELECTRICAL FAILURES, EQUIPMENT MALFUNCTIONS AND MIS-ALIGNED SIGNAL HEADS SHALL BE CORRECTED TO THE SATISFACTION OF THE ENGINEER WITH THE SIGNAL BACK TO SERVICE WITHIN FOUR HOURS AFTER THE CONTRACTOR HAS BEEN NOTIFIED OF THE OUTAGE.

IN THE EVENT NEW SIGNALS ARE DAMAGED PRIOR TO ACCEPTANCE, ALL DAMAGED EQUIPMENT EXCEPT POLES AND CONTROL EQUIPMENT SHALL BE REPLACED BY THE CONTRACTOR TO THE SATISFACTION OF THE ENGINEER WITH THE SIGNAL BACK IN SERVICE WITHIN 8 HOURS AFTER THE CONTRACTOR'S NOTIFICATION OF THE OUTAGE. THE CONTRACTOR SHALL ARRANGE FOR FULL TRAFFIC CONTROL UNTIL THE SIGNAL IS BACK IN OPERATION.

IF POLES AND/OR CONTROL EQUIPMENT ARE DAMAGED AND MUST BE REPLACED, THE CONTRACTOR SHALL MAKE TEMPORARY REPAIRS AS NECESSARY TO BRING THE SIGNAL BACK INTO FULL OPERATION WITHIN THE ALLOWED 8-HOUR PERIOD AND SHALL MAKE PERMANENT REPAIRS OR REPLACEMENT AS SOON THEREAFTER AS POSSIBLE.

NONE OF THE ABOVE SHALL BE CONSTRUED AS COLLECTIVE OR CONSECUTIVE OUTAGE TIME PERIODS AT ANY ONE LOCATION. THAT IS, WHERE MORE THAN ONE OUTAGE OCCURS AT ANY ONE LOCATION THEN THE ALLOTTED TIME LIMIT SHALL BE FOR THE WORST SINGLE OUTAGE.

WHERE OUTAGES ARE THE DIRECT RESULT OF A VEHICLE ACCIDENT, THE RESPONSE OF THE CONTRACTOR SHALL BE AS OUTLINED ABOVE. THE CONTRACTOR SHALL BE RESPONSIBLE FOR COLLECTION OF ANY COMPENSATION FOR THIS WORK FROM THOSE PARTIES RESPONSIBLE FOR THE DAMAGE.

WHERE THE CONTRACTOR HAS FAILED TO, OR CANNOT RESPOND TO, AN OUTAGE OR SIGNAL EQUIPMENT MALFUNCTION, AT THESE LOCATIONS WITHIN HIS RESPONSIBILITY, WITHIN PERIODS AS SPECIFIED ABOVE, THE ENGINEER MAY INVOKE THE PROVISIONS OF SECTION 105.15 AND ANY SUBSEQUENT BILLINGS TO THE STATE FOR POLICE SERVICES AND MAINTENANCE SERVICES BY CITY FORCES SHALL BE DEDUCTED FROM MONIES DUE OR TO BECOME DUE THE CONTRACTOR IN ACCORDANCE WITH PROVISIONS OF SECTION 105.15.

MAINTENANCE OF TRAFFIC SIGNAL/FLASHER INSTALLATION (CONT'D)

THE CONTRACTOR SHALL PROVIDE THE MAINTENANCE SERVICE ENTIRELY WITH HIS FORCES OR HE MAY CHOOSE TO ENTER INTO A COOPERATIVE UNDERSTANDING WITH THE LOCAL MAINTAINING AGENCY TO PROVIDE THE MAINTENANCE. THE CONTRACTOR SHALL INFORM THE ENGINEER, IN WRITING, OF THE MAINTENANCE METHOD SELECTED.

THE CONTRACTOR SHALL BE RESPONSIBLE FOR ANY DAMAGE TO ANY TRAFFIC SIGNAL COMPONENTS REQUIRED TO BE HANDLED DURING THE RELOCATION OF POLES AND REVISIONS TO THE SIGNAL SYSTEM.

ANY VEHICULAR TRAFFIC SIGNAL HEAD, EITHER NEW OR EXISTING WHICH WILL BE OUT OF OPERATION SHALL BE COVERED IN THE MANNER DESCRIBED IN 632.25.

THE CONTRACTOR SHALL MAINTAIN COMPLETE RECORDS OF MALFUNCTIONS INCLUDING:

1. TIME OF NOTIFICATION OF MALFUNCTION

2. TIME OF WORK CREWS ARRIVAL TO CORRECT THE MALFUNCTION

3. ACTIONS TAKEN TO CORRECT THE MALFUNCTION, INCLUDING A LIST OF PARTS REPAIRED OR REPLACED

4. A DIAGNOSIS OF REASON FOR THE MALFUNCTION AND PROBABILITY OF REOCCURRENCE

5. TIME OF COMPLETION OF THE REPAIR AND SYSTEM RESTORED TO FULL SERVICE.

A COPY OF THESE RECORDS SHALL BE PROVIDED TO THE ENGINEER WITHIN THREE (3) WORKING DAYS FOLLOWING COMPLETION OF EACH REPAIR.

ALL COSTS RESULTING FROM THE ABOVE REQUIREMENTS SHALL BE CONSIDERED TO BE INCLUDED IN THE LUMP SUM BID FOR ITEM 614, MAINTAINING TRAFFIC.

AIRWAY/HIGHWAY CLEARANCE FOR AIRPORTS AND HELIPORTS

THIS PROJECT HAS BEEN IDENTIFIED AS BEING WITHIN THE INFLUENCE AREA OF A PUBLIC USE AIRPORT OR HELIPORT. NO TEMPORARY STRUCTURES OR CONSTRUCTION EQUIPMENT AT MAXIMUM OPERATING HEIGHT SHALL EXCEED A HEIGHT OF **25 FT**. IF ANY TEMPORARY STRUCTURES OR CONSTRUCTION EQUIPMENT WILL EXCEED THIS HEIGHT, FURTHER COORDINATION WITH THE FEDERAL AVIATION ADMINISTRATION (FAA), AND ODOT OFFICE OF AVIATION, WILL BE NECESSARY PRIOR TO ERECTING SUCH TEMPORARY STRUCTURES OR OPERATING SUCH EQUIPMENT ON THE PROJECT. THE CONTRACTOR WILL BE REQUIRED TO FILE A NEW FAA FORM 7460-1, ADVISING THE FAA THAT AERONAUTICAL STUDY NO. **2019-AGL-21084-OE, 2019-AGL-21085-OE, AND 2019-AGL-21086-OE** IS BEING RESUBMITTED AND THAT AN ALTERATION TO THE ORIGINAL SUBMISSION IS REQUESTED.

NOTIFY THE ODOT OFFICE OF AVIATION WHEN RESUBMITTING AN FAA FORM 7460-1. NO TEMPORARY STRUCTURES OR CONSTRUCTION EQUIPMENT SHALL EXCEED THE PERMISSIBLE HEIGHT, UNTIL A COPY OF THE FAA APPROVAL AND THE ODOT OFFICE OF AVIATION PERMIT HAS BEEN FURNISHED TO THE PROJECT ENGINEER.

FAA APPROVAL MAY TAKE UP TO 45 DAYS. ALL SUBMISSIONS SHALL BE DIRECTED TO THESE OFFICES:

EXPRESS PROCESSING CENTER
THE FEDERAL AVIATION ADMINISTRATION
SOUTHWEST REGIONAL OFFICE
AIR TRAFFIC AIRSPACE BRANCH ASW-520
2601 MEACHAN BLVD.
FORT WORTH, TX 76137-4298

OHIO DEPARTMENT OF TRANSPORTATION
OFFICE OF AVIATION
2829 WEST DUBLIN-GRANVILLE ROAD
COLUMBUS, OHIO 43235
614-387-2346

CALCULATED PTB
CHECKED JSL

MAINTENANCE OF TRAFFIC NOTES

FAI-204/ 204A-
0.00/ 0.00

I:\ProjectData\FAI\95506\Design\MOT\Sheets\95506_MN003.dgn Sheet 2/19/2020 4:16:21 PM jlutz

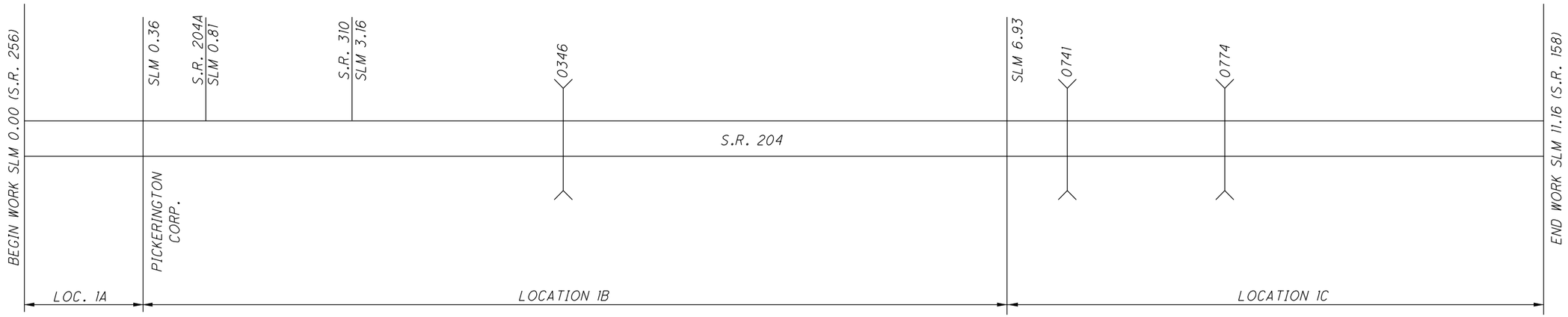

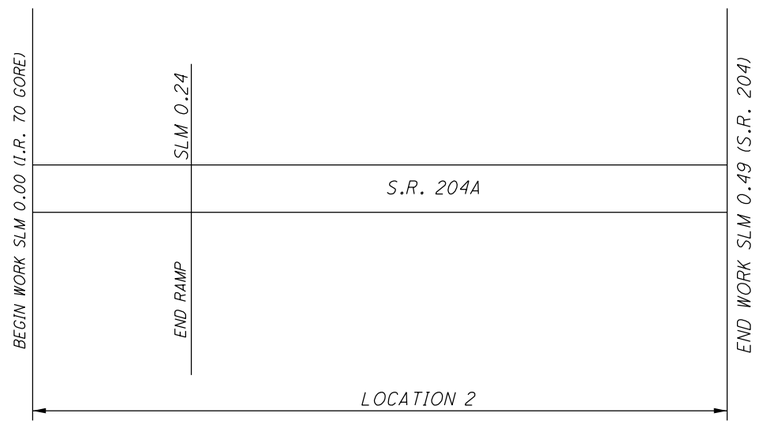

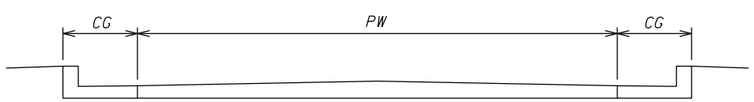

TYPICAL 1

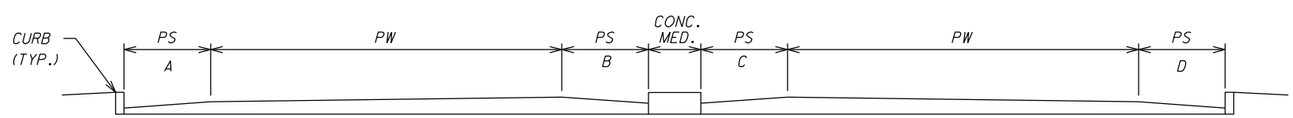

TYPICAL 4

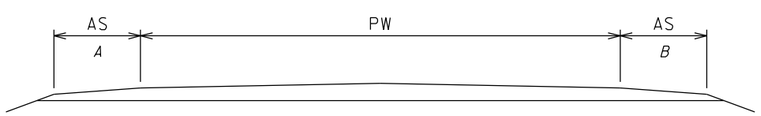

TYPICAL 2

AS= AGGREGATE SHOULDER
CG = CURB & GUTTER
PW = PAVEMENT WIDTH
PS = PAVED SHOULDER

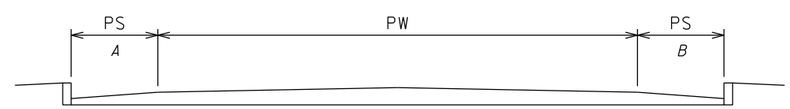

TYPICAL 5

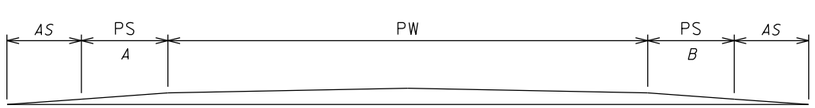

TYPICAL 3

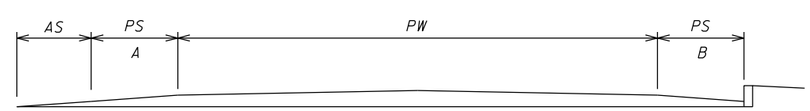

TYPICAL 6

NOTE: SEE SHOULDER DATA FOR A,B,C,D VALUES

CALCULATED PTB
CHECKED JSL

STRAIGHT LINE DIAGRAM/ TYPICALS

FAI-204/ 204A-
0.00/ 0.00

I:\ProjectData\FAI\95506\Design\Roadway\Sheets\95506_GA001.dgn Sheet 2/19/2020 4:16:24 PM jlutzi

SEE SHEET 7 FOR STRAIGHT LINE DIAGRAM AND TYPICALS

PAVEMENT DATA

LOCATION	COUNTY	ROUTE	BEGIN LOG POINT SLM	END LOG POINT SLM	LENGTH MILES	LENGTH LIN. FT.	PAVEMENT WIDTH (FT.)	TYPICAL	PAVEMENT AREA SQ. YD.	254 PAVEMENT PLANING, ASPHALT CONCRETE, 1.25' SQ. YD.	254 PAVEMENT PLANING, ASPHALT CONCRETE, 2.25' SQ. YD.	254 PAVEMENT PLANING, ASPHALT CONCRETE, VARIABLE (SEE SHEETS 49-51) SQ. YD.	407 NON-TRACKING TACK COAT @ 0.08 GAL./S.Y. GAL.	407 NON-TRACKING TACK COAT (@ 0.05 GAL./S.Y.) GAL.	441 THICKNESS INCHES	441 ASPHALT CONCRETE INTERMEDIATE COURSE, TYPE 1, (448) CU. YD.	441 THICKNESS INCHES	441 ASPHALT CONCRETE SURFACE COURSE, TYPE 1, (448), PG 70-22M CU. YD.
1A	FAI	S.R. 204	RADIUS RETURNS AT S.R. 256					1	153.3		153.3		12.3	7.7	1.00	4.3	1.25	5.4
			0.00	0.06	0.06	316.80	72.0	1	2,534.4		2,534.4		202.8	126.8	1.00	70.4	1.25	88.0
			0.06	0.09	0.03	158.40	78.0 (AVG.)	1	1,372.8		1,372.8		109.9	68.7	1.00	38.2	1.25	47.7
			0.09	0.11	0.02	105.60	72.0	1	844.8		844.8		67.6	42.3	1.00	23.5	1.25	29.4
			0.11	0.27	0.16	844.80	60.0	1	5,632.0		5,632.0		450.6	281.6	1.00	156.5	1.25	195.6
			0.27	0.36	0.09	475.20	54.0 (AVG.)	1	2,851.2		2,851.2		228.1	142.6	1.00	79.2	1.25	99.0
LOCATION 1A (TOTALS CARRIED TO SUB-SUMMARY)											**13,389**		**1,741**			**373**		**466**
1B	FAI	S.R. 204	0.36	0.40	0.04	211.20	54.0 (AVG.)	1	1,267.2		1,267.2		101.4	63.4	1.00	35.2	1.25	44.0
			0.40	0.44	0.04	211.20	22.0	1	516.3		516.3		41.4	25.9	1.00	14.4	1.25	18.0
			0.44	0.75	0.31	1,636.80	22.0	2	4,001.1		4,001.1		320.1	200.1	1.00	111.2	1.25	139.0
			0.75	1.23	0.48	2,534.40	24.0	3	6,758.4		6,758.4		540.7	338.0	1.00	187.8	1.25	234.7
			1.23	1.24	0.01	52.80	30.0 (AVG.)	3	176.0		176.0		14.1	8.8	**1.50**	7.4	1.25	6.2
			1.24	1.29	0.05	264.00	42.0 (AVG.)	3	1,232.0		616.0	616.0	98.6	61.6	**1.50**	51.4	1.25	42.8
			1.29	1.34	0.05	264.00	48.0	3	1,408.0		704.0	704.0	112.7	70.4	**1.50**	58.7	1.25	48.9
			1.34	1.40	0.06	316.80	40.0 (AVG.)	3	1,408.0		1,408.0		112.7	70.4	1.00	39.2	1.25	48.9
			1.40	1.46	0.06	316.80	28.0 (AVG.)	3	985.6		985.6		78.9	49.3	1.00	27.4	1.25	34.3
			1.46	1.66	0.20	1,056.00	22.0	2	2,581.3		2,581.3		206.6	129.1	1.00	71.8	1.25	89.7
			1.66	1.73	0.07	369.60	30.0 (AVG.)	3	1,232.0		1,232.0		98.6	61.6	1.00	34.3	1.25	42.8
			1.73	1.80	0.07	369.60	36.0	3	1,478.4		1,478.4		118.3	74.0	1.00	41.1	1.25	51.4
			1.80	1.85	0.05	264.00	30.0 (AVG.)	3	880.0		880.0		70.4	44.0	1.00	24.5	1.25	30.6
			1.85	3.87	2.02	10,665.60	22.0	2	26,071.5		26,071.5		2,085.8	1,303.6	1.00	724.3	1.25	905.3
			3.87	3.96	0.09	475.20	30.0 (AVG.)	3	1,584.0		1,584.0		126.8	79.2	1.00	44.0	1.25	55.0
			3.96	4.00	0.04	211.20	36.0	3	844.8		844.8		67.6	42.3	1.00	23.5	1.25	29.4
			4.00	4.10	0.10	528.00	30.0 (AVG.)	3	1,760.0		1,760.0		140.8	88.0	1.00	48.9	1.25	61.2
			4.10	5.91	1.81	9,556.80	24.0	2	25,484.8		25,484.8		2,038.8	1,274.3	1.00	708.0	1.25	884.9
			5.91	6.93	1.02	5,385.60	24.0	2	14,361.6	14,361.6			1,149.0	718.1	1.00	399.0	1.25	498.7
BRIDGE DEDUCTIONS (FROM SHEET 11)									(283.6)		(283.6)		(22.7)	(14.2)	1.00	(7.9)	1.25	(9.9)
LOCATION 1B (TOTALS CARRIED TO SUB-SUMMARY)										**14,362**	**78,066**	**1,320**	**12,189**			**2,645**		**3,256**
1C	FAI	S.R. 204	6.93	7.61	0.68	3,590.40	24.0	2	9,574.4	9,574.4			766.0	478.8	1.00	266.0	1.25	332.5
			7.61	7.66	0.05	264.00	24.0	6	704.0		704.0		56.4	35.2	1.00	19.6	1.25	24.5
			7.66	11.16	3.50	18,480.00	22.0	2	45,173.3	45,173.3			3,613.9	2,258.7	1.00	1,254.9	1.25	1,568.6
RADIUS RETURNS AT S.R. 158 (INCLUDES SHOULDER AREAS)								2	172.4		172.4							
BRIDGE DEDUCTIONS (FROM SHEET 11)									(554.4)	(554.4)			(44.4)	(27.8)	1.00	(15.4)	1.25	(19.3)
LOCATION 1C (TOTALS CARRIED TO SUB-SUMMARY)										**54,194**	**877**		**7,137**			**1,526**		**1,907**
2	FAI	S.R. 204A	0.00	0.24	0.24	1,267.20	16.0	6	2,252.8		2,252.8		180.3	112.7	1.00	62.6	1.25	78.3
			0.24	0.26	0.02	105.60	36.0	5	422.4		422.4		33.8	21.2	1.00	11.8	1.25	14.7
			0.26	0.35	0.09	475.20	24.0	4	1,267.2		1,267.2		101.4	63.4	1.00	35.2	1.25	44.0
			0.35	0.49	0.14	739.20	36.0	5	2,956.8		2,956.8		236.6	147.9	1.00	82.2	1.25	102.7
RADIUS RETURNS AT S.R. 204 (INCLUDES SHOULDER AREAS)								3	112.2		112.2		9.0	5.7	1.00	3.2	1.25	3.9
LOCATION 2 (TOTALS CARRIED TO SUB-SUMMARY)											**7,012**		**912**			**195**		**244**

CALCULATED PTB
CHECKED JSL

PAVEMENT DATA

FAI-204/204A - 0.00/0.00

I:\ProjectData\FAI\95506\Design\Roadway\Sheets\95506_G000I.dgn Sheet 2/19/2020 4:16:25 PM jlutzi

SEE SHEET 7 FOR STRAIGHT LINE DIAGRAM AND TYPICALS

SHOULDER DATA

LOCATION	COUNTY	ROUTE	BEGIN LOG POINT SLM	END LOG POINT SLM	LENGTH MILES	LENGTH LIN. FT.	TYPICAL	PAVED SHOULDER WIDTH (FT.) A	B	C	D	SHOULDER AREA SQ. YD.	209 PREPARING SUBGRADE FOR SHOULDER PAVING, AS PER PLAN MILE	254 PAVEMENT PLANING, ASPHALT CONCRETE, 1.25" SQ. YD.	PAVEMENT PLANING, ASPHALT CONCRETE, 2.25" SQ. YD.	PAVEMENT PLANING, ASPHALT CONCRETE, VARIABLE (SEE SHEETS 49-51) SQ. YD.	407 NON-TRACKING TACK COAT @ 0.08 GAL./S.Y. GAL.	NON-TRACKING TACK COAT (@ 0.05 GAL./S.Y.) GAL.	408 PRIME COAT, AS PER PLAN (@ 0.40 GAL./S.Y.) GAL.	441 THICKNESS INCHES	ASPHALT CONCRETE INTERMEDIATE COURSE, TYPE 1, (448) CU. YD.	THICKNESS INCHES	ASPHALT CONCRETE SURFACE COURSE, TYPE 1, (448), PG 70-22M CU. YD.	ASPHALT CONCRETE SURFACE COURSE, TYPE 1, (448), PG 70-22M (SAFETY EDGE) CU. YD.	617 THICKNESS INCHES	COMPACTED AGGREGATE, AS PER PLAN (2' WIDTH) CU. YD.
1B	FAI	S.R. 204	0.39	0.41	0.02	105.6	1	20	12			375.5			375.5		30.0	18.8		1.00	10.4	1.25	13.0			
			0.41	0.75	0.34	1,795.2	2						0.68						319.1						2.00	44.3
			0.75	1.23	0.48	2,534.4	3	4	4			2,252.8	0.96		2,075.0	177.8	180.2	112.6	450.6	1.00	62.6	1.25	78.2		2.00	62.6
			1.23	1.34	0.11	580.8	3	4	4			516.3	0.22		338.5	177.8	41.3	25.8	103.3	**1.50**	21.5	1.25	17.9		2.00	14.3
			1.34	1.49	0.15	792.0	3	4	4			704.0	0.30		526.2	177.8	56.3	35.2	140.8	1.00	19.6	1.25	24.4		2.00	19.6
			1.49	1.70	0.21	1,108.8	2						0.42						197.1						2.00	27.4
			1.70	1.85	0.15	792.0	3	2	2			352.0	0.30		352.0		28.2	17.6	140.8	1.00	9.8	1.25	12.2		2.00	19.6
			1.85	3.88	2.03	10,718.4	2						4.06						1,905.5						2.00	264.7
			3.88	4.00	0.12	633.6	3	4	2			422.4	0.24		422.4		33.8	21.1	112.6	1.00	11.7	1.25	14.7		2.00	15.6
			4.00	4.12	0.12	633.6	3	2	2			281.6	0.24		281.6		22.5	14.1	112.6	1.00	7.8	1.25	9.8		2.00	15.6
			4.12	4.30	0.18	950.4	2	2	2			422.4	0.36		422.4		33.8	21.1	169.0	1.00	11.7	1.25	14.7		2.00	23.5
			4.30	4.34	0.04	211.2	2	6	6			281.6	0.08		281.6		22.5	14.1		1.00	7.8	1.25	9.8			
			4.34	5.91	1.57	8,289.6	2	2	2			3,684.3	3.14		3,684.3		294.7	184.2	1,473.7	1.00	102.3	1.25	127.9		2.00	204.7
			5.91	6.93	1.02	5,385.6	2	2	2			2,393.6	2.04	2,393.6			191.5	119.7	957.4	1.00	66.5	1.25	83.1	14.4	2.00	133.0
	BRIDGE DEDUCTIONS (FROM SHEET 11)											(51.6)	(0.03)						(20.6)						2.00	(2.9)
LOCATION 1B (TOTALS CARRIED TO SUB-SUMMARY)													**13.01**	**2,394**	**8,760**	**534**	**1,520**		**6,062**		**332**		**421**			**842**
1C	FAI	S.R. 204	6.93	7.61	0.68	3,590.4	2						1.36						638.3					9.6	2.00	88.7
			7.61	7.66	0.05	264.0	6	2	8			293.3	0.10		293.3		23.5	14.7	46.9	1.00	8.1	1.25	10.2	0.7	2.00	6.5
			7.66	11.16	3.50	18,480.0	2						7.00						3,285.3					49.3	2.00	456.3
	BRIDGE DEDUCTIONS (FROM SHEET 11)											(97.3)	(0.05)						(38.9)					(0.3)	2.00	(8.1)
LOCATION 1C (TOTALS CARRIED TO SUB-SUMMARY)													**8.41**		**294**		**39**		**3,932**		**9**		**70**			**544**
2	FAI	S.R. 204A	0.00	0.24	0.24	1,267.2	6	3	6			1,267.2			1,267.2		95.0	63.4	225.3	1.00	35.2	1.25	44.0		2.00	15.6
			0.24	0.26	0.02	105.6	5	4	4			93.9			93.9		7.0	4.7		1.00	2.6	1.25	3.3			
			0.26	0.35	0.09	475.2	4	4	4	4	4	844.8			844.8		63.4	42.2		1.00	23.5	1.25	29.3			
			0.35	0.49	0.14	739.2	5	4	4			657.1			657.1		49.3	32.9		1.00	18.3	1.25	22.8			
LOCATION 2 (TOTALS CARRIED TO SUB-SUMMARY)															**2,863**		**358**		**226**		**80**		**100**			**16**

CALCULATED PTB
CHECKED JSL

SHOULDER DATA

FAI-204/204A-
0.00/0.00

I:\Project Data\FAI\95506\Design\Roadway\Sheets\95506_GQ002.dgn Sheet 2/19/2020 4:16:29 PM jlutzi

EXTRA AREA DATA

LOCATION	COUNTY	ROUTE	DESCRIPTION	SIDE	INTERSECTIONS A FT.	INTERSECTIONS B FT.	INTERSECTIONS C FT.	AREA SQ. YD.	202 WEARING COURSE REMOVED SQ. YD.	407 NON-TRACKING TACK COAT @ 0.08 GAL./S.Y. GAL.	441 THICKNESS INCHES	441 ASPHALT CONCRETE SURFACE COURSE, TYPE 1, (448), PG 64-22 CU. YD.
1A	FAI	S.R. 204	FREEDOM WAY	LT	48	32	115	392.0	392.0	31.4	1.25	13.7
			SHOPPES AT HUNTER RUN DR.	RT	42	44	113	366.4	366.4	29.4	1.25	12.8
			YARMOUTH DR.	LT	35	23	75	190.6	190.6	15.3	1.25	6.7
LOCATION 1A (TOTALS CARRIED TO SUB-SUMMARY)									**949**	**77**		**34**
1B	FAI	S.R. 204	SUMMERFIELD WAY	RT	35	34	78	217.8	217.8	17.5	1.25	7.6
			CAPETOWN AVE.	LT	30	35	93	213.4	213.4	17.1	1.25	7.5
			ECHO MANOR DR.	LT	34	21	58	149.3	149.3	12.0	1.25	5.2
			RUSTIC DR.	RT	25	38	86	172.3	172.3	13.8	1.25	6.0
			TAYLOR RD. (S.R. 204A)	LT	52	44	140	531.6	SEE PAVEMENT DATA TABLE			
			WELLESLEY DR.	RT	25	32	66	136.2	136.2	10.9	1.25	4.8
			WATERTON DR.	RT	25	25	59	116.7	116.7	9.4	1.25	4.1
			HARMON RD. (T.R. 221) (SEE DETAIL 1)	RT	CADD MEASURED			507.6	507.6	40.7	1.25	17.7
			ABBINGTON DR.	LT	30	25	60	141.7	141.7	11.4	1.25	5.0
			HAAF FARM DR.	LT	53	34	168	594.8	594.8	47.6	1.25	20.7
			DAYSPRINGS WAY	LT	25	36	116	211.2	211.2	16.9	1.25	7.4
			ASHLEY CREEK DR.	RT	25	44	85	179.2	179.2	14.4	1.25	6.3
			CARRIAGE LN.	LT	40	33	100	295.6	295.6	23.7	1.25	10.3
			CHESINGTON CT.	RT	24	26	72	130.7	130.7	10.5	1.25	4.6
			HARDWICK CT.	RT	30	16	68	140.0	140.0	11.2	1.25	4.9
			CHEVINGTON DR.	RT	35	20	75	184.8	184.8	14.8	1.25	6.5
			EASTWAY DR.	LT	40	20	80	222.3	222.3	17.8	1.25	7.8
			NEW ENGLAND AVE.	LT	20	60	117	196.7	196.7	15.8	1.25	6.9
			MILNOR RD. (C.R. 22) **	RT	60	23	102	416.7	416.7	33.4	1.25	14.5
			NANTUCKET AVE.	LT	38	30	84	240.7	240.7	19.3	1.25	8.4
			SUDBURY DR.	LT	26	22	74	138.7	138.7	11.1	1.25	4.9
			CHURCH VIEW DR.	RT	62	26	145	589.0	NO WORK			
			WAGRAM RD. (T.R. 223) **	LT	32	26	72	174.3	174.3	14.0	1.25	6.1
			AULT RD. (T.R. 223)	RT	22	18	52	85.6	85.6	6.9	1.25	3.0
			CALHOUN CT.	RT	12	40	91	87.4	87.4	7.0	1.25	3.1
			VIOLET MEADOWS BLVD.	LT	30	76	137	355.0	355.0	28.4	1.25	12.4
			PICKERINGTON RD. (C.R. 20)	RT	40	18	90	240.0	240.0	19.2	1.25	8.4
			OPTIMARA DR.	LT	20	50	82	146.7	146.7	11.8	1.25	5.1
			TOLLGATE RD. (T.R. 225)	LT	25	18	53	98.7	98.7	7.9	1.25	3.5
			TOLLGATE RD. (T.R. 225)	RT	20	32	68	111.2	111.2	8.9	1.25	3.9
			SAYLOR RD. (T.R. 229)	RT	25	21	55	105.6	105.6	8.5	1.25	3.7
			S.R. 310	LT	42	32	95	296.4	NO WORK			
			BLACKLICK RD. (C.R. 83)	LT	50	19	75	261.2	261.2	20.9	1.25	9.1
			MAUGER RD. (T.R. 239)	RT	35	18	65	161.4	161.4	13.0	1.25	5.7
LOCATION 1B (TOTALS CARRIED TO SUB-SUMMARY)									**6,434**	**516**		**226**

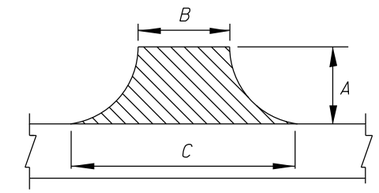

$$AREA = \left[\frac{A\ (B + C)}{2}\right] / 9$$

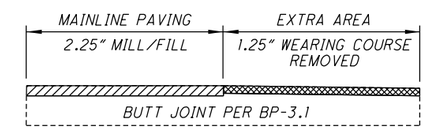

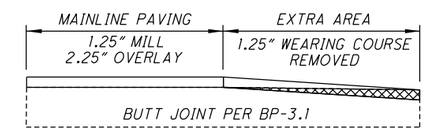

** SEE SHOULDER WIDENING DETAILS FOR MILNOR AND WAGRAM RD. ON SHEET 41

DETAIL 1

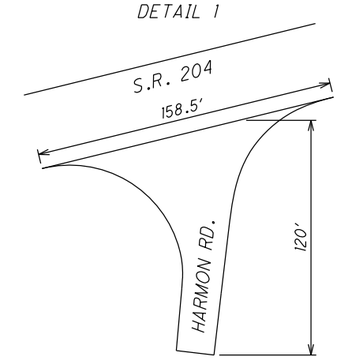

CALCULATED PTB
CHECKED JSL

EXTRA AREA DATA

FAI-204/204A-0.00/0.00

I:\Project Data\FAI\95506\Design\Roadway\Sheets\95506_G0003.dgn Sheet 2/20/2020 6:23:58 PM jlutzi

EXTRA AREA DATA

LOCATION	COUNTY	ROUTE	DESCRIPTION	SIDE	INTERSECTIONS (SEE SHEET 9 FOR DETAILS) A	B	C	AREA	202 WEARING COURSE REMOVED	407 NON-TRACKING TACK COAT @ 0.08 GAL./S.Y.	441 THICKNESS	441 ASPHALT CONCRETE SURFACE COURSE, TYPE 1, (448), PG 64-22
					FT.	FT.	FT.	SQ. YD.	SQ. YD.	GAL.	INCHES	CU. YD.
1C	FAI	S.R. 204	REFUGEE RD. (C.R. 7)	RT	40	29	57	191.2	191.2	15.3	1.25	6.7
			POPLAR CREEK RD. (T.R. 235)	RT	39	27	104	283.9	283.9	22.8	1.25	9.9
			HEIMBERGER RD. (T.R. 243)	LT	22	18	50	83.2	83.2	6.7	1.25	2.9
			HEIMBERGER RD. (T.R. 241)	RT	25	22	58	111.2	111.2	8.9	1.25	3.9
			SNYDER CHURCH RD. (T.R. 119)	LT	25	22	84	147.3	147.3	11.8	1.25	5.2
			SNYDER CHURCH RD. (C.R. 42)	RT	35	22	85	208.1	208.1	16.7	1.25	7.3
			BASIL RD. (C.R. 46)	LT	33	19	80	181.5	181.5	14.6	1.25	6.4
			BASIL RD. (C.R. 46)	RT	25	20	70	125.0	125.0	10.0	1.25	4.4
LOCATION 1C (TOTALS CARRIED TO SUB-SUMMARY)									**1,332**	**107**		**47**
2	FAI	S.R. 204A	HAAF FARM DR.	LT	45	14	40	135.0	135.0	10.8	1.25	4.7
LOCATION 2 (TOTALS CARRIED TO SUB-SUMMARY)									**135**	**11**		**5**

CALCULATED PTB
CHECKED JSL

EXTRA AREA DATA

FAI-204/204A-
0.00/0.00

I:\ProjectData\FAI\95506\Design\Roadway\Sheets\95506_G0004.dgn Sheet 2/19/2020 4:16:35 PM jlutzi

BRIDGE TREATMENT

LOCATION 1B:

FAI-204-0093	CULVERT - PAVE OVER SAME AS ROADWAY
FAI-204-0346	BUTT JOINT @ BRIDGE DECK
FAI-204-0432	CULVERT - PAVE OVER SAME AS ROADWAY
FAI-204-0629	CULVERT - PAVE OVER SAME AS ROADWAY

LOCATION 1C:

FAI-204-0741	MILL/FILL SURFACE COURSE ONLY
FAI-204-0774	MILL/FILL SURFACE COURSE ONLY
FAI-204-0783	CULVERT - PAVE OVER SAME AS ROADWAY

BRIDGE TREATMENT DATA

LOCATION	COUNTY, ROUTE, BRIDGE NO.	LENGTH (BRIDGE LIMITS)	WIDTH (BRIDGE WIDTH)	BRIDGE DECK AREA	APPROACH SLAB LENGTH	APPROACH SLAB WIDTH	APPROACH SLAB AREA (INCLUDES BOTH APPROACH SLABS)	DETAILS (SEE SHEET 13)	MAINLINE DEDUCTIONS (CARRIED TO PAVEMENT DATA TABLE)	SHOULDER DEDUCTIONS (CARRIED TO SHOULDER DATA TABLE)	202	407		441				516
											WEARING COURSE REMOVED	NON-TRACKING TACK COAT @ 0.08 GAL./S.Y.	NON-TRACKING TACK COAT (@ 0.05 GAL./S.Y.)	THICKNESS	ASPHALT CONCRETE INTERMEDIATE COURSE, TYPE 1, (448)	THICKNESS	ASPHALT CONCRETE SURFACE COURSE, TYPE 1, (448), PG 70-22M	2" DEEP JOINT SEALER, AS PER PLAN
		LIN. FT.	LIN. FT.	SQ. YD.	LIN. FT.	LIN. FT.	SQ. YD.		SQ.YD.	SQ.YD.	SQ.YD.	GAL.	GAL.	INCHES	CU. YD.	INCHES	CU. YD.	FT.
1B	FAI-204-0346	86.0	36.0	344.0	15.0	36.0	120.0	1	283.6	51.6	120.0	9.6	6.0	1.0	3.3	1.25	4.2	72
	SUB-TOTALS								(283.6)	(51.6)								
LOCATION 1B (TOTALS CARRIED TO SUB-SUMMARY)											120	16			4		5	72
1C	FAI-204-0741	46.0	34.0	173.8	20.0	34.0	151.2	2	229.3	38.2	325.0	26				1.25	11.3	
	FAI-204-0774	93.0	40.0	413.4	20.0	40.0	177.8	2	325.1	59.1	591.2	48				1.25	20.5	
	SUB-TOTALS								(554.4)	(97.3)								
LOCATION 1C (TOTALS CARRIED TO SUB-SUMMARY)											917	74					32	

CALCULATED PTB
CHECKED JSL

BRIDGE TREATMENT DATA

BRIDGE

FAI-204/204A-0.00/0.00

I:\ProjectData\FAI\95506\Design\Roadway\Sheets\95506_G0005.dgn Sheet 2/19/2020 4:16:37 PM jlutz

DETAIL 1

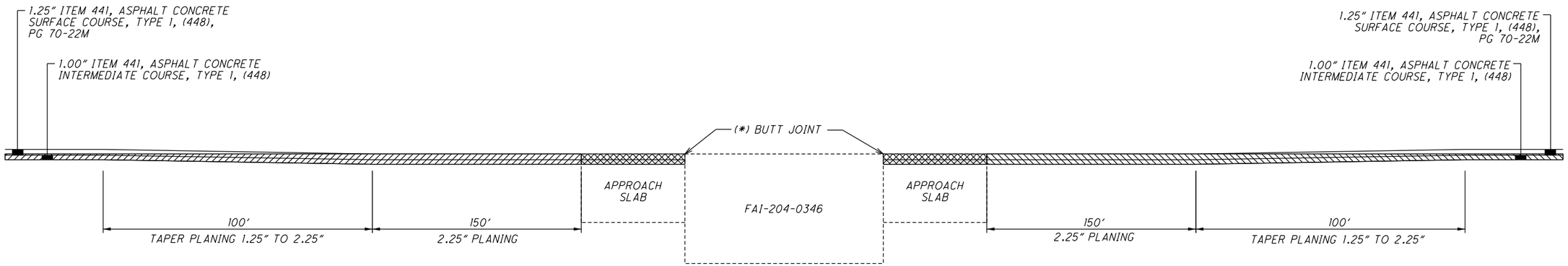

BUTT JOINT @ BRIDGE DECK

ITEM 254, PAVEMENT PLANING, ASPHALT CONCRETE

ITEM 202, WEARING COURSE REMOVED

(*) = 2" DEEP JOINT SEALER, AS PER PLAN

DETAIL 2

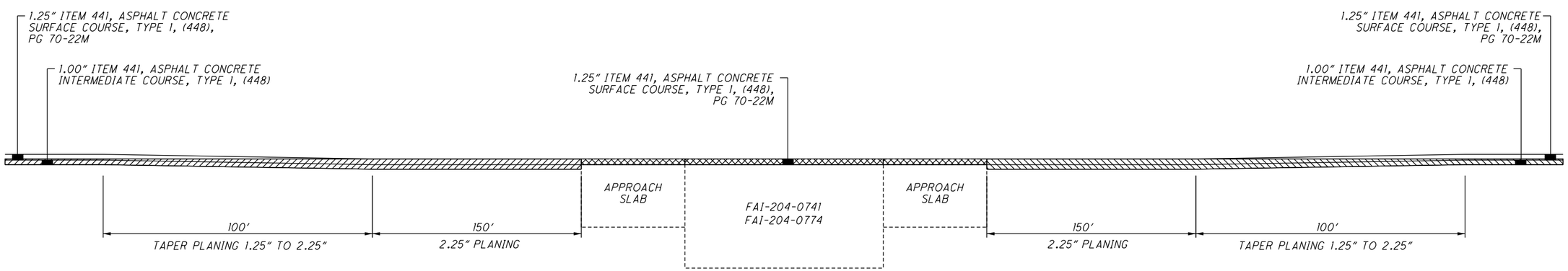

MILL AND FILL SURFACE COURSE ONLY

ITEM 254, PAVEMENT PLANING, ASPHALT CONCRETE

ITEM 202, WEARING COURSE REMOVED

(*) = 2" DEEP JOINT SEALER, AS PER PLAN

CALCULATED PTB
CHECKED JSL

BRIDGE TREATMENT DETAILS

FAI-204/ 204A - 0.00/ 0.00

H:\ProjectData\FAI\95506\Design\Roadway\Sheets\95506_SM001.dgn Sheet 2/19/2020 4:16:40 PM jlutzi

EDGE/LANE LINE DATA

LOCATION	COUNTY	ROUTE	S.L.M. FROM	S.L.M. TO	TOTAL LENGTH MILES	INFORMATION ONLY: WHITE EDGE LINE QUANTITIES TOTAL MILES	WHITE EDGE LINE QUANTITIES HIGHWAY MILES	WHITE EDGE LINE QUANTITIES RAMP MILES	YELLOW EDGE LINE QUANTITIES TOTAL MILES	YELLOW EDGE LINE QUANTITIES HIGHWAY MILES	YELLOW EDGE LINE QUANTITIES RAMP MILES	644: EDGE LINE, 6" MILE	644: LANE LINE, 6" MILE	REMARKS
1A	FAI	S.R. 204 E.B.	0.00	0.31	0.31								0.31	SEE SHEETS 18-19 FOR DETAILS
		S.R. 204 W.B.	0.07	0.36	0.29								0.29	
LOCATION 1A (TOTAL CARRIED TO SUB-SUMMARY)													**0.60**	
1B	FAI	S.R. 204	0.40	6.93	6.53	13.18	13.06					13.18		0.12 MILE ADDED FOR HARMON, MILNOR, WAGRAM, AND PICKERINGTON RD.
LOCATION 1B (TOTAL CARRIED TO SUB-SUMMARY)												**13.18**		
1C	FAI	S.R. 204	6.93	11.16	4.23	8.46	8.46					8.46		
LOCATION 1C (TOTAL CARRIED TO SUB-SUMMARY)												**8.46**		
2	FAI	S.R. 204A	0.00	0.24	0.24	0.24		0.24	0.24		0.24	0.48		
			0.24	0.35	0.11	0.22	0.22		0.22	0.22		0.44		
			0.35	0.49	0.14	0.28	0.28					0.28		
LOCATION 2 (TOTAL CARRIED TO SUB-SUMMARY)												**1.20**		

CALCULATED PTB
CHECKED JSL

PAVEMENT MARKING DATA (EDGE/LANE LINE)

FAI-204/204A-
0.00/0.00

I:\ProjectData\FAI\95506\Design\Traffic\Sheets\95506_T0001.dgn Sheet 5/22/2020 1:30:30 PM jlutzi

CENTER LINE DATA

LOCATION	COUNTY	ROUTE	S.L.M. FROM	S.L.M. TO	TOTAL LENGTH MILES	INFORMATION ONLY CENTER LINE QUANTITIES TOTAL MILES	INFORMATION ONLY CENTER LINE QUANTITIES EQUIVALENT SOLID LINE	620 DELINEATOR MISC.:, RAISED CURB CHANNELIZING SYSTEM REMOVAL FT.	620 DELINEATOR MISC.:, RAISED CURB CHANNELIZING SYSTEM FT.	644 CENTER LINE MILE	REMARKS
1A	FAI	S.R. 204	0.00	0.36	0.36	0.56	1.120			0.56	0.20 MILE ADDED FOR TRANSVERSE AREAS AND HUNTER RUN
LOCATION 1A (TOTAL CARRIED TO SUB-SUMMARY)										**0.56**	
1B	FAI	S.R. 204	0.36	6.93	6.57	7.01	10.085			7.01	0.42 MILE ADDED FOR TRANS. AREAS 0.02 MILE ADDED FOR HARMON, MILNOR, AND PICKERINGTON RD.
LOCATION 1B (TOTAL CARRIED TO SUB-SUMMARY)										**7.01**	
1C	FAI	S.R. 204	6.93	11.16	4.23	4.23	5.709			4.23	
LOCATION 1C (TOTAL CARRIED TO SUB-SUMMARY)										**4.23**	
2	FAI	S.R. 204A	0.25	0.26	0.01	0.02	0.020			0.02	0.01 MILE ADDED FOR TRANSVERSE AREAS
			0.35	0.49	0.14	0.14	0.280	640	640	0.14	
LOCATION 2 (TOTAL CARRIED TO SUB-SUMMARY)								**640**	**640**	**0.16**	

CALCULATED PTB
CHECKED JSL

PAVEMENT MARKING DATA (CENTER LINE)

FAI-204/204A-
0.00/0.00

I:\ProjectData\FAI\95506\Design\Traffic\Sheets\95506_T0002.dgn Sheet 5/22/2020 1:30:08 PM jlutzi

AUXILIARY MARKING DATA

LOCATION	COUNTY	ROUTE	DESCRIPTION	SIDE	644														REMARKS (PLACE AS DIRECTED BY THE ENGINEER AND/OR DETAILS BELOW) (STOP BARS SHALL BE PLACED MINIMUM 4' FROM EDGE OF PAVED SHOULDER)
					8" CHANNELIZING LINE	STOP LINE (24")	CROSSWALK LINE "PIANO KEY"	TRANSVERSE/ DIAGONAL LINES (24") (TC-71.10 SPACING)		LANE ARROW				WRONG WAY ARROW	WORD ON PAVEMENT "ONLY"		DOTTED LINE, 6"	YIELD LINE	
								WHITE	YELLOW	RT/TH	THRU	LT.	RT.		72"	96"	WHITE		
					FT.	FT.	FT.	FT.	FT.	EACH	EACH	EACH	EACH	EACH	EACH	EACH	FT.	FT.	
1A	FAI	S.R. 204	ON S.R. 204 AT S.R. 256	LT	1,060	62					3	4	6		8				SEE SHEETS 18-19 FOR DETAILS
			SLIP RAMP	RT	206		50						2		1				
			ON S.R. 204 AT FREEDOM WAY/ HUNTERS RUN	L/R	170	78	160		76	4	4	4							
			HUNTER RUN	RT	17	30	170												
			ON S.R. 204 AT YARMOUTH DR.	L/R	130	60			105	2	6	2			1				
			ON S.R. 204 BEFORE SUMMERFIELD WAY	RT	172				170				3		1		170		
			SUB-TOTALS						351	6	13	10	11						
LOCATION 1A (TOTALS CARRIED TO SUB-SUMMARY)					1,755	230	380	351		40					11		170		
1B	FAI	S.R. 204	SUMMERFIELD WAY	RT		18													
			ON S.R. 204 AFTER SUMMERFIELD WAY	L/R				285											SEE SHEET 19 FOR DETAILS
			CAPETOWN AVE.	LT		21													
			ECHO MANOR	LT		17													
			RUSTIC DR.	RT		32													
			ON S.R. 204 AT TAYLOR RD (S.R. 204A)	L/R		24													SEE SHEET 24 FOR DETAILS
			WELLESLEY DR.	RT		12													PLACE AT EXISTING LOCATION
			WATERTON DR.	RT		23													
			ON S.R. 204 BEFORE HARMON RD.	RT	475	48			90			2	4			2			SEE SHEET 20 FOR DETAILS
			HARMON RD. (T.R. 221)	RT		22													
			ABBINGTON DR.	LT		12													
			ON S.R. 204 AFTER HARMON RD.	LT	200	24			80			2				1			
			HAAF FARM DR.	LT		30													
			ON S.R. 204 AT DAYSPRINGS WAY	LT	45				56			1							SEE SHEET 21 FOR DETAILS
			DAYSPRINGS WAY	LT		30													
			ON S.R. 204 AT ASHLEY CREEK DR.	RT	75				80			2							
			ASHLEY CREEK DR.	RT		22													
			CARRIAGE LN.	LT		30													
			ON S.R. 204 AT CARRIAGE LN./ CHESINGTON CT.	L/R			160											21	
			CHESINGTON CT.	RT		18													
			HARDWICK CT.	RT		18													
			CHEVINGTON DR.	RT		22													
			EASTWAY DR.	LT		30													
			NEW ENGLAND ACRES	LT		32													
			ON S.R. 204 AT MILNOR RD.	L/R		24													SEE SHEET 22 FOR DETAILS
			MILNOR RD. (C.R. 22)	RT		20													
			SUB-TOTALS					285	306			7	4						
LOCATION 1B (TOTALS CARRIED TO NEXT SHEET)					795	529	160	591		11						3		21	

CALCULATED PTB
CHECKED JSL

PAVEMENT MARKING DATA (AUXILIARY)

FAI-204/ 204A-
0.00/ 0.00

I:\ProjectData\FAI\95506\Design\Traffic\Sheets\95506_T0003.dgn Sheet 2/9/2020 4:16:45 PM jlutzi

AUXILIARY MARKING DATA

LOCATION	COUNTY	ROUTE	DESCRIPTION	SIDE	644														REMARKS (PLACE AS DIRECTED BY THE ENGINEER AND/OR DETAILS BELOW) (STOP BARS SHALL BE PLACED MINIMUM 4' FROM EDGE OF PAVED SHOULDER)
					8" CHANNELIZING LINE	STOP LINE (24")	CROSSWALK LINE "PIANO KEY"	TRANSVERSE/ DIAGONAL LINES (24") (TC-71.10 SPACING)		LANE ARROW				WRONG WAY ARROW	WORD ON PAVEMENT "ONLY"		DOTTED LINE, 6"	YIELD LINE	
								WHITE	YELLOW	RT/TH	THRU	LT.	RT.		72"	96"	WHITE		
					FT.	FT.	FT.	FT.	FT.	EACH	EACH	EACH	EACH	EACH	EACH	EACH	FT.	FT.	
LOCATION 1B (CARRIED FROM PREVIOUS SHEET)					**795**	**529**	**160**	**591**		**11**						**3**		**21**	
1B	FAI	S.R. 204	NANTUCKET AVE.	LT		30													
			SUDBURY DR.	LT		16													
			CHURCH VIEW DR	RT	NO WORK														
			WAGRAM RD. (T.R. 223)	LT		17													
			AULT RD. (T.R. 223)	RT		15													
			CALHOUN CT.	RT		15													
			VIOLET MEADOWS BLVD.	LT		30													
			PICKERINGTON RD. (C.R. 20)	RT		18													
			ON S.R. 204 AT OPTIMARA DR.	RT	65				215			2							SEE SHEET 23 FOR DETAILS
			OPTIMARA DR.	LT		25													
			TOLLGATE RD. (T.R. 225)	LT		20													
			TOLLGATE RD. (T.R. 225)	RT		20													
			SAYLOR RD. (T.R. 229)	LT		20													
			S.R. 310	LT	NO WORK														
			ON S.R. 204 AT BLACKLICK RD. (C.R. 83)	LT		12													PLACE 20' FROM BLACKLICK RD.
			MAUGER RD. (T.R. 239)	RT		18													
			SUB-TOTALS						215			2							
LOCATION 1B (TOTALS CARRIED TO SUB-SUMMARY)					**860**	**785**	**160**	**806**		**13**						**3**		**21**	
1C	FAI	S.R. 204	ON S.R. 204 AT REFUGEE RD. (C.R. 7)	RT		20													PLACE 20' FROM REFUGEE RD.
			POPLAR CREEK RD. (T.R. 235)	RT		20													
			HEIMBERGER RD. (T.R. 243)	LT		18													
			HEIMBERGER RD. (T.R. 241)	RT		18													
			SNYDER CHURCH RD. (T.R. 119)	LT		18													
			SNYDER CHURCH RD. (C.R. 42)	RT		18													
			BASIL RD. (C.R. 46)	RT		18													
			BASIL RD. (C.R. 46)	LT		18													
			ON S.R. 204 AT S.R. 158	RT		12													PLACE 20' FROM S.R. 158
			SUB-TOTALS																
LOCATION 1C (TOTALS CARRIED TO SUB-SUMMARY)						**160**													
2	FAI	S.R. 204A	SLM 0.00 - SLM 0.24 (RAMP)	CL										2					SEE SHEET 24 FOR DETAILS
			SLM 0.24 - SLM 0.48	L/R	660	40			80	4		4				2			
			SUB-TOTALS						80	4		4							
LOCATION 2 (TOTALS CARRIED TO SUB-SUMMARY)					**660**	**40**		**80**		**8**				**2**		**2**			

CALCULATED PTB
CHECKED JSL

PAVEMENT MARKING DATA (AUXILIARY)

FAI-204/ 204A - 0.00/ 0.00

I:\ProjectData\FAI\95506\Design\Traffic\Sheets\95506_T0004.dgn Sheet 2/24/2020 11:33:57 AM jlutz

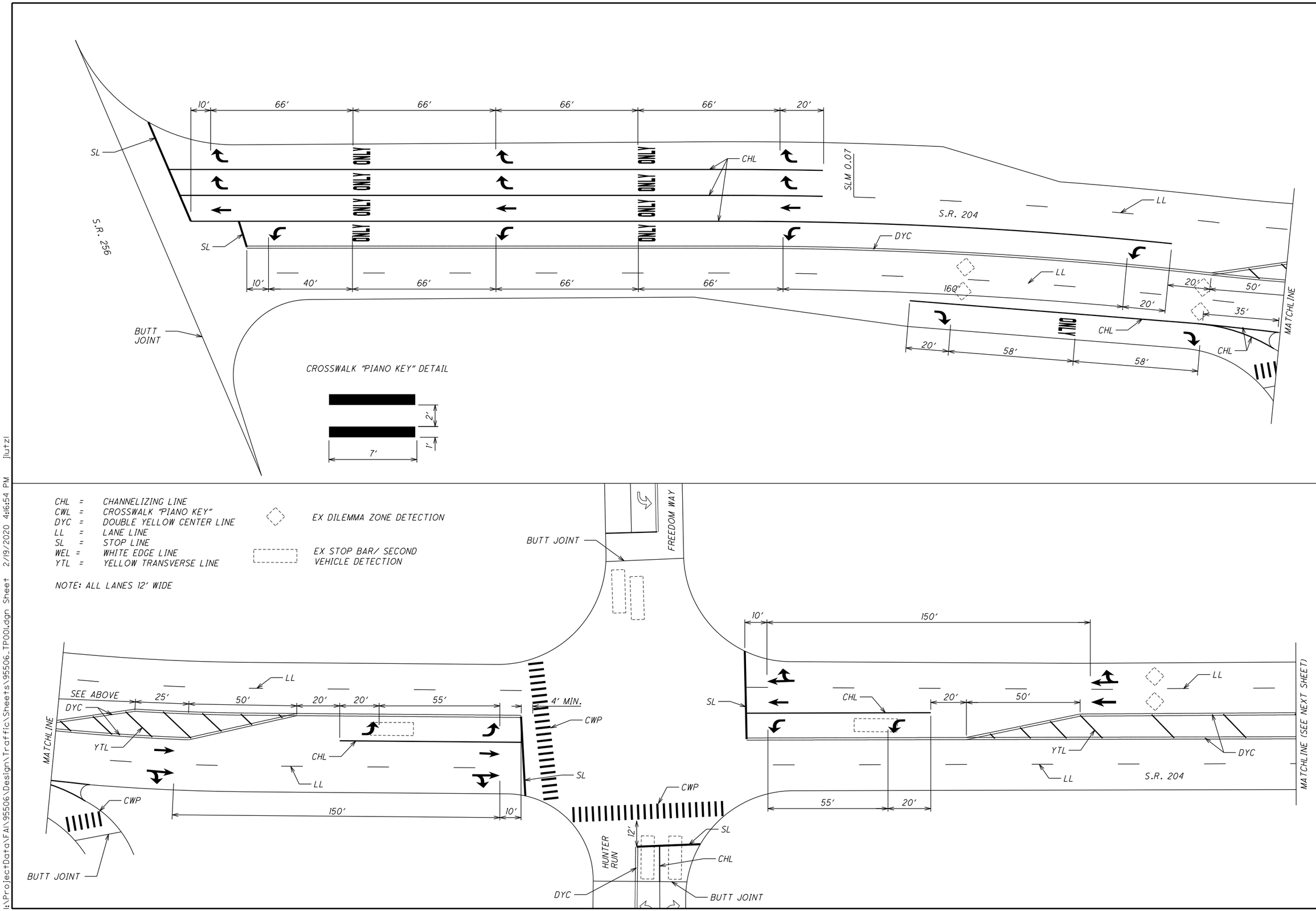

CALCULATED PTB
CHECKED JSL

PAVEMENT MARKING DETAILS
S.R. 204 IN PICKERINGTON

FAI-204/204A-
0.00/0.00

I:\ProjectData\FAI\95506\Design\Traffic\Sheets\95506_TP001.dgn Sheet 2/19/2020 4:6:54 PM jlutzi

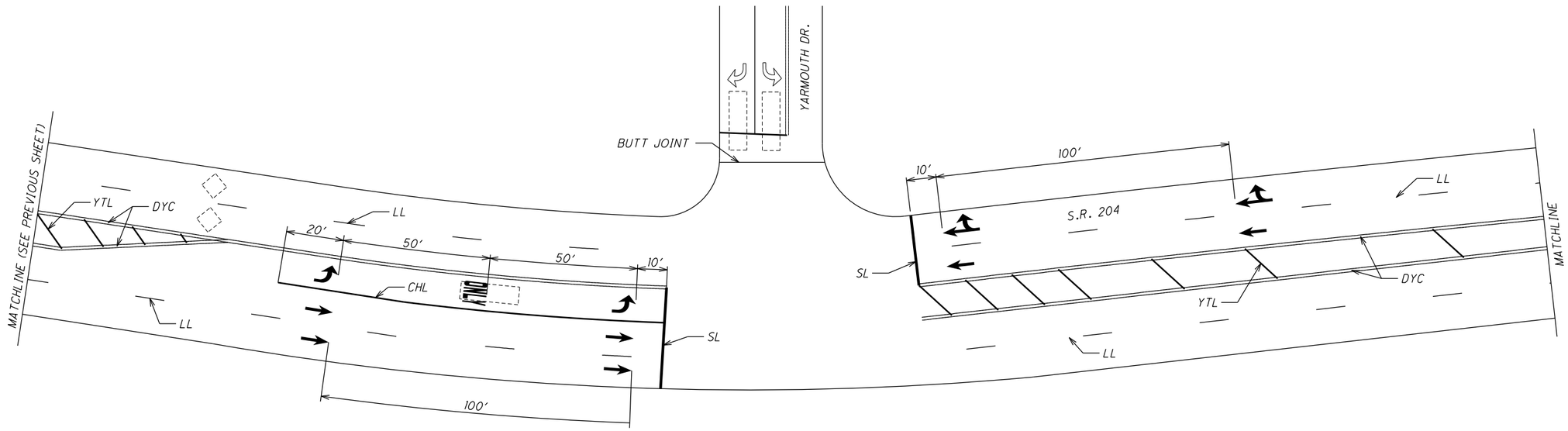

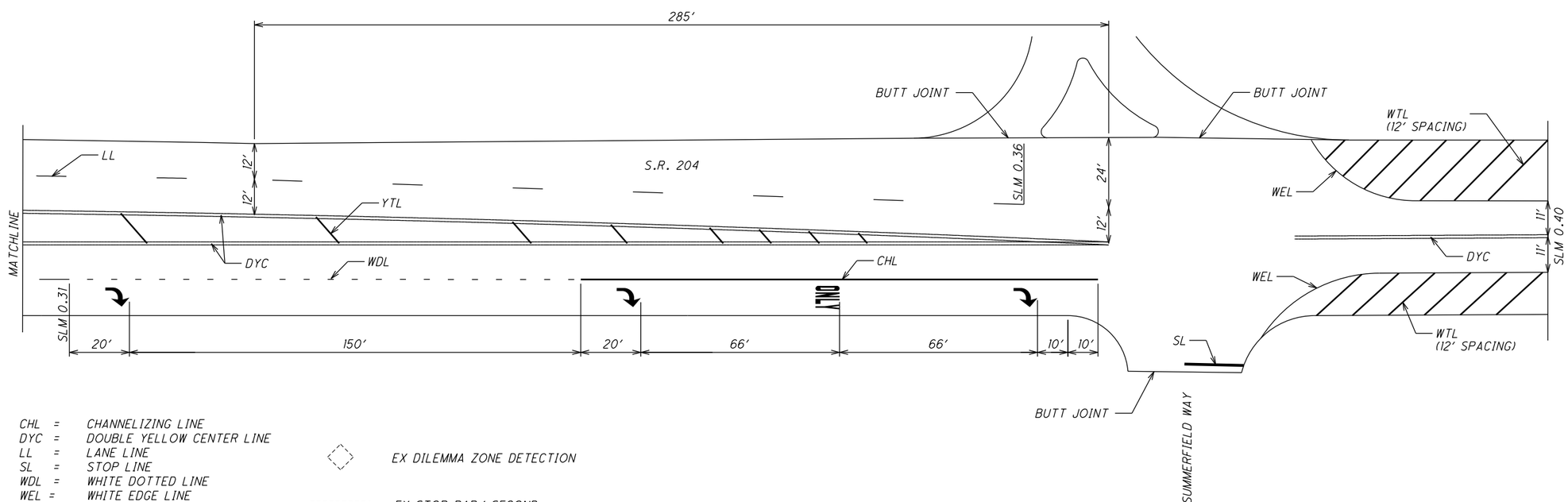

CHL = CHANNELIZING LINE
DYC = DOUBLE YELLOW CENTER LINE
LL = LANE LINE
SL = STOP LINE
WDL = WHITE DOTTED LINE
WEL = WHITE EDGE LINE
WTL = WHITE TRANSVERSE LINE
YTL = YELLOW TRANSVERSE LINE

EX DILEMMA ZONE DETECTION

EX STOP BAR/ SECOND VEHICLE DETECTION

NOTE: ALL LANES 12' WIDE

HORIZONTAL SCALE IN FEET 0 10 20 40

CALCULATED PTB
CHECKED JSL

PAVEMENT MARKING DETAILS S.R. 204 IN PICKERINGTON

FAI-204/204A-
0.00/0.00

i:\ProjectData\FAI\95506\Design\Traffic\Sheets\95506_TP002.dgn Sheet 2/19/2020 4:16:55 PM jlutzi

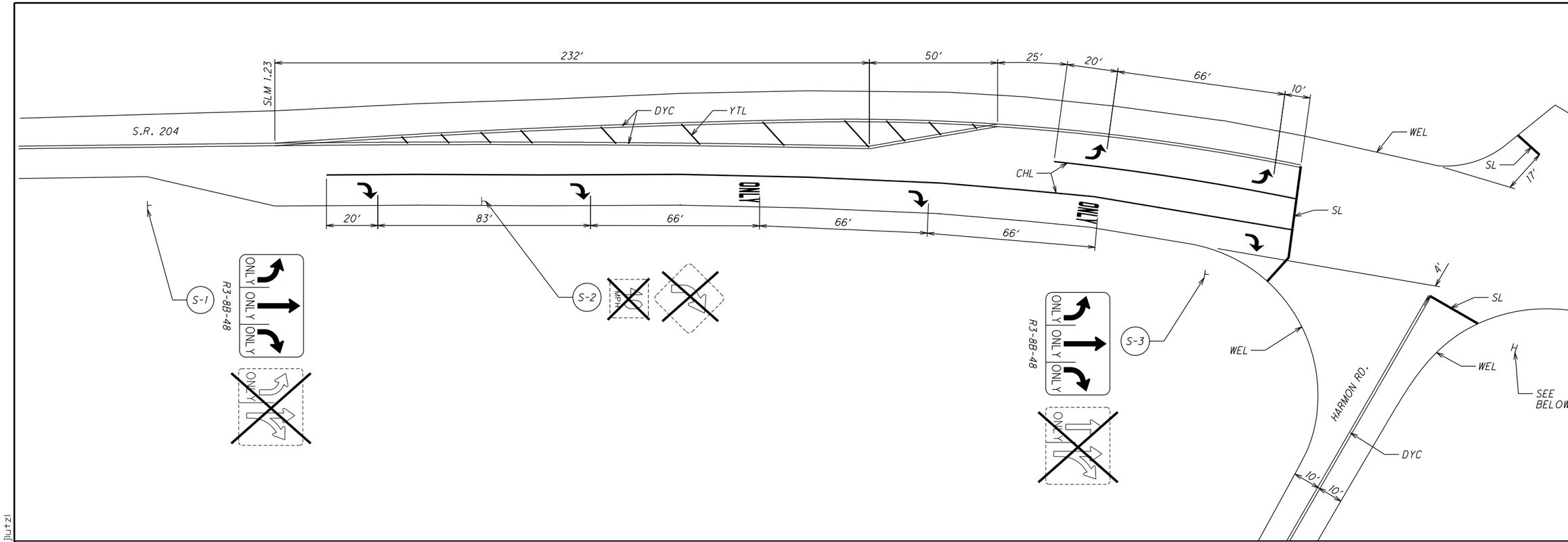

CHL = CHANNELIZING LINE
DYC = DOUBLE YELLOW CENTER LINE
SL = STOP LINE
WDL = WHITE DOTTED LINE
WEL = WHITE EDGE LINE
WTL = WHITE TRANSVERSE LINE
YTL = YELLOW TRANSVERSE LINE

NOTE: ALL LANES 12' WIDE

SEE SHEET 42 FOR SIGNING QTY'S

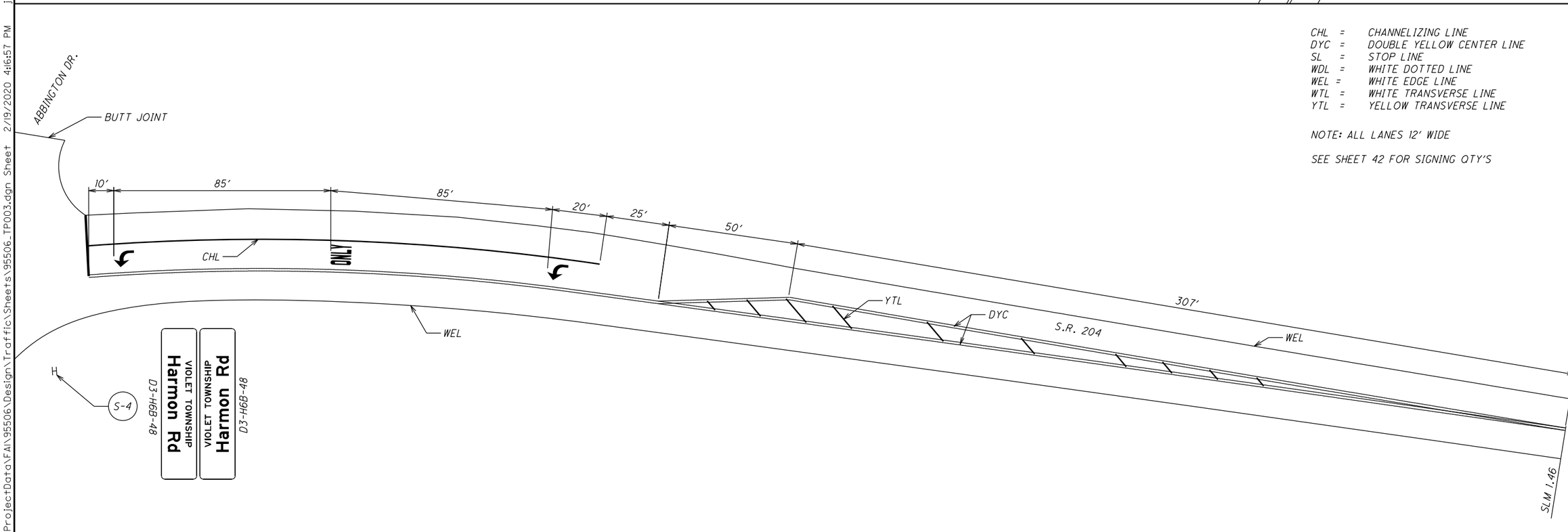

HORIZONTAL SCALE IN FEET 0 10 20 40

CALCULATED

CHECKED JSL

PAVEMENT MARKING DETAILS
S.R. 204 AT HARMON RD

FAI-204/204A-
0.00/0.00

I:\ProjectData\FAI\95506\Design\Traffic\Sheets\95506_TP003.dgn Sheet 2/19/2020 4:16:57 PM jlutzi

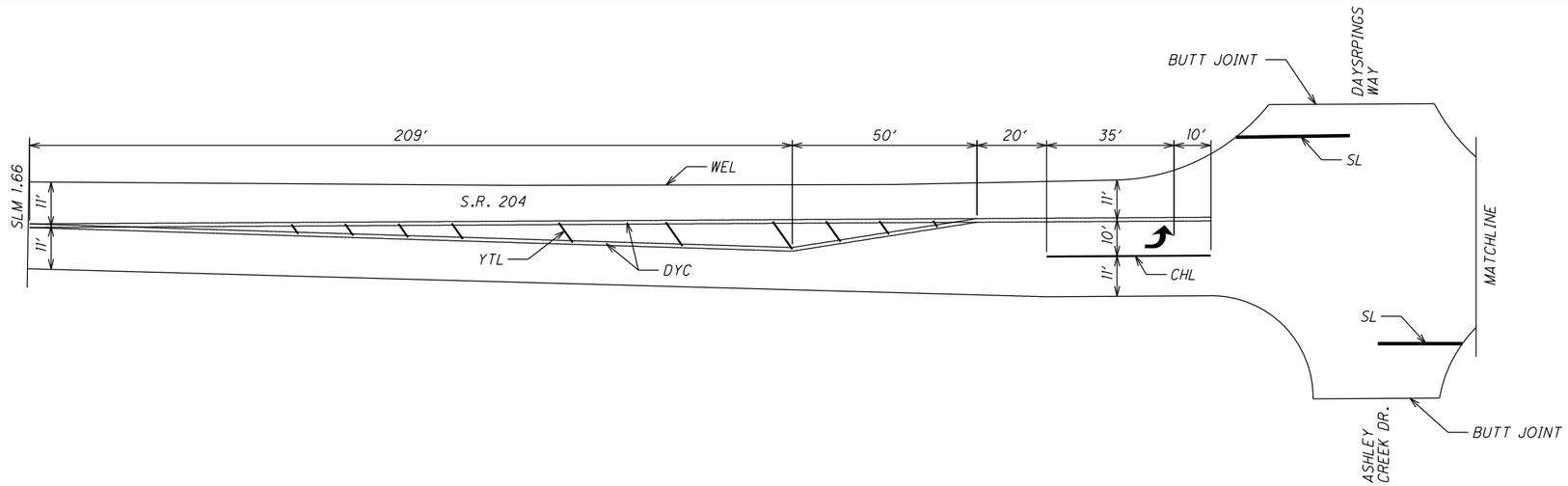

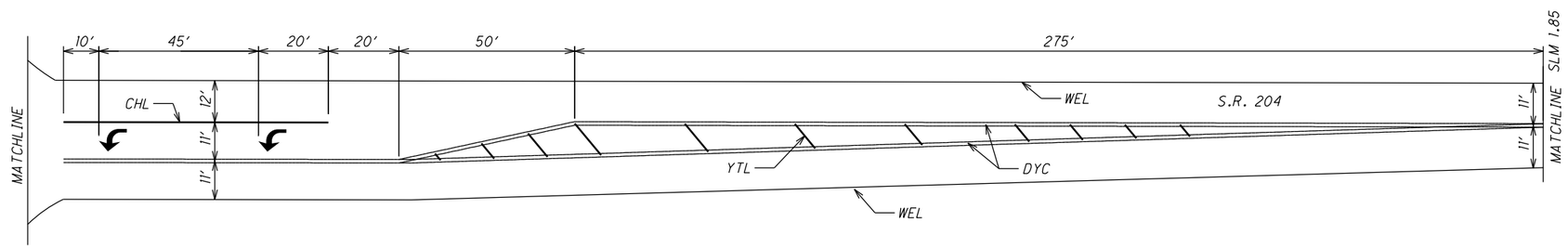

CROSSWALK "PIANO KEY" DETAIL

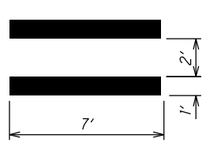

YIELD LINE DETAIL

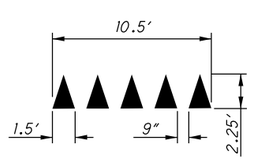

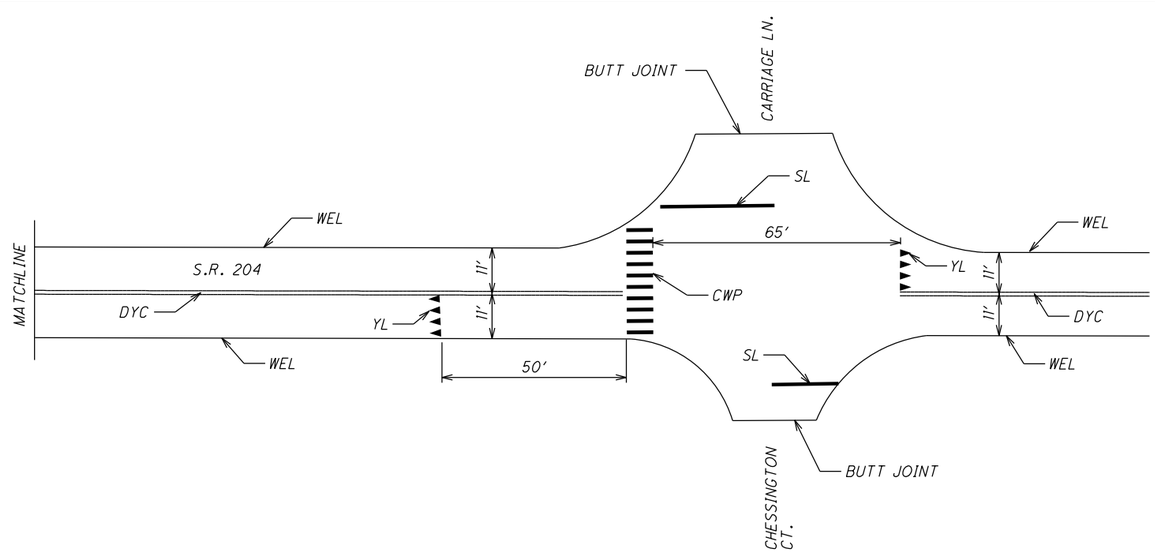

CHL = CHANNELIZING LINE
CWP = CROSSWALK "PIANO KEY"
DYC = DOUBLE YELLOW CENTER LINE
SL = STOP LINE
WEL = WHITE EDGE LINE
YTL = YELLOW TRANSVERSE LINE
YL = YIELD LINE

HORIZONTAL SCALE IN FEET 0 10 20 40

CALCULATED PTB
CHECKED JSL

PAVEMENT MARKING DETAILS
S.R. 204 AT DAYSPRINGS/ASHLEY CREEK

FAI-204/204A-
0.00/0.00

I:\ProjectData\FAI\95506\Design\Traffic\Sheets\95506_TP004.dgn Sheet 2/19/2020 4:16:58 PM jlutzi

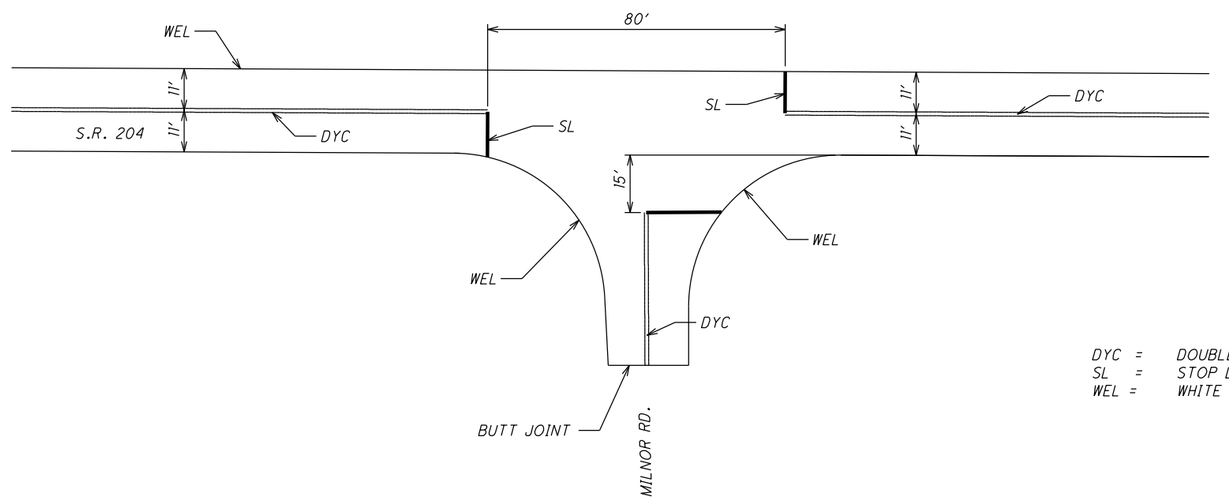

DYC = DOUBLE YELLOW CENTER LINE
SL = STOP LINE
WEL = WHITE EDGE LINE

HORIZONTAL SCALE IN FEET
0 10 20 40

CALCULATED PTB
CHECKED JSL

PAVEMENT MARKING DETAILS
S.R. 204 AT MILNOR RD.

FAI-204/204A-
0.00/0.00

I:\ProjectData\FAI\95506\Design\Traffic\Sheets\95506_TP005.dgn Sheet 2/19/2020 4:17:00 PM jlutzi

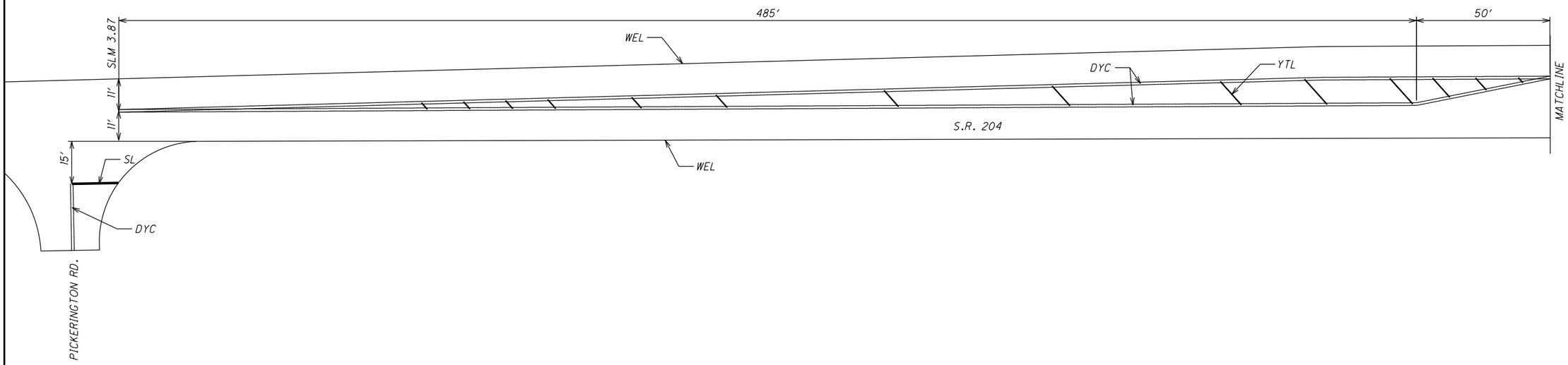

CHL = CHANNELIZING LINE
DYC = DOUBLE YELLOW CENTER LINE
SL = STOP LINE
WEL = WHITE EDGE LINE
YTL = YELLOW TRANSVERSE LINE

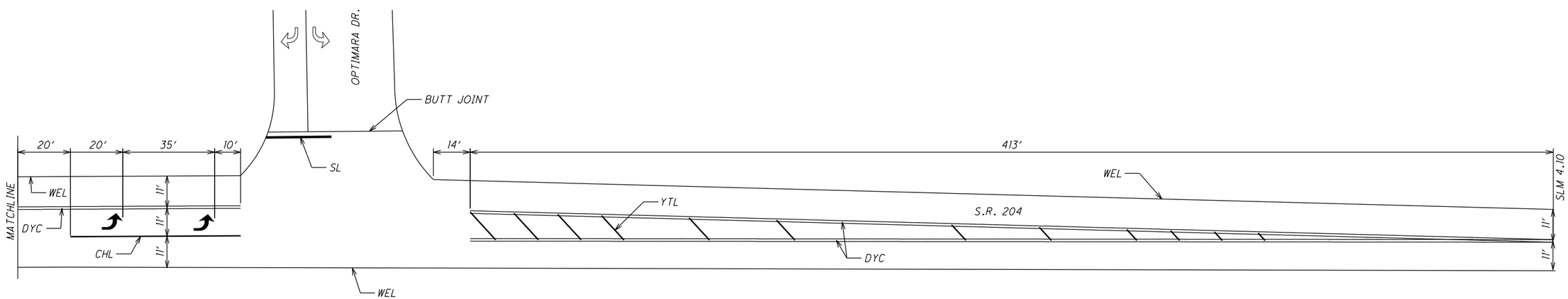

0 10 20 40
HORIZONTAL SCALE IN FEET

CALCULATED PTB
CHECKED JSL

PAVEMENT MARKING DETAILS
S.R. 204 AT OPTIMARA DR

FAI-204/204A-
0.00/0.00

I:\ProjectData\FAI\95506\Design\Traffic\Sheets\95506_TP006.dgn Sheet 2/19/2020 4:17:01 PM jlutzi

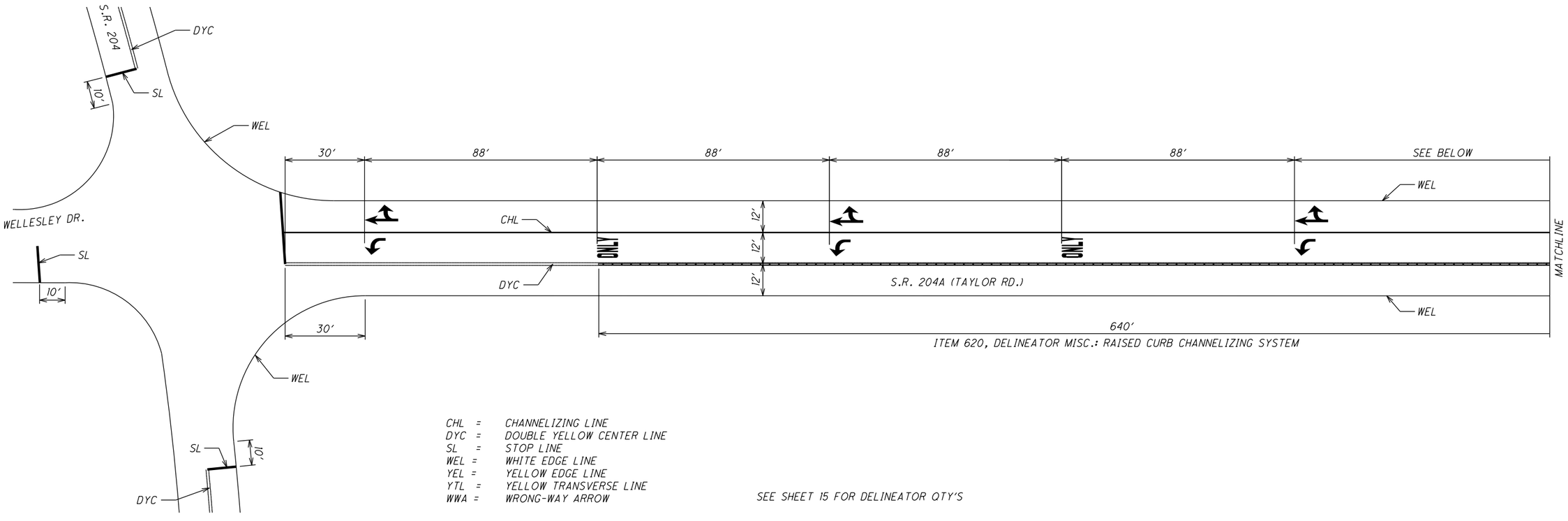

CALCULATED PTB
CHECKED JSL

HORIZONTAL SCALE IN FEET
0 10 20 40

PAVEMENT MARKING DETAILS
S.R. 204A (TAYLOR RD.)

FAI-204/204A-
0.00/0.00

I:\Project Data\FAI\95506\Design\Traffic\Sheets\95506_TP007.dgn Sheet 2/24/2020 11:31:34 AM jlutzi

DETAIL	SEE SCD TC-65.11
1	TAPERED ACCELERATION LANE
2	DECELERATION LANE
3	MULTILANE DIVIDED/CONTROLLED ACCESS
4	4-LANE DIVIDED TO 2-LANE TRANSITION
5	4-LANE UNDIVIDED TO 2-LANE TRANSITION
6	ONE LANE BRIDGE
7	STOP APPROACH

DETAIL	SEE SCD TC-65.11
8	THRU APPROACH
9	TWO-WAY LEFT TURN LANE
10	APPROACH WITH LEFT TURN LANE
11	HORIZONTAL CURVE 40' SPACING
12	HORIZONTAL CURVE 20' SPACING
GAP	CENTER LINE AT 80' TYPICAL SPACING
REM	SEE REMARKS

RAISED PAVEMENT MARKER DATA

LOCATION	COUNTY	ROUTE	BEGIN LOG POINT SLM	END LOG POINT SLM	LENGTH		DETAIL	621		PRISMATIC RETRO-REFLECTOR COLORS INFORMATION ONLY					REMARKS
								RPM	RPM REMOVED	ONE-WAY		TWO-WAY			
					MILES	LIN.FT.		EACH	EACH	WHITE	YELLOW	YELLOW / YELLOW	WHITE / RED	YELLOW / RED	
1A	FAI	S.R. 204	0.00	0.11	0.11	580.8	10,GAP,REM	52	52			10	42		INCLUDES TURN LANES AT S.R. 256 & SLIP LANE, 80' LANE LINE SPACING
			0.11	0.24	0.13	686.4	10,GAP,REM	39	39			18	21		INCLUDES LEFT TURN LANES AT FREEDOM WAY/ HUNTERS RUN, 80' LANE LINE SPACING
			0.24	0.27	0.03	158.4	10,11,REM	12	12			4	8		PC 0.24 PT 0.27 L=158' DEG=9, INCLUDES LEFT TURN AT YARMOUTH, 80' LANE LINE SPACING
			0.27	0.36	0.09	475.2	GAP,REM	29	29			12	17		INCLUDES RIGHT TURN AT SUMMERFIELD WAY, 80' LANE LINE SPACING
		SUB-TOTALS										44	88		
LOCATION 1A (TOTAL CARRIED TO SUB-SUMMARY)								**132**	**132**						
1B	FAI	S.R. 204	0.36	0.77	0.41	2,164.8	GAP	27	27			27			
			0.77	0.90	0.13	686.4	11	49	17	32		17			PC 0.77 PT 0.90 L=370' DEG=6, STOP APPROACH AT S.R. 204A (TAYLOR RD.)
			0.90	0.97	0.07	369.6	GAP	5	5			5			
			0.97	1.06	0.09	475.2	11	12	12			12			PC 0.97 PT 1.06 L=475' DEG=6
			1.06	1.13	0.07	369.6	GAP	5	5			5			
			1.13	1.19	0.06	316.8	11	8	8			8			PC 1.13 PT 1.19 L=317' DEG=6
			1.19	1.28	0.09	475.2	GAP	6	6			6			
			1.28	1.38	0.10	528.0	7,10,11	79	47	32		29	18		PC 1.28 PT 1.38 L=528' DEG=6, INCLUDES TURN LANES & STOP APPROACH AT HARMON RD.
			1.38	1.85	0.47	2,481.6	GAP	48	48			44	4		INCLUDES LEFT TURN LANES AT DAYSPRING WAY/ ASHLEY CREEK DR.
			1.85	3.87	2.02	10,665.6	7,GAP	165	133	32		133			STOP APPROACH AT MILNOR RD.
			3.87	4.10	0.23	1,214.4	10,GAP	29	29			29			INCLUDES LEFT TURN LANE AT OPTIMARA DR.
			4.10	6.54	2.44	12,883.2	GAP	177	145	16		161			STOP APPROACH AT BLACKLICK RD.
			6.54	6.76	0.22	1,161.6	12	35	35			35			PC 6.63 PT 6.67 L=211' DEG=19
			6.76	6.93	0.17	897.6	GAP	11	11			11			
		SUB-TOTALS								112		522	22		
LOCATION 1B (TOTAL CARRIED TO SUB-SUMMARY)								**656**	**528**						
1C	FAI	S.R. 204	6.93	7.54	0.61	3,220.8	GAP	40	40			40			
			7.54	7.74	0.20	1,056.0	12	45	45	16		29			PC 7.63 PT 7.65 L=106' DEG=13, STOP APPROACH AT REFUGEE RD.
			7.74	11.16	3.42	18,057.6	GAP	242	242	16		226			STOP APPROACH AT S.R. 158
		SUB-TOTALS								32		295			
LOCATION 1C (TOTAL CARRIED TO SUB-SUMMARY)								**327**	**327**						
2	FAI	S.R. 204A	0.00	0.24	0.24	1,267.2	GAP	16	8					16	BEGIN RAMP TO S.R. 204A (TAYLOR RD.), CONFORM RAMP TO TC-73.20
			0.35	0.49	0.14	739.2	GAP	42	42	16		9	17		STOP APPROACH AT S.R. 204
		SUB-TOTALS								16		9	17	16	
LOCATION 2 (TOTAL CARRIED TO SUB-SUMMARY)								**58**	**50**						

CALCULATED PTB
CHECKED JSL

RAISED PAVEMENT MARKER DATA

FAI-204/204A-0.00/0.00

I:\ProjectData\FAI\95506\Design\Traffic\Sheets\95506_T0005.dgn Sheet 2/19/2020 4:17:04 PM jlutzl

LOCATION 1A SHEET TOTALS										ITEM	ITEM EXT.	GRAND TOTAL	UNIT	DESCRIPTION
2	3	4	5	8	9	14	15	16	25					
														ROADWAY
					949					202	23500	949	SY	WEARING COURSE REMOVED
2										623	39500	2	EACH	MONUMENT BOX ADJUSTED TO GRADE
														DRAINAGE
1										611	98630	1	EACH	CATCH BASIN ADJUSTED TO GRADE
5										611	99654	5	EACH	MANHOLE ADJUSTED TO GRADE
														PAVEMENT
10										253	02000	10	CY	PAVEMENT REPAIR
				13,389						254	01000	13,389	SY	PAVEMENT PLANING, ASPHALT CONCRETE , 2.25"
				1,741	77					407	20000	1,818	GAL	NON-TRACKING TACK COAT
					34					441	50000	34	CY	ASPHALT CONCRETE SURFACE COURSE, TYPE 1, (448), PG64-22
				466						441	50100	466	CY	ASPHALT CONCRETE SURFACE COURSE, TYPE 1, (448), PG70-22M
				373						441	50200	373	CY	ASPHALT CONCRETE INTERMEDIATE COURSE, TYPE 1, (448)
														TRAFFIC CONTROL
									132	621	00100	132	EACH	RPM
									132	621	54000	132	EACH	RAISED PAVEMENT MARKER REMOVED
						0.60				644	00204	0.60	MILE	LANE LINE, 6"
							0.56			644	00300	0.56	MILE	CENTER LINE
								1,755		644	00400	1,755	FT	CHANNELIZING LINE, 8"
								230		644	00500	230	FT	STOP LINE
								380		644	00600	380	FT	CROSSWALK LINE
								351		644	00700	351	FT	TRANSVERSE/DIAGONAL LINE
								40		644	01300	40	EACH	LANE ARROW
								11		644	01400	11	EACH	WORD ON PAVEMENT, 72"
								170		644	01510	170	EACH	DOTTED LINE, 6"
														TRAFFIC SIGNALS
	15									632	26501	15	EACH	DETECTOR LOOP, AS PER PLAN
														MAINTENANCE OF TRAFFIC
			100							614	11110	100	HOUR	LAW ENFORCEMENT OFFICER WITH PATROL CAR FOR ASSISTANCE
		3								614	13000	3	CY	ASPHALT CONCRETE FOR MAINTAINING TRAFFIC
			4							614	18601	4	SNMT	PORTABLE CHANGEABLE MESSAGE SIGN, AS PER PLAN
		0.60								614	20100	0.60	MILE	WORK ZONE LANE LINE, CLASS I, 4", 642 PAINT
		0.60								614	20550	0.60	MILE	WORK ZONE LANE LINE, CLASS III, 4", 642 PAINT
		0.56								614	21100	0.56	MILE	WORK ZONE CENTER LINE, CLASS I, 642 PAINT
		0.56								614	21550	0.56	MILE	WORK ZONE CENTER LINE, CLASS III, 642 PAINT
		1,738								614	23200	1,738	FT	WORK ZONE CHANNELIZING LINE, CLASS I, 8", 642 PAINT
		1,738								614	23680	1,738	FT	WORK ZONE CHANNELIZING LINE, CLASS III, 8", 642 PAINT
		168								614	26200	168	FT	WORK ZONE STOP LINE, CLASS I, 642 PAINT
		168								614	26610	168	FT	WORK ZONE STOP LINE, CLASS III, 642 PAINT

CALCULATED PTB
CHECKED JSL

LOCATION 1A SUB-SUMMARY

FAI-204/204A-
0.00/0.00

I:\ProjectData\FAI\95506\Design\Roadway\Sheets\95506_GS001.dgn Sheet 2/19/2020 4:17:08 PM jlutzi

LOCATION 1B SHEET TOTALS												ITEM	ITEM EXT.	GRAND TOTAL	UNIT	DESCRIPTION
2	3	4	5	8	9	10	12	14	15	17	25					
																ROADWAY
	250					6,434	120					202	23500	6,804	SY	WEARING COURSE REMOVED
					13.01							209	72051	13.01	MILE	PREPARING SUBGRADE FOR SHOULDER PAVING, AS PER PLAN
																DRAINAGE
1												611	99654	1	EACH	MANHOLE ADJUSTED TO GRADE
																PAVEMENT
50												253	02000	50	CY	PAVEMENT REPAIR
	1,770			14,362	2,394							254	01000	18,526	SY	PAVEMENT PLANING, ASPHALT CONCRETE , 1.25"
	1,480			78,066	8,760							254	01000	88,306	SY	PAVEMENT PLANING, ASPHALT CONCRETE , 2.25"
				1,320	534							254	01000	1,854	SY	PAVEMENT PLANING, ASPHALT CONCRETE , VARIABLE
				12,189	1,520	516	16					407	20000	14,241	GAL	NON-TRACKING TACK COAT
					6,062							408	10001	6,062	GAL	PRIME COAT, AS PER PLAN
						226						441	50000	226	CY	ASPHALT CONCRETE SURFACE COURSE, TYPE 1, (448), PG64-22
	123			3,256	421		5					441	50100	3,805	CY	ASPHALT CONCRETE SURFACE COURSE, TYPE 1, (448), PG70-22M
	42			2,645	332		4					441	50200	3,023	CY	ASPHALT CONCRETE INTERMEDIATE COURSE, TYPE 1, (448)
							72					516	31011	72	FT	2" DEEP JOINT SEALER, AS PER PLAN
					842							617	10101	842	CY	COMPACTED AGGREGATE, AS PER PLAN
																WATER WORK
5												638	10800	5	EACH	VALVE BOX ADJUSTED TO GRADE
																TRAFFIC CONTROL
											656	621	00100	656	EACH	RPM
											528	621	54000	528	EACH	RAISED PAVEMENT MARKER REMOVED
								13.18				644	00104	13.18	MILE	EDGE LINE, 6"
									7.01			644	00300	7.01	MILE	CENTER LINE
										860		644	00400	860	FT	CHANNELIZING LINE, 8"
										785		644	00500	785	FT	STOP LINE
										160		644	00600	160	FT	CROSSWALK LINE
										806		644	00700	806	FT	TRANSVERSE/DIAGONAL LINE
										13		644	01300	13	EACH	LANE ARROW
										3		644	01410	3	EACH	WORD ON PAVEMENT, 96"
										21		644	20800	21	FT	YIELD LINE
																MAINTENANCE OF TRAFFIC
			100									614	11110	100	HOUR	LAW ENFORCEMENT OFFICER WITH PATROL CAR FOR ASSISTANCE
			41									614	12460	41	EACH	WORK ZONE MARKING SIGN
		3										614	13000	3	CY	ASPHALT CONCRETE FOR MAINTAINING TRAFFIC
			4									614	18601	4	SNMT	PORTABLE CHANGEABLE MESSAGE SIGN, AS PER PLAN
		7.01										614	21100	7.01	MILE	WORK ZONE CENTER LINE, CLASS I, 642 PAINT
		7.01										614	21550	7.01	MILE	WORK ZONE CENTER LINE, CLASS III, 642 PAINT
		860										614	23200	860	FT	WORK ZONE CHANNELIZING LINE, CLASS I, 8", 642 PAINT
		860										614	23680	860	FT	WORK ZONE CHANNELIZING LINE, CLASS III, 8", 642 PAINT
		132										614	26200	132	FT	WORK ZONE STOP LINE, CLASS I, 642 PAINT
		132										614	26610	132	FT	WORK ZONE STOP LINE, CLASS III, 642 PAINT

CALCULATED PTB
CHECKED JSL

LOCATION 1B SUB-SUMMARY

FAI-204/204A-
0.00/0.00

I:\ProjectData\FAI\95506\Design\Roadway\Sheets\95506_GS002.dgn Sheet 5/22/2020 1:35:04 PM jlutz1

LOCATION 1B (HARMON RD.) SHEET TOTALS					ITEM	ITEM EXT.	GRAND TOTAL	UNIT	DESCRIPTION
35	36	40	41	42					
									ROADWAY
LS					201	11000	LS	LS	CLEARING AND GRUBBING
			311		202	23010	311	SY	PAVEMENT REMOVED, ASPHALT
1,013			35		203	10000	1,048	CY	EXCAVATION
235					203	20000	235	CY	EMBANKMENT
	425				204	13000	425	CY	EXCAVATION OF SUBGRADE
	425				204	20000	425	CY	EMBANKMENT
			1,124		204	10000	1,124	SY	SUBGRADE COMPACTION
			2		204	45000	2	HOUR	PROOF ROLLING
									EROSION CONTROL
1,945					659	00500	1,945	SY	SEEDING AND MULCHING, CLASS 1
97					659	14000	97	SY	REPAIR SEEDING AND MULCHING
97					659	15000	97	SY	INTER-SEEDING
0.27					659	20000	0.27	TON	COMMERCIAL FERTILIZER
0.40					659	31000	0.40	ACRE	LIME
11					659	35000	11	MGAL	WATER
					832	30000	5,000	EACH	EROSION CONTROL
									DRAINAGE
0.52					602	20000	0.52	CY	CONCRETE MASONRY
	8				605	31100	8	FT	AGGREGATE DRAINS
34					611	06400	34	FT	15" CONDUIT, TYPE D
									PAVEMENT
			330		301	46000	330	CY	ASPHALT CONCRETE BASE, PG64-22
			161		304	20000	161	CY	AGGREGATE BASE
			46		407	20000	46	GAL	NON-TRACKING TACK COAT
	325				SPECIAL	69012050	325	SY	REINFORCED MESH FOR TRANSVERSE AND/OR LONGITUDINAL JOINTS AND CRACKS
									WATER WORK
	1				638	10481	1	EACH	FIRE HYDRANT REMOVED, AS PER PLAN
	1				638	10801	1	EACH	VALVE BOX ADJUSTED TO GRADE, AS PER PLAN
									TRAFFIC CONTROL
				50	630	03100	50	EACH	GROUND MOUNTED SUPPORT, NO. 3 POST
				28	630	80100	28	SF	SIGN, FLAT SHEET
				4	630	84900	4	EACH	REMOVAL OF GROUND MOUNTED SIGN AND DISPOSAL
				4	630	86002	4	EACH	REMOVAL OF GROUND MOUNTED POST SUPPORT AND DISPOSAL
									MAINTENANCE OF TRAFFIC
		1			614	12338	1	EACH	WORK ZONE IMPACT ATTENUATOR (BIDIRECTIONAL)
		13			614	13310	13	EACH	BARRIER REFLECTOR, TYPE 1 , TWO WAY
		13			614	13360	13	EACH	OBJECT MARKER, TWO WAY
		0.20			614	21100	0.20	MILE	WORK ZONE CENTER LINE, CLASS I, 642 PAINT
		0.24			614	22100	0.24	MILE	WORK ZONE EDGE LINE, CLASS I, 4", 642 PAINT
		20			614	26200	20	FT	WORK ZONE STOP LINE, CLASS I, 642 PAINT
		620			622	41100	620	FT	PORTABLE BARRIER, UNANCHORED

CALCULATED PTB
CHECKED JSL

LOCATION 1B SUB-SUMMARY (HARMON RD.)

FAI-204/204A-
0.00/0.00

I:\ProjectData\FAI\95506\Design\Roadway\Sheets\95506_GS003.dgn Sheet 2/26/2020 10:26:46 AM jlutz

LOCATION 1C SHEET TOTALS												ITEM	ITEM EXT.	GRAND TOTAL	UNIT	DESCRIPTION
2	3	4	5	8	9	11	12	14	15	17	25					
																ROADWAY
	100					1,332	917					202	23500	2,349	SY	WEARING COURSE REMOVED
					8.41							209	72051	8.41	MILE	PREPARING SUBGRADE FOR SHOULDER PAVING, AS PER PLAN
																PAVEMENT
50												253	02000	50	CY	PAVEMENT REPAIR
	690			54,194								254	01000	54,884	SY	PAVEMENT PLANING, ASPHALT CONCRETE , 1.25"
	640			877	294							254	01000	1,811	SY	PAVEMENT PLANING, ASPHALT CONCRETE , 2.25"
				7,137	39	107	74					407	20000	7,357	GAL	NON-TRACKING TACK COAT
					3,932							408	10001	3,932	GAL	PRIME COAT, AS PER PLAN
						47						441	50000	47	CY	ASPHALT CONCRETE SURFACE COURSE, TYPE 1, (448), PG64-22
	51			1,907	70		32					441	50100	2,060	CY	ASPHALT CONCRETE SURFACE COURSE, TYPE 1, (448), PG70-22M
	18			1,526	9							441	50200	1,553	CY	ASPHALT CONCRETE INTERMEDIATE COURSE, TYPE 1, (448)
					544							617	10101	544	CY	COMPACTED AGGREGATE, AS PER PLAN
																TRAFFIC CONTROL
											327	621	00100	327	EACH	RPM
											327	621	54000	327	EACH	RAISED PAVEMENT MARKER REMOVED
								8.46				644	00104	8.46	MILE	EDGE LINE, 6"
									4.23			644	00300	4.23	MILE	CENTER LINE
										160		644	00500	160	FT	STOP LINE
																MAINTENANCE OF TRAFFIC
			32									614	12460	32	EACH	WORK ZONE MARKING SIGN
		2										614	13000	2	CY	ASPHALT CONCRETE FOR MAINTAINING TRAFFIC
		4.65										614	21100	4.65	MILE	WORK ZONE CENTER LINE, CLASS I, 642 PAINT
		4.65										614	21550	4.65	MILE	WORK ZONE CENTER LINE, CLASS III, 642 PAINT
		32										614	26200	32	FT	WORK ZONE STOP LINE, CLASS I, 642 PAINT
		32										614	26610	32	FT	WORK ZONE STOP LINE, CLASS III, 642 PAINT

CALCULATED PTB
CHECKED JSL

LOCATION 1C SUB-SUMMARY

FAI-204/204A-
0.00/0.00

I:\ProjectData\FAI\95506\Design\Roadway\Sheets\95506_GS004.dgn Sheet 5/22/2020 1:40:05 PM jlutzi

LOCATION 2 SHEET TOTALS									ITEM	ITEM EXT.	GRAND TOTAL	UNIT	DESCRIPTION
2	4	8	9	11	14	15	17	25					
													ROADWAY
				135					202	23500	135	SY	WEARING COURSE REMOVED
													DRAINAGE
2									611	98630	2	EACH	CATCH BASIN ADJUSTED TO GRADE
1									611	99654	1	EACH	MANHOLE ADJUSTED TO GRADE
													PAVEMENT
10									253	02000	10	CY	PAVEMENT REPAIR
		7,012	2,863						254	01000	9,875	SY	PAVEMENT PLANING, ASPHALT CONCRETE , 2.25"
		912	358	11					407	20000	1,281	GAL	NON-TRACKING TACK COAT
			226						408	10001	226	GAL	PRIME COAT, AS PER PLAN
				5					441	50000	5	CY	ASPHALT CONCRETE SURFACE COURSE, TYPE 1, (448), PG64-22
		244	100						441	50100	344	CY	ASPHALT CONCRETE SURFACE COURSE, TYPE 1, (448), PG70-22M
		195	80						441	50200	275	CY	ASPHALT CONCRETE INTERMEDIATE COURSE, TYPE 1, (448)
			16						617	10101	16	CY	COMPACTED AGGREGATE, AS PER PLAN
													TRAFFIC CONTROL
						640			620	70010	640	FT	DELINEATOR, MISC.: RAISED CURB CHANNELIZING SYSTEM REMOVAL
						640			620	70010	640	FT	DELINEATOR, MISC.: RAISED CURB CHANNELIZING SYSTEM
								58	621	00100	58	EACH	RPM
								50	621	54000	50	EACH	RAISED PAVEMENT MARKER REMOVED
					1.20				644	00104	1.20	MILE	EDGE LINE, 6"
						0.16			644	00300	0.16	MILE	CENTER LINE
							660		644	00400	660	FT	CHANNELIZING LINE, 8"
							40		644	00500	40	FT	STOP LINE
							80		644	00700	80	FT	TRANSVERSE/DIAGONAL LINE
							8		644	01300	8	EACH	LANE ARROW
							2		644	01360	2	EACH	WRONG WAY ARROW
							2		644	01410	2	EACH	WORD ON PAVEMENT, 96"
													MAINTENANCE OF TRAFFIC
	3								614	13000	3	CY	ASPHALT CONCRETE FOR MAINTAINING TRAFFIC
	0.16								614	21100	0.16	MILE	WORK ZONE CENTER LINE, CLASS I, 642 PAINT
	0.16								614	21550	0.16	MILE	WORK ZONE CENTER LINE, CLASS III, 642 PAINT
	660								614	23200	660	FT	WORK ZONE CHANNELIZING LINE, CLASS I, 8", 642 PAINT
	660								614	23680	660	FT	WORK ZONE CHANNELIZING LINE, CLASS III, 8", 642 PAINT
	40								614	26200	40	FT	WORK ZONE STOP LINE, CLASS I, 642 PAINT
	40								614	26610	40	FT	WORK ZONE STOP LINE, CLASS III, 642 PAINT

CALCULATED PTB
CHECKED JSL

LOCATION 2 SUB-SUMMARY

FAI-204/204A-
0.00/0.00

I:\ProjectData\FAI\95506\Design\Roadway\Sheets\95506_GS005.dgn Sheet 5/22/2020 2:09:41 PM jlutz

LOCATION SUB TOTALS					PLAN SPLITS				ITEM	ITEM EXT.	GRAND TOTAL	UNIT	DESCRIPTION	SEE SHEET
1A	1B	1B (HARMON)	1C	2	01/S>2/PV/PICK (1A)	02/S>2/PV (1B, 2)	03/STR/PV (1C)	04/S>2/OT (SIGNAL)						
													ROADWAY	
		LS				LS			201	11000	LS	LS	CLEARING AND GRUBBING	
		311				311			202	23010	311	SY	PAVEMENT REMOVED, ASPHALT	
949	6,804		2,349	135	949	6,939	2,349		202	23500	10,237	SY	WEARING COURSE REMOVED	
		1,048				1,048			203	10000	1,048	CY	EXCAVATION	
		235				235			203	20000	235	CY	EMBANKMENT	
		425				425			204	13000	425	CY	EXCAVATION OF SUBGRADE	
		425				425			204	20000	425	CY	EMBANKMENT	
		1,124				1,124			204	10000	1,124	SY	SUBGRADE COMPACTION	
		2				2			204	45000	2	HOUR	PROOF ROLLING	
	13.01		8.41			13.01	8.41		209	72051	21.42	MILE	PREPARING SUBGRADE FOR SHOULDER PAVING, AS PER PLAN	3
2					2				623	39500	2	EACH	MONUMENT BOX ADJUSTED TO GRADE	
													EROSION CONTROL	
		1,945				1,945			659	00500	1,945	SY	SEEDING AND MULCHING, CLASS 1	
		97				97			659	14000	97	SY	REPAIR SEEDING AND MULCHING	
		97				97			659	15000	97	SY	INTER-SEEDING	
		0.27				0.27			659	20000	0.27	TON	COMMERCIAL FERTILIZER	
		0.40				0.40			659	31000	0.40	ACRE	LIME	
		11				11			659	35000	11	MGAL	WATER	
		5,000				5,000			832	30000	5,000	EACH	EROSION CONTROL	
													DRAINAGE	
		0.52				0.52			602	20000	0.52	CY	CONCRETE MASONRY	
		8				8			605	31100	8	FT	AGGREGATE DRAINS	
		34				34			611	06400	34	FT	15" CONDUIT, TYPE D	
1				2	1	2			611	98630	3	EACH	CATCH BASIN ADJUSTED TO GRADE	
5	1			1	5	2			611	99654	7	EACH	MANHOLE ADJUSTED TO GRADE	
													PAVEMENT	
10	50		50	10	10	60	50		253	02000	120	CY	PAVEMENT REPAIR	
	18,526		54,884			18,526	54,884		254	01000	73,410	SY	PAVEMENT PLANING, ASPHALT CONCRETE , 1.25"	
13,389	88,306		1,811	9,875	13,389	98,181	1,811		254	01000	113,381	SY	PAVEMENT PLANING, ASPHALT CONCRETE , 2.25"	
	1,854					1,854			254	01000	1,854	SY	PAVEMENT PLANING, ASPHALT CONCRETE , VARIABLE	
		330				330			301	46000	330	CY	ASPHALT CONCRETE BASE, PG64-22	
		161				161			304	20000	161	CY	AGGREGATE BASE	
1,818	14,241	46	7,357	1,281	1,818	15,568	7,357		407	20000	24,743	GAL	NON-TRACKING TACK COAT	
	6,062		3,932	226		6,288	3,932		408	10001	10,220	GAL	PRIME COAT, AS PER PLAN	
														2
34	226		47	5	34	231	47		441	50000	312	CY	ASPHALT CONCRETE SURFACE COURSE, TYPE 1, (448), PG64-22	
466	3,805		2,060	344	466	4,149	2,060		441	50100	6,675	CY	ASPHALT CONCRETE SURFACE COURSE, TYPE 1, (448), PG70-22M	
373	3,023		1,553	275	373	3,298	1,553		441	50200	5,224	CY	ASPHALT CONCRETE INTERMEDIATE COURSE, TYPE 1, (448)	
	72					72			516	31011	72	FT	2" DEEP JOINT SEALER, AS PER PLAN	2
	842		544	16		858	544		617	10101	1,402	CY	COMPACTED AGGREGATE, AS PER PLAN	2
		325				325			SPECIAL	69012050	325	SY	REINFORCED MESH FOR TRANSVERSE AND/OR LONGITUDINAL JOINTS AND CRACKS	36

CALCULATED PTB
CHECKED JSL

GENERAL SUMMARY

FAI-204/204A-
0.00/0.00

I:\ProjectData\FAI\95506\Design\Roadway\Sheets\95506_GC001.dgn Sheet 2/24/2020 3:11:39 PM jlutzi

LOCATION SUB TOTALS					PLAN SPLITS				ITEM	ITEM EXT.	GRAND TOTAL	UNIT	DESCRIPTION	SEE SHEET
1A	1B	1B (HARMON)	1C	2	01/S>2/PV/PICK (1A)	02/S>2/PV (1B, 2)	03/STR/PV (1C)	04/S>2/OT (SIGNAL)						
													WATER WORK	
		1				1			638	10481	1	EACH	FIRE HYDRANT REMOVED, AS PER PLAN	36
	5					5			638	10800	5	EACH	VALVE BOX ADJUSTED TO GRADE	
		1				1			638	10801	1	EACH	VALVE BOX ADJUSTED TO GRADE, AS PER PLAN	36
													TRAFFIC CONTROL	
				640		640			620	70010	640	FT	DELINEATOR, MISC.: RAISED CURB CHANNELIZING SYSTEM REMOVAL	3
				640		640			620	70010	640	FT	DELINEATOR, MISC.: RAISED CURB CHANNELIZING SYSTEM	3
132	656		327	58	132	714	327		621	00100	1,173	EACH	RPM	
132	528		327	50	132	578	327		621	54000	1,037	EACH	RAISED PAVEMENT MARKER REMOVED	
		50				50			630	03100	50	EACH	GROUND MOUNTED SUPPORT, NO. 3 POST	
		2						2	630	79000	2	EACH	SIGN HANGER ASSEMBLY, SPAN WIRE	
		38				28		10	630	80100	38	SF	SIGN, FLAT SHEET	
		4				4			630	84900	4	EACH	REMOVAL OF GROUND MOUNTED SIGN AND DISPOSAL	
		4				4			630	86002	4	EACH	REMOVAL OF GROUND MOUNTED POST SUPPORT AND DISPOSAL	
	13.18		8.46	1.20		14.38	8.46		644	00104	22.84	MILE	EDGE LINE, 6"	
0.60					0.60				644	00204	0.60	MILE	LANE LINE, 6"	
0.56	7.01		4.23	0.16	0.56	7.17	4.23		644	00300	11.96	MILE	CENTER LINE	
1,755	860			660	1,755	1,520			644	00400	3,275	FT	CHANNELIZING LINE, 8"	
230	785		160	40	230	825	160		644	00500	1,215	FT	STOP LINE	
380	160				380	160			644	00600	540	FT	CROSSWALK LINE	
351	806			80	351	886			644	00700	1,237	FT	TRANSVERSE/DIAGONAL LINE	
40	13			8	40	21			644	01300	61	EACH	LANE ARROW	
				2		2			644	01360	2	EACH	WRONG WAY ARROW	
11					11				644	01400	11	EACH	WORD ON PAVEMENT, 72"	
	3			2		5			644	01410	5	EACH	WORD ON PAVEMENT, 96"	
170					170				644	01510	170	EACH	DOTTED LINE, 6"	
	21					21			644	20800	21	FT	YIELD LINE	
													TRAFFIC SIGNALS	
		2						2	625	00450	2	EACH	CONNECTION, FUSED PULL APART	
		2						2	625	00460	2	EACH	CONNECTION, UNFUSED PULL APART	
		3						3	625	18510	3	EACH	BRACKET ARM, 30'	
		12						12	625	25602	12	FT	CONDUIT, 4", 725.05	
		2						2	625	26253	2	EACH	LUMINAIRE, CONVENTIONAL, SOLID STATE (LED), AS PER PLAN (150W, 120V, TYPE II)	50
		12						12	625	29002	12	FT	TRENCH, 24" DEEP	
		1						1	625	30706	1	EACH	PULL BOX, 725.08, 24"	
		5						5	625	32000	5	EACH	GROUND ROD	
		9						9	632	05007	9	EACH	VEHICULAR SIGNAL HEAD, (LED), 3-SECTION, 12" LENS, 1-WAY, POLYCARBONATE, AS PER PLAN	51
		1						1	632	05087	1	EACH	VEHICULAR SIGNAL HEAD, (LED), 5-SECTION, 12" LENS, 1-WAY, POLYCARBONATE, AS PER PLAN	51
		10						10	632	25000	10	EACH	COVERING OF VEHICULAR SIGNAL HEAD	
15					15				632	26501	15	EACH	DETECTOR LOOP, AS PER PLAN	3
		465						465	632	30300	465	FT	MESSENGER WIRE, 7 STRAND, 7/16" DIAMETER WITH ACCESSORIES	
		465						465	632	30600	465	FT	TETHER WIRE, WITH ACCESSORIES	

CALCULATED PTB
CHECKED JSL

GENERAL SUMMARY

FAI-204/204A-
0.00/0.00

I:\ProjectData\FAI\95506\Design\Roadway\Sheets\95506_GG002.dgn Sheet 5/22/2020 2:12:57 PM jlutz

LOCATION SUB TOTALS					PLAN SPLITS				ITEM	ITEM EXT.	GRAND TOTAL	UNIT	DESCRIPTION	SEE SHEET
1A	1B	1B (HARMON)	1C	2	01/S>2/PV/PICK (1A)	02/S>2/PV (1B, 2)	03/STR/PV (1C)	04/S>2/OT (SIGNAL)						
													TRAFFIC SIGNALS (CONT'D.)	
		1,104						1,104	632	40700	1,104	FT	SIGNAL CABLE, 7 CONDUCTOR, NO. 14 AWG	
		4						4	632	64000	4	EACH	STRAIN POLE FOUNDATION	
		475						475	632	67300	475	FT	POWER CABLE, 3 CONDUCTOR, NO. 8 AWG	
		1						1	632	70001	1	EACH	POWER SERVICE, AS PER PLAN	51
		1						1	632	83100	1	EACH	STRAIN POLE, TYPE TC-81.10, DESIGN 11	
		3						3	632	85100	3	EACH	COMBINATION STRAIN POLE, TYPE TC-81.10, DESIGN 11	
		1						1	632	90101	1	EACH	REMOVAL OF TRAFFIC SIGNAL INSTALLATION, AS PER PLAN	50
		1						1	633	65521	1	EACH	CABINET, TYPE 332, AS PER PLAN	52
		1						1	633	67101	1	EACH	CABINET FOUNDATION, AS PER PLAN	52
		1						1	633	67201	1	EACH	CONTROLLER WORK PAD, AS PER PLAN	52
		60						60	633	67320	60	FT	PREEMPTION DETECTOR CABLE	52
		1						1	633	75001	1	EACH	UNINTERRUPTIBLE POWER SUPPLY (UPS), 1000 WATT, AS PER PLAN	51
		1						1	633	99000	1	EACH	CONTROLLER ITEM, MISC.: PREEMPTION REMOVED FOR REUSE	52
		60						60	633	99000	60	EACH	CONTROLLER ITEM, MISC.: PREEMPTION LIGHT CONFIRMATION CABLE	52
		3						3	809	69000	3	EACH	ADVANCE RADAR DETECTION	52
		4						4	809	69100	4	EACH	STOP LINE RADAR DETECTION	52
		1						1	809	69122	1	EACH	ATC V6.24 CONTROLLER	52
													MAINTENANCE OF TRAFFIC	
100	100				100	100			614	11110	200	HOUR	LAW ENFORCEMENT OFFICER WITH PATROL CAR FOR ASSISTANCE	
		1				1			614	12338	1	EACH	WORK ZONE IMPACT ATTENUATOR (BIDIRECTIONAL)	
	41		32			41	32		614	12460	73	EACH	WORK ZONE MARKING SIGN	
3	3		2	3	3	6	2		614	13000	11	CY	ASPHALT CONCRETE FOR MAINTAINING TRAFFIC	
		13				13			614	13310	13	EACH	BARRIER REFLECTOR, TYPE 1 , TWO WAY	
		13				13			614	13360	13	EACH	OBJECT MARKER, TWO WAY	
4	4				4	4			614	18601	8	SNMT	PORTABLE CHANGEABLE MESSAGE SIGN, AS PER PLAN	
0.60					0.60				614	20100	0.60	MILE	WORK ZONE LANE LINE, CLASS I, 4", 642 PAINT	
0.60					0.60				614	20550	0.60	MILE	WORK ZONE LANE LINE, CLASS III, 4", 642 PAINT	
0.56	7.01	0.20	4.65	0.16	0.56	7.37	4.65		614	21100	12.58	MILE	WORK ZONE CENTER LINE, CLASS I, 642 PAINT	
0.56	7.01		4.65	0.16	0.56	7.17	4.65		614	21550	12.38	MILE	WORK ZONE CENTER LINE, CLASS III, 642 PAINT	
		0.24				0.24			614	22100	0.24	MILE	WORK ZONE EDGE LINE, CLASS I, 4", 642 PAINT	
1,738	860			660	1,738	1,520			614	23200	3,258	FT	WORK ZONE CHANNELIZING LINE, CLASS I, 8", 642 PAINT	
1,738	860			660	1,738	1,520			614	23680	3,258	FT	WORK ZONE CHANNELIZING LINE, CLASS III, 8", 642 PAINT	
168	132	20	32	40	168	192	32		614	26200	392	FT	WORK ZONE STOP LINE, CLASS I, 642 PAINT	
168	132		32	40	168	172	32		614	26610	372	FT	WORK ZONE STOP LINE, CLASS III, 642 PAINT	
		620				620			622	41100	620	FT	PORTABLE BARRIER, UNANCHORED	
													INCIDENTALS	
					LS	LS	LS	LS	614	11000	LS	LS	MAINTAINING TRAFFIC	
					LS	LS	LS	LS	623	10001	LS	LS	CONSTRUCTION LAYOUT STAKES AND SURVEYING, AS PER PLAN	
					LS	LS	LS	LS	624	10000	LS	LS	MOBILIZATION	

CALCULATED PTB
CHECKED JSL

GENERAL SUMMARY

FAI-204/204A-
0.00/0.00

I:\ProjectData\FAI\95506\Design\Roadway\Sheets\95506_GG003.dgn Sheet 5/22/2020 2:22:14 PM jlutzi

NOTES:

PROPOSED ITEM 301 SHALL MEET EXISTING PAVMENT ELEVATION

SEE INTERSECTION DETAILS FROM STA. 69+12.00 (S.R. 204) TO STA. 1+15.25 (HARMON RD.)

PROPOSED TYPICAL DOES NOT SHOW INTERMEDIATE AND SURFACE COURSES. SEE SHEETS 7-8 FOR PAVEMENT PLANING AND RESURFACING DETAILS

1 TAPERS FROM 12' AT STA. 65+00.00 TO 24' AT STA. 65+50.00

TAPERS FROM 24' AT STA. 65+50.00 TO 30.5' AT STA. 69+12.01

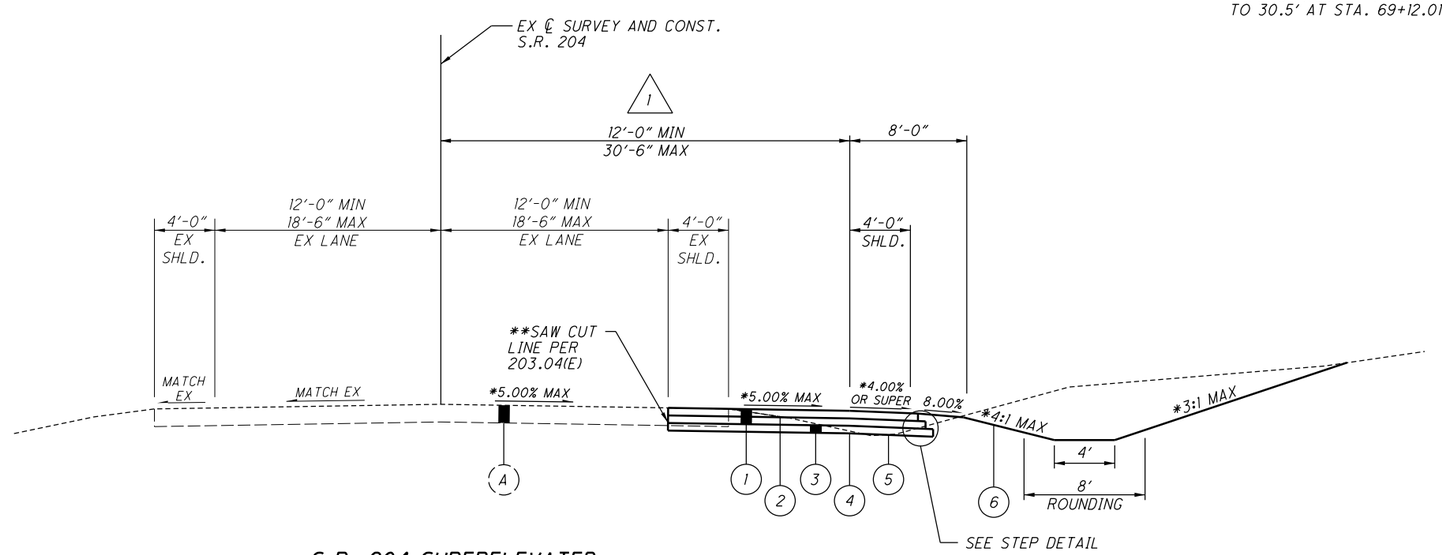

S.R. 204 SUPERELEVATED SECTION APPLIES:

STA. 65+00.00 TO STA. 69+12.00 RT. = 412.00 FT.

* SEE CROSS SECTIONS

** SAW CUT ALONG EXISTING EDGE OF PAVEMENT

PLACE REINFORCING MESH OVER SAW CUT PRIOR TO PLACING INTERMEDIATE COURSE (1.5" MIN.)

STEP DETAIL

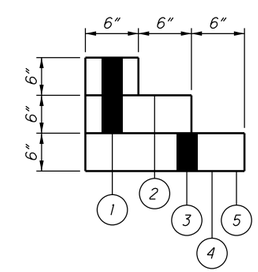

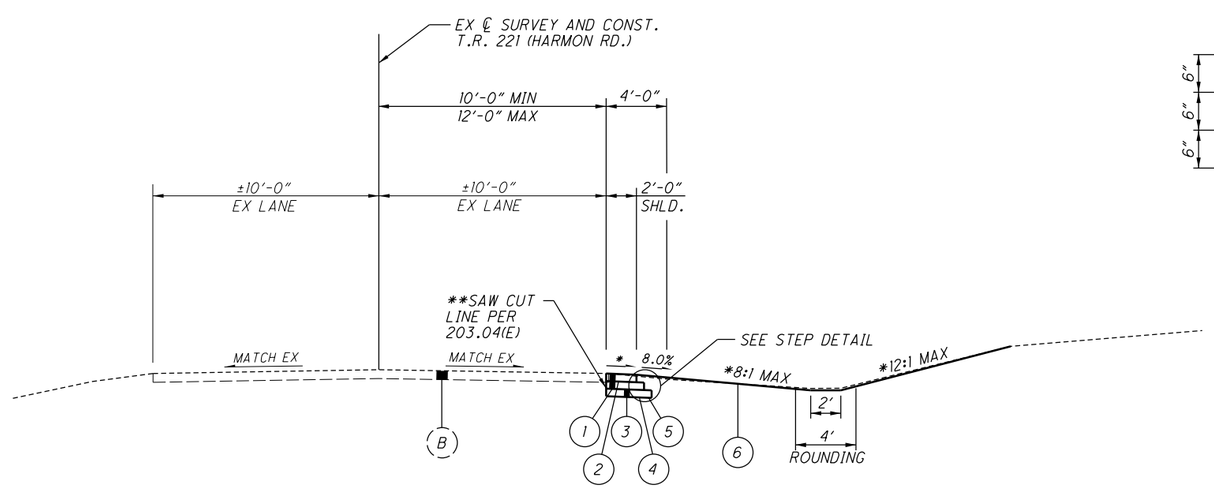

T.R. 221 (HARMON RD.) NORMAL SECTION APPLIES:

STA. 1+15.25 TO STA. 1+50.00 RT. = 412.00 FT.

LEGEND

(A) EXISTING ±14" ASPHALT CONCRETE PAVEMENT

(B) EXISTING ±7" ASPHALT CONCRETE PAVEMENT

(1) ITEM 301, 12" ASPHALT CONCRETE BASE, PG64-22 (TWO 6" LIFTS)

(2) ITEM 407, NON-TRACKING TACK COAT

(3) ITEM 304, 6" AGGREGATE BASE

(4) ITEM 204, SUBGRADE COMPACTION

(5) ITEM 204, PROOF ROLLING

(6) ITEM 659, SEEDING AND MULCHING, CLASS 2

CALCULATED PTB
CHECKED JSL

TYPICAL SECTIONS

FAI-204/204A-
0.00/0.00

i:\Project Data\FAI\95506\Design\Roadway\Sheets\95506_GY001.dgn Sheet 2/19/2020 4:17:35 PM jlutzi

ROUNDING

THE ROUNDING AT SLOPE BREAKPOINTS SHOWN ON THE TYPICAL SECTIONS APPLIES TO ALL CROSS-SECTIONS EVEN THOUGH OTHERWISE SHOWN.

WORK LIMITS

THE WORK LIMITS SHOWN ON THESE PLANS ARE FOR PHYSICAL CONSTRUCTION ONLY. PROVIDE THE INSTALLATION AND OPERATION OF ALL WORK ZONE TRAFFIC CONTROL AND WORK ZONE TRAFFIC CONTROL DEVICES REQUIRED BY THESE PLANS WHETHER INSIDE OR OUTSIDE THE WORK LIMITS.

UTILITIES

AT&T OHIO
160 NORTH SIXTH STREET
ZANESVILLE, OHIO 43701
ATTN: GARY VAN ALMSICK
614-223-7276
GV2758@ATT.COM

SPECTRUM CABLE TV
3770 EAST LIVINGSTON AVE.
COLUMBUS, OHIO 43227-2280
ATTN: ANTHONY ADAMS
614-827-7971
ANTHONY.ADAMS@CHARTER.COM

COLUMBIA GAS OF OHIO
3550 JOHNNY APPLESEED
COLUMBUS, OHIO 43231
ATTN: MARK CHRISTMAN
740-818-2109
MCHRISTMAN@NISOURCE.COM

SOUTH CENTRAL POWER
DIRECTOR OF ENGINEERING
2780 COONPATH ROAD, NE
P.O. OFFICE BOX 250
LANCASTER, OHIO 43130
ATTN: ZACK REED
740-689-6150
ZREED@SOUTHCENTRALPOWER.COM

FAIRFIELD COUNTY UTILITIES
6670 LOCKVILLE ROAD
CARROLL, OHIO 43112
ATTN: TONY VOGEL
614-322-5200
TONY.VOGEL@FAIRFIELDCOUNTYOHIO.GOV

UNDERGROUND UTILITIES

THE LOCATIONS OF THE UNDERGROUND UTILITIES SHOWN ON THE PLANS ARE AS OBTAINED FROM THE OWNERS OF THE UTILITIES AS REQUIRED BY SECTION 153.64 OF THE OHIO REVISED CODE. ODOT ASSUMES NO RESPONSIBILITY FOR THE LOCATION OR THE DEPTHS OF THE UNDERGROUND FACILITIES SHOWN ON THESE PLANS.

AT LEAST 48 HOURS BEFORE DIGGING, THE CONTRACTOR SHALL CALL THE OHIO UTILITIES PROTECTION SERVICE AT THE NUMBER LISTED ON THE TITLE SHEET. NON-MEMBER UTILITY COMPANIES MUST BE CALLED DIRECTLY. THE NAMES AND ADDRESSES OF THE UTILITIES LOCATED WITHIN THE PROJECT CONSTRUCTION LIMITS ARE LISTED ABOVE.

SURVEYING PARAMETERS

USE THE FOLLOWING VERTICAL POSITIONING AND HORIZONTAL POSITIONING PARAMETERS FOR ALL SURVEYING AND SEE TABLE ON SHEET FOR CONTROL POINT DATA FOR THE PROJECT.

VERTICAL POSITIONING
ORTHOMETRIC HEIGHT DATUM: NAVD88
GEOID: GEOID12A

HORIZONTAL POSITIONING
REFERENCE FRAME: NAD83
ELLIPSOID: GRS80
MAP PROJECTION: LAMBERT CONFORMAL CONIC
COORDINATE SYSTEM: OHIO STATE PLANE – SOUTH ZONE
COMBINED SCALE FACTOR: 1.000000000

UNITS ARE IN U.S. SURVEY FEET.

CN PT	STATION, OFFSET	NORTHING	EASTING	ELEV.	FEATURE CODE
SV1	66+92.37, 37.73' LT	703,443.363	1,894,088.982	940.13	5/8" REBAR W/ ODOT CAP
SV2	70+23.14, 45.81' LT	703,570.195	1,894,405.842	947.41	5/8" REBAR W/ ODOT CAP
SV3	73+06.38, 26.44' LT	703,564.483	1,894,698.354	948.67	5/8" REBAR W/ ODOT CAP

CLEARING AND GRUBBING

ALTHOUGH THERE ARE NO TREES OR STUMPS SPECIFICALLY MARKED FOR REMOVAL WITHIN THE LIMITS OF THE PROJECT, A LUMP SUM QUANTITY IS BEING CARRIED TO THE LOCATION SUB-SUMMARY FOR ITEM 201, CLEARING AND GRUBBING. ALL PROVISIONS AS SET FORTH IN THE SPECIFICATIONS UNDER THIS ITEM ARE INCLUDED IN THE LUMP SUM PRICE BID FOR ITEM 201, CLEARING AND GRUBBING.

NOTE: ALL TREES HAVE BEEN CLEARED WITHIN PROPOSED RIGHT-OF-WAY BY ODOT FORCES.

ENVIRONMENTAL COMMITMENTS

THE PROJECT IS LOCATED WITHIN THE KNOWN HABITAT RANGES OF THE FEDERALLY LISTED AND PROTECTED INDIANA BAT AND NORTHERN LONG-EARED BAT. **THE CONTRACTOR SHALL NOT REMOVE TREES FOR THIS PROJECT FROM APRIL 1 THROUGH SEPTEMBER 30. ALL NECESSARY TREE REMOVAL SHALL OCCUR FROM OCTOBER 1 THROUGH MARCH 31**. THE CONTRACTOR SHALL DEMARCATE CLEARING LIMITS IN THE FIELD TO AVOID ANY UNAUTHORIZED TREE CLEARING. THIS REQUIREMENT IS NECESSARY TO AVOID AND MINIMIZE IMPACTS TO THESE SPECIES' AS REQUIRED BY THE ENDANGERED SPECIES ACT. FOR THE PURPOSES OF THIS NOTE, A TREE IS DEFINED AS A LIVE, DYING, OR DEAD WOODY PLANT, WITH A TRUNK THREE INCHES OR GREATER IN DIAMETER AT A HEIGHT OF 4.5 FEET ABOVE THE GROUND SURFACE, AND WITH A MINIMUM HEIGHT OF 13 FEET.

SEEDING AND MULCHING

THE FOLLOWING QUANTITIES ARE PROVIDED TO PROMOTE GROWTH AND CARE OF PERMANENT SEEDED AREAS:

ITEM 659, SEEDING AND MULCHING, CLASS 1
LOCATION 1B: 1,945 SY

ITEM 659, REPAIR SEEDING AND MULCHING
LOCATION 1B: 97 SY

ITEM 659, INTER-SEEDING
LOCATION 1B: 97 SY

ITEM 659, COMMERCIAL FERTILIZER
LOCATION 1B: 0.27 TON

ITEM 659, LIME
LOCATION 1B: 0.40 ACRE

ITEM 659, WATER
LOCATION 1B: 11 MGAL

SEEDING AND MULCHING SHALL BE APPLIED TO ALL AREAS OF EXPOSED SOIL BETWEEN THE RIGHT-OF-WAY LINES, AND WITHIN THE CONSTRUCTION LIMITS FOR AREAS OUTSIDE THE RIGHT-OF-WAY LINES COVERED BY WORK AGREEMENT OR SLOPE EASEMENT. QUANTITY CALCULATIONS FOR SEEDING AND MULCHING ARE BASED ON THESE LIMITS.

EXCAVATION AND EMBANKMENT

THE FOLLOWING ESTIMATED QUANTITIES HAVE BEEN CALCULATED FROM THE CROSS SECTIONS AND HAVE BEEN CARRIED TO THE LOCATION SUB-SUMMARY.

ITEM 203, EXCAVATION
LOCATION 1B: 1,013 CY

ITEM 203, EMBANKMENT
LOCATION 1B: 235 CY

BENCHING OF FOUNDATION SLOPES

ALTHOUGH CROSS-SECTIONS INDICATE SPECIFIC DIMENSIONS FOR PROPOSED BENCHING OF THE EMBANKMENT FOUNDATIONS IN CERTAIN AREAS, NO WAIVER OF THE SPECIFICATIONS IS INTENDED. BENCH ALL OTHER SLOPED EMBANKMENT AREAS AS SET FORTH IN 203.05. NO ADDITIONAL PAYMENT WILL BE MADE FOR BENCHING REQUIRED UNDER THE PROVISIONS OF 203.05.

FIELD DRIVE PIPE

THE FOLLOWING ESTIMATED QUANTITY HAS BEEN CARRIED TO THE LOCATION SUB-SUMMARY FOR INSTALLING A DRIVE PIPE UNDER THE FIELD DRIVE AT **STA. 68+95** AS SHOWN IN THE PLANS.

ITEM 602, CONCRETE MASONRY
LOCATION 1B: 0.52 CY

ITEM 611, 15" CONDUIT, TYPE D
LOCATION 1B: 34 FT

I:\ProjectData\FAI\95506\Design\Roadway\Sheets\95506_GN003.dgn Sheet 2/19/2020 4:17:36 PM jlutz

ITEM 204, SUBGRADE COMPACTION AND PROOF ROLLING

CONSTRUCT THE SUBGRADE AS FOLLOWS AND, IN THE FOLLOWING SEQUENCE:

1. **EXCAVATE AND REPLACE 1' MINIMUM BELOW EXISTING DITCH BOTTOM UNDER PROPOSED SUBGRADE. SEE CROSS SECTION SHEETS FOR LIMITS AND ITEM 203, EXCAVATION/ EMBANKMENT QUANTITIES.**

2. SHAPE THE SUBGRADE TO WITHIN 0.2 FEET OF THE PLAN SUBGRADE ELEVATION.

3. EXCAVATE AND REPLACE UNSUITABLE SUBGRADE BEFORE PROOF ROLLING. THE EXCAVATION LIMITS ARE SHOWN AND LABELED ON THE CROSS SECTIONS AS UNSUITABLE SUBGRADE. UNSUITABLE SUBGRADE INCLUDES UNSUITABLE SOIL (A-4B, A-2-5, A-5, A-7-5, AND SOIL WITH A LIQUID LIMIT GREATER THAN 65) AND ANY COAL, SHALE, OR ROCK WHICH NEEDS TO BE REMOVED ACCORDING TO CMS 204.05.

   IF THERE IS UNSUITABLE SUBGRADE IN A SHALLOW FILL LOCATION, EXCAVATE AND REPLACE THE UNSUITABLE SUBGRADE BEFORE CONSTRUCTING THE SHALLOW FILL AND SHAPING THE SUBGRADE. (NOT APPLICABLE)

4. COMPACT THE SUBGRADE ACCORDING TO CMS 204.03.

5. APPROXIMATE LIMITS FOR EXCAVATION OF UNSTABLE SUBGRADE ARE SHOWN BELOW. THE ENGINEER WILL IDENTIFY THE ACTUAL LIMITS OF EXCAVATION FOR UNSTABLE SUBGRADE BASED ON THE PROOF ROLLING RESULTS AND VISUAL OBSERVATIONS.

   PROOF ROLL THE COMPACTED SUBGRADE ACCORDING TO CMS 204.06.

6. EXCAVATE UNSTABLE SUBGRADE AS DIRECTED BY THE ENGINEER AND STABILIZE BY REPLACING WITH THE SPECIFIED MATERIALS ACCORDING TO CMS 204.07. EXCAVATIONS WILL EXTEND 18 INCHES BEYOND THE EDGE OF THE SURFACE OF THE PAVEMENT, PAVED SHOULDERS, OR PAVED MEDIANS.

7. PROOF ROLL THE STABILIZED AREAS ACCORDING TO CMS 204.06 TO VERIFY STABILITY.

8. FINE GRADE THE SUBGRADE TO THE SPECIFIED GRADE.

THE QUANTITIES FOR EXCAVATING THE UNSUITABLE SUBGRADE AND UNSTABLE SUBGRADE ARE BOTH PAID UNDER ITEM 204, EXCAVATION OF SUBGRADE.

UNSUITABLE SUBGRADE: N/A

UNSTABLE SUBGRADE LIMITS:

S.R. 204
STA. 65+00 TO STA. 69+50 (1'-6")
(7,650 SF X 1.5' FT = 425 CY)

THE FOLLOWING QUANTITIES HAVE BEEN CARRIED TO THE LOCATION SUB-SUMMARY TO REMOVE AND REPLACE ANY UNSTABLE SUBGRADE AS DESCRIBED ABOVE AND **AS DIRECTED BY THE ENGINEER**.

ITEM 204, EXCAVATION OF SUBGRADE
LOCATION 1B: 425 CY

ITEM 204, EMBANKMENT
LOCATION 1B: 425 CY

ITEM 605, AGGREGATE DRAINS

THE FOLLOWING QUANTITY HAS BEEN CARRIED TO THE LOCATION SUB-SUMMARY FOR INSTALLATION OF AGGREGATE DRAINS AT **STA. 65+50 RT.** AS SHOWN IN THE PLANS.

ITEM 605, AGGREGATE DRAINS
LOCATION 1B: 8 FT

ITEM 623, CONSTRUCTION LAYOUT STAKES AND SURVEYING, AS PER PLAN

IN ADDITION TO THE REQUIREMENTS OF ITEM 623 CONSTRUCTION LAYOUT STAKES AND SURVEYING, THE CONTRACTOR SHALL PROVIDE THE FOLLOWING INFORMATION TO THE DEPARTMENT:

THE CONTRACTOR SHALL PROVIDE AS-BUILT DATA FOR THE SPECIFIED COMPLETED CONSTRUCTION ITEMS IN OHIO STATE PLANE COORDINATES (GRID). THE CONSTRUCTION ITEMS SHALL BE LOCATED AS PER THE SURVEY FEATURE CODE LIST FOUND ON THE OHIO DEPARTMENT OF TRANSPORTATION OFFICE OF CADD & MAPPING SERVICES WEBSITE. **AN EMAIL** CONTAINING A COMMA DELIMITED ASCII FILE AND A SURVEYOR'S CERTIFICATION SHALL BE DELIVERED TO CODY.GIERHART@DOT.OHIO.GOV AFTER ALL INFORMATION HAS BEEN COLLECTED. THE ASCII FILE SHALL INCLUDE A HEADER CONTAINING NAME OF SURVEYOR, DATE(S) OF COLLECTION, HORIZONTAL DATUM (I.E. NAD83 (2011), OHIO STATE PLANE COORDINATE SYSTEM NORTH OR SOUTH), VERTICAL DATUM (I.E. NAVD 88, GEOID12A) AND METHOD OF COLLECTION (I.E. OHIO VRS, GPS RTK, TOTAL STATION, ETC.) AND BE IN A TABLE FORM AS FOLLOWS:

POINT NUMBER, NORTHING, EASTING, ELEVATION, FEATURE CODE, DESCRIPTION

BELOW IS A LIST OF THE ITEMS THE CONTRACTOR IS REQUIRED TO PROVIDE FOR THE PROJECT:

- TRAFFIC SIGNAL POLES, PULL BOXES, AND CABINET
- SIGNS

THE ABOVE ITEMS SHALL BE COLLECTED USING SURVEY GRADE EQUIPMENT MEETING THE REQUIREMENTS OF SECTION 400 IN THE OHIO DEPARTMENT OF TRANSPORTATION SURVEY & MAPPING SPECIFICATIONS MANUAL.

ALL COST ASSOCIATED WITH OBTAINING THE INFORMATION LISTED ABOVE SHALL BE INCLUDED IN THE LUMP SUM BID FOR ITEM 623 CONSTRUCTION LAYOUT STAKES AND SURVEYING, AS PER PLAN.

ITEM 638, FIRE HYDRANT REMOVED, AS PER PLAN

THE FOLLOWING QUANTITY HAS BEEN CARRIED TO THE LOCATION SUB-SUMMARY FOR REMOVAL OF THE EXISITNG FIRE HYDRANT AND PLUG OF THE WATER LINE ON HARMON RD. (**SEE SHEET 42**). WHILE PLUGGING THE WATER LINE, THE WATCH VALVE BONNET BOLTS SHALL BE CHANGED TO 304 STAINLESS STEEL.

THE CONTRACTOR SHALL COORDINATE ALL WORK WITH FAIRFIELD COUNTY UTILITIES PRIOR TO CONSTRUCTION. PAYMENT SHALL INCLUDE ALL INCIDENTALS NECESSARY TO CONSTRUCT PER **CMS 638.15D**.

ITEM 638, FIRE HYDRANT, REMOVED, AS PER PLAN
LOCATION 1B: 1 EACH

ITEM 638, VALVE BOX ADJUSTED TO GRADE, AS PER PLAN

THE FOLLOWING QUANTITY HAS BEEN CARRIED TO THE LOCATION SUB-SUMMARY FOR ADJUSTMENT OF THE EXISITNG WATER VALVE AND REPLACEMENT OF THE EXISTING VALVE BOX WITH AN HEAVY-DUTY TRAFFIC TYPE (W-15) VALVE BOX. **SEE SHEET 42 FOR LOCATION AND SEE SPECIAL PROVISONS FOR DETAILS.**

THE CONTRACTOR SHALL COORDINATE ALL WORK WITH FAIRFIELD COUNTY UTILITIES PRIOR TO CONSTRUCTION. PAYMENT SHALL INCLUDE ALL INCIDENTALS NECESSARY TO CONSTRUCT PER **CMS 638.18**.

ITEM 638, VALVE BOX, ADJUSTED TO GRADE, AS PER PLAN
LOCATION 1B: 1 EACH

ITEM SPECIAL, REINFORCED MESH FOR TRANSVERSE AND/OR LONGITUDINAL JOINTS AND CRACKS

THIS ITEM SHALL BE USED TO REINFORCE THE LONGITUDINAL WIDENING JOINT AT S.R. 204 AND HARMON RD. INTERSECTION. PLACE REINFORCING MESH ON PLANED SURFACE, 5.0' WIDE CENTERED OVER LONGITUDINAL JOINT. THIS WORK SHALL BE PERFORMED ON ALL WIDENING JOINTS THROUGHOUT THE SECTION, INCLUDING RADIUS RETURNS. REINFORCING MATERIAL SHALL BE GLASGRID CG100 OR EQUIVALENT AND SHALL BE PLACED ACCORDING TO MANUFACTURER'S SPECIFICATIONS AND THIS NOTE.

ALL MATERIALS, LABOR, EQUIPMENT, TOOLS, TRAFFIC CONTROL AND INCIDENTALS NEEDED TO COMPLETE THE WORK DESCRIBED ABOVE SHALL BE INCLUDED FOR PAYMENT IN THE UNIT PRICE BID FOR ITEM SPECIAL, REINFORCED MESH FOR TRANSVERSE AND/OR LONGITUDINAL JOINTS AND CRACKS

A MINIMUM OF 1.5" OF ASPHALT INTERMEDIATE COURSE SHALL BE PLACED ON MESH BEFORE OPENING TO TRAFFIC.

S.R. 204/HARMON RD.
STA. 65+00 TO STA. 1+50: 585' X 5' / 9 = 325 SY

ITEM SPECIAL, REINFORCED MESH FOR TRANSVERSE AND/OR LONGITUDINAL JOINTS AND CRACKS
LOCATION 1B: 325 SY

CALCULATED PTB
CHECKED JSL

GENERAL NOTES (HARMON RD.)

FAI-204/204A-0.00/0.00

I:\Project Data\FAI\95506\Design\Roadway\Sheets\95506_GN004.dgn Sheet 2/19/2020 4:17:41 PM jlutz

LEGEND

- (CL) ITEM 614 WORK ZONE CENTER LINE, CLASS 1, 642 PAINT
- (WEL) ITEM 614 WORK ZONE EDGE LINE, 4", CLASS 1, 642 PAINT, (WHITE)
- ITEM 622, PORTABLE BARRIER, 32"
- DRUM
- DIRECTION OF TRAVEL

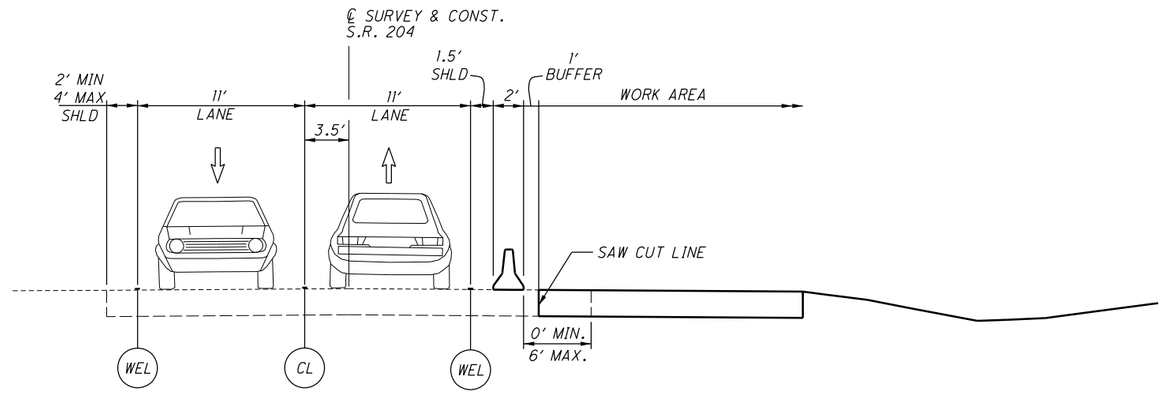

SECTION APPLIES:
STA. 63+67.00 TO STA. 65+80.00

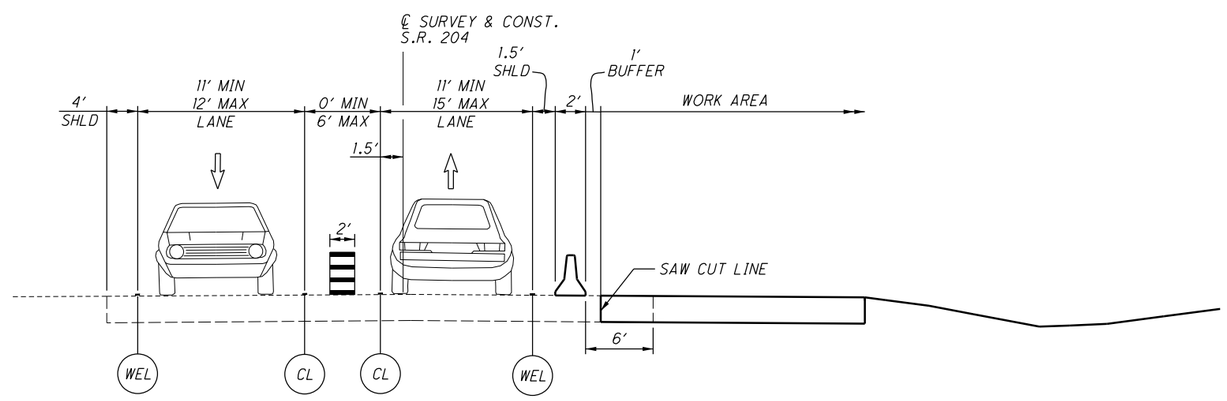

SECTION APPLIES:
STA. 65+80.00 TO STA. 69+50.00

CALCULATED PTB
CHECKED JSL

MAINTENANCE OF TRAFFIC TYPICAL SECTIONS

FAI-204/204A-
0.00/0.00

I:\ProjectData\FAI\95506\Design\MOT\Sheets\95506_MT001.dgn Sheet 2/19/2020 4:17:45 PM jlutzi

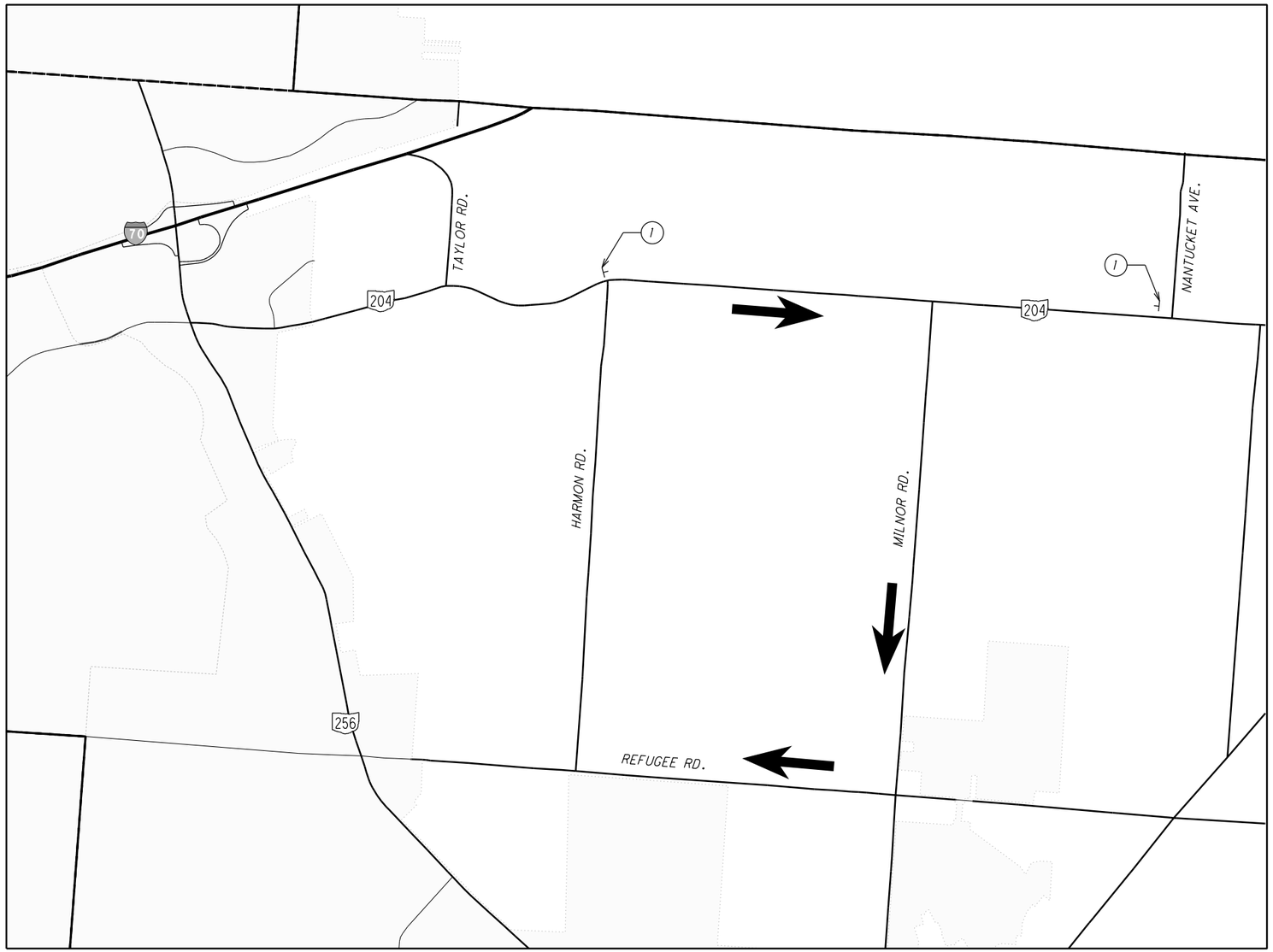

1

PORTABLE CHANGEABLE MESSAGE SIGN

HARMON ROAD CLOSED	USE MILNOR TO REFUGEE
SCREEN 1	SCREEN 2

NOTE: PLACE SIGNS A MINIMUM OF 1 WEEK PRIOR TO CLOSURE TO ALERT TRAFFIC

LEGEND

HARMON RD. SOUTHBOUND DETOUR

N

HORIZONTAL SCALE IN FEET

0 0 0 0

CALCULATED PTB

CHECKED JSL

DETOUR PLAN SOUTHBOUND HARMON RD.

FAI-204/204A-0.00/0.00

I:\ProjectData\FAI\95506\Design\MOT\Sheets\95506_MD001.dgn Sheet 2/19/2020 4:17:46 PM jlutzi

LEGEND

	WORK AREA	CL	ITEM 614 WORK ZONE CENTER LINE, CLASS 1, 642 PAINT
	WORK ZONE IMPACT ATTENUATOR (45 MPH)	SL	ITEM 614, WORK ZONE STOP LINE, CLASS 1, 642 PAINT
PCB	PORTABLE BARRIER, 32"	WEL	ITEM 614 WORK ZONE EDGE LINE, 4", CLASS 1, 642 PAINT, (WHITE)
• •	DRUMS (SEE SPACING BELOW)		

NOTE: REMOVE PHASE 1 DURING HARMON RD. CLOSURE AND COVER LEFT TURN ARROWS
EXISTING SIGNAL PHASING SHOWN ON SHEET 58

SEE SHEET 39 FOR MOT QTY'S

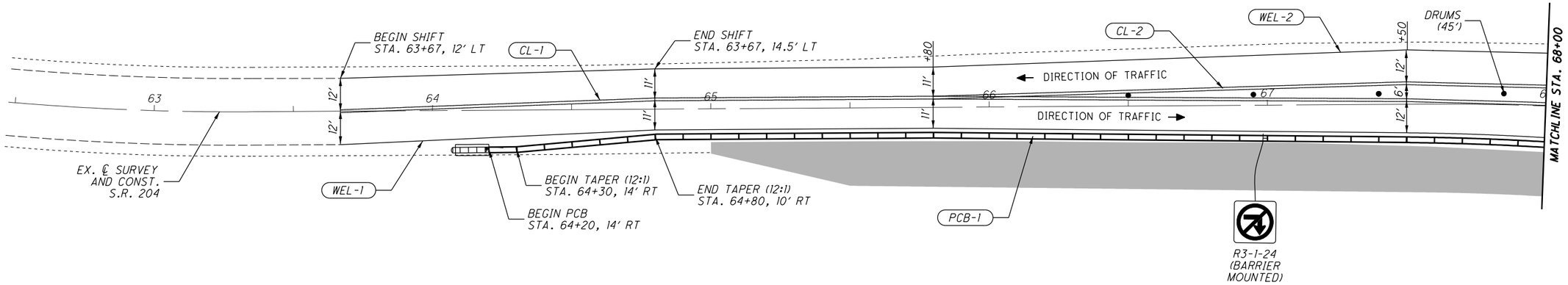

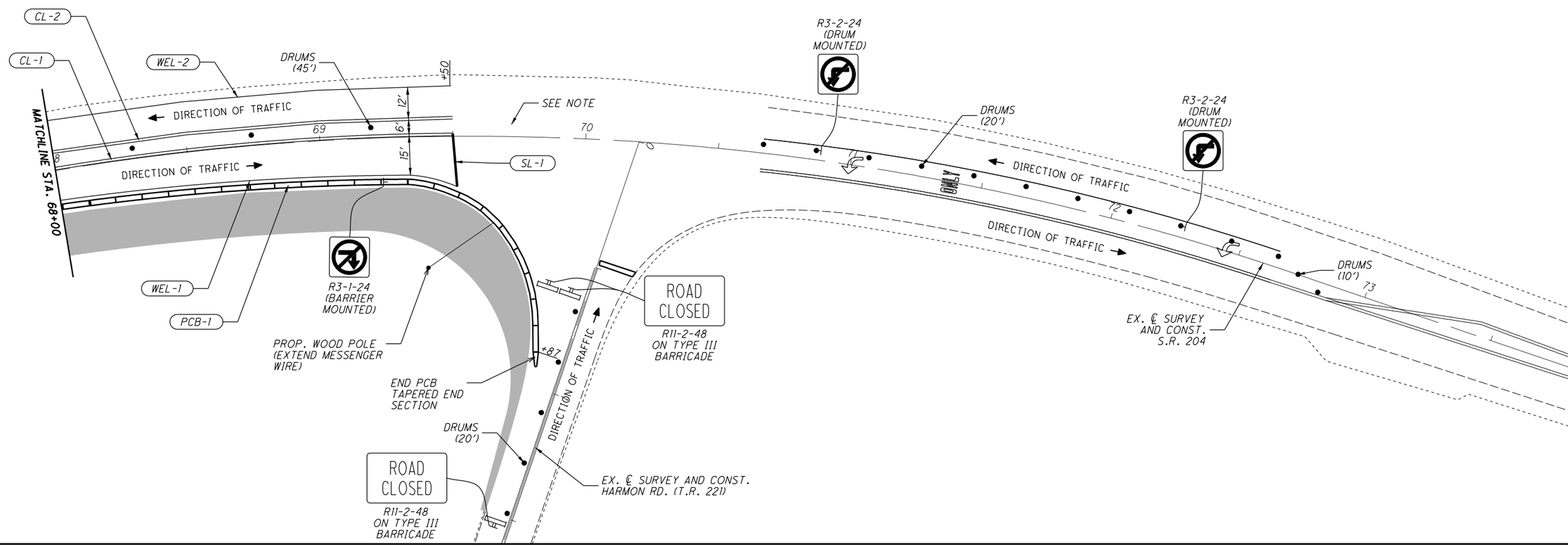

HORIZONTAL SCALE IN FEET
0 10 20 40

CALCULATED PTB
CHECKED JSL

MAINTENANCE OF TRAFFIC
S.R. 204 / HARMON RD. (T.R. 221)

FAI-204/204A-
0.00/0.00

I:\ProjectData\FAI\95506\Design\MOT\Sheets\95506_MP001.dgn Sheet 2/19/2020 4:17:47 PM jlutz

REF. NO.	LOCATION (STATION TO STATION)	614						622
		WORK ZONE IMPACT ATTENUATOR (BIDIRECTIONAL)	BARRIER REFLECTOR, TYPE 1, TWO WAY	OBJECT MARKER, TWO WAY	WORK ZONE CENTER LINE, CLASS I, 642 PAINT	WORK ZONE EDGE LINE, CLASS I, 4", 642 PAINT	WORK ZONE STOP LINE, CLASS I, 642 PAINT	PORTABLE BARRIER, 32"
		EACH	EACH	EACH	MILE	MILE	FEET	FEET
	S.R. 204/ HARMON RD.							
PCB-1	64+20.00 to 1+87.00	1	13	13				620
CL-1	63+67.00 to 69+50.00				0.12			
CL-2	65+80.00 to 69+50.00				0.08			
SL-1	69+50.00 to 69+51.54						20	
WEL-1	63+67.00 to 69+50.00					0.12		
WEL-2	63+67.00 to 69+50.00					0.12		
LOCATION 1B TOTALS (CARRIED TO SUB-SUMMARY)		**1**	**13**	**13**	**0.20**	**0.24**	**20**	**620**

CALCULATED PTB
CHECKED JSL

MOT CALCULATIONS (HARMON RD.)

FAI-204/ 204A-
0.00/ 0.00

I:\ProjectData\FAI\95506\Design\MOT\Sheets\95506_M0001.dgn Sheet 2/19/2020 4:17:48 PM jlutzi

LOCATION (STATION TO STATION)	LENGTH (L)	PAVEMENT WIDTH (W)	PAVEMENT AREA (A) = L x W	202 PAVEMENT REMOVED, ASPHALT (14" MAX, 7" MIN)	204 SUBGRADE COMPACTION S = A	204 PROOF ROLLING S / 2000	301 D = 12" ASPHALT CONCRETE BASE, PG64-22 A x (D / 36)	304 D = 6" AGGREGATE BASE A x (D / 36)	407 NON-TRACKING TACK COAT @ 0.05 GAL./S.Y. A x 0.05
	FT	FT	SY	SY	SY	HOUR	CY	CY	GAL
S.R. 204/ HARMON RD.									
65+00.00 to 65+50.00	50.00	6.0 (Avg.)	33.4	22.8*	33.4	0.02	11.2	5.6	1.7
65+50.00 to 69+12.00	362.00	12.0	482.7	230.1*	482.7	0.25	160.9	80.5	24.2
69+12.00 (S.R. 204) to 1+50.00 (HARMON RD.)	145.21	6.0 (Avg.)	160.1*	57.6*	160.1	0.09	53.4	26.7	8.1
FIELD DRIVE (STA. 68+95 RT.)			36.2*		36.2			6.1	
(* = Area by computer)									
LOCATION 1B TOTALS (CARRIED TO SUB-SUMMARY)				**311**	**713**	**1**	**226**	**119**	**34**

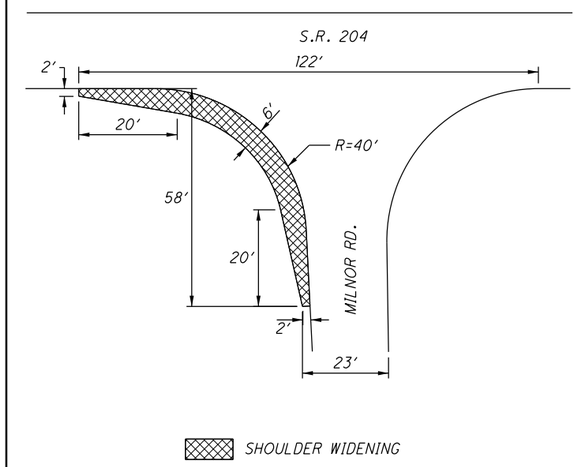

LOCATION (STATION TO STATION)	LENGTH (L)	SHOULDER WIDTH (W)	SHOULDER AREA (A) = L x W	202 EXCAVATION	204 STEP = 18" SUBGRADE COMPACTION S = A + (STEP/12 x L) / 9	204 PROOF ROLLING S / 2000	301 D = 6" STEP = 6" ASPHALT CONCRETE BASE, PG64-22 A x 2D/36 + (STEP/12 x L x D/12)/27	304 D = 6" STEP = 12" AGGREGATE BASE A x D/36 + ((STEP)/12 x L x D/12)/27	407 NON-TRACKING TACK COAT @ 0.05 GAL./S.Y. A + (STEP/12 x L)/9
	FT	FT	SY	CY	SY	HOUR	CY	CY	GAL
S.R. 204/ HARMON RD.									
65+50.00 to 69+12.00	362.00	4.0	160.9		221.2	0.12	57.0	33.6	9.1
69+12.00 (S.R. 204) to 1+50.00 (HARMON RD.)	140.34	3.0 (Avg.)	30.8*		54.2	0.03	11.6	7.8	2.0
S.R. 204/ MILNOR RD.									
SW CORNER (SEE DETAIL)	100.00	6.0	53.8*	18.9	70.4		18.9		
S.R. 204/ WAGRAM RD.									
NE CORNER (SEE DETAIL)	60.00	4.0	22.2*	8.0	32.2		8.0		
NW CORNER (SEE DETAIL)	60.00	4.0	22.2*	8.0	32.2		8.0		
(* = Area by Computer)									
LOCATION 1B TOTALS (CARRIED TO SUB-SUMMARY)				**35**	**411**	**1**	**104**	**42**	**12**

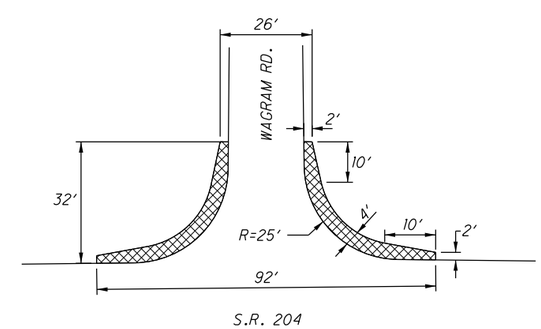

DIMENSIONS APPLY TO BOTH NE AND NW CORNERS

SHOULDER WIDENING

NOTE: ALL SHOULDER WIDENING SHALL OCCUR PRIOR TO PLACEMENT OF SURFACE COURSE FROM EXTRA AREA TABLE ON SHEET 10

CALCULATED PTB
CHECKED JSL

PAVEMENT CALCULATIONS (HARMON/ MILNOR/ WAGRAM RD.)

FAI-204/ 204A-
0.00/ 0.00

I:\Project Data\FAI\95506\Design\Roadway\Sheets\95506_G0006.dgn Sheet 2/24/2020 2:55:03 PM jlutzi

REF NO.	SHEET NO.	STATION	DESCRIPTION	SIDE	CODE	SIZE (INCHES) (W x H)	630			
							GROUND MOUNTED SUPPORT, NO. 3 POST	SIGN, FLAT SHEET	REMOVAL OF GROUND MOUNTED SIGN AND DISPOSAL	REMOVAL OF GROUND MOUNTED POST SUPPORT AND DISPOSAL
							FT	SF	EACH	EACH
			S.R. 204/ HARMON RD.							
S-1	20	65+00	ADVANCE INTERSECTION LANE CONTROL	RT	R3-8B	48 x 30	13.0	10	1	1
S-2	20	66+30	RIGHT CURVE 40 MPH	RT	W1-2R W13-1P	30 x 30 18 x 18			2	1
S-3	20	69+20	ADVANCE INTERSECTION LANE CONTROL	RT	R3-8B	48 x 30	13.0	10	1	2
S-4	20	70+50	VIOLET TOWNSHIP HARMON RD	RT	D3-H6B	48 x 12	24.0	8		
LOCATION 1B TOTALS (CARRIED TO SUB-SUMMARY)							**50**	**28**	**4**	**4**

CALCULATED PTB
CHECKED JSL

SIGN DATA

FAI-204/ 204A-
0.00/ 0.00

I:\ProjectData\FAI\95506\Design\Traffic\Sheets\95506_T0006.dgn Sheet 2/19/2020 4:17:52 PM jlutzi

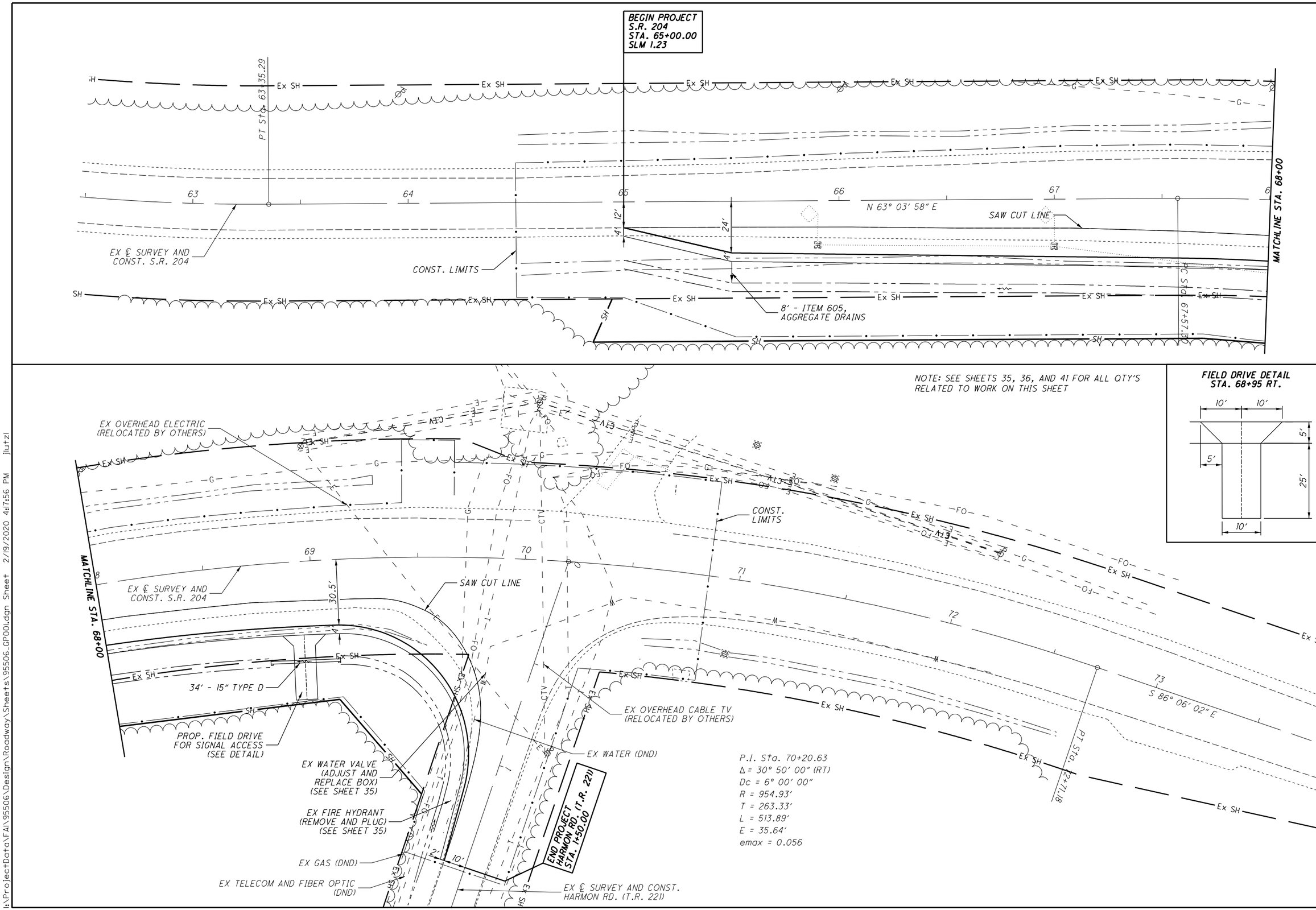

ROADWAY PLAN
S.R. 204 / HARMON RD. (T.R. 221)

FAI-204/204A-
0.00/0.00

I:\ProjectData\FAI\95506\Design\Roadway\Sheets\95506_GP001.dgn Sheet 2/19/2020 4:17:56 PM jlutzi

NOTE: 1' MINIMUM UNDERCUT OF EXISTING DITCH BOTTOMS BELOW PROPOSED SUBGRADE

SEEDING END WIDTH	SEEDING SQ. YDS.	END AREA CUT	END AREA FILL	VOLUME CUT	VOLUME FILL
35		58	15		
	181			98	28
30		47	15		
	181			75	40
35		33	28		
	362			173	68

CALCULATED PTB
CHECKED JSL

CROSS SECTIONS S.R. 204
STA. 64+50.00 TO STA. 66+00.00

FAI-204/204A-
0.00/0.00

I:\Project Data\FAI\95506\Design\Roadway\Sheets\95506_XS001.dgn Sheet+001 2/19/2020 4:17:57 PM jlutzi

NOTE: 1' MINIMUM UNDERCUT OF EXISTING DITCH BOTTOMS BELOW PROPOSED SUBGRADE

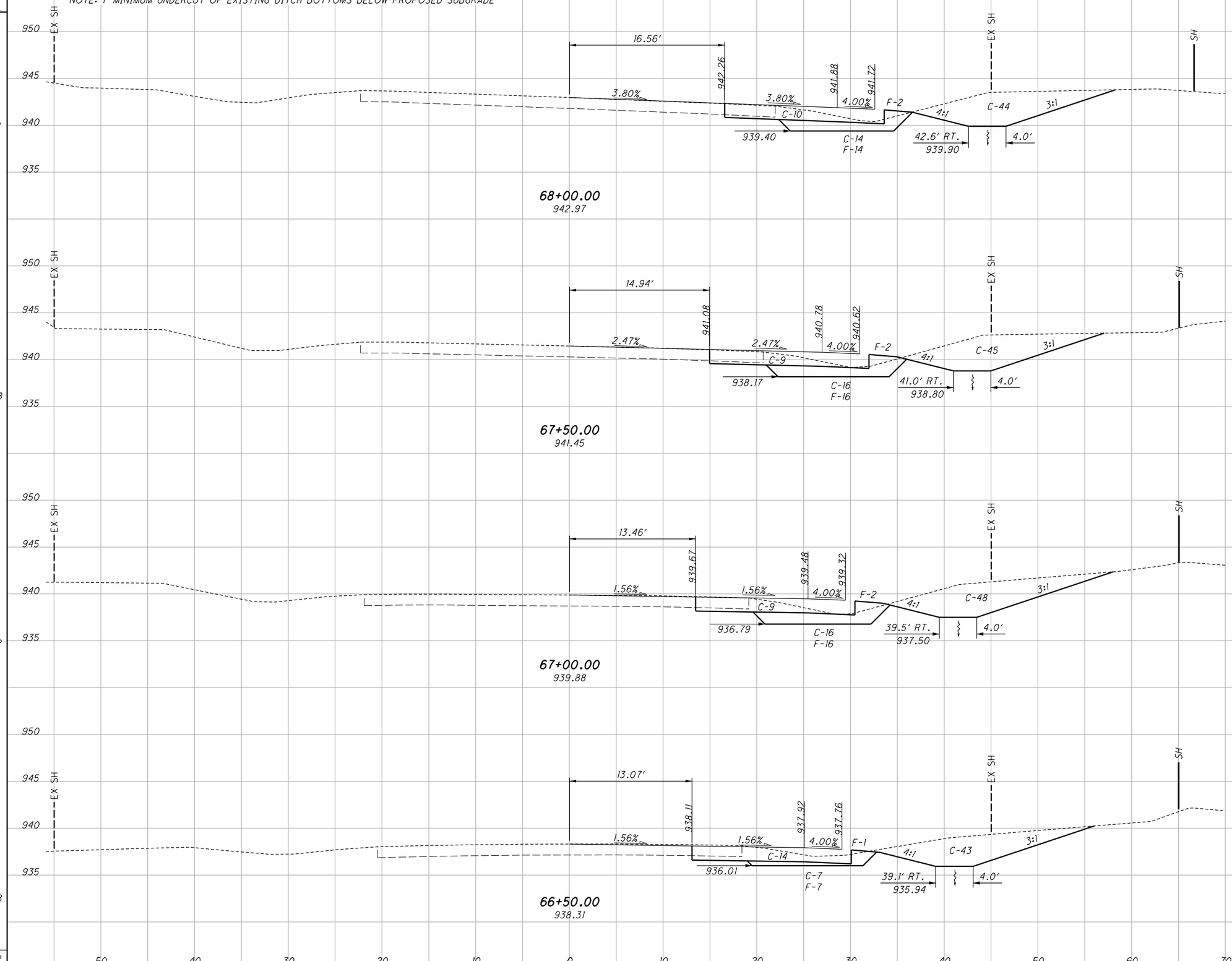

SEEDING END WIDTH	SEEDING SQ. YDS.	END AREA CUT	END AREA FILL	VOLUME CUT	VOLUME FILL
35		68	16		
	194			128	32
35		70	18		
	208			133	34
40		73	18		
	222			127	25
40		64	8		
	208			113	22
	832			501	113

CALCULATED PTB
CHECKED JSL

CROSS SECTIONS S.R. 204
STA. 66+50.00 TO STA. 68+00.00

FAI-204/204A-
0.00/0.00

I:\ProjectData\FAI\95506\Design\Roadway\Sheets\95506_XS001.dgn Sheet+002 2/19/2020 4:17:58 PM jlutzi

NOTE: 1' MINIMUM UNDERCUT OF EXISTING DITCH BOTTOMS BELOW PROPOSED SUBGRADE

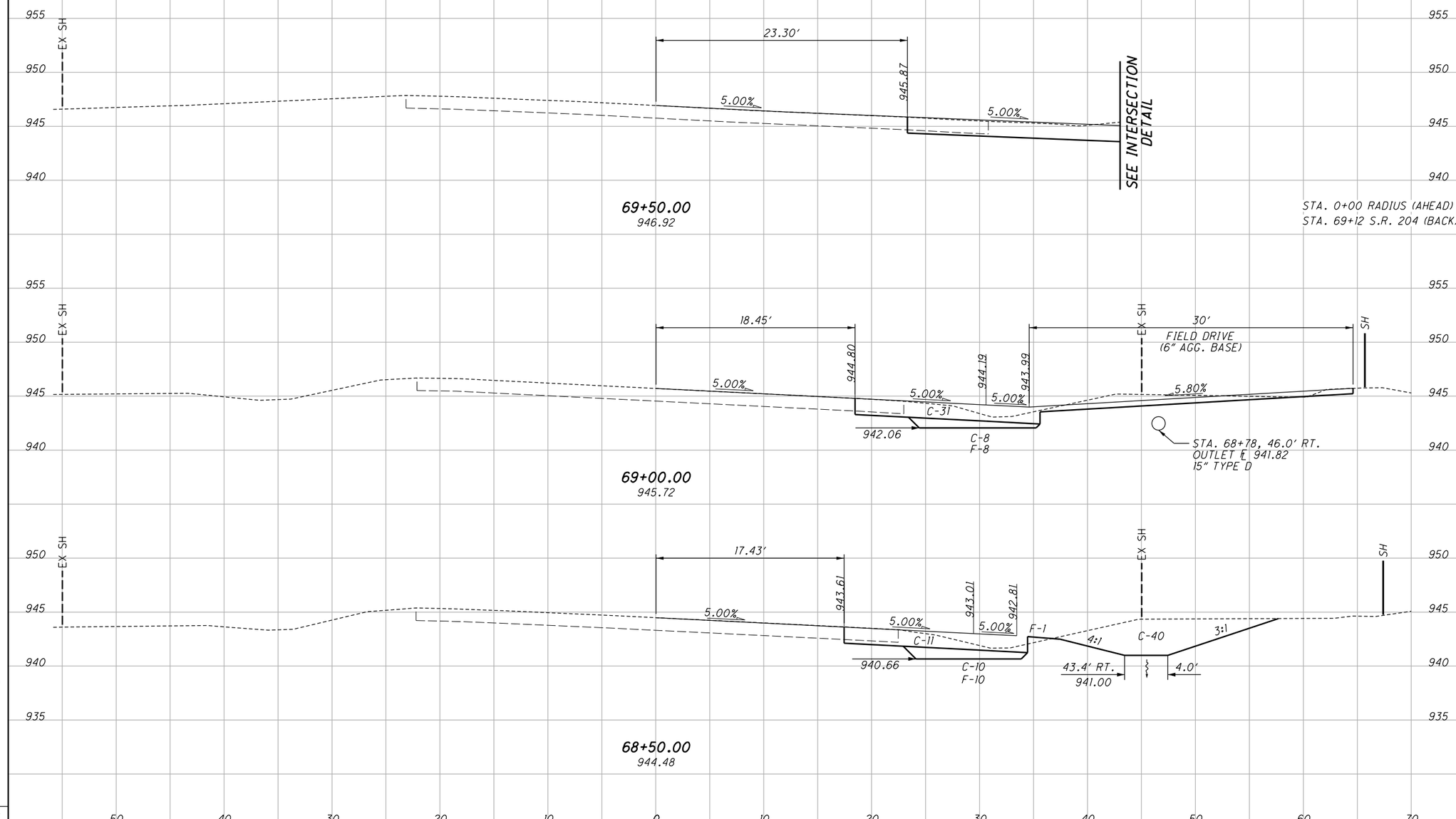

STA. 0+00 RADIUS (AHEAD)
STA. 69+12 S.R. 204 (BACK)

SEEDING END WIDTH	SEEDING SQ. YDS.	END AREA CUT	END AREA FILL	VOLUME CUT	VOLUME FILL
35	47	39	8	18	4
35	194	39	8	92	17
35	194	60	10	119	25
	435			229	46

CALCULATED PTB
CHECKED JSL

CROSS SECTIONS S.R. 204
STA. 68+50.00 TO STA. 69+50.00

FAI-204/204A-
0.00/0.00

I:\Project Data\FAI\95506\Design\Roadway\Sheets\95506_XS001.dgn Sheet+003 2/19/2020 4:17:58 PM jlutzi

NOTE: 1' MINIMUM UNDERCUT OF EXISTING DITCH BOTTOMS BELOW PROPOSED SUBGRADE

SEEDING END WIDTH	SEEDING SQ. YDS.	END AREA CUT	END AREA FILL	VOLUME CUT	VOLUME FILL
25		26	0		
	31			11	0
30		32	0		
	33			13	0
30		38	0		
	33			16	1
30		47	5		
	33			19	3
30		52	9		
	33			20	4
30		53	10		
	163			79	8

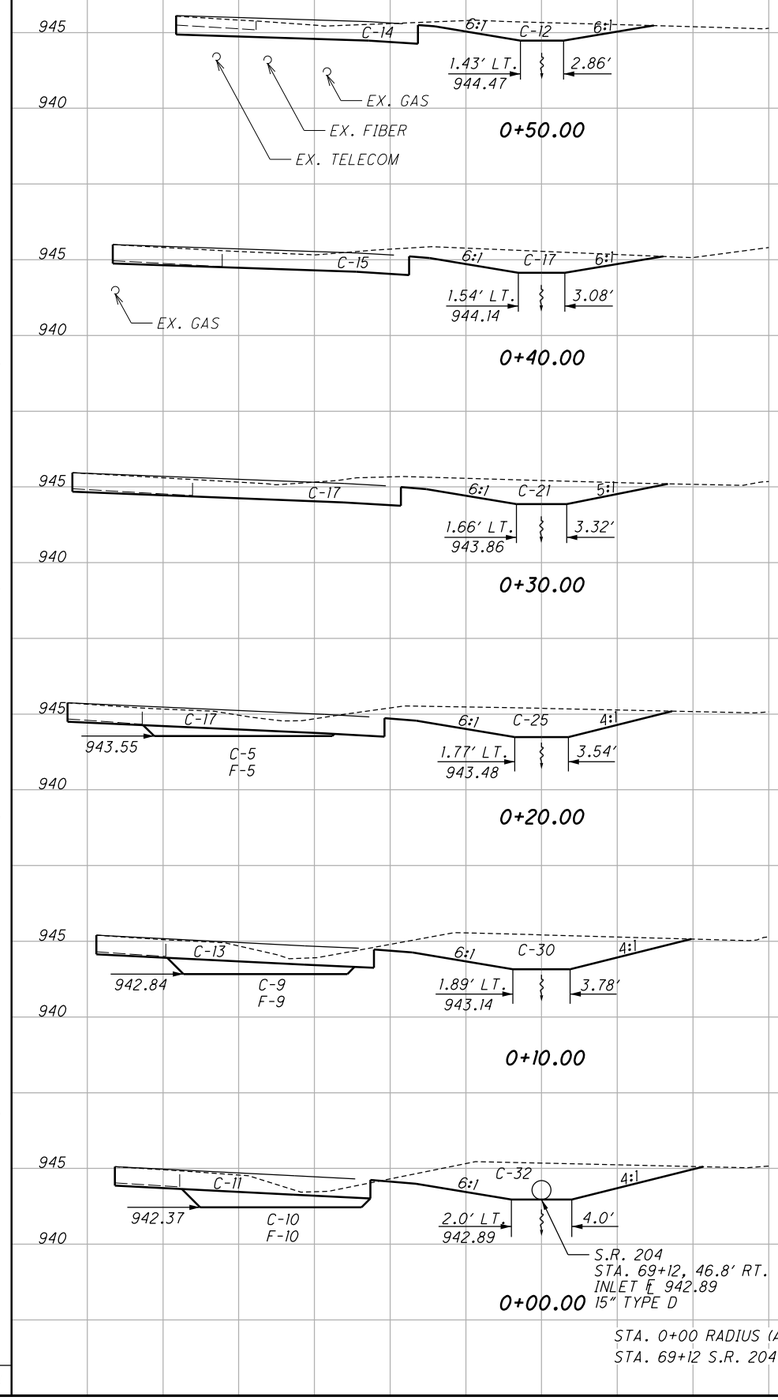

STA. 0+00 RADIUS (AHEAD)
STA. 69+12 S.R. 204 (BACK)

SEEDING END WIDTH	SEEDING SQ. YDS.	END AREA CUT	END AREA FILL	VOLUME CUT	VOLUME FILL
25		6	0		
	21			2	0
25		8	0		
	28			4	0
25		13	0		
	28			6	0
25		18	0		
	28			9	0
	105			21	0

STA. 1+14.84 HARMON (AHEAD)
STA. 0+87.45 RADIUS (BACK)

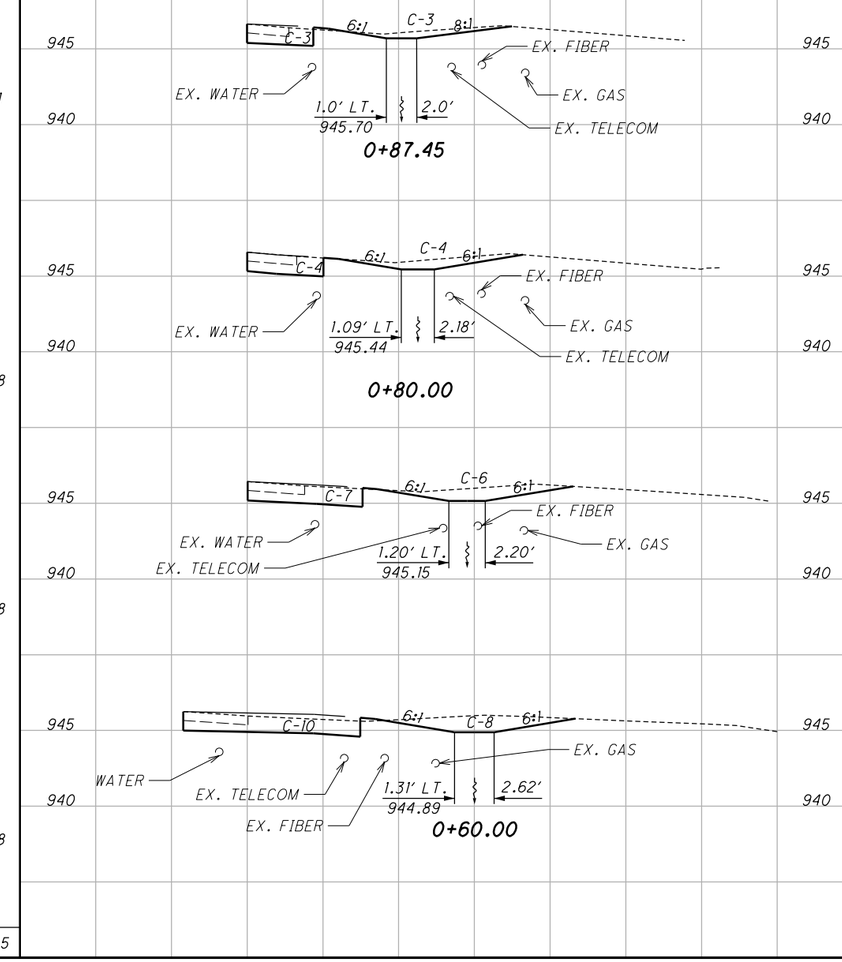

CALCULATED PTB
CHECKED JSL

CROSS SECTIONS RADIUS
STA. 0+00.00 TO STA. 0+87.45

FAI-204/204A-
0.00/0.00

I:\Project Data\FAI\95506\Design\Roadway\Sheets\95506_XS002.dgn Sheet 2/19/2020 4:17:59 PM jlutzi

S.R. 204/ HARMON RD.			
SHEET NO.	CUT	FILL	SEEDING
44	173	68	362
45	501	113	832
46	229	46	435
47 (LEFT)	79	8	163
47 (RIGHT)	21	0	105
48	10	0	48
TOTALS (CARRIED TO SHEET 35)	**1,013**	**235**	**1,945**

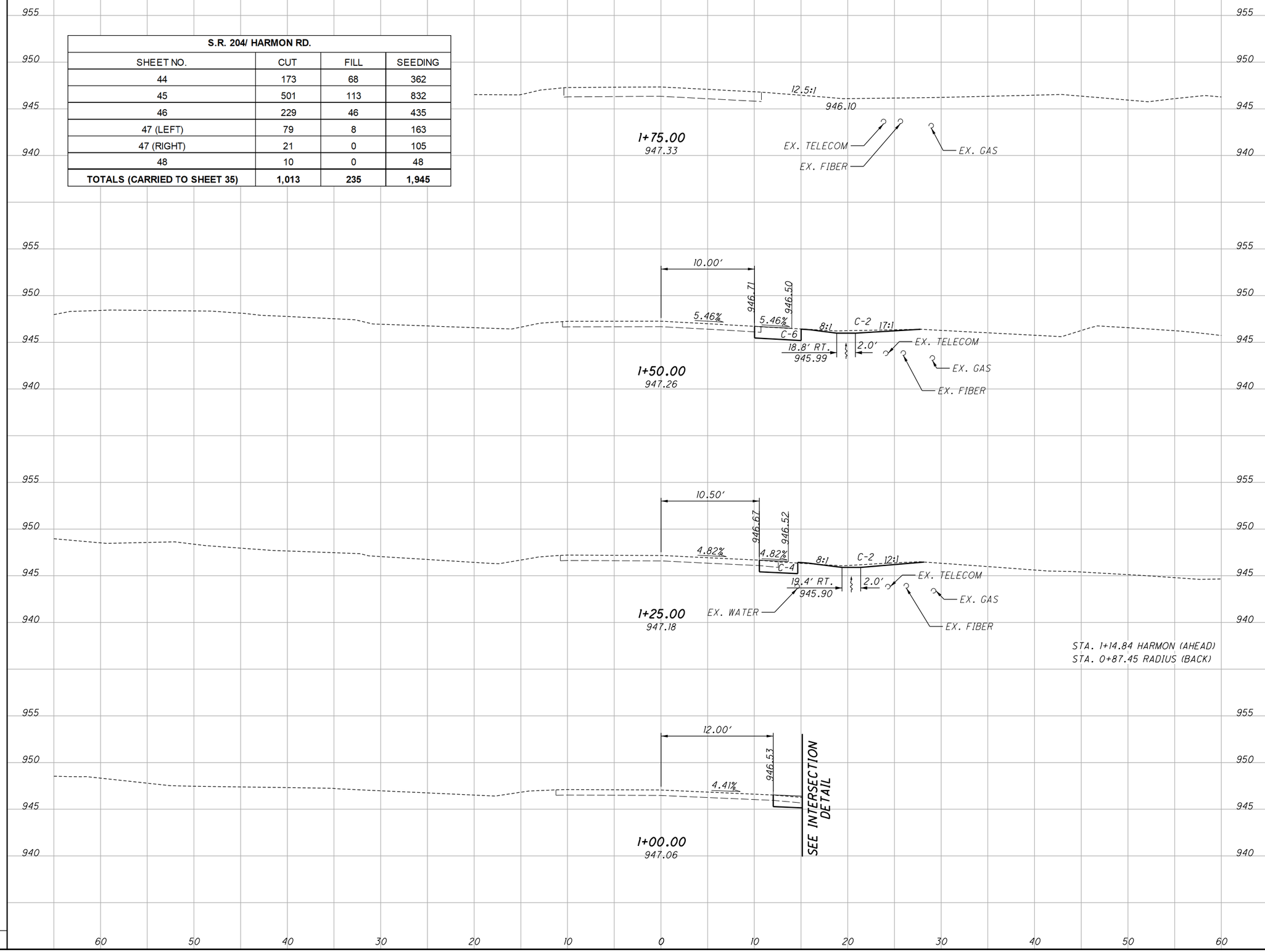

SEEDING END WIDTH	SEEDING SQ. YDS.	END AREA CUT	END AREA FILL	VOLUME CUT	VOLUME FILL
20		8	0		
	26			7	0
20		6	0		
	22			3	0
20		6	0		
	48			10	0

CALCULATED PTB
CHECKED JSL

CROSS SECTIONS HARMON RD. (T.R. 221)
STA. 1+00.00 TO STA. 1+75.00

FAI-204/204A-
0.00/0.00

I:\ProjectData\FAI\95506\Design\Roadway\Sheets\95506_XS003.dgn Sheet 2/19/2020 4:18:00 PM jlutzi

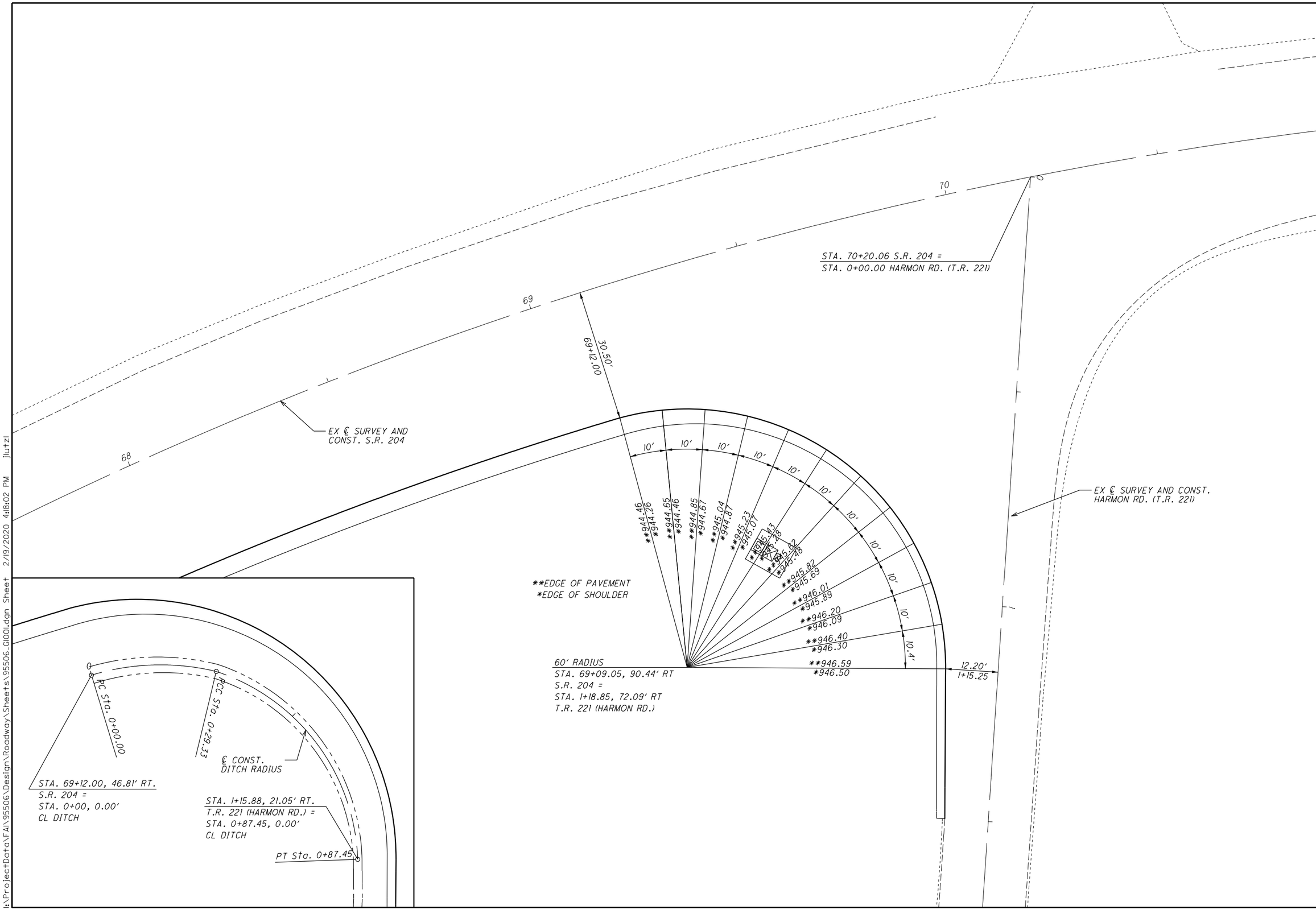

HORIZONTAL SCALE IN FEET
0 5 10 20

CALCULATED PTB
CHECKED JSL

INTERSECTION DETAIL
S.R. 204 / HARMON RD. (T.R. 221)

FAI-204/204A-
0.00/0.00

I:\ProjectData\FAI\95506\Design\Roadway\Sheets\95506_GI001.dgn Sheet 2/19/2020 4:18:02 PM jlutzi

UTILITIES

SEE **SHEET 34** FOR UTILITY INFORMATION

GENERAL

THE CONTRACTOR SHALL FURNISH AND INSTALL TRAFFIC CONTROL EQUIPMENT AND MATERIALS IN CONFORMANCE TO THESE PLANS AND SPECIFICATIONS, THE STATE OF OHIO DEPARTMENT OF TRANSPORTATION CONSTRUCTION AND MATERIAL SPECIFICATIONS (CMS), SUPPLEMENTAL SPECIFICATIONS (SS), STANDARD CONSTRUCTION DRAWINGS (SCD) AND PLAN INSERT SHEETS (PIS).

BEFORE ANY EQUIPMENT IS ORDERED OR INSTALLATION HAS BEGUN, THREE SETS OF A COMPLETE SCHEDULE OF EQUIPMENT INCLUDING CATALOG CUTS, DIAGRAMS, DRAWINGS, BROCHURES OR OTHER DESCRIPTIVE DATA SHALL BE SUBMITTED TO THE ENGINEER. ONE COPY WILL BE RETURNED MARKED "APPROVED" IF FOUND SATISFACTORY. WORK MAY BEGIN WHEN THE APPROVED COPY IS RECEIVED BY THE CONTRACTOR.

ANY EQUIPMENT OR MATERIAL NOT SPECIFICALLY CALLED FOR IN THESE SPECIFICATIONS BUT NECESSARY TO PROVIDE A COMPLETE AND SUCCESSFULLY OPERATING SYSTEM SHALL BE FURNISHED AS INCIDENTAL TO THE CONTRACT. PAYMENT FOR SUCH ITEMS WILL BE MADE UNDER THE APPROPRIATE RELATED ITEM AT THE CONTRACT BID PRICE, COMPLETE AND IN PLACE.

ALL NECESSARY SIGNS AND PAVEMENT MARKINGS SHALL BE IN PLACE BEFORE ANY SIGNAL MAY BE PLACED IN OPERATION UNLESS OTHERWISE DIRECTED BY THE ENGINEER.

GUARANTEE

THE CONTRACTOR SHALL GUARANTEE THAT THE TRAFFIC CONTROL SYSTEM INSTALLED AS PART OF THIS CONTRACT SHALL OPERATE SATISFACTORILY FOR A PERIOD OF **180 DAYS** FOLLOWING COMPLETION OF THE TEN-DAY PERFORMANCE TEST. IN THE EVENT OF UNSATISFACTORY OPERATION, THE CONTRACTOR SHALL CORRECT FAULTY INSTALLATIONS, MAKE REPAIRS AND REPLACE DEFECTIVE PARTS WITH NEW PARTS OF EQUAL OR BETTER QUALITY. EQUIPMENT, MATERIAL, AND LABOR COSTS INCURRED IN CORRECTING AN UNSATISFACTORY OPERATION SHALL BE BORNE BY THE CONTRACTOR.

THE GUARANTEE SHALL COVER THE FOLLOWING ITEMS OF THE TRAFFIC CONTROL SYSTEM: CONTROLLER, CABINET, UNINTERRUPTIBLE POWER SUPPLY, VEHICLE DETECTION EQUIPMENT, LED LAMP UNITS, NETWORK AND COMMUNICATION /INTERCONNECT EQUIPMENT.

CUSTOMARY MANUFACTURER'S GUARANTEES FOR THE FOREGOING ITEMS SHALL BE TURNED OVER TO THE STATE OR THE MAINTAINING AGENCY FOLLOWING ACCEPTANCE OF THE EQUIPMENT.

THE COST OF GUARANTEEING THE TRAFFIC CONTROL SYSTEM SHALL BE INCIDENTAL TO AND INCLUDED IN THE UNIT PRICE BID OF THE VARIOUS ITEMS MAKING UP THE SYSTEM.

WORK INSPECTION

THE CONTRACTOR SHALL PROVIDE THE PROJECT ENGINEER AND THE DISTRICT TRAFFIC ENGINEER WITH 72 HOUR NOTICE OF ANY SIGNAL WORK TO BE PERFORMED AT THE INTERSECTION OF **S.R. 204 AND HARMON RD.** SO THAT INSPECTION SERVICES CAN BE SUPPLIED.

STRAIN POLE SHOP DRAWINGS

THE STRAIN POLE DESIGNER SHALL PROVIDE DRAWINGS FOR ALL STRAIN POLES IN THESE PLANS, WITH STRUCTURAL ASPECTS OF THE DESIGN AND MATERIALS IN COMPLIANCE WITH THE 2001 AASHTO STANDARD SPECIFICATIONS, WITH 2006 INTERIM REVISIONS. THE STRAIN POLE SHALL BE ASTM A595 GRADE A WITH A MINIMUM YIELD STRENGTH OF 50 KSI. THE FOLLOWING DESIGN PARAMETERS SHALL BE USED:

1. BASIC WIND SPEED = 90 MPH
2. DESIGN LIFE = 25 YEARS
3. FATIGUE CATEGORY = III
4. GALLOPING: NO
5. TRUCK INDUCED GUST: NO

SUBMIT, TO THE ENGINEER PRIOR TO INCORPORATION: TWO COPIES OF THE STRAIN POLE DRAWINGS AND SHOP DRAWINGS, WHICH IDENTIFY AND DESCRIBE EACH MANUFACTURED STRAIN POLE AND WHICH IS BEING INCORPORATED INTO THE CONSTRUCTION. THE STRAIN POLE DRAWINGS AND SHOP DRAWINGS SHALL EACH BE REVIEWED, SEALED, SIGNED, AND DATED BY TWO OHIO REGISTERED PROFESSIONAL ENGINEERS.

PAYMENT SHALL BE INCIDENTAL TO THE ERECTION OF THE STRAIN POLE.

STRAIN POLE FOUNDATIONS

PRIOR TO ORDERING THE STRAIN POLES, THE CONTRACTOR SHALL CONTACT OUPS TO HAVE ALL THE UTILITIES LOCATED IN THE FIELD THEN MEET WITH THE PROJECT ENGINEER TO LOCATE THE PROPOSED POLE LOCATIONS TO INSURE THERE ARE NO CONFLICTS WITH UTILITIES. IF THERE ARE ISSUES, THE PROJECT ENGINEER SHALL PROVIDE GUIDANCE AS TO THE RELOCATION OF THE POLES.

ELEVATIONS SHOWN IN THE PLANS FOR STRAIN POLE FOUNDATIONS ARE FOR COMPUTATIONAL PURPOSES ONLY. THE ACTUAL ELEVATION OF THE FOUNDATION SHALL BE IN ACCORDANCE WITH **SCD TC-21.20**.

PAYMENT SHALL BE INCIDENTAL TO THE INSTALLATION OF THE SIGNAL FOUNDATION.

VARMINT GUARDS

VARMINT GUARDS SHALL BE INSTALLED ON ALL STRAIN POLES AS SHOWN ON **SCD HL-10.31** EXCEPT AS MODIFIED HEREIN. VARMIT GUARDS SHALL CONSIST OF **1/8"** (MINIMUM) STAINLESS STEEL SHEETING. ATTACH SHEETING WITH **3/4"** STAINLESS STEEL BANDS WITH A MINIMUM 2" OVERLAP. PAYMENT SHALL BE CONSIDERED INCIDENTAL TO THE COST OF THE STRAIN POLE AND INCLUDE ALL LABOR, EQUIPMENT, AND MATERIALS.

SIGNAL ACTIVATION

PRIOR TO REMOVING THE EXISTING TRAFFIC SIGNAL FROM SERVICE, ALL ITEMS IN THE PROPOSED SIGNAL PLAN SHALL BE FULLY COMPLETED, IF THERE ARE CONSTRUCTABILITY ISSUES (I.E., ROADWAY WIDENING, ETC.) THAT PREVENT THE SIGNAL FROM BEING COMPLETED PRIOR TO ACTIVATION, IT SHALL BE BROUGHT TO THE ATTENTION OF THE PROJECT ENGINEER AND DISTRICT TRAFFIC ENGINEER. THE DISTRICT TRAFFIC ENGINEER WILL THEN REVIEW, APPROVE OR REJECT PROPOSALS TO ACTIVATE THE TRAFFIC SIGNAL PRIOR TO COMPLETION.

THE CONTRACTOR SHALL NOTIFY THE PROJECT ENGINEER AND DISTRICT TRAFFIC ENGINEER AT LEAST 10 WORKING DAYS PRIOR TO SCHEDULING THE FINAL INSPECTION OF THE SIGNAL INSTALLATION. FINAL INSPECTION IS NOT CONSIDERED COMPLETE UNTIL DESIGNATED DISTRICT TRAFFIC PERSONNEL INSPECT THE TRAFFIC SIGNAL AND ISSUE WRITTEN APPROVAL. IF ISSUES ARE FOUND DURING THE FINAL INSPECTION THAT EFFECT THE SAFETY OF THE TRAVELING PUBLIC AND/OR THE EFFICIENCY OF THE INTERSECTION, THE SIGNAL SHALL NOT BE ACTIVATED ON THE PROPOSED DATE. ANY PUNCH LIST ITEMS THAT ARE FOUND SHALL BE CORRECTED AND REINSPECTED BY DISTRICT TRAFFIC PERSONNEL PRIOR TO FINAL ACCEPTANCE. ODOT FORCES SHALL ONLY ASSUME DAY TO DAY MAINTENANCE OF THE TRAFFIC SIGNAL AFTER FINAL WRITTEN ACCEPTANCE HAS BEEN ISSUED.

ITEM 625 LUMINAIRE, CONVENTIONAL, SOLID STATE (LED), AS PER PLAN (150W, 120V, TYPE II)

THE CONVENTIONAL LUMINAIRE SPECIFIED ABOVE SHALL CONFORM TO SUPPLEMENTAL SPECIFICATION 813 AND 913 AND SELECTED FROM THE APPROVED LIST OF LED LUMINAIRES:

HTTP://WWW.DOT.STATE.OH.US/DIVISIONS/CONSTRUCTIONMGT/MATERIALS/APPROVED%20LIST/SOLID_STATE_LUMINAIRES_SS_813.PDF

IF THE STRAIN POLE/ BRACKET ARM IS BEING PAINTED THE LUMINAIRE HOUSING SHALL BE POWDER COATED TO MATCH.

A PHOTOCELL SHALL BE INCLUDED TO BE MOUNTED ON THE STRAIN POLE TO CONTROL ALL LUMINAIRES AT THE INTERSECTION.

THE CONTRACTOR SHALL SUBMIT THE LUMINAIRE TO THE ENGINEER FOR ACCEPTANCE PRIOR TO ORDERING.

ITEM 632, REMOVAL OF TRAFFIC SIGNAL INSTALLATION, AS PER PLAN

TRAFFIC SIGNAL INSTALLATIONS SHALL BE REMOVED IN ACCORDANCE WITH **CMS 632.26** AND SHALL BE DISPOSED OR SALVAGE EQUIPMENT AS DESCRIBED BELOW.

REMOVE ALL EXISTING STRAIN POLES, SIGNAL HEADS, MESSENGER WIRE, CONDUITS, SIGNAL CABLE, CONTROLLER CABINET, UPS CABINET, WORK PAD, PULL BOXES (8 TOTAL) AND FOUNDATIONS.

SALVAGE ALL RADAR DETECTION AND ASSOCIATED EQUIPMENT AND DELIVER TO DISTRICT TRAFFIC SIGNAL ENGINEER BRIAN BOSCH.

PAYMENT FOR ITEM 632 REMOVAL OF TRAFFIC SIGNAL INSTALLATION, AS PER PLAN. PAYMENT SHALL MADE AT THE UNIT PRICE BID AND INCLUDE ALL LABOR, EQUIPMENT, AND INCIDENTALS NECESSARY TO COMPLETE THE ITEM.

ITEM 632, POWER SERVICE, AS PER PLAN

THE POWER SUPPLYING AGENCY FOR THIS PROJECT IS:

SOUTH CENTRAL POWER
PHONE: 800-282-5064

ALL POWER SERVICES SHALL BE POLE MOUNTED AS SPECIFIED IN **CMS 632.24, 732.20, AND SCD TC-83.10** AT EACH INTERSECTION SHOWN IN THE TRAFFIC SIGNAL PLANS.

THE CONTRACTOR SHALL SUPPLY **120/240 VOLT, SINGLE PHASE, 3-WIRE** POWER WITH ONE (1) MAIN DISCONNECT **60 AMP**, ONE (1) **30 AMP** DISCONNECT FOR THE SIGNAL AND ONE (1) **20 AMP** DISCONNECT FOR THE LIGHTING AT THE LOCATIONS SHOWN IN THE PLANS.

THE CONTRACTOR WILL BE RESPONSIBLE FOR CONTACTING THE POWER COMPANY FOR THE ELECTRICAL SERVICE CONNECTION. **A MINIMUM OF THREE (3) MONTHS NOTICE SHALL BE GIVEN TO THE POWER COMPANY FOR NEW INSTALLATIONS**. THE CONTRACTOR WILL BE RESPONSIBLE FOR REQUESTING AND SCHEDULING ANY INSPECTIONS THE POWER COMPANY MAY REQUIRE FOR THE POWER SERVICE HOOK UP. UNDER NO CIRCUMSTANCES SHALL THE CONTRACTOR SPLICE SERVICE CABLE INTO THE POWER COMPANY'S CIRCUITS. THE CONTRACTOR IS RESPONSIBLE FOR OBTAINING ANY NECESSARY PERMITS AND THE PAYING OF ALL FEES ASSOCIATED WITH THE SERVICE. THE CONTRACTOR SHALL PAY ALL POWER CHARGES UNTIL THE SIGNAL SERVICE IS ACCEPTED BY THE MAINTAINING AGENCY.

THE CONTRACTOR WILL BE RESPONSIBLE FOR RUNNING POWER SERVICE FROM THE TOP OF THE SIGNAL POLE TO THE POLE MOUNTED METER BASE, DISCONNECT(S), AND CABINET. IF THE PROPOSED POWER SERVICE LOCATION SHOWN IN PLANS IS NOT FEASIBLE THEN THE CONTRACTOR SHALL MOVE THE POWER SERVICE LOCATION AT APPROVAL OF THE ENGINEER. ITEMIZED QUANTITIES SHALL BE ADJUSTED.

DISCONNECT SWITCH ENCLOSURES SHALL BE PER **CMS 732.21** AND INCLUDE A PADLOCK EQUAL TO MASTER NO. 4BKA OR WILSON BOHANNON 660, WITH LOCK BODY OF BRONZE OR BRASS AND SHALL BE KEYED IN ACCORDANCE WITH **CMS 631.06**. EACH ENCLOSURE SHALL HAVE A SAFETY SWITCH DISCONNECT.

PAYMENT FOR THE AFOREMENTIONED WORK SHALL BE MADE AT THE UNIT PRICE BID FOR EACH POWER SERVICE, COMPLETE IN PLACE, INCLUDING WEATHER-HEAD, CONDUIT RISER, FITTINGS, CLAMPS, DISCONNECT SWITCH WITH ENCLOSURE, METER BASE, GROUND RODS, MOUNTING HARDWARE, PADLOCK AND KEY, POWER CABLE, AND ALL OTHER INCIDENTALS (UNLESS ITEMIZED SEPARATELY) NECESSARY FOR COMPLETE SERVICE AS SHOWN IN PLANS, ALL CONNECTIONS TESTED AND ACCEPTED.

ITEM 632, VEHICULAR SIGNAL HEAD, (LED), BY SECTION, 12" LENS, 1-WAY, POLYCARBONATE, AS PER PLAN

IN ADDITION TO THE REQUIREMENTS OF **CMS 632 & 732**, THE FOLLOWING SHALL APPLY:

1. SIGNAL HEADS AND VISORS SHALL BE CONSTRUCTED OF **BLACK** POLYCARBONATE PLASTIC WITH VISORS AS SPECIFIED AND MEET ITE SPECIFICATIONS.

2. PROPER EXTERIOR COLORS SHALL BE OBTAINED BY USE OF COLORED PLASTIC MATERIAL RATHER THAN PAINTING.

3. THE ENTRANCE FITTING SHALL BE OF THE TRI-STUD DESIGN WITH SERRATED RINGS IN ORDER TO ACHIEVE POSITIVE LOCKING.

4. ALUMINUM BACKPLATES SHALL BE IN ACCORDANCE WITH **CMS 732.22** AND INCLUDE A FLUORESCENT YELLOW REFLECTIVE BORDER, **REFLECTIVE SHEETING SHALL BE TYPE ASTM D4956 TYPE XI LISTED UNDER TYPE J ON THE DEPARTMENTS QUALIFIED PRODUCTS LIST.**

5. THE LIGHT EMITTING DIODE (LED) SIGNAL LAMP UNITS SHALL MEET THE REQUIREMENTS OF **CMS 732.04-C**. THE CONTRACTOR SHALL PROVIDE ODOT, IN WRITING, WITH THE LED MANUFACTURER NAME, SERIAL NUMBER, PART NUMBER, DESCRIPTION OF LAMP, AND DATE OF MANUFACTURE FOR ALL LED UNITS THAT ARE TO BE USED IN THE SIGNAL HEAD PRIOR TO INSTALLATION, FOR ACCEPTANCE AND WARRANTY PURPOSES.

6. SIGNAL HEADS SHALL HAVE A MINIMUM WALL THICKNESS OF 0.117 INCHES.

7. SIGNAL HEADS SHALL INCLUDE CUTAWAY TYPE VISORS UNLESS OTHERWISE SPECIFIED IN THE PLANS.

8. APPLY A BEAD OF SILICONE TO THE SIGNAL HEAD, WASHER, AND ENTRANCE ADAPTER SERRATIONS TO PREVENT WATER INTRUSION. ALSO, FILL THE SPACE BETWEEN CONCENTRIC SERRATION RINGS ON THE TOP OF THE SIGNAL HEAD TO COMPLETELY EXCLUDE WATER FROM THE SPACE BETWEEN THE CONCENTRIC RINGS.

9. BALANCE ADJUSTERS SHALL NOT BE USED ON ONE-WAY HEADS OR TETHERED HEADS.

PAYMENT SHALL BE MADE AT THE UNIT PRICE BID FOR EACH COMPLETE SIGNAL HEAD, FURNISHED AND INSTALLED, INCLUDING ALL LABOR, EQUIPMENT, MATERIALS, AND NEW ATTACHMENT HARDWARE.

ITEM 633, UNINTERRUPTIBLE POWER SUPPLY (UPS), 1000 WATT, AS PER PLAN

IN ADDITION TO THE REQUIREMENTS OF **CMS 633 & 733**, THE CONTRACTOR SHALL PROVIDE AN 8" MINIMUM CABINET RISER AND ANCHOR BOLTS FOR THE GROUND MOUNTED UNINTERRUPTIBLE POWER SUPPLY (UPS). SEE **PIS 208320** FOR MOUNTING DETAILS.

THE UPS CABINET SHALL INCLUDE A GENERATOR POWER PANEL WITH A HEAVY-DUTY POWER RELAY VERSUS THE LINE VOLTAGE GENERATOR SWITCH. THE GENERATOR INLET SHALL BE A RECESSED PANEL WITH A DOOR THAT IS FLUSH WITH THE EXTERNAL SIDE OF THE UPS CABINET. IT SHALL INCLUDE A RECESSED PLUG, AUTOMATIC TRANSFER SWITCH AND A DOOR THAT SECURELY CLOSES OVER THE POWER CORD. THE GENERATOR POWER PANEL SHALL BE CONSTRUCTED IN ACCORDANCE WITH **PIS 203012.**

THE UPS OUTPUT NOTIFICATIONS FOR ON BATTERY, BATTERY 2-HOUR TIMER, AND LOW BATTERY SHALL BE WIRED INTO THE TRAFFIC SIGNAL CABINET BACK PANEL TO PROVIDE SPECIAL STATUS ALARMS FOR EACH OUTPUT INTO THE SIGNAL CONTROLLER.

THIS ITEM SHALL INCLUDE A RED LED STATUS INDICATOR LAMP TO ALLOW MAINTENANCE PERSONNEL AND LAW ENFORCEMENT TO QUICKLY ASSESS WHETHER A TRAFFIC SIGNAL CABINET IS BEING POWERED BY A UPS. THE LED HOUSING SHALL BE NEMA 4X, IP65 OR IP66, RATED FOR OUTDOOR USE AND BE TAMPER/SHATTER RESISTANT. IT SHALL BE A DOMED ENCLOSURE CONTAINING A RED LENS WITH LED THAT IS VISIBLE FROM 100 FOOT MINIMUM. THE ENCLOSURE AND LED MODULE SHOULD BE PLACED AND CENTERED ON THE TOP SURFACE OF THE UPS CABINET AND SEALED FROM WATER INTRUSION. IT SHOULD BE WIRED USING MINIMUM 20GA STRANDED, INSULATED HOOKUP WIRE TO THE STATUS RELAY OUTPUTS OF THE UPS. THE WIRES SHALL BE TERMINATED BY LUGS AT THE DISPLAY END AND PERMANENTLY LABELED "BACKUP POWER STATUS DISPLAY", WITH WIRE POLARITY INDICATED. THE RED LED SHALL ONLY ILLUMINATE TO INDICATE THE CABINET IS OPERATING UNDER UPS BACKUP POWER (THE "BACKUP" OPERATING CONDITION). THIS ITEM INCLUDES PROGRAMMING THE UPS STATUS RELAY OUTPUTS TO PRODUCE THE LAMP STATUS DISPLAYS. THESE STATUS DISPLAYS WILL BE SOLID 100% DUTY CYCLE (NOT FLASHING) DISPLAYS. THE OPERATING VOLTAGE OF THE LED LAMP SHALL BE 120V AC UNLESS OTHERWISE INDICATED.

PAYMENT SHALL BE MADE AT THE UNIT PRICE BID FOR EACH UNIT, COMPLETE IN PLACE, INCLUDING WIRE FOR ALARM OUTPUT TO CONTROLLER AND ALL OTHER INCIDENTALS NECESSARY FOR A FULLY OPERATIONAL UPS, ALL CONNECTIONS TESTED AND ACCEPTED.

I:\ProjectData\FAI\95506\Design\Signals\Sheets\95506_CN002.dgn Sheet 2/19/2020 4:18:07 PM jlutz

ITEM 633, CABINET, TYPE 332, AS PER PLAN

THE CABINET SHALL BE FURNISHED AND INSTALLED ACCORDING TO CMS 633 AND 733 AND BE LISTED ON THE TRAFFIC AUTHORIZED PRODUCTS (TAP) LIST.

THE CABINET SHALL BE FURNISHED WITH AN EDI MMU AS ALLOWED ON THE TAP/APPROVED PRODUCTS LIST.

THE CONTRACTOR SHALL NOT REASSIGN THE CABINET DETECTOR INPUTS IN ORDER TO REDUCE THE NUMBER OF 2-CHANNEL DETECTOR UNITS SUPPLIED AND SHALL USE THE STANDARD CALTRANS INPUT FILE DESIGNATIONS FOLLOWING **PIS 203324**.

PAYMENT FOR ITEM 633, CABINET, TYPE 332, AS PER PLAN WILL BE AT THE CONTRACT BID PRICE PER EACH COMPLETE AND IN PLACE INCLUDING ALL COMPONENTS TESTED AND ACCEPTED.

ITEM 633, CONTROLLER WORK PAD, AS PER PLAN

THIS ITEM SHALL INCLUDE THE ADDITIONAL EXCAVATION, EMBANKMENT, AND CONCRETE NECESSARY TO EXTEND THE CONTROLLER WORK PAD TO THE DIMENSIONS **9' L X 8' W** AND PROVIDE A LEVEL WORK PAD.

THE CONTRACTOR SHALL CONSTRUCT THE WORK PAD AS FOLLOWS:

- EXCAVATE A MINIMUM OF 9" BELOW GRADE
- PLACE AND COMPACT 6" OF MATERIAL CONFORMING TO 304.02
- INSTALL A CAST-IN-PLACE WORK PAD THAT IS A MINIMUM OF 4" THICK

THE CONTROLLER WORK PAD SHALL BE IN ACCORDANCE WITH **CMS 633.11, SCD TC-83.20**, AND **PIS 208320.**

PAYMENT SHALL BE MADE AT THE UNIT PRICE BID AND INCLUDE ALL LABOR, EQUIPMENT, MATERIAL AND INCIDENTALS NECESSARY TO CONSTRUCT THE CONCRETE WORK PAD.

ITEM 633, CABINET FOUNDATION, AS PER PLAN

THIS ITEM SHALL INCLUDE THE ADDITIONAL EXCAVATION AND CONCRETE NECESSARY TO EXTEND THE CONTROLLER CABINET FOUNDATION TO SUPPORT THE UNINTERRUPTIBLE POWER SUPPLY (UPS) CABINET. IT IS THE CONTRACTOR'S RESPONSIBILITY TO PROVIDE A FOUNDATION LARGE ENOUGH TO ACCOMMODATE THE UPS BEING PROVIDED BY SEPARATE BID ITEM.

THE CONTROLLER AND UPS CABINET FOUNDATION SHALL BE IN ACCORDANCE WITH **CMS 633.10, SCD TC-83.20**, AND **PIS 208320.**

PAYMENT SHALL BE MADE AT THE UNIT PRICE BID AND INCLUDE ALL LABOR, EQUIPMENT, MATERIAL AND INCIDENTALS NECESSARY TO CONSTRUCT THE FOUNDATION, INCLUDING CONDUIT ELLS AND ANCHOR BOLTS, RESTORATION OF DISTURBED AREA AND DISPOSAL OF SURPLUS MATERIAL AS PER CMS 104.04

ITEM 633, PREEMPTION DETECTOR CABLE

THIS ITEM SHALL CONSIST OF FURNISHING AND INSTALLING PREEMPTION DETECTOR HOME RUN CABLE. IT SHALL CONNECT THE PREEMPTION RECEIVING UNIT TO THE PHASE SELECTOR IN THE LOCAL CONTROLLER CABINET.

ONLY ONE EXTERNAL SPLICE SHALL BE PERMITTED BETWEEN PREEMPTION RECEIVER UNIT AND CONTROLLER CABINET. THIS SPLICE SHALL MEET THE REQUIREMENTS OF CMS 632.23 USING A WATERPROOF EPOXY SPLICE KIT. THE CABLE SHALL BE APPROVED FOR BOTH OVERHEAD AND UNDERGROUND USE. THE JACKET SHALL WITHSTAND EXPOSURE TO SUNLIGHT AND ATMOSPHERIC TEMPERATURES AND STRESSES REASONABLY EXPECTED IN NORMAL INSTALLATIONS.

PAYMENT SHALL BE MADE AT THE UNIT PRICE BID PER FOOT FOR THE CABLE FURNISHED, IN PLACE, ALL CONNECTIONS MADE AND WIRING COMPLETED, TESTED AND ACCEPTED.

ITEM 633, CONTROLLER ITEM MISC.: PREEMPTION UNIT, REMOVED FOR REUSE

THIS ITEM SHALL CONSIST OF REMOVING THE PREEMPTION RECEIVING UNIT AND CONFIRMATION LIGHT FROM THE EXISTING STRAIN POLE AND INSTALLING ON THE PROPOSED STAIN POLE AT THE LOCATION SHOWN IN THE PLANS. THIS ITEM INCLUDES ANY ADDITIONAL HARDWARE REQUIRED FOR MOUNTING OF PREEMPTION UNIT AND CONFIRMATION LIGHT TO STRAIN POLE.

THIS ITEM ALSO INCLUDES THE REMOVAL OF THE PHASE SELECTOR FROM THE EXISTING CABINET AND INSTALLATION INTO THE PROPOSED CABINET, INCLUDING WIRING AND ALL ACCESSORIES THAT ARE NECESSARY TO MAKE THE PREEMPT PHASE SELECTOR COMPLETELY FUNCTIONAL AND OPERATIONAL.

PREEMPTION DETECTOR CABLE AND CONFIRMATION LIGHT CABLE HAVE BEEN ITEMIZED SEPARATELY.

PAYMENT FOR ITEM 633 "CONTROLLER UNIT MISC.: PREEMPTION UNIT, REMOVED FOR REUSE", SHALL BE AT THE UNIT PRICE BID FOR REMOVING AND RE-INSTALLING THE RECEIVING UNIT, CONFIRMATION LIGHTS AND PHASE SELECTOR, IN PLACE, ALL CONNECTIONS MADE AND WIRING COMPLETED, TESTED AND ACCEPTED.

ITEM 633, CONTROLLER ITEM MISC.: PREEMPTION CONFIRMATION LIGHT CABLE

THIS ITEM SHALL CONSIST OF FURNISHING AND INSTALLING PREEMPTION CONFIRMATION LIGHT CABLE. THE CABLE SHALL CONNECT THE PREEMPTION CONFIRMATION LIGHT UNIT TO A LOAD SWITCH IN THE CONTROLLER CABINET AS SHOWN IN THE PLANS.

THE PREEMPTION CONFIRMATION LIGHT CABLE SHALL BE A MINIMUM 4-CONDUCTOR, #14 AWG, SIGNAL CABLE WITH THE GREEN WIRE SERVING AS THE SAFETY GROUND CONDUCTOR.

PAYMENT SHALL BE AT THE UNIT PRICE BID FOR THE CABLE FURNISHED, IN PLACE, ALL CONNECTIONS MADE AND WIRING COMPLETED, TESTED AND ACCEPTED.

ITEM 809, ATC V6.24 CONTROLLER, AS PER PLAN

THE CONTROLLER UNIT SHALL BE FURNISHED AND INSTALLED PER **SS 809** AND BE LISTED ON THE TRAFFIC AUTHORIZED PRODUCTS (TAP) LIST.

THE CONTROLLER SHALL BE AN ECONOLITE COBALT AND COMPATIBLE WITH THE CABINET TYPE BEING INSTALLED.

PAYMENT FOR ITEM 809, ATC V6.24 CONTROLLER, AS PER PLAN WILL BE AT THE CONTRACT BID PRICE PER EACH COMPLETE AND IN PLACE INCLUDING ALL COMPONENTS TESTED AND ACCEPTED.

ITEM 809, STOP LINE RADAR DETECTION
ITEM 809, ADVANCE RADAR DETECTION

THESE ITEMS SHALL CONSIST OF FURNISHING AND INSTALLING A WAVETRONIX SMARTSENSOR MATRIX STOP BAR DETECTION UNIT AND/OR A WAVETRONIX SMARTSENSOR ADVANCE DETECTION UNIT (MODEL SS-200E) IN CONFORMANCE WITH **SS 809** AND THE FOLLOWING:

1. POWER SHALL BE PROVIDED FROM THE TRAFFIC CABINET.
2. ALL REQUIRED INPUTS CARDS SHALL BE INCLUDED IN THE TRAFFIC CABINET AND SHALL BE COMPATIBLE WITH CALTRANS, NEMA TS1 AND NEMA TS2 DETECTOR RACKS. THE CARDS SHALL PROVIDE TRUE PRESENCE DETECTOR CALLS OR CONTACT CLOSURE TO THE TRAFFIC CONTROLLER.
3. THE UNIT SHALL BE MOUNTED DIRECTLY TO A POLE OR MAST ARM, AS RECOMMENDED BY THE MANUFACTURER. CABLE(S) SHALL BE PROVIDED AS REQUIRED AND RECOMMENDED BY THE MANUFACTURER.
4. SURGE PROTECTION DEVICES, AS RECOMMENDED BY THE MANUFACTURER SHALL BE INCLUDED BOTH AT THE POLE WHERE THE UNIT IS LOCATED TO PROTECT THE UNIT AND IN THE TRAFFIC CABINET TO PROTECT THE CABINET ELECTRONICS.
5. THE MANUFACTURER'S REPRESENTATIVE SHALL BE ON SITE DURING INSTALLATION AND TESTING AND SHALL PROVIDE ONSITE TRAINING ON THE SETUP, OPERATION AND MAINTENANCE OF THE UNIT TO THE CITY OF ZANESVILLE MAINTENANCE PERSONAL.
6. A SERIAL TO ETHERNET COMMUNICATIONS MODULE AND ETHERNET CABLE (MIN. 7 FEET)
7. THE POWER SUPPLY AND COMMUNICATION MODULES SHALL BE SECURED TO A SINGLE PANEL THAT CAN BE MOUNTED INTERIOR TO THE TRAFFIC CABINET. THE PANEL SHALL INCLUDE MODULAR-PLUG STYLE CONNECTIONS FOR UP TO FOUR (4) SENSOR CABLES. ADDITIONAL SENSORS MAY BE HARD-WIRED TO THE COMMUNICATION MODULES, AS NECESSARY.

PAYMENT SHALL BE MADE AT THE UNIT PRICE BID FOR EACH UNIT, COMPLETE AND IN PLACE INCLUDING ALL REQUIRED CABINET HARDWARE, MOUNTING BRACKETS, CABLES, CONDUIT, AND ALL OTHER NECESSARY HARDWARE TO ESTABLISH A FULLY FUNCTIONAL DETECTION SYSTEM, ALL CONNECTIONS TESTED AND ACCEPTED

GROUNDING AND BONDING

IN ADDITION TO THE REQUIREMENTS OF **CMS 625 & 725**, THE FOLLOWING SHALL APPLY:

1) ALL METALLIC PARTS CONTAINING ELECTRICAL CONDUCTORS SHALL BE PERMANENTLY JOINED TO FORM AN EFFECTIVE GROUND FAULT CURRENT PATH BACK TO THE GROUNDED CONDUCTOR IN THE POWER SERVICE DISCONNECT SWITCH.

   A. PROVIDE AN EQUIPMENT GROUNDING CONDUCTOR IN METALLIC CONDUITS (725.04) IN ADDITION TO THE CONDUCTORS SPECIFIED AND BOND THE CONDUIT TO THIS GROUNDING CONDUCTOR.

   B. WHEN AN EQUIPMENT GROUNDING CONDUCTOR IS REQUIRED IN PLASTIC CONDUIT (725.05), THE INSTALLATION SHALL INCLUDE A SEPARATE EQUIPMENT GROUNDING CONDUCTOR IN ADDITION TO THE CONDUCTORS SPECIFIED.

   C. METALLIC CONDUIT CARRYING THE LOOP WIRES FROM IN THE PAVEMENT TO THE PULL BOX SPLICE LOCATION WILL ONLY BE BONDED AT THE PULL BOX END, AND WILL NOT CONTAIN AN EQUIPMENT GROUNDING CONDUCTOR.

   D. IF MULTIPLE CONDUIT RUNS BEGIN AND END AT THE SAME POINTS, ONLY ONE EQUIPMENT GROUNDING CONDUCTOR IS REQUIRED.

   E. IF AN EQUIPMENT GROUNDING CONDUCTOR IS NEEDED IN CONDUIT BETWEEN SIGNALIZED INTERSECTIONS FOR UNDERGROUND INTERCONNECT CABLE, THE GROUNDING SYSTEM FOR EACH SIGNALIZED INTERSECTION WILL BE SEPARATED ABOUT MIDWAY BETWEEN THE INTERSECTIONS.

   F. THE MESSENGER WIRE AT SIGNALIZED INTERSECTIONS WILL BE USED AS THE CONDUCTIVE PATH FROM CORNER TO CORNER IF CONDUIT IS NOT PROVIDED UNDER THE ROADWAY. WHEN CONDUIT CONNECTS THE CORNERS OF AN INTERSECTION, AN EQUIPMENT GROUNDING CONDUCTOR SHALL BE USED IN THE CONDUIT.

2) CONDUITS.

   A. THE 725.04 CONDUIT SHALL HAVE GROUNDING BUSHINGS INSTALLED AT ALL TERMINATION POINTS. THE BUSHING MATERIAL SHALL BE COMPATIBLE WITH GALVANIZED STEEL CONDUIT AND THE GROUNDING LUG MATERIAL SHALL BE COMPATIBLE FOR USE WITH COPPER WIRE. THREADED OR COMPRESSION TYPE BUSHINGS MAY BE USED.

   B. THE 725.05 CONDUIT SHALL HAVE THE INSIDE AND OUTSIDE DIAMETERS OF THE CONDUIT DEBURRED AT ALL TERMINATION POINTS.

   C. BOTH ENDS OF METALLIC CONDUIT SHALL BE BONDED TO THE EQUIPMENT GROUNDING CONDUCTOR.

   D. METALLIC CONDUIT MAY BE BONDED TO METALLIC BOXES THROUGH THE USE OF CONDUIT FITTINGS UL APPROVED FOR THIS TYPE OF CONNECTION, WITH THE BOX BONDED TO THE EQUIPMENT GROUNDING CONDUCTOR.

3) WIRE FOR GROUNDING AND BONDING.

   A. USE INSULATED, COPPER WIRE FOR THE EQUIPMENT GROUNDING CONDUCTOR. BONDING JUMPERS IN BOXES AND ENCLOSURES MAY BE BARE OR INSULATED COPPER WIRE. WIRE SIZE SHALL BE AS FOLLOWS:

      I) USE 4 AWG BETWEEN THE POWER SERVICE AND SUPPORTS, POLES, PEDESTALS, CONTROLLER OR FLASHER CABINETS.

      II) USE A MINIMUM 8 AWG BETWEEN LOOP DETECTOR PULL BOXES AND THE FIRST CONDUIT THAT REQUIRES A LARGER SIZE AS SPECIFIED IN 3.A.I ABOVE.

      III) USE A MINIMUM 8 AWG BETWEEN THE "PREPARE TO STOP WHEN FLASHING" INSTALLATION (INCLUDING SUPPORT) AND THE FIRST CONDUIT THAT REQUIRES A LARGER SIZE AS SPECIFIED IN 3.A.I ABOVE.

      IV) THE INSULATION SHALL BE GREEN OR GREEN WITH YELLOW STRIPE(S). FOR 4 AWG OR LARGER, INSULATION MAY ALSO BE BLACK WITH GREEN TAPE/LABELS INSTALLED AT ALL ACCESS POINTS.

   B. IN A HIGHWAY LIGHTING SYSTEM, THE EQUIPMENT GROUNDING CONDUCTOR SHALL BE THE SAME WIRE SIZE AS THE DUCT CABLE OR DISTRIBUTION CABLE CIRCUIT CONDUCTORS, WITH THE MINIMUM CONDUCTOR SIZE OF 4 AWG. BONDING JUMPERS WILL BE MINIMUM SIZE 4 AWG.

4) GROUND ROD.

   A. A 3/4 INCH SCHEDULE 40 PVC CONDUIT WILL BE USED IN FOUNDATIONS AND CONCRETE WALLS FOR THE GROUNDING CONDUCTOR (GROUND WIRE) RACEWAY TO THE GROUND ROD. SHOULD METALLIC CONDUIT BE USED, BOTH ENDS OF THE CONDUIT SHALL BE BONDED TO THE GROUNDING CONDUCTOR.

   B. THE TYPICAL GROUNDING CONDUCTOR (GROUND WIRE) SHALL BE 4 AWG INSULATED, COPPER.

5) THE GREEN CONDUCTOR IN SIGNAL CABLES (CONDUCTOR #4) SHALL NOT BE USED TO SUPPLY POWER TO A SIGNAL INDICATION. IT WILL BE CONNECTED TO THE SIGNAL BODY AS AN EQUIPMENT GROUND IN ALUMINUM HEADS AND IT WILL BE UNUSED IN PLASTIC HEADS. UNUSED CONDUCTORS SHALL BE GROUNDED IN THE CABINET. TYPICAL USE OF CONDUCTORS IS AS FOLLOWS:

COND. NO.	COLOR	VEHICLE SIGNAL	PEDESTRIAN SIGNAL
1	BLACK	GREEN BALL	#1 WALK
2	WHITE	AC NEUTRAL	AC NEUTRAL
3	RED	RED BALL	#1 DW/FDW
4	GREEN	EQUIPMENT GROUND	EQUIPMENT GROUND
5	ORANGE	YELLOW BALL	#2 DW/FDW
6	BLUE	GREEN ARROW	# 2 WALK
7	WHITE/BLACK STRIPE	YELLOW ARROW	NOT USED

6) POWER SERVICE AND DISCONNECT SWITCH.

   A. AT THE POWER SERVICE LOCATION, THE GROUNDING CONDUCTOR (GROUND WIRE) FROM THE DISCONNECT SWITCH NEUTRAL (AC-) BAR TO THE GROUND ROD SHALL BE A CONTINUOUS, UNSPLICED CONDUCTOR. IF SPLICED, IT SHALL BE AN EXOTHERMIC WELD BUTT SPLICE.

   B. THE SERVICE NEUTRAL (AC-) SHALL ONLY BE CONNECTED TO GROUND AT THE PRIMARY POWER SERVICE DISCONNECT SWITCH.

      I) NEMA CONTROLLER CABINETS: IF A POWER SERVICE DISCONNECT SWITCH IS LOCATED BEFORE THE CONTROLLER CABINET, THE NEUTRAL (AC-) AND THE GROUNDING BARS IN THE CONTROLLER CABINET SHALL NOT BE CONNECTED TOGETHER AS SHOWN IN NEMA TS-2, FIGURE 5-4.

      II) IF SECONDARY DISCONNECT SWITCHES ARE CONNECTED AFTER THE PRIMARY DISCONNECT SWITCH, THE NEUTRAL (AC-) SHALL ONLY BE GROUNDED AT THE PRIMARY SWITCH. EQUIPMENT GROUNDING CONDUCTORS SHALL BE BROUGHT TO THE PRIMARY SWITCH BUT SHALL BE GROUNDED AT BOTH SECONDARY AND PRIMARY SWITCHES.

7) PAYMENT

   ALL MATERIALS AND WORK REQUIRED TO COMPLETE THE EFFECTIVE GROUND FAULT CURRENT PATH SYSTEM ARE INCIDENTAL TO THE CONDUCTORS INSTALLED BY CONTRACT. GROUND RODS HAVE BEEN ITEMIZED SEPARATELY.

CALCULATED PTB CHECKED JSL

TRAFFIC SIGNAL NOTES

FAI-204/204A-
0.00/0.00

I:\ProjectData\FAI\95506\Design\Signals\Sheets\95506_CN004.dgn Sheet 2/19/2020 4:18:16 PM jlutzi

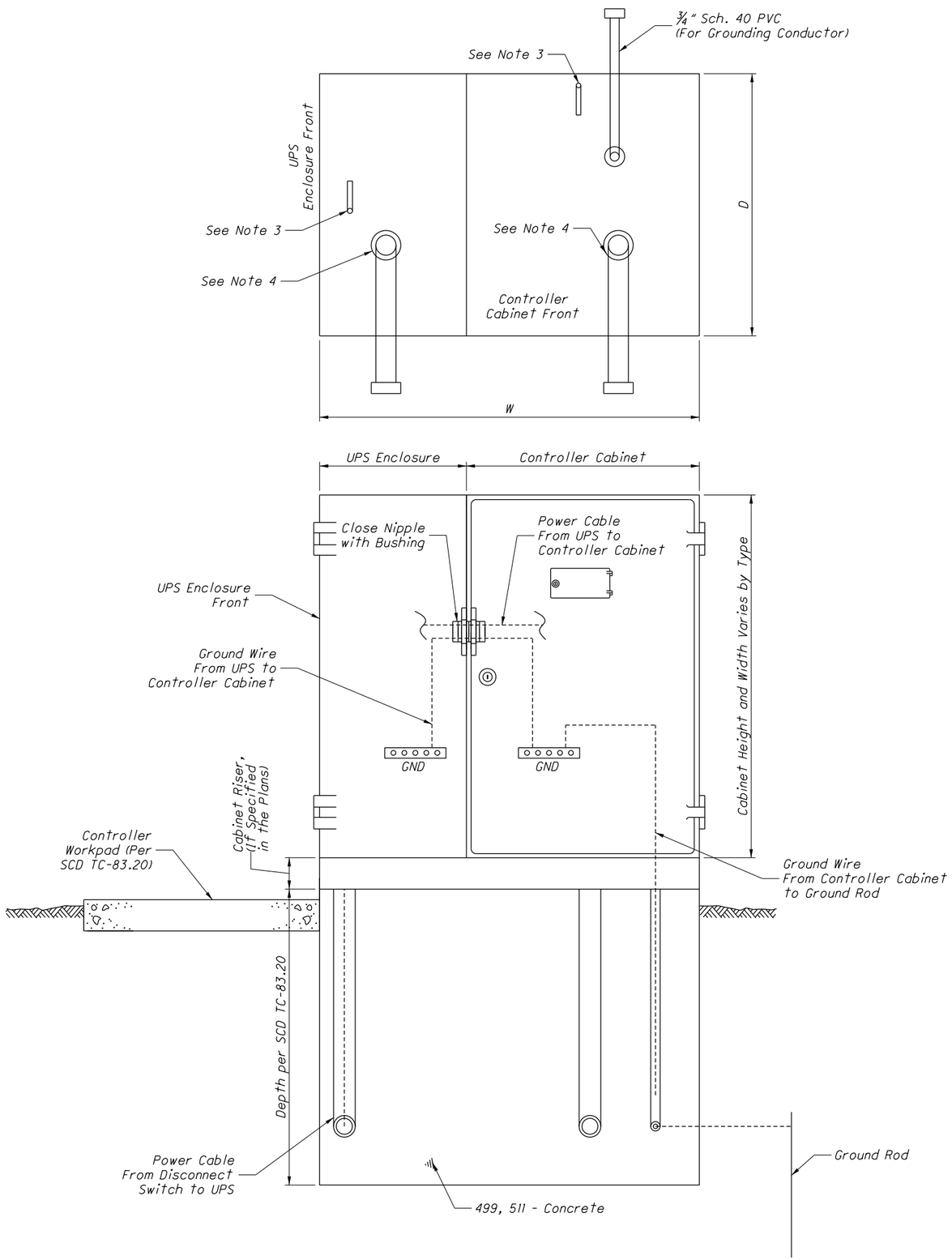

NOTES:

1. The Uninterruptible Power Supply (UPS) enclosure shall be mounted flush up against the traffic signal cabinet and sealed with silicone. The Contractor shall be responsible for providing the necessary power cable between the UPS unit and signal cabinet.

2. The UPS should be placed on the opposite side of the pull box on a 332/336 cabinet (per Standard Construction Drawing (SCD) TC-83.20). The UPS placement for a NEMA cabinet varies, placement should provide adequate access with respect to slope, guardrail spacing, etc.

3. The size, number, and location of anchor bolts shall be in accordance with the manufacturer's recommendations.

4. The size, number, and orientation of conduit ells shall be as shown in the plan, except that a 3/4" schedule 40 PVC shall be installed in each foundation.

5. 1/2" preformed joint filler as per CMS 705.03 shall be used between foundations and adjacent paved areas.

6. See SCD TC-83.20 for further details.

TYPE	W (IN.)	D (IN.)	FOUNDATION CONCRETE (CU. YD.)
TS-1	60	24	1.23
TS-2	70	36	2.16
332	50	36	1.54

OFFICE OF ROADWAY ENGINEERING

DESIGNED XXX REVIEWED XXX

REVISION DATE 7/18/2014 CHECKED JSL

PLAN INSERT SHEET 208320

UNINTERRUPTIBLE POWER SUPPLY (UPS) AND CONTROLLER CABINET FOUNDATION

FAI-204/204A-0.00/0.00

1/1

54/61

I:\ProjectData\FAI\95506\Design\Signals\Sheets\95506_CN005.dgn Sheet 2/19/2020 4:18:20 PM jlutzi

MATERIAL SPECIFICATIONS FOR BBS GENERATOR POWER PANEL EQUIPMENT

GENERATOR INLET - The inlet shall be 30 amp, 125/250V, locking, four (4) wire grounding and meet the NEMA configuration number L14-30-P 30A 125/250V specification. The inlet shall be a Hubbell catalog #2715.

LINE VOLTAGE GENERATOR SWITCH - The switch shall be 30 amp, 125/250V AC, two (2) pole, three (3) position (On, Off, On). The switch shall be a Hubbell catalog #1388.

LINE VOLTAGE INDICATOR LIGHT - The indicator light shall be 125V AC light emitting diode with a red lens.

LINE VOLTAGE CIRCUIT BREAKER - The circuit breaker shall be single pole single throw and a minimum of 30 amps. The amperage shall be increased to accomodate greater loads, if necessary. The gauge of the power cable shall be of proper size per N.E.C.

EXTERNAL LINE VOLTAGE INDICATOR LIGHT - The indicator light shall be a 1" waterproof NEMA 4X or IP66 LED lamp with a green lens.

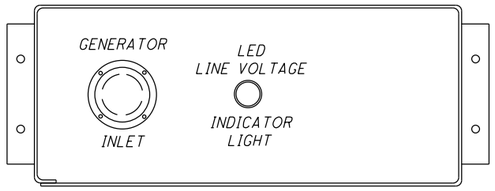

FRONT VIEW OF GENERATOR POWER PANEL

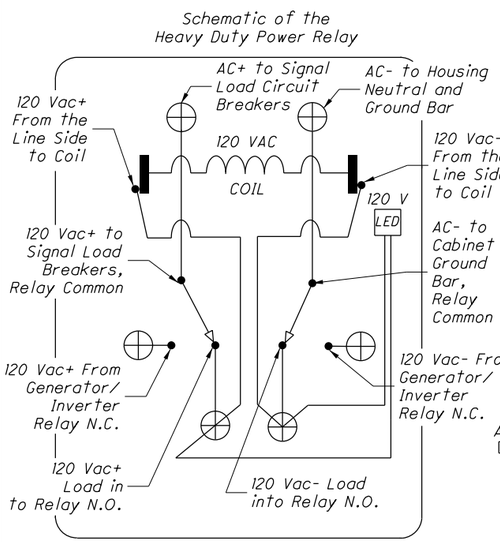

DETAIL "C"
SCHEMATIC OF THE H.D.
DPDT GEN / POWER RELAY

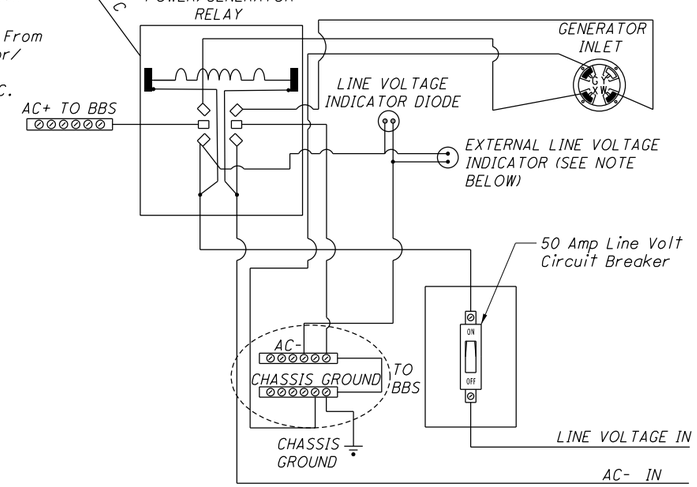

ELECTRICAL HOOKUP DETAIL FOR THE BBS GENERATOR POWER PANEL

NOTE: EXTERNAL LINE VOLTAGE INDICATOR LIGHT required when called for in the plans.
EXTERNAL LINE VOLTAGE INDICATOR LIGHT shall be located on the enclosure exterior for visibility from the adjacent roadway when all cabinet, and generator panel doors are closed.

GENERATOR POWER PANEL ENCLOSURE

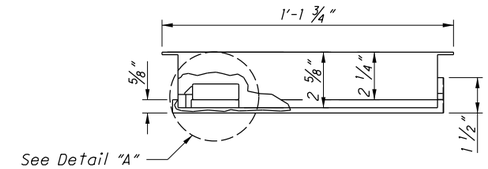

TOP VIEW

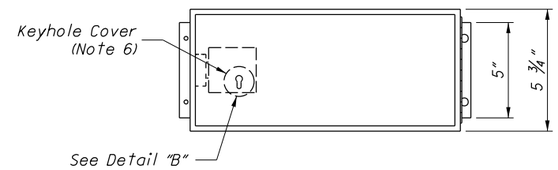

FRONT VIEW CLOSED DOOR

NOTES:

1. The enclosure shall be constructed of 1/8" thick alumimum.
2. The lock shall be the standard police door type, keyed with the standard flasher door skeleton key.
3. The door shall be sealed with a foam rubber gasket to prevent moisture from entering the enclosure.
4. The enclosure shall be mounted onto the outside of the controller cabinet with non-accessible bolts and sealed with a high quality silicon caulk at all surfaces touching the cabinet.
5. The hinge shall be of stainless steel or equivalent corrosive-resistant material.
6. Keyhole shall be covered with a movable circular aluminum or brass cover with top pivot pin.

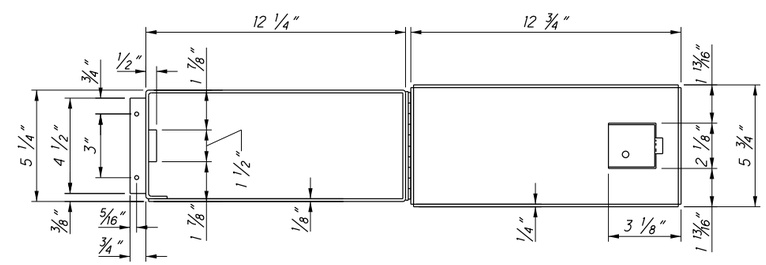

FRONT VIEW OPEN DOOR

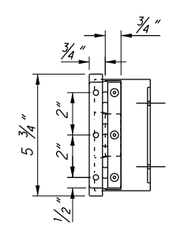

RIGHT SIDE VIEW
CLOSED DOOR

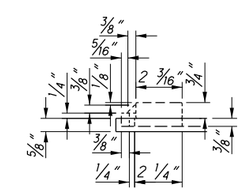

DETAIL "A"

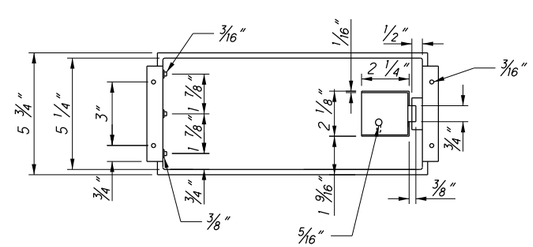

BACK VIEW CLOSED DOOR

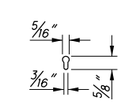

DETAIL "B"

THIS DRAWING REPLACES PIS 203012 DATED 04-20-2012.

PLAN INSERT SHEET 203012

BATTERY BACKUP SYSTEM (BBS)
GENERATOR POWER PANEL

OFFICE OF ROADWAY ENGINEERING

DESIGNED XXX | REVIEWED XXX
REVISION DATE 7/18/2014 | CHECKED JSL

FAI-204/204A-
0.00/0.00

1/1

55/61

i:\ProjectData\FAI\95506\Design\Signals\Sheets\95506_CN006.dgn Sheet 2/19/2020 4:18:21 PM jlutzi

SEPAC AND ASC/3 INPUT FILE INFORMATION FOR THE 332 CABINET

UPPER INPUT FILE (FILE=I)

UPPER CHANNEL														
PHASE	1	2	2	2	3	4	4	4	1		MANUAL	2	6	FLASH
DEFAULT FUNCTION	EXT-CALL	EXT-CALL	EXT-CALL	EXT-CALL	EXT-CALL	EXT-CALL	EXT-CALL	EXT-CALL	EXT-CALL	SPARE	CONTROL ADV.	PED	PED	SENSE
SEPAC DETECTOR NO.	VEH 1	VEH 3	VEH 5	VEH 7	VEH 9	VEH 11	VEH 13	VEH 15	VEH 17			PED 2	PED 6	
ASC/3 DETECTOR NO.	VEH 1	VEH 2	VEH 3	VEH 4	VEH 5	VEH 6	VEH 7	VEH 8	VEH 9			PED 2	PED 6	
C1 PIN NUMBER	56	39	63	47	58	41	65	49	60		80	67	68	81
FIELD TERMINALS	1-D,E	2-D,E	3-D,E	4-D,E	5-D,E	6-D,E	7-D,E	8-D,E	9-D,E	10-D,E	11-D,E	12-D,E	13-D,E	14-D,E
SLOT NUMBER	1	2	3	4	5	6	7	8	9	10	11	12	13	14

LOWER CHANNEL														
PHASE	1	2	2	2	3	4	4	4	3		ADV.	4	8	STOP
DEFAULT FUNCTION	EXT-CALL	EXT-CALL	EXT-CALL	EXT-CALL	EXT-CALL	EXT-CALL	EXT-CALL	EXT-CALL	EXT-CALL	SPARE	ENABLE	PED	PED	TIME
SEPAC DETECTOR NO.	VEH 1	VEH 4	VEH 6	VEH 7	VEH 9	VEH 12	VEH 14	VEH 15	VEH 18			PED 4	PED 8	
ASC/3 DETECTOR NO.	VEH 1	VEH 10	VEH 11	VEH 4	VEH 5	VEH 14	VEH 15	VEH 8	VEH 13			PED 4	PED 8	
C1 PIN NUMBER	56	43	76	47	58	45	78	49	62		53	69	70	82
FIELD TERMINALS	1-J,K	2-J,K	3-J,K	4-J,K	5-J,K	6-J,K	7-J,K	8-J,K	9-J,K	10-J,K	11-J,K	12-J,K	13-J,K	14-J,K

LOWER INPUT FILE (FILE=J)

UPPER CHANNEL														
PHASE	5	6	6	6	7	8	8	8	5					
DEFAULT FUNCTION	EXT-CALL	EXT-CALL	EXT-CALL	EXT-CALL	EXT-CALL	EXT-CALL	EXT-CALL	EXT-CALL	EXT-CALL	SPARE	SPARE	EV - A	EV - B	RR - 1
SEPAC DETECTOR NO.	VEH 19	VEH 21	VEH 23	VEH 25	VEH 29	VEH 31	VEH 33	VEH 35	VEH 37					
ASC/3 DETECTOR NO.	VEH 17	VEH 18	VEH 19	VEH 20	VEH 21	VEH 22	VEH 23	VEH 24	VEH 25					
C1 PIN NUMBER	55	40	64	48	57	42	66	50	59		54	71	72	51
FIELD TERMINALS	1-D,E	2-D,E	3-D,E	4-D,E	5-D,E	6-D,E	7-D,E	8-D,E	9-D,E	10-D,E	11-D,E	12-D,E	13-D,E	14-D,E
SLOT NUMBER	1	2	3	4	5	6	7	8	9	10	11	12	13	14

LOWER CHANNEL														
PHASE	5	6	6	6	7	8	8	8	7					
DEFAULT FUNCTION	EXT-CALL	EXT-CALL	EXT-CALL	EXT-CALL	EXT-CALL	EXT-CALL	EXT-CALL	EXT-CALL	EXT-CALL	SPARE	SPARE	EV - C	EV - D	RR - 2
SEPAC DETECTOR NO.	VEH 19	VEH 22	VEH 24	VEH 25	VEH 29	VEH 32	VEH 34	VEH 35	VEH 38					
ASC/3 DETECTOR NO.	VEH 17	VEH 26	VEH 27	VEH 20	VEH 21	VEH 30	VEH 31	VEH 24	VEH 29					
C1 PIN NUMBER	55	44	77	48	57	46	79	50	61		75	73	74	52
FIELD TERMINALS	1-J,K	2-J,K	3-J,K	4-J,K	5-J,K	6-J,K	7-J,K	8-J,K	9-J,K	10-J,K	11-J,K	12-J,K	13-J,K	14-J,K

SEPAC AND ASC/3 INPUT FILE INFORMATION FOR THE 336 CABINET

UPPER CHANNEL														
PHASE	1	2	3	4	5	6	7	8				2	6	FLASH
DEFAULT FUNCTION	EXT-CALL	EXT-CALL	EXT-CALL	EXT-CALL	EXT-CALL	EXT-CALL	EXT-CALL	EXT-CALL	RR - 1	EV - A	EV - B	PED	PED	SENSE
SEPAC DETECTOR NO.	VEH 1	VEH 3	VEH 9	VEH 11	VEH 19	VEH 21	VEH 29	VEH 31				PED 2	PED 6	
ASC/3 DETECTOR NO.	VEH 1	VEH 2	VEH 5	VEH 6	VEH 17	VEH 18	VEH 21	VEH 22				PED 2	PED 6	
C1 PIN NUMBER	56	39	58	41	55	40	57	42	51	71	72	67	68	81
FIELD TERMINALS	1-D,E	2-D,E	3-D,E	4-D,E	5-D,E	6-D,E	7-D,E	8-D,E	9-D,E	10-D,E	11-D,E	12-D,E	13-D,E	14-D,E
SLOT NUMBER	1	2	3	4	5	6	7	8	9	10	11	12	13	14

LOWER CHANNEL														
PHASE	2	2	4	4	6	6	8	8				4	8	STOP
DEFAULT FUNCTION	EXT-CALL	EXT-CALL	EXT-CALL	EXT-CALL	EXT-CALL	EXT-CALL	EXT-CALL	EXT-CALL	RR - 2	EV - C	EV - D	PED	PED	TIME
SEPAC DETECTOR NO.	VEH 7	VEH 4	VEH 15	VEH 12	VEH 25	VEH 22	VEH 35	VEH 32				PED 4	PED 8	
ASC/3 DETECTOR NO.	VEH 4	VEH 10	VEH 8	VEH 14	VEH 20	VEH 26	VEH 24	VEH 30				PED 4	PED 8	
C1 PIN NUMBER	47	43	49	45	48	44	50	46	52	73	74	69	70	82
FIELD TERMINALS	1-J,K	2-J,K	3-J,K	4-J,K	5-J,K	6-J,K	7-J,K	8-J,K	9-J,K	10-J,K	11-J,K	12-J,K	13-J,K	14-J,K

THIS DRAWING REPLACES PIS 203324 DATED 10-18-2013.

OFFICE OF ROADWAY ENGINEERING

DESIGNED XXX
REVIEWED XXX
REVISION DATE 07-15-2016
CHECKED JSL

PLAN INSERT SHEET

SEPAC AND ASC/3 INPUT FILE INFORMATION FOR 332 AND 336 CABINETS

FAI-204/204A-0.00/0.00

1/1

56/61

I:\ProjectData\FAI\95506\Design\Signals\Sheets\95506_CN007.dgn Sheet 2/19/2020 4:18:22 PM jiutz1

REF NO.	SHEET NO.	LOCATION	625 CONNECTION, FUSED PULL APART EACH	625 CONNECTION, UNFUSED PULL APART EACH	625 BRACKET ARM, 30' EACH	625 CONDUIT, 4", 725.05 FT	625 LUMINAIRE, CONVENTIONAL, SOLID STATE (LED), AS PER PLAN (150W, 120V, TYPE II) EACH	625 TRENCH, 24" DEEP FT	625 PULL BOX, 725.08, 24" EACH	625 GROUND ROD EACH	630 SIGN HANGER ASSEMBLY, SPAN WIRE EACH	630 SIGN, FLAT SHEET SF	632 VEHICULAR SIGNAL HEAD, (LED), 3-SECTION, 12" LENS, 1-WAY, POLYCARBONATE, AS PER PLAN EACH	632 VEHICULAR SIGNAL HEAD, (LED), 5-SECTION, 12" LENS, 1-WAY, POLYCARBONATE, AS PER PLAN EACH	632 COVERING OF VEHICULAR SIGNAL HEAD EACH	632 MESSENGER WIRE, 7 STRAND, 7/16" DIAMETER WITH ACCESSORIES FT	632 TETHER WIRE, WITH ACCESSORIES FT	632 SIGNAL CABLE, 7 CONDUCTOR, NO. 14 AWG FT	632 STRAIN POLE FOUNDATION EACH	632 POWER CABLE, 3 CONDUCTOR, NO. 8 AWG FT	632 POWER SERVICE, AS PER PLAN EACH	632 STRAIN POLE, TYPE TC-81.10, DESIGN 11 EACH	632 COMBINATION STRAIN POLE, TYPE TC-81.10, DESIGN 11 EACH	632 REMOVAL OF TRAFFIC SIGNAL INSTALLATION, AS PER PLAN EACH	633 CABINET, TYPE 332, AS PER PLAN EACH	633 CABINET FOUNDATION, AS PER PLAN EACH	633 CONTROLLER WORK PAD, AS PER PLAN EACH	633 PREEMPTION DETECTOR CABLE FT	633 UNINTERRUPTIBLE POWER SUPPLY (UPS), 1000 WATT, AS PER PLAN EACH	633 CONTROLLER ITEM, MISC.:PREEMPTION REMOVED FOR REUSE EACH	633 CONTROLLER ITEM, MISC.:PREEMPTION LIGHT CONFIRMATION CABLE EACH	809 ADVANCE RADAR DETECTION EACH	809 STOP LINE RADAR DETECTION EACH	809 ATC V6.24 CONTROLLER EACH
		S.R. 204/ HARMON RD.														465	465							1										
1		SIGNAL HEAD												1	1																			
2A		SIGNAL HEAD											1		1																			
2B		SIGNAL HEAD											1		1																			
2C		SIGNAL HEAD											1		1																			
4A		SIGNAL HEAD											1		1																			
4B		SIGNAL HEAD											1		1																			
6A		SIGNAL HEAD											1		1																			
6B		SIGNAL HEAD											1		1																			
8A		SIGNAL HEAD											1		1																			
8B		SIGNAL HEAD											1		1																			
C-1		GROUND MOUNTED CABINET								1															1	1	1		1					1
D-1		STOP LINE RADAR DETECTION																															1	
D-2A		ADVANCE RADAR DETECTION																														1		
D-2B		STOP LINE RADAR DETECTION																															1	
D-4		STOP LINE RADAR DETECTION																															1	
D-6		ADVANCE RADAR DETECTION																														1		
D-8A		ADVANCE RADAR DETECTION																														1		
D-8B		STOP LINE RADAR DETECTION																															1	
L-1		LIGHTING	1	1			1																											
L-2		LIGHTING	1	1			1																											
	58																																	
P-1		SIGNAL SUPPORT			1					1									1				1											
P-2		SIGNAL SUPPORT								1									1			1												
P-3		SIGNAL SUPPORT			1					1									1				1											
P-4		SIGNAL SUPPORT			1					1									1				1											
PB-1		PULL BOX							1																									
PE-1		PREEMPTION																										60		1	60			
PS-1		POWER SERVICE																			1													
S-1		SIGNING									1	5																						
S-2		SIGNING									1	5																						
CONDUIT		P-2 TO PB-1				12		12																										
SIGNAL CABLE		C-1 TO 2A, 2B, 2C																392																
		C-1 TO 4A, 4B																154																
		C-1 TO 1, 6A, 6B																297																
		C-1 TO 8A, 8B																261																
POWER CABLE		P-2 TO C-1																		60														
		PS-1 TO L-1, L-2																		415														
LOCATION 1B TOTALS (CARRIED TO GEN. SUM.)			**2**	**2**	**3**	**12**	**2**	**12**	**1**	**5**	**2**	**10**	**9**	**1**	**10**	**465**	**465**	**1,104**	**4**	**475**	**1**	**1**	**3**	**1**	**1**	**1**	**1**	**60**	**1**	**1**	**60**	**3**	**4**	**1**

CALCULATED PTB
CHECKED JSL

TRAFFIC SIGNAL SUB-SUMMARY

FAI-204/204A-
0.00/0.00

I:\ProjectData\FAI\95506\Design\Signals\Sheets\95506_CS001.dgn Sheet 2/19/2020 5:54:37 PM jlutz

LEGEND

	PROP	EXIST
TRAFFIC SIGNAL, 3-SECTION HEAD, 12"		
TRAFFIC SIGNAL, 5-SECTION HEAD, 12" WITH ARROWS		
BRACKET ARM W/ LUMINAIRE		
STRAIN POLE		
CONTROLLER CABINET W/ UPS		
TRAFFIC PULL BOX	TR	TR
STOP BAR RADAR DETECTION	S	
ADVANCE RADAR DETECTION	D	
PREEMPTION UNIT W/ CONFIRMATION LIGHT		

NOTE: ALL EXISTING PULL BOXES SHALL BE REMOVED AND EXISTING DETECTOR WIRING ABANDONED

SEE SHEET 56 FOR SIGNAL QTY'S

SIGNAL INDICATIONS

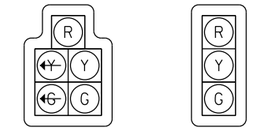

SIGNAL 1

SIGNAL 2A,2B,2C,4A,4B, 6A,6B,8A,8B

SIGN LEGEND

R10-12 (24" X 30") SIGN S1,S2

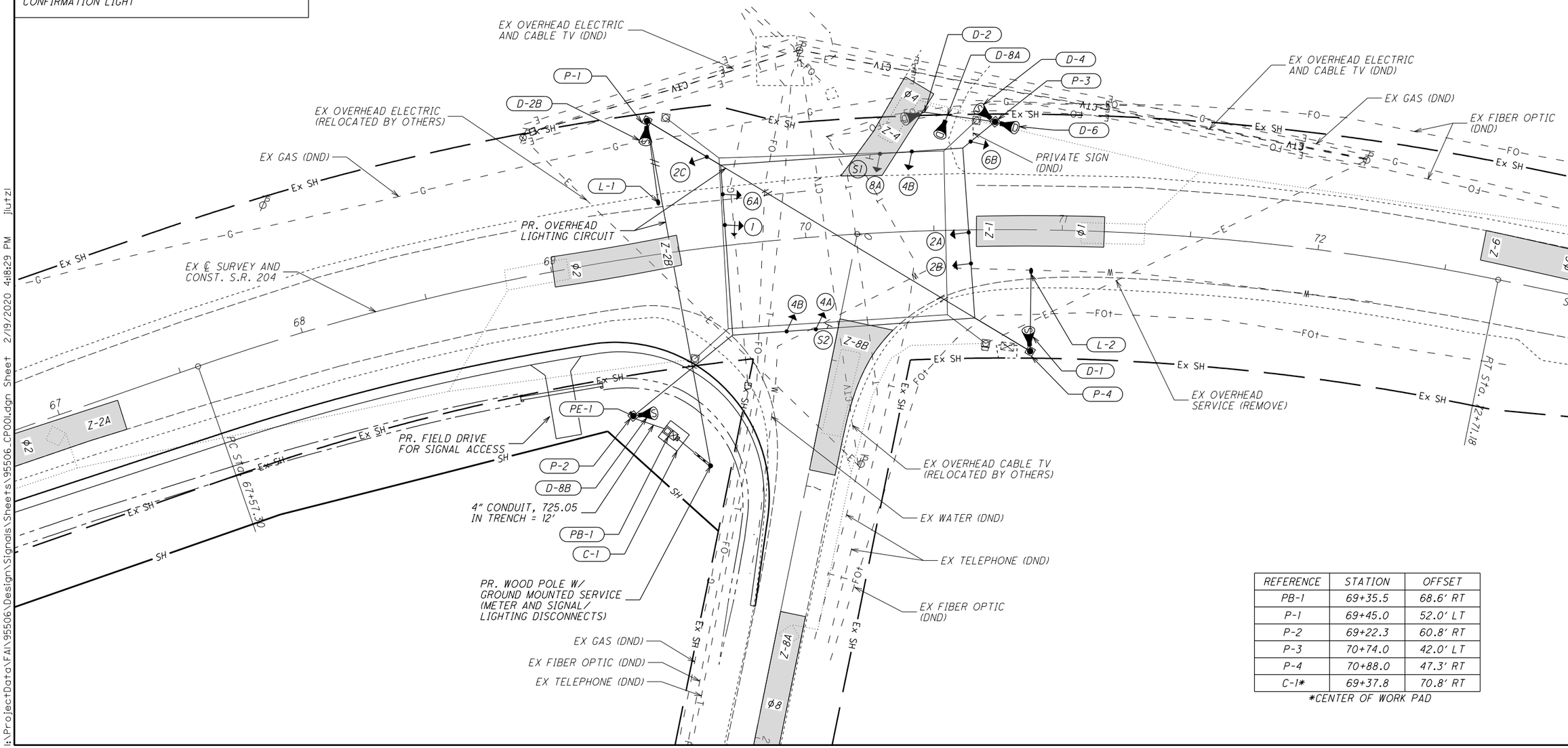

REFERENCE	STATION	OFFSET
PB-1	69+35.5	68.6' RT
P-1	69+45.0	52.0' LT
P-2	69+22.3	60.8' RT
P-3	70+74.0	42.0' LT
P-4	70+88.0	47.3' RT
C-1*	69+37.8	70.8' RT

*CENTER OF WORK PAD

HORIZONTAL SCALE IN FEET 0 10 20 40

CALCULATED PTB
CHECKED JSL

TRAFFIC SIGNAL PLAN
S.R. 204 / HARMON RD. (T.R. 221)

FAI-204/204A-
0.00/0.00

I:\ProjectData\FAI\95506\Design\Signals\Sheets\95506_CP001.dgn Sheet 2/19/2020 4:18:29 PM jlutzi

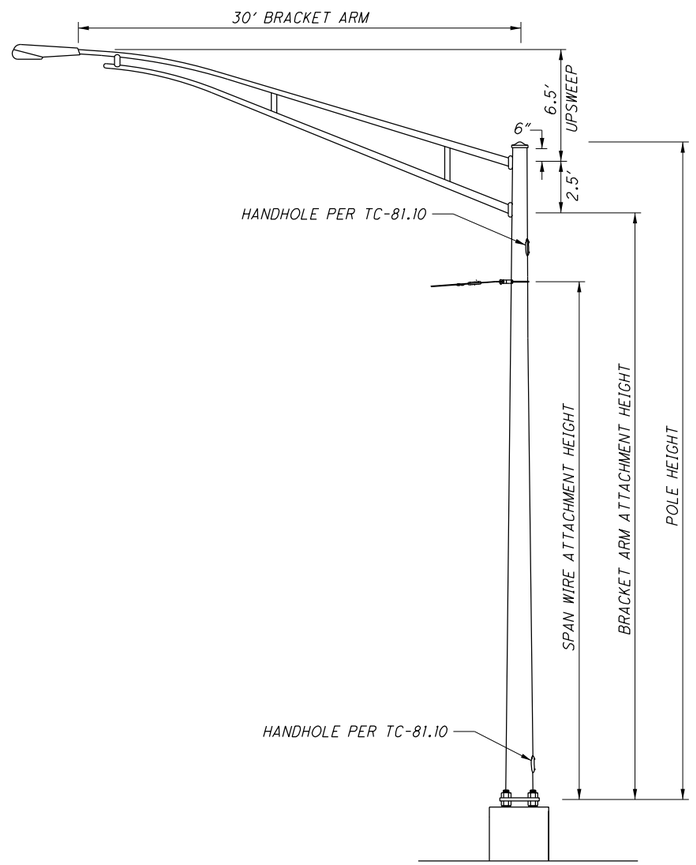

SPAN WIRE DETAILS

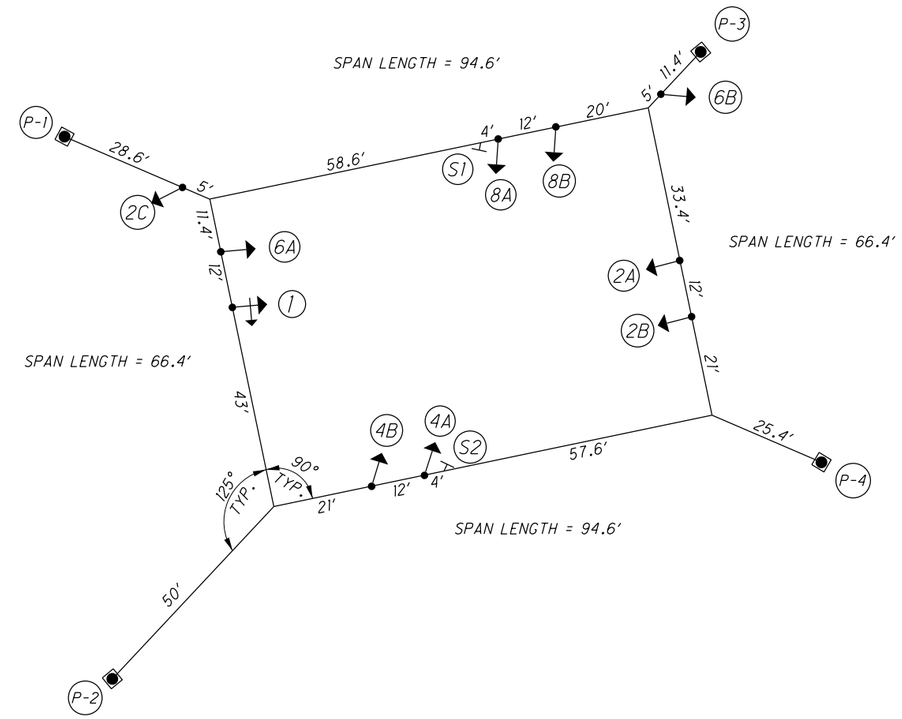

POLE ORIENTATION

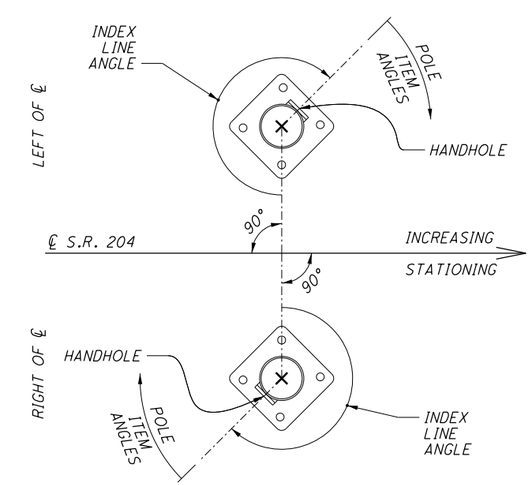

NOTES:

- ALL ANGLES ARE MEASURED CLOCKWISE
- THE INDEX LINE GOES THROUGH THE CENTER OF THE HANDHOLE

COMBINATION STRAIN POLE DETAILS

POLE NO.	DESIGN NO.	POLE HEIGHT (FT.)	FOUNDATION ELEVATION (FT.)	SPAN WIRE ATTACHMENT HEIGHT (FT.)	BRACKET ARM ATTACHMENT HEIGHT (FT.)	CABLE ENTRANCE DISTANCE FROM TOP (FT.)	INDEX LINE ANGLE	POLE ITEM ANGLES			
								HANDHOLE(S)	POWER SERVICE	SERVICE ENTRANCE CONDUIT	BRACKET ARM
							DEG.	DEG.	DEG.	DEG.	DEG.
P-1	11	32	947	27.5	29		125	0			235
P-2	11	32	945.5	30		0.5	240	0	270	270	
P-3	11	29	948	24.5	26		230	0			230
P-4	11	29	949	24	26		120	0	300	300	240

CALCULATED PTB
CHECKED JSL

TRAFFIC SIGNAL DETAILS
S.R. 204 / HARMON RD. (T.R. 221)

FAI-204/204A-
0.00/0.00

I:\ProjectData\FAI\95506\Design\Signals\Sheets\95506_CD001.dgn Sheet 2/19/2020 4:18:30 PM jlutzi

SIGNAL TIMING CHART

INTERSECTION: S.R. 204 & HARMON RD. (T.R. 221) MAINTAINING AGENCY: ODOT										
START UP			DUAL ENTRY: ϕ4 & ϕ8							
START IN		Y/R FLASH								
TIME FOR FLASH OR ALL RED		4 (SEC.)								
FIRST PHASES		2 & 6	OVERLAP				A	B	C	D
COLOR DISPLAYED		GREEN	PHASE							
INTERVAL OR FEATURE			ϕ1	ϕ2	ϕ3	ϕ4	ϕ5	ϕ6	ϕ7	ϕ8
INTERSECTION MOVEMENT			WB LT	EB		NB		WB		SB
MINIMUM GREEN (INITIAL)		(SEC)	8	15		10		15		10
ADDED INITIAL		(SEC/ACTUATION)		1				1		
MAXIMUM INITIAL		(SEC)		25				25		
PASSAGE TIME		(SEC)	3	5		3		5		3
TIME BEFORE REDUCTION		(SEC)								
MINIMUM GAP		(SEC)								
TIME TO REDUCE		(SEC)								
MAXIMUM GREEN I		(SEC)	15	50		25		50		25
MAXIMUM GREEN II		(SEC)								
YELLOW CHANGE		(SEC)	4	5		4		5		4
ALL RED CLEARANCE		(SEC)	1.5	1.5		2		1.5		1.5
WALK		(SEC)								
PEDESTRIAN CLEARANCE		(SEC)								
RECALL	MAXIMUM	(ON/OFF)								
	MINIMUM	(ON/OFF)		X				X		
	PEDESTRIAN	(ON/OFF)								
MEMORY		(ON/OFF)								

NOTES:

- ALL MOVEMENTS SHALL BE ACTUATED. THE PRIMARY THRU MOVEMENT SHOULD HAVE MIN RECALL ACTIVE TO REST IN GREEN.
- RADAR DETECTION UNITS FOR DILEMMA ZONE DETECTION SHALL PLACE A CONSTANT CALL TO THE CONTROLLER WHEN VEHICLES TRAVEL TIMES TO THE STOP BAR ARE BETWEEN 2.5 AND 6 SECONDS. SPEED TRIGGER SHALL BE SET FOR VEHICLES TRAVELING 35 MPH AND GREATER.
- RADAR SHALL HAVE QUEUE DETECTION CONFIGURED AND A ZONE PLACED AT 100-200 FEET FROM STOP BAR FOR SLOW MOVING VEHICLE EXTENSIONS. SPEED TRIGGER SHALL BE SET AT 1-35 MPH.
- ALL DETECTOR DELAYS SHALL BE PLACED IN THE CONTROLLER.

RADAR DETECTION CHART

RADAR DETECTION UNIT	RADAR DETECTION ZONE	RADAR TYPE	DELAY SEC.)	MIN. EXTENSION (SEC.)	ASSOCIATED CONTROLLER PHASE
D-1	Z-1	STOP LINE	3	2.5	ϕ1
D-2A	Z-2A	DILEMMA ZONE		2.5-6	ϕ2
D-2B	Z-2B	STOP LINE		2.5	ϕ2
D-4	Z-4	STOP LINE	5	2.5	ϕ4
D-6	Z-6	DILEMMA ZONE		2.5-6	ϕ6
D-8A	Z-8	DILEMMA ZONE		2.5-6	ϕ8
D-8B	Z-8	STOP LINE	8	2.5	ϕ8

SIGNAL PHASING DIAGRAM

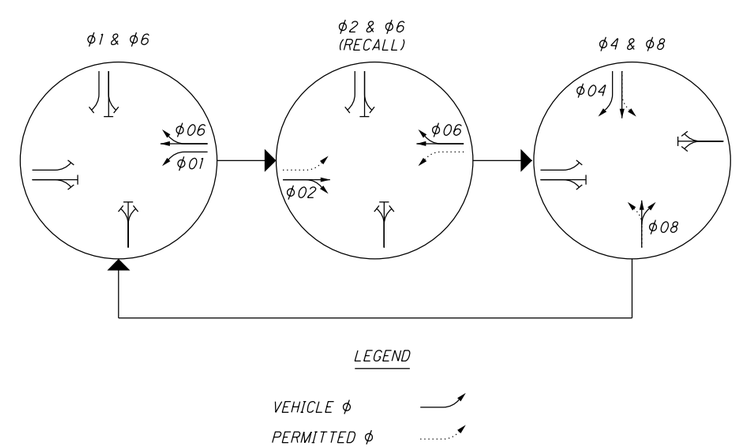

CALCULATED PTB
CHECKED JSL

TRAFFIC SIGNAL DETAILS
S.R. 204 / HARMON RD. (T.R. 221)

FAI-204/204A-
0.00/0.00

I:\ProjectData\FAI\95506\Design\Signals\Sheets\95506_CD002.dgn Sheet 2/19/2020 4:18:31 PM jlutzi

WIRING DIAGRAM

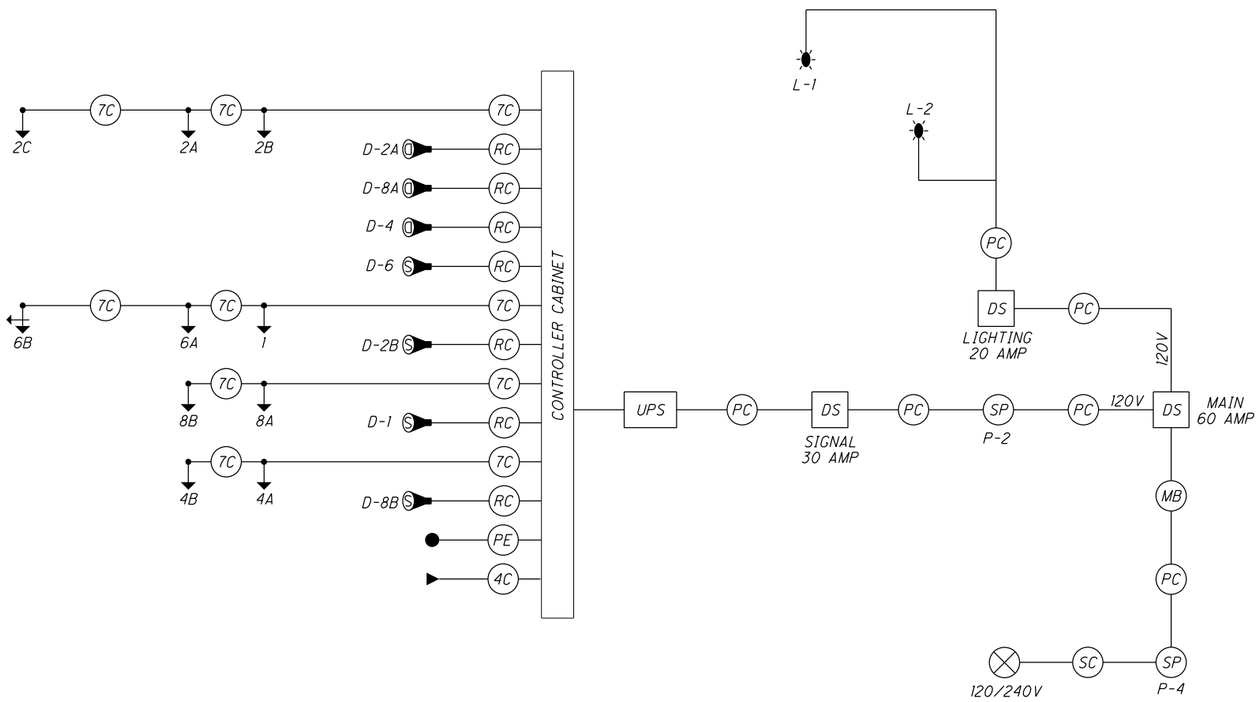

FIELD WIRING HOOK-UP CHART

SIGNAL HEAD	INDICATION	FIELD TERMINAL	FLASH
1	R	ϕ6 R	R
	Y	ϕ6 Y	
	G	ϕ6 G	
	<--Y---	ϕ1 Y	
	<--G---	ϕ1 G	
2A,2B, 2C	R	ϕ2 R	R
	Y	ϕ2 Y	
	G	ϕ2 G	
4A,4B	R	ϕ4 R	R
	Y	ϕ4 Y	
	G	ϕ4 G	
6A,6B	R	ϕ6 R	R
	Y	ϕ6 Y	
	G	ϕ6 G	
8A,8B	R	ϕ8 R	R
	Y	ϕ8 Y	
	G	ϕ8 G	

LEGEND

	3-SECTION VEHICULAR SIGNAL HEAD, 1-WAY	4C	SIGNAL CABLE, 4 CONDUCTOR, NO. 14 AWG
	5-SECTION VEHICULAR SIGNAL HEAD, 1-WAY	7C	SIGNAL CABLE, 7 CONDUCTOR, NO. 14 AWG
	BRACKET ARM W/ LUMINAIRE	RC	RADAR DETECTION CABLE
D	DILEMMA ZONE RADAR DETECTION UNIT	SC	SERVICE CABLE, 3 CONDUCTOR, NO. 8 AWG
S	STOP BAR RADAR DETECTION UNIT	PC	POWER CABLE, 3 CONDUCTOR, NO. 8 AWG
	PREEMPTION UNIT	PE	PREEMPTION HOME RUN CABLE/ LIGHT CONFIRMATION CABLE
	PREEMPTION CONFIRMATION LIGHT	SP	PROPOSED STRAIN POLE
	POWER SOURCE	MB	METER BASE
UPS	UNINTERRUPTIBLE POWER SUPPLY	DS	DISCONNECT SWITCH

CALCULATED PTB
CHECKED JSL

TRAFFIC SIGNAL DETAILS
S.R. 204 / HARMON RD. (T.R. 221)

FAI-204/204A-
0.00/0.00

I:\Project Data\FAI\95506\Design\Signals\Sheets\95506_CD003.dgn Sheet 2/19/2020 4:18:31 PM jlutzi

PROJECT: FAI-204 / 204A	DRILLING FIRM / OPERATOR: ODOT / CAREY	DRILL RIG: CME 75 TRUCK	STATION / OFFSET:	EXPLORATION ID B-001-0-18
TYPE: SUBGRADE	SAMPLING FIRM / LOGGER: ODOT / BRODIE	HAMMER: CME AUTOMATIC	ALIGNMENT: CENTERLINE OF SR204	
PID: 95506 SFN:	DRILLING METHOD: 3.5" SSA	CALIBRATION DATE: 6/1/17	ELEVATION: 935.9 (MSL) EOB: 7.5 ft.	PAGE 1 OF 1
START: 10/25/18 END: 10/25/18	SAMPLING METHOD: SPT	ENERGY RATIO (%): 85	LAT / LONG: 39.930708, -82.765787	

MATERIAL DESCRIPTION AND NOTES	ELEV. 935.9	DEPTHS	SPT/ RQD	N_{60}	REC (%)	SAMPLE ID	HP (tsf)	GRADATION (%) GR	CS	FS	SI	CL	ATTERBERG LL	PL	PI	WC	ODOT CLASS (GI)	BACK FILL
ASPHALT (14") & BASE (7")	934.2	1																
HARD, GRAYISH BROWN, **SILT AND CLAY**, LITTLE SAND, LITTLE GRAVEL AND STONE FRAGMENTS, DAMP TO MOIST	932.9	2	9 5 5	14	56	SS-1	4.50	11	7	12	37	33	29	17	12	17	A-6a (8)	
VERY STIFF, BROWN AND GRAY MOTTLED, **CLAY**, "AND" SILT, LITTLE GRAVEL AND STONE FRAGMENTS, TRACE SAND, MOIST		3																
@4.5'; MEDIUM STIFF	929.9	4	5 5 6	16	100	SS-2	3.00	13	3	5	41	38	41	17	24	26	A-7-6 (14)	
MEDIUM STIFF, BROWN AND GRAY MOTTLED, **SILT AND CLAY**, SOME SAND, LITTLE GRAVEL AND STONE FRAGMENTS, MOIST	928.4	5	4 4 4	11	100	SS-3	0.50	-	-	-	-	-	-	-	-	25	A-7-6 (V)	
	EOB	6	2 2 3	7	100	SS-4	1.00	12	6	24	35	23	28	15	13	22	A-6a (6)	
		7																

PROJECT: FAI-204 / 204A	DRILLING FIRM / OPERATOR: ODOT / CAREY	DRILL RIG: CME 75 TRUCK	STATION / OFFSET:	EXPLORATION ID B-002-0-18
TYPE: SUBGRADE	SAMPLING FIRM / LOGGER: ODOT / BRODIE	HAMMER: CME AUTOMATIC	ALIGNMENT: CENTERLINE OF SR204	
PID: 95506 SFN:	DRILLING METHOD: 3.5" SSA	CALIBRATION DATE: 6/1/17	ELEVATION: 939.1 (MSL) EOB: 7.5 ft.	PAGE 1 OF 1
START: 10/25/18 END: 10/25/18	SAMPLING METHOD: SPT	ENERGY RATIO (%): 85	LAT / LONG: 39.930911, -82.765193	

MATERIAL DESCRIPTION AND NOTES	ELEV. 939.1	DEPTHS	SPT/ RQD	N_{60}	REC (%)	SAMPLE ID	HP (tsf)	GRADATION (%) GR	CS	FS	SI	CL	ATTERBERG LL	PL	PI	WC	ODOT CLASS (GI)	BACK FILL
TOPSOIL (2")	938.9	1																
MEDIUM STIFF, BROWN, **SILT AND CLAY**, LITTLE SAND, TRACE GRAVEL, MOIST		2	2 4 4	11	50	SS-1	0.50	5	4	9	54	28	30	17	13	23	A-6a (9)	
@1.5'; SLIGHTLY ORGANIC (LOI = 3.5%)		3																
@3.0'; VERY STIFF, LITTLE GRAVEL		4	4 5 6	16	100	SS-2	3.50	11	6	13	46	24	29	17	12	20	A-6a (8)	
@4.5'; STIFF	933.1	5	6 4 5	13	56	SS-3	1.00	-	-	-	-	-	-	-	-	21	A-6a (V)	
STIFF, BROWNISH GRAY, **SANDY SILT**, SOME CLAY, TRACE GRAVEL, DAMP TO MOIST	931.6	6	4 5 8	18	78	SS-4	1.50	7	9	18	40	26	25	15	10	15	A-4a (6)	
	EOB	7																

PROJECT: FAI-204 / 204A	DRILLING FIRM / OPERATOR: ODOT / CAREY	DRILL RIG: CME 75 TRUCK	STATION / OFFSET:	EXPLORATION ID B-003-0-18
TYPE: SUBGRADE	SAMPLING FIRM / LOGGER: ODOT / BRODIE	HAMMER: CME AUTOMATIC	ALIGNMENT: CENTERLINE OF SR204	
PID: 95506 SFN:	DRILLING METHOD: 3.5" SSA	CALIBRATION DATE: 6/1/17	ELEVATION: 944.6 (MSL) EOB: 7.5 ft.	PAGE 1 OF 1
START: 10/25/18 END: 10/25/18	SAMPLING METHOD: SPT	ENERGY RATIO (%): 85	LAT / LONG: 39.931139, -82.764560	

MATERIAL DESCRIPTION AND NOTES	ELEV. 944.6	DEPTHS	SPT/ RQD	N_{60}	REC (%)	SAMPLE ID	HP (tsf)	GRADATION (%) GR	CS	FS	SI	CL	ATTERBERG LL	PL	PI	WC	ODOT CLASS (GI)	BACK FILL
ASPHALT (14") & BASE (4")	943.1	1																
VERY STIFF, BROWN, **SANDY SILT**, SOME CLAY, SOME GRAVEL, DAMP TO MOIST	941.6	2	4 5 9	20	61	SS-1	3.00	23	7	14	30	26	25	15	10	15	A-4a (4)	
VERY STIFF, BROWN, **SILT AND CLAY**, SOME SAND, LITTLE GRAVEL, DAMP		3																
		4	7 8 10	26	100	SS-2	4.00	12	7	15	34	32	28	16	12	15	A-6a (7)	
		5	7 7 9	23	100	SS-3	4.00	-	-	-	-	-	-	-	-	15	A-6a (V)	
@6.0'; BROWN WITH GRAY	937.1	6	8 10 11	30	100	SS-4	4.00	-	-	-	-	-	-	-	-	14	A-6a (V)	
	EOB	7																

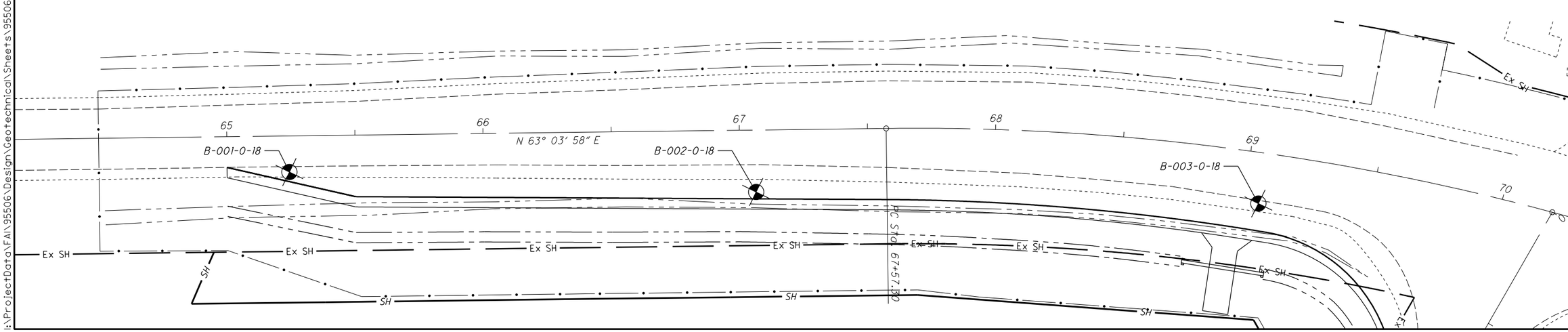

DRAWN PTB
CHECKED JSL

SOIL BORINGS
S.R. 204 / HARMON RD. (T.R. 221)

FAI-204/204A-
0.00/0.00

1 / 1

i:\ProjectData\FAI\95506\Design\Geotechnical\Sheets\95506_B001.dgn Sheet 2/19/2020 4:22:03 PM jlutz

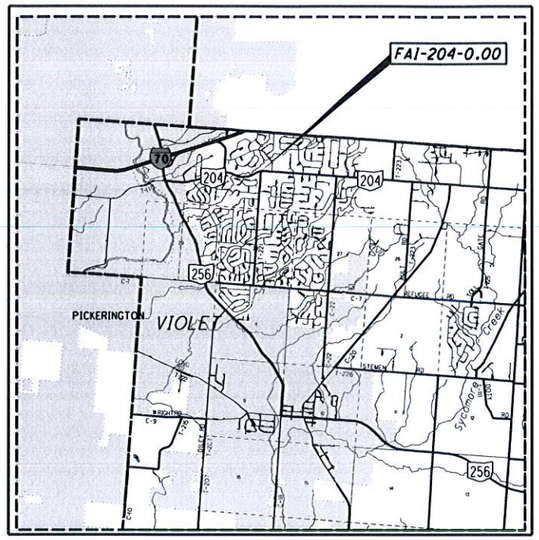

LATITUDE: 39°55'52" LONGITUDE: -82°45'51"

SCALE IN MILES

0 1 2 3 4

N

RIGHT OF WAY LEGEND SHEET

FAI-204-0.00

FAIRFIELD COUNTY
VIOLET TOWNSHIP
SECTION 21, T16N, R20W

PROJECT DESCRIPTION

ASPHALT CONCRETE RESURFACING AND RELATED WORK ON S.R. 204 AND 204A IN FAIRFIELD COUNTY, INCLUDING RIGHT TURN LANE AT HARMON RD. (T.R. 221).

PROJECT CONTROL

STATE PLANE COORDINATE SYSTEM, NAD 83 (2011), OHIO SOUTH ZONE 3402, GRID, ORTHOMETRIC HEIGHTS BASED ON NAVD88, GEOID 12A (OHIO).

PLAN PREPARED BY:

FIRM NAME: ODOT, DISTRICT 5
PLANS PREPARED BY: CANDY SHOEMAKER
FIELD REVIEW BY: LUKE WALKER & CANDY SHOEMAKER
OWNERSHIP VERIFIED BY: LUKE WALKER
DATE COMPLETED: 10/30/18

UNDERGROUND UTILITIES

CONTACT BOTH SERVICES
CALL TWO WORKING DAYS
BEFORE YOU DIG

CALL
1-800-362-2764
(TOLL FREE)
OHIO UTILITIES PROTECTION SERVICE
NON-MEMBERS
MUST BE CALLED DIRECTLY

OIL & GAS PRODUCERS PROTECTIVE
SERVICE CALL: **1-800-925-0988**

INDEX OF SHEETS:

LEGEND SHEET 1
PROPERTY MAP & SUMMARY OF ADDITIONAL RIGHT OF WAY. . 2
DETAIL SHEET 3

NOTE:
THE LOCATION OF THE UNDERGROUND UTILITES SHOWN ON THE PLANS ARE OBTAINED FROM THE OWNER OF THE UTILITIES AS REQUIRED BY SECTION 153.64 O.R.C.

UTILITY OWNERS

LISTED BELOW ARE ALL UTILITIES LOCATED WITHIN THE PROJECT CONSTRUCTION LIMITS TOGETHER WITH THEIR RESPECTIVE OWNERS:

SOUTH CENTRAL POWER
DIRECTOR OF ENGINEERING
2780 COONPATH ROAD, NE
P.O. OFFICE BOX 250
LANCASTER, OHIO 43130
ATTN: ZACK REED
740-689-6150
CELL: 740-415-4274
ZREED@SOUTHCENTRALPOWER.COM

FAIRFIELD COUNTY UTILITIES
6670 LOCKVILLE ROAD
CARROLL, OHIO 43112
ATTN: TONY J. VOGEL
DIRECTOR OF UTILITIES
614-322-5200
740-652-7120
TONY.VOGEL@FAIRFIELDCOUNTYOHIO.GOV

COLUMBIA GAS OF OHIO
3550 JOHNNY APPLESEED
COLUMBUS, OHIO 43231
ATTN: MAYA BARRETT
614-818-2108
MBARRETT@NISOURCE.COM

AT&T OHIO
160 NORTH SIXTH STREET
ZANESVILLE, OHIO 43701
ATTN: BARRETT TAMASOVICH
740-454-3552
BT2178@ATT.COM

I, Luke Walker, P. S. have conducted a survey of the existing conditions for the Ohio Department of Transportation in May, 2017. The results of that survey are contained herein.

Underground utility locations are shown for informational purposes only. Though they are believed to be accurate, their location is as marked on the ground by the utility company per OUPS Confirmation Number A707500895, A707500925, A707500945 and those markings subsequently being surveyed as a part of this project.

The horizontal geometry expressed herein is based on State Plane Coordinate System, NAD83 (2011), Ohio South Zone 3402, Grid values, Orthometric heights are based on NAVD88, Geoid 12A (Ohio).

As a part of this project I have reestablished the locations of the existing property lines and centerline of existing Right of Way for property takes contained herein.

As a part of this project I have established the proposed property lines, calculated the Gross Take, present roadway occupied (PRO), Net Take and Net Residue; as well as prepared the legal descriptions necessary to acquire the parcels as shown herein.

As a part of this work I have set monuments at the proposed property corners, and other points shown herein. The iron pins and caps will be 3/4" x 30" rebar with aluminum cap stamped "ODOT R/W District 5". All of my work contained herein was conducted in accordance with Ohio Administrative Code 4733-37 commonly known as "A Minimum Standards for Boundary Surveys in the State of Ohio" unless so noted.

The words I and my as used herein are to mean that either myself or someone working under my direct supervision.

Luke Walker, Professional Surveyor # 8701

Date: 10/31/2018

SURVEYORS SEAL

STATE OF OHIO
LUKE C. WALKER
S-8701
REGISTERED
PROFESSIONAL SURVEYOR

SIGNED: LW
DATE: 10/31/2018

CONVENTIONAL SYMBOLS

County Line
Township Line
Section Line
Corporation Line or
Fence Line (Ex) (Pr)
Center Line
Right of Way (Ex) Ex R/W
Right of Way (Pr) R/W
Standard Highway Ease.(Ex) Ex SH
Standard Highway Ease.(Pr) SH
Slope Ease.(Ex) Ex SL
Slope Ease.(Pr) SL
Temporary Right of Way TMP
Channel Ease. (Pr) CH
Utility Ease. (Ex) Ex U
Railroad or
Guardrail (Ex) (Pr)
Construction Limits
Edge of Pavement (Ex)
Edge of Pavement (Pr)
Edge of Shoulder (Ex)
Edge of Shoulder (Pr)
Ditch / Creek (Ex)
Ditch / Creek (Pr)
Tree Line (Ex)
Ownership Hook Symbol , Example
Property Line Symbol , Example
Break Line Symbol , Example
Tree (Pr) , Tree (Ex) , Shrub (Ex)
Tree (Remove) , Shrub (Remove)
Evergreen (Ex) , Stump
Evergreen (Remove) , Stump (Remove)
Wetland (Pr) , Grass (Pr) , Aerial Target
Post (Ex) , Mailbox (Ex) , Mailbox (Pr)
Light (Ex) , Telephone Marker (Ex)
Fire Hydrant (Ex) , Water Meter (Ex)
Water Valve (Ex) , Utility Valve Unknown (Ex.)
Telephone Pole (Ex) , Power Pole (Ex)
Light Pole (Ex)

STRUCTURE KEY

RESIDENTIAL
COMMERCIAL
OUT-BUILDING

LEGEND:
SH = STANDARD HIGHWAY EASEMENT
SL = SLOPE EASEMENT
T = TEMPORARY EASEMENT
CH = CHANNEL EASEMENT

FEDERAL PROJECT NO. 00000
PID NO. 95506
CALCULATED CS
CHECKED LW

RIGHT OF WAY LEGEND SHEET

FAI-204-0.00

1 / 3

0

I:\ProjectData\FAI\95506\Design\RW\Sheets\95506-RL001.dgn Untitled Sheet 10/30/2018 1:54:33 PM cshoemak

FAIRFIELD COUNTY
VIOLET TOWNSHIP
SECTION 21, T16N, R20W

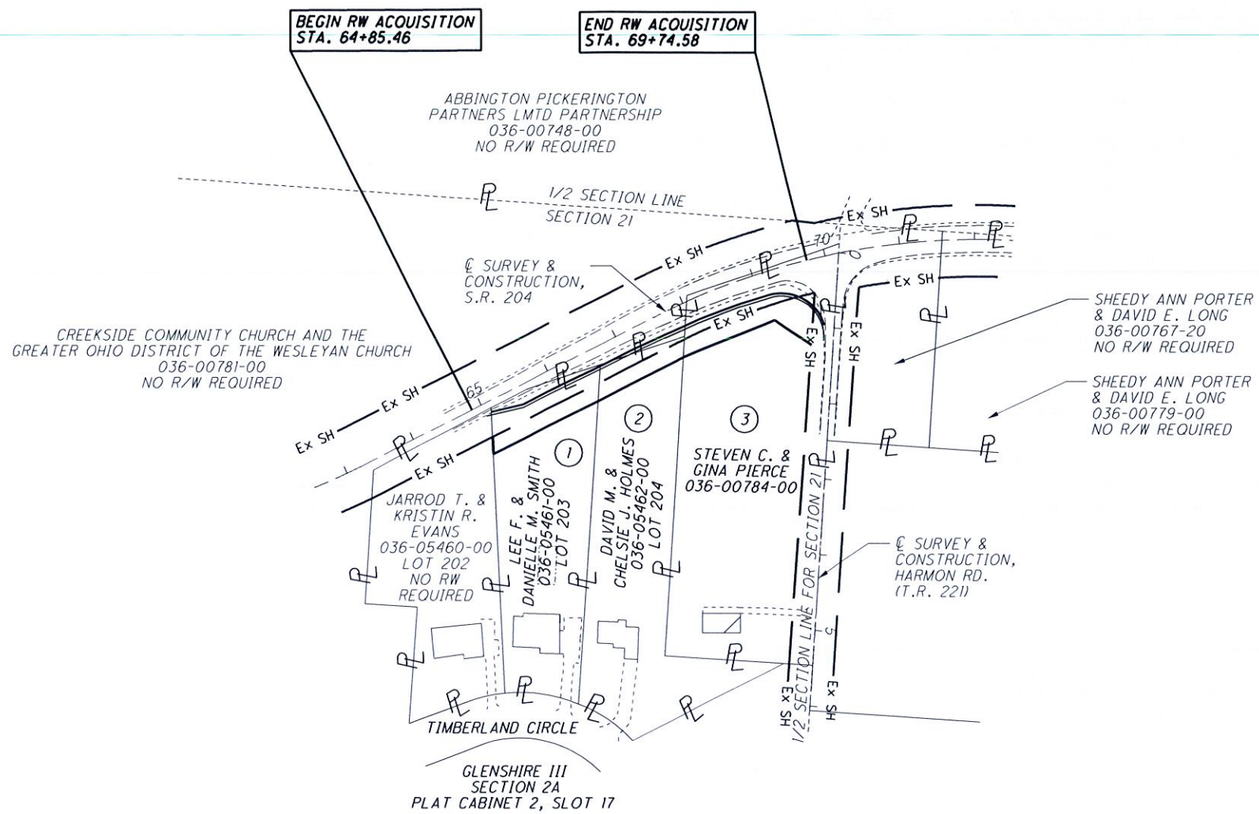

STRUCTURE KEY

- RESIDENTIAL
- COMMERCIAL
- OUT-BUILDING

REV. BY	DATE	DESCRIPTION

FIELD REVIEW BY: CS & LW
OWNERSHIP VERIFIED BY: LW
DATE COMPLETED: 10/30/18

TOTAL NUMBER OF :

3 OWNERSHIPS — 0 TOTAL TAKES
3 PARCELS — 0 OWNERSHIPS W/ STRUCTURES INVOLVED

RECORD AREA - TOTAL PRO - NET TAKE = NET RESIDUE

ALL AREAS IN ACRES

GRANTEE:

ALL RIGHT OF WAY ACQUIRED IN THE NAME OF THE STATE OF OHIO UNLESS OTHERWISE SHOWN.

* DENOTES RIGHT OF WAY ENCROACHMENT
** SURVEYED AREA

PARCEL NO.	OWNER	OWNERS RECORD DEED BOOK & PG.	AUDITOR'S PARCEL	RECORD AREA	TOTAL P.R.O.	GROSS TAKE	P.R.O. IN TAKE	NET TAKE	STRUCTURE	NET RESIDUE LEFT	NET RESIDUE RIGHT	TYPE FUND	REMARKS	AS ACQUIRED DEED BOOK & PG.
												STATE		
1-SH	LEE F. & DANIELLE M. SMITH	OR 1473, PG. 3201	036-05461-00	1.150	0.113	0.072	0.000	0.072	NO		0.965		GLENSHIRE III, SEC. 2A, LOT 203	
2-SH	DAVID M. & CHELSIE J. HOLMES	OR 1713, PG. 3806	036-05462-00	1.421	0.035	0.059	0.000	0.059	NO		1.327		GLENSHIRE III, SEC. 2A, LOT 204	
3-SH	STEVEN C. & GINA PIERCE	OR 1656, PG. 3024	036-00784-00	2.38	0.587	0.117	0.000	0.117	NO		1.676			
												STATE		

NOTE: ALL TEMPORARY PARCELS TO BE OF 12 MONTH DURATION.

NOTE: UNDER NO CIRCUMSTANCES ARE TEMPORARY EASEMENTS TO BE USED FOR STORAGE OF MATERIAL OR EQUIPMENT BY THE CONTRACTOR UNLESS NOTED OTHERWISE.

HORIZONTAL SCALE IN FEET 0 50 100 200

PID NO. 95506

R/W DESIGNER CS
R/W REVIEWER LW

PROPERTY MAP & SUMMARY OF ADDITIONAL RIGHT OF WAY

FAI-204-0.00

I:\PROJECTDATA\FAI\95506\DESIGN\RW\SHEETS\95506-RM001.dgn 10/30/18

FAIRFIELD COUNTY
VIOLET TOWNSHIP
SECTION 21, T16N, R20W

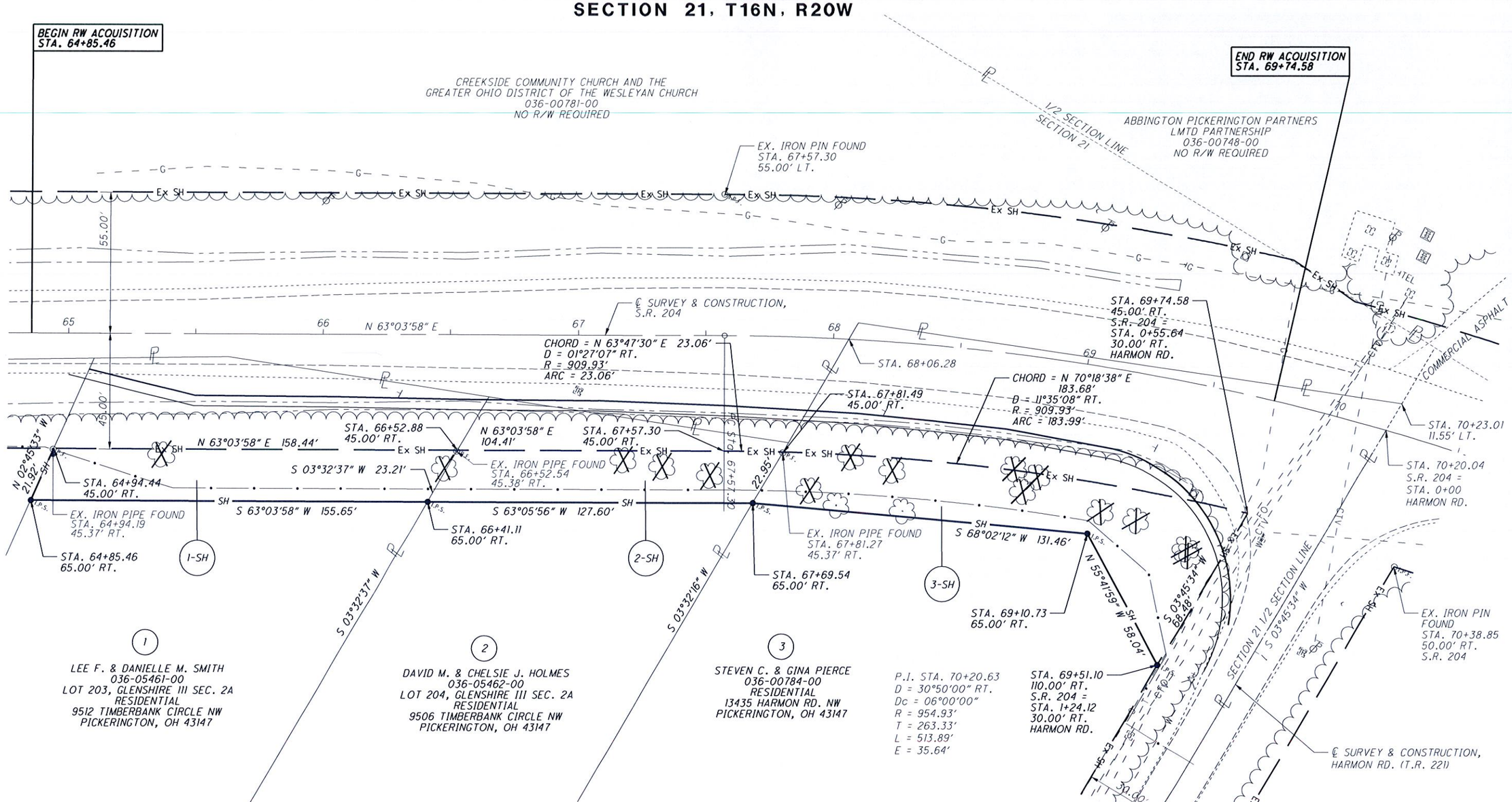

MONUMENT LEGEND

- EXISTING R/W MONUMENT BOX
- PROPOSED R/W MONUMENT BOX
- EXISTING CONCRETE MONUMENT
- PROPOSED CONCRETE MONUMENT
- RAILROAD SPIKE FOUND
- RAILROAD SPIKE SET
- I.R.F. IRON PIN FOUND
- I.R.F. IRON PIN FOUND W/ ID CAP
- I.R.S. IRON PIN SET W/ ID CAP
- P.F. IRON PIPE FOUND
- P.S. IRON PIPE SET
- P.K.F. P.K. NAIL FOUND
- P.K.S. P.K. NAIL SET

NOTES:
ALL EXISTING FENCE LOCATED INSIDE OF PROPOSED RIGHT OF WAY IS TO BE REMOVED.

THE DISPOSITION OF EXISTING CONSTRUCTION ITEMS WITHIN WORK LIMITS ARE SHOWN ON THE CONSTRUCTION PLANS.

NOTE:
ALL STATIONS AND OFFSETS ARE FROM THE CENTERLINE OF SURVEY AND CONSTRUCTION, S.R. 204 UNLESS OTHERWISE STATED.

NOTE:
THE EXISTING RIGHT OF WAY WIDTH AND LOCATION WERE DETERMINED USING DOCUMENTATION ON FILE FROM THE OHIO DEPARTMENT OF TRANSPORTATION, DISTRICT 5 OFFICE, JACKSONTOWN, OHIO.

FAI-204-0.75

CO. RD. AND TWP RD. RIGHT OF WAY DETERMINED FROM THE FAIRFIELD COUNTY ENGINEERS OFFICE FAIRFIELD COUNTY, OHIO

REV	DATE	DESCRIPTION

COMPLETION DATE: 10/30/18

HORIZONTAL SCALE IN FEET 0 10 20 40

PID NO. 95506

CALCULATED C.S.
CHECKED L.W.

RIGHT OF WAY DETAIL SHEET
STA. 64+85.46 TO STA. 70+50

FAI-204-0.00

3/3

I:\PROJECTDATA\FAI\95506\DESIGN\RW\SHEETS\95506-RD001.dgn 10/30/18

SPECIAL PROVISIONS

FAIRFIELD COUNTY UTILITIES

STANDARD CONSTRUCTION DRAWING

(W-15)

FAI-204/204A-0.00/0.00

PID: 95506

DATE: 2/19/2020

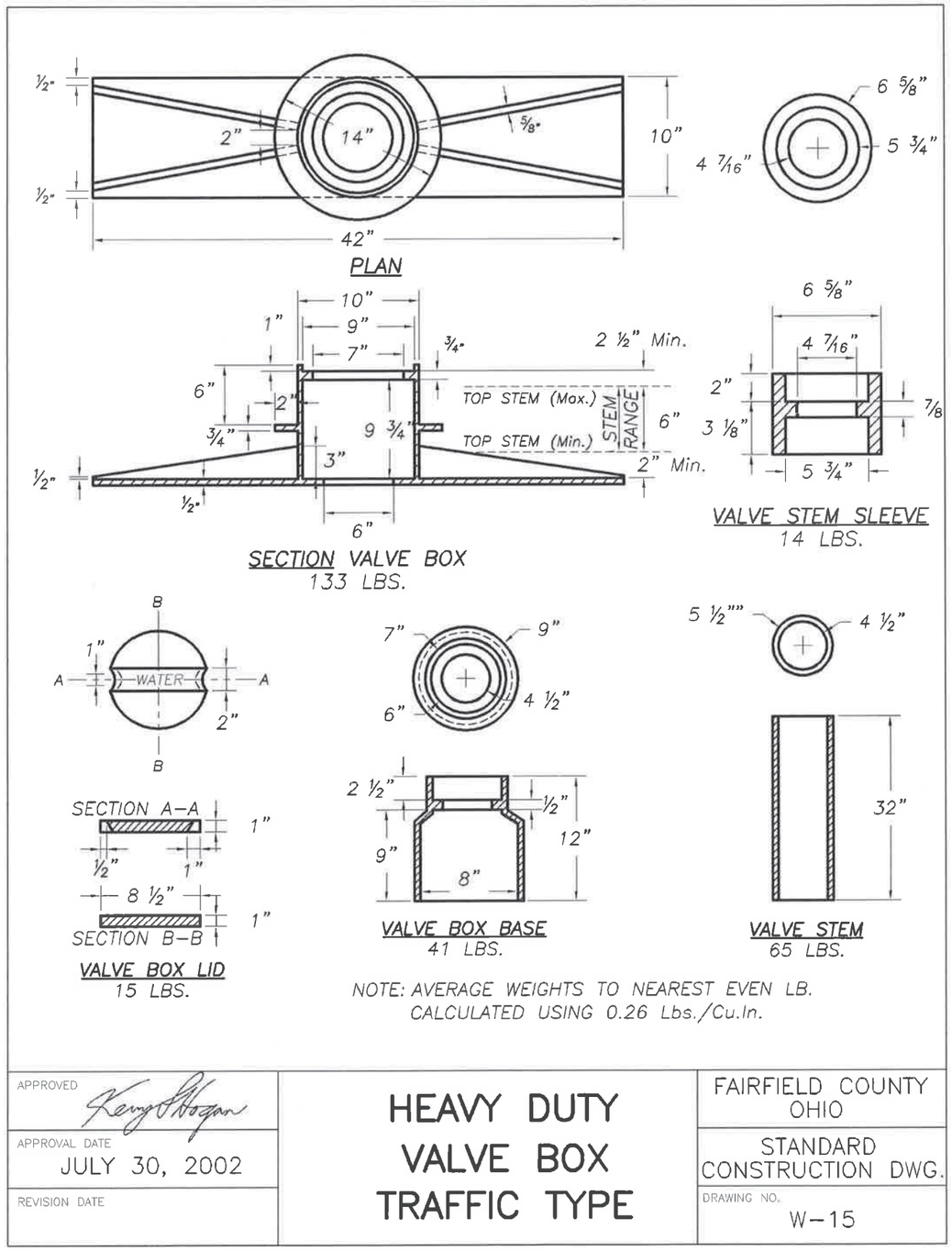

APPROVED	HEAVY DUTY VALVE BOX TRAFFIC TYPE	FAIRFIELD COUNTY OHIO
APPROVAL DATE JULY 30, 2002		STANDARD CONSTRUCTION DWG.
REVISION DATE		DRAWING NO. W–15