STATE OF OHIO

DEPARTMENT OF TRANSPORTATION

DISTRICT 6 BRIDGE REPAIR

FRA-33-25.96 and FRA-33-29.64

CITY OF COLUMBUS
VILLAGE OF CANAL WINCHESTER
FRANKLIN COUNTY

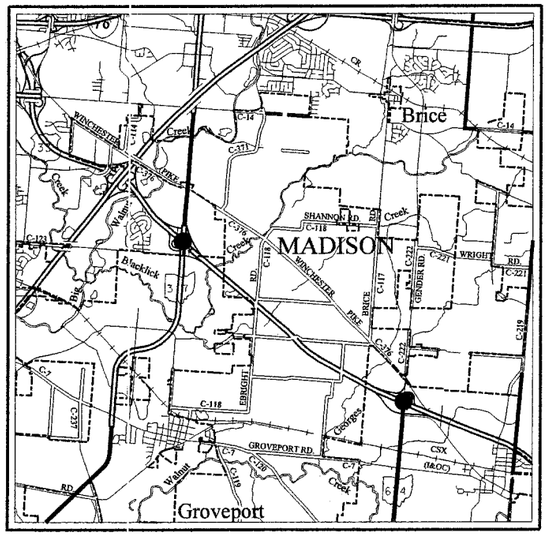

LOCATION MAP ● PROJECT LOCATION

LATITUDE: N 39°53'29" LONGITUDE: W 82°52'59" (FRA-33-2596)
LATITUDE: N 39°51'32" LONGITUDE: W 82°49'41" (FRA-33-2964)

SCALE IN MILES
0 1 2 3 4

N

PORTION TO BE IMPROVED
INTERSTATE & DIVIDED HIGHWAY
UNDIVIDED STATE & FEDERAL ROUTES
OTHER ROADS

DESIGN DESIGNATION	(FRA-33-2596)	(FRA-33-2964)
CURRENT ADT (2003)	26,840	16,843
DESIGN YEAR ADT (2023)	32,749	20,551
DESIGN HOURLY VOLUME (2023)	3,013	1,891
DIRECTIONAL DISTRIBUTION	55/45	56/44
TRUCKS (24 HOUR B&C)	1,731	1,481
DESIGN SPEED	50 MPH	50 MPH
LEGAL SPEED	45 MPH	35 MPH

DESIGN FUNCTIONAL CLASSIFICATION -
PRINCIPAL ARTERIAL - SR317 (FRA-33-2596)
MAJOR COLLECTOR - SR674 (FRA-33-2964)

DESIGN EXCEPTIONS
NONE REQUIRED

UNDERGROUND UTILITIES
TWO WORKING DAYS
BEFORE YOU DIG
CALL 1-800-362-2764 (TOLL FREE)
OHIO UTILITIES PROTECTION SERVICE
NON-MEMBERS
MUST BE CALLED DIRECTLY

PLANS PREPARED BY:

JOBES HENDERSON & ASSOCIATES INC.
CIVIL ENGINEERING & LAND SURVEYING SINCE 1965
59 GRANT STREET
NEWARK, OH 43055
TEL. (740) 344-5451
FAX (740) 344-5746
507 MAIN ST. SUITE 202
ZANESVILLE, OHIO 43701
TEL. (740) 453-5492
FAX (740) 453-5529
www.jobeshenderson.com

INDEX OF SHEETS:

TITLE SHEET	1
GENERAL NOTES	2
MAINTENANCE OF TRAFFIC GENERAL NOTES	3-5
GENERAL SUMMARY	6
HAMILTON ROAD	
TYPICAL SECTIONS	7
MAINTENANCE OF TRAFFIC	8-20
CALCULATIONS	21
TRAFFIC CONTROL	22-23
STRUCTURE DETAILS	24-27
GENDER ROAD	
TYPICAL SECTIONS	28
MAINTENANCE OF TRAFFIC	29-42
CALCULATIONS	43
PAVEMENT MARKING PLAN	44-45
STRUCTURE DETAILS	46-51

ENGINEERS SEAL:

STATE OF OHIO
CHARLES M. SAUNDERS
E-63848
REGISTERED
PROFESSIONAL ENGINEER

SIGNED: Charles M Saunders
DATE: 11-25-03

STANDARD CONSTRUCTION DRAWINGS

MT-35.10	4-20-01				
MT-95.30	4-19-02				
MT-95.31	4-19-02				
MT-95.32	4-19-02				
MT-98.16	4-19-02	TC-41.20	1-19-01		
MT-98.18	10-18-02	TC-42.20	4-20-01		
		TC-52.20	4-20-01		
MT-99.20M	1-30-95				
MT-101.20	10-18-02	TC-71.10	4-19-02		
MT-105.10	10-18-02	TC-73.10	1-19-01		
MT-105.11	10-18-02				

SUPPLEMENTAL SPECIFICATIONS

832	02-12-03
833	02-12-03
848	02-08-02
908	04-18-03
954	09-09-97

SPECIAL PROVISIONS

PROJECT DESCRIPTION

THIS PROJECT CONSISTS OF REPLACING THE WEARING SURFACE WITH MICROSILICA OVERLAY USING HYDRODEMOLITION. THE PROJECT INCLUDES MILLING EXISTING OVERLAY, VARIABLE AND FULL DEPTH DECK REPLACEMENT, CURB REPAIR, RESETTING ROCKERS, HEAT STRAIGHTENING, & SUBSTRUCTURE CONCRETE REPAIR.

2002 SPECIFICATIONS

THE STANDARD SPECIFICATIONS OF THE STATE OF OHIO, DEPARTMENT OF TRANSPORTATION, INCLUDING CHANGES AND SUPPLEMENTAL SPECIFICATIONS LISTED IN THE PROPOSAL SHALL GOVERN THIS IMPROVEMENT.

I HEREBY APPROVE THESE PLANS AND DECLARE THAT THE MAKING OF THIS IMPROVEMENT WILL NOT REQUIRE THE CLOSING TO TRAFFIC OF THE HIGHWAYS AND THAT THE PROVISIONS FOR THE MAINTENANCE AND SAFETY OF TRAFFIC WILL BE AS SET FORTH ON THE PLANS AND ESTIMATES.

PLANS CERTIFIED BY:
NAME: Gary L. Harrington DATE: 12.31.03
DISTRICT 6
OHIO DEPT. OF TRANSPORTATION

APPROVED Jack R. Marchbanks
DATE 12-31-03 DISTRICT DEPUTY DIRECTOR

APPROVED
DATE DIRECTOR, DEPARTMENT OF TRANSPORTATION

FEDERAL PROJECT NO. E036(536)
PID NO. 25710
CONSTRUCTION PROJECT NO.
RAILROAD INVOLVEMENT NONE
FRA-33-25.96
FRA-33-29.64

12/23/2003 - 03:19:30 PM - t:\009-02\dgn\PID 25710\T100T.dgn

CONSTRUCTION INITIATION

THE CONTRACTOR SHALL ADVISE THE DISTRICT OFFICE OF COMMUNICATIONS AT (614) 644-8309 OR BY FAX AT (614) 466-1768 AND THE DISTRICT TRAFFIC MANAGEMENT ENGINEER AT (740) 363-1251, EXT. 323, FOURTEEN (14) DAYS PRIOR TO THE START OF CONSTRUCTION ACTIVITIES. THE CONTRACTOR WILL IMMEDIATELY INFORM THE DISTRICT OFFICE OF COMMUNICATIONS AND THE DISTRICT TRAFFIC MANAGEMENT ENGINEER OF ANY AND ALL DELAYS AND/OR CHANGES REGARDING THE CONSTRUCTION PROJECT. THE PROJECT ENGINEER WILL PROVIDE CLARIFICATION FOR ANY QUESTIONS ABOUT THIS NOTIFICATION.

GENERAL

THE CONTRACTOR SHALL SUBMIT IN WRITING A SCHEDULE OF OPERATIONS TO THE ENGINEER (SEE 101.03) AND RECEIVE APPROVAL IN WRITING BEFORE WORK IS STARTED ON THIS PROJECT. ALL TRAFFIC CONTROL DEVICES SHALL BE FURNISHED, ERECTED, MAINTAINED, AND REMOVED BY THE CONTRACTOR IN ACCORDANCE WITH THE OHIO MANUAL OF UNIFORM TRAFFIC CONTROL DEVICES.

UTILITY LOCATIONS

LOCATION, ELEVATION, SUPPORT, PROTECTION AND RESTORATION OF ALL UTILITY LINES, SERVICES AND APPURTENANCES SHALL BE THE RESPONSIBILITY OF THE CONTRACTOR. THE COST OF THIS WORK SHALL BE INCLUDED WITH THE PRICE BID FOR THE PERTINENT ITEM, UNLESS OTHERWISE NOTED ON THE PLANS.

GROUND UTILITIES MARKED.
OHIO UTILITY PROTECTION SERVICE 1-800-362-2764.
NON-MEMBERS MUST BE CALLED DIRECTLY.

CABLE

INSIGHT COMMUNICATION
3770 EAST LIVINGSTON AVE.
COLUMBUS, OH 43227
ATTN: JOHN WINTERS
614-236-1292 EXT. 459

WIDE OPEN WEST
ATTN: MIKE D'AMICO
1-866-496-9669

TIME WARNER
1266 DUBLIN RD.
COLUMBUS, OH 43215
ATTN: ENGINEERING DEPT.
614-481-5050

WATER

VILLAGE OF CANAL WINCHESTER
36 SOUTH HIGH ST.
CANAL WINCHESTER, OH 43110
614-837-7493

PHONE

SBC
150 EAST GAY ST., 6TH FLOOR
COLUMBUS, OH 43215
ATTN: TOM ZIOMEK
614-223-7162

ELECTRIC

COLUMBUS SOUTHERN POWER
AEP
850 TECH CENTER DR.
GAHANNA, OH 43230
ATTN: RICK ECKLE
614-883-6829

SOUTH CENTRAL POWER
P.O. BOX 250
LANCASTER, OH 43130
ATTN: SHEILA EDWARDS
740-653-4422

GAS

COLUMBIA GAS OF OHIO
920 GOODALE BLVD.
COLUMBUS, OHIO 43212
ATTN: MR. WHITTEMORE
614-460-2170

COLUMBIA GAS TRANSMISSION
301 MAPLE ST.
SUGARGROVE, OH 43155
ATTN: WALLY WELSH
740-746-2219

COORDINATION WITH O.D.O.T.'S CENTRAL OHIO TRAFFIC MANAGEMENT PROGRAM (COTMP)

THE CONTRACTOR SHALL NOTIFY THE PROJECT ENGINEER IN WRITING OF ALL TRAFFIC RESTRICTIONS AND UPCOMING MAINTENANCE OF TRAFFIC CHANGES ON A WEEKLY BASIS. WHEN DETOURS ARE PLANNED, THIS NOTIFICATION SHALL BE AT THE PRE-CONSTRUCTION MEETING OR 30 DAYS IN ADVANCE ONCE CONSTRUCTION HAS BEGUN. LANE AND RAMP CLOSURES FOR 2 OR MORE WEEKS SHALL BE REPORTED 2 WEEKS IN ADVANCE OF CLOSURE. LANE AND RAMP CLOSURES OF LESS THAN 2 WEEKS DURATION AND MORE THAN 2 DAYS SHALL BE REPORTED AT LEAST 3 WORKING DAYS IN ADVANCE. FOR SHORT TERM LANE OR RAMP CLOSURES (2 DAYS OR LESS) NOTIFICATION SHALL BE MADE AT LEAST 1 WORKING DAY IN ADVANCE. INFORMATION SHALL INCLUDE BUT NOT BE LIMITED TO ALL CONSTRUCTION ACTIVITIES THAT IMPACT TRAFFIC AT PRESENT AND IN THE NEXT 30 DAYS. THE CONTRACTOR SHALL DESIGNATE AN INDIVIDUAL WHO WILL BE RESPONSIBLE FOR PREPARING THIS REPORT AT THE PRE-CONSTRUCTION MEETING. ANY UNFORESEEN IMPACTS TO TRAFFIC SHALL BE REPORTED TO THE PROJECT ENGINEER AS SOON AS POSSIBLE. THE PROJECT ENGINEER SHALL PROVIDE THIS INFORMATION TO COTMP. ALL CONSTRUCTION ACTIVITIES THAT INTERFERE WITH TRAFFIC SHALL BE REPORTED TO COTMP. THIS INFORMATION SHALL BE PROVIDED TO COTMP AT (614) 644-8309 OR BY FAX AT (614) 466-1768.

ALIGNMENT AND PROFILE

THE WORK PROPOSED BY THIS PROJECT IS FOR A DECK OVERLAY OF THE EXISTING DECK. THE ALIGNMENT OF THE EXISTING PAVEMENT WILL NOT BE CHANGED, AND THE PROFILE OF THE PROPOSED SURFACE WILL BE SIMILAR TO THAT OF THE EXISTING PAVEMENT.

CONTRACTOR EQUIPMENT - OPERATION AND STORAGE

THE CONTRACTOR'S EQUIPMENT SHALL BE OPERATED IN THE DIRECTION OF TRAFFIC WHERE PRACTICAL. EQUIPMENT SHALL HAVE AT LEAST ONE AMBER FLASHING LIGHT. WHEN PARKED ALONG THE HIGHWAY, THE EQUIPMENT SHALL BE LOCATED BEHIND THE PORTABLE CONCRETE BARRIER OR BEHIND THE DRUMS AND OUTSIDE OF THE CLEAR ZONE (15' FROM EDGE OF PAVEMENT). ALL OTHER EQUIPMENT, INCLUDING PRIVATE VEHICLES, SHALL BE STORED AT AN APPROVED CONTRACTOR'S STORAGE AREA.

CONTINGENCY QUANTITIES

THE CONTRACTOR SHALL NOT ORDER MATERIALS OR PERFORM WORK FOR ITEMS DESIGNATED BY PLAN NOTE TO BE USED "AS DIRECTED BY THE ENGINEER" UNLESS AUTHORIZED BY THE ENGINEER. THE ACTUAL WORK LOCATIONS AND QUANTITIES USED FOR SUCH ITEMS SHALL BE INCORPORATED INTO THE FINAL CHANGE ORDER GOVERNING COMPLETION OF THIS PROJECT.

CONVERSION OF METRIC STANDARD DRAWINGS

THE METRIC STANDARD DRAWINGS REFERENCED IN THIS PLAN SHALL BE CONVERTED TO ENGLISH UNITS USING THE SI (METRIC) TO ENGLISH CONVERSION FACTORS PROVIDED IN TABLE 109.02-2 OF THE 2002 CONSTRUCTION AND MATERIALS SPECIFICATIONS. THE APPENDIX OF ASTM E 380 SHALL BE UTILIZED FOR ANY ADDITIONAL CONVERSION FACTORS REQUIRED. CONVERSIONS SHALL BE APPROPRIATELY PRECISE AND SHALL REFLECT STANDARD INDUSTRY ENGLISH VALUES WHERE SUITABLE.

ITEM 646 ISLAND MARKING

THE CONCRETE MEDIAN SHALL BE PAINTED AS PER ITEM 646 WITH YELLOW PAINT. THE 10 FT TAPERS AT THE BEGINNING AND END OF THE BRIDGE SHALL BE PAINTED SOLID YELLOW INCLUDING THE TOP AND FACE OF CURBS. PAINT THE MEDIAN ON THE BRIDGE AND APPROACH SLAB WITH A ONE FOOT STRIP ON THE TOP OF THE MEDIAN TO THE CURB AND THE FACE OF CURB.

THE FOLLOWING ESTIMATED QUANTITIES HAVE BEEN CARRIED TO THE GENERAL SUMMARY:

ITEM 646 ISLAND MARKING	
FRA-33-25.96	1275 SQ FT
FRA-33-29.64	1080 SQ FT

CALCULATED
CHECKED

GENERAL NOTES

FRA-33-25.96
FRA-33-29.64

12/23/2003 - 11:26:10 AM - t:\009-02\dgn\GENDER\GRmtgn.dgn

ITEM 614 - MAINTAINING TRAFFIC

ALL WORK AND TRAFFIC CONTROL DEVICES SHALL BE IN ACCORDANCE WITH 614 AND OTHER APPLICABLE PORTIONS OF THE SPECIFICATIONS, AS WELL AS THE OHIO MANUAL OF UNIFORM TRAFFIC CONTROL DEVICES. PAYMENT FOR ALL LABOR, EQUIPMENT AND MATERIALS SHALL BE INCLUDED IN THE LUMP SUM CONTRACT PRICE FOR 614, MAINTAINING TRAFFIC UNLESS SEPARATELY ITEMIZED IN THE PLAN.

GENDER ROAD AND HAMILTON ROAD PHASING

MAINTAIN AT LEAST 1 LANE OF TRAFFIC IN EACH DIRECTION ALONG GENDER ROAD AND HAMILTON ROAD DURING ALL BRIDGE REHABILITATION OPERATIONS.

PERMITTED LANE CLOSURES FOR GENDER ROAD AND HAMILTON ROAD

GENDER ROAD AND HAMILTON ROAD MAY BE REDUCED TO ONE LANE IN EACH DIRECTION DURING NON-PEAK HOURS TO FINISH NON-CRITICAL WORK AS FOLLOWS:
ANY DAY 9A-3P, 8P-6A

PERMITTED LANE CLOSURES FOR U.S. 33

WEEKDAYS	1 LANE CLOSED	MON-THURS 7PM-5:30AM MON-FRI 9AM-2PM
WEEKENDS	1 LANE CLOSED	FRI 10PM - MON 5AM

HOLIDAYS (U.S. 33 TRAFFIC ONLY)

NO WORK SHALL BE PERFORMED AND ALL EXISTING LANES SHALL BE OPEN TO TRAFFIC DURING THE FOLLOWING DESIGNATED HOLIDAYS OR EVENTS:

NEW YEARS	LABOR DAY
MEMORIAL DAY	THANKSGIVING
INDEPENDENCE DAY	CHRISTMAS

THE PERIOD OF TIME THAT THE LANES ARE TO BE OPEN DEPENDS ON THE DAY OF THE WEEK ON WHICH THE HOLIDAY FALLS. THE FOLLOWING SCHEDULE SHALL BE USED TO DETERMINE THE PERIOD:

DAY OF THE WEEK	TIME ALL LANES MUST BE OPEN TO TRAFFIC
SUNDAY	12 NOON FRIDAY THRU 12 NOON MONDAY
MONDAY	12 NOON FRIDAY THRU 12 NOON TUESDAY
TUESDAY	12 NOON MONDAY THRU 12 NOON WEDNESDAY
WEDNESDAY	12 NOON TUESDAY THRU 12 NOON THURSDAY
THURSDAY	12 NOON WEDNESDAY THRU 12 NOON MONDAY
FRIDAY	12 NOON THURSDAY THRU 12 NOON MONDAY
SATURDAY	12 NOON FRIDAY THRU 12 NOON MONDAY

LIQUIDATED DAMAGES (SHORT-TERM CLOSURES)

SHOULD TRAFFIC CONTRACTOR FAIL TO HAVE ALL LANES REOPENED TO TRAFFIC AT THE DESIGNATED HOUR, AS STIPULATED IN THESE PLANS, THE CONTRACTOR SHALL BE ASSESSED LIQUIDATED DAMAGES AS FOLLOWS:

US-33 AND RAMPS, GENDER ROAD, HAMILTON ROAD	FIRST ½ HOUR	$100 PER HOUR OR PART
	EACH HOUR OR PART THEREAFTER	$100 PER MINUTE

LENGTH AND DURATION OF LANE CLOSURES

LENGTH AND DURATION OF LANE CLOSURES AND RESTRICTIONS SHALL BE AT THE APPROVAL OF THE ENGINEER. IT IS THE INTENT TO MINIMIZE THE IMPACT OF THE TRAVELING PUBLIC. LANE CLOSURES OR RESTRICTIONS OVER SEGMENTS OF THE PROJECT IN WHICH NO WORK IS ANTICIPATED WITHIN A REASONABLE TIME FRAME, AS DETERMINED BY THE ENGINEER, SHALL NOT BE PERMITTED. THE LEVEL OF UTILIZATION OF MAINTENANCE OF TRAFFIC DEVICES SHALL BE COMMENSURATE WITH THE WORK IN PROGRESS.

GENDER RD. AND HAMILTON RD. MAY BE REDUCED TO ONE LANE OF TRAFFIC IN EACH DIRECTION FOR A PERIOD NOT TO EXCEED 50 CALENDAR DAYS. LIQUIDATED DAMAGES SHALL BE ASSESSED IN ACCORDANCE WITH 108.07 FOR EACH CALENDAR DAY THE ROADWAY REMAINS REDUCED TO ONE LANE IN EACH DIRECTION BEYOND THE SPECIFIED LIMIT.

FLOODLIGHTING

FLOODLIGHTING OF THE WORK SITE FOR OPERATIONS CONDUCTED DURING NIGHT TIME PERIODS SHALL BE ACCOMPLISHED SO THAT THE LIGHTS DO NOT CAUSE GLARE TO THE DRIVERS ON THE ROADWAY. TO ENSURE THE ADEQUACY OF THE FLOODLIGHT PLACEMENT, THE CONTRACTOR AND THE ENGINEER SHALL DRIVE THROUGH THE WORK SITE EACH NIGHT WHEN THE LIGHTING IS IN PLACE AND OPERATIVE PRIOR TO COMMENCING ANY WORK. IF GLARE IS DETECTED THE LIGHT PLACEMENT AND SHIELDING SHALL BE ADJUSTED TO THE SATISFACTION OF THE ENGINEER BEFORE WORK PROCEEDS.

PAYMENT FOR ALL LABOR, EQUIPMENT AND MATERIALS SHALL BE INCLUDED IN THE LUMP SUM CONTRACT PRICE FOR MAINTAINING TRAFFIC.

DROP OFFS IN WORK ZONES

THE DROP OFF ADJACENT TO THE TRAVELED LANE SHALL BE NO GREATER THAN 5 INCHES BELLOW THE EXISTING PAVEMENT BY THE END OF EACH WORK DAY. THIS REQUIREMENT MAY BE MET BY TEMPORARILY PLACING SUBBASE AND BASE MATERIAL TO WITHIN 5 INCHES OF THE EXISTING GRADE ADJACENT TO THE TRAVELED LANE AND SLOPING MATERIAL AT 3:1 OR FLATTER WITHIN THE EXCAVATED AREA. PLACEMENT OF PROPOSED SUBBASE AND BASE MATERIAL SHALL FOLLOW AS CLOSELY AS POSSIBLE BEHIND EXCAVATION OPERATIONS DURING WORKING HOURS. THESE REQUIREMENTS SHALL BE AT NO ADDITIONAL COST.

ITEM 614-LAW ENFORCEMENT OFFICER WITH PATROL CAR

IN ADDITION TO THE REQUIREMENTS OF 614 AND THE LATEST EDITION OF THE OHIO MANUAL OF UNIFORM TRAFFIC CONTROL DEVICES (OMUTCD), A UNIFORMED LAW ENFORCEMENT OFFICER AND OFFICIAL PATROL CAR WITH WORKING TOP MOUNTED EMERGENCY FLASHING LIGHTS SHALL BE PROVIDED FOR CONTROLLING TRAFFIC FOR THE FOLLOWING TASKS:

1. FOR LANE CLOSURES: DURING INITIAL SET-UP AND TEAR DOWN PERIODS, SUBSTANTIAL SHIFTS OF A CLOSURE POINT OR WHEN NEW LANE CLOSURE ARRANGEMENTS ARE INITIATED.

2. DURING THE ENTIRE ADVANCE PREPARATION AND CLOSURE SEQUENCE WHERE COMPLETE BLOCKAGE OF TRAFFIC IS REQUIRED.

3. DURING ANY TWO-WAY, ONE-LANE OPERATION

4. AT SIGNALIZED INTERSECTIONS - DURING PEAK HOURS AS DIRECTED BY THE ENGINEER

THE LEO'S ARE CONSIDERED TO BE EMPLOYED BY THE CONTRACTOR AND THE CONTRACTOR SHALL BE RESPONSIBLE FOR THEIR ACTIONS. ALTHOUGH THEY ARE EMPLOYED BY THE CONTRACTOR, THE PROJECT ENGINEER SHALL HAVE CONTROL OVER THEIR PLACEMENT. THE OFFICIAL PATROL CAR SHALL BE A PUBLIC SAFETY VEHICLE AS REQUIRED BY THE OHIO REVISED CODE.

THE CONTRACTOR SHALL MAKE ARRANGEMENTS FOR THESE SERVICES WITH:

THE OHIO HIGHWAY PATROL: (614) 466-2660

LAW ENFORCEMENT OFFICERS WITH PATROL CAR REQUIRED BY THE TRAFFIC MAINTENANCE TASKS ABOVE SHALL BE PAID FOR ON A UNIT PRICE HOURLY BASIS UNDER ITEM 614 - LAW ENFORCEMENT OFFICER WITH PATROL CAR.

ITEM	QUANTITY	UNIT	DESCRIPTION
614	200	HOURS	L.E.O. WITH PATROL CAR

IF THE CONTRACTOR WISHES TO UTILIZE LEO'S FOR FLAGGING AND TRAFFIC CONTROL OTHER THAN FOR THAT REQUIRED IN THESE PLANS, THE CONTRACTOR MAY DO SO AT THE CONTRACTOR'S OWN EXPENSE. PAYMENT FOR THE EXCESS ABOVE THE CONTRACT REQUIREMENTS WILL BE INCLUDED UNDER ITEM 614 - MAINTAINING TRAFFIC.

TEMPORARY ROAD EARTHWORK

THE FOLLOWING QUANTITIES HAVE BEEN INCLUDED IN THE PLAN FOR INFORMATION ONLY. THESE QUANTITIES WILL BE USED TO CONSTRUCT THE TEMPORARY ROADS TO MAINTAIN THE "RAMP E" ON-RAMPS TO U.S. 33 FOR HAMILTON AND GENDER ROAD.

HAMILTON ROAD:
EMBANKMENT.....115 CY

GENDER ROAD:
EMBANKMENT.....250 CY

CALCULATED
CHECKED

MAINTENANCE OF TRAFFIC GENERAL NOTES

FRA-33-25.96
FRA-33-29.64

12/23/2003 - 11:26:15 AM - t:\009-02\dgn\GENDER\GRmtgn.dgn

ITEM 614 - REPLACEMENT SIGN

FLAT SIGNS FURNISHED BY THE CONTRACTOR IN ACCORDANCE WITH THE REQUIREMENTS OF THE PLANS, SPECIFICATIONS AND PROPOSAL WHICH BECOME DAMAGED BY TRAFFIC FOR REASONS BEYOND THE CONTROL TO THE CONTRACTOR SHALL BE REPLACED IN KIND WHEN ORDERED BY THE ENGINEER. REPLACEMENT SIGNS SHALL BE NEW. OTHER MATERIALS MAY BE IN USED BUT GOOD CONDITION SUBJECT TO APPROVAL BY THE ENGINEER.

PAYMENT FOR THE NEW SIGNS SHALL BE MADE AT THE CONTRACT PRICE PER SQUARE FEET FOR ITEM SPECIAL, REPLACEMENT SIGN, AND SHALL INCLUDE THE COST OF REMOVING AND DISPOSING OF DAMAGED SIGNS, HARDWARE AND SUPPORTS, AND PROVIDING THE NECESSARY REPLACEMENT HARDWARE, SUPPORTS, ETC.

AN ESTIMATED QUANTITY OF 90 SQUARE FEET HAS BEEN CARRIED TO THE GENERAL SUMMARY.

ITEM	QUANTITY	UNIT	DESCRIPTION
614	90	SQ.FT.	REPLACEMENT SIGN

DRUM SPACING

SPACING OF DRUMS SHALL NOT BE GREATER THAN 25 FEET FOR BOTH TYPICAL SECTIONS AND IN TAPER SECTIONS.

ITEM 614 - REPLACEMENT DRUM

DRUMS FURNISHED BY THE CONTRACTOR IN ACCORDANCE WITH THE REQUIREMENTS OF THE PLANS, SPECIFICATIONS AND PROPOSAL WHICH BECOME DAMAGED BY TRAFFIC FOR REASONS BEYOND THE CONTROL OF THE CONTRACTOR SHALL BE REPLACED IN KIND WHEN ORDERED BY THE ENGINEER. REPLACEMENT DRUMS SHALL BE NEW.

PAYMENT FOR THE NEW DRUMS SHALL BE MADE AT THE CONTRACT PRICE PER EACH FOR ITEM 614, REPLACEMENT DRUM, AND SHALL INCLUDE THE COST OF REMOVING AND DISPOSING OF THE DAMAGED DRUM, AND PROVIDING AND MAINTAINING THE REPLACEMENT DRUM IN ACCORDANCE WITH THE CONTRACT REQUIREMENTS FOR THE ORIGINAL DRUM.

AN ESTIMATED QUANTITY OF 50 EACH HAS BEEN PROVIDED IN THE GENERAL SUMMARY.

ITEM	QUANTITY	UNIT	DESCRIPTION
614	50	EACH	REPLACEMENT DRUM

EXISTING CONFLICTING PAVEMENT MARKINGS

EXISTING CONFLICTING PAVEMENT MARKINGS SHALL BE COVERED WITH A REMOVABLE, NON REFLECTIVE, PREFORMED TAPE THAT MINIMIZES CONTRAST WITH THE PAVEMENT UNLESS THE PLAN INDICATES REMOVAL. THE TAPE SHALL BE INSTALLED TEMPORARILY AND MAINTAINED AS DIRECTED BY THE PROJECT ENGINEER AND REMOVED WHEN NO LONGER NEEDED FOR THE MAINTENANCE OF TRAFFIC. THE COST OF COVERING OR REMOVING THE EXISTING CONFLICTING PAVEMENT MARKINGS SHALL BE INCLUDED IN THE LUMP SUM BID FOR MAINTENANCE OF TRAFFIC. REPLACEMENT OF REMOVED PAVEMENT MARKINGS SHALL BE INCLUDED IN THE APPROPRIATE ITEM AS DETAILED IN THE PAVEMENT MARKING PLAN.

LOCAL DETOUR COORDINATION WITH COLUMBUS

THE CONTRACTOR WILL COORDINATE THE DETOUR OF NORTHBOUND HAMILTON ROAD TO WESTBOUND U.S. 33 DURING PHASE 2 OF THE M.O.T OPERATION WITH THE CITY OF COLUMBUS DIVISION OF TRANSPORTATION (614) 645-5660. THE CITY OF COLUMBUS WILL PROVIDE SIGNAGE FOR THE DETOUR BEYOND WHAT IS SHOWN ON THIS PLAN.

ADDITIONAL DEVICES AS DIRECTED BY THE ENGINEER

IF THE FOLLOWING ADDITIONAL DEVICES ARE NEEDED, AS DIRECTED BY THE ENGINEER, FOR THE MAINTENANCE OF TRAFFIC THEY SHALL BE PAID FOR AT THE UNIT PRICE BID.

REPLACEMENT SIGN AND ASSEMBLY	SQ FT
REPLACEMENT DRUM	EACH
WORK ZONE RAISED PAVEMENT MARKER	EACH
WORK ZONE CENTER LINE	MILE
WORK ZONE EDGE LINE	MILE
WORK ZONE CHANNELIZING LINE	FT
WORK ZONE DOTTED LINE	FT
WORK ZONE STOP LINE	FT
WORK ZONE LANE ARROW	EACH
WORK ZONE WORD ON PAVEMENT	EACH

CALCULATED
CHECKED

MAINTENANCE OF TRAFFIC GENERAL NOTES

FRA-33-25.96
FRA-33-29.64

12/23/2003 - 11:26:20 AM - t:\009-02\dgn\GENDER\GRm+gn.dgn

SEQUENCE OF CONSTRUCTION GENDER ROAD

PHASE 1:

STEP (A) INSTALL NECESSARY TRAFFIC CONTROL DEVICES AS PER STANDARD DRAWING MT-95.32 ON BOTH NORTHBOUND AND SOUTHBOUND LANES OF GENDER RD. REMOVE CONCRETE MEDIAN AND REPLACE AS PER THE TYPICAL SECTIONS AS DETAILED ON SHEET 28.

STEP (B) INSTALL NECESSARY TRAFFIC CONTROL DEVICES AS PER STANDARD DRAWING MT-95.31 ON THE NORTHBOUND LANES OF GENDER RD. CONSTRUCT ITEM 615 ROADS FOR MAINTAINING TRAFFIC AND ITEM 615 PAVEMENT FOR MAINTAINING TRAFFIC, CLASS B AS DETAILED ON SHEET 31. RAMP "E" TO BE MAINTAINED AS PER STANDARD DRAWING MT-98.18.

PHASE 2:

STEP (A) INSTALL NECESSARY TRAFFIC CONTROL DEVICES AS PER STANDARD DRAWING MT-95.32 ON BOTH NORTHBOUND AND SOUTHBOUND LANES OF GENDER RD. INSTALL ALL TRAFFIC CONTROL AS DETAILED ON SHEETS 32-36.

STEP (B) SHIFT AND MAINTAIN TRAFFIC ONE-LANE EACH DIRECTION ON BRIDGE NO. FRA-33-2964 AND CONSTRUCT ALL WORK AS REQUIRED BY THE PLANS ON THE NORTHBOUND BRIDGE.

STEP (C) INSTALL NECESSARY TRAFFIC CONTROL DEVICES AS PER STANDARD DRAWING MT-95.31 ON THE NORTHBOUND LANES OF GENDER RD. AND REMOVE PAVEMENT FOR MAINTAINING TRAFFIC. RAMP "E" TO BE MAINTAINED AS PER STANDARD DRAWING MT-98.18.

PHASE 3:

STEP (A) INSTALL NECESSARY TRAFFIC CONTROL DEVICES AS PER STANDARD DRAWING MT-95.32 ON BOTH NORTHBOUND AND SOUTHBOUND LANES OF GENDER RD. INSTALL ALL TRAFFIC CONTROL AS DETAILED ON SHEETS 37-41.

STEP (B) SHIFT AND MAINTAIN TRAFFIC ONE-LANE EACH DIRECTION ON BRIDGE NO. FRA-33-2964 AND CONSTRUCT ALL WORK AS REQUIRED BY THE PLANS ON THE SOUTHBOUND BRIDGE.

PHASE 4:

STEP (A) REMOVE ALL WORK ZONE TRAFFIC CONTROL DEVICES AND CONSTRUCT FINAL TRAFFIC CONTROL AS DETAILED ON SHEETS 44-45 USING THE APPROPRIATE TRAFFIC CONTROL AS PER THE O.M.U.T.C.D.

HEAT STRAIGHTENING AND SPOT PAINTING:

WHEN THE ABOVE OPERATION IS PERFORMED, THE CONTRACTOR SHALL INSTALL THE NECESSARY TRAFFIC CONTROL AS PER STANDARD DRAWINGS MT-95.30 AND SHIFT THE RIGHT LANE OF THE NORTHBOUND LANES OF U.S.R. 33 TO THE LEFT LANE. THE ENTRANCE RAMP "E" SHALL BE MAINTAINED AS PER STANDARD DRAWING MT-98.16. PAYMENT FOR ALL LABOR, EQUIPMENT AND MATERIALS SHALL BE INCLUDED IN THE LUMP SUM CONTRACT PRICE FOR ITEM 614 MAINTAINING TRAFFIC.

SEQUENCE OF CONSTRUCTION HAMILTON ROAD

PHASE 1:

STEP (A) INSTALL NECESSARY TRAFFIC CONTROL DEVICES AS PER STANDARD DRAWING MT-95.32 ON BOTH NORTHBOUND AND SOUTHBOUND LANES OF HAMILTON RD. REMOVE CONCRETE MEDIAN AND REPLACE AS PER THE TYPICAL SECTIONS AS DETAILED ON SHEET 7.

STEP (B) INSTALL NECESSARY TRAFFIC CONTROL DEVICES AS PER STANDARD DRAWING MT-95.31 ON THE SOUTHBOUND LANES OF HAMILTON RD. CONSTRUCT ITEM 615 ROADS FOR MAINTAINING TRAFFIC AND ITEM 615 PAVEMENT FOR MAINTAINING TRAFFIC, CLASS B AS DETAILED ON SHEET 10. PLACE DRUMS AT THE ENTRANCE OF THE TEMP. ROAD UNTIL PHASE 3. RAMP "E" TO BE MAINTAINED AS PER STANDARD DRAWING MT-98.18.

PHASE 2:

STEP (A) INSTALL NECESSARY TRAFFIC CONTROL DEVICES AS PER STANDARD DRAWING MT-95.32 ON BOTH NORTHBOUND AND SOUTHBOUND LANES OF HAMILTON RD. INSTALL ALL TRAFFIC CONTROL AS DETAILED ON SHEETS 12-15.

STEP (B) SHIFT AND MAINTAIN TRAFFIC ONE-LANE EACH DIRECTION ON BRIDGE NO. FRA-33-2596 AND CONSTRUCT ALL WORK AS REQUIRED BY THE PLANS ON THE NORTHBOUND BRIDGE.

PHASE 3:

STEP (A) INSTALL NECESSARY TRAFFIC CONTROL DEVICES AS PER STANDARD DRAWING MT-95.32 ON BOTH NORTHBOUND AND SOUTHBOUND LANES OF HAMILTON RD. INSTALL ALL TRAFFIC CONTROL AS DETAILED ON SHEETS 16-19.

STEP (B) SHIFT AND MAINTAIN TRAFFIC ONE-LANE EACH DIRECTION ON BRIDGE NO. FRA-33-2596 AND CONSTRUCT ALL WORK AS REQUIRED BY THE PLANS ON THE SOUTHBOUND BRIDGE.

STEP (C) INSTALL NECESSARY TRAFFIC CONTROL DEVICES AS PER STANDARD DRAWING MT-95.31 ON THE SOUTHBOUND LANES OF HAMILTON RD. AND REMOVE PAVEMENT FOR MAINTAINING TRAFFIC. RAMP "E" TO BE MAINTAINED AS PER STANDARD DRAWING MT-98.18M

PHASE 4:

STEP (A) REMOVE ALL WORK ZONE TRAFFIC CONTROL DEVICES AND CONSTRUCT FINAL TRAFFIC CONTROL AS DETAILED ON SHEETS 22-23 USING THE APPROPRIATE TRAFFIC CONTROL AS PER THE O.M.U.T.C.D.

GENERAL:

THE CONTRACTOR SHALL BE RESPONSIBLE FOR THE MAINTENANCE OF TRAFFIC TO CONSTRUCT ALL TRAFFIC CONTROL ITEMS. ALL TRAFFIC CONTROL SHALL BE IN ACCORDANCE WITH APPLICABLE PORTIONS OF THE SPECIFICATIONS, AS WELL AS THE OHIO MANUAL OF UNIFORM TRAFFIC CONTROL DEVICES. PAYMENT FOR ALL LABOR, EQUIPMENT AND MATERIALS EXCEPT AS ITEMIZED SHALL BE INCLUDED IN THE LUMP SUM PRICE FOR ITEM 614 MAINTAINING TRAFFIC.

THE CONTRACTOR SHALL COMPLETE ALL WORK AS DESCRIBED IN THE SEQUENCE OF OPERATIONS, FOR EACH PHASE OF OPERATIONS, BEFORE STARTING WORK ON THE NEXT PHASE OF CONSTRUCTION.

THE CONTRACTOR SHALL NOT BE ALLOWED TO START WORK ON ANY PHASE OF CONSTRUCTION UNTIL APPROVAL HAS BEEN GRANTED BY THE PROJECT ENGINEER.

12/23/2003 -11:26:44 AM t:\009-02\dgn\GENDER\009-02GN2.dgn

SHEET NUMBER 2	3	4	20	21	23	42	43	45			ITEM	ITEM EXT.	GRAND TOTAL	UNIT	DESCRIPTION	SEE SHEET NO.
															ROADWAY	
				25			189				202	30600	214	SQ YD	CONCRETE MEDIAN REMOVED	
				673							202	32000	673	FT	CURB REMOVED	
				170							203	10000	170	CU YD	EXCAVATION	
				387							204	10000	387	SQ YD	SUBGRADE COMPACTION	
															PAVEMENT	
				673							255	20000	673	FT	FULL DEPTH PAVEMENT SAWING	
				97							301	46000	97	CU YD	ASPHALT CONCRETE BASE, PG64-22	
				65							304	20000	65	CU YD	AGGREGATE BASE	
				27			12				407	10000	39	GALLON	TACK COAT	
							7				407	14000	7	GALLON	TACK COAT FOR INTERMEDIATE COURSE	
							6				448	46020	6	CU YD	ASPHALT CONCRETE INTERMEDIATE COURSE, TYPE I, PG64-22	
				15			6				448	47020	21	CU YD	ASPHALT CONCRETE SURFACE COURSE, TYPE I, PG64-22	
				27			23				609	72000	50	SQ YD	CONCRETE MEDIAN	
															TRAFFIC CONTROL	
					15						630	03100	15	FT	GROUND MOUNTED SUPPORT, NO. 3 POST	
					8.2						630	80100	8.2	SQ FT	SIGN, FLAT SHEET	
					3						630	84900	3	EACH	REMOVAL OF GROUND MOUNTED SIGN AND DISPOSAL	
					1						630	86002	1	EACH	REMOVAL OF GROUND MOUNTED POST SUPPORT AND DISPOSAL	
					0.28			0.24			646	10000	0.52	MILE	EDGE LINE	
					0.13			0.11			646	10100	0.24	MILE	LANE LINE	
					0.11			0.20			646	10200	0.31	MILE	CENTER LINE	
					110						646	10300	110	FT	CHANNELIZING LINE	
					447			403			646	10600	850	FT	TRANSVERSE LINE	
2355					122			7			646	10800	2484	SQ FT	ISLAND MARKING	
					3						646	20300	3	EACH	LANE ARROW	
					1			1			646	20400	2	EACH	WORD ON PAVEMENT, 72"	
															MAINTENANCE OF TRAFFIC	
	200										614	11100	200	HOUR	LAW ENFORCEMENT OFFICER WITH PATROL CAR	
		90									614	12510	90	SQ FT	REPLACEMENT SIGN	
		50									614	12600	50	EACH	REPLACEMENT DRUM	
			119			161					614	12800	280	EACH	WORK ZONE RAISED PAVEMENT MARKER	
			0.22			0.30					614	21200	0.52	MILE	WORK ZONE CENTER LINE, CLASS I, 740.06, TYPE I	
			0.55			0.57					614	22200	1.12	MILE	WORK ZONE EDGE LINE, CLASS I, 740.06, TYPE I	
			1043			500					614	23400	1543	FT	WORK ZONE CHANNELIZING LINE, CLASS I, 740.06, TYPE I	
			397								614	24400	397	FT	WORK ZONE DOTTED LINE, CLASS I, 740.06, TYPE I	
						4					614	26400	4	FT	WORK ZONE STOP LINE, CLASS I, 740.06, TYPE I	
			4			1					614	30400	5	EACH	WORK ZONE LANE ARROW, CLASS I, 740.06, TYPE I	
						1					614	31400	1	EACH	WORK ZONE WORD ON PAVEMENT, 72", CLASS I, 740.06, TYPE I	
			LUMP			LUMP					615	10000	LUMP		ROADS FOR MAINTAINING TRAFFIC	
			243			278					615	25000	521	SQ YD	PAVEMENT FOR MAINTAINING TRAFFIC, CLASS B	
			10			12					617	10100	22	CU YD	COMPACTED AGGREGATE, TYPE A	
															STRUCTURES OVER 20 FEET	
															FOR FRA-33-2596 QUANTITIES	27
															FOR FRA-33-2964 QUANTITIES	48
											614	11000	LUMP		MAINTAINING TRAFFIC	
											619	16000	4	MONTH	FIELD OFFICE, TYPE A	
											624	10000	LUMP		MOBILIZATION	

CALCULATED | CHECKED

GENERAL SUMMARY

FRA-33-25.96
FRA-33-29.64

12/23/2003 - 12:13:10 PM - sderwacter - t:\009-02\dgn\PID 25710\GSUMMARY.dgn

EXISTING TYPICAL

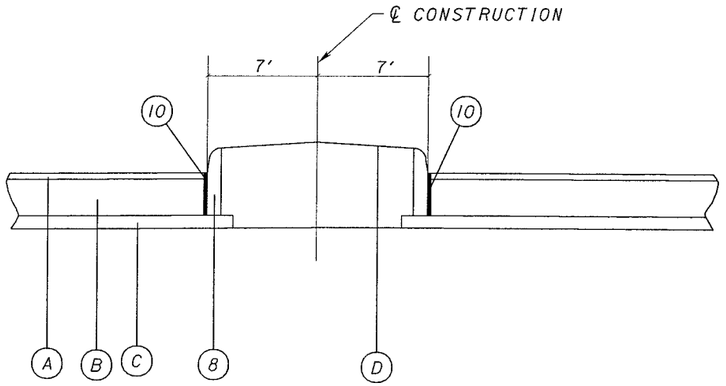

SECTION APPLIES:
STA. 315+81.46 TO STA. 318+05.99

LEGEND

EXISTING

- (A) +/- 1.5" ASPHALT
- (B) 9" REINFORCED CONCRETE PAVEMENT
- (C) VARIABLE DEPTH SUBBASE
- (D) GRASS

PROPOSED

(1)	ITEM 203	EXCAVATION
(2)	ITEM 448	1.5" ASPHALT CONCRETE SURFACE COURSE, TYPE 1, PG64-22
(3)	ITEM 407	TACK COAT
(4)	ITEM 301	9" ASPHALT CONCRETE BASE
(5)	ITEM 304	6" AGGREGATE BASE
(6)	ITEM 204	SUBGRADE COMPACTION
(7)	ITEM 609	CONCRETE MEDIAN
(8)	ITEM 202	CURB REMOVED (TYPE 2-A)
(9)	ITEM 202	CONCRETE MEDIAN REMOVED (4" TYPE 1)
(10)	ITEM 255	FULL DEPTH PAVEMENT SAWING

PROPOSED TYPICAL

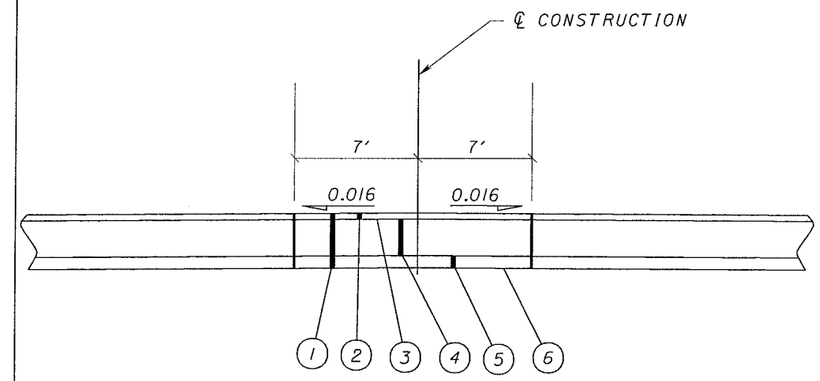

SECTION APPLIES:
STA. 315+81.46 TO STA. 317+91.40

EXISTING TYPICAL

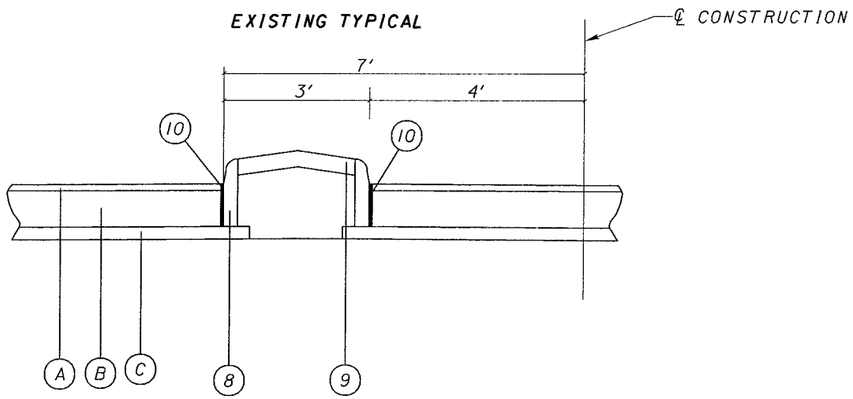

SECTION APPLIES:
STA. 321+97.14 TO STA. 323+09.00

PROPOSED TYPICAL

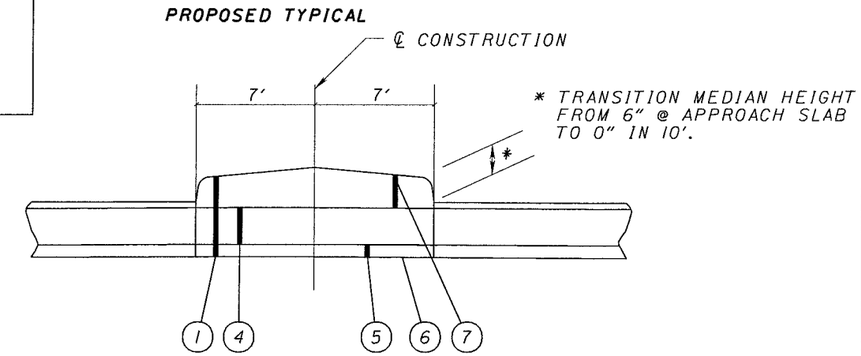

SECTION APPLIES:
STA. 317+91.40 TO STA. 318+05.99

PROPOSED TYPICAL

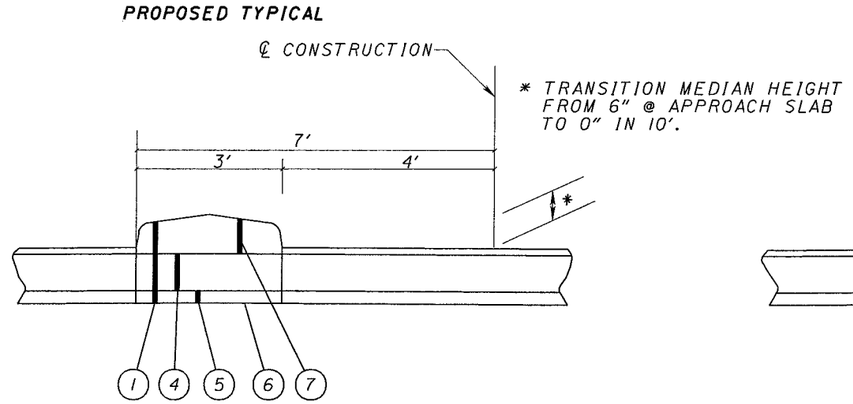

SECTION APPLIES:
STA. 321+97.14 TO STA. 322+08.24

PROPOSED TYPICAL

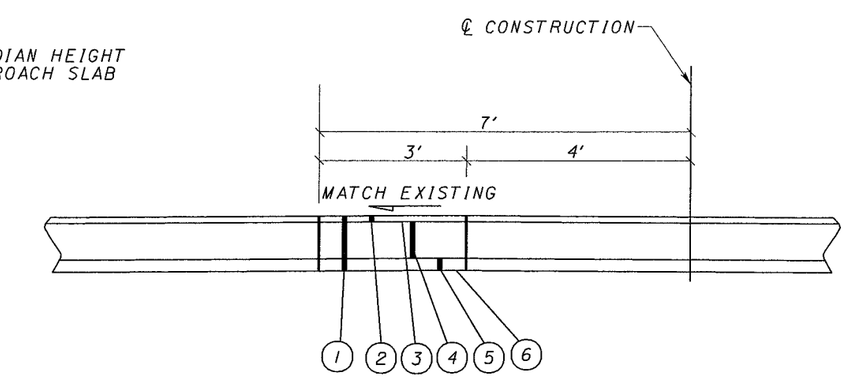

SECTION APPLIES:
STA. 322+08.24 TO STA. 323+09.00

CALCULATED
CHECKED

HAMILTON ROAD TYPICAL SECTIONS

FRA-33-25.96
FRA-33-29.64

12/23/2003 - 11:35:10 AM - sderwacter - t:\009-02\dgn\Hamilton\HRMCX.dgn

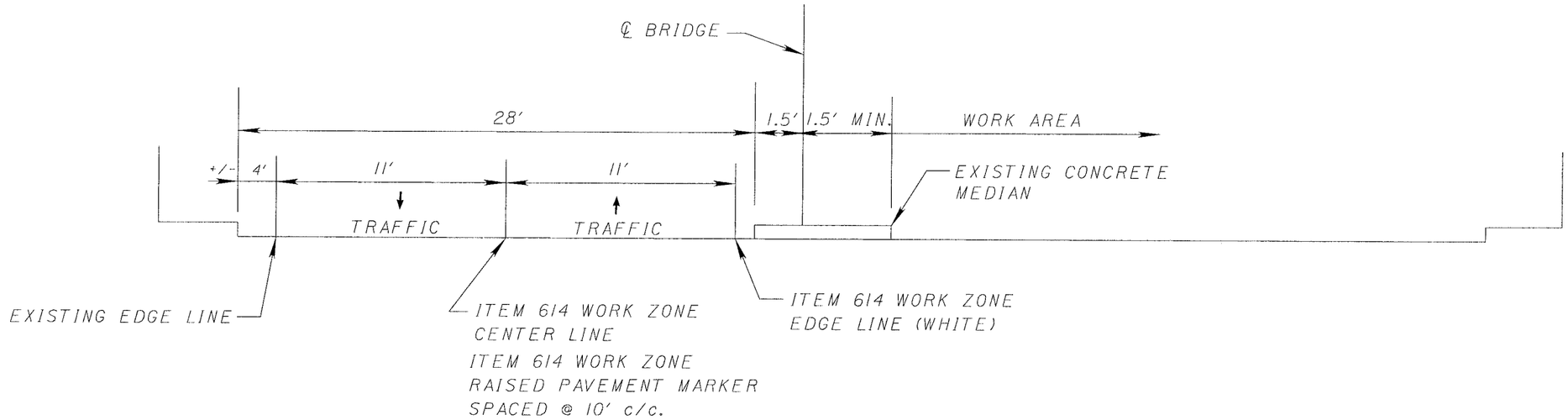

TYPICAL BRIDGE SECTION PHASE 2

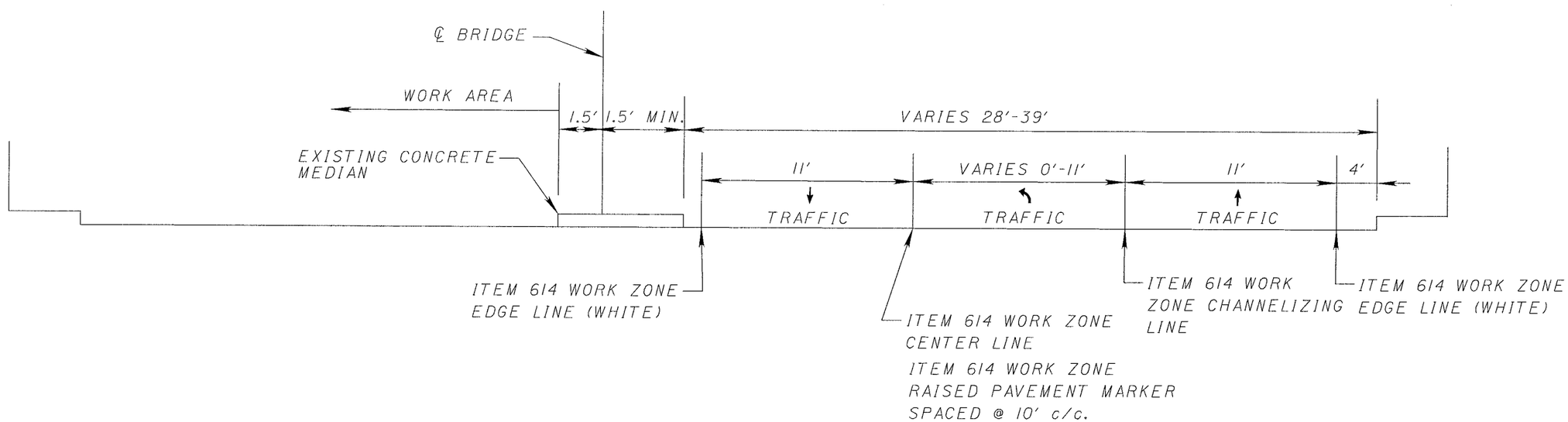

TYPICAL BRIDGE SECTION PHASE 3

CALCULATED
CHECKED

TYPICAL BRIDGE SECTION MAINTENANCE OF TRAFFIC
HAMILTON ROAD

FRA-33-25.96
FRA-33-29.64

12/23/2003 - 11:35:32 AM - t:\009-02\dgn\Hamilton\009-02MD3.dgn

12/23/2003 - 11:35:51 AM - t:\009-02\dgn\Hamilton\HRMP2.dgn

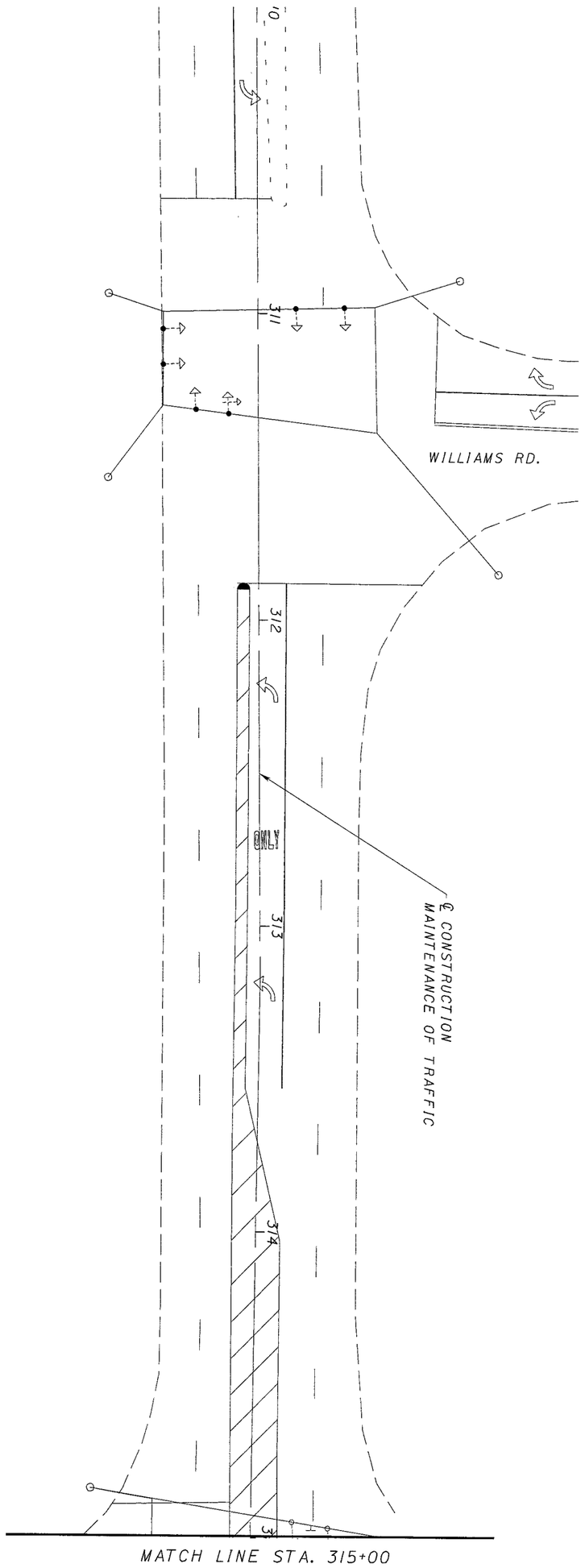

51 / 9	FRA-33-25.96 FRA-33-29.64	M.O.T - HAMILTON ROAD PHASE 1 STA. 310+00 TO STA. 315+00	CALCULATED CHECKED 0 20 40 HORIZONTAL SCALE IN FEET N

*FOR TEMPORARY ROAD QUANTITIES SEE SHEET 20

PT STA 1+75.55

ITEM 615 PAVEMENT FOR MAINTAINING TRAFFIC, CLASS B

ITEM 615 ROADS FOR MAINTAINING TRAFFIC

RAMP "C" EASTBOUND EXIT FROM U.S.R. 33

RAMP "E" EASTBOUND ENTRANCE TO U.S.R. 33

PC STA 0+00

EXISTING CATCH BASIN

CONST. LIMITS

2-C

16'

BENCHMARK:
SE BOLT ON
SIGN POLE
ELEV. 103.31

MATCH LINE STA. 315+00

MATCH LINE STA. 320+00

316 317 318 319

CONTROL POINT:
IRON PIN
STA. 0+00.45, 36.19 LT.

℄ CONSTRUCTION
MAINTENANCE OF TRAFFIC

RAMP "F" EASTBOUND ENTRANCE TO U.S.R. 33

BENCHMARK:
NAIL SET IN
GUARDRAIL BLOCK
ELEV. 101.05
STA. 0+21.94, 115.92 LT.

MEDIAN TO BE REMOVED AND REPLACED PER TYPICAL SECTIONS ON SHT. 7

2-C CURVE DATA	
P.I. STATION	0+93.3
DELTA	48°07'34"RT
DEGREE	27°24'51"
TANGENT	93.33
LENGTH	175.55
RADIUS	209.9
EXTERNAL	19.89
P.C. STATION	0+00
P.T. STATION	1+75.55
BACK	S39°17'33"W
AHEAD	S87°25'06"W
CHORD BEAR	S63°21'20"

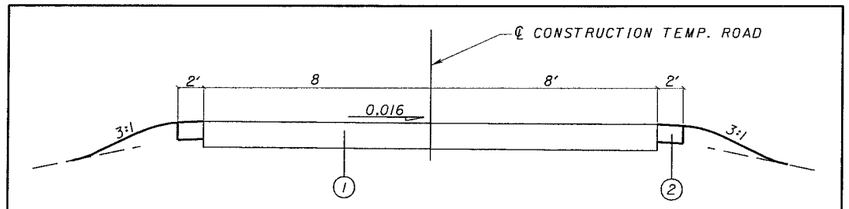

1 ITEM 615 PAVEMENT FOR MAINTAINING TRAFFIC, CLASS B

2 ITEM 617 COMPACTED AGGREGATE, TYPE A

PROFILE - TEMPORARY ROAD

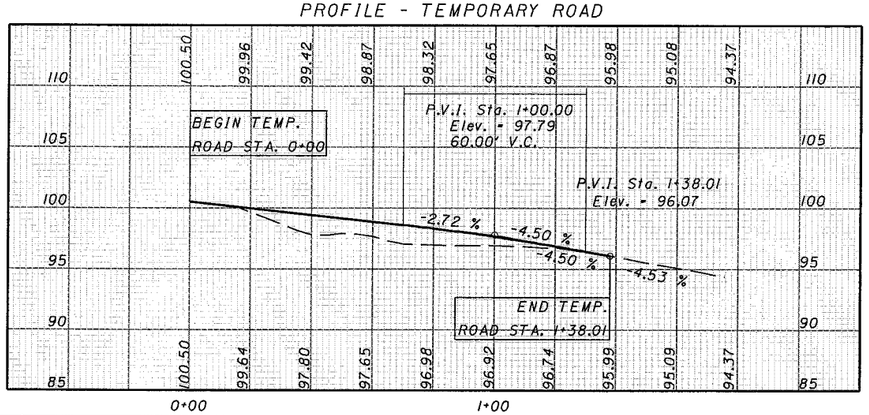

TEMPORARY ROAD CROSS SECTIONS

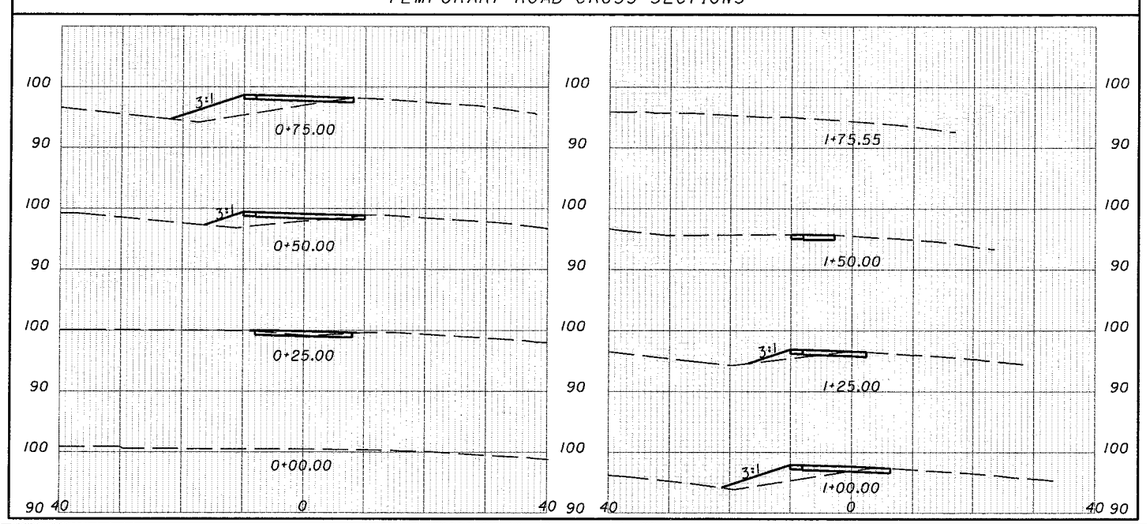

12/23/2003 - 11:36:05 AM - t:\009-02\dgn\Hamilton\HRMP2a.dgn

HORIZONTAL SCALE IN FEET 0 20 40

CALCULATED

CHECKED

M.O.T. - HAMILTON ROAD PHASE 1
STA. 315+00 TO STA. 320+00

FRA-33-25.96
FRA-33-29.64

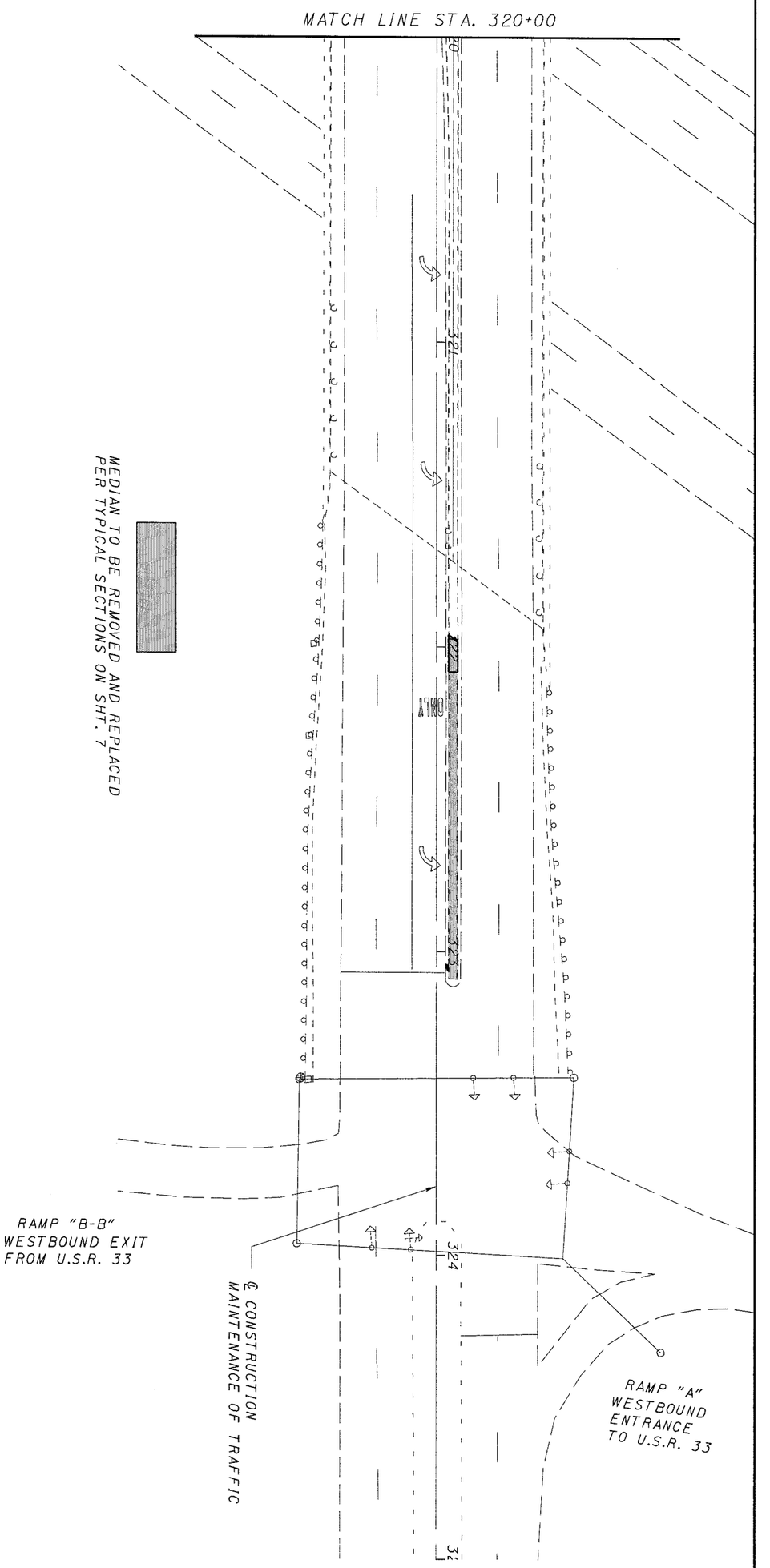

51	FRA-33-25.96 FRA-33-29.64	M.O.T. - HAMILTON ROAD PHASE 1 STA. 320+00 TO STA. 325+00	CALCULATED CHECKED	0 20 40 HORIZONTAL SCALE IN FEET

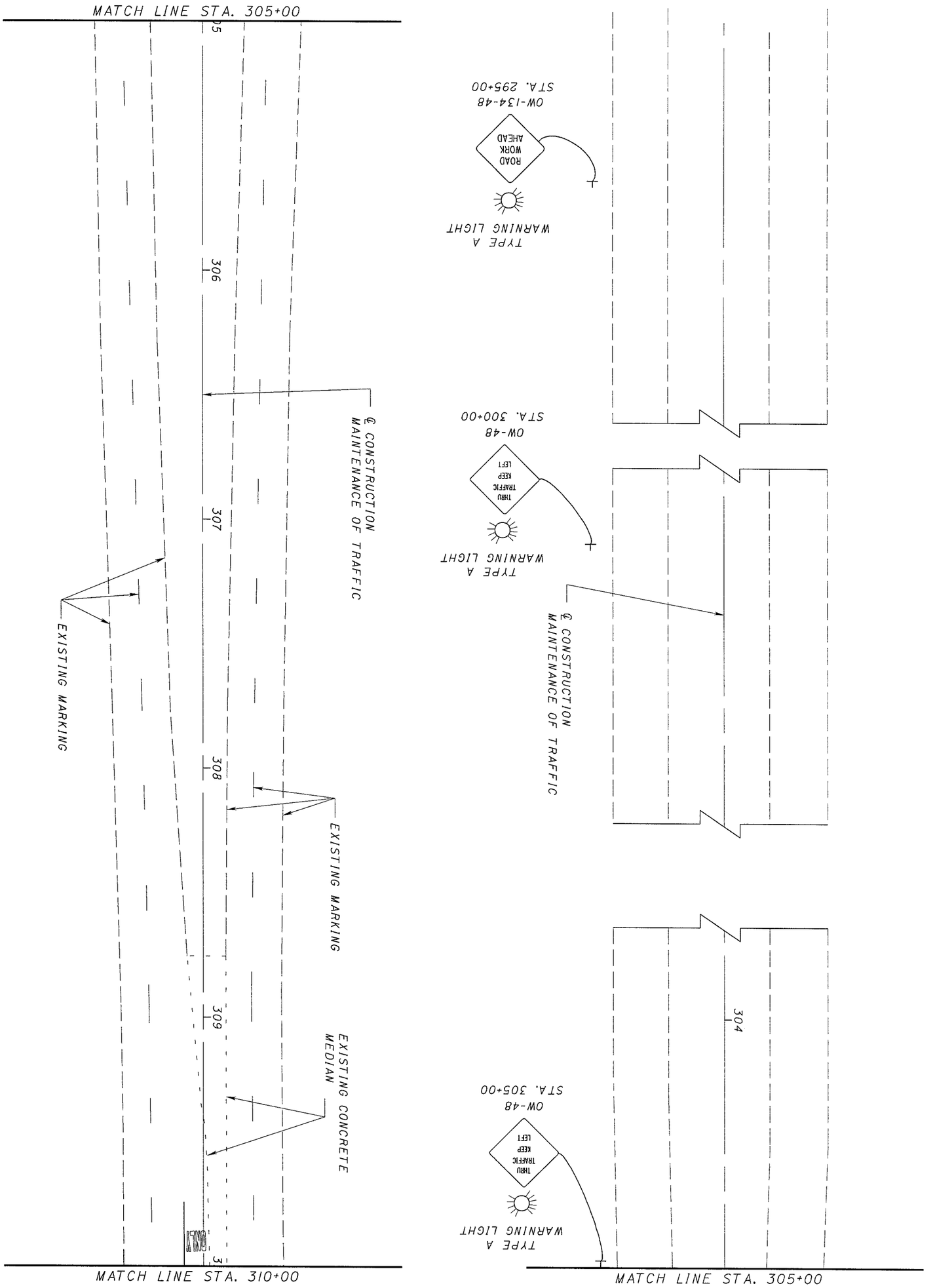

12 / 51	FRA-33-25.96 FRA-33-29.64	M.O.T. - HAMILTON ROAD PHASE 2 STA. 295+00 TO STA. 310+00	CALCULATED CHECKED 0 20 40 HORIZONTAL SCALE IN FEET

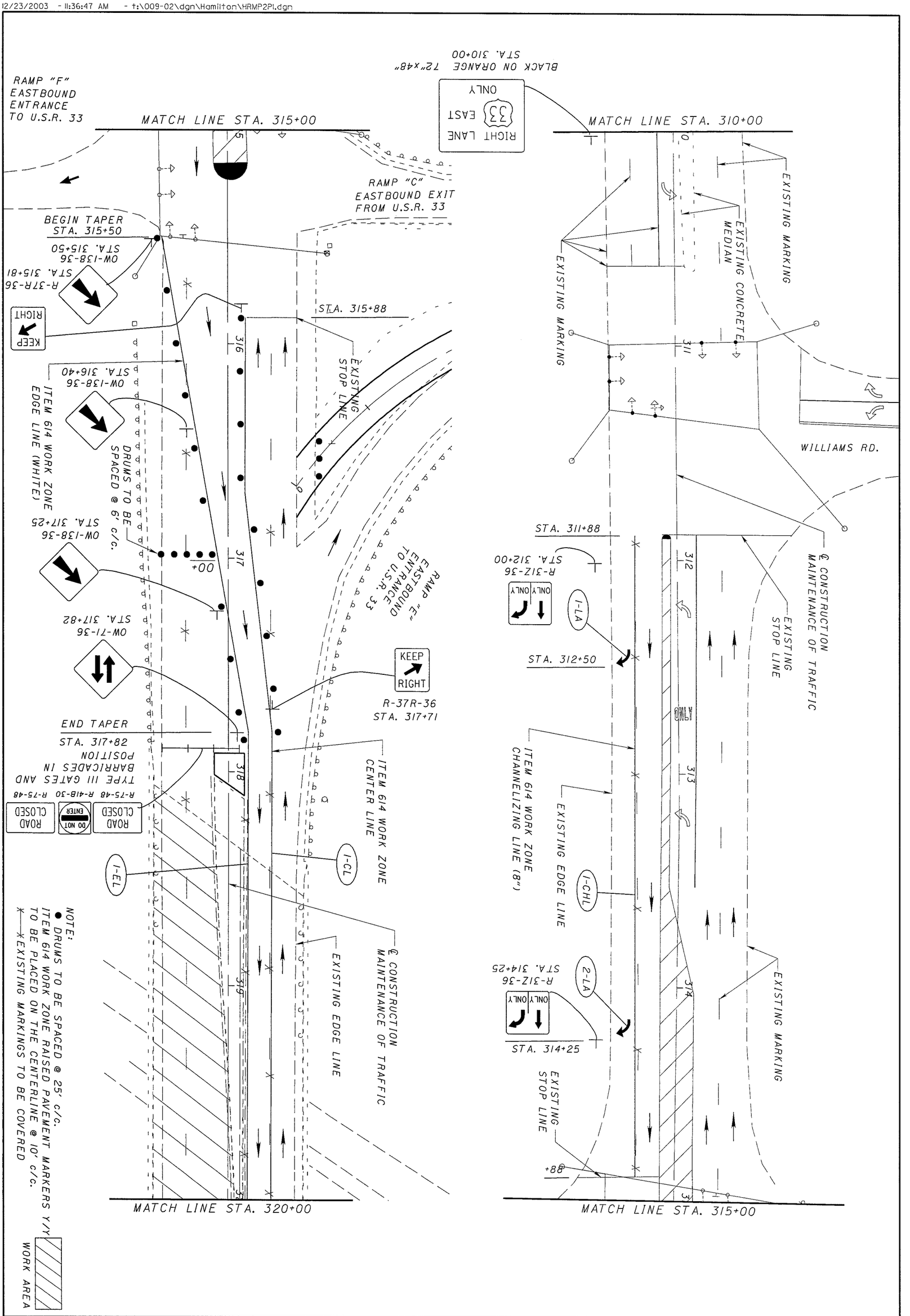

13 / 51	FRA-33-25.96 FRA-33-29.64	M.O.T. - HAMILTON ROAD PHASE 2 STA. 310+00 TO STA. 320+00	CALCULATED CHECKED 0 20 40 HORIZONTAL SCALE IN FEET

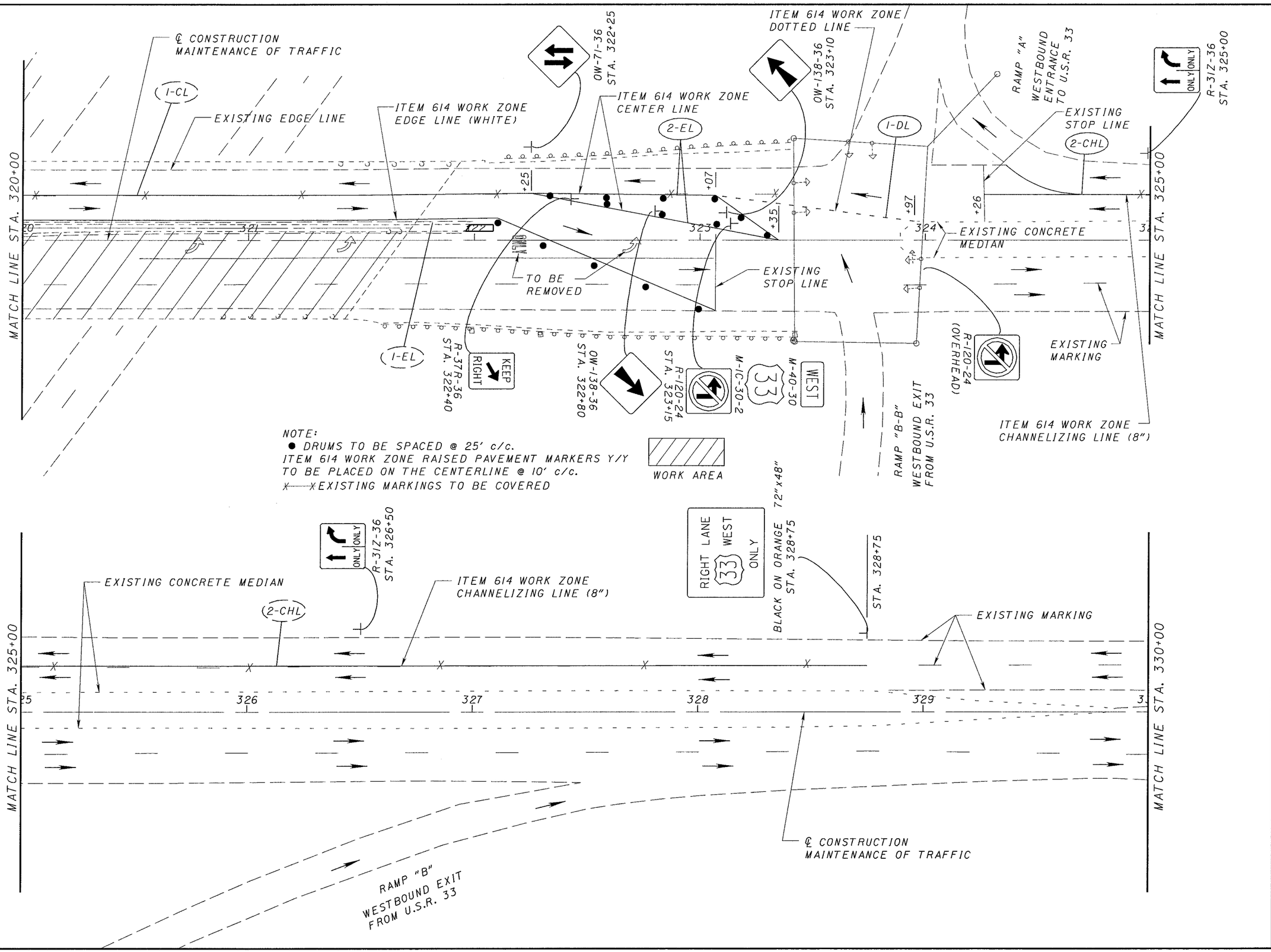

M.O.T. - HAMILTON ROAD PHASE 2
STA. 320+00 TO STA. 330+00

FRA-33-25.96
FRA-33-29.64

12/23/2003 - 11:36:57 AM - t:\009-02\dgn\Hamilton\HRMP3P1.dgn

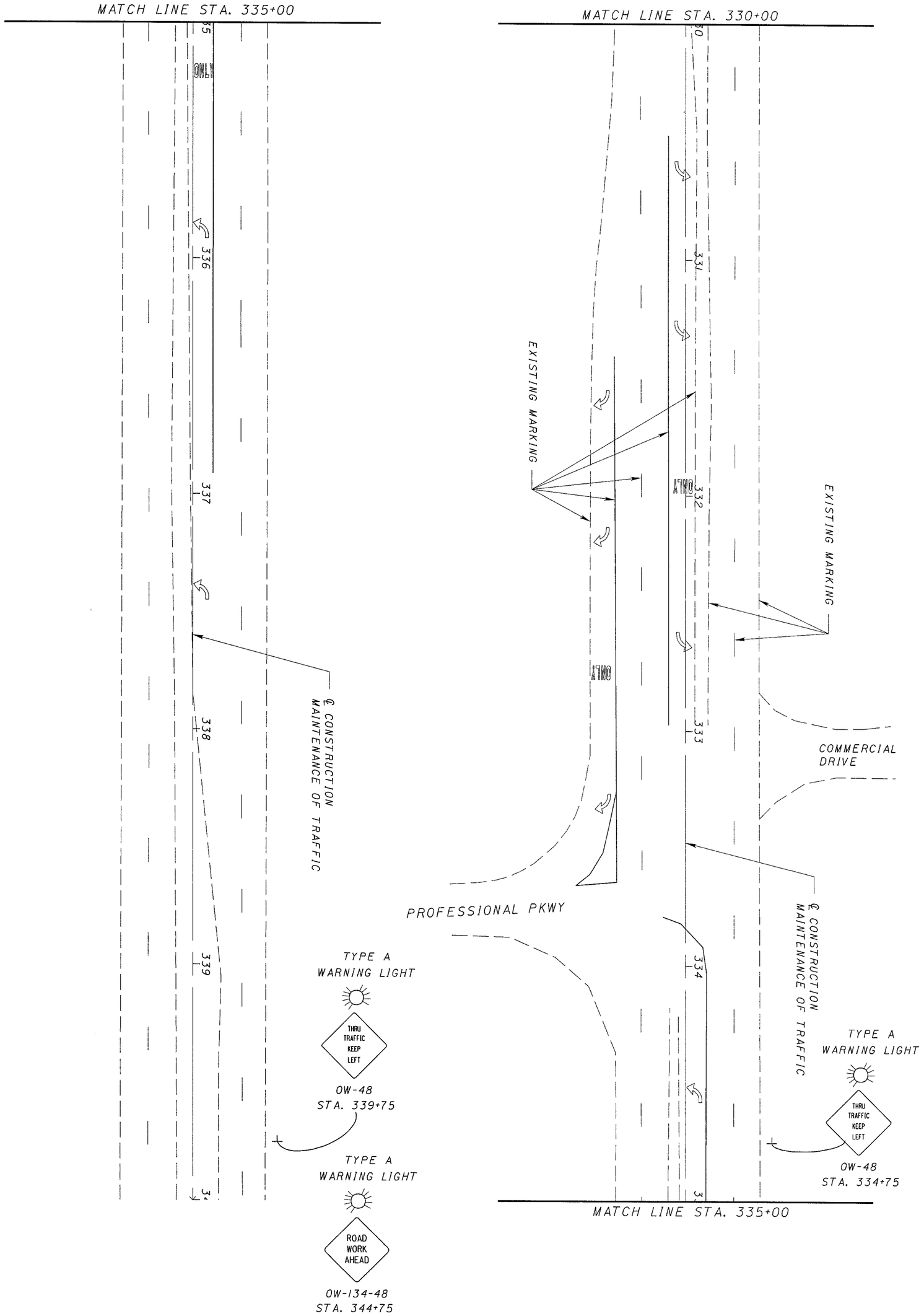

FRA-33-25.96
FRA-33-29.64

M.O.T. - HAMILTON ROAD PHASE 2
STA. 330+00 TO STA. 340+00

CALCULATED
CHECKED

0 20 40
HORIZONTAL SCALE IN FEET

N

N

HORIZONTAL
SCALE IN FEET
0 20 40

CALCULATED

CHECKED

M.O.T - HAMILTON ROAD PHASE 3
STA. 300+00 TO STA. 310+00

FRA-33-25.96
FRA-33-29.64

12/23/2003 - 11:37:18 AM - t:\009-02\dgn\Hamilton\HRMPIP2.dgn

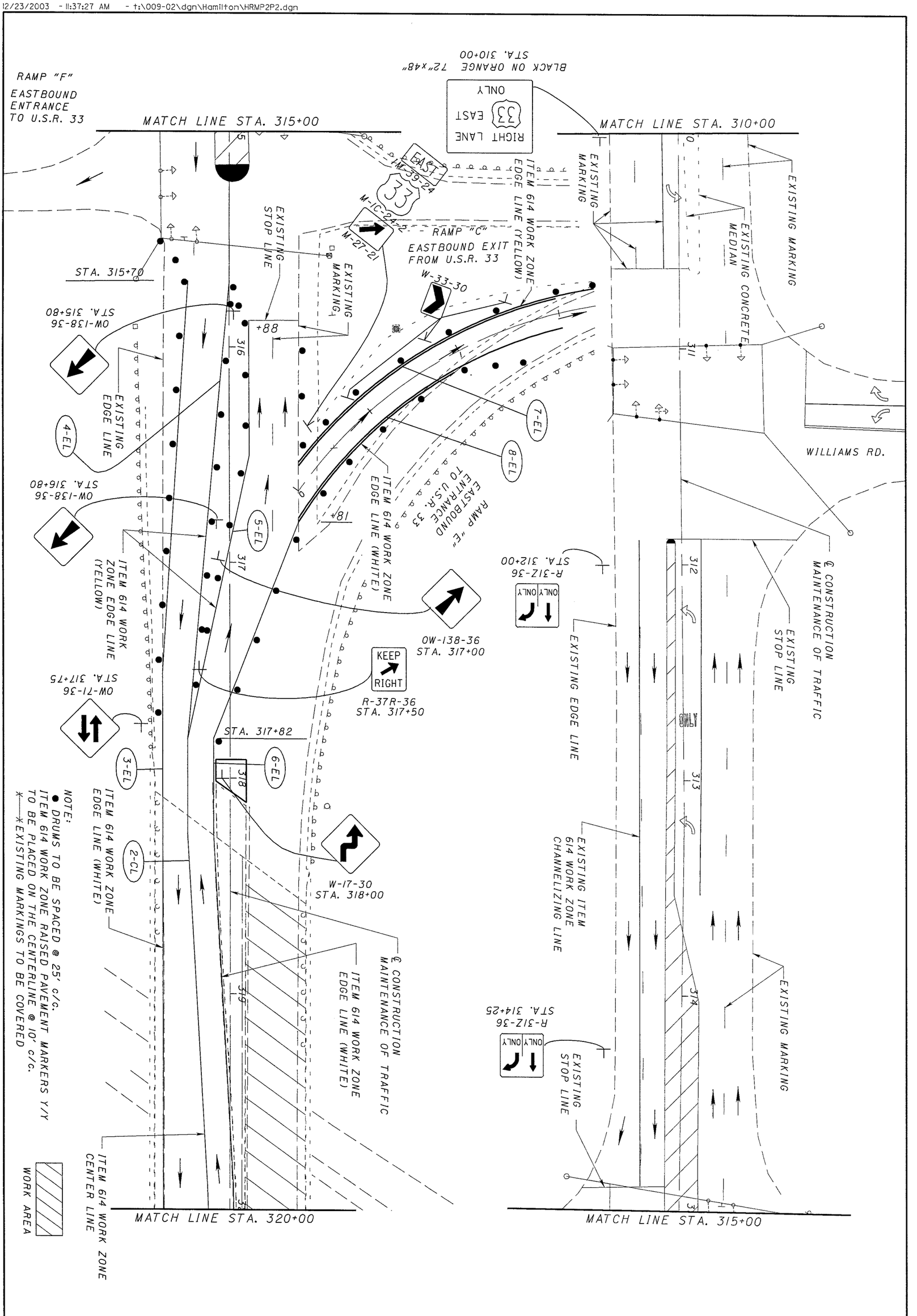

17/51	FRA-33-25.96 FRA-33-29.64	M.O.T. - HAMILTON ROAD PHASE 3 STA. 310+00 TO STA. 320+00	CALCULATED CHECKED 0 20 40 HORIZONTAL SCALE IN FEET N

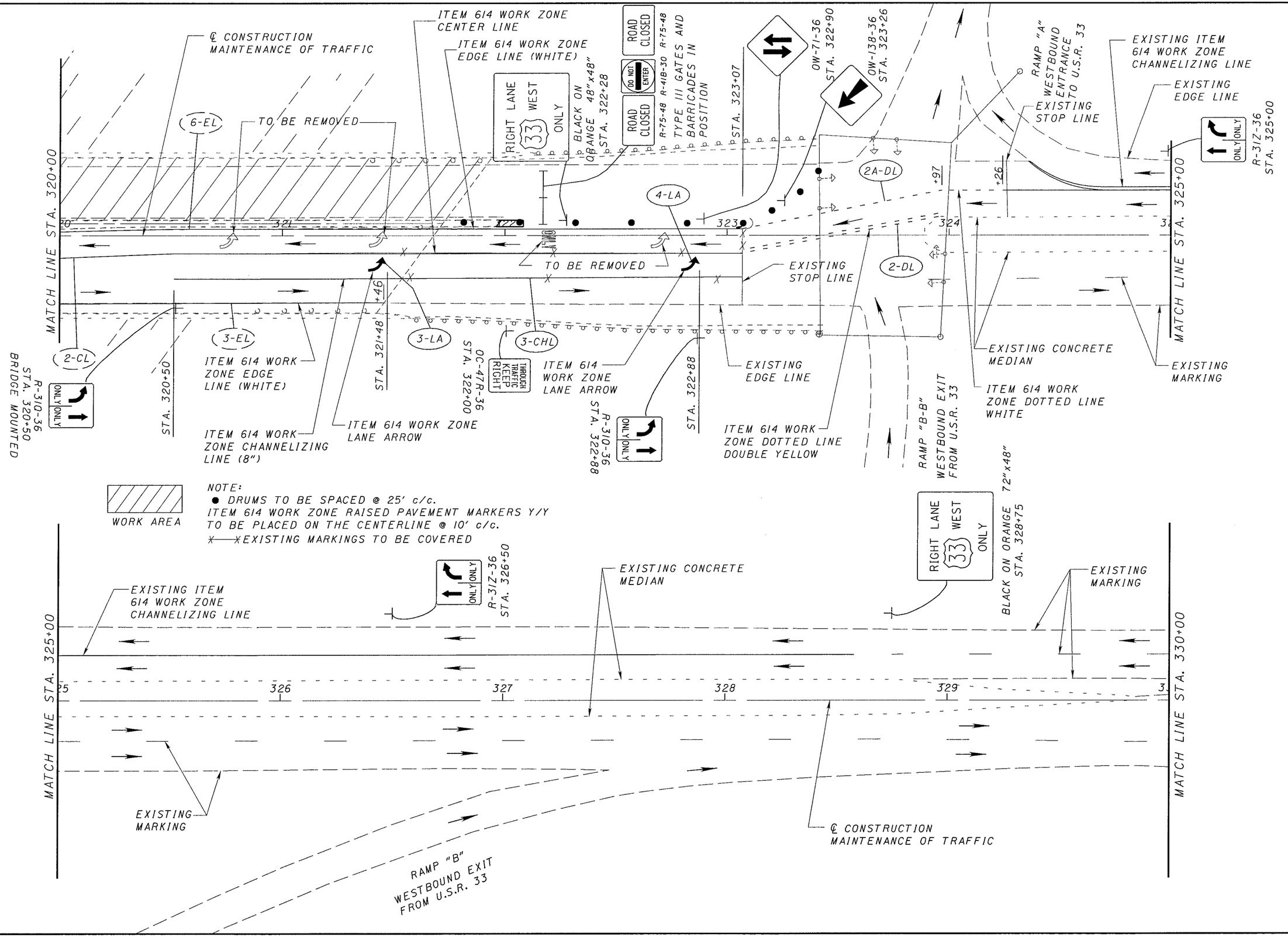

HORIZONTAL SCALE IN FEET
0 20 40

CALCULATED
CHECKED

M.O.T. - HAMILTON ROAD PHASE 3
STA. 320+00 TO STA. 330+00

FRA-33-25.96
FRA-33-29.64

12/23/2003 - 11:37:38 AM - t:\009-02\dgn\Hamilton\HRMP3P2.dgn

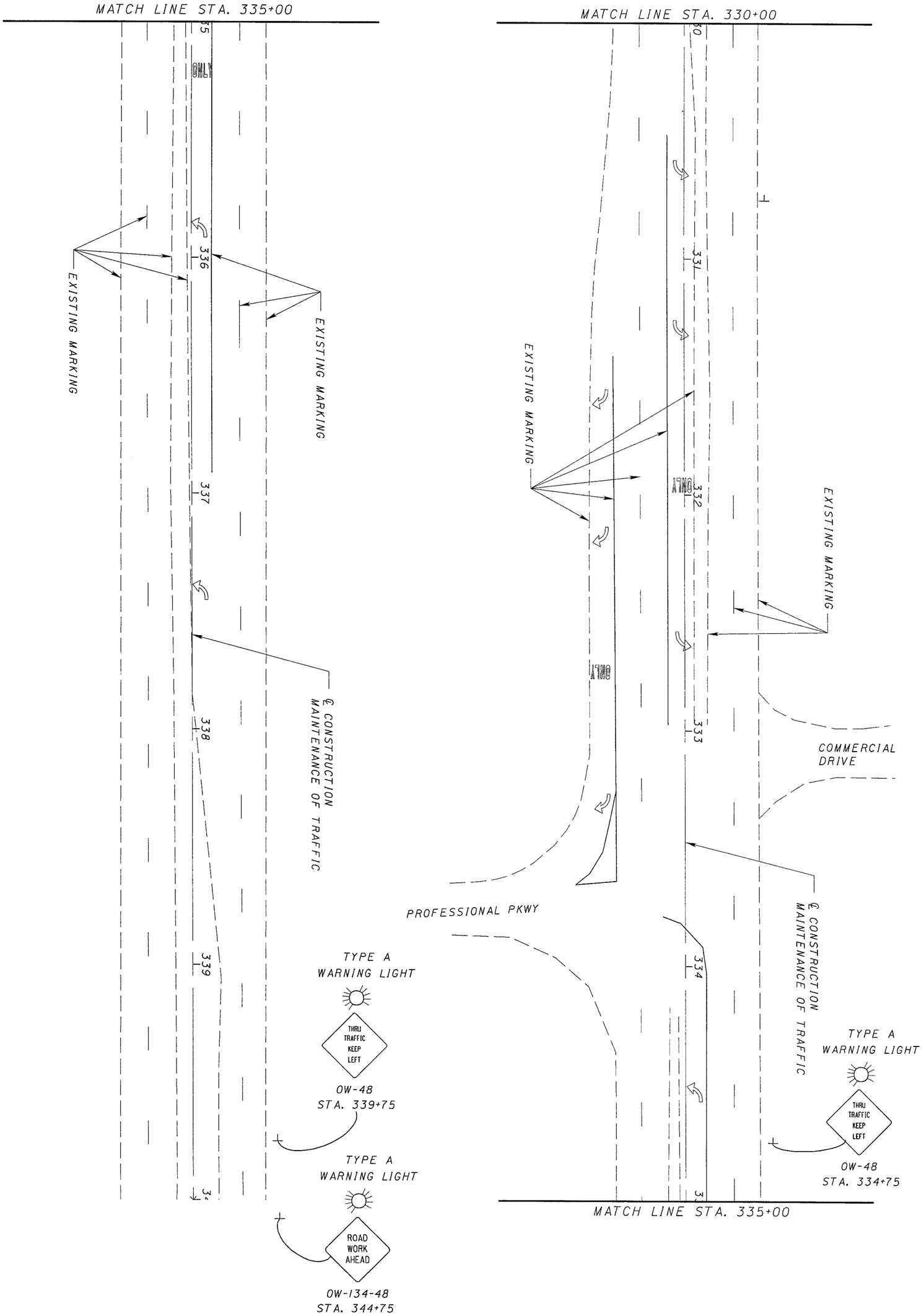

19 / 51	FRA-33-25.96 FRA-33-29.64	M.O.T. - HAMILTON ROAD PHASE 3 STA. 330+00 TO STA. 340+00	CALCULATED CHECKED 0 20 40 HORIZONTAL SCALE IN FEET N

SHEET NO.	REFERENCE NO.	LOCATION	STATION FROM	STATION TO	614 WORK ZONE EDGE LINE, CLASS I, 740.06, TYPE I (WHITE) MILE	614 WORK ZONE EDGE LINE, CLASS I, 740.06, TYPE I (YELLOW) MILE	614 WORK ZONE CENTER LINE, CLASS I, 740.06, TYPE I MILE	614 WORK ZONE CHANNELIZING LINE, CLASS I, 740.06, TYPE I FT.	614 WORK ZONE DOTTED LINE, CLASS I, 740.06, TYPE I FT.	614 WORK ZONE LANE ARROW, CLASS I, 740.06, TYPE I EACH	614 WORK ZONE RAISED PAVEMENT MARKER EACH		615 ROADS FOR MAINTAINING TRAFFIC LUMP	615 PAVEMENT FOR MAINTAINING TRAFFIC, CLASS B SQ YD		617 COMPACTED AGGREGATE, TYPE A CU YD					
13,14	1-EL	HAMILTON ROAD	315+50	323+07	0.143																
14	2-EL	HAMILTON ROAD	322+25	323+35		0.042															
17,18	3-EL	HAMILTON ROAD	315+70	321+46	0.109																
17	4-EL	HAMILTON ROAD	315+70	317+82		0.040															
17	5-EL	HAMILTON ROAD	315+88	317+82		0.037															
17,18	6-EL	HAMILTON ROAD	316+81	323+07	0.119																
17	7-EL	TEMP. RAMP	0+00	1+50		0.028															
17	8-EL	TEMP. RAMP	0+00	1+50	0.028																
13,14	1-CL	HAMILTON ROAD	315+88	322+25			0.121				65										
17,18	2-CL	HAMILTON ROAD	317+82	323+07			0.099				54										
13	1-CHL	HAMILTON ROAD	311+88	314+88				300													
14	2-CHL	HAMILTON ROAD	324+26	328+75				486													
18	3-CHL	HAMILTON ROAD	320+50	323+07				257													
13	1-LA	HAMILTON ROAD	312+50							1											
13	2-LA	HAMILTON ROAD	314+25							1											
18	3-LA	HAMILTON ROAD	321+48							1											
18	4-LA	HAMILTON ROAD	322+88							1											
14	1-DL	HAMILTON ROAD	323+07	323+97					90												
18	2-DL	HAMILTON ROAD	323+07	323+97					180												
18	2A-DL	HAMILTON ROAD	323+07	324+26					127												
10	2-C	TEMPORARY ROAD	0+00	1+72.28									LUMP	243		10					
		SUB-TOTALS			0.399	0.147															
TOTALS (CARRIED TO GENERAL SUMMARY)					0.55		0.22	1043	397	4	119		LUMP	243		10					

CALCULATED

CHECKED

MAINTAINING TRAFFIC SUB-SUMMARY
HAMILTON RD.

FRA-33-25.96
FRA-33-29.64

12/23/2003 - 11:38:10 AM - f:\009-02\dgn\Hamilton\009-02TS2.dgn

ITEM 202 CURB REMOVED

STA. 315+81.46 TO STA. 318+05.99
LT. 224.53 FT
RT. 224.53 FT
STA. 321+97.14 TO STA. 323+09.00
LT. 111.86 FT
RT. 111.86 FT
TOTAL = 673 FT

ITEM 202 CONCRETE MEDIAN REMOVED

STA. 321+97.14 TO STA. 323+09.00
(111.86'x2')/9 = 24.8 SQ YD
TOTAL = 25 SQ YD

ITEM 203 EXCAVATION

STA. 315+81.46 TO STA. 318+05.99
(((224.53'x14')/9)x(VARIABLE DEPTH)) = 151.3 CY
STA. 321+97.14 TO STA. 323+09.00
(((111.86'x3')/9)x(VARIABLE DEPTH)) = 18.6 CY
TOTAL = 170 CU YD

ITEM 407 TACK COAT

(0.075 GAL. PER SQ YD)
STA. 315+81.46 TO STA. 317+91.40
(((209.94x14')/9) = 326.6 SQ YDx0.075 = 24.5 GAL
STA. 322+08.24 TO STA. 323+09.00
(((100.76'x3')/9) = 33.6 SQ YDx0.075 = 2.5 GAL
TOTAL = 27 GALLON

ITEM 301 ASPHALT CONCRETE BASE, PG64-22

STA. 315+81.46 TO STA. 318+05.99
(((224.53'x14')/9)x(9"/12/3)) = 87.3 CY
STA. 321+97.14 TO STA. 323+09.00
(((111.86'x3')/9)x(9"/12/3)) = 9.3 CY
TOTAL = 97 CU YD

ITEM 304 AGGREGATE BASE

STA. 315+81.46 TO STA. 318+05.99
(((224.53'x14')/9)x(6"/12/3)) = 58.2 CY
STA. 321+97.14 TO STA. 323+09.00
(((111.86'x3')/9)x(6"/12/3)) = 6.2 CY
TOTAL = 65 CU YD

ITEM 204 SUBGRADE COMPACTION

STA. 315+81.46 TO STA. 318+05.99
((224.53'x14')/9) = 349.3 SQ YD
STA. 321+97.14 TO STA. 323+09.00
((111.86'x3')/9) = 37.3 SQ YD
TOTAL = 387 SQ YD

ITEM 255 FULL DEPTH PAVEMENT SAWING

STA. 315+81.46 TO STA. 318+05.99
LT. 224.53 FT
RT. 224.53 FT
STA. 321+97.14 TO STA. 323+09.00
LT. 111.86 FT
RT. 111.86 FT
TOTAL = 673 FT

ITEM 609 CONCRETE MEDIAN

STA. 317+91.40 TO STA. 318+05.99
(((VARIABLE LENGTH(10'to19.7'))x14')/9) = 23.2 SQ YD
STA. 321+97.14 TO STA. 323+08.24
(((VARIABLE LENGTH(10'to12.3'))x3')/9) = 3.7 SQ YD
TOTAL = 27 SQ YD

ITEM 448 ASPHALT CONCRETE SURFACE COURSE, TYPE I, PG64-22

STA. 315+81.46 TO STA. 317+91.40
(((209.94'x14')/9)x(1.5"/12/3)) = 13.6 CY
STA. 322+08.24 TO STA. 323+09.00
(((100.76'x3')/9)x(1.5"/12/3)) = 1.4 CY
TOTAL = 15 CU YD

QUANTITIES CARRIED TO GENERAL SUMMARY SHT. 6

CALCULATED
CHECKED

HAMILTON ROAD CALCULATIONS

FRA-33-25.96
FRA-33-29.64

12/23/2003 - 01:38:40 PM - sderwacter - t:\009-02\dgn\Hamilton\HRMGC.dgn

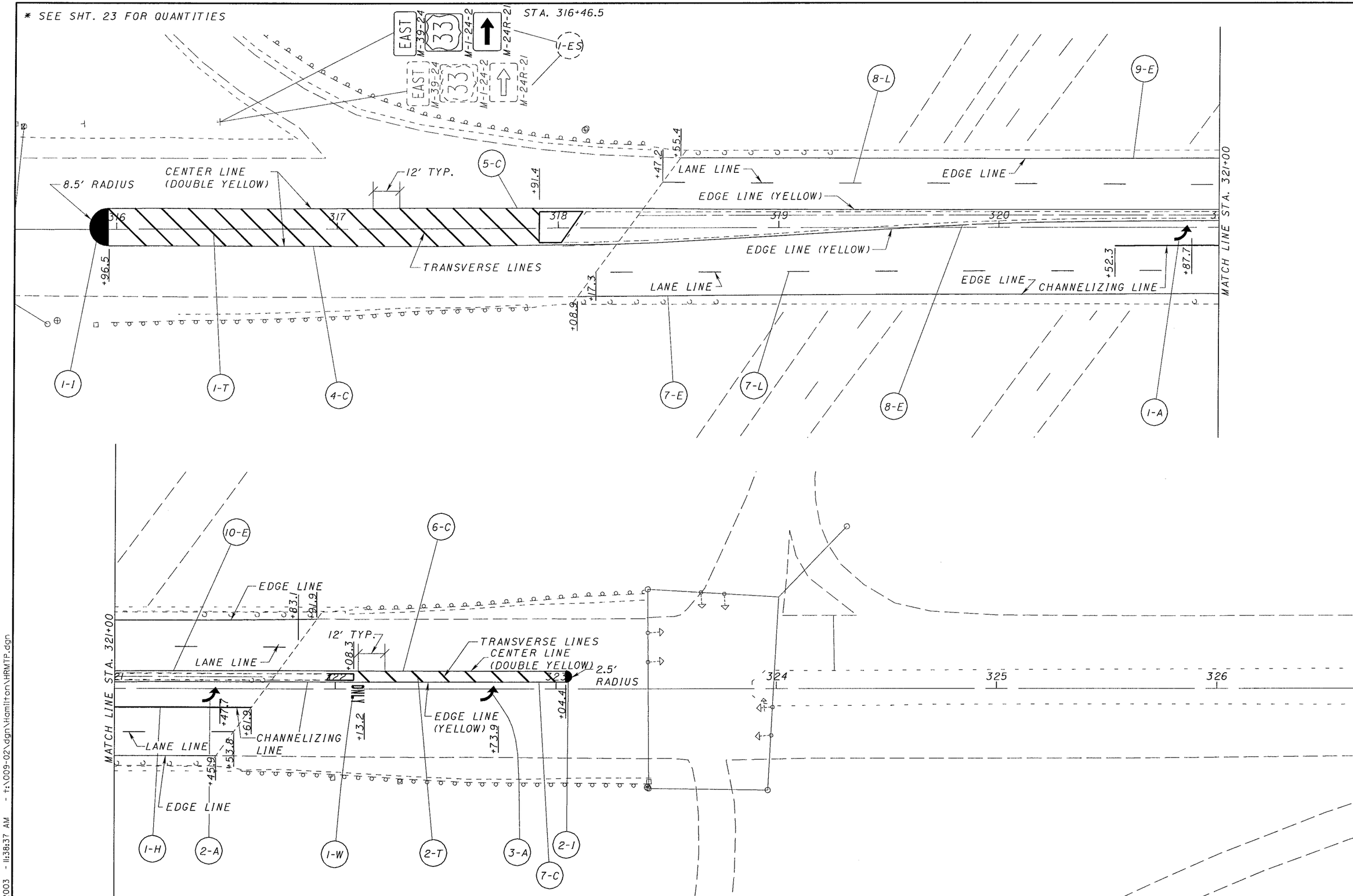

HORIZONTAL SCALE IN FEET
0 20 40

CALCULATED
CHECKED

HAMILTON ROAD
TRAFFIC CONTROL

FRA-33-25.96
FRA-33-29.64

12/23/2003 - 11:38:37 AM - f:\009-02\dgn\Hamilton\HRMTP.dgn

REF NO.	SHEET NO.	STATION FROM	STATION TO	SIDE	CODE	SIZE (INCHES)	646 CENTER LINE (DOUBLE YELLOW) MILE	646 TRANSVERSE LINE (YELLOW) FT	646 ISLAND MARKING (YELLOW) SQ FT	646 WORD ON PAVEMENT, 72" EACH	646 EDGE LINE (WHITE) MILE	646 EDGE LINE (YELLOW) MILE	646 LANE LINE MILE	646 CHANNELIZING LINE FT	646 LANE ARROW EACH	630 GROUND MOUNTED SUPPORT, NO. 3 POST FT	630 SIGN, FLAT SHEET SQ FT	630 REMOVAL OF GROUND MOUNTED SIGN AND DISPOSAL EACH	630 REMOVAL OF GROUND MOUNTED POST SUPPORT AND DISPOSAL EACH		
1-1	22	315+96.5		℄					113												
2-1	22	323+04.4		LT.					9												
7-E	22	318+08.9	321+45.9	RT.							0.064										
8-E	22	317+91.4	322+08.3	LT/RT								0.079									
9-E	22	318+55.4	321+91.9	LT.							0.064										
10-E	22	317+91.4	322+08.3	LT.								0.077									
1-T	22	315+96.5	317+91.4	℄				390													
2-T	22	322+08.3	323+04.4	LT.				57													
4-C	22	315+96.5	317+91.4	RT.			0.037														
5-C	22	315+96.5	317+91.4	LT.			0.037														
6-C	22	322+08.3	323+04.4	LT.			0.018														
7-C	22	322+08.3	323+04.4	LT.			0.018														
1-A	22	320+87.7		RT.											1						
2-A	22	321+47.7		RT.											1						
3-A	22	322+73.9		RT.											1						
7-L	22	318+17.3	321+53.8	RT.									0.064								
8-L	22	318+47.2	321+83.1	LT.									0.064								
1-W	22	322+13.2		RT.						1											
1-H	22	320+52.3	321+61.9	RT.										110							
1-ES	22	316+46.5		LT.	M-39-24	24x12										15	2	3	1		
					M-1-24-2	24x24											4				
					M-24R-21	21x15											2.2				
SUB-TOTALS							0.110				0.128	0.156	0.128								
TOTALS CARRIED TO GENERAL SUMMARY							0.11	447	122	1	0.28		0.13	110	3	15	8.2	3	1		

CALCULATED

CHECKED

HAMILTON ROAD
TRAFFIC CONTROL QUANTITIES

FRA-33-25.96
FRA-33-29.64

12/23/2003 - 11:38:48 AM - sderwater - t:\009-02\dgn\Hamilton\HRMTS.dgn

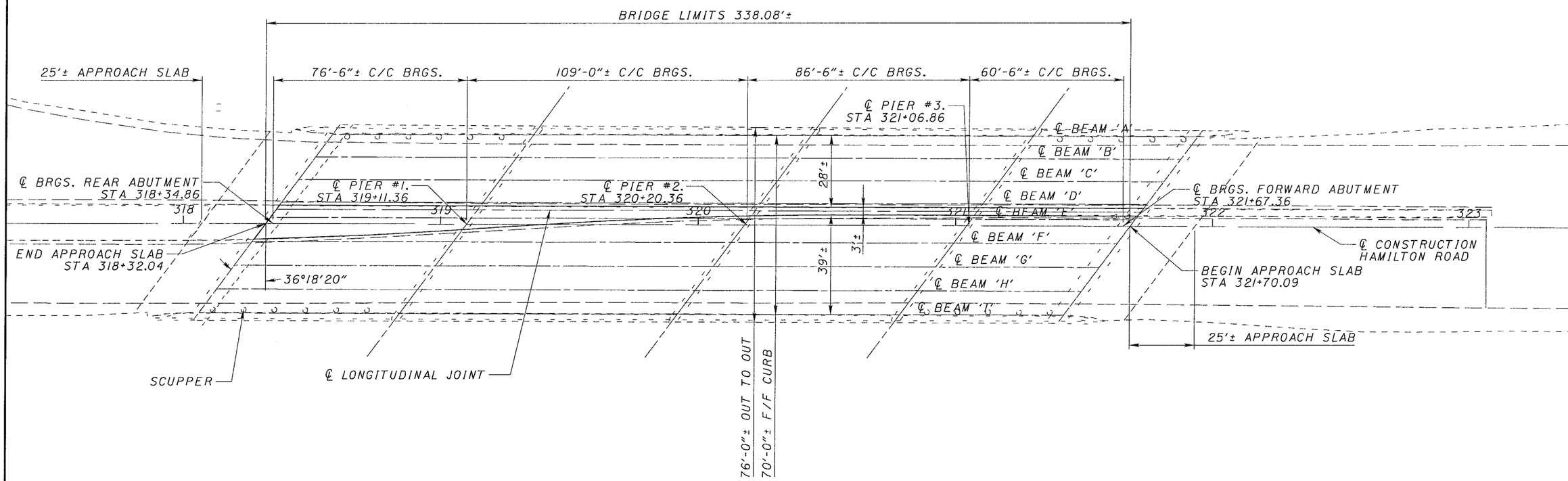

PROPOSED WORK:

1) REMOVE 1.25" LATEX OVERLAY FROM DECK
2) REMOVE 0.5" MONOLITHIC CONCRETE USING HYDRODEMOLITION ON DECK
3) REPAIR CURBS ON BRIDGE AND APPROACH SLABS WITH PATCHING
4) REPAIR AND PATCH TOPS OF BACKWALLS AT JOINTS
5) REPAIR BACKWALLS AND ABUTMENTS WITH PATCHING
6) CLEAN EXPANSION JOINTS AND SCUPPERS
7) SHIM FLOATING BEAMS AND RESET ROCKERS
8) APPLY 1.75" MIRCO-SILICA CONCRETE DECK OVERLAY

EXISTING STRUCTURE

TYPE: CONTINUOUS STEEL BEAM BRIDGE WITH REINFORCED CONCRETE DECK AND SUBSTRUCTURE
SPAN: 60'-6", 86'-6", 109'-0", 76'-6" C/C BEARING
ROADWAY: 70'-0" F/F OF 2'-3" SAFETY CURB

LOADING: CF 400(57)
WEARING SURFACE: 1" MONOLITHIC CONCRETE
SKEW: 36° 18' 20" LEFT FORWARD
ALIGNMENT: TANGENT
APPROACH SLABS: 25' LONG (SPECIAL)

PROPOSED STRUCTURE

TYPE: NO MODIFICATION TO EXISTING

SPAN: NO MODIFICATION TO EXISTING
ROADWAY: NO MODIFICATION TO EXISTING

LOADING: NO MODIFICATION TO EXISTING
WEARING SURFACE: 1.75" MICRO SILICA MODIFIED CONCRETE OVERLAY
SKEW: NO MODIFICATION TO EXISTING
ALIGNMENT: NO MODIFICATION TO EXISTING
APPROACH SLABS: NO MODIFICATION TO EXISTING

DESIGN AGENCY
JOBES HENDERSON & ASSOCIATES, INC.
59 GRANT ST NEWARK, OH 43055

DATE	REVIEWED	DRAWN	REVISED	STRUCTURE FILE NUMBER
				25/6381

DESIGNED BMP | CHECKED CMS

STA. 318+32.04
STA. 321+70.09

GENERAL PLAN

BRIDGE NO. FRA-33-2596
HAMILTON ROAD OVER U.S. 33

FRA-33-25.96

12/23/2003 - 11:39:05 AM - t:\009-02\dgn\PID 25710\HRBGP1.dgn

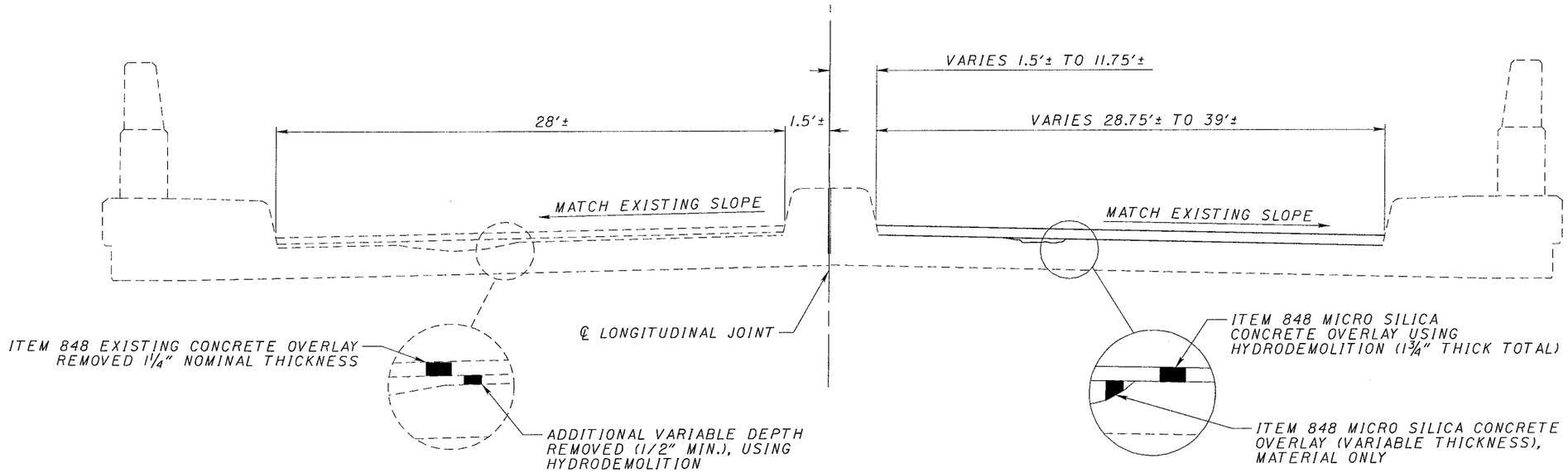

EXISTING OVERLAY REMOVAL, DETAIL "A"

PROPOSED DECK OVERLAY, DETAIL "B"

DESIGN AGENCY
JOBES HENDERSON & ASSOCIATES, INC.
59 GRANT ST NEWARK, OH 43055

DESIGNED	DRAWN	REVIEWED	DATE
BMP			
CHECKED	REVISED	STRUCTURE FILE NUMBER	
CMS		2516381	

TYPICAL SECTION
BRIDGE NO. FRA-33-2596
HAMILTON ROAD OVER U.S. 33

FRA-33-25.96

2/4

25/51

12/23/2003 - 11:39:17 AM - sderwacter - t:\009-02\dgn\PID 25710\HRBGY1.dgn

SUPPLEMENTAL SPECIFICATIONS

REFER TO THE FOLLOWING SUPPLEMENTAL SPECIFICATION(S):

848 DATED 2-08-02

908 DATED 4-18-03

954 DATED 9-09-97

DESIGN SPECIFICATIONS

DESIGN SPECIFICATIONS: THIS STRUCTURE CONFORMS TO "STANDARD SPECIFICATIONS FOR HIGHWAY BRIDGES" ADOPTED BY THE AMERICAN ASSOCIATION OF STATE HIGHWAY AND TRANSPORTATION OFFICIALS, 1996, INCLUDING THE 2002 AND 2003 INTERIM SPECIFICATIONS AND THE ODOT BRIDGE DESIGN MANUAL.

EXISTING STRUCTURE VERIFICATION

EXISTING STRUCTURE VERIFICATION: DETAILS AND DIMENSIONS SHOWN ON THESE PLANS PERTAINING TO THE EXISTING STRUCTURE HAVE BEEN OBTAINED FROM PLANS OF THE EXISTING STRUCTURE AND FROM FIELD OBSERVATIONS AND MEASUREMENTS. CONSEQUENTLY, THEY ARE INDICATIVE OF THE EXISTING STRUCTURE AND THE PROPOSED WORK BUT THEY SHALL BE CONSIDERED TENTATIVE AND APPROXIMATE. THE CONTRACTOR IS REFERRED TO CMS SECTIONS 102.05, 105.02 AND 513.04.

BASE CONTRACT BID PRICES UPON A RECOGNITION OF THE UNCERTAINTIES DESCRIBED ABOVE AND UPON A PREBID EXAMINATION OF THE EXISTING STRUCTURE. HOWEVER, THE DEPARTMENT WILL PAY FOR ALL PROJECT WORK BASED UPON ACTUAL DETAILS AND DIMENSIONS WHICH HAVE BEEN VERIFIED IN THE FIELD.

COPIES OF THE EXISTING BRIDGE PLANS ARE ON FILE AT THE DISTRICT 6 OFFICE OF THE OHIO DEPARTMENT OF TRANSPORTATION.

ITEM 519, PATCHING CONCRETE STRUCTURE, AS PER PLAN

THE CONTRACTOR SHALL PATCH AREAS ON THE CONCRETE MEDIAN AND SAFETY CURBS ON BOTH THE BRIDGE AND APPROACH SLABS. THE CONTRACTOR SHALL ALSO PATCH THE BACKWALLS AND ABUTMENTS PRIMARILY AT THE JOINTS. THIS WORK SHALL BE AS DIRECTED BY THE ENGINEER. THE PATCHED AREAS SHALL HAVE A MINIMUM DEPTH OF 4" AND A MAXIMUM DEPTH OF 8" UNLESS OTHERWISE DIRECTED BY THE ENGINEER.

PRIOR TO THE SURFACE CLEANING SPECIFIED IN 519.04 AND WITHIN 24 HOURS OF PLACING PATCHING MATERIAL, BLAST CLEAN ALL SURFACES TO BE PATCHED INCLUDING THE EXPOSED REINFORCING STEEL. ACCEPTABLE METHODS INCLUDE HIGH-PRESSURE WATER BLASTING WITH OR WITHOUT ABRASIVES IN THE WATER, ABRASIVE BLASTING WITH CONTAINMENT, OR VACUUM ABRASIVE BLASTING.

ANY EXISTING REINFORCING BARS WHICH ARE TO BE INCORPORATED INTO THE NEW WORK AND WHICH ARE MADE UNUSABLE BY CONCRETE REMOVAL OPERATIONS SHALL BE REPLACED WITH NEW STEEL AT THE CONTRACTOR'S COST. ANY EXISTING REINFORCING BARS DEEMED BY THE ENGINEER TO BE UNUSABLE BECAUSE OF CORROSION SHALL BE REPLACED WITH NEW STEEL AND SHALL BE INCLUDED FOR PAYMENT IN ITEM 519.

THE FOLLOWING ESTIMATED QUANTITY HAS BEEN INCLUDED IN THE PLAN FOR BIDDING PURPOSES BUT FINAL QUANTITIES SHALL BE MEASURED AT THE COMPLETION OF WORK:

ITEM 519, PATCHING CONCRETE STRUCTURE, AS PER PLAN

- 355 SQ FT

ITEM 516 - REFURBISHING BEARING DEVICE, AS PER PLAN:

THIS ITEM SHALL INCLUDE ALL WORK NECESSARY TO PROPERLY ALIGN BRIDGE BEARINGS AS WELL AS THEIR CLEANING AND TOUCH-UP PAINTING. INCLUDED SHALL BE THE DISASSEMBLY OF THE BEARINGS, HAND TOOL CLEANING (GRINDING IF NECESSARY), PAINTING ACCORDING TO ITEM 514, REPLACEMENT OF ANY DAMAGED SHEET LEAD WITH PREFORMED BEARING PADS (711.21), INSTALLATION OF ANY NECESSARY STEEL SHIMS OF THE SAME SIZE AS THE BEARINGS TO PROVIDE A SNUG FIT, REALIGNMENT OF THE UPPER BEARING PLATE BY REMOVING EXISTING WELDS AND REWELDING SO THAT THE BEARINGS ARE VERTICALLY ALIGNED AT 60 DEGREES F, LUBRICATING SLIDING SURFACES, AND REASSEMBLY OF THE BEARINGS. THE CONTRACTOR SHALL ASSURE ALL BEARINGS ARE SHIMMED ADEQUATELY AND THAT NO BEAMS AND/OR BEARING DEVICES ARE "FLOATING". AT THE OPTION OF THE CONTRACTOR AND AT NO ADDITIONAL COST TO THE STATE, NEW BEARINGS OF THE SAME TYPE AS THE EXISTING MAY BE INSTALLED IN PLACE OF REFURBISHING THE BEARINGS. ALL WORK SHALL BE TO THE SATISFACTION OF THE ENGINEER. PAYMENT FOR ALL THE ABOVE DESCRIBED LABOR AND MATERIALS WILL BE MADE AT THE CONTRACT PRICE BID FOR ITEM 516 - REFURBISH BEARING DEVICES, AS PER PLAN.

THE FOLLOWING QUANTITY HAS BEEN CARRIED TO THE GENERAL SUMMARY:

FRA-33-2596.....18 EACH

ITEM 516, JACKING AND TEMPORARY SUPPORT OF SUPERSTRUCTURE, AS PER PLAN

GENERAL: THIS WORK CONSISTS OF RAISING OR RE-POSITIONING EXISTING STRUCTURES TO THE DIMENSIONS AND REQUIREMENTS DEFINED IN THE PROJECT PLANS.

SUBMITTAL REQUIREMENTS: AN OHIO REGISTERED ENGINEER SHALL PREPARE, SEAL AND DATE PLANS FOR A JACKING SYSTEM, INCLUDING ANY TEMPORARY OR PERMANENT SUPPORTS, SUFFICIENT TO PERFORM THE WORK DESCRIBED IN THE PLANS. SUBMIT THREE SETS OF THESE PLANS TO THE DIRECTOR FOR APPROVAL AT LEAST THIRTY (30) DAYS BEFORE ACTUAL WORK IS TO BEGIN.

JACKING SUBMITTALS SHALL INCLUDE AT LEAST THE FOLLOWING:

1. THE SIGNATURE AND NUMBER, OR PROFESSIONAL SEAL, OF THE OHIO REGISTERED PROFESSIONAL ENGINEER WHO PREPARED THE SUBMITTAL.
2. CALCULATIONS AND ANALYSES OF THE STRUCTURE TO DETERMINE AND DEFINE THE ACTUAL LOADING APPLIED AT THE JACKING POINTS.
3. A DRAWING SHOWING THE PHYSICAL AND DIMENSIONAL POSITION OF THE JACKS WITH RESPECT TO THE STRUCTURE INCLUDING CLEARANCES AND CENTER OF LIFT.
4. A SCHEMATIC LAYOUT OF JACKS, CHECK VALVES, PUMPS WITH 3 WAY RETRACTOR VALVE, PRESSURE GAGES, FLOW CONTROL VALVES, ETC. IN ACCORDANCE WITH MANUFACTURER'S RECOMMENDATIONS. ALL JACKS FOR EACH ABUTMENT OR PIER SHALL BE CONNECTED TOGETHER. ALL JACKS AT EACH ABUTMENT OR PIER SHALL BE THE SAME SIZE.
5. ANALYSIS AND CALCULATIONS OF THE STRESSES INDUCED OR CREATED IN THE STRUCTURE AND ANY TEMPORARY OR PERMANENT SUPPORTS. DESIGN CALCULATIONS FOR ANY TEMPORARY OR PERMANENT SUPPORTS.
6. PHYSICAL DIMENSIONS, MATERIALS, AND FABRICATION DETAILS OF ANY TEMPORARY OR PERMANENT SUPPORTS. HORIZONTAL AND VERTICAL MOVEMENT RESTRAINT SHALL BE PROVIDED.
7. A STEP BY STEP PROCEDURE DETAILING ALL STEPS IN THE JACKING OPERATION.
8. METHOD OF ATTACHMENT TO STRUCTURAL MEMBERS. WELDING TO TENSION AREAS WILL NOT BE PERMITTED.

JACKING SYSTEM REQUIREMENTS: THE ENTIRE SYSTEM INCLUDING JACKS SHALL HAVE 20% MORE CAPACITY THAN REQUIRED BASED ON CALCULATED LOADS. FOR LIFTS GREATER THAN 1 INCH, JACKS SHALL HAVE LOCKING NUTS TO POSITIVELY LOCK AND SUPPORT THE STRUCTURE DURING THE LIFT. JACKS SHALL HAVE A SWIVEL LOAD CAP, A DOMED PISTON HEAD OR SOME OTHER DEVICE TO PROTECT AGAINST THE EFFECTS OF SIDE LOAD ON THE JACK. DO NOT USE JACKS ALONE TO SUPPORT LOADS EXCEPT DURING THE ACTUAL JACKING OPERATION. USE TEMPORARY SUPPORTS, BLOCKING OR OTHER METHODS APPROVED BY THE DIRECTOR. DO NOT USE SINGLE ACTING RAMS WITH NO OVER-TRAVEL PROTECTION SYSTEM. HAVE SPARE EQUIPMENT AVAILABLE ON SITE IN ORDER TO PROCEED WITH THE JACKING IN THE EVENT OF BREAKDOWN. PROVIDE A LIST OF SPARE EQUIPMENT TO THE ENGINEER.

JACKING OPERATION REQUIREMENTS: AT A MINIMUM, A JACKING OPERATION SHALL LIFT ALL BEAMS AT ANY ONE ABUTMENT OR PIER SIMULTANEOUSLY. THE ONLY EXCEPTION IS THE SITUATION WHERE THE WORK INVOLVES REPLACING OR REHABILITATING INDIVIDUAL BEARINGS; NO PERMANENT SHIMMING IS REQUIRED AND THE HEIGHT OF THE LIFT SHALL NOT EXCEED 1/4 INCH. THE MAXIMUM DIFFERENTIAL JACKING HEIGHT BETWEEN ANY ADJACENT ABUTMENTS OR PIERS SHALL BE 1 INCH OR LESS. IF THIS 1 INCH LIMIT IS TO BE EXCEEDED, PROVIDE CALCULATIONS SHOWING THAT THE SUPERSTRUCTURE COMPONENTS WILL NOT BE TEMPORARILY STRESSED BEYOND ALLOWABLE STRESSES AND THAT NO PERMANENT STRESSES WILL BE INDUCED IN THE COMPONENTS AFTER THEY OBTAIN THEIR FINAL POSITION. IF, DURING THE JACKING OPERATIONS, CRACKING OF THE CONCRETE SUPERSTRUCTURE, SEPARATION OF THE CONCRETE DECK FROM THE STEEL STRINGERS, OR OTHER DAMAGE TO THE STRUCTURE IS VISUALLY OBSERVED, IMMEDIATELY CEASE THE JACKING OPERATION AND INSTALL SUPPORTS TO THE SATISFACTION OF THE ENGINEER. ANALYZE THE DAMAGE AND SUBMIT A METHOD OF CORRECTION TO THE ENGINEER FOR APPROVAL. EPOXY INJECT ALL BEAMS THAT SEPARATE FROM THE DECK FOR THE DISTANCE OF THE SEPARATION IN ACCORDANCE WITH ODOT'S PROPOSAL NOTE "CONCRETE REPAIR BY EPOXY INJECTION". THE DEPARTMENT WILL NOT PAY FOR THE COST OF THIS EPOXY INJECTION OR OTHER REQUIRED REPAIRS. THE BRIDGE BEARINGS SHALL BE FULLY SEATED AT ALL CONTACT AREAS. IF FULL SEATING IS NOT ATTAINED, SUBMIT A REPAIR PLAN TO THE ENGINEER. THE DEPARTMENT WILL NOT PAY FOR THE REPAIR COSTS TO ENSURE FULL SEATING ON BEARINGS.

METHOD OF MEASUREMENT: THE DEPARTMENT WILL MEASURE THIS WORK ON A LUMP SUM BASIS.

BASIS OF PAYMENT: THE DEPARTMENT WILL PAY FOR THE ACCEPTED QUANTITIES AT THE CONTRACT PRICE FOR ITEM 516, JACKING AND TEMPORARY SUPPORT OF SUPERSTRUCTURE, AS PER PLAN.

ITEM 848 SURFACE PREPARATION USING HYDRODEMOLITION, AS PER PLAN

IN ADDITION TO THE REQUIREMENTS OF ITEM 848 SURFACE PREPARATION USING HYDRODEMOLITION, THIS WILL ALSO INCLUDE THE FOLLOWING:
DEBRIS PLUGGING THE EXISTING SLIDING PLATE EXPANSION JOINT AND SCUPPERS SHALL BE REMOVED AS DIRECTED BY THE ENGINEER.

* SEE SHEET 4/4 FOR QUANTITIES

ESTIMATED QUANTITIES

ITEM	ITEM EXT.	TOTAL	UNIT	DESCRIPTION	APPROACH SLABS	SUPERSTRUCTURE	SUBSTRUCTURE	SEE SHT NO.
					FRA-33-2596	FRA-33-2596	FRA-33-2596	
519	11101	355	SQ FT	PATCHING CONCRETE STRUCTURE, AS PER PLAN	185	70	100	26
516	45305	18	EACH	REFURBISH BEARING DEVICE, AS PER PLAN		18		26
516	47001	LUMP		JACKING AND TEMPORARY SUPPORT OF SUPERSTRUCTURE, AS PER PLAN		LUMP		26
848	10000	2407	SQ YD	MICRO SILICA MODIFIED CONCRETE OVERLAY USING HYDRODEMOLITION (1.75")		2407		
848	20001	2407	SQ YD	SURFACE PREPARATION USING HYDRODEMOLITION, AS PER PLAN		2407		26
848	30000	72	CU YD	MICRO SILICA MODIFIED CONCRETE OVERLAY (VARIABLE THICKNESS), MATERIAL ONLY		72		
848	50000	72	SQ YD	HAND CHIPPING		72		
848	50200	88	CU YD	FULL-DEPTH REPAIR		88		
848	50320	2407	SQ YD	EXISTING CONCRETE OVERLAY REMOVED		2407		
848	50340	192	SQ YD	REMOVAL OF DEBONDED OR DETERIORATED EXISTING VARIABLE THICKNESS CONCRETE OVERLAY		192		

DESIGN AGENCY
JOBES HENDERSON & ASSOCIATES, INC.
59 GRANT ST NEWARK, OH 43055

REVIEWED | DATE | STRUCTURE FILE NUMBER 2516381
DRAWN | REVISED
DESIGNED SJD | CHECKED CMS

ESTIMATED QUANTITIES
BRIDGE NO. FRA-33-2596
HAMILTON ROAD OVER U.S. 33

FRA-33-25.96

12/23/2003 - 11:39:55 AM - sderwacter - t:\009-02\dgn\Hamilton\HRMSS.dgn

EXISTING TYPICAL

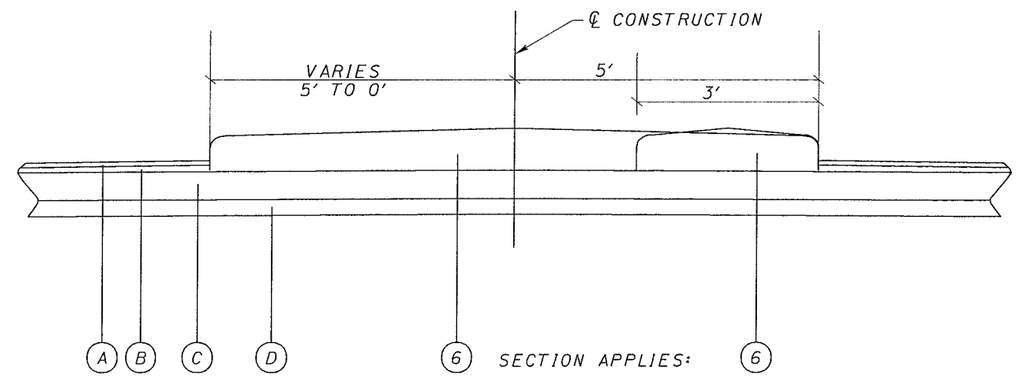

SECTION APPLIES:
STA. 216+18.04 - STA. 218+63.42
STA. 221+97.26 - STA. 222+40.49

PROPOSED TYPICAL

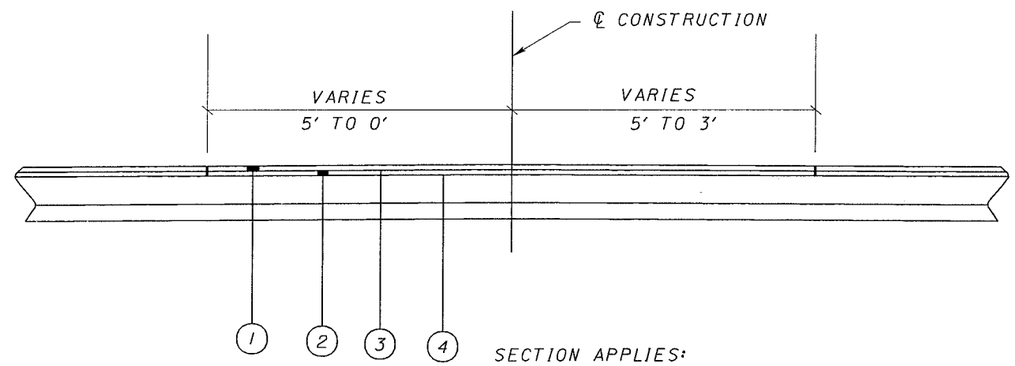

SECTION APPLIES:
STA. 216+18.04 - STA. 218+51.92
STA. 222+08.88 - STA. 222+40.49

PROPOSED TYPICAL

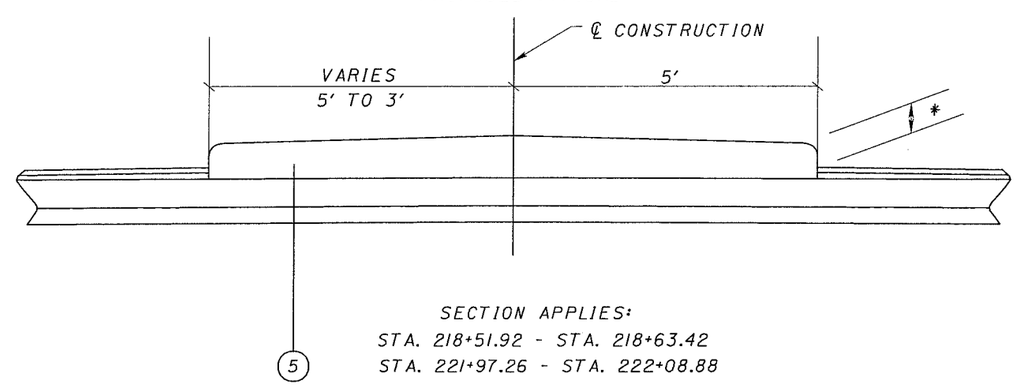

* TRANSITION MEDIAN HEIGHT FROM 6" @ APPROACH SLAB TO 0" IN 10'.

SECTION APPLIES:
STA. 218+51.92 - STA. 218+63.42
STA. 221+97.26 - STA. 222+08.88

LEGEND

EXISTING

(A) +/- 1¼" ASPHALT CONCRETE
(B) +/- 1¼" ASPHALT CONCRETE
(C) 7" BITUMINOUS AGGREGATE BASE
(D) 4" SUBBASE

PROPOSED

(1)	ITEM 448	1¼" ASPHALT CONCRETE SURFACE COURSE, TYPE I, PG64-22
(2)	ITEM 448	1¼" ASPHALT CONCRETE INTERMEDIATE COURSE, TYPE I, PG64-22
(3)	ITEM 407	TACK COAT FOR INTERMEDIATE COURSE
(4)	ITEM 407	TACK COAT
(5)	ITEM 609	CONCRETE MEDIAN
(6)	ITEM 202	CONCRETE MEDIAN REMOVED

CALCULATED
CHECKED

GENDER ROAD TYPICAL SECTIONS

FRA-33-25.96
FRA-33-29.64

12/23/2003 - 11:40:11 AM - sderwacter - T:\009-02\dgn\GENDER\GRMGY.dgn

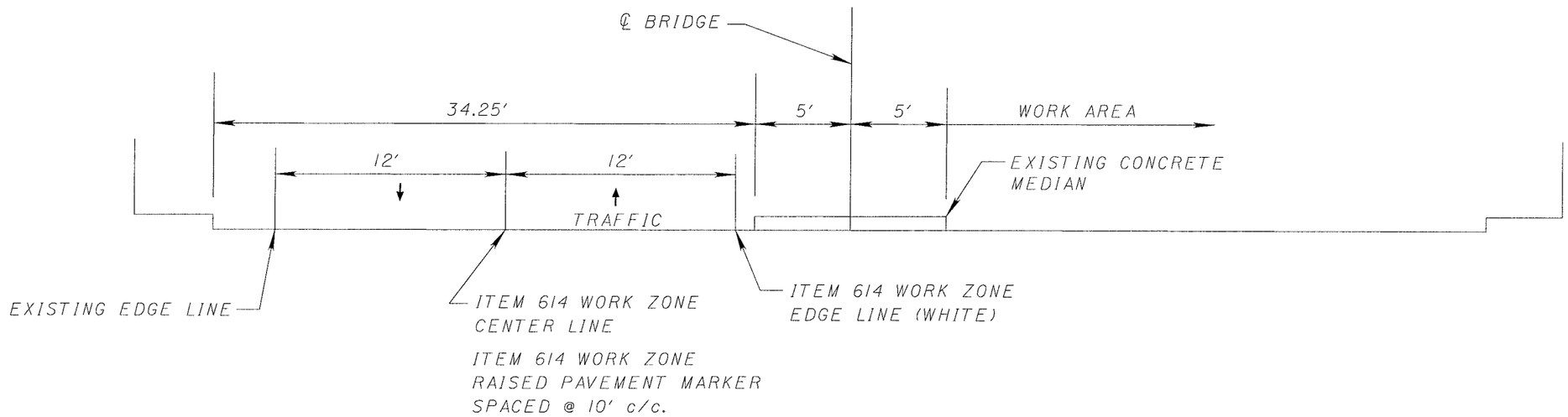

TYPICAL BRIDGE SECTION PHASE 2

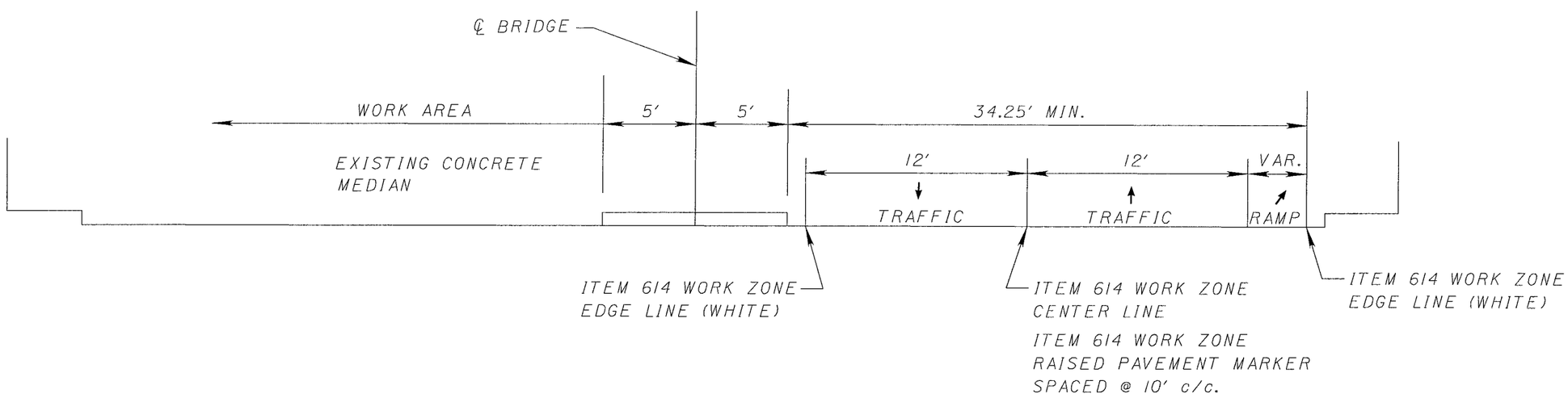

TYPICAL BRIDGE SECTION PHASE 3

CALCULATED
CHECKED

TYPICAL BRIDGE SECTION MAINTENANCE OF TRAFFIC
GENDER ROAD

FRA-33-25.96
FRA-33-29.64

12/23/2003 - 11:40:26 AM - t:\009-02\dgn\GENDER\009-02MD2.dgn

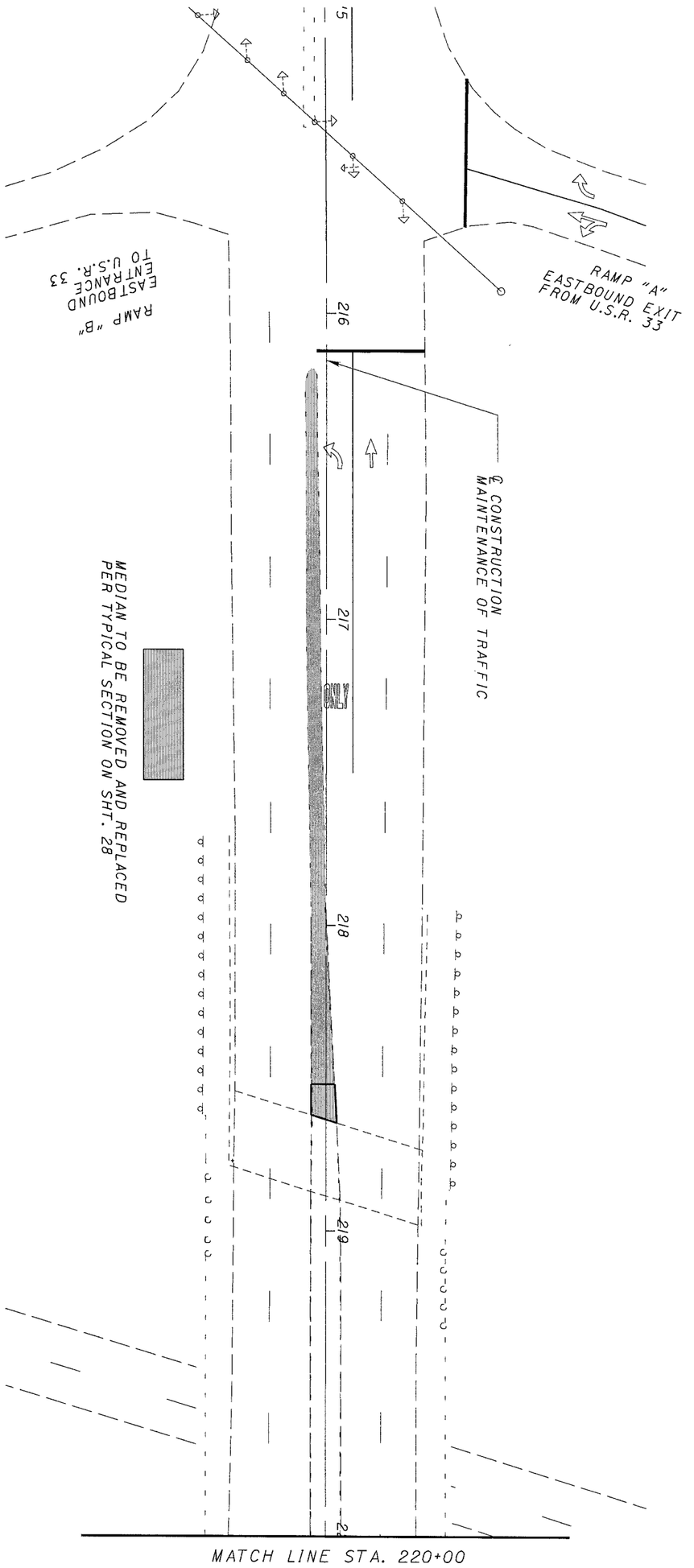

30 / 51	FRA-33-25.96 FRA-33-29.64	M.O.T. - GENDER ROAD PHASE 1 STA. 215+00 TO STA. 220+00	CALCULATED CHECKED 0 20 40 HORIZONTAL SCALE IN FEET N

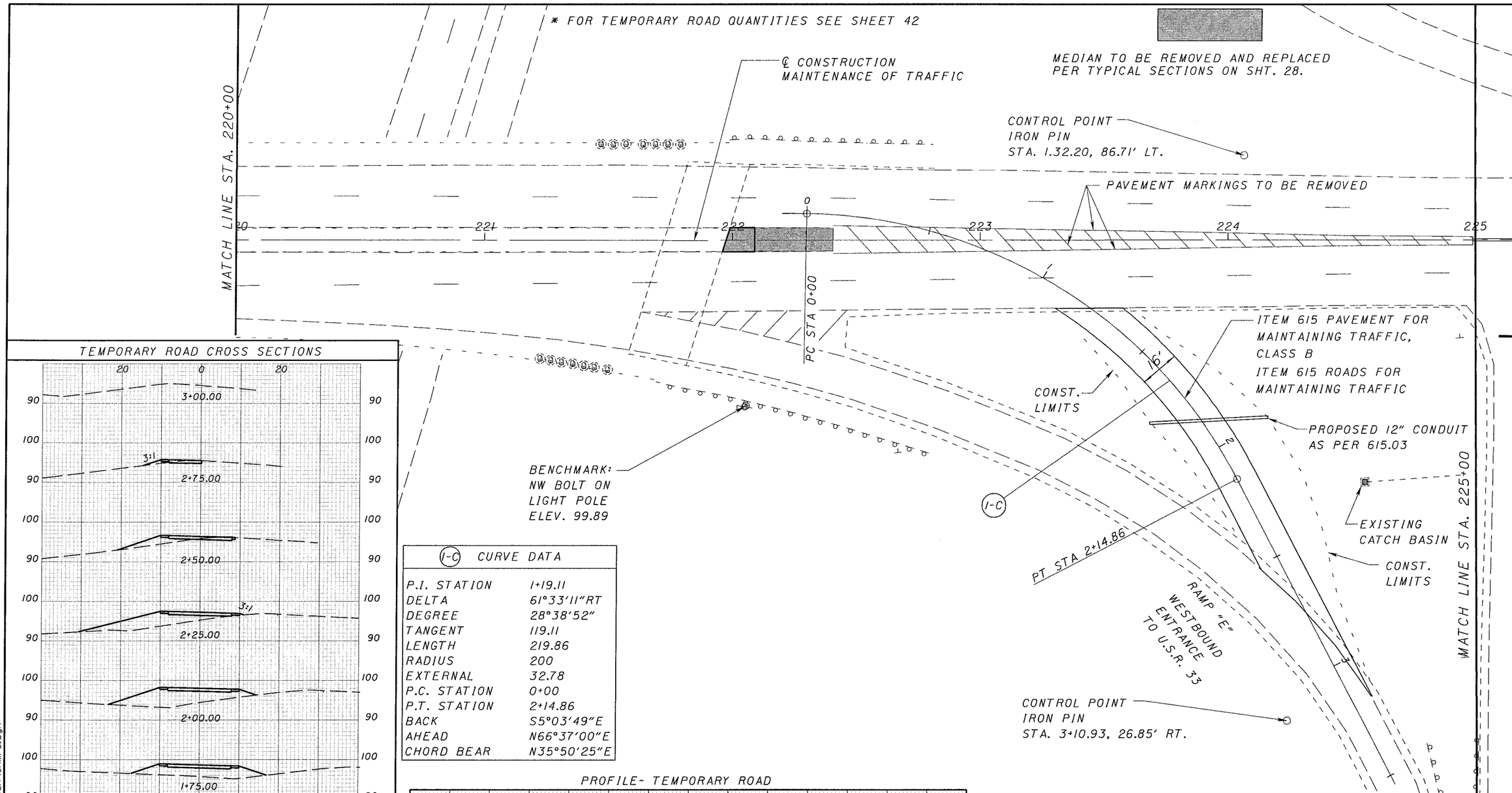

TEMPORARY ROAD CROSS SECTIONS

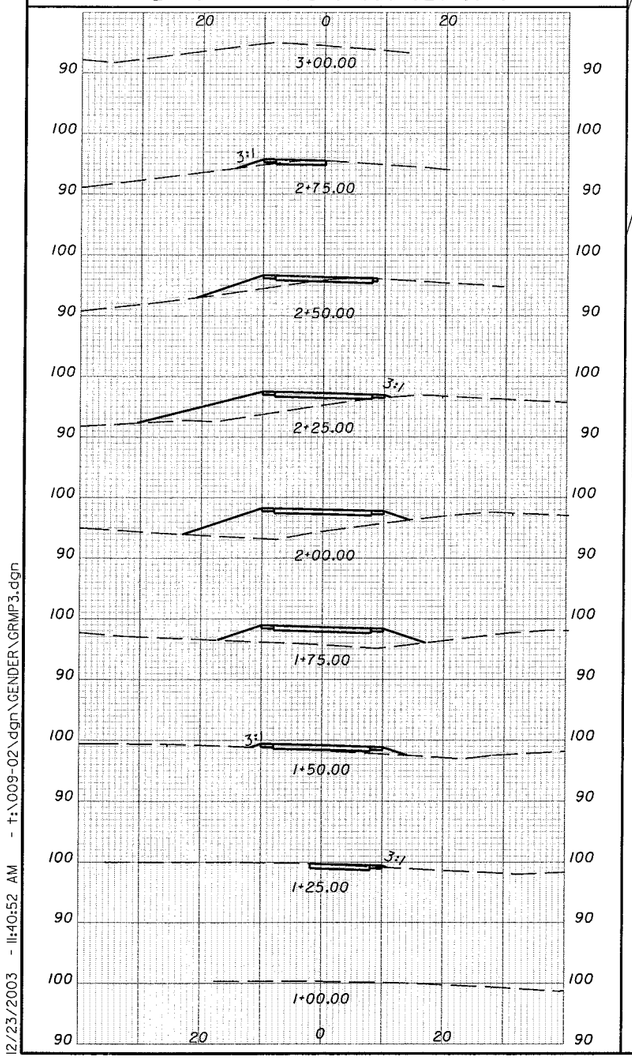

1-C CURVE DATA	
P.I. STATION	1+19.11
DELTA	61°33'11"RT
DEGREE	28°38'52"
TANGENT	119.11
LENGTH	219.86
RADIUS	200
EXTERNAL	32.78
P.C. STATION	0+00
P.T. STATION	2+14.86
BACK	S5°03'49"E
AHEAD	N66°37'00"E
CHORD BEAR	N35°50'25"E

PROFILE- TEMPORARY ROAD

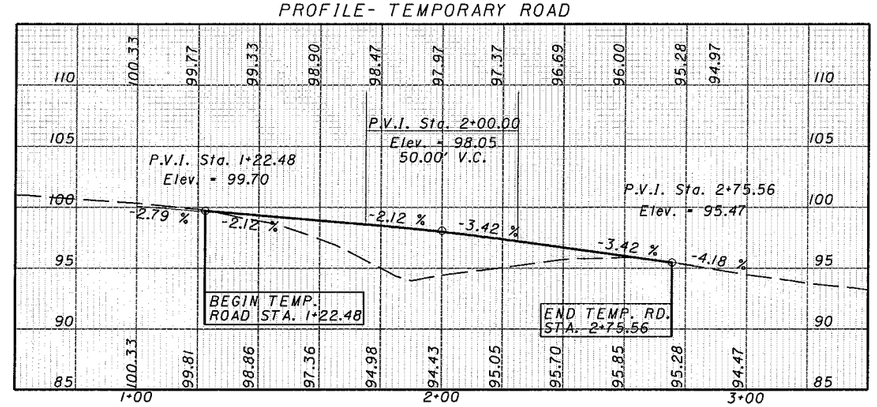

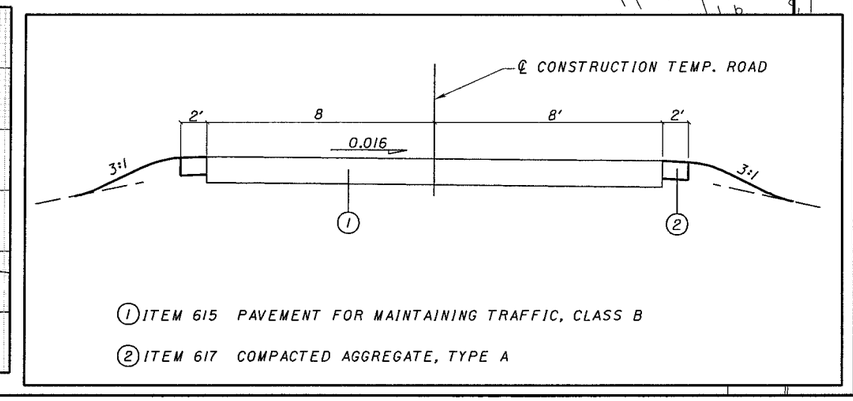

HORIZONTAL SCALE IN FEET 0 20 40

CALCULATED

CHECKED

M.O.T. - GENDER ROAD PHASE 1
STA. 220+00 TO STA. 225+00

FRA-33-25.96
FRA-33-29.64

12/23/2003 - 11:40:52 AM - t:\009-02\dgn\GENDER\GRMP3.dgn

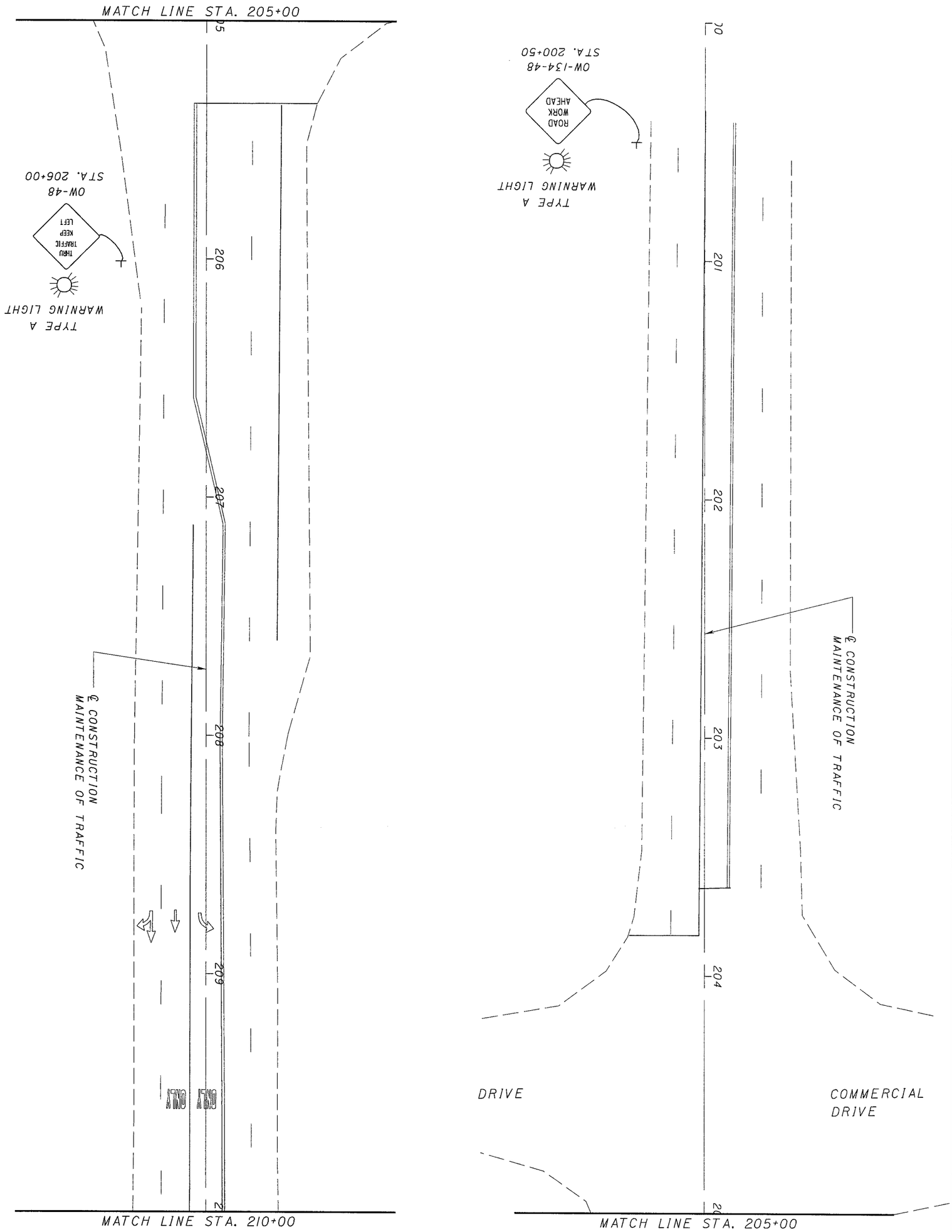

32/51	FRA-33-25.96 FRA-33-29.64	M.O.T. - GENDER ROAD PHASE 2 STA. 200+00 TO STA. 210+00	CALCULATED CHECKED 0 20 40 HORIZONTAL SCALE IN FEET N

12/23/2003 - 11:41:18 AM - t:\009-02\dgn\GENDER\GRMP2P1.dgn

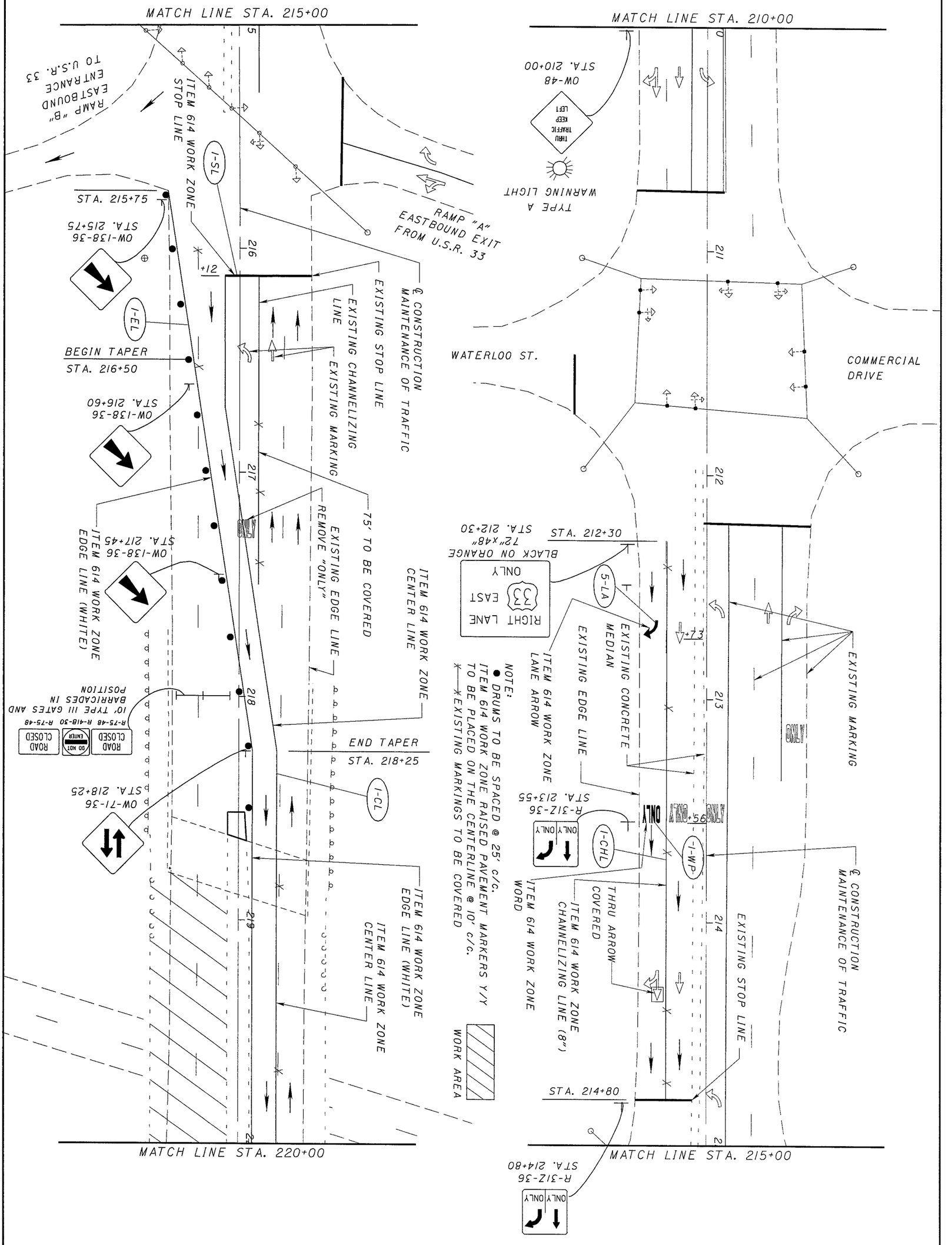

33/51	FRA-33-25.96 FRA-33-29.64	M.O.T. - GENDER ROAD PHASE 2 STA. 210+00 TO STA. 220+00	CALCULATED CHECKED 0 20 40 HORIZONTAL SCALE IN FEET N

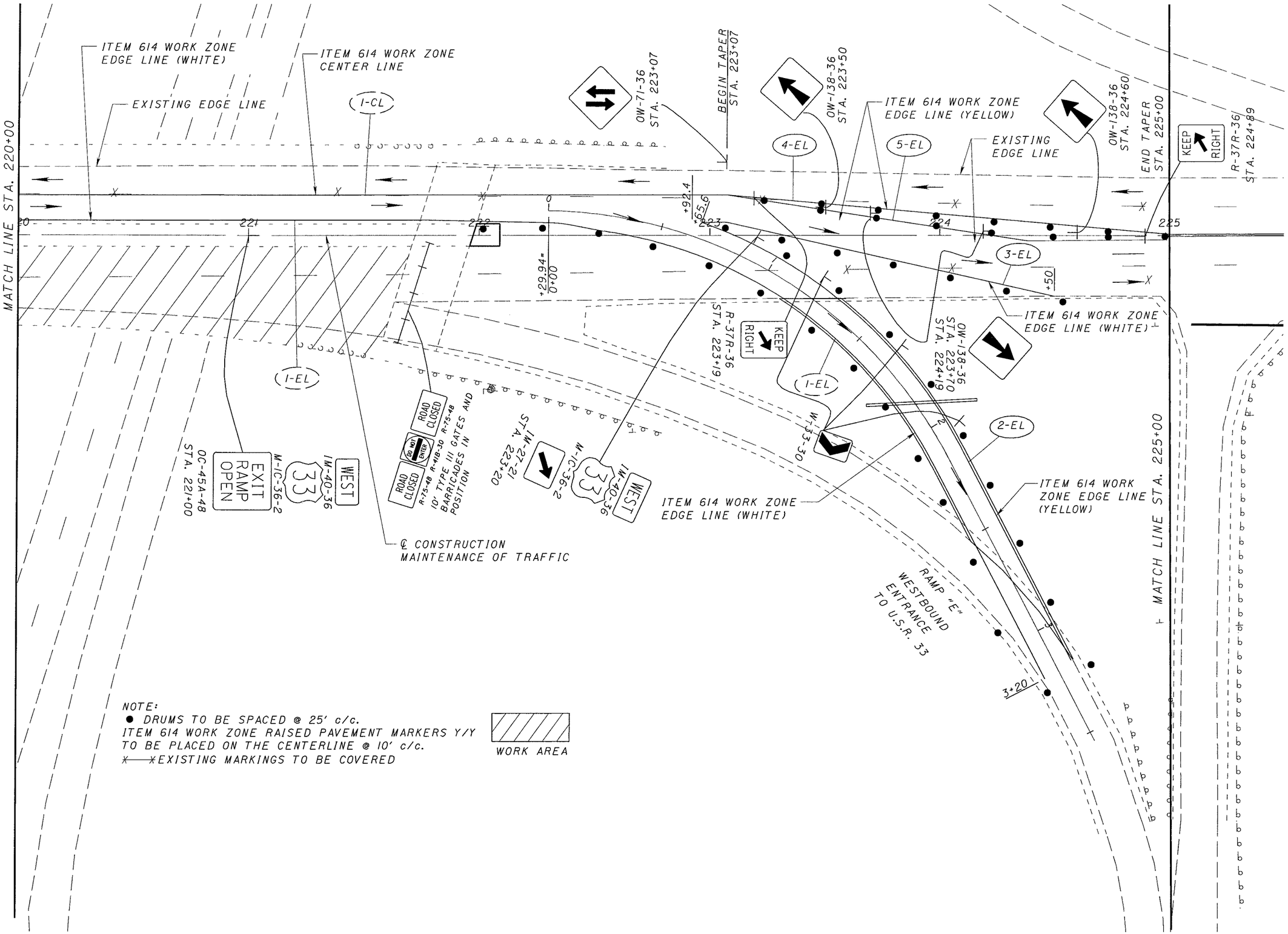

M.O.T. - GENDER ROAD PHASE 2
STA. 220+00 TO STA. 225+00

FRA-33-25.96
FRA-33-29.64

12/23/2003 - 11:41:33 AM - T:\009-02\dgn\GENDER\GRMP3P1.dgn

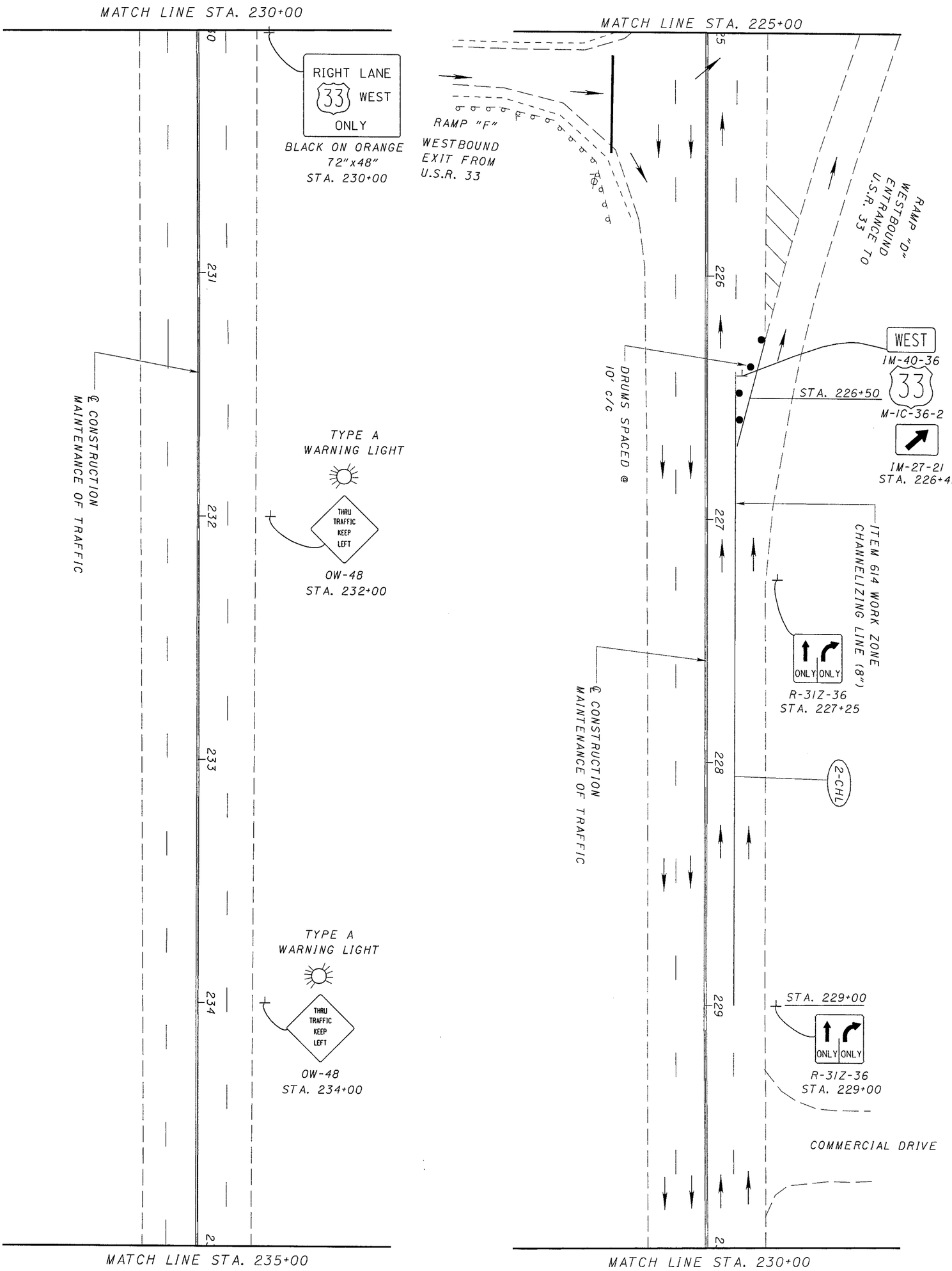

35 / 51	FRA-33-25.96 FRA-33-29.64	M.O.T. - GENDER ROAD PHASE 2 STA. 225+00 TO STA. 235+00	CALCULATED CHECKED 0 20 40 HORIZONTAL SCALE IN FEET N

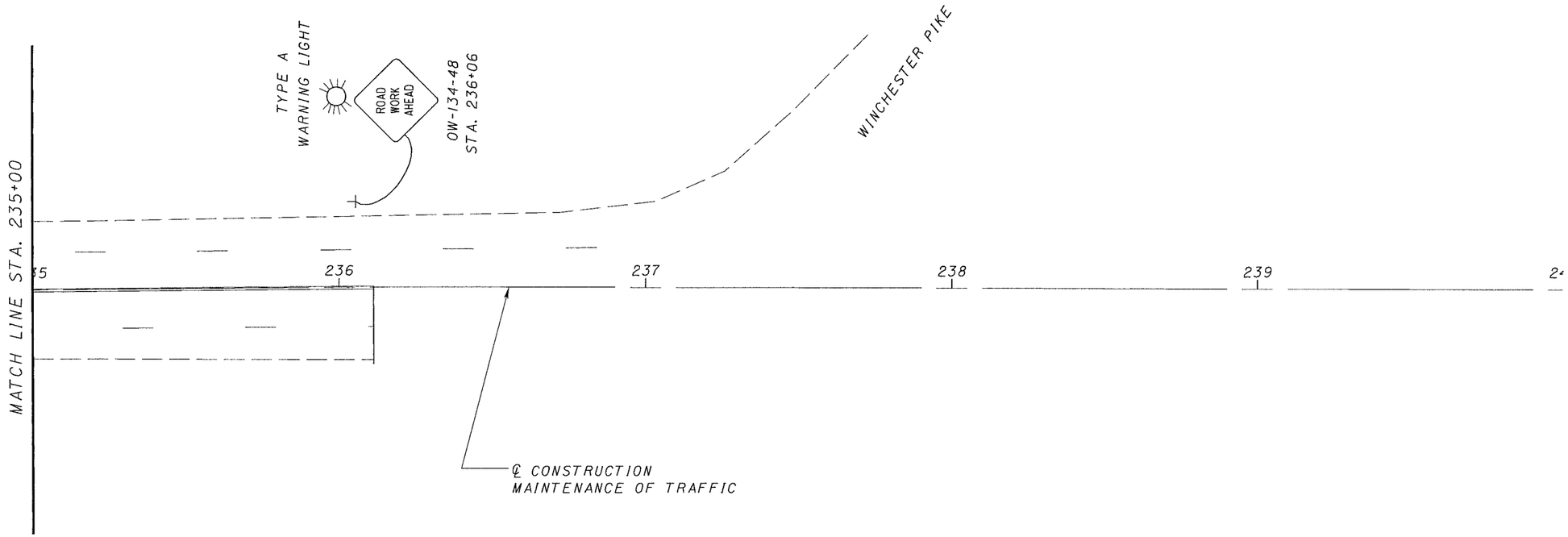

HORIZONTAL SCALE IN FEET
0 20 40

CALCULATED
CHECKED

M.O.T. - GENDER ROAD PHASE 2
STA. 235+00 TO STA. 240+00

FRA-33-25.96
FRA-33-29.64

36
51

12/23/2003 - 11:41:52 AM - H:\009-02\dgn\GENDER\GRMP5P1.dgn

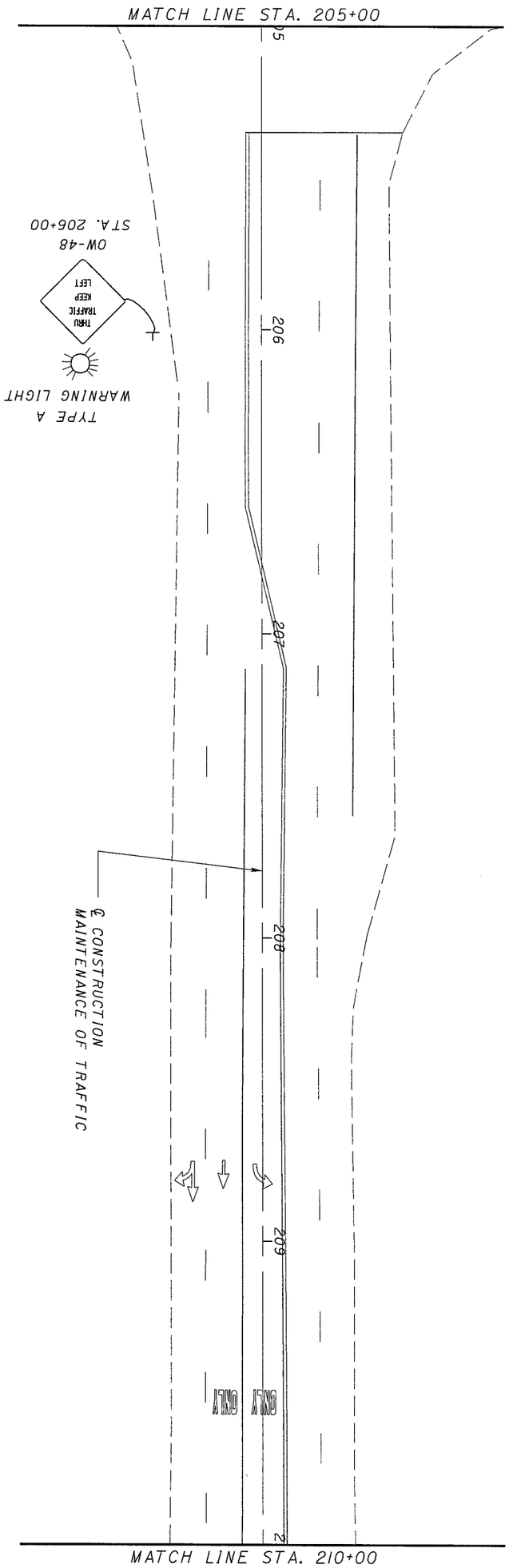

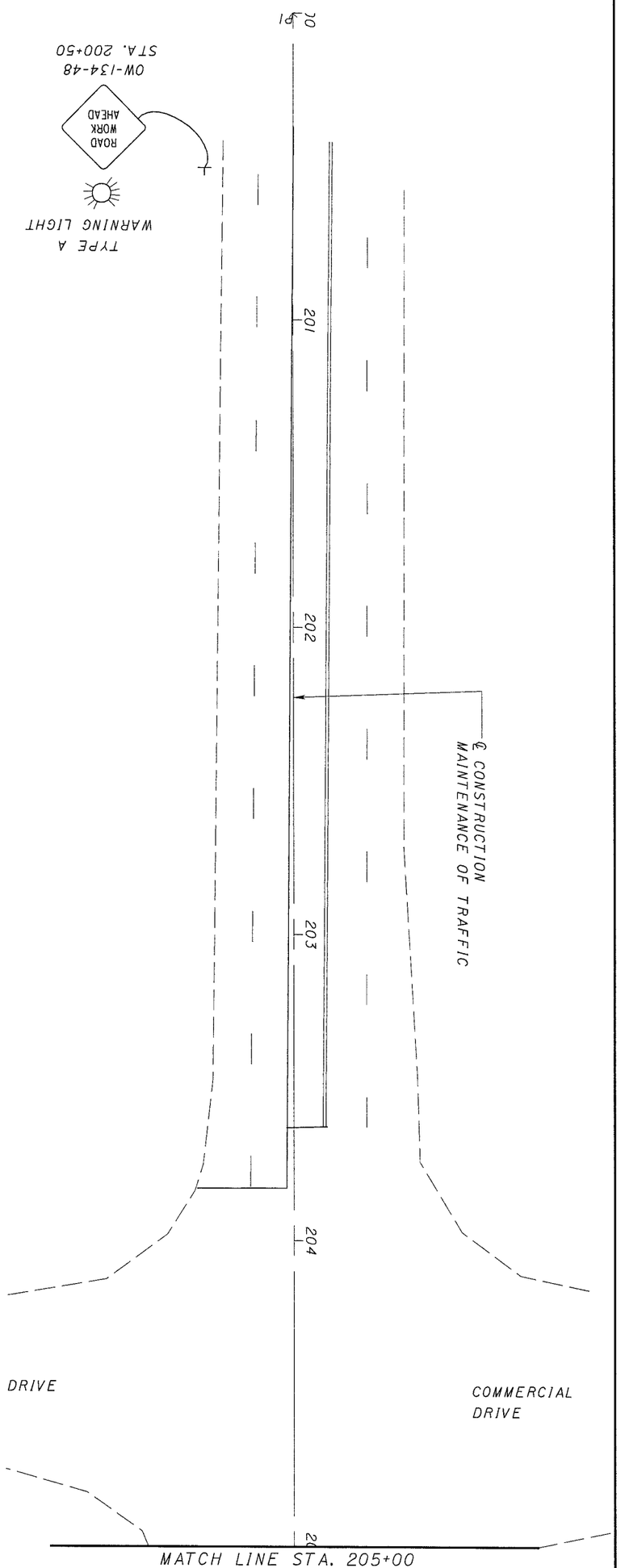

37/51	FRA-33-25.96 FRA-33-29.64	M.O.T. - GENDER ROAD PHASE 3 STA. 200+00 TO STA. 210+00	CALCULATED CHECKED	0 20 40 HORIZONTAL SCALE IN FEET

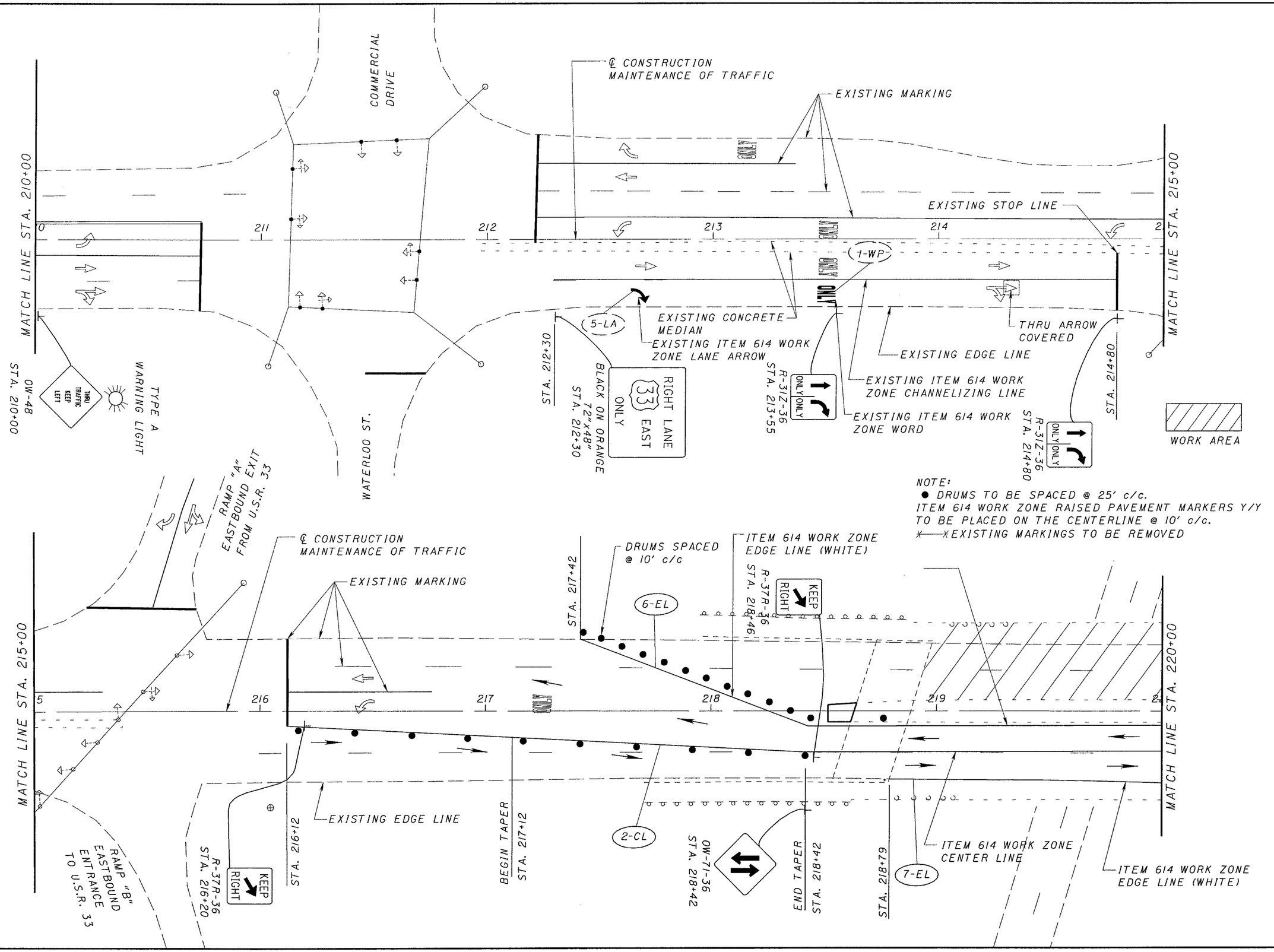

M.O.T. - GENDER ROAD PHASE 3
STA. 210+00 TO STA. 220+00

FRA-33-25.96
FRA-33-29.64

12/23/2003 - 11:42:31 AM - t:\009-02\dgn\GENDER\GRMP2P2.dgn

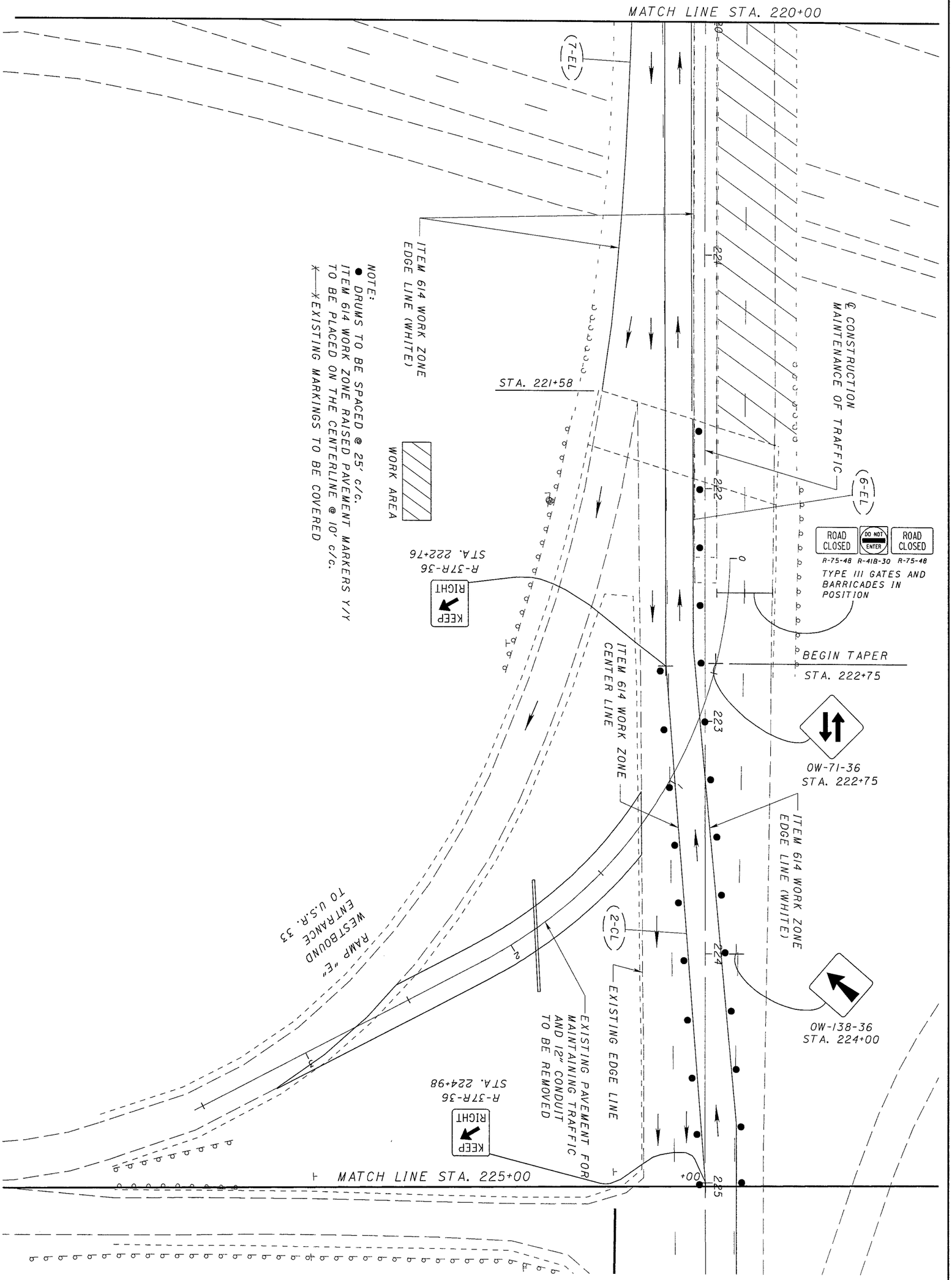

39 / 51	FRA-33-25.96 FRA-33-29.64	M.O.T. - GENDER ROAD PHASE 3 STA. 220+00 TO STA. 225+00	CALCULATED CHECKED 0 20 40 HORIZONTAL SCALE IN FEET N

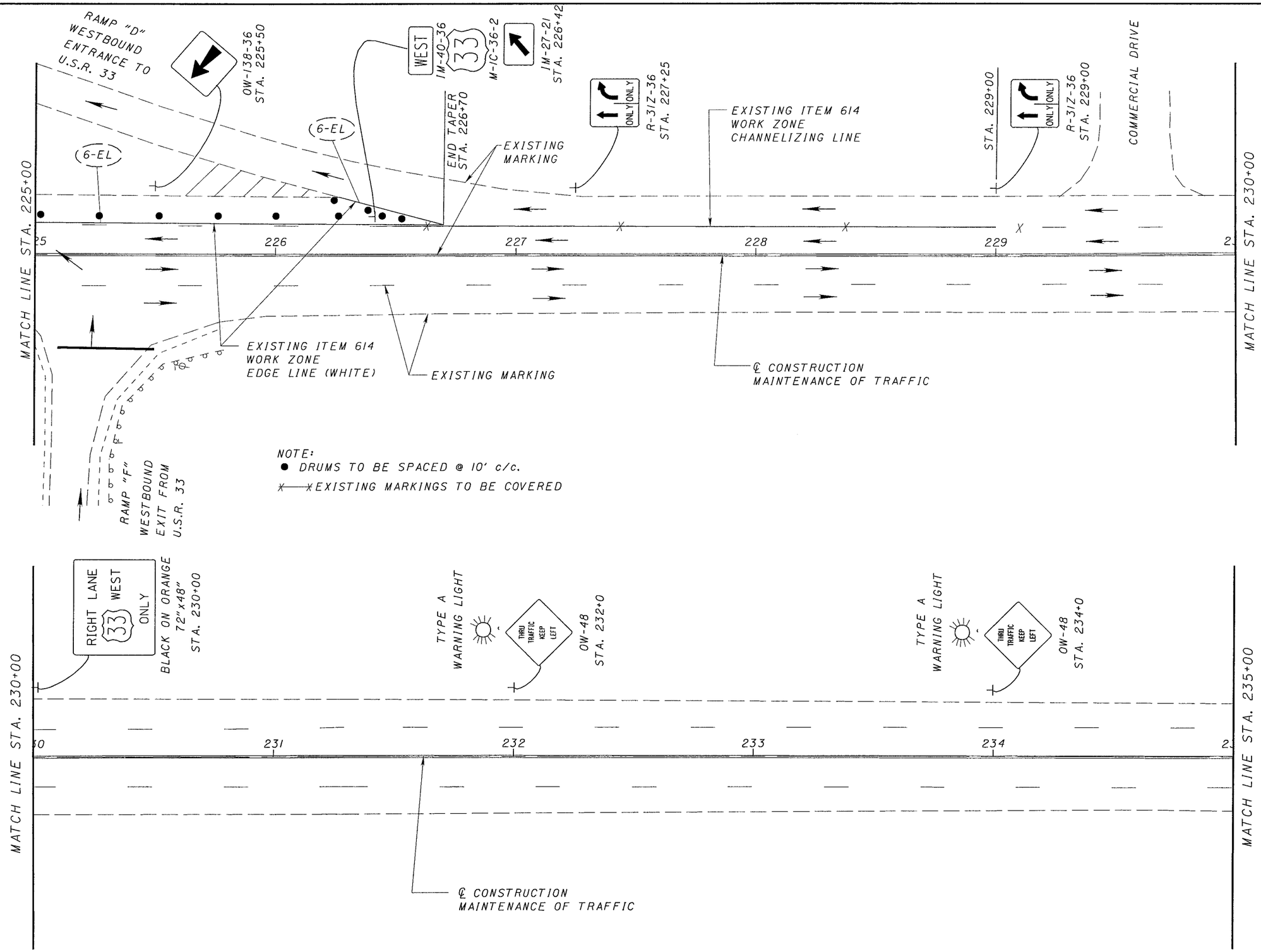

HORIZONTAL SCALE IN FEET
0 20 40

CALCULATED
CHECKED

M.O.T. - GENDER ROAD PHASE 3
STA. 225+00 TO STA. 235+00

FRA-33-25.96
FRA-33-29.64

12/23/2003 - 11:42:59 AM - t:\009-02\dgn\GENDER\GRMP4P2.dgn

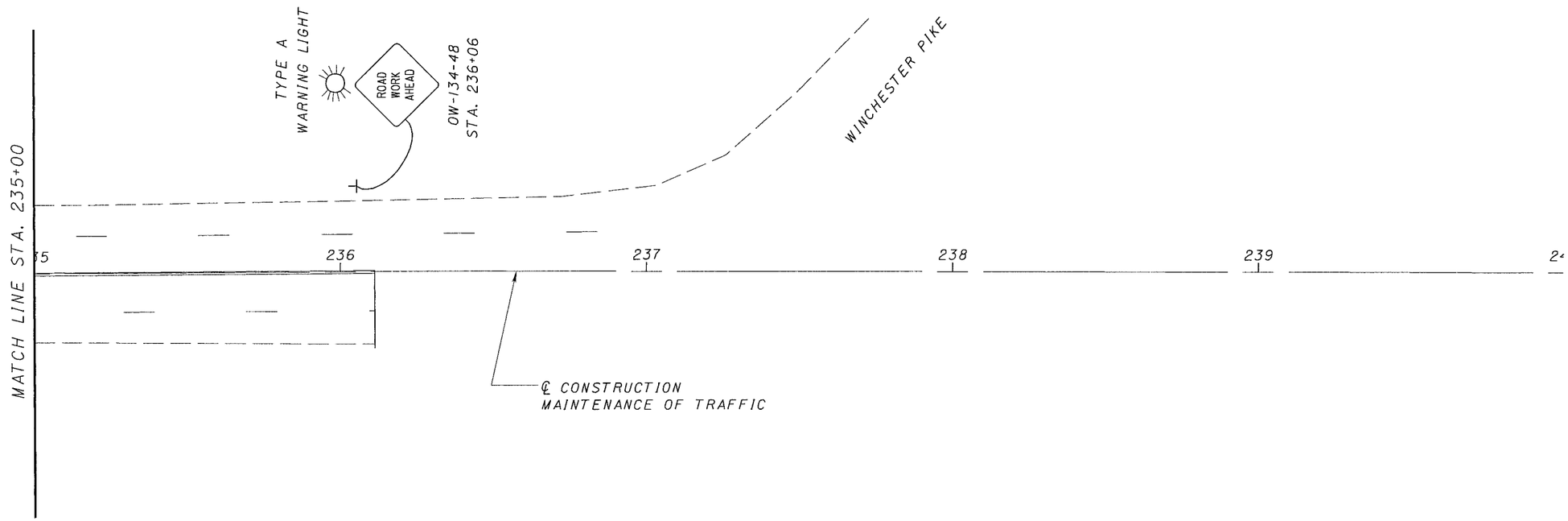

HORIZONTAL SCALE IN FEET
0 20 40

CALCULATED
CHECKED

M.O.T. - GENDER ROAD PHASE 3
STA. 235+00 TO STA. 240+00

FRA-33-25.96
FRA-33-29.64

41
51

12/23/2003 - 11:43:09 AM - t:\009-02\dgn\GENDER\GRMP5P2.dgn

SHEET NO.	REFERENCE NO.	LOCATION	STATION FROM	STATION TO	614 WORK ZONE EDGE LINE, CLASS I, 740.06, TYPE I (WHITE) MILE	614 WORK ZONE EDGE LINE, CLASS I, 740.06, TYPE I (YELLOW) MILE	614 WORK ZONE CENTER LINE, CLASS I, 740.06, TYPE I MILE	614 WORK ZONE CHANNELIZING LINE, CLASS I, 740.06, TYPE I FT.	614 WORK ZONE STOP LINE, CLASS I, 740.06, TYPE I FT.	614 WORK ZONE LANE ARROW, CLASS I, 740.06, TYPE I EACH	614 WORK ZONE WORD ON PAVEMENT, CLASS I, 740.06, TYPE I EACH	614 WORK ZONE RAISED PAVEMENT MARKER EACH	615 ROADS FOR MAINTAINING TRAFFIC LUMP	615 PAVEMENT FOR MAINTAINING TRAFFIC, CLASS B SQ YD		617 COMPACTED AGGREGATE, TYPE A CU YD					
33,34	1-EL	GENDER ROAD	215+75	222+29.94	0.124																
		R.F.M.T.	0+00	3+20	0.061																
34	2-EL	R.F.M.T.	0+65.6	3+20		0.048															
34	3-EL	GENDER ROAD	222+92.4	224+50	0.030																
34	4-EL	GENDER ROAD	223+07	225+00		0.037															
34	5-EL	GENDER ROAD	223+07	225+00		0.037															
38,39,40	6-EL	GENDER ROAD	217+42	226+70	0.181																
38,39	7-EL	GENDER ROAD	218+79	221+58	0.053																
33,34	1-CL	GENDER ROAD	216+12	223+07			0.132					71									
38,39	2-CL	GENDER ROAD	216+12	225+00			0.168					90									
33	1-CHL	GENDER ROAD	212+30	214+80				250													
35	2-CHL	GENDER ROAD	226+50	229+00				250													
33	1-SL	GENDER ROAD	216+12						4												
31	1-C	TEMPORARY ROAD	1+22.54	3+17.94									LUMP	278		12					
33,38	5-LA	GENDER ROAD	212+73							1											
33,38	1-WP	GENDER ROAD	213+56								1										
		SUB-TOTALS			0.449	0.122	0.300														
TOTALS (CARRIED TO GENERAL SUMMARY)					0.57		0.30	500	4	1	1	161	LUMP	278		12					

CALCULATED

CHECKED

MAINTAINING TRAFFIC SUB-SUMMARY
GENDER RD.

FRA-33-25.96
FRA-33-29.64

12/23/2003 - 11:43:23 AM - T:\009-02\dgn\GENDER\009-02TS3.dgn

ITEM 202 CONCRETE MEDIAN REMOVED

STA. 216+18.04 TO STA. 218+63.42

(245.38'xVARIABLE WIDTH(9'to4')) = 1240.5 SF/9 = 137.8 SQ YD

STA. 221+97.26 TO STA. 222+40.49

(43.23'x10')/9 = 48.0 SQ YD

TOTAL = 189 SQ YD

ITEM 448 ASPHALT CONCRETE INTERMEDIATE COURSE, TYPE I, PG64-22

STA. 216+18.04 TO STA. 218+51.92

(233.88'xVARIABLE WIDTH(7.6'to4')) = ((1144 SF/9)x(1.25/12/3)) = 4.4 CY

STA. 222+08.88 TO STA. 222+40.49

(((31.6'x10')/9)x(1.25/12/3)) = 1.2 CY

TOTAL = 6 CU YD

ITEM 448 ASPHALT CONCRETE SURFACE COURSE, TYPE I, PG64-22

STA. 216+18.04 TO STA. 218+51.92

(233.88'xVARIABLE WIDTH(7.6'to4')) = ((1144 SF/9)x(1.25/12/3)) = 4.4 CY

STA. 222+08.88 TO STA. 222+40.49

(((31.6'x10')/9)x(1.25/12/3)) = 1.2 CY

TOTAL = 6 CU YD

ITEM 407 TACK COAT FOR INTERMEDIATE COURSE

(0.04 GAL. PER SQ YD)

STA. 216+18.04 TO STA. 218+51.92

(233.88'xVARIABLE WIDTH(7.6'to4')) = (1144 SF/9) = 127.1 SQ YDx0.04 = 5.1 GAL

STA. 222+08.88 TO STA. 222+40.49

(((31.6'x10')/9) = 35.1 SQ YDx0.04 = 1.4 GAL

TOTAL = 7 GALLON

ITEM 407 TACK COAT

(0.075 GAL. PER SQ YD)

STA. 216+18.04 TO STA. 218+51.92

(233.88'xVARIABLE WIDTH(7.6'to4')) = (1144 SF/9) = 127.1 SQ YDx0.075 = 9.5 GAL

STA. 222+08.88 TO STA. 222+40.49

(((31.6'x10')/9) = 35.1 SQ YDx0.075 = 2.6 GAL

TOTAL = 12 GALLON

ITEM 609 CONCRETE MEDIAN

STA. 218+53.42 TO STA. 218+63.42

(((VARIABLE LENGTH(10'to12.6'))x(VARIABLE WIDTH(7.6'to8.7')))/9) = 9.9 SQ YD

STA. 221+97.26 TO STA. 222+08.88

(((VARIABLE LENGTH(10'to13'))x(VARIABLE WIDTH(7.9'to10.2')))/9) = 12.5 SQ YD

TOTAL = 23 SQ YD

QUANTITIES CARRIED TO GENERAL SUMMARY SHT. 6

12/23/2003 - 01:39:46 PM - sder-wacter - t:\009-02\dgn\GENDER\GRMGC.dgn

CALCULATED

CHECKED

GENDER ROAD CALCULATIONS

FRA-33-25.96
FRA-33-29.64

* SEE SHT. 45 FOR QUANTITIES

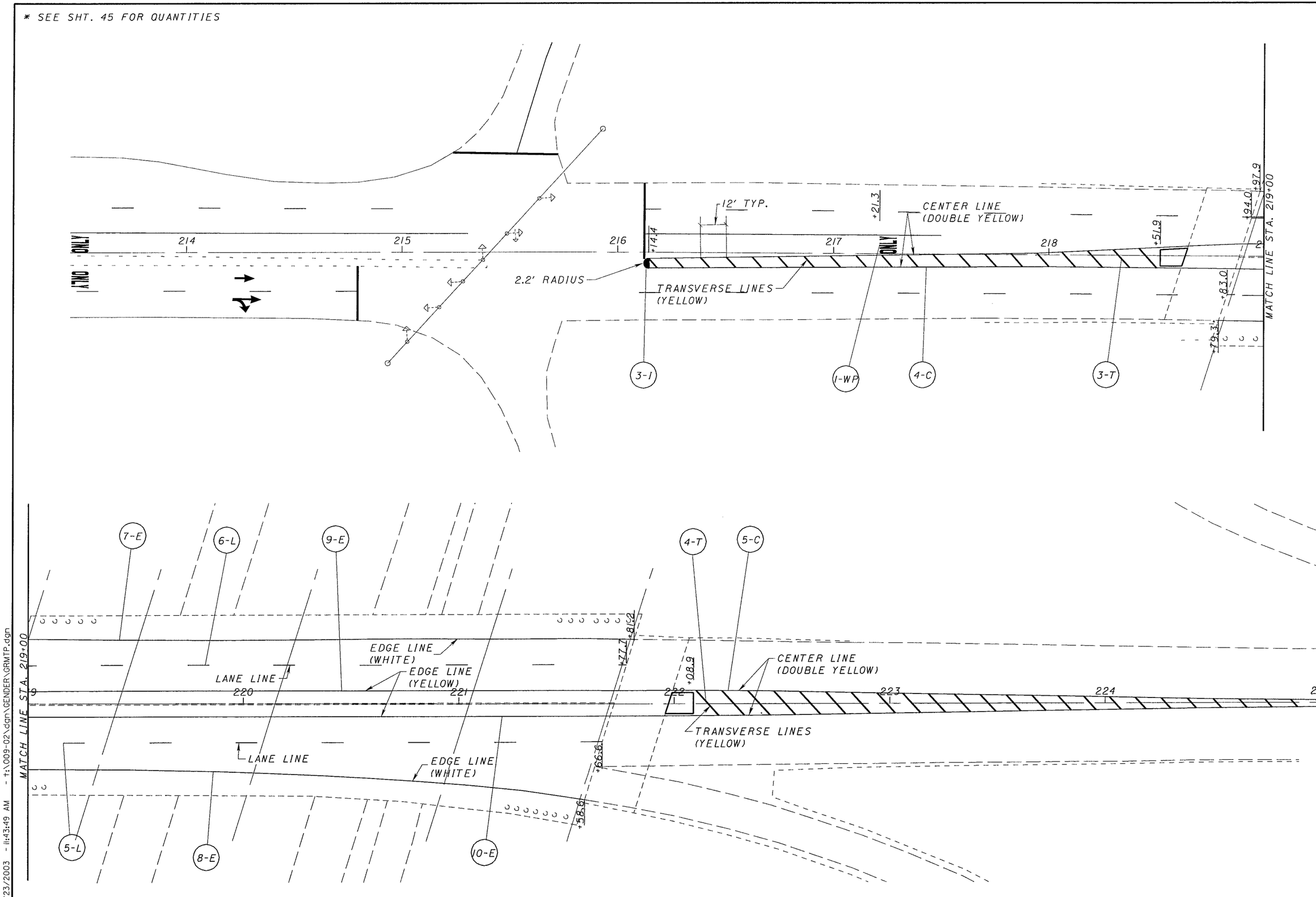

HORIZONTAL SCALE IN FEET
0 20 40

CALCULATED
CHECKED

GENDER ROAD
PAVEMENT MARKING PLAN

FRA-33-25.96
FRA-33-29.64

12/23/2003 - 11:43:49 AM - t:\009-02\dgn\GENDER\GRMTP.dgn

REF NO.	SHEET NO.	STATION FROM	STATION TO	SIDE	646 CENTER LINE (DOUBLE YELLOW) MILE	646 TRANSVERSE LINE (YELLOW) FT	646 ISLAND MARKING (YELLOW) SQ FT	646 WORD ON PAVEMENT, 72" EACH	646 EDGE LINE (WHITE) MILE	646 EDGE LINE (YELLOW) MILE	646 LANE LINE MILE
3-I	44	216+14.4		RT			7.4				
4-C	44	216+14.4	218+51.9	LT/RT	0.094						
5-C	44	222+08.9	225+00	LT/RT	0.110						
5-L	44	218+83.0	221+66.6	RT							0.054
6-L	44	218+94.0	221+77.7	LT							0.054
7-E	44	218+97.9	221+81.2	LT					0.054		
8-E	44	218+79.3	221+58.6	RT					0.053		
9-E	44	218+51.9	222+08.9	LT						0.068	
10-E	44	218+51.9	222+08.9	RT						0.068	
3-T	44	216+14.4	218+51.9	LT/RT		156					
4-T	44	222+08.9	225+00	LT/RT		247					
1-WP	44	217+21.3		LT				1			
SUB-TOTALS					0.204		7.4		0.107	0.136	0.108
TOTALS CARRIED TO GENERAL SUMMARY					0.20	403	7	1	0.24		0.11

CALCULATED

CHECKED

GENDER ROAD
PAVEMENT MARKING QUANTITIES

FRA-33-25.96
FRA-33-29.64

12/23/2003 - 11:44:02 AM - sderwacter - t:\009-02\dgn\GENDER\GRMTS.dgn

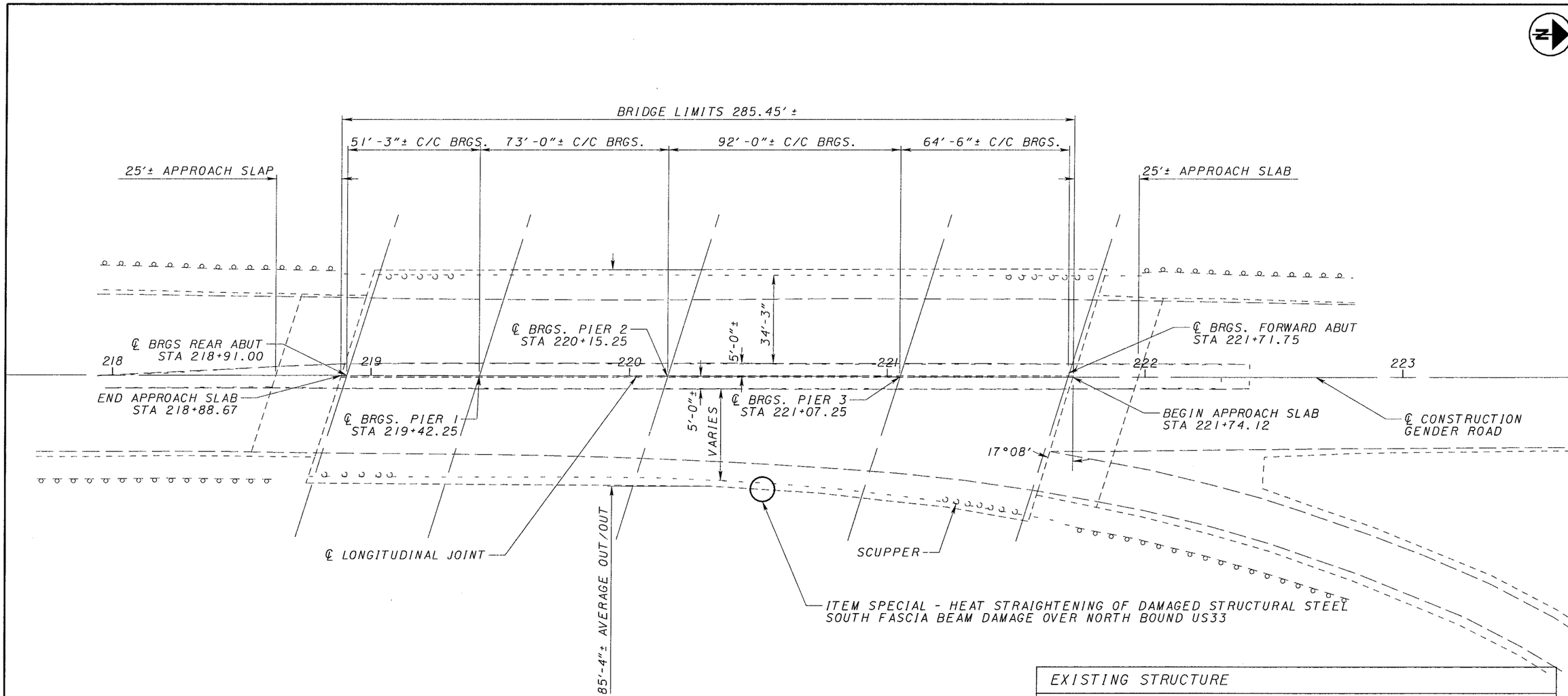

PROPOSED WORK:

1) REMOVE 1.25" MONOLITHIC CONCRETE USING HYDRODEMOLITION ON DECK
3) REPAIR CURBS WITH PATCHING
4) CLEAN EXPANSION JOINTS AND SCUPPERS
5) HEAT STRAIGHTEN SOUTH FASCIA BEAM OVER US33 NB AND SPOT PAINT TO MATCH
6) REPLACE BENT CROSSFRAMES DUE TO FASCIA BEAM HIT AND PAINT TO MATCH

EXISTING STRUCTURE

TYPE: CONTINUOUS STEEL BEAM BRIDGE WITH REINFORCED CONCRETE DECK AND SUBSTRUCTURE
SPAN: 64'-6", 92'-0", 73'-0", 51'-3"
ROADWAY: VARIABLE F/F PARAPET WITH 10'-0" RAISED MEDIAN AND STANDARD ROADWAY BRIDGE RAILING
LOADING: HS 20-44
WEARING SURFACE: 1" MONOLITHIC CONCRETE
SKEW: 17° 08' LEFT FORWARD
ALIGNMENT: TANGENT - GENDER ROAD
APPROACH SLABS: 25' LONG

PROPOSED STRUCTURE

TYPE: NO MODIFICATION TO EXISTING
SPAN: NO MODIFICATION TO EXISTING
ROADWAY: NO MODIFICATION TO EXISTING
LOADING: NO MODIFICATION TO EXISTING
WEARING SURFACE: 1.25" MICRO SILICA MODIFIED CONCRETE OVERLAY
SKEW: NO MODIFICATION TO EXISTING
ALIGNMENT: NO MODIFICATION TO EXISTING
APPROACH SLABS: NO MODIFICATION TO EXISTING

DESIGN AGENCY
JOBES HENDERSON & ASSOCIATES, INC.
59 GRANT ST NEWARK, OH 43055

DESIGNED	DRAWN	REVIEWED	DATE
BMP			
CHECKED	REVISED	STRUCTURE FILE NUMBER	
CMS		2517361	

GENERAL PLAN

BRIDGE NO. FRA-33-2964
S.R. 674 (GENDER ROAD) OVER U.S. 33

FRA-33-29.64

1/6

46/51

12/23/2003 - 11:44:38 AM - T:\009-02\dgn\PID 25710\GRBGPI.dgn

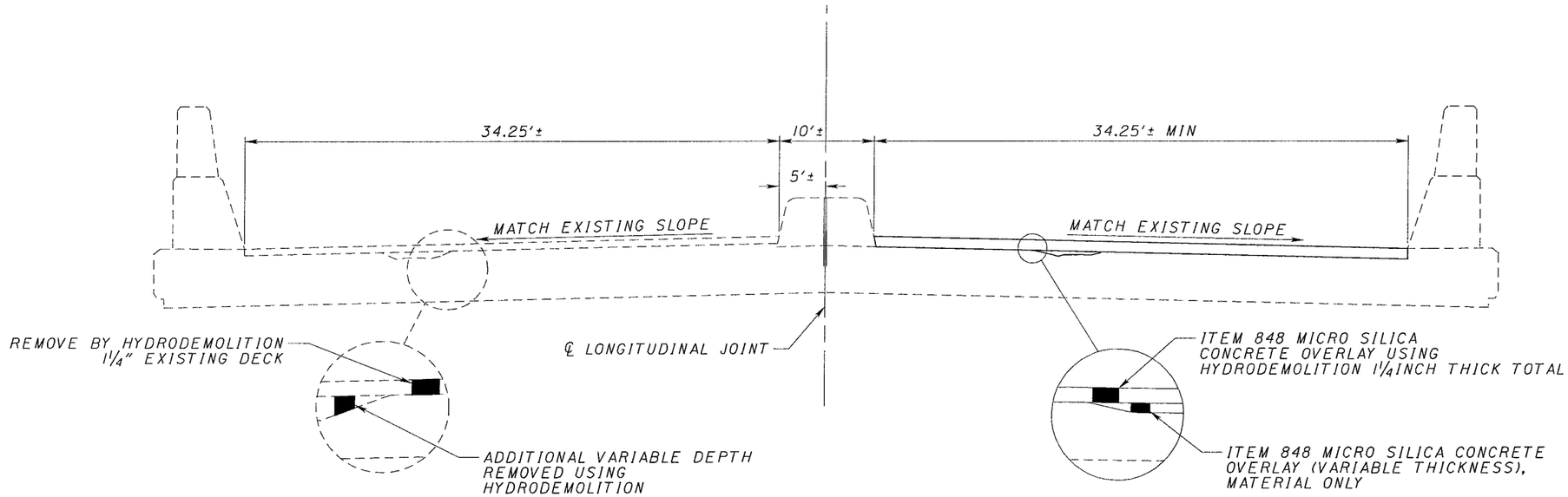

EXISTING OVERLAY REMOVAL, DETAIL "A"

PROPOSED DECK OVERLAY, DETAIL "B"

DESIGN AGENCY
JOBES HENDERSON
& ASSOCIATES, INC.
59 GRANT ST NEWARK, OH 43055

REVIEWED	DATE	DRAWN	REVISED	STRUCTURE FILE NUMBER
				25/736/

DESIGNED	CHECKED
BMP	CMS

TYPICAL SECTION
BRIDGE NO. FRA-33-2964
S.R. 674 (GENDER ROAD) OVER U.S. 33

FRA-33-29.64

2/6

47/51

12/23/2003 - 11:44:55 AM - sderwacter - t:\009-02\dgn\PID 25710\GRBGY1.dgn

ESTIMATED QUANTITIES

ITEM	ITEM EXT.	TOTAL	UNIT	DESCRIPTION	APPROACH SLAB	SUPERSTRUCTURE	SEE SHT. NO.
					FRA-33-2964	FRA-33-2964	
513	90000	150	POUND	STRUCTURAL STEEL, MISC.: REPLACEMENT OF DAMAGED CROSSFRAMES, AS PER PLAN		150	50
514	27800	LUMP		FIELD PAINTING, MISC.: REPAIR PAINTING		LUMP	50
SPECIAL	51319000	LUMP		HEAT STRAIGHTENING OF DAMAGED STRUCTURAL STEEL		LUMP	50
519	11101	192	SQ FT	PATCHING CONCRETE STRUCTURE, AS PER PLAN	135	57	49
848	10000	2279	SQ YD	MICRO SILICA MODIFIED CONCRETE OVERLAY USING HYDRODEMOLITION (1.25")		2279	
848	20001	2279	SQ YD	SURFACE PREPARATION USING HYDRODEMOLITION, AS PER PLAN		2279	49
848	30000	60	CU YD	MICRO SILICA MODIFIED CONCRETE OVERLAY (VARIABLE THICKNESS), MATERIAL ONLY		60	
848	50000	57	SQ YD	HAND CHIPPING		57	
848	50200	42	CU YD	FULL-DEPTH REPAIR		42	

DESIGN AGENCY
JOBES HENDERSON & ASSOCIATES, INC.
59 GRANT ST NEWARK, OH 43055

REVIEWED | DATE
STRUCTURE FILE NUMBER 2517361

DRAWN | REVISED
DESIGNED SJD | CHECKED CMS

ESTIMATED QUANTITIES
BRIDGE NO. FRA-33-2964
S.R. 674 (GENDER ROAD) OVER U.S. 33

FRA-33-29.64

12/23/2003 - 12:33:24 PM - sderwacter - t:\009-02\dgn\GENDER\GRWSS.dgn

SUPPLEMENTAL SPECIFICATIONS

REFER TO THE FOLLOWING SUPPLEMENTAL SPECIFICATION(S):

848 DATED 2-08-02
908 DATED 4-18-03
954 DATED 9-09-97

DESIGN SPECIFICATIONS

DESIGN SPECIFICATIONS: THIS STRUCTURE CONFORMS TO "STANDARD SPECIFICATIONS FOR HIGHWAY BRIDGES" ADOPTED BY THE AMERICAN ASSOCIATION OF STATE HIGHWAY AND TRANSPORTATION OFFICIALS, 1996, INCLUDING THE 2002 AND 2003 INTERIM SPECIFICATIONS AND THE ODOT BRIDGE DESIGN MANUAL.

EXISTING STRUCTURE VERIFICATION

EXISTING STRUCTURE VERIFICATION: DETAILS AND DIMENSIONS SHOWN ON THESE PLANS PERTAINING TO THE EXISTING STRUCTURE HAVE BEEN OBTAINED FROM PLANS OF THE EXISTING STRUCTURE AND FROM FIELD OBSERVATIONS AND MEASUREMENTS. CONSEQUENTLY, THEY ARE INDICATIVE OF THE EXISTING STRUCTURE AND THE PROPOSED WORK BUT THEY SHALL BE CONSIDERED TENTATIVE AND APPROXIMATE. THE CONTRACTOR IS REFERRED TO CMS SECTIONS 102.05, 105.02 AND 513.04.

BASE CONTRACT BID PRICES UPON A RECOGNITION OF THE UNCERTAINTIES DESCRIBED ABOVE AND UPON A PREBID EXAMINATION OF THE EXISTING STRUCTURE. HOWEVER, THE DEPARTMENT WILL PAY FOR ALL PROJECT WORK BASED UPON ACTUAL DETAILS AND DIMENSIONS WHICH HAVE BEEN VERIFIED IN THE FIELD.

COPIES OF THE EXISTING BRIDGE PLANS ARE ON FILE AT THE DISTRICT 6 OFFICE OF THE OHIO DEPARTMENT OF TRANSPORTATION.

ITEM 519, PATCHING CONCRETE STRUCTURE, AS PER PLAN

THE CONTRACTOR SHALL PATCH AREAS ON THE CONCRETE MEDIAN ON BOTH THE BRIDGE AND APPROACH SLABS. THIS WORK SHALL BE AS DIRECTED BY THE ENGINEER. THE PATCHED AREAS SHALL HAVE A MINIMUM DEPTH OF 4" AND A MAXIMUM DEPTH OF 8" UNLESS OTHERWISE DIRECTED BY THE ENGINEER.

PRIOR TO THE SURFACE CLEANING SPECIFIED IN 519.04 AND WITHIN 24 HOURS OF PLACING PATCHING MATERIAL, BLAST CLEAN ALL SURFACES TO BE PATCHED INCLUDING THE EXPOSED REINFORCING STEEL. ACCEPTABLE METHODS INCLUDE HIGH-PRESSURE WATER BLASTING WITH OR WITHOUT ABRASIVES IN THE WATER, ABRASIVE BLASTING WITH CONTAINMENT, OR VACUUM ABRASIVE BLASTING.

ANY EXISTING REINFORCING BARS WHICH ARE TO BE INCORPORATED INTO THE NEW WORK AND WHICH ARE MADE UNUSABLE BY CONCRETE REMOVAL OPERATIONS SHALL BE REPLACED WITH NEW STEEL AT THE CONTRACTOR'S COST. ANY EXISTING REINFORCING BARS DEEMED BY THE ENGINEER TO BE UNUSABLE BECAUSE OF CORROSION SHALL BE REPLACED WITH NEW STEEL AND SHALL BE INCLUDED FOR PAYMENT IN ITEM 519.

THE FOLLOWING ESTIMATED QUANTITY HAS BEEN INCLUDED IN THE PLAN FOR BIDDING PURPOSES BUT FINAL QUANTITIES SHALL BE MEASURED AT THE COMPLETION OF WORK:

ITEM 519, PATCHING CONCRETE STRUCTURE, AS PER PLAN
- 192 SQ FT

ITEM 848 SURFACE PREPARATION USING HYDRODEMOLITION, AS PER PLAN

IN ADDITION TO THE REQUIREMENTS OF ITEM 848 SURFACE PREPARATION USING HYDRODEMOLITION, THIS WILL ALSO INCLUDE THE FOLLOWING:

DEBRIS PLUGGING THE EXISTING SLIDING PLATE EXPANSION JOINT AND SCUPPERS SHALL BE REMOVED AS DIRECTED BY THE ENGINEER.

THE INTENT OF THIS PLAN IS TO REPAIR THE DAMAGED BEAM ON STRUCTURE FRA-33-2964. THE DAMAGED BEAMS SHALL BE REPAIRED BY MEANS OF HEAT STRAIGHTENING AND THE WORK SHALL ALSO INCLUDE THE REPLACEMENT OF ALL DAMAGED CROSS FRAMES AS DESIGNATED ON THE PLAN.

ITEM SPECIAL - HEAT STRAIGHTENING OF DAMAGED STRUCTURAL STEEL

THE DAMAGED BEAM WILL BE HEAT STRAIGHTENED AS PER PROPOSAL NOTE FOR HEAT STRAIGHTENING OF DAMAGED STRUCTURAL STEEL. AFTER ALL HEAT STRAIGHTENING REPAIRS HAVE BEEN MADE, THE FASTENERS IN THE SPLICE PLATES ADJOINING THE DAMAGED SECTION OF BEAM WILL BE CHECKED FOR TIGHTNESS. ANY LOOSE FASTENERS IN THE WEB OR THE BOTTOM FLANGE WILL BE REPLACED WITH NEW BOLTS, WASHERS, AND NUTS. THE NUTS IN THE TOP FLANGE SPLICE PLATE WILL BE CHECKED AND TIGHTENED IF ANY ARE FOUND TO BE LOOSE. IF ANY FASTENERS ARE REMOVED THEY MUST BE REPLACED AND TIGHTENED PRIOR TO THE REMOVAL OF ANOTHER FASTENER. AFTER COMPLETION OF ALL REPAIR WORK. THE DAMAGED AREAS WILL BE PAINTED WITH AN EPOXY MASTIC PAINT, SEE ITEM 514 - FIELD PAINTING, MISC.: REPAIR PAINTING. ALL LABOR, MATERIALS, EQUIPMENT AND INCIDENTALS NECESSARY TO COMPLETE THIS ITEM, EXCEPT FOR THE PAINTING, WILL BE INCLUDED FOR PAYMENT UNDER ITEM SPECIAL - HEAT STRAIGHTENING OF STRUCTURAL STEEL.

ITEM 514 - FIELD PAINTING, MISC.: REPAIR PAINTING

ALL PAINT DAMAGED BY THE COLLISION AND/OR THE REPAIR EFFORTS SHALL BE CLEANED AND PAINTED. THE CONTRACTOR WILL USE AN EPOXY MASTIC TO PAINT THE DESIGNATED AREAS. THE COLOR OF THE PAINT WILL CLOSELY MATCH THAT OF THE EXISTING PAINT. CLEANING SHALL BE BY HAND OR POWER TOOLS SUCH AS NEEDLE GUNS, DESCALERS, ABRASIVE WHEELS, DISCS, ROTARY IMPACT FLAPS, WIRE BRUSHES, ETC. (SEE SSPC 11-87T). THE APPEARANCE OF THE PREPARED SURFACE, AFTER POWER TOOL CLEANING WILL CORRESPOND TO PICTORIAL STANDARDS B, C, OR D ST3.

THE CONTRACTOR MAY CHOOSE TO USE SELECTIVE ABRASIVE BLASTING ON THIS PROJECT IN CONJUNCTION WITH HAND TOOL CLEANING, HOWEVER ANY ABRASIVE BLASTING MUST BE ACCOMPANIED WITH CONTAINMENT, COLLECTION, STORAGE, TESTING AND DISPOSAL OF ALL BLASTING DEBRIS. THE PROCEDURE SHALL BE PERFORMED IN ACCORDANCE WITH THE PROVISIONS OF SUPPLEMENTAL SPEC. 815 - FIELD PAINTING OF EXISTING STEEL, SYSTEM OZEU. VACUUM BLASTING WILL ALSO BE CONSIDERED ACCEPTABLE, PROVIDING ALL ABRASIVE IS RECYCLED. THE APPEARANCE AFTER BLASTING SHALL CORRESPOND TO B, C, OR D S02 (SSPC-SP6).

THE MINIMUM MIL THICKNESS OF EACH COAT OF PAINT SHALL BE VERIFIED WITH A POSITECTOR.

ALL COATS SHALL BE APPLIED BY BRUSH OR ROLLER (SUBJECT TO THE APPROVAL OF THE ENGINEER). AIRLESS SPRAY PAINTING IS ALLOWED ONLY IF OVER SPRAY IS CONTAINED BY ENCLOSURES.

PAINTING SHALL BE WITH 2 COATS, 5 MILS EACH OF AN EPOXY MASTIC SUCH AS:
- CARBOMASTIC 15
- AMERLOCK 400
- ALUMAPOXY
- OR EQUAL

OR A SINGLE COMPONENT MOISTURE CURE URETHANE SUCH AS WASSER:
- MC-MIOMASTIC @ 5 MILS (PRIMER)
- MC-FERROX A @ 3 MILS (TOP COAT)

APPLICATION RESTRICTION (TEMPERATURE, HUMIDITY, ETC.) WILL BE AS PER PRODUCT DATA SHEETS.

THE CONTRACTOR SHALL USE EXTREME CAUTION TO PREVENT PAINT SPATTERING OR OVERSPRAY FROM COMING IN CONTACT WITH PASSING TRAFFIC OR OTHER PRIVATE AND PUBLIC PROPERTY, INCLUDING WATERWAYS. ANY DAMAGE CAUSED BY THE CONTRACTORS NEGLIGENCE SHALL BE REPAIRED OR RESTORED AT HIS EXPENSE.

ITEM 513 - STRUCTURAL STEEL, MISC.: REPLACEMENT OF DAMAGED CROSS FRAMES, AS PER PLAN

THE REPAIR SHALL CONSIST OF REMOVING THE DAMAGED CROSS FRAMES (AS SHOWN ON PLAN SHEET 51) ON STRUCTURE FRA-33-2964. ALL CROSS FRAMES REMOVED WILL BECOME THE PROPERTY OF THE CONTRACTOR. THIS ITEM WILL ALSO INCLUDE SUPPLYING NEW CROSS FRAMES AND WELDING THEM BACK TO THE ORIGINAL POSITIONS OF THE CROSS FRAMES THAT WERE REMOVED. AFTER REMOVAL, ALL WELDS WILL BE GROUND SMOOTH, IN PREPARATION OF WELDING THE NEW CROSS FRAMES IN PLACE. CROSS FRAME ANGLES SHALL BE 3"X3"X5/16. THE NEW CROSS FRAME ANGLES WILL BE WELDED TO THE BEAM ON BOTH SIDES OF VERTICAL LEG AND ON THE TOP SIDE OF THE HORIZONTAL LEG. THE ANGLE WILL BE WELDED USING A 1/4" CONTINUOUS FILLET WELD. STEEL MEMBERS TO BE FABRICATED UNDER THIS ITEM WILL NOT REQUIRE SHOP DRAWINGS PRIOR TO FABRICATION. AISC CERTIFICATION IS NOT REQUIRED. THE CONTRACTOR WILL TAKE THE NECESSARY MEASUREMENTS. THE ENGINEER WILL HAVE THE AUTHORITY AND THE RESPONSIBILITY FOR ENSURING THAT THE STEEL IS ACCEPTABLE. AFTER FABRICATION THE PAY WEIGHTS SHALL BE COMPUTED IN COMPLIANCE WITH ITEM 513 OF THE CONSTRUCTION AND MATERIAL SPEC. AND SUBMITTED TO THE ENGINEER FOR HIS REVIEW AND APPROVAL.

ALL LABOR, MATERIALS, EQUIPMENT AND INCIDENTALS NECESSARY TO COMPLETE THIS ITEM EXCEPT FOR PAINT WILL BE INCLUDED FOR PAYMENT UNDER ITEM 513 - STRUCTURAL STEEL MISC.: REPLACEMENT OF DAMAGED CROSS FRAMES, AS PER PLAN.

STEEL FRAMING PLAN

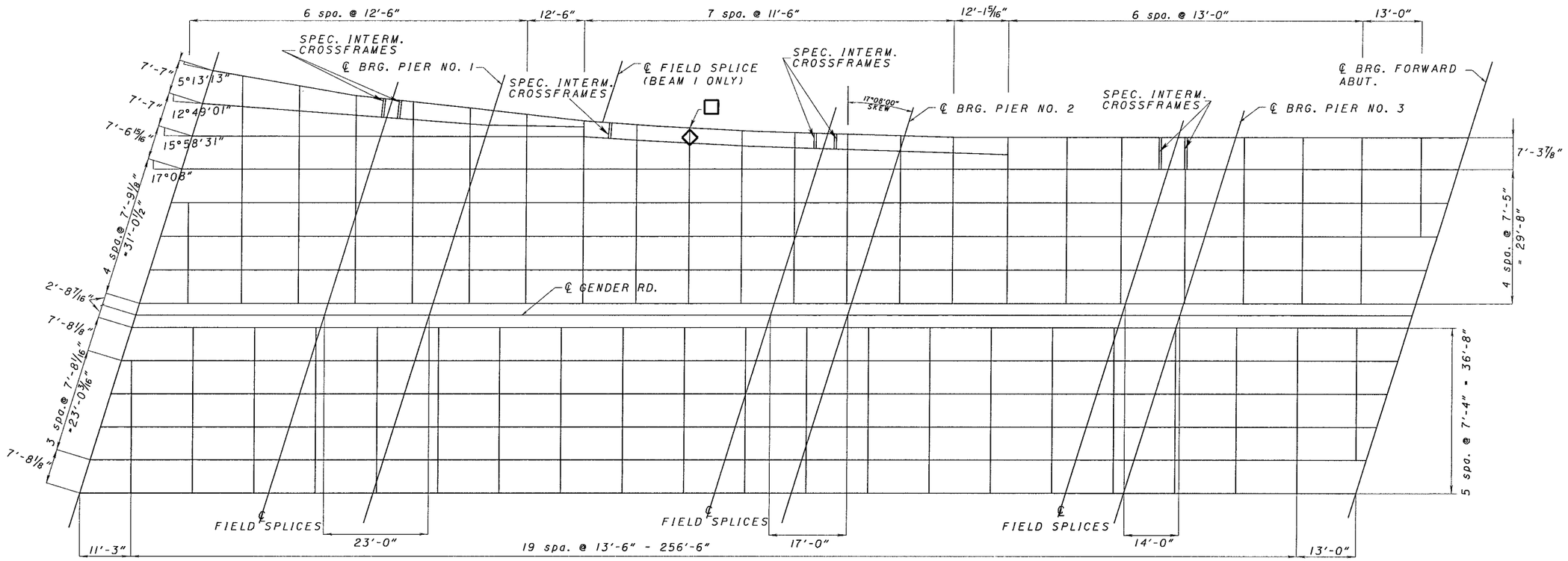

◇ DAMAGED CROSSFRAMES

□ AREA OF DAMAGE TO THE BEAMS

TRANSVERSE SECTION - NORTH BOUND LANES

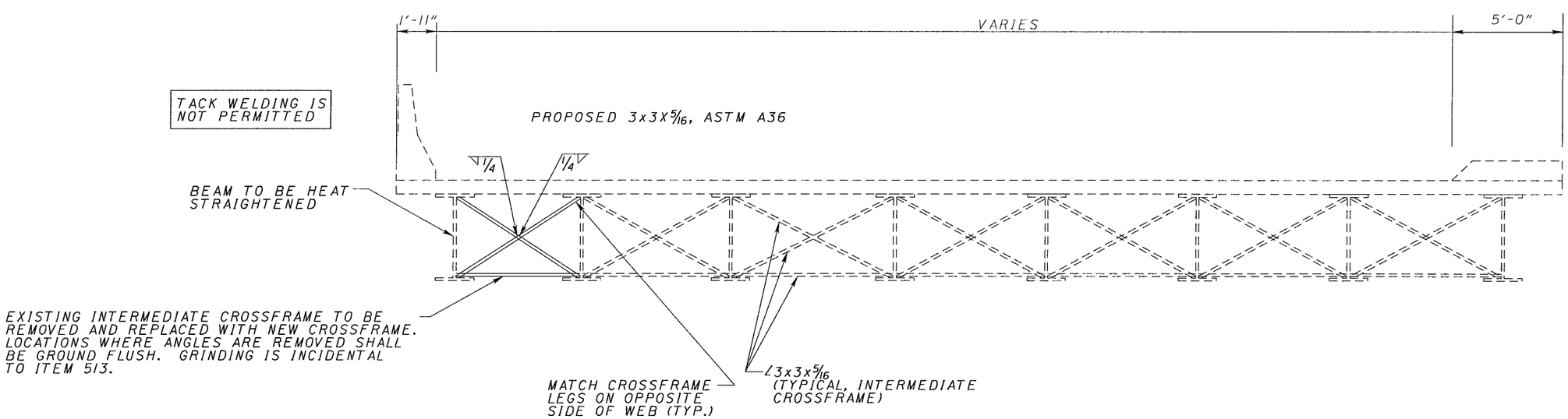

DESIGN AGENCY
JOBES HENDERSON & ASSOCIATES, INC.
59 GRANT ST NEWARK, OH 43055

DESIGNED	DRAWN	REVIEWED	DATE
SJD			
CHECKED	REVISED	STRUCTURE FILE NUMBER	
CMS		2517361	

HEAT STRAIGHTENING
BRIDGE NO. FRA-33-2964
S.R. 674 (GENDER ROAD) OVER U.S. 33

FRA-33-29.64

6 / 6

51 / 51

12/23/2003 - 11:46:02 AM - sderwacter - t:\009-02\dgn\GENDER\HEAT-STRAIGHTEN.dgn