B.M. 113
STA.156+47.92 I-670, 38.14'LT.
R.R.SPIKE SET ELEV.= 730.93

B.M. 122
STA.13+56.67 HIGH ST., 33.70'LT.
P.K.SET ELEV.= 754.51

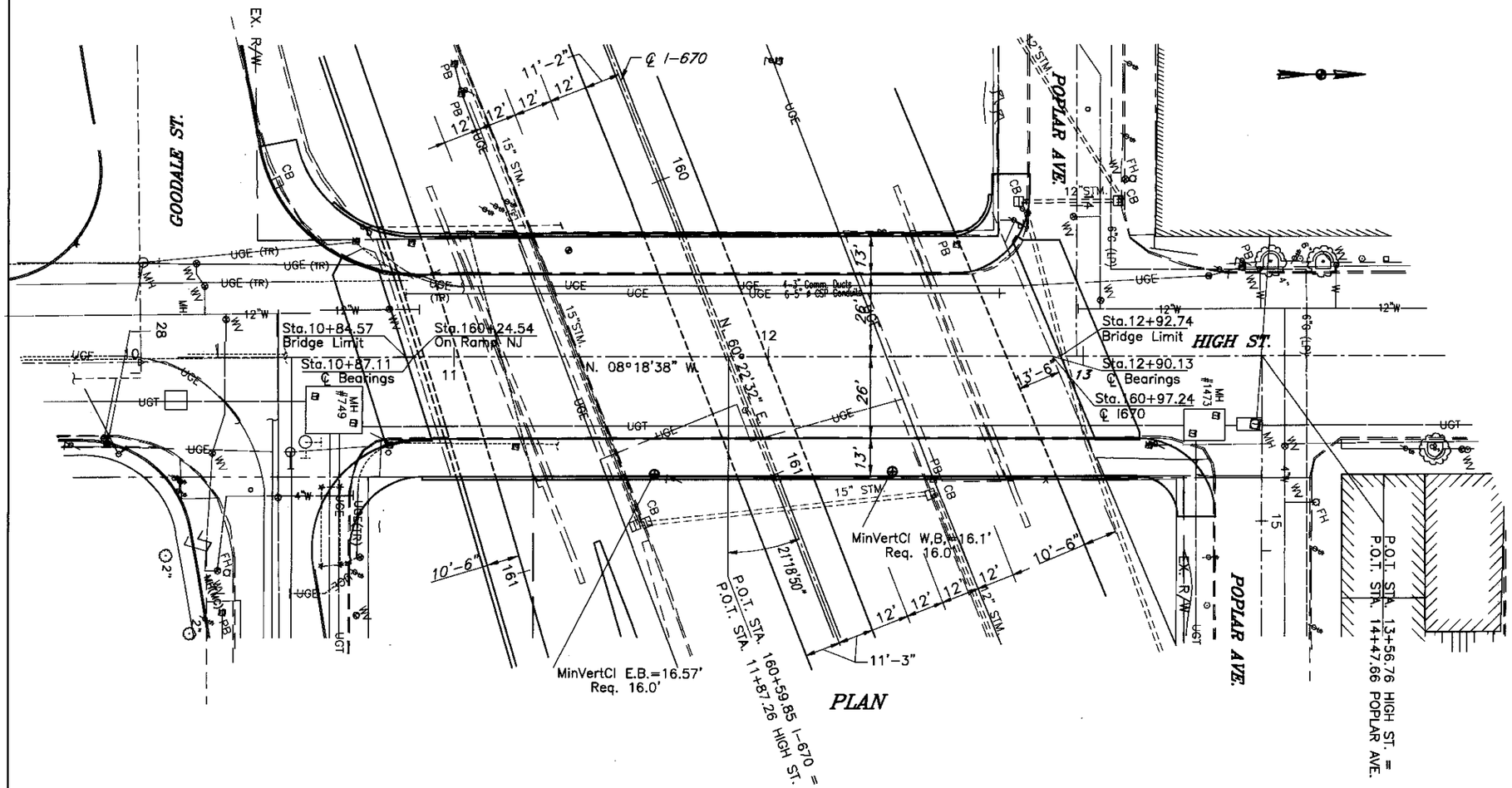

PLAN

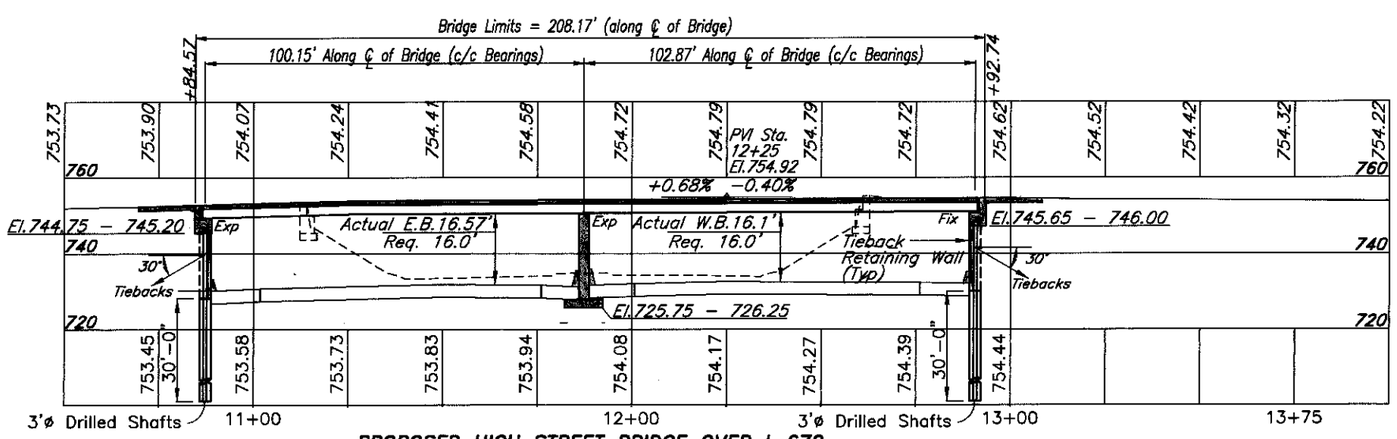

PROPOSED HIGH STREET BRIDGE OVER I-670
Profile Along ℄ High Street

DESIGN TRAFFIC

1996 ADT 12,480
2016 ADT 15,330
ADTT 1226

VERTICAL CURVE DATA

P.V.I. Sta. 12+25.00
El.= 754.92
G_1 = +0.68%
G_2 = -0.40%
VC= 100'

EXISTING STRUCTURE

TYPE: Reinf. Conc. Deck on Steel Beams and Reinf. Conc. Substructure
SPAN: 72'-3", 72'-3" c/c Bearings
ROADWAY: 52'-0" f/f Safety Curbs With 12'-6 3/4" Sidewalks
WEARING SURFACE: Asphalt Concrete
ALIGNMENT: Tangent
APPROACH SLABS : AS-1-54 (15' Long)
SKEW: 21°-21'-00" Right Forward
STRUCTURE FILE NUMBER: 2506335
BUILT: 1958

PROPOSED STRUCTURE

TYPE: Reinforced Concrete Deck on Continuous Steel Girders & Reinforced Concrete Substructure
SPAN: 100.15'+102.87' c/c Bearings
ROADWAY: 52'f/f Curbs & 12'-0" Sidewalks
LOADING: HS20-44 (Case II) And The Alternate Military Loading
SKEW: 21°-18'-50" R.F.
WEARING SURFACE: Monolithic Conc.
APPROACH SLABS: 15' Long (AS-1-81) (As per plan)
ALIGNMENT: Tangent
Crown: 3/16" Per Ft.

DESIGN AGENCY
ERIKSSON ENGINEERING LTD.
1523 CHESAPEAKE AVENUE
COLUMBUS, OH 43212

DATE	REVIEWED	DRAWN	DESIGNED	FRANKLIN COUNTY
5.18.01	SFN : 2506238	DA	VK	STA.10+84.57
		REVISED	CHECKED	STA.12+92.74
			CI	

SITE PLAN
BRIDGE NO. FRA-670-0380
I-670 UNDER HIGH STREET

FRA-670-3.17

1 / 19

647 / 905

Aug. 2, 2001 Q:\BRIDGE\I670\0380High\3613Bspl.dwg

GENERAL NOTES

THIS STRUCTURE CONFORMS TO "STANDARD SPECIFICATIONS FOR HIGHWAY BRIDGES" ADOPTED BY THE AMERICAN ASSOCIATION OF STATE HIGHWAY AND TRANSPORTATION OFFICIALS, 1996, INCLUDING THE 1997, 1998 & 1999 INTERIM SPECIFICATION AND THE ODOT BRIDGE DESIGN MANUAL.

DESIGN LOADING

HS20-44 CASE II AND THE ALTERNATE MILITARY LOADING.
60 P.S.F. FUTURE WEARING SURFACE.

DESIGN STRESSES

CONCRETE CLASS S –	COMPRESSIVE STRENGTH 4500 PSI (SUPERSTRUCTURE)
CONCRETE CLASS C –	COMPRESSIVE STRENGTH 4000 PSI (SUBSTRUCTURE)
REINFORCING STEEL –	ASTM A615, A616 OR A617 GRADE 60, MINIMUM YIELD STRENGTH 60,000 PSI
STRUCTURAL STEEL –	ASTM A572 (PROPOSED STEEL MEMBERS) UNIT STRESS 24,000 PSI

REFERENCE SHALL BE MADE TO STANDARD DRAWINGS:

AS-1-81	REV	4-20-01	SHEET NO. 1. AND 2.
BS-1-93	DATED	12-19-94	
EXJ-4-87	REV	4-20-01	SHEET NO. 2
GSD-1-96	DATED	4-20-01	
PCB-91	DATED	7-6-99	

AND TO SUPPLEMENTAL SPECIFICATIONS

816	DATED 4-21-97
842	DATED 1-6-99
846	DATED 9-9-97
863	DATED 10-12-99
864	DATED 7-11-00
899	DATED 10-21-98
910	DATED 7-11-00
954	DATED 9-9-97

DECK PROTECTION METHOD EPOXY COATED REINFORCING STEEL, 2 1/2" CONCRETE COVER AND SEALING OF CONCRETE SURFACES.

MONOLITHIC WEARING SURFACE IS ASSUMED FOR DESIGN PURPOSES TO BE 1".

PROPOSED WORK

1. INSTALLATION OF TEMPORARY SHEET PILING
2. PLACING AND ANCHORING PORTABLE CONCRETE BARRIERS
3. REMOVAL OF THE LEFT (WESTERN) PART OF THE STRUCTURE AS SHOWN ON SHEET 3. DECK, PIER INCLUDING FOOTING, AND THE ABUTMENTS INCLUDING FOOTINGS.
4. INSTALL THE TIEBACK WALLS AS SHOWN ON THE DRAWINGS FOR RETAINING WALLS.
5. BUILD THE PIER.
6. BUILD ABUTMENTS UP TO BEAM SEATS.
7. INSTALL STEEL BEAMS AND UTILITY LINES.
8. BUILD CONCRETE DECK.
9. PLACING PORTABLE CONCRETE BARRIERS ON THE NEW DECK.
10. REMOVAL OF THE RIGHT (EASTERN) PART OF THE STRUCTURE AS SHOWN ON SHEET 3. DECK, PIER INCLUDING FOOTING, AND ABUTMENTS INCLUDING FOOTINGS.
11. INSTALL THE TIEBACK WALLS (AS SHOWN ON THE DRAWINGS FOR RETAINING WALLS.
12. BUILD THE PIER.
13. BUILD THE ABUTMENTS UP TO THE BEAM SEATS.
14. INSTALL STEEL BEAMS AND UTILITY LINES.
15. BUILD CONCRETE DECK.
16. BUILD CLOSURE SECTION OF CONCRETE DECK.
17. INSTALLATION OF STRIP SEAL JOINTS, ABUTMENT BACKWALL AND APPROACH SLAB CONSTRUCTION.

MAINTENANCE OF TRAFFIC

TRAFFIC SHALL BE MAINTAINED AS SHOWN ON SHEET 4. COST OF MAINTAINING TRAFFIC SHALL BE INCLUDED IN ITEM 614 (ROADWAY PLANS) FOR PAYMENT.

ITEM 202 - STRUCTURE REMOVED, OVER 20 FOOT SPAN, AS PER PLAN:

REMOVAL OF EXISTING STRUCTURE: WHEN NO LONGER NEEDED TO MAINTAIN TRAFFIC THE EXISTING STRUCTURE SHALL BE REMOVED. ABUTMENTS SHALL BE REMOVED INCLUDING FOOTINGS. PIERS SHALL BE REMOVED INCLUDING FOOTINGS.

PORTIONS OF STRUCTURE REMOVED, AS PER PLAN SHALL INCLUDE THE ELEMENTS INDICATED IN THE PLANS AND GENERAL NOTES AND THAT ARE NOT SEPARATELY LISTED FOR PAYMENT, EXCEPT FOR WEARING COURSE REMOVAL. ITEMS TO BE REMOVED INCLUDE ALL EXISTING MATERIALS BEING REPLACED BY NEW CONSTRUCTION AND MISCELLANEOUS ITEMS THAT ARE NOT SHOWN TO BE INCORPORATED INTO THE FINAL CONSTRUCTION AND ARE DIRECTED TO BE REMOVED BY THE ENGINEER.

PROTECTION OF TRAFFIC: PRIOR TO DEMOLITION OF ANY PORTIONS OF THE EXISTING SUPERSTRUCTURE, THE CONTRACTOR SHALL SUBMIT HIS PLANS FOR THE PROTECTION OF TRAFFIC (VEHICULAR, PEDESTRIAN, ETC.) ADJACENT TO AND/OR UNDER THE STRUCTURE TO THE DIRECTOR' FOR APPROVAL. THESE PLANS SHALL INCLUDE PROVISIONS FOR ANY DEVICES AND STRUCTURES THAT MAY BE NECESSARY TO ENSURE SUCH PROTECTION. TEMPORARY VERTICAL CLEARANCES SPECIFIED ON THE PLANS OR IN THE PROPOSAL SHALL BE MAINTAINED AT ALL TIMES EXCEPT AS OTHERWISE APPROVED BY THE DIRECTOR.

PAYMENT: THIS WORK WILL BE PAID FOR AT THE CONTRACT LUMP SUM PRICE BID, WHICH PRICE AND PAYMENT SHALL BE FULL COMPENSATION FOR ALL LABOR, EQUIPMENT, MATERIALS AND INCIDENTALS NECESSARY TO COMPLETE THE WORK IN CONFORMANCE WITH THESE REQUIREMENTS, WITH PERTINENT PROVISIONS OF 202, AND TO THE SATISFACTION OF THE ENGINEER.

ITEM 690 - SPECIAL - MISC.: MATERIAL AND INSTALLATION OF UTILITY LINES, AS PER PLAN:

ALL EXPENSE INVOLVED IN INSTALLING THE AFFECTED UTILITY LINES SHALL BE BORNE BY THE UTILITIES. THE CONTRACTOR AND UTILITIES ARE TO COOPERATE BY ARRANGING THEIR WORK IN SUCH A MANNER THAT INCONVENIENCE TO EITHER WILL BE HELD TO A MINIMUM.

THE CONTRACTOR SHALL FURNISH ALL MATERIAL (CONDUITS, HANGERS, ETC.) AND LABOR FOR INSTALLATION OF THE CONDUITS AS SHOWN IN THESE PLANS, SHEETS 17, 18 AND 19.

THE STATE SHALL PAY THE CONTRACTOR A LUMP SUM FOR THE MATERIAL AND INSTALLATION AND FOR WHICH THE UTILITY COMPANIES SHALL REIMBURSE THE STATE.

ITEM 816 FIELD PAINTING OF NEW STEEL

THE URETHANE TOP COAT FOR THE IZEU PAINT SYSTEM SHALL BE FEDERAL COLOR STANDARD NO. 14062 (DARK GREEN).

ITEM 864 SEALING OF CONCRETE SURFACES (EPOXY-URETHANE)

SEALING OF CONCRETE SURFACES (EPOXY-URETHANE) SHALL BE APPLIED ON A 9" WIDTH OF THE ROADWAY ALONG THE CURBLINE, THE VERTICAL FACE OF THE CURB, THE TOP OF THE SIDEWALK, THE DECK FACIA AND A 6" WIDTH AT THE UNDERSIDE OF THE DECK.

SEALER SHALL ALSO BE APPLIED TO ALL EXPOSED SURFACES OF THE PIER, THE BACKWALLS AND THE BEAM SEATS. THE FRONT OF THE BEAM SEAT AND THE FACIA WALL WILL ALSO BE COVERED, HOWEVER QUANTITIES ARE INCLUDED WITH THE RETAINING WALLS.

THE TOP COAT FOR THE EPOXY-URETHANE SEALER SHALL BE FEDERAL COLOR STANDARD NO. 17778 (LIGHT NEUTRAL).

ADELPHIA BUSINESS SOLUTIONS
5550 BLAZER PARKWAY, SUITE 150
DUBLIN, OHIO 43017
614-766-0942 – PHONE
989-1543 – CELL
614-766-0948 – FAX
SCOTT LANCIA
PROJECT MANAGER
scott.lancia@adelphiacom.com

AMERICAN ELECTRIC POWER
850 TECH CENTER DRIVE
GAHANNA, OHIO 43230
883-6817 – PHONE
883-6868 – FAX
ROD SLONEKER
(CITY PROJECTS/DISTRIBUTION)
ENGINEERING LIAISON COORDINATOR
rsloneker@aep.com

AMERITECH
150 EAST GAY STREET, ROOM 6C
COLUMBUS, OHIO 43215
223-7162 – PHONE
620-8579 – CELL
223-5579 – FAX
ANTHONY S. JONES
MANAGER OSPE
anthony.s.jones@sbc.com

AMERITECH NEW MEDIA
2660 WINCHESTER PIKE
COLUMBUS, OHIO 43232
236-3920 – PHONE
236-2427 – FAX
240-1816 – PAGER
MIKE MCCOY
ENGINEERING MANAGER
Michael.l.mccoy@ameritech.com

AT&T CORP./TCG OHIO
10 WEST BROAD STREET, SUITE 400
COLUMBUS, OHIO 43215
233-5745 – PHONE
870-0236 – HOME
306-8602 – MOBILE
STEVE MCQUEEN
OPERATIONS MANAGER
slmcqueen@ams.att.com

FISHEL COMPANY
1810 ARLINGATE LANE
COLUMBUS, OHIO 43228
921-8602 – PHONE
850-7170 – FAX
RICH ACKISON
AREA MANAGER
drackison@fishelco.com

TIME WARNER COMMUNICATIONS
1266 DUBLIN ROAD
COLUMBUS, OHIO 43215
481-5263 – PHONE
481-5283 – FAX
640-3626 – PAGER
296-4168 – CELL
KEVIN RICH (CONDUIT)
ENGINEERING TEAM LEADER
kevin.rich@twcolumbus.com

XO COMMUNICATION
TWO EASTON OVAL, SUITE 300
COLUMBUS, OHIO 43219
416-1169 – PHONE
629-3201 – FAX
DALE FERGUSON
OSP ENGINEER
dferguson@nextlink.net

CITY OF COLUMBUS

DEPARTMENT OF TECHNOLOGY
TELECOMMUNICATION DIVISION
CITY HALL, 90 WEST BROAD STREET
ROOM 316
COLUMBUS, OHIO 43215-9006
645-1501 – PHONE
DAVE MCNALLY
NETWORK MANAGER
dwmcnalley@cmhmetro.net

DIVISION OF ELECTRICITY
3568 INDIANOLA AVENUE
COLUMBUS, OHIO 43214
645-3706 – PHONE
TED WILKINSON
ADMINISTRATOR
twilkinson@dosd.cmhmetro.net

TRAFFIC ENGINEERING
109 NORTH FRONT STREET
COLUMBUS, OHIO 43215
645-7790 – PHONE
STEVE JEWELL
SIGNAL ENGINEER
sgjewell@cmhmetro.net

DESIGN AGENCY
ERIKSSON ENGINEERING LTD.
1523 CHESAPEAKE AVENUE
COLUMBUS, OH 43212

REVIEWED 5.18.01 DATE
SFN : 2500238

DRAWN DM REVISED
DESIGNED CE CHECKED DA

GENERAL NOTES
BRIDGE NO. FRA-670-0380
I-670 UNDER HIGH STREET

FRA-670-3.17

648
905

Aug. 2, 2001 Q:\BRIDGE\I670\0380High\36138gn1.dwg

ESTIMATED QUANTITIES

ITEM	ITEM EXT.	TOTAL	UNIT	DESCRIPTION	ABUT.	PIERS	SUPER.	GEN.	NOTE / SEE SHEET
202	11003	LUMP		STRUCTURE REMOVED, OVER 20 FOOT SPAN, AS PER PLAN				LUMP	2
503	11100	LUMP		COFFERDAM, CRIBS & SHEETING				LUMP	
503	21300	LUMP		UNCLASSIFIED EXCAVATION		LUMP			
516	11211	166	LIN. FT	STRUCTURAL EXPANSION JOINT INCLUDING ELASTOMERIC STRIP SEAL, AS PER PLAN	166				13
516	44201	12	EACH	9"x16"x3 1/16" ELASTOMERIC BEARINGS WITH INTERNAL LAMINATES (NEOPRENE)	12				12
				AND 10"x24"x1 1/2" LOAD PLATE, AS PER PLAN					
516	44401	12	EACH	15"x22"x6 3/8" ELASTOMERIC BEARINGS WITH INTERNAL LAMINATES (NEOPRENE)	12				12
				AND 16"x24"x1 1/2" LOAD PLATE, AS PER PLAN					
516	44401	12	EACH	15"x24"x5 1/8" ELASTOMERIC BEARINGS WITH INTERNAL LAMINATES (NEOPRENE)		12			12
				AND 16"x26"x2 5/8" LOAD PLATE, AS PER PLAN					
816	00600	LUMP		FIELD PAINTING OF NEW STEEL, INTERMEDIATE & FINISH COAT, SYSTEM IZEU			LUMP		2
842	31504	464	CU. YD	CLASS S CONCRETE, SUPERSTRUCTURE			464		
842	41000	67	CU. YD	CLASS C CONCRETE, PIER ABOVE FOOTINGS		67			
842	44101	52	CU. YD	CLASS C CONCRETE, ABUTMENT NOT INCLUDING FOOTING, AS PER PLAN	52				ABUTMENT BACKWALL
842	46500	75	CU. YD	CLASS C CONCRETE, FOOTING		75			
846	73000	90	SQ. YD	TREATING CONCRETE BRIDGE DECK WITH HMWM RESIN			90		
863	10261	845,021	POUND	STRUCTURAL STEEL MEMBERS, LEVEL (3) FABRICATION, AS PER PLAN			845,021		11
863	20000	4428	EACH	WELDED STUD SHEAR CONNECTORS			4428		
864	10100	1122	SQ. YD	SEALING OF CONCRETE SURFACES (EPOXY-URETHANE)	215	148	759		2
SPECIAL	69098400	LUMP		MISC.: MATERIAL AND INSTALLATION OF UTILITY LINES, AS PER PLAN				LUMP	17,18 & 19
				Computed by: VK Date: 5-18-01					
				Checked by: DA Date: 5-18-01					

* SEE PROPOSAL NOTE

DESIGN AGENCY
ERIKSSON ENGINEERING LTD.
1523 CHESAPEAKE AVENUE
COLUMBUS, OH 43212

DATE 5.18.01
REVIEWED
SFN : 2506238

DRAWN DA
REVISED

DESIGNED JN
CHECKED DA

ESTIMATED QUANTITIES
BRIDGE NO. FRA-670-0380
1670 UNDER HIGH STREET

FRA-670-3.17

Aug. 2, 2001 Q:\BRIDGE\1670\0380High\36138qt.dwg

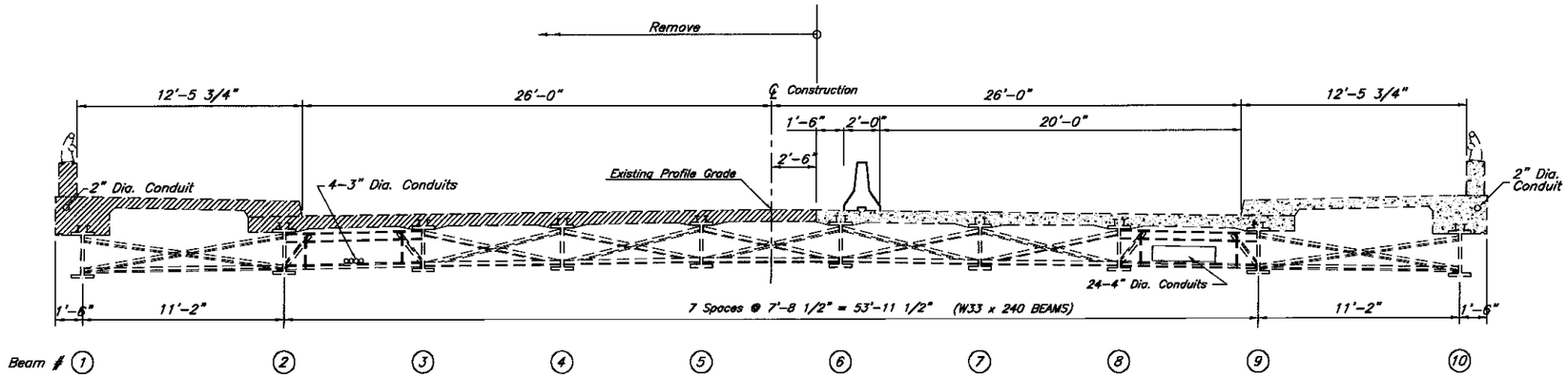

TRANSVERSE SECTION - STAGE I REMOVAL

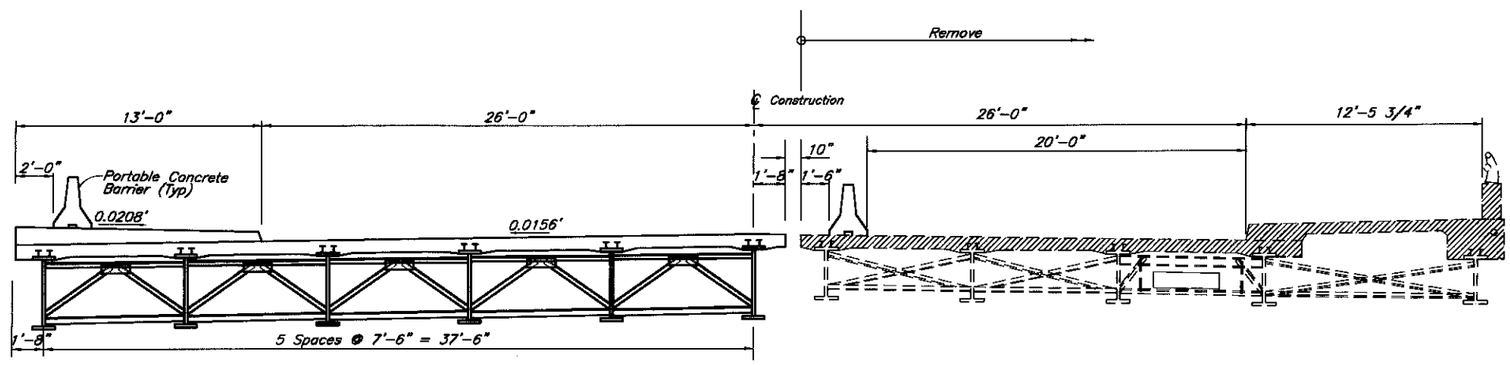

TRANSVERSE SECTION - STAGE I CONSTRUCTION & STAGE II REMOVAL

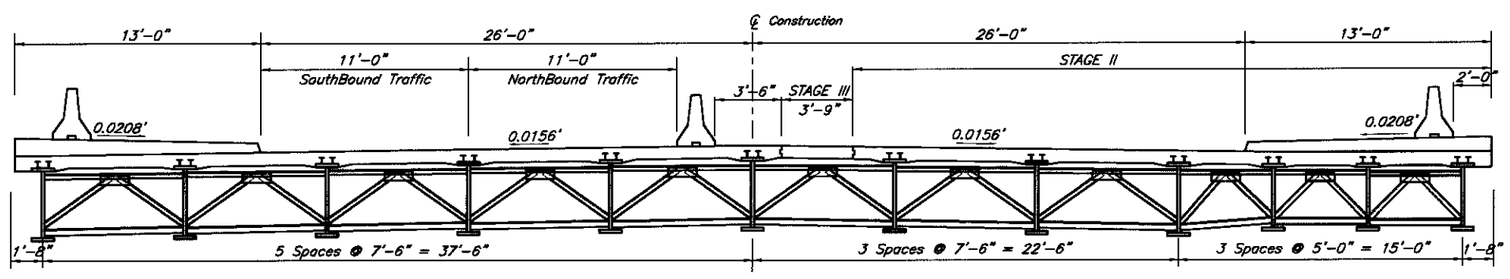

TRANSVERSE SECTION - STAGE II & III CONSTRUCTION

NOTE:
At the allowable speed of 25 MPH the Portable Barriers need not be anchored.

DESIGN AGENCY
ERIKSSON ENGINEERING LTD.
1523 CHESAPEAKE AVENUE
COLUMBUS, OH 43212

DESIGNED	DRAWN	REVIEWED	DATE
VK	DA	JRB	5.18.01
CHECKED	REVISED	SFN : 2506238	
DA			

STAGE CONSTRUCTION PLAN
BRIDGE NO. FRA-670-0380
UNDER HIGH STREET

FRA-670-3.17

Aug. 2, 2001 Q:\BRIDGE\670\0380High\3613Bst1.dwg

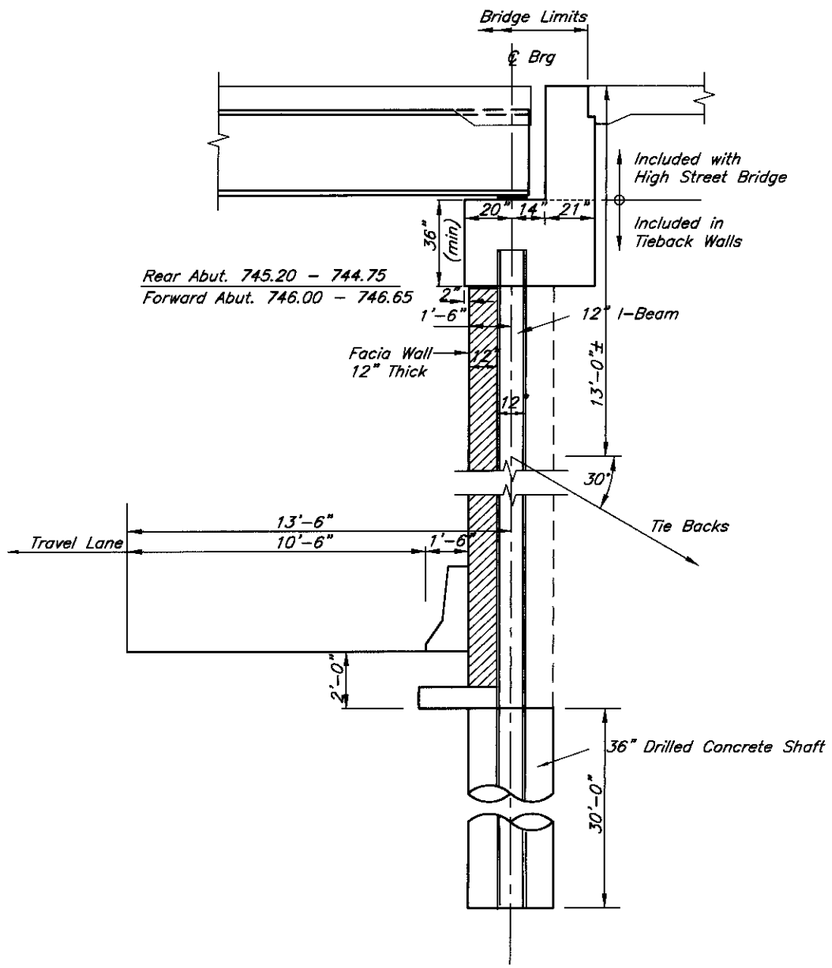

TYPICAL SECTION OF ABUTMENTS

FOR DETAILS & DIMINSIONS SEE
DRAWINGS FOR TIEBACK WALLS

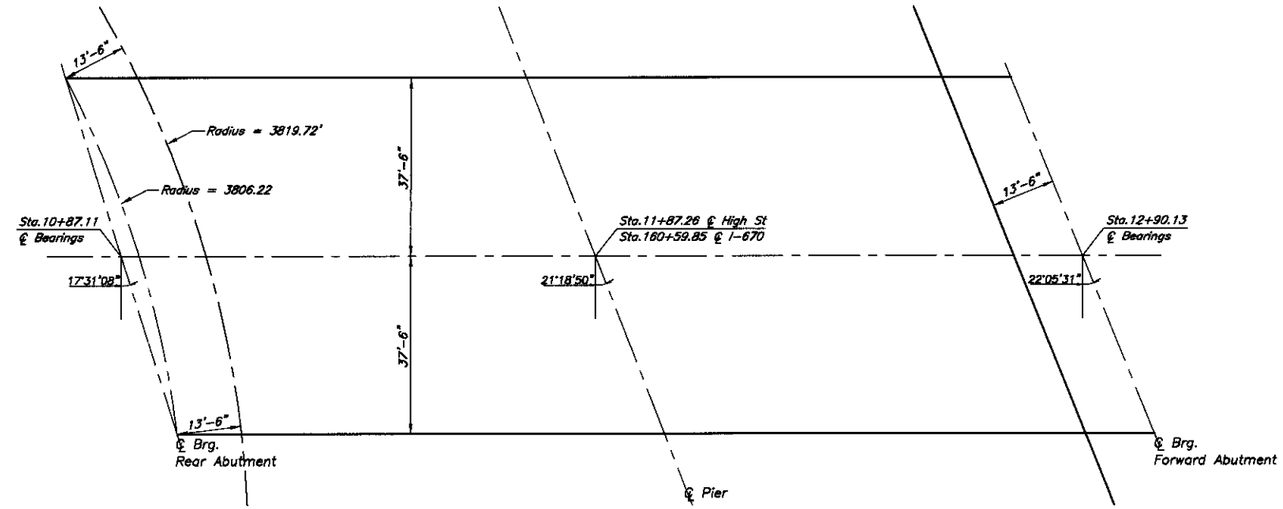

SUBSTRUCTURE LAYOUT

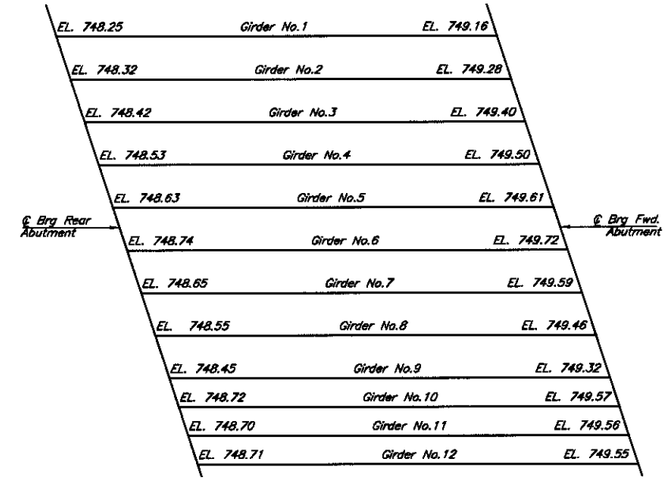

BRIDGE SEAT ELEVATIONS AT ABUTMENT

DESIGN AGENCY
ERIKSSON ENGINEERING LTD.
1523 CHESAPEAKE AVENUE
COLUMBUS, OH 43212

DESIGNED	DRAWN	REVIEWED	DATE
WY	DA		5.18.01
CHECKED	REVISED		SFN : 2506238
DA			

ABUTMENT DETAILS
Bridge No. FRA-670-0380
I670 Under High Street

FRA-670-0380

651
905

Aug. 2, 2001 Q:\BRIDGE\I670\0380High\36138abt.dwg

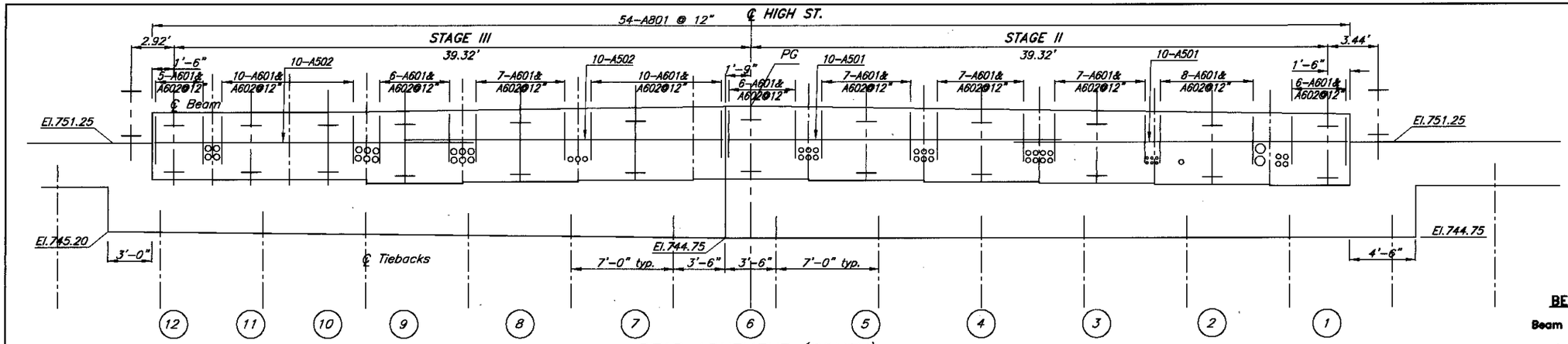

REAR ABUTMENT (SOUTH)
ELEVATION

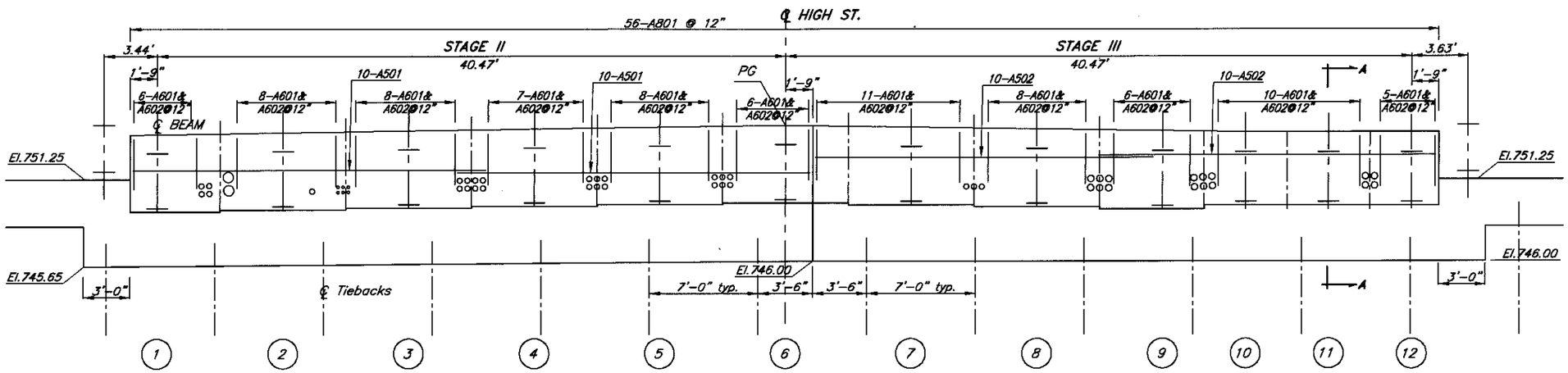

FORWARD ABUTMENT (NORTH)
ELEVATION

BEAM SEAT ELEVATION

Beam #	Rear Abut.	Forward Abut.
1	748.25	749.16
2	748.32	749.28
3	748.42	749.40
4	748.53	749.50
5	748.63	749.61
6	748.74	749.72
7	748.65	749.59
8	748.55	749.46
9	748.45	749.32
10	748.71	749.57
11	748.70	749.56
12	748.71	749.55

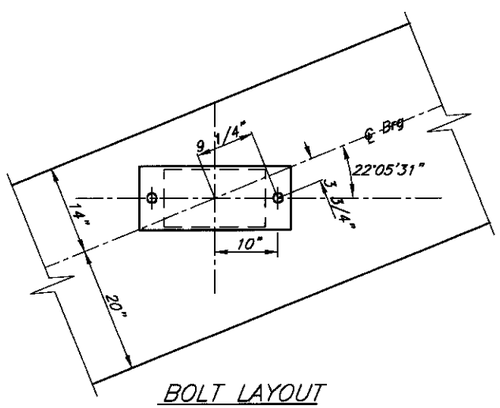

BOLT LAYOUT
@ FORWARD ABUTMENT

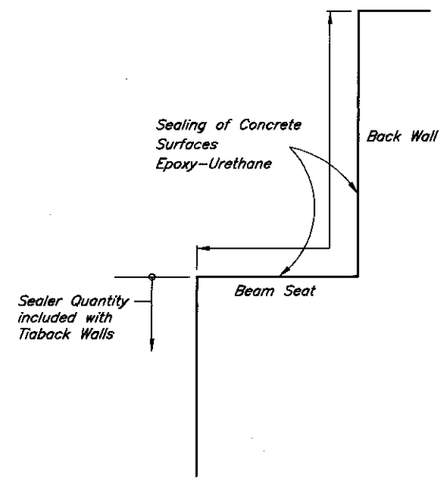

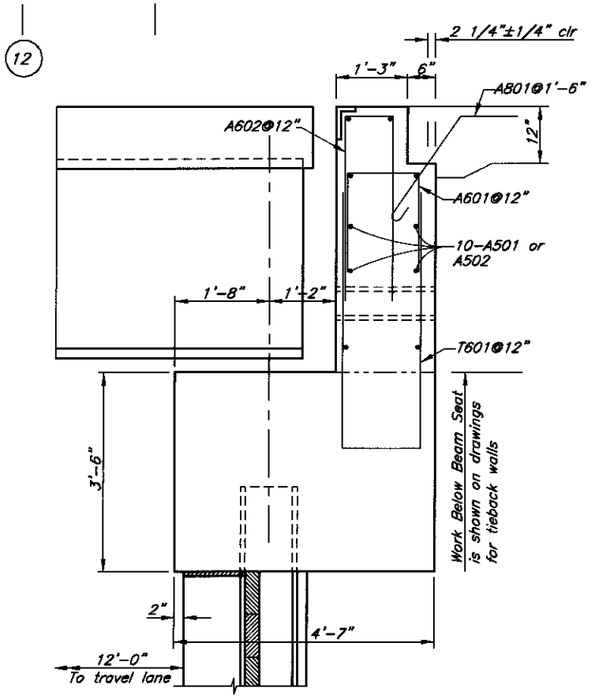

SECTION A-A

DESIGN AGENCY
ERIKSSON ENGINEERING LTD.
1523 CHESAPEAKE AVENUE
COLUMBUS, OH 43212

DATE 5.18.01
REVIEWED
SFN : 2506238
DRAWN CI
REVISED
DESIGNED VK
CHECKED DA

ABUTMENTS
BRIDGE NO. FRA-670-0380
I-670 UNDER HIGH STREET

FRA-670-3.17

Aug. 2, 2001 Q:\BRIDGE\I670\0380HIGH\3613Abs.dwg

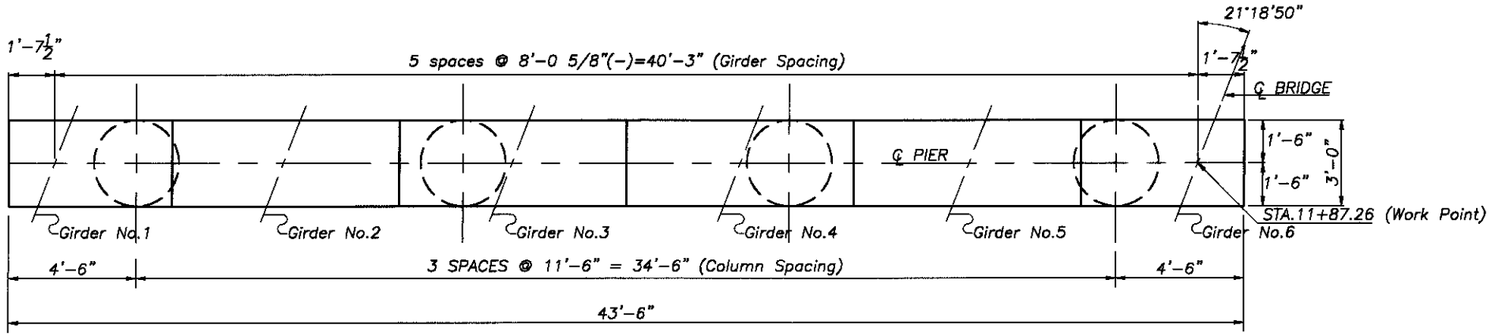

PLAN

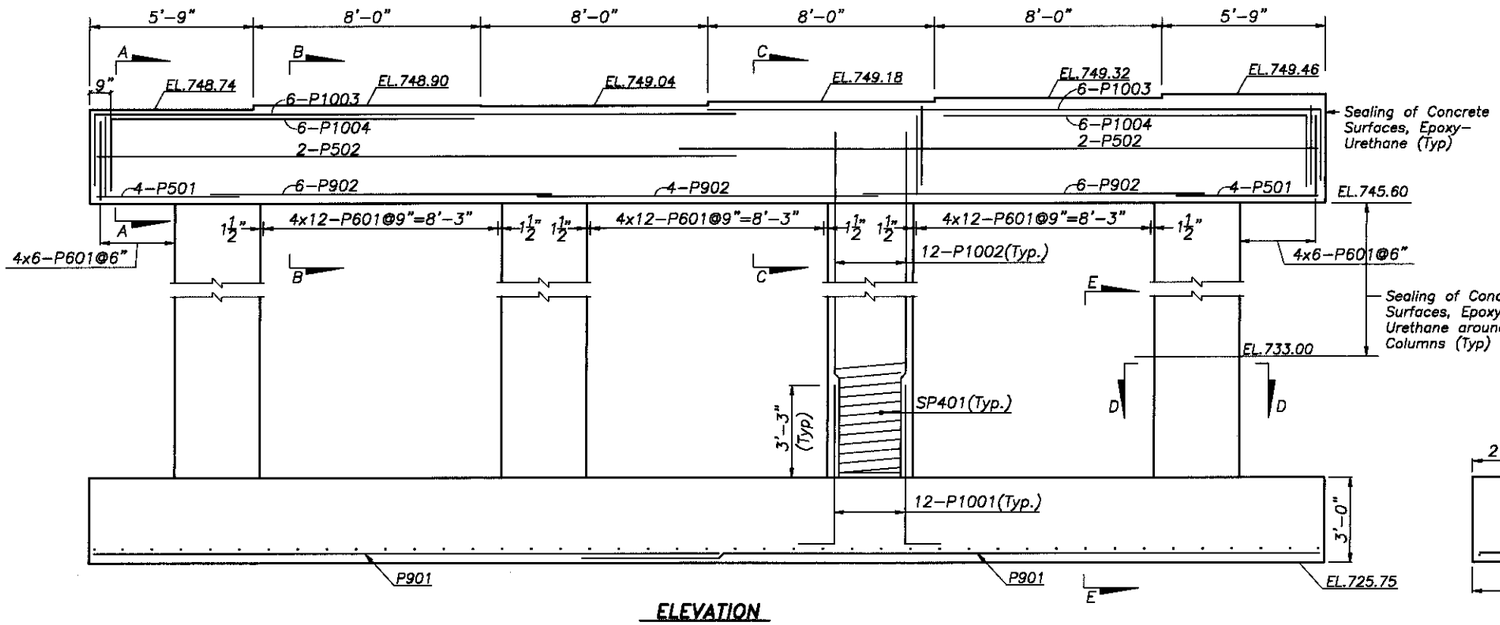

ELEVATION

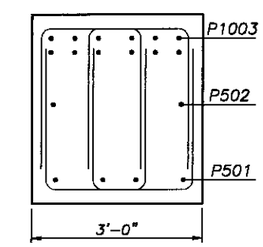

SECTION A-A

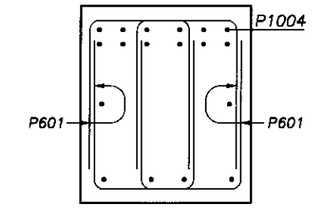

SECTION B-B

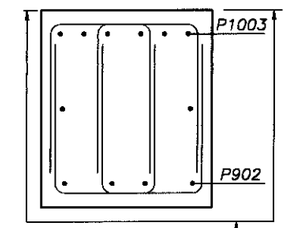

SECTION C-C

Sealing of Concrete Surfaces Epoxy-Urethane (Typ)

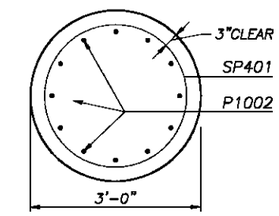

SECTION D-D

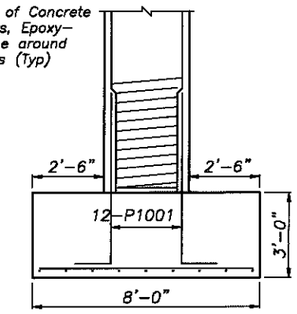

SECTION E-E

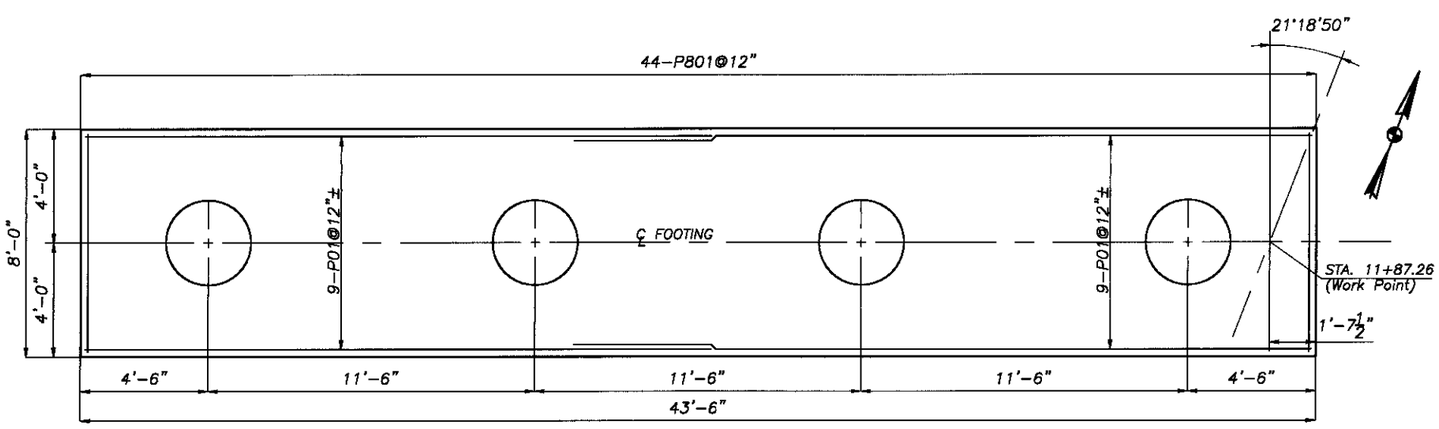

FOOTING PLAN

DESIGN AGENCY
ERIKSSON ENGINEERING LTD.
1523 CHESAPEAKE AVENUE
COLUMBUS, OH 43212

DATE	REVIEWED	DRAWN	DESIGNED
5.18.01		DA	VK
SFN : 2506238		REVISED	CHECKED CI

PIER DETAILS STAGE I CONSTRUCTION
BRIDGE NO. FRA-670-0380
I-670 UNDER HIGH STREET

FRA-670-3.17

Aug. 2, 2001 Q:\BRIDGE\I670\0380High\3613Bpd4.dwg

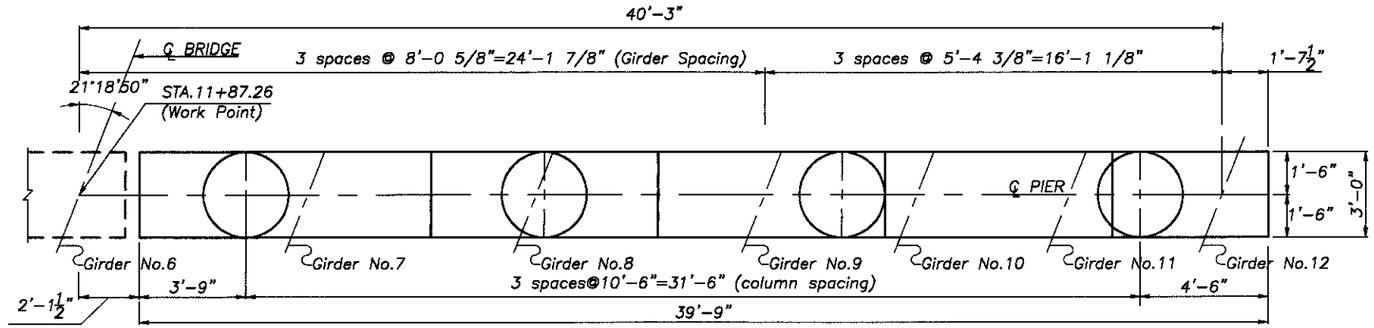

PLAN

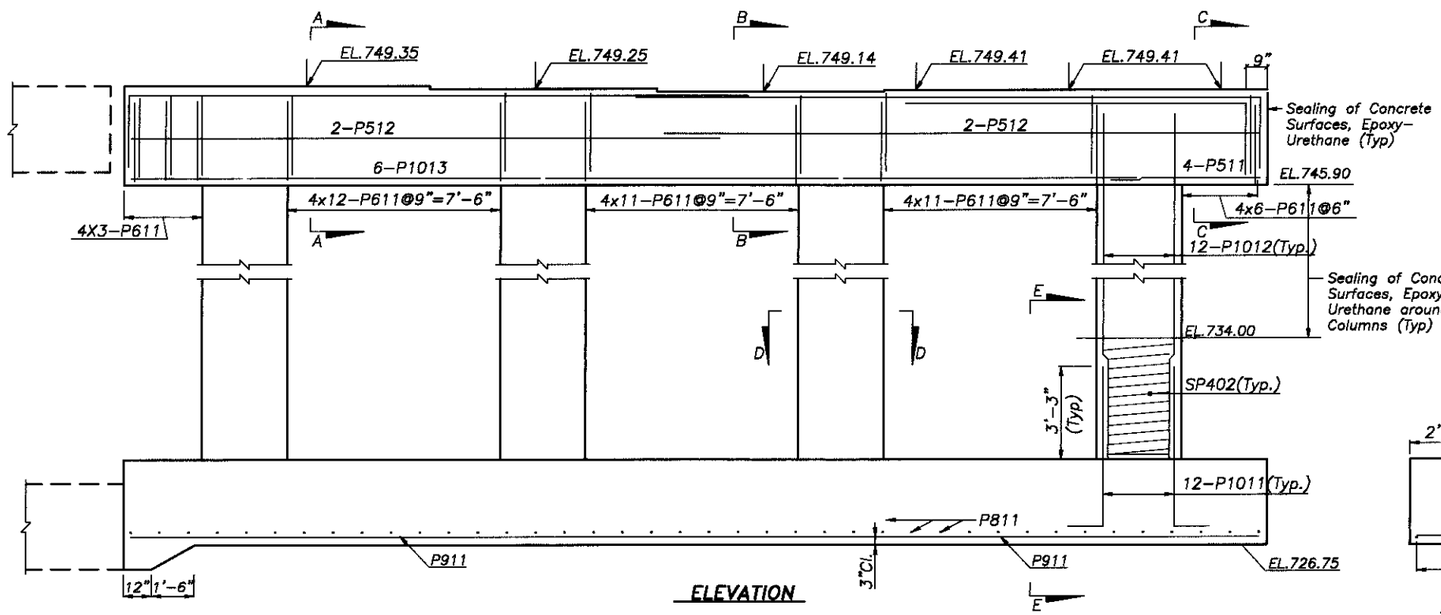

ELEVATION

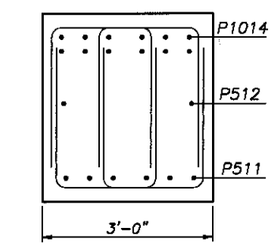

SECTION A-A

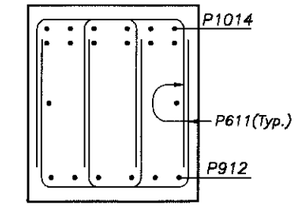

SECTION B-B

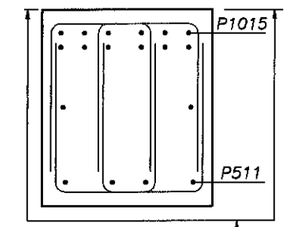

SECTION C-C

Sealing of Concrete Surfaces Epoxy-Urethane (Typ)

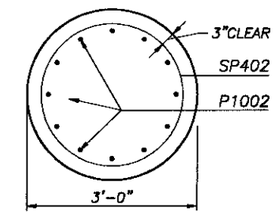

SECTION D-D

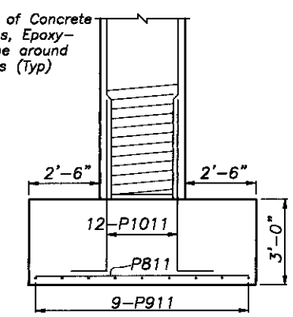

SECTION E-E

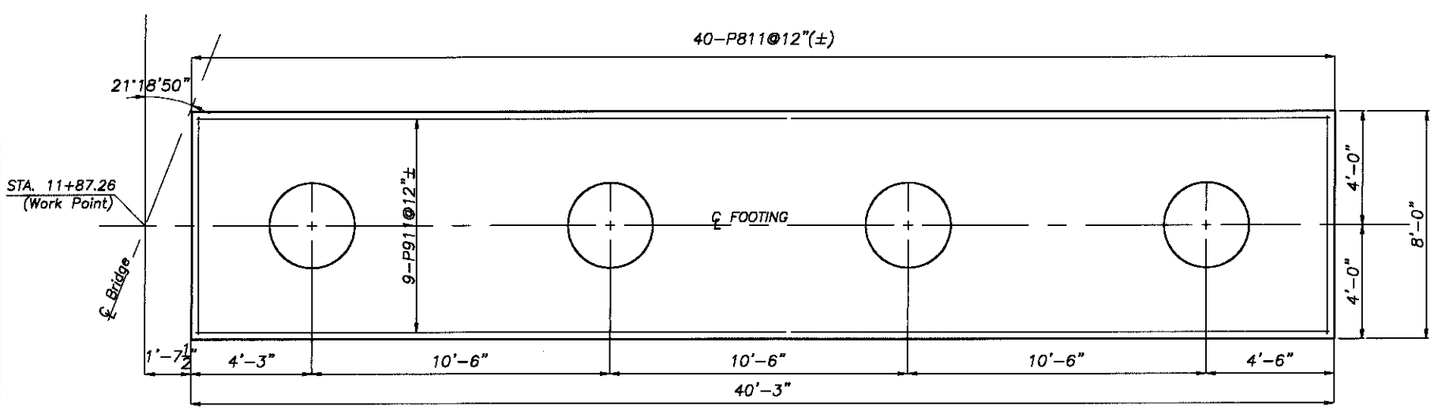

FOOTING PLAN

DESIGN AGENCY
ERIKSSON ENGINEERING LTD.
1323 CHESAPEAKE AVENUE
COLUMBUS, OH 43212

DESIGNED	DRAWN	REVIEWED	DATE
VK	DA		5.18.01
CHECKED	REVISED		SFN : 2506238
CI			

PIER DETAILS STAGE II CONSTRUCTION
Bridge No. FRA-670-0380
I-670 UNDER HIGH STREET

FRA-670-3.17

8 | 19

654
905

Aug. 2, 2001 Q:\BRIDGE\I670\0380High\3613Bpd5.dwg

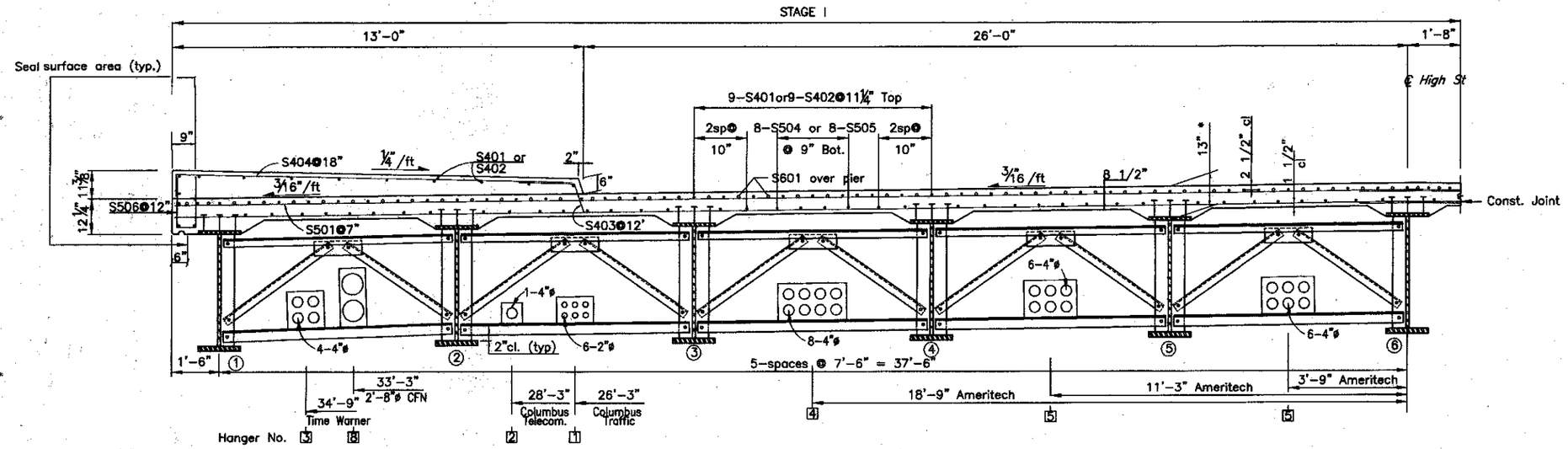

TRANSVERSE SECTION – STAGE I CONST.

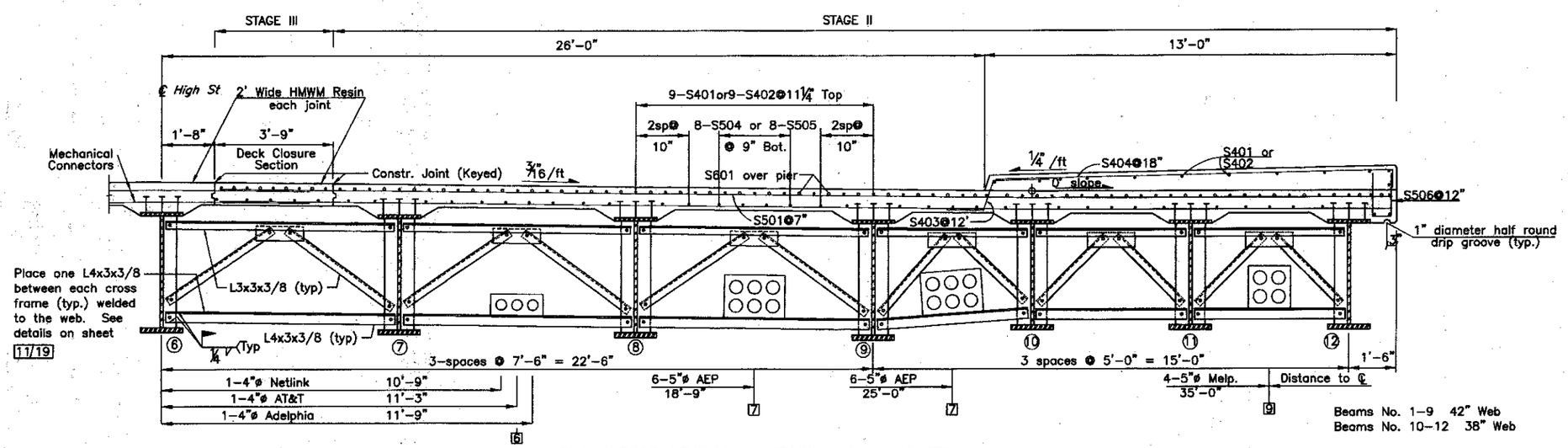

Beams No. 1–9 42" Web
Beams No. 10–12 38" Web

TRANSVERSE SECTION – STAGE II & III CONST.

** DECK SLAB DEPTH: The distance shown from the top of the deck slab to the bottom of the top flange is theoretical design dimension including the design thickness of the 8 1/2 inches. The quantity of deck concrete to be paid for shall be based upon this dimension, minus the design haunch thickness, even though deviation from it may be necessary because the top flange of the girder may not have the exact camber or conformation required to place it parallel to the finished grade. Deduction shall be made for volume of encased steel plates as per 511.18.*

A HAUNCH WIDTH of 9 inches shall be used for computing quantity of concrete. However, the haunch width may vary between 6 and 12 inches.

Intermediate crossframes between girders No.6 and No.7 shall not be erected until after the concrete for construction stage V has been placed.

DESIGN AGENCY
ERIKSSON ENGINEERING LTD.
1523 CHESAPEAKE AVENUE
COLUMBUS, OH 43212

DATE 5.18.01
REVIEWED
SFN : 2506238
DRAWN DA REVISED
DESIGNED VK CHECKED CJ

TRANSVERSE SECTIONS
Bridge No. FRA-670-0380
I-670 UNDER HIGH STREET

FRA-670-3.17

Aug. 2, 2001 Q:\BRIDGE\670\0380High\36136frm.dwg

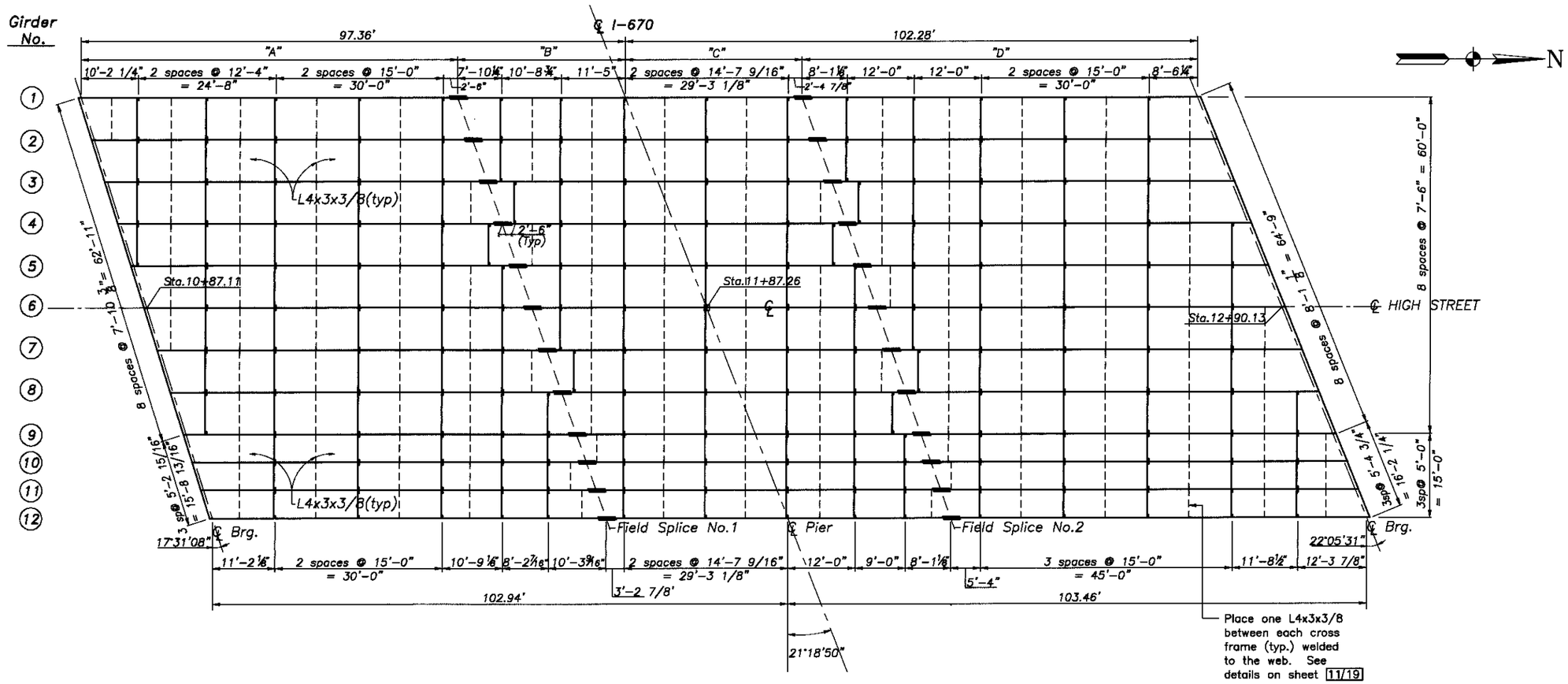

FRAMING PLAN

WELDED ATTACHMENT OF SUPPORTS FOR CONCRETE DECK FINISHING MACHINE MAY BE MADE TO AREAS OF THE FASCIA GIRDER FLANGES DESIGNATED "COMPRESSION". ATTACHMENTS SHALL NOT BE MADE TO AREAS DESIGNATED "TENSION". FILLET WELDS TO COMPRESSION FLANGES SHALL BE NOT CLOSER THAN 1" FROM EDGE OF FLANGE, BE NOT MORE THAN 2" LONG, AND BE NOT SMALLER THAN THE MINIMUM SIZE REQUIRED BY AASHTO.

DESIGN AGENCY
ERIKSSON ENGINEERING LTD.
1523 CHESAPEAKE AVENUE
COLUMBUS, OH 43212

DESIGNED	DRAWN	REVIEWED	DATE
VK	DA		5.18.01
CHECKED	REVISED		SFN : 2506238
CI			

FRAMING PLAN
Bridge No. FRA-670-0380
I-670 UNDER HIGH STREET

FRA-670-3.17

Aug. 2, 2001 Q:\BRIDGE\I670\0380High\3613Bdkd.dwg

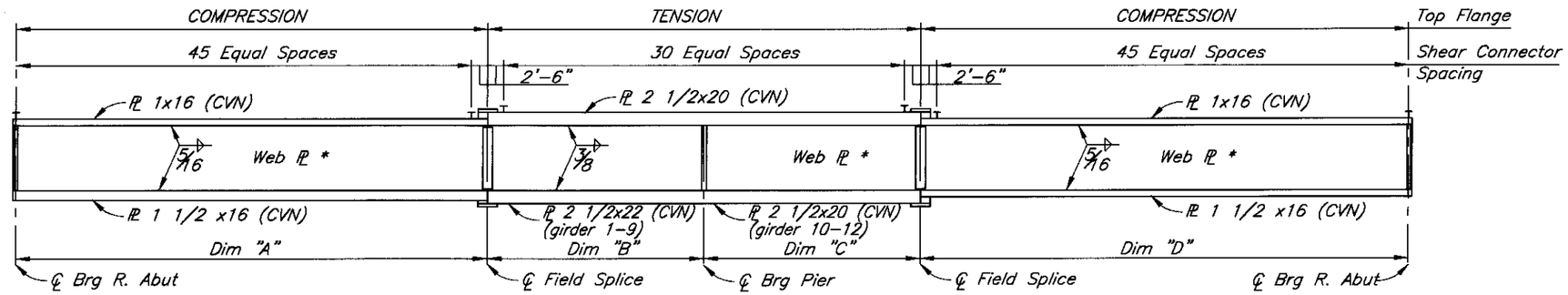

GIRDER ELEVATION – TYP.

Not To Scale

* Web PL 3/4 x42 for girder No.1 thru No.9
* Web PL 3/4 x38 for girders No.10 thru No.12

GIRDERS	DIM. "A"	DIM. "B"	DIM. "C"	DIM. "D"
1	67.36	30.00	31.67	70.61
2	67.66	30.25	31.41	70.99
3	67.97	30.50	31.15	71.37
4	68.28	30.75	30.89	71.74
5	68.59	31.00	30.64	72.11
6	68.90	31.25	30.38	72.49
7	69.21	31.50	30.12	72.87
8	69.52	31.75	29.86	73.25
9	69.83	32.00	29.61	73.61
10	70.03	32.17	29.43	73.87
11	70.24	32.33	29.26	74.12
12	70.44	32.50	29.09	74.37

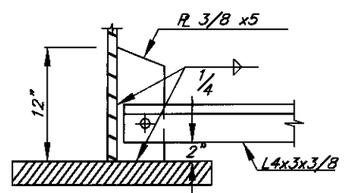

Place one L4x3x3/8 between each cross frame

When a shape or plate is designated (CVN) the material shall meet specified minimum notch toughness requirement as specified in 711.01

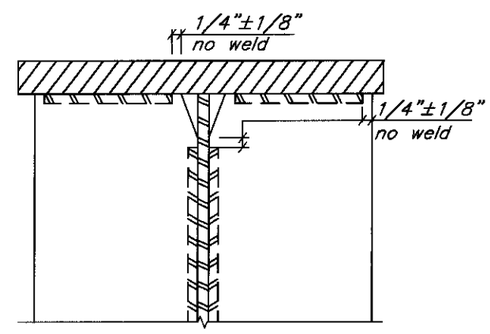

DETAIL "B" (Typ)

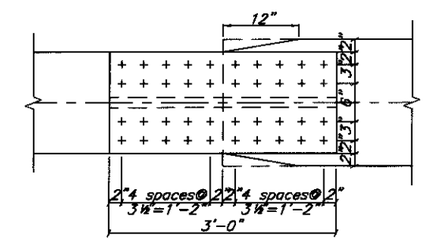

PLAN – TOP FLANGE
(Bottom FLange Similar)

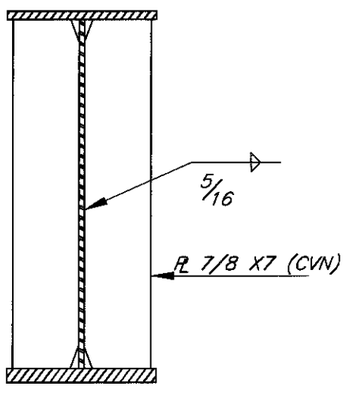

BEARING STIFFENER AT ABUTMENTS

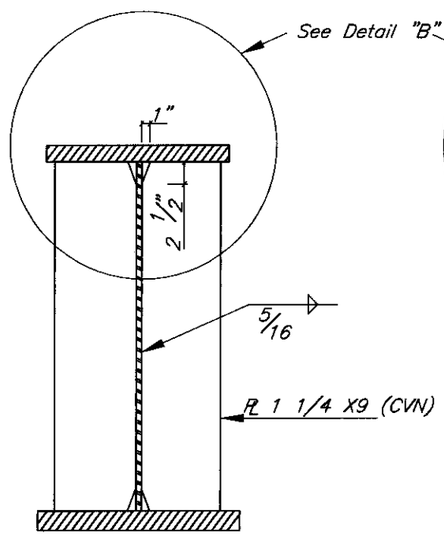

BEARING STIFFENER AT PIER

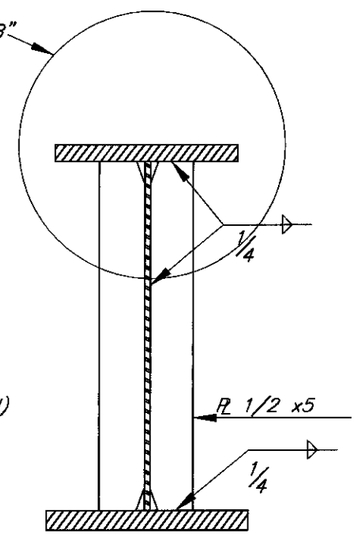

CROSSFRAME CONNECTION DETAIL

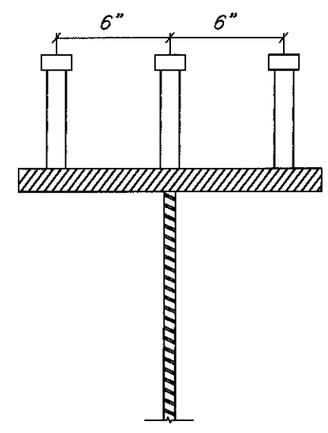

SHEAR CONNECTOR DETAIL

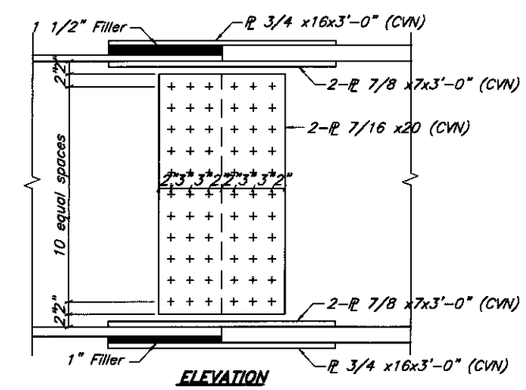

ELEVATION
FIELD SPLICE DETAILS

HIGH STRENGTH BOLTS shall be 1 inch diameter A325, galvinized, unless otherwise noted.

TYPICAL GIRDER DETAILS

Aug. 2, 2001 Q:\BRIDGE\I670\0380High\33613Bgdr.dwg

DESIGN AGENCY
ERIKSSON ENGINEERING LTD.
1523 CHESAPEAKE AVENUE
COLUMBUS, OH 43212

DESIGNED	DRAWN	REVIEWED	DATE
VK	DA		5.18.01
CHECKED	REVISED		SFN : 2506238
CI			

GIRDER DETAILS
Bridge No. FRA-670-0380
I-670 UNDER HIGH STREET

FRA-670-3.17

11 / 19

657 / 905

LOAD PLATE: The steel load plate shall be the same material as the attached structural steel and be similarly cleaned and coated. Surface preparation and priming shall be done in the shop and be included in the price bid for the bearings. Field coats shall be included in the price bid for painting main structural steel.

The steel load plate shall be bonded by vulcanization to the elastomer during the molding process.

Welding of the load plate to the superstructure shall be controlled so that the plate temperature at the elastomer bonded surface shall not exceed 300°F as determined by the use of pyrometric sticks or other temperature monitoring devices.

BASIS OF PAYMENT: The unit bid price shall include all materials, labor and incidentals necessary to finish and install laminated elastomeric bearings, either fixed or expansion. Payment will be made at the contract price for item 516, each, Laminated Elastomeric Bearings.

ELASTOMERIC BEARINGS: Elastomeric bearings shall comply with Item 516 and AASHTO Standard Specification for Highway Bridges, Section 18, Bearing Devices, Division II, Construction, Articles 18.4.5.1 and 18.5.6.2. Bearings shall be Grade 3, 70–durometer elastomer, and shall be subjected to the load testing requirements defined in Article 18.7.4.5 of the AASHTO document listed above. Bearings were designed under section 14.6.A of section 14, Bearings, Division I, Design. Testing shall be included in the unit price bid for the bearings, each.

LAMINATED ELASTOMERIC BEARINGS

LOCATION	DIMENSIONS (inches)					N	STEEL LOAD PLATE	REACTIONS		MAXIMUM DESIGN LOAD
	L	W	ti	te	T			DL	LL	
NORTH ABUTMENT FIXED BRGS	9	16	0.40	0.275	3 1/16	3	1 1/2x10x24	70K	44K	114K
SOUTH ABUTMENT EXPANSION BRGS	15	22	0.40	0.275	6 3/8	10	1 1/2x16x24	70K	44K	114K
PIER EXPANSION BRGS	15	24	0.40	0.275	5 1/8	5	2 5/8x16x26	261K	76K	337K

ti= Thickness of internal layer
te= Thickness of external layer
T= Total thickness of elastomeric bearing

N= No. of steel laminates
Internal steel laminate thickness = 0.0747"
Durometer of elastomer = 70

Dim "A" (in.)		
Temperature	South Abut.	North Abut.
30°F	2.00	2.00
40°F	1.85	2.00
50°F	1.70	2.00
60°F	1.50	2.00
70°F	1.35	2.00
80°F	1.20	2.00
90°F	1.00	2.00

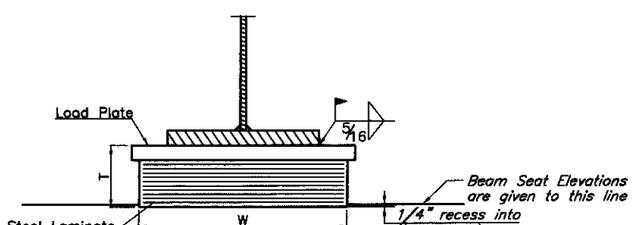

LAMINATED ELASTOMERIC EXPANSION BEARING AT SOUTH ABUTMENT

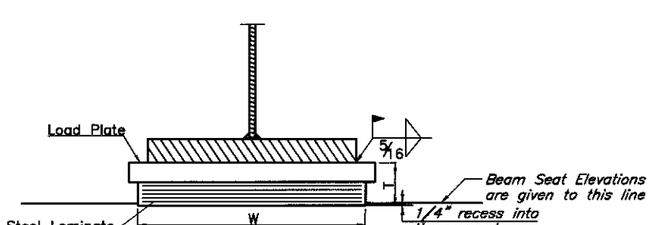

LAMINATED ELASTOMERIC EXPANSION BEARING AT PIER

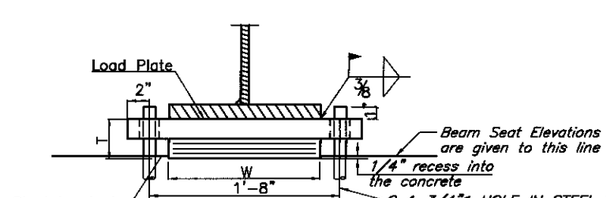

LAMINATED ELASTOMERIC FIXED BEARING AT NORTH ABUTMENT

℄ 1 3/4"ø HOLE IN STEEL LOAD PLATE FOR 1 1/4"øx1'-7" ANCHOR ROD GALVANIZED ACCORDING TO 711.02. INSTALL ANCHOR ROD PER 510. INCLUDE DOWEL HOLES AND ANCHOR RODS WITH ITEM 516 FOR PAYMENT.

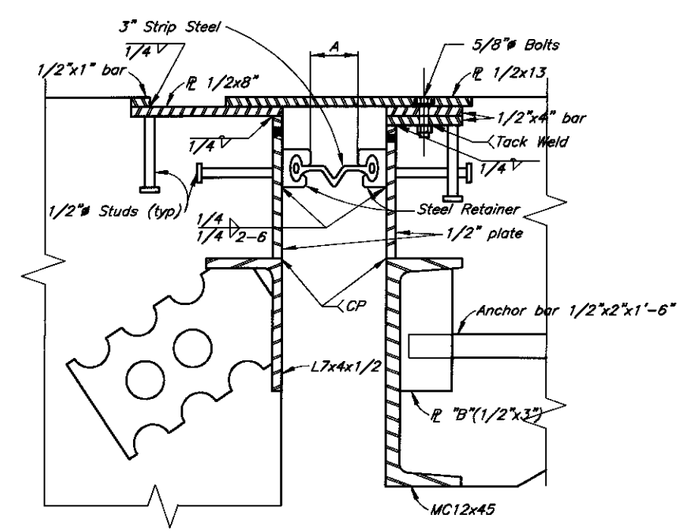

SECTION A–A

For location of Section A–A see Sheet 13/19

DESIGN AGENCY
ERIKSSON ENGINEERING LTD.
1523 CHESAPEAKE AVENUE
COLUMBUS, OH 43212

DESIGNED VK | CHECKED CI | DRAWN DA | REVISED | REVIEWED | DATE 5.18.01

SFN : 2506238

BEARING DETAILS
Bridge No. FRA-670-0380
I-670 UNDER HIGH STREET

FRA-670-3.17

Aug. 2, 2001 Q:\BRIDGE\670\0380High\36135ghs.dwg

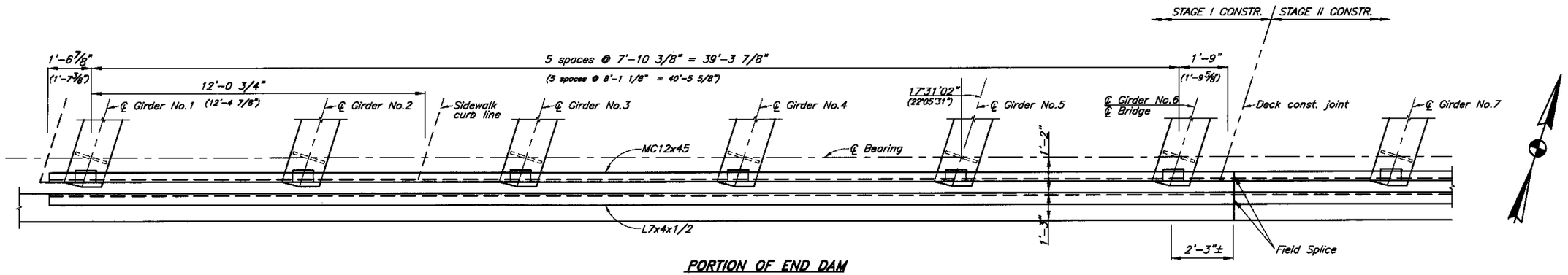

PORTION OF END DAM
(at Rear Abutment shown)

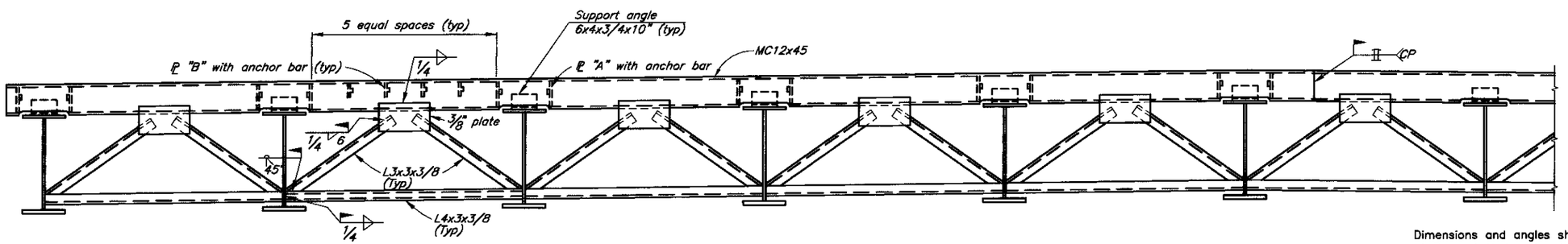

ELEVATION

Dimensions and angles shown in ( ) are at Forward Abutment only.

For details of Section A-A see sheet [. / .]

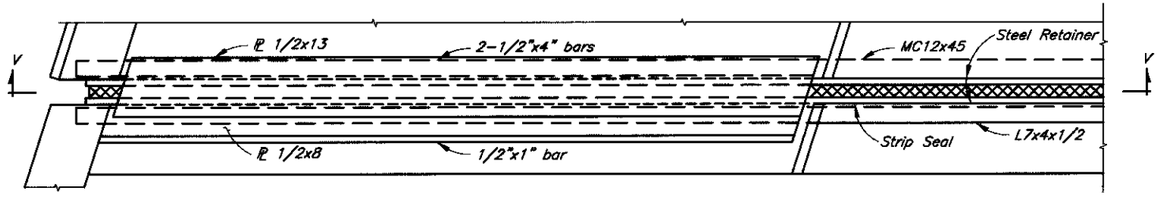

PART PLAN AT ABUTMENT

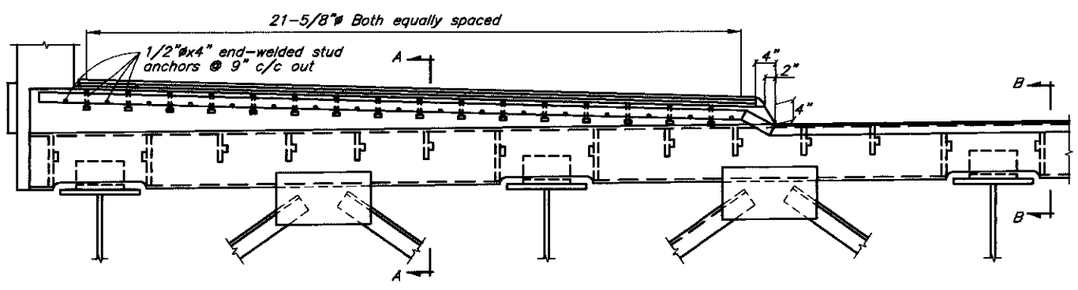

VIEW V-V

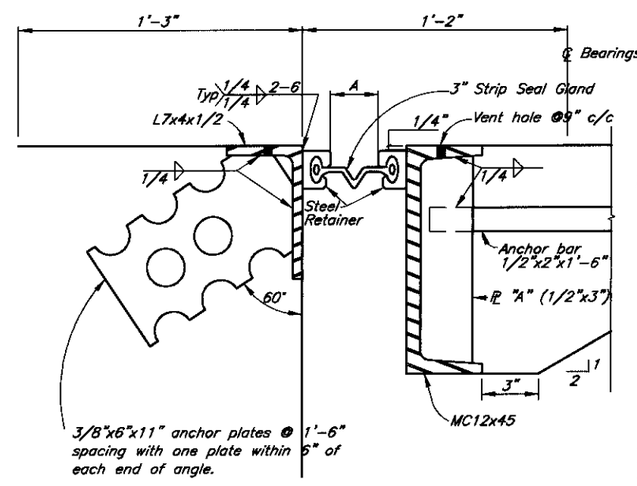

SECTION B-B

Dim "A" (in.)

Temperature	South Abut.	North Abut.
30°F	2.00	2.00
40°F	1.85	2.00
50°F	1.70	2.00
60°F	1.50	2.00
70°F	1.35	2.00
80°F	1.20	2.00
90°F	1.00	2.00

STRIP SEAL GLAND shall be installed in one continuous piece after completion of construction Stage III

FOR MORE DETAILS AND NOTES REFERENCE IS MADE TO STANDARD DRAWINGS EXJ-4-87 SHEETS No.1, No.2, No.3, No.4 & No.5

Aug. 2, 2001 Q:\BRIDGE\1670\0380High\36135edm.dwg

DESIGN AGENCY
ERIKSSON ENGINEERING LTD.
1523 CHESAPEAKE AVENUE
COLUMBUS, OH 43212

DATE 5.18.01
REVIEWED
SFN : 2506238
DRAWN DA
REVISED
DESIGNED VK
CHECKED CI

END DAM DETAILS
Bridge No. FRA-670-0380
I-670 UNDER HIGH STREET

FRA-670-3.17

13 / 19

659
905

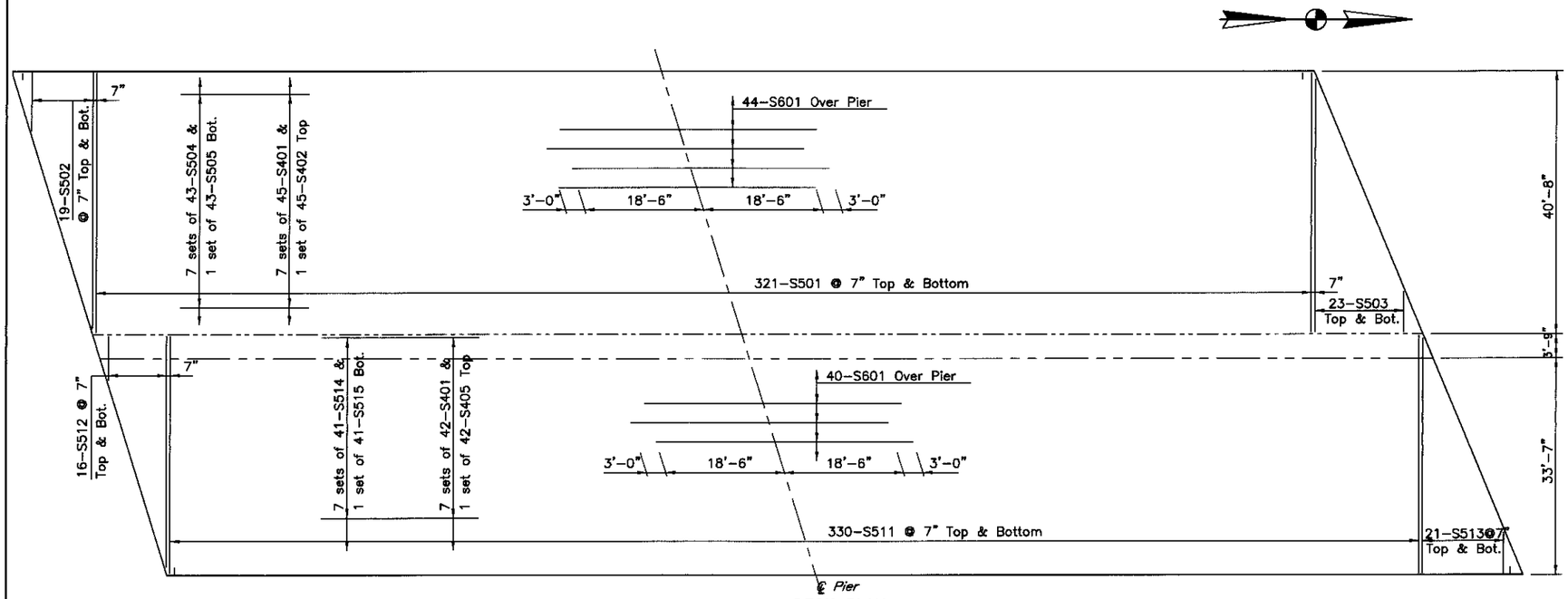

DECK PLAN

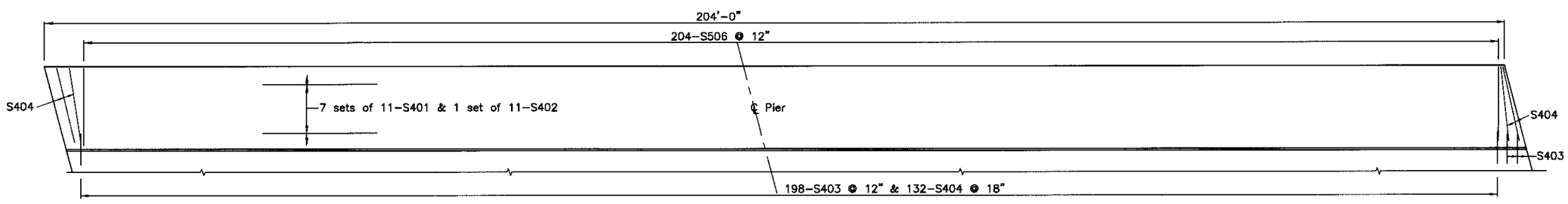

PLAN WEST SIDEWALK

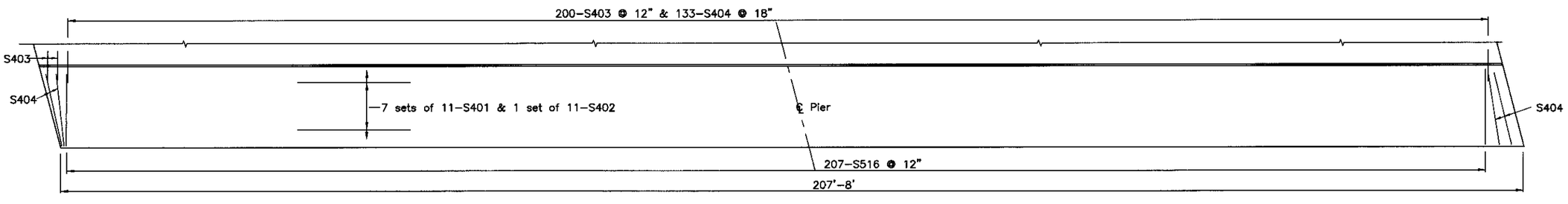

PLAN EAST SIDEWALK

Aug. 2, 2001 Q:\BRIDGE\I670\0380High\3613Bwlk.dwg

DESIGN AGENCY
ERIKSSON ENGINEERING LTD.
1523 CHESAPEAKE AVENUE
COLUMBUS, OH 43212

DESIGNED	DRAWN	REVIEWED	DATE
VK	DA		5.18.01
CHECKED	REVISED		SFN : 2506238
CI			

DECK PLAN
Bridge No. FRA-670-0380
I-670 UNDER HIGH STREET

FRA-670-3.17

14 / 19

660
905

SCREED ELEVATIONS

GIRDERS	SPAN NO 1									SPAN NO 2								
	REAR ABUT. BRG		1/4 POINT		CENTER POINT		℄ SPLICE NO 1		℄ PIER BRG		℄ SPLICE NO 2		CENTER POINT		3/4 POINT		FORWARD ABUT. BRG	
	STATION	ELEVATION	STATION	ELEVATION	STATION	ELEVATION	STATION	ELEVATION	STATION	ELEVATION	STATION	ELEVATION	STATION	ELEVATION	STATION	ELEVATION	STATION	ELEVATION
1	10+75.27	753.47	10+99.62	753.60	11+23.95	753.78	11+42.63	753.84	11+72.63	753.94	12+04.30	754.22	12+23.77	754.35	12+49.34	754.35	12+74.91	754.10
2	10+77.64	753.54	11+02.12	753.73	11+26.60	753.92	11+45.31	753.98	11+75.56	754.10	12+06.97	754.35	12+26.75	754.48	12+52.35	754.46	12+77.95	754.22
3	10+80.01	753.64	11+04.63	753.87	11+29.25	754.06	11+47.98	754.12	11+78.48	754.24	12+09.64	754.46	12+29.74	754.60	12+55.37	754.58	12+81.00	754.34
4	10+82.38	753.75	11+07.14	754.01	11+31.90	754.20	11+50.66	754.25	11+81.41	754.38	12+12.30	754.61	12+32.72	754.72	12+58.38	754.69	12+84.04	754.44
5	10+84.74	753.85	11+09.64	754.15	11+34.54	754.34	11+53.34	754.39	11+84.34	754.52	12+14.97	754.74	12+35.71	754.84	12+61.40	754.80	12+87.09	754.55
6	10+87.11	753.96	11+12.15	754.28	11+37.19	754.47	11+56.01	754.53	11+87.26	754.66	12+17.64	754.86	12+38.70	754.96	12+64.41	754.92	12+90.13	754.66
7	10+89.48	753.87	11+14.66	754.18	11+39.84	754.37	11+58.69	754.43	11+90.19	754.55	12+20.31	754.75	12+41.68	754.84	12+67.43	754.79	12+93.17	754.53
8	10+91.84	753.77	11+17.17	754.08	11+42.48	754.27	11+61.37	754.33	11+93.12	754.45	12+22.98	754.63	12+44.67	754.72	12+70.44	754.66	12+96.22	754.40
9	10+94.21	753.67	11+19.67	753.97	11+45.13	754.17	11+64.04	754.23	11+96.04	754.34	12+25.64	754.52	12+47.65	754.60	12+73.46	754.53	12+99.26	754.26
10	10+95.79	753.61	11+21.34	753.91	11+46.89	754.10	11+65.82	754.16	11+97.99	754.27	12+27.42	754.44	12+49.64	754.52	12+75.47	754.44	13+01.29	754.18
11	10+97.37	753.59	11+23.01	753.92	11+48.65	754.11	11+67.61	754.17	11+99.94	754.28	12+29.20	754.44	12+51.63	754.51	12+77.48	754.43	13+03.32	754.17
12	10+98.95	753.60	11+24.69	753.93	11+50.42	754.12	11+69.39	754.18	12+01.89	754.28	12+30.98	754.44	12+53.62	754.51	12+79.49	754.42	13+05.35	754.16

SCREED ELEVATIONS ARE FOR THE CONCRETE SURFACE BEFORE THE CONCRETE IS PLACED. ALLOWANCE HAS BEEN MADE FOR THE ANTICIPATED DEFLECTION OF THE STRUCTURAL STEEL.

DIMENSIONS "G, H AND I" ARE FROM "BASE LINE" TO TOP OF GIRDER WEB AT ABUTMENT AND PIER BEARINGS.

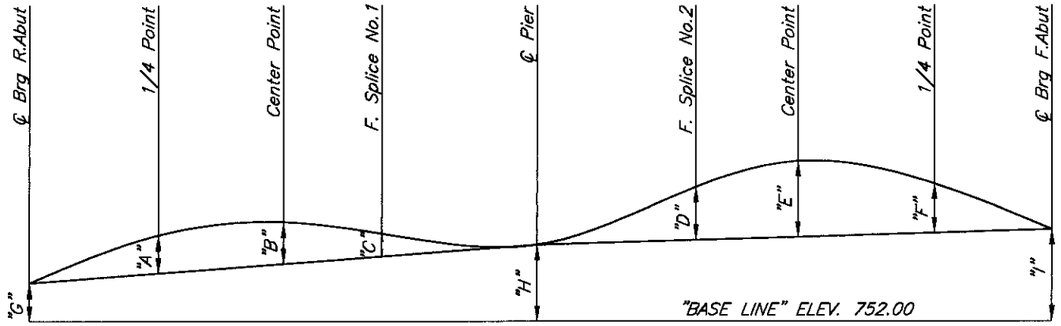

CAMBER DIAGRAM

Deflections are the same for all girders.

	SPAN NO 1			SPAN NO 2		
	1/4 POINT "A"	CENTER POINT "B"	SPLICE NO 1 "C"	SPLICE NO 2 "D"	CENTER POINT "E"	1/4 POINT "F"
DEFLECTION DUE TO WEIGHT OF STEEL	3/8	3/8	1/4	3/16	3/8	3/8
DEFLECTION DUE TO REMAINING DEAD LOAD	1 3/8	1 5/8	1	7/8	1 5/8	1 1/2
ADJUSTMENT REQUIRED FOR VERTICAL CURVE	0	0	0	1 5/16	1 9/16	1 3/16
REQUIRED SHOP CAMBER	1 3/4	2	1 1/4	2 11/16	3 9/16	3 1/16

VERTICAL OFFSET DIMENSIONS (in Feet)

GIRDERS	"G"	"H"	"I"
1	0.43	0.90	1.06
2	0.50	1.06	1.18
3	0.60	1.20	1.30
4	0.71	1.34	1.40
5	0.81	1.48	1.51
6	0.92	1.62	1.62
7	0.83	1.51	1.49
8	0.73	1.41	1.36
9	0.63	1.30	1.22
10	0.57	1.19	1.14
11	0.55	1.20	1.13
12	0.56	1.20	1.12

DESIGN AGENCY
ERIKSSON ENGINEERING LTD.
1523 CHESAPEAKE AVENUE
COLUMBUS, OH 43212

DATE 5.18.01
REVIEWED
SFN : 2506238
DRAWN DA
REVISED
DESIGNED VK
CHECKED CI

CAMBER DETAILS
Bridge No. FRA-670-0380
I-670 UNDER HIGH STREET

FRA-670-3.17

Aug. 2, 2001 Q:\BRIDGE\670\0380High\3613Bcbr.dwg

REINFORCING STEEL LIST

MARK	NO.	LENGTH	WEIGHT	TYPE	A	B	C	D	REMARKS
		DECK REINFORCING – STAGE II							
S401	392	30–0	7856	S					
S402	56	12–0	449	S					
S403	200	4–0	534	3	1–7	1–0	0–4		
S404	136	13–2	1196	1	0–7	12–8			
S501	642	40–4	27007	S					
S502	38	38–0	912	S					2 SETS OF 19, VARY
		TO							BY 1'–8" +/–
		8–0							
S503	46	38–0	1056	S					2 SETS OF 23, VARY
		TO							BY 1'–6" +/–
		6–0							
S504	301	30–0	9418	S					
S505	43	12–0	538	S					
S506	204	3–5	727	2	0–8	1–6			
S601	44	40–0	2644	S					
			52337	LBS					
			344 MECHANICAL SPLICES						
		DECK REINFORCING – STAGE III							
S401	371	30–0	7435	S					
S402	53	12–0	425	S					
S403	202	4–0	540	3	1–7	1–0	0–4		
S405	137	13–4	1220	1	0–9	12–8			
S511	660	37–0	25470	S					
S512	32	35–6	718	S					2 SETS OF 16, VARY
		TO							BY 1'–10" +/–
		7–6							
S513	42	35–6	909	S					2 SETS OF 21, VARY
		TO							BY 1'–6" +/–
		6–0							
S514	280	30–0	876	S					
S515	40	14–6	605	S					
S516	207	3–5	738	2	0–8	1–6			
S601	40	40–0	2403	S					
			41339	LBS					

Dimensions shown are out to out.

MARK	NO.	LENGTH	WEIGHT	TYPE	A	B	C	D	REMARKS
			PIER – STAGE II						
P501	8	5–0	42	S					
P502	4	22–7	94	S					
P601	192	6–11	1996	2	1–7	2–9	2–9		
P801	44	7–8	901	S					
P901	18	24–0	1469	S					
P902	16	11–4	617	S					
P1001	48	7–6	1549	1	1–10	6–0			
P1002	48	20–0	4131	S					
P1003	12	25–8	1325	1	2–9	23–3			
P1004	12	14–4	740	1	2–5	12–3			
		SPIRALS	1262						
			14,126	LBS					
			PIER – STAGE III						
P511	4	5–0	21	S					
P512	4	20–9	87	S					
P611	168	6–11	1746	2	1–7	2–9	2–9		
P811	40	7–8	819	S					
P911	9	40–0	1224	S					
P912	16	10–4	462	S					
P1011	48	7–6	1549	1	1–10	6–0			
P1012	48	19–6	4028	S					
P1013	6	14–0	361	S					
P1014	10	24–2	1040	1	2–9	21–9			
P1015	6	15–0	387	1	2–6	12–10			
		SPIRALS	1211						
			12,935	LBS					
			ABUTMENT BACKWALL – STAGE II						
A501	40	22–9	949	S					
A601	84	5–6	694	2	1–4	2–3			
A602	84	7–1	893	2	0–11	3–3			
A801	57	4–2	635	4	2–6	1–0	0–6		
			3171	LBS					
			ABUTMENT BACKWALL – STAGE III						
A502	40	21–9	908	S					
A601	78	5–6	644	2	1–4	2–3			
A602	78	7–1	829	2	0–11	3–3			
A801	53	4–2	590	4	2–6	1–0	0–6		
			2971	LBS					

ALL BARS SHALL BE EPOXY COATED

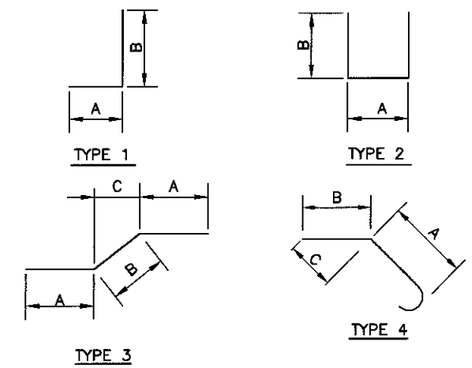

MARK	NO.	LENGTH	WEIGHT	SHAPE	REMARKS
SP401	4	16.85	1262	BT.	
SP402	4	16.15	1211	BT.	
			5060	LBS.	

Spirals: Core Diameter 30"
Pitch 4 1/2"

Other Details in Accordance with C.R.S.I. Standard Practice.

DESIGN AGENCY
ERIKSSON ENGINEERING LTD.
1523 CHESAPEAKE AVENUE
COLUMBUS, OH 43212

DATE 5.18.01
REVIEWED
SFN : 2506238
DRAWN CI REVISED
DESIGNED VK CHECKED DA

REINFORCING BAR LIST
BRIDGE NO. FRA-670-0380
1670 UNDER HIGH STREET

FRA-670-3.17

Aug. 2, 2001 Q:\BRIDGE\1670\0380High\3613Bbl.dwg

QUANTITY	MARK	DESCRIPTION	LENGTH FEET	LENGTH INCHES
QTY'S FOR 1 EA.		HANGERS		
2	A	1/2" X 2" FIBERGLASS FLAT BAR	1	2 1/4
1	B	2" X 2" X 1/4" FIBERGLASS SQ TUBE	1	4 1/4
2	C	5/8" DIA. TRD'D ROD (GALV.)	1	3/8
2	D	5/8" DIA. TRD'D ROD (GALV.)	0	10 5/8
10	F	5/8" HEX NUT (GALV.)		
10	G	5/8" FLAT WASHER (GALV.)		
10	H	5/8" LOCK WASHER (GALV.)		
8	K	1" DIA. FIBERGLASS SPACER TUBE	0	2 3/4

QUANTITY	MARK	DESCRIPTION	LENGTH FEET	LENGTH INCHES
QTY'S FOR 1 EA.		HANGERS		
3	a	1/2" X 2" FLAT BAR (GALV.)	1	1 3/4
0	b	2" X 2" X 1/4" FIBERGLASS SQ TUBE	0	0
2	c	5/8" DIA. TRD'D ROD (GALV.)	1	4 1/2
1	d	5/8" DIA. TRD'D ROD (GALV.)	1	1 9/16
8	f	5/8" HEX NUT (GALV.)		
8	g	5/8" FLAT WASHER (GALV.)		
8	h	5/8" LOCK WASHER (GALV.)		
6	k	1" DIA. FIBERGLASS SPACER TUBE	0	4 3/4

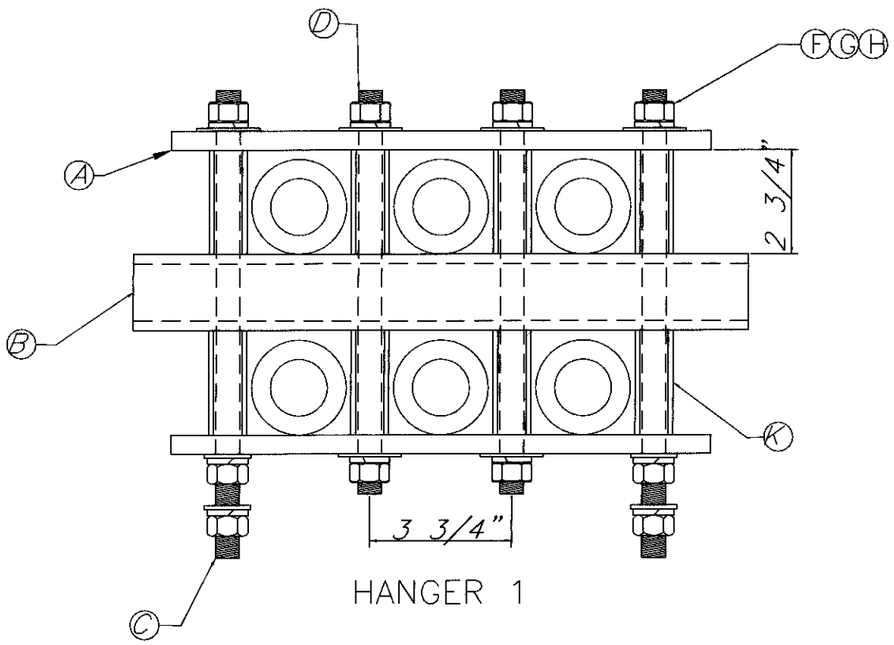

HANGER 1

QUANTITIES

BULLET RESISTANT FIBERGLASS
CONDUIT 20' GRAY

ID ø (IN)	LENGTH (FT)
2	1230
4	5740
5	3280
8	410

BULLET RESISTANT FIBERGLASS
SINGLE EXPANSION JOINT

ID ø (IN)	NO.
2	12
4	56
5	32
8	4

HANGERS

TYPE NO.	EACH
1	29
2	29
3	29
4	29
5	58
6	29
7	58
8	29
9	29

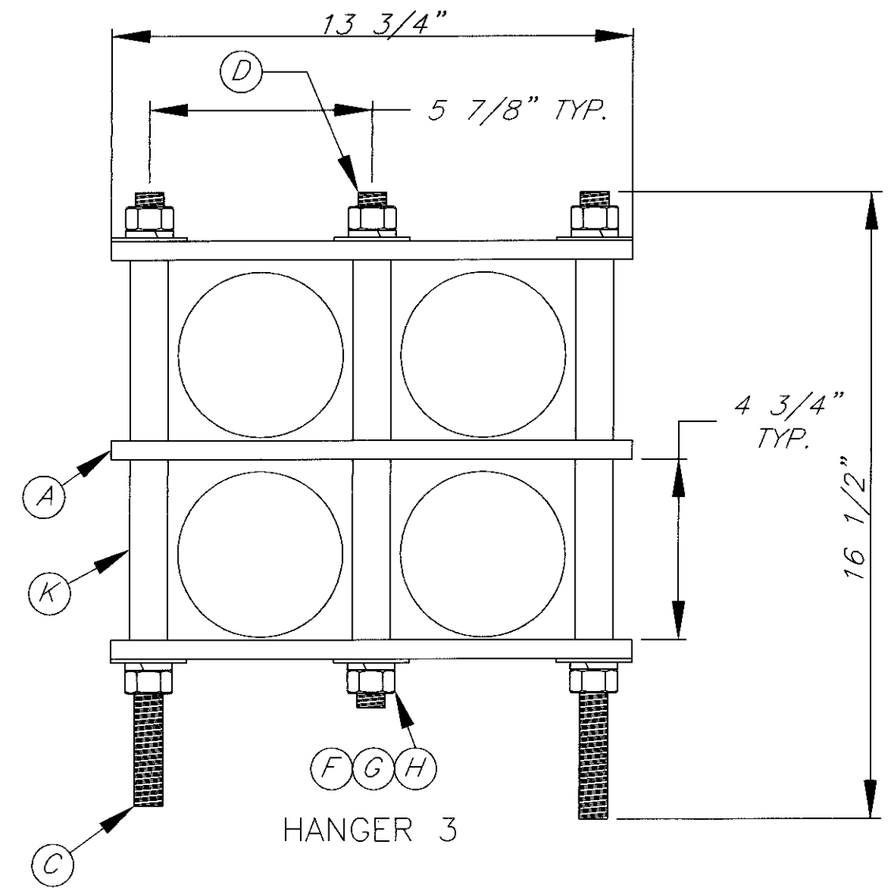

HANGER 3

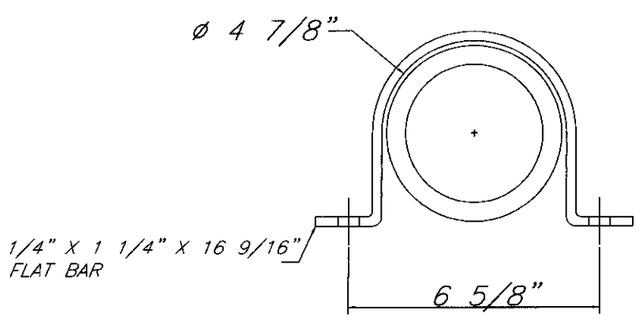

HANGER 2

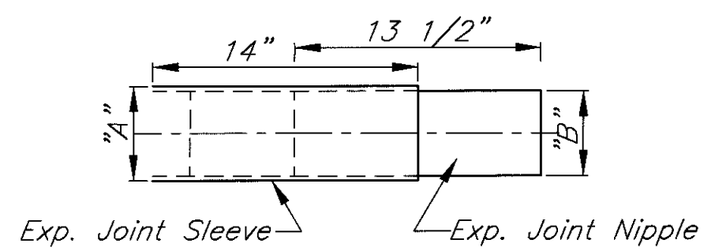

Expansion Joint Assembly, Single Direction
"Bullet Resistant"

Size	Dim "A"	Dim "B"
8"ø ID	9"ø OD	8.5"ø OD
5"ø ID	6"ø OD	5.5"ø OD
4"ø ID	5"ø OD	4.5"ø OD
2"ø ID	3"ø OD	2.5"ø OD

One expansion joint shall be placed at each end of each conduit, near the abutments.

Material : Filament wound fiberglass/epoxy. With Ultra-Violet Inhibitors.

DESIGN AGENCY
ERIKSSON ENGINEERING LTD.
1523 CHESAPEAKE AVENUE
COLUMBUS, OH 43212

DATE 5.18.01
REVIEWED DAD
SFN : 2506238
DRAWN DA
REVISED
DESIGNED RH
CHECKED DA

HANGERS FOR UTILITY CONDUITS
Bridge No. FRA-670-0380
I-670 UNDER HIGH STREET

FRA-670-3.17

17 / 19

663
905

Aug. 2, 2001 Q:\BRIDGE\670\0380High\3613Bhr1.dwg

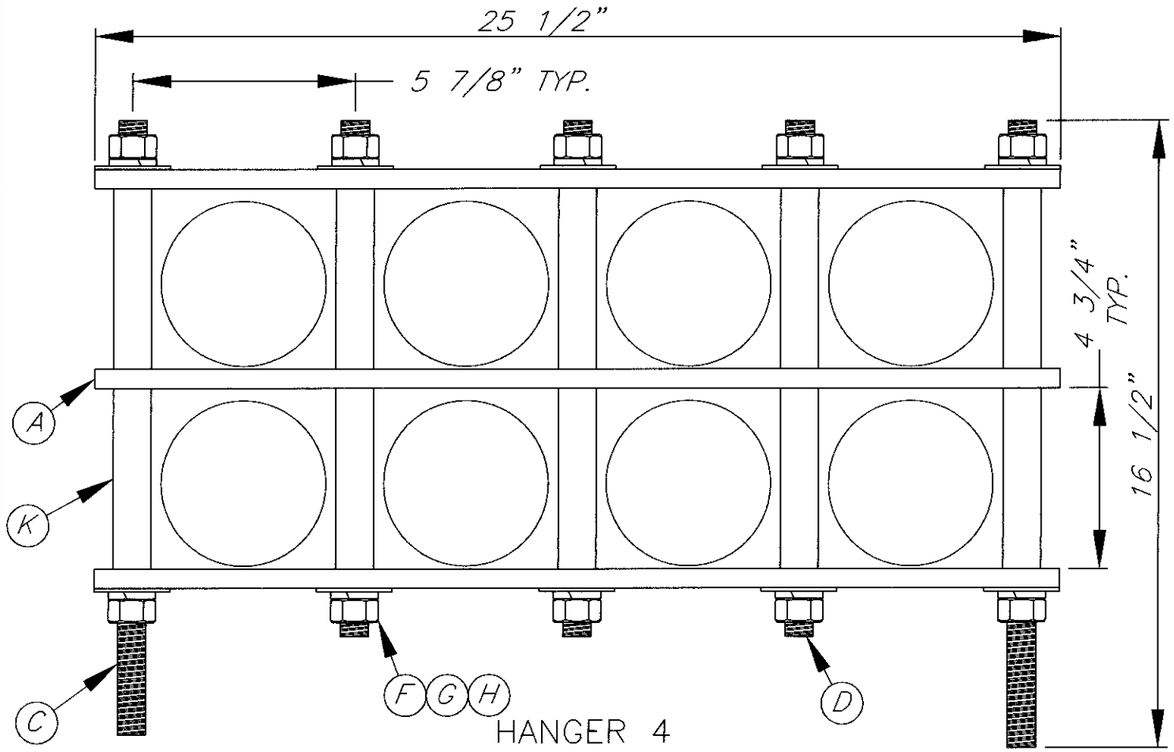

HANGER 4

QUANTITY	MARK	DESCRIPTION	LENGTH FEET	LENGTH INCHES
QTY'S FOR 1 EA.		HANGERS		
3	a	1/2" X 2" FLAT BAR (GALV.)	2	1 1/2
0	b	2" X 2" X 1/4" FIBERGLASS SQ TUBE	0	0
2	c	5/8" DIA. TRD'D ROD (GALV.)	1	4 1/2
3	d	5/8" DIA. TRD'D ROD (GALV.)	1	1 9/16
12	f	5/8" HEX NUT (GALV.)		
12	g	5/8" FLAT WASHER (GALV.)		
12	h	5/8" LOCK WASHER (GALV.)		
10	k	1" DIA. FIBERGLASS SPACER TUBE	0	4 3/4

QUANTITY	MARK	DESCRIPTION	LENGTH FEET	LENGTH INCHES
QTY'S FOR 1 EA.		HANGERS		
3	a	1/2" X 2" FLAT BAR (GALV.)	1	7 5/8
0	b	2" X 2" X 1/4" FIBERGLASS SQ TUBE	0	0
2	c	5/8" DIA. TRD'D ROD (GALV.)	1	4
2	d	5/8" DIA. TRD'D ROD (GALV.)	1	1 1/2
10	f	5/8" HEX NUT (GALV.)		
10	g	5/8" FLAT WASHER (GALV.)		
10	h	5/8" LOCK WASHER (GALV.)		
8	k	1" DIA. FIBERGLASS SPACER TUBE	0	4 3/4

QUANTITY	MARK	DESCRIPTION	LENGTH FEET	LENGTH INCHES
QTY'S FOR 1 EA.		HANGERS		
2	a	1/2" X 2" FLAT BAR (GALV.)	1	7 5/8
0	b	2" X 2" X 1/4" FIBERGLASS SQ TUBE	0	0
2	c	5/8" DIA. TRD'D ROD (GALV.)	0	11
2	d	5/8" DIA. TRD'D ROD (GALV.)	0	8 1/2
10	f	5/8" HEX NUT (GALV.)		
10	g	5/8" FLAT WASHER (GALV.)		
10	h	5/8" LOCK WASHER (GALV.)		
4	k	1" DIA. FIBERGLASS SPACER TUBE	0	4 3/4

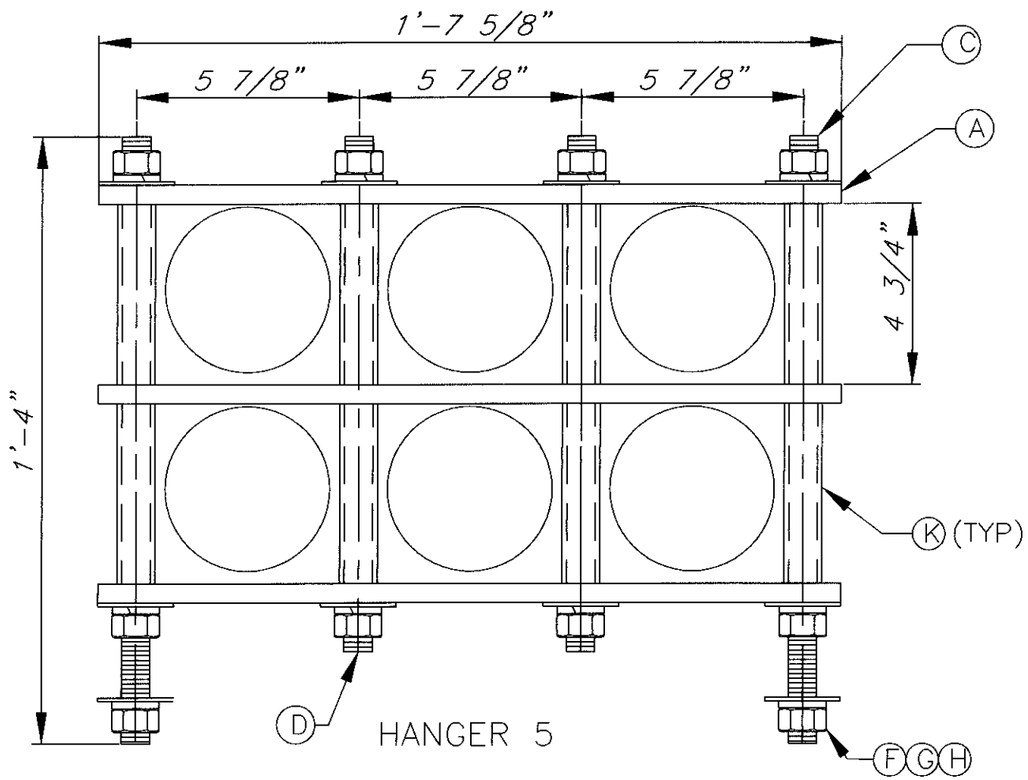

HANGER 5

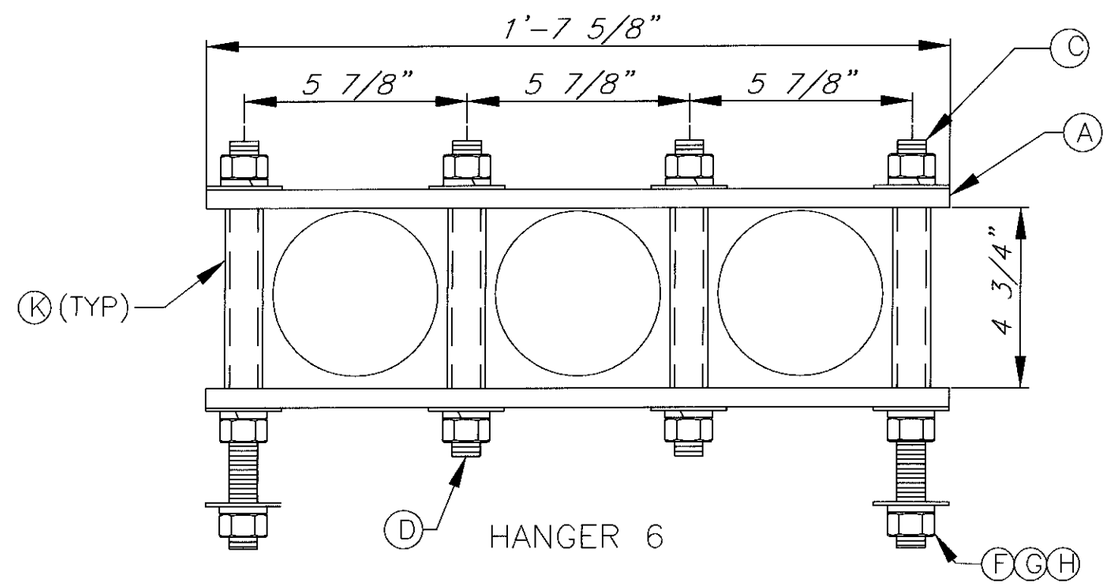

HANGER 6

DESIGN AGENCY
ERIKSSON ENGINEERING LTD.
1523 CHESAPEAKE AVENUE
COLUMBUS, OH 43212

DATE 5.18.01
REVIEWED
SFN : 2506238

DRAWN DA
REVISED

DESIGNED RH
CHECKED DA

HANGERS FOR UTILITY CONDUITS
Bridge No. FRA-670-0380
I-670 UNDER HIGH STREET

FRA-670-3.17

18 / 19

664
905

Aug. 2, 2001 Q:\BRIDGE\670\0380High\3613Bhr2.dwg

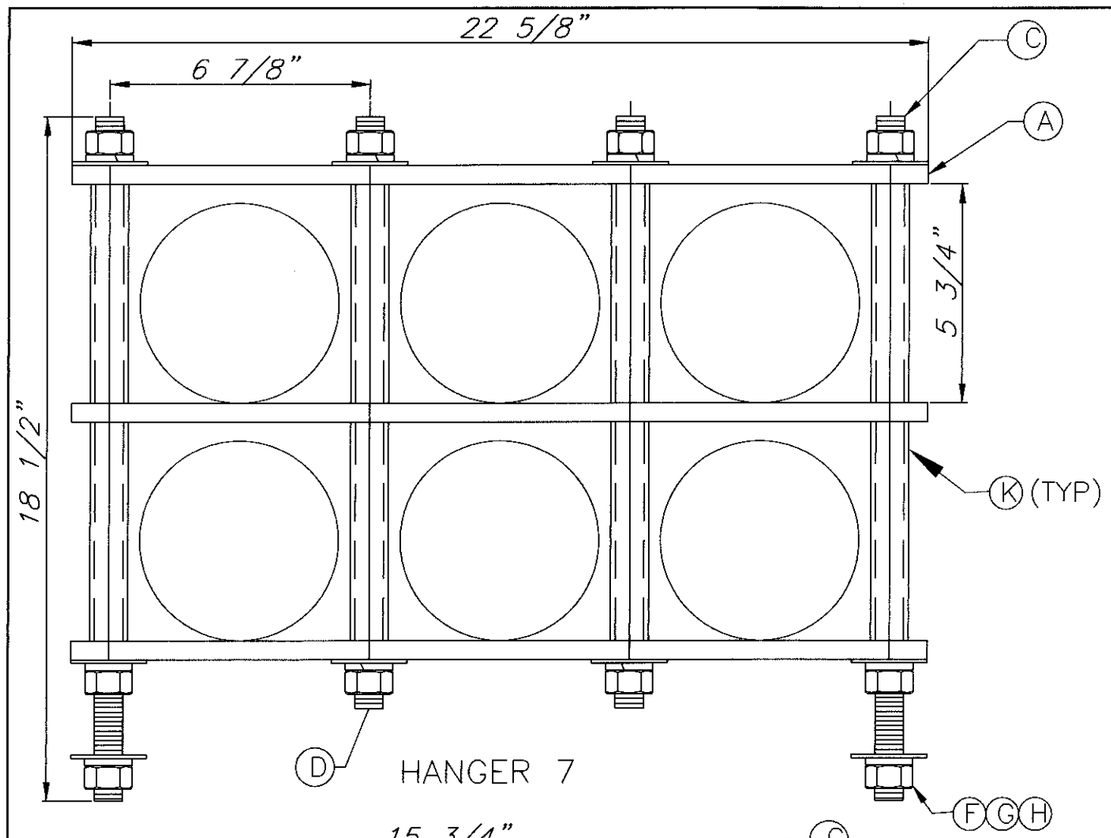

HANGER 7

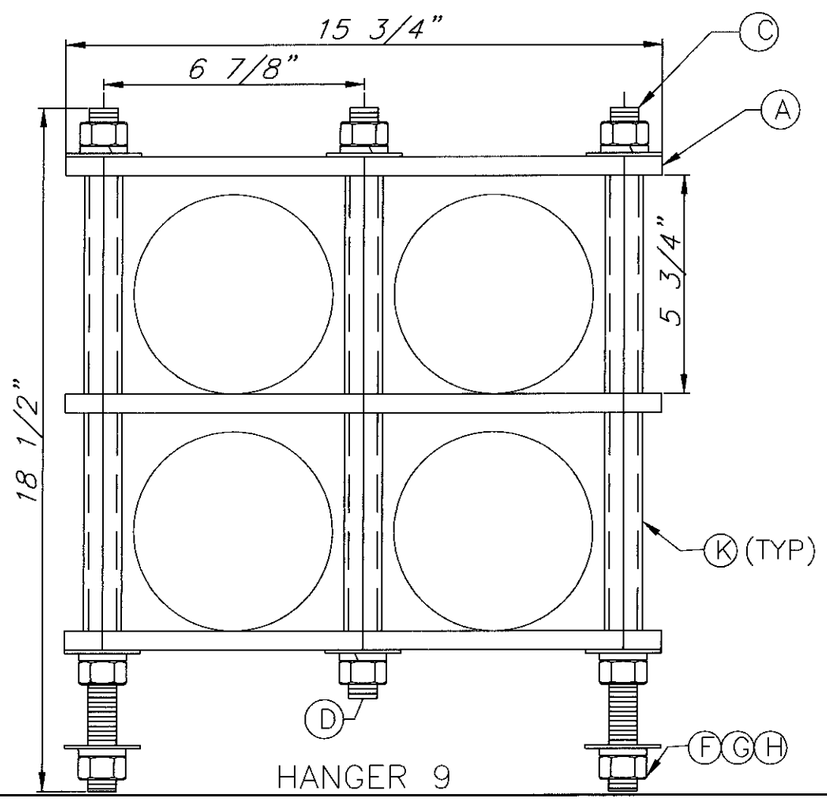

HANGER 9

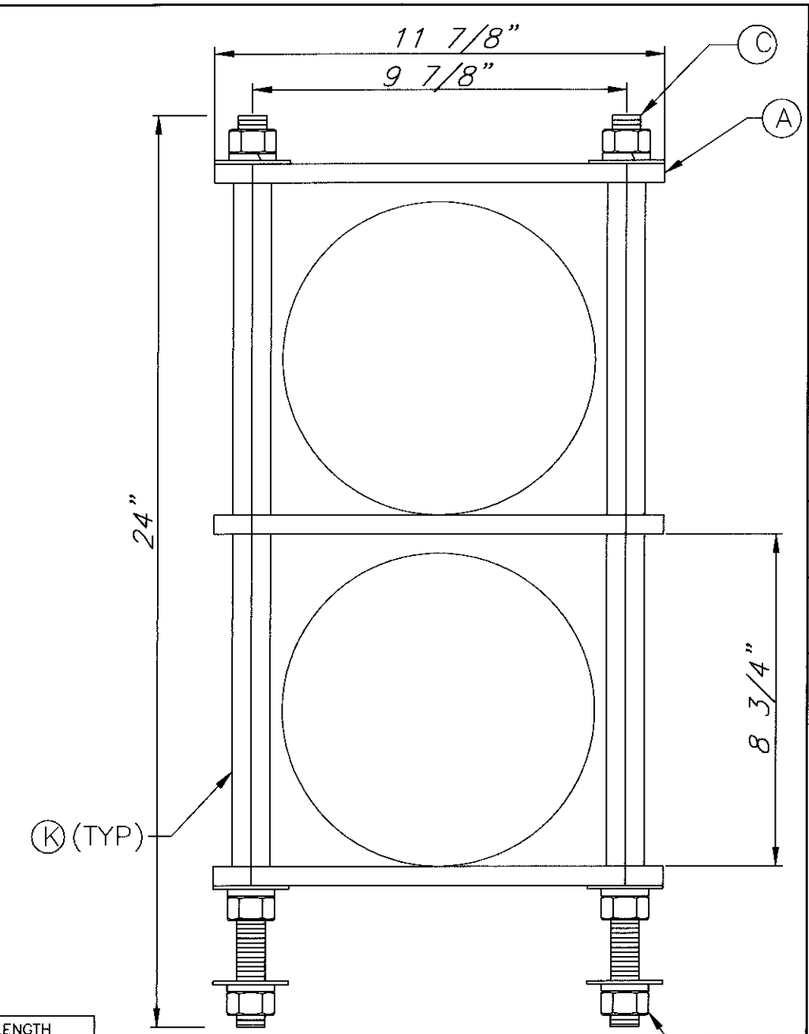

HANGER 8

QUANTITY	MARK	DESCRIPTION	LENGTH FEET	LENGTH INCHES
QTY'S FOR 1 EA.		HANGERS		
3	a	1/2" X 2" FLAT BAR (GALV.)	1	10 5/8
0	b	2" X 2" X 1/4" FIBERGLASS SQ TUBE	0	0
2	c	5/8" DIA. TRD'D ROD (GALV.)	1	6 1/2
2	d	5/8" DIA. TRD'D ROD (GALV.)	1	3 9/16
10	f	5/8" HEX NUT (GALV.)		
10	g	5/8" FLAT WASHER (GALV.)		
10	h	5/8" LOCK WASHER (GALV.)		
8	k	1" DIA. FIBERGLASS SPACER TUBE	0	5 3/4

QUANTITY	MARK	DESCRIPTION	LENGTH FEET	LENGTH INCHES
QTY'S FOR 1 EA.		HANGERS		
2	a	1/2" X 2" FLAT BAR (GALV.)	1	9 3/4
0	b	2" X 2" X 1/4" FIBERGLASS SQ TUBE	0	0
2	c	5/8" DIA. TRD'D ROD (GALV.)	1	3
8	f	5/8" HEX NUT (GALV.)		
8	g	5/8" FLAT WASHER (GALV.)		
8	h	5/8" LOCK WASHER (GALV.)		
3	k	1" DIA. FIBERGLASS SPACER TUBE	0	8 3/4

QUANTITY	MARK	DESCRIPTION	LENGTH FEET	LENGTH INCHES
QTY'S FOR 1 EA.		HANGERS		
3	a	1/2" X 2" FLAT BAR (GALV.)	1	3 3/4
0	b	2" X 2" X 1/4" FIBERGLASS SQ TUBE	0	0
2	c	5/8" DIA. TRD'D ROD (GALV.)	1	6 1/2
1	d	5/8" DIA. TRD'D ROD (GALV.)	1	3 9/16
8	f	5/8" HEX NUT (GALV.)		
8	g	5/8" FLAT WASHER (GALV.)		
8	h	5/8" LOCK WASHER (GALV.)		
6	k	1" DIA. FIBERGLASS SPACER TUBE	0	5 3/4

DESIGN AGENCY
ERIKSSON ENGINEERING LTD.
1523 CHESAPEAKE AVENUE
COLUMBUS, OH 43212

DATE 5.18.01
REVIEWED
SFN : 2506238

DRAWN DA
REVISED

DESIGNED RH
CHECKED DA

HANGERS FOR UTILITY CONDUITS
Bridge No. FRA-670-0380
I-670 UNDER HIGH STREET

FRA-670-3.17

19 / 19

665
905

Aug. 2, 2001 Q:\BRIDGE\I670\0380High\3613Bhr3.dwg