STATE OF OHIO
DEPARTMENT OF TRANSPORTATION
FRA-270-32.46
MIFFLIN TOWNSHIP
FRANKLIN COUNTY

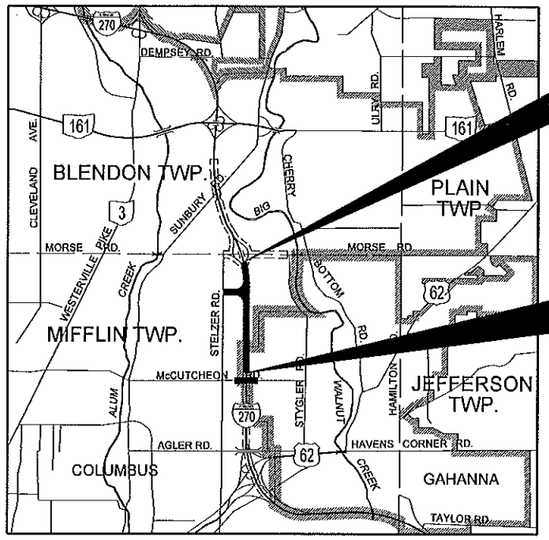

LOCATION MAP

LATITUDE: N40°02'30" LONGITUDE: W82°54'00"

SCALE IN MILES 0 1 2 3

N

Portion to be improved
State & Federal Routes
Other Roads

1993 SPECIFICATIONS

The standard specifications of the State of Ohio, Department of Transportation, including changes and supplemental specifications listed in the proposal shall govern this improvement.

I hereby approve these plans and declare that the making of this improvement will not require the closing to traffic of I-270 and that provisions for the maintenance and safety of traffic will be as set forth on the plans and estimates. See sheets 41 to 43 for local road closures and detour provisions

Under authority of Section 4511.21, Division (1) of the Revised Code of Ohio, the revised prima facie speed limits as indicated herein are determined to be reasonable and safe, and are hereby established for the duration of this project. The prima facie speed limit or limits hereby established shall become effective when appropriate signs giving notice there of are erected.

This improvement is especially designed for through traffic and has been declared a limited access highway or freeway by action of the Director in accordance with the provisions of Section 5511.02 of the revised code of Ohio.

PREPARED BY
ms consultants, inc.
CONSULTING ENGINEERS & PLANNERS
6500 BUSCH BOULEVARD, COLUMBUS, OHIO
FORMERLY MOSURE & SYRAKIS CO.

PLOT SCALE=1"= 2287'
COL #50 C:\DRAWING\06602306\TITLE06602PTL.DWG FEBRUARY-08-1995

INDEX OF SHEETS

Title Sheet	1
Design Designations	2
Schematic Plan	2
Reference Points, Benchmarks and Coordinates	3
Geometric Plans	4-5
Alignment Data Sheets	6-7
Typical Sections	8-35
General Notes	36-40
Maintenance of Traffic	41-53
General Summary	54-59
Sub Summaries	60-69
Calculations	70-77
Stormwater Pollution Prevention Plan	78
Index Maps & Conventional Signs	79-80
Plan and Profile	81-170
Connector Road	147-157
McCutcheon Road	166-170
Cross Section Layout Sheets	171-174
Cross Sections	175-295
I-270 Collector Distributors	175-231
I-270 Mainline	232-237
Connector Road	238-245
Ramps A-D	246-289
McCutcheon Road	290-295
Miscellaneous Details	296-314
Drainage Profile & Details	315-328
Sanitary Sewer Profile	329
Traffic Control Plans	330-361
Lighting Plans	362-383
Structures Over 20' Span	
Connector Road Plans	384-407
McCutcheon Road Plans	408-431
M.S.E. Wall Plans	432-468
Reinforced Earth Plans	469-488
VSL Plans	489-508
Retaining Wall Plans	509-537
Noise Barrier Details	538-543
Right-Of-Way Plans	544-593

SUPPLEMENTAL PRINTS OF STANDARD CONSTRUCTION DRAWINGS

BP-3.1	2-21-92	CB-6	5-1-79	TC-7.65	3-1-79	TC-71.10	9-10-91
BP-4.1	2-21-92	CB-458A	5-1-79	TC-12.30	1-20-84	TC-72.20	2-26-82
BP-5.1	2-21-92			TC-15.115	3-1-79	TC-81.10	1-20-84
BP-7.1	10-30-92	HW-3	6-1-65	TC-17.10	1-20-84	TC-82.10	8-29-84
		HW-4A	4-1-80	TC-18.24	4-25-79	TC-83.10	3-18-92
F-1	11-10-83	HW-4B	4-1-80	TC-21.10	9-1-92	TC-83.20	1-20-84
F-3	5-1-76			TC-21.20	9-1-92	TC-85.10	1-20-84
F-4	11-10-83	I-3C & D	4-1-80	TC-21.40	9-1-92	TC-85.20	1-20-84
F-5	5-1-76			TC-22.10	9-1-92		
F-6	5-1-76	MH-3	12-18-84	TC-22.20	9-1-92	HL-10.11	5-1-87
				TC-31.21	9-1-92	HL-10.12	5-1-87
GR-1.1	5-6-91	MC-1	6-13-69	TC-32.10	9-1-92	HL-10.13	5-1-87
GR-1.2	10-30-92	MC-4	7-26-76	TC-35.10	8-29-84	HL-10.31	5-1-87
GR-1.3	2-21-92	MC-5	6-12-75	TC-41.10	8-29-84	HL-20.11	5-1-87
GR-2.1	5-6-91	MC-7	10-15-76	TC-41.20	3-26-79	HL-20.21	5-1-87
GR-3.1	5-6-91	MC-8	6-12-75	TC-41.40	6-18-79	HL-20.31	5-1-87
GR-4.1	5-6-91	MC-9.2	5-6-91	TC-41.41	8-2-79	HL-30.11	5-1-87
GR-4.2	5-6-91	MC-9.3	10-30-92	TC-41.50	3-26-79	HL-30.21	5-1-87
GR-4.3	2-21-92	MC-9.4	10-30-92	TC-42.10	8-19-77	HL-30.22	5-1-87
GR-4.4	2-21-92	MC-10	5-1-76	TC-42.20	3-26-79	HL-30.31	5-1-87
GR-5.3	10-30-92	MC-11	8-1-78	TC-51.10	1-20-84	HL-30.33	5-1-87
GR-8.1	1-31-94			TC-51.11	1-20-84	HL-40.10	5-1-87
		MT-95.30	10-10-88	TC-52.10	4-3-79	HL-50.11	5-1-87
CB-2-2A & B	5-1-79	MT-99.10	11-14-86	TC-52.20	4-3-79	HL-50.21	5-1-87
CB-3	5-1-79	MT-101.60	7-1-92	TC-61.10	4-5-82	HL-60.11	5-1-87
CB-3A	5-1-79	MT-105.10	7-1-92	TC-65.10	2-1-90	HL-60.12	5-1-87
CB-4	11-10-83	MT-105.11	7-1-92	TC-65.11	2-1-90	HL-60.21	5-1-87
CB-5	11-10-83			TC-65.12	2-1-90	HL-60.31	5-1-87

SUPPLEMENTAL SPECIFICATIONS

802	4-13-90	945	5-17-83
862	12-18-88	946	3-3-92
931	7-19-94	948	2-1-93
942	3-18-92	962	1-23-90
944	5-2-94		

SPECIAL PROVISIONS

REINFORCED EARTH WALLS	1-23-95

UNDERGROUND UTILITIES

TWO WORKING DAYS BEFORE YOU DIG
CALL TOLL FREE 800-362-2764
OHIO UTILITIES PROTECTION SERVICE

PROJECT DESCRIPTION

Construction of a collector-distributor system (1.32 miles northbound and 1.23 miles southbound) from Morse Road, including a new interchange and four ramps which will connect the collector-distributor system to Stelzer Road. Also replacement of structure and 0.26 miles of pavement on McCutcheon Road over I-270.

FOR CITY OF COLUMBUS

Approved _____
Date _____ State/Federal Project Engineer

Approved _____
Date _____ City Engineer

Approved _____
Date _____ Director of Public Services

Approved _____
Date _____ Director of Public Utilities

Approved _____
Date _____ Director of Recreation and Parks

FOR CITY OF GAHANNA

Approved _____
Date _____ City Engineer

Approved _____
Date _____ Director of Public Service

Approved _____
Date _____ Superintendent of Streets

FOR STATE OF OHIO

Approved _____
Date _____ District Deputy Director

Approved _____
Date _____ Engineer, Bureau of Bridges and Structural Design

Approved _____
Date _____ Deputy Director, Design

Approved _____
Date _____ Director, Department of Transportation

DEPARTMENT OF TRANSPORTATION
FEDERAL HIGHWAY ADMINISTRATION

APPROVED:

DIVISION ADMINISTRATOR _____ DATE

FEDERAL PROJECT NO. NH-270-5(62)

PID NO. 12510

CONSTRUCTION PROJECT NO. 06022(0)

RAILROAD INVOLVEMENT NONE

FRA-270-32.46

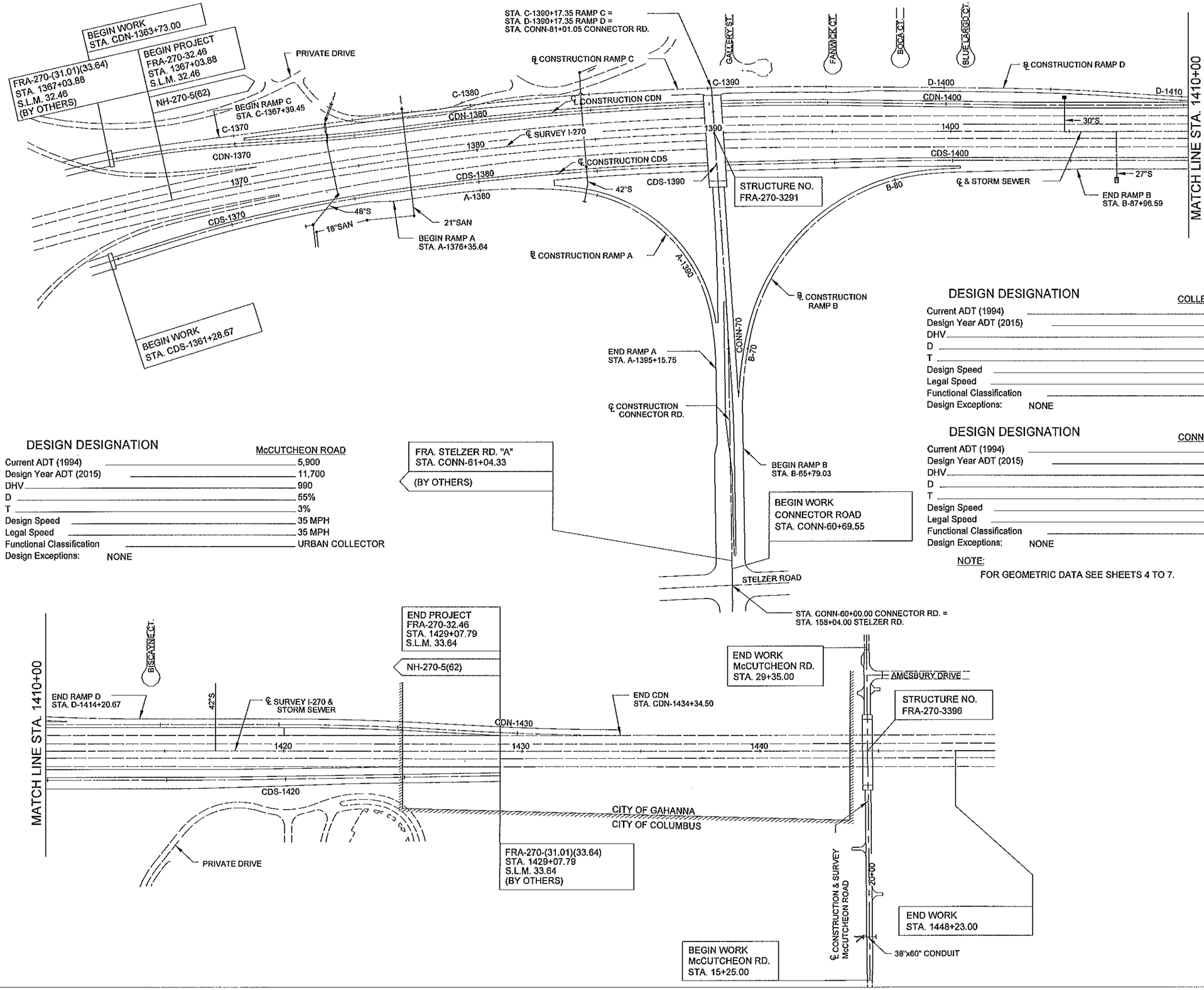

DESIGN DESIGNATION — McCUTCHEON ROAD

Current ADT (1994)	5,900
Design Year ADT (2015)	11,700
DHV	990
D	55%
T	3%
Design Speed	35 MPH
Legal Speed	35 MPH
Functional Classification	URBAN COLLECTOR
Design Exceptions:	NONE

DESIGN DESIGNATION — I-270 COLLECTOR/DISTRIBUTOR

Current ADT (1994)	100,500
Design Year ADT (2015)	156,000
DHV	13,260
D	55%
T	4%
Design Speed	60 MPH
Legal Speed	55 MPH
Functional Classification	CLASS II URBAN FREEWAY
Design Exceptions:	NONE

DESIGN DESIGNATION — CONNECTOR ROAD

Current ADT (1994)	N/A
Design Year ADT (2015)	37,000
DHV	3,150
D	55%
T	3%
Design Speed	40 MPH
Legal Speed	35 MPH
Functional Classification	URBAN ARTERIAL
Design Exceptions:	NONE

NOTE:
FOR GEOMETRIC DATA SEE SHEETS 4 TO 7.

N

0 100 200 400
HORIZONTAL
SCALE IN FEET

CALC. BY: M.M.R. DATE: 2-95
CHKD. BY: P.H.F. DATE: 2-95

SCHEMATIC PLAN

FRA-270-32.46

PLOT SCALE = 1'=200'
COL-SS C:\DRAWINGS\05282300PP-ANN05282SC1.DWG FEBRUARY-03-1995

CDN THREE POINT REFERENCE TIES

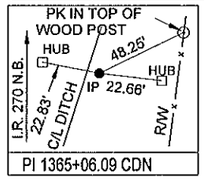

PI 1365+06.09 CDN

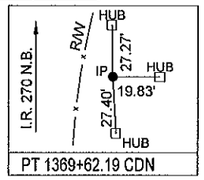

PT 1369+62.19 CDN

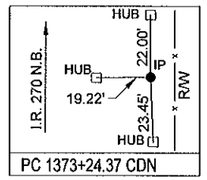

PC 1373+24.37 CDN

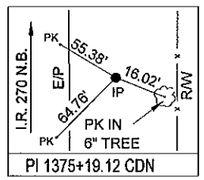

PI 1375+19.12 CDN

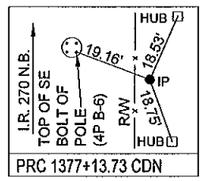

PRC 1377+13.73 CDN

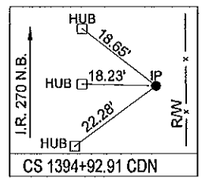

CS 1394+92.91 CDN

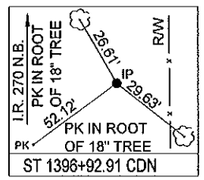

ST 1396+92.91 CDN

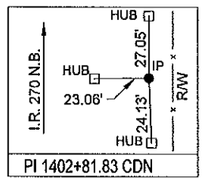

PI 1402+81.83 CDN

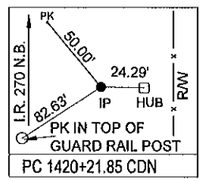

PC 1420+21.85 CDN

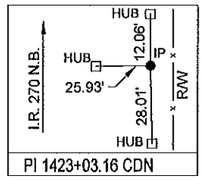

PI 1423+03.16 CDN

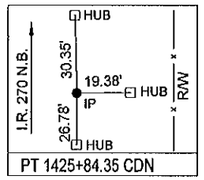

PT 1425+84.35 CDN

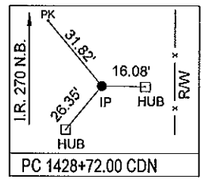

PC 1428+72.00 CDN

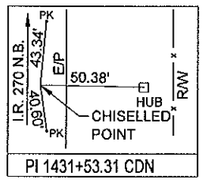

PI 1431+53.31 CDN

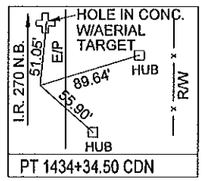

PT 1434+34.50 CDN

CDS THREE POINT REFERENCE TIES

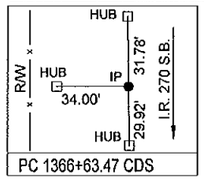

PC 1366+63.47 CDS

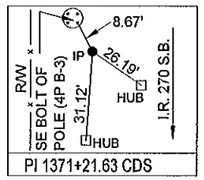

PI 1371+21.63 CDS

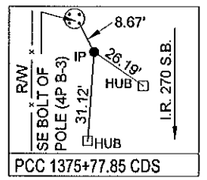

PCC 1375+77.85 CDS

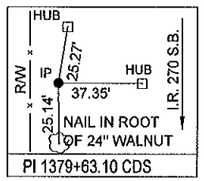

PI 1379+63.10 CDS

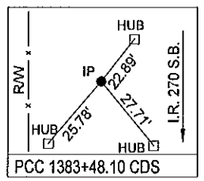

PCC 1383+48.10 CDS

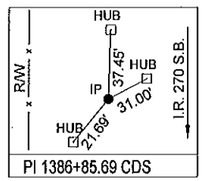

PI 1386+85.69 CDS

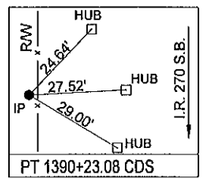

PT 1390+23.08 CDS

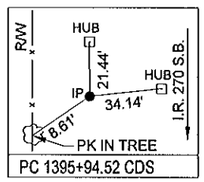

PC 1395+94.52 CDS

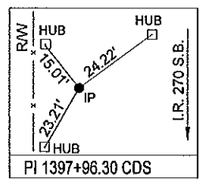

PI 1397+96.30 CDS

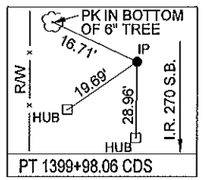

PT 1399+98.06 CDS

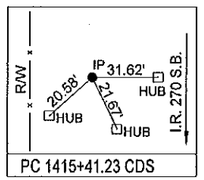

PC 1415+41.23 CDS

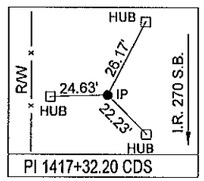

PI 1417+32.20 CDS

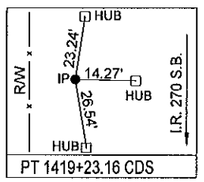

PT 1419+23.16 CDS

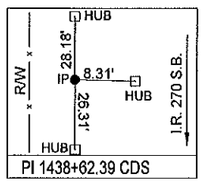

PI 1438+62.39 CDS

McCUTCHEON ROAD THREE POINT REFERENCE TIES

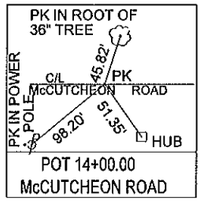

POT 14+00.00
McCUTCHEON ROAD

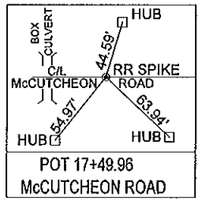

POT 17+49.96
McCUTCHEON ROAD

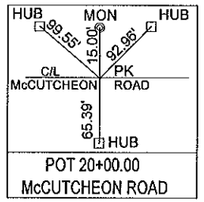

POT 20+00.00
McCUTCHEON ROAD

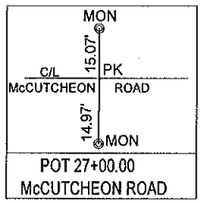

POT 27+00.00
McCUTCHEON ROAD

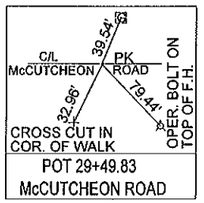

POT 29+49.83
McCUTCHEON ROAD

CONNECTOR ROAD THREE POINT REFERENCE TIES

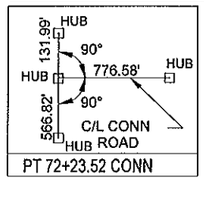

PT 72+23.52 CONN

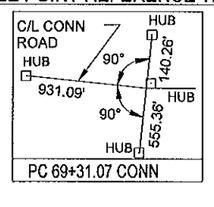

PC 69+31.07 CONN

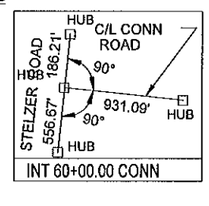

INT 60+00.00 CONN

LIST OF COORDINATES, OHIO STATE PLANE COORDINATE SYSTEM, NAD83 SOUTH ZONE

STATION	NORTHING	EASTING	DESCRIPTION
1350+00	750173.6777	1855409.8798	C/L MON.(ODOT)
1359+00	749299.5184	1855623.7852	C/L MON.(ODOT)
1368+00	748414.8599	1855787.7461	C/L MON.(ODOT)
1377+00	747520.5026	1855886.4731	C/L MON.(ODOT)
1386+00	746620.8918	1855919.5097	C/L MON.(ODOT)
1393+67	745854.3793	1855895.3906	C/L MON.(ODOT)
1403+00	744922.9172	1855837.1374	C/L MON.(ODOT)
1412+00	744024.7720	1855781.0851	C/L MON.(ODOT)
1421+00	743126.3260	1855724.7349	C/L MON.(ODOT)
1430+00	742228.2812	1855668.4973	C/L MON.(ODOT)
1439+00	741330.0711	1855612.2797	C/L MON.(ODOT)

LIST OF BENCHMARKS, NGVD29 VERTICAL DATUM

TBM #13 8" CONCRETE MONUMENT WITH 1/2" STEEL PIN, CENTERLINE I-270, FRA-270-22.99N, CENTERLINE STATION 1439+00, ELEVATION 828.50 FT.

TBM #14 8" CONCRETE MONUMENT WITH 1/2" STEEL PIN, CENTERLINE I-270, FRA-270-22.99N, CENTERLINE STATION 1430+00, ELEVATION 830.52 FT.

TBM #15 8" CONCRETE MONUMENT WITH 1/2" STEEL PIN, CENTERLINE I-270, FRA-270-22.99N, CENTERLINE STATION 1421+00, ELEVATION 832.56 FT.

TBM #16 8" CONCRETE MONUMENT WITH 1/2" STEEL PIN, CENTERLINE I-270, FRA-270-22.99N, CENTERLINE STATION 1412+00, ELEVATION 834.62 FT.

TBM #17 8" CONCRETE MONUMENT WITH 1/2" STEEL PIN, CENTERLINE I-270, FRA-270-22.99N, CENTERLINE STATION 1403+00, ELEVATION 836.81 FT.

TBM #18 8" CONCRETE MONUMENT WITH 1/2" STEEL PIN, CENTERLINE I-270, FRA-270-22.99N, CENTERLINE STATION 1393+67, ELEVATION 839.03 FT.

TBM #19 8" CONCRETE MONUMENT WITH 1/2" STEEL PIN, CENTERLINE I-270, FRA-270-22.99N, CENTERLINE STATION 1386+00, ELEVATION 841.10 FT.

TBM #20 8" CONCRETE MONUMENT WITH 1/2" STEEL PIN, CENTERLINE I-270, FRA-270-22.99N, CENTERLINE STATION 1377+00, ELEVATION 842.90 FT.

TBM #21 8" CONCRETE MONUMENT WITH 1/2" STEEL PIN, CENTERLINE I-270, FRA-270-22.99N, CENTERLINE STATION 1368+00, ELEVATION 854.98 FT.

TBM #22 8" CONCRETE MONUMENT WITH 1/2" STEEL PIN, CENTERLINE I-270, FRA-270-22.99N, CENTERLINE STATION 1359+00, ELEVATION 870.65 FT.

TBM #23 8" CONCRETE MONUMENT WITH 1/2" STEEL PIN, CENTERLINE I-270, FRA-270-22.99N, CENTERLINE STATION 1350+00, ELEVATION 864.79 FT.

CALC. BY: K.L.S. DATE: 10-94
CHKD. BY: M.F.J. DATE: 2-95

REFERENCE POINTS, BENCHMARKS & COORDINATES

FRA-270-32.46

PLOT SCALE
COL #27 C:\DRAWING\2006\2006RIGHTS\RIGHTS\CE\2006RIGHTS\CE2006REF-1.DWG FEBRUARY-07-1995

FOR CURVE AND TANGENT DATA SEE SHEETS 6 & 7

FRA-270-(31.01)(33.64)
STA. 1367+03.88
S.L.M.=32.46
(BY OTHERS)

BEGIN PROJECT
FRA-270-32.46
STA. 1367+03.88
SLM=32.46

NH-270-5(62)

POT = C-1367+39.45
=1367+54.33 ML, 231.61'Lt
BEGIN RAMP C

BEGIN WORK CDN
STA. CDN-1363+73.00

SC = CDN-1361+49.20
=1361+73.40 ML, 227.57'Lt

TS = CDN-1359+49.20
=1359+77.08 ML, 221.69'Lt

STA. 1359+00.08 ML
EXIST. MON., C/L

PC = C-1377+53.11
=1377+50.56 ML, 190.49'Lt

PRC = CDN-1377+13.73
=1377+10.26 ML, 123.50'Lt

PT = CDN-1369+62.19
=1369+70.47 ML, 183.77'Lt

PRC = CDN-1373+24.37
=1373+25.61 ML, 142.76'Lt

℄ CONSTRUCTION RAMP C

C-1370

S 03°57'54" E

S 00°16'29" E

C-1380

℄ CONSTRUCTION CDN

1360+00

1365+00

1370+00

℄ SURVEY I-270

CDS-1370

CDS-1360

S 13°58'07 E

STA. 1368+00.00 ML
EXIST. MON., C/L

PC = CDS-1366+63.47
=1366+42.31 ML, 172.98'Rt

PCC = CDS-1375+77.85
=1375+66.08 ML, 134.50'Rt

PC = A-1376+35.64
=1376+24.51 ML, 170.50'Rt
BEGIN RAMP A

POT = CDS-1366+50.00
=1366+24.59 ML, 174.43'Rt

BEGIN WORK CDS
STA. CDS-1361+28.67

POT = CONN-81+01.05
C-1390+17.35=
D-1390+17.35
=1389+95.49 ML, 190.50'Lt
END RAMP C, BEGIN RAMP D

STA. 1386+00.41 ML
EXIST. MON., C/L

CDS-1380
A-1380

PCC = A-1379+22.27
=1379+15.18 ML, 170.50'Rt

CS = A-1382+83.01
=1382+80.24 ML, 193.49'Rt.

PCC = CDS-1383+48.10
=1383+44.87 ML, 134.50'Rt.

SC = A-1384+83.01
=1384+79.41 ML, 233.07'Rt.

℄ CONSTRUCTION RAMP A

PT = CONN-72+23.52

PCC = A-1392+54.68
=CONN-71+17.02, 61.54'Lt.

PT = A-1394+54.68
=CONN-69+16.43, 54.00' Lt.

POT = A-1395+15.75
=CONN-68+50.77, 54.00' Lt.
END RAMP A

FRA. STELZER RD. "A"
STA. CONN-61+04.33
(BY OTHERS)

PT = D-1395+40.16
=1395+12.52 ML, 189.64'Lt

CS = CDN-1394+92.91
=1394+72.77 ML, 123.05'Lt

STA. 1393+67.43 ML
EXIST. MON., C/L

CDS-1390

S 02°14'21" W

CONN-80

N 89°40'08" E

CDS-1400

S 02°08'49" W

B-80

S 03°34'46" W

1400+00

D-1400

S 04°31'48" W

S 04°14'59" W

S 07°20'01" W

PC = D-1409+20.10
=1408+91.60 ML, 150.89'Lt

PT = D-1407+05.45
=1406+77.41 ML, 164.95'Lt

ST = CDN-1396+92.91
=1396+73.77 ML, 120.25'Lt.

PI = CDN-1402+81.83
=1402+61.59 ML, 110.50'Lt.

GAHANNA

COLUMBUS

PC = D-1402+94.25
=1402+66.57 ML, 180.82'Lt.

℄ CONSTRUCTION RAMP D

STA. 1403+00.71 ML
EXIST. MON., C/L

ST = B-83+02.66
=1400+64.12 ML, 170.85' Rt.

PT = CDS-1399+98.06
=1400+05.94 ML, 122.50' Rt.

POT = B-87+96.59
=1405+58.50 ML, 158.50'Rt
END RAMP B

CS = B-81+02.66
=1398+64.76 ML, 183.68' Rt.

PC = CDS-1395+94.52
=1396+02.44 ML, 127.22' Rt.

PT = 1393+67.00

PT = CDS-1390+23.08
=1390+27.34 ML, 135.94' Rt.

CONN-70

B-70

PCC = B-70+96.72
=CONN-70+89.65, 104.49' Rt.

PC = CONN-69+31.07

℄ CONSTRUCTION RAMP B

S 87°24'24" E

PC = B-67+23.87
=CONN-67+23.87, 54.00' Rt.

P.O.T. = B-65+79.03
=CONN-65+79.03, 54.00' RT.
BEGIN RAMP B

℄ CONSTRUCTION CONNECTOR ROAD

CONN-62

POT = CONN-60+69.55

STELZER ROAD
N 01°04'43" E

CONN-60

BEGIN WORK
CONNECTOR ROAD
STA. CONN-60+69.55

SEE SHEET 5

MATCH LINE STA. 1409+00

GEOMETRIC PLAN
1367+03.88 TO 1409+00.00

FRA-270-32.46

4
593

0 100 200 400
HORIZONTAL SCALE IN FEET

CALC. BY: S.D.E. DATE: 3/1994
CHKD. BY: M.F.J. DATE: 2/1995

PLOT SCALE=1"=200'
COL #30 C:\DRAWING\050323\09777\LEP0990GP1.DWG FEBRUARY-08-1995

FOR CURVE AND TANGENT DATA SEE SHEETS 6 & 7

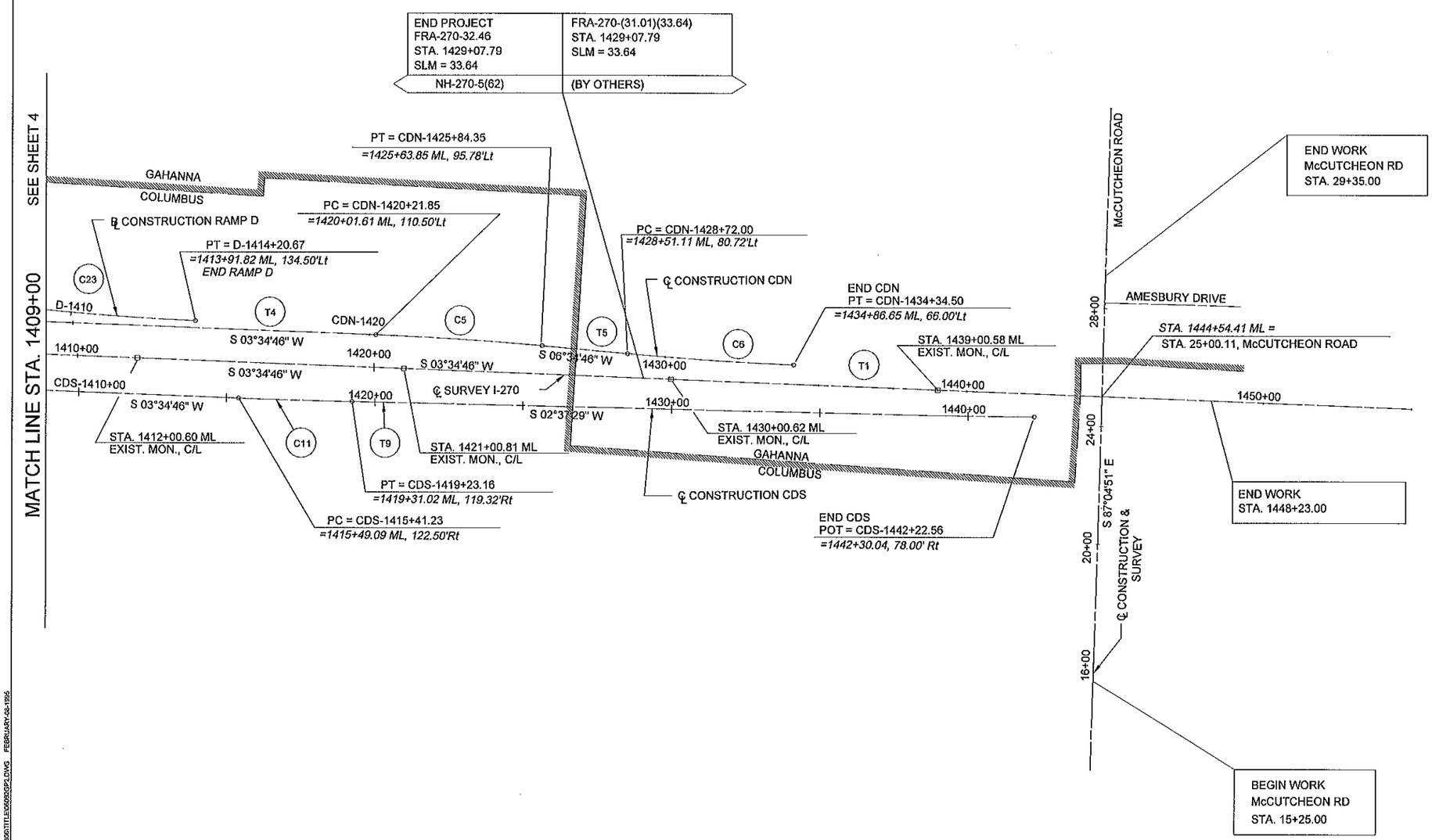

0 100 200 400
HORIZONTAL SCALE IN FEET

CALC. BY: S.D.E. DATE: 2/18/94
CHKD. BY: M.F.J. DATE: 2/5/95

GEOMETRIC PLAN
1409+00.00 TO 1429+07.79

FRA-270-32.46

PLOT SCALE: 1"=200'
COL #30 C:\DRAWING\06092306\TITLE\06092GP2.DWG FEBRUARY-08-1995
06092sch

ALIGNMENT DATA

MAINLINE DATA

(C1)

CURVE DATA

P.I. STA. = 1375+01.69
Δ = 17°32'53" RT.
D_C = 00°28'00"
R = 12277.67'
T = 1894.99'
L = 3760.30'
E = 145.38'
e_{max} = N.C.
P.C. STA. = 1356+06.70
P.T. STA. = 1393+67.00

(T1)

STA. = 1393+67.00
STA. = 1491+90.00
L = 9823.00'
BRG. = S 03°34'46" W

CD NORTHBOUND DATA

(C2)

CURVE DATA

P.I. STA.= CDN-1365+06.09
Δ = 13°41'38" RT.
D_C = 01°30'00"
R = 3820.00'
L_{s1} = 200.00' L_{s2} = 0
Θ_{s1} = 01°30'00" Θ_{s2} = 0
LT1 = 133.34' LT2 = 0
ST1 = 66.67' ST2 = 0
x1 = 199.99' x2 = 0
y1 = 1.75' y2 = 0
k1 = 100.00' k2 = 0
P1 = 0.44' P2 = 0
Δ_C = 12°11'38" RT.
L_C = 812.99'
T_1 = 556.89'
T_2 = 460.53'
E_s = 27.66'
e_{max} = 0.037
T.S. STA.= CDN-1359+49.20
S.C. STA.= CDN-1361+49.20
P.T. STA.= CDN-1369+62.19

(T2)

STA. = CDN-1369+62.19
STA. = CDN-1373+24.37
L = 362.18'
BRG. = S 00°16'30" E

(C3)

CURVE DATA

P.I. STA. = CDN-1375+19.13
Δ = 03°52'38" LT.
D_C = 00°59'45"
R = 5753.58'
T = 194.75'
L = 389.35'
E = 3.30'
e_{max} = 0.027
P.C. STA. = CDN-1373+24.38
P.R.C. STA. = CDN-1377+13.73

(C4)

CURVE DATA

P.I. STA.= CDN-1386+56.01
Δ = 08°40'56" RT.
D_C = 00°27'43"
R = 12401.17'
L_{s1} = 0 L_{s2} = 200.00'
Θ_{s1} = 0 Θ_{s2} = 00°27'43"
LT1 = 0 LT2 = 133.33'
ST1 = 0 ST2 = 66.67'
x1 = 0 x2 = 200.00'
y1 = 0 y2 = 0.54'
k1 = 0 k2 = 100.00'
P1 = 0 P2 = 0.13'
Δ_C = 08°13'13" RT.
L_C = 1779.18'
T_{s1} = 942.28'
T_{s2} = 1040.51'
E_s = 35.75'
e_{max} = N.C.
P.R.C. STA.= CDN-1377+13.73
C.S. STA.= CDN-1394+92.91
S.T. STA.= CDN-1396+92.91

(T3)

STA. = CDN-1396+92.91
STA. = CDN-1402+81.83
L = 588.92'
BRG. = S 04°31'48" W

(T4)

STA. = CDN-1402+81.83
STA. = CDN-1420+21.85
L = 1740.02'
BRG. = S 03°34'46" W

(C5)

CURVE DATA

P.I. STA. = CDN-1423+03.16
Δ = 03°00'00" RT.
D_C = 00°32'00"
R = 10742.96'
T = 281.31'
L = 562.50'
E = 3.68'
e_{max} = N.C.
P.C. STA. = CDN-1420+21.85
P.T. STA. = CDN-1425+84.35

(T5)

STA. = CDN-1425+84.35
STA. = CDN-1428+72.00
L = 287.65'
BRG. = S 06°34'46" W

(C6)

CURVE DATA

P.I. STA. = CDN-1431+53.31
Δ = 03°00'00" LT.
D_C = 00°32'00"
R = 10742.96'
T = 281.31'
L = 562.50'
E = 3.68'
e_{max} = N.C.
P.C. STA. = CDN-1428+72.00
P.T. STA. = CDN-1434+50.50

CD SOUTHBOUND DATA

(T6)

STA. = CDS-1356+50.00
STA. = CDS-1366+63.47
L = 1013.47'
BRG. = S 13°58'07" E

(C7)

CURVE DATA

P.I. STA. = CDS-1371+21.63
Δ = 09°08'38" RT.
D_C = 01°00'00"
R = 5729.58'
T = 458.16'
L = 914.38'
E = 18.29'
e_{max} = 0.027
P.C. STA. = CDS-1366+63.47
P.C.C. STA. = CDS-1375+77.85

(C8)

CURVE DATA

P.I. STA. = CDS-1379+63.11
Δ = 03°38'04" RT.
D_C = 00°28'19"
R = 12143.17'
T = 385.26'
L = 770.25'
E = 6.11'
e_{max} = N.C.
P.C.C. STA. = CDS-1375+77.85
P.C.C. STA. = CDS-1383+48.10

(C9)

CURVE DATA

P.I. STA. = CDS-1386+85.69
Δ = 03°25'46" RT.
D_C = 00°30'29"
R = 11276.48'
T = 337.59'
L = 674.98'
E = 5.05'
e_{max} = N.C.
P.C.C. STA. = CDS-1383+48.10
P.T. STA. = CDS-1390+23.08

(T7)

STA. = CDS-1390+23.08
STA. = CDS-1395+94.52
L = 571.45'
BRG. = S 02°14'21" W

(C10)

CURVE DATA

P.I. STA. = CDS-1397+96.30
Δ = 01°20'25" RT.
D_C = 00°19'56"
R = 17249.53'
T = 201.76'
L = 403.51'
E = 1.18'
e_{max} = N.C.
P.C. STA. = CDS-1395+94.52
P.T. STA. = CDS-1399+98.06

LEGEND

CDN – COLLECTOR DISTRIBUTOR NORTH

CDS – COLLECTOR DISTRIBUTOR SOUTH

A TO D – CONNECTOR ROAD RAMPS A,B,C AND D.

CONN – CONNECTOR ROAD

CALC. BY: C.J.W. DATE: 2-95
CHK. BY: M.F.J. DATE: 2-95

ALIGNMENT DATA

FRA-270-32.46

6
593

PLOT SCALE: 1"=1'
COL #30
C:\DRAWING\06092306\TITLE\06092AL1.DWG FEBRUARY-09-1995

ALIGNMENT DATA

CD SOUTHBOUND DATA

(CONTINUED)

(T8)

STA. = CDS-1399+98.06
STA. = CDS-1415+41.23
L = 1543.16'
BRG. = S 03°34'46" W

(C11)

CURVE DATA
P.I. STA. = CDS-1417+32.20
Δ = 00°57'17" LT.
D_c = 00°15'00"
R = 22918.31'
T = 190.95'
L = 381.89'
E = 0.80'
e_{max} = N.C.
P.C. STA. = CDS-1415+41.23
P.T. STA. = CDS-1419+23.16

(T9)

STA. = CDS-1419+23.16
STA. = CDS-1438+62.39
L = 1939.22'
BRG. = S 02°37'29" W

CONNECTOR ROAD DATA

(T10)

STA. = CONN-60+00.00
STA. = CONN-69+31.07
L = 931.07'
BRG. = S 87°24'24" E

(C12)

CURVE DATA
P.I. STA. = CONN-70+77.33
Δ = 02°55'28" LT.
D_c = 01°00'00"
R = 5729.58'
T = 146.25'
L = 292.44'
E = 1.87'
e_{max} = N.C.
P.C. STA. = CONN-69+31.07
P.T. STA. = CONN-72+23.52

(T11)

STA. = CONN-72+23.52
STA. = CONN-81+01.05
L = 877.53'
BRG. = S 89°40'08" E

RAMP "A" DATA

(C13)

CURVE DATA
P.I. STA. = A-1377+78.96
Δ = 01°21'23" RT.
D_c = 00°28'24"
R = 12107.17'
T = 143.32'
L = 286.63'
E = 0.85'
e_{max} = N.C.
P.C. STA. = A-1376+35.64
P.C.C. STA. = A-1379+22.27

(C14)

CURVE DATA
P.I. STA. = A-1381+03.01
Δ = 09°01'07" RT.
D_c = 02°30'00"
R = 2291.83'
T = 180.74'
L = 360.74'
E = 7.12'
e_{max} = 0.040
P.C.C. STA. = A-1379+22.27
C.S. STA. = A-1382+83.01

RAMP "A" DATA

(CONTINUED)

(C15)

CURVE DATA
P.I. STA. = A-1384+01.84
Δ = 11°15'00" RT.
D_{c1} = 02°30'00"
R_1 = 2291.83'
Dc2 = 08°45'00"
R_2 = 645.81'
L_s = 200.00'
P = 1.82'
Δ_1 = 02°29'55"
Δ_2 = 08°45'05"
T_1 = 118.83'
T_2 = 81.77'
e_1 = 0.040
e_2 = 0.060
C.S. STA. = A-1382+83.01
S.C. STA. = A-1384+83.01

(C16)

CURVE DATA
P.I. STA. = A-1389+20.71
Δ = 67°31'16" RT.
D_c = 08°45'00"
R = 654.81'
T = 437.70'
L = 771.67'
E = 132.82'
e_{max} = 0.060
P.C. STA. = A-1384+83.01
P.C.C. STA. = A-1392+54.68

(C17)

CURVE DATA
P.I. STA. = A-1393+54.84
Δ = 08°00'00" RT.
D_c = 04°00'00"
R = 1432.39'
T = 100.16'
L = 200.00'
E = 3.50'
e_{max} = 0.046
P.C.C. STA. = A-1392+54.68
P.T. STA. = A-1394+54.68

(T12)

STA. = A-1394+54.68
STA. = A-1395+06.68
L = 52.00'
BRG. = S 87°24'24" E

RAMP "B" DATA

(T13)

STA. = B-65+79.03
STA. = B-67+23.87
L = 144.84'
BRG. = S 87°24'24" E

(C18)

CURVE DATA
P.I. STA. = B-69+11.36
Δ = 14°54'50" RT.
D_c = 04°00'00"
R = 1432.39'
T = 187.48'
L = 372.85'
E = 12.22'
e_{max} = 0.046
P.C. STA. = B-67+23.87
P.C.C. STA. = B-70+96.72

(C19)

CURVE DATA
P.I. STA.= B-77+45.95
Δ = 74°38'23" RT.
D_c = 06°44'56"
R = 848.95'
L_{s1} = 0
Θ_{s1} = 0
LT1 = 0
ST1 = 0
x1 = 0
y1 = 0
k1 = 0
P1 = 0
L_{s2} = 200.00
Θ_{s2} = 06°44'56"
LT2 = 133.43'
ST2 = 66.75'
x2 = 199.72'
y2 = 7.85'
k2 = 99.95'
P2 = 1.96'
Δ_c = 67°53'27" RT.
L_c = 1005.94'
T_1 = 649.23'
T_2 = 746.61'
E_s = 219.80'
e_{max} = 0.060
P.C.C. STA.= B-70+96.72
C.S. STA.= B-81+02.66
S.T. STA.= B-83+02.66

(T14)

STA. = B-83+02.66
STA. = B-87+96.59
L = 493.93'
BRG. = S 02°08'49" W

RAMP "C" DATA

(T15)

STA. = C-1367+39.45
STA. = C-1377+53.11
L = 1013.66'
BRG. = S 03°57'54" W

(C20)

CURVE DATA
P.I. STA. = C-1383+85.77
Δ = 05°48'41" RT.
D_c = 00°27'35"
R = 12464.17'
T = 632.66'
L = 1264.24'
E = 16.05'
e_{max} = N.C.
P.C. STA. = C-1377+53.11
P.T. STA. = C-1390+17.35

RAMP "D" DATA

(C21)

CURVE DATA
P.I. STA. = D-1392+78.79
Δ = 02°24'12" RT.
D_c = 00°27'35"
R = 12464.17'
T = 261.44'
L = 522.81'
E = 2.74'
e_{max} = N.C.
P.C. STA. = D-1390+17.35
P.T. STA. = D-1395+40.16

(T16)

STA. = D-1395+40.16
STA. = D-1402+94.25
L = 754.10'
BRG. = S 04°14'59" W

(C22)

CURVE DATA
P.I. STA. = D-1404+99.90
Δ = 03°05'02" RT.
D_c = 00°45'00"
R = 7639.44'
T = 205.65'
L = 411.20'
E = 2.77'
e_{max} = N.C.
P.C. STA. = D-1402+94.25
P.T. STA. = D-1407+05.45

(T17)

STA. = D-1407+05.45
STA. = D-1409+20.10
L = 214.65'
BRG. = S 07°20'01" W

(C23)

CURVE DATA
P.I. STA. = D-1411+70.48
Δ = 03°45'15" LT.
D_c = 00°45'00"
R = 7639.44'
T = 250.37'
L = 500.57'
E = 4.10'
e_{max} = N.C.
P.C. STA. = D-1409+20.10
P.T. STA. = D-1414+20.67

LEGEND

CDN – COLLECTOR DISTRIBUTOR NORTH

CDS – COLLECTOR DISTRIBUTOR SOUTH

A TO D – CONNECTOR ROAD RAMPS A,B,C AND D.

CONN – CONNECTOR ROAD

CALC: G.J.W. DATE: 2-92
CHK: M.F.J. DATE: 2-92

ALIGNMENT DATA

FRA-270-32.46

PLOT SCALE: 1"=1'
COL #30 C:\DRAWING\06092308\TITLE\06092AL2.DWG FEBRUARY-09-1995

TYPICAL SECTIONS

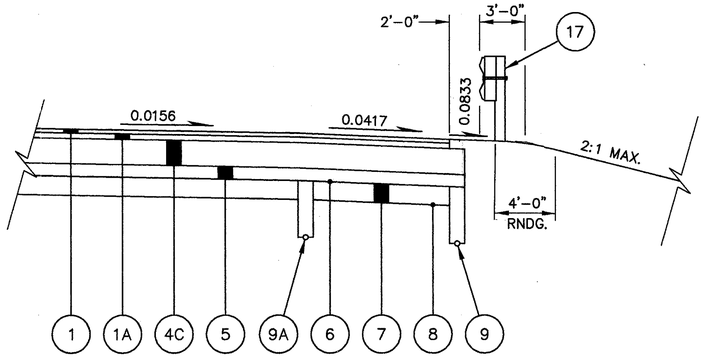

DETAIL – NORMAL GUARDRAIL TREATMENT

(SEE PLAN FOR LOCATIONS)

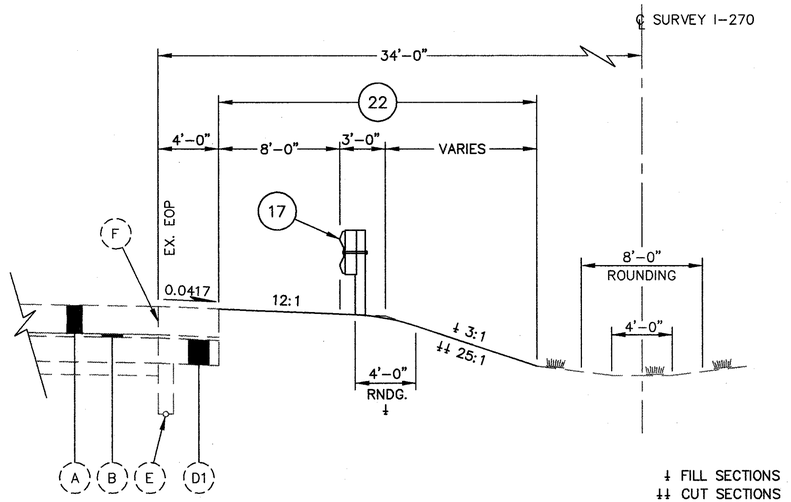

DETAIL – MEDIAN LIGHT TOWER GUARDRAIL TREATMENT LT & RT

LEGEND

1 — ITEM 446 – 1 1/4" ASPHALT CONCRETE, SURFACE COURSE, TYPE 1, AC–20

1A — ITEM 446 – 1 3/4" ASPHALT CONCRETE, INTERMEDIATE COURSE, TYPE 2, AC–20

2 — ITEM 404 – 1 1/4" ASPHALT CONCRETE, AC–20

3 — ITEM 402 – 1 3/4" ASPHALT CONCRETE, AC–20

4 — ITEM 301 – 3 1/2" BITUMINOUS AGGREGATE BASE, AC–20

4A — ITEM 301 – 6" BITUMINOUS AGGREGATE BASE, AC–20

4B — ITEM 301 – 7" BITUMINOUS AGGREGATE BASE, AC–20

4C — ITEM 301 – 8" BITUMINOUS AGGREGATE BASE, AC–20

4D — ITEM 301 – VARIABLE DEPTH BITUMINOUS AGGREGATE BASE, AC–20 (7" MIN./12" MAX.)

4E — ITEM 301 – 12" BITUMINOUS AGGREGATE BASE, AC–20

5 — ITEM SPECIAL – 4" ASPHALT TREATED FREE DRAINING BASE

6 — ITEM 408 – BITUMINOUS PRIME COAT (0.40 GAL/SY)

7 — ITEM 304 – 6" AGGREGATE BASE (SEE PROPOSAL NOTE)

7A — ITEM 304 – 10" AGGREGATE BASE (SEE PROPOSAL NOTE)

7B — ITEM 304 – VARIABLE DEPTH AGGREGATE BASE (SEE PROPOSAL NOTE) (2" MIN./6" MAX.)

8 — ITEM 203 – SUBGRADE COMPACTION

9 — ITEM 605 – 4" SHALLOW PIPE UNDERDRAIN WITH FABRIC WRAP, 707.15 AS PER PLAN (DEPTH AS SHOWN ON SHEETS 65 TO 69)

9A — ITEM 605 – 4" SHALLOW PIPE UNDERDRAIN WITH FABRIC WRAP, 707.15 AS PER PLAN A (DEPTH AS SHOWN ON SHEETS 65 TO 69)

9B — ITEM 605 – 4" SHALLOW PIPE UNDERDRAIN WITH FABRIC WRAP, 707.15 AS PER PLAN B (DEPTH AS SHOWN ON SHEETS 65 TO 69)

9C — ITEM 605 – 6" SHALLOW PIPE UNDERDRAIN, 707.15 AS PER PLAN (SEE SHEET 35)

9D — ITEM 605 – AGGREGATE DRAIN

10 — PROPOSED UNDERDRAIN TO BE BUILT IN PROJECT FRA–270–31.41

11 — ITEM 603 – SLOTTED DRAIN: 15" TYPE 2 & OR 3

12 — ITEM 611 – REINFORCED CONCRETE APPROACH SLAB (T=13"), AS PER PLAN (SEE SHEET 39)

12A — ITEM 611 – REINFORCED CONCRETE APPROACH SLAB (T=15"), AS PER PLAN (SEE SHEET 39)

13 — ITEM 622 – CONCRETE BARRIER, TYPE B

13A — ITEM 622 – CONCRETE BARRIER, TYPE C

13B — ITEM 622 – CONCRETE BARRIER, TYPE D, AS PER PLAN A (SEE SHEET 447)

13C — ITEM 622 – CONCRETE BARRIER, TYPE D, AS PER PLAN B (SEE SHEET 326)

14 — ITEM SPECIAL–NOISE BARRIER

15 — MECHANICALLY STABILIZED EARTH WALL (SEE SHEETS 432 TO 468)

16 — RETAINING WALL (SEE SHEETS 509 TO 537)

17 — ITEM 606 – GUARDRAIL, TYPE 5

18 — ITEM 607 – FENCE, TYPE CL, AS PER PLAN (SEE SHEET 536)

19 — ITEM 608 – 4" CONCRETE WALK

20 — ITEM 609 – COMBINATION CURB AND GUTTER, TYPE 2

20A — ITEM 609 – CURB, TYPE 6

21 — ITEM 612 – CONCRETE MEDIAN

22 — ITEM 659 – SEEDING AND MULCHING

22A — ITEM 659 – SEEDING AND MULCHING, AS PER PLAN (SEE SHEET 37)

23 — ITEM 660 – SODDING

24 — ITEM 653 – TOPSOIL FURNISHED AND PLACED (6" THICK)

25 — PROPOSED LANE ADDITIONS TO BE BUILT IN PROJECT FRA–270–31.41

A — 9" EXISTING PLAIN CONCRETE PAVEMENT

B — 1" ± EXISTING ASPHALT CONCRETE

B1 — 3" EXISTING ASPHALT CONCRETE

C — 8" EXISTING CONCRETE BASE

D — 3" EXISTING BITUMINOUS AGGREGATE BASE

D1 — 6" EXISTING BITUMINOUS AGGREGATE BASE

D2 — 8" EXISTING BITUMINOUS AGGREGATE BASE

E — EXISTING SHALLOW PIPE UNDERDRAIN

F — EXISTING LONGITUDINAL JOINT

G — EXISTING GUARDRAIL

CALC: G.J.W. DATE: 1/95
CHK: M.F.J. DATE: 1/95

TYPICAL SECTIONS LEGEND & DETAILS

FRA–270–32.46

8
593

PLOT SCALE: 1"=2' VERT., 1"=5' HOR.
COL #30 C:\DRAWING\0609230\TYPICALS\TYP_LSBD.DWG FEBRUARY-08-1995

TYPICAL SECTIONS

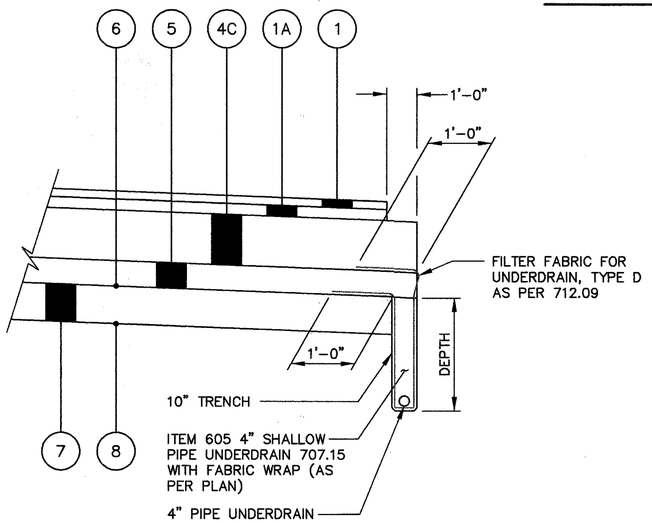

DETAIL – UNDERDRAIN (9)

FOR LEGEND, SEE SHEET NO. 8

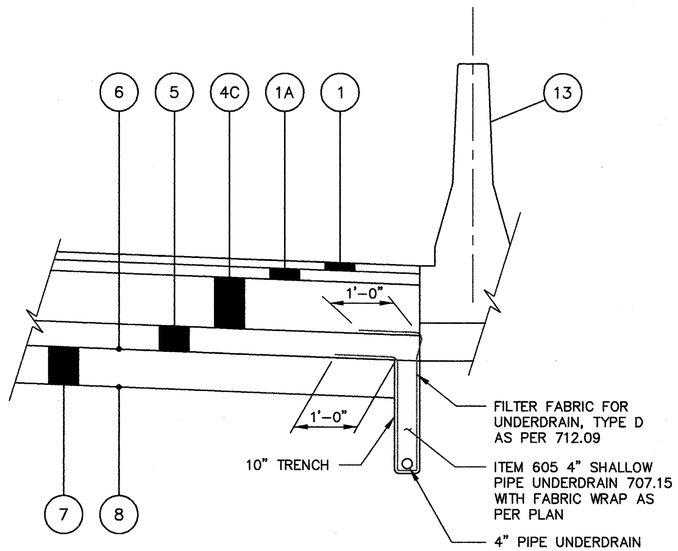

DETAIL – UNDERDRAIN (9) AT BARRIER

NOTES:

ITEM 408 PRIME COAT SHALL NOT BE APPLIED WITHIN THE LIMITS OF THE FILTER FABRIC.

FOR NOTE DESCRIBING THE CONSTRUCTION OF UNDERDRAINS SEE SHEET 40

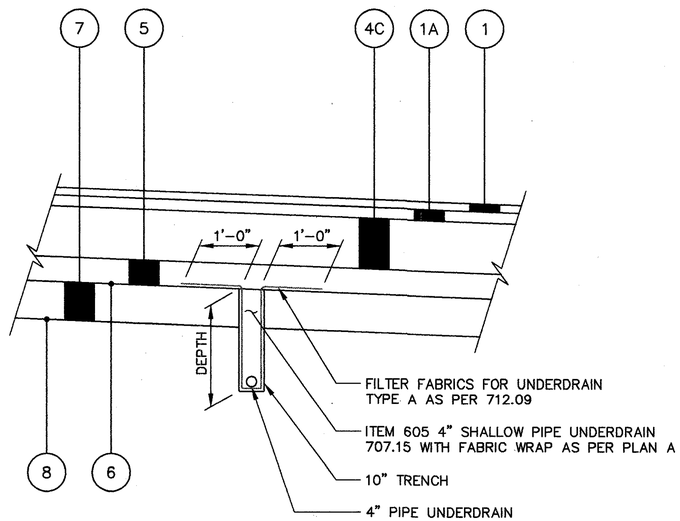

DETAIL – UNDERDRAIN (9A)

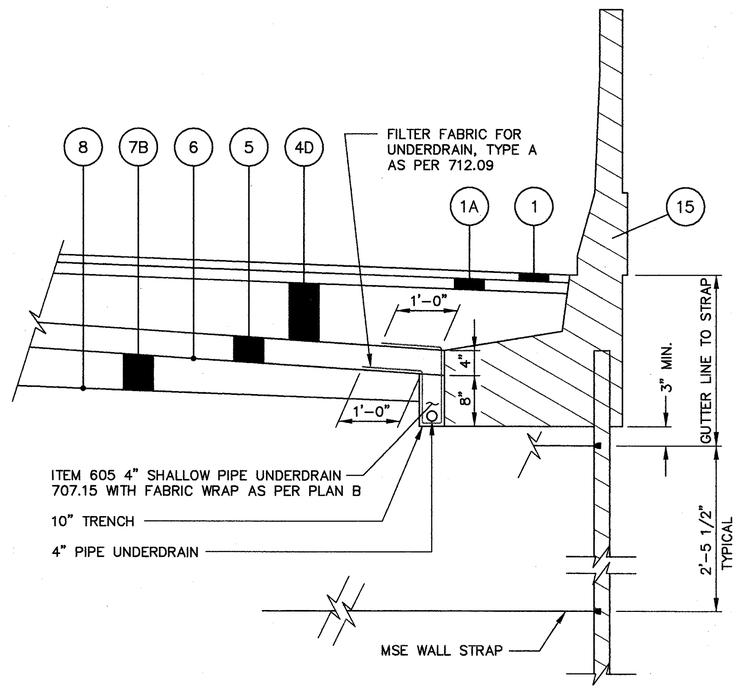

DETAIL – UNDERDRAIN (9B)

CALC. G.J.W. BY: DATE: 1/95
CHKD. M.F.J. DATE: 1/95

TYPICAL SECTION DETAILS

FRA–270–32.46

9
593

PLOT SCALE: 1"=5' VERT., 1"=2' HOR.
COL #30 C:\DRAWING\06092306\TYPICALS\TYP_DET1.DWG FEBRUARY-08-1995

TYPICAL SECTIONS

FOR LEGEND, SEE SHEET NO. 8

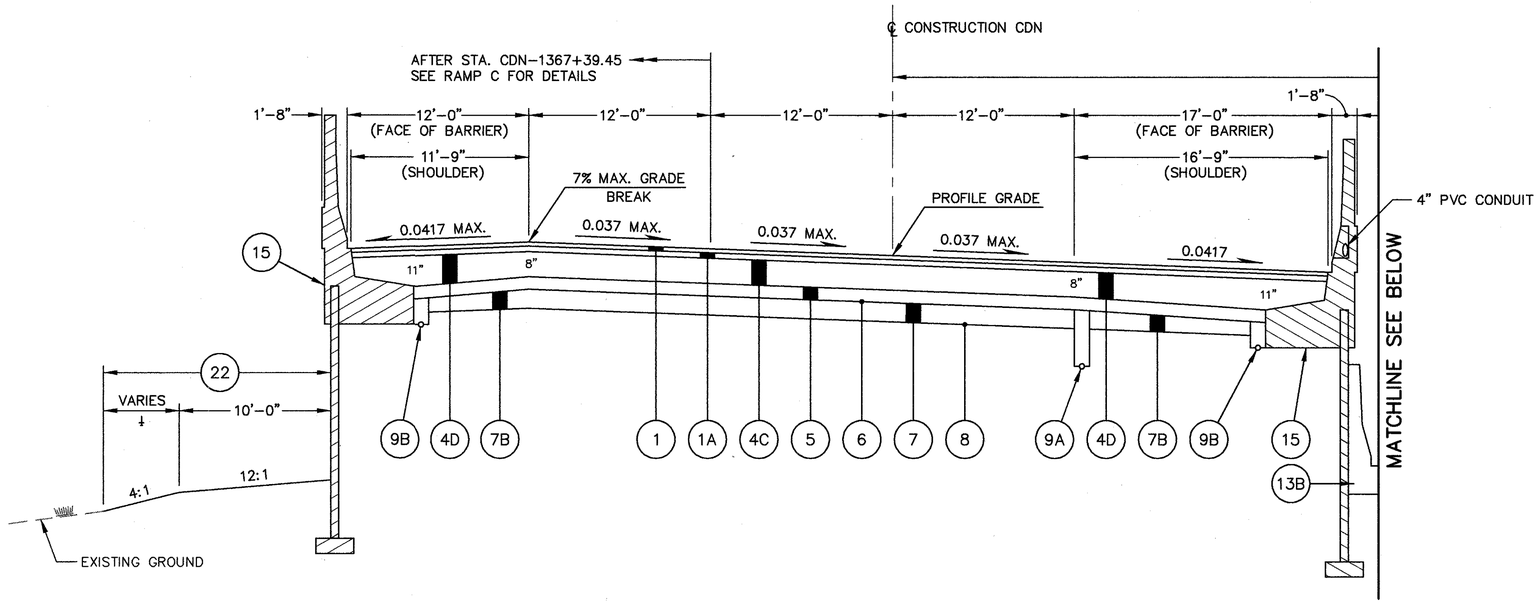

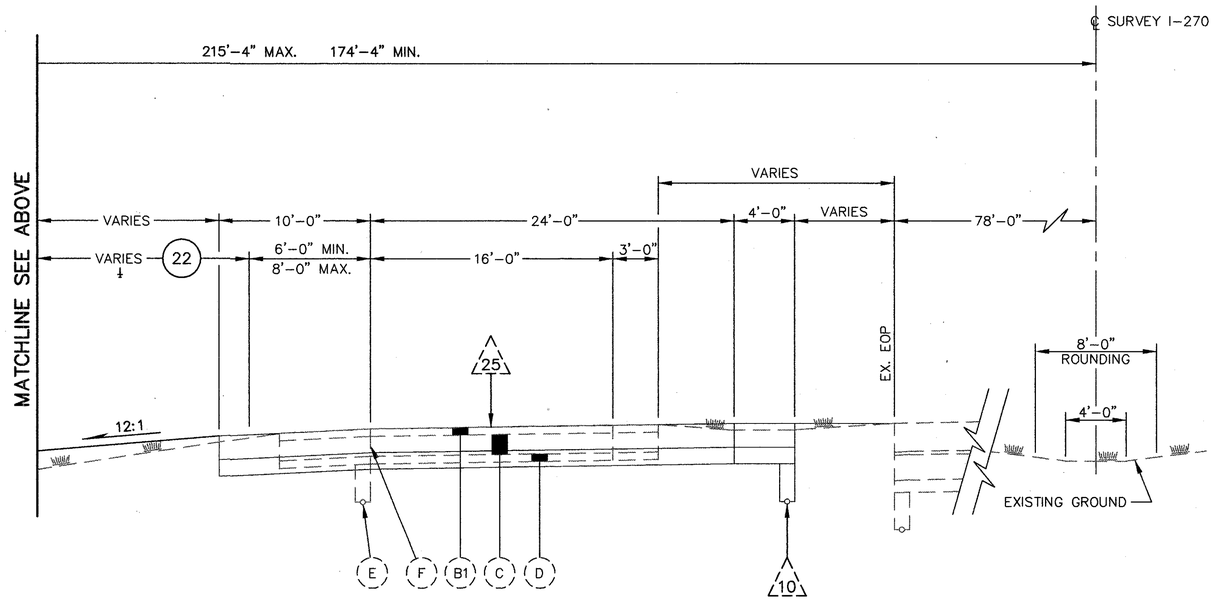

↓ UNLESS OTHERWISE SHOWN IN CROSS SECTIONS

SUPERELEVATED SECTION NORTHBOUND

STA. CDN-1366+50.00 TO STA. CDN-1370+48.83 = 398.83 L.F.

CALC. BY: G.J.W. DATE: 2/95
CHKD. BY: M.F.J. DATE: 2/95

TYPICAL SECTIONS C.D. NORTH

FRA-270-32.46

10
593

PLOT SCALE: 1"=2' \ VERT., 1"=5' HOR.
COL #30 C:\DRAWING\06092306\TYPICALS\TYP_1NB1.DWG FEBRUARY-09-1995

FOR LEGEND, SEE SHEET NO. 8

TYPICAL SECTIONS

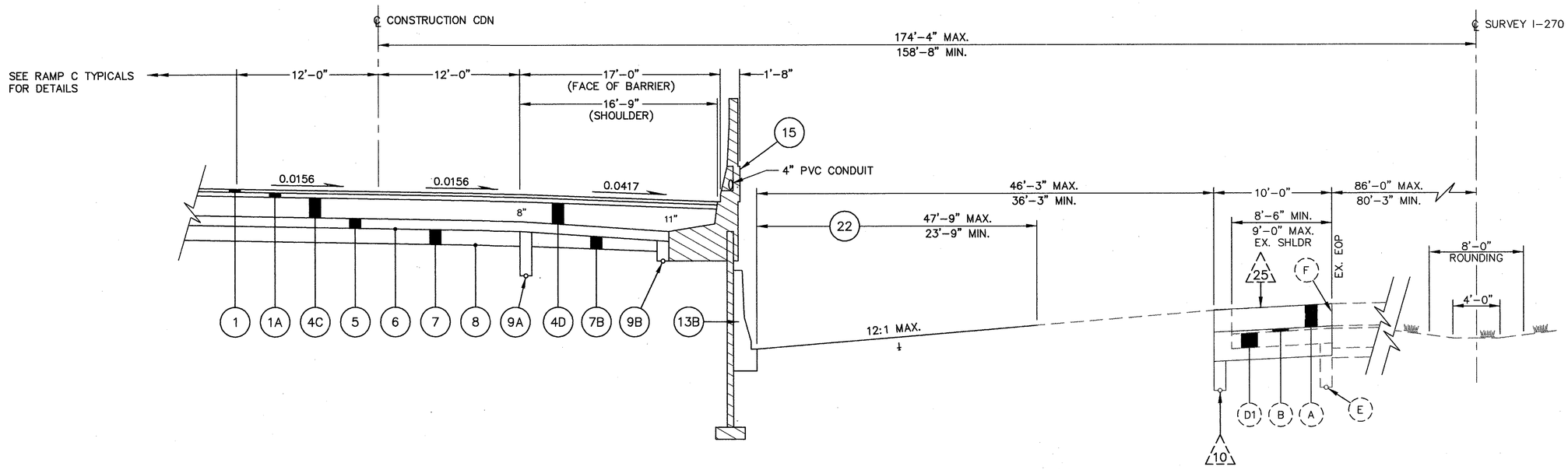

℄ UNLESS OTHERWISE SHOWN IN CROSS SECTIONS

NORMAL SECTION NORTHBOUND

STA. CDN-1370+48.83 TO STA. CDN-1371+81.37 = 132.54 L.F.

CALC. BY: G.J.W. DATE: 1/95
CHKD. BY: M.F.J. DATE: 1/95

TYPICAL SECTIONS C.D. NORTH

FRA-270-32.46

11
593

PLOT SCALE: 1"=2' VERT.; 1"=5' HOR.
COL #30 C:\DRAWING\060932306\TYPICALS\TYP_1NB2.DWG FEBRUARY-09-1995

TYPICAL SECTIONS

FOR LEGEND, SEE SHEET NO. 8

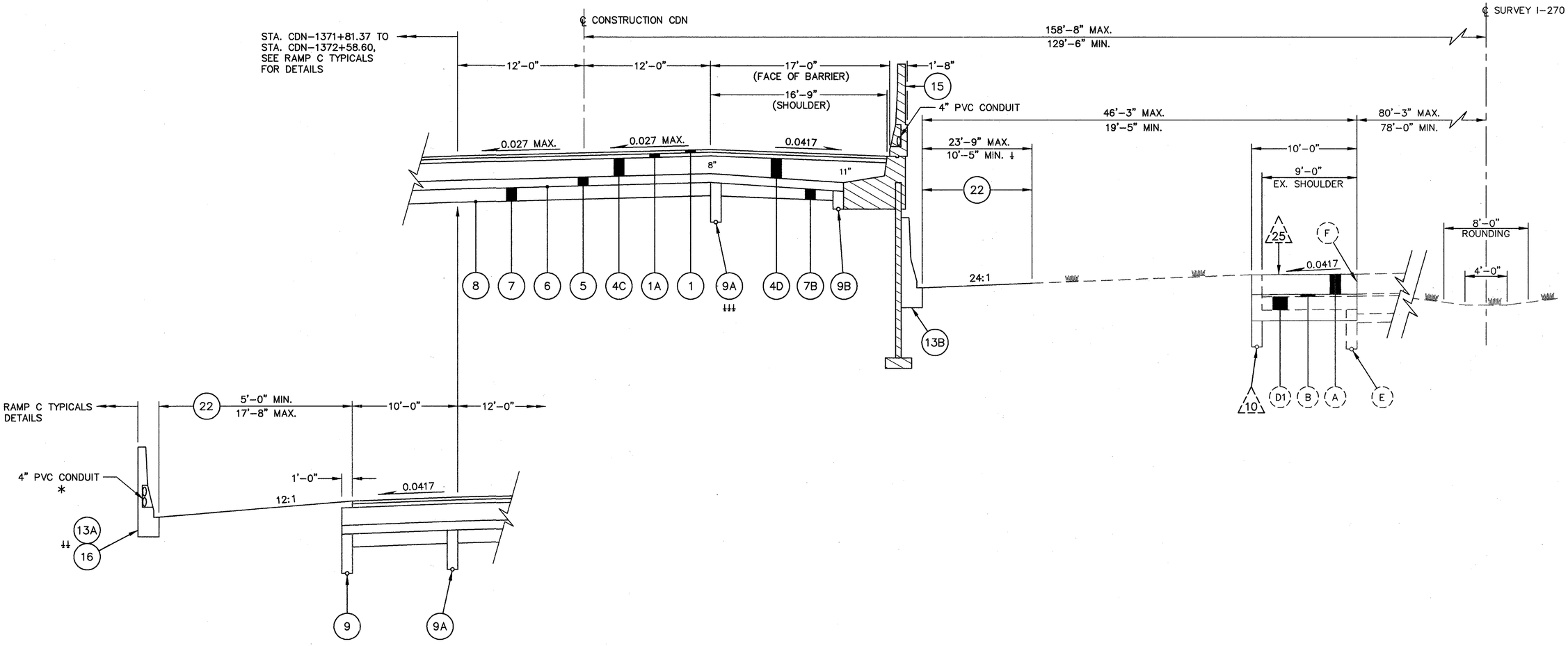

STA. CDN-1372+58.60 TO STA. CDN-1375+00.00 = 241.40 L.F.

↓ UNLESS OTHERWISE SHOWN IN CROSS SECTIONS

↓↓ TYPE C BARRIER, STA. CDN-1372+58.60 TO STA. CDN-1373+50.00 = 91.40 L.F.
RETAINING WALL, STA. CDN-1373+50.00 TO STA. CDN-1375+00.00 = 150.00 L.F.
SEE SHEETS 509 TO 537 FOR TRANSITION DETAILS

↓↓↓ END AT STA. CDN-1373+73.00

* BEGIN AT STA. CDN-1373+30.00

SUPERELEVATED SECTION NORTHBOUND

STA. CDN-1371+81.37 TO STA. CDN-1375+00.00 = 318.63 L.F.

CALC. BY: G.J.W. DATE: 1/95
CHKD. BY: M.F.J. DATE: 1/95

TYPICAL SECTIONS C.D. NORTH

FRA-270-32.46

12
593

PLOT SCALE: 1"=2' VERT., 1"=5' HOR.
COL #30 C:\DRAWING\96092306\TYPICALS\TYP_IN83.DWG FEBRUARY-08-1995

TYPICAL SECTIONS

FOR LEGEND, SEE SHEET NO. 8

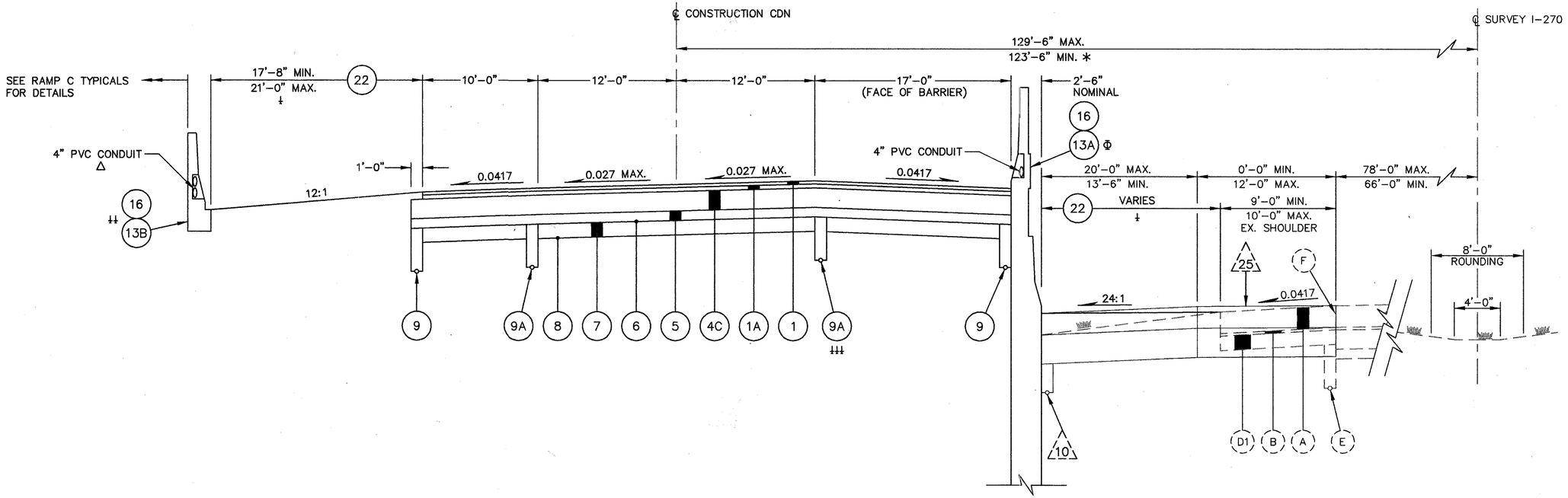

* 123'-6" FROM STA. CDN-1377+13.73 TO STA. CDN-1378+36.69 = 122.96 L.F.

Φ RETAINING WALL, STA. CDN-1375+00.00 TO STA. CDN-1378+00.00 = 300.00 L.F.
TYPE C BARRIER, STA. CDN-1378+00.00 TO STA. CDN-1378+36.69 = 36.69 L.F.
SEE SHEETS 509 TO 537 FOR TRANSITION DETAILS

‡ UNLESS OTHERWISE SHOWN IN CROSS SECTIONS

‡‡ RETAINING WALL, STA. CDN-1375+00.00 TO STA. CDN-1376+50.00 = 150.00 L.F.
TYPE D BARRIER, AS PER PLAN A, STA. CDN-1376+50.00 TO STA. CDN-1378+36.69 = 186.69 L.F.
SEE SHEETS 509 TO 537 FOR TRANSITION DETAILS

‡‡‡ BEGIN AT STA. CDN-1378+00.00

△ END AT STA. CDN-1380+50.00

SUPERELEVATED SECTION NORTHBOUND

STA. CDN-1375+00.00 TO STA. CDN-1378+36.69 = 336.69 L.F.

CALC. BY: G.J.W. DATE: 1/95
CHK'D BY: M.F.J. DATE: 1/95

TYPICAL SECTIONS C.D. NORTH

FRA-270-32.46

13
593

PLOT SCALE: 1"=2' VERT., 1"=5' HOR.
COL #27 C:\DRAWING\06092306\TYPICALS\TYP1NB3A.DWG FEBRUARY-04-1995

TYPICAL SECTIONS

FOR LEGEND, SEE SHEET NO. 8

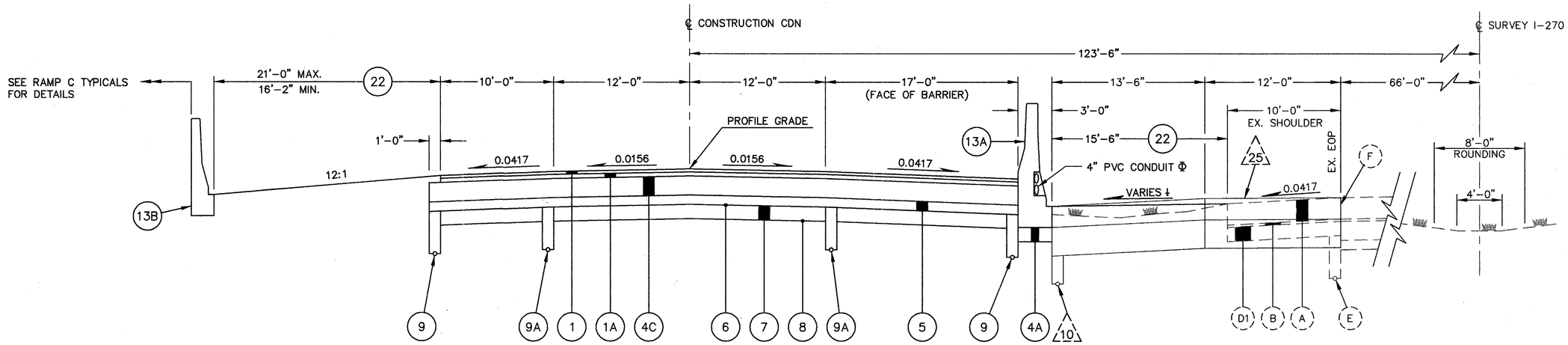

↓ UNLESS OTHERWISE SHOWN IN CROSS SECTIONS
Φ BEGIN SECOND CONDUIT RUN AT STA. CDN-1380+50.00

NORMAL SECTION NORTHBOUND

STA. CDN-1378+36.69 TO STA. CDN-1382+00.00 = 363.31 L.F.

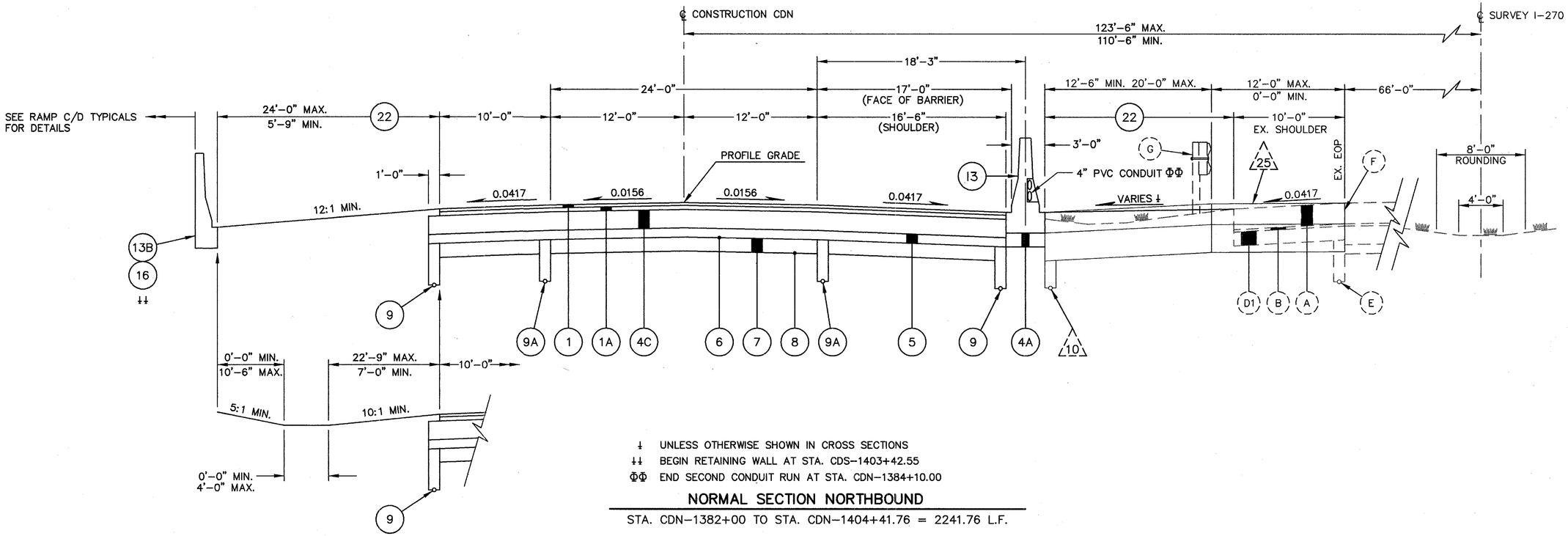

↓ UNLESS OTHERWISE SHOWN IN CROSS SECTIONS
↓↓ BEGIN RETAINING WALL AT STA. CDS-1403+42.55
ΦΦ END SECOND CONDUIT RUN AT STA. CDN-1384+10.00

NORMAL SECTION NORTHBOUND

STA. CDN-1382+00 TO STA. CDN-1404+41.76 = 2241.76 L.F.

STA. CDN-1403+50.00 TO STA. CDN-1404+41.76 = 91.76 L.F.

PLOT SCALE: 1"=2' VERT., 1"=5' HOR.
COL #30 C:\DRAWING\06092306\TYPICALS\TYP_INB4.DWG FEBRUARY-08-1995

CALC. G.J.W. BY: DATE: 1/95
CHKD. M.F.J. BY: DATE: 1/95

TYPICAL SECTIONS C.D. NORTH

FRA-270-32.46

TYPICAL SECTIONS

FOR LEGEND, SEE SHEET NO. 8

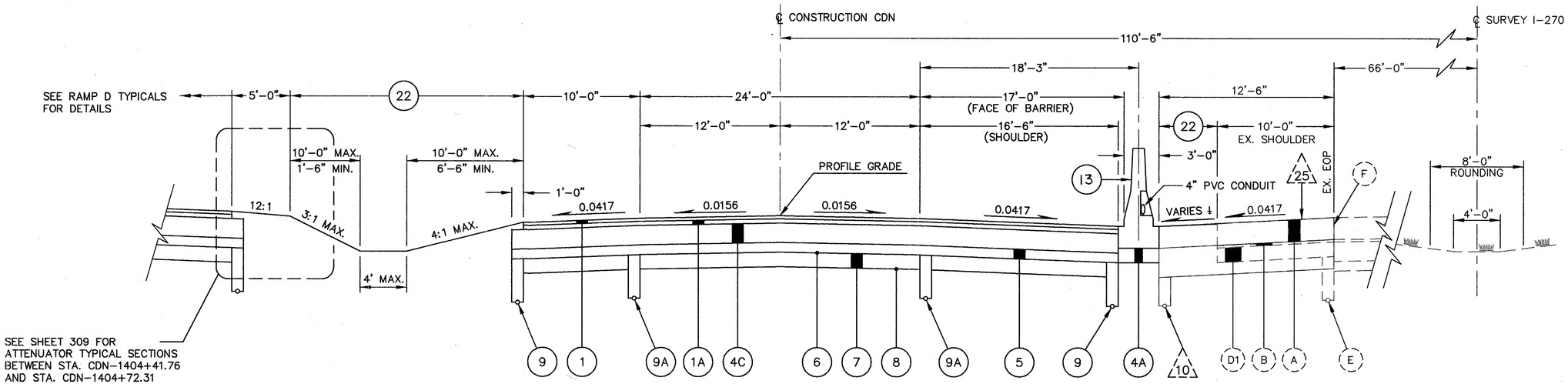

↓ UNLESS OTHERWISE SHOWN IN CROSS SECTIONS

NORMAL SECTION NORTHBOUND

STA. CDN-1404+41.76 TO STA. CDN-1407+49.68 = 307.92 L.F.

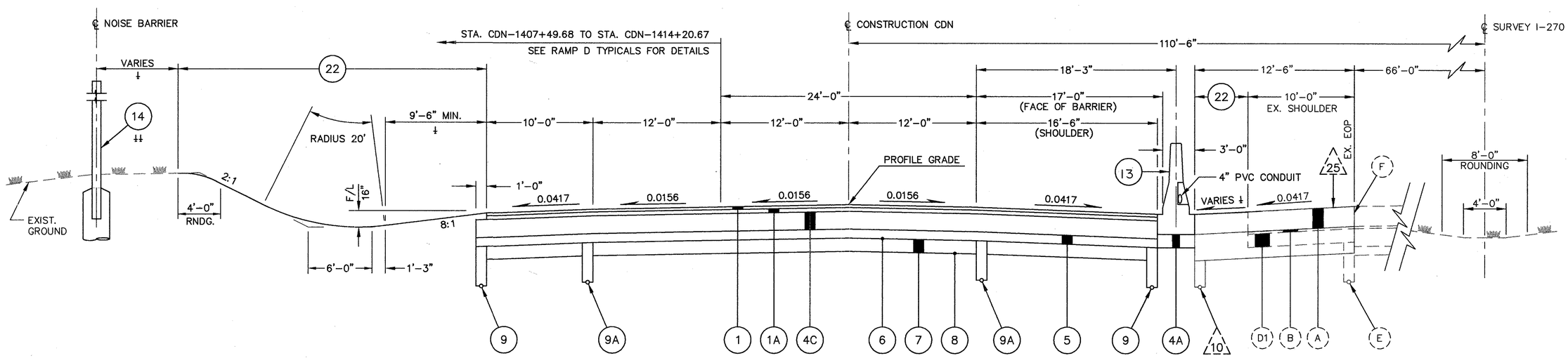

↓ UNLESS OTHERWISE SHOWN IN CROSS SECTIONS

↓↓ END NOISE BARRIER AT STA. CDN-1418+00.00

NORMAL SECTION NORTHBOUND

STA. CDN-1407+49.68 TO STA. CDN-1420+21.85 = 1272.17 L.F.

CALC. BY: G.J.W. DATE: 1/95
CHKD. BY: M.F.J. DATE: 1/95

TYPICAL SECTIONS C.D. NORTH

FRA-270-32.46

15
593

PLOT SCALE: 1"=0' VERT., 1"=5' HOR.
COL. #30 C:\DRAWING\06092306\TYPICALS\TYP_1NB5.DWG FEBRUARY-09-1995

TYPICAL SECTIONS

FOR LEGEND, SEE SHEET NO. 8

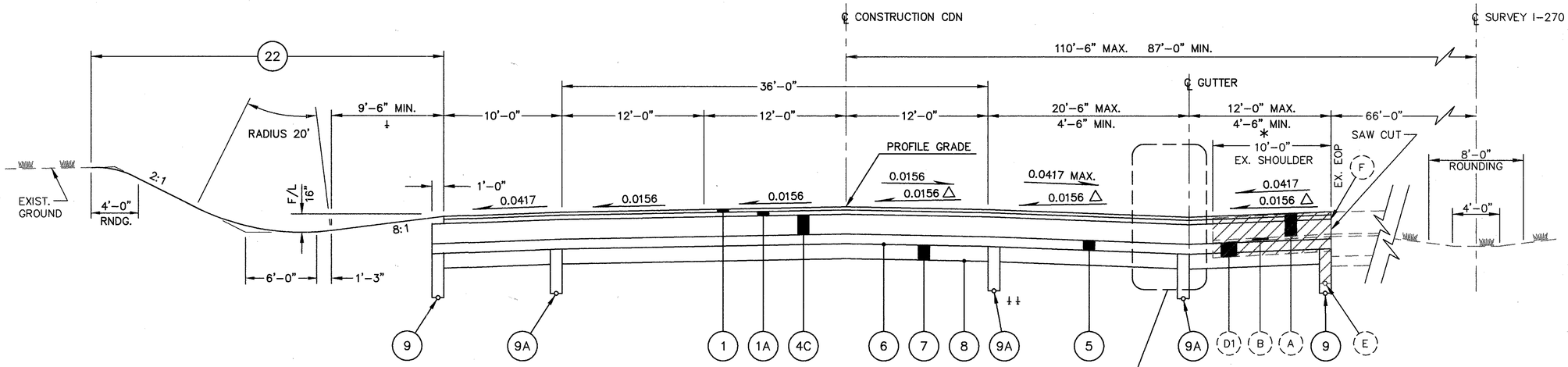

SEE SHEET 309 FOR ATTENUATOR TYPICAL SECTIONS BETWEEN STA. CDN-1420+21.85 AND STA. CDN-1420+52.35

△ AT STA. CDN-1427+52.49

↓ UNLESS OTHERWISE SHOWN IN CROSS SECTIONS

↓↓ END AT STA. CDN-1427+30

* STA. CDN-1424+49.70 TO STA. CDN-1427+52.49 = 302.79 L.F.

▨ TO BE REMOVED

NORMAL SECTION NORTHBOUND

STA. CDN-1420+21.85 TO STA. CDN-1427+52.49 = 730.64 L.F.

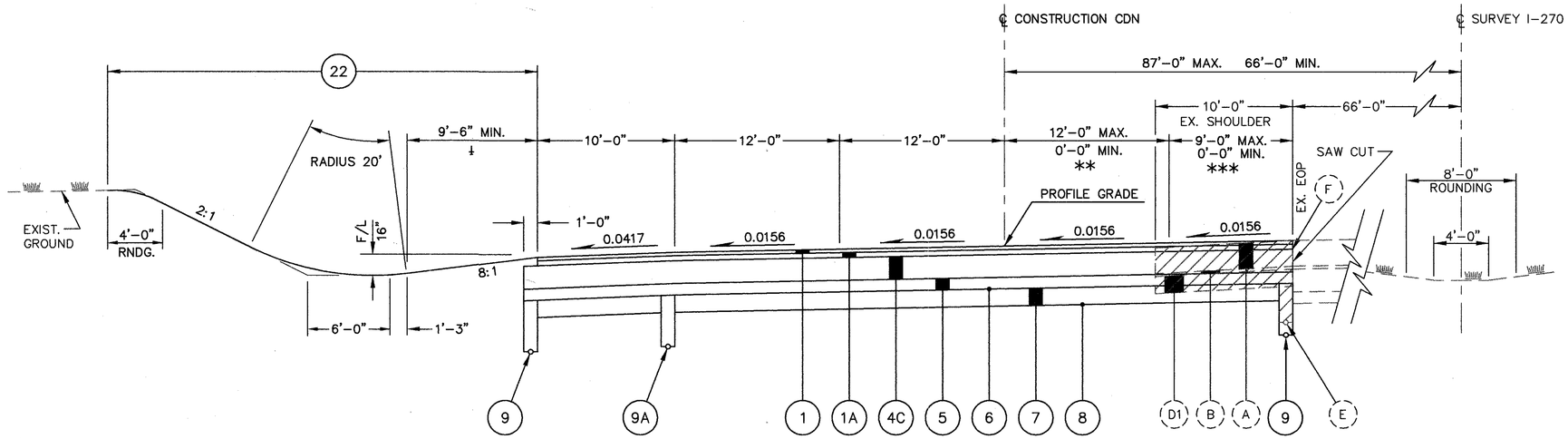

** STA. CDN-1429+26.96 TO STA. CDN-1434+34.50 = 507.54 L.F.

*** STA. CDN-1427+52.49 TO STA. CDN-1429+26.96 = 174.47 L.F.

↓ UNLESS OTHERWISE SHOWN IN CROSS SECTIONS

TRANSITION SECTION NORTHBOUND

STA. CDN-1427+52.49 TO STA. CDN-1434+34.50 = 682.01 L.F.

CALC. BY: G.J.W. DATE: 1/95
CHKD. BY: M.F.J. DATE: 1/95

TYPICAL SECTIONS C.D. NORTH

FRA-270-32.46

16
593

PLOT SCALE: 1"=2' VERT., 1"=5' HOR.
COL #30 C:\DRAWING\06092306\TYPICALS\TYP_1NB6.DWG FEBRUARY-09-1995

TYPICAL SECTIONS

FOR LEGEND, SEE SHEET NO. 8

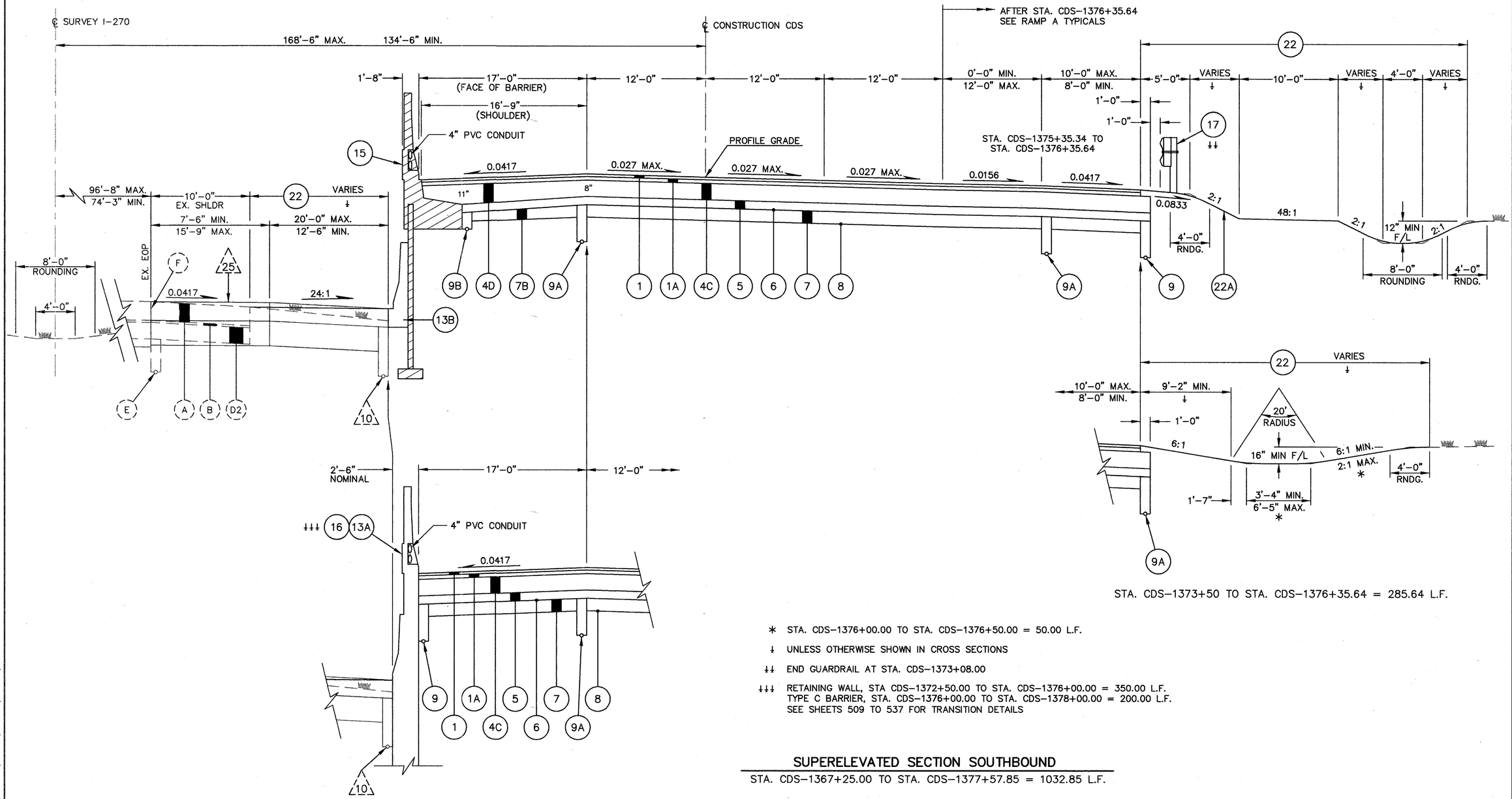

STA. CDS-1372+50.00 TO STA. CDS-1377+57.85 = 507.85 L.F.

STA. CDS-1373+50 TO STA. CDS-1376+35.64 = 285.64 L.F.

* STA. CDS-1376+00.00 TO STA. CDS-1376+50.00 = 50.00 L.F.

↓ UNLESS OTHERWISE SHOWN IN CROSS SECTIONS

↓↓ END GUARDRAIL AT STA. CDS-1373+08.00

↓↓↓ RETAINING WALL, STA CDS-1372+50.00 TO STA. CDS-1376+00.00 = 350.00 L.F.
TYPE C BARRIER, STA. CDS-1376+00.00 TO STA. CDS-1378+00.00 = 200.00 L.F.
SEE SHEETS 509 TO 537 FOR TRANSITION DETAILS

SUPERELEVATED SECTION SOUTHBOUND

STA. CDS-1367+25.00 TO STA. CDS-1377+57.85 = 1032.85 L.F.

CALC. BY: G.J.W. DATE: 1/95
CHKD. BY: M.F.J. DATE: 1/95

TYPICAL SECTIONS C.D. SOUTH

FRA-270-32.46

17
593

PLOT SCALE: 1"=2' VERT., 1"=5' HOR.
COL #30 C:\DRAWING\06092306\TYPICALS\TYP_1SB1.DWG FEBRUARY-08-1995

TYPICAL SECTIONS

FOR LEGEND, SEE SHEET NO. 8

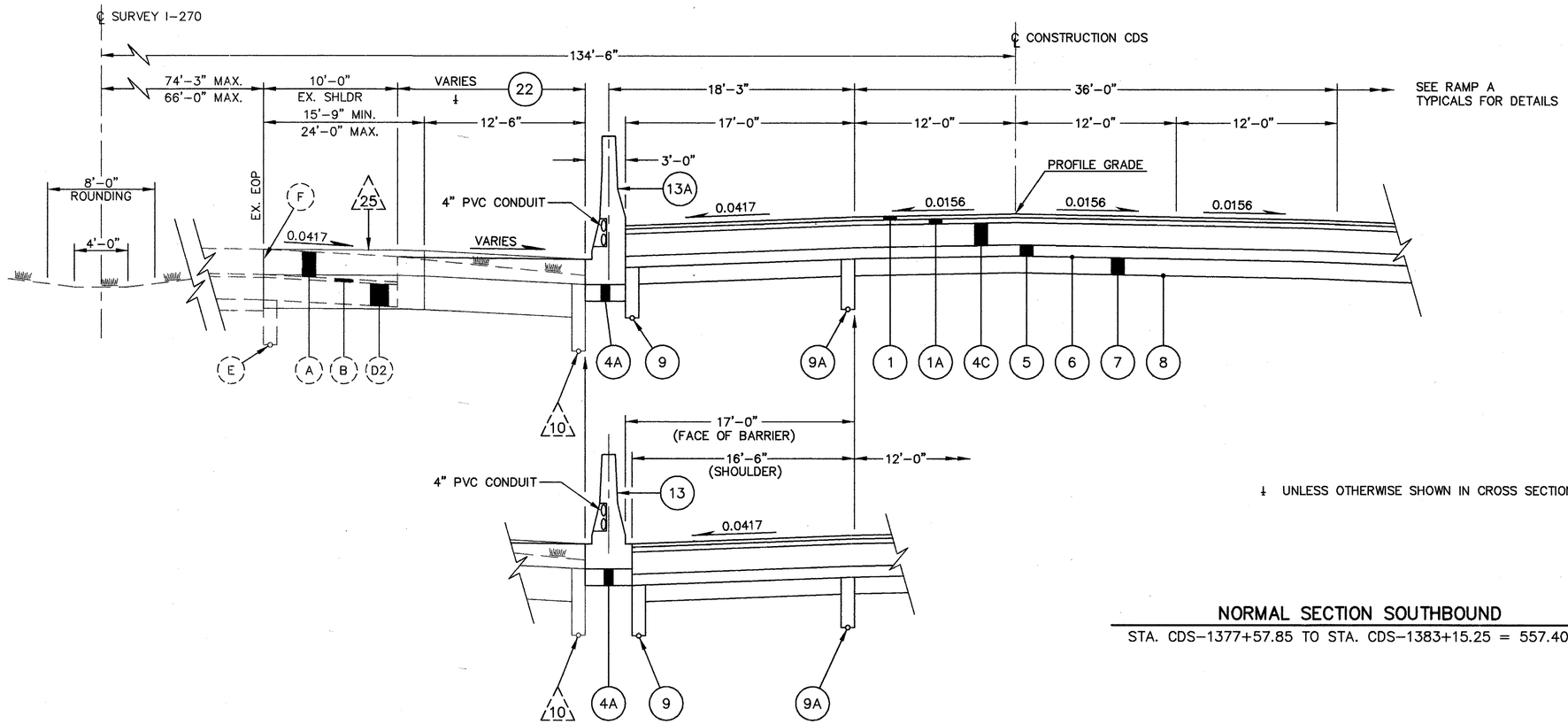

⫰ UNLESS OTHERWISE SHOWN IN CROSS SECTIONS

NORMAL SECTION SOUTHBOUND

STA. CDS-1377+57.85 TO STA. CDS-1383+15.25 = 557.40 L.F.

STA. CDS-1378+00.00 TO STA. CDS-1383+15.25 = 515.25 L.F.

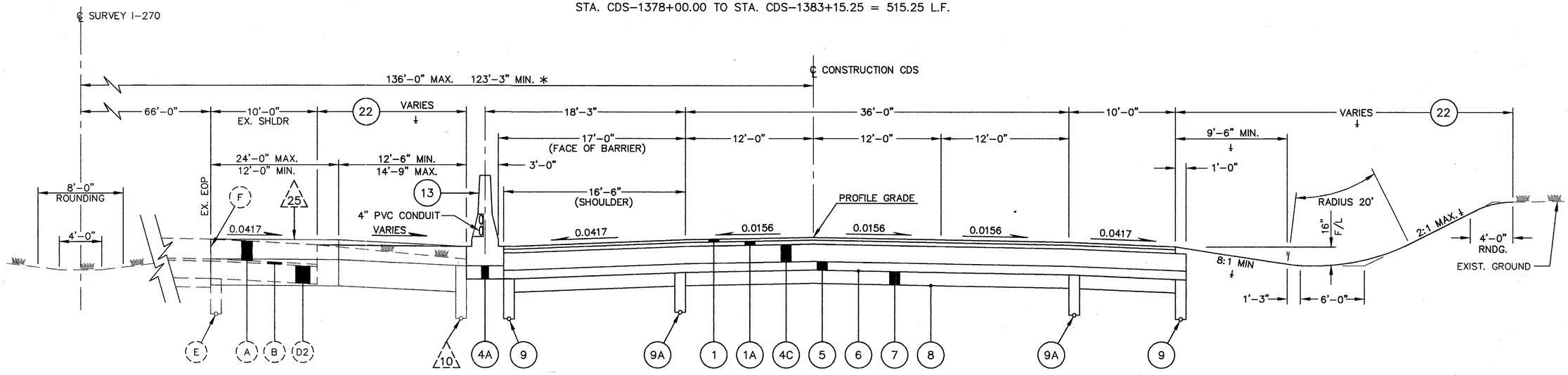

NORMAL SECTION SOUTHBOUND

STA. CDS-1383+15.25 TO STA. CDS-1398+38.57 = 1523.32 L.F.

⫰ UNLESS OTHERWISE SHOWN IN CROSS SECTIONS

* 134'-6" TO 136'-0", STA. CDS-1383+48.10 TO STA. CDS-1390+82.13 = 734.03 L.F.
136'-0" TO 123'-3", STA. CDS-1390+82.13 TO STA. CDS-1398+38.57 = 756.44 L.F.

CALC. BY: G.J.W. DATE: 1/95
CHKD. BY: M.F.J. DATE: 1/95

TYPICAL SECTIONS C.D. SOUTH

FRA-270-32.46

18
593

PLOT SCALE: 1"=2' VERT., 1"=5' HOR.
COL #30
C:\DRAWING\06092306\TYPICALS\TYP_1SB2.DWG FEBRUARY-08-1995

TYPICAL SECTIONS

FOR LEGEND, SEE SHEET NO. 8

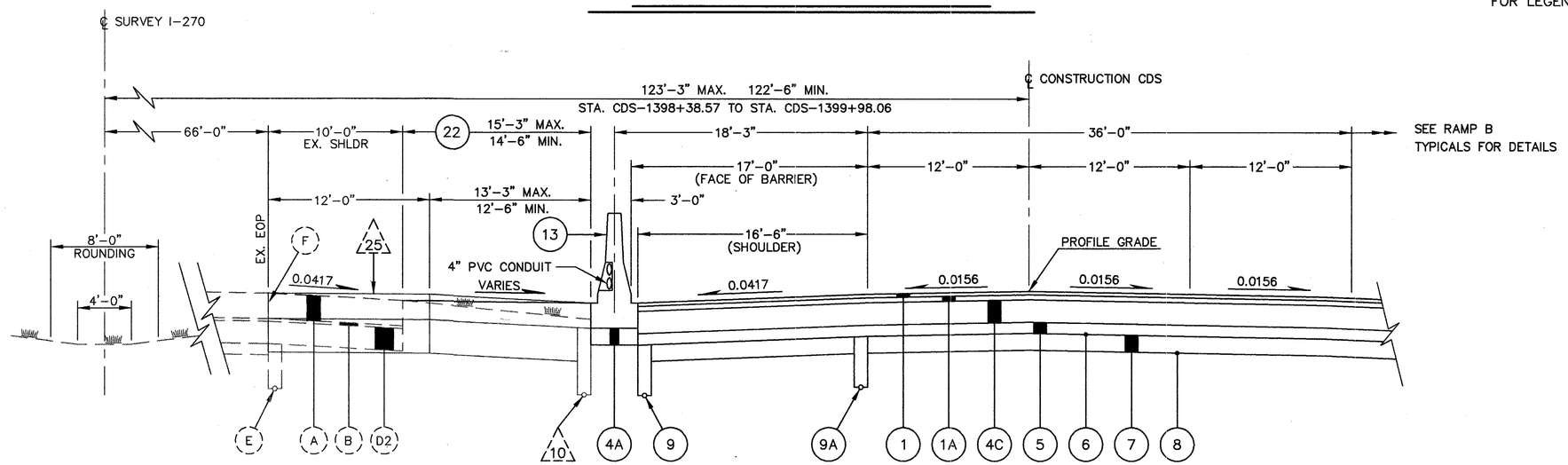

NORMAL SECTION SOUTHBOUND

STA. CDS-1398+38.57 TO STA. CDS-1405+50.12 = 711.55 L.F.

↓ UNLESS OTHERWISE SHOWN IN CROSS SECTIONS

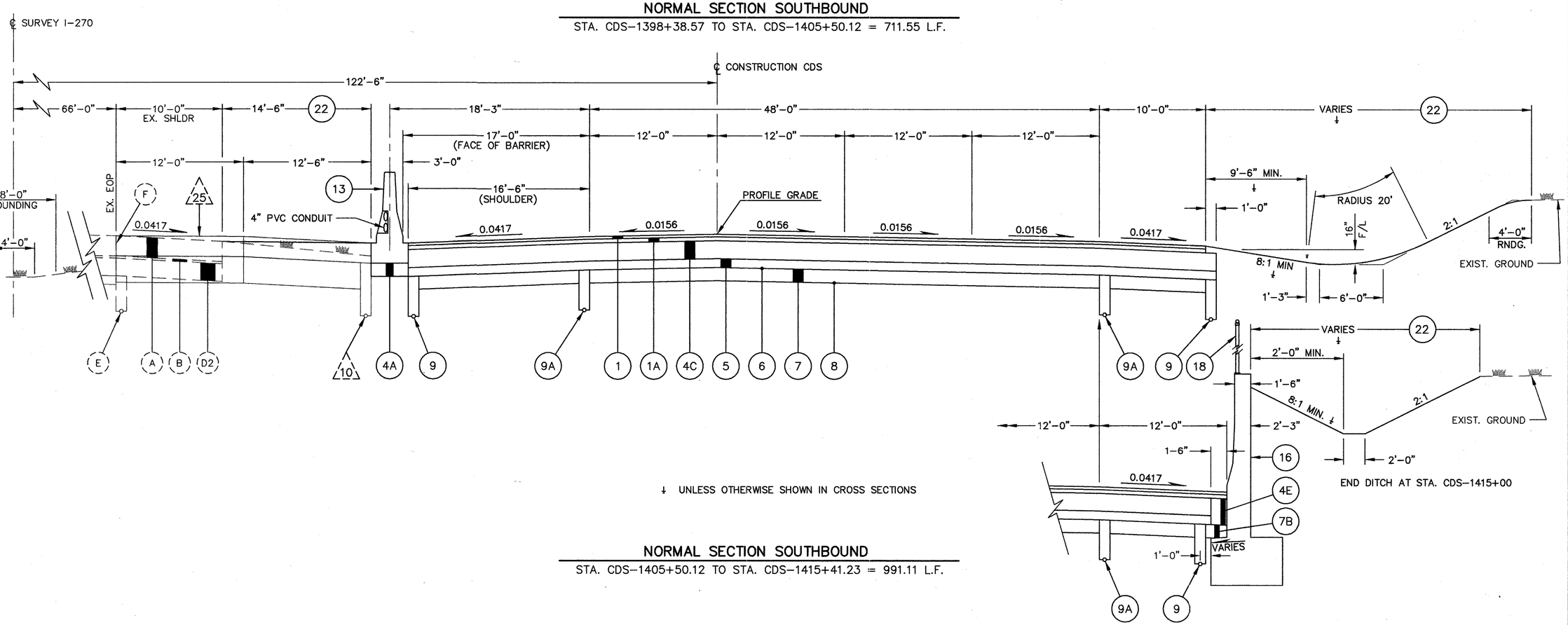

↓ UNLESS OTHERWISE SHOWN IN CROSS SECTIONS

NORMAL SECTION SOUTHBOUND

STA. CDS-1405+50.12 TO STA. CDS-1415+41.23 = 991.11 L.F.

STA. CDS-1413+00.00 TO STA. CDS-1415+41.23 = 241.23 L.F.

CALC. BY: G.J.W. DATE: 1/95
CHKD. BY: M.F.J. DATE: 1/95

TYPICAL SECTIONS C.D. SOUTH

FRA-270-32.46

19
593

PLOT SCALE: 1"=2' VERT., 1"=5' HOR.
COL #30 C:\DRAWING\06092306\TYPICALS\TYP_1SB3.DWG FEBRUARY-08-1995

TYPICAL SECTIONS

FOR LEGEND, SEE SHEET NO. 8

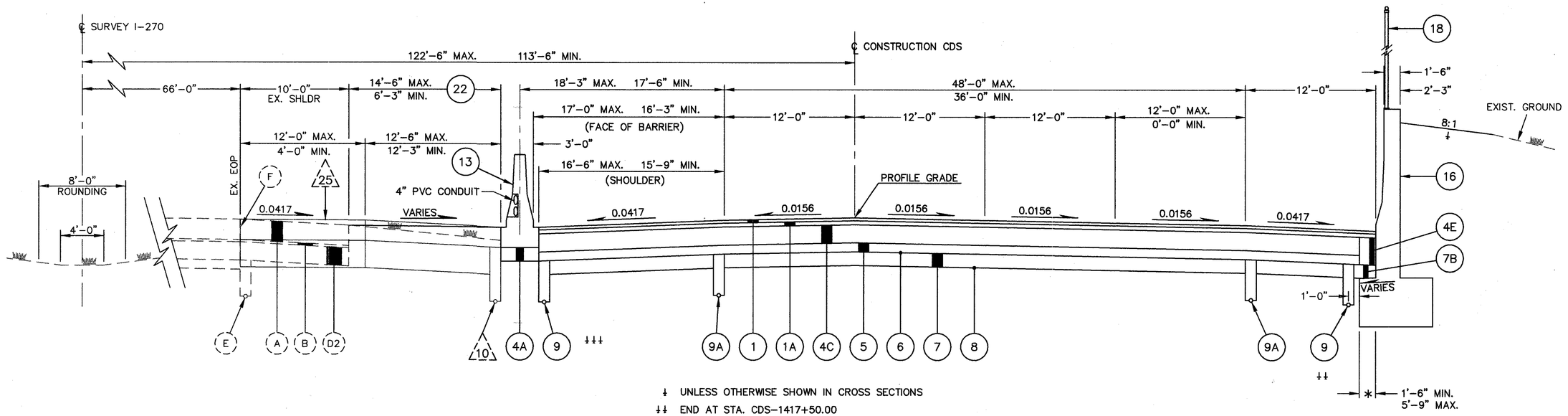

‡ UNLESS OTHERWISE SHOWN IN CROSS SECTIONS

‡‡ END AT STA. CDS-1417+50.00

‡‡‡ 4" ROCK CUT UNDERDRAIN FROM STA. CDS-1418+00.00 TO STA. CDS-1422+00.00. SEE SHEET 68 FOR DETAILS

* BEGIN 5'-9" AT STA. CDS-1417+50.00

TRANSITION SECTION SOUTHBOUND

STA. CDS-1415+41.23 TO STA. CDS-1422+70.00 = 728.77 L.F.

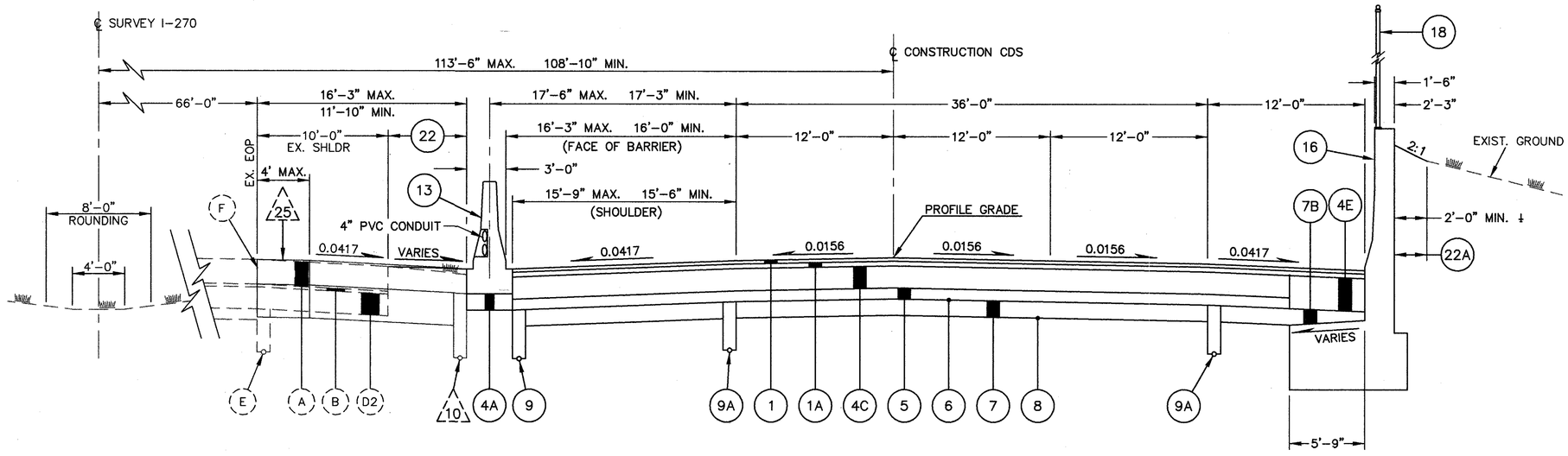

‡ UNLESS OTHERWISE SHOWN IN CROSS SECTIONS

NORMAL SECTION SOUTHBOUND

STA. CDS-1422+70.00 TO STA. CDS-1425+50.00 = 280.00 L.F.

CAD: G.J.W. DATE: 1/95
CHKD BY: M.F.J. DATE: 1/95

TYPICAL SECTIONS C.D. SOUTH

FRA-270-32.46

20
593

PLOT SCALE: 1"=2' VERT. 1"=5' HOR.
COL #50 C:\DRAWING\09092306\TYPICALS\TYP_1SB4.DWG FEBRUARY-09-1995

TYPICAL SECTIONS

FOR LEGEND, SEE SHEET NO. 8

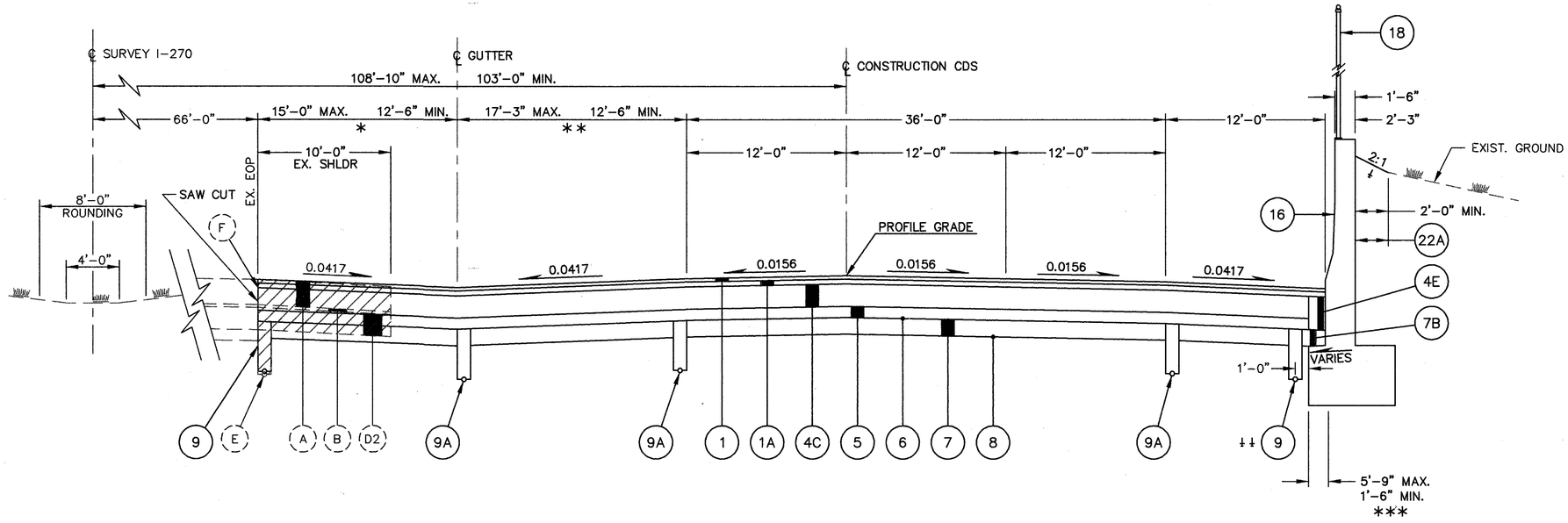

‡ UNLESS OTHERWISE SHOWN IN CROSS SECTIONS

‡‡ BEGIN AT STA. CDS-1426+00.00

* 13'-7" TO 15'-0" FROM STA. CDS-1425+50.00 TO STA. CDS-1426+00.00 = 50.00 L.F.
15'-0" TO 12'-6" FROM STA. CDS-1426+00.00 TO STA. CDS-1429+00.00 = 300.00 L.F.

** 17'-3" TO 15'-0" FROM STA. CDS-1425+50.00 TO STA. CDS-1426+00.00 = 50.00 L.F.
15'-0" TO 12'-6" FROM STA. CDS-1426+00.00 TO STA. CDS-1429+00.00 = 300.00 L.F.

*** BEGIN 1'-6" AT STA. CDS-1426+00.00

TO BE REMOVED

NORMAL SECTION SOUTHBOUND

STA. CDS-1425+50.00 TO STA. CDS-1429+00.00 = 350.00 L.F.

PLOT SCALE: 1"=2' VERT., 1"=5' HOR.
COL #30 C:\DRAWING\06092006\TYPICALS\TYP_1SB5.DWG FEBRUARY-09-1995

CALC. G.J.W. DATE: 1/95
CHKD. BY: M.F.J. DATE: 1/95

TYPICAL SECTIONS C.D. SOUTH

FRA-270-32.46

TYPICAL SECTIONS

FOR LEGEND, SEE SHEET NO. 8

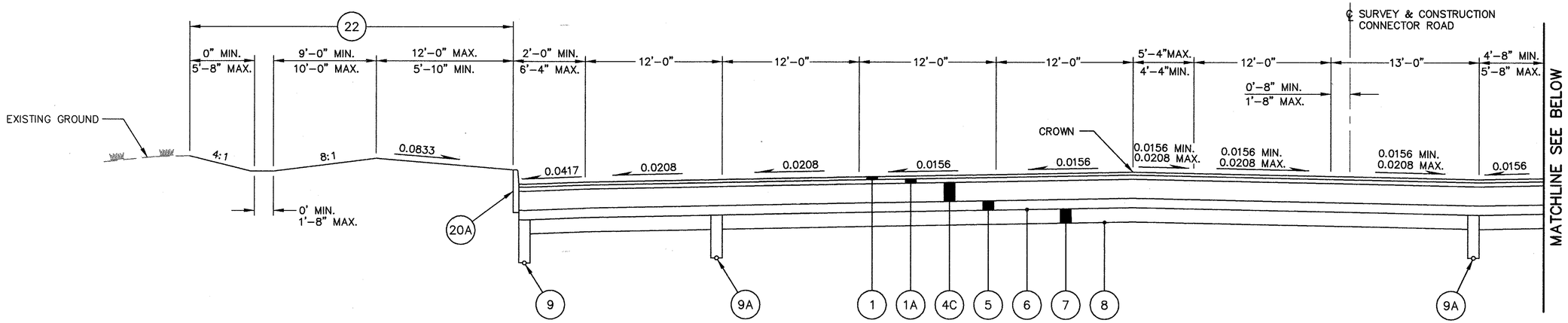

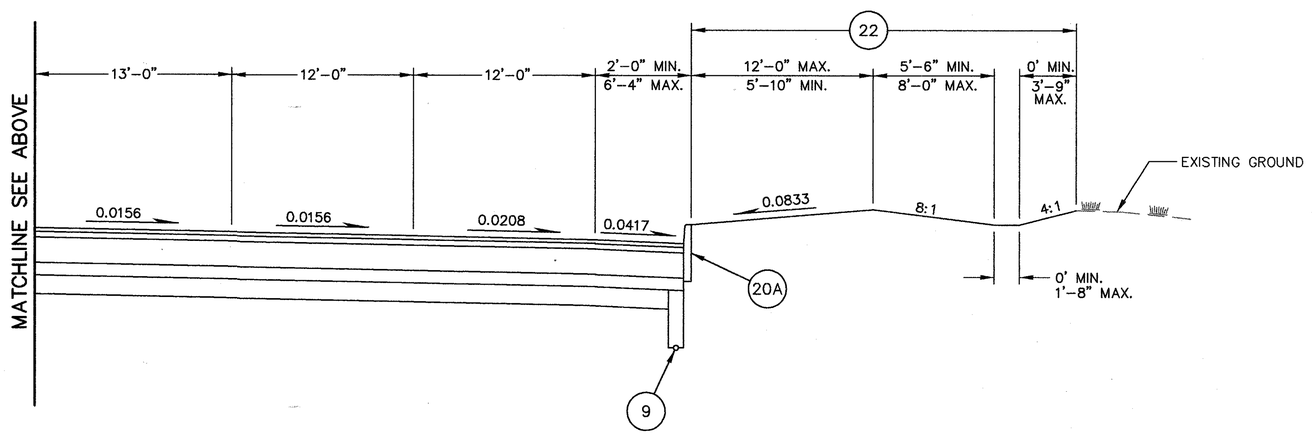

TRANSITION SECTION

STA. CONN-61+04.33 TO STA. CONN-61+25.00 = 20.67 L.F.

PLOT SCALE: 1"=2' VERT., 1"=5' HOR.
COL #30 C:\DRAWING\06092306\TYPICALS\TYP_ICN1.DWG FEBRUARY-09-1995

CALC. BY: G.J.W. DATE: 1/95
CHK. BY: M.F.J. DATE: 1/95

TYPICAL SECTIONS CONNECTOR ROAD

FRA-270-32.46

TYPICAL SECTIONS

FOR LEGEND, SEE SHEET NO. 8

NOTE: CURB HEIGHT TAPERS FROM 6" TO 0",
STA. CONN–61+35.00 TO STA. CONN–61+45.00

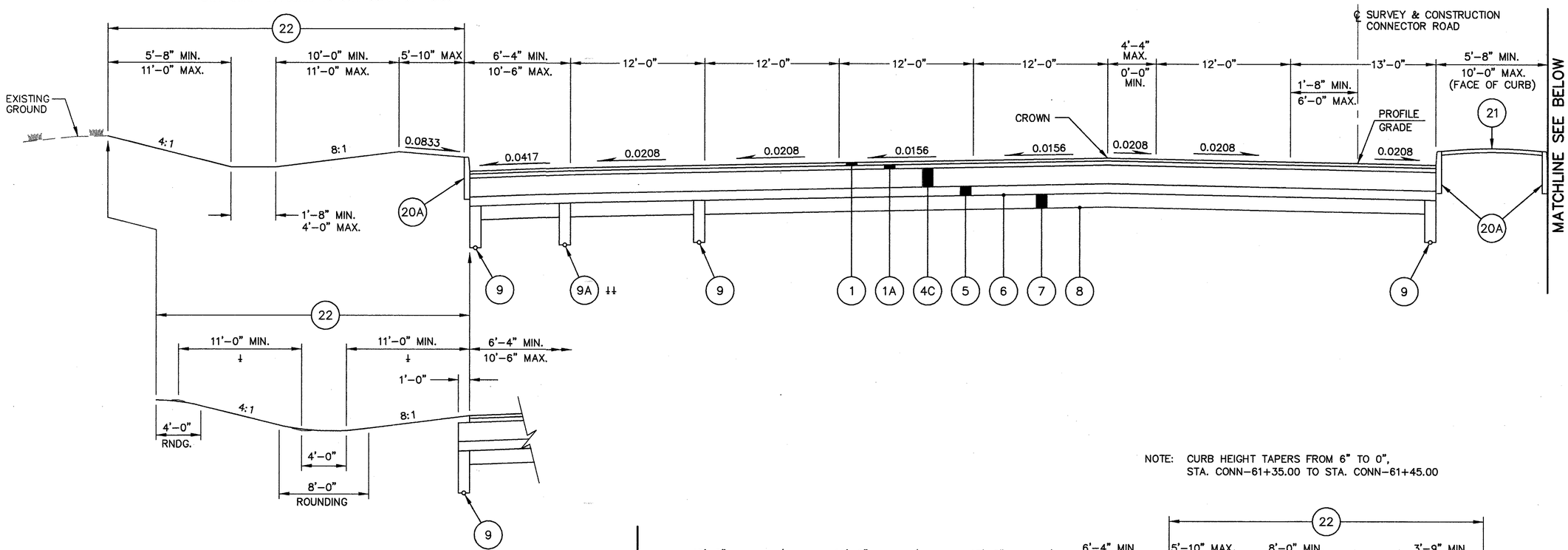

STA. CONN–61+45.00 TO STA. CONN–62+15.00 = 70.00 L.F.

NOTE: CURB HEIGHT TAPERS FROM 6" TO 0",
STA. CONN–61+35.00 TO STA. CONN–61+45.00

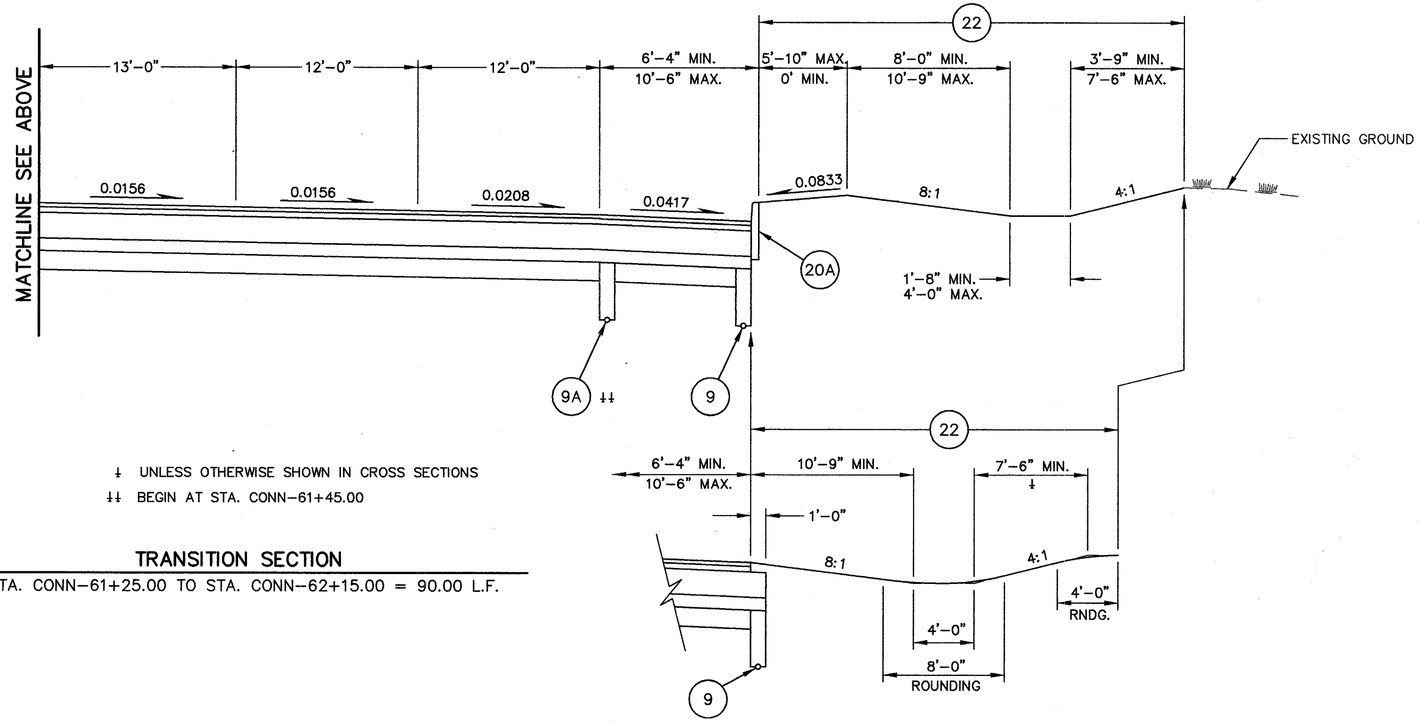

‡ UNLESS OTHERWISE SHOWN IN CROSS SECTIONS

‡‡ BEGIN AT STA. CONN–61+45.00

TRANSITION SECTION

STA. CONN–61+25.00 TO STA. CONN–62+15.00 = 90.00 L.F.

STA. CONN–61+45.00 TO STA. CONN–62+15.00 = 70.00 L.F.

PLOT SCALE: 1"=2' VERT., 1"=5' HOR.
COL #30 C:\DRAWING\06092306\TYPICALS\TYP_1CN2.DWG FEBRUARY-08-1995

CALC. BY: G.J.W. DATE: 1/95
CHKD. BY: M.F.J. DATE: 1/95

TYPICAL SECTIONS CONNECTOR ROAD

FRA–270–32.46

TYPICAL SECTIONS

FOR LEGEND, SEE SHEET NO. 8

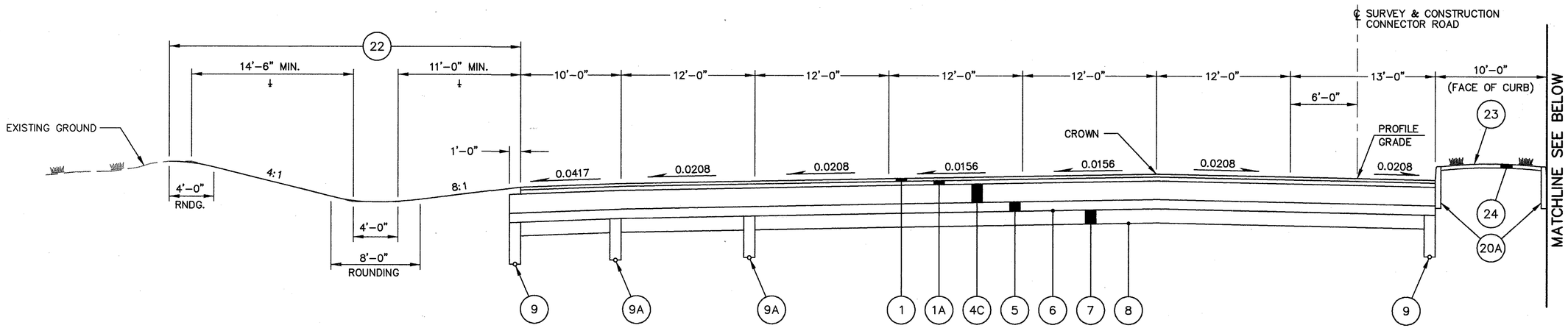

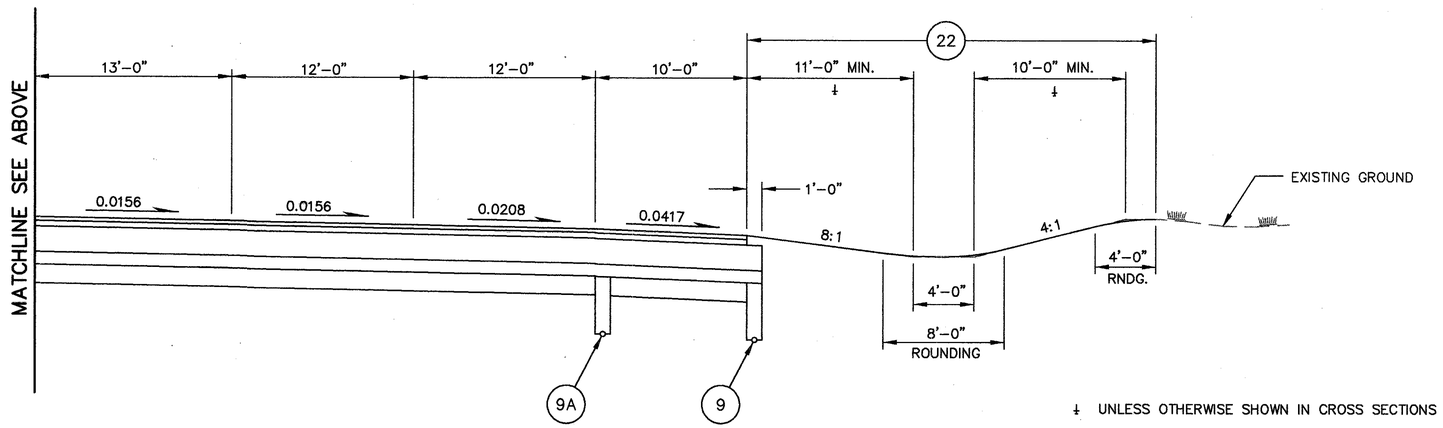

℄ UNLESS OTHERWISE SHOWN IN CROSS SECTIONS

NORMAL SECTION

STA. CONN–62+15.00 TO STA. CONN–64+70.00 = 255.00 L.F.

PLOT SCALE: 1"=2' VERT., 1"=5' HOR.
COL #30 C:\DRAWING\06092306\TYPICALS\TYP_CON3.DWG FEBRUARY–08–1995

CALC. BY: G.J.W. DATE: 1/95
CHKD. BY: M.F.J. DATE: 1/95

SECTIONS CONNECTOR ROAD

TYPICAL

FRA–270–32.46

TYPICAL SECTIONS

FOR LEGEND, SEE SHEET NO. 8

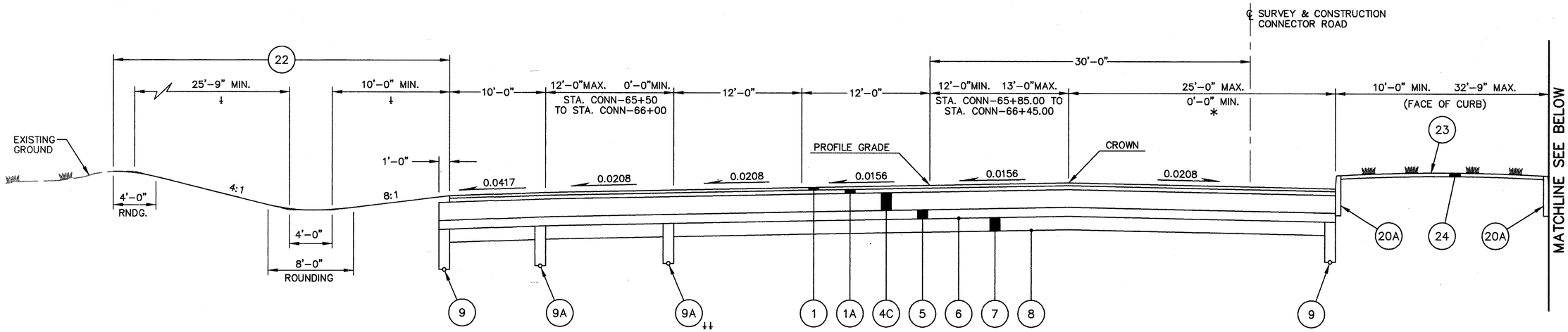

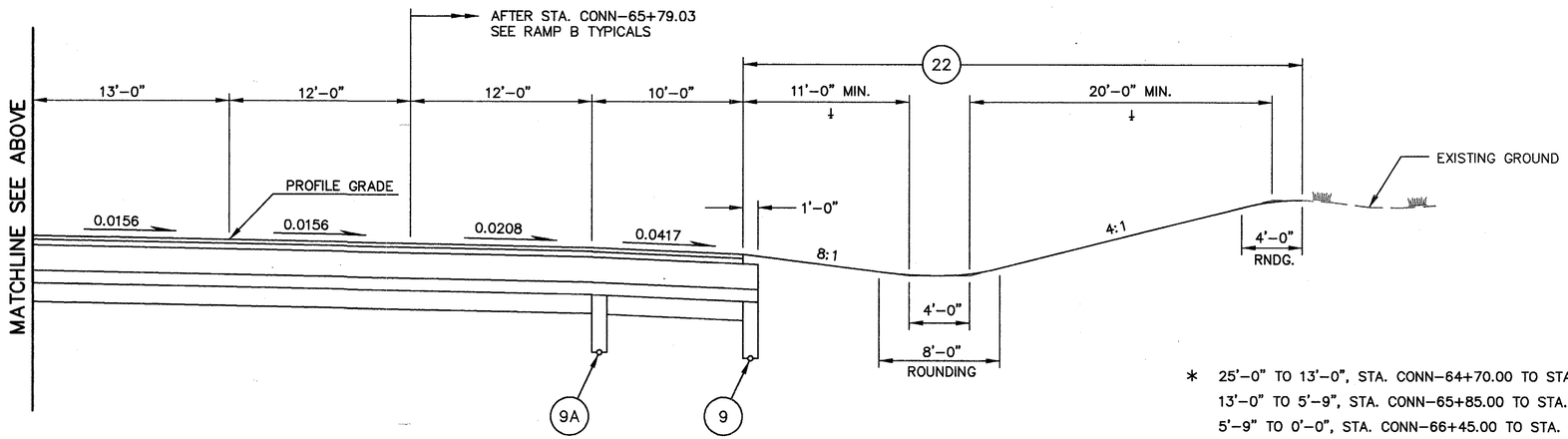

* 25'–0" TO 13'–0", STA. CONN–64+70.00 TO STA. CONN–65+85.00 = 115.00 L.F.
13'–0" TO 5'–9", STA. CONN–65+85.00 TO STA. CONN–66+45.00 = 60.00 L.F.
5'–9" TO 0'–0", STA. CONN–66+45.00 TO STA. CONN–67+00.00 = 55.00 L.F.

↓ UNLESS OTHERWISE SHOWN IN CROSS SECTIONS

↓↓ END AT STA. CONN–66+00.00

TRANSITION SECTION

STA. CONN–64+70.00 TO STA. CONN–67+00.00 = 230.00 L.F.

CALC. BY: G.J.W. DATE: 1/95
CHKD. BY: M.F.J. DATE: 1/95

TYPICAL SECTIONS CONNECTOR ROAD

FRA–270–32.46

25
593

PLOT SCALE: 1"=2' VERT., 1"=5' HOR.
COL. #30 C:\DRAWING\06092306\TYPICALS\TYP_1CN4.DWG FEBRUARY–08–1995

TYPICAL SECTIONS

FOR LEGEND, SEE SHEET NO. 8

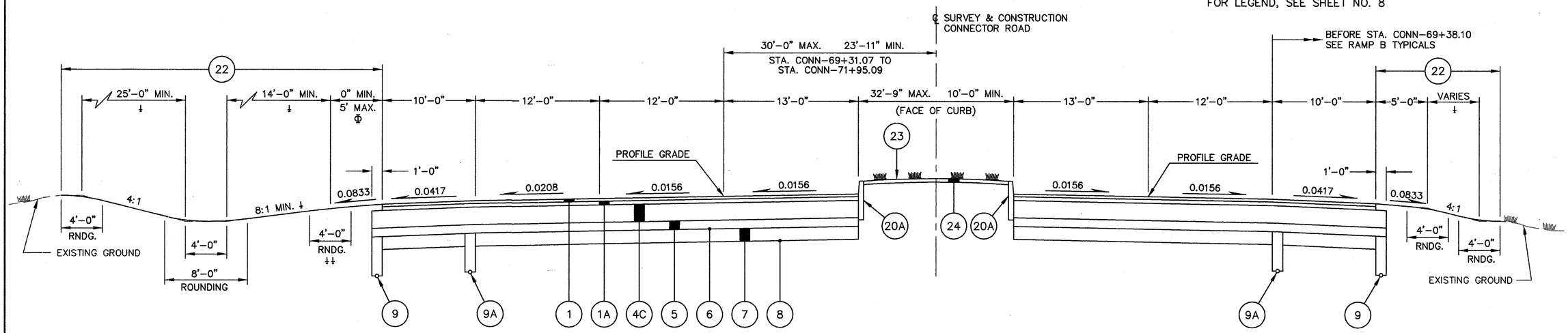

NORMAL SECTION

STA. CONN-67+00.00 TO STA. CONN-71+95.09 = 495.09 L.F.

↓ UNLESS OTHERWISE SHOWN IN CROSS SECTIONS
↓↓ ROUNDING USED WITH 4:1 FORESLOPES
Φ STA. CONN-68+00.00 TO STA. CONN-68+50.00 = 50.00 LF.

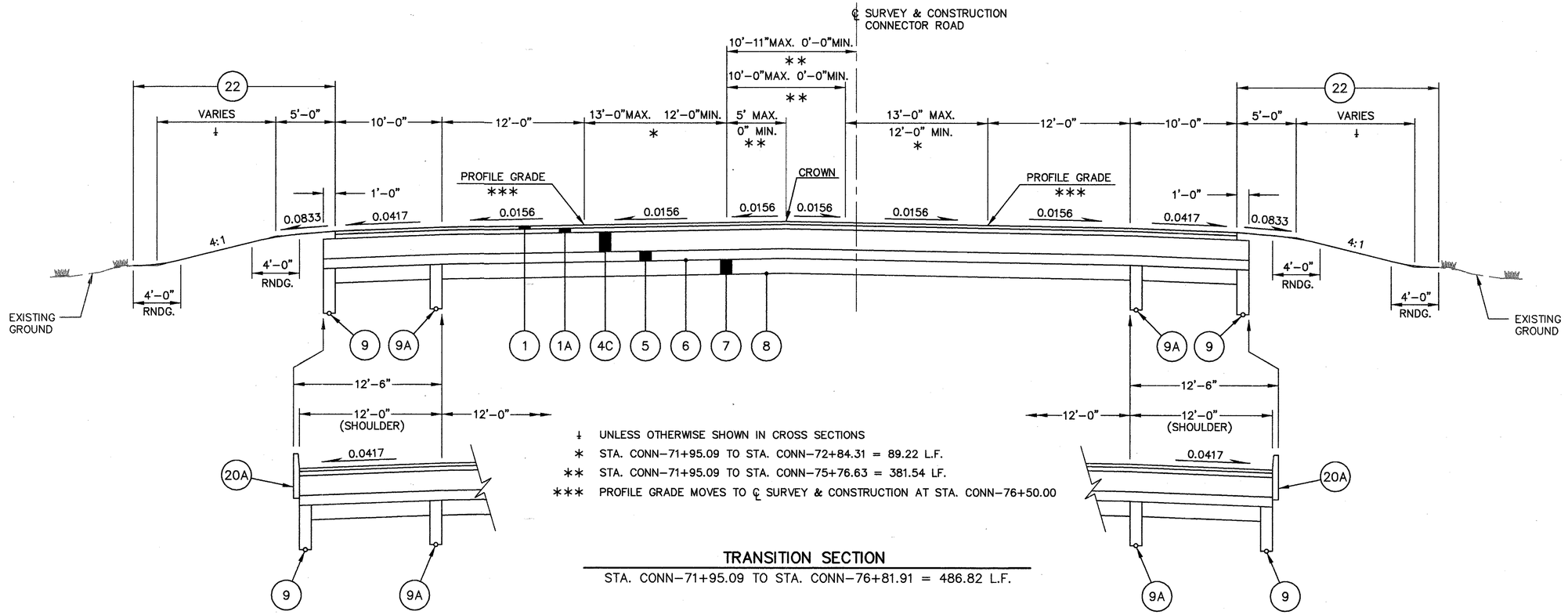

↓ UNLESS OTHERWISE SHOWN IN CROSS SECTIONS
* STA. CONN-71+95.09 TO STA. CONN-72+84.31 = 89.22 L.F.
** STA. CONN-71+95.09 TO STA. CONN-75+76.63 = 381.54 LF.
*** PROFILE GRADE MOVES TO ℄ SURVEY & CONSTRUCTION AT STA. CONN-76+50.00

TRANSITION SECTION

STA. CONN-71+95.09 TO STA. CONN-76+81.91 = 486.82 L.F.

STA. CONN-76+49.00 TO STA. CONN-76+72.11 = 23.11 L.F.

STA. CONN-76+45.00 TO STA. CONN-76+68.46 = 23.46 L.F.

CALC. BY: G.J.W. DATE: 1/95
CHKD. BY: M.F.J. DATE: 1/95

TYPICAL SECTIONS CONNECTOR ROAD

FRA-270-32.46

PLOT SCALE: 1"=2' VERT., 1"=5' HOR.
COL #30 C:\DRAWING\26092396\TYPICALS\TYP_1CN5.DWG FEBRUARY-08-1995

TYPICAL SECTIONS

FOR LEGEND, SEE SHEET NO. 8

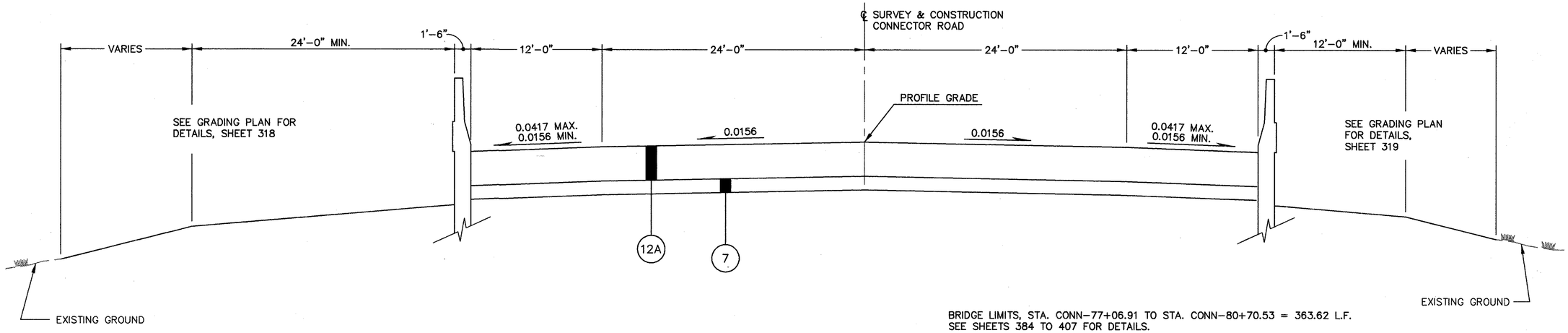

BRIDGE LIMITS, STA. CONN-77+06.91 TO STA. CONN-80+70.53 = 363.62 L.F.
SEE SHEETS 384 TO 407 FOR DETAILS.

APPROACH SLAB

STA. CONN-76+81.91 TO STA. CONN-77+06.91 = 25.00 L.F.

CALC. BY: G.J.W. DATE: 1/95
CHKD. BY: M.F.J. DATE: 1/95

TYPICAL SECTIONS CONNECTOR ROAD

FRA-270-32.46

27
593

PLOT SCALE: 1"=2' VERT., 1"=5' HOR.
COL #30 c:\DRAWING\06092306\TYPICALS\TYP_ICN6.DWG FEBRUARY-08-1995

TYPICAL SECTIONS

FOR LEGEND, SEE SHEET NO. 8

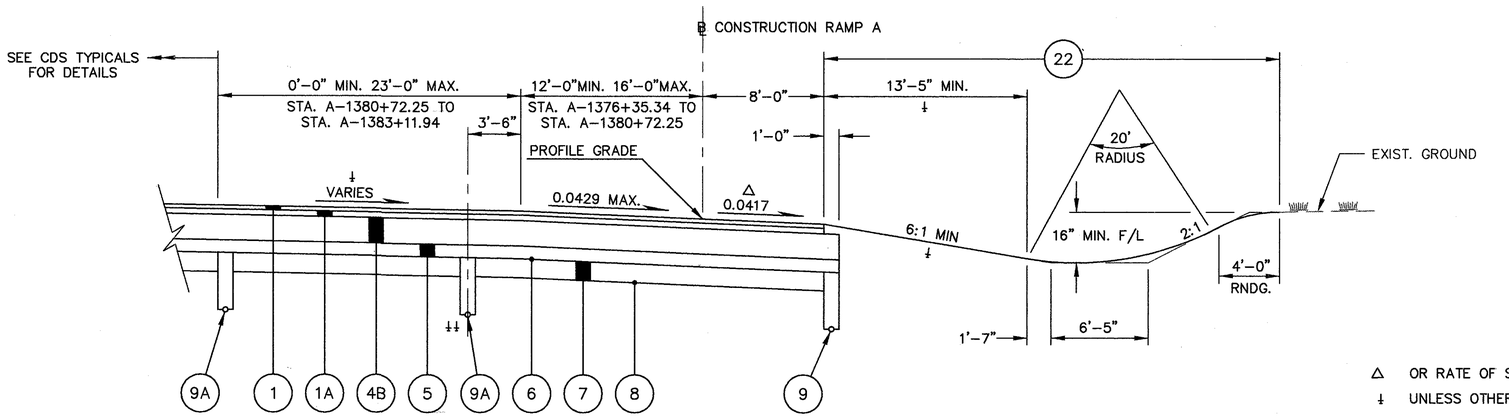

△ OR RATE OF SUPERELEVATION, WHICHEVER IS GREATER
↓ UNLESS OTHERWISE SHOWN IN CROSS SECTIONS
↓↓ BEGIN AT STA. A–1382+50.00

SUPERELEVATED SECTION RAMP A

STA. A–1376+35.64 TO STA. A–1383+11.94 = 676.30 L.F.

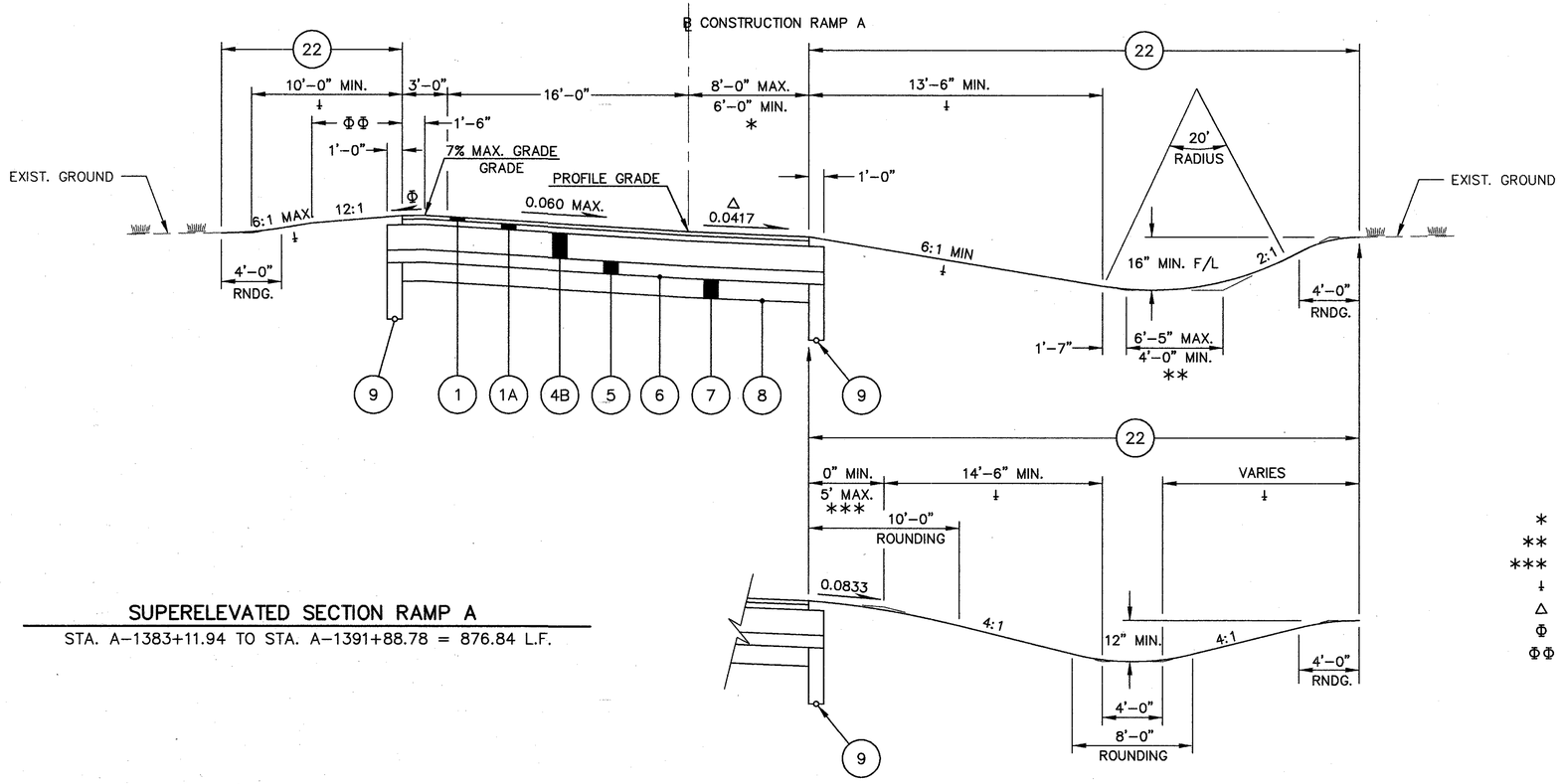

SUPERELEVATED SECTION RAMP A

STA. A–1383+11.94 TO STA. A–1391+88.78 = 876.84 L.F.

STA. A–1385+50.00 TO STA. A–1391+88.78 = 638.78 L.F.

* STA. A–1383+11.94 TO STA. A–1383+62.23 = 50.29 L.F.
** STA. A–1385+50.00 TO STA. A–1386+00.00 = 50.00 L.F.
*** STA. A–1385+50.00 TO STA. A–1386+00.00 = 50.00 L.F.
↓ UNLESS OTHERWISE SHOWN IN CROSS SECTIONS
△ OR RATE OF SUPERELEVATION, WHICHEVER IS GREATER
Φ 0.0104 MIN.
ΦΦ 0' TO 6'–0", STA. A–1386+00.00 TO STA. A–1386+50.00 = 50.00 L.F.

CALC. BY: G.J.W. DATE: 2/95
CHKD. BY: M.F.J. DATE: 2/95

TYPICAL SECTIONS RAMP A

TYPICAL

FRA–270–32.46

PLOT SCALE: 1"=2' VERT., 1"=5' HOR.
COL #20 C:\DRAWING\06092308\TYPICALS\TYP_1RP1.DWG FEBRUARY-09-1995

TYPICAL SECTIONS

FOR LEGEND, SEE SHEET NO. 8

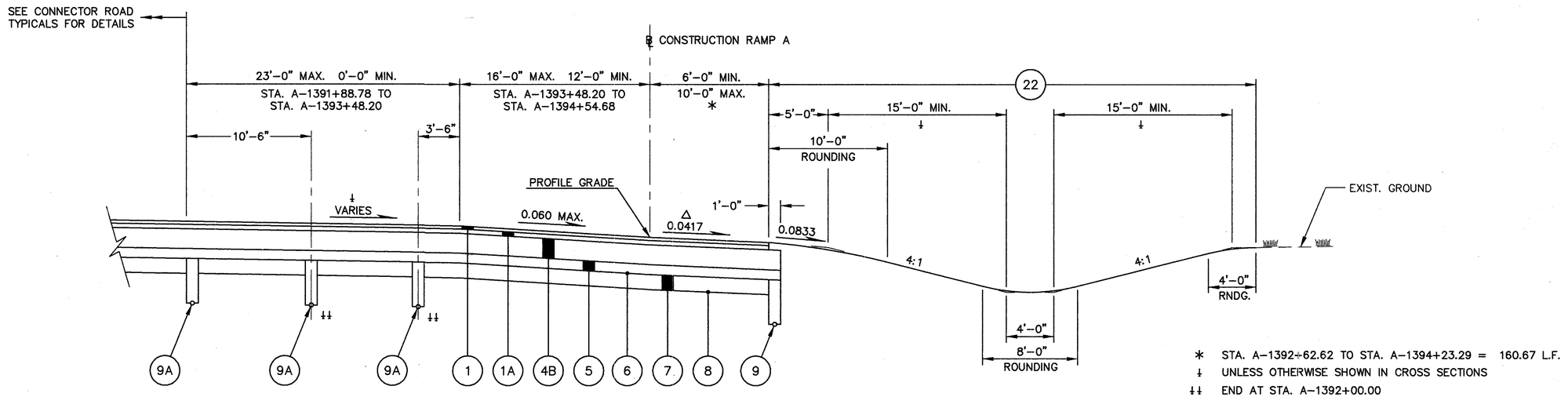

* STA. A–1392+62.62 TO STA. A–1394+23.29 = 160.67 L.F.
↓ UNLESS OTHERWISE SHOWN IN CROSS SECTIONS
↓↓ END AT STA. A–1392+00.00
△ OR RATE OF SUPERELEVATION, WHICHEVER IS GREATER

SUPERELEVATED SECTION RAMP A

STA. A–1391+88.78 TO STA. A–1395+15.75 = 326.97 L.F.

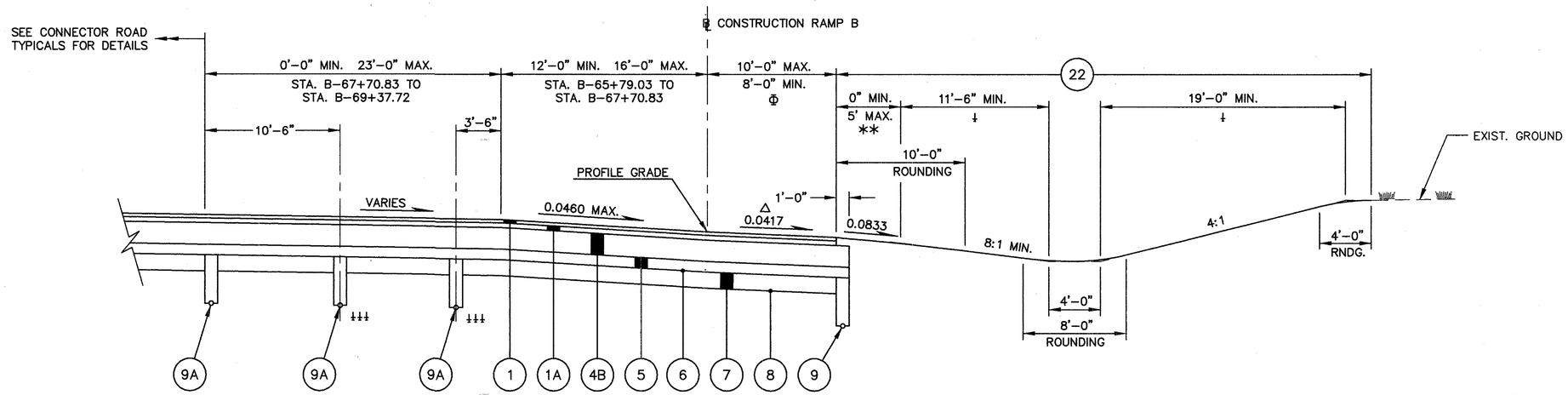

Φ STA. B–67+23.87 TO STA. B–67+73.87 = 50.00 L.F.
** STA. B–68+00.00 TO STA. B–68+50.00 = 50.00 L.F.
↓ UNLESS OTHERWISE SHOWN IN CROSS SECTIONS
↓↓↓ BEGIN AT STA. B–69+00.00
△ OR RATE OF SUPERELEVATION, WHICHEVER IS GREATER

SUPERELEVATED SECTION RAMP B

STA. B–65+79.03 TO STA. B–69+37.72 = 358.69 L.F.

CALC. BY: G.J.W. DATE: 1/95
CHKD. BY: M.F.J. DATE: 1/95

TYPICAL SECTIONS RAMPS A & B

TYPICAL

FRA–270–32.46

PLOT SCALE: 1"=2' VERT., 1"=5' HOR.
COL. #30 C:\DRAWING\96093206\TYPICALS\TYP_IRP2.DWG FEBRUARY-09-1995

TYPICAL SECTIONS

FOR LEGEND, SEE SHEET NO. 8

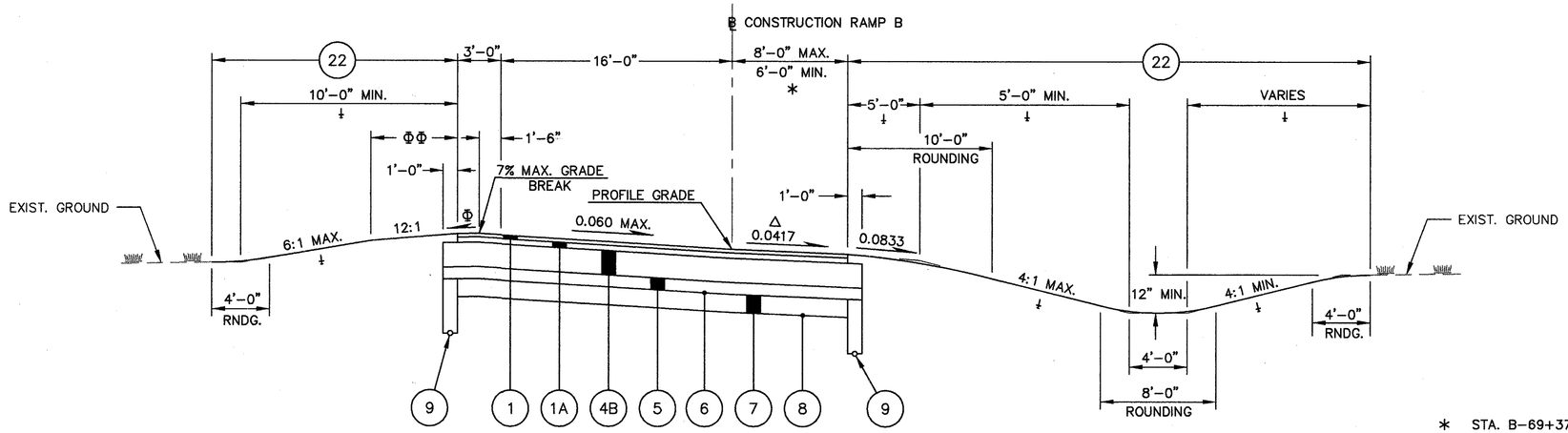

SUPERELEVATED SECTION RAMP B

STA. B–69+37.72 TO STA. B–80+87.62 = 1149.90 L.F.

* STA. B–69+37.72 TO STA. B–69+87.72 = 50.00 L.F.
↓ UNLESS OTHERWISE SHOWN IN CROSS SECTIONS
△ OR RATE OF SUPERELEVATION, WHICHEVER IS GREATER
Φ 0.0104 MIN.
ΦΦ 0' TO 6'–0", STA. B–71+00.00 TO STA. B–71+50.00 = 50.00 L.F.

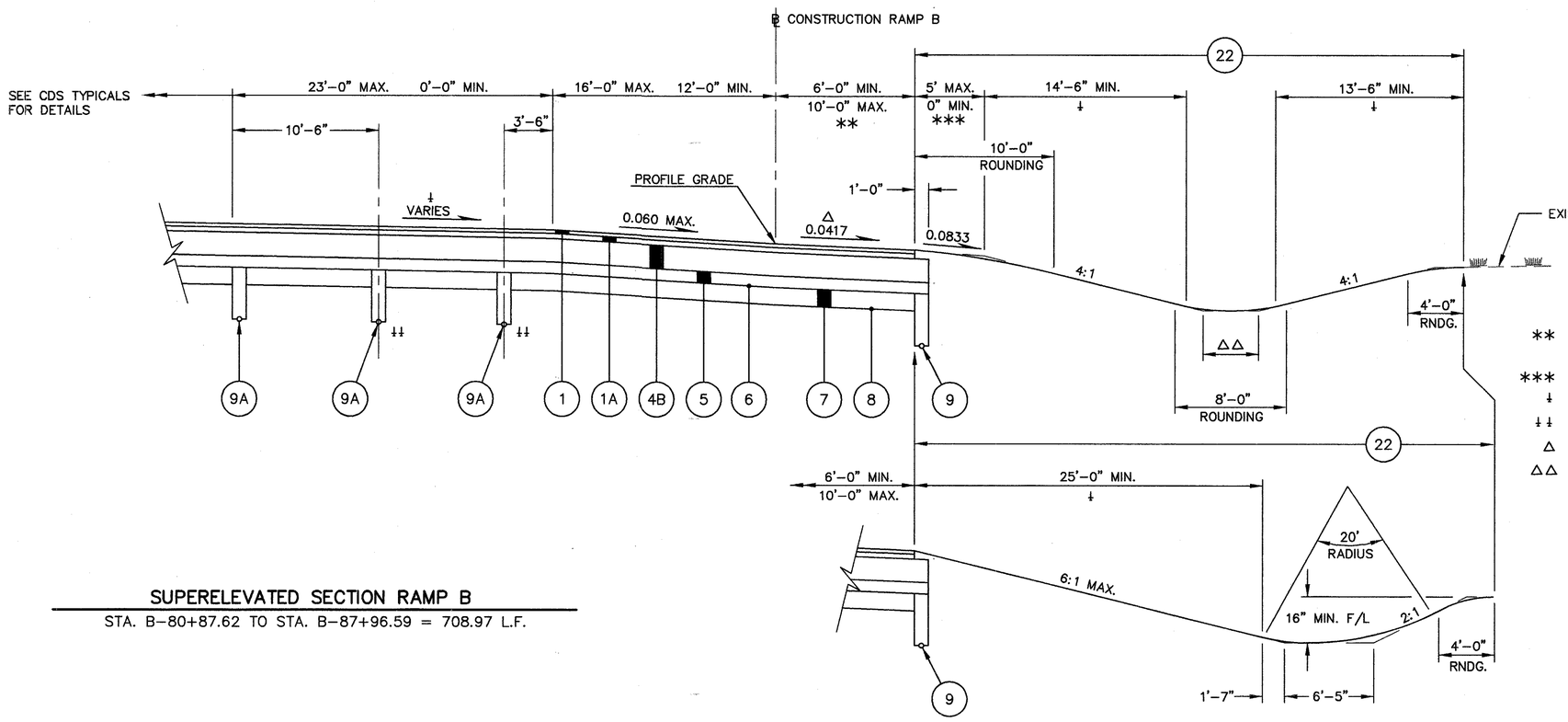

SUPERELEVATED SECTION RAMP B

STA. B–80+87.62 TO STA. B–87+96.59 = 708.97 L.F.

** 6'–0" TO 8'–0", STA. B–82+27.44 TO STA. B–82+77.44 = 50.00 L.F.
8'–0" TO 10'–0", STA. B–87+28.71 TO STA. B–87+96.59 = 67.88 L.F.
*** STA. B–82+00.00 TO STA. B–82+50.00 = 50.00 L.F.
↓ UNLESS OTHERWISE SHOWN IN CROSS SECTIONS
↓↓ END AT STA. B–81+00.00
△ OR RATE OF SUPERELEVATION, WHICHEVER IS GREATER
ΔΔ 4'–0" MIN., 6'–6" MAX

STA. B–82+50.00 TO STA. B–87+96.59 = 546.59 L.F.

CALC. BY: G.J.W. DATE: 1/95
CHKD. BY: M.F.J. DATE: 1/95

TYPICAL SECTIONS RAMP B

FRA–270–32.46

30
593

PLOT SCALE: 1"=2' VERT., 1"=5' HOR.
COL #40 C:\DRAWING\0609239A\TYPICALS\TYP_1RP3.DWG FEBRUARY–08–1995

TYPICAL SECTIONS

FOR LEGEND, SEE SHEET NO. 8

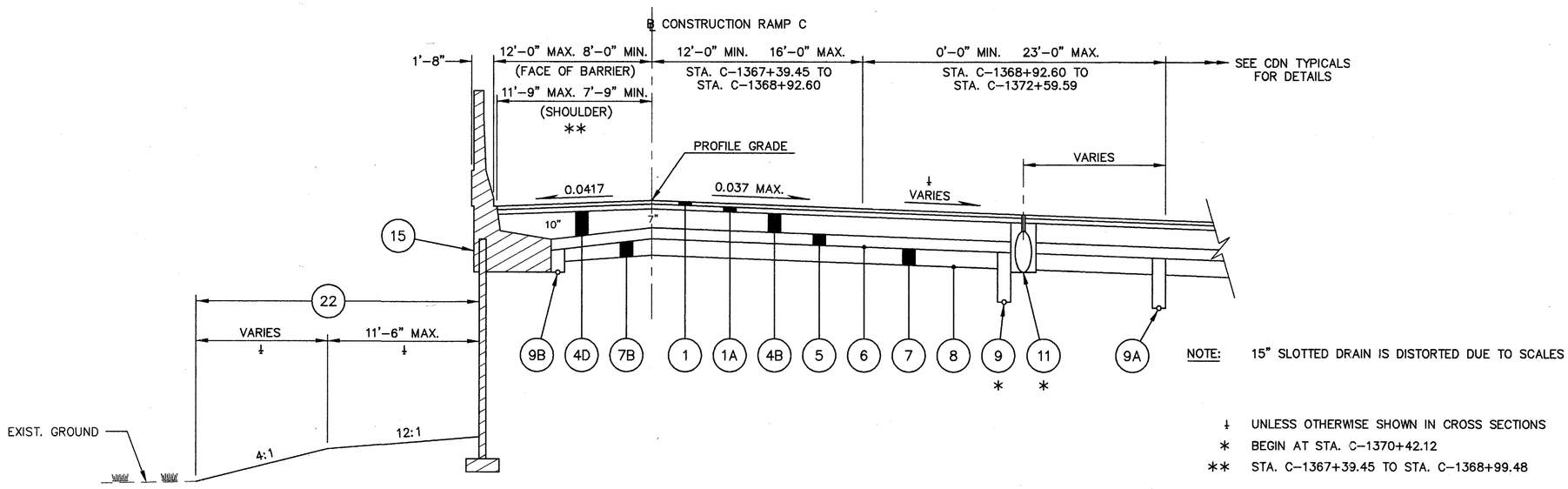

NOTE: 15" SLOTTED DRAIN IS DISTORTED DUE TO SCALES

↓ UNLESS OTHERWISE SHOWN IN CROSS SECTIONS
* BEGIN AT STA. C-1370+42.12
** STA. C-1367+39.45 TO STA. C-1368+99.48

SUPERELEVATED SECTION RAMP C

STA. C-1367+39.45 TO STA. C-1372+59.59 = 520.14 L.F.

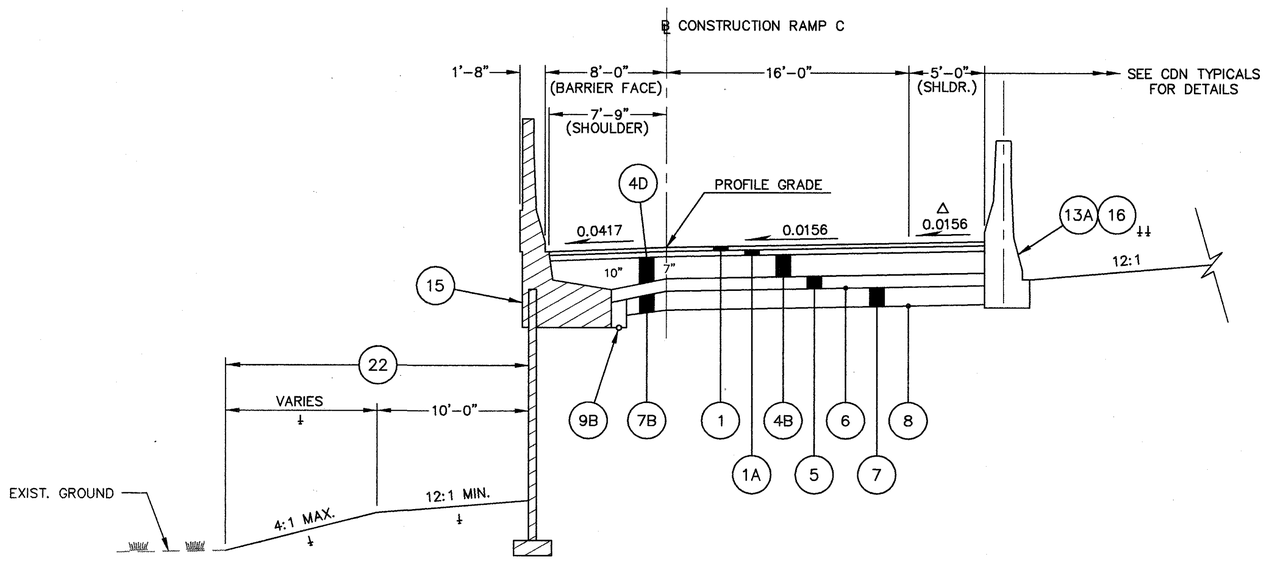

↓ UNLESS OTHERWISE SHOWN IN CROSS SECTIONS
↓↓ BEGIN RETAINING WALL AT STA. C-1373+50.00
SEE SHEETS 509 TO 537 FOR TRANSITION DETAILS
△ BEGIN AT STA. C-1373+00.00

NORMAL SECTION RAMP C

STA. C-1372+59.59 TO STA. C-1376+50.00 = 390.41 L.F.

PLOT SCALE: 1"=2' VERT., 1"=5' HOR.
COL. #50 C:\DRAWINGS\R609306F\TYPICALS\TYP_1RP4.DWG FEBRUARY-08-1995

CALC. BY: G.J.W. DATE: 1/95
CHKD. BY: M.F.J. DATE: 1/95

TYPICAL SECTIONS RAMP C

FRA-270-32.46

TYPICAL SECTIONS

FOR LEGEND, SEE SHEET NO. 8

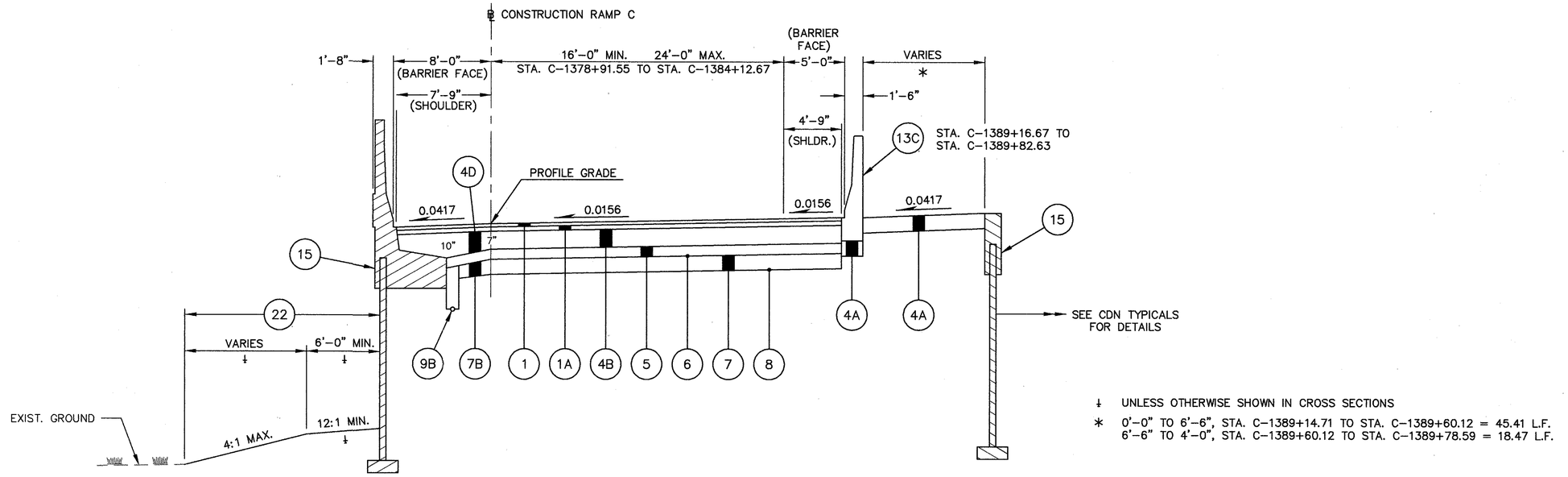

TRANSITION SECTION RAMP C

STA. C-1376+50.00 TO STA. C-1390+17.35 = 1367.35 L.F.

↓ UNLESS OTHERWISE SHOWN IN CROSS SECTIONS

* 0'-0" TO 6'-6", STA. C-1389+14.71 TO STA. C-1389+60.12 = 45.41 L.F.
6'-6" TO 4'-0", STA. C-1389+60.12 TO STA. C-1389+78.59 = 18.47 L.F.

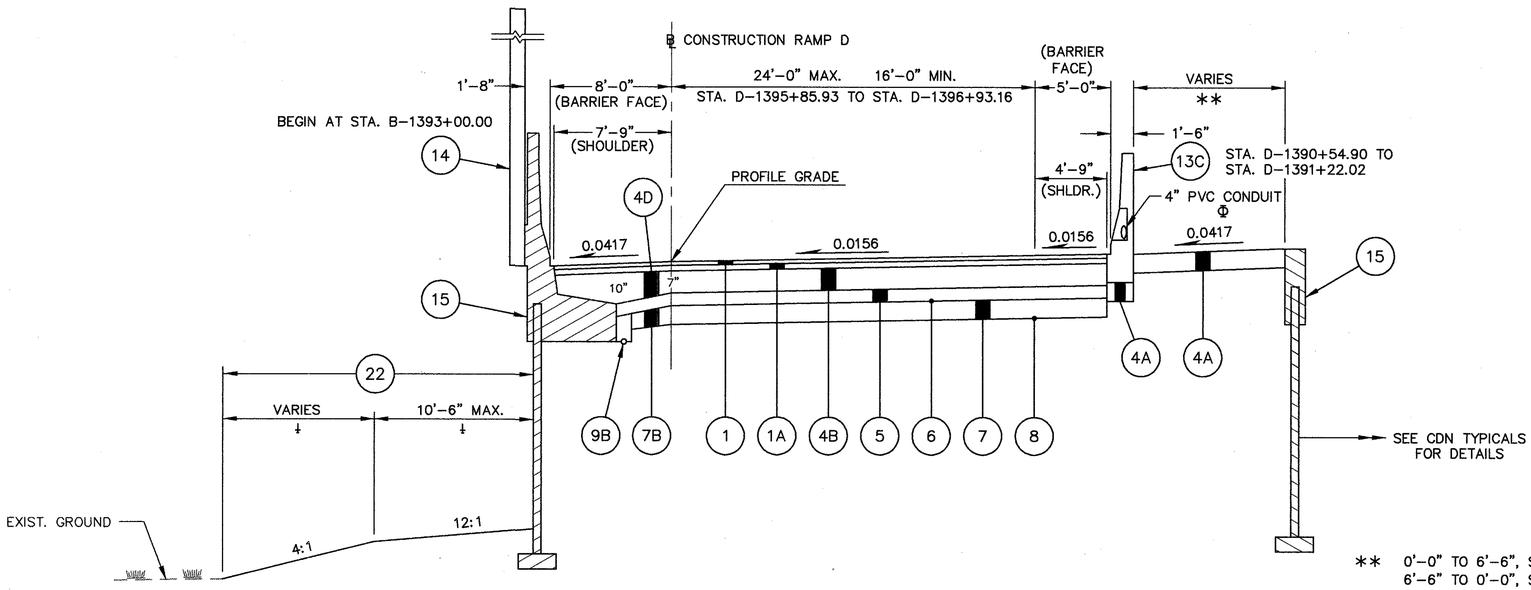

TRANSITION SECTION RAMP D

STA. D-1390+17.35 TO STA. D-1396+93.16 = 675.81 L.F.

** 0'-0" TO 6'-6", STA. D-1390+59.85 TO STA. D-1390+75.58 = 15.73 L.F.
6'-6" TO 0'-0", STA. D-1390+75.58 TO STA. D-1391+24.00 = 48.42 L.F.

↓ UNLESS OTHERWISE SHOWN IN CROSS SECTIONS

Φ STA. D-1390+64.00 TO STA. D-1393+57.00 = 293.00 L.F.

CALC. BY: G.J.W. DATE: 1/95
CHKD. BY: M.F.J. DATE: 1/95

TYPICAL SECTIONS RAMPS C & D

FRA-270-32.46

32
593

PLOT SCALE: 1"=2' VERT.; 1"=5' HOR.
COL #20 C:\DRAWING\960923\06\TYPICALS\TYPIRP4A.DWG FEBRUARY-09-1995

TYPICAL SECTIONS

FOR LEGEND, SEE SHEET NO. 8

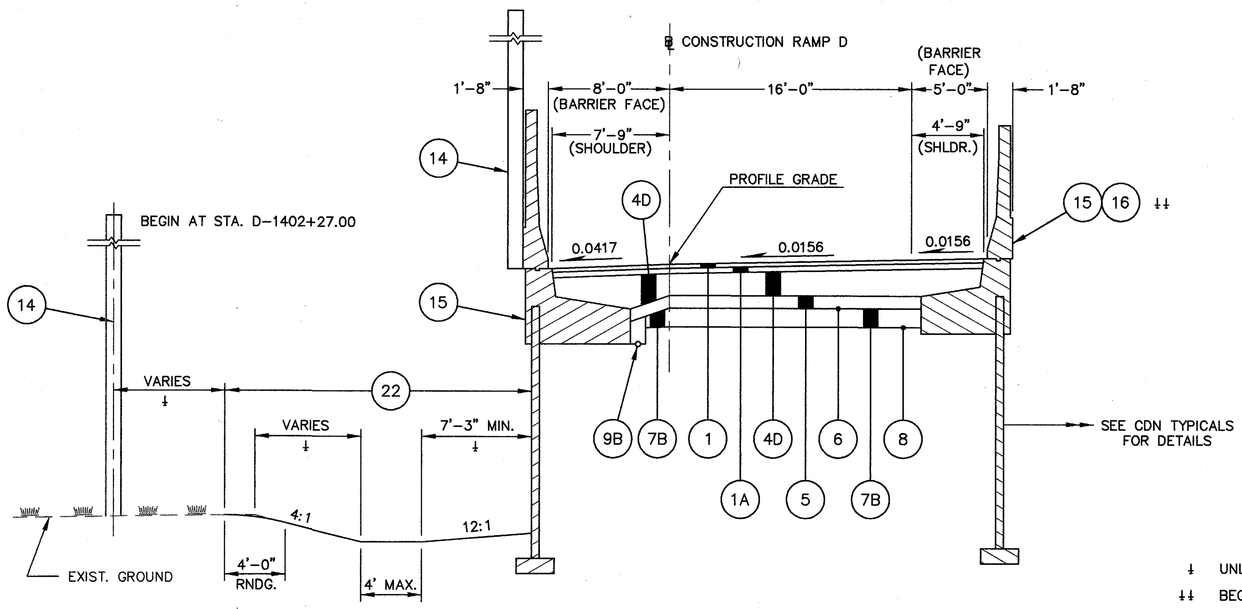

↓ UNLESS OTHERWISE SHOWN IN CROSS SECTIONS

↓↓ BEGIN RETAINING WALL AT STA. D–1402+50.00
SEE SHEETS 509 TO 537 FOR TRANSITION DETAILS

NORMAL SECTION RAMP D

STA. D–1396+93.16 TO STA. D–1403+00.00 = 606.84 L.F.

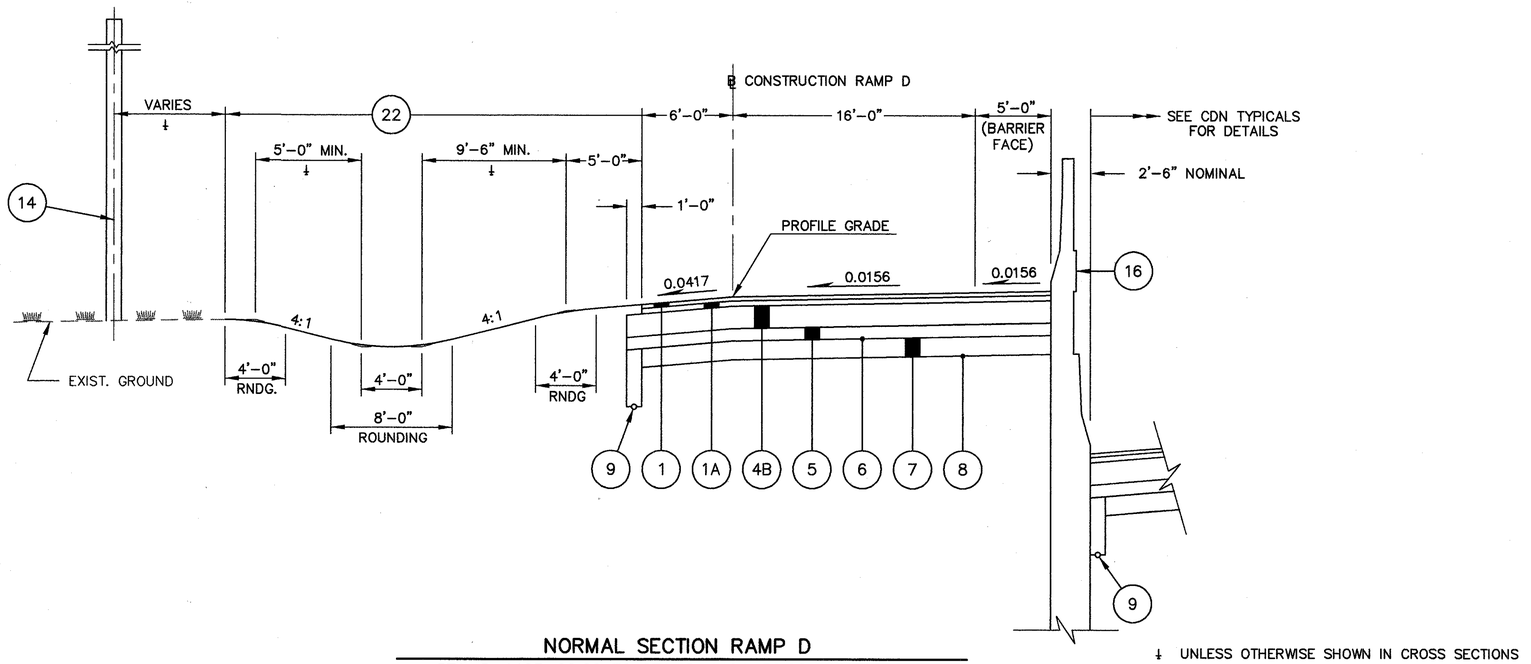

NORMAL SECTION RAMP D

STA. D–1403+00.00 TO STA. D–1404+50.00 = 150.00 L.F.

↓ UNLESS OTHERWISE SHOWN IN CROSS SECTIONS

CALC. BY: G.J.W. DATE: 1/95
CHKD. BY: M.F.J. DATE: 1/95

TYPICAL SECTIONS RAMP D

FRA–270–32.46

33
593

PLOT SCALE: 1"=2' VERT., 1"=5' HOR.
COL #30 C:\DRAWING\96092306\TYPICALS\TYP_1RPS.DWG FEBRUARY-08-1995

TYPICAL SECTIONS

FOR LEGEND, SEE SHEET NO. 8

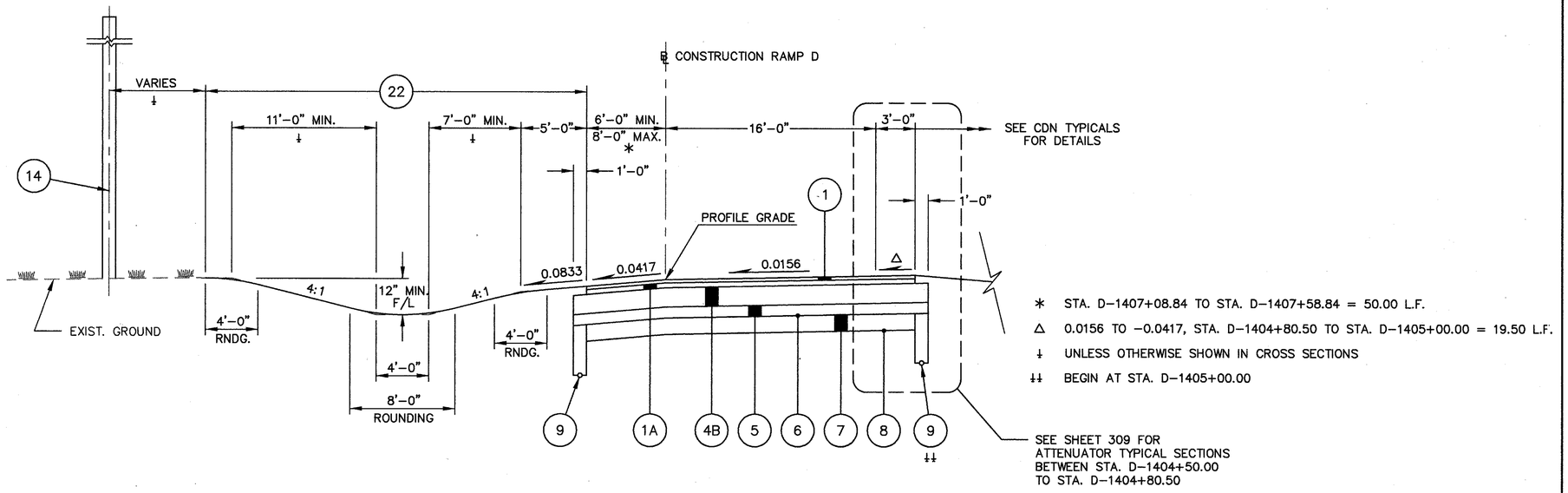

* STA. D-1407+08.84 TO STA. D-1407+58.84 = 50.00 L.F.

Δ 0.0156 TO -0.0417, STA. D-1404+80.50 TO STA. D-1405+00.00 = 19.50 L.F.

‡ UNLESS OTHERWISE SHOWN IN CROSS SECTIONS

‡‡ BEGIN AT STA. D-1405+00.00

NORMAL SECTION RAMP D

STA. D-1404+50.00 TO STA. D-1407+58.84 = 308.84 L.F.

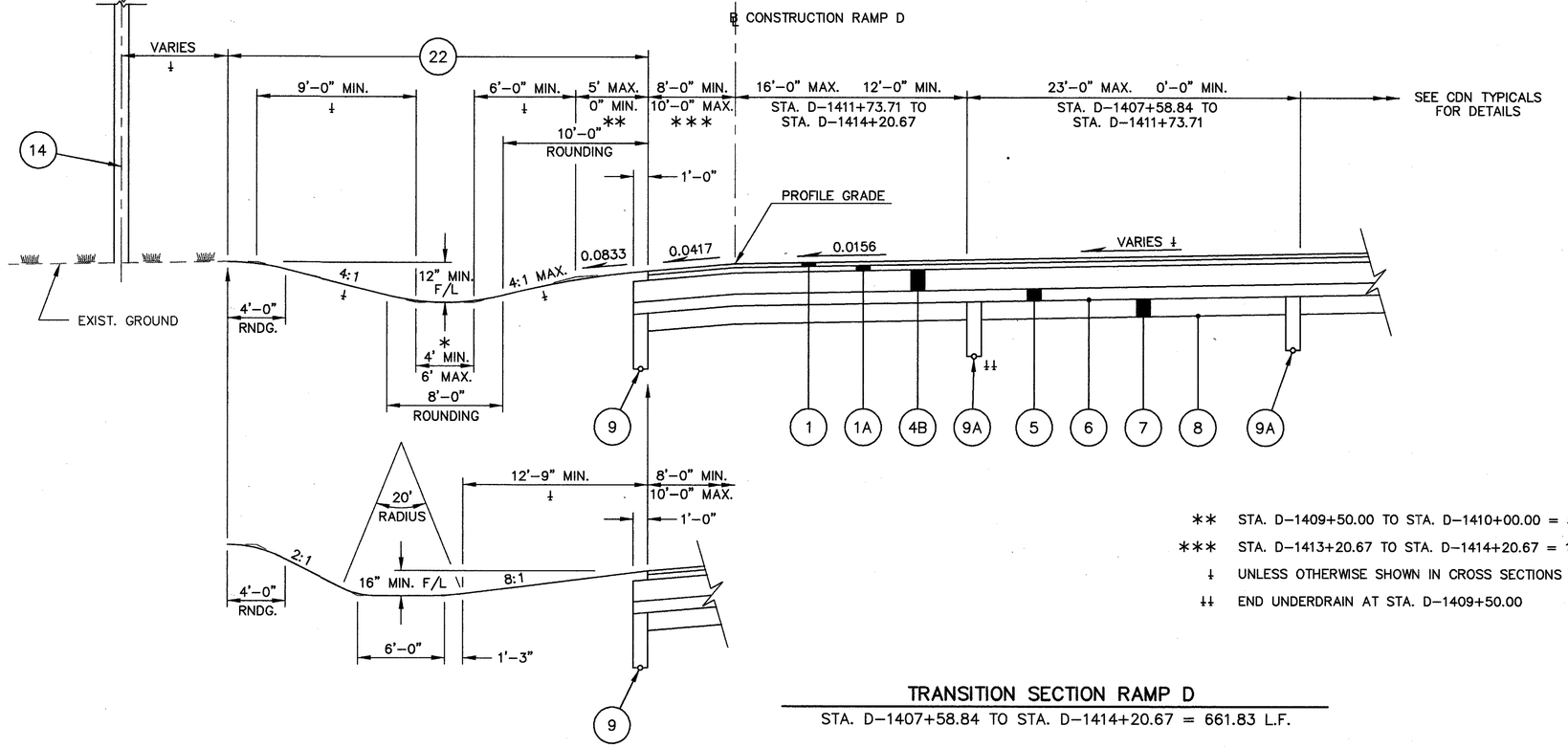

STA. D-1410+00.00 TO STA. D-1414+20.67 = 420.67 L.F.

** STA. D-1409+50.00 TO STA. D-1410+00.00 = 50.00 L.F.

*** STA. D-1413+20.67 TO STA. D-1414+20.67 = 100.00 L.F.

‡ UNLESS OTHERWISE SHOWN IN CROSS SECTIONS

‡‡ END UNDERDRAIN AT STA. D-1409+50.00

TRANSITION SECTION RAMP D

STA. D-1407+58.84 TO STA. D-1414+20.67 = 661.83 L.F.

CALC. BY: G.J.W. DATE: 1/95
CHEC. BY: M.F.J. DATE: 1/95

TYPICAL SECTIONS RAMP D

FRA-270-32.46

PLOT SCALE: 1"=2' VERT., 1"=5' HOR.
COL #30 C:\DRAWING\06092306\TYPICALS\TYP_IRP6.DWG FEBRUARY-08-1995

TYPICAL SECTIONS

TYPE 404 ON 301

FOR LEGEND, SEE SHEET NO. 8

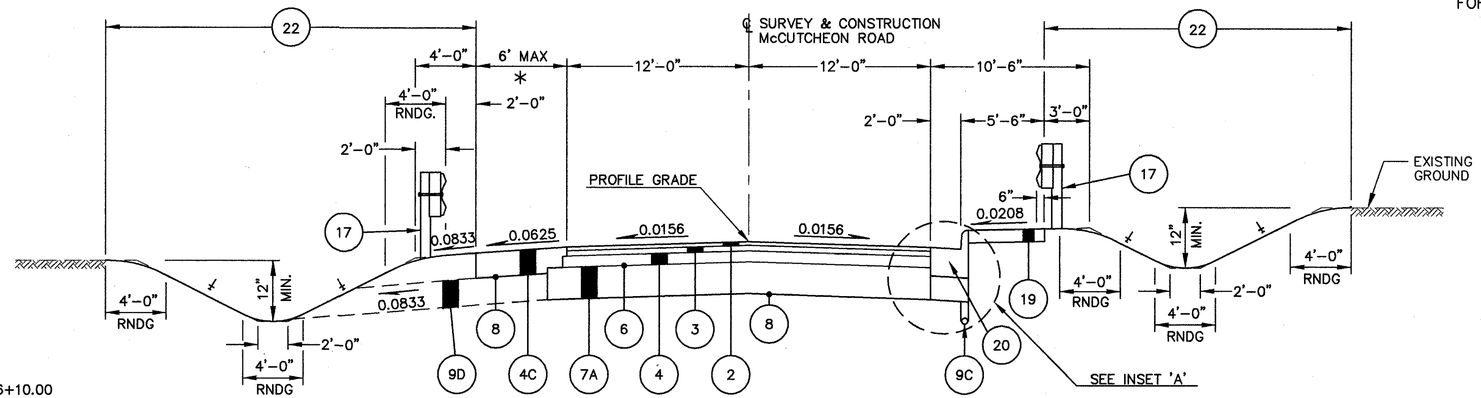

NORMAL SECTION

STA. 21+82.68 TO STA. 23+18.36 = 135.68 L.F.
STA. 26+63.86 TO STA. 28+02.18 = 138.32 L.F.

* 2'–0" TO 6'–0", STA. 15+35.00 TO STA. 16+10.00
6'–0"TO 0'–0", STA. 21+58.13 TO STA. 21+83.13
2'–0" FROM STA. 28+59.69 TO STA. 29+25.00

** 11'–5" TO 12'–0", STA. 15+35.00 TO STA. 16+10.00
12'–0" TO 9'–0", STA. 28+60.00 TO STA. 29+25.00

*** 1'–5" TO 0'–0", STA. 15+35.00 TO STA. 16+10.00

Φ 8'–6" TO 12'–0", STA. 15+35.00 TO STA. 16+10.00
12'–0" TO 10'–7", STA. 28+95.00 TO STA. 29+25.00

ΦΦ 2'–0" TO 6'–0", STA. 15+35.00 TO STA. 16+10.00
6'–0"TO 2'–0", STA. 28+60.00 TO STA. 29+25.00

△ 0.0625 TO 0.0156, STA. 23+18.36 TO STA. 23+36.11
0.0156 TO 0.0625, STA. 26+52.11 TO STA. 26+63.86

⏚ UNLESS OTHERWISE SHOWN IN CROSS SECTIONS

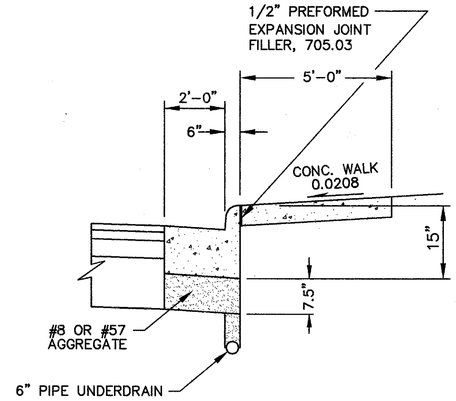

INSET 'A'

ODOT COMBINATION
CURB AND GUTTER, TYPE 2
N.T.S.

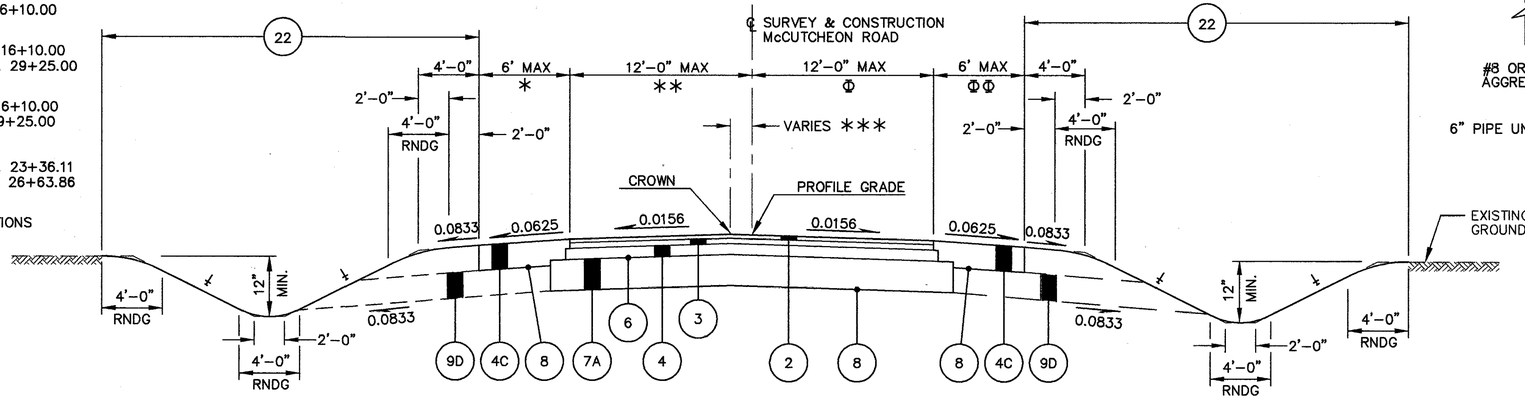

TRANSITION SECTION

STA. 15+35.00 TO STA. 21+82.68 = 647.68 L.F.
STA. 28+02.18 TO STA. 29+25.00 = 122.82 L.F.

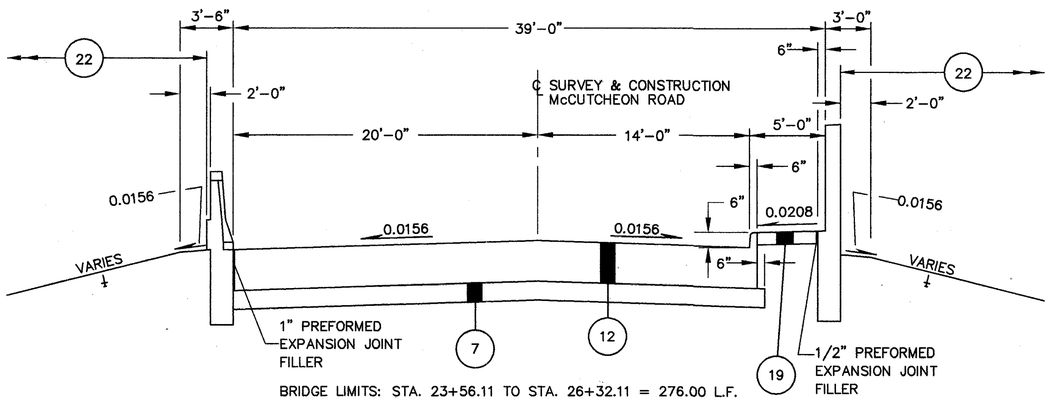

BRIDGE LIMITS: STA. 23+56.11 TO STA. 26+32.11 = 276.00 L.F.
SEE SHEETS 408 TO 431 FOR DETAILS

TYPICAL SECTION AT APPROACH SLABS

STA. 23+36.11 TO STA. 23+56.11 REAR APPROACH SLAB = 20.00 L.F.
STA. 26+32.11 TO STA. 26+52.11 FORWARD APPROACH SLAB = 20.00 L.F.

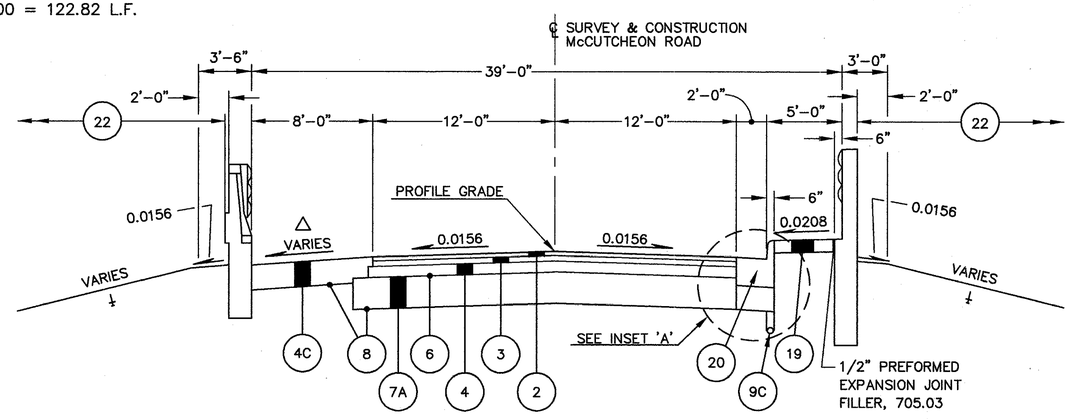

TYPICAL SECTION BEFORE/AFTER APPROACH SLAB

STA. 23+18.36 TO STA. 23+36.11 = 17.75 L.F.
STA. 26+52.11 TO STA. 26+63.86 = 11.75 L.F.

CALC. BY: G.J.W. DATE: 1/95
CHKD. BY: M.F.J. DATE: 1/95

TYPICAL SECTIONS McCUTCHEON ROAD

FRA–270–32.46

35
593

PLOT SCALE: 1"=5' HOR. 1"=2' VERT.
COL. #30 C:\DRAWING\060972\06\TYPICALS\TYP_MCUT.DWG FEBRUARY-08-1995

UTILITIES

LISTED BELOW ARE ALL UTILITIES LOCATED WITHIN THE PROJECT CONSTRUCTION LIMITS TOGETHER WITH THEIR RESPECTIVE OWNERS:

COAXIAL COMMUNICATIONS
3770 EAST LIVINGSTON AVE.
COLUMBUS, OHIO 43227
(614)236–1292 ext. 453

COLUMBIA GAS OF OHIO, INC.
939 WEST GOODALE STREET
COLUMBUS, OHIO 43215
(614)460–2079

COLUMBIA GAS TRANSMISSION CORP.
P.O. BOX 330
SUGAR GROOVE, OHIO 43155
(614)746–8366

COLUMBUS SOUTHERN POWER CO.
215 N. FRONT STREET
COLUMBUS, OHIO 43215–2291
(614)464–7911

OHIO BELL TELEPHONE (AMERITECH)
RM. 6C 150 EAST GAY STREET
COLUMBUS, OHIO 43215
(614)223–8535

OHIO RIVER PIPELINE CO.
245 MILL STREET
P.O. BOX 3104
LEXINGTON, OHIO 44904
(419)884–0800

WARNER CABLE
P.O. BOX 2553
COLUMBUS, OHIO 43216
(614)481–5263

METRO COM AXS
50 W. BROAD STREET, SUITE M–18
COLUMBUS, OHIO 43215
(614)221–9230

LIMITED DISTRIBUTION SERVICES, INC.
TWO LIMITED PARKWAY
P.O. BOX 182199
COLUMBUS, OHIO 43218
(614)479–7600

CITY OF COLUMBUS

DIVISION OF TRAFFIC
109 N. FRONT STREET
COLUMBUS, OHIO 43215
ATTN: STEVE JEWELL
(614)645–7790

DIVISION OF SEWERAGE & DRAINAGE
910 DUBLIN ROAD, 3rd FLOOR
COLUMBUS, OHIO 43215
ATTN: JERRY FRANCIS
(614)645–7102

DIVISION OF WATER
910 DUBLIN ROAD, 2nd FLOOR
COLUMBUS, OHIO 43215
ATTN: BOB BEER
(614)645–7102

CITY OF GAHANNA

DIVISION OF WATER & SEWERS
1717 ALUM CREEK DRIVE
GAHANNA, OHIO 43227
ATTN: KEITH SLONE
(614)471–0805

THE LOCATION OF THE UNDERGROUND UTILITIES SHOWN ON THE PLANS ARE AS OBTAINED FROM THE OWNERS AS REQUIRED BY SECTION 153.64 OF THE OHIO REVISED CODE.

FOR ADDITIONAL UTILITIES SEE SHEET 548

CONTINGENCY QUANTITIES

THE CONTRACTOR SHALL NOT ORDER MATERIALS OR PERFORM WORK FOR ITEMS DESIGNATED BY PLAN NOTE TO BE USED "AS DIRECTED BY THE ENGINEER" UNLESS AUTHORIZED BY THE ENGINEER. THE ACTUAL WORK LOCATIONS AND QUANTITIES USED FOR SUCH ITEMS SHALL BE INCORPORATED INTO THE FINAL CHANGE ORDER GOVERNING COMPLETION OF THIS PROJECT.

ELEVATION DATUM

ALL ELEVATIONS ARE BASED ON THE NGVD29 DATUM, AS TRANSFERRED FROM FRANKLIN COUNTY ENGINEERS GEODETIC CONTROL MONUMENTS.

MONUMENTS

MONUMENTS SHALL BE CONSTRUCTED IN ACCORDANCE WITH DETAILS SHOWN ON STANDARD CONSTRUCTION DRAWING, MC–1. FOR LOCATION, SEE SHEET 544.

THE FOLLOWING ESTIMATED QUANTITY HAS BEEN INCLUDED IN THE GENERAL SUMMARY:

ITEM 604 MONUMENT ASSEMBLY 5 EACH

FRANKLIN COUNTY ENGINEER'S MONUMENTATION

THE CONTRACTOR SHALL CONTACT FRANKLIN COUNTY ENGINEER'S OFFICE, SURVEY DEPARTMENT AT (614)462–3050 BEFORE OR UPON DISTURBING OR DESTROYING ANY FRANKLIN COUNTY GEODETIC MONUMENTS (VERTICAL AND/OR HORIZONTAL).

RIGHT OF WAY MONUMENTATION

UPON DISTURBING, DESTROYING, OR RENDERING USELESS ANY RIGHT OF WAY IRON PIN, SAID IRON PIN SHALL BE RESET UNDER THE DIRECTION OF A REGISTERED SURVEYOR IN ACCORDANCE WITH CURRENT ODOT SURVEYING STANDARD TO A TOLERANCE OF ± 0.02 FEET.

THE FOLLOWING ESTIMATED QUANTITY HAS BEEN INCLUDED IN THE GENERAL SUMMARY TO BE USED AS DIRECTED BY THE ENGINEER:

ITEM SPECIAL IRON PIN 20 EACH

WORK LIMITS

THE WORK LIMITS SHOWN ON THESE PLANS ARE FOR PHYSICAL CONSTRUCTION ONLY. THE INSTALLATION AND OPERATION OF ALL TEMPORARY TRAFFIC CONTROL AND TEMPORARY TRAFFIC CONTROL DEVICES REQUIRED BY THESE PLANS SHALL BE PROVIDED BY THE CONTRACTOR WHETHER INSIDE OR OUTSIDE THESE WORK LIMITS.

COOPERATION BETWEEN CONTRACTORS

CONSTRUCTION OF SOME ITEMS IN THIS PROJECT INVOLVE WORK AND ANTICIPATED WORK BY OTHER CONTRACTORS ON PROJECT FRA–270–(31.01)(33.64). WORK TO BE PERFORMED ON THIS PROJECT (FRA–270–32.46) IS NOTED IN THE PLANS AS WORK TO BE PERFORMED BY CONTRACTOR A. WORK TO BE PERFORMED ON PROJECT FRA–270–(31.01)(33.64) BY OTHERS IS NOTED AS WORK TO BE PERFORMED BY CONTRACTOR B. CONTRACTOR A AND CONTRACTOR B SHALL MAKE ALL NECESSARY ARRANGEMENTS TO ENSURE FULL COOPERATION IS GIVEN BY BOTH CONTRACTORS IN CONSTRUCTING ALL ITEMS AT THE INTERFACE OF PROJECT FRA–270–32.46 AND FRA–270–(31.01)(33.64).

CONSTRUCTION INITIATION

THE CONTRACTOR WILL ADVISE THE DISTRICT COMMUNICATIONS OFFICER AT (614) 363–1251 EXT. 261 OR BY FAX AT (614) 469–0235 SEVEN (7) DAYS PRIOR TO THE START OF CONSTRUCTION ACTIVITIES. THE PROJECT ENGINEER WILL PROVIDE ASSISTANCE/CLARIFICATION FOR ANY QUESTIONS.

ADVANCEMENT OF NOISE BARRIER CONSTRUCTION

THE CONTRACTOR SHALL PLAN THE CONSTRUCTION OF NOISE BARRIERS FROM STA. D–1402+27 TO STA. CDN–1418+00 TO COINCIDE WITH THE BEGINNING OF OTHER WORK ITEMS AT THAT LOCATION. IT IS EXPECTED THAT THE ADVANCEMENT OF NOISE BARRIER CONSTRUCTION SHALL PROCEED FROM START TO FINISH WITHOUT INTERRUPTION, UNLESS OTHERWISE DIRECTED BY THE ENGINEER.

REMOVAL OF TREES

ALL TREES MARKED FOR REMOVAL WITHIN THE CONSTRUCTION LIMITS OF THIS PROJECT SHALL BE REMOVED UNDER THE LUMP SUM PRICE BID FOR ITEM 201, CLEARING AND GRUBBING, EXCEPT THAT THOSE TREES FOR WHICH PROTECTION AND PRESERVATION WORK IS INDICATED ELSEWHERE IN THESE PLANS SHALL NOT BE REMOVED.

THE FOLLOWING IS AN APPROXIMATE ESTIMATE OF THE NUMBER OF TREES TO BE REMOVED.

SIZES	NO. TREES
12"	324
18"	286
24"	145
30"	5
48"	23
60"	0

THE ABOVE ESTIMATE IS APPROXIMATE AND THE STATE OF OHIO RESERVES THE RIGHT TO ORDER THE REMOVAL OF ADDITIONAL TREES OUTSIDE OF THE LIMITS OF CONSTRUCTION BUT WITHIN THE RIGHT–OF–WAY AND/OR EASEMENT LINES. PAYMENT FOR THE REMOVAL OF THESE ADDITIONAL TREES SHALL BE INCLUDED IN THE LUMP SUM PRICE BID FOR ITEM 201, CLEARING AND GRUBBING.

UNDERCUT AREAS

A QUANTITY OF 25000 CU.YD. OF EXCAVATION NOT INCLUDING EMBANKMENT CONSTRUCTION AND EMBANKMENT USING GRANULAR MATERIAL HAS BEEN PROVIDED IN THE GENERAL SUMMARY TO BE USED AS DIRECTED BY THE ENGINEER FOR REMOVAL AND REPLACEMENT OF SOFT AND/OR WET SUBGRADE AND/OR SHALLOW EMBANKMENT FOUNDATION.

ITEM 203 EXCAVATION NOT INCLUDING EMBANKMENT CONSTRUCTION 25,000 CU. YD.

ITEM 203 EMBANKMENT USING GRANULAR MATERIAL 25,000 CU. YD.

ITEM 203, ROADWAY EXCAVATION AND EMBANKMENT

THE FOLLOWING ESTIMATED QUANTITIES HAVE BEEN CARRIED TO THE GENERAL SUMMARY:

ITEM 203 EXCAVATION NOT INCLUDING EMBANKMENT CONSTRUCTION 145,795 CU. YD.

ITEM 203 EMBANKMENT 149,374 CU. YD.

THESE QUANTITIES INCLUDE THOSE ORIGINATING ON THE ROADWAY CROSS SECTION SHEETS, AS WELL AS ADDITIONAL QUANTITIES CALCULATED IN THE VICINITY OF THE THREE (3) BRIDGE ABUTMENTS, AND THOSE ASSOCIATED WITH THE RETAINING WALLS.

ADDITIONAL 203 QUANTITIES RELATING TO THE MSE WALLS HAVE BEEN CARRIED TO SHEET 200 OF THE MSE WALL PLANS.

ITEM 203 EMBANKMENT, AS PER PLAN, ADD 9,735 CU.YD. BETWEEN STATIONS 76+09 & 77+00

CALC BY: M.M.R. DATE: 09-07-94
CHK BY: M.F.J. DATE: 09-07-94

GENERAL NOTES

FRA–270–32.46

Plot Scale = 1" = 1'
COL #28 C:\DRAWING\06092306\TABLE\06092GNT.DWG FEBRUARY-13-1995

BENCHING OF FOUNDATION SLOPES

ALTHOUGH CROSS-SECTIONS INDICATE SPECIFIC DIMENSIONS FOR PROPOSED BENCHING OF THE EMBANKMENT FOUNDATION IN CERTAIN AREAS, NO WAIVER OF THE SPECIFICATIONS IS INTENDED. ALL OTHER SLOPED EMBANKMENT AREAS SHALL BE BENCHED AS SET FORTH IN 203.09. NO ADDITIONAL PAYMENT WILL BE MADE FOR BENCHING REQUIRED UNDER THE PROVISIONS OF 203.09.

ADDITIONAL SOIL INFORMATION

THE SOIL PROFILE AND/OR STRUCTURE FOUNDATION INVESTIGATION SHEETS CONTAIN ALL AVAILABLE SOIL AND BEDROCK INFORMATION WHICH CAN BE CONVENIENTLY SHOWN. ADDITIONAL SUBSURFACE INVESTIGATIONS MAY HAVE BEEN MADE TO STUDY SOME ASPECT OF THE PROJECT. MORE INFORMATION, IF ANY, MAY BE OBTAINED IN DISTRICT 6, THE BUREAU OF TESTS AT 1600 WEST BROAD STREET, THE BUREAU OF LOCATION AND DESIGN, OR THE BUREAU OF BRIDGES AND STRUCTURAL DESIGN AT 25 SOUTH FRONT STREET IN COLUMBUS, OHIO.

ROUNDING OF CORNERS SHOWN ON CROSS SECTIONS

THE ROUNDING AT SLOPE BREAKPOINTS SHOWN ON THE TYPICAL SECTIONS APPLY TO ALL CROSS SECTIONS EVEN THOUGH OTHERWISE SHOWN.

ITEM 203, PROOF ROLLING

A CALCULATION OF THIS QUANTITY IS SHOWN ON SHEET 77. THE FOLLOWING ESTIMATED QUANTITY HAS BEEN PROVIDED IN THE GENERAL SUMMARY FOR USE AS DIRECTED BY THE ENGINEER:

ITEM 203 PROOF ROLLING 43 HOUR

ITEM 207, TEMPORARY SOIL EROSION AND SEDIMENT CONTROL

THE FOLLOWING ESTIMATED QUANTITIES ARE TO BE USED AS DIRECTED BY THE ENGINEER FOR TEMPORARY EROSION AND SEDIMENT CONTROL MEASURES.

ITEM 207	TEMPORARY SEEDING AND MULCHING	28,435 SQ. YD.
ITEM 207	TEMPORARY SLOPE DRAINS	90 LIN. FT.
ITEM 207	TEMPORARY BENCHES, DAMS, AND SEDIMENT BASINS	1,000 CU. YD.
ITEM 207	STRAW OR HAY BALES	860 EACH
ITEM 207	FILTER FABRIC FENCE	17,840 LIN. FT.
ITEM 601	ROCK CHANNEL PROTECTION TYPE 'C' WITHOUT FILTER	2,090 CU. YD.
ITEM 659	WATER	61 MGAL.
ITEM 659	COMMERCIAL FERTILIZER	1.92 TON
ITEM 659	REPAIR SEEDING AND MULCHING	7,109 SQ. YD.

EROSION CONTROL

ITEMS 601 & 670 ARE PROVIDED IN THE PLANS FOR EROSION CONTROL. ROCK OF A STABLE NATURE WILL NOT BE REMOVED IN ORDER TO PLACE ITEM 601 OR 670, AND TURF OF A STABLE NATURE WILL NOT BE REMOVED IN ORDER TO PLACE ITEM 670. THE ENGINEER SHALL CHECK AND NON-PERFORM QUANTITIES OR ADJUST LOCATIONS AND QUANTITIES FOR THESE ITEMS WHERE INDICATED BY FIELD CONDITIONS DURING CONSTRUCTION.

IN ADDITION, THESE ITEMS SHALL MEET THE REQUIREMENT OF 108.04.

EARTHWORK CORRECTIONS FOR CURVATURE

WHENEVER THE TRUE VOLUME OF CUT OR FILL, OR BOTH COMBINED, BASED UPON THE CENTROIDAL ARC LENGTH, DIFFERS BY 40 C.Y. OR MORE PER STATION FROM THE ESTIMATED VOLUMES BASED UPON THE SURVEY LENGTH, A CORRECTION HAS BEEN SHOWN IN THE PLANS. AN FOLLOWS:

EXAMPLE 1: FIND CORRECTED ARC LENGTH WHERE CENTROIDS ARE LOCATED INSIDE THE CURVE.

CORRECTED RADIUS = $572.96 - \frac{35+25}{2} = 542.96$

ALIGNMENT FACTOR = $\frac{542.96}{572.96} = 0.94764$

CORRECTED ARC LENGTH = 50 X 0.94764 = 47.38'

EXAMPLE 2: FIND CORRECTED ARC LENGTH WHERE CENTROIDS ARE LOCATED OUTSIDE THE CURVE.

CORRECTED RADIUS = $572.96 + \frac{35+25}{2} = 602.96$

ALIGNMENT FACTOR = $\frac{602.96}{572.96} = 1.05236$

CORRECTED ARC LENGTH = 50 X 1.05236 = 52.62'

EXAMPLE 1

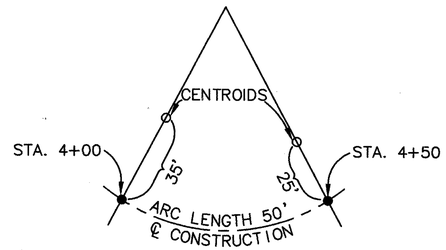

10° CURVE (R=572.96)

EXAMPLE 2

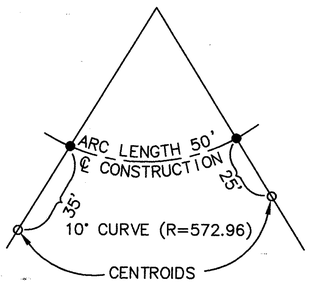

EXAMPLE: CORRECTED ARC LENGTH METHOD FOR EARTHWORK COMPUTATION

ITEM 659, SEEDING AND MULCHING

SEEDING AND MULCHING SHALL BE APPLIED TO ALL AREAS OF EXPOSED SOIL BETWEEN THE RIGHT-OF-WAY LINES, AND WITHIN THE CONSTRUCTION LIMITS FOR AREAS OUTSIDE THE RIGHT-OF-WAY LINES COVERED BY WORK AGREEMENT OR SLOPE EASEMENT. QUANTITY CALCULATIONS FOR ITEM 659, SEEDING AND MULCHING, ARE BASED ON THESE LIMITS.

IN ADDITION TO "AREAS IN FRONT OF RESIDENCES" REFERRED TO IN 659.09, THE SPECIAL PREPARATION SHALL BE EXTENDED TO ENCOMPASS ALL LAWNS AND/OR LAWN-LIKE AREAS AS DETERMINED BY THE ENGINEER. THE FOLLOWING ESTIMATED QUANTITY HAS BEEN CARRIED TO THE GENERAL SUMMARY :

ITEM 659 SEEDING AND MULCHING 136,972 SQ.YD.

ITEM 659, SEEDING AND MULCHING, AS PER PLAN

THE FOLLOWING SEED MIXTURE SHALL BE USED AT THE DESIGNATED AREAS FOR SEEDING AND MULCHING, AS PER PLAN.

33 PERCENT CROWN VETCH (CORONILLA VARIA)
67 PERCENT PERENNIAL RYEGRASS (LOLIUM PERENNE)

THE APPLICATION RATE SHALL BE 1.5 POUNDS PER 1000 SQ. FT.. IMMEDIATELY AFTER SOWING, THE AREA SHALL BE RAKED OR DRAGGED TO COVER THE SEED TO A DEPTH OF APPROXIMATELY 1/4" (6 MM), AS SPECIFIED IN 659.09.

CROWN VETCH SHALL BE APPLIED TO 2:1 SLOPES (UNLESS NOTED OTHERWISE) IN THE FOLLOWING DESIGNATED AREAS:

STA. CDS-1363+80 TO STA. CDS-1372+50, NORTH AND WEST OF MSE WALL/SHOULDER TO THE FIRST GRADE BREAK. THE 2:1 SLOPE IN THE DITCH WILL HAVE REGULAR SEEDING AND MULCHING.
STA. CDS-1413+00 TO STA. CDS-1429+00, ALL AREAS BEHIND THE RETAINING WALL DISTURBED BY EARTHWORK REGARDLESS OF SLOPES SHALL BE CROWN VETCH.

THE FOLLOWING ESTIMATED QUANTITY HAS BEEN CARRIED TO THE GENERAL SUMMARY:

ITEM 659 SEEDING AND MULCHING, AS PER PLAN 5,204 SQ. YD.

ITEM 659, AGRICULTURAL LIMING, AS PER PLAN

THE LOCATION AND NEED FOR AGRICULTURAL LIMING WILL BE DETERMINED BY LABORATORY TESTS AFTER ROUGH GRADING OPERATIONS HAVE BEEN PERFORMED. QUANTITIES FOR AGRICULTURAL LIMING, AS SHOWN BELOW, ARE SUFFICIENT FOR THE ENTIRE PROJECT BUT WILL BE NONPERFORMED FOR THE AREAS WHERE TESTS SHOW THAT LIMING IS NOT REQUIRED. THE FOLLOWING ESTIMATED QUANTITY HAS BEEN CARRIED TO THE GENERAL SUMMARY:

ITEM 659, AGRICULTURAL LIMING, AS PER PLAN 64.84 TON

WATERING PERMANENT SEEDED AREAS

THE FOLLOWING ESTIMATED QUANTITIES ARE TO BE USED AS DIRECTED BY THE ENGINEER TO PROMOTE GROWTH OF PERMANENT SEEDED AREAS PER 659:

ITEM 659 WATER 310 MGAL.

CALC. BY: MMR DATE: 06-07-94
CHKD. BY: MFJ DATE: 06-07-94

GENERAL NOTES

FRA-270-32.46

37
593

Plot Scale = 1" = 1'
COL #28 C:\DRAWING\06092308\TABLE\06092GN2.DWG FEBRUARY-13-1995

PROTECTION OF EXISTING SEDIMENTATION BASIN

A SEDIMENTATION BASIN CURRENTLY EXISTS FROM STA CDS-1412+75 TO STA CDS-1429+00. THIS BASIN WAS CONSTRUCTED BY THE PROPERTY OWNER AS PART OF THE ORIGINAL WETLAND MITIGATION PROGRAM FOR THE ROSS PARK DEVELOPMENT. WORK PERFORMED BY THE CONTRACTOR IN THIS AREA SHALL BE CONFINED TO THE WORK LIMITS AS SHOWN ON THE PLANS. SPECIAL CARE SHOULD BE TAKEN DURING CONSTRUCTION SO AS TO NOT DAMAGE THE BASIN IN ANY WAY. ANY DAMAGE TO THE INTEGRITY OF THE BASIN SHALL RESULT IN REPAIRING THE BASIN TO THE SATISFACTION OF THE OWNER AT CONTRACTOR'S COST.

DUST CONTROL

WATER USED AS A DUST PALLIATIVE SHALL BE FURNISHED AND APPLIED BY THE CONTRACTOR IN ACCORDANCE WITH THE PROVISIONS OF ITEM 616.

THE WORK IS TO BE DONE AT THE TIME, AT THE LOCATION, AND IN THE AMOUNT DIRECTED BY THE ENGINEER. IF THE CONTRACTOR OBTAINS WATER FROM A HYDRANT, THE WATER WILL BE METERED BY THE SUPPLIER, AND CHARGED TO THE CONTRACTOR AT THE PREVAILING RATE.

THE FOLLOWING ESTIMATED QUANTITIES HAVE BEEN INCLUDED IN THE GENERAL SUMMARY FOR THE WORK NOTED ABOVE.

ITEM 616 WATER	450	M. GAL.
ITEM 616 CALCIUM CHLORIDE	45	TON

MEDIAN AND/OR CURBING ON APPROACH SLABS

THE SHAPE OF THE MEDIAN AND/OR CURBING ON APPROACH SLABS SHALL BE TRANSITIONED, FROM THE STANDARD SECTION ON THE APPROACHES TO THE SECTION USED ON THE BRIDGE, WITHIN THE LIMITS OF THE APPROACH SLAB.

ITEM 408, BITUMINOUS PRIME COAT

THE RATE OF APPLICATION OF THE 408 BITUMINOUS PRIME COAT SHALL BE SUBJECT TO ADJUSTMENT AS DIRECTED BY THE ENGINEER. PLAN QUANTITIES INDICATE AN AVERAGE APPLICATION RATE OF 0.40 GALLONS PER SQUARE YARD OF BITUMINOUS PRIME COAT FOR ESTIMATING PURPOSES ONLY.

SPECIAL GUARDRAIL INSTALLATION, STA. 1444+00 TO STA. 1448+25

BETWEEN STATIONS 1444+00 TO STA. 1448+25, I-270 LT., GUARDRAIL POSTS ARE TO BE SET IN HOLES WHICH SHALL BE DUG BY HAND. HOLES ARE TO BE EXCAVATED CAREFULLY TO AVOID DAMAGE TO THE EXISTING STORM SEWER TRUNK LINE IN THE VICINITY. POSTS ARE TO BE SET PLUMB, BACKFILLED, AND COMPACTED IN ACCORDANCE WITH SECTION 606.03 OF THE CONSTRUCTION AND MATERIAL SPECIFICATIONS. IN ALL OTHER ASPECTS, THIS GUARDRAIL IS TO BE INSTALLED IN ACCORDANCE WITH THESE CONSTRUCTION PLANS, SECTION 606 OF THE CONSTRUCTION AND MATERIAL SPECIFICATIONS, AND THE APPROPRIATE STANDARD CONSTRUCTION DRAWINGS. THE COST OF THIS WORK SHALL BE INCLUDED IN THE CONTRACT UNIT PRICE PER LINEAR FOOT, ITEM 606 GUARDRAIL, TYPE 5.

~~LOCATION OF GUARDRAIL~~

~~THE LOCATION OF GUARDRAIL AS SHOWN IN THESE PLANS ARE SUBJECT TO ADJUSTMENT PRIOR TO FINAL ACCEPTANCE. THE ENGINEER SHALL BE SATISFIED THAT ALL INSTALLATIONS WILL AFFORD MAXIMUM PROTECTION FOR TRAFFIC.~~

ITEM SPECIAL, IMPACT ATTENUATOR, ADIEM II

THIS WORK SHALL CONSIST OF FURNISHING IMPACT ATTENUATORS AS REQUIRED IN THE PLANS. THIS ITEM SHALL INCLUDE ALL RELATED HARDWARE, NOT SEPARATELY SPECIFIED, AS REQUIRED BY THE MANUFACTURER TO CONSTRUCT COMPLETE AND FUNCTIONAL ADIEM II IMPACT ATTENUATOR SYSTEMS. THIS ITEM SHALL ALSO INCLUDE THE CONSTRUCTION OF A 6" THICK WELDED STEEL WIRE FABRIC REINFORCED 4000 P.S.I. PORTLAND CEMENT CONCRETE SECUREMENT PAD, PER THE CONSTRUCTION AND MATERIAL SPECIFICATION ITEMS 450, 499, AND 709. THE PAD SHALL BE PLACED SO THAT IT IS FLUSH WITH THE ADJACENT FLEXIBLE PAVEMENT. THE ATTENUATORS SHALL BE PLACED IN ACCORDANCE WITH THE MANUFACTURER'S SPECIFICATIONS AND AT THE LOCATIONS SHOWN ON THE PLANS. THE IMPACT ATTENUATOR SHALL BE MANUFACTURED BY SYRO, INC., 1170 NORTH STATE STREET, GIRARD, OHIO 44420: TELEPHONE: (216) 545-4373.

THE NOSE OF THE ATTENUATOR SHALL BE MARKED WITH THREE EVENLY SPACED FOUR (4) INCH WIDE, HORIZONTAL STRIPES OF WHITE REFLECTIVE MATERIAL MEETING THE REQUIREMENTS OF THE CONSTRUCTION AND MATERIAL SPECIFICATION SECTION 730.19.

PAYMENT FOR THE ABOVE WORK SHALL BE MADE AT THE UNIT PRICE BID FOR EACH, ITEM SPECIAL, IMPACT ATTENUATOR, ADIEM II AND SHALL BE CONSIDERED FULL PAYMENT FOR FURNISHING; INSTALLING AT THE SPECIFIED LOCATIONS, INCLUDING ALL LABOR, TOOLS, EQUIPMENT AND MISCELLANEOUS HARDWARE AND MATERIALS NECESSARY TO COMPLETE THESE ITEMS OF WORK.

ITEM 606, ANCHOR ASSEMBLY, TYPE E

THIS ITEM SHALL CONSIST OF FURNISHING AND INSTALLING AN ET-2000, OPTION "B", GUARDRAIL END TERMINAL AS MANUFACTURED BY SYRO STEEL COMPANY, 1170 N. STATE STREET, GIRARD, OHIO 44420 (TELEPHONE: 216-545-4373).

THE LENGTH OF THE ET-2000 SYSTEM IS CONSIDERED TO BE 50', INCLUSIVE OF TWO (2) 25' LONG RAIL ELEMENTS. INSTALLATION SHALL BE IN ACCORDANCE WITH THE MANUFACTURER'S SPECIFICATIONS AND AT THE LOCATIONS SHOWN IN THE PLANS.

PAYMENT FOR THE ABOVE WORK SHALL BE MADE AT THE UNIT BID PRICE FOR ITEM 606, EACH, ANCHOR ASSEMBLY, TYPE E AND SHALL INCLUDE ALL LABOR, TOOLS, EQUIPMENT AND MATERIALS NECESSARY TO CONSTRUCT A COMPLETE AND FUNCTIONAL ANCHOR ASSEMBLY SYSTEM, INCLUDING ALL RELATED HARDWARE, NOT SEPARATELY SPECIFIED, AS REQUIRED BY THE MANUFACTURER.

ITEM SPECIAL - MAILBOX SUPPORT, (SINGLE)

THIS WORK SHALL CONSIST OF FURNISHING AND ERECTING MAILBOX SUPPORTS AND ANY ASSOCIATED MOUNTING HARDWARE IN ACCORDANCE WITH PLAN DETAILS, AND ATTACHING AN OWNER-SUPPLIED MAILBOX AT LOCATIONS SPECIFIED IN THE PLAN, OR OTHERWISE ESTABLISHED BY THE ENGINEER.

WOOD POSTS SHALL BE NOMINAL 4"x4" SQUARE OR 4-1/2" DIAMETER ROUND, AND CONFORM TO 710.14.

STEEL POSTS SHALL BE NOMINAL PIPE SIZE 2" I.D., AND CONFORM TO AASHTO M 181.

HARDWARE (PLATES, SCREWS, BOLTS, ETC.) SHALL BE COMMERCIAL-GRADE GALVANIZED STEEL.

POSTS SHALL BE SET PER THE FIRST PARAGRAPH OF 606.03, AND SHALL IN NO INSTANCE BE ENCASED IN CONCRETE.

SUPPORT HARDWARE SHALL ACCOMMODATE EITHER A SINGLE OR A DOUBLE MAILBOX INSTALLATION, AND NO MORE THAN TWO BOXES MAY BE MOUNTED ON A SINGLE POST.

THE MAILBOX SHALL BE SECURELY AND NEATLY ATTACHED BY THE CONTRACTOR TO THE NEW SUPPORT. THE CONTRACTOR SHALL FURNISH ALL NECESSARY ATTACHMENT HARDWARE (NUTS, BOLTS, PLATES, SPACERS, AND WASHERS) AS NECESSARY TO ACCOMMODATE THE COMPLETE INSTALLATION.

IN THE ABSENCE OF A NEW BOX SUPPLIED BY THE OWNER, THE CONTRACTOR SHALL SALVAGE THE EXISTING BOX AND PLACE IT ON THE NEW SUPPORT. DUE CARE SHALL BE EXERCISED IN SUCH AN OPERATION, AND THE CONTRACTOR SHALL BE RESPONSIBLE FOR REPAIRING OR REPLACING ANY BOX DAMAGED BY IMPROPER HANDLING ON HIS PART, AS JUDGED AND DIRECTED BY THE ENGINEER.

THE CONTRACTOR SHALL BE RESPONSIBLE FOR COORDINATING WITH THE LOCAL POST MASTER REGARDING THE TIMING OF THE MOVEMENT OF ANY MAILBOX TO A NEW LOCATION.

PAYMENT UNDER THIS ITEM SHALL BE LIMITED TO FINAL PERMANENT INSTALLATIONS. TEMPORARY INSTALLATIONS SHALL BE IN ACCORDANCE WITH 107.12. HOWEVER, THE SAME MATERIAL AND SIZE LIMITATIONS AS FOR PERMANENT INSTALLATIONS SHALL APPLY.

MAILBOX SUPPORTS, COMPLETE IN PLACE, WILL BE PAID FOR AT THE CONTRACT UNIT PRICE PER EACH, FOR ITEM SPECIAL MAILBOX SUPPORT SYSTEM, (SINGLE).

ITEM 607, FENCE, TYPE CL

THIS WORK SHALL BE CONSTRUCTED IN ACCORDANCE WITH THE CONSTRUCTION AND MATERIAL SPECIFICATIONS, SECTION 607, AND WITH DETAILS SHOWN ON THE STANDARD CONSTRUCTION DRAWINGS.

THIS WORK SHALL INCLUDE THE FURNISHING AND ERECTING OF ALL HARDWARE AND MATERIALS, NECESSARY TO CONNECT THE EXISTING FENCE TO THE FENCE, TYPE CL AT THE PROJECT WORK LIMITS.

THE COST OF MAKING ALL CONNECTIONS TO EXISTING FENCE SHALL BE INCLUDED IN THE CONTRACT UNIT PRICE PER LINEAR FOOT ITEM 607, FENCE, TYPE CL.

CALC. BY: T.A.Z DATE: 11/10/94
CHKD. BY: M.F.J DATE: 11/18/94

GENERAL NOTES

FRA-270-32.46

38
593

Plot Scale = 1" = 1'
COL #28 C:\DRAWING\0609230N\TABLE\0609230N3.DWG FEBRUARY-13-1995

ITEM 622 – CONCRETE BARRIER WALL TRANSITIONS

SIGN SUPPORTS AND BRIDGE PIER BARRIERS SHALL BE 50 INCH BARRIER SECTIONS. VERTICAL AND HORIZONTAL TRANSITIONS FROM CONCRETE BARRIER, TYPE B SHALL BE MADE IN THE 40' TRANSITION LENGTH AS PER STANDARD CONSTRUCTION DRAWING, MC–9.4. ALL TRANSITIONS WILL BE PAID FOR AS ITEM 622, CONCRETE BARRIER, TYPE B.

CONDUIT IN BARRIER/PARAPET WALLS

4" PVC CONDUIT(S) SHALL BE PLACED INSIDE BARRIER/PARAPET WALLS AS INDICATED THE PLANS. CONDUITS(S) SHOWN IN TYPICAL SECTIONS REFLECT THE LOCATION OF CONDUIT(S) AT PULL BOXES. THE CONTRACTOR SHALL REFER TO STANDARD CONSTRUCTION DRAWING, MC–9.3 FOR PROPER LOCATION OF CONDUIT(S) BETWEEN PULL BOXES. FOR THE NUMBER OF CONDUITS AND THEIR LIMITS IN BARRIER/PARAPET WALLS REFER TO TRAFFIC CONTROL/SIGNAL AND LIGHTING PLANS.

ITEM 611, REINFORCED CONCRETE APPROACH SLAB (T=13"), AS PER PLAN:

THE REINFORCING STEEL FOR THE APPROACH SLABS OF THIS STRUCTURE SHALL BE EPOXY COATED IN CONFORMANCE WITH 509.

TWO SEPARATE THICKNESSES OF CLEAR OR OPAQUE POLYETHYLENE FILM, 705.06, SHALL BE PLACED ON THE PREPARED SUBBASE AND WHERE THE APPROACH SLAB IS TO BE CONSTRUCTED. THE POLYETHYLENE FILMS SHALL COMPLETELY COVER THE FULL LENGTH AND WIDTH OF THE SUBBASE BETWEEN THE SIDEWALL FORMS FOR THE APPROACH SLAB.

MATERIALS, LABOR AND INSTALLATION SHALL BE INCLUDED FOR PAYMENT IN THIS ITEM 611 REINFORCED CONCRETE APPROACH SLAB (T=13"), AS PER PLAN.

FOR DETAILED DESIGN OF APPROACH SLAB SEE SHEET 428.

ITEM 611, REINFORCED CONCRETE APPROACH SLAB (T=15"), AS PER PLAN:

THE REINFORCING STEEL FOR THE APPROACH SLABS OF THIS STRUCTURE SHALL BE EPOXY COATED IN CONFORMANCE WITH 509.

TWO SEPARATE THICKNESSES OF CLEAR OR OPAQUE POLYETHYLENE FILM, 705.06, SHALL BE PLACED ON THE PREPARED SUBBASE AND WHERE THE APPROACH SLAB IS TO BE CONSTRUCTED. THE POLYETHYLENE FILMS SHALL COMPLETELY COVER THE FULL LENGTH AND WIDTH OF THE SUBBASE BETWEEN THE SIDEWALL FORMS FOR THE APPROACH SLAB.

MATERIALS, LABOR AND INSTALLATION SHALL BE INCLUDED FOR PAYMENT IN THIS ITEM 611 REINFORCED CONCRETE APPROACH SLAB (T=15"), AS PER PLAN.

FOR DETAILED DESIGN OF APPROACH SLAB SEE SHEET 384.

ITEM 202 MANHOLE ABANDONED, AS PER PLAN

WHEN CALLED FOR ON THE PLANS EXISTING PIPES SHALL BE CONNECTED THROUGH THE STRUCTURES WITH NEW PIPE OF A TYPE AND IN A MANNER ACCEPTABLE TO THE ENGINEER, ALL WORK SHALL BE PERFORMED IN ACCORDANCE WITH SECTION 202 OF THE CONSTRUCTION AND MATERIALS SPECIFICATION.

ALL MATERIALS AND LABOR SHALL BE INCLUDED IN THE CONTRACT UNIT PRICE FOR EACH ITEM 202, MANHOLE ABANDONED, AS PER PLAN.

REMOVAL MISC.: CABINET WITH WEIGH–IN–MOTION EQUIPMENT

CONTRACTOR SHALL CAREFULLY REMOVE SO AS TO NOT DAMAGE THE CABINET AND ELECTRONICS AT THE WEIGH–IN–MOTION SITE, I–270 NORTH STA 1421+00. THESE ITEMS WILL BE STORED ON SITE FOR PICK–UP BY ODOT PERSONNEL. THE REMAINING ITEMS, INCLUDING THE CABINET CONCRETE BASE AND CONDUIT, SHALL BE REMOVED AND PROPERLY DISPOSED. THE CONTRACTOR IS RESPONSIBLE FOR NOTIFYING ANDREW WILLIAMS AT TRANSPORTATION TECHNICAL SERVICES PHONE (614)466–4224 TWO (2) WEEKS PRIOR TO ANY REMOVAL.

REVIEW OF DRAINAGE FACILITIES

BEFORE ANY WORK IS STARTED ON THE PROJECT AND AGAIN BEFORE FINAL ACCEPTANCE BY THE STATE, REPRESENTATIVES OF THE STATE AND THE CONTRACTOR, ALONG WITH LOCAL REPRESENTATIVES, SHALL MAKE AN INSPECTION OF ALL EXISTING SEWERS WHICH ARE TO REMAIN IN SERVICE AND WHICH MAY BE AFFECTED BY THE WORK. THE CONDITION OF THE EXISTING CONDUITS AND THEIR APPURTENANCES SHALL BE DETERMINED FROM FIELD OBSERVATIONS. RECORDS OF THE INSPECTION SHALL BE KEPT IN WRITING BY THE STATE.

ALL NEW CONDUITS, INLETS, CATCH BASINS, AND MANHOLES CONSTRUCTED AS A PART OF THE PROJECT SHALL BE FREE OF ALL FOREIGN MATTER AND IN A CLEAN CONDITION BEFORE THE PROJECT WILL BE ACCEPTED BY THE STATE.

ALL EXISTING SEWERS INSPECTED INITIALLY BY THE ABOVE MENTIONED PARTIES SHALL BE MAINTAINED AND LEFT IN A CONDITION REASONABLY COMPARABLE TO THAT DETERMINED BY THE ORIGINAL INSPECTION. ANY CHANGE IN THE CONDITION RESULTING FROM THE CONTRACTOR'S OPERATIONS SHALL BE CORRECTED BY THE CONTRACTOR TO THE SATISFACTION OF THE ENGINEER.

PAYMENT FOR ALL OPERATIONS DESCRIBED ABOVE SHALL BE INCLUDED IN THE CONTRACT PRICE FOR THE PERTINENT 603 CONDUIT ITEMS.

CROSSINGS AND CONNECTIONS TO EXISTING PIPES AND UTILITIES

WHERE PLANS PROVIDE FOR A PROPOSED CONDUIT TO BE CONNECTED TO, OR CROSS OVER OR UNDER AN EXISTING SEWER OR UNDERGROUND UTILITY, THE CONTRACTOR SHALL LOCATE THE EXISTING PIPES OR UTILITIES BOTH AS TO LINE AND GRADE BEFORE STARTING TO LAY THE PROPOSED CONDUIT.

IF IT IS DETERMINED THAT THE ELEVATION OF THE EXISTING CONDUIT, OR EXISTING APPURTENANCE TO BE CONNECTED, DIFFERS FROM THE PLAN ELEVATION OR RESULTS IN A CHANGE IN THE PLAN CONDUIT SLOPE, THE ENGINEER SHALL BE NOTIFIED BEFORE STARTING CONSTRUCTION OF ANY PORTION OF THE PROPOSED CONDUIT WHICH WILL BE AFFECTED BY THE VARIANCE IN THE EXISTING ELEVATIONS.

IF IT IS DETERMINED THAT THE PROPOSED CONDUIT WILL INTERSECT AN EXISTING SEWER OR UNDERGROUND UTILITY IF CONSTRUCTED AS SHOWN ON THE PLAN, THE ENGINEER SHALL BE NOTIFIED BEFORE STARTING CONSTRUCTION OF ANY PORTION OF THE PROPOSED CONDUIT WHICH WOULD BE AFFECTED BY THE INTERFERENCE WITH AN EXISTING FACILITY.

PAYMENT FOR ALL THE OPERATIONS DESCRIBED ABOVE SHALL BE INCLUDED IN THE CONTRACT PRICE FOR THE PERTINENT 603 CONDUIT ITEM.

FARM DRAINS

ALL FARM DRAINS, WHICH ARE ENCOUNTERED DURING CONSTRUCTION, SHALL BE PROVIDED WITH UNOBSTRUCTED OUTLETS UNDER THE DIRECTION OF THE ENGINEER. EXISTING COLLECTORS WHICH ARE LOCATED BELOW THE ROADWAY DITCH ELEVATIONS, AND WHICH CROSS THE ROADWAY, SHALL BE REPLACED WITHIN THE CONSTRUCTION LIMITS BY ITEM 603 CONDUIT, TYPE B, ONE COMMERCIAL SIZE LARGER THAN THE EXISTING CONDUIT.

EXISTING COLLECTORS AND ISOLATED FARM DRAINS, WHICH ARE ENCOUNTERED ABOVE THE ELEVATION OF THE ROADWAY DITCHES, SHALL BE OUTLETTED INTO THE ROADWAY DITCH BY 603 TYPE F CONDUIT. THE OPTIMUM OUTLET ELEVATION SHALL BE, IF POSSIBLE, ONE FOOT ABOVE THE FLOWLINE ELEVATION OF THE DITCH. LATERAL TILE FIELDS WHICH CROSS THE ROADWAY SHALL BE INTERCEPTED BY 603 TYPE E CONDUIT, AND CARRIED IN A LONGITUDINAL DIRECTION TO AN ADEQUATE OUTLET OR ROADWAY CROSSING.

THE LOCATION, TYPE, SIZE AND GRADE OF REQUIRED REPLACEMENTS SHALL BE DETERMINED BY THE ENGINEER DURING CONSTRUCTION, AND PAYMENT SHALL BE MADE ON FINAL MEASUREMENTS.

FARM DRAINS SHOWN ON PLANS HAVE BEEN FIELD LOCATED BY FARM DRAIN OUTLET ENDS LOCATED IN THE EXISTING DITCH. QUANTITIES HAVE BEEN CALLED OUT AND CARRIED TO THE GENERAL SUMMARY.

FOR ANY ADDITIONAL FARM TILES ENCOUNTERED, THE FOLLOWING ESTIMATED QUANTITIES HAVE BEEN INCLUDED IN THE GENERAL SUMMARY FOR THE WORK NOTED ABOVE:

ITEM 603 12" CONDUIT, TYPE B 100 LIN. FT.
ITEM 603 8" CONDUIT, TYPE E 100 LIN. FT.
ITEM 603 12" CONDUIT, TYPE E 100 LIN. FT.
ITEM 603 6" CONDUIT, TYPE F 100 LIN. FT.
ITEM 603 8" CONDUIT, TYPE F 100 LIN. FT.
ITEM 604 INSPECTION WELL 1 EACH
ITEM 604 INSPECTION WELL, 24" 1 EACH
ITEM 601 ROCK CHANNEL PROTECTION, TYPE C WITH FILTER 100 CU. YD.

NECESSARY BENDS OR BRANCHES SHALL BE INCLUDED FOR PAYMENT IN THE PERTINENT CONDUIT ITEM.

NONE OF THE ABOVE MATERIALS SHALL BE ORDERED BY THE CONTRACTOR UNTIL AUTHORIZED BY THE ENGINEER.

ITEM 603, EXISTING CONDUIT CONNECTIONS

WHEN THE PLANS CALL FOR STRUCTURES TO BE PLACED ON EXISTING CONDUIT, A NOMINAL PROPOSED CONDUIT QUANTITY HAS BEEN GIVEN TO MAKE THIS CONNECTION. THE CONTRACTOR SHALL CONNECT TO THE EXISTING CONDUIT AT THE NEAREST POSSIBLE JOINT AND PLACE A CONCRETE COLLAR AROUND THIS CONNECTION AS PER STANDARD CONSTRUCTION DRAWING, MC–4. METHOD OF PAYMENT FOR CONDUIT PLACED SHALL BE LINEAR FEET FROM THE CENTER OF THE PROPOSED STRUCTURE TO THE JOINT. NO QUANTITIES GREATER THAN THOSE SHOWN ON THE PLANS SHALL BE PAID WITHOUT PRIOR APPROVAL OF THE ENGINEER.

CALC: T.A.Z DATE: 1/18/94
CHK: M.F.J DATE: 1/18/94

GENERAL NOTES

FRA–270–32.46

39
593

Plot Scale – 1" = 1'
COL #28 C:\DRAWING\06092306\TABLE\06092N4.DWG FEBRUARY–13–1995

ITEM 605, AGGREGATE DRAIN

DRAINS SHOULD BE LOCATED AT 50 FOOT INTERVALS ON EACH SIDE OF THE PAVEMENT AND STAGGERED SO THAT EACH DRAIN IS 25 FEET FROM THE ADJACENT DRAIN ON THE OPPOSITE SIDE. AN AGGREGATE DRAIN SHALL BE PLACED AT THE LOW POINT OF EACH SAG VERTICAL CURVE.

THE FOLLOWING ESTIMATED QUANTITY HAS BEEN INCLUDED IN THE GENERAL SUMMARY FOR THE WORK NOTED ABOVE.
ITEM 605 AGGREGATE DRAIN 470 LIN. FT.

ITEM 605 – UNDERDRAIN IN ROCK

THE QUANTITY DETERMINED FOR THIS ITEM WAS BASED ON SOIL BORINGS FOR THE PROJECT SITE. OTHER LOCATIONS WHERE ROCK IS ENCOUNTERED DURING PLACEMENT OF UNDERDRAINS MAY OCCUR AND SHOULD BE REPORTED TO THE PROJECT ENGINEER AS SOON AS POSSIBLE. AS A RESULT, ADDITIONAL QUANTITIES FOR THIS ITEM MAY BE POSSIBLE AND SHALL BE PAID FOR AS DIRECTED BY THE ENGINEER.

CONSTRUCTION OF UNDERDRAINS

THE UNDERDRAINS IN THIS PLAN SHALL BE CONSTRUCTED AS PER THE FOLLOWING METHOD:

THIS CONSTRUCTION SEQUENCE IS ONLY FOR THE UNDERDRAINS LOCATED WITHIN THE FREE DRAINING BASE AREA.

1) SUBGRADE COMPACTION.
2) PROOF ROLLING.
3) PLACEMENT OF THE SUBBASE AND COMPACTION.
4) CONSTRUCT TRENCH FOR THE UNDERDRAINS MAKING SURE THAT THE TRENCHED MATERIAL IS REMOVED FROM THE AREA THEREFORE NOT CONTAMINATING THE SUBBASE.
5) WRAP THE TRENCH WITH FILTER FABRIC.
6) PLACE THE UNDERDRAIN AND BACKFILL THE TRENCH.
7) PLACE THE FREE DRAINING BASE AND SUBSEQUENT PAVEMENT LAYERS.

ITEM 604, INSPECTION WELL

INSPECTION WELL LOCATIONS ARE SHOWN ON THE PLANS. WHEN USED TO CONNECT TO AN EXISTING 6" OR 8" TILE THE INSPECTION WELL SHALL BE CONSTRUCTED AS PER STANDARD CONSTRUCTION DRAWING, MC–8 AND BE PAID FOR AS ITEM 604 INSPECTION WELL.

WHEN THE PLANS SHOW AN INSPECTION WELL CONNECTING TO EXISTING TILE LARGER THAN 8" THE INSPECTION WELL SHALL BE CONSTRUCTED AS PER STANDARD CONSTRUCTION DRAWING, MC–8, EXCEPT THAT THE 10" 706.01 BELL & SPIGOT OR 706.08 SHALL BE 24" 706.01 BELL & SPIGOT OR 706.08 AND THE 6" 706.01 OR 706.08 SHALL BE 706.01 OR 706.08 OF A SIZE TO MATCH THE EXISTING TILE.

THIS WORK SHALL BE PAID FOR AS ITEM 604, INSPECTION WELL, 24".

ITEM SPECIAL, FILL AND PLUG EXISTING CONDUIT

THIS ITEM SHALL CONSIST OF THE CONSTRUCTION OF BULKHEADS IN AN EXISTING CONDUIT AND FILLING THE AREA THUS SEALED OFF WITH LEAN GROUT, CONTROLLED LOW STRENGTH MATERIAL, SAND OR OTHER MATERIAL APPROVED BY THE ENGINEER.

BULKHEADS SHALL BE LOCATED AT THE LIMITS OF THE AREA TO BE FILLED AS INDICATED ON THE PLANS. THE BULKHEADS SHALL CONSIST OF BRICK OR CONCRETE MASONRY WITH A MINIMUM THICKNESS OF 12 INCHES.

THE FILL MATERIAL SHALL BE PUMPED INTO PLACE, OR PLACED BY OTHER MEANS APPROVED BY ENGINEER, SO THAT, AFTER SETTLEMENT, AT LEAST 90 PERCENT OF THE CROSS–SECTIONAL AREA OF THE CONDUIT, FOR ITS ENTIRE LENGTH, SHALL BE FILLED. THE FOOTAGE OF FILLED AND PLUGGED CONDUIT TO BE PAID FOR SHALL BE THE ACTUAL NUMBER OF LINEAR FEET (MEASURED ALONG THE CENTERLINE OF EACH CONDUIT FROM OUTER FACE TO OUTER FACE OF BULKHEADS) FILLED AND PLUGGED AS DESCRIBED ABOVE.

IN LIEU OF FILLING AND PLUGGING THE EXISTING CONDUIT, THE PIPE MAY BE CRUSHED AND BACKFILLED IN ACCORDANCE WITH THE PROVISIONS OF 203, OR IT MAY BE REMOVED.

THE FOOTAGE, MEASURED AS PROVIDED ABOVE, SHALL BE PAID FOR AT THE CONTRACT PRICE PER LINEAR FOOT FOR, ITEM SPECIAL, FILL AND PLUG EXISTING CONDUIT.

ITEM 603, B CONDUIT, AS PER PLAN

THIS CONDUIT SHALL MEET SS 945 WITH GASKET JOINT OR ASTM 3034 SDR35 WITH GASKET JOINT WITH THE FOLLOWING ADDITIONS:

1. CONDUIT SHALL BE CLOSED PROFILE,
2. CONDUIT SHALL HAVE INTEGRAL BELL GASKET JOINT,
3. CONDUIT SHALL BE PS 46 MINIMUM,
4. THE BACKFILL AND BEDDING SHALL MEET THE REQUIREMENTS OF THE WALL EMBANKMENT MATERIAL,
5. THE TRENCHING AND BACKFILLING REQUIREMENTS OF SECTIONS 603.03 AND 603.08 OF THE CONSTRUCTION AND MATERIALS SPECIFICATIONS MAY BE WAIVED,
6. CONDUIT CONSTRUCTION SHALL BE PERFORMED IN COOPERATION WITH MSE WALL CONSTRUCTION.

SANITARY WORK

THE FOLLOWING CONDUIT TYPES MAY BE USED: SS 944, SS 942, SS 931, 706.02 WITH JOINTS AS PER 706.11.

THE PAY ITEM(S) MEASURED PER LINEAR FOOT SHALL BE:

ITEM 603 8" CONDUIT, TYPE B, FOR SANITARY, (SS944, SS942, SS931)
ITEM 603 18" CONDUIT, TYPE B, FOR SANITARY, (706.02 WITH 706.11)
ITEM 603 21" CONDUIT, TYPE B, FOR SANITARY, (706.02 WITH 706.11)

SPRING DRAINS

THE FOLLOWING ESTIMATED QUANTITIES HAVE BEEN CARRIED TO THE GENERAL SUMMARY FOR USE AS DIRECTED BY THE ENGINEER FOR DRAINING ANY SPRINGS SHOWN IN THE PLAN OR ENCOUNTERED DURING CONSTRUCTION. THE FOLLOWING TYPES OF PIPES MAY BE USED: 707.17; ASTM D3034 SDR 35, SS 931 OR SS 944 PERFORATED PER 707.15.

SPRING DRAINS SHALL BE CONSTRUCTED AS SHOWN ON STANDARD CONSTRUCTION DRAWING, MC–1 AND PAID FOR AT THE CONTRACT PRICE FOR:

ITEM 605 6" UNCLASSIFIED PIPE UNDERDRAIN FOR SPRINGS 100 LIN. FT.

ITEM 605 AGGREGATE DRAIN FOR SPRINGS 200 LIN. FT.

THE CONTRACTOR SHALL NOT ORDER MATERIALS FOR "SPRING DRAINS" UNTIL AUTHORIZED BY THE ENGINEER, AND IN THE EVENT NO SPRINGS ARE ENCOUNTERED, THE ITEM SHALL BE NON–PERFORMED.

ITEM 603, TYPE B AND C CONDUIT, W/ COVER LESS THAN 17 FEET

CORRUGATED STEEL OR ALUMINUM SPIRAL RIB PIPE CONFORMING TO SUPPLEMENTAL SPECIFICATION 946 OR 948 MAY BE USED.

ITEM 602, CONCRETE MASONRY

ALL PLASTIC PIPE SHALL BE ATTACHED TO THE HW–4 HEADWALLS AS PER THE METAL PIPES AS SHOWN ON STANDARD CONSTRUCTION DRAWING, HW–4A.

ITEM 603, CONDUIT BORED OR JACKED

WHERE IT IS SPECIFIED THAT A CONDUIT BE INSTALLED BY THE METHOD OF BORING OR JACKING, NO TRENCH EXCAVATION SHALL BE CLOSER THAN 10 FEET, OR AS SHOWN, TO THE EDGE OF SHOULDER. TRENCHES LOCATED ON THE OUTSIDE SHOULDER OF EXISTING I–270 SHALL GENERALLY BE 10 FEET BEHIND THE PORTABLE CONCRETE BARRIERS. ALL TRENCHES SHALL BE PROTECTED AS PER MAINTENANCE OF TRAFFIC NOTE SHEET 53.

TRENCHES SHALL BE ADEQUATELY SUPPORTED AND THE SPECIFICATION REQUIREMENTS FOR CLASS B BEDDING SHALL BE DISREGARDED. IF A CASING PIPE IS USED IN THE BORING OR JACKING OPERATION, THE VOID BETWEEN IT AND THE INTERIOR CARRIER PIPE SHALL BE COMPLETELY FILLED WITH SAND, GROUT OR OTHER MATERIAL APPROVED BY THE ENGINEER.

CALC: T.A.Z DATE: 11/10/94
CHKD: M.F.J DATE: 11/10/94

GENERAL NOTES

FRA–270–32.46

40
593

Plot Scale – 1" = 1'
COL #28
C:\DRAWING\06092306\TABLE\06092DN5.DWG
FEBRUARY–13–1995

MAINTENANCE OF TRAFFIC GENERAL NOTES

614 MAINTAINING TRAFFIC

THE CONTRACTOR SHALL MAINTAIN TRAFFIC AT ALL TIMES ON THE PROJECT IN ACCORDANCE WITH ITEM 614 MAINTAINING TRAFFIC, AS SHOWN ON SHEETS 43 THROUGH 53 AND AS DESCRIBED BELOW UNLESS OTHERWISE NOTED AS A CITY OF COLUMBUS OR CITY OF GAHANNA RESPONSIBILITY.

ALL SIGNS, BARRICADES, SIGN SUPPORTS, PORTABLE CONCRETE BARRIER, DRUMS, FLAGGERS, AND INCIDENTALS (EXCEPT THOSE DENOTED AS EXISTING OR BY CITY OF COLUMBUS OR CITY OF GAHANNA FORCES) SHALL BE FURNISHED, ERECTED, MAINTAINED, AND REMOVED BY THE CONTRACTOR IN CONFORMANCE WITH THE MOST RECENT REVISION, CURRENT EDITION OF THE OHIO MANUAL OF UNIFORM TRAFFIC CONTROL DEVICES FOR STREETS AND HIGHWAYS (OMUTCD). ALL SIGNS USED FOR THE MAINTENANCE OF TRAFFIC SHALL BE NEW OR LIKE NEW CONDITION SUBJECT TO THE APPROVAL OF THE ENGINEER. DEVICES USED TO MAINTAIN TRAFFIC SHALL BE REMOVED IMMEDIATELY AFTER THE TERMINATION OF SAID WORK. THE MAJORITY OF THE WORK CAN BE CONSTRUCTED AS IT WILL FIT INTO THE CONTRACTOR'S SCHEDULE. THE EXCEPTIONS ARE DETAILED IN THE APPROPRIATE ITEMS DESCRIBED BELOW:

ITEM 1 ADVANCE WARNING SIGNS AND PORTABLE CONCRETE BARRIER

A. INSTALL THE ADVANCE WARNING SIGNS AND OTHER TRAFFIC CONTROL DEVICES AS SHOWN ON SHEET 44.

B. INSTALL THE PORTABLE CONCRETE BARRIER ALONG THE OUTSIDE SHOULDERS OF SOUTHBOUND I-270 BETWEEN STA. 1362+30 AND STA. 1445+50.

C. INSTALL THE PORTABLE CONCRETE BARRIER ALONG THE OUTSIDE SHOULDERS OF NORTHBOUND I-270 BETWEEN STA. 1363+00 AND STA. 1450+80.

ITEM 2 – MCCUTCHEON ROAD DETOUR

MCCUTCHEON ROAD TRAFFIC SHALL BE DETOURED DURING THE DEMOLITION AND CONSTRUCTION OF THE BRIDGE OVER I-270. THE DETOUR ROUTE AND SIGNING IS SHOWN ON SHEET 43. DETOUR SIGNS SHALL BE FURNISHED ERECTED AND REMOVED AS SHOWN ON SHEET 43.

TEN (10) WORKING DAYS PRIOR TO THE CLOSURE OF MCCUTCHEON ROAD, THE CONTRACTOR SHALL SUBMIT TO THE CITY OF GAHANNA A COPY OF THE DETOUR PLAN SCHEDULE.

SHORT DURATION CLOSURES AND LIQUIDATED DAMAGES

THE CONTRACTOR WILL BE PERMITTED TO CLOSE ALL OF THE NORTHBOUND OR SOUTHBOUND LANES OF I-270 BETWEEN THE HOURS OF 12:00 MIDNIGHT AND 5:00 AM FOR PERIODS OF FIFTEEN (15) MINUTES AT A TIME, AS SHOWN ON SHEET 52, SUBJECT TO APPROVAL OF THE ENGINEER, TO REMOVE OR ERECT GIRDERS FOR THE MCCUTCHEON ROAD BRIDGE AND THE CONNECTOR ROAD BRIDGE. ONE WEEK BEFORE AND DURING ANY SHORT DURATION CLOSURE THE CONTRACTOR SHALL ERECT THE CHANGEABLE MESSAGE SIGNS AS SHOWN ON SHEET 51. AFTER A CLOSURE OF 15 MINUTES THE CONTRACTOR SHALL OPEN THE ROADWAY, AS DIRECTED BY THE ENGINEER, TO CLEAR THE TRAFFIC QUEUE. AFTER THE QUEUE IS CLEARED THE ROADWAY MAY BE CLOSED FOR ANOTHER PERIOD OF 15 MINUTES. THE ENGINEER MUST BE NOTIFIED ONE WEEK IN ADVANCE OF ANY NIGHT THAT CLOSURES ARE PLANNED.

THE CONTRACTOR WILL BE ASSESSED LIQUIDATED DAMAGES IF ALL THREE TRAVEL LANES ARE NOT OPEN TO TRAFFIC BEFORE 5:00 AM. THE LIQUIDATED DAMAGES WILL BE ASSESSED AT THE RATE SHOWN IN THE TABLE UNTIL SUCH TIME AS THE THREE TRAVEL LANES ARE OPEN TO TRAFFIC.

TIME	ASSESSMENT
5:00 TO 5:29 AM	$500
5:30 TO 6:29 AM	$1250 PER 5 MINUTE PERIOD
6:30 AM UNTIL OPENING	$2500 PER 5 MINUTE PERIOD
	$100,000 MAXIMUM

THE MAXIMUM LIQUIDATED DAMAGE CHARGE IS FOR EACH AND EVERY OCCURRENCE THAT THE THREE TRAVEL LANES ARE NOT OPEN BEFORE 5:00 AM.

WEEKEND LANE CLOSURE FOR PAVEMENT TIE-IN

THE CONTRACTOR MAY CLOSE THE RIGHT LANE OF NORTHBOUND I-270 BETWEEN 10:00 PM FRIDAY AND 6:30 AM THE NEXT MONDAY, AS SHOWN ON SHEETS 47, 48, & 49, SUBJECT TO THE APPROVAL OF THE ENGINEER, TO CONSTRUCT THE TIE-IN BETWEEN THE NORTHBOUND COLLECTOR ROAD AND THE MAINLINE FROM STA. 1420+00 AND STA. 1434+50.

THE CONTRACTOR WILL BE ASSESSED LIQUIDATED DAMAGES, IF ALL THREE TRAVEL LANES ARE NOT OPEN TO TRAFFIC BEFORE 6:30 AM. THE LIQUIDATED DAMAGES WILL BE ASSESSED AT THE RATE SHOWN IN THE TABLE UNTIL SUCH TIME AS THE THREE TRAVEL LANES ARE OPEN TO TRAFFIC.

TIME	ASSESSMENT
6:30 TO 6:59 AM	$200
7:00 AM UNTIL OPENING	$2500 PER 5 MINUTE PERIOD
	$50,000 MAXIMUM

THE MAXIMUM LIQUIDATED DAMAGE CHARGE IS FOR EACH AND EVERY OCCURRENCE THAT THE THREE TRAVEL LANES ARE NOT OPEN BEFORE 6:30 AM.

LEFT LANE CLOSURE

THE CONTRACTOR MAY CLOSE THE LEFT LANE OF NORTHBOUND AND SOUTHBOUND I-270 AS PER STD. DWG. MT-95.30 AS REQUIRED FOR THE INSTALLATION OF LIGHT TOWERS IN THE MEDIAN AREA, SHOULDER GRADING, AND FOR OTHER CONSTRUCTION APPROVED BY THE ENGINEER. THE I-270 MAINLINE LEFT LANE CLOSURES ARE ONLY PERMITTED FROM 8:30 AM TO 3:30 PM WEEKDAYS AND DURING DAYLIGHT HOURS ON WEEKENDS. THE CONTRACTOR SHALL NOT INSTALL LIGHT TOWERS ANYWHERE ON THE PROJECT BETWEEN THE HOURS OF 6:30 AM – 8:30 AM AND 3:30 PM – 6:00 PM MONDAY THROUGH FRIDAY.

THE CONTRACTOR WILL BE ASSESSED LIQUIDATED DAMAGES, IF ALL THREE TRAVEL LANES ARE NOT OPEN TO TRAFFIC BEFORE 3:30 PM. THE LIQUIDATED DAMAGES WILL BE ASSESSED AT THE RATE SHOWN IN THE TABLE UNTIL SUCH TIME THE THREE TRAVEL LANES ARE OPEN TO TRAFFIC.

TIME	ASSESSMENT
3:30 PM UNTIL OPENING	$2500 PER 5 MINUTE PERIOD
	$50,000 MAXIMUM

THE MAXIMUM LIQUIDATED DAMAGE CHARGE IS FOR EACH AND EVERY OCCURANCE THAT THE THREE TRAVEL LANES ARE NOT OPEN BEFORE 3:30 PM.

MULTIPLE LANE CLOSURES

TWO-LANE CLOSURES IN THE SAME DIRECTION ON I-270 MAY NOT OCCUR AT THE SAME TIME.

GUARDRAIL INSTALLATION

LANE CLOSURES ARE NOT PERMITTED ON THE MAINLINE OF I-270 FOR THE INSTALLATION OF GUARDRAIL. GUARDRAIL AND POSTS SHALL BE CONSTRUCTED IN SECTIONS THAT CAN BE COMPLETED DURING THE SAME WORK DAY THEY WERE STARTED. THE ONLY EXCEPTION IS FOR POSTS THAT ARE SET IN CONCRETE THAT REQUIRES TIME TO CURE. AN UNPROTECTED EXPOSED GUARDRAIL END AT THE END OF THE WORK DAY IS NOT PERMITTED.

PEDESTRIAN SAFETY

THE SAFETY OF PEDESTRIAN TRAFFIC SHALL BE CONSIDERED AT ALL TIMES ALONG STELZER AND MCCUTCHEON ROADS. IT SHALL BE THE CONTRACTOR'S RESPONSIBILITY TO PROVIDE LIGHTS, SIGNS, TEMPORARY FENCE, BARRICADES AND OTHER DEVICES TO WARN AND TO PHYSICALLY SEPARATE THE PEDESTRIAN FROM HAZARDS INCIDENTAL TO THE CONSTRUCTION AND/OR INSTALLATION OF THE REQUIRED STRUCTURE AND ROADWAY ITEMS SUCH AS BRIDGE DECK REPLACEMENT, OPEN EXCAVATIONS, ETC. UNLESS OTHERWISE DIRECTED BY THE ENGINEER, SUCH PEDESTRIAN PROTECTION SHALL UTILIZE, BUT NOT BE LIMITED TO, TEMPORARY FENCE AND TYPE A WARNING LIGHTS MOUNTED ON DRUMS OR TYPE III BARRICADES.

FULL DEPTH BRIDGE CONSTRUCTION

NO FULL DEPTH BRIDGE DEMOLITION OR CONSTRUCTION SHALL BE PERFORMED OVER AN OPEN LANE OF TRAFFIC.

A PLATFORM SHALL BE REQUIRED TO PROTECT THE ROADWAY DURING THE REMOVAL OF THE EXISTING MCCUTCHEON ROAD CONCRETE PARAPET AND DECK. THE CONTRACTOR SHALL PROVIDE A PLATFORM OF SUITABLE STRENGTH ON THE UNDERSIDE OF THE DECK. THE DESIGN OF THE PLATFORM SHALL CONFORM WITH OSHA REQUIREMENTS AND THE APPROVAL OF THE ENGINEER AND SHALL REMAIN IN PLACE UNTIL THE WORK HAS BEEN COMPLETED AND ACCEPTED OR AS DIRECTED BY THE ENGINEER.

THE CONTRACTOR SHALL SUBMIT A DEMOLITION PLAN AND PLATFORM DESIGN 10 DAYS PRIOR TO COMMENCING ANY DEMOLITION FOR APPROVAL BY THE ENGINEER. THE SUBMITTAL SHALL BE IN WRITING TO THE DISTRICT CONSTRUCTION ENGINEER WITH A COPY TO THE PROJECT ENGINEER.

SEPARATE PAYMENT SHALL BE MADE FOR ITEMS 607, 614, 622 AND SPECIAL NOTED BELOW. ALL OTHER WORK REQUIRED FOR TRAFFIC MAINTENANCE UNLESS PAID FOR SEPARATELY ELSEWHERE SHALL BE INCLUDED IN THE LUMP SUM BID PRICE FOR ITEM 614 MAINTAINING TRAFFIC.

DESIGNATED LOCAL DETOUR ROUTE

A LOCAL SIGNED DETOUR ROUTE HAS BEEN DETERMINED TO BE THE "DESIGNATED LOCAL DETOUR ROUTE". THIS ROUTE IS SHOWN ON SHEET 43. DURING THE TIME TRAFFIC IS DETOURED, THE CONTRACTOR SHALL MAINTAIN THIS ROUTE IN A CONDITION WHICH IS REASONABLY SMOOTH AND FREE FROM HOLES, RUTS, RIDGES, BUMPS, DUST, AND STANDING WATER. ONCE THE DETOUR IS REMOVED AND TRAFFIC RETURNED TO ITS NORMAL PATTERN, THE DESIGNATED LOCAL DETOUR ROUTE SHALL BE RESTORED TO A CONDITION THAT IS EQUIVALENT TO THAT WHICH EXISTED PRIOR TO ITS USE FOR THIS PURPOSE. ALL SUCH WORK SHALL BE PERFOMED WHEN AS DIRECTED BY THE ENGINEER.

THE FOLLOWING ESTIMATED QUANTITIES ARE PROVIDED FOR USE AS DIRECTED BY THE ENGINEER TO MAINTAIN AND SUBSEQUENTLY RESTORE THE DESIGNATED LOCAL DETOUR ROUTE.

ITEM 301	BITUMINOUS AGGREGATE BASE, AC-20	10 CU YD
ITEM 404	ASPHALT CONCRETE, AC-20	1250 CU YD
ITEM 404	BITUMINOUS CONCRETE FOR MAINTAINING TRAFFIC	30 CU YD
ITEM 407	TACK COAT	3600 GAL
ITEM 642	CENTERLINE	1.7 MILE

ITEM 607 – FENCE, TYPE CLT, AS PER PLAN

THIS ITEM OF WORK SHALL CONSIST OF PROVIDING, INSTALLING AND SUBSEQUENTLY REMOVING A TEMPORARY FENCE, TYPE CLT, ALONG THE ENTIRE CONSTRUCTION LIMITS OF THE PROJECT WHICH GENERALLY INCLUDES:

EAST SIDE-STATION CDN 1364+78, 69' LT. TO
STATION CDN 1430+63, 76' LT.
WEST SIDE- STATION CDS 1361+24, 178' RT. TO
STATION CONN 60+69, 109' LT.
AND STATION CONN 60+77, 99' RT. TO
STATION CDS 1429+00, 65' RT.

THERE WILL BE LOCATIONS WHERE IT WILL NOT BE PRACTICAL TO LOCATE THE TEMPORAY FENCE ALONG THE CONSTRUCTION LIMITS. THE TABLE BELOW INDICATES PLACEMENT IN THOSE AREAS.

FROM STATION	TO STATION
RAMP C 1382+00, 12' LT.	RAMP C 1385+00, 12' LT.
RAMP C 1389+50, 21' LT.	RAMP D 1399+50, 22' LT.
RAMP D 1402+50, 39' LT.	RAMP D 1406+50, 46' LT.
McCUTCHEON 23+25, 59' LT.	McCUTCHEON 23+25, 66' RT.
McCUTCHEON 26+75, 50' LT.	McCUTCHEON 26+75, 41' RT.

ALL TEMPORARY FENCE LOCATIONS ARE SUBJECT TO APPROVAL OF THE ENGINEER.

THE FENCE SHALL BE IN ACCORDANCE WITH ITEM 607 WITH THE FOLLOWING EXCEPTIONS AND ADDITIONS:

1) THE CHAIN LINK FENCE FABRIC, POSTS, TENSION WIRES, AND ATTACHMENT HARDWARE ARE NOT REQUIRED TO BE NEW MATERIAL.

2) THE CHAIN LINK FENCE FABRIC SHALL BE 60-INCH MINIMUM.

3) THE CONTRACTOR SHALL MINIMIZE THE USE OF CONCRETE ENCASED LINE POSTS BY USING LONGER POSTS DRIVEN 48 INCHES DEEP.

4) THE CONTRACTOR SHALL MAINTAIN THE FENCE THROUGHOUT THE DURATION OF THE PROJECT.

5) THE CONTRACTOR SHALL REMOVE AND PROPERLY DISPOSE OF ALL FENCE MATERIAL UPON COMPLETION OF THE PROJECT. POST FOUNDATIONS SHALL BE REMOVED TO AT LEAST 1 FOOT BELOW GROUNDLINE.

6) UPON REMOVAL OF ALL FENCE MATERIALS, BACKFILLING, RESTORATION OF SURFACES AND DISPOSAL OF SURPLUS MATERIALS SHALL BE IN ACCORDANCE WITH 603.09.

FOR ADDITIONAL DETAILS, SEE ODOT STANDARD CONSTRUCTION DWGS. F-1, F-3, F-4, F-5, AND F-6.

PAYMENT FOR THIS ITEM OF WORK WILL BE MADE AT THE CONTRACT UNIT PRICE PER LINEAR FOOT OF ITEM 607 – FENCE, TYPE CLT, AS PER PLAN INCLUDING ALL LABOR, EQUIPMENT, MATERIAL, AND INCIDENTALS REQUIRED TO COMPLETE THIS ITEM OF WORK. THE FOLLOWING ESTIMATED QUANTITY HAS BEEN INCLUDED IN THE GENERAL SUMMARY:

ITEM 607 FENCE, TYPE CLT, AS PER PLAN 18,600 L.F.

ITEM 614 TEMPORARY PAVEMENT MARKINGS

TEMPORARY EDGE LINE, CLASS 1, 740.05, TYPE C, FOR CONNECTION OF THE NORTHBOUND C/D ROAD TO THE MAINLINE AS SHOWN ON SHEETS 47, 48, & 49. IS INCLUDED. PAVEMENT MARKINGS FURNISHED UNDER THIS ITEM INCLUDE INSTALLATION AND REMOVAL OF BOTH TEMPORARY AND CONFLICTING PERMANENT MARKINGS.

THE FOLLOWING QUANTITIES HAVE BEEN INCLUDED IN THE GENERAL SUMMARY FOR USE AS DIRECTED BY THE ENGINEER.

ITEM 614 TEMPORARY EDGE LINE, CLASS 1, 740.05, TYPE C 1.63 MI.

ITEM 614 DELINEATION OF PORTABLE CONCRETE BARRIER

PORTABLE CONCRETE BARRIER (PCB) SHALL BE DELINEATED WITH REFLECTORS, OBJECT MARKERS, AND REFLECTIVE SHEETING. STEADY BURN WARNING LIGHTS ARE NOT REQUIRED ON PCB.

A. 32" PORTABLE CONCRETE BARRIER WITHOUT GLARE SCREEN

1. REFLECTORS SHALL BE MOUNTED ON THE FACE OF THE PCB WITH THE TOP OF THE REFLECTOR APPROXIMATELY 26 INCHES ABOVE THE BASE AND AT A MAXIMUM SPACING OF 25 FEET. THE REFLECTOR SHALL BE: CUBE CORNER PRISM, REFLEXITE SHEETING, OR 3-M DIAMOND GRADE SHEETING. THE REFLECTOR SHALL HAVE A MINIMUM AREA OF 7.5 SQUARE INCHES WITH NO DIMENSION LESS THAN 2 INCHES. THEY SHALL BE YELLOW IF ON THE LEFT SIDE OF TRAFFIC AND WHITE IF ON THE RIGHT. WHEN ADJACENT TO A REVERSIBLE TRAFFIC DIRECTION LANE, YELLOW AND WHITE REFLECTORS SHALL BE PAIRED BACK-TO-BACK.

2. TOP MOUNTED OBJECT MARKERS (9" X 15") WITH ORANGE REFLECTIVE SHEETING, TYPE G (730.19) SHALL BE SECURELY MOUNTED (MOUNTING METHOD SUBJECT TO THE APPROVAL OF THE ENGINEER), MIDWAY BETWEEN THE FACE MOUNTED REFLECTORS. WHEN ADJACENT TO A REVERSIBLE TRAFFIC DIRECTION LANE OR BETWEEN OPPOSING TRAFFIC FLOWS, THEY SHALL BE MOUNTED IN PAIRS FACING TRAFFIC FROM EACH DIRECTION. SHEETING, TYPE G (730.19) SHALL BE MOUNTED MIDWAY BETWEEN THE FACE MOUNTED REFLECTORS. WHEN ADJACENT TO A REVERSIBLE TRAFFIC DIRECTION LANE OR BETWEEN OPPOSING TRAFFIC FLOWS, THEY SHALL BE MOUNTED IN PAIRS FACING TRAFFIC FROM EACH DIRECTION.

B. TAPERED END SECTIONS AND EXPOSED ENDS

1. OBJECT MARKERS (9" X 15") WITH ORANGE REFLECTIVE SHEETING, TYPE G, SHALL BE MOUNTED DIRECTLY ABOVE THE TOP SURFACE AT EACH END OF THE SECTION.

THE FOLLOWING QUANTITIES HAVE BEEN INCLUDED IN THE GENERAL SUMMARY FOR USE AS DIRECTED BY THE ENGINEER.

ITEM 614	BARRIER REFLECTOR, TYPE B	856 EACH
ITEM 614	OBJECT MARKER	856 EACH

CALC. F.A.M. BY: DATE: 10/94
CHK. D.R.B. BY: DATE: 10/94

MAINTENANCE OF TRAFFIC GENERAL NOTES

FRA-270-32.46

41
593

PLOT SCALE:
COL #33
C:\DRAWING\06092310\MT\06092NN1.DWG FEBRUARY-11-1995

MAINTENANCE OF TRAFFIC GENERAL NOTES

ITEM 614 WORK ZONE SPEED LIMIT SIGN

THE CONTRACTOR SHALL FURNISH, INSTALL, MAINTAIN, COVER DURING SUSPENSION OF WORK, AND SUBSEQUENTLY REMOVE WORK ZONE SPEED LIMIT SIGNS AND SUPPORTS (R-10-48)(45 MPH) WITHIN THE WORK LIMITS IN ACCORDANCE WITH THE FOLLOWING REQUIREMENTS.

THE CONTRACTOR SHALL COVER OR REMOVE ANY EXISTING SPEED LIMIT OR MINIMUM SPEED SIGNS WITHIN THE REDUCED SPEED ZONE. THESE SIGNS SHALL BE RESTORED DURING SUSPENSION OR TERMINATION OF THE REDUCED SPEED LIMIT. THE EXPENSE OF COVERING OR REMOVAL AND RESTORATION OF EXISTING SPEED LIMIT OR MINIMUM SPEED SIGNS SHALL BE INCLUDED IN THE PAY ITEM FOR THE WORK ZONE SPEED LIMIT SIGNS.

THE WORK ZONE SPEED LIMIT SIGNS MAY BE ERECTED OR UNCOVERED NO MORE THAN 4 HOURS BEFORE THE ACTUAL START OF WORK.

THE CONTRACTOR SHALL ERECT A WORK ZONE SPEED LIMIT SIGN IN ADVANCE OF ANY CONSTRUCTION WORK EXPECTED, OR AS DIRECTED BY THE ENGINEER. THE SIGN SHALL BE MOUNTED ON BOTH SIDES OF DIVIDED HIGHWAYS, 500 FEET IN ADVANCE OF EACH END OF THE PROJECT. THE SIGN SHALL BE REPEATED, ON THE SIDE NEAREST TRAFFIC, EVERY 1/2 MILE FOR 45 MPH ZONES. THESE SIGNS SHALL ALSO BE ERECTED IMMEDIATELY AFTER EACH OPEN ENTRANCE RAMP WITHIN THE ZONE. A SIGN TO INDICATE THE RESUMPTION OF THE STATUTORY SPEED LIMIT SHALL BE ERECTED AT THE END OF ANY REDUCED SPEED ZONE. THIS SIGN SHALL BE AN R-8A.

THE CONTRACTOR MAY USE SIGNS AND SUPPORTS IN USED BUT GOOD CONDITION PROVIDED THE SIGNS MEET CURRENT ODOT SPECIFICATIONS. SIGN FACES SHALL BE REFLECTORIZED WITH TYPE G SHEETING COMPLYING WITH THE REQUIREMENTS OF 730.19 AND U. S. DEPARTMENT OF TRANSPORTATION SUPPLEMENTAL SPECIFICATION FOR TYPE III-C SHEETING, FP-85. WORK ZONE SPEED LIMIT SIGNS SHALL BE MOUNTED ON TWO (2) ITEM 630 GROUND MOUNTED SUPPORTS, NO. 4 POSTS.

WORK ZONE SPEED LIMIT SIGNS AND SUPPORTS WILL BE MEASURED AS THE NUMBER OF SIGN INSTALLATIONS, INCLUDING THE SIGNS AND NECESSARY SUPPORTS. IF A SIGN AND SUPPORT COMBINATION IS REMOVED AND REERECTED AT ANOTHER LOCATION WITHIN THE PROJECT DUE TO CHANGES IN THE SPEED ZONE DIRECTED BY THE ENGINEER, IT SHALL BE CONSIDERED ANOTHER UNIT.

THE WORK ZONE SPEED LIMIT SIGNS WILL BE LEFT IN PLACE AT THE END OF THE PROJECT AND REMOVED IN A SUBSEQUENT PROJECT.

PAYMENT FOR ACCEPTED QUANTITIES, COMPLETE IN PLACE, WILL BE MADE AT THE CONTRACT UNIT PRICE. PAYMENT SHALL BE FULL COMPENSATION FOR ALL MATERIALS, LABOR, INCIDENTALS AND EQUIPMENT FOR FURNISHING, ERECTING, MAINTAINING, COVERING DURING SUSPENSION OF WORK, AND REMOVING THE SIGNS AND SUPPORTS.

614 WORK ZONE SPEED LIMIT SIGN 16 EACH

ITEM 614 PORTABLE CHANGEABLE MESSAGE SIGN, CLASS II, AS PER PLAN

THE CONTRACTOR SHALL FURNISH, INSTALL, MAINTAIN, AND REMOVE, WHEN NO LONGER NEEDED, CHANGEABLE MESSAGE SIGNS.

EACH SIGN SHALL BE TRAILER MOUNTED AND EQUIPPED WITH A FUNCTIONAL DIMMING MECHANISM TO DIM THE SIGN DURING DARKNESS AND A TAMPER AND VANDAL PROOF ENCLOSURE. THE SIGNS SHALL BE PROVIDED WITH APPROPRIATE TRAINING AND OPERATION INSTRUCTIONS TO ENABLE ON-SITE PERSONNEL TO OPERATE AND TROUBLESHOOT THE UNIT. THE SIGN SHALL ALSO BE CAPABLE OF BEING POWERED BY AN ELECTRICAL SERVICE LOOP FROM A LOCAL UTILITY COMPANY.

THE PROBABLE LOCATIONS AND MESSAGES FOR THOSE LOCATIONS ARE SHOWN ON SHEET 51 OF THE PLAN. PLACEMENT, OPERATION, MAINTENANCE AND ALL ACTIVATION OF THE SIGNS BY THE CONTRACTOR SHALL BE AS DIRECTED BY THE ENGINEER. THE PCMS SHALL BE LOCATED IN A HIGHLY VISIBLE POSITION YET PROTECTED FROM TRAFFIC. THE CONTRACTOR SHALL, AT THE DIRECTION OF THE ENGINEER, RELOCATE THE PCMS TO IMPROVE VISIBILITY OR ACCOMMODATE CHANGED CONDITIONS. WHEN NOT IN USE, THE PCMS WILL BE OFF, FACING AWAY FROM ALL TRAFFIC AND SHALL DISPLAY ONE OR MORE HIGH INTENSITY YELLOW REFLECTIVE SHEETING SURFACES OF 9-INCH BY 15-INCH MINIMUM SIZE FACING TRAFFIC.

THE ENGINEER SHALL BE PROVIDED ACCESS TO EACH SIGN UNIT AND SHALL BE PROVIDED WITH APPROPRIATE TRAINING AND OPERATION INSTRUCTIONS TO ENABLE ODOT PERSONNEL TO OPERATE AND TROUBLESHOOT THE UNIT AND TO REVISE SIGN MESSAGES, IF NECESSARY.

THE PCMS SHALL CONTAIN AN ACCURATE CLOCK AND PROGRAMMING LOGIC WHICH WILL ALLOW THE SIGN TO BE ACTIVATED, DEACTIVATED OR MESSAGES CHANGED AUTOMATICALLY AT DIFFERENT TIMES OF THE DAY FOR DIFFERENT DAYS OF THE WEEK.

THE PCMS UNIT SHALL BE MAINTAINED IN GOOD WORKING ORDER BY THE CONTRACTOR IN ACCORDANCE WITH THE PROVISIONS OF 614.03(C). THE CONTRACTOR SHALL, PRIOR TO ACTIVATING THE UNIT, MAKE ARRANGEMENTS WITH AN AUTHORIZED SERVICE AGENT FOR THE PCMS TO ASSURE PROMPT SERVICE IN THE EVENT OF FAILURE. ANY FAILURE SHALL NOT RESULT IN THE SIGN BEING OUT OF SERVICE FOR MORE THAN 12 HOURS INCLUDING WEEKENDS. FAILURE TO COMPLY MAY RESULT IN AN ORDER TO STOP WORK AND OPEN ALL TRAFFIC LANES AND/OR IN THE DEPARTMENT TAKING APPROPRIATE ACTION TO SAFELY CONTROL TRAFFIC AND THE ENTIRE COST TO CONTROL TRAFFIC ACCRUED BY THE DEPARTMENT WILL BE DEDUCTED FROM MONIES DUE, OR TO BECOME DUE THE CONTRACTOR ON HIS CONTRACT.

THE CONTRACTOR SHALL BE RESPONSIBLE FOR 24 HOURS PER DAY OPERATION AND MAINTENANCE OF THESE SIGNS ON THE PROJECT FOR THE DURATION OF THE PHASES WHEN THE PLAN REQUIRES THEIR USE.

THE REQUIREMENT TO FURNISH, INSTALL, MAINTAIN AND REMOVE A PCMS UNIT ON THIS PROJECT SHALL NOT IN ANY WAY RELIEVE THE CONTRACTOR OF HIS RESPONSIBILITIES AS OUTLINED IN CMS 104.04.

PAYMENT FOR THE ABOVE DESCRIBED ITEM SHALL BE AT THE CONTRACT UNIT PRICE BID PER SIGN-MONTH FOR EACH ITEM 614 PORTABLE CHANGEABLE MESSAGE SIGN, CLASS II, AS PER PLAN AND SHALL INCLUDE ALL LABOR, MATERIALS, EQUIPMENT, FUELS, LUBRICATING OILS, SOFTWARE, HARDWARE AND INCIDENTALS TO PERFORM THE ABOVE DESCRIBED WORK.

THE FOLLOWING QUANTITIES HAVE BEEN INCLUDED IN THE GENERAL SUMMARY FOR USE AS DIRECTED BY THE ENGINEER:

ITEM 614 PORTABLE CHANGEABLE MESSAGE SIGN,
CLASS II, AS PER PLAN 6.0 SIGN-MONTHS

ITEM 622 PORTABLE CONCRETE BARRIER, 32-INCH, AS PER PLAN

THIS ITEM SHALL BE AS PER ITEM 622 EXCEPT THE BARRIER SHALL CONFORM TO STANDARD CONSTRUCTION DRAWING MC-9.2 AND UPON COMPLETION OF THE PROJECT, ALL BARRIER SHALL REMAIN IN PLACE AND BECOME THE PROPERTY OF ODOT.

ALL APPROACHES TO INSTALLATIONS OF PORTABLE CONCRETE BARRIER SHALL INCLUDE A TAPERED END SECTION.

PCB BETWEEN STATION 1420+00 AND 1434+50 WILL BE REMOVED AND REPLACED BY THE CONTRACTOR FOR CONNECTION OF THE NORTHBOUND C/D ROAD TO THE MAINLINE AS SHOWN ON SHEET 47. THE PRICE OF THIS REMOVAL AND REPLACEMENT SHALL BE INCIDENTAL TO THE CONTRACT UNIT PRICE FOR THIS ITEM.

SUMMARY OF PORTABLE CONCRETE BARRIER

ALONG RIGHT SHOULDER OF I-270 MAINLINE:
NB STA. 1363+00 TO STA. 1450+80 8780 L.F.
SB STA. 1362+30 TO STA. 1445+50 8320 L.F.
ALONG LEFT SHOULDER OF I-270 AT CONNECTOR ROAD BRIDGE:
NB STA. 1384+85 TO STA. 1395+55 1070 L.F.
SB STA. 1384+35 TO STA. 1395+05 1070 L.F.
ALONG LEFT SHOULDER OF I-270 AT MCCUTCHEON BRIDGE:
NB STA. 1439+50 TO STA. 1450+20 1070 L.F.
SB STA. 1439+00 TO STA. 1449+70 1070 L.F.

THE FOLLOWING QUANTITIES HAVE BEEN INCLUDED IN THE GENERAL SUMMARY FOR USE AS DIRECTED BY THE ENGINEER:

ITEM 622 PORTABLE CONCRETE BARRIER, 32-INCH, AS PER PLAN 21,380 L.F.

ITEM SPECIAL - REPLACEMENT SIGN

FLAT SHEET SIGNS FURNISHED BY THE CONTRACTOR IN ACCORDANCE WITH THE REQUIREMENTS OF THE PLANS, SPECIFICATIONS AND PROPOSAL WHICH BECOME DAMAGED BY TRAFFIC FOR REASONS BEYOND THE CONTROL OF THE CONTRACTOR SHALL BE REPLACED IN KIND WHEN ORDERED BY THE ENGINEER. REPLACEMENT SIGNS SHALL BE NEW. OTHER MATERIALS MAY BE IN USED BUT GOOD CONDITION SUBJECT TO APPROVAL BY THE ENGINEER.

PAYMENT FOR THE NEW SIGNS SHALL BE MADE AT THE BID PRICE PER SQUARE FOOT FOR "ITEM SPECIAL - REPLACEMENT SIGN" AND SHALL INCLUDE THE SUPPORTS, AND PROVIDING THE NECESSARY REPLACEMENT HARDWARE, SUPPORTS, ETC.

AN ESTIMATED QUANTITY OF 96 SQUARE FEET HAS BEEN PROVIDED IN THE GENERAL SUMMARY.

ITEM SPECIAL - REPLACEMENT DRUM

DRUMS FURNISHED BY THE CONTRACTOR IN ACCORDANCE WITH THE REQUIREMENTS OF THE PLANS, SPECIFICATIONS AND PROPOSAL WHICH BECOME DAMAGED BY TRAFFIC FOR REASONS BEYOND THE CONTROL OF THE CONTRACTOR SHALL BE REPLACED IN KIND WHEN ORDERED BY THE ENGINEER. REPLACEMENT DRUMS SHALL BE NEW.

PAYMENT FOR THE NEW DRUMS SHALL BE MADE AT THE BID PRICE PER EACH FOR "ITEM SPECIAL - REPLACEMENT DRUM" AND SHALL INCLUDE THE COST OF REMOVING AND DISPOSING OF THE DAMAGED DRUM; AND PROVIDING AND MAINTAINING THE REPLACEMENT DRUM IN ACCORDANCE WITH THE CONTRACT REQUIREMENTS FOR THE ORIGINAL DRUM.

AN ESTIMATED QUANTITY OF 25 EACH HAS BEEN PROVIDED IN THE GENERAL SUMMARY.

ITEM 614 - LAW ENFORCEMENT OFFICER WITH PATROL CAR

THE CONTRACTOR SHALL PROVIDE THE SERVICES OF A UNIFORMED LAW ENFORCEMENT OFFICER (L.E.O.) WITH PATROL CAR PER WORK AREA AS FOLLOWS:
A) DURING INSTALLATION AND REMOVAL OF PCB, PAVEMENT MARKINGS, AND TRAFFIC CONTROL SIGNS ON ANY PORTION OF THE FREEWAY OPEN TO TRAFFIC.
B) DURING THE SHORT DURATION CLOSURES OF THE FREEWAY TO REMOVE OR ERECT GIRDERS FOR BRIDGE CONSTRUCTION.

IF THE CONTRACTOR DESIRES TO USE A L.E.O. OUTSIDE OF THE AREA AND TIMES DESCRIBED ABOVE, THIS SHALL BE PERMITTED; HOWEVER, THE COST OF THE L.E.O. SHALL BE BORNE BY THE CONTRACTOR. ALL PATROL CARS SHALL BE EQUIPPED WITH STANDARD TOP-MOUNTED FLASHING LIGHTS. THE CONTRACTOR SHALL MAKE ARRANGEMENTS FOR THESE SERVICES WITH THE DEPUTY CHIEF, SERVICE SUBDIVISION, COLUMBUS POLICE DEPARTMENT (645-4795). THE L.E.O.'S ARE CONSIDERED TO BE EMPLOYED BY THE CONTRACTOR AND THE CONTRACTOR SHALL BE RESPONSIBLE FOR THEIR ACTIONS. ALTHOUGH THEY ARE EMPLOYED BY THE CONTRACTOR, THE PROJECT ENGINEER SHALL HAVE CONTROL OVER THEIR PLACEMENT.

THE FOLLOWING QUANTITIES HAVE BEEN INCLUDED IN THE GENERAL SUMMARY FOR USE AS DIRECTED BY THE ENGINEER:

ITEM 614 - LAW ENFORCEMENT OFFICER WITH PATROL CAR 200 HOURS

COORDINATION WITH THE COLUMBUS PAVING THE WAY... PROGRAM (PTWP)

THE CONTRACTOR SHALL NOTIFY THE PROJECT ENGINEER IN WRITING OF ALL TRAFFIC RESTRICTIONS AND UPCOMING MAINTENANCE OF TRAFFIC CHANGES ON A WEEKLY BASIS. WHEN DETOURS ARE PLANNED THIS NOTIFICATION SHALL BE AT THE PRECONSTRUCTION MEETING OR 30 DAYS IN ADVANCE ONCE CONSTRUCTION HAS BEGUN. LANE AND RAMP CLOSURES FOR TWO OR MORE WEEKS SHALL BE REPORTED TWO WEEKS IN ADVANCE OF CLOSURE. LANE AND RAMP CLOSURES OF LESS THAN TWO WEEKS DURATION AND MORE THAN TWO DAYS SHALL BE REPORTED AT LEAST 3 WORKING DAYS IN ADVANCE. FOR SHORT-TERM LANE OR RAMP CLOSURES (TWO DAYS OR LESS) NOTIFICATION SHALL BE MADE AT LEAST ONE WORKING DAY IN ADVANCE.

INFORMATION SHALL INCLUDE, BUT NOT LIMITED TO, ALL CONSTRUCTION ACTIVITIES THAT IMPACT TRAFFIC AT PRESENT AND IN THE NEXT 30 DAYS. THE REPORT SHALL BE OF A FORMAT APPROVED BY THE PROJECT ENGINEER OR ONE SUPPLIED BY THE PTWP. THE CONTRACTOR SHALL DESIGNATE AN INDIVIDUAL WHO WILL BE RESPONSIBLE TO PREPARE THIS REPORT AT THE PRECONSTRUCTION MEETING.

ANY UNFORESEEN IMPACTS TO TRAFFIC SHALL BE REPORTED TO THE PROJECT ENGINEER AS SOON AS POSSIBLE.

THE PROJECT ENGINEER SHALL PROVIDE THIS INFORMATION TO THE PTWP PROGRAM. ALL CONSTRUCTION ACTIVITIES THAT INTERFERE WITH TRAFFIC SHALL BE REPORTED TO THE PTWP. THIS INFORMATION SHALL BE PROVIDED TO THE PROGRAM INFORMATION ASSISTANT AT 645-6016 OR THE PROGRAM COORDINATOR AT 645-3970, OR BY FAX 645-5844.

COOPERATION BETWEEN CONTRACTORS

SEPARATE CONTRACTORS MAY BE WORKING WITHIN THE PROJECT AREA ON OTHER PHASES OF THE I-270 IMPROVEMENT PROJECT [FRA-270-(31.01)(33.64)] AND [FRA-STELZER RD.-A]. SEE ODOT CONSTRUCTION AND MATERIALS SPECIFICATIONS SEC. 105.07.

CALC. F.A.M. DATE: 11/94
CHK'D. R.B. DATE: 11/94

MAINTENANCE OF TRAFFIC GENERAL NOTES

FRA-270-32.46

PLOT SCALE...
COL #9 C:\DRAWING\06092310\MT\06092MN2.DWG FEBRUARY-06-1995

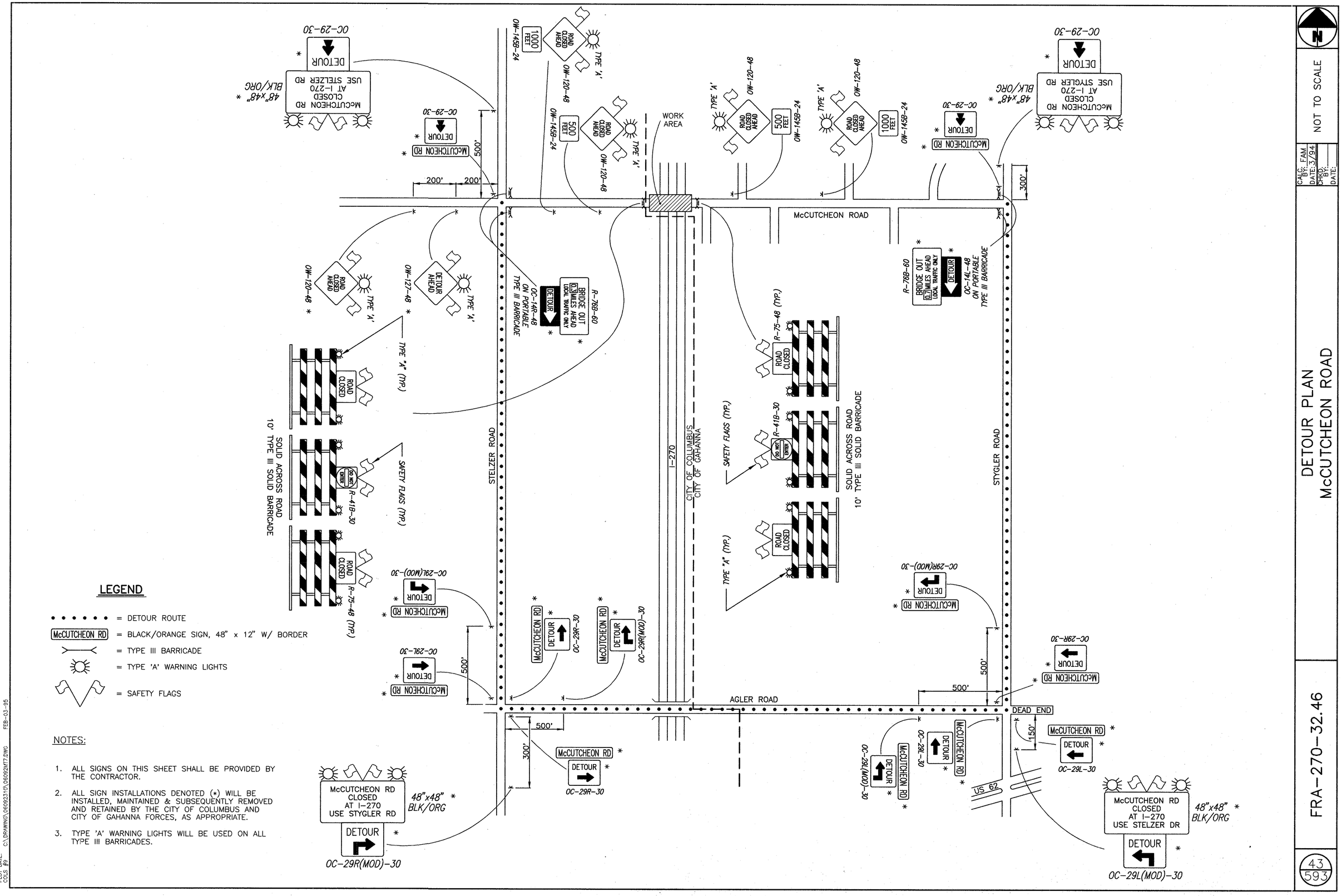

LEGEND

- = DETOUR ROUTE
- McCUTCHEON RD = BLACK/ORANGE SIGN, 48" x 12" W/ BORDER
- = TYPE III BARRICADE
- = TYPE 'A' WARNING LIGHTS
- = SAFETY FLAGS

NOTES:

1. ALL SIGNS ON THIS SHEET SHALL BE PROVIDED BY THE CONTRACTOR.
2. ALL SIGN INSTALLATIONS DENOTED (*) WILL BE INSTALLED, MAINTAINED & SUBSEQUENTLY REMOVED AND RETAINED BY THE CITY OF COLUMBUS AND CITY OF GAHANNA FORCES, AS APPROPRIATE.
3. TYPE 'A' WARNING LIGHTS WILL BE USED ON ALL TYPE III BARRICADES.

NOT TO SCALE

CALC. FAM DATE: 3/94
CHKD. BY: DATE:

DETOUR PLAN
McCUTCHEON ROAD

FRA-270-32.46

PLOT DATE: FEB-03-95
COLS #9 C:\DRAWING\06092311\06092MT7.DWG

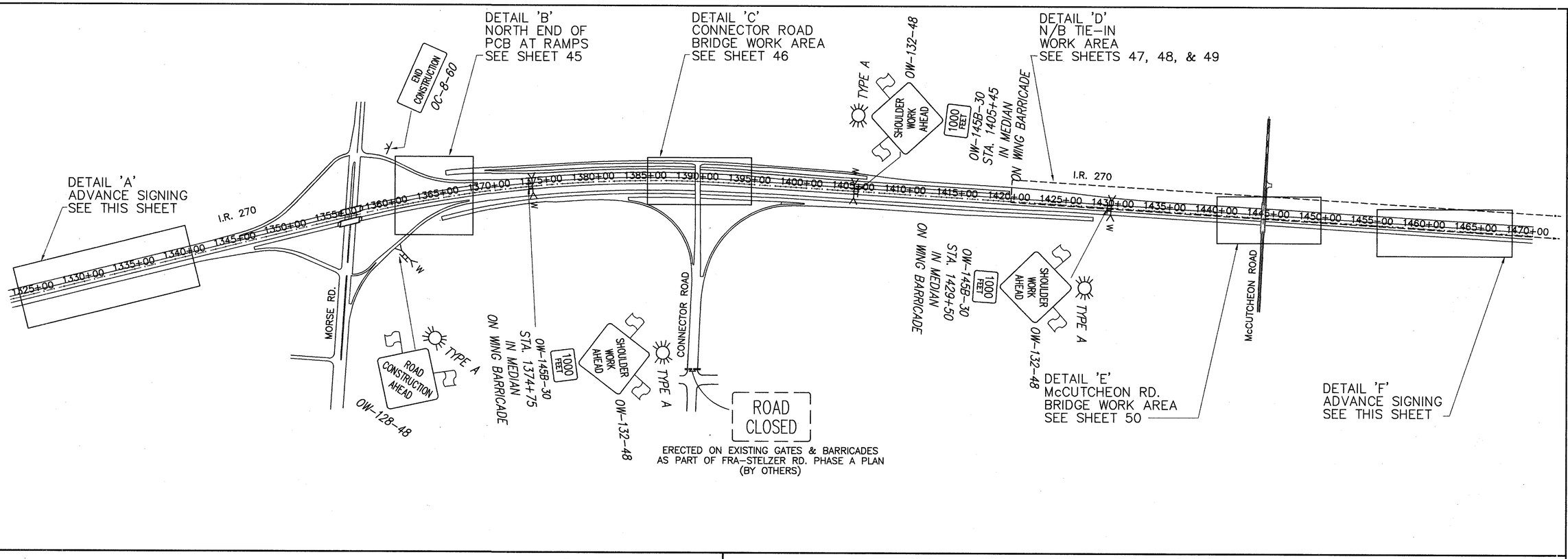

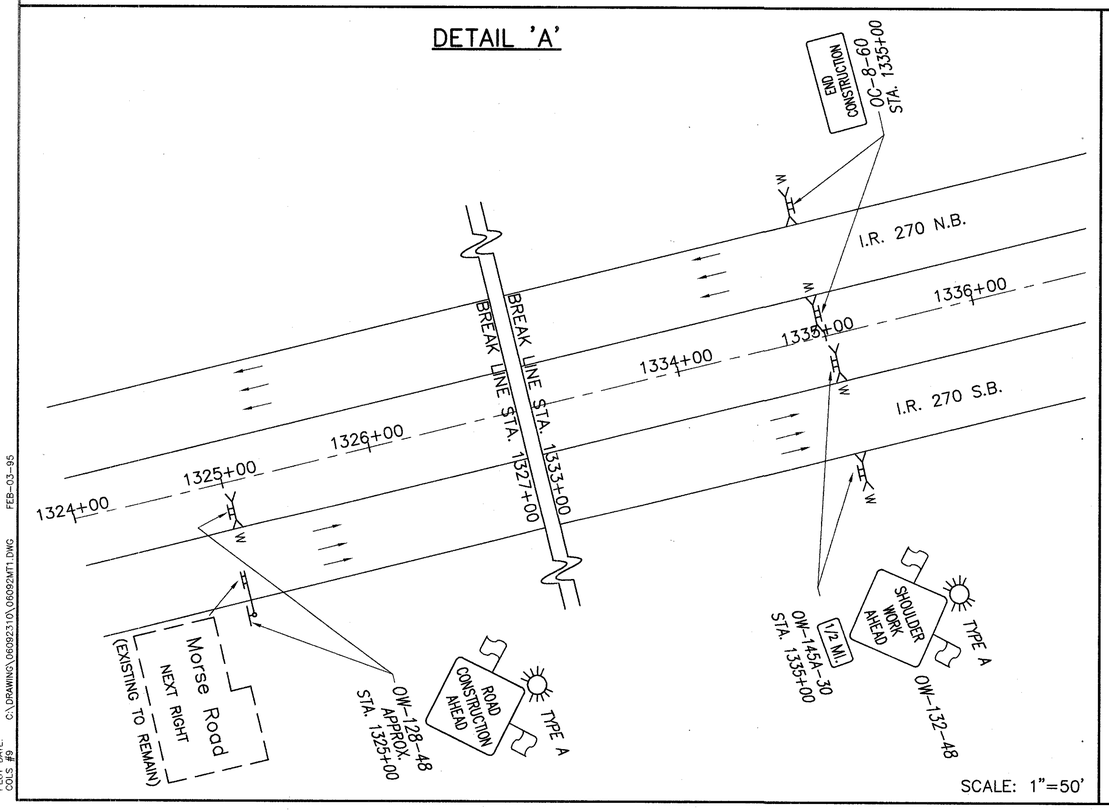

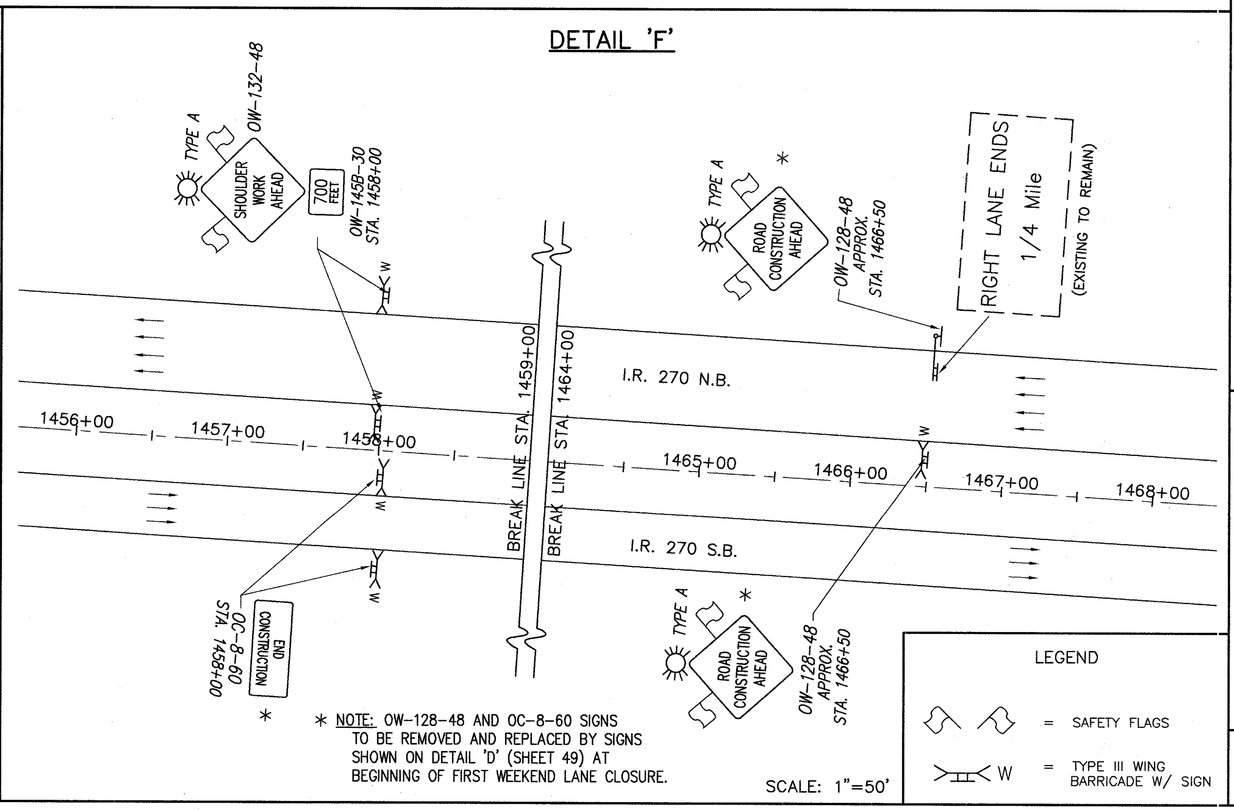

PLOT DATE: FEB-03-95
COLS. #9
C:\DRAWINGS\06092310\06092MT1.DWG

CALC:
DATE:
CHK:
BY:
DATE:

MAINTENANCE OF TRAFFIC
SCHEMATIC & ADVANCE SIGNING DETAILS 'A' & 'F'

FRA-270-32.46

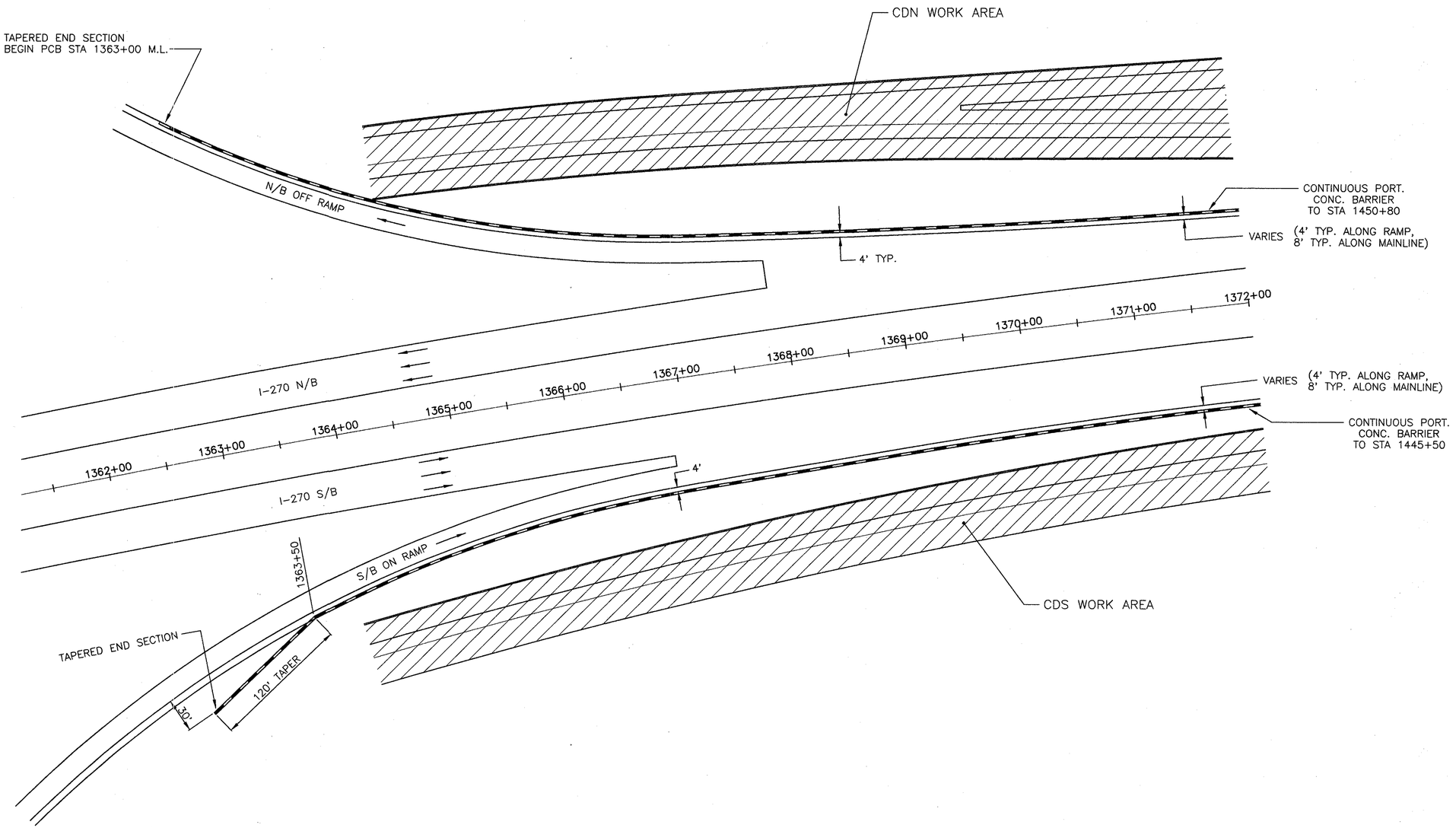

LEGEND

= WORK AREA

0 50 100
25
HORIZONTAL
SCALE IN FEET

CALC. BY:
DATE:
CHK'D BY:
DATE:

MAINTENANCE OF TRAFFIC
DETAIL 'B' – NORTH END OF PCB

FRA-270-32.46

PLOT DATE: FEB-03-95
CADD FILE: C:\DRAWING\06092310\06092MT4.DWG

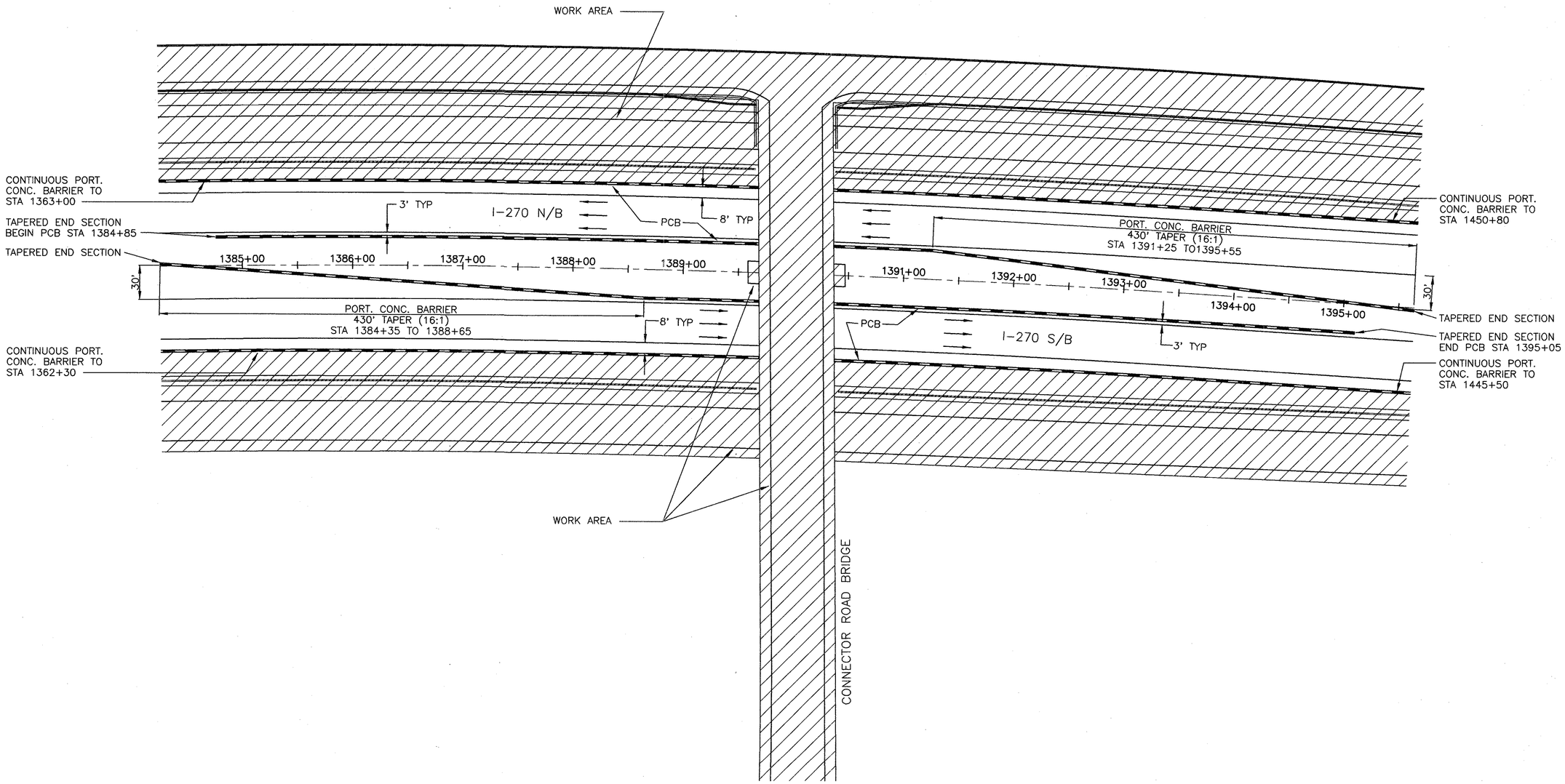

LEGEND

= WORK AREA

HORIZONTAL SCALE IN FEET
0 25 50 100

CALC. BY: DATE:
CHKD. BY: DATE:

MAINTENANCE OF TRAFFIC – DETAIL 'C'
CONNECTOR ROAD BRIDGE CONSTRUCTION

FRA-270-32.46

PLOT DATE: FEB-03-95
COLS #9
C:\DRAWINGS\06092310\06092MT2.DWG

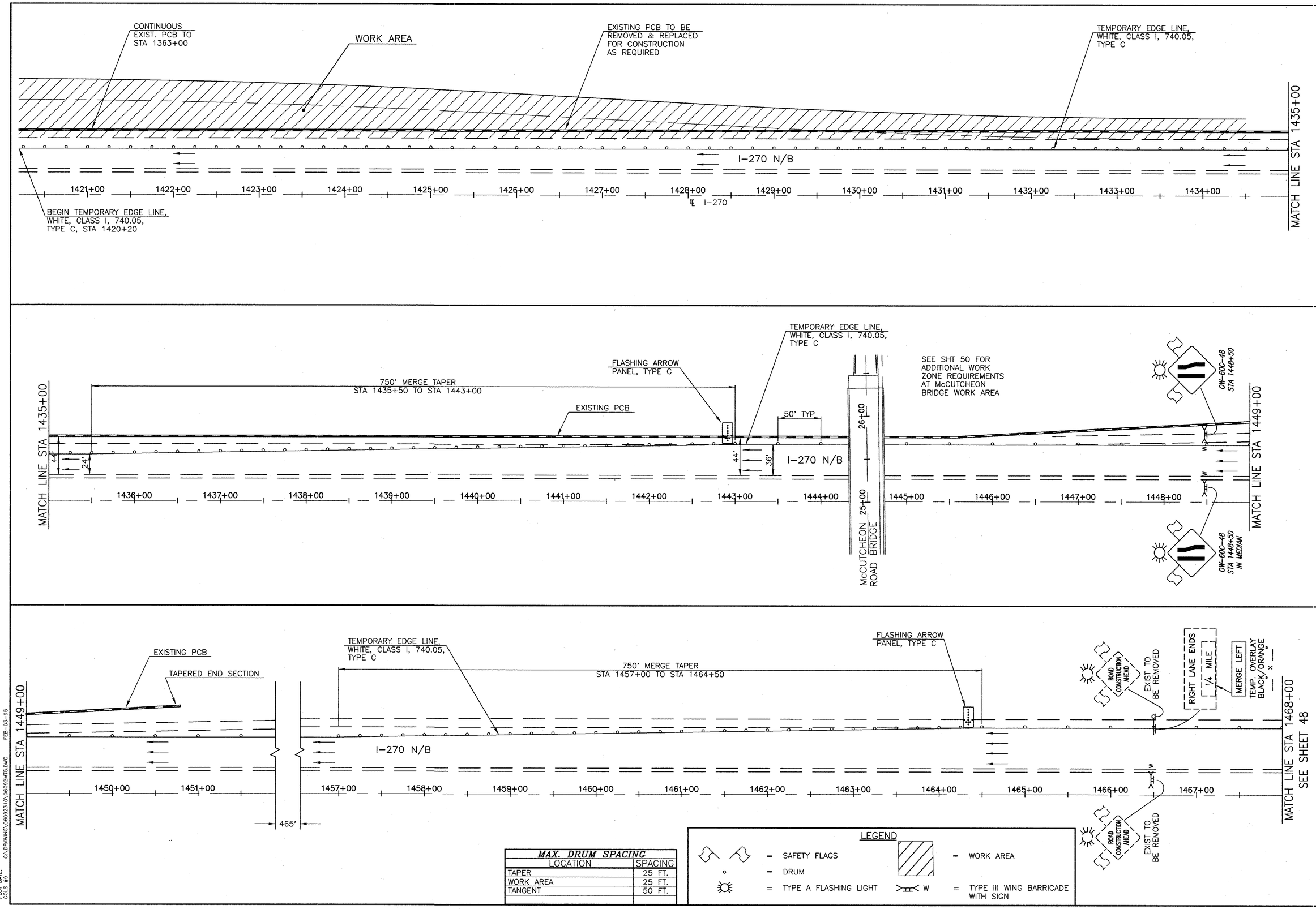

MAX. DRUM SPACING	
LOCATION	SPACING
TAPER	25 FT.
WORK AREA	25 FT.
TANGENT	50 FT.

0 25 50 100 HORIZONTAL SCALE IN FEET

CALC. BY: DATE: CHKD. BY: DATE:

MAINTENANCE OF TRAFFIC – DETAIL 'D'

N/B MAINLINE 4 LANE TO 2 LANE TRANSITION FOR CDN DECEL. WORK AREA

FRA-270-32.46

PLOT DATE: COLS #9 C:\DRAWING\06092310\06092MT5.DWG FEB-03-95

MATCH LINE – STA 1468+00 (SEE SHT. 47)

TYPE A

OW-60C-48
STA 1469+50

TEMPORARY EDGE LINE,
WHITE, CLASS I, 740.05,
TYPE C

420'

TYPE A

RIGHT LANE
CLOSED
AHEAD

OW-122-48
STA 1479+00

TEMP. EDGE LINE,
WHITE, CLASS I,
740.05, TYPE C

12'

12'

1469+00 1470+00 1471+00 1472+00 1473+00 1474+00 1479+00 1480+00 1481+00 1482+00 1483+00 1484+00 1485+00

I-270 N/B

MATCH LINE – STA 1486+50

MAX. DRUM SPACING	
LOCATION	SPACING
TAPER	25 FT.
TANGENT	50 FT.

LEGEND

= SAFETY FLAGS

W = TYPE III WING BARRICADE W/ SIGN

= TYPE A FLASHING LIGHT

o = DRUM

MATCH LINE – SEE SHEET 49

END TEMP. EDGE LINE
WHITE, CLASS 1, 740.05,
TYPE C, STA 1490+50

BEGIN TEMP. EDGE LINE,
YELLOW, CLASS 1,
740.05, TYPE C

330' SHIFT TAPER

MATCH LINE – STA 1486+50

AGLER ROAD

I-270 N/B

1487+00 1488+00 1489+00 1490+00 1491+00 1492+00 1493+00 1494+00 1495+00 1496+00 1497+00 1498+00 1499+00 1500+00

I-270 S/B

S/B OFF RAMP (TO I-670)

W

END
CONSTRUCTION
OC-8-60
STA 1489+50

*

TYPE A

ROAD
CONSTRUCTION
AHEAD

OW-128-48
STA 1500+00

*

W

W

* NOTE:

OW-128-48 AND OC-8-60 SIGNS TO BE ERECTED FOR FIRST WEEKEND CLOSURE AND LEFT IN PLACE FOR REMAINDER OF PROJECT.

N

0 25 50 100
HORIZONTAL
SCALE IN FEET

CALC. BY:
DATE:
CHKD. BY:
DATE:

MAINTENANCE OF TRAFFIC – DETAIL 'D'
N/B MAINLINE 4 LANE TO 2 LANE TRANSITION FOR CDN DECEL. WORK AREA

FRA-270-32.46

48
593

PLOT DATE:
COLS #9

C:\DRAWING\0609231\06092AT6.DWG FEB-3-95

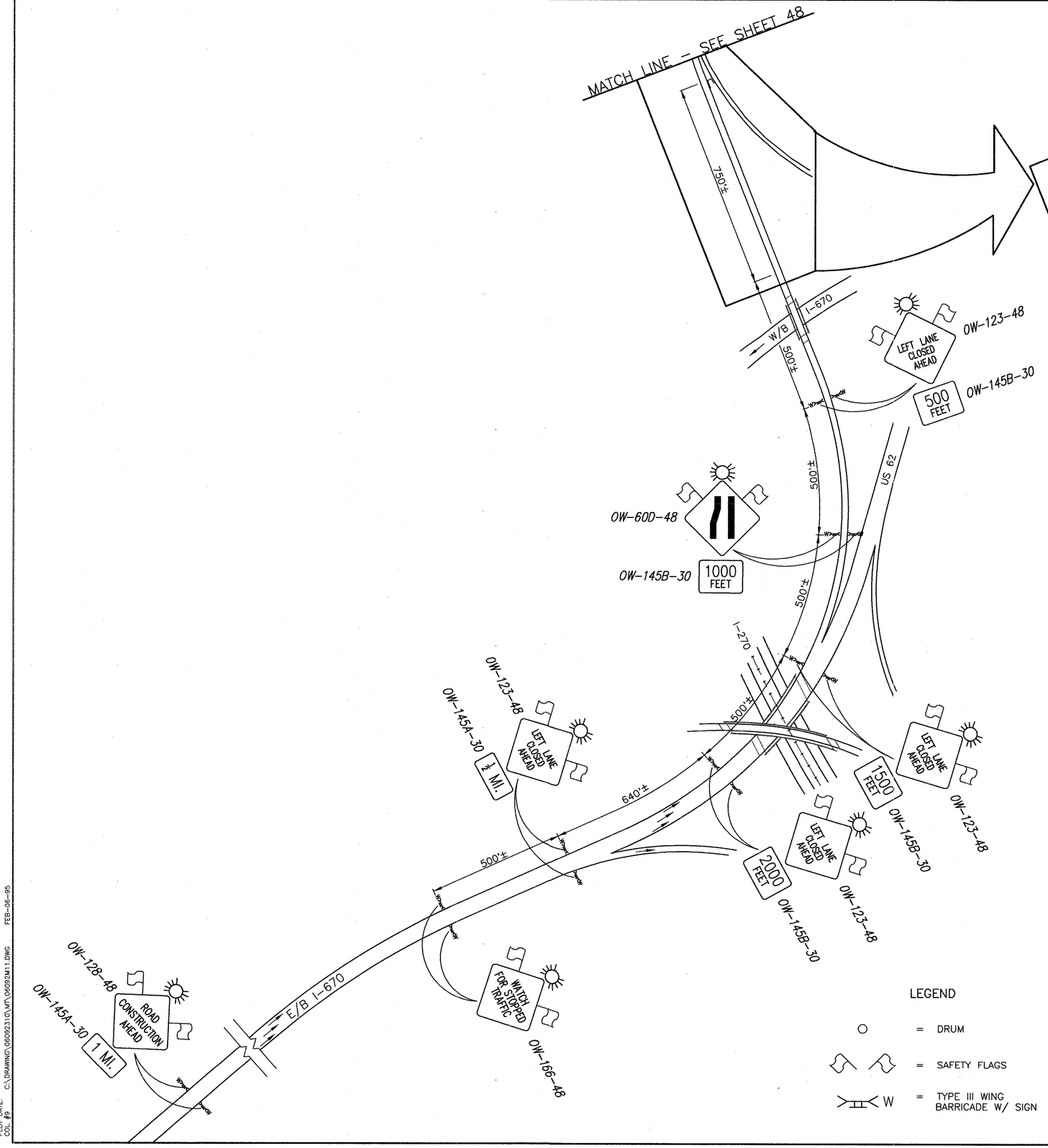

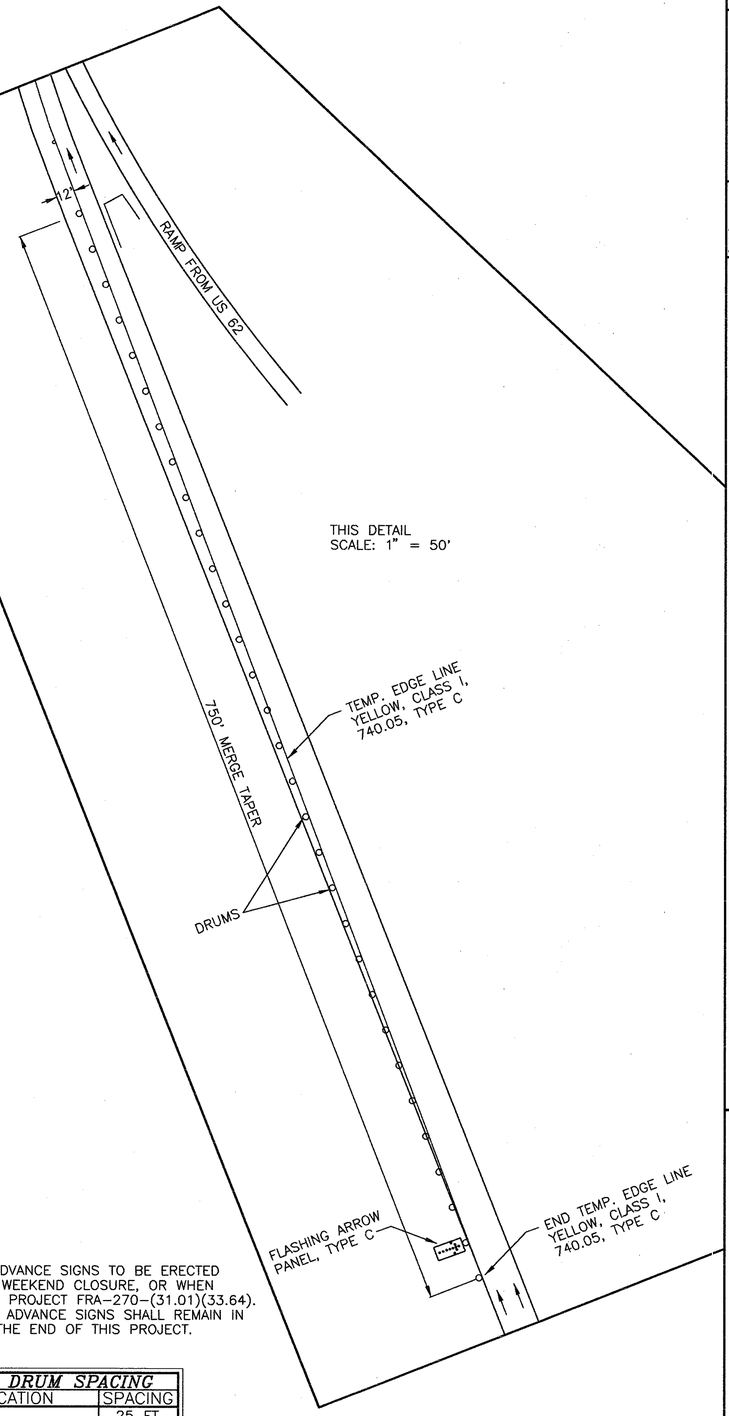

NOTE:
TAPER & ADVANCE SIGNS TO BE ERECTED FOR FIRST WEEKEND CLOSURE, OR WHEN NEEDED BY PROJECT FRA-270-(31.01)(33.64). TAPER AND ADVANCE SIGNS SHALL REMAIN IN PLACE AT THE END OF THIS PROJECT.

MAX. DRUM SPACING	
LOCATION	SPACING
TAPER	25 FT.
TANGENT	50 FT.

0 200 400
100 HORIZONTAL SCALE IN FEET

CALC. BY:
DATE:
CHKD. BY:
DATE:

MAINTENANCE OF TRAFFIC – DETAIL 'D'
TAPER & ADVANCE SIGNING – I-670 RAMP

FRA-270-32.46

PLOT DATE:
COL #9
C:\DRAWINGS\0609231\OLMT\0609231M11.DWG FEB-06-95

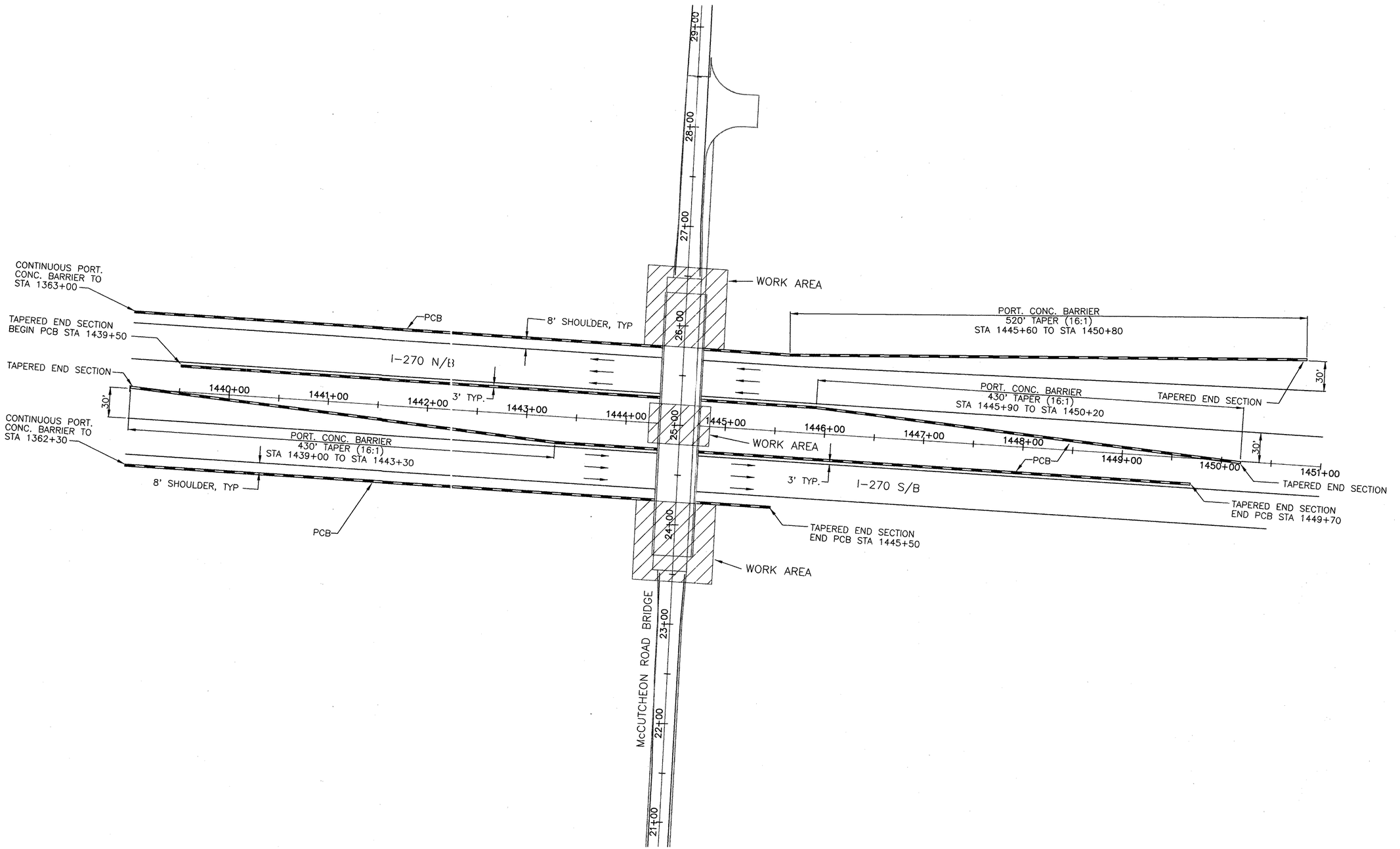

LEGEND

= WORK AREA

N

0 25 50 100
HORIZONTAL SCALE IN FEET

CALC. BY:
DATE:
CHKD. BY:
DATE:

MAINTENANCE OF TRAFFIC – DETAIL 'E'
McCUTCHEON ROAD BRIDGE CONSTRUCTION

FRA-270-32.46

50
51 93

PLOT DATE: FEB-03-95
COLS #9
C:\DRAWING\0692310\069292MT3.DWG

CHANGEABLE MESSAGE SIGN SEQUENCE DURING SHORT DURATION CLOSURES

	MESSAGE	TIME
A	I-270 EAST CLOSED	0.8 SEC
	20 MIN PERIODS	0.8 SEC
	AT MORSE ROAD	0.8 SEC
	USE I-71 SOUTH	0.8 SEC
		0.4 SEC

	MESSAGE	TIME
B	I-270 EAST CLOSED	0.8 SEC
	20 MIN PERIODS	0.8 SEC
	AT MORSE ROAD	0.8 SEC
	USE I-71 SOUTH	0.8 SEC
		0.4 SEC

	MESSAGE	TIME
C	PREPARE TO STOP	0.8 SEC
	20 MINUTE DELAY POSSIBLE	0.8 SEC
	AIRPORT NEXT EXIT	0.8 SEC
		0.4 SEC

	MESSAGE	TIME
D	AIRPORT I-270 SOUTH	0.8 SEC
	USE STELZER →	0.8 SEC
		0.4 SEC

	MESSAGE	TIME
E	I-270 NORTH CLOSED	0.8 SEC
	20 MIN PERIODS	0.8 SEC
	USE US-62 EAST	0.8 SEC
	HAMILTON TO MORSE	0.8 SEC
		0.4 SEC

	MESSAGE	TIME
F	20 MIN DELAY POSSIBLE	0.8 SEC
	NORTH OF I-670	0.8 SEC
	ALT NEXT RIGHT	0.8 SEC
	AIRPORT STRAIGHT AHEAD	0.8 SEC
		0.4 SEC

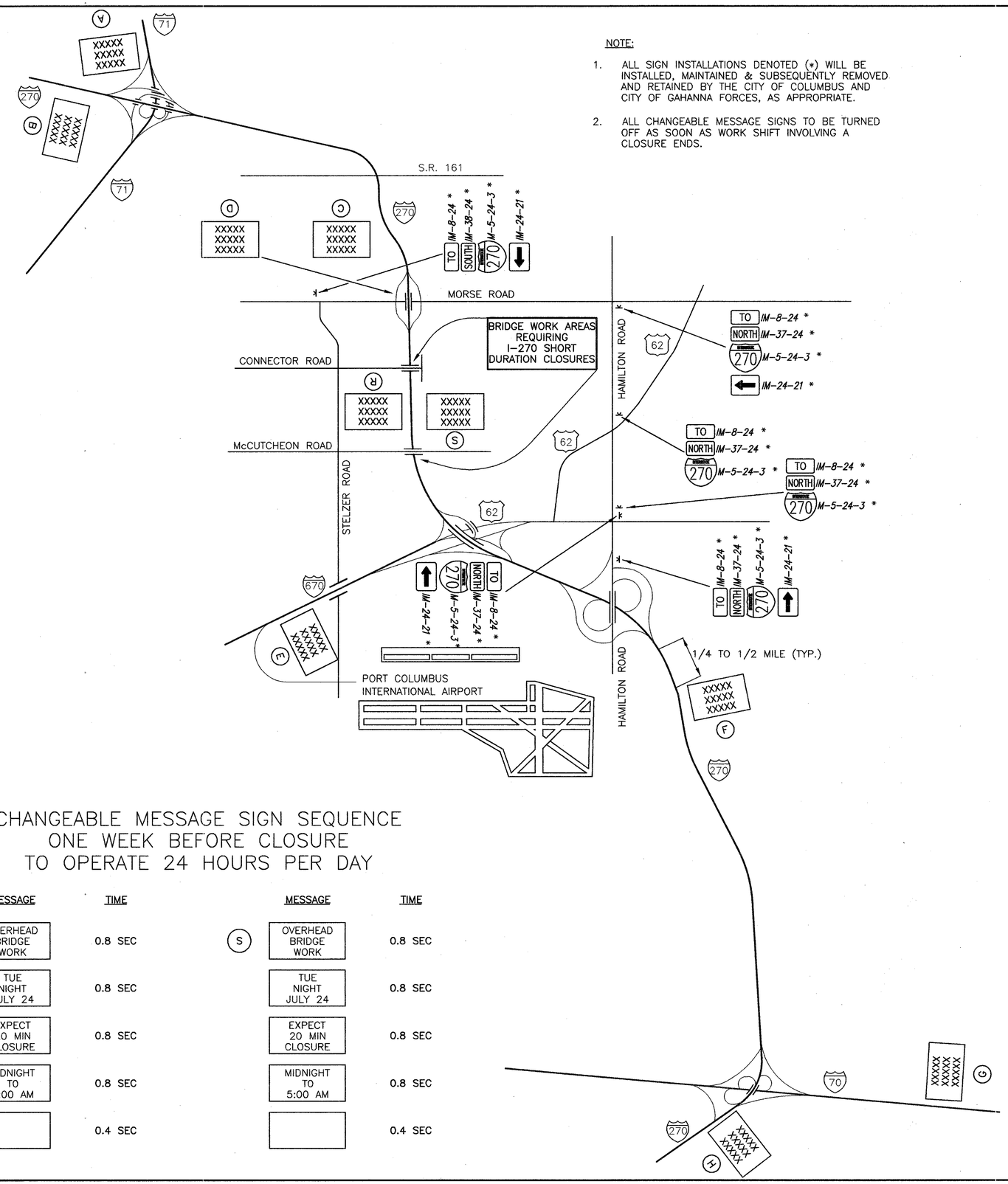

NOTE:

1. ALL SIGN INSTALLATIONS DENOTED (*) WILL BE INSTALLED, MAINTAINED & SUBSEQUENTLY REMOVED AND RETAINED BY THE CITY OF COLUMBUS AND CITY OF GAHANNA FORCES, AS APPROPRIATE.
2. ALL CHANGEABLE MESSAGE SIGNS TO BE TURNED OFF AS SOON AS WORK SHIFT INVOLVING A CLOSURE ENDS.

CHANGEABLE MESSAGE SIGN SEQUENCE ONE WEEK BEFORE CLOSURE TO OPERATE 24 HOURS PER DAY

	MESSAGE	TIME
G	I-270 NORTH CLOSED	0.8 SEC
	AT I-670	0.8 SEC
	20 MIN PERIODS	0.8 SEC
	USE I-70 EAST	0.8 SEC
		0.4 SEC

	MESSAGE	TIME
H	I-270 NORTH CLOSED	0.8 SEC
	AT I-670	0.8 SEC
	20 MIN PERIODS	0.8 SEC
	USE I-70 EAST	0.8 SEC
		0.4 SEC

	MESSAGE	TIME
R	OVERHEAD BRIDGE WORK	0.8 SEC
	TUE NIGHT JULY 24	0.8 SEC
	EXPECT 20 MIN CLOSURE	0.8 SEC
	MIDNIGHT TO 5:00 AM	0.8 SEC
		0.4 SEC

	MESSAGE	TIME
S	OVERHEAD BRIDGE WORK	0.8 SEC
	TUE NIGHT JULY 24	0.8 SEC
	EXPECT 20 MIN CLOSURE	0.8 SEC
	MIDNIGHT TO 5:00 AM	0.8 SEC
		0.4 SEC

NOT TO SCALE

CALC. BY: DATE: CHKD. BY: DATE:

I-270 SHORT DURATION CLOSURES: CHANGEABLE MESSAGE SIGN LOCATIONS

FRA-270-32.46

PLOT SCALE: COL #9 C:\DRAWING\06092310\MT\06092MT8.DWG FEBRUARY-03-1995

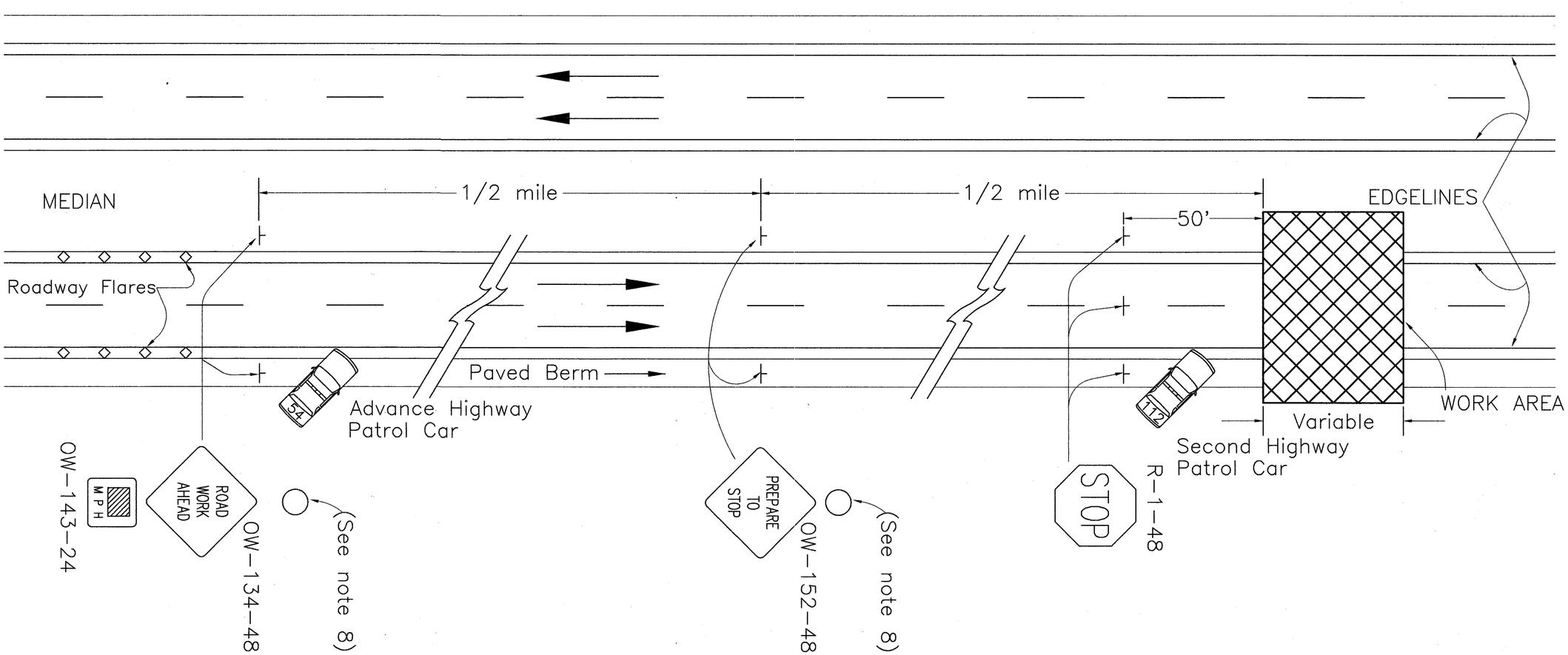

GENERAL NOTES

1. THIS TYPE OF HIGHWAY CLOSURE SHALL ONLY BE USED FOR EMERGENCIES OR FOR CONSTRUCTION OPERATIONS WHEN THE DURATION OF THE CLOSURE WILL NOT EXCEED 15 MINUTES. AFTER THE HIGHWAY HAS BEEN CLOSED AND REOPENED VIA THIS PROCEEDURE A MINIMUM PERIOD OF 30 MINUTES SHALL ELAPSE BEFORE ANOTHER SHORT DURATION CLOSURE, EXCEPT WITH THE APPROVAL OF THE ENGINEER.

2. AT LEAST TWO PATROLMEN AND TWO PATROL CARS SHALL BE PROVIDED ON EACH APPROACH TO THE CLOSURE. EACH PATROL CAR SHALL HAVE A ROOF MOUNTED ROTATING RED LIGHT OR A LIGHT BAR.

3. A MINIMUM OF FOUR FLARES SHALL BE BURNING CONTINUOUSLY ON EACH SIDE OF THE ROADWAY IN ADVANCE OF THE "OW-134-48" SIGN DURING THE TIME THAT TRAFFIC IS STOPPED ON THE DIVIDED HIGHWAY.

4. ROAD CLOSURES ARE ONLY PERMITTED BETWEEN 12:00 MIDNIGHT AND 5:00 AM, SUBJECT TO THE APPROVAL OF THE ENGINEER.

5. THE ADVANCE PATROL CAR AND THE "OW-134-48", "OW-143-24", AND "OW-152-48" SIGNS SHALL BE MOVED BACK AS REQUIRED BY THE QUEUING OF STOPPED VEHICLES. NEW FLARES SHALL BE PLACED WHENEVER THE ADVANCE PATROL CAR IS REQUIRED TO RELOCATE.

6. TRAFFIC CONTROL FOR CLOSURE SHALL BE ACCOMPLISHED IN THE FOLLOWING ORDER:

   A. ADVANCE PATROL CAR, LIGHTS AND FLASHER ON; AT LEAST FOUR FLARES BURNING ON EACH SIDE OF THE ROADWAY.
   B. "OW-134-48" AND "OW-143-24" SIGNS ERECTED.
   C. "OW-152-48" SIGNS ERECTED.
   D. SECOND PATROL CAR, LIGHTS AND FLASHERS ON.

   E. "R-1-48" SIGNS ERECTED BY FLAGMEN WITH FLARE OR FLAG USED TO STOP TRAFFIC. THE ORDER OF ERECTION SHALL BE TOWARD THE MEDIAN SHOULDER IN THE FOLLOWING ORDER: RIGHT SHOULDER, THEN CENTER, THEN MEDIAN SHOULDER.

6. TRAFFIC CONTROL SHALL BE REMOVED IN THE FOLLOWING ORDER:

   A. WITH TRAFFIC STOPPED ONE MAN WITH A FLARE OR FLAG SHOULD HOLD TRAFFIC AND OTHER FLAGMAN SHALL REMOVE THE "R-1-48" SIGNS TOWARD THE RIGHT SHOULDER IN THE FOLLOWING ORDER: MEDIAN, THEN CENTER, THE SIGN ON THE RIGHT SHOULDER.
   B. AFTER ALL STOPPED VEHICLES HAVE STARTED MOVING, THE "OW-152-48" SIGNS SHALL BE REMOVED. THESE SIGNS MAY BE COVERED IF RE-USE IS IMMINENT.
   C. AFTER ALL CARS HAVE RESUMED APPROXIMATELY NORMAL SPEED, THE "OW-134-48" AND "OW-143-24" SIGNS SHALL BE REMOVED. THESE SIGNS MAY BE COVERED IF RE-USE IS IMMIMENT.
   D. LIGHTS AND FLASHERS SHALL BE TURNED OFF ON BOTH PATROL CARS.
   E. REMOVE ALL ROADWAY FLARES IF THEY ARE STILL BURNING.

8. WHEN A DIVIDED HIGHWAY MUST BE CLOSED DURING HOURS OF DARKNESS, A TYPE B HIGH INTENSITY FLASHING BARRICADE WARNING LIGHT SHALL BE USED ON EACH OW-134 AND OW-152 SIGN.

9. IF AN ENTRANCE RAMP IS LOCATED BETWEEN THE OW-134 AND R-1 SIGNS, THE "OW-134-48", "OW-143-24", AND THE "OW-152-48" SIGNS SHALL ALSO BE ERECTED ON THE RAMP SHOULDER.

OHIO DEPARTMENT OF TRANSPORTATION

SHORT DURATION CLOSING OF I-270 FOR BRIDGE CONSTRUCTION

DATE 5/77

REV'D. FAM 1/95

CALC. BY: DATE: CHKD. BY: DATE:

SHORT DURATION CLOSING OF I-270 FOR BRIDGE CONSTRUCTION

FRA-270-32.46

52/593

PLOT SCALE... COL #9 C:\DRAWING\06092310\MT\06092M10.DWG FEBRUARY-06-1995

7E-1

GENERAL NOTES

1. IT IS INTENDED THAT THIS DRAWING BE USED FOR TREATMENT OF DROP-OFFS THAT DEVELOP DURING CONSTRUCTION OPERATIONS, AND THAT ARE NOT OTHERWISE PROVIDED FOR IN THE CONSTRUCTION PLANS. WHERE THE PLANS DO NOT PROVIDE SPECIFIC ITEMS FOR LABOR, EQUIPMENT, OR MATERIALS TO IMPLEMENT THE DROP-OFF TREATMENTS SPECIFIED HEREON, THEY SHALL BE INCLUDED FOR PAYMENT IN THE LUMP SUM BID FOR ITEM 614 - MAINTAINING TRAFFIC.
2. WHILE THE NEED FOR CERTAIN ADVISORY SIGNING IS NOTED HEREON, IT IS NOT INTENDED THAT THIS BE INDICATIVE OF ALL SIGNING THAT MAY BE REQUIRED TO ADVISE OR WARN MOTORISTS, AND ALL REQUIREMENTS OF THE OHIO MANUAL OF UNIFORM TRAFFIC CONTROL DEVICES (OMUTCD) MUST BE FULFILLED.
3. IN URBAN OR OTHERWISE HEAVILY DEVELOPED AREAS WHERE PEDESTRAINS AND/OR BICYCLISTS MAY BE PRESENT IN SIGNIFICANT NUMBERS, ADDITIONAL SIGNING AND PROTECTIVE MEASURES OTHER THAN THOSE SHOWN HEREON MAY BE REQUIRED.
4. THE DROP-OFF TREATMENT SELECTED FOR USE AT ANY GIVEN LOCATION SHALL BE AS APPROPRIATE FOR THE PREVAILING CONDITIONS AT THE SITE.
5. WHERE CONCRETE BARRIER IS SPECIFIED, IT SHALL BE IN ACCORDANCE WITH STANDARD CONSTRUCTION DRAWING MC-9.2 AND ITEM 622.
6. WHEN DRUMS ARE SPECIFIED FOR A DROPOFF CONDITION, A MINIMUM NUMBER OF FOUR DRUMS SHALL BE USED. SPACING SHALL BE AS INDICATED IN THE PLANS OR AS SPECIFIED IN THE OMUTCD.
7. WHEN OW-151 (LOW SHOULDER) SIGNS OR OW-171 (UNEVEN LANES) AND OWP-171 SIGNS ARE REQUIRED, THEY SHALL BE PLACED 750' IN ADVANCE OF THE CONDITION, ON ALL INTERSECTING ENTRANCE RAMPS WITHIN THE LIMITS OF THE CONDITION AND IMMEDIATELY BEYOND ALL INTERSECTING ROADWAYS WITHIN THE LIMITS OF THE CONDITION. WHEN THE DROPOFF CONDITION EXTENDS MORE THAN ONE-HALF MILE, ADDITIONAL SIGNS SHOULD BE ERECTED AT INTERVALS OF ONE MILE OR LESS.
8. FOR LOCATIONS, SUCH AS AT RAMPS, LANE SHIFTS, LANE CLOSURES, ETC., WHERE TRAFFIC IS REQUIRED TO NEGOTIATE ANY DIFFERENCE IN ELEVATION BETWEEN PAVEMENTS, A 3:1 SLOPE TREATMENT SIMILAR TO THE OPTIONAL WEDGE TREATMENT SHALL BE PROVIDED.
9. PORTABLE CONCRETE BARRIER SHALL BE PLACED ON THE SAME LEVEL AS THE TRAFFIC SURFACE AND SHALL NOT ENCROACH ON LANE WIDTH(S) DESIGNATED AS THE MINIMUM REQUIRED FOR TRAFFIC USE. WHERE DRUMS ARE USED, AND THEIR PRESENCE WOULD REDUCE TRAVELED LANE WIDTHS TO LESS THAN 10', DRUMS MAY BE PLACED ON THE OPPOSITE LEVEL FROM THAT OF TRAFFIC PROVIDED THE DROPOFF DEPTH DOES NOT EXCEED 5" AND APPROVAL IS GRANTED BY THE PROJECT ENGINEER.
10. PAVEMENT REPAIRS (OR SIMILAR WORK):
    - A. LENGTHS GREATER THAN 60 FEET - UTILIZE APPROPRIATE TREATMENT FROM CONDITION I.
    - B. LENGTHS 60 FEET OR LESS - REPAIRS SHALL BE EFFECTED IN ACCORDANCE WITH 255.08. DRUMS MAY BE USED AS A SEPARATOR ADJACENT TO THE TRAVELED LANE.

OPTIONAL WEDGE TREATMENT

(MILLING OR RESURFACING)

1. THIS TREATMENT MAY BE USED WHEN PERMITTED FOR CONDITION I ONLY.
2. OW-171 AND OWP-171 SIGNS REQUIRED.

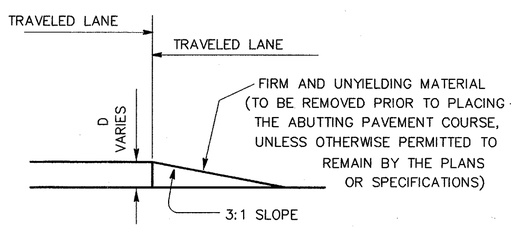

CONDITION I

DROPOFFS BETWEEN TRAVELED LANES

1. THESE TREATMENTS ARE TO BE USED FOR RESURFACING. PAVEMENT PLANING, EXCAVATION, ETC. BETWEEN OR WITHIN TRAVELED LANES.

D (IN.)	TREATMENT
≤1 1/2	ERECT OW-171 AND OWP-171 SIGNS.
>1 1/2-3	1) LANE CLOSURE UTILIZING DRUMS* AS SHOWN BELOW OR 2) OPTIONAL WEDGE TREATMENT
>3-5	LANE CLOSURE UTILIZING DRUMS AS SHOWN BELOW.
>5	LANE CLOSURE UTILIZING PORTABLE CONCRETE BARRIER AS SHOWN BELOW.

* CONES MAY BE USED FOR DAYTIME ONLY CONDITIONS.

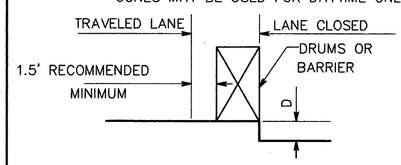

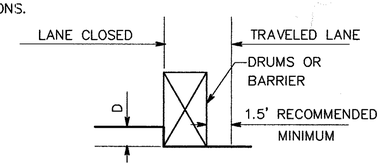

CONDITION II

DROPOFFS WITHIN GRADED SHOULDER AREA

1. THE TREATMENTS INDICATED BELOW ARE FOR USE IN CONJUNCTION WITH RESURFACING, PLANING, OR EXCAVATIONS WITHIN THE GRADED SHOULDER AREA
2. THE GRADED SHOULDER AREA IS THAT FLAT OR GRADUALLY SLOPING AREA BETWEEN THE EDGE OF A NORMALLY TRAVELED LANE AND THE MORE STEEPLY SLOPING DITCH FORESLOPE OR EMBANKMENT SLOPE. ITS SURFACE MAY BE SOIL OR TURF, AND/OR IT MAY BE INCLUSIVE OF A "TREATED" AREA (IMPROVED WITH AGGREGATES, ASPHALTIC MATERIALS, OR CONCRETE). FOR THE PURPOSES HEREIN, ITS MAXIMUM WIDTH SHALL BE CONSIDERED TO BE TWELVE (12) FEET.

D (IN.)	TREATMENT
≤1 1/2	1) IF EDGELINES ARE PRESENT , NO TREATMENT NECESSARY OR 2) ERECT OW-171 AND OWP-171 SIGNS.
>1 1/2-5	1) IF MIN. LANE WIDTH* REQUIREMENTS CAN BE MET, MAINTAIN LANES UTILIZING DRUMS AS SHOWN BELOW OR 2) IF MIN. LANE WIDTH* REQUIREMENTS CANNOT BE MET, CLOSE ADJACENT LANE UTILIZING DRUMS OR 3) OPTIONAL SHOULDER TREATMENT.
>5-12 DAYLIGHT ONLY	IF MIN. LANE WIDTH* REQUIREMENTS CAN BE MET, MAINTAIN LANES UTILIZING DRUMS AS SHOWN BELOW.
>5-24	1) IF MIN. LANE WIDTH* REQUIREMENTS CAN BE MET, MAINTAIN LANES UTILIZING PORTABLE CONCRETE BARRIER AS SHOWN BELOW. OR 2) IF MIN. LANE WIDTH* REQUIREMENTS CANNOT BE MET, CLOSE ADJACENT LANE UTILIZING DRUMS.
>24	LANE CLOSURE UTILIZING PORTABLE CONCRETE BARRIER AS SHOWN BELOW.

* MINIMUM LANE WIDTHS SHALL BE 10' UNLESS OTHERWISE SPECIFIED IN THE PLANS.

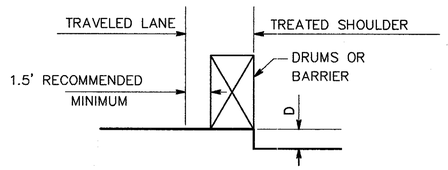

OPTIONAL SHOULDER TREATMENT

1. THIS TREATMENT MAY NOT BE USED WITHIN A BITUMINOUS SHOULDER WHERE A HOT-LONGITUDNAL JOINT PER 401.15 IS REQUIRED.
2. OW-151 SIGNS REQUIRED.

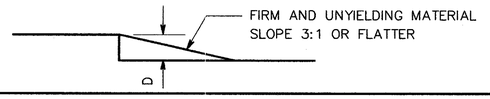

CONDITION III

DROPOFFS BEYOND GRADED SHOULDER OR BACK OF CURB

1. SEE NOTE 2 UNDER CONDITION II.
2. USE CHART A OR B BELOW, AS APPLICABLE.

CHART A

USE FOR: 1. UNCURBED FACILITIES.
2. CURBED FACILITIES, WHERE:
   - A. CURBS ARE LESS THAN 6" IN HEIGHT.
   - B. CURBS ARE 6" OR GREATER IN HEIGHT AND THE LEGAL SPEED IS GREATER THAN 40 MPH.

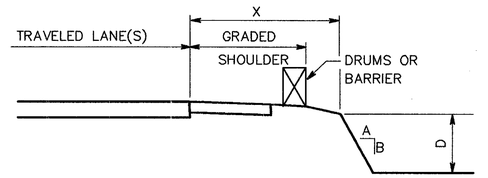

X (FT.)	D (IN.)	A/B	TREATMENT REQUIRED	
			DAY	NIGHT
0-4	ANY	ANY	(A)	(A)
4-30	ANY	3:1 OR FLATTER	NONE	NONE
4-12	≤3	STEEPER THAN 3:1	NONE	NONE
4-12	>3-≤12	STEEPER THAN 3:1	DRUMS	DRUMS
4-12	>12	STEEPER THAN 3:1	DRUMS	BARRIER
>12-20	≤12	STEEPER THAN 3:1	NONE	NONE
>12-20	>12-≤24	STEEPER THAN 3:1	DRUMS	DRUMS
>12-20	>24	STEEPER THAN 3:1	DRUMS	BARRIER
>20-30	≤24	STEEPER THAN 3:1	NONE	DRUMS
>20-30	>24	STEEPER THAN 3:1	DRUMS	BARRIER
>30	ANY	ANY	NONE	NONE

(A) USE TREATMENT SPECIFIED UNDER CONDITION II.

CHART B

USE FOR: CURBED FACILITIES, WHERE THE CURB IS 6" OR GREATER IN HEIGHT AND THE LEGAL SPEED IS 40 MPH OR LESS.

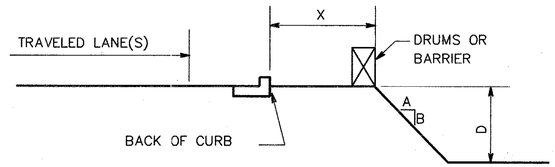

X (FT.)	D (IN.)	A/B	TREATMENT REQUIRED	
			DAY	NIGHT
0-10	<12	ANY	NONE	DRUMS
0-10	>12	ANY	DRUMS	DRUMS
>10	ANY	ANY	NONE	NONE

CALC. BY: AAA DATE: 000
CHK. BY: BBB DATE: 1-1-1

DROPOFFS IN WORK ZONES

FRA-270-32.46

PLOT SCALE =
COL. ID = C:\DRAWING\06092310\MT\06092M19.DWG FEBRUARY-08-1995

SHEET																	ITEM	ITEM EXT.	GRAND TOTAL	UNIT	DESCRIPTION	SEE SHEET NO.
36	37			60	61				70	76	77	111										
																					ROADWAY	
																	201	11000	LUMP		CLEARING AND GRUBBING	
											194						202	22900	194	SQ. YD.	APPROACH SLAB REMOVED	
				4331													202	23000	4331	SQ. YD.	PAVEMENT REMOVED	
				288													202	23500	288	SQ. YD.	WEARING COURSE REMOVED	
				233													202	30000	233	SQ. FT.	WALK REMOVED	
				108													202	32000	108	LIN. FT.	CURB REMOVED	
				170													202	35100	170	LIN. FT.	PIPE REMOVED, 24" AND UNDER	
				1405													202	38000	1405	LIN. FT.	GUARDRAIL REMOVED	
				13													202	42000	13	EACH	ANCHOR ASSEMBLY REMOVED, TYPE A	
				1													202	58100	1	EACH	CATCH BASIN REMOVED	
				4													202	58700	4	EACH	MANHOLE ABANDONED	
				3													202	58701	3	EACH	MANHOLE ABANDONED, AS PER PLAN	39
				400													SPECIAL	20270000	400	LIN. FT.	FILL AND PLUG EXISTING CONDUIT	40
				14049													202	75000	14049	LIN. FT.	FENCE REMOVED	
				5													202	75400	5	EACH	LIGHT POLE REMOVED	
				1													202	98000	LUMP	LUMP	REMOVAL MISCELLANEOUS: STONE LANDSCAPED WALL	
				1													202	98100	1	EACH	REMOVAL MISCELLANEOUS: PLAY SET	
				2													202	98100	2	EACH	REMOVAL MISCELLANEOUS: FLOODLIGHT	
				5													202	98100	5	EACH	REMOVAL MISCELLANEOUS: PRIVATE SIGNS	
				1													202	98100	1	EACH	REMOVAL MISCELLANEOUS: THE LIMITED SIGN	
				2													202	98100	2	EACH	REMOVAL MISCELLANEOUS: WOOD SIGN, REMOVED FOR REUSE	
				1													202	98100	1	EACH	REMOVAL MISCELLANEOUS: MAILBOX	
												1					202	98100	1	EACH	REMOVAL MISCELLANEOUS: CABINET WITH WEIGH-IN-MOTION EQUIPMENT	
9735																	203	20001	9,735	CU.YD.	EMBANKMENT, AS PER PLAN	
170795																	203	12000	170795	CU. YD.	EXCAVATION NOT INCLUDING EMBANKMENT CONSTRUCTION	
149374																	203	20000	149374	CU. YD.	EMBANKMENT	
25000																	203	21000	25000	CU. YD.	EMBANKMENT USING GRANULAR MATERIAL	
	43																203	45000	43	HOUR	PROOF ROLLING	
									124514	3817							203	50000	128331	SQ. YD.	SUBGRADE COMPACTION	
5																	604	38500	5	EACH	MONUMENT ASSEMBLY	
					3												604	39500	3	EACH	MONUMENT BOX ADJUSTED TO GRADE	
					8950												606	13000	8950	LIN. FT.	GUARDRAIL, TYPE 5	
					1												606	25000	1	EACH	ANCHOR ASSEMBLY, TYPE A	
					19												606	26100	19	EACH	ANCHOR ASSEMBLY, TYPE E	38
					13												606	26500	13	EACH	ANCHOR ASSEMBLY, TYPE T	

CAS:PHF DATE:02/01/95
CHK'D BY:MFJ DATE:02/02/95

GENERAL SUMMARY

FRA-270-32.46

Plot Scale = 1" = 1'
C:\DRAWING\06092306\TABLE\6092SM1.DWG
FEBRUARY-13-1995
COL #28

SHEET																	ITEM	ITEM EXT.	GRAND TOTAL	UNIT	DESCRIPTION	SEE SHEET NO.
36	37		39	61	62	77	78			128	167	168	170									
																					ROADWAY	
				8													606	35000	8	EACH	BRIDGE TERMINAL ASSEMBLY, TYPE 1	
				9373													607	20000	9373	LIN. FT.	FENCE, TYPE CL	
				1351													607	20001	1351	LIN. FT.	FENCE, TYPE CL, AS PER PLAN	536
				1													607	50900	1	EACH	GATE, TYPE CL, WALK GATE	
				1478													608	10000	1478	SQ. FT.	4" CONCRETE WALK	
				2													608	51000	2	EACH	CURB RAMP, TYPE 2	
				7816													622	23400	7816	LIN. FT.	CONCRETE BARRIER, TYPE B	
				475													622	23404	475	LIN. FT.	CONCRETE BARRIER, TYPE B-50	
				471													622	23500	471	LIN. FT.	CONCRETE BARRIER, TYPE C	
				4528													622	24001	4528	LIN. FT.	CONCRETE BARRIER, TYPE D, AS PER PLAN A	447
				93													622	24001	93	LIN. FT.	CONCRETE BARRIER, TYPE D, AS PER PLAN B	326
						320											653	10000	320	CU. YD.	TOPSOIL FURNISHED AND PLACED	
				2													SPECIAL	69010120	2	EACH	IMPACT ATTENUATOR, ADIEM II (See Note on Sh. 38)	310
20																	SPECIAL	69011500	20	EACH	IRON PIN	36
													2				SPECIAL	69050100	2	EACH	MAILBOX SUPPORT SYSTEM, SINGLE	38
																	SPECIAL	690E99000	3	ACRE	ROADWAY MISC.: WETLAND MITIGATION	
																					EROSION CONTROL	
	28435																207	10000	28435	SQ. YD.	TEMPORARY SEEDING AND MULCHING	
	17840						28800										207	30000	46640	LIN. FT.	FILTER FABRIC FENCE (SEE PROPOSAL NOTE)	
	90																207	40000	90	LIN. FT.	TEMPORARY SLOPE DRAIN	
	1000						10000										207	50000	11000	CU. YD.	TEMPORARY BENCHES, DAMS AND SEDIMENT BASINS	
	860						860										207	70000	1720	EACH	STRAW OR HAY BALES	
					37												601	11000	37	SQ. YD.	RIP RAP USING 6" REINFORCED CONCRETE SLAB	
			100		324												601	32200	424	CU. YD.	ROCK CHANNEL PROTECTION, TYPE C WITH FILTER	
	2100						150										601	34200	2250	CU. YD.	ROCK CHANNEL PROTECTION, TYPE C WITHOUT FILTER	
										151							601	38000	151	LIN. FT.	PAVED GUTTER, TYPE 1-4	
	136972																659	10000	136972	SQ. YD.	SEEDING AND MULCHING	
	5204																659	10001	5204	SQ. YD.	SEEDING AND MULCHING, AS PER PLAN	37
	7109																659	14000	7109	SQ. YD.	REPAIR SEEDING AND MULCHING	
	1.92					13.13											659	20000	15.05	TON	COMMERCIAL FERTILIZER	
	64.84																659	30001	64.84	TON	AGRICULTURAL LIMING, AS PER PLAN	37
	371																659	35000	371	M GAL	WATER	
											29	51					660	20000	80	SQ. YD.	REINFORCED SODDING	
						1922				50							660	30000	1972	SQ. YD.	SODDING	
										707		594					667	10000	1301	SQ. YD.	SEEDING & JUTE MATTING	
					3113												670	40000	3113	SQ. YD.	DITCH EROSION PROTECTION	
																					DRAINAGE	
					11.7												602	20000	11.7	CU. YD.	CONCRETE MASONRY	
					23.7												602	20001	23.7	CU. YD.	CONCRETE MASONRY, AS PER PLAN	324

CALC: PHF 9/1/95
DATE: 09/01/95
CHK: MFJ
BY: MFJ
DATE: 12/02/95

GENERAL SUMMARY

FRA-270-32.46

55
593

Plot Scale = 1" = 1'
COL #28
C:\DRAWING\0609306\TABLE\60925M2.DWG
FEBRUARY-14-1995

SHEET																ITEM	ITEM EXT.	GRAND TOTAL	UNIT	DESCRIPTION	SEE SHEET NO.
	39			62	63		65	66	67	68	69										
																				DRAINAGE	
											20					603	01500	20	LIN. FT.	6" CONDUIT, TYPE F, 707.17 NONPERFORATED ASTM 3034 SDR35, SS931, OR SS944	
							308	236	710	35	413					603	00100	1702	LIN. FT.	4" CONDUIT, TYPE B, 707.17 NONPERFORATED ASTM 3034 SDR35, SS931, OR SS944	
							240	50	120	70	20					603	00406	500	LIN. FT.	4" CONDUIT, TYPE F, 707.17 NONPERFORATED ASTM 3034 SDR35, SS931, OR SS944	
				270												603	00900	270	LIN. FT.	6" CONDUIT, TYPE B 707.17	
	100			10												603	01500	110	LIN. FT.	6" CONDUIT, TYPE F	
				10												603	01800	10	LIN. FT.	8" CONDUIT, TYPE B, FOR SANITARY, SS945, PS46 MIN, SS942, SS931	40
	100															603	02500	100	LIN. FT.	8" CONDUIT, TYPE E	
	100			331												603	02600	331	LIN. FT.	8" CONDUIT, TYPE F	
				10												603	03700	10	LIN. FT.	10" CONDUIT, TYPE F	
	100			248												603	04400	348	LIN. FT.	12" CONDUIT, TYPE B	
				1038												603	04600	1038	LIN. FT.	12" CONDUIT, TYPE C	
				110												603	04900	110	LIN. FT.	12" CONDUIT, TYPE D	
	100															603	05100	100	LIN. FT.	12" CONDUIT, TYPE E	
				248												603	05200	248	LIN. FT.	12" CONDUIT, TYPE F	
				2466												603	05900	2466	LIN. FT.	15" CONDUIT, TYPE B	
				12												603	05900	12	LIN. FT.	15" CONDUIT, TYPE B, 706.02	
				65												603	05900	65	LIN. FT.	15" CONDUIT, TYPE B, 707.02	
				2827												603	05901	2827	LIN. FT.	15" CONDUIT, TYPE B, AS PER PLAN	40
				1139												603	06100	1139	LIN. FT.	15" CONDUIT, TYPE C	
				511												603	06700	511	LIN. FT.	15" CONDUIT, TYPE F	
				12												603	06700	12	LIN. FT.	15" CONDUIT, TYPE F, 707.01	
				559												603	07400	559	LIN. FT.	18" CONDUIT, TYPE B	
				128												603	07400	128	LIN. FT.	18" CONDUIT, TYPE B, 706.02, 2000 D-LOAD	
				468												603	07400	468	LIN. FT.	18" CONDUIT, TYPE B, FOR SANITARY 706.02 WITH 706.11	40
				439												603	07600	439	LIN. FT.	18" CONDUIT, TYPE C	
				20												603	07600	20	LIN. FT.	18" CONDUIT, TYPE C 707.13	
				22												603	08900	22	LIN. FT.	21" CONDUIT, TYPE B	
				122												603	08900	122	LIN. FT.	21" CONDUIT, TYPE B, FOR SANITARY, 706.02 WITH 706.11	40
					1299											603	09100	1299	LIN. FT.	21" CONDUIT, TYPE C	
					110											603	10200	110	LIN. FT.	24" CONDUIT, TYPE A OR 27" 707.01	
					334											603	10400	334	LIN. FT.	24" CONDUIT, TYPE B	
					794											603	10600	794	LIN. FT.	24" CONDUIT, TYPE C	
					104											603	11900	104	LIN. FT.	27" CONDUIT, TYPE B	
					753											603	12100	753	LIN. FT.	27" CONDUIT, TYPE C	
					22											603	12100	22	LIN. FT.	27" CONDUIT, TYPE C 706.02	
					73											603	13400	73	LIN. FT.	30" CONDUIT, TYPE B	
					269											603	13600	269	LIN. FT.	30" CONDUIT, TYPE C	
					274											603	16400	274	LIN. FT.	36" CONDUIT, TYPE B	
					973											603	16600	973	LIN. FT.	36" CONDUIT, TYPE C	
					60											603	16600	60	LIN. FT.	36" CONDUIT, TYPE C 707.13	
					241											603	19400	241	LIN. FT.	42" CONDUIT, TYPE B	
					12											603	19400	12	LIN. FT.	42" CONDUIT, TYPE B 706.02	
					81											603	19400	81	LIN. FT.	42" CONDUIT, TYPE B 706.02, 2500 D-LOAD	
					58											603	19600	58	LIN. FT.	42" CONDUIT, TYPE C	
					60											603	19600	60	LIN. FT.	42" CONDUIT, TYPE C 707.13	
					180											603	20900	180	LIN. FT.	48" CONDUIT, TYPE B	
					8											603	20900	8	LIN. FT.	48" CONDUIT, TYPE B 706.02, 1250 D-LOAD	
					32											603	21100	32	LIN. FT.	48" CONDUIT, TYPE C	
					120											603	22400	120	LIN. FT.	54" CONDUIT, TYPE B 706.02, 1250 D-LOAD	
					103											603	52500	103	LIN. FT.	24" x 38" CONDUIT, TYPE A, 706.04, CLASS HE-II	
					56											603	53000	56	LIN. FT.	38" x 60" CONDUIT, TYPE A, 706.04, CLASS HE-II	
					58											603	96600	58	LIN. FT.	CONDUIT, BORED OR JACKED 15", TYPE B	

CALC. T.A.Z DATE: 11/94
CHKD. M.F.J. BY: M.F.J. DATE: 11/94

GENERAL SUMMARY

FRA-270-32.46

Plot Scale = 1" = 1'
COL #28
C:\DRAWING\06092306\TABLE\60925M3.DWG FEBRUARY-14-1995

SHEET																ITEM	ITEM EXT.	GRAND TOTAL	UNIT	DESCRIPTION	SEE SHEET NO.
	39		40		63	64	65	66	67	68	69	71	72	74	76						
																				DRAINAGE	
					151											603	96600	151	LIN. FT.	CONDUIT, BORED OR JACKED: 18", TYPE B	
					70											603	96600	70	LIN. FT.	CONDUIT, BORED OR JACKED: 21", TYPE B	
					60											603	96600	60	LIN. FT.	CONDUIT, BORED OR JACKED: 24", TYPE B	
					70											603	96600	70	LIN. FT.	CONDUIT, BORED OR JACKED: 30", TYPE B	
					70											603	96600	70	LIN. FT.	CONDUIT, BORED OR JACKED: 42", TYPE B	
					204											603	97000	204	LIN. FT.	SLOTTED DRAIN: 15", TYPE 2 AND/OR 3	320A
						1										604	00400	1	EACH	CATCH BASIN, NO. 3	
						7										604	00800	7	EACH	CATCH BASIN, NO. 3A	
						4										604	01200	4	EACH	CATCH BASIN, NO. 4	
						1										604	01400	1	EACH	CATCH BASIN, NO. 4A	
						5										604	01401	5	EACH	CATCH BASIN, NO. 4A, AS PER PLAN	325
						3										604	01600	3	EACH	CATCH BASIN, NO. 5	
						6										604	01800	6	EACH	CATCH BASIN, NO. 5A	
						1										604	02000	1	EACH	CATCH BASIN, NO. 6	
						1										604	04100	1	EACH	CATCH BASIN, NO. 2-2A	
						2										604	04500	2	EACH	CATCH BASIN, NO. 2-2B	
						4										604	08600	4	EACH	CATCH BASIN, MISC.: A, AS PER PLAN	323
						1										604	09000	1	EACH	CATCH BASIN ADJUSTED TO GRADE	
						19										604	15150	19	EACH	INLET, NO. 3D	
						1										604	15200	1	EACH	INLET, NO. 3D50	
						1										604	15201	1	EACH	INLET, NO. 3D50, AS PER PLAN	322
						15										604	15210	15	EACH	INLET, NO. 3E, 32" HEIGHT	321
						2										604	15210	2	EACH	INLET, NO. 3E, 42" HEIGHT	321
						8										604	15210	8	EACH	INLET, NO. 3E, HEIGHT VARIES	520,535
						11										604	22500	11	EACH	INLET, MISC.: NO. 3E, 42" HEIGHT, AS PER PLAN	463,464
						5										604	22500	5	EACH	INLET, MISC.: NO. 3E, 50" HEIGHT, AS PER PLAN	463,464
						12										604	31500	12	EACH	MANHOLE, NO. 3	
						8										604	31500	8	EACH	MANHOLE, NO. 3, SANITARY	
						5										604	31500	5	EACH	MANHOLE, NO. 3, 72" DIAMETER	
						2										604	31500	2	EACH	MANHOLE, NO. 3, 84" DIAMETER	
						6										604	31510	6	EACH	MANHOLE, NO. 3 WITH FLAT TOP	
						2										604	31510	2	EACH	MANHOLE, NO. 3 WITH FLAT TOP, 72" DIAMETER	
						1										604	31510	1	EACH	MANHOLE, NO. 3 WITH FLAT TOP, 84" DIAMETER	
						2										604	34500	2	EACH	MANHOLE ADJUSTED TO GRADE (SANITARY)	
						1										604	36000	1	EACH	GAS VALVE BOX ADJUSTED TO GRADE	
									5		6					SPECIAL	60436600	11	EACH	PRECAST REINFORCED CONCRETE OUTLET	325
	1					5										604	37000	6	EACH	INSPECTION WELL	
	1					7										604	37000	8	EACH	INSPECTION WELL, 24"	40
							5496	4240	8910	1498	4166					605	05111	24310	LIN. FT.	4" SHALLOW PIPE UNDERDRAIN WITH FABRIC WRAP, AS PER PLAN, 707.15 (12" DEPTH)	9
							6235	4274	8052	2758						605	05111	18561	LIN. FT.	4" SHALLOW PIPE UNDERDRAIN WITH FABRIC WRAP, AS PER PLAN A, 707.15 (12" DEPTH)	9
							201		1412		1024					605	05111	2637	LIN. FT.	4" SHALLOW PIPE UNDERDRAIN WITH FABRIC WRAP, AS PER PLAN, 707.15 (18" DEPTH)	9
									1136		3069					605	05111	4205	LIN. FT.	4" SHALLOW PIPE UNDERDRAIN WITH FABRIC WRAP, AS PER PLAN A, 707.15 (18" DEPTH)	9
							2463	697	450		1172					605	05111	4782	LIN. FT.	4" SHALLOW PIPE UNDERDRAIN WITH FABRIC WRAP, AS PER PLAN, 707.15 (30" DEPTH)	9
							2390	697	750		518					605	05111	4355	LIN. FT.	4" SHALLOW PIPE UNDERDRAIN WITH FABRIC WRAP, AS PER PLAN A, 707.15 (30" DEPTH)	9
							4296		525							605	05111	4821	LIN. FT.	4" SHALLOW PIPE UNDERDRAIN WITH FABRIC WRAP, AS PER PLAN B, 707.15 (MSE WALL)	9
										400						605	05221	400	LIN. FT.	4" ROCK CUT UNDERDRAIN, AS PER PLAN	9
											243					605	11101	243	LIN. FT.	6" SHALLOW PIPE UNDERDRAIN, AS PER PLAN, 707.15 (12" DEPTH)	35
			100													605	13410	100	LIN. FT.	6" UNCLASSIFIED PIPE UNDERDRAIN WITH FABRIC WRAP	
			470													605	31100	470	LIN. FT.	AGGREGATE DRAIN	
			200													605	32200	200	LIN. FT.	AGGREGATE DRAIN FOR SPRINGS	

CALC. T.A.Z. BY: T.A.Z. DATE: 11/94
CHK. M.F.J. DATE: 11/94

GENERAL SUMMARY

FRA-270-32.46

FEBRUARY-09-1995
Plot Scale = 1" = 1'
C:\DRAWING\V6092206\6092SM4.DWG
COL #29

SHEET																			ITEM	ITEM EXT.	GRAND TOTAL	UNIT	DESCRIPTION	SEE SHEET NO.
71	72	73	74	75	76	77	91	93	128	147	149	151	153	156	166	167	168	170						
																							PAVEMENT	
						2218													255	20000	2218	LIN. FT.	FULL DEPTH PAVEMENT SAWING	
27650					500											19		25	301-	10002	28194	CU. YD.	BITUMINOUS AGGREGATE BASE, AC-20	
	20644				862													25	304	20000	21531	CU. YD.	AGGREGATE BASE (SEE PROPOSAL NOTE)	
					150											5		7	402	20000	162	CU. YD.	ASPHALT CONCRETE, AC-20	
					108											4		5	404	20000	117	CU. YD.	ASPHALT CONCRETE, AC-20	
			49803		1357														408	10000	51160	GALLON	BITUMINOUS PRIME COAT	
															14	13			410	10000	27	CU. YD.	TRAFFIC COMPACTED SURFACE, TYPE A	
				6119															446	01200	6119	CU. YD.	ASPHALT CONCRETE INTERMEDIATE COURSE, TYPE 2, AC-20	
			4372																446	01400	4372	CU. YD.	ASPHALT CONCRETE SURFACE COURSE, TYPE 1, AC-20	
																		88	452	10000	88	SQ. YD.	6" PLAIN CONCRETE PAVEMENT	
																143	84	123	609	12000	350	LIN. FT.	COMBINATION CURB AND GUTTER, TYPE 2	
							154	18	40	84	620	652	706	6				88	609	26000	2368	LIN. FT.	CURB, TYPE 6	
																	171		611	15001	171	SQ. YD.	REINFORCED CONCRETE APPROACH SLAB (T = 13"), AS PER PLAN	39
									200										611	25001	200	SQ. YD.	REINFORCED CONCRETE APPROACH SLAB (T = 15"), AS PER PLAN	39
										38	40								612	42000	78	SQ. YD.	CONCRETE MEDIAN, 6"	
	124722																		SPECIAL	69000120	124,722	SQ. YD.	4" ASPHALT TREATED FREE DRAINING BASE (SEE PROPOSAL NOTE)	
																							WATER WORK	
															1			2	638	10800	3	EACH	VALVE BOX ADJUSTED TO GRADE	

CASE: P H F
DATE: 10/01/95
CHKD: M F J
DATE: 12/02/95

GENERAL SUMMARY

FRA-270-32.46

58
593

Plot Scale = 1" = 1'
COL #28 C:\DRAWING\60922306\TABLE\60922SM5.DWG FEBRUARY-14-1995

SHEET																ITEM	ITEM EXT.	GRAND TOTAL	UNIT	DESCRIPTION	SEE SHEET NO.
38			41	42		77		98	100	102	104	106	108	110							
																				MAINTENANCE OF TRAFFIC	
			10													301	10002	10	CU. YD.	BITUMINOUS AGGREGATE BASE, AC-20	
			1250													404	20000	1250	CU. YD.	ASPHALT CONCRETE, AC-20	
			30													404	35000	30	CU. YD.	BITUMINOUS CONCRETE FOR MAINTAINING TRAFFIC	
			3600													407	10000	3600	GALLON	TACK COAT	
			18600													607	23001	18600	LIN. FT.	FENCE, TYPE CLT, AS PER PLAN	41
				200												614	11100	200	HOUR	LAW ENFORCEMENT OFFICER WITH PATROL CAR	42
				16												614	12470	16	EACH	WORK ZONE SPEED LIMIT SIGN	
				96												SPECIAL	61412500	96	SQ. FT.	REPLACEMENT SIGN	42
				25												SPECIAL	61412600	25	EACH	REPLACEMENT DRUM	42
			856													614	13300	856	EACH	BARRIER REFLECTOR, TYPE B	
			856													614	13350	856	EACH	OBJECT MARKER	
				6												614	18601	6	SIGN-MNTH	PORTABLE CHANGEABLE MESSAGE SIGN, AS PER PLAN, CLASS II	42
			1.63													614	22300	1.63	MILE	TEMPORARY EDGE LINE, CLASS I, 740.05, TYPE C	
450																616	10000	450	M GAL.	WATER	
45																616	20000	45	TON	CALCIUM CHLORIDE	
				21380												622	40021	21380	LIN. FT.	PORTABLE CONCRETE BARRIER, 32 INCH, AS PER PLAN	42
			1.70													642	00290	1.70	MILE	CENTER LINE	
																				LIGHTING	
																				FOR QUANTITIES SEE SHEET NO.364	
																				TRAFFIC CONTROL	
						147										802	00100	147	EACH	BARRIER REFLECTOR, TYPE A	
						351										802	00200	351	EACH	BARRIER REFLECTOR, TYPE B	
																				FOR ADDITIONAL QUANTITIES SEE SHEET NO. 333 TO 335	
																				MSE WALLS	
																				FOR QUANTITIES SEE SHEET NO. 334	
																				STRUCTURE OVER 20' SPAN	
																				FOR QUANTITIES SEE SHEETS 386, 410	
																				RETAINING WALLS	
																				FOR QUANTITIES SEE SHEET NO. 509 & 524	
								2721	508							SPECIAL	60610000	3229	SQ. FT.	NOISE BARRIER	
								503	3811	836			2274			SPECIAL	60610000	7424	SQ. FT.	NOISE BARRIER, 10 FEET HIGH AND UNDER	538
									474	5816	6074	5899	3383	2200		SPECIAL	60610000	23846	SQ. FT.	NOISE BARRIER, OVER 10' TO 14 FEET HIGH	538
																				NOISE BARRIER, OVER 14' TO 20 FEET HIGH	538
			LUMP													614	11000	LUMP		MAINTAINING TRAFFIC	
																619	15020	LUMP		FIELD OFFICE, TYPE C	
																SPECIAL	61925010	LUMP		COMPUTER EQUIPMENT FOR TYPE B OR C OFFICE	
																623	10000	LUMP		CONSTRUCTION LAYOUT STAKES	
																624	10000	LUMP		MOBILIZATION	

CALC. BY: P.H.F. DATE: 02/01/95
CHKD. BY: M.F.J. DATE: 02/02/95

GENERAL SUMMARY

FRA-270-32.46

Plot Scale = 1" = 1'
C:\DRAWING\06092306\TABLE\60923SM6.DWG FEBRUARY-14-1995
COL #28

ROADWAY SUB–SUMMARY

SHEET NO.	202																											SPECIAL	
				PAVEMENT REMOVED	WEARING COURSE REMOVED	WALK REMOVED	CURB REMOVED		PIPE REMOVED, 24" AND UNDER		GUARDRAIL REMOVED	ANCHOR ASSEMBLY REMOVED, TYPE A			CATCH BASIN REMOVED	MANHOLE ABANDONED	MANHOLE ABANDONED, AS PER PLAN				LIGHT POLE REMOVED	REMOVAL MISCELLANEOUS: MAILBOX	FENCE REMOVED	REMOVAL MISCELLANEOUS: STONE LANDSCAPED WALL	REMOVAL MISCELLANEOUS: PLAY SET	REMOVAL MISCELLANEOUS: WOOD SIGN REMOVED FOR REUSE	REMOVAL MISCELLANEOUS: FLOODLIGHT	REMOVAL MISCELLANEOUS: PRIVATE SIGNS	REMOVAL MISCELLANEOUS: THE LIMITED SIGN		FILL AND PLUG EXISTING CONDUIT	
				SQ. YD.	SQ. YD.	SQ. FT.	LIN. FT.		LIN. FT.		LIN. FT.	EACH			EACH	EACH	EACH				EACH	EACH	LIN. FT.	LUMP	EACH	EACH	EACH	EACH	EACH		LIN. FT.	
81																							75								
83																							357						1		
85											167	1											350								
87				532																	1		432	1							
89				1111													1				2		401					1			
91				391																			413					1			
93				8																			419								
95																2							490							330	
98											165	1											458							70	
100																							451								
102																					1		490								
104									25						1						1		400		1		2	1			
106																							400								
108																							452					1			
110				282																			400								
111				444							163	1											446								
112				444																			426					1			
113				444																			215								
114				286																											
115																							470								
117																							397								
119																1							397								
121																1	1						376								
123																							376								
125																							350								
127																							352								
128																							350								
130																							400								
131																							400								
133																							400								
135																							400								
137																							400								
138																							400								
139																							400								
140																							400								
141				250																			400								
142				139																			125								
143																															
144																															
145											34	2																			
146											34	2																			
147																															
149																															
151																															
153																															
156																															
158																															
160																															
162																															
164																															
166					22				25		93	4																			
167									120		105	2										1									
168											591						1						181			1					
170					266	233	108				53															1					
				4331	288	233	108		170		1405	13			1	4	3				5	1	14049	1	1	2	2	5	1	400	

CALC. BY: PHF DATE: 09/07/94
CHKD. BY: MFJ DATE: 09/07/94

SUB–SUMMARY

ROADWAY SUB–SUMMARY

FRA–270–32.46

60
593

Plot Scale – 1" = 20'
COL #28 C:\DRAWNG\06092306\TABLE\R–SUM01.DWG FEBRUARY–13–1995

ROADWAY SUB–SUMMARY

SHEET NO.	604						606							SPECIAL	607				608			622						
					MONUMENT BOX ADJUSTED TO GRADE			GUARDRAIL, TYPE 5		ANCHOR ASSEMBLY, TYPE A		ANCHOR ASSEMBLY, TYPE E	ANCHOR ASSEMBLY, TYPE T		BRIDGE TERMINAL ASSEMBLY, TYPE 1		IMPACT ATTENUATOR, ADIEM II	FENCE, TYPE CL	FENCE, TYPE CL, AS PER PLAN		GATE, TYPE CL, WALK GATE		4" CONCRETE WALK		CURB RAMP, TYPE 2		CONCRETE BARRIER, TYPE B	CONCRETE BARRIER, TYPE B–50	CONCRETE BARRIER, TYPE C	CONCRETE BARRIER, TYPE D, AS PER PLAN A	CONCRETE BARRIER, TYPE D, AS PER PLAN B		
					EACH			LIN. FT.		EACH		EACH	EACH		EACH		EACH	LIN. FT.	LIN. FT.		EACH		SQ. FT.		EACH		LIN. FT.	LIN. FT.	LIN. FT.	LIN. FT.	LIN. FT.		
81																		75												86			
83													1					55												327			
85								337.5																						330			
87								412.5																									
89								137.5				1																	91	232			
91																											50		180	380			
93																											390			623			
95								275					1														390			468			
98								400																			308	71		382	93		
100								212.5				1															369			381			
102								87.5				1			1		1	20			1						390			369			
104								125					1														390			162			
106								400																			380						
108								362.5				1															210	170					
110																	1	250									380						
111																		400									352						
112								25					1					400															
113								162.5				1						215															
114																																	
115																		450												169			
117								250										395												362			
119								312.5					1					395												257			
121												1						372											150				
123								575				1						372									125	150	50				
125								362.5					1					310									315	5					
127								350																			350						
128								212.5					1		2												242	79					
130																											380						
131								175				1						353									380						
133								362.5					1					400									370						
135																		403									360						
137								150				1						400									400						
138								137.5				1			1			377	26								370						
139								400											400								380						
140								400											400								380						
141								62.5					1						400								155						
142								225				1						27	125														
143								450																									
144								387.5																									
145								337.5																									
146								187.5				1																					
147																		204															
149																		700															
151																		651															
153																		653															
156								225				2																					
158																		299															
160																		315															
162																		304															
164																		347															
166								275				4																					
167					1			100	1			1												753									
168								50					2		4			231						330									
170					2			25					2											395		2							
TOTALS					3			8950	1			19	13		8		2	9373	1351		1		1478		2		7816	475	471	4528	93		

Plot Scale – 1" = 20'
COL #28
C:\DRAWING\06092306\TABLE\R–SUM02.DWG
FEBRUARY–13–1995

CALC BY: PHF DATE: 09/07/94
CHKD. BY: MFJ DATE: 09/07/94

ROADWAY SUB–SUMMARY

FRA–270–32.46

DRAINAGE SUB–SUMMARY

SHEET NO.	601			670		602			603																										
	RIPRAP USING 6" REINFORCED CONCRETE SLAB	ROCK CHANNEL PROTECTION, TYPE C WITH FILTER, T=18"		DITCH EROSION PROTECTION		CONCRETE MASONRY	CONCRETE MASONRY, AS PER PLAN		6" CONDUIT, TYPE B (707.17)	6" CONDUIT, TYPE F	8" CONDUIT, TYPE C, FOR SANITARY, SS945, SS942 OR SS931, PS46 MIN.	8" CONDUIT, TYPE F	10" CONDUIT, TYPE F	12" CONDUIT, TYPE B	12" CONDUIT, TYPE C	12" CONDUIT, TYPE D	12" CONDUIT, TYPE F	15" CONDUIT, TYPE B	15" CONDUIT, TYPE B (706.02)	15" CONDUIT, TYPE B (707.02)	15" CONDUIT, TYPE B, AS PER PLAN	15" CONDUIT, TYPE C	15" CONDUIT, TYPE F	15" CONDUIT, TYPE F (707.01)		18" CONDUIT, TYPE B	18" CONDUIT, TYPE B (706.02 2000 D–LOAD)	18" CONDUIT, TYPE B FOR SANITARY (706.02 WITH 706.11)	18" CONDUIT, TYPE C	18" CONDUIT, TYPE C (707.13)	21" CONDUIT, TYPE B	21" CONDUIT, TYPE B FOR SANITARY (706.02 WITH 706.11)
	CU. YD.	CU. YD.		SQ. YD.		CU. YD.	CU. YD.		LIN. FT.	LIN. FT.	LIN. FT.	LIN. FT.	LIN. FT.	LIN. FT.	LIN. FT.	LIN. FT.	LIN. FT.	LIN. FT.	LIN. FT.	LIN. FT.	LIN. FT.	LIN. FT.	LIN. FT.	LIN. FT.	LIN. FT.		LIN. FT.	LIN. FT.	LIN. FT.	LIN. FT.	LIN. FT.	LIN. FT.	LIN. FT.
81	1.1					1.0																													
83																						16													
85																		9			286			5											
87																					437	44		7											
89																		72			326	250													40
91																																			
93									36									65			390	200										188			
95											10							62			355	50													
98																					402					65									
100																					398														
102				208														262			233														
104		2		459		0.2			76						12			106				50									251	20			
106				125																															
108		2		193		0.2									22			82																	
110				214					96									83																	
111				42														150																	
112										10		10						294																	
113																																			
114																																			
115																																			
117		1.6		185		0.3													12			67	120				128								
119	1.6			220		1.4												176					306					94							
121				127													248	38										334						82	
123		24.1		48		0.5												209																	
125	4.1	91		133		1.2			10			10						18																	
127	0.6			229		0.4																80													
128		1.1		83		0.4												46																	
130				229																															
131		3.3		164		0.5												78				42													
133		2.9				0.3							10					116																	
135	2.9	2.9		68		1.0												104																	
137				84								20																							
138	2.2	31		21		0.4			26			233																						22	
139									26									75																	
140																		125																	
141												58						148																	
142		11																123																	
143																																			
144																																			
145																																			
146																																			
147														76	119																				
149														125	83																				
151															345																				
153				121										47	287																				
156		1.1				0.3												25				101	85												
158		136																																	
160	1.8	1.8				1.2																													
162	1.9	9.6		46		1.4									53							131													
164	0.6	1.1		114		0.8																86													
166	21.0						23.7									30				65		22													
167																80												20							
168		1.1				0.2									86													20							
170															31																				
TOTALS	37.8	323.6		3113		11.7	23.7		270	10	10	331	10	248	1038	110	248	2466	12	65	2827	1139	511	12		559	128	468	439	20	22	122

CALC BY: PHF DATE: 09/10/04
CHECK BY: MFJ DATE: 09/10/04

DRAINAGE SUB–SUMMARY

FRA–270–32.46

62
593

PLOT SCALE... COL #12 D:\DRAWINGS\06092306\TABLE\D-SUM01.DWG FEBRUARY-14-1995

DRAINAGE SUB–SUMMARY

SHEET NO.	603																														
	21" CONDUIT, TYPE C	24" CONDUIT, TYPE A OR 27" 70.20	24" CONDUIT, TYPE B	24" CONDUIT, TYPE C	27" CONDUIT, TYPE B	27" CONDUIT, TYPE C	27" CONDUIT, TYPE C (706.02)	30" CONDUIT, TYPE B	30" CONDUIT, TYPE C	36" CONDUIT, TYPE B	36" CONDUIT, TYPE C	36" CONDUIT, TYPE C (707.13)		42" CONDUIT, TYPE B	42" CONDUIT, TYPE B (706.02)	42" CONDUIT, TYPE B (706.02, 2500 D-LOAD)	42" CONDUIT, TYPE C	42" CONDUIT, TYPE C (707.13)	48" CONDUIT, TYPE B	48" CONDUIT, TYPE B (706.02, 1250 D-LOAD)	48" CONDUIT, TYPE C	54" CONDUIT, TYPE B (706.02 1250 D-LOAD)	24" x 38" CONDUIT, TYPE A, (706.04) HE II	38" x 60" CONDUIT, TYPE A, (706.04) HE II	CONDUIT, BORED OR JACKED 15", TYPE B	CONDUIT, BORED OR JACKED 18", TYPE B	CONDUIT, BORED OR JACKED 21", TYPE B	CONDUIT, BORED OR JACKED 24", TYPE B	CONDUIT, BORED OR JACKED 30", TYPE B	CONDUIT, BORED OR JACKED 42", TYPE B	SLOTTED DRAIN, 15" TYPE 2 AND/OR 3	
	LIN. FT.	LIN. FT.	LIN. FT.	LIN. FT.	LIN. FT.	LIN. FT.	LIN. FT.	LIN. FT.	LIN. FT.	LIN. FT.	LIN. FT.	LIN. FT.		LIN. FT.	LIN. FT.	LIN. FT.	LIN. FT.	LIN. FT.	LIN. FT.	LIN. FT.	LIN. FT.	LIN. FT.	LIN. FT.	LIN. FT.	LIN. FT.	LIN. FT.	LIN. FT.	LIN. FT.	LIN. FT.	LIN. FT.	
81										174																81					
83										100	247																				
85											350																			204	
87											138								8		120										
89	150																														
91	400																														
93	13															81															
95																															
98	150																														
100	150			250																											
102						400																									
104				100		50		73			218	20																	70		
106				299		103																									
108						200			200																						
110	294								69		20			92				20												70	
111																															
112																		40								58					
113																															
114																															
115																															
117																															
119																	58		121		32										
121																			59												
123																															
125				20										149	12																
127				125																											
128	80																														
130	51																														
131			99																												
133																															
135					104		22																								
137																															
138												40																	70		
139																										70					
140																															
141			235																									60			
142																															
143																															
144																															
145																															
146																															
147																															
149																															
151																															
153																															
156																															
158																															
160		110																													
162																							103								
164	11																														
166																								56							
167																															
168																															
170																															
TOTALS	1299	110	334	794	104	753	22	73	269	274	973	60		241	12	81	58	60	180	8	32	120	103	56	58	151	70	60	70	70	204	

CALC. BY: H.F. DATE: 09/07/94
CHKD. BY: M.F.J. DATE: 09/07/94

DRAINAGE SUB–SUMMARY

FRA–270–32.46

63
593

PLOT SCALE... COL #12
D:\DRAWING\06092306\TABLE\D-SUM02.DWG FEBRUARY-14-1995

DRAINAGE SUB–SUMMARY

SHEET NO.	604																																
	CATCH BASIN, NO. 3	CATCH BASIN, NO. 3A	CATCH BASIN, NO. 4	CATCH BASIN, NO. 4A	CATCH BASIN, NO. 4A, AS PER PLAN	CATCH BASIN, NO. 5	CATCH BASIN, NO. 5A	CATCH BASIN, NO. 6	CATCH BASIN NO. 2–2A	CATCH BASIN NO. 2–2B	CATCH BASIN MISC.: CATCH BASIN A, AS PER PLAN	CATCH BASIN ADJUSTED TO GRADE	INLET, NO. 3D	INLET, NO. 3D5O	INLET, NO. 3D5O AS PER PLAN	INLET, NO. 3E	INLET, NO. 3E, AS PER PLAN			MANHOLE, NO. 3	MANHOLE, NO. 3, SAN	MANHOLE, NO. 3, 72" DIAMETER	MANHOLE, NO. 3, 84" DIAMETER	MANHOLE, NO. 3, WITH FLAT TOP		MANHOLE, NO. 3, WITH FLAT TOP, 72" DIAMETER		MANHOLE, NO. 3, WITH FLAT TOP, 84" DIAMETER		MANHOLE ADJUSTED TO GRADE (SANITARY)		GAS VALVE BOX ADJUSTED TO GRADE	INSPECTION WELL	INSPECTION WELL, 24"
	EACH	EACH	EACH	EACH	EACH	EACH	EACH	EACH	EACH	EACH	EACH	EACH	EACH	EACH	EACH	EACH	EACH			EACH	EACH	EACH	EACH	EACH		EACH		EACH		EACH		EACH	EACH	EACH
81																				1													
83																1				1													
85																1	2			1													
87								1								2	3						1						1				
89														1		1	2				2												
91																1																	
93												1		1		2	2					3											
95														1		3	2				1												
98															1	1	2																
100																1	1																
102							1							1		2	2							1									
104					2	2	1			1				1																			
106							1													1													
108							1			1				1																			
110					1		2							1																			
111											1																						
112					1						2																						
113																																	
114																																	
115																																	
117																2				1													1
119																1					1		1				1						2
121																2					2	1					1						3
123														1	1																		
125				1										1								1											
127			1																														
128		1	1											1																			
130			1											1																			
131			1											1										1									
133														1																			
135														2																			
137																																	
138					1									1																		3	
139														1		1																	
140														1		1								1									
141											1			1		2								2								2	
142																1								1									
143																																	
144																																	
145																																	
146																																	
147		1																		2													
149		3																															
151	1																			2													
153																				2													
156		1																		1													
158																																	
160																																	
162						1																											
164																																	
166									1																								1
167																					1								1				
168																					1								1				
170		1																												1			
TOTALS	1	7	4	1	5	3	6	1	1	2	4	1	19	1	1	25	16			12	8	5	2	6		2		1		2		1	5	7

CAL: SPHF DATE: 09/07/94
CHK: BY: M.F.J DATE: 09/07/94

DRAINAGE SUB–SUMMARY

FRA–270–32.46

64
593

PLOT SCALE
COL #12
D:\DRAWING\06092306\TABLE\D-SUM03.DWG FEBRUARY-14-1995

REFERENCE NO.	STATION TO STATION (ALL STATIONING CDN UNLESS NOTED OTHERWISE)	SIDE	FROM SHEET NO.	UNDERDRAIN OUTLET			605 4" SHALLOW PIPE UNDERDRAIN LIN. FT.						603 4" CONDUIT, TYPE B (707.17 NONPERFORATED ASTM 3034 SDR 35, SS 931 OR SS 944)	603 4" CONDUIT, TYPE F (707.17 NONPERFORATED ASTM 3034 SDR 35 SS 931 OR SS 944)	SPEC. PRECAST REIN. CONCRETE OUTLET	STANDARD				BENDS AND BRANCHES			
							12" DEPTH		18" DEPTH	30" DEPTH		MSE WALL				OUTLET FITTING	45° WYE FITTING	TEE FITTING	END CAP	4"x4"–45° WYE	4"x4"–TEE	4"x90°	4"x45°
				ELEV	STATION	TYPE	(9)	(9A)	(9)	(9)	(9A)	(9B)	LIN. FT.	LIN. FT.	EACH	EACH	EACH	EACH	EACH	EACH	EACH	EACH	EACH
U1	1366+50 ~ C–1375+50	LT.	83, 85, 87	851.72	C–1375+50	I–3E						890		10					1				
U1A	C–1375+50 ~ C–1376+18	LT.	87	851.49	C–1376+18	I–3E						58		10					1				
U2	1367+40 ~ 1373+87	LT.	83, 85, 87	851.57	1373+87	MH–3		647					17						1				
U2A	C–1370+42 ~ C–1372+55	LT.	85, 87	857.92	C–1372+55	CB–6			201					10					1				
U3	1366+50 ~ 1373+75	RT.	83, 85, 87		1373+75	I–3E		725					12						1			1	
U4	1366+50 ~ 1369+50	RT.	83, 85	865.54	1369+50	I–3E						290		10					1				
U5	1369+50 ~ 1371+50	RT.	85	860.06	1371+50	I–3E						190		10					1				
U6	1371+50 ~ 1373+75	RT.	85, 87	854.20	1373+75	I–3E						215		10					1				
U7	1372+58 ~ 1373+87	LT.	87		1373+87	U2	129												1			1	
U8	1373+87 ~ 1379+00	LT.	87, 89		1379+00	U9	513												1				
U9	1373+87 ~ 1379+00	LT.	87, 89	841.40	1379+00	I–3E		513					29					1	1			1	
U10	1373+87 ~ 1379+00	RT.	87, 89	842.21	1379+00	I–3D	394					113		10					1			2	
U11	C–1376+18 ~ C–1376+75	LT.	87, 89	851.49	C–1376+18	I–3E						47		10					1				
U11A	C–1376+75 ~ C–1379+75	LT.	89	851.65	C–1376+75	I–3E						290		10					1				
U12	1379+00 ~ 1384+50	RT.	89, 91	839.00	1384+50	I–3D					550		18						1			1	
U13	1379+00 ~ 1384+50	RT.	89, 91	839.00	1384+50	I–3D				540				10					1				
U14	1379+00 ~ 1384+50	LT.	89, 91		1384+50	U15				550									1				
U15	1379+00 ~ 1384+50	LT.	89, 91	839.00	1384+50	I–3E					550		22					1	1			1	
U16	C–1379+75 ~ C–1384+62	LT.	89, 91, 93	854.04	C–1379+75	I–3E						477		10					1				
U17	1384+50 ~ 1389+00	LT.	93, 95		1389+00	U18	450												1				
U18	1384+50 ~ 1389+00	LT.	93, 95	839.50	1389+00	I–3E		450					20					1	1			1	
U19	1384+50 ~ 1389+00	RT.	93, 95	839.52	1389+00	I–3D		450					18						1			1	
U20	1384+50 ~ 1389+00	RT.	93, 95	839.52	1389+00	I–3D	440							10					1				
U21	C–1384+76 ~ C–1387+75	LT.	93	858.08	C–1384+76	I–3E						289		10					1				
U21A	C–1387+75 ~ C–1389+64	LT.	93, 95	859.99	C–1387+75	I–3E	600					179		10					1				
U22	1389+00 ~ 1395+00	LT.	95, 98		1395+00	U23	600												1				
U23	1389+00 ~ 1395+00	LT.	95, 98	838.40	1395+00	I–3E		600					22					1	1			1	
U24	1389+00 ~ 1395+00	RT.	95, 98	838.07	1395+00	I–3D		600					18						1			1	
U25	1389+00 ~ 1395+00	RT.	95, 98	838.07	1395+00	I–3D	590							10					1				
U26	C–1389+62 ~ D–1390+18	LT.	95	860.74	C–1389+64	I–3E						46		10					1				
U27	D–1390+18 ~ D–1390+72	LT.	95	860.74	D–1390+72	I–3E						44		10					1				
U28	D–1390+72 ~ D–1393+50	LT.	95, 98	859.25	D–1393+50	I–3E						268		10					1			2	
U29	D–1393+50 ~ D–1396+50	LT.	98	853.86	D–1396+50	I–3E						290		10					1				
U30	1395+00 ~ 1400+50	LT.	98, 100		1400+50	U31	550												1				
U31	1395+00 ~ 1400+50	LT.	98, 100	836.00	1400+50	I–3E		550					32					1	1			1	
U32	1395+00 ~ 1400+50	RT.	98, 100	836.73	1400+50	I–3D		550					18						1			1	
U33	1395+00 ~ 1400+50	RT.	98, 100	836.73	1400+50	I–3D	540							10					1				
U34	D–1396+50 ~ D–1399+50	LT.	98, 100	848.10	D–1399+50	I–3E						290		10					1				
U35	D–1399+50 ~ D–1402+00	LT.	100, 102	843.30	D–1402+00	I–3E						240		10					1				
U35A	D–1402+00 ~ D–1402+90	LT.	102	841.57	D–1402+90	I–3E						80		10					1				
U36	1400+50 ~ 1405+00	LT.	102, 104		1405+00	U37					450								1				
U37	1400+50 ~ 1405+00	LT.	102, 104	835.50	1405+00	CB–5A		450					20					1	1			1	
U38	1400+50 ~ 1407+50	RT.	102, 104	835.21	1407+50	I–3D		700					18						1			1	
U39	1400+50 ~ 1407+50	RT.	102, 104	835.21	1407+50	I–3D	690							10					1				
U40	D–1402+90 ~ D–1407+57	LT.	102, 104		D–1407+57	U41				467									1				
U41	D–1405+00 ~ D–1407+57	RT.	104	833.64	D–1407+57	CB–5A				257			44					1	1			1	
U42	1405+00 ~ 1407+50	LT.	104		1407+50	U43				250									1			1	
U43	1405+00 ~ 1411+47	LT.	104, 106		1411+50	U47					647								1		2		
U44	D–1407+57 ~ D–1411+56	LT.	104, 106		D–1411+56	U47				399									1				
U45	D–1407+57 ~ D–1409+50	RT.	104, 106		1409+50	U43					193								1				
TOTAL							5496	6235	201	2463	2390	4296	308	240									

PLOT SCALE = 1" = 1'
COL #28 C:\DRAWING\06092308\TABLE\06092UD1.DWG FEBRUARY-13-1995

CADD: G.J.W. DATE: 02/95
CHKD: M.F.J. DATE: 02/95

UNDERDRAIN DATA AND QUANTITIES – CDN

FRA–270–32.46

REFERENCE NO.	STATION TO STATION (ALL STATIONING CDN UNLESS NOTED OTHERWISE)	SIDE	FROM SHEET NO.	UNDERDRAIN OUTLET			605 4" SHALLOW PIPE UNDERDRAIN LIN. FT.				603 4" CONDUIT, TYPE B (707.17 NONPERFORATED ASTM 3034 SDR 35, SS 931 OR SS 944) LIN. FT.	603 4" CONDUIT, TYPE F (707.17 NONPERFORATED ASTM 3034 SDR, 35 SS 931 OR SS 944) LIN. FT.	SPEC. PRECAST REIN. CONCRETE OUTLET EACH	STANDARD				BENDS AND BRANCHES			
							12" DEPTH		30" DEPTH					OUTLET FITTING	45° WYE FITTING	TEE FITTING	END CAP	4"x4"–45° WYE	4"x4"–TEE	4"x90°	4"x45°
				ELEV	STATION	TYPE	(9)	(9A)	(9)	(9A)											
														EACH	EACH	EACH	EACH	EACH	EACH	EACH	EACH
U46	1407+50 ~ 1411+47	RT.	104, 106		D–1411+55	U47				397							1				
U47	1407+50 ~ 1411+47	RT.	104, 106	832.00	D–1411+55	CB–5A			397		82					3	1			1	
U48	D–1411+59 ~ 1414+50	LT.	106, 108		1414+50	U49			300								1				
U49	1411+50 ~ 1414+50	LT.	106, 108	832.00	1414+50	CB–5A				300	39					1	1			1	
U50	1411+50 ~ 1414+50	RT.	106, 108	833.67	1414+50	I–3D		300			18						1			1	
U51	1411+50 ~ 1414+50	RT.	106, 108	833.67	1414+50	I–3D	290					10					1				
U52	1414+50 ~ 1420+11	LT.	108, 110		1420+11	U53	561										1				
U53	1414+50 ~ 1420+11	LT.	108, 110	832.00	1420+11	CB–5A		561			28					1	1			1	
U54	1414+50 ~ 1420+11	RT.	108, 110	832.68	1420+11	I–3D		561			18						1			1	
U55	1414+50 ~ 1420+11	RT.	108, 110	832.68	1420+11	I–3D	551					10					1				
U56	1420+11 ~ 1427+30	LT.	110, 111, 112	829.30	1427+30	CB–A	719				51					2	1			1	
U57	1420+11 ~ 1427+30	LT.	110, 111, 112		1427+30	U56		719									1				
U58	1420+11 ~ 1427+30	RT.	110, 111, 112		1426+25	U56		719									1				
U59	1420+11 ~ 1423+00	RT.	110, 111	831.50	1423+00	CB–A		279				10					1			1	
U60	1420+11 ~ 1427+30	RT.	110, 111, 112	831.50	1423+00	CB–A	709					10					1				
U61	1423+00 ~ 1427+30	RT.	111, 112	830.80	1427+30	CB–A		430				10					1				
U62	1427+30 ~ 1434+34.50	LT.	112, 113, 114		FRA–270–(31.01)(33.64)		705										1				
U63	1427+30 ~ 1434+34.50	LT.	112, 113, 114		FRA–270–(31.01)(33.64)			705									1				
U64	1427+30 ~ 1434+34.50	RT.	112, 113, 114		FRA–270–(31.01)(33.64)		705										1				
TOTAL							4240	4274	697	697	236	50									

PLOT SCALE = 1" = 1'
COL #28 C:\DRAWING\06092206\TABLE\06092U02.DWG FEBRUARY-13-1995

CALC. G.J.W. DATE: 02/95
CHK. M.F.J. DATE: 02/95

UNDERDRAIN DATA AND QUANTITIES – CDN

FRA–270–32.46

REFERENCE NO.	STATION TO STATION (ALL STATIONING CDS UNLESS NOTED OTHERWISE)	SIDE	FROM SHEET NO.	UNDERDRAIN OUTLET			605 4" SHALLOW PIPE UNDERDRAIN LIN. FT.							603 4" CONDUIT, TYPE B (707.17 NONPERFORATED ASTM 3034 SDR, 35 SS 931 OR SS 944) LIN. FT.	603 4" CONDUIT, TYPE F (707.17 NONPERFORATED ASTM 3034 SDR, 35 SS 931 OR SS 944) LIN. FT.	SPEC. PRECAST REIN. CONCRETE OUTLET EACH	STANDARD				BENDS AND BRANCHES			
							12" DEPTH		18" DEPTH		30" DEPTH		MSE WALL				OUTLET FITTING EACH	45° WYE FITTING EACH	TEE FITTING EACH	END CAP EACH	4"x4"–45° WYE EACH	4"x4"–TEE EACH	4"x90° EACH	4"x45° EACH
				ELEV	STATION	TYPE	(9)	(9A)	(9)	(9A)	(9)	(9A)	(9B)											
U65	1367+25 ~ 1374+09	LT.	117, 119, 121	847.71	1374+09	I–3E	153						525		10					1				
U66	1367+25 ~ 1374+09	LT.	117, 119, 121	847.71	1374+09	I–3E		684						15						1			1	
U67	1367+25 ~ 1371+75	RT.	117, 119		1371+75							450		51		1			1	1			1	
U68	1367+25 ~ 1371+75	RT.	117, 119		1371+75	U67					450									1				
U69	1371+75 ~ 1376+50	RT.	119, 121		1376+50	U70				483										1				
U70	1371+75 ~ 1379+50	RT.	119, 121, 123		1379+50	U73			775											1				
U71	1374+13 ~ 1378+10	LT.	121, 123	842.33	1378+10	I–3D	387								10					1				
U72	1374+13 ~ 1378+10	LT.	121, 123	842.33	1378+10	I–3D		397						18						1			1	
U73	A–1376+50 ~ A–1379+50	LT.	121, 123		A–1379+50							300		45		1			1	1			1	
U74	1378+10 ~ 1380+80	LT.	123	841.53	1380+80	I–3D	260								10					1				
U74A	1380+80 ~ 1384+40	LT.	123, 125	840.00	1384+40	I–3D	350								10					1				
U75	1378+10 ~ 1384+40	LT.	123, 125	840.00	1384+40	I–3D		630						18						1			1	
U76	1379+50 ~ 1384+55	RT.	123, 125	838.00	1384+55	CB–4A		505						29					1	1			1	
U77	A–1379+50 ~ A–1383+25	RT.	123, 125		A–1383+25	U80	375													1				
U78	A–1382+50 ~ A–1384+46	LT.	125	838.00	A–1384+46	CB–4A	16	62						118						1				
U79	1383+16 ~ 1384+55	RT.	125		1384+55	U76	139													1				
U80	A–1383+25 ~ A–1388+25	LT.	125, 158, 160		A–1383+25		500							48		1			2	1			1	
U81	A–1383+25 ~ A–1388+25	RT.	125, 158, 160		A–1383+25	U80	500													1				
U82	1384+40 ~ 1389+00	LT.	125, 127, 128	839.10	1389+00	I–3D	450								10					1				
U83	1384+40 ~ 1389+00	LT.	125, 127, 128	839.10	1389+00	I–3D		460						18						1			1	
U84	1384+55 ~ 1389+00	RT.	125, 127, 128	838.79	1389+00	CB–4		445						24					1	1			1	
U85	1384+55 ~ 1389+00	RT.	125, 127, 128		1389+00	U84	445													1				
U86	1389+00 ~ 1393+50	LT.	128, 130	838.31	1393+50	I–3D	440								10					1				
U87	1389+00 ~ 1393+50	LT.	128, 130	838.31	1393+50	I–3D		450						18						1			1	
U88	1389+00 ~ 1393+50	RT.	128, 130	837.81	1393+50	CB–4		450						22					1	1			1	
U89	1389+00 ~ 1393+50	RT.	128, 130		1393+50	U88	450													1				
U90	1393+50 ~ 1396+00	LT.	130, 131	837.50	1396+00	I–3D	240								10					1				
U91	1393+50 ~ 1396+00	LT.	130, 131	837.50	1396+00	I–3D		250						18						1			1	
U92	1393+50 ~ 1396+00	RT.	130, 131	837.13	1396+00	CB–4		250						24					1	1			1	
U93	1393+50 ~ 1396+00	RT.	130, 131		1396+00	U92	250													1				
U94	1396+00 ~ 1400+50	LT.	131, 133	836.35	1400+50	I–3D	440								10					1				
U95	1396+00 ~ 1400+50	LT.	131, 133	836.35	1400+50	I–3D		450						18						1			1	
U96	1396+00 ~ 1402+53	RT.	131, 133		B–85+00					653				50					1	1			1	
U97	1396+00 ~ 1398+50	RT.	131		B–81+00		250							46					2	1			1	
U98	B–78+63 ~ B–81+00	LT.	131		B–81+00	U97			237											1				
U99	B–78+63 ~ B–81+00	RT.	131		B–81+00	U97	237													1				
U100	B–81+00 ~ B–85+00	RT.	131, 133		B–85+00	U96			400											1				
U101	1400+50 ~ 1405+00	LT.	133, 135	835.42	1405+00	I–3D	440								10					1				
U102	1400+50 ~ 1405+00	LT.	133, 135	835.42	1405+00	I–3D		450						18						1			1	
U103	1402+53 ~ 1405+00	RT.	133, 135		1405+00			247						48		1				1				
U104	B–85+00 ~ B–87+46	RT.	133, 135		1405+00	U103	246												1	1			1	
U105	1405+00 ~ 1412+00	LT.	135, 137, 138	833.48	1412+00	I–3D	690								10					1				
U106	1405+00 ~ 1412+00	LT.	135, 137, 138	833.48	1412+00	I–3D		700						18						1			1	
U107	1405+50 ~ 1411+90	RT.	135, 137, 138		1411+90			640						18		1			1	1			1	
U108	1405+00 ~ 1411+90	RT.	135, 137, 138		1411+90	U107	690													1				
U109	1412+00 ~ 1416+91	RT.	138, 139	832.50	1416+91	I–3E		491						10						1			1	
U110	1412+00 ~ 1416+91	RT.	138, 139	832.50	1416+91	I–3E	481								10					1				
U111	1412+00 ~ 1416+91	LT.	138, 139	832.60	1416+91	I–3D	481								10					1				
U112	1412+00 ~ 1416+91	LT.	138, 139	832.60	1416+91	I–3D		491						18						1			1	
TOTAL							8910	8052	1412	1136	450	750	525	710	120	5								

PLOT SCALE = 1" = 1'
COL #28 C:\DRAWING\06092306\TABLE\06092U03.DWG FEBRUARY-13-1995

CALC. G.J.W. DATE:02/95
CHECK M.F.J. DATE:02/95

UNDERDRAIN DATA AND QUANTITIES – CDS

FRA–270–32.46

REFERENCE NO.	STATION TO STATION ALL STATIONING CDS UNLESS NOTED OTHERWISE	SIDE	FROM SHEET NO.	UNDERDRAIN OUTLET			605 4" SHALLOW PIPE UNDERDRAIN LIN. FT. 12" DEPTH		603 4" CONDUIT, TYPE B (707.17 NONPERFORATED ASTM 3034 SDR 35, SS 931 OR SS 944)	603 4" CONDUIT, TYPE F (707.17 NONPERFORATED ASTM 3034 SDR 35 SS 931 OR SS 944)	SPEC. PRECAST REIN. CONCRETE OUTLET	STANDARD				BENDS AND BRANCHES			
				ELEV	STATION	TYPE	(9)	(9A)	LIN. FT.	LIN. FT.	EACH	OUTLET FITTING EACH	45° WYE FITTING EACH	TEE FITTING EACH	END CAP EACH	4"x4"–45° WYE EACH	4"x4"–TEE EACH	4"x90° EACH	4"x45° EACH
U113	1416+91 ~ 1422+50	LT.	139, 140	831.60	1422+50	I–3D	549 *			10					1				
U114	1416+91 ~ 1422+50	LT.	139, 140	831.60	1422+50	I–3D		559	18						1			1	
U115	1416+91 ~ 1422+50	RT.	139, 140	831.30	1422+50	MH–3		549		10					1				
U116	1416+91 ~ 1417+50	RT.	139	832.50	1416+91	I–3E	49			10					1				
U117	1422+50 ~ 1425+40	LT.	140, 141	830.77	1425+40	I–3D	280			10					1				
U118	1422+50 ~ 1425+40	LT.	140, 141	830.77	1425+40	I–3D		290	17						1			1	
U119	1422+50 ~ 1425+40	RT.	140, 141	828.69	1425+40	MH–3		290		10					1				
U120	1425+50 ~ 1429+00	LT.	141, 142		FRA–270–(31.01)(33.64)		350								1				
U121	1425+40 ~ 1429+00	LT.	141, 142		FRA–270–(31.01)(33.64)			360							1				
U122	1425+50 ~ 1429+00	RT.	141, 142		FRA–270–(31.01)(33.64)			350							1				
U123	1426+00 ~ 1427+00	RT.	141	830.50	1427+00	I–3E	90			10					1				
U124	1425+40 ~ 1429+00	LT.	141, 142		FRA–270–(31.01)(33.64)			360							1				
U125	1427+00 ~ 1428+90	RT.	141, 142	829.88	1428+90	I–3E	180			10					1				
TOTAL							1498	2758	35	70									

* FROM STA. CDS–1418+00 TO STA. CDS–1422+00 UNDERDRAIN WILL BE PAID AS ITEM 605 4" ROCK CUT UNDERDRAIN

CALC'D G.J.W. DATE 02/95
CHK'D M.F.J. DATE 02/95

UNDERDRAIN DATA AND QUANTITIES – CDS

FRA–270–32.46

PLOT SCALE = 1" = 1'
COL #28 C:\DRAWING\06092306\TABLE\V6092UD4.DWG FEBRUARY-13-1995

REFERENCE NO.	STATION TO STATION ALL STATIONING CONN UNLESS NOTED OTHERWISE	SIDE	FROM SHEET NO.	UNDERDRAIN OUTLET			605 4" SHALLOW PIPE UNDERDRAIN LIN. FT.					603 4" CONDUIT, TYPE B (707.17 NONPERFORATED ASTM 3034 SDR 35, SS 931 OR 944)	603 4" CONDUIT, TYPE F (707.17 NONPERFORATED ASTM 3034 SDR 35, SS 931 OR 944)	SPEC. PRECAST REIN. CONCRETE OUTLET	STANDARD				BENDS AND BRANCHES			
							12" DEPTH	18" DEPTH		30" DEPTH					OUTLET FITTING	45° WYE FITTING	TEE FITTING	END CAP	4"x4"–45° WYE	4"x4"–TEE	4"x90°	4"x45°
				ELEV	STATION	TYPE	(9)	(9)	(9A)	(9)	(9A)	LIN. FT.	LIN. FT.	EACH	EACH	EACH	EACH	EACH	EACH	EACH	EACH	EACH
U126	61+04 ~ 66+47	LT.	147, 149, 151	844.70	66+25	MH–3	543					82				1	3	1				
U127	61+45 ~ 66+00	LT.	147, 149, 151		66+00	U128			456									1				
U128	61+04 ~ 66+47	LT.	147, 149, 151		66+47	U126			543									1	1			
U129	61+04 ~ 61+30	RT.	147	846.01	61+30	CB–3A					16		10					1				
U130	61+45 ~ 66+34	RT.	147, 149, 151		66+34	U131			489									1				
U131	61+04 ~ 66+34	RT.	147, 149, 151	844.70	66+25	MH–3	531					55					4	1				1
U132	61+25 ~ 66+25	L–R	147, 149, 151	845.18	66+25	CB–3A				486			10					1				
U133	66+47 ~ 69+25	LT.	151, 153		66+47	U126	278											1				
U134	66+47 ~ 69+25	LT.	151, 153		66+47	U126			278									1				
U135	66+47 ~ 67+00	LT.	151		66+47	U126				53								1				
U136	66+34 ~ 69+05	RT.	151, 153		66+34	U131			271									1				
U137	B–66+34 ~ B–69+00	RT.	151, 153		B–66+34	U131	266											1				
U138	A–1392+00 ~ A–1394+47	RT.	153		A–1394+47	U139		247										1				
U139	69+25 ~ 71+80	LT.	153		A–1394+50				255			46		1			1	1			1	
U140	69+05 ~ 76+82	RT.	128, 153, 156		B–69+00				777			60		1			3	1			1	
U141	69+05 ~ 76+82	RT.	128, 153, 156		B–69+00	U140		777										1				
U142	B–69+00 ~ B–71+50	LT.	153		B–69+00	U140	250											1				
U143	B–69+00 ~ B–71+50	RT.	153		B–69+00	U140	250											1				
U144	B–71+50 ~ B–78+63	LT.	131, 162, 164		B–78+63		713					52		1			1	1			1	
U145	B–71+50 ~ B–78+63	RT.	131, 162, 164		B–78+63	U144	713											1				
U146	A–1391+36 ~ A–1392+00	RT.	153		A–1392+00	U149				64								1				
U147	A–1391+36 ~ A–1392+00	LT.	153		A–1392+00	U149				64								1				
U148	71+77 ~ 76+82	LT.	128, 153, 156		71+77	U149				505								1				
U149	71+80 ~ 76+82	LT.	128, 153, 156		A–1392+00						502	66		1			3	1			1	
U150	A–1388+25 ~ A–1391+36	RT.	153, 160		A–1388+25	U151	311											1				
U151	A–1388+25 ~ A–1391+36	LT.	153, 160		A–1388+25		311					52		1			1	1			1	
TOTAL							4166	1024	3069	1172	518	413	20	5								

REFERENCE NO.	STATION TO STATION ALL STATIONING McCUTCHEON UNLESS NOTED OTHERWISE	SIDE	FROM SHEET NO.	UNDERDRAIN OUTLET			605 6" SHALLOW PIPE UNDERDRAIN LIN. FT.	603 6"CONDUIT, TYPE F 707.17 NONPERFORATED ASTM 3034 SDR 35 OR SS 931 OR 944	SPEC. PRECAST REIN. CONCRETE OUTLET	STANDARD				BENDS AND BRANCHES			
				ELEV	STATION	TYPE	(9C)	LIN. FT.	EACH	OUTLET FITTING	45° WYE FITTING	TEE FITTING	END CAP	4"x4"–45° WYE	4"x4"–TEE	4"x90°	4"x45°
										EACH	EACH	EACH	EACH	EACH	EACH	EACH	EACH
U152	21+70 ~ 23+36	RT.	167, 168		21+70		166	10	1				1				
U153	26+52 ~ 27+29	RT.	168, 170	843.50	27+29	CB–3A	77	10					1			1	
TOTAL							243	20	1								

PLOT SCALE = 1" = 1'
COL #7 D:\DRAWING\06092308\TABLE\06092UD5.DWG FEBRUARY-10-1995

CAL: G.J.W. DATE: 02/95
CHK: M.F.J. DATE: 02/95

CONNECTOR ROAD
McCUTCHEON ROAD

UNDERDRAIN DATA AND QUANTITIES

FRA–270–32.46

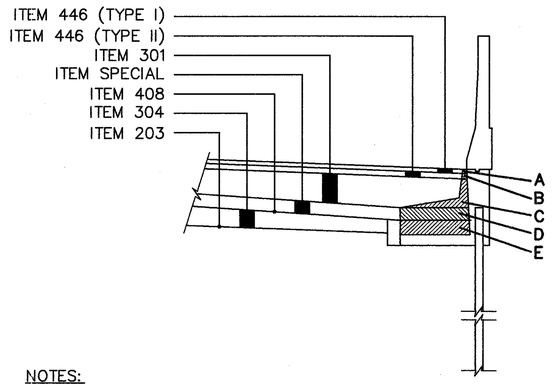

NOTES:

LETTERED AREAS (I.E. A THROUGH E) DEPICT THOSE AREAS FOR EACH PAVEMENT LAYER THAT ARE DEDUCTED FROM PAVEMENT CALCULATIONS WHEREVER MSE WALLS ARE PRESENT.

ADDITIONAL DEDUCTIONS RESULT FROM MODIFIED I–3E INLETS. THIS DEDUCTION TAKES INTO ACCOUNT THE SIZE OF THE INLET ALONG WITH THE NUMBER OF INLETS.

AREAS DEDUCTED FROM CALCULATIONS

ITEM 203 – SUBGRADE COMPACTION

CDN–1366+50 to CDN–1367+39.45 (Pavement & Shoulders)
less deductions for area above sleeper slab
Cadd Measured Area = 5775.02 Sq. Ft.
(5775.02 – 715.60)(1/9) .....562.16 SQ. YD.

CDN–1367+39.45 to CDN–1368+92.26 (Pavement & Rt. Shoulder)
less deductions for area above sleeper slab
Cadd Measured Area = 6213.19 Sq. Ft.
(6213.19 – 611.24)(1/9) .....622.44 SQ. YD.

CDN–1368+92.26 to CDN–1372+58.66 (Pavement & Rt. Shoulder)
less deductions for inlets(s) and area above sleeper slab
Cadd Measured Area = 14922.05 Sq. Ft.
(14922.05)(1/9) – [(10)(8)(2)(1/9) + (1465.60)(1/9)] .....1477.38 SQ. YD.

CDN–1372+58.66 to CDN–1407+49.68 (Pavement & Shoulders)
less deductions for inlets(s) and area above sleeper slab
Cadd Measured Area = 176996.99 Sq. Ft.
(176996.99)(1/9) – [(965.36)(1/9) +
(10)(8)(1)(1/9)] = ...19556.11 SQ. YD.

CDN–1407+49.68 to CDN–1411+64.62 (Pavement & Rt. Shoulder)
Cadd Measured Area = 16704.84 Sq. Ft.
(16704.84)(1/9) .....1856.09 SQ. YD.

CDN–1411+64.62 to CDN–1414+12.05 (Pavement & Rt. Shoulder)
Cadd Measured Area = 10021.06 Sq. Ft.
(10021.06)(1/9) .....1113.45 SQ. YD.

CDN–1414+12.05 to CDN–1420+21.85 (Pavement & Shoulders)
Cadd Measured Area = 38722.01 Sq. Ft.
(38722.01)(1/9) .....4302.45 SQ. YD.

CDN–1420+21.85 to CDN–1429+26.96 (Pavement, Lt. Shoulder & Rt. Gore)
Cadd Measured Area = 60333.38 Sq. Ft.
(60333.38)(1/9) .....6703.71 SQ. YD.

CDN–1429+26.96 to CDN–1434+34.50 (Pavement & Lt. Shoulder)
Cadd Measured Area = 19343.54 Sq. Ft.
(19343.54)(1/9) .....2149.28 SQ. YD.

CDS–1367+25.00 to CDS–1375+35.34 (Pavement & Shoulders)
less deductions for area above sleeper slab
Cadd Measured Area = 51031.73 Sq. Ft.
(51031.73)(1/9) – (2100.00)(1/9) .....5670.19 SQ. YD.

CDS–1375+35.34 to CDS–1379+23.12 (Pavement & Lt. Shoulder)
Cadd Measured Area = 20395.15 Sq. Ft.
(20395.15)(1/9) .....2266.13 SQ. YD.

CDS–1379+23.12 to CDS–1383+15.25 (Pavement & Lt. Shoulder)
Cadd Measured Area = 20540.24 Sq. Ft.
(20540.24)(1/9) .....2282.25 SQ. YD.

CDS–1383+15.25 to CDS–1398+38.57 (Pavement & Shoulders)
Cadd Measured Area = 96730.82 Sq. Ft.
(96730.82)(1/9) .....10747.87 SQ. YD.

CDS–1398+38.57 to CDS–1405+50.00 (Pavement & Lt. Shoulder)
Cadd Measured Area = 37357.87 Sq. Ft.
(37357.87)(1/9) .....4150.87 SQ. YD.

CDS–1405+50.00 to CDS–1413+00.00 (Pavement & Shoulders)
Cadd Measured Area = 56615.69 Sq. Ft.
(56615.69)(1/9) .....6290.63 SQ. YD.

CDS–1413+00.00 to CDS–1425+50.00 (Pavement & Shoulders)
additions for area above retaining wall foundation
Cadd Measured Area = 82172.93 Sq. Ft.
(82172.93)(1/9) .....9130.33 SQ. YD.

CDS–1425+50.00 to CDS–1429+00.00 (Includes Rt. Shoulder & Lt. Gore)
additions for area above retaining wall foundation
Cadd Measured Area = 25866.81 Sq. Ft.
(25866.81)(1/9) .....2874.09 SQ. YD.

C–1367+39.45 to C–1372+59.59 (Pavement & Rt. Gore)
less deductions for area above sleeper slab
Cadd Measured Area = 16400.95 Sq. Ft.
(16400.95)(1/9) – (2080.56)(1/9) .....1591.15 SQ. YD.

C–1372+59.59 to C–1376+50.00 (Shoulders)
less deductions for inlet(s) and area above sleeper slab
Cadd Measured Area = 11178.97 Sq. Ft.

(11178.97)(1/9)–(390.41)(1/9).....1198.73 SQ. YD.

C–1376+50.00 to C–1389+48.32 (Shoulders)
less deductions for inlet(s) and area above sleeper slab
Cadd Measured Area = 43341.93 Sq. Ft.

(43341.93)(1/9)–[(1299.06)(1/9)+(1295.96)(1/9)].....4527.43 SQ. YD.

C–1389+48.32 to C–1390+17.35 (Shoulders)
less deductions for inlet(s) and area above sleeper slab
Cadd Measured Area = 2614.93 Sq. Ft.

(2614.93)(1/9)–[(96.07)(1/9)+(39.00)(1/9)].....275.54 SQ. YD.

D–1390+17.35 to D–1393+00.00 (Pavement & Shoulders)
less deductions for inlet(s) and area above sleeper slab
Cadd Measured Area = 10418.99 Sq. Ft.
(10418.99)(1/9) – [(1842.52)(1/9) +
(10)(8)(1)(1/9)] .....944.05 SQ. YD.

D–1393+00.00 to D–1403+00.00 (Pavement & Shoulders)
less deductions for inlet(s) and area above sleeper slab
Cadd Measured Area = 31215.96 Sq. Ft.
(31215.96)(1/9) – [(9050.00)(1/9) +
(10)(8)(5)(1/9)] .....2418.44 SQ. YD.

D–1403+00.00 to D–1404+50.00 (Pavement & Shoulders)
Cadd Measured Area = 4033.79 Sq. Ft.
(4033.79)(1/9) .....448.20 SQ. YD.

D–1404+50.00 to 1407+58.84 (Pavement & Shoulders)
Cadd Measured Area = 7771.21 Sq. Ft.
(7771.21)(1/9) .....863.47 SQ. YD.

D–1407+58.84 to D–1414+20.67 (Pavement, Lt. Shoulder & Rt. Gore)
Cadd Measured Area = 20243.82 Sq. Ft.
(20243.82)(1/9) .....2249.31 SQ. YD.

A–1376+35.64 to A–1383+11.94 (Pavement, Rt. Shoulder & Lt. Gore)
Cadd Measured Area = 19332.85 Sq. Ft.
(19332.85)(1/9) .....2148.09 SQ. YD.

A–1383+11.94 to A–1391+88.78 (Pavement & Shoulders)
Cadd Measured Area = 23954.32 Sq. Ft.
(23954.32)(1/9) .....2661.59 SQ. YD.

A–1391+88.78 to A–1395+15.75 (Pavement, Rt. Shoulder & Lt. Gore)
Cadd Measured Area = 9201.26 Sq. Ft.
(9201.26)(1/9) .....1022.36 SQ. YD.

B–65+79.03 to B–69+37.72 (Pavement, Rt. Shoulder & Lt. Gore)
Cadd Measured Area = 10376.22 Sq. Ft.
(10376.22)(1/9) .....1152.91 SQ. YD.

B–69+37.72 to B–80+87.61 (Pavement & Shoulders)
Cadd Measured Area = 31307.11 Sq. Ft.
(31307.11)(1/9) .....3478.57 SQ. YD.

B–80+87.61 to B–87+96.59 (Pavement, Rt. Shoulder & Lt. Gore)
Cadd Measured Area = 21474.48 Sq. Ft.
(21474.48)(6/12)(1/27) .....2386.05 SQ. YD.

CONN–61+04.33 to CONN–61+40.67 (Pavement & Shoulders)
Cadd Measured Area = 5228.24 Sq. Ft.
(5228.24)(1/9) .....580.92 SQ. YD.

(East) CONN–61+40.67 to CONN–65+79.03 (Pavement & Rt. Shoulder)
Cadd Measured Area = 20833.40 Sq. Ft.
(20833.40)(1/9) .....2314.82 SQ. YD.

(West) CONN–61+40.67 to CONN–66+00.00 (Pavement & Lt. Shoulder)
Cadd Measured Area = 37170.18 Sq. Ft.
(37170.18)(1/9) .....4130.02 SQ. YD.

(East) CONN–65+79.03 to CONN–69+38.10 (Pavement)
Cadd Measured Area = 8976.41 Sq. Ft.
(8976.41)(1/9) .....997.38 SQ. YD.

(West) CONN–66+00.00 to CONN–68+55.70 (Pavement & Lt. Shoulder)
Cadd Measured Area = 12795.55 Sq. Ft.
(12795.55)(1/9) .....1421.73 SQ. YD.

(East) CONN–69+38.10 to CONN–71+87.28 (Pavement & Rt. Shoulder)
Cadd Measured Area = 9006.50 Sq. Ft.
(9006.50)(1/9) .....1000.72 SQ. YD.

(West) CONN–68+55.70 to CONN–71+87.28 (Pavement)
Cadd Measured Area = 8260.73 Sq. Ft.
(8260.73)(1/9) .....917.86 SQ. YD.

CONN–71+87.28 to CONN–76+81.91 (Pavement & Shoulders)
Cadd Measured Area = 36262.49 Sq. Ft.
(36262.49)(1/9) .....4029.17 SQ. YD.

THE FOLLOWING QUANTITIES HAS BEEN CARRIED TO THE GENERAL SUMMARY.

TOTAL ITEM 203 = 124514 SQ. YD.

CALC. BY: T.A.Z DATE: 10/14/94
CHKD. BY: M.F.J DATE: 11/7/94

CALCULATIONS

FRA–270–32.46

PLOT SCALE: 1"=20'
COL. #7 D:\DRAWING\06092306\QUANT\6092CALI.DWG FEBRUARY-13-1995

ITEM 301 – BITUMINOUS AGGREGATE BASE

CDN–1366+50 to CDN–1367+39.45 (Pavement & Shoulders)
less deductions for area above sleeper slab
Cadd Measured Area = 5775.02 Sq. Ft.
(5775.02)(8/12)(1/27) – (0.2026)(179.07)(1/27) .....141.25 CU. YD.

CDN–1367+39.45 to CDN–1368+92.26 (Pavement & Rt. Shoulder)
less deductions for area above sleeper slab
Cadd Measured Area = 6213.19 Sq. Ft.
(6213.19)(8/12)(1/27) – (0.2026)(151.65)(1/27).....152.27 CU. YD.

CDN–1368+92.26 to CDN–1372+58.66 (Pavement & Rt. Shoulder)
less deductions for inlet(s) and area above sleeper slab
Cadd Measured Area = 14922.05 Sq. Ft.
(14922.05)(8/12)(1/27) – [(10)(8)(8/12)(2)(1/27) +
(0.2026)(365.81)(1/27)] .....361.75 CU. YD.

CDN–1372+58.66 to CDN–1407+49.68 (Pavement & Shoulders)
less deductions for inlet(s) and area above sleeper slab
Cadd Measured Area = 179907.38 Sq. Ft.
(179907.38)(8/12)(1/27) – [(0.2026)(242.29)(1/27) +
((10)(8)(8/12))(1)(1/27)] .....4438.36 CU. YD.

CDN–1407+49.68 to CDN–1411+64.62 (Pavement & Rt. Shoulder)
Cadd Measured Area = 16704.84 Sq. Ft.
(16704.84)(8/12)(1/27) .....412.47 CU. YD.

CDN–1411+64.62 to CDN–1414+12.05 (Pavement & Rt. Shoulder)
Cadd Measured Area = 10021.06 Sq. Ft.
(10021.06)(8/12)(1/27) .....247.43 CU. YD.

CDN–1414+12.05 to CDN–1420+21.85 (Pavement & Shoulders)
Cadd Measured Area = 38722.01 Sq. Ft.
(38722.01)(8/12)(1/27) .....956.10 CU. YD.

CDN–1420+21.85 to CDN–1429+26.96 (Pavement, Lt. Shoulder & Rt. Gore)
Cadd Measured Area = 61089.01 Sq. Ft.
(61089.01)(8/12)(1/27) .....1508.37 CU. YD.

CDN–1429+26.96 to CDN–1434+34.50 (Pavement & Lt. Shoulder)
Cadd Measured Area = 19765.13 Sq. Ft.
(19765.13)(8/12)(1/27) .....488.03 CU. YD.

CDS–1367+25.00 to CDS–1375+35.34 (Pavement & Shoulders)
less deductions for area above sleeper slab
Cadd Measured Area = 51703.00 Sq. Ft.
(51703.00)(8/12)(1/27) – (0.2026)(527.81)(1/27) .....1272.66 CU. YD.

CDS–1375+35.34 to CDS–1379+23.12 (Pavement & Lt. Shoulder)
Cadd Measured Area = 20395.15 Sq. Ft.
(20395.15)(8/12)(1/27) .....503.58 CU. YD.

CDS–1379+23.12 to CDS–1383+15.25 (Pavement & Lt. Shoulder)
Cadd Measured Area = 20540.24 Sq. Ft.
(20540.24)(8/12)(1/27) .....507.17 CU. YD.

CDS–1383+15.25 to CDS–1398+38.57 (Pavement & Shoulders)
Cadd Measured Area = 96730.82 Sq. Ft.
(96730.82)(8/12)(1/27) .....2388.42 CU. YD.

CDS–1398+38.57 to CDS–1405+50.00 (Pavement & Lt. Shoulder)
Cadd Measured Area = 37357.87 Sq. Ft.
(37357.87)(8/12)(1/27) .....922.42 CU. YD.

CDS–1405+50.00 to CDS–1413+00.00 (Pavement & Shoulders)
Cadd Measured Area = 56615.69 Sq. Ft.
(56615.69)(8/12)(1/27) .....1397.92 CU. YD.

CDS–1413+00.00 to CDS–1425+50.00 (Pavement & Shoulders)
additions for area above retaining wall foundation
Cadd Measured Area = 82172.93 Sq. Ft.
(82172.93)(8/12)(1/27) + (5395.00)(12/12)(1/27).....2228.78 CU. YD.

CDS–1425+50.00 to CDS–1429+00.00 (Pavement & Shoulders)
additions for area above retaining wall foundation
Cadd Measured Area = 25866.81 Sq. Ft.
(25866.81)(8/12)(1/27) + (737.50)(12/12)(1/27) .....666.00 CU. YD.

C–1367+39.45 to C–1372+59.59 (Pavement & Rt. Gore)
less deductions for area above sleeper slab
Cadd Measured Area = 16400.95 Sq. Ft.
(16400.95)(7/12)(1/27) – (0.0911)(520.12)(1/27) .....352.59 CU. YD.

C–1372+59.59 to C–1376+50.00 (Shoulders)(2 Modified Inlets)
less deductions for inlet(s) and area above sleeper slab
Cadd Measured Area = 11178.97 Sq. Ft.
(11178.97)(7/12)(1/27) – [(390.41)(0.0911)(1/27) +
(10)(8)(7/12)(2)(1/27)].....236.74 CU. YD.

C–1376+50.00 to C–1389+48.32 (Shoulders)(4 Modified Inlets)
less deductions for inlet(s) and area above sleeper slab
Cadd Measured Area = 43341.93 Sq. Ft.
(43341.93)(7/12)(1/27) – [(1299.06)(0.0911)(1/27) +
(1295.96)(0.1374)(1/27) + (10)(8)(7/12)(4)(1/27)].....918.51 CU. YD.

C–1389+48.32 to C–1390+17.35 (Shoulders)(0 Modified Shoulders)
less deductions for inlet(s) and area above sleeper slab
Cadd Measured Area = 2614.93 Sq. Ft.
(2614.93)(7/12)(1/27) – [(96.07)(0.1100)(1/27) +
(39.00)(0.1374)(1/27)].....55.91 CU. YD.

D–1390+17.35 to D–1393+00.00 (Pavement & Shoulders)
less deductions for inlet(s) and area above sleeper slab
Cadd Measured Area = 10418.99 Sq. Ft.
(10418.99)(7/12)(1/27) – [((0.0966)(282.83) + (0.1432)(157.61))(1/27) +
((10)(8)(7/12))(1)(1/27)] .....221.52 CU. YD.

D–1393+00.00 to D–1403+00.00 (Pavement & Shoulders)
less deductions for inlet(s) and area above sleeper slab
Cadd Measured Area = 31215.96 Sq. Ft.
(31215.96)(7/12)(1/27) – [((0.1018)(950.15) + (0.1432)(949.67))(1/27) +
((10)(8)(7/12))(5)(1/27)] .....657.16 CU. YD.

D–1403+00.00 to D–1404+50.00 (Pavement & Shoulders)
Cadd Measured Area = 4158.90 Sq. Ft.
(4158.90)(7/12)(1/27) .....89.85 CU. YD.

D–1404+50.00 to 1407+58.84 (Pavement & Shoulders)
Cadd Measured Area = 7771.21 Sq. Ft.
(7771.21)(7/12)(1/27) .....167.90 CU. YD.

D–1407+58.84 to D–1414+20.67 (Pavement, Lt. Shoulder & Rt. Gore)
Cadd Measured Area = 20243.82 Sq. Ft.
(20243.82)(7/12)(1/27) .....437.37 CU. YD.

A–1376+35.64 to A–1383+11.94 (Pavement, Rt. Shoulder & Lt. Gore)
Cadd Measured Area = 19332.85 Sq. Ft.
(19332.85)(7/12)(1/27) .....417.69 CU. YD.

A–1383+11.94 to A–1391+88.78 (Pavement & Shoulders)
Cadd Measured Area = 23954.32 Sq. Ft.
(23954.32)(7/12)(1/27) .....517.53 CU. YD.

A–1391+88.78 to A–1395+15.75 (Pavement, Rt. Shoulder & Lt. Gore)
Cadd Measured Area = 9201.26 Sq. Ft.
(9201.26)(7/12)(1/27) .....198.79 CU. YD.

B–65+79.03 to B–69+37.72 (Pavement, Rt. Shoulder & Lt. Gore)
Cadd Measured Area = 10376.22 Sq. Ft.
(10376.22)(7/12)(1/27) .....224.18 CU. YD.

B–69+37.72 to B–80+87.61 (Pavement & Shoulders)
Cadd Measured Area = 31307.11 Sq. Ft.
(31307.11)(7/12)(1/27) .....676.39 CU. YD.

B–80+87.61 to B–87+96.59 (Pavement, Rt. Shoulder & Lt. Gore)
Cadd Measured Area = 21474.48 Sq. Ft.
(21474.48)(7/12)(1/27) .....463.96 CU. YD.

CONN–61+04.33 to CONN–61+40.67 (Pavement & Shoulders)
Cadd Measured Area = 5228.24 Sq. Ft.
(5228.24)(8/12)(1/27) .....129.09 CU. YD.

(East) CONN–61+40.67 to CONN–65+79.03 (Pavement & Rt. Shoulder)
Cadd Measured Area = 20833.40 Sq. Ft.
(20833.40)(8/12)(1/27) .....514.40 CU. YD.

(West) CONN–61+40.67 to CONN–66+00.00 (Pavement & Lt. Shoulder)
Cadd Measured Area = 37170.18 Sq. Ft.
(37170.18)(8/12)(1/27) .....917.78 CU. YD.

(East) CONN–65+79.03 to CONN–69+38.10 (Pavement)
Cadd Measured Area = 8976.41 Sq. Ft.
(8976.41)(8/12)(1/27) .....221.64 CU. YD.

(West) CONN–66+00.00 to CONN–68+55.70 (Pavement & Lt. Shoulder)
Cadd Measured Area = 12795.55 Sq. Ft.
(12795.55)(8/12)(1/27) .....315.94 CU. YD.

(East) CONN–69+38.10 to CONN–71+87.28 (Pavement & Rt. Shoulder)
Cadd Measured Area = 9006.50 Sq. Ft.
(9006.50)(8/12)(1/27) .....222.38 CU. YD.

(West) CONN–68+55.70 to CONN–71+87.28 (Pavement)
Cadd Measured Area = 8260.73 Sq. Ft.
(8260.73)(8/12)(1/27) .....203.97 CU. YD.

CONN–71+87.28 to CONN–76+81.91 (Pavement & Shoulders)
Cadd Measured Area = 36262.49 Sq. Ft.
(36262.49)(8/12)(1/27) .....895.37 CU. YD.

THE FOLLOWING QUANTITIES HAS BEEN CARRIED TO THE GENERAL SUMMARY.

TOTAL ITEM 301 = 27650 CU. YD.

CALC. BY: T.A.Z DATE: 10/14/94
CHKD. BY: M.F.J DATE: 11/07/94

CALCULATIONS

FRA–270–32.46

PLOT SCALE: 1" = 1'
COL. #'s D:\DRAWING\06092305\QUANT\6092CALC.DWG FEBRUARY–13–1995

ITEM 304 – AGGREGATE BASE

CDN–1366+50 to CDN–1367+39.45 (Pavement & Shoulders)
less deductions for area above sleeper slab
Cadd Measured Area = 5775.02 Sq. Ft.
(5775.02)(6/12)(1/27) – (1.9800)(179.07)(1/27) .....93.81 CU. YD.

CDN–1367+39.45 to CDN–1368+92.26 (Pavement & Rt. Shoulder)
less deductions for area above sleeper slab
Cadd Measured Area = 6213.19 Sq. Ft.
(6213.19)(6/12)(1/27) – (1.9800)(151.65)(1/27) .....103.94 CU. YD.

CDN–1368+92.26 to CDN–1372+58.66 (Pavement & Rt. Shoulder)
less deductions for inlets(s) and area above sleeper slab
Cadd Measured Area = 14922.05 Sq. Ft.
(14922.05)(6/12)(1/27) – [(10)(8)(6/12)(2)(1/27) +
(1.9800)(365.81)(1/27)] .....219.88 CU. YD.

CDN–1372+58.66 to CDN–1407+49.68 (Pavement & Shoulders)
less deductions for inlets(s) and area above sleeper slab
Cadd Measured Area = 176996.99 Sq. Ft.
(176996.99)(6/12)(1/27) – [(1.9800)(242.29)(1/27) +
((10)(8)(6/12))(1)(1/27)] .....3258.47 CU. YD.

CDN–1407+49.68 to CDN–1411+64.62 (Pavement & Rt. Shoulder)
Cadd Measured Area = 16704.84 Sq. Ft.
(16704.84)(6/12)(1/27) .....309.35 CU. YD.

CDN–1411+64.62 to CDN–1414+12.05 (Pavement & Rt. Shoulder)
Cadd Measured Area = 10021.06 Sq. Ft.
(10021.06)(6/12)(1/27) .....185.58 CU. YD.

CDN–1414+12.05 to CDN–1420+21.85 (Pavement & Shoulders)
Cadd Measured Area = 38722.01 Sq. Ft.
(38722.01)(6/12)(1/27) .....717.07 CU. YD.

CDN–1420+21.85 to CDN–1429+26.96 (Pavement, Lt. Shoulder & Rt. Gore)
Cadd Measured Area = 60333.38 Sq. Ft.
(60333.38)(6/12)(1/27) .....1117.29 CU. YD.

CDN–1429+26.96 to CDN–1434+34.50 (Pavement & Lt. Shoulder)
Cadd Measured Area = 19343.54 Sq. Ft.
(19343.54)(6/12)(1/27) .....358.21 CU. YD.

CDS–1367+25.00 to CDS–1375+35.34 (Pavement & Shoulders)
less deductions for area above sleeper slab
Cadd Measured Area = 51031.73 Sq. Ft.
(51031.73)(6/12)(1/27) – (1.9800)(527.81)(1/27) .....906.33 CU. YD.

CDS–1375+35.34 to CDS–1379+23.12 (Pavement & Lt. Shoulder)
Cadd Measured Area = 20395.15 Sq. Ft.
(20395.15)(6/12)(1/27) .....377.69 CU. YD.

CDS–1379+23.12 to CDS–1383+15.25 (Pavement & Lt. Shoulder)
Cadd Measured Area = 20540.24 Sq. Ft.
(20540.24)(6/12)(1/27) .....380.38 CU. YD.

CDS–1383+15.25 to CDS–1398+38.57 (Pavement & Shoulders)
Cadd Measured Area = 96730.82 Sq. Ft.
(96730.82)(6/12)(1/27) .....1791.31 CU. YD.

CDS–1398+38.57 to CDS–1405+50.00 (Pavement & Lt. Shoulder)
Cadd Measured Area = 37357.87 Sq. Ft.
(37357.87)(6/12)(1/27) .....691.81 CU. YD.

CDS–1405+50.00 to CDS–1413+00.00 (Pavement & Shoulders)
Cadd Measured Area = 56615.69 Sq. Ft.
(56615.69)(6/12)(1/27) .....1048.44 CU. YD.

CDS–1413+00.00 to CDS–1425+50.00 (Pavement & Shoulders)
additions for area above retaining wall foundation
Cadd Measured Area = 82172.93 Sq. Ft.
(82172.93)(6/12)(1/27) + (5395.00)(7/12)(1/27) .....1638.28 CU. YD.

CDS–1425+50.00 to CDS–1429+00.00 (Includes Rt. Shoulder & Lt. Gore)
additions for area above retaining wall foundation
Cadd Measured Area = 25866.81 Sq. Ft.
(25866.81)(6/12)(1/27) + (737.50)(7/12)(1/27) .....494.95 CU. YD.

C–1367+39.45 to C–1372+59.59 (Pavement & Rt. Gore)
less deductions for area above sleeper slab
Cadd Measured Area = 16400.95 Sq. Ft.
(16400.95)(6/12)(1/27) – (1.9808)(520.12)(1/27) .....265.56 CU. YD.

C–1372+59.59 to C–1376+50.00 (Shoulders)(2 Modified Inlets)
less deductions for inlet(s) and area above sleeper slab
Cadd Measured Area = 11178.97 Sq. Ft.
(11178.97)(6/12)(1/27) – [(390.41)(1.9808)(1/27) +
(10)(8)(6/12)(2)(1/27)].....175.42 CU. YD.

C–1376+50.00 to C–1389+48.32 (Shoulders)(4 Modified Inlets)
less deductions for inlet(s) and area above sleeper slab
Cadd Measured Area = 43341.93 Sq. Ft.
(43341.93)(6/12)(1/27) – [(1299.06)(1.9808)(1/27) +
(1295.96)(1.9790)(1/27) + (10)(8)(6/12)(4)(1/27)].....606.41 CU. YD.

C–1389+48.32 to C–1390+17.35 (Shoulders)(0 Modified Inlets)
less deductions for inlet(s) and area above sleeper slab
Cadd Measured Area = 2614.93 Sq. Ft.
(2614.93)(6/12)(1/27) – [(96.07)(3.06)(1/27) +
(39.00)(1.9790)(1/27)].....34.67 CU. YD.

D–1390+17.35 to D–1393+00.00 (Pavement & Shoulders)
less deductions for inlet(s) and area above sleeper slab
Cadd Measured Area = 10418.99 Sq. Ft.
(10418.99)(6/12)(1/27) – [((1.9809)(282.83) + (1.9794)(157.61))(1/27) +
((10)(8)(6/12))(1)(1/27)] .....159.16 CU. YD.

D–1393+00.00 to D–1403+00.00 (Pavement & Shoulders)
less deductions for inlet(s) and area above sleeper slab
Cadd Measured Area = 31215.96 Sq. Ft.
(31215.96)(6/12)(1/27) – [((2.5931)(950.15) + (1.9794)(949.67))(1/27) +
((10)(8)(6/12))(5)(1/27)] .....409.79 CU. YD.

D–1403+00.00 to D–1404+50.00 (Pavement & Shoulders)
Cadd Measured Area = 4033.79 Sq. Ft.
(4033.79)(6/12)(1/27) .....74.70 CU. YD.

D–1404+50.00 to 1407+58.84 (Pavement & Shoulders)
Cadd Measured Area = 7771.21 Sq. Ft.
(7771.21)(6/12)(1/27) .....143.91 CU. YD.

D–1407+58.84 to D–1414+20.67 (Pavement, Lt. Shoulder & Rt. Gore)
Cadd Measured Area = 20243.82 Sq. Ft.
(20243.82)(6/12)(1/27) .....374.89 CU. YD.

A–1376+35.64 to A–1383+11.94 (Pavement, Rt. Shoulder & Lt. Gore)
Cadd Measured Area = 19332.85 Sq. Ft.
(19332.85)(6/12)(1/27) .....358.02 CU. YD.

A–1383+11.94 to A–1391+88.78 (Pavement & Shoulders)
Cadd Measured Area = 23954.32 Sq. Ft.
(23954.32)(6/12)(1/27) .....443.66 CU. YD.

A–1391+88.78 to A–1395+15.75 (Pavement, Rt. Shoulder & Lt. Gore)
Cadd Measured Area = 9201.26 Sq. Ft.
(9201.26)(6/12)(1/27) .....170.39 CU. YD.

B–65+79.03 to B–69+37.72 (Pavement, Rt. Shoulder & Lt. Gore)
Cadd Measured Area = 10376.22 Sq. Ft.
(10376.22)(6/12)(1/27) .....192.15 CU. YD.

B–69+37.72 to B–80+87.61 (Pavement & Shoulders)
Cadd Measured Area = 31307.11 Sq. Ft.
(31307.11)(6/12)(1/27) .....579.76 CU. YD.

B–80+87.61 to B–87+96.59 (Pavement, Rt. Shoulder & Lt. Gore)
Cadd Measured Area = 21474.48 Sq. Ft.
(21474.48)(6/12)(1/27) .....397.68 CU. YD.

CONN–61+04.33 to CONN–61+40.67 (Pavement & Shoulders)
Cadd Measured Area = 5228.24 Sq. Ft.
(5228.24)(6/12)(1/27) .....96.82 CU. YD.

(East) CONN–61+40.67 to CONN–65+79.03 (Pavement & Rt. Shoulder)
Cadd Measured Area = 20833.40 Sq. Ft.
(20833.40)(6/12)(1/27) .....385.80 CU. YD.

(West) CONN–61+40.67 to CONN–66+00.00 (Pavement & Lt. Shoulder)
Cadd Measured Area = 37170.18 Sq. Ft.
(37170.18)(6/12)(1/27) .....688.34 CU. YD.

(East) CONN–65+79.03 to CONN–69+38.10 (Pavement)
Cadd Measured Area = 8976.41 Sq. Ft.
(8976.41)(6/12)(1/27) .....166.23 CU. YD.

(West) CONN–66+00.00 to CONN–68+55.70 (Pavement & Lt. Shoulder)
Cadd Measured Area = 12795.55 Sq. Ft.
(12795.55)(6/12)(1/27) .....236.95 CU. YD.

(East) CONN–69+38.10 to CONN–71+87.28 (Pavement & Rt. Shoulder)
Cadd Measured Area = 9006.50 Sq. Ft.
(9006.50)(6/12)(1/27) .....166.79 CU. YD.

(West) CONN–68+55.70 to CONN–71+87.28 (Pavement)
Cadd Measured Area = 8260.73 Sq. Ft.
(8260.73)(6/12)(1/27) .....152.98 CU. YD.

CONN–71+87.28 to CONN–76+81.91 (Pavement & Shoulders)
Cadd Measured Area = 36262.49 Sq. Ft.
(36262.49)(6/12)(1/27) .....671.53 CU. YD.

THE FOLLOWING QUANTITIES HAS BEEN CARRIED TO THE GENERAL SUMMARY.

TOTAL ITEM 304 = 20644 CU. YD.

ITEM SPECIAL – ASPHALT TREATED FREE DRAINING BASE

CDN–1366+50 to CDN–1367+39.45 (Pavement & Shoulders)
less deductions for area above sleeper slab
Cadd Measured Area = 5775.02 Sq. Ft.
(5775.02)(4/12)(1/27) – (1.036)(179.07)(1/27) .....64.43 CU. YD.

CDN–1367+39.45 to CDN–1368+92.26 (Pavement & Rt. Shoulder)
less deductions for area above sleeper slab
Cadd Measured Area = 6213.19 Sq. Ft.
(6213.19)(4/12)(1/27) – (1.036)(151.65)(1/27) .....70.89 CU. YD.

CDN–1368+92.26 to CDN–1372+58.66 (Pavement & Rt. Shoulder)
less deductions for inlet(s) and area above sleeper slab
Cadd Measured Area = 14922.05 Sq. Ft.
(14922.05)(4/12)(1/27) – [(1.036)(365.81)(1/27) +
(10)(8)(4/12)(2)(1/27) .....168.21 CU. YD.

CDN–1372+58.66 to CDN–1407+49.68 (Pavement & Shoulders)
less deductions for inlet(s) and area above sleeper slab
Cadd Measured Area = 117907.38 Sq. Ft.
(179907.38)(4/12)(1/27) – [(1.036)(242.29)(1/27) +
((10)(8))(4/12))(1)(1/27)] .....2210.79 CU. YD.

CDN–1407+49.68 to CDN–1411+64.62 (Pavement & Rt. Shoulder)
Cadd Measured Area = 16704.84 Sq. Ft.
(16704.84)(4/12)(1/27) .....206.23 CU. YD.

CDN–1411+64.62 to CDN–1414+12.05 (Pavement & Rt. Shoulder)
Cadd Measured Area = 10021.06 Sq. Ft.
(10021.06)(4/12)(1/27) .....123.72 CU. YD.

CDN–1414+12.05 to CDN–1420+21.85 (Pavement & Shoulders)
Cadd Measured Area = 38722.01 Sq. Ft.
(38722.01)(4/12)(1/27) .....478.05 CU. YD.

CDN–1420+21.85 to CDN–1429+26.96 (Pavement, Lt. Shoulder & Rt. Gore)
Cadd Measured Area = 61089.01 Sq. Ft.
(61089.01)(4/12)(1/27) .....754.19 CU. YD.

CDN–1429+26.96 to CDN–1434+34.50 (Pavement & Lt. Shoulder)
Cadd Measured Area = 19765.13 Sq. Ft.
(19765.13)(4/12)(1/27) .....244.01 CU. YD.

CDS–1367+25.00 to CDS–1375+35.34 (Pavement & Shoulders)
less deductions for area above sleeper slab
Cadd Measured Area = 51703.00 Sq. Ft.
(51703.00)(4/12)(1/27) – (1.036)(527.81)(1/27) .....618.06 CU. YD.

CDS–1375+35.34 to CDS–1379+23.12 (Pavement & Lt. Shoulder)
Cadd Measured Area = 20395.15 Sq. Ft.
(20395.15)(4/12)(1/27) .....251.79 CU. YD.

CDS–1379+23.12 to CDS–1383+15.25 (Pavement & Lt. Shoulder)
Cadd Measured Area = 20540.24 Sq. Ft.
(20540.24)(4/12)(1/27) .....253.58 CU. YD.

CALC. T.A.Z
BY:
DATE: 10/14/94
CHKD. M.F.J
BY:
DATE: 11/17/94

CALCULATIONS

FRA–270–32.46

PLOT SCALE
COL #7
D:\DRAWING\G6092306\QUANT\G6092CAL3.DWG FEBRUARY-13-1995

CDS–1383+15.25 to CDS–1398+38.57 (Pavement & Shoulders)
Cadd Measured Area = 96730.82 Sq. Ft.
(96730.82)(4/12)(1/27) .....1194.21 CU. YD.

CDS–1398+38.57 to CDS–1405+50.00 (Pavement & Lt. Shoulder)
Cadd Measured Area = 37357.87 Sq. Ft.
(37357.87)(4/12)(1/27) .....461.21 CU. YD.

CDS–1405+50.00 to CDS–1413+00.00 (Pavement & Shoulders)
Cadd Measured Area = 56615.69 Sq. Ft.
(56615.69)(4/12)(1/27) .....698.96 CU. YD.

CDS–1413+00.00 to CDS–1425+50.00 (Pavement & Shoulders)
Cadd Measured Area = 82173.93 Sq. Ft.
(82173.93)(4/12)(1/27) .....1014.49 CU. YD.

CDS–1425+50.00 to CDS–1429+00.00 (Pavement & Shoulders)
Cadd Measured Area = 25866.81 Sq. Ft.
(25866.81)(4/12)(1/27) .....319.34 CU. YD.

C–1367+39.45 to C–1372+59.59 (Pavement & Rt. Gore)
less deductions for area above sleeper slab
Cadd Measured Area = 16400.95 Sq. Ft.
(16400.95)(4/12)(1/27) – (0.7918)(520.12)(1/27) .....187.23 CU. YD.

C–1372+59.59 to C–1376+50.00 (Shoulders)(2 Modified Inlets)
less deductions for inlet(s) and area above sleeper slab
Cadd Measured Area = 11178.97 Sq. Ft.
(11178.97)(4/12)(1/27) – [(390.41)(0.7918)(1/27) +
(10)(8)(4/12)(2)(1/27)].....124.58 CU. YD.

C–1376+50.00 to C–1389+48.32 (Shoulders)(4 Modified Inlets)
less deductions for inlet(s) and area above sleeper slab
Cadd Measured Area = 43341.93 Sq. Ft.
(43341.93)(4/12)(1/27) – [(1299.06)(0.7918)(1/27) +
(1295.96)(1.2045)(1/27) + (10)(8)(4/12)(4)(1/27)].....435.22 CU. YD.

C–1376+50.00 to C–1389+48.32 (Shoulders)(0 Modified Inlets)
less deductions for inlet(s) and area above sleeper slab
Cadd Measured Area = 2614.93 Sq. Ft.
(2614.93)(4/12)(1/27) – [(96.07)(1.0200)(1/27) +
(39.0)(1.2045)(1/27)].....26.91 CU. YD.

D–1390+17.35 to D–1393+00.00 (Pavement & Shoulders)
less deductions for inlet(s) and area above sleeper slab
Cadd Measured Area = 10418.99 Sq. Ft.
(10418.99)(4/12)(1/27) – [((0.8116)(282.83) + (1.2106)(157.61))(1/27) +
((10)(8)(4/12))(1)(1/27)] .....112.07 CU. YD.

D–1393+00.00 to D–1403+00.00 (Pavement & Shoulders)
less deductions for inlet(s) and area above sleeper slab
Cadd Measured Area = 31215.96 Sq. Ft.
(31215.96)(4/12)(1/27) – [((0.9480)(950.15) + (1.2106)(949.67))(1/27) +
((10)(8)(4/12))(5)(1/27)] .....304.50 CU. YD.

D–1403+00.00 to D–1404+50.00 (Pavement & Shoulders)
Cadd Measured Area = 4158.90 Sq. Ft.
(4158.90)(4/12)(1/27) .....51.34 CU. YD.

D–1404+50.00 to 1407+58.84 (Pavement & Shoulders)
Cadd Measured Area = 7771.21 Sq. Ft.
(7771.21)(4/12)(1/27) .....95.94 CU. YD.

D–1407+58.84 to D–1414+20.67 (Pavement, Lt. Shoulder & Rt. Gore)
Cadd Measured Area = 20243.82 Sq. Ft.
(20243.82)(4/12)(1/27) .....249.92 CU. YD.

A–1376+35.64 to A–1383+11.94 (Pavement, Rt. Shoulder & Lt. Gore)
Cadd Measured Area = 19332.85 Sq. Ft.
(19332.85)(4/12)(1/27) .....238.68 CU. YD.

A–1383+11.94 to A–1391+88.78 (Pavement & Shoulders)
Cadd Measured Area = 23954.32 Sq. Ft.
(23954.32)(4/12)(1/27) .....295.73 CU. YD.

A–1391+88.78 to A–1395+15.75 (Pavement, Rt. Shoulder & Lt. Gore)
Cadd Measured Area = 9201.26 Sq. Ft.
(9201.26)(4/12)(1/27) .....113.60 CU. YD.

B–65+79.03 to B–69+37.72 (Pavement, Rt. Shoulder & Lt. Gore)
Cadd Measured Area = 10376.22 Sq. Ft.
(10376.22)(4/12)(1/27) .....128.10 CU. YD.

B–69+37.72 to B–80+87.61 (Pavement & Shoulders)
Cadd Measured Area = 31307.11 Sq. Ft.
(31307.11)(4/12)(1/27) .....386.51 CU. YD.

B–80+87.61 to B–87+96.59 (Pavement, Rt. Shoulder & Lt. Gore)
Cadd Measured Area = 21474.48 Sq. Ft.
(21474.48)(4/12)(1/27) .....265.12 CU. YD.

CONN–61+04.33 to CONN–61+40.67 (Pavement & Shoulders)
Cadd Measured Area = 5228.24 Sq. Ft.
(5228.24)(4/12)(1/27) .....64.55 CU.YD.

(East) CONN–61+40.67 to CONN–65+79.03 (Pavement & Rt. Shoulder)
Cadd Measured Area = 20833.40 Sq. Ft.
(20833.40)(4/12)(1/27) .....257.20 CU. YD.

(West) CONN–61+40.67 to CONN–66+00.00 (Pavement & Lt. Shoulder)
Cadd Measured Area = 37170.18 Sq. Ft.
(37170.18)(4/12)(1/27) .....458.89 CU. YD.

(East) CONN–65+79.03 to CONN–69+38.10 (Pavement)
Cadd Measured Area = 8976.41 Sq. Ft.
(8976.41)(4/12)(1/27) .....110.82 CU. YD.

(West) CONN–66+00.00 to CONN–68+55.70 (Pavement & Lt. Shoulder)
Cadd Measured Area = 12795.55 Sq. Ft.
(12795.55)(4/12)(1/27) .....157.97 CU. YD.

(East) CONN–69+38.10 to CONN–71+87.28 (Pavement & Rt. Shoulder)
Cadd Measured Area = 9006.50 Sq. Ft.
(9006.50)(4/12)(1/27).....111.19 CU. YD.

(West) CONN–68+55.70 to CONN–71+87.28 (Pavement)
Cadd Measured Area = 8260.73 Sq. Ft.
(8260.73)(4/12)(1/27) .....101.98 CU. YD.

CONN–71+87.28 to CONN–76+81.91 (Pavement & Shoulders)
Cadd Measured Area = 36262.49 Sq. Ft.
(36262.49)(4/12)(1/27) .....447.69 CU. YD.

THE FOLLOWING QUANTITIES HAS BEEN CARRIED TO THE GENERAL SUMMARY. (*)

TOTAL ITEM SPECIAL = 13858 CU. YD.

(*) 13858 C.Y. x 27 x (1 3/4) x (1/9) = 124,722 SQ. YD.

ITEM 408 – BITUMINOUS PRIME COAT

CDN–1366+50 to CDN–1367+39.45 (Pavement & Shoulders)
less deductions for area above sleeper slab
Cadd Measured Area = 5775.02 Sq. Ft.
(5775.02)(1/9)(0.4) – (179.07)(3.9583)(1/9)(0.4) .....225.17 GAL.

CDN–1367+39.45 to CDN–1368+92.26 (Pavement & Rt. Shoulder)
less deductions for area above sleeper slab
Cadd Measured Area = 6213.19 Sq. Ft.
(6213.19)(1/9)(0.4) – (151.65)(3.9583)(1/9)(0.4) .....249.46 GAL.

CDN–1368+92.26 to CDN–1372+58.66 (Pavement & Rt. Shoulder)
less deductions for inlet(s) and area above sleeper slab
Cadd Measured Area = 14922.05 Sq. Ft.
(14922.05)(1/9)(0.4) – [(365.81)(3.9583)(1/9)(0.4) +
(10)(8)(1/9)(2)(0.4) .....591.74 GAL

CDN–1372+58.66 to CDN–1407+49.68 (Pavement & Shoulders)
less deductions for inlet(s) and area above sleeper slab
Cadd Measured Area = 179907.38 Sq. Ft.
(179907.38)(1/9)(0.4) – [(242.29)(3.9583)(1/9)(0.4) +
(10)(8))(1/9)(1)(0.4)] .....7949.70 GAL.

CDN–1407+49.68 to CDN–1411+64.62 (Pavement & Rt. Shoulder)
Cadd Measured Area = 16704.84 Sq. Ft.
(16704.84)(1/9)(0.4) .....742.44 GAL.

CDN–1411+64.62 to CDN–1414+12.05 (Pavement & Rt. Shoulder)
Cadd Measured Area = 10021.06 Sq. Ft.
(10021.06)(1/9)(0.4) .....445.38 GAL.

CDN–1414+12.05 to CDN–1420+21.85 (Pavement & Shoulders)
Cadd Measured Area = 38722.01 Sq. Ft.
(38722.01)(1/9)(0.4) .....1720.98 GAL.

CDN–1420+21.85 to CDN–1429+26.96 (Pavement, Lt. Shoulder & Rt. Gore)
Cadd Measured Area = 61089.01 Sq. Ft.
(61089.01)(1/9)(0.4) .....2715.07 GAL.

CDN–1429+26.96 to CDN–1434+34.50 (Pavement & Lt. Shoulder)
Cadd Measured Area = 19765.13 Sq. Ft.
(19765.13)(1/9)(0.4) .....878.45 GAL.

CDS–1367+25.00 to CDS–1375+35.34 (Pavement & Shoulders)
less deductions for area above sleeper slab
Cadd Measured Area = 51703.00 Sq. Ft.
(51703.00)(1/9)(0.4) – [(3.9583)(527.81)](1/9)(0.4) .....2205.06 GAL.

CDS–1375+35.34 to CDS–1379+23.12 (Pavement & Lt. Shoulder)
Cadd Measured Area = 20395.15 Sq. Ft.
(20395.15)(1/9)(0.4) .....906.45 GAL.

CDS–1379+23.12 to CDS–1383+15.25 (Pavement & Lt. Shoulder)
Cadd Measured Area = 20540.24 Sq. Ft.
(20540.24)(1/9)(0.4) .....912.90 GAL.

CDS–1383+15.25 to CDS–1398+38.57 (Pavement & Shoulders)
Cadd Measured Area = 96730.82 Sq. Ft.
(96730.82)(1/9)(0.4) .....4299.15 GAL.

CDS–1398+38.57 to CDS–1405+50.00 (Pavement & Lt. Shoulder)
Cadd Measured Area = 37357.87 Sq. Ft.
(37357.87)(1/9)(0.4) .....1660.35 GAL.

CDS–1405+50.00 to CDS–1413+00.00 (Pavement & Shoulders)
Cadd Measured Area = 56615.69 Sq. Ft.
(56615.69)(1/9)(0.4) .....2516.25 GAL.

CDS–1413+00.00 to CDS–1425+50.00 (Pavement & Shoulders)
Cadd Measured Area = 87567.93 Sq. Ft.
(87567.93)(1/9)(0.4) .....3891.91 GAL.

CDS–1425+50.00 to CDS–1429+00.00 (Pavement & Shoulders)
Cadd Measured Area = 26604.31 Sq. Ft.
(26604.31)(1/9)(0.4) .....1182.41 GAL.

C–1367+39.45 to C–1372+59.59 (Pavement & Rt. Gore)
less deductions for area above sleeper slab
Cadd Measured Area = 16400.95 Sq. Ft.
(16400.95)(1/9)(0.4) – (520.19)(3.9200)(1/9)(0.4) .....638.32 GAL.

C–1372+59.59 to C–1376+50.00 (Shoulders)(2 Modified Inlets)
less deductions for inlet(s) and area above sleeper slab
Cadd Measured Area = 11178.97 Sq. Ft.
(11178.97)(1/9)(0.4) – [(390.41)(3.9200)(1/9)(0.4) +
(10)(8)(1/9)(2)(0.4)].....421.71 GAL.

C–1376+50.00 to C–1389+48.32 (Shoulders)(4 Modified Inlets)
less deductions for inlet(s) and area above sleeper slab
Cadd Measured Area = 43341.93 Sq. Ft.
(43341.93)(1/9)(0.4) – [(1299.06)(3.9200)(1/9)(0.4) +
(1295.96)(3.960)(1/9)(0.4) + (10)(8)(1/9)(4)(0.4)].....1457.67 GAL.

C–1389+48.32 to C–1390+17.35 (Shoulders)(0 Modified Inlets)
less deductions for inlet(s) and area above sleeper slab
Cadd Measured Area = 2614.93 Sq. Ft.
(2614.93)(1/9)(0.4) – [(96.07)(6.2067)(1/9)(0.4) +
(39.0)(3.9600)(1/9)(0.4)].....82.85 GAL.

D–1390+17.35 to D–1393+00.00 (Pavement & Shoulders)
less deductions for inlet(s) and area above sleeper slab
Cadd Measured Area = 10418.99 Sq. Ft.
(10418.99)(1/9)(0.4) – [((282.83)(3.9600) + (157.61)(3.9600))(1/9)(0.4) +
((10)(8))(1/9)(1)(0.4)] .....381.99 GAL.

D–1393+00.00 to D–1403+00.00 (Pavement & Shoulders)
less deductions for inlet(s) and area above sleeper slab
Cadd Measured Area = 31215.96 Sq. Ft.
(31215.96)(1/9)(0.4) – [((950.15)(4.6700) + (949.67)(3.9600))(1/9)(0.4) +
((10)(8))(1/9)(5)(0.4)] .....1005.25 GAL.

D–1403+00.00 to D–1404+50.00 (Pavement & Shoulders)
Cadd Measured Area = 4050.00 Sq. Ft.
(4050.00)(1/9)(0.4) .....180.00 GAL.

CALC. T.A.Z
BY: T.A.Z
DATE: 10/14/94
CHKD. M.F.J
BY: M.F.J
DATE: 11/07/94

CALCULATIONS

FRA–270–32.46

PLOT SCALE...
COL. #12 D:\DRAWING\06092306\PLAN\6092CAL4.DWG NOVEMBER-21-1994

D–1404+50.00 to 1407+58.84 (Pavement & Shoulders)
Cadd Measured Area = 7771.21 Sq. Ft.
(7771.21)(1/9)(0.4) .....345.39 GAL.

D–1407+58.84 to D–1414+20.67 (Pavement, Lt. Shoulder & Rt. Gore)
Cadd Measured Area = 20243.83 Sq. Ft.
(20243.83)(1/9)(0.4) .....899.73 GAL.

A–1376+35.64 to A–1383+11.94 (Pavement, Rt. Shoulder & Lt. Gore)
Cadd Measured Area = 19332.85 Sq. Ft.
(19332.85)(1/9)(0.4) .....859.24 GAL.

A–1383+11.94 to A–1391+88.78 (Pavement & Shoulders)
Cadd Measured Area = 23954.32 Sq. Ft.
(23954.32)(1/9)(0.4) .....1064.64 GAL.

A–1391+88.78 to A–1395+15.75 (Pavement, Rt. Shoulder & Lt. Gore)
Cadd Measured Area = 9201.26 Sq. Ft.
(9201.26)(1/9)(0.4) .....408.95 GAL.

B–65+79.03 to B–69+37.72 (Pavement, Rt. Shoulder & Lt. Gore)
Cadd Measured Area = 10376.22 Sq. Ft.
(10376.22)(1/9)(0.4) .....461.17 GAL.

B–69+37.72 to B–80+87.61 (Pavement & Shoulders)
Cadd Measured Area = 31307.11 Sq. Ft.
(31307.11)(1/9)(0.4) .....1391.43 GAL.

B–80+87.61 to B–87+96.59 (Pavement, Rt. Shoulder & Lt. Gore)
Cadd Measured Area = 21474.48 Sq. Ft.
(21474.48)(1/9)(0.4) .....954.42 GAL.

CONN–61+04.33 to CONN–61+40.67 (Pavement & Shoulders)
Cadd Measured Area = 5228.24 Sq. Ft.
(5228.24)(1/9)(0.4) .....232.37 GAL.

(East) CONN–61+40.67 to CONN–65+79.03 (Pavement & Rt. Shoulder)
Cadd Measured Area = 20833.40 Sq. Ft.
(20833.40)(1/9)(0.4) .....925.93 GAL.

(West) CONN–61+40.67 to CONN–66+00.00 (Pavement & Lt. Shoulder)
Cadd Measured Area = 37170.18 Sq. Ft.
(37170.18)(1/9)(0.4) .....1652.00 GAL.

(East) CONN–65+79.03 to CONN–69+38.10 (Pavement)
Cadd Measured Area = 8976.41 Sq. Ft.
(8976.41)(1/9)(0.4) .....398.95 GAL.

(West) CONN–66+00.00 to CONN–68+55.70 (Pavement & Lt. Shoulder)
Cadd Measured Area = 12795.55 Sq. Ft.
(12795.55)(1/9)(0.4) .....568.69 GAL.

(East) CONN–69+38.10 to CONN–71+87.28 (Pavement & Rt. Shoulder)
Cadd Measured Area = 9006.50 Sq. Ft.
(9006.50)(1/9)(0.4).....400.29 GAL.

(West) CONN–68+55.70 to CONN–71+87.28 (Pavement)
Cadd Measured Area = 8260.73 Sq. Ft.
(8260.73)(1/9)(0.4) .....367.14 GAL.

CONN–71+87.28 to CONN–76+81.91 (Pavement & Shoulders)
Cadd Measured Area = 36262.49 Sq. Ft.
(36262.49)(1/9)(0.4) .....1611.67 GAL.

THE FOLLOWING QUANTITIES HAS BEEN CARRIED TO THE GENERAL SUMMARY.

TOTAL ITEM 408 = 49803 GAL.

ITEM 446 – ASPHALT CONCRETE, SURFACE COURSE, TYPE 1

CDN–1366+50 to CDN–1367+39.45 (Pavement & Shoulders)
less deductions for area above sleeper slab
Cadd Measured Area = 5775.02 Sq. Ft.
(5775.02)(1.25/12)(1/27) – (179.07)(0.0012)(1/27) .....22.27 CU. YD.

CDN–1367+39.45 to CDN–1368+92.26 (Pavement & Rt. Shoulder)
less deductions for area above sleeper slab
Cadd Measured Area = 6213.19 Sq. Ft.
(6213.19)(1.25/12)(1/27) – (151.65)(0.0012)(1/27) .....23.96 CU. YD.

CDN–1368+92.26 to CDN–1372+58.66 (Pavement & Rt. Shoulder)
less deductions for inlet(s) and area above sleeper slab
Cadd Measured Area = 14922.05 Sq. Ft.
(14922.05)(1.25/12)(1/27) – [(365.81)(0.0012)(1/27) +
((10)(8)(1.25/12))(2)(1/27)] .....56.94 CU. YD.

CDN–1372+58.66 to CDN–1407+49.68 (Pavement & Shoulders)
less deductions for inlet(s) and area above sleeper slab
Cadd Measured Area = 176416.41 Sq. Ft.
(176416.41)(1.25/12)(1/27) – [(242.29)(0.0012)(1/27) +
((10)(8))(1.25/12))(1)(1/27)] .....680.30 CU. YD.

CDN–1407+49.68 to CDN–1411+64.62 (Pavement & Rt. Shoulder)
Cadd Measured Area = 16805.07 Sq. Ft.
(16805.07)(1.25/12)(1/27) .....64.83 CU. YD.

CDN–1411+64.62 to CDN–1414+12.05 (Pavement & Rt. Shoulder)
Cadd Measured Area = 10021.06 Sq. Ft.
(10021.06)(1.25/12)(1/27) .....38.66 CU. YD.

CDN–1414+12.05 to CDN–1420+21.85 (Pavement & Shoulders)
Cadd Measured Area = 38112.22 Sq. Ft.
(38112.22)(1.25/12)(1/27) .....147.04 CU. YD.

CDN–1420+21.85 to CDN–1429+26.96 (Pavement, Lt. Shoulder & Rt. Gore)
Cadd Measured Area = 60182.27 Sq. Ft.
(60182.27)(1.25/12)(1/27) .....232.19 CU. YD.

CDN–1429+26.96 to CDN–1434+34.50 (Pavement & Lt. Shoulder)
Cadd Measured Area = 19259.22 Sq. Ft.
(19259.22)(1.25/12)(1/27) .....74.30 CU. YD.

CDS–1367+25.00 to CDS–1375+35.34 (Pavement & Shoulders)
Cadd Measured Area = 50920.17 Sq. Ft.
less deductions and area above sleeper slab
(50920.17)(1.25/12)(1/27) – (527.81)(0.0012)(1/27) .....196.45 CU. YD.

CDS–1375+35.34 to CDS–1379+23.12 (Pavement & Lt. Shoulder)
Cadd Measured Area = 20490.78 Sq. Ft.
(20490.78)(1.25/12)(1/27) .....79.05 CU. YD.

CDS–1379+23.12 to CDS–1383+15.25 (Pavement & Lt. Shoulder)
Cadd Measured Area = 20586.83 Sq. Ft.
(20586.83)(1.25/12)(1/27) .....79.42 CU. YD.

CDS–1383+15.25 to CDS–1398+38.57 (Pavement & Shoulders)
Cadd Measured Area = 95207.50 Sq. Ft.
(95207.50)(1.25/12)(1/27) .....367.31 CU. YD.

CDS–1398+38.57 to CDS–1405+50.00 (Pavement & Lt. Shoulder)
Cadd Measured Area = 37357.87 Sq. Ft.
(37357.87)(1.25)(1/27) .....144.13 CU. YD.

CDS–1405+50.00 to CDS–1413+00.00 (Pavement & Shoulders)
Cadd Measured Area = 55865.82 Sq. Ft.
(55865.82)(1.25/12)(1/27) .....215.53 CU. YD.

CDS–1413+00.00 to CDS–1425+50.00 (Pavement & Shoulders)
Cadd Measured Area = 87567.93 Sq. Ft.
(87567.93)(1.25/12)(1/27) .....337.84 CU. YD.

CDS–1425+50.00 to CDS–1429+00.00 (Pavement, Rt. Shoulder & Lt. Gore)
Cadd Measured Area = 26604.31 Sq. Ft.
(26604.31)(1.25/12)(1/27) .....102.64 CU. YD.

C–1367+39.45 to C–1372+59.59 (Pavement, Lt. Shoulder & Rt. Gore)
less deductions for area above sleeper slab
Cadd Measured Area = 16400.95 Sq. Ft.
(16400.95)(1.25/12)(1/27) – (520.12)(0.0012)(1/27) .....63.25 CU. YD.

C–1372+59.59 to C–1376+50.00 (Shoulders)(2 Modified Inlets)
less deductions for inlet(s) and area above sleeper slab
Cadd Measured Area = 11178.97 Sq. Ft.
(11178.97)(1.25/12)(1/27) – [(390.41)(0.0012)(1/27) +
(10)(8)(1.25/12)(2)(1/27)].....42.49 CU. YD.

C–1376+50.00 to C–1389+48.32 (Shoulders)(4 Modified Inlets)
less deductions for inlet(s) and area above sleeper slab
Cadd Measured Area = 43341.93 Sq. Ft.
(43341.93)(1.25/12)(1/27) – [(1299.06)(0.0012)(1/27) +
(1295.96)(0.0013)(1/27) + (10)(8)(1.25/12)(4)(1/27)].....165.86 CU. YD.

C–1389+48.32 to C–1390+17.35 (Shoulders)(0 Modified Inlets)
less deductions for inlet(s) and area above sleeper slab
Cadd Measured Area = 2614.93 Sq. Ft.
(2614.93)(1.25/12)(1/27) – [(96.07)(0.0012)(1/27) +
(39.0)(0.0013)(1/27)].....10.06 CU. YD.

D–1390+17.35 to D–1393+00.00 (Pavement & Shoulders)
less deductions for inlet(s) and area above sleeper slab
Cadd Measured Area = 10418.99 Sq. Ft.
(10418.99)(1.25/12)(1/27) – [((282.83)(0.0012) + (157.61)(0.0012))(1/27) +
((10)(8)(1.25/12))(1)(1/27)] .....39.87 CU. YD.

D–1393+00.00 to D–1403+00.00 (Pavement & Shoulders)
less deductions for inlet(s) and area above sleeper slab
Cadd Measured Area = 31215.96 Sq. Ft.
(31215.96)(1.25/12)(1/27) – [((950.15)(0.0012) + (949.67)(0.0012))(1/27) +
((10)(8)(1.25/12))(5)(1/27)] .....118.80 CU. YD.

D–1403+00.00 to D–1404+50.00 (Pavement & Shoulders)
Cadd Measured Area = 4050.00 Sq. Ft.
(4050.00)(1.25/12)(1/27) .....15.63 CU. YD.

D–1404+50.00 to 1407+58.84 (Pavement & Shoulders)
Cadd Measured Area = 7769.07 Sq. Ft.
(7769.07)(1.25/12)(1/27) .....29.97 CU. YD.

D–1407+58.84 to D–1414+20.67 (Pavement, Lt. Shoulder & Rt. Gore)
Cadd Measured Area = 19582.54 Sq. Ft.
(19582.54)(1.25/12)(1/27) .....75.55 CU. YD.

A–1376+35.64 to A–1383+11.94 (Pavement, Rt. Shoulder & Lt. Gore)
Cadd Measured Area = 18558.48 Sq. Ft.
(18558.48)(1.25/12)(1/27) .....71.60 CU. YD.

A–1383+11.94 to A–1391+88.78 (Pavement & Shoulders)
Cadd Measured Area = 22183.87 Sq. Ft.
(22183.87)(1.25/12)(1/27) .....85.59 CU. YD.

A–1391+88.78 to A–1395+15.75 (Pavement, Rt. Shoulder & Lt. Gore)
Cadd Measured Area = 8876.12 Sq. Ft.
(8876.12)(1.25/12)(1/27) .....34.24 CU. YD.

B–65+79.03 to B–69+37.72 (Pavement, Rt. Shoulder & Lt. Gore)
Cadd Measured Area = 10018.80 Sq. Ft.
(10018.80)(1.25/12)(1/27) .....38.65 CU. YD.

B–69+37.72 to B–80+87.61 (Pavement & Shoulders)
Cadd Measured Area = 28989.97 Sq. Ft.
(28989.97)(1.25/12)(1/27) .....111.84 CU. YD.

B–80+87.61 to B–87+96.59 (Pavement, Rt. Shoulder & Lt. Gore)
Cadd Measured Area = 20766.36 Sq. Ft.
(20766.36)(1.25/12)(1/27) .....80.12 CU. YD.

CONN–61+04.33 to CONN–61+40.67 (Pavement & Shoulders)
Cadd Measured Area = 5228.24 Sq. Ft.
(5228.24)(1.25/12)(1/27) .....20.17 CU.YD.

(East) CONN–61+40.67 to CONN–65+79.03 (Pavement & Rt. Shoulder)
Cadd Measured Area = 20399.37 Sq. Ft.
(20399.37)(1.25/12)(1/27) .....78.70 CU. YD.

(West) CONN–61+40.67 to CONN–66+00.00 (Pavement & Lt. Shoulder)
Cadd Measured Area = 36713.80 Sq. Ft.
(36713.80)(1.25/12)(1/27) .....141.64 CU. YD.

(East) CONN–65+79.03 to CONN–69+38.10 (Pavement)
Cadd Measured Area = 8976.41 Sq. Ft.
(8976.41)(1.25/12)(1/27) .....34.63 CU. YD.

(West) CONN–66+00.00 to CONN–68+55.70 (Pavement & Lt. Shoulder)
Cadd Measured Area = 12539.81 Sq. Ft.
(12539.81)(1.25/12)(1/27) .....48.38 CU. YD.

(East) CONN–69+38.10 to CONN–71+87.28 (Pavement & Rt. Shoulder)
Cadd Measured Area = 8755.88 Sq. Ft.
(8755.88)(1.25/12)(1/27).....33.78 CU. YD.

(West) CONN–68+55.70 to CONN–71+87.28 (Pavement)
Cadd Measured Area = 8260.73 Sq. Ft.
(8260.73)(1.25/12)(1/27) .....31.87 CU. YD.

CONN–71+87.28 to CONN–76+81.91 (Pavement & Shoulders)
Cadd Measured Area = 35343.56 Sq. Ft.
(35343.56)(1.25/12)(1/27) .....136.36 CU. YD.

THE FOLLOWING QUANTITIES HAS BEEN CARRIED TO THE GENERAL SUMMARY.

TOTAL ITEM 446 (TYPE 1) = 4372 CU. YD.

CALC. BY: T.A.Z DATE: 10/14/94
CHKD. BY: M.F.J DATE: 11/18/94

CALCULATIONS

FRA–270–32.46

PLOT SCALE: 1'=1'
COL #7 D:\DRAWING\06092305\QUANT\6092CALS.DWG FEBRUARY-13-1995

ITEM 446 – ASPHALT CONCRETE, INTERMEDIATE COURSE, TYPE 2

CDN–1366+50 to CDN–1367+39.45 (Pavement & Shoulders)
less deductions for area above sleeper slab
Cadd Measured Area = 5775.02 Sq. Ft.
(5775.02)(1.75/12)(1/27) – (179.07)(0.0057)(1/27) .....31.15 CU. YD.

CDN–1367+39.45 to CDN–1368+92.26 (Pavement & Rt. Shoulder)
less deductions area above sleeper slab
Cadd Measured Area = 6213.19 Sq. Ft.
(6213.19)(1.75/12)(1/27) – (151.65)(0.0057)(1/27) .....33.53 CU. YD.

CDN–1368+92.26 to CDN–1372+58.66 (Pavement & Rt. Shoulder)
less deductions for inlet(s) and area above sleeper slab
Cadd Measured Area = 14922.05 Sq. Ft.
(14922.05)(1.75/12)(1/27) – [(365.81)(0.0057)(1/27) +
((10)(8)(1.75))(2)(1/27)] .....79.66 CU. YD.

CDN–1372+58.66 to CDN–1407+49.68 (Pavement & Shoulders)
less deductions for inlet(s) and area above sleeper slab
Cadd Measured Area = 176416.41 Sq. Ft.
(176416.41)(1.75/12)(1/27) – [(242.29)(0.0057)(1/27) +
((10)(8))(1.75/12))(1)(1/27)] .....952.38 CU. YD.

CDN–1407+49.68 to CDN–1411+64.62 (Pavement & Rt. Shoulder)
Cadd Measured Area = 16805.07 Sq. Ft.
(16805.07)(1.75/12)(1/27) .....90.77 CU. YD.

CDN–1411+64.62 to CDN–1414+12.05 (Pavement & Rt. Shoulder)
Cadd Measured Area = 10021.06 Sq. Ft.
(10021.06)(1.75/12)(1/27) .....54.13 CU. YD.

CDN–1414+12.05 to CDN–1420+21.85 (Pavement & Shoulders)
Cadd Measured Area = 38112.22 Sq. Ft.
(38112.22)(1.75/12)(1/27) .....205.85 CU. YD.

CDN–1420+21.85 to CDN–1429+26.96 (Pavement, Lt. Shoulder & Rt. Gore)
Cadd Measured Area = 60182.27 Sq. Ft.
(60182.27)(1.75/12)(1/27) .....325.06 CU. YD.

CDN–1429+26.96 to CDN–1434+34.50 (Pavement & Lt. Shoulder)
Cadd Measured Area = 19259.22 Sq. Ft.
(19259.22)(1.75/12)(1/27) .....104.02 CU. YD.

CDS–1367+25.00 to CDS–1375+35.34 (Pavement & Shoulders)
less deductions for area above sleeper slab
Cadd Measured Area = 50920.17 Sq. Ft.
(50920.17)(1.75/12)(1/27) – (527.81)(0.0057)(1/27) .....275.03 CU. YD.

CDS–1375+35.34 to CDS–1379+23.12 (Pavement & Lt. Shoulder)
Cadd Measured Area = 20490.78 Sq. Ft.
(20490.78)(1.75/12)(1/27) .....110.68 CU. YD.

CDS–1379+23.12 to CDS–1383+15.25 (Pavement & Lt. Shoulder)
Cadd Measured Area = 20586.83 Sq. Ft.
(20586.83)(1.75/12)(1/27) .....111.19 CU. YD.

CDS–1383+15.25 to CDS–1398+38.57 (Pavement & Shoulders)
Cadd Measured Area = 95207.50 Sq. Ft.
(95207.50)(1.75/12)(1/27) .....514.24 CU. YD.

CDS–1398+38.57 to CDS–1405+50.00 (Pavement & Lt. Shoulder)
Cadd Measured Area = 37357.87 Sq. Ft.
(37357.87)(1.75/12)(1/27) .....201.78 CU. YD.

CDS–1405+50.00 to CDS–1413+00.00 (Pavement & Shoulders)
Cadd Measured Area = 55865.82 Sq. Ft.
(55865.82)(1.75/12)(1/27) .....301.74 CU. YD.

CDS–1413+00.00 to CDS–1425+50.00 (Pavement & Shoulders)
Cadd Measured Area = 87567.93 Sq. Ft.
(87567.93)(1.75/12)(1/27) .....472.97 CU. YD.

CDS–1425+50.00 to CDS–1429+00.00 (Pavement, Rt. Shoulder & Lt. Gore)
Cadd Measured Area = 26604.31 Sq. Ft.
(26604.31)(1.75/12)(1/27) .....143.70 CU. YD.

C–1367+39.45 to C–1372+59.59 (Pavement, Lt. Shoulder & Rt. Gore)
less deductions for area above sleeper slab
Cadd Measured Area = 16400.95 Sq. Ft.
(16400.95)(1.75/12)(1/27) – (520.12)(0.0057)(1/27) .....88.48 CU. YD.

C–1372+59.59 to C–1376+50.00 (Shoulders)(2 Modified Inlets)
less deductions for inlet(s) and area above sleeper slab
Cadd Measured Area = 11178.97 Sq. Ft.
(11178.97)(1.75/12)(1/27) – [(390.41)(0.0057)(1/27) +
(10)(8)(1.75/12)(2)(1/27)].....58.56 CU. YD.

C–1376+50.00 to C–1389+48.32 (Shoulders)(4 Modified Inlets)
less deductions for inlet(s) and area above sleeper slab
Cadd Measured Area = 43341.93 Sq. Ft.
(43341.93)(1.75/12)(1/27) – [(1299.06)(0.0057)(1/27) +
(1295.96)(0.0058)(1/27) + (10)(8)(1.75/12)(4)(1/27)].....231.82 CU. YD.

C–1389+48.32 to C–1390+17.35 (Shoulders)(0 Modified Inlets)
less deductions for inlet(s) and area above sleeper slab
Cadd Measured Area = 2614.93 Sq. Ft.
(2614.93)(1.75/12)(1/27) – [(96.07)(0.0057)(1/27) +
(39.0)(0.0058)(1/27)].....14.09 CU. YD.

D–1390+17.35 to D–1393+00.00 (Pavement & Shoulders)
less deductions for inlet(s) and area above sleeper slab
Cadd Measured Area = 10418.99 Sq. Ft.
(10418.99)(1.75/12)(1/27) – [((282.83)(0.0057) + (157.61)(0.0058))(1/27) +
((10)(8)(1.75/12))(1)(1/27)] .....55.75 CU. YD.

D–1393+00.00 to D–1403+00.00 (Pavement & Shoulders)
less deductions for inlet(s) and area above sleeper slab
Cadd Measured Area = 31215.96 Sq. Ft.
(31215.96)(1.75/12)(1/27) – [((950.15)(0.0057) + (949.67)(0.0058))(1/27) +
((10)(8)(1.75/12))(5)(1/27)] .....166.04 CU. YD.

D–1403+00.00 to D–1404+50.00 (Pavement & Shoulders)
Cadd Measured Area = 4050.00 Sq. Ft.
(4050.00)(1.75/12)(1/27) .....21.88 CU. YD.

D–1404+50.00 to 1407+58.84 (Pavement & Shoulders)
Cadd Measured Area = 7769.07 Sq. Ft.
(7769.07)(1.75/12)(1/27) .....41.96 CU. YD.

D–1407+58.84 to D–1414+20.67 (Pavement, Lt. Shoulder & Rt. Gore)
Cadd Measured Area = 19582.54 Sq. Ft.
(19582.54)(1.75/12)(1/27) .....105.77 CU. YD.

A–1376+35.64 to A–1383+11.94 (Pavement, Rt. Shoulder & Lt. Gore)
Cadd Measured Area = 18558.48 Sq. Ft.
(18558.48)(1.75/12)(1/27) .....100.24 CU. YD.

A–1383+11.94 to A–1391+88.78 (Pavement & Shoulders)
Cadd Measured Area = 22183.87 Sq. Ft.
(22183.87)(1.75/12)(1/27) .....119.82 CU. YD.

A–1391+88.78 to A–1395+15.75 (Pavement, Rt. Shoulder & Lt. Gore)
Cadd Measured Area = 8876.12 Sq. Ft.
(8876.12)(1.75/12)(1/27) .....47.94 CU. YD.

B–65+79.03 to B–69+37.72 (Pavement, Rt. Shoulder & Lt. Gore)
Cadd Measured Area = 10018.80 Sq. Ft.
(10018.80)(1.75/12)(1/27) .....54.11 CU. YD.

B–69+37.72 to B–80+87.61 (Pavement & Shoulders)
Cadd Measured Area = 28989.97 Sq. Ft.
(28989.97)(1.75/12)(1/27) .....156.58 CU. YD.

B–80+87.61 to B–87+96.59 (Pavement, Rt. Shoulder & Lt. Gore)
Cadd Measured Area = 20766.36 Sq. Ft.
(20766.36)(1.75/12)(1/27) .....112.16 CU. YD.

CONN–61+04.33 to CONN–61+40.67 (Pavement & Shoulders)
Cadd Measured Area = 5228.24 Sq. Ft.
(5228.24)(1.75/12)(1/27) .....28.24 CU.YD.

(East) CONN–61+40.67 to CONN–65+79.03 (Pavement & Rt. Shoulder)
Cadd Measured Area = 20399.37 Sq. Ft.
(20399.37)(1.75/12)(1/27) .....110.18 CU. YD.

(West) CONN–61+40.67 to CONN–66+00.00 (Pavement & Lt. Shoulder)
Cadd Measured Area = 36713.80 Sq. Ft.
(36713.80)(1.75/12)(1/27) .....198.30 CU. YD.

(East) CONN–65+79.03 to CONN–69+38.10 (Pavement)
Cadd Measured Area = 8976.41 Sq. Ft.
(8976.41)(1.75/12)(1/27) .....48.48 CU. YD.

(West) CONN–66+00.00 to CONN–68+55.70 (Pavement & Lt. Shoulder)
Cadd Measured Area = 12539.81 Sq. Ft.
(12539.81)(1.75/12)(1/27) .....67.73 CU. YD.

(East) CONN–69+38.10 to CONN–71+87.28 (Pavement & Rt. Shoulder)
Cadd Measured Area = 8755.88 Sq. Ft.
(8755.88)(1.75/12)(1/27).....47.29 CU. YD.

(West) CONN–68+55.70 to CONN–71+87.28 (Pavement)
Cadd Measured Area = 8260.73 Sq. Ft.
(8260.73)(1.75/12)(1/27) .....44.62 CU. YD.

CONN–71+87.28 to CONN–76+81.91 (Pavement & Shoulders)
Cadd Measured Area = 35343.56 Sq. Ft.
(35343.56)(1.75/12)(1/27) .....190.90 CU. YD.

THE FOLLOWING QUANTITIES HAS BEEN CARRIED TO THE GENERAL SUMMARY.

TOTAL ITEM 446 (TYPE 2) = 6119 CU. YD.

CALCULATIONS

CADD: TAZ DATE: 10/14/94
CHK'D BY: M.F.J DATE: 11/18/94

FRA–270–32.46

75
593

PLOT SCALE:
COL. #'s D:\DRAWING\96092306\QUANTY\6092CAL6.DWG FEBRUARY-13-1995

McCUTCHEON ROAD

ITEM 203 – SUBGRADE COMPACTION

STA. 15+35.00 to STA. 16+10.00 (Pavement & Shoulders)
Cadd Measured Area = Lt. 299.98 + Rt. 300.03 = 600.01 Sq. Ft.
(600.01)(1/9).....66.67 SQ. YD.

STA. 15+35.00 to STA. 16+10.00 (Pavement)
Cadd Measured Area = 1647.19 Sq. Ft.
(1647.19)(1/9).....183.02 SQ. YD.

STA. 16+10.00 to STA. 21+82.68 (Pavement & Shoulders)
Cadd Measured Area = (Lt. 2754.49 + 412.49) + (Rt. 1601.00 + 1491.62) = 6259.60 Sq. Ft.
(6259.60)(1/9).....695.51 SQ. YD.

STA. 16+10.00 to STA. 21+82.68 (Pavement)
Cadd Measured Area = 13744.35 Sq. Ft.
(13744.35)(1/9).....1527.15 SQ. YD.

STA. 21+82.68 to STA. 23+36.11 (Pavement & Lt. Shoulder)
Cadd Measured Area = 920.57 Sq. Ft.
(920.57)(1/9).....102.29 SQ. YD.

STA. 21+82.68 to STA. 23+36.11 (Pavement)
Cadd Measured Area = 3682.28 Sq. Ft.
(3682.28)(1/9).....409.14 SQ. YD.

STA. 26+52.11 to STA. 27+24.60 (Pavement & Lt. Shoulder)
Cadd Measured Area = 400.49 Sq. Ft.
(400.49)(1/9).....44.50 SQ. YD.

STA. 26+52.11 to STA. 27+50.00 (Pavement)
Cadd Measured Area = 2349.35 Sq. Ft.
(2349.35)(1/9).....261.04 SQ. YD.

STA. 27+61.42 to STA. 28+59.09 (Pavement & Lt. Shoulder)
Cadd Measured Area = 527.04 Sq. Ft.
(527.04)(1/9).....58.56 SQ. YD.

STA. 27+50.00 to STA. 28+69.57 (Pavement)
Cadd Measured Area = 2867.65 Sq. Ft.
(2867.65)(1/9).....318.63 SQ. YD.

STA. 28+69.57 to STA. 29+25.00 (Pavement & Shoulders)
Cadd Measured Area = Lt. 26.55 + Rt. 110.98 = 137.53 Sq. Ft.
(137.53)(1/9).....15.28 SQ. YD.

STA. 28+69.57 to STA. 29+25.00 (Pavement)
Cadd Measured Area = 1214.94 Sq. Ft.
(1214.94)(1/9).....134.99 SQ. YD.

THE FOLLOWING QUANTITIES HAS BEEN CARRIED TO THE GENERAL SUMMARY.

TOTAL ITEM 203 = 3817 SQ. YD.

ITEM 301 – BITUMINOUS AGGREGATE BASE

STA. 15+35.00 to STA. 16+10.00 (Pavement & Shoulders)
Cadd Measured Area = Lt. 299.98 + Rt. 300.03 = 600.01 Sq. Ft.
(600.01)(8/12)(1/27).....14.82 CU. YD.

STA. 15+35.00 to STA. 16+10.00 (Pavement)
Cadd Measured Area = 1680.56 Sq. Ft.
(1680.56)(3.5/12)(1/27).....18.15 CU. YD.

STA. 16+10.00 to STA. 21+82.68 (Pavement & Shoulders)
Cadd Measured Area = (Lt. 2754.49 + 412.49) + (Rt. 1601.00 + 1491.62) = 6259.60 Sq. Ft.
(6259.60)(8/12)(1/27).....154.56 CU. YD.

STA. 16+10.00 to STA. 21+82.68 (Pavement)
Cadd Measured Area = 14078.23 Sq. Ft.
(14078.23)(3.5/12)(1/27).....152.08 CU. YD.

STA. 21+82.68 to STA. 23+36.11 (Pavement & Lt. Shoulder)
Cadd Measured Area = 920.57 Sq. Ft.
(920.57)(8/12)(1/27).....22.73 CU. YD.

STA. 21+82.68 to STA. 23+36.11 (Pavement)
Cadd Measured Area = 3727.03 Sq. Ft.
(3727.03)(3.5/12)(1/27).....40.26 CU. YD.

STA. 26+52.11 to STA. 27+24.60 (Pavement & Lt. Shoulder)
Cadd Measured Area = 400.49 Sq. Ft.
(400.49)(8/12)(1/27).....9.89 CU. YD.

STA. 26+52.11 to STA. 27+50.00 (Pavement)
Cadd Measured Area = 2377.90 Sq. Ft.
(2377.90)(3.5/12)(1/27).....25.69 CU. YD.

STA. 27+61.42 to STA. 28+59.09 (Pavement & Lt. Shoulder)
Cadd Measured Area = 527.04 Sq. Ft.
(527.04)(8/12)(1/27).....13.01 CU. YD.

STA. 27+50.00 to STA. 28+69.57 (Pavement)
Cadd Measured Area = 2927.37 Sq. Ft.
(2927.37)(3.5/12)(1/27).....31.62 CU. YD.

STA. 28+69.57 to STA. 29+25.00 (Pavement & Shoulders)
Cadd Measured Area = Lt. 26.55 + Rt. 110.98 = 137.53 Sq. Ft.
(137.53)(8/12)(1/27).....3.40 CU. YD.

STA. 28+69.57 to STA. 29+25.00 (Pavement)
Cadd Measured Area = 1247.28 Sq. Ft.
(1247.28)(3.5/12)(1/27).....13.47 CU. YD.

THE FOLLOWING QUANTITIES HAS BEEN CARRIED TO THE GENERAL SUMMARY.

TOTAL ITEM 301 = 500 CU. YD.

ITEM 304 – AGGREGATE BASE

STA. 15+35.00 to STA. 16+10.00 (Pavement)
Cadd Measured Area = 1840.63 Sq. Ft.
(1840.63)(10/12)(1/27).....56.81 CU. YD.

STA. 16+10.00 to STA. 21+82.68 (Pavement)
Cadd Measured Area = 15220.35 Sq. Ft.
(15220.35)(10/12)(1/27).....469.76 CU. YD.

STA. 21+82.68 to STA. 23+36.11 (Pavement)
Cadd Measured Area = 3880.46 Sq. Ft.
(3880.46)(10/12)(1/27).....119.77 CU. YD.

STA. 26+52.11 to STA. 27+50.00 (Pavement)
Cadd Measured Area = 2475.79 Sq. Ft.
(2475.79)(10/12)(1/27).....76.41 CU. YD.

STA. 27+50.00 to STA. 28+69.57 (Pavement)
Cadd Measured Area = 3166.52 Sq. Ft.
(3166.52)(10/12)(1/27).....97.73 CU. YD.

STA. 28+69.57 to STA. 29+25.00 (Pavement)
Cadd Measured Area = 1358.18 Sq. Ft.
(1358.18)(10/12)(1/27).....41.92 CU. YD.

THE FOLLOWING QUANTITIES HAS BEEN CARRIED TO THE GENERAL SUMMARY.

TOTAL ITEM 304 = 862 CU. YD.

ITEM 402 – ASPHALT CONCRETE

STA. 15+35.00 to STA. 16+10.00 (Pavement)
Cadd Measured Area = 1647.19 Sq. Ft.
(1647.19)(1.75/12)(1/27).....8.90 CU. YD.

STA. 16+10.00 to STA. 21+82.68 (Pavement)
Cadd Measured Area = 13744.35 Sq. Ft.
(13744.35)(1.75/12)(1/27).....74.24 CU. YD.

STA. 21+82.68 to STA. 23+36.11 (Pavement)
Cadd Measured Area = 3682.28 Sq. Ft.
(3682.28)(1.75/12)(1/27).....19.89 CU. YD.

STA. 26+52.11 to STA. 27+50.00 (Pavement)
Cadd Measured Area = 2349.35 Sq. Ft.
(2349.35)(1.75/12)(1/27).....12.69 CU. YD.

STA. 27+50.00 to STA. 28+69.57 (Pavement)
Cadd Measured Area = 2867.65 Sq. Ft.
(2867.65)(1.75/12)(1/27).....15.49 CU. YD.

STA. 28+69.57 to STA. 29+25.00 (Pavement)
Cadd Measured Area = 1214.94 Sq. Ft.
(1214.94)(1.75/12)(1/27).....6.56 CU. YD.

THE FOLLOWING QUANTITIES HAS BEEN CARRIED TO THE GENERAL SUMMARY.

TOTAL ITEM 402 = 138 CU. YD.

ITEM 404 – ASPHALT CONCRETE

STA. 15+25.00 to STA. 15+35.00 (Pavement and Joint)
(8.5+11.4)(10)(1.25/12)(1/27).....0.77 CU. YD.

STA. 15+35.00 to STA. 16+10.00 (Pavement)
Cadd Measured Area = 1647.19 Sq. Ft.
(1647.19)(1.25/12)(1/27).....6.35 CU. YD.

STA. 16+10.00 to STA. 21+82.68 (Pavement)
Cadd Measured Area = 13744.35 Sq. Ft.
(13744.35)(1.25/12)(1/27).....53.03 CU. YD.

STA. 21+82.68 to STA. 23+36.11 (Pavement)
Cadd Measured Area = 3682.28 Sq. Ft.
(3682.28)(1.25/12)(1/27).....14.21 CU. YD.

STA. 26+52.11 to STA. 27+50.00 (Pavement)
Cadd Measured Area = 2349.35 Sq. Ft.
(2349.35)(1.25/12)(1/27).....9.06 CU. YD.

STA. 27+50.00 to STA. 28+69.57 (Pavement)
Cadd Measured Area = 2867.65 Sq. Ft.
(2867.65)(1.25/12)(1/27).....11.06 CU. YD.

STA. 28+69.57 to STA. 29+25.00 (Pavement)
Cadd Measured Area = 1214.94 Sq. Ft.
(1214.94)(1.25/12)(1/27).....4.69 CU. YD.

STA. 29+25.00 to STA. 29+35.00 (Pavement and Joint)
(10.6+9)(10)(1.25/12)(1/27).....0.76 CU. YD.

THE FOLLOWING QUANTITIES HAS BEEN CARRIED TO THE GENERAL SUMMARY.

TOTAL ITEM 404 = 100 CU. YD.

ITEM 408 – BITUMINOUS PRIME COAT

STA. 15+25.00 to STA. 15+35.00 (Pavement and Joint)
(8.5+11.4)(10)(1/9)(0.4).....8.84 GAL.

STA. 15+35.00 to STA. 16+10.00 (Pavement)
Cadd Measured Area = 1840.63 Sq. Ft.
(1840.63)(1/9)(0.4).....81.81 GAL.

STA. 16+10.00 to STA. 21+82.68 (Pavement)
Cadd Measured Area = 15220.35 Sq. Ft.
(15220.35)(1/9)(0.4).....676.46 GAL.

STA. 21+82.68 to STA. 23+36.11 (Pavement)
Cadd Measured Area = 3880.46 Sq. Ft.
(3880.46)(1/9)(0.4).....172.47 GAL.

STA. 26+52.11 to STA. 27+50.00 (Pavement)
Cadd Measured Area = 2475.79 Sq. Ft.
(2475.79)(1/9)(0.4).....110.04 GAL.

STA. 27+50.00 to STA. 28+69.57 (Pavement)
Cadd Measured Area = 3166.52 Sq. Ft.
(3166.52)(1/9)(0.4).....140.73 GAL.

STA. 28+69.57 to STA. 29+25.00 (Pavement)
Cadd Measured Area = 1358.18 Sq. Ft.
(1358.18)(1/9)(0.4).....60.36 GAL.

STA. 29+25.00 to STA. 29+35.00 (Pavement and Joint)
(10.6+9)(10)(1/9)(0.4).....8.71 GAL.

THE FOLLOWING QUANTITIES HAS BEEN CARRIED TO THE GENERAL SUMMARY.

TOTAL ITEM 408 = 1259 GAL.

AMESBURY DRIVE

ITEM 402 – ASPHALT CONCRETE

STA. 5+12.00 to STA. 5+65.00 (Pavement)
Cadd Measured Area = 2197.74 Sq. Ft.
(2197.74)(1.75/12)(1/27).....11.87 CU. YD.

THE FOLLOWING QUANTITIES HAS BEEN CARRIED TO THE GENERAL SUMMARY.

TOTAL ITEM 402 = 12 CU. YD.

ITEM 404 – ASPHALT CONCRETE

STA. 5+12.00 to STA. 5+65.00 (Pavement)
Cadd Measured Area = 2197.74 Sq. Ft.
(2197.74)(1.25/12)(1/27).....8.48 CU. YD.

THE FOLLOWING QUANTITIES HAS BEEN CARRIED TO THE GENERAL SUMMARY.

TOTAL ITEM 404 = 8 CU. YD.

ITEM 408 – BITUMINOUS PRIME COAT

STA. 5+12.00 to STA. 5+65.00 (Pavement)
Cadd Measured Area = 2197.74 Sq. Ft.
(2197.74)(1/9)(0.4).....97.68 GAL.

THE FOLLOWING QUANTITIES HAS BEEN CARRIED TO THE GENERAL SUMMARY.

TOTAL ITEM 408 = 98 GAL.

CALC: T.A.Z
BY: T.A.Z
DATE: 10/14/94
CHKD: M.F.J
BY: M.F.J
DATE: 11/18/94

CALCULATIONS

FRA-270-32.46

PLOT SCALE
COL #7
D:\DRAWING\96092306\QUANT\6092CALZ.DWG FEBRUARY-13-1995

CAL BY: T.A.Z DATE: 10/14/94
CHKD BY: M.F.J DATE: 11/18/94

ITEM 203 – ROADWAY EXCAVATION (NOT INCLUDING EMBANKMENT CONSTRUCTION)

CDN .....28490 CU. YD.
CDS .....44061 CU. YD.
I–270 (MAINLINE) .....2252 CU. YD.
CONNECTOR ROAD .....18268 CU. YD.
RAMP "A" .....10437 CU. YD.
RAMP "B" .....29782 CU. YD.
RAMP "C" .....202 CU. YD.
RAMP "D" .....11208 CU. YD.
McCUTCHEON ROAD .....1095 CU. YD.

TOTAL ITEM 203 (EXCAVATION) = 145795 CU. YD.

ITEM 203 – EMBANKMENT

CDN .....28268 CU. YD.
CDS .....64078 CU. YD.
I–270 (MAINLINE) .....99 CU. YD.
CONNECTOR ROAD .....27,650 CU. YD.
RAMP "A" .....8995 CU. YD.
RAMP "B" .....4218 CU. YD.
RAMP "C" .....7267 CU. YD.
RAMP "D" .....244 CU. YD.
McCUTCHEON ROAD .....6484 CU. YD.
BR. NO. FRA–270–32.91 .....1437 CU. YD.
BR. NO. FRA–270–33.96 .....175 CU. YD.
CAST–IN–PLACE WALLS .....459 CU. YD.

TOTAL ITEM 203 (EMBANKMENT) = 149,374 CU. YD.

ITEM 202 – APPROCH SLAB REMOVED

McCUTCHEON RD.
((25)(35)(1/9))(2) ..... 194.44 SQ. YD.

THE FOLLOWING QUANTITIES HAS BEEN CARRIED TO THE GENERAL SUMMARY.

TOTAL ITEM 202 = 194 SQ. YD.

ITEM 611 – REINFORCED CONCRETE APPROACH SLABS (T=13") (AS PER PLAN)

McCUTCHEON ROAD
(38.5)(20)(1/9)(2) .....171.11 SQ. YD.

TOTAL ITEM 611 = 171 SQ. YD.

ITEM 611 – REINFORCED CONCRETE APPROACH SLABS (T=15") (AS PER PLAN)

CONNECTOR ROAD
(72)(25)(1/9) .....200.00 SQ. YD.

TOTAL ITEM 611 = 200 SQ. YD.

ITEM 659 – SEEDING AND MULCHING

CDN .....29747 SQ. YD.
CDS .....32073 SQ. YD.
I–270 (MAINLINE) .....5116 SQ. YD.
CONNECTOR ROAD .....14346 SQ. YD.
RAMP "A" .....15448 SQ. YD.
RAMP "B" .....21949 SQ. YD.
RAMP "C" .....4423 SQ. YD.
RAMP "D" .....6842 SQ. YD.
McCUTCHEON ROAD .....7028 SQ. YD.

TOTAL ITEM 659 (SEEDING & MULCHING) = 136972 SQ. YD.

ITEM 659 – SEEDING AND MULCHING, AS PER PLAN

CDS .....5204 SQ. YD.

TOTAL ITEM 659 (SEEDING & MULCHING, AS PER PLAN) = 5204 SQ. YD.

ITEM 653 – TOPSOIL FURNISHED AND PLACED

CONNECTOR ROAD STA. CONN–62+15.00 TO STA. CONN–72+00.00
Cadd Measured Area = 17300.60 SQ. FT.
(17300.60)(6/12)(1/27) = 320.38 CU.YD.

THE FOLLOWING QUANTITIES HAS BEEN CARRIED TO THE GENERAL SUMMARY.

TOTAL ITEM 653 (TOPSOIL) = 320 CU. YD.

ITEM 660 – SODDING

CONNECTOR ROAD STA. CONN–62+15.00 TO STA. CONN–72+00.00
Cadd Measured Area = 17300.60 SQ. FT.
(17300.60)(1/9) = 1922.29 SQ.YD.

TOTAL ITEM 660 (SODDING) = 1922 SQ. YD.

ITEM 255 – FULL DEPTH PAVEMENT SAWING

CDN STA. 1420+21.85 TO STA. 1434+34.50 ..... 1413 L.F.
CDS STA. 1425+50 TO STA. 1429+00 ..... 350 L.F.
RAMP "C" STA. 1382+99.86 TO STA. 1384+69.06 ..... 170 L.F.
McCUTCHEON RD.
STA. 15+25 ..... 20 L.F.
STA. 29+35 ..... 20 L.F.
STA. 27+67.19 TO STA. 28+69.58 ..... 102 L.F.
AMESBURY DR. STA. 5+14.98 TO STA. 5+65 ..... 143 L.F.

THE FOLLOWING QUANTITIES HAS BEEN CARRIED TO THE GENERAL SUMMARY.

TOTAL ITEM 255 = 2218 L.F.

ITEM 659 – WATER

144098 Sq. Yd. x 9 Sq. Ft./Sq. Yd. x 240 Gal./1000 Sq. Ft. x 1 MGal./1000 Gal.....311.25 MGAL.

TOTAL ITEM 659 (WATER) = 310 MGAL.

ITEM 659 – COMMERCIAL FERTILIZER

145921 Sq. Yd. x 9 Sq. Ft./Sq. Yd. x 20 Lbs./1000 Sq. Ft. x 1 Ton/2000 Lbs..... 13.13 TONS

THE FOLLOWING QUANTITIES HAS BEEN CARRIED TO THE GENERAL SUMMARY.

TOTAL ITEM 659 (COM. FERTILIZER) = 13.13 TONS

ITEM 659 – AGRICULTURAL LIMING, AS PER PLAN

144098 Sq. Yd. x 9 Sq. Ft./Sq. Yd. x 100 Lbs./1000 Sq. Ft. x 1 Ton/2000 Lbs.....64.84 TONS

TOTAL ITEM 659 (AG. LIMING) = 64.84 TONS

ITEM 802 – BARRIER REFLECTOR, TYPE A

McCUTCHEON ROAD .....19 EA.
CONNECTOR ROAD .....12 EA.
RAMP "D" .....2 EA.
I–270 MEDIAN .....92 EA.
CDS .....18 EA.
RAMP "A" .....4 EA.

THE FOLLOWING QUANTITIES HAS BEEN CARRIED TO THE GENERAL SUMMARY.

TOTAL ITEM 802 (TYPE A) = 147 EA.

ITEM 802 – BARRIER REFLECTOR, TYPE B

RAMPS "C" & "D" .....101 EA.
CDN .....112 EA.
CDS .....138 EA.

THE FOLLOWING QUANTITIES HAS BEEN CARRIED TO THE GENERAL SUMMARY.

TOTAL ITEM 802 (TYPE B) = 351 EA.

ITEM 203 – PROOF ROLLING

CDN – 38343.07 SQ. YD./3000 Hr./Sq. Yd. ..... 12.78 Hours
CDS – 43412.36 SQ. YD./3000 Hr./Sq. Yd. ..... 14.47 Hours
RAMP "C" – 7592.85 SQ. YD./3000 Hr./Sq. Yd. ..... 2.53 Hours
RAMP "D" – 6923.47 SQ. YD./3000 Hr./Sq. Yd. ..... 2.31 Hours
RAMP "A" – 5832.04 SQ. YD./3000 Hr./Sq. Yd. ..... 1.94 Hours
RAMP "B" – 7017.53 SQ. YD./3000 Hr./Sq. Yd. ..... 2.34 Hours
CONNECTOR RD. – 15392.62 SQ. YD./3000 Hr./Sq. Yd. ..... 5.13 Hours
McCUTCHEON RD. – 3816.78 SQ.YD./3000 Hr./Sq. Yd. ..... 1.27 Hours

TOTAL ITEM 203 PROFF ROLLING = 43 HOURS

Plot Scale = 1" = 20'
CDS #7 D:\DRAWING\06092306\QUANT\6092CALS.DWG FEBRUARY-13-1995

CALCULATIONS

FRA–270–32.46

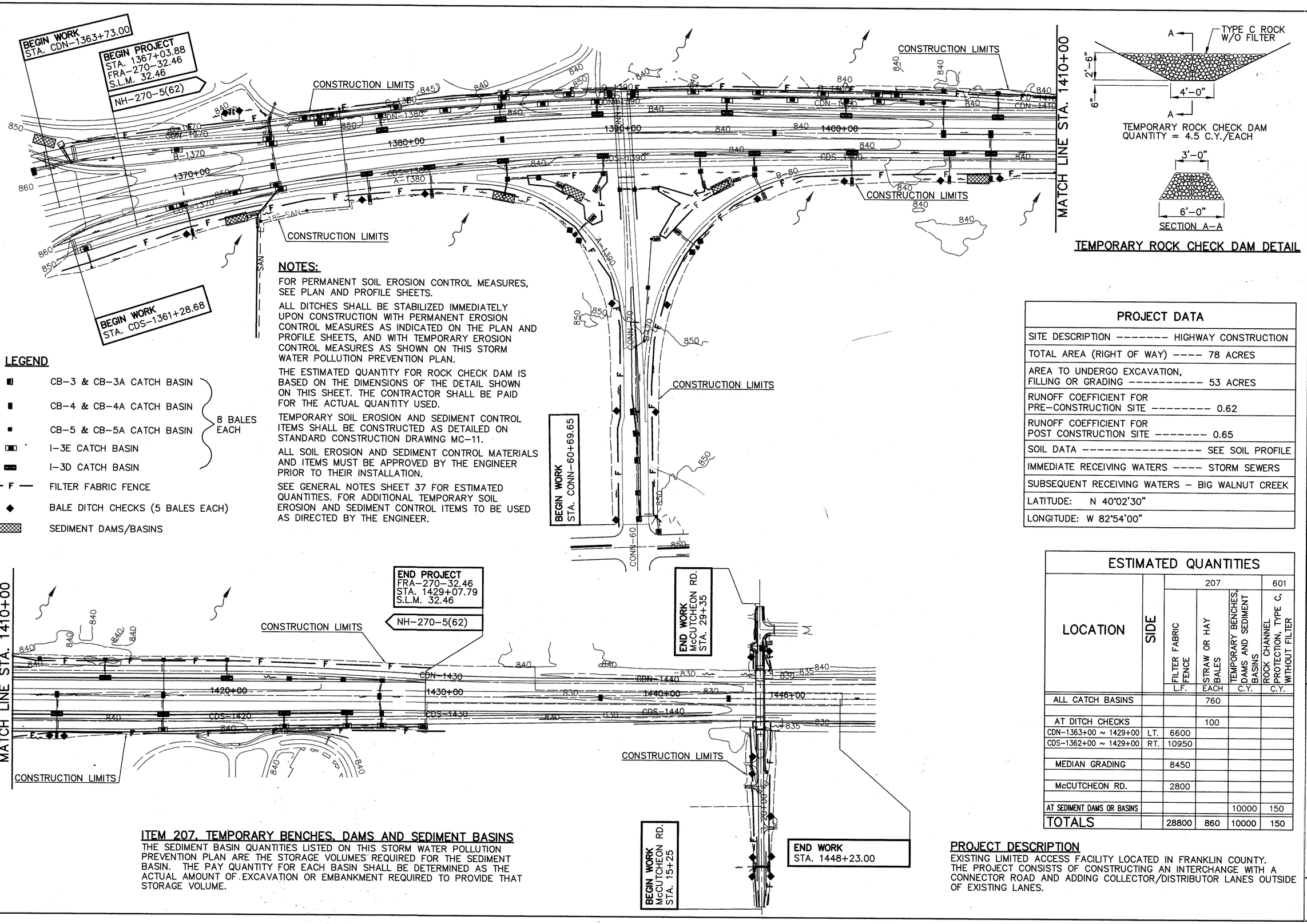

LEGEND

- CB–3 & CB–3A CATCH BASIN
- CB–4 & CB–4A CATCH BASIN
- CB–5 & CB–5A CATCH BASIN
- I–3E CATCH BASIN
- I–3D CATCH BASIN

(8 BALES EACH)

- F — FILTER FABRIC FENCE
- ◆ BALE DITCH CHECKS (5 BALES EACH)
- SEDIMENT DAMS/BASINS

NOTES:

FOR PERMANENT SOIL EROSION CONTROL MEASURES, SEE PLAN AND PROFILE SHEETS.

ALL DITCHES SHALL BE STABILIZED IMMEDIATELY UPON CONSTRUCTION WITH PERMANENT EROSION CONTROL MEASURES AS INDICATED ON THE PLAN AND PROFILE SHEETS, AND WITH TEMPORARY EROSION CONTROL MEASURES AS SHOWN ON THIS STORM WATER POLLUTION PREVENTION PLAN.

THE ESTIMATED QUANTITY FOR ROCK CHECK DAM IS BASED ON THE DIMENSIONS OF THE DETAIL SHOWN ON THIS SHEET. THE CONTRACTOR SHALL BE PAID FOR THE ACTUAL QUANTITY USED.

TEMPORARY SOIL EROSION AND SEDIMENT CONTROL ITEMS SHALL BE CONSTRUCTED AS DETAILED ON STANDARD CONSTRUCTION DRAWING MC–11.

ALL SOIL EROSION AND SEDIMENT CONTROL MATERIALS AND ITEMS MUST BE APPROVED BY THE ENGINEER PRIOR TO THEIR INSTALLATION.

SEE GENERAL NOTES SHEET 37 FOR ESTIMATED QUANTITIES. FOR ADDITIONAL TEMPORARY SOIL EROSION AND SEDIMENT CONTROL ITEMS TO BE USED AS DIRECTED BY THE ENGINEER.

TEMPORARY ROCK CHECK DAM DETAIL

PROJECT DATA	
SITE DESCRIPTION	HIGHWAY CONSTRUCTION
TOTAL AREA (RIGHT OF WAY)	78 ACRES
AREA TO UNDERGO EXCAVATION, FILLING OR GRADING	53 ACRES
RUNOFF COEFFICIENT FOR PRE–CONSTRUCTION SITE	0.62
RUNOFF COEFFICIENT FOR POST CONSTRUCTION SITE	0.65
SOIL DATA	SEE SOIL PROFILE
IMMEDIATE RECEIVING WATERS	STORM SEWERS
SUBSEQUENT RECEIVING WATERS	BIG WALNUT CREEK
LATITUDE:	N 40°02'30"
LONGITUDE:	W 82°54'00"

ESTIMATED QUANTITIES

LOCATION	SIDE	207 FILTER FABRIC FENCE L.F.	207 STRAW OR HAY BALES EACH	207 TEMPORARY BENCHES, DAMS AND SEDIMENT BASINS C.Y.	601 ROCK CHANNEL PROTECTION, TYPE C, WITHOUT FILTER C.Y.
ALL CATCH BASINS			760		
AT DITCH CHECKS			100		
CDN–1363+00 ~ 1429+00	LT.	6600			
CDS–1362+00 ~ 1429+00	RT.	10950			
MEDIAN GRADING		8450			
McCUTCHEON RD.		2800			
AT SEDIMENT DAMS OR BASINS				10000	150
TOTALS		28800	860	10000	150

ITEM 207, TEMPORARY BENCHES, DAMS AND SEDIMENT BASINS

THE SEDIMENT BASIN QUANTITIES LISTED ON THIS STORM WATER POLLUTION PREVENTION PLAN ARE THE STORAGE VOLUMES REQUIRED FOR THE SEDIMENT BASIN. THE PAY QUANTITY FOR EACH BASIN SHALL BE DETERMINED AS THE ACTUAL AMOUNT OF EXCAVATION OR EMBANKMENT REQUIRED TO PROVIDE THAT STORAGE VOLUME.

PROJECT DESCRIPTION

EXISTING LIMITED ACCESS FACILITY LOCATED IN FRANKLIN COUNTY. THE PROJECT CONSISTS OF CONSTRUCTING AN INTERCHANGE WITH A CONNECTOR ROAD AND ADDING COLLECTOR/DISTRIBUTOR LANES OUTSIDE OF EXISTING LANES.

Plot Scale – 1" = 200'
COL #29 C:\DRAWING\06092306\PLAN\06092SWP.DWG FEBRUARY-10-1995

CALC. BY: MMR DATE: 08-31-94
CHKD. BY: PHF DATE: 09-01-94

HORIZONTAL SCALE IN FEET
0 100 200 400

STORM WATER POLLUTION PREVENTION PLAN
BEGIN PROJECT TO END PROJECT
FRA–270–32.46

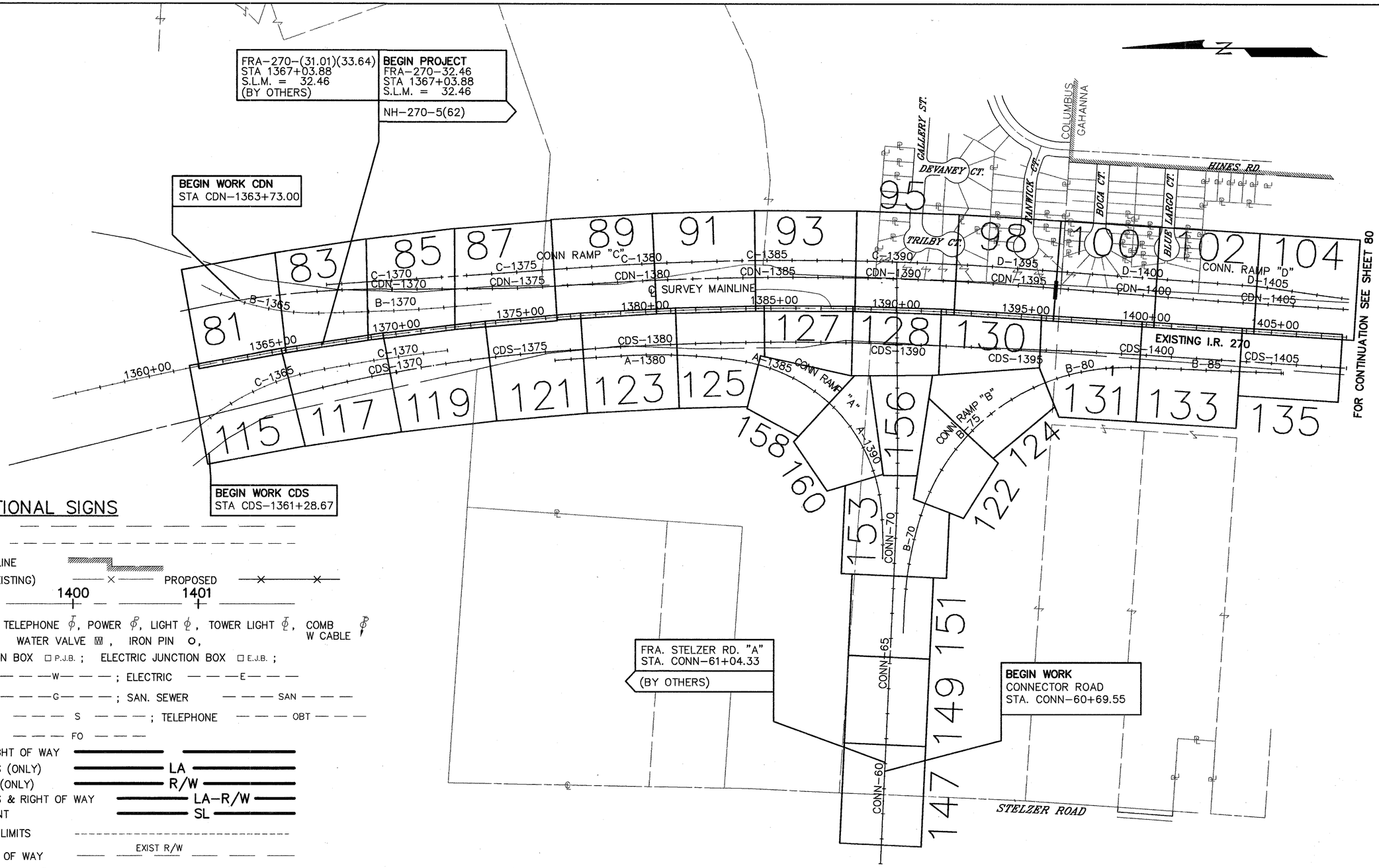

CONVENTIONAL SIGNS

TOWNSHIP LINE
SECTION LINE
CORPORATION LINE
FENCE LINE (EXISTING) PROPOSED
CENTER LINE 1400 1401
UTILITY POLES: TELEPHONE, POWER, LIGHT, TOWER LIGHT, COMB W CABLE
GAS VALVE, WATER VALVE, IRON PIN,
PHONE JUNCTION BOX P.J.B.; ELECTRIC JUNCTION BOX E.J.B.;
WATER LINE —W—; ELECTRIC —E—
GAS LINE —G—; SAN. SEWER —SAN—
STORM SEWER —S—; TELEPHONE —OBT—
FIBER OPTIC —FO—
TEMPORARY RIGHT OF WAY
LIMITED ACCESS (ONLY) LA
RIGHT OF WAY (ONLY) R/W
LIMITED ACCESS & RIGHT OF WAY LA-R/W
SLOPE EASEMENT SL
CONSTRUCTION LIMITS
EXISTING RIGHT OF WAY EXIST R/W
PROPERTY LINE (IN EXISTING FENCE)
GUARDRAIL (EXISTING) OR
SLOPE LINE 4:1 DITCH & SWALE LINE
OVERLAND FLOW FLOW IN PIPE
CATCH BASINS CB HEADWALLS HW MANHOLES MH
PROP. TRUSS SIGN, PROP. CANTILEVER SIGN
PROP. TOWER LIGHTING, PROP. CONVENTIONAL LIGHTING,

RIB-49 ROADWAY BORING (RESOURCE INTERNATIONAL) SEE PROJ. FRA-270-(31.01)(33.64) FOR SOIL PROFILES.

ALL OTHER ROADWAY BORINGS (BBC&M), REFER TO SOIL PROFILES.

SCALE 1"=200'
COL #30
C:\DRAWING\06092306\INDEX\0609IND1.DWG FEBRUARY-09-1995

0 100 200 400 SCALE IN FEET

FEDERAL PROJECT NO. NH-270-5(62)

STATE PROJECT NO. 060220

INDEX MAP

FRA-270-32.46

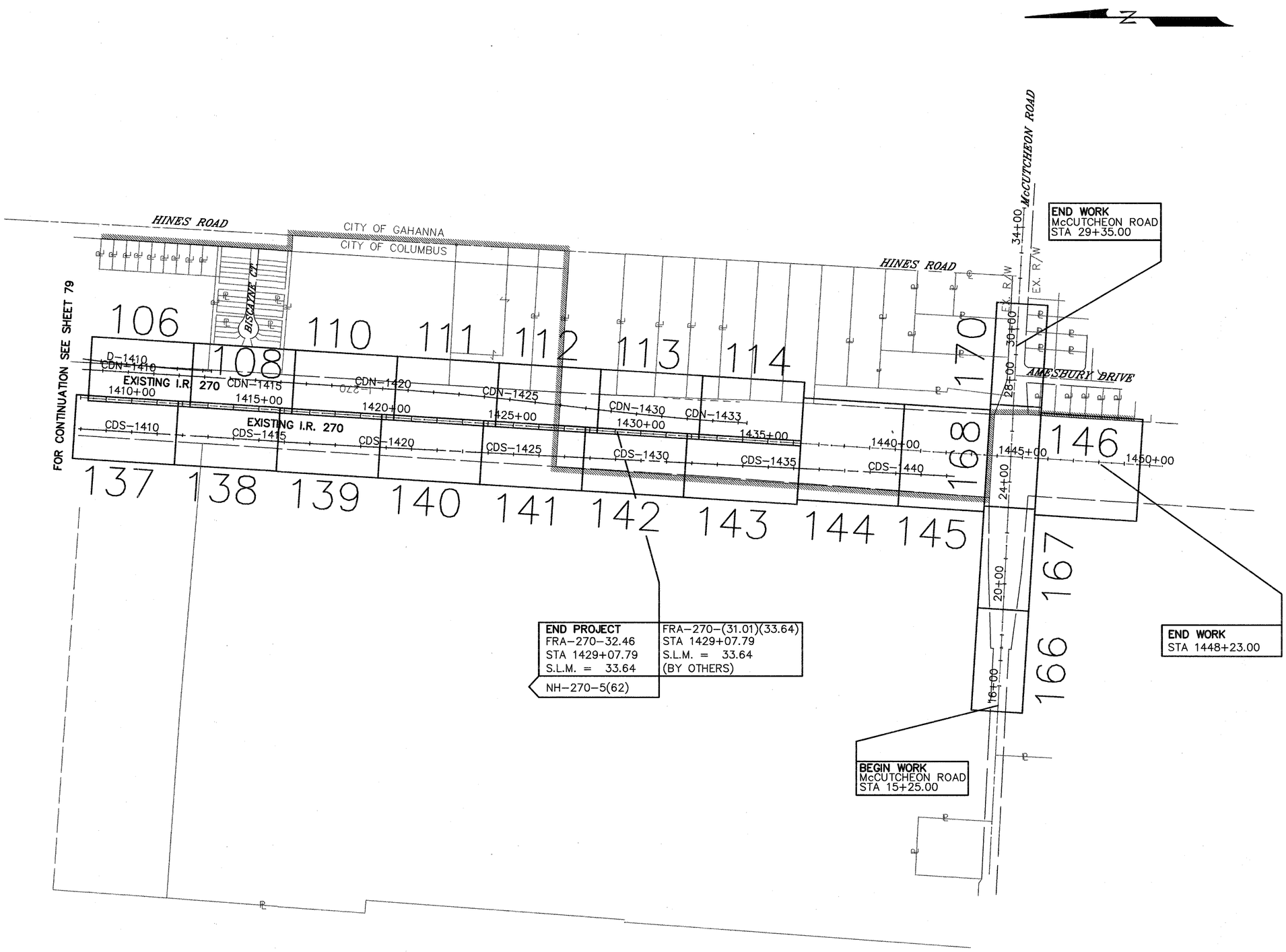

FEDERAL PROJECT NO. NH-270-5(62)

STATE PROJECT NO. 060220

INDEX MAP

FRA-270-32.46

80
593

SCALE 1"=200'
COL #30 C:\DRAWING\06092306\INDEX\0609IND2.DWG FEBRUARY-09-1995

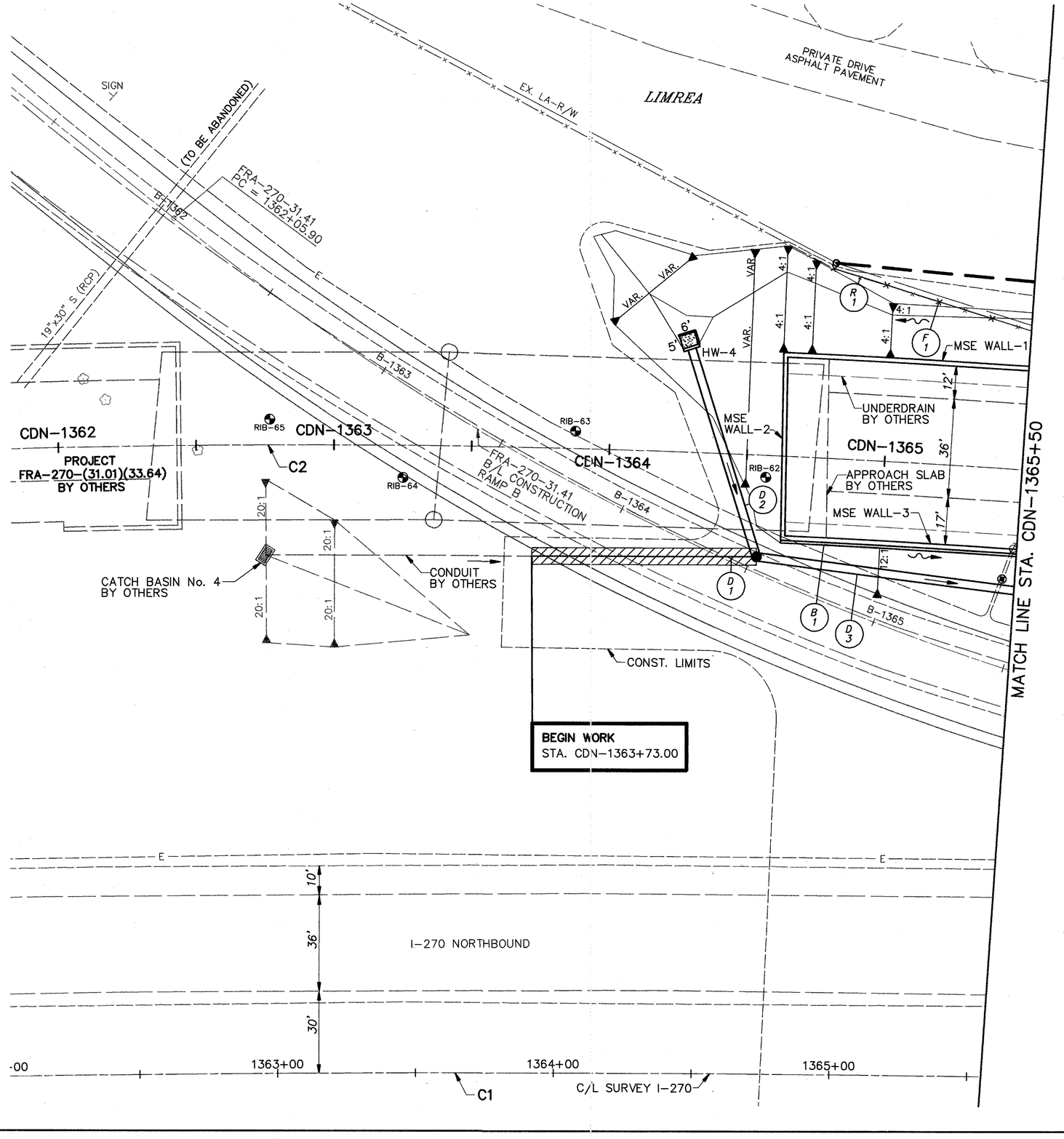

CROSS REFERENCES

SHEET NO.	DESCRIPTION	SHEET NO.	DESCRIPTION
4	C1, C2 CURVE INFO.	432	MSE WALL-2
82	ROADWAY PROFILE	440	MSE WALL-3
362	⊛ ℄ LIGHTING PLAN		
432	MSE WALL-1		

REFERENCE No.	STATION TO STATION (ALL STATIONING REFERS TO CDN ALIGNMENT)	SIDE	622 CONCRETE BARRIER, TYPE D, AS PER PLAN A L.F.	607 FENCE, TYPE CL L.F.	202 FENCE REMOVED L.F.
B1	1364+63 ~ 1365+50	RT.	86		
F1	1364+78 ~ 1365+50	LT.		75	
R1	1364+78 ~ 1365+50	LT.			75
SHEET TOTALS			86	75	75

REFERENCE No.	STATION TO STATION (ALL STATIONING REFERS TO CDN ALIGNMENT)	SIDE	603 36" CONDUIT, TYPE B L.F.	602 CONCRETE MASONRY C.Y.	601 RIPRAP USING 6" REIN. CONCRETE SLAB C.Y.	603 CONDUIT, BORED OR JACKED, 18", TYPE B L.F.	604 MANHOLE, NO.3 EA.
D1	1363+73 ~ 1364+55	RT.				81	
D2	1364+28 ~ 1364+55	L-R	80	0.98	1.13		
D3	1364+61 ~ 1365+50	RT.	94				1
SHEET TOTALS			174	0.98	1.13	81	1

HORIZONTAL SCALE IN FEET: 0, 10, 20, 40

CALC. BY: GJW DATE: 2/2/94
CHKD. BY: MFJ DATE: 12/5/94

PLAN
STA. CDN-1362+00 TO CDN-1365+50

FRA-270-32.46

81
593

DESIGN01
CDN-SUMM, MN1
PLOT SCALE 1"=20'
COL. #28
C:\JPAWNG\06092306\PLAN\06092P01.DWG
FEBRUARY-10-1995

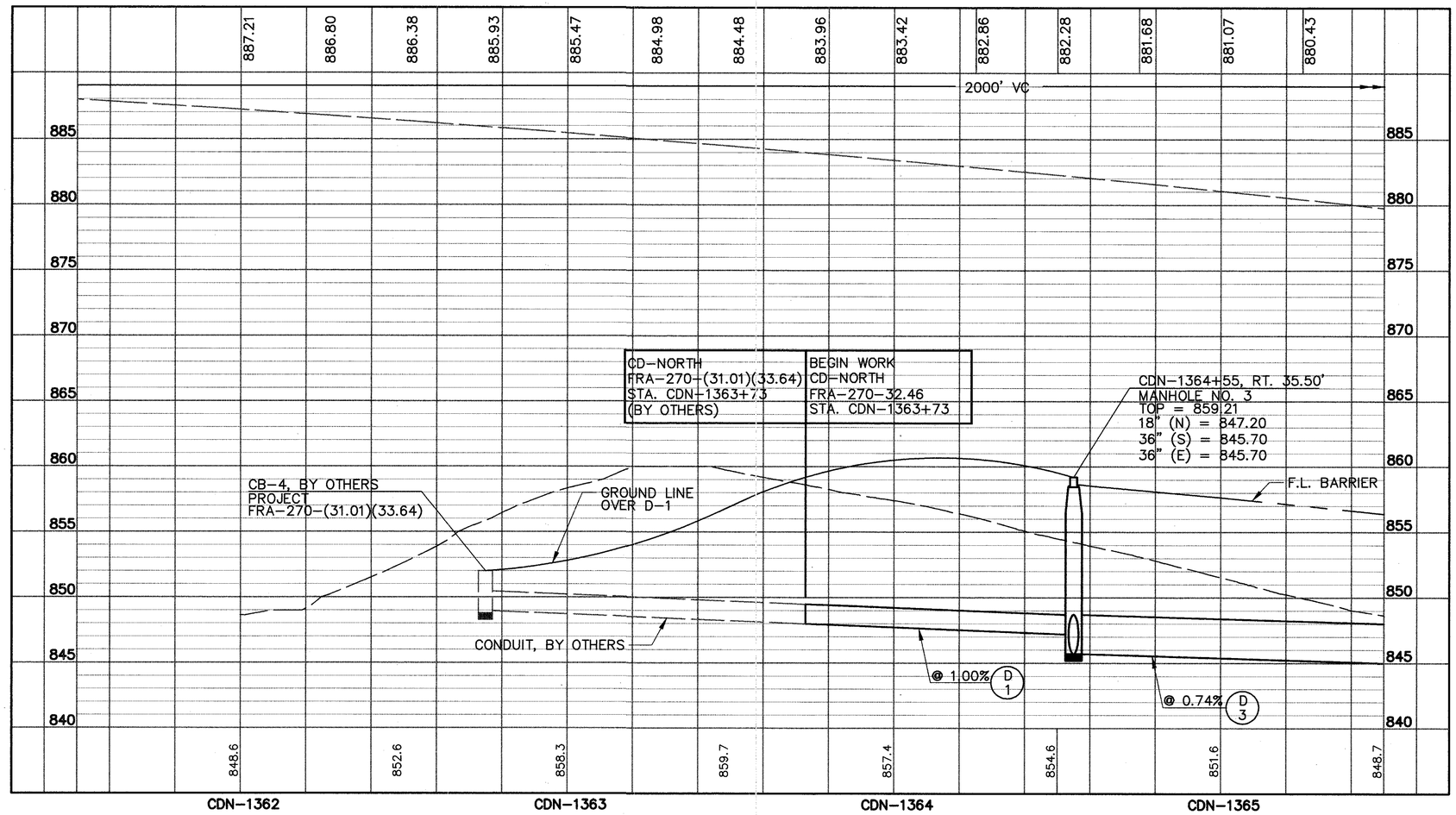

LEGEND:

EXISTING EDGE OF PAVEMENT, MAINLINE I-270

EXISTING PROFILE GRADE

PROPOSED PROFILE GRADE

0 10 20 40
HORIZONTAL SCALE IN FEET

CALC. BY: GJW DATE: 3/15/94
CHKD. BY: TAZ DATE: 1/19/95

PROFILE
STA. CDN-1362+00 TO CDN-1365+50

FRA-270-32.46

82
593

PLOT SCALE...
COL #28 C:\DRAWING\06092306\PLAN\0609PR01.DWG FEBRUARY-11-1995
CDPROF-N

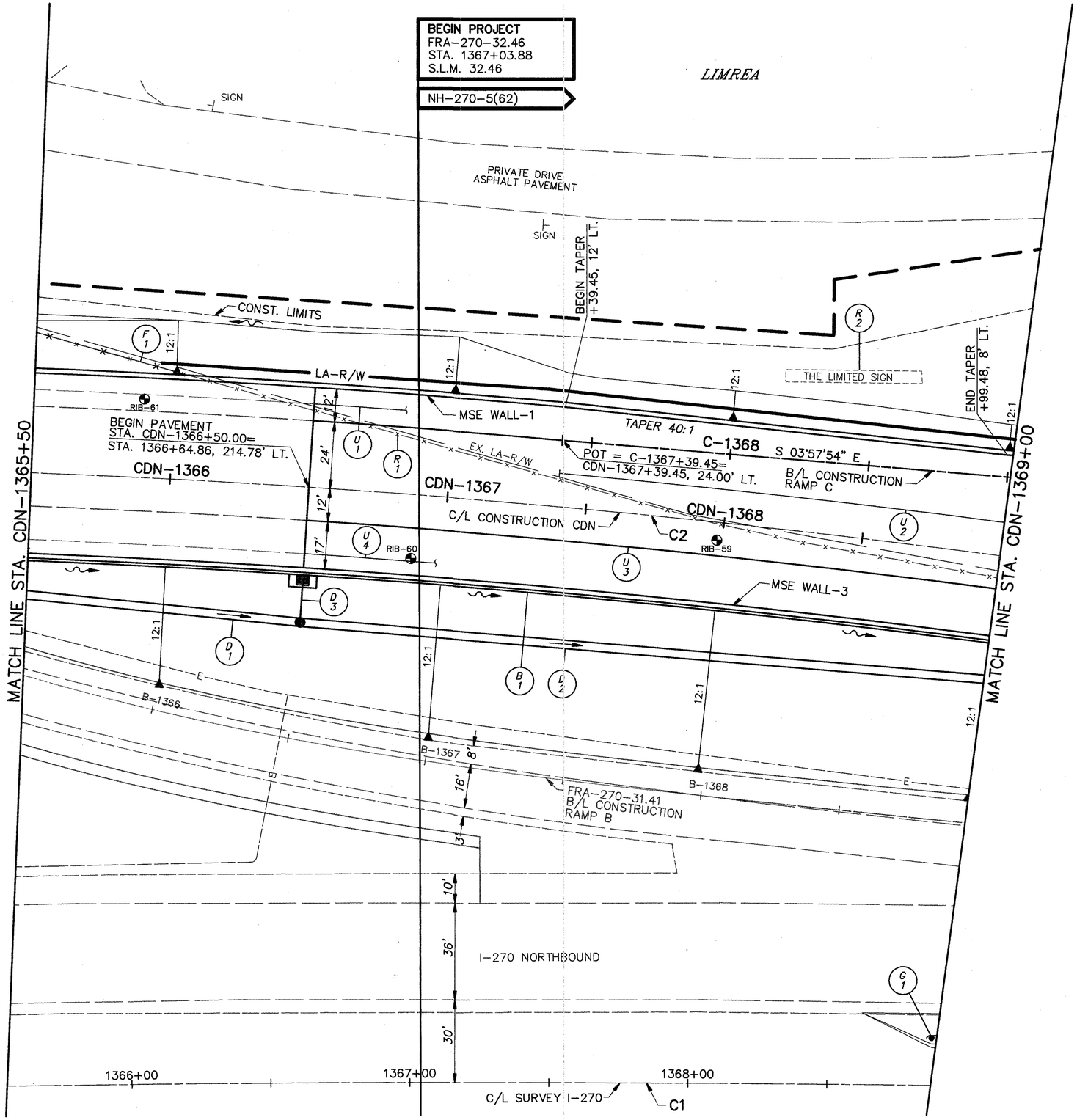

CROSS REFERENCES

SHEET NO.	DESCRIPTION	SHEET NO.	DESCRIPTION
4	C1, C2 CURVE INFO.	432	MSE WALL-1
84	ROADWAY PROFILE	440	MSE WALL-3
65	U 1 UNDERDRAIN DATA AND QUANTITIES		

REFERENCE No.	STATION TO STATION * STATIONING REFERS TO RAMP C ALIGNMENT	SIDE	622 CONCRETE BARRIER, TYPE D, AS PER PLAN A L.F.	607 FENCE, TYPE CL L.F.	202 FENCE REMOVED L.F.	202 REMOVAL MISC. THE LIMITED SIGN EA.			
B1	1365+50 ~ 1369+00	RT.	327						
F1	1365+50 ~ 1366+04	LT.		55					
R1	1365+50 ~ 1369+00	L-R			357				
R2	*1368+43.14	RT.				1			
SHEET TOTALS			327	55	357	1			

REFERENCE No.	STATION TO STATION STATIONING REFERS TO CDN ALIGNMENT	SIDE	604 MANHOLE, NO.3 EA.	604 INLET, No. 3E EA.	603 36" CONDUIT, TYPE B L.F.	603 36" CONDUIT, TYPE C L.F.	603 15" CONDUIT, TYPE C L.F.	606 ANCHOR ASSEMBLY, TYPE T EA.	
D1	1365+50 ~ 1366+50	RT.			100				
D2	1366+50 ~ 1369+00	RT.	1			247			
D3	1366+50	RT.		1			16		
G1	1368+98.05 ~ 1369+11.05	RT.						1	
SHEET TOTALS			1	1	100	247	16	1	

HORIZONTAL SCALE IN FEET
0 10 20 40

CALC. GJW BY: DATE: 2/2/94
CHK. MFJ BY: DATE: 12/5/94

PLAN
STA. CDN-1365+50 TO CDN-1369+00

FRA-270-32.46

83
593

DESIGN01 CDN-SUMM_MIN1
PLOT SCALE 1"=20'
COL #28
C:\DRAWING\06092306\PLAN\06092P02.DWG FEBRUARY-10-1995

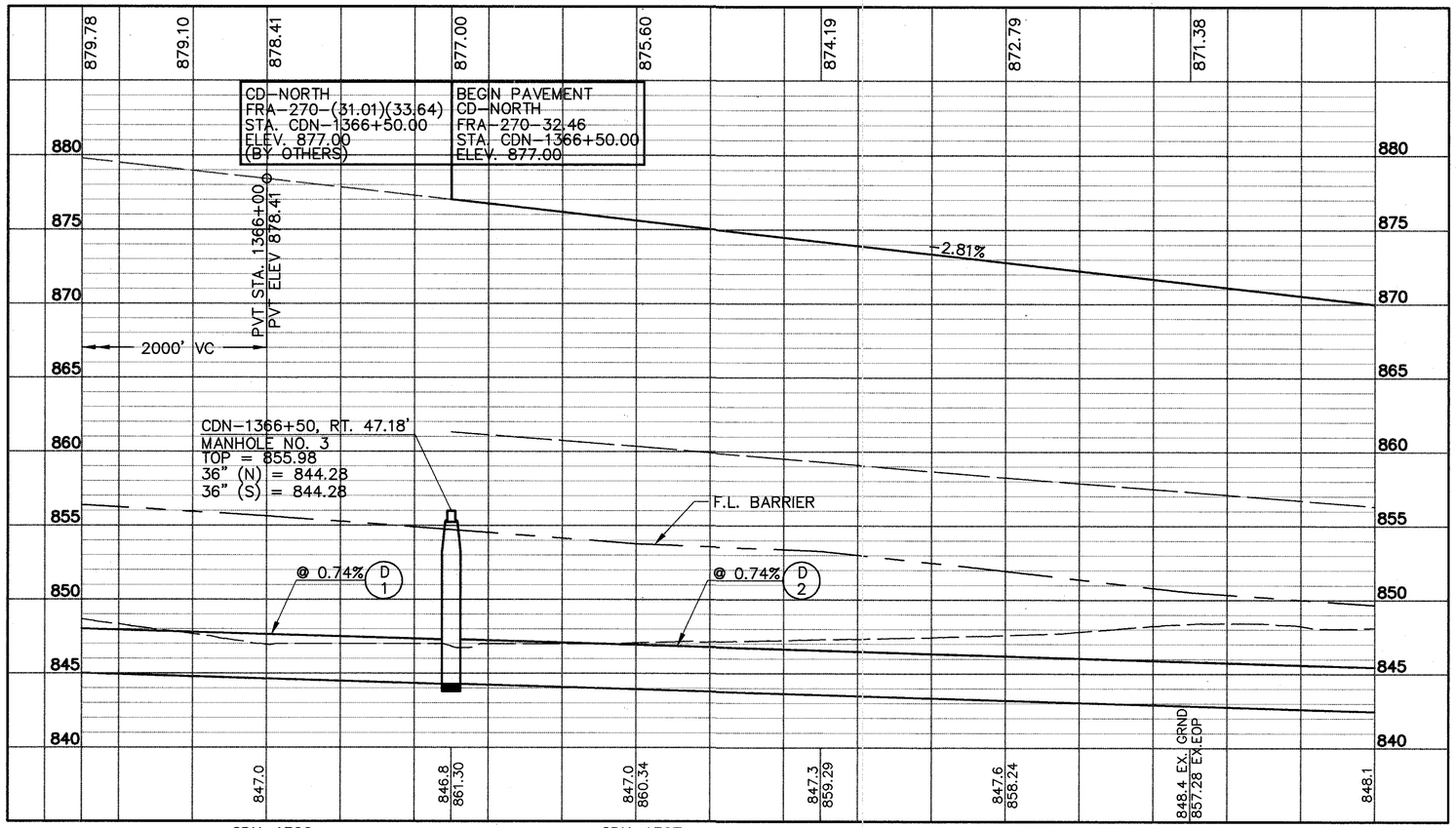

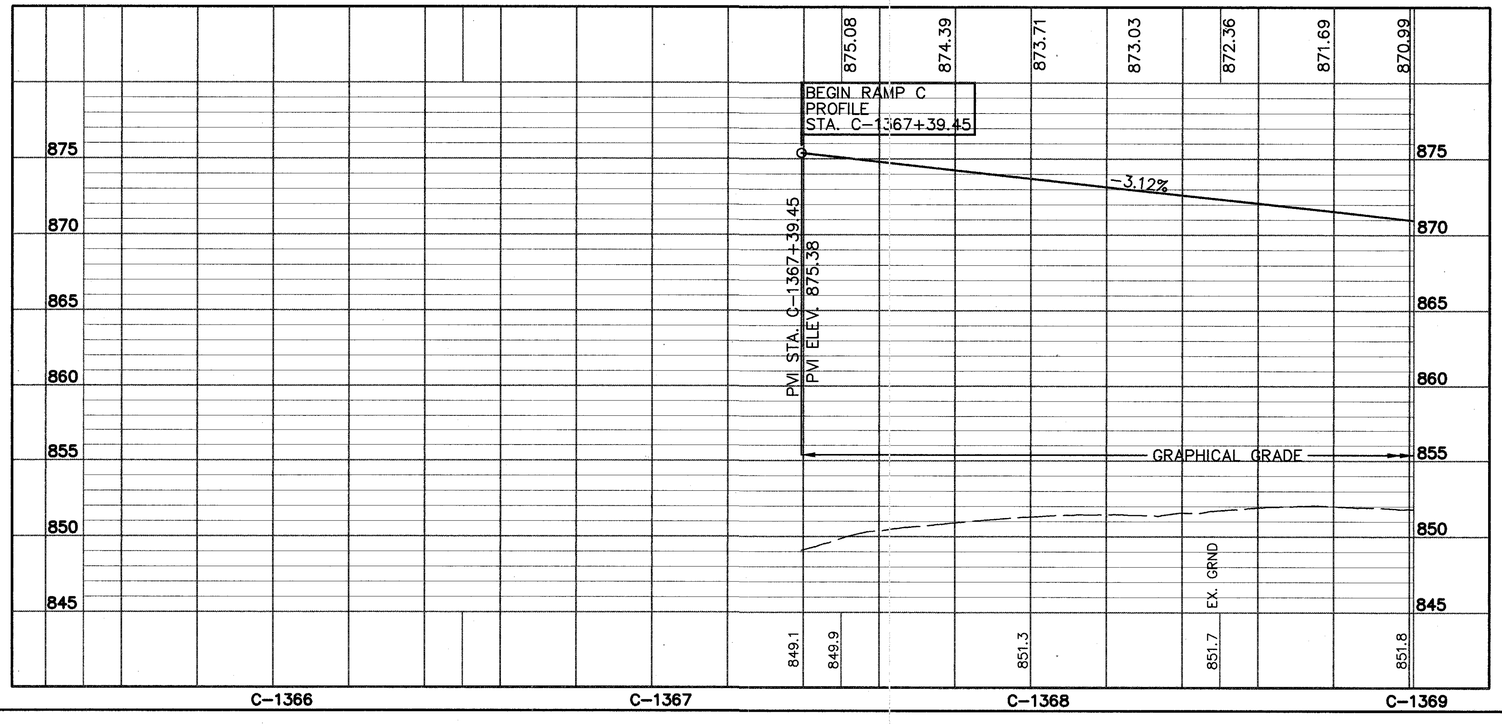

LEGEND:

EXISTING EDGE OF PAVEMENT, MAINLINE I-270

EXISTING PROFILE GRADE

PROPOSED PROFILE GRADE

0 10 20 40 HORIZONTAL SCALE IN FEET

CALC. BY: GJW DATE: 3/15/94
CHKD. BY: TAZ DATE: 1/19/95

PROFILE
STA. CDN-1365+50 TO CDN-1369+00
FRA-270-32.46

84
593

PLOT SCALE
COL. #28
C:\DRAWING\06092306\PLAN\0609PR02.DWG FEBRUARY-10-1995
CDPROF-N

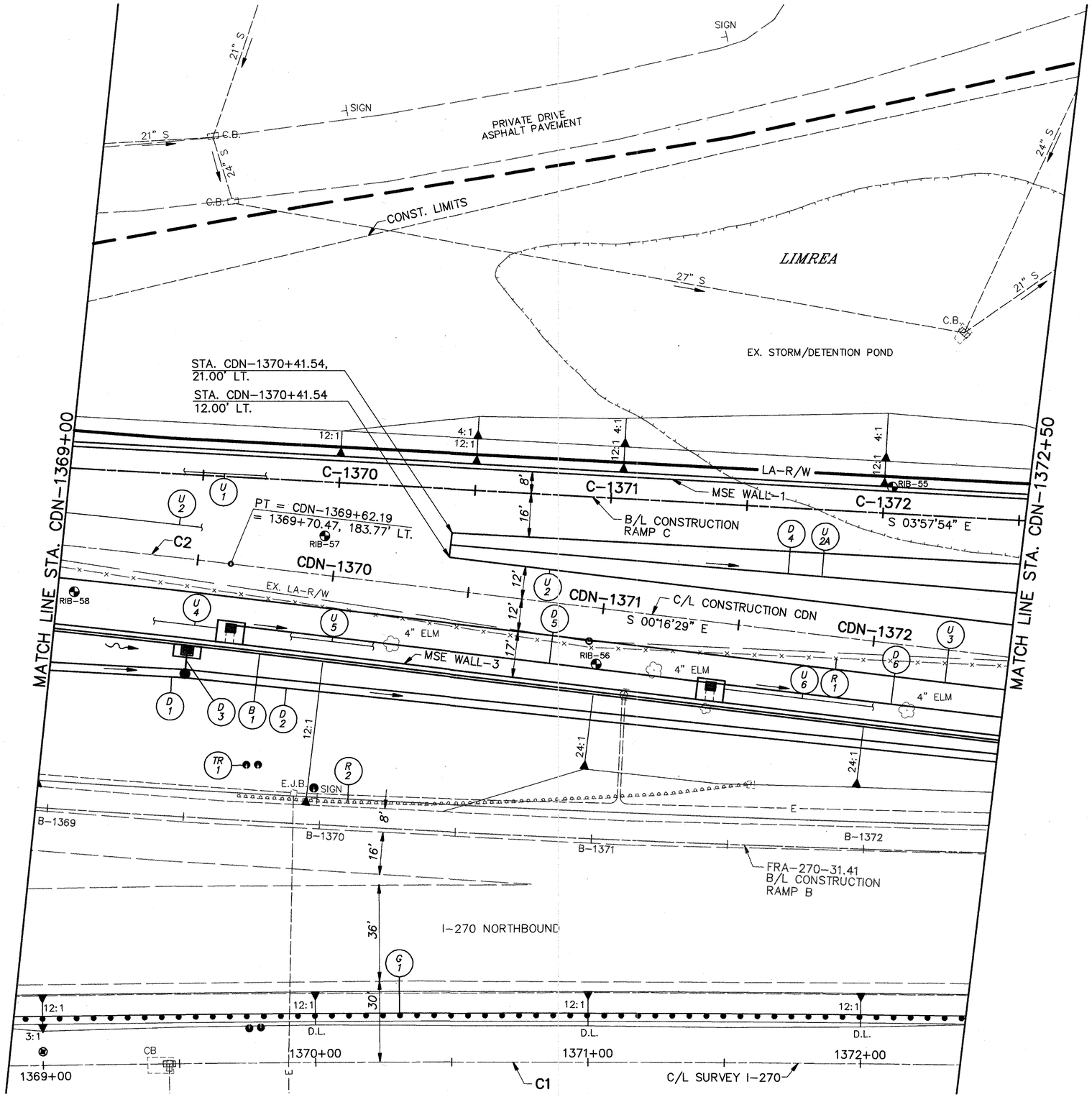

CROSS REFERENCES

SHEET NO.	DESCRIPTION	SHEET NO.	DESCRIPTION
4	C1, C2 CURVE INFO.	432	MSE WALL-1
86	ROADWAY PROFILE	440	MSE WALL-3
65	(U 1) UNDERDRAIN DATA AND QUANTITIES	362	⊗ Ø LIGHTING PLAN
317	GRADING PLAN	342	(TR 1) TRAFFIC CONTROL PLAN

REFERENCE No.	STATION TO STATION (STATIONING REFERS TO CDN ALIGNMENT)	SIDE	622 CONCRETE BARRIER, TYPE D, AS PER PLAN A (L.F.)	202 FENCE REMOVED (L.F.)	202 GUARDRAIL REMOVED (L.F.)	606 GUARDRAIL, TYPE 5 (L.F.)	202 ANCHOR ASSEMBLY REMOVED, TYPE A (EA.)	604 MANHOLE, NO.3 (EA.)	603 36" CONDUIT, TYPE C (L.F.)
B1	1369+00 ~ 1372+50	RT.	330						
R1	1369+00 ~ 1372+50	RT.		350					
R2	1369+75 ~ 1371+50	RT.			167		1		
G1	1369+11.05 ~ 1372+48.44	RT.				337.5			
D1	1369+00 ~ 1369+49	RT.							50
D2	1369+49 ~ 1372+50	RT.						1	300
SHEET TOTALS			330	350	167	337.5	1	1	350

REFERENCE No.	STATION TO STATION (* STATIONING REFERS TO RAMP C ALIGNMENT)	SIDE	604 INLET, NO. 3E (EA.)	604 INLET, NO. 3E AS PER PLAN (EA.)	603 15" CONDUIT, TYPE B (L.F.)	603 SLOTTED DRAIN, 15" TYPE 2 AND/OR 3 (L.F.)	603 15" CONDUIT, TYPE B AS PER PLAN (L.F.)	603 15" CONDUIT, TYPE F 707.01 (L.F.)	
D3	1369+50	RT.	1		9				
D4	*1370+41 ~ 1372+50	RT.				204		5	
D5	1369+65 ~ 1371+42.50	RT.		1			178		
D6	1371+42.50 ~ 1372+50	RT.		1			108		
SHEET TOTALS			1	2	9	204	286	5	

0 10 20 40 HORIZONTAL SCALE IN FEET

CALC. BY: GJW DATE: 2/2/94
CHKD. BY: MFJ DATE: 12/5/94

PLAN
STA. CDN-1369+00 TO CDN-1372+50

FRA-270-32.46

DESIGN01 CDN-SUMM, MN1 PLOT SCALE 1"=20' COL #28 C:\DRAWING\06092306\PLAN\06092P03.DWG FEBRUARY-12-1995

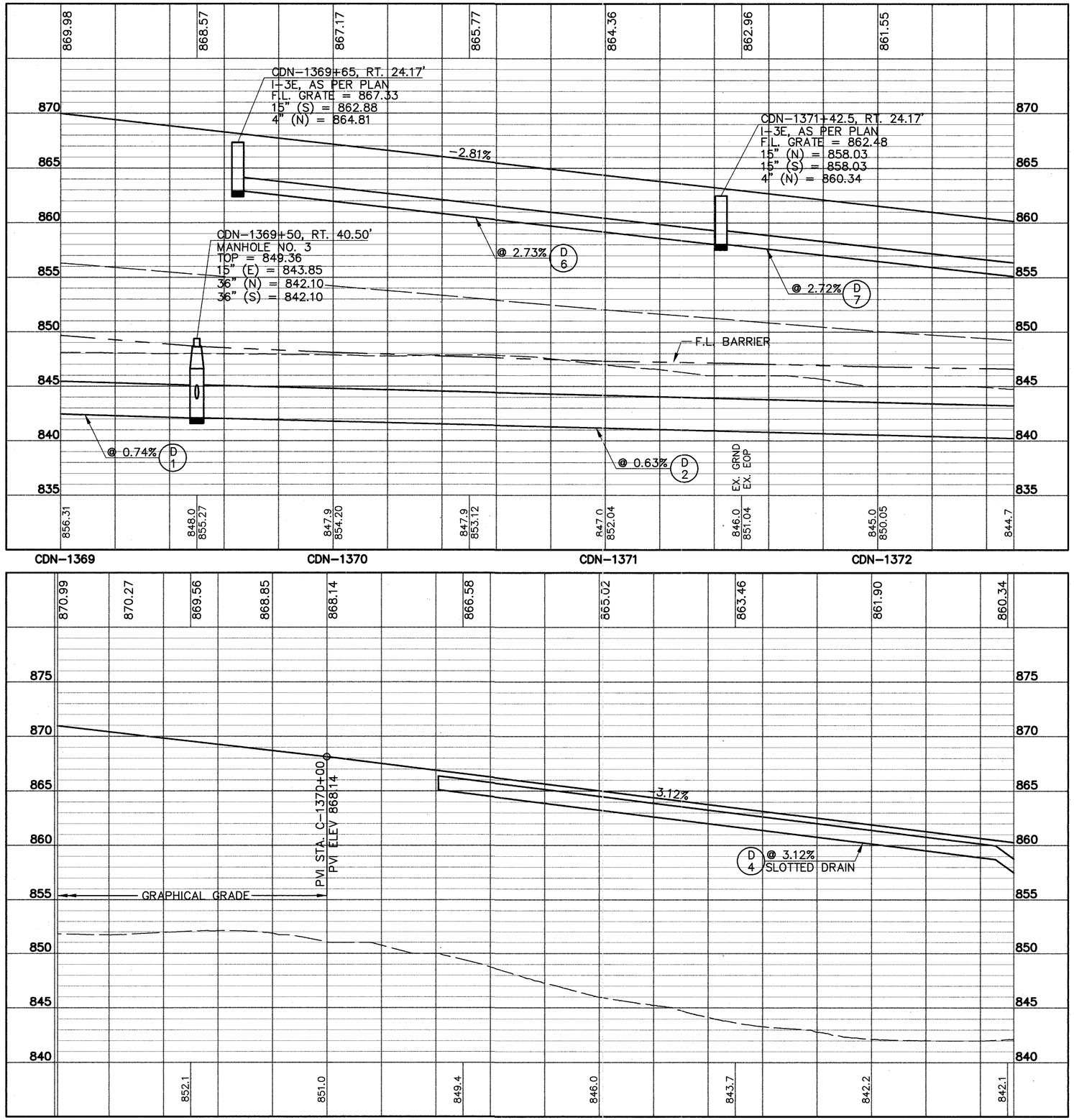

LEGEND:

EXISTING EDGE OF PAVEMENT, MAINLINE I–270

EXISTING PROFILE GRADE

PROPOSED PROFILE GRADE

N

0 10 20 40 HORIZONTAL

CALC. BY: GJW DATE: 3/15/94
CHKD. BY: TAZ

PROFILE
STA. CDN–1369+50 TO CDN–1372+50

FRA–270–32.46

86
93

PLOT SCALE...
COL #23 C:\DRAWING\06092306\PLAN\0609PRO3.DWG FEBRUARY-10-1995
CDPROF-N.DWG

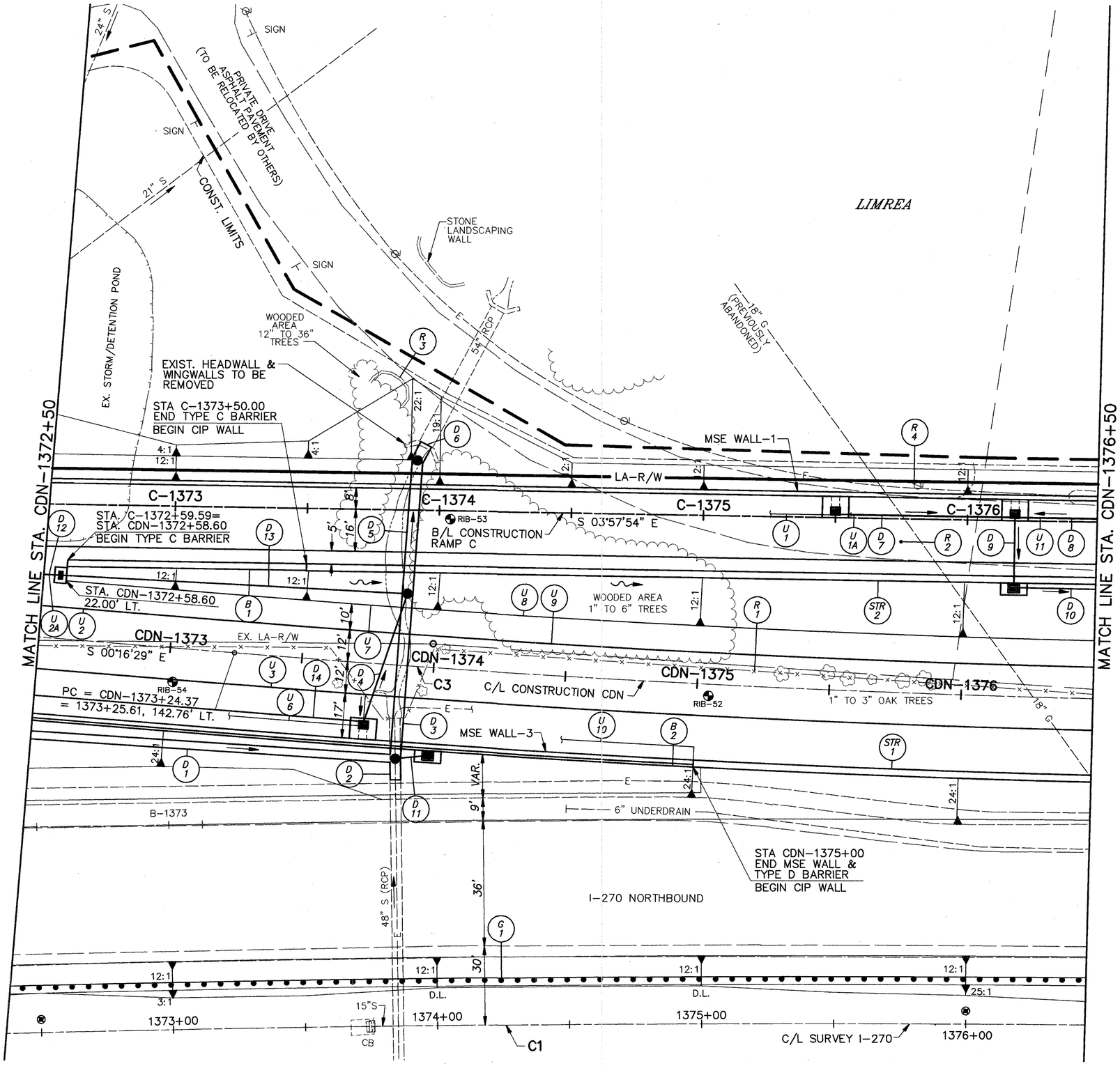

CROSS REFERENCES

SHEET NO.	DESCRIPTION	SHEET NO.	DESCRIPTION
4	C1, C3 CURVE INFO.	432	MSE WALL-1
88	ROADWAY PROFILE	440	MSE WALL-3
315	DRAINAGE PROFILE	511	STR 1 SITE PLAN
65	U 1 UNDERDRAIN DATA AND QUANTITIES	362	LIGHTING PLAN
510	STR 2 SITE PLAN		

REFERENCE No.	STATION TO STATION * STATIONING REFERS TO RAMP C ALIGNMENT	SIDE	622 CONCRETE BARRIER, TYPE C L.F.	622 CONCRETE BARRIER, TYPE D, AS PER PLAN A L.F.	202 FENCE REMOVED L.F.	202 PAVEMENT REMOVED S.Y.	603 36" CONDUIT, TYPE C L.F.	606 GUARDRAIL, TYPE 5 L.F.	202 REMOVAL MISC., STONE LANDSCAPE WALL L.S.	202 LIGHT POLE REMOVED EA.
B1	1372+59 ~ 1373+50	LT.	91							
B2	1372+50 ~ 1375+00	RT.		232						
R1	1372+50 ~ 1376+50	L-R			432					
R2	*1374+26 ~ 1376+50	L-R				532				
R3	*1373+73 ~ 1373+88	LT.							1	
R4	*1375+82	LT.								1
D1	1372+50 ~ 1373+87	RT.					138			
G1	1372+48.44 ~ 1376+53.39	RT.						412.5		
SHEET TOTALS			91	232	432	532	138	412.5	1	1

REFERENCE No.	STATION TO STATION STATIONING REFERS TO CDN ALIGNMENT	SIDE	603 48" CONDUIT, TYPE B 706.02 (1250 DLOAD) L.F.	603 15" CONDUIT, TYPE B AS PER PLAN L.F.	603 54" CONDUIT, TYPE B 706.02 (1250 DLOAD) L.F.	604 MANHOLE, NO. 3, 84" DIAMETER EA.	604 INLET, NO. 3E AS PER PLAN EA.	604 MANHOLE, NO. 3, WITH FLAT TOP 84" DIAMETER, EA.
D2	1373+87	RT.	8					
D3	1373+87	L-R			63			1
D4	1373+75 ~ 1373+87	RT.		53			1	
D5	1373+87	L-R			50	1		
SHEET TOTALS			8	53	113	1	1	1

REFERENCE No.	STATION TO STATION * STATIONING REFERS TO RAMP C ALIGNMENT	SIDE	603 54" CONDUIT, TYPE B 706.02 (1250 DLOAD) L.F.	603 15" CONDUIT, TYPE C L.F.	603 15" CONDUIT, TYPE B AS PER PLAN L.F.	604 INLET, NO. 3E EA.	604 MANHOLE, NO. 3, WITH FLAT TOP 84" DIAMETER, EA.	604 INLET, NO. 3E AS PER PLAN EA.	604 CATCH BASIN, TYPE 6 EA.	603 15" CONDUIT, TYPE F 707.01 L.F.
D6	*1373+90 ~ 1373+95	LT.	7				1			
D7	*1375+50 ~ 1376+18	LT.			68			1		
D8	*1376+18 ~ 1376+50	LT.			31					
D9	*1376+18	L-R			28			1		
D10	*1376+18 ~ 1376+50	RT.		31		1				
D11	1373+87 ~ 1374+00	RT.		13		1				
D12	1372+50 ~ 1372+57	LT.								7
D13	1372+57 ~ 1373+88	LT.			132				1	
D14	1372+50 ~ 1373+75	RT.			125					
SHEET TOTALS			7	44	384	2	1	2	1	7

HORIZONTAL SCALE IN FEET
0 10 20 40

CALC. BY: G.J.W. DATE: 2/2/94
CHKD. BY: M.F.J. DATE: 12/5/94

PLAN STA. CDN-1372+50 TO CDN-1376+50

FRA-270-32.46

87
593

DESIGN01
CDM-SUMM, MN)
PLOT SCALE 1"=20'
COL #28
C:\DRAWING\06092306\PLAN\06092P04.DWG
FEBRUARY-12-1995

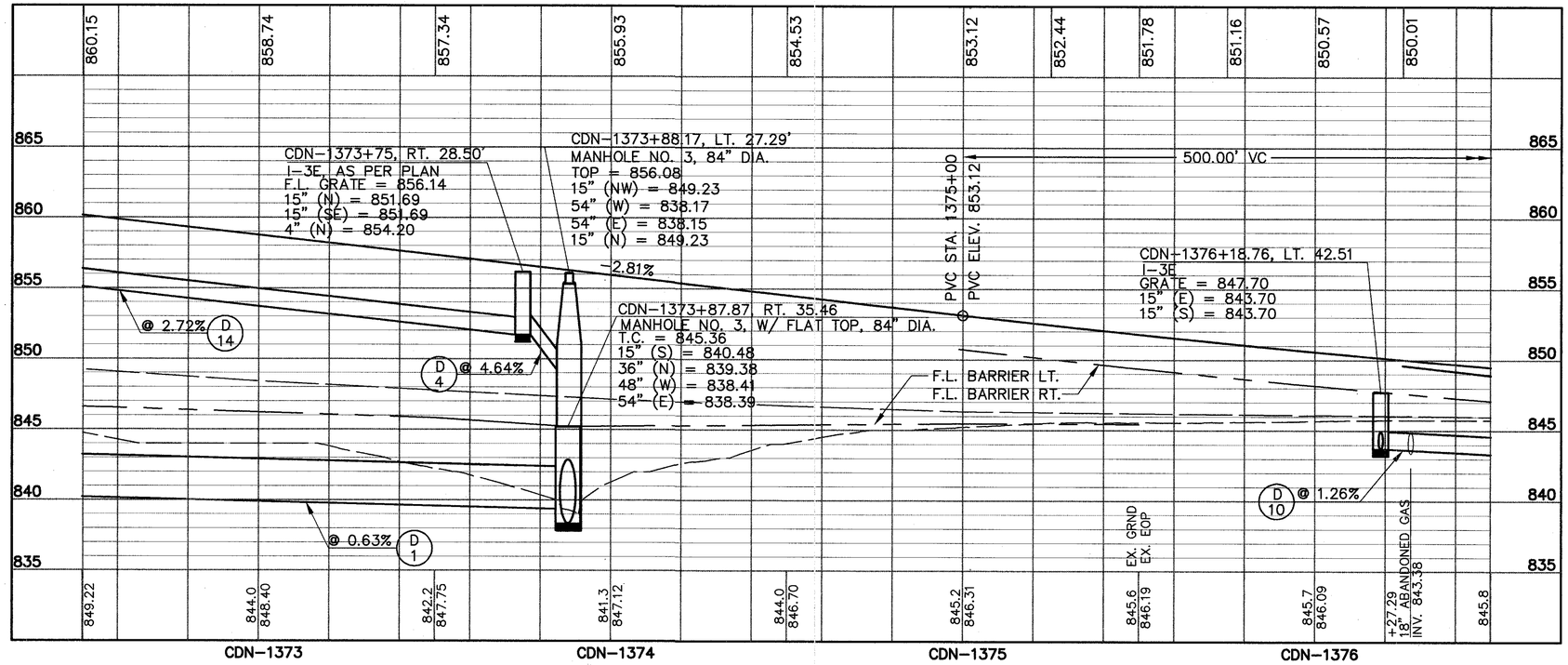

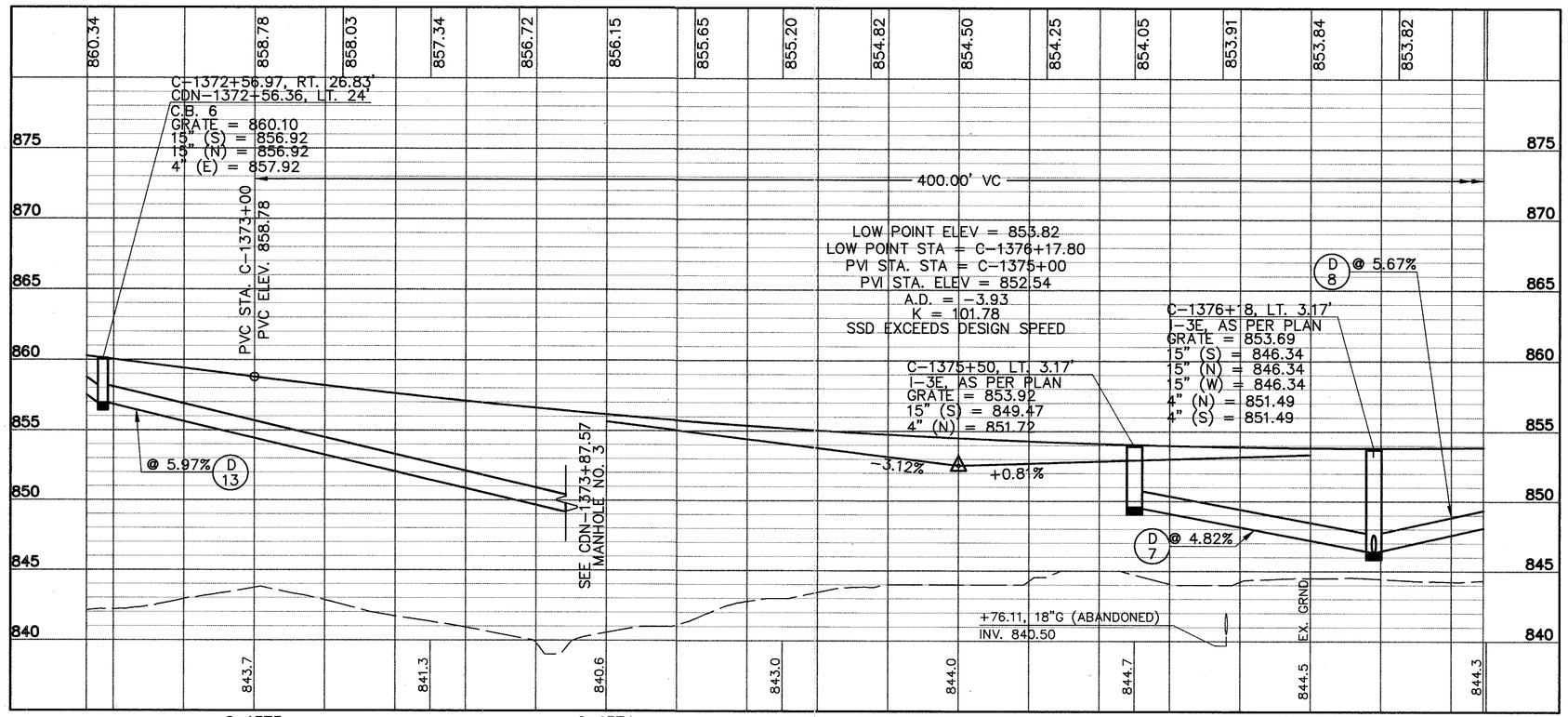

LEGEND:

EXISTING EDGE OF PAVEMENT, MAINLINE I–270 ——— ——— ———

EXISTING PROFILE GRADE — — — — — —

PROPOSED PROFILE GRADE ———

HORIZONTAL SCALE IN FEET
0 20 40

CALC. BY: GJW DATE: 3/15/94
CHKD. BY: T.A.Z DATE: 1/19/95

PROFILE
STA. CDN–1372+50 TO CDN–1376+50

FRA–270–32.46

88
593

PLOT SCALE... C:\DRAWING\06092306\PLAN\0609PR04.DWG FEBRUARY–10–1995
COL #28
RMPCPROF.DWG
CDPROF–N.DWG

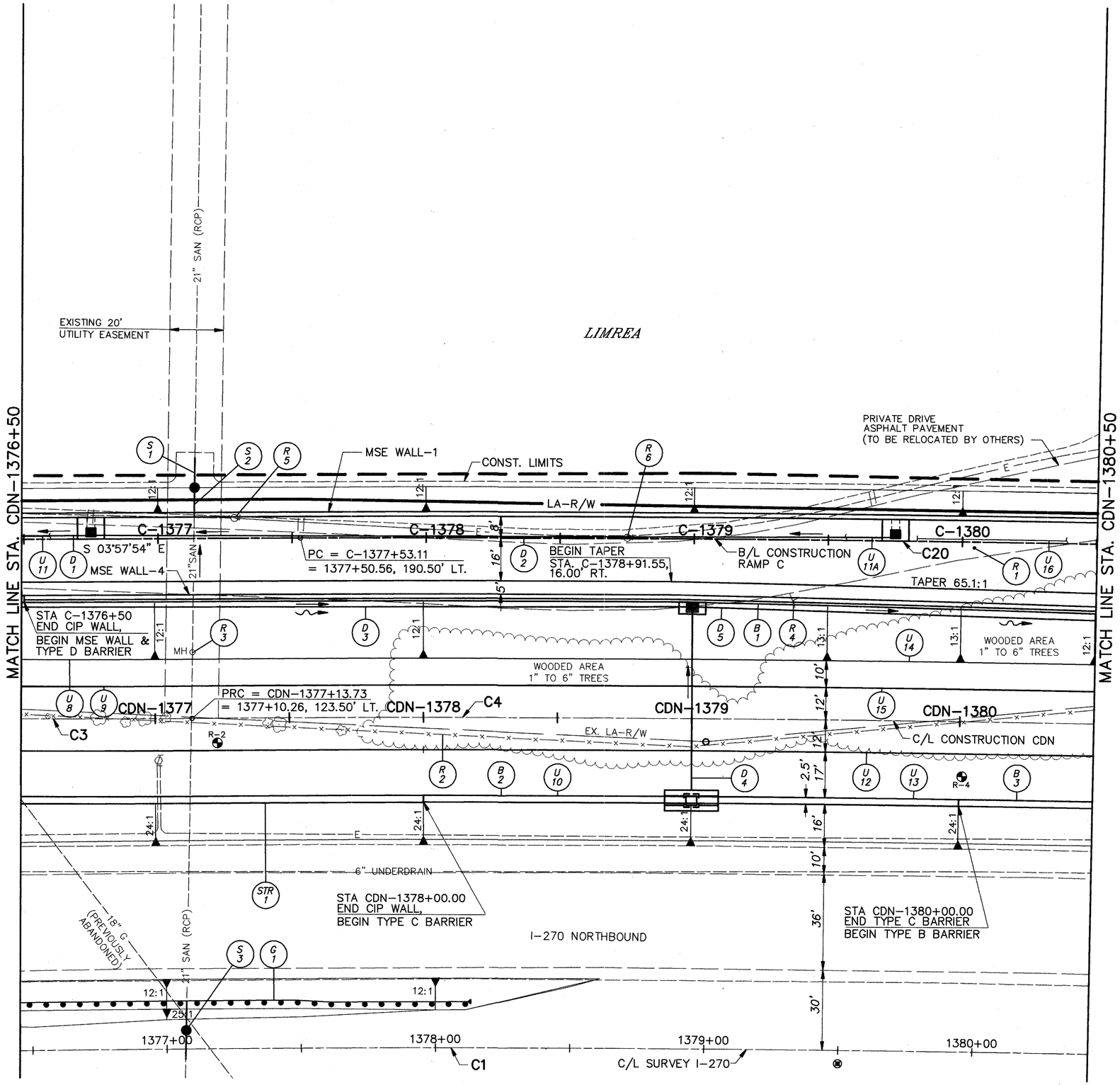

CROSS REFERENCES

SHEET NO.	DESCRIPTION	SHEET NO.	DESCRIPTION
4	C1, C3, C4, C20 CURVE INFO.	432	MSE WALL–1
90	ROADWAY PROFILE	434	MSE WALL–4
511	(STR 1) SITE PLAN	362	⊗ ℄ LIGHTING PLAN
65	(U 1) UNDERDRAIN DATA AND QUANTITIES		

REFERENCE No.	STATION TO STATION * STATIONING REFERS TO RAMP C ALIGNMENT	SIDE	202 PAVEMENT REMOVED S.Y.	202 FENCE REMOVED L.F.	202 MANHOLE ABANDONED, AS PER PLAN EA.	202 REMOVAL MISC. PRIVATE SIGNS EA.	202 LIGHT POLE REMOVED EA.
R1	*1376+50.33 ~ 1380+50.27	L–R	1111				
R2	1376+50 ~ 1380+50	L–R		401			
R3	1377+13.73	LT.			1		
R4	*1379+36.84	RT.				1	
R5	*1377+15	LT.					1
R6	*1378+25	LT.					1
SHEET TOTALS			1111	401	1	1	2

REFERENCE No.	STATION TO STATION * STATIONING REFERS TO RAMP C ALIGNMENT	SIDE	604 MANHOLE, NO. 3, SAN EA.	603 21" CONDUIT, TYPE B, FOR SANITARY 706.02, W/706.11 L.F.	606 ANCHOR ASSEMBLY, TYPE E EA.	606 GUARDRAIL, TYPE 5 L.F.	622 CONCRETE BARRIER, TYPE C L.F.	622 CONCRETE BARRIER, TYPE D, AS PER PLAN A L.F.	622 CONCRETE BARRIER, TYPE B L.F.
S1	*1377+13	LT.	1	10					
S2	*1377+13	LT.		10					
S3	1377+10.71	RT	1	20					
B1	1376+50 ~ 1380+50	LT.						380	
B2	1378+00 ~ 1380+00	RT.					180		
B3	1380+00 ~ 1380+50	RT							50
G1	1376+53.39 ~ 1378+15.65	RT				1	137.5		
SHEET TOTALS			2	40	1	137.5	180	380	50

REFERENCE No.	STATION TO STATION * STATIONING REFERS TO RAMP C ALIGNMENT	SIDE	604 INLET, NO. 3D EA.	604 INLET, NO. 3E EA.	603 15" CONDUIT, TYPE B AS PER PLAN L.F.	603 15" CONDUIT, TYPE C L.F.	603 21" CONDUIT, TYPE C L.F.	604 INLET, NO. 3E AS PER PLAN EA.	603 15" CONDUIT, TYPE B L.F.
D1	*1376+49 ~ 1376+75	LT.			26			1	
D2	*1376+75 ~ 1379+75	LT.			300			1	
D3	1376+50 ~ 1379+00	LT.				250			
D4	1379+00	L–R	1						72
D5	*1379+00 ~ 1380+50	LT.		1			150		
SHEET TOTALS			1	1	326	250	150	2	72

HORIZONTAL SCALE IN FEET
0 10 20 40

CALC: G.J.W. BY: DATE: 2/2/94
CHKD: M.F.J. BY: DATE: 12/5/94

PLAN
STA. CDN–1376+50 TO CDN–1380+50

FRA–270–32.46

89
593

PLOT SCALE 1"=20'
COL #26
C:\DRAWING\06092306\PLAN\06092P05.DWG
FEBRUARY–11–1995
DESIGN01
CDN–SUMM. MN1

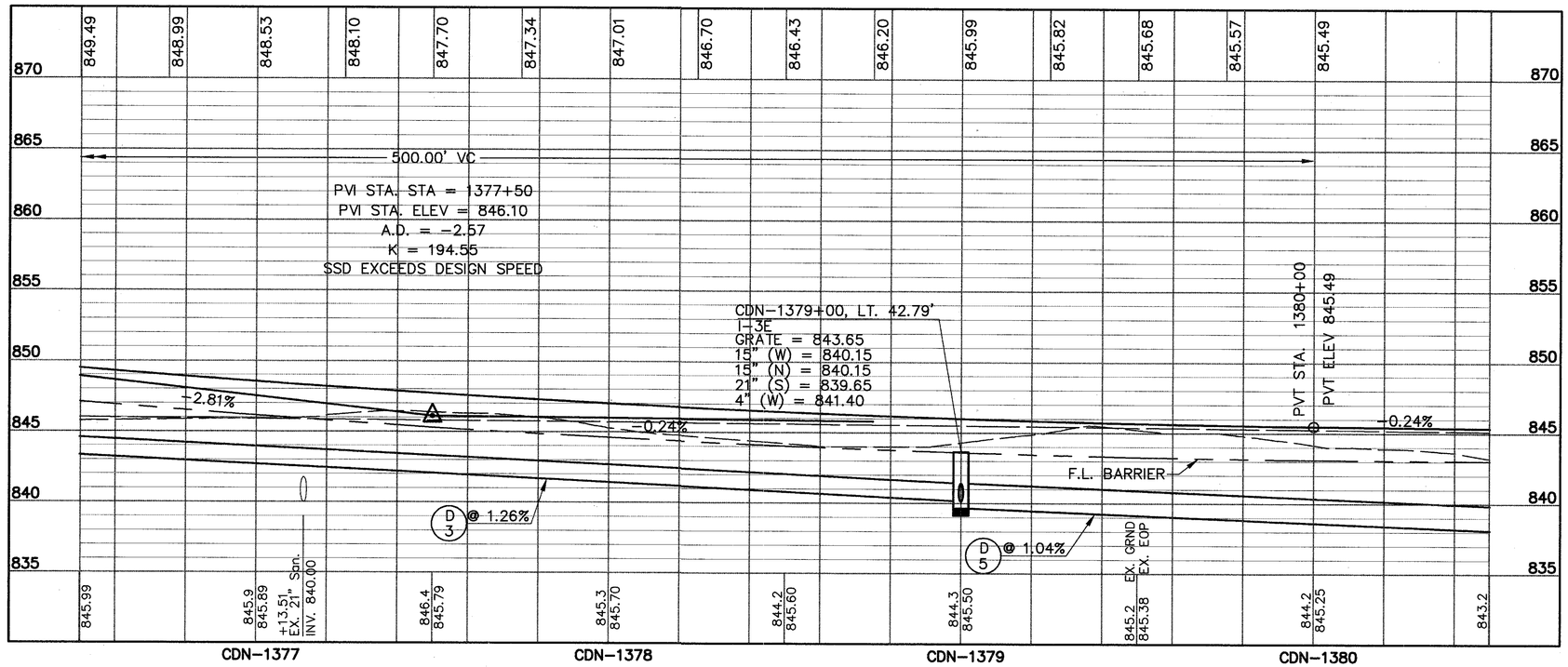

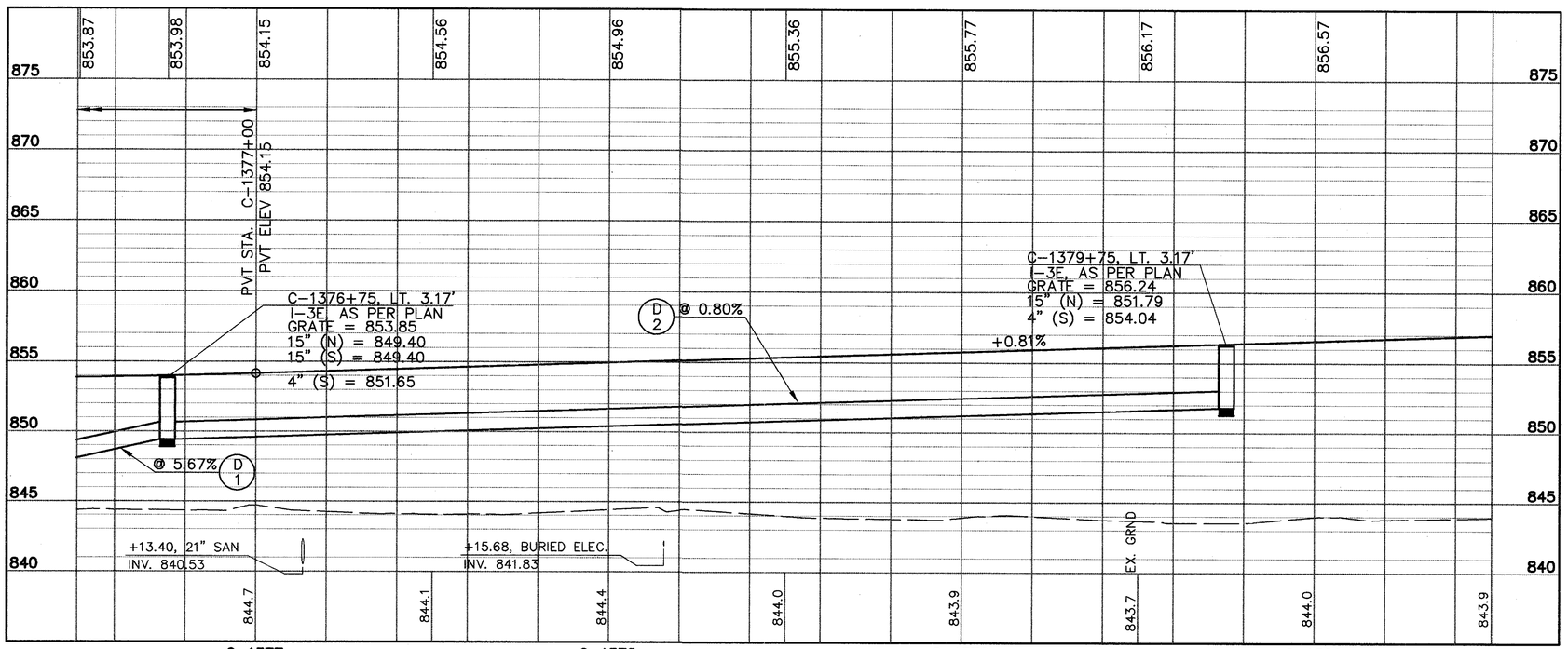

LEGEND:

EXISTING EDGE OF PAVEMENT, MAINLINE I-270

EXISTING PROFILE GRADE

PROPOSED PROFILE GRADE

HORIZONTAL SCALE IN FEET
0 10 20 40

CALC. BY: GJW DATE: 3/15/94
CHKD. BY: T.A.Z DATE: 1/9/95

PROFILE
STA. CDN-1376+50 TO CDN-1380+50

FRA-270-32.46

90
593

PLOT SCALE
COL #28
C:\DRAWING\06092306\PLAN\0609PR05.DWG
FEBRUARY-10-1995
RMPCPROF.DWG
CDPROF-N.DWG

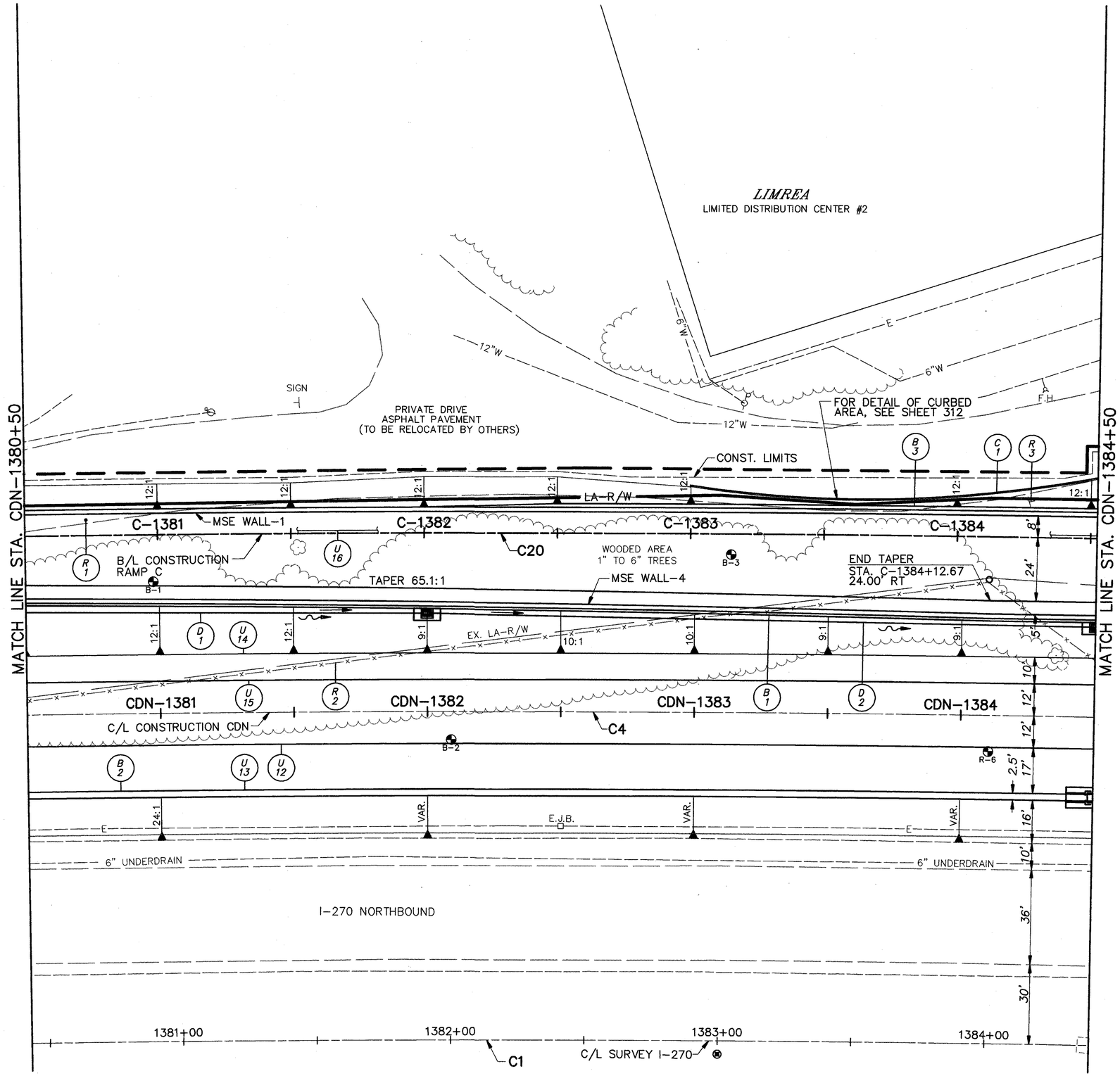

CROSS REFERENCES

SHEET NO.	DESCRIPTION	SHEET NO.	DESCRIPTION
4	C1, C4, C20 CURVE INFO.	432	MSE WALL-1
92	ROADWAY PROFILE	434	MSE WALL-4
65	(U 1) UNDERDRAIN DATA AND QUANTITIES		
362	⊛ LIGHTING PLAN		

REFERENCE No.	STATION TO STATION * STATIONING REFERS TO RAMP C ALIGNMENT	SIDE	622 CONCRETE BARRIER, TYPE B L.F.	622 CONCRETE BARRIER, TYPE D, AS PER PLAN A L.F.	609 CURB, TYPE 6 L.F.	202 FENCE REMOVED L.F.	202 REMOVAL MISC., PRIVATE SIGNS EA.	202 PAVEMENT REMOVED S.Y.
B1	1380+50 ~ 1384+50	LT.		371				
B2	1380+50 ~ 1384+40	RT.	390					
B3	*1382+00 ~ 1384+50	LT.		252				
R1	*1380+50 ~ 1384+16	LT.						391
R2	1380+50 ~ 1384+50	LT.				413		
R3	1384+26.84	LT.					1	
C1	*1383+00 ~ 1384+50	LT.			154			
SHEET TOTALS			390	623	154	413	1	391

REFERENCE No.	STATION TO STATION STATIONING REFERS TO CDN ALIGNMENT	SIDE	604 INLET, NO. 3E EA.	603 21" CONDUIT, TYPE C L.F.
D1	1380+50 ~ 1382+00	LT.		150
D2	1382+00 ~ 1384+50	LT.	1	250
SHEET TOTALS			1	400

HORIZONTAL SCALE IN FEET
0 10 20 40

CALC. G.J.W. BY: DATE: 2/2/94
CHKD. M.F.J. BY: DATE: 12/5/94

PLAN
STA. CDN-1380+50 TO CDN-1384+50

FRA-270-32.46

91
593

DESIGN01
CDN-SUMM, MN2

PLOT SCALE 1"=20'
COL #28
C:\DRAWING\06092306\PLAN\06092P06.DWG

FEBRUARY-11-1995

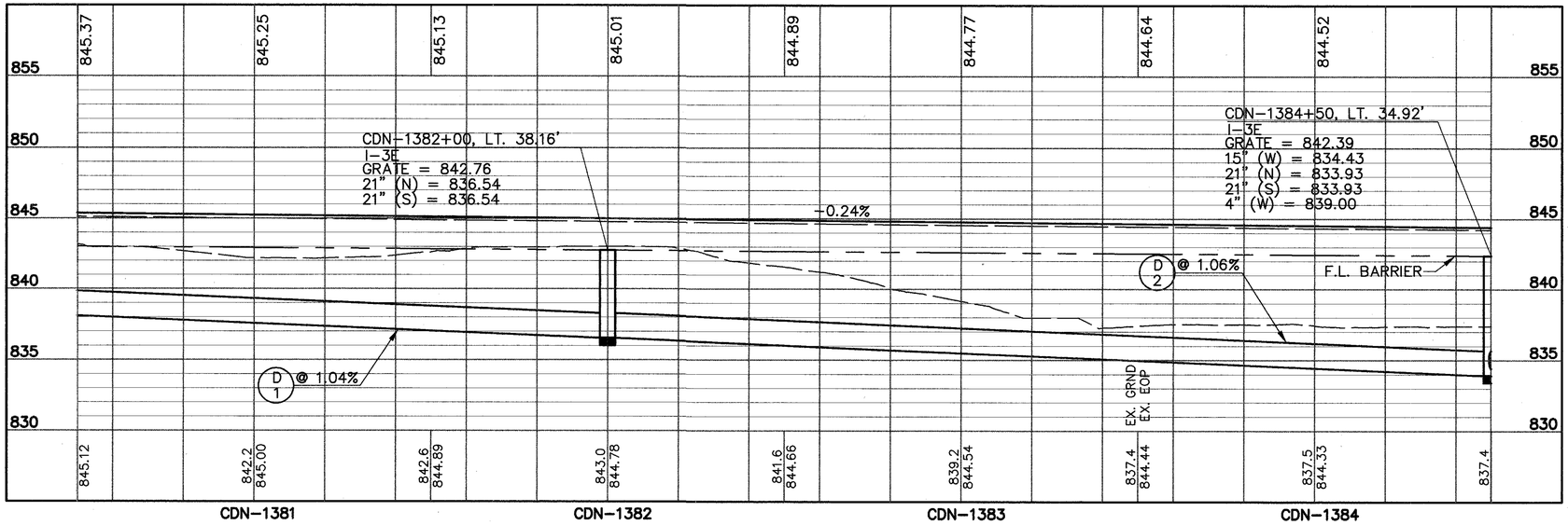

LEGEND:

EXISTING EDGE OF PAVEMENT, MAINLINE I-270

EXISTING PROFILE GRADE

PROPOSED PROFILE GRADE

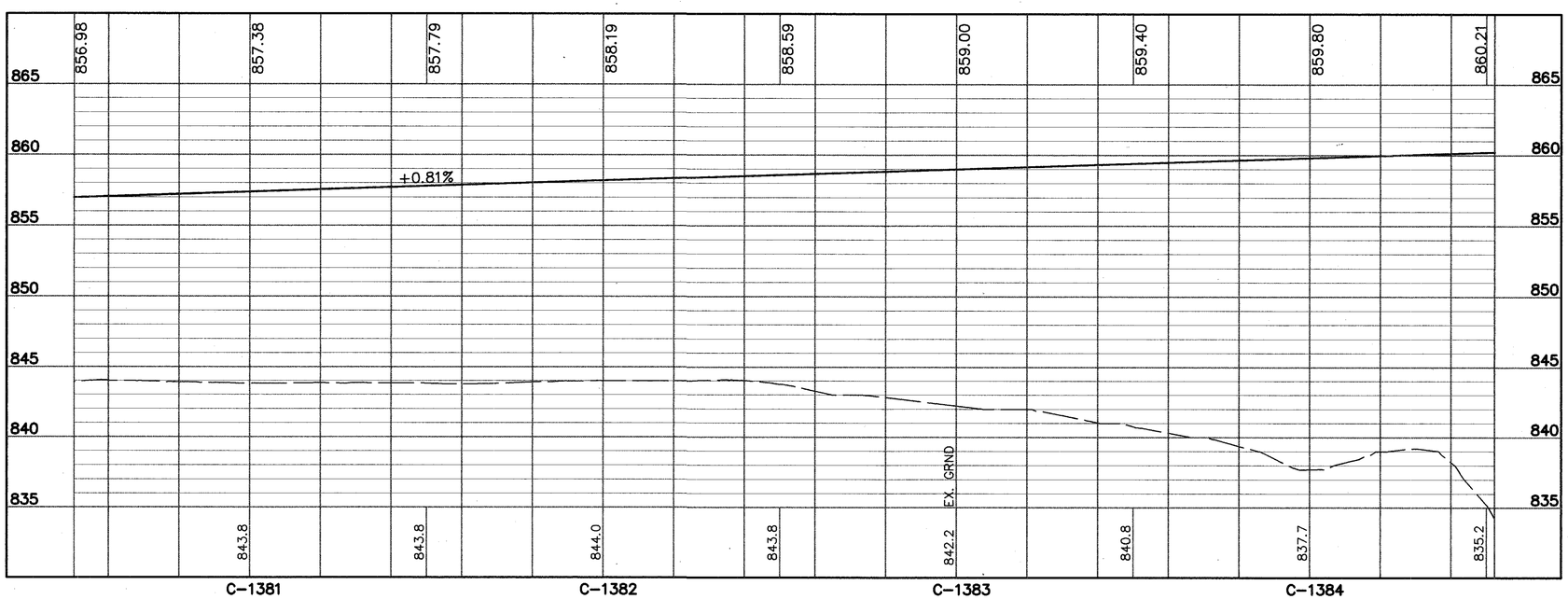

HORIZONTAL SCALE IN FEET
0 20 40

CALC. BY: G.J.W DATE: 3/15/94
CHKD. BY: T.A.Z DATE: 1/19/95

PROFILE
STA. CDN-1380+50 TO CDN-1384+50

FRA-270-32.46

92
593

PLOT SCALE... COL #28 C:\DRAWING\06092306\PLAN\0609PR06.DWG FEBRUARY-10-1995

RMPCPROF.DWG
CDPROF-N.DWG

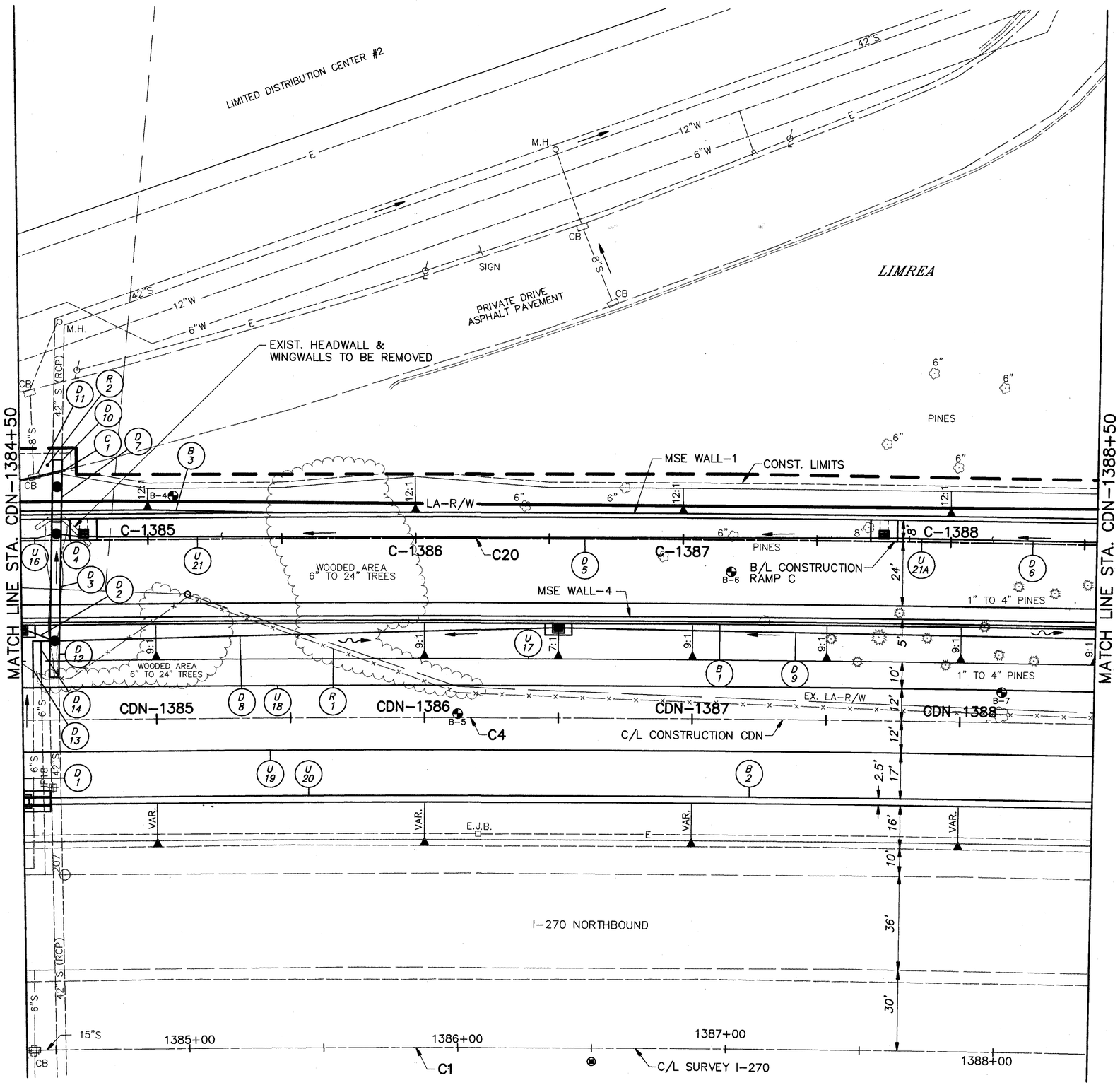

CROSS REFERENCES

SHEET NO.	DESCRIPTION	SHEET NO.	DESCRIPTION
4	C1, C4, C20 CURVE INFO.	432	MSE WALL-1
94	ROADWAY PROFILE	434	MSE WALL-4
315	DRAINAGE PROFILE	362	⊗ LIGHTING PLAN
65	(U 1) UNDERDRAIN DATA AND QUANTITIES		

REFERENCE No.	STATION TO STATION * STATIONING REFERS TO RAMP C ALIGNMENT	SIDE	622 CONCRETE BARRIER, TYPE B L.F.	622 CONCRETE BARRIER, TYPE D, AS PER PLAN A L.F.	609 CURB, TYPE 6 L.F.	202 FENCE REMOVED L.F.	202 PAVEMENT REMOVED S.Y.
B1	1384+50 ~ 1388+50	LT.		371			
B2	1384+50 ~ 1388+50	RT.	390				
B3	*1384+53 ~ 1385+50	LT.		97			
R1	1384+50 ~ 1388+50	LT.				419	
R2	*1384+50 ~ 1384+67.75	LT.					8
C1	*1384+50 ~ 1384+67	LT.			18		
SHEET TOTALS			390	468	18	419	8

REFERENCE No.	STATION TO STATION * STATIONING REFERS TO RAMP C ALIGNMENT	SIDE	604 INLET, NO. 3D EA.	604 MANHOLE, NO.3 72" DIAMETER EA.	604 INLET, NO. 3E EA.	603 INLET, NO. 3E AS PER PLAN EA.	603 15" CONDUIT, TYPE L.F.	603 21" CONDUIT, TYPE L.F.	603 42" CONDUIT, TYPE 706.02-(2500 DLOAD) L.F.	603 15" CONDUIT, TYPE AS PER PLAN L.F.
D1	1384+50	L-R	1				65			
D2	1384+50 ~ 1384+62	LT.			1			13		
D3	1384+62	LT.		1					40	
D4	*1384+62 ~ 1384+75	LT.				1				10
D5	*1384+75 ~ 1387+75	LT.				1				300
D6	*1387+75 ~ 1388+55	LT.								80
SHEET TOTALS			1	1	1	2	65	13	40	390

REFERENCE No.	STATION TO STATION * STATIONING REFERS TO RAMP C ALIGNMENT	SIDE	604 INLET, NO. 3E EA.	604 MANHOLE, NO.3 72" DIAMETER EA.	604 CATCH BASIN, ADJUSTED TO GRADE EA.	603 18" CONDUIT, TYPE C L.F.	603 15" CONDUIT, TYPE C L.F.	603 42" CONDUIT, TYPE B 706.02-(2500 DLOAD) L.F.	603 6" CONDUIT, TYPE B 707.17 L.F.
D7	*1384+62	LT.		1				17	
D8	1384+62 ~ 1386+50	LT.	1			188			
D9	1386+50 ~ 1388+50	LT.					200		
D10	*1384+62	LT.		1				10	
D11	*1384+57	LT.			1				
D12	1384+62	LT.						14	
D13	1384+54 ~ 1384+62	LT.							22
D14	1384+57	LT.							14
SHEET TOTALS			1	2	1	188	200	41	36

HORIZONTAL SCALE IN FEET
0 10 20 40

CALC: G.J.W. DATE: 2/2/94
CHKD: M.F.J. DATE: 12/5/94

PLAN
STA. CDN-1384+50 TO CDN-1388+50

FRA-270-32.46

93
593

PLOT SCALE 1"=20'
COL #28
C:\DRAWING\06092306\PLAN\06092P07.DWG FEBRUARY-12-1995
DESIGN01
CDN-SUMM. MN2

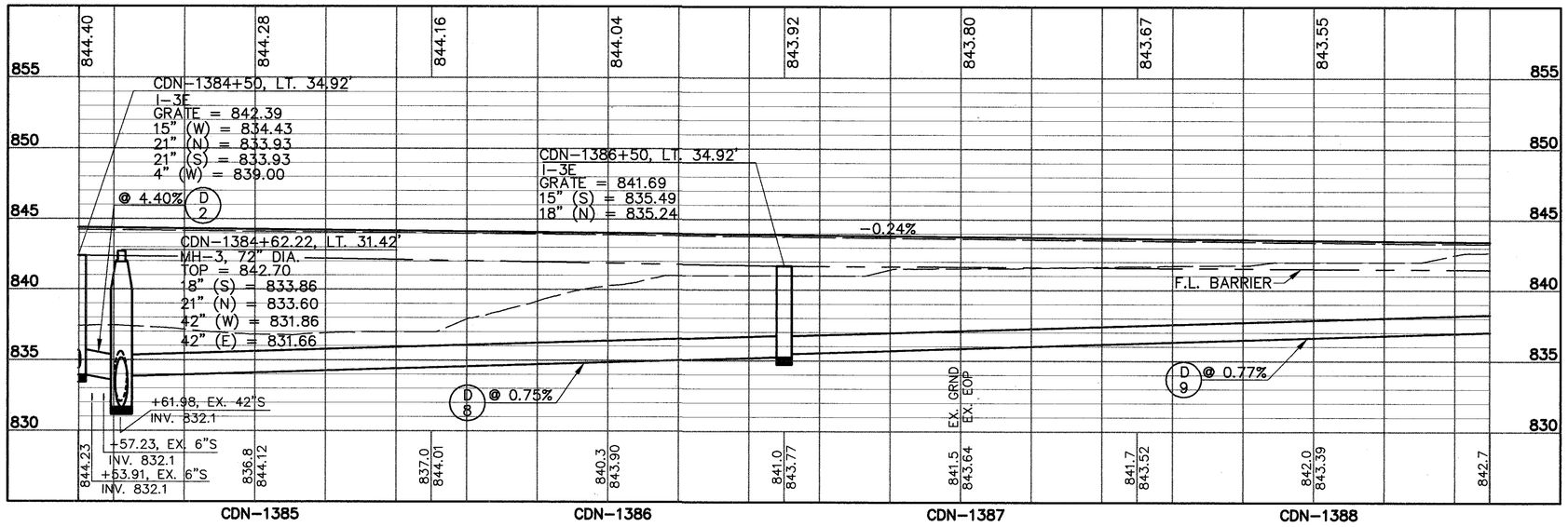

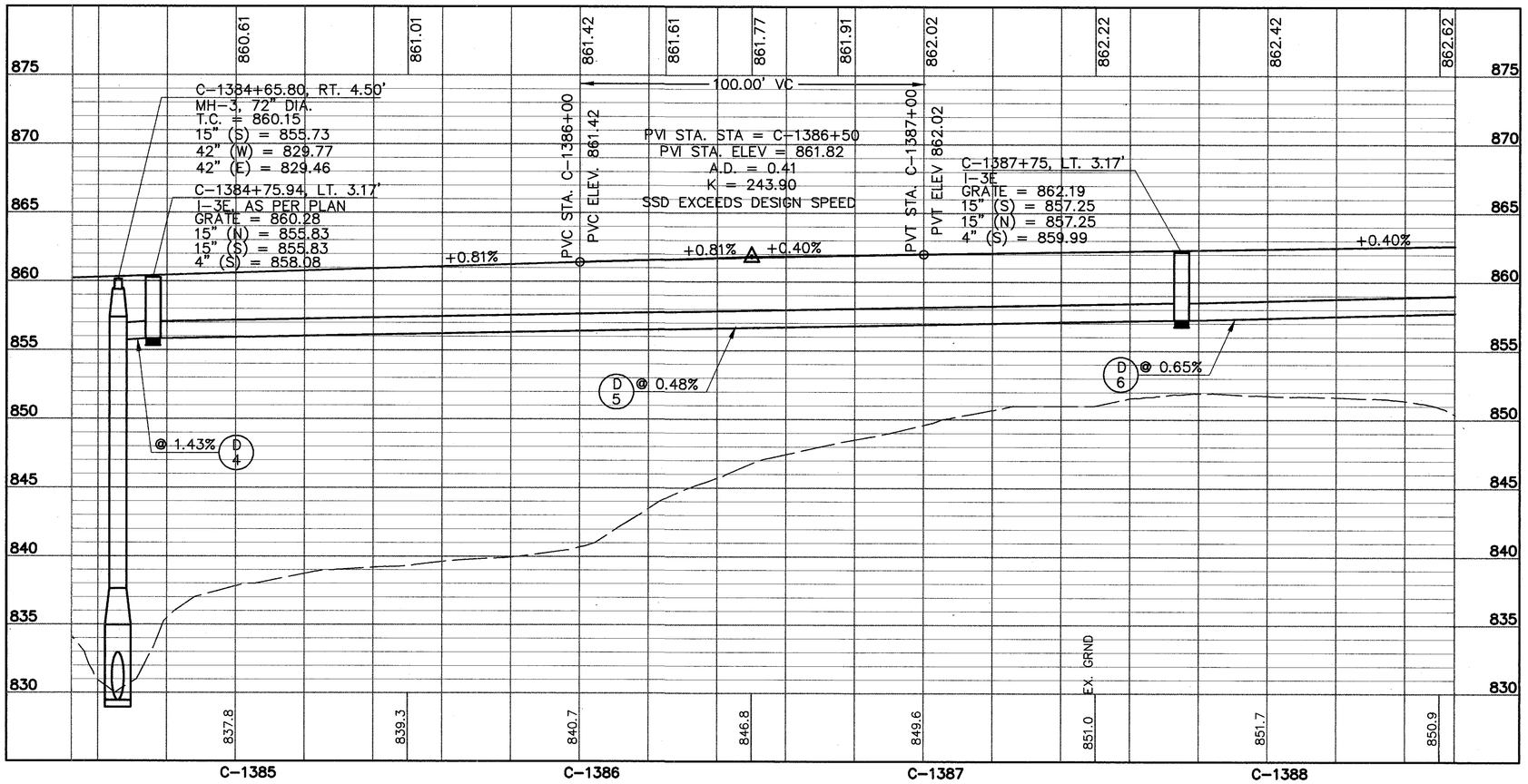

LEGEND:

EXISTING EDGE OF PAVEMENT, MAINLINE I-270

EXISTING PROFILE GRADE

PROPOSED PROFILE GRADE

HORIZONTAL SCALE IN FEET

0 10 20 40

CALC. BY: G.J.W DATE: 3/15/94
CHKD. BY: T.A.Z DATE: 7/19/94

PROFILE
STA. CDN-1384+50 TO CDN-1388+50

FRA-270-32.46

94
593

RMPOPROF.DWG
CDPROF-N.DWG
PLOT SCALE:
COL #28
C:\DRAWING\06092306\PLAN\0609PR07.DWG
FEBRUARY-10-1995

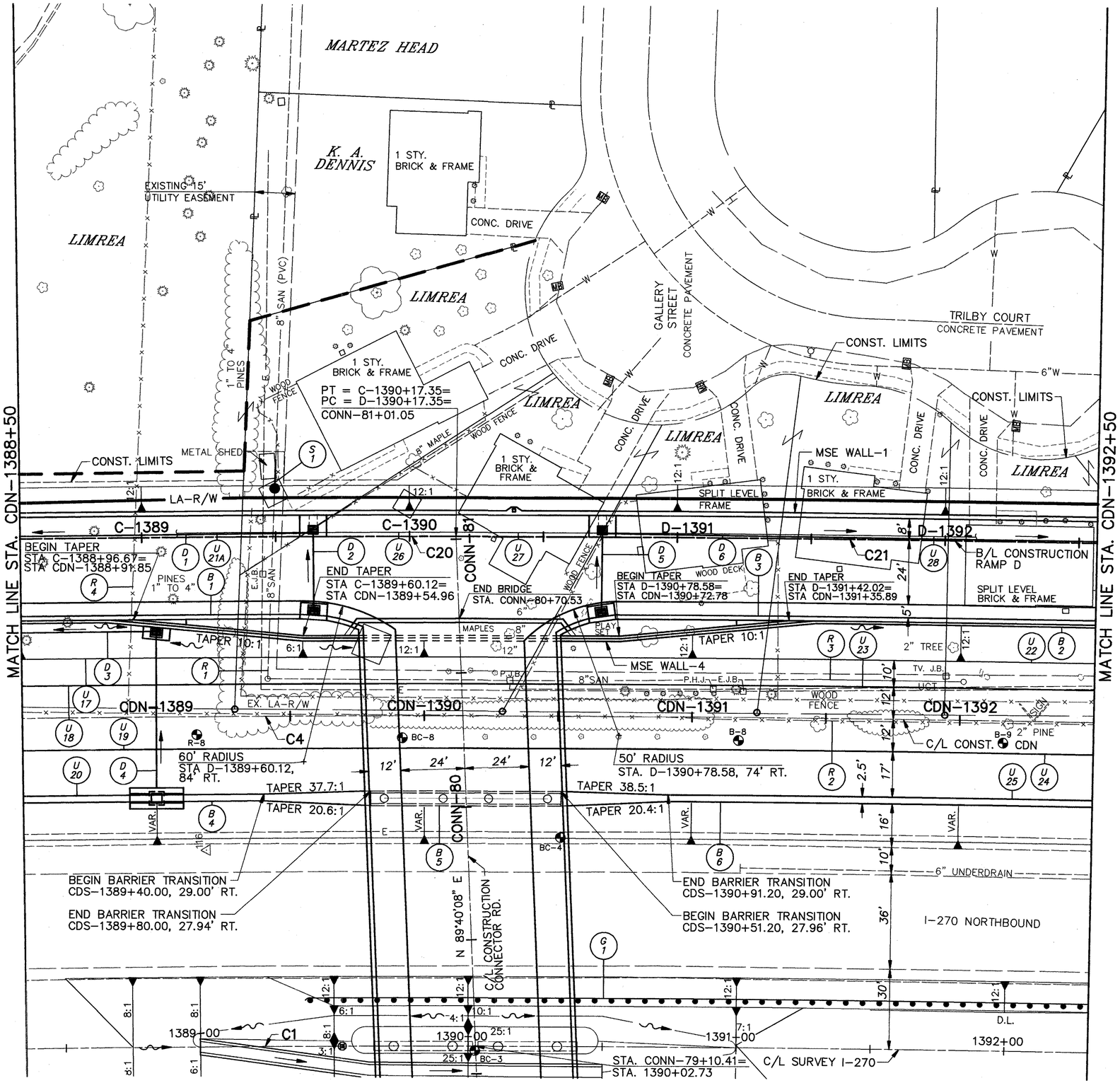

CROSS REFERENCES

SHEET NO.	DESCRIPTION	SHEET NO.	DESCRIPTION
4	C1, C4, C20, C21 CURVE INFO.	432	MSE WALL-1
96, 97	ROADWAY PROFILE	434	MSE WALL-4
362	⊗ LIGHTING PLAN		
65	(U 1) UNDERDRAIN DATA AND QUANTITIES		

REFERENCE No.	STATION TO STATION * STATIONING REFERS TO RAMP C/D ALIGNMENTS	SIDE	622 CONCRETE BARRIER, TYPE B L.F.	622 CONCRETE BARRIER, TYPE D, AS PER PLAN A L.F.	622 CONCRETE BARRIER, TYPE D, AS PER PLAN B L.F.	202 MANHOLE ABANDONED L.F.	202 FENCE REMOVED L.F.	202 SPECIAL-FILL & PLUG EXISTING CONDUIT L.F.	622 CONCRETE BARRIER, TYPE B50 L.F.
B1	*1389+16.67 ~ 1389+82.63	RT.			46				
B2	1388+50 ~ 1392+50	LT.		382					
B3	*1390+54.90 ~ 1391+22.02	RT.			47				
B4	1388+50 ~ 1389+80	RT	110						
B5	1389+80 ~ 1390+51	RT							71
B6	1390+51 ~ 1392+50	RT	198						
R1	1389+42	L-R				1		70	
R2	1388+50 ~ 1392+50	LT.					400		
R3	1389+42 ~ 1392+04	LT.				1		260	
R4	1388+90 ~ 1388+98	LT.					90		
SHEET TOTALS			308	382	93	2	490	330	71

REFERENCE No.	STATION TO STATION * STATIONING REFERS TO RAMP C/D ALIGNMENTS	SIDE	604 MANHOLE, NO. 3D EA.	604 INLET, NO. 3E EA.	604 INLET, NO. 3E AS PER PLAN EA.	603 B 15" CONDUIT, TYPE B AS PER PLAN L.F.	603 B 15" CONDUIT, TYPE B L.F.	603 C 15" CONDUIT, TYPE C L.F.
D1	*1388+55 ~ 1389+64	LT.			1	110		
D2	*1389+64	L-R		1		30		
D3	1388+50 ~ 1389+00	LT.		1				50
D4	1389+00	L-R	1				62	
D5	*1390+72	L-R		1		30		
D6	*1390+72 ~ 1392+57	LT.			1	185		
SHEET TOTALS			1	3	2	355	62	50

REFERENCE No.	STATION TO STATION * STATIONING REFERS TO RAMP C/D ALIGNMENTS	SIDE	604 MANHOLE, NO. 3, SAN EA.	603 8" CONDUIT, TYPE C, FOR SANITARY SS931, SS942, SS945; PS 46 MIN. L.F.	606 GUARDRAIL, TYPE 5 L.F.	606 ANCHOR ASSEMBLY, TYPE T EA.
S1	*1389+50	LT.	1	10		
G1	1389+56.98 ~ 1392+46.94	RT.			275	1
SHEET TOTALS			1	10	275	1

HORIZONTAL SCALE IN FEET
0 10 20 40

C.M.G.J.W. DATE: 2/2/94
CHKD. BY: M.F.J. DATE: 12/5/94

PLAN
STA. CDN-1388+50 TO CDN-1392+50

FRA-270-32.46

95
593

PLOT SCALE 1"=20'
COL #28
C:\DRAWING\06092306\PLAN\06092P08.DWG
FEBRUARY-14-1995

DESIGNED
CDN-SUMM, MN2

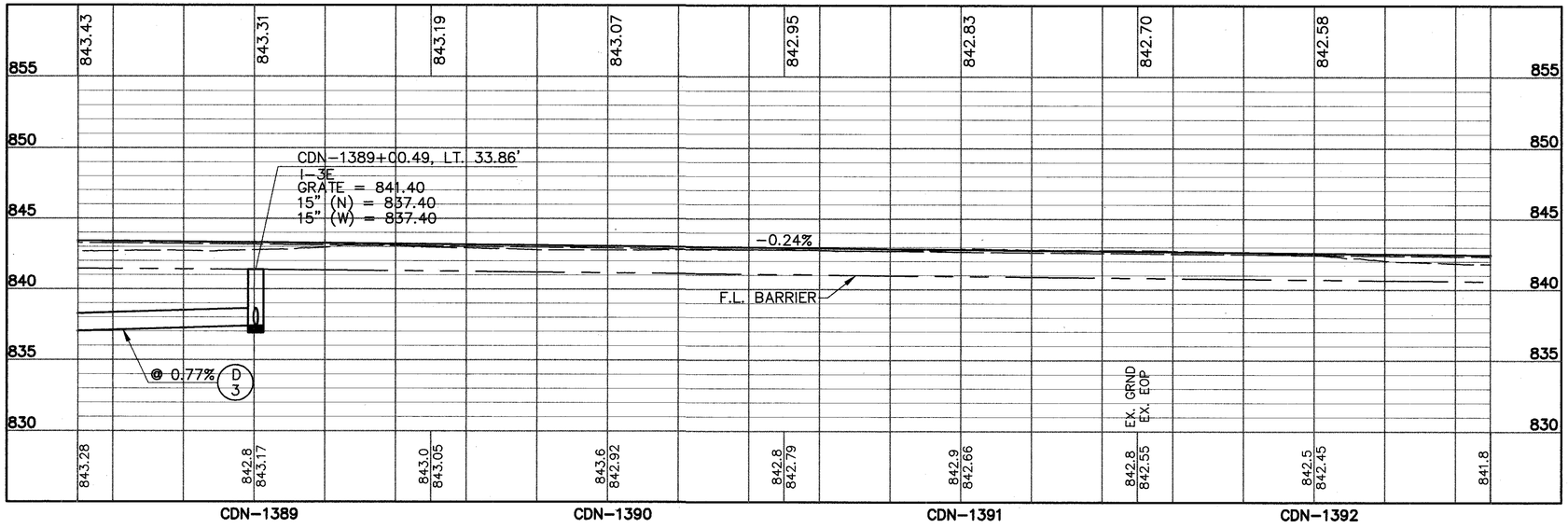

LEGEND:

EXISTING EDGE OF PAVEMENT, MAINLINE I–270

EXISTING PROFILE GRADE

PROPOSED PROFILE GRADE

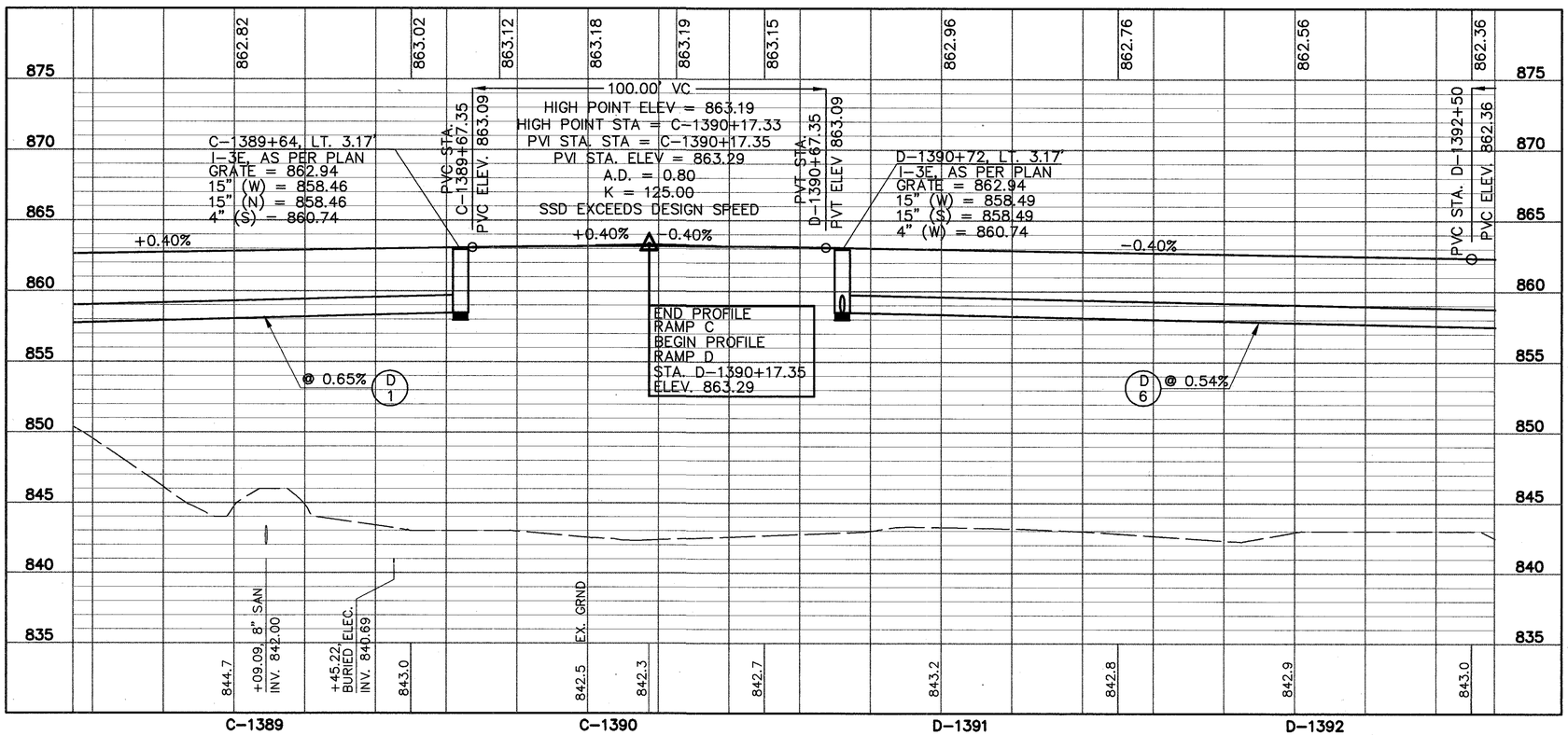

PROFILE
STA. CDN–1388+50 TO CDN–1392+50

FRA–270–32.46

96
593

CALC. BY: G.J.W DATE: 3/15/94
CHKD. BY: T.A.Z DATE: 1/19/95

HORIZONTAL SCALE IN FEET
0 10 20 40

RMPCPROF.DWG RMPDPROF.DWG CDPROF–N.DWG
COL #28 PLOT SCALE: 1"=20'
C:\DRAWING\06092306\PLAN\0609PR08.DWG FEBRUARY–10–1995

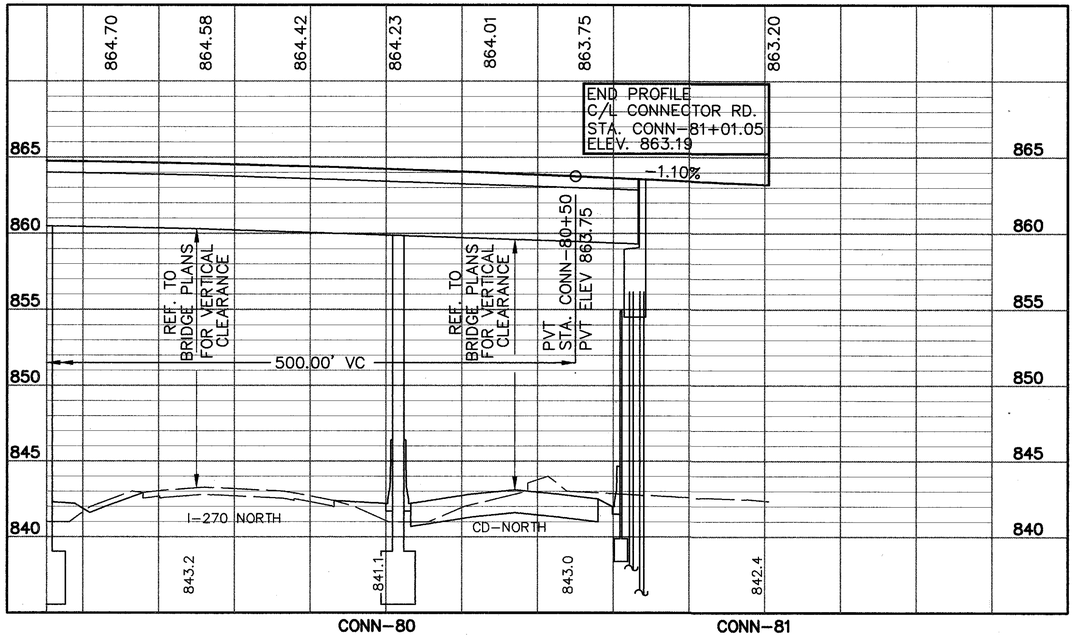

FOR THE REST OF THE CONNECTOR RD. PROFILE, SEE SHEET 129

LEGEND:

EXISTING EDGE OF PAVEMENT, MAINLINE I-270

EXISTING PROFILE GRADE

PROPOSED PROFILE GRADE

N

0 10 20 40 HORIZONTAL SCALE IN FEET

CALC. BY: G.J.W. DATE: 3/15/94
CHKD. BY: T.A.Z. DATE: 1/19/95

PROFILE
STA. CONN-79+10.41 TO CONN-81+01.05

FRA-270-32.46

97
593

CONNPROF.DWG PLOT SCALE: 1"=20' COL. #28 C:\DRAWNG\06092306\PLAN\0609PR8A.DWG FEBRUARY-10-1995

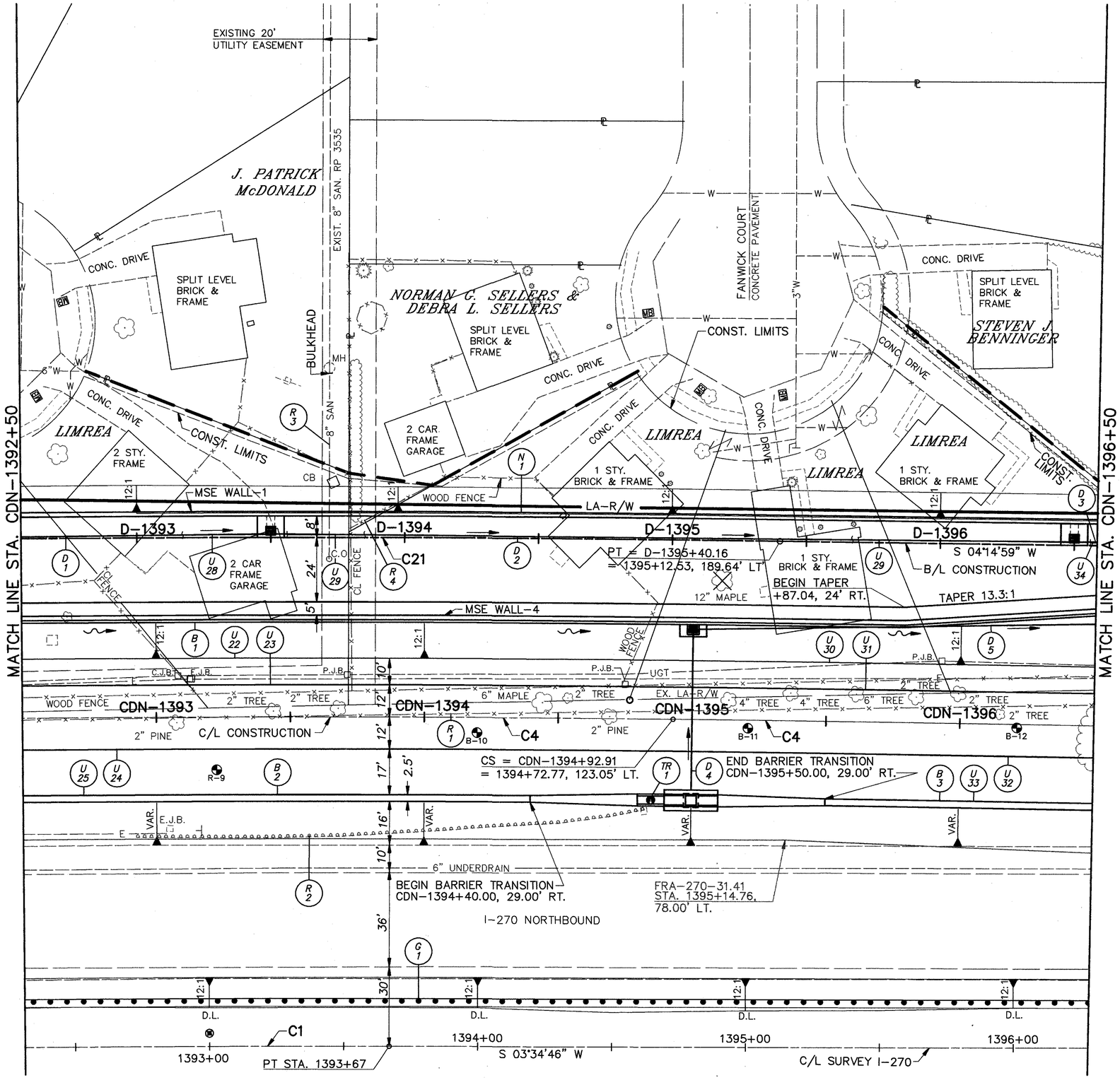

CROSS REFERENCES

SHEET NO.	DESCRIPTION	SHEET NO.	DESCRIPTION
4	C1, C4, C21 CURVE INFO.	432	MSE WALL-1
99	ROADWAY PROFILE	434	MSE WALL-4
342	TR 1 TRAFFIC CONTROL PLAN	362	⊛ LIGHTING PLAN
65	U 1 UNDERDRAIN DATA AND QUANTITIES		
538	N 1 NOISE BARRIER DETAILS		

REFERENCE No.	STATION TO STATION * STATIONING REFERS TO RAMP D ALIGNMENT	SIDE	622 CONCRETE BARRIER, TYPE B L.F.	622 CONCRETE BARRIER, TYPE D, AS PER PLAN A L.F.	202 GUARDRAIL REMOVED L.F.	202 FENCE REMOVED L.F.	SPEC. FILL AND PLUG EXISTING CONDUIT L.F.	202 ANCHOR ASSEMBLY REMOVED, TYPE A EA.
B1	1392+50 ~ 1396+50	LT.		381				
B2	1392+50 ~ 1394+80	RT.	229					
B3	1395+10 ~ 1396+50	RT.	140					
R1	1392+50 ~ 1396+50	LT.				400		
R2	1392+92 ~ 1394+83	RT.			165			1
R3	1393+72	L-R					70	
R4	*1393+79 ~ 1394+10	LT.				58		
	SHEET TOTALS		369	381	165	458	70	1

REFERENCE No.	STATION TO STATION * STATIONING REFERS TO RAMP D ALIGNMENT	SIDE	604 INLET, NO. 3D50, AS PER PLAN EA.	604 INLET, NO. 3E EA.	604 INLET, NO. 3E AS PER PLAN EA.	603 15" CONDUIT, TYPE B AS PER PLAN L.F.	603 21" CONDUIT, TYPE C L.F.	603 18" CONDUIT, TYPE B L.F.	606 GUARDRAIL, TYPE 5 L.F.
D1	*1392+57 ~ 1393+50	LT.				93			
D2	*1393+50 ~ 1396+50	LT.			1	300			
D3	*1396+50 ~ 1396+59	LT.			1	9			
D4	1395+00	L-R	1					65	
D5	*1395+00 ~ 1396+50	LT.		1			150		
G1	*1392+46.94 ~ 1396+49.82	RT.							400
	SHEET TOTALS		1	1	2	402	150	65	400

REFERENCE No.	STATION TO STATION * STATIONING REFERS TO RAMP D ALIGNMENT	SIDE	SPEC. NOISE BARRIER H ≤ 10' S.F.	SPEC. NOISE BARRIER 10' < H ≤ 14' S.F.
N1	*1393+00 ~ 1394+51.89	LT.	1340	
	*1394+51.89 ~ 1395+00	LT.		503
	*1395+00 ~ 1396+58.58	LT.	1381	
	SHEET TOTALS		2721	503

HORIZONTAL SCALE IN FEET
0 10 20 40

CALC. GJM DATE: 2/2/94
CHK. MFJ DATE: 12/5/94

PLAN
STA. CDN-1392+50 TO CDN-1396+50

FRA-270-32.46

98
593

PLOT SCALE: 1" = 20'
COL #28
C:\DRAWING\06093206\PLAN\06092P09.DWG
FEBRUARY-11-1995
DESIGN01
CDN-SUMM, MN3

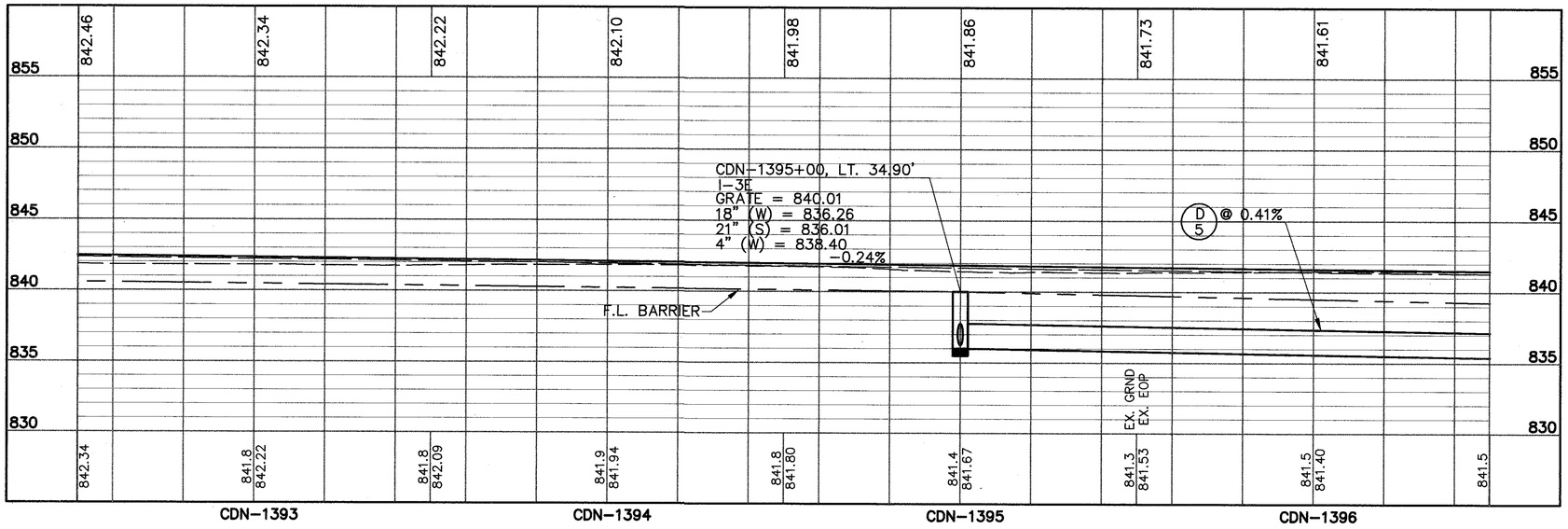

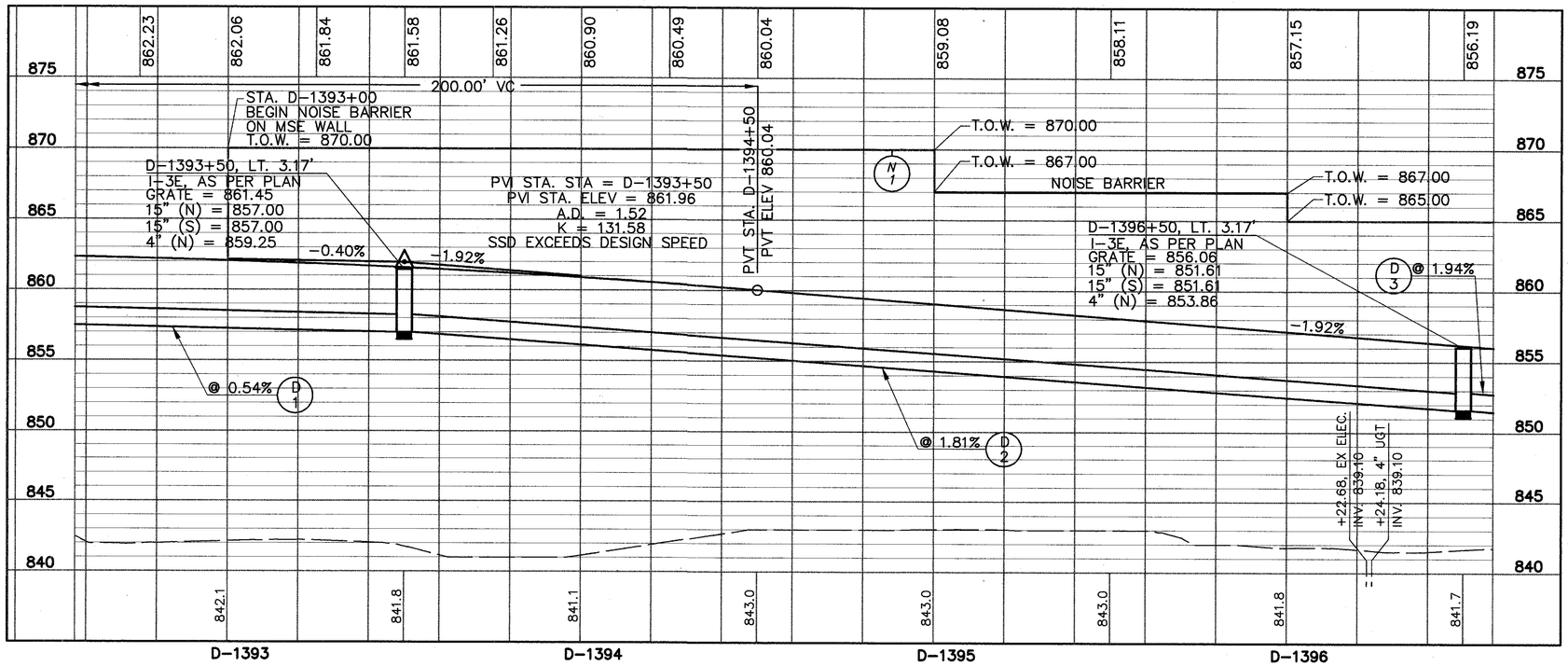

LEGEND:

EXISTING EDGE OF PAVEMENT, MAINLINE I-270 ——— ——— ———

EXISTING PROFILE GRADE — — — —

PROPOSED PROFILE GRADE ———

0 20 40
10
HORIZONTAL
SCALE IN FEET

CALC. BY: GJW DATE: 7/15/94
CHKD. BY: T.A.Z DATE: 1/19/95

PROFILE
STA. CDN-1392+50 TO CDN-1396+50

FRA-270-32.46

99
593

PLOT SCALE=... C:\DRAWING\06092306\PLAN\0609PR09.DWG FEBRUARY-10-1995
COL #28
RMPDPROF.DWG
CDPROF-N.DWG

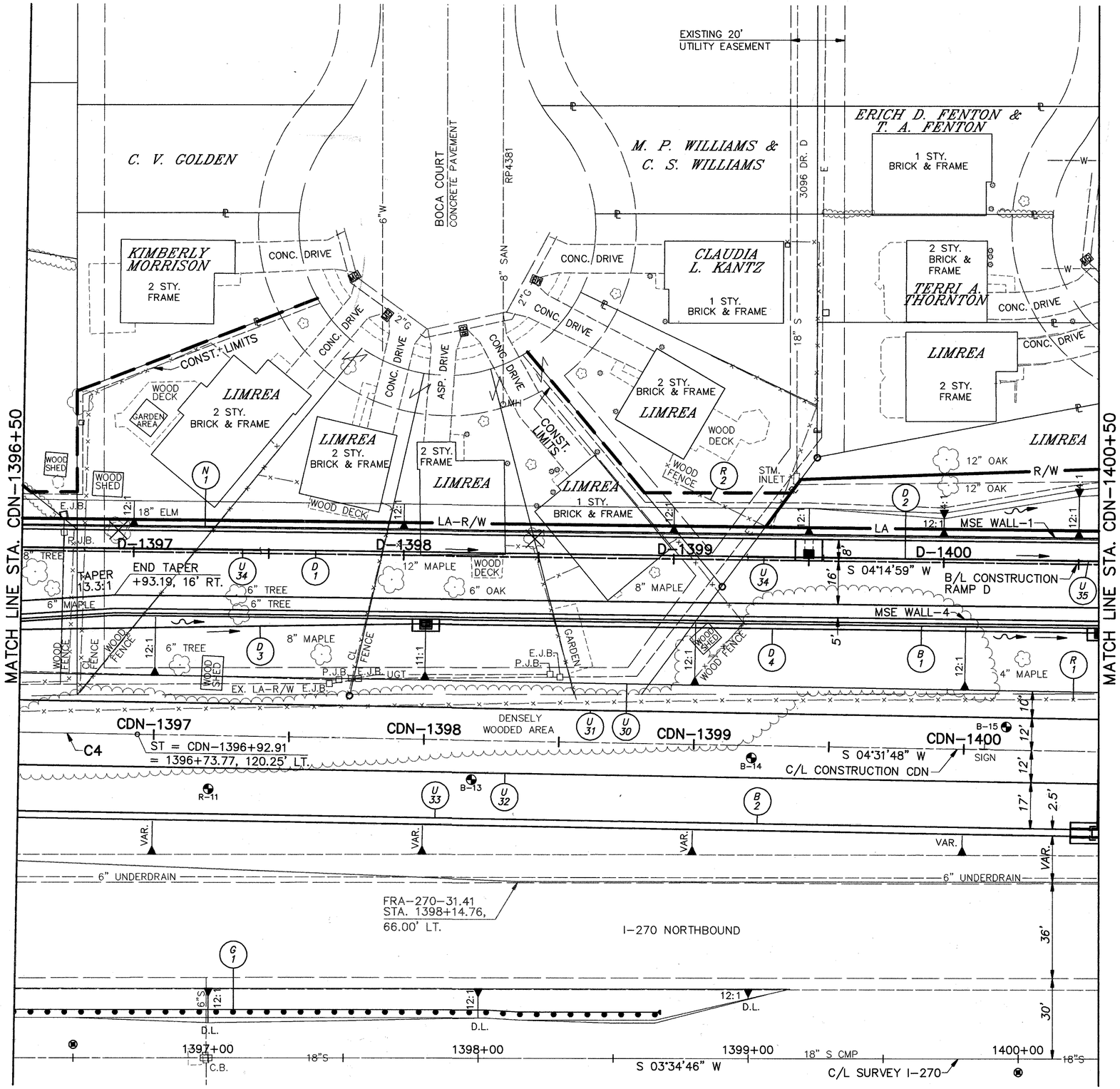

CROSS REFERENCES

SHEET NO.	DESCRIPTION	SHEET NO.	DESCRIPTION
4	C4 CURVE INFO.	434	MSE WALL-4
101	ROADWAY PROFILE	362	⊗ LIGHTING PLAN
65	(U 1) UNDERDRAIN DATA AND QUANTITIES	538	(N 1) NOISE BARRIER DETAILS
432	MSE WALL-1		

REFERENCE No.	STATION TO STATION * STATIONING REFERS TO RAMP D ALIGNMENT	SIDE	622 CONCRETE BARRIER, TYPE B L.F.	622 CONCRETE BARRIER, TYPE D, AS PER PLAN A L.F.	SPEC. NOISE BARRIER H ≤ 10' S.F.	SPEC. NOISE BARRIER 10' < H ≤ 14' S.F.	SPEC. NOISE BARRIER H > 14' S.F.	202 FENCE REMOVED L.F.
B1	1396+50 ~ 1400+50	LT.		369				
B2	1396+50 ~ 1400+50	RT.	390					
N1	*1396+58.58 ~ 1397+12.11	LT.			508			
	*1397+12.11 ~ 1400+24.37	LT.				3811		
	*1400+24.37 ~ 1400+57.46	LT.					474	
R1	1396+50 ~ 1400+50	LT.						400
R2	*1399+08 ~ 1399+42	LT.						51
SHEET TOTALS			390	369	508	3811	474	451

REFERENCE No.	STATION TO STATION * STATIONING REFERS TO RAMP D ALIGNMENT	SIDE	604 INLET, NO. 3E EA.	604 INLET, NO. 3E AS PER PLAN EA.	603 15" CONDUIT, TYPE B AS PER PLAN L.F.	603 21" CONDUIT, TYPE C L.F.	603 24" CONDUIT, TYPE C L.F.	606 GUARDRAIL, TYPE 5 L.F.	606 ANCHOR ASSEMBLY, TYPE E EA.
D1	*1396+59 ~ 1399+50	LT.			291				
D2	*1399+50 ~ 1400+57	LT.		1	107				
D3	1396+50 ~ 1398+00	LT.				150			
D4	1398+00 ~ 1400+50	LT.	1				250		
G1	1396+49.82 ~ 1398+87.34	LT.						212.5	1
SHEET TOTALS			1	1	398	150	250	212.5	1

0 10 20 40 HORIZONTAL SCALE IN FEET

CALC. BY: GJW DATE: 2/2/94
CHKD. BY: MFJ DATE: 12/5/94

PLAN
STA. CDN-1396+50 TO CDN-1400+50

FRA-270-32.46

DESIGN01 CDN-SUMM, MN3 PLOT SCALE: 1"=20' COL. #28 C:\DRAWING\06092306\PLAN\06092P10.DWG FEBRUARY-11-1995

5-9-R

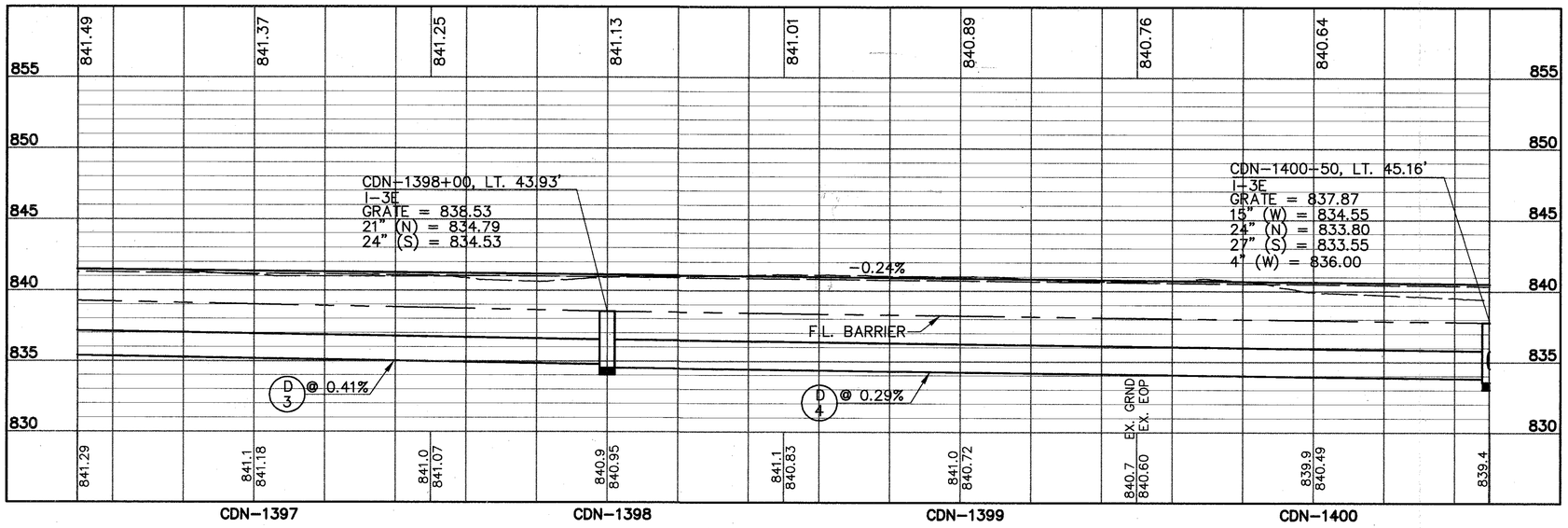

LEGEND:

EXISTING EDGE OF PAVEMENT, MAINLINE I–270

EXISTING PROFILE GRADE

PROPOSED PROFILE GRADE

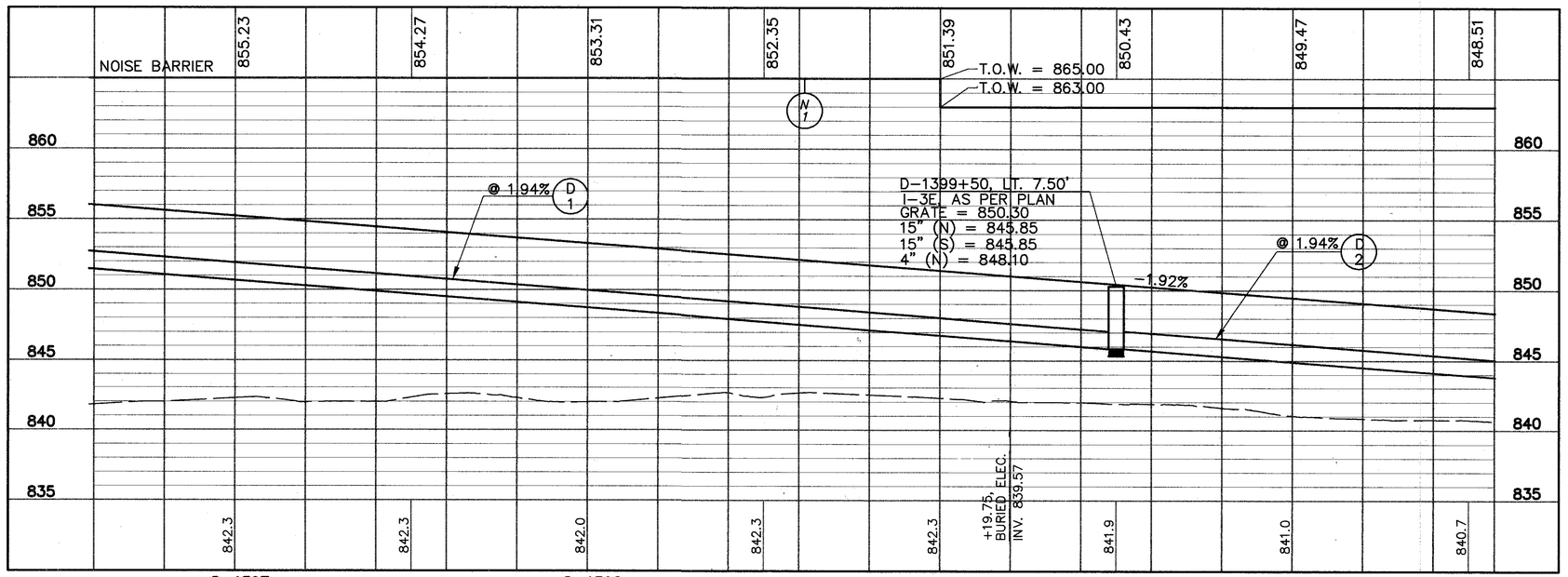

0 10 20 40 HORIZONTAL SCALE IN FEET

CALC. BY: G.J.W. DATE: 3/15/94
CHKD. BY: T.A.Z. DATE: 1/19/95

PROFILE
CDN–1396+50 TO CDN–1400+50

STA. CDN–1396+50 TO CDN–1400+50

FRA–270–32.46

101
593

PLOT SCALE...
COL #28
C:\DRAWNG\06092306\PLAN\0609PR10.DWG FEBRUARY–10–1995
RMPROF.DWG
CDPROF–A.DWG

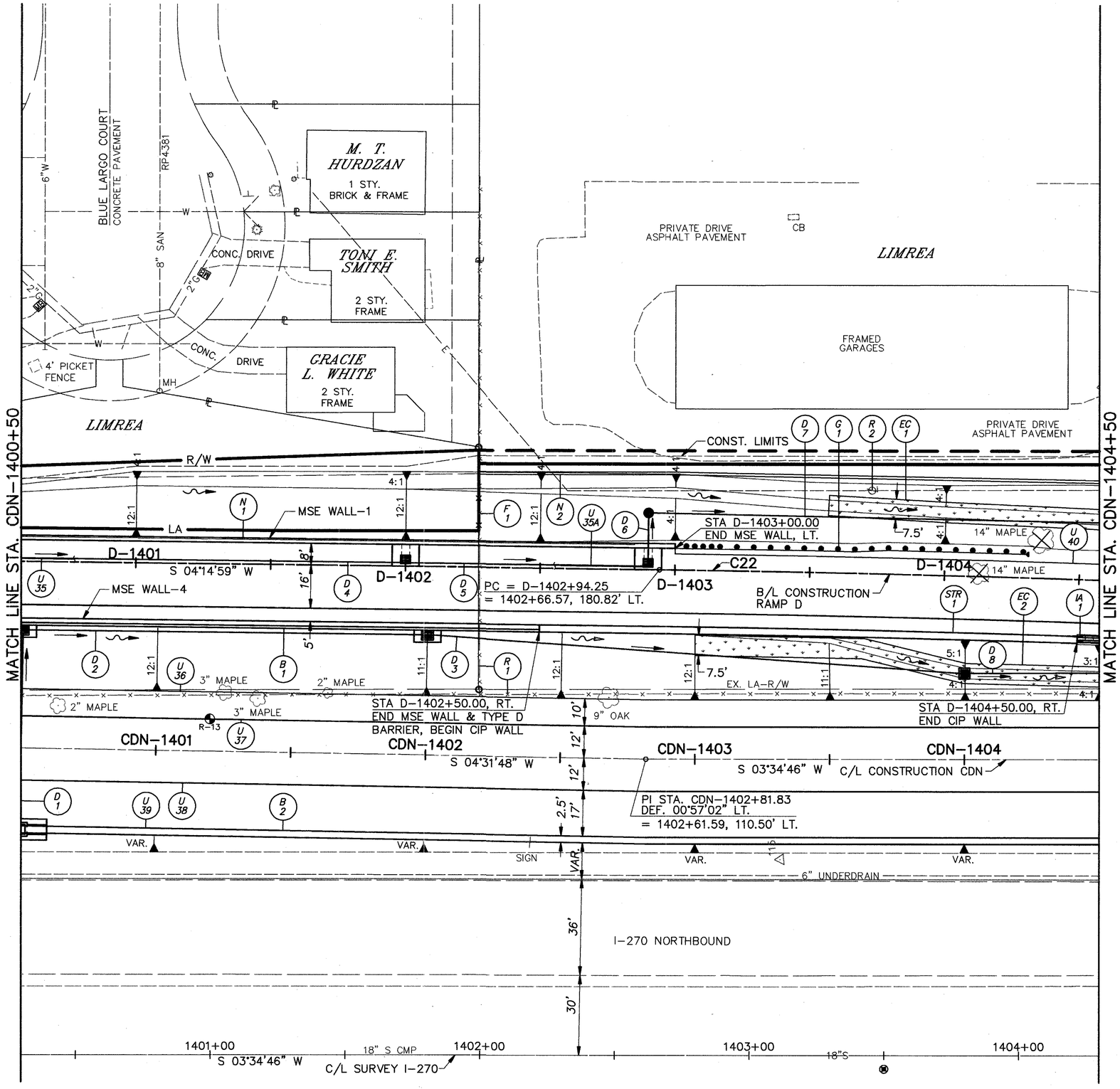

CROSS REFERENCES		SHEET NO.	DESCRIPTION
SHEET NO.	DESCRIPTION	432	MSE WALL-1
4	C22 CURVE INFO.	434	MSE WALL-4
103	ROADWAY PROFILE	362	⊗ LIGHTING PLAN
538	(N 1) NOISE BARRIER DETAILS	65	(U 1) UNDERDRAIN DATA AND QUANTITIES

REFERENCE No.	STATION TO STATION * STATIONING REFERS TO RAMP D ALIGNMENT	SIDE	622 CONCRETE BARRIER, TYPE B L.F.	622 CONCRETE BARRIER, TYPE D, AS PER PLAN A L.F.	SPEC. NOISE BARRIER 10' < H ≤ 14' S.F.	SPEC. NOISE BARRIER H > 14' S.F.	607 FENCE, TYPE CL L.F.	607 GATE, TYPE CL WALK GATE EA.	202 LIGHT POLE REMOVED EA.
B1	1400+50 ~ 1404+41.90	LT.		162					
B2	1400+50 ~ 1404+50	RT.	390						
N1	∗1400+57.46 ~ 1401+00	LT.				640			
	∗1401+00 ~ 1401+28.45	LT.			391				
	∗1401+28.45 ~ 1402+00	LT.				1051			
	∗1402+00 ~ 1402+32.54	LT.			445				
	∗1402+32.54 ~ 1402+85	LT.				761			
N2	∗1402+27 ~ 1404+57.52	LT.				3364			
F1	∗1402+27	LT.					20	1	
R2	∗1403+75	LT.							1
SHEET TOTALS			390	162	836	5816	20	1	1

REFERENCE No.	STATION TO STATION * STATIONING REFERS TO RAMP D ALIGNMENT	SIDE	604 INLET, NO. 3D EA.	604 INLET, NO. 3E EA.	604 MANHOLE, NO.3, W/FLAT TOP EA.	604 INLET, NO. 3E AS PER PLAN EA.	603 15" CONDUIT, TYPE B L.F.	603 27" CONDUIT, TYPE C L.F.	603 15" CONDUIT, TYPE B AS PER PLAN L.F.
D1	1400+50	L-R	1				75		
D2	1400+50 ~ 1402+00	LT.		1				150	
D3	1402+00 ~ 1404+00	LT.		1				200	
D4	∗1400+57 ~ 1402+00	LT.							143
D5	∗1402+00 ~ 1402+90	LT.				1			90
D6	∗1402+90	LT.				1	19		
D7	∗1402+90 ~ 1404+57.50	LT.			1		168		
SHEET TOTALS			1	2	1	2	262	350	233

REFERENCE No.	STATION TO STATION * STATIONING REFERS TO RAMP D ALIGNMENT	SIDE	606 BRIDGE TERMINAL ASSEMBLY, TYPE 1 EA.	606 GUARDRAIL, TYPE 5 L.F.	606 ANCHOR ASSEMBLY, TYPE E EA.	202 FENCE REMOVED L.F.	603 27" CONDUIT, TYPE C L.F.	604 CATCH BASIN, NO. 5A EA.	670 DITCH EROSION PROTECTION S.Y.	SPEC. IMPACT ATTENUATOR, TYPE ADIEM II EA.
D8	1404+00 ~ 1404+50	LT.					50	1	83	
G1	∗1403+00 ~ 1404+28.99	LT.	1	87.5	1					
R1	1400+50 ~ 1404+50	LT.				400				
R1	∗1402+27	L-R				90				
EC1	∗1403+58 ~ 1404+58	RT.							83	
EC2	1404+00 ~ 1404+50	RT.							42	
IA1	1404+47.99 ~ 1404+77.57	RT.								1
SHEET TOTALS			1	87.5	1	490	50	1	208	1

HORIZONTAL SCALE IN FEET
0 20 40

CALC. BY: G.J.V. DATE: 2/2/94
CHK. BY: M.F.J. DATE: 12/5/94

PLAN
STA. CDN-1400+50 TO CDN-1404+50

FRA-270-32.46

102
593

PLOT SCALE 1"=20'
COL #28
C:\DRAWING\06092306\PLAN\06092P11.DWG
FEBRUARY-12-1995
DESIGN01
CDN-SUMM, MN3

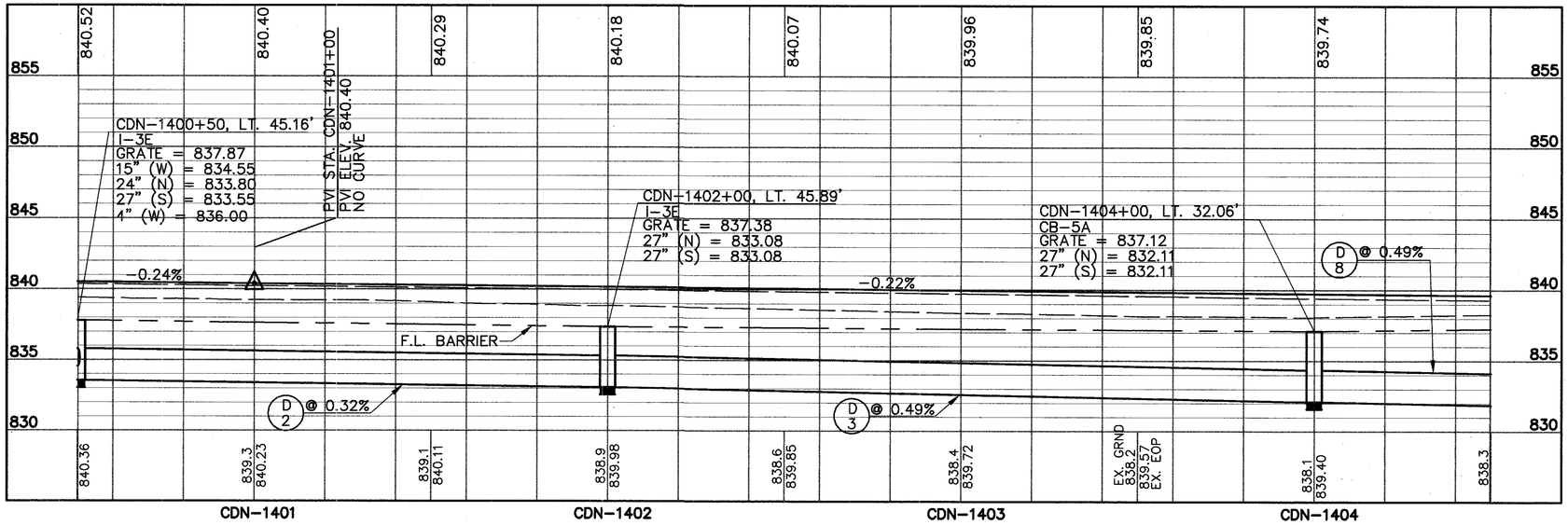

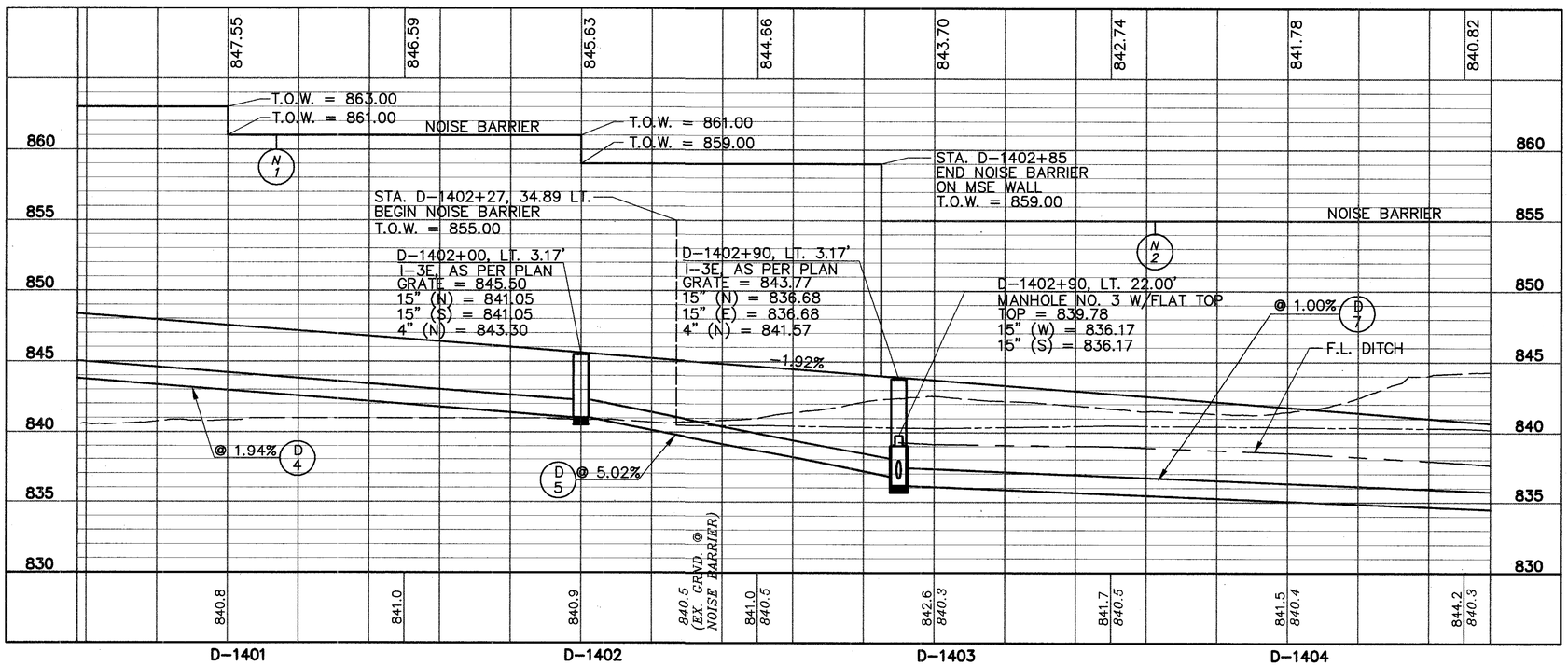

LEGEND:

EXISTING EDGE OF PAVEMENT, MAINLINE I–270

EXISTING PROFILE GRADE

PROPOSED PROFILE GRADE

GROUND LINE AT BASE OF NOISE WALL

0 10 20 40 HORIZONTAL SCALE IN FEET

CALC. BY: G.J.W DATE: 3/15/94
CHKD. BY: T.A.Z DATE: 1/19/95

PROFILE
STA. CDN–1400+50 TO CDN–1404+50

FRA–270–32.46

103
593

PLOT SCALE... COL #28
C:\DRAWING\06092306\PLAN\0609PR11.DWG FEBRUARY–10–1995
RMPDPROF.DWG
CDPROF–N.DWG

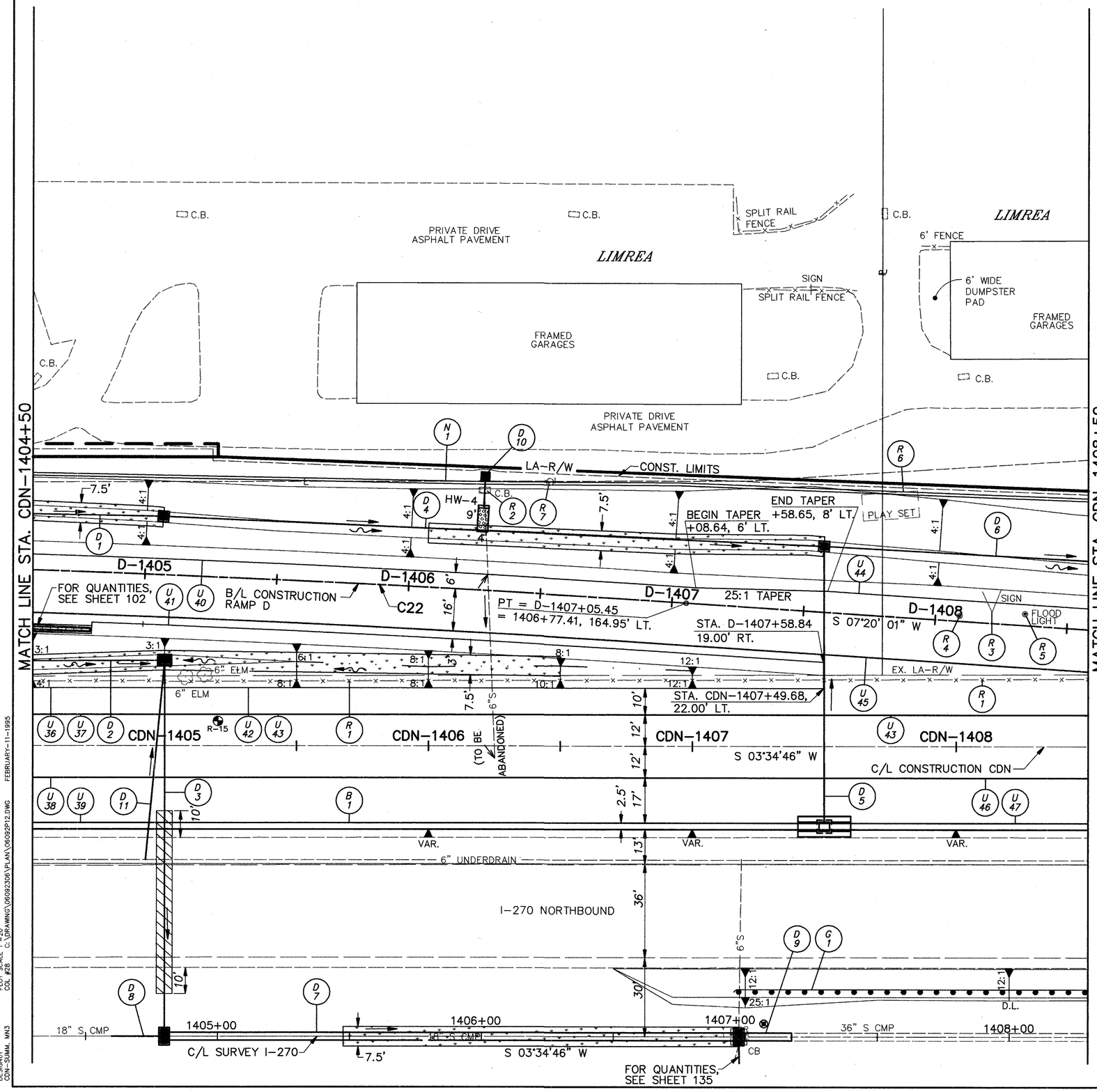

CROSS REFERENCES		CROSS REFERENCES	
SHEET NO.	DESCRIPTION	SHEET NO.	DESCRIPTION
4	C22 CURVE INFO.	315	DRAINAGE PROFILE
105	ROADWAY PROFILE	538	(N1) NOISE BARRIER DETAILS
362	⊛ LIGHTING PLAN		
65	(U1) UNDERDRAIN DATA AND QUANTITIES		

REFERENCE No.	STATION TO STATION ✱ STATIONING REFERS TO RAMP D ALIGNMENT	SIDE	622 CONCRETE BARRIER, TYPE B L.F.	SPEC. NOISE BARRIER H > 14' S.F.	606 GUARDRAIL, TYPE 5 L.F.	606 ANCHOR ASSEMBLY, TYPE T EA.	202 FENCE REMOVED L.F.	202 CATCH BASIN REMOVED EA.	202 REMOVAL MISC., FLOOD LIGHT EA.	202 REMOVAL MISC., PRIVATE SIGN EA.	202 REMOVAL MISC., PLAY SET EA.	202 PIPE REMOVED, 24" AND UNDER L.F.	202 LIGHT POLE REMOVED EA.
B1	1404+50 ~ 1408+50	RT.	380										
N1	✱1404+57.52 ~ 1408+58.16	LT.		6074									
G1	✱1407+17.74 ~ 1408+55.24	RT.			125	1							
R1	1404+50 ~ 1408+50	LT.					400						
R2	✱1402+26	LT.						1				25	
R3	✱1408+20	LT.								1			
R4	✱1407+09	LT.							1				
R5	✱1408+34	LT.							1				
R6	✱1407+80	LT.									1		
R7	✱1406+50	LT.											1
SHEET TOTALS			380	6074	125	1	400	1	2	1	1	25	1

REFERENCE No.	STATION TO STATION ✱ STATIONING REFERS TO RAMP D ALIGNMENT	SIDE	604 CATCH BASIN NO. 5 EA.	604 CATCH BASIN No. 5A EA.	604 INLET, NO. 3D EA.	603 15" CONDUIT, TYPE B L.F.	603 15" CONDUIT, TYPE C L.F.	603 27" CONDUIT, TYPE C L.F.	603 30" CONDUIT, TYPE B L.F.	603 CONDUIT, BORED OR JACKED, 30", TYPE B L.F.	603 18" CONDUIT, TYPE C L.F.	670 DITCH EROSION PROTECTION S.Y.
D1	✱1404+57.50 ~ 1405+07	LT.					50					
D2	1404+50 ~ 1405+00	LT.						50				
D3	1405+00	L-R		1					73	70		167
D4	✱1405+07 ~ 1407+57	LT.	1								251	42
D5	1407+50	L-R			1	106						
SHEET TOTALS			1	1	1	106	50	50	73	70	251	209

REFERENCE No.	STATION TO STATION ✱ STATIONING REFERS TO RAMP D ALIGNMENT	SIDE	604 CATCH BASIN NO. 4A AS PER PLAN EA.	604 CATCH BASIN NO. 5 EA.	603 18" CONDUIT, TYPE C 701.13 L.F.	603 24" CONDUIT, TYPE C L.F.	670 DITCH EROSION PROTECTION S.Y.	603 36" CONDUIT, TYPE C 707.13 L.F.	603 12" CONDUIT, TYPE C L.F.	604 CATCH BASIN NO. 2-2-B EA.	602 CONCRETE MASONRY C.Y.	601 ROCK CHANNEL PROTECTION, TYPE C, WITH FILTER, T = 18" C.Y.	603 6" CONDUIT, TYPE B 707.17 L.F.	603 36" CONDUIT, TYPE C L.F.
D6	✱1407+57 ~ 1408+57	LT.		1		100	125							
D7	1405+00 ~ 1407+18	RT.	1											218
D8	1404+90 ~ 1405+00	RT.			20									
D9	1407+18 ~ 1407+28	RT.	1				125	20						
D10	1406+26	LT.							12	1	0.21	2		
D11	1404+95	L-R											76	
SHEET TOTALS			2	1	20	100	250	20	12	1	0.21	2	76	218

HORIZONTAL SCALE IN FEET
0 10 20 40

CALC: G.J.W. DATE: 2/2/94
CHKD. BY: M.F.J. DATE: 12/5/94

PLAN
STA. CDN-1404+50 TO CDN-1408+50

FRA-270-32.46

104
593

PLOT SCALE 1"=20'
COL. #26
C:\DRAWING\06092306\PLAN\06092P12.DWG
FEBRUARY-11-1995
DESIGN:
CDN-SUMM. MN3

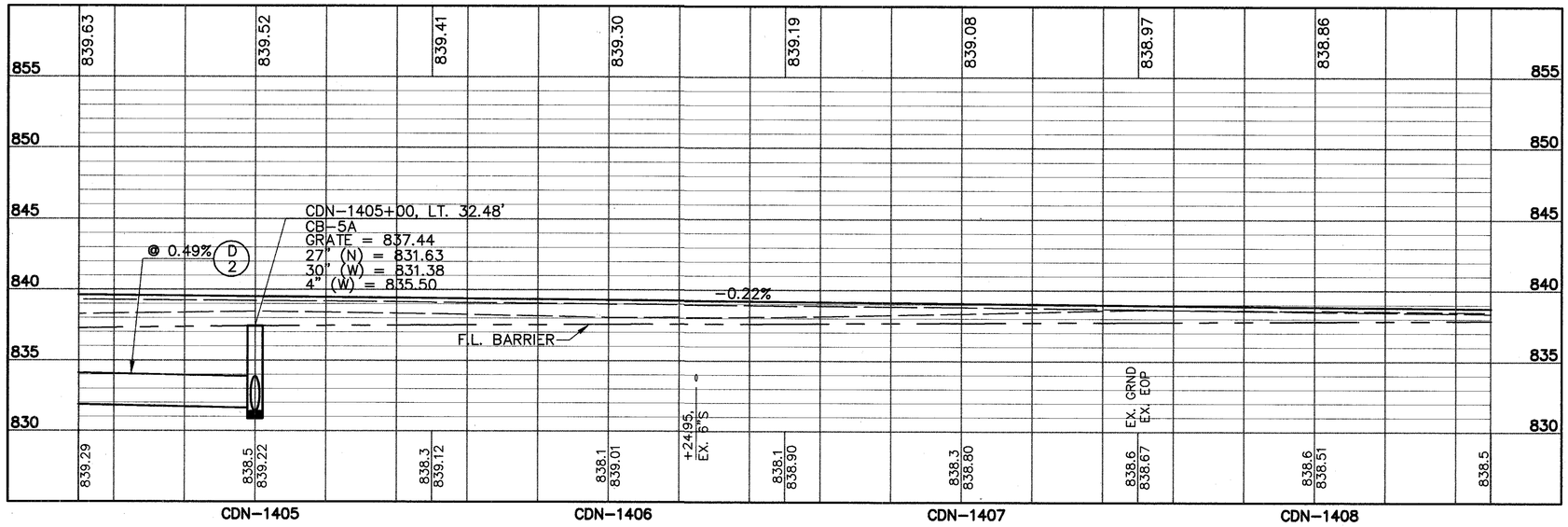

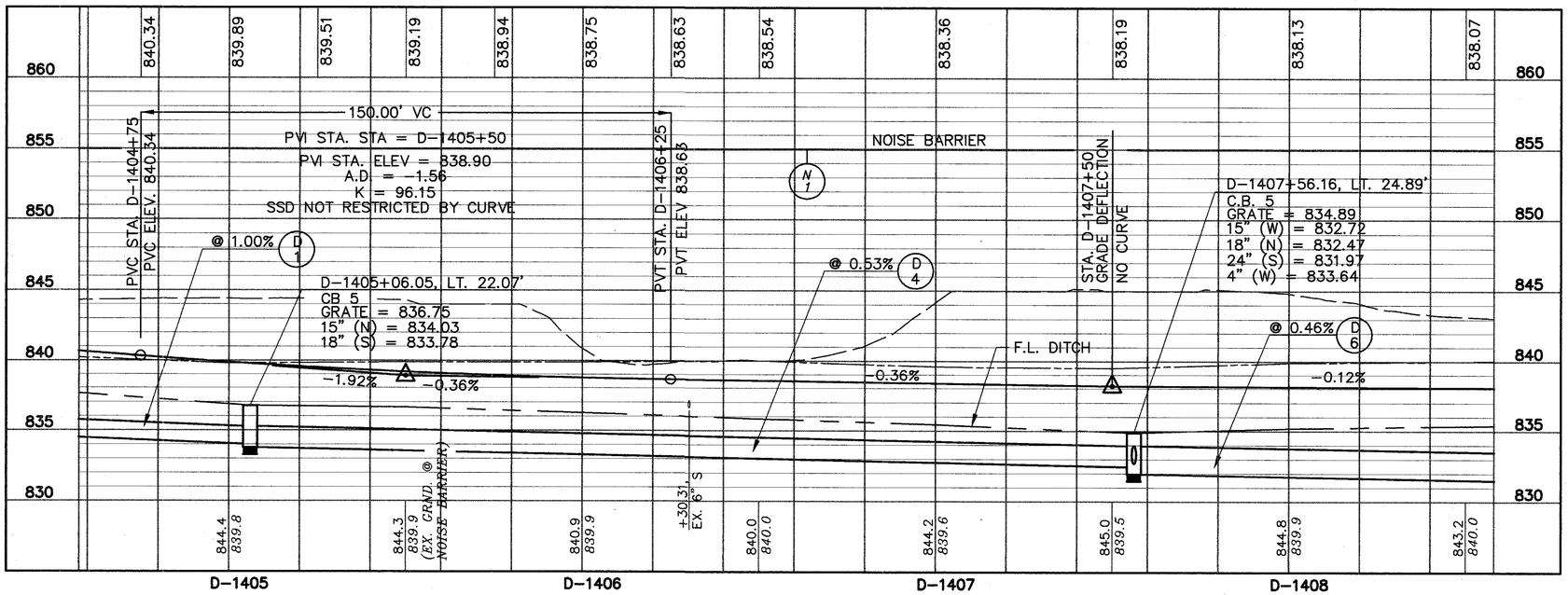

LEGEND:

EXISTING EDGE OF PAVEMENT, MAINLINE I-270

EXISTING PROFILE GRADE

PROPOSED PROFILE GRADE

GROUND LINE AT BASE OF NOISE WALL

0 10 20 40
HORIZONTAL SCALE IN FEET

CALC. BY: GJW DATE: 3/15/94
CHKD. BY: TAZ DATE: 1/19/95

PROFILE
STA. CDN-1404+50 TO CDN-1408+50

FRA-270-32.46

RMPDPROF.DWG
CDPROF-N.DWG
PLOT SCALE...
COL #28
C:\DRAWING\06092306\PLAN\0609PR12.DWG
FEBRUARY-10-1995

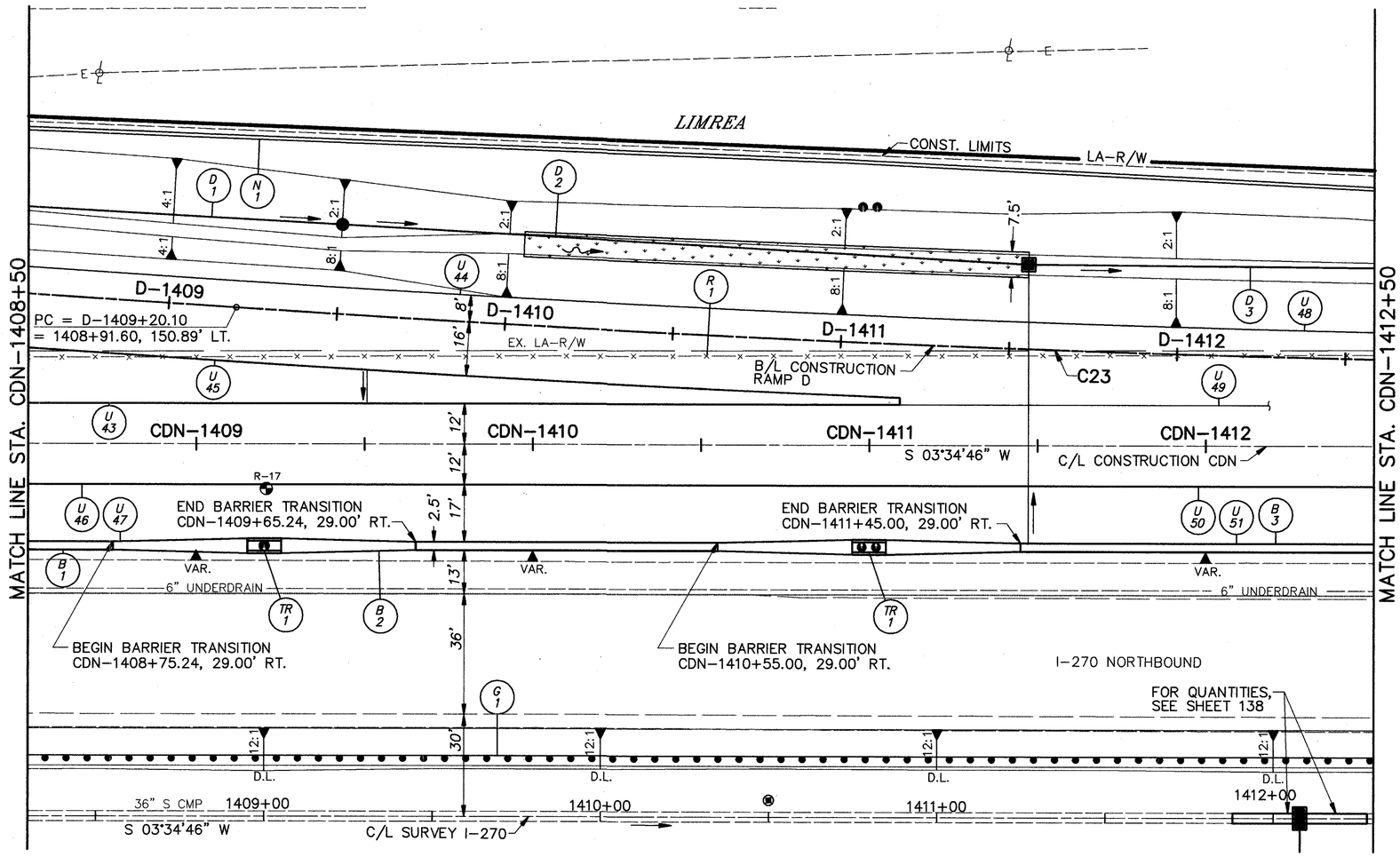

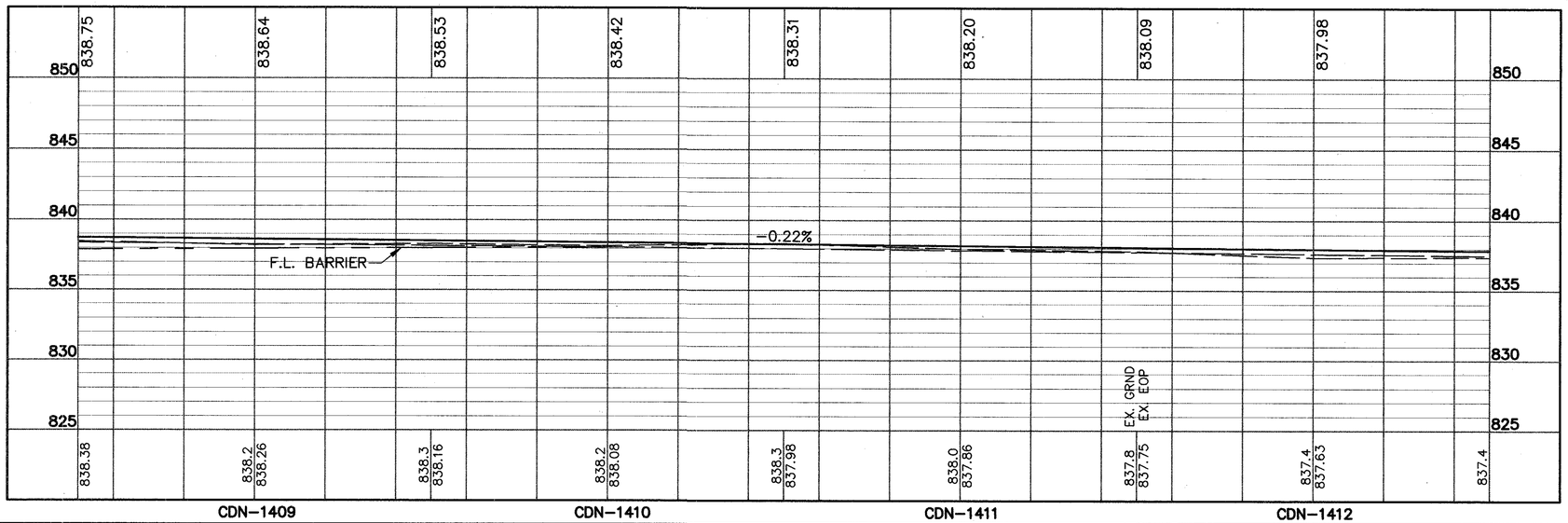

CROSS REFERENCES

SHEET NO.	DESCRIPTION	SHEET NO.	DESCRIPTION
4	C23 CURVE INFO.	362	⊗ LIGHTING PLAN
107	ROADWAY PROFILE	538	(N 1) NOISE BARRIER DETAILS
342	(TR 1) TRAFFIC CONTROL PLAN		
65	(U 1) UNDERDRAIN DATA AND QUANTITIES		

REFERENCE No.	STATION TO STATION * STATIONING REFERS TO RAMP D ALIGNMENT	SIDE	622 CONCRETE BARRIER, TYPE B L.F.	622 CONCRETE BARRIER, TYPE B50 L.F.	SPEC. NOISE BARRIER H > 14' S.F.	606 GUARDRAIL, TYPE 5 L.F.
B1	1408+50 ~ 1409+15	RT.	65			
B2	1409+25 ~ 1410+95	RT.		170		
B3	1411+05 ~ 1412+50	RT.	145			
G1	1408+55.24 ~ 1412+55.24	RT.				400
N1	*1408+58.16 ~ 1412+58.64	LT.			5899	
SHEET TOTALS			210	170	5899	400

REFERENCE No.	STATION TO STATION * STATIONING REFERS TO RAMP D ALIGNMENT	SIDE	604 CATCH BASIN, NO. 5A EA.	603 24" CONDUIT, TYPE C L.F.	202 FENCE REMOVED L.F.	670 DITCH EROSION PROTECTION S.Y.	603 27" CONDUIT, TYPE C L.F.	604 MANHOLE, NO. 3 EA.
R1	1408+50 ~ 1412+50	LT.			400			
D1	*1408+57 ~ 1409+50	LT.		94				
D2	*1409+50 ~ 1411+56	LT.		205				1
D3	*1411+56 ~ 1412+59	LT.	1			125	103	
SHEET TOTALS			1	299	400	125	103	1

HORIZONTAL SCALE IN FEET 0 10 20 40

CALC. BY: GJW DATE: 2/2/94
CHKD. BY: MFJ DATE: 12/5/94

PLAN & PROFILE
STA. CDN-1408+50 TO STA. CDN-1412+50

FRA-270-32.46

PLOT SCALE... COL #28 C:\DRAWING\06092306\PLAN\06092P13.DWG FEBRUARY-12-1995

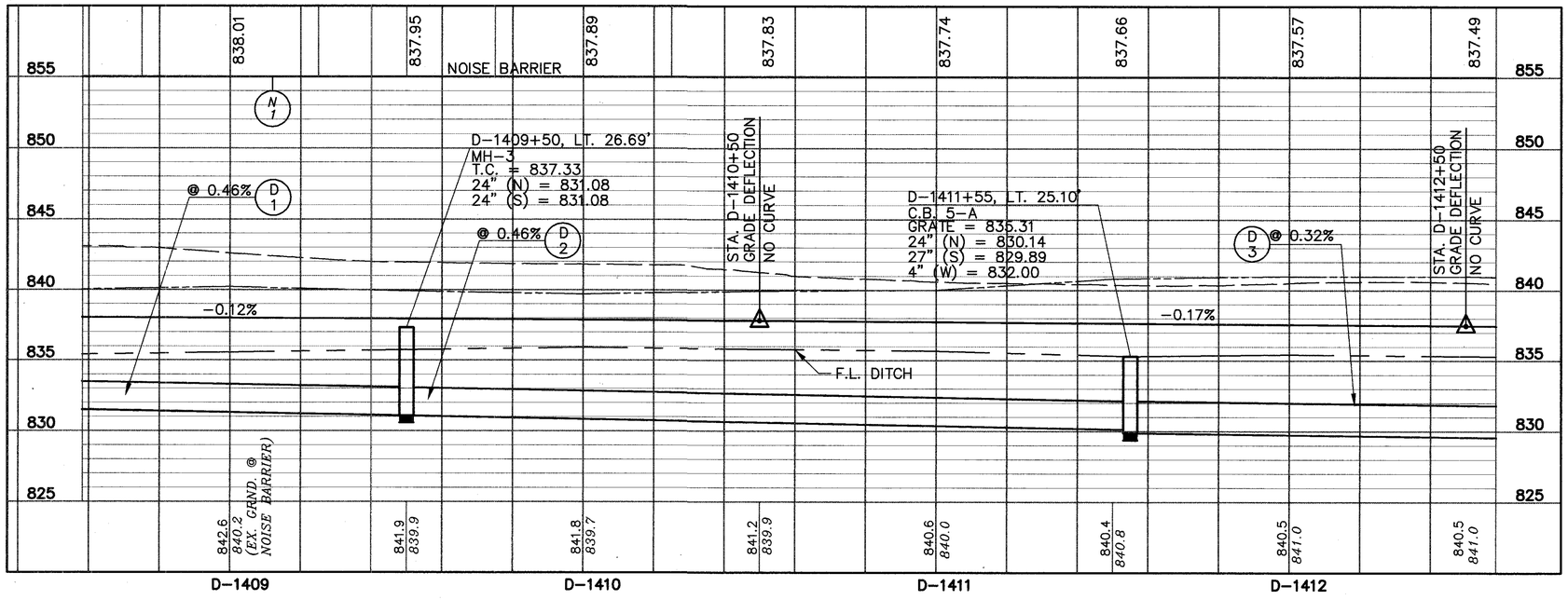

LEGEND:

EXISTING EDGE OF PAVEMENT, MAINLINE I–270

EXISTING PROFILE GRADE

PROPOSED PROFILE GRADE

GROUND LINE AT BASE OF NOISE WALL

HORIZONTAL SCALE IN FEET
0 10 20 40

CALC. G.J.W. DATE: 3/15/94
CHK. T.A.Z. DATE: 1/19/95

PROFILE
STA. D–1408+58.16 TO D–1412+58.64

FRA–270–32.46

107
593

RMPDPROF.DWG
CDPROF–N.DWG

PLOT SCALE...
COL #29

C:\DRAWING\06092306\PLAN\0609PR13.DWG

FEBRUARY–10–1995

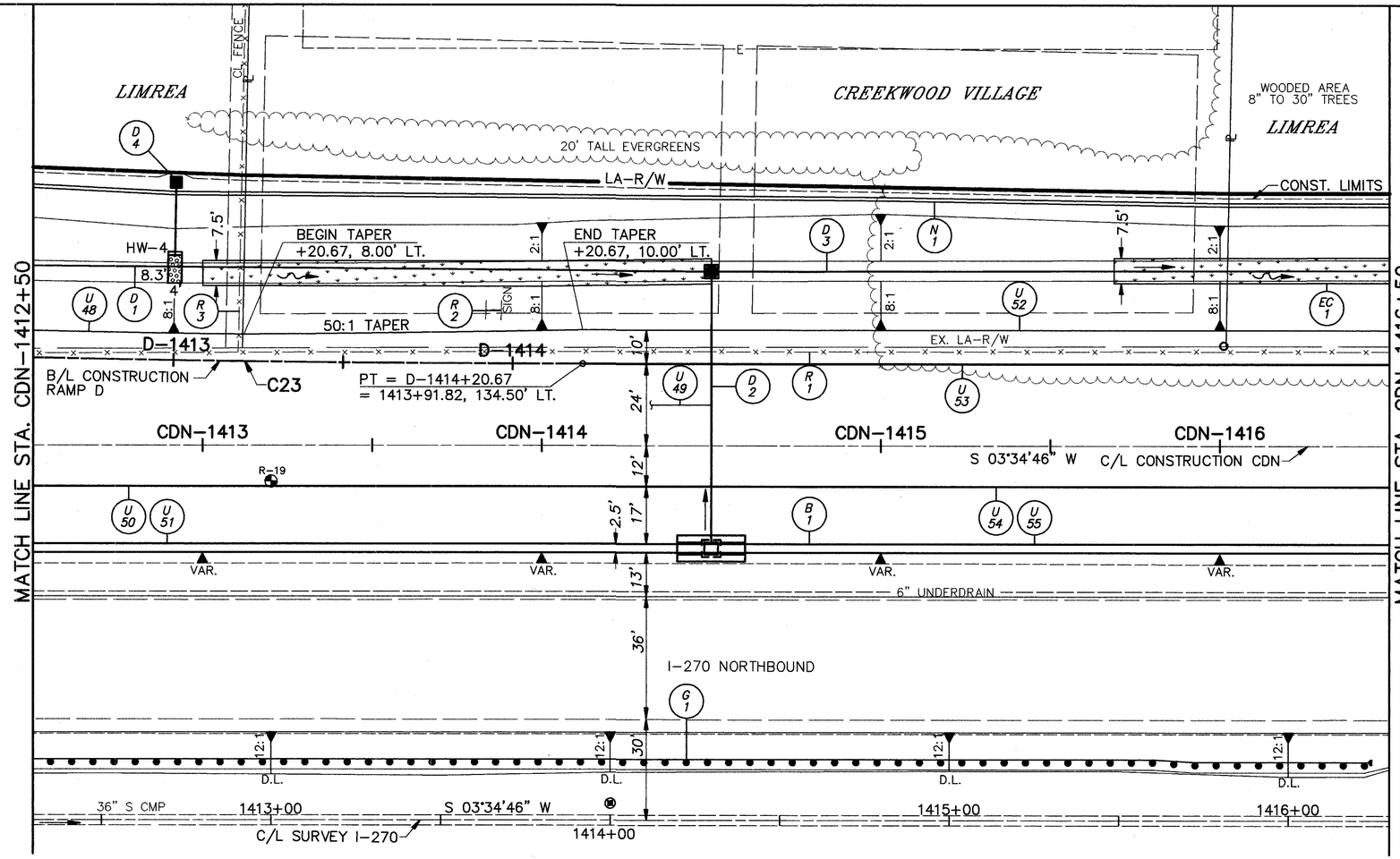

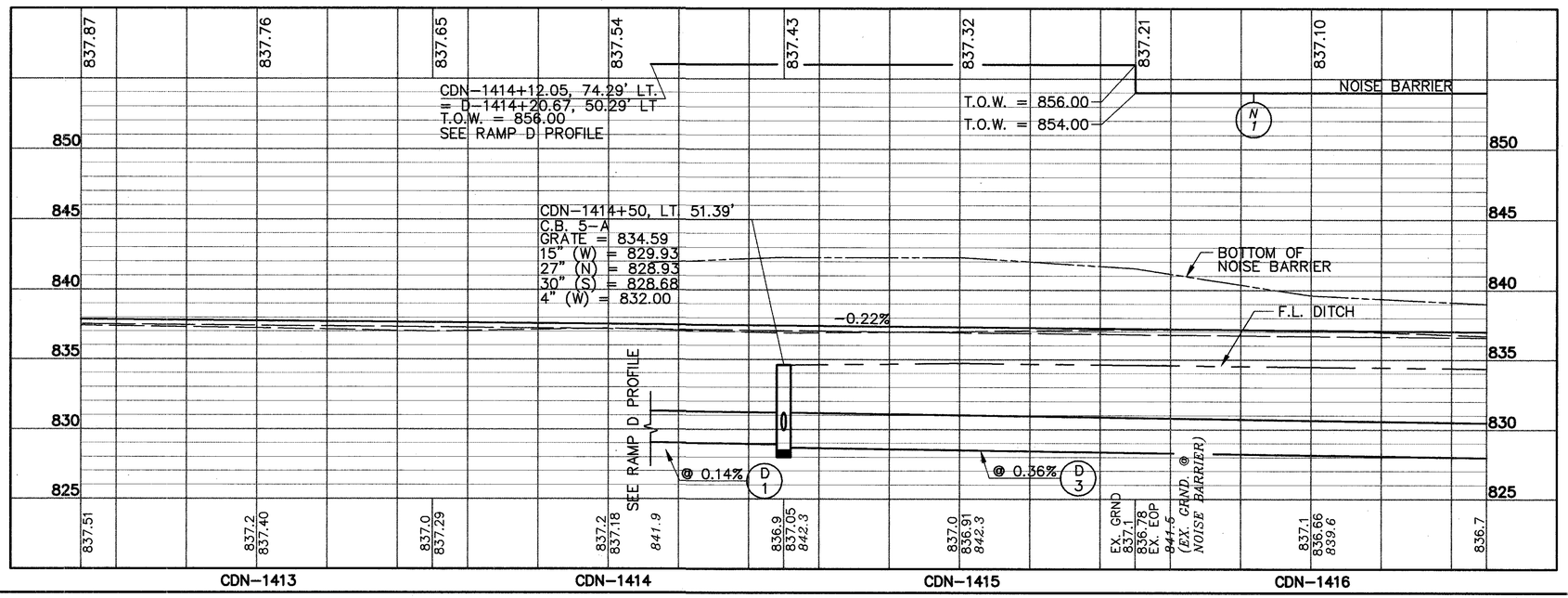

CROSS REFERENCES

SHEET NO.	DESCRIPTION	SHEET NO.	DESCRIPTION
4	C23 CURVE INFO.	538	(N 1) NOISE BARRIER DETAILS
109	ROADWAY PROFILE		
65	(U 1) UNDERDRAIN DATA AND QUANTITIES		
362	LIGHTING PLAN		

REFERENCE No.	STATION TO STATION (ALL STATIONING REFERS TO CDN ALIGNMENT)	SIDE	670 DITCH EROSION PROTECTION S.Y.	604 CATCH BASIN, NO. 5A EA.	604 INLET, NO. 3D EA.	603 27" CONDUIT, TYPE C L.F.	603 30" CONDUIT, TYPE C L.F.	603 15" CONDUIT, TYPE B L.F.
D1	1412+50 ~ 1414+50	LT.				200		
D2	1414+50	L-R			1			82
D3	1414+50 ~ 1416+50	LT.	125	1			200	
EC1	1415+70 ~ 1416+50	LT.	68					
SHEET TOTALS			193	1	1	200	200	82

REFERENCE No.	STATION TO STATION (ALL STATIONING REFERS TO CDN ALIGNMENT)	SIDE	603 12" CONDUIT, TYPE C L.F.	604 CATCH BASIN NO. 2-2-B EA.	602 CONCRETE MASONRY C.Y.	601 ROCK CHANNEL PROTECTION, TYPE C, WITH FILTER, T = 18" C.Y.	606 ANCHOR ASSEMBLY, TYPE E EA.	606 GUARDRAIL, TYPE 5 L.F.	622 CONCRETE BARRIER, TYPE B L.F.
D4	1413+00	LT.	22	1	0.21	2			
G1	1412+55.24 ~ 1416+42.74	RT.					1	362.5	
B1	1412+50 ~ 1416+50	RT.							380
SHEET TOTALS			22	1	0.21	2	1	362.5	380

REFERENCE No.	STATION TO STATION (* STATIONING REFERS TO RAMP D ALIGNMENT)	SIDE	202 FENCE REMOVED L.F.	202 REMOVAL MISC. PRIVATE SIGNS EA.	SPEC. NOISE BARRIER H > 14' S.F.	SPEC. NOISE BARRIER 10' < H ≤ 14' S.F.
R1	1412+50 ~ 1416+50	LT.	400			
R2	1413+88	LT.		1		
R3	1413+10	LT.	52			
N1	*1412+58.64 ~ 1413+34.21	LT.			1088	
	*1413+34.21 ~ 1413+64.29	LT.				412
	*1413+64.29 ~ 1414+20.67	LT.			833	
N1	1414+12.05 ~ 1414+21.54	LT.			133	
	1414+21.54 ~ 1415+18.75	LT.				1339
	1415+18.75 ~ 1415+50	LT.			445	
	1415+50 ~ 1415+89.47	LT.				523
	1415+89.47 ~ 1416+50	LT.			884	
SHEET TOTALS			452	1	3383	2274

HORIZONTAL SCALE IN FEET 0 10 20 40

CALC. BY: G.J.W DATE: 2/2/94
CHKD. BY: M.F.J DATE: 12/5/94

PLAN & PROFILE
STA. CDN-1412+50 TO STA. CDN-1416+50

FRA-270-32.46

108
593

PLOT SCALE: 1" = 20'
COL #28
C:\DRAWING\D6092306\PLAN\D6092P14.DWG FEBRUARY-12-1995

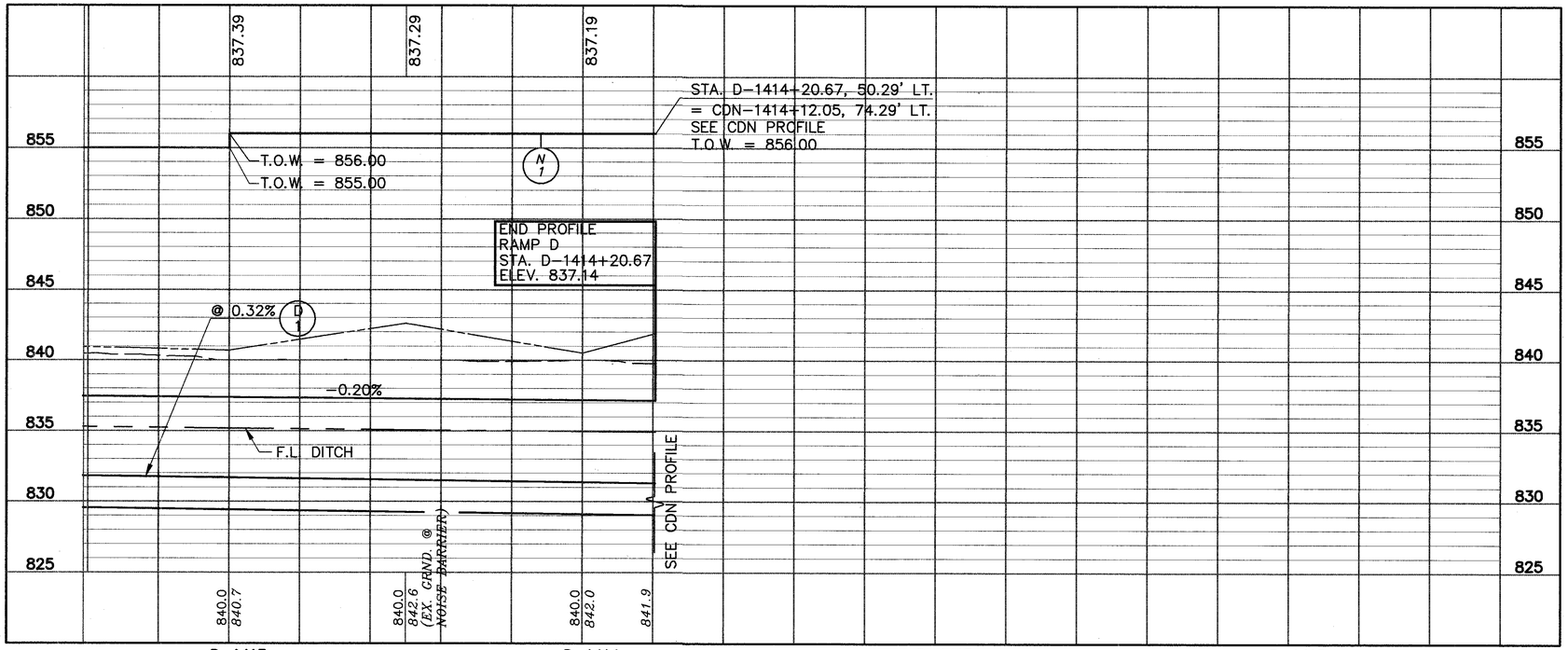

LEGEND:

EXISTING EDGE OF PAVEMENT, MAINLINE I-270

EXISTING PROFILE GRADE

PROPOSED PROFILE GRADE

GROUND LINE AT BASE OF NOISE WALL

0 10 20 40 HORIZONTAL SCALE IN FEET

CALC. BY: G.J.W. DATE: 3/15/94
CHKD. BY: T.A.Z. DATE: 7/19/95

PROFILE
STA. D-1412+58.64 TO D-1414+20.67

FRA-270-32.46

109
59

RMPDPROF.DWG
CDPROF-N.DWG

PLOT SCALE
COL #28

C:\DRAWING\06092306\PLAN\0609PR14.DWG

FEBRUARY-10-1995

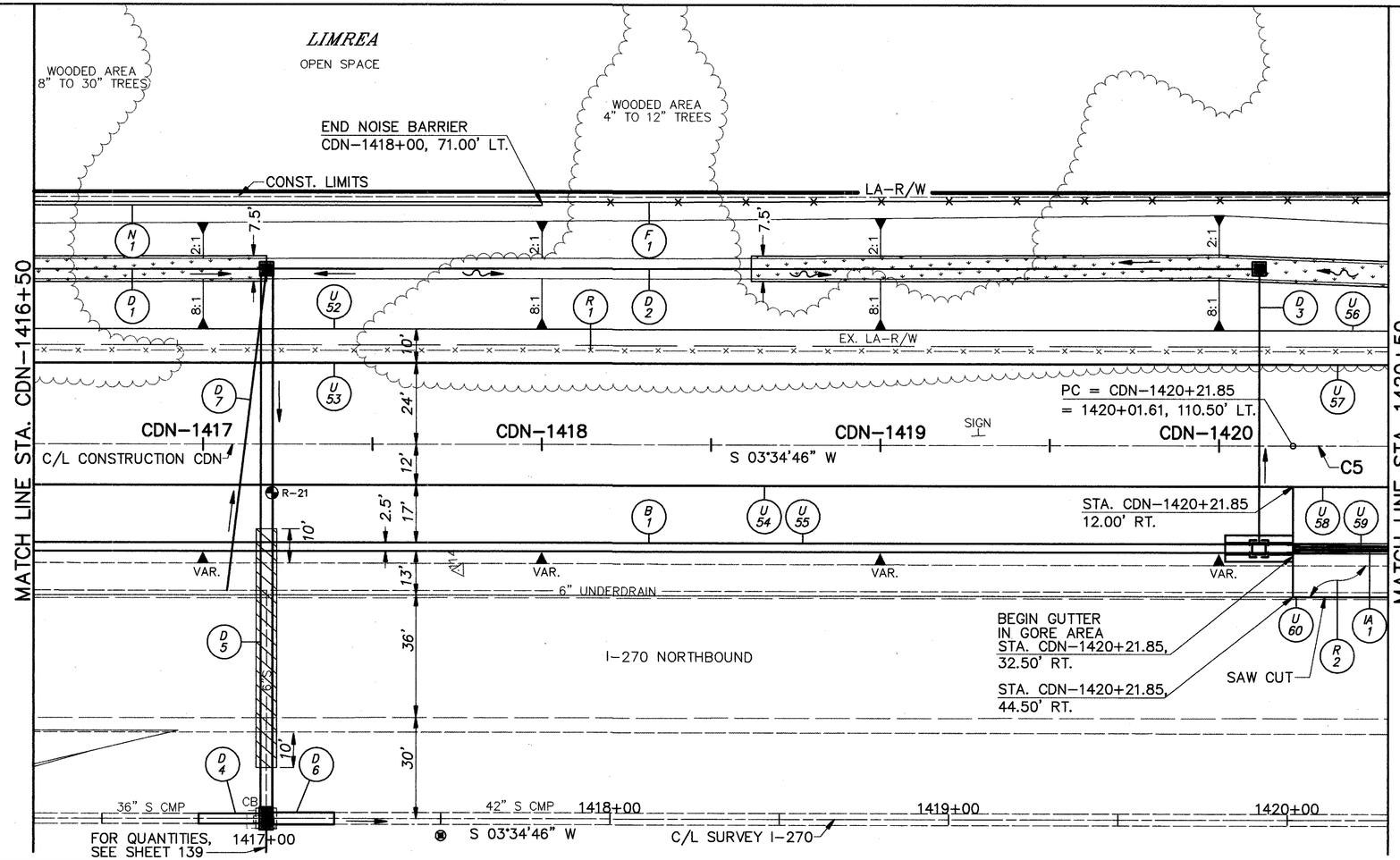

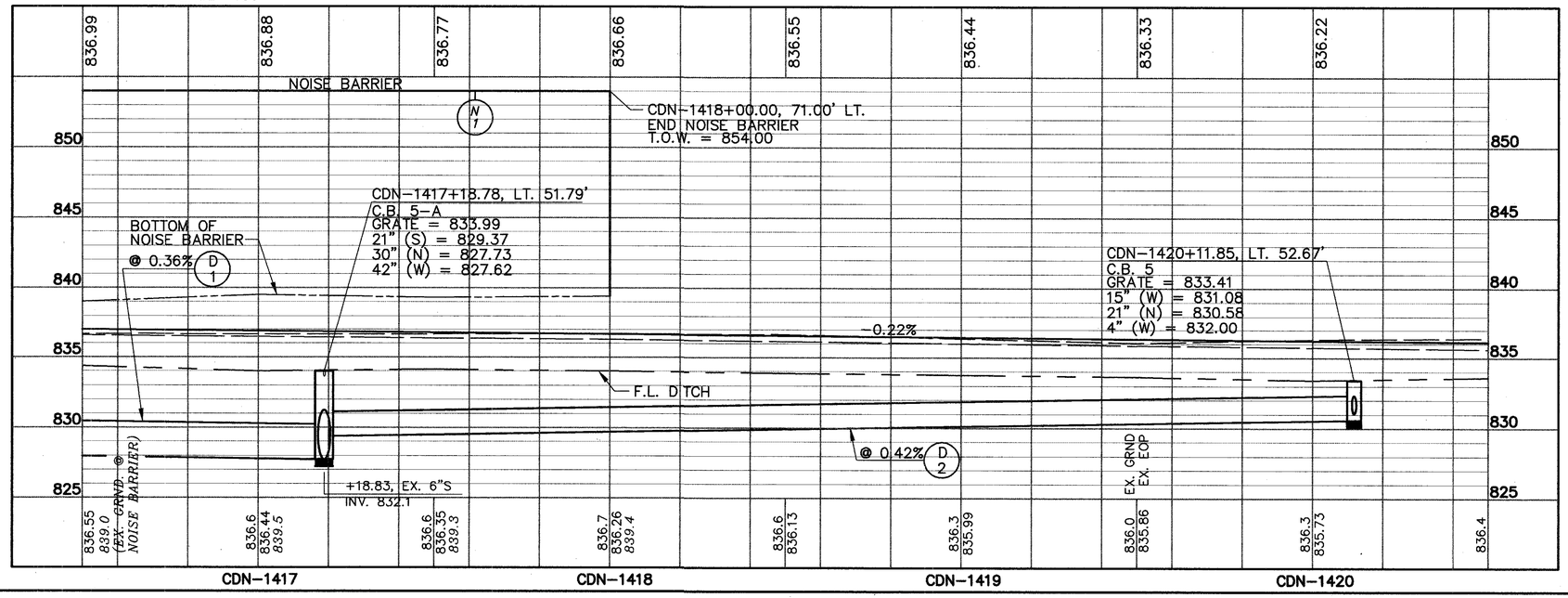

CROSS REFERENCES

SHEET NO.	DESCRIPTION	SHEET NO.	DESCRIPTION
4	C5 CURVE INFO.	538	(N 1) NOISE BARRIER DETAILS
65	(U 1) UNDERDRAIN DATA AND QUANTITIES		
315	DRAINAGE PROFILE		
362	⊗ LIGHTING PLAN		

REFERENCE No.	STATION TO STATION (ALL STATIONING REFERS TO CDN ALIGNMENT)	SIDE	622 CONCRETE BARRIER, TYPE B L.F.	SPEC. NOISE BARRIER H > 14' S.F.	607 FENCE, TYPE CL L.F.	202 FENCE REMOVED L.F.	SPEC. IMPACT ATTENUATOR, TYPE ADIEM II EA.	202 PAVEMENT REMOVED S.Y.
B1	1416+50 ~ 1420+21.85	RT.	352					
N1	1416+50 ~ 1418+00	LT.		2200				
F1	1418+00 ~ 1420+50	LT.			250			
R1	1416+50 ~ 1420+50	LT.				400		
R2	1420+21.85 ~ 1420+50	RT.						282
IA1	1420+20 ~ 1420+49.50	RT.					1	
SHEET TOTALS			352	2200	250	400	1	282

REFERENCE No.	STATION TO STATION (ALL STATIONING REFERS TO CDN ALIGNMENT)	SIDE	604 INLET, NO. 3D EA.	604 CATCH BASIN, NO. 5A EA.	603 15" CONDUIT, TYPE B L.F.	603 21" CONDUIT, TYPE C L.F.	603 36" CONDUIT, TYPE C L.F.	670 DITCH EROSION PROTECTION S.Y.	603 30" CONDUIT, TYPE C L.F.
D1	1416+50 ~ 1417+19	LT.							69
D2	1417+19 ~ 1420+11.85	LT.		1		294		157	
D3	1420+11.85	L–R	1		83				
D4	1417+09 ~ 1417+19	RT.					20		
SHEET TOTALS			1	1	83	294	20	157	69

REFERENCE No.	STATION TO STATION (ALL STATIONING REFERS TO CDN ALIGNMENT)	SIDE	604 CATCH BASIN, NO. 4A AS PER PLAN EA.	604 CATCH BASIN, NO. 5A EA.	603 42" CONDUIT, TYPE B L.F.	603 42" CONDUIT, TYPE C 707.13 L.F.	603 CONDUIT, BORED OR JACKED, 42", TYPE B L.F.	603 6" CONDUIT TYPE B (707.17) L.F.	670 DITCH EROSION PROTECTION S.Y.
D5	1417+19	L–R		1	92		70		57
D6	1417+19 ~ 1417+29	RT.	1			20			
D7	1417+07 ~ 1417+19	L–R						96	
SHEET TOTALS			1	1	92	20	70	96	57

HORIZONTAL SCALE IN FEET
0 10 20 40

CALC. BY: G.J.W. DATE: 2/2/94
CHKD. BY: M.F.J. DATE: 12/5/94

PLAN & PROFILE
STA. CDN–1416+50 TO STA. CDN–1420+50

FRA–270–32.46

110
593

PLOT SCALE 1"=20'
COL. #25
C:\DRAWING\06092306\PLAN\06092P15.DWG
FEBRUARY-11-1995
DESIGN01
CDN–SUMM. MN4

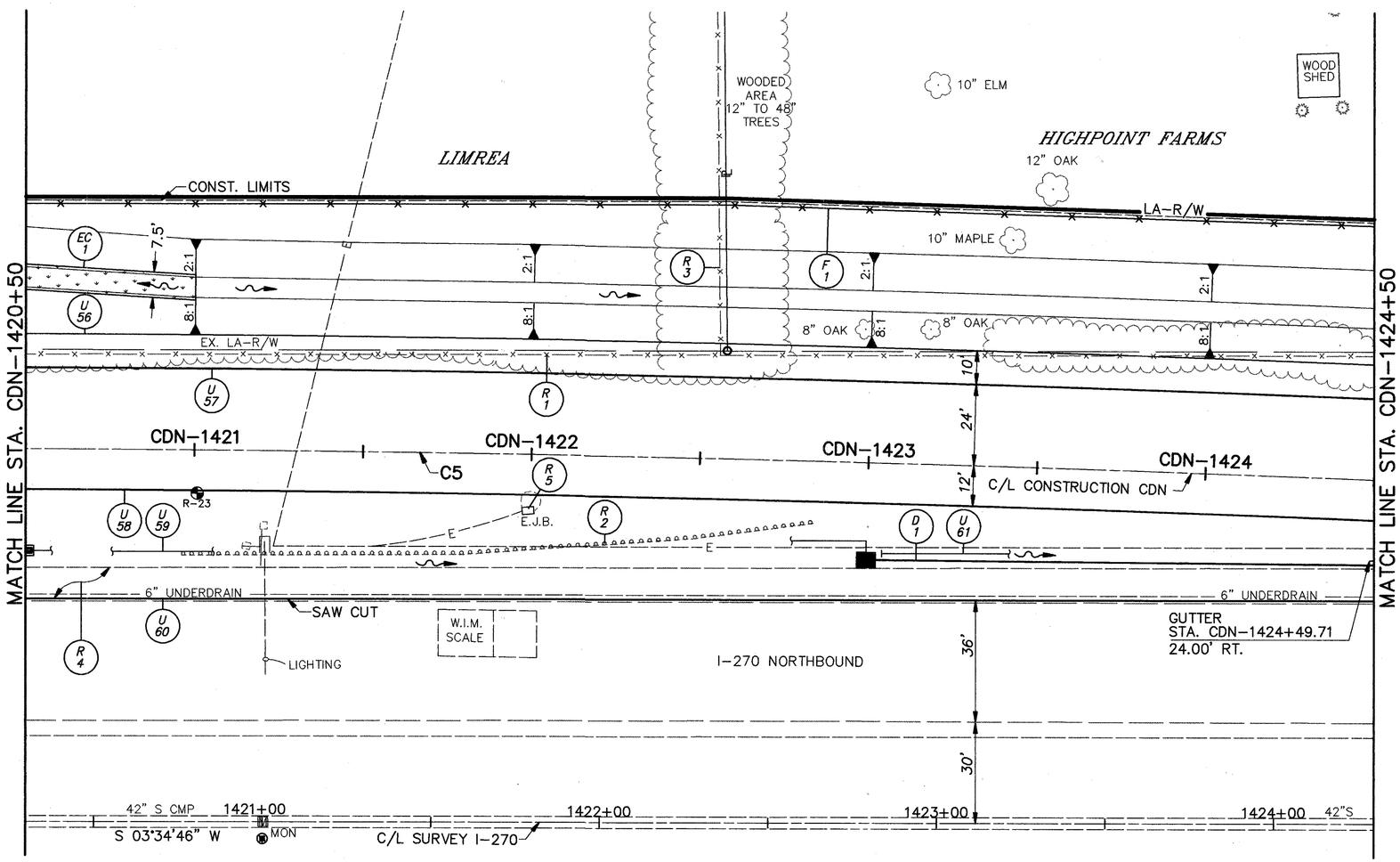

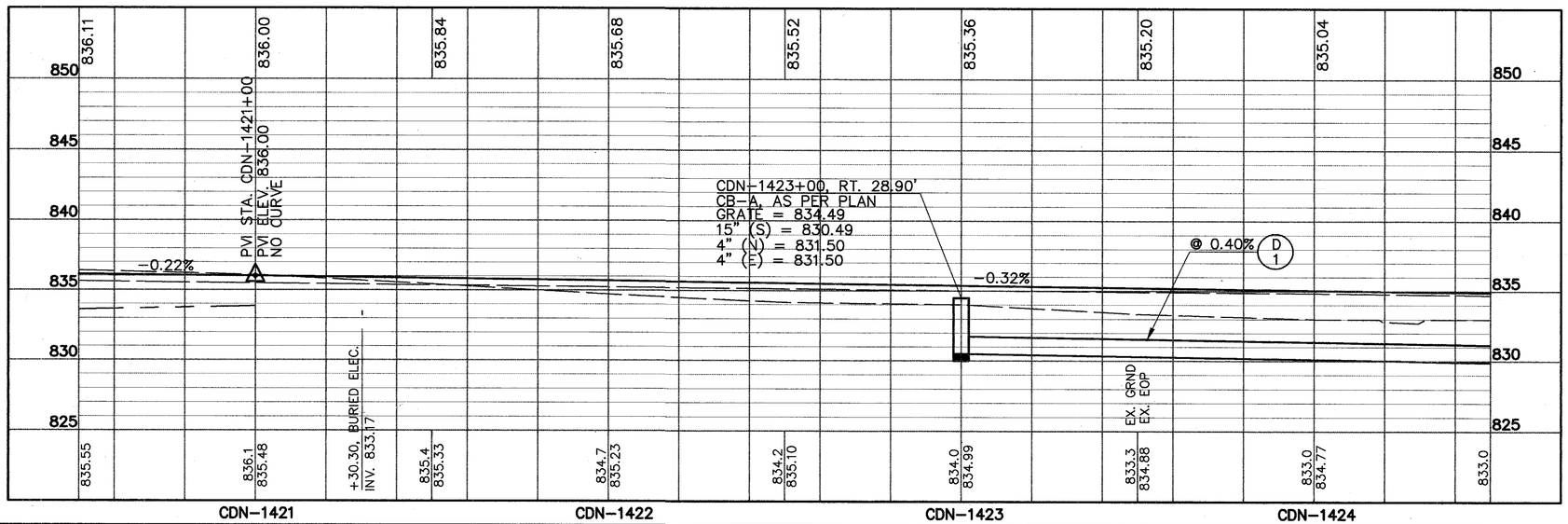

CROSS REFERENCES

SHEET NO.	DESCRIPTION
4	C5 CURVE INFO.
65	(U 1) UNDERDRAIN DATA AND QUANTITIES
362	LIGHTING PLAN

REFERENCE No.	STATION TO STATION (ALL STATIONING REFERS TO CDN ALIGNMENT)	SIDE	607 FENCE, TYPE CL (L.F.)	604 CATCH BASIN, MISC.: CATCH BASIN AS PER PLAN (EA.)	603 15" CONDUIT, TYPE B (L.F.)	202 FENCE REMOVED (L.F.)	202 GUARDRAIL REMOVED (L.F.)	670 DITCH EROSION PROTECTION (S.Y.)	202 ANCHOR ASSEMBLY REMOVED, TYPE A (EA.)
F1	1420+50 ~ 1424+50	LT.	400						
R1	1420+50 ~ 1424+50	LT.				400			
R2	1420+96 ~ 1422+83	RT.					163		1
R3	1422+55	LT.				46			
D1	1423+00 ~ 1424+50	RT.		1	150				
EC1	1420+50 ~ 1421+00	LT.						42	
SHEET TOTALS			400	1	150	446	163	42	1

REFERENCE No.	STATION TO STATION (ALL STATIONING REFERS TO CDN ALIGNMENT)	SIDE	202 PAVEMENT REMOVED (S.Y.)	202 REMOVAL MISC., CABINET W/ WEIGHT-IN-MOTION EQUIP. (EA.)
R4	1420+50 ~ 1424+50	RT.	444	
R5	1421+98	RT.		1
SHEET TOTALS			444	1

HORIZONTAL SCALE IN FEET: 0, 10, 20, 40

CAD: GJW DATE: 2/2/94
CHKD BY: M.F.J DATE: 12/5/94

PLAN & PROFILE
STA. CDN-1420+50 TO STA. CDN-1424+50

FRA-270-32.46

111
593

PLOT SCALE 1"=20'
COL #28 C:\DRAWING\06092306\PLAN\06092P16.DWG FEBRUARY-12-1995
DESIGN01
CDN-30MM, MN4

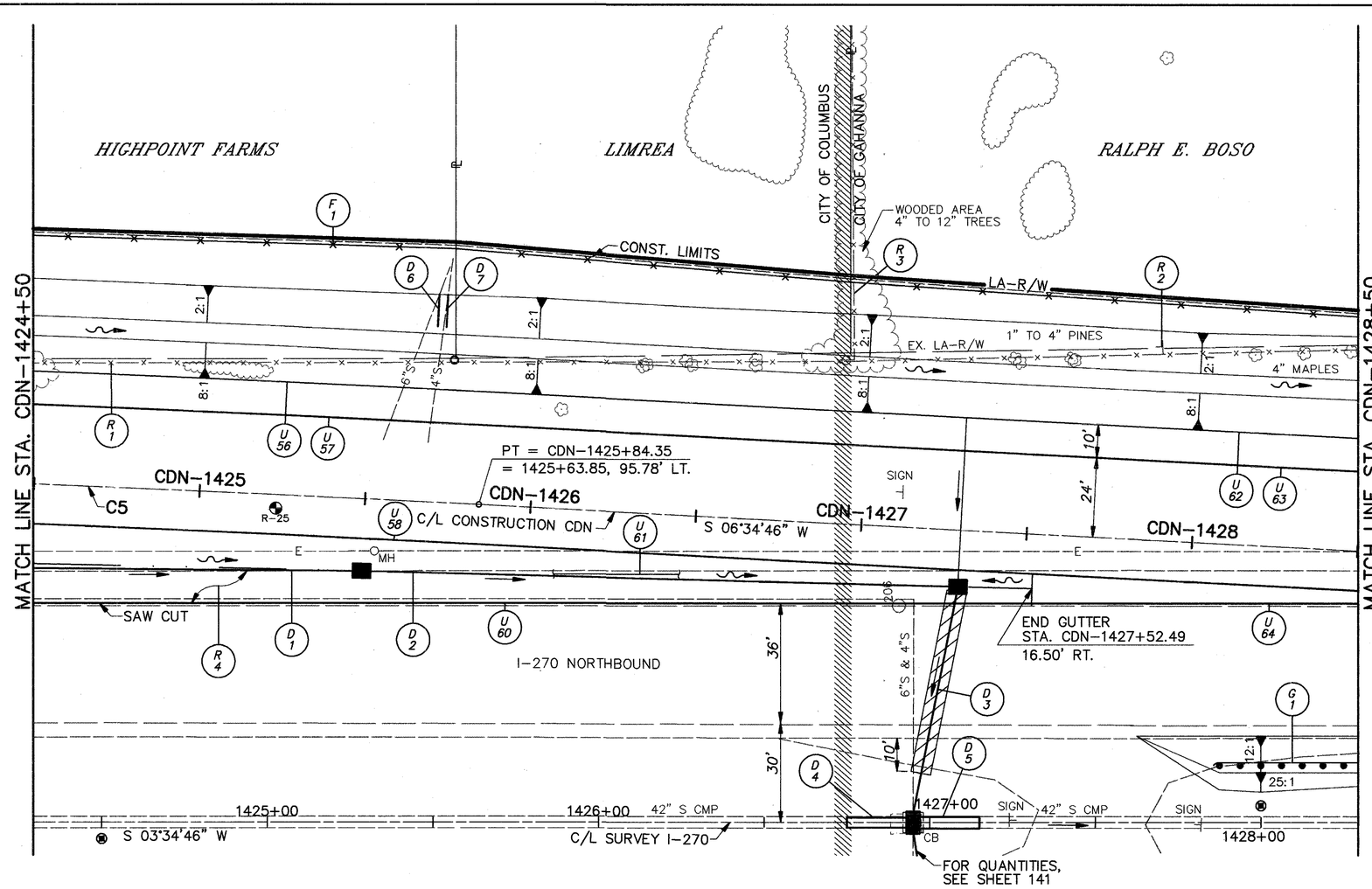

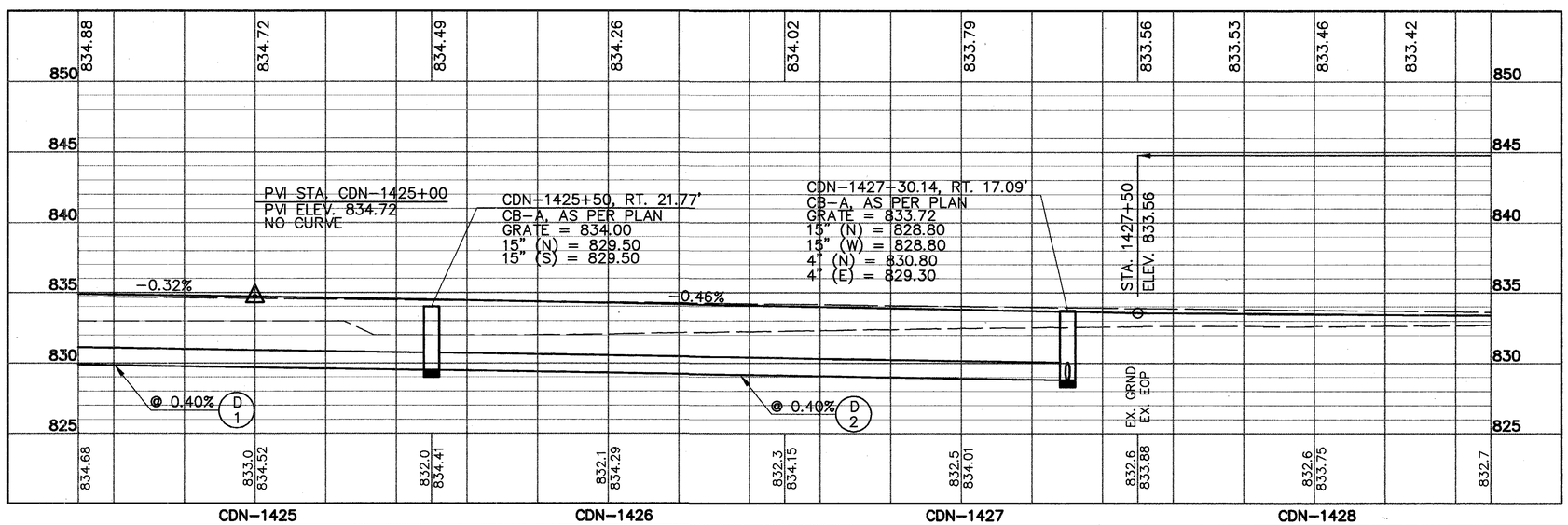

CROSS REFERENCES

SHEET NO.	DESCRIPTION
4	C5 CURVE INFO.
65	(U 1) UNDERDRAIN DATA AND QUANTITIES
315	DRAINAGE PROFILE
362	⊗ LIGHTING PLAN

REFERENCE No.	STATION TO STATION (ALL STATIONING REFERS TO CDN ALIGNMENT)	SIDE	607 FENCE, TYPE CL (L.F.)	202 FENCE REMOVED (L.F.)	202 REMOVAL MISC., PRIVATE SIGN (EA.)	606 GUARDRAIL, TYPE 5 (L.F.)	606 ANCHOR ASSEMBLY, TYPE T (EA.)	202 PAVEMENT REMOVED (S.Y.)
F1	1424+50 ~ 1428+50	LT.	400					
R1	1424+50 ~ 1428+50	LT.		400				
R2	1427+90	LT.			1			
R3	1427+00	LT.		26				
R4	1424+50 ~ 1428+50	RT.						444
G1	1428+11.76 ~ 1428+49.21	RT.				25	1	
SHEET TOTALS			400	426	1	25	1	444

REFERENCE No.	STATION TO STATION (ALL STATIONING REFERS TO CDN ALIGNMENT)	SIDE	604 CATCH BASIN, NO. 4A AS PER PLAN (EA.)	604 CATCH BASIN, MISC.: CATCH BASIN "A" AS PER PLAN (EA.)	603 15" CONDUIT, TYPE B (L.F.)	603 CONDUIT, BORED OR JACKED, 15", TYPE B (L.F.)	603 42" CONDUIT, TYPE C 707.13 (L.F.)	603 8" CONDUIT, TYPE F (L.F.)	603 6" CONDUIT, TYPE F (L.F.)
D1	1424+50 ~ 1425+50	RT.			100				
D2	1425+50 ~ 1427+30	RT.		1	180				
D3	1427+20 ~ 1427+30	RT.		1	14	58			
D4	1427+10 ~ 1427+20	RT.					20		
D5	1427+20 ~ 1427+30	RT.	1				20		
D6	1425+69	LT.						10	
D7	1425+72	LT.							10
SHEET TOTALS			1	2	294	58	40	10	10

PLAN & PROFILE
STA. CDN–1424+50 TO STA. CDN–1428+50

FRA–270–32.46

112
593

CALC: GJW DATE: 12/2/94
CHKD: MFJ DATE: 12/5/94

HORIZONTAL SCALE IN FEET
0 10 20 40

PLOT SCALE 1"=20'
COL #28
C:\DRAWING\06092305\PLAN\06092P17.DWG
FEBRUARY-13-1995
DESIGN01
CDN-SUMM, MN4

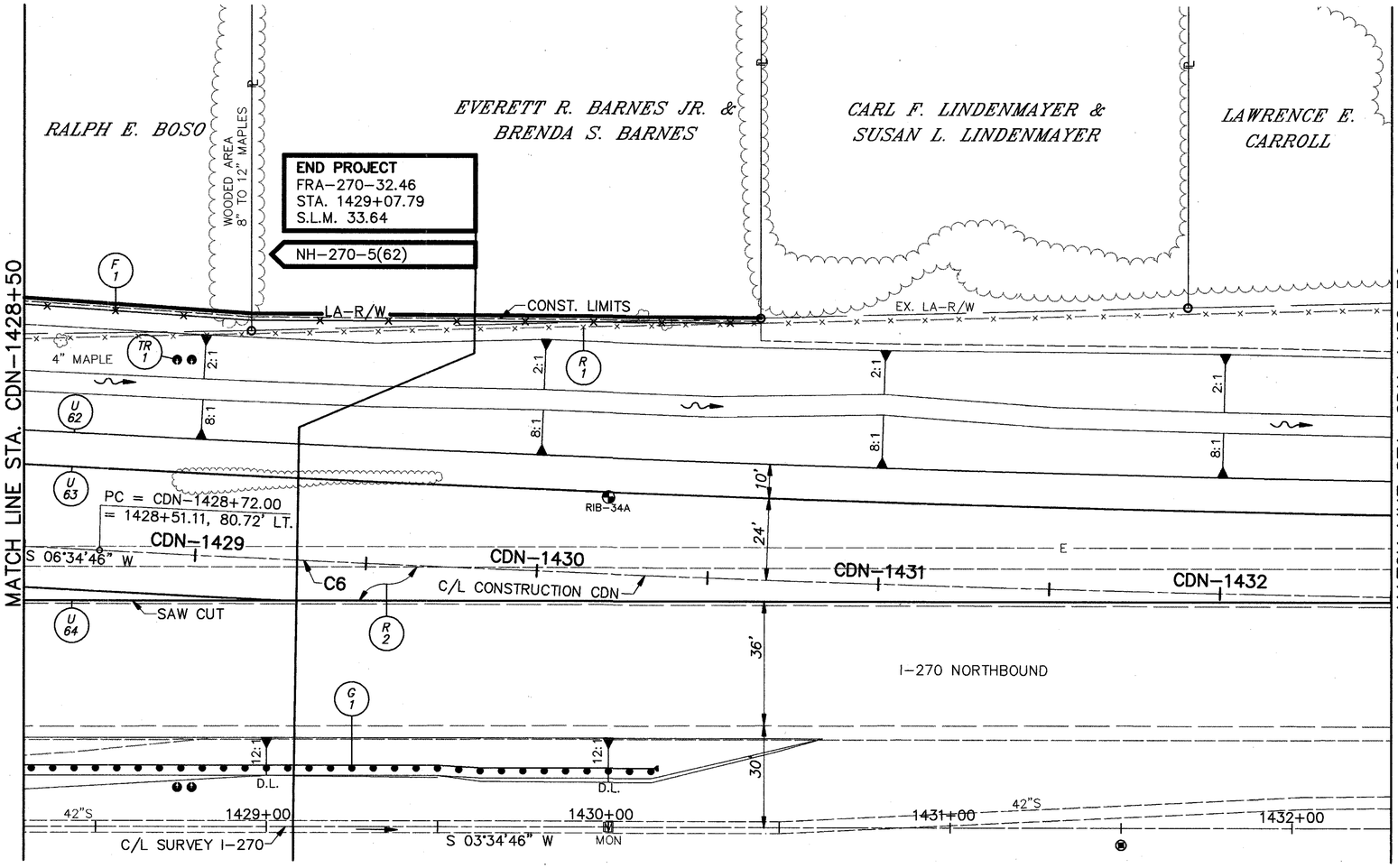

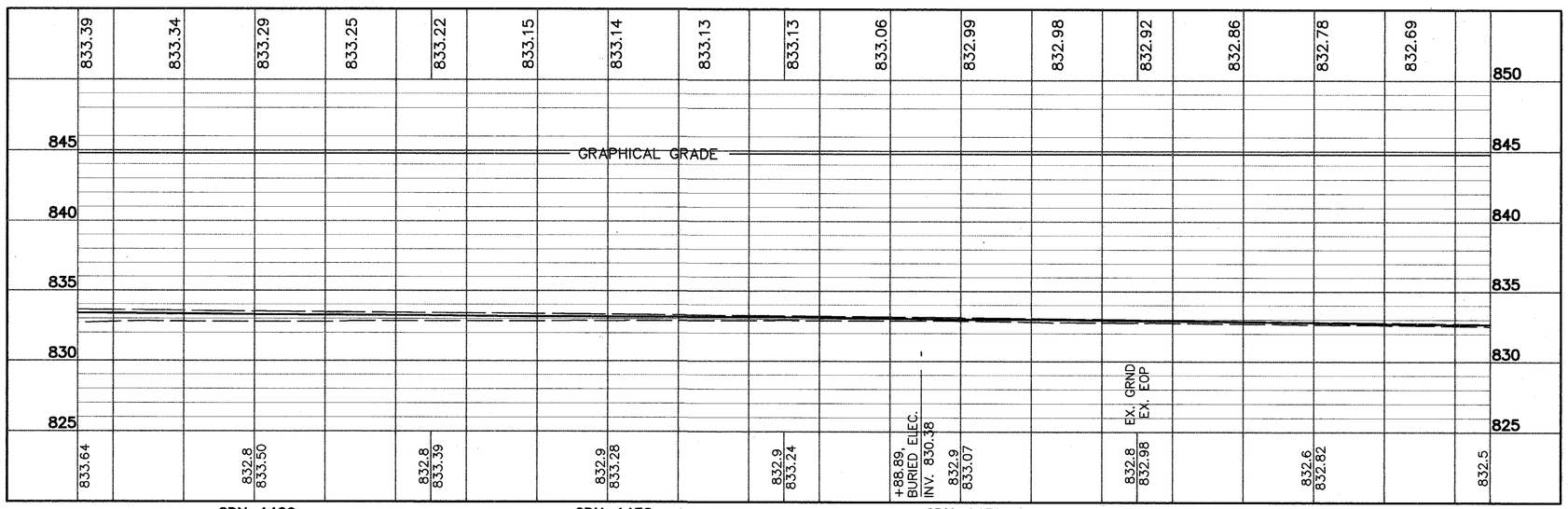

CROSS REFERENCES

SHEET NO.	DESCRIPTION
4	C6 CURVE INFO.
65	U 1 UNDERDRAIN DATA AND QUANTITIES
342	TR 1 TRAFFIC CONTROL PLAN

REFERENCE No.	STATION TO STATION (ALL STATIONING REFERS TO CDN ALIGNMENT)	SIDE	607 FENCE, TYPE CL	202 FENCE REMOVED	606 ANCHOR ASSEMBLY, TYPE E	606 GUARDRAIL, TYPE 5	202 PAVEMENT REMOVED
			L.F.	L.F.	EA.	L.F.	S.Y.
F1	1428+50 ~ 1430+63	LT.	215				
R1	1428+50 ~ 1430+63	LT.		215			
R2	1428+50 ~ 1432+50	RT.					444
G1	1428+49.21 ~ 1430+35.64	RT.			1	162.5	
SHEET TOTALS			215	215	1	162.5	444

N

0 10 20 40 HORIZONTAL SCALE IN FEET

CALC. BY: G.J.W. DATE: 2/2/94
CHKD. BY: M.F.J. DATE: 12/5/94

PLAN & PROFILE
STA. CDN-1428+50 TO STA. CDN-1432+50

FRA-270-32.46

113
59

DESIGN01
CDN-SUMM, MN4
PLOT SCALE...
COL #28
C:\DRAWNG\06092306\PLAN\06092P18.DWG
FEBRUARY-13-1995

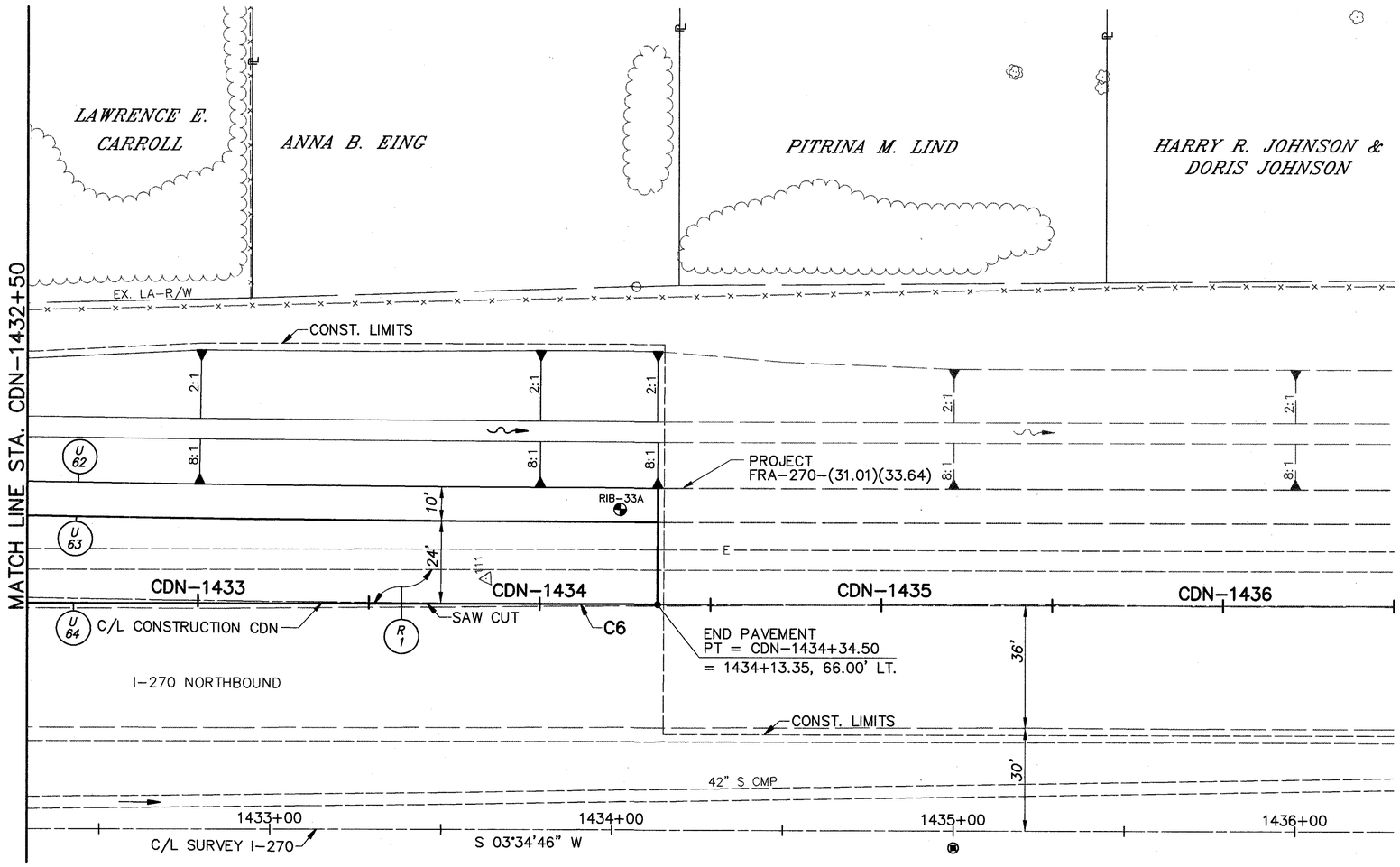

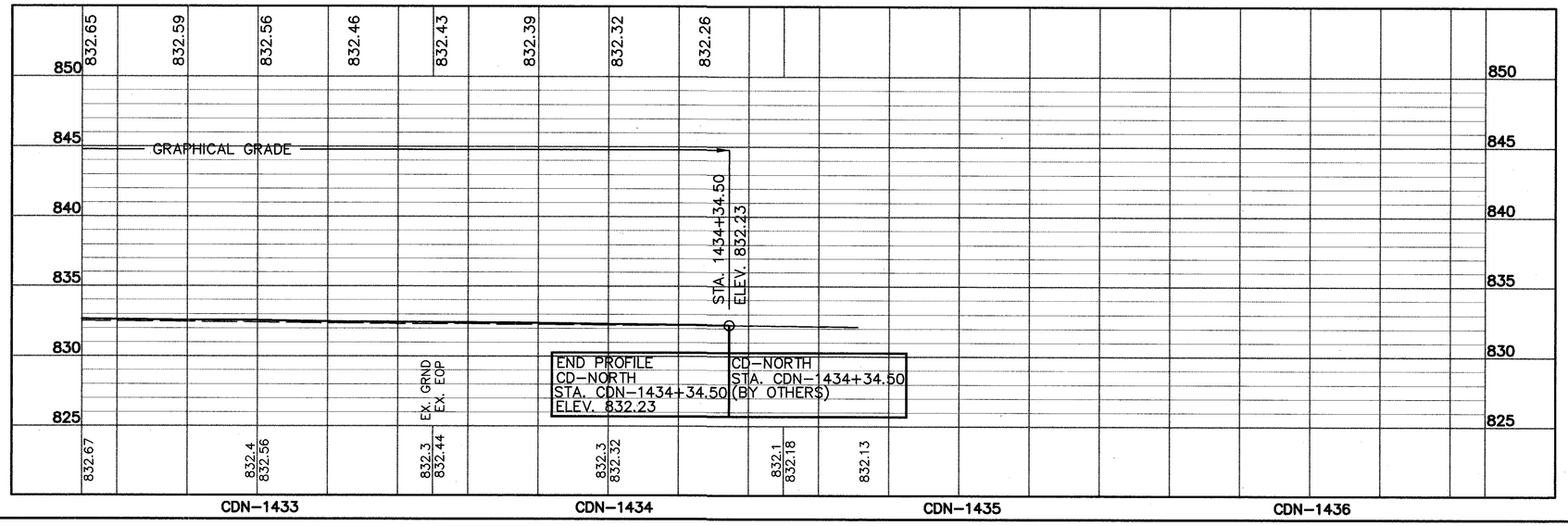

CROSS REFERENCES

SHEET NO.	DESCRIPTION
4	C6 CURVE INFO.
65	(U 1) UNDERDRAIN DATA AND QUANTITIES
362	⊛ LIGHTING PLAN

REFERENCE No.	STATION TO STATION (ALL STATIONING REFERS TO CDN ALIGNMENT)	SIDE	PAVEMENT REMOVED 202 S.Y.
R1	1432+50 ~ 1435+07.65	RT.	286
SHEET TOTALS			286

HORIZONTAL SCALE IN FEET: 0, 10, 20, 40

CALC'D BY: GJW DATE: 2/2/94
CHK'D BY: MF-J DATE: 12/5/94

PLAN & PROFILE
STA. CDN-1432+50 TO STA. CDN-1436+50.00

FRA-270-32.46

114
593

PLOT SCALE
COL #25 C:\DRAWING\06092306\PLAN\06092P19.DWG FEBRUARY-11-1995

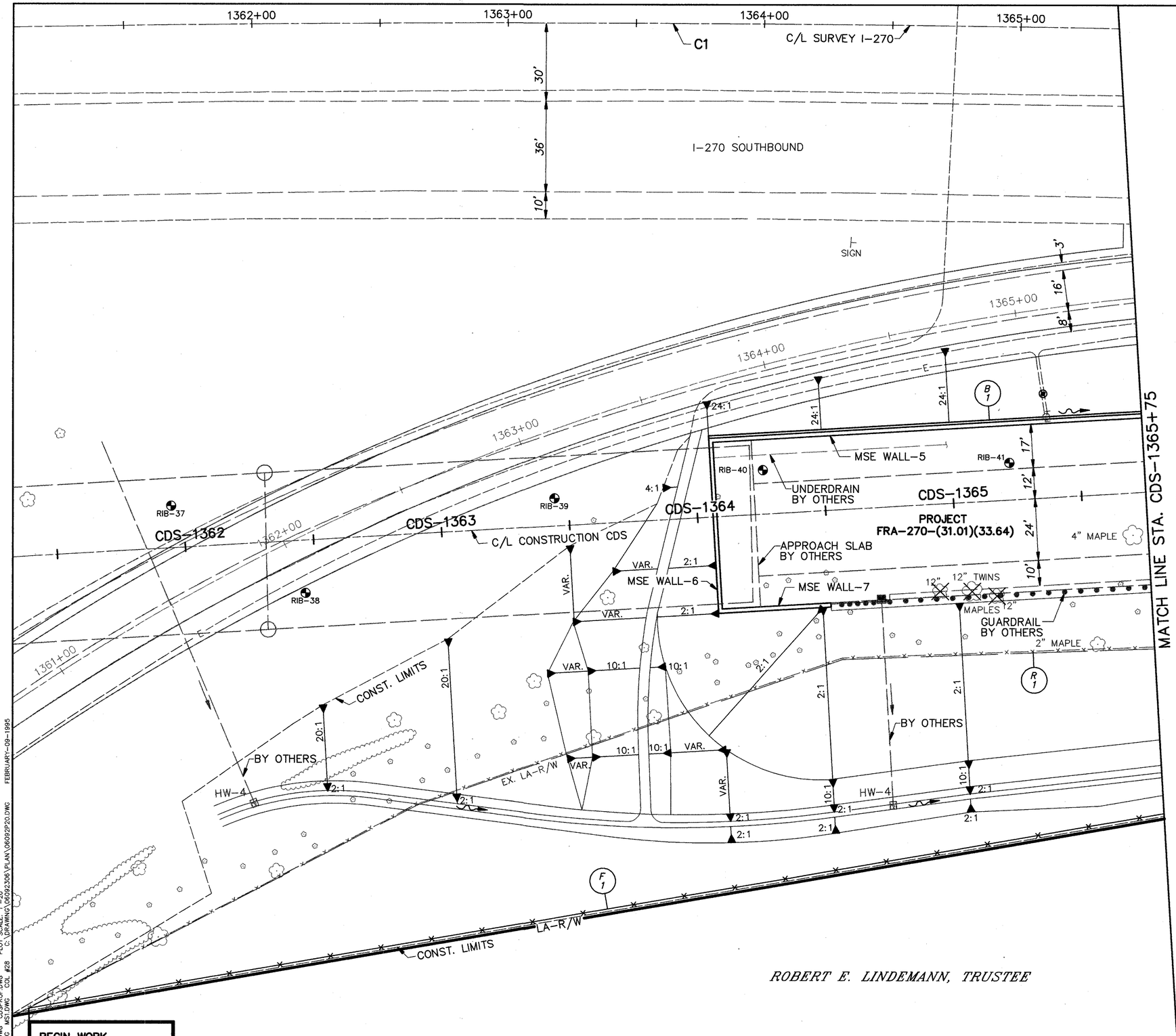

CROSS REFERENCES

SHEET NO.	DESCRIPTION	SHEET NO.	DESCRIPTION
4	C1 CURVE INFO.	445	MSE WALL-7
116	ROADWAY PROFILE	362	⊗ ℄ LIGHTING PLAN
443	MSE WALL-5		
445	MSE WALL-6		

REFERENCE No.	STATION TO STATION (ALL STATIONING REFERS TO CDS ALIGNMENT)	SIDE	622 CONCRETE BARRIER, TYPE D, AS PER PLAN A L.F.	607 FENCE, TYPE CL L.F.	202 FENCE REMOVED L.F.
B1	1364+06 ~ 1365+75	LT.	169		
R1	1361+28.67 ~ 1365+75	RT.			470
F1	1361+28.67 ~ 1365+75	RT.		450	
SHEET TOTALS			169	450	470

HORIZONTAL SCALE IN FEET
0 10 20 40

CALC. GJW DATE: 2/2/94
CHKD. MFJ DATE: 12/5/94

PLAN
CDS START TO STA. CDS-1365+75

FRA-270-32.46

115
593

PLOT SCALE: 1"=20
C:\DRAWNG\06092306\PLAN\06092P20.DWG
FEBRUARY-09-1995
CDS-SUMM.DWG CDSPROF.DWG
DESIGN01.DWG MS1.DWG CDL #28

PLOT SCALE...
COL #28 C:\DRAWING\06092306\PLAN\0609PR20.DWG FEBRUARY-10-1995

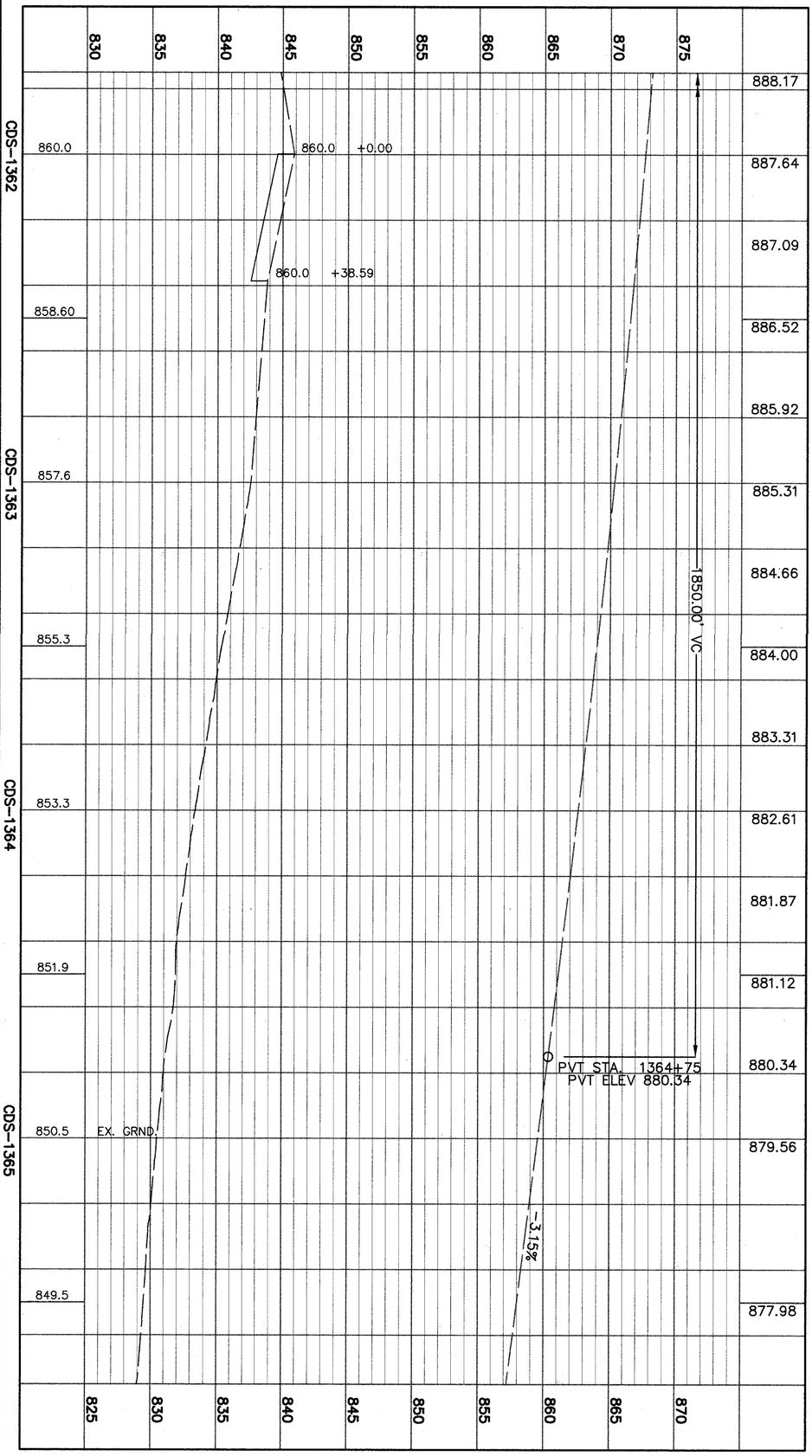

LEGEND:

EXISTING EDGE OF PAVEMENT, MAINLINE I-270

EXISTING PROFILE GRADE

PROPOSED PROFILE GRADE

116 / 597	FRA-270-32.46	PROFILE CDS-START TO STA. CDS-1365+75	CALC BY: GJW DATE: 3/15/94 CHKD BY: TAZ DATE: 1/19/95 0 20 10 40 HORIZONTAL SCALE IN FEET N

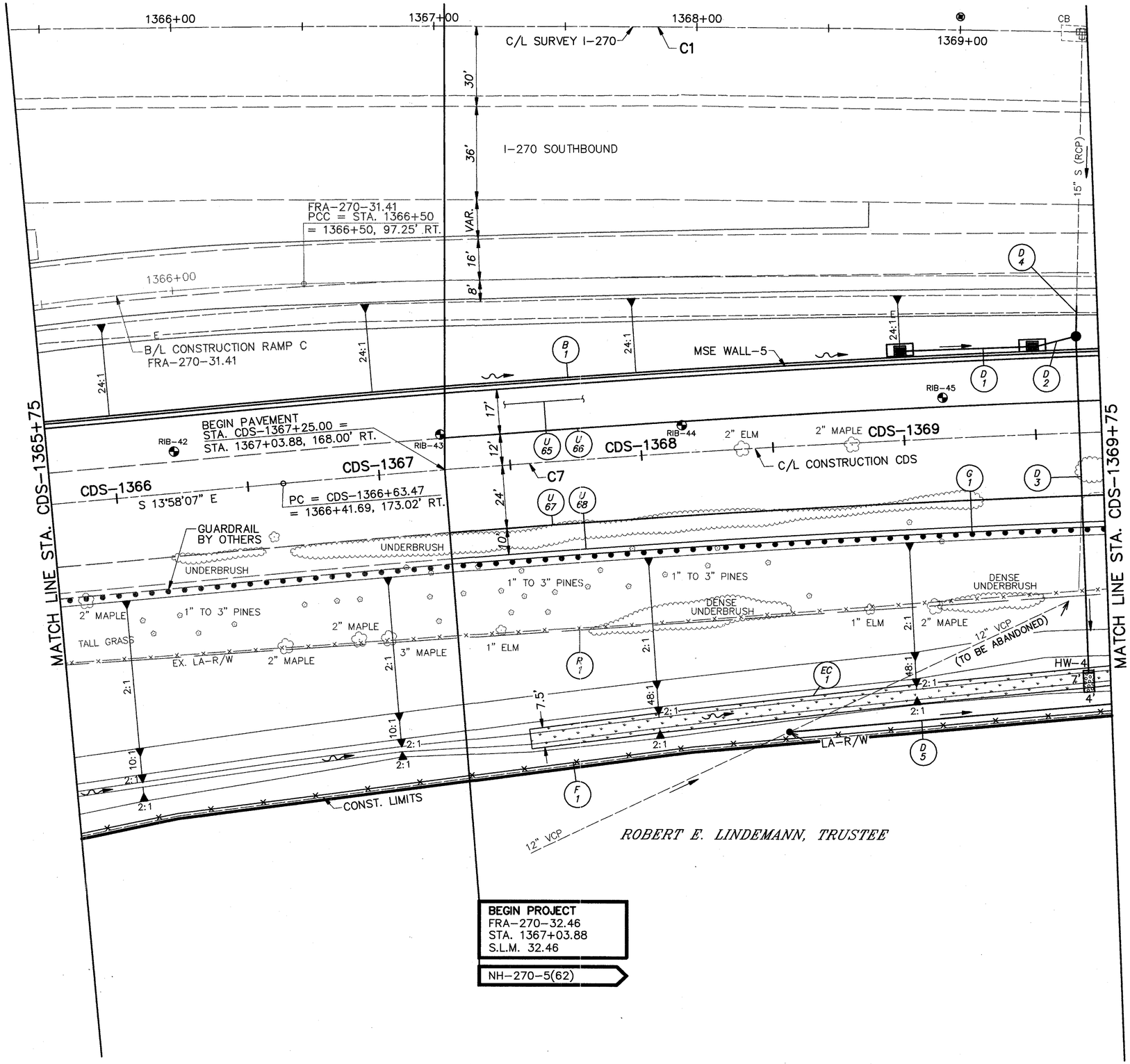

BEGIN PROJECT
FRA-270-32.46
STA. 1367+03.88
S.L.M. 32.46

NH-270-5(62)

CROSS REFERENCES

SHEET NO.	DESCRIPTION	SHEET NO.	DESCRIPTION
4	C1, C7 CURVE INFO.	443	MSE WALL-5
118	ROADWAY PROFILE		
67	(U 1) UNDERDRAIN DATA AND QUANTITIES		
362	LIGHTING PLAN		

REFERENCE No.	STATION TO STATION (ALL STATIONING REFERS TO CDS ALIGNMENT)	SIDE	622 CONCRETE BARRIER, TYPE D, AS PER PLAN A (L.F.)	607 FENCE, TYPE CL (L.F.)	606 GUARDRAIL, TYPE 5 (L.F.)	202 FENCE REMOVED (L.F.)
B1	1365+75 ~ 1369+75	LT.	362			
F1	1365+75 ~ 1369+75	RT.		395		
G1	1367+29.16 ~ 1369+80.73	RT.			250	
R1	1365+75 ~ 1369+75	RT.				397
SHEET TOTALS			362	395	250	397

REFERENCE No.	STATION TO STATION (ALL STATIONING REFERS TO CDS ALIGNMENT)	SIDE	604 INLET, NO. 3E (EA.)	604 MANHOLE, NO. 3 (EA.)	603 18" CONDUIT, TYPE B 706.02 (2000 DLOAD) (L.F.)	603 15" CONDUIT, TYPE C (L.F.)	603 15" CONDUIT, TYPE B 706.02 (L.F.)	602 CONCRETE MASONRY (C.Y.)	601 ROCK CHANNEL PROTECTION, TYPE C WITH FILTER, T = 18" (C.Y.)
D1	1369+00 ~ 1369+50	LT.	1			50			
D2	1369+50 ~ 1369+67	LT.	1			17			
D3	1369+67	L-R		1	128			0.33	1.56
D4	1369+67	LT.					12		
SHEET TOTALS			2	1	128	67	12	0.33	1.56

REFERENCE No.	STATION TO STATION (ALL STATIONING REFERS TO CDS ALIGNMENT)	SIDE	603 15" CONDUIT, TYPE F (L.F.)	670 DITCH EROSION PROTECTION (S.Y.)	604 INSPECTION WELL, 24" (EA.)
D5	1368+50 ~ 1369+75	RT.	120		1
EC1	1367+50 ~ 1369+75	RT.		185	
SHEET TOTALS			120	185	1

HORIZONTAL SCALE IN FEET
0 10 20 40

CALC: G.UV DATE: 2/2/94
CHK: M.F.J DATE: 12/5/94

PLAN
CDS-1365+75 TO STA. CDS-1369+75

FRA-270-32.46

117
593

CDS-SUMM.DWG CDSPROF.DWG
DESIGN01.DWG MS1.DWG COL #28
PLOT SCALE: 1"=20
C:\DRAWING\06092306\PLAN\06092P21.DWG FEBRUARY-09-1995

LEGEND:

EXISTING EDGE OF PAVEMENT, MAINLINE I-270

EXISTING PROFILE GRADE

PROPOSED PROFILE GRADE

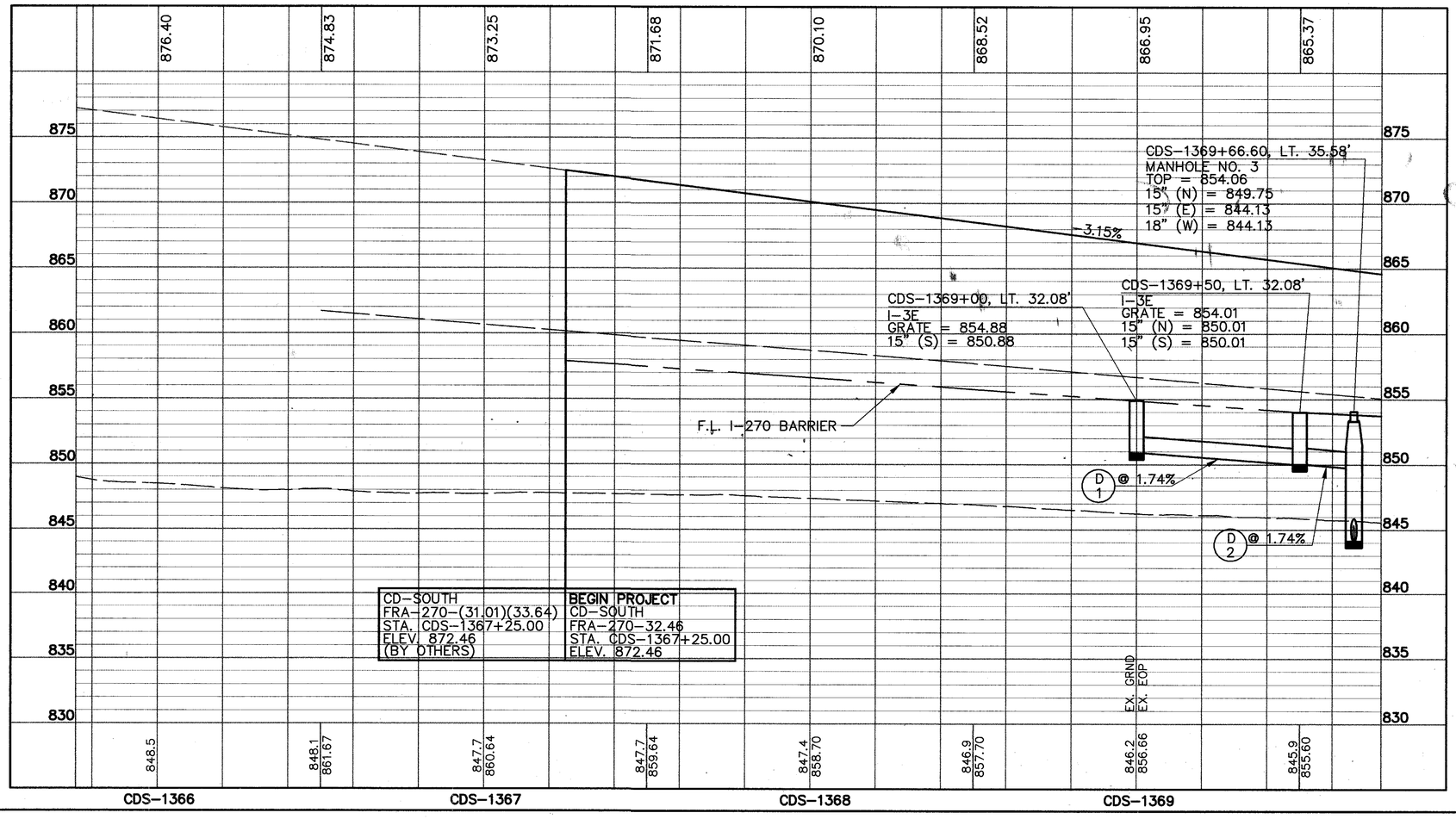

PLOT SCALE... COL #28 C:\DRAWING\06092306\PLAN\0609PR21.DWG FEBRUARY-10-1995

0 10 20 40
HORIZONTAL SCALE IN FEET

CALC. BY: GJW DATE: 3/15/94
CHKD. BY: TAZ DATE: 1/19/95

PROFILE
STA. CDS-1365+75 TO STA. CDS-1369+75

FRA-270-32.46

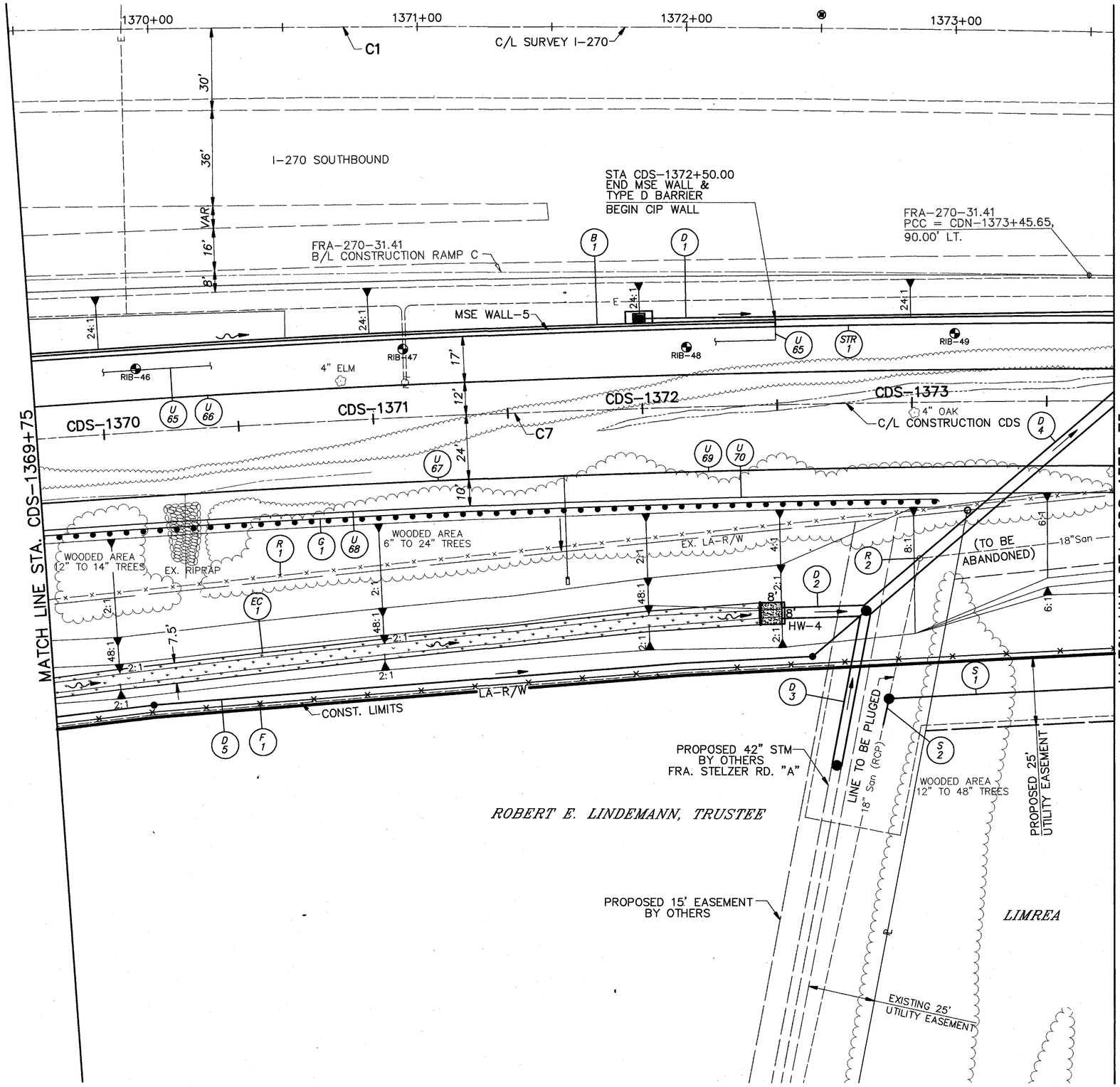

CROSS REFERENCES

SHEET NO.	DESCRIPTION	SHEET NO.	DESCRIPTION
4	C1, C7 CURVE INFO.	443	MSE WALL-5
120	ROADWAY PROFILE	511	(STR 1) SITE PLAN
315	DRAINAGE PROFILE	362	LIGHTING PLAN
67	(U 1) UNDERDRAIN DATA AND QUANTITIES	329	SANITARY PROFILE

REFERENCE No.	STATION TO STATION (ALL STATIONING REFERS TO CDS ALIGNMENT)	SIDE	622 CONCRETE BARRIER, TYPE D, AS PER PLAN	607 FENCE, TYPE CL	606 GUARDRAIL, TYPE 5	606 ANCHOR ASSEMBLY, TYPE T	202 FENCE REMOVED	202 MANHOLE ABANDONED
			L.F.	L.F.	L.F.	EA.	L.F.	L.F.
B1	1369+75 ~ 1372+50	LT.	257					
F1	1369+75 ~ 1373+75	RT.		395				
G1	1369+80.73 ~ 1373+07.79	RT.			312.5	1		
R1	1369+75 ~ 1373+75	RT.					397	
R2	1373+02 ~ 1373+75	RT.						1
SHEET TOTALS			257	395	312.5	1	397	1

REFERENCE No.	STATION TO STATION (ALL STATIONING REFERS TO CDS ALIGNMENT)	SIDE	604 INLET, NO. 3E	604 MANHOLE, NO. 3, WITH FLAT TOP 72" DIAMETER	603 15" CONDUIT, TYPE B	603 42" CONDUIT, TYPE C	603 48" CONDUIT, TYPE C	602 CONCRETE MASONRY	601 RIPRAP USING 6" REIN. CONCRETE SLAB
			EA.	EA.	L.F.	L.F.	L.F.	C.Y.	C.Y.
D1	1372+00 ~ 1373+75	LT.	1		176				
D2	1372+50 ~ 1372+83	RT.					32	1.40	1.63
D3	1372+69 ~ 1372+83	RT.		1		58			
SHEET TOTALS			1	1	176	58	32	1.40	1.63

REFERENCE No.	STATION TO STATION (ALL STATIONING REFERS TO CDS ALIGNMENT)	SIDE	604 MANHOLE, NO. 3, 84" DIAMETER	603 48" CONDUIT, TYPE B	670 DITCH EROSION PROTECTION	604 MANHOLE, NO.3, SAN.	603 18" CONDUIT, TYPE B, FOR SANITARY 706.02 W/ 706.11	603 15" CONDUIT, TYPE F	604 INSPECTION WELL, 24"
			EA.	L.F.	S.Y.	EA.	L.F.	L.F.	EA.
D4	1372+83 ~ 1373+75	L-R	1	121					
D5	1369+75 ~ 1372+82	RT.						306	2
EC1	1369+75 ~ 1372+50	RT.			220				
S1	1372+89 ~ 1373+75	RT.				1	84		
S2	1372+89	RT.					10		
SHEET TOTALS			1	121	220	1	94	306	2

HORIZONTAL SCALE IN FEET
0 10 20 40

CADD BY: G.J.W. DATE: 2/7/94
CHECKED BY: M.F.J. DATE: 12/5/94

PLAN
CDS-1369+75 TO STA. CDS-1373+75

FRA-270-32.46

119
593

CDS-SUMM.DWG CDSPROF.DWG MS1.DWG DESIGN01.DWG COL #28 PLOT SCALE: 1"=20 C:\DRAWING\06092306\PLAN 06092P22.DWG FEBRUARY-09-1995

LEGEND:

EXISTING EDGE OF PAVEMENT, MAINLINE I-270 ——— ——— ———

EXISTING PROFILE GRADE — — — — —

PROPOSED PROFILE GRADE ———————

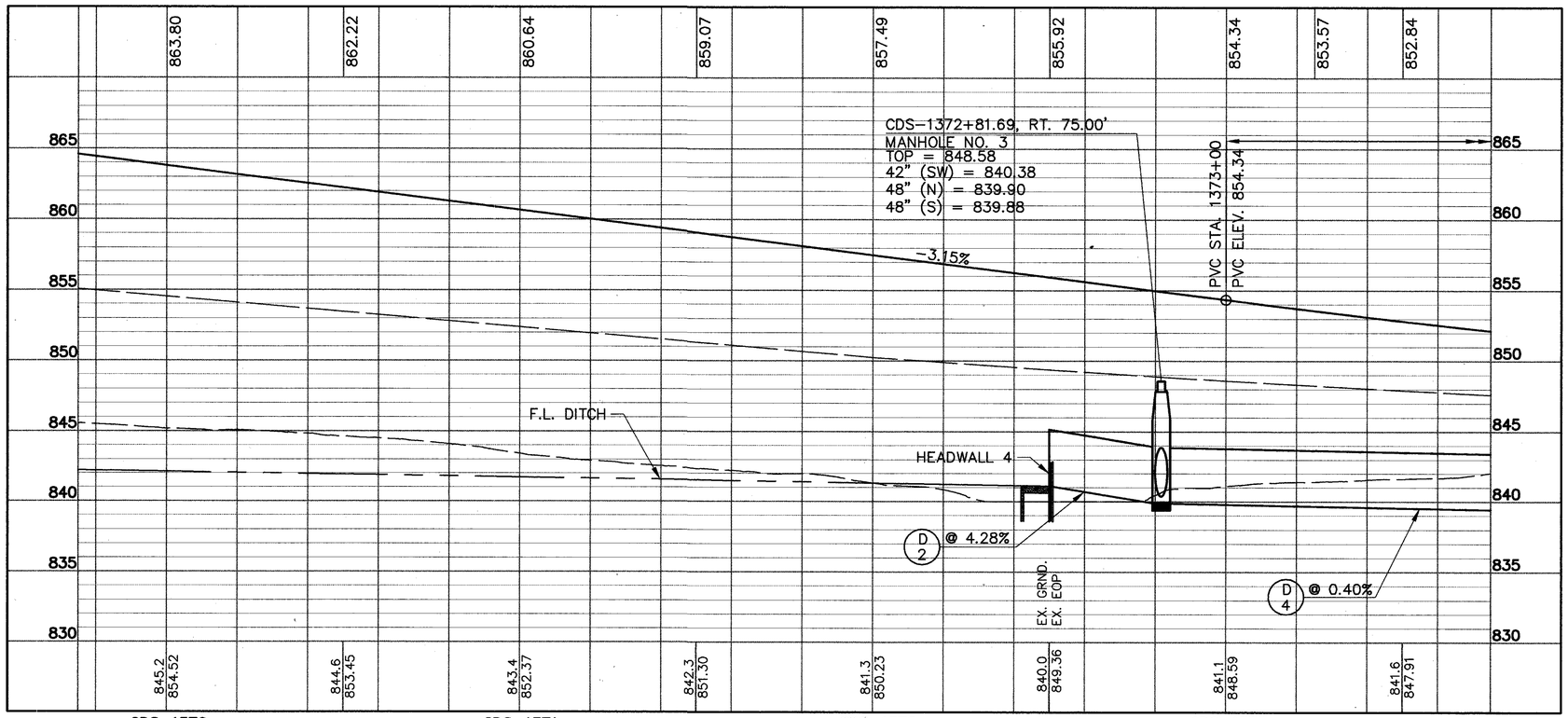

PLOT SCALE... C:\DRAWING\06092306\PLAN\0609PR22.DWG FEBRUARY-10-1995
COL #28

CALC. BY: GJW DATE: 3/15/94
CHKD. BY: TAZ DATE: 1/19/95

0 10 20 40
HORIZONTAL SCALE IN FEET

PROFILE
STA. CDS-1369+75 TO STA. CDS-1373+75

FRA-270-32.46

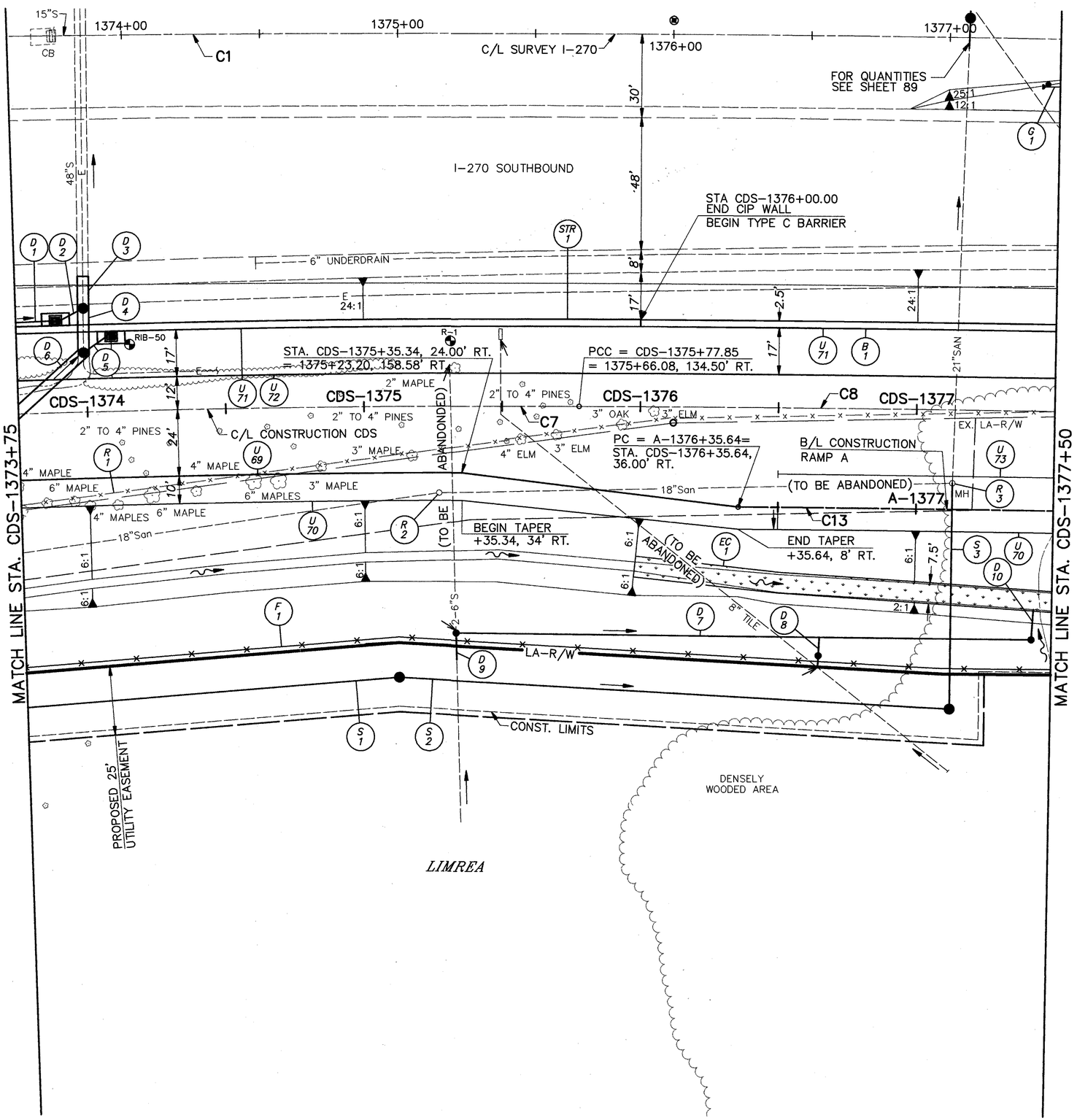

CDS-SUMM.DWG CDSPROF.DWG PLOT SCALE: 1" = 20'
DESIGN3.DWG #STD.DWG COL #28 C:\DRAWING\06923365\PLAN\06923P23.DWG FEBRUARY--14--1995

CROSS REFERENCES

SHEET NO.	DESCRIPTION	SHEET NO.	DESCRIPTION
4	C1, C7, C8, C13 CURVE INFO.	511	STR 1 SITE PLAN
122	ROADWAY PROFILE	315	DRAINAGE PROFILE
329	S 1 SANITARY PROFILE	362	LIGHTING PLAN
67	U 1 UNDERDRAIN DATA AND QUANTITIES		

REFERENCE No.	STATION TO STATION (STATIONING REFERS TO CDS ALIGNMENT)	SIDE	622 CONCRETE BARRIER, TYPE C L.F.	607 FENCE, TYPE CL L.F.	202 FENCE REMOVED L.F.	202 MANHOLE ABANDONED EA.	202 MANHOLE ABANDONED, AS PER PLAN EA.	606 ANCHOR ASSEMBLY, TYPE E EA.
B1	1376+00 ~ 1377+50	LT.	150					
F1	1373+75 ~ 1377+50	RT.		372				
R1	1373+75 ~ 1377+50	RT.			376			
R2	1375+27	RT.				1		
R3	1373+13	RT.					1	
G1	1377+45.69 ~ 1377+70.45	LT.						1
SHEET TOTALS			150	372	376	1	1	1

REFERENCE No.	STATION TO STATION (STATIONING REFERS TO CDS ALIGNMENT)	SIDE	604 INLET, NO. 3E EA.	604 MANHOLE, NO. 3, 72" DIAMETER EA.	603 15" CONDUIT, TYPE B L.F.	603 48" CONDUIT, TYPE B L.F.	603 12" CONDUIT, TYPE F L.F.	604 INSPECTION WELL, 24" EA.	604 MANHOLE NO. 3, WITH FLAT TOP, 72" DIA. EA.
D1	1373+75 ~ 1373+88	LT.			15				
D2	1373+88 ~ 1374+00	LT.	1		11				
D3	1374+00	LT.				11			1
D4	1374+00	LT.		1		16			
D5	1374+00 ~ 1374+09	LT.	1		12				
D6	1373+75 ~ 1374+00	LT.				32			
D7	1375+32 ~ 1377+44	RT.					218	1	
D8	1376+64	RT.					10	1	
D9	1375+32	RT.					10		
D10	1376+64	RT.					10	1	
SHEET TOTALS			2	1	38	59	248	3	1

REFERENCE No.	STATION TO STATION (* STATIONING REFERS TO RAMP A ALIGNMENT)	SIDE	604 MANHOLE, NO. 3, SAN. EA.	603 CONDUIT, TYPE B FOR SANITARY 706.02 WITH 706.11 L.F.	603 CONDUIT, TYPE B FOR SANITARY 706.02 WITH 706.11 L.F.	670 DITCH EROSION PROTECTION S.Y.
EC1	1376+00 ~ 1377+50	RT.				127
S1	1373+75 ~ 1375+05	RT.		135		
S2	1375+05 ~ 1377+09	RT.	1	199		
S3	*1377+09	L-R	1		82	
SHEET TOTALS			2	334	82	127

HORIZONTAL SCALE IN FEET
0 10 20 40

CALC. BY: GJW DATE: 2/2/94
CHKD. BY: MFJ DATE: 12/5/94

PLAN
STA. CDS-1373+75 TO STA. CDS-1377+50

CDS-1373+75

FRA-270-32.46

121
593

LEGEND:

EXISTING EDGE OF PAVEMENT, MAINLINE I-270 ——— ——— ———

EXISTING PROFILE GRADE — — — — — —

PROPOSED PROFILE GRADE ———————

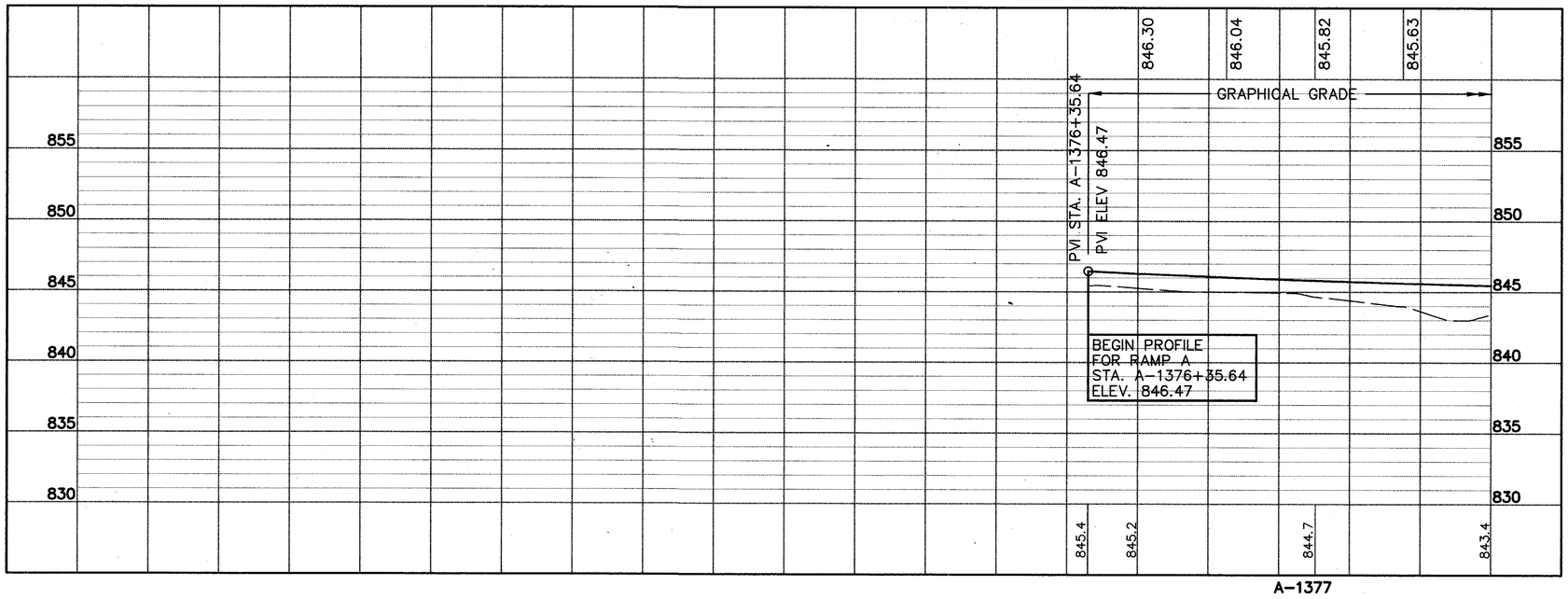

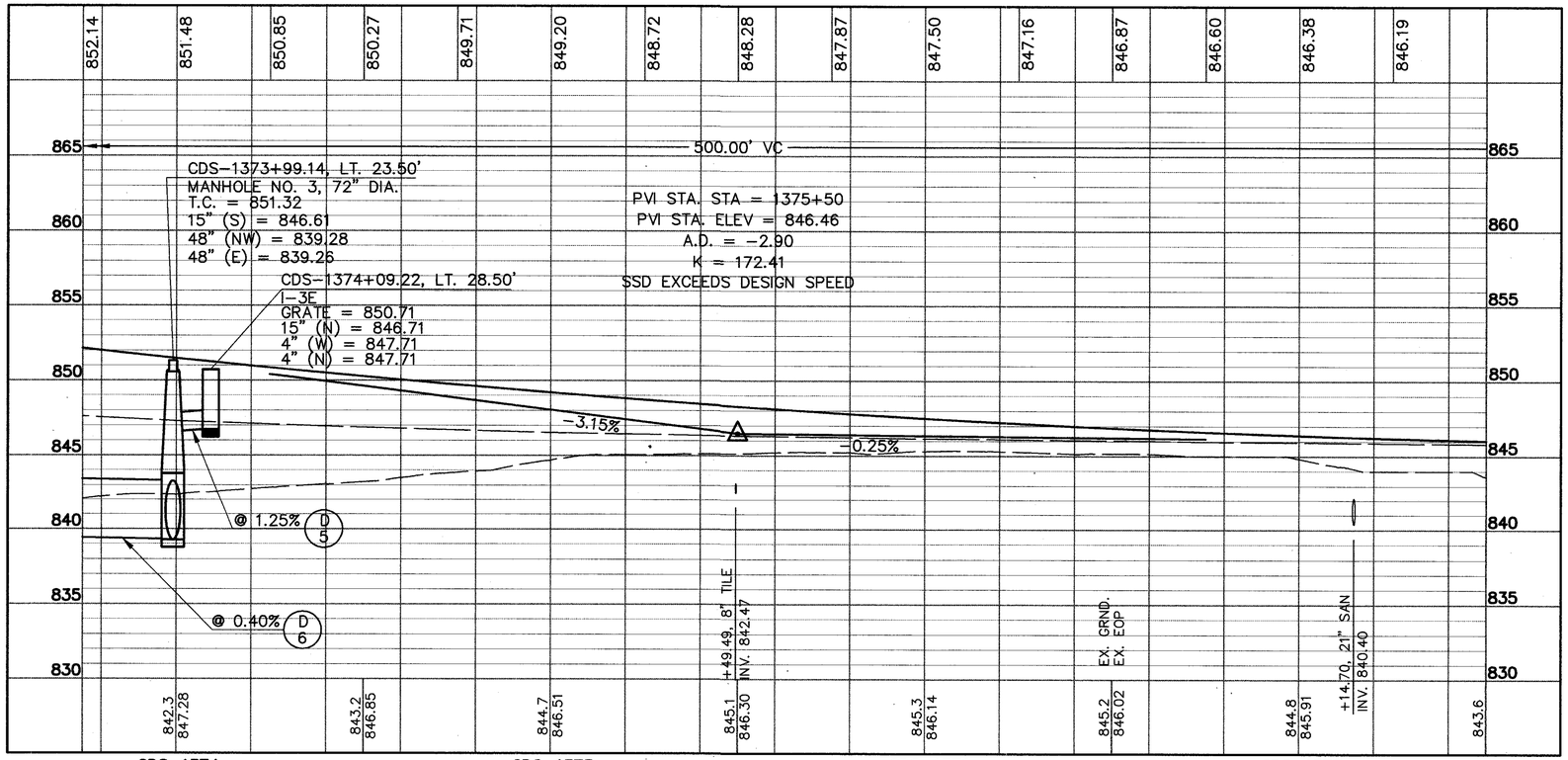

PLOT SCALE ...
COL #25 C:\DRAWING\06092306\PLAN\0609PR23.DWG FEBRUARY-10-1995

CALC BY: GJW DATE: 3/15/94
CHKD BY: TAZ DATE: 1/19/95

0 20 40
10
HORIZONTAL SCALE IN FEET

PROFILE
STA. CDS-1373+75 TO STA. CDS-1377+50

FRA-270-32.46

122
593

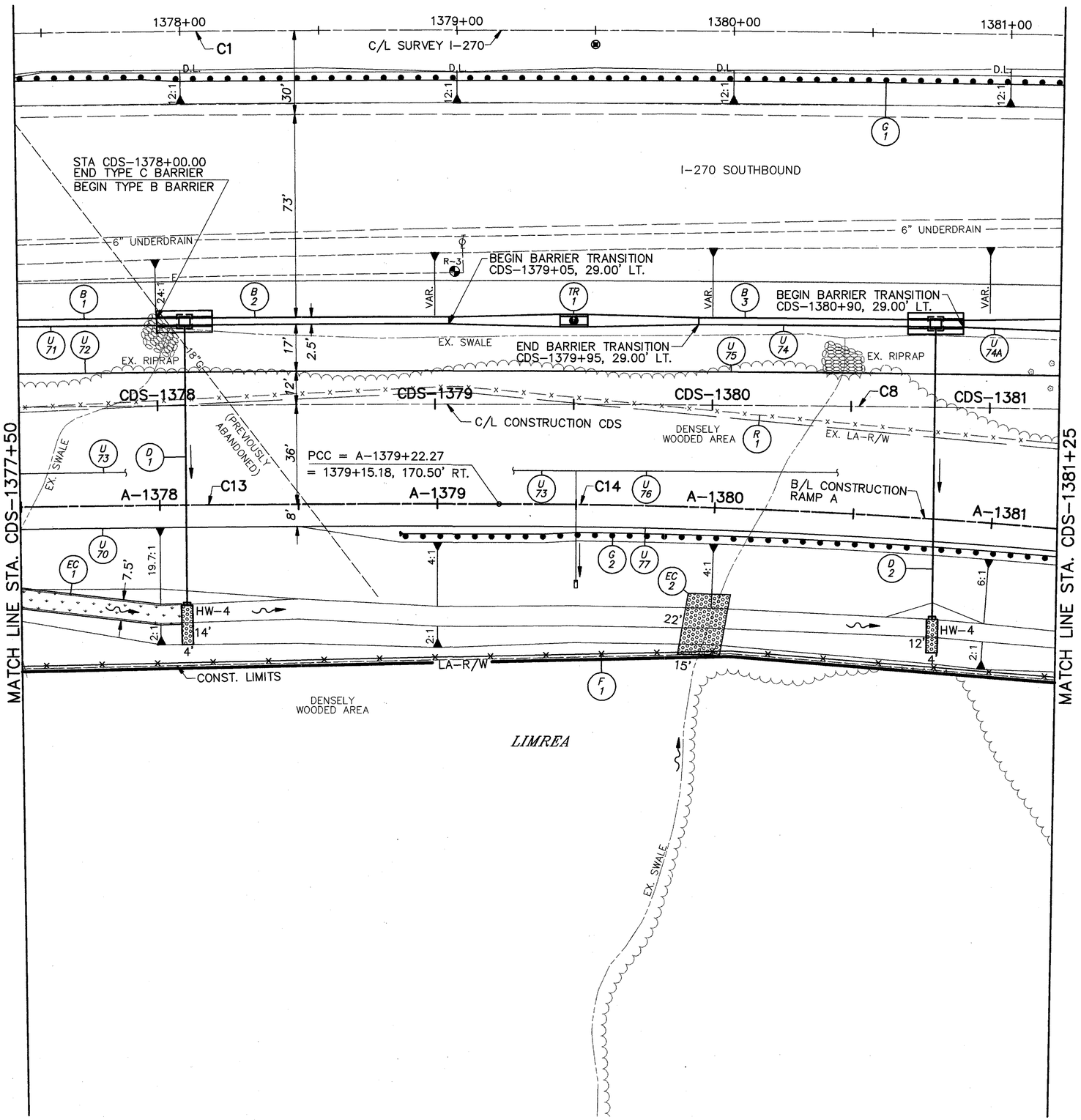

CROSS REFERENCES

SHEET NO.	DESCRIPTION	SHEET NO.	DESCRIPTION
4	C1, C8, C13, C14 CURVE INFO.	362	⊗ ℄ LIGHTING PLAN
124	ROADWAY PROFILE		
67	U 1 UNDERDRAIN DATA AND QUANTITIES		
342	TR 1 TRAFFIC CONTROL PLAN		

REFERENCE No.	STATION TO STATION (* STATIONING REFERS TO RAMP A ALIGNMENT)	SIDE	622 CONCRETE BARRIER, TYPE C L.F.	622 CONCRETE BARRIER, TYPE B L.F.	607 FENCE, TYPE CL L.F.	202 FENCE REMOVED L.F.	606 GUARDRAIL, TYPE 5 L.F.	606 ANCHOR ASSEMBLY, TYPE E EA.	622 CONCRETE BARRIER, TYPE B-50 L.F.
B1	1377+50 ~ 1378+00	LT.	50						
B2	1378+00 ~ 1379+45	LT.		125					
B3	1379+55 ~ 1381+25	LT.							150
F1	*1377+50 ~ 1381+23	RT.			372				
R1	1377+50 ~ 1381+25	RT.				376			
G1	1377+70.45 ~ 1381+29.51	LT.					362.5		
G2	1378+89.28 ~ 1381+27.05	RT.					212.5	1	
SHEET TOTALS			50	125	372	376	575	1	150

REFERENCE No.	STATION TO STATION (STATIONING REFERS TO CDS ALIGNMENT)	SIDE	604 INLET, NO. 3D EA.	603 15" CONDUIT, TYPE B L.F.	602 CONCRETE MASONRY C.Y.	601 ROCK CHANNEL PROTECTION, TYPE C WITH FILTER, T = 18" C.Y.	670 DITCH EROSION PROTECTION S.Y.	604 INLET, NO. 3D50 EA.
D1	1378+10	L-R	1	102	0.27	3.11		
D2	1380+80	L-R		107	0.27	2.67		1
EC1	1377+50 ~ 1378+05	RT.					48	
EC2	1379+88 ~ 1380+07	RT.				18.33		
SHEET TOTALS			1	209	0.54	24.11	48	1

HORIZONTAL SCALE IN FEET
0 10 20 40

CALC: GJVV DATE: 2/2/94
CHKD: MFJ DATE: 12/5/94

PLAN
CDS-1377+50 TO STA. CDS-1381+25

FRA-270-32.46

123
593

CDS-SUMM.DWG CDSPROF.DWG
DESIGNXT.DWG MST.DWG COL #28
PLOT SCALE: 1"=20
C:\DRAWING\06092305\PLAN\06092PP24.DWG
FEBRUARY-10-1995

LEGEND:

EXISTING EDGE OF PAVEMENT, MAINLINE I-270

EXISTING PROFILE GRADE

PROPOSED PROFILE GRADE

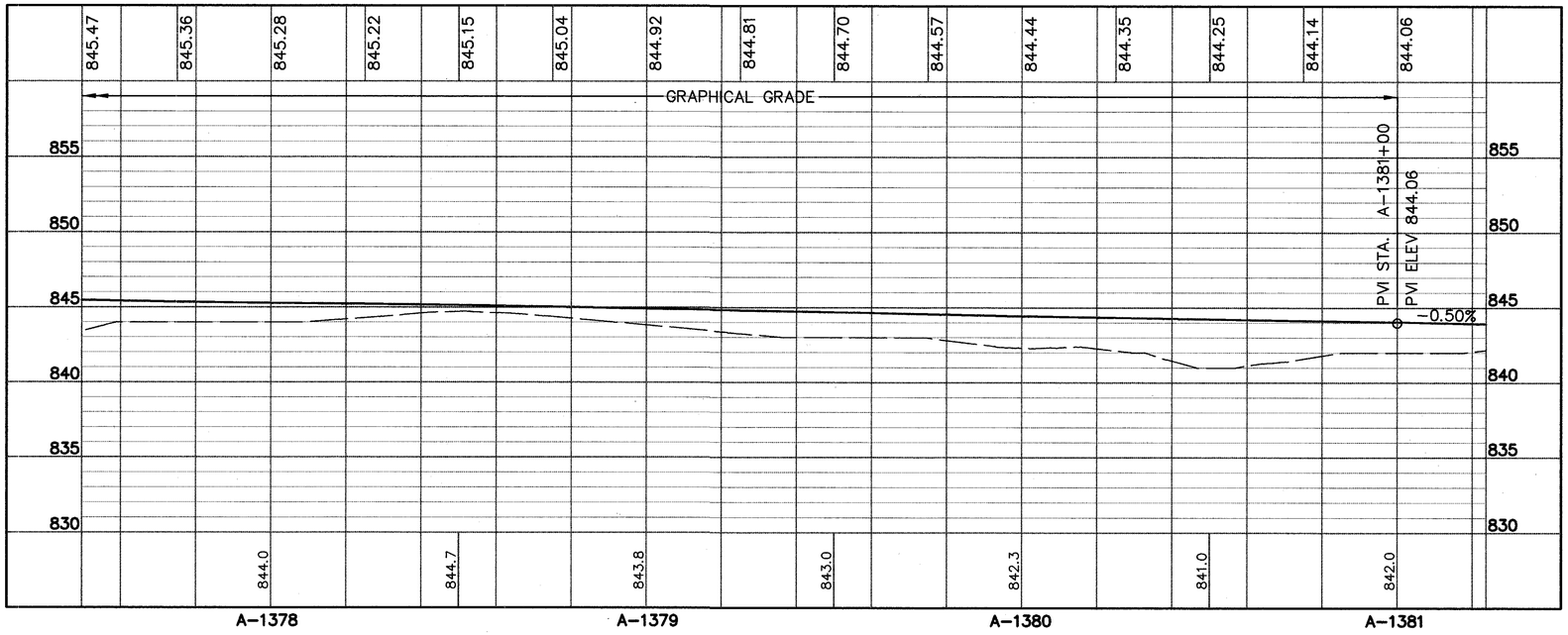

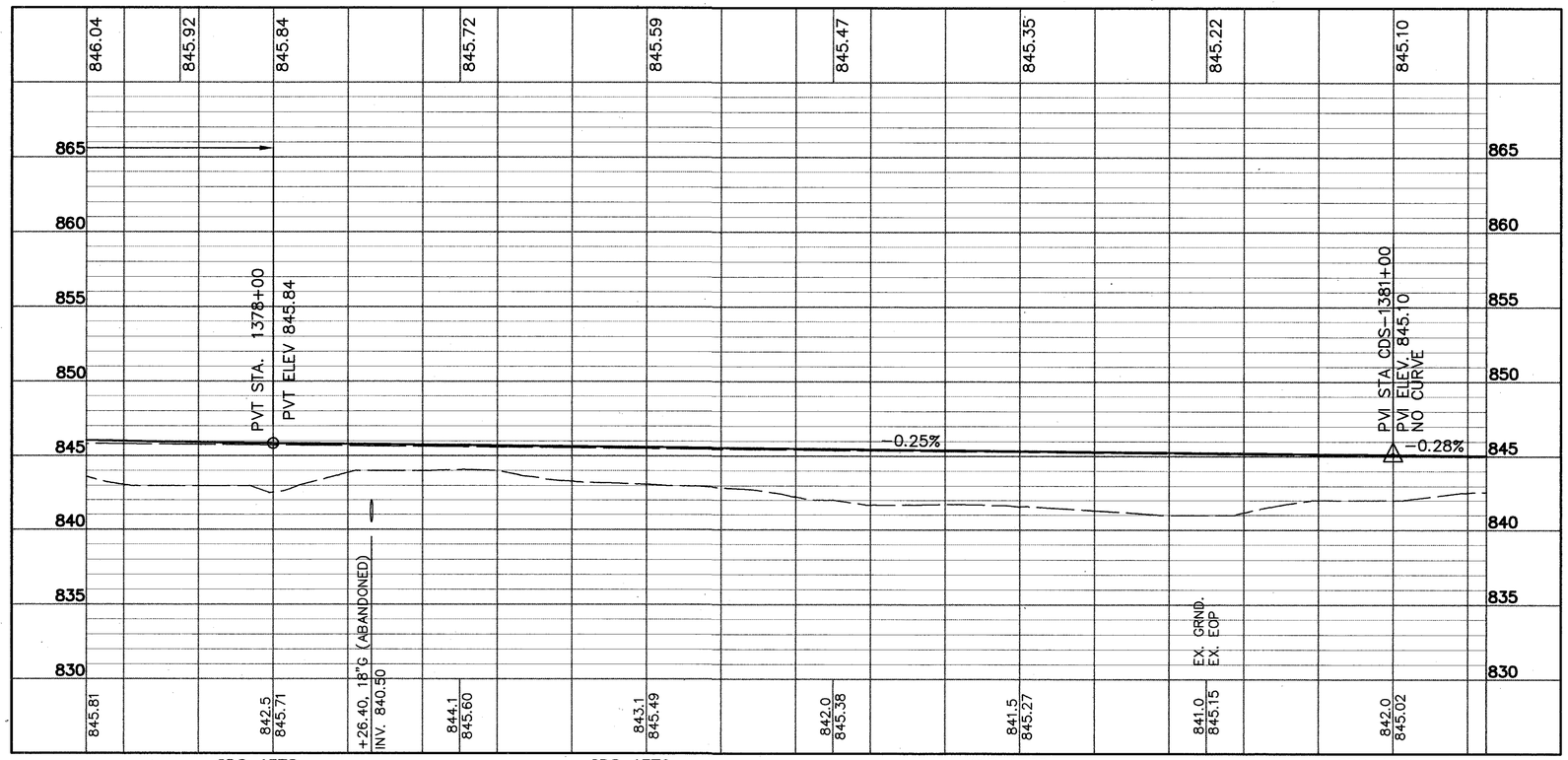

0 10 20 40
HORIZONTAL SCALE IN FEET

CALC. BY: G.J.W. DATE: 3/15/94
CHKD. BY: T.A.Z. DATE: 1/19/95

PROFILE
STA. CDS-1377+50 TO STA. CDS-1381+25

FRA-270-32.46

124
593

PLOT SCALE:
COL. #28 C:\DRAWING\06092306\PLAN\0609PR24.DWG FEBRUARY-10-1995

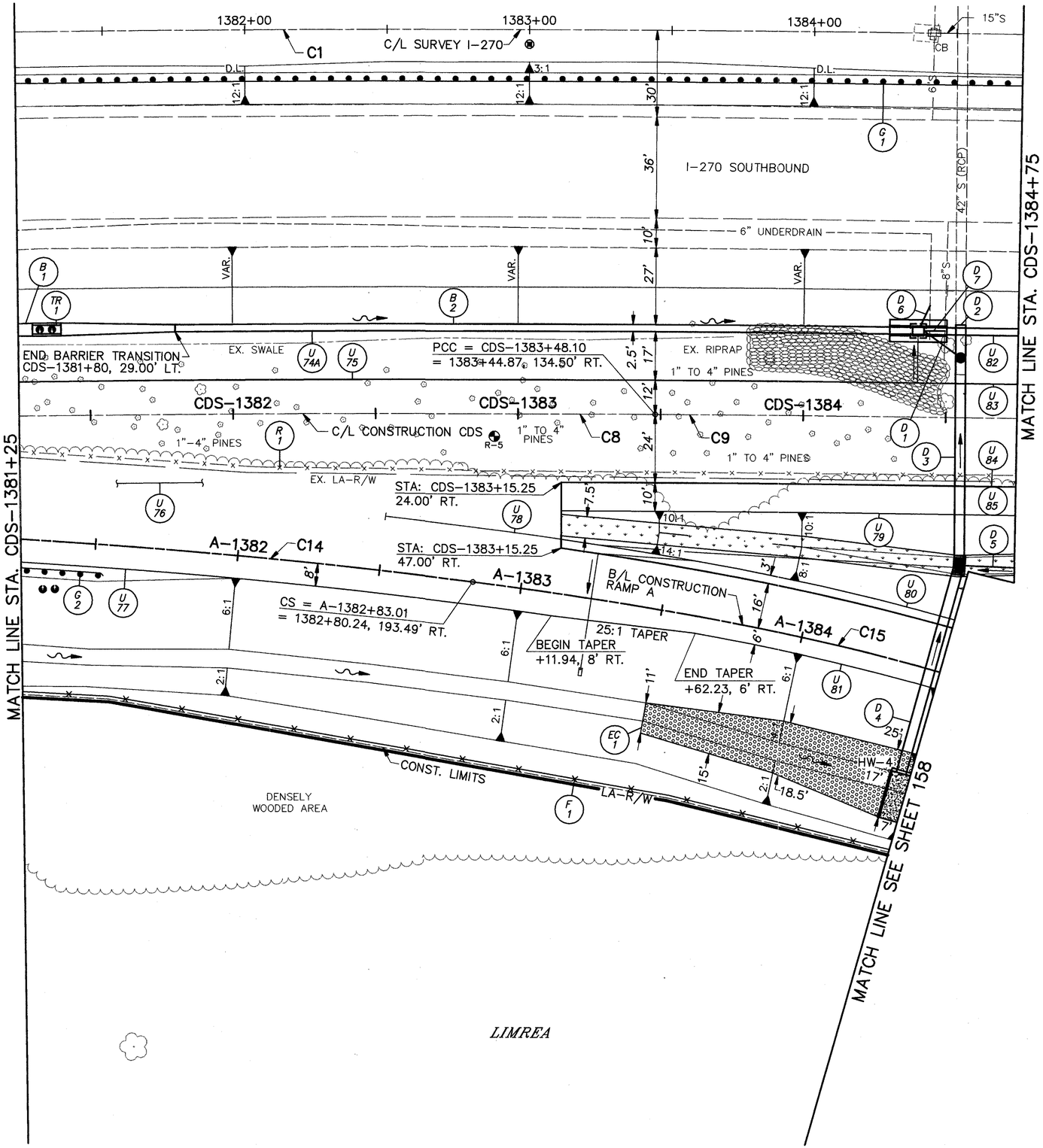

CROSS REFERENCES

SHEET NO.	DESCRIPTION		SHEET NO.	DESCRIPTION
4	C1, C8, C9	CURVE INFO.	67	U 1 UNDERDRAIN DATA AND QUANTITIES
4	C14, C15	CURVE INFO.	342	TR 1 TRAFFIC CONTROL PLAN
126	ROADWAY PROFILE		362	LIGHTING PLAN
315	DRAINAGE PROFILE			

REFERENCE No.	STATION TO STATION * STATIONING REFERS TO RAMP A ALIGNMENT	SIDE	622 CONCRETE BARRIER, TYPE B	607 FENCE, TYPE CL	202 FENCE REMOVED	606 GUARDRAIL, TYPE 5	606 ANCHOR ASSEMBLY, TYPE T	622 CONCRETE BARRIER, TYPE B50
			L.F.	L.F.	L.F.	L.F.	EA.	L.F.
B1	1381+25 ~ 1381+30	LT.						5
B2	1381+40 ~ 1384+75	LT.	315					
F1	*1381+23 ~ 1384+50	RT.		310				
R1	1381+25 ~ 1384+75	RT.			350			
G1	1381+29.51 ~ 1384+76.09	LT.				350		
G2	1381+27.05 ~ 1381+52.08	RT.				12.5	1	
SHEET TOTALS			315	310	350	362.5	1	5

REFERENCE No.	STATION TO STATION STATIONING REFERS TO CDS ALIGNMENT	SIDE	604 INLET, NO. 3D	604 MANHOLE, NO. 3 72" DIAMETER	604 CATCH BASIN, NO. 4A	603 15" CONDUIT, TYPE B	603 42" CONDUIT, TYPE B 706.02	670 DITCH EROSION PROTECTION	603 42" CONDUIT, TYPE B
			EA.	EA.	EA.	L.F.	L.F.	S.Y.	L.F.
D1	1384+40 ~ 1384+55	LT.	1			18			
D2	1384+55	LT.		1			12		
D3	1384+55	L-R			1			133	73
SHEET TOTALS			1	1	1	18	12	133	73

REFERENCE No.	STATION TO STATION * STATIONING REFERS TO RAMP A ALIGNMENT	SIDE	603 24" CONDUIT, TYPE C	603 42" CONDUIT, TYPE B	603 6" CONDUIT, TYPE B 707.17	603 8" CONDUIT, TYPE F	602 CONCRETE MASONRY	601 RIPRAP USING 6" REIN. CONCRETE SLAB	601 ROCK CHANNEL PROTECTION, TYPE C, WITH FILTER, T = 18"
			L.F.	L.F.	L.F.	L.F.	C.Y.	C.Y.	C.Y.
D4	*1384+46.50	L-R		76			1.18	4.09	
D5	1384+55 ~ 1384+75	RT.	20						
D6	1384+44	LT.			10				
D7	1384+50	LT.				10			
EC1	*1383+50 ~ 1384+50	RT.							91
SHEET TOTALS			20	76	10	10	1.18	4.09	91

HORIZONTAL SCALE IN FEET
0 10 20 40

CHKD BY: GJW DATE: 2/2/94
CHKD BY: MFJ DATE: 12/5/94

PLAN
CDS-1381+25 TO STA. CDS-1384+75

FRA-270-32.46

125
593

CDS-SUMM.DWG CDSPROF.DWG
DESIGN01.DWG HS1.DWG COL #28
PLOT SCALE: 1"=20'
C:\DRAWING\06092306\PLAN\06092P25.DWG FEBRUARY-09-1995

LEGEND:

EXISTING EDGE OF PAVEMENT, MAINLINE I-270

EXISTING PROFILE GRADE

PROPOSED PROFILE GRADE

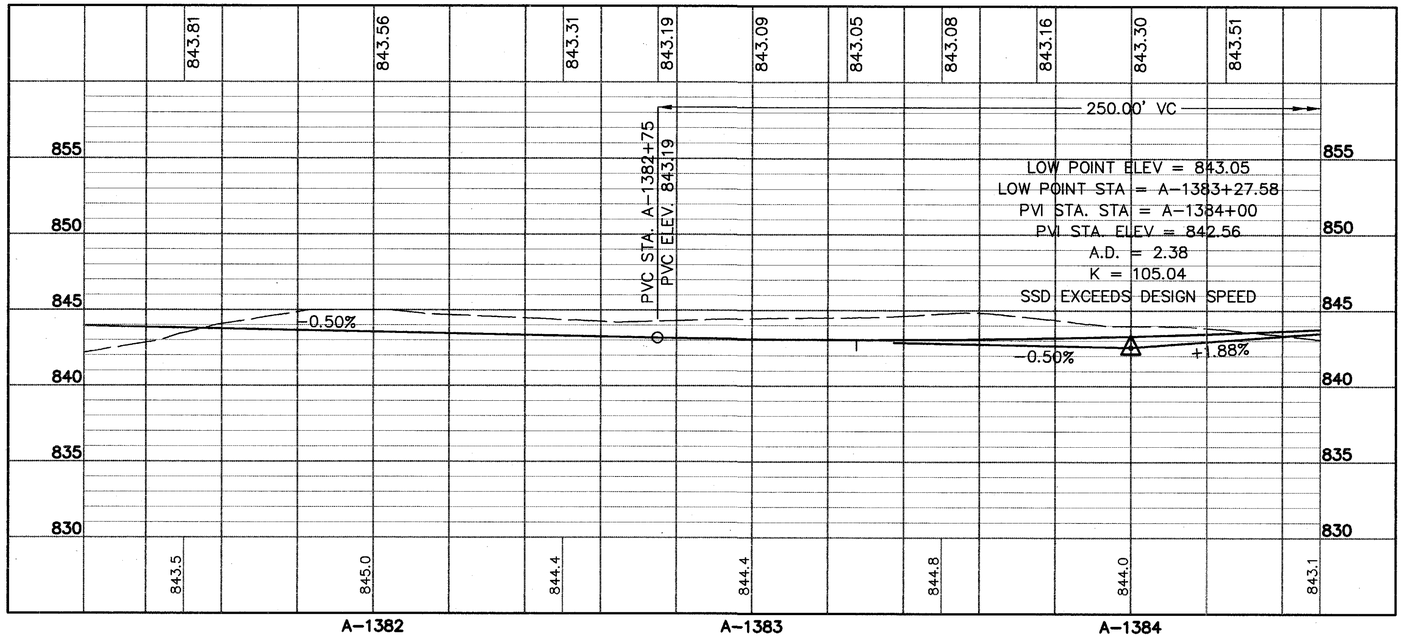

FOR THE REST OF RAMP A PROFILE, SEE SHEET 159

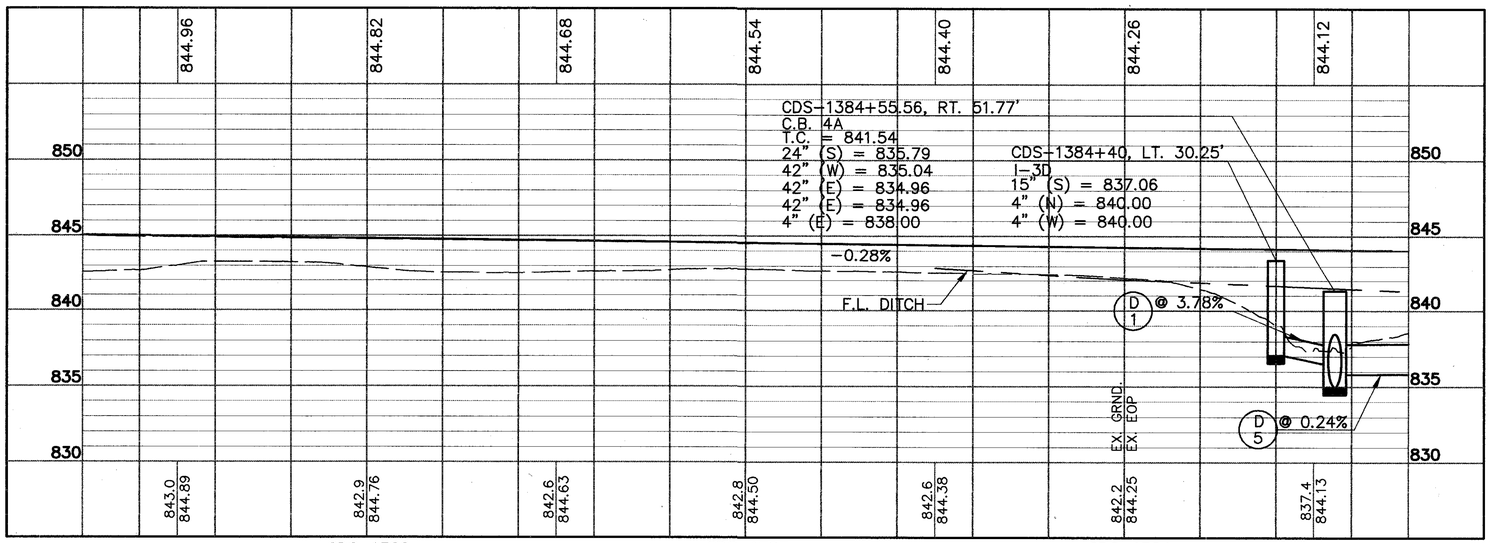

0 10 20 40
HORIZONTAL SCALE IN FEET

CALC. BY: GJW DATE: 3/15/94
CHKD. BY: TAZ DATE: 1/19/95

PROFILE
STA. CDS-1381+25 TO STA. CDS-1384+75

FRA-270-32.46

PLOT SCALE... COL #28 C:\DRAWING\06092306\PLAN\0609PR25.DWG FEBRUARY-10-1995

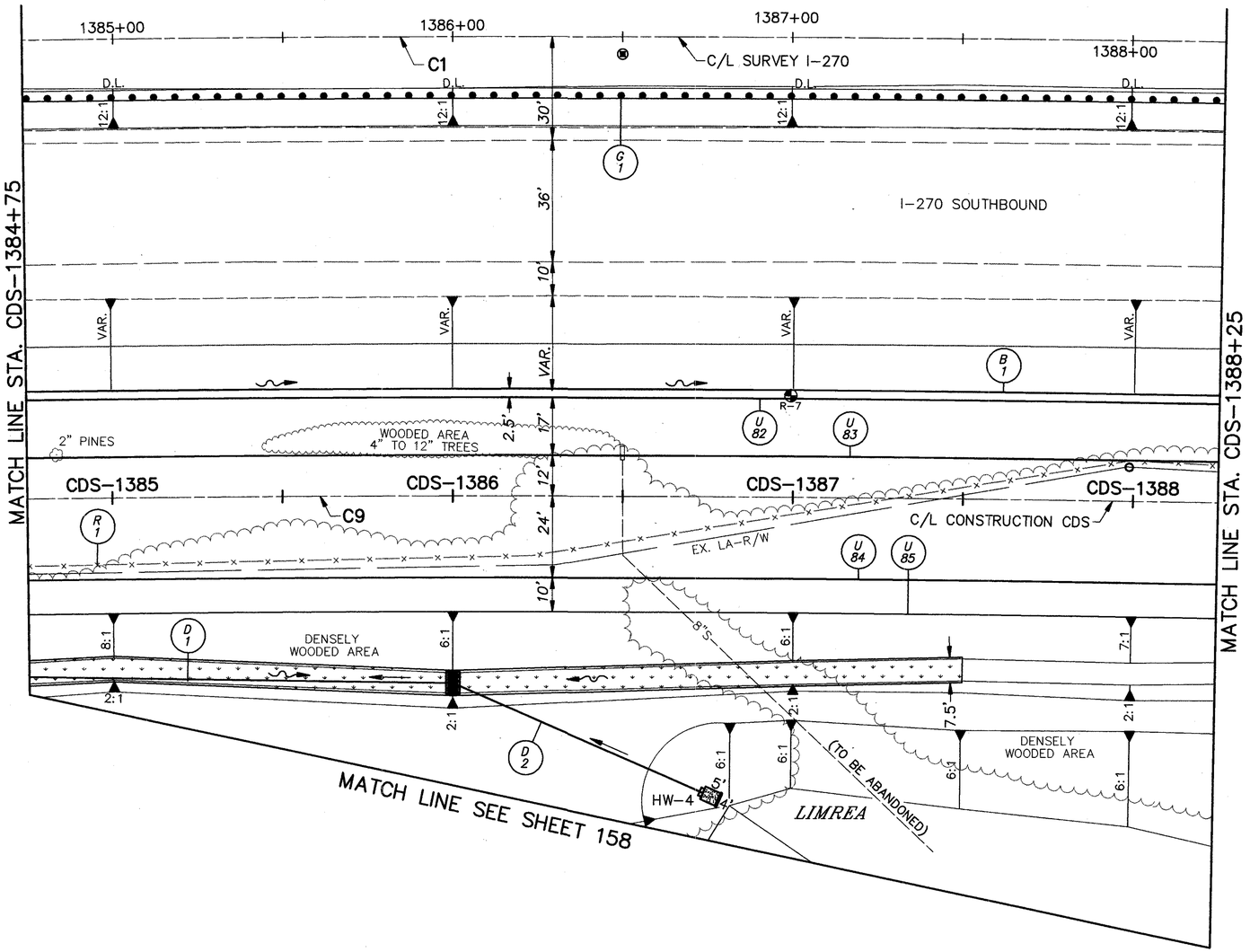

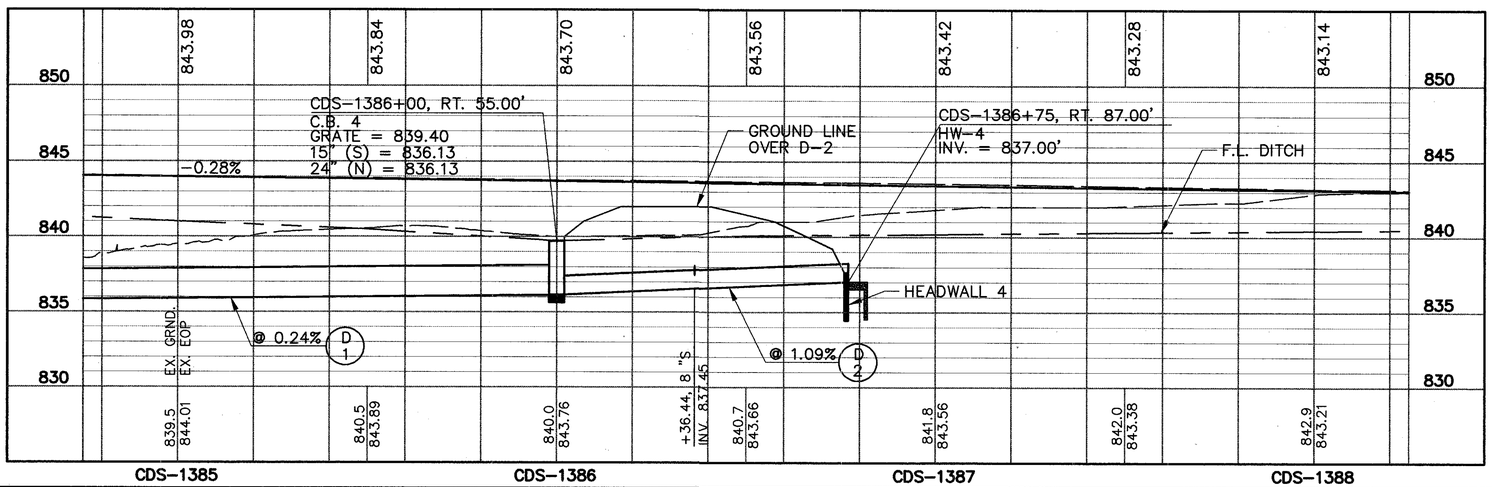

CROSS REFERENCES	
SHEET NO.	DESCRIPTION
4	C1, C9 CURVE INFO.
67	(U 1) UNDERDRAIN DATA AND QUANTITIES
362	⊗ LIGHTING PLAN

REFERENCE No.	STATION TO STATION (ALL STATIONING REFERS TO CDS ALIGNMENT)	SIDE	622 CONCRETE BARRIER, TYPE B (L.F.)	202 FENCE REMOVED (L.F.)	606 GUARDRAIL, TYPE 5 (L.F.)
B1	1384+75 ~ 1388+25	LT.	350		
R1	1384+75 ~ 1388+25	L-R		352	
G1	1384+76.09 ~ 1388+22.50	LT.			350
SHEET TOTALS			350	352	350

REFERENCE No.	STATION TO STATION (ALL STATIONING REFERS TO CDS ALIGNMENT)	SIDE	604 CATCH BASIN, NO. 4 (EA.)	603 15" CONDUIT, TYPE C (L.F.)	603 24" CONDUIT, TYPE C (L.F.)	602 CONCRETE MASONRY (C.Y.)	601 RIPRAP USING 6" REIN. CONCRETE SLAB (C.Y.)	670 DITCH EROSION PROTECTION (S.Y.)
D1	1384+75 ~ 1386+00	RT.	1		125			229
D2	1386+00 ~ 1386+75	RT.		80		0.36	0.59	
SHEET TOTALS			1	80	125	0.36	0.59	229

HORIZONTAL SCALE IN FEET
0 10 20 40

CALC. G.J.W. DATE: 2/2/94
CHK. M.F.J. DATE: 12/5/94

PLAN & PROFILE
STA CDS-1384+75 TO STA. CDS-1388+25

FRA-270-32.46

127
593

CDSSUMM.DWG CDSPROF.DWG MST.DWG DESIGN01.DWG
PLOT SCALE: 1"=20' COL #28 C:\DRAWING\06092306\PLAN\06092P26.DWG FEBRUARY-10-1995

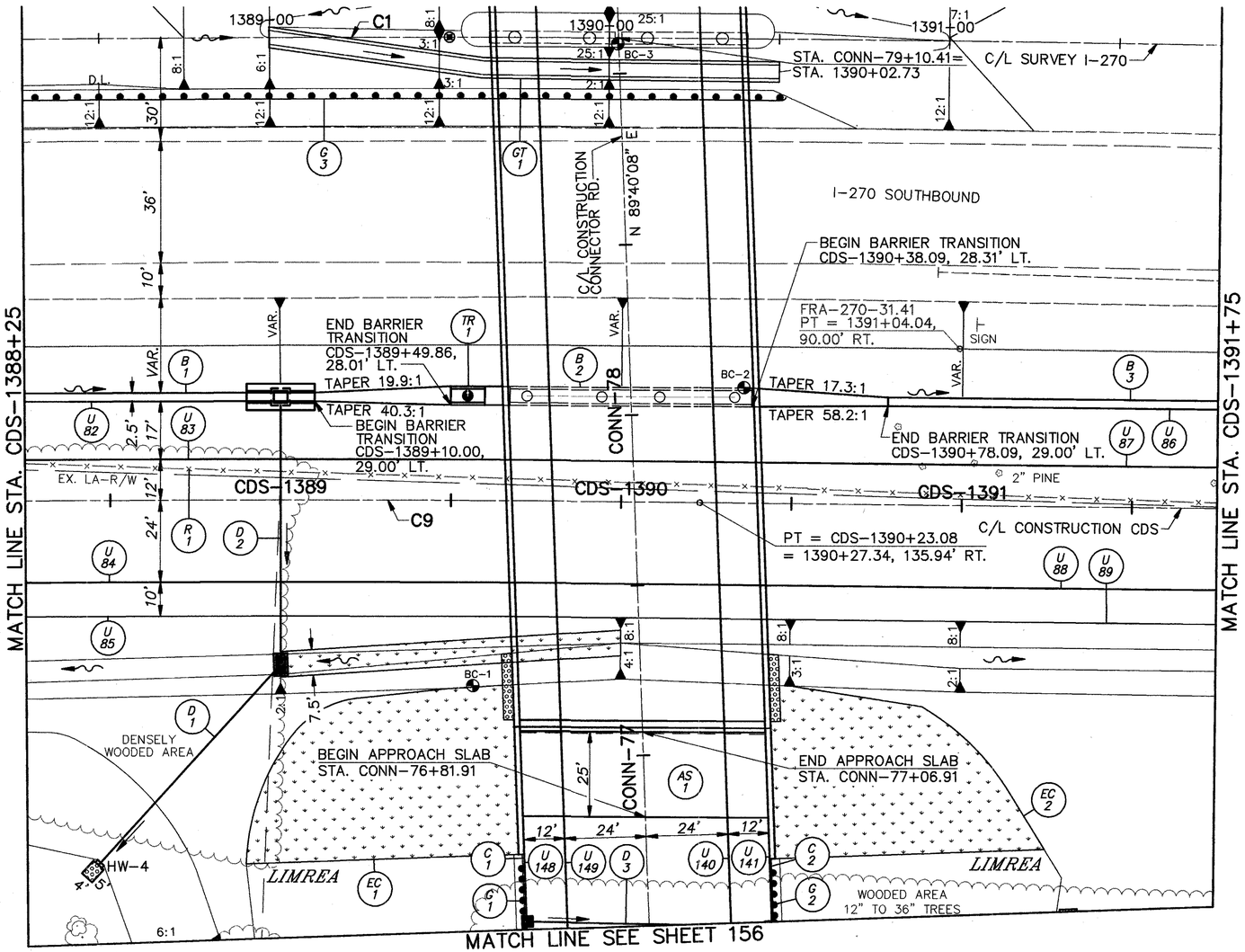

CROSS REFERENCES

SHEET NO.	DESCRIPTION	SHEET	DESCRIPTION
4	C1, C9 CURVE INFO.	362	⊛ LIGHTING PLAN
129	ROADWAY PROFILE		
67	(U 1) UNDERDRAIN DATA AND QUANTITIES		
342	(TR 1) TRAFFIC CONTROL PLAN		

REFERENCE No.	STATION TO STATION (* STATIONING REFERS TO CONNECTOR RD. ALIGNMENT)	SIDE	622 CONCRETE BARRIER, TYPE B L.F.	611 REIN. CONCRETE APPROACH SLAB, T=15", AS PER PLAN S.Y.	609 CURB, TYPE 6 L.F.	202 FENCE REMOVED L.F.	622 CONCRETE BARRIER, TYPE B50 L.F.
B1	1388+25 ~ 1389+49.86	LT.	105				
B2	1389+59.84 ~ 1390+38	LT.					78.5
B3	1390+38 ~ 1391+75	LT.	137				
R1	1388+25 ~ 1391+75	LT.				350	
AS1	* 76+81.91 ~ 77+06.91	L-R		200			
C1	* 76+50 ~ 76+72.11	LT.			22		
C2	* 76+50 ~ 76+68.46	RT.			18		
SHEET TOTALS			242	200	40	350	78.5

REFERENCE No.	STATION TO STATION (* STATIONING REFERS TO CONNECTOR RD. ALIGNMENT)	SIDE	604 CATCH BASIN, NO. 4 EA.	603 21" CONDUIT, TYPE C L.F.	602 CONCRETE MASONRY C.Y.	601 ROCK CHANNEL PROTECTION, TYPE C, WITH FILTER, T = 18" C.Y.	670 DITCH EROSION PROTECTION S.Y.	667 SEEDING AND JUTE MATTING S.Y.	601 PAVED GUTTER TYPE 1-4 L.F.	660 SODDING S.Y.
EC1	* 76+72	LT.						379		
EC2	* 76+68	RT.						328		
GT1	1388+97 ~ 1390+45	LT.							150.5	50
D1	1388+45 ~ 1389+00	RT.	1	80	0.39	1.11	83			
SHEET TOTALS			1	80	0.39	1.11	83	707	150.5	50

REFERENCE No.	STATION TO STATION (* STATIONING REFERS TO CONNECTOR RD. ALIGNMENT)	SIDE	604 CATCH BASIN, NO. 3A EA.	604 INLET, NO. 3D EA.	603 15" CONDUIT, TYPE B L.F.	603 18" CONDUIT, TYPE B L.F.	606 BRIDGE TERMINAL ASSEMBLY, TYPE 1 EA.	606 GUARDRAIL, TYPE 5 L.F.	606 ANCHOR ASSEMBLY, TYPE T EA.
D2	1389+00	L-R		1		79			
D3	* 76+88.50	LT.	1		46				
G1	* 76+55.47 ~ 76+72.11	LT.					1		
G2	* 76+51.82 ~ 76+68.46	RT.					1		
G3	1388+22.50 ~ 1390+45.26	LT.						212.5	1
SHEET TOTALS			1	1	46	79	2	212.5	1

HORIZONTAL SCALE IN FEET: 0, 10, 20, 40

C/L: G.J.W. DATE: 2/7/94
CHK: M.F.J. DATE: 12/5/94

PLAN
STA CDS-1388+25 TO STA. CDS-1391+75

FRA-270-32.46

128
593

COSSUMM.DWG COSPROF.DWG PLOT SCALE: 1"=20'
DESIGN01.DWG MS1.DWG COL #28 C:\DRAWING\06092306\PLAN\06092P27.DWG FEBRUARY-13-1995

LEGEND:

EXISTING EDGE OF PAVEMENT, MAINLINE I–270

EXISTING PROFILE GRADE

PROPOSED PROFILE GRADE

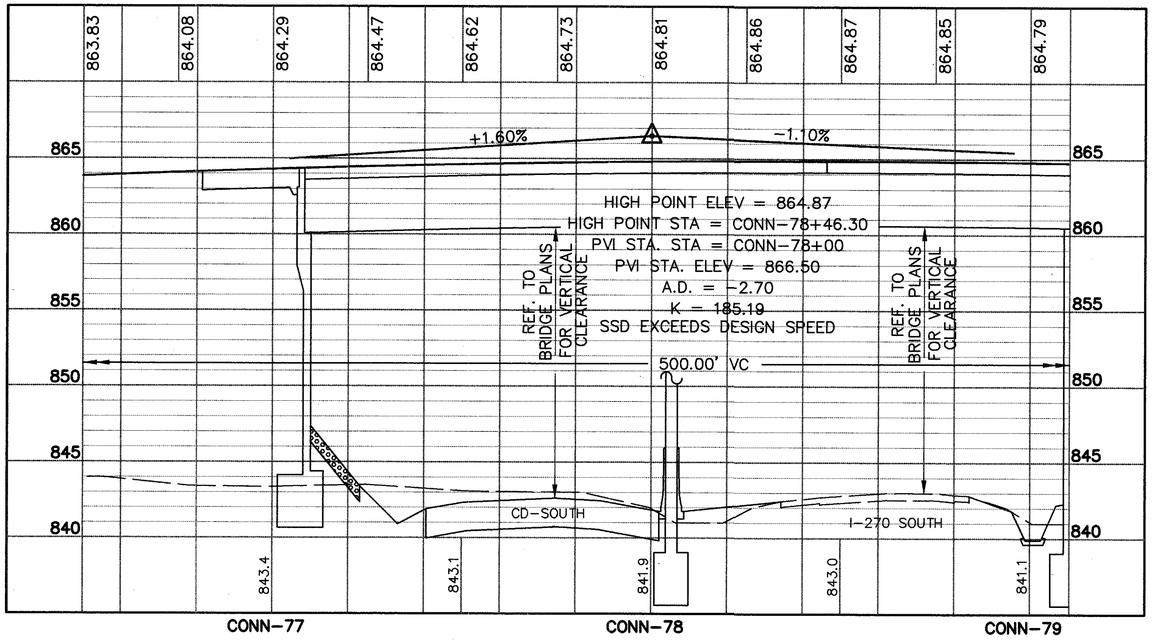

FOR THE REST OF THE CONNECTOR RD. PROFILE, SEE SHEET 97, 157

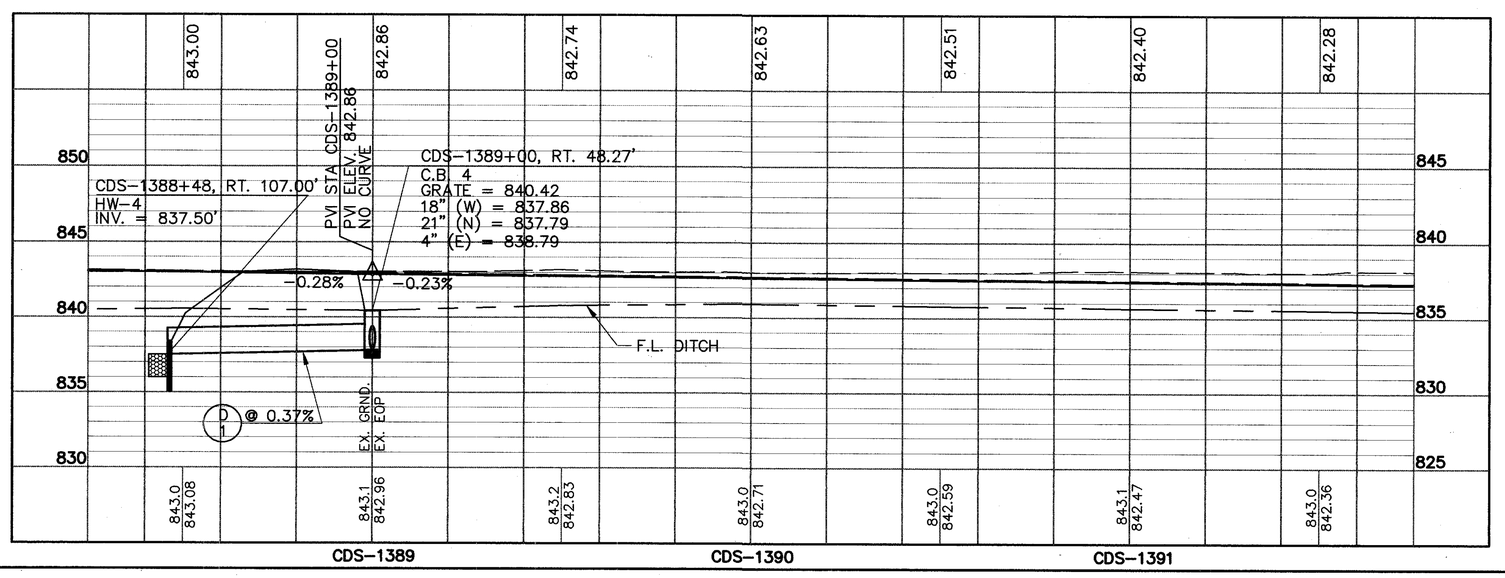

PLOT SCALE:
COL #28

C:\DRAWING\06092306\PLAN\0609PR27.DWG FEBRUARY−10−1995

0 10 20 40
HORIZONTAL SCALE IN FEET

CALC. BY: GJW DATE: 3/15/94
CHKD. BY: TAZ DATE: 1/19/95

PROFILE
STA. CDS−1388+25 TO STA. CDS−1391+75

FRA−270−32.46

129
593

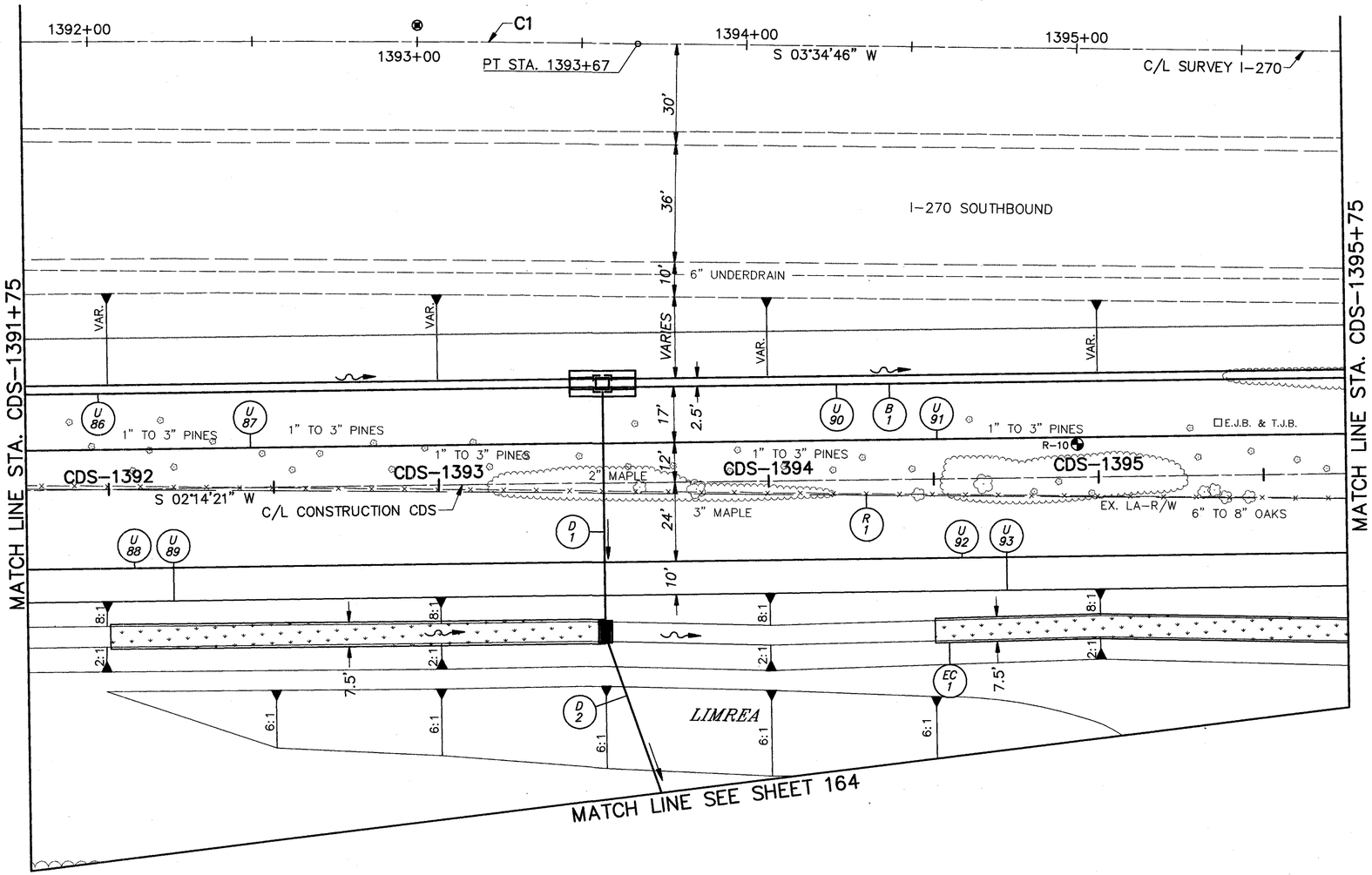

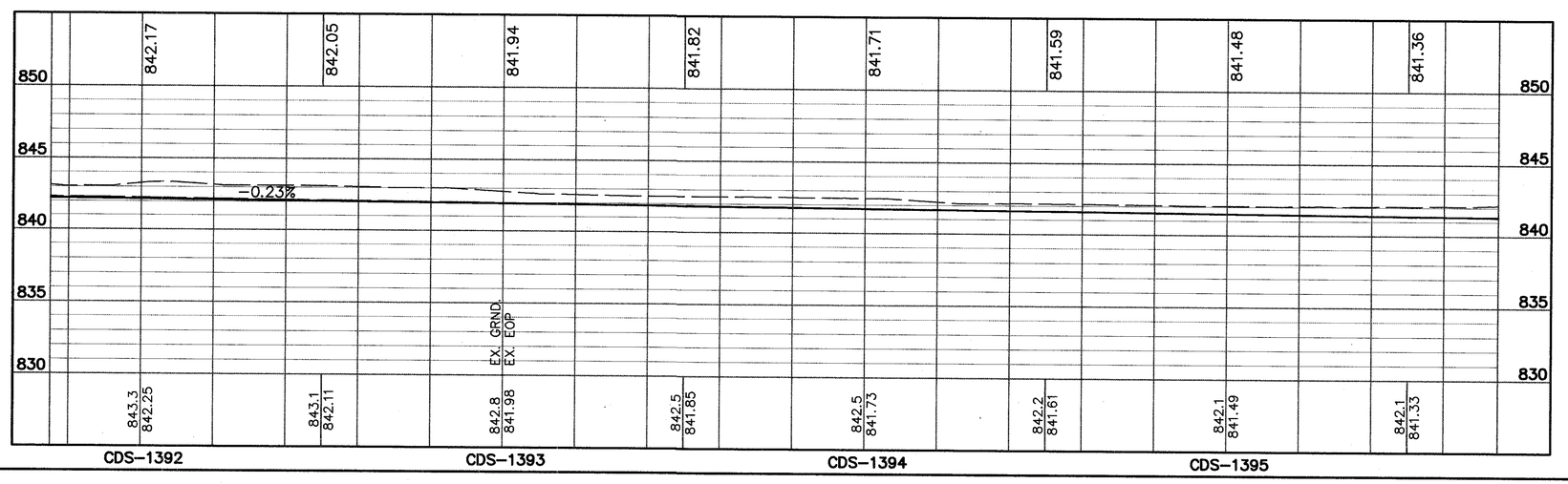

CROSS REFERENCES

SHEET NO.	DESCRIPTION
4	C1 CURVE INFO.
67	(U 1) UNDERDRAIN DATA AND QUANTITIES
362	⊗ LIGHTING PLAN

REFERENCE No.	STATION TO STATION (ALL STATIONING REFERS TO CDS ALIGNMENT)	SIDE	622 CONCRETE BARRIER, TYPE B L.F.	202 FENCE REMOVED L.F.
B1	1391+75 ~ 1395+75	LT.	380	
R1	1391+75 ~ 1395+75	L-R		400
SHEET TOTALS			380	400

REFERENCE No.	STATION TO STATION (ALL STATIONING REFERS TO CDS ALIGNMENT)	SIDE	604 CATCH BASIN, NO. 4 EA.	604 INLET, NO. 3D EA.	603 18" CONDUIT, TYPE B L.F.	603 21" CONDUIT, TYPE C L.F.	670 DITCH EROSION PROTECTION S.Y.
D1	1393+50	L-R		1	75		
D2	1393+50	RT.	1			51	125
EC1	1393+50	RT.					104
SHEET TOTALS			1	1	75	51	229

CALC. BY: GJW DATE: 2/2/94
CHKD. BY: MFJ DATE: 12/5/94

0 10 20 40 HORIZONTAL SCALE IN FEET

PLAN & PROFILE
STA CDS-1391+75 TO STA. CDS-1395+75

FRA-270-32.46

130
593

CDSSUMM.DWG CDSPROF.DWG
DESIGN01.DWG MST.DWG COL #28 PLOT SCALE: 1"=20'
C:\DRAWING\96092306\PLAN\96092P28.DWG FEBRUARY-10-1995

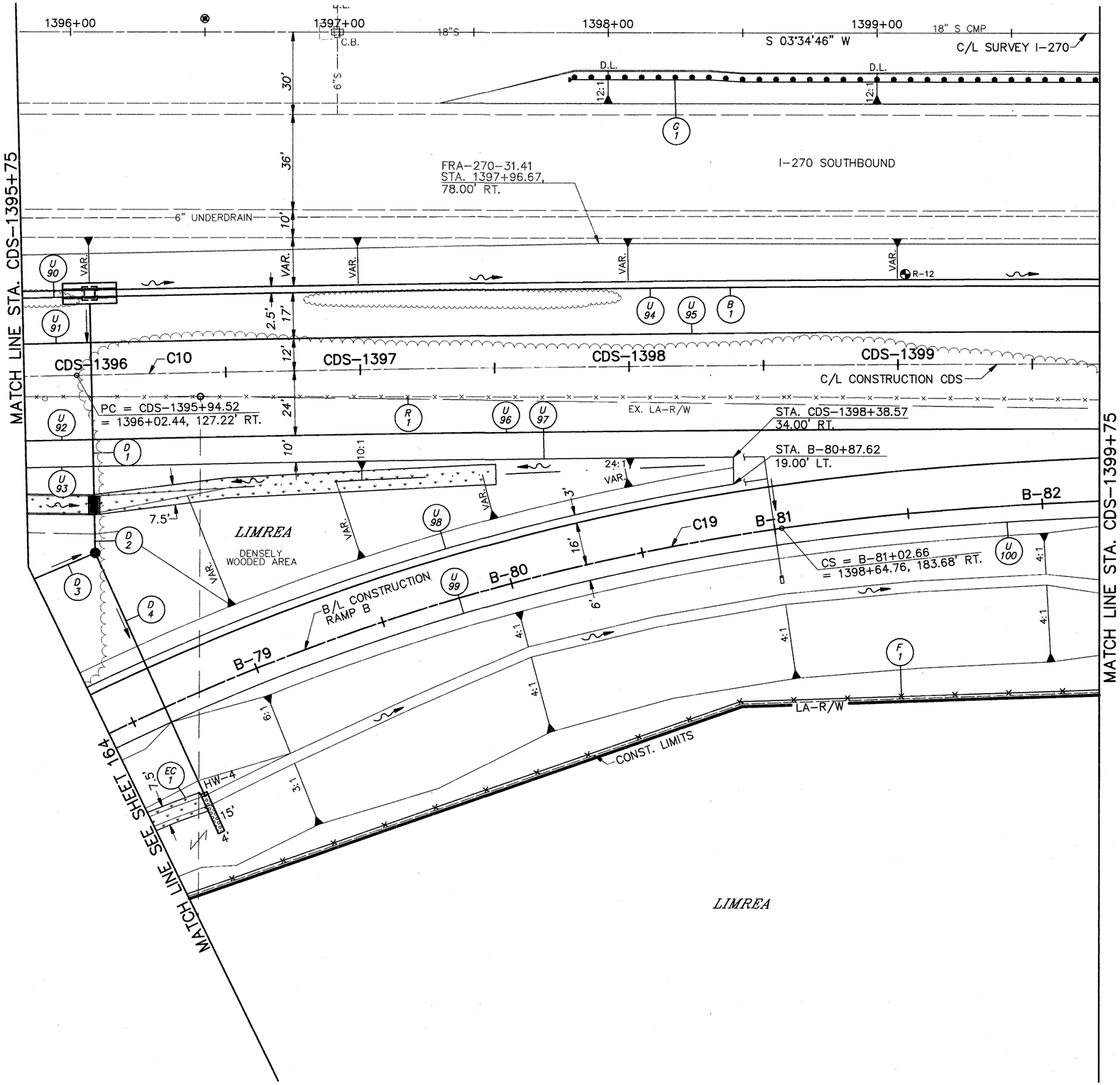

CROSS REFERENCES

SHEET NO.	DESCRIPTION
4	C10, C19 CURVE INFO.
132	ROADWAY PROFILE
67	(U 1) UNDERDRAIN DATA AND QUANTITIES
362	⊗ LIGHTING PLAN

REFERENCE No.	STATION TO STATION * STATIONING REFERS TO RAMP B ALIGNMENT	SIDE	622 CONCRETE BARRIER, TYPE B L.F.	607 FENCE, TYPE CL L.F.	202 FENCE REMOVED L.F.	604 INLET, NO. 3D EA.	603 15" CONDUIT, TYPE B L.F.	606 GUARDRAIL, TYPE 5 L.F.	606 ANCHOR ASSEMBLY, TYPE E EA.
B1	1395+75 ~ 1399+75	LT.	380						
F1	* 78+40 ~ 82+21	RT.		353					
R1	1395+75 ~ 1399+75	RT.			400				
D1	1396+00	L-R				1	78		
G1	1397+80.96 ~ 1399+79.73	LT.						175	1
SHEET TOTALS			380	353	400	1	78	175	1

REFERENCE No.	STATION TO STATION * STATIONING REFERS TO RAMP B ALIGNMENT	SIDE	604 CATCH BASIN, NO. 4 EA.	604 MANHOLE, NO. 3, WITH FLAT TOP EA.	603 15" CONDUIT, TYPE C L.F.	603 24" CONDUIT, TYPE B L.F.	602 CONCRETE MASONRY C.Y.	601 ROCK CHANNEL PROTECTION, TYPE C, WITH FILTER, T = 18" C.Y.	670 DITCH EROSION PROTECTION S.Y.
D2	1395+00	RT.	1		18				146
D3	1395+83 ~ 1396+00	LT.			24				
D4	* 78+63	L-R		1		99	0.46	3.33	
EC1	* 78+40 ~ 78+63	LT.							18
SHEET TOTALS			1	1	42	99	0.46	3.33	164

CALC. BY: G.J.W DATE: 2/2/94
CHKD. BY: M.F.J DATE: 12/5/94

HORIZONTAL SCALE IN FEET
0 10 20 40

PLAN
CDS-1395+75 TO STA. CDS-1399+75

FRA-270-32.46

131
593

CDS-SUMM.DWG CDSPROF.DWG
DESIGN01.DWG MS1.DWG COL #28
PLOT SCALE: 1"=20
C:\DRAWING\06092306\PLAN\06092P23.DWG FEBRUARY-10-1995

LEGEND:

EXISTING EDGE OF PAVEMENT, MAINLINE I–270

EXISTING PROFILE GRADE

PROPOSED PROFILE GRADE

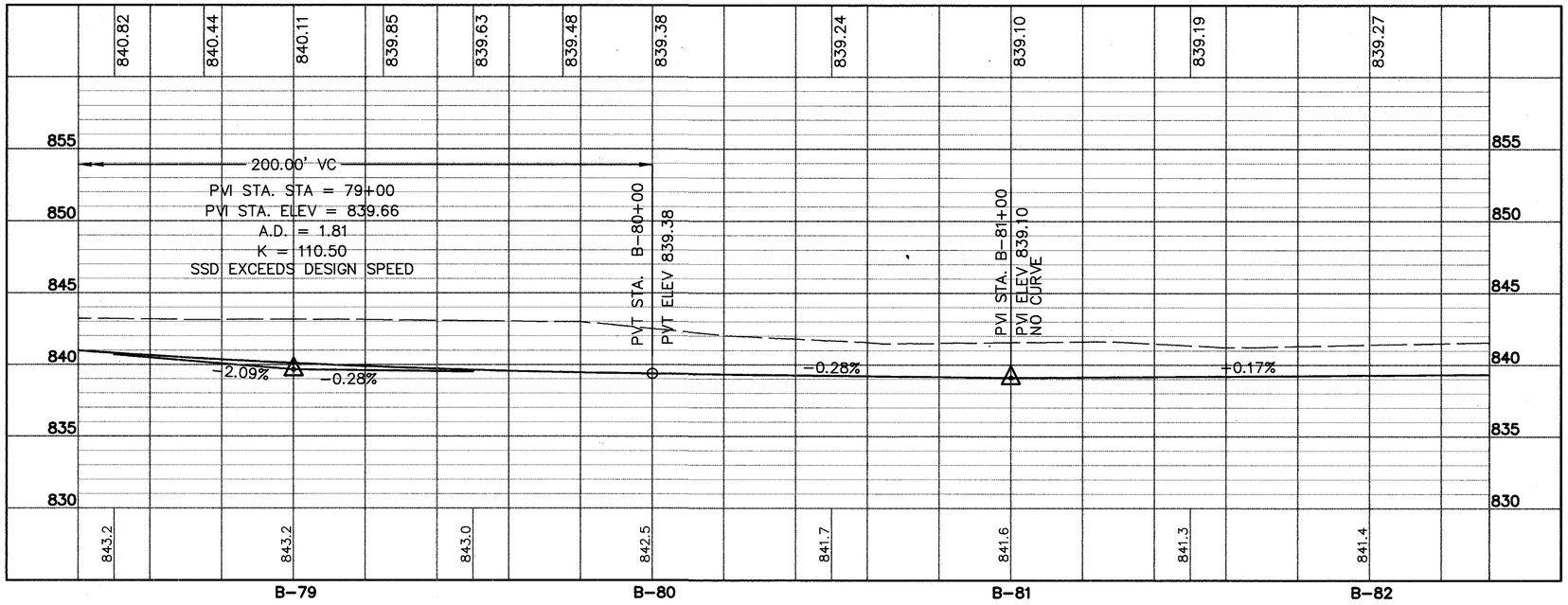

FOR THE REST OF RAMP B PROFILE, SEE SHEET 165

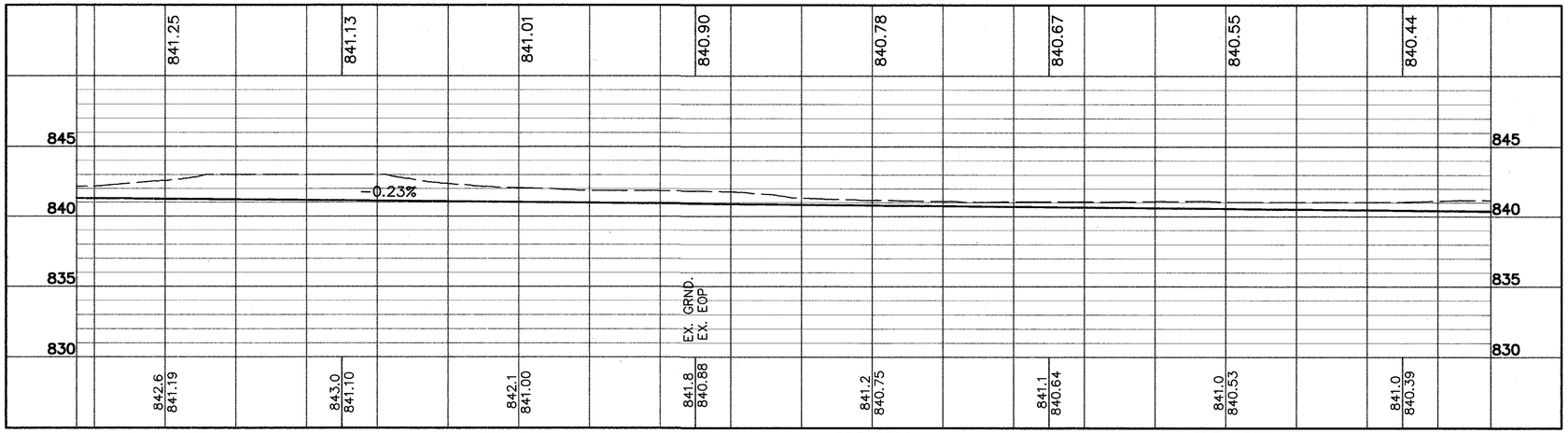

HORIZONTAL SCALE IN FEET
0 10 20 40

CALC. BY: GJW DATE: 3/15/94
CHKD. BY: TAZ DATE: 1/19/95

PROFILE
STA. CDS–1395+75 TO STA. CDS–1399+75

FRA–270–32.46

132
59 93

PLOT SCALE:
COL #28 C:\DRAWNG\06092306\PLAN\0609PR29.DWG FEBRUARY-10-1995

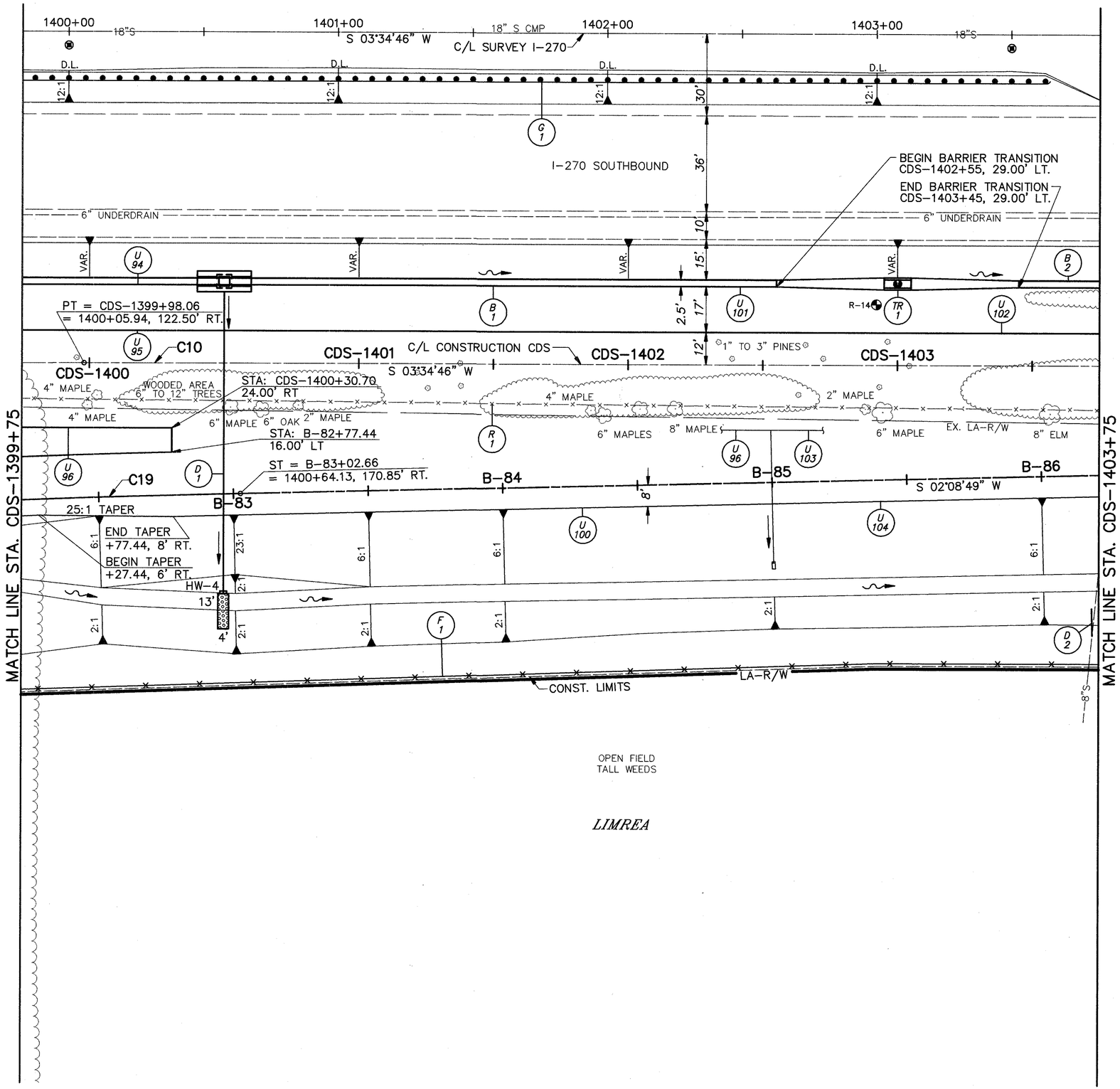

CROSS REFERENCES

SHEET NO.	DESCRIPTION	SHEET NO.	DESCRIPTION
4	C10, C19 CURVE INFO.	342	TR 1 TRAFFIC CONTROL PLAN
134	ROADWAY PROFILE		
67	U 1 UNDERDRAIN DATA AND QUANTITIES		
362	LIGHTING PLAN		

REFERENCE No.	STATION TO STATION * STATIONING REFERS TO RAMP B ALIGNMENT	SIDE	622 CONCRETE BARRIER, TYPE B	607 FENCE, TYPE CL	202 FENCE REMOVED	606 GUARDRAIL, TYPE 5	606 ANCHOR ASSEMBLY, TYPE T
			L.F.	L.F.	L.F.	L.F.	EA.
B1	1399+75 ~ 1402+95	LT.	300				
B2	1403+05 ~ 1403+75	LT.	70				
F1	* 82+21 ~ 86+21	RT.		400			
R1	1399+75 ~ 1403+75	RT.			400		
G1	1399+79.73 ~ 1403+54.62	LT.				362.5	1
SHEET TOTALS			370	400	400	362.5	1

REFERENCE No.	STATION TO STATION * STATIONING REFERS TO RAMP B ALIGNMENT	SIDE	604 INLET, NO. 3D	603 15" CONDUIT, TYPE B	603 10" CONDUIT, TYPE F	602 CONCRETE MASONRY	601 ROCK CHANNEL PROTECTION, TYPE C WITH FILTER, T = 18"
			EA.	L.F.	L.F.	C.Y.	C.Y.
D1	1400+50	L-R	1	116		0.27	2.89
D2	* 86+18	RT.			10		
SHEET TOTALS			1	116	10	0.27	2.89

N

0 10 20 40 HORIZONTAL SCALE IN FEET

CALC. BY: G.J.W. DATE: 2/2/94
CHKD. BY: M.F.J. DATE: 12/5/94

PLAN
STA. CDS-1399+75 TO STA. CDS-1403+75

FRA-270-32.46

133
593

CDS-SUMM.DWG COSPROF.DWG PLOT SCALE: 1"=20
DESIGN01.DWG WS1.DWG COL #28 C:\DRAWNG\06092306\PLAN\06092P30.DWG FEBRUARY-09-1995

PLOT SCALE...
COL #28 C:\DRAWING\06092306\PLAN\0609PR30.DWG FEBRUARY-10-1995

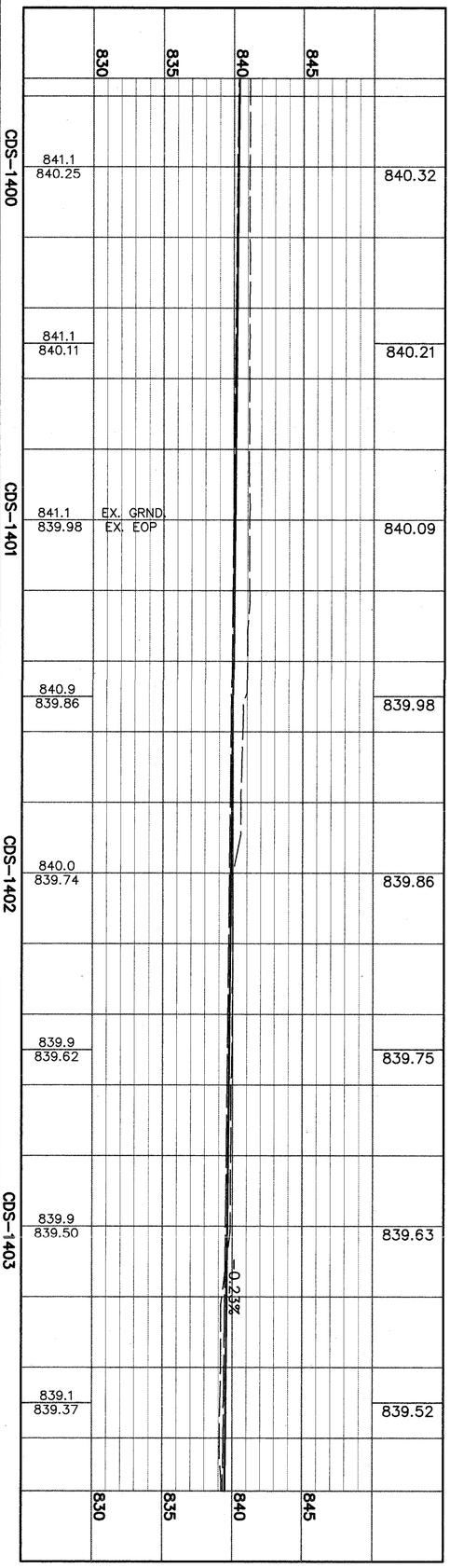

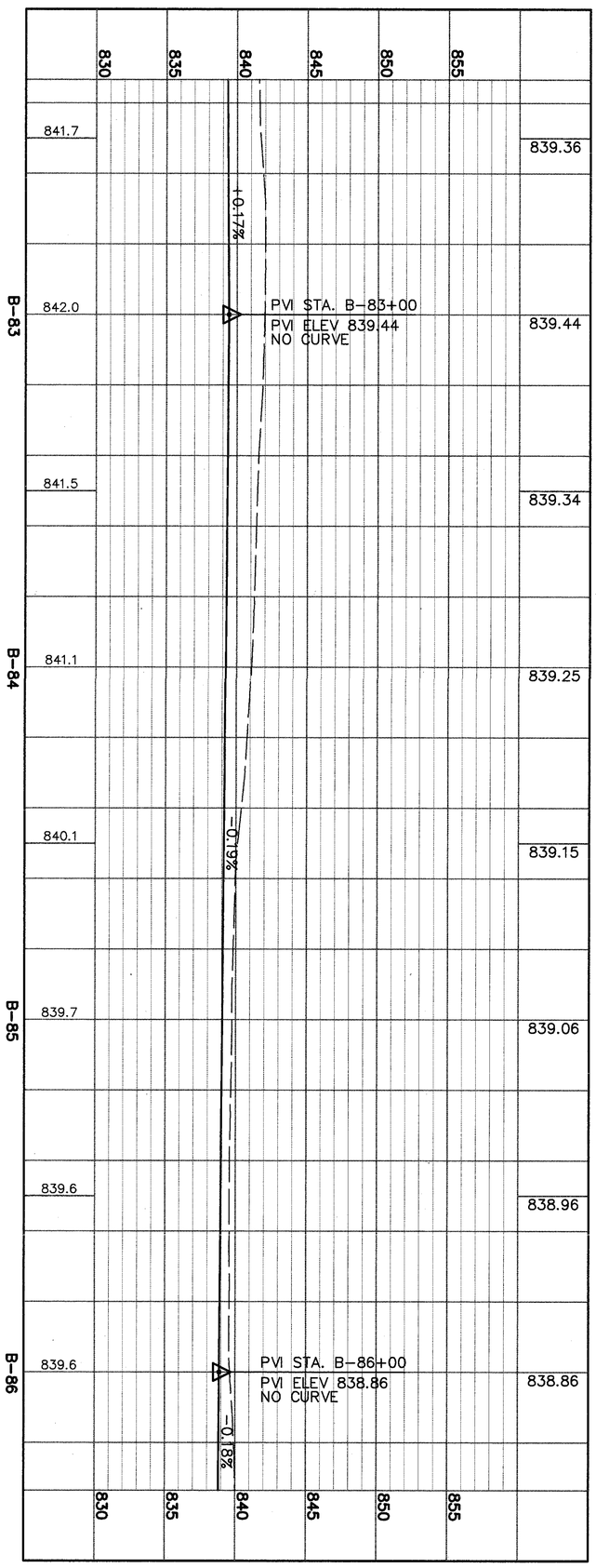

LEGEND:

EXISTING EDGE OF PAVEMENT, MAINLINE I-270

EXISTING PROFILE GRADE

PROPOSED PROFILE GRADE

34/593	FRA-270-32.46	PROFILE STA. CDS-1399+75 TO STA. CDS-1403+75	CALC BY: GJW DATE: 3/15/94 CHKD BY: TAZ DATE: 1/19/95	0 20 10 40 HORIZONTAL SCALE IN FEET

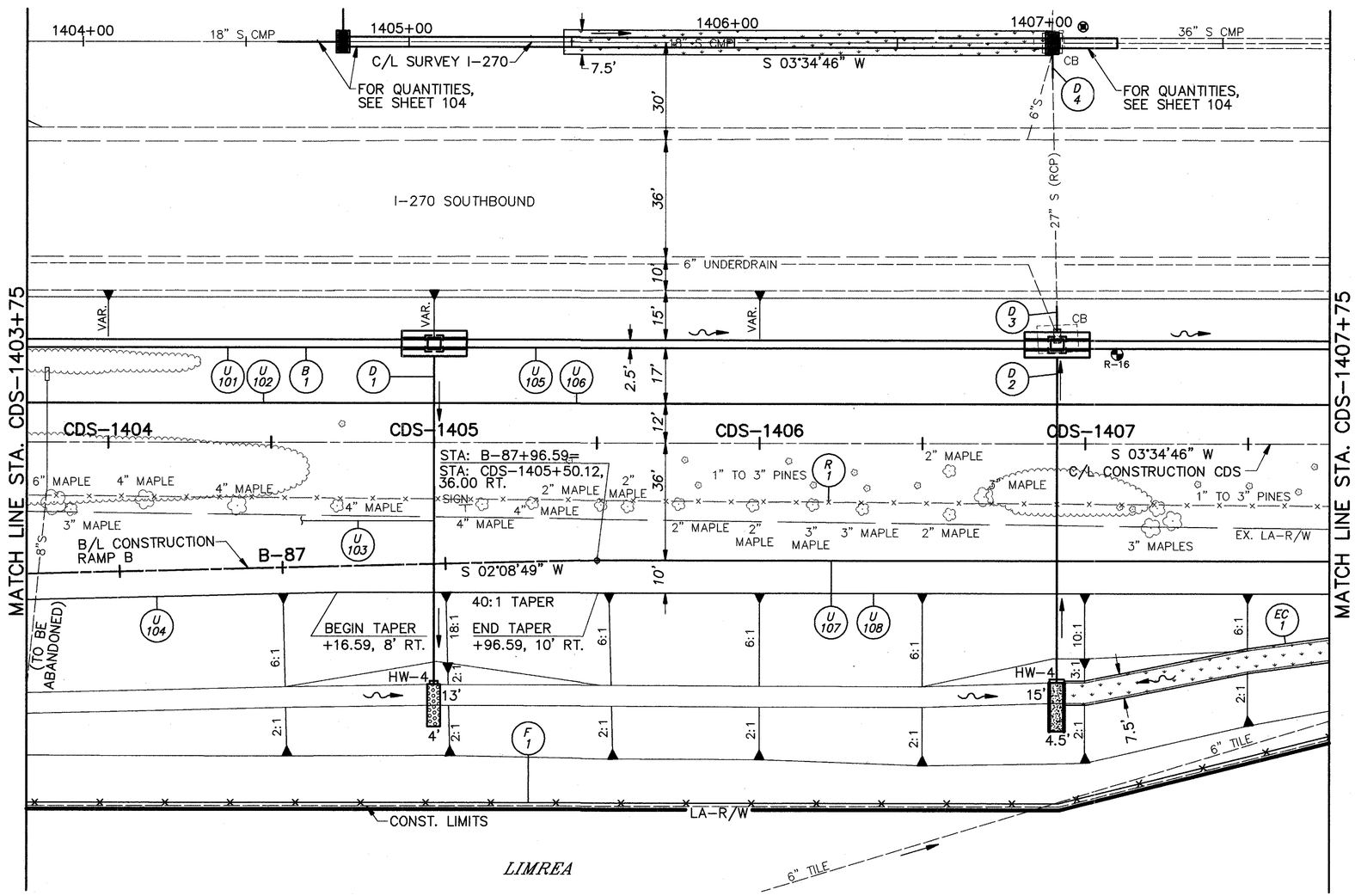

CROSS REFERENCES	
SHEET NO.	DESCRIPTION
136	ROADWAY PROFILE
67	(U 1) UNDERDRAIN DATA AND QUANTITIES
362	⊗ LIGHTING PLAN

REFERENCE No.	STATION TO STATION (STATIONING REFERS TO CDS ALIGNMENT)	SIDE	622 CONCRETE BARRIER, TYPE B (L.F.)	607 FENCE, TYPE CL (L.F.)	202 FENCE REMOVED (L.F.)
B1	1403+75 ~ 1407+75	LT.	360		
F1	1403+75 ~ 1407+75	RT.		403	
R1	1403+75 ~ 1407+75	RT.			400
SHEET TOTALS			360	403	400

REFERENCE No.	STATION TO STATION (STATIONING REFERS TO CDS ALIGNMENT)	SIDE	604 INLET, NO. 3D (EA.)	603 15" CONDUIT, TYPE B (L.F.)	603 27" CONDUIT, TYPE B (L.F.)	603 27" CONDUIT, TYPE C 706.02 (L.F.)	602 CONCRETE MASONRY (C.Y.)	601 ROCK CHANNEL PROTECTION, TYPE C WITH FILTER, T = 18" (C.Y.)	601 RIPRAP USING 6" REIN. CONCRETE SLAB (C.Y.)
D1	1405+00	L-R	1	104			0.27	2.89	
D2	1406+91	L-R			104		0.70		2.92
D3	1406+91	LT.	1			12			
D4	1406+91	LT.				10			
SHEET TOTALS			2	104	104	22	0.97	2.89	2.92

REFERENCE No.	STATION TO STATION (STATIONING REFERS TO CDS ALIGNMENT)	SIDE	670 DITCH EROSION PROTECTION (S.Y.)
EC1	1406+90 ~ 1407+75	RT.	68
SHEET TOTALS			68

HORIZONTAL SCALE IN FEET: 0, 10, 20, 40

CALC: GJW DATE: 2/2/94
CHKD: MFJ DATE: 12/5/94

PLAN
CDS-1403+75 TO STA. CDS-1407+75

FRA-270-32.46

135
593

CDS-SUMM.DWG CDSPROF.DWG PLOT SCALE: 1"=20
DESIGN01.DWG MST.DWG COL #28 C:\DRAWING\06092305\PLAN\06092931.DWG FEBRUARY-10-1995

LEGEND:

EXISTING EDGE OF PAVEMENT, MAINLINE I–270 ——— ——— ———

EXISTING PROFILE GRADE — — — —

PROPOSED PROFILE GRADE ———

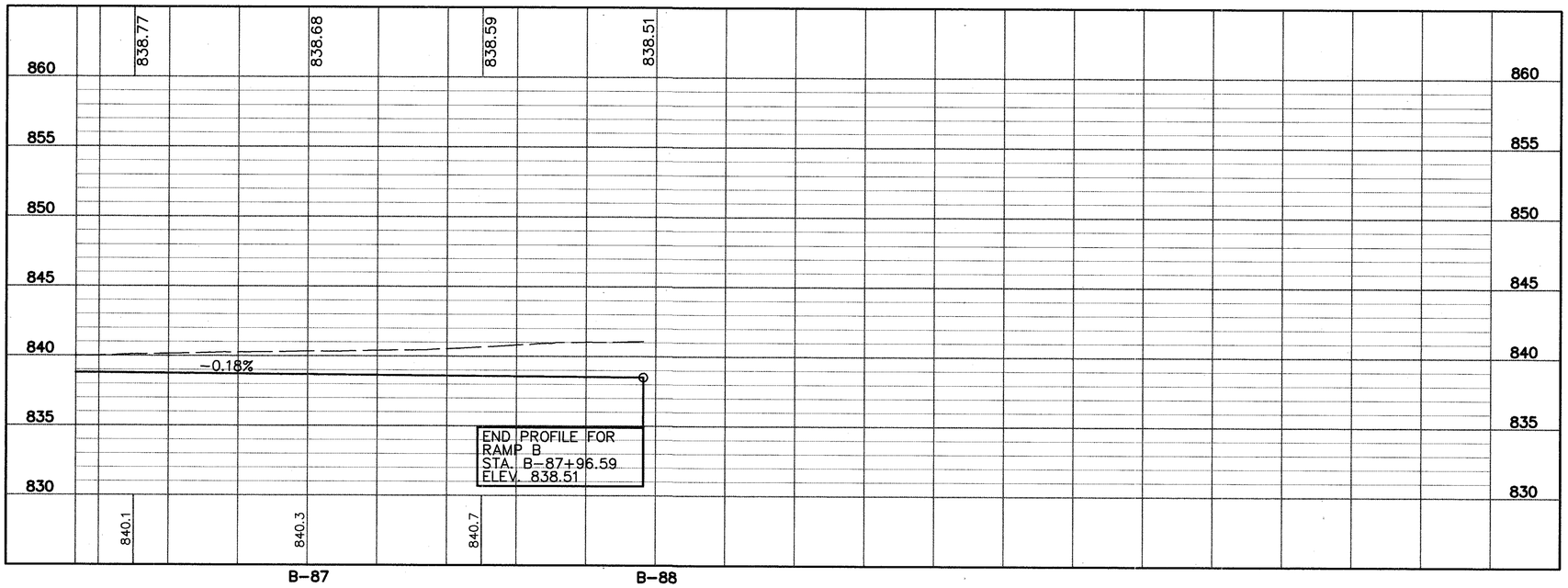

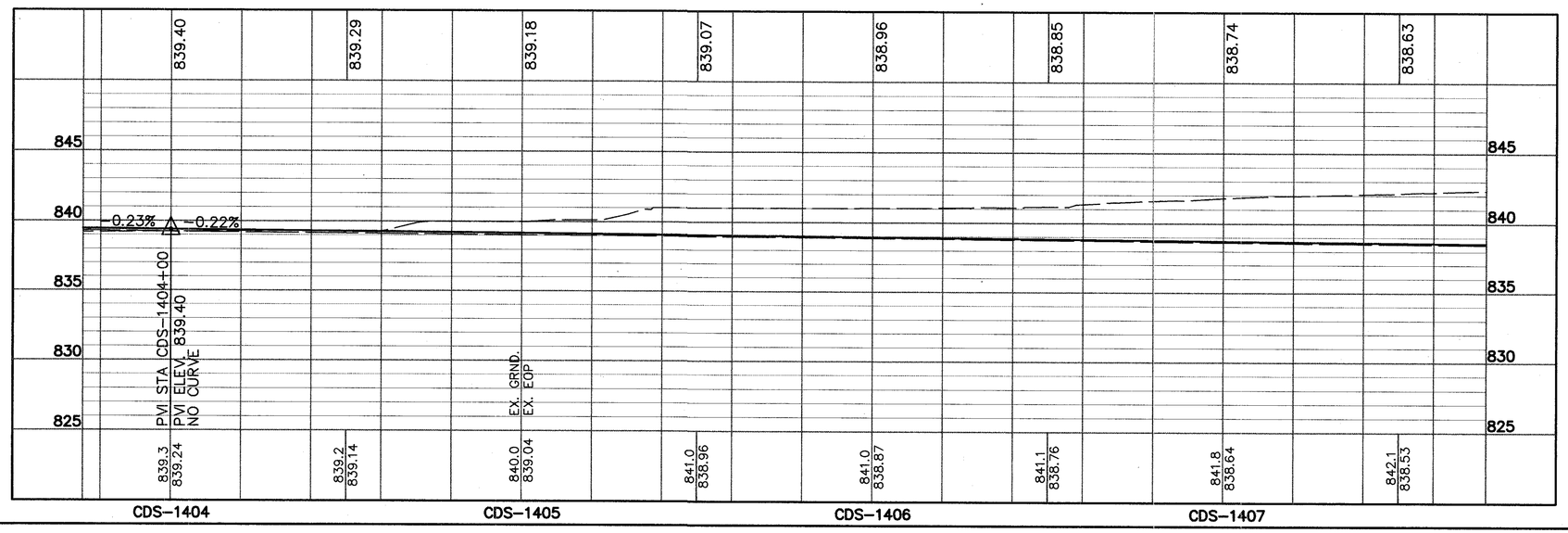

PLOT SCALE..
COL #28 C:\DRAWING\06092306\PLAN\0609PR31.DWG FEBRUARY-10-1995



CALC. BY: G.J.W. DATE: 3/15/94
CHKD. BY: T.A.Z. DATE: 1/19/95

PROFILE

STA. CDS−1403+75 TO STA. CDS−1407+75

FRA−270−32.46

136
593

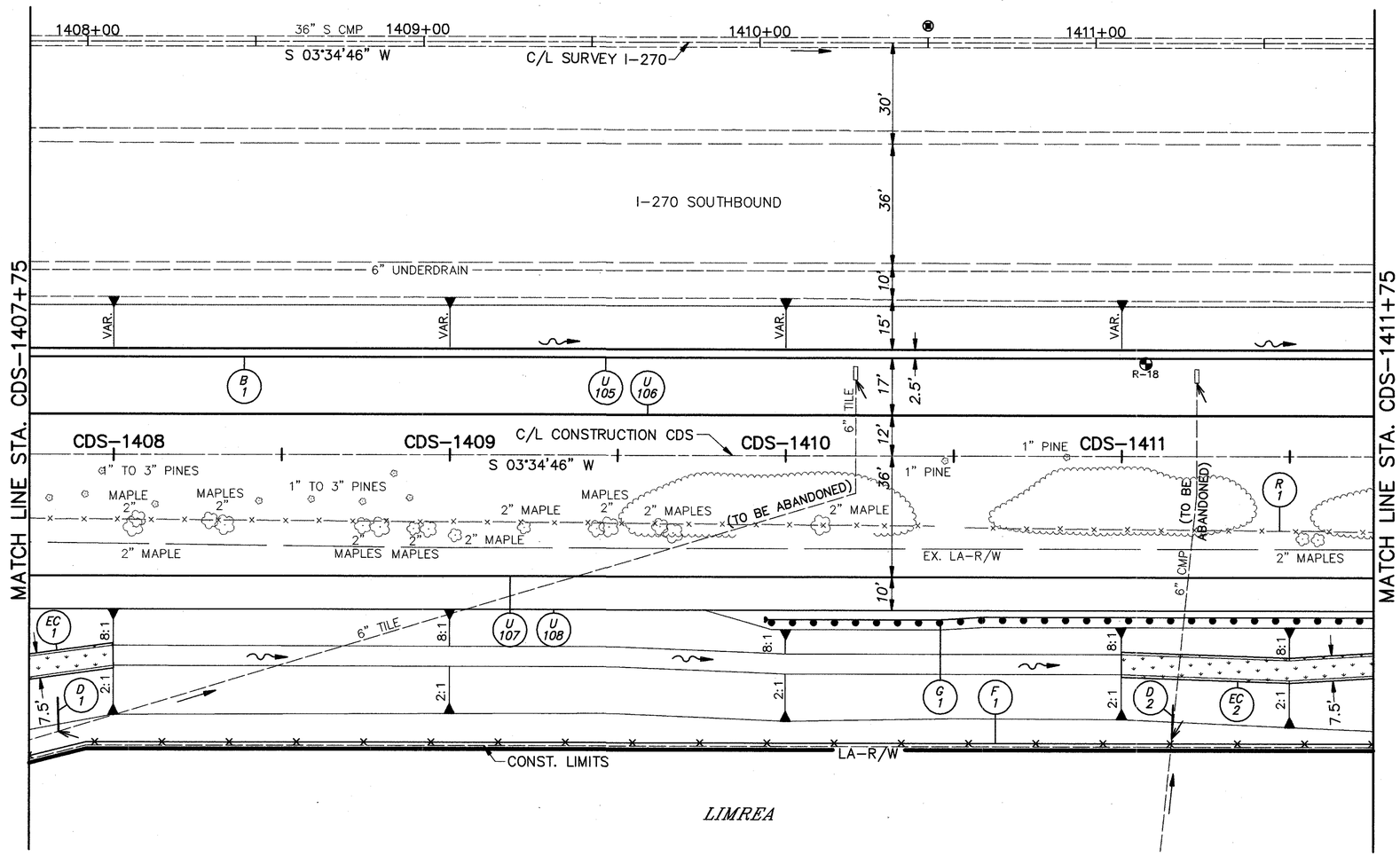

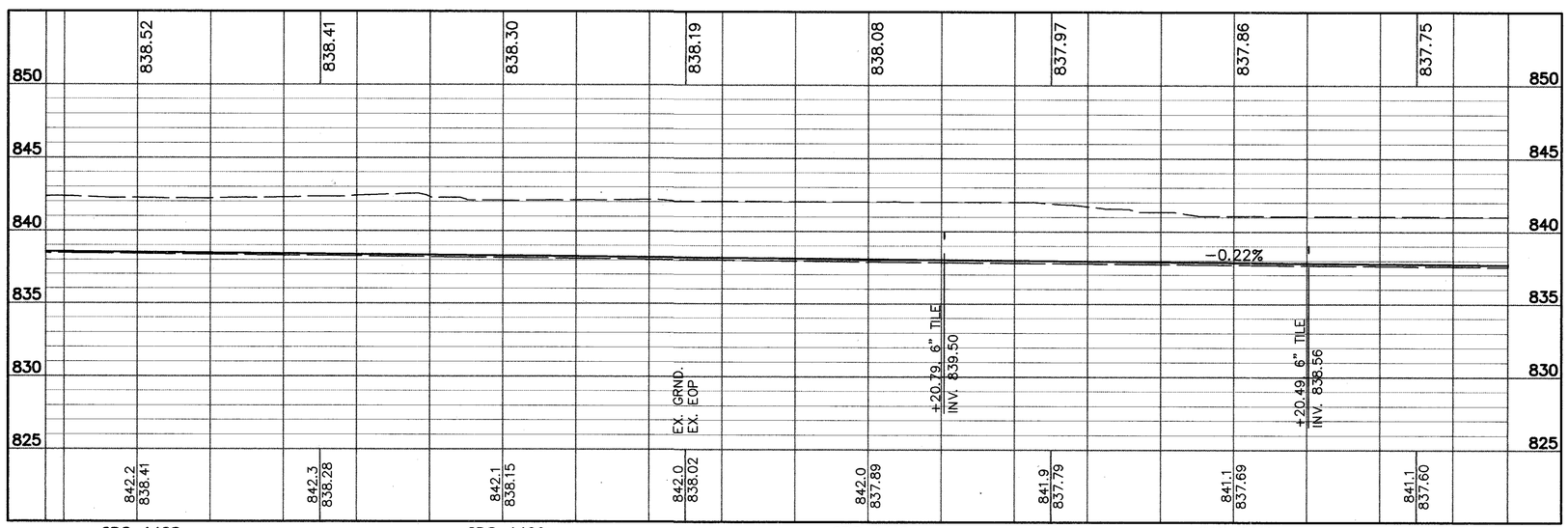

CROSS REFERENCES

SHEET NO.	DESCRIPTION
362	⊛ LIGHTING PLAN
67	(U 1) UNDERDRAIN DATA AND QUANTITIES

REFERENCE No.	STATION TO STATION (ALL STATIONING REFERS TO CDS ALIGNMENT)	SIDE	622 CONCRETE BARRIER, TYPE B	607 FENCE, TYPE CL	606 GUARDRAIL, TYPE 5	606 ANCHOR ASSEMBLY, TYPE E	202 FENCE REMOVED	603 8" CONDUIT, TYPE F	670 DITCH EROSION PROTECTION
			L.F.	L.F.	L.F.	EA.	L.F.	L.F.	S.Y.
B1	1407+75 ~ 1411+75	LT.	400						
G1	1409+95.85 ~ 1411+70.85	RT.			150	1			
F1	1407+75 ~ 1411+75	RT.		400					
R1	1407+75 ~ 1411+75	RT.					400		
D1	1407+80	RT.						10	
D2	1411+15	RT.						10	
EC1	1407+75 ~ 1408+00	RT.							21
EC2	1411+00 ~ 1411+75	RT.							63
SHEET TOTALS			400	400	150	1	400	20	84

HORIZONTAL SCALE IN FEET
0 10 20 40

CALC: G.J.W. DATE: 2/2/94
CHKD: M.F.-J. DATE: 12/5/94

PLAN & PROFILE
STA CDS-1407+75 TO STA. CDS-1411+75

FRA-270-32.46

137
593

CDSSUMM.DWG CDSPROF.DWG MS1.DWG DESIGN01.DWG COL #28 PLOT SCALE: 1"=20' C:\DRAWING\06092306\PLAN\06092P32.DWG FEBRUARY-10-1995

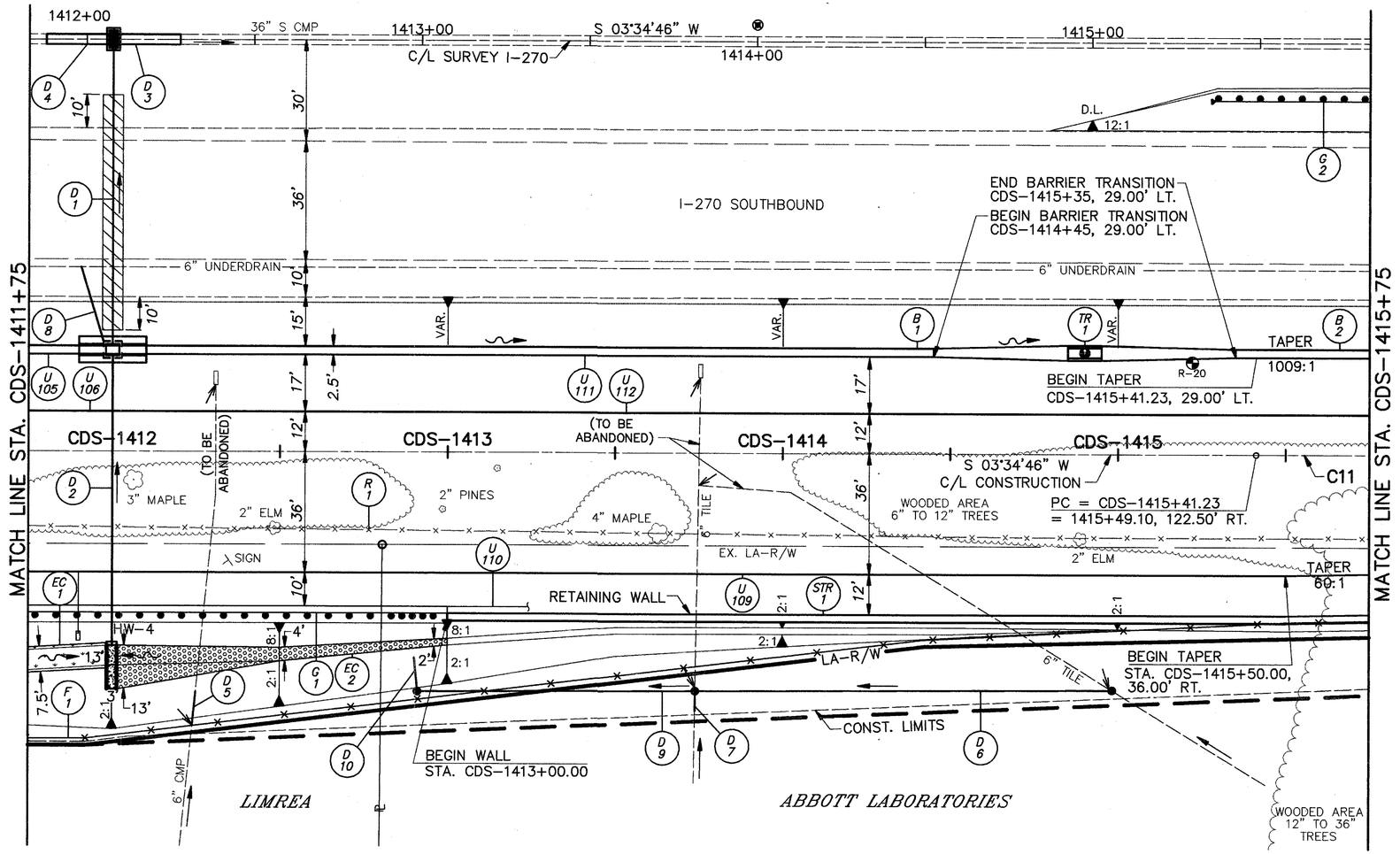

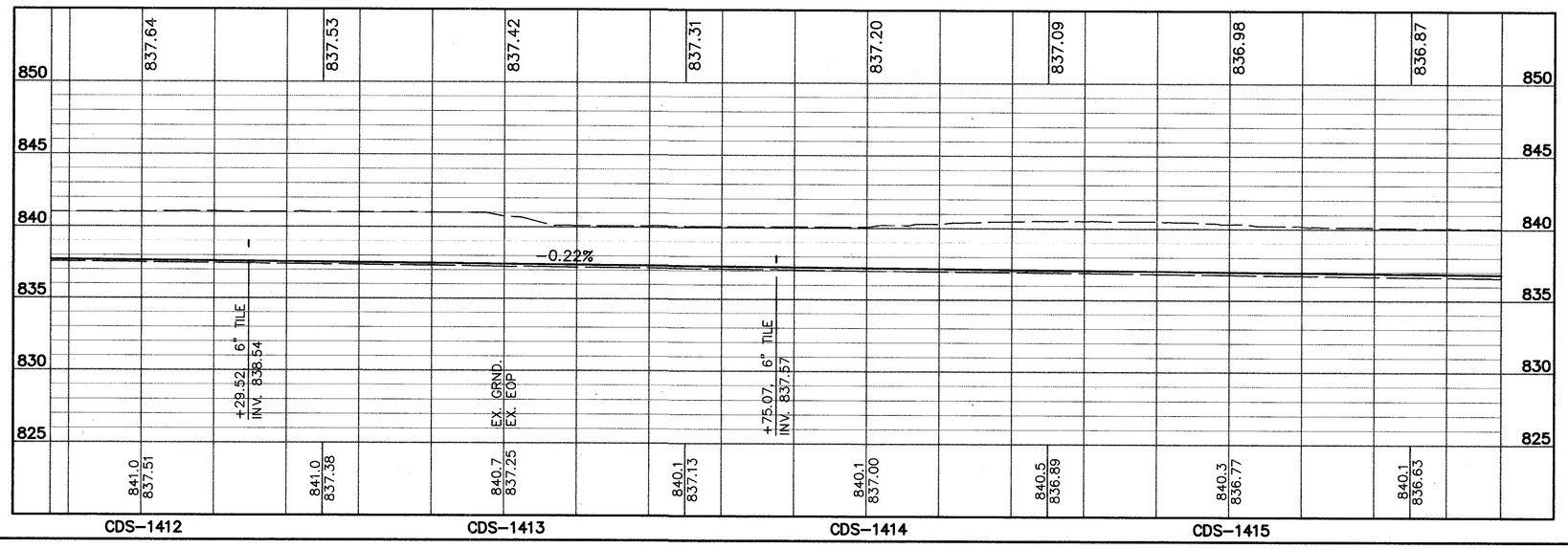

CROSS REFERENCES

SHEET NO.	DESCRIPTION	SHEET NO.	DESCRIPTION
4	C11 CURVE INFO.	362	LIGHTING PLAN
67	U 1 UNDERDRAIN DATA AND QUANTITIES	315	DRAINAGE PROFILE
524	STR 1 RETAINING WALL		
342	TR 1 TRAFFIC CONTROL PLAN		

REFERENCE No.	STATION TO STATION (ALL STATIONING REFERS TO CDS ALIGNMENT)	SIDE	622 CONCRETE BARRIER, TYPE B	607 FENCE, TYPE CL	607 FENCE, TYPE CL AS PER PLAN	606 GUARDRAIL, TYPE 5	606 BRIDGE TERMINAL ASSEMBLY, TYPE 1	202 FENCE REMOVED	606 ANCHOR ASSEMBLY, TYPE E
			L.F.	L.F.	L.F.	L.F.	EA.	L.F.	EA.
B1	1411+75 ~ 1414+85	LT.	290						
B2	1414+95 ~ 1415+75		80						
G1	1411+70.85 ~ 1413+00	RT.				112.5	1		
G2	1415+29.62 ~ 1415+79.80	LT.				25			1
F1	1411+75 ~ 1415+75	RT.		377	26				
R1	1411+75 ~ 1415+75	RT.						400	
SHEET TOTALS			370	377	26	137.5	1	400	1

REFERENCE No.	STATION TO STATION (ALL STATIONING REFERS TO CDS ALIGNMENT)	SIDE	604 INLET, NO. 3D	603 CONDUIT, BORED OR JACKED, 21", TYPE B	603 18" CONDUIT, TYPE B	603 21" CONDUIT, TYPE B	602 CONCRETE MASONRY	601 RIPRAP USING 6" REIN. CONCRETE SLAB
			EA.	L.F.	L.F.	L.F.	C.Y.	C.Y.
D1	1412+00	LT.	1	70		22		
D2	1412+00	L-R			88		0.44	2.17
SHEET TOTALS			1	70	88	22	0.44	2.17

REFERENCE No.	STATION TO STATION (ALL STATIONING REFERS TO CDS ALIGNMENT)	SIDE	604 CATCH BASIN, NO. 4A AS PER PLAN	603 8" CONDUIT, TYPE F	603 36" CONDUIT, TYPE C 707.13	670 DITCH EROSION PROTECTION	601 ROCK CHANNEL PROTECTION, TYPE C, WITH FILTER, T = 18"	604 INSPECTION WELL	603 6" CONDUIT, TYPE B, 707.17
			EA.	L.F.	L.F.	S.Y.	C.Y.	EA.	L.F.
D3	1412+00 ~ 1412+10	LT.	1		20				
D4	1413+90 ~ 1412+00	LT.			20				
D5	1412+25	RT.		10					
D6	1413+74 ~ 1415+00	RT.		124				1	
D7	1413+74	RT.		6					
D8	1411+90 ~ 1412+00	LT.							26
D9	1412+91 ~ 1413+74	RT.		83				1	
D10	1412+90 ~ 1412+91	RT.		10				1	
EC1	1411+75 ~ 1412+00	RT.				21			
EC2	1412+00 ~ 1413+00	RT.					31		
SHEET TOTALS			1	233	40	21	31	3	26

HORIZONTAL SCALE IN FEET: 0, 10, 20, 40

CALC: BS:GJW DATE:2/2/94
CHKD: BY:M.F.J DATE:12/5/94

PLAN & PROFILE
STA. CDS-1411+75 TO STA. CDS-1415+75

FRA-270-32.46

138
593

CDSSUMM.DWG CDSPROF.DWG PLOT SCALE 1"=20'
DESIGN01.DWG MST.DWG COL #29 C:\DRAWING\06092306\PLAN\06092P33.DWG FEBRUARY-13-1995

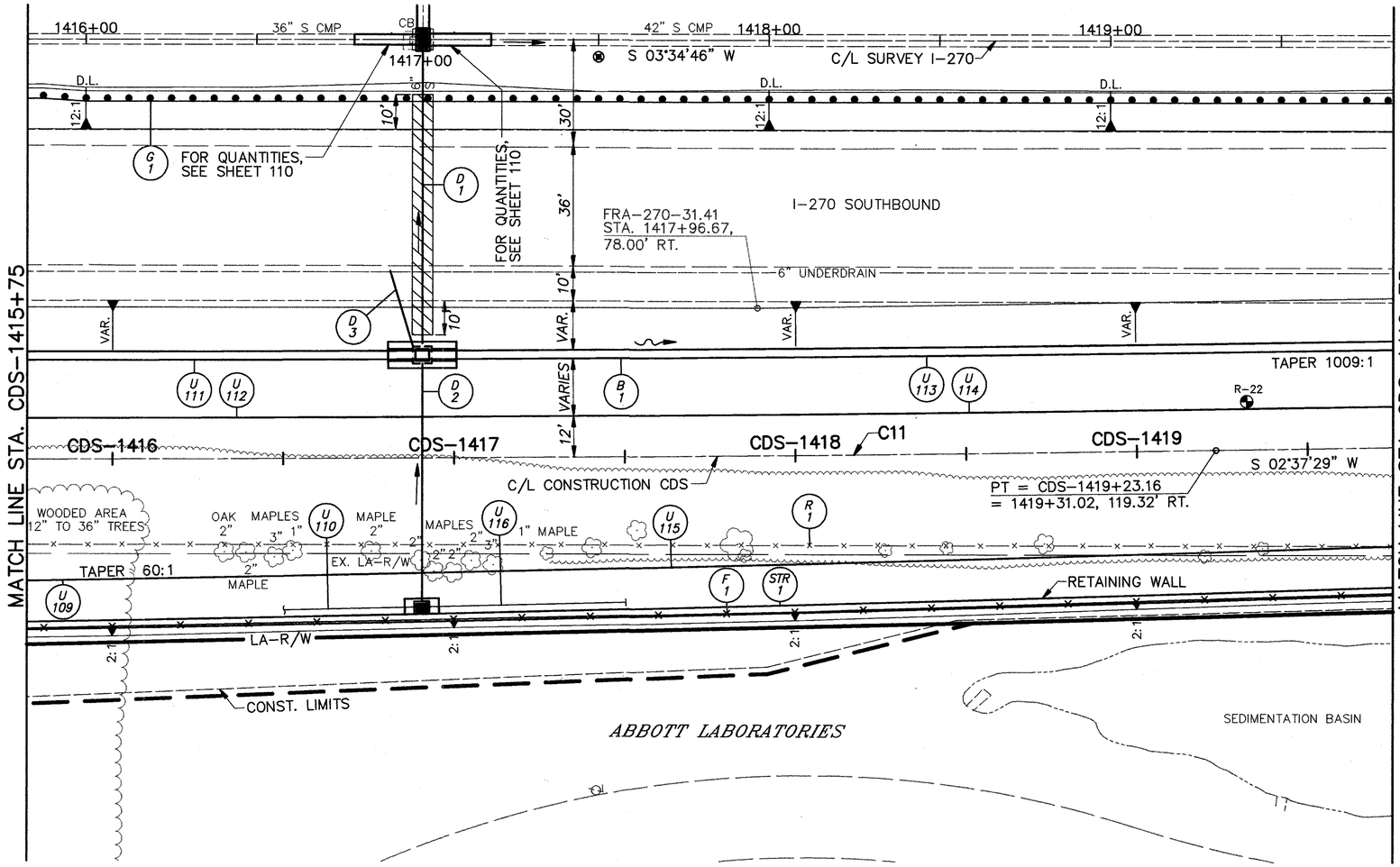

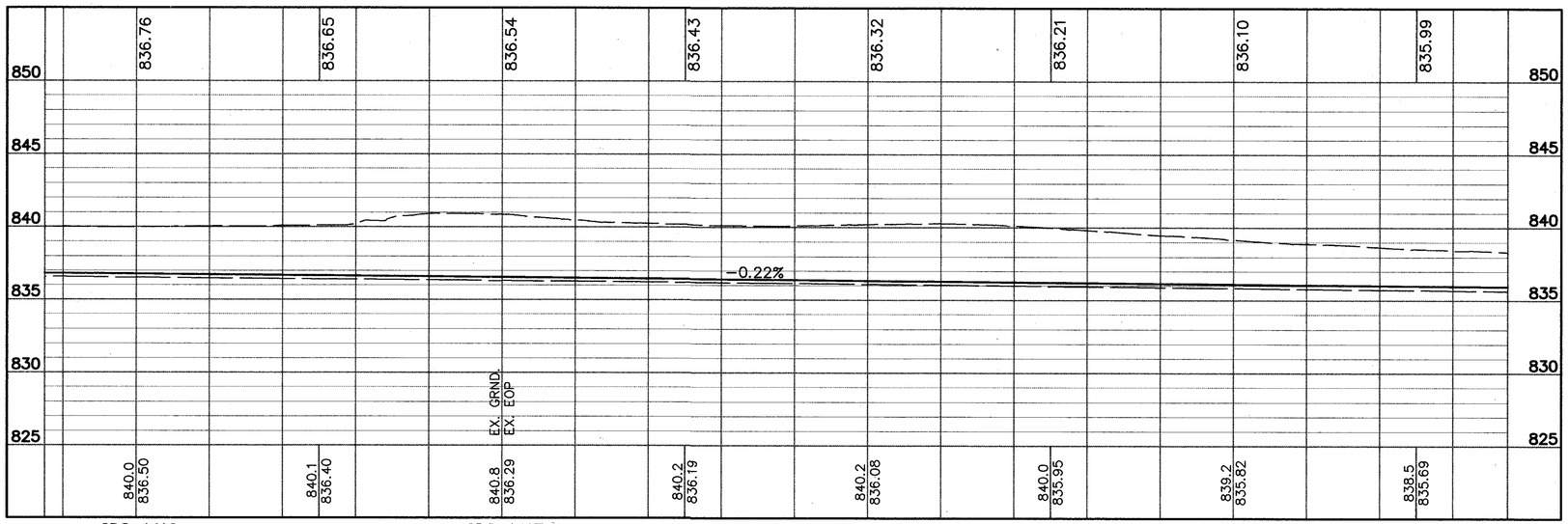

CROSS REFERENCES

SHEET NO.	DESCRIPTION
4	C11 CURVE INFO.
67	U 1 UNDERDRAIN DATA AND QUANTITIES
524	STR 1 RETAINING WALL
362	LIGHTING PLAN

REFERENCE No.	STATION TO STATION (ALL STATIONING REFERS TO CDS ALIGNMENT)	SIDE	622 CONCRETE BARRIER, TYPE B (L.F.)	607 FENCE, TYPE CL AS PER PLAN (L.F.)	202 FENCE REMOVED (L.F.)	606 GUARDRAIL, TYPE 5 (L.F.)
B1	1415+75 ~ 1419+75	LT.	380			
F1	1415+75 ~ 1419+75	RT.		400		
R1	1415+75 ~ 1419+75	RT.			400	
G1	1415+79.80 ~ 1419+81.32	LT.				400
SHEET TOTALS			380	400	400	400

REFERENCE No.	STATION TO STATION (ALL STATIONING REFERS TO CDS ALIGNMENT)	SIDE	604 INLET, NO. 3D (EA.)	604 INLET, NO. 3E (EA.)	603 15" CONDUIT, TYPE B (L.F.)	603 18" CONDUIT, TYPE B (L.F.)	603 6" CONDUIT, TYPE B 707.17 (L.F.)	603 CONDUIT, BORED OR JACKED, 18", TYPE B (L.F.)
D1	1416+90.50	LT.	1			22		70
D2	1416+90.50	L-R		1	75			
D3	1416+80 ~ 1416+90	LT.					26	
SHEET TOTALS			1	1	75	22	26	70

HORIZONTAL SCALE IN FEET
0 10 20 40

CHK: G.J.W. DATE: 2/2/94
CHK: M.F.J. DATE: 12/5/94

PLAN & PROFILE
STA CDS-1415+75 TO STA. CDS-1419+75

FRA-270-32.46

139
593

ODSSUMM.DWG ODSPROF.DWG
DESIGN01.DWG MS1.DWG COL #28 PLOT SCALE: 1"=20'
C:\DRAWNG\06092306\PLAN\06092P34.DWG FEBRUARY-11-1995

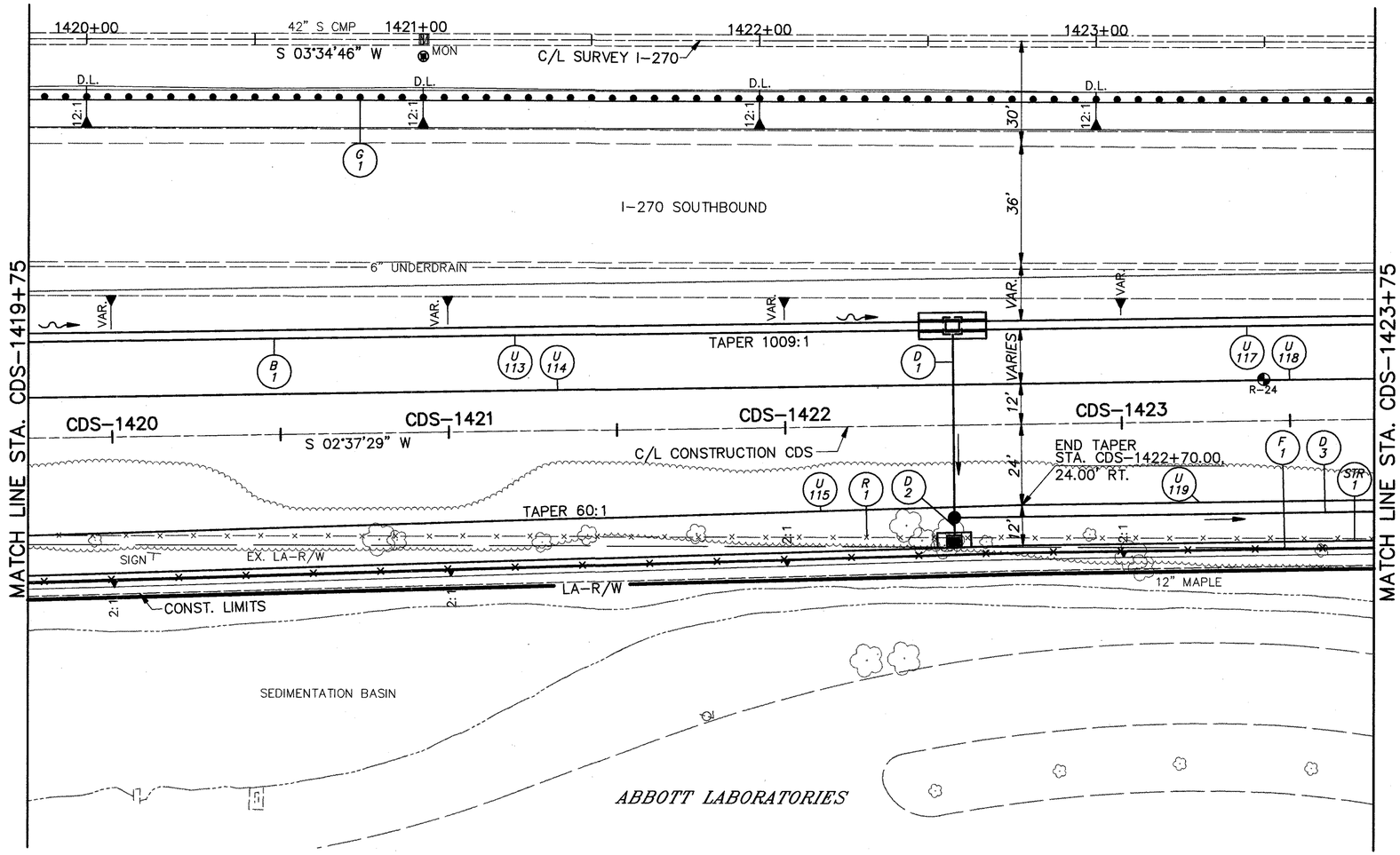

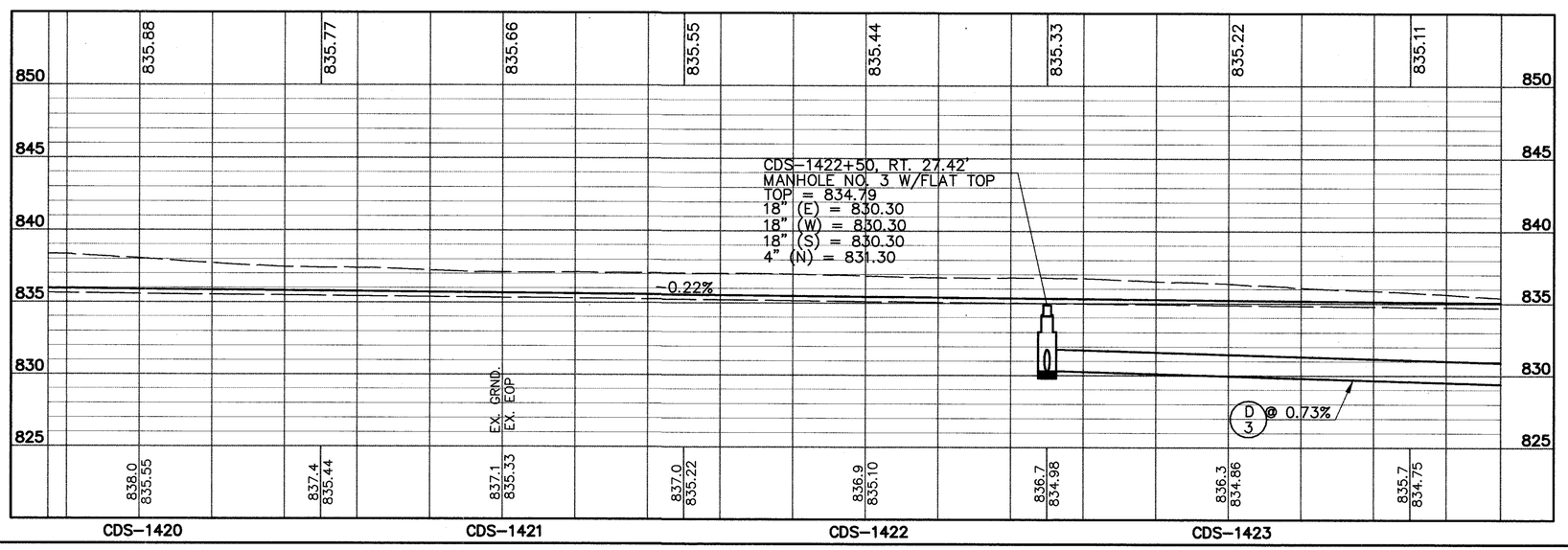

CROSS REFERENCES

SHEET NO.	DESCRIPTION
67	(U 1) UNDERDRAIN DATA AND QUANTITIES
524	(STR 1) RETAINING WALL
362	⊗ LIGHTING PLAN

REFERENCE No.	STATION TO STATION (ALL STATIONING REFERS TO CDS ALIGNMENT)	SIDE	622 CONCRETE BARRIER, TYPE B (L.F.)	607 FENCE, TYPE CL AS PER PLAN (L.F.)	202 FENCE REMOVED (L.F.)	606 GUARDRAIL, TYPE 5 (L.F.)			
B1	1419+75 ~ 1423+75	LT.	380						
F1	1419+75 ~ 1423+75	RT.		400					
R1	1419+75 ~ 1423+75	RT.			400				
G1	1419+81.32 ~ 1423+81.27	LT.				400			
SHEET TOTALS			380	400	400	400			

REFERENCE No.	STATION TO STATION (ALL STATIONING REFERS TO CDS ALIGNMENT)	SIDE	604 MANHOLE, NO. 3 WITH FLAT TOP (EA.)	604 INLET, NO. 3D (EA.)	604 INLET, NO. 3E (EA.)	603 18" CONDUIT, TYPE B (L.F.)	603 15" CONDUIT, TYPE B (L.F.)		
D1	1422+50	L-R		1		57			
D2	1422+50	RT.			1	8			
D3	1422+50 ~ 1423+75	RT.	1				125		
SHEET TOTALS			1	1	1	65	125		

HORIZONTAL SCALE IN FEET: 0, 10, 20, 40

CALC. G.J.W. DATE: 2/2/94
CHK. M.F.J. DATE: 12/5/94

PLAN & PROFILE
STA CDS-1419+75 TO STA. CDS-1423+75

FRA-270-32.46

140
593

CDSSUM.DWG CDSPROF.DWG
DESIGN01.DWG MS1.DWG
COL #28 PLOT SCALE: 1"=20'
C:\DRAWNG\06092306\PLAN\06092P35.DWG FEBRUARY-10-1995

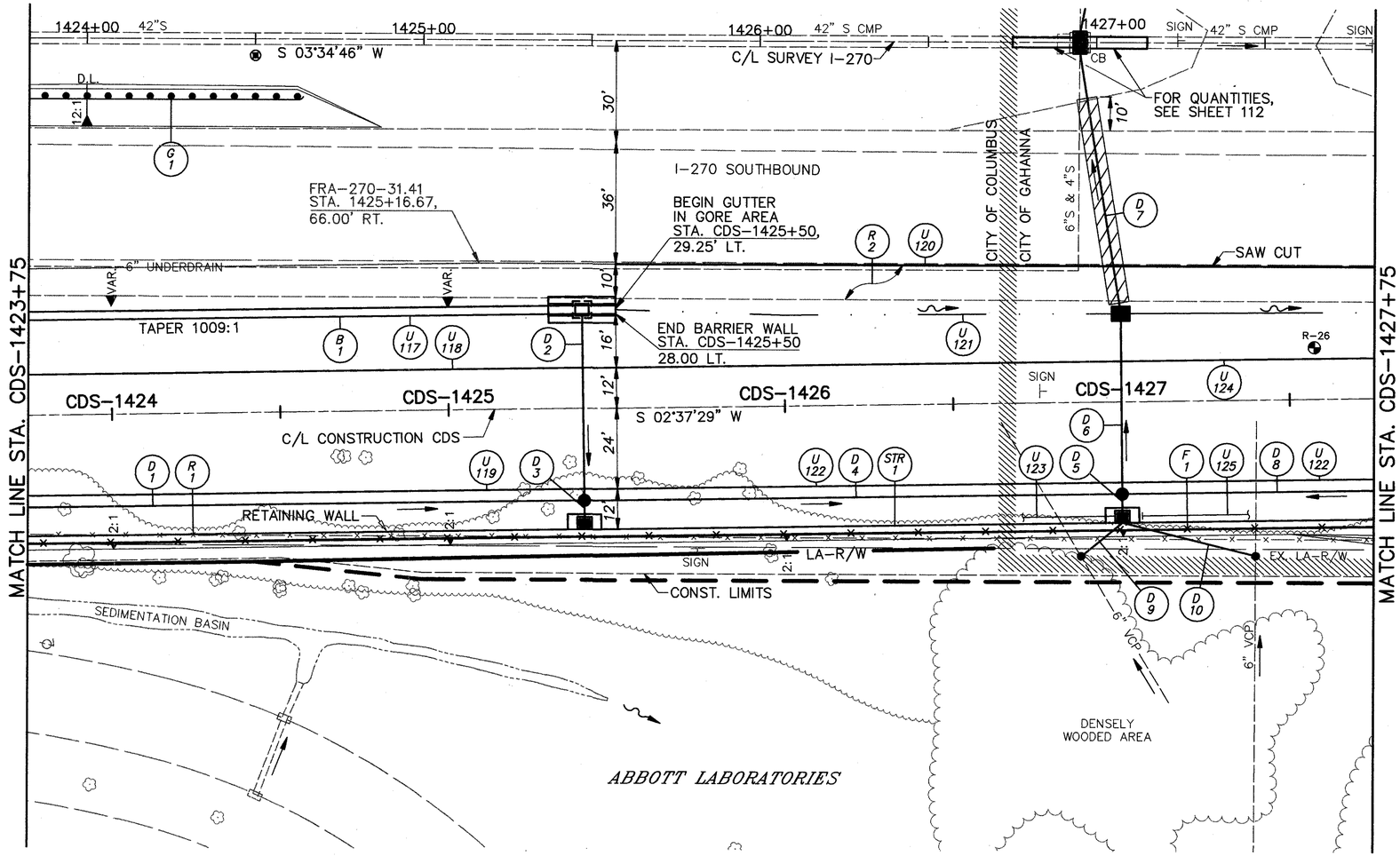

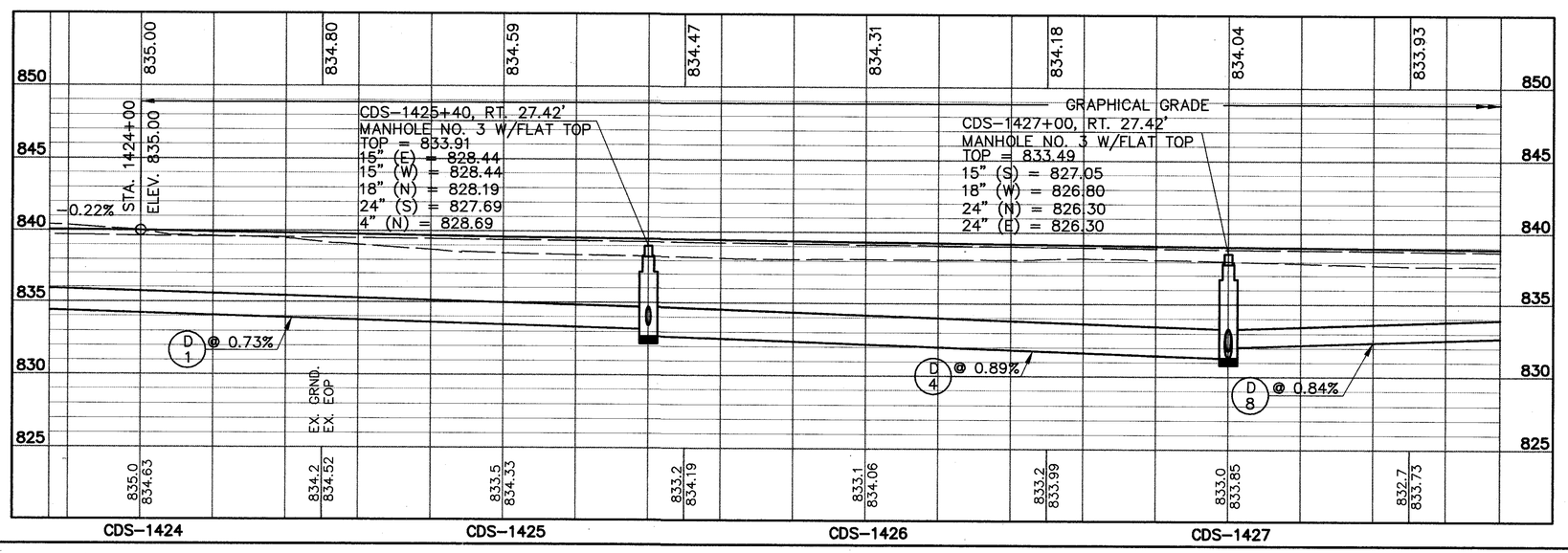

CROSS REFERENCES

SHEET NO.	DESCRIPTION
67	(U 1) UNDERDRAIN DATA AND QUANTITIES
524	(STR 1) RETAINING WALL
362	⊗ LIGHTING PLAN

REFERENCE No.	STATION TO STATION (ALL STATIONING REFERS TO CDS ALIGNMENT)	SIDE	622 CONCRETE BARRIER, TYPE B L.F.	607 FENCE, TYPE CL AS PER PLAN L.F.	202 FENCE REMOVED L.F.	606 GUARDRAIL, TYPE 5 L.F.	606 ANCHOR ASSEMBLY, TYPE T EA.	603 18" CONDUIT, TYPE B L.F.	202 PAVEMENT REMOVED S.Y.
B1	1423+75 ~ 1425+50	LT.	155						
F1	1423+75 ~ 1427+75	RT.		400					
R1	1423+75 ~ 1427+75	RT.			400				
R2	1425+50 ~ 1427+75	RT.							250
G1	1423+81.27 ~ 1424+56.26	LT.				62.5	1		
D1	1423+75 ~ 1425+40	RT.						165	
SHEET TOTALS			155	400	400	62.5	1	165	250

REFERENCE No.	STATION TO STATION (ALL STATIONING REFERS TO CDS ALIGNMENT)	SIDE	604 INLET, NO. 3D EA.	604 INLET, NO. 3E EA.	604 MANHOLE, NO. 3 WITH FLAT TOP EA.	603 15" CONDUIT, TYPE B L.F.	604 CATCH BASIN MISC.: CATCH BASIN "A" AS PER PLAN EA.	603 24" CONDUIT, TYPE B L.F.	603 CONDUIT, BORED OR JACKED, 24", TYPE B L.F.
D2	1425+40	L-R	1			57			
D3	1425+40	RT.		1		8			
D4	1425+40 ~ 1427+00	RT.			1			160	
D5	1427+00	RT.		1		8			
D6	1427+00	L-R			1			54	
D7	1426+87 ~ 1427+00	LT.					1	21	60
D8	1427+00 ~ 1427+75	RT.				75			
SHEET TOTALS			1	2	2	148	1	235	60

REFERENCE No.	STATION TO STATION (ALL STATIONING REFERS TO CDS ALIGNMENT)	SIDE	603 8" CONDUIT, TYPE F L.F.	604 INSPECTION WELL EA.
D9	1426+86 ~ 1427+00	RT.	16	1
D10	1427+00 ~ 1427+40	RT.	42	1
SHEET TOTALS			58	2

HORIZONTAL SCALE IN FEET: 0, 10, 20, 40

CALC. BY: G.J.W. DATE: 2/2/94
CHKD. BY: M.F.J. DATE: 12/5/94

PLAN & PROFILE
STA CDS-1423+75 TO STA. CDS-1427+75
FRA-270-32.46

141
593

PLOT SCALE: 1"=20'
COL #28
C:\DRAWING\06092306\PLAN\06092P36.DWG
FEBRUARY-10-1995
CDSSUMM.DWG CDSPROF.DWG
DESIGN01.DWG MS1.DWG

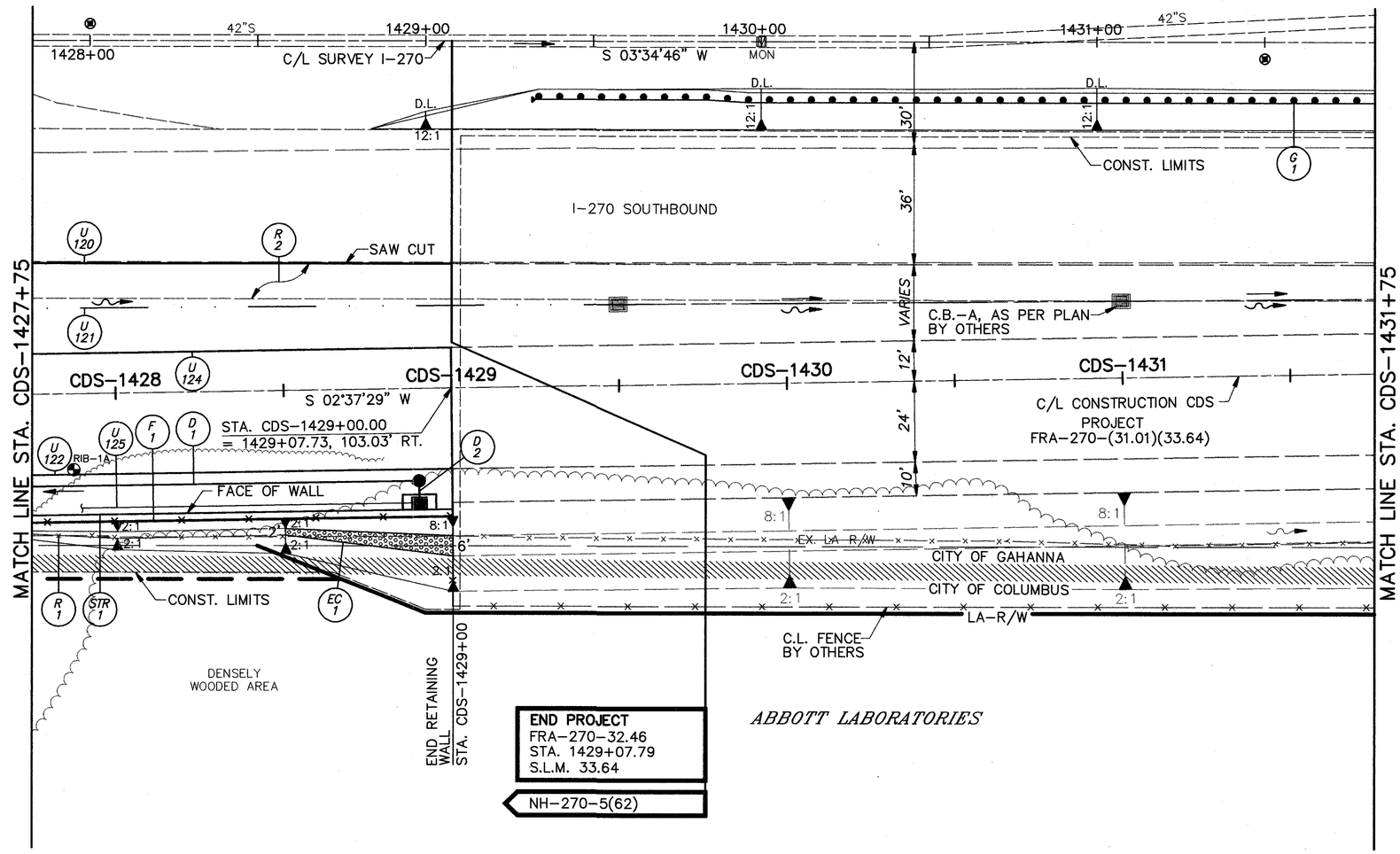

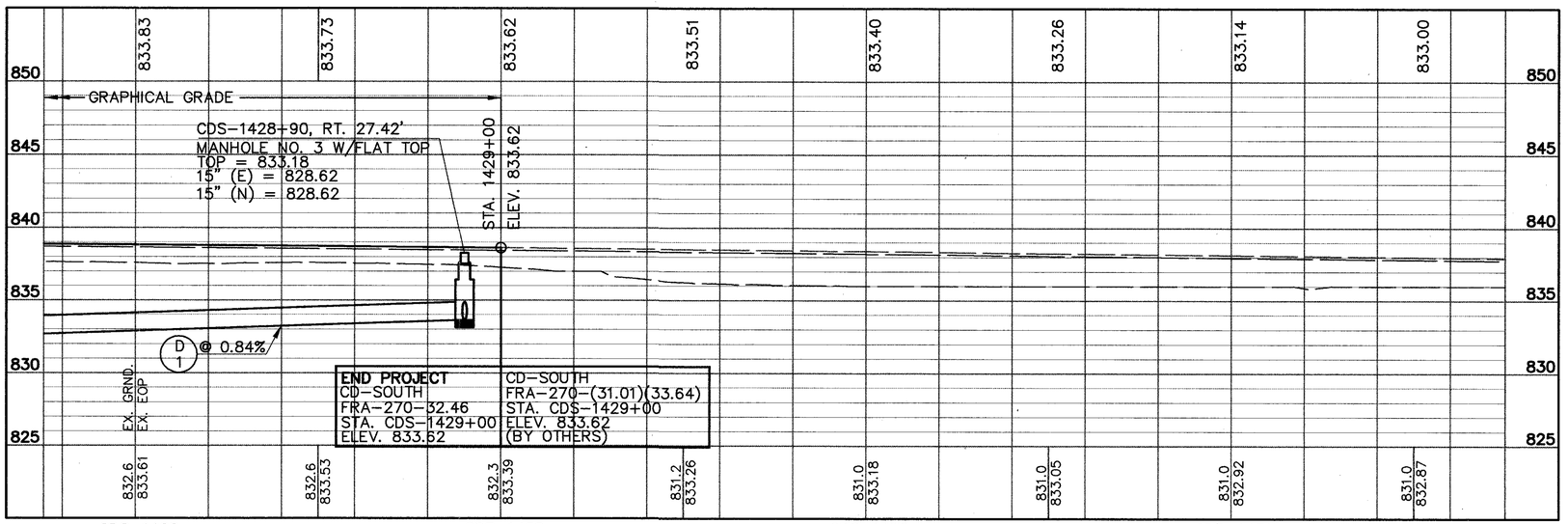

CROSS REFERENCES

SHEET NO.	DESCRIPTION
67	(U 1) UNDERDRAIN DATA AND QUANTITIES
524	(STR 1) RETAINING WALL
362	⊗ LIGHTING PLAN

REFERENCE No.	STATION TO STATION (ALL STATIONING REFERS TO CDS ALIGNMENT)	SIDE	607 FENCE, TYPE CL L.F.	607 FENCE, TYPE CL AS PER PLAN L.F.	604 INLET, NO. 3E EA.	604 MANHOLE, NO. 3 WITH FLAT TOP EA.	603 15" CONDUIT, TYPE B L.F.	202 FENCE REMOVED L.F.	601 ROCK CHANNEL PROTECTION, TYPE C, WITH FILTER, T = 18" C.Y.
F1	1427+75 ~ 1429+00	RT.	27	125					
R1	1427+75 ~ 1429+00	RT.						125	
D1	1427+75 ~ 1428+90	RT.				1	115		
D2	1428+90	RT.			1		8		
EC1	1428+50 ~ 1429+00	RT.							11
SHEET TOTALS			27	125	1	1	123	125	11

REFERENCE No.	STATION TO STATION (ALL STATIONING REFERS TO CDS ALIGNMENT)	SIDE	606 GUARDRAIL, TYPE 5 L.F.	606 ANCHOR ASSEMBLY, TYPE E EA.	202 PAVEMENT REMOVED S.Y.
G1	1429+27.36 ~ 1431+77.32	LT.	225	1	
R2	1427+75 ~ 1429+00	LT.			139
SHEET TOTALS			225	1	139

HORIZONTAL SCALE IN FEET
0 20 40
10

CALC'D-J.W/ DATE:2/2/94
CHK'D-M.F.J DATE:12/5/94

PLAN & PROFILE
STA CDS-1427+75 TO STA. CDS-1429+00

FRA-270-32.46

142
593

CDSSUMM.DWG CDSPROF.DWG MS1.DWG DESIGN01.DWG
PLOT SCALE: 1"=20'
C:\DRAWING\06092306\PLAN\06092F37.DWG
COL #28
FEBRUARY-10-1995

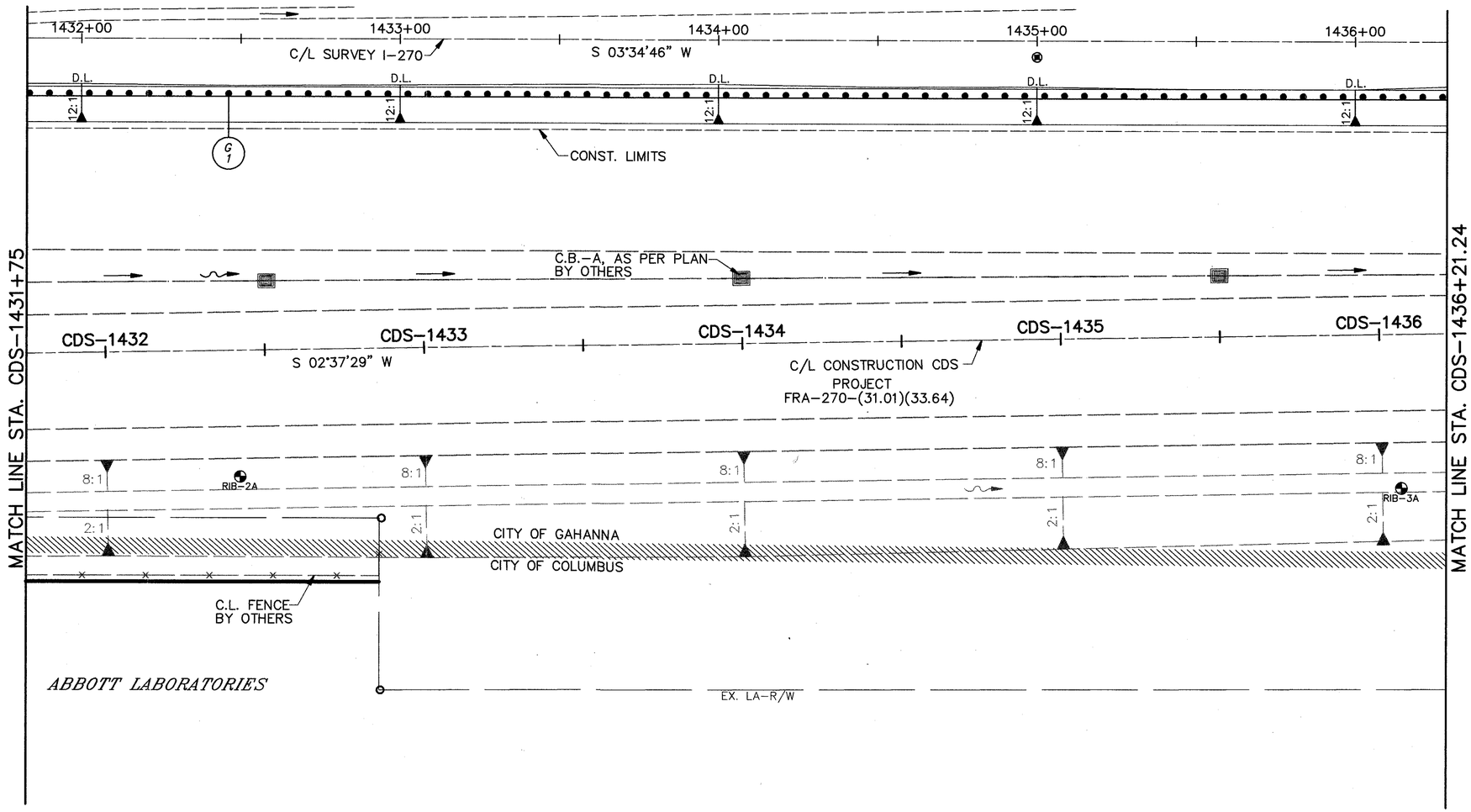

CROSS REFERENCES

SHEET NO.	DESCRIPTION
362	⊗ LIGHTING PLAN

REFERENCE No.	STATION TO STATION (ALL STATIONING REFERS TO CDS ALIGNMENT)	SIDE	GUARDRAIL, TYPE 5 L.F.
			606
G1	1431+77.32 ~ 1436+27.25	LT.	450
SHEET TOTALS			450

0 10 20 40 HORIZONTAL SCALE IN FEET

CALC. BY: GJW DATE: 2/2/94
CHKD. BY: MFJ DATE: 12/5/94

PLAN
STA. CDS-1431+75 TO STA. CDS-1436+21.24

FRA-270-32.46

PLOT SCALE: 1"=20'
COL #28 C:\DRAWING\06092306\PLAN\06092P56.DWG FEBRUARY-11-1995

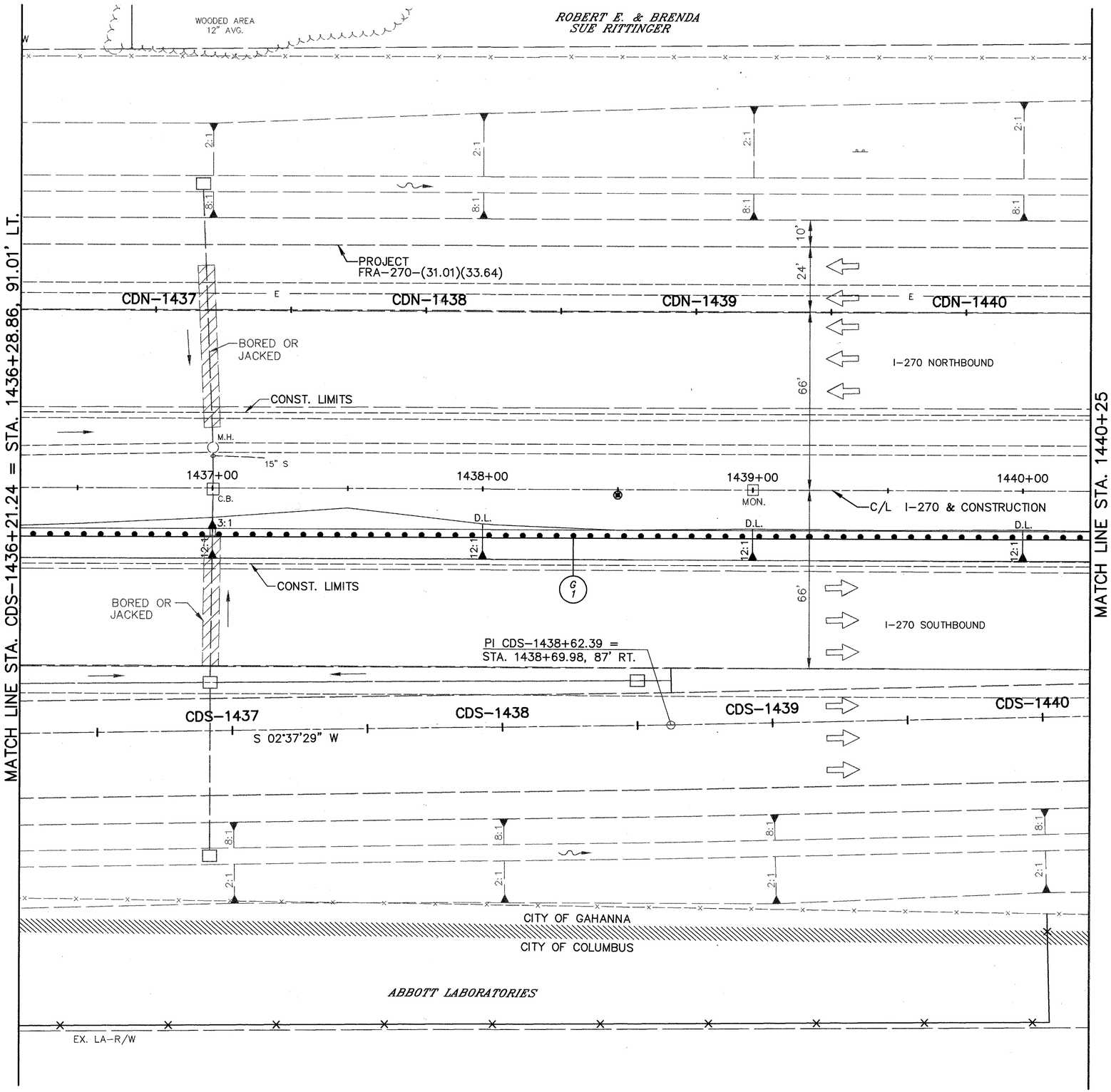

CROSS REFERENCES	
SHEET NO.	DESCRIPTION
362	⊛ LIGHTING PLAN

REFERENCE No.	STATION TO STATION (ALL STATIONING REFERS TO CDS ALIGNMENT)	SIDE	606 GUARDRAIL, TYPE 5 L.F.
G1	1436+27.25 ~ 1440+15.25	LT.	387.5
SHEET TOTALS			387.5

HORIZONTAL SCALE IN FEET
0 20 40

CALC: GJW BY: DATE: 2/2/94
CHKD: M.F.J. DATE: 12/5/94

PLAN
STA. 1436+28.86 TO STA. 1440+25

FRA-270-32.46

144
593

PLOT SCALE: 1"=20'
COL #28 C:\DRAWING\06092306\PLAN\06092P53.DWG FEBRUARY-10-1995

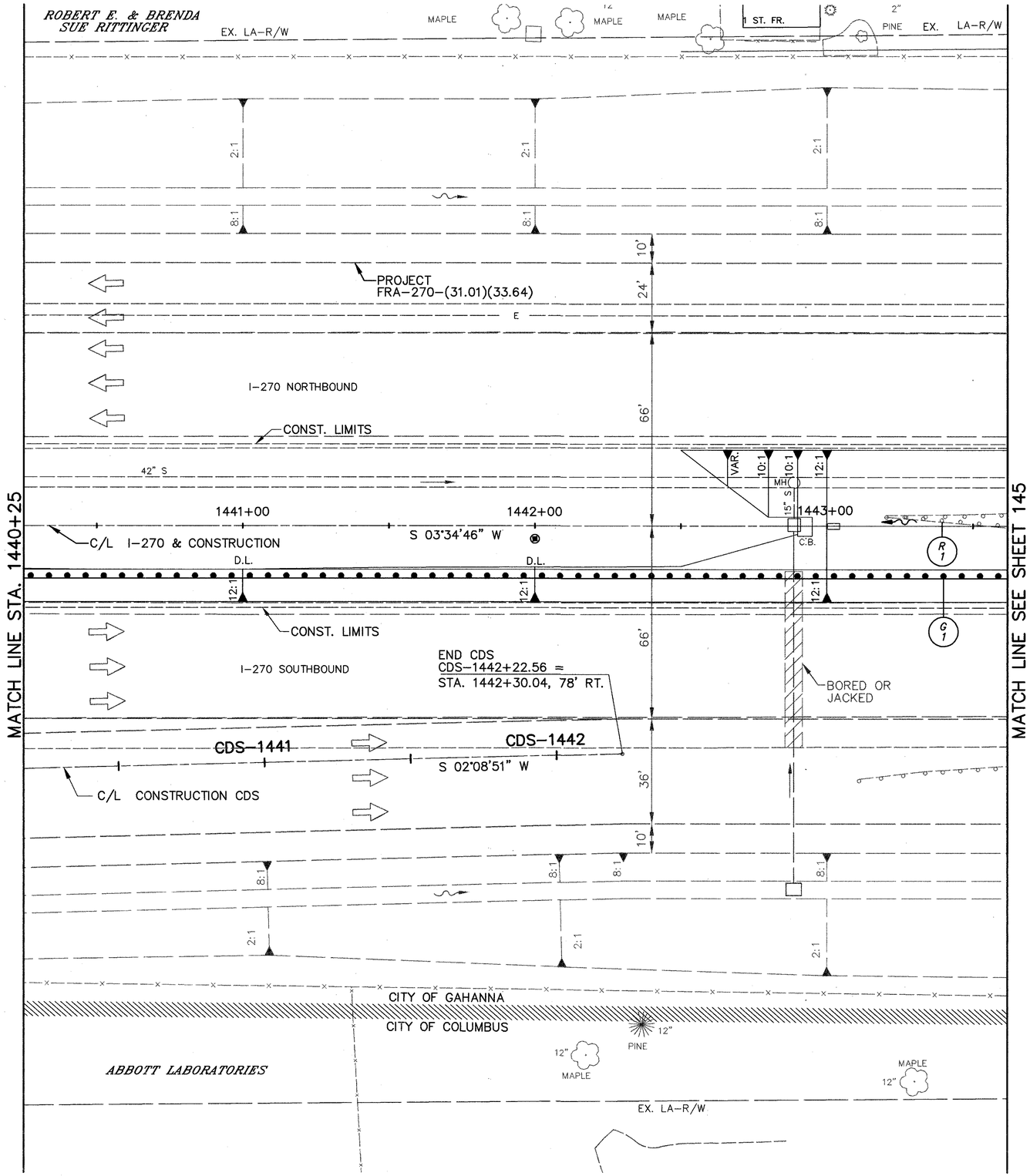

CROSS REFERENCES	
SHEET NO.	DESCRIPTION
362	⊗ LIGHTING PLAN

REFERENCE No.	STATION TO STATION (ALL STATIONING REFERS TO I-270 ALIGNMENT)	SIDE	606 GUARDRAIL, TYPE 5 L.F.	202 ANCHOR ASSEMBLY, REMOVED, TYPE A EA.	202 GUARDRAIL REMOVED L.F.
G1	1440+21.16 ~ 1443+58.66	RT.	337.5		
R1	1443+20 ~ 1443+62	LT.		2	34
SHEET TOTALS			337.5	2	34

HORIZONTAL SCALE IN FEET
0 10 20 40

CALC. BY: GJW DATE: 2/2/94
CHKD. BY: MFJ DATE: 12/5/94

PLAN
STA. 1440+25 TO STA. 1443+61.83

FRA-270-32.46

145
593

PLOT SCALE: 1"=20'
COL. #28
C:\DRAWING\06092306\PLAN\06092P54.DWG
FEBRUARY-11-1995

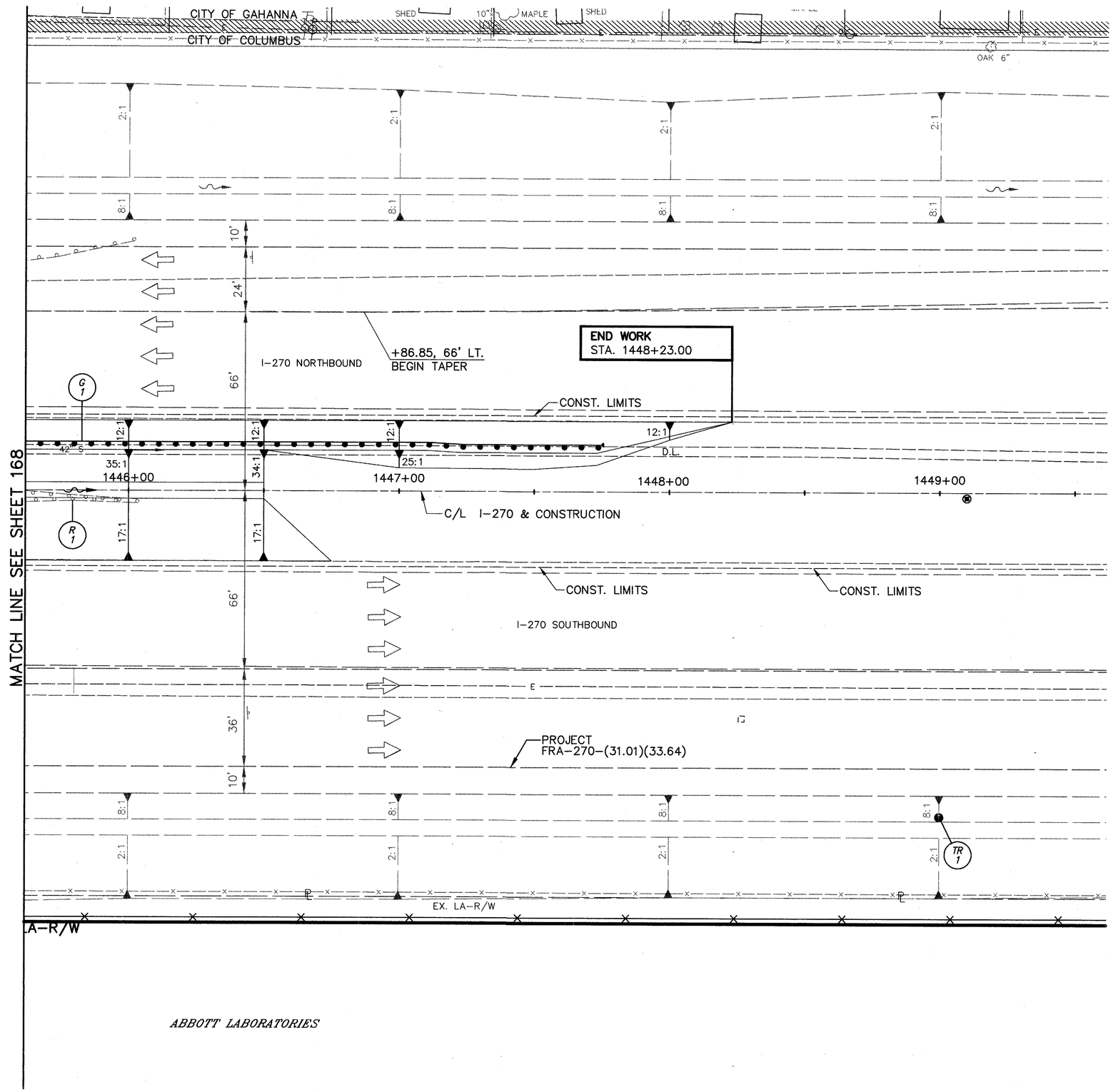

ABBOTT LABORATORIES

CROSS REFERENCES	
SHEET NO.	DESCRIPTION
362	⊛ LIGHTING PLAN
342	(TR 1) TRAFFIC CONTROL PLAN

REFERENCE No.	STATION TO STATION (ALL STATIONING REFERS TO I-270 ALIGNMENT)	SIDE	606 GUARDRAIL, TYPE 5 (L.F.)	606 ANCHOR ASSEMBLY, TYPE E (EA.)	202 ANCHOR ASSEMBLY, REMOVED, TYPE A (EA.)	202 GUARDRAIL REMOVED (L.F.)
G1	1445+61.16 ~ 1447+73.66	LT.	187.5	1		
R1	1445+62 ~ 1446+05	RT.			2	34
SHEET TOTALS			187.5	1	2	34

HORIZONTAL SCALE IN FEET
0 10 20 40

CALC: GJW BY: DATE: 2/2/94
CHKD: MFJ BY: DATE: 12/5/94

PLAN
STA. 1445+61.83 TO STA. 1448+23

FRA-270-32.46

146
593

PLOT SCALE: 1"=20'
COL #28 C:\DRAWING\06092306\PLAN\06092P55.DWG FEBRUARY-10-1995

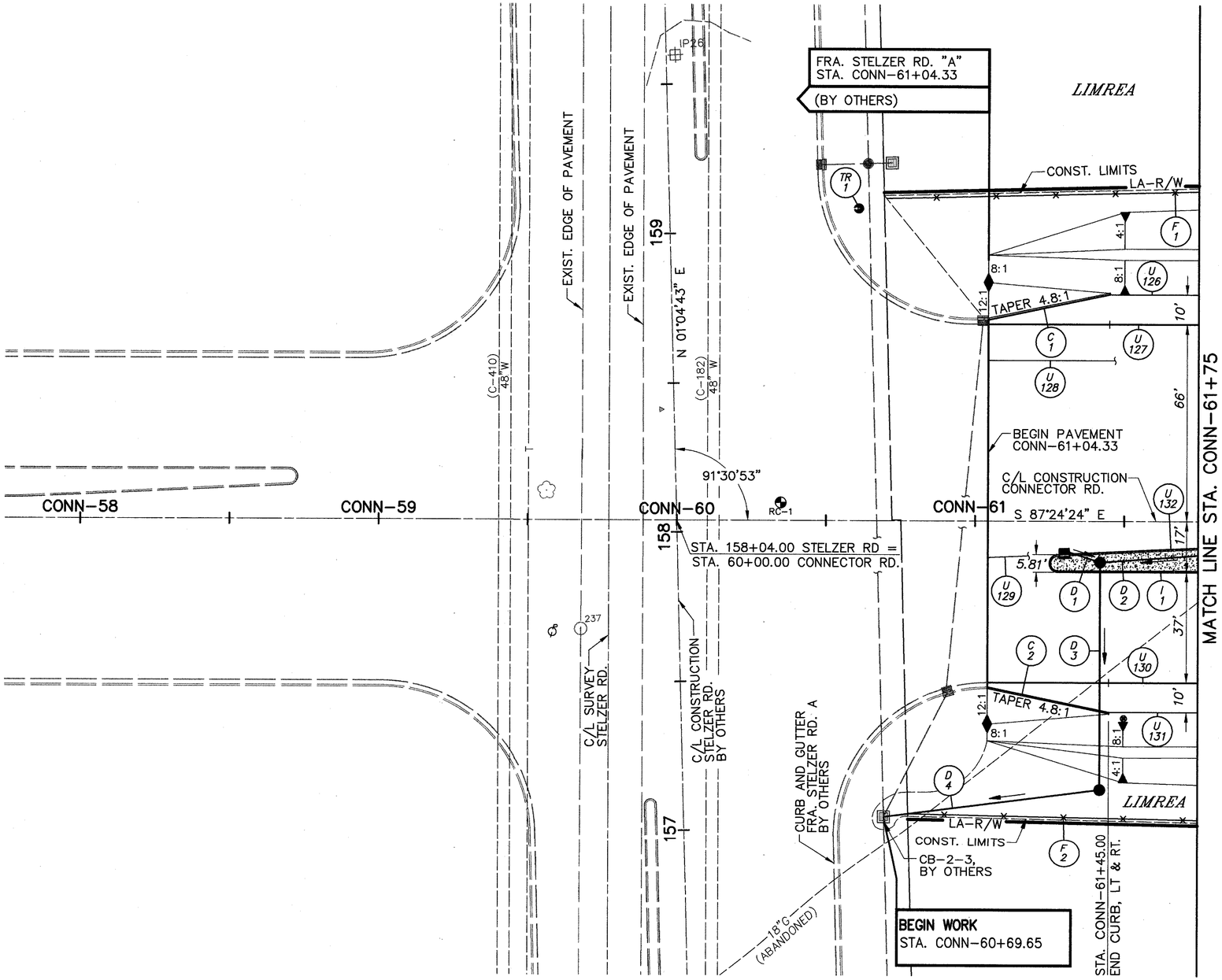

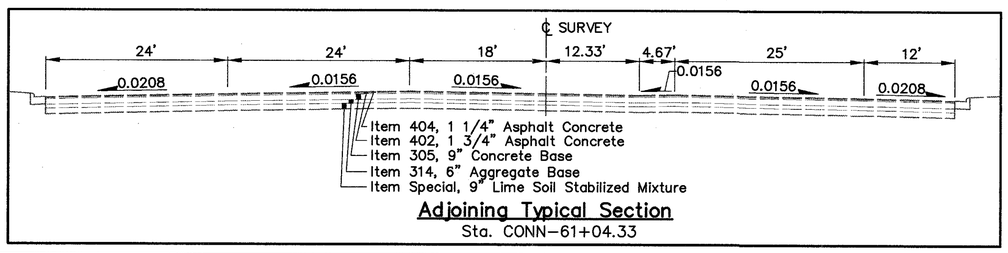

Adjoining Typical Section
Sta. CONN–61+04.33

CROSS REFERENCES

SHEET NO.	DESCRIPTION
69	(U 1) UNDERDRAIN DATA AND QUANTITIES
148	ROADWAY PROFILE
362	● LIGHTING PLAN
342	(TR 1) TRAFFIC CONTROL PLAN

REFERENCE No.	STATION TO STATION (ALL STATIONING REFERS TO CONN. ALIGNMENT)	SIDE	609 CURB, TYPE 6 L.F.	607 FENCE, TYPE CL L.F.	604 CATCH BASIN, NO. 3A EA.	604 MANHOLE, NO. 3 EA.	603 12" CONDUIT, TYPE B L.F.	603 12" CONDUIT, TYPE C L.F.	612 6" CONCRETE MEDIAN S.Y.
I1	61+25 ~ 61+75	RT.							37.70
C1	61+04.33 ~ 61+45	LT.	42						
C2	61+04.33 ~ 61+45	RT.	42						
F1	60+69 ~ 61+75	LT.		106					
F2	60+77 ~ 61+75	RT.		98					
D1	61+30 ~ 61+42	RT.			1			13	
D2	61+42 ~ 61+75	RT.						33	
D3	61+42	RT.				1	76		
D4	60+70 ~ 61+42	RT.				1		73	
SHEET TOTALS			84	204	1	2	76	119	37.70

HORIZONTAL SCALE IN FEET
0 10 20 40

CAD BY: GJW DATE: 2/2/94
CHKD. BY: M.F.J DATE: 12/5/94

PLAN
STA. CONN–60+04.33 TO STA. CONN–61+75

FRA–270–32.46

147
593

COSSUMM.DWG COSPROF.DWG PLOT SCALE: 1"=20'
DESIGN01.DWG MS1.DWG" COL. #28 C:\DRAWING\06092306\PLAN\06092P38.DWG FEBRUARY-10-1995

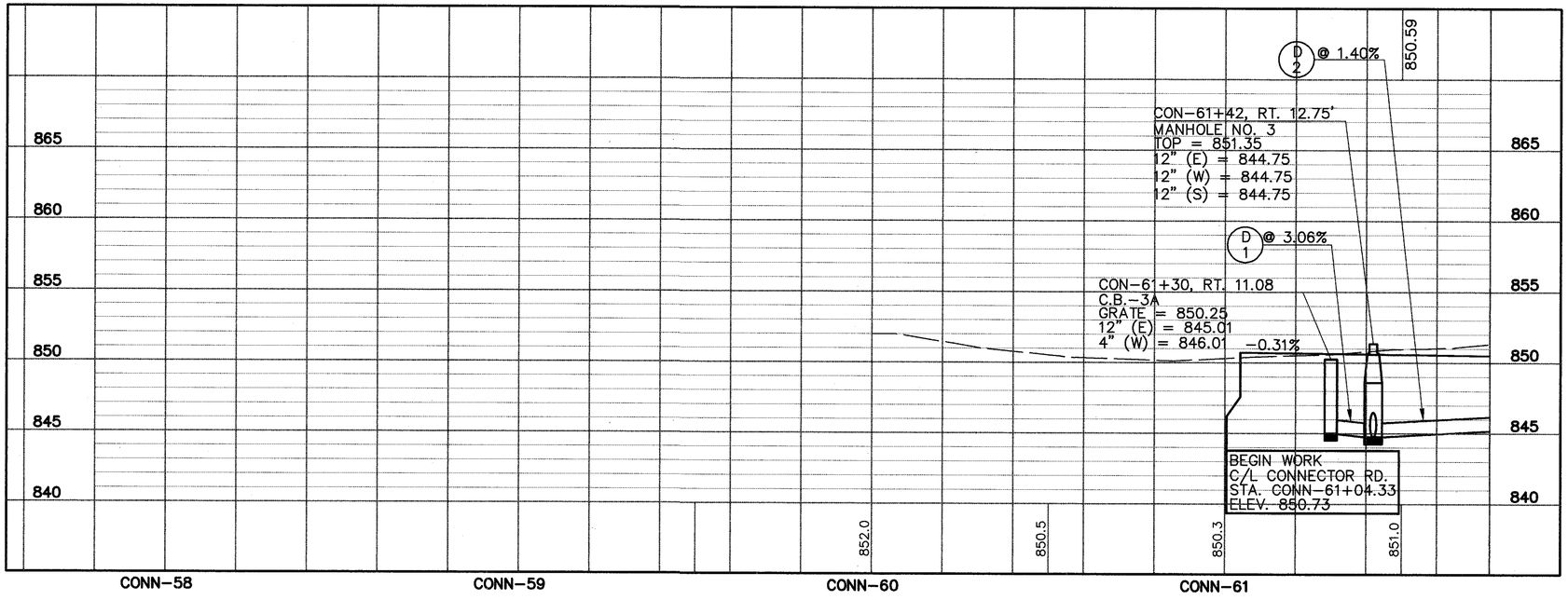

LEGEND:

EXISTING EDGE OF PAVEMENT, MAINLINE I-270

EXISTING PROFILE GRADE

PROPOSED PROFILE GRADE

0 10 20 40
HORIZONTAL SCALE IN FEET

CALC. BY: GJW DATE: 3/15/94
CHKD. BY: TAZ DATE: 1/19/95

PROFILE
STA. CONN-61+04.33 TO STA. CONN-61+75

FRA-270-32.46

148
593

PLOT SCALE=... C:\DRAWING\06092306\PLAN\0609FR38.DWG FEBRUARY-10-1995
COL #28

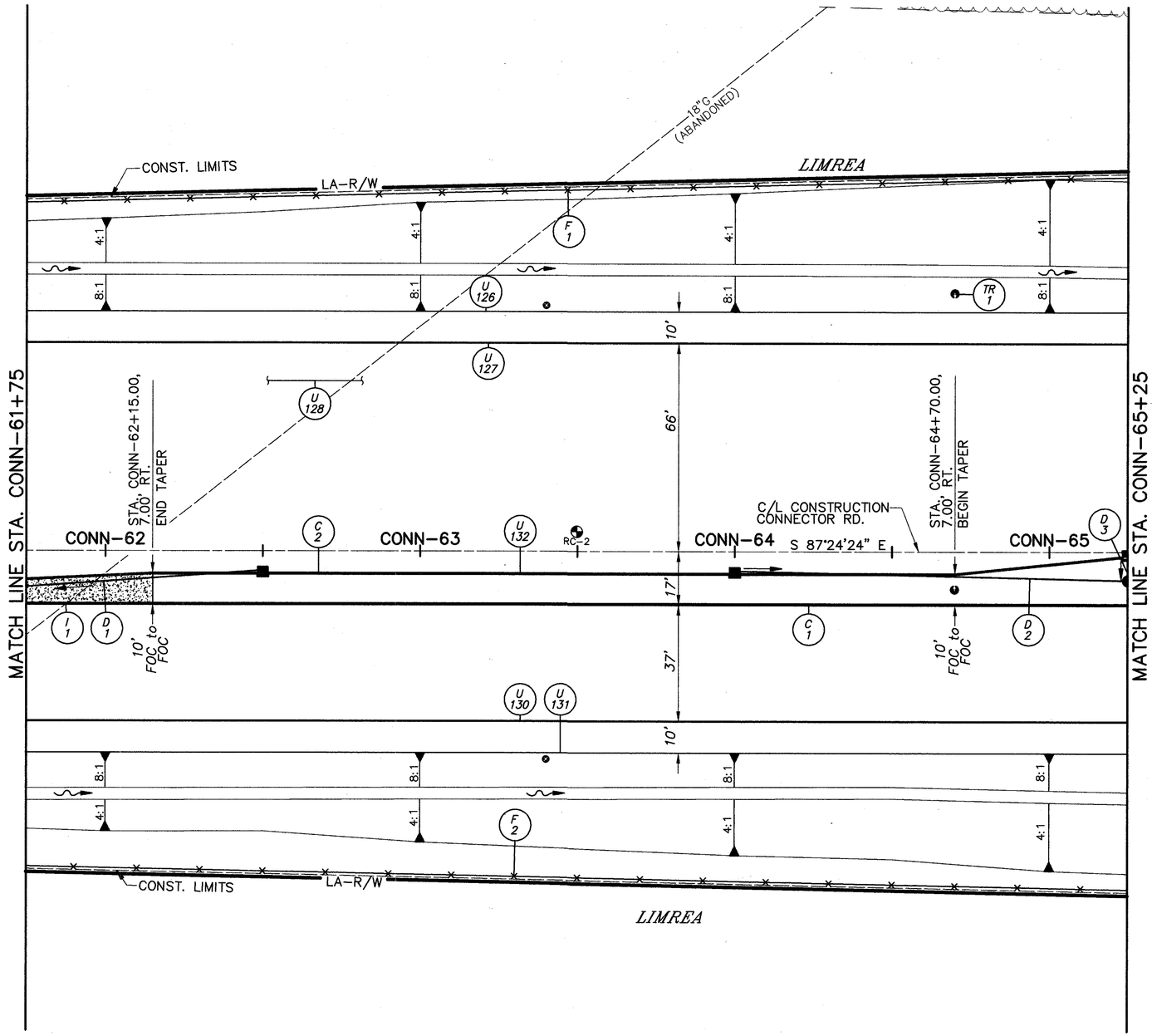

CROSS REFERENCES	
SHEET NO.	DESCRIPTION
150	ROADWAY PROFILE
69	(U 1) UNDERDRAIN DATA AND QUANTITIES
362	⊙ LIGHTING PLAN
342	(TR 1) TRAFFIC CONTROL PLAN

REFERENCE No.	STATION TO STATION (ALL STATIONING REFERS TO CONN. ALIGNMENT)	SIDE	609 CURB, TYPE 6 (L.F.)	607 FENCE, TYPE CL (L.F.)	604 CATCH BASIN, NO. 3A (EA.)	603 12" CONDUIT, TYPE B (L.F.)	603 12" CONDUIT, TYPE C (L.F.)	612 6" CONCRETE MEDIAN (S.Y.)
C1	62+15 ~ 65+25	RT.	310					
C2	62+15 ~ 65+25	RT.	310					
F1	61+75 ~ 65+25	LT.		350				
F2	61+75 ~ 65+25	RT.		350				
D1	61+75 ~ 62+50	RT.			1		75	
D2	64+00 ~ 65+25	RT.			1	125		
D3	65+25	RT.			1		8	
I1	61+75 ~ 62+15	RT.						40
SHEET TOTALS			620	700	3	125	83	40

HORIZONTAL SCALE IN FEET
0 10 20 40

CALC. BY: J.W. DATE: 2/2/94
CHKD. BY: M.F.J. DATE: 12/5/94

PLAN
STA. CONN-61+75 TO STA. CONN-65+25

FRA-270-32.46

149
593

CDSSUMM.DWG CDSPROF.DWG
DESIGN01.DWG MS1.DWG COL #28 PLOT SCALE: 1"=20'
C:\DRAWING\06092306\PLAN\06092P39.DWG FEBRUARY-10-1995

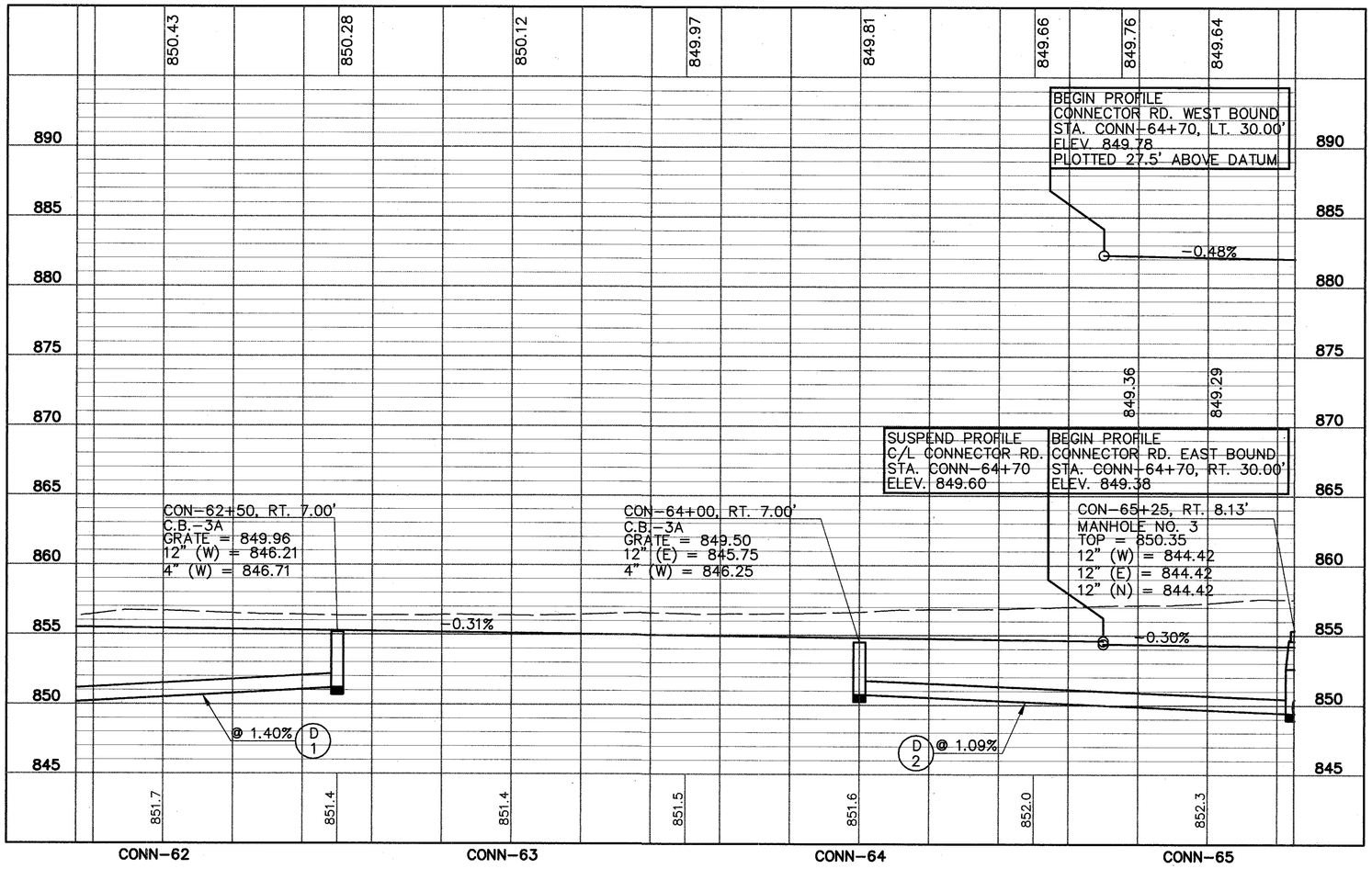

LEGEND:

EXISTING EDGE OF PAVEMENT, MAINLINE I-270

EXISTING PROFILE GRADE

PROPOSED PROFILE GRADE

N

0 10 20 40
HORIZONTAL SCALE IN FEET

CALC. BY: GJW DATE: 3/15/94
CHKD. BY: TAZ DATE: 1/19/95

PROFILE
STA. CONN-61+75 TO STA. CONN-65+25

FRA-270-32.46

150/593

PLOT SCALE... COL #28 C:\DRAWING\06092306\PLAN\0609PR39.DWG FEBRUARY-10-1995

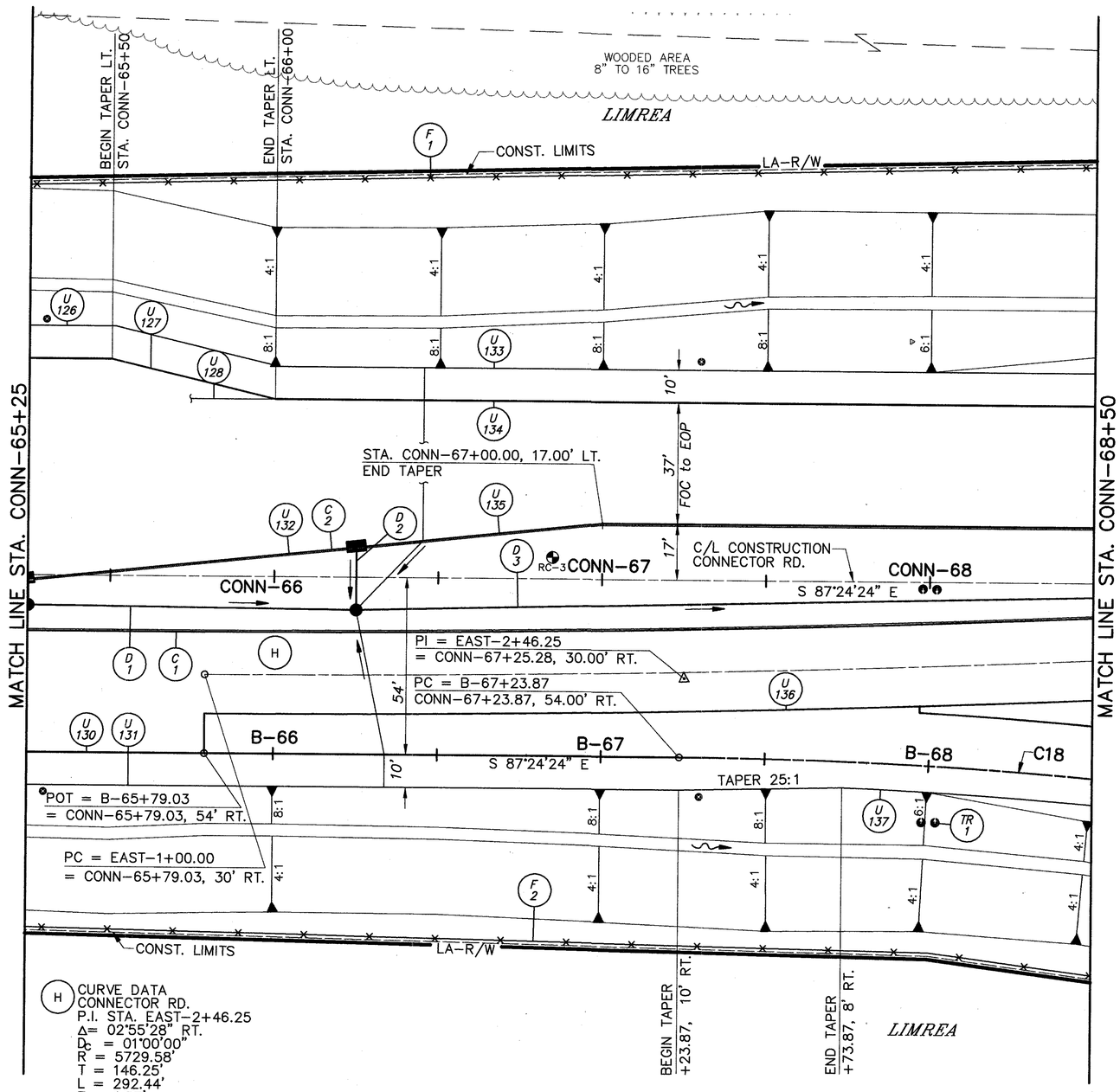

H CURVE DATA
CONNECTOR RD.
P.I. STA. EAST-2+46.25
Δ = 02°55'28" RT.
D_c = 01°00'00"
R = 5729.58'
T = 146.25'
L = 292.44'
E = 1.87'
e_{max} = N.C.
P.C. STA. EAST-1+00.00
P.T. STA. EAST-3+92.44

CROSS REFERENCES

SHEET NO.	DESCRIPTION
152	ROADWAY PROFILE
69	(U 1) UNDERDRAIN DATA AND QUANTITIES
362	⊙ LIGHTING PLAN
342	(TR 1) TRAFFIC CONTROL PLAN

REFERENCE No.	STATION TO STATION (ALL STATIONING REFERS TO CONN. ALIGNMENT)	SIDE	609 CURB, TYPE 6	607 FENCE, TYPE CL	604 CATCH BASIN, NO. 3	604 MANHOLE, NO. 3	603 12" CONDUIT, TYPE C
			L.F.	L.F.	EA.	EA.	L.F.
C1	65+25 ~ 68+50	RT.	325				
C2	65+25 ~ 68+50	LT.	327				
F1	65+25 ~ 68+50	LT.		326			
F2	65+25 ~ 68+50	RT.		325			
D1	65+25 ~ 66+25	RT.				1	100
D2	66+25	L-R			1		20
D3	66+25 ~ 68+50	RT.				1	225
SHEET TOTALS			652	651	1	2	345

HORIZONTAL SCALE IN FEET
0 10 20 40

CALC. BY: GJW DATE: 2/2/94
CHKD. BY: MFJ DATE: 12/5/94

PLAN
STA. CONN-65+25 TO STA. CONN-68+50

FRA-270-32.46

151
593

C:\SSUUM.DWG C:\SPROF.DWG PLOT SCALE: 1"=20'
DESIGN01.DWG MST.DWG COL #28 C:\DRAWING\06092306\PLAN\06092P40.DWG FEBRUARY-10-1995

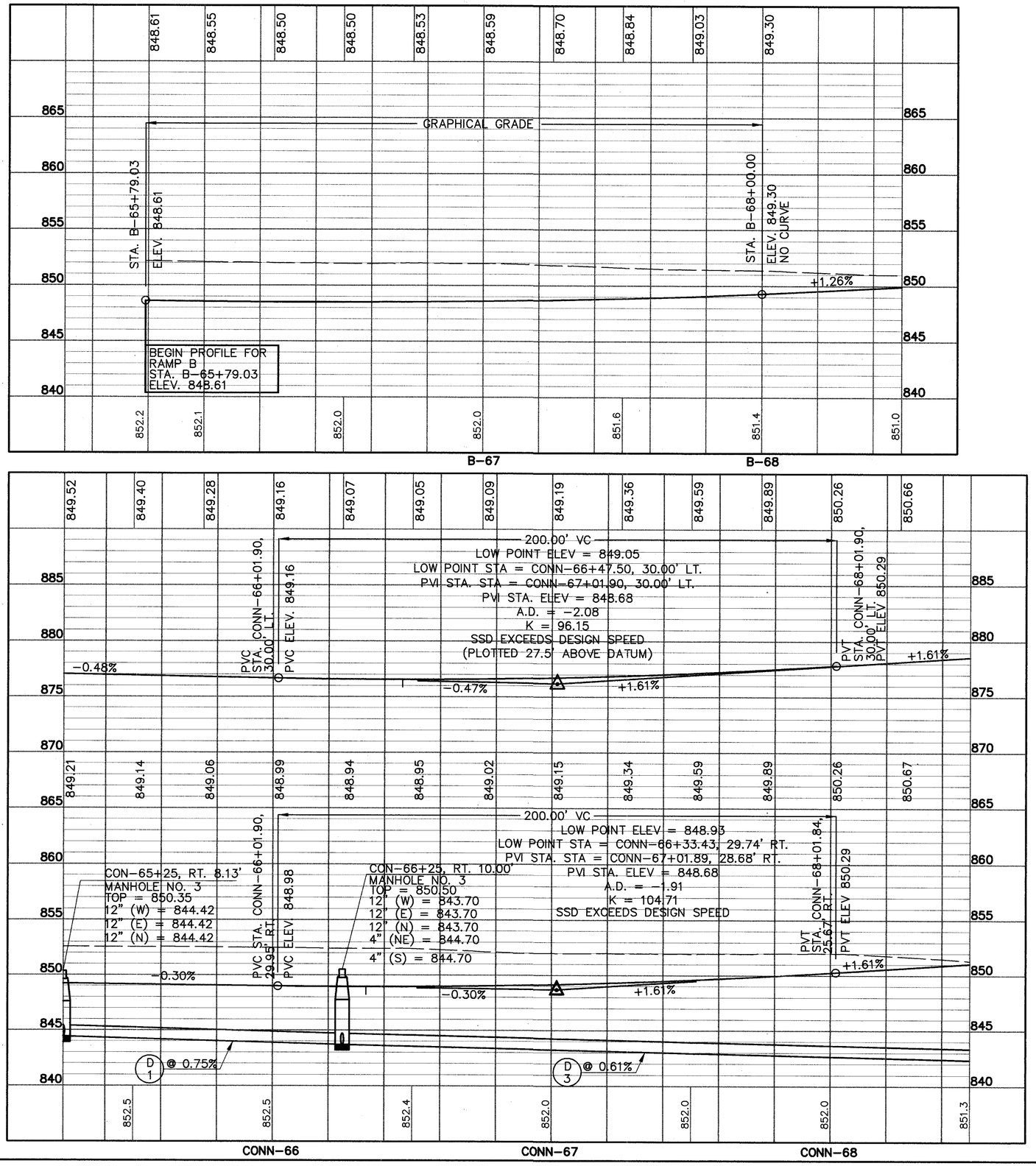

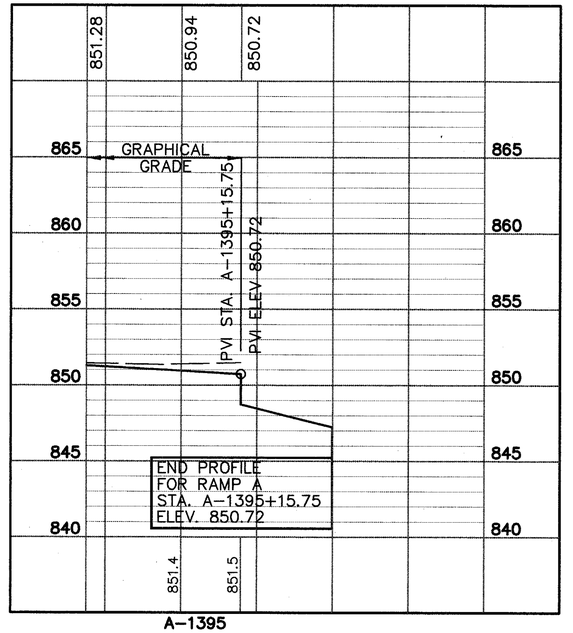

LEGEND:

EXISTING EDGE OF PAVEMENT, MAINLINE I-270

EXISTING PROFILE GRADE

PROPOSED PROFILE GRADE

N

0 10 20 40
HORIZONTAL SCALE IN FEET

CALC. BY: GJW DATE: 3/15/94
CHKD. BY: TAZ DATE: 1/19/95

PROFILE
STA. CONN-65+25 TO STA. CONN-68+50

FRA-270-32.46

152
593

PLOT SCALE... COL #28 C:\DRAWING\06092306\PLAN\0609PR40.DWG FEBRUARY-10-1995

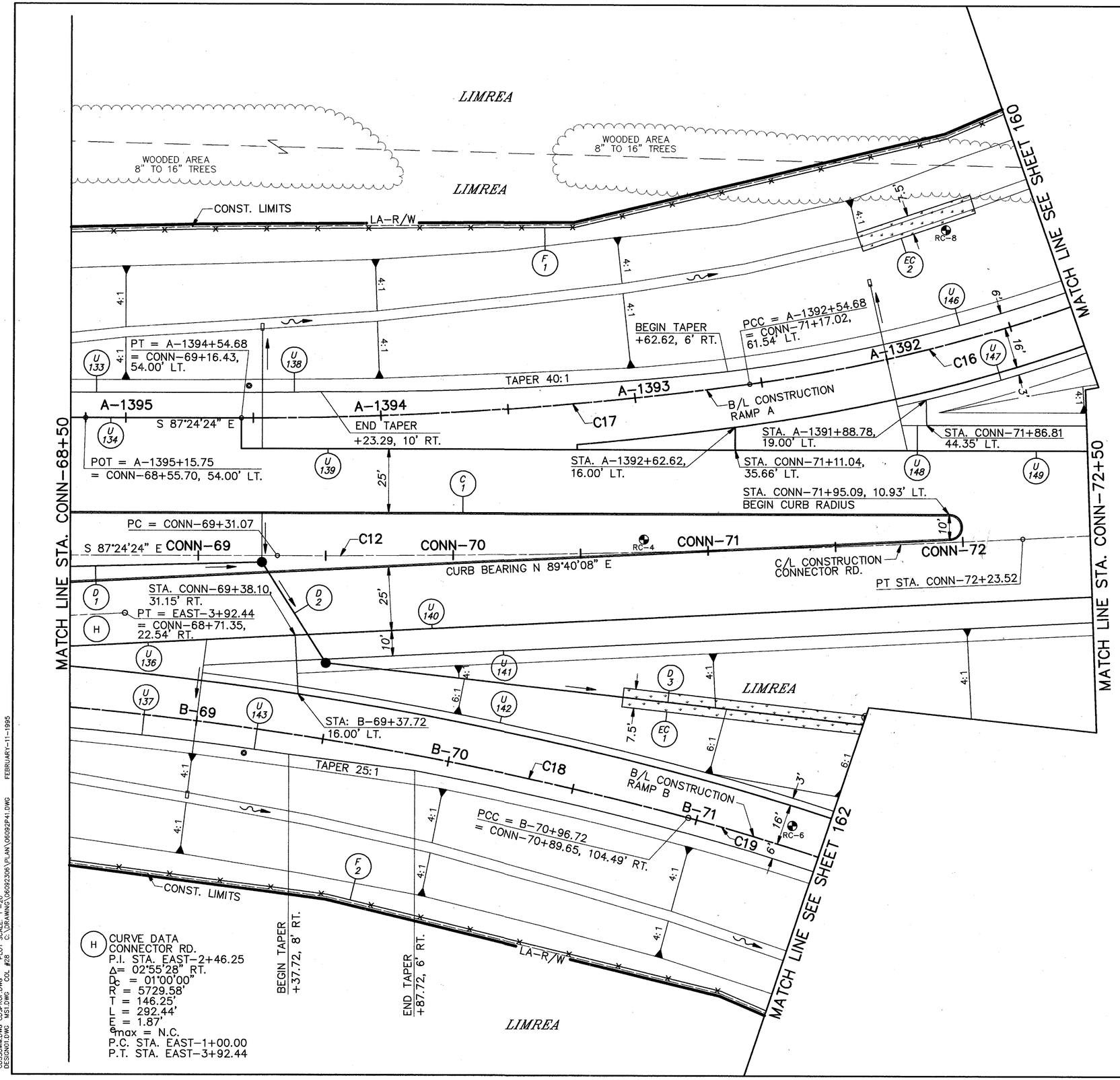

CROSS REFERENCES

SHEET NO.	DESCRIPTION		SHEET NO.	DESCRIPTION
4	C12, C16, C17	CURVE INFO.	362	⊙ LIGHTING PLAN
4	C18, C19	CURVE INFO.		
154/155	ROADWAY PROFILE			
69	(U 1)	UNDERDRAIN DATA AND QUANTITIES		

REFERENCE No.	STATION TO STATION * STATIONING REFERS TO RAMP A/B ALIGNMENTS	SIDE	609 CURB, TYPE 6 L.F.	607 FENCE, TYPE CL L.F.	604 MANHOLE, NO. 3 EA.	603 12" CONDUIT, TYPE B L.F.	603 12" CONDUIT, TYPE C L.F.	670 DITCH EROSION PROTECTION S.Y.
C1	68+50 ~ 72+00	L-R	706					
F1	68+50 ~ 68+55.70	LT.		6				
	*1395+15.75 ~ 1391+25	LT.		366				
F2	* 68+50 ~ 71+50	RT.		281				
D1	68+50 ~ 69+25	RT.					75	
D2	69+25 ~ 69+50	RT.			1	47		
D3	* 69+50 ~ 71+50	LT.			1		212	
EC1	* 70+60.50 ~ 71+50	LT.						79
EC2	*1391+50 ~ 1392+00	RT.						42
SHEET TOTALS			706	653	2	47	287	121

HORIZONTAL SCALE IN FEET
0 10 20 40

CALC: G.J.W. DATE: 2/2/94
CHK: M.F.J. DATE: 12/5/94

PLAN
STA. CONN-68+50 TO STA. CONN-72+50

FRA-270-32.46

153
593

CDSSUMM.DWG CDSPROF.DWG MSI.DWG DESIGN01.DWG
PLOT SCALE: 1"=20'
COL #28
C:\DRAWING\06092306\PLAN\06092P41.DWG
FEBRUARY-11-1995

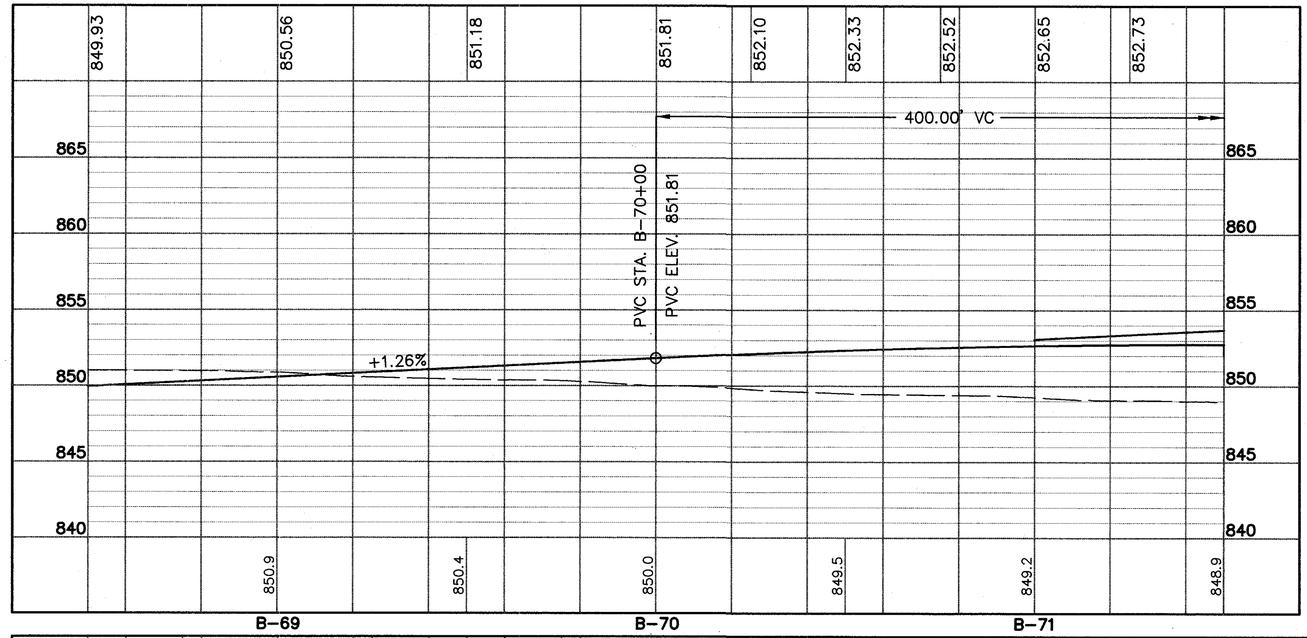

FOR THE REST OF RAMP B PROFILE, SEE SHEET 163

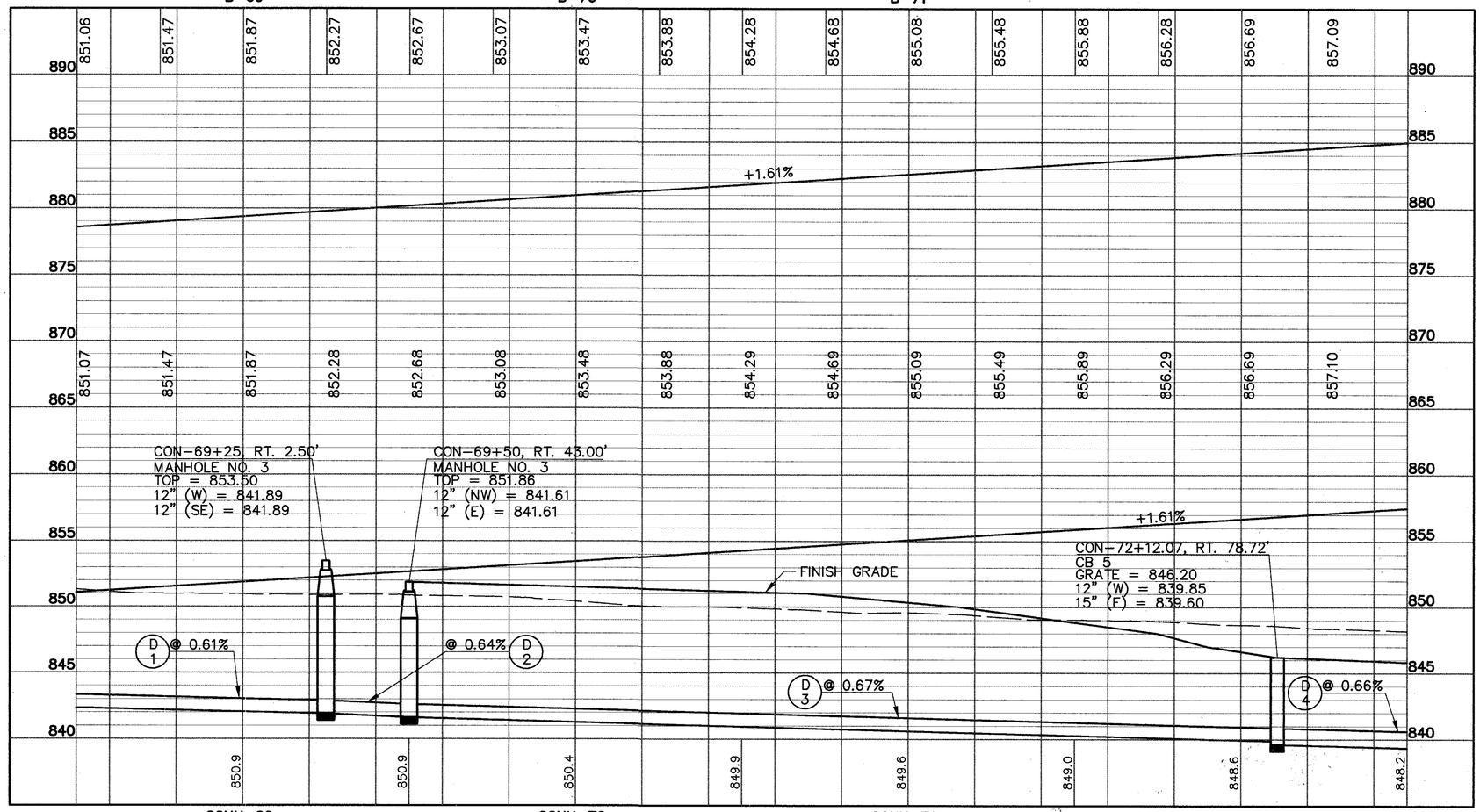

LEGEND:

EXISTING EDGE OF PAVEMENT, MAINLINE I-270

EXISTING PROFILE GRADE

PROPOSED PROFILE GRADE

N

0 10 20 40
HORIZONTAL SCALE IN FEET

CALC. BY: GJW DATE: 3/15/94
CHKD. BY: TAZ DATE: 1/19/95

PROFILE
STA. CONN-68+50 TO STA. CONN-72+50

FRA-270-32.46

PLOT SCALE... COL #28 C:\DRAWING\06092306\PLAN\0609PR41.DWG FEBRUARY-10-1995

LEGEND:

EXISTING EDGE OF PAVEMENT, MAINLINE I-270 ——— ——— ———

EXISTING PROFILE GRADE — — — — —

PROPOSED PROFILE GRADE ———————

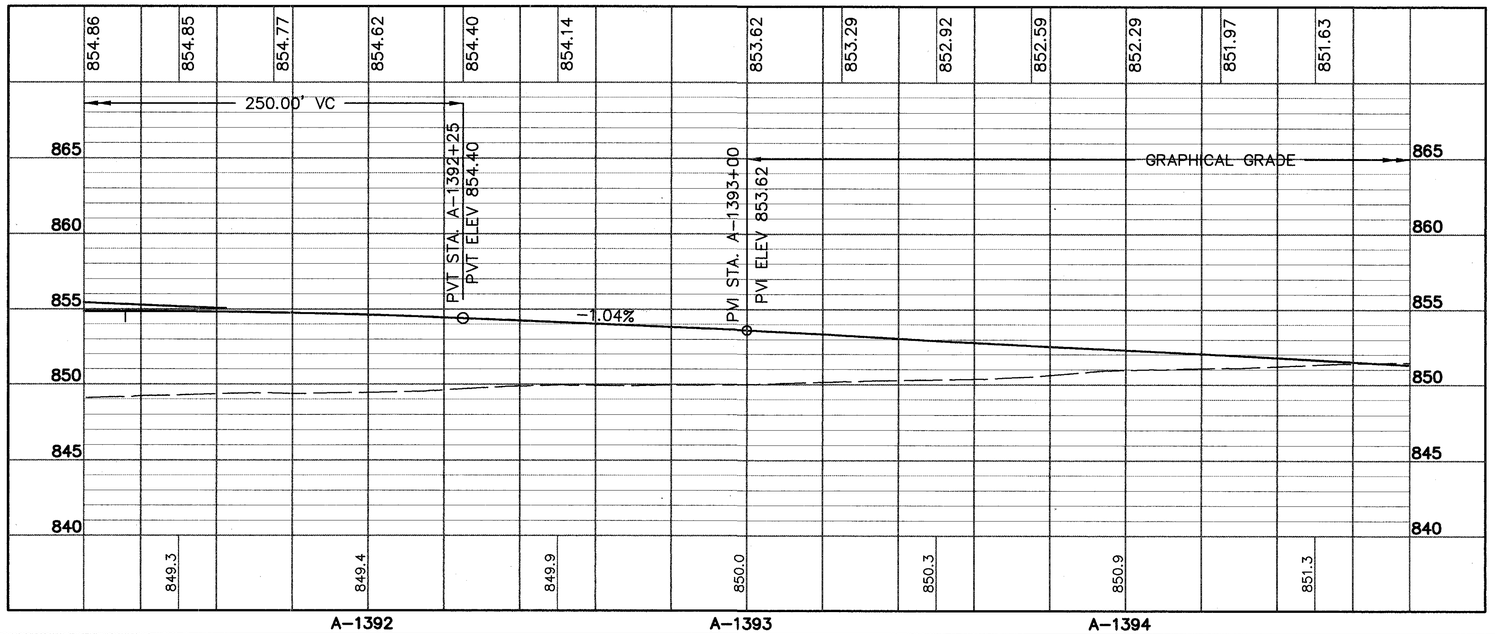

FOR THE REST OF RAMP A PROFILE, SEE SHEET 161

PLOT SCALE: COL #28
C:\DRAWING\06092306\PLAN\609PR41A.DWG FEBRUARY-10-1995

CALC BY: GJW DATE: 3/15/94
CHKD BY: TAZ DATE: 1/19/95

0 10 20 40 HORIZONTAL SCALE IN FEET

PROFILE
STA. A-1391+25 TO STA. A-1394+54.68

FRA-270-32.46

155
593

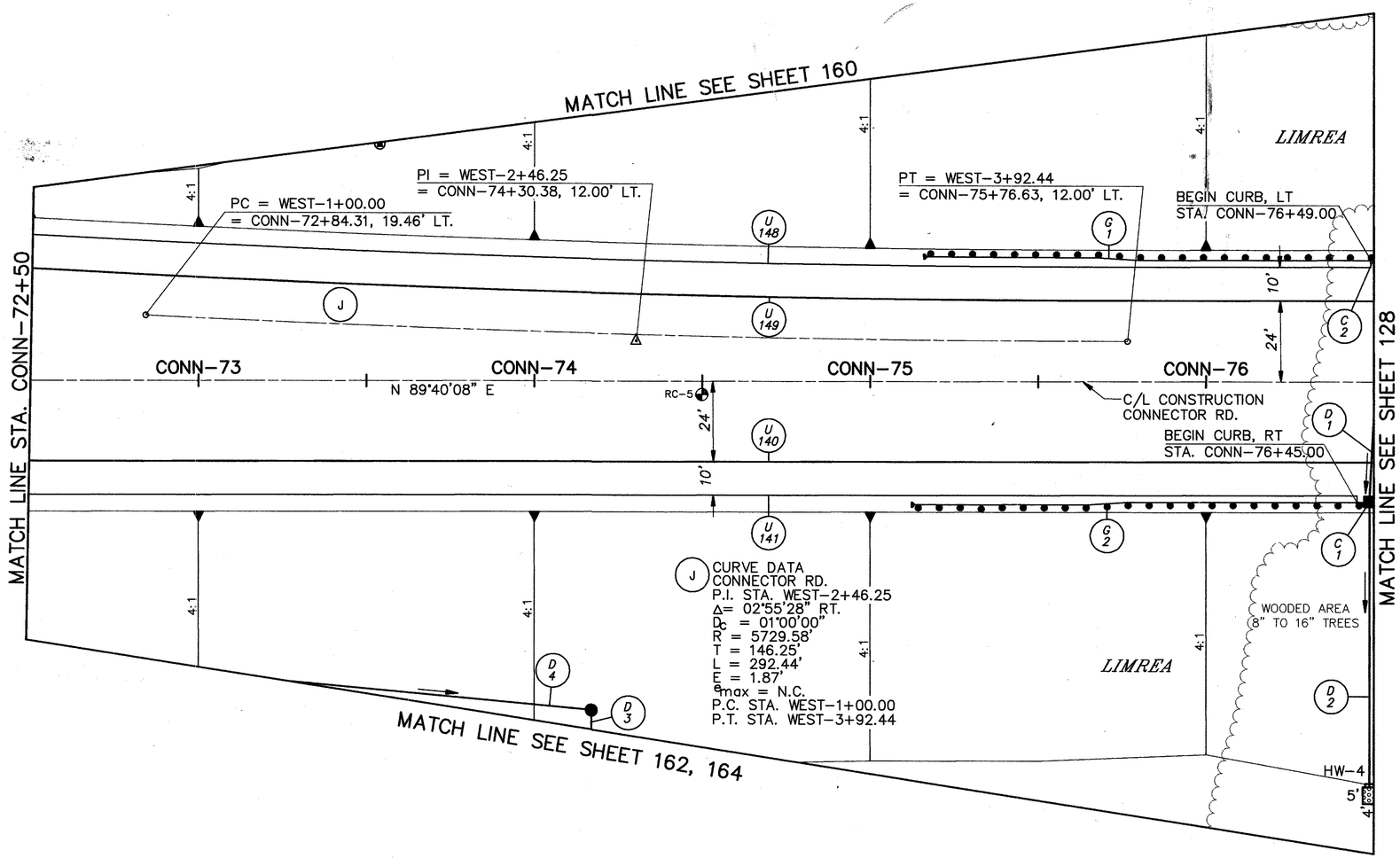

CROSS REFERENCES

SHEET NO.	DESCRIPTION
157	ROADWAY PROFILE
69	(U 1) UNDERDRAIN DATA AND QUANTITIES
362	⊗ LIGHTING PLAN

REFERENCE No.	STATION TO STATION (ALL STATIONING REFERS TO CONN. ALIGNMENT)	SIDE	609 CURB, TYPE 6 (L.F.)	606 ANCHOR ASSEMBLY, TYPE E (EA.)	606 GUARDRAIL, TYPE 5 (L.F.)
C1	76+45 ~ 76+50	RT.	5		
C2	76+49 ~ 76+50	LT.	1		
G1	75+17.98 ~ 76+55.47	LT.		1	112.5
G2	75+14.32 ~ 76+51.82	RT.		1	112.5
SHEET TOTALS			6	2	225

REFERENCE No.	STATION TO STATION (ALL STATIONING REFERS TO CONN. ALIGNMENT)	SIDE	604 CATCH BASIN, NO. 3A (EA.)	603 15" CONDUIT, TYPE B (L.F.)	603 15" CONDUIT, TYPE F (L.F.)	603 15" CONDUIT, TYPE C (L.F.)	602 CONCRETE MASONRY (C.Y.)	601 ROCK CHANNEL PROTECTION, TYPE C WITH FILTER, T = 18" (C.Y.)
D1	76+48	RT.		25				
D2	76+48	RT.	1		85	4	0.27	1.11
SHEET TOTALS			1	25	85	4	0.27	1.11

REFERENCE No.	STATION TO STATION (ALL STATIONING REFERS TO CONN. ALIGNMENT)	SIDE	604 MANHOLE, NO. 3 (EA.)	603 15" CONDUIT, TYPE C (L.F.)
D3	74+17	RT.	1	6
D4	73+27 ~ 74+17	RT.		91
SHEET TOTALS			1	97

N

0 10 20 40
HORIZONTAL SCALE IN FEET

CALC. BY: GJW DATE: 2/2/94
CHKD. BY: MFJ DATE: 12/5/94

PLAN
STA. CONN-72+50 TO STA. CONN-76+50

FRA-270-32.46

CDSSUMM.DWG CDSPROF.DWG PLOT SCALE: 1"=20'
DESIGN01.DWG MS1.DWG COL #28 C:\DRAWING\06092306\PLAN\06092P42.DWG FEBRUARY-14-1995

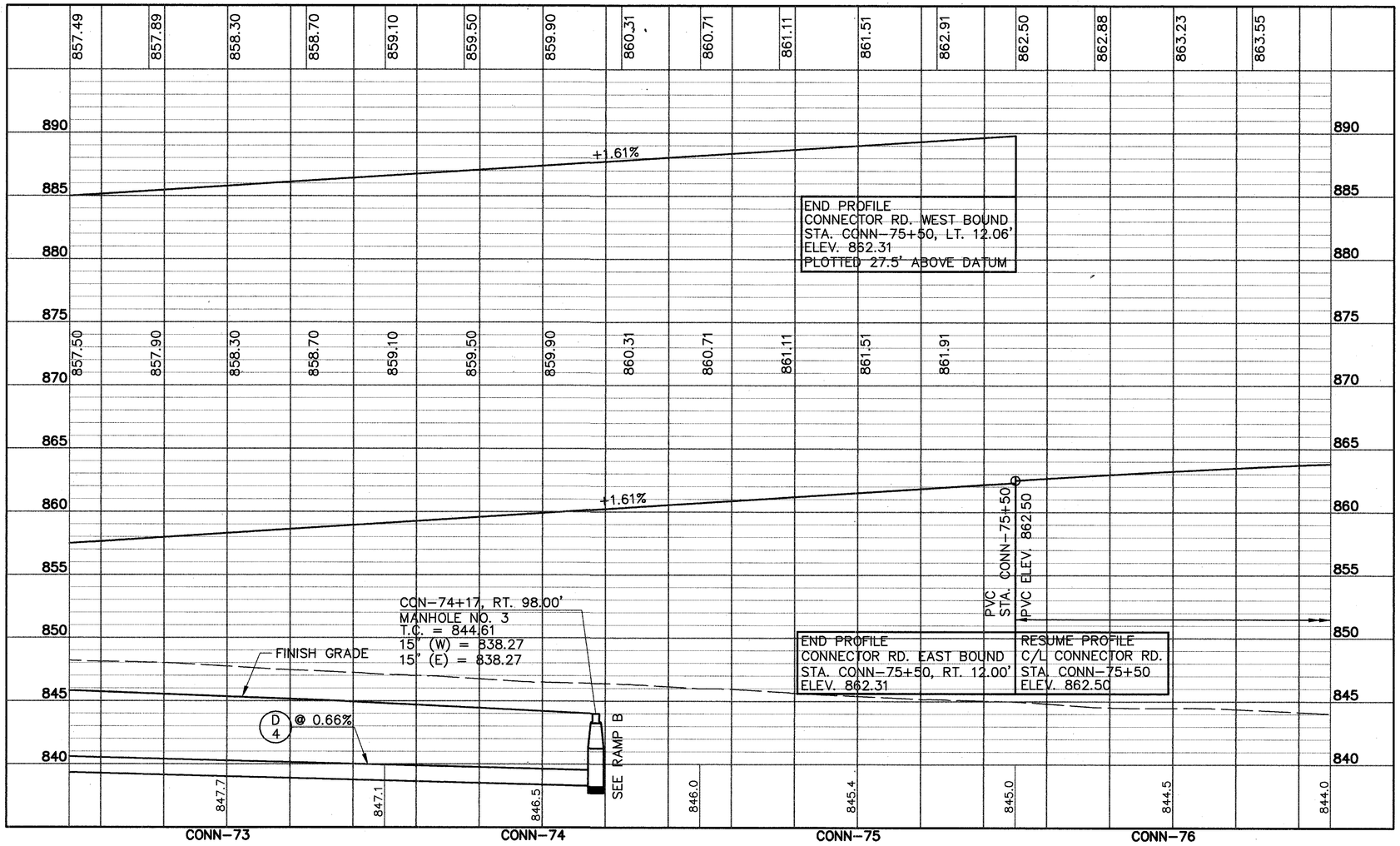

LEGEND:

EXISTING EDGE OF PAVEMENT, MAINLINE I-270

EXISTING PROFILE GRADE

PROPOSED PROFILE GRADE

FOR THE REST OF CONNECTOR ROAD PROFILE, SEE SHEET 129

HORIZONTAL SCALE IN FEET
0 20 40

CALC. G.J.W. BY: DATE: 3/15/94
CHKD. T.A.Z. BY: DATE: 1/19/95

PROFILE STA. CONN-72+50 TO STA. CONN-76+50

FRA-270-32.46

157
593

PLOT SCALE... COL #28 C:\DRAWING\06092306\PLAN\0609PR42.DWG FEBRUARY-10-1995

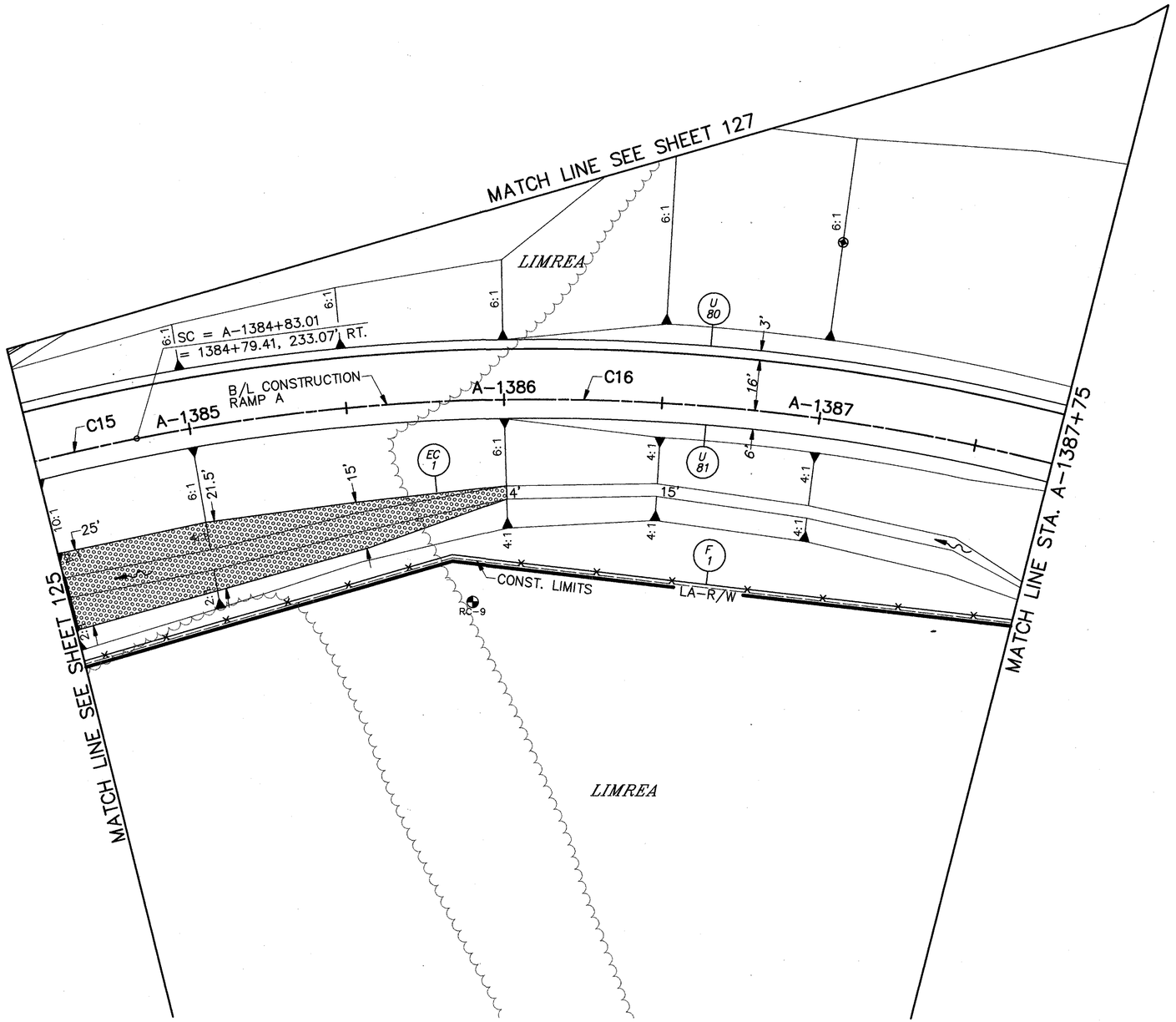

CROSS REFERENCES

SHEET NO.	DESCRIPTION
4	C15, C16 CURVE INFO.
159	ROADWAY PROFILE
67	(U 1) UNDERDRAIN DATA AND QUANTITIES
362	⊗ LIGHTING PLAN

REFERENCE No.	STATION TO STATION (ALL STATIONING REFERS TO A ALIGNMENT)	SIDE	607 FENCE, TYPE CL (L.F.)	601 ROCK CHANNEL PROTECTION, TYPE C, WITH FILTER, T = 18" (C.Y.)
F1	1384+50 ~ 1387+75	RT.	299	
EC1	1384+50 ~ 1386+50	RT.		136
SHEET TOTALS			299	136

HORIZONTAL SCALE IN FEET
0 10 20 40

CALC. BY: GJW DATE: 2/2/94
CHKD. BY: MF-J DATE: 12/5/94

PLAN
STA. A-1384+50 TO STA. A-1387+75

FRA-270-32.46

STA. A-1384+50 TO STA. A-1387+75

158
59

CDSSUMM.DWG CDSPROF.DWG PLOT SCALE: 1"=20'
DESIGN01.DWG MS1.DWG COL #28 C:\DRAWNG\06092306\PLAN\06092P43.DWG FEBRUARY-11-1995

LEGEND:

EXISTING EDGE OF PAVEMENT, MAINLINE I–270 ——— ——— ———

EXISTING PROFILE GRADE — — — — — —

PROPOSED PROFILE GRADE ———————

FOR THE REST OF RAMP A PROFILE, SEE SHEET 126

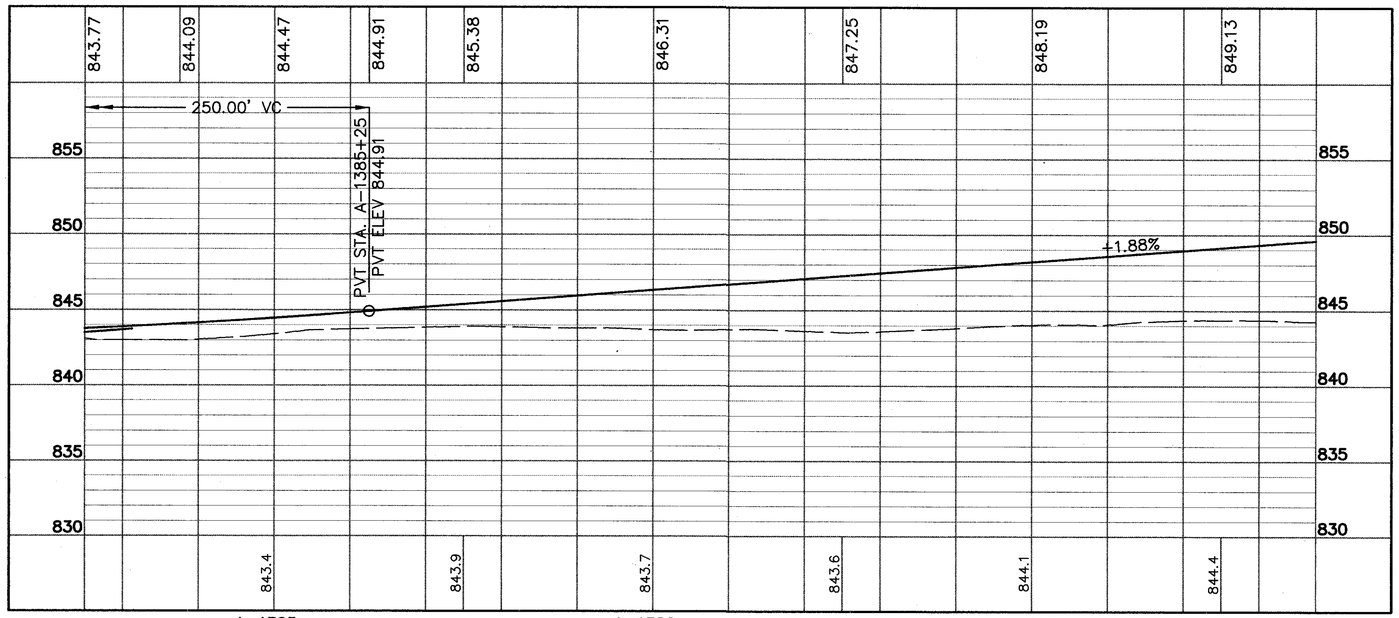

PLOT SCALE... COL #28 C:\DRAWING\06092306\PLAN\0609PR43.DWG FEBRUARY-10-1995

CALC. BY: G.J.W. DATE: 3/15/94
CHK'D BY: T.A.Z. DATE: 1/19/95

0 10 20 HORIZONTAL SCALE IN FEET 40

PROFILE
STA. A–1384+50 TO STA. A–1387+75

FRA–270–32.46

159
593

CROSS REFERENCES

SHEET NO.	DESCRIPTION
4	C16 CURVE INFO.
161	ROADWAY PROFILE
69	(U 1) UNDERDRAIN DATA AND QUANTITIES

REFERENCE No.	STATION TO STATION (ALL STATIONING REFERS TO A ALIGNMENT)	SIDE	607 FENCE, TYPE CL	603 24" CONDUIT, TYPE A 27" 707.01 ALTERNATE	602 CONCRETE MASONRY	601 ROCK CHANNEL PROTECTION, TYPE C WITH FILTER, T = 18"	601 RIPRAP USING 6" REIN. CONCRETE SLAB
			L.F.	L.F.	C.Y.	C.Y.	C.Y.
F1	1384+50 ~ 1387+75	RT.	315				
D1	1388+50	L-R		110	1.23	1.75	1.82
SHEET TOTALS			315	110	1.23	1.75	1.82

HORIZONTAL SCALE IN FEET
0 10 20 40

CALC. G.J.W. DATE: 2/2/94
CHK. M.F.J. DATE: 12/5/94

PLAN
STA. A-1387+75 TO STA. A-1391+25

FRA-270-32.46

160
593

C03SUMM.DWG C03SPROF.DWG PLOT SCALE: 1"=20'
DESIGN01.DWG MST.DWG COL #28 C:\DRAWING\06092306\PLAN\06092P44.DWG FEBRUARY-10-1995

LEGEND:

EXISTING EDGE OF PAVEMENT, MAINLINE I-270

EXISTING PROFILE GRADE

PROPOSED PROFILE GRADE

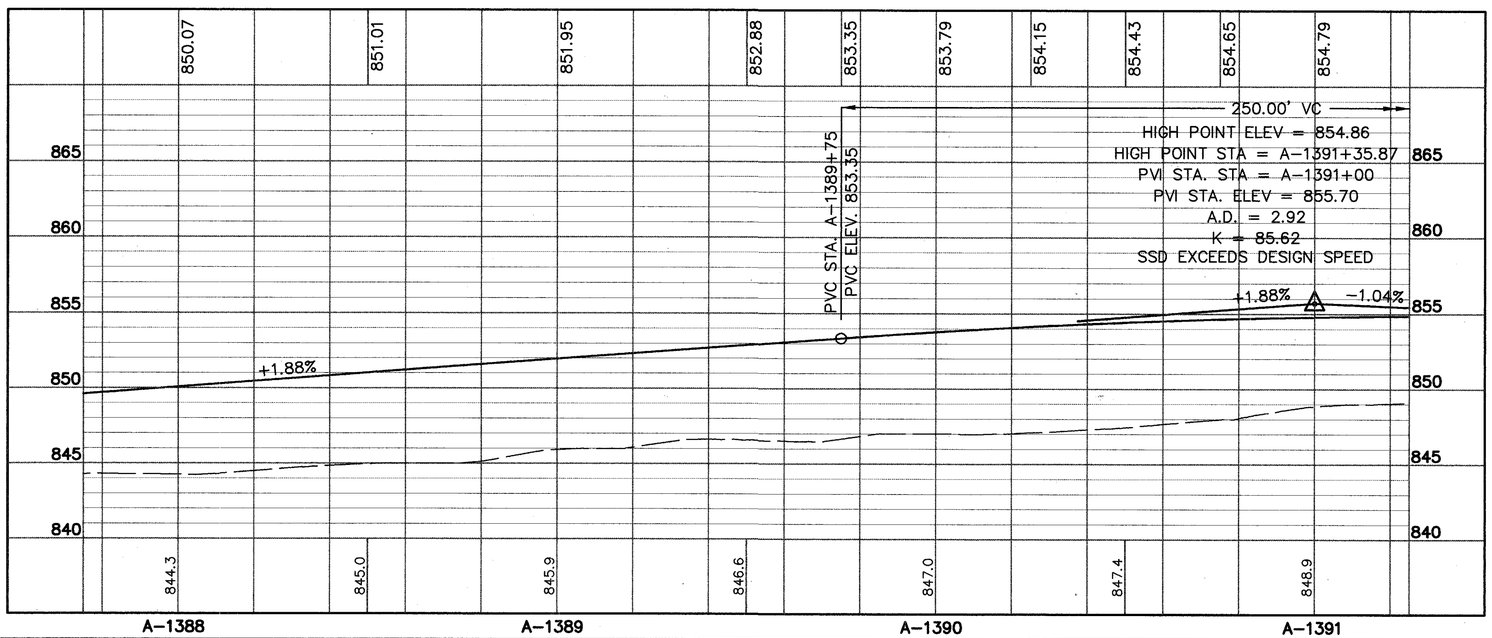

FOR THE REST OF RAMP A PROFILE, SEE SHEET 155

0 10 20 40
HORIZONTAL SCALE IN FEET

CALC. BY: GJW DATE: 3/15/94
CHKD. BY: TAZ DATE: 1/19/95

PROFILE
STA. A-1387+75 TO STA. A-1391+25

FRA-270-32.46

PLOT SCALE... COL #28 C:\DRAWING\06092306\PLAN\0609PR44.DWG FEBRUARY-10-1995

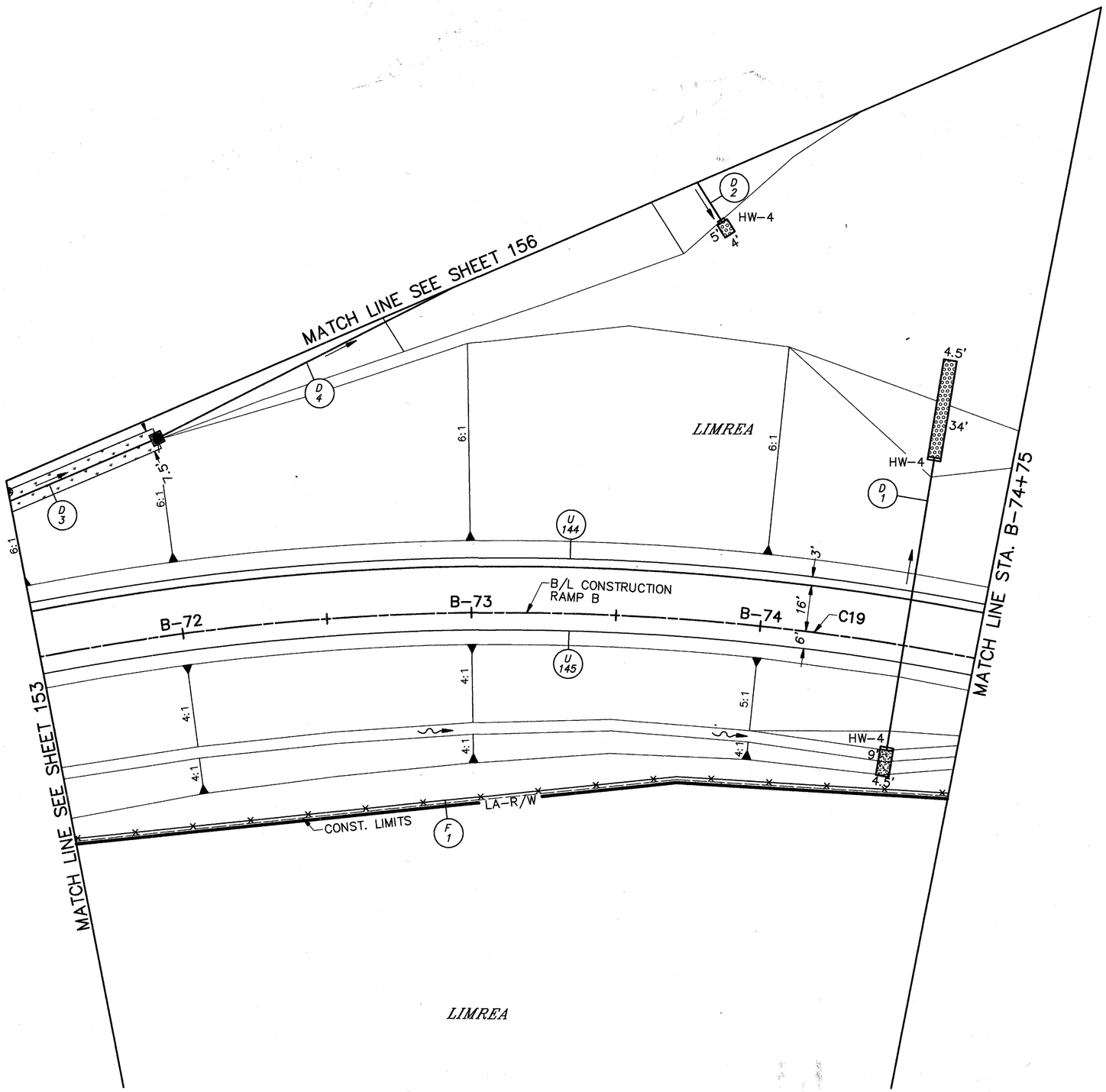

CROSS REFERENCES

SHEET NO.	DESCRIPTION
4	C19 CURVE INFO.
163	ROADWAY PROFILE
69	(U 1) UNDERDRAIN DATA AND QUANTITIES

REFERENCE No.	STATION TO STATION (ALL STATIONING REFERS TO B ALIGNMENT)	SIDE	607 FENCE, TYPE CL (L.F.)	603 24" x 38" CONDUIT, TYPE A, 706.04 HE II (L.F.)	602 CONCRETE MASONRY (C.Y.)	601 ROCK CHANNEL PROTECTION, TYPE C WITH FILTER, T = 18" (C.Y.)	601 RIPRAP USING 6" REIN. CONCRETE SLAB (C.Y.)
F1	71+50 ~ 74+75	RT.	304				
D1	74+50	L-R		103	1.08	8.5	1.92
SHEET TOTALS			304	103	1.08	8.5	1.92

REFERENCE No.	STATION TO STATION (ALL STATIONING REFERS TO B ALIGNMENT)	SIDE	604 CATCH BASIN, NO. 5 (EA.)	603 15" CONDUIT, TYPE C (L.F.)	603 12" CONDUIT, TYPE C (L.F.)	602 CONCRETE MASONRY (C.Y.)	601 ROCK CHANNEL PROTECTION, TYPE C WITH FILTER, T = 18" (C.Y.)	670 DITCH EROSION PROTECTION (S.Y.)
D2	73+68 ~ 73+76	LT.		16		0.27	1.11	
D3	71+50 ~ 72+00	LT.			53			
D4	72+00 ~ 72+96	LT.	1	115				46
SHEET TOTALS			1	131	53	0.27	1.11	46

HORIZONTAL SCALE IN FEET: 0, 10, 20, 40

CHK'G: GJW DATE: 2/22/94
CHK'D: MF-J DATE: 12/5/94

PLAN STA. B-71+50 TO STA. B-74+75

FRA-270-32.46

162
593

CDSSUMM.DWG CDSPROF.DWG DESIGN01.DWG MS1.DWG COL #28 PLOT SCALE: 1"=20' C:\DRAWING\06092346\PLAN\06092P45.DWG FEBRUARY-14-1995

LEGEND:

EXISTING EDGE OF PAVEMENT, MAINLINE I–270 ——— ——— ———

EXISTING PROFILE GRADE — — — — — —

PROPOSED PROFILE GRADE ———————

FOR THE REST OF RAMP B
PROFILE, SEE SHEET 154

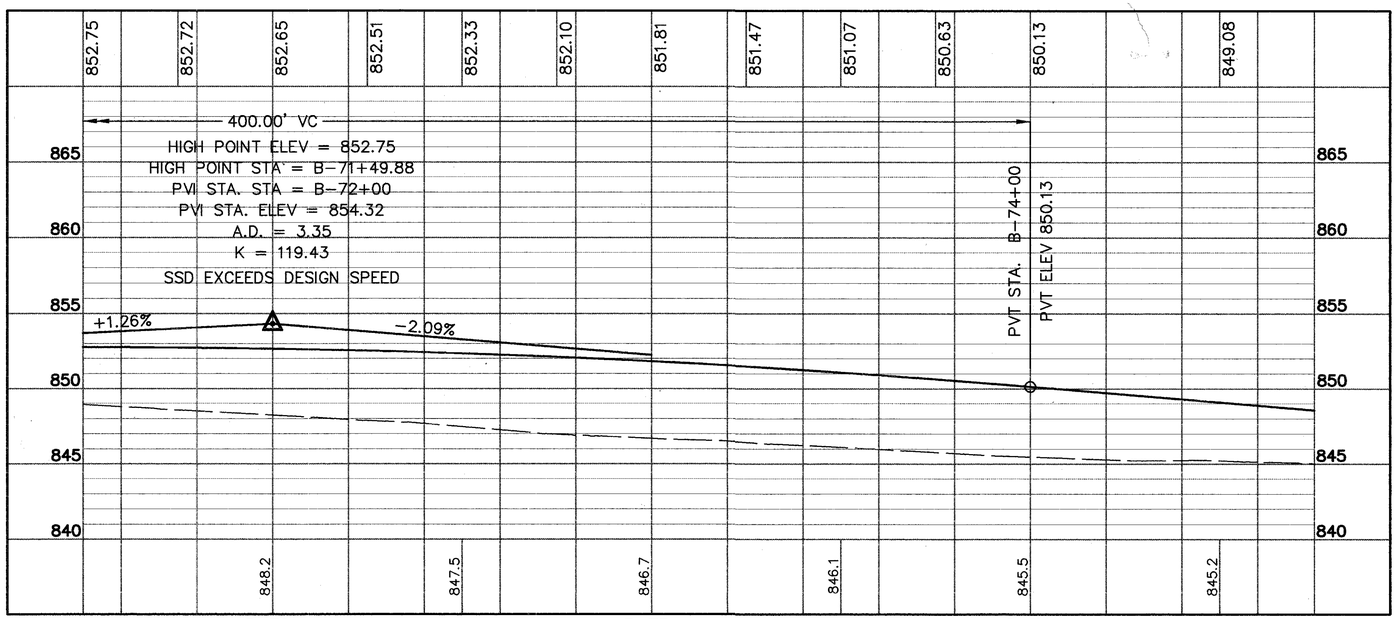

PLOT SCALE:
COL #28
C:\DRAWING\06092306\PLAN\0609PR45.DWG FEBRUARY-10-1995

CALC. BY: GJW DATE: 3/15/94
CHKD. BY: TAZ DATE: 1/19/95

0 10 20 40
HORIZONTAL SCALE IN FEET

PROFILE
STA. B–71+50 TO STA. B–74+75

FRA–270–32.46

163
593

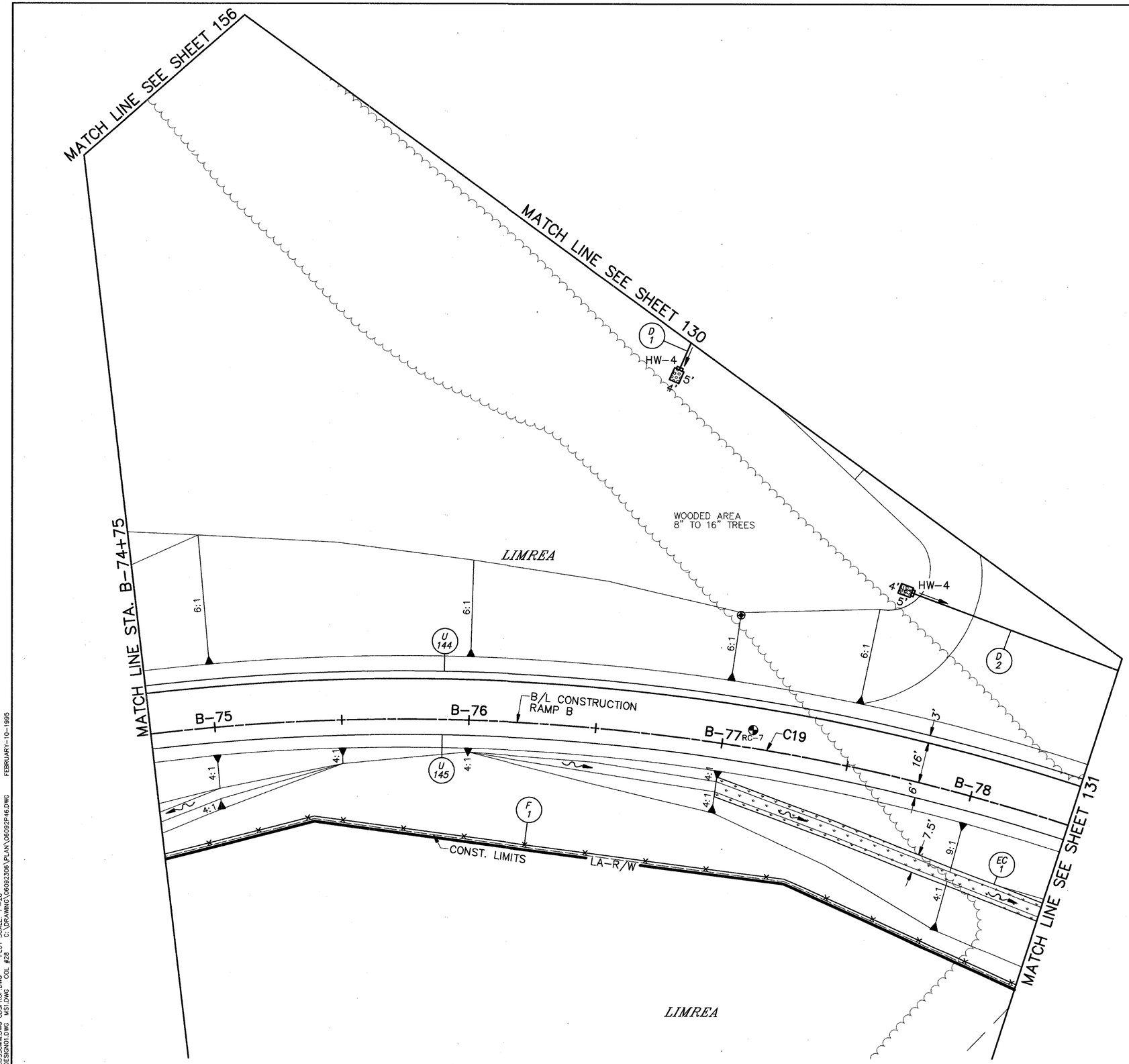

CROSS REFERENCES

SHEET NO.	DESCRIPTION
4	C19 CURVE INFO.
165	ROADWAY PROFILE
69	U 1 UNDERDRAIN DATA AND QUANTITIES
362	⊛ LIGHTING PLAN

REFERENCE No.	STATION TO STATION (ALL STATIONING REFERS TO B ALIGNMENT)	SIDE	607 FENCE, TYPE CL (L.F.)	603 15" CONDUIT, TYPE C (L.F.)	603 21" CONDUIT, TYPE C (L.F.)	602 CONCRETE MASONRY (C.Y.)	601 ROCK CHANNEL PROTECTION, TYPE C WITH FILTER, T = 18" (C.Y.)	601 RIPRAP USING 6" REIN. CONCRETE SLAB (C.Y.)	670 DITCH EROSION PROTECTION (S.Y.)
F1	74+75 ~ 78+40	RT.	347						
D1	76+64 ~ 76+70	LT.			11	0.39	1.11		
D2	77+60 ~ 78+40	LT.		86		0.36		0.59	
EC1	77+00 ~ 78+40	RT.							114
SHEET TOTALS			347	86	11	0.75	1.11	0.59	114

HORIZONTAL SCALE IN FEET 0 10 20 40

CALC. BY: GJW DATE: 2/2/94
CHKD. BY: MFJ DATE: 12/5/94

PLAN
STA. B-74+75 TO STA. B-78+50

FRA-270-32.46

CDSSUMM.DWG CDSPROF.DWG PLOT SCALE: 1"=20'
DESIGN01.DWG MS1.DWG COL #28 C:\DRAWING\06092306\PLAN\06092P46.DWG FEBRUARY-10-1995

LEGEND:

EXISTING EDGE OF PAVEMENT, MAINLINE I-270 ——— – – ———

EXISTING PROFILE GRADE – – – – – – – – – –

PROPOSED PROFILE GRADE ———————

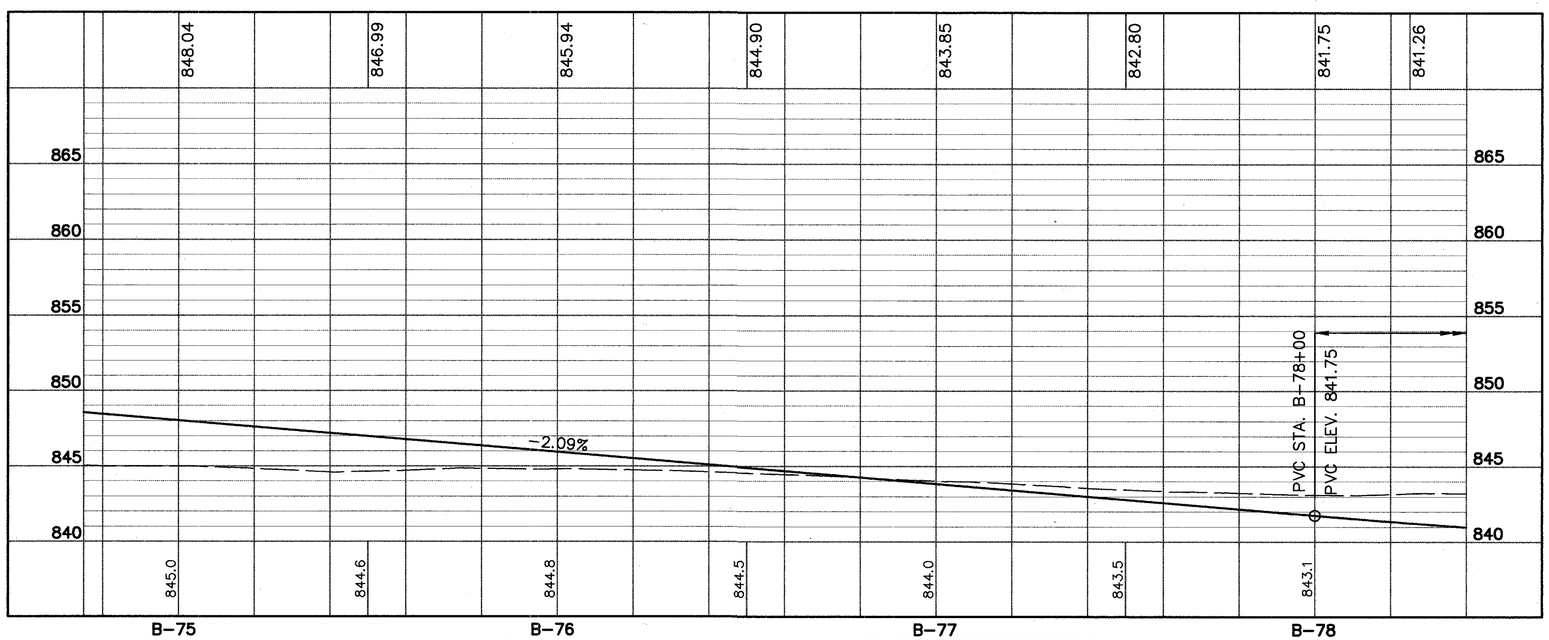

FOR THE REST OF RAMP B PROFILE, SEE SHEET 132

PLOT SCALE..
COL #28
C:\DRAWING\06092306\PLAN\0609PR46.DWG FEBRUARY-10-1995

HORIZONTAL SCALE IN FEET
0 10 20 40

CALC. BY: G.J.W DATE: 3/15/94
CHKD. BY: T.A.Z DATE: 1/19/95

PROFILE
STA. B-74+75 TO STA. B-78+50

FRA-270-32.46

165
593

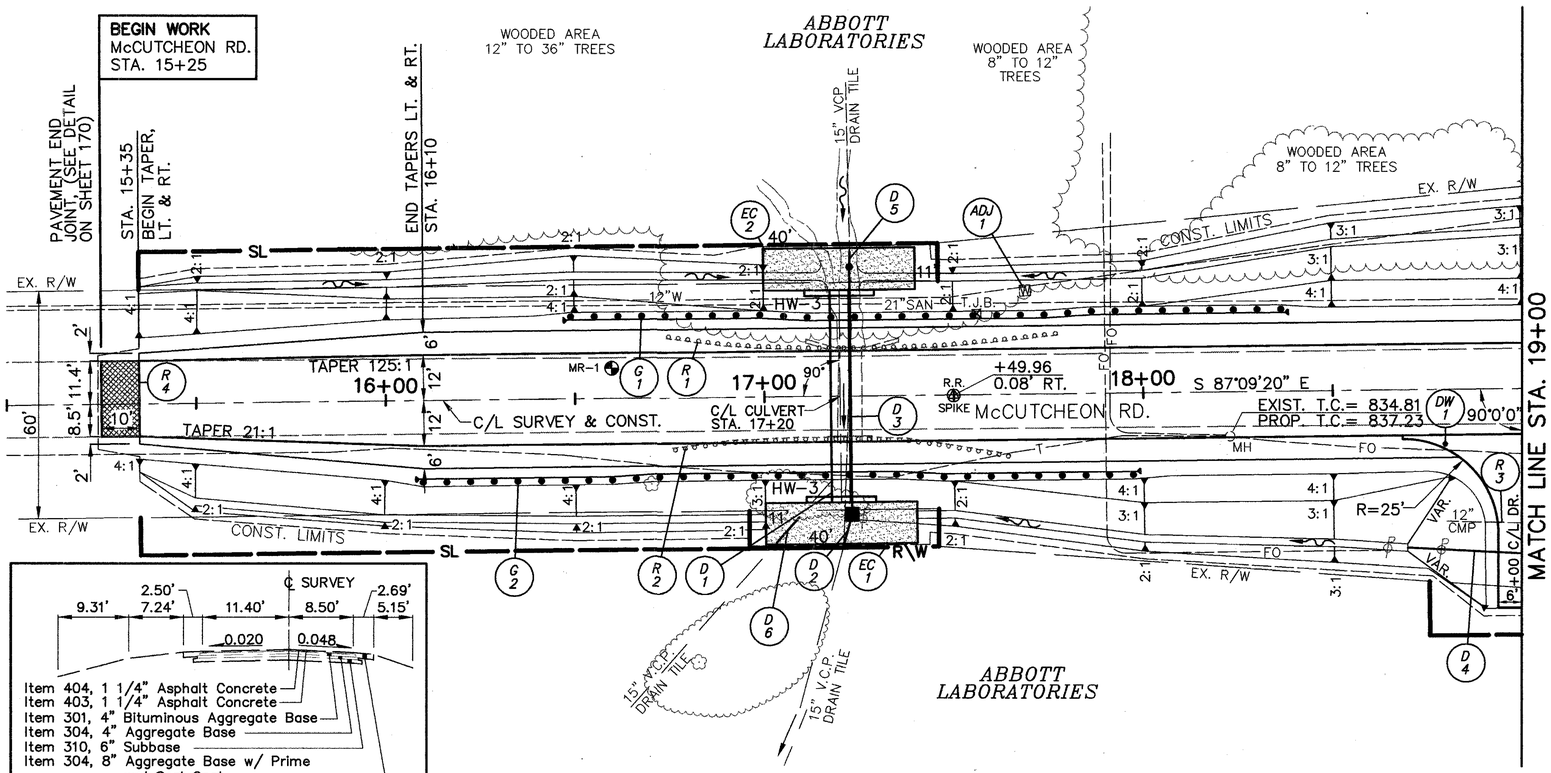

Adjoining Typical Section
Sta. 15+35

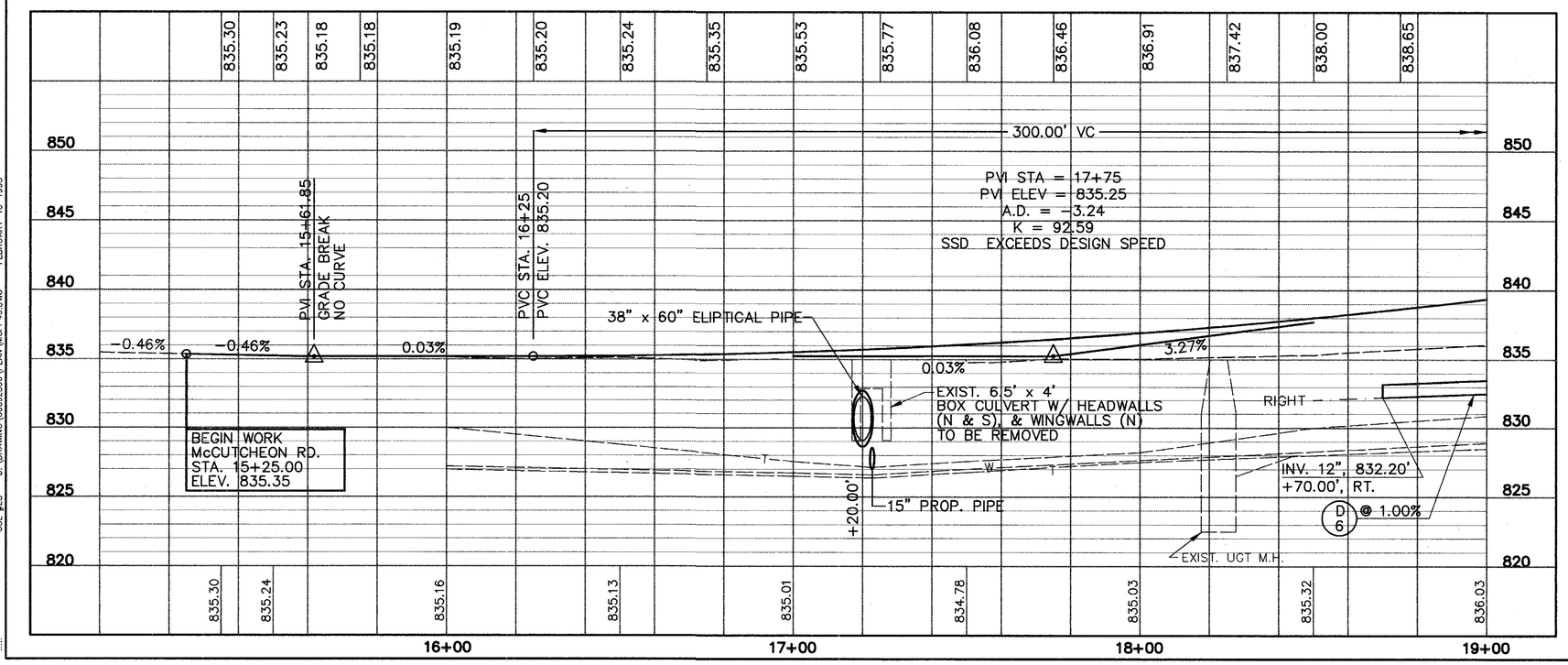

CROSS REFERENCES

SHEET NO.	DESCRIPTION
324	(D 1) No. 3 HEADWALL, AS PER PLAN

REFERENCE No.	STATION TO STATION (STATIONING REFERS TO McCUTCHEON RD. ALIGNMENT)	SIDE	606 GUARDRAIL, TYPE 5 L.F.	606 ANCHOR ASSEMBLY, TYPE E EA.	638 WATER VALVE BOX, ADJUSTED TO GRADE EA.	202 GUARDRAIL REMOVED L.F.	202 PIPE REMOVED, 24" & UNDER L.F.	202 ANCHOR ASSEMBLY REMOVED, TYPE A EA.	202 WEARING COURSE REMOVED S.Y.
G1	16+49.04 ~ 18+36.54	LT.	137.5	2					
G2	16+09.64 ~ 17+97.14	RT.	137.5	2					
R1	16+75 ~ 17+78	LT.				54		2	
R2	16+75 ~ 17+65	RT.				39		2	
R3	18+80 ~ 19+00	RT.					25		
R4	15+75 ~ 15+35	L-R							22
ADJ1	17+70	LT.			1				
SHEET TOTALS			275	4	1	93	25	4	22

REFERENCE No.	STATION TO STATION (STATIONING REFERS TO McCUTCHEON RD. ALIGNMENT)	SIDE	603 38"x 60" TYPE A, L.F.	602 CONCRETE MASONARY AS PER PLAN C.Y.	603 15" CONDUIT, TYPE B (707.02) L.F.	603 12" CONDUIT, TYPE D L.F.	601 RIPRAP USING 6" REIN. CONCRETE SLAB C.Y.	604 INSPECTION WELL, 24" EA.	603 15" CONDUIT, TYPE C L.F.
D1	17+20	L-R	56	23.7					
D3	17+23	L-R			65			1	
D4	18+78 ~ 19+00	RT.				30			
D5	17+23	LT.							4
D6	17+00 ~ 17+08	RT.							9
EC1	17+00 ~ 17+40	RT.					11.59		
EC2	17+00 ~ 17+40	LT.					9.37		
SHEET TOTALS			56	23.7	65	30	20.96	1	13

REFERENCE No.	STATION TO STATION (STATIONING REFERS TO McCUTCHEON RD. ALIGNMENT)	SIDE	603 15" CONDUIT, TYPE C L.F.	410 TRAFFIC COMPACTED SURFACE, TYPE A T = 10" C.Y.	604 CATCH BASIN, NO. 2-2-A EA.
D2	17+23	RT.	9		1
DW1	18+69 ~ 19+00	RT.		13.81	
SHEET TOTALS			9	13.81	1

N

0 20 40
10 HORIZONTAL SCALE IN FEET

CAS: G.J.W DATE: 2/2/94
CHKD: M.F.J DATE: 12/5/94

McCUTCHEON ROAD PLAN AND PROFILE
STA. 15+25.00 TO STA. 19+00.00

FRA-270-32.46

166
593

PLOT SCALE: 1" = 20'
COL. #28
D:\DRAWING\06092306\PLAN\MCPP49.DWG
FEBRUARY-13-1995

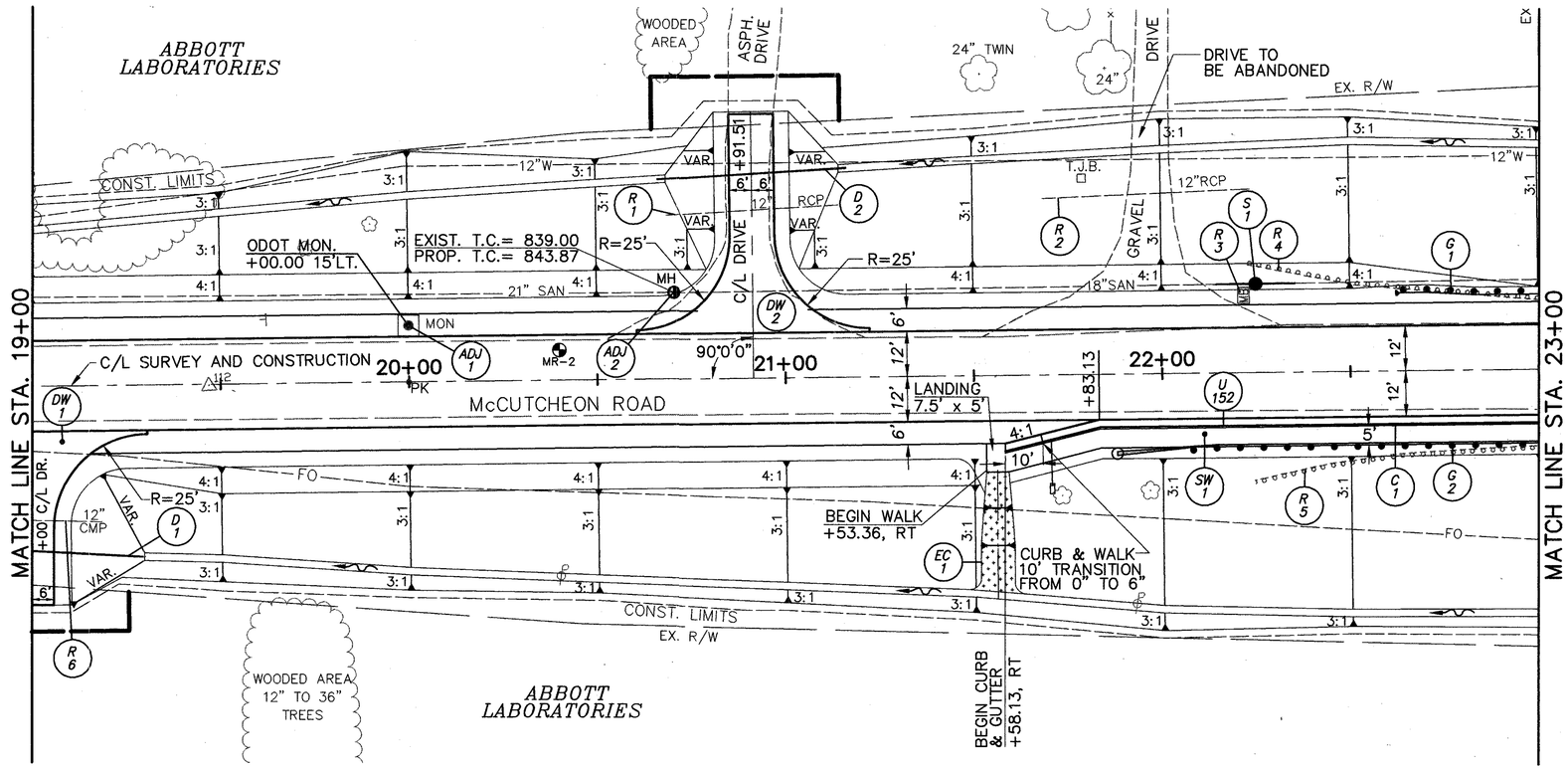

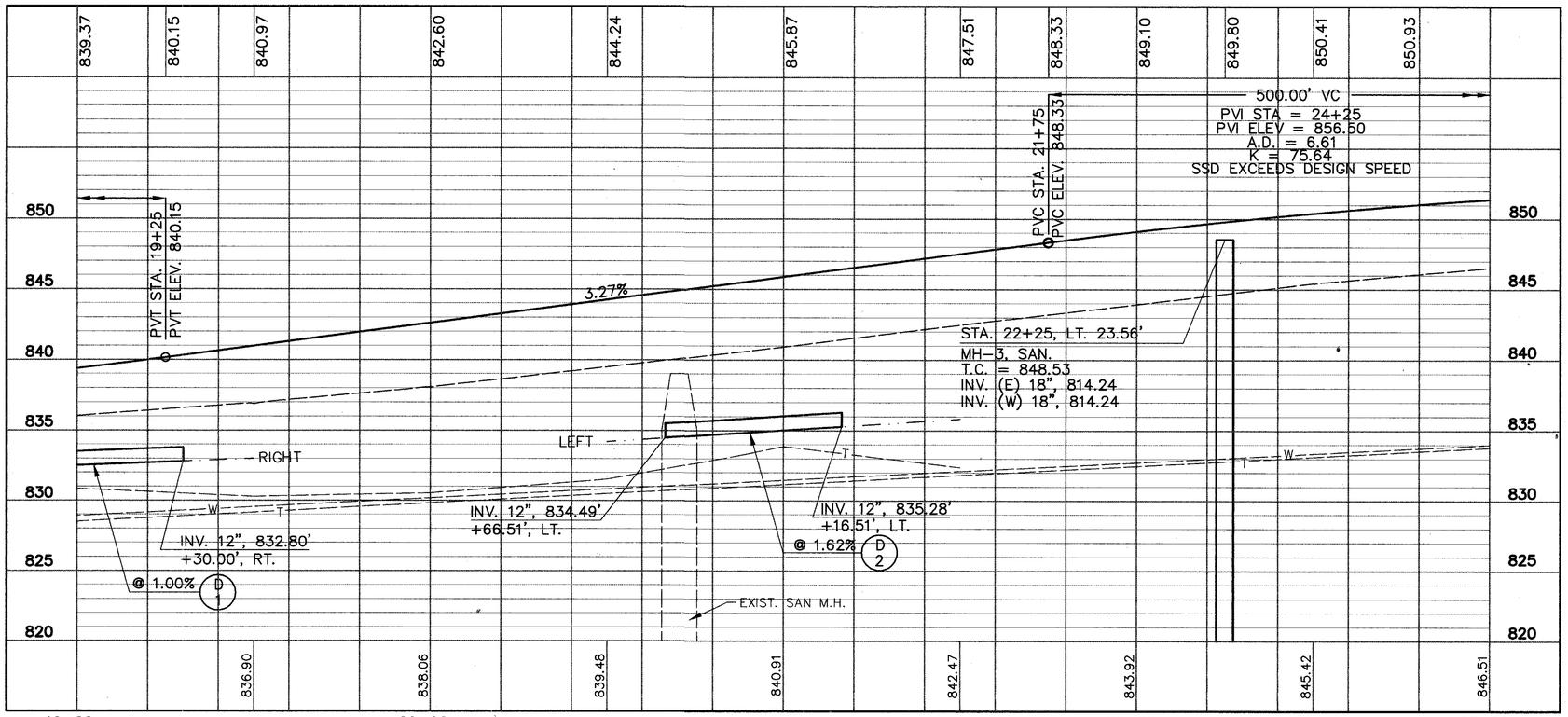

PLOT SCALE = 1.0000 '/ IN.
COL #28
D:\DRAWING\06092306\PLAN\MCPP50.DWG FEBRUARY-11-1995

CROSS REFERENCES

SHEET NO.	DESCRIPTION
69	(U 1) UNDERDRAIN DATA AND QUANTITIES

HORIZONTAL SCALE IN FEET: 0, 10, 20, 40

CALC. BY: G.J.W DATE: 2/2/94
CHKD. BY: M.F.J DATE: 12/5/94

REFERENCE No.	STATION TO STATION (STATIONING REFERS TO McCUTCHEON RD. ALIGNMENT)	SIDE	606 GUARDRAIL, TYPE 5 L.F.	606 ANCHOR ASSEMBLY, TYPE E EA.	606 ANCHOR ASSEMBLY, TYPE A EA.	660 REINFORCED SODDING S.Y.	604 MONUMENT BOX, ADJUSTED TO GRADE EA.	604 MANHOLE, SANITARY ADJUSTED TO GRADE EA.
G1	22+64.22 ~ 23+00	LT.	12.5	1				
G2	21+87.92 ~ 23+00	RT.	87.5		1			
ADJ1	20+00	LT.					1	
ADJ2	20+70	LT.						1
EC1	21+57	RT.				29		
SHEET TOTALS			100	1	1	29	1	1

REFERENCE No.	STATION TO STATION (STATIONING REFERS TO McCUTCHEON RD. ALIGNMENT)	SIDE	609 COMBINATION CURB & GUTTER TYPE 2 L.F.	608 4" CONCRETE WALK S.F.	603 12" CONDUIT, TYPE D L.F.	410 TRAFFIC COMPACTED SURFACE, TYPE A T = 10" C.Y.	404 ASPHALT CONCRETE, T = 1 1/4" C.Y	402 ASPHALT CONCRETE, T = 1 3/4" C.Y	301 BITUMINOUS AGGREGATE BASE, T = 6" C.Y
C1	21+58.13 ~ 23+00	RT.	143						
D1	19+00 ~ 19+30	RT.			30				
D2	20+66.51 ~ 21+16.51	LT.			50				
DW1	19+00 ~ 19+31	RT.				13.23			
DW2	20+60.51 ~ 21+22.51	LT.					3.89	5.44	19.39
SW1	21+53.36 ~ 23+00	RT.		705					
SHEET TOTALS			143	705	80	13.23	3.89	5.44	19.39

REFERENCE No.	STATION TO STATION (STATIONING REFERS TO McCUTCHEON RD. ALIGNMENT)	SIDE	202 ANCHOR ASSEMBLY REMOVED, TYPE A EA.	604 MANHOLE NO. 3, SAN. EA.	603 18" CONDUIT, TYPE B FOR SANITARY, 706.02 L.F.	202 GUARDRAIL REMOVED L.F.	202 PIPE REMOVED 24" & UNDER L.F.	202 REMOVAL MISC., MAILBOX EA.
R1	20+68 ~ 21+15	LT.					46	
R2	21+70 ~ 22+25	LT.					55	
R3	22+23	LT.						1
R4	22+23 ~ 23+00	LT.	1			55		
R5	22+23 ~ 23+00	RT.	1			50		
R6	19+00 ~ 19+18	RT.					19	
S1	22+25	LT.		1	20			
SHEET TOTALS			2	1	20	105	120	1

McCUTCHEON ROAD PLAN AND PROFILE STA. 19+00.00 TO STA. 23+00.00

FRA-270-32.46

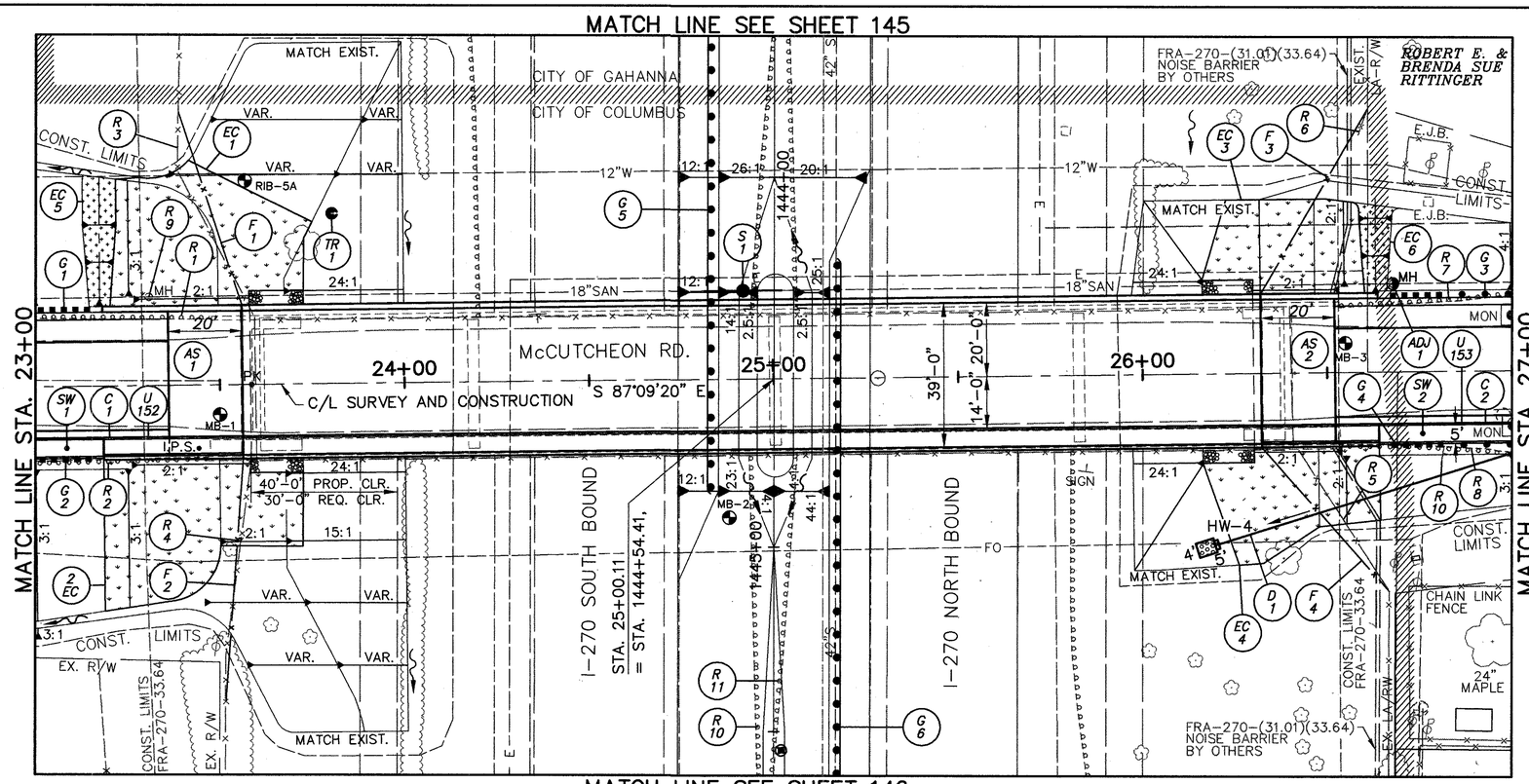

CROSS REFERENCES

SHEET NO.		DESCRIPTION	SHEET NO.	DESCRIPTION
69	U 1	UNDERDRAIN DATA AND QUANTITIES	362	LIGHTING PLAN
329	S 1	SANITARY PROFILE	169	ROADWAY PROFILE
342	TR 1	TRAFFIC CONTROL PLAN		

REFERENCE No.	STATION TO STATION (STATIONING REFERS TO McCUTCHEON RD. ALIGNMENT)	SIDE	611 REIN. CONCRETE APPROACH SLAB, T=13", AS PER PLAN S.Y.	604 MANHOLE ABANDONED, AS PER PLAN EA.	607 FENCE, TYPE CL L.F.	606 GUARDRAIL, TYPE 5 L.F.	606 BRIDGE TERMINAL ASSEMBLY, TYPE 1 EA.	202 GUARDRAIL REMOVED L.F.	202 FENCE REMOVED L.F.
AS1	23+36.11 ~ 23+56.11	L-R	85.55						
AS2	26+32.11 ~ 26+52.11	L-R	85.55						
F1	23+40 ~ 23+56.11	LT.			55				
F2	23+51 ~ 23+56.11	RT.			66				
F3	26+32.11 ~ 26+62	LT.			58				
F4	26+32.11 ~ 26+67	RT.			52				
G1	23+00 ~ 23+19	LT.					1		
G2	23+00 ~ 23+19	RT.					1		
G3	26+64 ~ 27+05.51	RT.				25	1		
G4	26+64 ~ 27+05.51	LT.				25	1		
R1	23+00 ~ 23+50	LT.						50	
R2	23+00 ~ 23+46	RT.						46	
R3	23+40 ~ 23+57	LT.							60
R4	23+51 ~ 23+57	RT.							66
R5	26+40.11 ~ 26+67	RT.							45
R6	26+68 ~ 26+62	LT.							10
R7	26+52 ~ 27+00	LT.						48	
R8	26+52 ~ 27+00	RT.						47	
R9	23+30	LT.		1					
SHEET TOTALS			171.11	1	231	50	4	191	181

REFERENCE No.	STATION TO STATION (STATIONING REFERS TO I-270. ALIGNMENT)	SIDE	606 GUARDRAIL, TYPE 5 L.F.	606 ANCHOR ASSEMBLY, TYPE T EA.	202 GUARDRAIL REMOVED L.F.
G5	1443+58.66 ~ 1444+83.66	RT.	112.5	1	
G6	1444+23.66 ~ 1445+61.16	LT.	125	1	
R10	1443+62 ~ 1445+62	RT.			200
R11	1443+62 ~ 1445+62	LT.			200
SHEET TOTALS			237.5	2	400

REFERENCE No.	STATION TO STATION (STATIONING REFERS TO McCUTCHEON RD. ALIGNMENT)	SIDE	667 SEEDING & JUTE MATTING S.Y.	660 REINFORCED SODDING S.Y.
EC1	23+21 ~ 23+72	LT.	182	
EC2	23+21 ~ 23+72	RT.	185	
EC3	26+16 ~ 26+60	LT.	108	
EC4	26+16 ~ 26+65	RT.	119	
EC5	23+17	LT.		31
EC6	26+63	LT.		20
SHEET TOTALS			594	51

REFERENCE No.	STATION TO STATION (STATIONING REFERS TO McCUTCHEON RD. ALIGNMENT)	SIDE	604 MANHOLE NO. 3, SAN. EA.	603 18" CONDUIT, TYPE B, FOR SANITARY, 706.02 w/706.11 EA.
S1	24+92	LT.	1	20
SHEET TOTALS			1	20

REFERENCE No.	STATION TO STATION (STATIONING REFERS TO McCUTCHEON RD. ALIGNMENT)	SIDE	609 COMBINATION CURB & GUTTER TYPE 2. L.F.	608 4" CONCRETE WALK S.F.	604 MANHOLE, SANITARY ADJUSTED TO GRADE EA.	603 12" CONDUIT, TYPE C L.F.	602 CONCRETE MASONRY C.Y.	601 ROCK CHANNEL PROTECTION, TYPE C WITH FILTER, T = 18" C.Y.	202 REMOVAL MISC.: WOOD SIGN, REMOVED FOR REUSE EA.
R10	26+81	RT.							1
ADJ1	26+68	LT.			1				
C1	23+00 ~ 23+36	RT.	36						
C2	26+52 ~ 27+00	RT.	48						
D1	26+16 ~ 27+00	RT.				86	0.21	1.11	
SW1	23+00 ~ 23+36	RT.		93					
SW2	26+52 ~ 27+00	RT.		180					
SHEET TOTALS			84	273	1	86	0.21	1.11	1

HORIZONTAL SCALE IN FEET
0 20

CAS:GJW DATE:2/2/94
CHK:MFJ DATE:12/5/94

McCUTCHEON ROAD PLAN
STA. 23+00.00 TO STA. 27+00.00

FRA-270-32.46

168
593

PLOT SCALE: COL #28
D:\DRAWING\06092306\PLAN\MCPP51.DWG FEBRUARY-13-1995

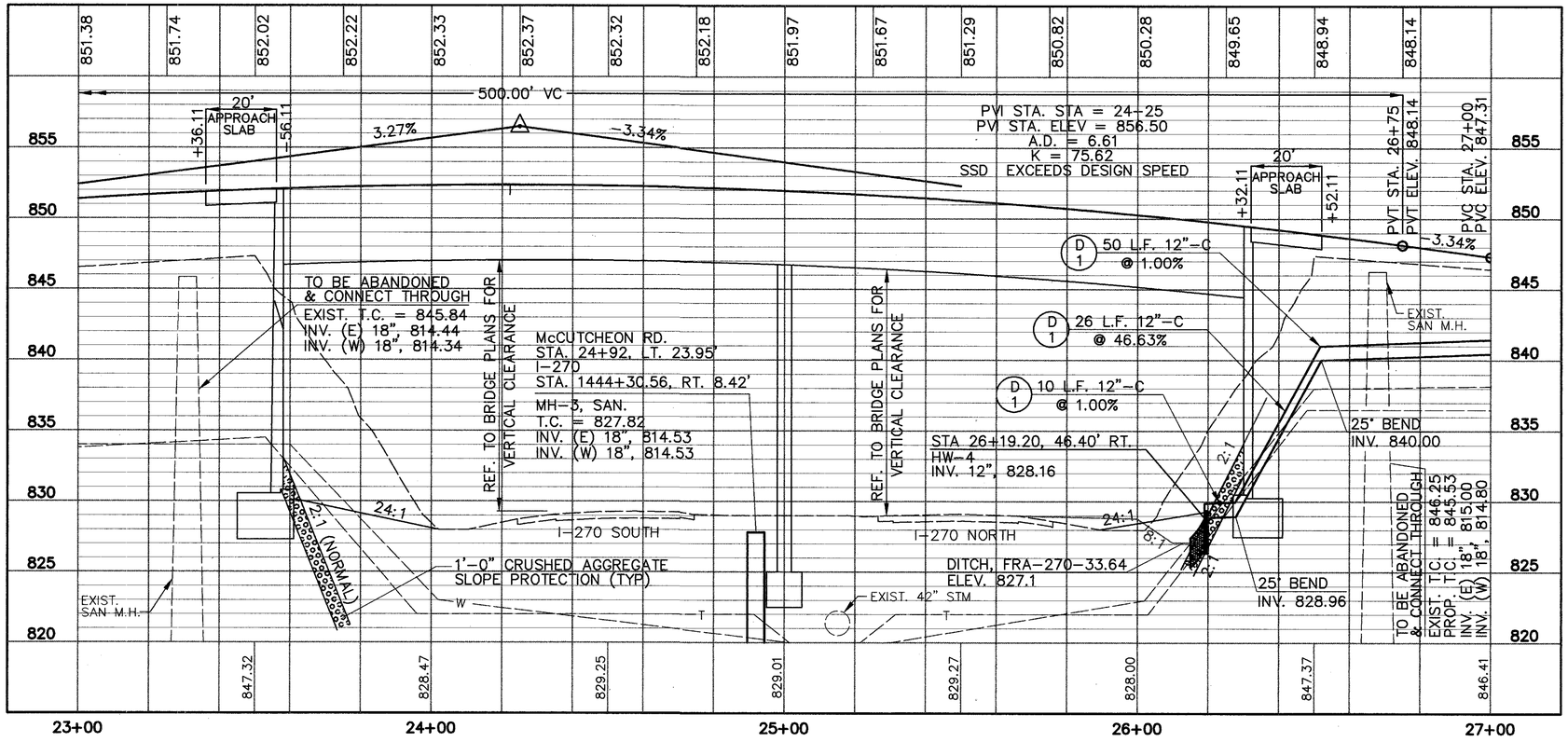

PLOT SCALE:
COL #28 D:\DRAWING\06092306\PLAN\MCPR51.DWG FEBRUARY-09-1995

CHK'G BY: GJW DATE: 3/15/94
CHK'D BY: TAZ DATE: 1/19/95

0 20
X HORIZONTAL SCALE IN FEET

McCUTCHEON ROAD PROFILE
STA. 23+00.00 TO STA. 27+00.00

FRA-270-32.46

169
593

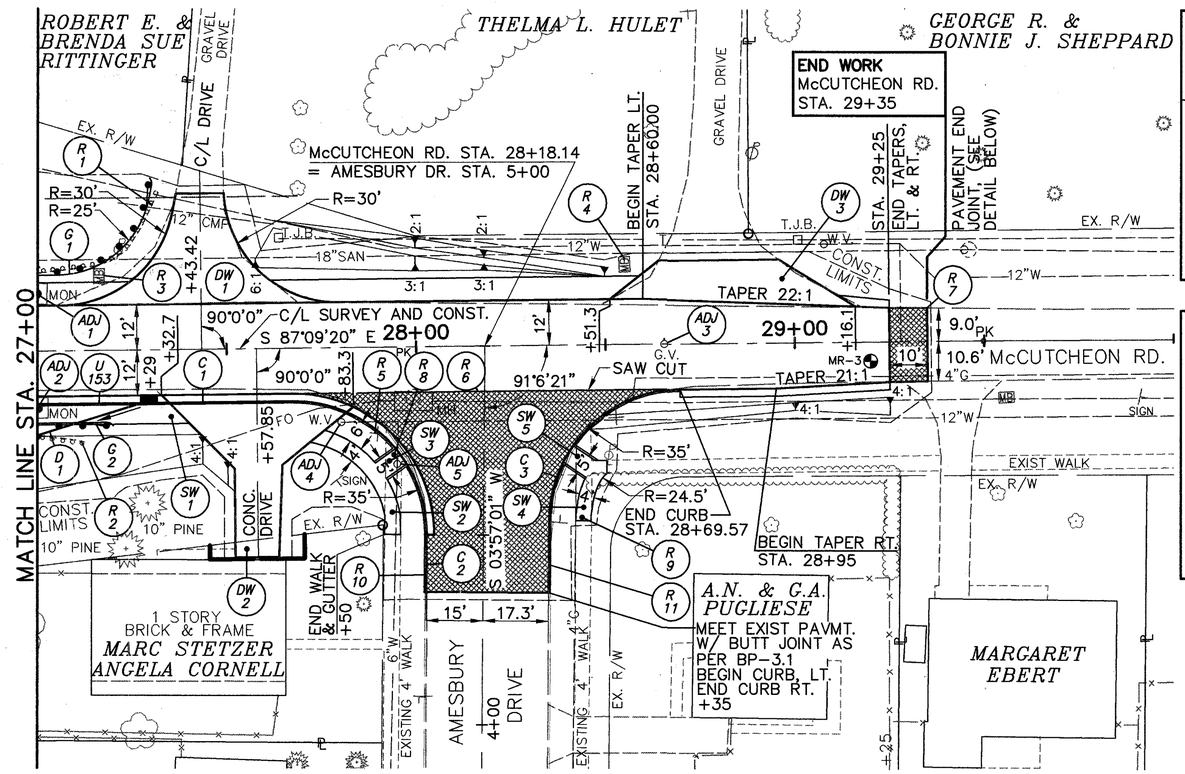

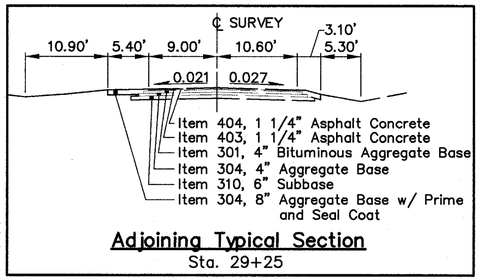

Adjoining Typical Section
Sta. 29+25

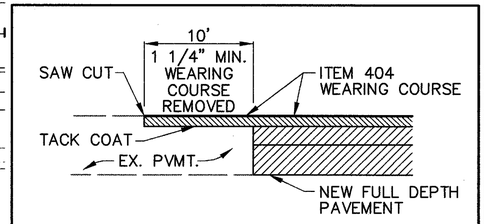

Pavement End Joint Detail
N.T.S.

CROSS REFERENCES

SHEET NO.	DESCRIPTION
69	(U 1) UNDERDRAIN DATA AND QUANTITIES

REFERENCE No.	STATION TO STATION (STATIONING REFERS TO McCUTCHEON RD. ALIGNMENT)	SIDE	606 GUARDRAIL, TYPE 5 L.F.	606 ANCHOR ASSEMBLY, TYPE T EA.	638 WATER VALVE BOX, ADJUSTED TO GRADE EA.	604 GAS VALVE BOX, ADJUSTED TO GRADE EA.	604 MONUMENT BOX, ADJUSTED TO GRADE EA.	202 REMOVAL MISC.: WOOD SIGN, REMOVED FOR REUSE EA.	202 WEARING COURSE REMOVED S.Y.
ADJ1	27+00	LT.					1		
ADJ2	27+00	RT.					1		
ADJ3	28+65					1			
ADJ4	27+81	RT.			1				
ADJ5	27+94	RT.			1				
G1	27+05.51 ~ 27+30.66	LT.	25	1					
G2	27+05.51 ~ 27+18.01	RT.		1					
R5	27+89	RT.						1	
R6	27+67 ~ 28+70	RT.							244
R7	29+25 ~ 29+35	L-R							22
SHEET TOTALS			25	2	2	1	2	1	266

REFERENCE No.	STATION TO STATION (STATIONING REFERS TO McCUTCHEON RD. ALIGNMENT)	SIDE	609 CURB, TYPE 2 L.F.	609 CURB, TYPE 6 L.F.	452 6" PLAIN CONCRETE PAVEMENT S.Y	404 ASPHALT CONCRETE, T = 1 1/4" C.Y.	402 ASPHALT CONCRETE, T = 1 3/4" C.Y.	304 AGGREGATE BASE, T = 6" C.Y.	301 BITUMINOUS AGGREGATE BASE, T = 6" C.Y.
C1	27+00 ~ 28+02	RT.	123						
C2	28+02	RT.		15					
C3	28+35 ~ 28+95	RT.		73					
DW1	27+08 ~ 27+78	LT.				2.95	4.13	14.63	14.63
DW2	27+32.7 ~ 27+83.3	RT.			87.5				
DW3	28+51.3 ~ 29+16.1	LT.				2.04	2.85	10.12	10.12
SHEET TOTALS			123	88	87.5	4.99	6.98	24.75	24.75

REFERENCE No.	STATION TO STATION (STATIONING REFERS TO McCUTCHEON RD. ALIGNMENT)	SIDE	608 4" CONCRETE WALK S.F.	608 CURB RAMP, TYPE 2 EA.	604 CATCH BASIN, NO. 3A EA.	603 12" CONDUIT, TYPE C L.F.	202 GUARDRAIL REMOVED L.F.	690 MAILBOX SUPPORT SYSTEM, SINGLE EA.	202 WALK REMOVED S.F.
D1	27+00 ~ 27+29	RT.			1	31			
R1	27+00 ~ 27+30	LT.					41		
R2	27+00 ~ 27+12	RT.					12		
R3	27+15	LT.						1	
R4	28+55	LT.						1	
R8	27+97.65 ~ 27+91.88	RT.							109
R9	28+38.44 ~ 28+50	RT.							124
SW1	27+00 ~ 27+43	RT.	183						
SW2	27+72 ~ 27+96	RT.	145						
SW3	27+95	RT.		1					
SW4	28+42 ~ 28+50	RT.	67						
SW5	28+42	RT.		1					
SHEET TOTALS			395	2	1	31	53	2	233

REFERENCE No.	STATION TO STATION (STATIONING REFERS TO AMESBURY DR. ALIGNMENT)	SIDE	202 CURB REMOVED L.F.
R10	4+34.99 ~ 4+83.64	LT.	58
R11	4+34.99 ~ 4+79.00	RT.	50
SHEET TOTALS			108

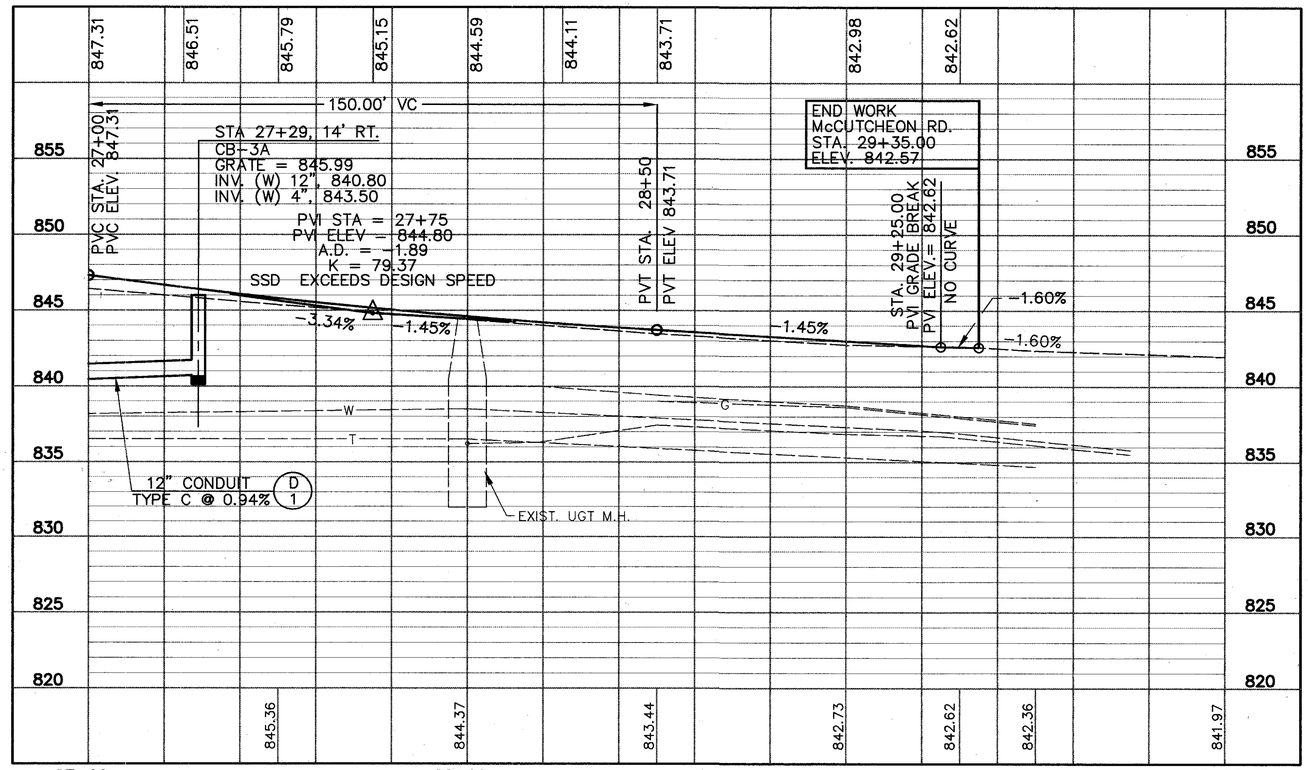

McCUTCHEON ROAD PLAN AND PROFILE
STA. 27+00.00 TO STA. 29+35.00

FRA-270-32.46

170
593

C.K.D. GJW DATE: 2/2/94
CHK'D BY: MFJ DATE: 12/5/94

HORIZONTAL SCALE IN FEET
0 10 20 40

MCC-SUMM, MC-HEND
MCONPROF, MCCTCH01
PLOT SCALE...
COL #28
D:\DRAWING\06092306\PLAN\MCPP52.DWG
FEBRUARY-11-1995

XSLAYOUT.DWG PLOT SCALE: 1"=100'
COL #30 C:\DRAWNG\06092306\XSECS\XSLOUT01.DWG FEBRUARY-09-1995

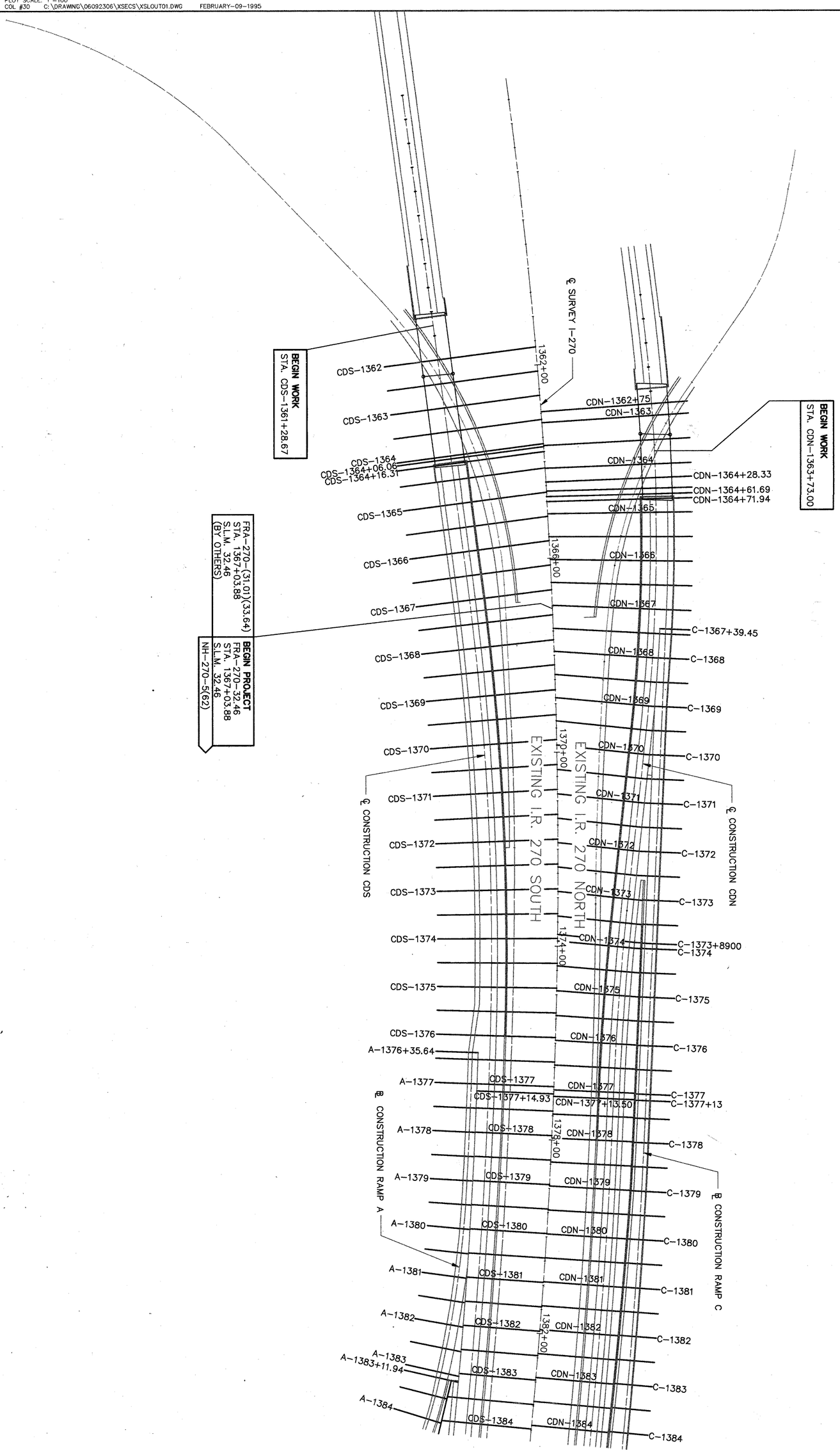

171
593

FRA-270-32.46

CROSS SECTION LAYOUT
I-270, C.D. NORTH AND SOUTH

CALC. BY: G.J.W. DATE: 2-95
CHKD. BY: M.F.J. DATE: 2-95

0 100
50 200
HORIZONTAL SCALE IN FEET

N

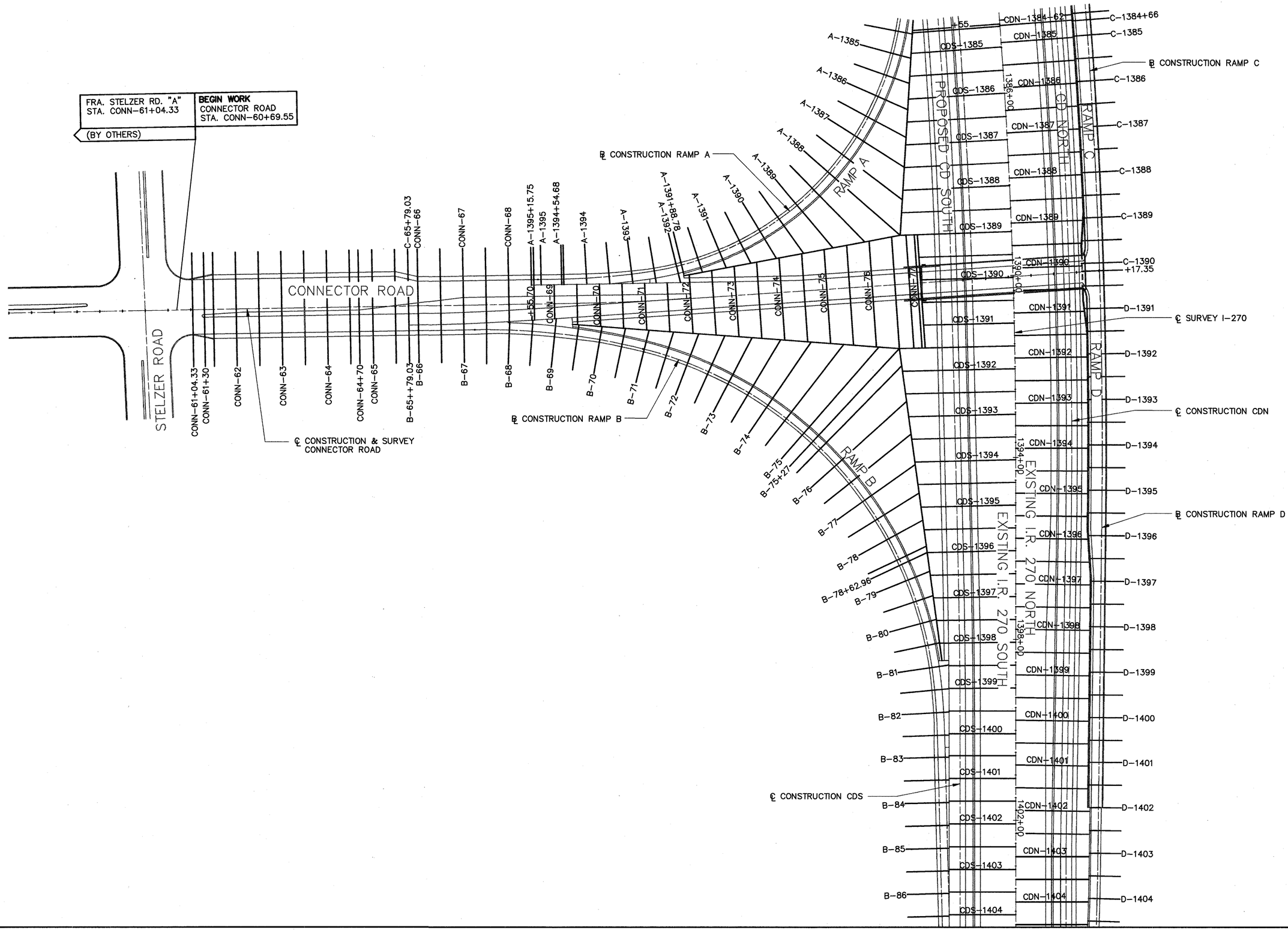

N

0 50 100 200
HORIZONTAL SCALE IN FEET

CHK'D G.J.W. DATE 2–95
BY M.F.J. DATE 2–95

CROSS SECTION LAYOUT
I–270, C.D. NORTH, C.D. SOUTH, AND CONNECTOR ROAD

FRA–270–32.46

172
593

PLOT SCALE 1"=100'
COL #30 C:\DRAWING\06092306\XSECS\XSLOUT02.DWG FEBRUARY–13–1995
XSLAYOUT.DWG

CALC. BY: G.J.W. DATE: 2-95
CHKD. BY: M.F.J. DATE: 2-95

0 50 100 200
HORIZONTAL SCALE IN FEET

CROSS SECTION LAYOUT
I-270, C.D. NORTH AND C.D. SOUTH

FRA-270-32.46

173
593

XSLAYOUT.DWG

PLOT SCALE: 1"=100'
COL #30
C:\DRAWING\06092306\XSECS\XSLOUT03.DWG

FEBRUARY--09-1995

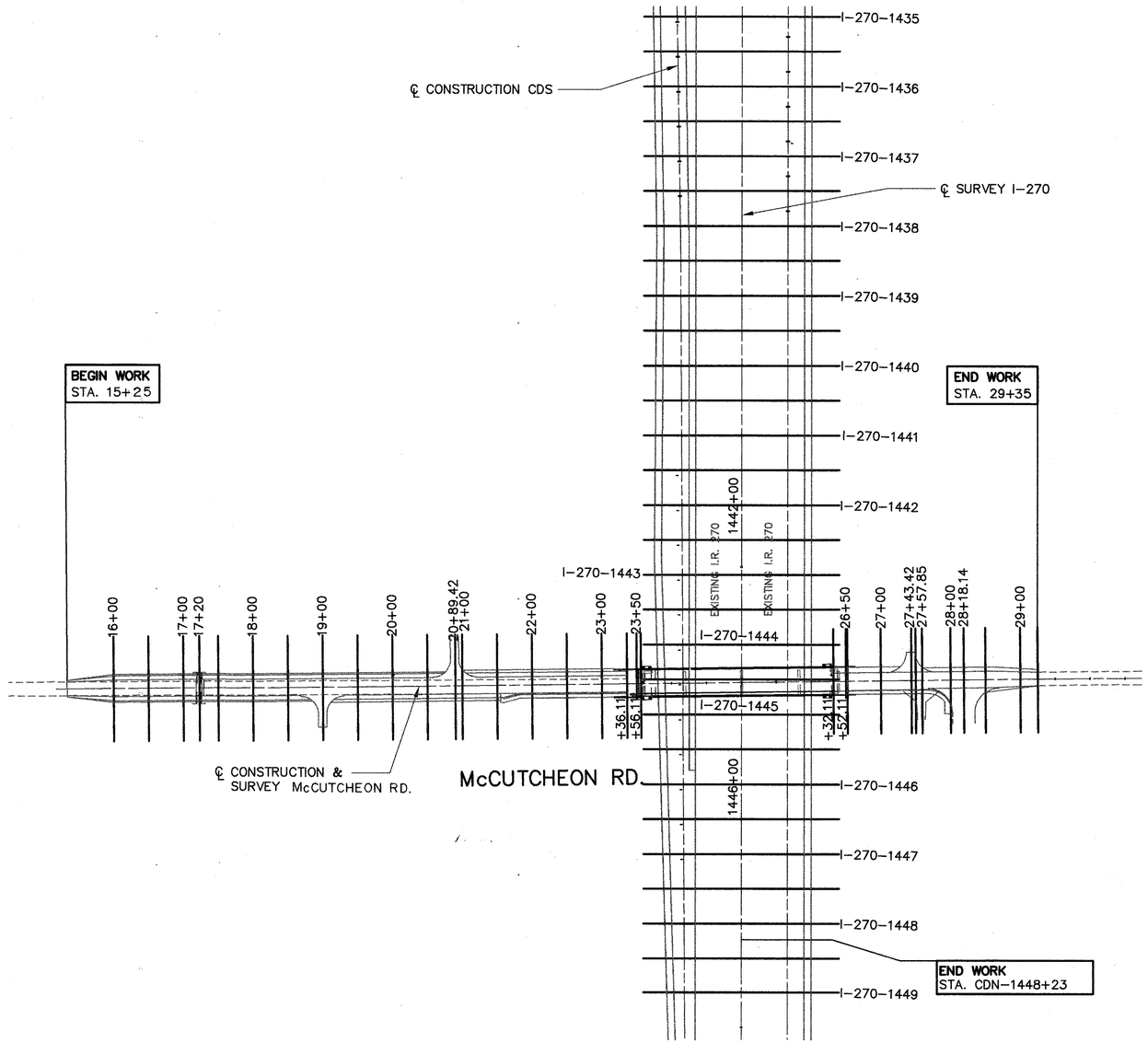

CROSS SECTION LAYOUT
McCUTCHEON ROAD

FRA-270-32.46

174
593

CALC. BY: G.J.W. DATE: 2-95
CHK. BY: M.F.J. DATE: 2-95

0 50 100 200
HORIZONTAL SCALE IN FEET

XSLAYOUT.DWG
PLOT SCALE: 1"=100'
COL #30
C:\DRAWING\06092306\XSECS\XSLOUT04.DWG FEBRUARY-09-1995

SEEDING	
END WIDTH	SQ. YDS.
45	146
60	

END AREA		VOLUME	
CUT	FILL	CUT	FILL
0	44	0	58
0	82		

CALC. BY: S.D.E. DATE: 02/03/95
CHKD. BY: M.F.J. DATE: 02/15/95

CROSS SECTIONS
STA. CDN-1362+75 TO STA. CDN-1363+00

FRA-270-32.46

175
593

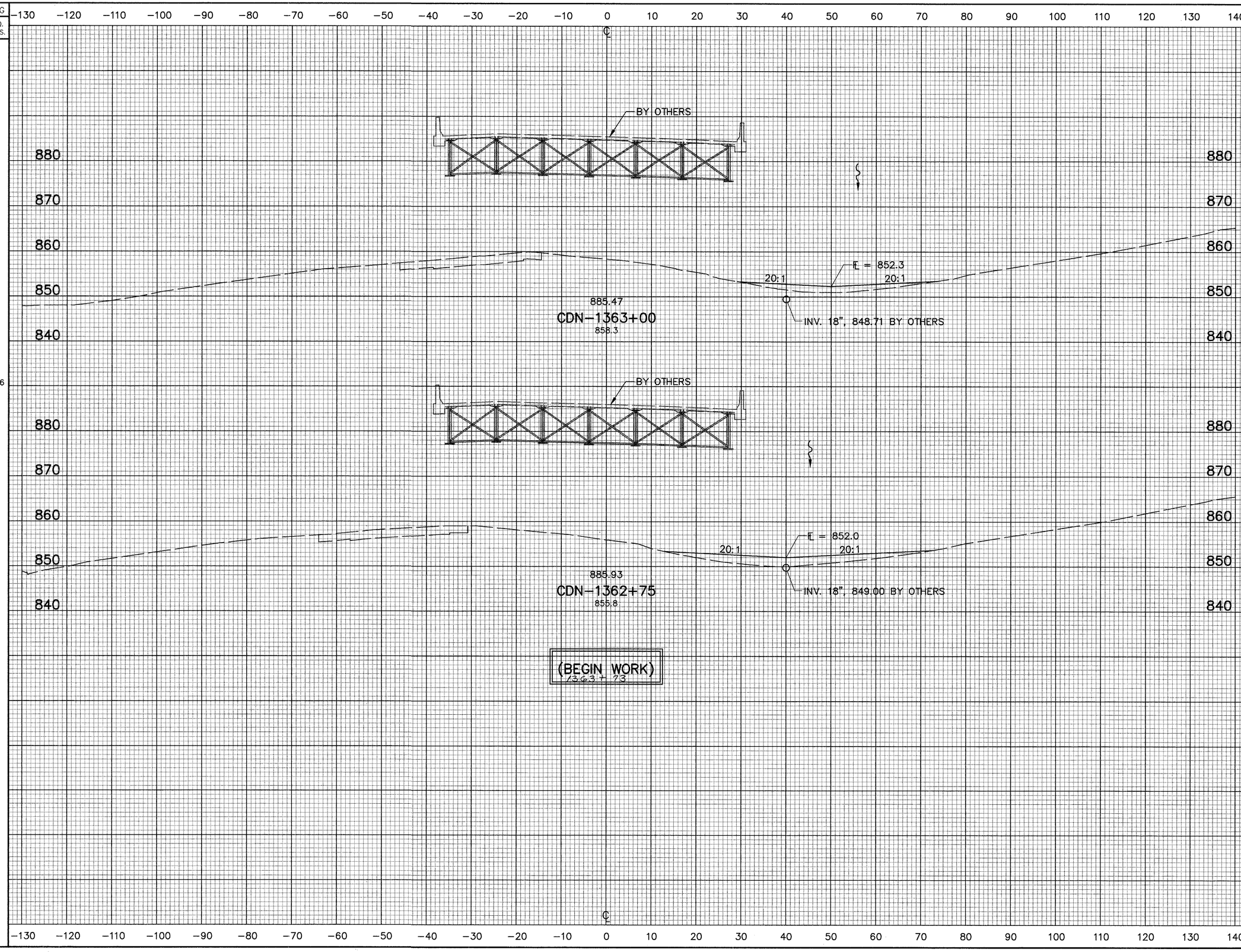

Plot Scale - 1" = 10'
COL #18
C:\DRAWING\06092306\XSECS\6092XS01.DWG - VIEW: N1 FEBRUARY-08-1995

SEEDING		END AREA		VOLUME	
END WIDTH	SQ. YDS.	CUT	FILL	CUT	FILL
94	148	40	12	21	6
0	0	0	0	0	0
0	0	0	0	0	0
125				0	40

CALC. S.D.E. BY: DATE: 12/20/95
CHK. M.F.J. BY: DATE: 12/15/95

BY OTHERS

CDN-1364+28.33, RT. 38.42'
HW-4
INV. 36", 846.50
Q50 = 37 CFS
HW 50 = 849.6
Q100 = 42 CFS
HW 100 = 849.9

Ex. R/W

VARIES

2:1

12:1

INLET CHANNEL PROTECTION, (6"x 5.0'x 6.0') CONCRETE

80 L.F. 36"-A @ 1.00%

882.80
CDN-1364+28.33
855.9

INV. 18", 847.44
(TO BE BORED OR JACKED)

BY OTHERS

Ex. R/W

883.42
CDN-1364+00
857.4

INV. 18", 847.72
(TO BE BORED OR JACKED)

BY OTHERS

884.48
CDN-1363+50
859.7

INV. 18", 848.22

870 860 850 840

-130 -120 -110 -100 -90 -80 -70 -60 -50 -40 -30 -20 -10 0 10 20 30 40 50 60 70 80 90 100 110 120 130 140

CROSS SECTIONS
STA. CDN-1363+50 TO STA. CDN-1364+28.33

FRA-270-32.46

176
593

Plot Scale - 1" = 10'
COL #18
C:\DRAWINGS\06092306\XSECS\6092XS01.DWG - WEW N2 FEBRUARY-08-1995

SEEDING END WIDTH	SEEDING SQ. YDS.
44	51
45	110
130	90
221	

END AREA CUT	END AREA FILL	VOLUME CUT	VOLUME FILL
7	85	4	35
11	99		
11	364	4	94
6	69	18	33

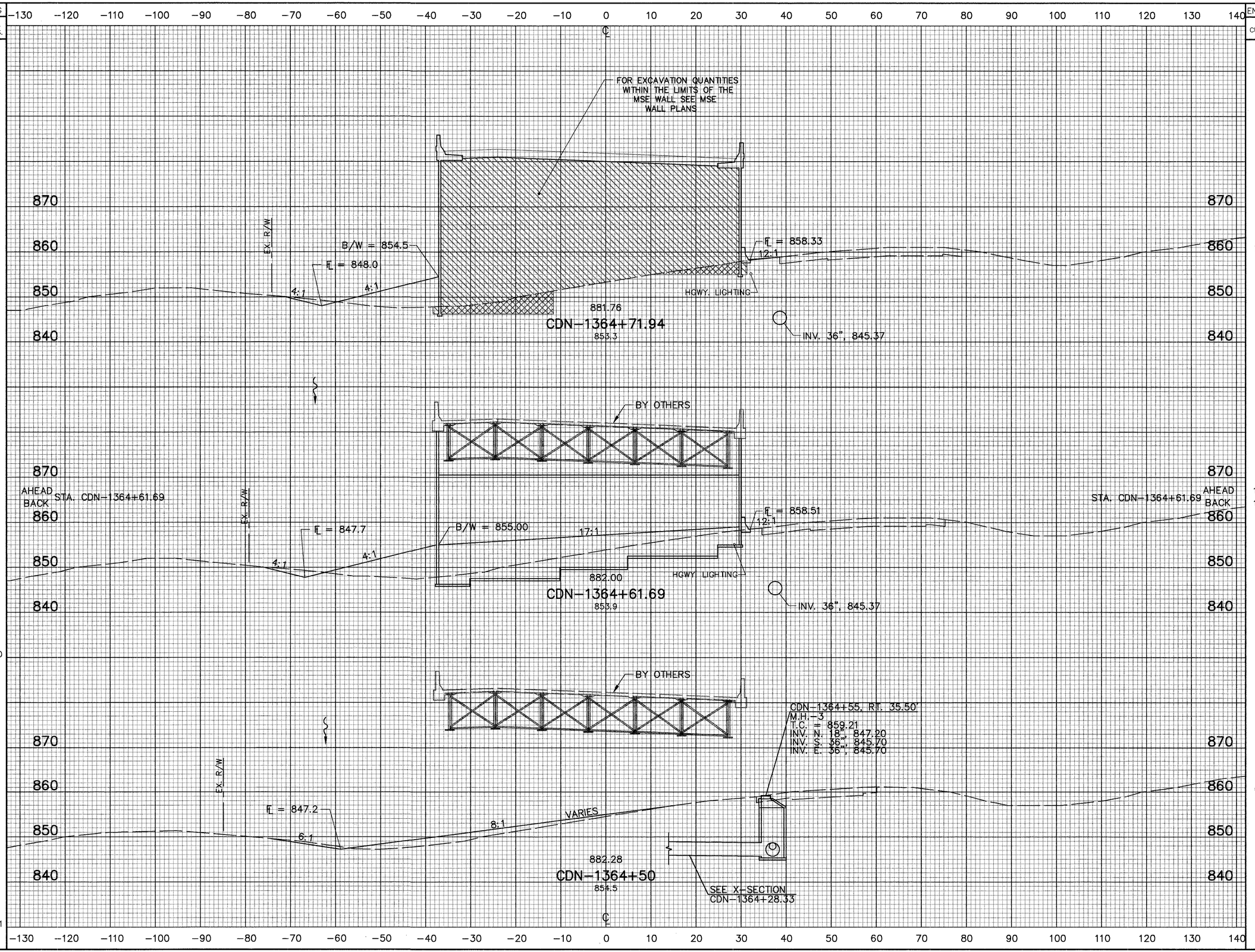

CROSS SECTIONS
STA. CDN-1364+50 TO STA. CDN-1364+71.94

FRA-270-32.46

177
593

CALC. S.D.E. DATE: 02/03/95
CHK. M.F.J. DATE: 02/15/95

Plot Scale = 1" = 10'
COL #18
C:\DRAWING\0609236\XSECS\60923XS01.DWG — MEW: N3 FEBRUARY-08-1995

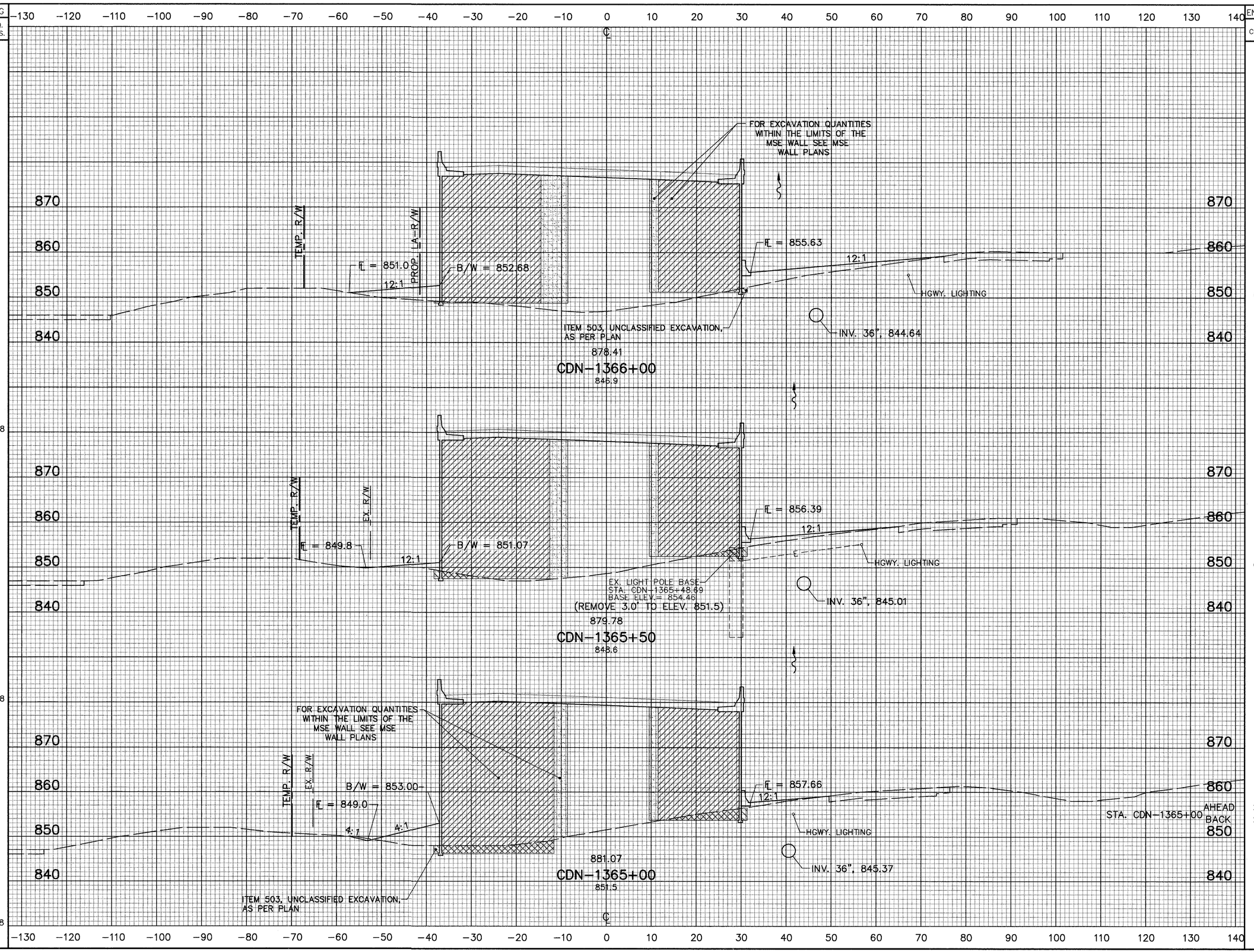

SEEDING END WIDTH	SEEDING SQ. YDS.	END AREA CUT	END AREA FILL	VOLUME CUT	VOLUME FILL
63		0	683		
	328			0	1169
55		0	579		
	258			2	1049
38		2	554		
		2	50		
	128			5	70

CALC. BY: S.D.E. DATE: 02/03/95
CHKD. BY: M.F.J. DATE: 02/15/95

CROSS SECTIONS
STA. CDN-1365+00 TO STA. CDN-1366+00

FRA-270-32.46

Plot Scale - 1" = 10'
COL #18 C:\DRAWING\06092306\XSECS\6092XS01.DWG - VIEW: N4 FEBRUARY-08-1995

SEEDING END WIDTH	SEEDING SQ. YDS.
58	319
57	62
56	
78	
	340
77	
	408
70	
	369

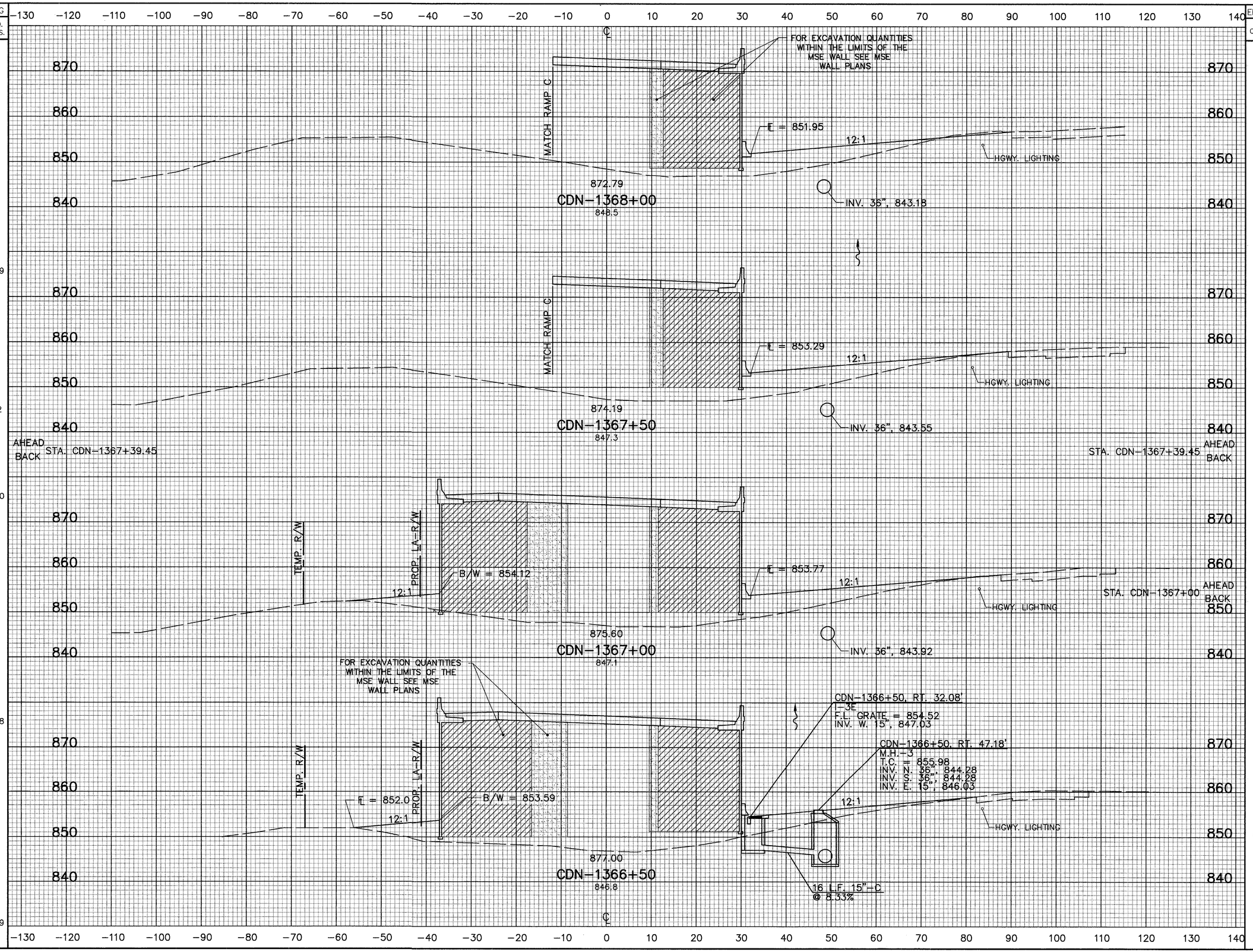

END AREA CUT	END AREA FILL	VOLUME CUT	VOLUME FILL
5	654		
		5	1302
0	752		
		0	297
0	769		
0	909		
		0	1341
0	927		
0	736		
		0	1383
0	758		
		0	1334

CALC: S.D.E. BY: DATE: 02/03/95
CHKD: M.F.J. BY: DATE: 02/15/95

CROSS SECTIONS STA. CDN−1366+50 TO STA. CDN−1368+00

FRA−270−32.46

179 593

Plot Scale = 1" = 10'
COL #18 C:\DRAWING\G6092306\XSECS\G6092XS01.DWG — VIEW: NS FEBRUARY−08−1995

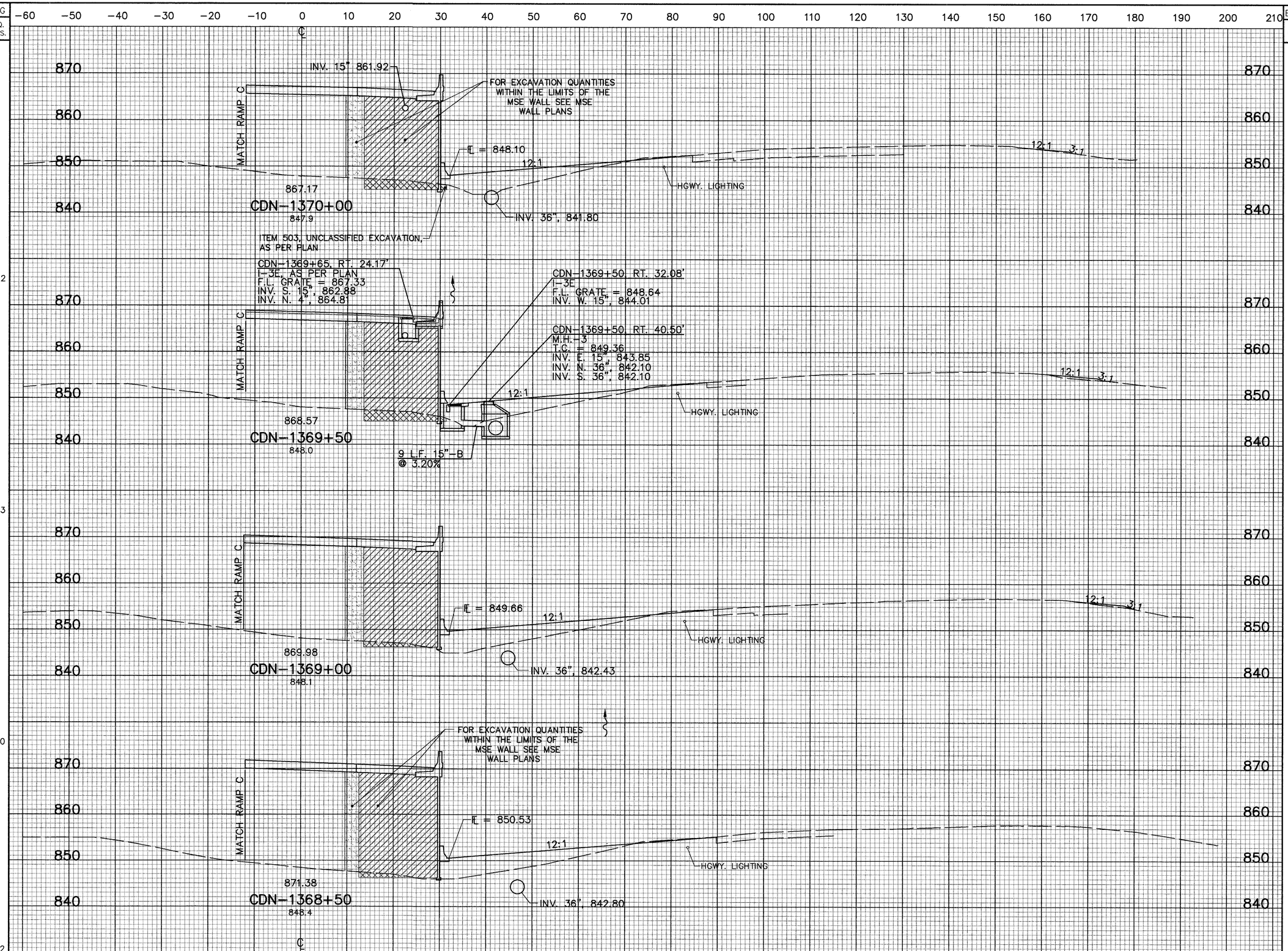

END AREA CUT	END AREA FILL	VOLUME CUT	VOLUME FILL
2	479		
		5	926
3	521		
		5	1006
2	565		
		4	1060
2	580		
		6	1143

CALC. BY: S.D.E. DATE: 02/03/95
CHKD. BY: M.F.J. DATE: 02/15/95

CROSS SECTIONS
STA. CDN-1368+50 TO STA. CDN-1370+00

FRA-270-32.46

Plot Scale - 1" = 10'
COL #18 C:\DRAWING\06092306\XSECS\6092XS01.DWG - VIEW: N6 FEBRUARY-08-1995

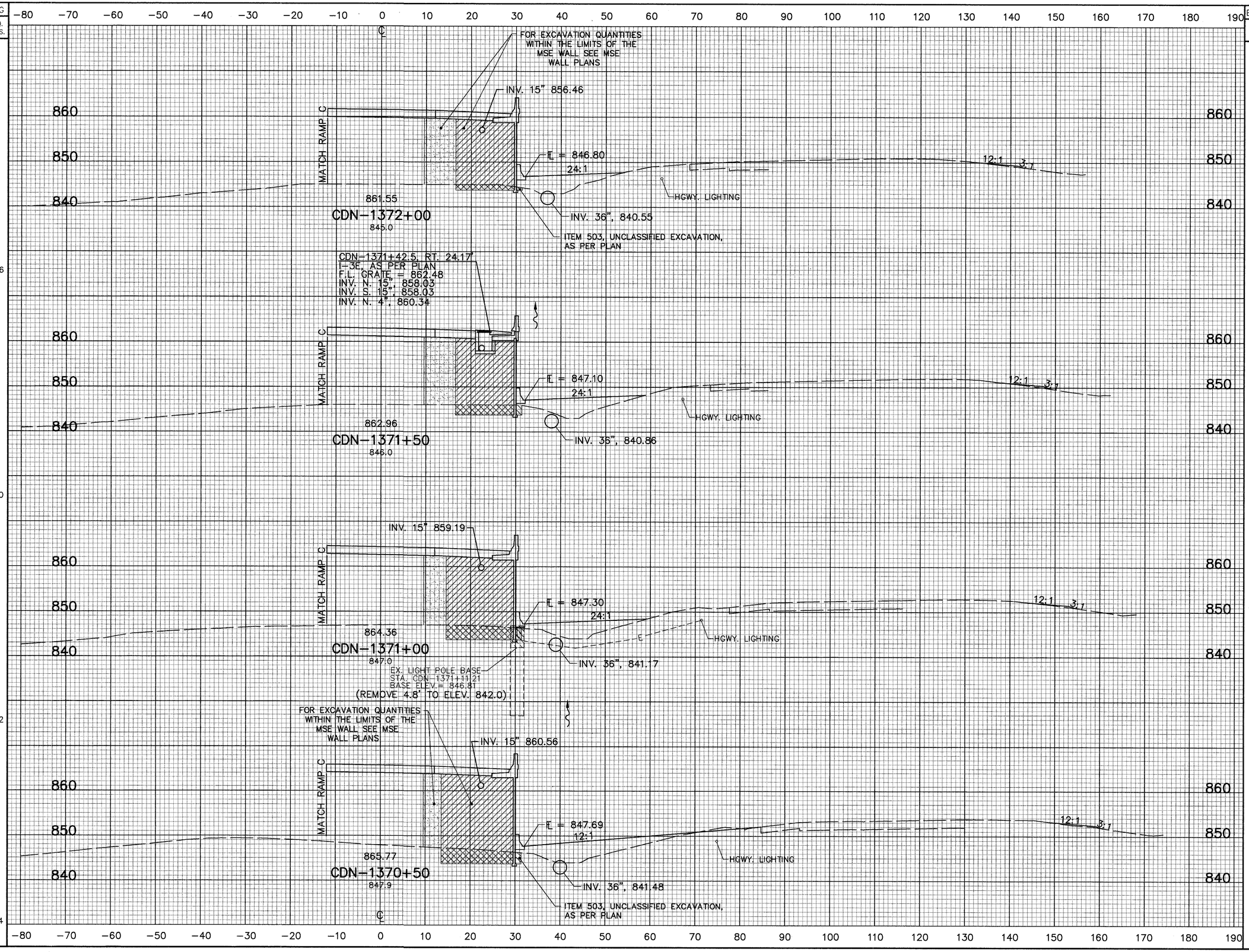

END AREA CUT	END AREA FILL	VOLUME CUT	VOLUME FILL
0	380		
		0	720
0	398		
		0	737
0	399		
		3	784
3	448		
		7	858

CALC. BY: S.D.E. DATE: 02/03/95
CHKD. BY: M.F.J. DATE: 02/15/95

CROSS SECTIONS
STA. CDN-1370+50 TO STA. CDN-1372+00

FRA-270-32.46

Plot Scale - 1" = 10'
COL #18 C:\DRAWING\06092306\XSECS\6092XS01.DWG - VIEW: N7 FEBRUARY-08-1995

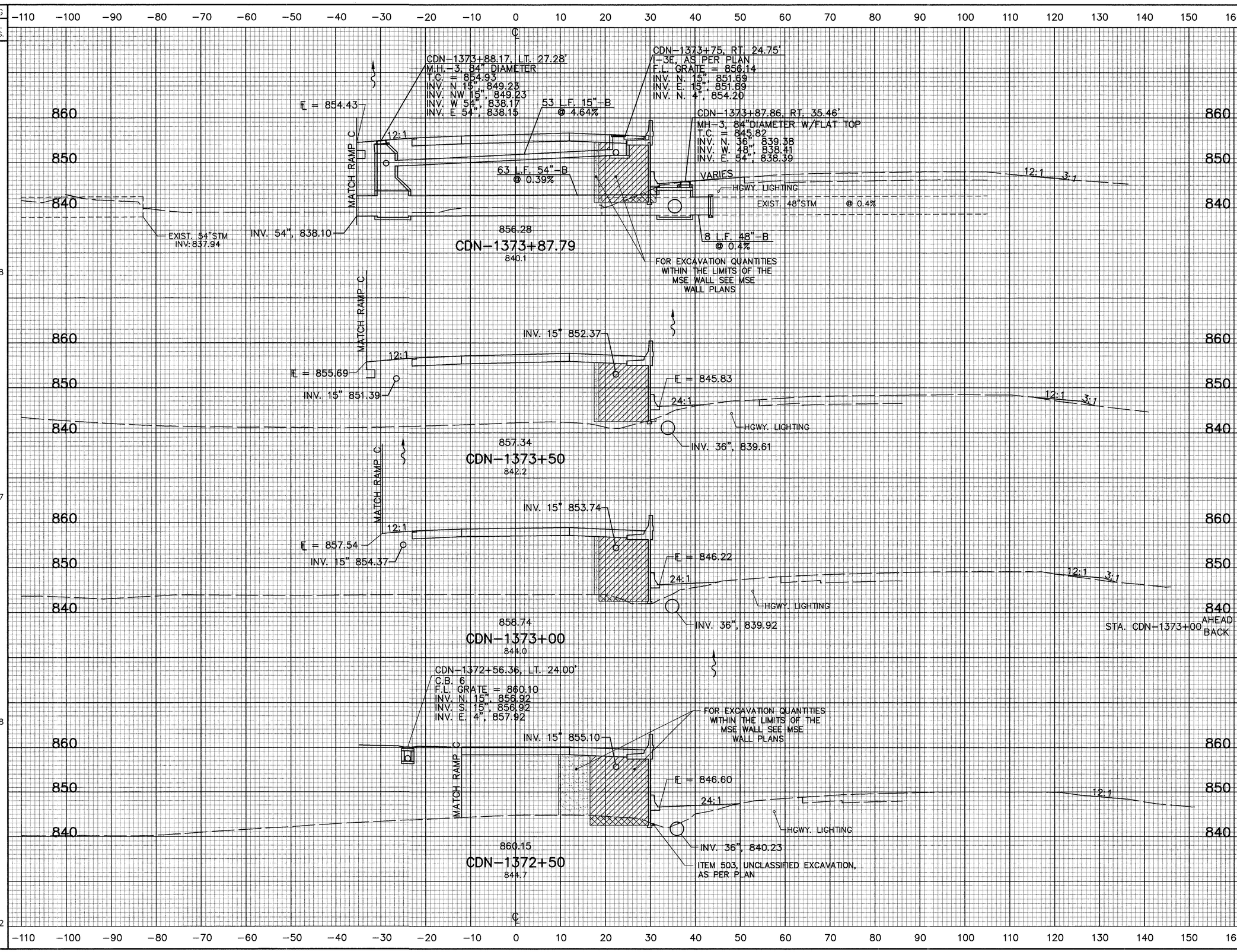

SEEDING END WIDTH	SEEDING SQ. YDS.	END AREA CUT	END AREA FILL	VOLUME CUT	VOLUME FILL
44		2	795		
	168			2	1064
36		0	725		
	197			0	1269
35		0.0	646		
		0.0	537		
	178			0	816
29		0	344		
	142			0	670

CALC. BY: S.D.E. DATE: 02/03/95
CHKD. BY: M.F.J. DATE: 02/15/95

CROSS SECTIONS
STA. CDN-1372+50 TO STA. CDN-1373+87.79

FRA-270-32.46

Plot Scale - 1" = 10'
COL #18 C:\DRAWING\06092306\XSECS\6092XS01.DWG - VIEW: N8 FEBRUARY-08-1995

SEEDING END WIDTH	SEEDING SQ. YDS.	STATION	END AREA CUT	END AREA FILL	VOLUME CUT	VOLUME FILL
53	278	CDN–1376+00	18	156	19	368
47	244	CDN–1375+50	3	241	3	630
41	231	CDN–1375+00	0	439	0	800
		STA. CDN–1375+00 AHEAD	0	349		
42	242	CDN–1374+50	0	515	3	1123
45	242	CDN–1374+00	3	698	1	338
60						

CDN–1376+18.76, LT. 42.51'
3E
F.L. GRATE = 847.70
INV. E. 15", 843.70
INV. S. 15", 843.70

℄ MATCH RAMP C

℄ = 848.10 — 12:1 — ℄ = 845.39 — VARIES — 12:1 — 25:1

BURIED ELEC.

18" GAS LINE (ABANDONED)

HGWY. LIGHTING

ITEM 503, UNCLASSIFIED EXCAVATION, AS PER PLAN

850.57
CDN–1376+00
845.7

℄ = 849.41 — 12:1 — ℄ = 845.44 — VARIES — 12:1 — 25:1

BURIED ELEC.

HGWY. LIGHTING

851.78
CDN–1375+50
845.6

℄ = 850.86 — 12:1 — ℄ = 845.46 — 24:1 — 12:1 — 3:1

BURIED ELEC.

HGWY. LIGHTING

853.12
CDN–1375+00
845.2

FOR EXCAVATION QUANTITIES WITHIN THE LIMITS OF THE MSE WALL SEE MSE WALL PLANS

℄ = 852.43 — 12:1 — 844.61 ℄ = 845.36 — VARIES — 12:1 — 3:1

BURIED ELEC.

HGWY. LIGHTING

ITEM 503, UNCLASSIFIED EXCAVATION, AS PER PLAN

854.53
CDN–1374+50
844.0

FOR EXCAVATION QUANTITIES WITHIN THE LIMITS OF THE MSE WALL SEE MSE WALL PLANS

CDN–1374+00, RT. 32.08'
3E
F.L. GRATE = 845.08
INV. N. 15", 841.08

℄ = 854.02 — 12:1 — VARIES — 12:1 — 3:1

HGWY. LIGHTING

ITEM 503, UNCLASSIFIED EXCAVATION, AS PER PLAN

855.93
CDN–1374+00
841.3

CALC: S.D.E. BY: DATE: 02/05/95
CHK: M.F.J. BY: DATE: 02/15/95

CROSS SECTIONS STA. CDN–1374+00 TO STA. CDN–1376+00

FRA–270–32.46

183
593

Plot Scale – 1" = 10'
COL #18
C:\DRAWING\06092306\XSECS\6092XS01.DWG – VIEW: N9 FEBRUARY–08–1995

SEEDING END WIDTH	SEEDING SQ. YDS.
39	242
48	275
51	207
51	77
51	297
56	303

END AREA CUT	END AREA FILL	VOLUME CUT	VOLUME FILL
3	28	16	45
14	21	116	41
111	23	147	41
106	37	51	21
97	47	149	129
64	92	76	230

CALC. BY: S.D.E. DATE: 02/03/95
CHKD. BY: M.F.J. DATE: 02/15/95

CROSS SECTIONS
STA. CDN-1376+50 TO STA. CDN-1378+50

FRA-270-32.46

184
593

Plot Scale = 1" = 10'
COL #18 C:\DRAWING\06092306\XSECS\6092XS01.DWG - VIEW: N10 FEBRUARY-08-1995

CDN-1378+50
846.43
844.2
℄ = 844.09
INV. 15", 840.77
12:1
℄ = 844.95
VARIES
12:1 3:1
BURIED ELEC.
HGWY. LIGHTING

CDN-1378+00
847.01
845.3
℄ = 844.66
INV. 15", 841.40
12:1
℄ = 845.06
VARIES
12:1
BURIED ELEC.
HGWY. LIGHTING

CDN-1377+50
847.70
846.4
℄ = 845.35
INV. 15", 842.04
12:1
℄ = 845.13
VARIES
12:1 25:1
BURIED ELEC.
HGWY. LIGHTING
ITEM 503, UNCLASSIFIED EXCAVATION, AS PER PLAN

CDN-1377+13.50
848.30
846.0
TO BE ABANDONED & CONNECTED THROUGH EXIST. SAN M.H. T.C. 848.52
℄ = 845.95
INV. 15", 842.51
12:1
℄ = 845.20
VARIES
12:1 25:1
BURIED ELEC.
HGWY. LIGHTING
EXIST. 21"SAN INV. 824.62
EXIST. 21"SAN
CDN-1377+13.50, RT. 117.50'
M.H.-3 SAN
T.C. = 844.09
INV. W. 21", 855.06
INV. E. 21", 855.06

CDN-1377+00
848.53
845.9
℄ = 846.16
INV. 15", 842.68
12:1
℄ = 845.22
VARIES
12:1 25:1
BURIED ELEC.
HGWY. LIGHTING
EX. LIGHT POLE BASE STA. CDN-1377+00 BASE ELEV. = 845.35 REMOVE 1.5' TO 843.8
18" GAS LINE (ABANDONED)

CDN-1376+50
849.49
845.8
℄ = 846.96
INV. 15", 843.32
12:1
℄ = 845.32
VARIES
12:1 25:1
BURIED ELEC.
HGWY. LIGHTING
18" GAS LINE (ABANDONED)
ITEM 503, UNCLASSIFIED EXCAVATION, AS PER PLAN

SEEDING END WIDTH	SEEDING SQ. YDS.
34	186
33	183
33	186
34	194
36	203
37	211

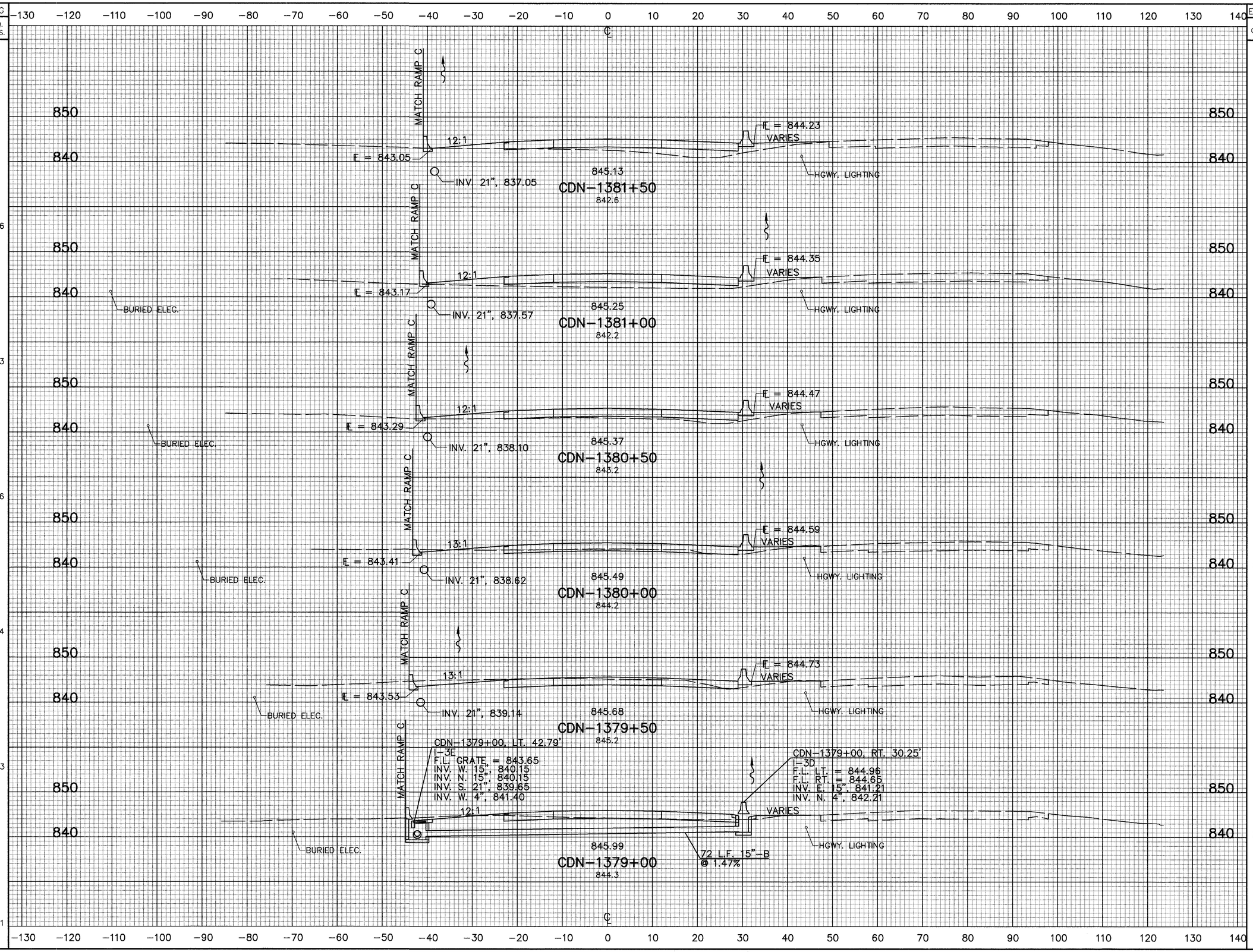

END AREA CUT	END AREA FILL	VOLUME CUT	VOLUME FILL
1	75		
		1	150
0	87		
		0	127
0	50		
		21	60
23	15		
		96	20
81	7		
		98	11
25	5		
		25	31

CALC. BY: S.D.E. DATE: 02/10/95
CHKD. BY: M.F.J. DATE: 02/10/95

CROSS SECTIONS
STA. CDN-1379+00 TO STA. CDN-1381+50

FRA-270-32.46

185
593

Plot Scale - 1" = 10'
CAL #18 C:\DRAWING\06092306\XSECS\6092XS01.DWG - VIEW: N11 FEBRUARY-08-1995

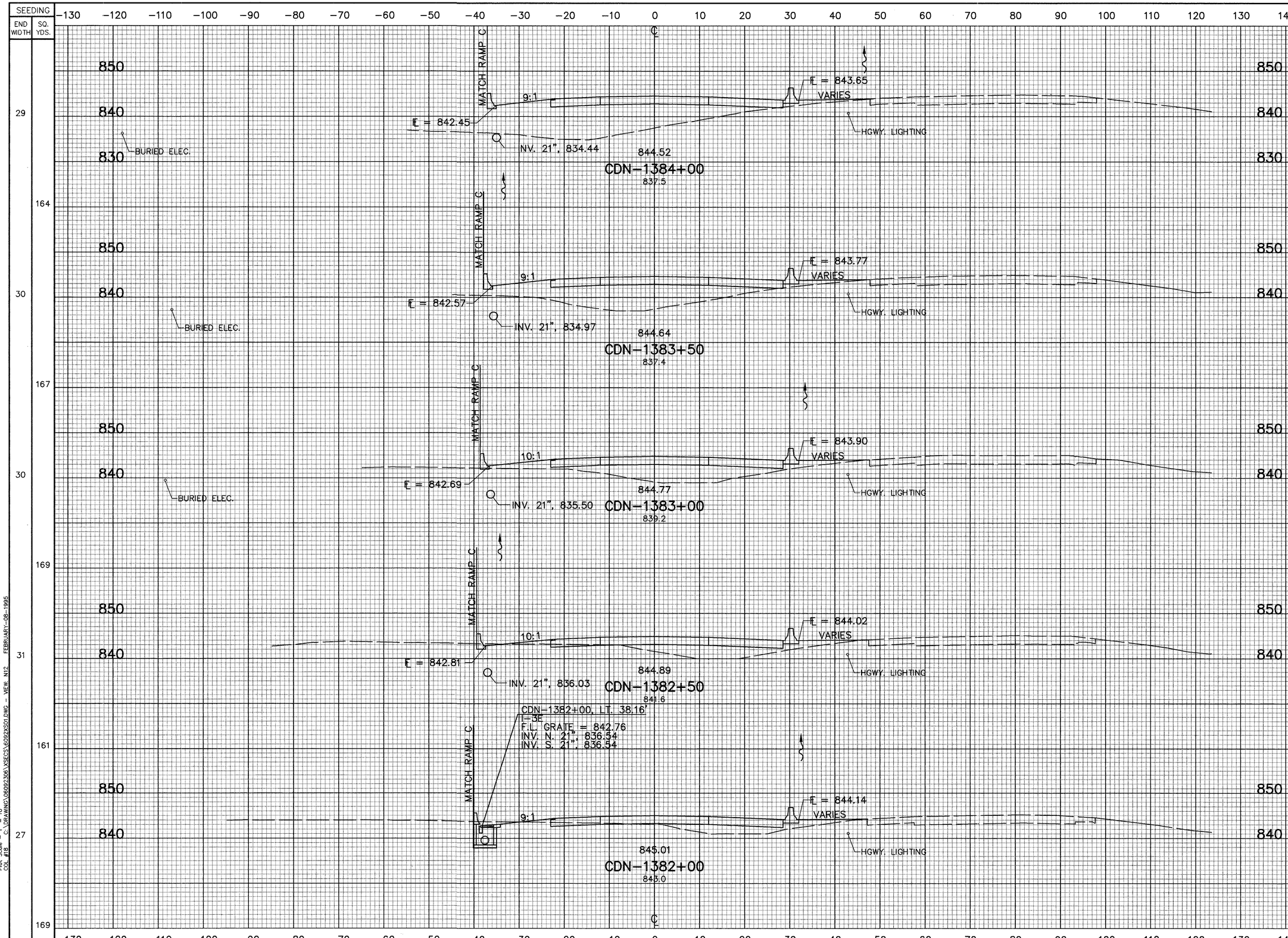

END WIDTH	SQ. YDS.	END AREA CUT	END AREA FILL	VOLUME CUT	VOLUME FILL
29		0	340		
	164			0	545
30		0	249		
	167			0	378
30		0	159		
	169			6	232
31		6	92		
	161			16	142
27		11	61		
	169			11	126

CALC. BY: S.D.E. DATE: 02/03/95
CHKD. BY: M.F.J. DATE: 02/15/95

CROSS SECTIONS
STA. CDN-1382+00 TO STA. CDN-1384+00

FRA-270-32.46

186/593

Plot Scale - 1" = 10'
COL #18 C:\DRAWING\06092306\XSECS\6092XS01.DWG - VIEW: N12 FEBRUARY-08-1995

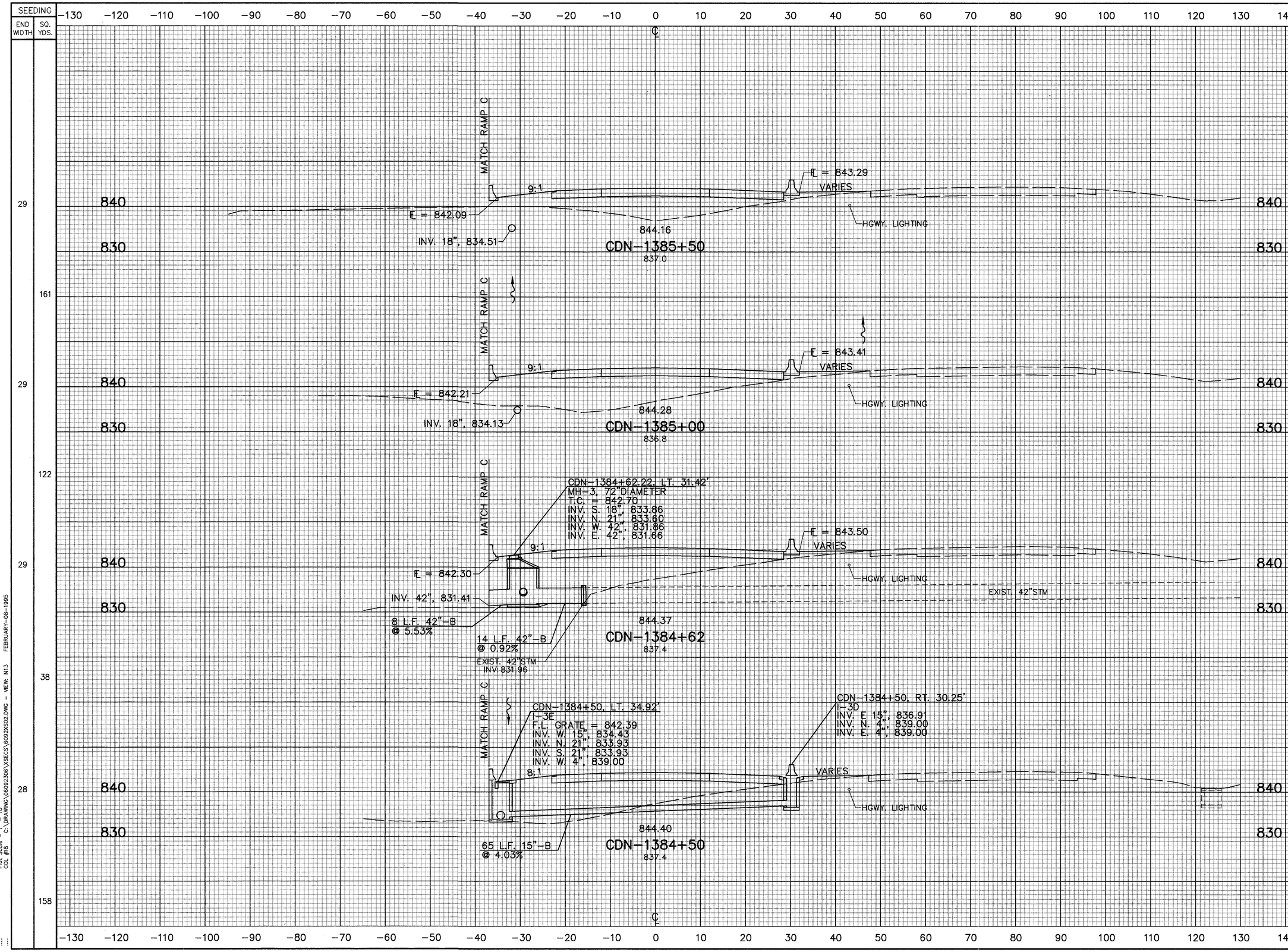

END AREA CUT	END AREA FILL	VOLUME CUT	VOLUME FILL
0	221		
		0	534
0	356		
		0	554
0	431		
		0	183
0	391		
		0	677

CALC. BY: S.D.E. DATE: 02/02/95
CHKD. BY: M.F.J. DATE: 02/15/95

CROSS SECTIONS
STA. CDN-1384+50 TO STA. CDN-1385+50

FRA-270-32.46

Plot Scale - 1" = 10'
COL #18 C:\DRAWING\06092306\XSECS\6092XS02.DWG - VIEW: N13 FEBRUARY-08-1995

SEEDING END WIDTH	SEEDING SQ. YDS.	END AREA CUT	END AREA FILL	VOLUME CUT	VOLUME FILL
29	161	117	11	199	25
29	161	98	16	170	38
29	161	86	25	142	67
29	161	67	47	80	106
29	161	19	68	18	184
29	161	0	131	0	326

℄

MATCH RAMP C

℄ = 842.56
VARIES
HGWY. LIGHTING

9:1

℄ = 841.37
INV. 15", 837.02

843.43
CDN–1388+50
842.7

℄ = 842.68
VARIES
HGWY. LIGHTING

9:1

℄ = 841.49
INV. 15", 836.64

843.55
CDN–1388+00
842.0

℄ = 842.80
VARIES
HGWY. LIGHTING

8.9:1

℄ = 841.61
INV. 15", 836.25

843.67
CDN–1387+50
841.7

℄ = 842.93
VARIES
HGWY. LIGHTING

9:1

℄ = 841.73
INV. 15", 835.86

843.80
CDN–1387+00
841.5

CDN–1386+50, LT. 34.92'
I–3E
F.L. GRATE = 841.69
INV. S. 15", 835.49
INV. N. 18", 835.24

℄ = 843.05
VARIES
HGWY. LIGHTING

7:1

843.92
CDN–1386+50
841.0

℄ = 843.17
VARIES
HGWY. LIGHTING

9:1

℄ = 841.97
INV. 18", 834.88

844.04
CDN–1386+00
840.3

850
840

–130 –120 –110 –100 –90 –80 –70 –60 –50 –40 –30 –20 –10 0 10 20 30 40 50 60 70 80 90 100 110 120 130 140

CALC. BY: S.D.E. DATE: 02/02/95
CHK'D BY: M.F.J. DATE: 02/15/95

CROSS SECTIONS
STA. CDN–1386+00 TO STA. CDN–1388+50

FRA–270–32.46

188
593

Plot Scale – 1" = 10'
COL #18
C:\DRAWING\06092306\XSECS\6092XS02.DWG – VIEW: N14 FEBRUARY–08–1995

SEEDING END WIDTH	SEEDING SQ. YDS.	END AREA CUT	END AREA FILL	VOLUME CUT	VOLUME FILL
40	250	93	13	179	21
50	264	101	10	176	35
45	250	89	27	166	51
45	256	90	28	182	46
47	269	107	22	195	30
50	219	104	10	205	20

CALC. BY: S.D.E. DATE: 02/02/95
CHKD. BY: M.F.J. DATE: 02/15/95

CROSS SECTIONS
STA. CDN-1389+00 TO STA. CDN-1391+50

FRA-270-32.46

189
593

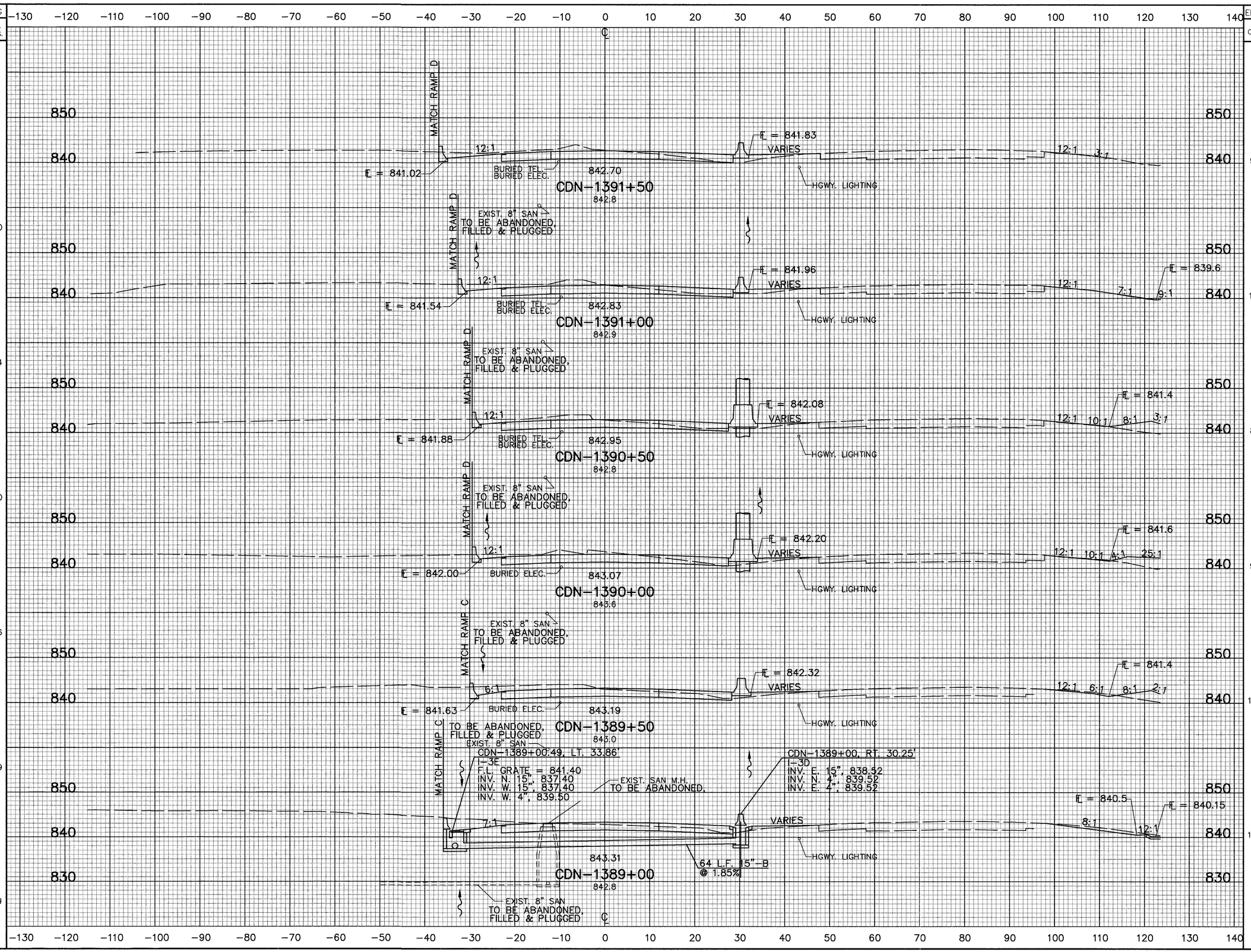

Plot Scale - 1" = 10'
COL #18 C:\DRAWING\06092306\XSECS\6092XS02.DWG - VIEW: N15 FEBRUARY-08-1995

CROSS SECTIONS
STA. CDN–1392+00 TO STA. CDN–1394+50

FRA–270–32.46

190
593

CALC. BY: S.D.E. DATE: 02/15/95
CHKD. BY: M.F.J. DATE: 02/15/95

SEEDING END WIDTH	SEEDING SQ. YDS.	STATION	END AREA CUT	END AREA FILL	VOLUME CUT	VOLUME FILL
41		CDN–1394+50	92	5		
	225				159	9
40		CDN–1394+00	80	5		
	222				137	12
40		CDN–1393+50	68	8		
	222				137	15
40		CDN–1393+00	80	8		
	219				144	17
39		CDN–1392+50	75	10		
	219				141	21
40		CDN–1392+00	77	12		
	222				158	23

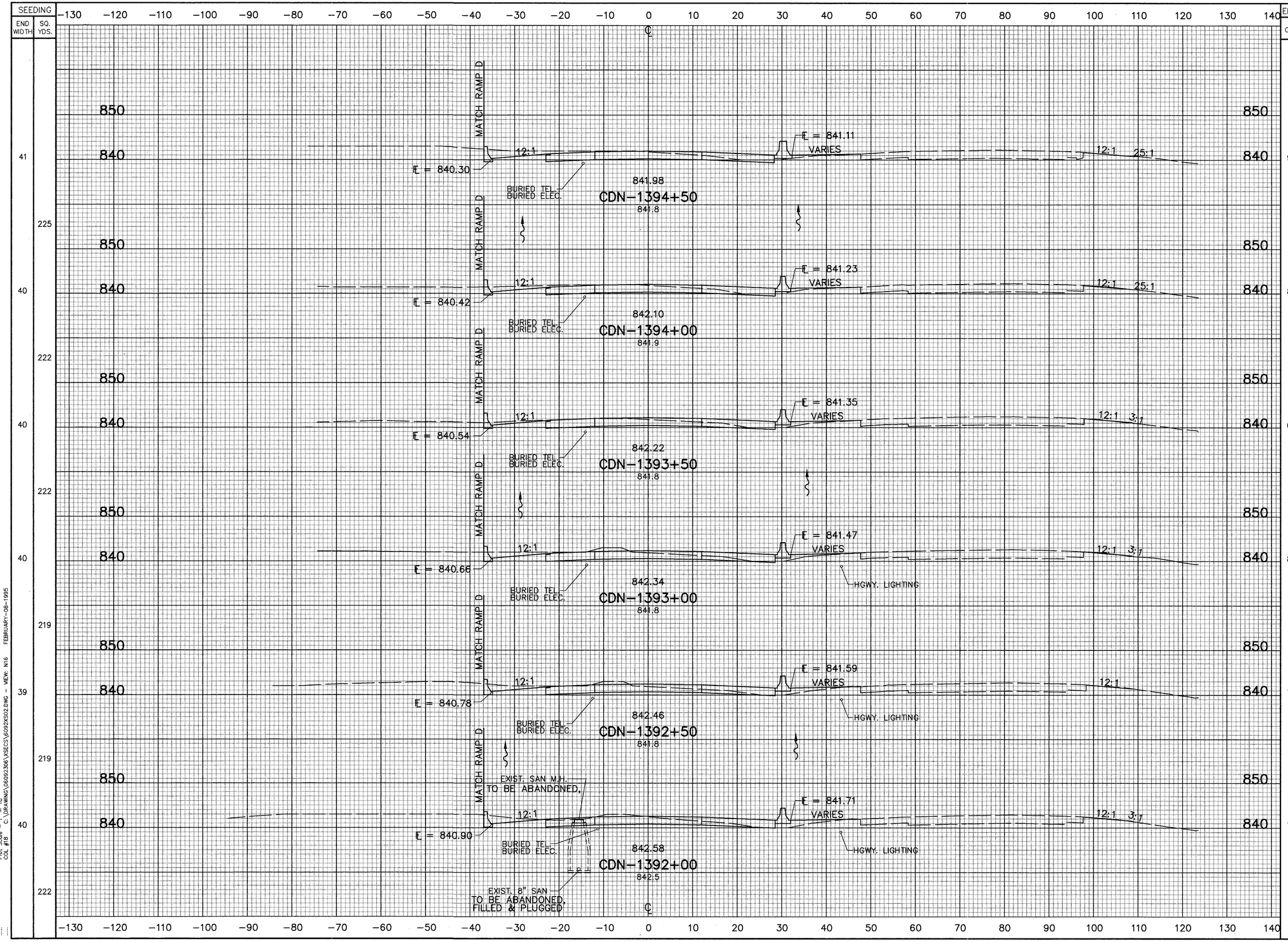

Plot Scale – 1" = 10'
COL. #18
C:\DRAWING\G6092306\XSECS\G092XS02.DWG – VIEW: N16 FEBRUARY–08–1995

SEEDING END WIDTH	SEEDING SQ. YDS.	END AREA CUT	END AREA FILL	VOLUME CUT	VOLUME FILL
45	264	108	6	197	13
50	258	105	8	210	14
43	228	122	7	213	12
39	217	108	5	190	9
39	217	97	5	174	8
39	219	91	4	169	8

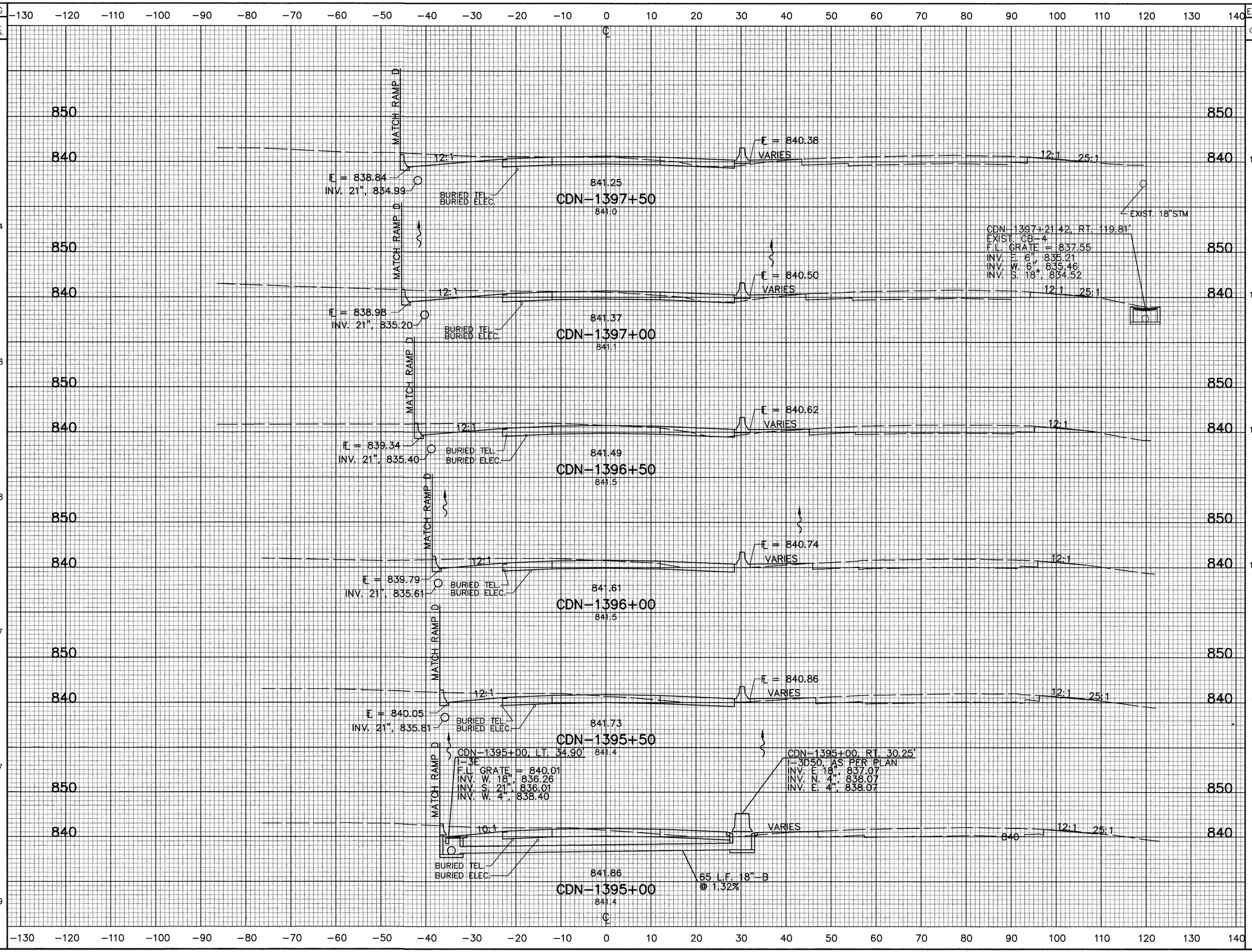

CALC. S.D.F. DATE: 02/02/95
CHKD. BY: M.F.J. DATE: 02/15/95

CROSS SECTIONS STA. CDN-1395+00 TO STA. CDN-1397+50

FRA-270-32.46

191
593

Plot Scale - 1" = 10'
COL #18 C:\DRAWING\06092306\XSECS\6092XS02.DWG - VIEW N17 FEBRUARY-08-1995

CROSS SECTIONS
STA. CDN-1400+50 TO STA. CDN-1398+00

FRA-270-32.46

192
593

CALC. BY: S.D.E. DATE: 02/02/95
CHKD. BY: M.F.J. DATE: 02/15/95

Plot Scale - 1" = 10'
COL #18 C:\DRAWNG\06092306\XSECS\60922S02.DWG - VIEW: N18 FEBRUARY-08-1995

SEEDING END WIDTH	SEEDING SQ. YDS.	END AREA CUT	END AREA FILL	VOLUME CUT	VOLUME FILL
30	169	105	1	211	2
30	169	123	1	241	4
31	186	137	3	248	6
36	225	131	3	252	9
45	247	141	7	229	12
44	247	106	6	198	11

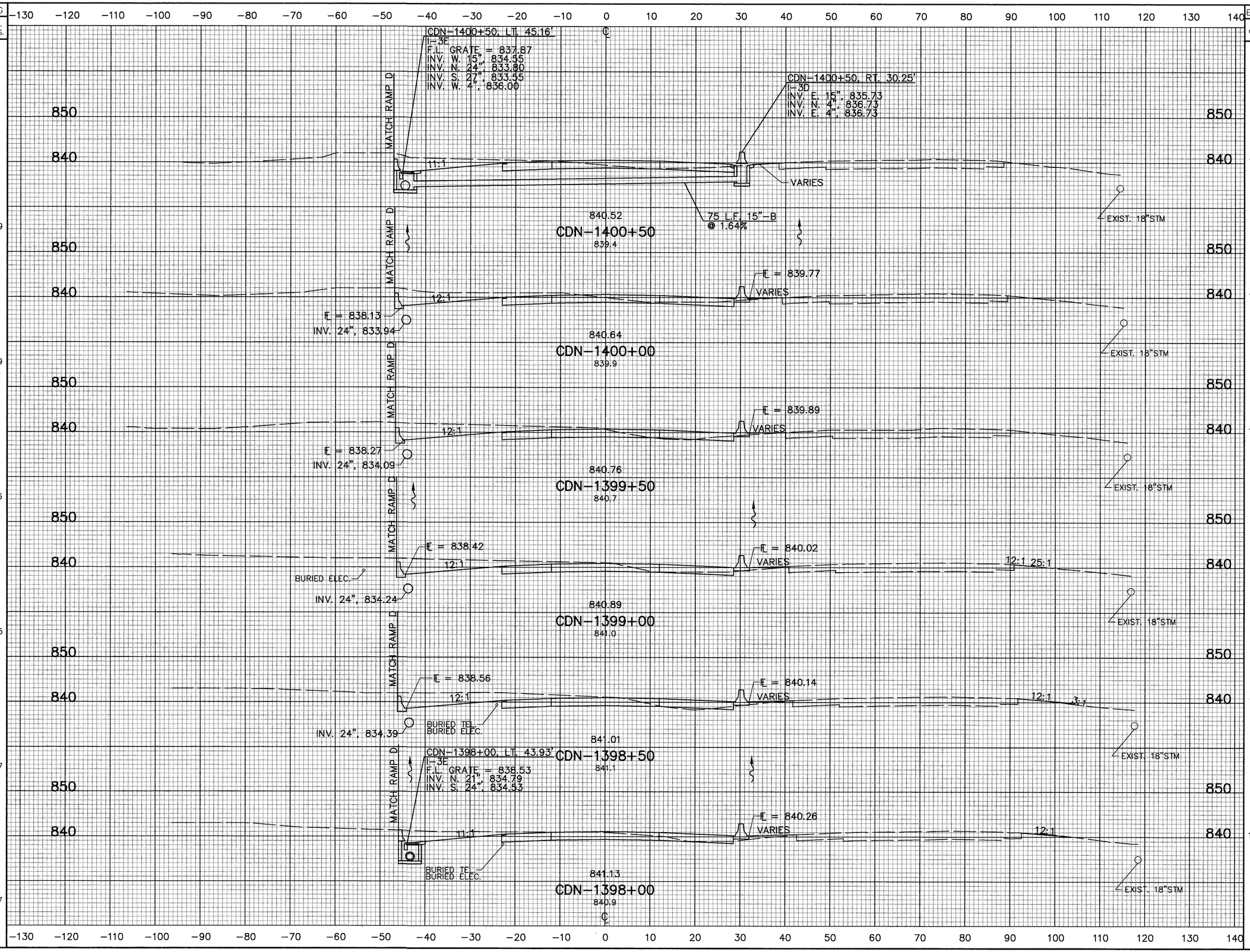

SEEDING END WIDTH	SEEDING SQ. YDS.
27	144
25	147
28	158
29	161
29	164

-130 -120 -110 -100 -90 -80 -70 -60 -50 -40 -30 -20 -10 0 10 20 30 40 50 60 70 80 90 100 110 120 130 140

℄

ITEM 503, UNCLASSIFIED EXCAVATION, AS PER PLAN

MATCH RAMP D

840 / 830

BURIED ELEC.

FL = 837.32
INV. 27", 832.60

1:2:1

℄ = 839.09

VARIES

839.96
CDN-1403+00
838.4

EXST. 18"STM

ITEM 503, UNCLASSIFIED EXCAVATION, AS PER PLAN

MATCH RAMP D

840 / 830

BURIED ELEC.

℄ = 837.44
INV. 27", 832.84

1:2:1

℄ = 839.20

VARIES

840.07
CDN-1402+50
838.6

EXIST. 18"STM

CDN-1402+00, LT. 45.89'
I-3E
F.L. GRATE = 837.38
INV. N. 27", 833.08
INV. S. 27", 833.08

MATCH RAMP D

840 / 830

1:1:1

℄ = 839.31

VARIES

840.18
CDN-1402+00
838.9

EXIST. 18"STM

MATCH RAMP D

840 / 830

℄ = 837.72
INV. 27", 833.24

1:2:1

℄ = 839.42

VARIES

840.29
CDN-1401+50
839.1

EXIST. 18"STM

MATCH RAMP D

840 / 830

℄ = 837.85
INV. 27", 833.39

1:2:1

℄ = 839.53

VARIES

840.40
CDN-1401+00
839.3

EXIST. 18"STM

℄

-130 -120 -110 -100 -90 -80 -70 -60 -50 -40 -30 -20 -10 0 10 20 30 40 50 60 70 80 90 100 110 120 130 140

END AREA CUT	END AREA FILL	VOLUME CUT	VOLUME FILL
93	1	169	3
90	2	174	5
98	3	182	6
99	3	185	6
101	4	191	5

C.A.S.D.E. BY: S.D.E. DATE: 02/02/95
CHKD. BY: M.F.J. DATE: 02/15/95

CROSS SECTIONS STA. CDN-1401+00 TO STA. CDN-1403+00

FRA-270-32.46

193
593

Plot Scale - 1" = 10'
COL #18 C:\DRAWING\06092306\XSECS\6092XS02.DWG - VIEW: N19 FEBRUARY-08-1995

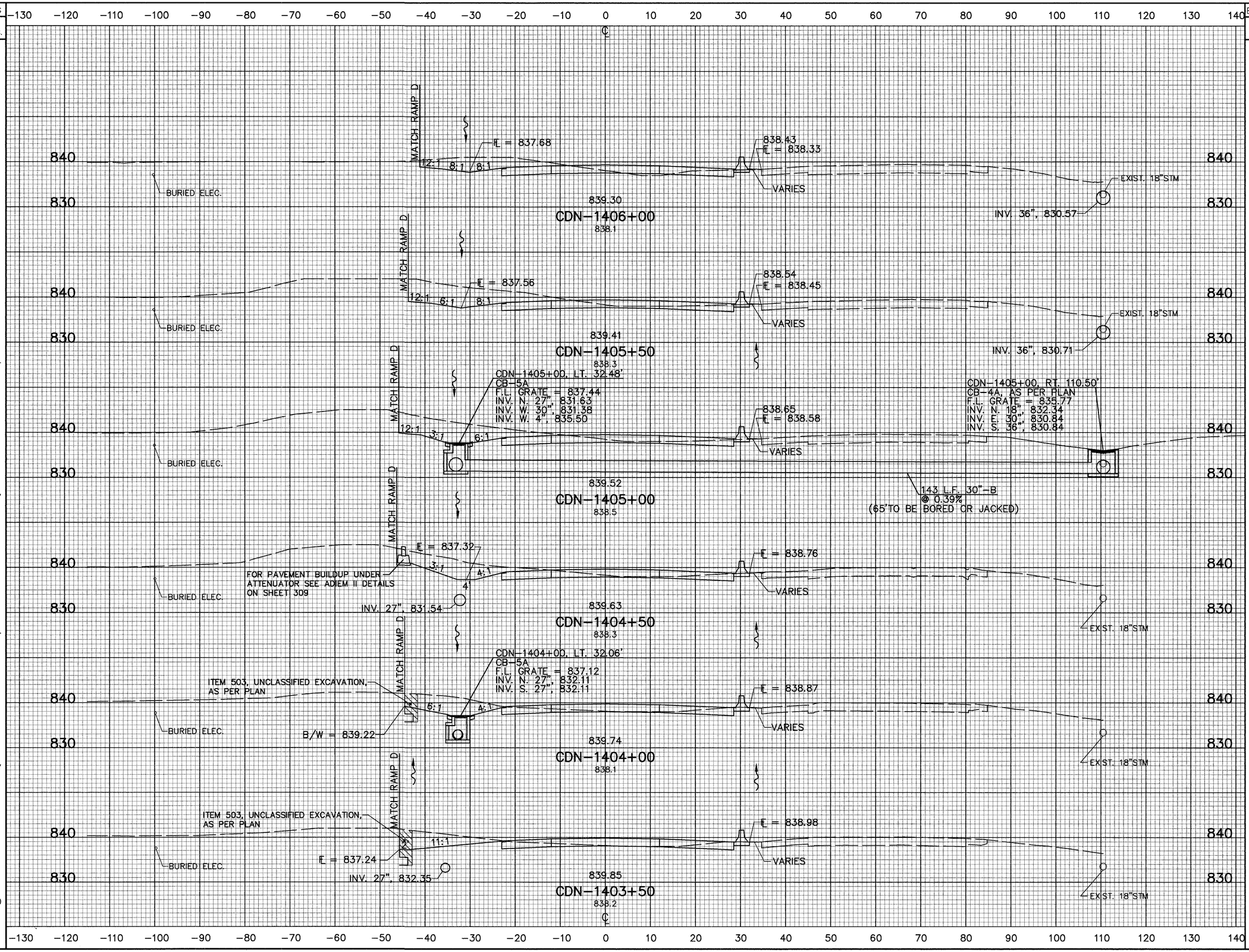

CALC. BY: S.D.E. DATE: 02/02/95
CHKD. BY: M.F.J. DATE: 02/15/95

CROSS SECTIONS
STA. CDN-1403+50 TO STA. CDN-1406+00

FRA-270-32.46

Plot Scale - 1" = 10'
COL #18 C:\DRAWING\06092306\XSECS\6092XS02.DWG - VIEW: N20 FEBRUARY-10-1995

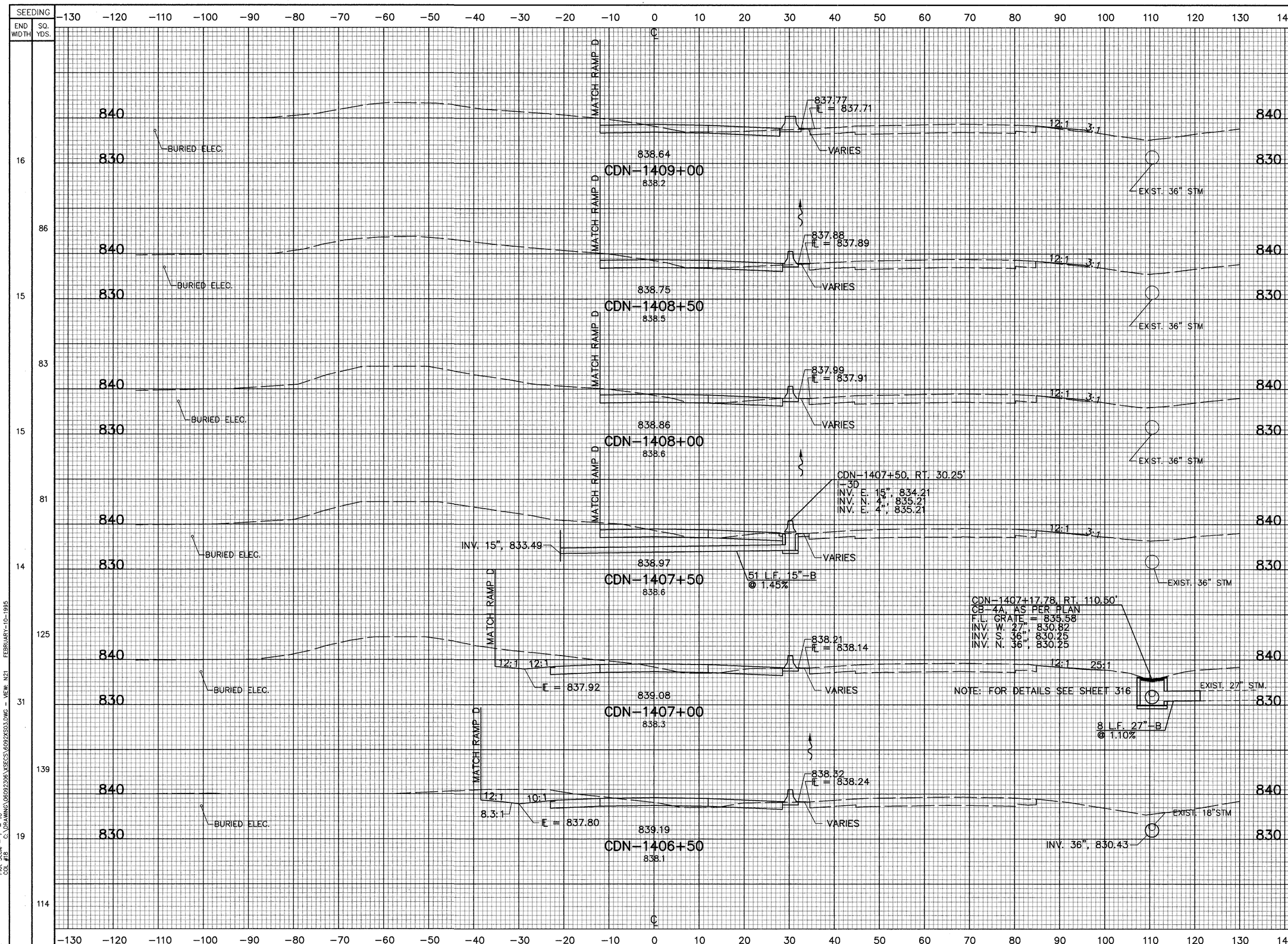

END AREA CUT	END AREA FILL	VOLUME CUT	VOLUME FILL
49	3		
		92	5
50	2		
		94	4
51	2		
		97	3
54	1		
		168	3
127	2		
		220	5
111	3		
		212	6

CALC. BY: S.D.E. DATE: 00/00/00
CHKD. BY: M.F.J. DATE: 02/15/95

CROSS SECTIONS
STA. CDN-1406+50 TO STA. CDN-1409+00

FRA-270-32.46

Plot Scale - 1" = 10'
COL #18 C:\DRAWING\06092306\XSECS\6092XS03.DWG - VIEW: N21 FEBRUARY-10-1995

CROSS SECTIONS
STA. CDN-1412+00 TO STA. CDN-1409+50

SEEDING END WIDTH	SEEDING SQ. YDS.	END AREA CUT	END AREA FILL	VOLUME CUT	VOLUME FILL
15	83	42	2	84	4
15	83	49	2	91	4
15	81	49	2	104	3
14	78	63	1	111	2
14	78	57	1	102	1
14	83	53	0	94	3

CDN-1412+00
837.4
℄ 837.11
℄ = 836.95
VARIES
12:1
3:1
EXIST. 36" STM

CDN-1411+50
838.09
837.8
℄ 837.22
℄ = 837.07
VARIES
BURIED ELEC.

CDN-1411+00
838.20
838.0
℄ 837.33
℄ = 837.17
VARIES
BURIED ELEC.

CDN-1410+50
838.31
838.3
℄ 837.44
℄ = 837.32
VARIES
12:1
25:1
BURIED ELEC.

CDN-1410+00
838.42
838.2
℄ 837.55
℄ = 837.47
VARIES
BURIED ELEC.

CDN-1409+50
838.53
838.3
℄ 837.66
℄ = 837.56
VARIES
BURIED ELEC.

MATCH RAMP D

840
830

−130 −120 −110 −100 −90 −80 −70 −60 −50 −40 −30 −20 −10 0 10 20 30 40 50 60 70 80 90 100 110 120 130 140

CALC. S.D.E. BY: DATE: 02/02/95
CHKD. M.F.J. BY: DATE: 02/15/95

FRA-270-32.46

196/593

Plot Scale – 1" = 10'
COL. #18
C:\DRAWING\06092306\XSECS\6092XS03.DWG – VIEW: N22 FEBRUARY-10-1995

SEEDING END WIDTH	SEEDING SQ. YDS.	END AREA CUT	END AREA FILL	VOLUME CUT	VOLUME FILL
59	328	283	4	510	7
59	194	268	4	287	5
60		261	5		
14		44	5		
14	32	44	6	34	8
14	78	44	3	81	8
14	81	44	2	81	5
15	83	47	4	84	6
15	83	44	6	82	6

CALC. BY: S.D.E. DATE: 02/02/95
CHKD. BY: M.F.J. DATE: 02/15/95

CROSS SECTIONS
STA. CDN-1412+50 TO STA. CDN-1415+00

FRA-270-32.46

197/593

Plot Scale = 1" = 10'
COL #18
C:\DRAWING\06092306\XSECS\6092XS03.DWG - VIEW: N23 FEBRUARY-08-1995

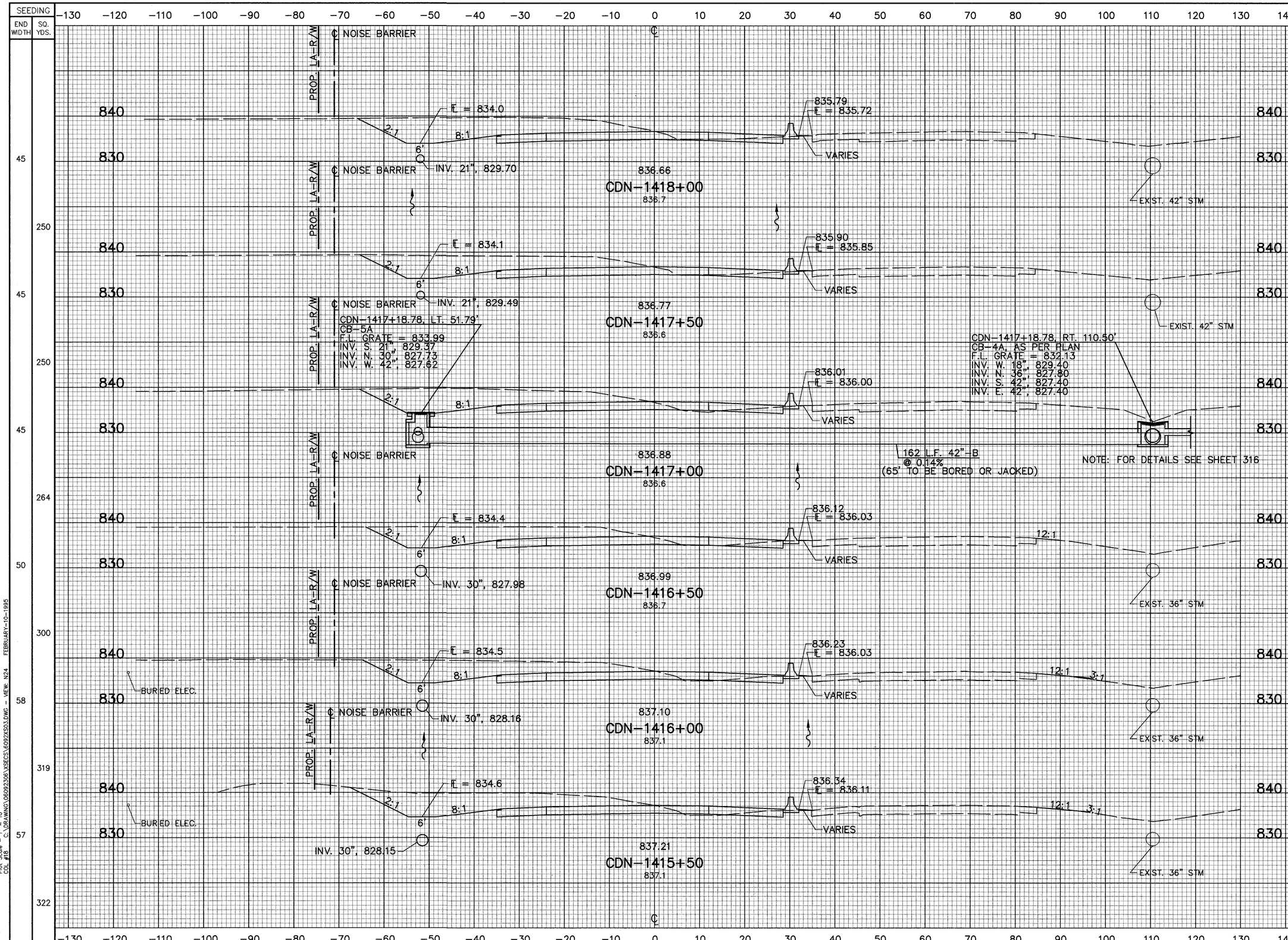

END WIDTH	SQ. YDS.	END AREA CUT	END AREA FILL	VOLUME CUT	VOLUME FILL
45		306	0		
	250			535	0
45		272	0		
	250			509	2
45		278	2		
	264			491	3
50		252	1		
	300			480	4
58		266	3		
	319			508	6
57		283	3		
	322			524	6

CALC. BY: S.D.E. DATE: 02/02/95
CHKD. BY: M.F.J. DATE: 02/15/95

CROSS SECTIONS
STA. CDN-1415+50 TO STA. CDN-1418+00

FRA-270-32.46

Plot Scale - 1" = 10'
COL #18 C:\DRAWING\06092306\XSECS\6092XS03.DWG - VIEW: N24 FEBRUARY-10-1995

SEEDING END WIDTH	SEEDING SQ. YDS.	END AREA CUT	END AREA FILL	VOLUME CUT	VOLUME FILL
32	186	338	1	627	3
35	211	339	2	630	5
41	225	341	3	599	7
40	219	306	5	581	9
39	217	321	5	569	8
39	242	294	4	556	4

−130 −120 −110 −100 −90 −80 −70 −60 −50 −40 −30 −20 −10 0 10 20 30 40 50 60 70 80 90 100 110 120 130 140

℄

PROP. LA−R/W

840
830

℄ = 833.9
2:1
8:1
6'

836.00
CDN−1421+00
836.1

℄ = 834.98

EXIST. 42" STM

FOR PAVEMENT BUILDUP UNDER ATTENUATOR SEE ADIEM II DETAILS ON SHEET 309

℄ = 833.6
℄ = 835.05

CDN−1420+11.85, LT. 52.67'
OB−5
F.L. GRATE = 833.41
INV. W. 15", 831.08
INV. N. 21", 830.58
INV. W. 4", 832.00

836.11
CDN−1420+50
836.4

CDN−1420+11.85, RT. 30.25'
I−3D
INV. E. 15", 831.68
INV. N. 4", 832.68
INV. E. 4", 832.68

VARIES

83 L.F. 15"−B
@ 0.75%

836.22
CDN−1420+00
836.3

835.46
℄ = 835.39

INV. 21", 830.33

836.33
CDN−1419+50
836.0

℄ = 833.8
835.57
℄ = 835.52

INV. 21", 830.12

836.44
CDN−1419+00
836.3

℄ = 833.9
835.68
℄ = 835.63

INV. 21", 829.91

836.55
CDN−1418+50
836.6

CROSS SECTIONS
STA. CDN−1418+50 TO STA. CDN−1421+00

FRA−270−32.46

199
593

CAD: S.D.E. DATE: 02/02/95
CHKD: M.F.J. BY: DATE: 02/15/95

Plot Scale − 1" = 10'
COL #18
C:\DRAWING\06092308\XSECS\6092K503.DWG − VIEW: N25 FEBRUARY−08−1995

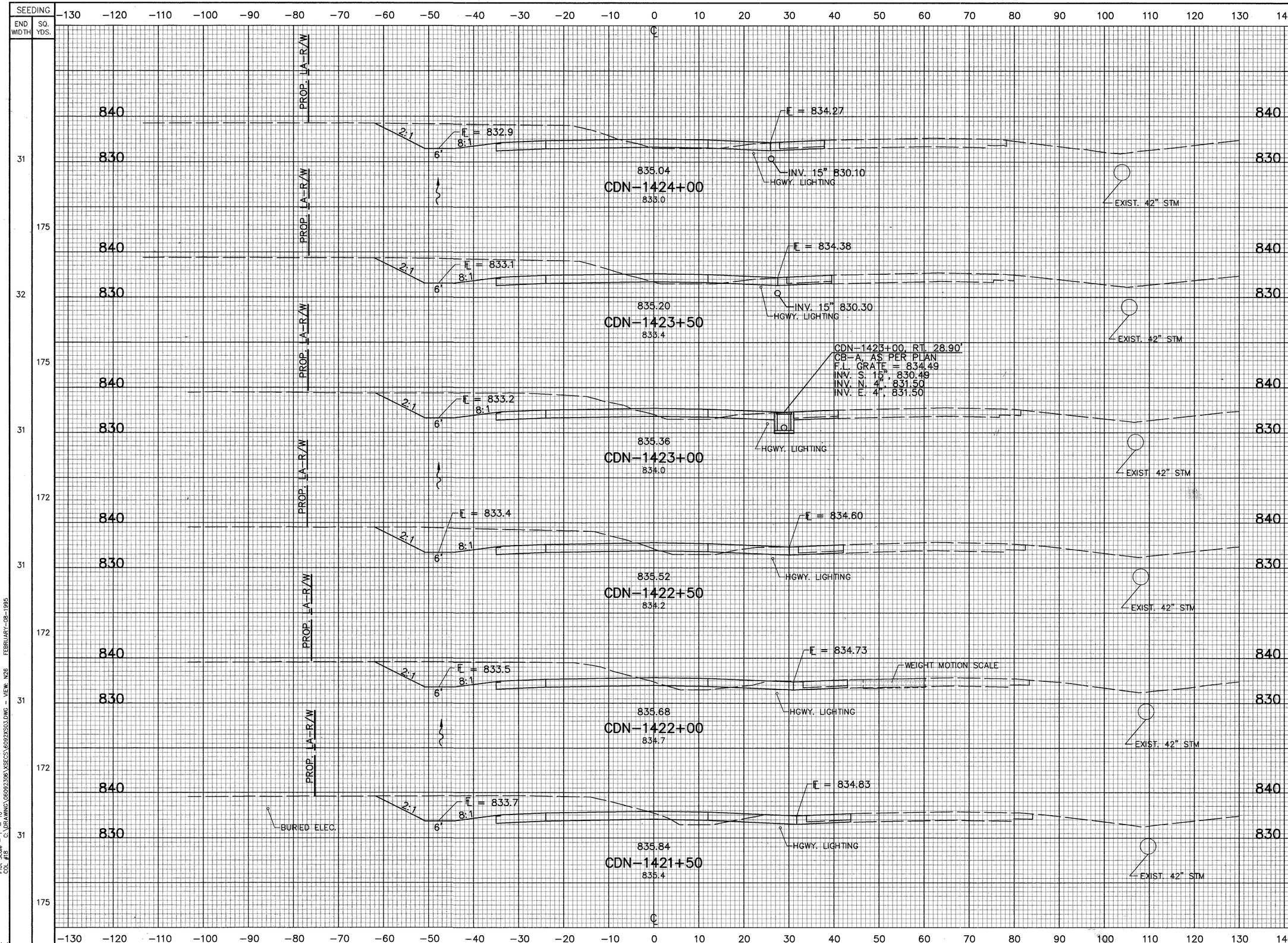

END AREA CUT	END AREA FILL	VOLUME CUT	VOLUME FILL
272	3		
		508	7
277	5		
		527	10
292	6		
		537	13
288	8		
		550	15
306	8		
		576	17
316	10		
		606	10

CALC. BY: S.D.E. DATE: 02/02/95
CHKD. BY: M.F.J. DATE: 02/15/95

CROSS SECTIONS
STA. CDN-1421+50 TO STA. CDN-1424+00

FRA-270-32.46

200/593

Plot Scale - 1" = 10'
COL #18 C:\DRAWING\06092306\XSECS\6092XS03.DWG - VIEW: N26 FEBRUARY-08-1995

S-9-R

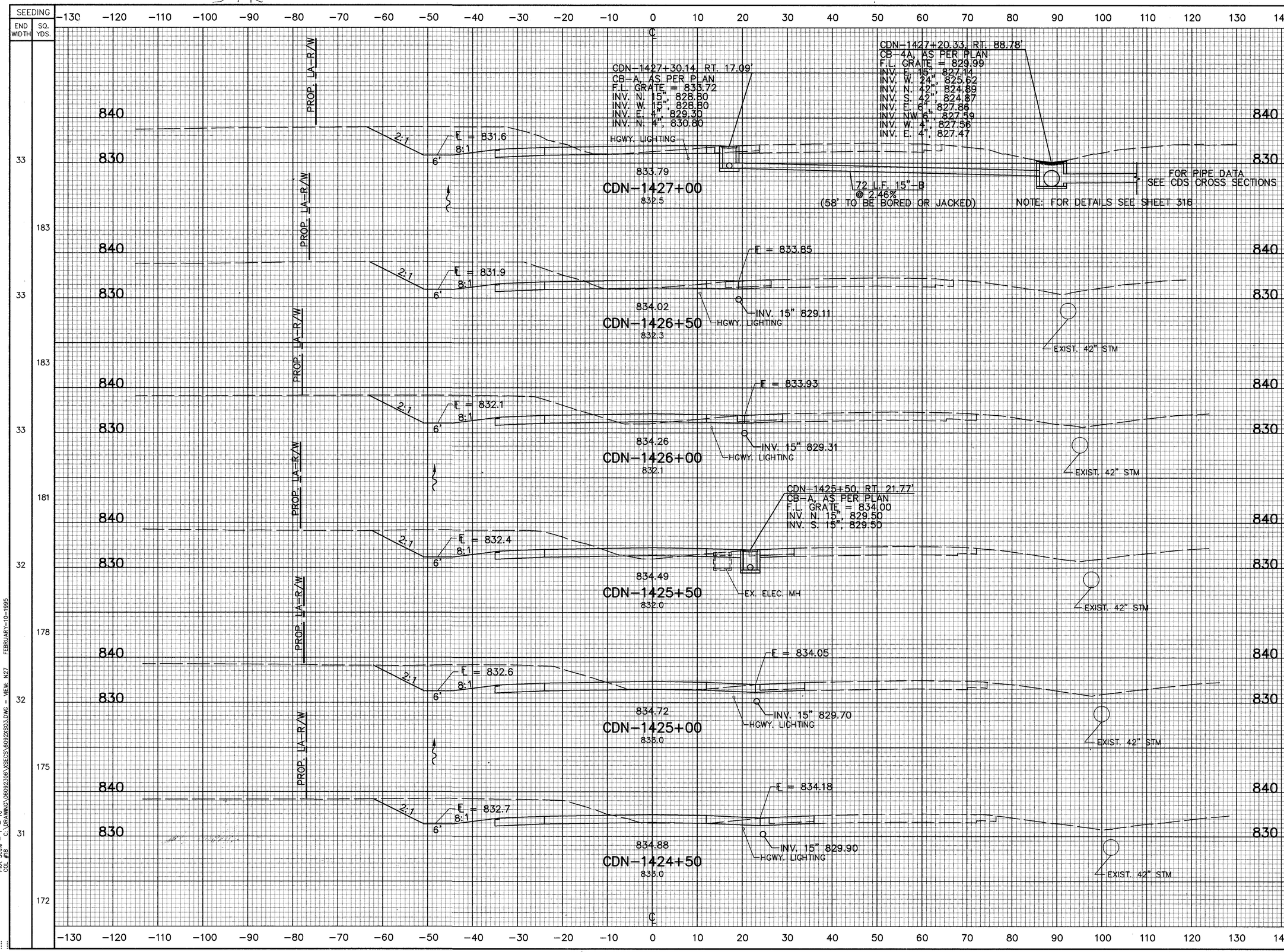

SEEDING END WIDTH	SEEDING SQ. YDS.	END AREA CUT	END AREA FILL	VOLUME CUT	VOLUME FILL
33		251	0		
	183			468	2
33		254	2		
	183			483	6
33		268	4		
	181			498	9
32		270	6		
	178			500	6
32		270	0		
	175			505	1
31		275	1		
	172			506	4

CALC. BY: S.D.E. DATE: 02/02/95
CHKD. BY: M.F.J. DATE: 02/15/95

CROSS SECTIONS
STA. CDN-1424+50 TO STA. CDN-1427+00

FRA-270-32.46

201
593

Plot Scale - 1" = 10'
COL #18 C:\DRAWING\06092306\XSECS\6092XS03.DWG - VIEW: N27 FEBRUARY-10-1995

SEEDING END WIDTH	SEEDING SQ. YDS.	END AREA CUT	END AREA FILL	VOLUME CUT	VOLUME FILL
62		175	3		
	331			321	4
57		172	1		
	283			329	2
45		183	1		
	258			360	1
48		208	0		
	269			390	0
49		214	0		
	228			425	2
33		245	0		
	183			459	0

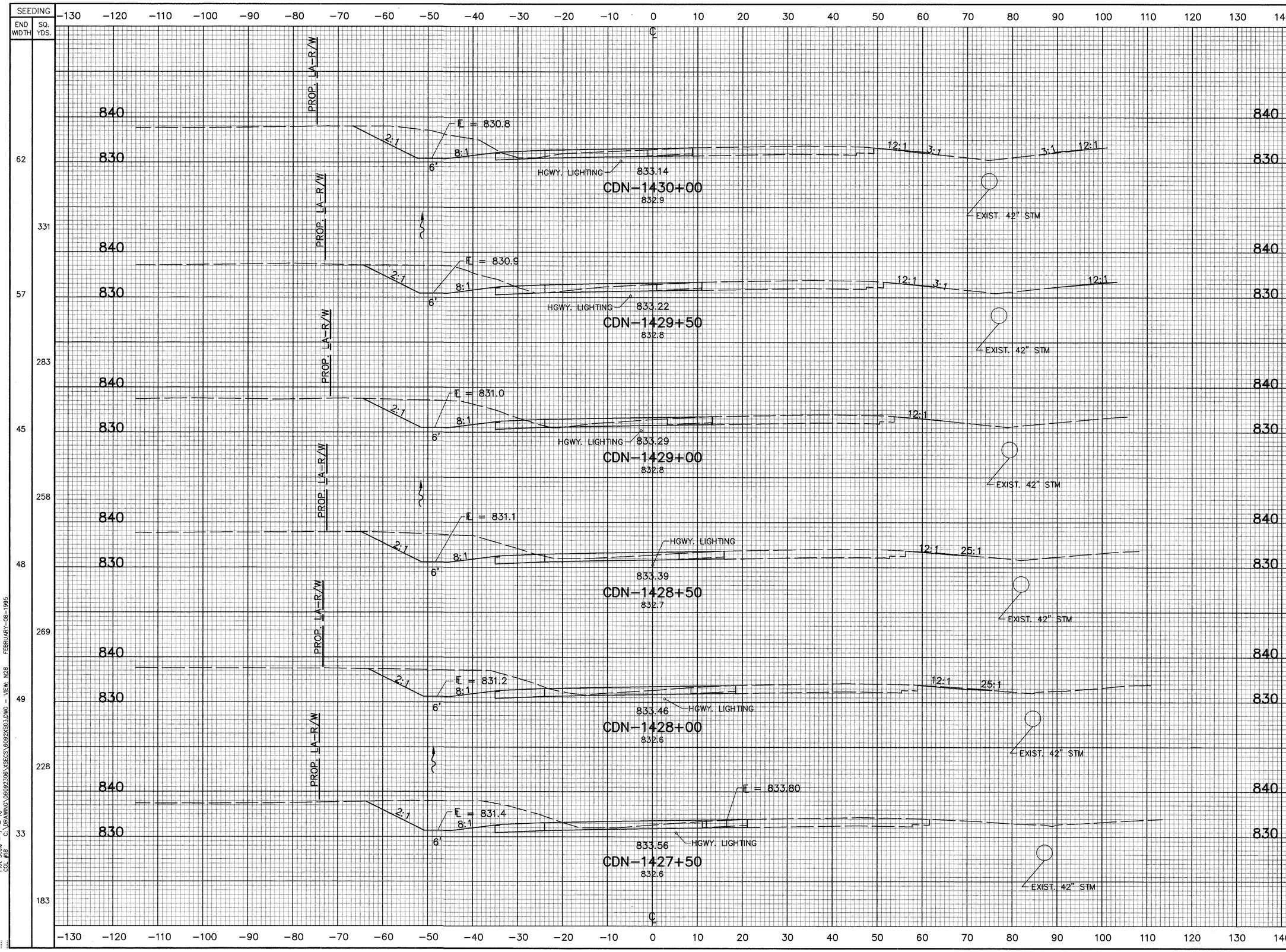

CROSS SECTIONS
STA. CDN-1427+50 TO STA. CDN-1430+00

FRA-270-32.46

202
593

CAD: S.D.E. DATE: 02/02/95
CHKD. BY: M.F.-J. DATE: 02/15/95

Plot Scale - 1" = 10'
COL #18
C:\DRAWING\06092306\XSECS\6092XS03.DWG - VIEW: N28 FEBRUARY-08-1995

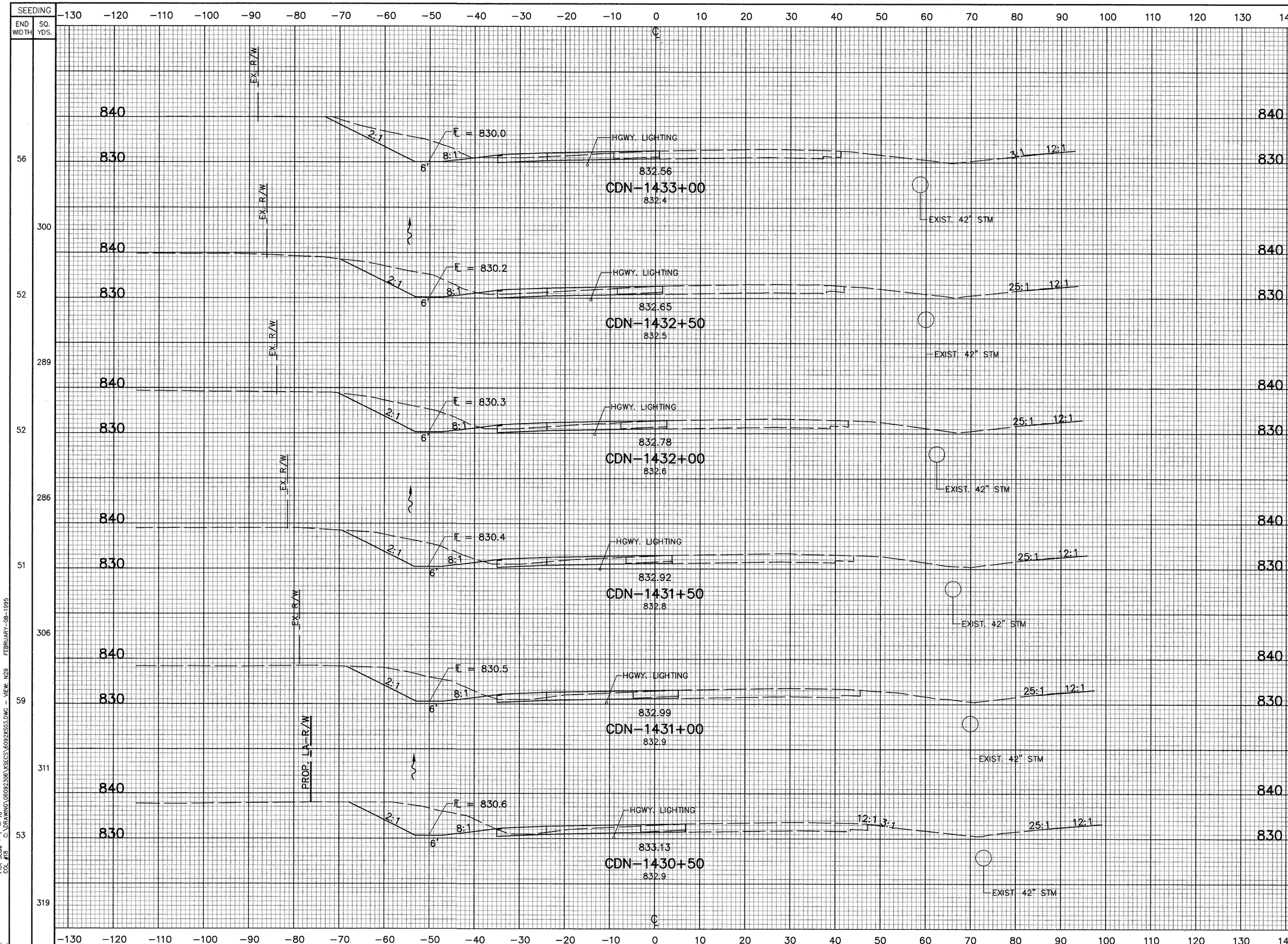

CALC. BY: S.D.E. DATE: 02/02/95
CHKD. BY: M.F.J. DATE: 02/15/95

CROSS SECTIONS
STA. CDN-1430+50 TO STA. CDN-1433+00

FRA-270-32.46

Plot Scale - 1" = 10'
COL #18 C:\DRAWING\06092306\XSECS\6092XS03.DWG - VIEW: N29 FEBRUARY-08-1995

SEEDING			END AREA		VOLUME		
END WIDTH	SQ. YDS.		CUT	FILL	CUT	FILL	
		−130 −120 −110 −100 −90 −80 −70 −60 −50 −40 −30 −20 −10 0 10 20 30 40 50 60 70 80 90 100 110 120 130 140					
56	217	EX. R/W 840 830 2:1 8:1 6' ℄ = 829.7 HGWY. LIGHTING 832.23 CDN−1434+34.50 832.2 3:1 12:1 EXIST. 42" STM	142	1	180	2	
57	314	EX. R/W 840 830 2:1 8:1 6' ℄ = 829.8 HGWY. LIGHTING 832.32 CDN−1434+00 832.3 3:1 12:1 EXIST. 42" STM	139	2	252	4	
56	311	EX. R/W 840 830 2:1 8:1 6' ℄ = 829.9 HGWY. LIGHTING 832.43 CDN−1433+50 832.3 3:1 12:1 EXIST. 42" STM	133	2	251	4	
		−130 −120 −110 −100 −90 −80 −70 −60 −50 −40 −30 −20 −10 0 10 20 30 40 50 60 70 80 90 100 110 120 130 140					

Plot Scale - 1" = 10'
COL #18 C:\DRAWING\06092306\XSECS\6092XS03.DWG - VIEW: N30 FEBRUARY-08-1995

CALC: S.D.E. DATE: 02/02/95
CHK: M.F.J. DATE: 02/15/95

CROSS SECTIONS
STA. CDN−1433+50 TO STA. CDN−1434+34.50

FRA−270−32.46

204
593

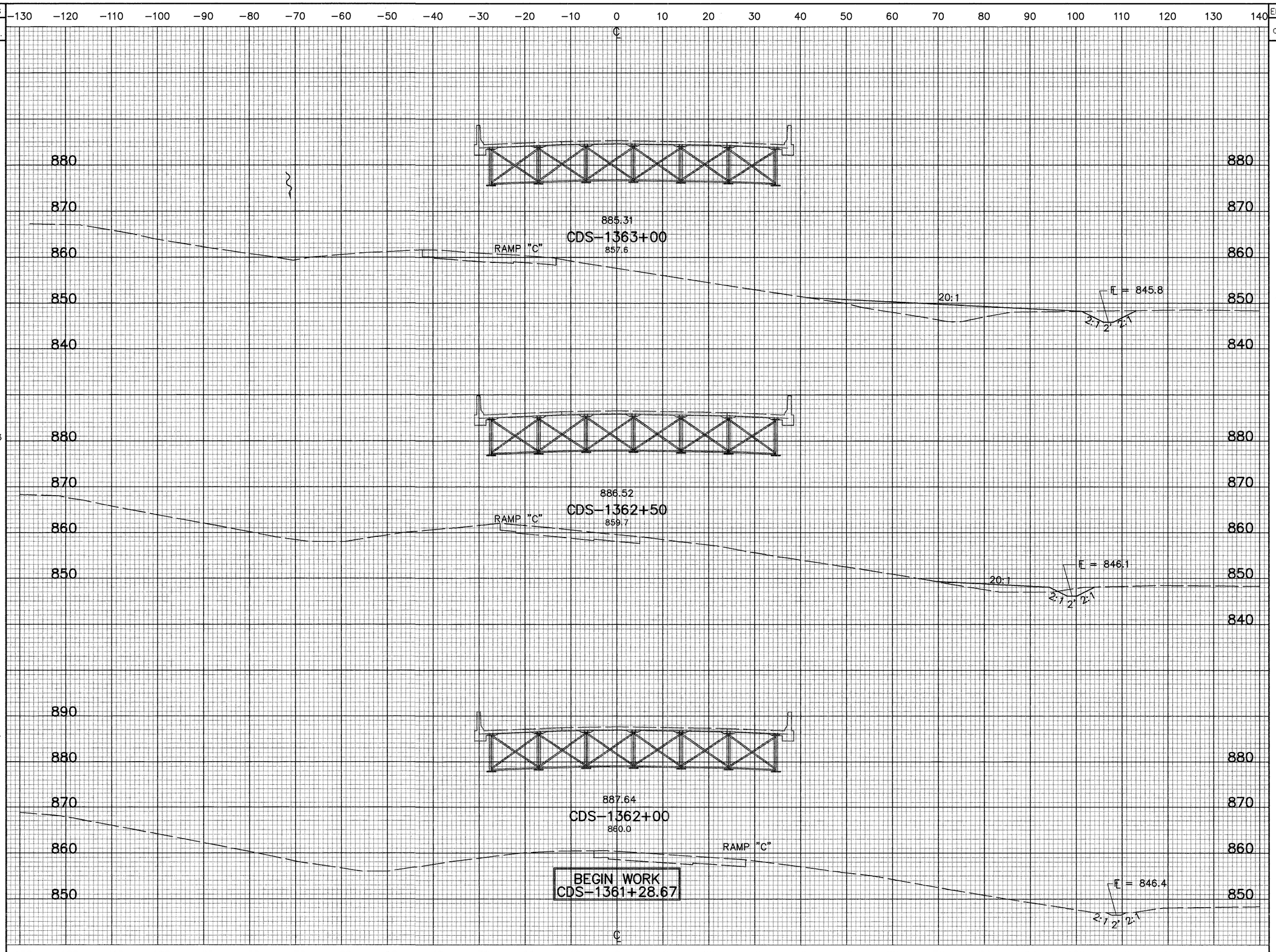

SEEDING END WIDTH	SEEDING SQ. YDS.	END AREA CUT	END AREA FILL	VOLUME CUT	VOLUME FILL
73		17	99		
	303			23	117
36		8	27		
	114			9	25
5		2	0		

CALC. BY: S.D.E. DATE: 02/02/95
CHKD. BY: M.F.J. DATE: 02/15/95

CROSS SECTIONS
STA. CDS-1362+00 TO STA. CDS-1363+00

FRA-270-32.46

205/593

Plot Scale - 1" = 10'
COL #18 C:\DRAWING\06092306\XSECS\CDSXSEC.DWG - VIEW: CDS1 FEBRUARY-08-1995

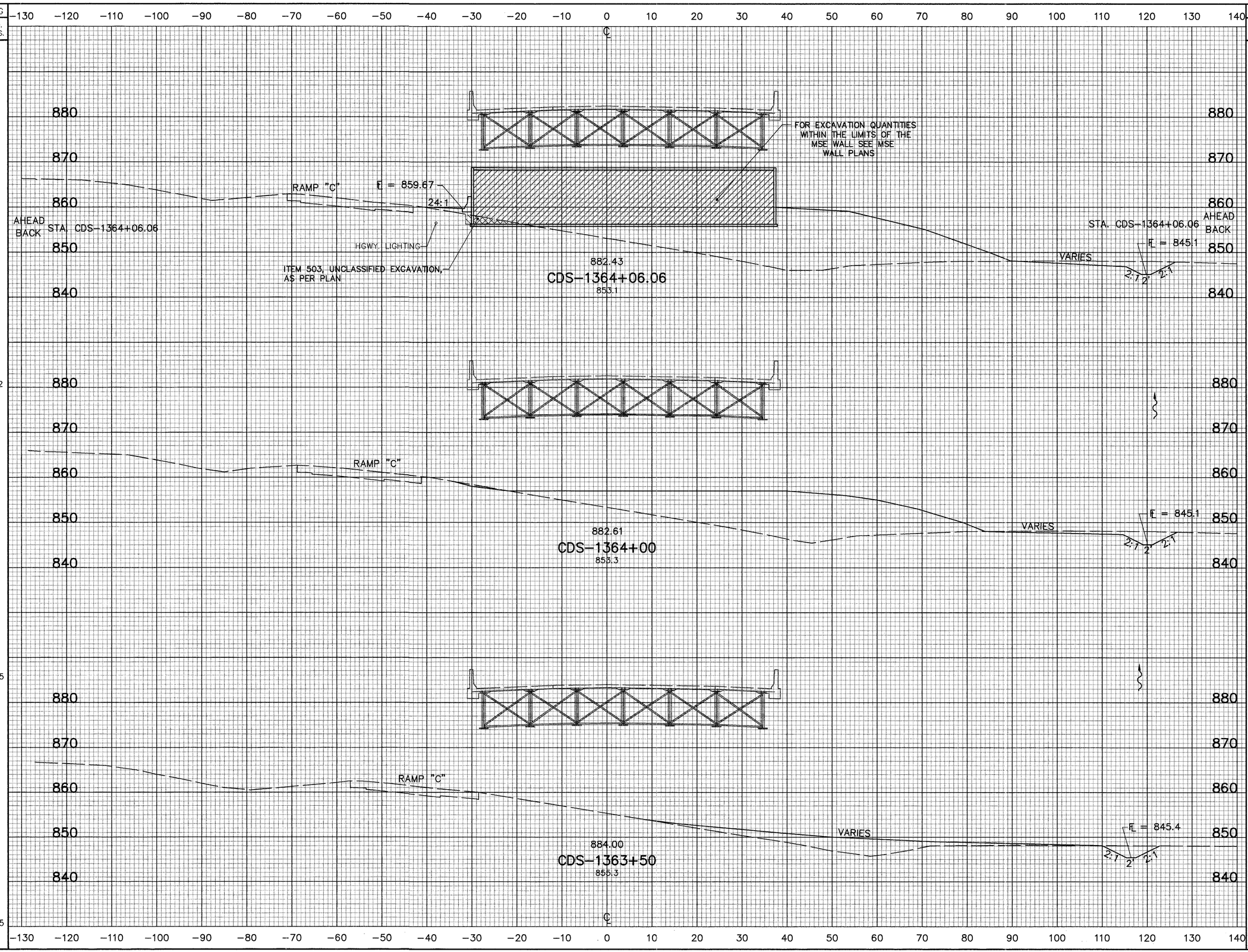

SEEDING END WIDTH	SEEDING SQ. YDS.	END AREA CUT	END AREA FILL	VOLUME CUT	VOLUME FILL
100		36	696		
171		36	957		
	112			8	177
163		36	621		
	775			52	702
116		20	137		
	525			34	219

CALC. BY: S.D.E. DATE: 02/02/95
CHKD. BY: M.F.J. DATE: 02/15/95

CROSS SECTIONS
STA. CDS-1363+50 TO STA. CDS-1364+06.06

FRA-270-32.46

Plot Scale - 1" = 10'
COL #18 C:\DRAWING\06092306\XSECS\CDSXSEC.DWG - VIEW: CDS2 FEBRUARY-08-1995

SEEDING		SEEDING, AS PER PLAN	
END WIDTH	SQ. YDS.	END WIDTH	SQ. YDS.
52		69	
	264		392
43		72	
	185		228
56		50	
106		0	
	117		95

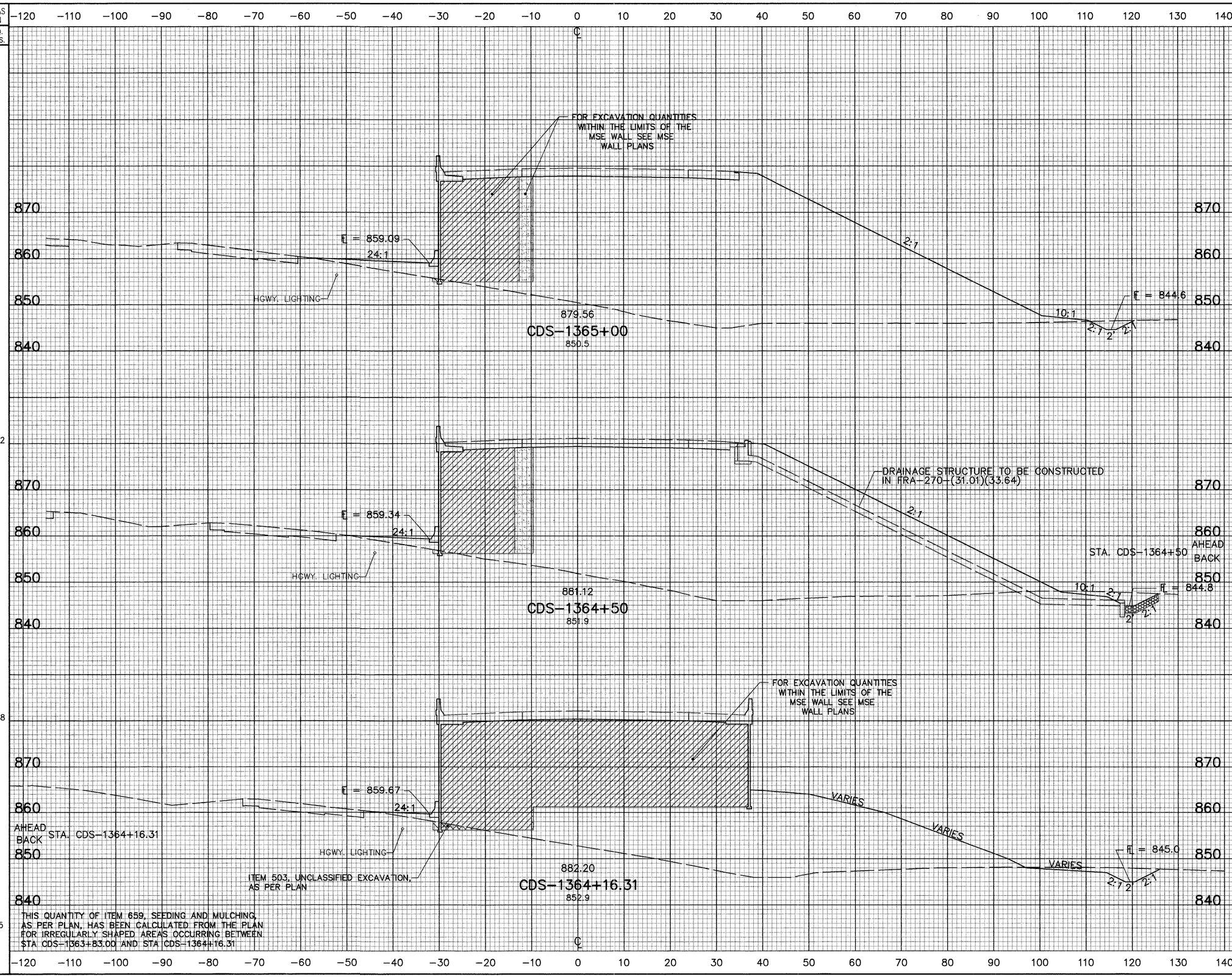

THIS QUANTITY OF ITEM 659, SEEDING AND MULCHING, AS PER PLAN, HAS BEEN CALCULATED FROM THE PLAN FOR IRREGULARLY SHAPED AREAS OCCURRING BETWEEN STA CDS-1363+83.00 AND STA CDS-1364+16.31

END AREA		VOLUME	
CUT	FILL	CUT	FILL
11	2567		
		35	4812
27	2630		
27	1796		
		37	1869
33	1199		
		13	360

CALC. S.D.E. BY: DATE: 02/02/95
CHK. M.F.J. DATE: 02/15/95

CROSS SECTIONS
STA. CDS-1364+16.31 TO STA. CDS-1365+00

FRA-270-32.46

207
593

Plot Scale - 1" = 10'
COL #18 C:\DRAWING\06092306\XSECS\CDSXSEC.DWG - VIEW: CDS3 FEBRUARY-08-1995

SEEDING		SEEDING, AS PER PLAN	
END WIDTH	SQ. YDS.	END WIDTH	SQ. YDS.
60		60	
	328		342
58		63	
	330		358
61		66	
	314		375

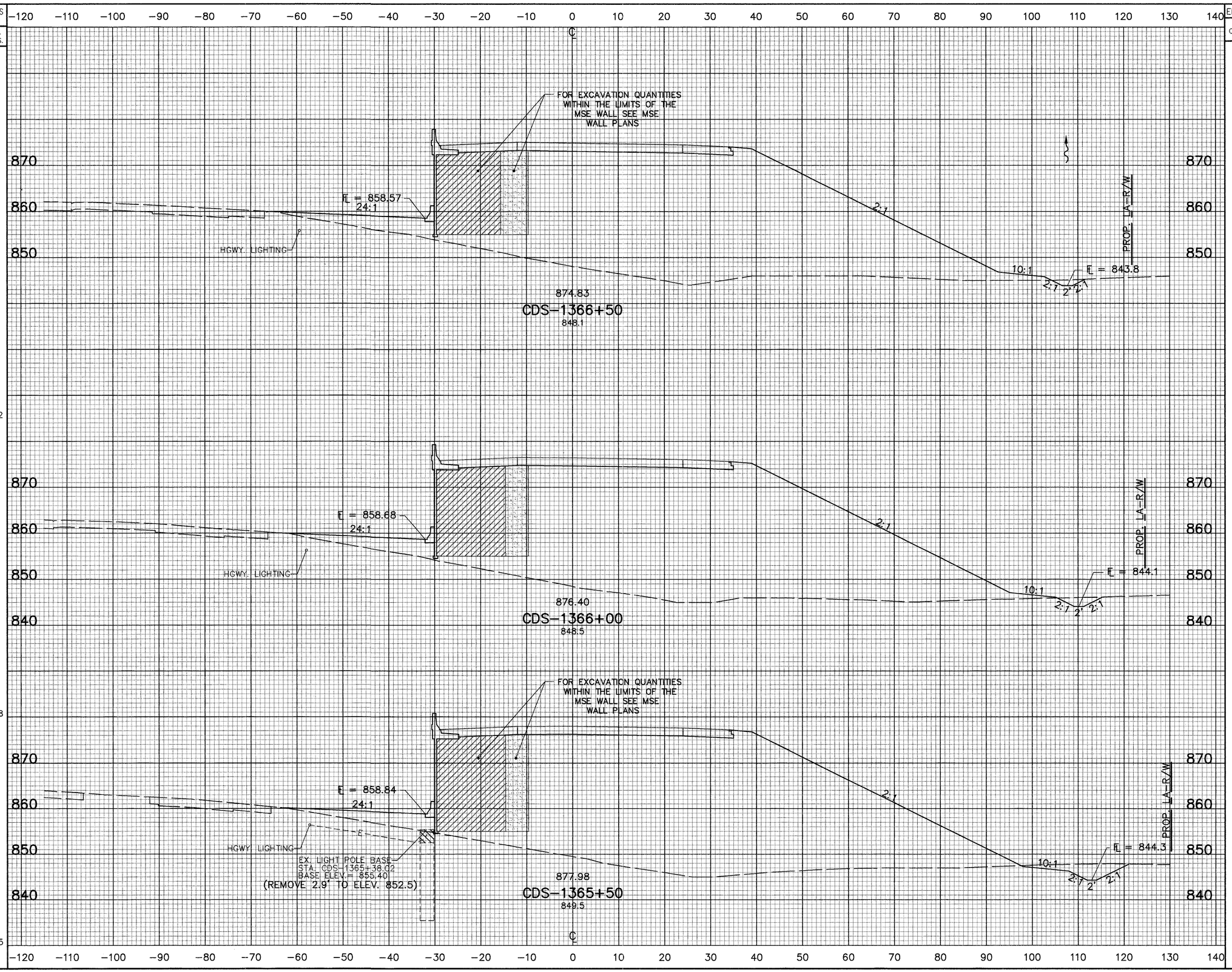

END AREA		VOLUME	
CUT	FILL	CUT	FILL
6	2235		
		16	4251
11	2356		
		45	4414
38	2411		
		45	4609

CALC. BY: S.D.E. DATE: 02/02/95
CHKD. BY: M.F.J. DATE: 02/15/95

CROSS SECTIONS
STA. CDS-1365+50 TO STA. CDS-1366+50

FRA-270-32.46

208/593

Plot Scale - 1" = 10'
COL #18 C:\DRAWING\06092306\XSECS\CDSXSEC.DWG - VIEW: CDS4 FEBRUARY-08-1995

SEEDING		SEEDING, AS PER PLAN	
END WIDTH	SQ. YDS.	END WIDTH	SQ. YDS.
56	314	52	297
57	311	55	314
55	319	58	328

END AREA		VOLUME	
CUT	FILL	CUT	FILL
21	1686	31	3268
13	1843	17	3567
5	2009	10	3930

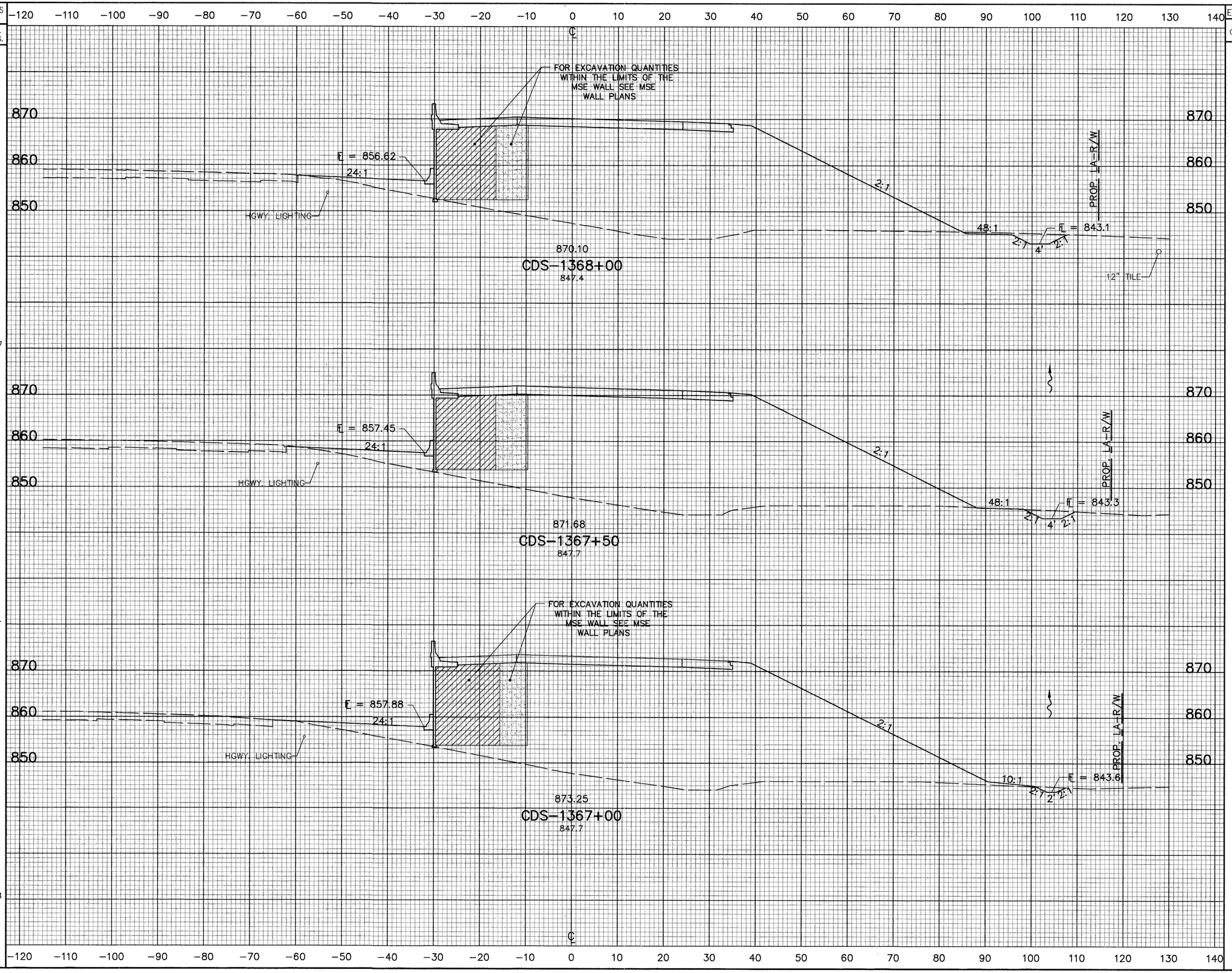

CALC. BY: S.D.E. DATE: 02/15/95
CHK'D. BY: M.F.J. DATE: 02/15/95

CROSS SECTIONS
STA. CDS-1367+00 TO STA. CDS-1368+00

FRA-270-32.46

209
593

Plot Scale = 1" = 10'
COL #18
C:\DRAWING\06092306\XSECS\CDSXSEC.DWG - VIEW: CDS2 FEBRUARY-08-1995

SEEDING END WIDTH	SEEDING SQ. YDS.	SEEDING, AS PER PLAN END WIDTH	SEEDING, AS PER PLAN SQ. YDS.
48		41	
	278		225
52		40	
	269		239
45		46	
	269		264
52		49	
	300		281

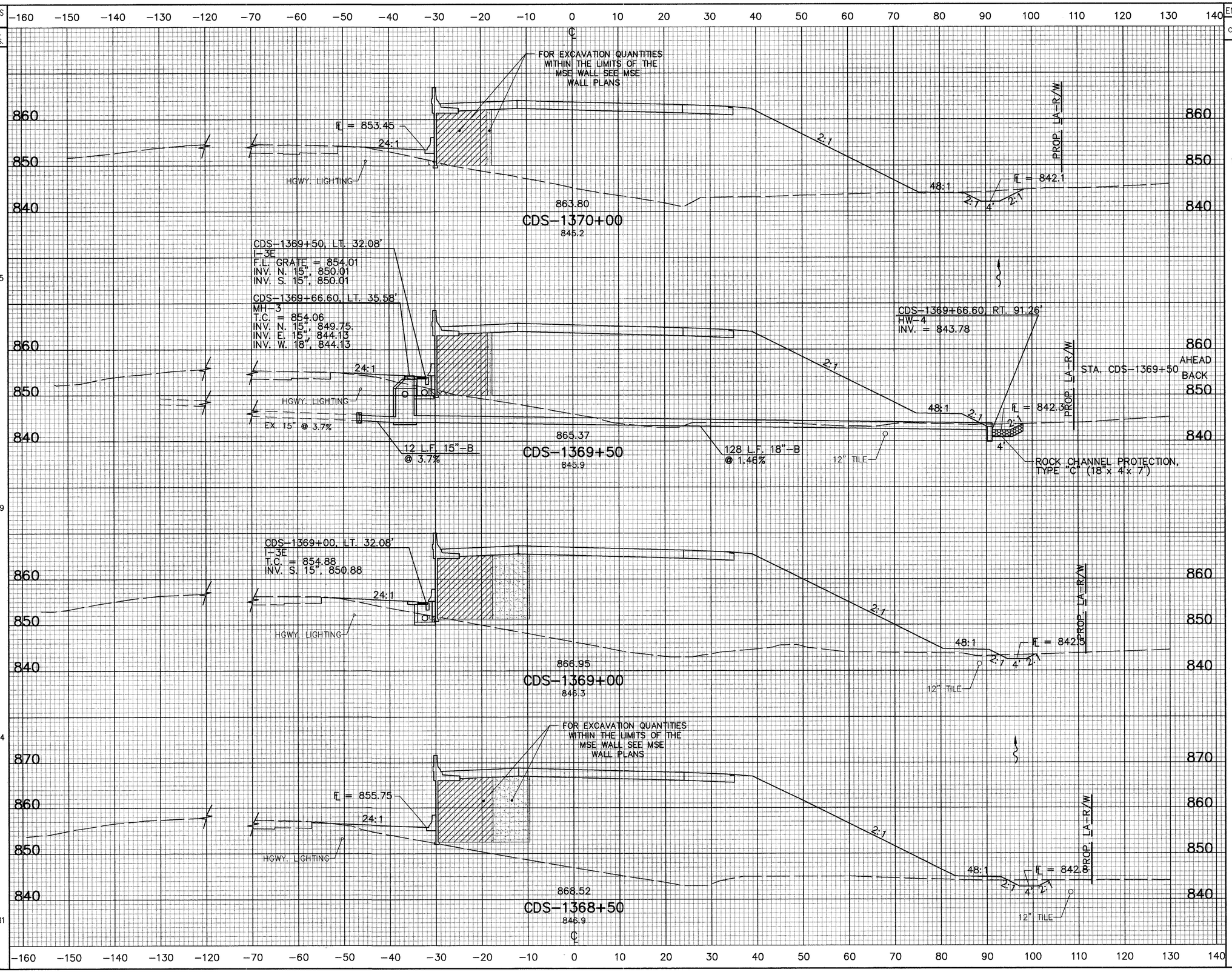

END AREA CUT	END AREA FILL	VOLUME CUT	VOLUME FILL
19	1368		
		25	2657
AHEAD 8	1502		
BACK 8	1393		
		12	2677
5	1498		
		13	2887
9	1628		
		28	3069

CALC. BY: S.D.E. DATE: 02/02/95
CHKD. BY: M.F.J. DATE: 02/15/95

CROSS SECTIONS
STA. CDS-1368+50 TO STA. CDS-1370+00

FRA-270-32.46

210/593

Plot Scale - 1" = 10'
COL #18 C:\DRAWING\06092306\XSECS\CDSXSEC.DWG - VIEW: CDS6 FEBRUARY-08-1995

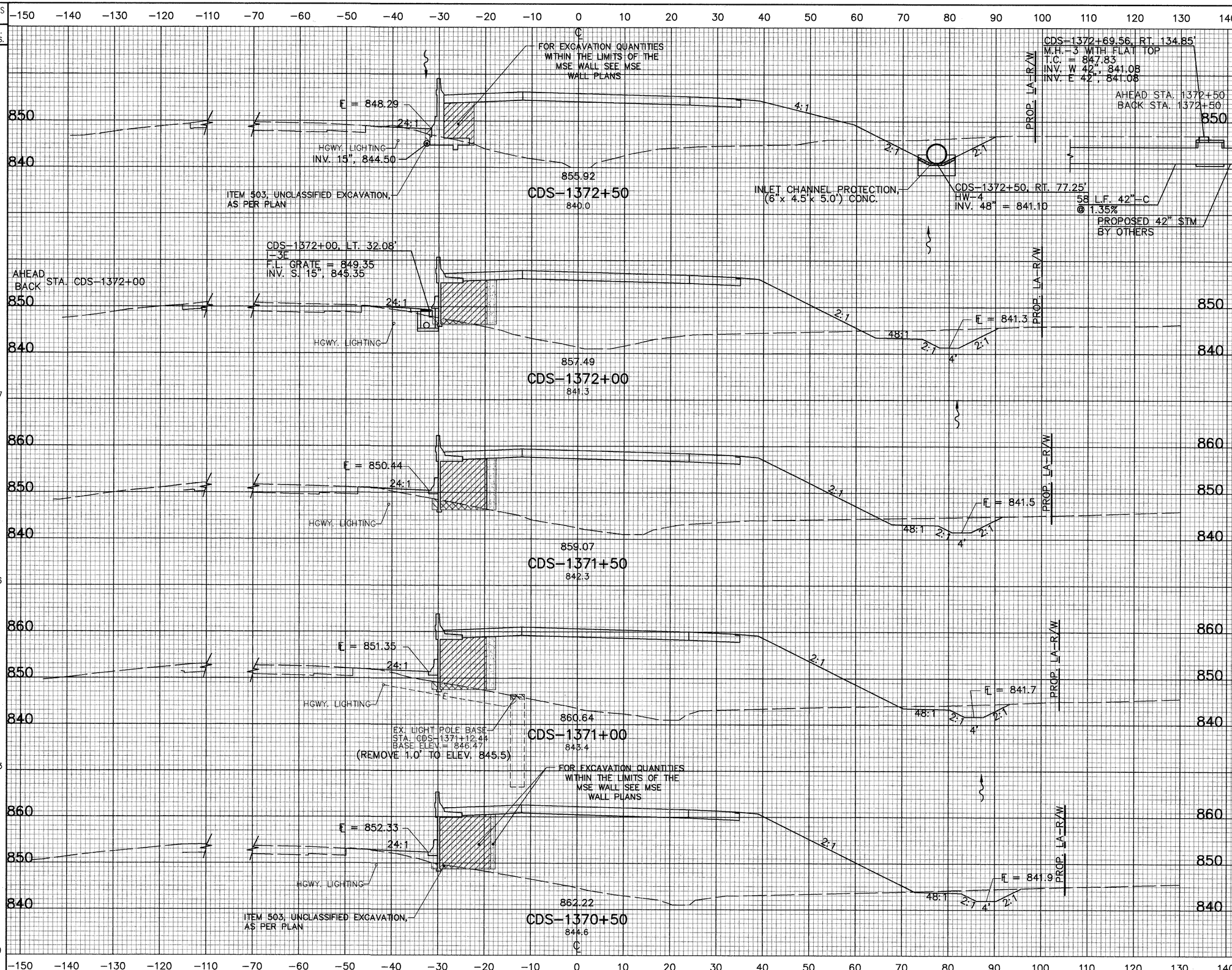

SEEDING END WIDTH	SEEDING SQ. YDS.	SEEDING, AS PER PLAN END WIDTH	SEEDING, AS PER PLAN SQ. YDS.	END AREA CUT	END AREA FILL	VOLUME CUT	VOLUME FILL
74				69	820		
				69	769		
	414					122	1503
75		0					
47		28		63	854		
	256		167			102	1706
45		32		47	988		
	253		186			72	1952
46		35		31	1121		
	256		203			53	2191
46		38		26	1245		
	261		219			42	2419

CALC. BY: S.D.E. DATE: 02/02/95
CHKD. BY: M.F.J. DATE: 02/15/95

CROSS SECTIONS
STA. CDS-1370+50 TO STA. CDS-1372+50

FRA-270-32.46

Plot Scale - 1" = 10'
COL #18 C:\DRAWING\06092306\XSECS\CDSXSEC.DWG - VIEW: CDS7 FEBRUARY-08-1995

SEEDING END WIDTH	SEEDING SQ. YDS.
44	253
47	272
51	286
52	314
61	375

END AREA CUT	END AREA FILL	VOLUME CUT	VOLUME FILL
11	168		
		19	410
10	275		
		19	615
10	389		
		13	839
4	517		
		4	1149
0	724		
		64	1430

CALC. S.D.E. DATE: 02/09/96
CHK. M.F.J. DATE: 02/15/96

CROSS SECTIONS
STA. CDS-1373+00 TO STA. CDS-1375+00

FRA-270-32.46

212
593

Plot Scale - 1" = 10'
COS #18 C:\DRAWING\06092308\XSECS\CDSXSEC.DWG - VIEW: CDSB FEBRUARY-08-1995

℄ = 845.71
ITEM 503, UNCLASSIFIED EXCAVATION, AS PER PLAN
VARIES
HGWY. LIGHTING
FOR EXCAVATION QUANTITIES WITHIN THE LIMITS OF THE MSE WALL SEE MSE WALL PLANS
6:1
℄ = 845.0
6:1
3.33'
PROP. LA-R/W
CDS-1375+12.02, RT. 96.88'
M.H.-3 SAN
T.C. = 846.70
INV. S 18", 828.35
INV. N 18", 828.51
PROP. U. ESMT
849.20
CDS-1375+00
844.7
EXIST. 18"SAN INV: 828.59
CDS-1374+09.22, LT. 28.50'
I-3E
F.L. GRATE = 850.71
INV. N 15", 846.71
INV. W 4", 847.71
INV. N 4", 847.71
℄ = 845.81
24:1
HGWY. LIGHTING
℄ = 845.5
6:1
6:1
3.33'
PROP. LA-R/W
PROP. U. ESMT
850.27
CDS-1374+50
843.2
EXIST. 18"SAN INV: 829.07
INV. 18"SAN, 830.08
℄ = 845.94
CDS-1373+99.41, LT. 37.58'
M.H.-3, 72" DIAMETER
WITH FLAT TOP
T.C. = 846.09
INV. N 15", 841.81
INV. NW 48", 839.22
INV. E 48", 839.20
HGWY. LIGHTING
24:1
CDS-1373+99.14, LT. 23.50'
M.H.-3, 72" DIAMETER
T.C. = 851.32
INV. S 15", 846.61
INV. NW 48", 839.28
INV. E 48", 839.26
℄ = 846.0
6:1
6:1
3.33'
PROP. LA-R/W
PROP. U. ESMT
48" CULVERT
11 L.F. 48"-B @ 0.40%
16 L.F. 48"-B @ 0.40%
INV: 839.29
851.48
CDS-1374+00
842.3
EXIST. 18"SAN INV: 829.55
INV. 18"SAN, 829.54
PROP. LA-R/W
PROP. U. ESMT
℄ = 846.56
24:1
HGWY. LIGHTING
℄ = 846.5
6:1
6:1
3.33'
PROP. LA-R/W
PROP. U. ESMT
852.84
CDS-1373+50
841.6
INV. 48", 839.52
CDS-1373+89.37, LT. 32.08
I-3E
F.L. GRATE = 845.91
INV. N. 15", 841.91
INV. S. 15", 841.91
EXIST. 18"SAN INV: 830.02
CDS-1372+81.69, RT. 75.00'
M.H.-3
T.C. = 848.58
INV. SW 42", 840.38
INV. N 48", 839.90
INV. S 48", 839.88
INV. 18"SAN, 830.11
CDS-1372+89.78, RT. 108.75'
M.H.-3 SAN
T.C. = 847.33
INV. W 18", 832.85
INV. S 18", 830.75
FOR EXCAVATION QUANTITIES WITHIN THE LIMITS OF THE MSE WALL SEE MSE WALL PLANS
℄ = 847.33
24:1
12:1
8:1
HGWY. LIGHTING
INV. 15", 843.62
PROP. LA-R/W
854.34
CDS-1373+00
841.1
ITEM 503, UNCLASSIFIED EXCAVATION, AS PER PLAN
SEE CDS-1372+50
EXIST. SAN MH (TO BE ABANDONED)
EXIST. 18"SAN
PLUG
10 L.F. 18"-C @ 0.68%

SEEDING		END AREA		VOLUME	
END WIDTH	SQ. YDS.	CUT	FILL	CUT	FILL
32	113	0	38	1	38
26	43	1	21	5	8
26	119	18	9	24	24
17	25	8	17	4	8
16	44	6	14		
44	181	26	51	35	70
45	247	27	55	45	133
44	244	22	89	31	238

-150 -140 -130 -120 -110 -100 -90 -80 -70 -60 -50 -40 -30 -20 -10 0 10 20 30 40 50 60 70 80 90 100 110 120

℄

850 / 840

℄ = 845.06
VARIES
3:1 12:1
HGWY. LIGHTING
846.04
CDS-1377+50
843.6
MATCH RAMP A

℄ = 845.13
VARIES
25:1 12:1
HGWY. LIGHTING
846.26
CDS-1377+14.93
844.1
EXIST. 21"SAN
EXIST. 21"SAN
INV: 825.59
MATCH RAMP A
EXIST. SAN M.H.
T.C.: 844.19
CDS-1377+13.24, RT. 107.19'
M.H.-3 SAN
T.C. = 844.00
INV. N 18", 826.12
INV. E 21", 825.84
PROP. LA R/W
21" @ 0.31%
SEE SAN PROFILE

℄ = 845.16
VARIES
25:1 12:1
HGWY. LIGHTING
EX. LIGHT POLE BASE
STA. CDS-1376+91
BASE ELEV.= 845.16
(REMOVE 1.9' TO ELEV. 843.3)
846.38
CDS-1377+00
844.8
MATCH RAMP A
EXIST. 18"SAN
INV: 825.78
8" TILE
INV. 18"SAN, 826.24

℄ = 845.27
VARIES
HGWY. LIGHTING
846.87
CDS-1376+50
845.2
EXIST. 18"SAN
INV: 826.53
8" TILE
INV. 18"SAN, 826.80
AHEAD
BACK
STA. CDS-1376+35.64
PROP. LA R/W

AHEAD
BACK
STA. CDS-1376+35.64

℄ = 845.39
VARIES
6:1
3.33'
6:1
℄ = 844.0
HGWY. LIGHTING
847.50
CDS-1376+00
845.3
EXIST. 18"SAN
INV: 827.25
8" TILE
INV. 18"SAN, 827.36
PROP. LA R/W
PROP. U. ESMT

FOR EXCAVATION QUANTITIES WITHIN THE LIMITS OF THE MSE WALL SEE MSE WALL PLANS

℄ = 845.60
VARIES
6:1
3.33'
6:1
℄ = 844.6
HGWY. LIGHTING
C.A.S.P.
848.28
CDS-1375+50
845.1
EXIST. 18"SAN
INV: 827.97
ITEM 503, UNCLASSIFIED EXCAVATION, AS PER PLAN
INV. 18"SAN, 827.79

℄

-150 -140 -130 -120 -110 -100 -90 -80 -70 -60 -50 -40 -30 -20 -10 0 10 20 30 40 50 60 70 80 90 100 110 120

CADD S.D.E.
BY: S.D.E.
DATE: 02/02/95
CHKD. M.F.J.
BY: M.F.J.
DATE: 02/15/95

CROSS SECTIONS
STA. CDS-1375+50 TO STA. CDS-1377+50

FRA-270-32.46

213
593

Plot Scale - 1" = 10'
COL #18
C:\DRAWING\06092306\XSECS\CDSXSEC.DWG - VIEW: CDS9 FEBRUARY-08-1995

SEEDING END WIDTH	SEEDING SQ. YDS.
40	208
35	194
35	189
33	186
34	189
34	183

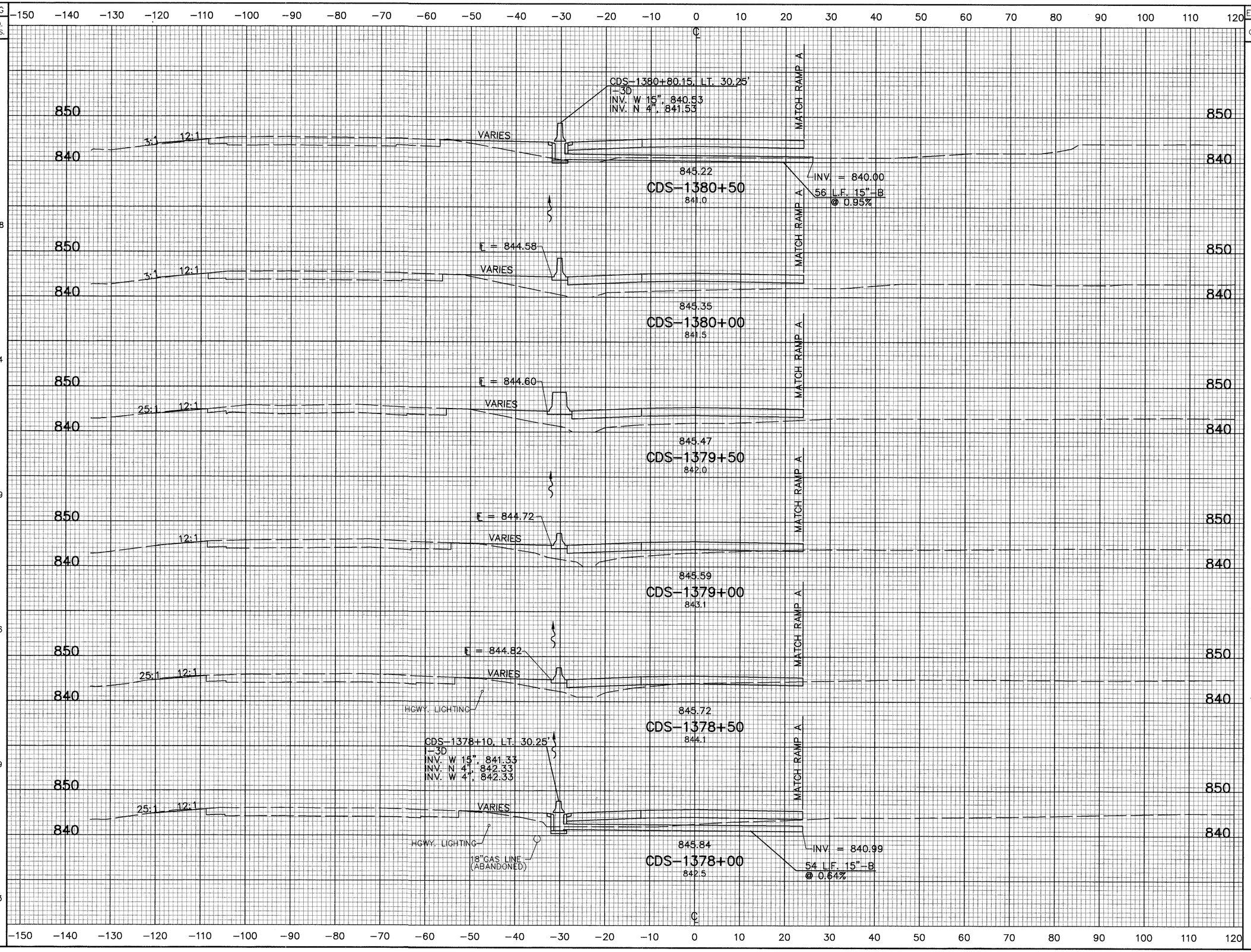

END AREA CUT	END AREA FILL	VOLUME CUT	VOLUME FILL
0	178		
		0	306
0	152		
		2	264
2	133		
		3	196
1	79		
		14	122
14	53		
		15	137
2	95		
		2	123

CALC. BY: S.D.E. DATE: 02/02/96
CHKD. BY: M.F.J. DATE: 02/19/96

CROSS SECTIONS
STA. CDS-1378+00 TO STA. CDS-1380+50

FRA-270-32.46

214
593

Plot Scale - 1" = 10'
CDS #18
C:\DRAWING\06092306\XSECS\CDSXSEC.DWG - VIEW: CDS10 FEBRUARY-08-1995

CROSS SECTIONS
STA. CDS-1381+00 TO STA. CDS-1383+50

FRA-270-32.46

215
593

CALC. BY: S.D.E. DATE: 02/02/95
CHKD. BY: M.F.J. DATE: 02/15/95

SEEDING END WIDTH	SEEDING SQ. YDS.	END AREA CUT	END AREA FILL	VOLUME CUT	VOLUME FILL
52	261	43	106	54	191
42	231	15	100	22	189
41	225	9	104	27	191
40	219	20	102	32	188
39	217	15	101	14	221
39	219	0	138	0	293

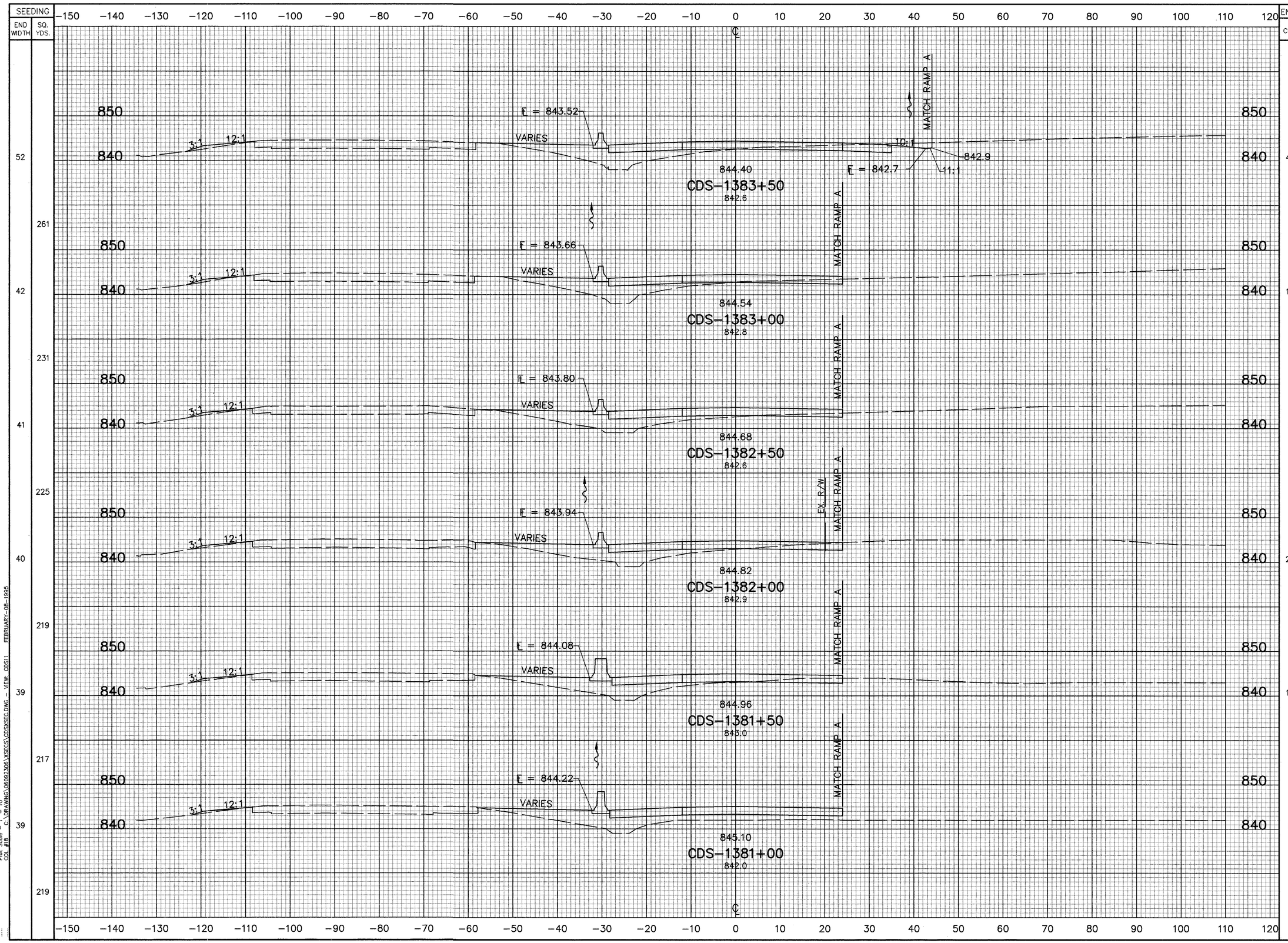

Plot Scale − 1" = 10'
COL #18
C:\DRAWING\06092306\XSECS\CDSXSEC.DWG − VIEW: CDS11 FEBRUARY−08−1995

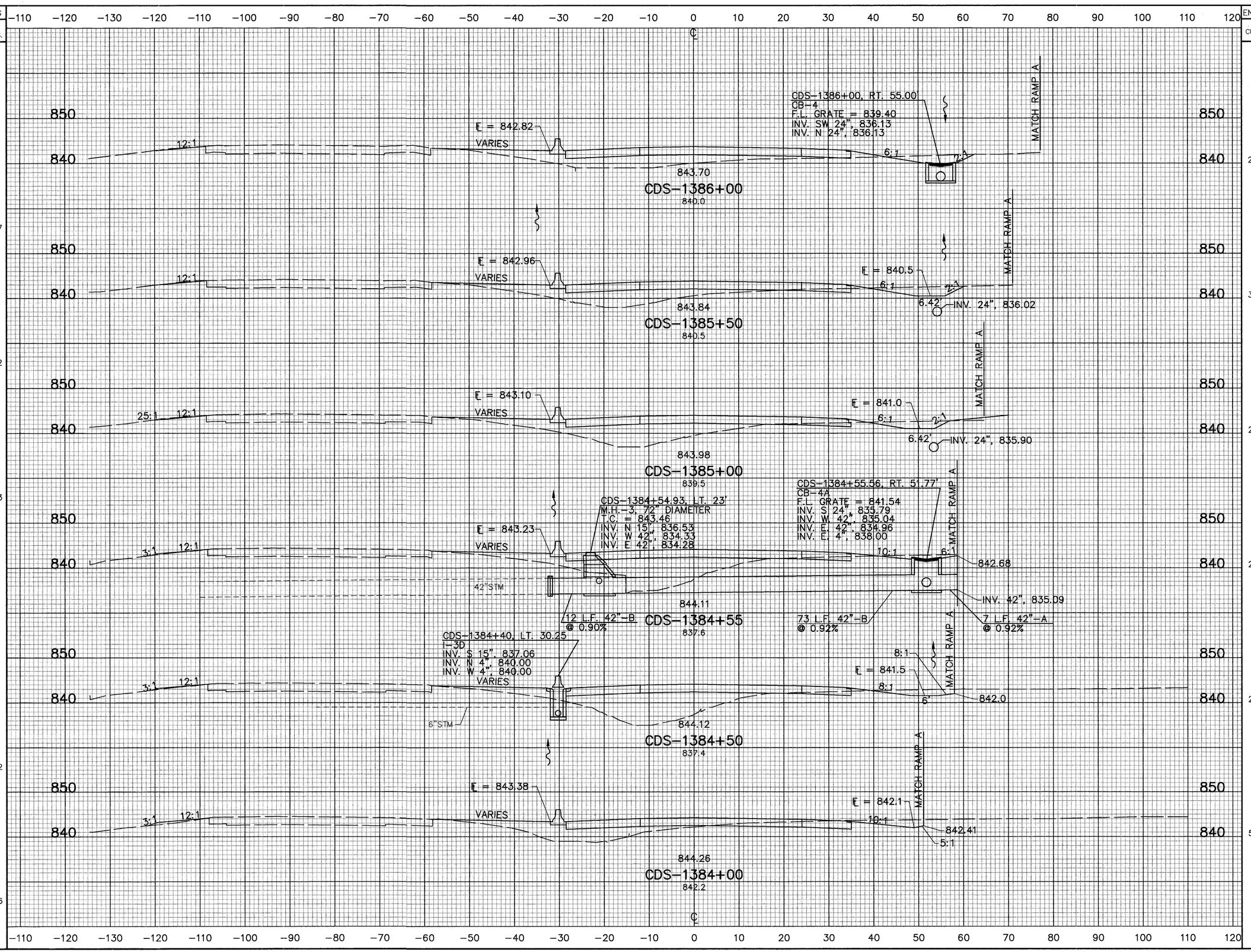

END WIDTH	SQ. YDS.	END AREA CUT	END AREA FILL	VOLUME CUT	VOLUME FILL
67		24	136		
	367			56	247
65		37	131		
	372			59	275
69		27	166		
	333			39	310
64		20	206		
	36			4	39
65		27	218		
	342			71	302
58		50	108		
	306			86	198

CALC. BY: S.D.E. DATE: 02/02/95
CHKD. BY: M.F.J. DATE: 02/15/95

CROSS SECTIONS
STA. CDS-1384+00 TO STA. CDS-1386+00

FRA-270-32.46

216/593

Plot Scale - 1" = 10'
COL #18 C:\DRAWING\06092306\XSECS\CDSXSEC.DWG - VIEW: CDS12 FEBRUARY-08-1995

| SEEDING | | |

SEEDING END WIDTH	SEEDING SQ. YDS.	END AREA CUT	END AREA FILL	VOLUME CUT	VOLUME FILL
106	564	336	11	572	22
97	500	282	13	473	28
83	472	229	17	394	45
87	467	197	32	350	62
81	478	181	35	344	84
91	603	190	56	350	151

CALC. BY: S.D.E. DATE: 02/02/95
CHKD. BY: M.F.J. DATE: 02/15/95

CROSS SECTIONS
STA. CDS-1389+50 TO STA. CDS-1392+00

FRA-270-32.46

218
593

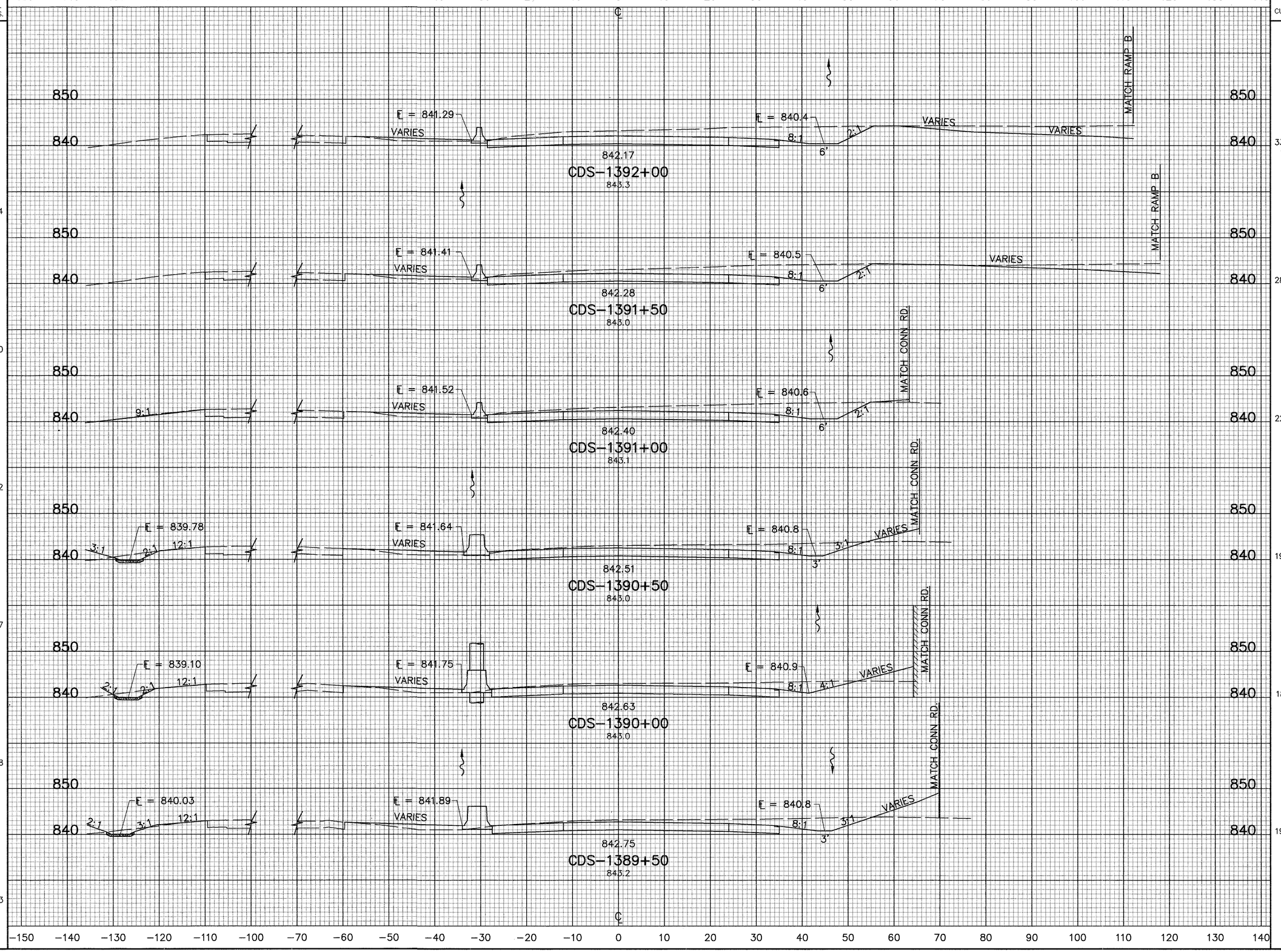

Plot Scale = 1" = 10'
COL. #18
C:\DRAWNG\96092306\XSECS\CDSXSEC.DWG - VIEW: CDS14 FEBRUARY-08-1995

SEEDING END WIDTH	SEEDING SQ. YDS.
58	336
63	381
74	447
87	486
88	500
92	550

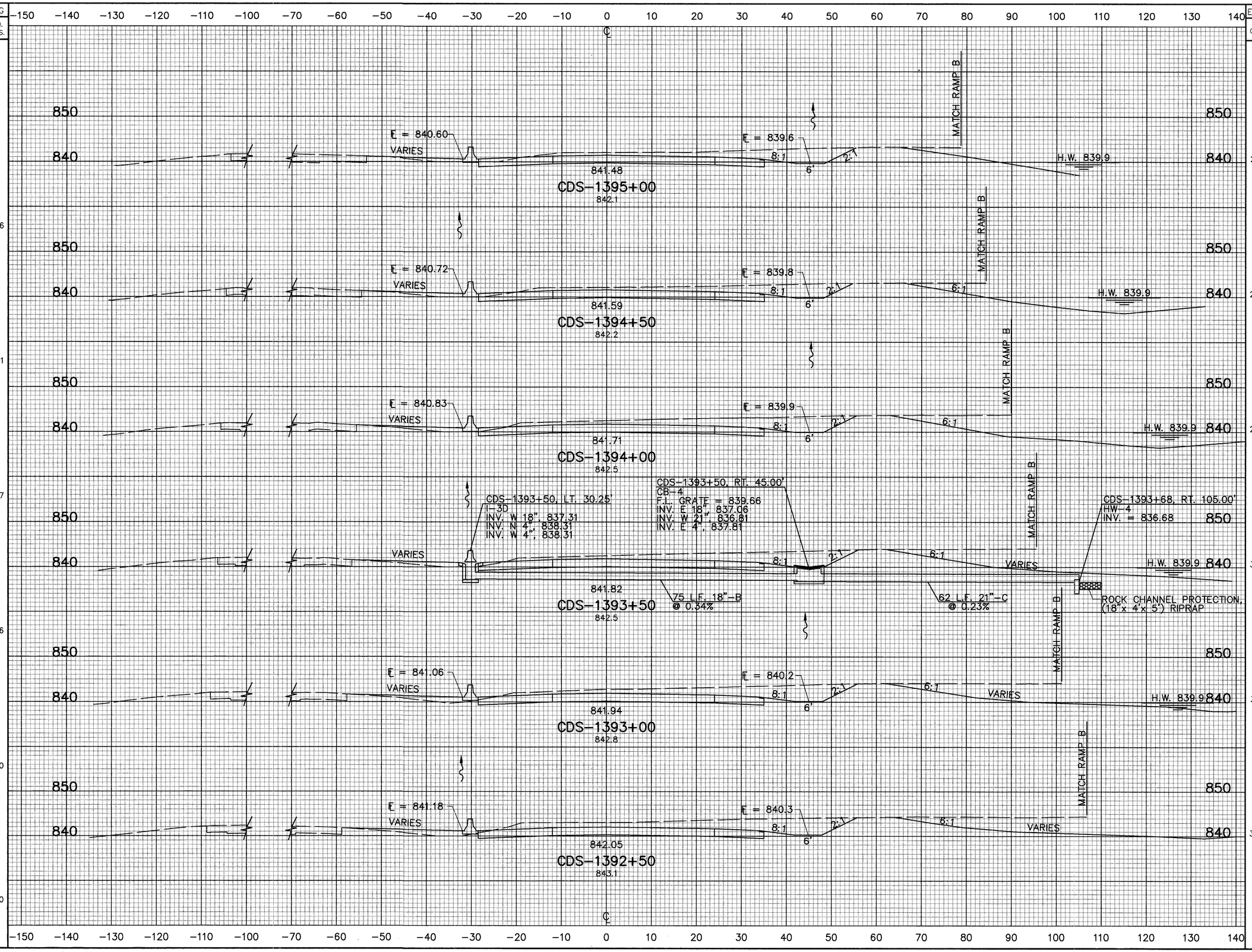

END AREA CUT	END AREA FILL	VOLUME CUT	VOLUME FILL
218	8		
233	10	418	17
296	13	490	21
318	14	569	25
341	18	610	30
366	20	655	35
		650	29

CALC. BY: S.D.E. DATE: 02/02/95
CHKD. BY: M.F.J. DATE: 02/15/95

CROSS SECTIONS
STA. CDS-1392+50 TO STA. CDS-1395+00

FRA-270-32.46

219
593

Plot Scale - 1" = 10'
COL #18 C:\DRAWING\06092306\VSECS\CDSXSEC.DWG - VIEW: CDS15 FEBRUARY-08-1995

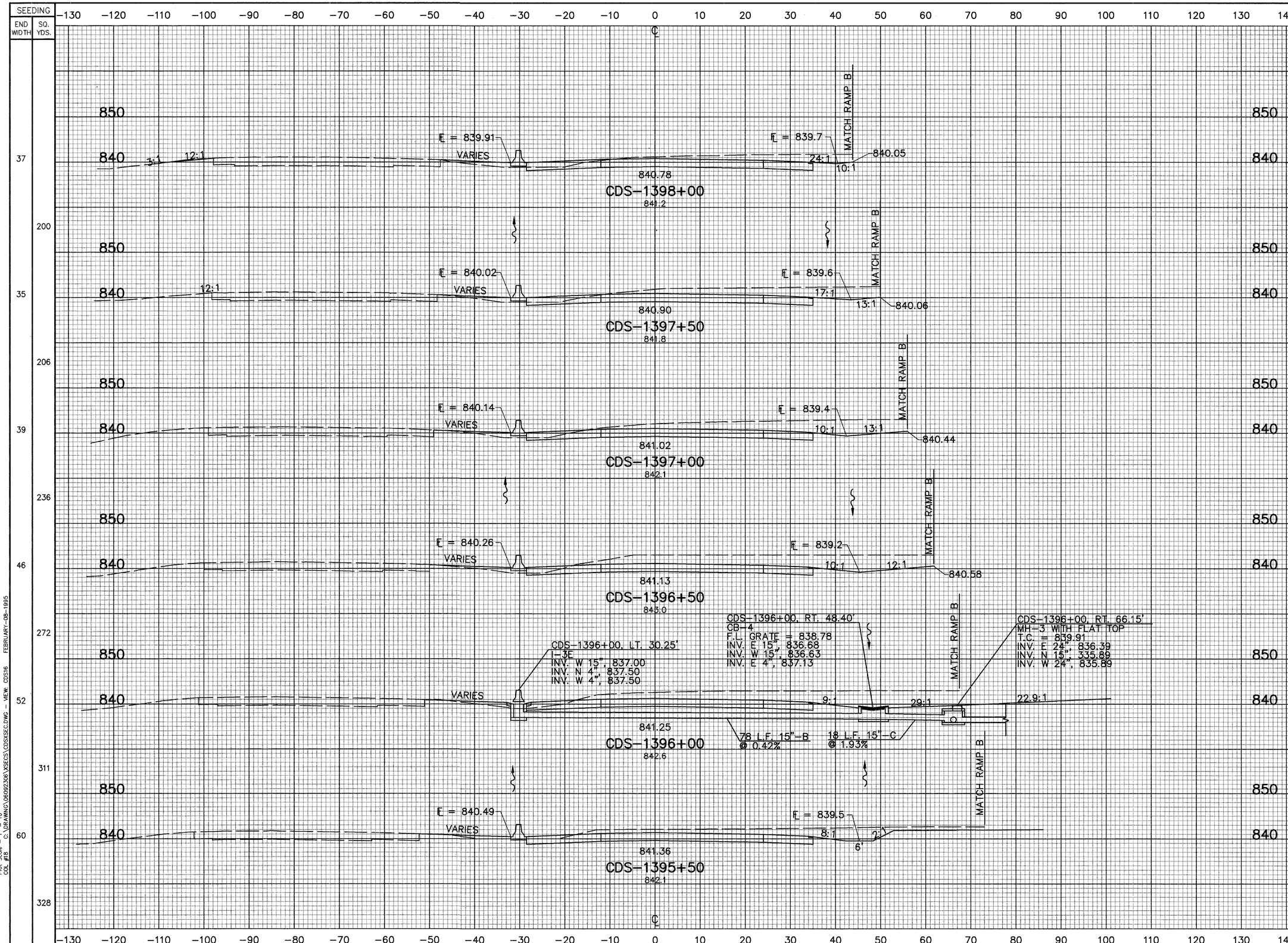

SEEDING END WIDTH	SEEDING SQ. YDS.	END AREA CUT	END AREA FILL	VOLUME CUT	VOLUME FILL
37		151	12		
	200			319	20
35		194	10		
	206			398	19
39		236	10		
	236			481	19
46		284	10		
	272			542	19
52		301	11		
	311			480	17
60		217	7		
	328			403	14

CALC. BY: S.D.E. DATE: 02/02/95
CHKD. BY: M.F.J. DATE: 02/15/95

CROSS SECTIONS
STA. CDS-1395+50 TO STA. CDS-1398+00

FRA-270-32.46

Plot Scale - 1" = 10'
COL #18 C:\DRAWING\06092306\XSECS\CDSXSEC.DWG - VIEW: CDS16 FEBRUARY-08-1995

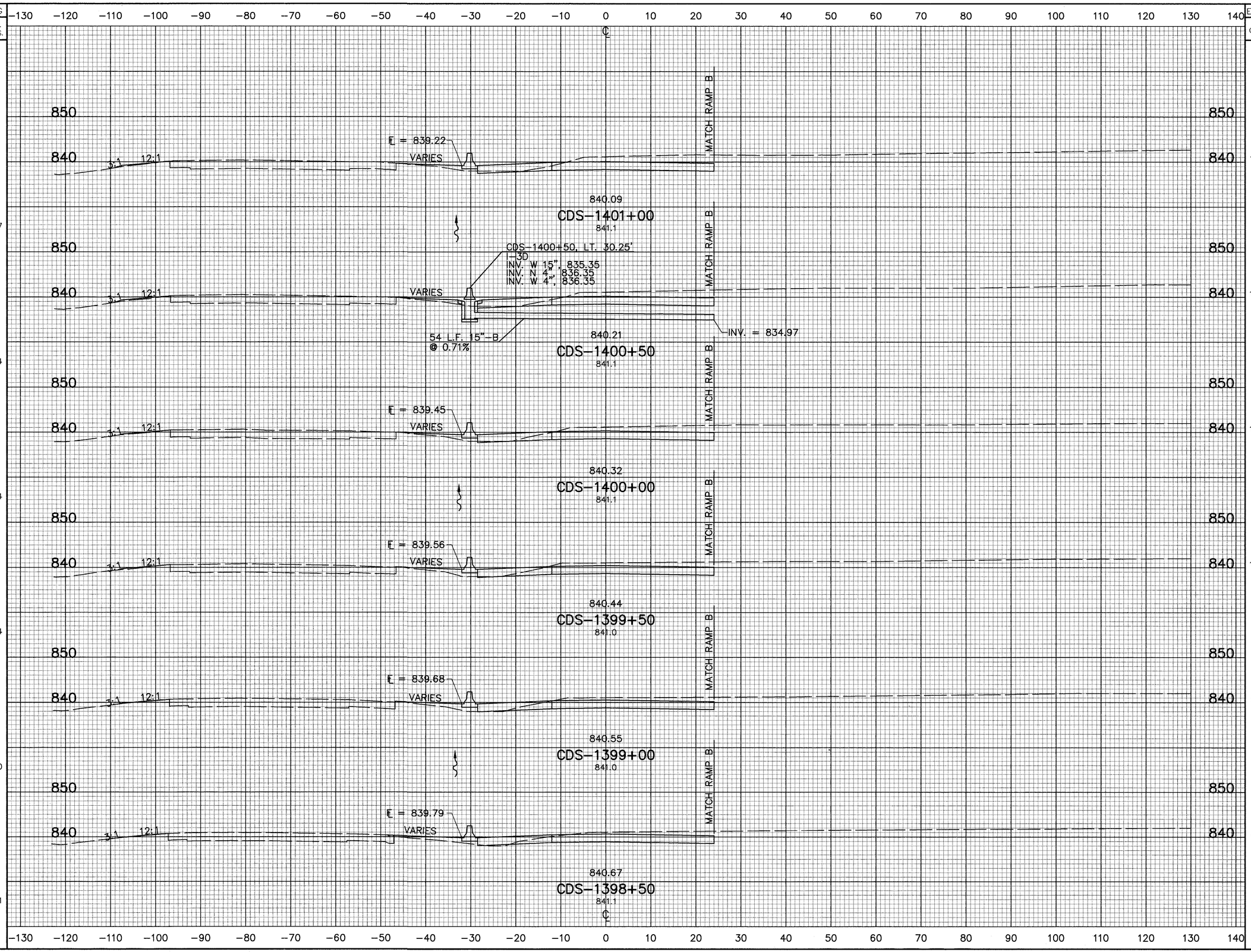

CALC. BY: S.D.E. DATE: 02/02/95
CHKD. BY: M.F.J. DATE: 02/15/95

CROSS SECTIONS
STA. CDS-1398+50 TO STA. CDS-1401+00

FRA-270-32.46

Plot Scale - 1" = 10'
COL #18 C:\DRAWING\06092306\XSECS\CDSXSEC.DWG - VIEW: CDS17 FEBRUARY-08-1995

SEEDING END WIDTH	SEEDING SQ. YDS.	END AREA CUT	END AREA FILL	VOLUME CUT	VOLUME FILL
14	114	76	7	136	12
27	147	71	6	143	9
26	147	83	4	154	7
27	150	83	4	158	9
27	150	88	6	181	13
27	150	107	8	201	16

−130 −120 −110 −100 −90 −80 −70 −60 −50 −40 −30 −20 −10 0 10 20 30 40 50 60 70 80 90 100 110 120 130 140

℄

850 840

℄ = 838.54
VARIES

MATCH RAMP B

839.40
CDS−1404+00
839.3

℄ = 838.64
VARIES
3:1 12:1

MATCH RAMP B

839.52
CDS−1403+50
839.1

℄ = 838.76
VARIES
3:1 12:1

MATCH RAMP B

839.63
CDS−1403+00
839.9

℄ = 838.87
VARIES
3:1 12:1

MATCH RAMP B

839.75
CDS−1402+50
839.9

℄ = 838.99
VARIES
3:1 12:1

MATCH RAMP B

839.86
CDS−1402+00
840.0

℄ = 839.10
VARIES
3:1 12:1

MATCH RAMP B

839.98
CDS−1401+50
840.9

℄

Plot Scale − 1" = 10'
COL #18 C:\DRAWING\06092306\XSECS\CDSXSEC.DWG − VIEW: CDS18 FEBRUARY−08−1995

CALC: S.D.E. BY: DATE: 02/02/95
CHKD: M.F.J. BY: DATE: 02/15/95

CROSS SECTIONS
STA. CDS−1401+50 TO STA. CDS−1404+00

FRA−270−32.46

222
593

SEEDING END WIDTH	SEEDING SQ. YDS.	END AREA CUT	END AREA FILL	VOLUME CUT	VOLUME FILL
69	309	630	21	924	21
70	383	618	8	1069	10
68	378	536	3	953	6
68		496	4		
15	81	188	4	278	8
14		112	5		
15	81	84	8	181	12
				148	14

NOTE: FOR DETAILS SEE SHEET 316.

CDS-1406+90.00, LT. 124.00'
CB-4A, AS PER PLAN
F.L. GRATE = 835.21
INV. W. 27", 830.82
INV. S. 36", 830.25
INV. N. 36", 830.25

NOTE: FOR DETAILS SEE SHEET 316.

10 L.F. 27"-C @ 1.10%

EXIST. 27" STM.

EXIST. 27" @ 1.1%

CDS-1406+90, LT. 30.25'
I-3D
INV. W 27", 831.88
INV. E 27", 831.87

VARIES

12 L.F. 27"-C @ 1.1%

EXIST. C.B. INV. 831.84

℄

838.76
CDS-1406+90
841.6

104 L.F. 27"-B @ 1.10%

21:1

2:1

CDS-1406+90, RT. 73.35'
HW-4
INV. = 833.00

F.L. = 833.0

2:1

INLET CHANNEL PROTECTION, (6"x 4.5'x 15.0') CONCRETE

PROP. LA-R/W

PROP. LA-R/W

PROP. LA-R/W

F.L. = 837.98

VARIES

838.85
CDS-1406+50
841.1

F.L. = 833.1

6:1

2:1

6.42'

6" TILE

F.L. = 838.09

VARIES

838.96
CDS-1406+00
841.0

F.L. = 833.2

6:1

2:1

6.42'

MATCH RAMP B

AHEAD
BACK STA. CDS-1405+50

F.L. = 838.20

VARIES

839.07
CDS-1405+50
841.0

STA. CDS-1405+50 AHEAD
BACK

MATCH RAMP B

CDS-1405+00, LT. 30.25'
I-3D
INV. W 15", 834.42
INV. N 4", 835.42
INV. W 4", 835.42

VARIES

54 L.F. 15"-B @ 0.92%

839.18
CDS-1405+00
840.0

INV. = 833.93

MATCH RAMP B

MATCH RAMP B

F.L. = 838.42

VARIES

839.29
CDS-1404+50
839.2

℄

840
830

-130 -120 -110 -100 -90 -80 -70 -60 -50 -40 -30 -20 -10 0 10 20 30 40 50 60 70 80 90 100 110 120 130 140

CALC'S D.E. BY: DATE: 02/02/95
CHK'D M.F.J. BY: DATE: 02/15/95

CROSS SECTIONS STA. CDS-1404+50 TO STA. CDS-1406+90

FRA-270-32.46

223
593

Plot Scale - 1" = 10'
COL #18
C:\DRAWING\06092308\XSECS\DSXSEC.DWG - VIEW: 19 FEBRUARY-10-1995

SEEDING END WIDTH	SEEDING SQ. YDS.	END AREA CUT	END AREA FILL	VOLUME CUT	VOLUME FILL
47	264	518	4	975	7
48	267	535	4	1005	7
48	264	550	4	1019	6
47	292	550	3	1076	6
58	353	612	3	1169	19
69	77	651	18	237	7

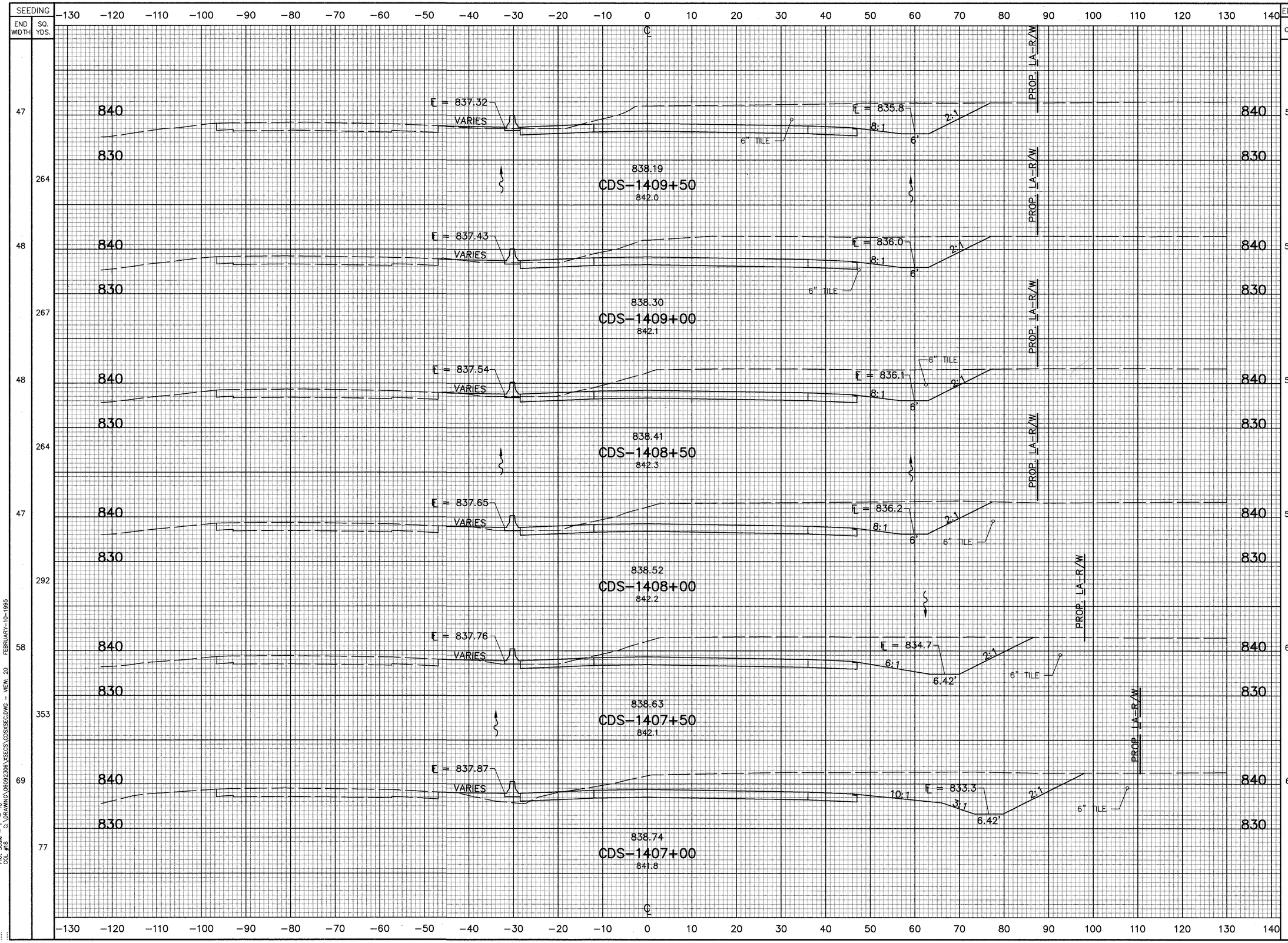

CALC. S.D.E. BY: DATE: 02/02/95
CHKD. M.F.J. BY: DATE: 02/15/95

CROSS SECTIONS STA. CDS-1407+00 TO STA. CDS-1409+50

FRA-270-32.46

224
593

Plot Scale = 1" = 10'
COL. #18 C:\DRAWNG\06092306\XSECS\CDSXSEC.DWG -- VIEW: 20 FEBRUARY-10-1995

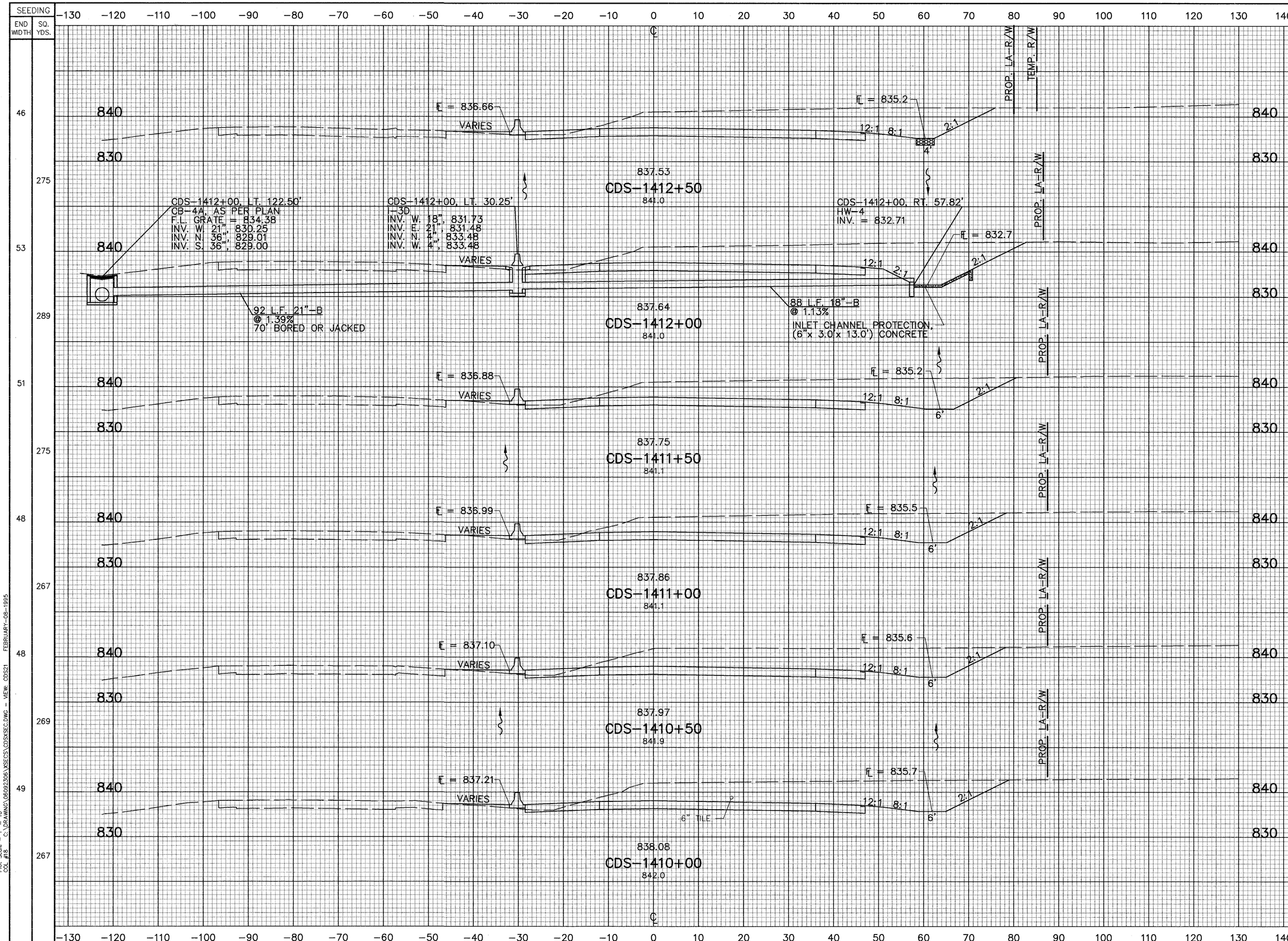

CALC. BY: S.D.E. DATE: 02/02/95
CHKD. BY: M.F.J. DATE: 02/15/95

CROSS SECTIONS
STA. CDS-1410+00 TO STA. CDS-1412+50

FRA-270-32.46

225/593

Plot Scale - 1" = 10'
COL #18 C:\DRAWING\06092306\XSECS\CDSXSEC.DWG - VIEW: CDS21 FEBRUARY-08-1995

518.1 3.8

SEEDING END WIDTH	SEEDING SQ. YDS.	SEEDING, AS PER PLAN END WIDTH	SEEDING, AS PER PLAN SQ. YDS.
14		3	
	78		14
14		2	
	78		19
14		5	
	78		36
14		8	
	78		53
14		11	
	78		86
14			
34		20	
	222		

END AREA CUT	END AREA FILL	VOLUME CUT	VOLUME FILL
344	11		
		647	20
355	11		
		654	20
351	11		
		626	20
325	11		
		596	18
319	8		
		636	12
368	5		
		801	8

CALC. S.D.E. BY: DATE: 02/02/95
CHK. M.F.J. BY: DATE: 02/15/95

CROSS SECTIONS STA. CDS-1415+50 TO STA. CDS-1413+00

FRA-270-32.46

226
593

Plot Scale - 1" = 10'
COL. #18
C:\DRAWING\06092306\XSECS\CDSXSEC.DWG - VIEW: CDS22 FEBRUARY-08-1995

-120 -110 -100 -90 -80 -70 -60 -50 -40 -30 -20 -10 0 10 20 30 40 50 60 70 80 90 100 110 120 130 140

℄

840
830

T.W. = 843.00
PROP. LA-R/W
TEMP. R/W
℄ = 836.00
VARIES
3:1
12:1
ITEM 503, UNCLASSIFIED EXCAVATION, AS PER PLAN
836.87
CDS-1415+50
840.1

T.W. = 843.00
PROP. LA-R/W
TEMP. R/W
℄ = 836.11
VARIES
12:1
2%
2:1
6" TILE
836.98
CDS-1415+00
840.3

℄ = 841.5
T.W. = 843.00
PROP. LA-R/W
TEMP. R/W
℄ = 836.22
VARIES
2%
2:1
6" TILE
837.09
CDS-1414+50
840.5

℄ = 840.0
T.W. = 842.15
PROP. LA-R/W
TEMP. R/W
℄ = 836.33
VARIES
2%
2:1
6" TILE
837.20
CDS-1414+00
840.1

℄ = 838.5
T.W. = 840.62
PROP. LA-R/W
TEMP. R/W
℄ = 836.44
VARIES
2%
2:1
837.31
CDS-1413+50
840.1

AHEAD
BACK
STA. CDS-1413+00

T.W. = 839.10
℄ = 835.9
PROP. LA-R/W
TEMP. R/W
℄ = 836.55
VARIES
6:1
2%
2:1
2"
ITEM 503, UNCLASSIFIED EXCAVATION, AS PER PLAN
837.42
CDS-1413+00
840.7

℄

-120 -110 -100 -90 -80 -70 -60 -50 -40 -30 -20 -10 0 10 20 30 40 50 60 70 80 90 100 110 120 130 140

SEEDING END WIDTH	SEEDING SQ. YDS.	CROWN VETCH END WIDTH	CROWN VETCH SQ. YDS.	END AREA CUT	END AREA FILL	VOLUME CUT	VOLUME FILL
24		2		334	5		
	136		14			632	11
25		3		349	7		
	139		17			639	14
25		3		341	8		
	147		14			671	14
28				384	7		
	150					673	15
26		2		343	9		
	144		14			621	19
26		3		328	11		
	111		17			622	20

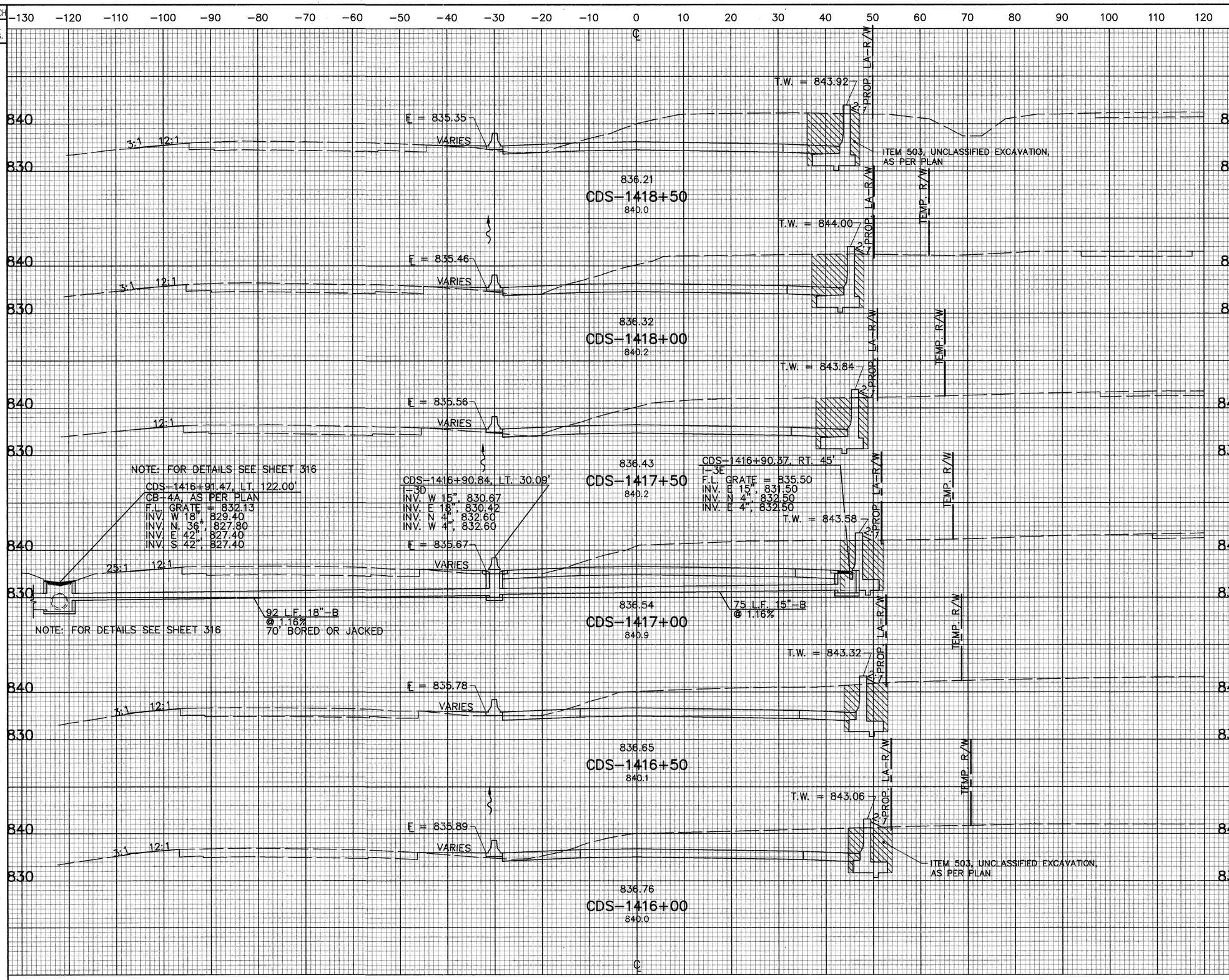

CALC. BY: S.D.E. DATE: 02/02/95
CHKD. BY: M.F.J. DATE: 02/15/95

CROSS SECTIONS STA. CDS-1416+00 TO STA. CDS-1418+50

FRA-270-32.46

227
593

Plot Scale = 1" = 10'
COL. #18
C:\DRAWING\06092306\XSECS\CDSXSEC.DWG - VIEW: 23 FEBRUARY-10-1995

SEEDING		SEEDING, AS PER PLAN		END AREA		VOLUME	
END WIDTH	SQ. YDS.	END WIDTH	SQ. YDS.	CUT	FILL	CUT	FILL
20	114	2	11	207	1	387	3
21	117	2	11	211	2	407	3
21	122	2	11	229	1	442	4
23	128	2	11	248	3	492	6
23	131	2	11	283	3	542	6
24	133	2	11	302	4	589	8

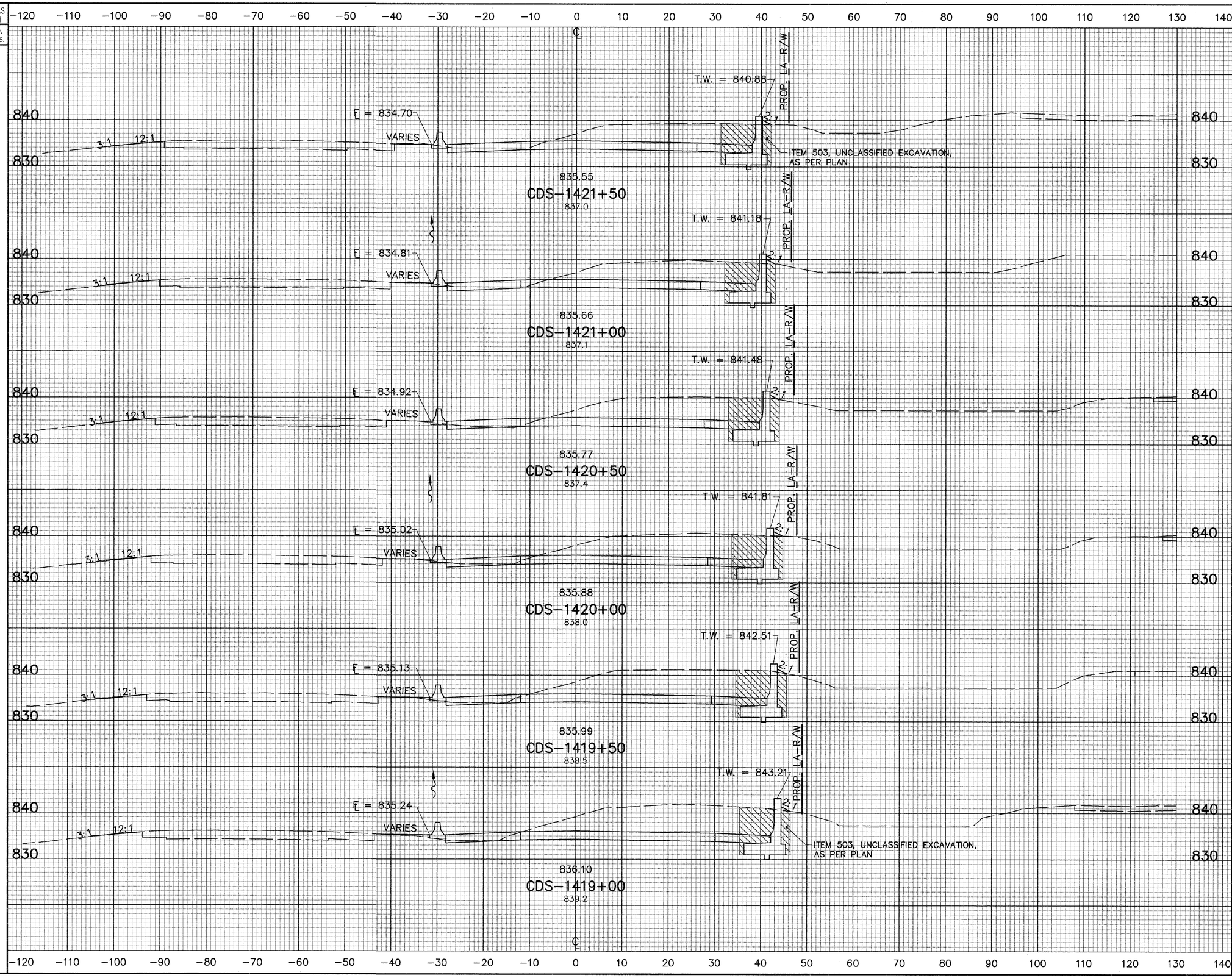

Plot Scale - 1" = 10'
COL #18 C:\DRAWING\06092306\XSECS\CDSXSEC.DWG - VIEW: CDS24 FEBRUARY-08-1995

CALC. S.D.E. BY: S.D.E. DATE: 02/02/95
CHKD. M.F.J. BY: M.F.J. DATE: 02/15/95

CROSS SECTIONS
STA. CDS-1419+00 TO STA. CDS-1421+50

FRA-270-32.46

228
593

SEEDING		SEEDING, AS PER PLAN		END AREA		VOLUME	
END WIDTH	SQ. YDS.	END WIDTH	SQ. YDS.	CUT	FILL	CUT	FILL
16		2		138	10		
	92		11			268	13
17		2		151	4		
	94		11			291	7
17		2		163	4		
	94		11			315	7
17		2		177	4		
	97		11			332	8
18		2		182	5		
	103		11			343	8
19		2		188	4		
	108		11			360	5

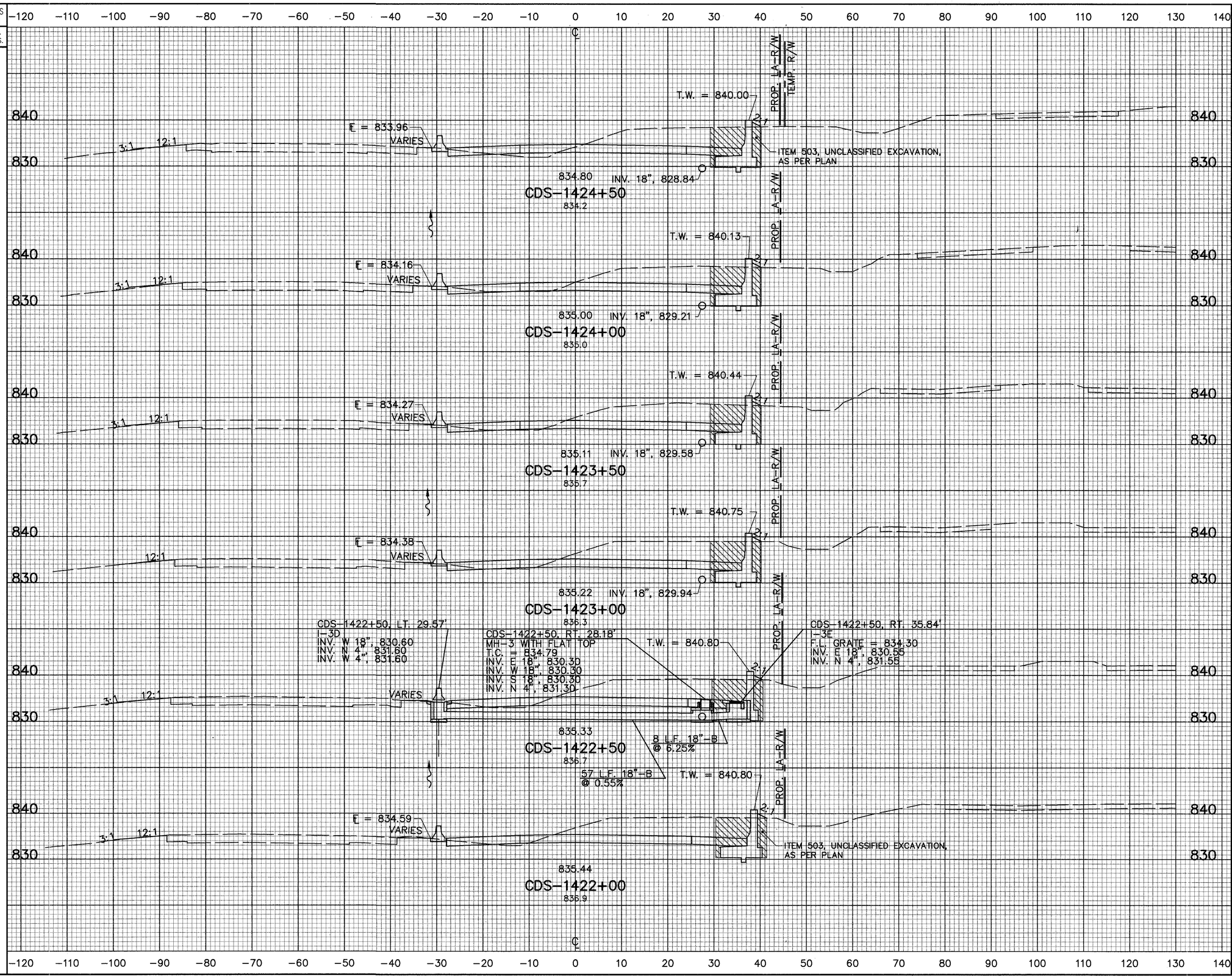

Plot Scale = 1" = 10'
COL #18 C:\DRAWING\06092306\XSECS\CDSXSEC.DWG — VIEW: 25 FEBRUARY-10-1995

CALC. S.D.E. DATE: 02/02/95
CHK. M.F.J. DATE: 06/05/94

CROSS SECTIONS
STA. CDS-1422+00 TO STA. CDS-1424+50

FRA-270-32.46

SEEDING		SEEDING, AS PER PLAN	
END WIDTH	SQ. YDS.	END WIDTH	SQ. YDS.
0		2	
	0		11
0		2	
	0		11
0		2	
	0		11
0		2	
	6		11
2		2	
	50		11

END AREA		VOLUME	
CUT	FILL	CUT	FILL
171	2		
		327	5
182	3		
		336	6
181	3		
		312	6
156	4		
		297	9
165	6		
		282	13
140	8		
		266	17

CALC. BY: S.D.E. DATE: 02/02/95
CHKD. BY: M.F.J. DATE: 02/15/95

CROSS SECTIONS
STA. CDS-1425+00 TO STA. CDS-1427+50

FRA-270-32.46

230/593

-120 -110 -100 -90 -80 -70 -60 -50 -40 -30 -20 -10 0 10 20 30 40 50 60 70 80 90 100 110 120 130 140

840
830

EXIST. EDGE OF PAVMT.

TEMP. R/W
EX. LA-R/W
PROP. LA-R/W

CDS-1426+89.02, LT. 106.48'
CB-4A, AS PER PLAN
F.L. GRATE = 829.99
INV. E. 6", 827.86
INV. E. 4", 827.47
INV. W. 6", 827.59
INV. W. 4", 827.56
INV. E. 15", 827.14
INV. W. 24", 825.62
INV. S. 42", 824.87
INV. N. 42", 824.89

NOTE: FOR DETAILS SEE SHEET 316

81 L.F. 24"-B
@ 0.51%
60' BORED OR JACKED

CDS-1427+00, LT. 26.45'
CB-A, AS PER PLAN
F.L. GRATE = 833.26
INV. W 24", 826.01
INV. E. 24", 826.01

833.93
CDS-1427+50
832.7
INV. 15", 827.46

CDS-1427+00, RT. 28.19'
MH-3 WITH FLAT TOP
T.C. = 833.49
INV. W 15", 826.80
INV. S. 15", 827.05
INV. N. 24", 826.30
INV. E 24", 826.30

T.W. = 837.84
T.W. = 838.42
T.W. = 838.94
T.W. = 839.46
T.W. = 839.98
T.W. = 840.00

℄ GUTTER 833.17
℄ GUTTER 833.38
℄ GUTTER 833.49
℄ GUTTER, 833.62

CDS-1427+00, RT. 35.50'
I-3E
F.L. GRATE = 833.02
INV. E. 18", 827.07
INV. N. 4", 830.50
INV. NW. 8", TO BE VERIFIED
INV. SW. 8", TO BE VERIFIED

ITEM 503, UNCLASSIFIED EXCAVATION, AS PER PLAN

834.04
CDS-1427+00
833.0

8 L.F. 15"-B
@ 6.75%
54 L.F. 24"-B
@ 0.58%

834.18
CDS-1426+50
833.2
INV. 24", 826.73

834.31
CDS-1426+00
833.1
INV. 24", 827.17

CDS-1425+40, LT. 29.33'
I-3E
INV. E 15", 829.77
INV. N 4", 830.77
INV. W 4", 830.77

CDS-1425+40, RT. 28.19'
MH-3 WITH FLAT TOP
T.C. = 833.91
INV. E 15", 828.44
INV. W 15", 828.44
INV. N 18", 828.19
INV. S 24", 827.69
INV. N 4", 828.69

CDS-1425+40, RT. 35.50'
I-3E
F.L. GRATE = 833.47
INV. E 15", 828.71

834.47
CDS-1425+50
833.2

8 L.F. 15"-B
@ 6.75%
57 L.F. 15"-B
@ 2.46%

℄ = 833.75
VARIES

ITEM 503, UNCLASSIFIED EXCAVATION, AS PER PLAN
INV. 18", 828.47

834.59
CDS-1425+00
833.5

Plot Scale - 1" = 10'
COL #18 C:\DRAWING\06092306\XSECS\CDSXSEC.DWG -- VIEW: 26 FEBRUARY-10-1995

SEEDING		SEEDING, AS PER PLAN	
END WIDTH	SQ. YDS.	END WIDTH	SQ. YDS.
0		33	
	0		122
0		11	
	0		56
0		9	
	0		31

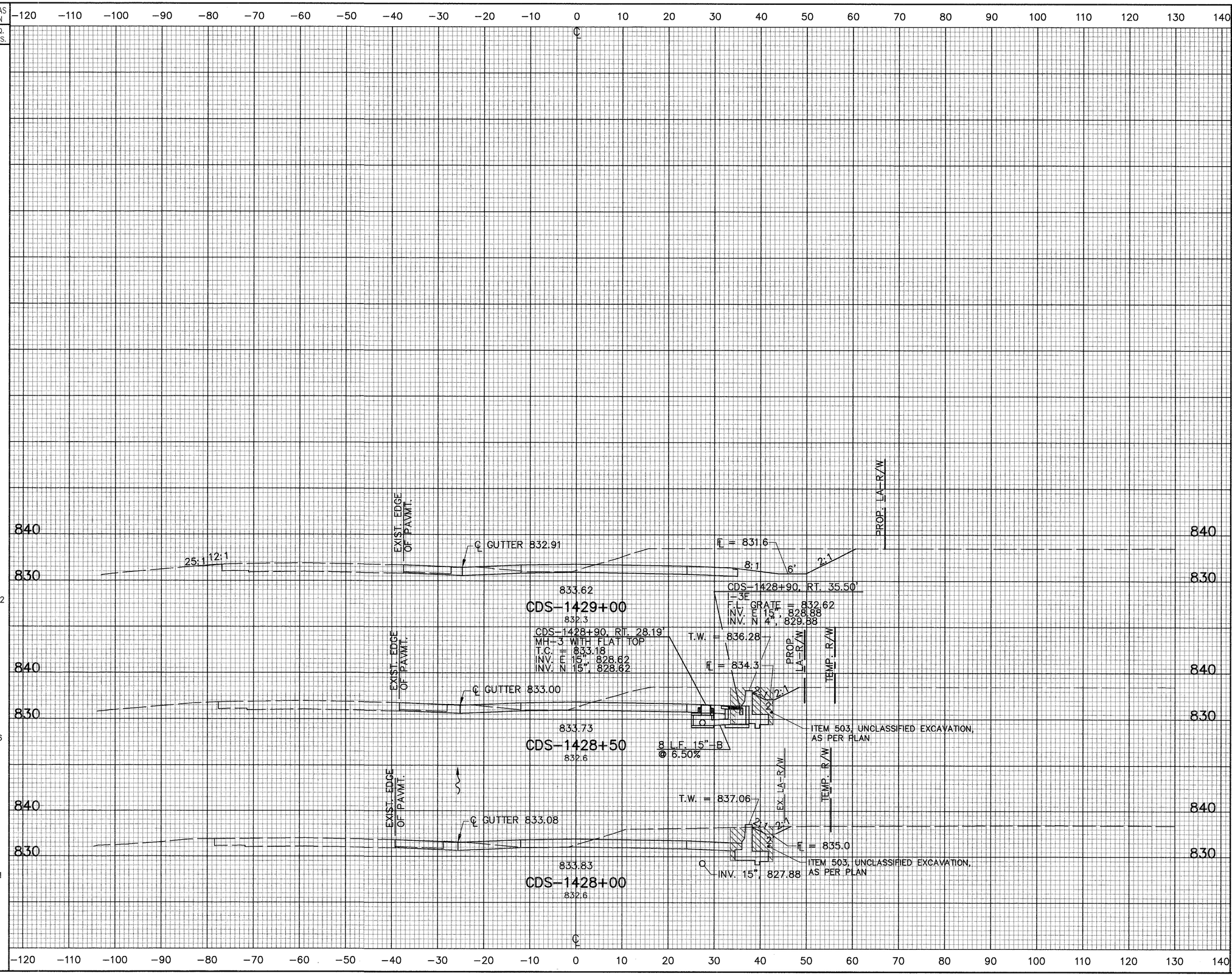

END AREA		VOLUME	
CUT	FILL	CUT	FILL
298	0		
		455	0
193	0		
		335	0
169	0		
		315	2

CALC. BY: S.D.E. DATE: 02/02/95
CHKD. BY: M.F.J. DATE: 02/15/95

CROSS SECTIONS
STA. CDS-1428+00 TO STA. CDS-1429+00

FRA-270-32.46

Plot Scale - 1" = 10'
COL #18 C:\DRAWING\06092306\XSECS\CDSXSEC.DWG - VIEW: CDS27 FEBRUARY-08-1995

SEEDING END WIDTH	SEEDING SQ. YDS.	END AREA CUT	END AREA FILL	VOLUME CUT	VOLUME FILL
13	67	0	2	0	2
11	69	0	0	0	0
14	83	0	0	1	0
16	78	1	0	1	0
12		0	0		

130 120 110 100 90 80 70 60 50 40 30 20 10 0 10 20 30 40 50 60 70 80 90 100 110 120 130 140

840 / 830 / 820

BY OTHERS PROJECT FRA-270-(31.01)(33.64)

2:1 6' 8:1

F.L.=829.7

828.64
1436+50
828.6

3:1 12:1 8:1

BY OTHERS PROJECT FRA-270-(31.01)(33.64)

F.L.=829.8

828.93
1436+00
828.9

12:1

BY OTHERS PROJECT FRA-270-(31.01)(33.64)

F.L.=829.9

829.16
1435+50
829.2

12:1 8:1

BY OTHERS PROJECT FRA-270-(31.01)(33.64)

F.L.=830.0

829.41
1435+00
829.4

25:1 12:1

BY OTHERS PROJECT FRA-270-(31.01)(33.64)

F.L.=830.2

829.56
1434+50
829.6

3:1 12:1

CALC. S.D.E. BY: DATE: 12/03/95
CHKD. M.F.J. BY: DATE: 12-15-95

CROSS SECTIONS STA. 1434+50 TO STA. 1436+50

FRA-270-32.46

232
593

Plot Scale = 1" = 10'
COL. #18
C:\DRAWING\06092306\XSECS\6092XSML.DWG -- VIEW: ML1 FEBRUARY-08-1995

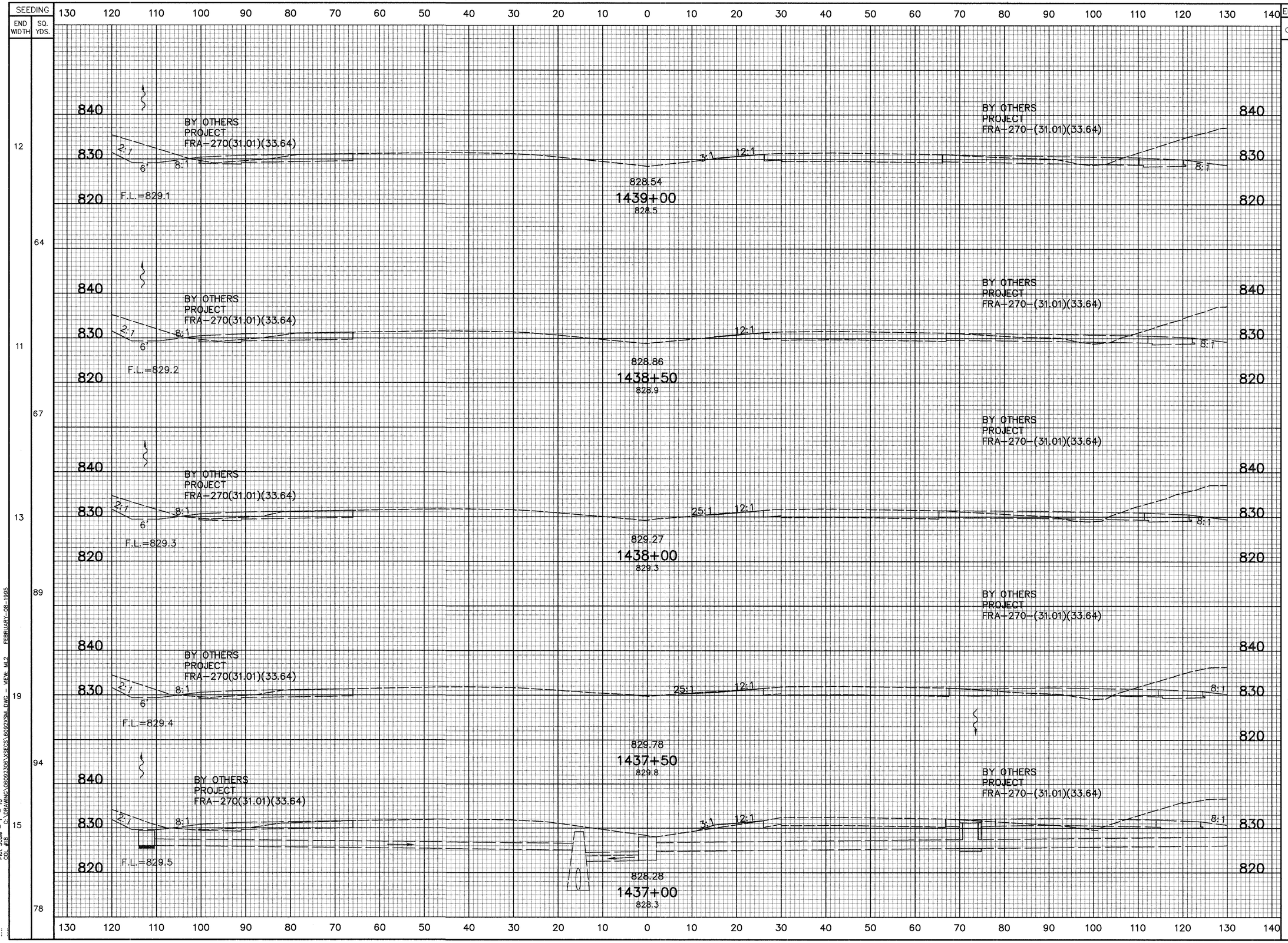

CALC. BY: S.D.E. DATE: 02/03/95
CHKD. BY: M.F.J. DATE: 02/15/95

CROSS SECTIONS
STA. 1437+00 TO STA. 1439+00

FRA-270-32.46

Plot Scale - 1" = 10'
COL #18 C:\DRAWING\06092306\XSECS\6092XSML.DWG - VIEW: ML2 FEBRUARY-08-1995

SEEDING END WIDTH	SEEDING SQ. YDS.	1441+50	1441+00	1440+50	1440+00	1439+50	END AREA CUT	END AREA FILL	VOLUME CUT	VOLUME FILL
11	61	828.10	828.35	828.45	828.58	828.62	0	1	0	1
11	61	828.1	828.4	828.5	828.6	828.6	0	0	0	0
11	64	F.L.=828.3	F.L.=828.5	F.L.=828.7	F.L.=828.9	F.L.=829.1	0	0	0	0
12	67						0	0	0	1
12	67						0	1	0	1

BY OTHERS
PROJECT
FRA-270-(31.01)(33.64)

2:1, 6', 8:1, 3:1, 12:1

130 120 110 100 90 80 70 60 50 40 30 20 10 0 10 20 30 40 50 60 70 80 90 100 110 120 130 140

840 830 820

Plot Scale = 1" = 10'
CQL #18
C:\DRAWING\06092306\XSECS\60922SML.DWG - VIEW: ML3 FEBRUARY-08-1995

CALC. BY: S.D.E. DATE: 02/03/95
CHKD. BY: M.F.J. DATE: 02/15/95

CROSS SECTIONS
STA. 1439+50 TO STA. 1441+50

FRA-270-32.46

234
593

SEEDING END WIDTH	SEEDING SQ. YDS.	END AREA CUT	END AREA FILL	VOLUME CUT	VOLUME FILL
52	289	235	0	242	0
52	289	26	0	31	1
52	177	8	1	7	2
12	67	0	1	0	2
12	64	0	1	0	2

CALC. BY: S.D.E. DATE: 02/15/95
CHKD. BY: M.F.J. DATE: 02/15/95

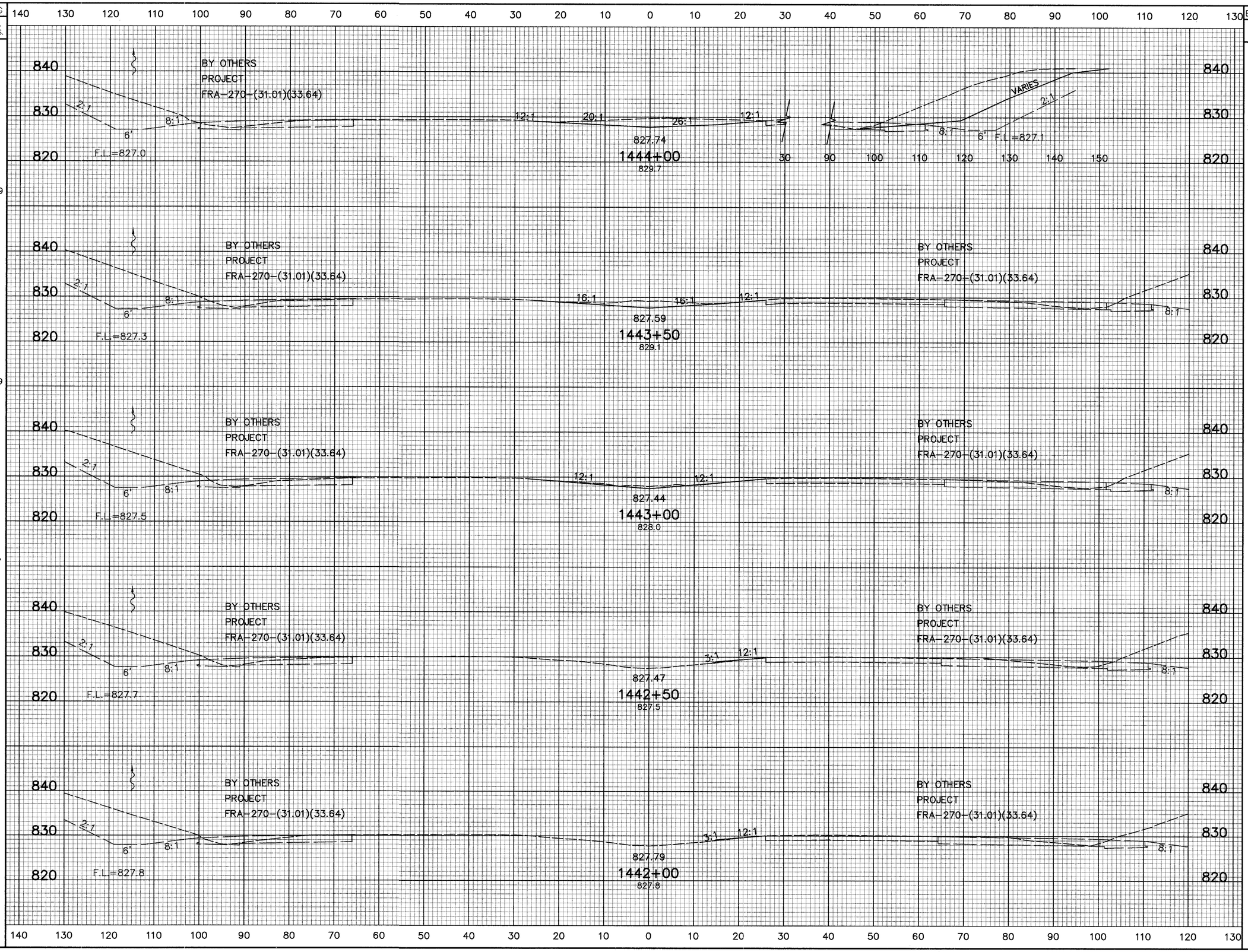

Plot Scale - 1" = 10'
COL. #18
C:\DRAWING\D6092306\XSECS\6092XSML.DWG - VIEW: ML4 FEBRUARY-08-1995

CROSS SECTIONS STA. 1442+00 TO STA. 1444+00

FRA-270-32.46

235
593

SEEDING END WIDTH	SEEDING SQ. YDS.	END AREA CUT	END AREA FILL	VOLUME CUT	VOLUME FILL
52	289	10	0	29	0
52	289	21	0	44	0
52	289	27	0	309	1
52	289	307	1	815	2
53	1690	573	1	748	68
	292				

BY OTHERS
PROJECT
FRA-270-(31.01)(33.64)

F.L.=826.4

827.12
1446+50
827.4

F.L.=826.5

827.27
1446+00
828.4

F.L.=826.6

827.42
1445+50
828.8

F.L.=826.7

827.57
1445+00
829.2

ITEM 601, CRUSHED AGGREGATE SLOPE PROTECTION TO BE PLACED AND PARTIALLY COVERED AS PART OF PROJECT ONE AND UNCOVERED AS PART OF PROJECT THREE.

F.L.=826.9

829.94
1444+50
829.3

THIS QUANTITY OF ITEM 659, SEEDING AND MULCHING, AS PER PLAN, HAS BEEN CALCULATED FROM THE PLAN FOR IRREGULARLY SHAPED AREAS OCCURRING BETWEEN STA. 1443+60 AND STA. 1445+50

CALC. BY: S.D.E. DATE: 02/03/05
CHKD. BY: M.F.J. DATE: 02/15/05

CROSS SECTIONS STA. 1444+50 TO STA. 1446+50

FRA-270-32.46

SHEET 236 OF 593

Plot Scale - 1" = 10'
COL #18 C:\DRAWING\0609230\XSECS\0692XSM.DWG - VIEW: ML5 FEBRUARY-08-1995

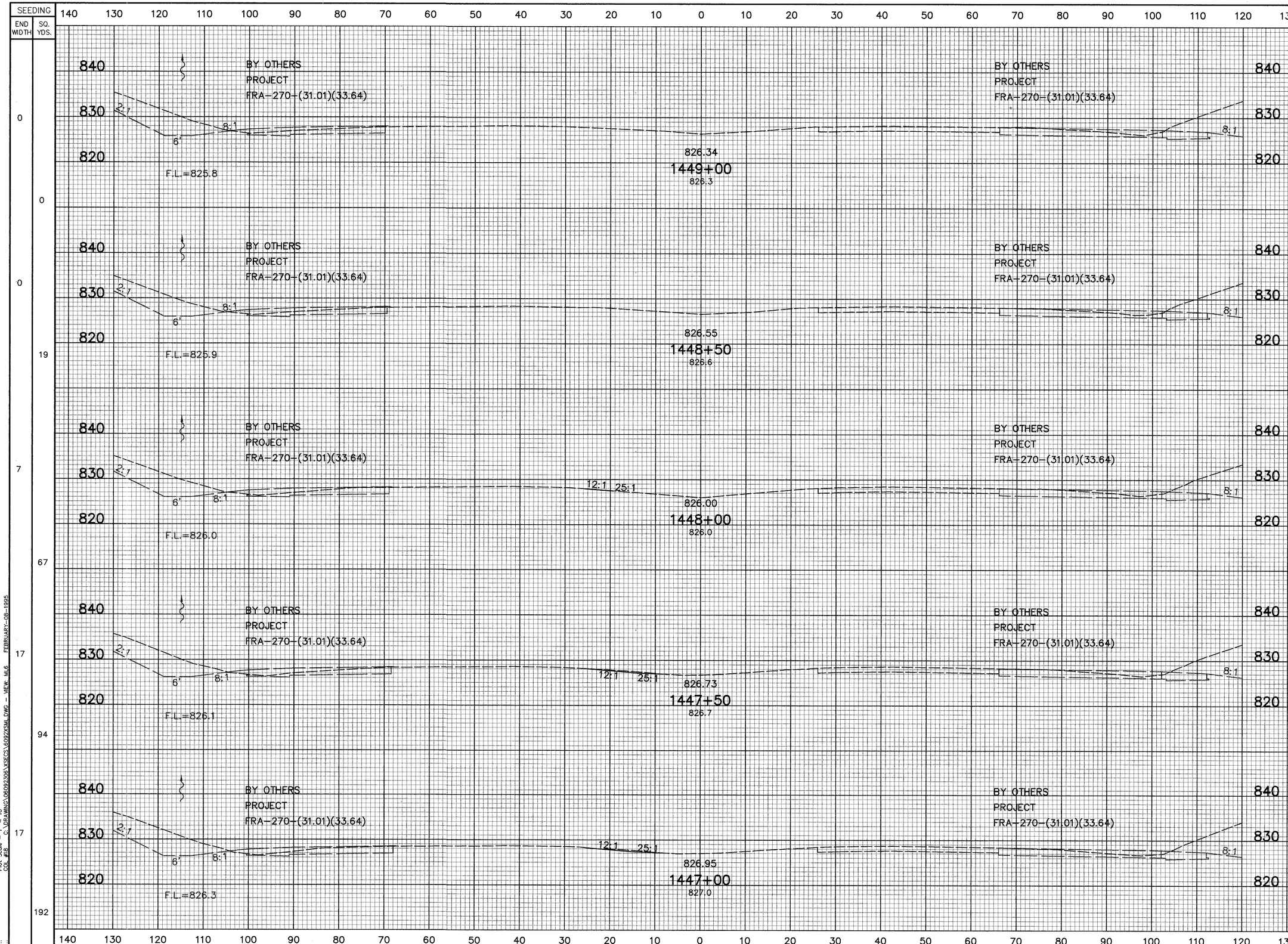

CALC. BY: S.D.E. DATE: 02/03/95
CHKD. BY: M.F.J. DATE: 02/15/95

CROSS SECTIONS
STA. 1447+00 TO STA. 1449+00

FRA-270-32.46

Plot Scale - 1" = 10'
COL #18 C:\DRAWING\06092306\XSECS\6092XSML.DWG - VIEW: ML6 FEBRUARY-08-1995

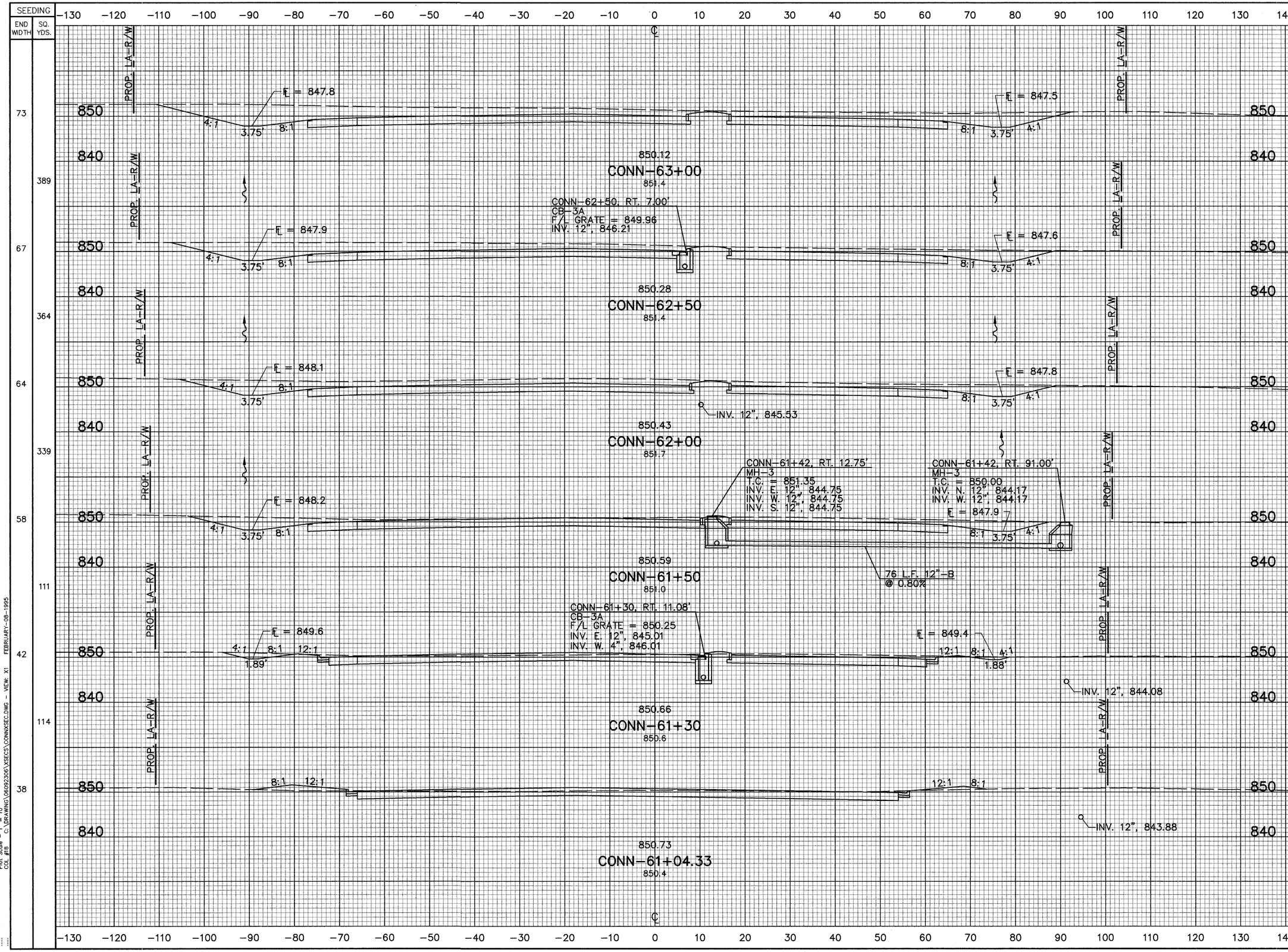

END WIDTH	SQ. YDS.	END AREA CUT	END AREA FILL	VOLUME CUT	VOLUME FILL
73		628	0		
	389			1087	0
67		546	0		
	364			963	0
64		494	0		
	339			818	1
58		389	1		
	111			236	1
42		249	3		
	114			204	11
38		181	21		

CALC. BY: S.D.E. DATE: 02/03/95
CHKD. BY: M.F.J. DATE: 02/15/95

CROSS SECTIONS
STA. CONN-61+04.33 TO STA. CONN-63+00

FRA-270-32.46

238/593

Plot Scale - 1" = 10'
COL #18 C:\DRAWING\06092306\XSECS\CONNXSEC.DWG - VIEW: X1 FEBRUARY-08-1995

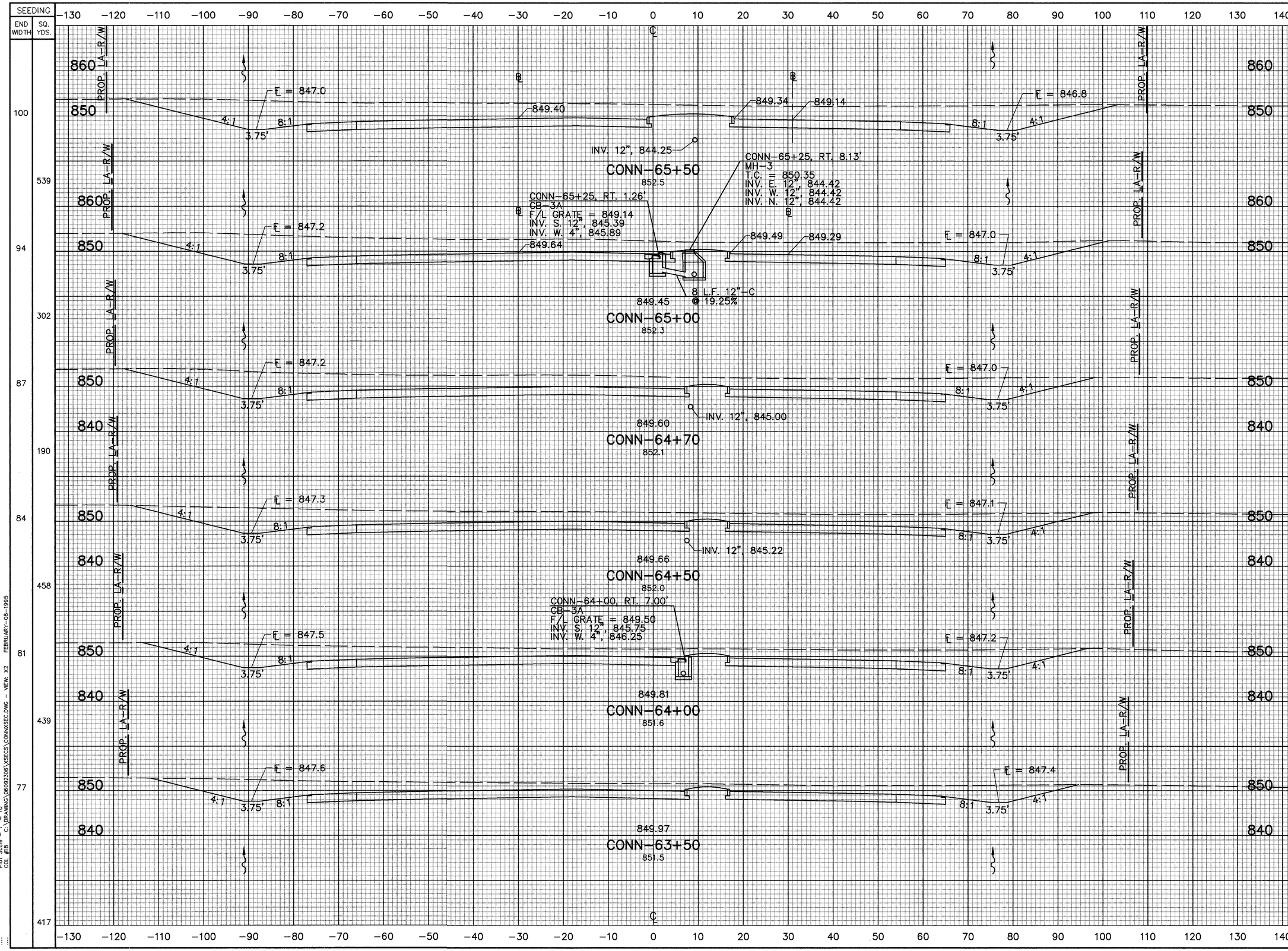

Station	Seeding End Width	Seeding Sq. Yds.	End Area Cut	End Area Fill	Volume Cut	Volume Fill
CONN-65+50	100		1010	0		
		539			1835	0
CONN-65+00	94		972	0		
		302			1039	0
CONN-64+70	87		899	0		
		190			643	0
CONN-64+50	84		837	0		
		458			1474	0
CONN-64+00	81		755	0		
		439			1320	0
CONN-63+50	77		671	0		
		417			1203	0

CALC. BY: S.D.E. DATE: 02/03/95
CHKD. BY: M.F.J. DATE: 02/15/95

CROSS SECTIONS
STA. CONN-63+50 TO STA. CONN-65+50

FRA-270-32.46

239/593

Plot Scale - 1" = 10'
COL #18 C:\DRAWING\06092306\XSECS\CONNXSEC.DWG - VIEW: X2 FEBRUARY-08-1995

SEEDING END WIDTH	SEEDING SQ. YDS.	END AREA CUT	END AREA FILL	VOLUME CUT	VOLUME FILL
79	442	464	0	945	0
80	436	557	0	1079	0
77	411	608	0	1164	0
71	381	649	0	1217	0
66	150	665	0	528	0
63	326	694	0	1059	0
102		960	0		

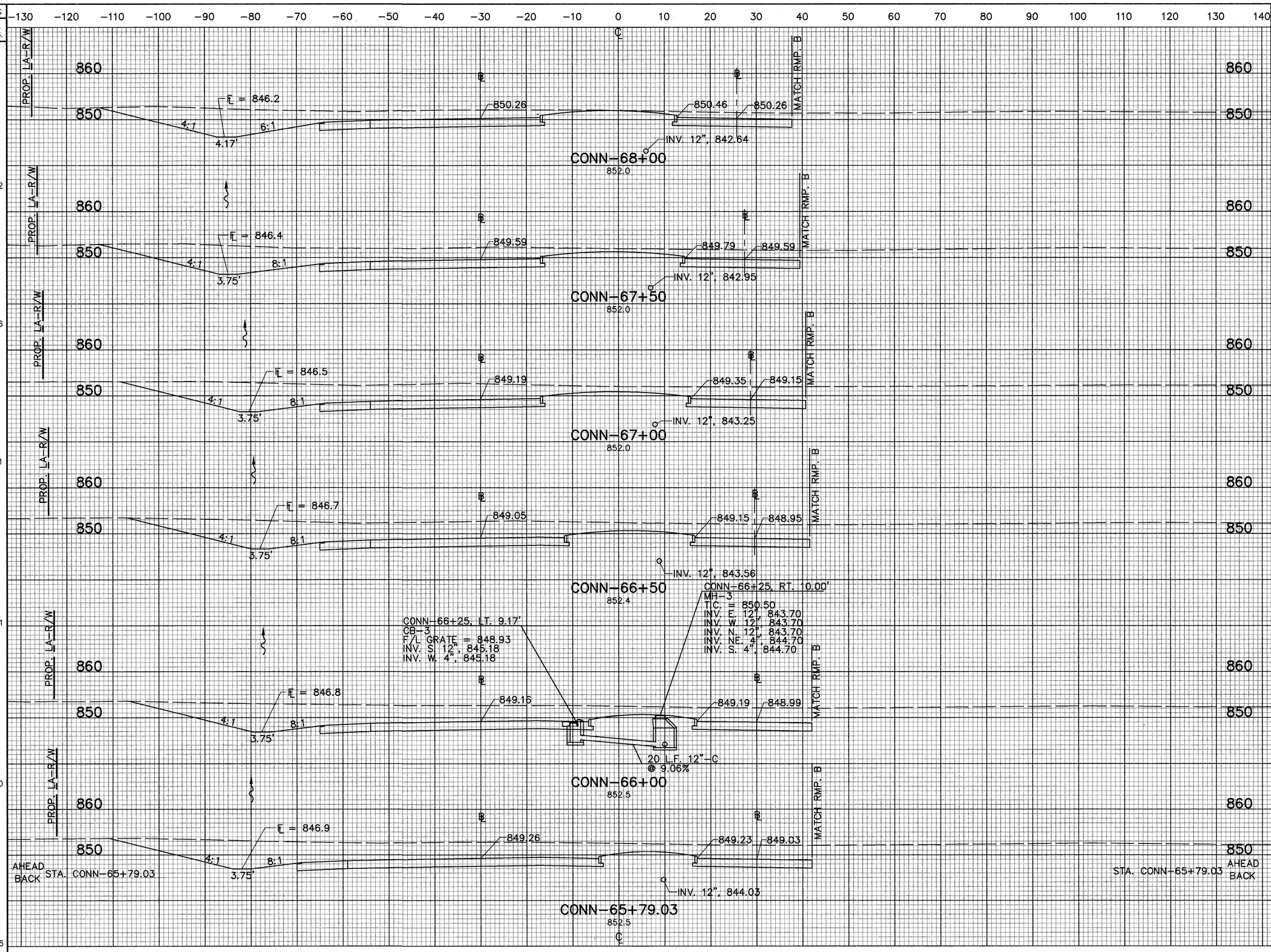

CALC. S.D.E. BY: DATE: 02/03/95
CHKD. M.F.J. DATE: 02/15/95

CROSS SECTIONS
STA. CONN-65+79.03 TO STA. CONN-68+00

FRA-270-32.46

240
593

Plot Scale = 1" = 10'
COL #18
C:\DRAWING\96092306\XSECS\CONNXSEC.DWG - VIEW: X3 FEBRUARY-08-1995

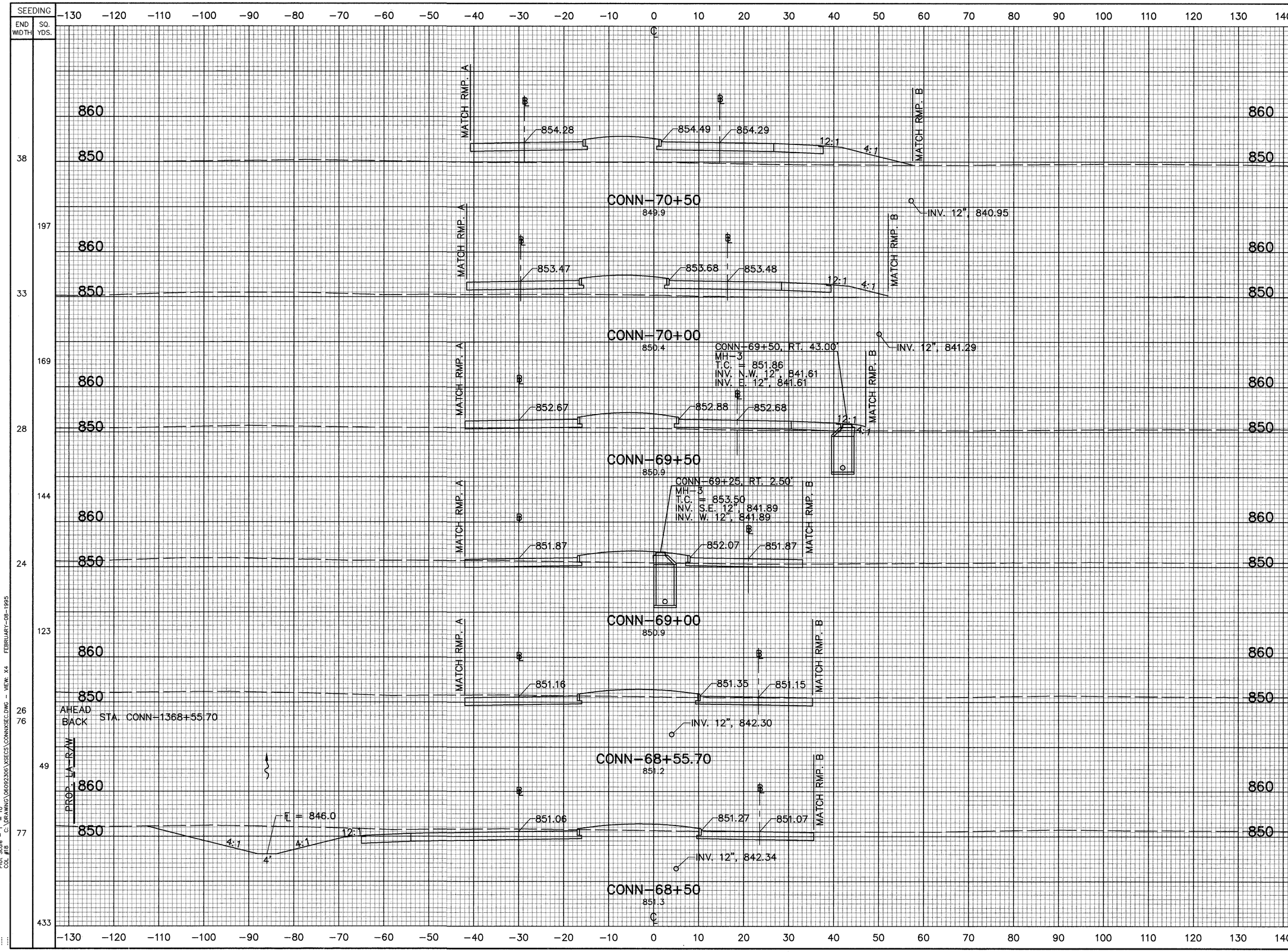

CALC. BY: S.D.E. DATE: 02/03/95
CHKD. BY: M.F.J. DATE: 02/15/95

CROSS SECTIONS
STA. CONN-68+50 TO STA. CONN-70+50

FRA-270-32.46

Plot Scale - 1" = 10'
COL #18 C:\DRAWING\06092306\XSECS\CONNXSEC.DWG - VIEW: X4 FEBRUARY-08-1995

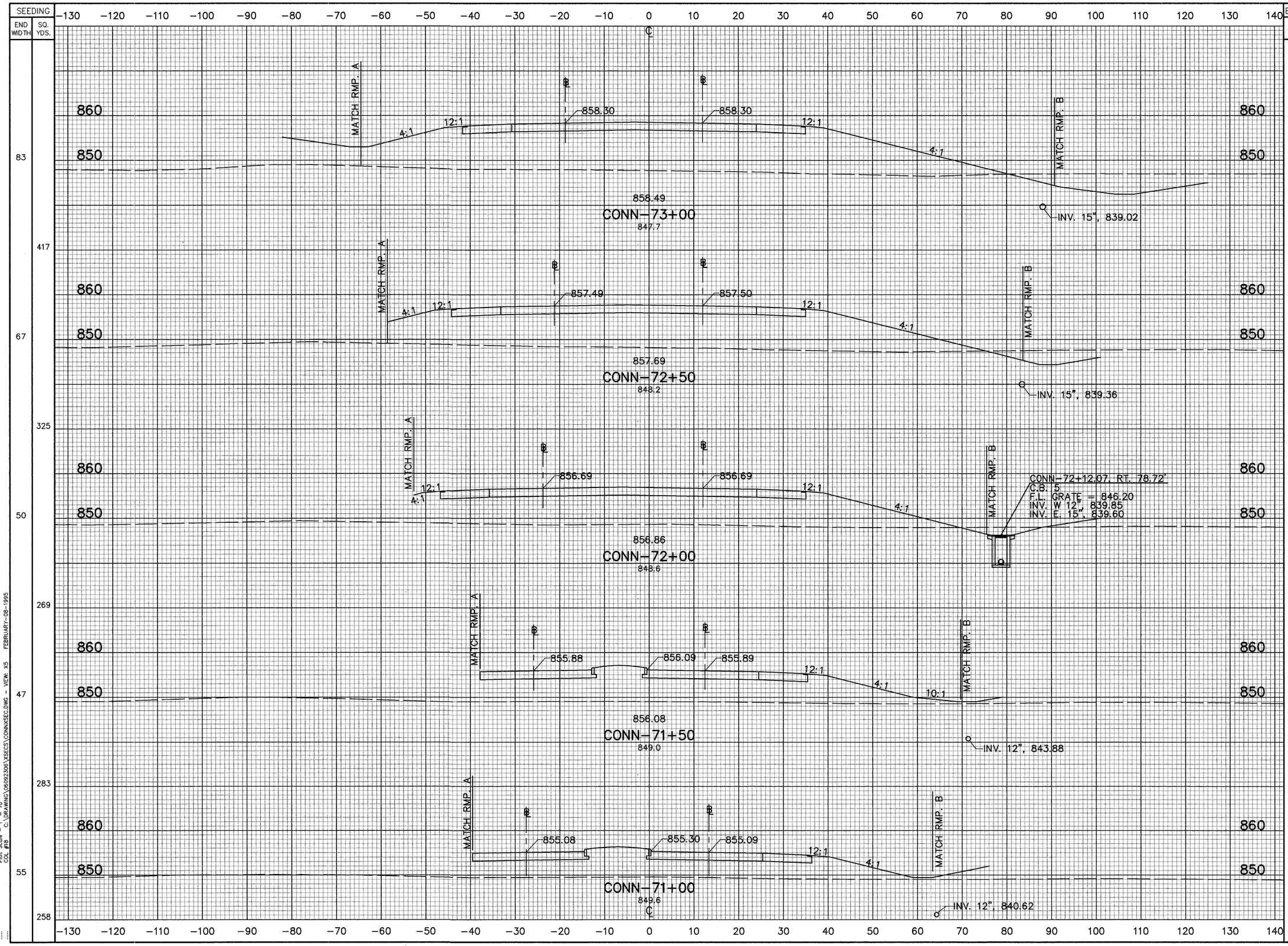

END AREA CUT	END AREA FILL	VOLUME CUT	VOLUME FILL
13	1099		
		20	1844
9	892		
		12	1479
4	705		
		4	1128
0	513		
		0	845
0	400		
		0	652

CALC. BY: S.D.E. DATE: 02/03/95
CHKD. BY: M.F.J. DATE: 02/15/95

CROSS SECTIONS
STA. CONN-71+00 TO STA. CONN-73+00

FRA-270-32.46

Plot Scale - 1" = 10'
COL #18 C:\DRAWING\06092306\XSECS\CONNXSEC.DWG - VIEW: X5 FEBRUARY-08-1995

CROSS SECTIONS
STA. CONN–73+50 TO STA. CONN–75+00

SEEDING END WIDTH	SEEDING SQ. YDS.	END AREA CUT	END AREA FILL	VOLUME CUT	VOLUME FILL
142	750	45	2046	75	3551
128	672	36	1789	56	3102
114	589	25	1561	38	2674
98	503	16	1327	27	2246

C'ALC. S.D.E. DATE: 02/03/95
CHK'D. M.F.J. DATE: 02/15/95

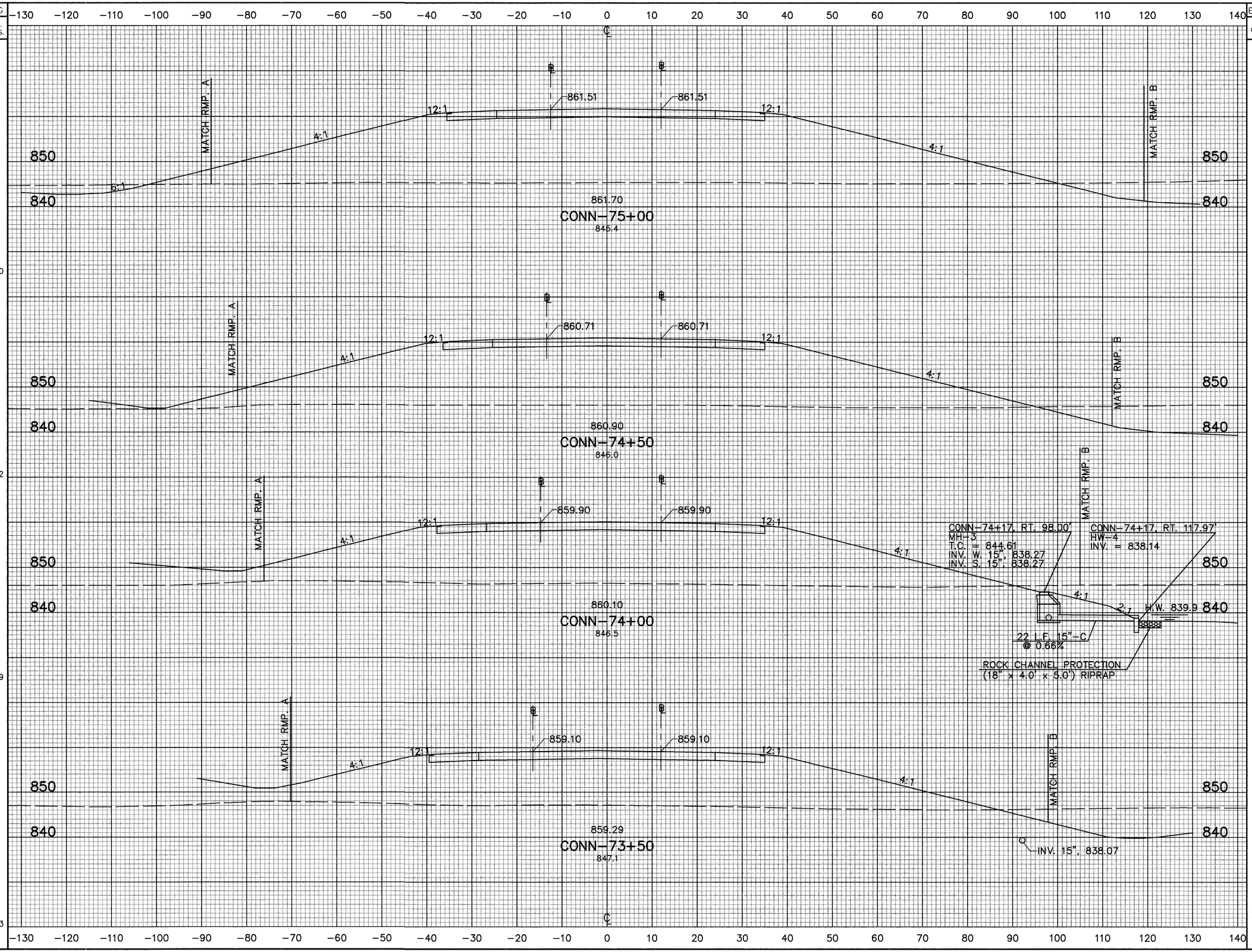

Plot Scale – 1" = 10'
COL #18 C:\DRAWING\06092306\XSECS\CONNXSEC.DWG – VIEW: X6 FEBRUARY–08–1995

FRA–270–32.46

243
593

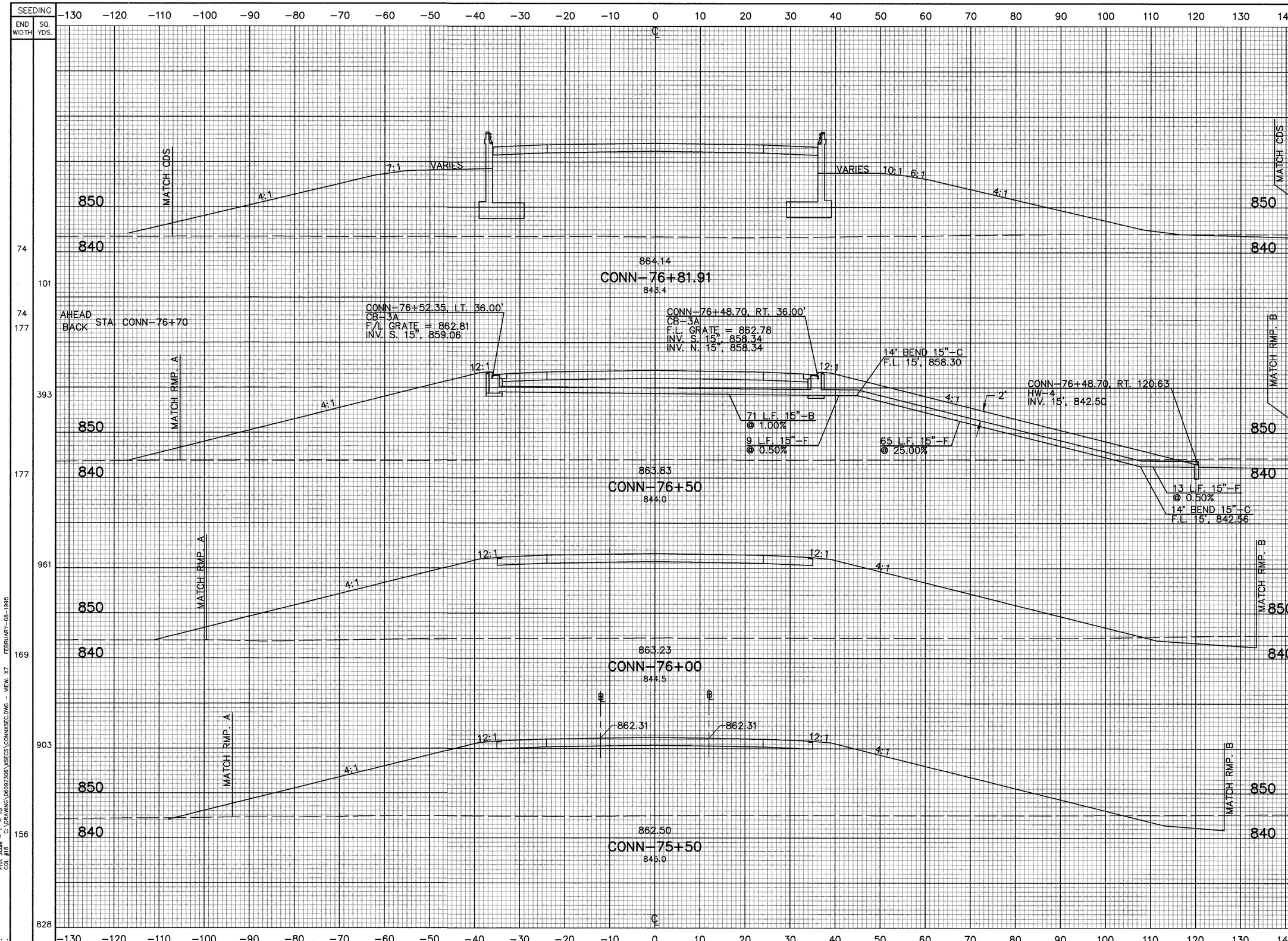

END AREA CUT	END AREA FILL	VOLUME CUT	VOLUME FILL
9	2758		
		31	3326
44	2870		
		76	5023
38	2555		
		81	4475
49	2278		
		87	4004

CALC. BY: S.D.E. DATE: 02/03/95
CHKD. BY: M.F.J. DATE: 02/15/95

CROSS SECTIONS
STA. CONN-75+50 TO STA. CONN-76+81.91

FRA-270-32.46

Plot Scale - 1" = 10'
COL #18 C:\DRAWING\06092306\XSECS\CONNXSEC.DWG - VIEW: X7 FEBRUARY-08-1995

SEEDING		END AREA		VOLUME	
END WIDTH	SQ. YDS.	CUT	FILL	CUT	FILL
65		0	1780		
45		0	501		
51		0	2133		
126		3	1638		

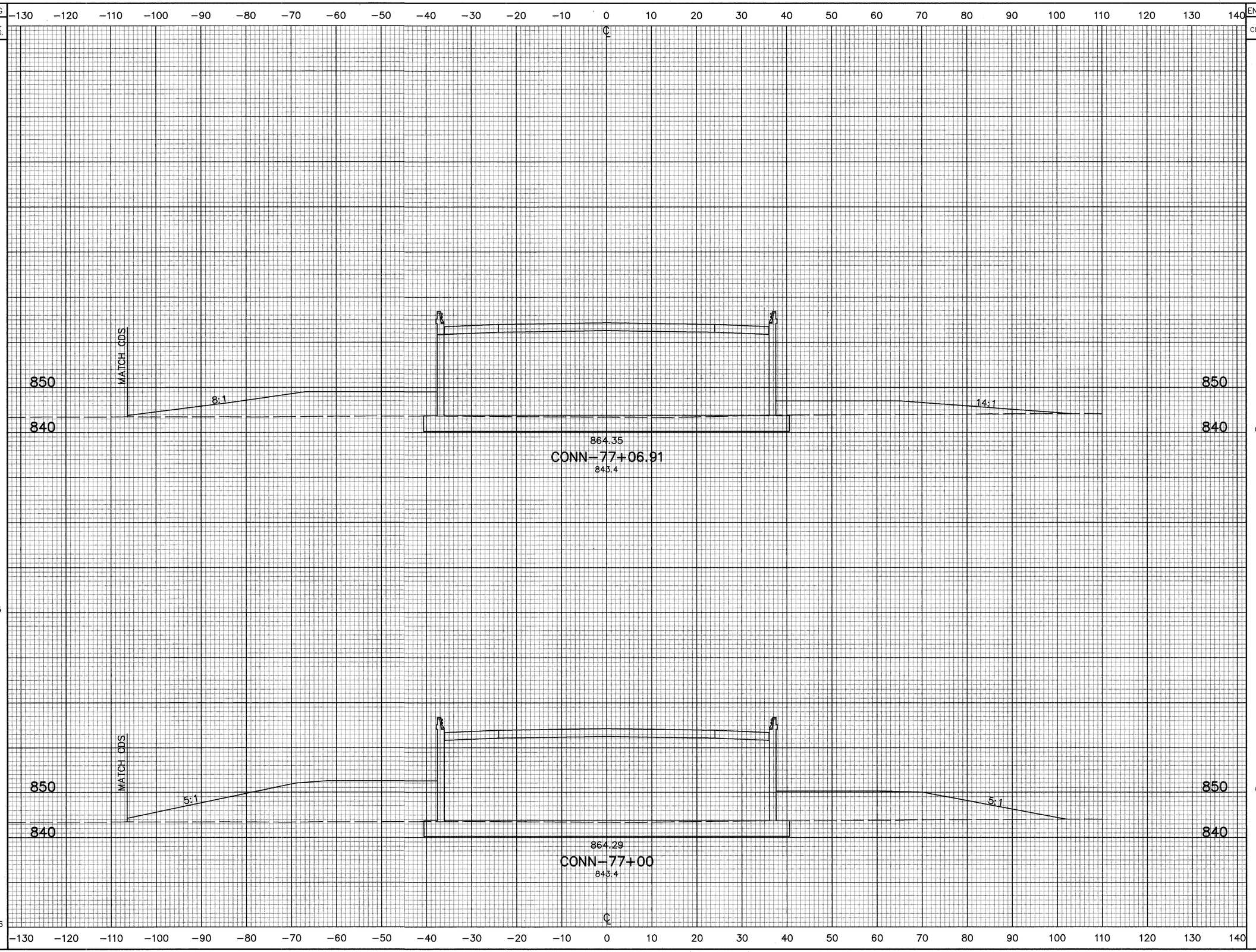

CALC. S.D.E. DATE: 02/03/95
CHKD. M.F.J. BY: DATE: 02/15/95

CROSS SECTIONS
STA. CONN-77+00 TO STA. CONN-77+06.91

FRA-270-32.46

245
593

Plot Scale - 1" = 10'
COL #18 C:\DRAWING\06092306\XSECS\CONNXSEC.DWG - VIEW: X8 FEBRUARY-08-1995

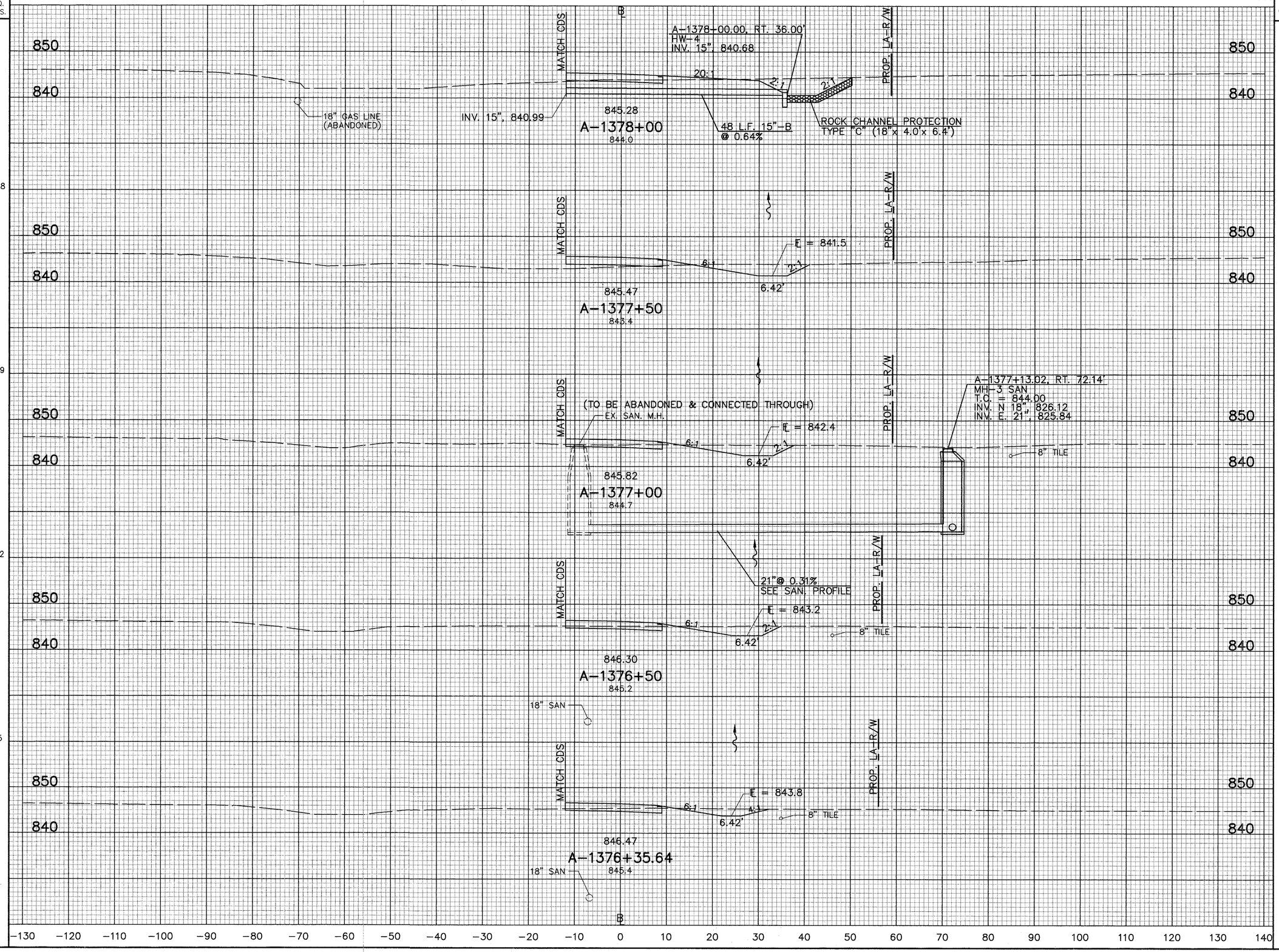

END WIDTH	SQ. YDS.	END AREA CUT	END AREA FILL	VOLUME CUT	VOLUME FILL
46		58	7		
	228			92	19
36		41	14		
	189			82	14
32		48	1		
	172			84	2
30		43	1		
	45			20	1
27		33	1		

CALC. BY: S.D.E. DATE: 02/03/95
CHKD. BY: M.F.J. DATE: 02/15/95

CROSS SECTIONS
STA. A-1376+35.64 TO STA. A-1378+00

FRA-270-32.46

Plot Scale - 1" = 10'
COL #18 C:\DRAWING\06092306\XSECS\RMPAXSEC.DWG - VIEW: A1 FEBRUARY-08-1995

SEEDING END WIDTH	SEEDING SQ. YDS.	STATION	END AREA CUT	END AREA FILL	VOLUME CUT	VOLUME FILL
47	253	A-1380+50	34	74	89	86
44	247	A-1380+00	62	19	111	29
45	256	A-1379+50	58	12	139	14
47	256	A-1379+00	92	3	210	3
45	253	A-1378+50	135	0	179	6

A-1380+78.90, RT. 36.00'
HW-4
INV. 15", 839.52

MATCH CDS

INV. 15", 840.00

844.25
A-1380+50
841.0

18:1
2:1
2:1
PROP. L.A.-R/W
51 L.F. 15"-B
@ 0.95%
ROCK CHANNEL PROTECTION
TYPE "C" (18" x 4.0 x 12.0')

℄ = 839.8
12:1
4:1
2:1
7.25'

844.44
A-1380+00
842.3

ROCK CHANNEL PROTECTION
TYPE "C" (18" x 15.0' x 22.0')

℄ = 840.0

844.70
A-1379+50
843.0

℄ = 840.3

844.92
A-1379+00
843.8

℄ = 840.5

18" GAS LINE
(ABANDONED)

845.15
A-1378+50
844.7

CROSS SECTIONS
STA. A-1378+50 TO STA. A-1380+50

FRA-270-32.46

247
593

CALC. BY: S.D.E. DATE: 02/03/95
CHKD. BY: M.F.J. DATE: 02/15/95

Plot Scale - 1" = 10'
COL #18
C:\DRAWING\06092306\XSECS\RMPAXSEC.DWG - VIEW: A2 FEBRUARY-08-1995

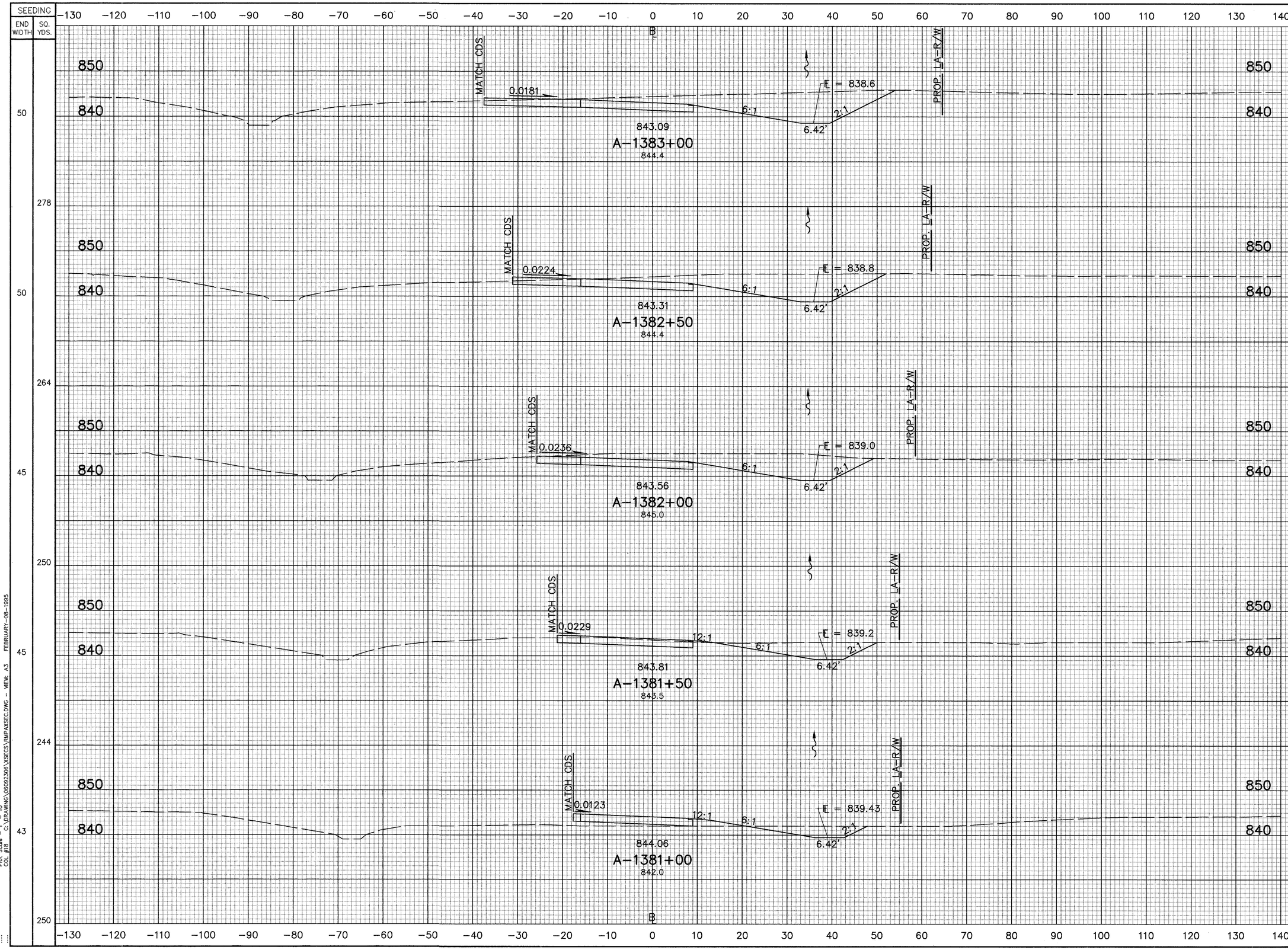

SEEDING END WIDTH	SEEDING SQ. YDS.	END AREA CUT	END AREA FILL	VOLUME CUT	VOLUME FILL
50		301	0		
	278			517	0
50		257	0		
	264			469	0
45		249	0		
	250			341	1
45		119	1		
	244			150	25
43		43	26		
	250			71	93

CALC. BY: S.D.E. DATE: 02/03/95
CHKD. BY: M.F.J. DATE: 02/15/95

CROSS SECTIONS
STA. A-1381+00 TO STA. A-1383+00

FRA-270-32.46

248/593

Plot Scale - 1" = 10'
COL #18 C:\DRAWING\06092306\XSECS\RMPAXSEC.DWG - VIEW: A3 FEBRUARY-08-1995

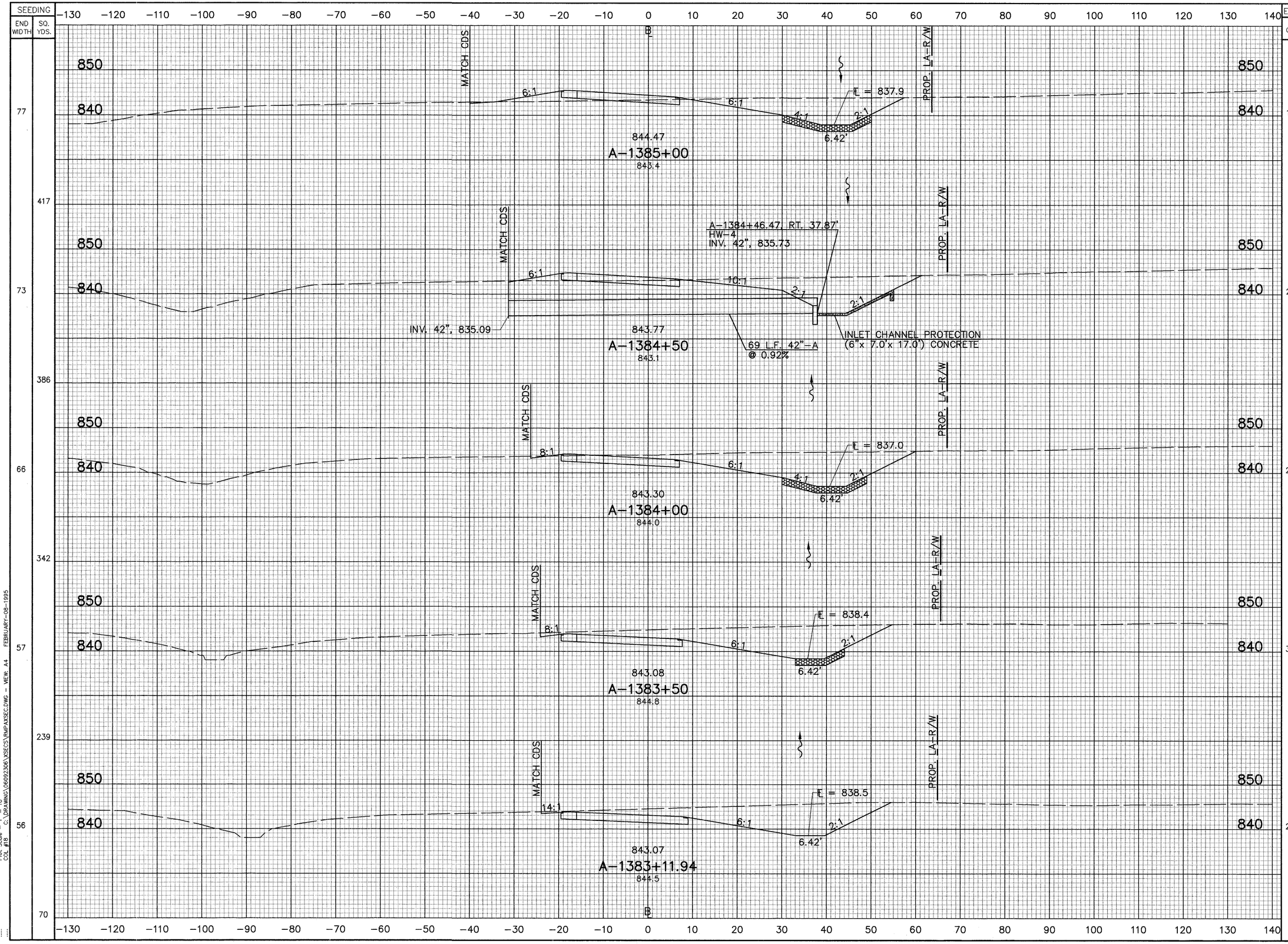

END AREA CUT	END AREA FILL	VOLUME CUT	VOLUME FILL
166	22		
		347	31
209	12		
		466	12
294	1		
		557	1
308	0		
		420	0
288	0		
		130	0

CALC. BY: S.D.E. DATE: 02/03/95
CHKD. BY: M.F.J. DATE: 02/15/95

CROSS SECTIONS
STA. A-1383+11.94 TO STA. A-1385+00

FRA-270-32.46

249/593

Plot Scale - 1" = 10'
COL #18 C:\DRAWING\06092306\XSECS\RMPAXSEC.DWG - VIEW: A4 FEBRUARY-08-1995

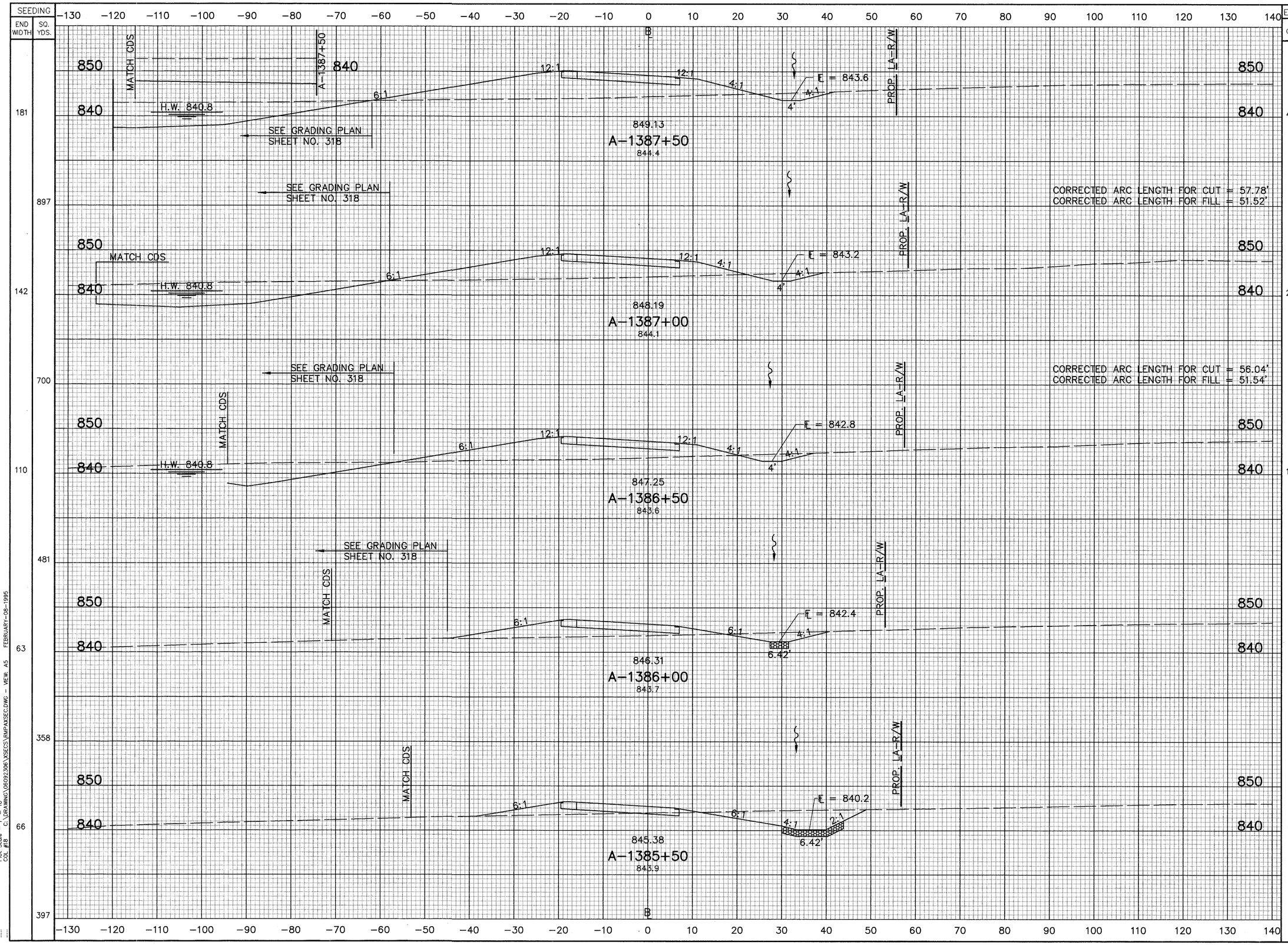

END WIDTH	SQ. YDS.	END AREA CUT	END AREA FILL	VOLUME CUT	VOLUME FILL
181		447	276		
	897			733	476
142		260	226		
	700			390	395
110		125	191		
	481			142	268
63		28	98		
	358			116	128
66		97	40		
	397			244	58

CALC. BY: S.D.E. DATE: 02/03/95
CHKD. BY: M.F.J. DATE: 02/15/95

CROSS SECTIONS
STA. A-1385+50 TO STA. A-1387+50

FRA-270-32.46

Plot Scale - 1" = 10'
COL #18 C:\DRAWING\06092306\XSECS\RMPAXSEC.DWG - VIEW: A5 FEBRUARY-08-1995

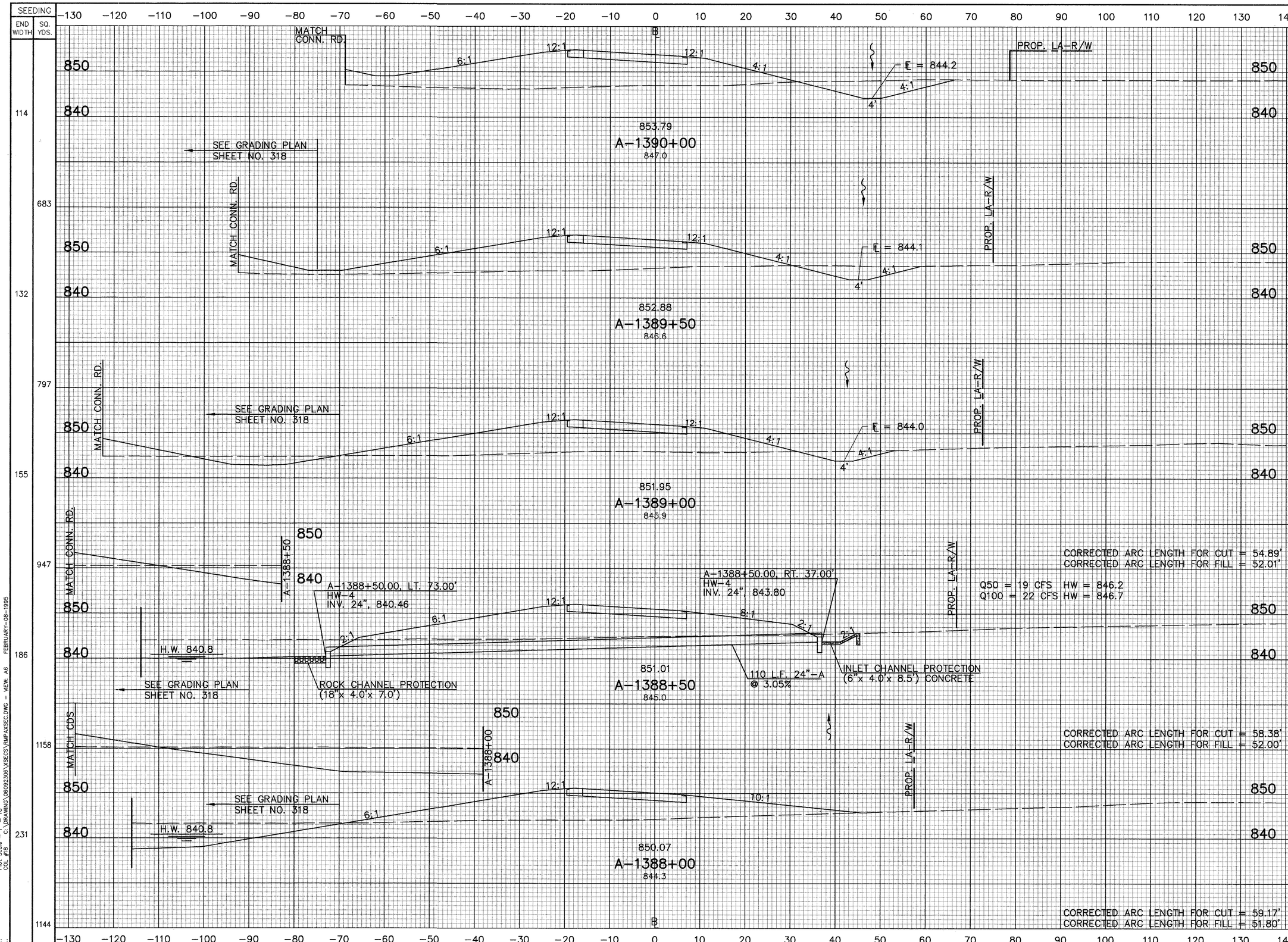

CALC. BY: S.D.E. DATE: 02/03/95
CHKD. BY: M.F.J. DATE: 02/15/95

CROSS SECTIONS
STA. A-1388+00 TO STA. A-1390+00

FRA-270-32.46

251/593

Plot Scale - 1" = 10'
COL #18 C:\DRAWING\06092306\XSECS\RMPAXSEC.DWG - VIEW: A6 FEBRUARY-08-1995

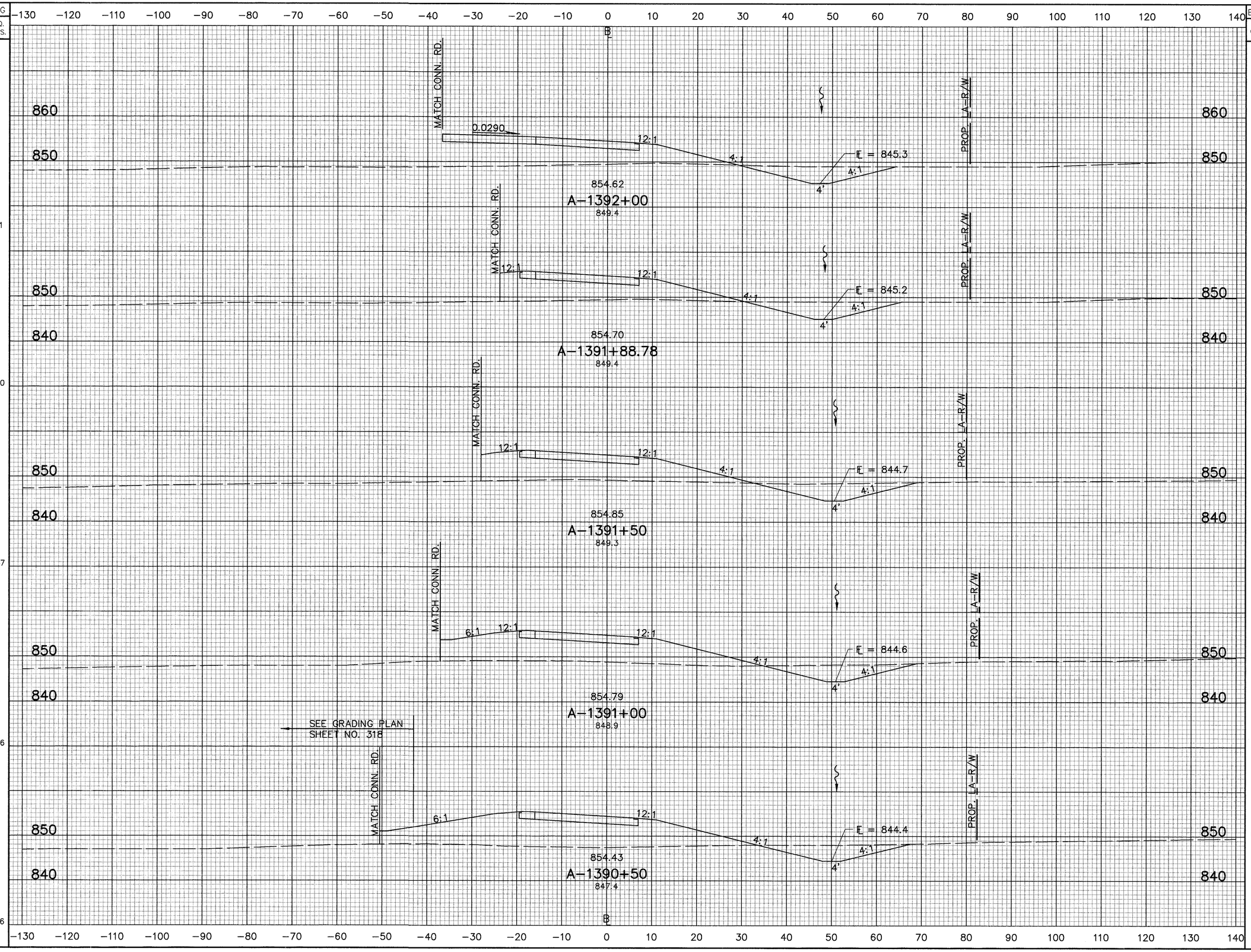

END AREA CUT	END AREA FILL	VOLUME CUT	VOLUME FILL
72	252		
		31	94
75	200		
		108	318
76	243		
		134	513
69	311		
		127	663
68	405		
		132	844

CALC. BY: S.D.E. DATE: 02/03/95
CHKD. BY: M.F.J. DATE: 02/15/95

CROSS SECTIONS
STA. A-1390+50 TO STA. A-1392+00

FRA-270-32.46

Plot Scale - 1" = 10'
COL #18 C:\DRAWING\06092306\XSECS\RMPAXSEC.DWG - VIEW: A7 FEBRUARY-08-1995

SEEDING END WIDTH	SEEDING SQ. YDS.	END AREA CUT	END AREA FILL	VOLUME CUT	VOLUME FILL
55		142	4		
	311			244	42
57		122	41		
	325	209	124		
60		104	93		
	333	180	227		
60		90	152		
	339	150	374		

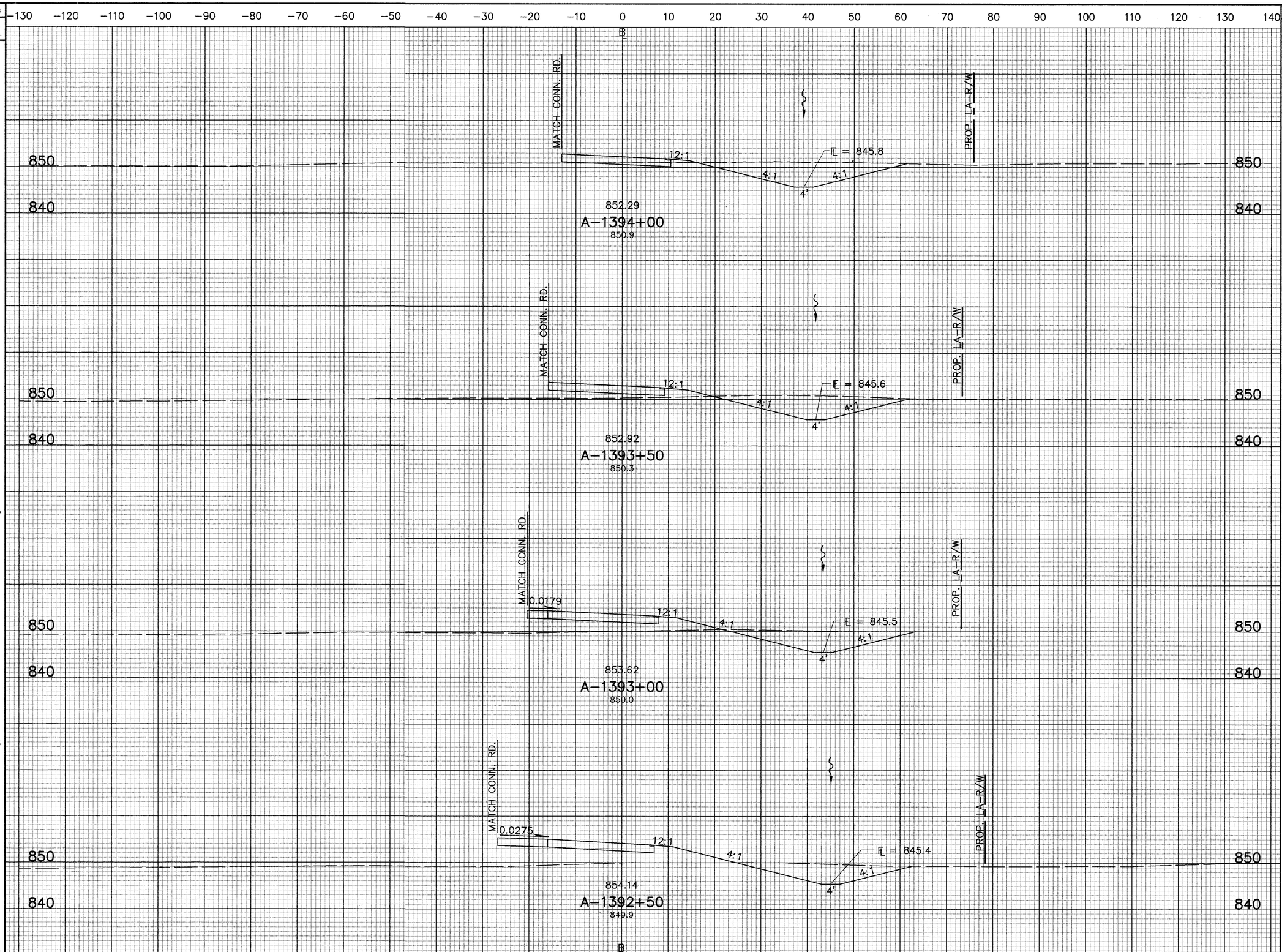

Plot Scale - 1" = 10'
COL #18 C:\DRAWING\06092308\XSECS\XMPAXSEC.DWG - VIEW: A8 FEBRUARY-08-1995

CALC: S.D.E. DATE: 02/03/95
CHKD: M.F.J. DATE: 02/15/95

CROSS SECTIONS
STA. A-1392+50 TO STA. A-1394+00

FRA-270-32.46

253
593

SEEDING END WIDTH	SEEDING SQ. YDS.	END AREA CUT	END AREA FILL	VOLUME CUT	VOLUME FILL
52	92	228	0	130	0
53		217	0		
54	269	188	0	340	0
54	28	183	0	32	0
	303			301	4

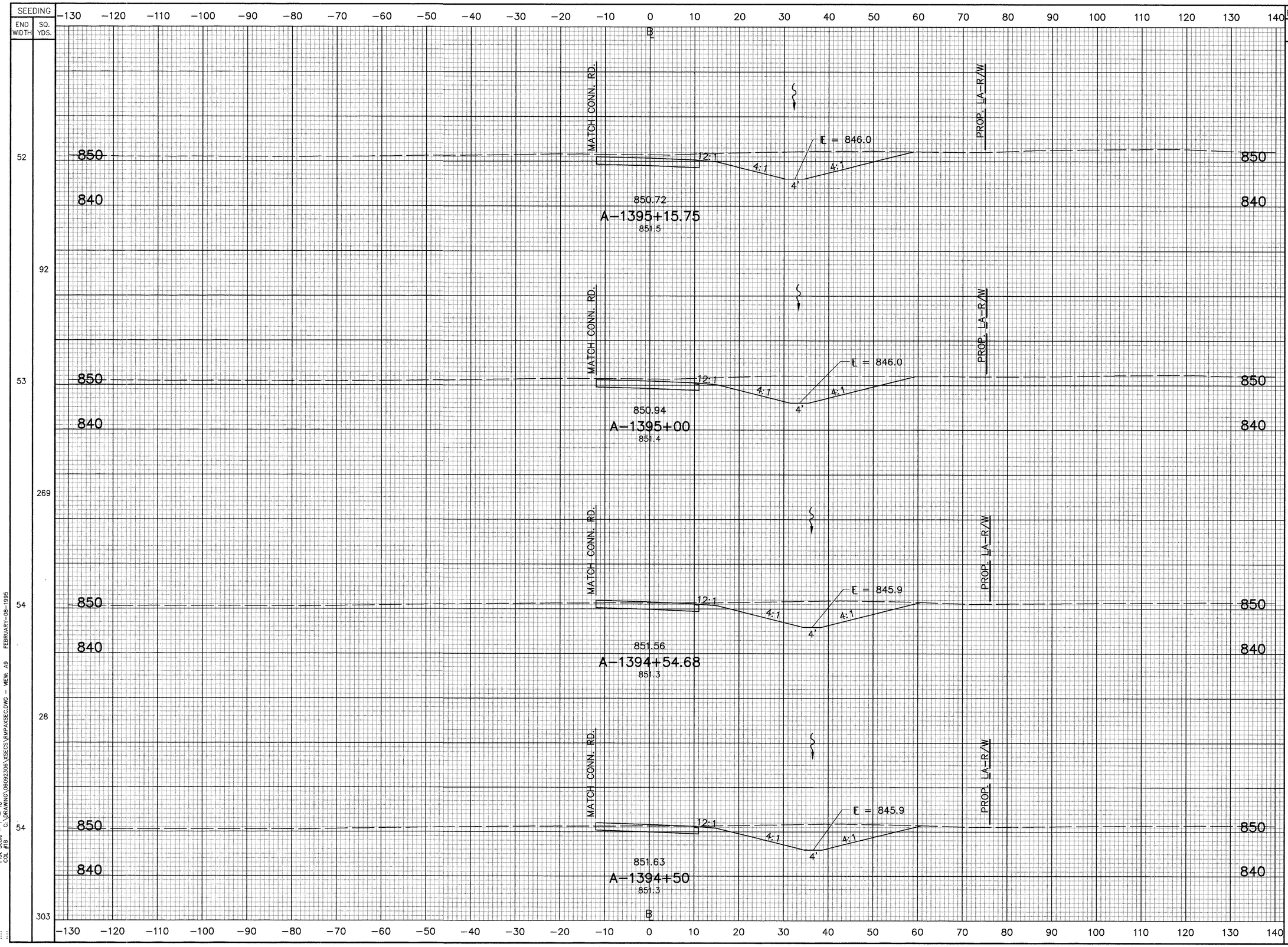

Plot Scale – 1" = 10'
COL #18 C:\DRAWING\08092306\XSECS\RMPAXSEC.DWG – VIEW: A9 FEBRUARY–08–1995

CALC. BY: S.D.E. DATE: 02/01/95
CHKD. BY: M.F.J. DATE: 02/15/95

CROSS SECTIONS
STA. A–1394+50 TO STA. A–1395+15.75

FRA–270–32.46

254
593

SEEDING END WIDTH	SEEDING SQ. YDS.	END AREA CUT	END AREA FILL	VOLUME CUT	VOLUME FILL
41		270	0		
	222			489	0
39		258	0		
	217			477	0
39		257	0		
	91			200	0
39		258	0		

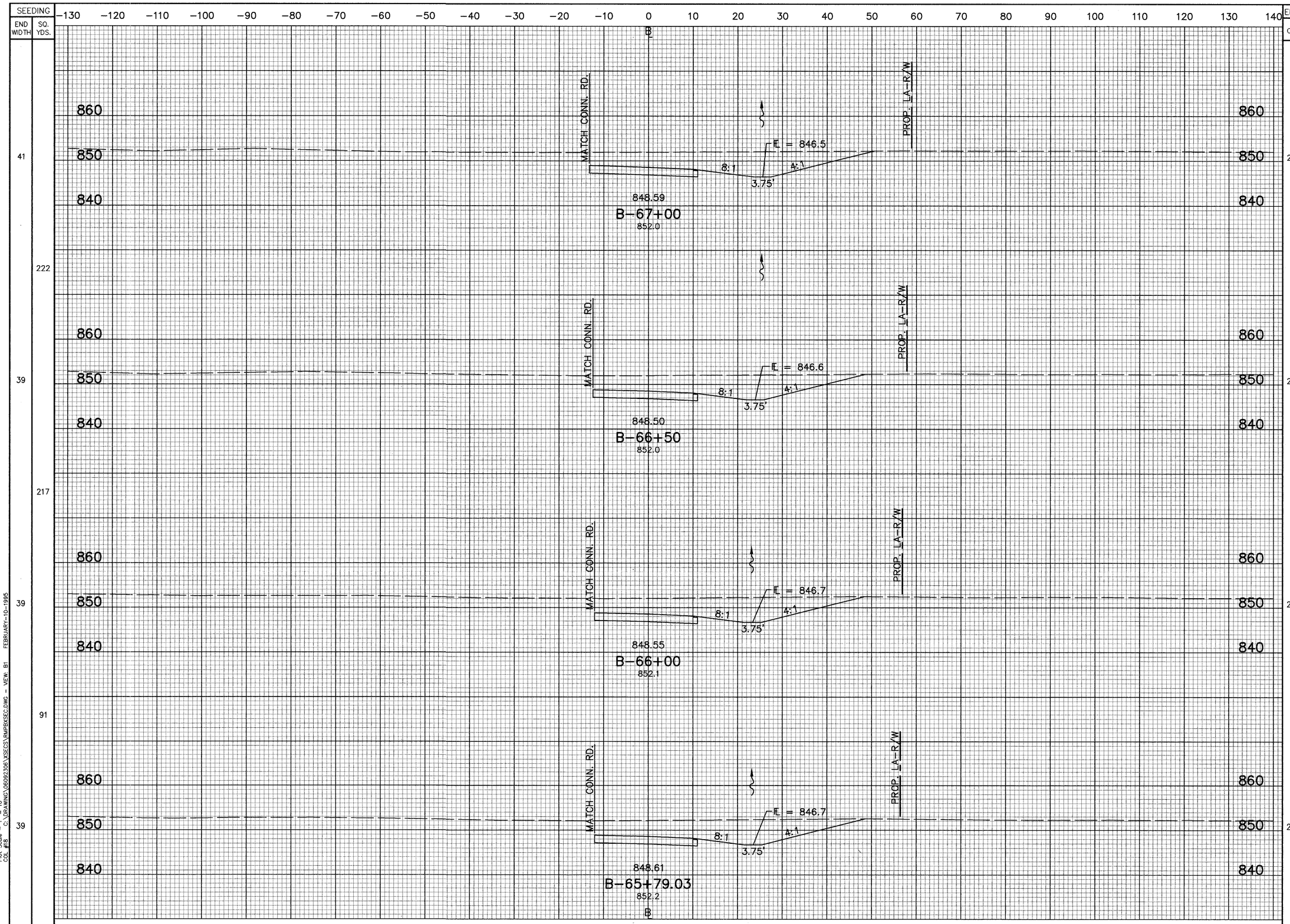

CALC. BY: S.D.E. DATE: 12/12/95
CHKD. BY: M.F.J. DATE: 12/15/95

CROSS SECTIONS
STA. B-65+79.03 TO STA. B-67+00

FRA-270-32.46

255
593

Plot Scale - 1" = 10'
COL. #18
C:\DRAWING\06092306\XSECS\RMPBXSEC.DWG - VIEW: B1 FEBRUARY-10-1995

SEEDING END WIDTH	SEEDING SQ. YDS.	END AREA CUT	END AREA FILL	VOLUME CUT	VOLUME FILL
46		183	0		
	247			364	0
43		210	0		
	239	420	0		
43		244	0		
	242	471	0		
44		265	0		
	236	495	0		

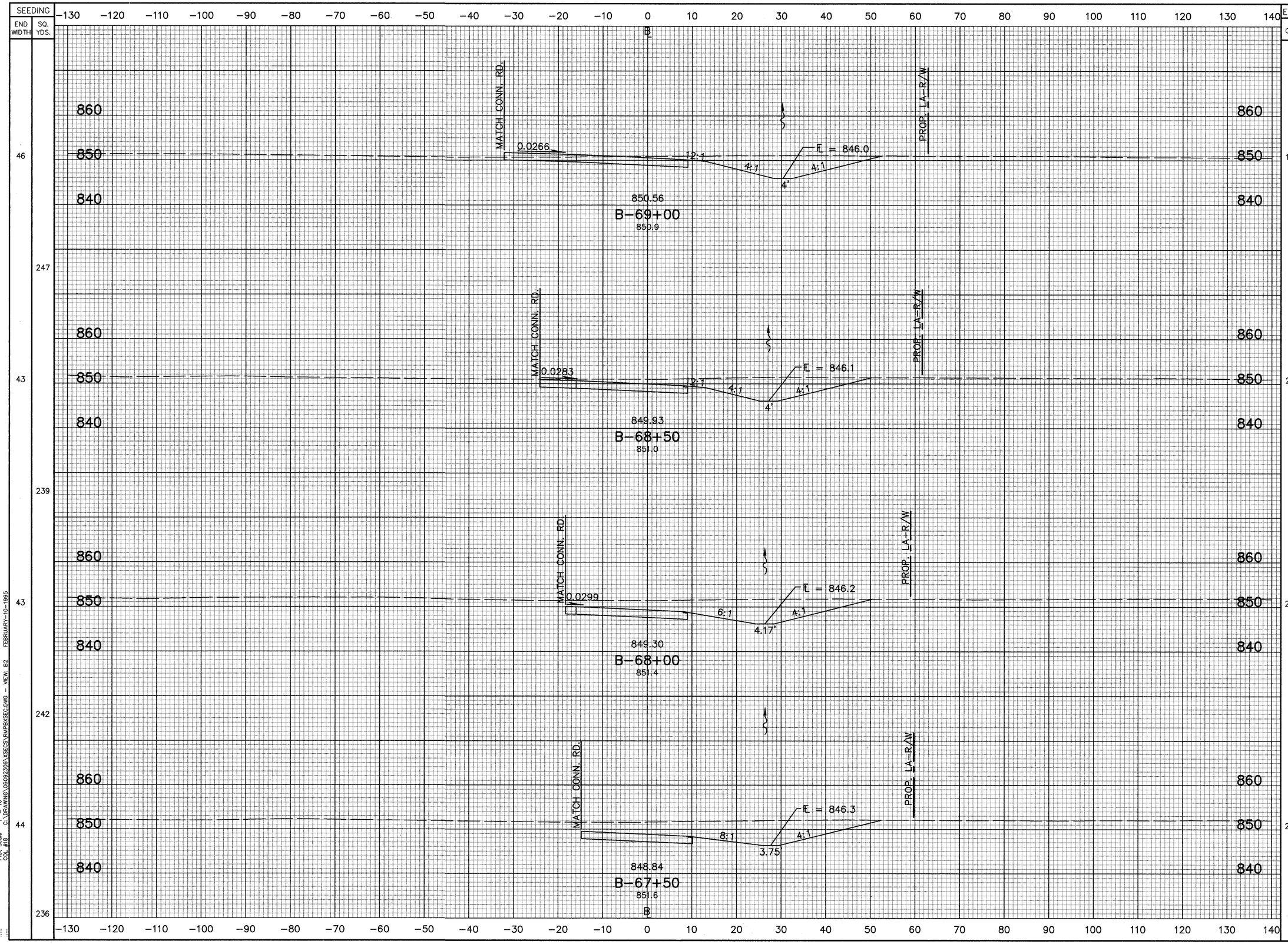

Plot Scale = 1" = 10'
COL #18 C:\DRAWING\0609230S\XSECS\RMPBXSEC.DWG — VIEW: B2 FEBRUARY-10-1995

CALC. BY: S.D.E. DATE: 12/02/95
CHKD. BY: M.F.J. DATE: 02/15/96

CROSS SECTIONS
STA. B-67+50 TO STA. B-69+00

FRA-270-32.46

256
593

SEEDING END WIDTH	SEEDING SQ. YDS.	STATION	END AREA CUT	END AREA FILL	VOLUME CUT	VOLUME FILL
88		B-71+50	65	192		
	456				125	320
76		B-71+00	70	154		
	397				141	238
67		B-70+50	82	103		
	353				165	131
60		B-70+00	96	39		
	314				203	43
53		B-69+50	123	7		
	275				283	6

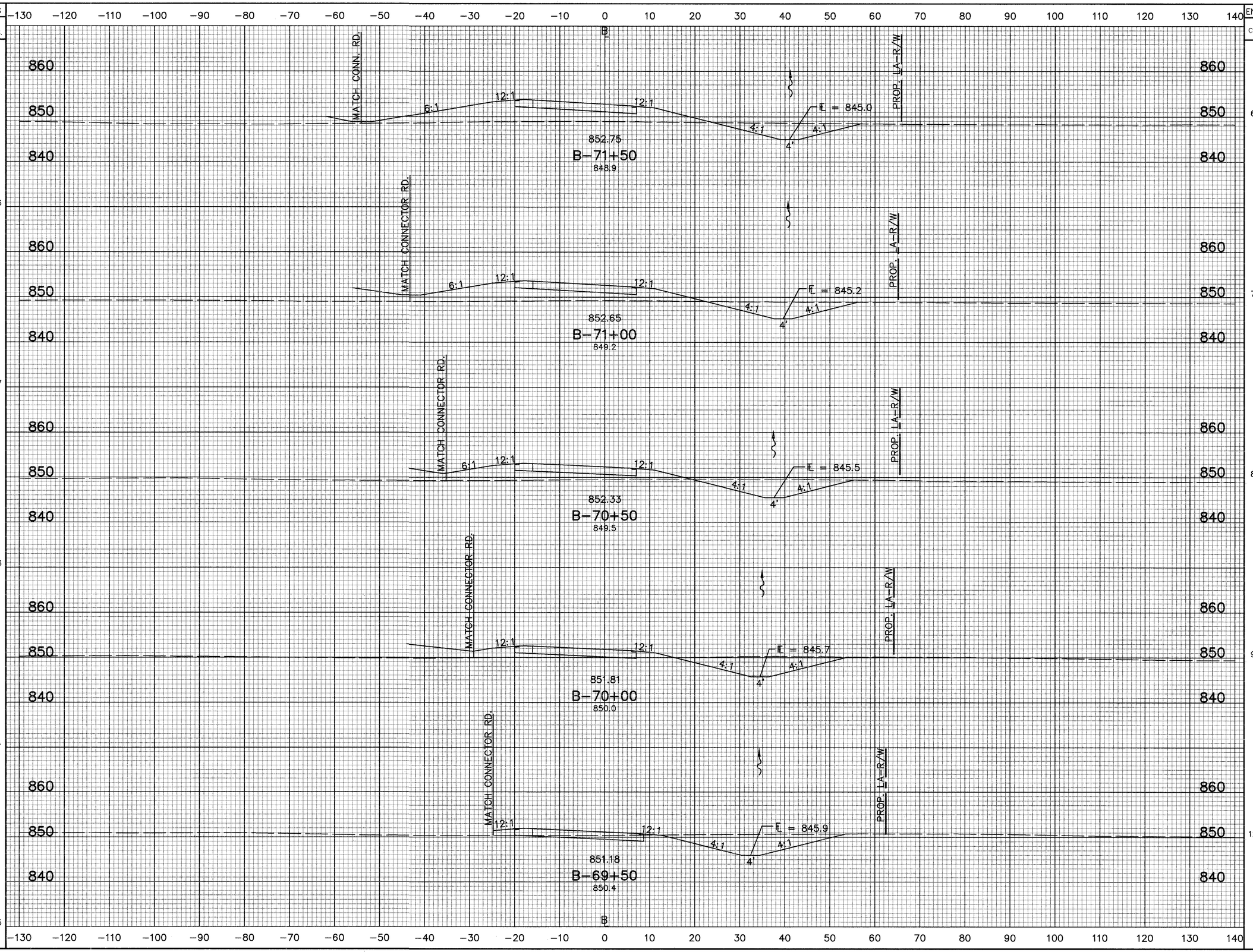

Plot Scale = 1" = 10'
COL #18
C:\DRAWING\06092306\XSECS\RMPBXSEC.DWG - VIEW: B3 FEBRUARY-10-1995

CALC. S.D.E. BY: DATE: 02/02/95
CHKD. M.F.J. BY: DATE: 02/15/95

CROSS SECTIONS
STA. B-69+50 TO STA. B-71+50

FRA-270-32.46

257
593

SEEDING END WIDTH	SEEDING SQ. YDS.	END AREA CUT	END AREA FILL	VOLUME CUT	VOLUME FILL
191		681	241		
	978			1173	481
161		443	269		
	831			669	516
138		214	278		
	714			303	495
119		113	257		
	611			165	452
101		65	231		
	525			120	392

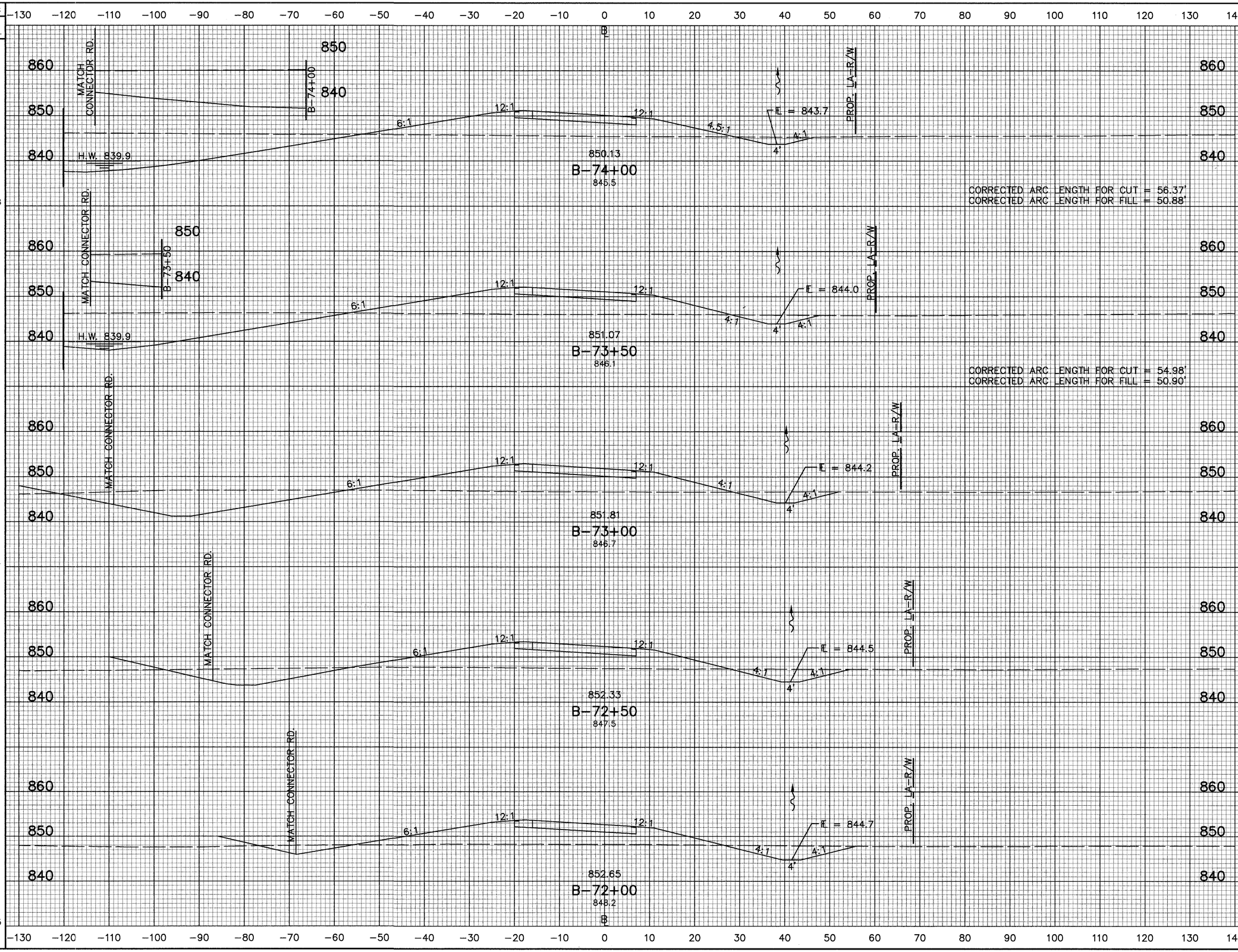

Plot Scale – 1" = 10'
COL #18 C:\DRAWING\06092306\XSECS\RMPBXSEC.DWG – VIEW: B4 FEBRUARY-10-1995

CALC: S.D.E. DATE: 02/09/95
CHK: M.F.J. DATE: 02/15/95

CROSS SECTIONS
STA. B–72+00 TO STA. B–74+00

FRA–270–32.46

258
593

SEEDING END WIDTH	SEEDING SQ. YDS.	END AREA CUT	END AREA FILL	VOLUME CUT	VOLUME FILL
161		742	7		
	981			1740	30
192		914	25		
	1214			2148	97
245		1089	77		
	1400			2432	196
259		1156	130		
	1356			2233	351
229		920	241		
	1167			1697	455

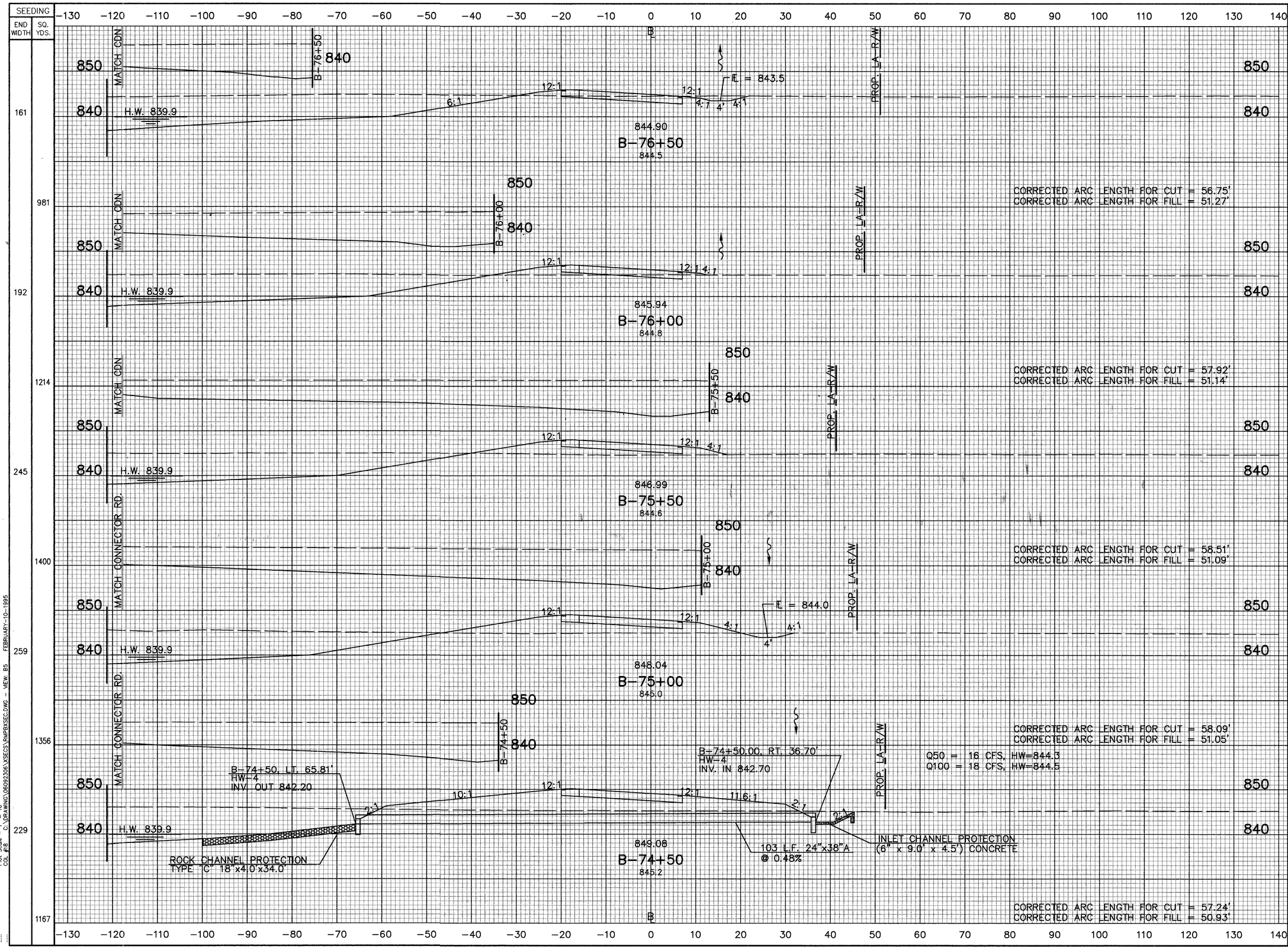

CROSS SECTIONS
STA. B–74+50

FRA–270–32.46

259
593

CALC. S.D.E. DATE: 02/02/95
CHKD. M.F.J. DATE: 02/15/95

Plot Scale – 1" = 10'
COL #18
C:\DRAWING\06092306\XSECS\RMPBXSEC.DWG – VIEW: B5 FEBRUARY–10–1995

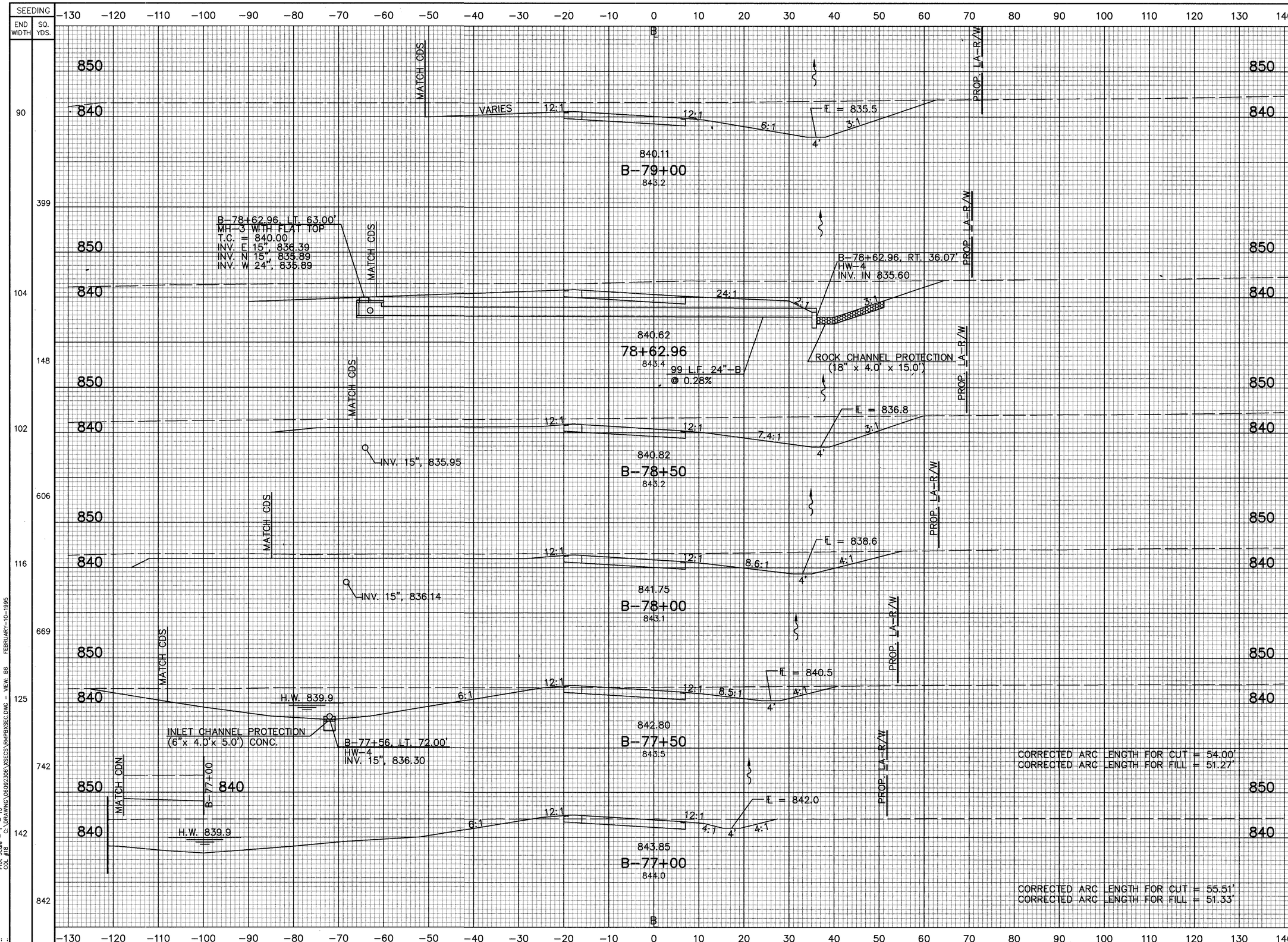

END AREA CUT	END AREA FILL	VOLUME CUT	VOLUME FILL
473	0		
		635	0
453	0		
		205	0
403	0		
		628	0
275	0		
		711	1
493	1		
		1119	4
626	3		
		1406	10

CALC. BY: S.D.E. DATE: 02/02/95
CHKD. BY: M.F.J. DATE: 02/15/95

CROSS SECTIONS
STA. B-77+00 TO STA. B-79+00

FRA-270-32.46

Plot Scale - 1" = 10'
COL #18 C:\DRAWING\06092306\XSECS\RMPBXSEC.DWG - VIEW: B6 FEBRUARY-10-1995

SEEDING END WIDTH	SEEDING SQ. YDS.	STATION	END AREA CUT	END AREA FILL	VOLUME CUT	VOLUME FILL
53	289	B-81+50	330	0	629	0
51	303	B-81+00	349	0	604	0
58	339	B-80+50	304	0	620	0
64	403	B-80+00	366	0	766	0
81	475	B-79+50	461	0	865	0

CALC. BY: S.D.E. DATE: 02/02/95
CHKD. BY: M.F.J. DATE: 02/15/95

CROSS SECTIONS
STA. B-79+50 TO STA. B-81+50

FRA-270-32.46

261
593

Plot Scale = 1" = 10'
COL #18 C:\DRAWING\08092306\XSECS\RMPBXSEC.DWG - VIEW: B7 FEBRUARY-10-1995

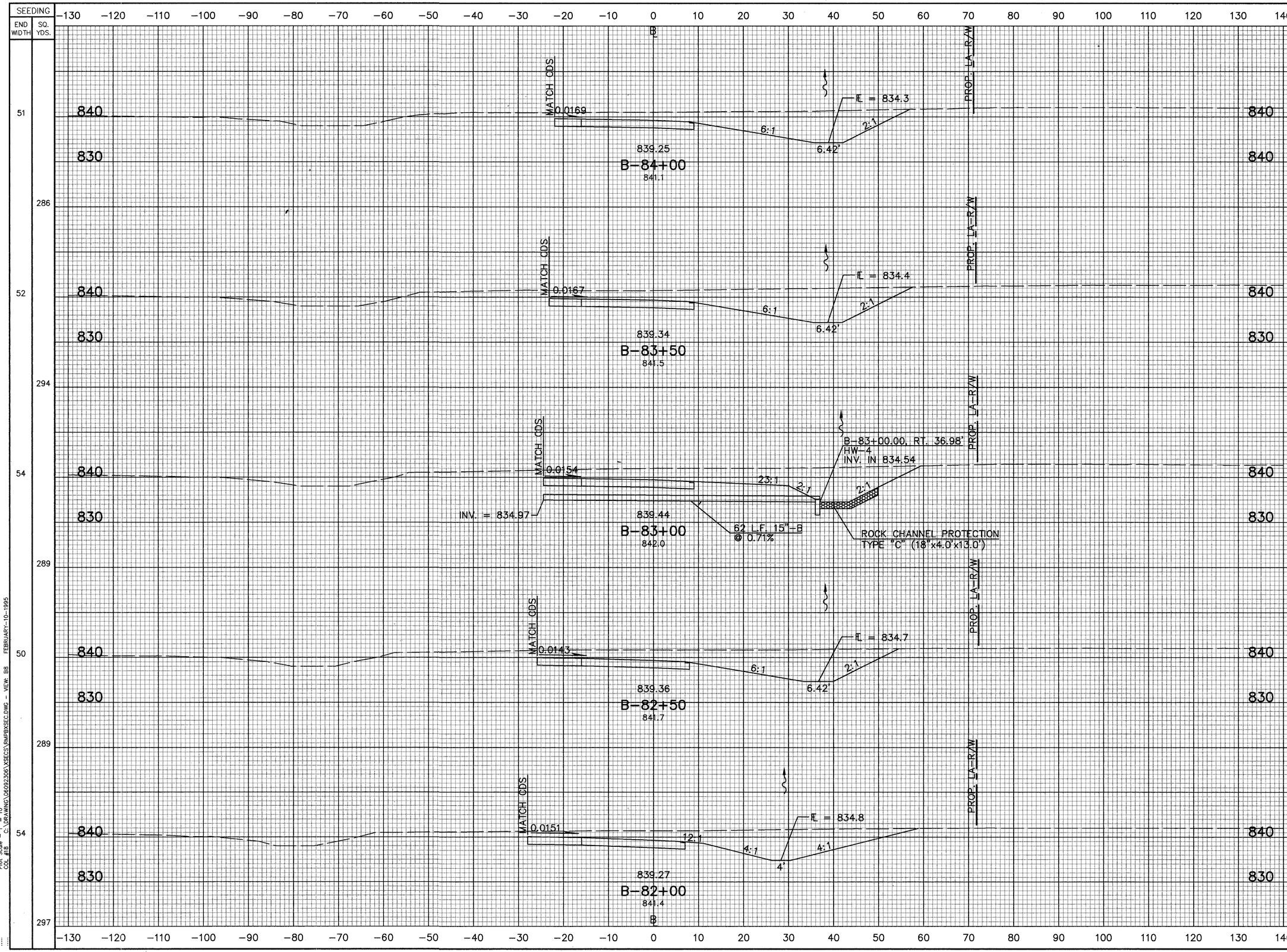

SEEDING END WIDTH	SEEDING SQ. YDS.	END AREA CUT	END AREA FILL	VOLUME CUT	VOLUME FILL
51		327	0		
	286			639	0
52		363	0		
	294			664	0
54		354	0		
	289			652	0
50		350	0		
	289			629	0
54		329	0		
	297			610	0

CALC. BY: S.D.E. DATE: 02/02/95
CHKD. BY: M.F.J. DATE: 02/15/95

CROSS SECTIONS
STA. B-82+00 TO STA. B-84+00

FRA-270-32.46

Plot Scale - 1" = 10'
COL #18 C:\DRAWING\06092306\XSECS\RMPBXSEC.DWG - VIEW: B8 FEBRUARY-10-1995

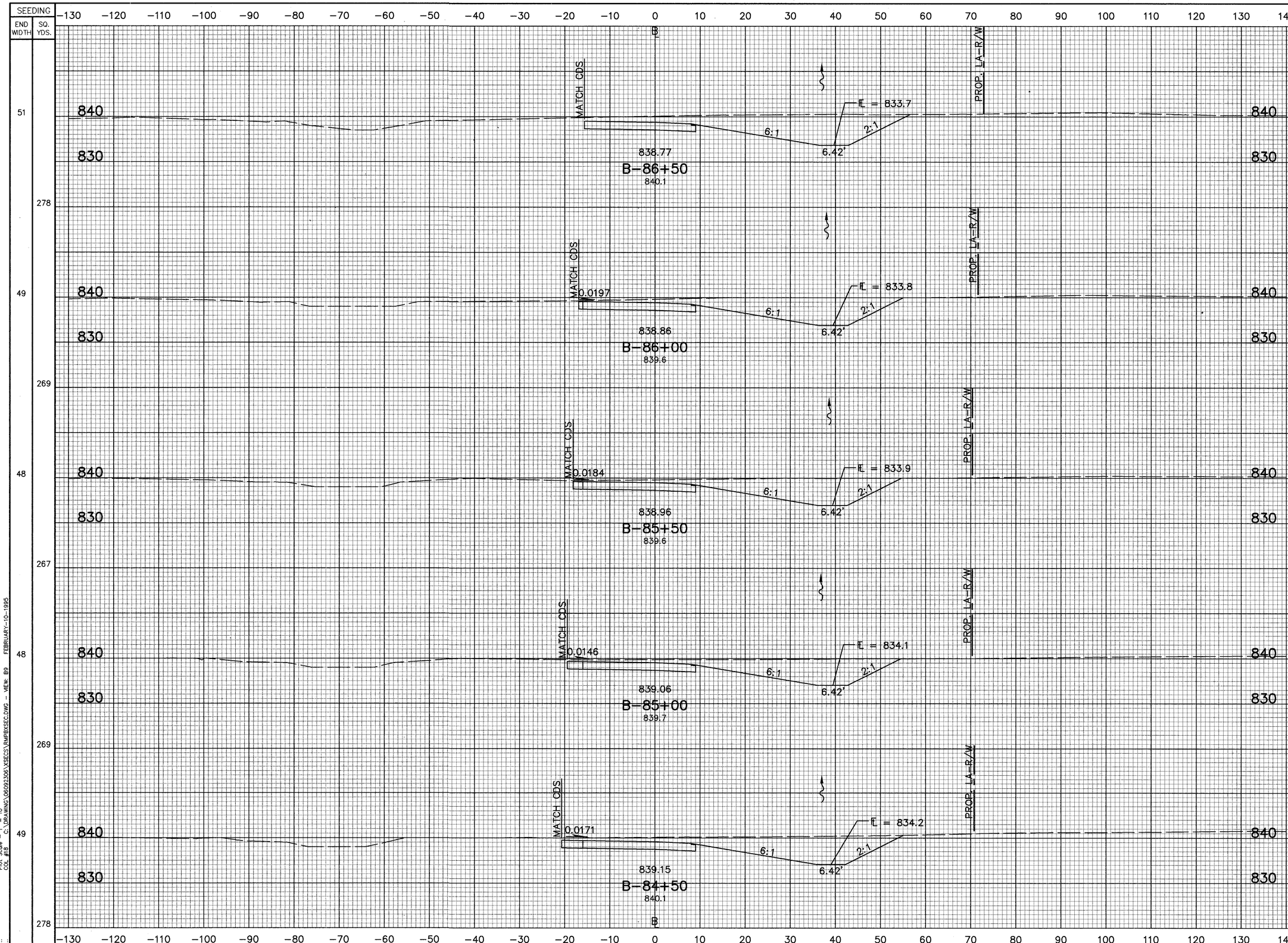

CALC. BY: S.D.E. DATE: 02/02/95
CHKD. BY: M.F.J. DATE: 02/15/95

CROSS SECTIONS
STA. B-84+50 TO STA. B-86+50

FRA-270-32.46

Plot Scale - 1" = 10'
COL #18 C:\DRAWING\06092306\XSECS\RMPBXSEC.DWG - VIEW: B9 FEBRUARY-10-1995

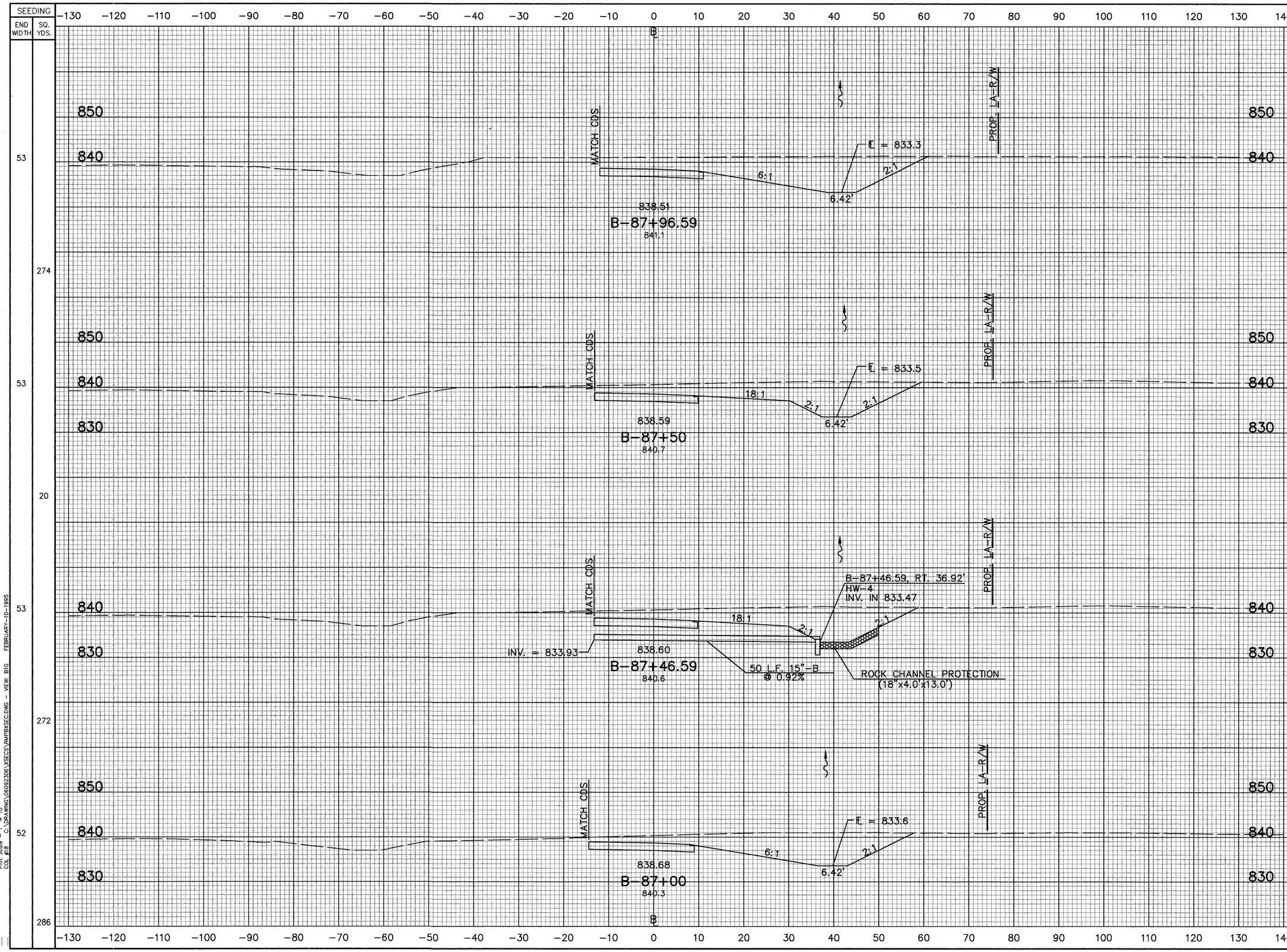

CALC. BY: S.D.E.
DATE: 02/02/95
CHKD. BY: M.F.J.

CROSS SECTIONS
STA. B-87+00 TO STA. B-87+96.59

FRA-270-32.46

Plot Scale - 1" = 10'
COL #18 C:\DRAWING\06092306\XSECS\RMPBXSEC.DWG - VIEW: B10 FEBRUARY-10-1995

SEEDING		END AREA		VOLUME		
END WIDTH	SQ. YDS.	CUT	FILL	CUT	FILL	
11	61	0	99	0	192	C-1368+50
11	61	0	108			C-1368+00
11	61	0	125	0	216	C-1367+50
13	51	0	136	0	51	C-1367+39.45

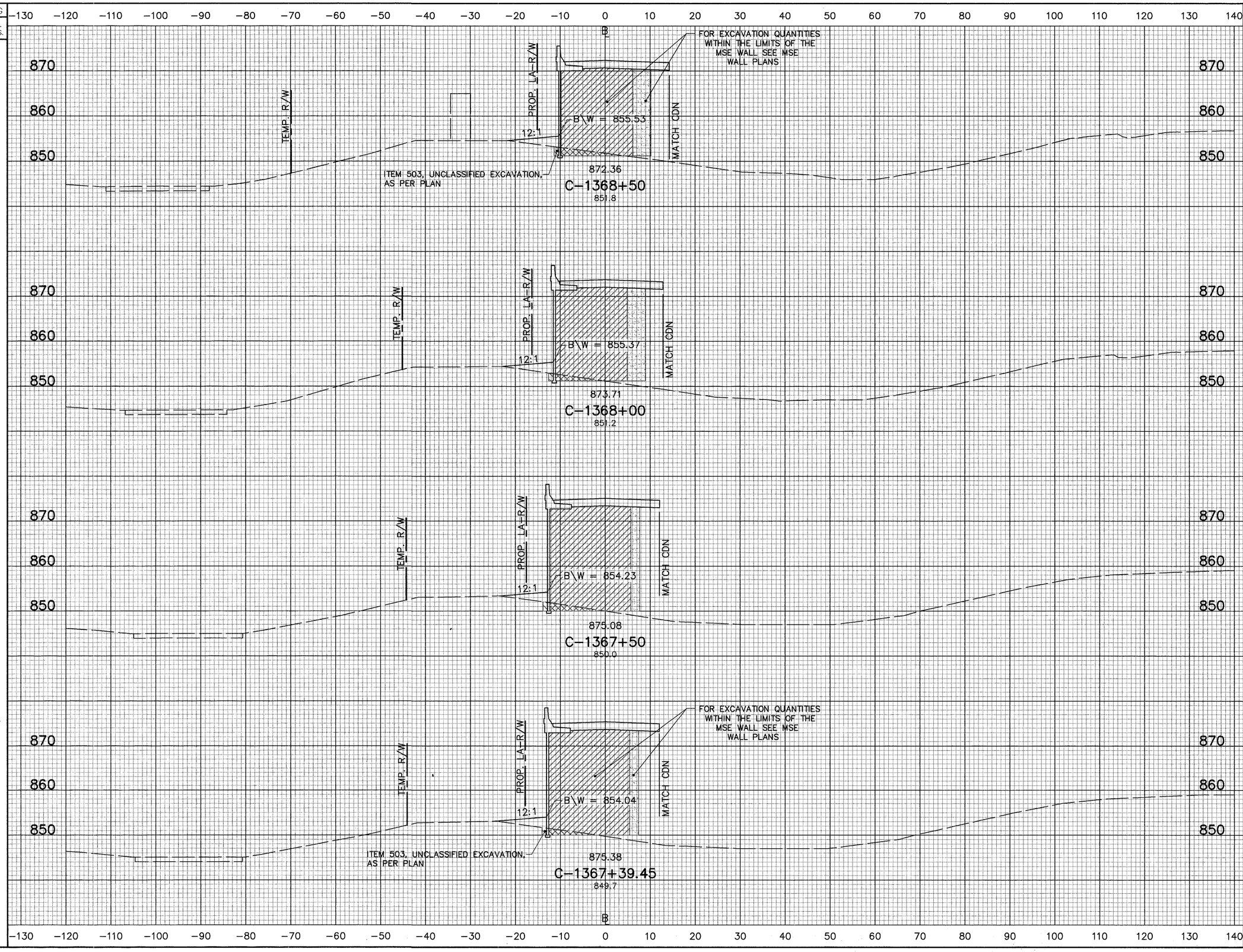

CROSS SECTIONS
STA. C-1367+39.45 TO STA. C-1368+50

FRA-270-32.46

265
593

CALC: S.D.E. DATE: 02/20/95
CHKD: M.F.J. DATE: 02/15/95

Plot Scale - 1" = 10'
COL #18 C:\DRAWING\06092306\XSECS\RMPCXSEC.DWG - VIEW: C1 FEBRUARY--09-1995

SEEDING		END AREA		VOLUME		
END WIDTH	SQ. YDS.	CUT	FILL	CUT	FILL	
18	78	0	249	0	396	C–1370+50
10		0	179			C–1370+00
10	56	0	135	0	291	C–1369+50
10	56	0	103	0	220	C–1369+00
	58			0	187	

CALC. BY: S.D.E. DATE: 12/03/95
CHKD. BY: M.F.J. DATE: 12/15/95

CROSS SECTIONS
STA. C–1369+00 TO STA. C–1370+50

FRA–270–32.46

266
593

Plot Scale – 1" = 10'
COL #18
C:\DRAWING\06092306\XSECS\RMPCXSEC.DWG – VIEW: C2
FEBRUARY–09–1995

SEEDING END WIDTH	SEEDING SQ. YDS.	END AREA CUT	END AREA FILL	VOLUME CUT	VOLUME FILL
92	511	12	494	31	885
92		21	462		
90.	506	42	382	58	782
77	464	33	318	69	648
	264			31	525

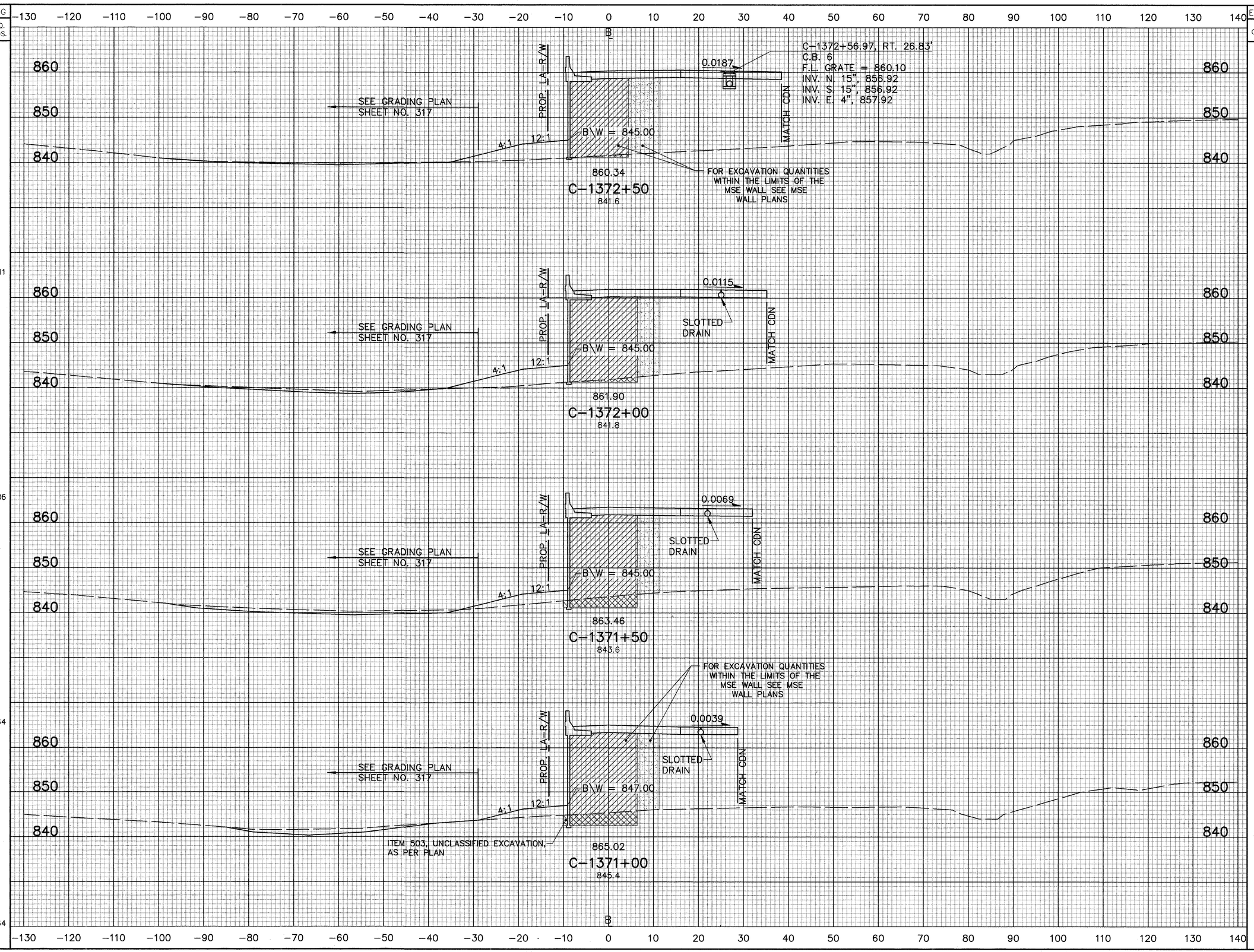

CALC. S.D.E. BY: DATE: 12/03/95
CHKD. M.F.J. BY: DATE: 12/15/95

CROSS SECTIONS STA. C-1371+00 TO STA. C-1372+50

FRA-270-32.46

267
593

Plot Scale - 1" = 10'
COL #18
C:\DRAWING\06092306\XSECS\RMPCXSEC.DWG — VIEW: C3 FEBRUARY-09-1995

SEEDING		END AREA		VOLUME	
END WIDTH	SQ. YDS.	CUT	FILL	CUT	FILL
34	46	0	287	0	128
41		0	341		
126	294	0	384	11	634
86		0	353		
17		0	190		
14		0	191		

CALC. S.D.E. DATE: 02/03/95
CHK. M.F.J. DATE: 02/15/95

CROSS SECTIONS
STA. C-1373+00 TO STA. C-1374+00

FRA-270-32.46

268
593

Plot Scale - 1" = 10'
COL #18 C:\DRAWING\06092306\XSECS\RMPCXSEC.DWG - VIEW: C4 FEBRUARY-09-1995

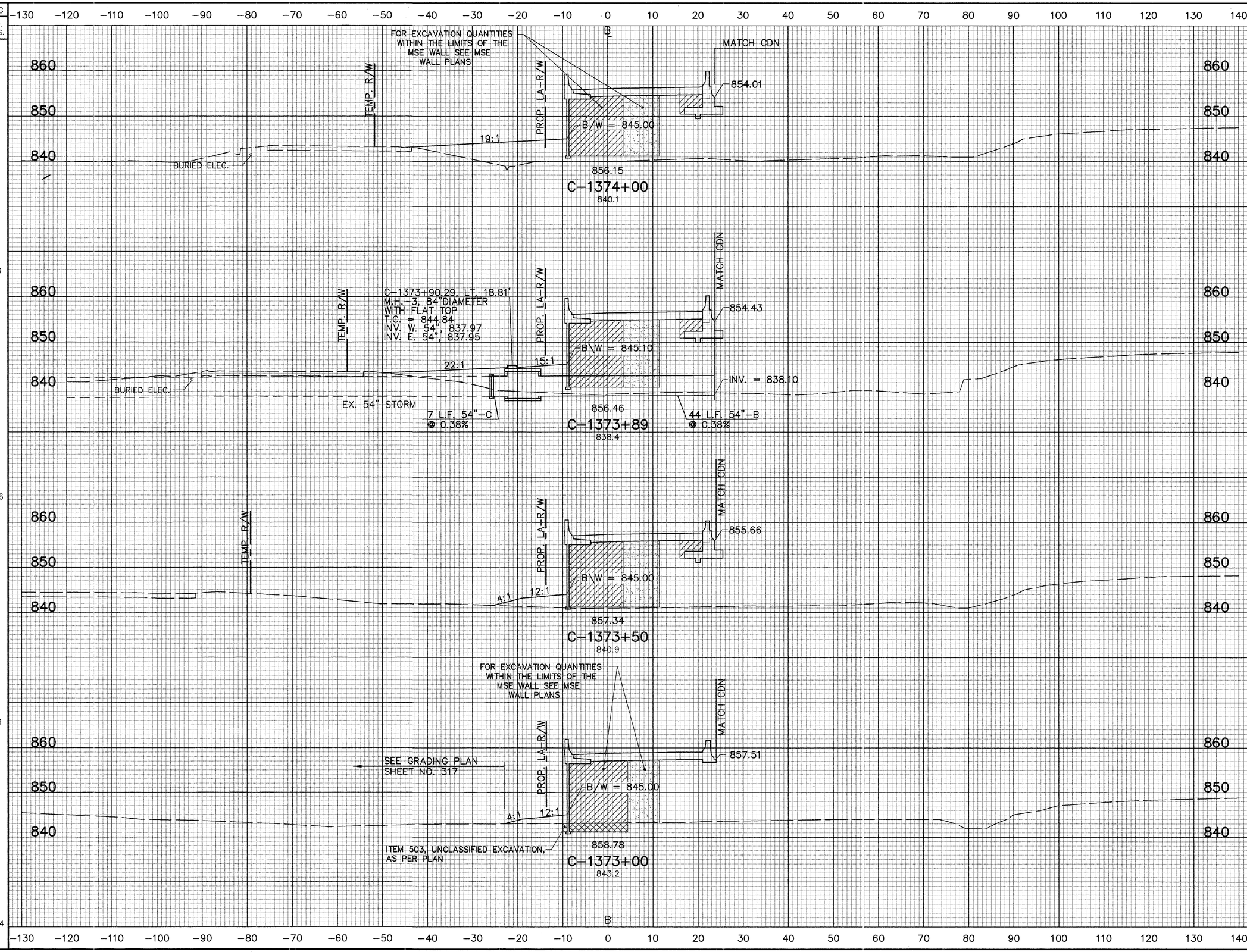

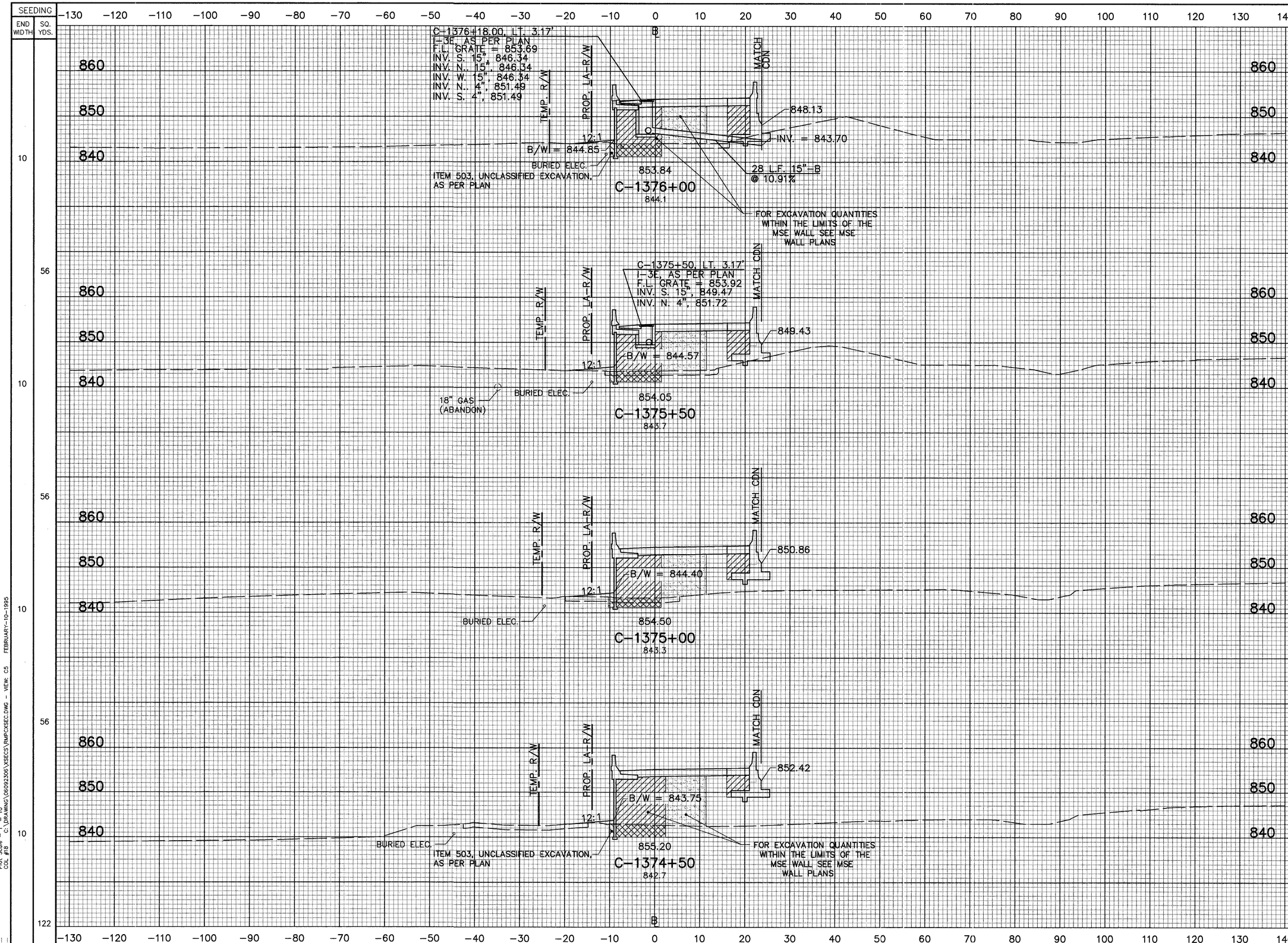

END AREA CUT	END AREA FILL	VOLUME CUT	VOLUME FILL
0	41		
		0	81
0	46		
		0	102
0	64		
		0	154
0	102		
		0	360

CALC. BY: S.D.E. DATE: 02/03/95
CHKD. BY: M.F.J. DATE: 02/15/95

CROSS SECTIONS
STA. C-1374+50 TO STA. C-1376+00

FRA-270-32.46

Plot Scale - 1" = 10'
COL #18 C:\DRAWING\06092306\XSECS\RMPCXSEC.DWG - VIEW: C5 FEBRUARY-10-1995

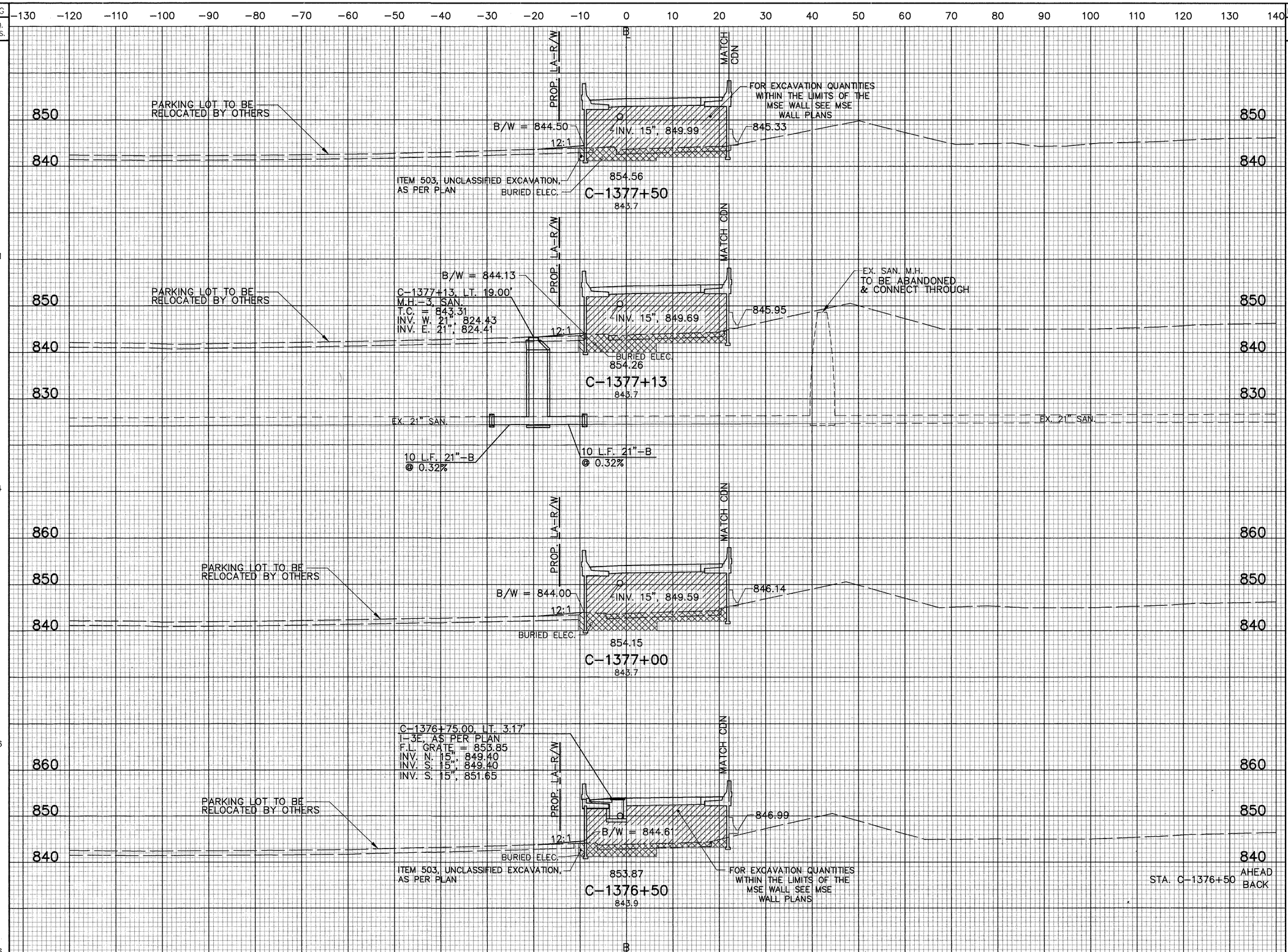

SEEDING END WIDTH	SEEDING SQ. YDS.	END AREA CUT	END AREA FILL	VOLUME CUT	VOLUME FILL
10		0	3		
	41			0	4
10		0	3		
	14			0	1
10		0	2		
	56			0	5
10					
	56			0	64

CALC. BY: S.D.E. DATE: 02/03/95
CHKD. BY: M.F.J. DATE: 02/15/95

CROSS SECTIONS
STA. C-1376+50 TO STA. C-1377+50

FRA-270-32.46

270/593

Plot Scale - 1" = 10'
COL #18 C:\DRAWING\06092306\XSECS\RMPCXSEC.DWG - VIEW: C6 FEBRUARY-09-1995

SEEDING		END AREA		VOLUME	
END WIDTH	SQ. YDS.	CUT	FILL	CUT	FILL
10	56	0	5	0	7
10	56	0	3		
10	56	0	3		
	56	0	6		
	56	0	6		
	56	0	6		

CALC. BY: S.D.E. DATE: 02/03/95
CHKD. BY: M.F.J. DATE: 02/15/95

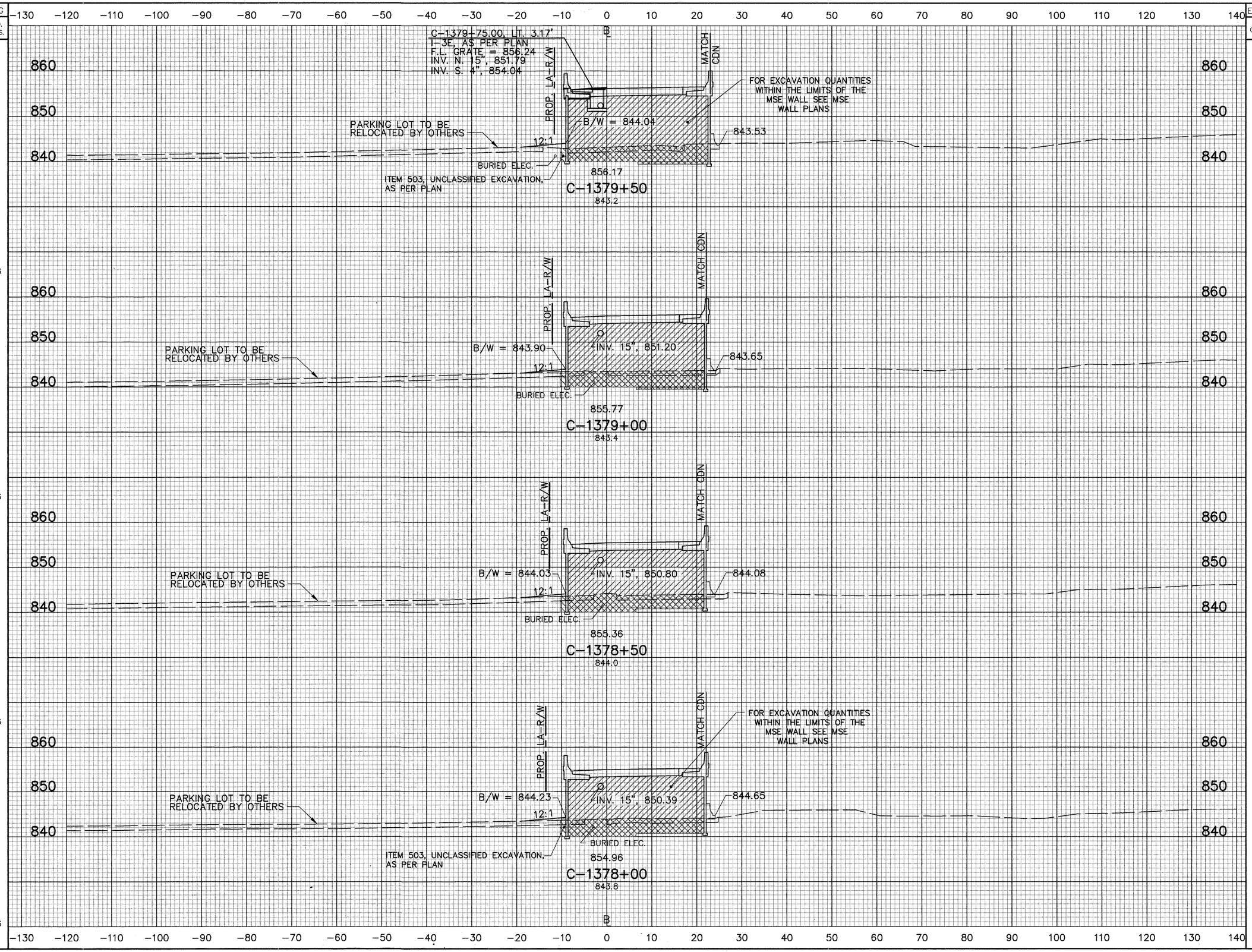

CROSS SECTIONS
STA. C−1378+00 TO STA. C−1379+50

FRA−270−32.46

271
593

Plot Scale = 1" = 10'
COL #18
C:\DRAWING\96092306\XSECS\RMPCXSEC.DWG − VIEW: C7 FEBRUARY−09−1995

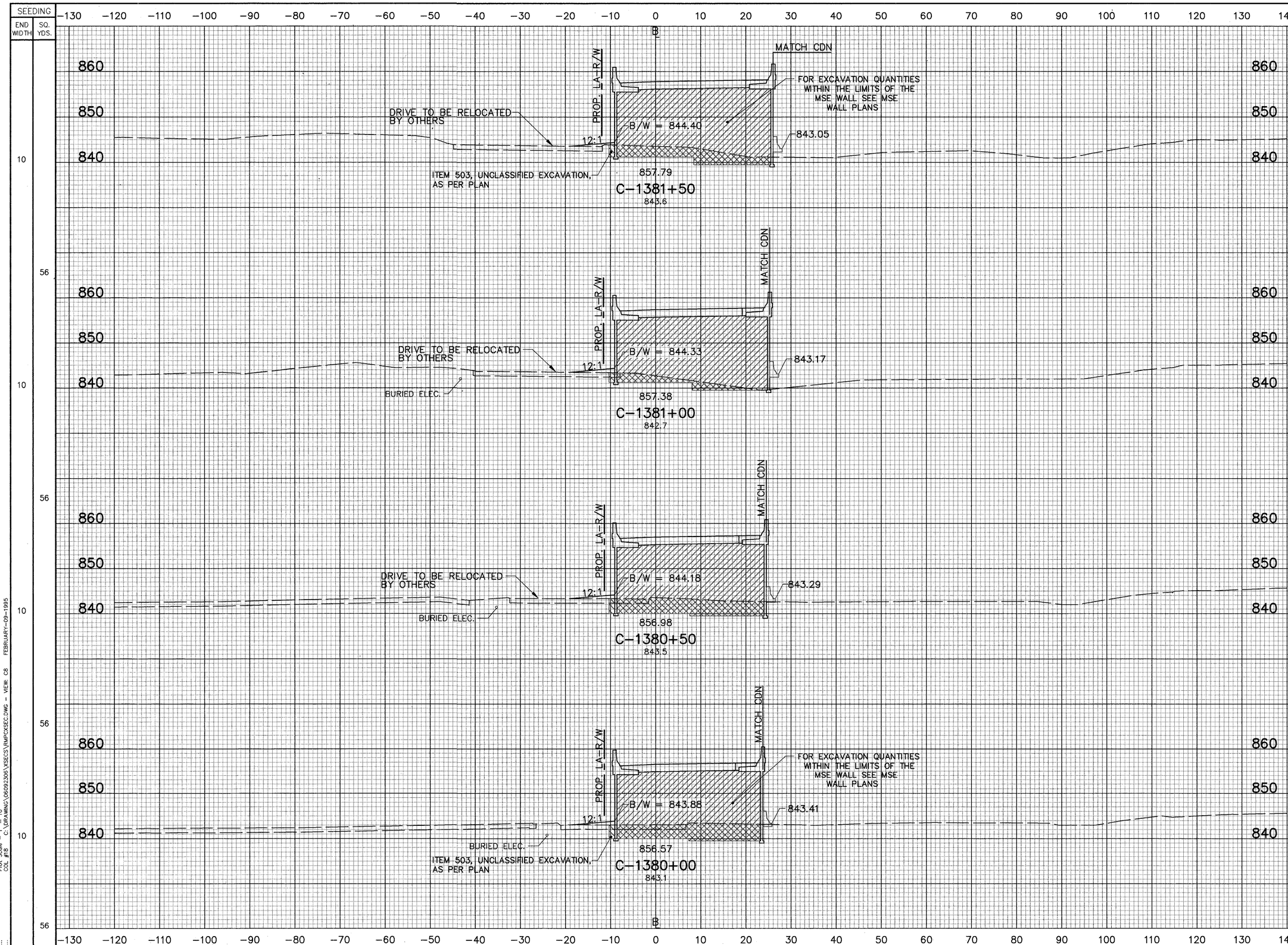

CALC. BY: S.D.E. DATE: 02/03/95
CHKD. BY: M.F.J. DATE: 02/15/95

CROSS SECTIONS
STA. C-1380+00 TO STA. C-1381+50

FRA-270-32.46

272/593

Plot Scale - 1" = 10'
COL #18 C:\DRAWING\06092306\XSECS\RMPCXSEC.DWG - VIEW: C8 FEBRUARY-09-1995

SEEDING		END AREA		VOLUME	
END WIDTH	SQ. YDS.	CUT	FILL	CUT	FILL
2	25	0	1	0	6
7		0	6		
47				0	8
10	61	0	3		
12		0	6	0	8
61		0	9		

CALC. BY: S.D.E. DATE: 02/03/95
CHKD. BY: M.F.J. DATE: 02/15/95

CROSS SECTIONS
STA. C-1382+00 TO STA. C-1383+50

FRA-270-32.46

273
593

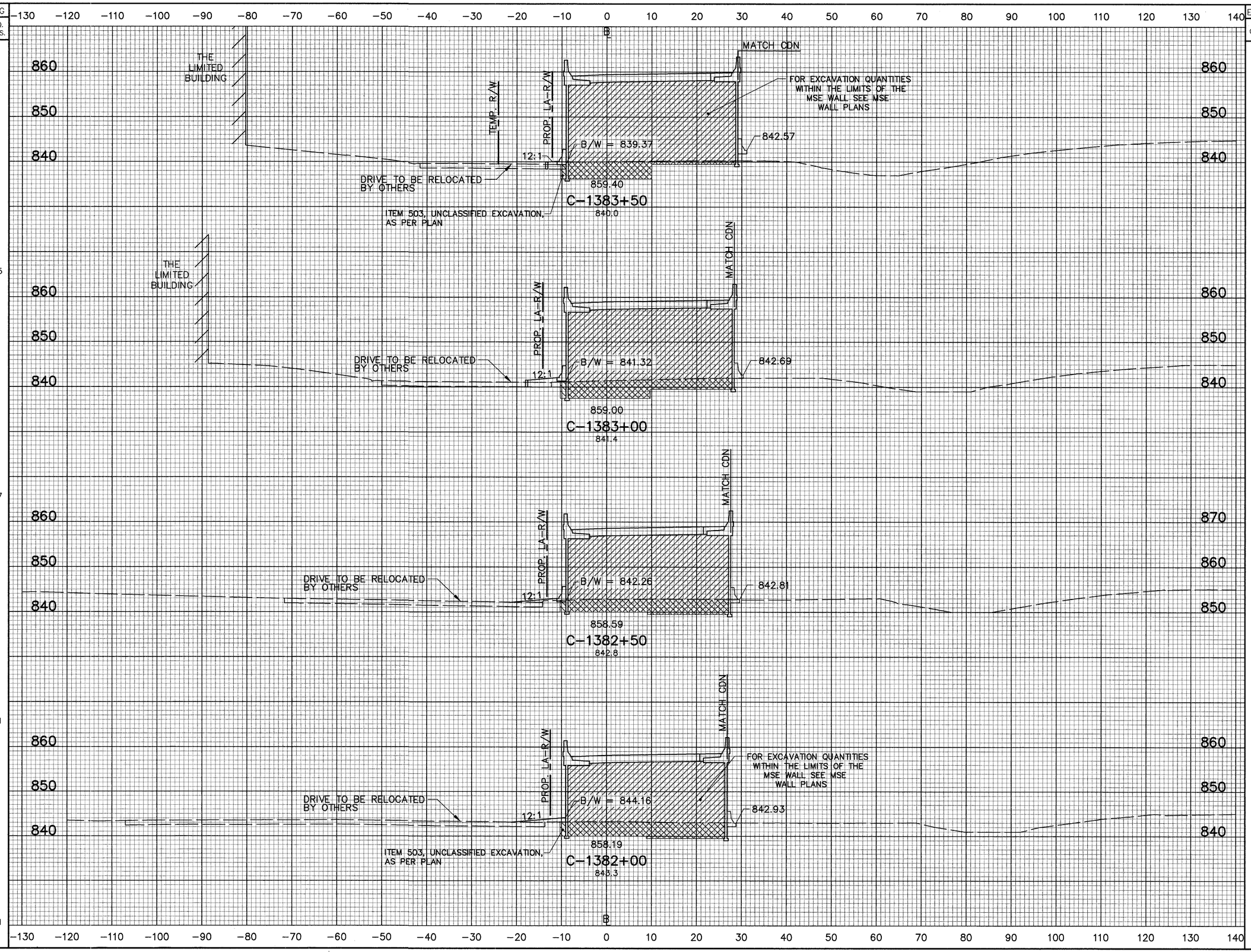

Plot Scale - 1" = 10'
CSA #18
C:\DRAWING\06092306\XSECS\RMPCXSEC.DWG - VIEW: C9 FEBRUARY-10-1995

SEEDING END WIDTH	SEEDING SQ. YDS.
8	42
14	22
11	42
4	17

END AREA CUT	END AREA FILL	VOLUME CUT	VOLUME FILL
0	45		
		0	172
0	228		
		0	103
0	121		
		1	147
1	38		
		1	36

C-1384+75.94, LT. 3.17'
I-3E, AS PER PLAN
F.L. GRATE = 860.28
INV. N. 15", 855.83
INV. S. 15", 855.83
INV. S. 4", 858.08

C-1384+65.80, LT. 4.50'
M.H.-3, 72" DIAMETER
T.C. = 860.15
INV. S. 15", 855.73
INV. W. 42", 829.77
INV. E. 42", 829.46

C-1384+66.27, LT. 20.00'
M.H.-3, 72" DIAMETER
WITH FLAT TOP
T.C. = 836.10
INV. W. 42", 829.35
INV. E. 42", 829.28

MATCH CDN

FOR EXCAVATION QUANTITIES WITHIN THE LIMITS OF THE MSE WALL SEE MSE WALL PLANS

842.22
B/W = 835.39
860.61
C-1385+00
837.3

842.30
INV. = 831.41
33 L.F. 42"-B @ 5.53%
860.34
C-1384+66
830.2

842.28
B/W = 836.88
860.21
C-1384+50
833.8

842.46
B/W = 838.77
859.80
C-1384+00
838.7

TEMP. R/W
PROP. LA-R/W
12:1

EXIST. 42" STM
BURIED ELEC.
EXIST. 6" WATER
EXIST. 12" WATER
EXIST. 42" INV. 828.62
EXIST. 42" INV. 829.45

10 L.F. 42"-B @ 1.15%
17 L.F. 42"-B @ 1.15%

ITEM 503, UNCLASSIFIED EXCAVATION, AS PER PLAN

THE LIMITED BUILDING

-130 -120 -110 -100 -90 -80 -70 -60 -50 -40 -30 -20 -10 0 10 20 30 40 50 60 70 80 90 100 110 120 130 140

860 850 840

CROSS SECTIONS
STA. C-1384+00 TO STA. C-1385+00

FRA-270-32.46

274/593

C.A.S.D.E. DATE: 02/03/95
CHKD. BY: M.F.J. DATE: 02/15/95

Plot Scale - 1" = 10'
COL #18 - C:\DRAWING\06092305\XSECS\PMPCXSEC.DWG - VIEW: C10 FEBRUARY-10-1995

SEEDING		END AREA		VOLUME	
END WIDTH	SQ. YDS.	CUT	FILL	CUT	FILL
10	50	0	3	0	5
8	33	0	2	0	2
4	39	0	0	0	1
10	50	0	1	0	1

CALC. S.D.E. DATE: 12/03/95
CHKD. M.F.J. DATE: 12/15/95

CROSS SECTIONS
STA. C-1385+50 TO STA. C-1387+00

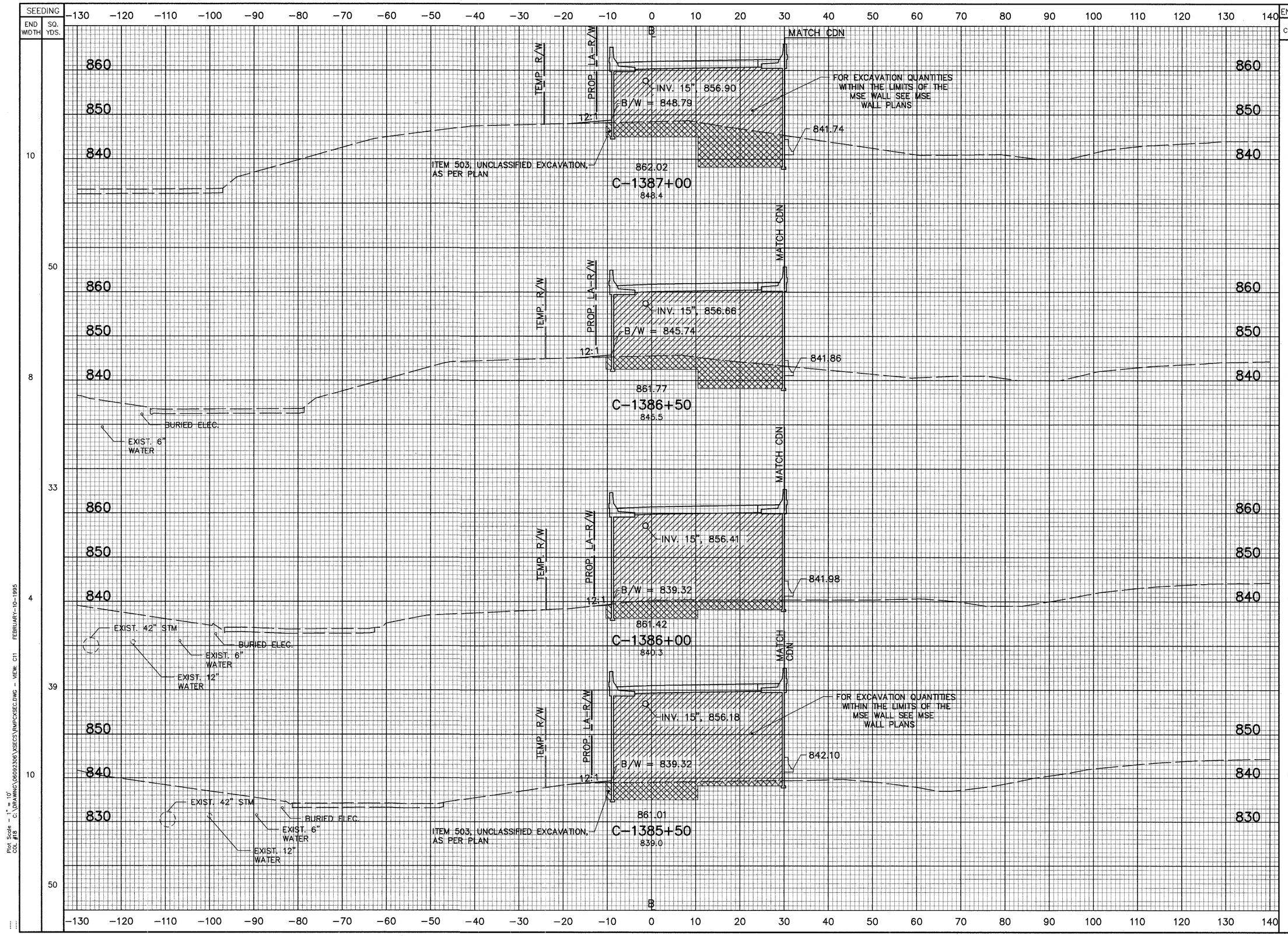

Plot Scale - 1" = 10'
COL #18
C:\DRAWING\06092306\XSECS\RMPCXSEC.DWG - VIEW: C11 FEBRUARY-10-1995

FRA-270-32.46

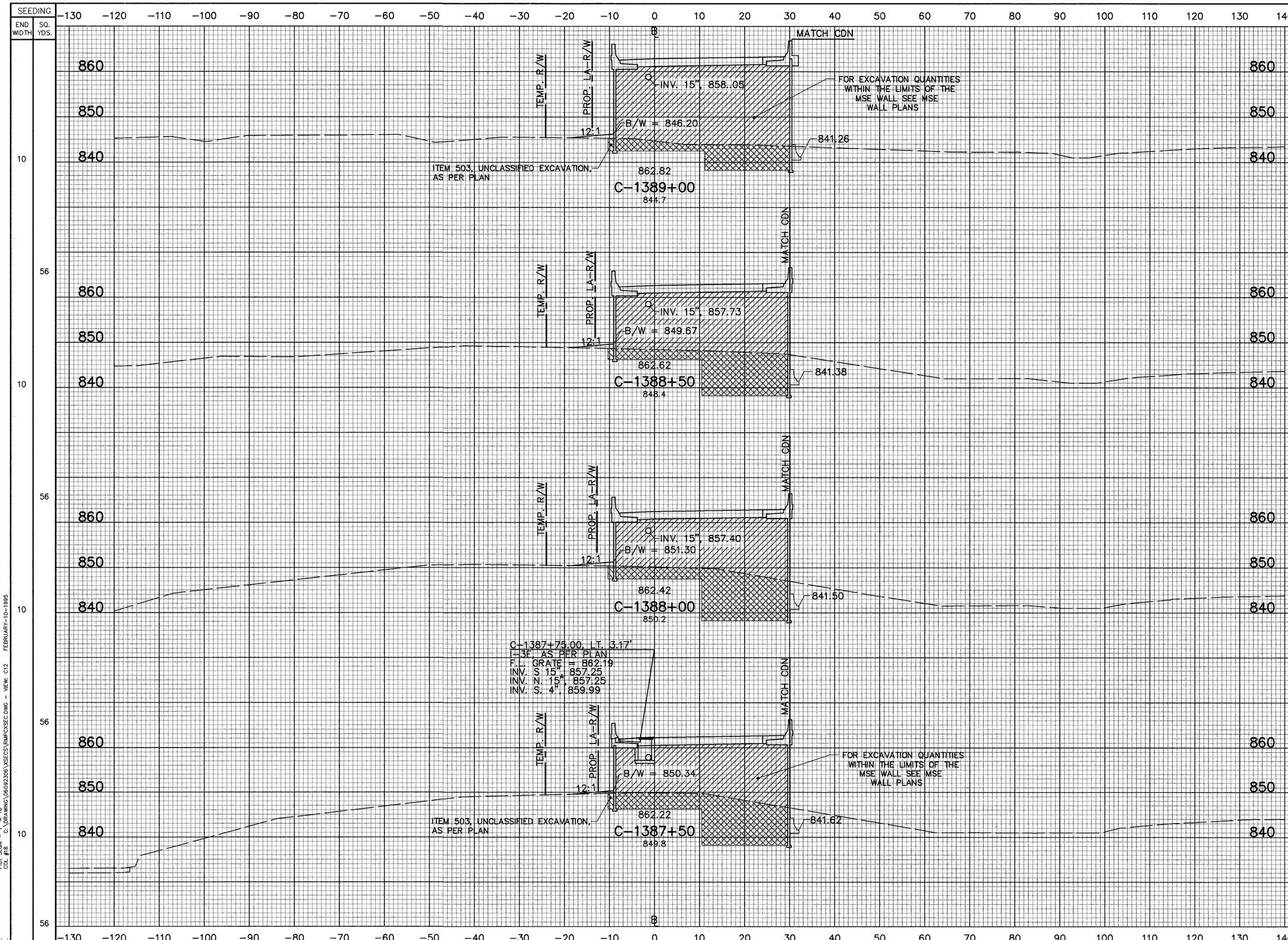

CALC. BY: S.D.E. DATE: 02/03/95
CHKD. BY: M.F.J. DATE: 02/15/95

CROSS SECTIONS
STA. C-1387+50 TO STA. C-1389+00

FRA-270-32.46

Plot Scale - 1" = 10'
COL #18 C:\DRAWING\06092306\XSECS\RMPCXSEC.DWG - VIEW: C12 FEBRUARY-10-1995

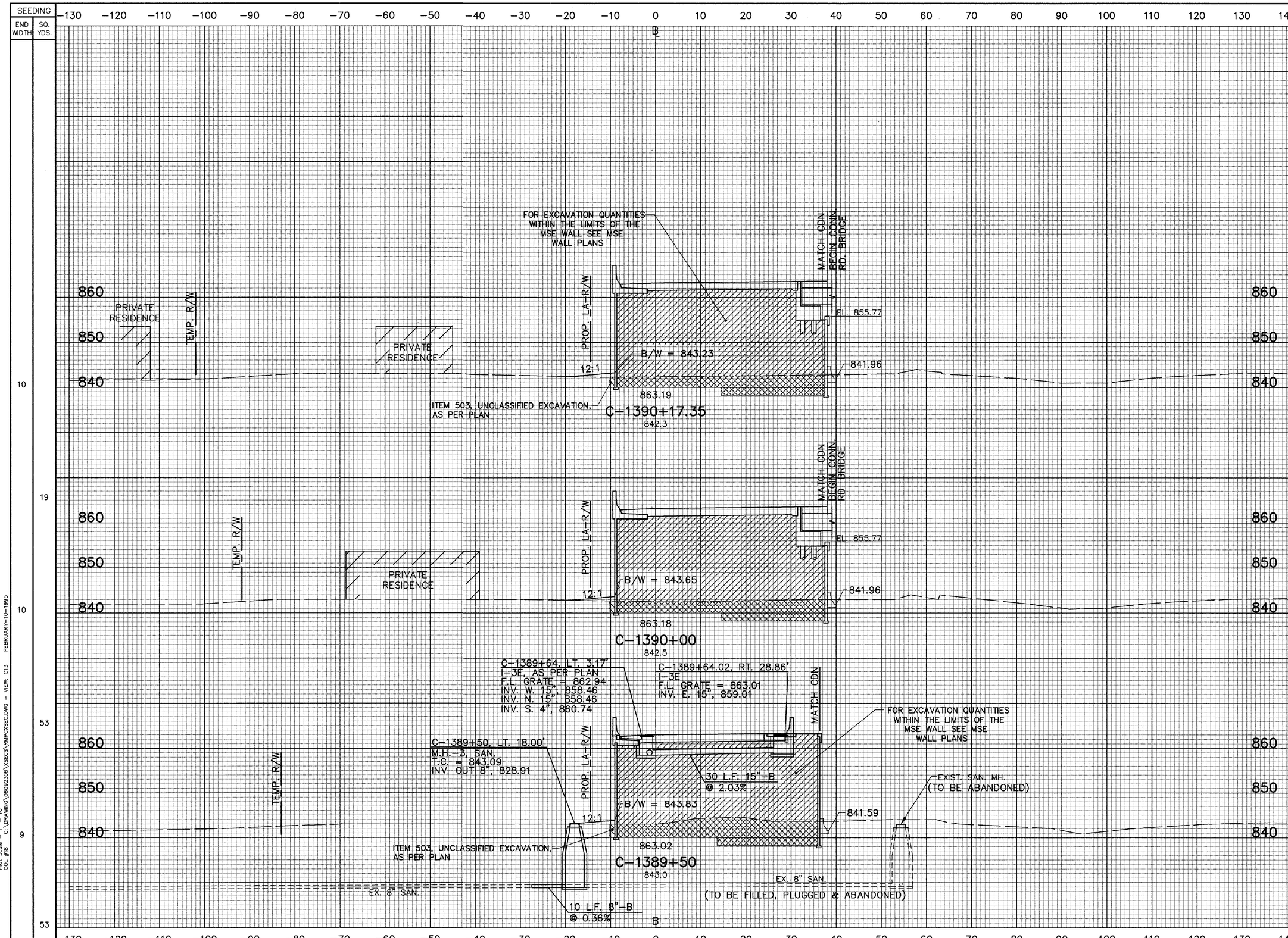

SEEDING END WIDTH	SEEDING SQ. YDS.	END AREA CUT	END AREA FILL	VOLUME CUT	VOLUME FILL
10		0	5		
	19			0	3
10		0	5		
	53			0	8
9		0	4		
	53			0	8

CALC. BY: S.D.E. DATE: 02/03/95
CHKD. BY: M.F.J. DATE: 02/15/95

CROSS SECTIONS
STA. C-1389+50 TO STA. C-1390+17.35

FRA-270-32.46

Plot Scale - 1" = 10'
COL #18 C:\DRAWING\06092306\XSECS\RMPCXSEC.DWG - VIEW: C13 FEBRUARY-10-1995

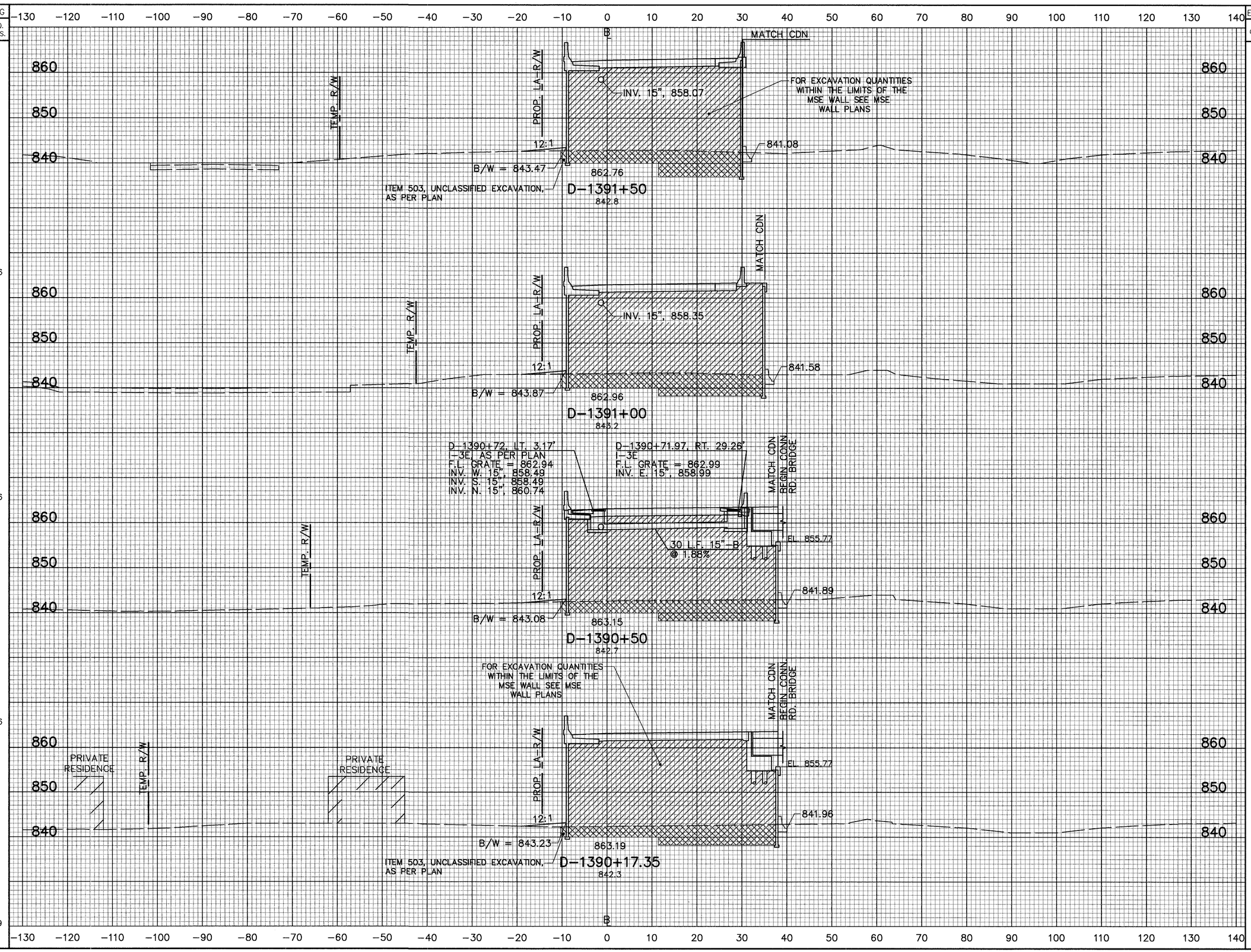

END WIDTH	SQ. YDS.	END AREA CUT	END AREA FILL	VOLUME CUT	VOLUME FILL
10		0	4		
	56			0	7
10		0	4		
	56			0	7
10		0	3		
	36			0	5
10		0	5		
	19			0	0

CALC. BY: S.D.E. DATE: 02/02/95
CHKD. BY: M.F.J. DATE: 02/15/95

CROSS SECTIONS
STA. D-1390+17.35 TO STA. D-1391+50

FRA-270-32.46

278/593

Plot Scale - 1" = 10'
COL #18 C:\DRAWING\06092306\XSECS\RMPDXSEC.DWG - VIEW: D1 FEBRUARY-10-1995

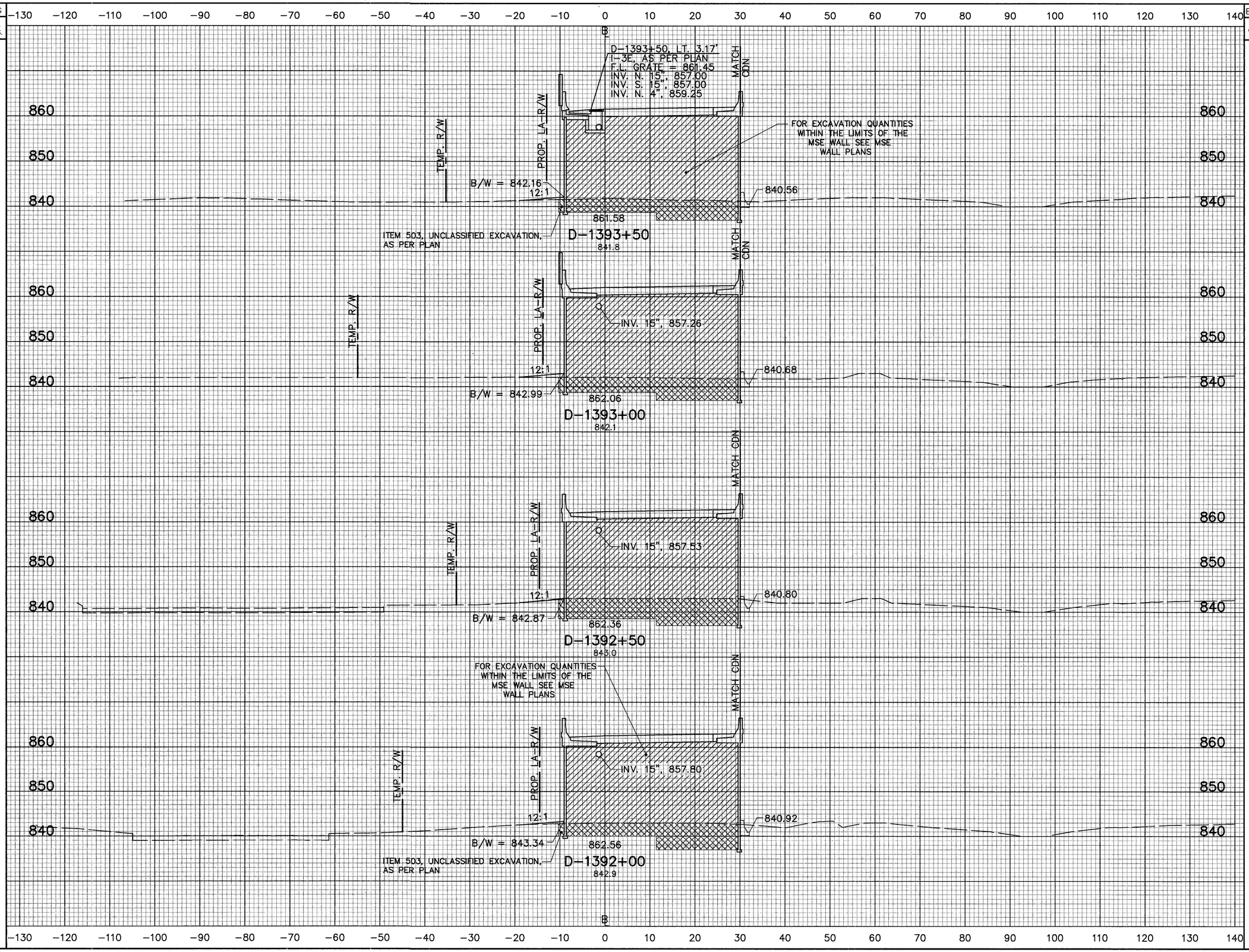

END AREA CUT	END AREA FILL	VOLUME CUT	VOLUME FILL
0	3		
		0	7
0	4		
		1	4
1	0		
		1	3
0	3		
		0	7

CALC. BY: S.D.E. DATE: 02/02/95
CHKD. BY: M.F.J. DATE: 02/15/95

CROSS SECTIONS
STA. D-1392+00 TO STA. D-1393+50

FRA-270-32.46

Plot Scale - 1" = 10'
COL #18 C:\DRAWING\06092306\XSECS\RMPDXSEC.DWG - VIEW: D2 FEBRUARY-10-1995

SEEDING END WIDTH	SEEDING SQ. YDS.
10	56
10	56
10	56
10	56

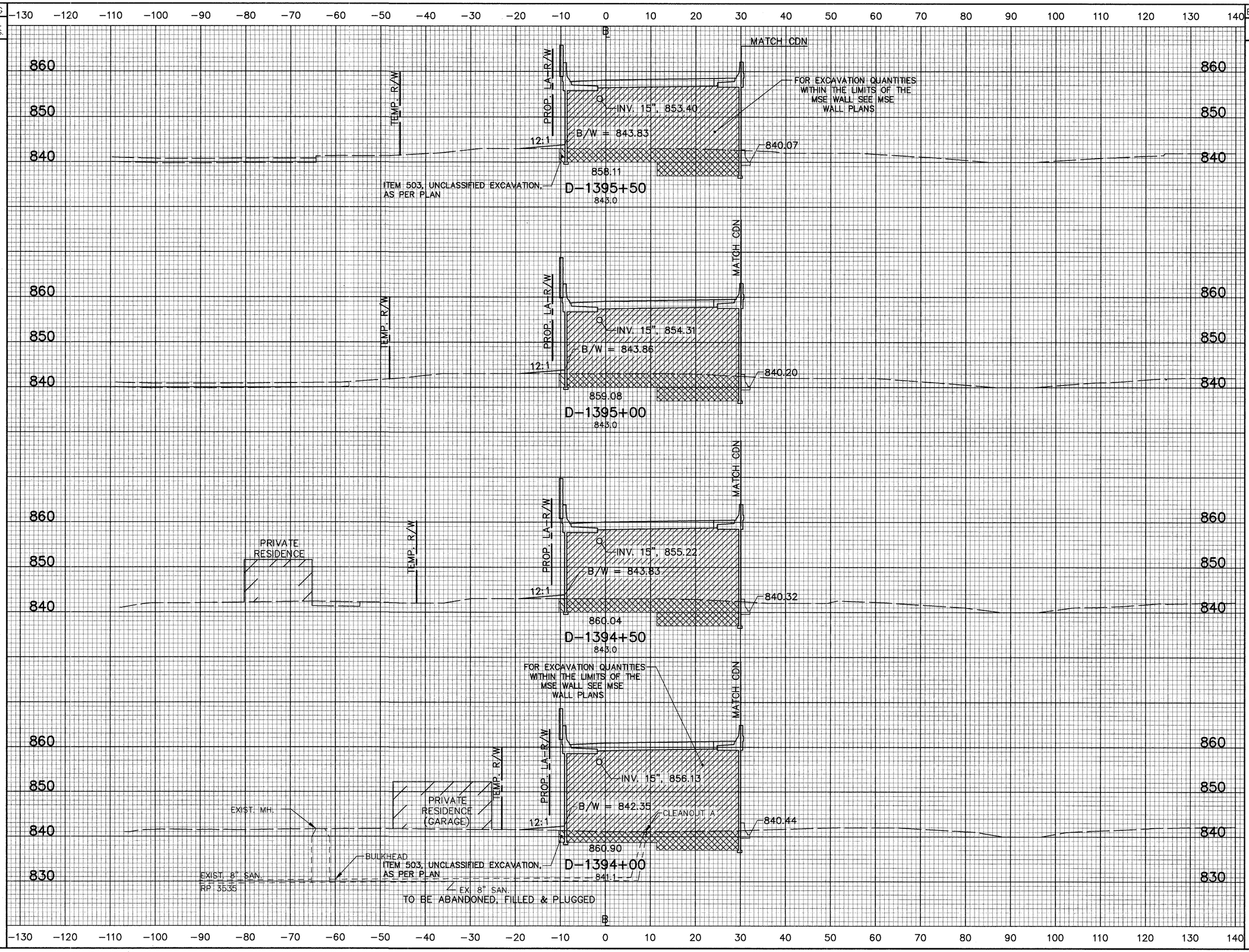

END AREA CUT	END AREA FILL	VOLUME CUT	VOLUME FILL
0	4		
0	4	0	7
0	4		
0	5		
0	7		

CALC. S.D.E. DATE: 02/02/95
CHKD. M.F.J. DATE: 02/15/95

CROSS SECTIONS STA. D-1394+00 TO STA. D-1395+50

FRA-270-32.46

280/593

Plot Scale - 1" = 10'
COL. #18 C:\DRAWING\96092306\XSECS\RMPDXSEC.DWG - VIEW: D3 FEBRUARY-10-1995

SEEDING			END AREA		VOLUME		
END WIDTH	SQ. YDS.		CUT	FILL	CUT	FILL	
10	56	D-1397+50	0	5	0	9	
10	56	D-1397+00	0	5			
10	56	D-1396+50	0	4	0	8	
10	56	D-1396+00	0	4	0	7	
	56				0	7	

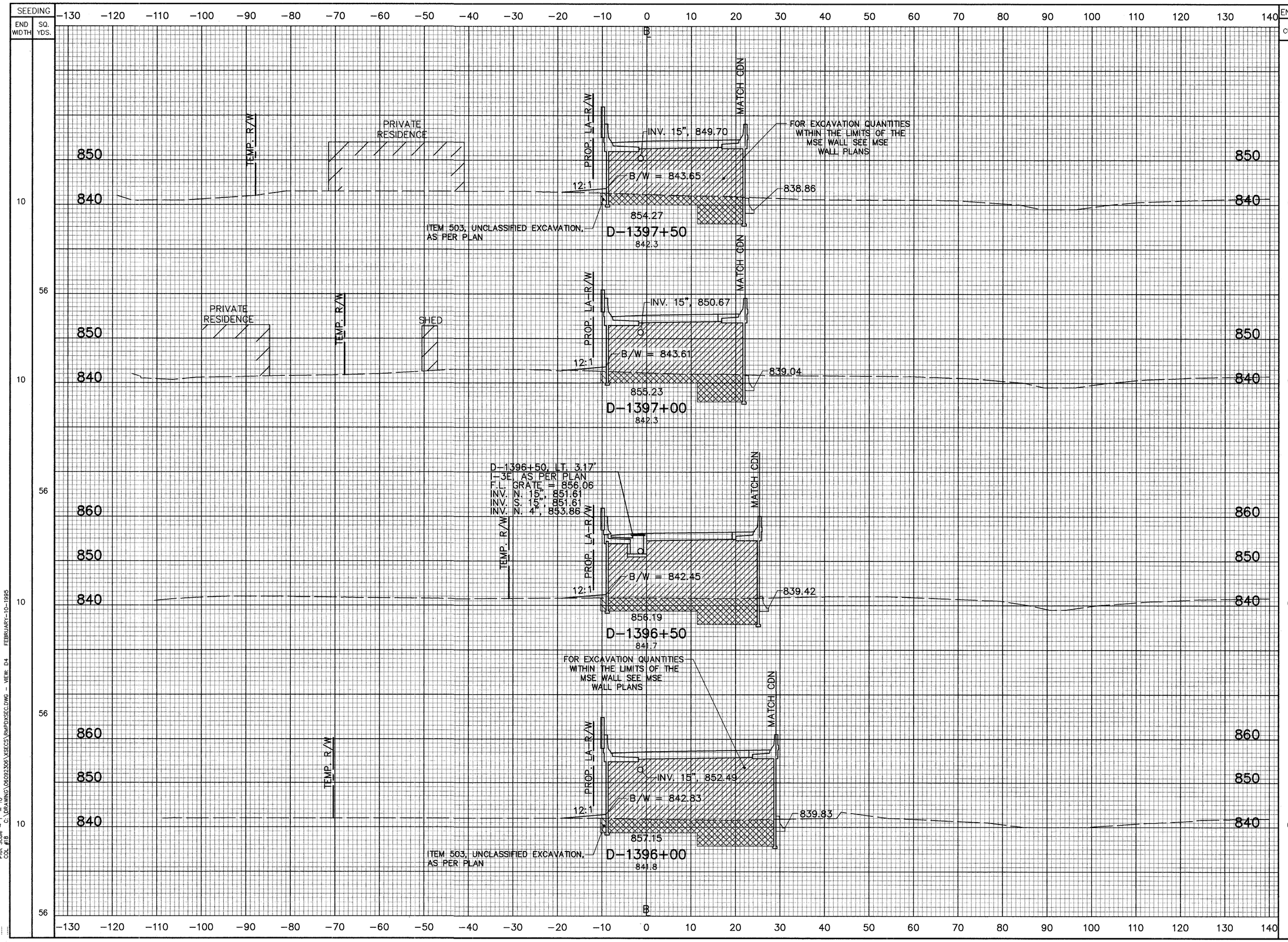

CALC. S.D.E. BY: DATE: 02/02/95
CHK. M.F.J. DATE: 02/15/95

CROSS SECTIONS
STA. D-1396+00 TO STA. D-1397+50

FRA-270-32.46

281/593

Plot Scale = 1" = 10'
COL #18
C:\DRAWING\06092306\XSECS\RWPDXSEC.DWG - VIEW: D4 FEBRUARY-10-1995

SEEDING END WIDTH	SEEDING SQ. YDS.
10	56
10	56
10	56
10	56

END AREA CUT	END AREA FILL	VOLUME CUT	VOLUME FILL
0	2	0	7
0	5	0	8
0	4	0	9
0	6	0	10

D-1399+50, LT. 3.17'
I-3R, AS PER PLAN
F.L. GRATE = 850.30
INV. N. 15", 845.85
INV. S. 15", 845.85
INV. N. 4", 848.10

FOR EXCAVATION QUANTITIES WITHIN THE LIMITS OF THE MSE WALL SEE MSE WALL PLANS

R/W
LA-R/W
MATCH CDN
12:1
B/W = 841.33
838.30
850.43
ITEM 503, UNCLASSIFIED EXCAVATION, AS PER PLAN
D-1399+50
841.9

PRIVATE RESIDENCE
PRIVATE RESIDENCE
TEMP. R/W
PROP. LA-R/W
MATCH CDN
INV. 15", 846.79
B/W = 843.56
838.44
851.39
D-1399+00
842.3

TEMP. R/W
PROP. LA-R/W
MATCH CDN
INV. 15", 847.76
B/W = 843.83
838.58
852.35
D-1398+50
842.3

TEMP. R/W
PROP. LA-R/W
MATCH CDN
INV. 15", 848.73
FOR EXCAVATION QUANTITIES WITHIN THE LIMITS OF THE MSE WALL SEE MSE WALL PLANS
B/W = 843.83
838.72
ITEM 503, UNCLASSIFIED EXCAVATION, AS PER PLAN
853.31
D-1398+00
842.0

850
840
-130 -120 -110 -100 -90 -80 -70 -60 -50 -40 -30 -20 -10 0 10 20 30 40 50 60 70 80 90 100 110 120 130 140

CALC'S.D.E. DATE:02/02/95
CHKD. BY:M.F.J. DATE:02/15/95

CROSS SECTIONS
STA. D-1398+00 TO STA. D-1399+50

FRA-270-32.46

282/593

Plot Scale - 1" = 10'
COL #18 C:\DRAWING\06092306\XSECS\RMPDXSEC.DWG - VIEW: D5 FEBRUARY-10-1995

SEEDING END WIDTH	SEEDING SQ. YDS.	STATION
28	153	D–1401+50
27		D–1401+00
125	81	D–1400+50
18	58	D–1400+00
11		

END AREA CUT	END AREA FILL	VOLUME CUT	VOLUME FILL
22	0	29	3
9	3		
8	13		
0	11		
3	10		
3	0		
3	2		

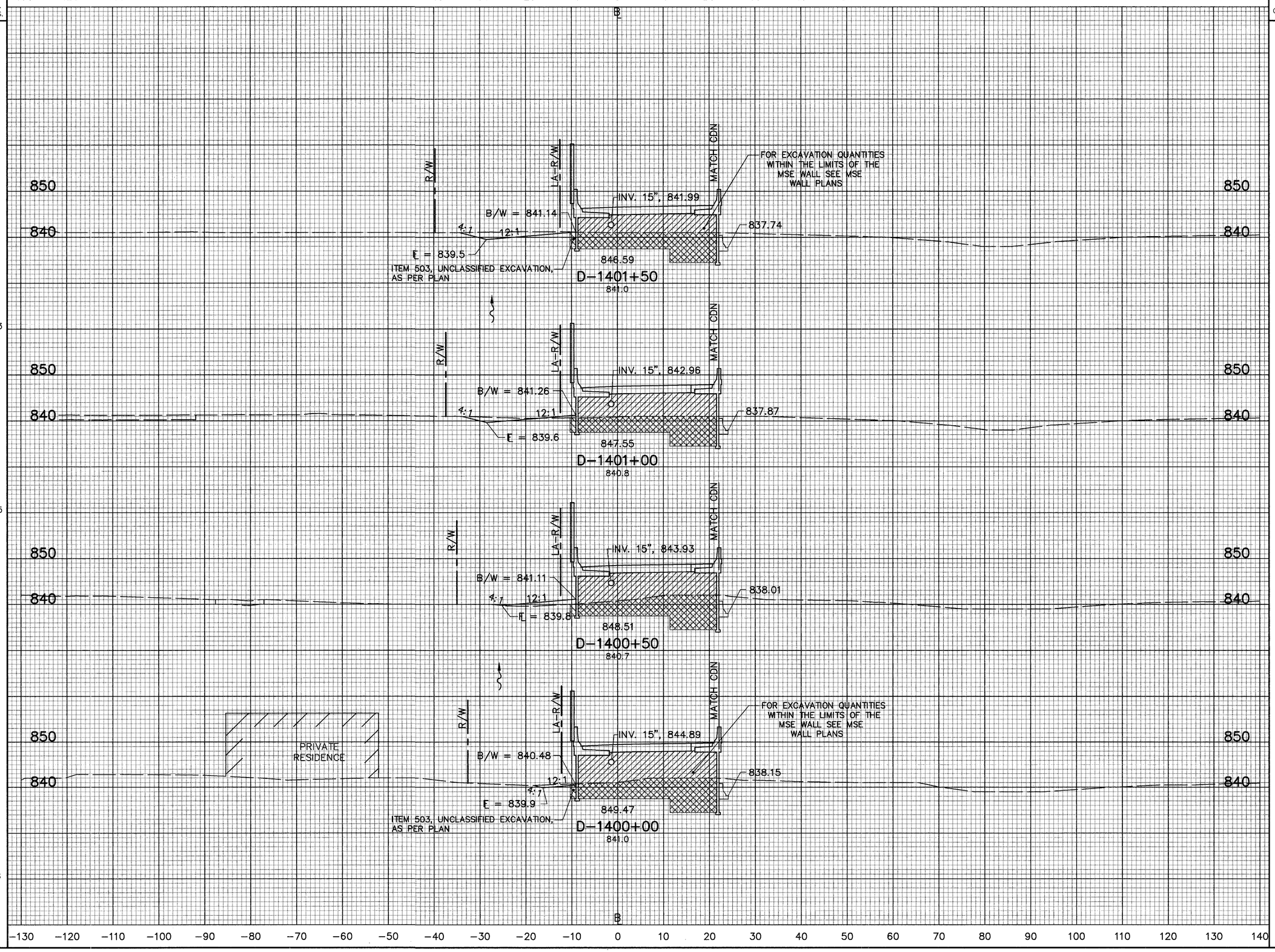

CALC. BY: S.D.E. DATE: 02/02/95
CHKD. BY: M.F.J. DATE: 02/15/95

CROSS SECTIONS STA. D–1400+00 TO STA. D–1401+50

FRA–270–32.46

283/593

Plot Scale – 1" = 10'
COL #18 C:\DRAWING\06092306\XSECS\RMPDXSEC.DWG – VIEW: D6 FEBRUARY-10-1995

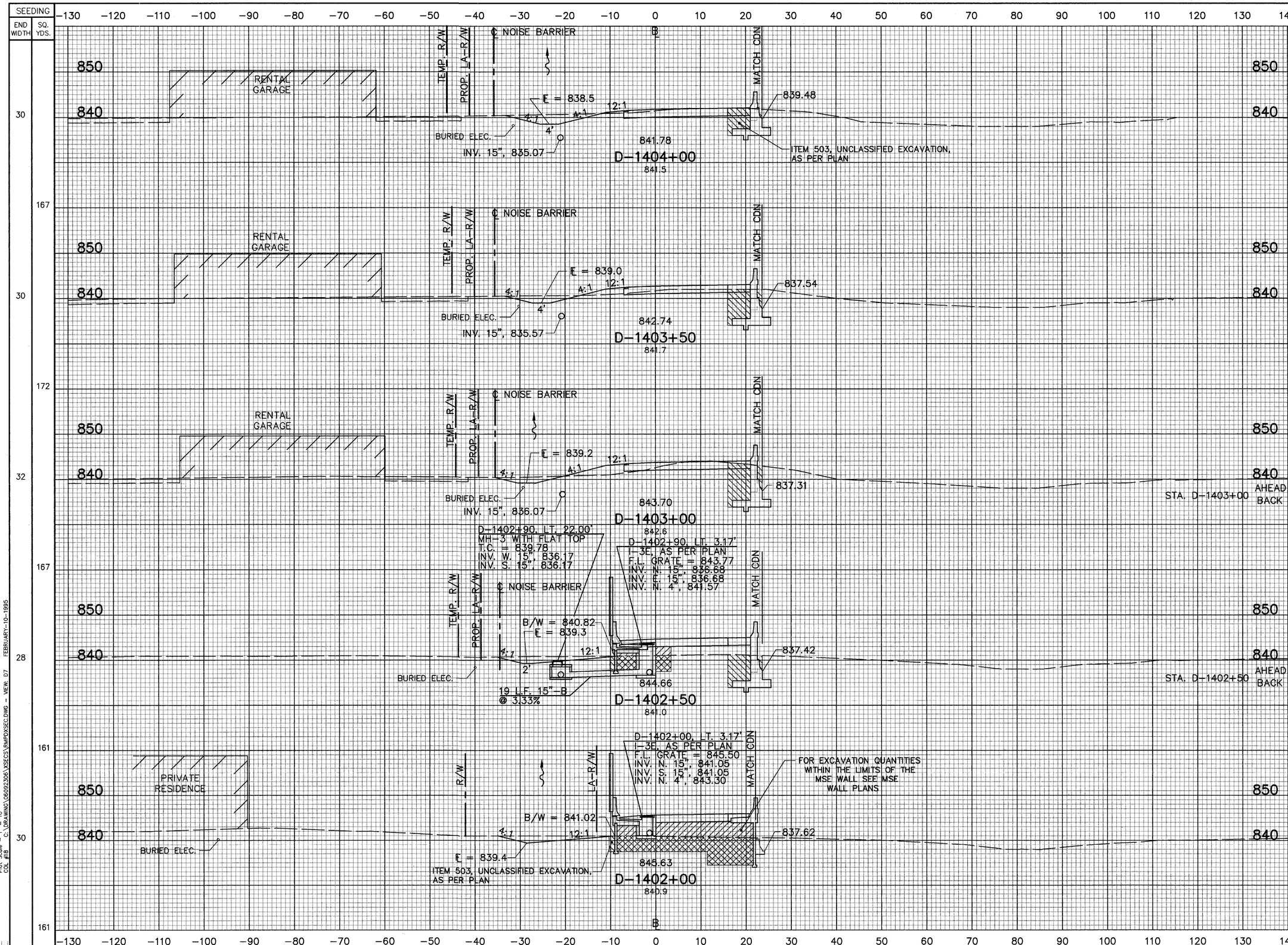

END AREA CUT	END AREA FILL	VOLUME CUT	VOLUME FILL
61	2		
		85	10
31	9		
		63	26
37	19		
33	11		
		50	44
21	36		
21	0		
		38	0
20	0		
		39	0

STA. D-1403+00 AHEAD / BACK

STA. D-1402+50 AHEAD / BACK

CALC. BY: S.D.E. DATE: 02/02/95
CHKD. BY: M.F.J. DATE: 02/15/95

CROSS SECTIONS
STA. D-1402+00 TO STA. D-1404+00

FRA-270-32.46

Plot Scale - 1" = 10'
COL #18 C:\DRAWING\06092306\XSECS\RMPDXSEC.DWG - VIEW: D7 FEBRUARY-10-1995

SEEDING END WIDTH	SEEDING SQ. YDS.	END AREA CUT	END AREA FILL	VOLUME CUT	VOLUME FILL
37		171	0		
	197			313	0
34		167	0		
	183			394	0
32		259	0		
	178			466	0
32		244	0		
	178			409	0
32		198	0		
	172	240	2		

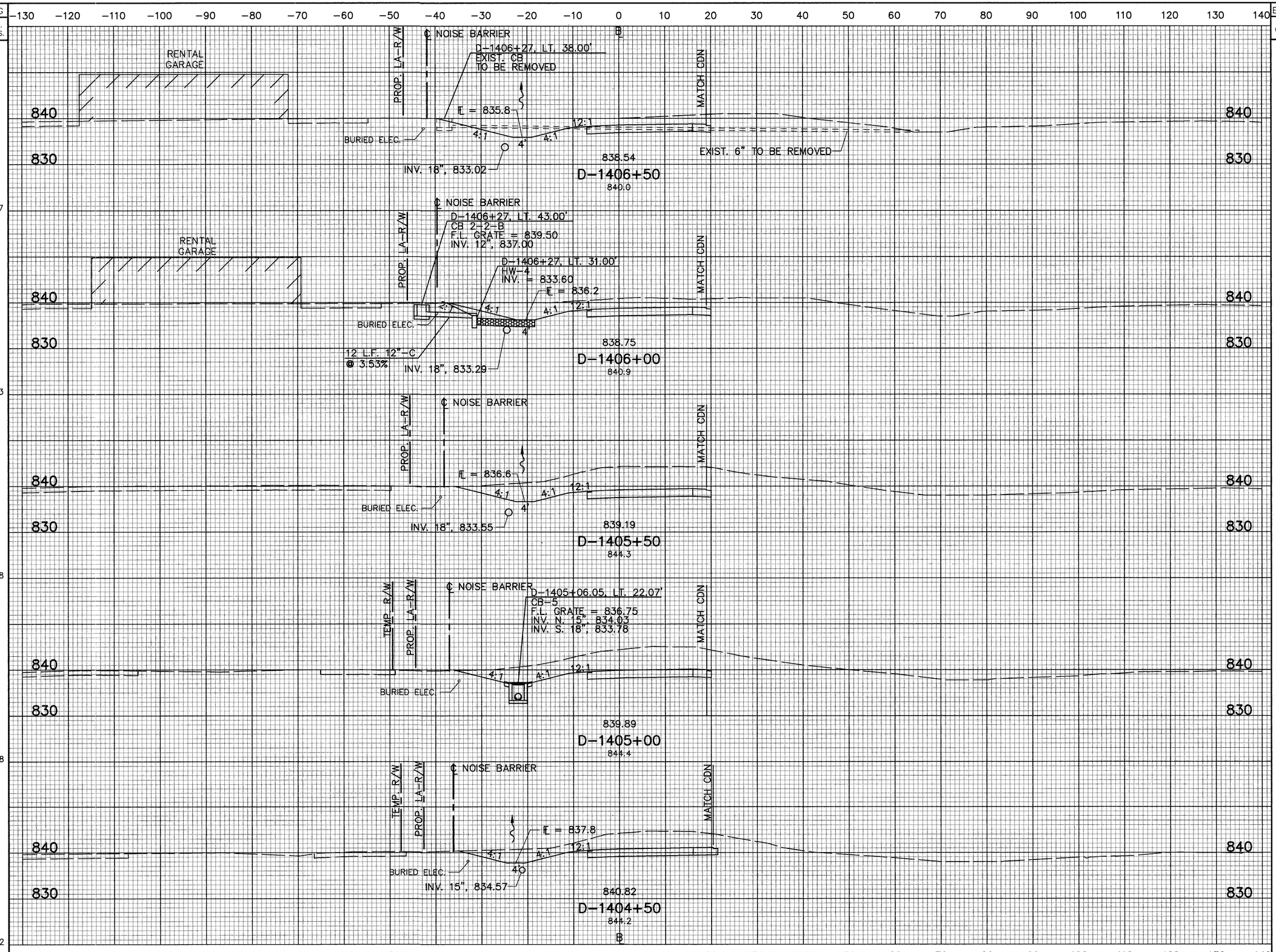

CALC. S.D.E. BY: DATE: 02/02/95
CHK. M.F.J. BY: DATE: 02/15/95

CROSS SECTIONS
STA. D-1404+50 TO STA. D-1406+50

FRA-270-32.46

285
593

Plot Scale - 1" = 10'
COL #8
C:\DRAWING\06092306\XSECS\RMPDXSEC.DWG - VIEW: D8 FEBRUARY-10-1995

SEEDING END WIDTH	SEEDING SQ. YDS.	END AREA CUT	END AREA FILL	VOLUME CUT	VOLUME FILL
38	211	366	0	715	0
38	219	406	0	809	0
41	233	468	0	856	0
43	225	457	0	733	0
38	208	335	0	469	0

CALC. S.D.E. BY: DATE: 02/02/95
CHK. M.F.J. BY: DATE: 02/15/95

CROSS SECTIONS
STA. D-1407+00 TO STA. D-1409+00

FRA-270-32.46

286
593

Plot Scale - 1" = 10'
COL. #18 C:\DRAWING\06092306\XSECS\RMPDXSEC.DWG - VIEW: 09 FEBRUARY-10-1995

-130 -120 -110 -100 -90 -80 -70 -60 -50 -40 -30 -20 -10 0 10 20 30 40 50 60 70 80 90 100 110 120 130 140

850 / 840

RENTAL GARAGE

BURIED ELEC.

PROP. LA-R/W

℄ NOISE BARRIER

MATCH CDN

4:1 4' 4:1 12:1

FL = 835.6

0.0169

INV. 24", 831.30

838.01
D-1409+00
842.6

FL = 835.4

0.0158

INV. 24", 831.53

838.07
D-1408+50
843.2

FL = 835.2

0.0157

4.33'

INV. 24", 831.76

838.13
D-1408+00
844.8

D-1407+56.16, LT. 24.89'
CB-5
F.L. GRATE = 834.89
INV. W. 15", 832.72
INV. N. 18", 832.47
INV. S. 24", 831.97
INV. W. 4", 833.64

12:1 12:1

FL = 837.89

INV. = 833.49

55 L.F. 15"-B @ 1.45%

838.19
D-1407+50
845.0

FL = 835.4

4'

INV. 18", 832.76

838.36
D-1407+00
844.2

℄

SEEDING END WIDTH	SEEDING SQ. YDS.
41	306
49	247
40	211
36	197
35	203

END AREA CUT	END AREA FILL	VOLUME CUT	VOLUME FILL
253	0	511	0
299	0	586	0
334	0	626	0
342	0	632	0
341	0	655	0

CALC. BY: S.D.E. DATE: 02/02/95
CHKD. BY: M.F.J. DATE: 02/15/95

CROSS SECTIONS
STA. D-1411+50 TO STA. D-1409+50

FRA-270-32.46

287
593

Plot Scale - 1" = 10'
COL. #18
C:\DRAWING\06092306\XSECS\RMPDXSEC.DWG - VIEW: D10 FEBRUARY-10-1995

SEEDING END WIDTH	SEEDING SQ. YDS.	END AREA CUT	END AREA FILL	VOLUME CUT	VOLUME FILL
35	192	207	0	385	0
34	217	209	0	463	0
44	253	291	0	559	0
47	250	313	0	524	0

CALC. BY: S.D.E. DATE: 02/02/95
CHKD. BY: M.F.J. DATE: 02/15/95

CROSS SECTIONS
STA. D-1412+00 TO STA. D-1413+50

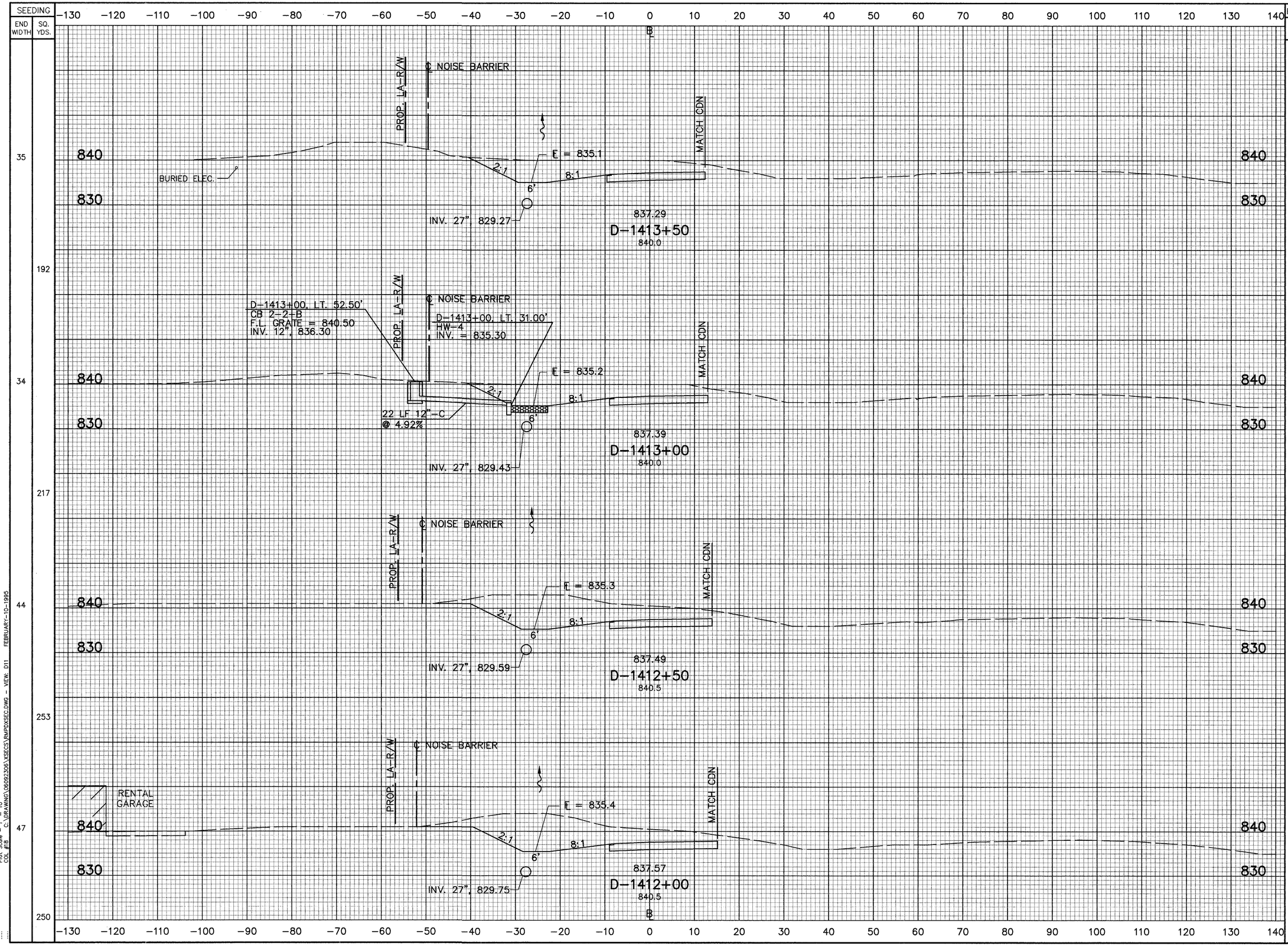

Plot Scale = 1" = 10'
COL. #18 C:\DRAWING\06092306\XSECS\RWPDXSEC.DWG - VIEW: D11 FEBRUARY-10-1995

FRA-270-32.46

288
593

SEEDING		END AREA		VOLUME	
END WIDTH	SQ. YDS.	CUT	FILL	CUT	FILL
36	82	210	0	160	0
35	194	207	0	383	0

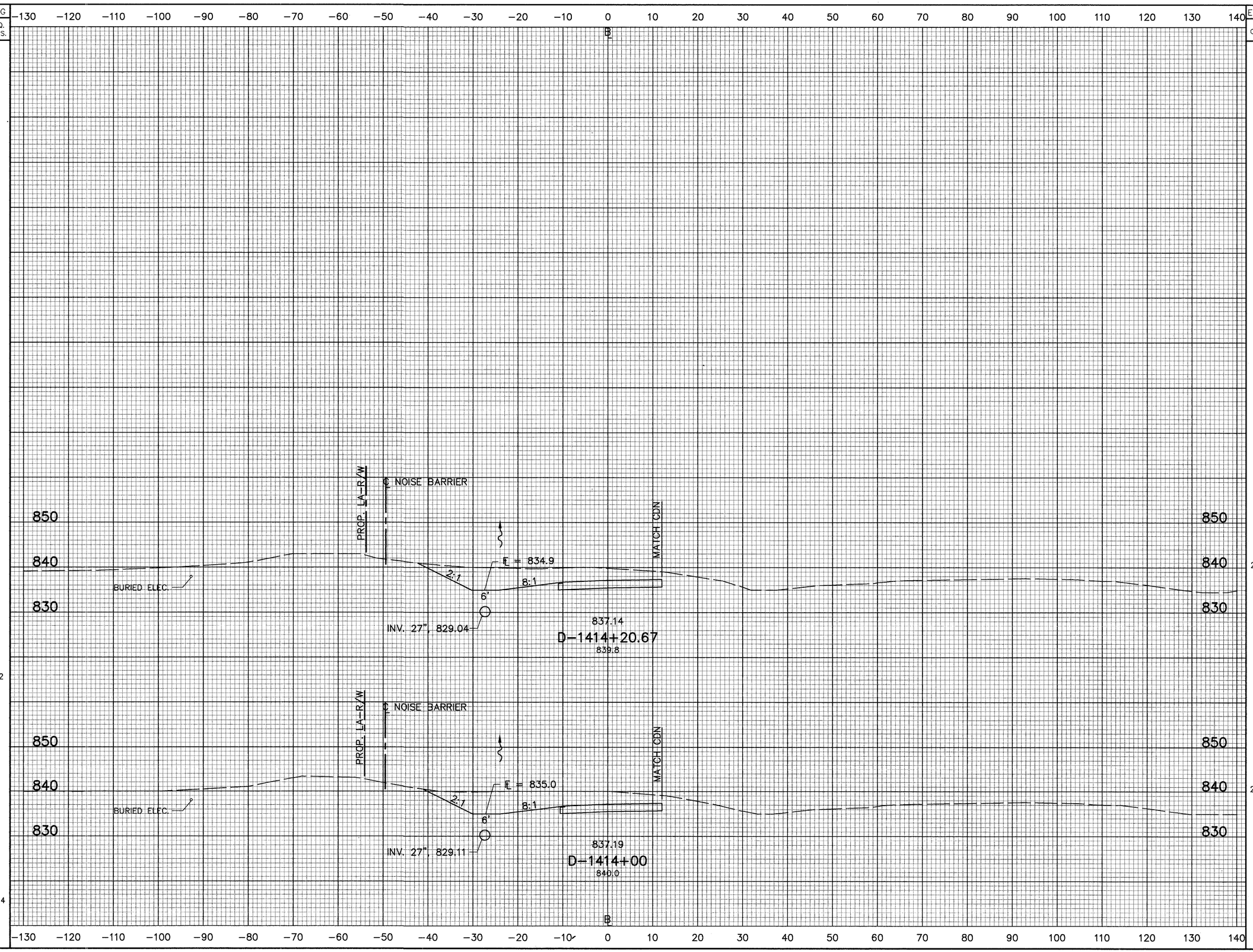

Plot Scale - 1" = 10'
COL #18 C:\DRAWING\06092306\XSECS\RMPDXSEC.DWG - VIEW: D12 FEBRUARY-10-1995

CALC. BY: S.D.E. DATE: 12/02/95
CHKD. BY: M.F.J. DATE: 12/15/95

CROSS SECTIONS
STA. D-1414+00 TO STA. D-1414+20.67

FRA-270-32.46

289
593

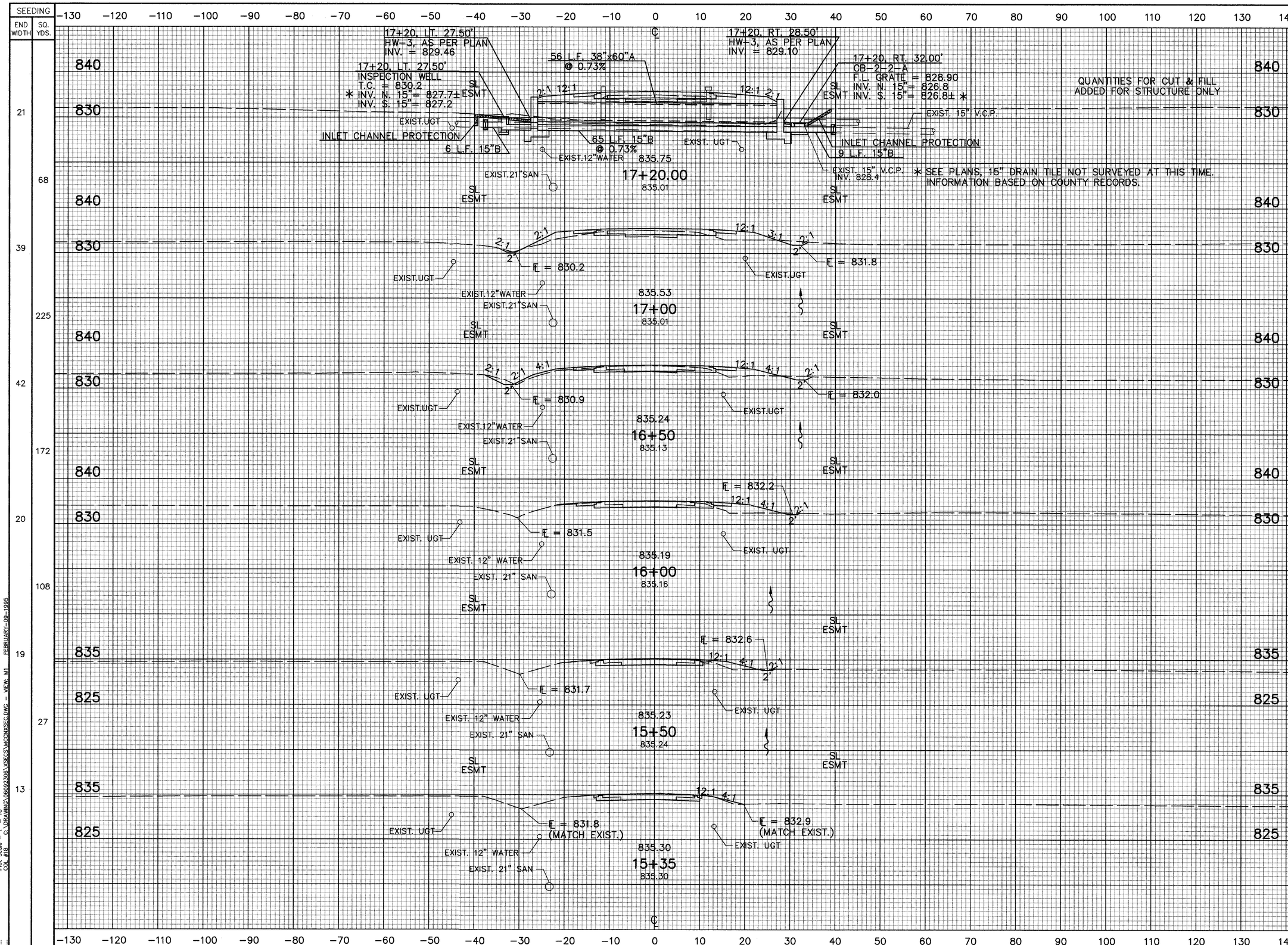

Seeding End Width	Seeding Sq. Yds.	End Area Cut	End Area Fill	Volume Cut	Volume Fill
21		44	41		
	68				
39		25	30		
	225			57	48
42		37	22		
	172			67	38
20		35	19		
	108			63	27
19		33	10		
	27			18	3
13		32	2		

CALC. BY: S.D.E. DATE: 02/03/95
CHKD. BY: M.F.J. DATE: 02/15/95

CROSS SECTIONS
STA. 15+35 TO STA. 17+22.43 McCUTCHEON RD.

FRA-270-32.46

Plot Scale - 1" = 10'
COL #18 C:\DRAWING\06092306\XSECS\MCCNXSEC.DWG - VIEW: M1 FEBRUARY-09-1995

SEEDING END WIDTH	SEEDING SQ. YDS.	STATION	CUT	FILL
84	428	20+00	19	306
70	372	19+50	14	242
64	−28	19+00	10	188
56	292	18+50	12	133
49	233	18+00	13	76
35	90	17+50	16	31
			31	507
			22	398
			20	297
			23	194
			27	99
			38	56

DEDUCTION FOR DRIVEWAY AT STA. 19+00

PVI STA. STA = 19+50, 32' R
PVI STA. ELEV = 837.52
A.D. = 8.34
K = 2.40

PVI STA. STA = 19+50, 53 R
PVI STA. ELEV = 834.02
A.D. = −21.93
K = 0.46

EXISTING DRIVEWAY

20.00' VC
10.00' VC
PVC 22' RT. ELEV. 838.35
PVT 42' RT. ELEV 833.85
PVC 48' RT. ELEV. 834.85
PVT 58' RT. ELEV 834.31
−8.3%
16.7%
5.8%
16.67%

EXISTING 12" PIPE
PROPOSED 12" PIPE
PROP. FIBER OPTIC
EXIST.UGT MH

CALC. BY: S.D.E. DATE: 02/03/95
CHKD. BY: M.F.J. DATE: 02/15/95

CROSS SECTIONS
STA. 17+50 TO STA. 20+00 McCUTCHEON RD.

FRA-270-32.46

291
593

Plot Scale = 1" = 10'
COL. #18
C:\DRAWING\V6092306\XSECS\MCCNXSEC.DWG - VIEW: M2 FEBRUARY--09--1995

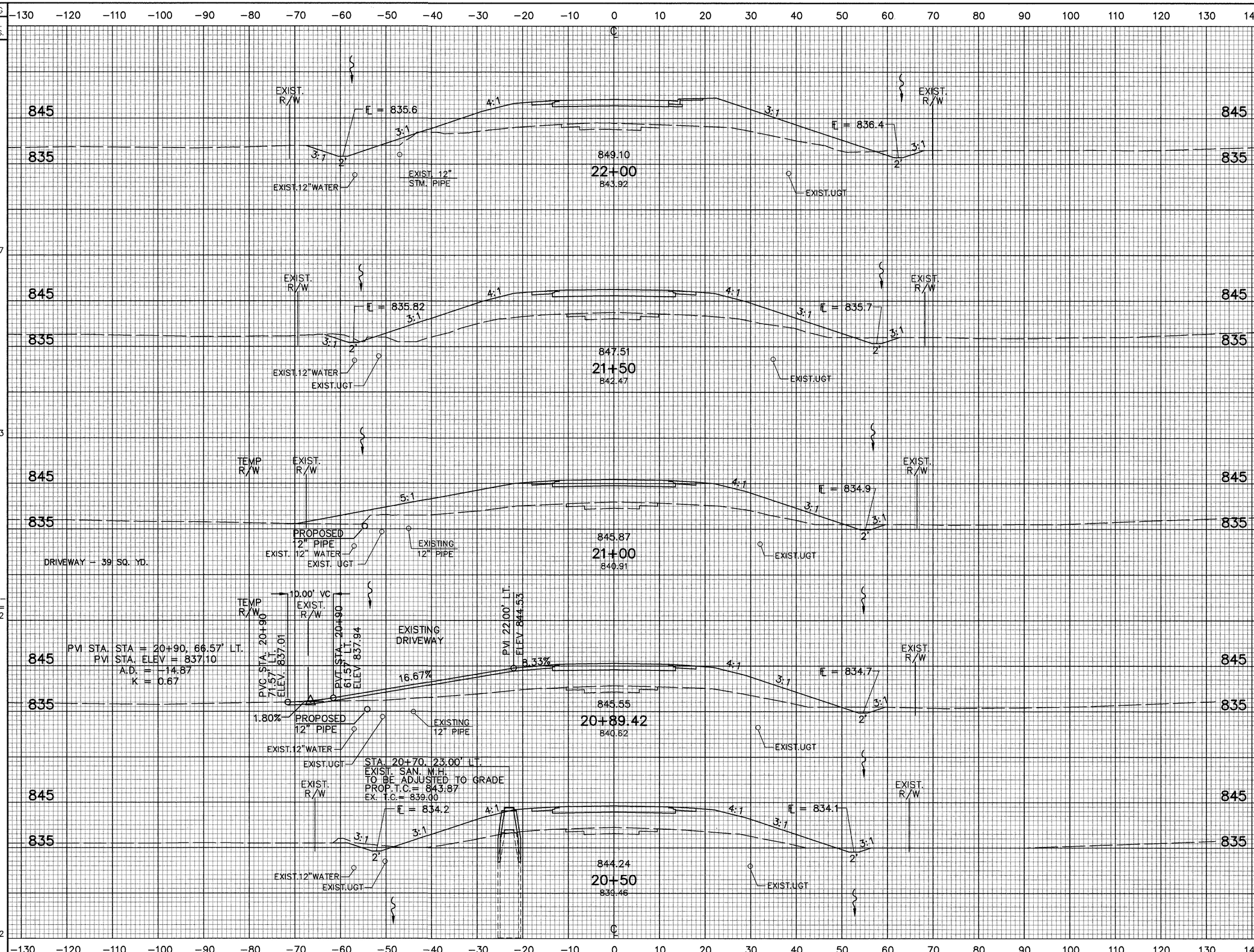

END AREA CUT	END AREA FILL	VOLUME CUT	VOLUME FILL
31	387		
		42	719
15	389		
		19	732
6	402		
		4	148
12	353		
		20	504
16	337		
		32	595

CALC. BY: S.D.E. DATE: 02/03/95
CHKD. BY: M.F.J. DATE: 02/15/95

CROSS SECTIONS
STA. 20+50 TO STA. 22+00 McCUTCHEON RD.

FRA-270-32.46

Plot Scale - 1" = 10'
COL #18 C:\DRAWING\06092306\XSECS\MCCNXSEC.DWG - VIEW: M3 FEBRUARY-09-1995

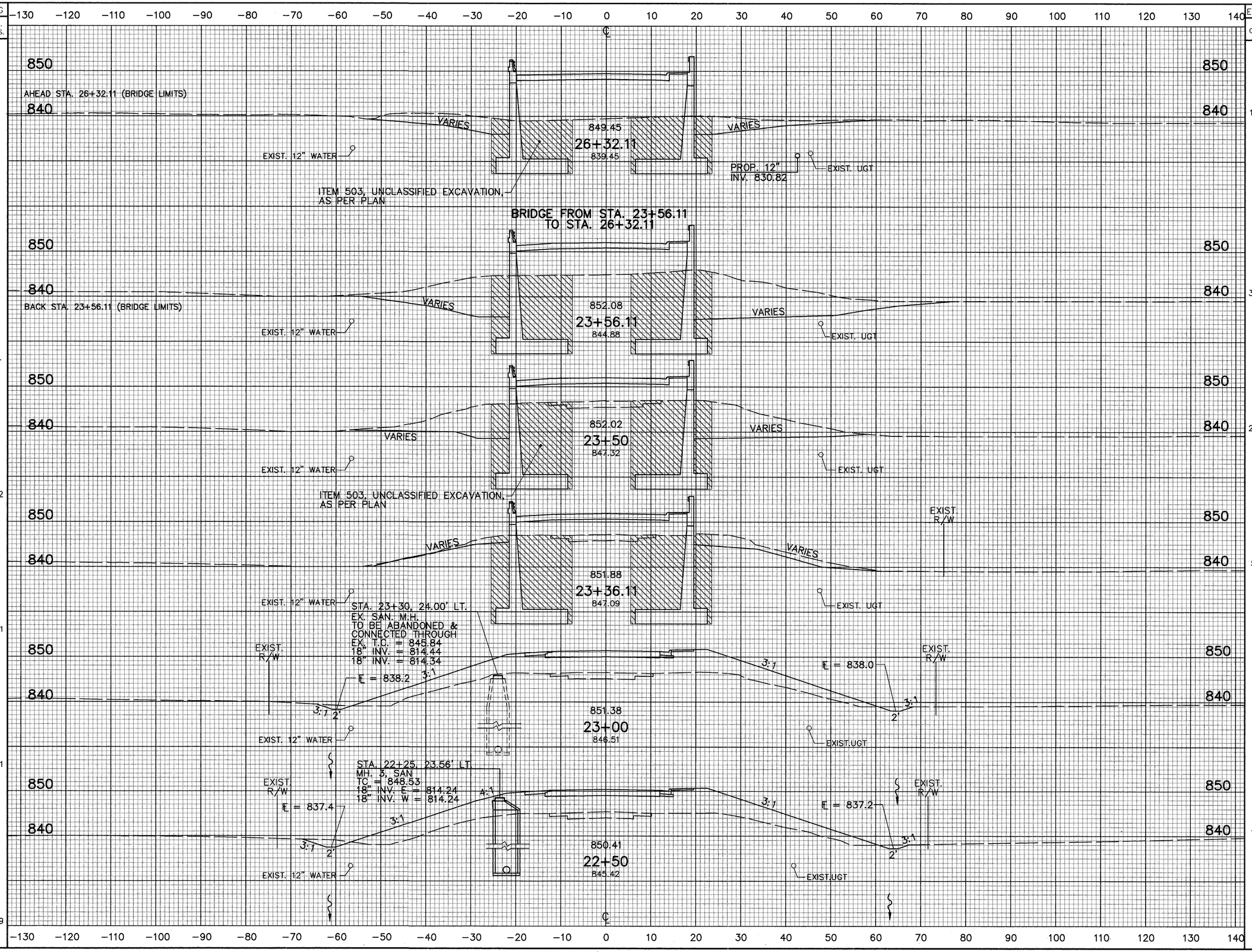

SEEDING END WIDTH	SEEDING SQ. YDS.	END AREA CUT	END AREA FILL	VOLUME CUT	VOLUME FILL
59		115	327		
108		370	219		
	74			67	42
109		225	152		
	142			72	74
75		55	135		
	351			43	330
100		9	359		
	561			21	713
102		14	411		
	569			42	739

CALC. BY: S.D.E. DATE: 02/03/95
CHKD. BY: M.F.J. DATE: 02/15/95

CROSS SECTIONS
STA. 22+50 TO STA. 26+32.11 McCUTCHEON RD.

FRA-270-32.46

293/593

Plot Scale - 1" = 10'
COL #18 C:\DRAWING\06092306\XSECS\MCCNXSEC.DWG - VIEW: M4 FEBRUARY-09-1995

SEEDING		END AREA		VOLUME	
END WIDTH	SQ. YDS.	CUT	FILL	CUT	FILL
		34	12		
				8	2
		29	7		
		34	31		
33	226	13	31		
				14	44
52	12	3	19		
				1	3
51	306	14	57		
		43	127		

CALC. BY: S.D.E. DATE: 12/03/95
CHKD. BY: M.F.J. DATE: 12/15/95

CROSS SECTIONS
STA. 26+50 TO STA. 27+50 McCUTCHEON RD

FRA-270-32.46

294/593

Plot Scale – 1" = 10'
COL. #15 C:\DRAWING\06092306\XSECS\MCCNKSEC.DWG – MEW: MS FEBRUARY-09-1995

THIS QUANTITY OF ITEM 659, SEEDING AND MULCHING, AS PER PLAN, HAS BEEN CALCULATED FROM THE PLAN FOR IRREGULARLY SHAPED AREAS OCCURRING BETWEEN STA 27+00 AND STA 29+25 SEE SHEET 295

END PAVING, 41' LT.
ELEV. = 844.00
EXIST. R/W
PVI 24.90' LT. ELEV. 844.67
PVI 18.00' LT. ELEV. 845.24
4.2% 8.3% 6%
EXISTING 12" PIPE
EXIST. 12" WATER
EXISTING DRIVEWAY
845.79
27+50
845.36
TEMP. R/W
EXIST. R/W
4:1
EXISTING DRIVEWAY
EXIST. UGT

END PAVING, 41' LT.
ELEV. = 843.99
EXIST. R/W
PVI 24.90' LT. ELEV. 844.84
PVI 18.00' LT. ELEV. 845.41
5.4% 8.3% 6%
EXIST.12"WATER
EXISTING 12" PIPE
EXISTING DRIVEWAY
845.96
27+43.42
845.50
EXIST. R/W
4:1
EXISTING DRIVEWAY
EXIST.UGT

STA. 26+68, 24.00' RT.
EX. SAN. M.H. TO BE ADJUSTED TO GRADE
EX. TC 846.25
PROP TC = 845.53
EX. INV. = 815.00
EX. INV. = 814.80
EXIST. R/W
4:1 12:1
EXIST. 12" WATER
847.31
27+00
846.41
STA. 27+29, RT. 14.00'
CB-3A
F.L. GRATE = 845.99
INV. W 12" 840.80
INV. W 4" 843.50
EXIST. R/W
3:1
EXIST. UGT

VARIES
EXIST. 12" WATER
848.87
26+52.11
847.34
VARIES
EXIST. UGT
PROP. 12" INV. 840.00

VARIES
EXIST. 12" WATER
848.94
26+50
847.37
VARIES
EXIST. UGT
PROP. 12" INV. 839.08

850
840

SEEDING	
END WIDTH	SQ. YDS.

SUPERELEVATION TABLES

CD NORTHBOUND

C2											
LEFT				℄			RIGHT				REMARKS
EDGE OF PAVEMENT	DIFF.	RATE	WIDTH	PROFILE GRADE	℄ STATION	℄ ELEVATION	WIDTH	RATE	DIFF.	EDGE OF PAVEMENT	
871.29	0.44	0.0370	12.00	870.85	1368+68.83		12.00	−0.0370	−0.44	870.41	FS
871.12	0.44	0.0363	↑	870.68	1368+75.00		↑	−0.0363	−0.44	870.24	
870.38	0.40	0.0333		869.98	1369+00.00			−0.0333	−0.40	869.58	
869.64	0.36	0.0303		869.28	1369+25.00			−0.0303	−0.36	868.92	
868.90	0.33	0.0273		868.57	1369+50.00			−0.0273	−0.33	868.24	
868.54	0.31	0.0259		868.23	1369+62.19			−0.0259	−0.31	867.92	PT
868.16	0.29	0.0244		867.87	1369+75.00			−0.0244	−0.29	867.58	
867.43	0.26	0.0214		867.17	1370+00.00			−0.0214	−0.26	866.91	
866.69	0.22	0.0184	↓	866.47	1370+25.00		↓	−0.0184	−0.22	866.25	
865.99	0.19	0.0156	12.00	865.80	1370+48.83		12.00	−0.0156	−0.19	865.61	PLANE

C3											
LEFT				℄			RIGHT				REMARKS
EDGE OF PAVEMENT	DIFF.	RATE	WIDTH	PROFILE GRADE	℄ STATION	℄ ELEVATION	WIDTH	RATE	DIFF.	EDGE OF PAVEMENT	
862.26	0.19	0.0156	12.00	862.07	1371+81.37		12.00	−0.0156	−0.19	861.88	PLANE/NC
861.68	0.13	0.0112	↑	861.55	1372+00.00		↑	−0.0112	−0.13	861.42	
860.91	0.06	0.0053		860.85	1372+25.00			−0.0053	−0.06	860.79	
860.22	0.00	0.0000		860.22	1372+47.29			0.0000	0.00	860.22	FLAT
860.14	−0.01	−0.0006		860.15	1372+50.00			0.0006	0.01	860.14	
859.36	−0.08	−0.0066		859.44	1372+75.00			0.0066	0.08	859.36	
858.59	−0.15	−0.0125		858.74	1373+00.00			0.0125	0.15	858.59	
857.84	−0.22	−0.0182		858.06	1373+24.37			0.0182	0.22	857.84	PC
857.05	−0.29	−0.0243	↓	857.34	1373+50.00		↓	0.0243	0.29	857.05	
856.70	−0.32	−0.0270	12.00	857.02	1373+61.37		12.00	0.0270	0.32	856.70	FS
849.03	−0.32	−0.0270	12.00	849.35	1376+56.69		12.00	0.0270	0.32	849.67	FS
848.72	−0.27	−0.0227	↑	848.99	1376+75.00		↑	0.0227	0.27	849.26	
848.33	−0.20	−0.0167		848.53	1377+00.00			0.0167	0.20	848.73	
848.26	−0.19	−0.0156		848.45	1377+04.86			0.0156	0.19	848.64	PLANE
848.10	↑	↑		848.29	1377+13.73			0.0135	0.16	848.45	PRC
847.91				848.10	1377+25.00			0.0108	0.13	848.23	
847.51				847.70	1377+50.00			0.0049	0.06	847.76	
847.21				847.40	1377+70.77			0.0000	0.00	847.40	HALF FLAT
847.15				847.34	1377+75.00			−0.0010	−0.01	847.33	
846.82				847.01	1378+00.00			−0.0069	−0.08	846.93	
846.51	↓	↓	↓	846.70	1378+25.00		↓	−0.0128	−0.15	846.55	
846.38	−0.19	−0.0156	12.00	846.57	1378+36.69		12.00	−0.0156	−0.19	846.38	NC

CD SOUTHBOUND

C7											
LEFT				℄			RIGHT				REMARKS
EDGE OF PAVEMENT	DIFF.	RATE	WIDTH	PROFILE GRADE	℄ STATION	℄ ELEVATION	WIDTH	RATE	DIFF.	EDGE OF PAVEMENT	
879.89	−0.19	−0.0156	12.00	880.08	1364+83.47		24.00	−0.0156	−0.37	879.71	NC
879.41	−0.15	−0.0125	↑	879.56	1365+00.00		↑	↑	↑	879.19	
878.67	−0.09	−0.0078		878.77	1365+25.00					878.40	
877.94	−0.04	−0.0031		877.98	1365+50.00					877.61	
877.46	0.00	0.0000		877.46	1365+66.60					877.09	HALF FLAT
877.21	0.02	0.0016		877.19	1365+75.00					876.82	
876.48	0.08	0.0063		876.40	1366+00.00					876.03	
875.75	0.13	0.0110		875.62	1366+25.00					875.25	
875.02	0.19	0.0156		874.84	1366+49.72			−0.0156	−0.37	874.47	PLANE
874.62	0.22	0.0182		874.40	1366+63.47			−0.0182	−0.44	873.96	PC
874.28	0.24	0.0203		874.04	1366+75.00			−0.0203	−0.49	873.55	
873.55	0.30	0.0250	↓	873.25	1367+00.00		↓	−0.0250	−0.60	872.65	
873.25	0.32	0.0270	12.00	872.92	1367+10.47		24.00	−0.0270	−0.65	872.27	FS
848.94	0.32	0.0270	12.00	848.61	1375+30.85		24.00	−0.0270	−0.65	847.96	FS
848.56	0.28	0.0234	↑	848.28	1375+50.00		↑	−0.0234	−0.56	847.72	
848.09	0.22	0.0187		847.87	1375+75.00			−0.0187	−0.45	847.42	
848.04	0.22	0.0182		847.82	1375+77.85			−0.0182	−0.44	847.38	PCC
847.81	0.19	0.0156		847.62	1375+91.60			−0.0156	−0.37	847.25	PLANE
847.67	0.17	0.0140		847.50	1376+00.00			↑	↑	847.13	
847.28	0.11	0.0093		847.16	1376+25.00					846.79	
846.92	0.06	0.0046		846.87	1376+50.00					846.50	
846.61	0.00	0.0000		846.61	1376+74.72					846.24	HALF FLAT
846.32	−0.06	−0.0047		846.38	1377+00.00					846.01	
846.08	−0.11	−0.0094		846.19	1377+25.00					845.82	
845.87	−0.17	−0.0141	↓	846.04	1377+50.00		↓	↓	↓	845.67	
845.81	−0.19	−0.0156	12.00	846.00	1377+57.85		24.00	−0.0156	−0.37	845.63	NC

CALC. BY: G.J.W. DATE: 2-95
CHKD. BY: M.F.J. DATE: 2-95

CD NORTHBOUND
CD SOUTHBOUND

SUPERELEVATION TABLE

FRA-270-32.46

296
593

PLOT SCALE 1"=1'
COL #20 C:\DRAWING\06092306\TABLE\G6092SR1.DWG FEBRUARY-08-1995

SUPERELEVATION TABLES

RAMP A

C14						
LEFT						REMARKS
EDGE OF PAVEMENT	DIFF.	RATE	WIDTH	PROFILE GRADE	℄ STATION	
845.35	0.19	0.0156	12.00	845.16	1378+46.04	NC
845.34	0.19	0.0162	↑	845.15	1378+50.00	
845.28	0.24	0.0203		845.04	1378+75.00	
845.21	0.29	0.0244		844.92	1379+00.00	
845.17	0.34	0.0280	↓	844.83	1379+22.27	PCC
845.15	0.34	0.0284	12.00	844.81	1379+25.00	
845.09	0.39	0.0325	12.14	844.70	1379+50.00	
845.03	0.46	0.0366	12.49	844.57	1379+75.00	
844.98	0.52	0.0400	12.97	844.46	1379+96.04	FS
844.96	0.52	↑	13.07	844.44	1380+00.00	
844.91	0.56		13.88	844.35	1380+25.00	
844.85	0.60	↓	14.90	844.25	1380+50.00	
844.77	0.64	0.0400	16.00	844.13	1380+75.00	

C15/C16						
LEFT						REMARKS
EDGE OF PAVEMENT	DIFF.	RATE	WIDTH	PROFILE GRADE	℄ STATION	
843.79	0.64	0.0400	16.00	843.15	1382+83.01	CS/PLN
843.76	0.67	0.0417	↑	843.09	1383+00.00	
843.76	0.69	0.0429		843.07	1383+11.94	
843.76	0.71	0.0442		843.05	1383+25.00	
843.83	0.75	0.0467		843.08	1383+50.00	
843.95	0.79	0.0492		843.16	1383+75.00	
844.13	0.83	0.0517		843.30	1384+00.00	
844.37	0.87	0.0542		843.50	1384+25.00	
844.68	0.91	0.0567		843.77	1384+50.00	
845.04	0.95	0.0592	↓	844.09	1384+75.00	
845.16	0.96	0.0600	16.00	844.20	1384+83.01	SC/FS

C17						
LEFT						REMARKS
EDGE OF PAVEMENT	DIFF.	RATE	WIDTH	PROFILE GRADE	℄ STATION	
855.67	0.96	0.0600	16.00	854.71	1391+87.18	PLANE
855.56	0.94	0.0587	↑	854.62	1392+00.00	
855.30	0.90	0.0561		854.40	1392+25.00	
855.00	0.86	0.0535		854.14	1392+50.00	
854.94	0.85	0.0530		854.09	1392+54.68	PCC
854.69	0.81	0.0509		853.88	1392+75.00	
854.39	0.77	0.0483		853.62	1393+00.00	
854.07	0.74	0.0460	↓	853.33	1393+22.18	FS
854.03	0.74	↑	16.00	853.29	1393+25.00	
853.65	0.73		15.87	852.92	1393+50.00	
853.25	0.66	↓	14.24	852.59	1393+75.00	
853.15	0.64	0.0460	13.93	852.51	1393+80.75	PLANE
852.84	0.55	0.0424	13.05	852.29	1394+00.00	
852.43	0.46	0.0377	12.31	851.97	1394+25.00	
852.03	0.40	0.0331	12.01	851.63	1394+50.00	
851.95	0.39	0.0322	12.00	851.56	1394+54.68	PT
851.62	0.34	0.0284	↑	851.28	1394+75.00	
851.22	0.28	0.0237	↓	850.94	1395+00.00	
850.97	0.25	0.0208	12.00	850.72	1395+15.75	NC

RAMP B

C18						
LEFT						REMARKS
EDGE OF PAVEMENT	DIFF.	RATE	WIDTH	PROFILE GRADE	℄ STATION	
848.86	0.25	0.0208	12.00	848.61	65+79.03	
848.80	0.25	0.0208	12.04	848.55	66+00.00	
848.75	0.25	0.0208	12.18	848.50	66+25.00	
848.76	0.26	0.0208	12.44	848.50	66+50.00	
848.78	0.26	0.0208	12.61	848.52	66+62.80	NC
848.83	0.30	0.0231	12.80	848.53	66+75.00	
848.96	0.37	0.0277	13.27	848.59	67+00.00	
849.14	0.45	0.0322	13.83	848.69	67+23.87	PC
849.15	0.45	0.0324	13.86	848.70	67+25.00	
849.39	0.55	0.0371	14.79	848.84	67+50.00	
849.70	0.67	0.0417	16.00	849.03	67+75.00	
850.01	0.74	0.0460	16.00	849.27	67+97.80	FS

C19						
LEFT						REMARKS
EDGE OF PAVEMENT	DIFF.	RATE	WIDTH	PROFILE GRADE	℄ STATION	
852.80	0.74	0.0460	16.00	852.06	70+21.72	PLANE
852.84	0.74	0.0463	↑	852.10	70+25.00	
853.11	0.78	0.0486		852.33	70+50.00	
853.34	0.82	0.0510		852.52	70+75.00	
853.48	0.85	0.0530		852.63	70+96.72	PCC
853.50	0.85	0.0533		852.65	71+00.00	
853.62	0.89	0.0556		852.73	71+25.00	
853.68	0.93	0.0580	↓	852.75	71+50.00	
853.69	0.96	0.0600	16.00	852.73	71+71.72	FS
840.06	0.96	0.0600	16.00	839.10	81+02.66	CS/FS
840.02	0.88	0.0550	↑	839.14	81+25.00	
839.98	0.79	0.0495		839.19	81+50.00	
839.93	0.70	0.0439		839.23	81+75.00	
839.88	0.61	0.0384		839.27	82+00.00	
839.84	0.53	0.0328		839.31	82+25.00	
839.80	0.44	0.0273		839.36	82+50.00	
839.75	0.35	0.0217		839.40	82+75.00	
839.70	0.26	0.0162	↓	839.44	83+00.00	
839.68	0.25	0.0156	16.00	839.43	83+02.66	ST/NC

RAMP C

SEE NOTE						
TANGENT		RIGHT				REMARKS
℄ STATION	PROFILE GRADE	WIDTH	RATE	DIFF.	EDGE OF PAVEMENT	
1370+57.59	866.34	16.00	−0.0370	−0.59	865.75	FS
1370+75.00	865.80	↑	−0.0325	−0.52	865.28	
1371+00.00	865.02		−0.0260	−0.42	864.60	
1371+25.00	864.24		−0.0194	−0.31	863.93	
1371+50.00	863.46		−0.0129	−0.21	863.25	
1371+75.00	862.68		−0.0064	−0.10	862.58	
1371+99.59	861.91		0.0000	0.00	861.91	FLAT
1372+25.00	861.12		0.0066	0.11	861.23	
1372+50.00	860.34	↓	0.0131	0.21	860.55	
1372+59.59	860.04	16.00	0.0156	0.25	860.29	NC

NOTE :
THE CURVATURE OF RAMP C DOES NOT REQUIRE SUPERELEVATION TO MAINTAIN THE DESIGN SPEED. HOWEVER A TRANSITION IS PROVIDED AT THE BEGINNING OF THE RAMP TO MATCH THE SUPERELEVATION OF CDN IN THAT AREA.

CALC:GJW DATE:11-94
CHK:MFJ DATE:11-95

RAMP A
RAMP B
RAMP C

SUPERELEVATION TABLE

FRA-270-32.46

297
593

PLOT SCALE 1"=1'
COL #20 C:\DRAWING\06092306\TABLE\06092SR2.DWG FEBRUARY-08-1995

PC = CDN–1420+21.85
= 1420+01.61, 95.78' LT

10'
24'
12'
36'
4'

835.85 835.80 835.74 835.69 835.63 835.55 835.47 835.39 835.31 835.23 835.15 835.07 834.99 834.91 834.83 834.75 834.67 834.59 834.51 834.43 834.35 834.23 834.12

CDN–1420 836.22 836.17 836.11 836.06 836.00 CDN–1421 835.92 835.84 835.76 835.68 CDN–1422 835.60 835.52 835.44 835.36 CDN–1423 835.28 835.20 835.12 835.04 CDN–1424 834.96 834.88 834.80 834.72 CDN–1425 834.60 834.49

836.03 835.98 835.92 835.87 835.81 835.73 835.65 835.57 835.49 835.41 835.33 835.25 835.17 835.09 835.01 834.93 834.85 834.77 834.69 834.61 834.53 834.42 834.30

CD NORTHBOUND

C/L CONSTRUCTION CDN

CONC. ATTENUATOR PAD

I–3D

835.27
835.20

834.98 834.96 834.93 834.83 834.80 834.73 834.65 834.60 834.55 834.49 834.44 834.38 834.34 834.27 834.23 834.18 834.12 834.05 834.03 834.00

STA. CDN–1420+52.35
31.88' RT.

℄ PAVED GUTTER

C.B.–A

C.B.–A

(835.73) (835.55) (835.48) (835.33) (835.23) (835.10) (834.99) (834.88) (834.77) (834.68) (834.51) (834.41)

TYPE B
BARRIER

BEGIN GUTTER
IN GORE AREA
STA. CDN–1420+21.85,
32.50' RT.

STA. CDN–1420+21.85
44.50' RT.

GUTTER
STA. CDN–1424+49.70
24.00' RT.

I–270 NORTHBOUND

C/L SURVEY I–270

1420+00 1421+00 1422+00 1423+00 S 03°34'46" W 1424+00 1425+00

MATCHLINE STA. CDN–1425+73.50

PT = CDN–1425+84.35
= 1425+63.85, 95.78' LT

PC = CDN–1428+72.00
= 1428+51.11, 80.72' LT

END PROJECT
FRA–270–32.46
STA. 1429+07.79
S.L.M. 33.64

NH–270–5(62)

LEGEND

(XXX.XX)	EXISTING ELEVATIONS
XXX.XX	PROPOSED ELEVATIONS (NON TYPICAL)
XXX.XX	PLANNED PAVEMENT ELEVATIONS PER PROFILE GRADE AND TYPICAL CROSS SLOPE

NOTES: STATIONS ARE AT 25' INCREMENTS UNLESS OTHERWISE NOTED

ELEVATIONS AT INLETS/CATCH BASINS ARE TO F.L. OF GRATE

834.00 833.89 833.77 833.65 833.54 833.42 833.31 833.19 833.16 833.09 833.05 833.02 832.97 832.92 832.88 832.85 832.78 832.77 832.76 832.76 832.69 832.62 832.61 832.55

834.37 834.26 CDN–1426 834.14 834.02 833.91 833.79 CDN–1427 833.68 833.56 833.53 833.46 CDN–1428 833.42 833.39 833.34 833.29 CDN–1429 833.25 833.22 833.15 833.14 833.13 833.13 CDN–1430 833.06 832.99 CDN–1431 832.98 832.92

834.18 834.07 834.01 833.96 833.90 833.85 833.80 833.74 +52.49 833.72 833.65 833.61 833.58 833.53

833.95 833.93 833.88 833.85 833.82 833.77

S 06°34'46" W

C.B.–A

(834.28) (834.15) (834.01) 833.72 +30.00 833.81 +52.49 (833.88) (833.75) (833.64) (833.50) (833.39) (833.28) (833.24) (833.07) (832.98)

END GUTTER
STA. CDN–1427+52.49
16.50' RT.

I–270 NORTHBOUND

C/L SURVEY I–270

1426+00 1427+00 S 03°34'46" W 1428+00 1429+00 1430+00 1431+00

MATCHLINE STA. CDN–1431+64

PAVEMENT DETAILS
STA. CDN–1420+00 TO CDN–1431+64

FRA–270–32.46

298
593

CALC. BY: G.J.W. DATE: 2–95
CHKD. BY: M.F.J. DATE: 2–95

HORIZONTAL SCALE IN FEET
0 10 20 40

PLOT SCALE 1"=20'
COL #30 C:\DRAWNG\06092306\DETAILS\06092201.DWG FEBRUARY–09–1995

PVMTD201

LEGEND

(XXX.XX)	EXISTING ELEVATIONS
XXX.XX	PROPOSED ELEVATIONS (NON TYPICAL)
XXX.XX	PLANNED PAVEMENT ELEVATIONS PER PROFILE GRADE AND TYPICAL CROSS SLOPE

NOTES: STATIONS ARE AT 25' INCREMENTS UNLESS OTHERWISE NOTED

ELEVATIONS AT INLETS/CATCH BASINS ARE TO F.L. OF GRATE

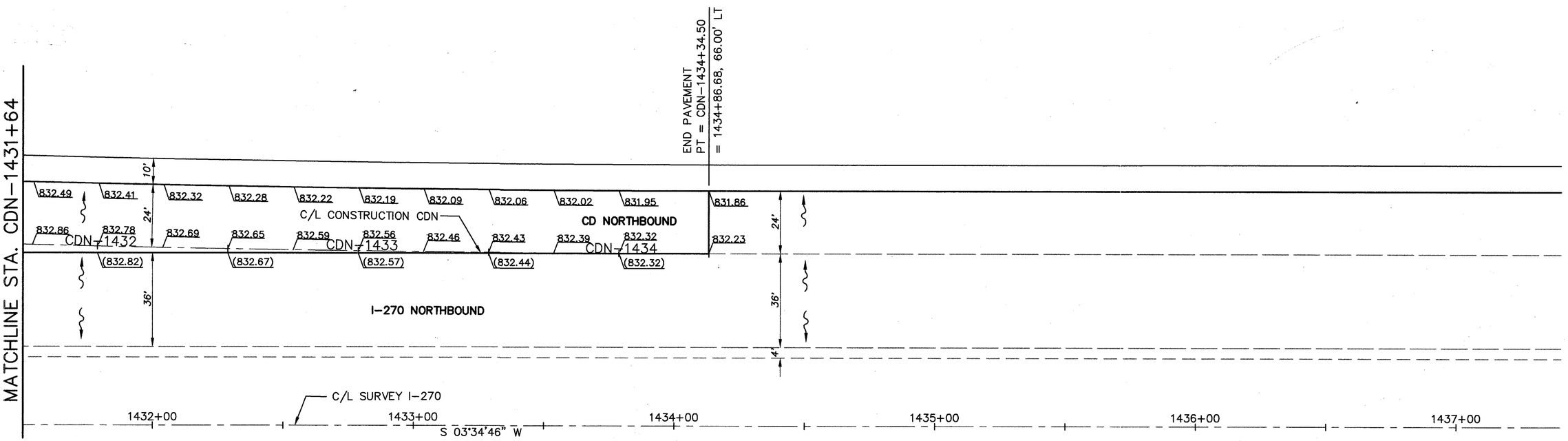

N

0 10 20 40
HORIZONTAL SCALE IN FEET

CAD: G.J.W. DATE: 2–95
CHKD: M.F.J. DATE: 2–95

PAVEMENT DETAILS
STA. CDN–1431+64 TO CDN–1434+34.50

FRA–270–32.46

299
593

PLOT SCALE = 1"=20'
COL #30 C:\DRAWING\06092306\DETAILS\06092002.DWG FEBRUARY-09-1995

PWMTDZ01

LEGEND

(XXX.XX)	EXISTING ELEVATIONS
XXX.XX	PROPOSED ELEVATIONS (NON TYPICAL)
XXX.XX	PLANNED PAVEMENT ELEVATIONS PER PROFILE GRADE AND TYPICAL CROSS SLOPE

NOTES: STATIONS ARE AT 25' INCREMENTS UNLESS OTHERWISE NOTED

ELEVATIONS AT INLETS/CATCH BASINS ARE TO F.L. OF GRATE

END PROJECT
FRA-270-32.46
STA. 1429+07.79
S.L.M. 33.64

NH-270-5(62)

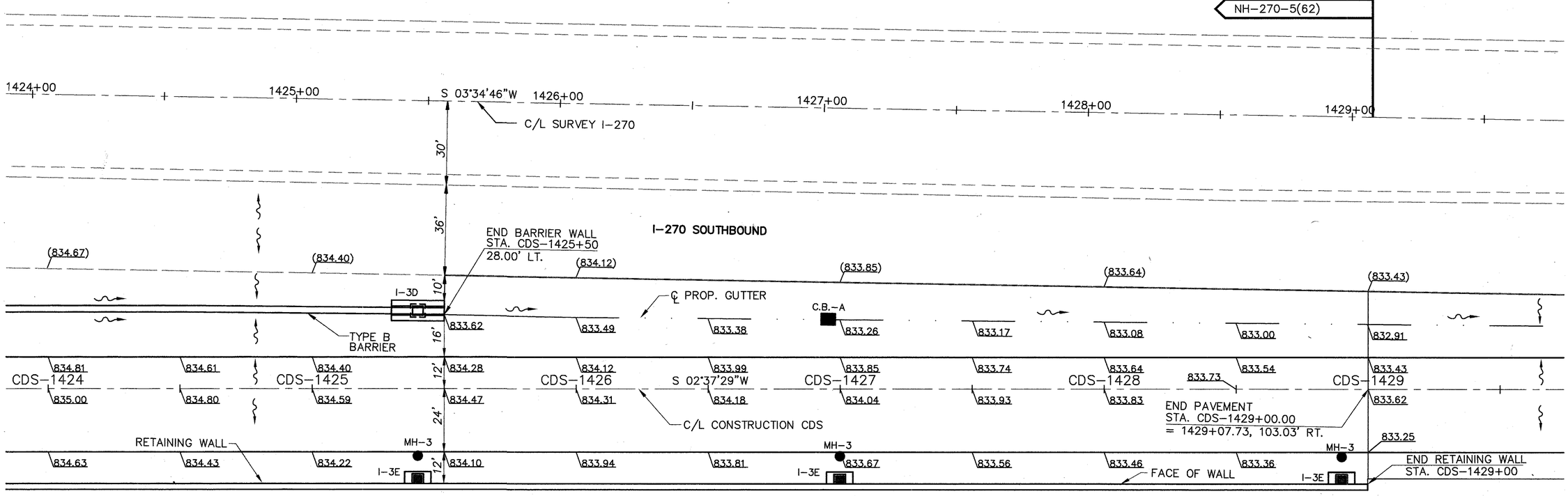

N

0 10 20 40
HORIZONTAL SCALE IN FEET

CALC. G.J.W. BY: DATE: 2-95
CHK. M.F.J. BY: DATE: 2-95

PAVEMENT DETAILS
STA. CDS-1424+00 TO CDS-1429+00

FRA-270-32.46

300
593

PLOT SCALE=1"=20'
COL #30 C:\DRAWING\06092306\DETAILS\06092D10.DWG FEBRUARY-09-1995

PVMT0701

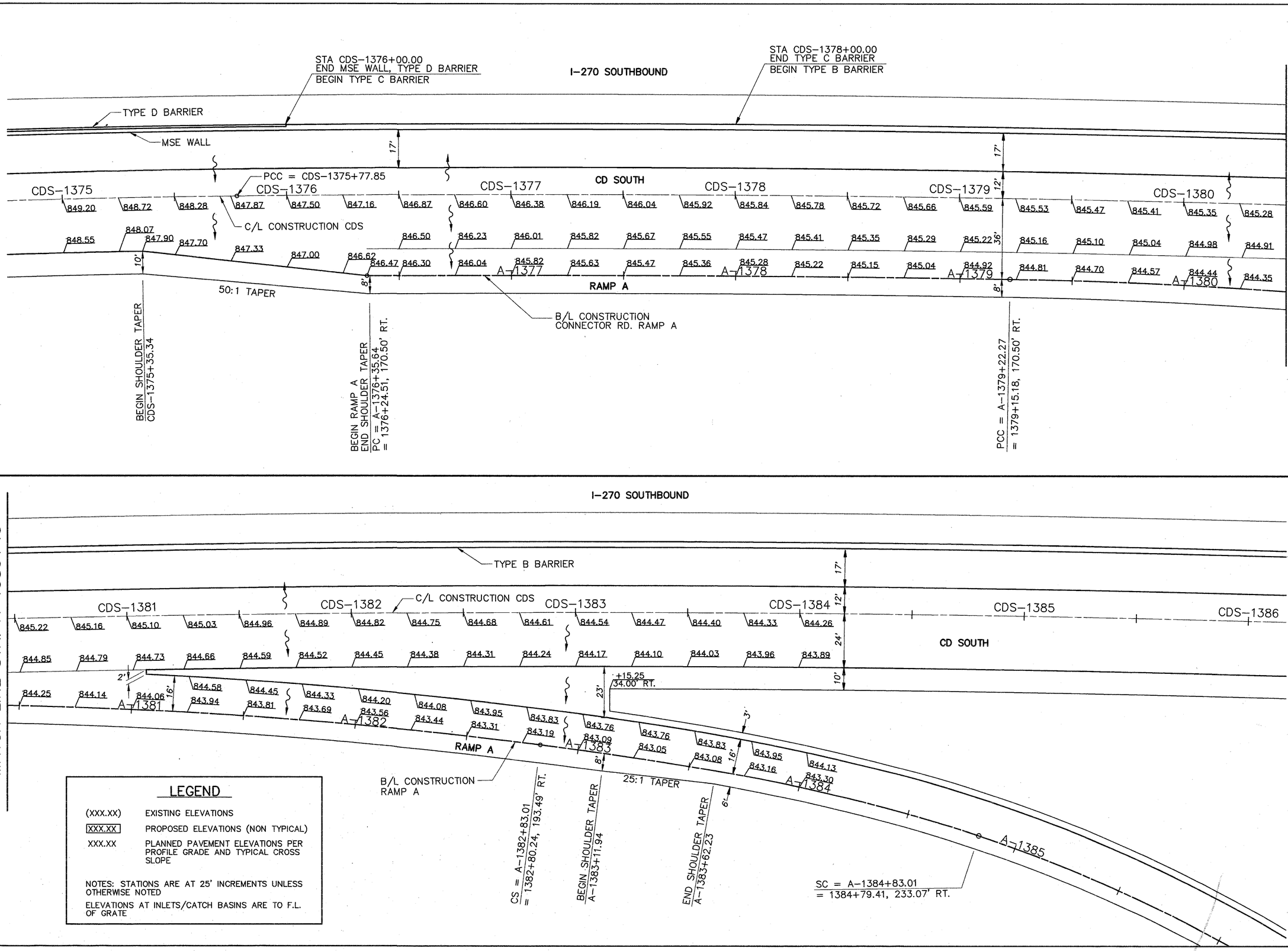

LEGEND

(XXX.XX)	EXISTING ELEVATIONS
XXX.XX	PROPOSED ELEVATIONS (NON TYPICAL)
XXX.XX	PLANNED PAVEMENT ELEVATIONS PER PROFILE GRADE AND TYPICAL CROSS SLOPE

NOTES: STATIONS ARE AT 25' INCREMENTS UNLESS OTHERWISE NOTED

ELEVATIONS AT INLETS/CATCH BASINS ARE TO F.L. OF GRATE

HORIZONTAL SCALE IN FEET
0 10 20 40

CALC. BY: G.J.W. DATE: 2-95
CHKD. BY: M.F.J. DATE: 2-95

PAVEMENT DETAILS
RAMP A @ SOUTHBOUND EXIT

FRA-270-32.46

301
593

PLOT SCALE: 1"=20'
COL. #05
C:\DRAWINGS\06092306\DETAILS\06092004.DWG FEBRUARY-07-1995
06092306\RMP-A.DWG

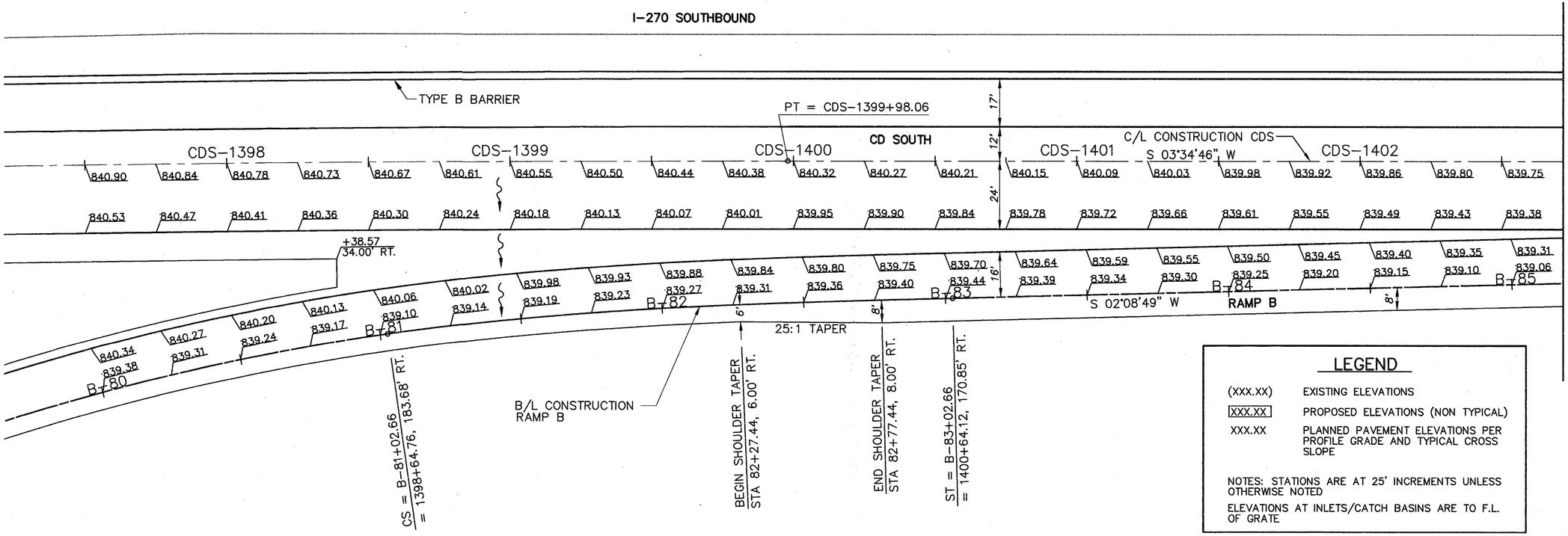

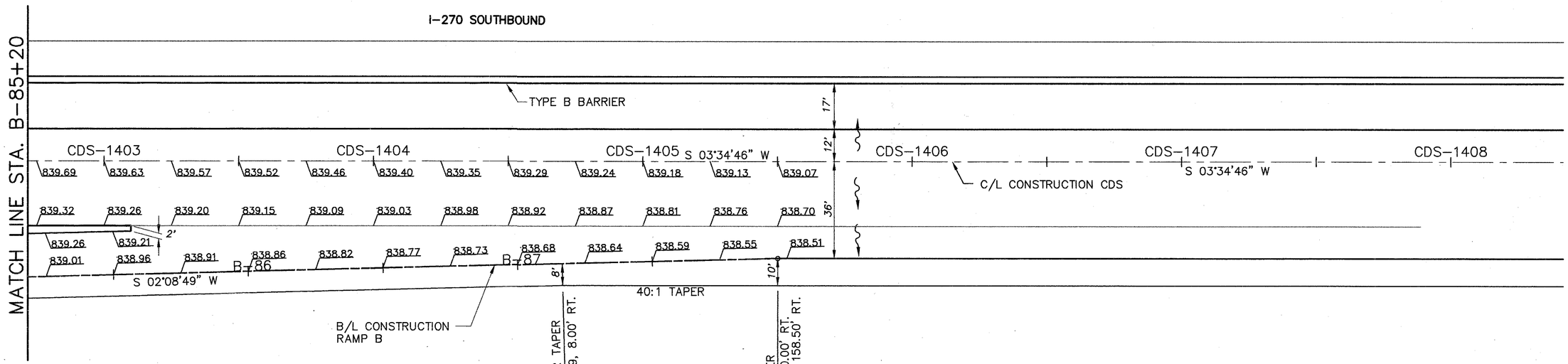

PAVEMENT DETAILS
RAMP B @ SOUTHBOUND ENTRANCE

FRA-270-32.46

302
593

CALC. BY: G.J.W. DATE: 2-95
CHKD. BY: M.F.J. DATE: 2-95

0 10 20 40 HORIZONTAL SCALE IN FEET

PLOT SCALE 1"=20'
COL. A30 C:\DRAWING\06092306\DETAILS\06092005.DWG FEBRUARY-07-1995
\06092306\RMP-B

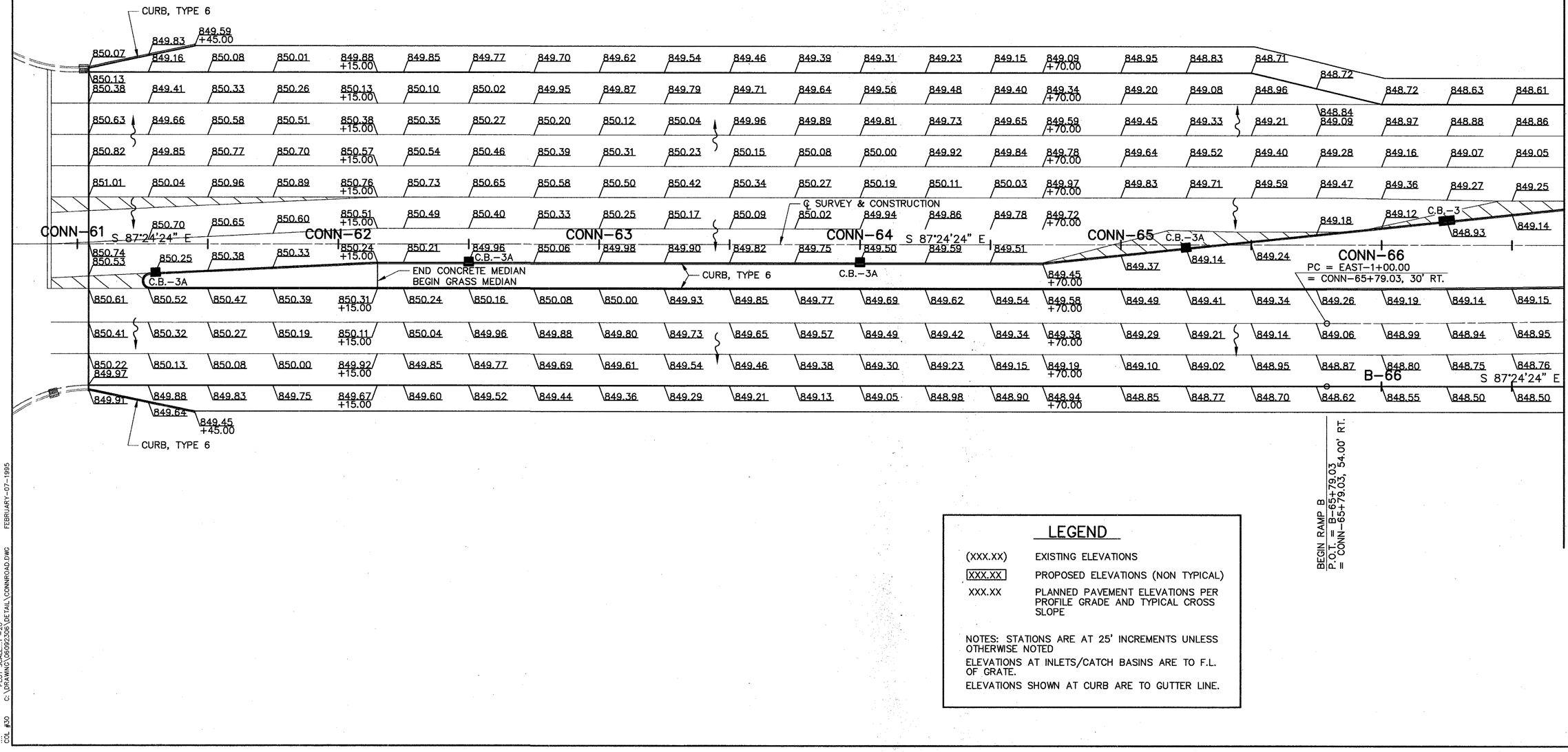

LEGEND

(XXX.XX)	EXISTING ELEVATIONS
XXX.XX	PROPOSED ELEVATIONS (NON TYPICAL)
XXX.XX	PLANNED PAVEMENT ELEVATIONS PER PROFILE GRADE AND TYPICAL CROSS SLOPE

NOTES: STATIONS ARE AT 25' INCREMENTS UNLESS OTHERWISE NOTED

ELEVATIONS AT INLETS/CATCH BASINS ARE TO F.L. OF GRATE.

ELEVATIONS SHOWN AT CURB ARE TO GUTTER LINE.

MATCH LINE STA. CONN–66+70.00 SEE SHEET 304

PAVEMENT DETAILS
CONNECTOR ROAD

FRA–270–32.46

303
593

CALC. BY: G.J.W. DATE: 2–95
CHKD. BY: M.F.J. DATE: 2–95

0 10 20 40
HORIZONTAL SCALE IN FEET

PLOT SCALE: 1"=20'
C:\DRAWNG\06092306\DETAIL\CONNROAD.DWG FEBRUARY–07–1995
COL #30

LEGEND

(XXX.XX)	EXISTING ELEVATIONS
XXX.XX	PROPOSED ELEVATIONS (NON TYPICAL)
XXX.XX	PLANNED PAVEMENT ELEVATIONS PER PROFILE GRADE AND TYPICAL CROSS SLOPE

NOTES: STATIONS ARE AT 25' INCREMENTS UNLESS OTHERWISE NOTED.

ELEVATIONS AT INLETS/CATCH BASINS ARE TO F.L. OF GRATE.

ELEVATIONS AT CURB ARE TO GUTTER LINE.

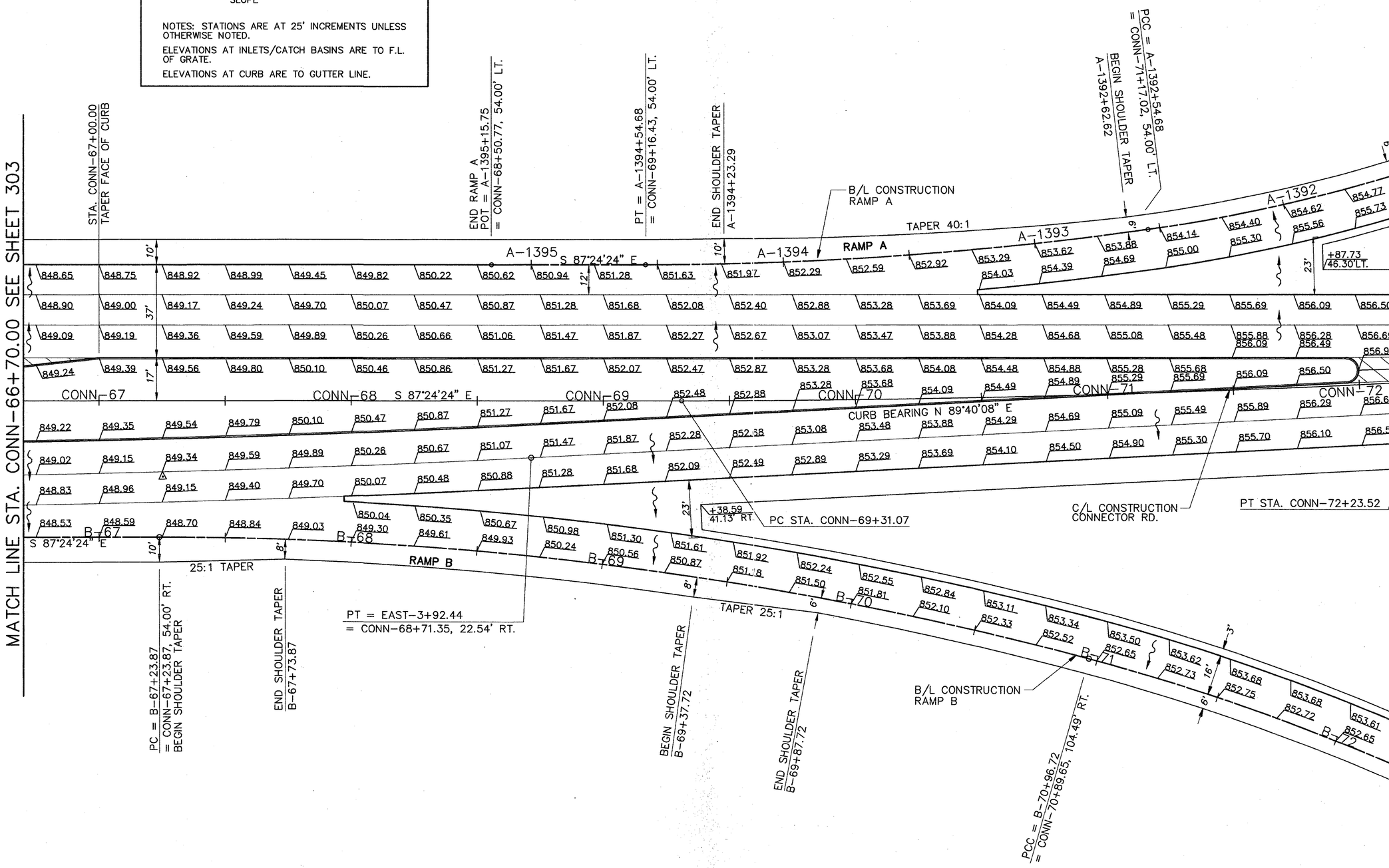

PAVEMENT DETAILS
CONNECTOR ROAD ENTRANCE/EXIT @ RAMPS A & B

HORIZONTAL SCALE IN FEET 0 10 20 40

CALC. BY: G.J.W. DATE: 2-95
CHKD. BY: M.F.J. DATE: 2-95

FRA-270-32.46

PLOT SCALE...1"=20' COL #30 C:\DRAWING\06092306\DETAILS\06092D06.DWG FEBRUARY-07-1995

CONN-1.DWG

LEGEND

(XXX.XX)	EXISTING ELEVATIONS
XXX.XX	PROPOSED ELEVATIONS (NON TYPICAL)
XXX.XX	PLANNED PAVEMENT ELEVATIONS PER PROFILE GRADE AND TYPICAL CROSS SLOPE

NOTES: STATIONS ARE AT 25' INCREMENTS UNLESS OTHERWISE NOTED

ELEVATIONS AT INLETS/CATCH BASINS ARE TO F.L. OF GRATE

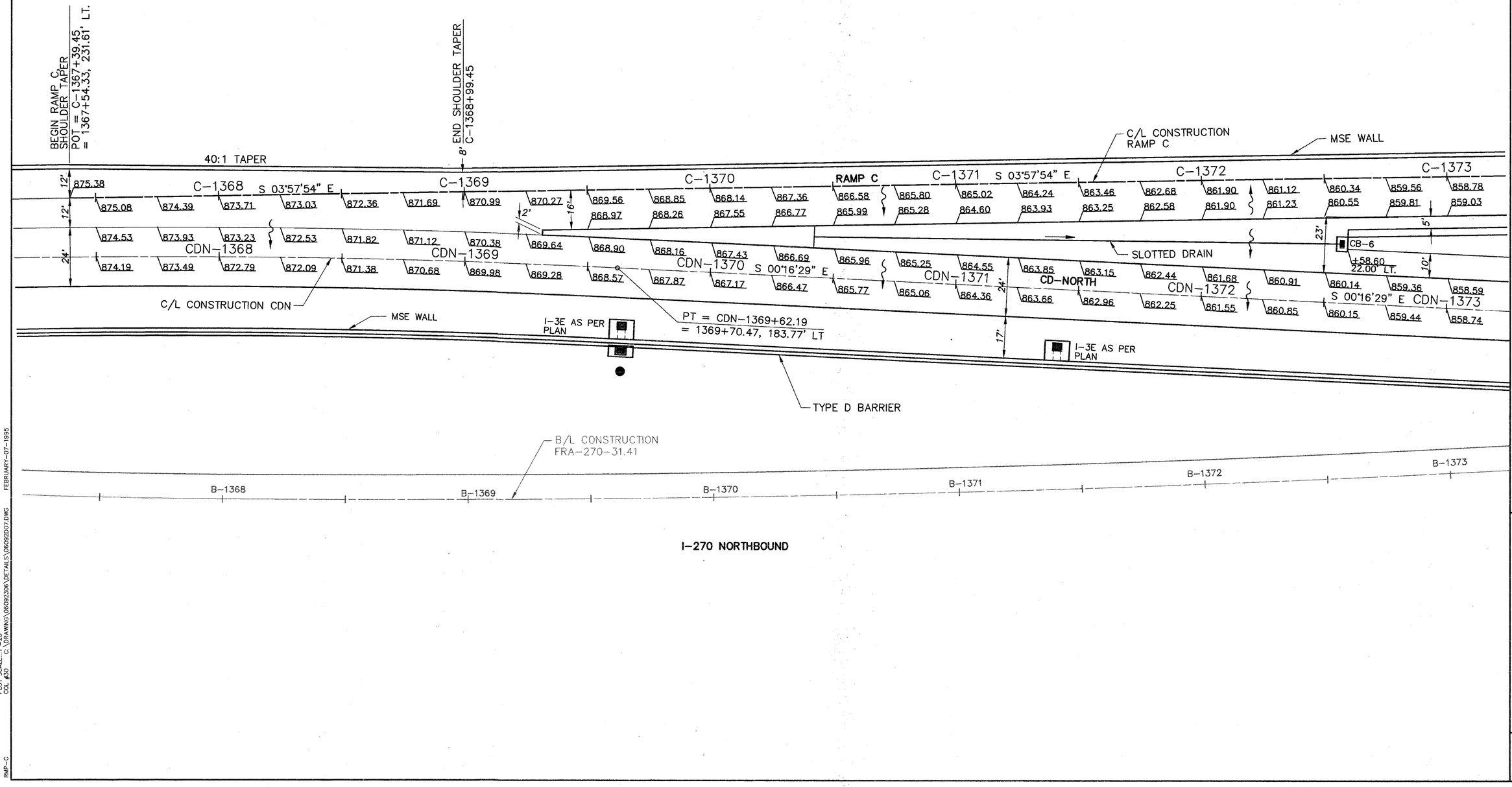

I-270 NORTHBOUND

0 10 20 40 HORIZONTAL SCALE IN FEET

CALC. BY: G.J.W. DATE: 2-95
CHKD. BY: M.F.J. DATE: 2-95

PAVEMENT DETAILS
RAMP C @ NORTHBOUND ENTRANCE

FRA-270-32.46

305
593

PLOT SCALE .1"=20'
COU. #30 C:\DRAWING\06092396\DETAILS\06092D07.DWG FEBRUARY-07-1995
RMP-C

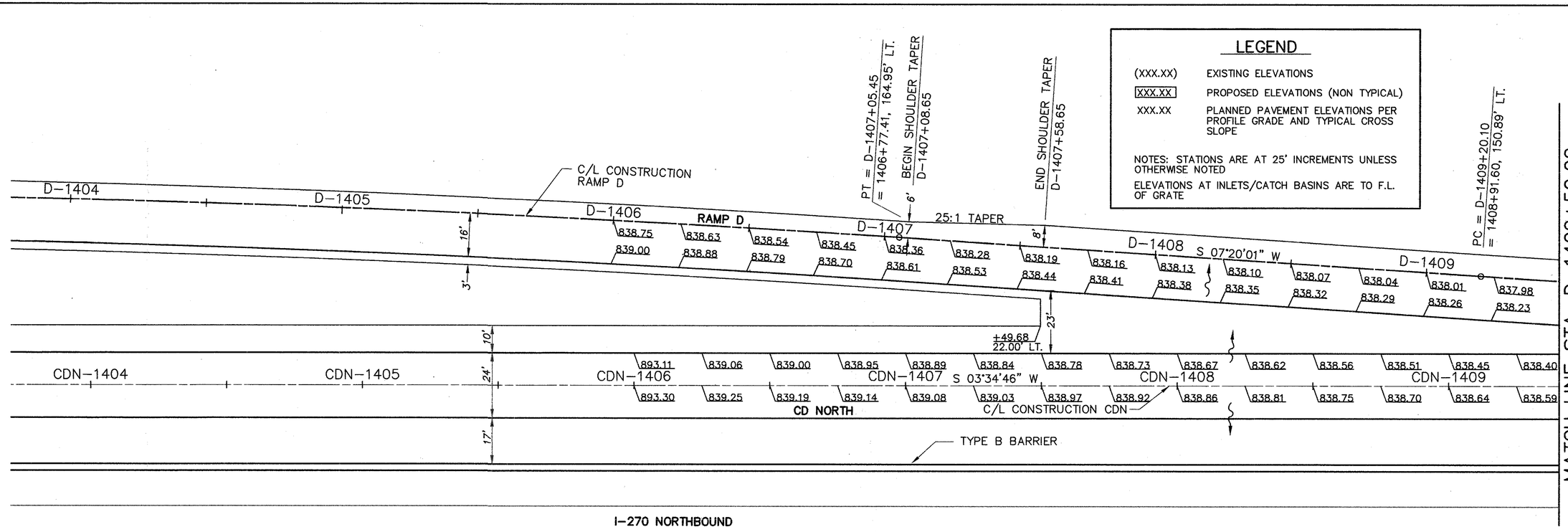
LEGEND
(XXX.XX) EXISTING ELEVATIONS
XXX.XX PROPOSED ELEVATIONS (NON TYPICAL)
XXX.XX PLANNED PAVEMENT ELEVATIONS PER PROFILE GRADE AND TYPICAL CROSS SLOPE
NOTES: STATIONS ARE AT 25' INCREMENTS UNLESS OTHERWISE NOTED
ELEVATIONS AT INLETS/CATCH BASINS ARE TO F.L. OF GRATE
MATCH LINE STA. D-1409+50.00
D-1404
D-1405
D-1406
D-1407
D-1408
D-1409
RAMP D
C/L CONSTRUCTION RAMP D
PT = D-1407+05.45 = 1406+77.41, 164.95' LT.
BEGIN SHOULDER TAPER D-1407+08.65
END SHOULDER TAPER D-1407+58.65
25:1 TAPER
S 07°20'01" W
PC = D-1409+20.10 = 1408+91.60, 150.89' LT.
16'
3'
8'
6'
23'
10'
24'
17'
+49.68 22.00' LT.
CDN-1404
CDN-1405
CDN-1406
CDN-1407
CDN-1408
CDN-1409
S 03°34'46" W
CD NORTH
C/L CONSTRUCTION CDN
TYPE B BARRIER
I-270 NORTHBOUND
MATCH LINE STA. D-1409+50.00
D-1410
D-1411
D-1412
D-1413
D-1414
RAMP D
C/L CONSTRUCTION RAMP D
BEGIN SHOULDER TAPER D-1413+20.67
END RAMP D, SHOULDER TAPER PT = D-1414+20.67= = 1413+91.82, 134.50' LT.
50:1 TAPER
16'
2'
8'
10'
12'
24'
17'
CDN-1410
CDN-1411
CDN-1412
CDN-1413
CDN-1414
S 03°34'46" W
CD NORTH
C/L CONSTRUCTION CDN
TYPE B BARRIER
I-270 NORTHBOUND
N
0 20 40
HORIZONTAL SCALE IN FEET.
CALC. G.J.W. DATE: 2-95
CHKD. M.F.J. DATE: 2-95
PAVEMENT DETAILS
RAMP D @ NORTHBOUND EXIT
FRA-270-32.46
306
593
06091206/RMP-D.DWG PLOT SCALE=1"=20' COL #30 C:\DRAWNG\06092306\DETAILS\06092008.DWG FEBRUARY-07-1995

LEGEND

(XXX.XX)	EXISTING ELEVATIONS
XXX.XX	PROPOSED ELEVATIONS (NON TYPICAL)
XXX.XX	PLANNED PAVEMENT ELEVATIONS PER PROFILE GRADE AND TYPICAL CROSS SLOPE

NOTES: STATIONS ARE AT 25' INCREMENTS UNLESS OTHERWISE NOTED.

ELEVATIONS AT INLETS/CATCH BASINS ARE TO F.L. OF GRATE.

ELEVATIONS SHOWN AT WALL ARE TO GUTTER LINE.

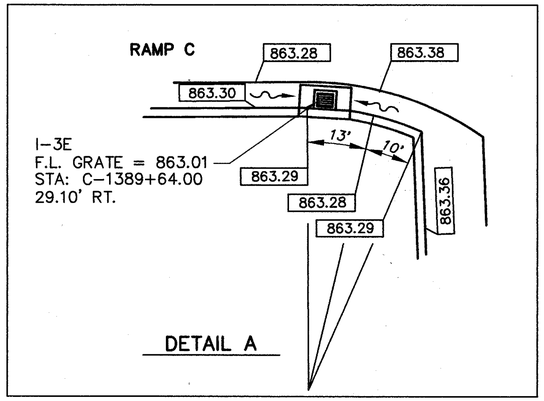

DETAIL A

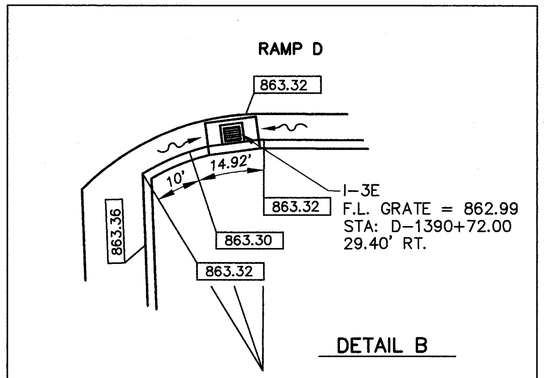

DETAIL B

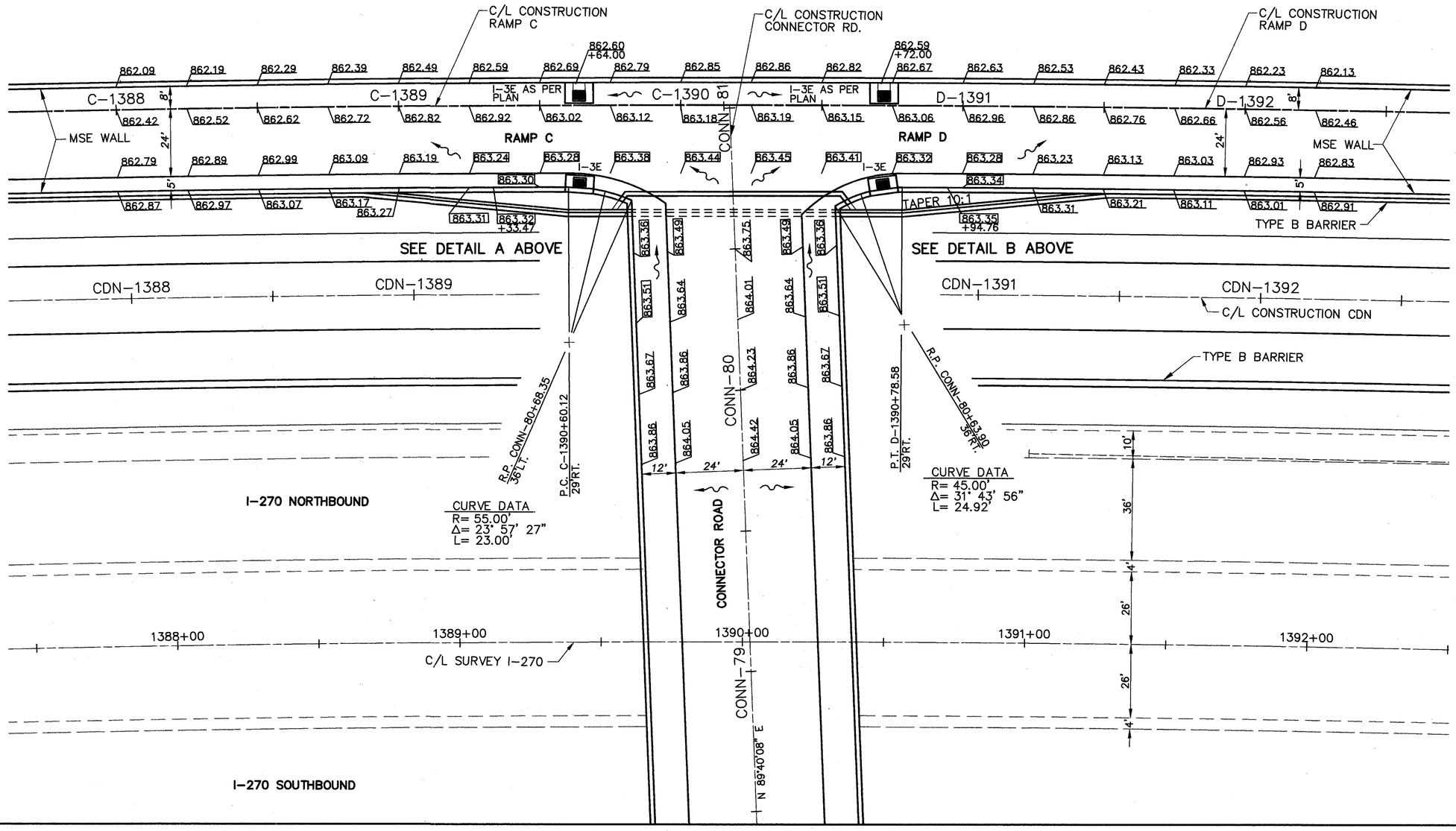

CURVE DATA
R= 55.00'
Δ= 23° 57' 27"
L= 23.00'

CURVE DATA
R= 45.00'
Δ= 31° 43' 56"
L= 24.92'

N

HORIZONTAL SCALE IN FEET
0 20 40

CALC. BY: G.J.W. DATE: 2-95
CHK. BY: M.F.J. DATE: 2-95

PAVEMENT DETAILS
CONNECTOR ROAD EXIT/ENTRANCE @ RAMPS C & D

FRA-270-32.46

307
593

PLOT SCALE: 1"=20'
COL #30
C:\DRAWING\06092306\DETAILS\06092D09.DWG FEBRUARY-09-1995
CONN-1.DWG

LEGEND

(XXX.XX)	EXISTING ELEVATIONS
XXX.XX	PROPOSED ELEVATIONS (NON TYPICAL)
XXX.XX	PLANNED PAVEMENT ELEVATIONS PER PROFILE GRADE AND TYPICAL CROSS SLOPE
(XXX.XX)	PROPOSED CONCRETE WALK ELEVATIONS (NON TYPICAL)
	LIMITS OF PAVEMENT END JOINT. SEE SHEET 170 FOR DETAILS.

NOTES:

STATIONS ARE AT 25' INCREMENTS UNLESS OTHERWISE NOTED

ELEVATIONS AT INLETS ARE TO F.L. OF GRATE.

ELEVATIONS SHOWN AT CURB ARE TO GUTTER LINE

END WORK
McCUTCHEON RD.
STA. 29+35.00

GRAVEL DRIVE

GRAVEL DRIVE

844.00
50.00'LT.

℄ DRIVE +43.42

844.46
32.00'LT.

845.08
22.00'LT.

(842.8)
+64.28
22.00'LT.

(842.5)
+95.92
22.00'LT.

846.32 845.77 845.60 844.96 844.41 843.92 843.52 843.17 842.82

27+00 28+00 29+00

844.22
+18.14

EXIST. ASPHALT PAVEMENT

(842.44)
(842.62)
(842.29)

846.51 845.79 845.15 844.60 844.11 843.71 843.35 842.98

COMBINATION CURB AND GUTTER, TYPE 2

CB-3A

846.32

845.99
+29.36

845.56 844.87 844.27 843.76 843.41 843.10 842.78

5' CONCRETE WALK

(847.15)
+15.00

(846.65)

(846.33)
+35.00

(847.25)
+15.00

(846.65)

(846.23)
+35.00

845.39

845.33
14.50'RT.

℄ DRIVE +57.85

845.11
24.50'RT.

844.35
24.50'RT.

843.37
44.50'RT.

843.27
55.00'RT.

844.92 844.55 844.05 843.76 843.21 843.26

842.78
+65.00

842.84

CURB, TYPE 6

843.08

EXIST. 4' WALK

(843.4) 842.99 842.56 (843.0) 842.13 (843.0) (843.0)

842.57 842.27 841.98

842.15

841.85

PT = 4+50.03,
50.00' LT.

PC = 27+67.18
49.00' RT.

PC = 4+54.00,
52.33' RT.

PT = 28+69.57,
47.00' RT.

CURVE DATA
R = 35.00'
Δ = 91°06'21"
L = 55.65'

CURVE DATA
R = 35.00'
Δ = 88°53'39"
L = 54.30'

(841.49)
+34.99

(841.70)
+34.99

(841.41)
+34.99

BUTT JOINT, BP-3.1

EXISTING 4' WALK

EXIST. CURB

EXIST. ASPHALT PAVEMENT

EXISTING 4' WALK

EXIST. CURB

4+00

PLOT SCALE=1"=10'
COL #30 C:\DRAWNGS\06092306\DETAIL\MCCUTDET.DWG FEBRUARY-07-1995

HORIZONTAL SCALE IN FEET
0 20 40

CALC. BY: G.J.W. DATE: 2-95
CHK. BY: M.F.J. DATE: 2-95

PAVEMENT DETAILS
McCUTCHEON ROAD

FRA-270-32.46

308
593

ADIEM II IMPACT ATTENUATOR

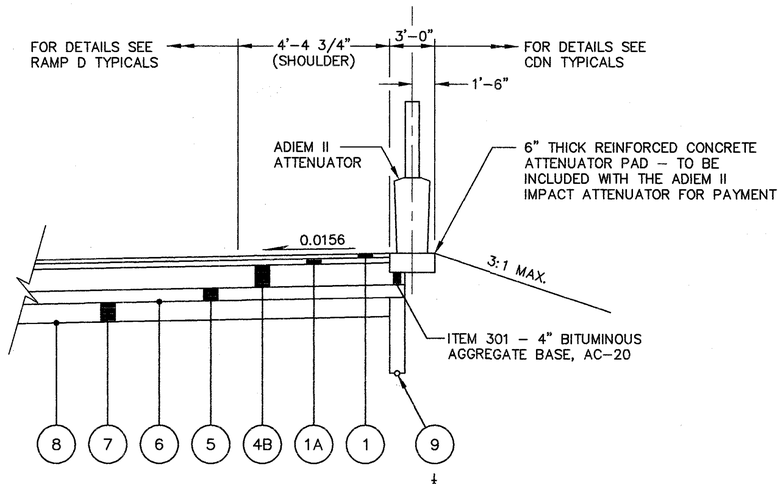

↓ BEGIN AT STA. D–1404+75.00

TYPICAL SECTION AT IMPACT ATTENUATOR

STA. D–1404+50.00 TO STA. D–1404+80.50
STA. CDN–1404+41.76 TO STA. CDN–1404+72.31

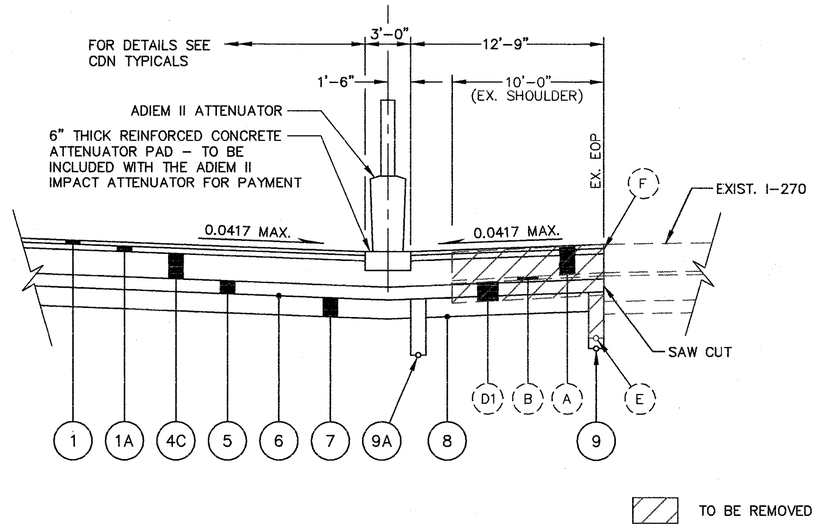

TYPICAL SECTION AT IMPACT ATTENUATOR

STA. CDN–1420+21.85 TO STA. CDN–1420+52.35

LEGEND

- (1) — ITEM 446 – 1 1/4" ASPHALT CONCRETE, SURFACE COURSE, TYPE I, AC–20
- (1A) — ITEM 446 – 1 3/4" ASPHALT CONCRETE, INTERMEDIATE COURSE, TYPE II, AC–20
- (4B) — ITEM 301 – 7" BITUMINOUS AGGREGATE BASE, AC–20
- (4C) — ITEM 301 – 8" BITUMINOUS AGGREGATE BASE, AC–20
- (5) — ITEM SPECIAL – 4" ASPHALT TREATED FREE DRAINING BASE
- (6) — ITEM 408 – BITUMINOUS PRIME COAT (0.40 GAL/SY)
- (7) — ITEM 304 – 6" AGGREGATE BASE (SEE PROPOSAL NOTE)
- (8) — ITEM 203 – SUBGRADE COMPACTION
- (9) — ITEM 605 – 4" SHALLOW PIPE UNDERDRAIN WITH FABRIC WRAP, 707.15 AS PER PLAN (DEPTH AS SHOWN ON PLAN SHEETS SS6 TO SS10)
- (9A) — ITEM 605 – 4" SHALLOW PIPE UNDERDRAIN WITH FABRIC WRAP, 707.15 AS PER PLAN A (DEPTH AS SHOWN ON PLAN SHEETS SS6 TO SS10)

- (A) — 9" EXISTING PLAIN CONCRETE PAVEMENT
- (B) — 1" ± EXISTING ASPHALT CONCRETE
- (D1) — 6" EXISTING BITUMINOUS AGGREGATE BASE
- (E) — EXISTING SHALLOW PIPE UNDERDRAIN
- (F) — EXISTING LONGITUDINAL JOINT

PLOT SCALE: 1"=2' VERT., 1"=5' HOR.
COL #30
C:\DRAWING\06092306\TYPICALS\MIS_DET2.DWG FEBRUARY-07-1995

CALC. BY: S.D.K. DATE: 2/95
CHKD. BY: M.F.J. DATE: 2/95

ADIEM II IMPACT ATTENUATOR TYPICAL SECTIONS & LEGEND

FRA–270–32.46

309
593

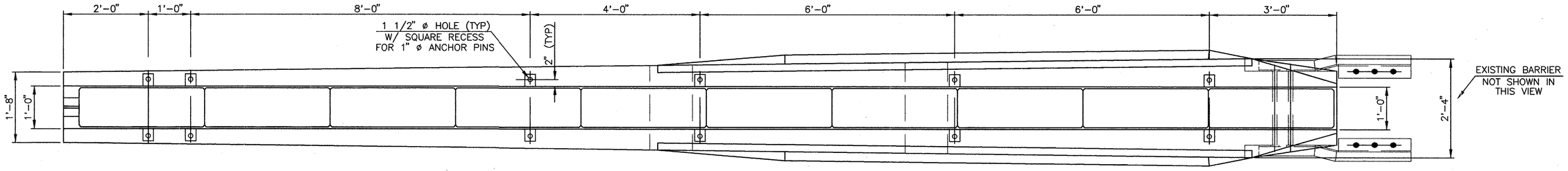

PLAN VIEW

SPLICE ANGLE NOTE:

Standard splice angles, shown, are not used. See sheet 311 for details and locations of special splice angles to be used.

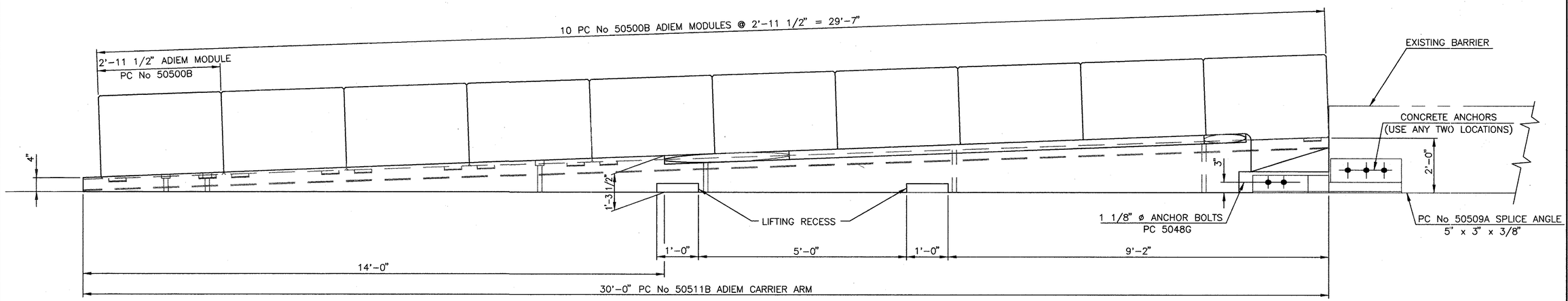

ELEVATION VIEW

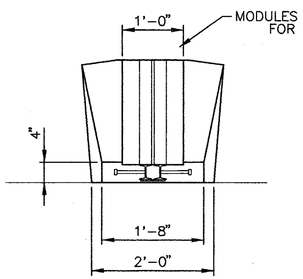

FRONT ELEVATION VIEW

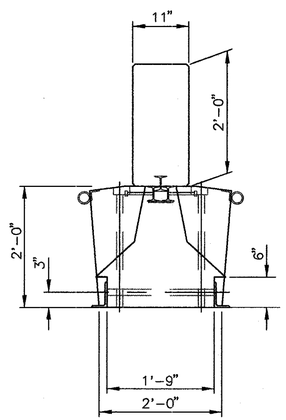

REAR ELEVATION VIEW

BILL OF MATERIAL			
PRODUCT CODE	QTY	DESCRIPTION	REMARKS
50500B	20	MODULES x 2'-11 1/2"	
50511B	2	BASE x 30'-0"	
SPECIAL	1	SPLICE ANGLE, TYPE B (AS SHOWN)	SEE SHT. 311
SPECIAL	1	SPLICE ANGLE, TYPE B (OPP. HAND)	SEE SHT. 311
SPECIAL	1	SPLICE ANGLE, No. 1	SEE SHT. 311
SPECIAL	1	SPLICE ANGLE, No. 2	SEE SHT. 311
5905W	0.4	ACRYLINK COATING (1 GAL)	
5048G	4	1 1/8" ø ANCHOR STUD x 30"	
4963G	8	1 1/8" WASHER	
3976G	8	1 1/8" HEX NUT	
5650G	8	1" ø HEX HD PIN x 36"	SEE NOTE 1
5646G	8	1" ø HEX HD PIN x 24"	SEE NOTE 1
5643G	8	1" ø HEX HD PIN x 18"	SEE NOTE 1
3900G	24	1" WASHER	
4702G	8	3/4"ø HEX HD BOLT x 2"	
3700G	8	3/4" WASHER	
5640G	8	3/4" CONCRETE ANCHOR	

Note:
1. Anchor pins are 1" diameter, hex head, pointed rods, galvanized.

ADIEM INSTALLATION INSTRUCTIONS

1. The ADIEM base is to be placed on a smooth surface (the same horizontal plane as the concrete barrier) and parallel to the mainline or ramp traveled lane(s).
2. Install anchor rods for ADIEM base by driving in soil or soft asphalt or driving in pre-drilled holes for hard asphalt or concrete (no epoxy required). The base should not be moved after the holes are drilled. The holes should be drilled using, at a minimum, a 35# hammer and minimum 36 inch long drill bit. (A 50# hammer is recommended.)
3. Attach connection brackets to base with two (2) 1 1/8" x 30" threaded rods provided. Then field drill holes into the existing barrier and attach the other end of the connection bracket to it with expansion anchor hardware provided.
4. Oil the ADIEM base track. Slide the modules onto the base. Be careful not to damage edges of the modules while sliding onto the base.
5. If the modules are scuffed or nicked, apply ACRYLINK coating to the affected area.
6. Recommended tools and equipment:
   35/50# air hammer/drill
   1 3/8" ø x 36" rock drill
   1 1/4" ø x 12" rock drill
   Sledge hammer
   Oil
   Wrenches

ALTERNATE ADIEM INSTALLATION INSTRUCTIONS

1. At a holding site, the modules are slid into the ADIEM base after oiling the base track. Be careful not to damage the edges of the modules while sliding them onto the base.
2. If the modules are scuffed or nicked, apply ACRYLINK coating to the affected area.
3. The unit is then delivered to the job site. The unit is to be placed on a smooth surface (the same horizontal slope as the concrete barrier) and parallel to the mainline or ramp traveled lane(s).
4. The front module should be removed so the remaining modules can be shifted for easy access for drilling the anchor rod holes.
5. Install anchor rods for ADIEM base by driving in soil or soft asphalt or driving in predrilled holes for hard asphalt or concrete (no epoxy required). The base should not be moved after the holes are drilled. The holes should be drilled using, at a minimum, a 35# hammer and a minimum 36 inch long drilling bit. (A 50# hammer is recommended.)
6. Attach connection brackets to base with two (2) 1 1/8" x 30" threaded rods provided. Then field drill holes in the existing barrier and attach connection brackets to it with expansion anchor hardware provided.

NO.	REMARKS	DATE	BY

REVISIONS

ADIEM II IMPACT ATTENUATOR ERECTION DETAILS

SYRO, INC.
A Subsidiary of Trinity Industries, Inc.
GIRARD, OHIO CENTERVILLE, UTAH

DRAWN
CHECKED
APPROVED
DATE
SCALE NONE
DRAWING NO.

CAL: BY: S.D.K. DATE: 2/95
CHKD: BY: M.F.J. DATE: 2/95

ADIEM II IMPACT ATTENUATOR ERECTION DETAILS

FRA-270-32.46

310
593

COL #30 C:\DRAWING\06092306\DETAIL\AD2SS344.DWG FEBRUARY-08-1995

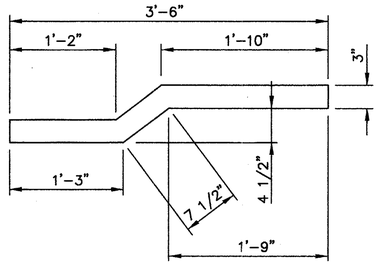

DETAIL "A"

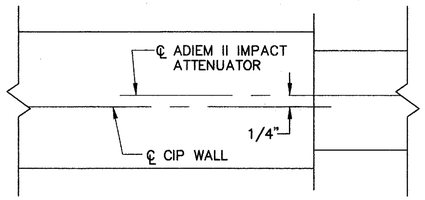

DETAIL "B"

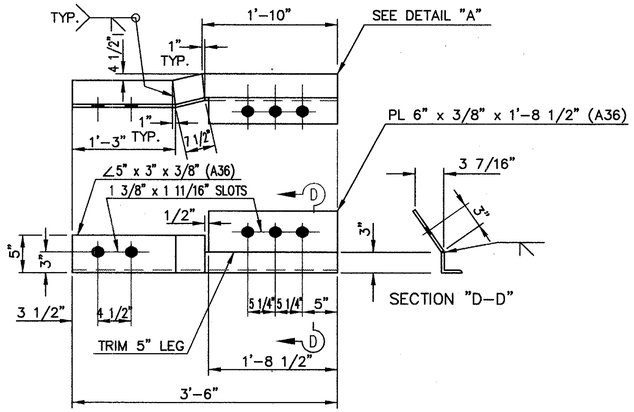

SPLICE ANGLE (AS SHOWN)

SPLICE ANGLE (OPP HAND)

(TYPE B)

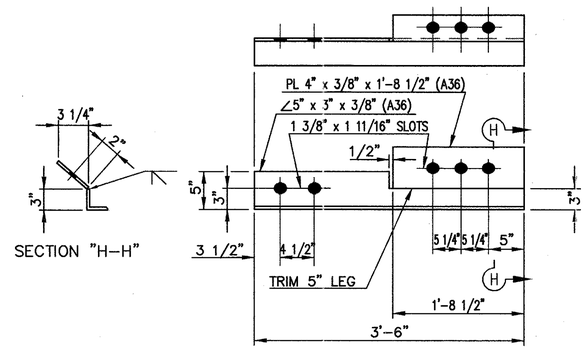

SPLICE ANGLE No. 1

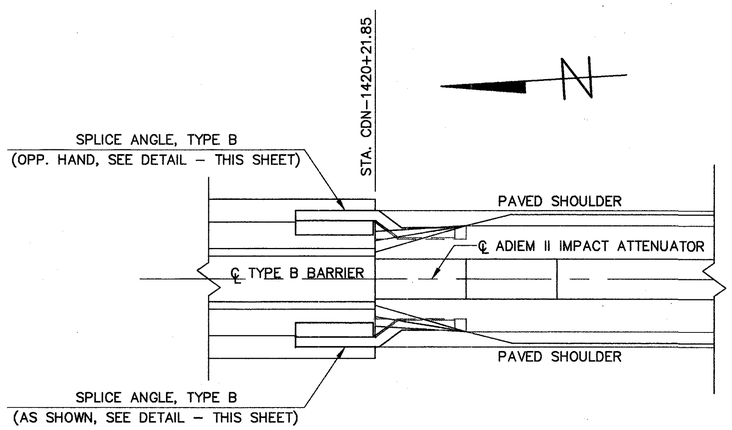

IMPACT ATTENUATOR CONNECTION DETAIL

STA. CDN-1420+21.85

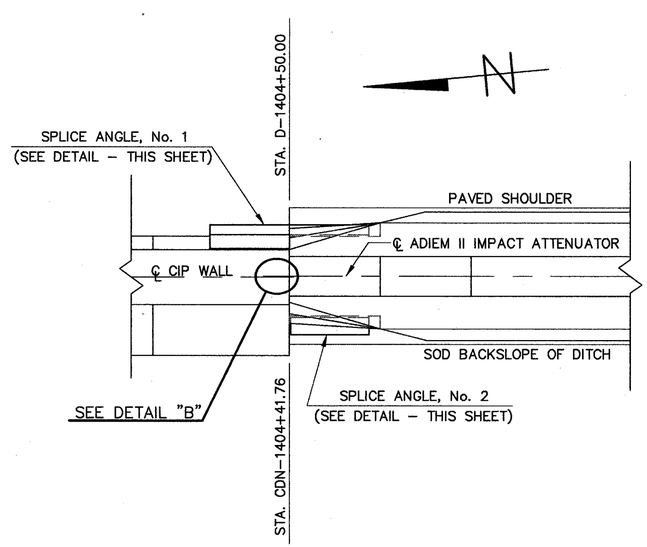

IMPACT ATTENUATOR CONNECTION DETAIL

STA. D-1404+50.00 / STA. CDN-1404+41.76

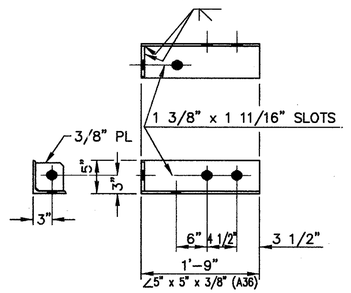

SPLICE ANGLE No. 2

NO.	REMARKS	DATE	BY
	REVISIONS		

ADIEM II IMPACT ATTENUATOR CONNECTION DETAILS

DRAWN
CHECKED
APPROVED
DATE
SCALE NONE
DRAWING NO.

SYRO, INC.
A Subsidiary of Trinity Industries, Inc.
GIRARD, OHIO CENTERVILLE, UTAH

CAD: S.D.K. DATE: 2/95
CHK: M.F.J. DATE: 2/95

ADIEM II IMPACT ATTENUATOR CONNECTION DETAILS

FRA-270-32.46

311
593

COL #30 C:\DRAWING\06092306\DETAIL\ATTENDET.DWG FEBRUARY-08-1995

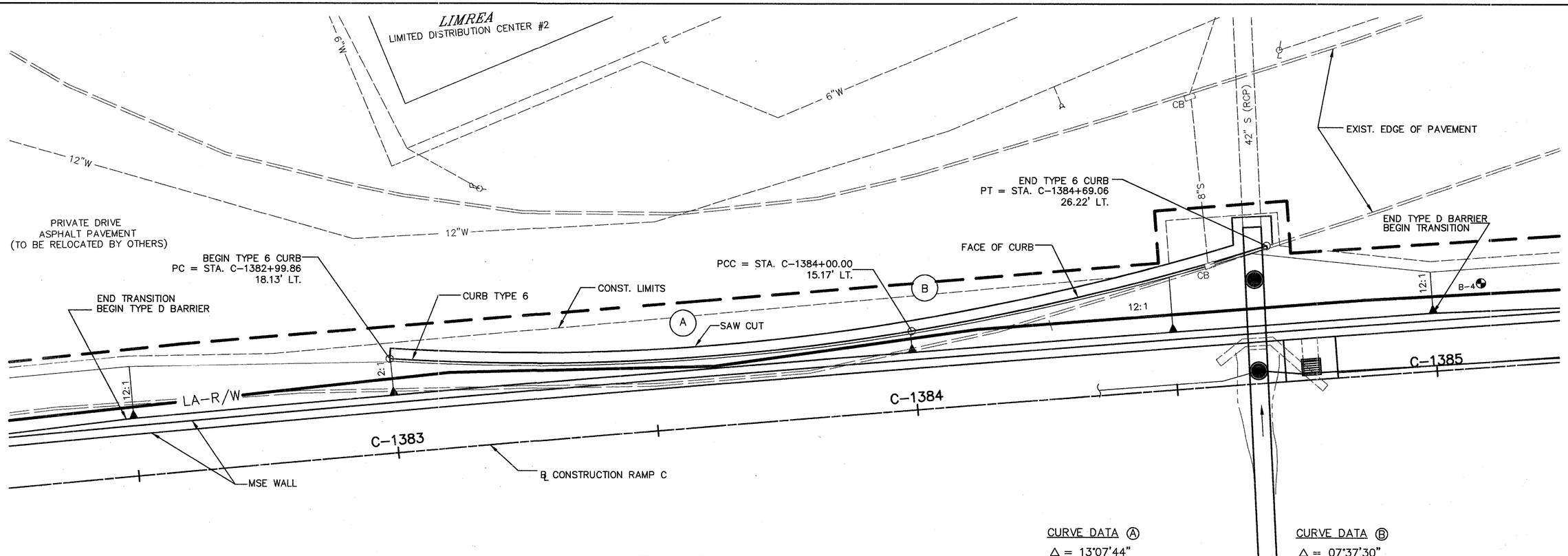

PLAN – LIMITED DRIVE

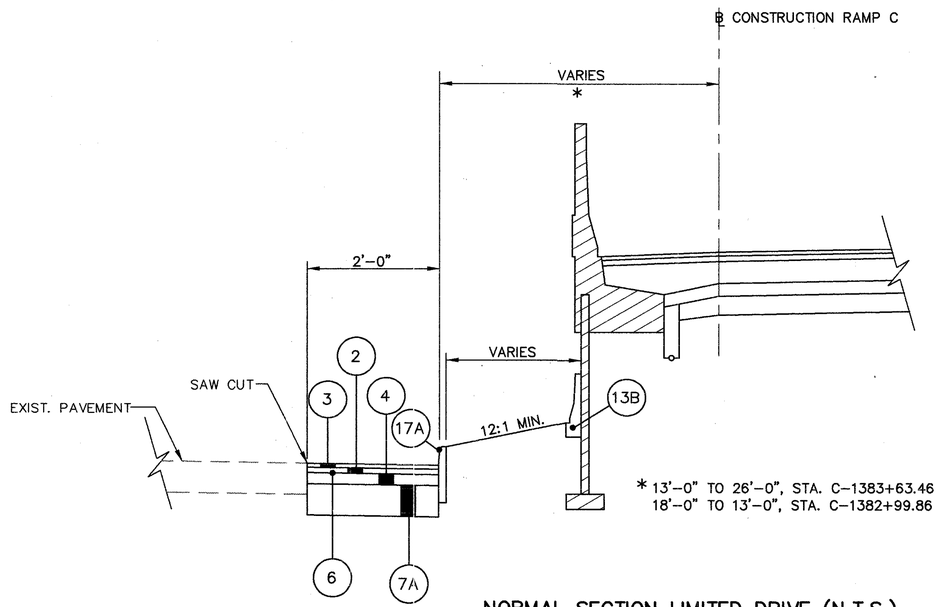

* 13'-0" TO 26'-0", STA. C-1383+63.46 TO STA. C-1384+69.06 = 105.6 L.F.
18'-0" TO 13'-0", STA. C-1382+99.86 TO STA. C-1383+63.46 = 63.6 L.F.

NORMAL SECTION LIMITED DRIVE (N.T.S.)

STA. C-1382+99.86 TO STA. C-1384+69.06 = 169.2 L.F.

CURVE DATA (A)

Δ = 13°07'44"
R = 438.79'
T = 50.49'
L = 100.54'
E = 2.90'
D_C = 13°03'28"
PC = STA. C-1382+99.86, 18.13' LT.
PCC = STA. C-1384+00.00, 15.17' LT.
PI = STA. C-1383+50.35, 10.76' LT.

CURVE DATA (B)

Δ = 07°37'30"
R = 524.82'
T = 34.97'
L = 69.84'
E = 1.17'
D_C = 10°52'33"
PCC = STA. C-1384+00.00, 15.17' LT.
PT = STA. C-1384+69.06, 26.22' LT.
PI = STA. C-1384+34.97, 18.35' LT.

LEGEND

- 2 — ITEM 404 – 1 1/4" ASPHALT CONCRETE, AC-20
- 3 — ITEM 402 – 1 3/4" ASPHALT CONCRETE, AC-20
- 4 — ITEM 301 – 3 1/2" BITUMINOUS AGGREGATE BASE, AC-20
- 6 — ITEM 408 – BITUMINOUS PRIME COAT (0.40 GAL/SY)
- 7A — ITEM 304 – 10" AGGREGATE BASE (SEE PROPOSAL NOTE)
- 13B — ITEM 622 – CONCRETE BARRIER TYPE D, AS PER PLAN A (SEE SHEET 447)
- 17A — ITEM 609 – CURB, TYPE 6

NOTE: SUBGRADE COMPACTION REQUIREMENTS WAIVED IN THIS AREA

HORIZONTAL SCALE IN FEET
0 5 10 20

CALC. BY: M.A.L. DATE: 02/07/95
CHKD. BY: G.J.W. DATE: 02/10/95

PAVEMENT DETAIL – THE LIMITED, EAST SIDE

FRA-270-32.46

312/593

Plot Scale = 1" = 10'
COL #29 C:\DRAWING\06092306\0609LDR.DWG FEBRUARY-10-1995

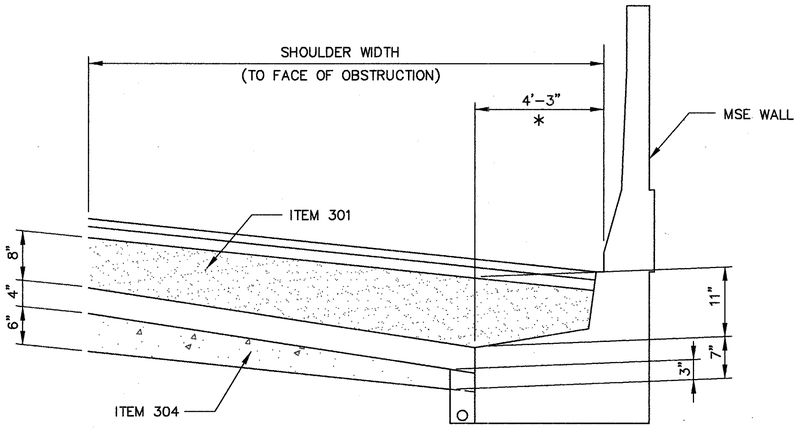

SECTION A–A

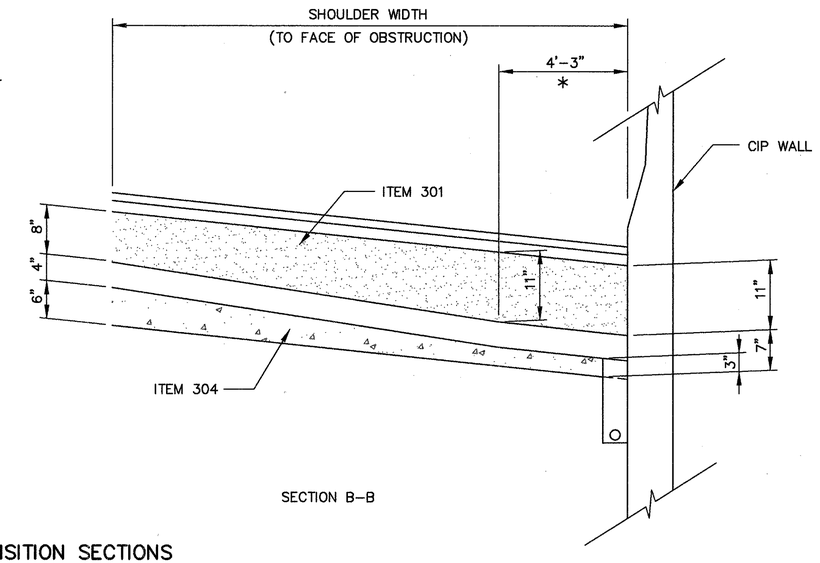

SECTION B–B

BEGINNING TRANSITION SECTIONS

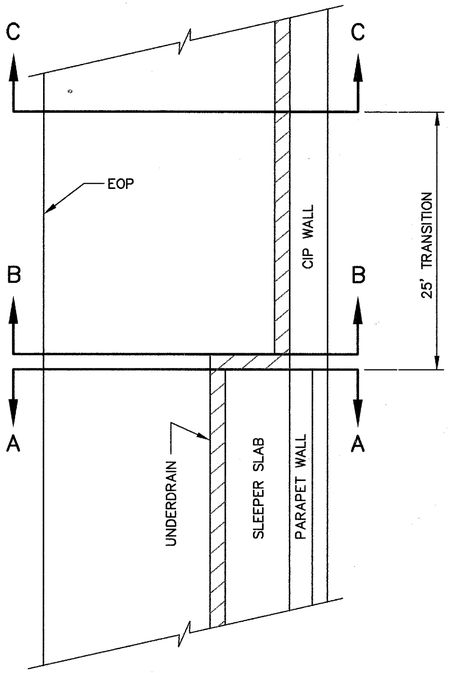

PLAN VIEW

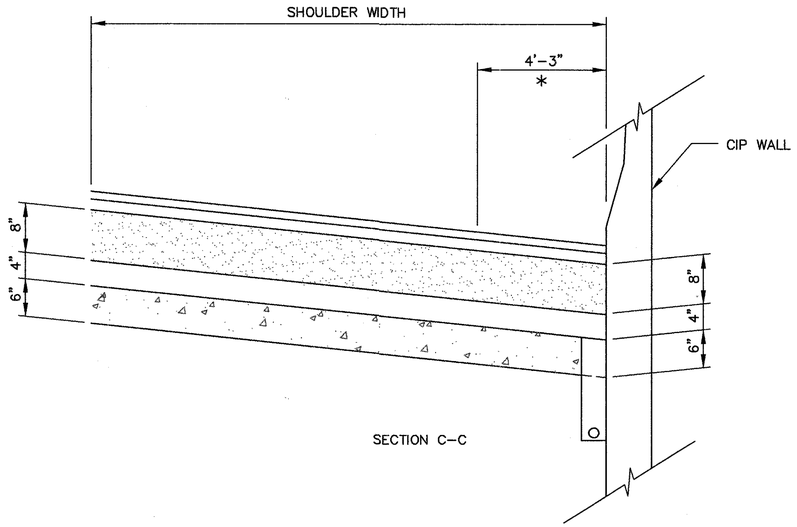

SECTION C–C

END TRANSITION SECTION

* DIMENSION CHANGES TO 5'–6" WHEN NOISE BARRIER IS ATTACHED TO MSE WALL (SEE PLANS FOR LOCATION)

25' TRANSITION – MSE WALL ⇔ CIP WALL
(301 and 304 layers)

CALC. BY: G.J.W. DATE: 1/95
CHKD. BY: M.F.J. DATE: 1/95

UNDERDRAIN TRANSITION

MISCELLANEOUS DETAILS

FRA–270–32.46

313
593

PLOT SCALE: 1"=2' VERT., 1"=5' HOR.
COL #30 C:\DRAWING\06092306\TYPICALS\MIS_DET1.DWG FEBRUARY-09-1995

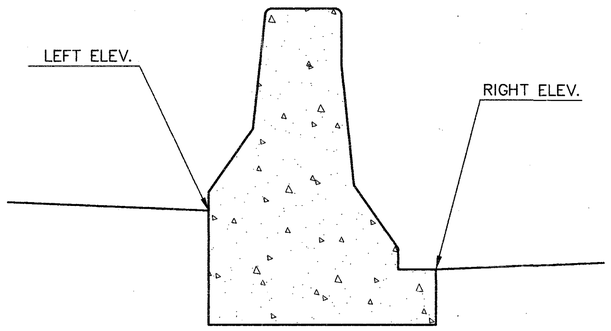

CONCRETE BARRIER, TYPE C

CDN LEFT ELEV.	CDN ℄ STA.	MAINLINE RIGHT ELEV.
846.22	1378+00.00	845.06
846.54	1378+50.00	844.95
845.09	1379+00.00	844.85
844.78	1379+50.00	844.73
844.59	1380+00.00	844.59

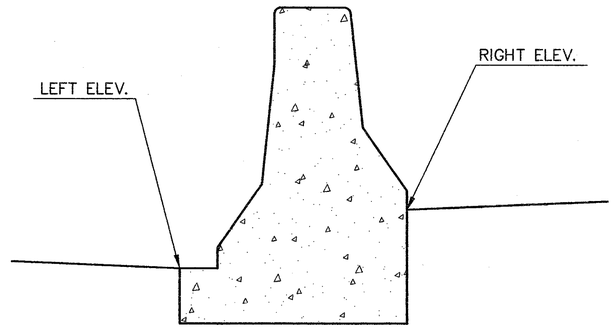

CONCRETE BARRIER, TYPE C

MAINLINE LEFT ELEV.	CDS ℄ STA.	CDS RIGHT ELEV.
845.39	1376+00.00	846.96
845.27	1376+50.00	846.57
845.16	1377+00.00	845.61
845.06	1377+50.00	845.16
844.94	1378+00.00	844.94

TYPE C BARRIER ELEVATION TABLES

CAD: G.J.W. DATE: 2-95
CHK: M.F.J. DATE: 2-95

FRA-270-32.46

314
593

PLOT SCALE: 1" = 1'-0"
COL #30 C:\DRAWNG\06092306\PLAN\06092TYC.DWG FEBRUARY-07-1995

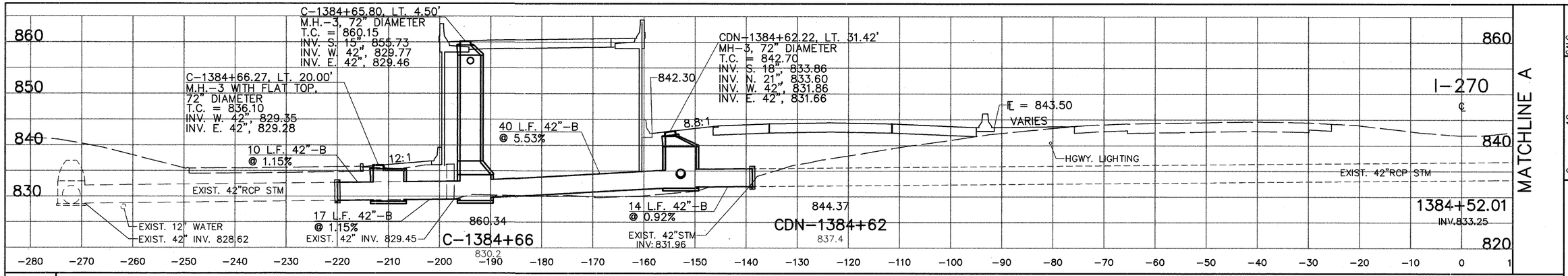

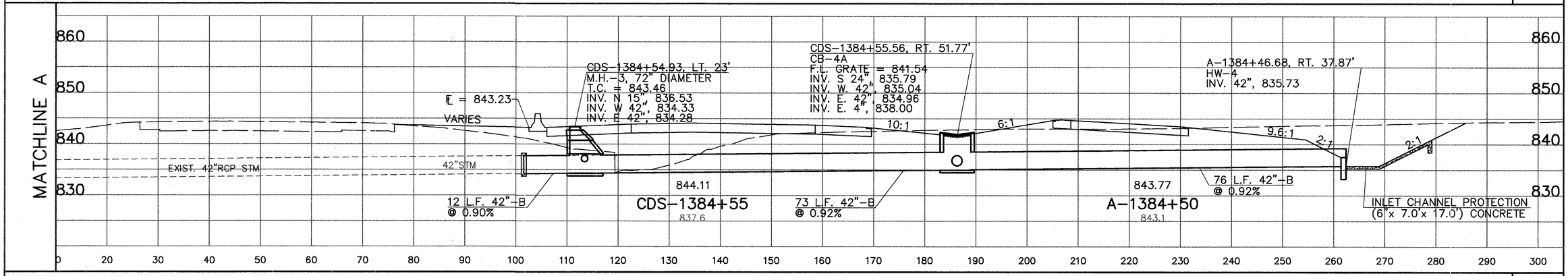

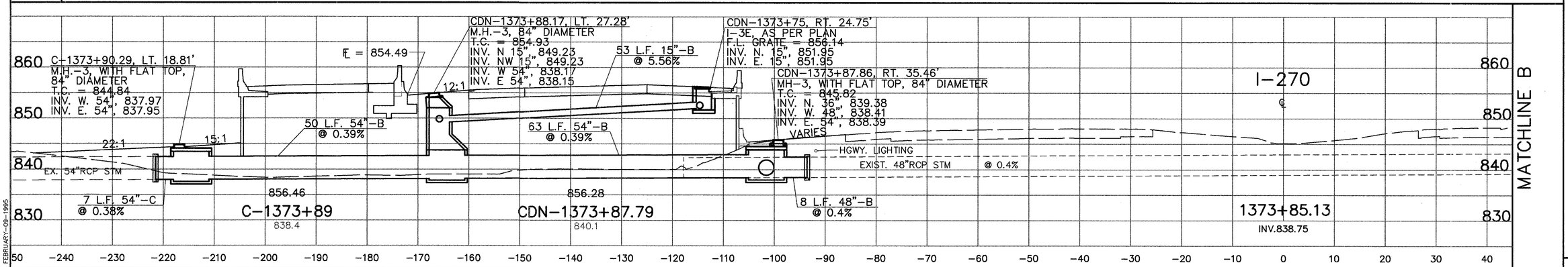

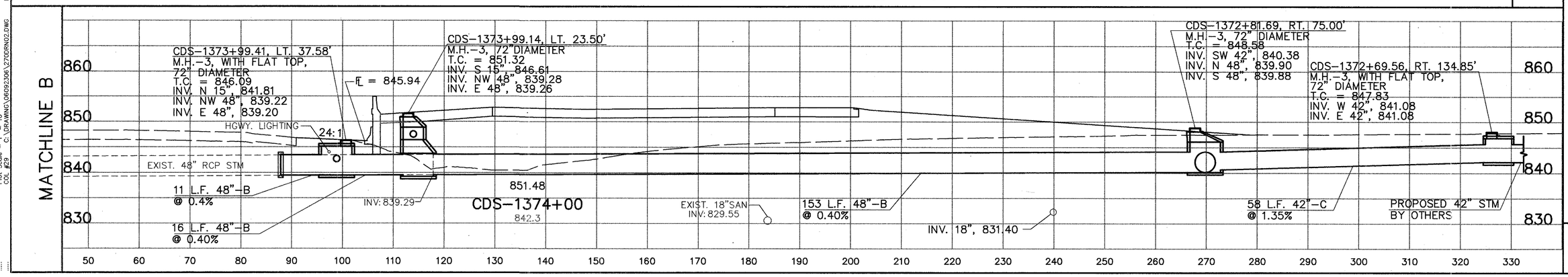

CALC.–P.H.F. DATE:11/23/94
CHK'D.–M.F.J. DATE:11/23/94

0 5 10 20
HORIZONTAL SCALE IN FEET

I–270 DRAINAGE STRUCTURE PROFILE

FRA–270–32.46

315
593

FEBRUARY–09–1995

Plot Scale – 1" = 10'
COL #29
C:\DRAWING\06093206\V2700RN02.DWG

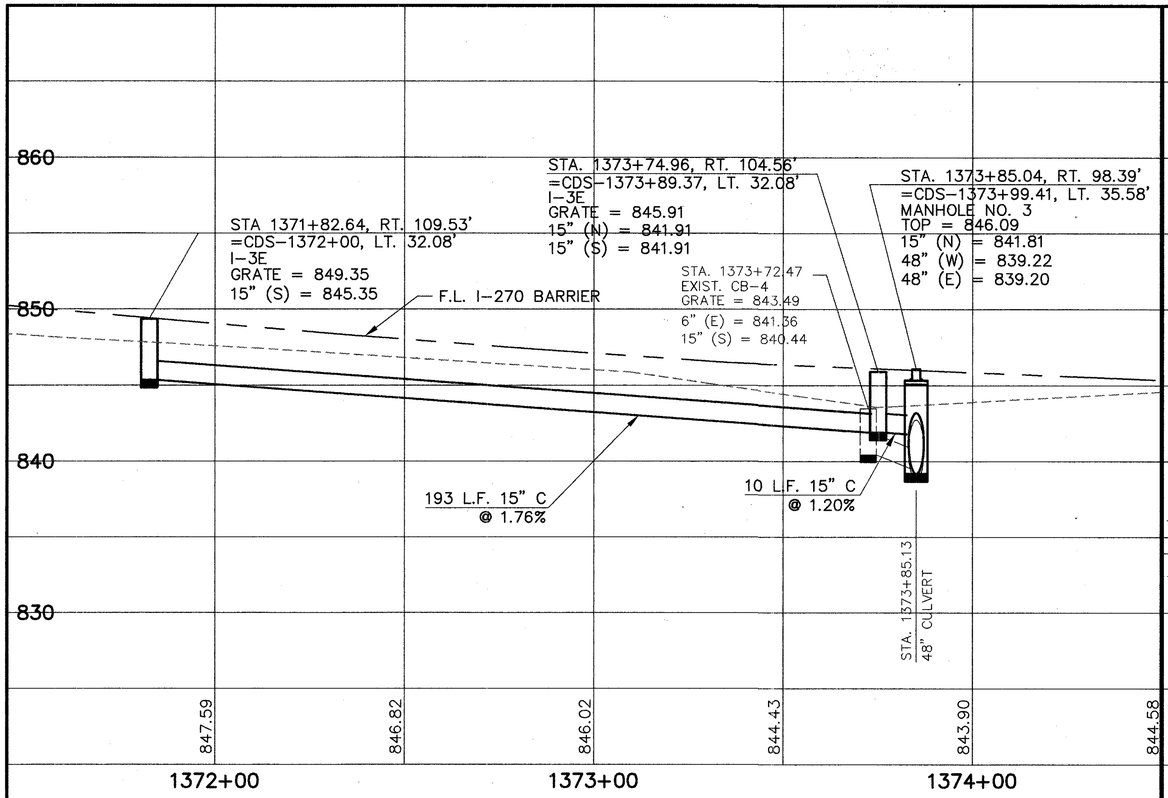

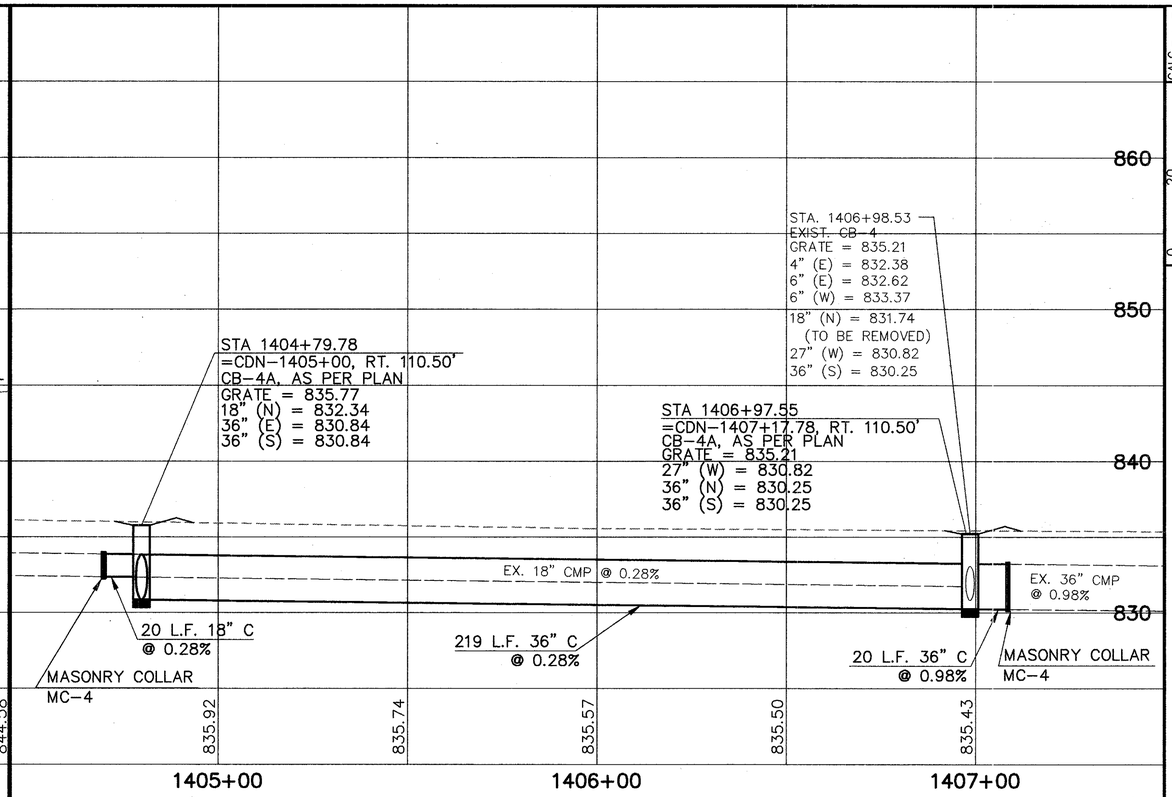

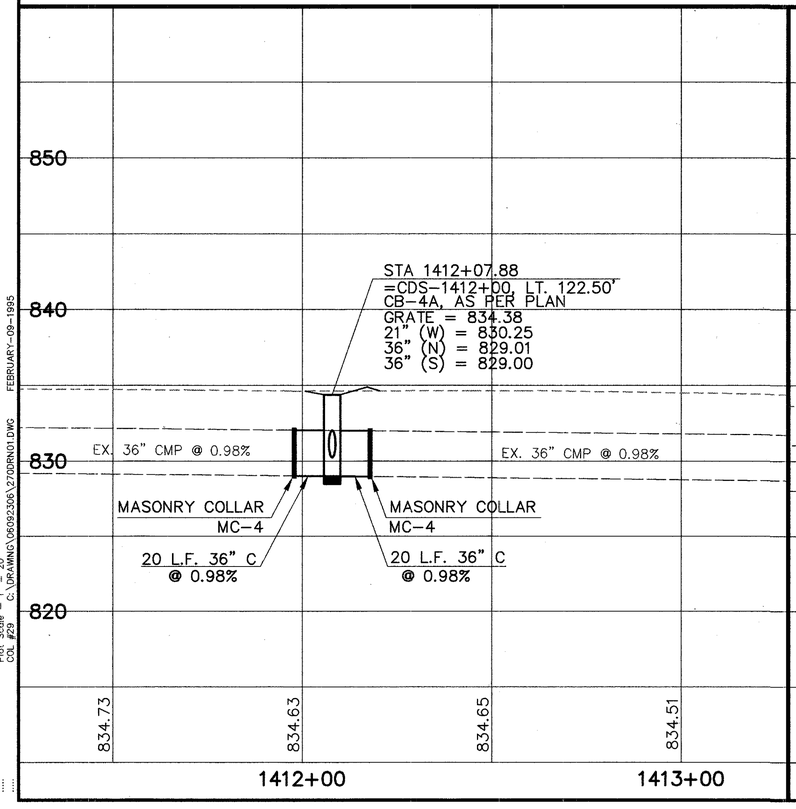

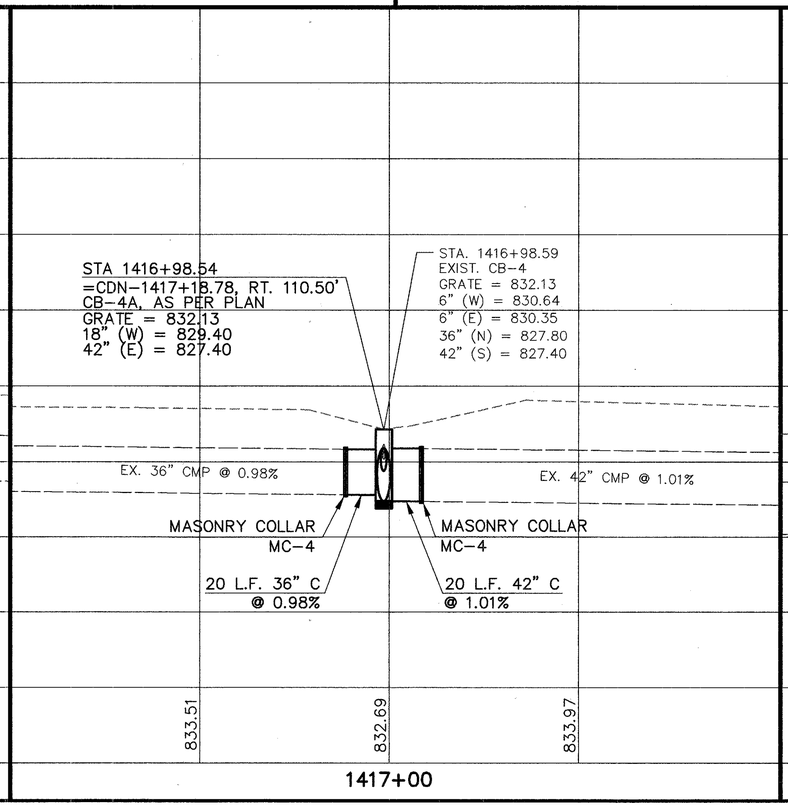

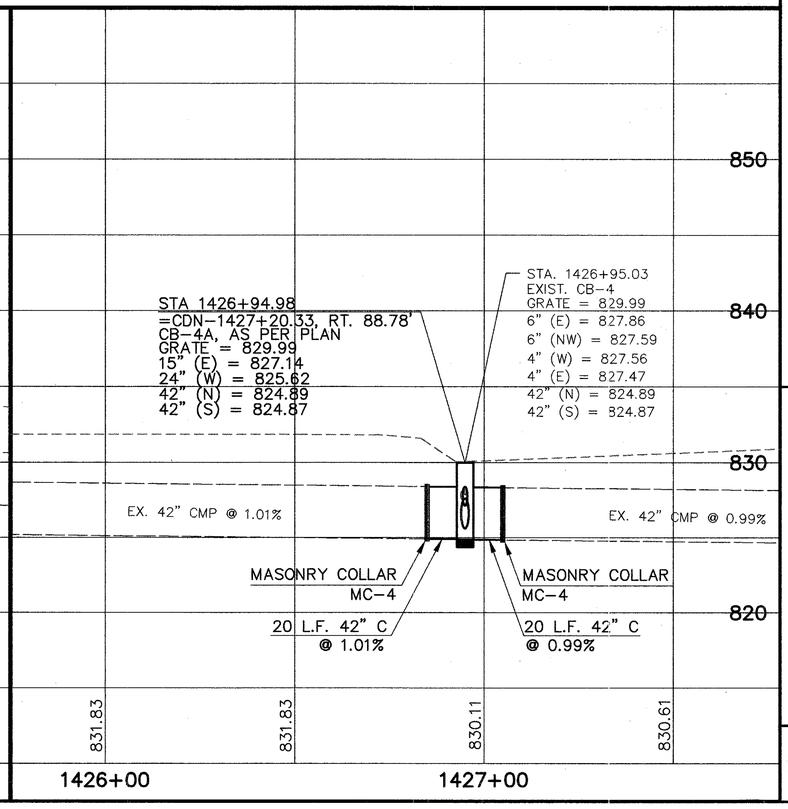

CALC. BY: P. H. F. DATE: 09/08/94
CHKD. BY: M. F. J. DATE: 09/08/94

HORIZONTAL SCALE IN FEET
0 10 20 40

I-270 DRAINAGE STRUCTURE PROFILE

FRA-270-32.46

316
593

Plot Scale = 1" = 20'
COL #29
C:\DRAWNG\96092306\270DRN01.DWG
FEBRUARY-09-1995

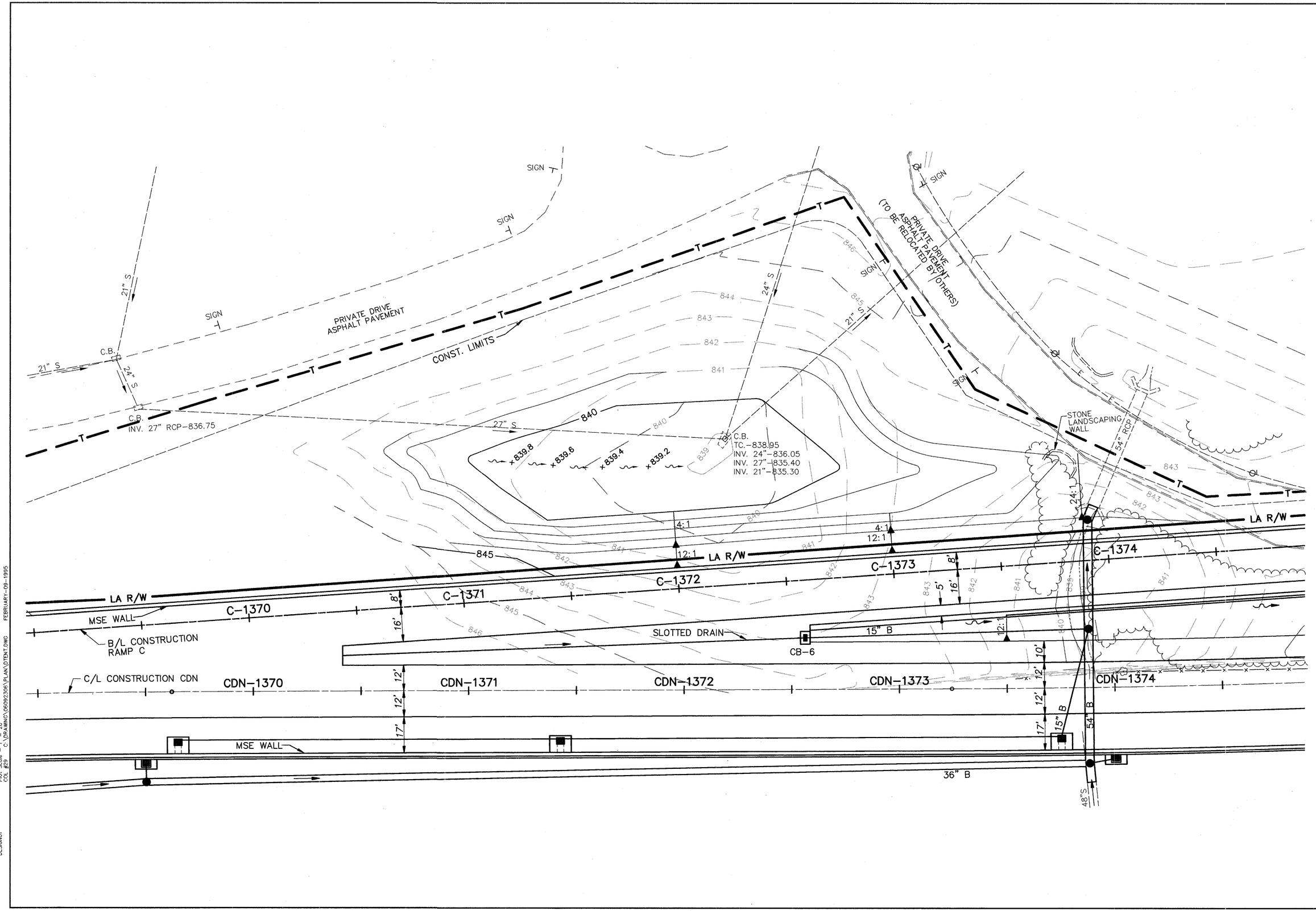

0 10 20 40
HORIZONTAL SCALE IN FEET

CALC. BY: PHF DATE: 08/31/94
CHKD. BY: MFJ DATE: 12/5/94

GRADING PLAN
LIMITED DETENTION AREA

FRA-270-32.46

DESIGN01 Plot Scale - 1" = 20' COL #29 C:\DRAWING\06092306\PLAN\DTENT.DWG FEBRUARY-09-1995

CALC. BY: PHF DATE: 10/20/94
CHKD. BY: MFJ DATE: 12/5/94

0 15 30 60
HORIZONTAL SCALE IN FEET

GRADING PLAN
TRUMPET AREA A

FRA-270-32.46

318
593

Plot Scale = 1" = 30'
COL. #29
C:\DRAWING\06092306\PLAN\TRUMPETA.DWG FEBRUARY-09-1995

DESIGN01

DESIGN01 Plot Scale - 1" = 30'
COL #29 C:\DRAWING\06092306\PLAN\TRUMPETB.DWG FEBRUARY-09-1995

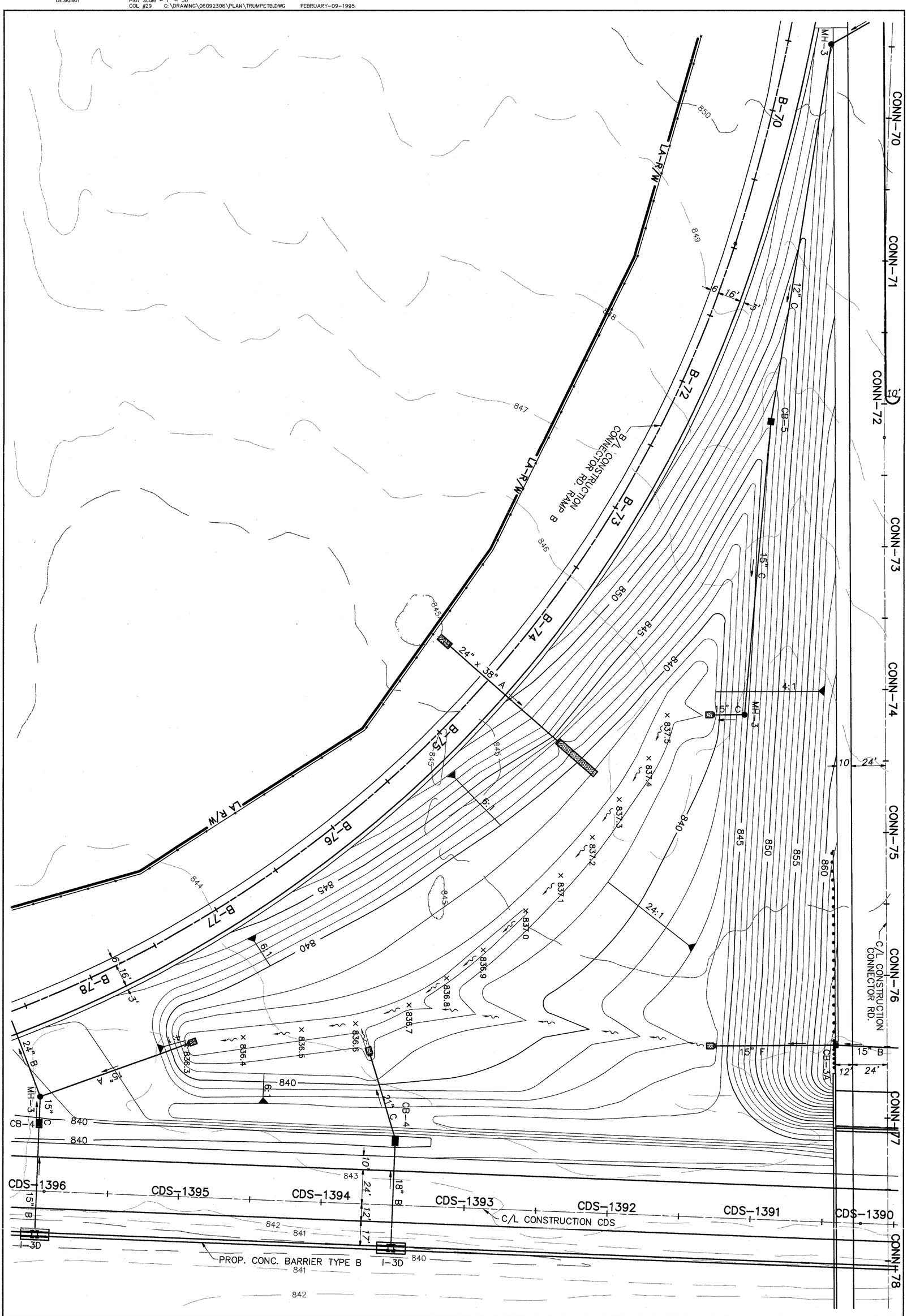

319 / 593	FRA-270-32.46	GRADING PLAN TRUMPET AREA B	CALC. BY: PHF DATE: 08/30/94 CHKD. BY: MFJ DATE: 12/5/94 0 15 30 60 HORIZONTAL SCALE IN FEET

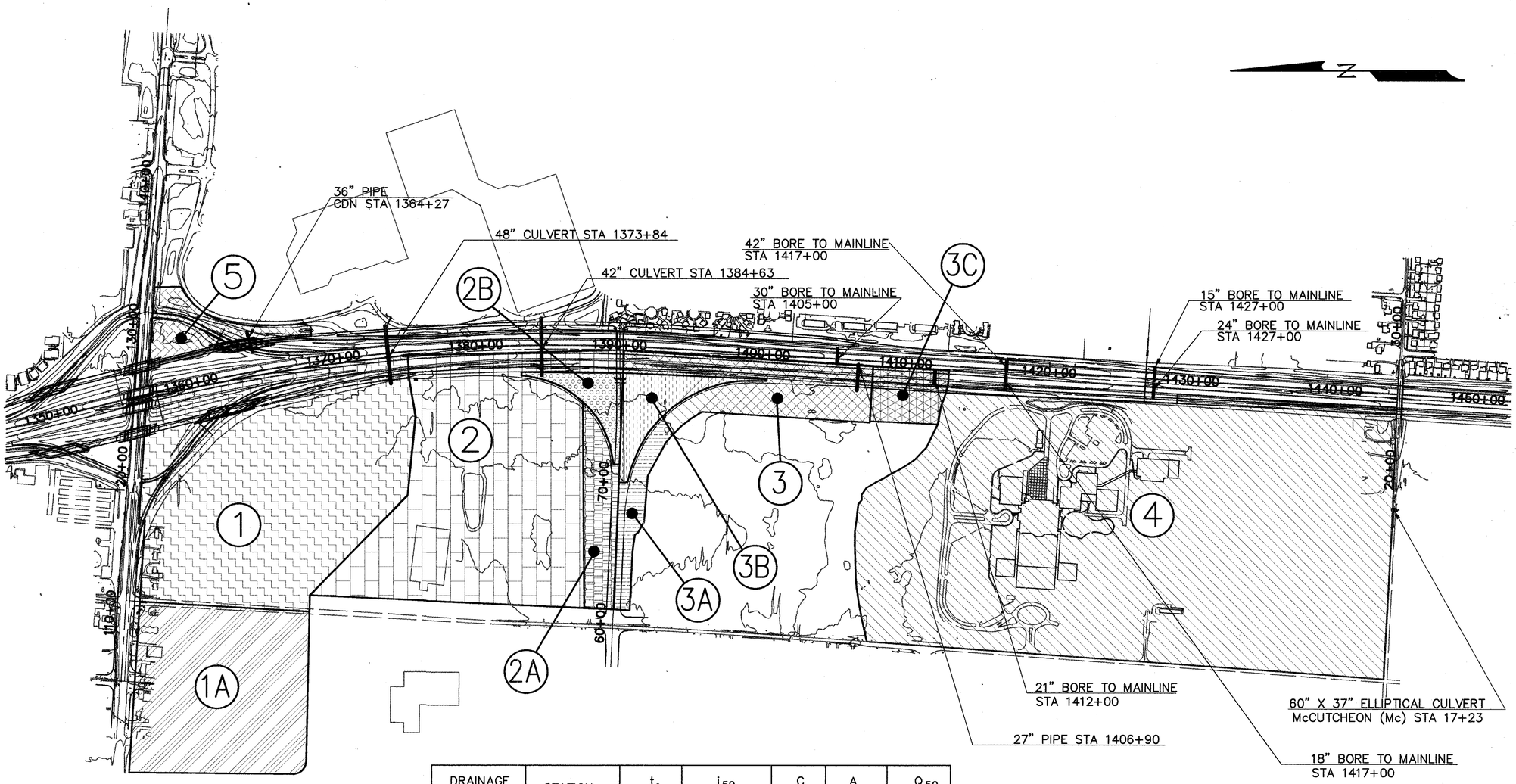

DRAINAGE BASIN	STATION	t_c (min)	i_{50} (in/hr)	C	A (ac)	Q_{50} (cfs)
1	CDS 1372+50	38	3.4	0.47	58	94
1A	CDS 1373+00	44	3.0	0.41	49	60
2	A 1384+50	45	3.0	0.43	56	74
2A	A 1388+50	32	3.8	0.50	10	19
* 2B	DETENTION A	52	3.0	0.24	2.6	10
3	CDS 1406+90	50	2.8	0.4	11.2	12.5
3A	B 74+50	30	4.0	0.56	7	16
* 3B	DETENTION B	72	2.2	0.24	7.8	8
3C	CDS 1412+00	14	6.1	0.57	3	11
4	Mc 17+23	98	1.6	0.43	148	101
5	CDN 1364+27	20	5.1	0.64	11	37

* EQUIVALENT VALUES AFTER 50 YEAR STORM ROUTING

NOTE: ACTUAL DELINEATION OF THE DRAINAGE BASINS WAS DERIVED FROM FRANKLIN COUNTY MAPPING (1"=100', 2' CONTOURS), HENDERSON AERIAL MAPPING (1"=20', 1' CONTOURS) AND FIELD VERIFICATION. THE BASIN DELINEATION IS GRAPHICALLY DEPICTED ABOVE.

0 200 400' 800'
HORIZONTAL SCALE IN FEET

CALC. L.A.M. DATE: 02/17/94
CHK. M.F.J. DATE: 12/5/94

DRAINAGE BASIN MAP

FRA-270-32.46

320
593

PLOT SCALE: 1"=400'
COL #28
C:\DRAWING\06092306\DRAINAGE\DR1DSGN.DWG FEBRUARY-09-1995

TYPE 1

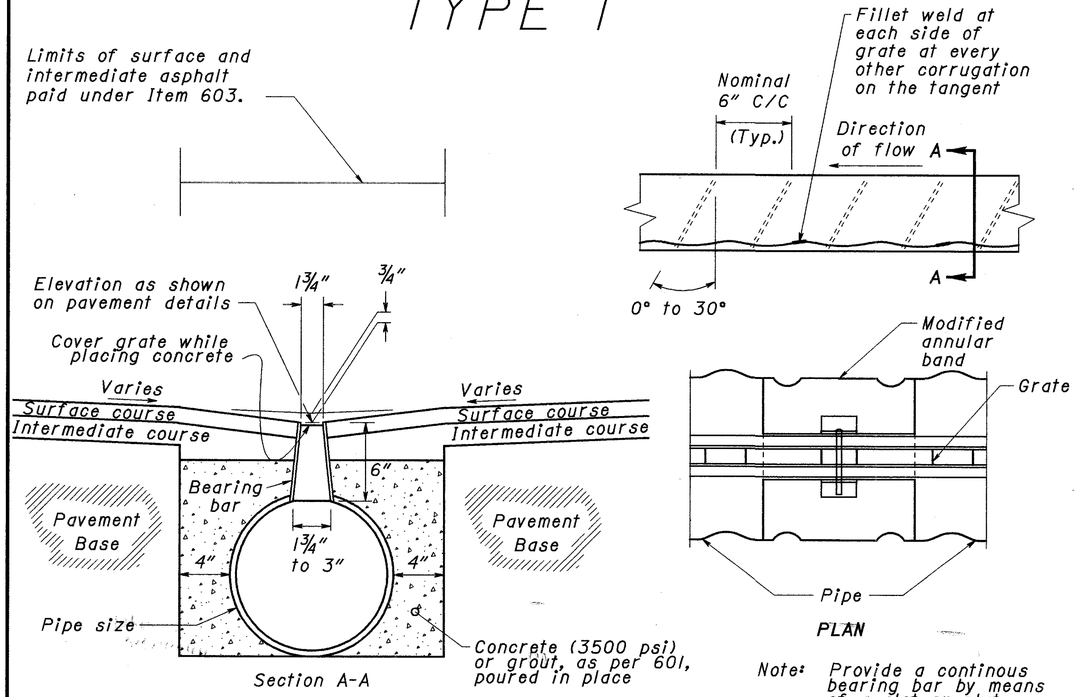

Note: Provide a continous bearing bar by means of a slot or plate through the joint.

_____ " SLOTTED DRAIN, TYPE 1

TYPE 2

Note: The asphalt surface course shall be placed ¼" higher than the outside edge of the concrete surface.

* Surface on the side shall be formed to provide a straight edge for the top 3".

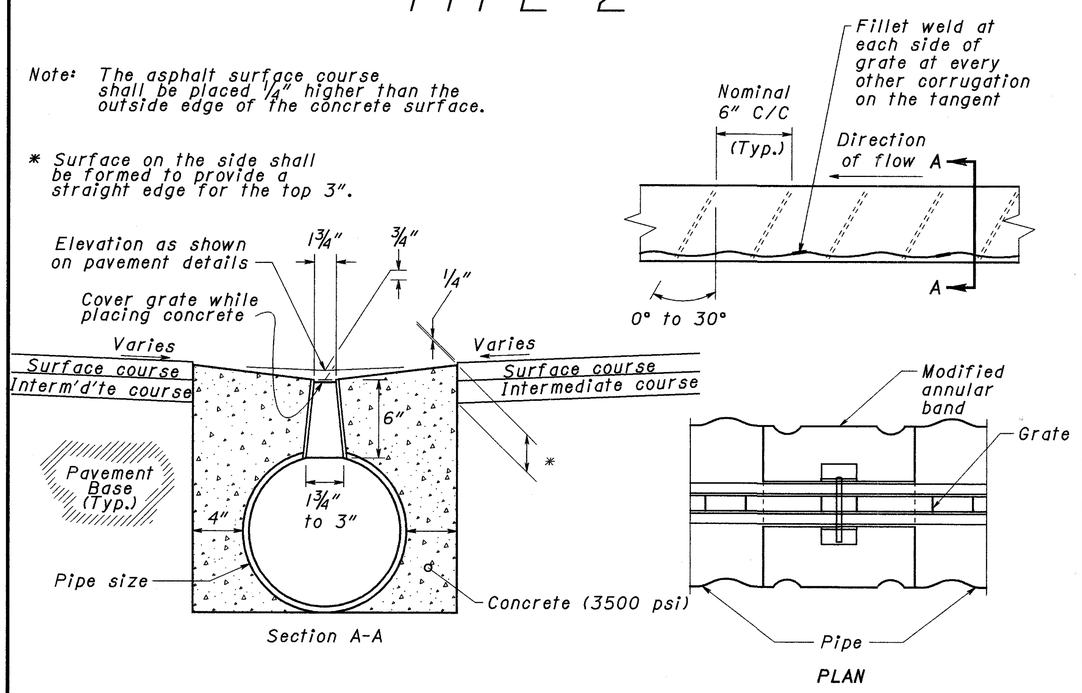

15" " SLOTTED DRAIN, TYPE 2

TYPE 3

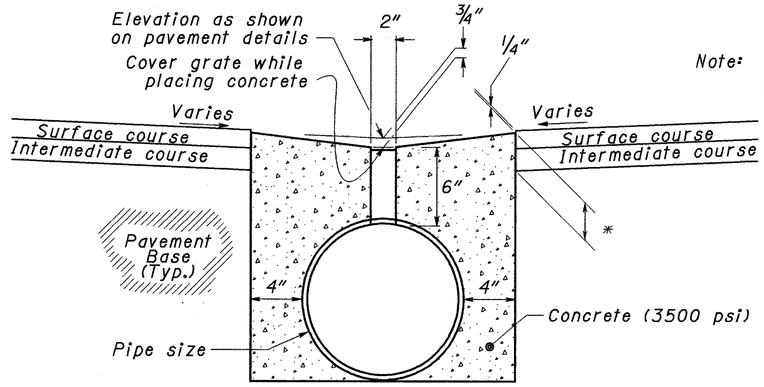

Note: The asphalt surface course shall be placed ¼" higher than the outside edge of the concrete surface.

* Surface on the side shall be formed to provide a straight edge for the top 3".

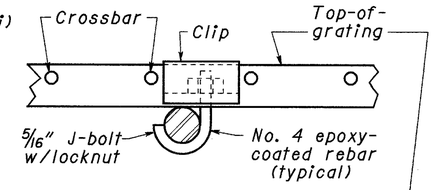

Elevation

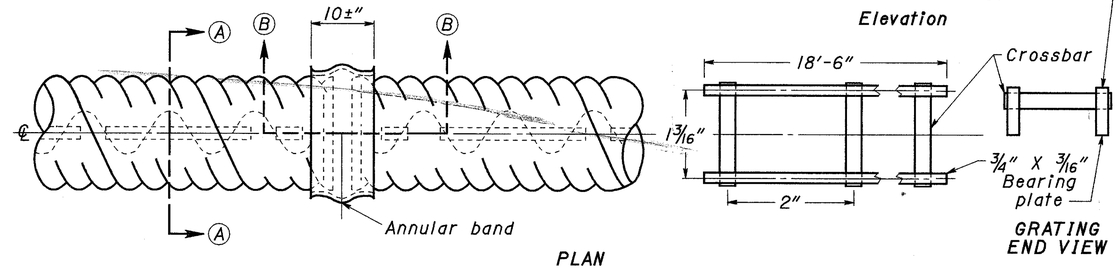

PLAN

GRATING END VIEW

GRATING DETAILS

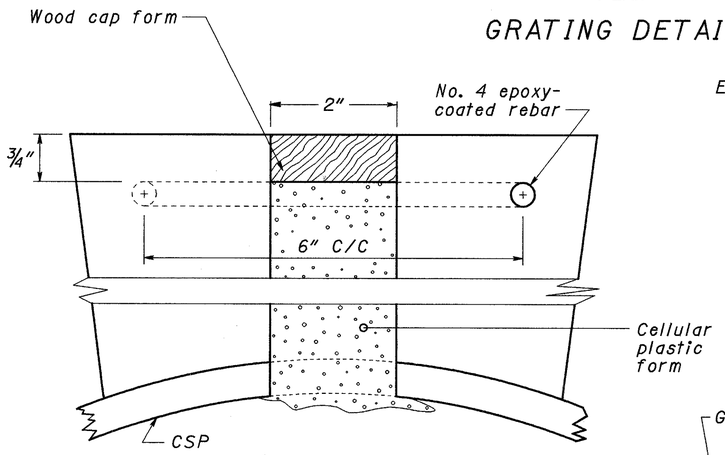

SECTION A-A

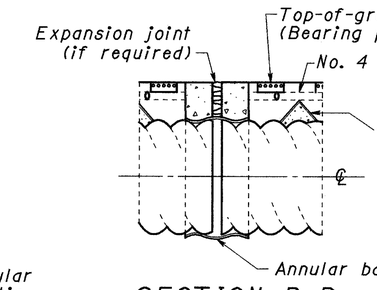

SECTION B-B

Note: Plastic form and wood cap to be placed on pipe in shop; to be removed after concrete has cured.

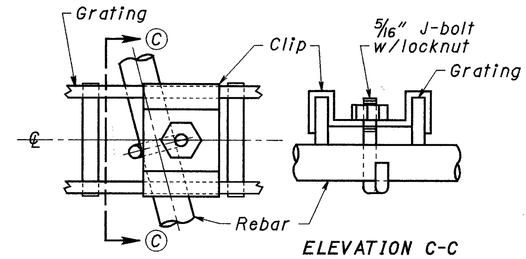

PLAN

ELEVATION C-C

15" " SLOTTED DRAIN, TYPE 3

SLOTTED DRAIN DETAIL

FRA-270-32.46

320A
593

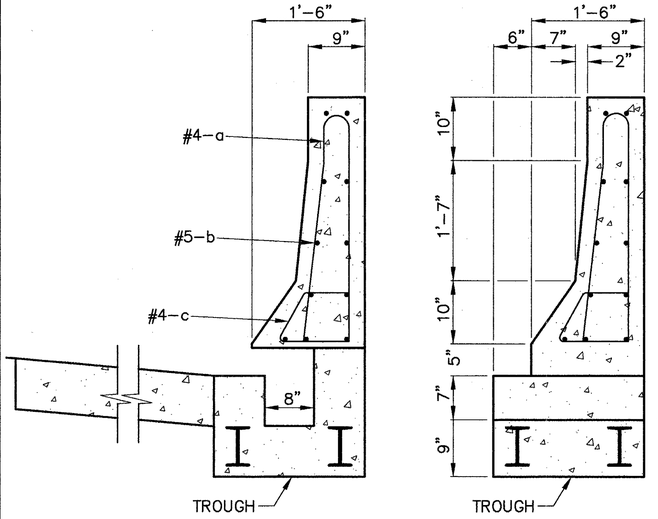

SECTION D-D

SECTION B-B

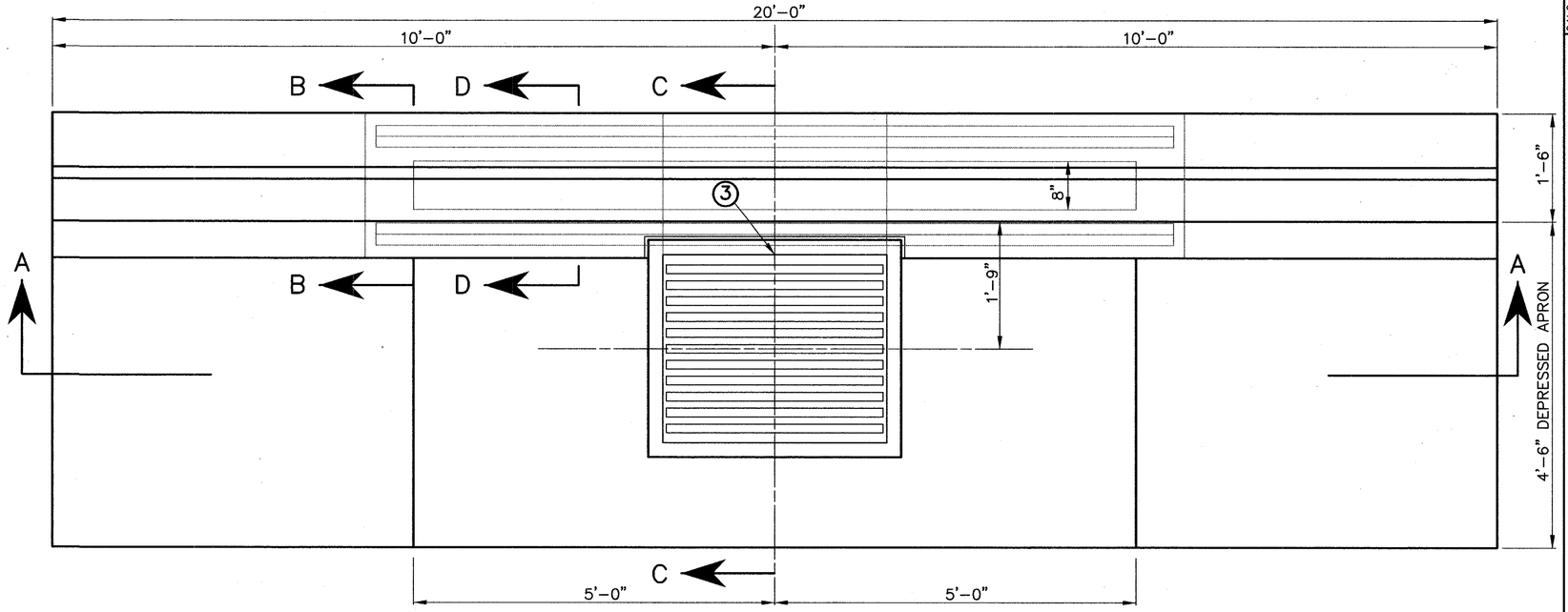

PLAN

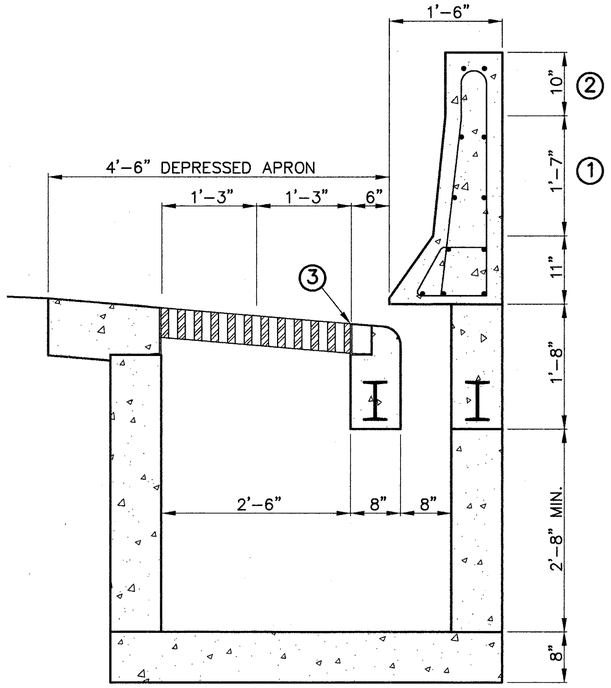

SECTION C-C

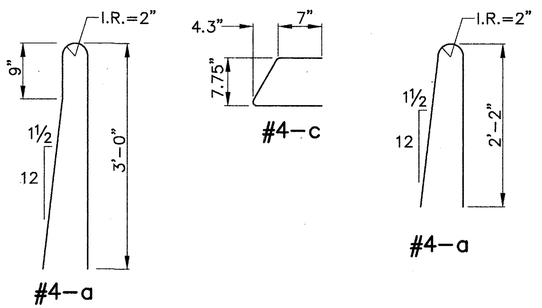

BAR BENDING DIAGRAMS

ELEVATION A-A

NOTES

1. INLETS LOCATED IN CONCRETE BARRIER, TYPE D WITH A 32" HEIGHT, SHALL BE PAID FOR AS ITEM 604 INLET No. I-3E, 32" HEIGHT.
2. INLETS LOCATED IN CONCRETE BARRIER, TYPE D WITH A 42" HEIGHT, SHALL BE PAID FOR AS ITEM 604 INLET No. I-3E, 42" HEIGHT.
3. LOCATION OF GRATE ELEVATION, STATION, AND OFFSET
4. FOR DIMENSIONS NOT SHOWN, SEE STD. DWG. I-3A & B BARRIER MEDIAN INLETS

CALC BY: G R T DATE: 11/20/94
CHKD: R W B DATE: 12/12/94

ITEM 604 INLET, NO. 3E

FRA-270-32.46

Plot Scale = 1" = 1'
COL. #29
C:\DRAWING\06092306\PLAN\60926ET3.DWG FEBRUARY-09-1995

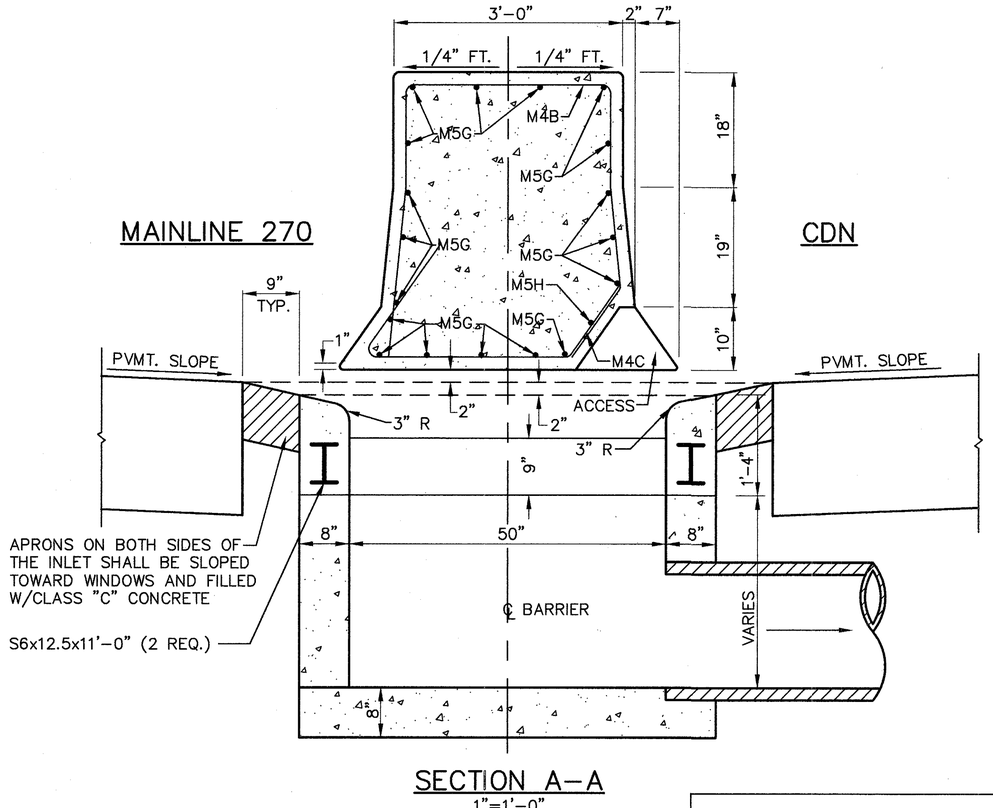

SECTION A-A
1"=1'-0"

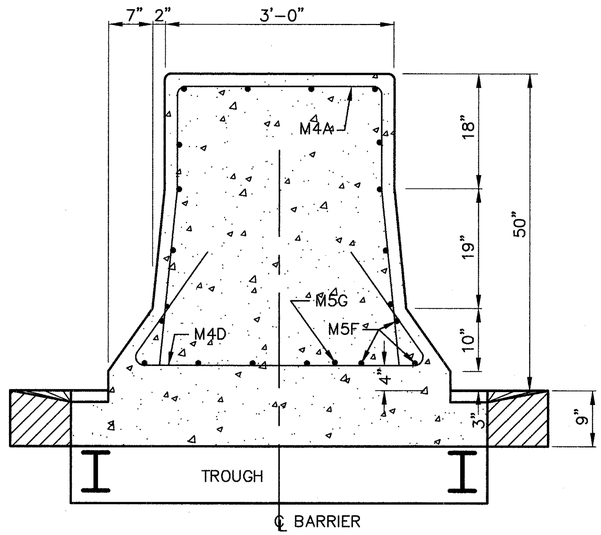

SECTION B-B

NOTE:
FOR DETAILS NOT SHOWN, SEE STD. CONSTRUCTION DWG. I-3C & D.
ALL STEEL SHALL CONFORM TO ITEM 509, EPOXY COATED REINFORCING STEEL.

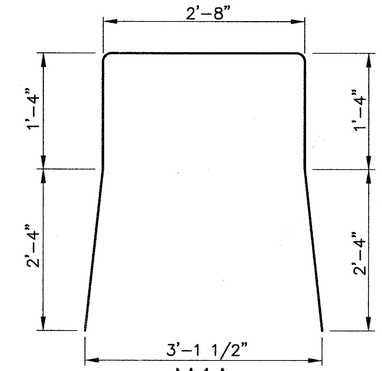

M4A

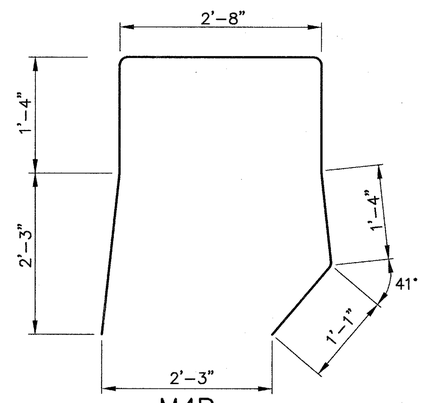

M4B

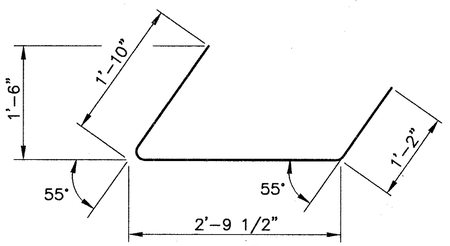

M4C

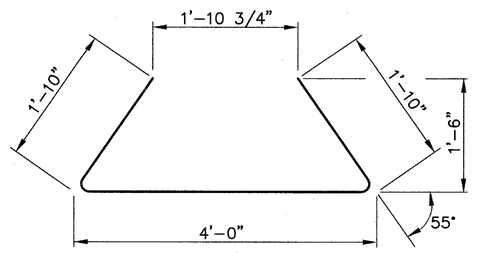

M4D

BENDING DIAGRAMS

STEEL LIST											
M4A		M4B		M4C		M4D		M5F		M5G	
No	LIN. FT.	No	LIN. FT.	No	LIN. FT.	No	LIN. FT.	No	LIN. FT.	No	LIN. FT.
10	10'-0"	5	10'-0"	5	5'-8"	10	7'-6"	6	8'-2"	18	19'-8"

M5H	
No	LIN. FT.
1	5'-0"

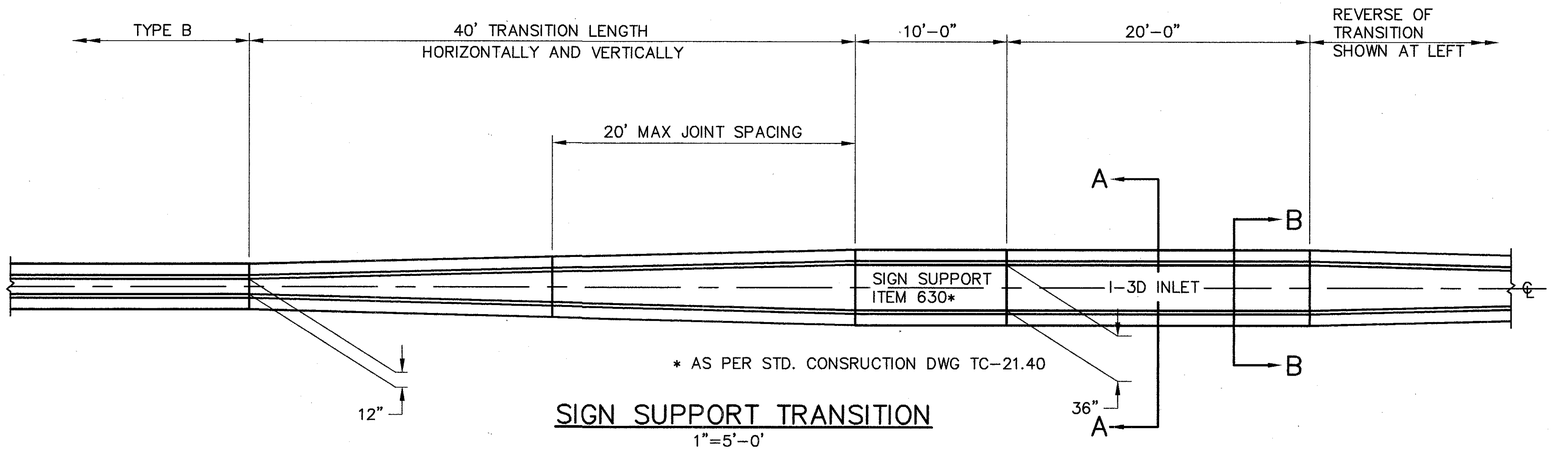

* AS PER STD. CONSRUCTION DWG TC-21.40

SIGN SUPPORT TRANSITION
1"=5'-0'

CALC. BY: TAZ DATE: 8/5/94
CHKD. BY: PHF DATE: 8/20/94

INLET, No. 3D50, AS PER PLAN

FRA-270-32.46

Plot Scale - 1" = 1'
COL #29 C:\DRAWING\06092306\PLAN\6092DET2.DWG FEBRUARY-09-1995

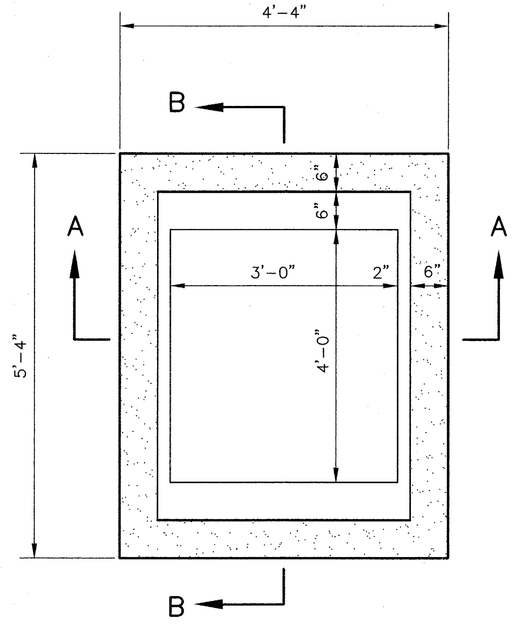

INLET PLAN
WITHOUT GRATE

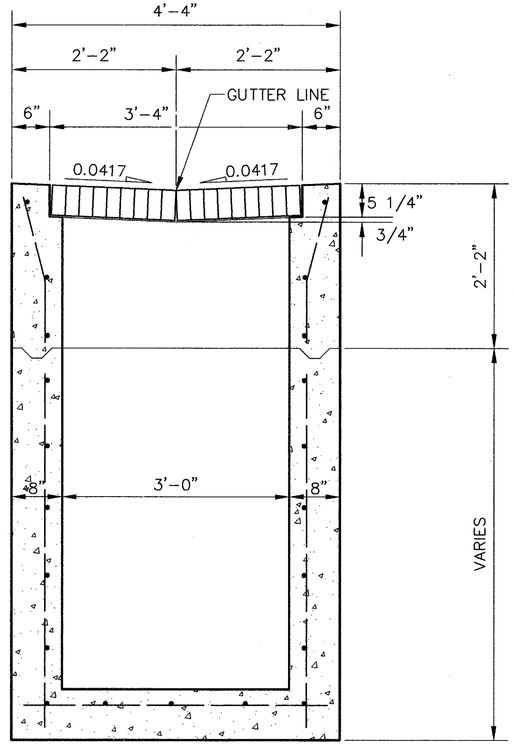

SECTION AA

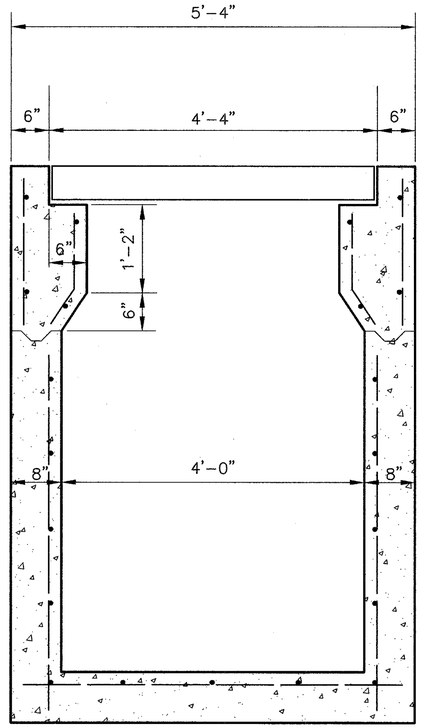

SECTION BB

GENERAL NOTES:

1. REINFORCING STEEL SHALL BE NO. 4 BARS AT 12" CENTERS BOTH WAYS WITH 2" CLEARANCE TO INSIDE OF WALLS AND BOTTOM.
2. ALL EXPOSED EDGES SHALL BE FILLETED 3/4".
3. ALL STEEL USED FOR THE GRATE SHALL MEET THE REQUIREMENTS OF ASTM A-36.

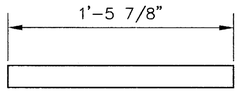

CROSS BAR
1 3/4"x1/4"
3/16" CONT. WELD AT MAIN BAR NOTCHES

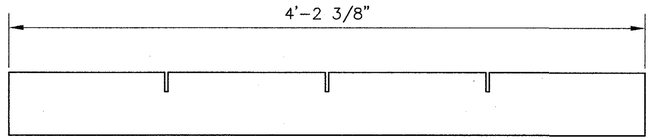

MAIN BAR
5"x1/2" (NOTCHED 1 3/4" DEEP FOR CROSS BARS)
THE TWO OUTSIDE MAIN BARS ARE NOT NOTCHED

GRATE DETAILS

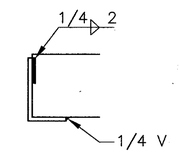

DETAIL

GRATE PLAN
TWO REQUIRED

CALC BY: G R T
DATE: 8/27/94
CHKD BY: R W B
DATE: 12/12/94

CATCH BASIN A, AS PER PLAN

FRA-270-32.46

323
593

Plot Scale = 1" = 1'
COL #29
C:\DRAWING\06092306\PLAN\6092WALET.DWG
FEBRUARY-09-1995

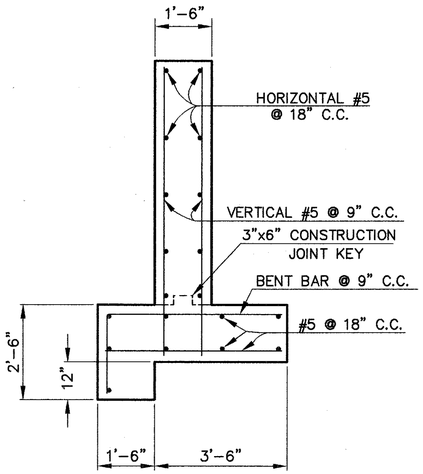

SECTION B-B

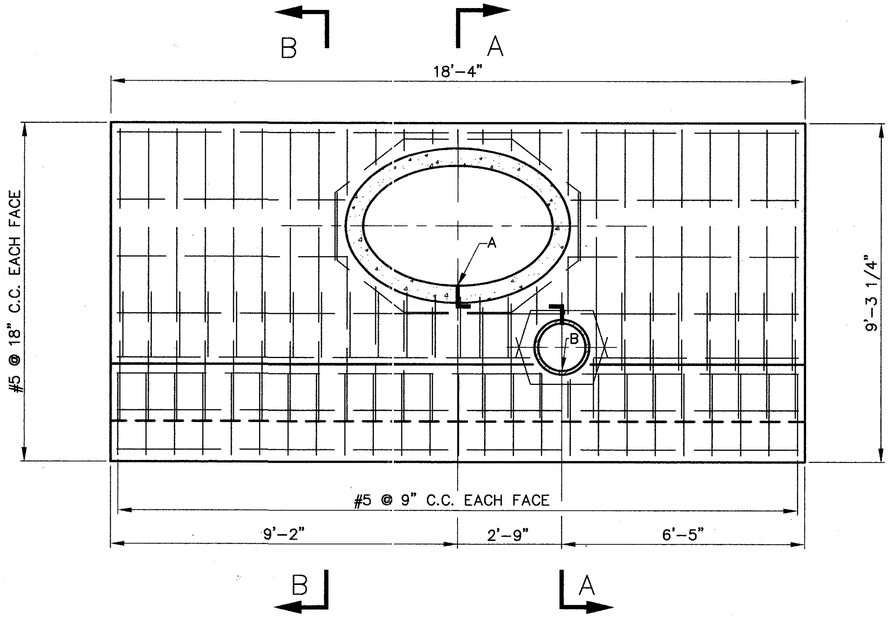

SOUTH HEADWALL ELEVATION

SCALE: 1/2" = 1'-0"

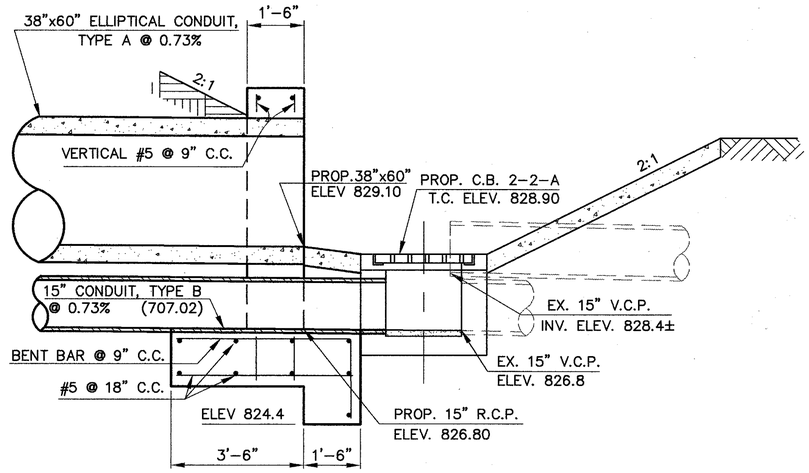

SECTION A-A

(PROFILE SOUTH END)

LOCATION	DESCRIPTION	NORTH H.W.	SOUTH H.W.
A	INV. 38"x60"	829.50	829.10
B	INV. 15"	827.20	826.80

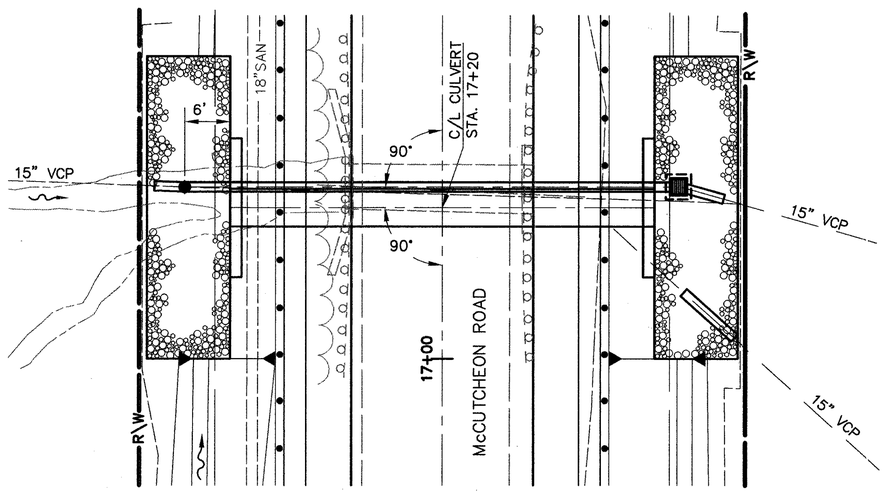

DETAILED PLAN VIEW

SCALE: 1" = 10'

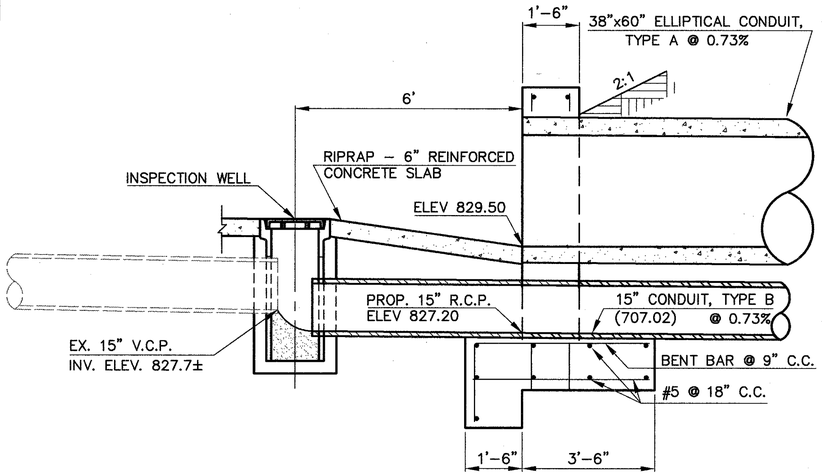

SECTION A-A

(PROFILE NORTH END)

NOTE:

PRIOR TO FOOTING CONSTRUCTION AND PROPOSED 15" CONDUIT PLACEMENT THE CONTRACTOR SHALL VERIFY ALL EXISTING HORIZONTAL AND VERTICAL DATA. THE EXISTING 15" PIPE ELEVATIONS GIVEN ARE APPROXIMATE.

CALC. BY: MMR DATE: 10/18/94
CHKD. BY: PHF DATE: 10/19/94

NO. 3 HEADWALL, AS PER PLAN

FRA-270-32.46

324
593

Plot Scale — 1" = 2'
COL #29 — C:\DRAWING\06092306\PLAN\06092PIP.DWG — FEBRUARY-09-1995

CATCH BASIN No. 4, 5 & 8, AS PER PLAN

1"=1'-0"

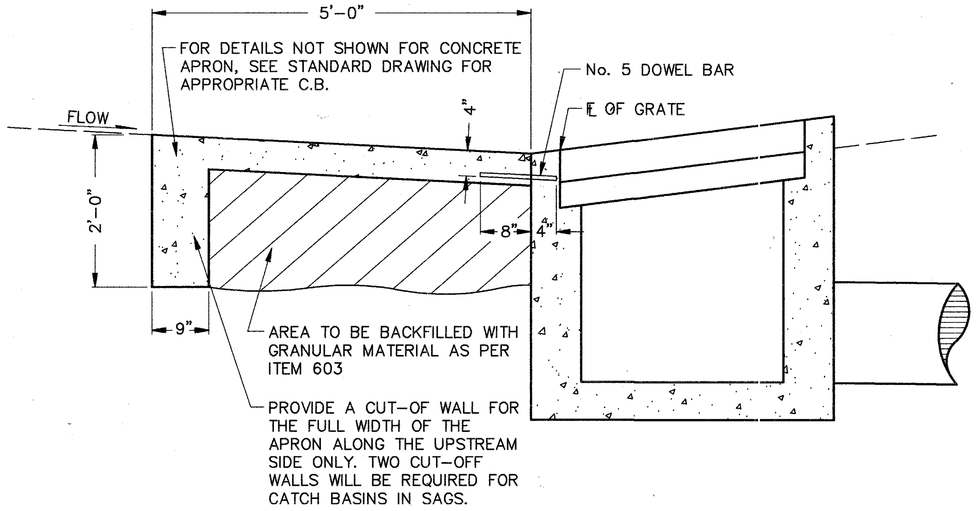

NOTE: THIS DETAIL SHALL BE USED FOR No. 4, No. 5 AND No. 8 CATCH BASINS, AS PER PLAN. FOR DETAILS NOT SHOWN SEE STD. DWG. CB-4, CB-5, AND CB-8.

THE REQUIREMENTS OF ITEM 604 SHALL GOVERN THE REPLACEMENT OF THE EXISTING CATCH BASIN. THE WORK SHALL INCLUDE THE REMOVAL AND DISPOSAL OF THE EXISTING CATCH BASIN AND ITS SUBSEQUENT REPLACEMENT. THE CONCRETE APRON SHALL BE REPLACED AND BACKFILLED AS SHOWN HERE AND IN THE PERTINENT STANDARD DRAWING.

PAYMENT FOR THE ABOVE WORK SHALL BE INCLUDED IN THE UNIT BID PRICE FOR ITEM 604 CATCH BASIN, No. 4, 5 OR 8, AS PER PLAN, AND SHALL CONSTITUTE FULL COMPENSATION FOR FURNISHING ALL MATERIAL, LABOR, TOOLS, AND EQUIPMENT INCIDENTAL TO COMPLETE THIS ITEM OF WORK.

THE FURNISHING AND PLACING OF STEEL FOR THE 5/8" x 12" DOWEL BARS SHALL BE PER 509 REINFORCING STEEL. THE DOWEL BARS SHALL BE EPOXY COATED PER 509.10. THE DOWEL BARS SHALL BE INSTALLED PER 510 OR CAST INTO THE BASIN. BOLT OR INSERTS MAY BE USED. THE CATCH BASIN SHALL BE PRECAST OR CAST-IN-PLACE CONCRETE. BRICK OR CONCRETE BLOCK WILL NOT BE PERMITIED. THE 6" CONCRETE APRON SHALL BE REINFORCED PER 601.04(3).

THE NUMBER OF BARS NEEDED ALONG EACH SIDE OF A No. 4 CATCH BASIN WITH A CONCRETE APRON IS 7. FOR A No. 5 & 8 CATCH BASIN THE NUMBER OF BARS NEEDED ALONG EACH SIDE WITH A CONCRETE APRON IS 4.

CATCH BASIN No.	TOTAL # OF BARS FOR A	
	STD. APRON	SAG. APRON
4	7	14
5	12	16
8	12	16

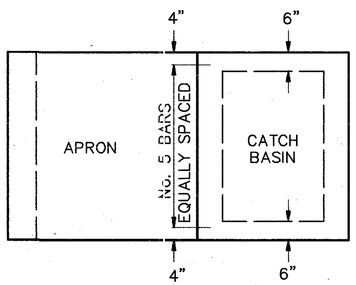

PLAN VIEW

BAR LOCATION DETAIL

1/2"=1'-0"

ITEM SPECIAL
PRECAST REINFORCED CONCRETE OUTLET

3"=1'-0"

THE CONCRETE OUTLET SHALL MEET THE REQUIREMENTS OF ITEM 604 IN THE CONSTRUCTION AND MATERIALS SPECIFICATIONS. PAYMENT SHALL BE MADE ON AN EACH BASIS. PAYMENT SHALL INCLUDE THE COST OF THE SOD AND WIRE CLOTH.

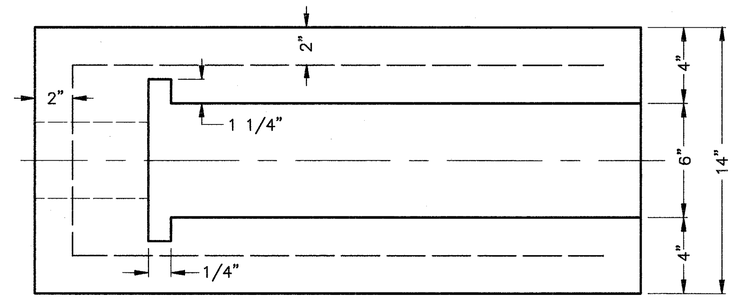

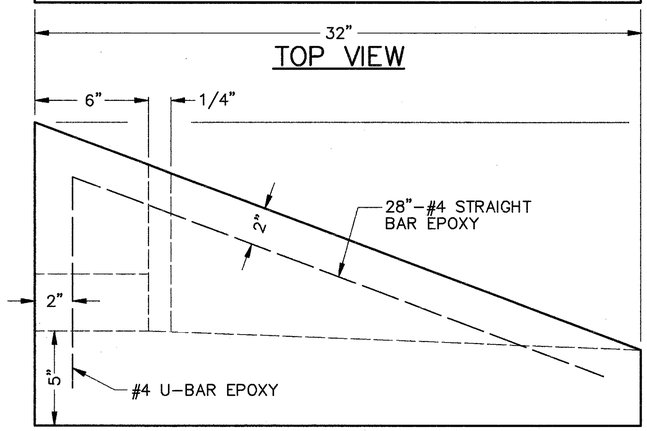

SIDE VIEW

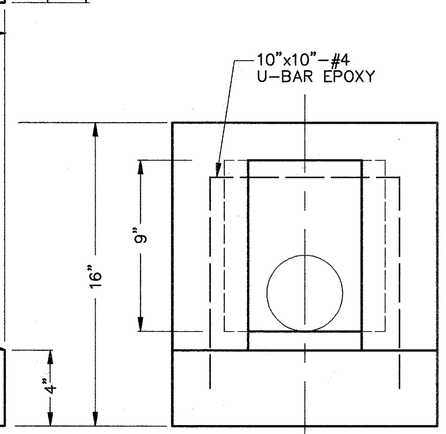

FRONT VIEW

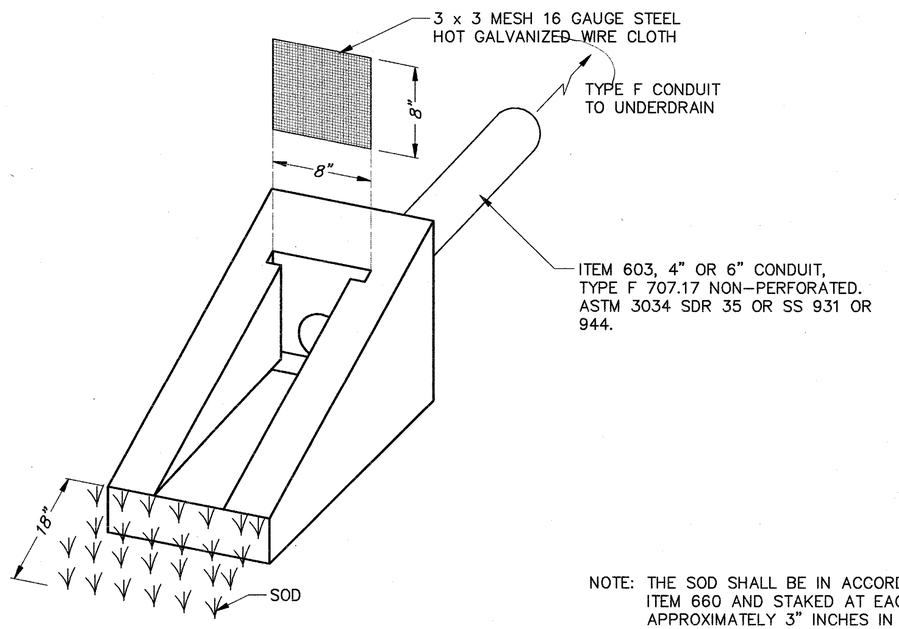

NOTE: THE SOD SHALL BE IN ACCORDANCE WITH ITEM 660 AND STAKED AT EACH CORNER APPROXIMATELY 3" INCHES IN FROM THE EDGE.

CAD: T.A.Z DATE: 8/15/94
CHK: BY: G.J.W DATE: 8/20/94

DRAINAGE STRUCTURE DETAILS

FRA-270-32.46

325
593

Plot Scale = 0'-1" = 1'
COL #29
C:\DRAWING\06092306\PLAN\66926ET1.DWG FEBRUARY-09-1995

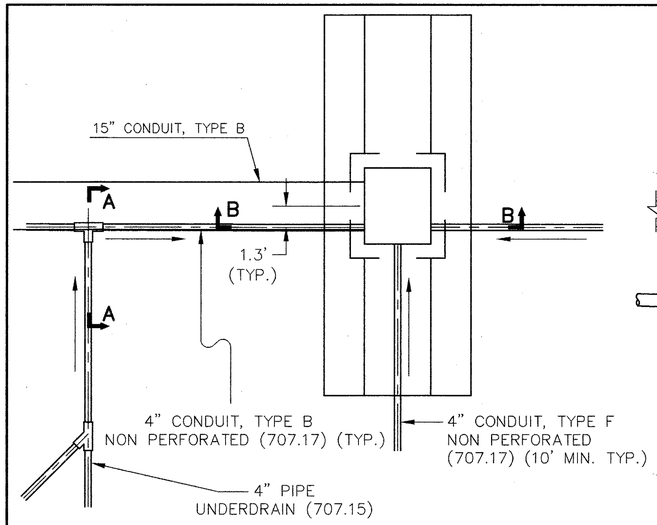

PLAN
SCALE: 1" = 4'

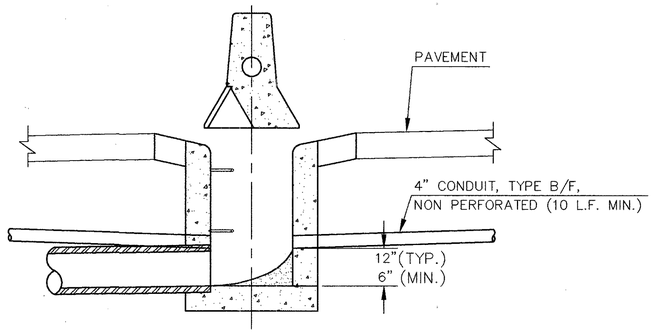

SECTION B–B
SCALE: 1" = 2'

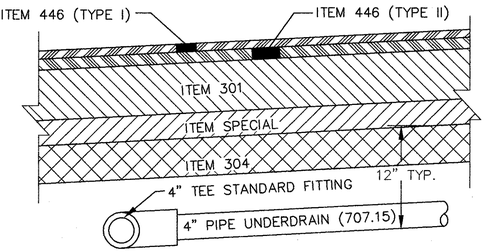

SECTION A–A
SCALE: 1" = 1'

UNDERDRAIN CONNECTION DETAILS
SCALE: AS SHOWN

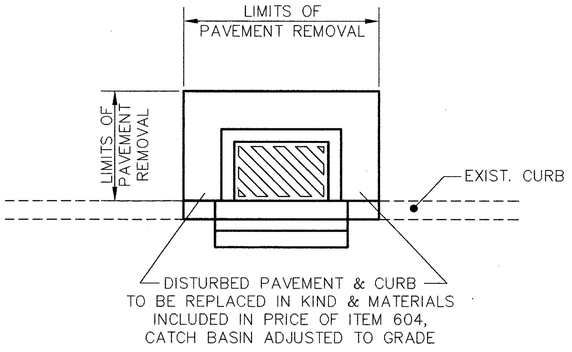

CURB INLET ADJUSTMENT
SCALE: 1" = 2'
CDN STA. 1384+50±

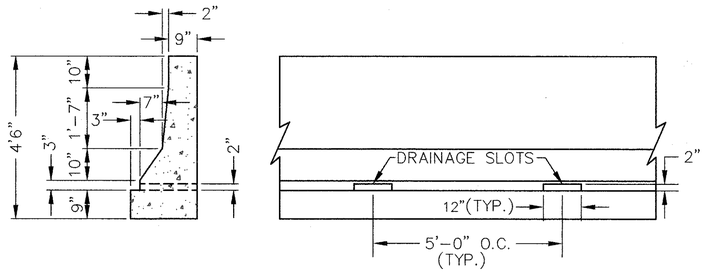

CONCRETE BARRIER TYPE D, AS PER PLAN B
SCALE: 1" = 2'

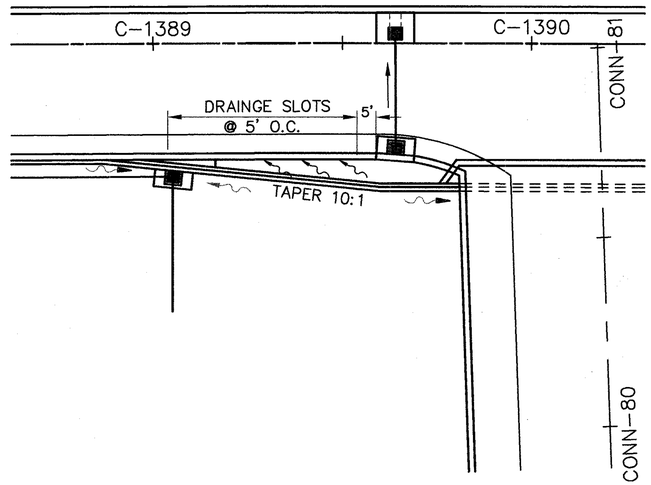

RAMP C @ CONNECTOR ROAD
SCALE: 1" = 20'

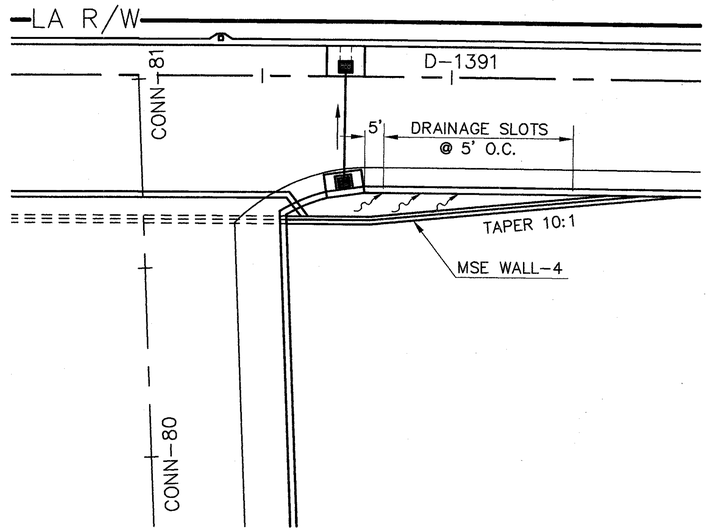

RAMP D @ CONNECTOR ROAD
SCALE: 1" = 20'

MISCELLANEOUS DRAINAGE DETAILS

FRA–270–32.46

326
593

CALC: P H F
BY:
DATE: 11/15/94
CHKD: M F J
BY:
DATE: 11/17/94

Plot Scale – 1" = 20'
COL #29 C:\DRAWING\06092306\PLAN\60920ETD.DWG FEBRUARY–09–1995

BORED OR JACKED CONDUIT DETAILS

FRA-270-32.46

CALC. BY: P. H. F. DATE: 01/27/95
CHKD. BY: M. F. J. DATE: 01/31/95

NOTES:

1.) CASING PIPES LARGER THAN 30" SHALL BE GROUTED ON THE OUTSIDE OF THE PIPE.

2.) THE CARRIER PIPE SHALL BE OF THE SAME SIZE AND MATERIAL FROM STRUCTURE TO STRUCTURE.

* SOIL INFORMATION OBTAINED FROM SOIL PROFILE SHEETS, FRA-270-22.99N APPROXIMATE DATE 1967. STATIONING REFERS TO I-270 ℄.

** CASING PIPES ARE NOT REQUIRED. CASING PIES ARE SHOWN FOR INFORMATIONAL PURPOSES ONLY. IF CASING PIPES ARE USED. THE INSIDE DIAMETER OF THE CASING SHALL BE AT LEAST 4" GREATER THAN THE LARGEST OUTSIDE DIAMETER OF THE CARRIER PIPE JOINTS OR FITTINGS. LARGER CASINGS MAY BE USED BUT IN ANY CASE THE CASING SHALL NOT PROTRUDE INTO THE EXISTING PAVEMENT STRUCTURE.

*** REFER TO MAINTENANCE OF TRAFFIC SHEET 53 OF 593 FOR APPROPRIATE WORK SITE PROTECTION. ALL LABOR, MATERIAL, TOOLS, EQUIPMENT, AND INCIDENTALS NECESSARY SHALL BE PAID FOR AS "CONDUIT, BORED OF JACKED 15"", TYPE B." THE SIZE, INDICATED IN THE PAY ITEM SHALL BE THE SIZE OF THE CARRIER PIPE.

**** CARRIER PIPE SIZE MAY BE INCREASED TO 18" IF MICROTUNNELING PROCESS IS USED. IF AN 18" CONDUIT IS USED AS AN ALTERNATE IT SHALL BE PAID FOR AS THE PAY ITEM CONDUIT, BORED OF JACKED 15", TYPE B.

CDN-1427+30.14, RT. 17.09'
CB-A, AS PER PLAN
F.L. GRATE = 833.72
INV. N. 15", 828.80
INV. W. 15", 828.80

CDN-1427+20.33, RT. 88.78'
CB-4A
F.L. GRATE = 829.99
INV. E. 15", 827.14
INV. W. 24", 825.62
INV. N. 42", 824.89
INV. S. 42", 824.87
EX. INV. E. 6", 827.86
EX. INV. NW 6", 827.59
EX. INV. W. 4", 827.56
EX. INV. E. 4", 827.47

HGWY. LIGHTING

℄ = 831.6

833.79
CDN-1427+00
832.5

1425+00, 95' LT.

72 L.F. 15"-B ****
@ 2.46%
58' BORED OR JACKED

27" STEEL PIPE ENCASEMENT **
58' BORED OR JACKED

1428+00 *

FOR PIPE DATA SEE CDS CROSS SECTIONS

CDN-1417+18.78, LT. 51.79'
CB-5A
F.L. GRATE = 833.99
INV. S. 21", 829.37
INV. N. 36", 828.12
INV. W. 42", 827.62

1417+00, 96' LT.

836.01
℄ = 836.00
VARIES

836.88
CDN-1417+00
836.6

162 L.F. 42"-B
@ 0.14%
70' BORED OR JACKED

54" STEEL PIPE ENCASEMENT **
70' BORED OR JACKED

CDN-1417+18.78, RT. 110.50'
CB-4A
F.L. GRATE = 832.13
INV. W. 18", 829.40
INV. N. 36", 827.80
INV. S. 42", 827.40
INV. E. 42", 827.40

1415+70 *

MATCH RAMP D

CDN-1405+00, LT. 32.48'
CB-A, AS PER PLAN
F.L. GRATE = 837.44
INV. N. 27", 831.38
INV. W. 30", 831.38

838.65
℄ = 838.58
VARIES

CDN-1405+00, RT. 110.50'
CB-4A
F.L. GRATE = 835.77
INV. N. 18", 832.34
INV. E. 30", 830.84
INV. S. 36", 830.84

BURIED ELEC.

839.52
CDN-1405+00
838.5

143 L.F. 30"-B
@ 0.39%
70' BORED OR JACKED

42" STEEL PIPE ENCASEMENTH **
70' BORED OR JACKED

1403+00 *

1406+00 *

1405+00, 120' LT.

CLAY
GRAVEL, STONE FRAGMENTS
SHALE
SILTY CLAY
SANDY SILT
GREY SHALE FRAGMENTS IN SOIL
SILT & CLAY
GRAVEL W/ SAND

Plot Scale = 1" = 10'
COL #29
C:\DRAWING\96092306\XSEC\BEDROCK.DWG - VIEW: XSEC1 FEBRUARY-10-1995

BORED OR JACKED CONDUIT DETAILS

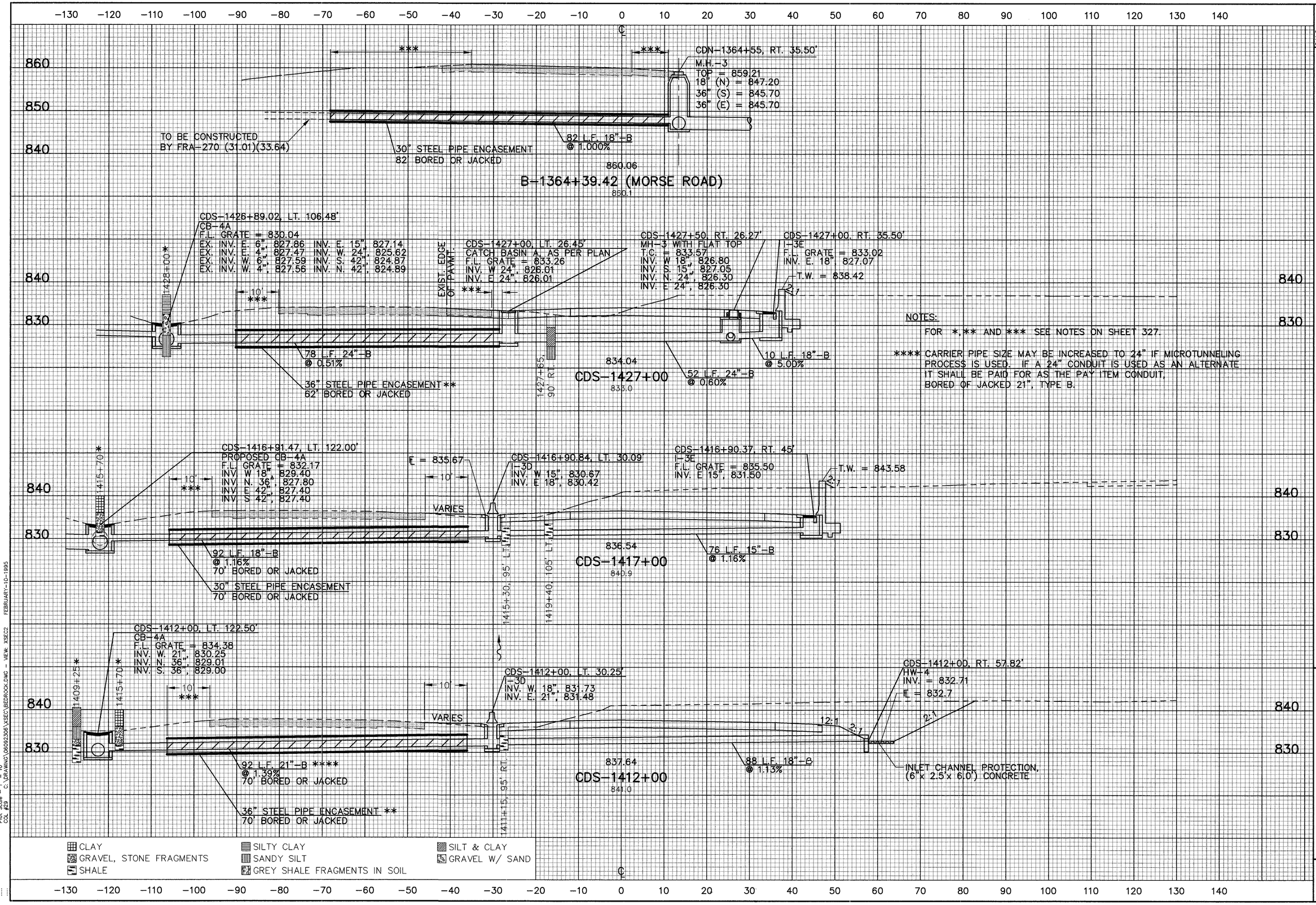

Plot Scale = 1" = 10'
COL #29
C:\DRAWING\06092308\XSEC\BEDROCK.DWG - VIEW: XSEC2 FEBRUARY-10-1995

FRA-270-32.46

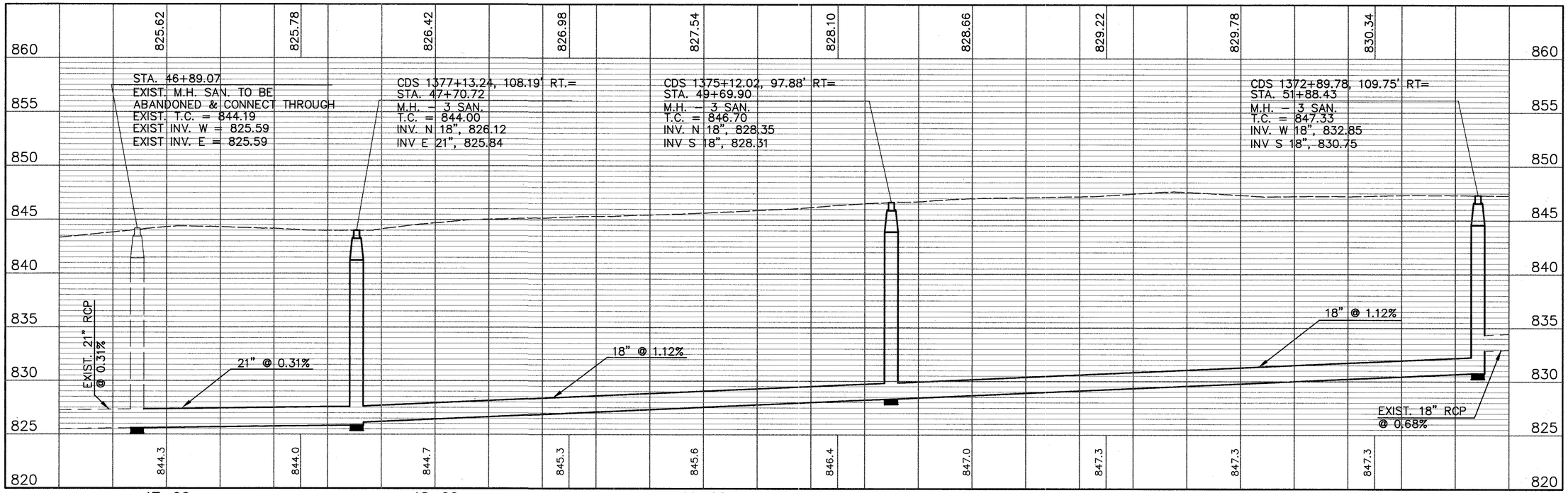

CDS SANITARY RELOCATION: SCALE: VER.- 1" = 5'
(STATIONING AS PER CC-4501) HOR.- 1" = 20'

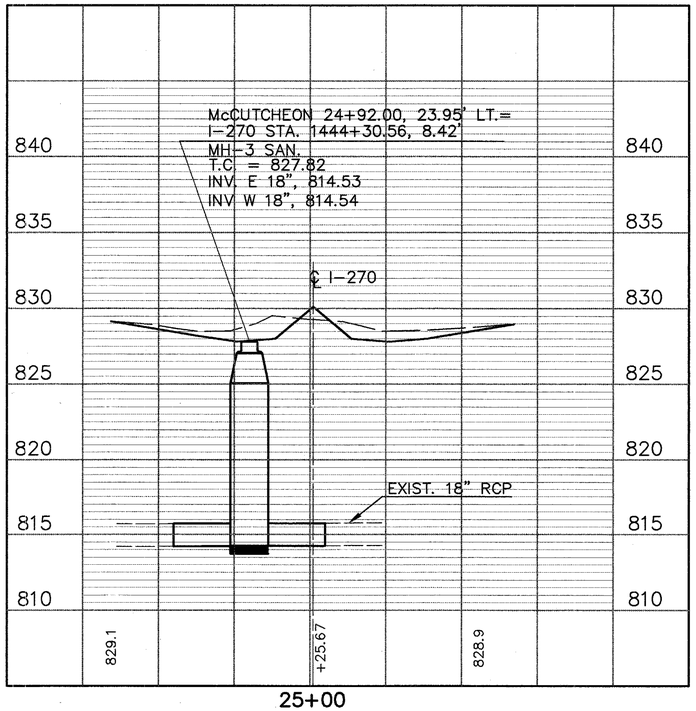

M.H. PLACEMENT @ McCUTCHEON & I-270 SCALE: VER.- 1" = 5'
(CC-3025) HOR.- 1" = 10'

CALC. BY: PHF DATE: 11/12/94
CHKD. BY: MFJ DATE: 12/5/94

I-270 SANITARY SEWER PROFILE

FRA-270-32.46

329
593

Plot Scale - 1" = 20'
COL #29 C:\DRAWING\06092306\DRAINAGE\SANITARY.DWG FEBRUARY-09-1995

TRAFFIC CONTROL GENERAL NOTES

GENERAL

TRAFFIC CONTROL STANDARD CONSTRUCTION DRAWINGS

REFERENCES TO SUPPLEMENTAL SPECIFICATIONS 857, 858, 861, 957, 958, AND 961 ON THE TRAFFIC CONTROL STANDARD CONSTRUCTION DRAWINGS IN THESE PLANS SHALL BE CONSIDERED TO READ AS RESPECTIVE REFERENCES TO ITEMS 630, 631, 633, 730, 731, AND 733.
REFERENCE TO ITEM 608, 4" CONCRETE WALK, ON THE TRAFFIC CONTROL STANDARD CONSTRUCTION DRAWINGS IN THESE PLANS SHALL BE CONSIDERED TO READ "ITEM 633, CONTROLLER WORK PAD".

CONTINGENCY QUANTITIES

THE CONTRACTOR SHALL NOT ORDER MATERIALS OR PERFORM WORK FOR PLAN ITEMS SET UP TO BE USED "AS DIRECTED BY THE ENGINEER" UNLESS AUTHORIZED BY THE ENGINEER.

UNDERGROUND UTILITIES

THE LOCATION OF THE UNDERGROUND UTILITIES SHOWN ON THE PLAN ARE AS OBTAINED FROM THE OWNERS OF THE UTILITIES AS REQUIRED BY SECTION 153.64 ORC.

AT LEAST TWO WORKING DAYS PRIOR TO COMMENCING CONSTRUCTION OPERATIONS IN AN AREA WHICH MAY INVOLVE UNDERGROUND UTILITY FACILITIES, THE CONTRACTOR SHALL NOTIFY THE PROJECT ENGINEER, THE REGISTERED UTILITY PROTECTION SERVICE AND THE OWNERS OF EACH UNDERGROUND UTILITY FACILITY SHOWN IN THE PLANS.

SEE SHEET 36 FOR ADDITIONAL INFORMATION.

UNDERDRAINS FOR PULL BOXES

REFERENCE IS MADE TO STANDARD DRAWING HL-30.11 FOR DETAILS OF DRAINING PULL BOXES. UNDERDRAINS FOR PULL BOXES SHALL BE USED AS DIRECTED BY THE ENGINEER AND SHALL BE PROVIDED WHERE THE LENGTH REQUIRED FOR A SATISFACTORY OUTLET DOES NOT EXCEED APPROXIMATELY 20 FEET. AN ESTIMATED QUANTITY OF 860 LIN. FT. OF ITEM 603 - "4 INCH CONDUIT. TYPE E" IS INCLUDED IN THE GENERAL SUMMARY FOR THIS PURPOSE.

ITEM 625 CONDUIT, BY SIZE, 713.07, AS PER PLAN

SECTION 713.07 OF THE SPECIFICATIONS IS MODIFIED TO REQUIRE THAT THE CONDUIT AND FITTINGS SHALL CONFORM TO NEMA STANDARD PUBLICATION NO. TC-6.

ITEM 625 PULL BOX, 713.08, 18" OR 24", AS PER PLAN

THE PULL BOXES SHALL BE SUPPLIED WITH THE WORD "TRAFFIC" FORMED ON THE SURFACE.

ITEM 625 PULL BOX, MISC: 713.08, 32", AS PER PLAN

THIS ITEM SHALL MATCH THE DETAIL AND SPECIFICATIONS AS SHOWN ON SHEET 360. INSTALLATION SHALL BE IN ACCORDANCE WITH 625.11. THE PULL BOX SHALL BE SUPPLIED WITH THE WORD "TRAFFIC" FORMED ON THE SURFACE.

ITEM 632 LOOP DETECTOR PAVEMENT CUTTING, AS PER PLAN

THIS ITEM SHALL BE PROVIDED IN ACCORDANCE WITH 632.10 AND IN ADDITION THE LOOP SEALANT SHALL BE FOSROC GOLD LABEL FLEX OR EQUIVALENT.

PAYMENT SHALL BE PER ITEM 632.

SIGNING

630 SIGN SUPPORT ASSEMBLY, BARRIER MOUNTED

THE CONTRACTOR SHALL MOUNT SIGNS ON MEDIAN BARRIER AS SHOWN ON THE DETAIL ON SHEET 354.

PAYMENT FOR 630 SIGN SUPPORT ASSEMBLY, BARRIER MOUNTED SHALL BE PER EACH ASSEMBLY INCLUDING POST SUPPORT, STEEL CHANNELS, AND INCIDENTALS FOR A COMPLETE ASSEMBLY IN PLACE.

630 REMOVAL AND STORAGE OF OVERHEAD SIGNS AND SUPPORTS

THE CONTRACTOR SHALL BE RESPONSIBLE FOR REMOVING AND STORING ALL EXISTING OVERHEAD SIGNS AND TYPE TC-12.30 AND TYPE TC-18.24 SUPPORTS INDICATED ON THE PLANS AS PER 630.12 AND 630.14 EXCEPT THAT THE REMOVED ITEMS SHALL BE STORED ON THE CONSTRUCTION SITE FOR ODOT TO PICK UP. THE APPROXIMATE LOCATIONS OF THE ITEMS TO BE REMOVED ARE SHOWN ON THE SIGNING AND PAVEMENT MARKING PLAN SHEETS. THE CONTRACTOR SHALL NOTIFY THE ENGINEER WHO WILL NOTIFY ODOT 48 HOURS IN ADVANCE OF WHEN THE SIGNING ITEMS WILL BE REMOVED. AT THE COMPLETION OF THE PROJECT, ANY STORED ITEMS STILL REMAINING ON THE SITE SHALL BE PROPERLY DISPOSED OF BY THE CONTRACTOR. QUANTITIES ARE INCLUDED IN THE MAJOR SIGN SUB-SUMMARY.

PAYMENT SHALL BE AS PER ITEM 630.

SURVEILLANCE

ITEM 625 MEDIAN PULL BOX, BY SIZE

THIS ITEM SHALL MATCH THE DETAIL AND SPECIFICATIONS AS SHOWN ON SHEET 355. MEDIAN PULL BOXES SHALL BE INSTALLED IN BARRIER AT LOCATIONS SHOWN ON THE PLANS. WHEN MEDIAN PULL BOXES ARE INSTALLED IN TYPE B OR TYPE C BARRIER BETWEEN THE I-270 MAINLINE AND THE COLLECTOR DISTRIBUTOR ROAD, THE PULL BOX COVER PLATE SHALL BE ON THE MAINLINE SIDE OF THE BARRIER.

PAYMENT FOR ALL HARDWARE AND WORK NECESSARY TO INSTALL A MEDIAN PULL BOX IN THE BARRIER SHALL BE INCIDENTAL TO THE CONTRACT UNIT PRICE PER EACH MEDIAN PULL BOX.

STEEL CONDUIT ELLS INTO MEDIAN PULL BOX

THE COST OF PROVIDING AND INSTALLING THE STEEL CONDUIT ELLS SHOWN ON THE SURVEILLANCE SYSTEM SCHEMATIC (SHEET 341) SHALL BE INCIDENTAL TO THE CONTRACT UNIT PRICE PER LINEAR FEET OF CONDUIT.

ITEM 632 LOOP DETECTOR WIRE, TYPE E, AS PER PLAN

THE CONTRACTOR SHALL LEAVE FIVE (5) FEET OF SLACK ON EACH END OF THE LOOP DETECTOR WIRE, PROVIDE A LABEL SHOWING LOOP LOCATION AND DIRECTION OF WINDING, AND SEAL THE ENDS WITH A WATERTIGHT SEALANT APPROVED BY THE ENGINEER. ALL OTHER REQUIREMENTS ARE AS PER 632.22 AND 732.

THE INSTALLED LOOPS SHALL BE TESTED FOR CONTINUITY (PARAGRAPH 3) AND INSULATION (PARAGRAPH 4) AS PER 632.27. THE INSULATION RESISTANCE MEASURED TO GROUND SHALL NOT BE LESS THAN ONE HUNDRED (100) MEGOHMS. ONLY 90% OF THE LOOP DETECTOR CABLE AND SAW CUT QUANTITIES WILL BE PAID UNTIL THE LOOPS ARE TESTED AND A COPY OF THE TEST RECORDS FURNISHED TO THE ENGINEER. ANY BAD LOOPS WILL BE RECUT. NO SPLICES OUTSIDE OF THE PULL BOXES OR OTHER ENCLOSURES WILL BE PERMITTED.

PAYMENT FOR ITEM 632 LOOP DETECTOR WIRE, TYPE E, AS PER PLAN, WILL BE THE THE CONTRACT BID PRICE PER LINEAR FOOT COMPLETE IN PLACE INCLUDING THE ABOVE REQUIREMENTS.

CONDUIT ON STRUCTURE

EXPANSION FITTINGS FOR CONDUIT ON STRUCTURES SHALL BE OZ TYPE AX, CROUSE-HINDS TYPE XJ-4, APPLETON TYPE XJ-4, OR EQUAL APPROVED BY THE ENGINEER, FOR THE CONNECTOR ROAD BRIDGE AND THE McCUTCHEON BRIDGE OVER I-270.

EACH EXPANSION FITTING SHALL HAVE A COPPER EXTERNAL BONDING JUMPER.

CALC: M.D.L. DATE: 8/94
CHK: D.R.B. BY: DATE: 2/95

TRAFFIC CONTROL GENERAL NOTES

FRA-270-32.46

330
593

PLOT SCALE: 1
COL #23 C:\DRAWING\06092310\TC\06092TN2.DWG FEBRUARY-08-1995

TRAFFIC SIGNALS

GENERAL:

THE CONTRACTOR SHALL FURNISH AND INSTALL TRAFFIC SIGNAL DEVICES IN COMPLIANCE WITH THESE PLANS AND SPECIFICATIONS, THE ODOT CONSTRUCTION AND MATERIAL SPECIFICATIONS, ALL SUPPLEMENTAL SPECIFICATIONS, OHIO MANUAL OF UNIFORM TRAFFIC CONTROL DEVICES FOR STREETS AND HIGHWAYS, AND THE "TC" STANDARD CONSTRUCTION DRAWINGS ISSUED BY THE ODOT BUREAU OF DESIGN SERVICES. THESE SPECIFICATIONS SET FORTH THE MINIMUM DESIGN AND MINIMUM OPERATING REQUIREMENTS FOR TRAFFIC SIGNAL EQUIPMENT. THE SYSTEMS ENGINEER, CITY OF COLUMBUS, DIVISION OF TRAFFIC ENGINEERING, SHALL INFORM THE PROJECT ENGINEER WHETHER THE SUPPLIED ITEMS MEET OR EXCEED THESE MIMIMUM REQUIREMENTS.

TRAFFIC SIGNAL CONTROL EQUIPMENT SHALL MEET OR EXCEED THE STANDARDS SPECIFIED IN THE FOLLOWING DOCUMENTS.

(A) SPECIFICATIONS LISTED IN THIS PLAN

(B) NEMA STANDARDS PUBLICATION NO. TS1 SECTIONS 1, 2, 5, 6, 8, 11, 13 AND 14

(C) ODOT CONSTRUCTION AND MATERIAL SPECIFICATIONS 633 AND 733

IN CASE OF A CONFLICTING SPECIFICATION STATEMENT, THE SPECIFICATION DOCUMENT HIERARCHY SHALL BE IN THE ORDER LISTED FROM (A), HIGHEST, TO (C), LOWEST.

THE DIVISION OF TRAFFIC ENGINEERING SHALL BENCH TEST ALL INTERSECTION CONTROLLERS IN THEIR COMPLETED CABINET ASSEMBLIES PRIOR TO THE EQUIPMENT BEING INSTALLED IN THE FIELD. TESTING SHALL NOT BEGIN UNLESS CORRECT CABINET ASSEMBLY WIRING SCHEMATICS ARE SUBMITTED WITH ITS RESPECTIVE CABINETS. THE TEST PROCEDURES SHALL CONSIST OF OPERATING THE EQUIPMENT FOR A MINUMUM OF FORTY-EIGHT (48) HOURS. THE CONTRACTOR SHALL DELIVER ALL CONTROLLERS AND COMPLETE CABINET ASSEMBLIES FOR TESTING TO THE DIVISION OF TRAFFIC ENGINEERING MAINTENANCE SHOP AT 515 SHORT STREET; COLUMBUS, OHIO 43215. THE CONTRACTOR SHALL BE RESPONSIBLE FOR LOADING AND UNLOADING ALL EQUIPMENT. THE DIVISION WILL COMPLETE TESTING ON EACH CONTROLLER AND CABINET ASSEMBLY WITHIN FIVE (5) WORKING DAYS. UPON COMPLETION OF THE TESTING THE DIVISION WILL NOTIFY THE CONTRACTOR THAT THE EQUIPMENT CAN BE PICKED UP. ANY DEVICE FOUND TO BE UNSATISFACTORY SHALL BE REPLACED, REPAIRED OR CORRECTED AS NECESSARY BY THE CONTRACTOR AND RESUBMITTED FOR TESTING. THE DIVISION DOES NOT GUARANTEE THAT RE-TESTS WILL BE COMPLETED WITHIN FIVE (5) WORKING DAYS. ANY DELAYS CAUSED BY RE-TESTING SHALL BE THE CONTRACTOR'S SOLE RESPONSIBILITY. CONTROL EQUIPMENT WHICH HAS NOT PASSED TESTING OR WHICH HAS NOT BEEN TESTED BY THE DIVISION SHALL NOT BE INSTALLED IN THE FIELD TO CONTROL TRAFFIC. IT IS RECOMMENDED THAT THE CONTRACTOR HAVE A REPRESENTATIVE IN ATTENDANCE DURING THE TESTING PROCESS. THE COST FOR TESTING SHALL BE INCIDENTAL TO THE COST OF THE EQUIPMENT.

THE CITY OF COLUMBUS, DIVISION OF TRAFFIC ENGINEERING, REQUIRES A 10 DAY TEST TO START AFTER THE SIGNAL INSTALLATION IS 100% COMPLETE WHICH INCLUDES ESTABLISHING DATA COMMUNICATION. NO PARTIAL TESTS WILL BE CONDUCTED. THE CONTRACTOR SHALL SUBMIT A WRITTEN REQUEST TO THE DIVISION'S SYSTEMS ENGINEER AT 109 N. FRONT STREET, 2ND FLOOR; COLUMBUS, OH 43215-9024 STATING THAT THE SIGNAL INSTALLATION IS 100% COMPLETE AND A START DATE FOR THE TEN DAY TEST IS REQUESTED. IF LESS THAN 100% COMPLETION IS DETECTED UPON INSPECTION BY THIS DIVISION OR ANY MALFUNCTION IS DETECTED, THEN THE TEN DAY TEST SHALL BE COMPLETELY RESTARTED.

ITEM 625 CONNECTION TO EXISTING PULL BOX

THIS ITEM OF WORK SHALL CONSIST OF PROVIDING A CONNECTION TO AN EXISTING CONCRETE PULL BOX AS REQUIRED BY THE PLAN. THIS ITEM SHALL PERMIT THE ENTRANCE OF THE NUMBER AND SIZE OF CONDUITS SHOWN INTO THE FOLLOWING THREE (3) PULL BOXES:

PULLBOX	CONDUITS
157+10, 56' LT.	2-3"
157+10, 56' RT.	2-3" AND 1-2"
159+35, 56' LT.	2-1-1/2"

CONNECTIONS TO THE EXISTING PULL BOX SHALL BE PROVIDED VIA KNOCK OUTS OR BY DRILLING A HOLE IN THE SIDE OF THE POLE BOX. IN THE EVENT THAT THE PULL BOX SHOULD BE DAMAGED, THE DAMAGE SHALL BE REPAIRED AS DIRECTED BY THE ENGINEER. THE COST OF REPAIRS TO OR REPLACEMENT OF THE EXISTING PULL BOX WILL BE INCIDENTAL TO THE COST OF THE CONNECTION. CARE SHOULD BE TAKEN TO NOT DISTURB THE EXISTING WIRING IN THE PULL BOX.

PAYMENT FOR 625 CONNECTION TO EXISTING PULL BOX WILL BE MADE AT THE CONTRACT UNIT PRICE FOR EACH CONNECTION IS MADE INCLUDING ALL LABOR, EQUIPMENT, MATERIALS AND INCIDENTALS REQUIRED TO PERFORM THE COMPLETE ITEM OF WORK.

ITEM 632 VEHICULAR SIGNAL HEAD, __ SECTION, 12" LENS, 1-WAY, AS PER PLAN.

ALL VEHICULAR SIGNAL HEADS SHALL BE SUPPLIED WITH GLASS LENSES. ALL BOLTS AND WASHERS FOR SECURING SECTIONS TOGETHER, MOUNTING HARDWARE FOR THE LENS, DOOR LATCHING BOLTS, AND HINGE PINS SHALL BE STAINLESS STEEL. DOOR LATCHING BOLTS SHALL FIT THROUGH A SLOT IN THE DOOR PER CITY OF COLUMBUS, DIVISION OF TRAFFIC ENGINEERING, SPECIFICATIONS. CONTACT THE PROJECT ENGINEER FOR SPECIFICATION DETAILS. AN ALUMINUM, WEATHERPROOF TRI-STUD SINGLE WIRE ENTRANCE WITH THREE (3) 5/16" x 1-7/16" STAINLESS STEEL STUDS, LOCK WASHERS, AND HEX NUTS SHALL BE PROVIDED WITH EACH SIGNAL HEAD. THE WEATHER HEAD ENTRANCE SHALL HAVE A MINIMUM INSIDE DIAMETER OPENING OF 1-1/2", INCLUDING ANY RUBBER OR PLASTIC GROMMET THAT MAY BE NECESSARY TO PROTECT THE CABLE. THE OPENING AT THE TRI-STUD END MAY BE IRREGULARLY SHAPED, BUT IT MUST HAVE A MINIMUM OPENING OF 1-1/2" AT ITS WIDEST POINT AND A MINIMUM OPENING OF 11/16" AT ITS NARROWEST POINT. THE TRI-STUD WASHER MUST HAVE THE SAME OPENING AT THE ENTRANCE. THE TOP OF THE ENTRANCE SHALL HAVE ONLY ONE (1) CLEVIS HOLE AND IT MUST ACCOMMODATE A 5/8" STAINLESS STEEL CLEVIS PIN. THE CLEVIS ATTACHMENT SHALL BE NO GREATER THAN 5/8" THICK OR GREATER THAN 1-3/4" IN WIDTH MEASURED AT THE CENTER OF THE CLEVIS HOLE.

A SPAN WIRE HANGER, PROVIDED WITH EACH SIGNAL HEAD, SHALL BE ALUMINUM AND SHALL HAVE A 5/8" STAINLESS STEEL CLEVIS PIN CAPABLE OF MOUNTING TO SPAN WIRES UP TO 1/2" IN DIAMETER. THE HANGER SHALL BE PROVIDED WITH TWO (2) U-TYPE STAINLESS STEEL MOUNTING BOLTS WITH HEX NUTS AND LOCK WASHERS. THE HANGER SPACER SHALL BE CAST ALUMINUM. THE CLEVIS PIN HOLE WITH STAINLESS STEEL BUSHINGS SHALL BE LOCATED A MINIMUM OF 2-1/2" FROM THE OUTSIDE TOP OF THE HANGER.

ITEM 632 LOOP DETECTOR UNIT, BY TYPE, AS PER PLAN

THE UNITS SHALL BE RACK MOUNTED, SHALL HAVE 2 SCANNING LOOP CHANNELS PER UNIT, SHALL HAVE A VEHICULAR COUNT OUTPUT, SHALL REMEMBER AND LOCK-IN AN INDICATION FOR INTERMITTENT AND/OR FAILED LOOP ON A PER CHANNEL BASIS, SHALL GENERATE AND SEND A "FAILED" LOOP OUTPUT SIGNAL TO THE CONTROLLER, AND SHALL HAVE DELAY/EXTENSION TIMING. FAILED AND COUNT SIGNALS SHALL BE ROUTED THROUGH THE UNIT'S EDGE CONNECTOR ONLY. THE RACK SHALL BE WIRED SO ALL DETECTOR INPUTS AND OUTPUTS ARE ACCESSIBLE VIA BACKPANEL TERMINALS. IF MULTIPLE RACKS ARE USED, EACH RACK SHALL BE PROVIDED WITH ITS OWN POWER SUPPLY MODULE AND A SEPARATE INCOMING AC POWER CIRCUIT. AC POWER TO EITHER RACK SHALL BE INDEPENDENTLY DISCONNECTED WITHOUT DISRUPTING POWER TO ANY OTHER DEVICE IN THE CABINET. DISRUPTION OF AC POWER TO EACH RACK CAN BE ACCOMPLISHED BY USING A SEPARATE BREAKER OR BY PROVIDING AC POWER VIA A PLUG AND RECEPTACLE. ALL AC POWER SHALL BE TERMINATED AT THE RACK POWER SUPPLY MODULE. RACKS SHALL BE SECURED TO THE BOTTOM SHELF VIA REMOVABLE FASTENERS AND BE POSITIONED TOWARD THE LEFT SIDE OF THE CABINET. EITHER RACK SHALL BE REMOVABLE WITHOUT NEEDING TO REMOVE BOTH RACKS. RACKS CAN BE HORIZONTALLY MOUNTED OR STACKED ON TOP OF EACH OTHER PROVIDED THAT THEY ARE FASTENED SECURELY. RACKS SHALL HAVE ADEQUATE AIR FLOW BETWEEN THEM AND HAVE A MINIMUM OF 3/4" CLEARANCE BETWEEN THE RACK STRUCTURE AND SURROUNDING CABINET ITEMS. PAYMENT FOR THE RACK AND POWER SUPPLY MODULE SHALL BE CONSIDERED INCIDENTAL TO THIS PAY ITEM.

ITEM 632 MAGNETOMETER SENSOR PROBE, AS PER PLAN

MAGNETOMETER SENSORS SHALL BE SUPPLIED IN A SET OF TWO PROBES WITH 5.5 TOTAL FEET OF PROBE INTERCONNECT CABLE AND SUFFICIENT LEAD-IN CABLE LENGTH TO REACH THE PULL BOX PLUS 5 FEET OF LEAD-IN COILED INSIDE THE PULL BOX. PAYMENT FOR THIS ITEM SHALL BE FOR EACH MAGNETOMETER SENSOR INSTALLED.

ITEM 632 MAGNETOMETER DETECTOR UNIT, AS PER PLAN

THE UNITS SHALL BE RACK MOUNTED, AND SHALL HAVE 2 CHANNELS PER UNIT. THE RACK SHALL BE WIRED SO ALL DETECTOR INPUTS AND OUTPUTS ARE ACCESSIBLE VIA BACKPANEL TERMINALS. IF MULTIPLE RACKS ARE USED, EACH RACK SHALL BE PROVIDED WITH ITS OWN POWER SUPPLY MODULE AND A SEPARATE INCOMING AC POWER CIRCUIT. AC POWER TO EITHER RACK SHALL BE INDEPENDENTLY DISCONNECTED WITHOUT DISRUPTING POWER TO ANY OTHER DEVICE IN THE CABINET. DISRUPTION OF AC POWER TO EACH RACK CAN BE ACCOMPLISHED BY USING A SEPARATE BREAKER OR BY PROVIDING AC POWER VIA A PLUG AND RECEPTACLE. ALL AC POWER SHALL BE TERMINATED AT THE RACK POWER SUPPLY MODULE. RACKS SHALL BE SECURED TO THE BOTTOM SHELF VIA REMOVABLE FASTENERS AND BE POSITIONED TOWARD THE LEFT SIDE OF THE CABINET. EITHER RACK SHALL BE REMOVABLE WITHOUT NEEDING TO REMOVE BOTH RACKS. RACKS CAN BE HORIZONTALLY MOUNTED OR STACKED ON TOP OF EACH OTHER PROVIDED THAT THEY ARE FASTENED SECURELY. RACKS SHALL HAVE ADEQUATE AIR FLOW BETWEEN THEM AND HAVE A MINIMUM OF 3/4" CLEARANCE BETWEEN THE RACK STRUCTURE AND SURROUNDING CABINET ITEMS. PAYMENT FOR THE RACK AND POWER SUPPLY MODULE SHALL BE CONSIDERED INCIDENTAL TO THIS PAY ITEM.

ITEM 632 PEDESTRIAN PUSHBUTTON LEAD-IN CABLE, AS PER PLAN

PEDESTRIAN PUSHBUTTON LEAD-IN CABLE SHALL BE THE SAME AS LOOP DETECTOR LEAD-IN CABLE.

THE QUANTITIES FOR LOOP DETECTOR LEAD-IN CABLE AND PEDESTRIAN PUSHBUTTON LEAD-IN CABLE HAVE BEEN COMBINED ON THE TRAFFIC CONTROL GENERAL SUMMARY FOR ESTIMATING PURPOSES. THE QUANTITIES ARE LISTED SEPARATELY ON THE SIGNAL PLANS FOR INSTALLATION PURPOSES.

ITEM 632 INTERCONNECT CABLE, No. 19 AWG, 6 PAIR, PE 39-BJFA, AS PER PLAN

ELECTRICAL CHARACTERISTICS FOR INTERCONNECT CABLE SHALL BE AS SPECIFIED BY THE CONTROLLER MANUFACTURER.

INTERCONNECT CABLE SHALL RUN CONTINUOUSLY FROM CONTROL CABINET TO CONTROL CABINET. NO SPLICES SHALL BE ALLOWED. THE INTERCONNECT CABLE SHALL HAVE ITS SHIELD GROUNDED PER THE CONTROLLER MANUFACTURER'S RECOMMENDATION. THE CONTRACTOR SHALL BE REQUIRED TO TEST ALL CONDUCTORS FOR PROPER ELECTRICAL INTEGRITY. UNUSED CABLE PAIRS SHALL BE GROUNDED IN THE CABINET AT ONE END OF THE CABLE ONLY. THE RECEIVE AND TRANSMIT PAIRS THAT ARE USED SHALL BE AS SPECIFIED BY THE CITY OF COLUMBUS, DIVISION OF TRAFFIC ENGINEERING. THE INTERCONNECT CABLE SHALL BE ROUTED DIRECTLY TO THE CONTROL CABINET VIA A CONDUIT AS SHOWN ON THE PLANS. (DETECTOR HOMERUN CABLE CAN ALSO BE PLACED IN THIS CONDUIT. SIGNAL CABLES SHALL BE PLACED IN OTHER CONDUIT).

REROUTING OF EXISTING INTERCONNECT CABLE

60 FEET OF 6 PAIR INTERCONNECT CABLE WILL BE COILED IN THE EXISTING PULL BOX AT STELZER ROAD STATION 157+10, LEFT, DURING THE STELZER ROAD CONSTRUCTION CONTRACT.

THE CONTRACTOR FOR THIS PROJECT IS RESPONSIBLE FOR ROUTING THIS CABLE THROUGH THE CONDUIT INSTALLED BETWEEN THE EXISTING PULL BOX AND THE NEW CONTROLLER CABINET AT STELZER ROAD AND CONNECTOR ROAD AND MAKING THE PROPER CONNECTIONS IN THE CONTROL CABINET. CONTACT THE CITY OF COLUMBUS TRAFFIC ENGINEERING DEPARTMENT FOR CONNECTION INFORMATION.

PAYMENT FOR REROUTING THE CABLE AND ALL NECESSARY CONNECTIONS IS INCIDENTAL TO THE CONTROLLER.

ITEM 632 POWER CABLE, BY SIZE, AS PER PLAN

THIS ITEM SHALL MEET ALL THE REQUIREMENTS OF 632 AND 732 EXCEPT THE CONDUCTORS SHALL BE COPPER. POWER CABLE SHALL BE CONTINUOUS FROM POWER SOURCE TO CABINET, AND FROM CABINET TO CABINET WITH NO SPLICES.

ITEM 632 POWER SERVICE, AS PER PLAN

POWER SERVICE FOR BOTH SIGNAL INSTALLATIONS IN THIS PROJECT WILL BE FURNISHED BY CITY OF COLUMBUS DIVISION OF ELECTRICITY AT A VAULT TO BE INSTALLED AT APPROXIMATE STATION 153+55, LEFT, ON STELZER ROAD. THE CONTRACTOR SHALL RUN POWER CABLE FROM A PULL BOX NEAR THIS LOCATION TO THE BREAKERS AT THE CONTROLLER CABINET ON THE SOUTHWEST CORNER OF STELZER ROAD AND CONNECTOR ROAD. THE BREAKERS FOR BOTH INTERSECTIONS WILL BE AT THE SAME LOCATION. THE CONTRACTOR WILL FURNISH AND INSTALL POWER CABLE BETWEEN THE TWO INTERSECTIONS AS SHOWN ON THE PLANS. ALL POWER CABLE, PULL BOXES, CONDUIT AND TRENCH WILL BE PAID FOR SEPARATELY. A DISCONNECT SWITCH AND METER BASE ARE NOT REQUIRED.

ITEM 632 PEDESTAL, 5', TRANSFORMER BASE, AS PER PLAN

THIS ITEM SHALL BE AS PER ITEM 632 AND 732 EXCEPT THAT THE TRANSFORMER BASE AND THE PIPE SHALL BE ALUMINUM.

ITEM 633, CONCRETE FOR CABINET FOUNDATION, AS PER PLAN

THE FOUNDATION HEIGHT ABOVE GROUND SHALL BE 4 INCHES INSTEAD OF OF 12 INCHES AS SHOWN ON TC-83.20.

CAD: MDL DATE: 8/94
CHK: BY: FAM DATE: 8/94

TRAFFIC CONTROL GENERAL NOTES

FRA-270-32.46

331
593

PLOT SCALE: 1.0000 '/ INCH
COL #23 C:\DRAWING\06092310\TC\06092TN3.DWG FEBRUARY-06-1995

CALC'D: MDL DATE: 8/94
CHK'D: F.A.M DATE: 8/94

TRAFFIC CONTROL GENERAL NOTES

FRA-270-32.46

332
593

ITEM 633 CONTROLLER, ACTUATED, MULTI-PHASE, SOLID STATE DIGITAL MICROPROCESSOR, AS PER PLAN

IN ADDITION TO THE OTHER REQUIREMENTS OF ODOT 633 AND 733. THE CONTROLLER FOR STELZER AND THE CONNECTOR ROAD SHALL BE A "P" SIZE EIGHT PHASE CABINET WITH AN ECONOLITE ASC/2-2110-2-0 CLOSED LOOP MODEL.

THE CONTROLLER FOR THE CONNECTOR ROAD AND RAMP D SHALL BE A "K" SIZE TWO PHASE CABINET WITH AN ECONOLITE ASC/2-2110-2-0 CLOSED LOOP MODEL.

IN ADDITION TO THE OTHER SPECIFICATION DOCUMENTS, CABINET ASSEMBLIES SHALL MEET THE FOLLOWING SPECIFICATIONS.

(A) ALL LABELS SHALL BE PERMANENTLY SECURED TO THE CABINET. PLASTIC LABEL MAKER TAPE IS NOT CONSIDERED TO BE PERMANENT. CROY TYPE LABELS ARE ACCEPTABLE.

(B) TO ILLUMINATE THE BACK PANEL THE 120 VAC CONVENIENCE OUTLET/LAMP ASSEMBLY SHALL BE MOUNTED ON THE RIGHT SIDE OF THE CABINET BELOW THE BOTTOM SHELF NEAR THE UPPER PART OF THE BACK PANEL. THE OUTLET/LAMP ASSEMBLY SHALL NOT INTERFERE WITH THE REMOVAL OR INSTALLATION OF ANY EQUIPMENT. (ALSO SEE ODOT 733.04(9))

(C) LOAD SWITCHES SHALL BE SUPPLIED WITH LIGHTS PERMANENTLY LABELED AS R,Y,G OR A,B,C. A LOAD SWITCH SHALL BE PROVIDED FOR EACH BACK PANEL LOAD SWITCH SOCKET. ALL LOAD SWITCHES SHALL REST IN A SUPPORT RACK. (ALSO SEE ODOT 733.04(2))

(D) LIGHTNING PROTECTION DEVICES SUCH AS SURRESTOR, ITT, GENERAL ELECTRIC, OR APPROVED EQUAL SHALL BE PROVIDED. (ALSO SEE ODOT 733.04(6))

(E) THE MAIN CABINET DOOR LOCK SHALL BE KEYED TO THE CITY OF COLUMBUS MASTER, CORBIN KEY NO. 2 (IR 6380). THE POLICE PANEL DOOR LOCK SHALL BE KEYED TO THE CITY OF COLUMBUS MASTER, BRASS CORBIN POLICE PANEL KEY NO. 0357SG. (ALSO SEE ODOT 733.03 PARAGRAPH #8)

(F) THE CABINET MATERIAL SHALL BE 5052 MARINE GRADE, .125 INCH THICK ALUMINUM SHEETING WITH A 32 HARDNESS IN ITS NATURAL COLOR AND SHALL BE PAINTED WHITE ON THE INSIDE. THE INSIDE OF THE CABINET SHALL BE TREATED WITH A THREE (3) STAGE IRON PHOSPHATE COATING AND A ZINC CHROMATE PRIMER COATING. A BAKED WHITE ALKALI ENAMEL FINISH SHALL THEN BE APPLIED. ALL COATINGS SHALL BE PROPERLY DRIED AND APPLIED SUCH THAT THE INSIDE WHITE PAINT WILL NOT PEEL FOR A GUARANTEED PERIOD OF TWO (2) YEARS. ALL EXTERIOR SEAMS SHALL BE EITHER CONTINUOUSLY WELDED, TACK WELDED, SEALED WITH A 15 TO 20 YEAR SILICONE SEALER, AND/OR OVERLAPPED SUCH THAT WATER DOES NOT ENTER THE CABINET. ALL CABINET EDGES SHALL BE SMOOTH (FREE OF ANY SHARP EDGES). THE CABINET DOOR SHALL BE HINGED USING A HEAVY GAUGE CONTINUOUS HINGE THAT HAS A STAINLESS STEEL HINGE PIN. THE HINGE SHALL BE BOLTED TO THE CABINET SO THE DOOR CAN BE REMOVED. THE BOLTS AND NUTS SHALL BE MADE OF STAINLESS STEEL AND SECURELY FASTENED TO PREVENT VIBRATIONS FROM LOOSENING THE NUTS. THE DOOR, SEALED WITH A NEOPRENE GASKET, SHALL BE EQUIPPED WITH A THREE (3) POINT LATCHING MECHANISM AND A STAINLESS STEEL HANDLE WHICH CAN BE PADLOCKED. THE DOOR SHALL BE DESIGNED SUCH THAT THE DOOR CAN BE LOCKED IN AN OPEN POSITION AT 90, 135, AND 180 DEGREES TO THE CABINET FACE (NOMINAL VALUES). (ALSO SEE ODOT 733.03 PARAGRAPH #3 AND #4)

(G) A THYRECTOR SURGE PROTECTOR WITH A RMS INPUT OF 150 VOLTS AND INPUT PEAK OF 210 VOLTS SHALL BE PROVIDED IN ADDITION TO ITEM D. THE THYRECTOR SHALL BE PLACED ACROSS THE INPUT AC POWER LINE.

(H) A 35 AMP LINE FILTER SHALL BE SUPPLIED AND SHALL BE MOUNTED ON THE POWER DISTRIBUTION PANEL. (ALSO SEE ODOT 733.04(8))

(I) TWO (2) CIRCUIT SOLID STATE FLASHER, EDI MODEL 810 OR PDC 204, RATED AT 15 AMPS PER CIRCUIT SHALL BE PROVIDED (NEMA TYPE III). CIRCUIT 1 SHALL CONTROL THE MAINLINE FLASHING YELLOW LIGHTS. CIRCUIT 2 SHALL CONTROL THE SIDE STREET FLASHING RED LIGHTS. (ALSO SEE ODOT 733.04(4))

(J) ONE (1) 30 AMP CIRCUIT BREAKER, LABELED AS "MAIN", SHALL BE WIRED AS THE MAIN POWER DISTRIBUTION BREAKER, A SECOND CIRCUIT BREAKER, LABELED AS "PED" AND RATED AT 10 AMPS, SHALL BE SUPPLIED FOR THE PEDESTRIAN SIGNAL LOAD ONLY. THE PEDESTRIAN SIGNAL BREAKER SHALL BE WIRED IN SERIES WITH BUT AFTER THE MAIN POWER BREAKER. A THIRD CIRCUIT BREAKER, LABELED AS "AUX" AND RATED AT 15 AMPS, SHALL SUPPLY A SEPARATE BRANCH OF AC+ POWER TO THE VENTILATING FAN, CONVENIENCE OUTLET AND LIGHT SO THAT THEY MAY OPERATE INDEPENDENTLY OF THE MAIN POWER BREAKER. ALL BREAKERS SHALL BE MOUNTED SIDE-BY-SIDE ON THE POWER DISTRIBUTION PANEL. (ALSO SEE ODOT 733.04(7))

IN THE STELZER RD. AND CONNECTOR RD. CABINET, AN ADDITIONAL 30 AMP CIRCUIT BREAKER (LABELED AS "MAIN - AT N/B RAMPS") SHALL BE WIRED AS THE MAIN POWER DISTRIBUTION BREAKER FOR THE CONNECTOR RD. AND N/B OFF RAMP 'D'.

(K) ALL CONTROLLER MS CONNECTOR HARNESSES SHALL HAVE A CONDUCTOR FOR EACH PLUG PIN EXCEPT THE REMOTE RESET FUNCTION FOR THE CONFLICT MONITOR. THE CONTROLLER AND CONFLICT MONITOR MS HARNESS CONDUCTORS SHALL BE CONNECTED TO A BACK PANEL TERMINAL STRIP WHICH IS ACCESSIBLE FROM THE FRONT OF THE PANEL. DETECTOR UNIT HARNESS CONDUCTORS SHALL BE CONNECTED TO A LEFT SIDE CABINET MOUNTED TERMINAL STRIP. OTHER EQUIPMENT SHALL BE CONNECTED AS APPROPRIATE. (ALSO SEE ODOT 733.04 (15))

(L) THE EIGHT PHASE CABINET ASSEMBLY SHALL CONTAIN ALL PEDESTRIAN SIGNAL CIRCUITRY FOR EACH NEMA DEFINED THROUGH PHASE.

(M) A POLICE DOOR MOUNTED SIGNAL SHUTDOWN SWITCH WITH SWITCH POSITIONS LABELED AS "SIG ON" AND "SIG OFF" SHALL BE INSTALLED. (ALSO SEE ODOT 733.04 (11.a))

(N) A POLICE DOOR MOUNTED SIGNAL-FLASH SWITCH WITH SWITCH POSITIONS LABELED AS "ON SIG" AND "ON FLASH" SHALL NOT ONLY PLACE THE SIGNALS ON FLASH BUT ALSO STOP-TIME THE CONTROLLER UNIT. A RUN/STOP-TIME SWITCH WITH SWITCH POSITIONS LABELED AS "CONT. RUN" AND "STOP-TIME" SHALL BE INSTALLED ON THE INSIDE OF THE CABINET DOOR. THE RUN/STOP-TIME SWITCH SHALL ALLOW THE CONTROLLER UNIT TO TIME NORMALLY BUT KEEP THE SIGNALS ON FLASH. THE SIGNAL-FLASH SWITCH SHALL NOT RETURN THE SIGNALS TO NORMAL OPERATION UNLESS THE RUN/STOP-TIME SWITCH IS RESET TO THE STOP-TIME POSITION SO THE SIGNAL-FLASH SWITCH CAN AGAIN STOP-TIME THE CONTROLLER UNIT. THE SIGNAL-FLASH SWITCH SHALL NOT REMOVE POWER TO THE CONTROLLER UNIT OR ITS AUXILIARY EQUIPMENT. (ALSO SEE ODOT 733.04 (11.b AND 11.d))

(O) A POLICE DOOR MOUNTED AUTO-MANUAL TRANSFER SWITCH WITH SWITCH POSITIONS LABELED AS "AUTO" AND "MANUAL" SHALL BE INSTALLED. A MANUAL PUSH BUTTON CONTROL SHALL NOT BE INSTALLED, BUT WIRING FOR A PUSH BUTTON CONTROL SHALL BE PROVIDED UP TO THE POINT WHERE THE PUSH BUTTON WOULD HAVE BEEN CONNECTED. (ALSO SEE ODOT 733.04 (11c))

(P) A CONTROLLER SHUTDOWN SWITCH WITH SWITCH POSITIONS LABELED AS "CONT ON" AND "CONT OFF" AND A COORDINATED/FREE SWITCH WITH SWITCH POSITIONS LABELED AS "COORD" AND "FREE" SHALL BE INSTALLED INSIDE THE CABINET NEXT TO THE RUN/STOP-TIME SWITCH. A COORDINATED/FREE SWITCH SHALL NOT BE REQUIRED IF THE CONTROLLER HAS A BUILT-IN COORD/FREE SWITCH. (ALSO SEE ODOT 733.04 (11.e AND 11.f))

(Q) AFTER A NEMA DEFINED POWER INTERRUPTION THE CONFLICT MONITOR SHALL CAUSE THE INTERSECTION SIGNALS TO FLASH AS PER SPECIFICATIONS FOR 10 SECONDS BEFORE THE INITIALIZED CONTROLLER UNIT TAKES CONTROL OF THE INTERSECTION SIGNALS.

(R) THE CONFLICT MONITOR SHALL BE CONNECTED DIRECTLY TO THE FIELD TERMINALS. JUMPERS OR LINKS ON THE BACK PANEL TO FORM A CIRCUIT FOR THE CONFLICT MONITOR SHALL NOT BE ACCEPTABLE.

(S) THE CONFLICT MONITOR SETTINGS FOR MINIMUM YELLOW TIMING ON ALL CHANNELS SHALL BE SET AT THREE (3) SECONDS.

(T) THE WATCH DOG TIMER SHALL CAUSE THE CONTROLLER TO GO INTO A FLASH OPERATION IF A MICROPROCESSOR FAILURE IS DETECTED.

(U) ALL BACK PANEL HARDWARE SHALL BE MOUNTED WITH SCREWS. RIVETS OR OTHER NON-REMOVABLE FASTENERS ARE NOT ACCEPTABLE.

(V) WIRE CONNECTIONS ON THE BACK PANEL SHALL BE MADE WITH CRIMP TERMINALS AND THREADED FASTENERS. TELEPHONE TYPE KNIFE CONNECTORS (SOLDERED OR OTHERWISE) ARE NOT ACCEPTABLE.

(W) ALL WIRES FASTENED TO THE LOAD SWITCH AND FLASHER PLUGS SHALL BE SOLDERED IN PLACE.

(X) THE BACK PANEL AND POWER DISTRIBUTION PANEL SHALL HAVE SILK SCREENED TERMINAL/SOCKET FUNCTION IDENTIFICATION LABELS SUCH AS AC COM, PHASE 3 GREEN, 115 VAC, SIGNAL BUS, ETC. REFERENCE NUMBERS SHALL NOT BE ACCEPTABLE IN LIEU OF FUNCTION LABELS BUT THEY CAN SUPPLEMENT THEM. ADDITIONAL TERMINAL BLOCKS AND AUXILLARY PANELS SHALL USE SILK SCREENED REFERENCE NUMBERS TO IDENTIFY TERMINAL CONNECTIONS.

(Y) ALL TERMINAL STRIPS IN CLOSE PROXIMITY OF SHELF MOUNTED CONTROL DEVICE EQUIPMENT SHALL BE COVERED TO PREVENT ACCIDENTAL CONTACT WITH THE DEVICES. ALL TERMINAL STRIPS SHALL BE READILY ACCESSIBLE WITHOUT REMOVAL OF ANY EQUIPMENT.

(Z) THE CABINET SHALL HAVE TWO (2) NON-LIPPED AND NON-VENTED (SOLID) SHELVES SPACED AT LEAST 9" APART.

(AA) THERE SHALL BE A MINIMUM OF ONE (1) INCH EMPTY SPACE BETWEEN ALL ITEMS ATTACHED TO THE DOOR AND ALL SHELF-MOUNTED DEVICES INCLUDING ITS CONNECTING HARNESSES, ALL LOAD SWITCHES, FLASHER AND ALL SIDE-PANEL-MOUNTED ITEMS.

(BB) THE THERMOSTAT TO THE VENTILATING FAN SHALL BE SET AT 95 DEGREES FAHRENHEIT. (ALSO SEE ODOT 733.04 (1))

(CC) ALL FLASH TRANSFER RELAYS SHALL BE WIRED FOR FAIL-SAFE OPERATION, E.G., ENERGIZED DURING NORMAL OPERATION.

(DD) THE CONTROLLER ASSEMBLY, WHEN PLACED IN OR COMING OUT OF AN AUTOMATIC FLASHING MODE, SHALL CONFORM TO THE AUTOMATIC FLASHING CRITERIA SET FORTH IN THE OHIO MANUAL OF UNIFORM TRAFFIC CONTROL DEVICES, SECTION 6B-18, INCLUDING THE FOLLOWING ADDITIONS.

1) A VEHICULAR CALL SHALL BE PLACED ON ALL PHASES, AND
2) THE CONTROLLER SHALL ENTER THE FLASH MODE AT THE END OF THE THROUGH SIDE STREET PHASE(S) YELLOW (OR DURING THE SIDESTREET PHASE(S) RED CLEARANCE INTERVAL) BUT JUST PRIOR TO ANY MAIN STREET GREEN.

THE FLASH TRANSFER LOGIC DEVICE SHALL BE EXTERNAL TO THE CONTROLLER AND BE COMPATIBLE WITH ANY NEMA CONTROLLER. THIS CIRCUITRY SHALL BE SUPPLIED WHEN SPECIFIED IN ADDITION TO THE FOLLOWING.

EXCEPTION: FOR THE ON-STREET MASTER ARTERIAL CONTROLLERS ONLY, INTERNAL IC LOGIC CAN BE USED IN LIEU OF AN EXTERNAL DEVICE AS LONG AS THE INTERNAL IC LOGIC MEETS THE STANDARDS SET FORTH ABOVE. (ALSO SEE ODOT 733.04 (11.b))

(EE) THE POWER SERVICE SHALL BE CONNECTED TO AN ACCESSIBLE TERMINAL STRIP WHICH SHALL BE LOCATED NEAR THE BOTTOM OF THE CABINET AND SHALL BE OF SUFFICIENT SIZE TO ACCEPT A #6 WIRE LUG OVER A 1/4" STUD. THE TERMINAL STRIP SHALL BE COVERED OR SHIELDED TO MINIMIZE ACCIDENTAL CONTACT DURING NORMAL SERVICING OPERATIONS. THE POWER SERVICE CONNECTION SHALL BE IMMEDIATELY BELOW THE CABINET BREAKERS AND SHALL NOT BE WIRED DIRECTLY TO THE MAIN POWER DISTRIBUTION BREAKER. THE POWER DISTRIBUTION PANEL SHALL BE LOCATED AT THE BOTTOM RIGHT SIDE OF THE CABINET OR IT SHALL BE AN INTEGRAL PART OF THE RIGHT SIDE OF THE BACK PANEL. THERE SHALL BE A MINIMUM OF TWO (2) INCHES CLEARANCE BETWEEN THE POWER TERMINAL AND THE BOTTOM OF THE CABINET. A #4 WIRE LUG SHALL BE PROVIDED FOR ATTACHING A GROUNDING WIRE FROM A GROUND ROD. THE GROUNDING WIRE LUG SHALL BE ATTACHED TO THE POWER DISTRIBUTION PANEL (LOWER LEFT CORNER), OR IF NONE, TO THE BACK PANEL (BOTTOM MIDDLE).

(FF) A SINGLE POLE MERCURY PLUNGER RELAY SHALL BE INSTALLED WHICH WILL ALLOW POWER TO BE REMOVED FROM THE VEHICULAR AND PEDESTRIAN POWER BUSES. THE MERCURY RELAY SHALL BE RATED AT 35 AMPS AND THE RELAY COIL WIRED WITH A NOISE SUPPRESSION DEVICE.

(GG) ALL EXTERNAL RELAY COILS SHALL HAVE NOISE SUPPRESSION DEVICES.

(HH) ALARM 1 CIRCUITRY SHALL BE ASSOCIATED WITH A DOOR SWITCH: DOOR OPEN = TRUE; DOOR CLOSED = FALSE. ALARM 2 CIRCUITRY SHALL BE ASSOCIATED WITH THE LOOP FAILED CHANNEL OUTPUTS OF ALL DS 262FC UNITS: LOOP FAILED = TRUE; LOOP OKAY = FALSE.
SYSTEM DETECTORS "A1" THROUGH "D2" CAN BE HARDWIRED DIRECTLY TO THE SCREW TERMINALS ON THE TIO BOARD. ALL "D" HARNESS WIRES SHALL BE ROUTED THROUGH A LABELLED TERMINAL STRIP MOUNTED ON THE LEFT CABINET SIDE PANEL.

FOUR (4) SETS OF CABINET WIRING SCHEMATICS, ONE (1) SERVICE MANUAL AND ONE (1) INSTRUCTIONAL MANUAL SHALL BE PROVIDED PER CABINET. DELIVERY OF THESE DIAGRAMS & MANUALS SHALL ACCOMPANY THE CABINET. THE CONTRACTOR SHALL CLEARLY NOTE ANY DEVIATIONS, CHANGES, ADDITIONS OR OTHER MODIFICATIONS ON THE DIAGRAMS AND MANUALS THAT ARE APPROPRIATE TO REFLECT THE EXACT EQUIPMENT TO BE PROVIDED. THE COST FOR THIS MATERIAL SHALL BE INCIDENTAL TO THE COST OF THE SIGNAL EQUIPMENT. THE COPIES OF DIAGRAMS AND MANUALS SHALL BE STORED IN A PLASTIC ENVELOPE MOUNTED HORIZONTALLY AND SECURELY FASTENED TO THE INSIDE OF THE MAIN CABINET DOOR. THE ENVELOPE OPENING SHALL BE TO THE RIGHT. THE ENVELOPE SHALL NOT BLOCK ANY PART OF THE AIR FILTER OR THE AIR INTAKE LOCATED IN THE DOOR.

SERVICE & INSTRUCTIONAL MANUALS SHALL INCLUDE SECTIONS COVERING THE GENERAL DESCRIPTION OF EQUIPMENT, EQUIPMENT INSTALLATION PROCEDURES, EQUIPMENT PROGRAMMING PROCEDURES, THEORY OF OPERATION WITH SYSTEM DESCRIPTION INCLUDING BLOCK DIAGRAMS AND DETAILED CIRCUIT DIAGRAMS, PREVENTIVE MAINTENANCE, FIELD TROUBLE ANALYSIS, BENCH TROUBLE ANALYSIS, TROUBLESHOOTING ANALYSIS CHART, WAVE FORMS, VOLTAGE MEASUREMENTS, VOLTAGE MEASUREMENT CHARTS, PARTS LIST, ELECTRICAL INTERCONNECTION DRAWINGS, SCHEMATIC AND LOGIC DIAGRAMS, ASSEMBLY DRAWINGS WITH PICTORIAL DIAGRAMS SHOWING PHYSICAL LOCATIONS AND IDENTIFICATION OF EACH COMPONENT.

PLOT SCALE: COL #23 C:\DRAWING\06092310\TC\06092TN4.DWG FEBRUARY-06-1995

TOTAL FROM SHEET NO.															PARTICIPATION SUB-TOTAL			ITEM	ITEM EXT.	GRAND TOTAL	UNIT	DESCRIPTION	SEE SHT. NO.
						330	331	336	337	338	339	340	357	359									
																						TRAFFIC CONTROL	
											11							620	10300	11	EA.	DELINEATOR, TYPE C, POST MOUNTED	
											22							620	15300	22	EA.	DELINEATOR, TYPE D, POST MOUNTED	
								2	11									625	32000	13	EA.	GROUND ROD	
								5	91									630	00000	96	C.Y.	CONCRETE FOR ANCHOR BASE FOUNDATION	
									1									630	00100	1	C.Y.	CONCRETE FOR EMBEDDED FOUNDATION	
								127										630	02100	127	L.F.	GROUND MOUNTED SUPPORT, NO. 2 POST	
								212										630	03100	212	L.F.	GROUND MOUNTED SUPPORT, NO. 3 POST	
								57										630	04100	57	L.F.	GROUND MOUNTED SUPPORT, NO. 4 POST	
									68									630	06400	68	L.F.	GROUND MOUNTED SUPPORT, S4 x 7.7 BEAM	
								15										630	08004	15	L.F.	ONE WAY SUPPORT, NO. 3 POST	
									4									630	09000	4	EA.	BREAKAWAY BEAM CONNECTION	
									1									630	20300	1	EA.	OVERHEAD SIGN SUPPORT, TYPE TC-12.30, DESIGN 3, 16'ARM	
									5									630	20600	5	EA.	OVERHEAD SIGN SUPPORT, TYPE TC-12.30, DESIGN 6, 26'ARM	
									1									630	21000	1	EA.	OVERHEAD SIGN SUPPORT, TYPE TC-12.30, DESIGN 10, 30'ARM	
									1									630	37000	1	EA.	OVERHEAD SIGN SUPPORT, TYPE TC-7.65, DESIGN 6, 71 FEET	
									1									630	49000	1	EA.	OVERHEAD SIGN SUPPORT, TYPE TC-7.65, DESIGN 8, 91 FEET	
									1									630	50000	1	EA.	OVERHEAD SIGN SUPPORT, TYPE TC-7.65, DESIGN 8, 101 FEET	
									1									630	72000	1	EA.	OVERHEAD SIGN SUPPORT, TYPE TC-15.115, 125 FEET	
								1										630	75600	1	EA.	SPAN WIRE SIGN SUPPORT, TYPE TC-17.10, DESIGN 6, 94' SPAN	
									1									630	77000	1	EA.	OVERPASS STRUCTURE MOUNTED SIGN SUPPORT, TYPE TC-18.24	
								2										630	79500	2	EA.	SIGN SUPPORT ASSEMBLY, POLE MOUNTED	
								6										630	79600	6	EA.	SIGN SUPPORT ASSEMBLY, BRIDGE MOUNTED	
								75										630	80100	75	S.F.	SIGN, FLAT SHEET	
								247					14					630	80102	261	S.F.	SIGN, FLAT SHEET, TYPE G	
									2465									630	80204	2465	S.F.	SIGN, EXTRUSHEET, TYPE G	
									998									630	80306	998	S.F.	SIGN, TEMPORARY OVERLAY, TYPE G	
								13					5					630	83000	18	S.F.	COVERING OF SIGN	
								7	1									630	84900	8	EA.	REMOVAL OF GROUND MOUNTED SIGN AND DISPOSAL	
								12										630	86002	12	EA.	REMOVAL OF GROUND MOUNTED POST SUPPORT AND DISPOSAL	
									2									630	86102	2	EA.	REMOVAL OF GROUND MOUNTED BEAM SUPPORT AND DISPOSAL	
									3									630	87000	3	EA.	REMOVAL OF OVERHEAD MOUNTED SIGN AND STORAGE	
									2									630	88100	2	EA.	REMOVAL OF OVERHEAD SIGN SUPPORT AND STORAGE, TYPE TC-12.30	
									1									630	88600	1	EA.	REMOVAL OF OVERHEAD SIGN SUPPORT AND STORAGE, TYPE TC-18.24	
								1										630	97700	1	EA.	SIGNING, MISC.: SIGN SUPPORT ASSEMBLY, BARRIER MOUNTED	
									11									631	70100	11	EA.	BALLAST WIRING ENCLOSURE, TYPE B	
									11									631	84000	11	EA.	SIGN SERVICE	
									18									631	84300	18	EA.	SIGN WIRED	
									11									631	85100	11	EA.	DISCONNECT SWITCH WITH ENCLOSURE, TYPE X	
									4									631	87102	4	EA.	BALLAST, TYPE CMRI-100-480, INTEGRAL	
									23									631	87202	23	EA.	BALLAST, TYPE CMRI-175-480, INTEGRAL	
									6									631	87302	6	EA.	BALLAST, TYPE CMRI-250-480, INTEGRAL	
									4									631	89100	4	EA.	MERCURY VAPOR LUMINAIRE, TYPE TC-31.21 WITH 100 WATT LAMP	
									23									631	89200	23	EA.	MERCURY VAPOR LUMINAIRE, TYPE TC-31.21 WITH 175 WATT LAMP	
									6									631	89300	6	EA.	MERCURY VAPOR LUMINAIRE, TYPE TC-31.21 WITH 250 WATT LAMP	

CAS: M.D.L. DATE: 8/94
CHK'D: D.R.B. BY: DATE: 2/95

TRAFFIC CONTROL GENERAL SUMMARY

FRA-270-32.46

333
593

PLOT SCALE: 1.000
COL #A3 C:\DRAWING\060923(0)\TC\060921GI.DWG FEBRUARY-11-1995

TOTAL FROM SHEET NO.															PARTICIPATION SUB-TOTAL			ITEM	ITEM EXT.	GRAND TOTAL	UNIT	DESCRIPTION	SEE SHT. NO.
						330	331	336	337	338	339	340	357	465									
																						TRAFFIC CONTROL (CONTINUED)	
										0.97								642	00102	0.97	MI.	EDGE LINE, TYPE 2	
										0.84								642	00202	0.84	MI.	LANE LINE, TYPE 2	
										1304								642	00402	1304	L.F.	CHANNELIZING LINE, TYPE 2	
										3								642	01302	3	EA.	LANE ARROW, TYPE 2	
										1								642	01402	1	EA.	WORD ON PAVEMENT, 72", TYPE 2	
										607								642	01502	607	L.F.	DOTTED LINE, 4", TYPE 2	
										455								642	50020	455	L.F.	PAVEMENT MARKING, MISC., CHANNELIZING LINE, 10", TYPE 2	
										155								642	50020	155	L.F.	PAVEMENT MARKING, MISC., TRANSVERSE LINE, 20", TYPE 2	
										6.02								644	00100	6.02	MI.	EDGE LINE	
										4.28								644	00200	4.28	MI.	LANE LINE	
										4469								644	00400	4469	L.F.	CHANNELIZING LINE	
										27								644	00500	27	L.F.	STOP LINE	
										2398								644	00700	2398	L.F.	TRANSVERSE LINE	
										19								644	01300	19	EA.	LANE ARROW	
										1								644	01301	1	EA.	LANE ARROW, AS PER PLAN	349
										5								644	01400	5	EA.	WORD ON PAVEMENT, 72"	
										1								644	01410	1	EA.	WORD ON PAVEMENT, 96"	
										2997								644	50300	2997	L.F.	PAVEMENT MARKING, MISC., CHANNELIZING LINE, 10"	
										115								644	50300	115	L.F.	PAVEMENT MARKING, MISC., STOP LINE, 20"	
										211								644	50300	211	L.F.	PAVEMENT MARKING, MISC., TRANSVERSE LINE, 20"	
										1.68								644	50400	1.68	MI.	PAVEMENT MARKING, MISC., EDGE LINE, 5"	
										0.83								644	50400	0.83	MI.	PAVEMENT MARKING, MISC., LANE LINE, 5"	
										0.51								644	50400	0.51	MI.	PAVEMENT MARKING, MISC., CENTER LINE, 5"	
											1051							621	00100	1051	EA.	RAISED PAVEMENT MARKER	
																						RETAINING WALLS	
																						DESIGN A RETAINED EARTH BY VSL CORP.	
														6362				203	20,000	6362	CU. YD.	EMBANKMENT	
														97030				203	35001	97030	CU. YD.	SELECT GRANULAR EMBANKMENT, AS PER PLAN (SEE SPECIAL PROV.)	
														15982				503	21101	15,982	CU. YD.	UNCLASSIFIED EXCAVATION, AS PER PLAN (SEE SPECIAL PROV.)	
														3632				511	51100	3,632	CU. YD.	CLASS C CONCRETE, MISC: PARAPET AND COPING, AS PER PLAN	
														15230				SPECIAL	512675 00	15,230	SQ. YD.	SEALING OF CONCRETE SURFACES	
														148,762				SPECIAL	61013700	148,762	SQ. FT.	RETAINED EARTH WALL BY VSL CORP.	
																						DESIGN B REINFORCED EARTH WALL	
														6362				203	20000	6362	CU. YD.	EMBANKMENT	
														97030				203	35001	97030	CU. YD.	SELECT GRANULAR EMBANKMENT AS PER PLAN (SEE SPECIAL PROV.)	
														15982				503	21101	15982	CU. YD.	UNCLASSIFIED EXCAVATION, AS PER PLAN (SEE SPECIAL PROV.)	
														3632				511	51100	3632	CU. YD.	CLASS C CONCRETE MISC: PARAPET AND COPING, AS PER PLAN	
														15230				SPECIAL	51267500	15230	SQ. YD.	SEALING OF CONCRETE SURFACES	
														148,762				SPECIAL	61013500	148,762	SQ. FT.	REINFORCED EARTH WALL	

CALC. BY: M.D.L. DATE: 8/94
CHKD. BY: F.A.M. DATE: 1/95

TRAFFIC CONTROL GENERAL SUMMARY & RETAINING WALL

FRA-270-32.46

334
593

PLOT SCALE: COL #33
C:\DRAWNG\06092310\TC\06092TG2.DWG FEBRUARY-11-1995

TOTAL FROM SHEET NO.															PARTICIPATION SUB–TOTAL			ITEM	ITEM EXT.	GRAND TOTAL	UNIT	DESCRIPTION	SEE SHT. NO.
						330	331	336	337	338	339	340	357	359									
																						TRAFFIC SIGNALS	
						860												603	00400	860	L.F.	4" CONDUIT, TYPE E	
													486					625	25400	486	L.F.	CONDUIT, 2", 713.04	
												2700						625	25403	2700	L.F.	CONDUIT, 2", 713.07, AS PER PLAN	330
												6080	99	200				625	25500	6379	L.F.	CONDUIT, 3", 713.04	
												180	183	838				625	25503	1201	L.F.	CONDUIT, 3", 713.07, AS PER PLAN	330
												732						625	25600	732	L.F.	CONDUIT, 4", 713.04	
												6829		420				625	25603	7249	L.F.	CONDUIT, 4", 713.07, AS PER PLAN	330
												5541	731	139				625	29000	6411	L.F.	TRENCH	
														3				625	29901	3	EA.	JUNCTION BOX, As Per Plan	359
												18	7	1				625	30701	26	EA.	PULL BOX, 713.08, 18", AS PER PLAN	330
												7	1	2				625	30707	10	EA.	PULL BOX, 713.08, 24", AS PER PLAN	330
												5		2				625	31500	7	EA.	MEDIAN PULL BOX, 18"	
												19		1				625	31500	20	EA.	MEDIAN PULL BOX, 36"	
												6	1					625	31600	7	EA.	PULL BOX, MISC.: 713.08, 32", AS PER PLAN	330
													7					625	31600	7	EA.	PULL BOX MISC: CONNECTION TO EXISTING PULL BOX	
													5	1				625	32000	6	EA.	GROUND ROD	
													2					630	79000	2	EA.	SIGN HANGER ASSEMBLY, SPAN WIRE	
													9	4				632	00301	13	EA.	VEHICULAR SIGNAL HEAD, 3 SECTION, 12" LENS, 1–WAY, AS PER PLAN	331
													5					632	00501	5	EA.	VEHICULAR SIGNAL HEAD, 5 SECTION, 12" LENS, 1–WAY, AS PER PLAN	331
													14					632	25000	14	EA.	COVERING OF VEHICULAR SIGNAL HEAD	
													4					632	26000	4	EA.	PEDESTRIAN PUSHBUTTON	
														1				632	27005	1	EA.	LOOP DETECTOR UNIT, AS PER PLAN	331
													4					632	27009	4	EA.	LOOP DETECTOR UNIT, DELAY AND EXTENSION TYPE, AS PER PLAN	331
												1235	1274	216				632	27501	2725	L.F.	LOOP DETECTOR PAVEMENT CUTTING, AS PER PLAN	330
													2	1				632	28007	3	EA.	MAGNETOMETER DETECTOR UNIT, AS PER PLAN	331
													10	4				632	28101	14	EA.	MAGNETOMETER SENSOR PROBE, AS PER PLAN	331
													585	85				632	30200	670	L.F.	MESSENGER WIRE, 7 STRAND, 3/8" DIAMETER WITH ACCESSORIES	
														238				632	40500	238	L.F.	SIGNAL CABLE, 5 CONDUCTOR, NO. 14 AWG	
													648					632	40700	648	L.F.	SIGNAL CABLE, 7 CONDUCTOR, NO. 14 AWG	
													1326					632	40900	1326	L.F.	SIGNAL CABLE, 9 CONDUCTOR, NO. 14 AWG	
												1628	201	556				632	62810	2385	L.F.	INTERCONNECT CABLE, MISC.: 6 PAIR, NO. 19 AWG, PE 39–BJFA, AS PER PLAN	331
													2820	492				632	64900	3312	L.F.	LOOP DETECTOR WIRE, TYPE E	
												3664						632	64901	3664	L.F.	LOOP DETECTOR WIRE, TYPE E, AS PER PLAN	330
													3385	669				632	65200	4054	L.F.	LOOP DETECTOR LEAD–IN CABLE	
													1674	777				632	65900	2451	L.F.	MAGNETOMETER LEAD–IN CABLE	
												1574	578	455				632	69350	2607	L.F.	POWER CABLE MISC.: 2 CONDUCTOR, NO.2 AWG, AS PER PLAN	331
														1				632	82300	1	EA.	Strain Pole, Type TC-81.10, Design 3, 27 Ft.	
													1					632	70001	1	EA.	POWER SERVICE, AS PER PLAN	331
													6	1				632	71000	7	EA.	CABLE SUPPORT ASSEMBLY	
													13					632	72000	13	C.Y.	CONCRETE FOR ANCHOR BASE FOUNDATION	
														1				632	82300	1	EA.	STRAIN POLE, TYPE TC–81.10, DESIGN 3, 24 Ft.	
													2					632	83200	2	EA.	STRAIN POLE, TYPE TC–81.10, DESIGN 12, 32 Ft.	
													2					632	83200	2	EA.	Strain Pole, Type TC-81.10, Design 12, 34 Ft.	
													2					632	89803	2	EA.	PEDESTAL, 5', TRANSFORMER BASE, AS PER PLAN	331
														1				633	32005	1	EA.	CONTROLLER, ACTUATED, 2 PHASE, SOLID STATE DIGITAL MICROPROCESSOR, AS PER PLAN	332
													1					633	38001	1	EA.	CONTROLLER, ACTUATED, 8 PHASE, SOLID STATE DIGITAL MICROPROCESSOR, AS PER PLAN	332
													1					633	70001	1	C.Y.	CONCRETE FOR CABINET FOUNDATION, AS PER PLAN	331
													12					633	70500	12	S.F.	CONTROLLER WORK PAD	
																						FOR ROADWAY QUANTITIES, SEE SHEETS 54–59	
																						FOR LIGHTING QUANTITIES, SEE SHEET 364	
																						FOR STRUCTURE QUANTITIES, SEE SHEETS 386 AND 410	
																						FOR MSE WALL QUANTITIES, SEE SHEET 334	
																						FOR RETAINING WALL QUANTITIES, SEE SHEETS 509 AND 524	

CALC. M.D.L. DATE: 8/94
CHK'D. R.B. BY: DATE: 2/95

TRAFFIC CONTROL GENERAL SUMMARY

FRA–270–32.46

335
593

PLOT SCALE:
COL #33 C:\DRAWING\0609231G\TG\0609271G3.DWG FEBRUARY-11-1995

ML = I-270 MAINLINE

LOCATION

| SIGN REF.NO. | STATION | SHT.NO. | SIDE | SIGN CODE NUMBER AND SIZE | | |

ML = I-270 MAINLINE

LOCATION

*** = ASSUMED LENGTH
NAME OF CROSSROAD
STILL TO BE DETERMINED

| REF.NO. | STATION | SHT.NO. | SIDE | SIGN CODE NUMBER AND SIZE (LENGTH X EFFECTIVE HEIGHT, PLUS 6" GLARE SHIELD) GB-132 11'x10' | GB-156 13'x6.5' | GB-192 16'x14.5' | GB-228 19'x6.5' | GE-120 10'x7' | GE-216*** 18'x4.5' | GE-216*** 18'x6.5' | GE-204 17'x12.5' | GEP-84 7'x2' | GEP-96 8'x2' | GF-72 6'x5' | GG-144 12'x7.5' | GG-300 25'x10' | GH-84 7'x5' | GH-96 8'x5.5' | W-54C(MOD)-156 13'x9' | W-54D(MOD)-156 13'x9' | 625 GROUND ROD EA. | 630 SIGN, EXTRUSHEET, TYPE G S.F. | 630 SIGN, TEMPORARY OVERLAY, TYPE G S.F. | 630 GROUND MOUNTED SUPPORT, S4X7.7 BEAM L.F. | 630 BREAKAWAY BEAM CONNECTION EA. | 630 OVERPASS STRUCTURE MOUNTED SIGN SUPPORT, TYPE TC-18.24 EA. | 630 OVERHEAD SIGN SUPPORT TYPE TC-7.65 DESIGN 6 71 FT SPAN EA. | 630 OVERHEAD SIGN SUPPORT TYPE TC-7.65 DESIGN 8 91 FT SPAN EA. | 630 OVERHEAD SIGN SUPPORT TYPE TC-7.65 DESIGN 8 101 FT SPAN EA. | 630 OVERHEAD SIGN SUPPORT TYPE TC-15.115 125 FT SPAN EA. | 630 OVERHEAD SIGN SUPPORT TYPE TC-12.30 DESIGN 3 16 FT ARMS EA. | 630 OVERHEAD SIGN SUPPORT TYPE TC-12.30 DESIGN 6 26 FT ARMS EA. | 630 OVERHEAD SIGN SUPPORT TYPE TC-12.30 DESIGN 10 30 FT ARMS EA. | 630 CONCRETE FOR ANCHOR BASE FOUNDATIONS C.Y. | 630 CONCRETE FOR EMBEDDED FOUNDATION C.Y. | 631 REMOVAL OF GROUND MOUNTED SIGN & DISPOSAL EA. | 631 REMOVAL OF GROUND MOUNTED BEAM SUPPORT & DISPOSAL EA. | 631 REMOVAL OF OVERHEAD MOUNTED SIGN & STORAGE EA. | 631 REMOVAL OF OVERHEAD SIGN SUPPORT & STORAGE, TYPE TC-12.30 EA. | 631 REMOVAL OF OVERHEAD SIGN SUPPORT & STORAGE, TYPE TC-18.24 EA. | 631 SIGN SERVICE EA. | 631 SIGN WIRED EA. | 631 DISCONNECT SWITCH WITH ENCLOSURE, TYPE X EA. | 631 BALLAST, TYPE CMRI-100-480, INTEGRAL EA. | 631 BALLAST, TYPE CMRI-175-480, INTEGRAL EA. | 631 BALLAST, TYPE CMRI-250-480, INTEGRAL EA. | 631 MERCURY VAPOR LUMINAIRE TYPE TC-31.21 WITH 100 WATT LAMP EA. | 631 MERCURY VAPOR LUMINAIRE TYPE TC-31.21 WITH 175 WATT LAMP EA. | 631 MERCURY VAPOR LUMINAIRE TYPE TC-31.21 WITH 250 WATT LAMP EA. | 631 BALLAST WIRING ENCLOSURE, TYPE B EA. |
|---|---|---

PAVEMENT MARKING SUB-SUMMARY

FRA-270-32.46

CALC. BY: M.R.S. DATE: 8/94
CHKD. BY: F.A.M. DATE: 1/95

ML = MAINLINE

O.D.O.T. LINE SPECIFICATIONS

LOCATION FROM	LOCATION TO	SHT. NO.	SIDE	642 (B) EDGE LINE, YELLOW, TYPE 2 L.F.	642 (C) LANE LINE, TYPE 2 L.F.	642 (D) DOTTED LINE, 4", WHITE, TYPE 2 L.F.	642 (I) CHANNELIZING LINE, TYPE 2 L.F.	642 (LA) LANE ARROW, TYPE 2 EA.	642 (W) WORD ON PAVEMENT, 72" TYPE 2 EA.	644 (A) EDGE LINE, WHITE L.F.	644 (B) EDGE LINE, YELLOW L.F.	644 (C) LANE LINE L.F.	644 (I) CHANNELIZING LINE L.F.	644 (K) STOP LINE L.F.	644 (M) TRANSVERSE LINE, WHITE L.F.	644 (LA) LANE ARROW EA.	644 (W) WORD ON PAVEMENT, 72" EA.
CDS																	
1366+50	1429+00	342	LT								6250						
1366+50	1429+00		℄–R									12500					
1366+50	1376+36		RT							986							
1376+36	1379+76	343	RT									340					
1379+76	1383+16		RT										340		285		
1383+16	1403+91		RT							2075							
1403+91	1415+42	345	RT									1151					
1405+50	1429+00	345	RT							2350							
RAMP A																	
1376+36	1392+35	343	℄							1599							
1379+76	1383+12		LT										336				
1383+12	1392+61		RT								949						
RAMP B																	
69+38	1405+50CDS	348	℄							1847							
69+38	82+88	348	RT								1350						
82+88	86+35	345	LT										347				
CDN																	
1366+50	1417+52	342	RT	5102													
1366+50	1368+95		LT									245					
1366+50	1411+00		℄–R		4450							4450					
1368+95	1407+49		LT							3854							
1407+49	1411+45	346	LT										396				
1411+45	1417+52		LT			607											
1411+00	1417+52		L–R				1304										
1417+52	1420+22		RT								270						
1417+52	1434+35		L–℄							1683		3366					
1420+22	1429+27		RT										905				
1420+02ML	1429+27		RT										925				
1420+22	1429+27		RT												1600		
RAMP C																	
1366+50CDN	1390+17	342	℄							2367							
1368+95	1372+60	342	RT										365				
1372+60	1389+93	343	RT								1733						
1384+45	1389+75	343	RT									530					
RAMP D																	
1390+17	1417+52CDN	344	℄							2735							
1390+40	1407+59		RT								1719						
1390+59			℄–R											27			
1390+59	1395+28		RT										469				
1407+59	1411+45	346	RT										386				
1390+90		344	RT													2	
1391+58			RT														1
1392+24			RT													2	
1395+05		345	RT													2	
1407+59	1411+45	346	RT												513		
CONNECTOR ROAD																	
61+00		348	L–R					1								2	
61+68			L–R						1								2
62+34			L–R					1								2	
64+27			℄													1	
65+07			L–R					1								1	
65+52			LT													1	
76+83		344	RT													2	
78+55			RT													2	
79+21			RT														2
79+89			RT													2	
TOTAL				5102	4450	607	1304	3	1	19496	12271	22582	4469	27	2398	19	5
TOTAL (FT)										31767							
TOTAL (MI)				0.97	0.84					6.02		4.28					

CITY OF COLUMBUS LINE SPECIFICATIONS

LOCATION FROM	LOCATION TO	SHT. NO.	SIDE	642 (CH) CHANNELIZING LINE, 10", TYPE 2 L.F.	642 (WT) TRANSVERSE LINE, WHITE, 20", TYPE 2 L.F.	644 (WE) EDGE LINE, WHITE, 5" L.F.	644 (YE) EDGE LINE, YELLOW, 5" L.F.	644 (LL) LANE LINE, 5" L.F.	644 (DY) CENTER LINE, SOLID DOUBLE, 5" L.F.	644 (CH) CHANNELIZING LINE, 10" L.F.	644 (SL) STOP LINE, 20" L.F.	644 (WT) TRANSVERSE LINE, WHITE, 20" L.F.	644 (YT) TRANSVERSE LINE, YELLOW, 20" L.F.	644 (A) LANE ARROW, AS PER PLAN EA.	644 (W*) WORD "MERGE" ON PAVEMENT, 96" EA.
CONNECTOR ROAD															
60+74		348	L–R								90				
60+75	65+30		LT.							455					
60+75	65+30		LT.	455											
60+75	80+30		LT.					1955							
60+75	65+75		L–℄							1140					
60+75	65+75		L–℄		155										
60+75	61+25		RT.										14		
60+75	76+40		RT.					1565							
60+75	64+50		RT.					375							
60+74	61+24		RT.						100						
61+25	72+00		L–R				2150								
61+50	71+06		LT.			956									
61+50	69+38B		RT.			788									
64+50	69+63		RT.							513					
67+00	69+38		RT.							238					
65+30	70+11		LT.					481							
67+00	69+63		RT.									97			
69+63	80+62		RT.			1099									
70+11	71+11	344	LT.							100					
70+11	80+66		LT.			1055									
72+00	80+19		℄						819						
72+00	75+76		RT.						376						
72+00	75+76		RT.										100		
76+68	80+19		RT.							351					
80+20			℄–R								25				
80+21	1389+75C		R–L							110					
1390+58D	80+30		L–R							90					
RAMP C															
1385+15			RT.											1	
1385+86			RT.												1
McCUTCHEON ROAD															
15+25	29+35	349	LT.			1410									
15+25	29+35		℄						1410						
15+25	29+35		RT.			1410									
TOTAL				455	155	6718	2150	4376	2705	2997	115	97	114	1	1
TOTAL (FT)						8868				211					
TOTAL (MI)						1.68		0.83	0.51						

PLOT SCALE
COL #23
C:\DRAWING\06092310\TC\06092SS1.DWG
FEBRUARY-06-1995

ITEM 621 RAISED PAVEMENT MARKER SUB–SUMMARY

ROADWAY	STATION	TO STATION	SIDE	INTERVAL	1–WAY WHITE	2–WAY WH/RED	1–WAY YELLOW	2–WAY YEL/YEL
CDS	1367+15	1382+35	℄	80'		20		
CDS	1367+15	1382+35	RT	80'		20		
CDS	1379+76	1383+16	RT	20'	18			
RAMP 'A'	1379+90	1383+10	LT	20'	17			
RAMP 'A'	1383+50	1383+90	LT	40'			2	
CDS	1383+15	1428+75	℄	80'	58			
CDS	1383+15	1428+75	RT	80'	58			
CDS	1383+56	1383+96	RT	40'	2			
CDS	1397+45	1403+85	RT	40'	17			
RAMP 'B'	79+95	82+75	LT	40'			8	
RAMP 'B'	83+15	85+95	LT	40'	8			
CDS	1404+75	1415+15	RT	80'	14			
CDN	1366+60	1368+20	LT	80'	3			
CDN	1366+60	1407+40	℄	80'	52			
CDN	1366+60	1407+40	RT	80'	52			
CDN	1368+90	1373+30	LT	40'	12			
RAMP 'C'	1369+30	1372+50	RT	40'	9			
RAMP 'C'	1372+90	1373+30	RT	40'			2	
RAMP 'C'	1384+70	1389+50	RT	80'	7			
RAMP 'C'	1387+70	1389+70	℄	20'	11			
RAMP 'C'	1387+70	1389+70	RT	20'			11	
RAMP 'D'	1390+60	1395+80	℄	20'	27			
RAMP 'D'	1390+60	1395+20	RT	20'		24		
RAMP 'D'	1390+60	1395+80	RT	20'			27	
RAMP 'D'	1406+80	1407+20	RT	40'			2	
RAMP 'D'	1407+60	1411+40	RT	20'	20			
CDN	1406+70	1407+10	LT	40'	2			
CDN	1407+50	1411+50	LT	20'	21			
CDN	1408+20	1423+40	℄–LT	80'		20		
CDN	1408+20	1423+40	RT–℄	80'		20		
CDN	1419+42	1419+82	RT	40'			2	
CDN	1420+22	1429+22	RT	20'	46			
MAINLINE	1419+22	1419+62	LT	40'	2			
MAINLINE	1420+02	1429+02	LT	20'	45			
CDN	1424+20	1433+80	LT	80'	13			
CDN	1424+20	1433+80	℄	80'	13			
CONNECTOR	60+75	65+15	LT.	20'	23			
CONNECTOR	60+75	65+35	LT.	20'	24			
CONNECTOR	60+75	65+55	LT.	20'	25			
CONNECTOR	60+75	61+75	LT.	20'	6			
CONNECTOR	60+75	64+35	LT.	20'	19			
CONNECTOR	60+75	61+15	RT.	20'				3
CONNECTOR	60+75	61+15	RT.	20'				3
CONNECTOR	60+95	74+55	LT.	40'		35		
CONNECTOR	60+95	76+15	RT.	80'		20		
CONNECTOR	60+95	64+15	RT.	80'		5		
CONNECTOR	61+50	64+30	RT.	20'	15			
CONNECTOR	61+55	65+35	LT.	20'	20			
CONNECTOR	64+65	69+25	RT.	20'	24			
CONNECTOR	66+15	69+75	LT.	40'	10			
CONNECTOR	65+75	69+75	LT.	40'		11		
CONNECTOR	69+45	69+85	RT.	40'	2			
CONNECTOR	70+30	76+35	LT.	40'	16			
RAMP A	1393+00	–	LT.	40	1			
RAMP A	1392+20	1392+60	LT.	40'			2	
RAMP B	67+25	69+25	LT.	20'	11			
RAMP B	69+45	69+85	LT.	40'			2	
CONNECTOR	72+15	74+15	LT.	40'				6
CONNECTOR	72+15	80+15	℄	40'				21
CONNECTOR	75+35	80+15	LT.	80'		7		
CONNECTOR	76+55	80+15	LT.	20'	19			
CONNECTOR	76+79	80+19	RT.	20'	18			
CONNECTOR	76+79	80+19	RT.	20'	18			
TOTALS					778	182	58	33
TOTAL					1051			

ITEM 620 DELINEATOR SUB–SUMMARY

ROADWAY	STATION FROM	STATION TO	SIDE	INTERVAL (FT.)	TYPE C POST	TYPE D POST
RAMP A	1377+25	1381+25	RT.	200	3	
RAMP A	1381+25	1383+15	RT.	190	1	
RAMP A	1383+15	1384+80	RT.	165	1	
RAMP A	1384+80	1391+80	LT.	80		10
RAMP A	1391+80	1393+40	RT.	160	2	
RAMP B	69+00	71+00	RT.	200	2	
RAMP B	71+00	80+60	LT.	90		12
RAMP B	80+60	82+20	RT.	160	2	
TOTALS					11	22

CALC. BY: F.A.M. DATE: 8/94
CHKD. BY: D.R.B. DATE: 2/95

DELINEATOR AND RPM SUB–SUMMARY

FRA–270–32.46

339
593

PLOT SCALE = 1.0000 '/ IN
COL. #23

C:\DRAWING\06092310\TC\06092SS7.DWG FEBRUARY–09–1995

SIGNAL POWER/INTERCONNECT, WEIGH-IN-MOTION & SURVEILLANCE SUB-SUMMARY

	PULL BOX OWNER	STATION	SIDE	SHEET NUMBER	625 CONDUIT, 2", 713.07, A.P.P. L.F.	625 CONDUIT, 3", 713.04 L.F.	625 CONDUIT, 3", 713.07, A.P.P. L.F.	625 CONDUIT, 4", 713.04 L.F.	625 CONDUIT, 4", 713.07, A.P.P. L.F.	625 CONDUIT 4", 713.07 (INCIDENTAL TO COST OF BARRIER) L.F.	625 TRENCH L.F.	632 INTERCONNECT CABLE, 6 PAIR, NO. 19 AWG, PE 39-BJFA, A.P.P. L.F.	632 POWER CABLE, 2 CONDUCTOR, NO. 2 AWG, A.P.P. L.F.	625 (P18) PULL BOX, 713.08, 18", A.P.P. EA.	625 PULL BOX, 713.08, 24", A.P.P. EA.	625 (P32) PULL BOX, 713.08, 32", A.P.P. EA.	625 (SP18) MEDIAN PULL BOX, 18" EA.	625 (SP36) MEDIAN PULL BOX, 36" EA.	632 LOOP DETECTOR PAVEMENT CUTTING, AS PER PLAN L.F.	632 LOOP DETECTOR WIRE, TYPE E, A.P.P. L.F.	COMMENTS
TRAFFIC SIGNAL POWER AND INTERCONNECT	CITY	CONN 61+10	R	348																	PULL BOX ON SHEET 356
		CONN 64+00	R			580					290	295			1						
		CONN 67+00	R			600					300	305			1						
		B-69+90	R			580					290	295			1						
		CONN 69+90	R			96					48	53			1						
		CONN 72+60	R	344		540					270	275			1						
		CONN 76+60	R	344		800					400	405									PULL BOX ON SHEET 359
	CITY	CONN 61+44	L	348		351					351		356								PULL BOX ON SHEET 356
		CONN 64+95	L			350					350		355	1							
		CONN 68+45	L			350					350		355	1							
		A-1391+65	R	344		45					45		50	1							
		CONN 72+12	L			238					238		243	1							
		CONN 74+50	L			210					210		215	1							
		CONN 76+60	L																		PULL BOX ON SHEET 359
	CITY	McC 23+08	L	349				366			20			1							
		McC 26+74	L					366			20			1							
		McC 23+08	R											1							
		McC 26+74	R					366			20			1							
	SUB-TOTAL (SIG POWER/INTERCONNECT)					4740		732			3182	1628	1574	9	5						
WEIGH-IN-MOTION	ODOT	D-1402+35	L	345			180				90				1						
		D-1403+25	L			260					130				1						
		CDN-1403+20	R															1			
	SUB-TOTAL (WEIGH-IN-MOTION)					260	180				220				2			1			
SURVEILLANCE	CITY	CDS 1364+10 TO CDS 1383+95	L	342					1985	1985								5			
		CDS 1383+95	L-R	343		236			104		170					3		1	302	978	
		CDS 1383+95 TO CDS 1402+00	L	343					1805	1805								4			
		CDS 1402+00	L-R	345		174					87							1	142	464	
		RAMP B 71+00	L-R	344										1					42	126	
		RAMP B 71+00 TO RAMP B 84+50	R	344	2700						1350			2							
		RAMP B 84+50	L-R	345					100		50					2			137	244	
		CDS 1402+00 TO CDS 1412+75		345					1075	1075								2			
		CDS 1412+75		346		180					90					1		1			
		CDS 1412+75 TO CDS 1419+50	L						675	675								1			
		CDS 1419+50	L-R			65					65			1				1	129	424	
		RAMP C 1373+30	L-R	343		50					25			1			1		37	116	
		RAMP C 1373+30 TO CDN 1384+10	L-R			146			1085	1085	73						3				
		CDN 1384+10	L-R			55					55			1				1	186	508	
		CDN 1404+75	L-R	345		106					106			2				1	134	394	
		CDN 1419+75	L-R	346		68					68			1			1		126	410	
	SUB-TOTAL (SURVEILLANCE)				2700	1080			6829	6625	2139			9		6	5	18	1235	3664	
	TOTAL * QUANTITY SHOWN FOR INFORMATION ONLY				2700	6080	180	732	6829	6625*	5541	1628	1574	18	7	6	5	19	1235	3664	

CALC: F.A.M. DATE: 1/95
CHK: D.R.B. DATE: 2/95

INTERCONNECT, WIM & SURVEILLANCE SUB-SUMMARIES

FRA-270-32.46

340/593

PLOT SCALE... COL #33 C:\DRAWNG\06092310\TC\0609255S.DWG FEBRUARY-11-1995

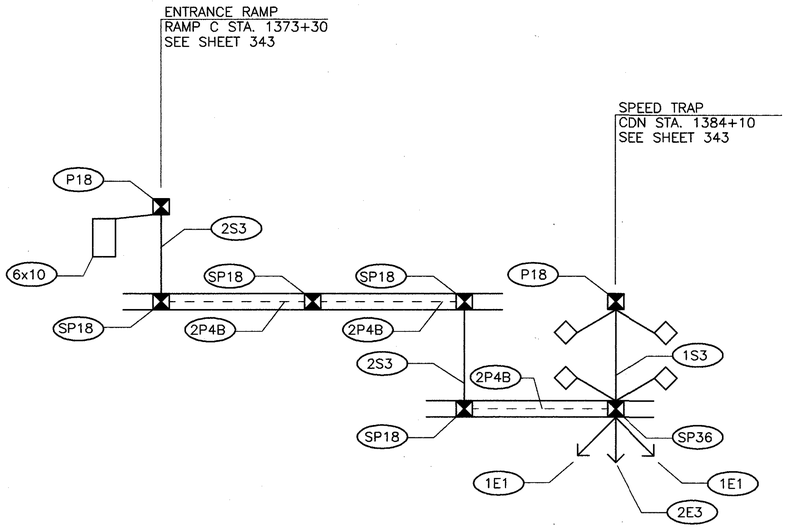

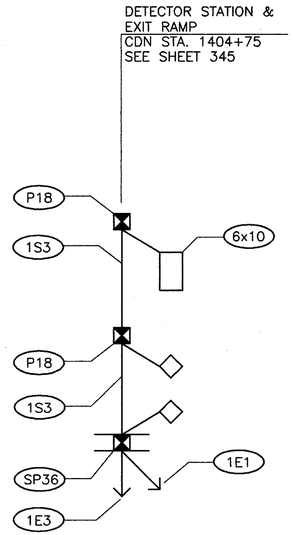

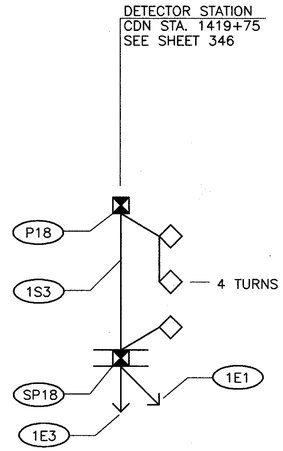

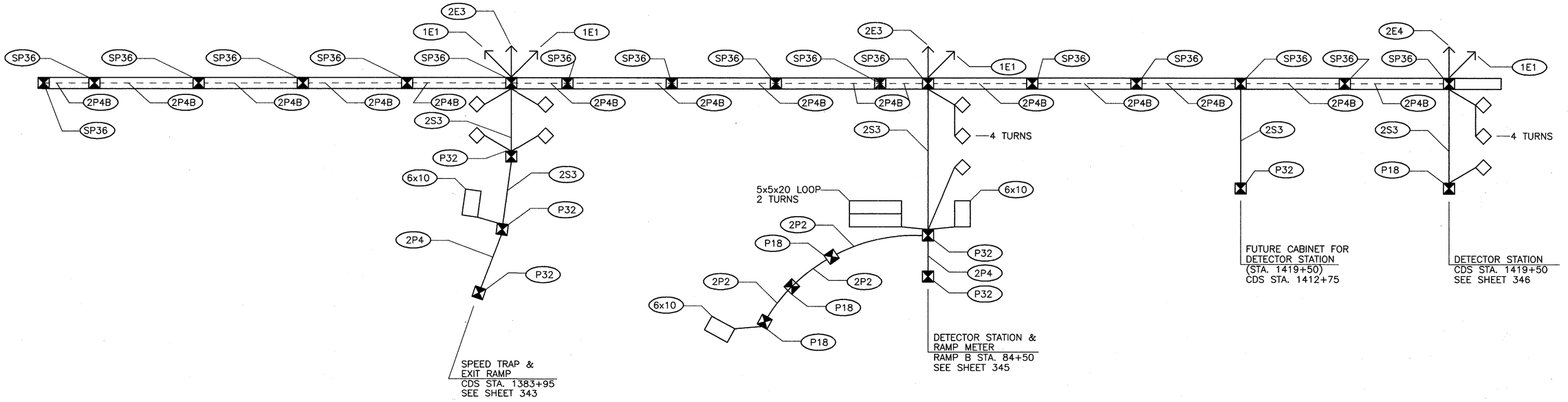

LEGEND

- PULL BOX
- PULL BOX IN BARRIER
- CONDUIT
- LOOP & LEAD-IN
- CONDUIT ELL DIRECTION

2E3 STEEL CONDUIT ELL DESIGNATION

2 E 3
- NUMBER OF ELLS: 1 = ONE, 2 = TWO
- SIZE: 1 = 1 1/2 INCHES, 3 = 3 INCHES, 4 = 4 INCHES
- ELL

2P2 CONDUIT DESIGNATION

2 P 2
- NUMBER OF CONDUITS: 1 = ONE, 2 = TWO
- SIZE: 2 = 2 INCHES, 3 = 3 INCHES, 4 = 4 INCHES
- P = PVC, S = STEEL

- 6x10 — 6' x 10' RECTANGULAR LOOP
- P18 — 18" DIA. PULL BOX
- P32 — 32" DIA. PULL BOX
- SP18 — 18" MEDIAN (SURVEILLANCE) PULL BOX IN BARRIER
- SP36 — 36" MEDIAN (SURVEILLANCE) PULL BOX IN BARRIER
- 2P4B — 2-4" PVC CONDUITS IN BARRIER
- 1P3B — 1-3" PVC CONDUIT IN BARRIER

NOTES:

1. ALL LOOPS ARE 6 FT.x 6 FT. DIAMOND LOOPS UNLESS OTHERWISE NOTED
2. ALL LOOPS ARE THREE TURNS UNLESS OTHERWISE NOTED
3. SEE PLAN SHEETS FOR EXACT LOCATIONS

NOT TO SCALE

CALC. BY:
DATE:
CHKD. BY:
DATE:

SURVEILLANCE SYSTEM SCHEMATIC

FRA-270-32.46

PLOT SCALE=1:20
COL #33
C:\DRAWING\06092310\TC\06092SSS.DWG
FEBRUARY-13-1995

NOTE:

THE WORD "ONLY" ON PAVEMENT SHALL BE THE URBAN SIZE AS SHOWN ON STANDARD DRAWING TC-71.10.

642 PAVEMENT MARKING	644 PAVEMENT MARKING	O.D.O.T. LINE SPECIFICATIONS
	A	EDGE LINE, WHITE
B	B	EDGE LINE, YELLOW
C	C	LANE LINE, 4"
D		DOTTED LINE, 4" WHITE
		DOTTED LINE, 4" YELLOW
		CENTER LINE, SOLID DOUBLE 4"
		CENTER LINE, DASHED SINGLE
		CENTER LINE, DASHED & SOLID DOUBLE 4"
I	I	CHANNELIZING LINE
		CHANNELIZING LINE, 4"
	K	STOP LINE
		CROSSWALK LINE
	M	TRANSVERSE LINE, WHITE
		TRANSVERSE LINE, YELLOW
		ISLAND MARKING, WHITE
		ISLAND MARKING, YELLOW
LA	LA	LANE ARROW
W	W	WORD , 72" ONLY

ISLAND DETAIL

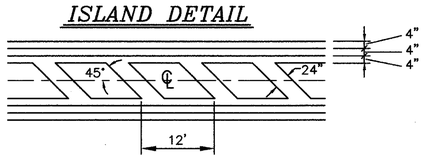

642 PAVEMENT MARKING	644 PAVEMENT MARKING	CITY OF COLUMBUS LINE SPECIFICATIONS
	WE	EDGE LINE, WHITE, 5"
	YE	EDGE LINE, YELLOW, 5"
	LL	LANE LINE, 5"
		DOTTED LINE, 5" WHITE
		DOTTED LINE, 5" YELLOW
	DY	CENTER LINE, SOLID DOUBLE 5" 5" 5"
		CENTER LINE, DASHED SINGLE
		CENTER LINE, DASHED & SOLID DOUBLE 5" 5" 5" 10' 30' 10'
		BROKEN CENTER LINE, 4" YELLOW, BIKEWAY (SINGLE 5' DASH, 20'SPACE)
CH	CH	CHANNELIZING LINE, 10"
	SL	STOP LINE, 20"
		CROSSWALK LINE, 10"
WT		TRANSVERSE LINE, WHITE, 20"
	YT	TRANSVERSE LINE, YELLOW, 20"
		ISLAND MARKING, WHITE
		ISLAND MARKING, YELLOW
	A	ARROW, 17'-3"
	W*	WORD, 96" MERGE

ISLAND DETAIL

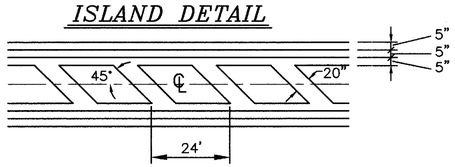

DELINEATOR & RAISED PAVEMENT MARKER (RPM) LEGEND

RPM, WHITE, (ONE WAY) □
RPM, WHITE/RED, (TWO WAY) ○
RPM, YELLOW, (ONE WAY) ■
RPM, YELLOW/YELLOW, (TWO WAY) ●
DELINEATOR, WHITE, (ONE WAY) △
DELINEATOR, YELLOW, (ONE WAY) ▲

SIGN LEGEND

EXISTING SIGN
EXISTING SIGN TO BE REMOVED
PROPOSED SIGN

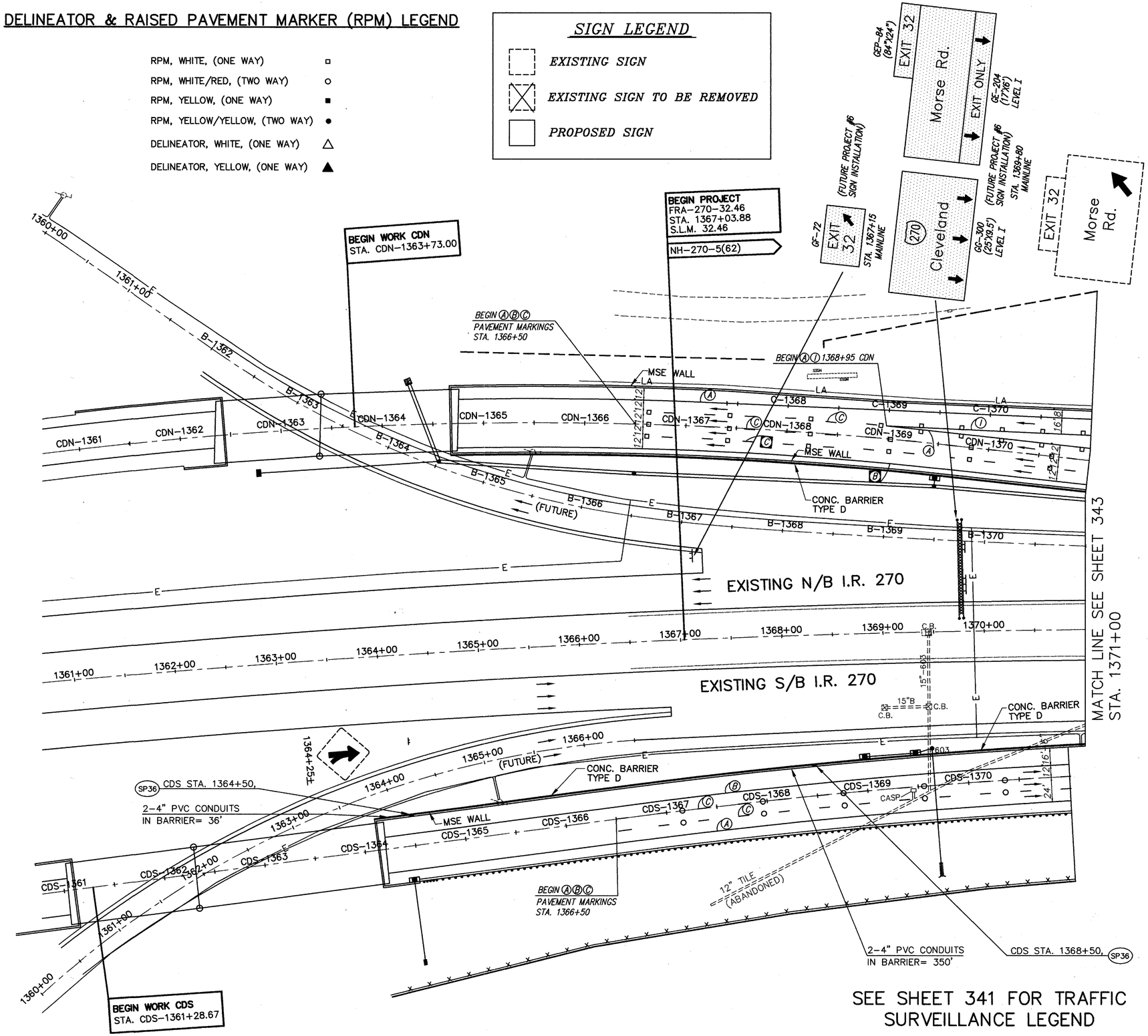

SEE SHEET 341 FOR TRAFFIC SURVEILLANCE LEGEND

0 25 50 100
HORIZONTAL SCALE IN FEET

CALC. BY:
DATE:
CHKD. BY:
DATE:

SIGNING AND PAVEMENT MARKING PLAN
STA. 1361+00 TO STA. 1371+00

FRA-270-32.46

PLOT SCALE... COL #33 C:\DRAWING\06092310\TC\06092SP1.DWG FEBRUARY-13-1995

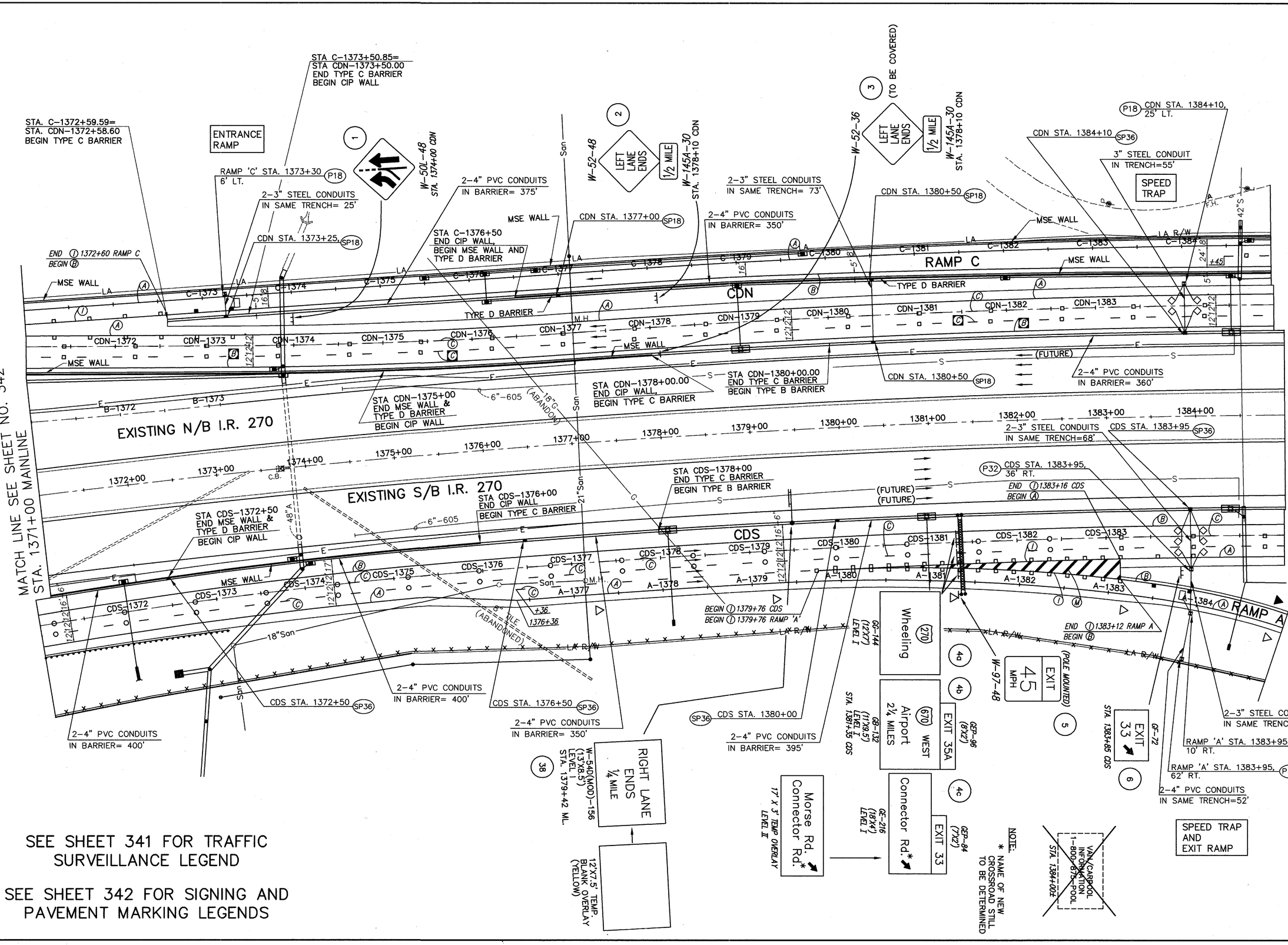

PLOT SCALE=... COL #33 C:\DRAWING\06092310\TC\06092SP2.DWG FEBRUARY-13-1995

CALC. BY: DATE:
CHKD. BY: DATE:

0 50 100
25
HORIZONTAL SCALE IN FEET

SIGNING AND PAVEMENT MARKING PLAN
STA. 1371+00 TO STA. 1385+00

FRA-270-32.46

343
593

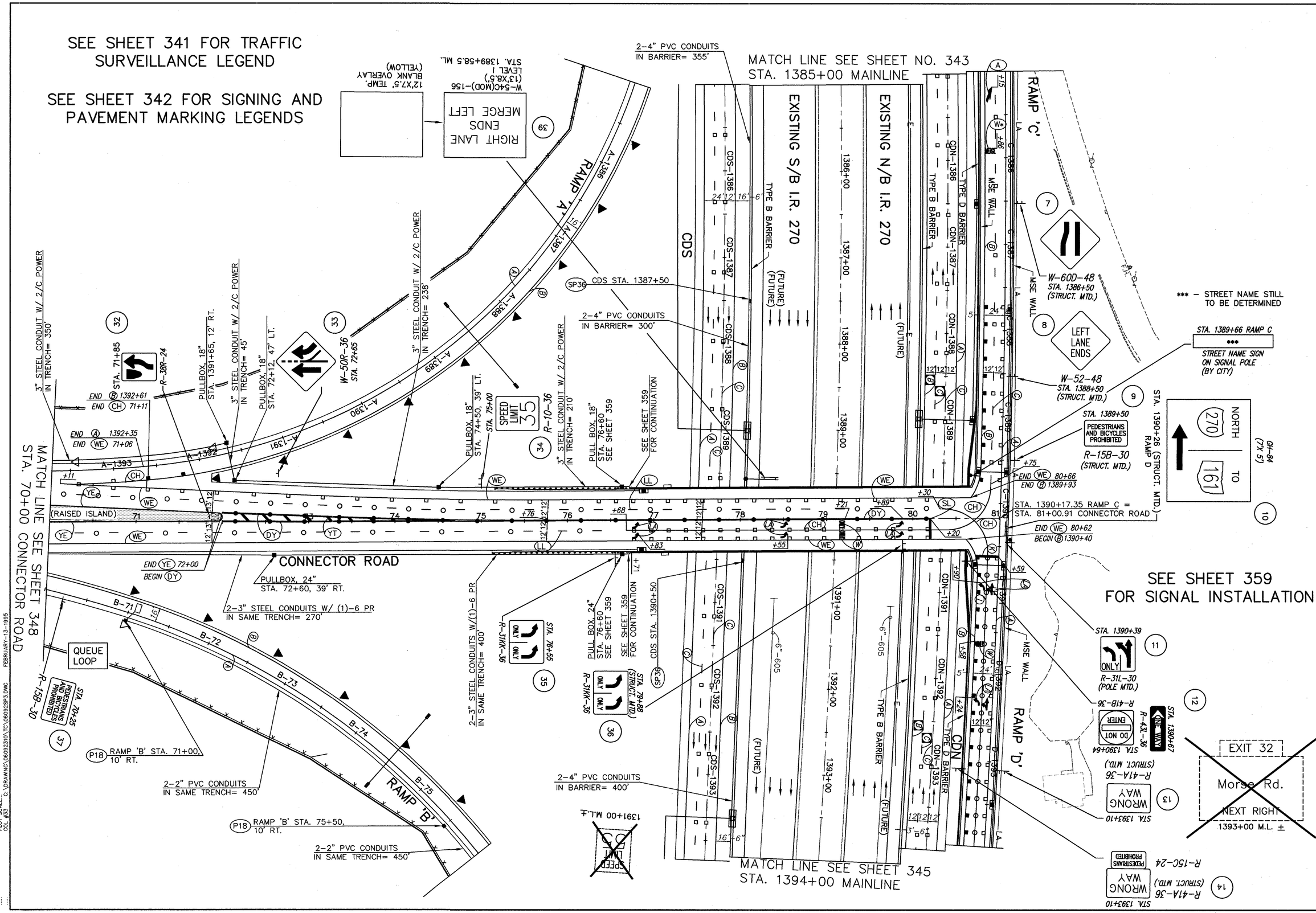
SEE SHEET 341 FOR TRAFFIC SURVEILLANCE LEGEND
SEE SHEET 342 FOR SIGNING AND PAVEMENT MARKING LEGENDS
MATCH LINE SEE SHEET NO. 343
STA. 1385+00 MAINLINE
MATCH LINE SEE SHEET 348
STA. 70+00 CONNECTOR ROAD
MATCH LINE SEE SHEET 345
STA. 1394+00 MAINLINE
SEE SHEET 359
FOR SIGNAL INSTALLATION
CONNECTOR ROAD
RAMP 'A'
RAMP 'B'
RAMP 'C'
RAMP 'D'
EXISTING S/B I.R. 270
EXISTING N/B I.R. 270
CDS
CDN
RIGHT LANE ENDS MERGE LEFT
12'X7.5' TEMP. BLANK OVERLAY (YELLOW)
W-54C(MOD)-156 (13'X8.5') LEVEL I STA. 1389+58.5 ML.
2-4" PVC CONDUITS IN BARRIER= 355'
2-4" PVC CONDUITS IN BARRIER= 300'
2-4" PVC CONDUITS IN BARRIER= 400'
CDS STA. 1387+50
CDS STA. 1390+50
3" STEEL CONDUIT W/ 2/C POWER IN TRENCH= 350'
3" STEEL CONDUIT W/ 2/C POWER IN TRENCH= 45'
3" STEEL CONDUIT W/ 2/C POWER IN TRENCH= 238'
3" STEEL CONDUIT W/ 2/C POWER IN TRENCH= 210'
PULLBOX, 18" STA. 1391+65, 12' RT.
PULLBOX, 18" STA. 72+12, 47' LT.
PULLBOX, 18" STA. 74+50, 39' LT.
PULLBOX, 24" STA. 72+60, 39' RT.
PULL BOX, 18" STA. 76+60 SEE SHEET 359
PULL BOX, 24" STA. 76+60 SEE SHEET 359
SEE SHEET 359 FOR CONTINUATION
2-3" STEEL CONDUITS W/ (1)-6 PR IN SAME TRENCH= 270'
2-3" STEEL CONDUITS W/(1)-6 PR IN SAME TRENCH= 400'
2-2" PVC CONDUITS IN SAME TRENCH= 450'
2-2" PVC CONDUITS IN SAME TRENCH= 450'
RAMP 'B' STA. 71+00, 10' RT.
RAMP 'B' STA. 75+50, 10' RT.
STA. 70+25 PEDESTRIANS AND BICYCLES PROHIBITED
STA. 71+85
R-38R-24
W-50R-36 STA. 72+65
R-10-36
SPEED LIMIT 35
STA. 76+55
R-31KK-36
STA. 79+88 (STRUCT. MTD.)
QUEUE LOOP
R-15B-30
W-60D-48 STA. 1386+50 (STRUCT. MTD.)
W-52-48 STA. 1388+50 (STRUCT. MTD.)
LEFT LANE ENDS
STA. 1389+66 RAMP C
STREET NAME SIGN ON SIGNAL POLE (BY CITY)
STA. 1389+50
PEDESTRIANS AND BICYCLES PROHIBITED
R-15B-30 (STRUCT. MTD.)
STA. 1390+26 (STRUCT. MTD.) RAMP D
NORTH 270 TO 161
GH-84 (7'X 5')
STA. 1390+17.35 RAMP C = STA. 81+00.91 CONNECTOR ROAD
END (WE) 80+62 BEGIN (B) 1390+40
END (WE) 80+66 END (B) 1389+93
END (YE) 72+00 BEGIN (DY)
STA. 1390+39
R-31L-30 (POLE MTD.)
R-41B-36
STA. 1390+67
R-43L-36
STA. 1390+64
R-41A-36 (STRUCT. MTD.)
STA. 1393+10
R-15C-24
R-41A-36 (STRUCT. MTD.)
STA. 1393+10
EXIT 32
Morse Rd.
NEXT RIGHT
1393+00 M.L. ±
1391+00 M.L.±
SPEED LIMIT 35
MSE WALL
TYPE B BARRIER
TYPE D BARRIER
(FUTURE)
(RAISED ISLAND)
*** - STREET NAME STILL TO BE DETERMINED
HORIZONTAL SCALE IN FEET
0 25 50 100
CALC. BY:
DATE:
CHKD. BY:
DATE:
SIGNING AND PAVEMENT MARKING PLAN
STA. 1385+00 TO STA. 1394+00 MAINLINE
STA. 70+00 TO STA. 81+01 CONNECTOR ROAD
FRA-270-32.46
344
593
PLOT SCALE... COL #33
C:\DRAWING\06092310\TC\06092SP3.DWG
FEBRUARY-13-1995

SIGNING AND PAVEMENT MARKING PLAN
STA. 1394+00 TO STA. 1407+50 MAINLINE

FRA-270-32.46

345
593

HORIZONTAL SCALE IN FEET
0 25 50 100

CALC. BY:
DATE:
CHKD. BY:
DATE:

NOTE:
1. TWO 3" CONDUIT ELLS SHALL BE PROVIDED ON THE MAINLINE SIDE OF THE PULL BOX.

MATCH LINE SEE SHEET 344
STA. 1394+00 MAINLINE

MATCH LINE SEE SHEET 346
STA. 1407+50 MAINLINE

EXISTING N/B I.R. 270

EXISTING S/B I.R. 270

RAMP 'D'

RAMP 'B'

BLUE LARGO CT.

Morse Rd.

EXIT 32

EXIT ONLY

NEXT RIGHT
TEMP. OVERLAY WHITE ON GREEN (18'X3') LEVEL I

GEP-84 (7'X2')

GB-228 (19'X6') LEVEL I

STA. 1394+64.5 MAINLINE

STA. 1400+00±

STA. 1395+28

R-3IL-30 (STRUCT. MTD.)

ADOPT A HIGHWAY LITTER CONTROL NEXT 2 MILES
TED NUGENT WORLD BORN HUNTERS COLUMBUS CHAPTER
1402+20±

PULL BOX, 713.08, 24" RAMP 'D' STA. 1402+35, 35' LT.

2-3" PVC CONDUITS IN SAME TRENCH= 90'

2-3" STEEL CONDUITS IN SAME TRENCH= 130' (FOR FUTURE WEIGH-IN-MOTION SCALES)

EXIT RAMP DETECTOR STATION

STA. D-1402+50 RT. END MSE WALL AND TYPE D BARRIER, BEGIN CIP WALL

FUTURE POWER AND TELEPHONE DROP LOCATION FOR WEIGH-IN-MOTION SCALES TO BE INSTALLED IN CDMS PROJECT #6

4507 BLUE LARGO

4503 BLUE LARGO

PULL BOX, 713.08, 24" RAMP 'D' STA. 1403+25, 35' LT.

RAMP 'D' STA. 1404+81 10' LT. (P18)

3" STEEL CONDUIT IN TRENCH= 52'

CDN STA. 1404+75, 24' LT. (P18)

NOISE BARRIER

GF-72

EXIT 33

STA. 1406+90 CDN

CDN-1395 CDN-1396 CDN-1397 CDN-1398 CDN-1399 CDN-1400 CDN-1401 CDN-1402 CDN-1403 CDN-1404 CDN-1406 CDN-1407

CDS-1395 CDS-1396 CDS-1397 CDS-1398 CDS-1399 CDS-1400 CDS-1401 CDS-1403 CDS-1404 CDS-1405 CDS-1406 CDS-1407

B-1395 B-1396 B-1397 B-1398 B-1399 B-1400 B-1401 B-1402 B-1403 B-1404 B-1405 B-1406 B-1407

B-76 B-77 B-78 B-79 B-80 B-81 B-82 B-83 B-84 B-85 B-86 B-87

TYPE D BARRIER

TYPE B BARRIER

MSE WALL

STM

6"-605

18"-603

27"-B

C.B.

6" TILE (ABANDONED)

CDS STA. 1394+50 (SP36)

CDS STA. 1398+00 (SP36)

CDS STA. 1402+00 (SP36)

CDN STA. 1403+20 SEE NOTE 1 ABOVE (SP36)

CDN STA. 1404+75 (SP36)

1395+00 1396+00 1397+00 1398+00 1399+00 1400+00 1401+00 1402+00 1403+00 1404+00 1405+00 1406+00 1407+00

1405+50

END (B) 82+88 RAMP B
BEGIN (1)

END (A) 1403+91 CDS
END (1) 86+35 RAMP 'B'

2-2" PVC CONDUITS IN SAME TRENCH= 450'

2-4" PVC CONDUITS IN BARRIER= 350'

2-4" PVC CONDUITS IN BARRIER= 400'

2-4" PVC CONDUITS IN SAME TRENCH= 50'

RAMP 'B' STA. 84+50, 60' RT. (P32)

RAMP 'B' STA. 84+50, 10' RT. (P32)

2-3" STEEL CONDUITS IN TRENCH= 87'

3" STEEL CONDUIT IN TRENCH= 54'

2-4" PVC CONDUITS IN BARRIER= 400'

2-4" PVC CONDUITS IN BARRIER= 275'

RAMP 'B' STA. 80+00, 10' RT. (P18)

W-49R-48 STA. 1397+55 CDS

W-54D(MOD)-156 (13'X8.5') LEVEL I STA. 1403+08 MAINLINE

RIGHT LANE ENDS 1/4 MILE

12'X7.5' TEMP. BLANK OVERLAY (YELLOW)

DETECTOR STATION RAMP METER

SEE SHEET 341 FOR TRAFFIC SURVEILLANCE LEGEND

SEE SHEET 342 FOR SIGNING AND PAVEMENT MARKING LEGENDS

PLOT SCALE
COL #33

C:\DRAWING\06092310\TC\06092SP4.DWG FEBRUARY-13-1995

PLOT SCALE...
COL #33 C:\DRAWING\06092310\TC\06092SP5.DWG FEBRUARY-13-1995

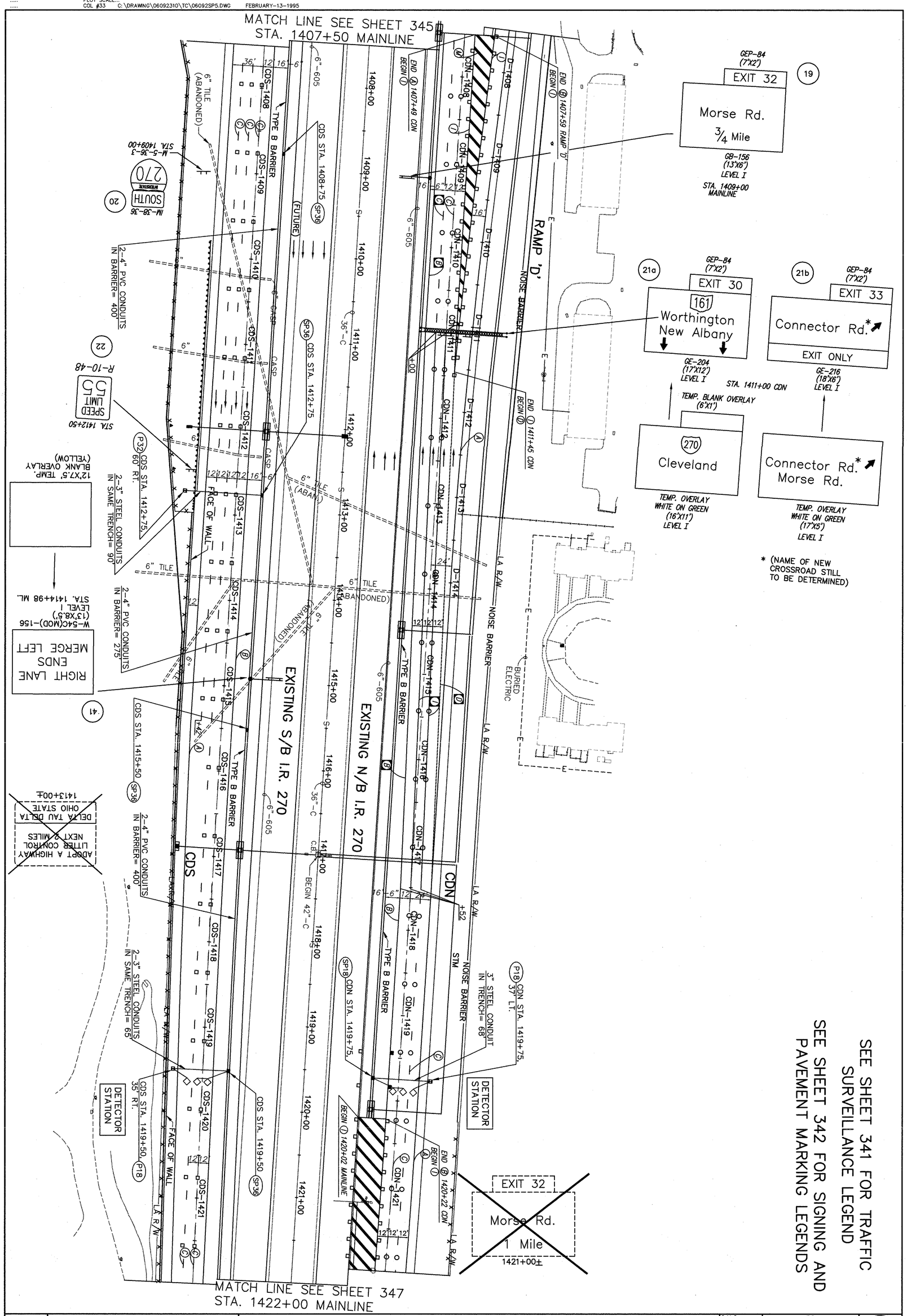

SEE SHEET 341 FOR TRAFFIC SURVEILLANCE LEGEND

SEE SHEET 342 FOR SIGNING AND PAVEMENT MARKING LEGENDS

346 / 593	FRA-270-32.46	SIGNING AND PAVEMENT MARKING PLAN STA. 1407+50 TO STA. 1422+00 MAINLINE	CALC. BY: DATE: CHKD. BY: DATE: 0 50 25 100 HORIZONTAL SCALE IN FEET

PLOT SCALE...
COL #33 C:\DRAWNG\06092310\TC\06092SP6.DWG FEBRUARY-13-1995

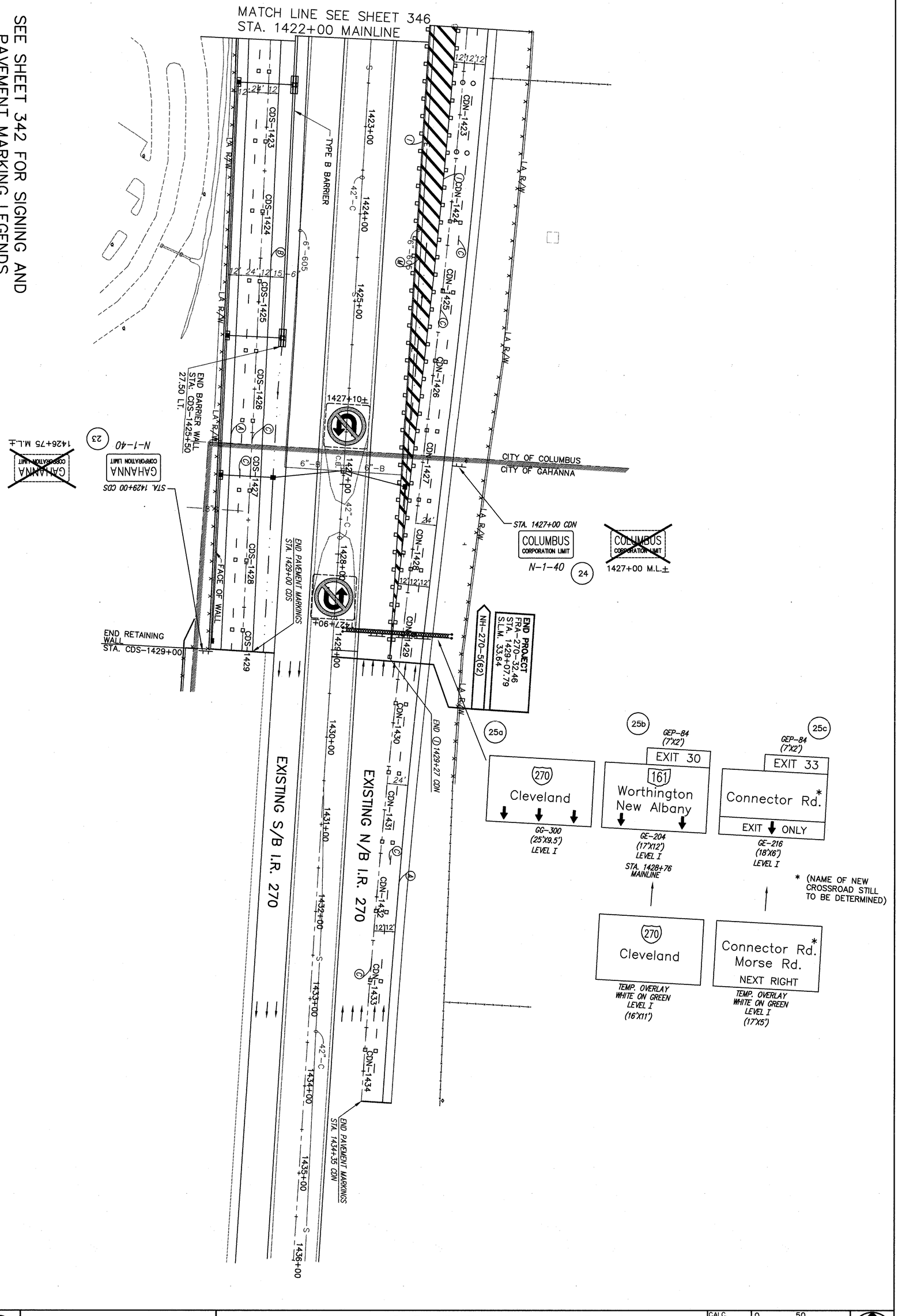

347 / 593	FRA-270-32.46	SIGNING AND PAVEMENT MARKING PLAN STA. 1422+00 TO STA. 1436+00 MAINLINE	CALC. BY: DATE: CHKD. BY: DATE: 0 50 25 100 HORIZONTAL SCALE IN FEET N

PLOT SCALE...
COL #33 C:\DRAWING\06092310\TC\06092SP7.DWG FEBRUARY-13-1995

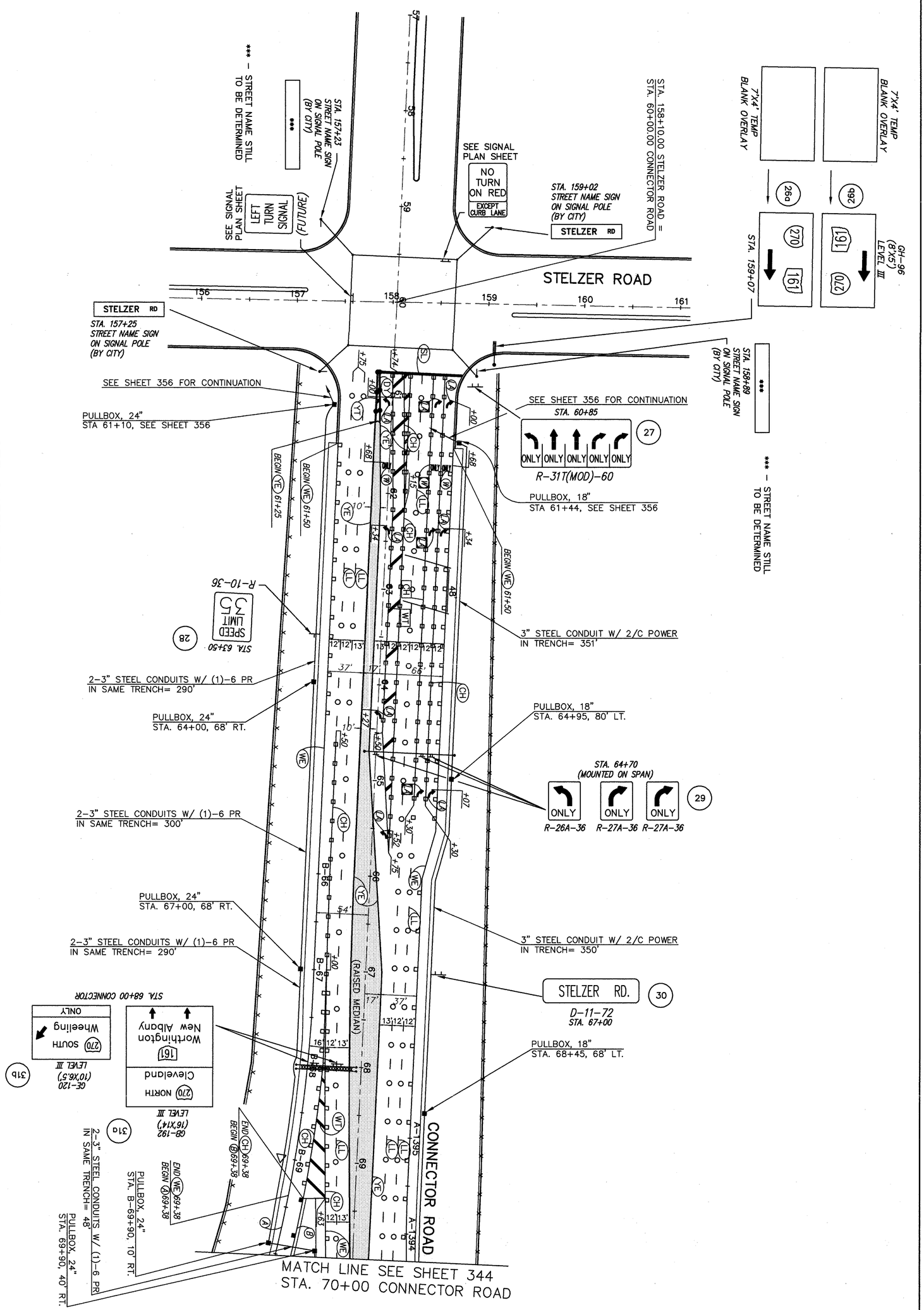

SEE SHEET 356 FOR SIGNAL INSTALLATION

SEE SHEET 342 FOR SIGNING AND PAVEMENT MARKING LEGENDS

348
593

FRA-270-32.46

SIGNING AND PAVEMENT MARKING PLAN STA. 57+00 TO STA. 70+00 CONNECTOR ROAD

CALC. BY:
DATE:
CHKD. BY:
DATE:

0 50 25 100
HORIZONTAL SCALE IN FEET

N

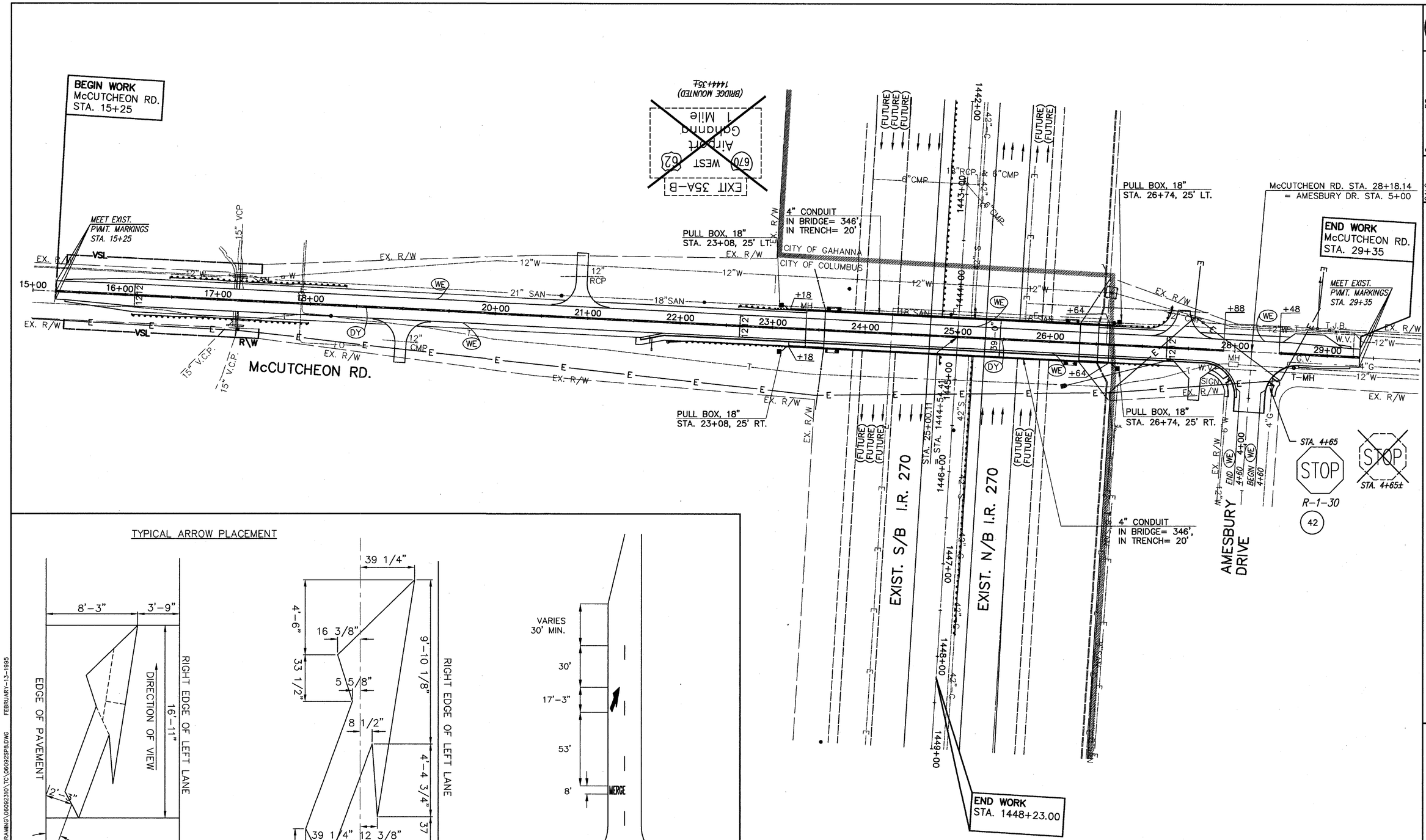

TYPICAL ARROW PLACEMENT

LEFT LANE TRANSITION ARROW
NOT TO SCALE

NOT TO SCALE

NOT TO SCALE

MERGE ARROW DETAILS

NOTE:
BROKEN LINES (---) ILLUSTRATE THE FOUR (4) TYPICAL LANE TRANSITION PAVEMENT MARKING ARROW PIECES.

SEE SHEET 342 FOR SIGNING AND PAVEMENT MARKING LEGENDS

HORIZONTAL SCALE IN FEET
0 25 50 100

CALC. BY: DATE:
CHKD. BY: DATE:

SIGNING AND PAVEMENT MARKING PLAN AND DETAILS
STA. 15+25 TO STA. 29+35 McCUTCHEON ROAD

FRA–270–32.46

349
593

PLOT SCALE
COL. KEY
C:\DRAWING\06092310\C\06092SPSDWG.DWG FEBRUARY-1-1995

* ASSUMED DIMENSION.
NAME OF CONNECTOR RD.
STILL TO BE DETERMINED.

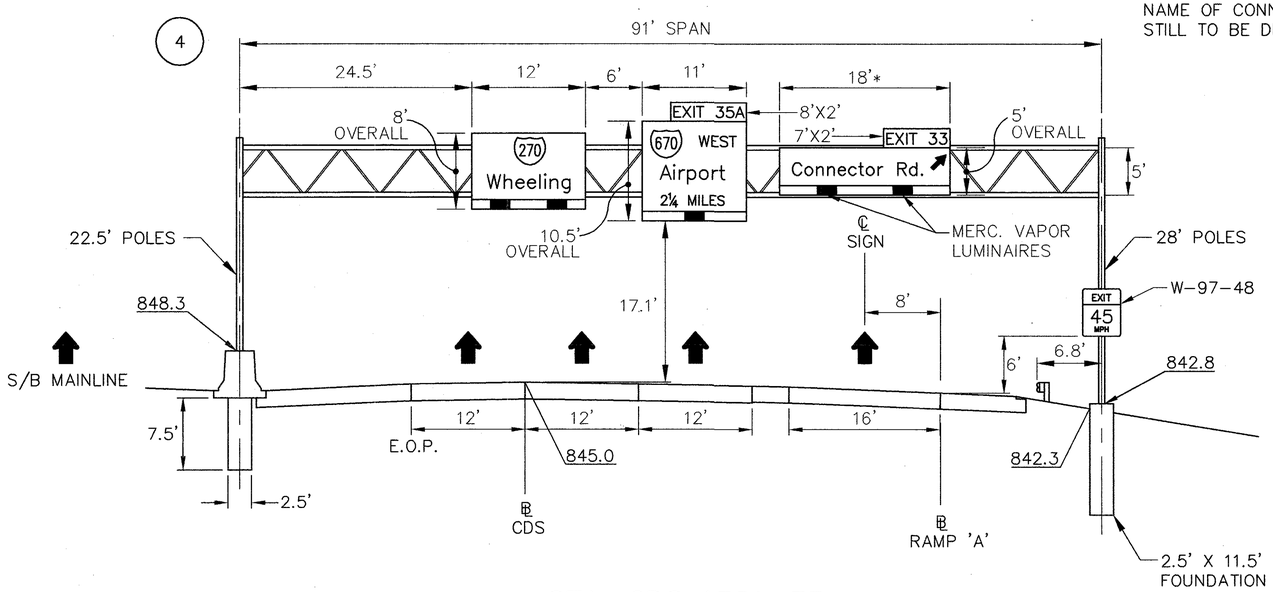

STA. CDS 1381+35
(TC-7.65, DESIGN 8)

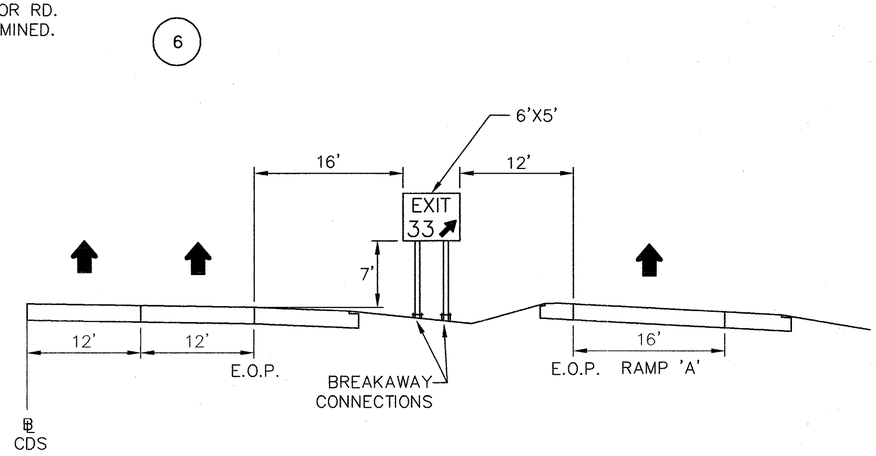

STA. CDS 1383+85, RT.

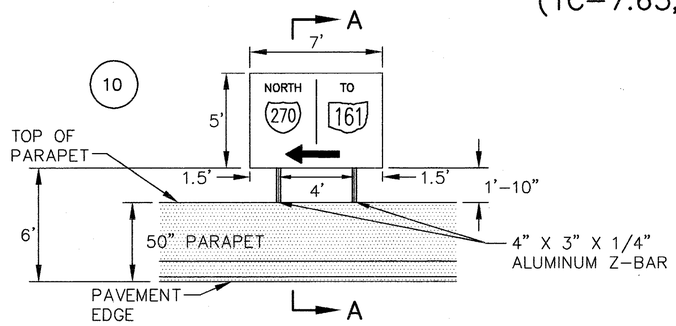

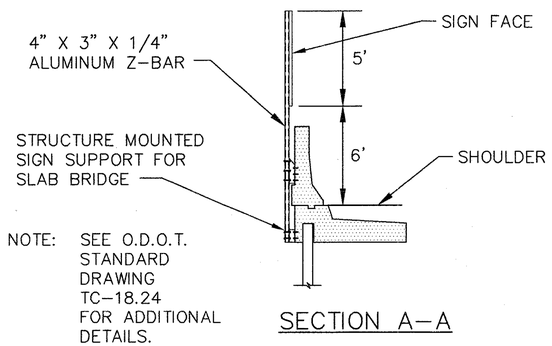

STA. D-1390+26, LT.
SCALE: 1"=4'

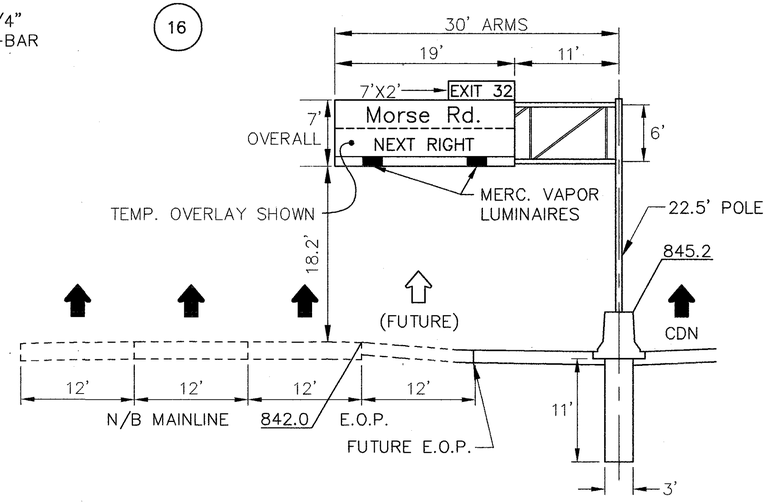

STA. 1394+64.5 MAINLINE, LT.
(STA. CDN 1394+84.9, RT.)
(TC-12.30, DESIGN 10)

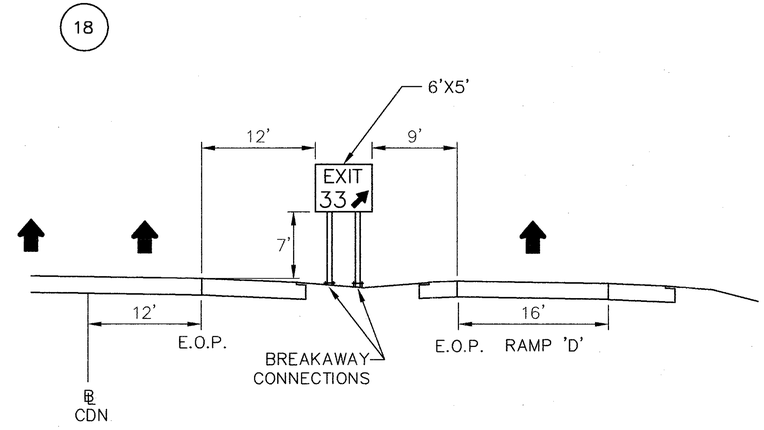

STA. CDN 1406+90, LT.

SCALE IN FEET 0 4 8 16 EXCEPT AS NOTED
CALC. BY:
DATE:
CHECK BY: D.R.B.
DATE: 1/95

SIGN ELEVATIONS

FRA-270-32.46

350
593

PLOT SCALE... C:\DRAWING\06092310\TC\06092SE1.DWG FEBRUARY-06-1995
COL #23

19

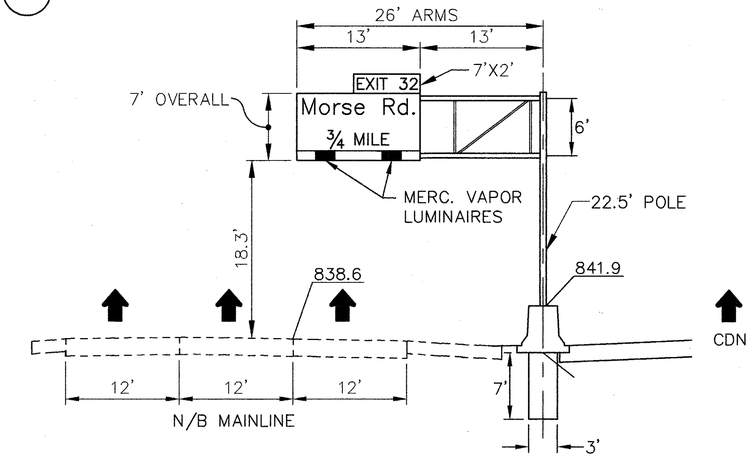

STA. 1409+00 MAINLINE, LT.
(TC-12.30, DESIGN 6)

21

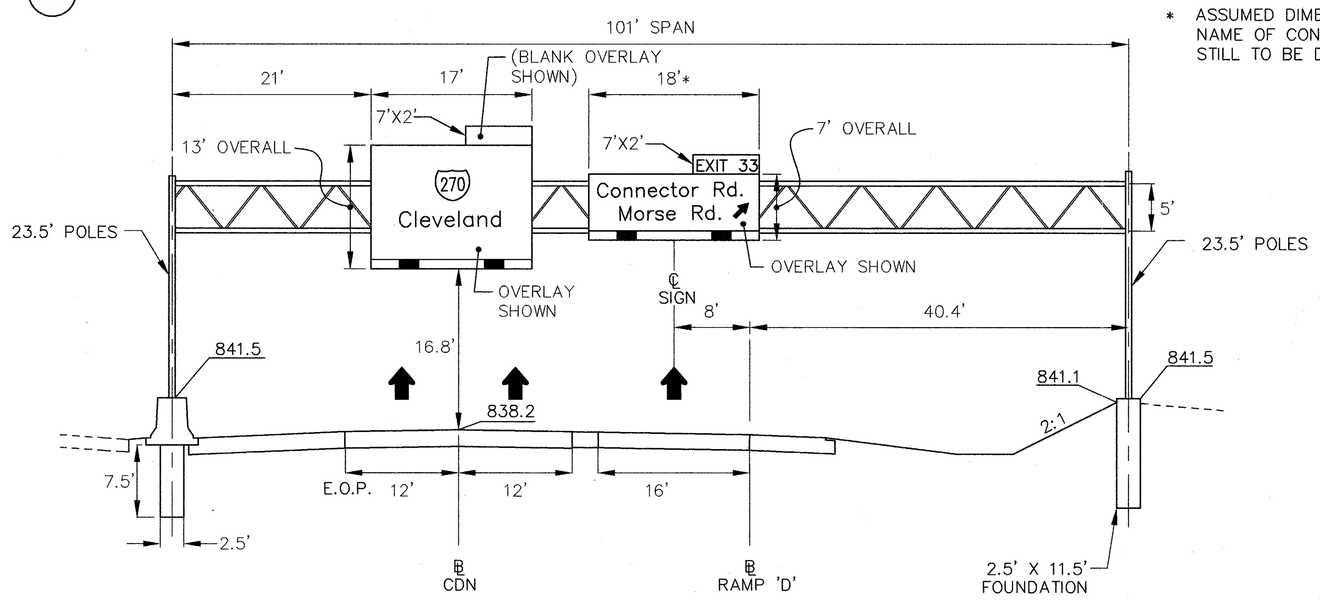

* ASSUMED DIMENSION.
NAME OF CONNECTOR RD.
STILL TO BE DETERMINED.

STA. CDN 1411+00
(TC-7.65, DESIGN 8)

25

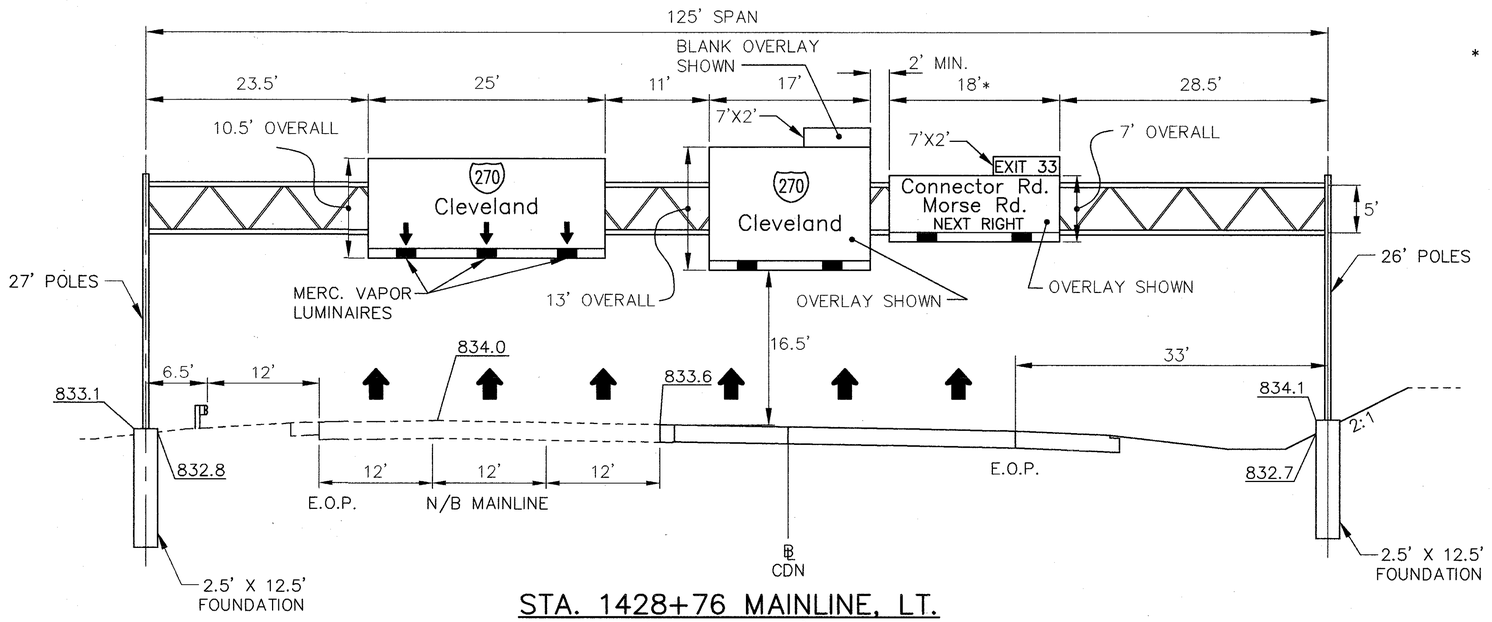

* ASSUMED DIMENSION.
NAME OF CROSSROAD
STILL TO BE DETERMINED.

STA. 1428+76 MAINLINE, LT.
(TC-15.115)

SCALE IN FEET
0 4 8 16
CALC. BY:
DATE:
CHKD. BY: D.R.B.
DATE: 1/95

SIGN ELEVATIONS

FRA-270-32.46

351
593

PLOT SCALE:
COL #23
C:\DRAWING\06092310\TC\06092SE2.DWG
FEBRUARY-06-1995

(26)

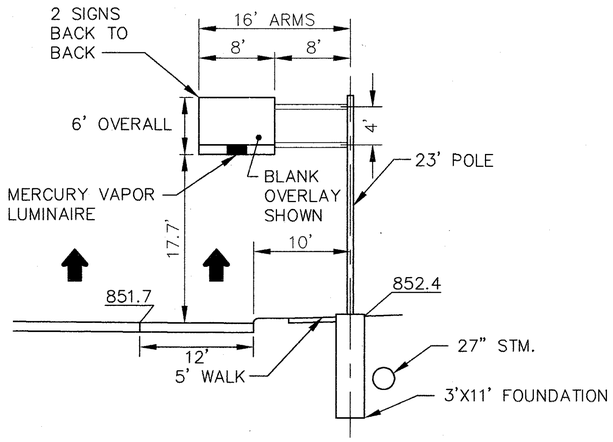

STA. 159+07 STELZER RD., RT.
(TC-12.30, DESIGN 3)

(29)

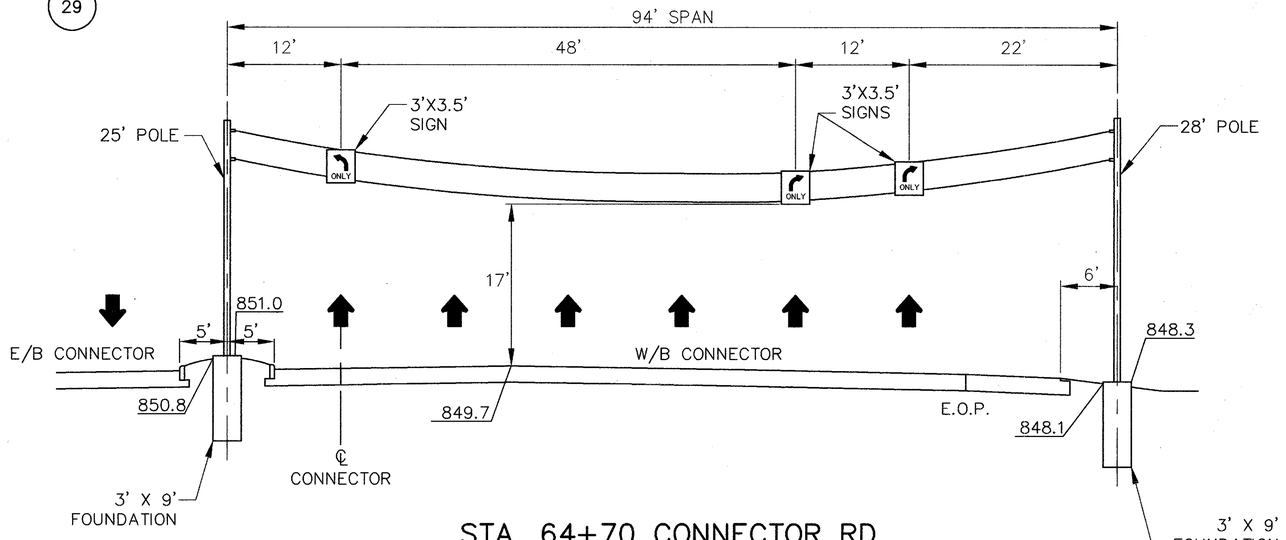

STA. 64+70 CONNECTOR RD.
(TC-17.10, DESIGN 6)

(31)

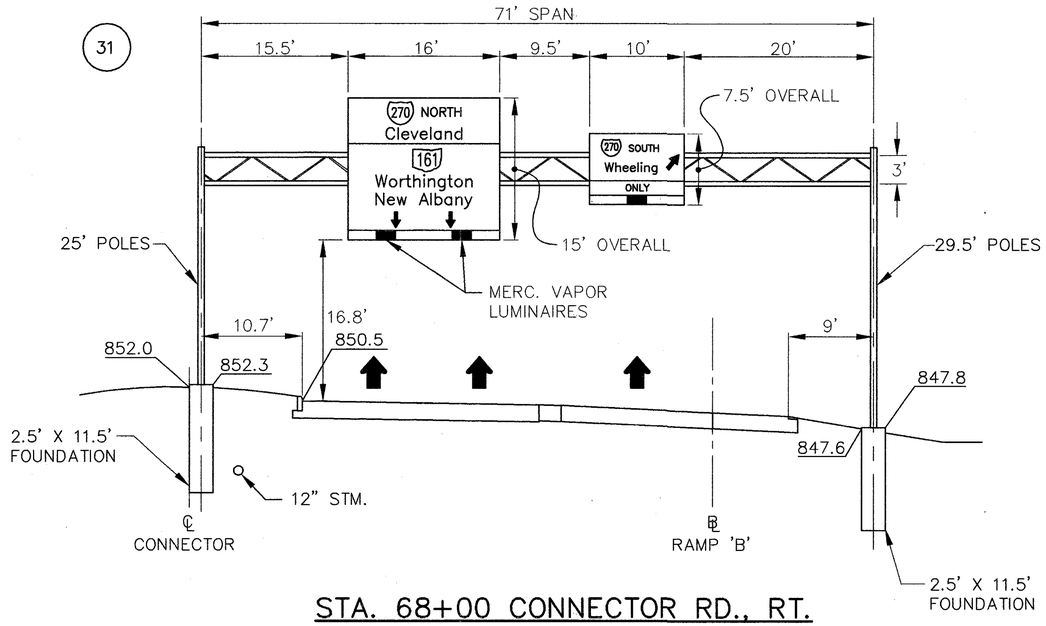

STA. 68+00 CONNECTOR RD., RT.
(TC-7.65, DESIGN 6)

SIGN ELEVATIONS

FRA-270-32.46

352
593

SCALE IN FEET
0 4 8 16

CALC. BY:
DATE:
CHK. BY: D.R.B.
DATE: 1/95

PLOT SCALE...
COL #23
C:\DRAWING\06092310\TC\06092SE3.DWG FEBRUARY-08-1995

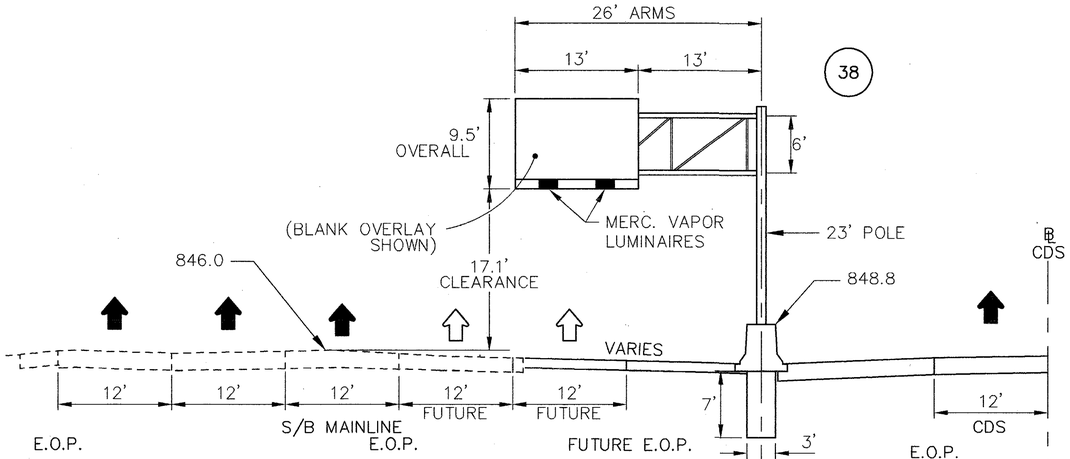

STA. 1379+42.4 MAINLINE, RT.
(STA. CDS 1379+50, LT.)
(TC-12.30, DESIGN 6)

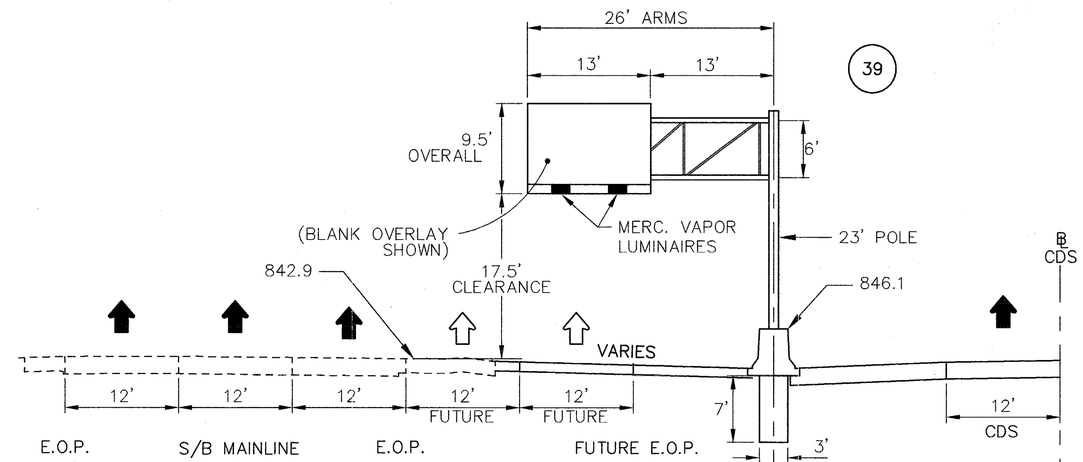

STA. 1389+58.5 MAINLINE, RT.
(STA. CDS 1389+54.8, LT.)
(TC-12.30, DESIGN 6)

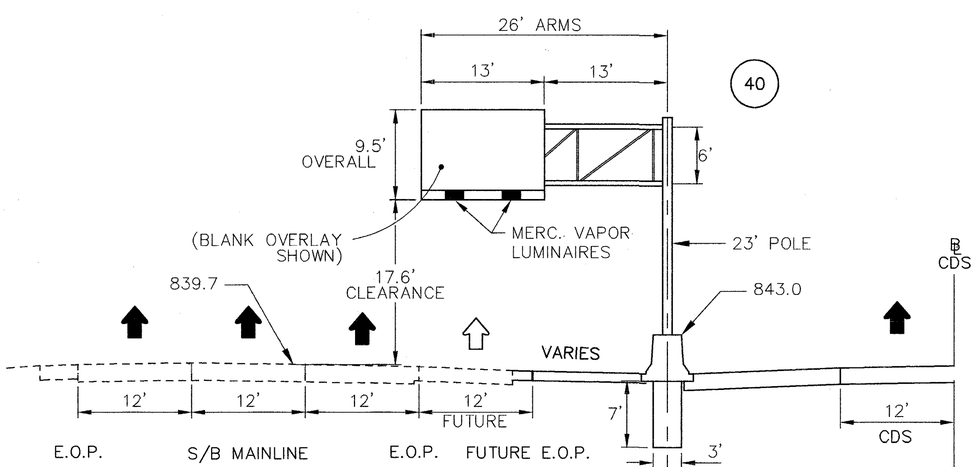

STA. 1403+07.9 MAINLINE, RT.
(STA. CDS 1403+00, LT.)
(TC-12.30, DESIGN 6)

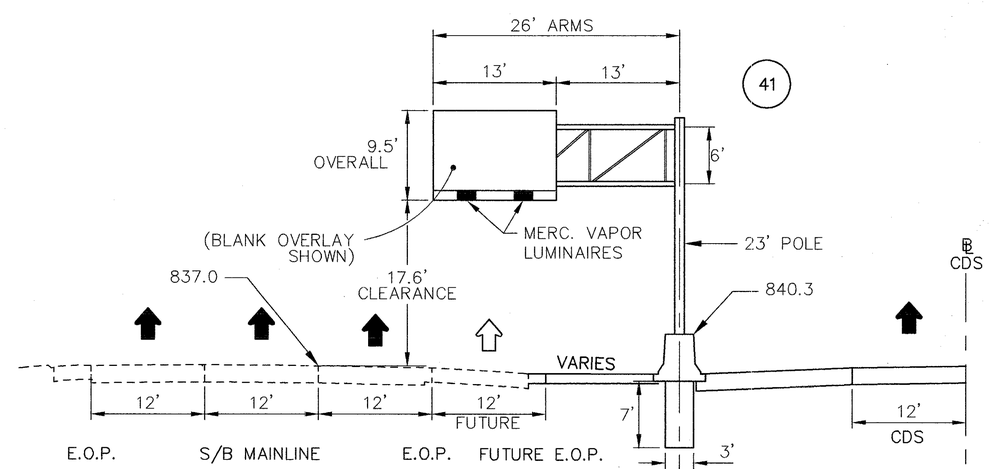

STA. 1414+97.9 MAINLINE, RT.
(STA. CDS 1414+90, LT.)
(TC-12.30, DESIGN 6)

0 4 8 16
SCALE IN FEET

CALC. BY:
DATE:
CHKD. BY: D.R.B.
DATE: 1/95

SIGN ELEVATIONS

FRA-270-32.46

353
593

PLOT SCALE...
COL #23 C:\DRAWING\06092310\TC\06092SE4.DWG FEBRUARY-06-1995

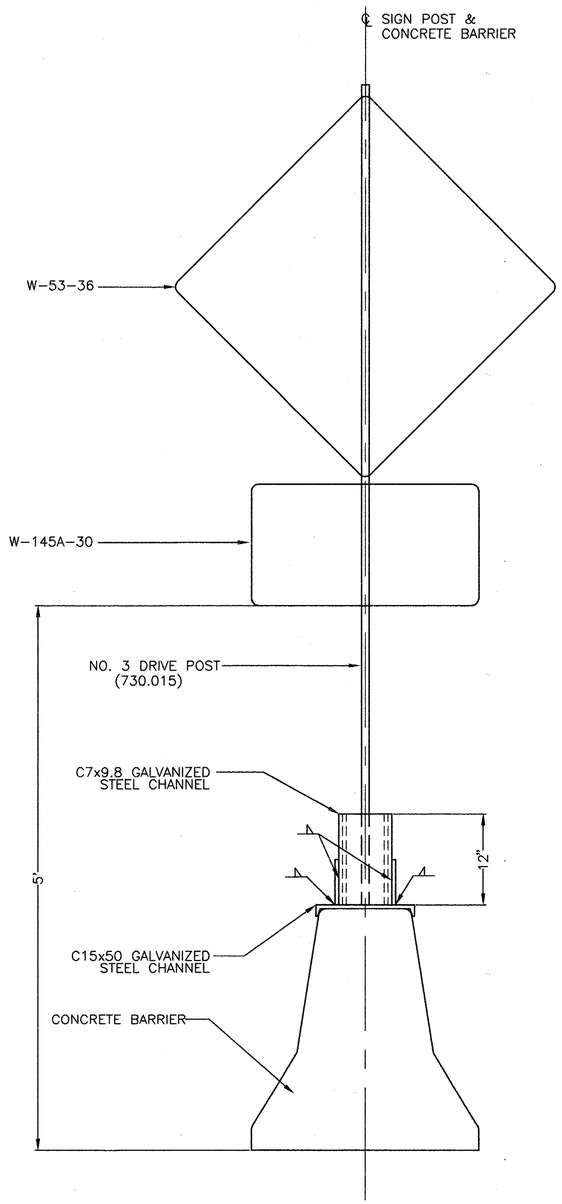

NOTES:

1.) FOR FASTENERS, SEE STD. DWG. TC-52.10 OR TC-52.20.

2.) FOR SPACING, SEE STD. DWG. TC-41.20

3.) FOR SIGN ATTACHMENT DETAIL, SEE STD. DWG. TC-41.20

4.) FOR DETAILS AND SPECIFICATIONS NOT SHOWN, SEE STD. DWG. TC-41.20

5.) THE C7x9.8 GALVANIZED STEEL CHANNEL SHALL BE WELDED TO THE C15x50 GALVANIZED STEEL CHANNEL

6.) THE NO. 3 DRIVE POST SHALL BE ATTACHED TO THE C7x9.8 GALVANIZED STEEL CHANNEL WITH FOUR 5/16" DIA. STEEL HEX HEAD BOLTS. THE HOLES IN THE C7x9.8 STEEL CHANNEL SHALL BE DRILLED BEFORE GALVANIZING. THE HOLES SHALL BE 2" CENTER TO CENTER

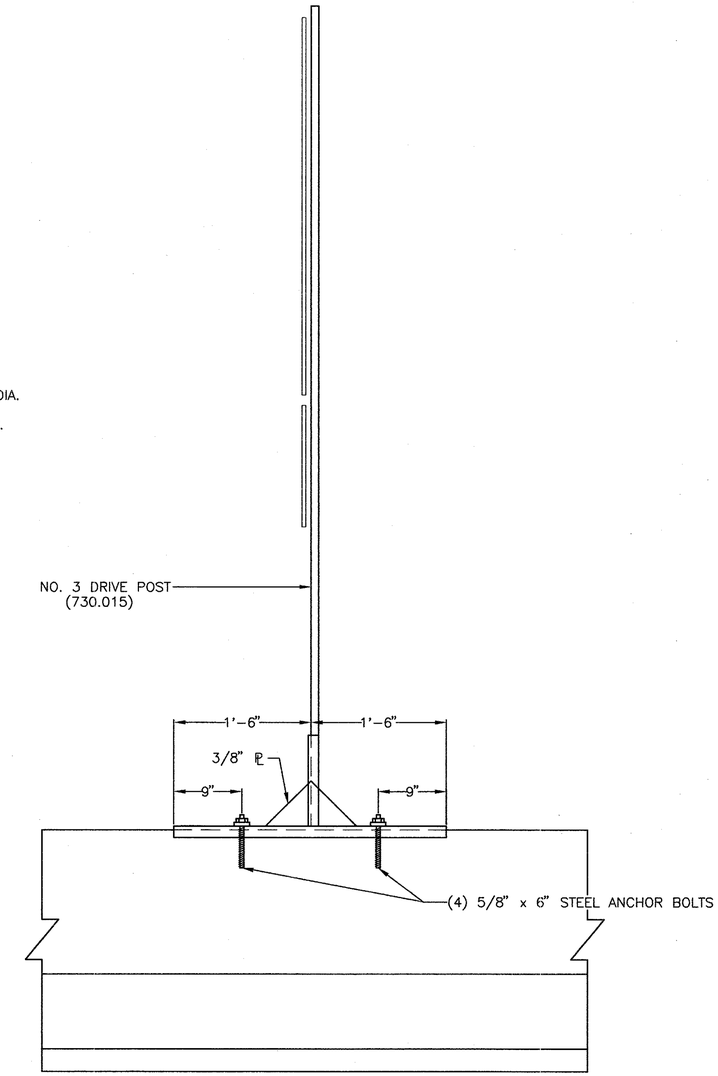

CONCRETE BARRIER MOUNTED SIGN DETAIL
STA. CDN 1378+10

PLOT SCALE...
COL #23 C:\DRAWING\06092310\TC\06092BMS.DWG FEBRUARY-06-1995

CONCRETE BARRIER MOUNTED SIGN SUPPORT DETAIL

FRA-270-32.46

TYPICAL LOOP PLACEMENT

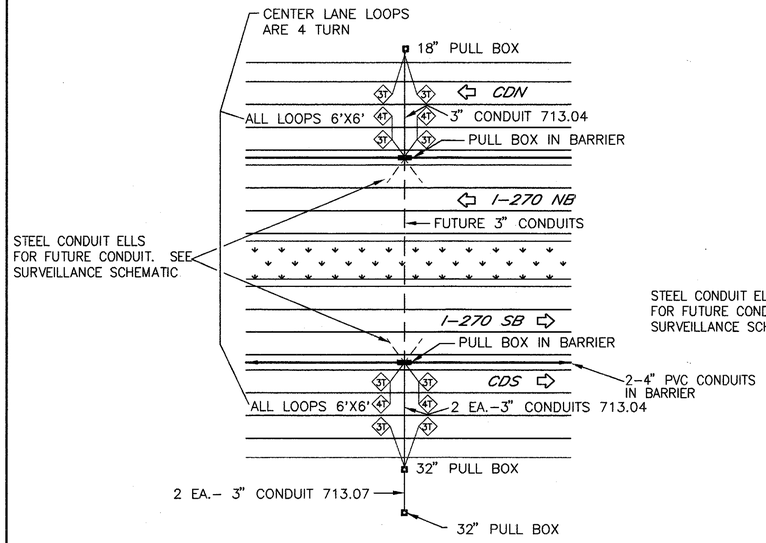

SPEED TRAP STATION

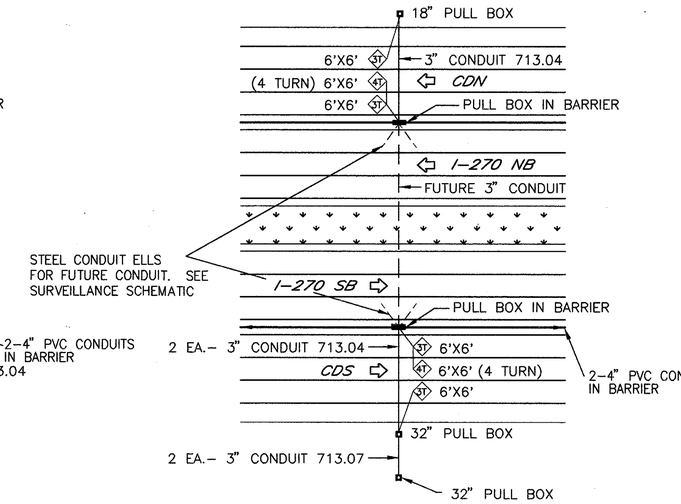

DETECTOR STATION

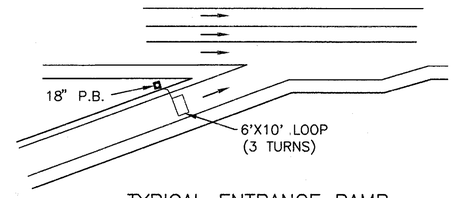

TYPICAL ENTRANCE RAMP

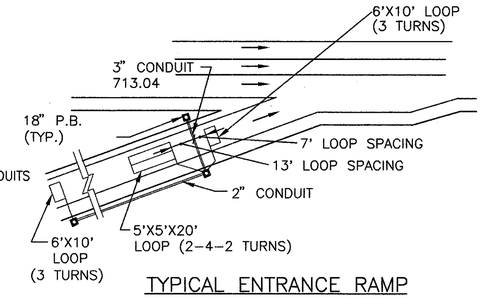

TYPICAL ENTRANCE RAMP
& FUTURE RAMP METER

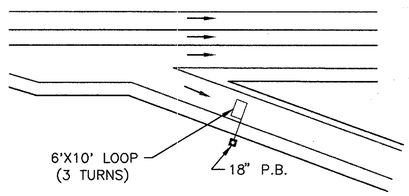

TYPICAL EXIT RAMP

SURVEILLANCE MEDIAN PULL BOX & CONDUIT

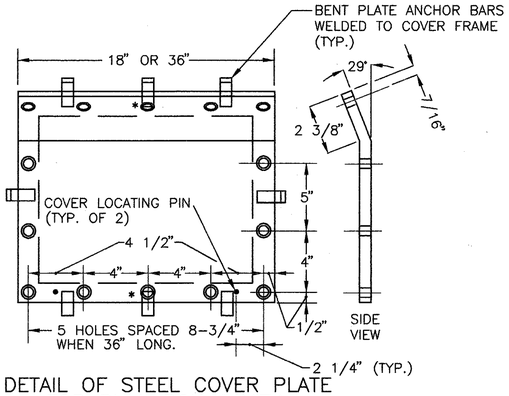

DETAIL OF STEEL COVER PLATE
FOR PULL BOX CAVITY

*NOTE:
WHEN 36" LONG COVER PLATE IS USED LOCATE 2 ADDITIONAL PLATE ANCHOR BARS AS SHOWN.

ASSEMBLY NOTES:
1. COVER SHALL BE ORIENTED WITH THE LOCATING PINS BEFORE DRILLING COVER PLATE BOLT HOLES.
2. APPLY ANTI-SIEZE OR GREASE TO SCREW THREADS OF BOLTS AT INSTALLATION OF COVER.

NOTE:
THE PULL BOX CAVITY STEEL COVER PLATE AND FRAME SHALL BE HOT DIP GALVANIZED AFTER ALL FABRICATION IS FINISHED, IN ACCORDANCE WITH THE REQUIREMENTS OF ASTM A-123.

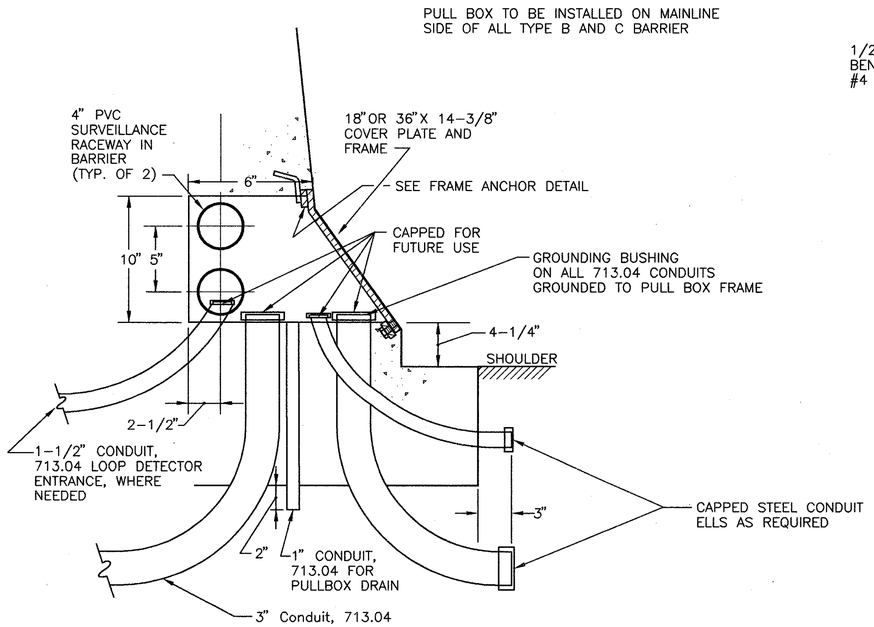

TYPICAL TRAFFIC SURVEILLANCE PULLBOX

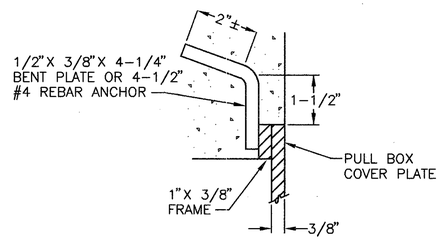

FRAME ANCHOR DETAIL

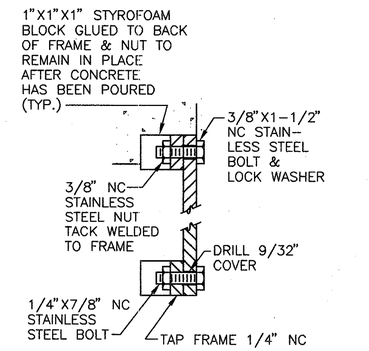

COVER BOLT & LOCATION PIN DETAIL

PLOT SCALE...1"=20'
COL #23 C:\DRAWING\06092310\TCI06092S56.DWG FEBRUARY-06-1995

CALC. BY: DATE:
CHKD. BY: DATE:

SURVEILLANCE SYSTEM DETAILS & TYPICALS

SURVEILLANCE

FRA-270-32.46

18" PULL BOX
STA 58+96, 59' RT

2" CONDUIT W/(2)-2/C
IN TRENCH = 47'

POLE A STRAIN POLE
STA 157+23, 85' LT

(1)-2" CONDUIT W/ (6)-2/C, &
(1)-3" CONDUIT W/ (2)-7/C, (2)-9/C
IN TRENCH = 8'

32" PULL BOX
STA 157+16, 81.5' LT

(1)-2" CONDUIT W/ (6)-2/C, &
(1)-3" CONDUIT W/ (2)-7/C, (2)-9/C
IN TRENCH = 8'

GROUND MOUNTED CONTROL
CABINET STA 157+09, 77' LT

2" CONDUIT W/ (2)-2/C
IN TRENCH = 17'

(2)-3" CONDUITS: (1) W/
POWER & (1) W/ (3)-2/C,
(4)-4/C, (1) NEW 6 PAIR
INTERCONNECT & (2) EXIST
6 PAIR INTERCONNECT IN
TRENCH = 21'

(3)-EXIST. 3" CONDUITS: (1) W/ NEW
POWER, (1) W/ NEW 6 PAIR INTERCONNECT
& (1) W/ NEW (2)-2/C, (2)-4/C = 112'

EXIST. 3" CONDUIT W/ EXIST.
6 PAIR INTERCONNECT

PEDESTAL "E" W/ (1)-
PEDESTRIAN PUSHBUTTON
STA 157+23, 68' LT

18" PULL BOX, STA 153+55 ±
TO BE DETERMINED IN FIELD,
ADJACENT TO NEW ELECTRIC VAULT

EXIST. PULL BOX
STA 157+10, 56' LT

3" CONDUIT W/ POWER
IN TRENCH = 360'

18" PULL BOX
STA 153+88, 59' RT

2" CONDUIT W/ (1)-4/C
IN TRENCH = 220'

18" PULL BOX
STA 156+08, 59' RT

2" CONDUIT W/ (2)-4/C,
IN TRENCH = 87'

18" PULL BOX
STA 156+95, 59' RT

2" CONDUIT W/ (1)-2/C,
(2)-4/C IN TRENCH = 15'

EXIST. PULL BOX
STA 157+10, 56' RT

POLE D STRAIN POLE
STA 157+25, 74' RT

3" CONDUIT W/ (1)-2/C,
(1)-6 PAIR INTERCONNECT
IN TRENCH = 41'

18" PULL BOX
STA 61+10, 60' RT

FOR CONTINUATION OF CONDUIT,
SEE SHT 348

PUSH BUTTON TO CROSS STELZER RD.
CM-R73

NOTE:
TWO CM-R73 SIGNS SHALL BE PROVIDED & INSTALLED WITH EACH PEDESTRIAN PUSHBUTTON.

(2)-EXIST. 3" CONDUITS: (1) W/ NEW (1)-2/C, (2)-4/C, &
(1) W/ EXISTING 6 PAIR INTERCONNECT = 190'

18" PULL BOX
STA 59+08, 69' LT

2" CONDUIT W/ (1)-2/C IN TRENCH = 29'

PEDESTAL "F" W/ (1)- PEDESTRIAN
PUSHBUTTON STA 158+88, 70' LT

2" CONDUIT W/ (2)-2/C IN TRENCH = 18'

POLE B STRAIN POLE
STA 159+02, 80' LT

EXIST. PULL BOX
STA 159+00, 56' LT

(2)-EXIST. 3" CONDUITS:
(1) W/ NEW (1)-2/C,
(2)-4/C, & (1) W/ EXISTING
6 PAIR INTERCONNECT = 35'

TYPICAL PUSHBUTTON INSTALLATION

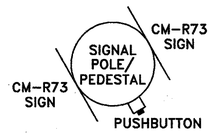

EXIST. PULL BOX
STA 159+35, 56' LT

(2)-EXIST. 3" CONDUITS: (1) W/ NEW
(2)-4/C, & (1) W/ EXISTING 6 PAIR
INTERCONNECT = 67'

EXIST. PULL BOX
STA 160+02, 56' LT

(2)-EXIST. 3" CONDUITS: (1) W/ NEW
(1)-4/C, & (1) W/ EXISTING 6 PAIR
INTERCONNECT = 220'

EXIST. PULL BOX
STA 162+22, 56' LT

NOTE:
THIS RIGHT TURN ONLY LANE ENDS AT STA 166+00.

TC-12.30 SIGN SUPPORT
STA 159+07, 63.5' RT
SEE SIGNING PLAN SHEETS
FOR ADDITIONAL DETAILS

PULL BOX FOR
SIGN LIGHTING

POLE C STRAIN POLE
STA 158+89, 76' RT

2" CONDUIT W/ (3)-2/C
IN TRENCH = 37'

24" PULL BOX
STA 61+07, 72' LT

18" PULL BOX (FOR POWER)
STA 61+44, 72' LT

FOR CONTINUATION OF CONDUIT,
SEE SHT 348

3" STEEL CONDUIT W/ POWER
IN TRENCH = 183'

STELZER ROAD

STA. 158+04.00 STELZER RD =
STA. 60+00.00 CONNECTOR ROAD

CONNECTOR ROAD

(RAISED ISLAND)

ONLY

ONLY ONLY

ONLY

R-23-30 NO TURN ON RED
RP-23-30 R3-7P OVER LANE

R-25E(L)-24 (COVERED) (SEE NOTE 8)
LEFT TURN SIGNAL

EX 48" WATER
EX OBT CONDUIT
EX 2" G
EX 15" CONC
4' CONC. MEDIAN
E (LTG)
27" STM
15" STM
STM

HEADS	HEADS	HEADS	HEADS
11,12	2,3,6,9,10,13,14	4,7	1,5,8

NOTES:

1. THE CONTRACTOR SHALL PROVIDE AND INSTALL POWER CABLE FROM THE CONTROL CABINET TO THE PULL BOX SHOWN ON THE PLAN.
2. THE CONTROLLER DOOR SHALL BE LOCATED ON THE WEST SIDE OF THE CABINET.
3. ALL TRENCH SHALL BE PERFORMED PRIOR TO PLACEMENT OF SIDEWALKS & ROADWAY BASE COURSE.
4. THE CONTRACTOR SHALL PLACE ALL LOOPS IN THE CENTER OF EACH LANE UNLESS OTHERWISE SHOWN.
5. FOR INFORMATION PERTAINING TO PAVEMENT MARKING & ADDITIONAL SIGNING AT THIS INTERSECTION, SEE SHEET 348
6. POWER CABLE AND INTERCONNECT CABLE SHALL BE CONTINUOUS, WITH NO SPLICES.
7. 60 FEET OF 6 PAIR INTERCONNECT CABLE WILL BE COILED IN THE EXISTING PULL BOX AT STA 157+10 FROM A PREVIOUS CONTRACT. SEE TRAFFIC CONTROL NOTE SHEET FOR ADDITIONAL INFORMATION.
8. SOUTHBOUND DUAL LEFT TURN LANES ON STELZER RD. WILL BE OPENED, AND THE LEFT TURN SIGNAL SIGN WILL BE UNCOVERED AT THE START OF PROJECT #6.

PLOT SCALE = 40
PLOT DATE = FEBRUARY-03-1995
C:\DRAWING\06092310\TC\06092S3.DWG

CALC. BY:
DATE:
CHKD. BY:

SIGNAL INSTALLATION
STELZER RD & CONNECTOR RD

FRA-270-32.46

356
593

TYPICAL MAGNETOMETER PROBE SET PLACEMENT

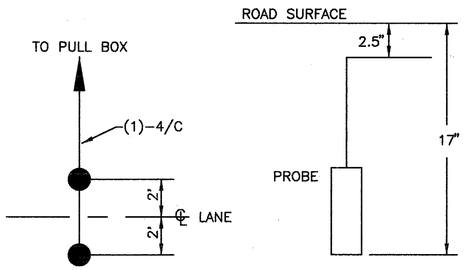

PED UNIT CABLE ROUTING TYPICAL

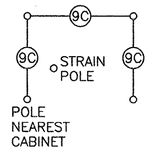

SIGNAL HEAD FIELD WIRING HOOKUP PER APPROACH

SIGNAL DISPLAY	WIRE COLOR
THRU R	RED
THRU Y	ORANGE
THRU G	GREEN
L/T R	BLACK
L/T Y	WHITE W/BLACK TRACER
L/T G	BLUE
R/T R	NOT USED BY CITY
R/T Y	RED W/BLACK TRACER
R/T G	GREEN W/BLACK TRACER

WHITE SHALL BE USED FOR GROUND (COMMON). SPLICE ALL WIRES IN THE SIGNAL HEAD OR PED UNIT. USE #14 AWG 2 WIRE SPADE TERMINAL OR #14 AWG 1 WIRE SPADE TERMINAL TO CONNECT ALL WIRES TO FIELD TERMINALS. USE BUTT SPLICES ON ALL THROUGH WIRES. ALL UNUSED WIRES SHALL BE SPLICED THROUGH AND SHALL HAVE A DEAD-END TERMINAL AT THE END OF THE WIRE.

DETECTOR ASSIGNMENTS

DETECTOR #		RACK 1 (LT) OUTPUT CH#		PHASE		SYS DET		2 TURNS	DELAY DATA		DET UNIT RACK & CABLE LABEL	
MAGS	LOOPS	MAGS	LOOPS	MAGS	LOOPS	PROBES	LOOPS	LOOP SIZE	LOOP SEC	ø GRN INHIBIT	MAG	LOOP
P1\P2	L1	3	11	6	1		B1	5x25	3	ø1	NB(F)	NBLT
P3\P4	L2\L3	1	12	6	5	A1	B2	5x25\5x25	3	ø5	NB(N)	SBLT
P5\P6\P7	L4	7	15	2	8	A2		5x36	12	ø8	SB(N)	EB(R)
P8\P9\P10	L5\L6	5	16	2	8			5x38\5x40	3	ø8	SB(F)	EB
	L7\L8		9		3		C1	FUTURE\5x25	3	ø3+ø8		EBLT
	L9\L10		13		4		C2	5x34\5x36	12	ø4		WBRT
	L11\L12		14		4		D1	5x38\5x40	3	ø4		WB
	L13\L14		10		7		D2	FUTURE\5x25	3	ø4+ø7		WBLT

SIGNAL TIMING IN SECONDS

TIMING INTERVAL	NBLT ø1	SB ø2	EBLT ø3	WB ø4	SBLT ø5	NB ø6	WBLT ø7	EB ø8
MAX. GREEN I	20	60	20	40	50	40	20	40
MAX. GREEN II	–	–	–	–	–	–	–	–
YELLOW CLEAR	3.6	4.3	3.6	3.8	3.6	4.3	3.6	3.8
RED CLEAR	2.5	2.6	2.5	2.3	2.5	2.6	2.5	2.3
MAX. INITIAL	–	–	–	–	–	–	–	–
MIN. INITIAL	10	20	10	10	10	20	10	10
ADDED INITIAL/ACT.	–	–	–	–	–	–	–	–
PRESET EXTENSION	3.7	2.8	3.7	3.7	3.7	2.8	3.7	3.7
MIN. EXTENSION	–	–	–	–	–	–	–	–
TIME BEFORE REDUCT	–	–	–	–	–	–	–	–
TIME TO MIN. EXT.	–	–	–	–	–	–	–	–
PED. WALK	–	–	–	4	–	–	–	4
PED. CLEAR	–	–	–	24	–	–	–	24
RECALL/MEMORY MODE	NON-LOCK	RECALL	NON-LOCK	NON-LOCK	NON-LOCK	RECALL	NON-LOCK	NON-LOCK

NOTES

1. LOCAL CONTROLLER NUMBER IS 4
2. PED CABLE SHALL BE DROPPED INSIDE THE POLE TO THE TOP OF THE POLE FOUNDATION FOR FUTURE USE. TAG PED CABLE INSIDE THE POLE AT HANDHOLE LEVEL.
3. SET CONFLICT MONITOR FOR 10 SEC FLASH.
4. DIODES SHALL BE USED TO ISOLATE LOCAL CALL FUNCTIONS FROM SYSTEM DETECTOR FUNCTIONS.
5. LOOP DETECTOR LEAD-IN CABLE SHALL BE USED FOR THE PED PUSHBUTTONS. GROUND THE SHIELD ONLY AT THE CABINET.
6. HARD WIRE "PED RECYCLE" AND "REST-IN-WALK" TO GROUND.
7. INSTALL A DIODE BETWEEN TERMINALS, ø2 "ø ON" OUTPUT AND ø1 "OMIT" INPUT, SO THE LEFT TURN PHASE (ø1) IS OMITTED DURING THE THROUGH PHASE (ø2).
8. EPOXY THE END OF ALL FUTURE-USE CABLES THAT ARE TERMINATED IN A PULL BOX. COIL 5 FEET OF CABLE IN PULL BOX.
9. SET ALL FAR (F) PROBE CHANNELS ON PRESENCE MODE, AND SET ALL OTHER PROBE CHANNELS ON PULSE MODE.
10. SET ALL LOOP UNIT CHANNELS TO PRESENCE/COUNT MODE.
11. SET EXTENSION TIME TO 1.5 SECONDS ON P6, P7, P8, P9 & P10 UNITS.
12. INSTALL DIODE JUMPER BETWEEN ø7 VEH CALL LINE & ø4 VEH CALL LINE SO ø7 CALLS & EXTENDS ø4 BUT NOT VICE VERSA.
13. INSTALL DIODE JUMPER BETWEEN ø3 VEH CALL LINE & ø8 VEH CALL LINE SO ø3 CALLS & EXTENDS ø8 BUT NOT VICE VERSA.
14. INSTALL DIODES TO PREVENT PHASE GREEN FEEDBACK BETWEEN PHASES 4 & 7 AND PHASES 3 & 8.

SUB-SUMMARY OF TRAFFIC SIGNAL ITEMS

REFERENCE LETTER	ITEM DESCRIPTION	ITEM NUMBER	UNIT	QUANTITY
	CONDUIT, 2", 713.04	625	L.F.	486
	CONDUIT, 3", 713.04	625	L.F.	99
	CONDUIT, 3", 713.07, A.P.P.	625	L.F.	183
	TRENCH	625	L.F.	731
	PULL BOX, 713.08, 18", A.P.P.	625	EA.	7
	PULL BOX, 713.08, 24", A.P.P.	625	EA.	1
	PULL BOX, 713.08, 32", A.P.P.	625	EA.	1
	CONNECTION TO EXISTING PULL BOX	625	EA.	7
	GROUND ROD	625	EA.	5
	SIGN HANGER ASSEMBLY, SPAN WIRE	630	EA.	2
	SIGN, FLAT SHEET, TYPE G	630	S.F.	13.44
	COVERING OF SIGN	630	S.F.	5.0
	VEHICULAR SIGNAL HEAD, 3 SECTION, 12" LENS, 1-WAY, A.P.P.	632	EA.	9
	VEHICULAR SIGNAL HEAD, 5 SECTION, 12" LENS, 1-WAY, A.P.P.	632	EA.	5
	COVERING OF VEHICULAR SIGNAL HEAD	632	EA.	14
	PEDESTRIAN PUSHBUTTON	632	EA.	4
	LOOP DETECTOR UNIT, DELAY AND EXTENSION TYPE, A.P.P.	632	EA.	4
	LOOP DETECTOR PAVEMENT CUTTING, A.P.P.	632	L.F.	1274
	MAGNETOMETER DETECTOR UNIT, A.P.P.	632	EA.	2
	MAGNETOMETER SENSOR PROBE, A.P.P.	632	EA.	10
	MESSENGER WIRE, 7 STRAND, 3/8" DIAMETER WITH ACCESSORIES	632	L.F.	585
	SIGNAL CABLE, 7 CONDUCTOR, NO. 14 AWG	632	L.F.	648
	SIGNAL CABLE, 9 CONDUCTOR, NO. 14 AWG	632	L.F.	1326
	INTERCONNECT CABLE, 6 PAIR, NO. 19 AWG, PE 39-BJFA, A.P.P.	632	L.F.	201
	LOOP DETECTOR WIRE, TYPE E	632	L.F.	2820
*	PEDESTRIAN PUSHBUTTON LEAD-IN CABLE, A.P.P.	632	L.F.	948
*	LOOP DETECTOR LEAD-IN CABLE	632	L.F.	2437
	MAGNETOMETER LEAD-IN CABLE	632	L.F.	1674
	POWER CABLE, 2 CONDUCTOR, NO. 2 AWG, A.P.P.	632	L.F.	578
	POWER SERVICE, A.P.P.	632	EA.	1
	CABLE SUPPORT ASSEMBLY	632	EA.	6
	CONCRETE FOR ANCHOR BASE FOUNDATION	632	C.Y.	12.72
C/D A/B	STRAIN POLE, TYPE TC-81.10, DESIGN 12, 32 FEET	632	EA.	2
C/D A/B	STRAIN POLE, TYPE TC-81.10, DESIGN 12, 34 FEET	632	EA.	2
	PEDESTAL, 5 FEET, TRANSFORMER BASE, A.P.P.	632	EA.	2
	CONTROLLER, ACTUATED, 8 PHASE, SOLID STATE DIGITAL MICROPROCESSOR, A.P.P.	633	EA.	1
	CONCRETE FOR CABINET FOUNDATION, A.P.P.	633	C.Y.	0.62
	CONTROLLER WORK PAD (48" x 36")	633	S.F.	12.0

* THE QUANTITIES FOR LOOP DETECTOR LEAD-IN CABLE AND PEDESTRIAN PUSHBUTTON LEAD-IN CABLE HAVE BEEN COMBINED ON THE TRAFFIC CONTROL GENERAL SUMMARY FOR ESTIMATING PURPOSES. THE QUANTITIES ARE LISTED SEPARATELY ON THE SIGNAL SUB-SUMMARY FOR INSTALLATION PURPOSES.

NO SCALE

CALC. BY: MDL DATE: 8-94
CHKD. BY: FAM DATE: 10-94

SIGNAL INSTALLATION
STELZER RD. & CONNECTOR RD.

FRA-270-32.46

357
593

PLOT SCALE: 1.000 '/ IN
COE #25 C:\DRAWING\06092310\TC\0609234.DWG FEBRUARY-03-1995

SIGNAL DISPLAYS

PHASE	SIGNAL NUMBER 1	2	3	4	5	6	7	8	9	10	11	12	13	14	DESCRIPTION OF INTERVAL
ø1+ø5	R	R	R	R	~~G~~	~~G~~	R	R	R	R	R	~~G~~	~~G~~	R	R	GREEN
	R	R	R	R	~~G~~	~~Y~~	R	R	R	R	R	~~G~~	~~G~~	R	R	YELLOW CLEAR TO ø2 + ø5
	R	R	R	R	~~G~~	R	R	R	R	R	R	~~G~~	~~G~~	R	R	RED CLEAR TO ø2 + ø5
	R	R	R	R	~~Y~~	~~G~~	R	R	R	R	R	~~Y~~	~~Y~~	R	R	YELLOW CLEAR TO ø1 + ø6
	R	R	R	R	~~G~~	R	R	R	R	R	R	R	R	R	R	RED CLEAR TO ø1 + ø6
	R	R	R	R	~~Y~~	~~Y~~	R	R	R	R	R	~~Y~~	~~Y~~	R	R	YELLOW CLEAR TO ø2 + ø6
	R	R	R	R	R	R	R	R	R	R	R	R	R	R	R	RED CLEAR TO ø2 + ø6
ø2+ø5	R	R	R	R	~~G~~	R	R	R	R	R	R	~~G~~	~~G~~	G	G	GREEN
	R	R	R	R	~~Y~~	R	R	R	R	R	R	~~Y~~	~~Y~~	G	G	YELLOW CLEAR TO ø2 + ø6
	R	R	R	R	R	R	R	R	R	R	R	R	R	G	G	RED CLEAR TO ø2 + ø6
ø1+ø6	R	R	R	R	~~G~~	G	G	G	R	R	R	R	R	R	R	GREEN
	R	R	R	R	~~Y~~	G	G	G	R	R	R	R	R	R	R	YELLOW CLEAR TO ø2 + ø6
	R	R	R	R	G	G	G	G	R	R	R	R	R	R	R	RED CLEAR TO ø2 + ø6
ø2+ø6 (RECALL)	R	R	R	R	G	G	G	G	R	R	R	R	R	G	G	GREEN
	R	R	R	R	Y	Y	Y	Y	R	R	R	R	R	Y	Y	YELLOW CLEAR
	R	R	R	R	R	R	R	R	R	R	R	R	R	R	R	RED CLEAR
ø3+ø7	~~G~~	R	R	R	R	R	R	~~G~~	~~G~~	R	R	R	R	R	R	GREEN
	~~Y~~	R	R	R	R	R	R	~~Y~~	~~G~~	R	R	R	R	R	R	YELLOW CLEAR TO ø3 + ø8
	R	R	R	R	R	R	R	R	~~G~~	R	R	R	R	R	R	RED CLEAR TO ø3 + ø8
	~~G~~	R	R	R	R	R	R	~~G~~	~~Y~~	R	R	R	R	R	R	YELLOW CLEAR TO ø4 + ø7
	~~G~~	R	R	R	R	R	R	~~G~~	R	R	R	R	R	R	R	RED CLEAR TO ø4 + ø7
	~~Y~~	R	R	R	R	R	R	~~Y~~	R	R	R	R	R	R	R	YELLOW CLEAR TO OTHERS
	R	R	R	R	R	R	R	R	R	R	R	R	R	R	R	RED CLEAR TO OTHERS
ø3+ø8	R	R	R	R	R	R	R	~~G~~	G	G	G	R	R	R	R	GREEN
	R	R	R	R	R	R	R	~~Y~~	G	G	G	R	R	R	R	YELLOW CLEAR TO ø4 + ø8
	R	R	R	R	R	R	R	G	G	G	G	R	R	R	R	RED CLEAR TO ø4 + ø8
	R	R	R	R	R	R	R	~~Y~~	Y	Y	Y	R	R	R	R	YELLOW CLEAR TO OTHERS
	R	R	R	R	R	R	R	R	R	R	R	R	R	R	R	RED CLEAR TO OTHERS
ø4+ø7	~~G~~	G	G	G	G	R	R	R	~~G~~	R	R	R	R	R	R	GREEN
	~~Y~~	G	G	G	G	R	R	R	~~Y~~	R	R	R	R	R	R	YELLOW CLEAR TO ø4 + ø8
	G	G	G	G	R	R	R	R	R	R	R	R	R	R	R	RED CLEAR TO ø4 + ø8
	~~Y~~	Y	Y	Y	Y	R	R	R	~~Y~~	R	R	R	R	R	R	YELLOW CLEAR TO OTHERS
	R	R	R	R	R	R	R	R	R	R	R	R	R	R	R	RED CLEAR TO OTHERS
ø4+ø8	G	G	G	G	R	R	R	G	G	G	R	R	R	R	R	GREEN
	Y	Y	Y	Y	R	R	R	Y	Y	Y	R	R	R	R	R	YELLOW CLEAR
	R	R	R	R	R	R	R	R	R	R	R	R	R	R	R	RED CLEAR
FLASH	R	R	R	R	R	R	R	R	R	R	R	R	R	R	R	FLASH

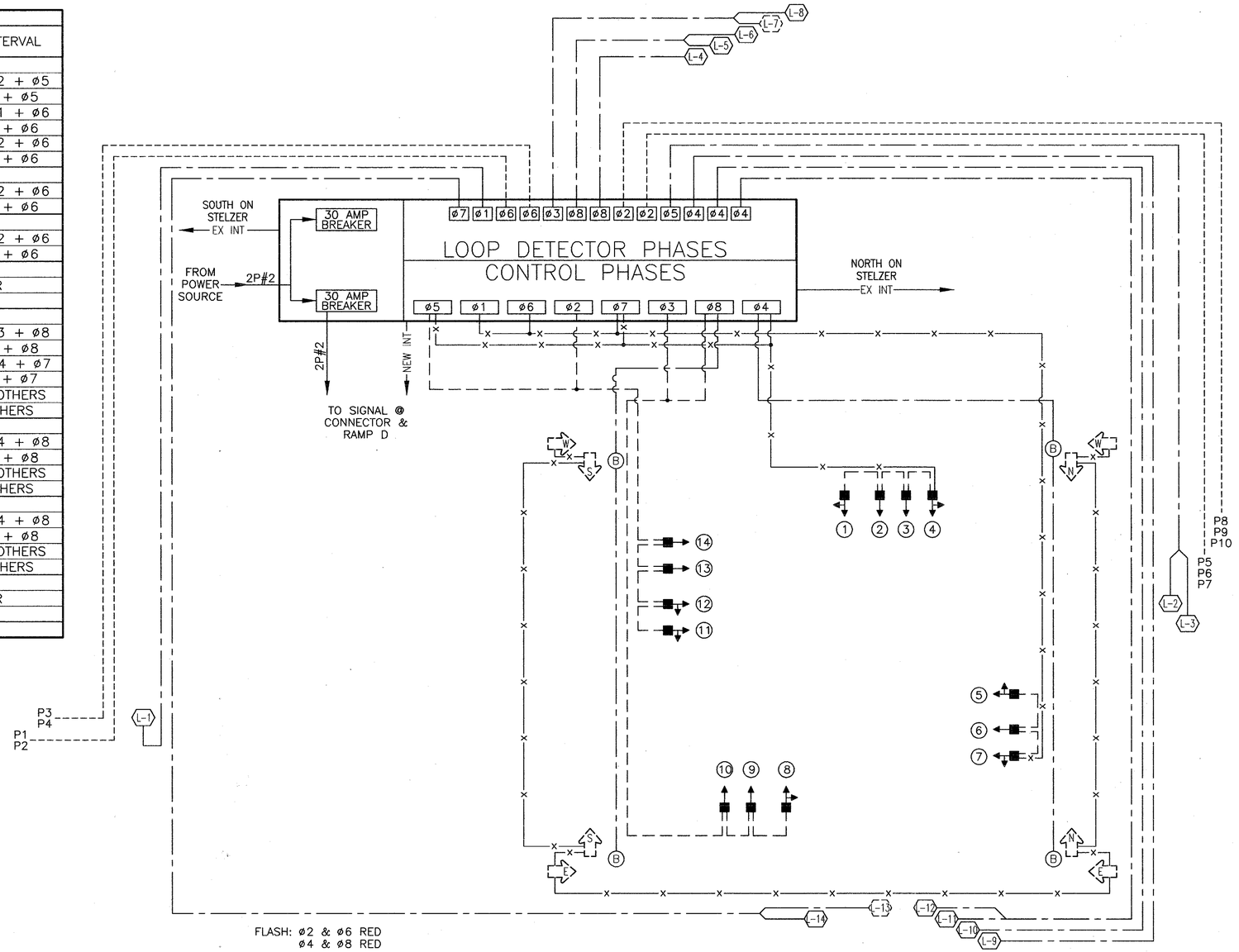

FLASH: ø2 & ø6 RED
ø4 & ø8 RED
INITIALIZE IN
ø2 & ø6 GREEN

WIRING DIAGRAM

NOTE: 9/C CABLE FOR FUTURE PED SIGNALS SHALL EXTEND FROM POLE CABLE ENTRANCE TO TOP OF FOUNDATION AND BE TAGGED.

WIRING DIAGRAM LEGEND

- VEHICULAR SIGNAL HEAD
- {L-7} FUTURE VEHICLE LOOP DETECTOR
- (L-1) VEHICLE LOOP DETECTOR
- P1 MAGNETOMETER PROBE SET
- W FUTURE PEDESTRIAN SIGNAL HEAD
- (B) PEDESTRIAN PUSHBUTTON
- —2P#2— 2/C #2 AWG. (POWER)
- — — — 2/C #14 AWG.
- ---------- 4/C #14 AWG.
- — — — — 7/C #14 AWG.
- ——x—— 9/C #14 AWG.
- —EX INT— EXISTING INTERCONNECT CABLE
- —NEW INT— 6-PAIR #19 AWG. INTERCONNECT CABLE

SIGNAL PHASING

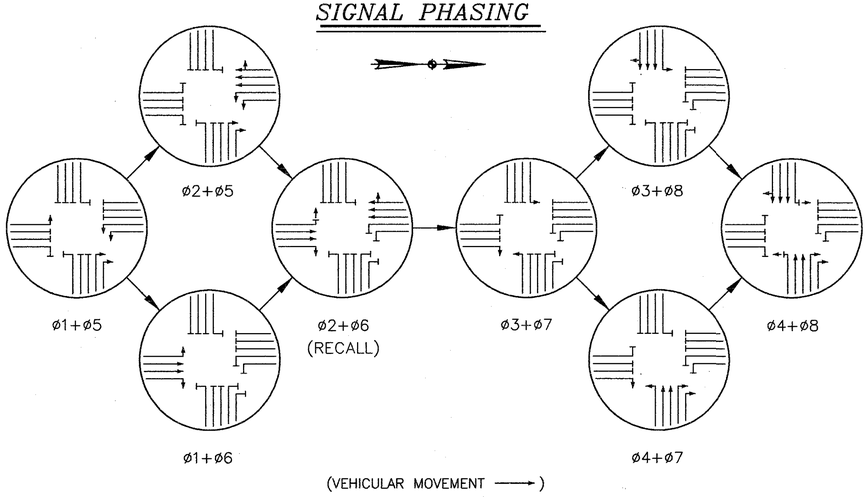

NO SCALE

CALC. BY:
DATE:
CHKD. BY:
DATE:

SIGNAL INSTALLATION
STELZER RD. & CONNECTOR RD.

FRA-270-32.46

358
593

PLOT SCALE
COL #25
C:\DRAWNG\06092310\TC\0609255.DWG FEBRUARY-03-1995

SIGNAL PHASING

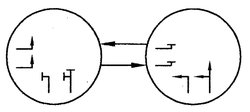

VEHICULAR MOVEMENT →

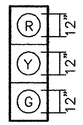

HEADS
1,2,3,4

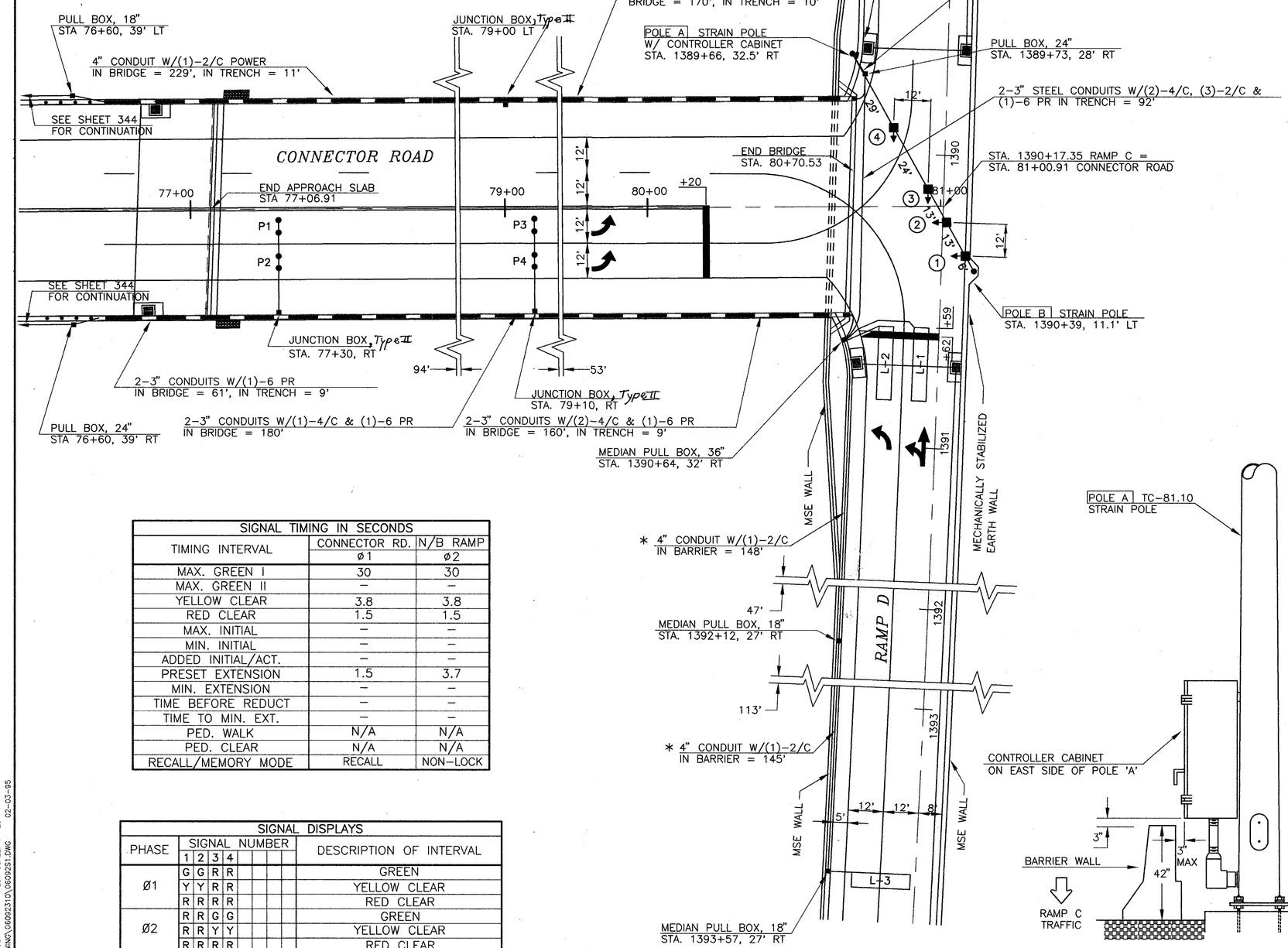

SIGNAL TIMING IN SECONDS		
TIMING INTERVAL	CONNECTOR RD. ø1	N/B RAMP ø2
MAX. GREEN I	30	30
MAX. GREEN II	–	–
YELLOW CLEAR	3.8	3.8
RED CLEAR	1.5	1.5
MAX. INITIAL	–	–
MIN. INITIAL	–	–
ADDED INITIAL/ACT.	–	–
PRESET EXTENSION	1.5	3.7
MIN. EXTENSION	–	–
TIME BEFORE REDUCT	–	–
TIME TO MIN. EXT.	–	–
PED. WALK	N/A	N/A
PED. CLEAR	N/A	N/A
RECALL/MEMORY MODE	RECALL	NON-LOCK

SIGNAL DISPLAYS									
PHASE	SIGNAL NUMBER								DESCRIPTION OF INTERVAL
	1	2	3	4					
ø1	G	G	R	R					GREEN
	Y	Y	R	R					YELLOW CLEAR
	R	R	R	R					RED CLEAR
ø2	R	R	G	G					GREEN
	R	R	Y	Y					YELLOW CLEAR
	R	R	R	R					RED CLEAR
FLASH	R	R	Y	Y					FLASH

CONTROLLER MOUNTING DETAIL
NOT TO SCALE

SUB-SUMMARY OF TRAFFIC SIGNAL ITEMS

REFERENCE LETTER	ITEM DESCRIPTION	ITEM NUMBER	UNIT	QUANTITY
A	GROUND ROD	625	EA.	1
	MEDIAN PULL BOX, 18"	625	EA.	2
	MEDIAN PULL BOX, 36"	625	EA.	1
	PULL BOX, 713.08, 18", A.P.P.	625	EA.	1
	PULL BOX, 713.08, 24", A.P.P.	625	EA.	2
	TRENCH	625	L.F.	139
	CONDUIT, 3", 713.04	625	L.F.	200
	CONDUIT, 3", 713.07, A.P.P.	625	L.F.	838
	CONDUIT, 4", 713.07, A.P.P.	625	L.F.	420
	JUNCTION BOX, A.P.P. **	625	EA.	3
	VEHICULAR SIGNAL HEAD, 3 SECTION, 12" LENS, 1 WAY, A.P.P.	632	EA.	4
	LOOP DETECTOR UNIT, A.P.P.	632	EA.	1
	LOOP DETECTOR PAVEMENT CUTTING, A.P.P.	632	L.F.	216
	MAGNETOMETER DETECTOR UNIT, A.P.P.	632	EA.	1
	MAGNETOMETER SENSOR PROBE, A.P.P.	632	EA.	4
B	STRAIN POLE, TC-81.10, DESIGN 3, 24 FEET	632	EA.	1
A	STRAIN POLE, TC-81.10, DESIGN 3, 27 FEET	632	EA.	1
	CABLE SUPPORT ASSEMBLY	632	EA.	1
	MESSENGER WIRE, 7 STRAND, 3/8 INCH DIA. WITH ACCESSORIES	632	L.F.	85
	SIGNAL CABLE, 5 CONDUCTOR, NO. 14 AWG	632	L.F.	238
	INTERCONNECT CABLE, 6 PAIR, NO. 19 AWG, PE 39-BJFA, A.P.P.	632	L.F.	556
	LOOP DETECTOR WIRE, TYPE E	632	L.F.	492
	LOOP DETECTOR LEAD-IN CABLE	632	L.F.	669
	MAGNETOMETER LEAD-IN CABLE	632	L.F.	777
	POWER CABLE, 2 CONDUCTOR, NO. 2 AWG, A.P.P.	632	L.F.	455
	CONTROLLER, ACTUATED, 2 PHASE, SOLID STATE DIGITAL	633	EA.	1
	MICROPROCESSOR, A.P.P.			

* 4" PVC CONDUIT IN BARRIER IS INCIDENTAL TO COST OF BARRIER.

** Junction Boxes shall be type II

NOTES:

1. THE CONTRACTOR SHALL PLACE ALL DETECTOR LOOPS IN THE CENTER OF EACH LANE UNLESS OTHERWISE SHOWN.
2. THE CONTROL CABINET DOOR SHALL BE LOCATED ON THE EAST SIDE OF THE CABINET.
3. PAYMENT FOR THE CONCRETE FOUNDATION FOR POLE 'A' IS INCLUDED WITH ITEM 610 REINFORCED EARTH WALL.

N

0 10 20 40 SCALE IN FEET

CALC. MDL DATE: 8-94
CHKD. DRB BY: DATE: 1-95

SIGNAL INSTALLATION
CONNECTOR RD. & N/B OFF-RAMP (RAMP "D")

FRA-270-32.46

359
593

PLOT DATE: 02-03-95 PLOT SCALE: 1" =20' 02-03-95
COL #25 C:\DRAWING\0609231\0609231.DWG

DETECTOR ASSIGNMENTS

DET #		RACK 1 (LT) OUTPUT CH#		PHASE		SYS DET		2 TURNS	DELAY DATA		DET UNIT RACK & CABLE LABEL	
MAGS	LOOPS	MAGS	LOOPS	MAGS	LOOPS	PROBES	LOOPS	LOOP SIZE	LOOP SEC	ø GRN INHIBIT	MAG	LOOP
P1/P2	L-1	3	7	1	2		B1	5' x 25'		ø2	EB(F)	NB(R)
P3/P4	L-2	1	7	1	2	A1		5' x 25'		ø2	EB(N)	NBLT(L)
	L-3		8		2		B2	25' x 5'				NB

FLASH: ø1 YELLOW
ø2 RED
INITIALIZE IN
ø1 GREEN

SIGNAL HEAD FIELD WIRING HOOKUP PER APPROACH

SIGNAL DISPLAY	WIRE COLOR
THRU R	RED
THRU Y	ORANGE
THRU G	GREEN
L/T R	BLACK
L/T ~~Y~~	WHITE W/BLACK TRACER
L/T ~~G~~	BLUE
R/T R	NOT USED BY CITY
R/T ~~Y~~	RED W/BLACK TRACER
R/T ~~G~~	GREEN W/BLACK TRACER

WHITE SHALL BE USED FOR GROUND (COMMON). SPLICE ALL WIRES IN THE SIGNAL HEAD OR PED UNIT. USE #14 AWG 2 WIRE SPADE TERMINAL OR #14 AWG 1 WIRE SPADE TERMINAL TO CONNECT ALL WIRES TO FIELD TERMINALS. USE BUTT SPLICES ON ALL THROUGH WIRES. ALL UNUSED WIRES SHALL BE SPLICED THROUGH AND SHALL HAVE A DEAD-END TERMINAL AT THE END OF THE WIRE.

WIRING DIAGRAM LEGEND

- VEHICULAR SIGNAL HEAD
- (L) VEHICLE LOOP DETECTOR
- P VEHICLE MAGNETOMETER PROBE
- ——— 5/C #14 AWG.
- —— – —— 2/C #14 AWG.
- — — — — 4/C #14 AWG.
- ——2P—— 2/C #2 AWG. (POWER)
- ——6PR—— 6 PAIR #19 AWG. (INTERCONNECT)

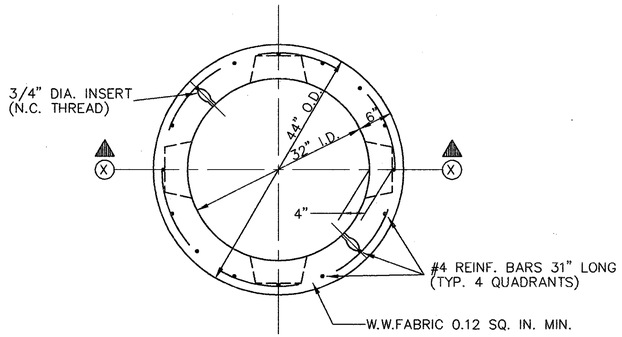

TOP VIEW

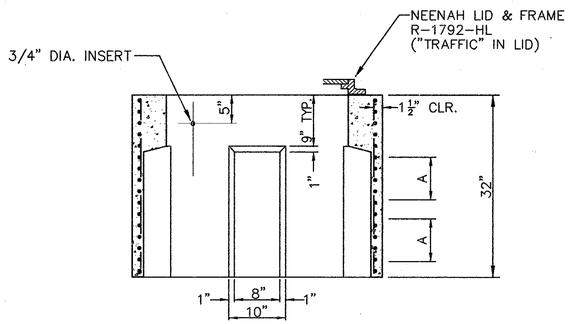

APPROX. WT. = 1700 LBS.

SECTION X-X

"A" CUT OUT 4 WIRES IN THE AREA OF THE REDUCED WALL SECTION. ALSO INCLUDE THE VERTICAL WIRE FOR REMOVAL.

CONCRETE COMP. STRENGTH - 4000 PSI MIN. DESIGN

CONCRETE AIR ENTRAINMENT TO BE 6% ±1½%

COATING OF PROTECTIVE ACRYLIC IS TO BE APPLIED TO THE TOP 12" OF THE OUTSIDE FACE AND TOTAL INSIDE FACE.

LID RING LOAD TRANSFER IS TO BE DISTRIBUTED BY USE OF A PREFORMED MASTIC JOINT MATERIAL.

DESIGNED & BUILT BY UNIVERSAL CONCRETE PRODUCTS.

PULL BOX, 713.08, 32", A.P.P. DETAIL

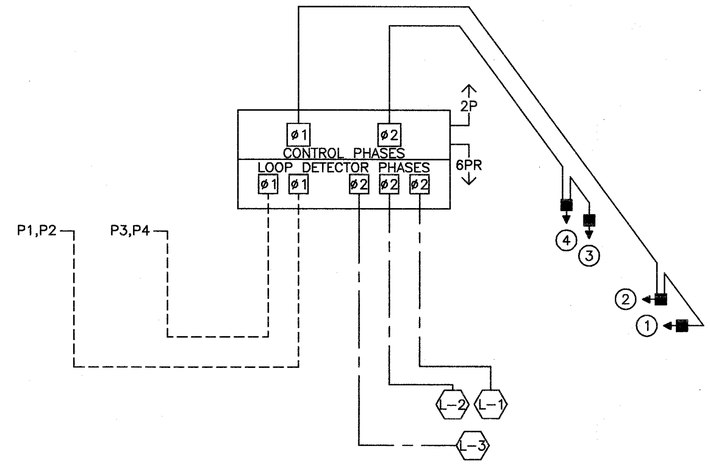

WIRING DIAGRAM

TYPICAL MAGNETOMETER PROBE SET PLACEMENT

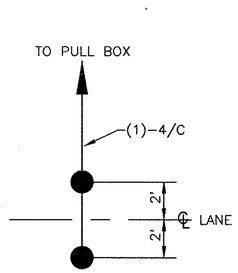

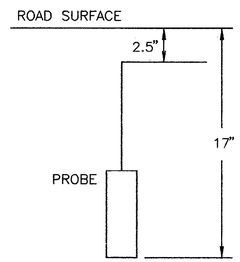

NOTES

1. SET CONFLICT MONITOR FOR 10 SEC FLASH.
2. DIODES SHALL BE USED TO ISOLATE LOCAL CALL FUNCTIONS FROM SYSTEM DETECTOR FUNCTIONS.
3. CONTROLLER NUMBER IS 5.
4. SET P1 & P2 PROBE CHANNELS ON PRESENCE MODE. SET ALL OTHER PROBE CHANNELS TO PULSE MODE.
5. SET ALL LOOP UNIT CHANNELS TO PRESENCE/COUNT MODE.
6. SET EXTENSION TIME TO 1.5 SECONDS ON P1, P2 & L-3 UNITS.

NO SCALE

CALC. BY:
DATE:
CHKD. BY:
DATE:

SIGNAL INSTALLATION
CONNECTOR RD. & N/B OFF-RAMP (RAMP "D")

FRA-270-32.46

360
593

PLOT DATE: 02-03-95
COL #25
C:\DRAWING\960923\0609252.DWG
PLOT SCALE: 1"=20'
02-03-95

SIGNAL SPANS AND PERCENT SAG				POLE SIZES & SPAN ATTACHMENT HEIGHT					POLE FABRICATION ACCESSORY LOCATIONS–CLOCKWISE FROM HANDHOLE AT 0 DEGREES									FIELD ORIENTATION		
INTERSECTION	SHT. NO.	SPAN DESIGNATION	PERCENT SAG	POLE OR BULLRING DESIGNATION	TC 81.10 POLE DESIGN NO.	POLE HT. (FT.)	ATTACHMENT HT.(FT.) SPAN @ HT.	SPAN @ HT.	ANCHOR BOLT REF. LINE	CABLE ENTRANCES (NOTE 1) 1 ANGLE–HT. DEG.–FT.	2 ANGLE–HT. DEG.–FT.	3 ANGLE–HT. DEG.–FT.	CONTROL CABINET (NOTE 2)	PED. SIGNALS (NOTE 3)	PED. PUSH BUTTON	INDEX LINE ANGLE (HANDHOLE)	ANCHOR BOLT REF. LINE	UNUSED FOUNDN CONDUIT ELL 2" DIA.
		AB	4	A	12	34	30.4'		0°	180°–29'	180°–31'	195°–32'		135°/225°	–	135°	45°	
STELZER RD.		BC	4	B	12	34	30.9'		0°	180°–32'				135°/225°	–	225°	45°	
&	356																	
CONNECTOR RD.		CD	4	C	12	32	28.5'		0°	180°–30'				135°/225°	225°	135°	45°	
		DA	4	D	12	32	29.0'		0°	180°–30'				135°/225°	135°	225°	45°	
				PEDESTAL E					0°						180°	135°	45°	
				PEDESTAL F					0°						180°	225°	45°	
CONNECTOR RD.		AB	4	A	3	27	24.4'		0°	135°–26'			120°			240°	45°	
&	359																	
RAMP 'D'				B	3	24	21.1'		0°	45°–23'						0°	45°	0°

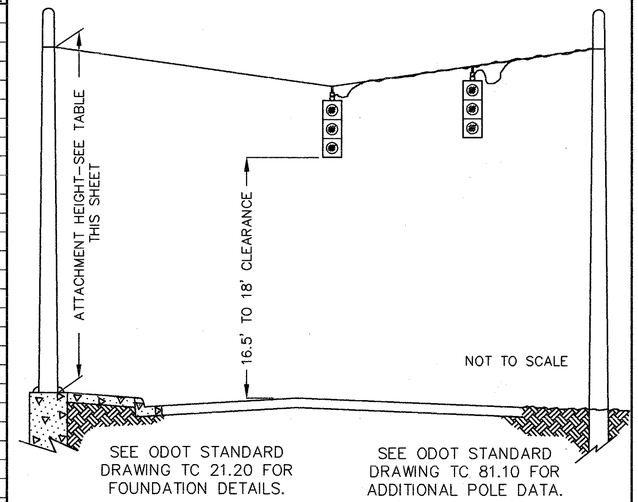

TYPICAL SIGNAL ELEVATION

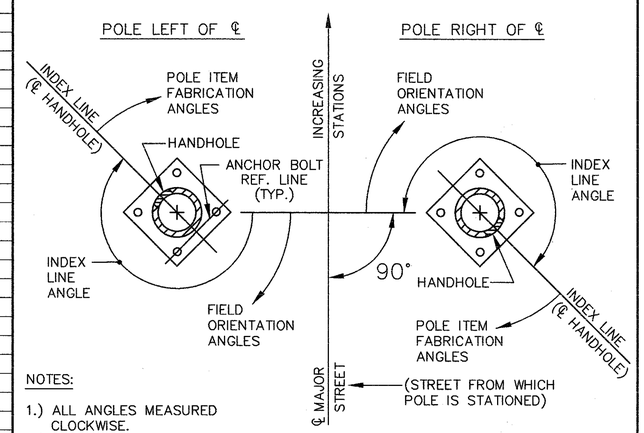

NOTES:

1.) ALL ANGLES MEASURED CLOCKWISE.
2.) INDEX LINE GOES THROUGH THE CENTER OF THE HANDHOLE.

SIGNAL STRAIN POLE ORIENTATION DETAIL

NOTES:

1. CABLE ENTRANCES ARE GIVEN FOR NEW STEEL POLES ONLY, NO. 1 & 2 ARE 2–IN. ENTRANCES FOR SIGNAL CABLES, ENTRANCE NO. 3 IS A 1–1/2 IN. ENTRANCE FOR ELECTRICAL SERVICE. UNUSED B.H.C. SHALL HAVE GALVANIZED PLUG.
2. WHEN CONTROL CABINETS ARE LOCATED ON NEW STEEL POLES, 2–1/2 IN. BLIND HALF COUPLINGS SHALL BE PROVIDED IN THE POLE AS PER TC–83.10 AND AT THE ORIENTATION NOTED IN THE TABLE.
3. WHEN PEDESTRIAN SIGNALS ARE LOCATED ON NEW STEEL POLES, 1–1/2 IN. BLIND HALF COUPLINGS SHALL BE PROVIDED IN THE POLE AS PER TC–85.10 AND AT THE ORIENTATION NOTED IN THE TABLE.

CALC. BY: M.D.L. DATE: 8/94
CHKD. BY: F.A.M. DATE: 8/94

STRAIN POLE ORIENTATION DATA

FRA–270–32.46

PLOT SCALE... COL #25 C:\DRAWING\06092310\TC\06092SW0.DWG FEBRUARY–03–1995

POWER SERVICE

THE POWER SUPPLYING AGENCY FOR THIS PROJECT IS:

COLUMBUS SOUTHERN POWER
215 NORTH FRONT STREET
COLUMBUS, OHIO 43215
(614) 836-2570

THE CONTRACTOR SHALL PAY ELECTRICAL ENERGY CHARGES FOR NEW POWER SERVICES ESTABLISHED BY THIS PROJECT. AFTER ACCEPTANCE OF THE LIGHTING, POWER SERVICE ELECTRICAL ENERGY ACCOUNTS SHALL BE TRANSFERRED TO THE MAINTAINING AGENCIES NOTED IN THE PLANS. THIS SHALL INCLUDE NEW POWER SERVICE ESTABLISHED BY THIS PROJECT AS WELL AS REASSIGNMENT OF EXISTING SERVICE DUE TO WORK PERFORMED BY THIS PROJECT.

UNDERGROUND UTILITIES

THE LOCATIONS OF THE UNDERGROUND UTILITIES SHOWN ON THE PLANS ARE AS OBTAINED FROM THE OWNERS OF THE UTILITY AS REQUIRED BY SECTION 153.64 ORC.

AT LEAST 48 HOURS BEFORE DIGGING, THE CONTRACTOR SHALL CALL THE OHIO UTILITIES PROTECTION SERVICE, TOLL-FREE, 800-362-2764. NON-MEMBER UTILITY COMPANIES MUST BE CALLED DIRECTLY.

SEE SHEET 36 FOR ADDITIONAL UTILITY INFORMATION.

CONTINGENCY QUANTITIES

THE CONTRACTOR SHALL NOT ORDER MATERIALS OR PERFORM WORK FOR PLAN ITEMS SET UP TO BE USED "AS DIRECTED BY THE ENGINEER" UNLESS AUTHORIZED BY THE ENGINEER.

TOWER FOUNDATIONS

TOWER FOUNDATIONS SHALL PROJECT SIX TO TWELVE INCHES ABOVE GRADE IN LIEU OF BEING SET FLUSH AS SHOWN IN THE STANDARD DRAWINGS, UNLESS OTHERWISE INDICATED ON THE ELEVATION VIEWS.

ELECTRICAL SERVICE FOR ILLUMINATED SIGNS

THE PAY ITEMS IN THE LIGHTING GENERAL SUMMARY INCLUDE THE PULL BOX OR JUNCTION BOX ADJACENT TO EACH LIGHTED SIGN AND THE ELECTRICAL SERVICE CONNECTIONS LEADING INTO THE BOX, INCLUDING SPLICES OR CONNECTOR KITS IN THE PULL BOX OR JUNCTION BOX. QUANTITIES FOR ELECTRICAL SERVICE FROM THE CONNECTION IN THE PULL BOX OR JUNCTION BOX TO THE SIGN ARE INCLUDED IN THE TRAFFIC CONTROL GENERAL SUMMARY.

UNDERDRAINS FOR PULL BOXES

REFERENCE IS MADE TO STANDARD DRAWING HL-30.11 FOR DETAILS OF DRAINING PULL BOXES. UNDERDRAINS FOR PULL BOXES SHALL BE USED AS DIRECTED BY THE ENGINEER AND SHALL BE PROVIDED WHERE THE LENGTH REQUIRED FOR A SATISFACTORY OUTLET DOES NOT EXCEED APPROXIMATELY 20 FEET. AN ESTIMATED QUANTITY OF "ITEM 603, 4" CONDUIT, TYPE E" IS INCLUDED IN THE LIGHTING GENERAL SUMMARY FOR THIS PURPOSE.

625 TRENCH

TRENCH SHALL BE AS PER 625.12. IN ADDITION, ALL TRENCHING IN PAVED AREAS SHALL BE PERFORMED PRIOR TO THE FINAL PAVEMENT.

PADLOCKS AND KEYS

PADLOCKS FURNISHED SHALL BE EITHER BRASS OR BRONZE, EQUAL TO MASTER NO. 4BKA, WILSON BOHANNAN 660A, OR EQUAL APPROVED BY THE ENGINEER AND SHALL BE KEYED IN ACCORDANCE WITH SPECIFICATION 631.08, PARAGRAPH 3. PAYMENT SHALL BE INCLUDED IN THE BID FOR THE ITEMS BEING LOCKED.

EXPANSION FITTINGS AND GROUNDS

THE EXPANSION FITTINGS OR GROUNDS SHOWN ARE NOT TO BE CONSIDERED COMPLETE IN NUMBER OR MORE THAN APPROXIMATE IN LOCATION.

625 PORTABLE POWER UNIT

A PORTABLE POWER UNIT FOR RAISING AND LOWERING THE LUMINAIRE ASSEMBLY SHALL BE FURNISHED AND DELIVERED TO THE ENGINEER BY THE CONTRACTOR UPON COMPLETION OF THE PROJECT.

PAYMENT FOR ITEM 625 PORTABLE POWER UNIT WILL BE AS PER 625.24.

PORTABLE POWER unit 625 1 EACH.

625 HIGH VOLTAGE TEST

A HIGH VOLTAGE TEST, AS DESCRIBED IN 625.22, SHALL BE PERFORMED ON ALL OUTDOOR DISTRIBUTION CABLE AND DUCT CABLE SYSTEMS TO BE INSTALLED ON THIS PROJECT.

PAYMENT FOR ITEM 625 HIGH VOLTAGE TEST WILL BE AS PER 625.24.

625 LIGHT POLE, DESIGN AT ____ B41.7, AS PER PLAN

LIGHT POLES PROVIDED AND INSTALLED BY THE CONTRACTOR SHALL BE DESIGN AT10B41.7 AND AT12B41.7. ALL ALUMINUM SURFACES ON THE POLE AND BASE SHALL BE ROTARY SANDED TO A SATIN GROUND FINISH AND BRACKETS SHALL BE ETCHED TO A MATTE FINISH. SHAFTS AND BRACKETS SHALL BE TREATED WITH AN ALCOHOLIC-PHOSPHORIC ACID SOLUTION AT 70 DEGREES F FOR APPROXIMATELY FIVE MINUTES FOLLOWED BY A COLD WATER RINSE. SHAFTS AND BRACKETS SHALL BE PRIMED WITH EPOXY ZINC CHROMATE AND FINISHED WITH A SPRAY COATING OF DARK BRONZE POLYURETHANE ENAMEL. THE FINISH COAT SHALL BE 2 MILS DRY FILM THICKNESS. ALL MATERIALS SHALL BE APPROVED.

625 LUMINAIRE, STYLE B, AS PER PLAN

STYLE B LUMINAIRES SHALL HAVE SINGLE RATED 480 VOLT, 400 WATT, INTEGRAL REGULATOR BALLASTS FOR USE WITH HIGH PRESSURE SODIUM LAMPS AND SHALL BE GENERAL ELECTRIC M-400. CROUSE-HINDS OVM, AMERICAN 25/26 OR EQUAL APPROVED BY THE ENGINEER. LUMINAIRE SHALL BE FINISHED TO MATCH COLOR OF POLE.

625 LIGHT POLE, HAPCO BRAND, (ALTERNATE BID)

THE ALTERNATE LIGHT POLE SHALL BE HAPCO BRAND, B70365 OR B70365-45427-12' AS SPECIFIED IN THE CITY OF COLUMBUS DIVISION OF ELECTRICITY STREET LIGHTING SPECIFICATIONS AT LOCATIONS INDICATED IN THE PLAN.

625 LUMINAIRE, KIM BRAND, (ALTERNATE BID)

ALTERNATE LUMINAIRE SHALL BE KIM AR3/400 HPS, MEETING PHOTOMETRIC REPORT #ITL36083.

713.14 LAMPS

HIGH PRESSURE SODIUM LAMPS SHALL BE GENERAL ELECTRIC "LUCALOX", PHILLIPS "CERAMALUX", SYLVANIA "LUMALUX", OR EQUAL APPROVED BY THE ENGINEER.

625.07 - 713.13 UNDERPASS LUMINAIRES

UNDERPASS LUMINAIRES SHALL BE HOLOPHANE "UNDERPASS WALLPACK", WESTINGHOUSE, OR GENERAL ELECTRIC WL-250 UNDERPASS UNIT OR EQUAL APPROVED BY THE ENGINEER, AND SHALL BE FURNISHED WITH AN INTEGRAL FUSE HOLDER AND 10-AMPERE FUSE. THE INTEGRAL HIGH PRESSURE SODIUM BALLAST SHALL BE OF A REGULATOR TYPE RATED FOR 480 VOLTS, 100 WATTS.

625 - SERVICE TO UNDERPASS LIGHTING

THIS ITEM SHALL CONSIST OF PROVIDING COMPLETE ELECTRICAL SERVICE, EXCEPT FOR LUMINAIRES AND STRUCTURE GROUNDING, FOR AN UNDERPASS LIGHTING SYSTEM ON THE CONNECTOR ROAD BRIDGE OVER I-270. THE INSTALLATION WORK SHALL INCLUDE CONDUITS, CONDUIT GROUNDING, MOUNTINGS, FITTINGS, JUNCTION BOXES, CABLES, AND ALL INCIDENTALS NECESSARY TO COMPLETE, READY FOR USE, THE SERVICE AS DETAILED ON SHEET 377. PAYMENT BID FOR "ITEM 625 - SERVICE TO UNDERPASS LIGHTING" SHALL INCLUDE PAYMENT FOR ALL EQUIPMENT, LABOR, AND MATERIALS NECESSARY TO COMPLETE THE WORK AS SPECIFIED. COMPONENT PARTS NOT SPECIFICALLY MENTIONED BUT REQUIRED FOR SATISFACTORY OPERATION OF THIS ITEM SHALL BE FURNISHED AND CONSIDERED PAID FOR AS PART OF THE ITEM.

625 MEDIAN PULL BOX, 18", 713.08

THIS ITEM SHALL CONFORM TO THE DETAIL AND SPECIFICATIONS AS SHOWN ON SHEET 377. MEDIAN PULL BOXES SHALL BE INSTALLED IN BARRIER AT LOCATIONS SHOWN ON THE PLANS. WHEN MEDIAN PULL BOXES ARE INSTALLED IN BARRIER BETWEEN THE I-270 MAINLINE AND THE COLLECTOR-DISTRIBUTOR ROAD, THE PULL BOX COVER PLATE SHALL BE ON THE MAINLINE SIDE OF THE BARRIER.

PAYMENT FOR ALL HARDWARE AND WORK NECESSARY TO INSTALL A MEDIAN PULL BOX IN THE BARRIER SHALL BE INCIDENTAL TO THE CONTRACT UNIT PRICE PER EACH MEDIAN PULL BOX.

625 LIGHT TOWERS AND LUMINAIRES REMOVED FOR REUSE

BEFORE ANY WORK IS STARTED IN THE IMMEDIATE VICINITY OF ANY EXISTING LIGHT TOWERS, REPRESENTATIVES OF THE STATE, THE MAINTAINING AGENCY, AND THE CONTRACTOR SHALL MAKE A VISUAL INSPECTION OF THE EXISTING LIGHT TOWERS AND LUMINAIRES TO BE REMOVED FOR REUSE. DURING THIS INSPECTION, A WRITTEN RECORD OF THE CONDITION OF THE EXISTING TOWERS AND LUMINAIRES SHALL BE MADE BY THE STATE'S REPRESENTATIVE. THIS WRITTEN REPORT SHALL NOTE INDIVIDUAL LUMINAIRES WHICH ARE NOT IN WORKING ORDER, INDIVIDUAL TOWERS WHICH ARE DAMAGED, AND INDIVIDUAL LOWERING DEVICES WHICH ARE NOT IN PROPER WORKING ORDER. THE COMPLETED REPORT SHALL BE SIGNED BY THE REPRESENTATIVES OF THE STATE, THE MAINTAINING AGENCY, AND THE CONTRACTOR.

PRECAUTIONS SHOULD BE TAKEN BY THE CONTRACTOR TO PROTECT THE LUMINAIRES AND TOWERS DURING STORAGE FROM WEATHER DAMAGE AND CONSTRUCTION ACTIVITIES ON THE CONSTRUCTION SITE.

PAYMENT FOR THE ABOVE ITEMS SHALL INCLUDE ALL LABOR, EQUIPMENT, MATERIALS, AND INCIDENTALS REQUIRED TO PERFORM THIS COMPLETE ITEM OF WORK.

625 LUMINAIRE REMOVED, AS PER PLAN

THE CONTRACTOR SHALL BE RESPONSIBLE FOR REMOVING AND STORING LUMINAIRES AS INDICATED ON THE PLANS. THE REMOVED LUMINAIRES SHALL BE CAREFULLY STORED ON THE CONSTRUCTION SITE FOR ODOT(DISTRICT 6) TO PICK UP. THE APPROXIMATE LOCATIONS OF THE LUMINAIRES TO BE REMOVED ARE SHOWN ON THE LIGHTING SUB-SUMMARY SHEETS. THE CONTRACTOR SHALL NOTIFY THE ENGINEER WHO WILL NOTIFY ODOT 48 HOURS IN ADVANCE OF WHEN THE LUMINAIRES WILL BE REMOVED. AT THE COMPLETION OF THE PROJECT, ANY STORED LUMINAIRES STILL REMAINING ON THE SITE SHALL BE PROPERLY DISPOSED OF BY THE CONTRACTOR. QUANTITIES ARE INCLUDED IN THE LIGHTING SUB-SUMMARY.

PAYMENT FOR ITEM 625 LUMINAIRE REMOVED, AS PER PLAN SHALL INCLUDE ALL LABOR, EQUIPMENT, AND INCIDENTALS REQUIRED TO PERFORM THE COMPLETE ITEM OF WORK.

625 LIGHT TOWER FOUNDATION, 36"X15' DEEP, AS PER PLAN

THIS ITEM SHALL BE AS PER 625.06 AND 713.21 EXCEPT THAT FOUR (4) ANCHOR BOLTS SHALL BE FURNISHED AND INSTALLED TO ACCOMMODATE AN EXISTING LIGHT TOWER THAT IS TO BE REUSED IN THIS PROJECT. THE CONTRACTOR SHALL SUPPLY CERTIFIED CALCULATIONS TO SUPPORT THE SELECTION OF THE ANCHOR BOLTS. IN ADDITION, THE TOWER FOUNDATION SHALL PROJECT SIX TO TWELVE INCHES ABOVE GRADE IN LIEU OF BEING SET FLUSH AS SHOWN IN THE STANDARD DRAWINGS, UNLESS OTHERWISE INDICATED ON THE ELEVATION VIEWS.

PAYMENT SHALL BE AS PER 625.24.

625 REERECT EXISTING LIGHT TOWER

UPON REMOVAL OF A LIGHT TOWER FROM STORAGE, REPRESENTATIVES OF THE STATE, THE MAINTAINING AGENCY, AND THE CONTRACTOR SHALL MAKE A VISUAL INSPECTION OF THE LIGHT TOWER AND DETERMINE WHETHER THE TOWER AND ITS APPURTENANCES ARE IN THE SAME CONDITION AS INDICATED IN THE WRITTEN REPORT TAKEN AT THE TIME THE TOWER WAS REMOVED AND PLACED INTO STORAGE.

IF, AS A RESULT OF THIS INSPECTION, IT IS DETERMINED THAT THE CONDITION OF THE TOWER IS BELOW THAT STATED IN THE REPORT, THE CONTRACTOR SHALL, AT HIS OPTION AND EXPENSE, REPAIR OR REPLACE ALL DAMAGED PORTIONS OF THE TOWER AND APPURTENANCES.

UPON APPROVAL OF THE CONDITION OF THE LIGHT TOWER, THE CONTRACTOR SHALL CLEAN AND REERECT THE TOWER AT THE LOCATION AS INDICATED IN THE PLANS.

PAYMENT SHALL BE FOR EACH LIGHT TOWER REERECTED, COMPLETE IN PLACE, INCLUDING ALL LABOR, EQUIPMENT, MATERIALS, AND INCIDENTALS.

CAS: R.A.K. DATE: 9/94
CHKD: D.R.B. DATE: 2/95

LIGHTING GENERAL NOTES

FRA-270-32.46

362
593

PLOT SCALE: 1.0000 '/ IN.
COE #33 C:\DRAWING\0609231O\HL\0609ZLN1.DWG FEBRUARY-11-1995

625 REERECT EXISTING LUMINAIRE

UPON REMOVAL OF LUMINAIRES FROM STORAGE, REPRESENTATIVES OF THE STATE, THE MAINTAINING AGENCY, AND THE CONTRACTOR SHALL MAKE A VISUAL INSPECTION OF THE LUMINAIRE AND DETERMINE WHETHER THE LUMINAIRE IS IN THE SAME CONDITION AS INDICATED IN THE WRITTEN REPORT TAKEN AT THE TIME THE LUMINAIRE WAS REMOVED AND PLACED INTO STORAGE.

IF, AS A RESULT OF THIS INSPECTION, IT IS DETERMINED THAT THE CONDITION OF THE LUMINAIRE IS BELOW THAT STATED IN THE REPORT, THE CONTRACTOR SHALL, AT HIS OPTION AND EXPENSE, REPAIR OR REPLACE ALL DAMAGED PORTIONS OF THE LUMINAIRE.

UPON APPROVAL OF THE CONDITION OF THE LUMINAIRE, THE CONTRACTOR SHALL CLEAN AND RELAMP THE LUMINAIRE AS PER 625.07 AND REERECT THE LUMINAIRE ON THE REERECTED TOWERS AS INDICATED IN THE PLANS.

PAYMENT SHALL BE FOR EACH LUMINAIRE REERECTED, COMPLETE IN PLACE INCLUDING ALL LABOR, EQUIPMENT, MATERIALS, AND INCIDENTALS.

625 MODIFY EXISTING LUMINAIRE

THIS ITEM SHALL CONSIST OF PROVIDING AND INSTALLING OF A SYMMETRICAL REFRACTOR IN LIEU OF THE EXISTING ASYMMETRICAL REFRACTOR PRIOR TO REERECTION.

625 LUMINAIRE MOUNTING ARM

THIS ITEM OF WORK INCLUDES PROVIDING AND INSTALLING A 2-INCH NOMINAL STEEL PIPE MOUNTING ARM ON AN EXISTING LIGHT TOWER LUMINAIRE RING ASSEMBLY AT LOCATIONS INDICATED IN THE PLANS. IN ADDITION THE EXISTING LUMINAIRE MOUNTING ARMS SHALL BE REPOSITIONED ON THE RING ASSEMBLY SUCH THAT THE EXISTING AND NEW ARMS ARE SPACED EVENLY AROUND THE RING. THE CONTRACTOR SHALL PROVIDE AND INSTALL ANY NECESSARY CONDUCTORS AND MISCELLANEOUS HARDWARE IN THE RING ASSEMBLY TO FACILITATE WIRING THE ADDITIONAL LUMINAIRES AS PER 713.21.

PAYMENT WILL BE MADE FOR EACH LUMINAIRE MOUNTING ARM PROVIDED AND INSTALLED INCLUDING ALL NECESSARY ADJUSTMENTS, LABOR, MATERIALS, AND INCIDENTALS REQUIRED TO PERFORM THE COMPLETE ITEM OF WORK.

625 CONNECTION TO EXISTING CONDUIT

THIS ITEM INCLUDES THE ADDITIONAL WORK REQUIRED TO CAREFULLY REMOVE A SEGMENT OF AN EXISTING 3" STEEL CONDUIT CONTAINING CIRCUIT MIB CABLE IN ORDER TO INSTALL A PULLBOX AT THE LOCATION SHOWN IN THE PLAN. THE RESULTING EXPOSED ENDS OF THE CONDUIT SHALL EXTEND INSIDE THE NEW PULLBOX AND SHALL BE FREE OF BURRS. THE EXISTING CABLE THROUGHOUT THE AREA SHALL BE REPLACED UNTIL AN UNDISTURBED PULL BOX IS REACHED, AS BETWEEN PB-1 AND PB-2 ACCROSS THE MEDIAN. IT IS THE RESPONSIBILITY OF THE CONTRACTOR TO ASSURE THAT CIRCUIT MIB IS "OFF" PRIOR TO PERFORMING THIS ITEM OF WORK.

PAYMENT WILL BE MADE FOR EACH CONNECTION TO EXISTING CONDUIT WHICH SHALL INCLUDE ALL LABOR, EQUIPMENT, MATERIALS, AND INCIDENTALS REQUIRED TO COMPLETE THIS ITEM OF WORK.

625 CONNECTION TO EXISTING PULL BOX

THIS ITEM OF WORK SHALL CONSIST OF PROVIDING A CONNECTION TO AN EXISTING CONCRETE PULL BOX AS REQUIRED BY THE PLAN. THE CONNECTION AT MAINLINE STA. 1443+88 (LT) SHALL PERMIT THE ENTRANCE OF THE NEW 4 INCH CONDUIT RUN AS SHOWN IN THE PLAN. THE CONNECTION AT STA. 1369+90 (RT) RAMP "C" SHALL PERMIT THE ENTRANCE OF THE REROUTED DUCT CABLE END AS SHOWN IN THE PLAN.

CONNECTION TO THE EXISTING CONCRETE PULL BOX SHALL BE PROVIDED BY DIRECTING THE CONDUIT/DUCT CABLE UPWARD THROUGH THE PULL BOX FLOOR WITHOUT DISTURBING THE PULL BOX OR BY DRILLING A HOLE IN THE SIDE OF THE PULL BOX. IN THE EVENT THAT THE PULL BOX SHOULD BE DAMAGED, THE DAMAGE SHALL BE REPAIRED AS DIRECTED BY THE ENGINEER. THE COST OF REPAIRS TO OR REPLACEMENT OF THE EXISTING PULL BOX WILL BE INCIDENTAL TO THE COST OF THE CONNECTION. CARE SHOULD BE TAKEN TO NOT DISTURB THE EXISTING WIRING IN THE PULL BOX EXCEPT AS REQUIRED BY THE PLANS.

PAYMENT FOR ITEM 625 CONNECTION TO EXISTING PULL BOX WILL BE MADE AT THE UNIT PRICE FOR EACH CONDUIT CONNECTED INCLUDING ALL LABOR, EQUIPMENT, MATERIALS, AND INCIDENTALS REQUIRED TO PERFORM THE COMPLETE ITEM OF WORK.

EXISTING POWER SERVICE "MI" AT MORSE ROAD

THE CONTRACTOR SHALL LOCATE POWER SERVICE "MI" AT THE I-270 AND MORSE ROAD INTERCHANGE AT STA. 1356+34 RAMP C.

KEYS TO ACCESS THE CONTROL CENTER SHOULD BE OBTAINED FROM THE ODOT DISTRICT SIX OFFICE. CIRCUIT "B" SHALL BE SWITCHED "OFF" WHENEVER CIRCUIT MIB WORK IS BEING PERFORMED. ALL REMAINING CIRCUITS SHALL REMAIN "ON" UNLESS OTHERWISE APPROVED BY THE ENGINEER. UPON COMPLETION OF CIRCUIT MIB WORK, THE CONTRACTOR SHALL RESTORE POWER TO CIRCUIT MIB.

PAYMENT FOR THIS ITEM IS INCIDENTAL TO THE VARIOUS LIGHTING ITEMS INCLUDED IN THE PROJECT.

625 REFURBISH POWER SERVICE "B" AS PER PLAN

POWER SERVICE "B" IS AN EXISTING FENCED CONTROL CENTER LOCATED AT STA. 26+77, 56' LT, MCCUTCHEON ROAD WITH ONE ACTIVE LIGHTED SIGNING CIRCUIT "C" AND ONE SPARE CIRCUIT "D". THE CONTRACTOR SHALL BE RESPONSIBLE FOR PROVIDING ALL NECESSARY CONDUITS, FITTINGS, CABLES, FUSES, CONNECTORS, AND INCIDENTALS NECESSARY TO REUSE THE CONTROL CENTER AS REQUIRED BY THE PLAN.

PAYMENT SHALL BE AS PER ITEM 625.

625 POWER SERVICE "N", AS PER PLAN

THIS ITEM OF WORK SHALL CONFORM TO 625.18 AND 713.19. THE CONTRACTOR SHALL NOTIFY THE COLUMBUS SOUTHERN POWER COMPANY (CSP) WHEN THE CIRCUITS ARE READY FOR POWER AND CSP WILL MAKE THE POWER SERVICE CONNECTION AT THE TOP OF THE SERVICE POLE.

POWER SUPPLIED SHALL BE 480 VOLT, TWO-WIRE GROUNDED NEUTRAL.

PAYMENT SHALL BE AS PER ITEM 625.

625 POWER SERVICE "S", AS PER PLAN

THIS ITEM OF WORK SHALL CONFORM TO 625.18 AND 713.19 EXCEPT THAT THE CONTROL CENTER MOUNTING SHALL BE AS DETAILED ON SHEET 368 INCLUDING THE 48" X 48" CONCRETE PAD. A WOOD SERVICE POLE IS NOT REQUIRED. THE CONTRACTOR SHALL NOTIFY THE COLUMBUS SOUTHERN POWER COMPANY (CSP) WHEN THE CIRCUIT IS READY FOR POWER AND CSP WILL MAKE THE POWER SERVICE CONNECTION AT THE POWER COMPANY'S SERVICE TRANSFORMER OR PEDESTAL.

POWER SUPPLIED SHALL BE 480 VOLT, TWO-WIRE GROUNDED NEUTRAL.

PAYMENT SHALL BE AS PER ITEM 625.

ITEM SPECIAL - PLASTIC CAUTION TAPE

THE LOCATION OF UNDERGROUND DUCT CABLE OR NON-METALLIC CONDUIT, WHEN INSTALLED IN LOCATIONS OTHER THAN THE NORMAL OR ALTERNATE TRENCH ALIGNMENT SHOWN ON STANDARD CONSTRUCTION DRAWING HL-20.11, SHALL BE MARKED BY THE USE OF A CONTINUOUS IDENTIFYING TAPE BURIED IN THE TRENCH ABOVE THE LINE. THE IDENTIFYING TAPE SHALL BE AN INERT MATERIAL, APPROXIMATELY 6" WIDE, COMPOSED OF POLYETHYLENE PLASTIC, HIGHLY RESISTANT TO ALKALIS, ACID OR OTHER CHEMICAL COMPOUNDS LIKELY TO BE ENCOUNTERED IN SOILS. THE TAPE SHALL BE BRIGHT YELLOW WITH IDENTIFYING PRINTING "ELECTRIC" IN BLACK LETTERS, ONE SIDE ONLY. TAPES SHALL BE SUPPLIED IN CONTINUOUS ROLLS WITH THE IDENTIFYING LETTERING REPEATED CONTINUOUSLY THE FULL LENGTH OF THE TAPE. IDENTIFYING TAPES SHALL BE BURIED IN THE ELECTRIC LINE TRENCH WITH ONE STRIP PLACED APPROXIMATELY DOWN THE CENTERLINE AND LOCATED APPROXIMATELY 8" TO 12" BELOW THE FINAL FINISHED GRADE. THE TAPE SHALL BE PLACED IN THE TRENCH WITH PRINTED SIDE UP AND SHALL BE ESSENTIALLY PARALLEL WITH THE FINISHED SURFACE. THE CONTRACTOR SHALL TAKE NECESSARY PRECAUTIONS TO INSURE THAT THE TAPE IS NOT PULLED, DISTORTED, OR OTHERWISE MISPLACED IN COMPLETING THE TRENCH BACKFILL. TAPE SHALL BE ALLEN SYSTEM'S, TERRA TAPE, TECTA TAPE OR EQUAL AS APPROVED BY THE ENGINEER.

THE TAPE SHALL BE PAID FOR PER LINEAR FOOT OF "ITEM SPECIAL - PLASTIC CAUTION TAPE," COMPLETE AND IN PLACE.

ITEM SPECIAL - DISCONNECT EXISTING CIRCUIT

THIS ITEM OF WORK SHALL CONSIST OF DISCONNECTING EXISTING CIRCUIT(S) IN AN EXISTING LIGHT POLE OR AN EXISTING PULL BOX. DISCONNECTION IN A PULL BOX SHALL CONSIST OF CUTTING CIRCUIT CABLES AND REMOVING SPLICE KITS AND CABLES OF CIRCUIT(S) TO BE ABANDONED. CABLES OF CIRCUIT(S) TO BE REUSED SHALL BE CUT IN SUCH A MANNER THAT SUFFICIENT CABLE REMAINS FOR MAKING RECONNECTION SPLICES.

DISCONNECTIONS IN LIGHT POLES SHALL CONSIST OF REMOVING THE ENDS OF CABLES OF CIRCUIT(S) TO BE ABANDONED. THOSE ENDS OF CONNECTOR KITS FROM WHICH THE ABANDONED CABLES ARE REMOVED SHALL BE PLUGGED AND TAPED SHUT.

PAYMENT WILL BE MADE AT THE UNIT PRICE BID FOR "ITEM SPECIAL - DISCONNECT EXISTING CIRCUIT" WHICH SHALL BE FULL COMPENSATION FOR ALL LABOR, MATERIALS, AND INCIDENTALS REQUIRED FOR COMPLETING THE WORK IN A SATISFACTORY WORKMANLIKE MANNER.

ITEM 202 LIGHT TOWER FOUNDATION REMOVED, AS PER PLAN

THIS ITEM OF WORK SHALL CONSIST OF REMOVING AN EXISTING LIGHT TOWER FOUNDATION TO A MINIMUM OF ONE FOOT BELOW FINISHED GRADE, BACKFILLING THE RESULTANT DEPRESSION WITH COMPACTED SOIL, AND PROPERLY RESTORING THE DISTURBED AREA.

PAYMENT WILL BE MADE AT THE UNIT PRICE BID FOR EACH ITEM 202 LIGHT TOWER FOUNDATION, AS PER PLAN, WHICH SHALL BE FULL COMPENSATION FOR ALL LABOR, MATERIALS, AND INCIDENTALS REQUIRED TO COMPLETE THE WORK SATISFACTORILY.

ITEM 202 EXISTING CONDUIT CLEANED, AS PER PLAN

THIS ITEM SHALL CONSIST OF LOCATING AND CLEANING AN EXISTING CONDUIT OF ALL MUD AND DEBRIS SO THAT NEW CABLES MAY BE INSTALLED.

INCIDENTAL TO THE CLEANING IS THE INSTALLATION OF BUSHINGS AND/OR COUPLINGS ON THE ENDS OF EXISTING CONDUIT AS REQUIRED. MATERIALS REMOVED SHALL BECOME THE PROPERTY OF THE CONTRACTOR AND SHALL BE PROPERLY DISPOSED OF OFF THE JOB SITE. DISTURBED AREAS SHALL BE PROPERLY RESTORED.

PAYMENT WILL BE MADE FOR EACH LINEAL FOOT OT ITEM 202 "EXISTING CONDUIT CLEANED, AS PER PLAN" AND SHALL BE FULL COMPENSATION FOR ALL MATERIALS, LABOR, AND INCIDENTALS REQUIRED TO COMPLETE THE WORK IN A SATISFACTORY WORKMANLIKE MANNER.

CALC. BY: R.A.K. DATE: 9/94
CHKD. BY: D.R.B. DATE: 2/95

LIGHTING GENERAL NOTES

FRA-270-32.46

363
593

PLOT SCALE
COL #35 C:\DRAWING\06092310\HL06092LN2.DWG FEBRUARY-11-1995

TOTAL FROM PLAN SHEET NO./FROM SUB-SUMMARY SHEET NO.														PARTICIPATION SUB-TOTAL		ITEM	ITEM EXT.	GRAND TOTAL	UNIT	DESCRIPTION	SEE SHT. NO.
			362		369/365	370/365	371/365	372/366	373/366	374/366	375/366	376/367									
																				LIGHTING	
						4										202	75507	4	EACH	LUMINAIRE REMOVED, AS PER PLAN	362
					8	12										202	75508	20	EACH	LUMINAIRE REMOVED FOR REUSE	
					201											202	75711	201	LIN. FT.	EXISTING CONDUIT CLEANED, AS PER PLAN	363
					2	4										202	98100	6	EACH	REMOVAL MISC.: LIGHT TOWER FOUNDATION [redacted], AS PER PLAN	362
					2	4										202	98100	6	EACH	REMOVAL MISC.: LIGHT TOWER REMOVED FOR REUSE	
					20	20	20	40		20	20	60				603	00400	200	LIN. FT.	4" CONDUIT, TYPE E	
												10				625	00500	10	EACH	CONNECTOR KIT, TYPE II	
												10				625	00600	10	EACH	CONNECTOR KIT, TYPE III	
												4				625	01004	4	EACH	CONNECTOR KIT, TYPE VII B	
					4	4	2	4	4	2	4	4				625	01500	28	EACH	CABLE SPLICING KIT	
												1				625	06200	1	EACH	LIGHT POLE, DESIGN AT10B41.7, AS PER PLAN	362
												9				625	06300	9	EACH	LIGHT POLE, DESIGN AT12B41.7, AS PER PLAN	362
						1	6	5	4	4	2					625	13400	22	EACH	LIGHT TOWER, BBBBBB100	
												10				625	14100	10	EACH	LIGHT POLE FOUNDATION, 24" X 8' DEEP	
						1	4	5	4	4	2					625	15000	20	EACH	LIGHT TOWER FOUNDATION, 36" X 15' DEEP	
					3	3										625	15001	6	EACH	LIGHT TOWER FOUNDATION, 36" X 15' DEEP, AS PER PLAN	362
							2									625	15100	2	EACH	LIGHT TOWER FOUNDATION, 36" X 20' DEEP	
			1													625	20000	1	EACH	PORTABLE POWER UNIT	
					442						196					625	22900	638	LIN. FT.	NO. 1/0 AWG. 5000 VOLT DISTRIBUTION CABLE	
												1066				625	23400	1066	LIN. FT.	NO. 10 AWG. POLE AND BRACKET CABLE	
												1967				625	23900	1967	LIN. FT.	1-1/2" DUCT CABLE WITH TWO NO. 6 AWG. 5000 VOLT CABLES	
					215	1550	2506	1625	1600	1345						625	24300	8841	LIN. FT.	1-1/2" DUCT CABLE WITH TWO NO. 2 AWG. 5000 VOLT CABLES	
								1985		105	813					625	24310	2903	LIN. FT.	1-1/2" DUCT CABLE WITH TWO NO. 1/0 AWG. 5000 VOLT CABLES	
						30	126	113	6	70		131				625	25500	476	LIN. FT.	CONDUIT, 3", 713.04	
								125			28					625	25600	153	LIN. FT.	CONDUIT, 4", 713.04	
									160							625	25602	160	LIN. FT.	CONDUIT, 4", 713.07	
						70	70	210	135							625	25900	485	LIN. FT.	CONDUIT, JACKED OR DRILLED UNDER PAVEMENT, SIZE: 3"	
								65			60					625	25900	125	LIN. FT.	CONDUIT, JACKED OR DRILLED UNDER PAVEMENT, SIZE: 4"	
												10				625	26250	10	EACH	LUMINAIRE, CONVENTIONAL, STYLE B, TYPE II, 400 WATT HIGH PRESSURE SODIUM, 480 VOLT, 713.11, A.P.P.	
						18	36	30	24	24	12					625	26260	144	EACH	LUMINAIRE HIGH MAST SYMMETRIC, 400 WATT HIGH PRESSURE SODIUM, 713.21, 480 VOLT	
							12									625	27500	12	EACH	LUMINAIRE, UNDERPASS, 100 WATT, HIGH PRESSURE SODIUM, 480 VOLT, 713.13.	
					6	6										625	98000	12	EACH	LIGHTING MISC: MODIFY EXISTING LUMINAIRE	
					2	6										625	98000	8	EACH	LIGHTING MISC: LUMINAIRE MOUNTING ARM	
					200	1430	2356	2188	1255	1400	816	1837				625	29002	11,482	LIN. FT.	TRENCH, 24" DEEP	
																				FOR ROADWAY QUANTITIES, SEE SHEETS 54-59	
											1					625	30706	1	EACH	PULL BOX, 713.08, 24"	FOR TRAFFIC CONTROL QUANTITIES, SEE SHEETS 333-335
					1	1	1	2		1		3				625	30700	9	EACH	PULL BOX, 713.08, 18"	FOR STRUCTURE QUANTITIES, SEE SHEETS 386 AND 410
						1	1	2	2							625	31500	6	EACH	MEDIAN PULL BOX	FOR MSE WALL QUANTITIES, SEE SHEET 334
																					FOR RETAINING WALL QUANTITIES, SEE SHEETS 509 AND 524
					6	8	12	10	8	8	4	10				625	32000	66	EACH	GROUND ROD	
							1				1					625	33000	2	EACH	STRUCTURE GROUNDING SYSTEM	
											1					625	98000	1	EACH	⊛REFURBISH POWER SERVICE B, AS PER PLAN ⊛ LIGHTING, MISC.:	363
								1								625	98000	1	EACH	LIGHTING, MISC: POWER SERVICE N, AS PER PLAN	363
												1				625	98000	1	EACH	LIGHTING, MISC: POWER SERVICE S, AS PER PLAN	363
					3	3										625	98000	6	EACH	LIGHTING, MISC.: REERECT EXISTING LIGHT TOWER	
					14	6										625	35100	20	EACH	REERECT EXISTING LUMINAIRE	
												148				SPECIAL	62536000	148	LIN. FT.	PLASTIC CAUTION TAPE	363
							1									625	37100	1	EACH	SERVICE TO UNDERPASS LIGHTING	
																625	38000	LUMP		HIGH VOLTAGE TEST	
					3	4										SPECIAL	62540020	7	EACH	DISCONNECT EXISTING CIRCUIT	363
					1											625	98000	1	EACH	LIGHTING, MISC.: CONNECTION TO EXISTING CONDUIT	
					1						1					625	98000	2	EACH	LIGHTING, MISC.: CONNECTION TO EXISTING PULL BOX	
												1				625	10500	1	EACH	LIGHT POLE, MISC: HAPCO BRAND (B70365) - ALTERNATE BID	
												9				625	10500	9	EACH	LIGHT POLE, MISC: HAPCO BRAND (B70365-45427-12') - ALTERNATE BID	
												10				625	27600	10	EACH	LUMINAIRE, MISC: KIM BRAND - ALTERNATE BID	

CAL: R.A.K. DATE: 2/95
CHKD: R.B. BY: D.R.B. DATE: 2/95

LIGHTING GENERAL SUMMARY

FRA-270-32.46

364
593

FEBRUARY-14-1995
C:\DRAWING\06092310\HL\06092LGS.DWG
PLOT SCALE = 1.000
PLOT DATE = 2/23/95

MC = McCUTCHEON ROAD
ML = MAINLINE I-270
A = RAMP A
B = RAMP B
S = STELZER ROAD

| LOCATION | CIRCUIT NODES * = MATCH LINE | 625 LIGHT POLE, DESIGN AT10B41.7 EA. | 625 LIGHT POLE, DESIGN AT12B41.7 EA. | 625 LIGHT TOWER, BBBBBB100 EA. | 202 LIGHT TOWER FOUND. REMOVED A.P.P. EA. | 202 LIGHT TOWER REMOVED FOR REUSE EA. | SPECIAL PLASTIC CAUTION TAPE L.F. | SPECIAL DISCONNECT EXISTING CIRCUIT EA. | 625 REERECT EXISTING LIGHT TOWER EA. | 625 LIGHT TOWER FOUNDATION, 36"x 15' DEEP EA. | 625 LIGHT TOWER FOUNDATION 36" x 20' DEEP EA. | 625 LIGHT POLE FOUNDATION, 24"x 8' DEEP EA. | 625 LIGHT TOWER FOUNDATION, 36"x 15' DEEP, AS PER PLAN EA. | 202 LUMINAIRE REMOVED FOR REUSE EA. | 202 LUMINAIRE REMOVED, A.P.P. EA. | 625 LUMINAIRE, UNDERPASS, HPS, 713.13 EA. | 625 LUMINAIRE, STYLE B, TYPE II 400 W HPS, 713.11, 480 V EA. | 625 LUMINAIRE, SYMMETRIC, 400 W HPS, 713.21, 480 V EA. | 625 GROUND ROD EA. | 625 STRUCTURE GROUNDING SYSTEM EA. | 625 REERECT EXISTING LUMINAIRE EA. | 625 MODIFY AND REERECT EXISTING LUMINAIRE EA. | 603 4" CONDUIT, TYPE "E" L.F. | 625 PULL BOX, 713.08, 24" EA. | 625 PULL BOX, 713.08, 18" EA. | 625 MEDIAN PULL BOX, 18" EA. | 625 TRENCH, 24" DEEP L.F. | 202 EXISTING CONDUIT CLEANED, A.P.P. L.F. | 625 CONDUIT, 3", 713.04 L.F. | 625 CONDUIT, 4", 713.04 L.F. | 625 CONDUIT, 4", 713.07 L.F. | 625 CONDUIT, JACKED OR DRILLED UNDER PAVEMENT, 3" L.F. | 625 CONDUIT, JACKED OR DRILLED UNDER PAVEMENT, 4" L.F. | 625 NO. 1/0 AWG. 5000 VOLT DISTRIBUTION CABLE L.F. | 625 NO. 10 AWG POLE AND BRACKET CABLE L.F. | 625 1 1/2" DUCT CABLE WITH 2-NO.6 5000 VOLT CABLE L.F. | 625 1 1/2" DUCT CABLE WITH 2-NO.2 AWG. 5000 VOLT CABLE L.F. | 625 1 1/2" DUCT CABLE WITH 2-NO. 1/0 AWG. 5000 VOLT CABLE L.F. | 625 SERVICE TO UNDERPASS LIGHTING EA. | 625 CONNECTION TO EXISTING CONDUIT EA. | 625 CONNECTION TO EXISTING PULL BOX EA. | 625 CONNECTOR KIT, TYPE II EA. | 625 CONNECTOR KIT, TYPE III EA. | 625 CONNECTOR KIT, TYPE VIIB EA. | 625 CABLE SPLICING KIT EA. | 625 POWER SERVICE 'B', A.P.P. EA. | 625 POWER SERVICE 'N', A.P.P. EA. | 625 POWER SERVICE 'S', A.P.P. EA. | 625 LUMINAIRE MOUNTING ARM EA. |
|---|---|---

MC = McCUTCHEON ROAD
ML = MAINLINE I-270
A = RAMP A
B = RAMP B
S = STELZER ROAD

| LOCATION | CIRCUIT NODES * = MATCH LINE | 625 | | | 202 | | SPECIAL | | 625 | | | | | 202 | | 625 | | | | | | | 603 | 625 | | | 202 | 625 | | | | | | |

MC = McCUTCHEON ROAD
ML = MAINLINE I-270
A = RAMP A
S = STELZER ROAD

| LOCATION | CIRCUIT NODES | 625 | | | 202 | | SPECIAL | | 625 | | | | | 202 | | 625 | | | | | | | | | 603 | 625 | | | 202 | 625 | | | | | | | | |

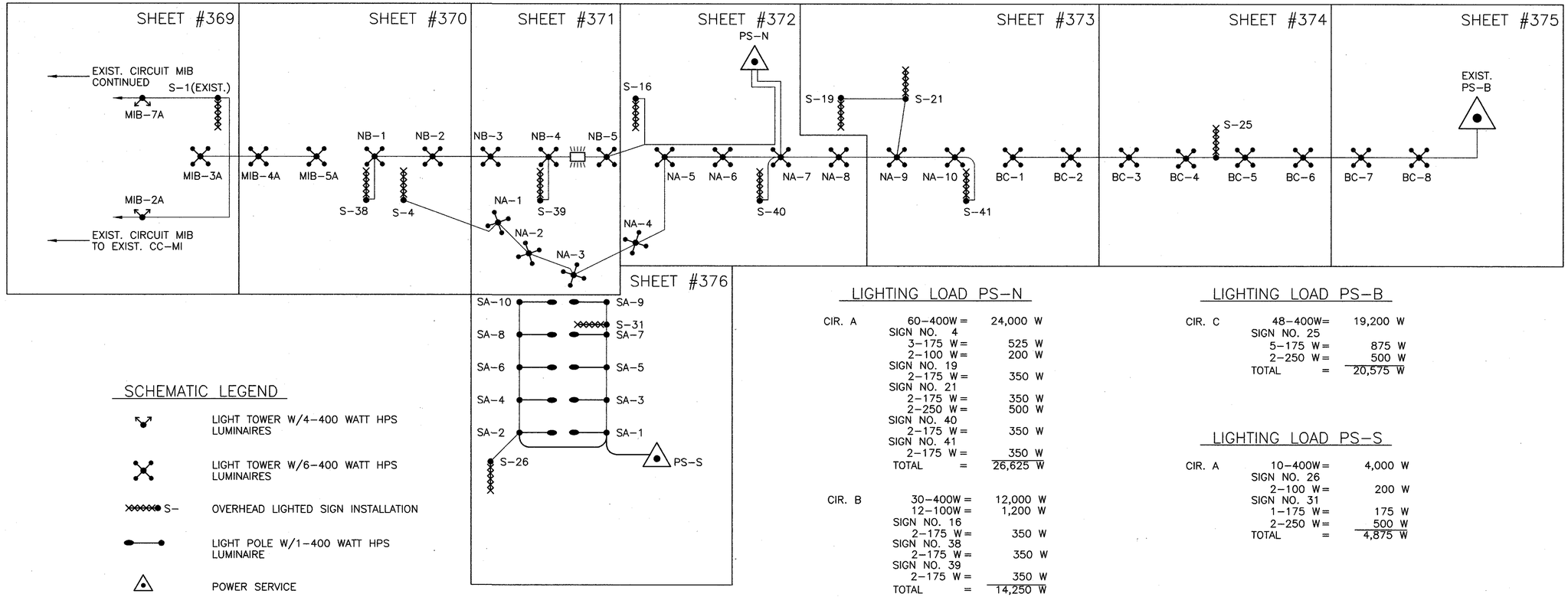

SCHEMATIC LEGEND

- LIGHT TOWER W/4-400 WATT HPS LUMINAIRES
- LIGHT TOWER W/6-400 WATT HPS LUMINAIRES
- S- OVERHEAD LIGHTED SIGN INSTALLATION
- LIGHT POLE W/1-400 WATT HPS LUMINAIRE
- POWER SERVICE
- 12-100W HPS UNDERPASS LIGHTING UNITS

LIGHTING LOAD PS-N

CIR. A	60-400W =	24,000	W
	SIGN NO. 4		
	3-175 W =	525	W
	2-100 W =	200	W
	SIGN NO. 19		
	2-175 W =	350	W
	SIGN NO. 21		
	2-175 W =	350	W
	2-250 W =	500	W
	SIGN NO. 40		
	2-175 W =	350	W
	SIGN NO. 41		
	2-175 W =	350	W
	TOTAL =	26,625	W
CIR. B	30-400W =	12,000	W
	12-100W =	1,200	W
	SIGN NO. 16		
	2-175 W =	350	W
	SIGN NO. 38		
	2-175 W =	350	W
	SIGN NO. 39		
	2-175 W =	350	W
	TOTAL =	14,250	W

LIGHTING LOAD PS-B

CIR. C	48-400W=	19,200	W
	SIGN NO. 25		
	5-175 W=	875	W
	2-250 W=	500	W
	TOTAL =	20,575	W

LIGHTING LOAD PS-S

CIR. A	10-400W=	4,000	W
	SIGN NO. 26		
	2-100 W=	200	W
	SIGN NO. 31		
	1-175 W=	175	W
	2-250 W=	500	W
	TOTAL =	4,875	W

POWER SERVICE DATA

POWER SERVICE	LINE VOLTS	CONNECTED LOAD (KVA)	SERVICE ENTRANCE CONDUCTOR SIZE-AWG	ENCLOSURE RATING (AMPS)	CIRCUIT NO.	CIRCUIT LOAD AMPS	CIRCUIT FUSE SIZE AMPS	CIRCUIT CABLE SIZE AWG	MAINTAINING AGENCY
'N' RAMP 'D' STA. 1402+35± (LT)	480	53.2	2	100	A	73.5	90	1/0, 2	O.D.O.T.
					B	39.6	50	1/0, 2	
'B' (EXISTING) McCUTCHEON ROAD 26+77 (LT)	480	27.2	(EXIST.)	100	C	56.7	70	1/0,2	O.D.O.T.
					D	FOR FRA-270-(31.01)(33.64)			
'S' STELZER RD. STA. 157+12 (RT)	480	6.5	2	60	A	13.5	20	6	O.D.O.T.

NOTE: FOR ADDITIONAL CONTROL CENTER DETAILS, SEE STANDARD DRAWINGS

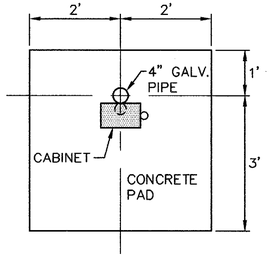

PLAN VIEW

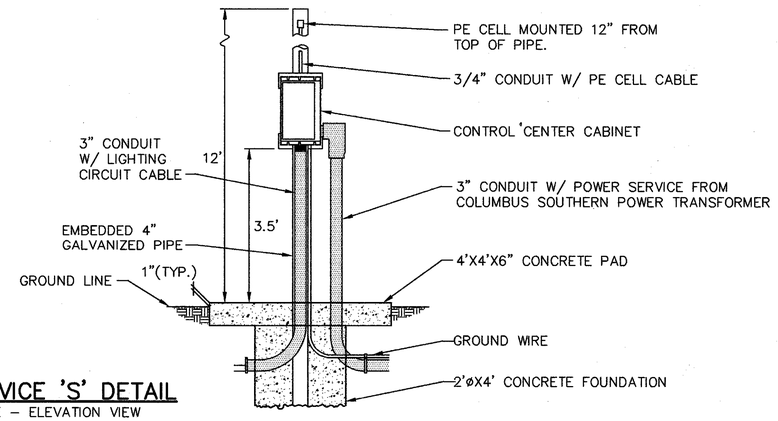

POWER SERVICE 'S' DETAIL

NOT TO SCALE - ELEVATION VIEW

CALC. R.A.K. DATE: 6/94
CHK. D.R.B. DATE: 9/94

LIGHTING CIRCUIT SCHEMATIC AND POWER SERVICE DETAILS

FRA-270-32.46

368
593

PLOT SCALE... COL #33
C:\DRAWING\06092310\HL\06092LCS.DWG FEBRUARY-13-1995

TOWER IDENT. NO.	LOCATION	OFFSET FROM ℄ OR ℄	POLE HEIGHT
MIB–2A	1365+06 ℄ RAMP 'C' (1365+37 ℄ CDS)	32' RT. (40' LT.)	100'
MIB–3A	1369+00 ℄ MAINLINE	5' LT.	100'
MIB–4A	1372+50 ℄ MAINLINE	5' LT.	100'
MIB–5A	1376+00 ℄ MAINLINE	5' LT.	100'
MIB–7A	1365+40 ℄ RAMP 'B' (1365+45 ℄ CDN)	30' LT. (40' RT.)	100'
NA–1	1387+00 ℄ RAMP 'A'	56' LT.	100'
NA–2	1390+35 ℄ RAMP 'A'	56' LT.	100'
NA–3	71+50 ℄ RAMP 'B'	56' LT.	100'
NA–4	77+00 ℄ RAMP 'B'	51' LT.	100'
NA–5	1396+50 ℄ MAINLINE	5' LT.	100'
NA–6	1400+00 ℄ MAINLINE	5' RT.	100'
NA–7	1403+50 ℄ MAINLINE	5' RT.	100'
NA–8	1407+10 ℄ MAINLINE	5' LT.	100'
NA–9	1410+50 ℄ MAINLINE	5' LT.	100'
NA–10	1414+00 ℄ MAINLINE	5' LT.	100'
NB–1	1379+50 ℄ MAINLINE	5' RT.	100'
NB–2	1383+00 ℄ MAINLINE	5' RT.	100'
NB–3	1386+50 ℄ MAINLINE	5' RT.	100'
NB–4	1389+53 ℄ MAINLINE	℄	100'
NB–5	1393+00 ℄ MAINLINE	5' LT.	100'
BC–1	1417+50 ℄ MAINLINE	5' RT.	100'
BC–2	1421+00 ℄ MAINLINE	5' RT.	100'
BC–3	1424+50 ℄ MAINLINE	5' RT.	100'
BC–4	1428+00 ℄ MAINLINE	5' LT.	100'
BC–5	1431+50 ℄ MAINLINE	5' RT.	100'
BC–6	1435+00 ℄ MAINLINE	2' RT.	100'
BC–7	1438+50 ℄ MAINLINE	2' RT.	100'
BC–8	1442+00 ℄ MAINLINE	2' RT.	100'

NOTES:

ALL WIRE TO BE 2–#2, UNLESS OTHERWISE NOTED.

FOR TOWER ELEVATIONS SEE SHEET 378

FOR QUANTITIES SEE SHEETS 365–367

LEGEND

- EXISTING LIGHT POLE
- STATION, OFFSET FROM PAVEMENT EDGE, BASE TYPE WATTAGE, IES, ARM, MOUNTING HEIGHT (SA–1) LIGHT POLE
- STATION (EX. POLE NO.)® REMOVE LIGHT TOWER FOR REUSE
- (NA–4) TOWER\POLE IDENTIFICATION NO.
- LIGHT TOWER W/ 4–400 WATT HPS LUMINAIRES. TYPE II OR III (ASYMMETRICAL)
- LIGHT TOWER W/ 6–400 WATT HPS LUMINAIRES. TYPE V (SYMMETRICAL)
- 100 WATT HPS – UNDERPASS LUMINAIRE
- OVERHEAD LIGHTED SIGN INSTALLATION
- 3" CONDUIT, 713.04
- 4" CONDUIT, 713.04
- ENC 4" CONDUIT, 713.07 CONCRETE ENCASED
- EXISTING CABLE TO REMAIN IN PLACE
- 1–1/2" DUCT CABLE IN 24" DEEP TRENCH
- A INDICATES CIRCUIT & NO. OF SINGLE CONDUCTORS IN CABLE OR CONDUIT
- EXISTING PULL BOX WITH IDENTIFICATION NO.
- STUB AND CAP CONDUIT
- (PB–2) PULL BOX, IDENTIFICATION NO.
- (MP–4) MEDIAN PULL BOX, IDENTIFICATION NO.
- POWER SERVICE

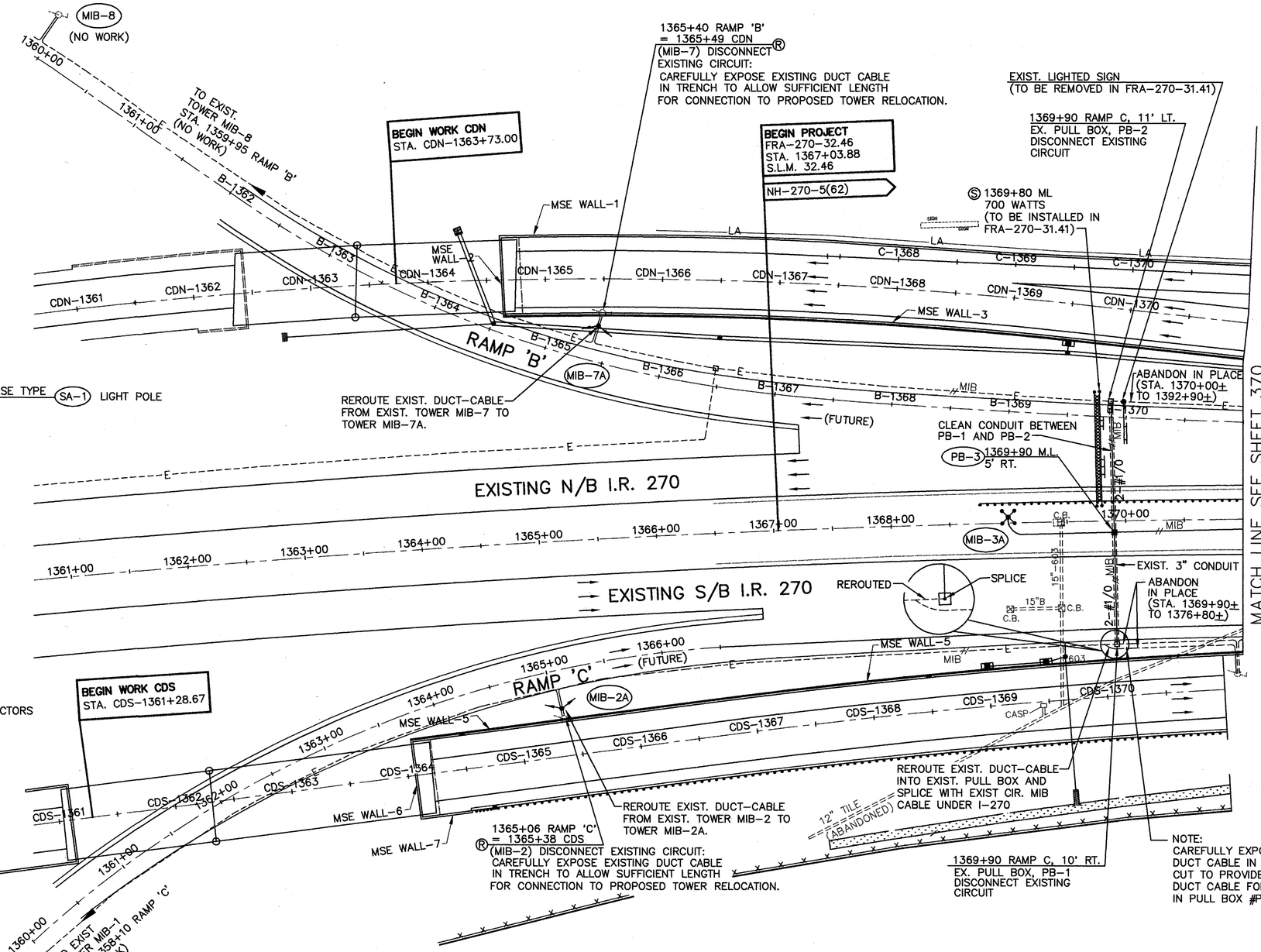

0 25 50 100 HORIZONTAL SCALE IN FEET

CALC. BY:
DATE:
CHKD. BY:
DATE:

LIGHTING PLAN
STA. 1361+00 TO STA. 1371+00

FRA–270–32.46

369
593

PLOT SCALE: 1.0000 / UNIT
PLOT DATE: FEBRUARY–14–1995
C:\DRAWING\06092310\MIL\06092LP1.DWG

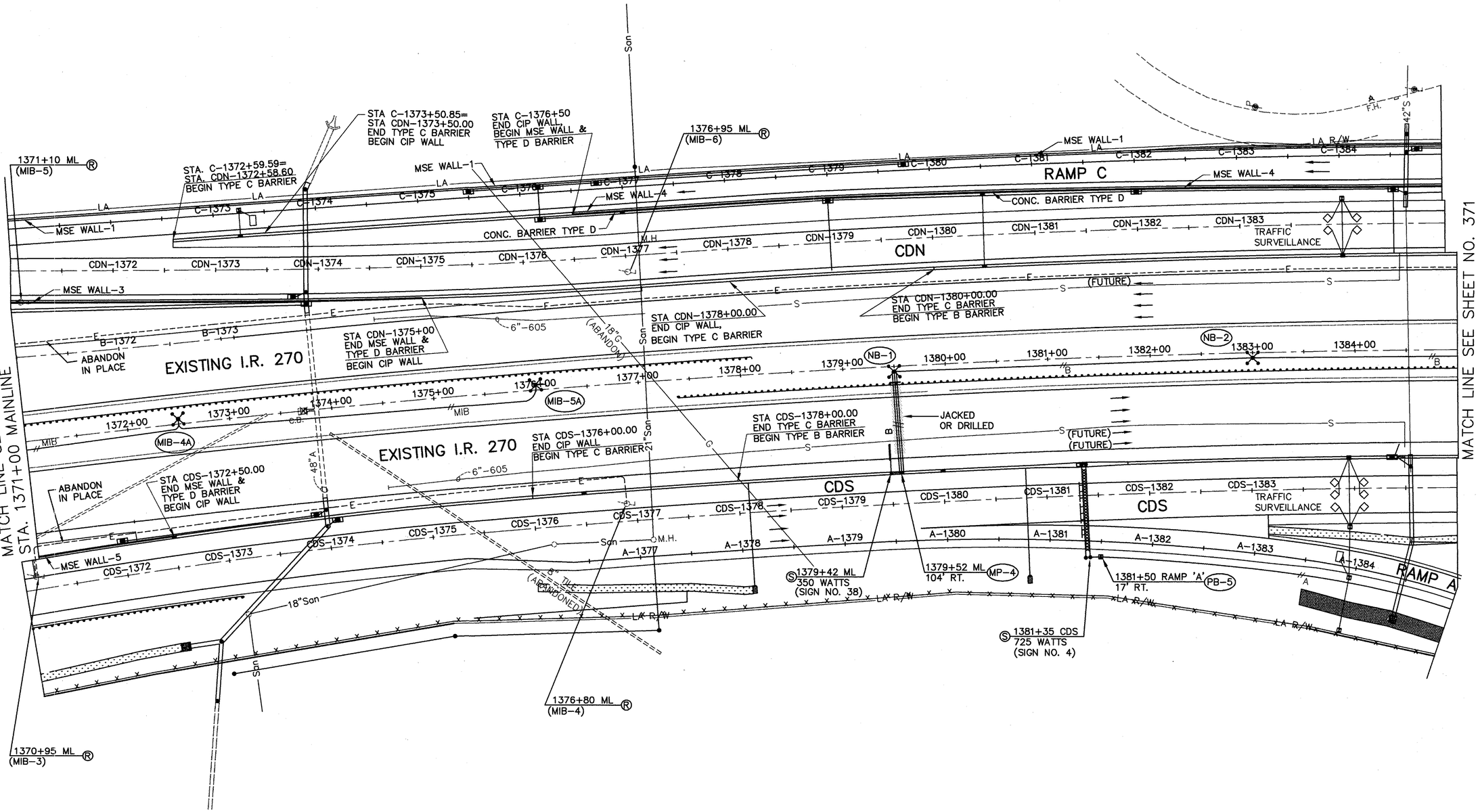

NOTES:

ALL WIRE TO BE 2-#2, UNLESS OTHERWISE NOTED.

FOR LIGHTING LEGEND SEE SHEET 369

FOR TOWER ELEVATIONS SEE SHEETS 378 AND 379

FOR QUANTITIES SEE SHEETS 365-367

CALC. BY:
DATE:
CHKD. BY:
DATE:

0 25 50 100 HORIZONTAL SCALE IN FEET

LIGHTING PLAN
STA. 1371+00 TO STA. 1385+00

FRA-270-32.46

370
593

PLOT SCALE
COL. #23
C:\DRAWING\06092310\HL\06092LP2.DWG FEBRUARY-13-1995

PLOT SCALE...
COL #23 C:\DRAWING\06092310\HL\06092LP3.DWG FEBRUARY-13-1995

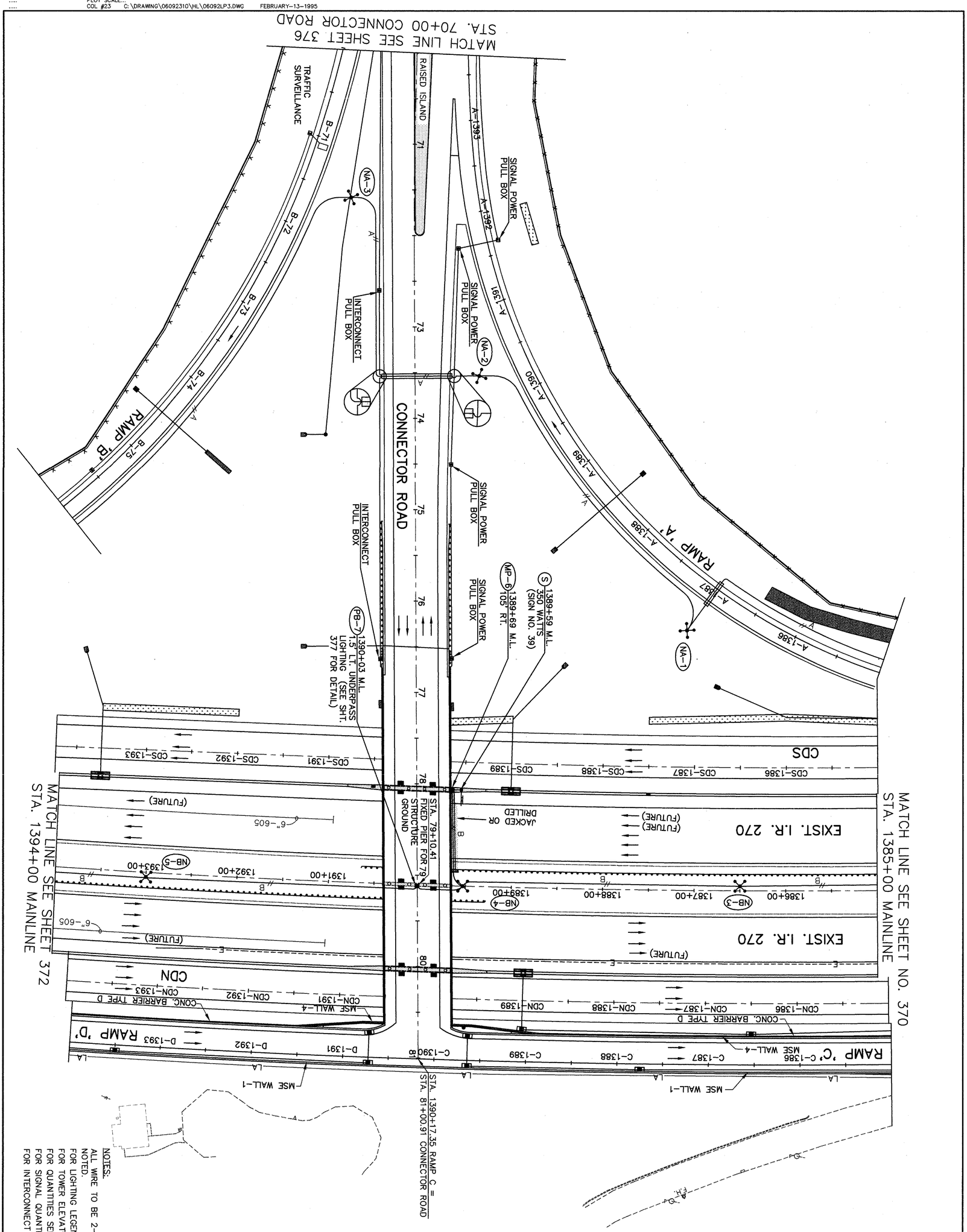

NOTES:
ALL WIRE TO BE 2-#2, UNLESS OTHERWISE NOTED.
FOR LIGHTING LEGEND SEE SHEET 369
FOR TOWER ELEVATIONS SEE SHEETS 379, 382, 383
FOR QUANTITIES SEE SHEETS 365-367
FOR SIGNAL QUANTITIES, SEE SHEET 359
FOR INTERCONNECT QUANTITIES, SEE SHEETS 340 & 359

371 / 593	FRA-270-32.46	LIGHTING PLAN STA. 1385+00 TO STA. 1394+00 MAINLINE STA. 70+00 TO STA. 81+01 CONNECTOR ROAD	CALC. BY: DATE: CHKD. BY: DATE: 0 50 25 100 HORIZONTAL SCALE IN FEET

LIGHTING PLAN
STA. 1394+00 TO STA. 1407+50 MAINLINE

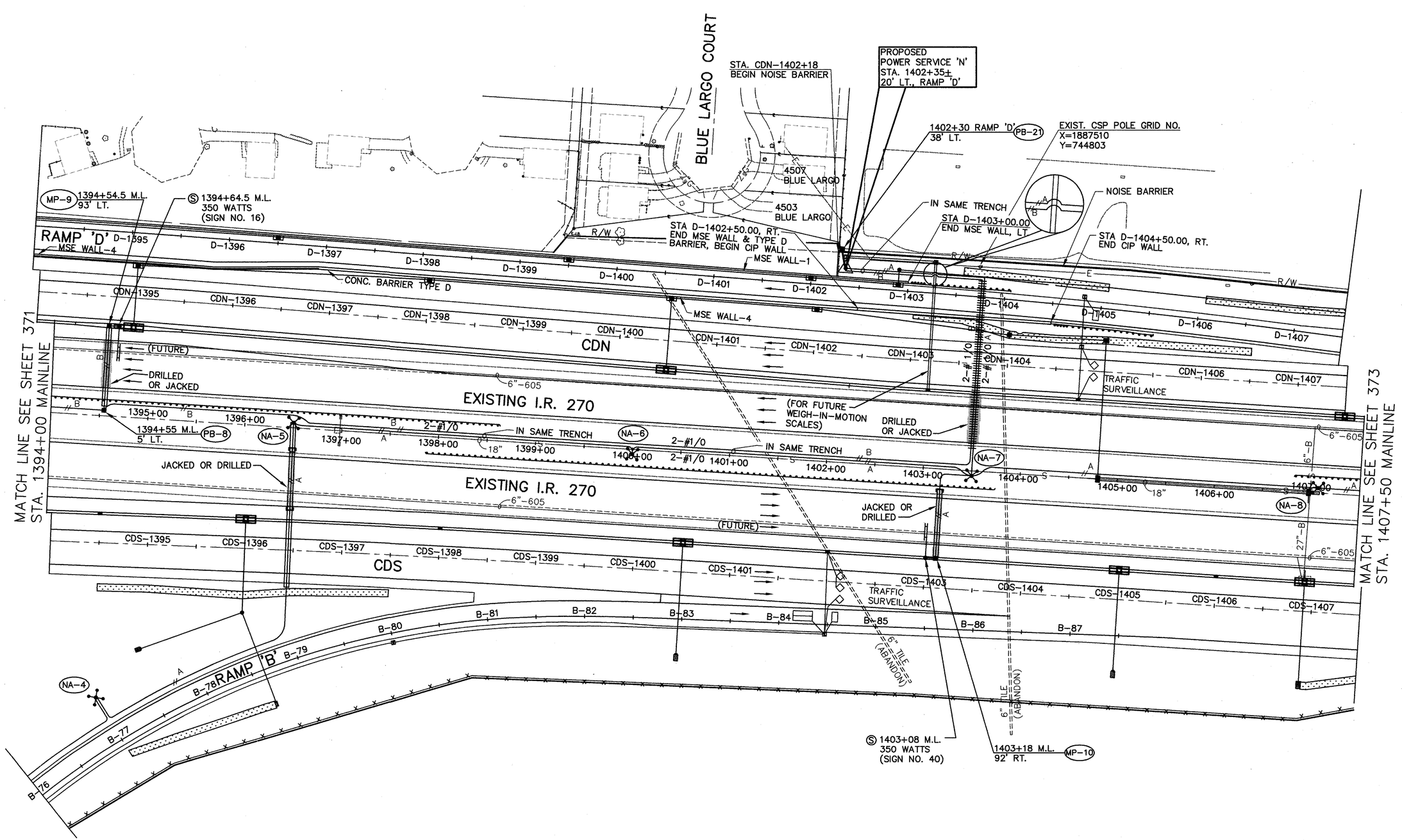

NOTES:

ALL WIRE TO BE 2–#2, UNLESS OTHERWISE NOTED.

FOR LIGHTING LEGEND SEE SHEET 369

FOR TOWER ELEVATIONS SEE SHEETS 380 AND 383

FOR QUANTITIES SEE SHEETS 365–367

PLOT SCALE...
COL #33 C:\DRAWNG\06092310\HL\06092LP4.DWG FEBRUARY–13–1995

FRA–270–32.46

372
593

2-4" PVC CONDUITS
IN BARRIER = 160'

1411+00 CDN Ⓢ
850 WATTS
(SIGN NO. 21)

MP-12 1409+30 CDN
30' RT.

Ⓢ 1409+00 M.L.
350 WATTS
(SIGN NO. 19)

BURIED
ELECTRIC

END NOISE BARRIER
CDN-1418+00, 71.00' LT.

RAMP 'D'

D-1408 D-1409 D-1410 D-1411 D-1412 D-1413 D-1414

CDN-1408 CDN-1409 CDN-1410 CDN-1411 CDN-1412 CDN-1413 CDN-1414 CDN-1415 CDN-1416 CDN-1417 CDN-1418 CDN-1419 CDN-1421

MP-13 1410+90 CDN
30' RT.

JACKED
OR DRILLED

6" TILE (ABANDONED)

EXISTING I.R. 270

1408+00 1409+00 1410+00 1411+00 1412+00 1413+00 1414+00 1415+00 1416+00 1417+00 1418+00 1419+00 1420+00 1421+00

NA-9 NA-10 BC-1 BC-2

(FUTURE)

DRILLED OR
JACKED

CDS-1408 CDS-1409 CDS-1410 CDS-1411 CDS-1412 CDS-1413 CDS-1414 CDS-1415 CDS-1416 CDS-1417 CDS-1418 CDS-1419 CDS-1420 CDS-1421

6" TILE
(ABANDONED)

RETAINING WALL

BEGIN WALL
STA. CDS-1413+00.00
48.00' RT.

1414+98 ML Ⓢ
350 WATTS
(SIGN NO. 41)

1415+08 ML MP-14
92' RT.

TRAFFIC
SURVEILLANCE

MATCH LINE SEE SHEET 372
STA. 1407+50 MAINLINE

MATCH LINE SEE SHEET 374
STA. 1422+00 MAINLINE

NOTES:

ALL WIRE TO BE 2-#2, UNLESS OTHERWISE NOTED.

FOR LIGHTING LEGEND SEE SHEET 369

FOR TOWER ELEVATIONS SEE SHEETS 380-381

FOR QUANTITIES SEE SHEETS 365-367

HORIZONTAL SCALE IN FEET
0 25 50 100

CALC. BY:
DATE:
CHK'D BY:
DATE:

LIGHTING PLAN
STA. 1407+50 TO STA. 1422+00 MAINLINE

FRA-270-32.46

373
593

PLOT SCALE
COL #23
C:\DRAWING\06092310\HL\06092LP5.DWG
FEBRUARY-13-1995

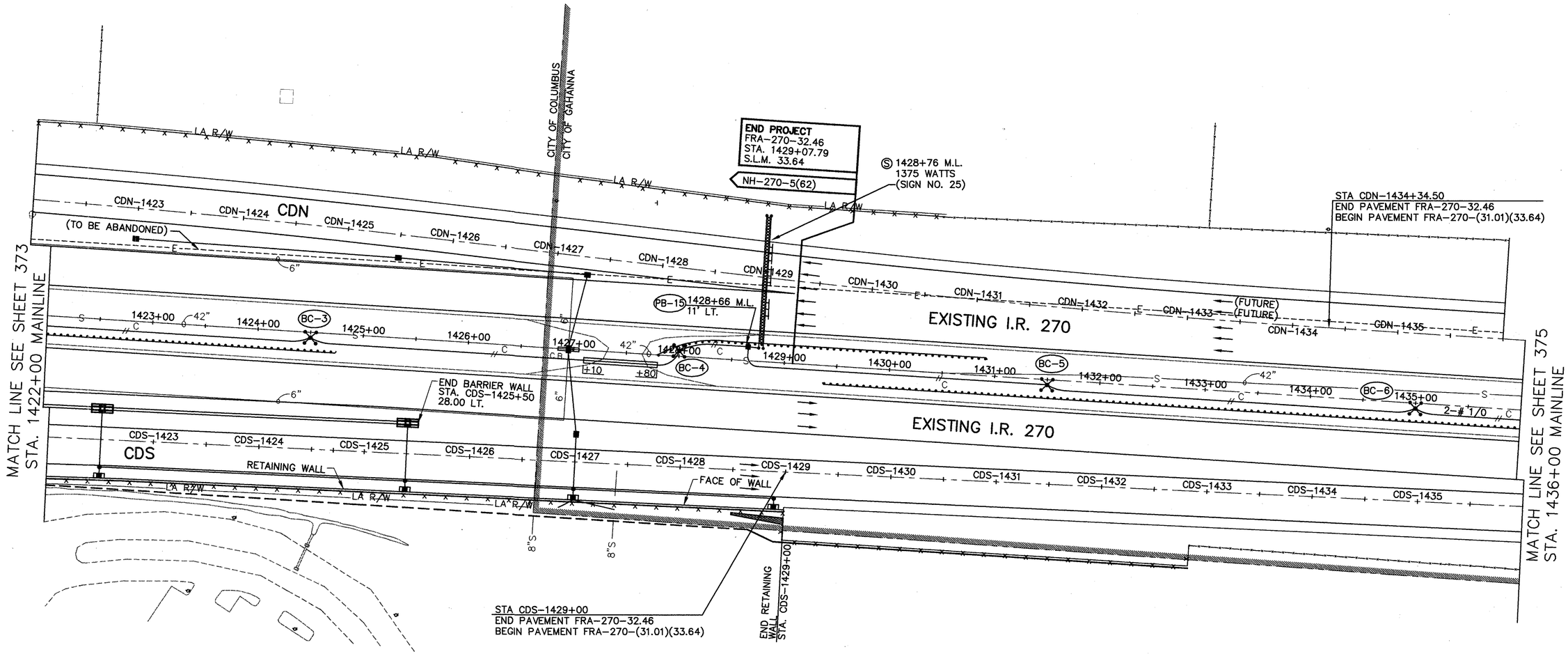

NOTES:

ALL WIRE TO BE 2-#2, UNLESS OTHERWISE NOTED.

FOR LIGHTING LEGEND SEE SHEET 369

FOR TOWER ELEVATIONS SEE SHEET 381

FOR QUANTITIES SEE SHEETS 365-367

0 25 50 100
HORIZONTAL SCALE IN FEET

CALC. BY: DATE:
CHKD. BY: DATE:

LIGHTING PLAN
STA. 1422+00 TO STA. 1436+00 MAINLINE

FRA-270-32.46

374
593

PLOT SCALE
COL #23 C:\DRAWNG\06092310\HL\06092LP6.DWG FEBRUARY-13-1995

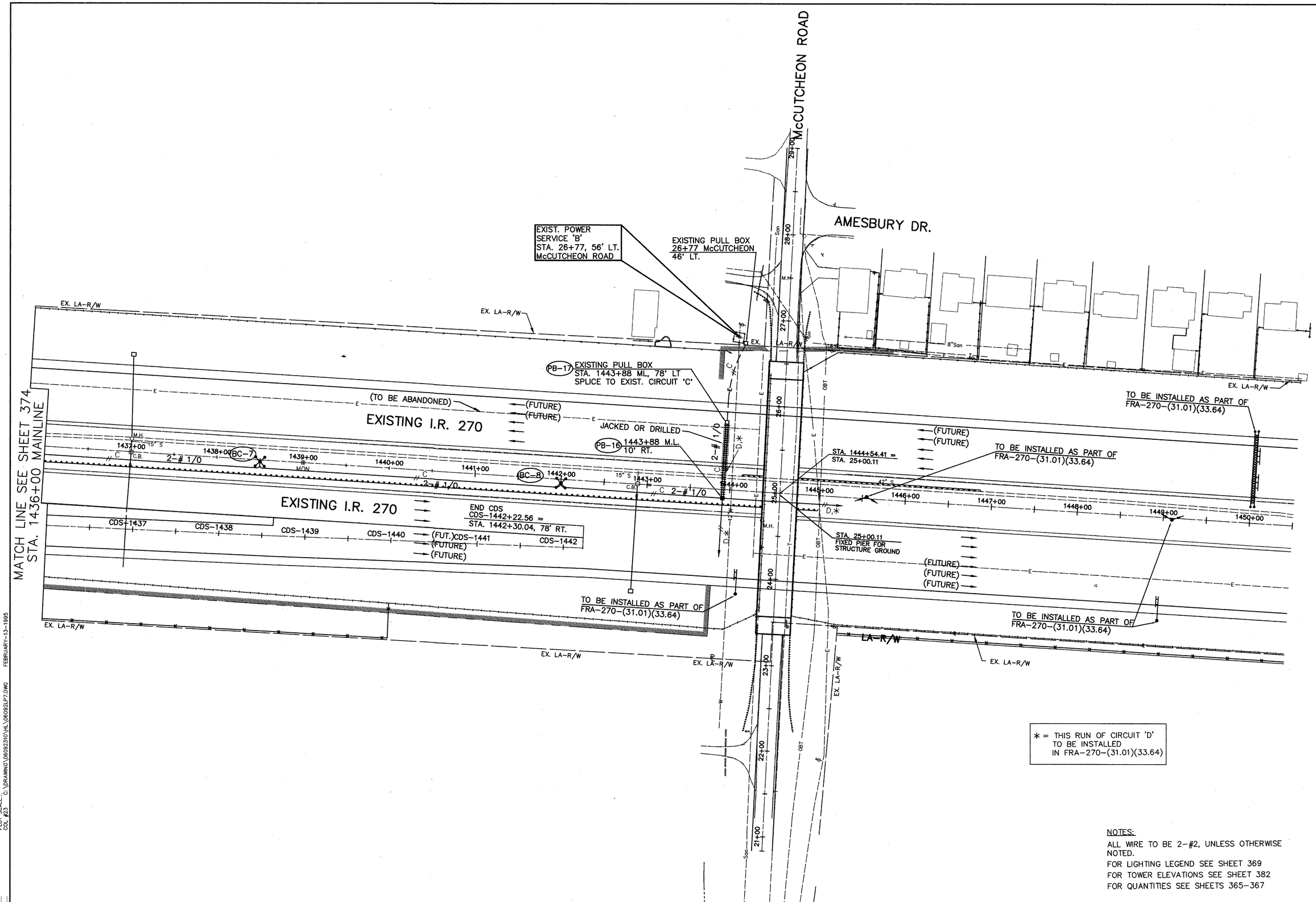

NOTES:

ALL WIRE TO BE 2-#2, UNLESS OTHERWISE NOTED.

FOR LIGHTING LEGEND SEE SHEET 369

FOR TOWER ELEVATIONS SEE SHEET 382

FOR QUANTITIES SEE SHEETS 365-367

0 25 50 100 HORIZONTAL SCALE IN FEET

CALC. BY: DATE: CHKD. BY: DATE:

LIGHTING PLAN

STA 1436+00 - 1450+50 MAINLINE

FRA-270-32.46

375/593

PLOT SCALE: COL #23 C:\DRAWING\06092310\HL\06092LP7.DWG FEBRUARY-13-1995

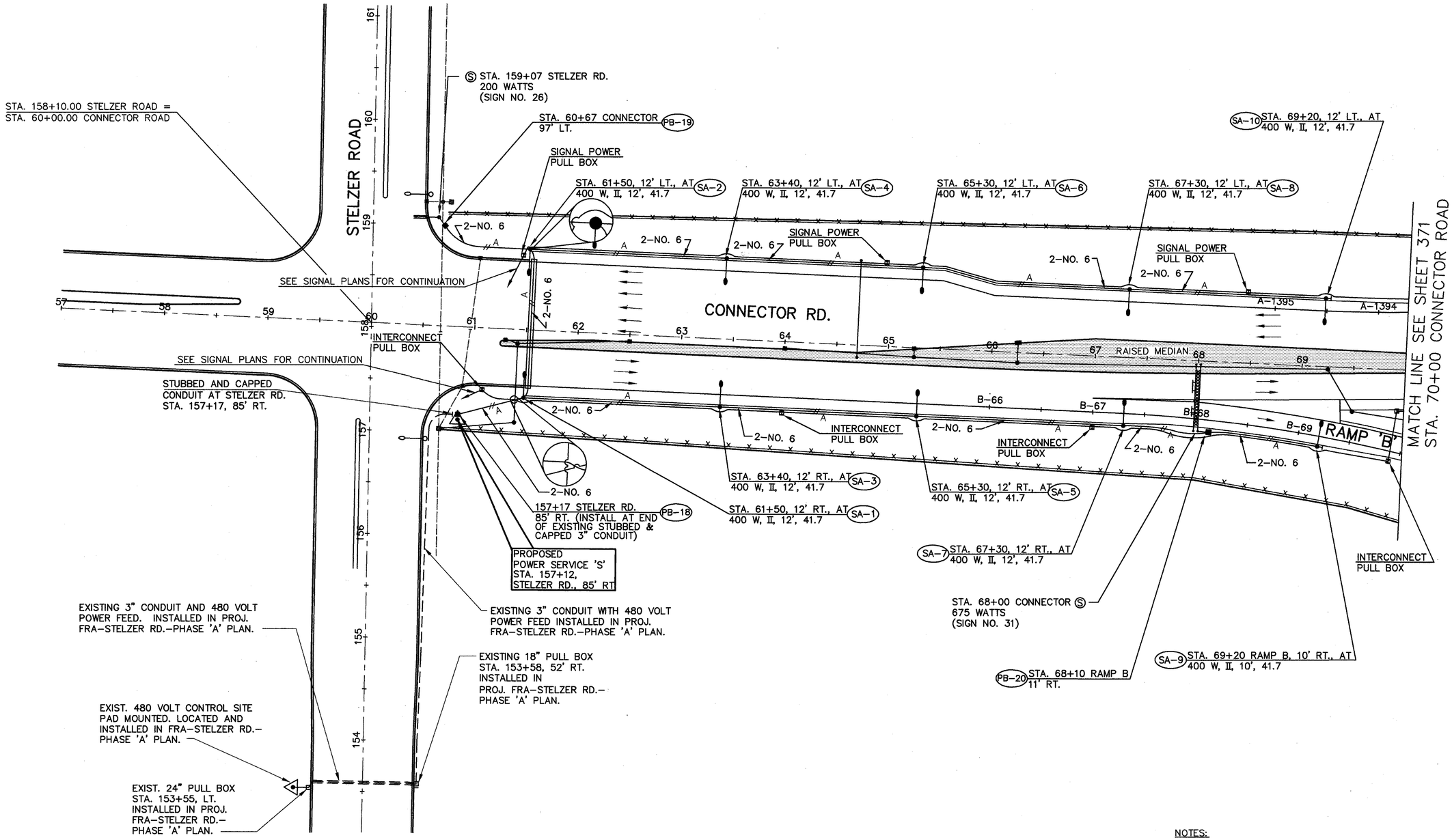

NOTES:

ALL WIRE TO BE 2-#2, UNLESS OTHERWISE NOTED.

FOR LIGHTING LEGEND SEE SHEET 369

FOR QUANTITIES SEE SHEETS 365-367

FOR SIGNAL QUANTITIES SEE SHEET 357

FOR INTERCONNECT QUANTITIES SEE SHEETS 340 & 357

HORIZONTAL SCALE IN FEET
0 25 50 100

CALC. BY:
DATE:
CHKD. BY:
DATE:

LIGHTING PLAN
STA. 57+00 TO STA. 70+00 CONNECTOR ROAD

FRA-270-32.46

376
593

PLOT SCALE..
COL #23
C:\DRAWING\06092310\HL\06092LP8.DWG FEBRUARY-13-1995

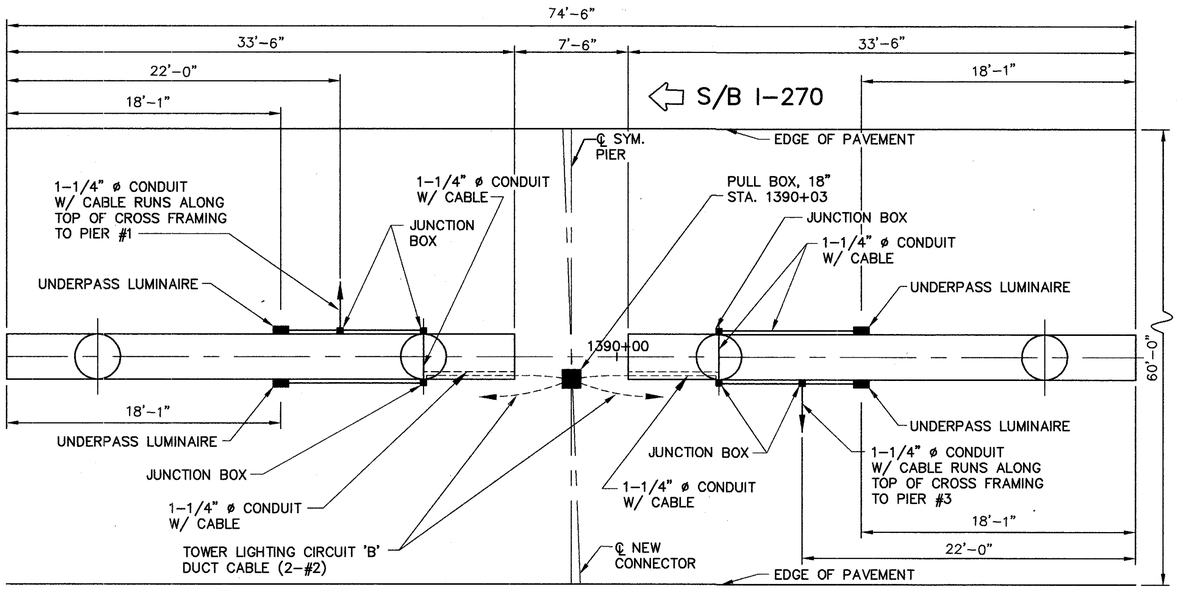

PLAN
(PIER NO. 2 SHOWN)

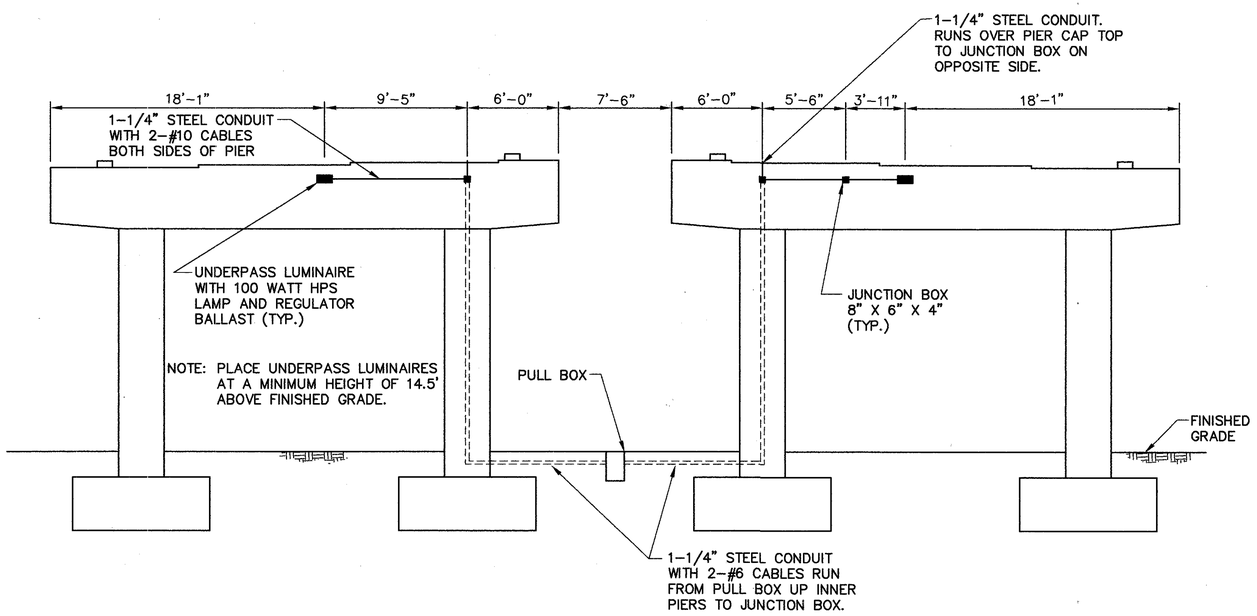

ELEVATION
(PIER NO. 2 SHOWN)

UNDERPASS LIGHTING DETAIL

PULL BOX TO BE INSTALLED ON MAINLINE SIDE OF ALL TYPE B AND C BARRIER

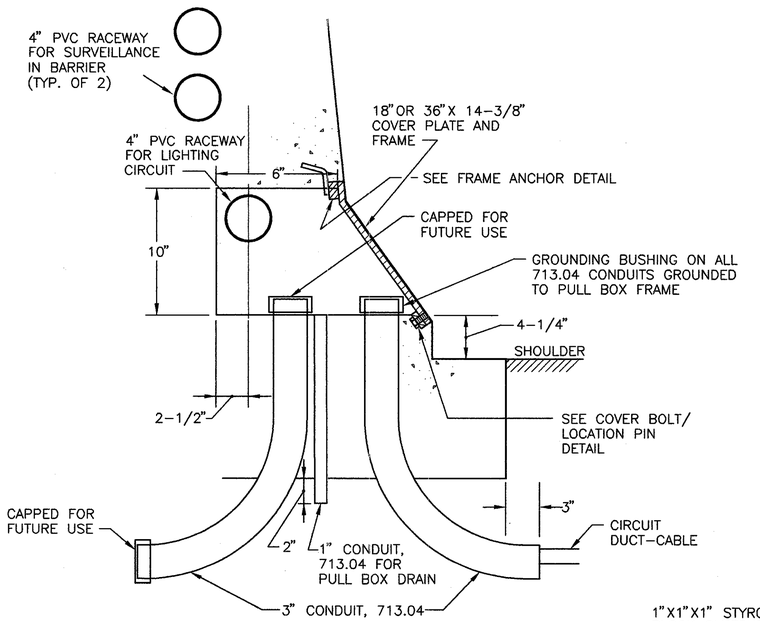

TYPICAL MEDIAN PULL BOX

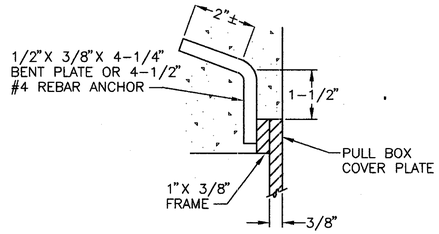

FRAME ANCHOR DETAIL

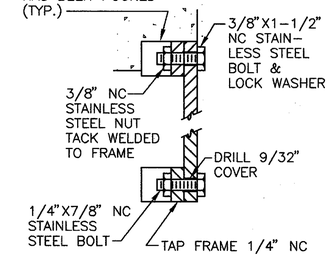

COVER BOLT & LOCATION PIN DETAIL

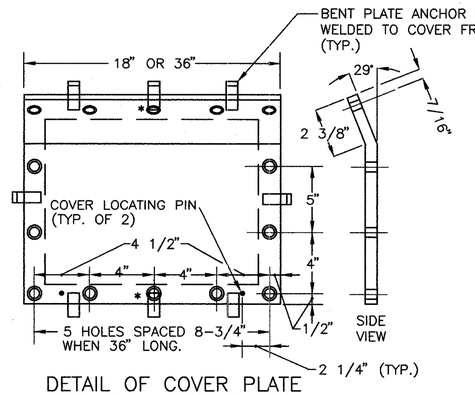

DETAIL OF COVER PLATE FOR PULL BOX CAVITY

*NOTE:
WHEN 36" LONG COVER PLATE IS USED LOCATE 2 ADDITIONAL PLATE ANCHOR BARS AS SHOWN.

ASSEMBLY NOTES:
1. COVER SHALL BE ORIENTED WITH THE LOCATING PINS BEFORE DRILLING COVER PLATE BOLT HOLES.
2. APPLY ANTI-SIEZE OR GREASE TO SCREW THREADS OF BOLTS AT INSTALLATION OF COVER.

NOTE:
THE PULL BOX CAVITY STEEL COVER PLATE AND FRAME SHALL BE HOT DIP GALVANIZED AFTER ALL FABRICATION IS FINISHED, IN ACCORDANCE WITH THE REQUIREMENTS OF ASTM A-123.

MEDIAN PULL BOX & CONDUIT

CALC. BY: DATE:
CHKD. BY: DATE:

0 2.5 5 10
HORIZONTAL SCALE IN FEET

UNDERPASS LIGHTING DETAIL AND LIGHTING MEDIAN PULL BOX DETAIL

FRA-270-32.46

377
593

PLOT SCALE: 1.000 / FOOT
COL #23 C:\DRAWING\06092310\HL\DETAIL.DWG FEBRUARY-14-1995

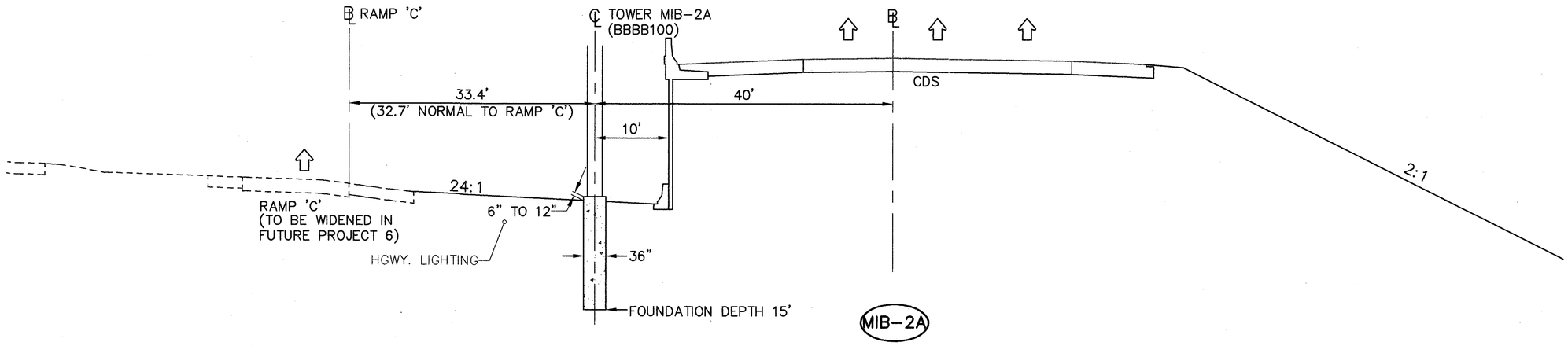

MIB-2A

STA. 1365+06 RAMP 'C', 33.4' RT.
EQUIV. STA. 1365+37 CDS, 40' LT. SHOWN

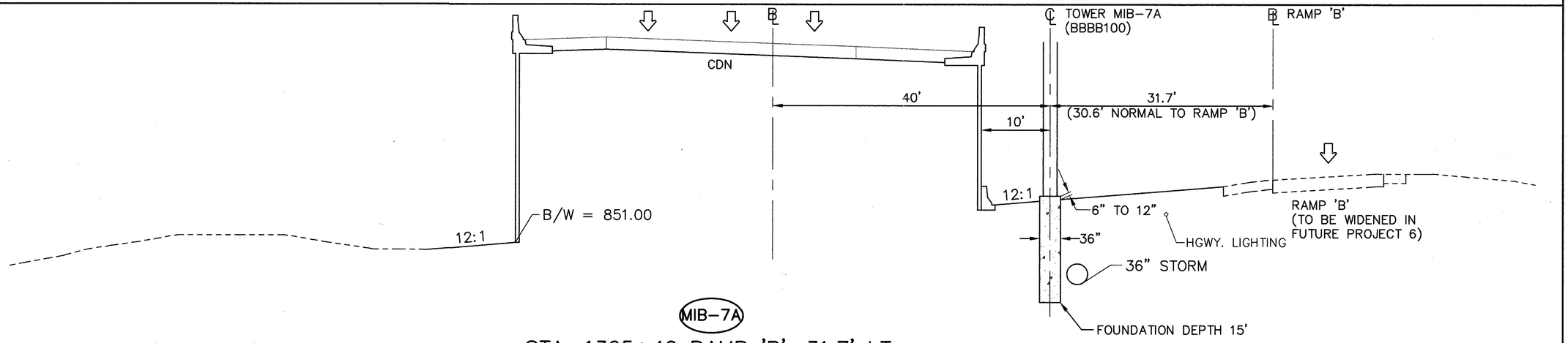

MIB-7A

STA. 1365+40 RAMP 'B', 31.7' LT.
EQUIV. STA. 1365+45 CDN, 40' RT. SHOWN

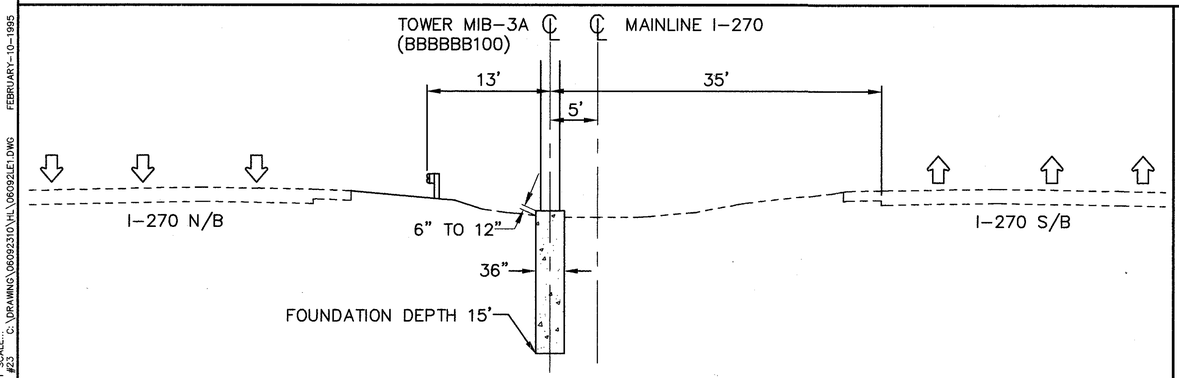

MIB-3A

STA. 1369+00 MAINLINE, 5' LT.

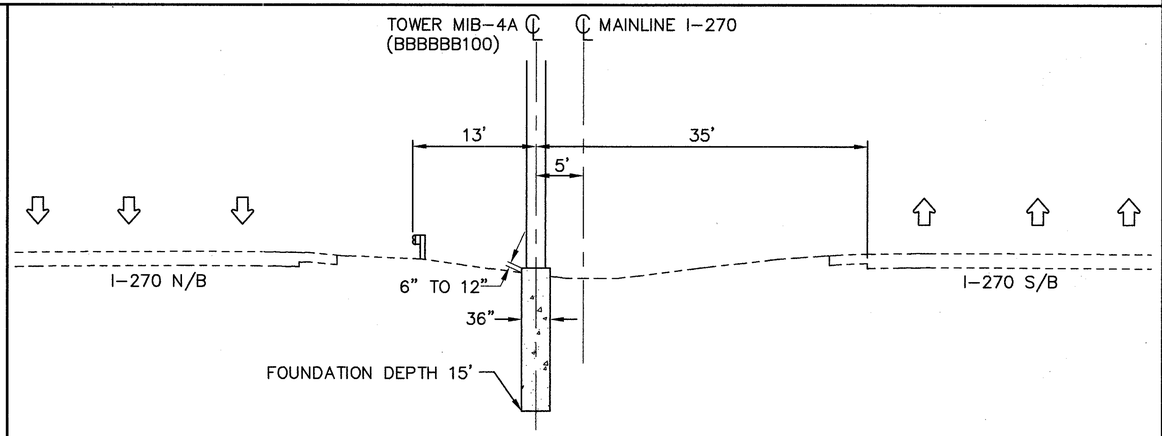

MIB-4A

STA. 1372+50 MAINLINE, 5' LT.

0 4 8 16
SCALE IN FEET

CALC. BY:
DATE:
CHKD. BY:
DATE:

LIGHT TOWER ELEVATIONS

FRA-270-32.46

PLOT SCALE...
COL #23 C:\DRAWING\06092310\HL\06092LE1.DWG FEBRUARY-10-1995

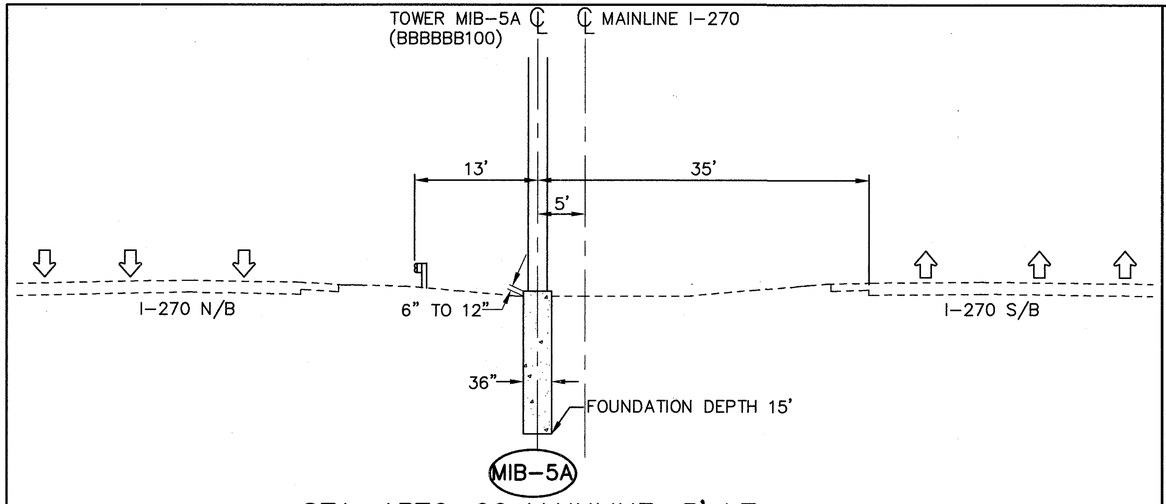

STA. 1376+00 MAINLINE, 5' LT.

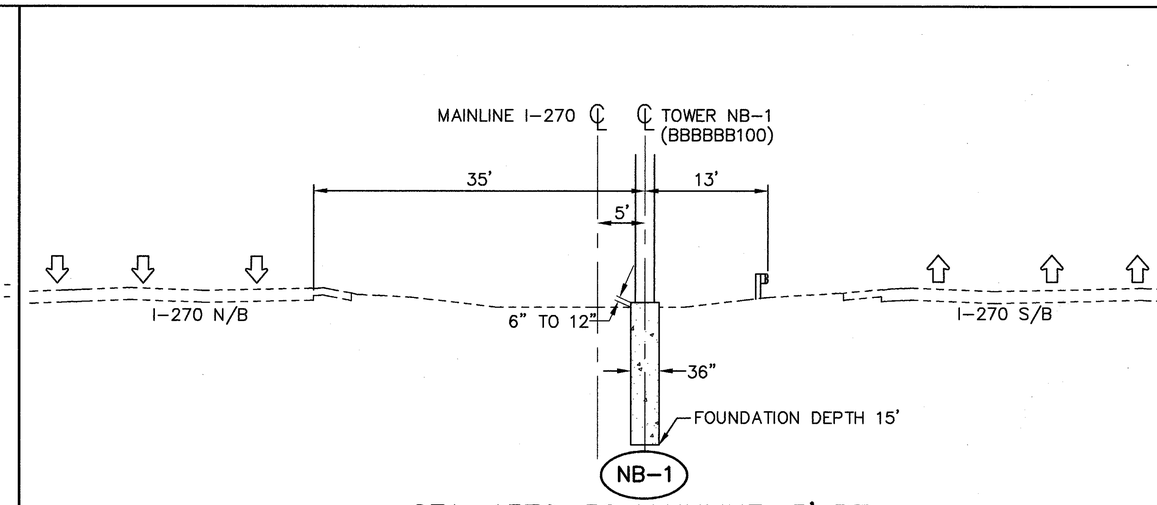

STA. 1379+50 MAINLINE, 5' RT.

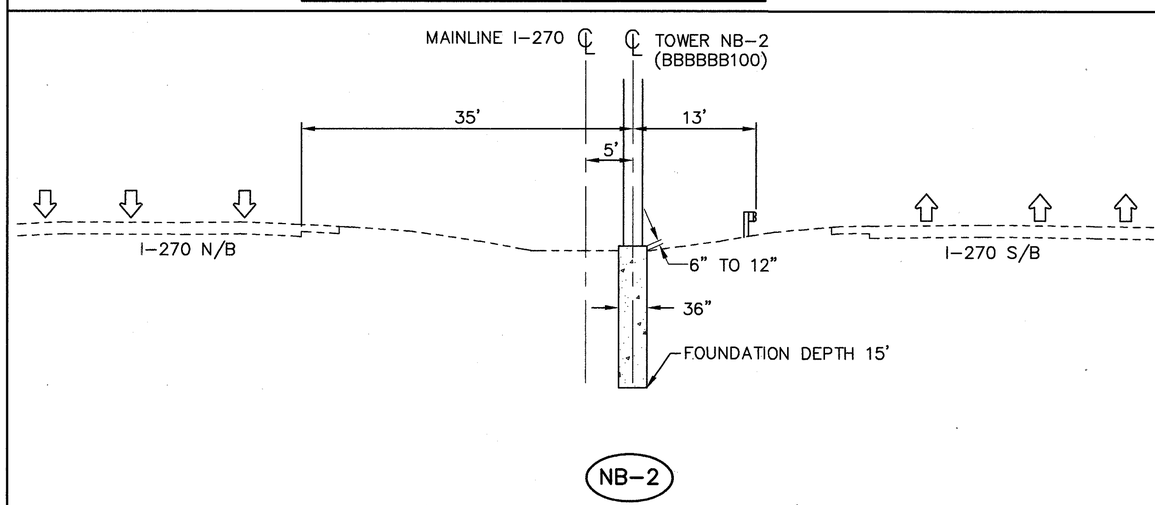

STA. 1383+00 MAINLINE, 5' RT.

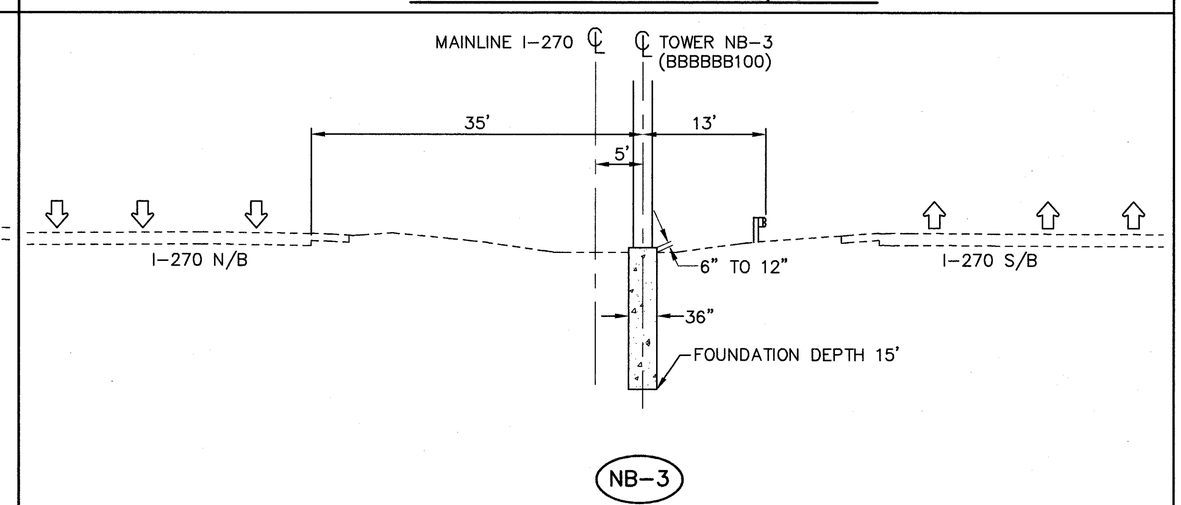

STA. 1386+50 MAINLINE, 5' RT.

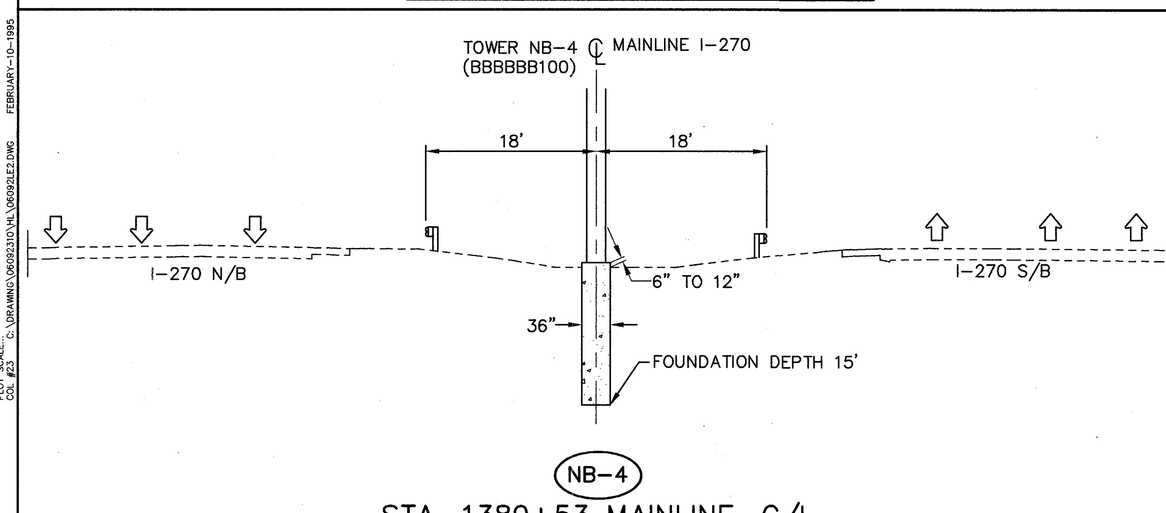

STA. 1389+53 MAINLINE, C/L

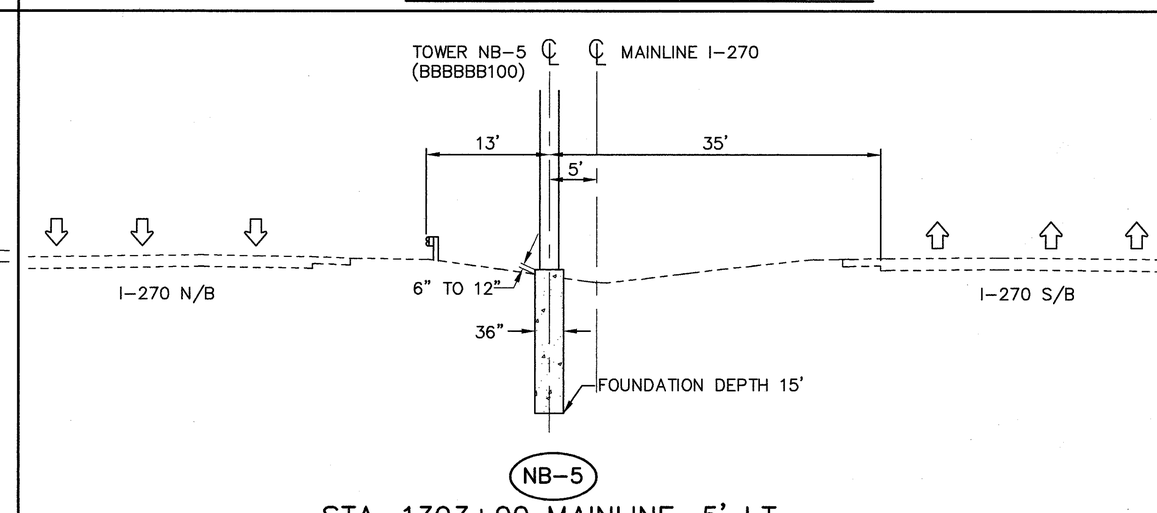

STA. 1393+00 MAINLINE, 5' LT.

0 4 8 16
SCALE IN FEET

CALC. BY:
DATE:
CHKD. BY:
DATE:

LIGHT TOWER ELEVATIONS

FRA-270-32.46

379
593

PLOT SCALE...
COL #23 C:\DRAWING\06092310\HL\06092LE2.DWG FEBRUARY-10-1995

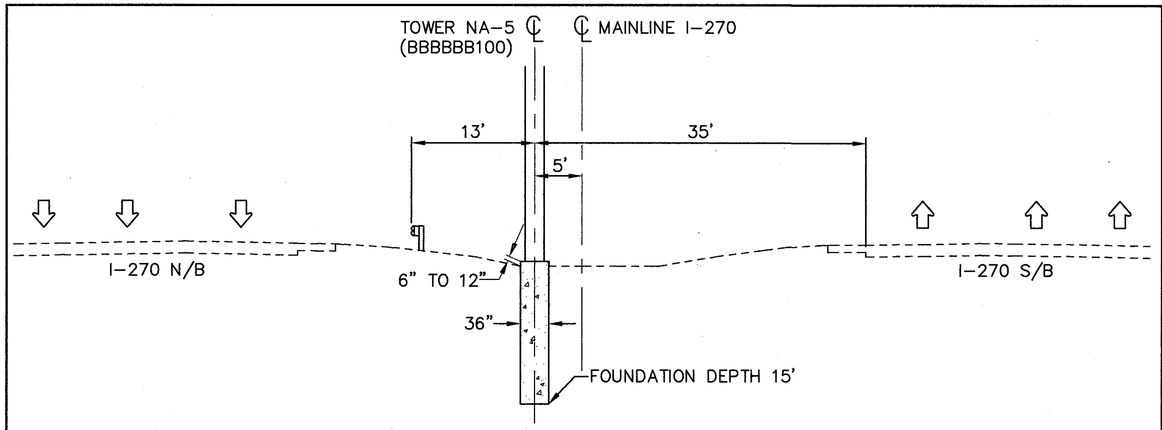

NA-5

STA. 1396+50 MAINLINE, 5' LT.

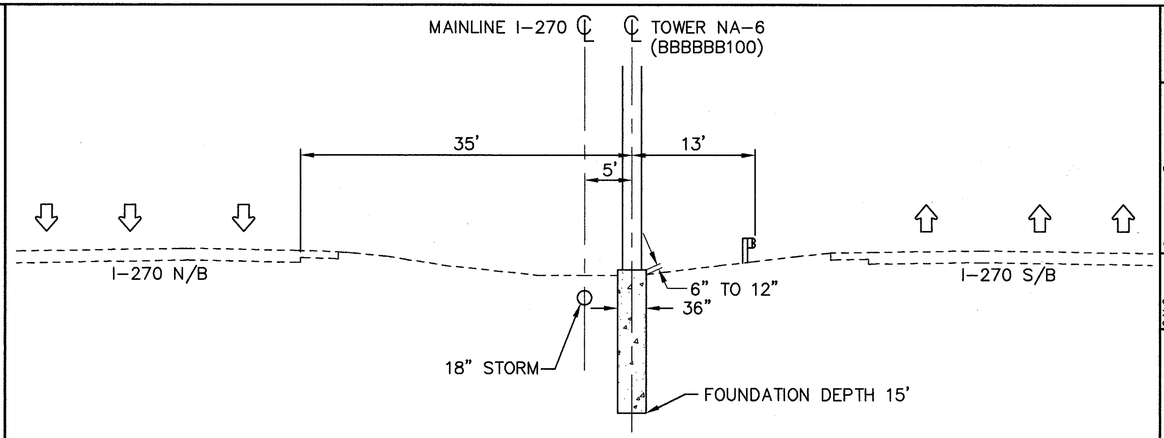

NA-6

STA. 1400+00 MAINLINE, 5' RT.

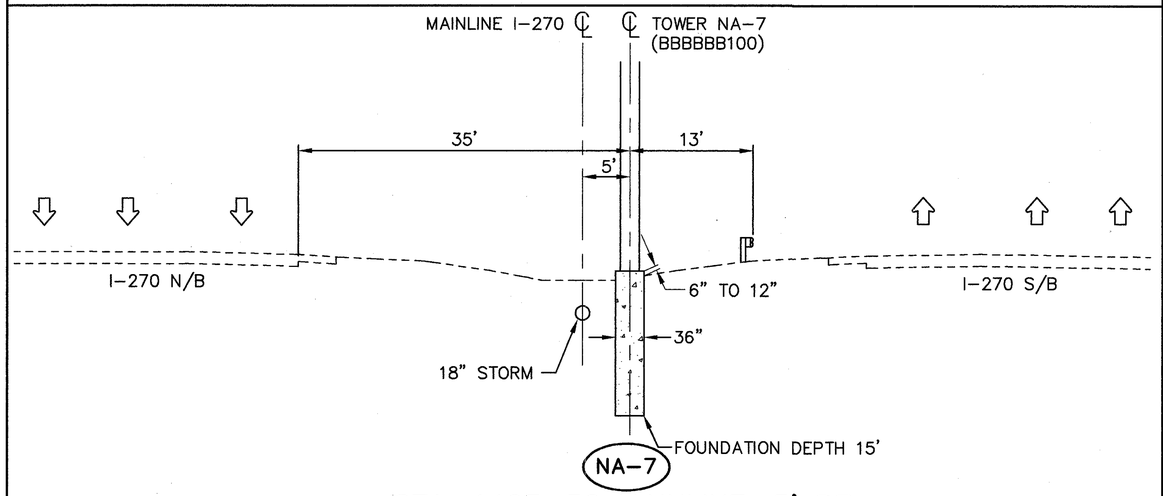

NA-7

STA. 1403+50 MAINLINE, 5' RT.

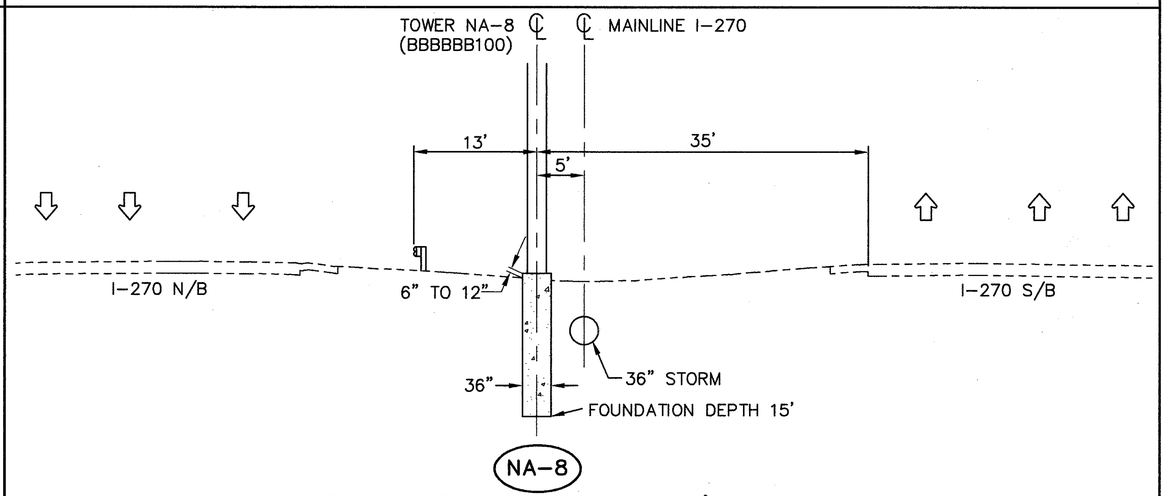

NA-8

STA. 1407+10 MAINLINE, 5' LT.

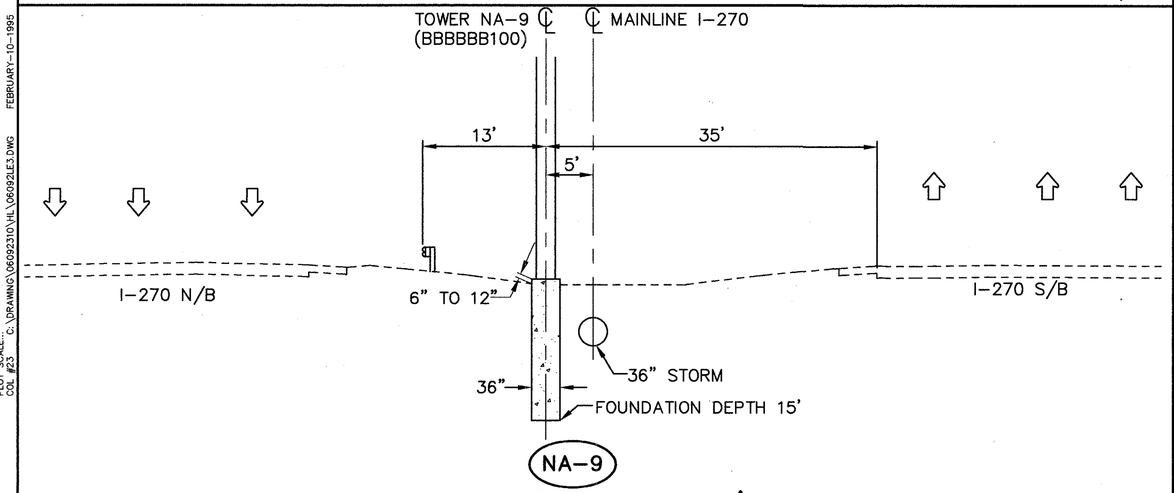

NA-9

STA. 1410+50 MAINLINE, 5' LT.

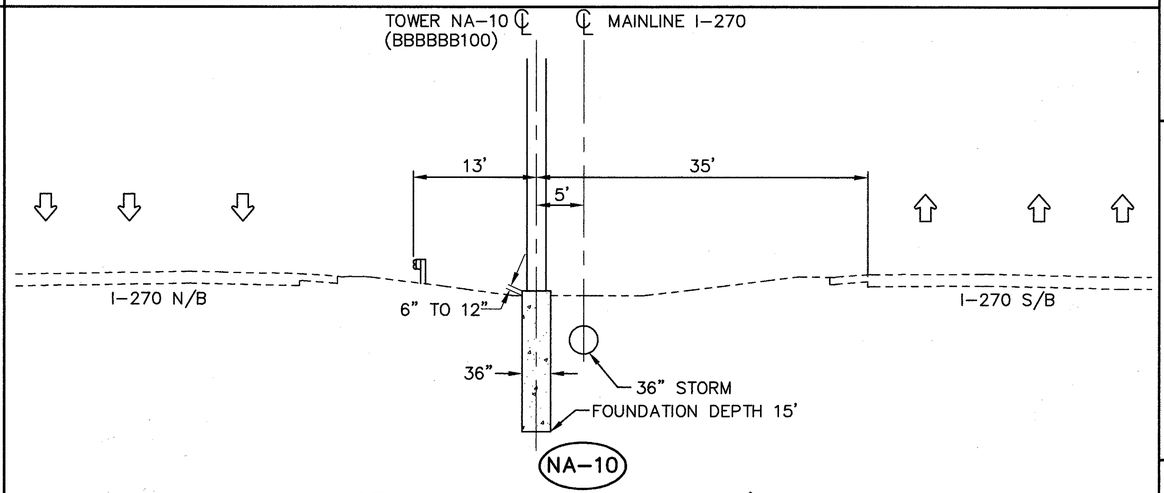

NA-10

STA. 1414+00 MAINLINE, 5' LT.

SCALE IN FEET 0 4 8 16

CALC. BY:
DATE:
CHKD. BY:
DATE:

LIGHT TOWER ELEVATIONS

FRA-270-32.46

380
593

PLOT SCALE:
COL #23
C:\DRAWNG\06092310\NL\06092LES.DWG FEBRUARY-10-1995

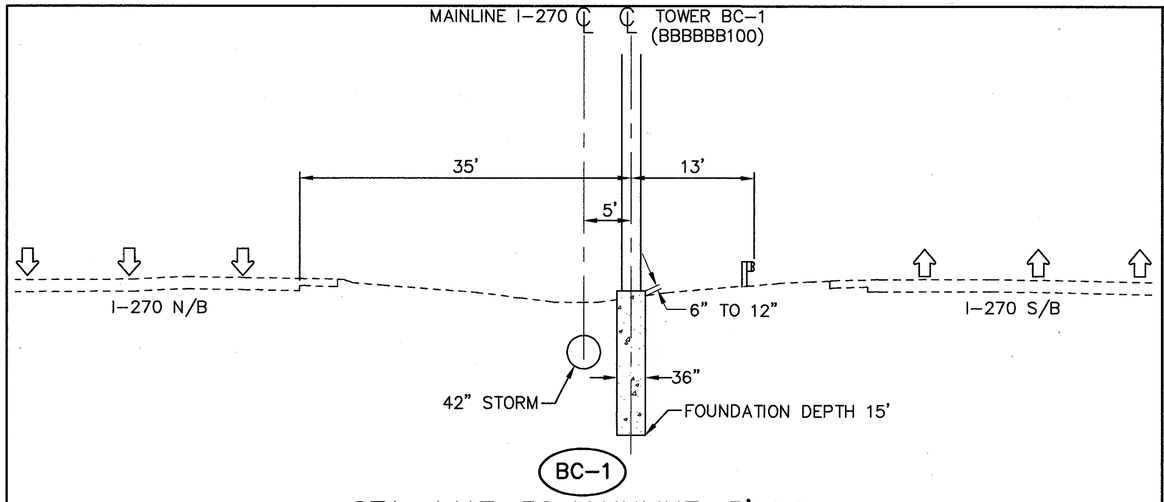

STA. 1417+50 MAINLINE, 5' RT.

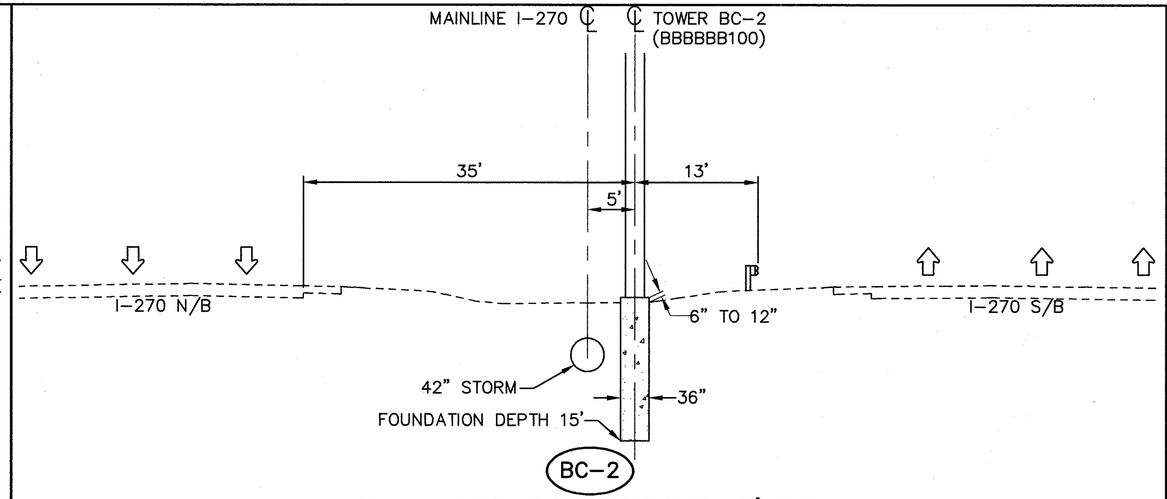

STA. 1420+00 MAINLINE, 5' RT.

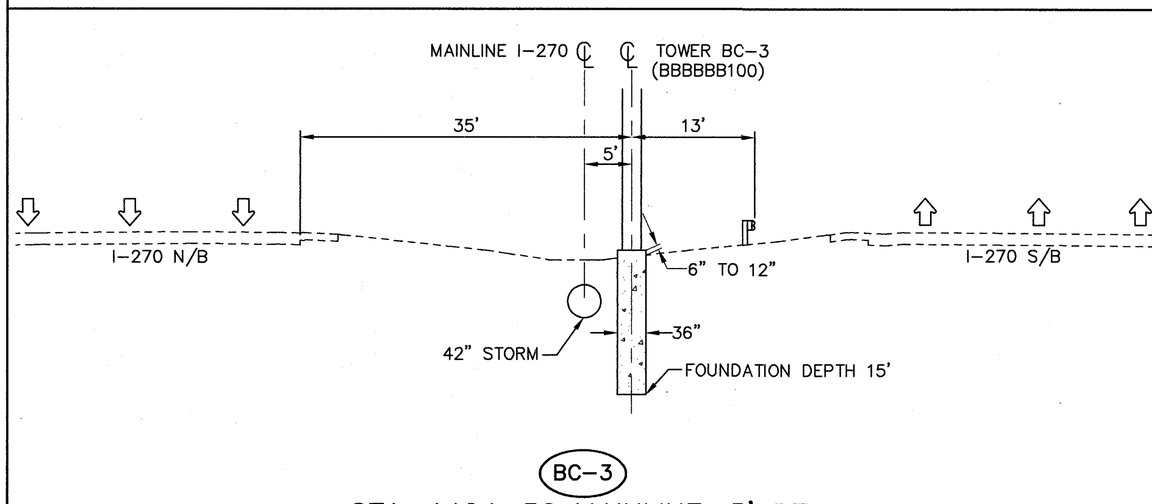

STA. 1424+50 MAINLINE, 5' RT.

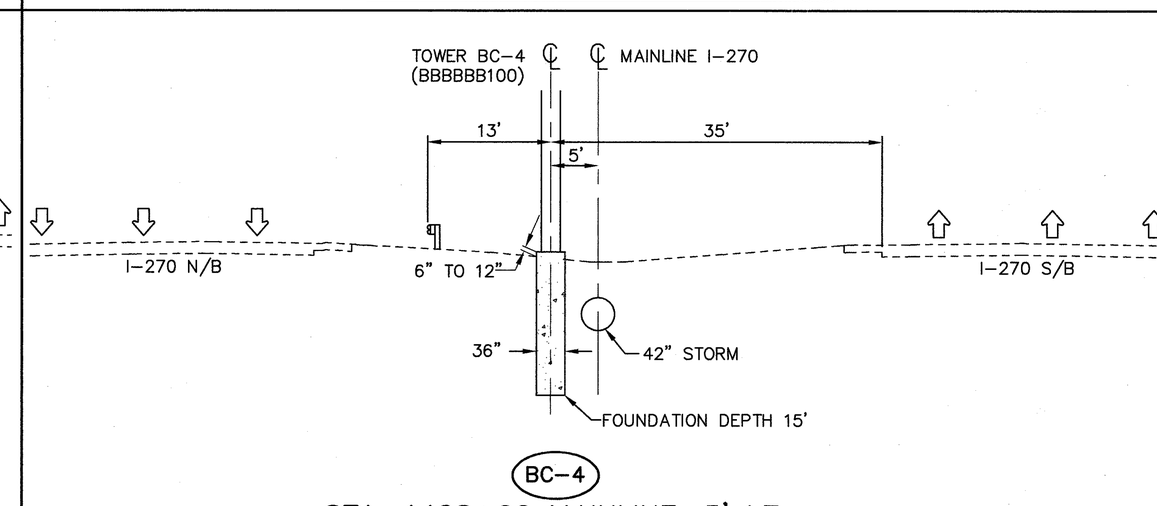

STA. 1428+00 MAINLINE, 5' LT.

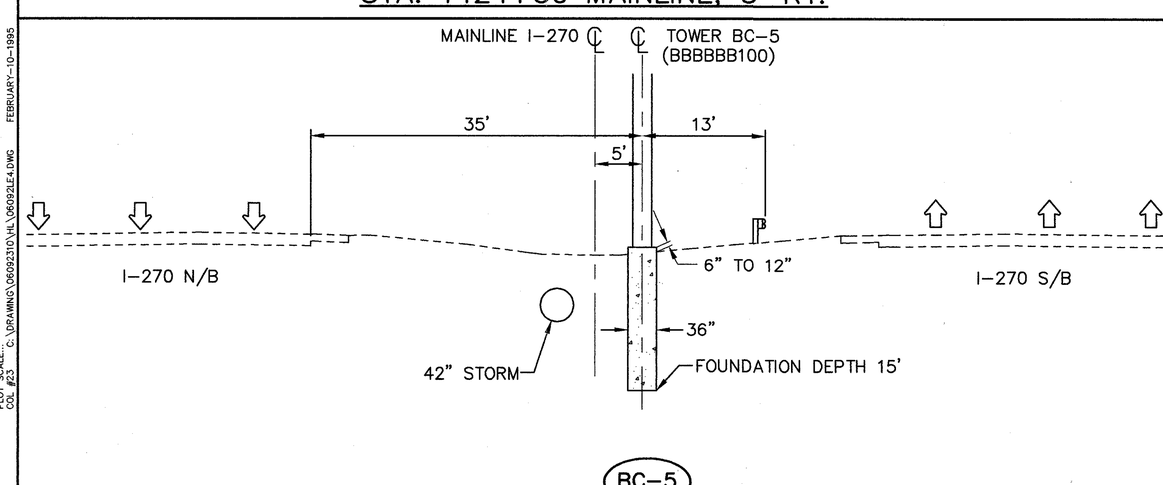

STA. 1431+50 MAINLINE, 5' RT.

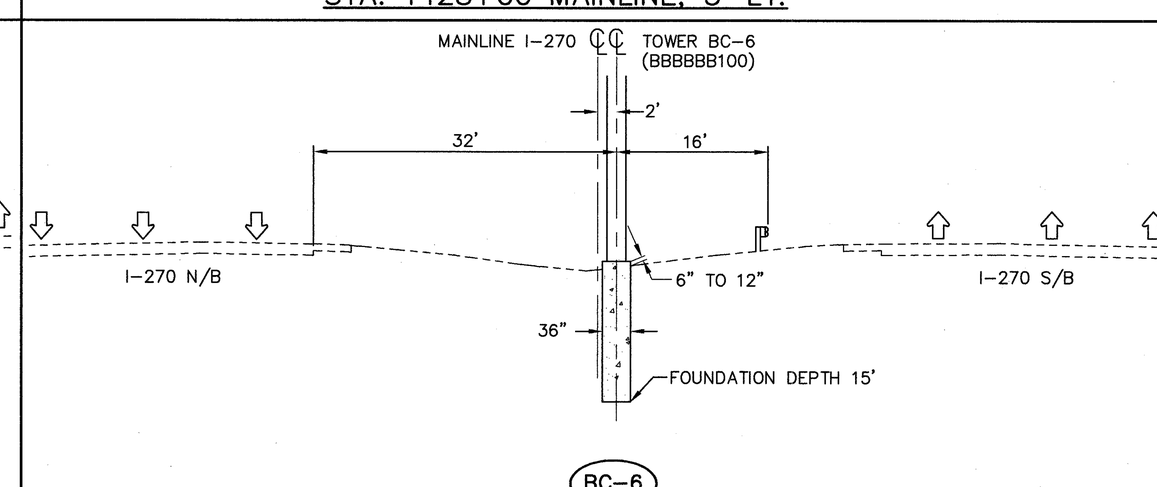

STA. 1435+00 MAINLINE, 2' RT.

SCALE IN FEET 0 4 8 16

CALC. BY:
DATE:
CHKD. BY:
DATE:

LIGHT TOWER ELEVATIONS

FRA-270-32.46

381
593

PLOT SCALE...
COL #23 C:\DRAWING\06092310\HL\06092LE4.DWG FEBRUARY-10-1995

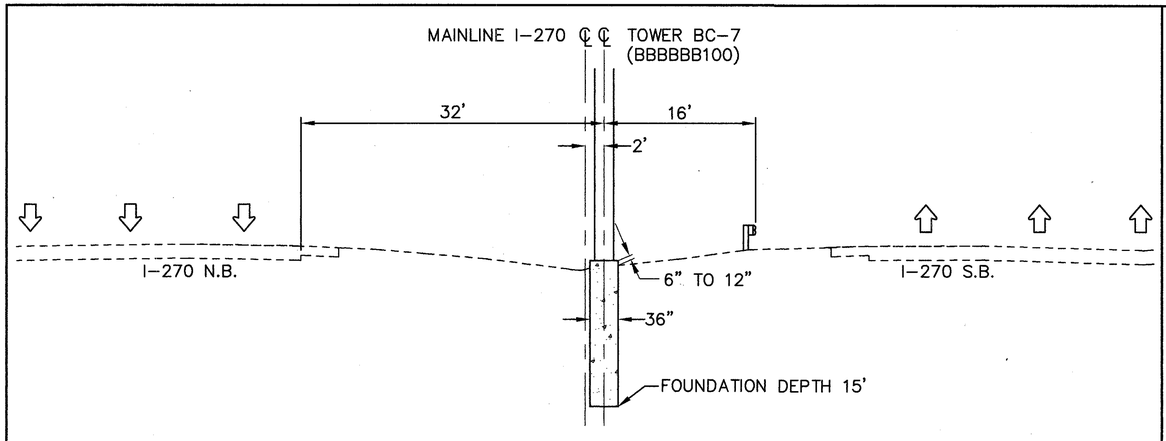

BC-7

MAINLINE STA. 1438+50, 2' RT.

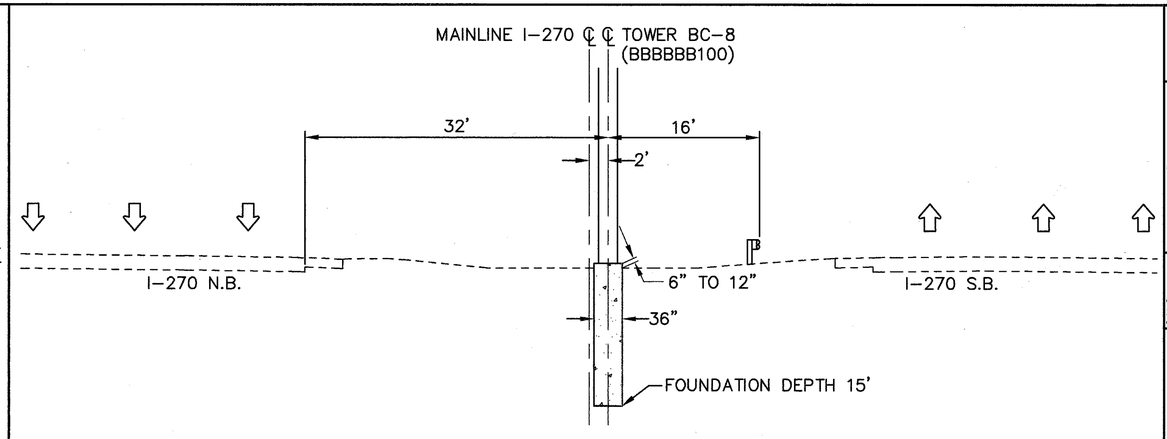

BC-8

MAINLINE STA. 1442+00, 2' RT.

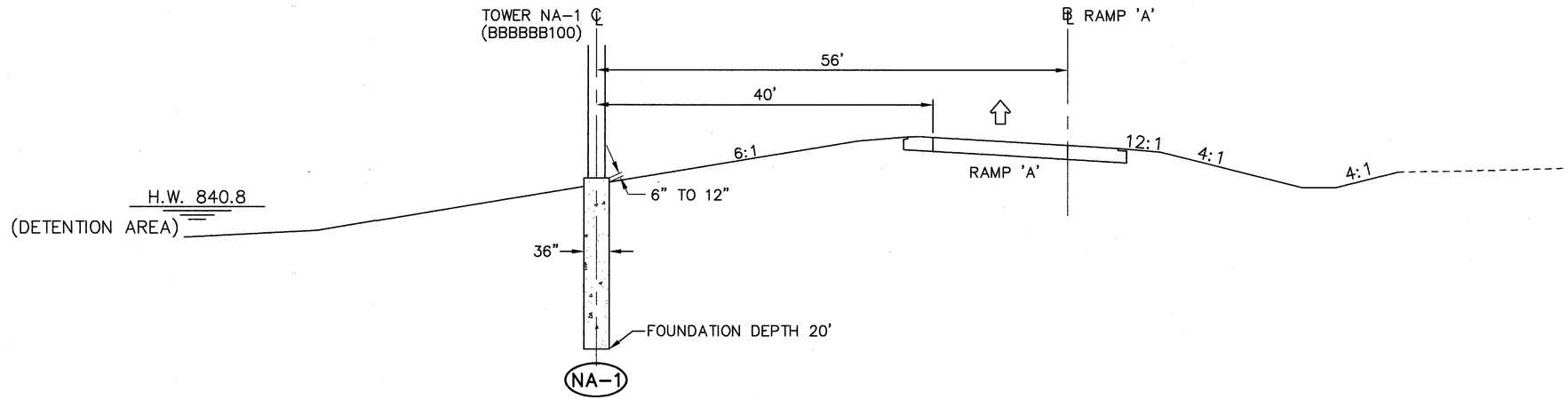

NA-1

RAMP 'A' STA. 1387+00, 56' LT.

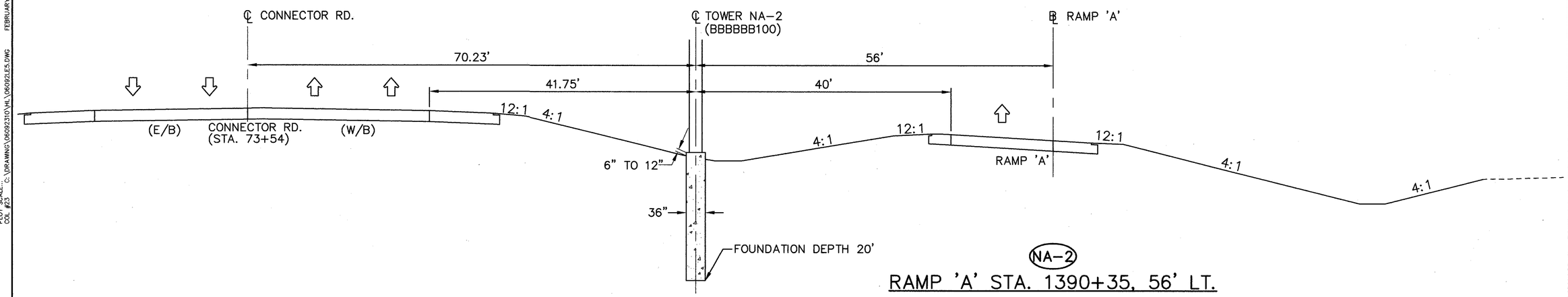

NA-2

RAMP 'A' STA. 1390+35, 56' LT.

SCALE IN FEET 0 4 8 16

CALC. BY: DATE:
CHKD. BY: DATE:

LIGHT TOWER ELEVATIONS

FRA-270-32.46

382
593

PLOT SCALE: COL #23
C:\DRAWING\06092310\HL\06092LE5.DWG FEBRUARY-10-1995

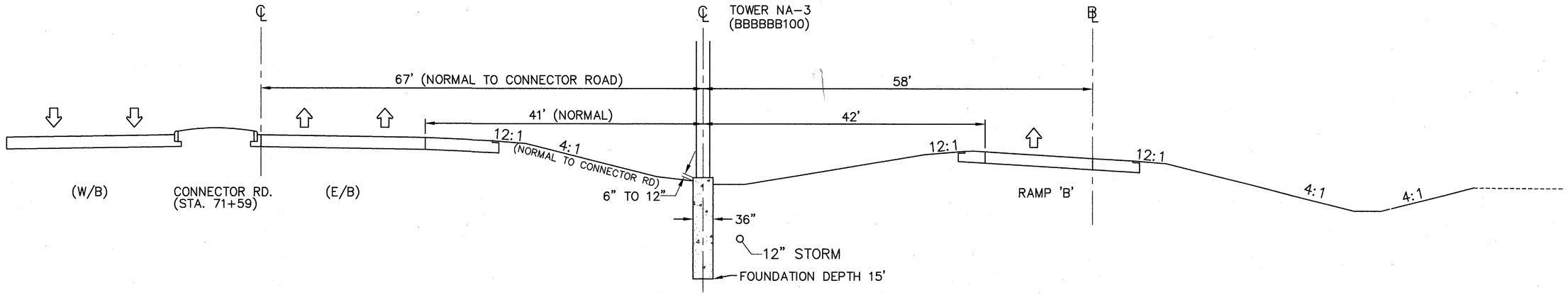

NA-3

RAMP 'B' 71+50, 58' LT.

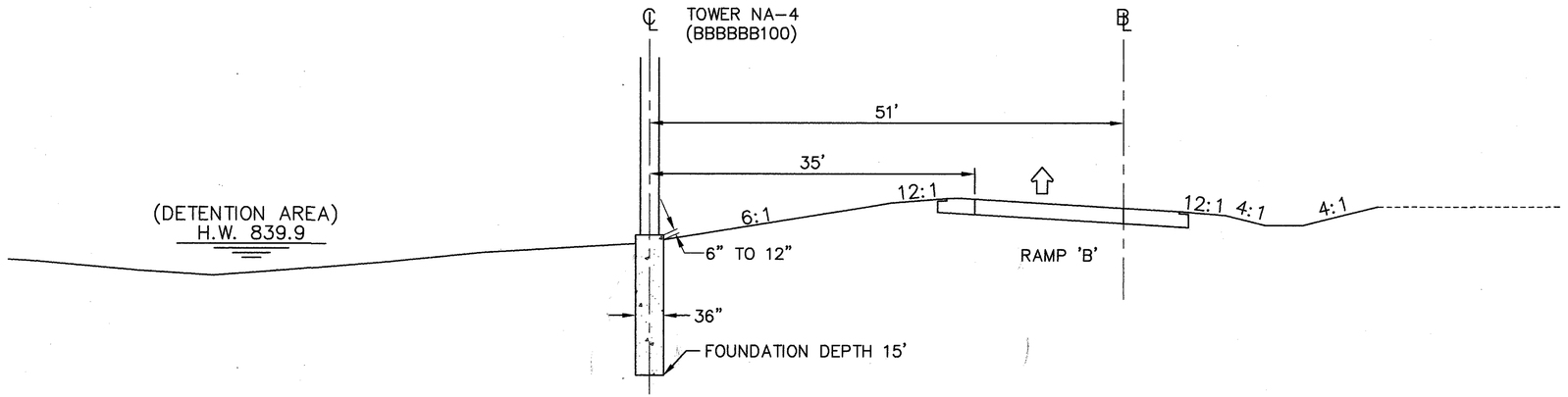

NA-4

RAMP 'B' 77+00, 51' LT.

SCALE IN FEET 0 4 8 16

CALC. BY:
DATE:
CHKD. BY:
DATE:

LIGHT TOWER ELEVATIONS

FRA-270-32.46

383/593

PLOT SCALE...
COL #23 C:\DRAWING\06092310\HL\06092LE6.DWG FEBRUARY-10-1995

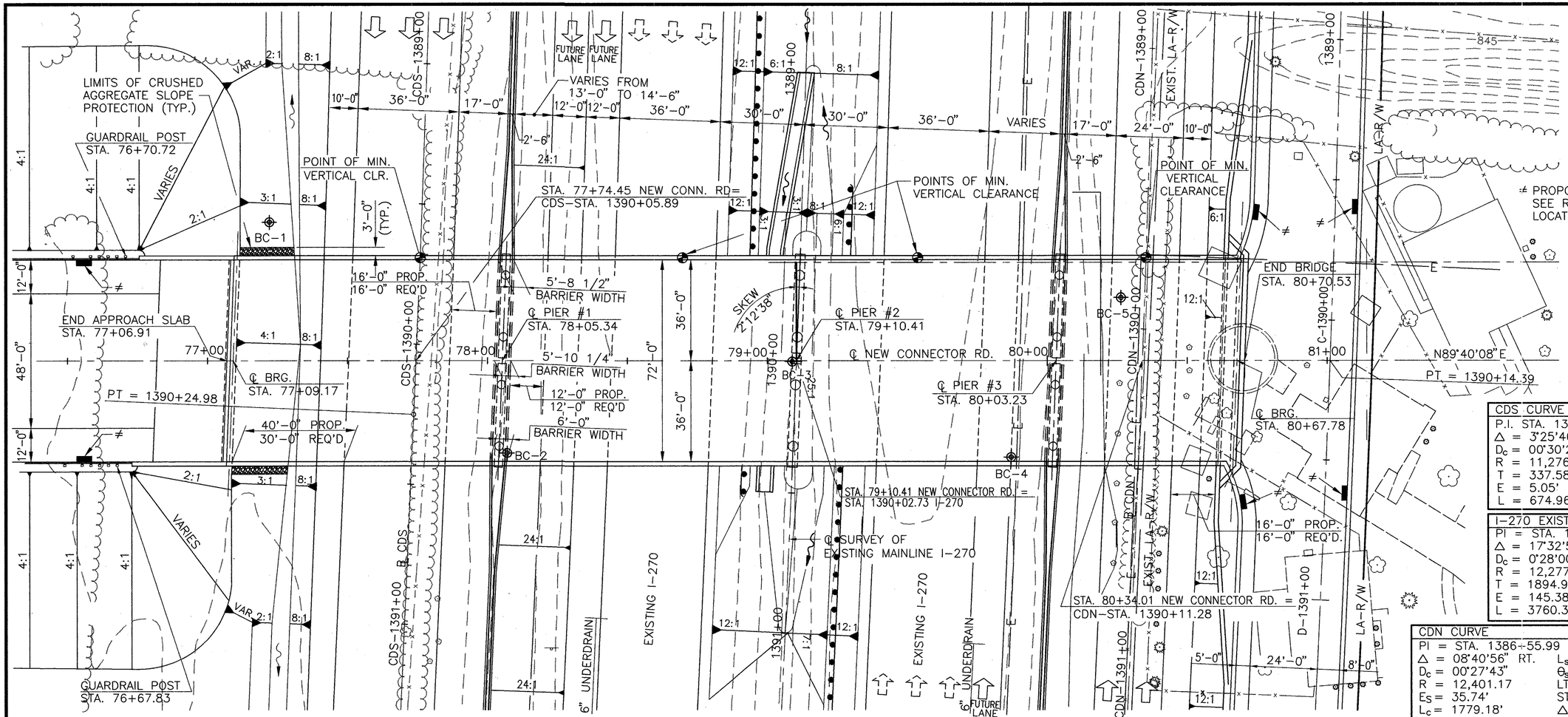

CDS CURVE	
P.I. STA. 1386+85.69	
△ = 3°25'46" RT.	
D_c = 00°30'29"	
R = 11,276.48'	
T = 337.58'	
E = 5.05'	
L = 674.96	

I-270 EXIST. MAINLINE CURVE	
PI = STA. 1375+01.69	
△ = 17°32'53" RT.	
D_c = 0°28'00"	
R = 12,277.67'	
T = 1894.99'	
E = 145.38'	
L = 3760.30'	

CDN CURVE		
PI = STA. 1386+55.99		
△ = 08°40'56" RT.	L_s = 200.00'	
D_c = 00°27'43"	Θ_s = 00°27'43"	
R = 12,401.17	LT = 133.33'	
E_S = 35.74'	ST = 66.67'	
L_c = 1779.18'	△$_c$ = 08°13'13" RT.	
e_{max} = 0.00	T_{s_1} = 942.26'	
	T_{s_2} = 1040.55'	

ESTIMATED PAY LENGTHS FOR 12"ø C.I.P. CONCRETE PILES ARE:
REAR ABUTMENT = 30 FT.
FWD. ABUTMENT = 45 FT.

ESTIMATED PAY LENGTHS FOR 14"ø C.I.P. CONCRETE PILES ARE:
PIERS 1, 2 & 3 = 30 FT.

⊕ INDICATES TEST BORING LOCATION

PLAN

BENCH MARKS:
#18 CONCRETE CENTERLINE MONUMENT FOR I-270 @ STA. 1393+66.998 ELEV. 839.03
#19 CONCRETE CENTERLINE MONUMENT FOR I-270 @ STA. 1386+00.00 ELEV. 841.10

NOTE: EARTHWORK LIMITS SHOWN ARE APPROXIMATE. ACTUAL SLOPES SHALL CONFORM TO PLAN CROSS SECTIONS

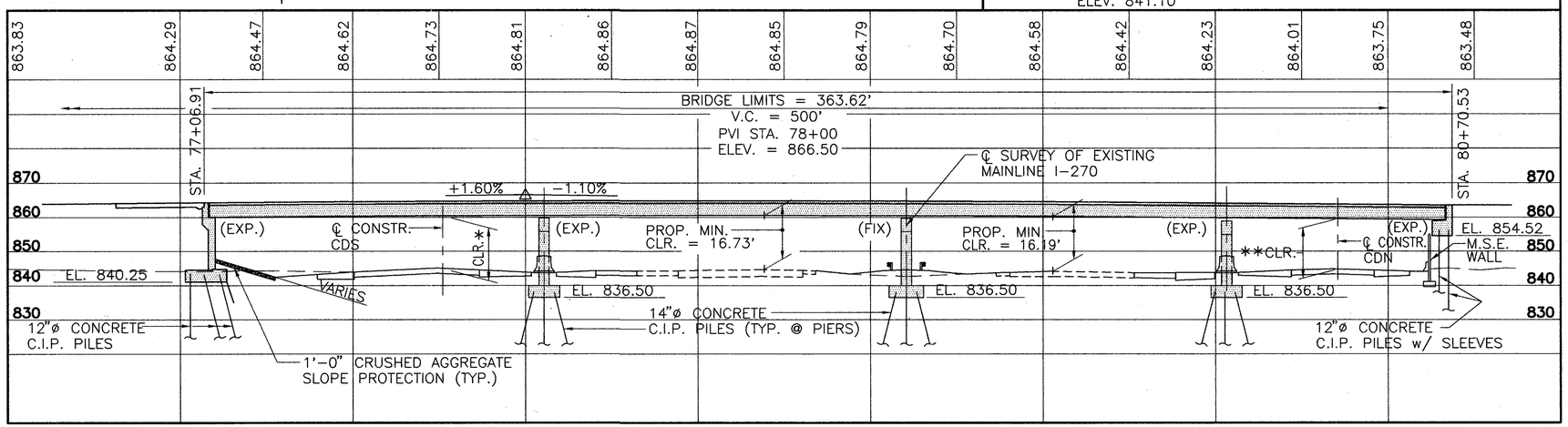

℄ PROFILE

PROPOSED STRUCTURE

TYPE: CONTINUOUS COMPOSITE STEEL BEAM (A572-50 PAINTED) WITH CAP AND COLUMN CONCRETE PIERS AND HIGH WALL ABUTMENT AT WEST END AND STUB ABUTMENT AT EAST END.

SPANS: 96'-2", 105'-0 7/8", 92'-9 7/8" AND 64'-6 5/8" C/C BEARINGS

ROADWAY: 72'-0" TOE TO TOE OF BARRIER

DESIGN LOADING: HS20-44 CASE II AND ALTERNATE MILITARY LOADING

SKEW: 2°12'38" L.F.

WEARING SURFACE: MONOLITHIC CONCRETE

ALIGNMENT: TANGENT

APPROACH SLAB: AS-1-81 (25'-0" LONG) @ WEST END, NONE @ EAST END

CROWN: VARIES

AVERAGE DAILY TRAFFIC: 37,000 (2015)

AVERAGE DAILY TRUCK TRAFFIC: 1,110 (2015)

COORDINATES: LATITUDE 40° 02' 50" LONGITUDE 82° 54' 10"

PREPARED BY: ms consultants, inc. CONSULTING ENGINEERS & PLANNERS 4900 BOSOR WOODSBORO, COLUMBUS, OHIO

DESIGNED	DRAWN	REVIEWED	DATE
S.B.	E.R.K.	J.A.B.	10-93
CHECKED	REVISED	STRUCTURE FILE NO.	
R.B.		2512041	

FRANKLIN COUNTY
STA. 77+06.91
STA. 80+70.53

SITE PLAN

BR. NO. FRA-270-3291
I.R. 270 UNDER NEW CONNECTOR ROAD

FRA-270-32.46

1/24

384/593

PLOT SCALE = 1" = 20'
COL #19 C:\DRAWING\06092308\CONBRG\CONBRST.DWG FEBRUARY-03-1995

SITE PLAN

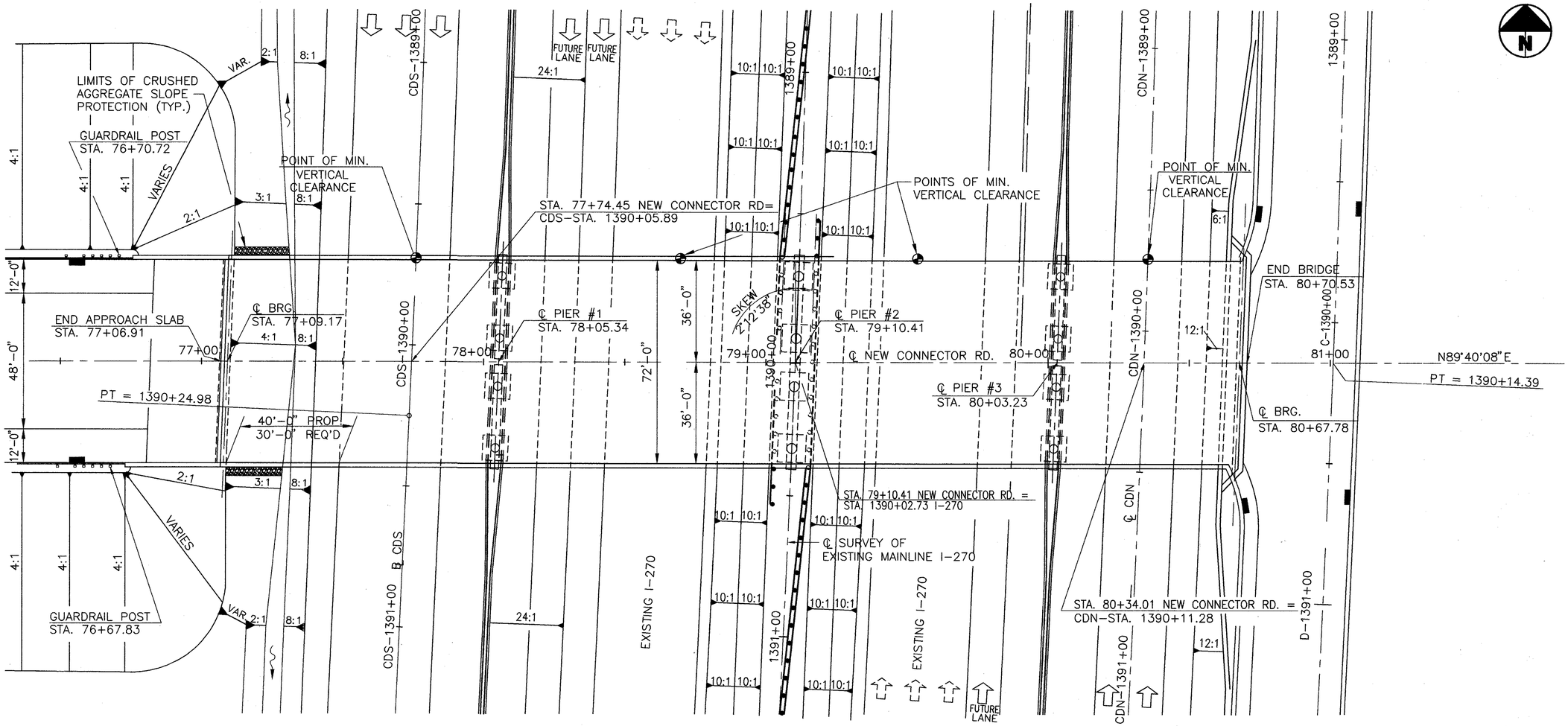

PLAN

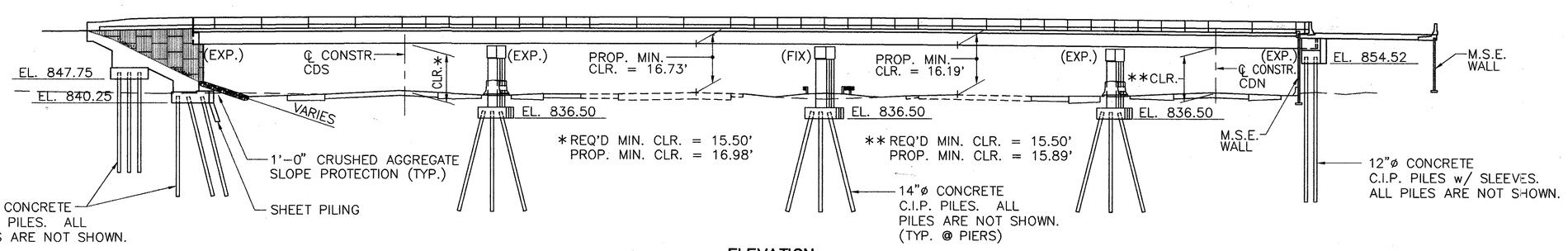

ELEVATION

PLOT SCALE: 1" = 20'
COL #19 C:\DRAWING\06092308\CONNBRG\CONBRGP1.DWG FEBRUARY-07-1995

PREPARED BY
ms consultants, inc.
CONSULTING ENGINEERS & PLANNERS
4000 JEROME BOULEVARD, COLUMBUS, OHIO

DESIGNED	DRAWN	REVIEWED	DATE
B.G.	C.H.	J.A.B.	7-94
CHECKED	REVISED	STRUCTURE FILE NO.	
R.B.		2512041	

GENERAL PLAN & ELEVATION

BR. NO. FRA-270-3291
I.R. 270 UNDER NEW CONNECTOR ROAD

FRA-270-32.46

2/24

385/593

GENERAL NOTES

STANDARD DRAWINGS
REFERENCE SHALL BE MADE TO STANDARD DRAWINGS:

VPF-1-90	9-26-90
SD-1-69	6-12-69
AS-1-81	11-27-81
MC-9.4	10-30-92
EXJ-4-87	11-12-93

AND TO SUPPLEMENTAL SPECIFICATIONS:
944 DATED 5-2-94

DESIGN SPECIFICATIONS: THIS STRUCTURE CONFORMS TO "STANDARD SPECIFICATIONS FOR HIGHWAY BRIDGES" ADOPTED BY THE AMERICAN ASSOCIATION OF STATE HIGHWAY AND TRANSPORTATION OFFICIALS, 1993, AND THE ODOT BRIDGE DESIGN MANUAL.

DESIGN LOADING: HS20-44, CASE II AND THE ALTERNATE MILITARY LOADING.

DESIGN DATA:

CONCRETE CLASS S - COMPRESSIVE STRENGTH 4500 P.S.I. (SUPERSTRUCTURE)

CONCRETE CLASS C - COMPRESSIVE STRENGTH 4000 P.S.I. (SUBSTRUCTURE)

REINFORCING STEEL - ASTM A615, A616 OR A617
GRADE 60 MINIMUM YIELD STRENGTH 60,000 P.S.I.
SPIRAL REINFORCEMENT MAY BE PLAIN BARS, ASTM A82 OR A615.

STRUCTURAL STEEL
ASTM A572 - YIELD STRENGTH 50,000 P.S.I.

DECK PROTECTION METHOD:

EPOXY COATED REINFORCING STEEL.
SEALING OF CONCRETE SURFACES.
2-1/2" CONCRETE COVER.

MONOLITHIC WEARING SURFACE: ASSUMED, FOR DESIGN PURPOSES, TO BE 1" THICK.

ITEM SPECIAL, SEALING OF CONCRETE SURFACES: A CONCRETE SEALER SHALL BE APPLIED TO THE CONCRETE SURFACES SHOWN ON SHEET(S) 7/24, 8/24, 10/24 & 14/24. SEE PROPOSAL FOR SURFACE PREPARATION REQUIREMENTS, APPLICATION RATES, MATERIAL REQUIREMENTS AND APPLICATION PROCEDURES.

PILE DRIVING CONSTRAINTS: PRIOR TO DRIVING PILES AT THE REAR ABUTMENT, THE BRIDGE APPROACH EMBANKMENT BEHIND THE REAR ABUTMENT SHALL BE CONSTRUCTED UP AT A 1:1 SLOPE FROM THE TOP OF THE HEEL OF THE FOOTING TO THE SUBGRADE ELEVATION AND FOR A MINIMUM DISTANCE OF 250 FEET BEHIND THE ABUTMENT. THE INSTALLATION OF THE REAR ABUTMENT PILES SHALL NOT BEGIN UNTIL AFTER THE ABOVE REQUIRED EMBANKMENT HAS BEEN CONSTRUCTED. AFTER THE FOOTING AND THE BREASTWALL HAVE BEEN CONSTRUCTED, THE EMBANKMENT IMMEDIATELY BEHIND THE REAR ABUTMENT SHALL BE CONSTRUCTED UP TO THE BEAM SEAT ELEVATION AND ON A 1:1 SLOPE UP TO THE SUBGRADE ELEVATION PRIOR TO SETTING THE BEAMS ON THE ABUTMENT.

ITEM 203 EMBANKMENT, AS PER PLAN: ALL FILL MATERIAL FOR THE CONSTRUCTION OF THE APPROACH EMBANKMENT PLACED BETWEEN STATIONS 76+09 TO 77+09 SHALL BE 203 GRANULAR MATERIAL PLACED IN LIFTS NOT TO EXCEED A THICKNESS OF SIX (6) INCHES.

ITEM 503, UNCLASSIFIED EXCAVATION, AS PER PLAN:
UNCLASSIFIED EXCAVATION SHALL BE IN ACCORDANCE WITH 503 EXCEPT THAT THE BACKFILL MATERIAL BEHIND THE REAR ABUTMENT SHALL BE 203 GRANULAR MATERIAL PLACED IN LIFTS NOT TO EXCEED A THICKNESS OF SIX (6) INCHES.

ITEM 203, SELECT GRANULAR EMBANKMENT, AS PER PLAN: ALL FILL MATERIAL FOR THE CONSTRUCTION OF THE APPROACH EMBANKMENT AT THE FORWARD ABUTMENT SHALL BE 203 SELECT GRANULAR EMBANKMENT PLACED AS PER THE REQUIREMENTS FOR MECHANICALLY STABILIZED EARTH (MSE) WALLS. SEE MSE WALL PLANS FOR DETAILS.

PILE DESIGN LOADS (SAFE BEARING CAPACITY): THE DESIGN LOAD FOR THE ABUTMENT PILES IS 48.7 TONS PER PILE AND THE DESIGN LOAD FOR THE PIER PILES IS 67.3 TONS PER PILE.

ITEM 507, 14-INCH DIAMETER PILES, AS PER PLAN:
PILE WALL THICKNESS: THE RESPONSIBILITY OF CHOOSING AND PROVIDING A SATISFACTORY PILE WALL THICKNESS FOR THIS PROJECT SHALL BE BORNE BY THE CONTRACTOR EXCEPT THAT THE PILE WALL THICKNESS SHALL NOT BE LESS THAN 0.235 INCHES. IF A PILE WALL THICKNESS GREATER THAN 0.235 INCHES IS NECESSARY TO RESIST THE PILE INSTALLATION DRIVING STRESS, THE CONTRACTOR SHALL MAKE THIS DETERMINATION AND SHALL FURNISH A PILE WITH AN ACCEPTABLE WALL THICKNESS. IF MONOTUBE PILES ARE USED, THE MINIMUM WALL THICKNESS SHALL BE 0.17 INCHES.

ITEM 507 14-INCH DIAMETER PILES, AS PER PLAN:
PILE HAMMER: THE PILE HAMMER USED TO INSTALL THE 14-INCH PILES SHALL HAVE A STATE'S ENERGY RATING OF NOT LESS THAN 20,000 FOOT-POUNDS. THIS REQUIREMENT DOES NOT RELIEVE THE CONTRACTOR FROM 108.05 WHICH STATES THAT THE CONTRACTOR IS TO PROVIDE SUFFICIENT EQUIPMENT FOR PROSECUTING THE REQUIRED WORK. REFER TO "ODOT'S MANUAL OF PROCEDURES FOR STRUCTURES" TO OBTAIN THE STATE'S ENERGY RATING.

UTILITY LINES: ALL EXPENSE INVOLVED IN RELOCATION (INSTALLING) THE AFFECTED UTILITY LINES SHALL BE BORNE BY THE UTILITIES. THE CONTRACTOR AND UTILITIES ARE TO COOPERATE BY ARRANGING THEIR WORK IN SUCH A MANNER THAT INCONVENIENCE TO EITHER WILL BE HELD TO A MINIMUM.

CONCRETE PARAPETS: WITHIN 48 HOURS AFTER PLACEMENT OF PARAPET CONCRETE SAWCUT 1 INCH DEEP JOINTS INTO THE CONCRETE PARAPET AT LOCATIONS AS DETAILED IN THE PLANS. THE SAW CUT SHALL BE MADE IN THE COMPLETE CIRCUMFERENCE OF THE PARAPET, STARTING AND ENDING AT THE ELEVATION OF THE CONCRETE DECK, AND THE COMPLETED SAWCUT SHALL BE FILLED WITH A CAULKING MATERIAL CONFORMING TO FEDERAL SPECIFICATION TT-S-00227E. THE BOTTOM HALF INCH OF THE ONE INCH DEEP SAWED JOINT IN BOTH THE INSIDE AND OUTSIDE FACES OF THE PARAPET SHOULD BE LEFT UNSEALED TO ALLOW ANY WATER WHICH MAY ENTER THE JOINT TO ESCAPE.

PAYMENT FOR LABOR, MATERIALS AND INSTALLATION OF CAULKING MATERIAL SHALL BE INCLUDED IN ITEM 511 CLASS S CONCRETE, SUPERSTRUCTURE.

ITEM 518, 6" PERFORATED CORRUGATED PLASTIC PIPE, AS PER PLAN: CORRUGATED PIPE USED IN ABUTMENT DRAINAGE SHALL BE 6 INCH DIAMETER, PLASTIC CORRUGATED AS PER SUPPLEMENTAL SPECIFICATION 944, AASHTO M294, TYPE SP.

ITEM 518, 6" NON-PERFORATED CORRUGATED PLASTIC PIPE, INCLUDING SPECIALS, AS PER PLAN: CORRUGATED PIPE USED IN ABUTMENT DRAINAGE SHALL BE 6 INCH DIAMETER, PLASTIC CORRUGATED AS PER SUPPLEMENTAL SPECIFICATION 944, AASHTO M294, TYPE S. THIS ITEM SHALL INCLUDE ALL ELBOWS, TEES AND END CAPS REQUIRED TO COMPLETE THE ABUTMENT DRAINAGE SYSTEM.

ESTIMATED QUANTITIES

CALC. BY: B.G. DATE: 7-94
CHKD. BY: R.B. DATE: 7-94

ITEM	ITEM EXT.	TOTAL	UNIT	DESCRIPTION	SUPER.	ABUTS.	PIERS	GENERAL
503	21101	407	CU. YD.	UNCLASSIFIED EXCAVATION, AS PER PLAN		307	100	
504	11100	817	SQ. FT.	STEEL SHEET PILING LEFT IN PLACE (MIN. SECTION MODULUS OF 7 CU. IN./FT. OF WALL)		817		
505	11100	LUMP	LUMP	PILE DRIVING EQUIPMENT MOBILIZATION				LUMP
507	22200	2580	LIN. FT.	12" CAST-IN-PLACE REINFORCED CONCRETE PILES		2580		
507	42200	2280	LIN. FT.	14" CAST-IN-PLACE REINFORCED CONCRETE PILES			2280	
509	15840	329,443	POUND	EPOXY COATED REINFORCING STEEL, GRADE 60	239,406	39,140	50,897	
511	31502	911	CU. YD.	CLASS S CONCRETE, SUPERSTRUCTURE	911			
* 511	33404	911	CU. YD.	CLASS S CONCRETE, SUPERSTRUCTURE (USING SHRINKAGE COMPENSATING CEMENT) **	911			
* 511	33410	LUMP	LUMP	CLASS S CONCRETE, USING SHRINKAGE COMPENSATING CEMENT, FOR PRE-TREATMENT TESTING **	LUMP			
511	41000	153	CU. YD.	CLASS C CONCRETE, PIER ABOVE FOOTINGS			153	
511	44101	281	CU. YD.	CLASS C CONCRETE, ABUTMENT NOT INCLUDING FOOTING, AS PER PLAN		281		
511	46500	297	CU. YD.	CLASS C CONCRETE, FOOTING		161	136	
SPECIAL	51267500	1254	SQ. YD.	SEALING OF CONCRETE SURFACES **	849	405		
513	12400	625,309	POUND	STRUCTURAL STEEL, A572-50 AISC CATEGORY III (BUILT UP GIRDER) **	625,309			
513	20000	6072	EACH	WELDED STUD SHEAR CONNECTOR	6072			
SPECIAL	51400610	625,309	POUND	PAINTING OF NEW STEEL, SYSTEM IZEU ** (NON-EPOXY) 1	625,309			
516	11210	154	LIN. FT.	STRUCTURAL EXPANSION JOINT INCLUDING ELASTOMER STRIP SEAL **	154			
516	44000	8	EACH	ELASTOMERIC BEARING WITH INTERNAL LAMINATES AND LOAD PLATE (NEOPRENE) ** (20"x 19" x 1 11/16" PAD w/21" x 20" x 2" PLATE)			8	
516	44000	8	EACH	ELASTOMERIC BEARING WITH INTERNAL LAMINATES AND LOAD PLATE (NEOPRENE) ** (18"x 18" x 1 7/16" PAD w/24" x 19" x 2" PLATE)			8	
516	44000	8	EACH	ELASTOMERIC BEARING WITH INTERNAL LAMINATES AND LOAD PLATE (NEOPRENE) ** (17"x 17" x 1 1/2" PAD w/18" x 18" x 2" PLATE)			8	
516	44100	8	EACH	ELASTOMERIC BEARING WITH INTERNAL LAMINATES AND LOAD PLATE (NEOPRENE) ** (15"x 9" x 2 3/4" PAD w/16" x 10" x 1 1/2" PLATE)		8		
516	44200	8	EACH	ELASTOMERIC BEARING WITH INTERNAL LAMINATES AND LOAD PLATE (NEOPRENE) ** (16"x 12" x 3 1/2" PAD w/17" x 13" x 1 1/2" PLATE)		8		
518	21200	182	CU. YD.	POROUS BACKFILL w/ FILTER FABRIC		182		
518	40001	245	LIN. FT.	6" PERFORATED CORRUGATED PLASTIC PIPE, AS PER PLAN		245		
518	40011	30	LIN. FT.	6" NON-PERFORATED CORRUGATED PLASTIC PIPE, INCLUDING SPECIALS, AS PER PLAN		30		
601	20000	190	SQ.YD.	CRUSHED AGGREGATE SLOPE PROTECTION		190		

* ALTERNATE BID ITEM: THESE TWO TWO ITEMS CONSTITUTE ONE ALTERNATE BID TO CLASS S CONCRETE, SUPERSTRUCTURE
** SEE PROPOSAL NOTE

PLOT SCALE... 1 = 1
COL #19 C:\DRAWING\06092718\CONBRGN1.DWG MAY-06-1996

PREPARED BY ms consultants, inc. CONSULTING ENGINEERS & PLANNERS 6500 ROCKS BOULEVARD, COLUMBUS, OHIO

DESIGNED B.G. | DRAWN C.H. | REVIEWED J.A.B. | DATE 7-94
CHECKED R.B. | REVISED 1 5-96 | STRUCTURE FILE NO. 2512041

GENERAL NOTES & ESTIMATED QUANTITIES
BR. NO. FRA-270-3291
I.R. 270 UNDER NEW CONNECTOR ROAD

FRA-270-32.46

3/24

386/593

REAR ABUTMENT

NOTE: FOR DETAILS OF FOUNDATION, SEE SHT. NO. 5/24.

PIER NO. 1

NOTE: FOR DETAILS OF PIER NO. 1, SEE SHT. NO. 11/24.

PIER NO. 2

NOTE: FOR DETAILS OF PIER NO. 2, SEE SHT. NO. 12/24.

PIER NO. 3

NOTE: FOR DETAILS OF PIER NO. 3, SEE SHT. NO. 13/24.

FORWARD ABUTMENT

NOTE: FOR DETAILS OF FORWARD ABUTMENT, SEE SHT. NO. 9/24.

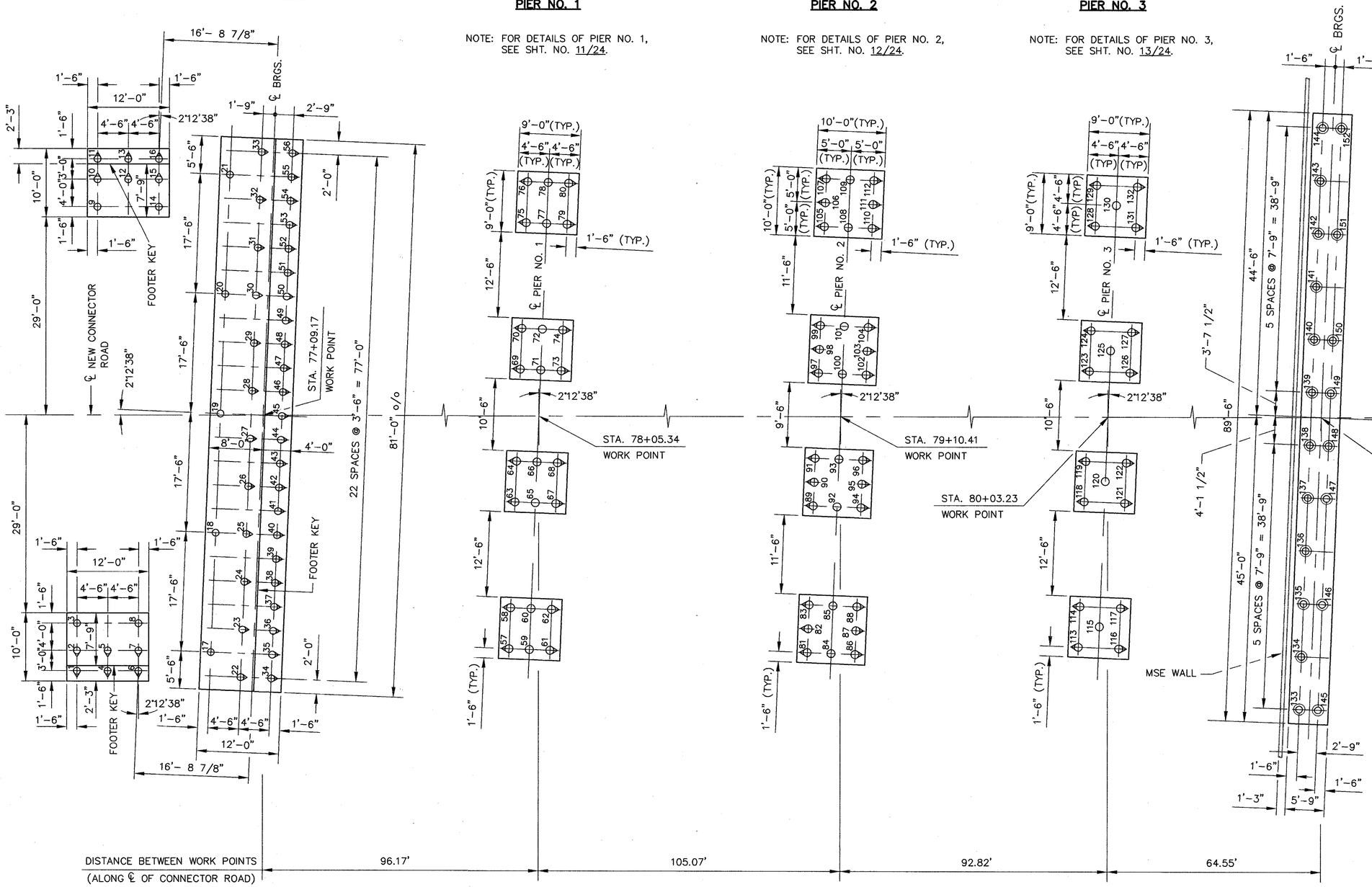

DISTANCE BETWEEN WORK POINTS (ALONG ℄ OF CONNECTOR ROAD)	96.17'	105.07'	92.82'	64.55'

NOTE: CONTRACTOR SHALL PROVIDE PILE SLEEVES FOR THE 12" ø C.I.P. PILES FOR THE FORWARD ABUTMENT. THE COST FOR PILE SLEEVES SHALL BE INCIDENTAL TO MECHANICALLY STABILIZED EARTH (MSE) WALL. SEE MSE WALL SPECIAL PROVISIONS.

FOUNDATION LAYOUT PLAN

○ INDICATES VERTICAL PILE

○ INDICATES BATTERED PILE IN THE DIRECTION OF THE ARROW.
REAR ABUTMENT PILES SHALL BE BATTERED 1:3
PIER PILES SHALL BE BATTERED 1:4
REAR & FORWARD ABUTMENTS SHALL HAVE 12" ø C.I.P. PILES
PIERS SHALL HAVE 14" ø C.I.P. PILES

LEGEND

TYP. = TYPICAL
STA. = STATION
BRGS. = BEARINGS
C.I.P. = CAST-IN-PLACE
MSE = MECHANICALLY STABILIZED EARTH

PREPARED BY
ms consultants, inc.
CONSULTING ENGINEERS & PLANNERS
4000 EMBASSY PARKWAY, COLUMBUS, OHIO

DESIGNED B.G.	DRAWN C.H.	REVIEWED J.A.B.	DATE 7-94
CHECKED R.B.	REVISED	STRUCTURE FILE NO. 251041	

FOUNDATION LAYOUT PLAN
BR. NO. FRA-270-32.46
I.R. 270 UNDER NEW CONNECTOR ROAD

FRA-270-32.46

4 / 24

387 / 593

PLOT SCALE = 1" = 8'
COL #19
C:\DRAWING\06092308\CONNBRG\CONNBRF1.DWG FEBRUARY-03-1995

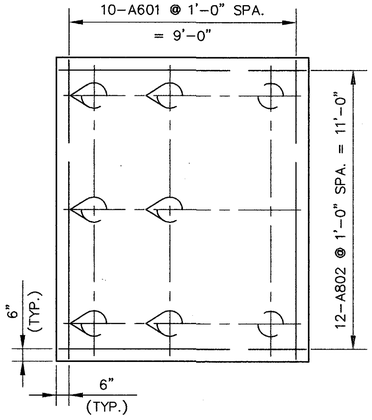

TOP REINFORCEMENT

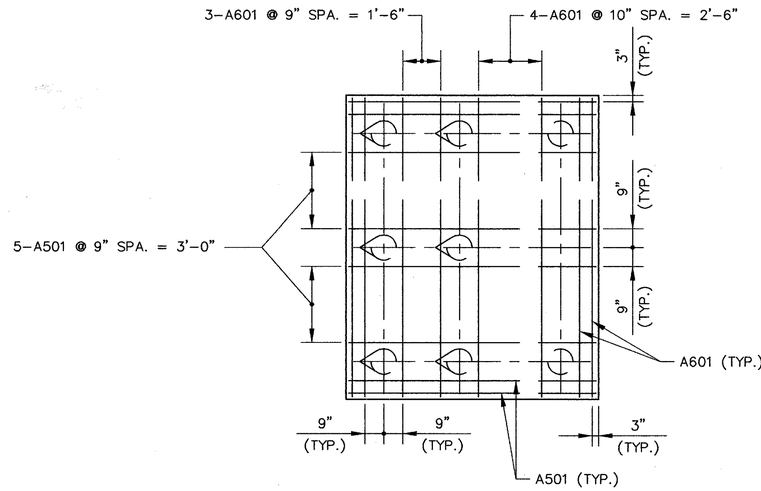

BOTTOM REINFORCEMENT

TYPICAL WINGWALL FOOTING REINFORCEMENT

SOUTH WINGWALL FOOTING SHOWN
(NORTH WINGWALL FOOTING OPPOSITE HAND)

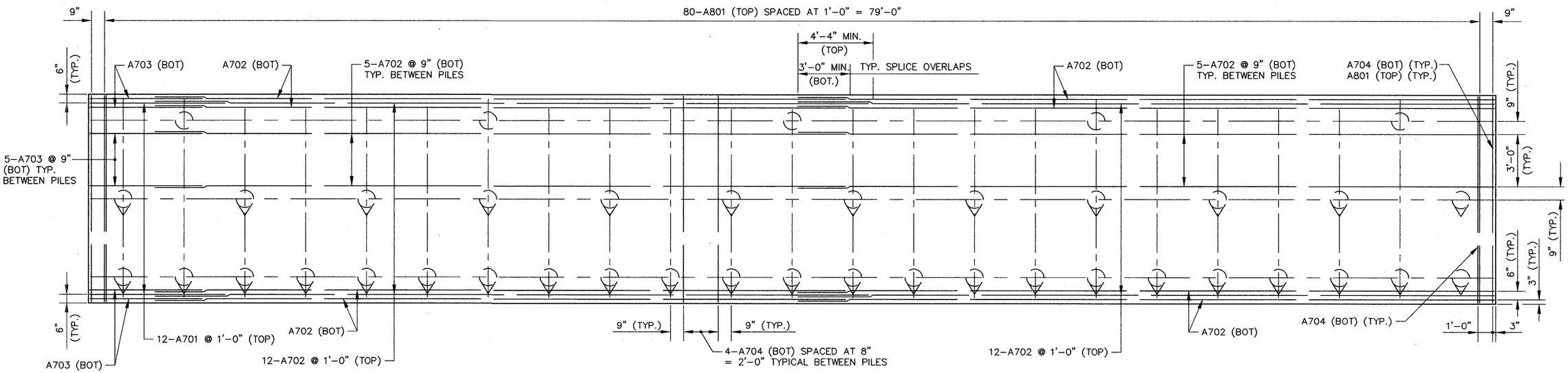

FOOTING REINFORCEMENT

LEGEND

12" ø C.I.P. CONCRETE PILE (VERTICAL)

12" ø C.I.P. CONCRETE PILE BATTERED 1:3 IN DIRECTION OF THE ARROW

PLOT SCALE.. 1" = 3"
COL #19 C:\DRAWINGS\06092308\CONNBRG\CONBRFD1.DWG FEBRUARY-03-1995

PREPARED BY
ms consultants, inc.
CONSULTING ENGINEERS & PLANNERS
YOUNGSTOWN, OHIO COLUMBUS, OHIO

DESIGNED	DRAWN	REVIEWED	DATE
B.G.	C.H.	J.A.B.	7–94
CHECKED	REVISED	STRUCTURE FILE NO.	
R.B.		2512041	

REAR ABUTMENT FOUNDATION PLAN
BR. NO. FRA–270–32.91
I.R. 270 UNDER NEW CONNECTOR ROAD

FRA–270–32.46

5 / 24

388 / 593

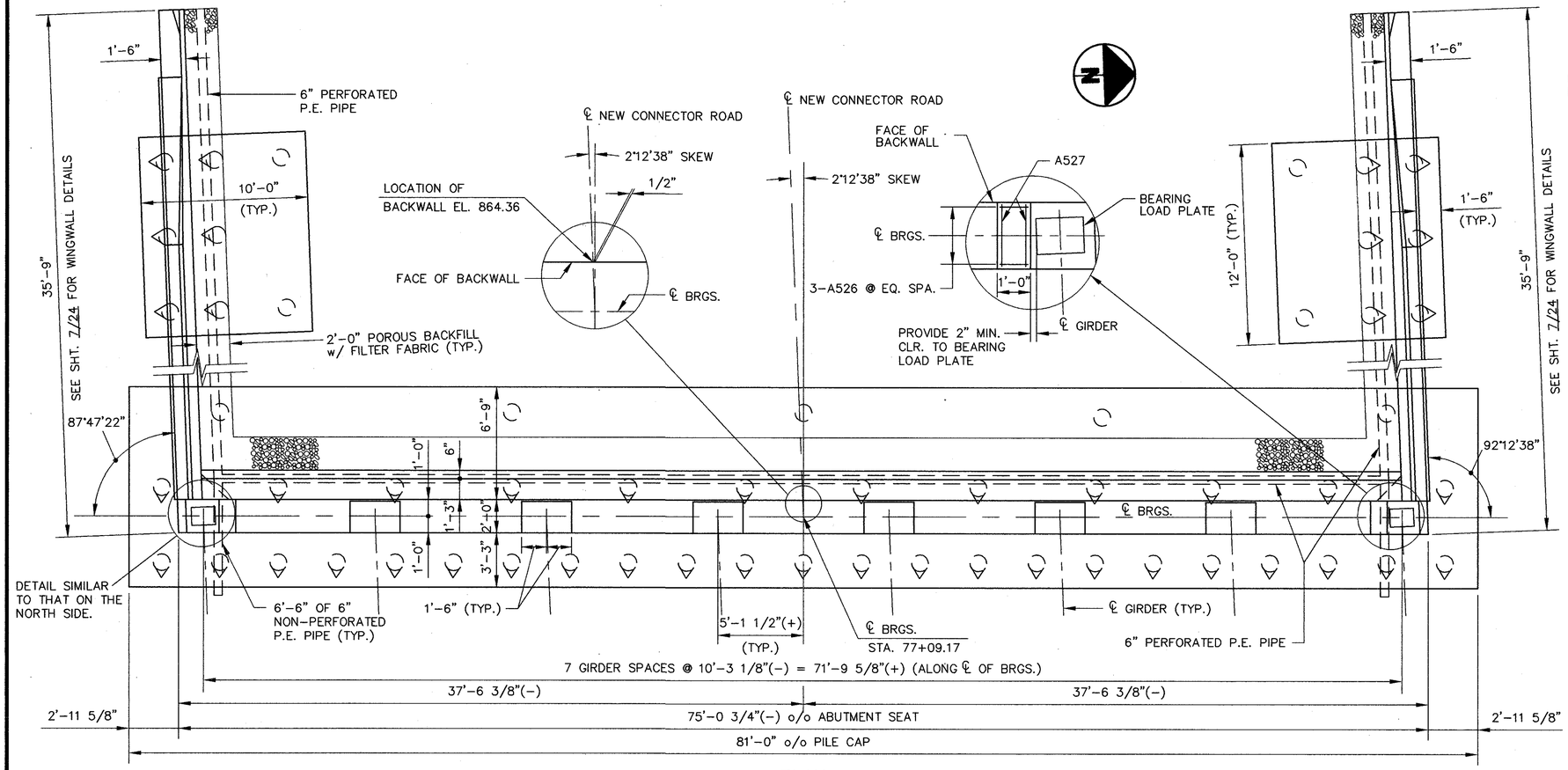

PLAN

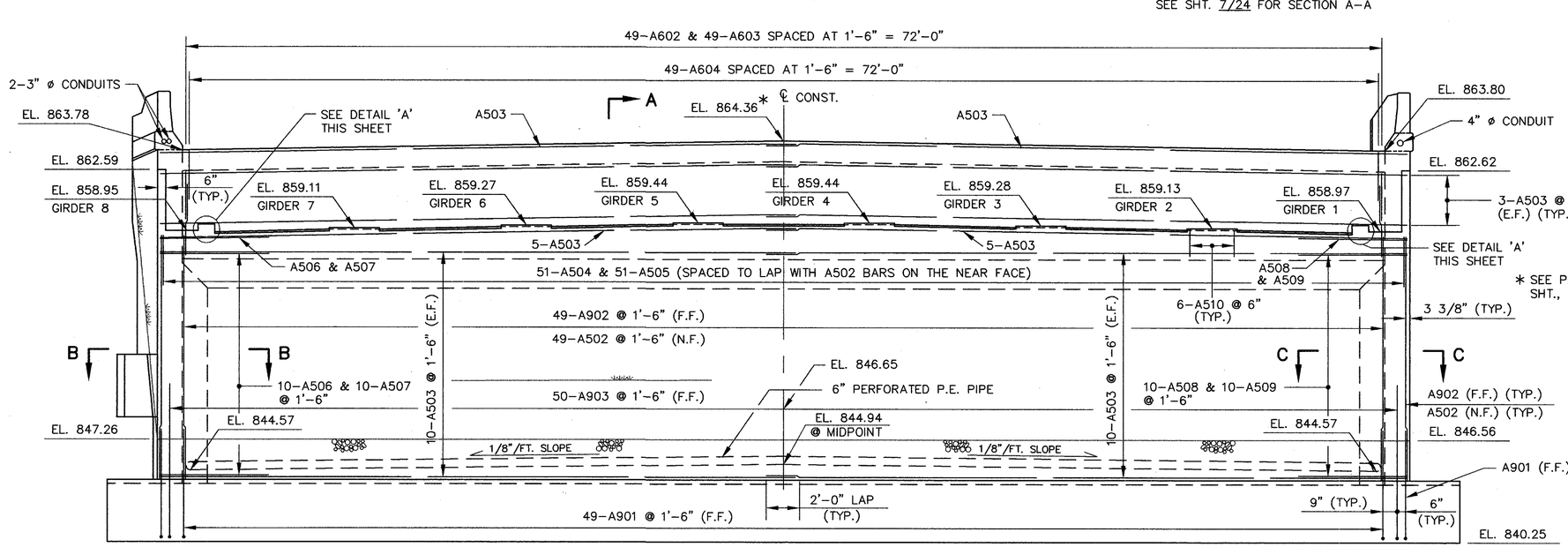

ELEVATION

NOTE: SEE SHT. 5/24 FOR FOOTING DETAILS
SEE SHT. 7/24 & 8/24 FOR WINGWALL & OTHER MISC. DETAILS

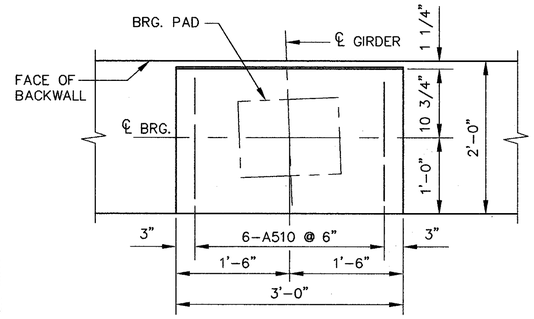

GIRDER SEAT DETAIL

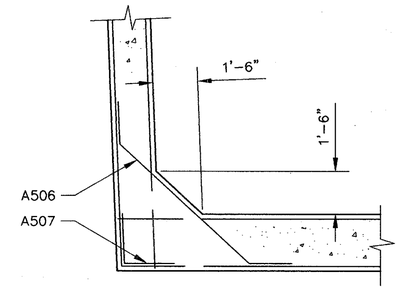

SECTION B-B

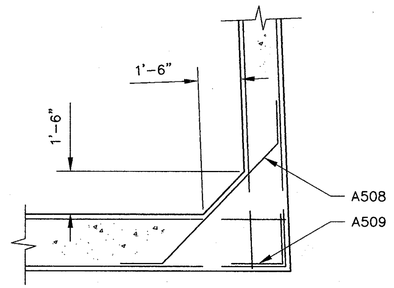

SECTION C-C

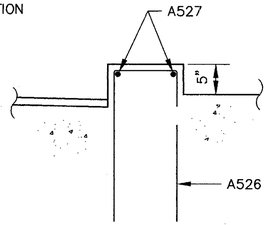

DETAIL 'A'

LEGEND
N.F. = NEAR FACE
F.F. = FAR FACE
EL. = ELEVATION
TYP. = TYPICAL

PLOT SCALE = 1" = 4'
COL #30 C:\DRAWING\06092308\CONNBRG\CONNBRA01.DWG FEBRUARY-03-1995

PREPARED BY ms consultants, inc. CONSULTING ENGINEERS & PLANNERS 4900 EMPIRE BOULEVARD, COLUMBUS, OHIO

DESIGNED	DRAWN	REVIEWED	DATE
B.G.	C.H.	J.A.B.	7-94
CHECKED	REVISED	STRUCTURE FILE NO.	
R.B.		25122041	

REAR ABUTMENT PLAN, ELEVATION & DETAILS
BR. NO. FRA-270-32.91
I.R. 270 UNDER NEW CONNECTOR ROAD

FRA-270-32.46

6 / 24

389 / 593

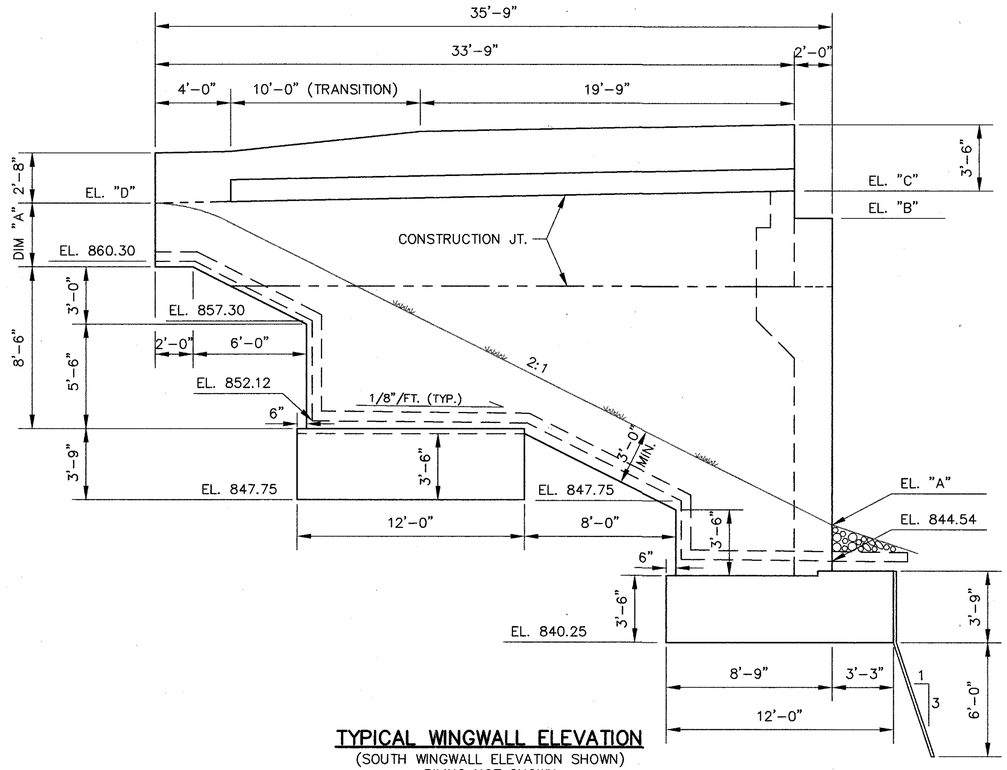

TYPICAL WINGWALL ELEVATION

(SOUTH WINGWALL ELEVATION SHOWN)
PILING NOT SHOWN

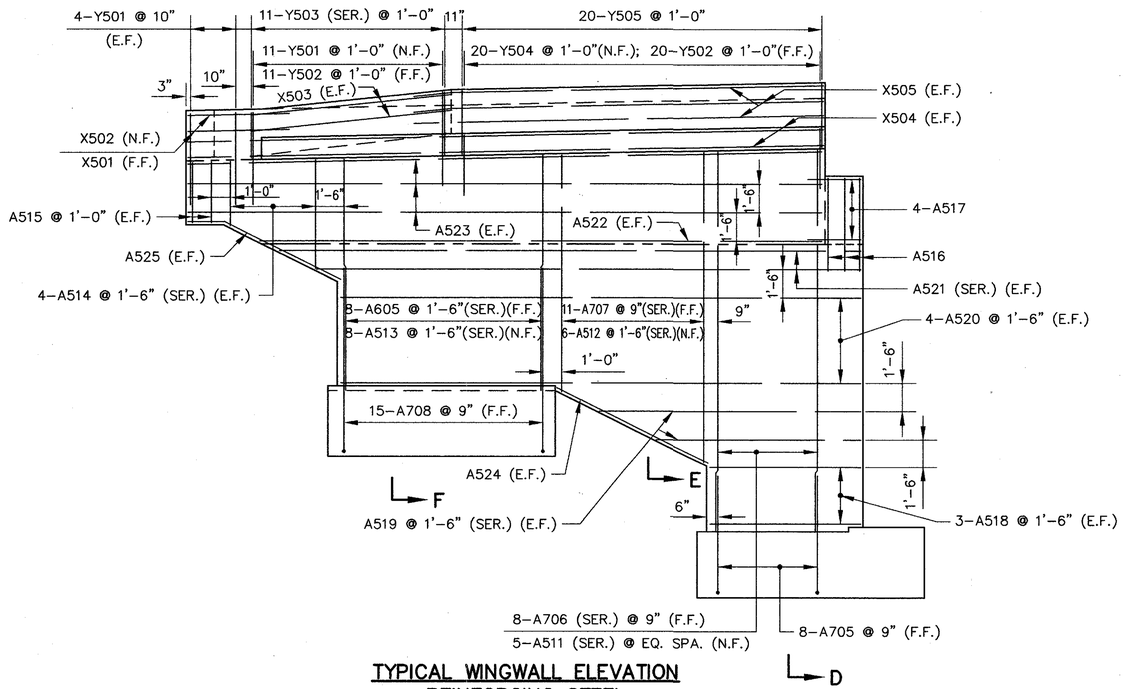

TYPICAL WINGWALL ELEVATION REINFORCING STEEL

(SOUTH WINGWALL ELEVATION SHOWN)
PILING NOT SHOWN

TABLE OF WINGWALL VARIABLES		
VARIABLE	SOUTH	NORTH
DIM "A"	3'-4 1/4"	3'-4 1/2"
ELEVATION "A"	847.26	846.56
"B"	862.59	862.62
"C"	863.78	863.80
"D"	863.10	863.13

NOTES:

POROUS BACKFILL WITH FILTER FABRIC, 2 FEET THICK SHALL EXTEND UP TO THE PLANE OF THE SUBGRADE, TO ONE FOOT BELOW THE EMBANKMENT SURFACE, AND LATERALLY TO THE ENDS OF THE WINGWALLS. GEOTEXTILE FABRIC SHALL CONFORM WITH 712.09, TYPE A. THE BOTTOM OF THE POROUS BACKFILL SHALL BE SLOPED (1 INCH PER FOOT MINIMUM) LATERALLY TO DRAIN. GEOTEXTILE FABRIC IS INCLUDED WITH POROUS BACKFILL FOR PAYMENT.

BACKWALL CONCRETE: IN ADDITION TO THE PROVISIONS OF 511.08, BACKWALL CONCRETE ABOVE THE OPTIONAL CONSTRUCTION JOINT AT THE APPROACH SLAB SEAT SHALL NOT BE PLACED UNTIL AFTER THE DECK CONCRETE IN THE SPAN ADJACENT TO THE ABUTMENT HAS BEEN PLACED.

INSTALLATION OF SEAL: DURING INSTALLATION OF THE SUPPORT/ARMOR FOR THE SUPERSTRUCTURE SIDE OF THE EXPANSION JOINT SEAL, THE SEATING OF BEAMS ON BEARINGS SHALL BE CAREFULLY OBSERVED TO ASSURE THAT POSITIVE BEARING IS MAINTAINED. PROPER VERTICAL FIT OF THE SUPPORT/ARMOR ON THE BEAMS SHALL BE ACHIEVED BY POSITIONING OF THE BEVEL FILL PLATES RATHER THAN BY CLAMPING FORCE.

APPROACH SLAB: PAYMENT FOR LABOR, MATERIALS & INSTALLATION OF APPROACH SLAB SHALL BE INCLUDED WITH ITEM 611, REINFORCED CONCRETE APPRACH SLAB (T = 15"), AS PER PLAN. SEE ROADWAY SUMMARY.

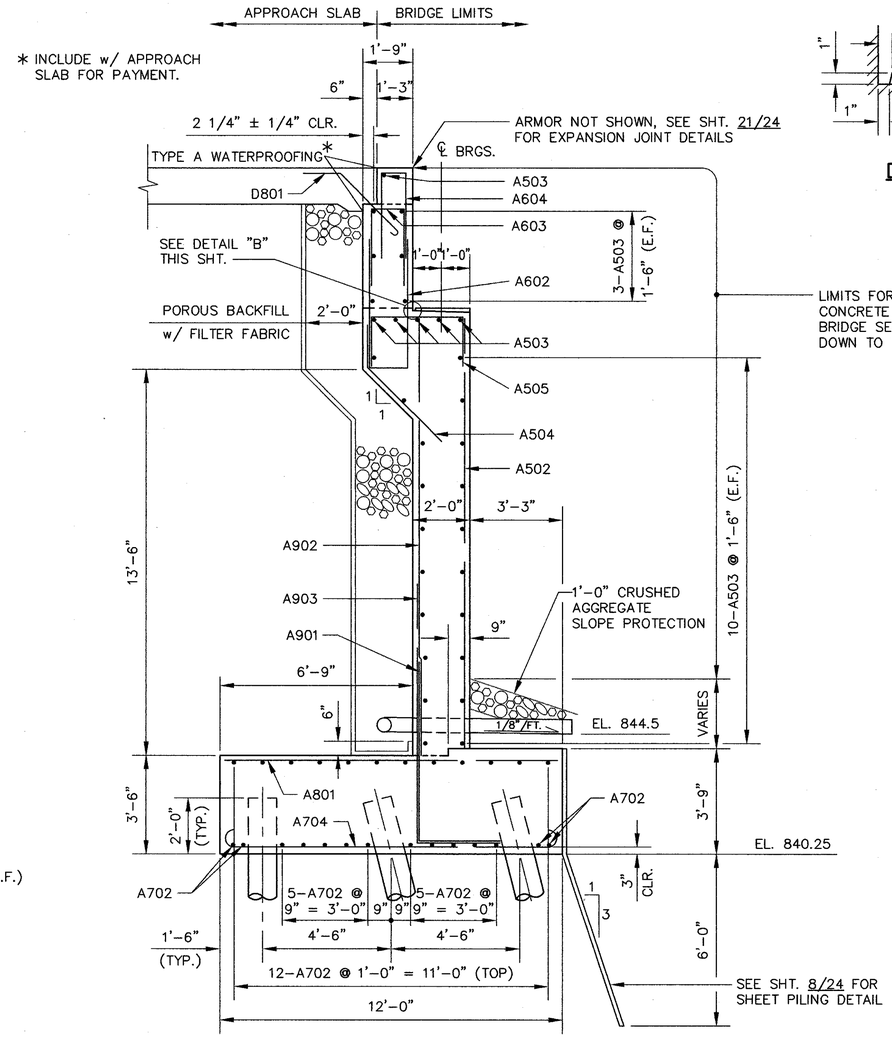

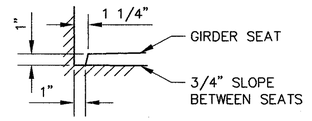

DETAIL "B"

SECTION A-A

LEGEND

N.F. = NEAR FACE
F.F. = FAR FACE
E.F. = EACH FACE
EL. = ELEVATION
SPA. = SPACING
SER. = SERIES

PREPARED BY ms consultants, inc. CONSULTING ENGINEERS & PLANNERS 600 STONE BUILDING, COLUMBUS, OHIO

DESIGNED B.G. | DRAWN C.H. | CHECKED R.B. | REVIEWED J.A.B. | DATE 7-94 | REVISED | STRUCTURE FILE NO. 2512041

REAR ABUTMENT WINGWALL ELEV. & DETAILS
BR. NO. FRA-270-32.91
I.R. 270 UNDER NEW CONNECTOR ROAD

FRA-270-32.46

7/24

390/593

PLOT SCALE: 1" = 4'
COL #19 C:\DRAWING\06092308\CONNBRG\CONBRAD2.DWG FEBRUARY-03-1995

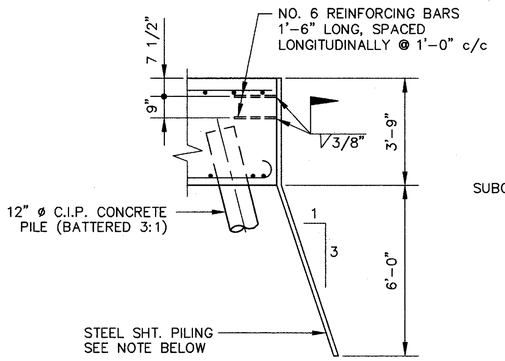

SHEET PILING DETAIL

NOTE: STEEL SHEET PILING LEFT IN PLACE SHALL HAVE A MINIMUM SECTION MODULUS OF 7 CU. IN. PER FOOT OF WALL.

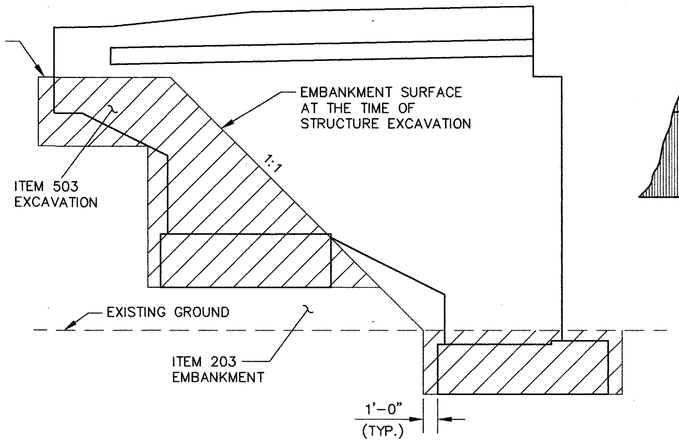

PAY LIMITS FOR UNCLASSIFIED EXCAVATION

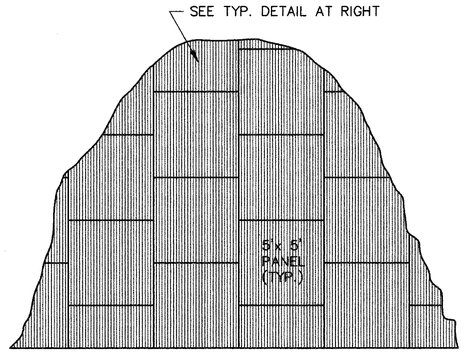

TYP. EXPOSED WALL FINISH FOR ABUTMENTS & WINGWALLS

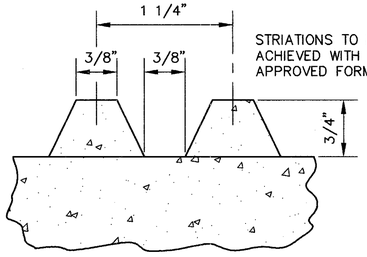

TYP. DETAIL – VERTICAL STRIATIONS

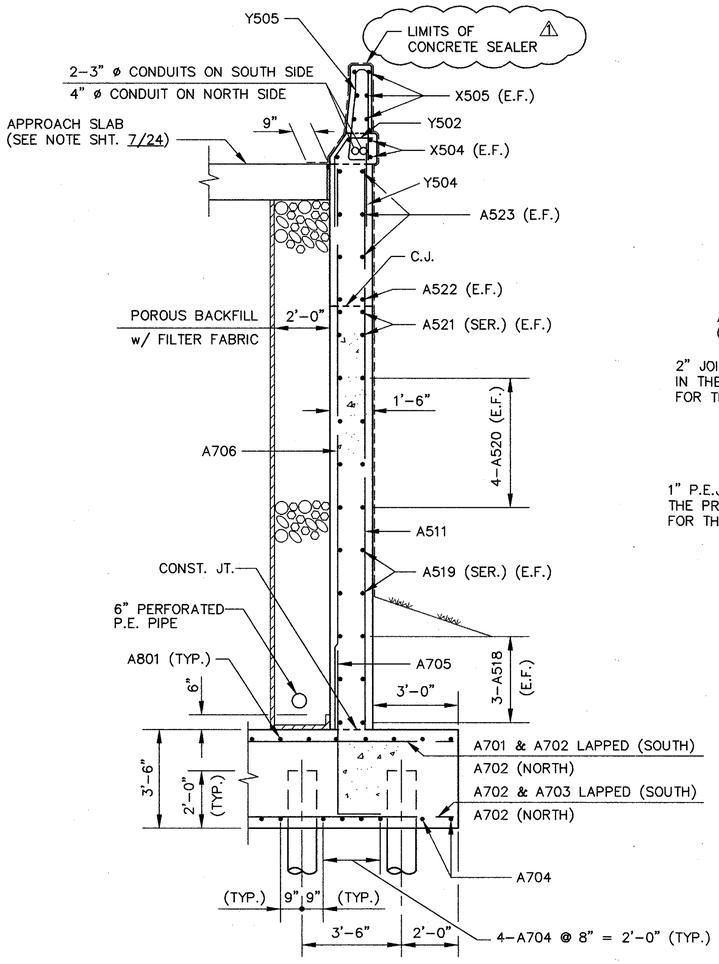

SECTION D–D
(SOUTH WALL SHOWN)

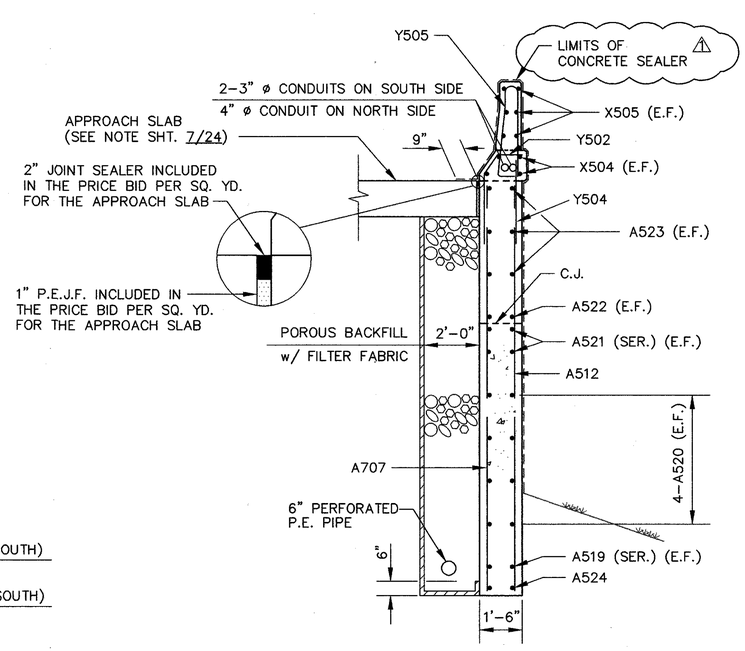

SECTION E–E
(SOUTH WALL SHOWN)

SEE SHT. 7/24 FOR WINGWALL ELEVATION DETAILS

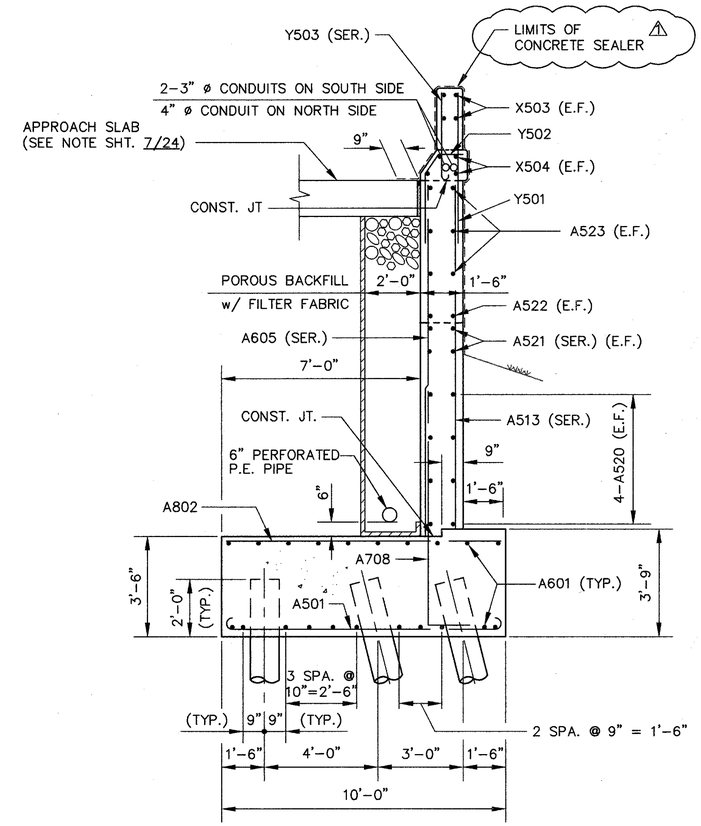

SECTION F–F
(SOUTH WALL SHOWN)

NOTE: POROUS BACKFILL WITH FILTER FABRIC, 2 FEET THICK SHALL EXTEND UP TO THE PLANE OF THE SUBGRADE, TO ONE FOOT BELOW THE EMBANKMENT SURFACE, AND LATERALLY TO THE ENDS OF THE WINGWALLS. GEOTEXTILE FABRIC SHALL CONFORM WITH 712.09, TYPE A. THE BOTTOM OF THE POROUS BACKFILL SHALL BE SLOPED (1 INCH PER FOOT MINIMUM) LATERALLY TO DRAIN. GEOTEXTILE FABRIC IS INCLUDED WITH POROUS BACKFILL FOR PAYMENT.

LEGEND
E.F. = EACH FACE
TYP. = TYPICAL
SPA. = SPACING
SER. = SERIES
C.J. = CONSTRUCTION JOINT
P.E.J.F. = PREFORMED EXPANSION JOINT FILLER

PLOT SCALE = 3/8" = 1'
COL #19 C:\DRAWING\06092718\CONBRAD3.DWG MAY-06-1996

PREPARED BY
ms consultants, inc.
CONSULTING ENGINEERS & PLANNERS
6500 DOUBLE BOULEVARD, COLUMBUS, OHIO

DESIGNED B.G.	DRAWN C.H.	REVIEWED J.A.B.	DATE 7-94
CHECKED R.B.	REVISED 1 5-96	STRUCTURE FILE NO. 2512041	

MISC. REAR ABUTMENT DETAILS
BR. NO. FRA-270-32.91
I.R. 270 UNDER NEW CONNECTOR ROAD

FRA-270-32.46

8/24

391/593

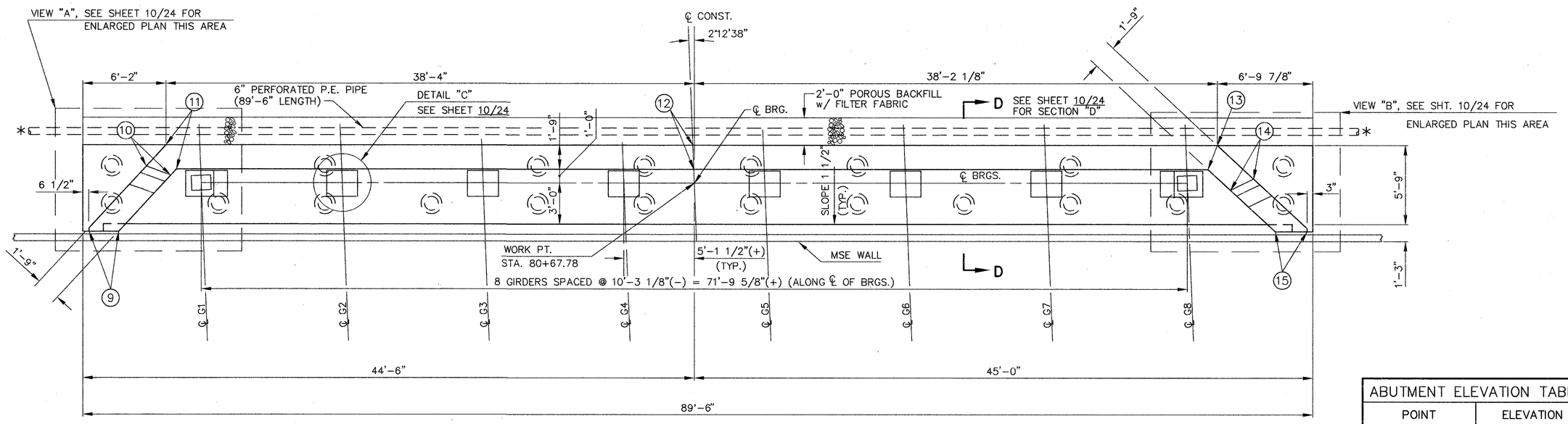

PLAN

∗ 6" NON-PERFORATED CORRUGATED PLASTIC PIPE EXTENDED FROM THE ENDS OF THE ABUTMENT TO THE DRAINAGE INLETS (TYPE I-3E) LENGTHS OF 6" NON-PERFORATED PIPE SHALL BE:
NORTH SIDE: 9'-0"
SOUTH SIDE: 8'-0"
SEE ROADWAY PLANS FOR LOCATION OF INLETS.

ABUTMENT ELEVATION TABLE	
POINT	ELEVATION
1	858.52
2	858.66
3	858.71
4	858.75
5	858.75
6	858.71
7	858.66
8	858.58
9	863.29
10	863.29
11	863.31
12	863.54
13	863.35
14	863.32
15	863.32

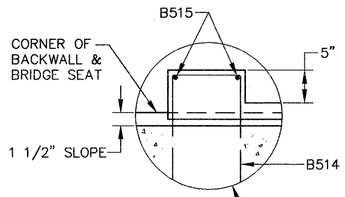

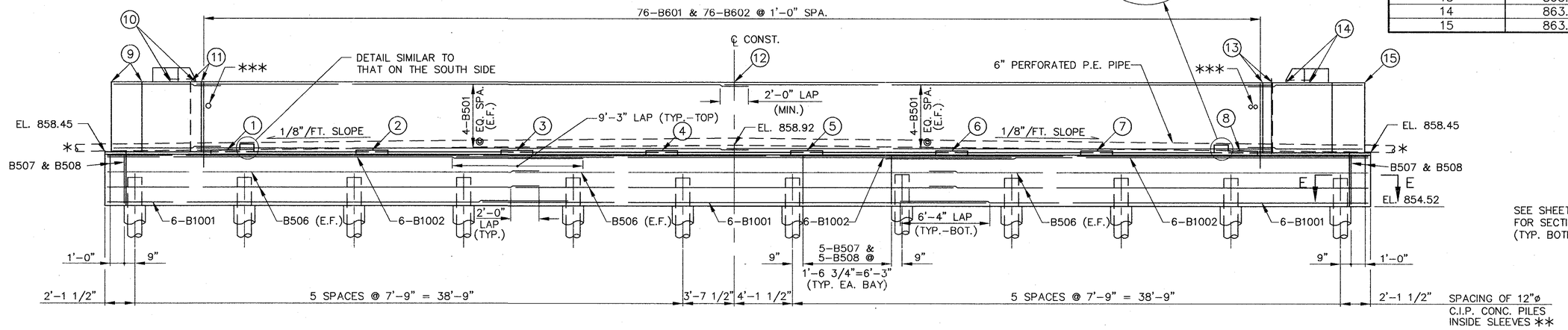

ELEVATION

SEE SHEET 10/24 FOR SECTION "E" (TYP. BOTH ENDS)

** FOR PILE SLEEVES, SEE NOTE ON SHT. 4/24.

*** CONDUITS SHALL BE DIRECTED TO PASS FROM THE SUPERSTRUCTURE THROUGH THE ABUTMENT BACKWALL IN THE APPROX. LOCATIONS SHOWN. SEE SIGNAL PLANS AND STD. DWG. HL-30.31 FOR FURTHER DETAILS. CONTRACTOR SHALL PROVIDE SLEEVES IN ABUTMENT BACKWALL FOR CONDUITS. PAYMENT FOR LABOR, MATERIALS AND INSTALLATION SHALL BE INCLUDED IN ITEM 625, CONDUIT, 713.07. SEE TRAFFIC CONTROL GENERAL SUMMARY FOR QUANTITY.

LEGEND
E.F. = EACH FACE
EQ. SPA. = EQUAL SPACES
BRG. = BEARING
SPA. = SPACING
EA. = EACH
TYP. = TYPICAL
MIN. = MINIMUM

PLOT SCALE.. 1" = 4'
COL #19 C:\DRAWING\06092309\CONNBRG\ABUTTPE1.DWG FEBRUARY-03-1995

PREPARED BY ms consultants, inc. CONSULTING ENGINEERS & PLANNERS 6500 BUSCH BOULEVARD, COLUMBUS, OHIO

DESIGNED B.G. | DRAWN M.R. | CHECKED R.B. | REVIEWED J.A.B. | DATE 7-94 | REVISED | STRUCTURE FILE NO. 2512041

FORWARD ABUTMENT PLAN & ELEVATION
BR. NO. FRA-270-3291
I.R. 270 UNDER NEW CONNECTOR ROAD

FRA-270-32.46

9/24

392/593

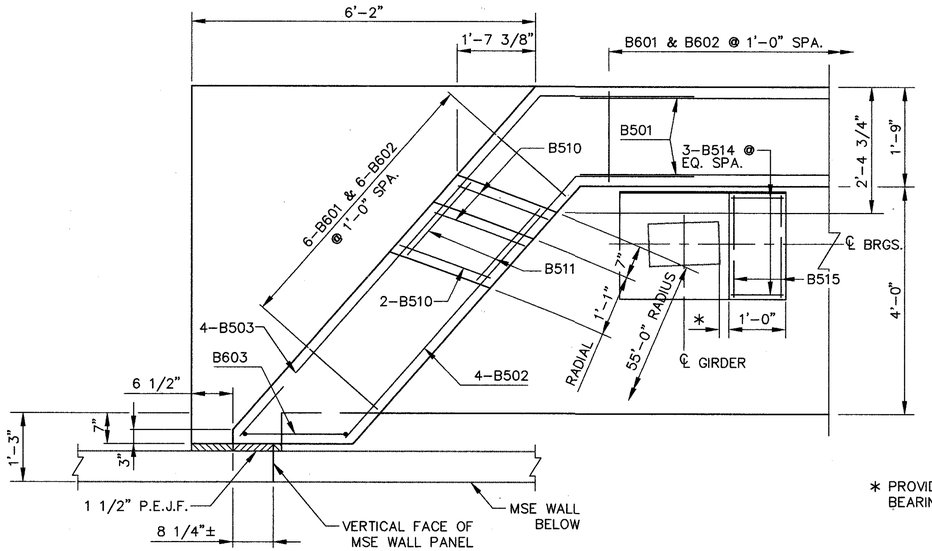

VIEW A

* PROVIDE 2" MIN. CLR. TO BEARING LOAD PLATE

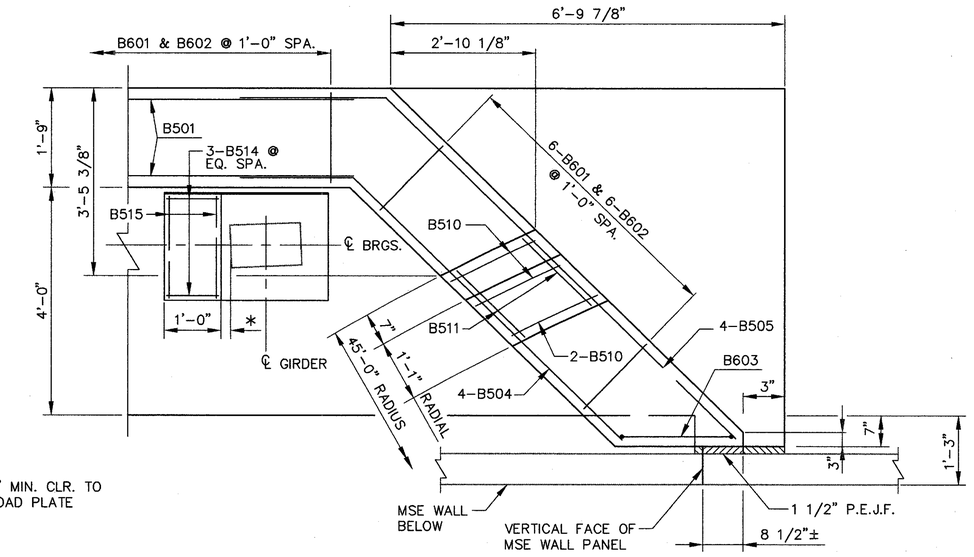

VIEW B

NOTE: COST FOR 1 1/2" P.E.J.F. SHALL BE INCLUDED WITH 'CLASS C CONCRETE ABUTMENT NOT INCLUDING FOOTING' FOR PAYMENT.

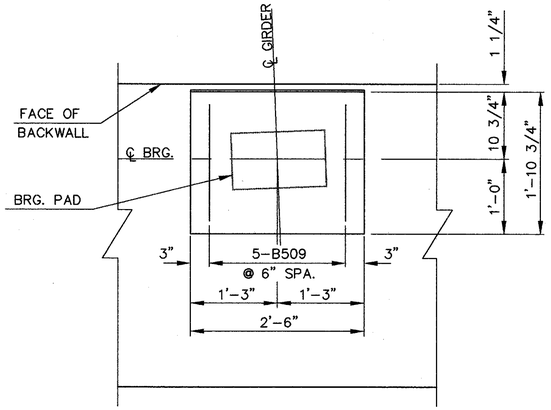

DETAIL C

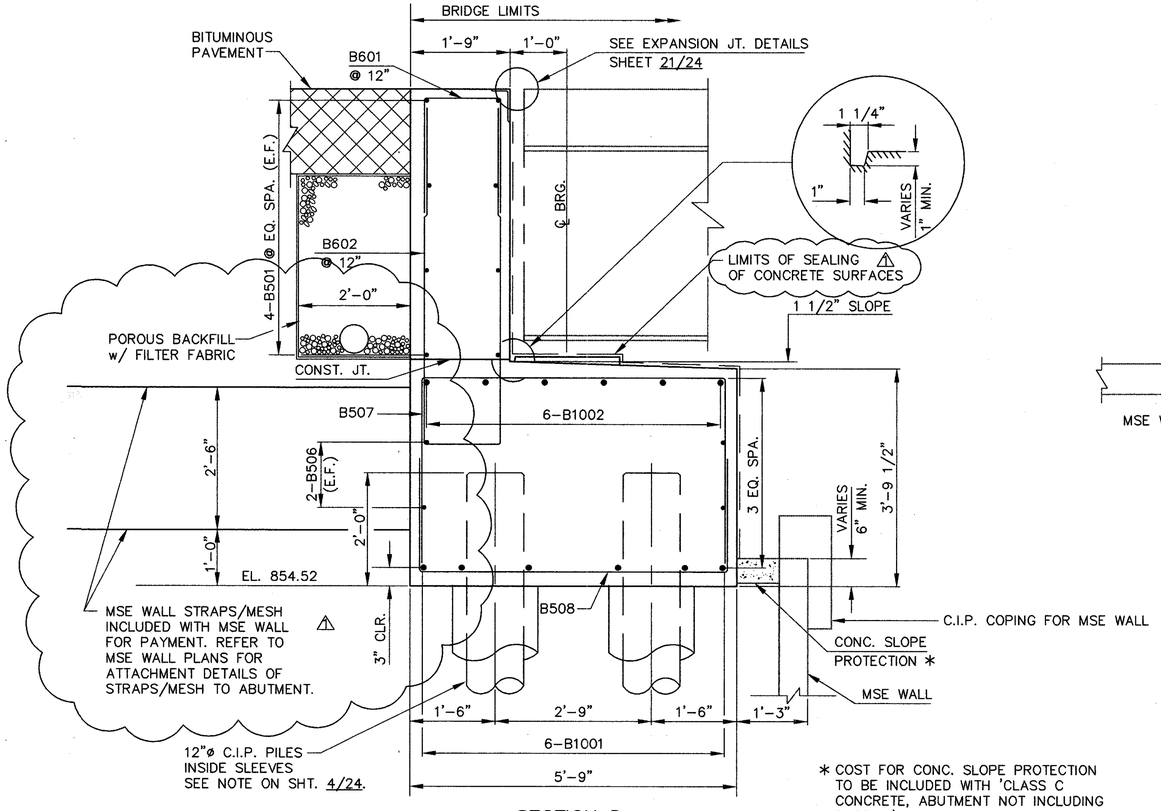

SECTION D

* COST FOR CONC. SLOPE PROTECTION TO BE INCLUDED WITH 'CLASS C CONCRETE, ABUTMENT NOT INCLUDING FOOTING' FOR PAYMENT.

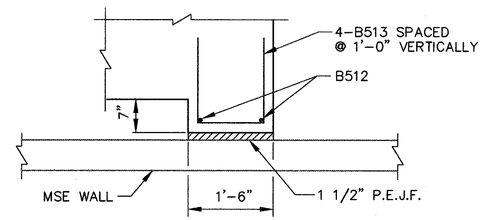

SECTION E-E

LEGEND

E.F. = EACH FACE
EQ. SPA. = EQUAL SPACES
BRG. = BEARING
SPA. = SPACING
CLR. = CLEAR
TYP. = TYPICAL
MIN. = MINIMUM
C.I.P. = CAST-IN-PLACE
MSE = MECHANICALLY STABILIZED EARTH
P.E.J.F. = PREFORMED EXPANSION JOINT FILLER

PLOT SCALE... 1 = 4
COL #19 C:\DRAWING\06092718\ABUTTD1.DWG MAY-06-1996

PREPARED BY ms consultants, inc. CONSULTING ENGINEERS & PLANNERS 6000 RIDGE BOULEVARD, COLUMBUS, OHIO

DESIGNED B.G.	DRAWN M.R.	REVIEWED J.A.B.	DATE 7-94
CHECKED R.B.	REVISED ⚠ 5-96	STRUCTURE FILE NO. 2512041	

FORWARD ABUTMENT DETAILS

BR. NO. FRA-270-3291
I.R. 270 UNDER NEW CONNECTOR ROAD

FRA-270-32.46

10/24

393/593

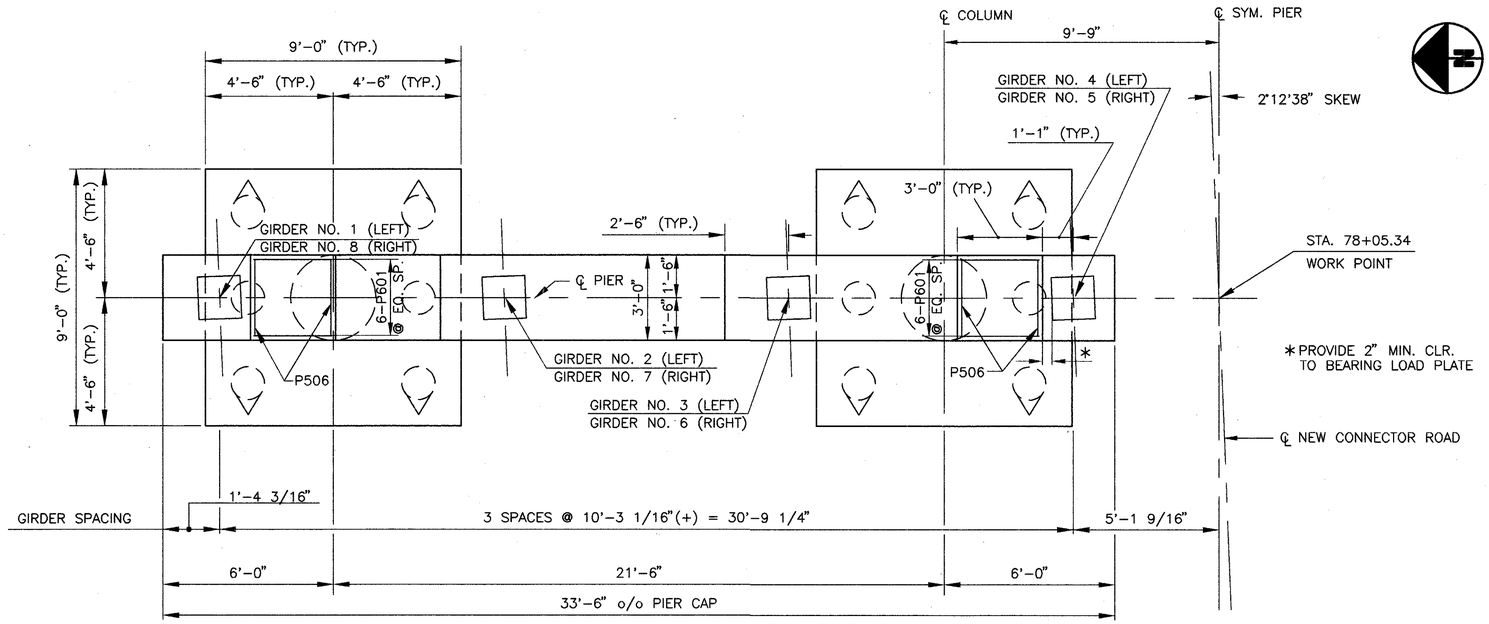

PLAN "LEFT" PIER
(RIGHT PIER OPPOSITE HAND)

TABLE OF ELEVATIONS		
ELEVATION	LEFT PIER	RIGHT PIER
A	859.39	859.38
B	859.55	859.54
C	859.71	859.70
D	859.86	859.86
E	855.38	855.38
F	836.50	836.50

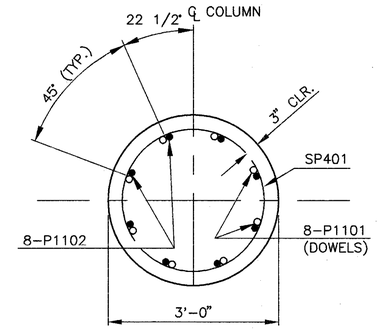

SECTION C-C

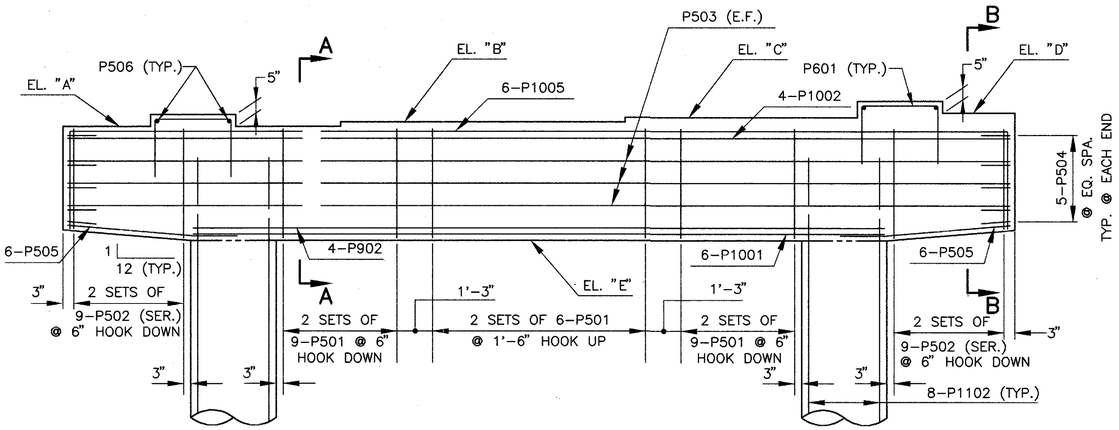

ELEVATION

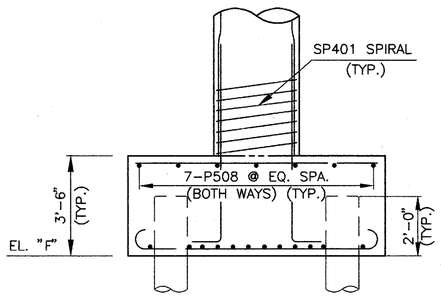

NOTE: COLUMN REINFORCING SHOWN IS TYPICAL FOR BOTH COLUMNS

SEE SHEET 4/24 FOR FOOTING LAYOUT

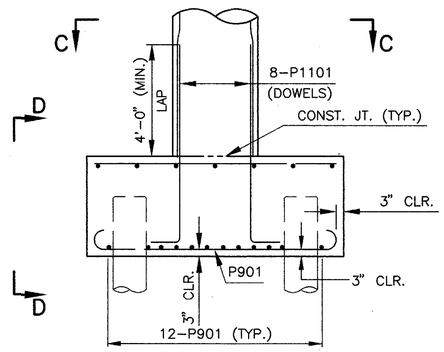

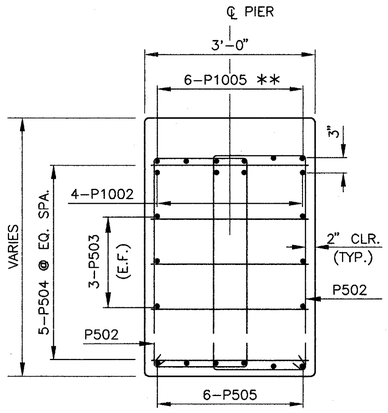

SECTION B-B

** VERTICAL PORTION OF P1005 BARS DOWN THE FACE OF PIER CAP NOT SHOWN FOR CLARITY.

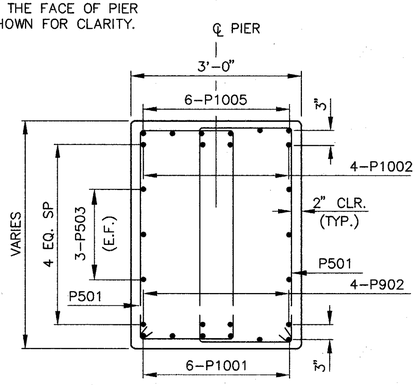

SECTION A-A

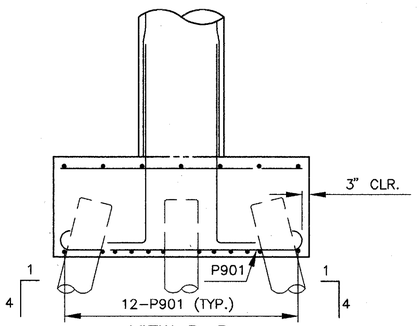

VIEW D-D

LEGEND

- ◯ 14" ø C.I.P. CONCRETE PILE (VERTICAL)
- ◯ 14" ø C.I.P. CONCRETE PILE BATTERED 1:4 IN THE DIRECTION OF THE ARROW

E.F. = EACH FACE
EQ. SPA. = EQUAL SPACES
SER. = SERIES
SPA. = SPACING
CLR. = CLEAR
TYP. = TYPICAL
o/o = OUT TO OUT
MIN. = MINIMUM

PLOT SCALE... 1/4" = 1'
COL #19 G:\DRAWING\06092308\CONNBRG\CONBRPD1.DWG FEBRUARY-03-1995

PREPARED BY ms consultants, inc. CONSULTING ENGINEERS & PLANNERS 4494 POST BOULEVARD, COLUMBUS, OHIO

DESIGNED B.G.	DRAWN M.R.	REVIEWED J.A.B.	DATE 7-94
CHECKED R.B.	REVISED	STRUCTURE FILE NO. 2512041	

PIER NO. 1 DETAILS
BR. NO. FRA-270-3291
I.R. 270 UNDER NEW CONNECTOR ROAD

FRA-270-32.46

11/24

394/593

TABLE OF ELEVATIONS		
ELEVATION	LEFT PIER	RIGHT PIER
A	859.39	859.40
B	859.55	859.56
C	859.71	859.72
D	859.87	895.87
E	855.39	855.39
F	836.50	836.50

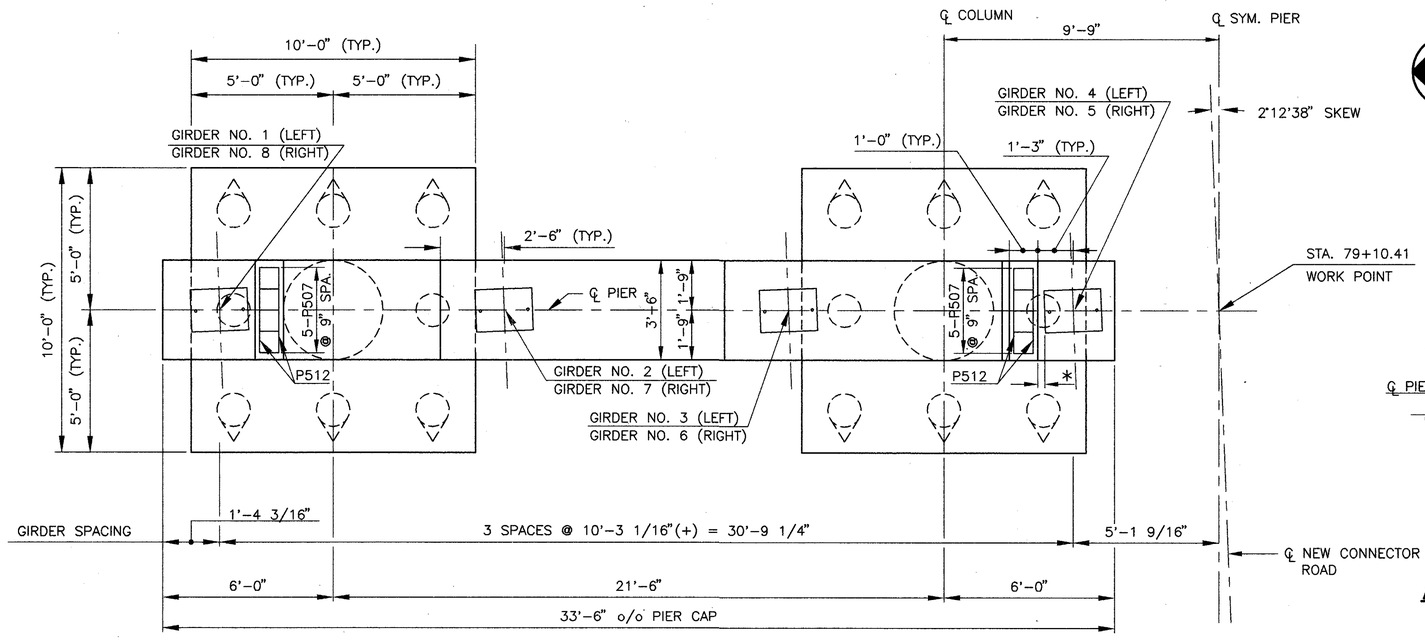

PLAN "LEFT" PIER
(RIGHT PIER OPPOSITE HAND)

* PROVIDE 2" MIN. CLR. TO BEARING LOAD PLATE (TYP.)

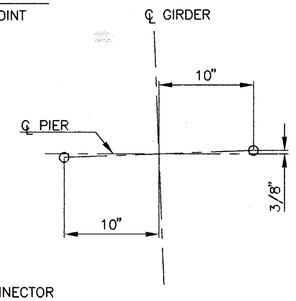

ANCHOR ROD LAYOUT

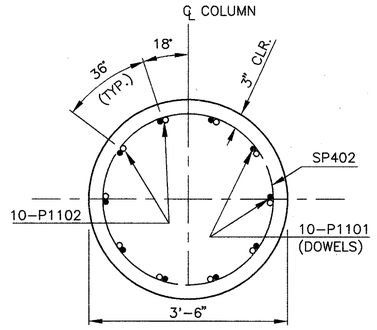

SECTION C-C

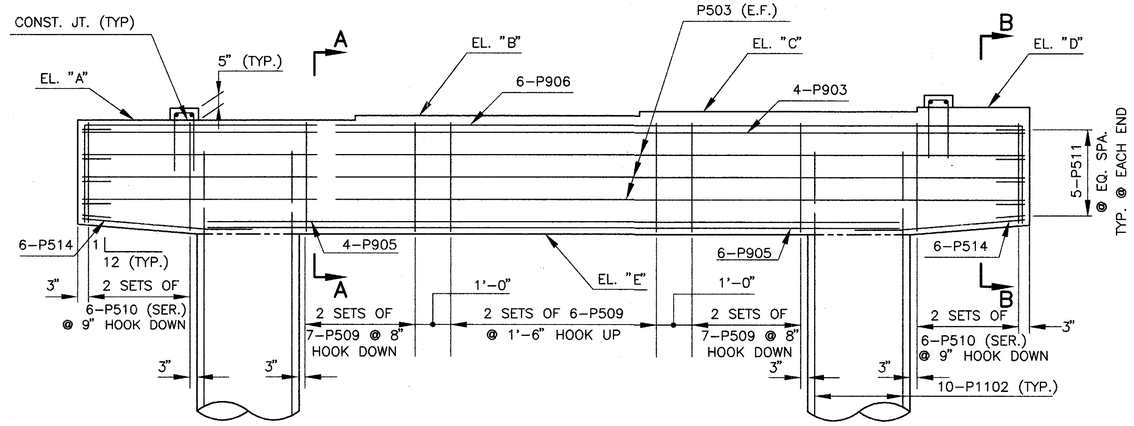

ELEVATION

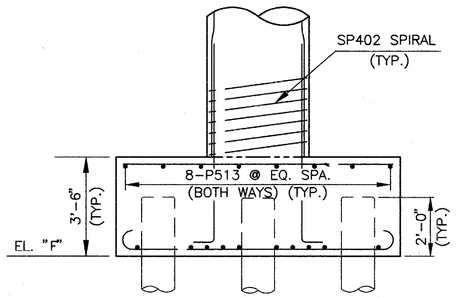

NOTE: COLUMN REINFORCING SHOWN IS TYPICAL FOR BOTH COLUMNS

SEE SHEET 4/24 FOR FOOTING LAYOUT

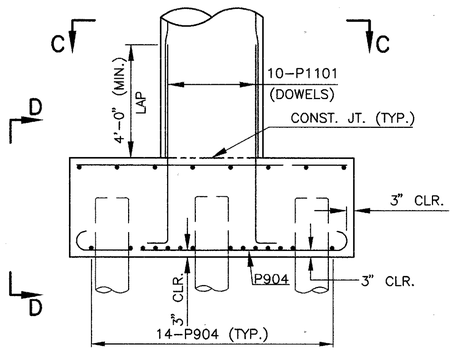

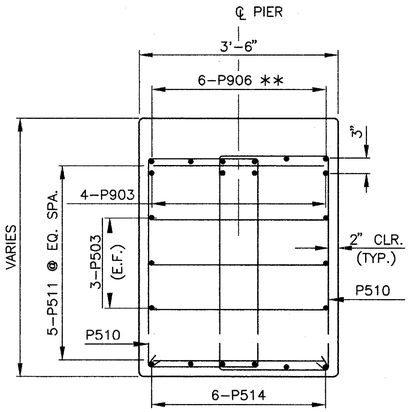

SECTION B-B

** VERTICAL PORTION OF P906 BARS DOWN THE FACE OF PIER CAP NOT SHOWN FOR CLARITY.

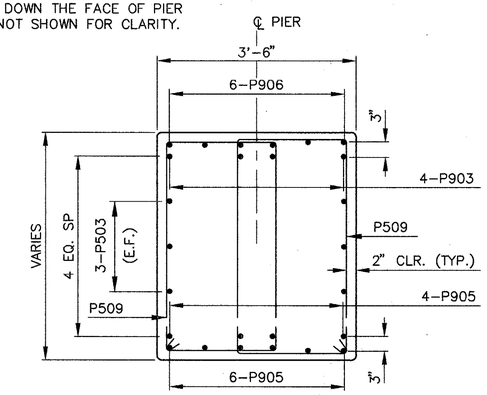

SECTION A-A

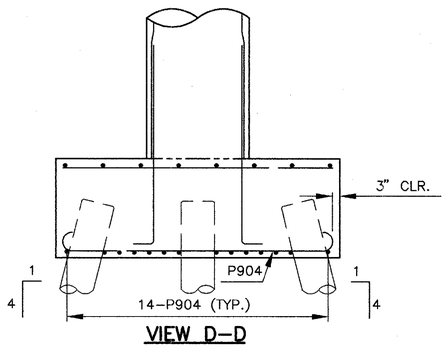

VIEW D-D

BRIDGE SEAT REINFORCING: REINFORCING STEEL IN THE VICINITY OF THE BRIDGE SEAT SHALL BE ACCURATELY PLACED TO AVOID INTERFERENCE WITH THE DRILLING OF ANCHOR ROD HOLES, OR THE PRESETTING OF ANCHOR RODS.

LEGEND

- ○ 14" ø C.I.P. CONCRETE PILE (VERTICAL)
- ◯ 14" ø C.I.P. CONCRETE PILE BATTERED 1:4 IN THE DIRECTION OF THE ARROW

E.F. = EACH FACE
EQ. SPA. = EQUAL SPACES
SER. = SERIES
SPA. = SPACING
CLR. = CLEAR
TYP. = TYPICAL
o/o = OUT TO OUT
MIN. = MINIMUM

PLOT SCALE: 1/4" = 1"
COL #19 C:\DRAWING\06092308\CONNBRG\CONBRPD2.DWG FEBRUARY-03-1995

PREPARED BY
ms consultants, inc.
CONSULTING ENGINEERS & PLANNERS
400 EDISON DRIVE, COLUMBUS, OHIO 43228

DESIGNED B.G. | DRAWN M.R. | CHECKED R.B. | REVIEWED J.A.B. | DATE 7-94 | REVISED | STRUCTURE FILE NO. 2512041

PIER NO. 2 DETAILS
BR. NO. FRA-270-3291
I.R. 270 UNDER NEW CONNECTOR ROAD

FRA-270-32.46

12/24

395/593

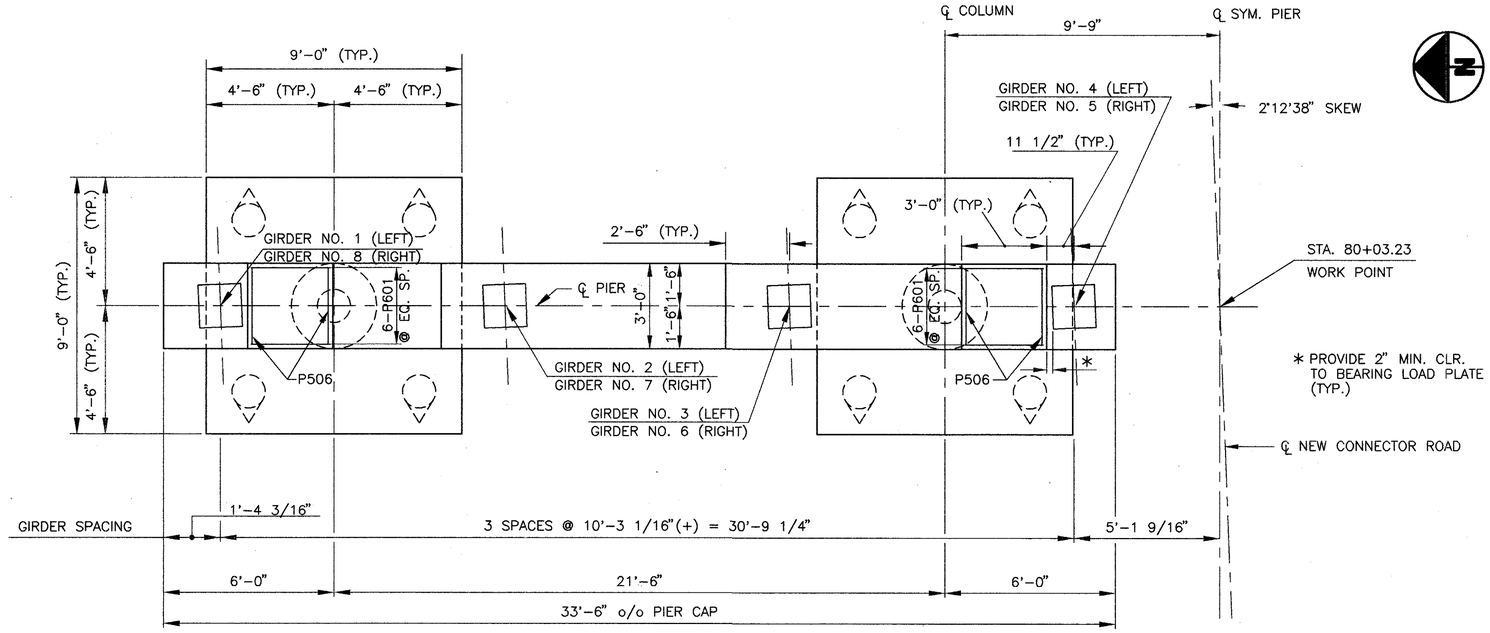

PLAN "LEFT" PIER
(RIGHT PIER OPPOSITE HAND)

TABLE OF ELEVATIONS		
ELEVATION	LEFT PIER	RIGHT PIER
A	858.87	858.89
B	859.02	859.04
C	859.19	859.20
D	859.35	859.35
E	854.87	854.87
F	836.50	836.50

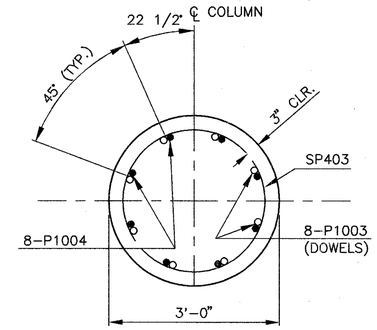

SECTION C-C

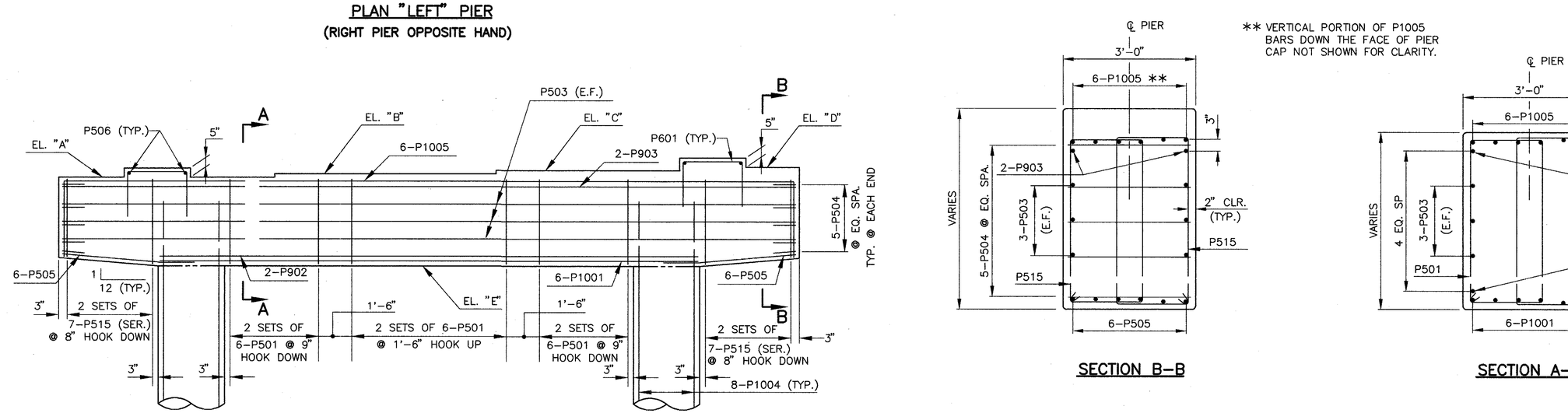

NOTE: COLUMN REINFORCING SHOWN IS TYPICAL FOR BOTH COLUMNS
SEE SHEET 4/24 FOR FOOTING LAYOUT

ELEVATION

SECTION B-B

SECTION A-A

** VERTICAL PORTION OF P1005 BARS DOWN THE FACE OF PIER CAP NOT SHOWN FOR CLARITY.

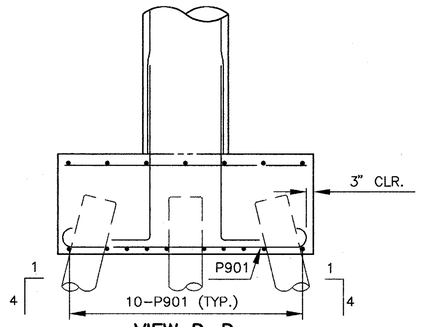

VIEW D-D

LEGEND

- ○ 14" ø C.I.P. CONCRETE PILE (VERTICAL)
- ⌀ 14" ø C.I.P. CONCRETE PILE BATTERED 1:4 IN THE DIRECTION OF THE ARROW

E.F. = EACH FACE
EQ. SPA. = EQUAL SPACES
SER. = SERIES
SPA. = SPACING
CLR. = CLEAR
TYP. = TYPICAL
o/o = OUT TO OUT
MIN. = MINIMUM

PREPARED BY
ms consultants, inc.
CONSULTING ENGINEERS & PLANNERS
6000 BUSCH BOULEVARD, COLUMBUS, 43229

DESIGNED	DRAWN	REVIEWED	DATE
B.G.	M.R.	J.A.B.	7-94
CHECKED	REVISED	STRUCTURE FILE NO.	
R.B.		2512041	

PIER NO. 3 DETAILS
BR. NO. FRA-270-3291
I.R. 270 UNDER NEW CONNECTOR ROAD

FRA-270-32.46

13/24

396/593

PLOT SCALE..3/8" = 1'; SECTIONS: 3/4" = 1'
COL #19 C:\DRAWING\06092308\CONNBRG\CONNBRPD3.DWG FEBRUARY-03-1995

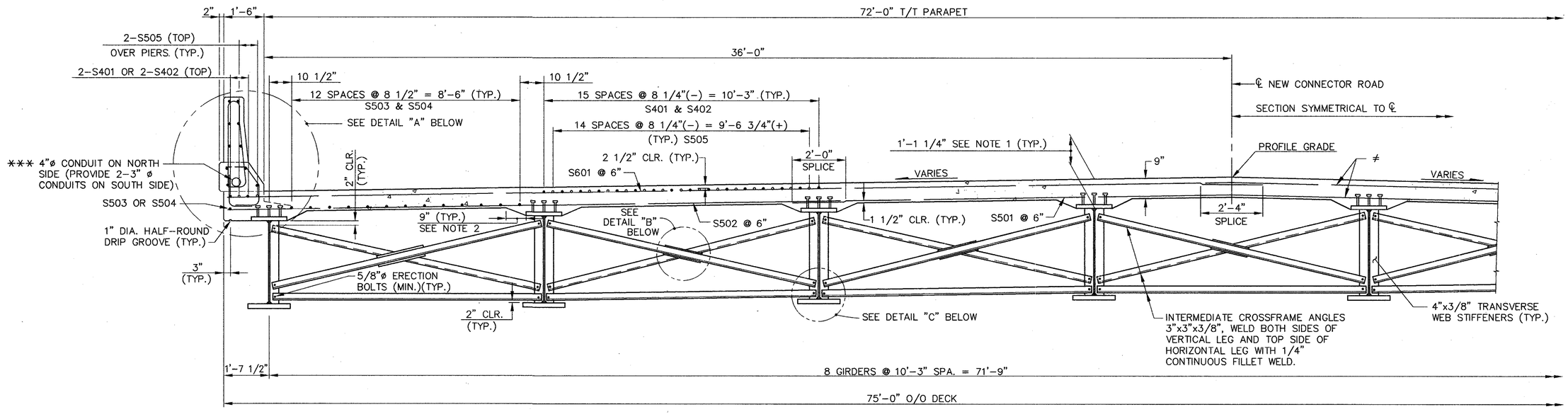

*** PAYMENT FOR LABOR, MATERIALS AND INSTALLATION OF CONDUIT SHALL BE INCLUDED IN ITEM 625, CONDUIT, 713.07. SEE TRAFFIC CONTROL GENERAL SUMMARY FOR QUANTITY.

TRANSVERSE SECTION

(LOOKING STATION AHEAD)

≠ TRANSVERSE BARS BENT IN FIELD TO MATCH ROADWAY CROSS-SLOPE

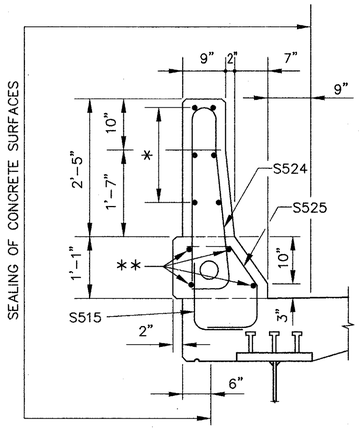

DETAIL A

* 3-S503 (E.F.) (TYP.). S516, S517, S520 OR S521 AT FWD. ABUT. SEE SHT. 23/24 FOR DETAILS.

** 4-S503 (TYP.). S516, S518 & S519 OR S520, S522 & S523 AT FWD. ABUT. SEE SHT. 23/24 FOR DETAILS.

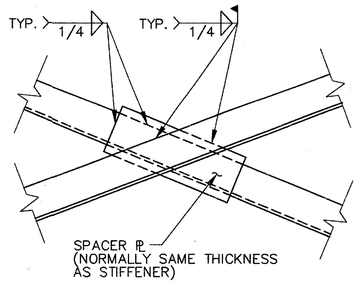

DETAIL B

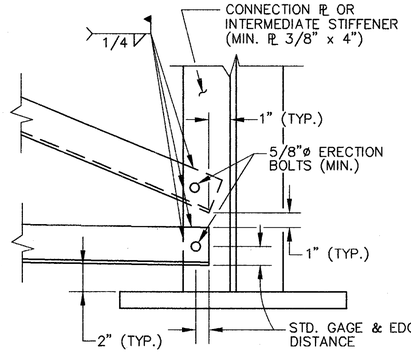

DETAIL C

NOTES

1. THE DISTANCE SHOWN FROM THE TOP OF THE DECK SLAB TO THE BOTTOM OF THE TOP FLANGE IS THE THEORETICAL DESIGN DIMENSION. THE QUANTITY OF DECK CONCRETE TO BE PAID FOR SHALL BE BASED UPON THIS DIMENSION, EVEN THOUGH DEVIATION FROM IT MAY BE NECESSARY BECAUSE THE TOP FLANGE OF THE GIRDER MAY NOT HAVE THE EXACT CAMBER OR CONFORMATION REQUIRED TO PLACE IT PARALLEL TO THE FINISHED GRADE. DEDUCTION SHALL BE MADE FOR VOLUME OF ENCASED STEEL PLATES AS PER 511.18.

2. A HAUNCH WIDTH OF 9 INCHES SHALL BE USED FOR COMPUTING QUANTITY OF CONCRETE. HOWEVER, THE HAUNCH WIDTH MAY VARY BETWEEN 6 AND 12 INCHES.

3. ERECTION BOLTS: THE HOLE DIAMETER IN THE CROSS FRAMES AND GIRDER STIFFENERS SHALL BE 3/16" LARGER THAN THE DIAMETER OF THE ERECTION BOLTS. UNLESS REPLACED BY PERMANENT HIGH STRENGTH BOLTS, ERECTION BOLTS SHALL REMAIN IN PLACE. LOCK WASHERS SHALL BE FURNISHED FOR OTHER THAN FULLY TORQUED HIGH STRENGTH ERECTION BOLTS. BOLTS SHALL BE FURNISHED AS PART OF ITEM 513.

   IN LIEU OF ERECTION BOLTS AND AT THE OPTION OF THE CONTRACTOR, ALTERNATIVE MEANS OF TEMPORARY BRACING MAY BE USED SUBJECT TO THE APPROVAL OF THE DIRECTOR (501.06).

PLOT SCALE.. 1/2" = 1'
COL #19 c:\DRAWING\06092A03\CONNERG\CONBRTS1.DWG FEBRUARY-03-1995

PREPARED BY: ms consultants, inc. CONSULTING ENGINEERS & PLANNERS 4969 EDISON BOULEVARD, COLUMBUS, OHIO

DESIGNED	DRAWN	REVIEWED	DATE
B.G.	T.S.	J.A.B.	5-94
CHECKED	REVISED	STRUCTURE FILE NO.	
R.B.		2512041	

TRANSVERSE SECTION
BR. NO. FRA-270-3291
I.R. 270 UNDER NEW CONNECTOR ROAD

FRA-270-32.46

14/24

397/593

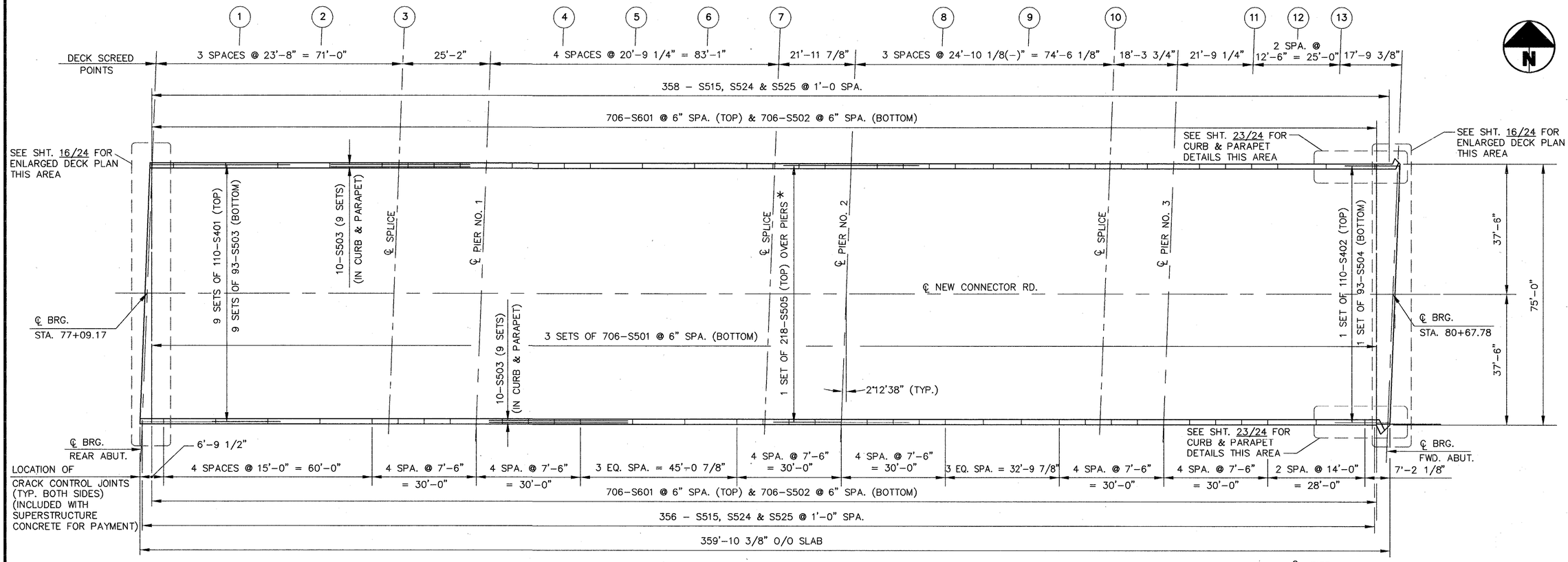

DECK SLAB PLAN

*TYPICAL AT ALL PIERS (SEE STAGGER DIAGRAM, THIS SHEET)

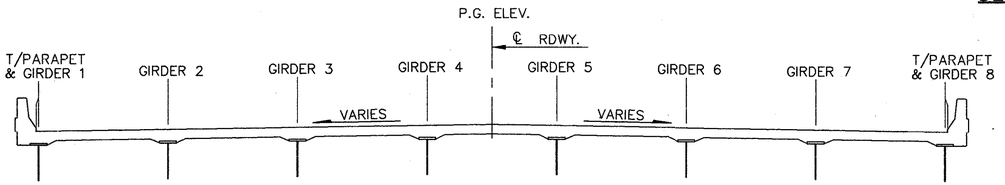

SCREED LINES

(LOOKING STA. AHEAD)

LAP LENGTHS
NO. 4 BARS : 1'-6"
NO. 5 BARS : 2'-0"

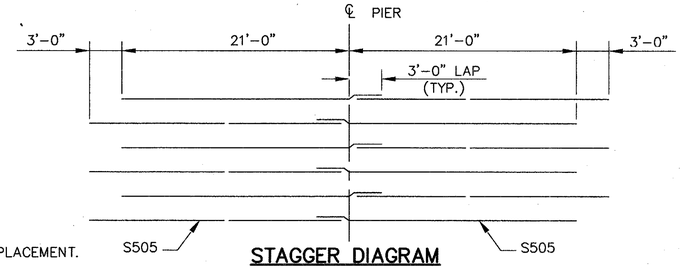

STAGGER DIAGRAM

OVER PIERS

SCREED ELEVATIONS SHOWN ARE FOR THE DECK SLAB SURFACE PRIOR TO CONCRETE PLACEMENT. ALLOWANCE HAS BEEN MADE FOR ANTICIPATED CALCULATED DEAD LOAD DEFLECTIONS.

POINT	SCREED ELEVATIONS																	
	STATION	T/PARAPET & GIRDER 1	STATION	GIRDER 2	STATION	GIRDER 3	STATION	GIRDER 4	STATION	P.G. ELEV.	STATION	GIRDER 5	STATION	GIRDER 6	STATION	GIRDER 7	STATION	T/PARAPET & GIRDER 8
℄ REAR ABUT.	77+10.56	863.81	77+10.16	863.97	77+09.76	864.13	77+09.37	864.28	77+09.17	864.36	77+08.97	864.28	77+08.58	864.12	77+08.18	863.95	77+07.78	863.79
1	77+34.23	864.06	77+33.83	864.26	77+33.43	864.42	77+33.03	864.58	77+32.84	864.65	77+32.64	864.57	77+32.24	864.41	77+31.85	864.25	77+31.45	864.05
2	77+57.89	864.21	77+57.49	864.41	77+57.10	864.57	77+56.70	864.73	77+56.50	864.81	77+56.31	864.73	77+55.91	864.57	77+55.51	864.40	77+55.11	864.20
3-SPL.	77+81.56	864.25	77+81.16	864.44	77+80.76	864.59	77+80.37	864.75	77+80.17	864.83	77+79.97	864.75	77+79.58	864.59	77+79.18	864.43	77+78.78	864.24
℄ PIER 1	78+06.73	864.27	78+06.33	864.43	78+05.93	864.59	78+05.54	864.75	78+05.34	864.83	78+05.14	864.74	78+04.75	864.58	78+04.35	864.42	78+03.95	864.26
4	78+27.00	864.30	78+26.60	864.47	78+26.20	864.63	78+25.81	864.79	78+25.61	864.87	78+25.41	864.79	78+25.02	864.63	78+24.62	864.47	78+24.22	864.30
5	78+47.27	864.35	78+46.87	864.52	78+46.47	864.68	78+46.08	864.84	78+45.88	864.92	78+45.68	864.84	78+45.29	864.68	78+44.89	864.52	78+44.49	864.35
6	78+67.54	864.34	78+67.14	864.53	78+66.74	864.69	78+66.35	864.85	78+66.15	864.93	78+65.95	864.85	78+65.56	864.69	78+65.16	864.53	78+64.76	864.35
7-SPL.	78+87.81	864.29	78+87.41	864.46	78+87.01	864.62	78+86.62	864.78	78+86.42	864.86	78+86.22	864.78	78+85.83	864.62	78+85.43	864.46	78+85.03	864.29
℄ PIER 2	79+11.80	864.19	79+11.40	864.36	79+11.00	864.52	79+10.61	864.68	79+10.41	864.76	79+10.21	864.68	79+09.82	864.52	79+09.42	864.36	79+09.02	864.20
8	79+35.97	864.12	79+35.57	864.30	79+35.17	864.46	79+34.78	864.62	79+34.58	864.70	79+34.38	864.62	79+33.99	864.46	79+33.59	864.31	79+33.19	864.13
9	79+60.14	864.01	79+59.74	864.20	79+59.34	864.36	79+58.95	864.53	79+58.75	864.61	79+58.55	864.53	79+58.16	864.37	79+57.76	864.21	79+57.36	864.03
10-SPL.	79+84.31	863.82	79+83.91	864.00	79+83.51	864.16	79+83.12	864.33	79+82.92	864.41	79+82.72	864.33	79+82.33	864.17	79+81.93	864.02	79+81.53	863.84
℄ PIER 3	80+04.62	863.64	80+04.22	863.80	80+03.82	863.96	80+03.43	864.12	80+03.23	864.21	80+03.03	864.13	80+02.64	863.97	80+02.24	863.81	80+01.84	863.65
11	80+26.39	863.51	80+25.99	863.63	80+25.59	863.78	80+25.20	863.94	80+25.00	864.03	80+24.80	863.95	80+24.41	863.79	80+24.01	863.64	80+23.61	863.47
12	80+38.89	863.45	80+38.49	863.57	80+38.09	863.71	80+37.70	863.84	80+37.50	863.92	80+37.30	863.85	80+36.91	863.71	80+36.51	863.58	80+36.11	863.46
13	80+51.39	863.38	80+50.99	863.50	80+50.59	863.61	80+50.20	863.72	80+50.00	863.78	80+49.80	863.73	80+49.41	863.62	80+49.01	863.50	80+48.61	863.38
℄ FWD. ABUT.	80+69.17	863.30	80+68.77	863.44	80+68.37	863.49	80+67.98	863.53	80+67.78	863.55	80+67.58	863.56	80+67.19	863.56	80+66.79	863.57	80+66.39	863.36

PLOT SCALE = 1" = 15'
COL #19
C:\DRAWING\96092308\CONNBRG\CONNBRSLP.DWG
FEBRUARY-03-1995

ms consultants, inc.
CONSULTING ENGINEERS & PLANNERS
6500 RIVER BOULEVARD, COLUMBUS, OHIO

DESIGNED	DRAWN	REVIEWED	DATE
B.G.	C.H.	J.A.B.	7-94
CHECKED	REVISED	STRUCTURE FILE NO.	
R.B.		2512041	

DECK PLAN & SCREED ELEVATIONS
BR. NO. FRA-270-3291
NEW CONNECTOR ROAD BRIDGE OVER I.R. 270

FRA-270-32.46

15/24

398/593

DECK PLAN & SCREED ELEVATIONS

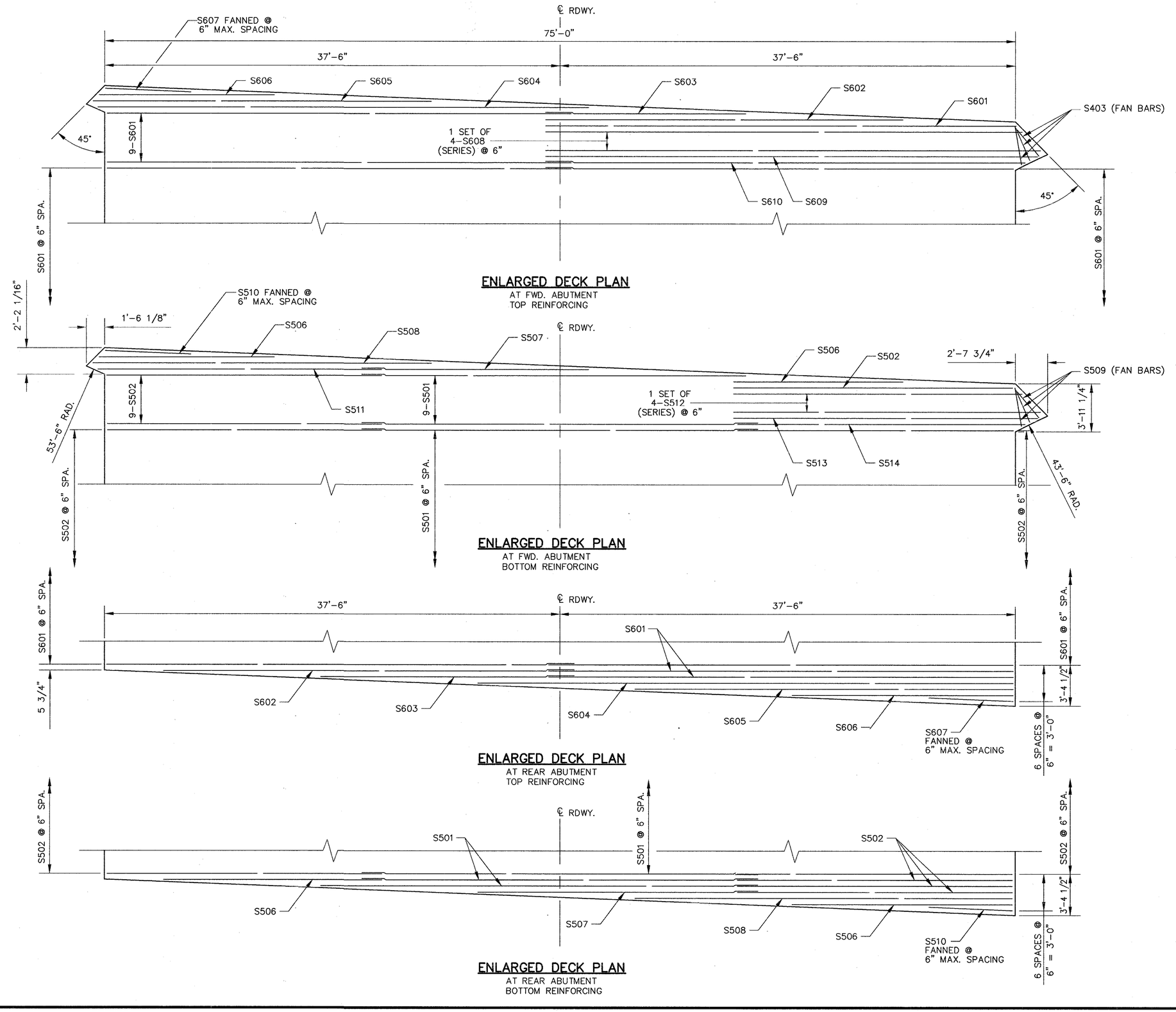

PLOT SCALE = 1/4" = 1'
COL. #9 C:\DRAWING\06092306\CONNBRG\CONBRDSD.DWG FEBRUARY-03-1995

PREPARED BY
ms consultants, inc.
CONSULTING ENGINEERS & PLANNERS
4000 EMBASSY BOULEVARD, COLUMBUS, OHIO

DESIGNED	DRAWN	REVIEWED	DATE
B.G.	C.H.	J.A.B.	5-94
CHECKED	REVISED	STRUCTURE FILE NO.	
R.B.		2512041	

ENLARGED DECK PLAN
BR. NO. FRA-270-3291
I.R. 270 UNDER NEW CONNECTOR ROAD

FRA-270-32.46

16/24

399/593

ENLARGED DECK PLAN

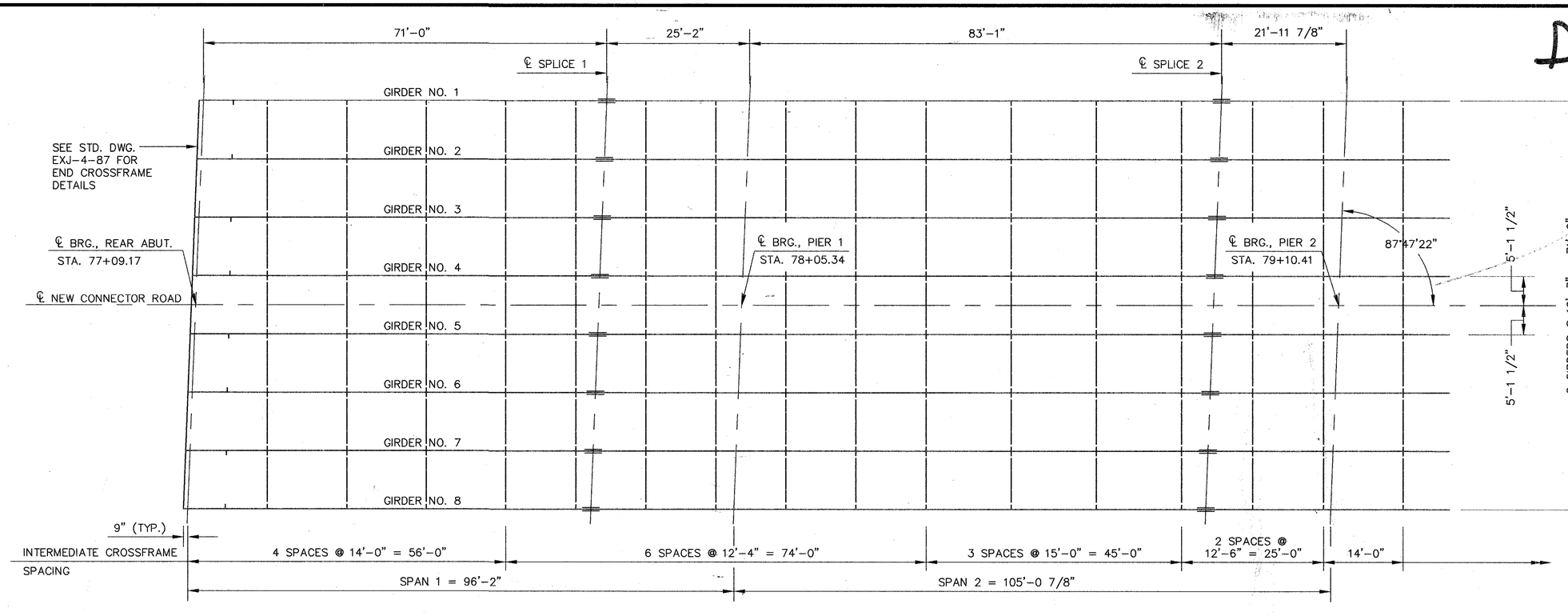

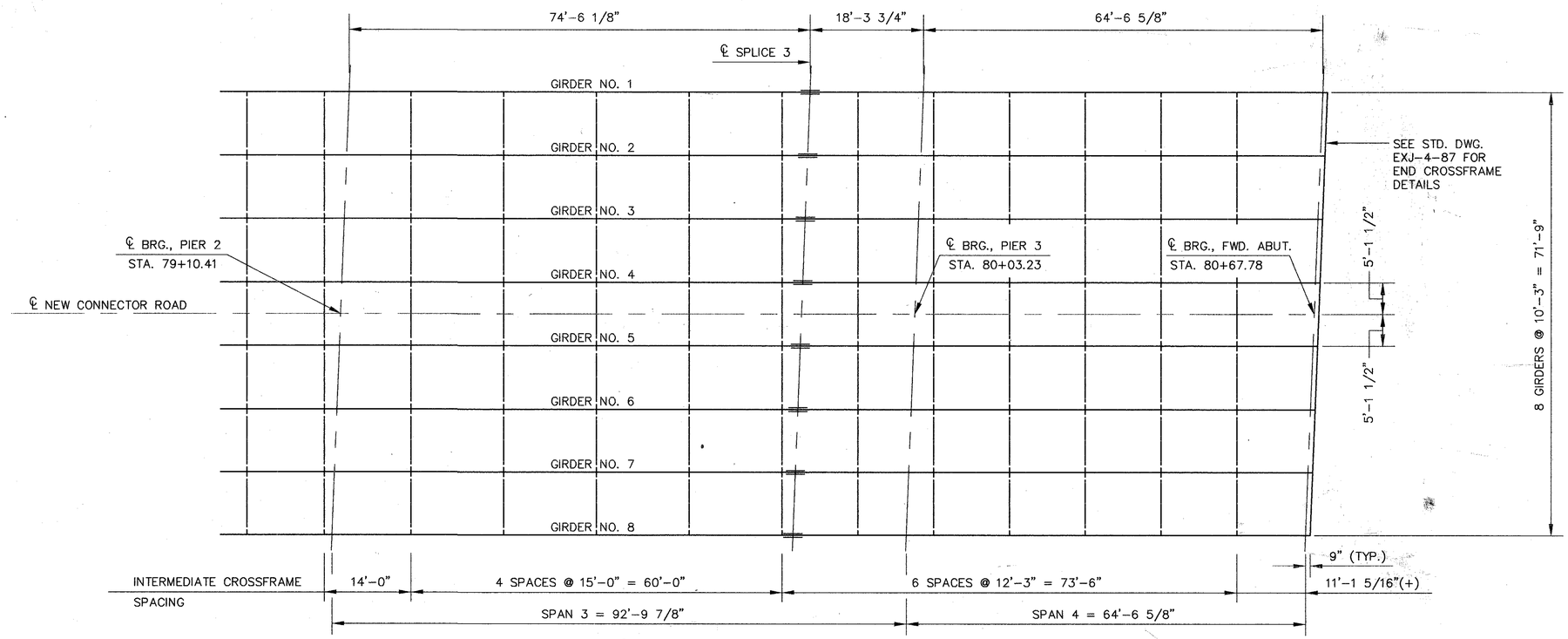

FRAMING PLAN

PLOT SCALE... 3/32" = 1'
COL #19 C:\DRAWING\06092308\CONNBRG\CONBRFP1.DWG FEBRUARY-03-1995

PREPARED BY
ms consultants, inc.
CONSULTING ENGINEERS & PLANNERS
6500 BROOK BOULEVARD, COLORADO, 0350

DESIGNED B.G.	DRAWN C.H.	REVIEWED J.A.B.	DATE 7-94
CHECKED R.B.	REVISED	STRUCTURE FILE NO. 2512041	

FRAMING PLAN
BR. NO. FRA-270-3291
NEW CONNECTOR ROAD BRIDGE OVER I.R. 270

FRA-270-32.46

17/24

400/593

FRAMING PLAN

S-9-R

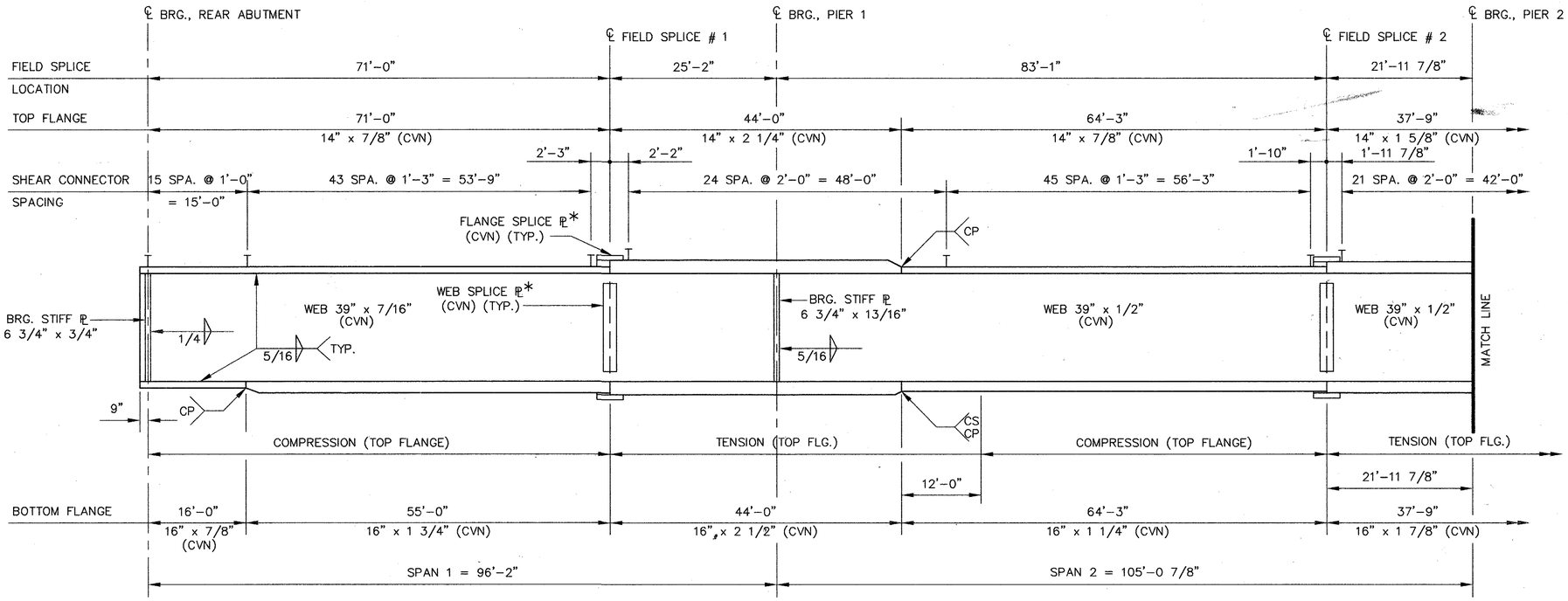

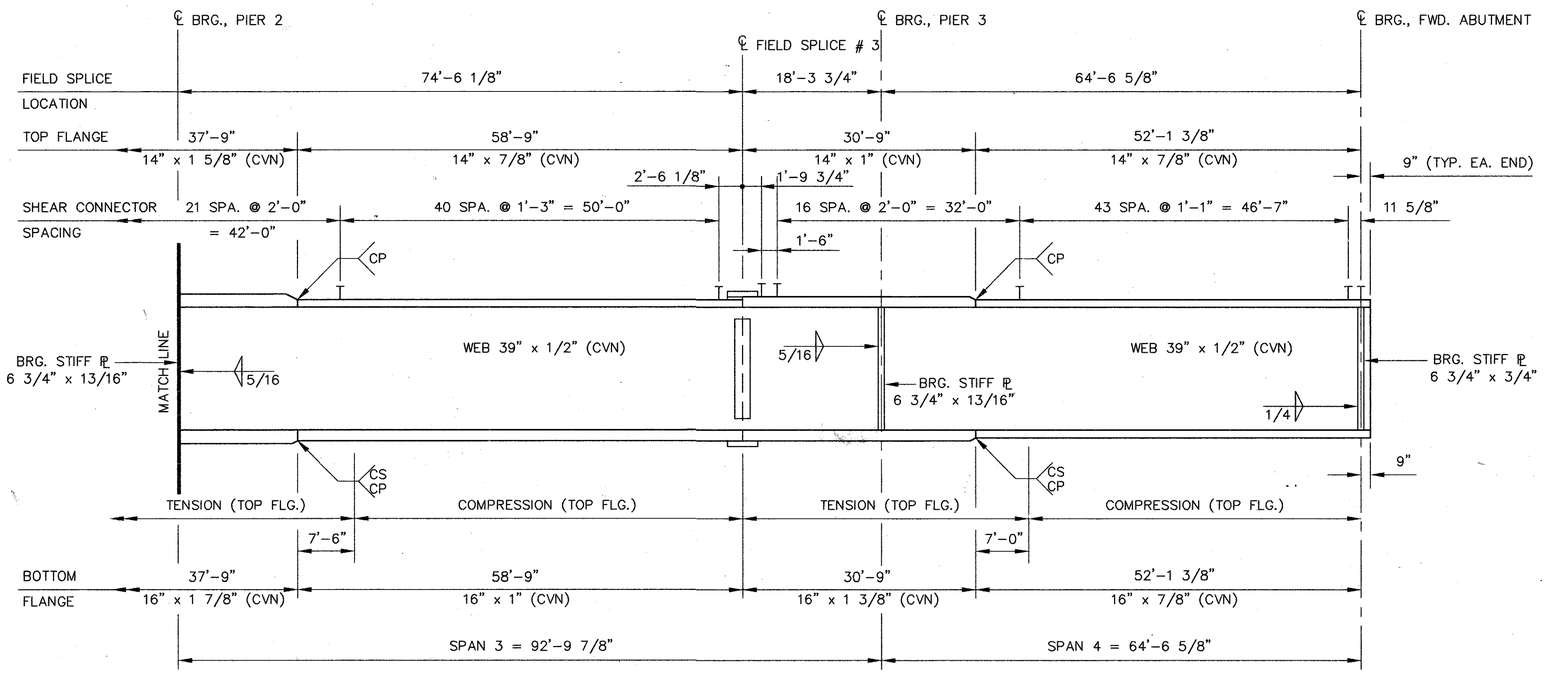

GIRDER ELEVATION

NOTES

1. WELDED ATTACHMENT OF SUPPORTS FOR CONCRETE DECK FINISHING MACHINE MAY BE MADE TO AREAS OF THE FASCIA STRINGER FLANGES DESIGNATED "COMPRESSION". ATTACHMENTS SHALL NOT BE MADE TO AREAS DESIGNATED "TENSION". FILLET WELDS TO COMPRESSION FLANGES SHALL NOT BE CLOSER THAN 1" FROM EDGE OF FLANGE, BE NOT MORE THAN 2" LONG, AND BE NOT SMALLER THAN MINIMUM SIZE REQUIRED BY AASHTO.
2. WHERE A SHAPE OR PLATE IS DESIGNATED (CVN), THE MATERIAL SHALL MEET SPECIFIED MINIMUM NOTCH TOUGHNESS REQUIREMENTS AS SPECIFIED IN 711.01.
3. INTERMEDIATE STIFFENERS ARE SINGLE STIFFENERS EXCEPT WHERE DOUBLE STIFFENERS ARE REQUIRED TO CONNECT TO CROSSFRAMES. PLACE INTERMEDIATE STIFFENERS AT EQUAL SPACES BETWEEN CROSSFRAMES AS SHOWN ON THE FRAMING PLAN WHICH ALSO SHOWS THE NUMBER OF STIFFENERS.

C.P. = COMPLETE PENETRATION WELD REQUIRED.

C.S. = BUTT WELD SUBJECT TO COMPRESSIVE STRESSES ONLY.

INTERMEDIATE STIFFENER WELDS

FLANGE THICKNESS (INCHES)	FILLET WELD SIZE (INCHES)
7/8"	5/16"
1"	5/16"
1 1/8"	5/16"
1 1/4"	5/16"
1 3/8"	5/16"
1 1/2"	5/16"
1 5/8"	5/16"
1 3/4"	5/16"
1 7/8"	5/16"
2 1/4"	5/16"
2 1/2"	5/16"

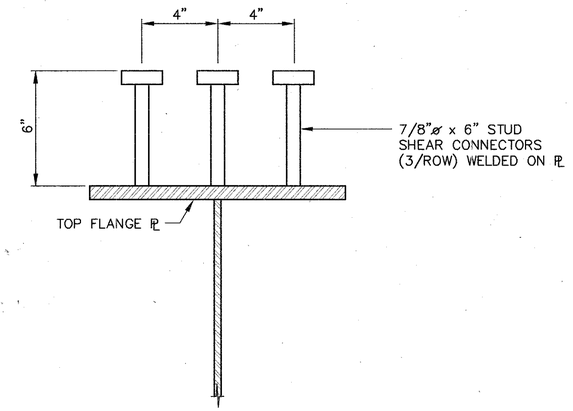

SHEAR CONNECTOR DETAIL

* FOR SPLICE DETAILS, SEE SHEET 19/24.

PLOT SCALE=1" = 10'
COL #19
C:\DRAWING\06092308\CONBRG\CONBRGE1.DWG
FEBRUARY-06-1995

PREPARED BY ms consultants, inc. CONSULTING ENGINEERS & PLANNERS 6500 BUSCH BOULEVARD, COLUMBUS, OHIO

DESIGNED B.G. | DRAWN C.H. | REVIEWED J.A.B. | DATE 7-94 | CHECKED R.B. | REVISED | STRUCTURE FILE NO. 2512041

GIRDER ELEVATION
BR. NO. FRA-270-3291
NEW CONNECTOR ROAD BRIDGE OVER I.R. 270

FRA-270-32.46

18/24

401/593

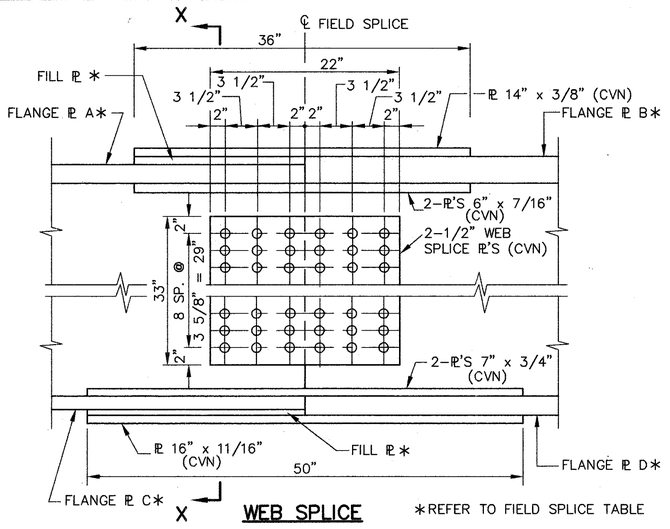

WEB SPLICE

*REFER TO FIELD SPLICE TABLE

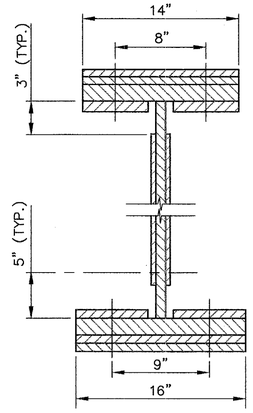

SECTION X–X

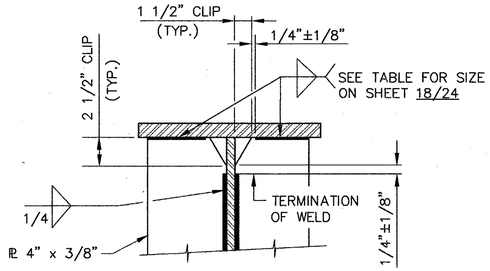

INTERMEDIATE STIFFENER WELD DETAIL

NOTE: WELD TO COMPRESSION FLANGE ONLY FOR INTERMEDIATE STIFFENER WITHOUT CROSSFRAME AND TO BOTH FLANGES FOR INTERMEDIATE STIFFENER WITH CROSSFRAME.

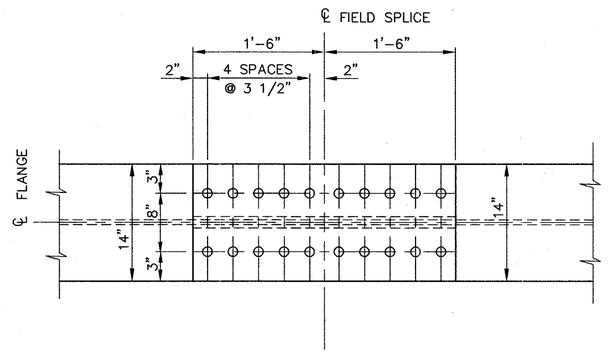

TOP FLANGE SPLICE

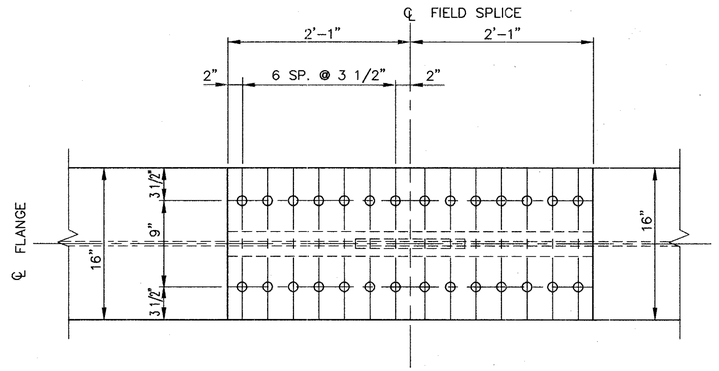

BOTTOM FLANGE SPLICE

NOTE: ALL BOLTS SHALL BE 1" DIA. A–325 GALVANIZED UNLESS OTHERWISE NOTED.

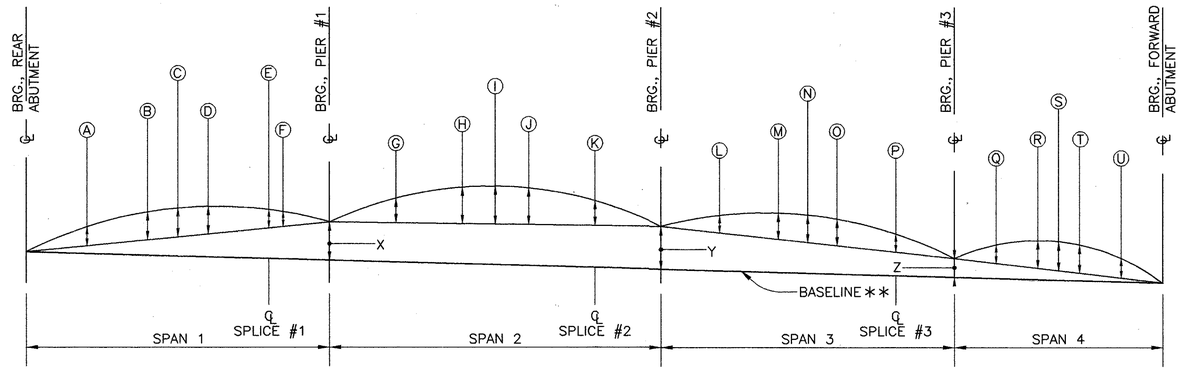

CAMBER DIAGRAM

** BASELINE IS A LINE BETWEEN ℄ BEARINGS OF ABUTMENTS ALONG THE ℄ GIRDER.

CAMBER & DEFLECTION TABLE (INCHES)

		SPAN 1						SPAN 2					SPAN 3					SPAN 4				
		1/5 PT.	2/5 PT.	MID PT.	3/5 PT.	SPL. PT.	4/5 PT.	1/5 PT.	2/5 PT.	MID PT.	3/5 PT.	SPL PT.	1/5 PT.	2/5 PT.	MID PT.	3/5 PT.	SPL. PT.	1/5 PT.	2/5 PT.	MID PT.	3/5 PT.	4/5 PT.
POINT	GIRDER NO.	A	B	C	D	E	F	G	H	I	J	K	L	M	N	O	P	Q	R	S	T	U
DEFLECTION DUE TO WEIGHT OF STEEL	1 TO 8	1/4	3/8	5/16	5/16	3/16	1/8	–	1/8	3/16	3/16	1/16	1/16	1/8	1/8	1/8	1/16	–	1/16	1/16	1/16	1/16
DEFLECTION DUE TO REMAINING DEAD LOAD	1 AND 8	1 3/8	1 15/16	1 7/8	1 9/16	15/16	11/16	3/16	3/4	7/8	7/8	7/16	5/16	13/16	15/16	7/8	7/16	1/16	5/16	3/8	3/8	5/16
	2 TO 7	1 11/16	2 7/16	2 5/16	1 15/16	1 3/16	13/16	3/16	7/8	1 1/16	1 1/16	1/2	7/16	1 1/16	1 3/16	1 1/8	9/16	1/16	3/8	7/16	1/2	3/8
ADJUSTMENT REQUIRED FOR VERTICAL CURVE	1	1/2	3/4	3/4	3/4	9/16	1/2	9/16	7/8	7/8	7/8	9/16	7/16	5/8	5/8	5/8	3/8	-3/16	-3/8	-7/16	-1/2	-1/16
	2	1/2	3/4	3/4	3/4	9/16	1/2	9/16	7/8	7/8	7/8	9/16	7/16	11/16	11/16	11/16	7/16	-7/16	-3/4	-13/16	-13/16	-5/8
	3	1/2	3/4	3/4	3/4	9/16	1/2	9/16	7/8	7/8	7/8	9/16	7/16	11/16	11/16	11/16	7/16	-1/4	-7/16	-7/16	7/16	-5/16
	4	1/2	3/4	3/4	3/4	9/16	1/2	9/16	7/8	7/8	7/8	9/16	7/16	11/16	11/16	11/16	7/16	1/16	1/16	1/16	1/16	–
	5	1/2	3/4	3/4	3/4	9/16	1/2	9/16	7/8	7/8	7/8	9/16	7/16	11/16	11/16	11/16	7/16	1/16	1/16	1/16	–	–
	6	1/2	3/4	3/4	3/4	9/16	1/2	9/16	7/8	7/8	7/8	9/16	7/16	11/16	11/16	11/16	7/16	-1/4	-7/16	-7/16	-7/16	-5/16
	7	1/2	3/4	3/4	3/4	9/16	1/2	9/16	7/8	7/8	7/8	9/16	7/16	11/16	11/16	11/16	7/16	-7/16	-3/4	-3/4	-3/4	-5/8
	8	1/2	3/4	3/4	3/4	9/16	1/2	9/16	7/8	7/8	7/8	9/16	7/16	5/8	11/16	5/8	3/8	-5/16	-5/8	-11/16	-13/16	-11/16
REQUIRED SHOP CAMBER	1	2 1/8	3 1/16	2 15/16	2 5/8	1 11/16	1 5/16	3/4	1 3/4	1 15/16	1 15/16	1 1/16	13/16	1 9/16	1 11/16	1 5/8	7/8	-1/8	–	–	-1/16	5/16
	2	2 7/16	3 9/16	3 3/8	3	1 15/16	1 7/16	3/4	1 7/8	2 1/8	2 1/8	1 1/8	15/16	1 7/8	2	1 15/16	1 1/16	-3/8	-5/16	-5/16	-1/4	-3/16
	3	2 7/16	3 9/16	3 3/8	3	1 15/16	1 7/16	3/4	1 7/8	2 1/8	2 1/8	1 1/8	15/16	1 7/8	2	1 15/16	1 1/16	-3/16	–	1/16	1/8	1/8
	4	2 7/16	3 9/16	3 3/8	3	1 15/16	1 7/16	3/4	1 7/8	2 1/8	2 1/8	1 1/8	15/16	1 7/8	2	1 15/16	1 1/16	1/8	7/16	9/16	5/8	7/16
	5	2 7/16	3 9/16	3 3/8	3	1 15/16	1 7/16	3/4	1 7/8	2 1/8	2 1/8	1 1/8	15/16	1 7/8	2	1 15/16	1 1/16	1/8	1/2	9/16	9/16	7/16
	6	2 7/16	3 9/16	3 3/8	3	1 15/16	1 7/16	3/4	1 7/8	2 1/8	2 1/8	1 1/8	15/16	1 7/8	2	1 15/16	1 1/16	-3/16	–	1/16	1/8	1/8
	7	2 7/16	3 9/16	3 3/8	3	1 15/16	1 7/16	3/4	1 7/8	2 1/8	2 1/8	1 1/8	15/16	1 7/8	2	1 15/16	1 1/16	-3/8	-5/16	-1/4	-3/16	-3/16
	8	2 1/8	3 1/16	2 15/16	2 5/8	1 11/16	1 5/16	3/4	1 3/4	1 15/16	1 15/16	1 1/16	13/16	1 9/16	1 3/4	1 5/8	7/8	-1/4	-1/4	-1/4	-3/8	-5/16

OFFSETS (INCHES)

GIRDER	X	Y	Z
1	7 1/8	8	3
2	7 3/16	8 1/4	3 3/16
3	7 9/16	9	4 5/16
4	7 15/16	9 13/16	5 1/2
5	7 15/16	9 13/16	5 1/2
6	7 9/16	9	4 5/16
7	7 1/4	8 3/8	3 3/8
8	7	7 7/8	2 11/16

FIELD SPLICE TABLE

		FLANGE PLATE SIZE	FLANGE FILL PLATE SIZE
FIELD SPLICE NO. 1	A	14" x 7/8"	14" x 1 3/8" x 18"
	B	14" x 2 1/4"	
	C	16" x 1 3/4"	16" x 3/4" x 25"
	D	16" x 2 1/2"	
FIELD SPLICE NO. 2	A	14" x 7/8"	14" x 3/4" x 18"
	B	14" x 1 5/8"	
	C	16" x 1 1/4"	16" x 5/8" x 25"
	D	16" x 1 7/8"	
FIELD SPLICE NO. 3	A	14" x 7/8"	14" x 1/8" x 18"
	B	14" x 1"	
	C	16" x 1"	16" x 3/8" x 25"
	D	16" x 1 3/8"	

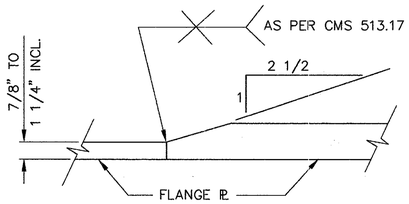

TYPICAL GIRDER FLANGE ℙ SHOP SPLICE

LEGEND

BRG. = BEARING
TYP. = TYPICAL

PLOT SCALE: 1" = 20'
COL #19 C:\DRAWING\06092305\CONNBRG\CONBRG01.DWG FEBRUARY-06-1995

ms consultants, inc.
PREPARED BY
CONSULTING ENGINEERS & PLANNERS
OHIO POWER SIEFERT BUILDING, COLUMBUS, OHIO

DESIGNED B.G.	DRAWN M.R.	REVIEWED J.A.B.	DATE 7-94
CHECKED R.B.	REVISED	STRUCTURE FILE NO. 2512041	

GIRDER DETAILS
BR. NO. FRA-270-3291
I.R. 270 UNDER NEW CONNECTOR ROAD

FRA-270-32.46

19/24

402/593

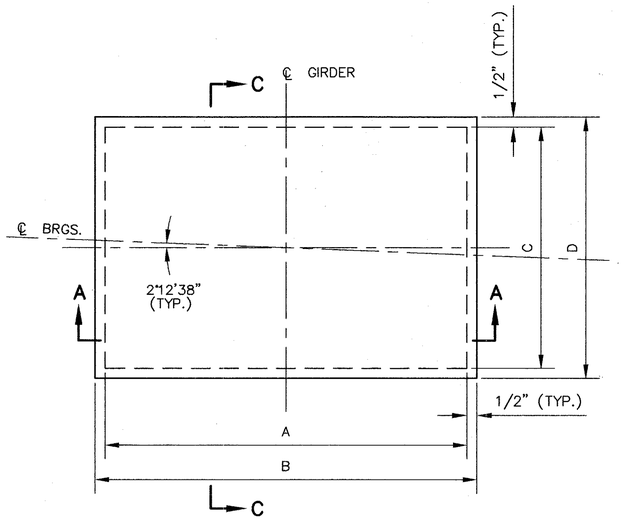

PLAN

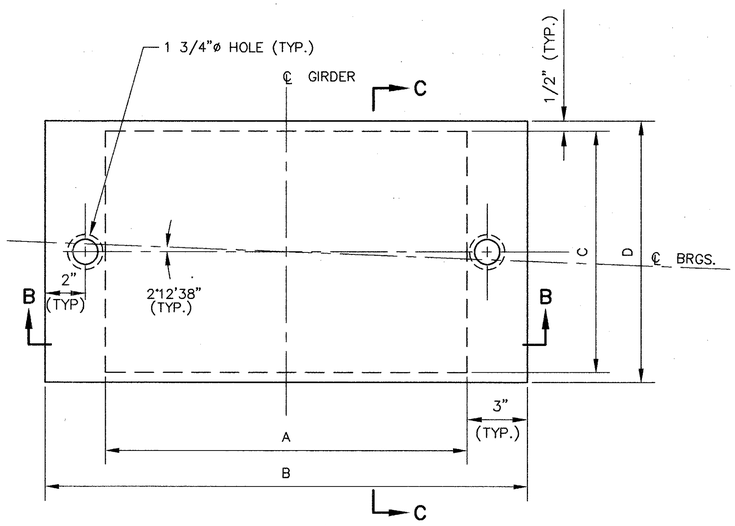

PLAN

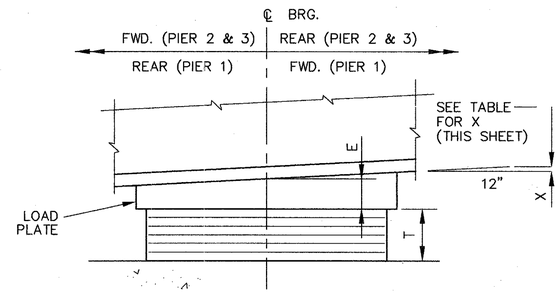

SECTION C–C
@ PIERS

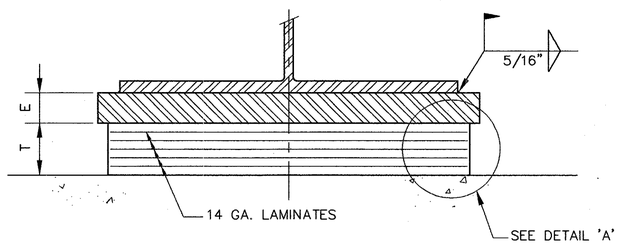

SECTION A–A
EXPANSION BEARING DETAIL

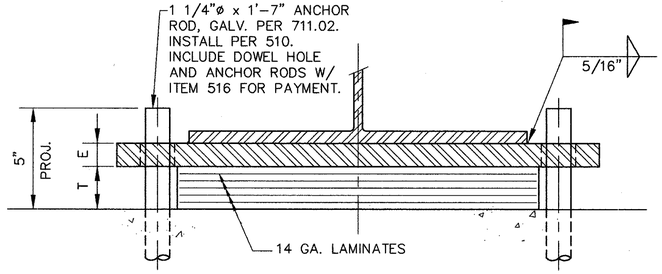

SECTION B–B
FIXED BEARING DETAIL

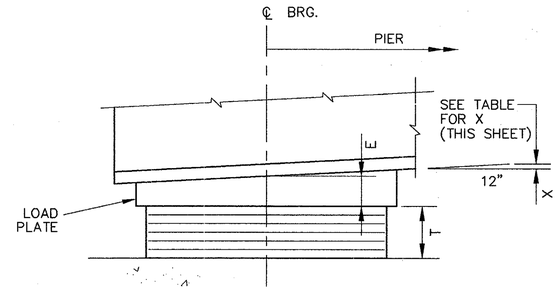

SECTION C–C
@ ABUTMENTS

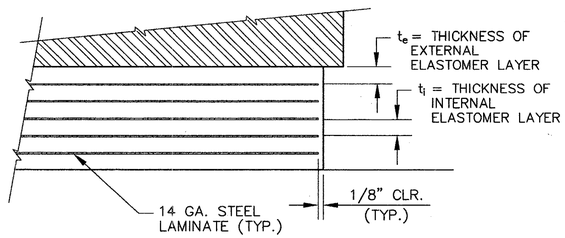

DETAIL A

LAMINATED BEARING DIMENSIONS

LOCATION	A	B	C	D	E	x	t_e	n @ t_i	T	TOTAL REQ'D.	PAD DESIGNATION	DESIGN LOAD (KIPS) DEAD	LIVE	TOTAL
REAR ABUT. (EXP)	16"	17"	12"	13"	1 1/2"	3/32"	0.2143	8 @ 0.3	3.5009"	8	12"x16"x3 1/2" 50 DUROMETER	75^k	65^k	140^k
PIER NO. 1 (EXP)	20"	21"	19"	20"	2"	–	0.3073	2 @ 0.43	1.6987"	8	19"x20"x1 11/16" 50 DUROMETER	249^k	92^k	341^k
PIER NO. 2 (FIX)	18"	24"	18"	19"	2"	–	0.25	2 @ 0.35	1.4241"	8	18"x18"x1 7/16" 50 DUROMETER	210^k	87^k	296^k
PIER NO. 3 (EXP)	17"	18"	17"	18"	2"	3/32"	0.2174	2 @ 0.38	1.5269"	8	17"x17"x1 1/2" 50 DUROMETER	181^k	79^k	260^k
FWD ABUT. (EXP)	15"	16"	9"	10"	1 1/2"	1/8"	0.2125	6 @ 0.2975	2.7329"	8	9"x15"x2 3/4" 50 DUROMETER	48^k	61^k	109^k

LAMINATED ELASTOMERIC BEARINGS

1. STEEL LOAD PLATE SHALL BE ASTM A–572. ELASTOMER SHALL BE 50 DUROMETER.
2. LOAD PLATE. THE STEEL LOAD PLATE SHALL BE BONDED BY VULCANIZED TO THE ELASTOMER DURING THE MOLDING PROCESS. WELDING OF THE LOAD PLATE TO THE SUPERSTRUCTURE SHALL BE CONTROLLED SO THAT THE PLATE TEMPERATURE AT THE ELATOMER BONDED SURFACE SHALL NOT EXCEED 300° F. AS DETERMINED BY THE USE OF PYROMETRIC STICKS OR OTHER TEMPERATURE MONITORING DEVICES.
3. BEARING ANCHOR RODS. AT THE OPTION OF THE CONTRACTOR, THE BEARING ANCHOR RODS (OR FORMED HOLES), LOCATED AND SUPPORTED BY TEMPLATES, MAY BE CAST–IN–PLACE.
4. BEARING REPOSITIONING. IF DECK CONCRETE IS PLACED AT AN AMBIENT TEMPERATURE HIGHER THAN 80°F OR LOWER THAN 40°F AND THE BEARING SHEAR DEFLECTION EXCEEDS 1/6 OF THE BEARING HEIGHT AT 60°F +/– 10°F, THE BEAMS OR GIRDERS SHALL BE RAISED TO ALLOW THE BEARINGS TO RETURN TO THEIR UNDEFORMED SHAPE AT 60°F +/– 10°F.
5. BASIS OF PAYMENT. THE UNIT BID PRICE SHALL INCLUDE ALL MATERIALS, LABOR, AND INCIDENTALS NECESSARY TO TEST, FURNISH AND INSTALL LAMINATED ELASTOMERIC BEARINGS EITHER FIXED OR EXPANSION. PAYMENT WILL BE MADE AT THE CONTRACT PRICE FOR ITEM 516, EACH.

PREPARED BY
ms consultants, inc.
CONSULTING ENGINEERS & PLANNERS
400 FOSTER BOULEVARD, CHARLESTON, 25301

DESIGNED	DRAWN	REVIEWED	DATE
B.G.	C.H.	J.A.B.	1–94
CHECKED	REVISED	STRUCTURE FILE NO.	
R.B.		2512041	

BEARING DETAILS
BR. NO. FRA–270–3291
NEW CONNECTOR ROAD BRIDGE OVER I.R. 270

FRA–270–32.46

20/24

403/593

PLOT SCALE... 1" = 10'
COL #19 C:\DRAWING\06092308\CONNBRG\CONBRB01.DWG FEBRUARY–06–1995

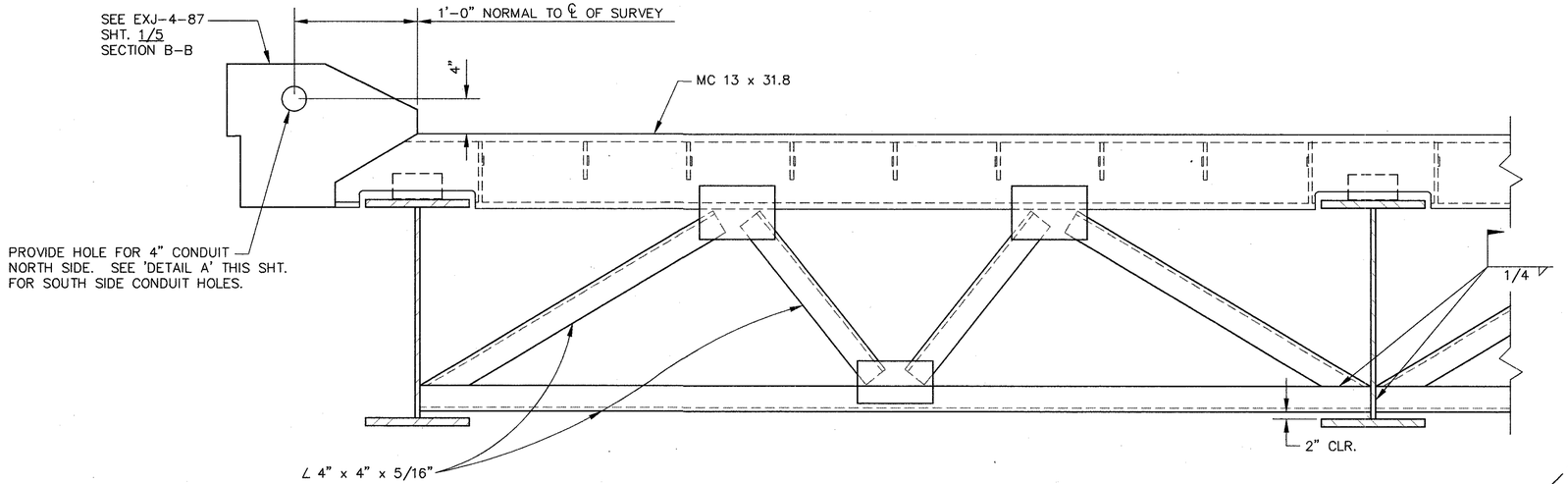

END CROSSFRAME DETAIL AT REAR ABUTMENT

REFER TO STD. DWG. SD-1-69 AND EXJ-4-87 FOR ADDITIONAL DETAILS

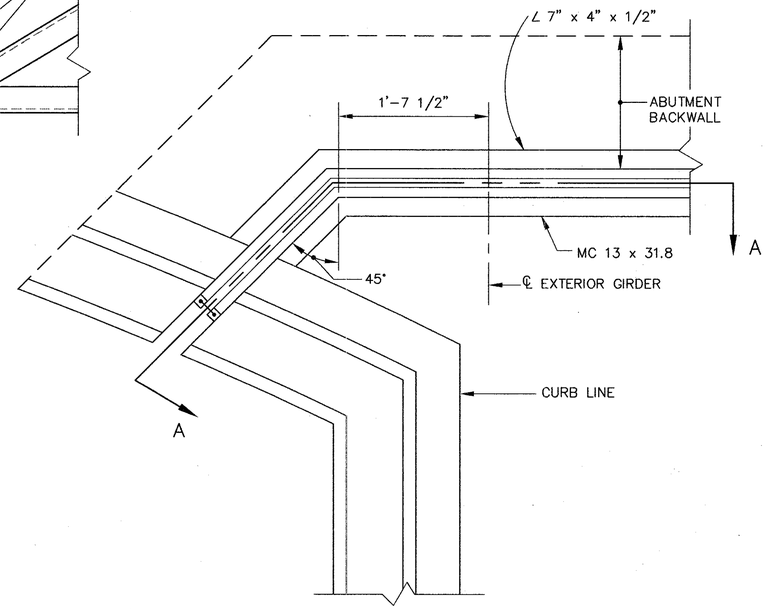

PARTIAL PLAN AT FWD. ABUTMENT

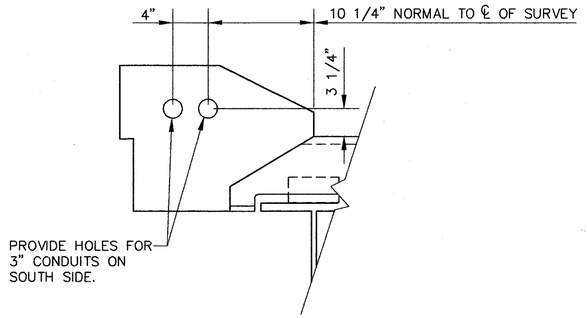

DETAIL A

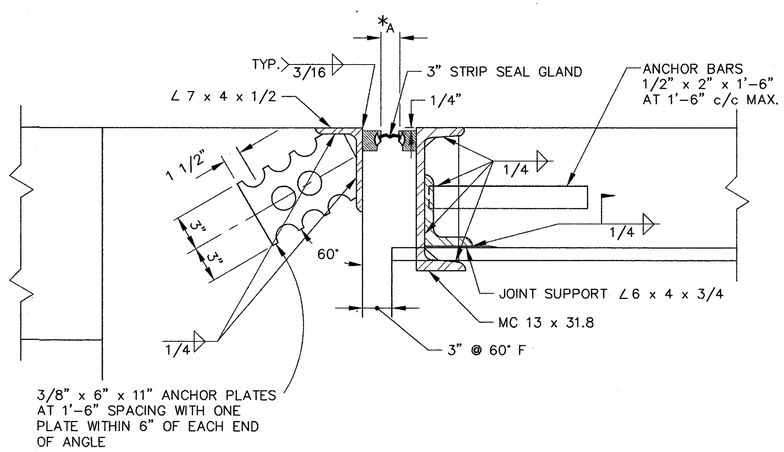

STRIP SEAL ASSEMBLY

STRIP SEAL GLAND AND RETAINER & ADDITIONAL DETAILS NOT SHOWN ARE TO BE IN ACCORDANCE WITH STD. DWG. EXJ-4-87

*FOR DIMENSION "A" SEE TABLE THIS SHEET.

JOINT OPENING TABLE (DIM "A")		
TEMPERATURE °F	FORWARD ABUT.	REAR ABUT.
90°	1 1/8"	1"
80°	1 1/4"	1 3/16"
70°	1 3/8"	1 5/16"
60°	1 1/2"	1 1/2"
50°	1 5/8"	1 11/16"
40°	1 3/4"	1 13/16"
30°	1 7/8"	2"

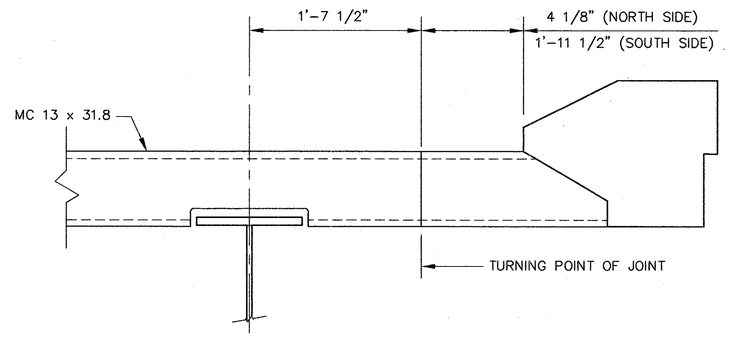

SECTION A-A

(PARTIAL END CROSSFRAME DETAIL - FWD. ABUT.)

PREPARED BY ms consultants, inc. CONSULTING ENGINEERS & PLANNERS 6500 BUSCH BOULEVARD, COLUMBUS, OHIO

DESIGNED R.B.	DRAWN C.H.	REVIEWED J.A.B.	DATE 5-94
CHECKED B.G.	REVISED	STRUCTURE FILE NO. 2512041	

EXPANSION JOINT DETAILS
BR. NO. FRA-270-32.91
I.R. 270 UNDER NEW CONNECTOR ROAD

FRA-270-32.46

21/24

404/593

PLOT SCALE... 1/2" = 1'
COL #19 C:\DRAWING\06092308\CONNBRG\CONBREJD.DWG FEBRUARY-06-1995

EXPANSION JOINT DETAILS

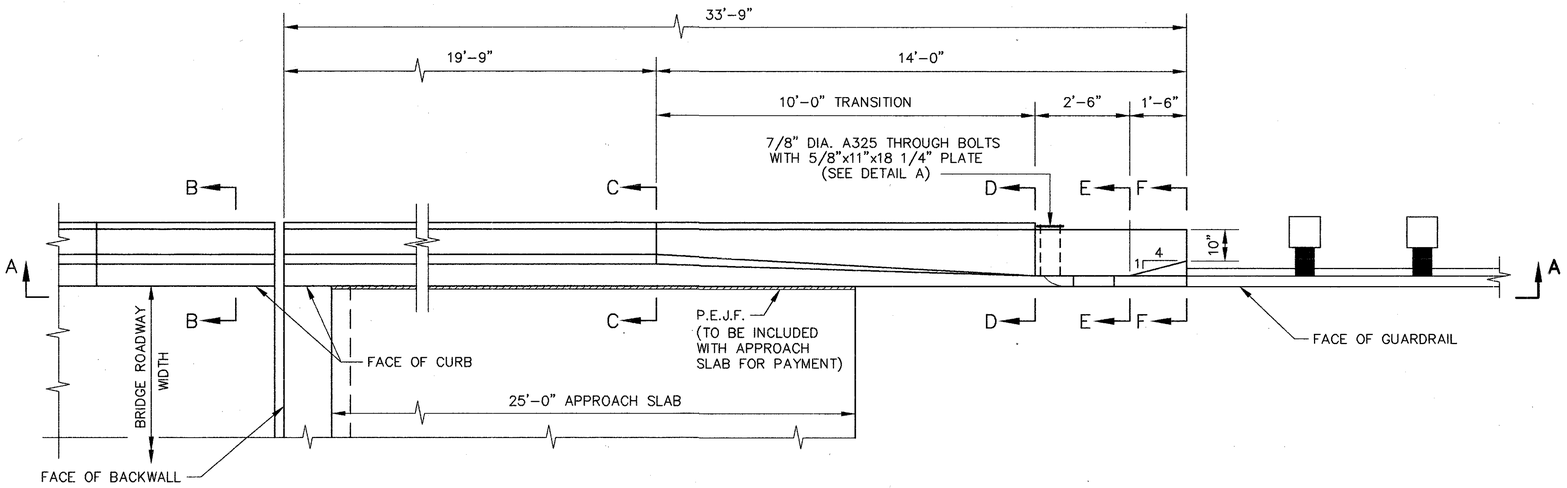

PART PLAN AT ABUTMENT
(REAR ABUTMENT ONLY)

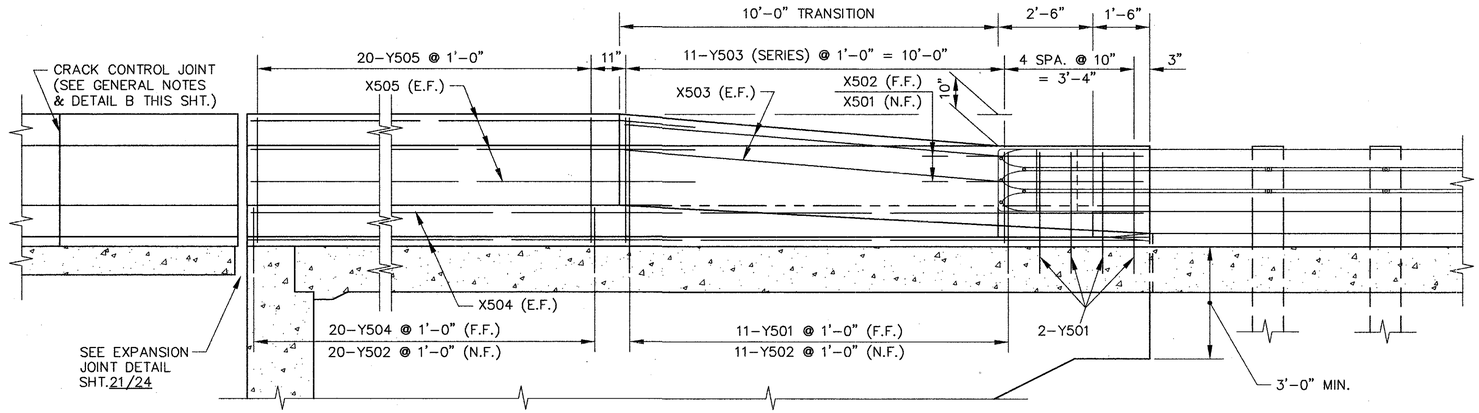

SECTION A-A

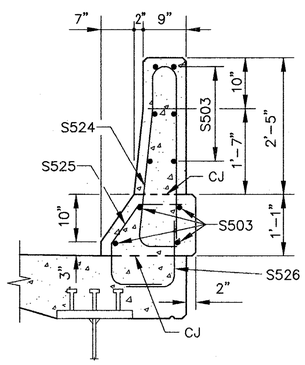

SECTION B-B

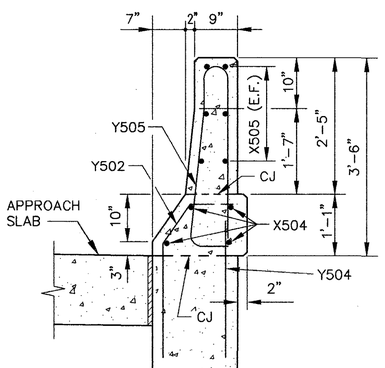

SECTION C-C

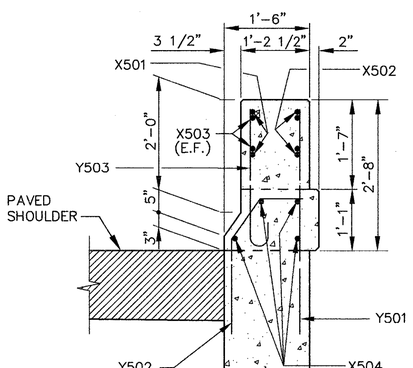

SECTION D-D

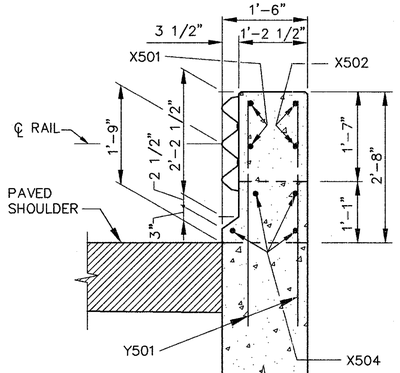

SECTION E-E

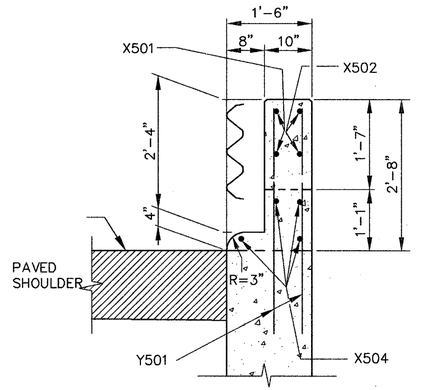

SECTION F-F

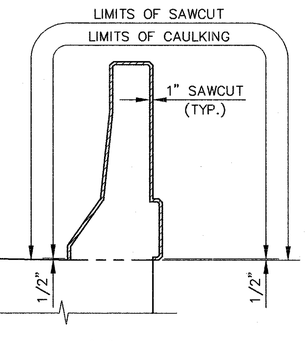

DETAIL 'B'
(SECTION THROUGH SAWCUT)

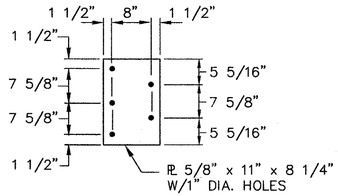

DETAIL 'A'

NOTES

DESIGN SPECIFICATIONS: "STANDARD SPECIFICATIONS FOR HIGHWAY BRIDGES" ADOPTED BY AASHTO, 1993.

DESIGN DATA: CONCRETE CLASS S f'c = 4500 P.S.I., REINFORCING STEEL ASTM A615, A617 GRADE 60 fy = 60000 P.S.I.

QUANTITIES OF CONCRETE AND REINFORCING STEEL FOR PARAPET ARE INCLUDED WITH ABUTMENTS FOR PAYMENT.

FOR BRIDGE TERMINAL ASSEMBLY SEE STANDARD CONSTRUCTION DRAWING GR-3.1 AND GR-3.2.

LEGEND
N.F. = NEAR FACE
E.F. = EACH FACE
F.F. = FAR FACE
CJ = CONSTRUCTION JOINT
P.E.J.F. = PREFORMED EXPANSION JOINT FILLER

PREPARED BY
ms consultants, inc.
CONSULTING ENGINEERS & PLANNERS
4000 BRIDGE BOULEVARD, COLUMBUS, OHIO

DESIGNED R.B. | DRAWN C.H. | REVIEWED J.A.B. | DATE 5-94
CHECKED B.G. | REVISED | STRUCTURE FILE NO. 2512041

BRIDGE RAILING DEFLECTOR PARAPET
BR. NO. FRA-270-32.91
I.R. 270 UNDER NEW CONNECTOR ROAD

FRA-270-32.46

22/24

405/593

PLOT SCALE... 1" =2'
COL #19 C:\DRAWING\06092308\CONNBRG\CONBRBR1.DWG FEBRUARY-06-1995

BRIDGE RAILING DEFLECTOR PARAPET

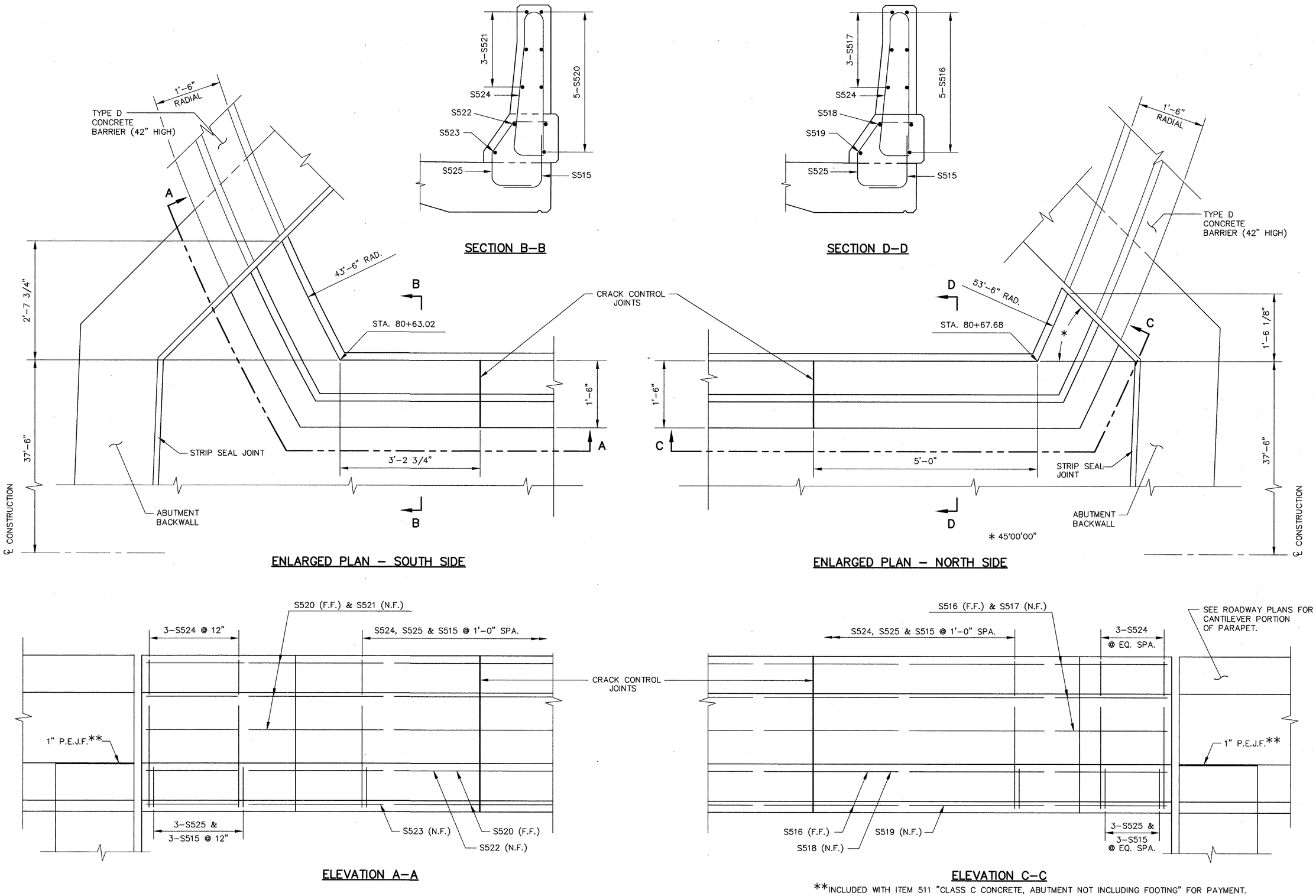

**INCLUDED WITH ITEM 511 "CLASS C CONCRETE, ABUTMENT NOT INCLUDING FOOTING" FOR PAYMENT.

PLOT SCALE... 1" = 1'
COL #19 C:\DRAWING\06092308\CONNBRG\CONBREP1.DWG FEBRUARY-06-1995

PREPARED BY ms consultants, inc. CONSULTING ENGINEERS & PLANNERS 6500 BUSCH BOULEVARD, COLUMBUS, OHIO

DESIGNED	DRAWN	REVIEWED	DATE
R.B.	C.H.	J.AB.	5–94
CHECKED	REVISED	STRUCTURE FILE NO.	
B.G.		2512041	

PARAPET DETAILS AT FORWARD ABUTMENT

BR. NO. FRA–270–3291
I.R. 270 UNDER NEW CONNECTOR ROAD

FRA–270–32.46

23/24

406/593

PARAPET DETAILS AT FORWARD ABUTMENT

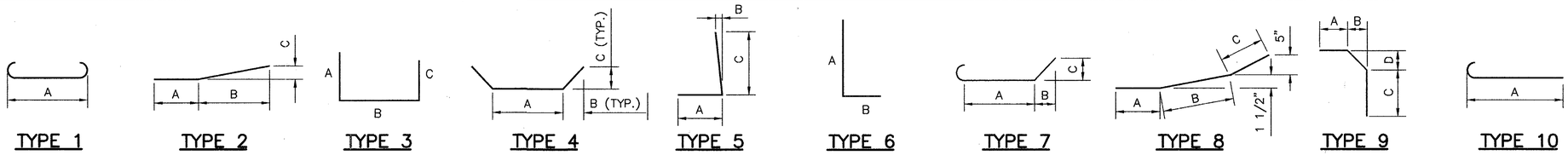

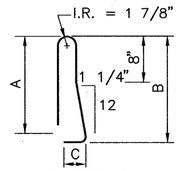

TYPE 11

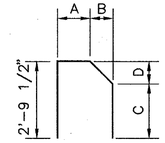

TYPE 12

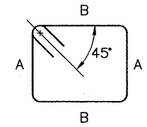

TYPE 13

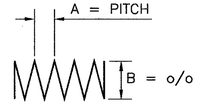

TYPE 14

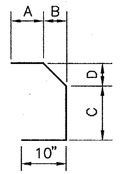

TYPE 15

REAR ABUTMENT & WINGWALLS

MARK	NO.	LENGTH	TYPE	A	B	C	D	INC.	WEIGHT
A501	28	10'-10"	1	9'-8"					316
A502	51	14'-8"	STR.						780
A503	64	38'-4"	STR.						2559
A504	51	5'-3"	2	3'-9"	1'-0 3/4"	1'-0 3/4"			279
A505	51	8'-2"	3	3'-6"	3'-5"	1'-6"			434
A506	11	9'-4"	4	6'-4 1/2"	1'-1"	1'-0 1/2"			107
A507	11	2'-10"	2	1'-6"	3/4"	1'-6"			33
A508	11	6'-1"	4	6'-1 1/2"	1'-0 1/2"	1'-1"			70
A509	11	2'-10"	5	1'-6"	0 3/4"	1'-6"			33
A510	48	4'-4"	3	1'-6"	1'-7"	1'-6"			217
A511	2 SETS OF 5	19'-9" / 19'-10"	STR.					1/4"	206
A512	2 SETS OF 6	12'-0" / 15'-11"	STR.					9 3/8"	175
A513	2 SETS OF 8	11'-7" / 11'-10"	STR.					3/8"	195
A514	4 SETS OF 4	2'-11" / 5'-3"	STR.					9 3/8"	68
A515	8	3'-4"	STR.						28
A516	6	4'-11"	STR.						31
A517	8	3'-4"	STR.						28
A518	12	7'-11"	STR.						99
A519	4 SETS OF 2	10'-9" / 13'-9"	STR.					3'-0"	102
A520	16	27'-5"	STR.						458
A521	4 SETS OF 2	28'-9" / 30'-8"	STR.					1'-11"	248
A522	4	29'-8"	STR.						124
A523	12	33'-5"	STR.						418
A524	4	11'-4"	STR.						47
A525	4	10'-5"	2	1'-11"	6'-0"	3'-0"			43
A526	6	4'-5"	3	2'-0"	8"	2'-0"			28
A527	4	1'-8"	STR.						7
A601	42	11'-8"	STR.						736
A602	49	10'-7"	3	4'-9"	1'-5"	4'-9"			779
A603	49	6'-1"	3	2'-6"	1'-5"	2'-6"			448
A604	49	5'-9"	3	2'-7"	11"	2'-7"			423
A605	2 SETS OF 8	11'-10" / 12'-1"	STR.					3/8"	287
A701	12	9'-4"	STR.						229
A702	24	40'-0"	STR.						1962
A703	14	6'-8"	STR.						191
A704	92	13'-4"	1	11'-8"					2507
A705	16	7'-5"	6	6'-1"	1'-6"				243
A706	2 SETS OF 8	19'-9" / 19'-10"	STR.					1/8"	647
A707	2 SETS OF 11	12'-0" / 15'-11"	STR.					4 3/4"	628
A708	30	11'-0"	6	9'-8"	1'-6"				675
A801	82	11'-8"	STR.						2554
A802	24	9'-8"	STR.						619
A901	51	10'-6"	6	8'-0"	2'-9"				1821
A902	51	14'-10"	STR.						2572
A903	50	11'-8"	6	9'-2"	2'-9"				1983
D801	49	4'-11"	7	2'-7"	1'-0"	1'-0"			643
X501	4	5'-8"	8	1'-10"	2'-5"	1'-5"			24
X502	4	5'-8"	STR.						24
X503	8	10'-0"	STR.						83
X504	8	33'-5"	STR.						279
X505	12	21'-1"	STR.						264

REAR ABUTMENT & WINGWALLS (CONT.)

MARK	NO.	LENGTH	TYPE	A	B	C	D	INC.	WEIGHT
Y501	38	4'-0"	STR.						159
Y502	62	3'-3"	9	8"	6"	1'-9"	8 1/2"		210
Y503	2 SETS OF 11	3'-0" / 3'-10"	10	2'-5" / 3'-3"				1"	78
Y504	40	2'-4"	STR.						97
Y505	40	6'-7"	11	3'-0"	3'-3"	8 1/4"			275
						TOTAL			28,573

FORWARD ABUTMENT & WINGWALLS

MARK	NO.	LENGTH	TYPE	A	B	C	D	INC.	WEIGHT
B501	16	38'-7"	STR.						644
B502	4	8'-2"	2	6'-2"	1'-4 1/4"	1'-5 5/8"			34
B503	4	10'-10"	2	8'-1 1/2"	1'-10 3/8"	2'-0 1/4"			45
B504	4	8'-8"	2	6'-8"	1'-5 5/8"	1'-4 1/4"			36
B505	4	11'-6"	2	8'-9 1/2"	2'-0 1/4"	1'-10 3/8"			48
B506	12	31'-1"	STR.						389
B507	59	12'-2"	3	3'-6"	5'-5"	3'-6"			749
B508	59	9'-2"	3	2'-0"	5'-5"	2'-0"			564
B509	40	4'-3"	3	1'-6"	1'-6"	1'-6"			177
B510	8	1'-6"	STR.						13
B511	4	6'-9"	12	11"	6 1/2"	2'-1"	8 1/2"		28
B512	4	3'-5"	STR.						14
B513	8	3'-11"	3	1'-6"	1'-2"	1'-6"			33
B514	6	4'-5"	3	2'-0"	8"	2'-0"			28
B515	4	1'-7"	STR.						7
B601	88	4'-1"	3	1'-6"	1'-5"	1'-6"			540
B602	88	13'-5"	3	6'-2"	1'-5"	6'-2"			1773
B603	2	10'-0"	3	4'-4"	1'-7 1/2"	4'-4"			30
B1001	18	34'-0"	STR.						2633
B1002	18	35'-11"	STR.						2782
						TOTAL			10,567

PIERS

MARK	NO.	LENGTH	TYPE	A	B	C	D	INC.	WEIGHT
P501	168	11'-2"	13	1'-8"	3'-8"				1957
P502	8 SETS OF 9	10'-6" / 11'-2"	13	1'-8"	3'-4" / 3'-8"			1/2"	814
P503	24	33'-2"	STR.						830
P504	40	4'-5"	3	1'-0"	2'-8"	1'-0"			184
P505	48	5'-10"	2	1'-6"	4'-4"	4 3/8"			292
P506	16	2'-8"	STR.						45
P507	20	4'-5"	3	2'-0"	8"	2'-0"			92
P508	112	8'-8"	STR.						1012
P509	80	11'-10"	13	2'-0"	3'-8"				987
P510	8 SETS OF 6	11'-2" / 11'-10"	13	2'-0"	3'-4" / 3'-8"			3/4"	576
P511	20	4'-11"	3	1'-0"	3'-2"	1'-0"			103
P512	8	3'-2"	STR.						26
P513	64	9'-8"	STR.						645
P514	24	5'-7"	2	1'-6"	4'-1"	4 1/8"			140
P515	8 SETS OF 7	10'-6" / 11'-2"	13	1'-8"	3'-4" / 3'-8"			5/8"	633
P601	48	6'-4"	3	2'-0"	2'-8"	2'-0"			457
P901	176	11'-2"	1	8'-8"					6682
P902	12	24'-6"	STR.						1000
P903	12	33'-2"	STR.						1353
P904	112	12'-2"	1	9'-8"					4633
P905	20	25'-0"	STR.						1700
P906	12	39'-2"	3	3'-3 1/2"	33'-2"	3'-3 1/2"			1598
P1001	24	24'-6"	STR.						2530
P1002	8	33'-2"	STR.						1142
P1003	32	7'-5"	6	6'-3"	1'-6"				1021
P1004	32	17'-11"	STR.						2467
P1005	24	39'-1"	3	3'-3 1/2"	33'-2"	3'-3 1/2"			4036

PIERS (CONT.)

MARK	NO.	LENGTH	TYPE	A	B	C	D	INC.	WEIGHT
P1101	72	8'-3"	6	7'-1"	1'-6"				3156
P1102	72	18'-5"	STR.						7045
SP401	4	15'-5"	14	4 1/2"	30"				1060
SP402	4	15'-5"	14	4 1/2"	36"				1294
SP403	4	14'-11"	14	4 1/2"	30"				1027
							TOTAL		50,897

SUPERSTRUCTURE

MARK	NO.	LENGTH	TYPE	A	B	C	D	INC.	WEIGHT
S401	990	40'-0"	STR.						26,453
S402	110	13'-1"	STR.						961
S403	3	3'-3"	STR.						7
S501	717	32'-9"	STR.						24,491
S502	1425	23'-0"	STR.						34,184
S503	1017	40'-0"	STR.						42,429
S504	93	17'-7"	STR.						1706
S505	654	24'-0"	STR.						16,371
S506	4	18'-3"	STR.						76
S507	2	23'-2"	STR.						48
S508	2	31'-2"	STR.						65
S509	3	3'-3"	STR.						10
S510	2	9'-0"	STR.						19
S511	1	23'-9"	STR.						25
S512	1 SET OF 4	23'-9" / 25'-3"	STR.					6"	102
S513	1	25'-0"	STR.						26
S514	1	24'-0"	STR.						25
S515	720	2'-1"	6	1'-4 1/2"	10"				1565
S516	5	17'-0"	2	15'-6"	7 1/2"	1'-4 3/8"			89
S517	3	17'-4"	2	15'-9"	8 1/4"	1'-5 5/8"			54
S518	1	17'-7"	2	15'-11"	8 1/2"	1'-6 5/8"			18
S519	1	18'-0"	2	16'-2 1/2"	9 1/4"	1'-8"			19
S520	5	16'-6"	2	13'-8"	1'-3"	1'-4 1/8"			86
S521	3	16'-10"	2	13'-11"	1'-4"	2'-7 3/4"			53
S522	1	17'-0"	2	14'-0 1/2"	1'-4 1/2"	2'-8"			18
S523	1	17'-6"	2	14'-4 1/2"	1'-5 1/2"	2'-9 3/4"			18
S524	720	6'-7"	11	3'-0"	3'-3"	8 1/4"			4944
S525	720	3'-2"	15	9"	6"	11"	8 1/2"		2378
S601	1424	38'-6"	STR.						82,346
S602	2	33'-10"	STR.						102
S603	2	20'-11"	STR.						63
S604	2	40'-0"	STR.						120
S605	2	31'-2"	STR.						94
S606	2	18'-3"	STR.						55
S607	2	9'-0"	STR.						27
S608	1 SET OF 4	39'-0" / 40'-6"	STR.					6"	239
S609	1	40'-7"	STR.						61
S610	1	39'-6"	STR.						59
						TOTAL			239,406

NOTES

SPIRAL REINFORCMENT BARS: THE "LENGTH" SHOWN IN THE STEEL LIST FOR THE SPIRAL BARS IS THE LENGTH OF THE SPIRAL ALONG THE AXIS OF THE SPIRAL. THREE STEEL CHANNEL, TEE OR ANGLE SPACERS, WEIGHING APPROXIMATELY 0.80 LB. PER LIN. FT. OF SPACER, SHALL BE PROVIDED FOR EACH SPIRAL UNIT. THEY SHALL BE EQUALLY SPACED ALONG THE PERIPHERY OF THE COILS. THE NUMBER OF POUNDS OF THESE SPACERS, BASED ON 2.40 PER LIN. FT. WILL BE PAID FOR AS REINFORCING STEEL AND IS INCLUDED IN THE TABULATED QUANTITIES OF SPIRAL BARS.

ALL BARS TO BE EPOXY COATED.

PREPARED BY
ms consultants, inc.
CONSULTING ENGINEERS & PLANNERS
4600 JESTER BOULEVARD, COLUMBUS, OHIO

DESIGNED B.G. | DRAWN C.H. | CHECKED R.B. | REVIEWED J.A.B. | DATE 7-94 | REVISED

STRUCTURE FILE NO. 2512041

REINFORCING STEEL LIST

BR. NO. FRA-270-32.91
I.R. 270 UNDER NEW CONNECTOR ROAD

FRA-270-32.46

24/24

407/593

PLOT SCALE: 1 = 1
COL #9 C:\DRAWING\06092308\CONNBRG\CONNBRG1.DWG FEBRUARY-06-1995

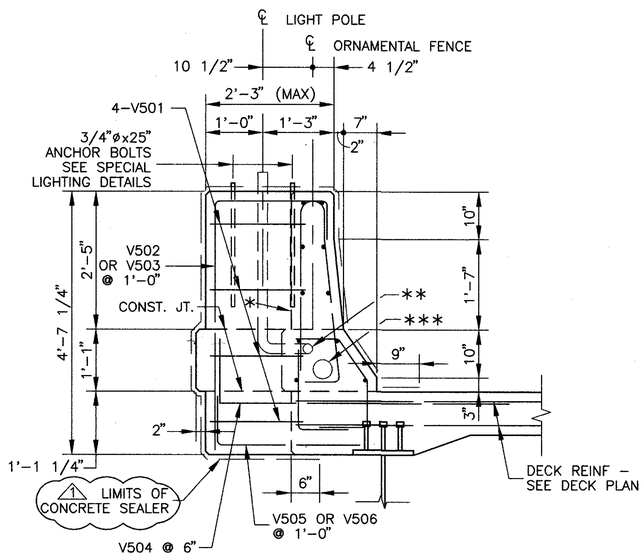

SECTION A-A

NOTE: FOR REINFORCING NOT LABELED, SEE SHTS. 397/593.

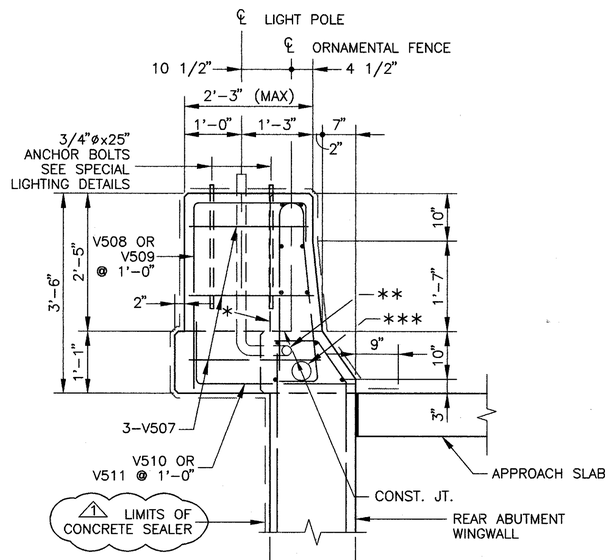

SECTION B-B

NOTE: FOR REINFORCING NOT LABELED, SEE SHTS. 390/593 + 391/593.

* - OUTSIDE FACE OF PARAPET BEYOND.

** - 2"ø CONDUIT FOR BRIDGE DECORATIVE LIGHTING SEE LIGHTING SUMMARY SHEET

*** - CONDUITS. SEE SHT. 397/593.

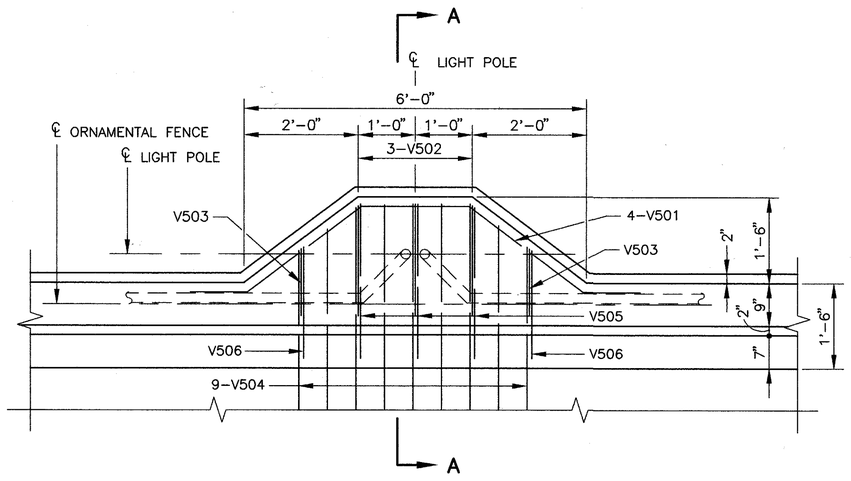

PLAN VIEW

PILASTER @ BRIDGE PARAPET

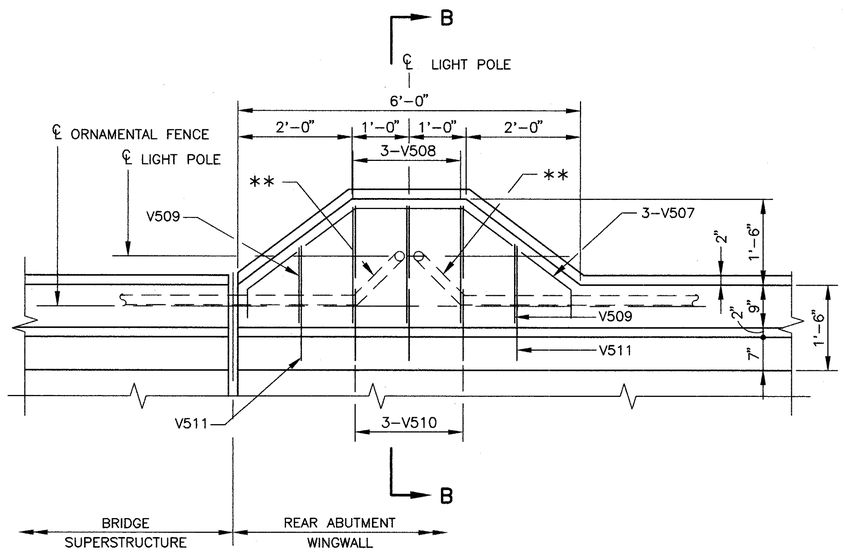

PLAN VIEW

@ REAR ABUTMENT WINGWALL

NOTE: SOUTH WINGWALL SHOWN, NORTH WINGWALL SIMILAR

PLOT SCALE... 3/4" = 1'
COL #19 C:\DRAWING\06092720\EASTPD1.DWG MAY-06-1996

PREPARED BY ms consultants, inc. CONSULTING ENGINEERS & PLANNERS 6500 BOUCH BOULEVARD, COLUMBUS, OHIO

DESIGNED	DRAWN	REVIEWED	DATE
B.G.	R.W.D.	J.A.B.	12/95
CHECKED	REVISED	STRUCTURE FILE NO.	
R.B.	1 5-96	2512041	

PILASTER DETAILS

BR. NO. FRA-270-3291
I.R. 270 UNDER NEW CONNECTOR ROAD

FRA-270-32.46

24a/24b
~~407A~~
596
601
393

ESTIMATED QUANTITIES

ITEM	ITEM EXT.	TOTAL	UNIT	DESCRIPTION	SUPER.	ABUTS.
509	15800	3,241	POUND	EPOXY COATED REINFORCING STEEL, GRADE 60 *	3,103	138
SPECIAL	51149500	23	CU. YD.	HIGH PERFORMANCE CONCRETE, MISC.: PILASTERS *	23	
511	44100	2	CU. YD.	CLASS C CONCRETE, ABUTMENT NOT INCLUDING FOOTING *		2
SPECIAL	51267500	45	SQ. YD.	SEALING OF CONCRETE SURFACES * (NON-EPOXY) 1	41	4
SPECIAL	51400610	625,309	POUND	PAINTING OF NEW STEEL, SYSTEM IZEU, (SEE NOTE)	625,309	

* -THESE ITEMS AND QUANTITIES ARE IN ADDITION TO THOSE LISTED IN THE ESTIMATED QUANTITIES ON SHT. 386/593.

NOTE
ITEM SPECIAL, PAINTING OF NEW STEEL, SYSTEM IZEU: THE PAINTING OF THE STRUCTURAL STEEL SHALL BE AS PER PROPOSAL NOTE "ITEM 514-FIELD PAINTING OF NEW STEEL, SYSTEM IZEU-04/15/93" EXCEPT THE COLOR OF THE URETHANE FINISH COAT SHALL MATCH THE FOLLOWING COLOR: #349/41040, DARK BLUE, SMOOTH, GLOSSY BY TIGER DRYLAC (COLOR SAMPLES TO BE PROVIDED). THE URETHANE FINISH COAT SHALL MEET THE REQUIREMENTS OF THE PROPOSAL NOTE AND SUPPLEMENTAL SPECIFICATION 910.

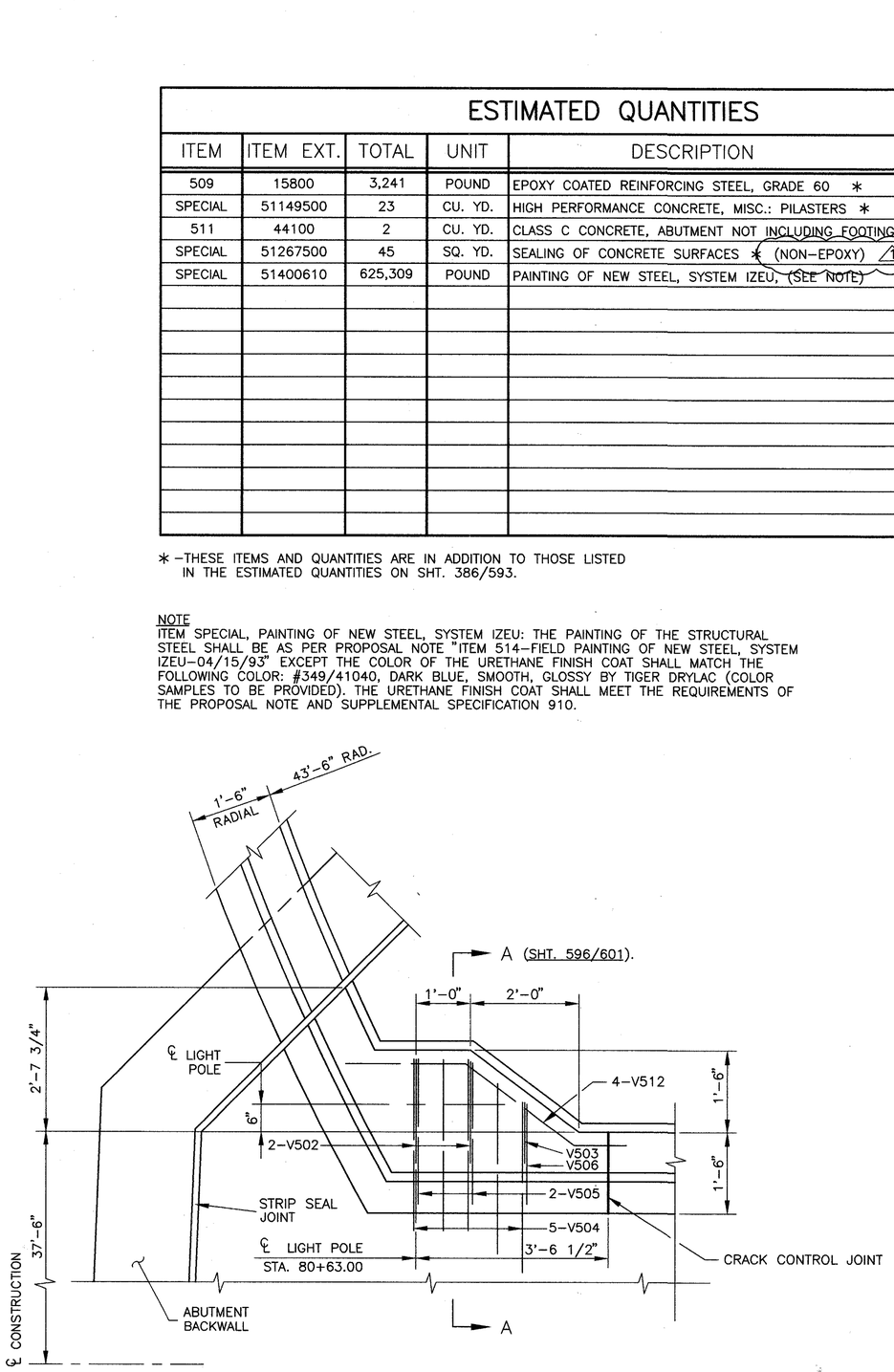

PLAN VIEW
PILASTER @ SOUTHEAST CORNER

PILASTER REINFORCING SCHEDULE

MARK	NO.	LENGTH	TYPE	A	B	C	D	INC.	WEIGHT
V501	84	8'-7"	1	1'-6"	1'-0"	2'-0"	1'-8"		752
V502	65	6'-11"	2	1'-11"	4'-3"				469
V503	43	6'-2"	2	1'-2"	4'-3"				277
V504	194	5'-10"	3	5'-0"					1,180
V505	65	3'-10"	3	3'-0"					260
V506	43	3'-1"	3	2'-3"					138
V507	6	7'-7"	4	1'-6"	1'-8"	2'-0"			47
V508	6	5'-10"	2	1'-11"	3'-2"				37
V509	4	5'-1"	2	1'-2"	3'-2"				21
V510	6	3'-6"	3	2'-8"					22
V511	4	2'-9"	3	1'-11"					11
V512	4	6'-7"	5	1'-6"	2'-2"	2'-0"	1'-0"		27
								TOTAL	3,241

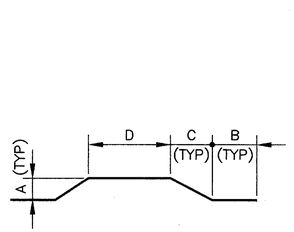

TYPE 1

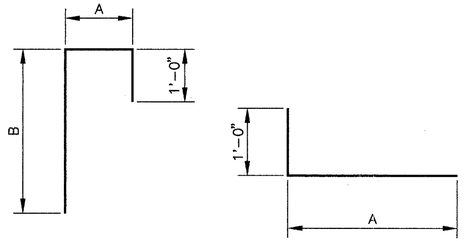

TYPE 2 TYPE 3

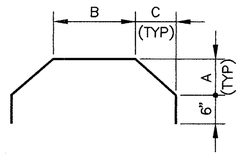

TYPE 4

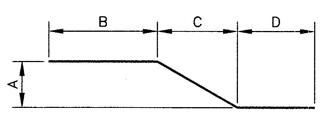

TYPE 5

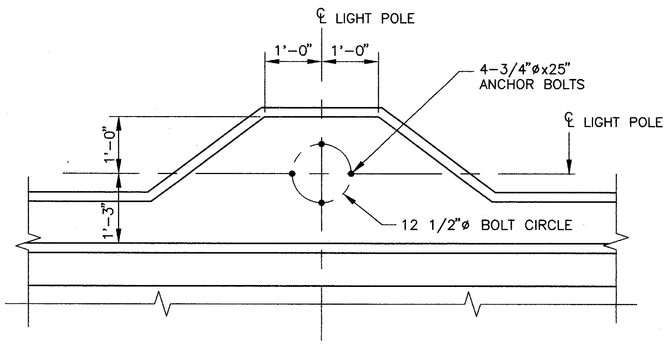

BOLT PATTERN FOR LIGHT POLE

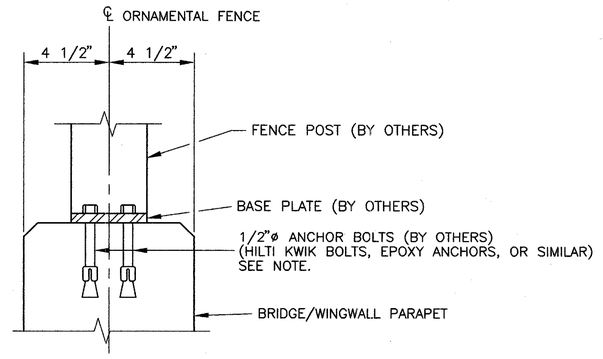

DETAIL
MOUNTING OF ORNAMENTAL FENCE

NOTE: ANCHOR BOLTS TO BE FURNISHED & INSTALLED BY FENCE CONTRACTOR. THE FENCE CONTRACTOR SHALL FIELD VERIFY THE LOCATIONS OF THE FENCE POSTS AND ANCHOR BOLTS PRIOR TO INSTALLING THE ANCHOR BOLTS.

PLOT SCALE = 3/4" = 1'
COL #19 C:\DRAWING\06092720\EASTPIL1.DWG MAY-06-1996

PREPARED BY ms consultants, inc. CONSULTING ENGINEERS & PLANNERS 6500 EMORY BOULEVARD, COLUMBUS, OHIO

DESIGNED B.G. | DRAWN R.W.D. | REVIEWED J.A.B. | DATE 12/95
CHECKED R.B. | REVISED 1 5-96 | STRUCTURE FILE NO. 2512041

MISC. DETAILS & QUANTITIES
BR. NO. FRA-270-3291
I.R. 270 UNDER NEW CONNECTOR ROAD

FRA-270-32.46

24B 24B
4673
597
601

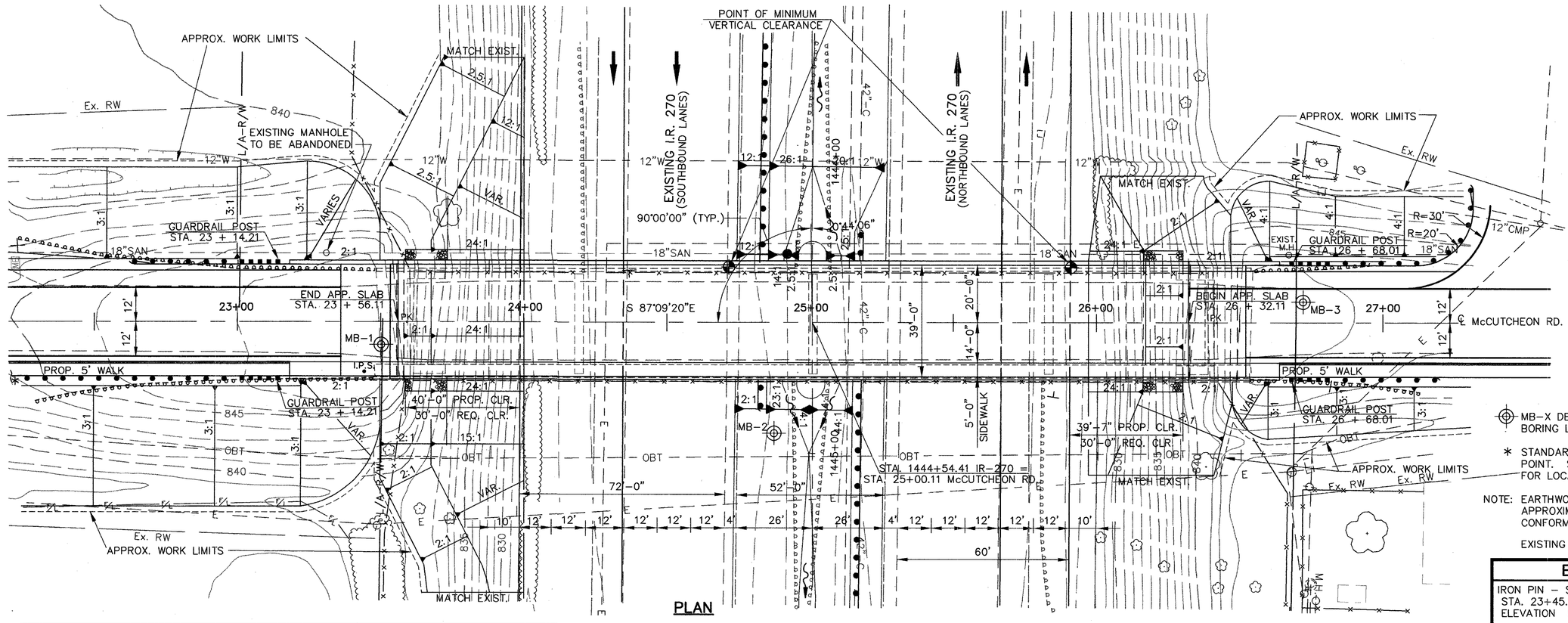

PLAN

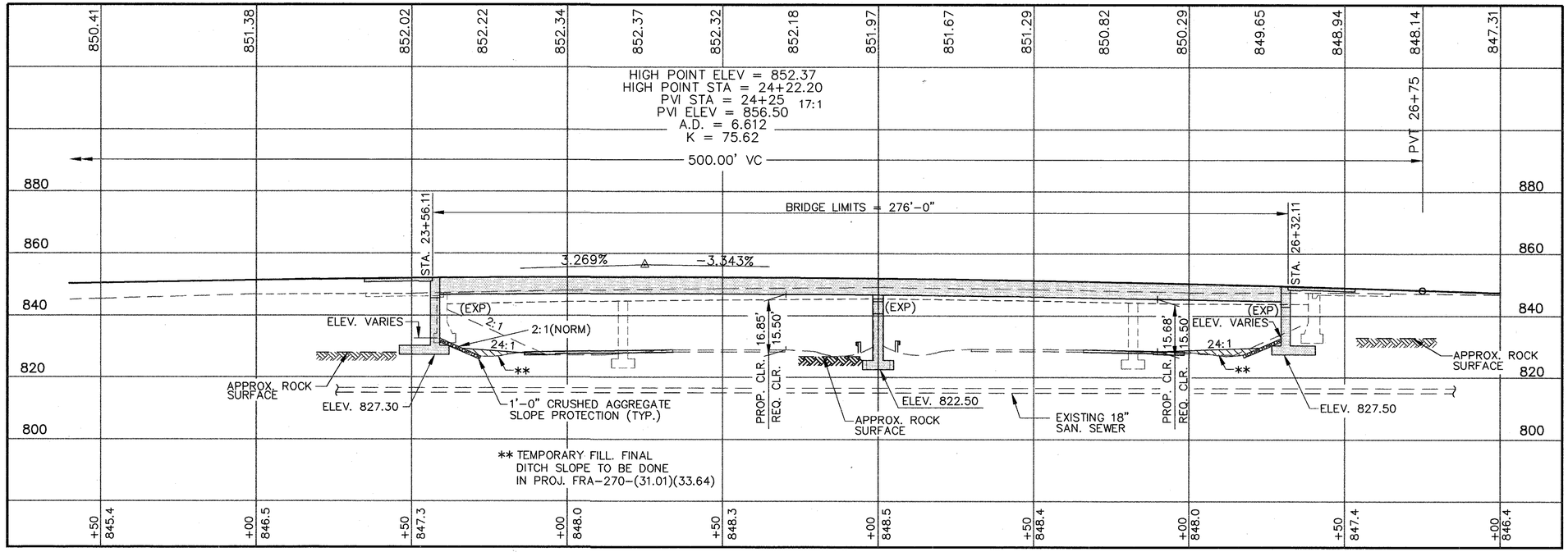

℄ PROFILE

MB-X DESIGNATES SUBSURFACE BORING LOCATION

* STANDARD GUARDRAIL BEYOND THIS POINT. SEE ROADWAY DRAWINGS FOR LOCATION.

NOTE: EARTHWORK LIMITS SHOWN ARE APPROXIMATE. ACTUAL SLOPES SHALL CONFORM TO PLAN CROSS-SECTIONS.

EXISTING STRUCTURE TO BE REMOVED

BENCHMARKS

IRON PIN – S. SIDE OF McCUTCHEON RD.
STA. 23+45.82, 16.20' RT.
ELEVATION 847.66

BRASS PLATE – N. SIDE OF E. ABUTMENT OF McCUTCHEON RD. BR. O/I-270
16.20 FT. N. OF McCUTCHEON RD.
ELEVATION 848.046

EXISTING STRUCTURE

TYPE: CONTINUOUS STEEL BEAM WITH REINFORCED CONCRETE DECK & SUBSTRUCTURE

SPANS: 57'-5"±,82'-0"±,82'-0"±,57'-5"±

ROADWAY: 30'-0" f/f CURB w/ 2'-0" SAFETY CURB & 5'-0" SIDEWALK

LOAD FREQUENCY: HS 20-44

SKEW: NONE

WEARING SURFACE: 1" LATEX MOD. CONCRETE

ALIGNMENT: TANGENT

APPROACH SLABS: AS-1-67 MOD. (25'-0" LONG)

STRUCTURE FILE NUMBER: 2512068

PROPOSED STRUCTURE

TYPE: COMPOSITE STEEL PLATE GIRDERS A572-50 PAINTED W/ CONC. PIER & SEMI-INTEGRAL WALL ABUTMENTS.

SPANS: 143'-0" AND 131'-0" (ON TAN.)

ROADWAY: 34'-0" f/f CURB w/5' SIDEWALK

SKEW: NONE

ALIGNMENT: TANGENT

DESIGN LOADING: HS 20-44 CASE II AND THE ALTERNATE MILITARY LOADING

APPROACH SLABS: AS-1-81 (20' LONG)

CROWN: 3/16"/FT.

WEARING SURFACE: MONOLITHIC

AVERAGE DAILY TRAFFIC: 11,700 (2015)

AVERAGE DAILY TRUCK TRAFFIC: 350 (2015)

COORDINATES: LATITUDE: 40° 52' 00"
LONGITUDE: 82° 54' 10"

PREPARED BY
ms consultants, inc.
CONSULTING ENGINEERS & PLANNERS
2221 SCHROCK ROAD, COLUMBUS, OHIO 43229

DESIGNED	DRAWN	REVIEWED	DATE
B.H.	T.S.	J.A.B.	3-94
CHECKED	REVISED	STRUCTURE FILE NO.	
R.B.		2512025	

FRANKLIN COUNTY
STA. 23+56.11
STA. 26+32.11

SITE PLAN
BR. NO. FRA-270-3396
I.R. 270 UNDER McCUTCHEON ROAD

FRA-270-32.46

1/24

408/593

PLOT: COL. #19 1" = 20' C:\DRAWING\06092308\MCCUTST.DWG JANUARY 7, 1995

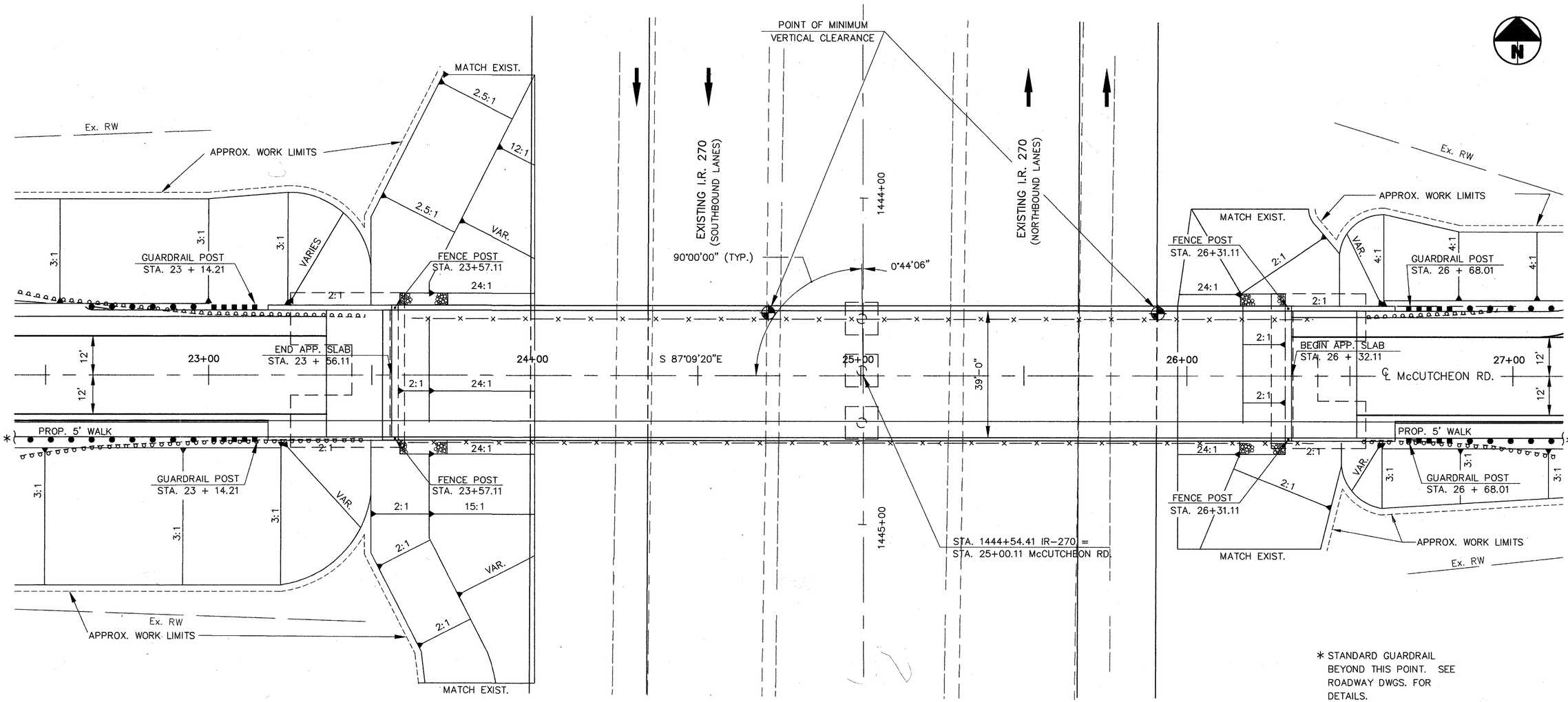

* STANDARD GUARDRAIL BEYOND THIS POINT. SEE ROADWAY DWGS. FOR DETAILS.

GENERAL PLAN

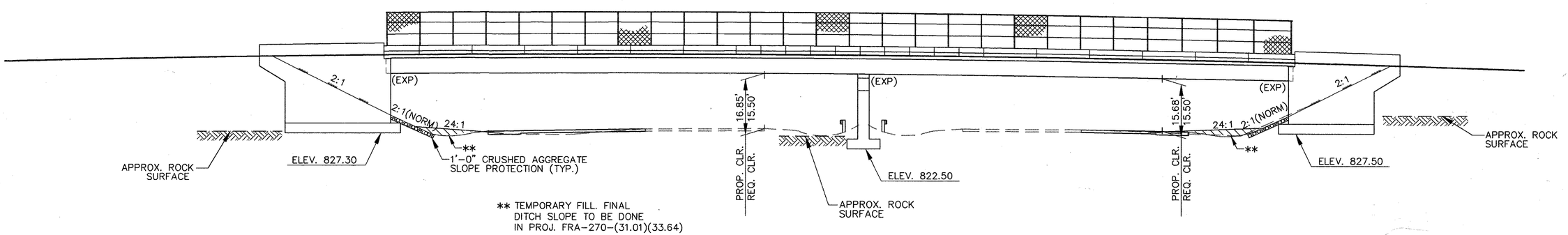

** TEMPORARY FILL. FINAL DITCH SLOPE TO BE DONE IN PROJ. FRA-270-(31.01)(33.64)

ELEVATION

PLOT SCALE..1/16" = 1'
COL #19 C:\DRAWING\06092308\MCCUTCH\MCCUTGP1.DWG FEBRUARY-06-1995

PREPARED BY ms consultants, inc.
CONSULTING ENGINEERS & PLANNERS
6500 BUSCH BOULEVARD, COLUMBUS, OHIO

DESIGNED	DRAWN	REVIEWED	DATE
R.B.	C.H.	J.A.B.	3-94
CHECKED	REVISED	STRUCTURE FILE NO.	
M.J.		2512025	

GENERAL PLAN
BR. NO. FRA-270-3396
I.R. 270 UNDER McCUTCHEON ROAD

FRA-270-32.46

2/24

409/593

GENERAL PLAN

GENERAL NOTES

STANDARD DRAWINGS
REFERENCE SHALL BE MADE TO STANDARD DRAWINGS:

VPF-1-90	3-24-93
SD-1-69	6-12-69
AS-1-81	11-27-81

DESIGN SPECIFICATIONS
THIS STRUCTURE CONFORMS TO "STANDARD SPECIFICATIONS FOR HIGHWAY BRIDGES" ADOPTED BY THE AMERICAN ASSOCIATION OF STATE HIGHWAY AND TRANSPOTATION OFFICIALS, 1992, INCLUDING THE 1993 INTERIM SPECIFICATIONS AND THE ODOT BRIDGE DESIGN MANUAL.

DESIGN LOADING
HS20-44, CASE II AND THE ALTERNATE MILITARY LOADING.

DESIGN DATA
CONCRETE CLASS S - COMPRESSIVE STRENGTH 4500 P.S.I. (SUPERSTRUCTURE)

CONCRETE CLASS C - COMPRESSIVE STRENGTH 4000 P.S.I. (SUBSTRUCTURE)

REINFORCING STEEL - ASTM A615, A616 OR A617
GRADE 60 MINIMUM YIELD STRENGTH 60,000 P.S.I.
SPIRAL REINFORCEMENT MAY BE PLAIN BARS, ASTM A82 OR A615.

STRUCTURAL STEEL
ASTM A572 - YIELD STRENGTH 50,000 P.S.I.

DECK PROTECTION METHOD
EPOXY COATED REINFORCING STEEL.
2-1/2" CONCRETE COVER.
SEALING OF CONCRETE SURFACES.

MONOLITHIC WEARING SURFACE
MONOLITHIC WEARING SURFACE IS ASSUMED, FOR DESIGN PURPOSES, TO BE 1" THICK.

ITEM SPECIAL, SEALING OF CONCRETE SURFACES
A CONCRETE SEALER SHALL BE APPLIED TO THE CONCRETE SURFACES SHOWN ON SHEETS 5-10 & 12. SEE PROPOSAL FOR SURFACE PREPARATION REQUIREMENTS, APPLICATION RATES, MATERIAL REQUIREMENTS AND APPLICATION PROCEDURES.

REMOVAL OF EXISTING STRUCTURE:
WHEN NO LONGER NEEDED TO MAINTAIN TRAFFIC, THE EXISTING STRUCTURE SHALL BE REMOVED. ABUTMENTS SHALL BE REMOVED ENTIRELY AND PIERS SHALL BE REMOVED AS SHOWN ON SHT. 4/24.

PROTECTION OF TRAFFIC:
PRIOR TO DEMOLITION OF ANY PORTIONS OF THE EXISTING SUPERSTRUCTURE, THE CONTRACTOR SHALL SUBMIT HIS PLANS FOR THE PROTECTION OF TRAFFIC (VEHICULAR, PEDESTRIAN, BOAT, ETC.) ADJACENT TO AND/OR UNDER THE STRUCTURE TO THE DIRECTOR FOR APPROVAL. THESE PLANS SHALL INCLUDE PROVISIONS FOR ANY DEVICES AND STRUCTURES THAT MAY BE NECESSARY TO ENSURE SUCH PROTECTION. TEMPORARY VERTICAL CLEARANCES SPECIFIED ON THE PLANS OR IN THE PROPOSAL SHALL BE MAINTAINED AT ALL TIMES EXCEPT AS OTHERWISE APPROVED BY THE DIRECTOR.

CONSTRUCTION CONSTRAINTS
ALL EMBANKMENT MATERIAL FOR FILLING THE VOID CREATED BY EXCAVATING FOR THE ABUTMENT FOOTINGS SHALL BE 203 GRANULAR EMBANKMENT MATERIAL. AFTER THE FOOTING AND THE BREASTWALL HAVE BEEN CONSTRUCTED, THE VOID BEHIND EACH ABUTMENT SHALL BE FILLED UP TO THE BEAM SEAT ELEVATION AND FROM THE BEAM SEAT UP ON A 1:1 SLOPE TO THE SUBGRADE ELEVATION PRIOR TO CONSTRUCTING THE BACKWALL AND SETTING THE BEAMS ON THE ABUTMENT.

ITEM 203 EMBANKMENT, AS PER PLAN:
ALL FILL MATERIAL FOR CONSTRUCTION OF THE APPROACH EMBANKMENT AND FOR FILLING THE EXCAVATION VOID CREATED BY REMOVAL OF THE EXISTING FORWARD/REAR ABUTMENT, SHALL BE 203 GRANULAR MATERIAL PLACED IN LIFTS NOT TO EXCEED A THICKNESS OF SIX (6) INCHES.

ITEM 503, UNCLASSIFIED EXCAVATION, AS PER PLAN
UNCLASSIFIED EXCAVATION SHALL BE IN ACCORDANCE WITH 503 EXCEPT THAT THE BACKFILL MATERIAL BEHIND THE ABUTMENTS SHALL BE 203 GRANULAR MATERIAL PLACED IN LIFTS NOT TO EXCEED A THICKNESS OF SIX (6) INCHES.

FOUNDATION BEARING PRESSURE
THE ALLOWABLE BEARING PRESSURE IS 5 TONS PER SQUARE FOOT.

REAR ABUTMENT AND WINGWALL FOOTINGS, AS DESIGNED, PRODUCE A MAXIMUM BEARING PRESSURE OF 3.8 TONS PER SQUARE FOOT.

PIER FOOTINGS, AS DESIGNED, PRODUCE A MAXIMUM BEARING PRESSURE OF 4.6 TONS PER SQUARE FOOT.

FORWARD ABUTMENT AND WINGWALL FOOTINGS, AS DESIGNED, PRODUCE A MAXIMUM BEARING PRESSURE OF 3.2 TONS PER SQUARE FOOT.

FOOTINGS
FOOTINGS SHALL BE PLACED IN BEDROCK AT THE ELEVATION SHOWN.

UTILITY LINES
ALL EXPENSE INVOLVED IN RELOCATION OF (INSTALLING) THE AFFECTED UTILITY LINES SHALL BE BORNE BY THE UTILITY(IES). THE CONTRACTOR AND UTILITY(IES) ARE TO COOPERATE BY ARRANGING THEIR WORK IN SUCH A MANNER THAT INCONVENIENCE TO EITHER WILL BE HELD TO A MINIMUM.

CONCRETE PARAPETS
WITHIN 48 HOURS AFTER PLACEMENT OF PARAPET CONCRETE, SAWCUT 1 INCH DEEP JOINTS INTO THE CONCRETE PARAPET AT LOCATIONS AS DETAILED IN THE PLANS. THE SAW CUT SHALL BE MADE IN THE COMPLETE CIRCUMFERENCE OF THE PARAPET, STARTING AND ENDING AT THE ELEVATION OF THE CONCRETE DECK, AND THE COMPLETED SAWCUT SHALL BE FILLED WITH A CAULKING MATERIAL CONFORMING TO FEDERAL SPECIFICATION TT-S-00227E. THE BOTTOM HALF INCH OF THE ONE INCH DEEP SAWED JOINT IN BOTH THE INSIDE AND OUTSIDE FACES OF THE PARAPET SHOULD BE LEFT UNSEALED TO ALLOW ANY WATER WHICH MAY ENTER THE JOINT TO ESCAPE. PAYMENT FOR LABOR, MATERIALS AND INSTALLATION OF CAULKING MATERIAL SHALL BE INCLUDED IN ITEM 511 CLASS S CONCRETE, SUPERSTRUCTURE.

ITEM 511 CLASS C CONCRETE, ABUTMENT, AS PER PLAN:
INSTALL A 3 FOOT WIDE STRIP, 3/32 INCH THICK, GENERAL PURPOSE, HEAVY DUTY NEOPRENE SHEET WITH NYLON FABRIC REINFORCEMENT AT LOCATIONS SHOWN IN THE PLANS. SECURE THE 3 FOOT WIDE NEOPRENE SHEETING TO THE CONCRETE WITH 1-1/4" x 3/32" x 1/4" (LENGTH x SHANK DIAMETER x HEAD DIAMETER) #10 GALVANIZED SCREWS THROUGH A 1 INCH OUTSIDE DIAMETER, #10 GAGE GALVANIZED WASHER. MAXIMUM FASTENER SPACING IS 9 INCHES. OTHER SIMILAR GALVANIZED DEVICES WHICH WILL NOT DAMAGE EITHER THE NEOPRENE OR THE CONCRETE MAY BE USED SUBJECT TO THE APPROVAL OF THE ENGINEER.

CENTER THE NEOPRENE STRIPS ON ALL JOINTS. FOR HORIZONTAL JOINTS, SECURE THE HORIZONTAL NEOPRENE STRIP BY USING A SINGLE LINE OF FASTENERS, STARTING AT 6 INCHES (+/-) FROM THE TOP OF THE NEOPRENE STRIP. FOR THE VERTICAL JOINTS SECURE THE VERTICAL NEOPRENE STRIP BY USING A SINGLE VERTICAL LINE OF FASTENERS, STARTING AT 6 INCHES (+/-) FROM THE VERTICAL EDGE OF THE NEOPRENE STRIP NEAREST TO THE CENTERLINE OF ROADWAY. FOR VERTICAL JOINTS, INSTALL 2 ADDITIONAL FASTENERS AT 6 INCHES CENTER TO CENTER ACROSS THE TOP HALF OF THE NEOPRENE STRIP ON THE SIDE OF THE NEOPRENE STRIP AS THE SINGLE VERTICAL ROW OF FASTENERS.

THE VERTICAL NEOPRENE STRIPS SHOULD COMPLETELY OVERLAP THE HORIZONTAL STRIPS. LAPS IN THE LENGTH OF THE HORIZONTAL STRIPS DUE TO MATERIAL MANUFACTURING SHALL BE AT LEAST ONE FOOT IN LENGTH, IF NOT VULCANIZED OR ADHESIVED, OR 6 INCHES IN LENGTH IF THE LAP IS VULCANIZED OR ADHESIVED. NO LAPS ARE ACCEPTABLE IN VERTICALLY INSTALLED NEOPRENE STRIPS.

IN ADDITION, INSTALL A 3 INCH THICKNESS OF POLYSTYRENE SHEETING BETWEEN THE ABUTMENT BACK WALL AND THE POROUS BACKFILL AT LOCATIONS AS SHOWN IN THE PLANS.

PAYMENT FOR LABOR, MATERIALS AND INSTALLATION OF THESE ITEMS SHALL BE INCLUDED IN ITEM 511 CLASS C CONCRETE, ABUTMENT, AS PER PLAN.

ESTIMATED QUANTITIES

CALC. BY: B.G. DATE: 3-94
CHKD. BY: R.B. DATE: 5-94

ITEM	ITEM EXT.	TOTAL	UNIT	DESCRIPTION	SUPER.	ABUTS.	PIER	GENERAL
202	11003	LUMP	LUMP	STRUCTURE REMOVED, OVER 20' SPAN, AS PER PLAN				LUMP
503	21102	1932	CU. YD.	UNCLASSIFIED EXCAVATION, INCLUDING SHALE		1889	43	
509	15830	155,767	POUND	EPOXY COATED REINFORCING STEEL, GRADE 60	101,006	43,588	11,173	
511	31508	513	CU. YD.	CLASS S CONCRETE, SUPERSTRUCTURE	513			
* 511	33404	513	CU. YD.	CLASS S CONCRETE, SUPERSTRUCTURE (USING SHRINKAGE COMPENSATING CEMENT) **	513			
* 511	33410	LUMP	LUMP	CLASS S CONCRETE, USING SHRINKAGE COMPENSATING CEMENT, FOR PRE-PLACEMENT TESTING **	LUMP			
511	41000	31	CU. YD.	CLASS C CONCRETE, PIER ABOVE FOOTINGS			31	
511	44101	315	CU. YD.	CLASS C CONCRETE, ABUTMENT NOT INCLUDING FOOTING, AS PER PLAN		315		
511	46500	331	CU. YD.	CLASS C CONCRETE, FOOTING		297	34	
SPECIAL	51267500	759	SQ. YD.	SEALING OF CONCRETE SURFACES ** (NON-EPOXY) ⚠1	759			
513	12400	365,145	POUND	STRUCTURAL STEEL, A572-50 AISC CATEGORY III (BUILT UP GIRDER) **	365,145			
513	20000	2190	EACH	WELDED STUD SHEAR CONNECTOR	2190			
SPECIAL	51400610	365,145	POUND	PAINTING OF NEW STEEL, SYSTEM IZEU **	365,145			
516	44100	5	EACH	ELASTOMERIC BEARING WITH INTERNAL LAMINATES AND LOAD PLATES (NEOPRENE) **			5	
				(22"x 22"x 2 11/16" PAD w/ 23"x 23"x 2" PLATE)				
516	44200	10	EACH	ELASTOMERIC BEARING WITH INTERNAL LAMINATES AND LOAD PLATES (NEOPRENE) **		10		
				(18"x 12"x 3 1/8" PAD w/ 19"x 13"x 1 1/2" PLATE)				
518	21201	230	CU. YD.	POROUS BACKFILL WITH FILTER FABRIC, AS PER PLAN		230		
601	20000	172	SQ. YD.	CRUSHED AGGREGATE SLOPE PROTECTION		172		
SPECIAL	60739900	274	LIN. FT.	VANDAL PROTECTION FENCE, 6' STRAIGHT, COATED FABRIC	274			
SPECIAL	60739930	274	LIN. FT.	VANDAL PROTECTION FENCE, 12' CURVED, COATED FABRIC	274			

* ALTERNATE BID ITEM: THESE TWO ITEMS CONSTITUTE ONE ALTERNATE BID TO CLASS S CONCRETE, SUPERSTRUCTURE.
** SEE PROPOSAL NOTE

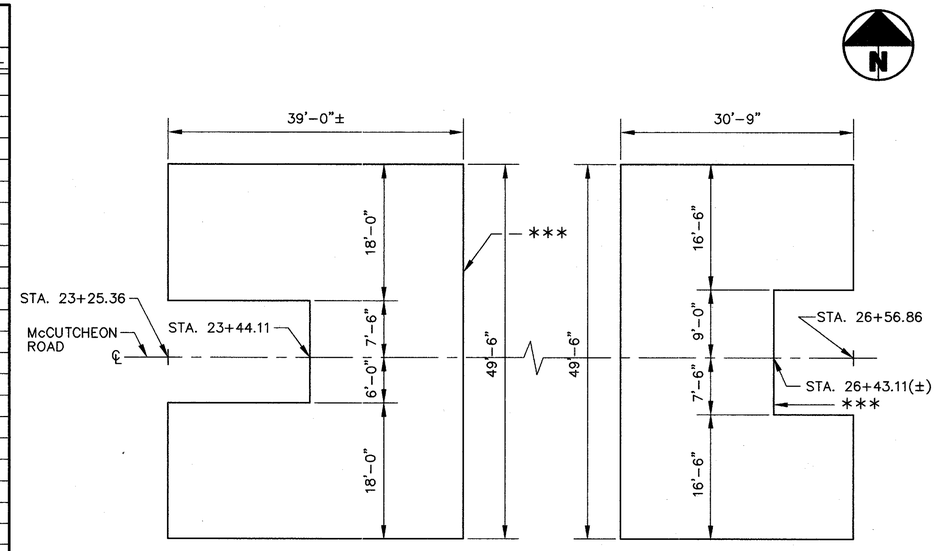

PLAN LIMITS OF UNCLASSIFIED EXCAVATION

(EXTENDING FROM THE BOTTOM OF FOOTING TO THE EXISTING GROUND SURFACE)

*** EDGE OF EXISTING ABUTMENT FOUNDATION

PREPARED BY ms consultants, inc. CONSULTING ENGINEERS & PLANNERS 4480 REFUGEE ROAD, COLUMBUS, OHIO

DESIGNED B.G.	DRAWN C.H.	REVIEWED J.A.B.
CHECKED R.B.	REVISED 5-96	DATE 5-94
		STRUCTURE FILE NO. 2512025

GENERAL NOTES & ESTIMATED QUANTITIES
BR. NO. FRA-270-3396
I.R. 270 UNDER McCUTCHEON ROAD

FRA-270-32.46

3/24

410/593

PLOT SCALE = 1 : 1
COLOR #19 C:\DRAWING\0609218\MCCUTGN1.DWG MAY-06-1996

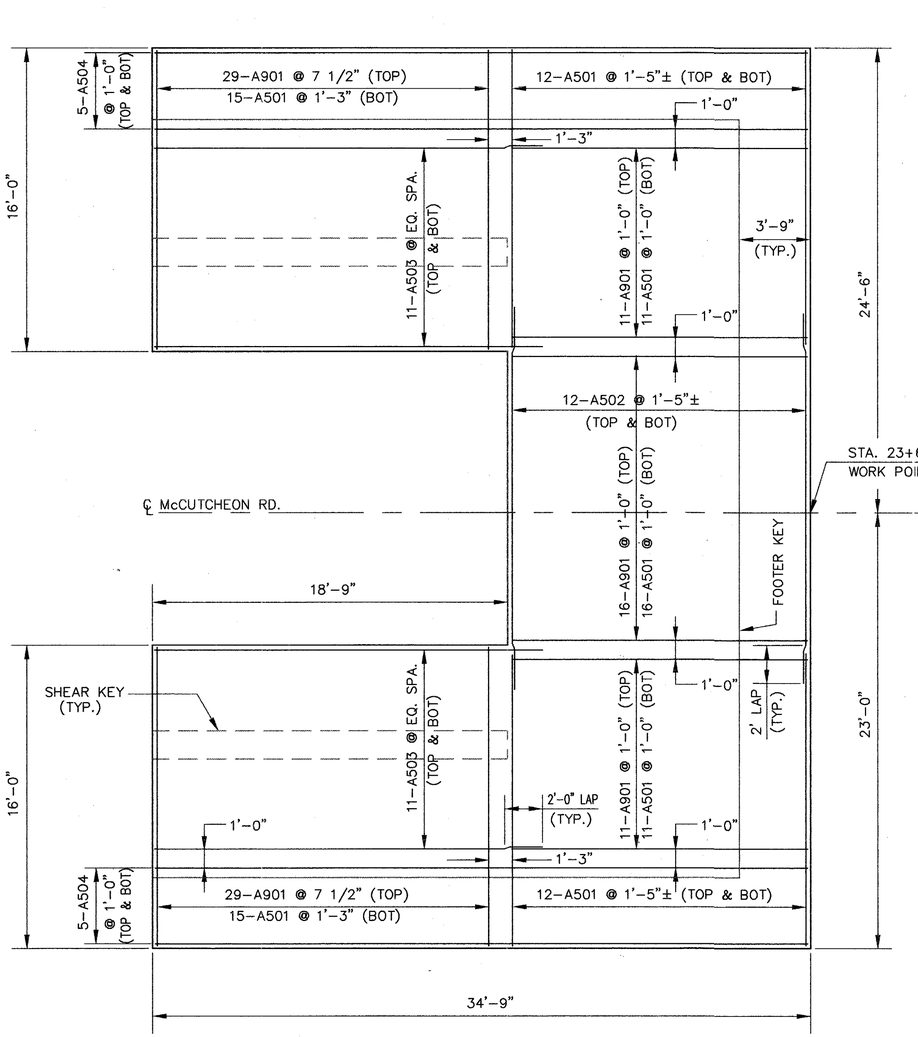

REAR ABUTMENT

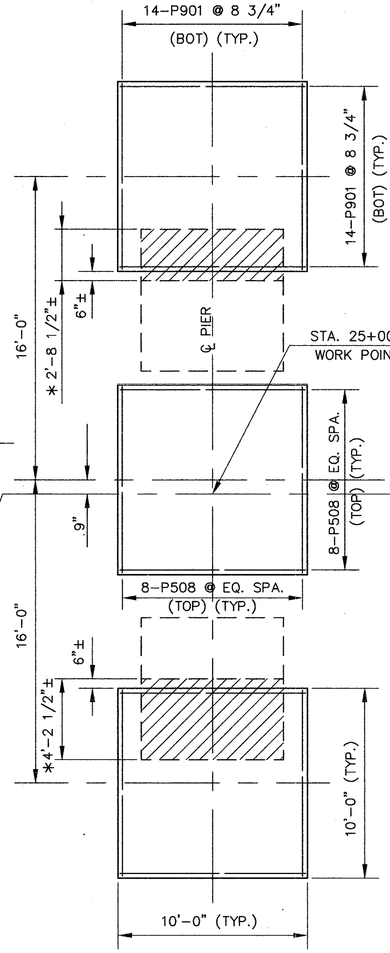

PIER

∗ LIMITS OF REMOVAL OF EXISTING FOOTINGS.

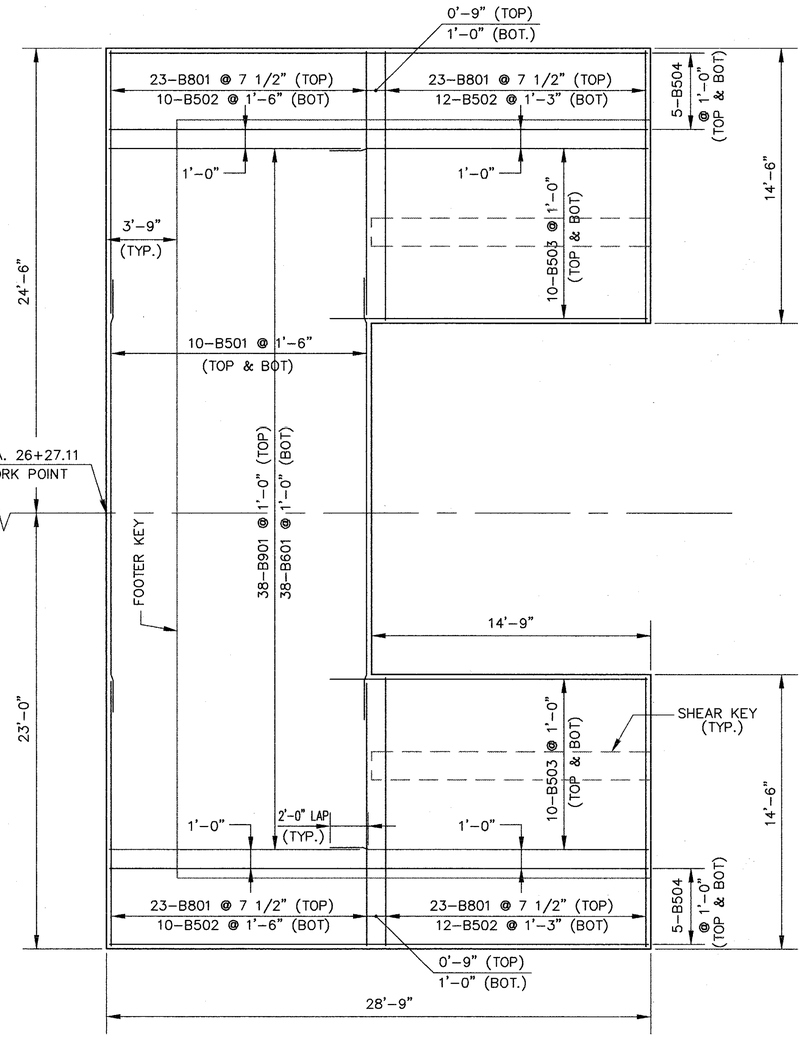

FORWARD ABUTMENT

LEGEND

TYP. = TYPICAL
BOT. = BOTTOM
EQ. SPA. = EQUAL SPACES

PLOT SCALE: 1" = 4'
COL. #19
C:\DRAWING\06092308\MCCUTCH\MCCUTFL1.DWG FEBRUARY-06-1995

PREPARED BY
ms consultants, inc.
CONSULTING ENGINEERS & PLANNERS
4000 EMBER BOULEVARD, COLUMBUS, OHIO

DESIGNED	DRAWN	REVIEWED	DATE
B.G.	C.H.	J.A.B.	3-94
CHECKED	REVISED	STRUCTURE FILE NO.	
R.B.		2512025	

FOUNDATION LAYOUT PLAN

BR. NO. FRA-270-3396
I.R. 270 UNDER McCUTCHEON ROAD

FRA-270-32.46

4/24

411/593

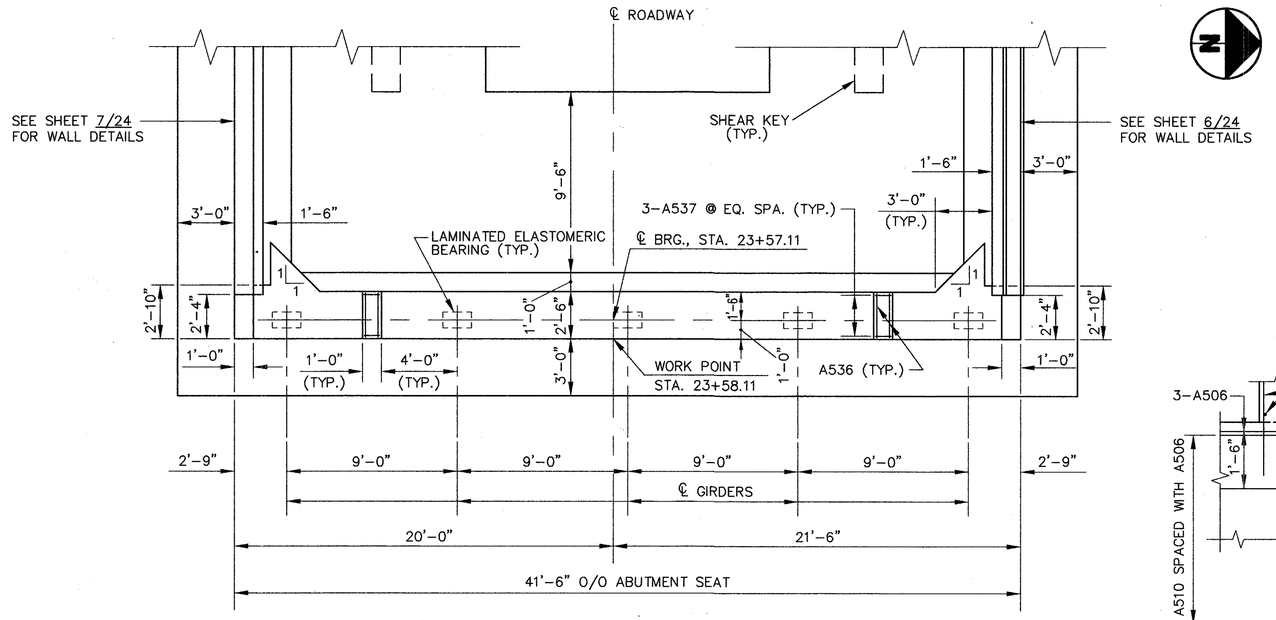

PLAN

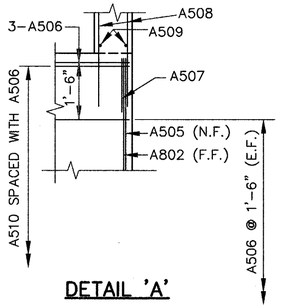

DETAIL 'A'

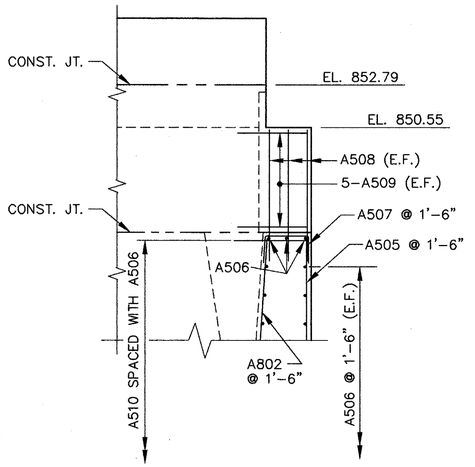

SECTION B-B

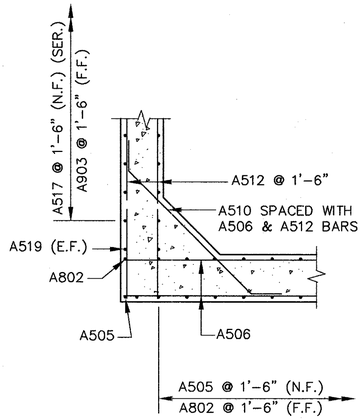

SECTION C-C

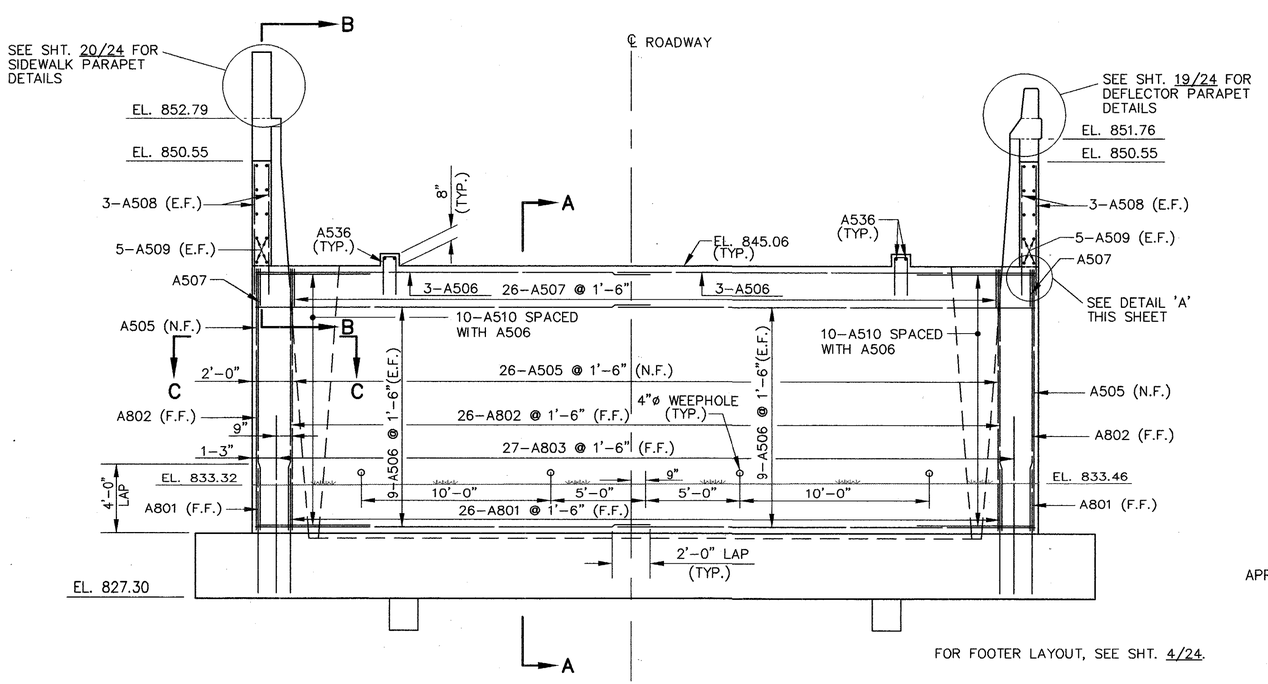

ELEVATION

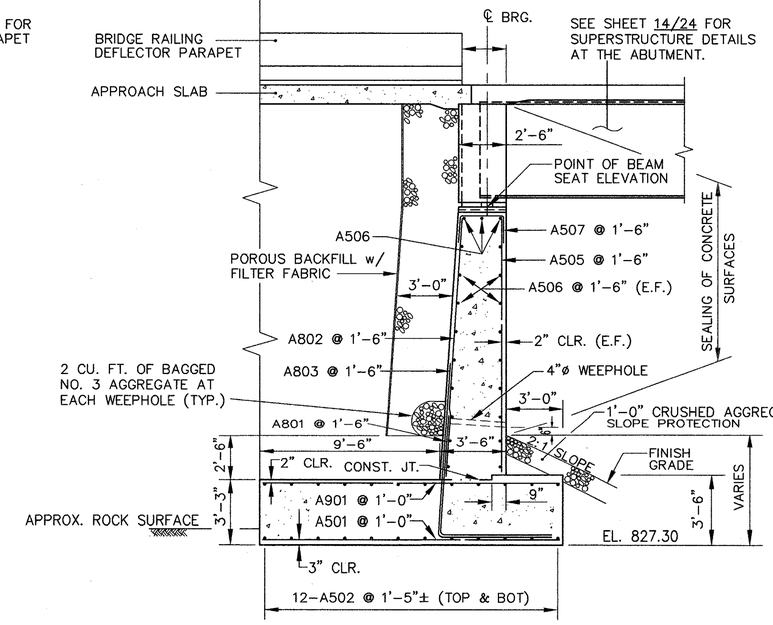

SECTION A-A

NOTE: POROUS BACKFILL WITH FILTER FABRIC, 3'-0" THICK SHALL EXTEND UP TO THE PLANE OF THE SUBGRADE AND LATERALLY TO THE WINGWALLS. GEOTEXTILE FABRIC SHALL CONFORM WITH 712.09, TYPE A. TWO CUBIC FEET OF BAGGED NO. 3 AGGREGATE SHALL BE PLACED AT EACH WEEPHOLE. BAGGED AGGREGATE AND GEOTEXTILE FABRIC ARE INCLUDED WITH POROUS BACKFILL FOR PAYMENT.

LEGEND
N.F. = NEAR FACE
E.F. = EACH FACE
F.F. = FAR FACE
SER. = SERIES
CONST. JT. = CONSTRUCTION JOINT

PLOT SCALE = 1" = 4"
COL #19
C:\DRAWING\06092308\MCCUTCH\MCCUTAD1.DWG FEBRUARY-06-1995

PREPARED BY
ms consultants, inc.
CONSULTING ENGINEERS & PLANNERS
4600 BEECH BOULEVARD, COLUMBUS, OHIO

DESIGNED	DRAWN	REVIEWED	DATE
B.G.	C.H.	J.A.B.	3-94
CHECKED	REVISED	STRUCTURE FILE NO.	
R.B.		2512025	

REAR ABUTMENT DETAILS
BR. NO. FRA-270-3396
I.R. 270 UNDER McCUTCHEON ROAD

FRA-270-32.46

5/24

412/593

REAR ABUTMENT DETAILS

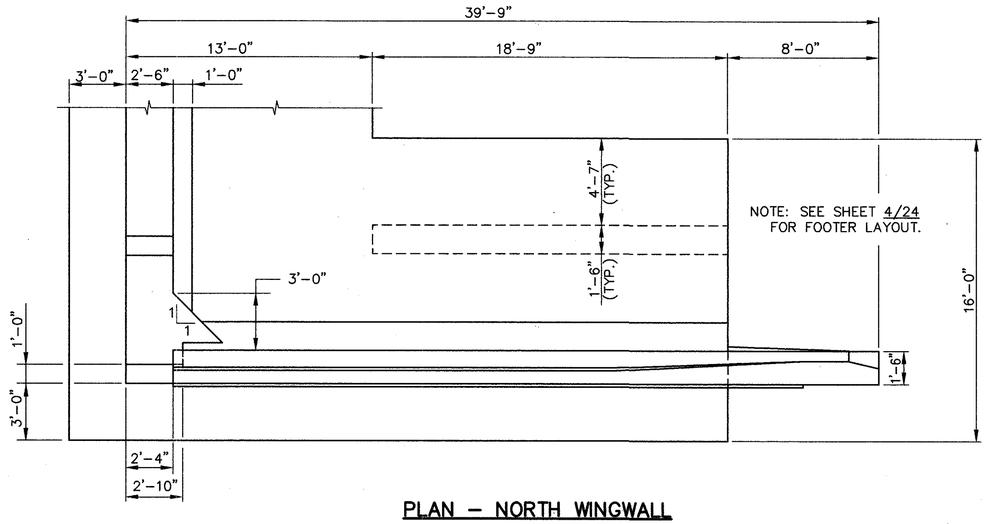

PLAN – NORTH WINGWALL

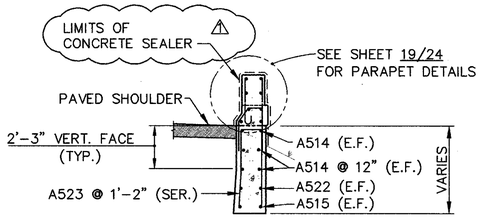

SECTION G–G

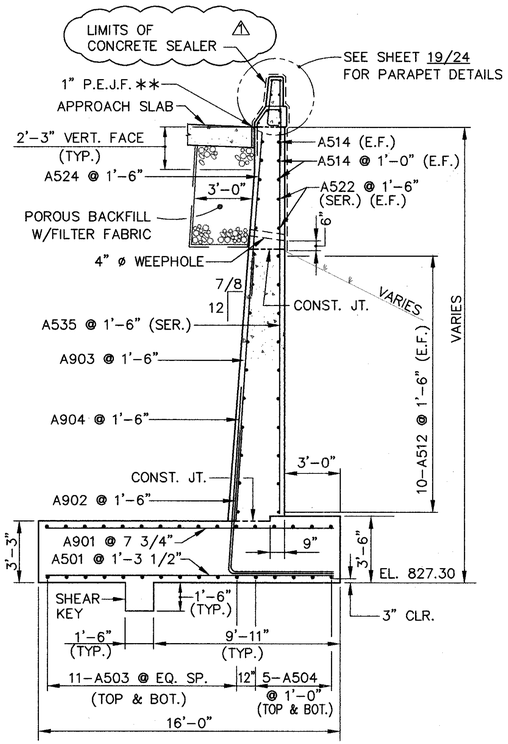

SECTION F–F

** INCLUDE WITH APPROACH SLAB FOR PAYMENT.

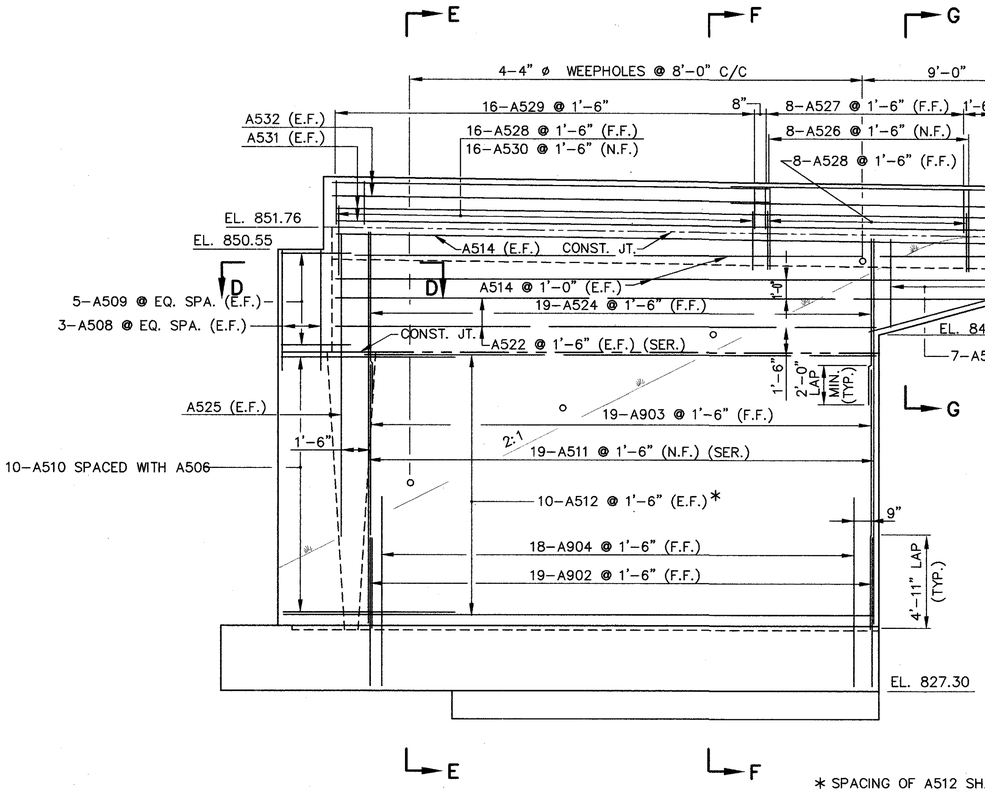

ELEVATION – NORTH WINGWALL

* SPACING OF A512 SHALL MATCH SPACING OF A506 FROM ABUTMENT.

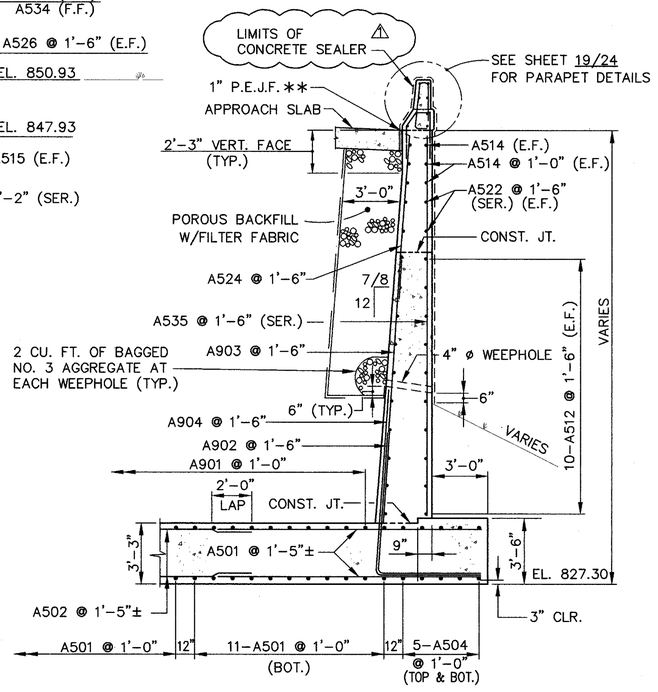

SECTION E–E

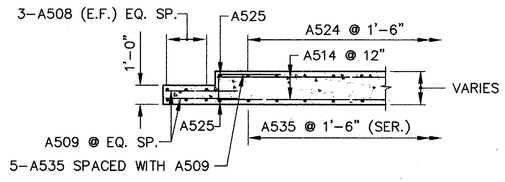

SECTION D–D

LEGEND

N.F. = NEAR FACE
E.F. = EACH FACE
F.F. = FAR FACE
SER. = SERIES
EL. = ELEVATION
CLR. = CLEAR
TYP. = TYPICAL
CONST. JT. = CONSTRUCTION JOINT
P.E.J.F. = PREFORMED EXPANSION JOINT FILLER

PLOT SCALE 1" = 4'
COL #19
C:\DRAWING\06092718\MCCUTTW2.DWG MAY-06-1996

PREPARED BY
ms consultants, inc.
CONSULTING ENGINEERS & PLANNERS
6500 BUSER BOULEVARD, COLUMBUS, OHIO

DESIGNED B.G.	DRAWN T.S.	REVIEWED J.A.B.	DATE 3-94
CHECKED R.B.	REVISED 5-96	STRUCTURE FILE NO. 2512025	

REAR ABUTMENT WINGWALLS

BR. NO. FRA-270-3396
I.R. 270 UNDER McCUTCHEON ROAD

FRA-270-32.46

6/24

413/593

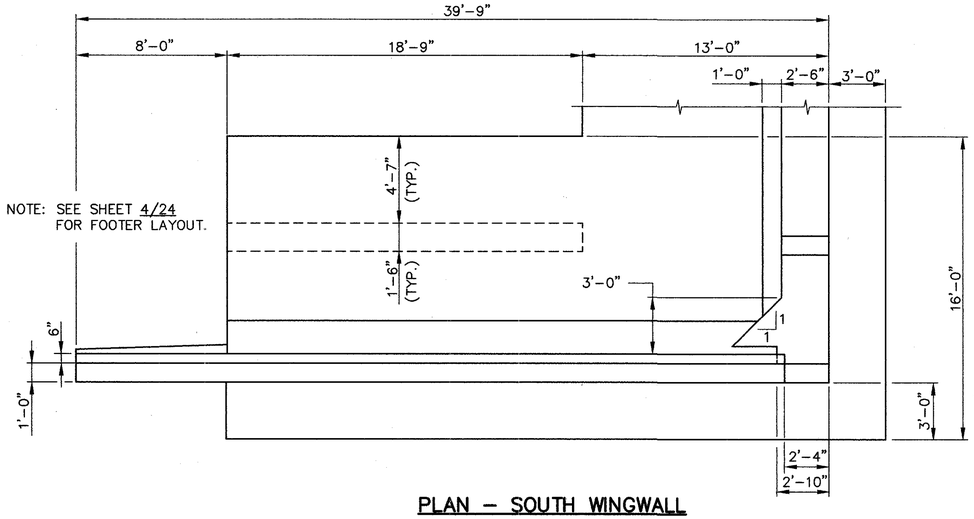

PLAN – SOUTH WINGWALL

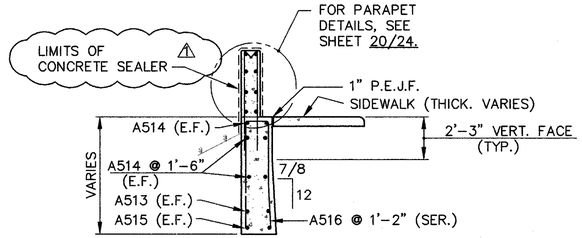

SECTION H–H

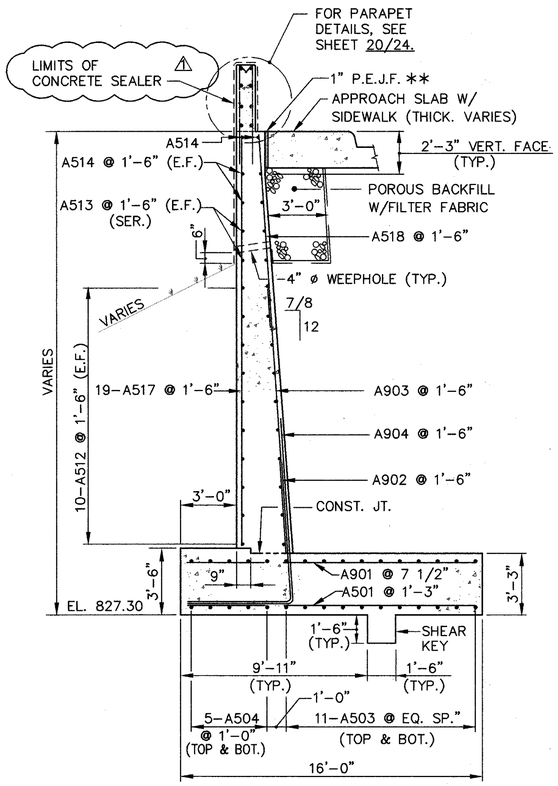

SECTION I–I

** INCLUDE WITH APPROACH SLAB FOR PAYMENT

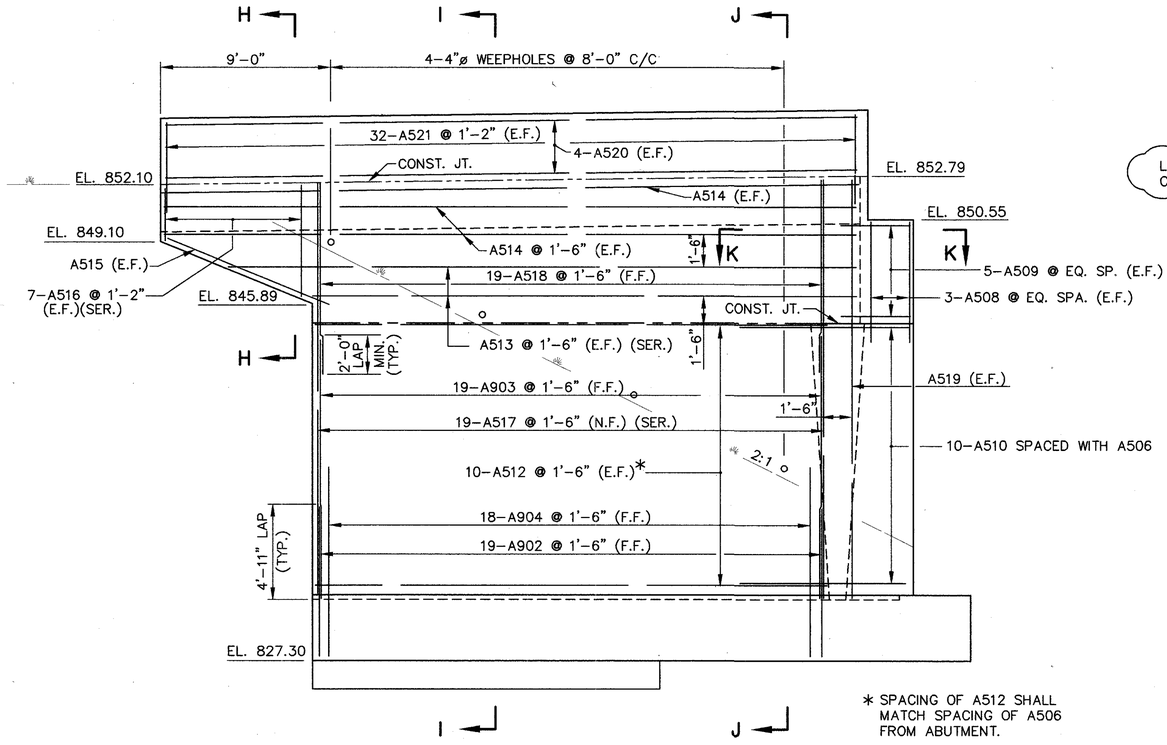

* SPACING OF A512 SHALL MATCH SPACING OF A506 FROM ABUTMENT.

ELEVATION – SOUTH WINGWALL

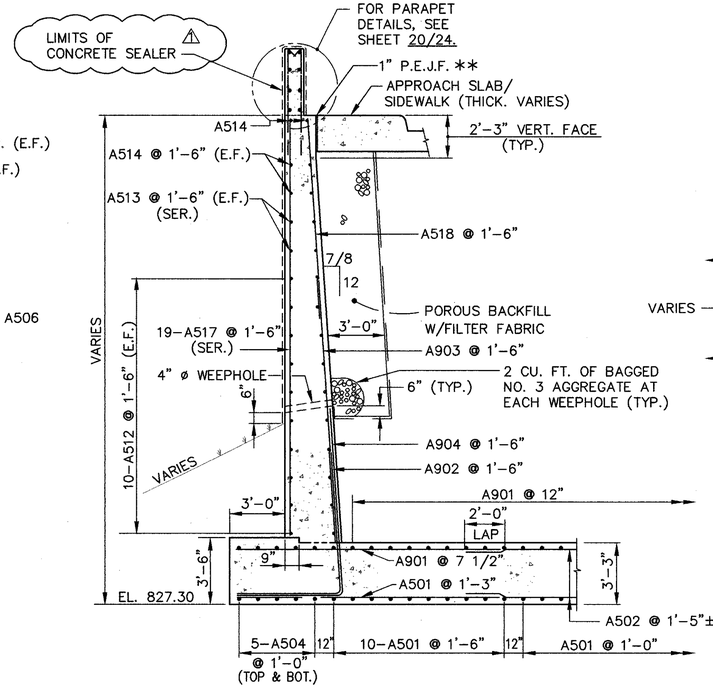

SECTION J–J

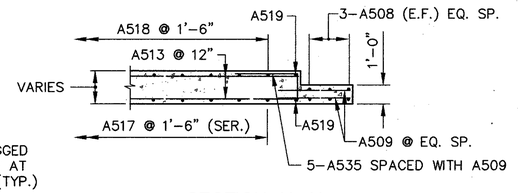

SECTION K–K

LEGEND

N.F. = NEAR FACE
E.F. = EACH FACE
F.F. = FAR FACE
SER. = SERIES
EL. = ELEVATION
CLR. = CLEAR
TYP. = TYPICAL
CONST. JT. = CONSTRUCTION JOINT
P.E.J.F. = PREFORMED EXPANSION JOINT FILLER

PLOT SCALE 1" = 4'
COL #18 C:\DRAWING\0609278\MCCUTTWP1.DWG MAY-06-1996

PREPARED BY ms consultants, inc. CONSULTING ENGINEERS & PLANNERS 4080 STONE BOULEVARD, COLUMBUS, OHIO

DESIGNED B.G. | DRAWN T.S. | CHECKED R.B. | REVIEWED J.A.B. | DATE 3-94 | REVISED 5-96 | STRUCTURE FILE NO. 2512025

REAR ABUTMENT WINGWALLS

BR. NO. FRA-270-3396
I.R. 270 UNDER McCUTCHEON ROAD

FRA-270-32.46

7/24

414/593

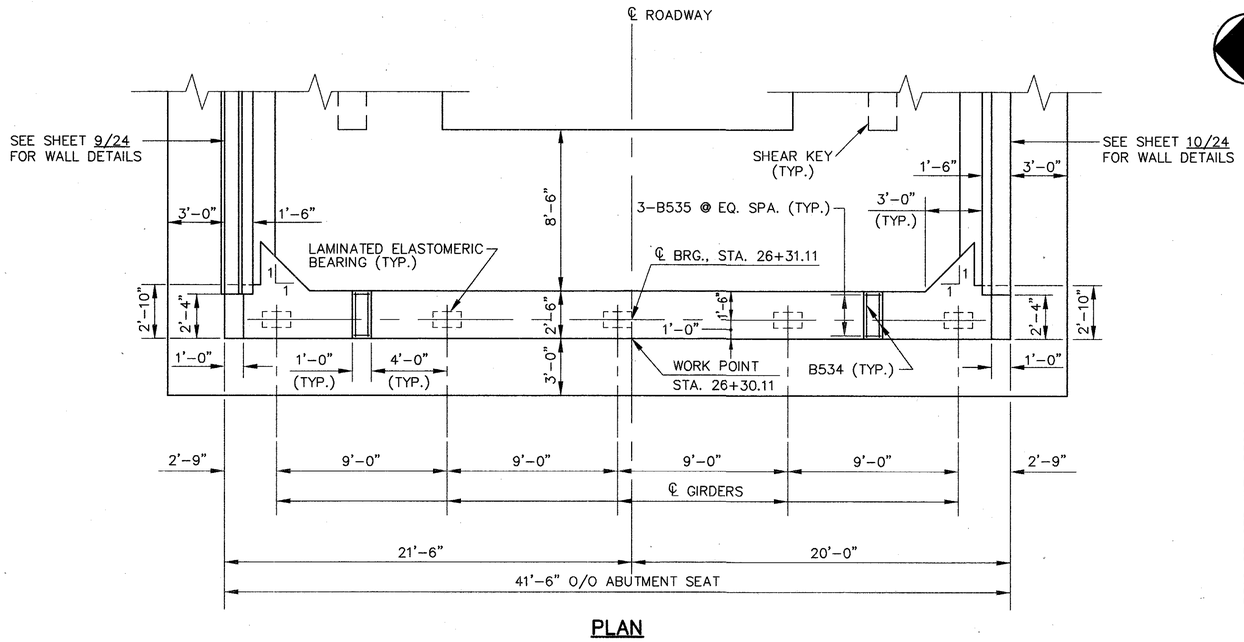

PLAN

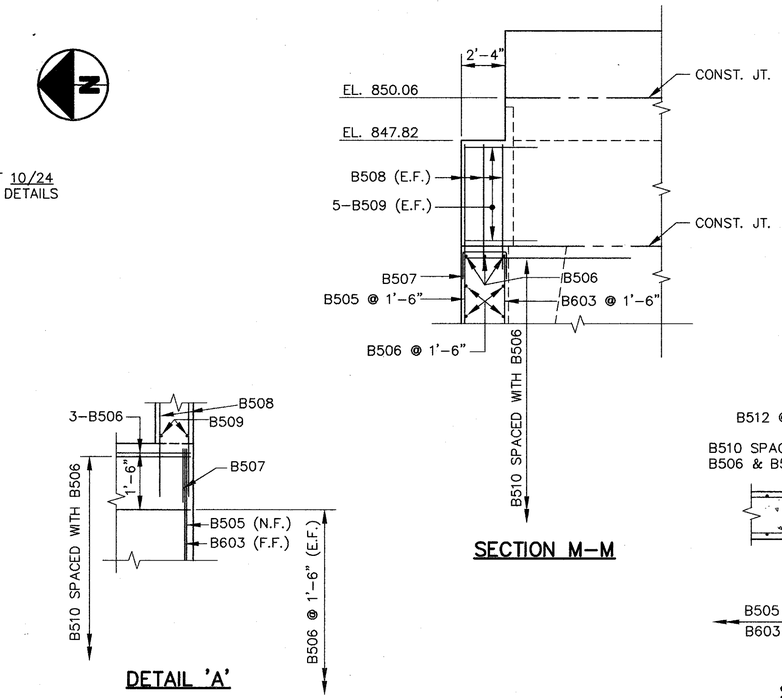

DETAIL 'A'

SECTION M-M

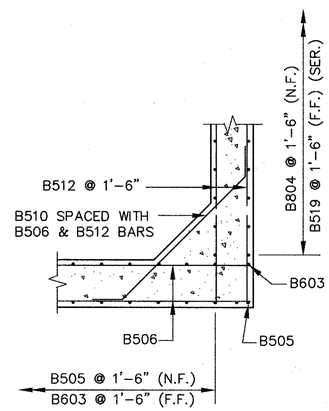

SECTION N-N

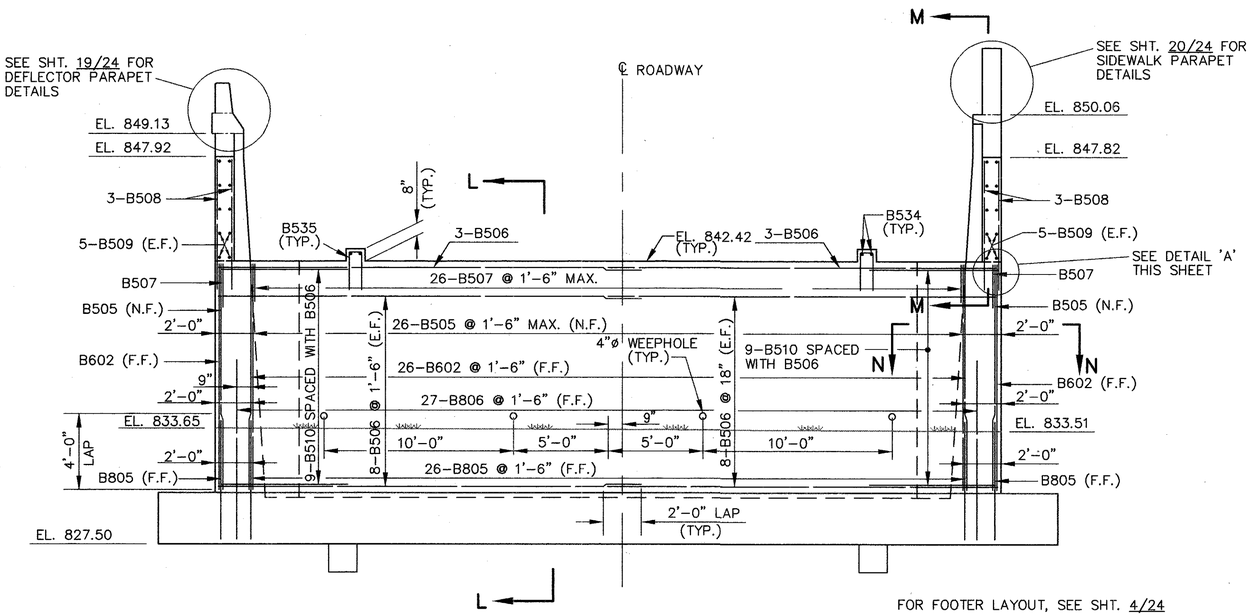

ELEVATION

FOR FOOTER LAYOUT, SEE SHT. 4/24

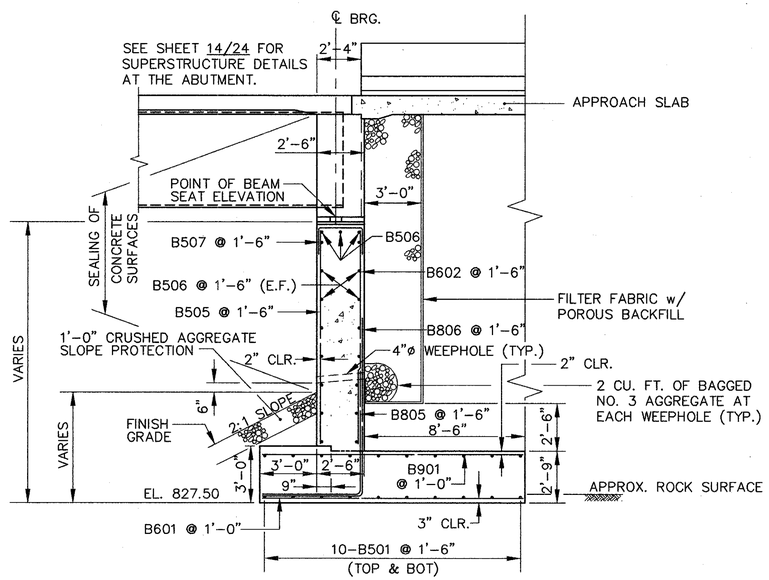

SECTION L-L

NOTE: POROUS BACKFILL WITH FILTER FABRIC, 3'-0" THICK SHALL EXTEND UP TO THE PLANE OF THE SUBGRADE AND LATERALLY TO THE WINGWALLS. GEOTEXTILE FABRIC SHALL CONFORM WITH 712.09, TYPE A. TWO CUBIC FEET OF BAGGED NO. 3 AGGREGATE SHALL BE PLACED AT EACH WEEPHOLE. BAGGED AGGREGATE AND GEOTEXTILE FABRIC ARE INCLUDED WITH POROUS BACKFILL FOR PAYMENT.

LEGEND
N.F. = NEAR FACE
E.F. = EACH FACE
F.F. = FAR FACE
SER. = SERIES
CONST. JT. = CONSTRUCTION JOINT

PREPARED BY
ms consultants, inc.
CONSULTING ENGINEERS & PLANNERS
4600 BOHER BOULEVARD, COLUMBUS, OHIO

DESIGNED	DRAWN	REVIEWED	DATE
B.G.	C.H.	J.A.B.	3-94
CHECKED	REVISED	STRUCTURE FILE NO.	
R.B.		2512025	

FORWARD ABUTMENT DETAILS
BR. NO. FRA-270-3396
I.R. 270 UNDER McCUTCHEON ROAD

FRA-270-32.46

8/24

415/593

PLOT SCALE= 1" = 4'
COL #19
C:\DRAWING\0609308\MCCUTCH\MCCUTAD2.DWG FEBRUARY-06-1995

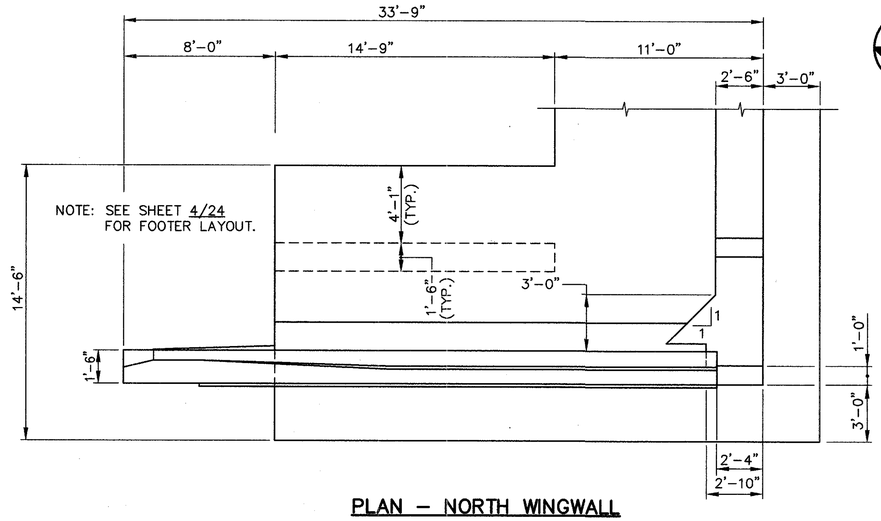

PLAN – NORTH WINGWALL

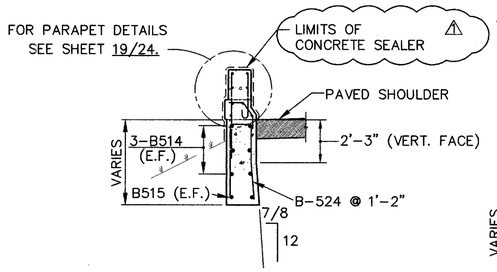

SECTION O–O

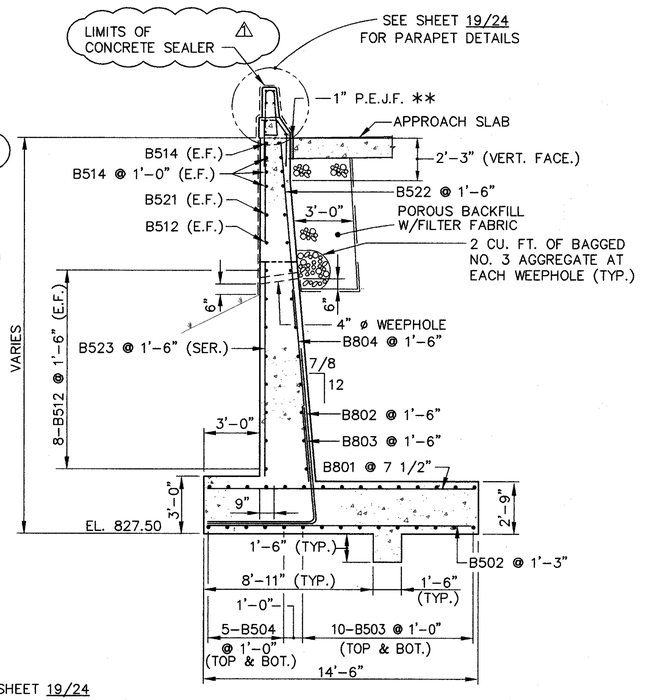

SECTION P–P

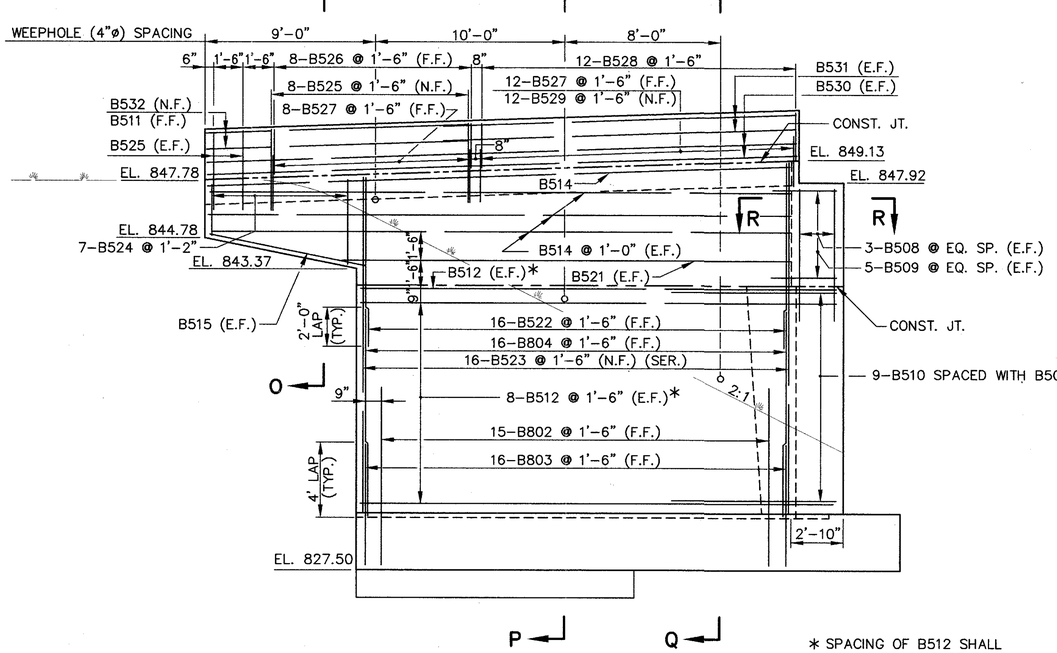

* SPACING OF B512 SHALL MATCH SPACING OF B506 FROM ABUTMENT.

ELEVATION – NORTH WINGWALL

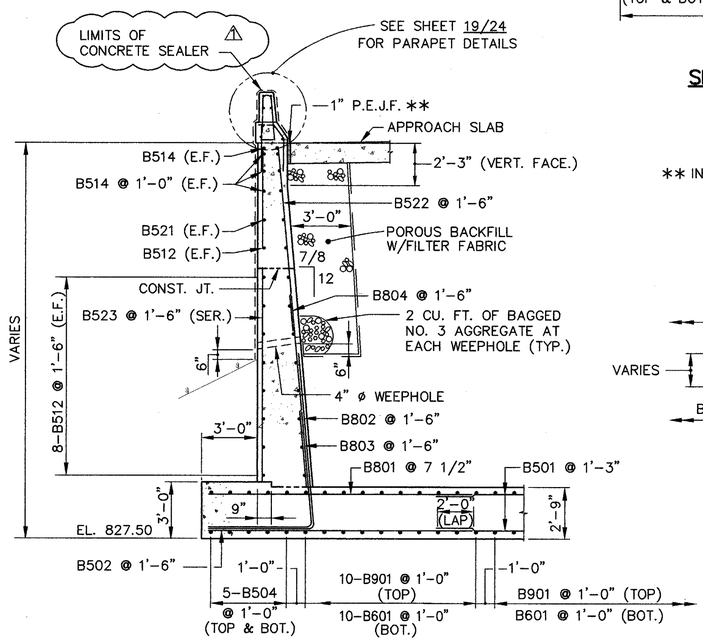

SECTION Q–Q

** INCLUDE WITH APPROACH SLAB FOR PAYMENT

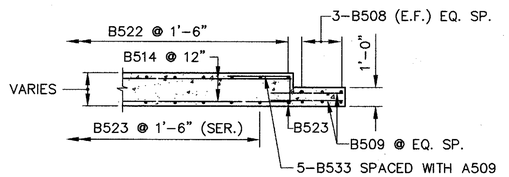

SECTION R–R

LEGEND

N.F. = NEAR FACE
E.F. = EACH FACE
F.F. = FAR FACE
SER. = SERIES
EL. = ELEVATION
CLR. = CLEAR
TYP. = TYPICAL
CONST. JT. = CONSTRUCTION JOINT
P.E.J.F. = PREFORMED EXPANSION JOINT FILLER

PLOT SCALE 1' = 4'
DGN. #19 C:\DRAWING\06092718\MCCUTWW4.DWG MAY-06-1996

PREPARED BY
ms consultants, inc.
CONSULTING ENGINEERS & PLANNERS
YOUNGSTOWN, COLUMBUS, AKRON

DESIGNED	DRAWN	CHECKED	REVIEWED	DATE
B.G.	T.S.	R.B.	J.A.B.	3-94

REVISED	STRUCTURE FILE NO.
5-96	2512025

FORWARD ABUTMENT WINGWALLS

BR. NO. FRA-270-3396
I.R. 270 UNDER McCUTCHEON ROAD

FRA-270-32.46

9/24

416/593

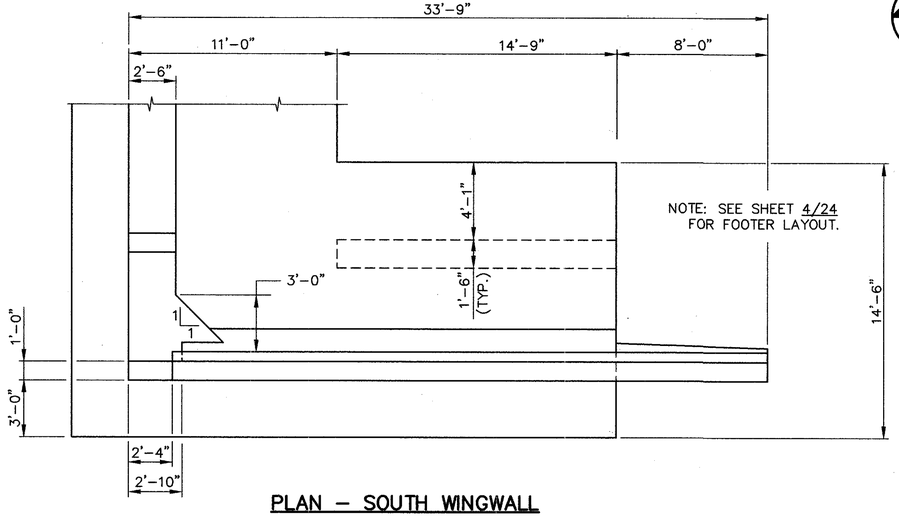

PLAN – SOUTH WINGWALL

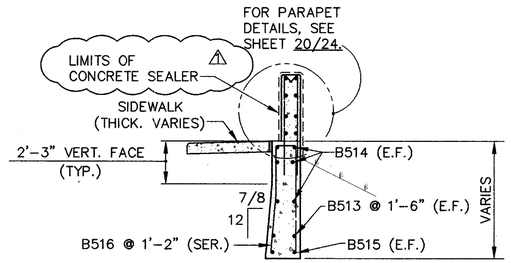

SECTION V–V

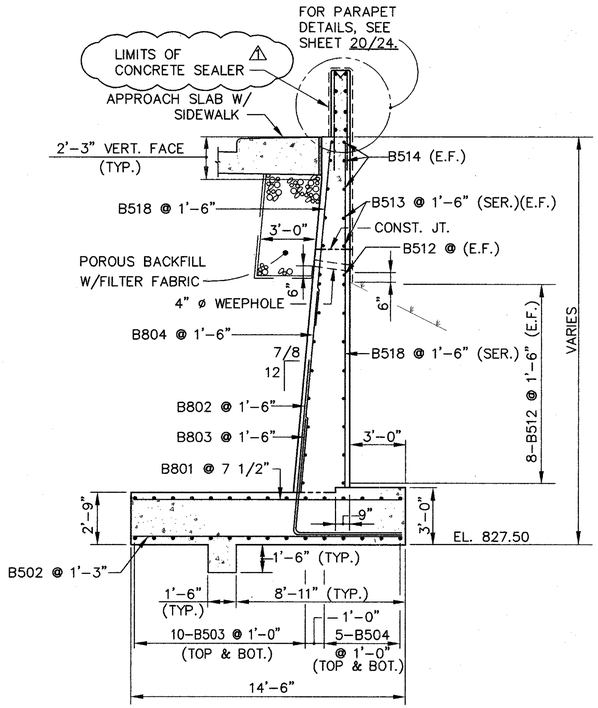

SECTION U–U

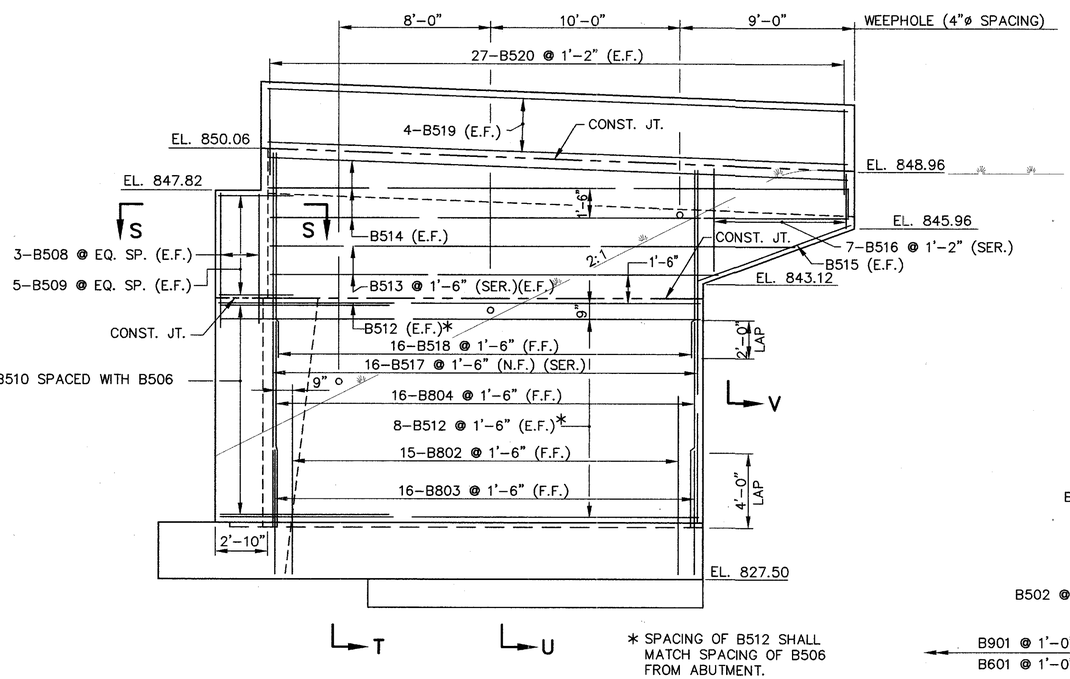

ELEVATION – SOUTH WINGWALL

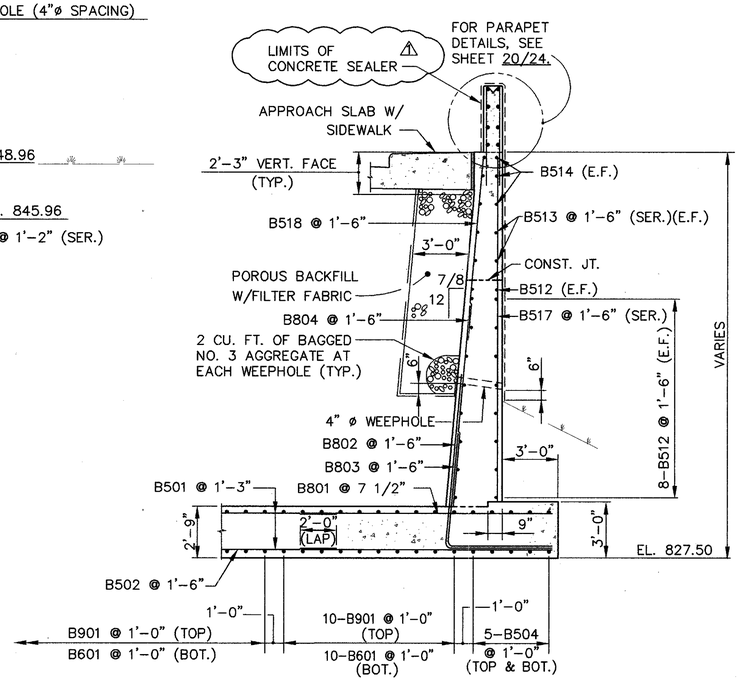

SECTION T–T

** INCLUDE WITH APPROACH SLAB FOR PAYMENT

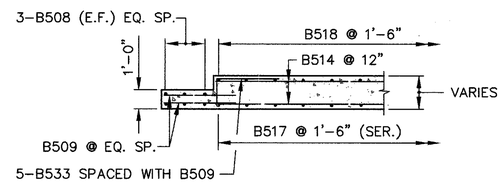

SECTION S–S

LEGEND

N.F. = NEAR FACE
E.F. = EACH FACE
F.F. = FAR FACE
SER. = SERIES
EL. = ELEVATION
CLR. = CLEAR
TYP. = TYPICAL
CONST. JT. = CONSTRUCTION JOINT
P.E.J.F. = PREFORMED EXPANSION JOINT FILLER

PLOT SCALE 1" = 4'
COL #19
C:\DRAWING\06092718\MCCUTWW3.DWG
MAY-06-1996

PREPARED BY
ms consultants, inc.
CONSULTING ENGINEERS & PLANNERS
4900 BUSINESS BOULEVARD, COLUMBUS, OHIO

DESIGNED B.G.
DRAWN T.S.
CHECKED R.B.
REVIEWED J.A.B.
DATE 3-94
REVISED 5-96
STRUCTURE FILE NO. 2512025

FORWARD ABUTMENT WINGWALLS
BR. NO. FRA-270-3396
I.R. 270 UNDER McCUTCHEON ROAD

FRA-270-32.46

10/24

417/593

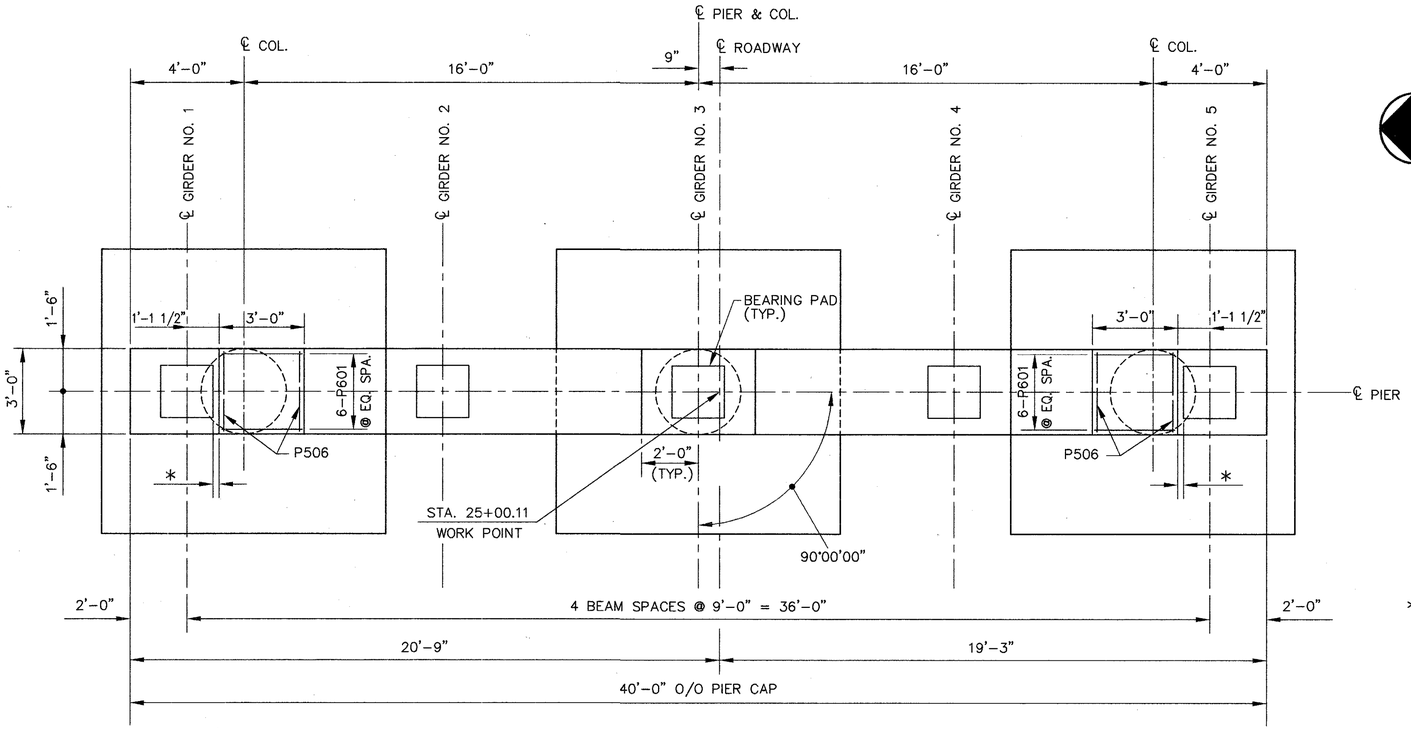

PLAN

* PROVIDE 2" MIN. CLR. TO BEARING LOAD PLATE (TYP.)

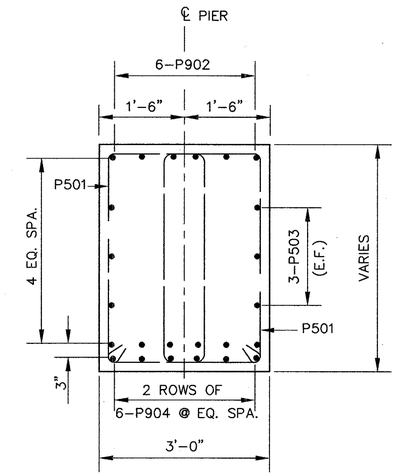

SECTION A-A

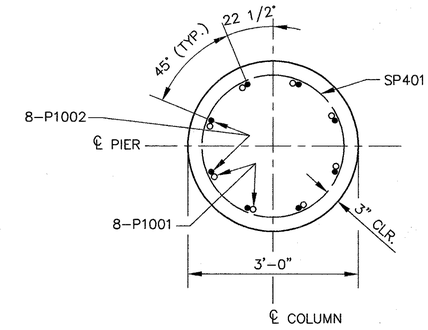

SECTION C-C

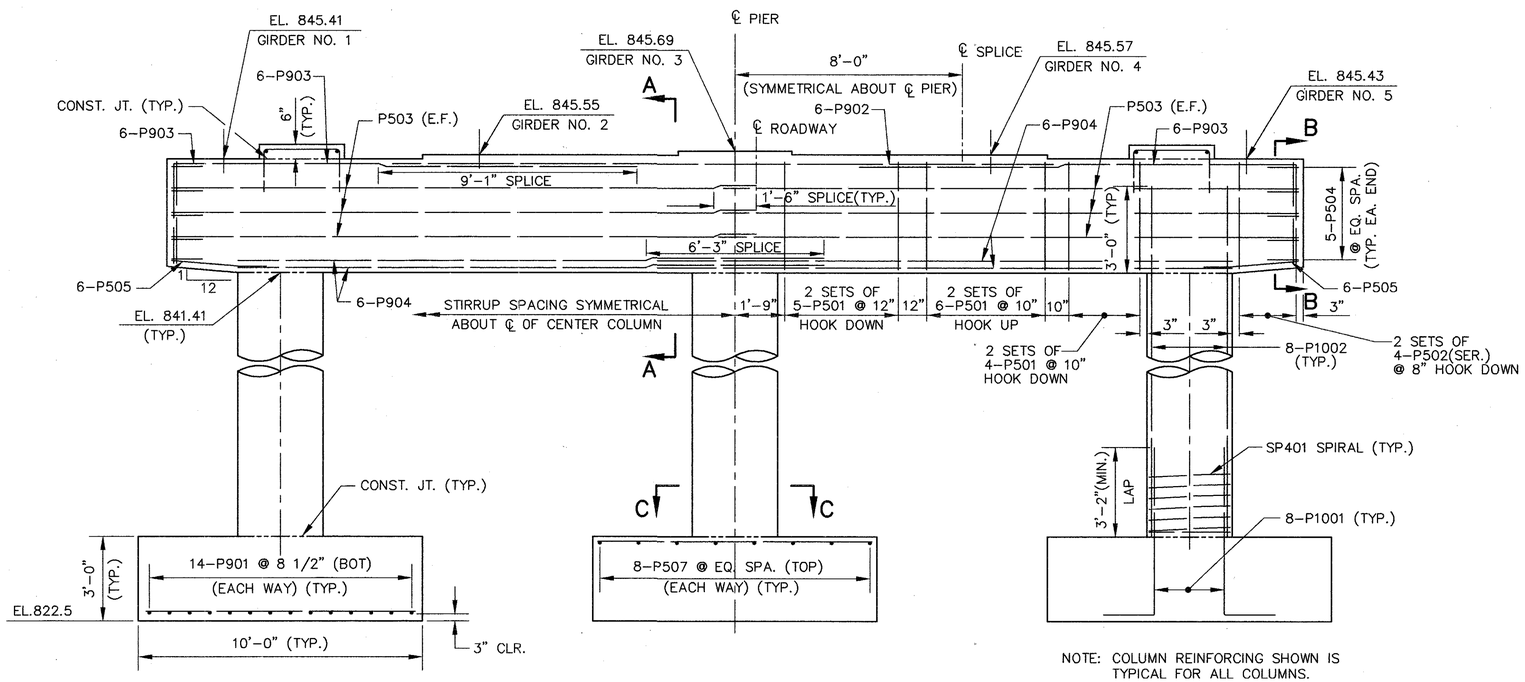

SEE SHEET 4/24 FOR FOOTING LAYOUT

NOTE: COLUMN REINFORCING SHOWN IS TYPICAL FOR ALL COLUMNS.

ELEVATION

** VERTICAL PORTION OF P903 BARS DOWN THE FACE OF PIER CAP NOT SHOWN FOR CLARITY.

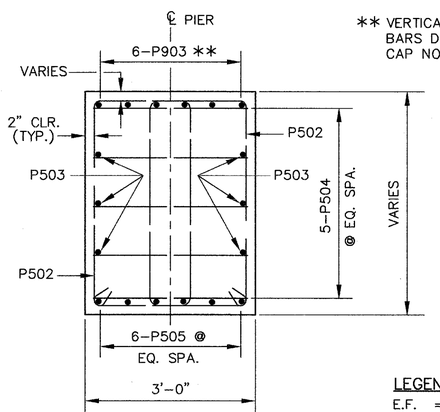

SECTION B-B

LEGEND

E.F. = EACH FACE
EQ. SPA. = EQUAL SPACES
SER. = SERIES
EL. = ELEVATION
CLR. = CLEAR
TYP. = TYPICAL
o/o = OUT TO OUT
MIN. = MINIMUM
BOT. = BOTTOM

PLOT SCALE... 3/8" = 1'
COL #19 C:\DRAWING\06092308\MCCUTCH\MCCUTPD1.DWG FEBRUARY-06-1995

PREPARED BY ms consultants, inc. CONSULTING ENGINEERS & PLANNERS 8500 BUSCH BOULEVARD, COLUMBUS, OHIO

DESIGNED	DRAWN	REVIEWED	DATE
B.G.	C.H.	J.A.B.	3-94
CHECKED	REVISED	STRUCTURE FILE NO.	
R.B.		2512025	

PIER DETAILS
BR. NO. FRA-270-3396
I.R. 270 UNDER McCUTCHEON ROAD

FRA-270-32.46

11/24

418/593

PIER DETAILS

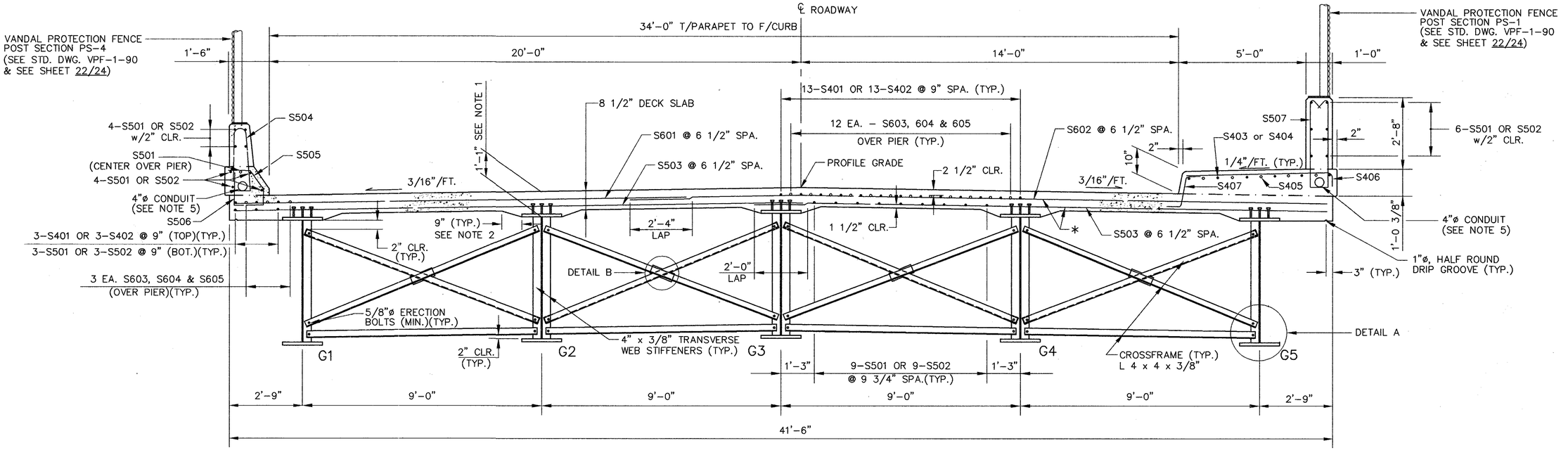

TRANSVERSE SECTION
(LOOKING STATION AHEAD)

* TRANSVERSE BARS BENT IN FIELD TO MATCH ROADWAY CROSS-SLOPE.

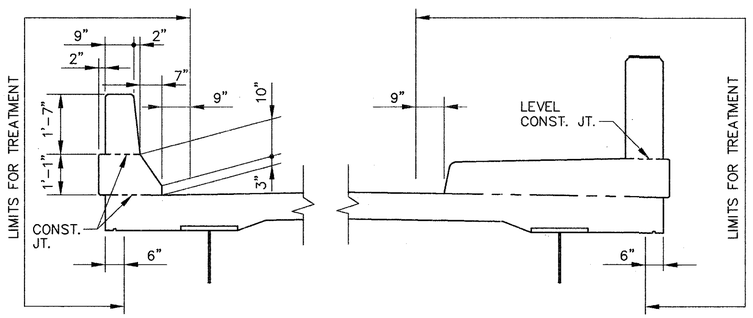

LIMITS OF TREATMENT OF CONCRETE SEALER

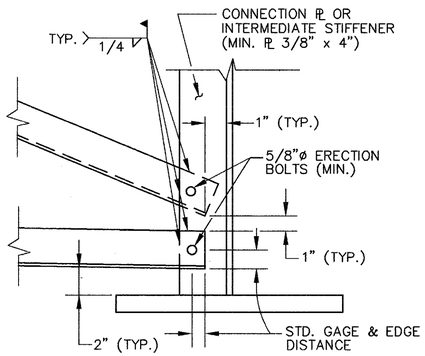

DETAIL A

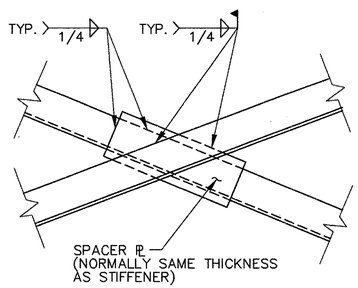

DETAIL B

NOTES

1. THE DISTANCE SHOWN FROM THE TOP OF THE DECK SLAB TO THE BOTTOM OF THE TOP FLANGE IS THE THEORETICAL DESIGN DIMENSION. THE QUANTITY OF DECK CONCRETE TO BE PAID FOR SHALL BE BASED UPON THIS DIMENSION, EVEN THOUGH DEVIATION FROM IT MAY BE NECESSARY BECAUSE THE TOP FLANGE OF THE GIRDER MAY NOT HAVE THE EXACT CAMBER OR CONFORMATION REQUIRED TO PLACE IT PARALLEL TO THE FINISHED GRADE. DEDUCTION SHALL BE MADE FOR VOLUME OF ENCASED STEEL PLATES AS PER 511.18.
2. A HAUNCH WIDTH OF 9 INCHES SHALL BE USED FOR COMPUTING QUANTITY OF CONCRETE. HOWEVER, THE HAUNCH WIDTH MAY VARY BETWEEN 6 AND 12 INCHES.
3. ERECTION BOLTS: THE HOLE DIAMETER IN THE CROSS FRAMES AND GIRDER STIFFENERS SHALL BE 3/16" LARGER THAN THE DIAMETER OF THE ERECTION BOLTS. UNLESS REPLACED BY PERMANENT HIGH STRENGTH BOLTS, ERECTION BOLTS SHALL REMAIN IN PLACE. LOCK WASHERS SHALL BE FURNISHED FOR OTHER THAN FULLY TORQUED HIGH STRENGTH ERECTION BOLTS. BOLTS SHALL BE FURNISHED AS PART OF ITEM 513.

   IN LIEU OF ERECTION BOLTS AND AT THE OPTION OF THE CONTRACTOR, ALTERNATIVE MEANS OF TEMPORARY BRACING MAY BE USED SUBJECT TO THE APPROVAL OF THE DIRECTOR (501.06).
4. SEE GENERAL NOTES FOR CRACK CONTROL JOINTS IN PARAPETS.
5. PAYMENT FOR LABOR, MATERIALS AND INSTALLATION OF CONDUIT SHALL BE INCLUDED WITH ITEM 625, CONDUIT, 4", 713.07. SEE TRAFFIC CONTROL GENERAL SUMMARY FOR QUANTITY.

LEGEND

SPA. = SPACES
MIN. = MINIMUM
STD. DWG. = STANDARD DRAWING
BOT. = BOTTOM
EA. = EACH
CLR. = CLEAR
TYP. = TYPICAL
STD. = STANDARD

PLOT SCALE = 1/2" = 1'
COL #19
C:\DRAWING\06092308\MCCUTCH\MCCUTTS1.DWG FEBRUARY-06-1995

PREPARED BY
ms consultants, inc.
CONSULTING ENGINEERS & PLANNERS
4600 BOSTON BOULEVARD, COLUMBUS, OHIO

DESIGNED	DRAWN	REVIEWED	DATE
R.B.	C.H.	J.A.B.	3-94
CHECKED	REVISED	STRUCTURE FILE NO.	
B.G.		2512025	

TRANSVERSE SECTION
BR. NO. FRA-270-3396
I.R. 270 UNDER McCUTCHEON ROAD

FRA-270-32.46

12/24

419/593

TRANSVERSE SECTION

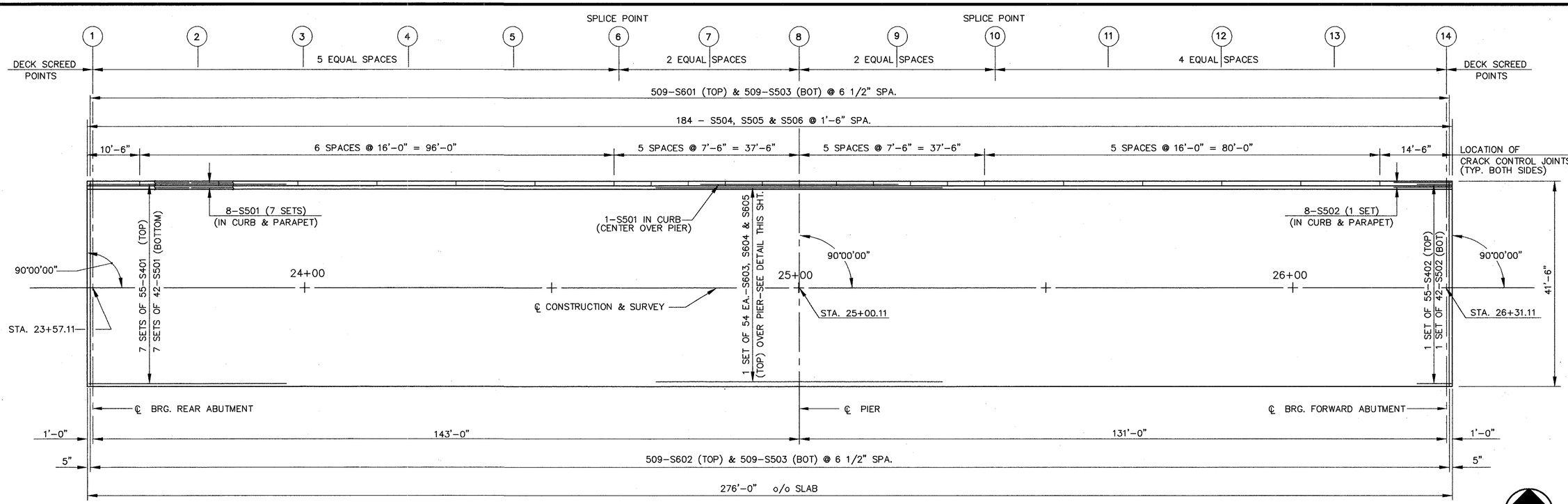

DECK SLAB PLAN

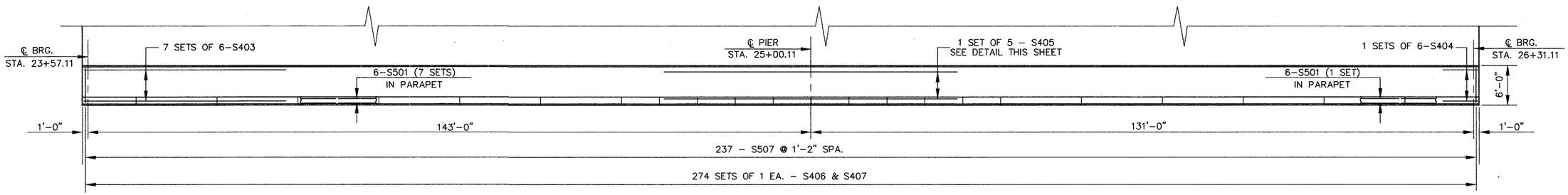

SIDEWALK PLAN

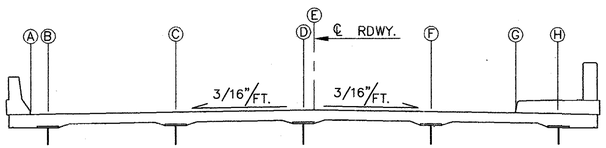

SCREED LINES

(LOOKING STATION AHEAD)

LAP LENGTHS
NO. 4 BARS : 1'–6"
NO. 5 BARS : 2'–0"

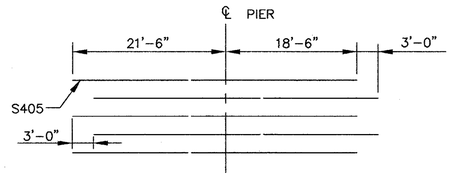

STAGGER DIAGRAM

SIDEWALK – OVER PIER

LEGEND
EA. = EACH
BRG. = BEARING
BOT. = BOTTOM
SPA. = SPACING
SHT. = SHEET
o/o = OUT TO OUT

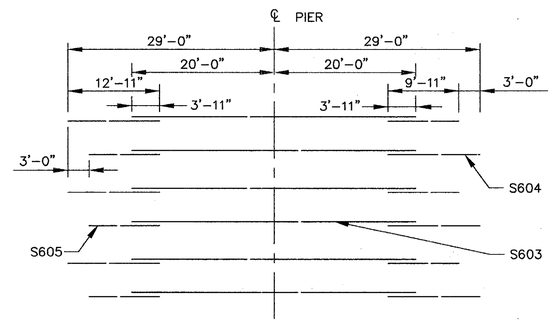

STAGGER DIAGRAM

DECK – OVER PIER

SCREED ELEVATIONS

SCREED LINE	POINT*	①	②	③	④	⑤	⑥	⑦	⑧	⑨	⑩	⑪	⑫	⑬	⑭
	STATION	23+57.11	23+78.41	23+99.71	24+21.01	24+42.31	24+63.61	24+81.86	25+00.11	25+19.86	25+39.61	25+62.49	25+85.36	26+08.24	26+31.11
Ⓐ	ELEVATION	851.77	852.07	852.26	852.31	852.24	852.06	851.86	851.65	851.43	851.20	850.88	850.44	849.86	849.17
Ⓑ	ELEVATION	851.79	852.09	852.28	852.33	852.26	852.08	851.88	851.67	851.45	851.22	850.90	850.46	849.88	849.19
Ⓒ	ELEVATION	851.94	852.25	852.44	852.50	852.41	852.23	852.02	851.81	851.59	851.36	851.05	850.61	850.03	849.33
Ⓓ	ELEVATION	852.08	852.39	852.58	852.64	852.55	852.37	852.16	851.95	851.73	851.50	851.19	850.75	850.17	849.47
Ⓔ	ELEVATION	852.09	852.40	852.59	852.65	852.57	852.38	852.18	851.97	851.74	851.52	851.20	850.76	850.18	849.48
Ⓕ	ELEVATION	851.96	852.27	852.46	852.52	852.44	852.25	852.05	851.84	851.62	851.39	851.07	850.63	850.06	849.35
Ⓖ	ELEVATION	851.87	852.17	852.36	852.42	852.34	852.15	851.95	851.75	851.53	851.30	851.97	850.54	849.96	849.26
Ⓗ	ELEVATION	851.82	852.12	852.30	852.36	852.28	852.10	851.90	851.70	851.47	851.24	850.92	850.48	849.91	849.21

*SCREED POINTS ARE LOCATED 90°00'00" TO ℄ SURVEY

PREPARED BY
ms consultants, inc.
CONSULTING ENGINEERS & PLANNERS
2221 SCHROCK ROAD, COLUMBUS, OHIO 43229

DESIGNED	DRAWN	REVIEWED	DATE
R.B.	C.H.	J.A.B.	3/94
CHECKED	REVISED	STRUCTURE FILE NO.	
B.G.		2512025	

DECK/SIDEWALK PLAN & SCREED
BR. NO. FRA–270–3396
I.R. 270 UNDER McCUTCHEON ROAD

FRA–270–32.46

13/24

420/593

PLOT SCALE
COL #19
C:\DRAWING\06092309\MCCUTCH\MCCUTSLP.DWG FEBRUARY–06–1995

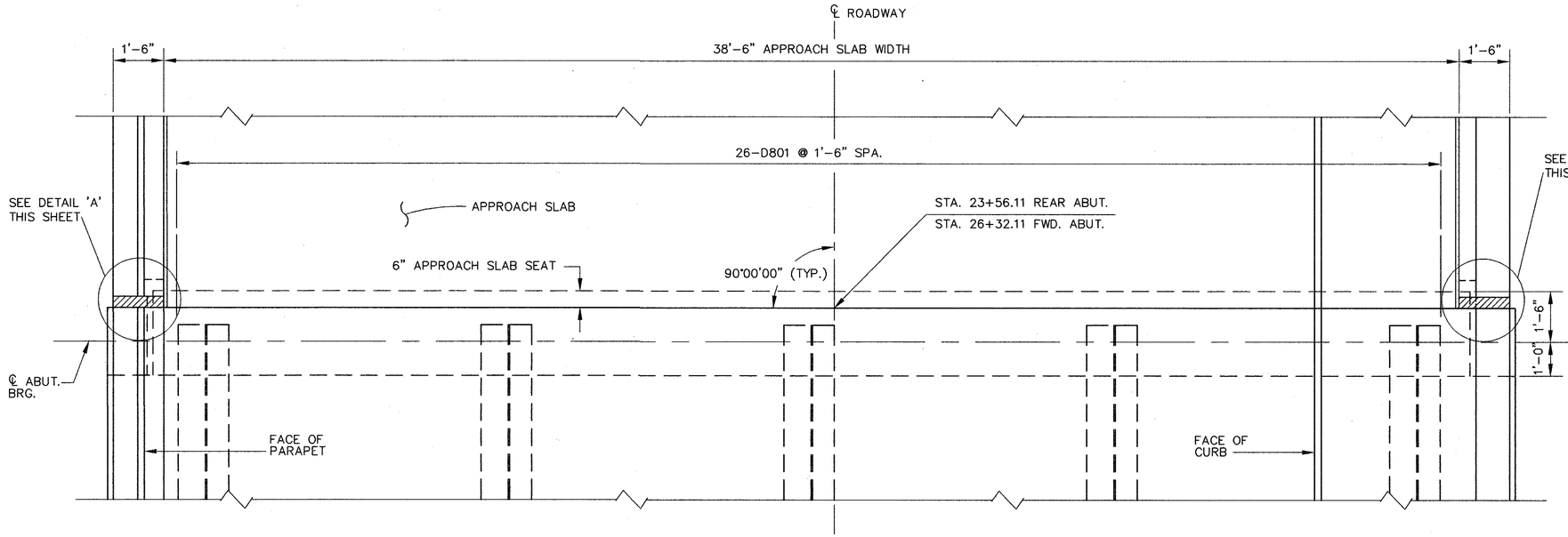

PLAN

FWD. ABUTMENT SHOWN
(REAR ABUTMENT OPPOSITE HAND)

SEE SHEET 15/24 FOR SECTIONS A-A, B-B, C-C, D-D, & E-E.

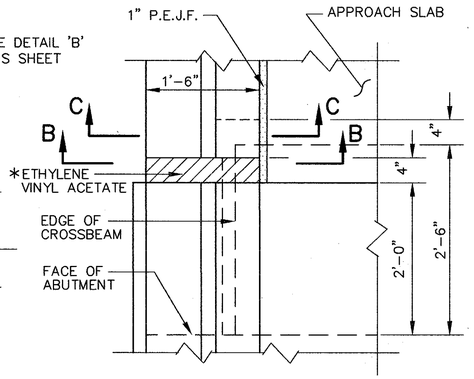

DETAIL 'A'

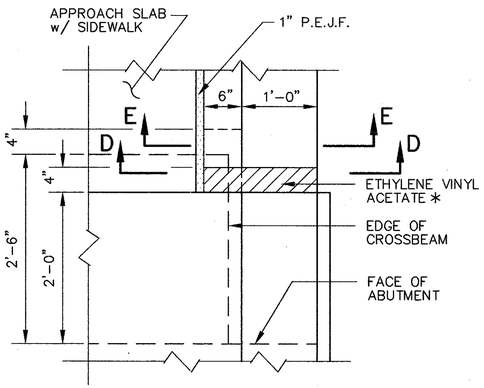

DETAIL 'B'

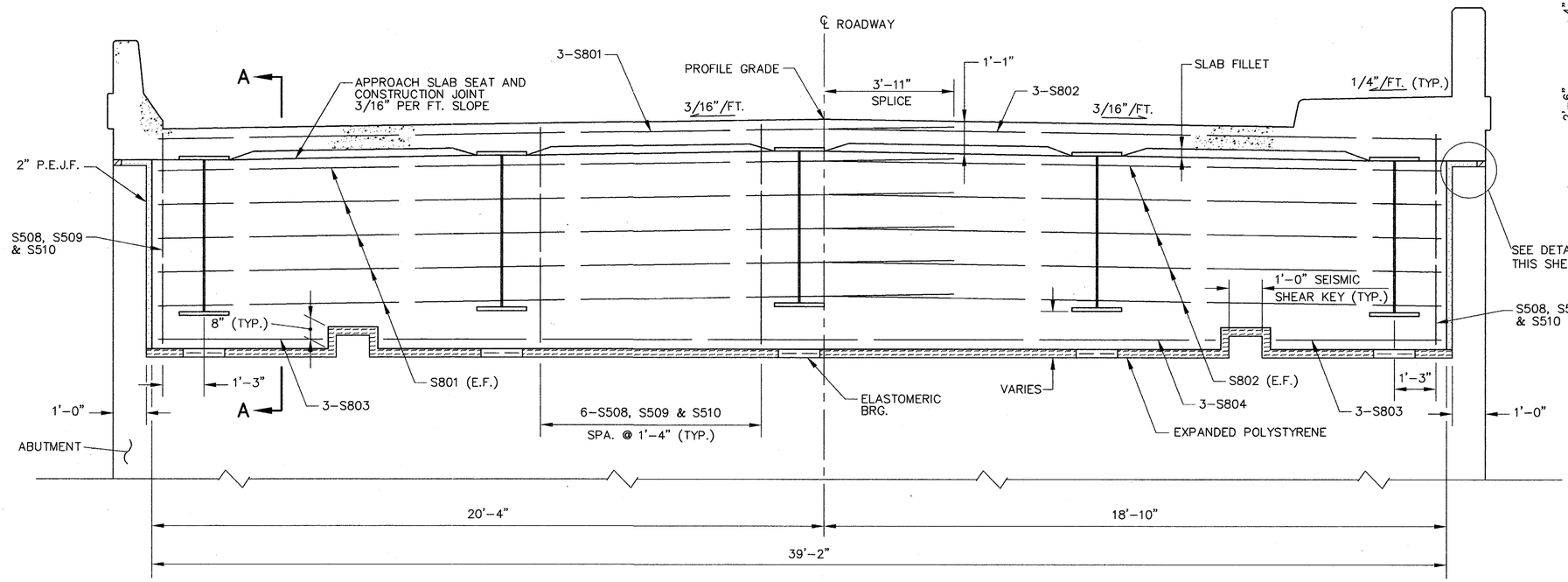

ELEVATION

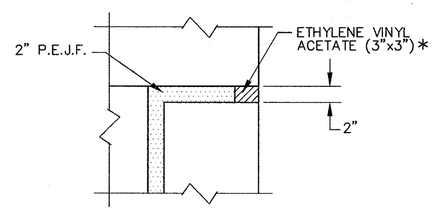

DETAIL 'C'

LEGEND

BRG. = BEARING
SPA. = SPACING
E.F. = EACH FACE
FT. = FOOT
ABUT. = ABUTMENT
STA. = STATION
TYP. = TYPICAL
FWD. = FORWARD
P.E.J.F. = PREFORMED EXPANSION JOINT FILLER

* ETHYLENE VINYL ACETATE
1. EVAZOTE 50 BY E-POXY INDUSTRIES, INC.
2. THERMAL-CHEM E.V.A. BY THERMAL-CHEM, INC.
3. OR APPROVED EQUAL
INSTALL WITH BONDER AS PER MANUFACTURER'S RECOMMENDATIONS.
ETHYLENE VINYL ACETATE IS INCLUDED WITH CLASS S CONCRETE, SUPERSTRUCTURE FOR PAYMENT.

PREPARED BY: ms consultants, inc. CONSULTING ENGINEERS & PLANNERS 4564 Bonita Boulevard, Columbus, Ohio

DESIGNED	DRAWN	REVIEWED	DATE
B.G.	C.H.	J.A.B.	3-94
CHECKED	REVISED	STRUCTURE FILE NO.	
R.B.		2512025	

SUPERSTRUCTURE DETAILS @ ABUTMENT

BR. NO. FRA-270-3396
I.R. 270 UNDER McCUTCHEON ROAD

FRA-270-32.46

14/24

421/593

PLOT SCALE = 1/2" = 1'
COL #19
C:\DRAWING\06092308\MCCUTCH\MCCUTSD1.DWG FEBRUARY-06-1995

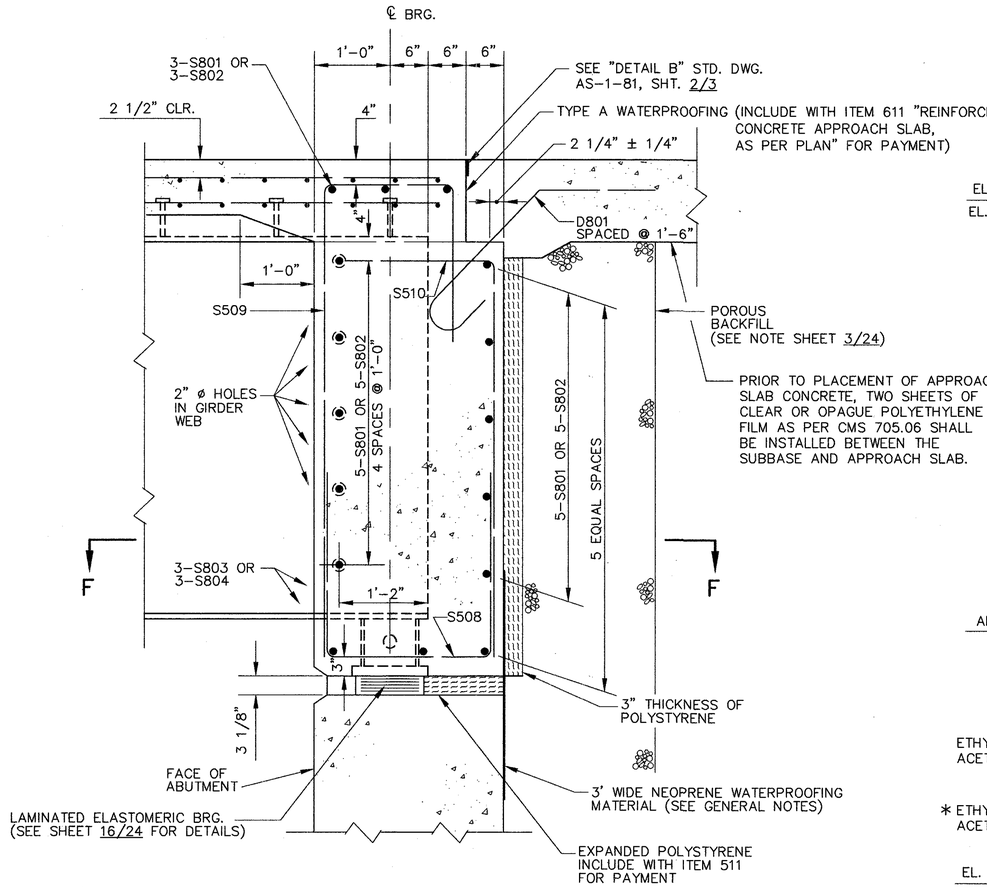

SECTION A–A
SUPERSTRUCTURE AT ABUTMENT

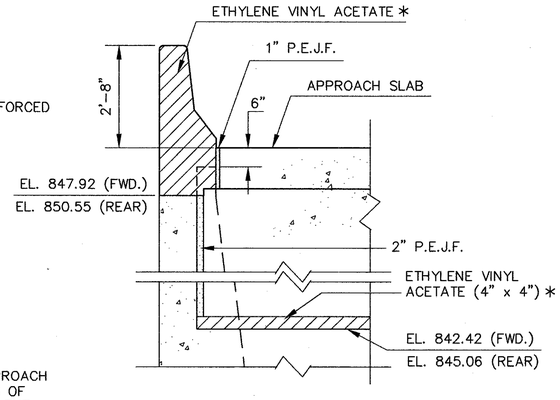

SECTION B–B

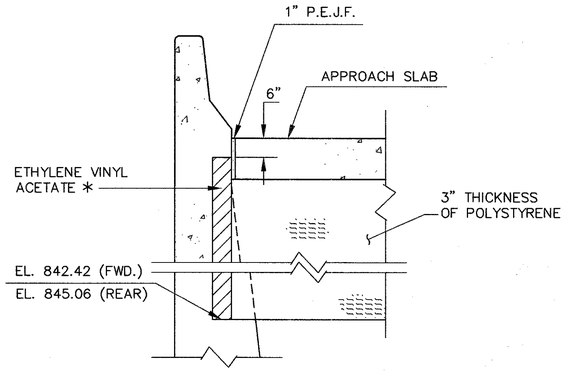

SECTION C–C

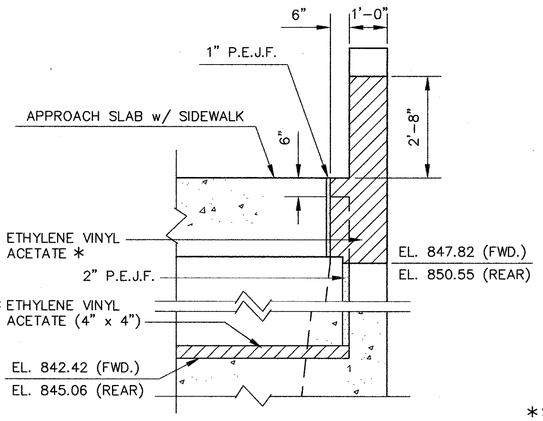

SECTION D–D

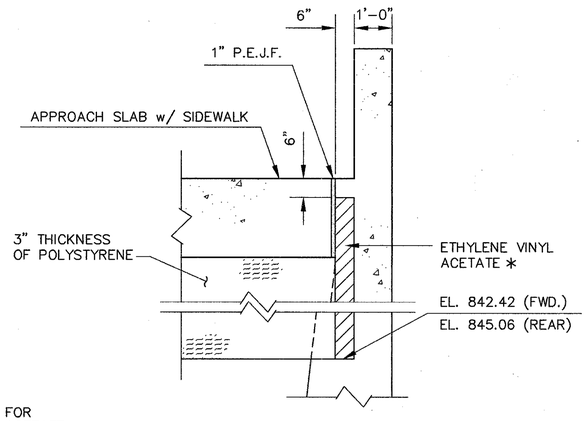

SECTION E–E

* SEE SHT. 14/24 FOR
ETHYLENE VINYL ACETATE

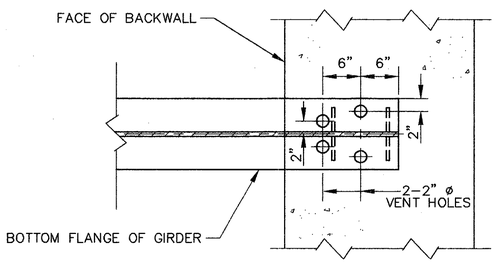

SECTION F–F

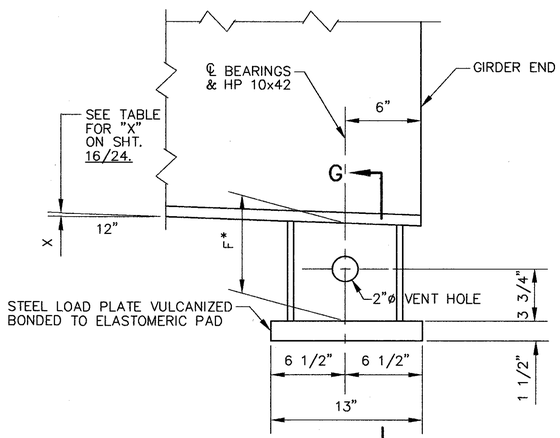

BEAM SUPPORT
*SEE TABLE THIS SHEET FOR "F"

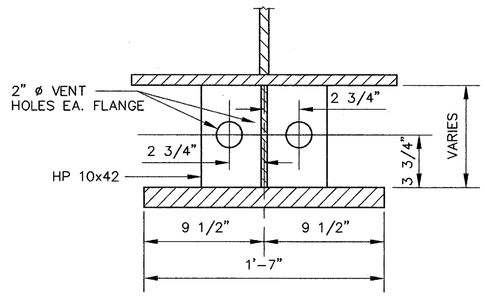

SECTION G–G

BRG. ASSEMBLY HEIGHT	
GIRDER	F
1	7 3/8"
2	9 1/16"
3	10 3/4"
4	9 3/8"
5	7 11/16"

LEGEND
BRG. = BEARING
FWD. = FORWARD
EA. = EACH
SHT. = SHEET
EL. = ELEVATION
CLR. = CLEAR
P.E.J.F. = PREFORMED EXPANSION JOINT FILLER

FOR LOCATION OF SECTION A–A, B–B, C–C, D–D, & E–E SEE SHEET 14/24

PLOT SCALE = 1"=1'
COL #19 C:\DRAWING\06092308\MCCUTCH\MCCUT5D2.DWG FEBRUARY-06-1995

PREPARED BY
ms consultants, inc.
CONSULTING ENGINEERS & PLANNERS
OHIO PIKE BUILDING, CHESNEE, S.C.

DESIGNED	DRAWN	REVIEWED	DATE
B.G.	C.H.	J.A.B.	3-94
CHECKED	REVISED	STRUCTURE FILE NO.	
R.B.		2512025	

SUPERSTRUCTURE DETAILS
BR. NO. FRA-270-3396
I.R. 270 UNDER McCUTCHEON ROAD

FRA-270-32.46

15/24

422/593

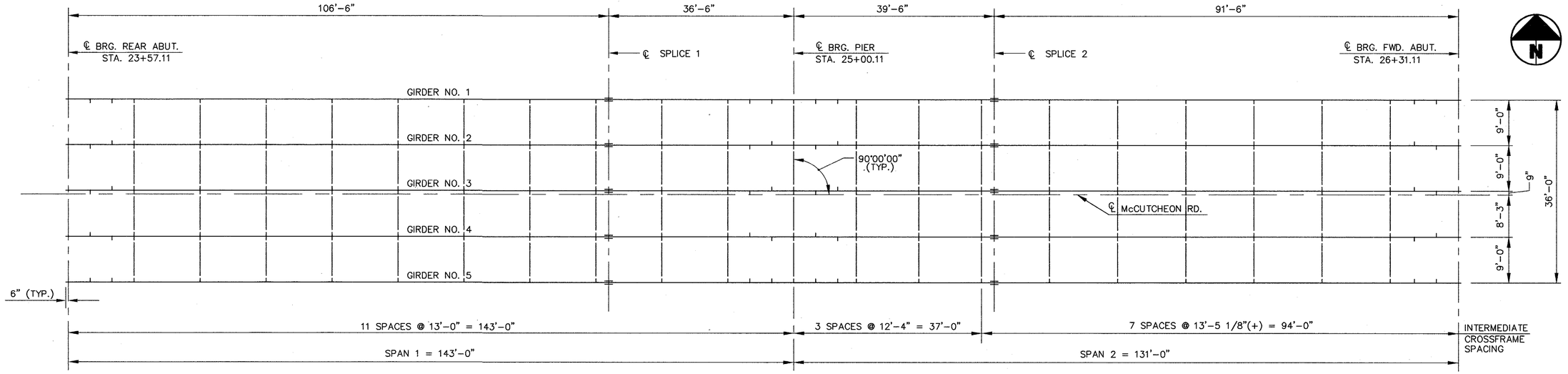

FRAMING PLAN

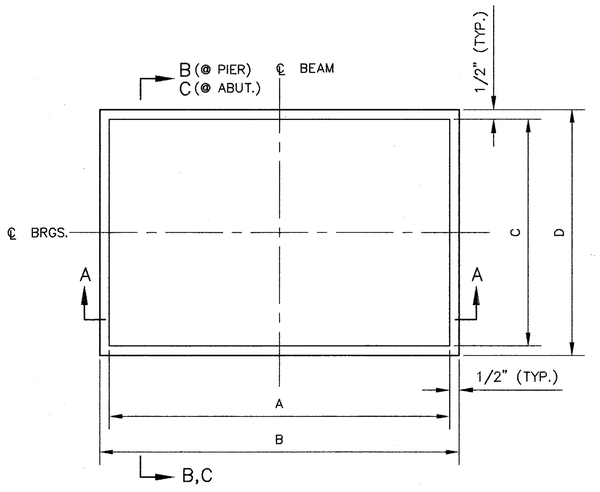

TYP. BEARING PLAN

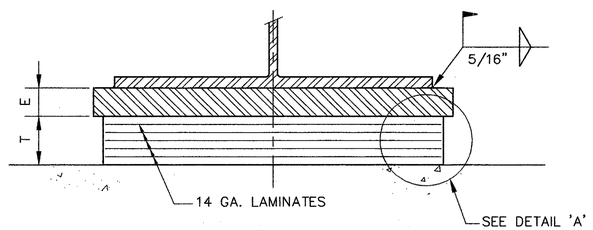

SECTION A–A
BEARING DETAIL

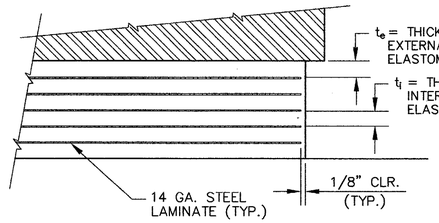

DETAIL A

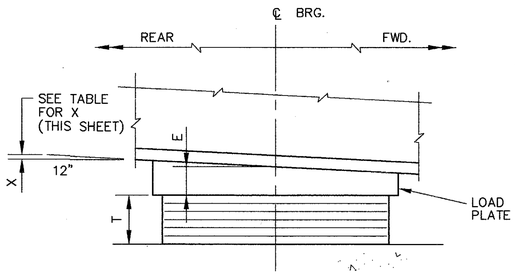

SECTION B–B
@ PIER

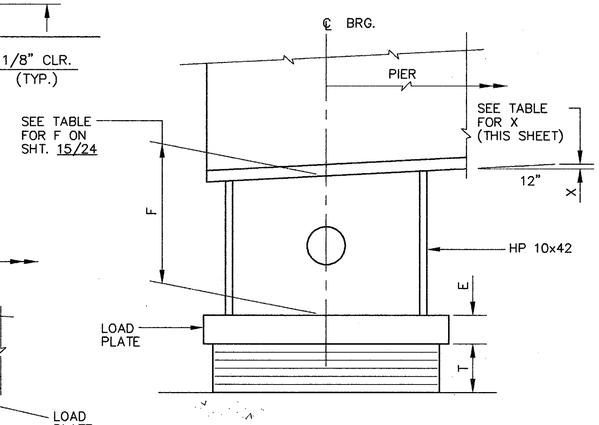

SECTION C–C
@ ABUTMENTS

LAMINATED BEARING DIMENSIONS

LOCATION	A	B	C	D	E	x	t_e	n @ t_i	T	TOTAL REQ'D.	PAD DESIGNATION	DESIGN LOAD (KIPS) DEAD	LIVE	TOTAL
REAR ABUTMENT	18"	19"	12"	13"	1 1/2"	3/32"	0.218	6 @ 0.3053	3.096"	5	12"x18"x3 1/8" 50 DUROMETER	121^k	62^k	183^k
PIER	22"	23"	22"	23"	2"	1/8"	0.3036	4 @ 0.425	2.6807"	5	22"x22"x2 11/16" 50 DUROMETER	351^k	106^k	457^k
FWD. ABUTMENT	18"	19"	12"	13"	1 1/2"	5/16"	0.218	6 @ 0.3053	3.096"	5	12"x18"x3 1/8" 50 DUROMETER	109^k	58^k	167^k

LAMINATED ELASTOMERIC BEARINGS

1. STEEL LOAD PLATE SHALL BE ASTM A–572. ELASTOMER SHALL BE 50 DUROMETER.
2. WELDING SHALL BE CONTROLLED SO THAT THE PLATE TEMPERATURE AT THE ELASTOMER BONDED SURFACE DOES NOT EXCEED 300°F AS DETERMINED BY USE OF PYROMETRIC STICKS OR OTHER TEMPERATURE MONITORING DEVICES.
3. BEARING REPOSITIONING. IF DECK CONCRETE IS PLACED AT AN AMBIENT TEMPERATURE HIGHER THAN 80°F OR LOWER THAN 40°F AND THE BEARING SHEAR DEFLECTION EXCEEDS 1/6 OF THE BEARING HEIGHT AT 60°F (+/–) 10°F, THE BEAMS OR GIRDERS SHALL BE RAISED TO ALLOW THE BEARINGS TO RETURN TO THEIR UNDEFORMED SHAPE AT 60°F (+/–) 10°F.
4. BASIS OF PAYMENT. THE UNIT BID PRICE SHALL INCLUDE ALL MATERIALS, LABOR, AND INCIDENTALS NECESSARY TO TEST, FURNISH AND INSTALL LAMINATED ELASTOMERIC BEARINGS EITHER FIXED OR EXPANSION. PAYMENT WILL BE MADE AT THE CONTRACT PRICE FOR ITEM 516, EACH.
5. THE HP 10x42 BEAM PEDESTALS SHALL CONFORM TO C.M.S. 711.01 AND BE INCLUDED WITH ITEM 513 STRUCTURAL STEEL, A572–50 AISC CATEGORY III FOR PAYMENT.

LEGEND
GA. = GAUGE
FWD. = FORWARD
BRG. = BEARING
ABUT. = ABUTMENT
CLR. = CLEAR
TYP. = TYPICAL

PLOT SCALE = 3/32" = 1'
COL #19
C:\DRAWING\06092308\MCCUTCH\MCCUTTP1.DWG FEBRUARY-06-1995

PREPARED BY
ms consultants, inc.
CONSULTING ENGINEERS & PLANNERS
4500 BEECH BOULEVARD, COLUMBUS, OHIO

DESIGNED R.B.	DRAWN C.H.	REVIEWED J.A.B.	DATE 3-94
CHECKED B.G.	REVISED	STRUCTURE FILE NO. 2512025	

FRAMING PLAN & BEARING DETAILS
BR. NO. FRA-270-3396
I.R. 270 UNDER McCUTCHEON ROAD

FRA-270-32.46

16/24

423/593

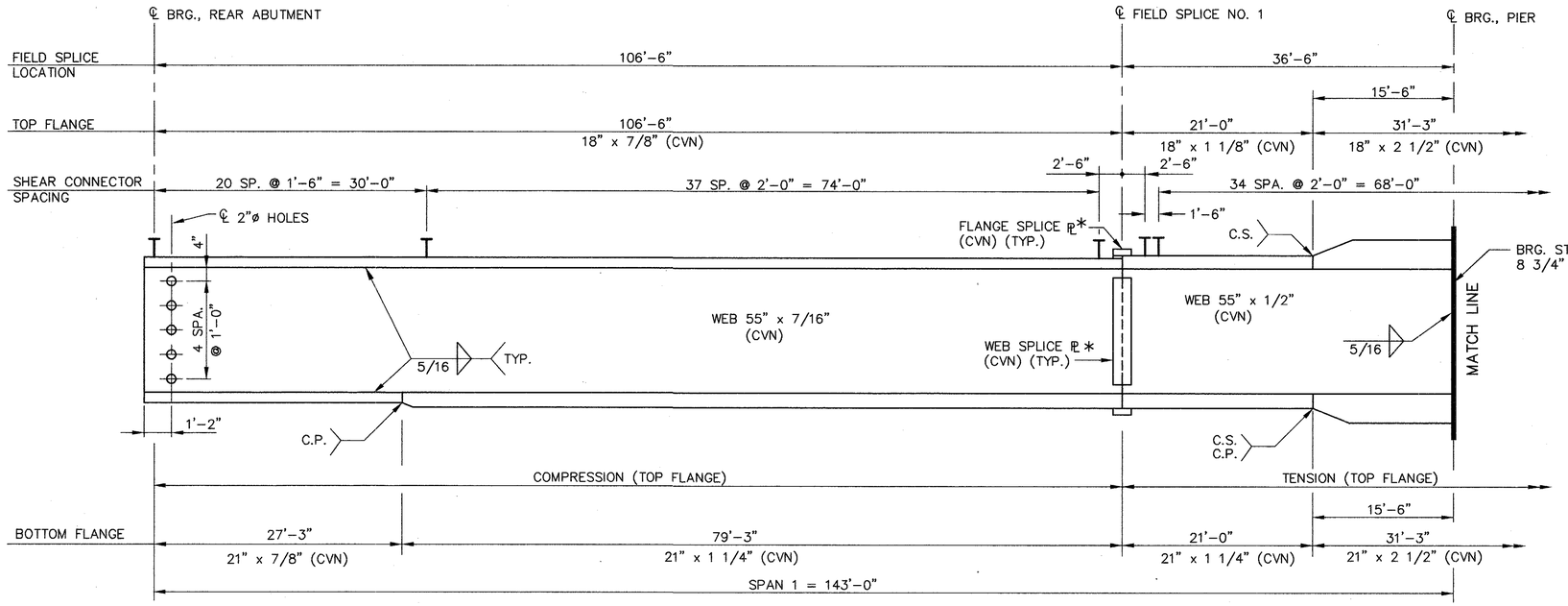

* FOR SPLICE DETAILS, SEE SHEET 18/24

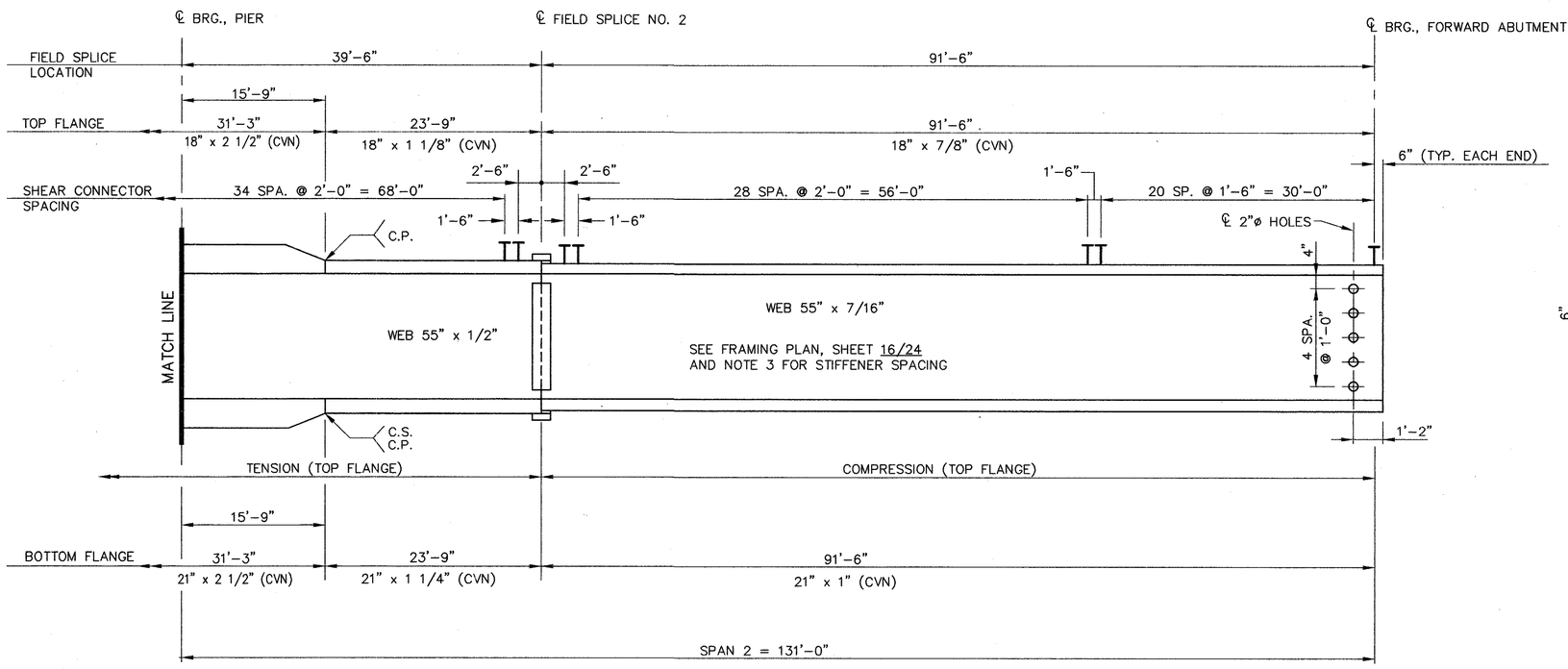

NOTES

1. WELDED ATTACHMENT OF SUPPORTS FOR CONCRETE DECK FINISHING MACHINE MAY BE MADE TO AREAS OF THE FASCIA STRINGER FLANGES DESIGNATED "COMPRESSION". ATTACHMENTS SHALL NOT BE MADE TO AREAS DESIGNATED "TENSION". FILLET WELDS TO COMPRESSION FLANGES SHALL NOT BE CLOSER THAN 1" FROM EDGE OF FLANGE, BE NOT MORE THAN 2" LONG, AND BE NOT SMALLER THAN MINIMUM SIZE REQUIRED BY AASHTO.
2. WHERE A SHAPE OR PLATE IS DESIGNATED (CVN), THE MATERIAL SHALL MEET SPECIFIED MINIMUM NOTCH TOUGHNESS REQUIREMENTS AS SPECIFIED IN 711.01.
3. INTERMEDIATE STIFFENERS ARE SINGLE STIFFENERS EXCEPT WHERE DOUBLE STIFFENERS ARE REQUIRED TO CONNECT TO CROSSFRAMES. PLACE INTERMEDIATE STIFFENERS AT EQUAL SPACES BETWEEN CROSSFRAMES AS SHOWN ON THE FRAMING PLAN WHICH ALSO SHOWS THE NUMBER OF STIFFENERS.

C.P. = COMPLETE PENETRATION WELD REQUIRED

C.S. = BUTT WELD SUBJECT TO COMPRESSIVE STRESSES ONLY

INTERMEDIATE STIFFENER WELDS	
FLANGE THICKNESS (INCHES)	FILLET WELD SIZE (INCHES)
7/8"	5/16"
1"	5/16"
1 1/8"	5/16"
1 1/4"	5/16"
2 1/2"	5/16"

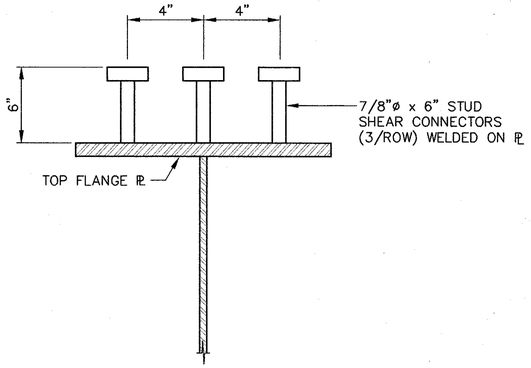

SHEAR CONNECTOR DETAIL

LEGEND

EA. = EACH
SP.,SPA. = SPACES
BRG. = BEARING
TYP. = TYPICAL

PLOT SCALE = 1" = 8'
COS #19 C:\DRAWING\0692308\MCCUTCH\MCCUTSEL.DWG FEBRUARY-07-1995

PREPARED BY ms consultants, inc. CONSULTING ENGINEERS & PLANNERS 600 STONE BUILDING, OKEMOS, MICH.

DESIGNED B.G.	DRAWN T.S.	REVIEWED J.A.B.	DATE 3-94
CHECKED R.B.	REVISED	STRUCTURE FILE NO. 2512025	

GIRDER ELEVATION
BR. NO. FRA-270-3396
I.R. 270 UNDER McCUTCHEON ROAD

FRA-270-32.46

17/24

424/593

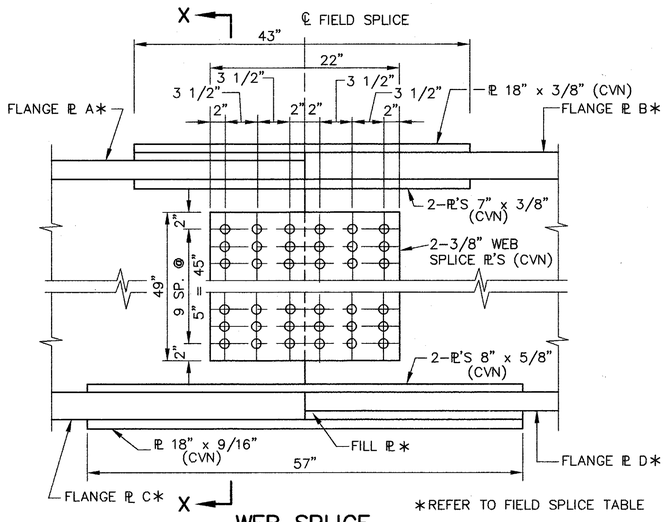

WEB SPLICE

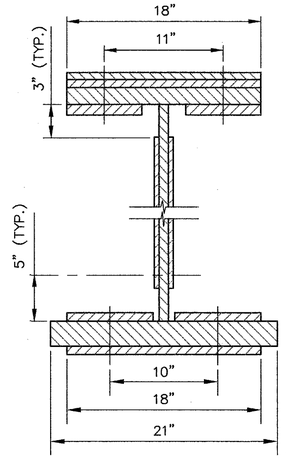

SECTION X-X

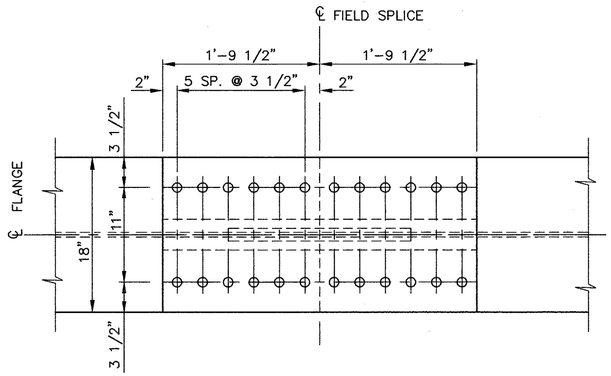

TOP FLANGE SPLICE

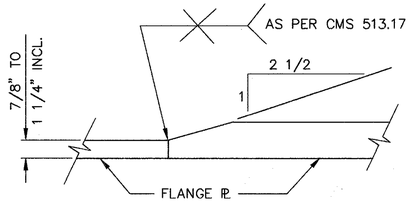

TYPICAL GIRDER FLANGE PL SHOP SPLICE

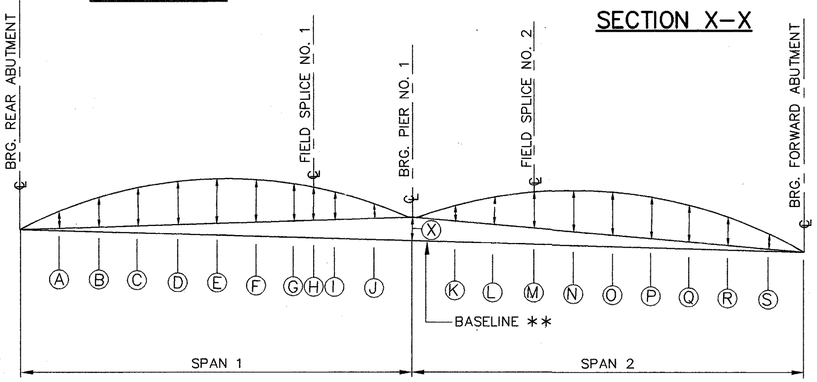

** CAMBER DIAGRAM

BASELINE IS A LINE BETWEEN ℄ BEARINGS OF ABUTMENTS ALONG THE ℄ GIRDER.

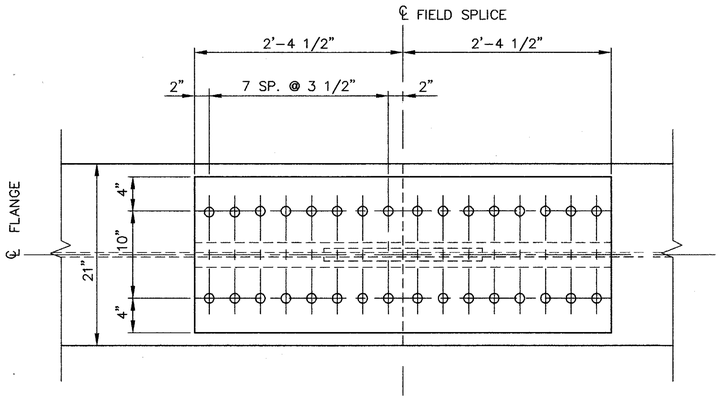

BOTTOM FLANGE SPLICE

NOTE: ALL BOLTS SHALL BE 1" DIA. A-325 GALVANIZED UNLESS OTHERWISE NOTED.

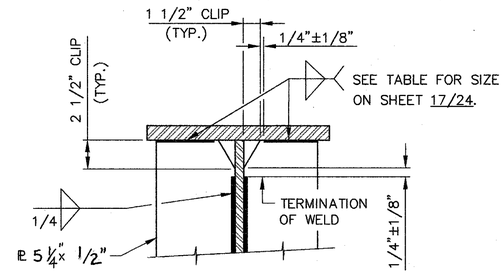

INTERMEDIATE STIFFENER WELD DETAIL

NOTE: WELD TO COMPRESSION FLANGE ONLY FOR INTERMEDIATE STIFFENER WITHOUT CROSSFRAME AND TO BOTH FLANGES FOR INTERMEDIATE STIFFENER WITH CROSSFRAME.

CAMBER & DEFLECTION TABLE (INCHES)

		SPAN 1										SPAN 2								
		1/10 PT.	2/10 PT.	3/10 PT.	4/10 PT.	5/10 PT.	6/10 PT.	7/10 PT.	SPL. PT.	8/10 PT.	9/10 PT.	1/10 PT.	2/10 PT.	3/10 PT.	4/10 PT.	5/10 PT.	6/10 PT.	7/10 PT.	8/10 PT.	9/10 PT.
POINT		A	B	C	D	E	F	G	H	I	J	K	L	M	N	O	P	Q	R	S
DEFLECTION DUE TO WEIGHT OF STEEL	GIRDER NO. 1,2,3,4 & 5	5/16	5/8	3/4	7/8	13/16	11/16	1/2	3/8	1/4	1/16	0	1/16	3/16	5/16	3/8	7/16	7/16	5/16	3/16
DEFLECTION DUE TO REMAINING DEAD LOAD	GIRDER NO. 1 & 5	1 13/16	3 3/16	4 3/16	4 1/2	4 5/16	3 9/16	2 1/2	2	1 3/8	1/2	0	3/8	1	1 3/4	2 5/16	2 9/16	2 7/16	1 15/16	1 1/16
	GIRDER NO. 2,3 & 4	1 7/8	3 5/16	4 3/8	4 11/16	4 1/2	3 3/4	2 5/8	2 1/8	1 7/16	1/2	0	1/2	1 1/16	1 13/16	2 7/16	2 11/16	2 1/2	2	1 1/8
ADJUSTMENT REQUIRED FOR VERTICAL CURVE	GIRDER NO. 1,2,3,4 & 5	1 7/16	2 9/16	3 7/16	3 7/8	4 1/16	3 7/8	3 7/16	3 1/16	2 9/16	1 7/16	1 1/4	2 3/16	2 7/8	3 1/4	3 7/16	3 1/4	2 7/8	2 3/16	2 9/16
REQUIRED SHOP CAMBER	GIRDER NO. 1 & 5	3 9/16	6 3/8	8 3/8	9 1/4	9 3/16	8 1/8	6 7/16	5 7/16	4 3/16	2	1 1/4	2 5/8	4 1/16	5 5/16	6 1/8	6 1/4	5 3/4	4 7/16	2 1/2
	GIRDER NO. 2,3 & 4	3 5/8	6 1/2	8 9/16	9 7/16	9 3/8	8 5/16	6 9/16	5 9/16	4 1/4	2	1 1/4	2 5/8	4 1/8	5 3/8	6 1/4	6 3/8	5 13/16	4 1/2	2 9/16

OFFSETS	
GIRDER	X
1,2,3,4 & 5	1'-2 7/8"

LEGEND
TYP. = TYPICAL
BRG. = BEARING

FIELD SPLICE TABLE

	FLANGE PLATE SIZE		FLANGE FILL PLATE SIZE
FIELD SPLICE NO. 1	A	18" x 0 7/8"	18" x 1/4" x 21 1/2"
	B	18" x 1 1/8"	
	C	21" x 1 1/4"	---
	D	21" x 1 1/4"	
FIELD SPLICE NO. 2	A	18" x 1 1/8"	18" x 1/4" x 21 1/2"
	B	18" x 0 7/8"	
	C	21" x 1 1/4"	18" x 1/4" x 28 1/2"
	D	21" x 1"	

PLOT SCALE 1" = 4"
COL #19 C:\DRAWING\06092308\MCCUTCH\MCCUTG01.DWG FEBRUARY-07-1995

PREPARED BY ms consultants, inc. CONSULTING ENGINEERS & PLANNERS 4564 DORR, BOARDMAN, OHIO 44511

DESIGNED B.G.	DRAWN T.S.	REVIEWED J.A.B.	DATE 3-94
CHECKED R.B.	REVISED	STRUCTURE FILE NO. 2512025	

GIRDER DETAILS
BR. NO. FRA-270-32.46
I.R. 270 UNDER McCUTCHEON ROAD

FRA-270-32.46

18/24

425/593

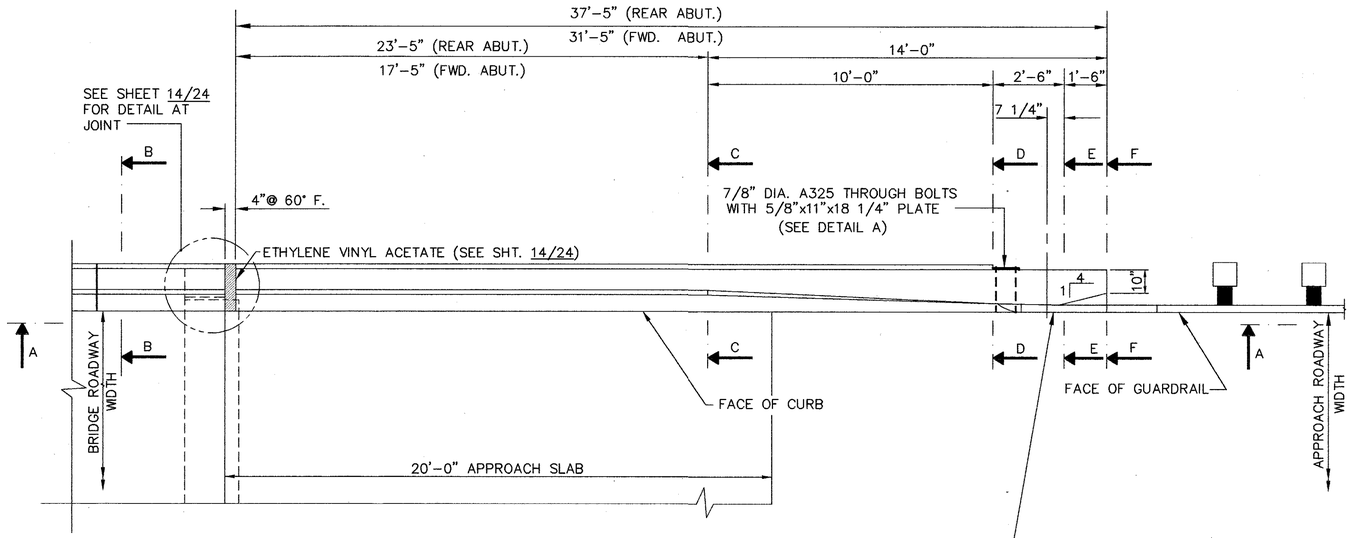

PART PLAN AT ABUTMENT

(FWD. ABUT. SHOWN, REAR ABUT. OPPOSITE HAND)

NOTE: THE THRIE BEAM TERMINAL CONNECTOR SHALL FIT UNDER THE STANDARD GUARDRAIL SECTION AT THE APPROACH END. ALL LAPS SHALL BE IN THE DIRECTION OF TRAFFIC

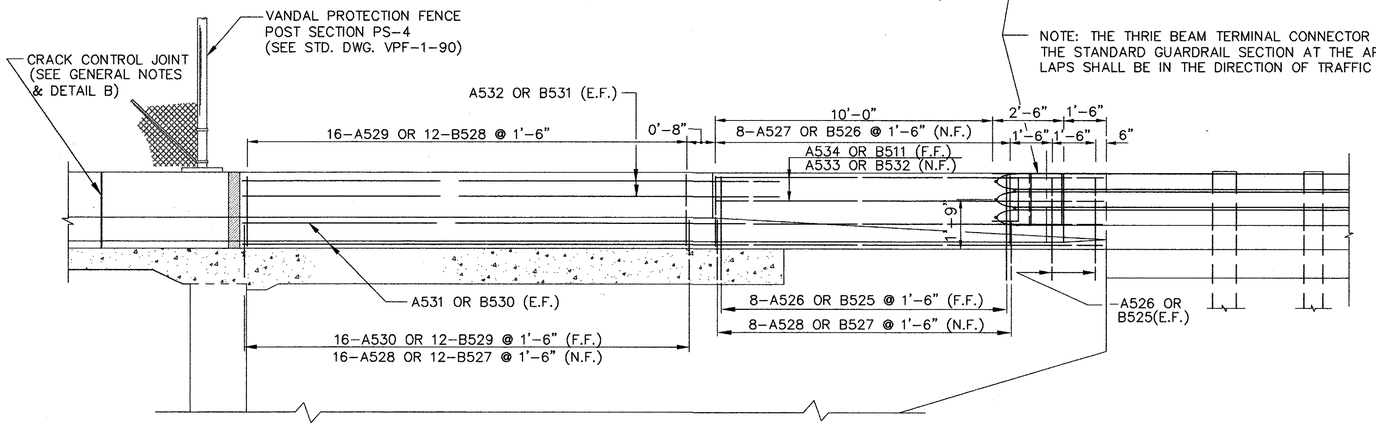

SECTION A-A

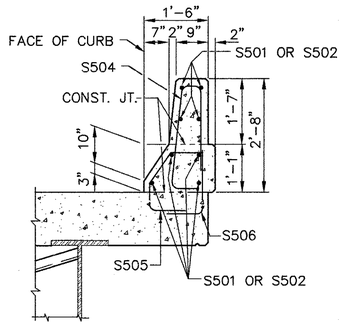

SECTION B-B

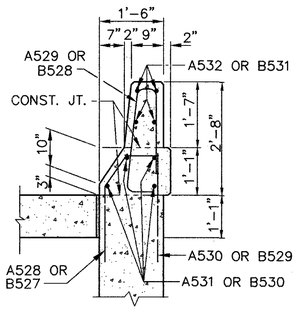

SECTION C-C

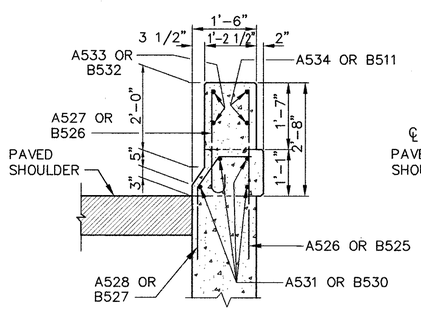

SECTION D-D

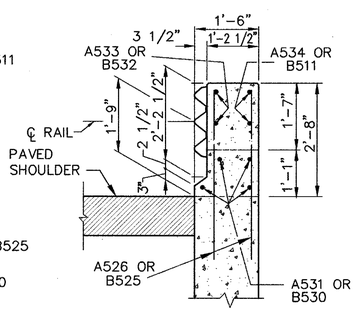

SECTION E-E

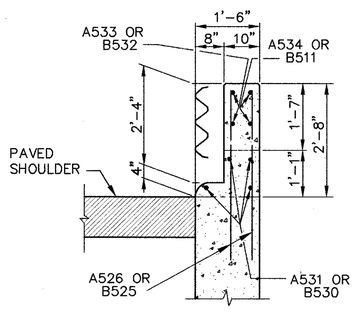

SECTION F-F

NOTES

DESIGN SPECIFICATIONS: "STANDARD SPECIFICATIONS FOR HIGHWAY BRIDGES" ADOPTED BY AASHTO, 1992.

DESIGN DATA: CONCRETE CLASS S f'c = 4500 P.S.I., REINFORCING STEEL ASTM A615, A617 GRADE 60 fy = 60000 P.S.I.

QUANTITIES OF CONCRETE AND REINFORCING STEEL FOR PARAPET ARE INCLUDED WITH ABUTMENTS FOR PAYMENT.

FOR BRIDGE TERMINAL ASSEMBLY SEE STANDARD CONSTRUCTION DRAWING GR-3.1 AND GR-3.2.

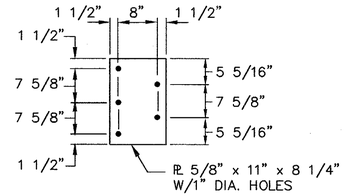

DETAIL A

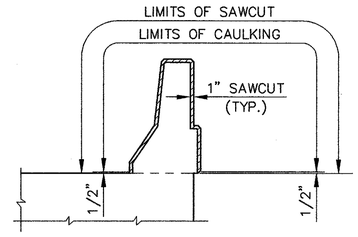

DETAIL B

(SECTION THROUGH SAWCUT)

LEGEND

N.F. = NEAR FACE
E.F. = EACH FACE
F.F. = FAR FACE
FWD. = FORWARD
ABUT. = ABUTMENT

PLOT SCALE 1" = 8'
COL #19 C:\DRAWING\08092308\MCCUTCH\MCCUTBR1.DWG FEBRUARY-07-1995

PREPARED BY ms consultants, inc. CONSULTING ENGINEERS & PLANNERS 4000 BRIDGE BOULEVARD, COLUMBUS, OHIO

DESIGNED B.G.	DRAWN T.S.	REVIEWED J.A.B.	DATE 3-94
CHECKED R.B.	REVISED	STRUCTURE FILE NO. 2512025	

BRIDGE RAILING DEFLECTOR PARAPET
BR. NO. FRA-270-3396
I.R. 270 UNDER McCUTCHEON ROAD

FRA-270-32.46

19/24

426/593

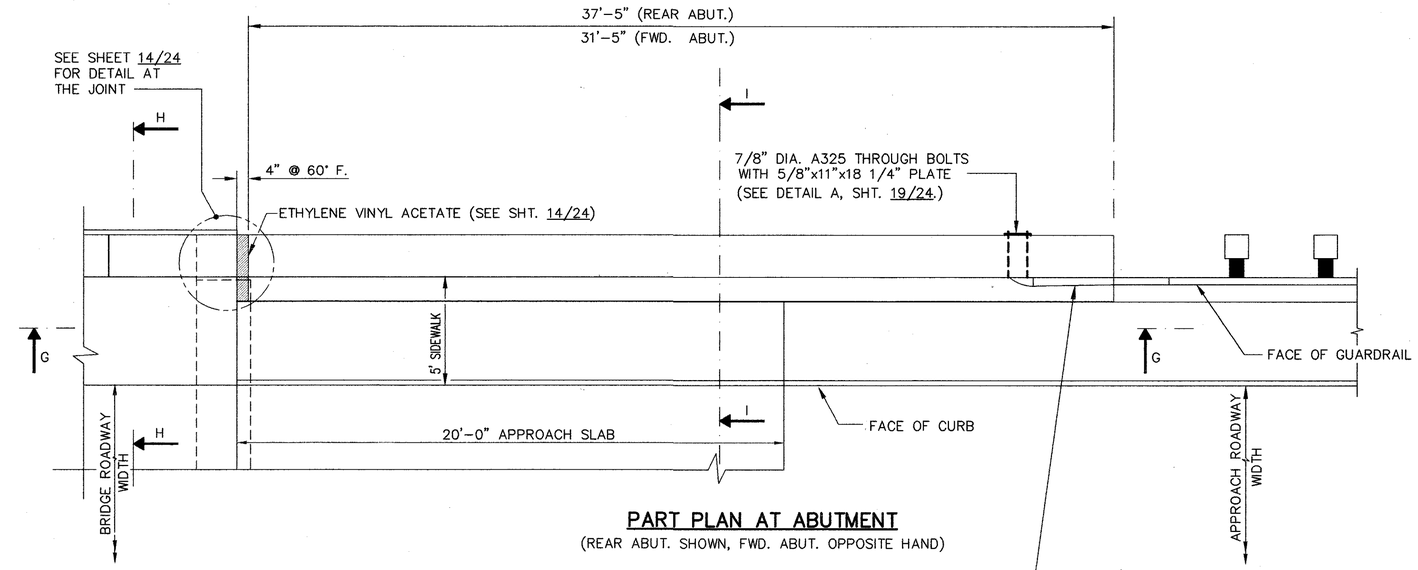

PART PLAN AT ABUTMENT

(REAR ABUT. SHOWN, FWD. ABUT. OPPOSITE HAND)

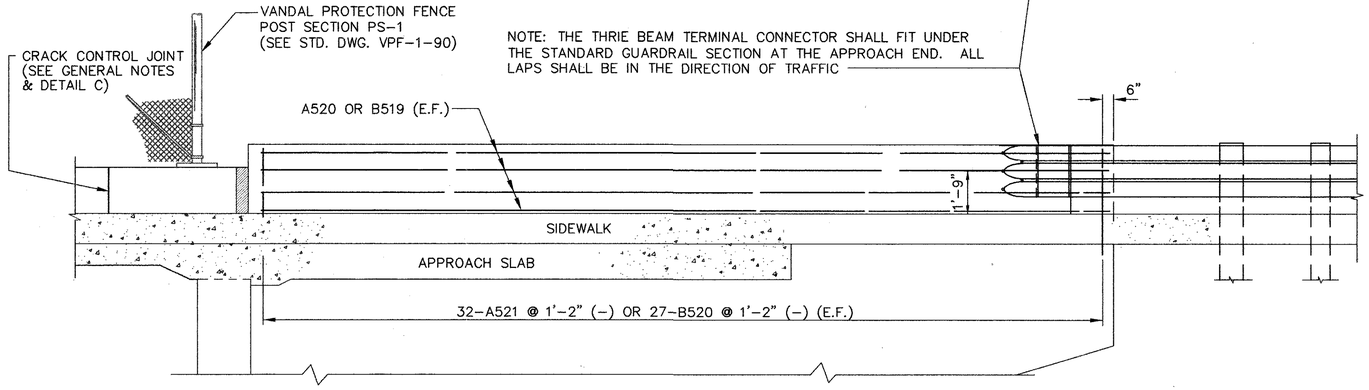

SECTION G-G

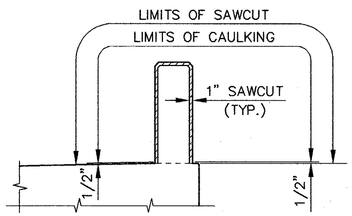

DETAIL C

(SECTION THROUGH SAWCUT)

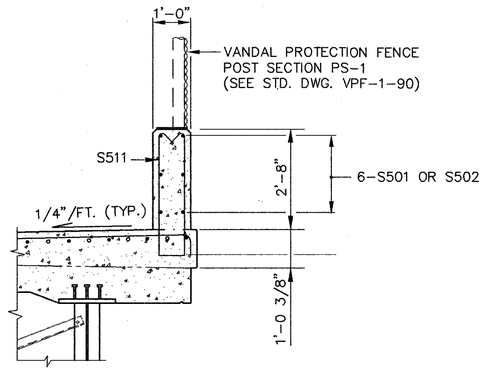

SECTION H-H

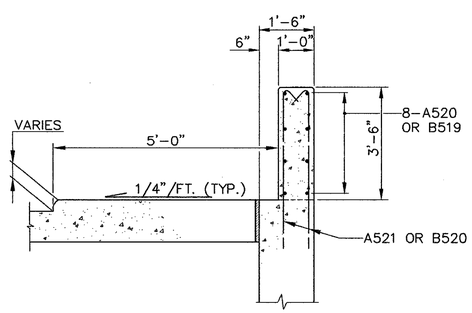

SECTION I-I

NOTES

DESIGN SPECIFICATIONS: "STANDARD SPECIFICATIONS FOR HIGHWAY BRIDGES" ADOPTED BY AASHTO, 1992.

DESIGN DATA: CONCRETE CLASS S f'c = 4500 P.S.I., REINFORCING STEEL ASTM A615, A617 GRADE 60 fy = 60000 P.S.I.

QUANTITIES OF CONCRETE AND REINFORCING STEEL FOR PARAPET ARE INCLUDED WITH ABUTMENTS FOR PAYMENT.

FOR BRIDGE TERMINAL ASSEMBLY SEE STANDARD CONSTRUCTION DRAWING GR-3.1 AND GR-3.2.

LEGEND

TYP. = TYPICAL
SHT. = SHEET
FWD. = FORWARD
ABUT. = ABUTMENT
E.F. = EACH FACE

PLOT SCALE... 1" = 8'
COL #19
C:\DRAWING\06092308\MCCUTCH\MCCUTBR2.DWG FEBRUARY-07-1995

PREPARED BY
ms consultants, inc.
CONSULTING ENGINEERS & PLANNERS
4900 BUSCH BOULEVARD, COLUMBUS, OHIO

DESIGNED B.G.	DRAWN T.S.	REVIEWED J.A.B.	DATE 3-94
CHECKED R.B.	REVISED	STRUCTURE FILE NO. 2512025	

BRIDGE RAILING SIDEWALK PARAPET
BR. NO. FRA-270-3396
I.R. 270 UNDER McCUTCHEON ROAD

FRA-270-32.46

20/24

427/593

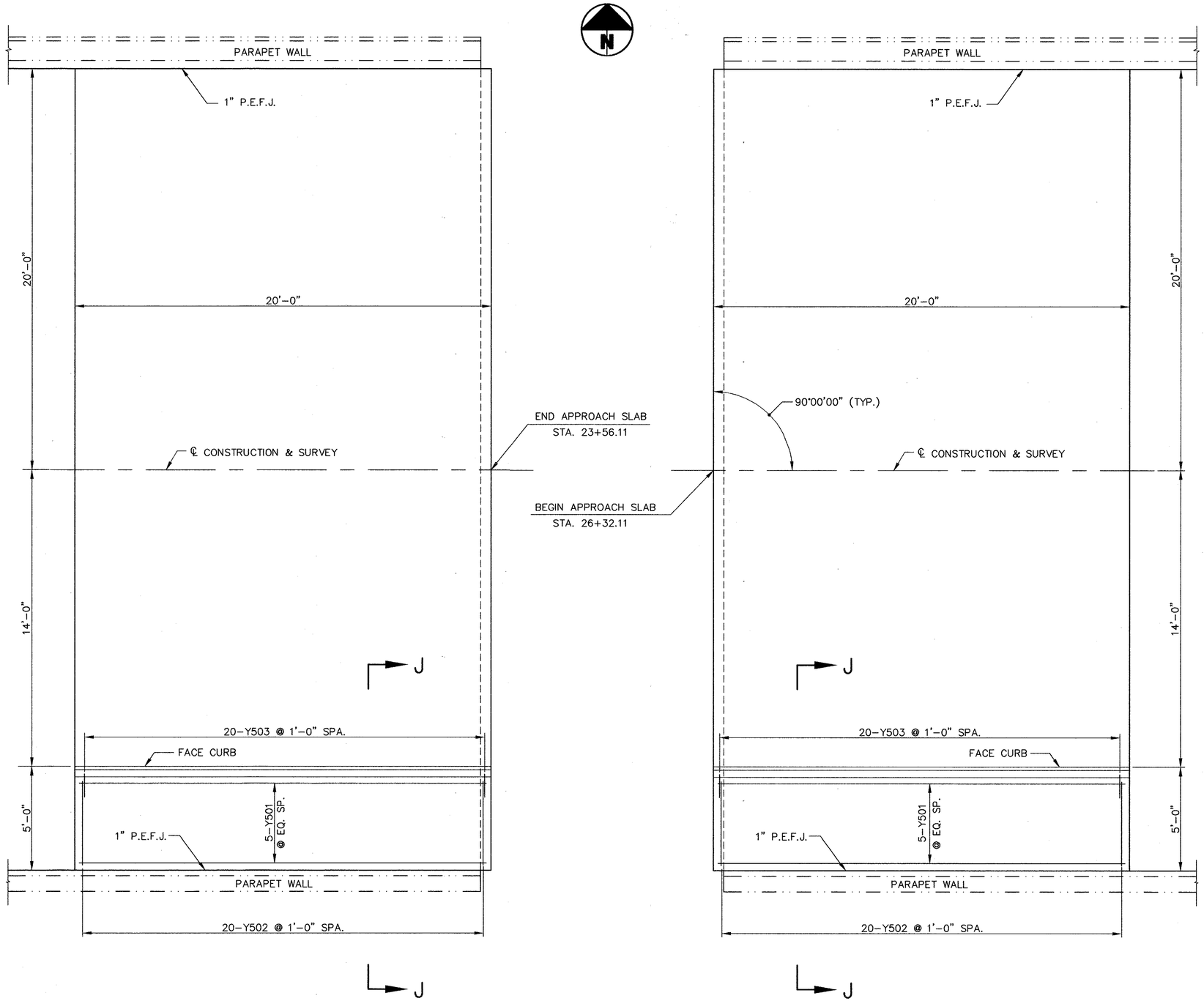

PLAN
(REAR APPROACH SLAB)

PLAN
(FORWARD APPROACH SLAB)

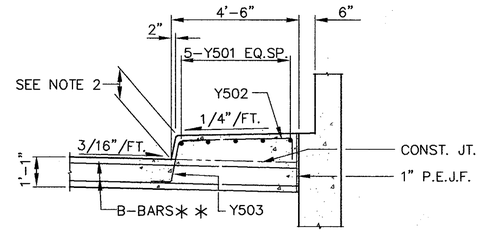

SECTION J-J

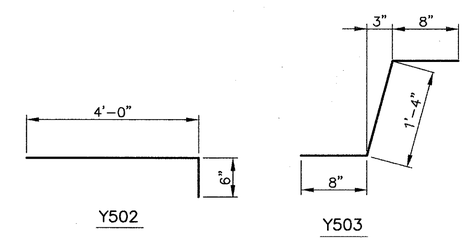

REINFORCING BAR LIST ✱				
MARK	NO.	LENGTH	SHAPE	WEIGHT
Y501	10	19'-8"	STR.	205
Y502	40	4'-4"	BT.	181
Y503	40	2'-5"	BT.	101

✱ INCLUDES BOTH APPROACH SLABS. REINFORCING STEEL TO BE INCLUDED WITH APPROACH SLAB FOR PAYMENT.

NOTES

✱✱ 1. ALL REINFORCING BARS SHALL BE EPOXY COATED. FOR ADDITIONAL DETAILS OF REINFORCEMENT IN APPROACH SLABS NOT SHOWN, SEE STD. DWG. AS-1-81.

2. CURB HEIGHT VARIES UNIFORMLY FROM 10" HIGH AT BRIDGE TO 6" HIGH 10 FT. PAST THE END OF WINGWALL.

3. SEE SHEET 19/24 FOR DEFLECTOR PARAPET TRANSITION DETAILS AND SHEET 20/24 FOR SIDEWALK PARAPET TRANSITION DETAILS.

4. PAYMENT FOR LABOR, MATERIALS & INSTALLATION OF APPROACH SLABS SHALL BE INCLUDED WITH ITEM 611, REINFORCED CONCRETE APPROACH SLAB (T=13"), AS PER PLAN. SEE ROADWAY SUMMARY.

LEGEND

EQ. SP. = EQUAL SPACES
SPA. = SPACING
TYP. = TYPICAL
P.E.J.F. = PREFORMED EXPANSION JOINT FILLER

PREPARED BY ms consultants, inc. CONSULTING ENGINEERS & PLANNERS 6500 BUSCH BOULEVARD, COLUMBUS, OHIO

DESIGNED B.G.	DRAWN T.S.	REVIEWED J.A.B.	DATE 3-94
CHECKED R.B.	REVISED	STRUCTURE FILE NO. 2512025	

APPROACH SLAB DETAILS
BR. NO. FRA-270-3396
I.R. 270 UNDER McCUTCHEON ROAD

FRA-270-32.46

21/24

428/593

PLOT SCALE 3/8" = 1'
COL #19 C:\DRAWING\06092308\MCCUTCH\MCCUTAPS.DWG FEBRUARY-07-1995

APPROACH SLAB DETAILS

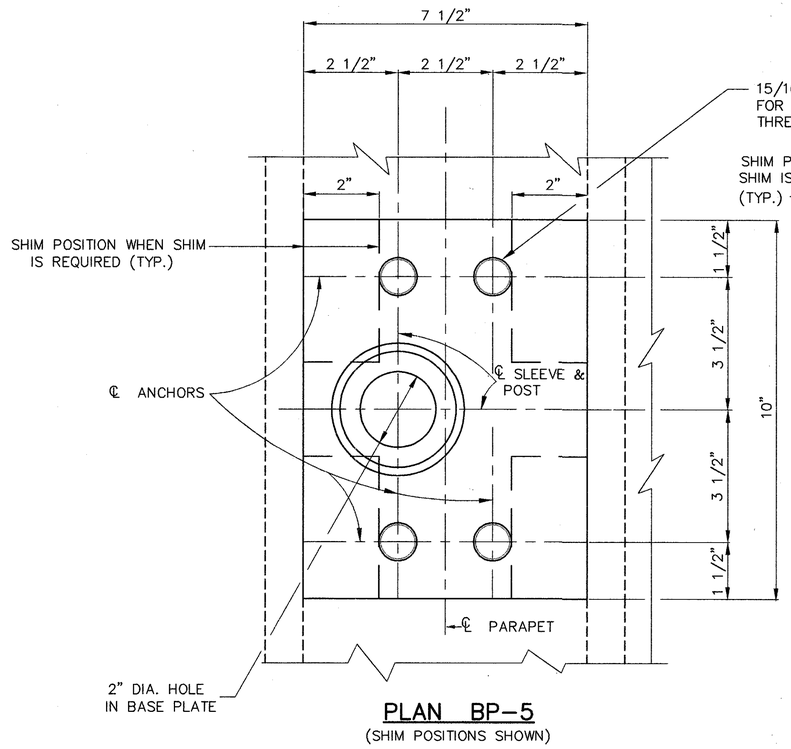

PLAN BP-5
(SHIM POSITIONS SHOWN)

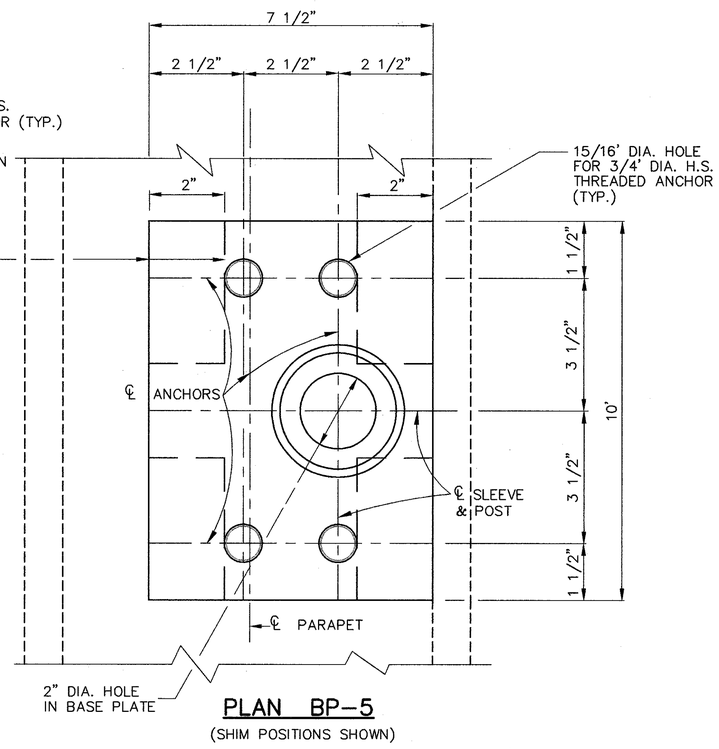

PLAN BP-5
(SHIM POSITIONS SHOWN)

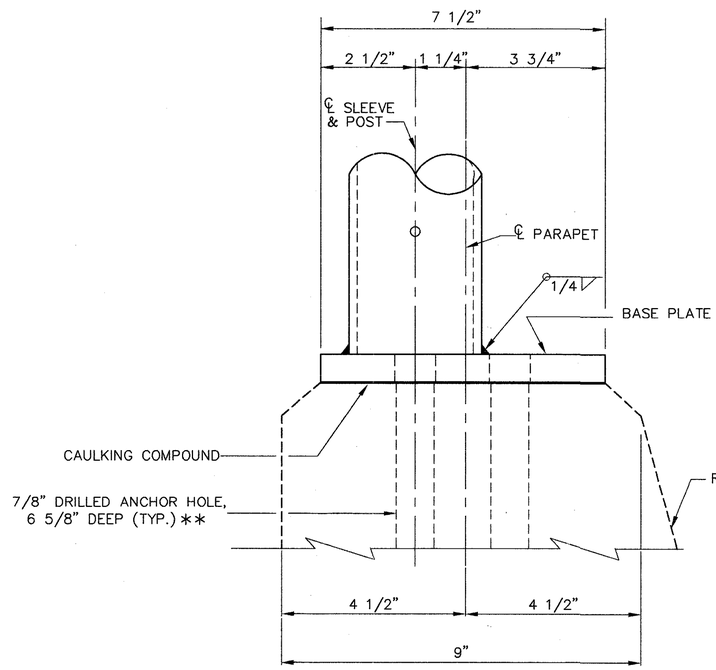

END VIEW BP-5
(DEFLECTOR PARAPET)

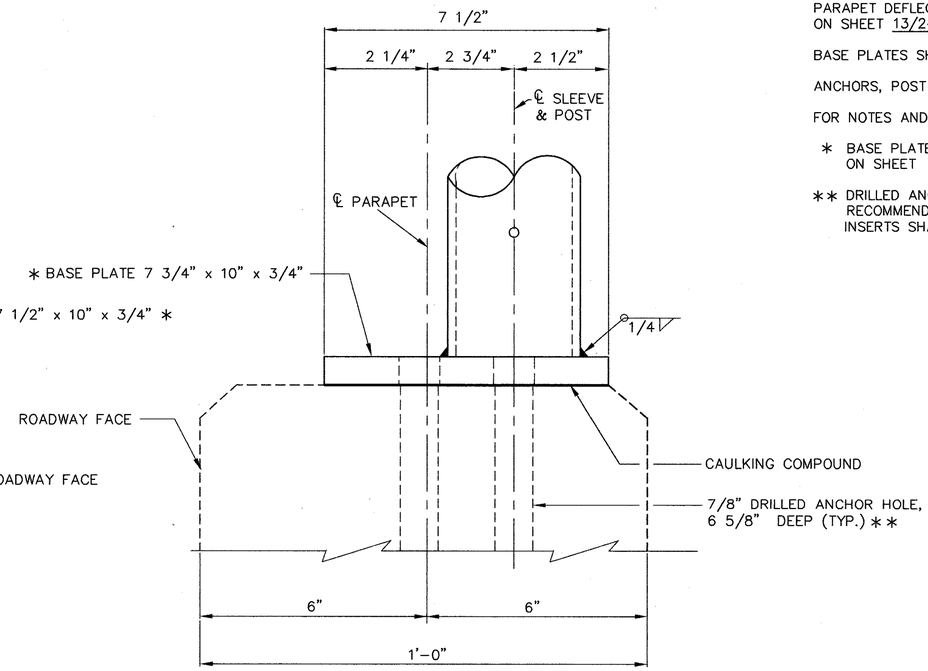

END VIEW BP-5
(SIDEWALK PARAPET)

NOTES

PARAPET DEFLECTION JOINTS SHALL BE LOCATED AS SHOWN ON SHEET 13/24 , DECK PLAN.

BASE PLATES SHALL CLEAR PARAPET CRACK CONTROL JOINTS BY 2" MIN.

ANCHORS, POST AND SET SCREWS NOT SHOWN.

FOR NOTES AND DETAILS NOT SHOWN, SEE STD. DWG. VPF-1-90.

* BASE PLATE REQUIRES A SLEEVE. SEE POST SLEEVE DETAILS ON SHEET 2/6 , STD. DWG. VPF-1-90.

** DRILLED ANCHOR HOLE SHALL BE 6 5/8" DEEP OR AS RECOMMENDED BY THE FASTENER MANUFACTURER. INSERTS SHALL BE APPROVED BY THE DIRECTOR.

LEGEND
TYP. = TYPICAL
DIA. = DIAMETER
H.S. = HIGH STRENGTH

PLOT SCALE 1" = 8'
CAL #13 C:\DRAWING\06092308\MCCUTCH\MCCUTVPF.DWG FEBRUARY-07-1995

PREPARED BY ms consultants, inc. CONSULTING ENGINEERS & PLANNERS 400 STONE BUILDING, COLUMBUS, OHIO

DESIGNED R.B.	DRAWN T.S.	REVIEWED J.A.B.	DATE 3-94
CHECKED B.G.	REVISED	STRUCTURE FILE NO. 2512025	

VANDAL PROTECTION FENCE
BR. NO. FRA-270-3396
I.R. 270 UNDER McCUTCHEON ROAD

FRA-270-32.46

22/24

429/593

VANDAL PROTECTION FENCE DETAILS

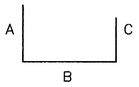

TYPE 1

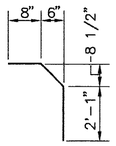

TYPE 5

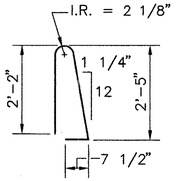

TYPE 7

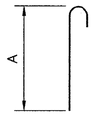

TYPE 8

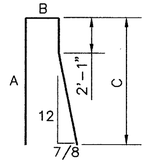

TYPE 9

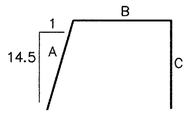

TYPE 10

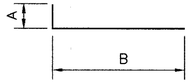

TYPE 11

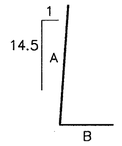

TYPE 14

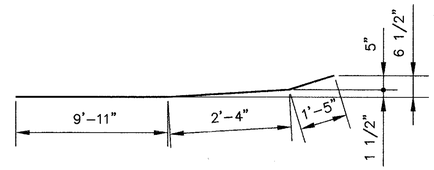

TYPE 15

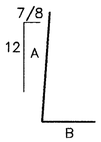

TYPE 16

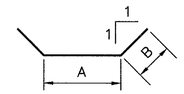

TYPE 18

NOTE: ALL BARS TO BE EPOXY COATED.

REAR ABUTMENT & WINGWALLS										FWD. ABUTMENT & WINGWALLS									
MARK	NO.	LENGTH	TYPE	A	B	C	D	INC.	WEIGHT	MARK	NO.	LENGTH	TYPE	A	B	C	D	INC.	WEIGHT
A501	116	15'-8"	STR.						1895	B501	20	22'-10"	STR.						476
A502	22	19'-10"	STR.						455	B502	44	14'-2"	STR.						650
A503	44	20'-9"	STR.						952	B503	40	16'-9"	STR.						699
A504	20	34'-5"	STR.						718	B504	20	28'-5"	STR.						593
A505	28	14'-1"	STR.						411	B505	28	11'-9"	STR.						343
A506	42	21'-7"	STR.						945	B506	38	21'-7"	STR.						855
A507	28	4'-11"	10	1'-6"	2'-2"	1'-6"			144	B507	28	4'-11"	1	1'-6"	2'-2"	1'-6"			144
A508	12	7'-3"	STR.						91	B508	12	7'-3"	STR.						91
A509	20	3'-8"	STR.						76	B509	20	3'-8"	STR.						76
A510	20	11'-9"	18	8'-10"	1'-6"				245	B510	18	11'-9"	18	8'-10"	1'-6"				221
A511	19	20'-1" / 20'-7 1/2"	STR.					3/8"	403	B511	2	13'-8"	STR.						29
										B512	36	25'-5"	STR.						954
A512	40	31'-5"	STR.						1311	B513	4	23'-4" / 27'-7"	STR.					4'-3"	106
A513	4	28'-11" / 32'-7"	STR.					3'-8"	128	B514	6	30'-7"	STR.						191
A514	12	36'-7"	STR.						458	B515	4	9'-0"	STR.						38
A515	4	9'-0"	STR.						38	B516	7	6'-3" / 11'-3"	9	2'-8" / 5'-2"	1'-2"	2'-8" / 5'-2"		5"	64
A516	7	6'-3" / 11'-9"	9	2'-8" / 5'-5"	1'-2"	2'-8" / 5'-5"		5 1/2"	66	B517	16	18'-7" / 19'-4 1/2"	STR.					5/8"	317
A517	19	21'-7" / 21'-7 1/2"	STR.					3/8"	424	B518	16	10'-7"	STR.						177
A518	19	11'-1"	STR.						220	B519	8	30'-11"	STR.						258
A519	2	21'-8"	STR.						45	B520	54	5'-5"	8	4'-10"					305
A520	8	36'-11"	STR.						308	B521	2	22'-8"	STR.						47
A521	64	5'-5"	8	4'-10"					362	B522	16	9'-8"	STR.						161
A522	4	28'-7" / 35'-0"	STR.					6'-5"	133	B523	16	17'-9" / 18'-8"	STR.					3/4"	304
A523	7	6'-3" / 10'-3"	9	2'-8" / 4'-8"	1'-2"	2'-8" / 4'-8"		4"	60	B524	7	6'-3" / 8'-9"	9	2'-8" / 3'-11"	1'-2"	2'-8" / 3'-11"		2 1/2"	55
A524	19	10'-0"	STR.						198	B525	12	4'-0"	STR.						50
A525	2	20'-7"	STR.						43	B526	8	3'-0"	8	2'-5"					25
A526	12	4'-0"	STR.						50	B527	20	3'-7"	5						75
A527	8	3'-0"	8	2'-5"					25	B528	12	5'-3"	7						66
A528	24	3'-7"	5						90	B529	12	2'-9"	STR.						34
A529	16	5'-3"	7						88	B530	4	30'-11"	STR.						129
A530	16	2'-9"	STR.						46	B531	4	19'-0"	STR.						80
A531	4	36'-11"	STR.						154	B532	2	13'-8"	15						29
A532	4	25'-3"	STR.						105	B533	10	4'-10"	11	1'-2"	3'-10"				50
A533	2	13'-8"	15						29	B534	4	2'-2"	STR.						9
A534	2	13'-8"	STR.						29	B535	6	4'-5"	1	2'-0"	8"	2'-0"			28
A535	10	4'-10"	11	1'-2"	3'-10"				50										
A536	4	2'-2"	STR.						9	B601	38	13'-8"	STR.						780
A537	6	4'-5"	1	2'-0"	8"	2'-0"			28	B602	28	12'-0"	STR.						505
A801	28	12'-9"	14	6'-10 1/2"	6'-0"				953	B801	92	14'-2"	STR.						3480
A802	28	14'-4"	STR.						1072	B802	30	14'-10"	16	9'-6 1/2"	5'-6"				1188
A803	27	15'-3"	14	9'-4 1/2"	6'-0"				1099	B803	32	11'-10"	16	6'-6 1/2"	5'-6"				1011
										B804	32	11'-0"	STR.						940
A901	96	15'-8"	STR.						5114	B805	28	11'-5"	1	6'-5 1/2"	5'-2"	0			854
A902	38	13'-1"	16	7'-10"	5'-6"				1690	B806	27	14'-5"	1	9'-5 1/2"	5'-2"	0			1039
A903	38	13'-0"	STR.						1680										
A904	36	15'-2"	16	9'-11"	5'-6"				1856	B901	38	13'-8"	STR.						1766
						TOTAL WEIGHT			24,296							TOTAL WEIGHT			19,292

LEGEND
INC. = INCREMENT
STR. = STRAIGHT BAR
I.R. = INSIDE RADIUS

PLOT SCALE = 1 = 1
COL #19 C:\DRAWING\0609230\MCCUTCH\MCCUTR1.DWG FEBRUARY-07-1995

PREPARED BY
ms consultants, inc.
CONSULTING ENGINEERS & PLANNERS
600 HOWE BOULEVARD, COLORADO, 0809

DESIGNED C.H. | DRAWN C.H. | REVIEWED J.A.B. | DATE 3-94 | CHECKED R.B. | REVISED | STRUCTURE FILE NO. 2512025

REINFORCING STEEL-ABUTMENTS & WINGWALLS
BR. NO. FRA-270-3396
I.R. 270 UNDER McCUTCHEON ROAD

FRA-270-32.46

23/24

430/593

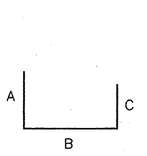

TYPE 1

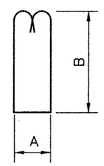

TYPE 2

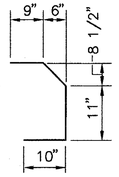

TYPE 3

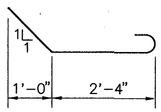

TYPE 4

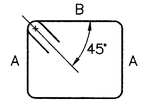

TYPE 6

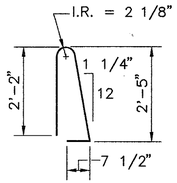

TYPE 7

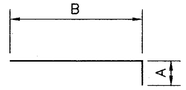

TYPE 11

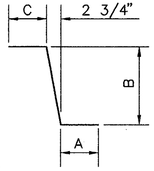

TYPE 12

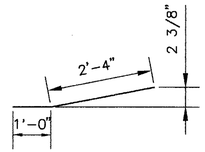

TYPE 13

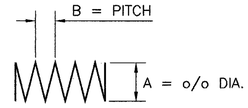

TYPE 17

SUPERSTRUCTURE										PIER									
MARK	NO.	LENGTH	TYPE	A	B	C	D	INC.	WEIGHT	MARK	NO.	LENGTH	TYPE	A	B	C	D	INC.	WEIGHT
S401	385	40'–0"	STR.						10,287	P501	60	11'–3"	6	1'–8 1/2"					704
S402	55	6'–2"	STR.						227	P502	2 SETS OF 8	11'–3" / 10'–10"	6	3'–7 3/4" / 3'–5 1/2"	1'–8 1/2"			3/4"	184
S403	42	40'–0"	STR.						1,122										
S404	6	6'–2"	STR.						25	P503	12	20'–7"	STR.						258
S405	5	40'–0"	STR.						134	P504	10	4'–5"	1	1'–0"	2'–8"	1'–0"			46
S406	274	6'–2"	11	0'–7"	5'–8"				1,129	P505	12	3'–6"	13						44
S407	274	2'–5"	12	0'–8 1/2"	1'–2"	0'–8 1/2"			442	P506	4	2'–8"	STR.						11
										P507	48	9'–8"	STR.						484
S501	393	40'–0"	STR.						16,396										
S502	56	9'–8"	STR.						565	P601	12	6'–4"	1	2'–0"	2'–8"	2'–0"			114
S503	1018	21'–7"	STR.						22,917										
S504	184	5'–3"	7						1,008	P901	84	9'–8"	STR.						2,761
S505	184	3'–3"	3						624	P902	6	25'–1"	STR.						512
S506	184	2'–1"	1	1'–4 1/2"	0'–10"				400	P903	12	19'–7"	11	3'–5 1/2"	16'–5"				799
S507	237	7'–10"	2	0'–8"	3'–3"				1,936	P904	24	20'–10"	STR.						1,700
S508	52	6'–9"	1	2'–5"	2'–2"	2'–5"			366										
S509	52	9'–4"	1	5'–11"	1'–8"	2'–0"			506	P1001	24	7'–7"	11	2'–0"	5'–11"				783
S510	52	6'–0"	11	2'–0"	4'–9 1/2"				325	P1002	24	18'–11"	STR.						1,954
S601	509	17'–3"	STR.						13,188	SP401	3	15'–11"	17	2'–6"	4 1/2"				819
S602	509	26'–3"	STR.						20,069										
S603	54	40'–0"	STR.						3,244										
S604	54	12'–11"	STR.						1,048							TOTAL WEIGHT			11,173
S605	54	9'–11"	STR.						805										
S801	26	24'–1"	STR.						1,672										
S802	26	18'–8"	STR.						1,296										
S803	12	7'–0"	STR.						224										
S804	6	25'–2"	STR.						403										
D801	52	4'–8"	4						648										
						TOTAL WEIGHT			101,006										

NOTES:

SPIRAL REINFORCMENT BARS: THE "LENGTH" SHOWN IN THE STEEL LIST FOR THE SPIRAL BARS IS THE LENGTH OF THE SPIRAL ALONG THE AXIS OF THE SPIRAL. THREE STEEL CHANNEL, TEE OR ANGLE SPACERS, WEIGHING APPROXIMATELY 0.80 LB. PER LIN. FT. OF SPACER, SHALL BE PROVIDED FOR EACH SPIRAL UNIT. THEY SHALL BE EQUALLY SPACED ALONG THE PERIPHERY OF THE COILS. THE NUMBER OF POUNDS OF THESE SPACERS, BASED ON 2.40 PER LIN. FT., WILL BE PAID FOR AS REINFORCING STEEL AND IS INCLUDED IN THE TABULATED QUANTITIES OF SPIRAL BARS.

LEGEND

INC. = INCREMENT
STR. = STRAIGHT BAR
I.R. = INSIDE RADIUS

PREPARED BY
ms consultants, inc.
CONSULTING ENGINEERS & PLANNERS
OMAHA WORTHINGTON CHARLOTTE KANSAS CITY

REVIEWED J.A.B.	DATE 3-94	STRUCTURE FILE NO. 2512025
DRAWN C.H.	REVISED	
DESIGNED C.H.	CHECKED R.B.	

REINFORCING STEEL–SUPERSTRUCTURE & PIER
BR. NO. FRA-270-3396
I.R. 270 UNDER McCUTCHEON ROAD

FRA–270–32.46

24/24

431/593

PLOT SCALE: 1 = 1
COLOR #19 G:\DRAWING\96092908\MCCUTCH\MCCUTCH1.DWG FEBRUARY-07-1995

CURVE DATA (C2)

P.I. STA.= CDN–1365+06.09
Δ = 13°41'38" RT.
D_c = 01°30'00"
R = 3820.00'
L_s = 200.00'
θ_s = 01°30'00"
LT = 133.34'
ST = 66.67'
x = 199.99'
y = 1.75'
k = 100.00'
P = 0.44'
Δ_c = 12°11'38" RT.
L_c = 812.99'
T_s = 556.89'
E_s = 27.66'
e_{max} = 0.037'
TS STA.=CDN–1359+49.20
SC STA.=CDN–1361+49.20
PT STA.=CDN–1369+62.19

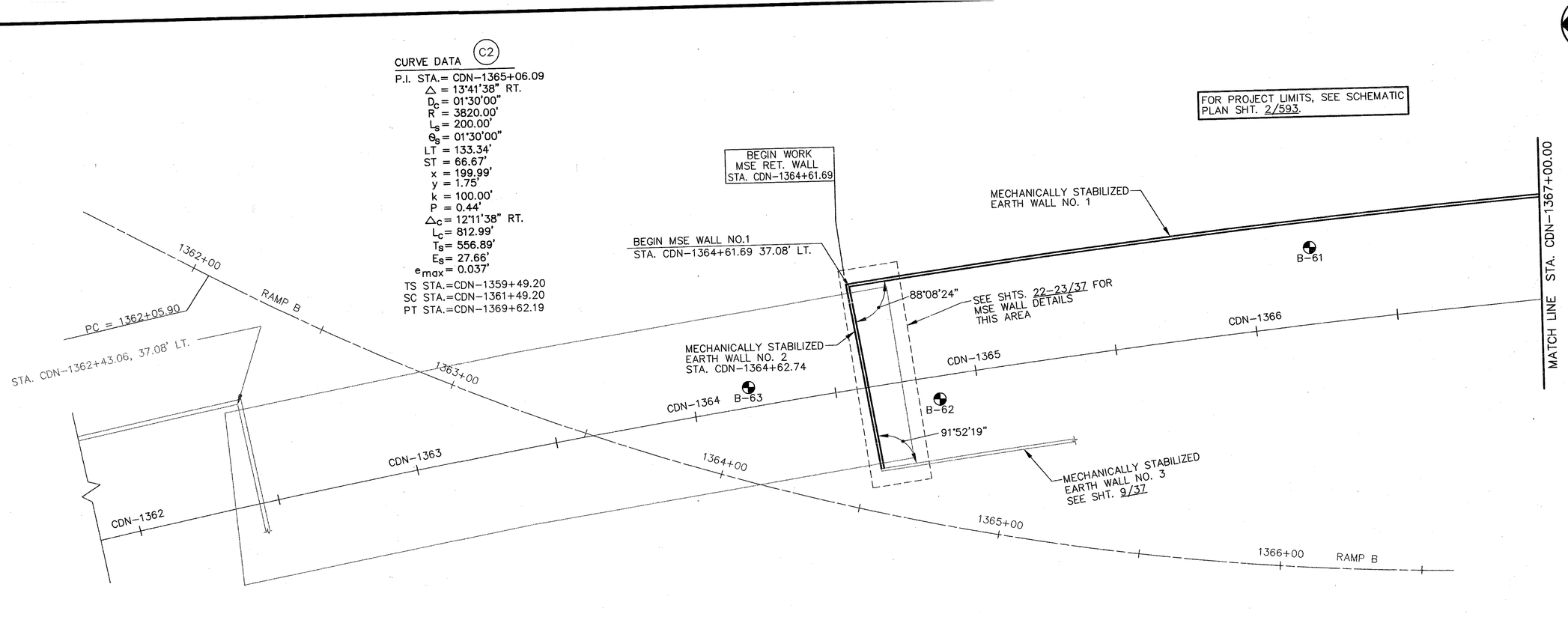

PLAN

INDICATES LOCATION OF SUBSURFACE BORINGS

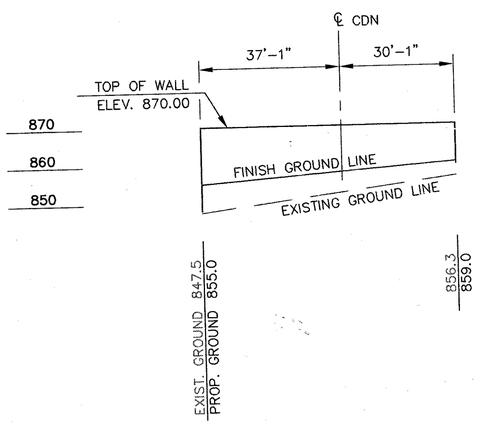

PROFILE WALL NO.2

LOCATION	STATION	ELEV.
A	CDN–1364+61.69	870.00
B	CDN–1364+71.94	870.00
C	CDN–1364+71.94	882.26

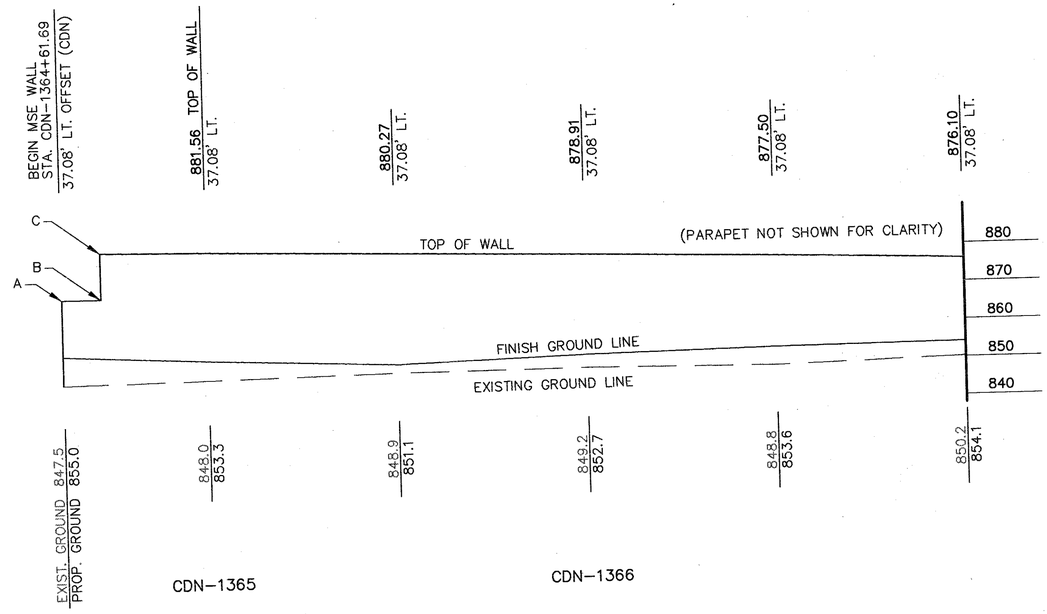

PROFILE WALL NO.1 (EAST)

PLOT SCALE...1" = 20'
DGN: 49 C:\NEANN\V0609236\PROFILE\RAMPCD.DWG FEBRUARY-08-1995

PREPARED BY ms consultants, inc.
CONSULTING ENGINEERS & PLANNERS
4000 BRIDGE BROADWAY, COLUMBUS, OHIO

DESIGNED C.H.	DRAWN C.H.	REVIEWED J.A.B.	DATE 3-94
CHECKED R.B.	REVISED	STRUCTURE FILE NO. N/A	

WALL NO. 1 & NO. 2
MECHANICALLY STABILIZED EARTH WALLS
STA. CDN–1364+62.74 to STA. CDN–1367+00

FRA–270–32.46

1/3

432/593

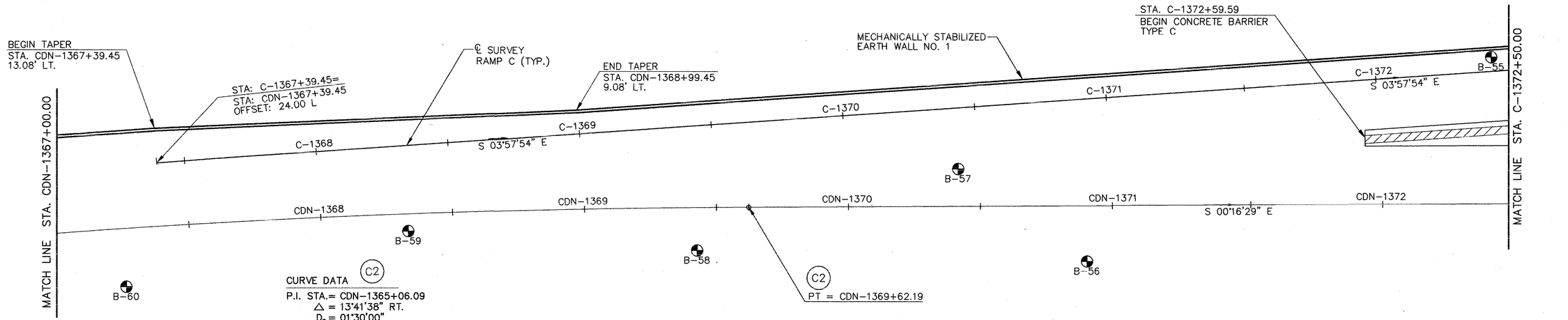

CURVE DATA

P.I. STA.= CDN-1365+06.09
Δ = 13°41'38" RT.
D_c = 01°30'00"
R = 3820.00'
L_s = 200.00'
θ_s = 01°30'00"
LT = 133.34'
ST = 66.67'
x = 199.99'
y = 1.75'
k = 100.00'
P = 0.44'
Δ_c = 12°11'38" RT.
L_c = 812.99'
T_s = 556.89'
E_s = 27.66'
e_{max} = 0.037'
TS STA.=CDN-1359+49.20
SC STA.=CDN-1361+49.20
PT STA.=CDN-1369+62.19

PLAN

INDICATES LOCATION OF SUBSURFACE BORINGS

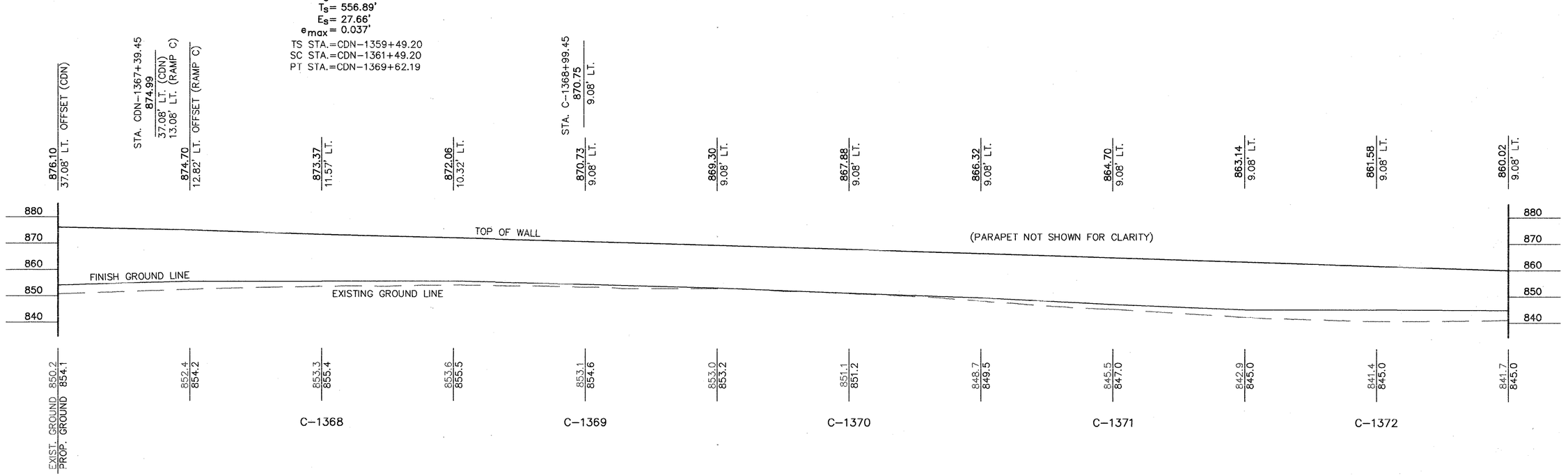

PROFILE WALL NO.1 (EAST)

PLOT SCALE..1" = 20'
COD. FILE C:\MDM\WGV\06092230\GV\PROFILE\RAMPC0.DWG FEBRUARY-08-1995

PREPARED BY
ms consultants, inc.
CONSULTING ENGINEERS & PLANNERS
4000 BRIDGE PARKWAY, COLUMBUS, OHIO

DESIGNED	DRAWN	REVIEWED	DATE
C.H.	C.H.	J.A.B.	3-94
CHECKED	REVISED	STRUCTURE FILE NO.	
R.B.		N/A	

WALL NO. 1
MECHANICALLY STABILIZED EARTH WALLS
STA. C-1367+00 to STA. C-1372+50

FRA-270-32.46

2/37

433/593

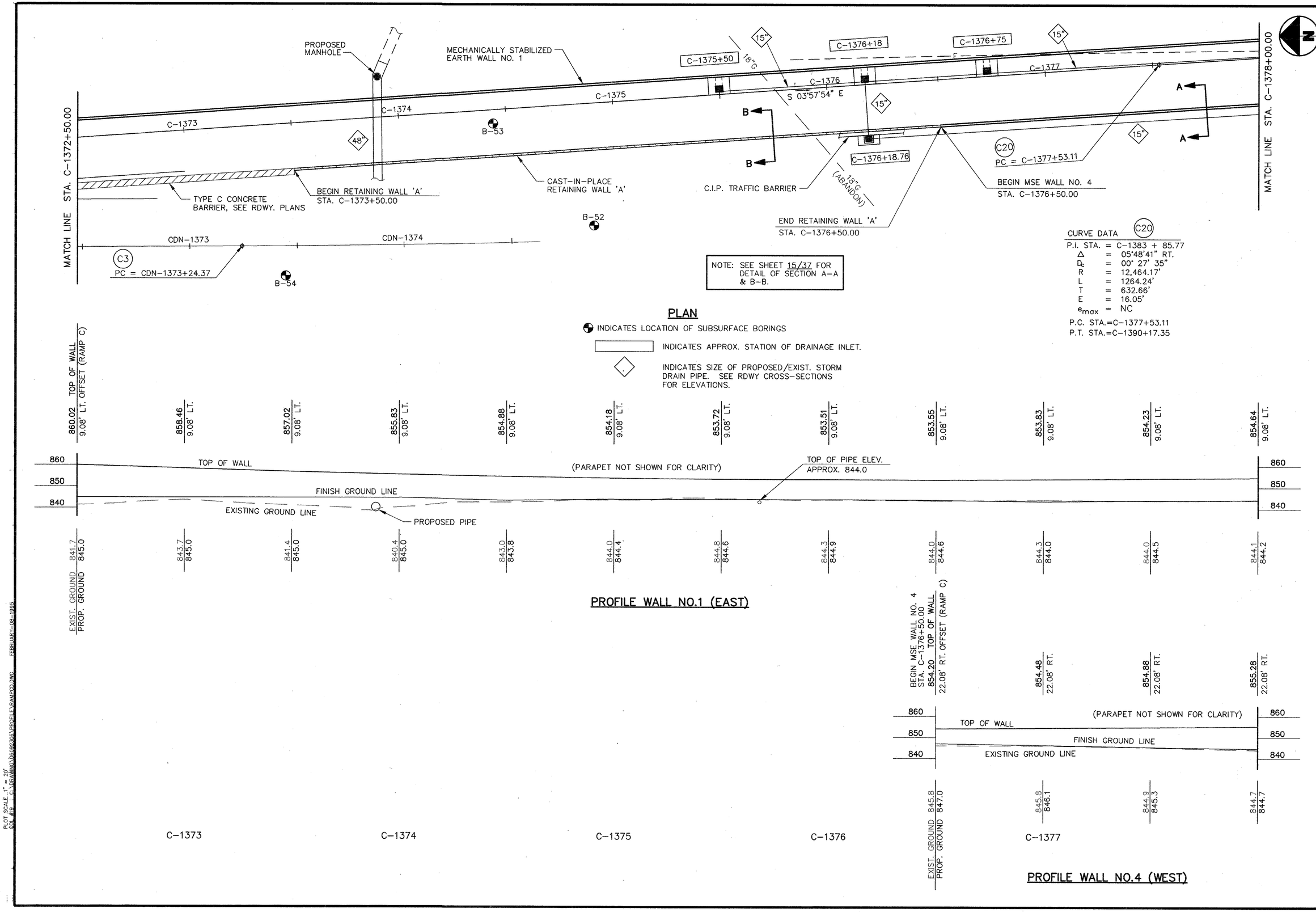

PLOT SCALE 1" = 20'
COL #19 | C:\DRAWING\06092306\PROFILE\RAMPCD.DWG FEBRUARY-08-1995

PREPARED BY ms consultants, inc.
CONSULTING ENGINEERS & PLANNERS
4500 BUSCH BOULEVARD, COLUMBUS, OHIO

DESIGNED	DRAWN	REVIEWED	DATE
C.H.	C.H.	J.A.B.	3-94
CHECKED	REVISED	STRUCTURE FILE NO.	
R.B.		N/A	

WALL NO. 1 & NO. 4
MECHANICALLY STABILIZED EARTH WALLS
STA. C-1372+50 to STA. C-1378+00

FRA-270-32.46

3/37

434/593

WALL NO. 1 & NO. 4

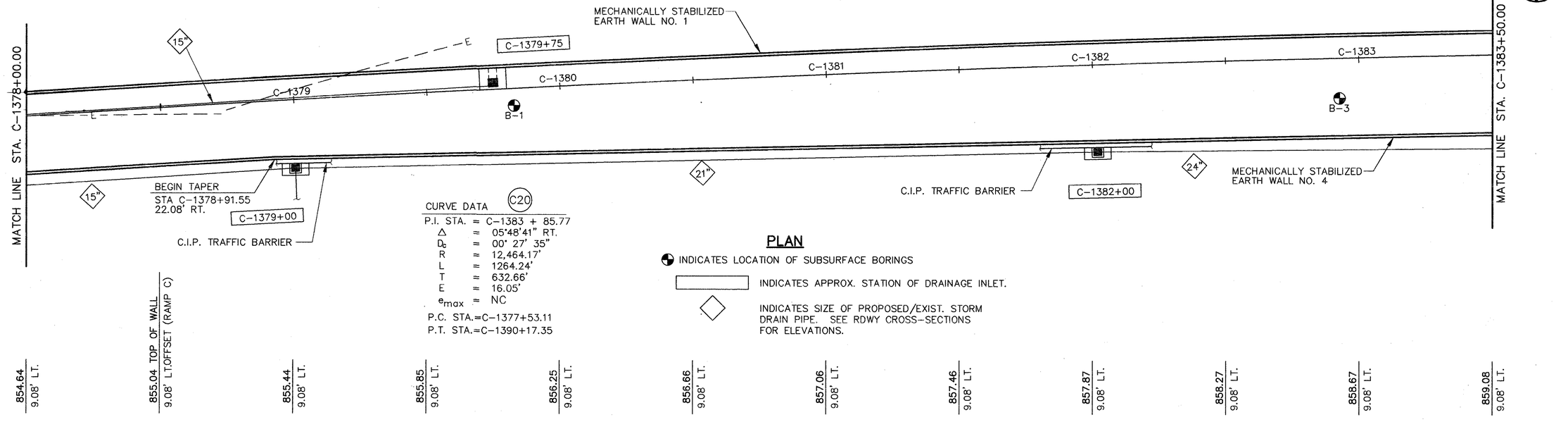

CURVE DATA (C20)

P.I. STA. = C-1383 + 85.77
Δ = 05°48'41" RT.
D_c = 00° 27' 35"
R = 12,464.17'
L = 1264.24'
T = 632.66'
E = 16.05'
e_{max} = NC
P.C. STA.=C-1377+53.11
P.T. STA.=C-1390+17.35

PLAN

INDICATES LOCATION OF SUBSURFACE BORINGS

INDICATES APPROX. STATION OF DRAINAGE INLET.

INDICATES SIZE OF PROPOSED/EXIST. STORM DRAIN PIPE. SEE RDWY CROSS-SECTIONS FOR ELEVATIONS.

855.04 TOP OF WALL 9.08' LT.OFFSET (RAMP C)	854.64 9.08' LT.	855.44 9.08' LT.	855.85 9.08' LT.	856.25 9.08' LT.	856.66 9.08' LT.	857.06 9.08' LT.	857.46 9.08' LT.	857.87 9.08' LT.	858.27 9.08' LT.	858.67 9.08' LT.	859.08 9.08' LT.

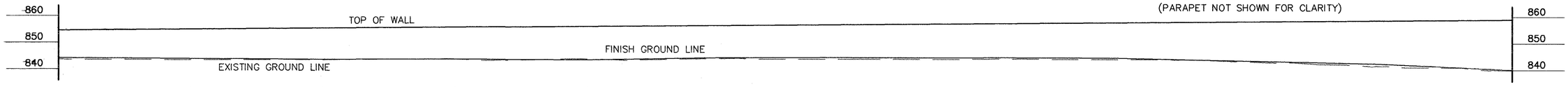

EXIST. GROUND 844.1 PROP. GROUND 844.2	843.8 844.0	843.7 843.9	843.8 844.0	844.0 843.9	844.0 844.2	844.0 844.3	844.0 844.4	844.0 844.3	843.6 843.3	842.0 842.1	840.0 840.1

PROFILE WALL NO.1 (EAST)

855.28 TOP OF WALL 22.08' RT.OFFSET (RAMP C)	STA. C-1378+91.55 856.02 22.08' RT.	855.69 22.08' RT.	856.09 22.21' RT.	856.51 22.98' RT.	856.92 23.74' RT.	857.34 24.51' RT.	857.76 25.28' RT.	858.17 26.05' RT.	858.59 26.82' RT.	859.00 27.58' RT.	859.42 28.35' RT.	859.83 29.12' RT.

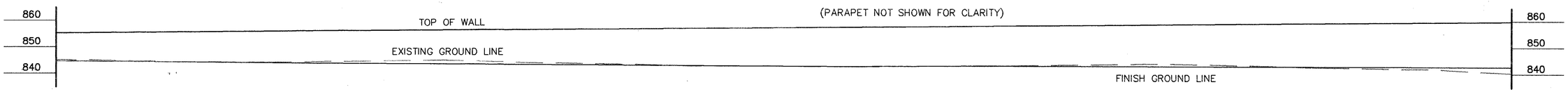

EXIST. GROUND 844.7 PROP. GROUND 844.7	844.2 844.1	844.2 843.7	844.9 843.5	844.0 843.4	843.0 843.3	842.8 843.2	843.1 843.1	843.6 842.9	843.3 842.8	842.2 842.7	840.3 842.6
		C-1379		C-1380		C-1381		C-1382		C-1383	

PROFILE WALL NO.4 (WEST)

PLOT SCALE .1" = 20'
COL #19 C:\DRAWING\D6092063\PROFILE\RAMPCD.DWG FEBRUARY-08-1995

PREPARED BY
ms consultants, inc.
CONSULTING ENGINEERS & PLANNERS
4900 BUSINESS BOULEVARD, COLUMBUS, OHIO

DESIGNED C.H.	DRAWN C.H.	REVIEWED J.A.B.	DATE 3-94
CHECKED R.B.	REVISED	STRUCTURE FILE NO. N/A	

WALL NO. 1 & NO. 4
MECHANICALLY STABILIZED EARTH WALLS
STA. C-1378+00 to STA. C-1383+50

FRA-270-32.46

4 / 37

435
593

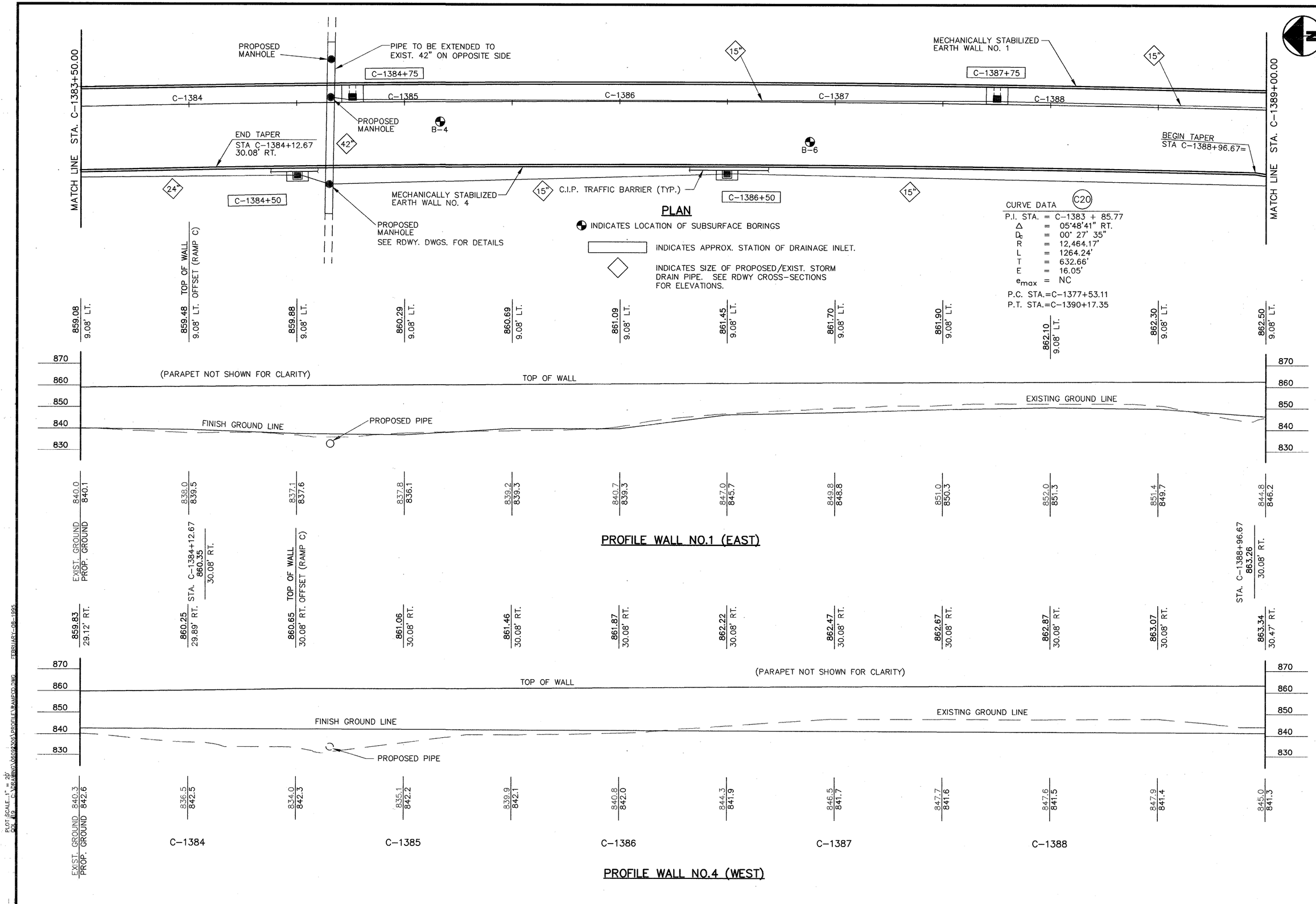

PLOT SCALE 1" = 20'
COL. #19 C:\DRAWING\06092306\PROFILE\RAMPCD.DWG FEBRUARY-08-1995

PREPARED BY
ms consultants, inc.
CONSULTING ENGINEERS & PLANNERS
6500 BUSCH BOULEVARD, COLUMBUS, OHIO

DESIGNED	DRAWN	REVIEWED	DATE
C.H.	C.H.	J.A.B.	3-94
CHECKED	REVISED	STRUCTURE FILE NO.	
R.B.		N/A	

WALL NO. 1 & NO. 4
MECHANICALLY STABILIZED EARTH WALLS
STA. C-1383+50 to STA. C-1389+00

FRA-270-32.46

5/37

436/593

WALL NO. 1 & NO. 4

CURVE DATA (C20)
P.I. STA. C-1383 + 85.77
Δ = 05°48'41" RT.
D_c = 00° 27' 35"
R = 12,464.17'
L = 1264.24'
T = 632.66'
E = 16.05'
e_{max} = NC
P.C. STA.=C-1377+53.11
P.T. STA.=C-1390+17.35

RAMP D
CONN-STA: 81+01.05
PT = C-1390+17.35=
PC = D-1390+17.35

NOTE: SIGNAL STRAIN POLE AT STATION C-1389+66, 37.5' RT., SHALL BE AS PER STD. DWG. TC-81.10, DESIGN NO. 3 FOUNDATION FOR POLE SHALL BE AS PER STD. DWG. TC-21.20. THE CONCRETE FOUNDATION SHALL BE PROVIDED WITH THE TOP OF THE FOUNDATION SET AT ELEV. 863.75. PAYMENT FOR LABOR, MATERIALS & INSTALLATION OF THE FOUNDATION SHALL BE INCLUDED WITH ITEM 610, REINFORCED EARTH WALL. ANCHOR BOLTS & CONDUIT FOR SIGNAL STRAIN POLE ARE INCLUDED WITH ITEM 632, STRAIN POLE. SEE SIGNAL PLAN SHT. 359/593.

CURVE DATA (C21)
P.I. STA. = D-1392 + 78.79
Δ = 02°24'12" RT.
D_c = 00° 27' 35"
R = 12,464.17'
L = 522.81'
T = 261.44'
E = 2.74'
e_{max} = NC
P.C. STA.=D-1390+17.35
P.T. STA.=D-1395+40.16

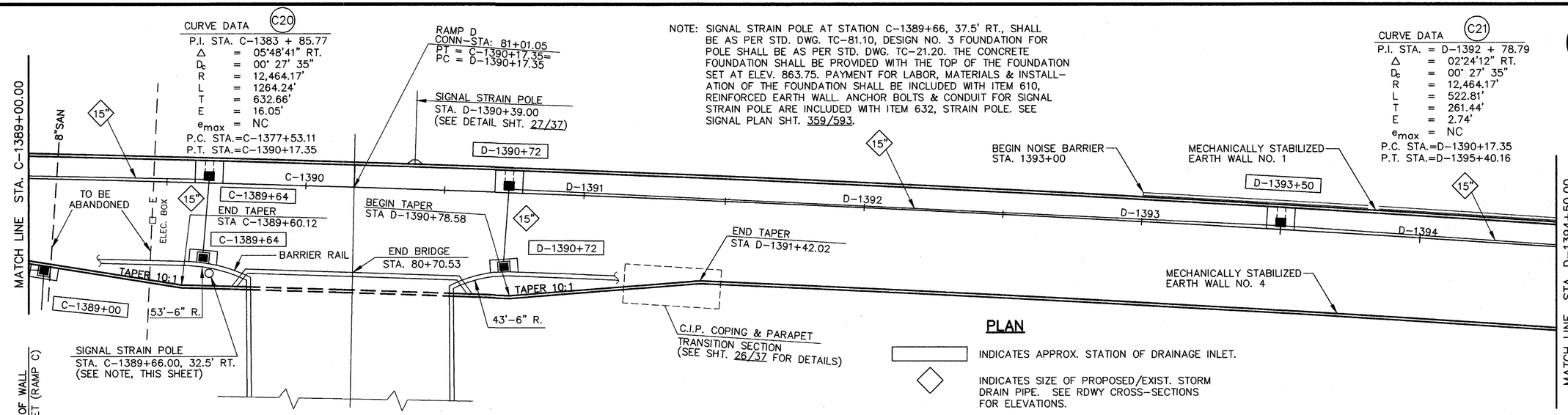

PLAN

INDICATES APPROX. STATION OF DRAINAGE INLET.

INDICATES SIZE OF PROPOSED/EXIST. STORM DRAIN PIPE. SEE RDWY CROSS-SECTIONS FOR ELEVATIONS.

862.50 TOP OF WALL
9.08' LT. OFFSET (RAMP C)

862.70	862.85	862.82	862.63	862.43	862.23	862.03	861.74	861.25	860.58	859.71
9.08' LT.	9.08' LT.	9.08' LT.	9.08' LT.	9.08' LT.	9.08' LT.	9.08' LT.	9.08' LT.	9.08' LT.	9.08' LT.	9.08' LT.

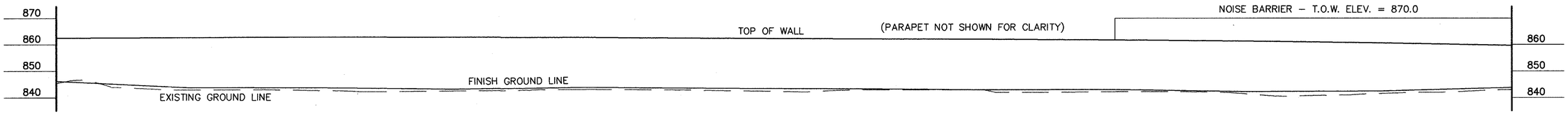

EXIST. GROUND 844.8 / PROP. GROUND 846.2	843.0 / 843.8	EXIST. GROUND 842.7 / PROP. GROUND 843.7	842.5 / 843.1	843.2 / 843.9	842.8 / 843.5	842.8 / 843.3	843.0 / 842.9	842.2 / 843.0	841.6 / 842.2	841.3 / 842.4	843.0 / 843.8

PROFILE WALL NO.1 (EAST)

TOP OF WALL (RAMP C)	STA. C-1389+60.12	STA. C-1389+75.25	STA. D-1390+62.56	STA. D-1390+78.58	STA. D-1391+42.02					
863.34 / 30.47' RT. OFFSET	863.26 / 37.50' RT.	37.50' RT.	37.50' RT.	863.23 / 37.50' RT.	863.23 / 30.08' RT.					
863.76 / 36.32' RT.	855.77 / 37.50' RT.	855.77 / 37.50' RT.	863.73 / 34.99' RT.	863.21 / 30.08' RT.	863.01 / 30.08' RT.	862.81 / 30.08' RT.	862.51 / 30.08' RT.	862.03 / 30.08' RT.	861.35 / 30.08' RT.	860.48 / 30.08' RT.

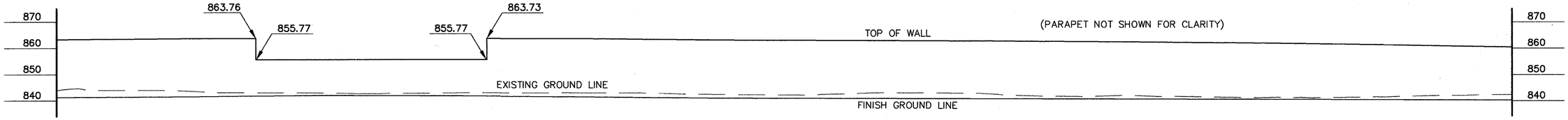

EXIST. GROUND 845.0 / PROP. GROUND 841.3	843.6 / 841.6	843.0 / 842.0	842.9 / 841.9	843.0 / 841.6	842.4 / 841.1	842.7 / 840.9	843.0 / 840.8	841.8 / 840.7	841.2 / 840.6	841.3 / 840.4	842.4 / 840.3
	C-1390			D-1391		D-1392		D-1393		D-1394	

PROFILE WALL NO.4 (WEST)

PLOT SCALE .1" = 20'
COL. #19 C:\DRAWING\06092306\PROFILE\RAMPCD.DWG FEBRUARY-08-1995

prepared by
ms consultants, inc.
CONSULTING ENGINEERS & PLANNERS
6500 RIVER BOULEVARD, COLUMBUS, OHIO

DESIGNED C.H.	DRAWN C.H.	REVIEWED J.A.B.	DATE 3-94
CHECKED R.B.	REVISED	STRUCTURE FILE NO. N/A	

WALL NO. 1 & NO. 4
MECHANICALLY STABILIZED EARTH WALLS
STA. C-1389+00 to STA. D-1394+50

FRA-270-32.46

6 / 37

437
593

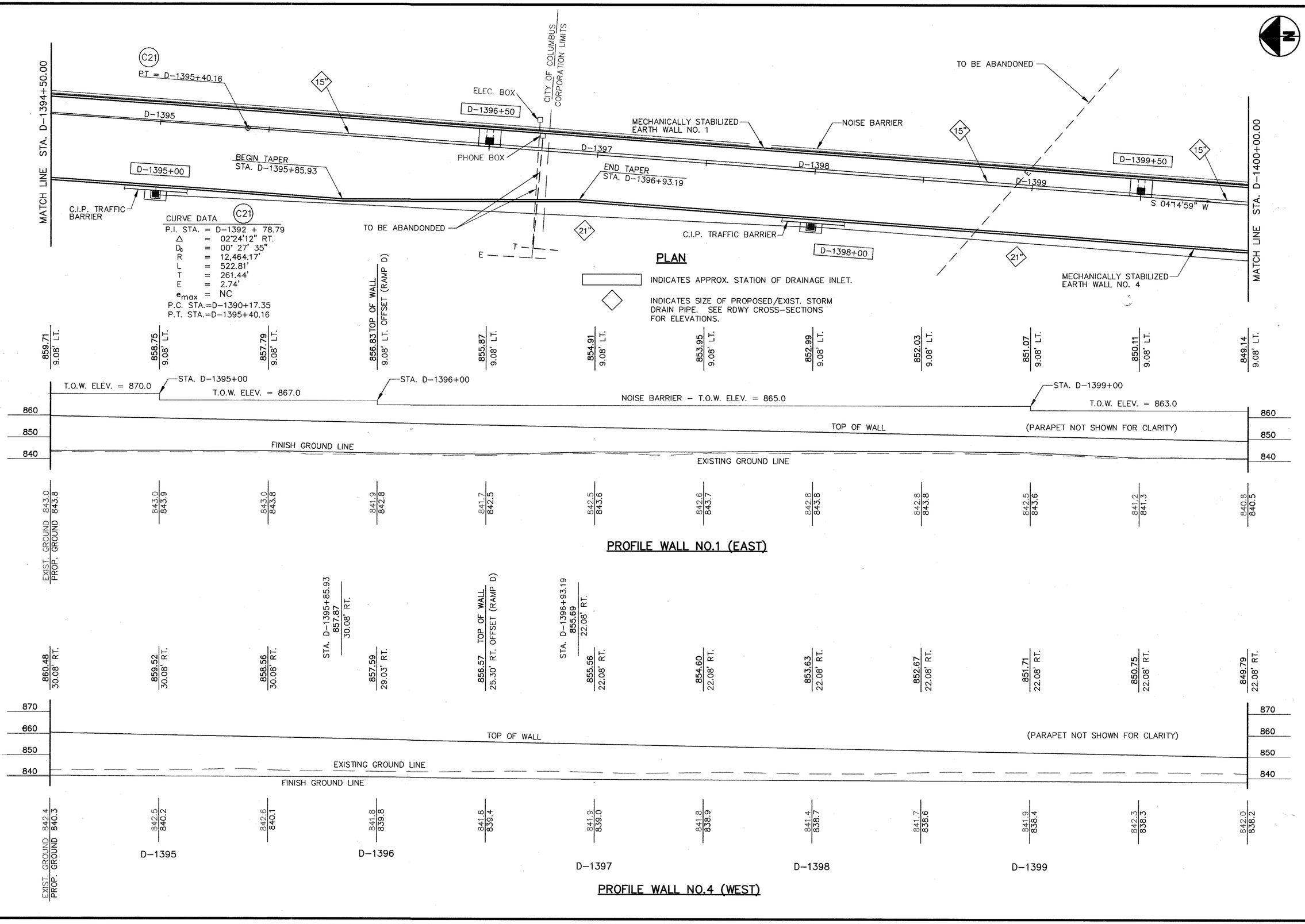

PREPARED BY
ms consultants, inc.
CONSULTING ENGINEERS & PLANNERS
4900 BUSINESS BOULEVARD, COLUMBUS, OHIO

DESIGNED C.H.	DRAWN C.H.	REVIEWED J.A.B.	DATE 3-94
CHECKED R.B.	REVISED	STRUCTURE FILE NO. N/A	

WALL NO. 1 & NO. 4
MECHANICALLY STABILIZED EARTH WALLS
STA. D-1394+50 to STA. D-1400+00

FRA-270-32.46

7 / 37

438
593

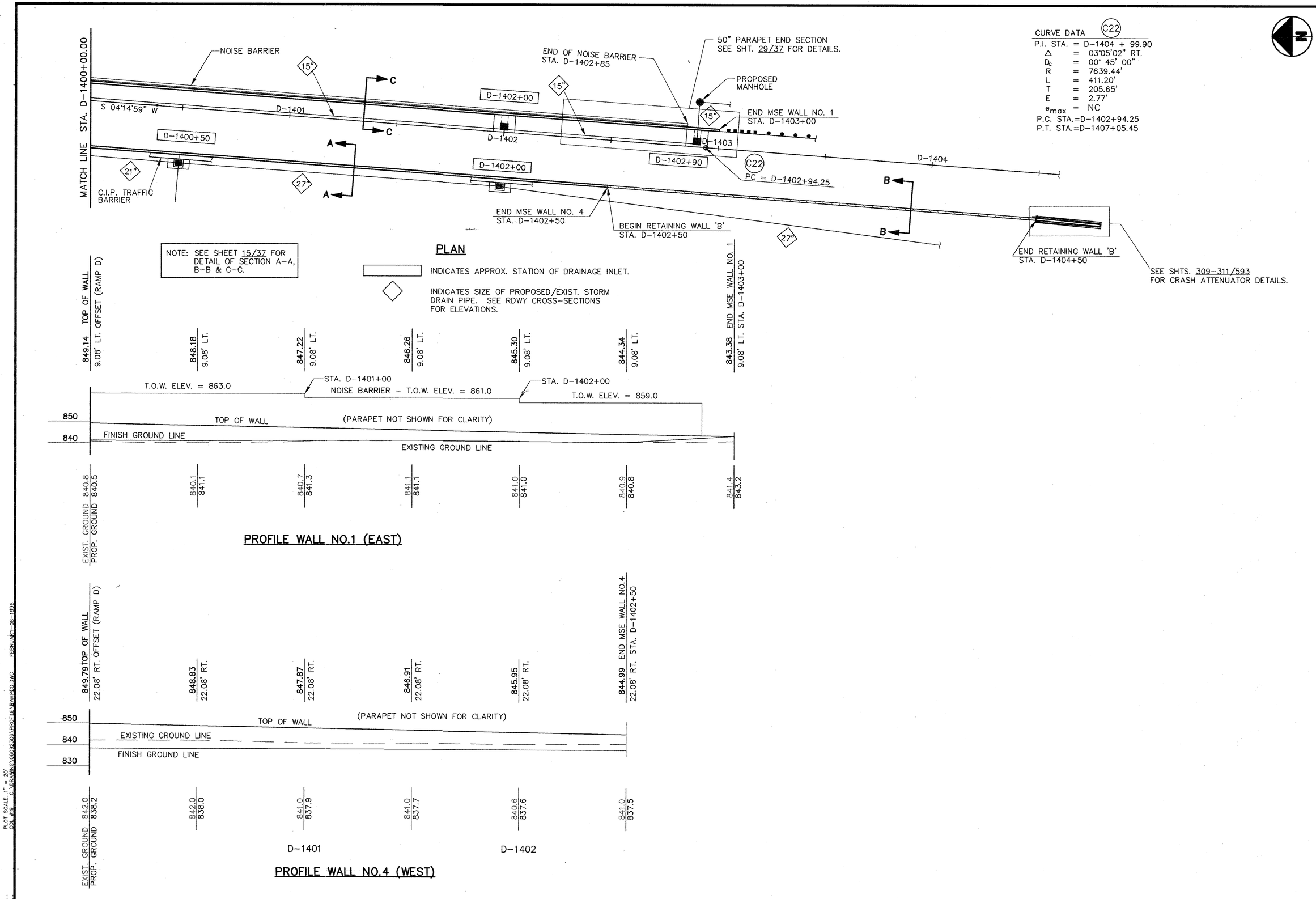

PLOT SCALE 1" = 20'
COL #19 C:\DRAWING\06092306\PROFILE\RAMPCD.DWG FEBRUARY-08-1995

PREPARED BY ms consultants, inc.
CONSULTING ENGINEERS & PLANNERS
6500 BUSCH BOULEVARD, COLUMBUS, OHIO

DESIGNED	DRAWN	REVIEWED	DATE
C.H.	C.H.	J.A.B.	3-94
CHECKED	REVISED	STRUCTURE FILE NO.	
R.B.		N/A	

WALL NO. 1 & NO. 4
MECHANICALLY STABILIZED EARTH WALLS
STA. D-1400+00 to STA. D-1403+00

FRA-270-32.46

8/37

439/593

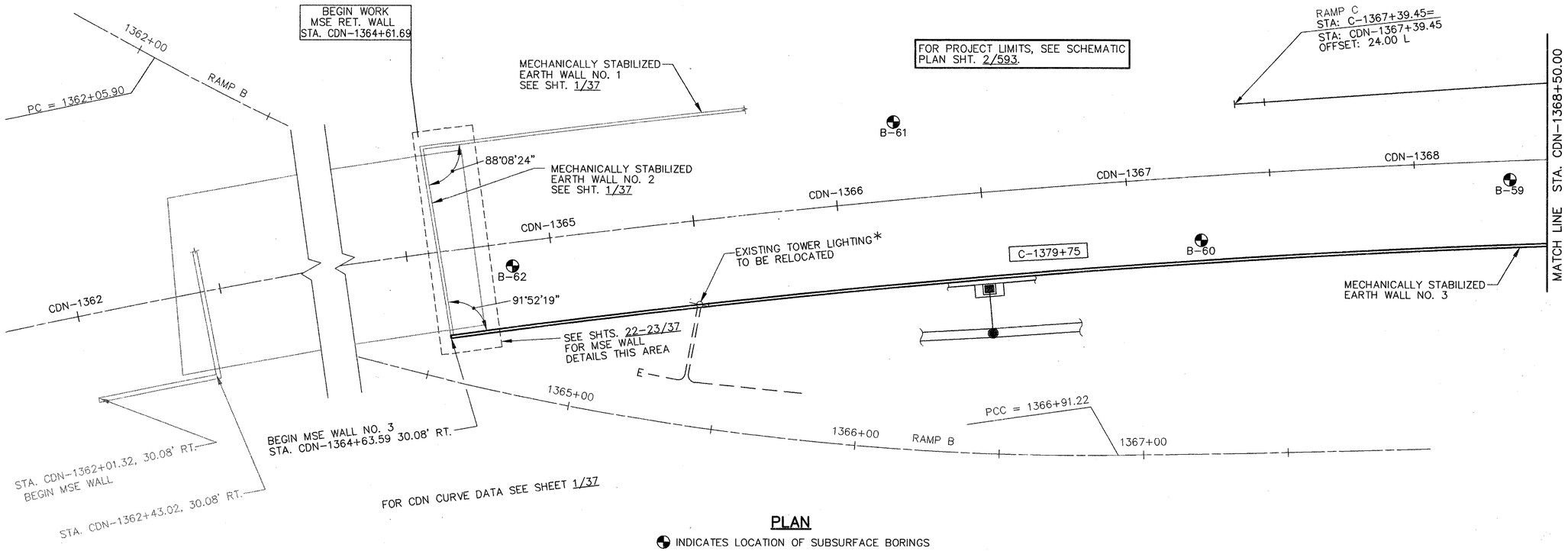

PLAN

● INDICATES LOCATION OF SUBSURFACE BORINGS

* EXISTING TOP OF FOUNDATION EL. 854.46±
REMOVE FOUNDATION TO EL. 849.0
COST OF REMOVAL SHALL BE INCLUDED
WITH ITEM 202, LIGHT TOWER FOUNDATION
REMOVED, AS PER PLAN. SEE LIGHTING
GENERAL SUMMARY.

LOCATION	STATION	ELEV.
A	CDN-1364+63.59	870.50
B	CDN-1364+73.84	870.50
C	CDN-1364+73.84	880.57

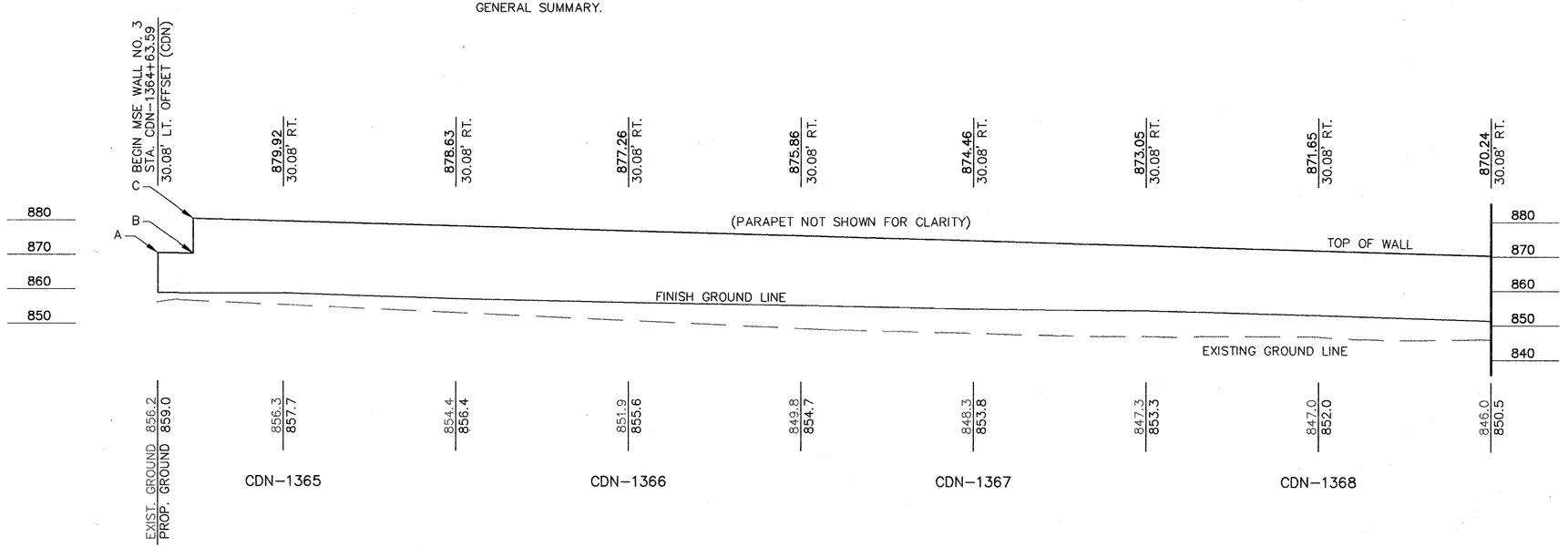

PROFILE WALL NO.3

PLOT SCALE .1" = 20'
COL. #19 C:\DRAWING\06092305\PROFILE\RAMPC.DWG FEBRUARY-08-1995

PREPARED BY
ms consultants, inc.
CONSULTING ENGINEERS & PLANNERS
4500 BROOK BOULEVARD, COLUMBUS, OHIO

DESIGNED C.H.	DRAWN C.H.	REVIEWED J.A.B.	DATE 3-94
CHECKED R.B.	REVISED	STRUCTURE FILE NO. N/A	

WALL NO. 3
MECHANICALLY STABILIZED EARTH WALLS
STA. CDN-1364+63.23 to STA. CDN-1368+50

FRA-270-32.46

9/37

440/593

CURVE DATA (C2)

P.I. STA.= CDN–1365+06.09
Δ = 13°41'38" RT.
D_c = 01°30'00"
R = 3820.00'
L_s = 200.00'
θ_s = 01°30'00"
LT = 133.34'
ST = 66.67'
x = 199.99'
y = 1.75'
k = 100.00'
P = 0.44'
Δ_c = 12°11'38" RT.
L_c = 812.99'
T_s = 556.89'
E_s = 27.66'
e_{max} = 0.037'
TS STA.=CDN–1359+49.20
SC STA.=CDN–1361+49.20
PT STA.=CDN–1369+62.19

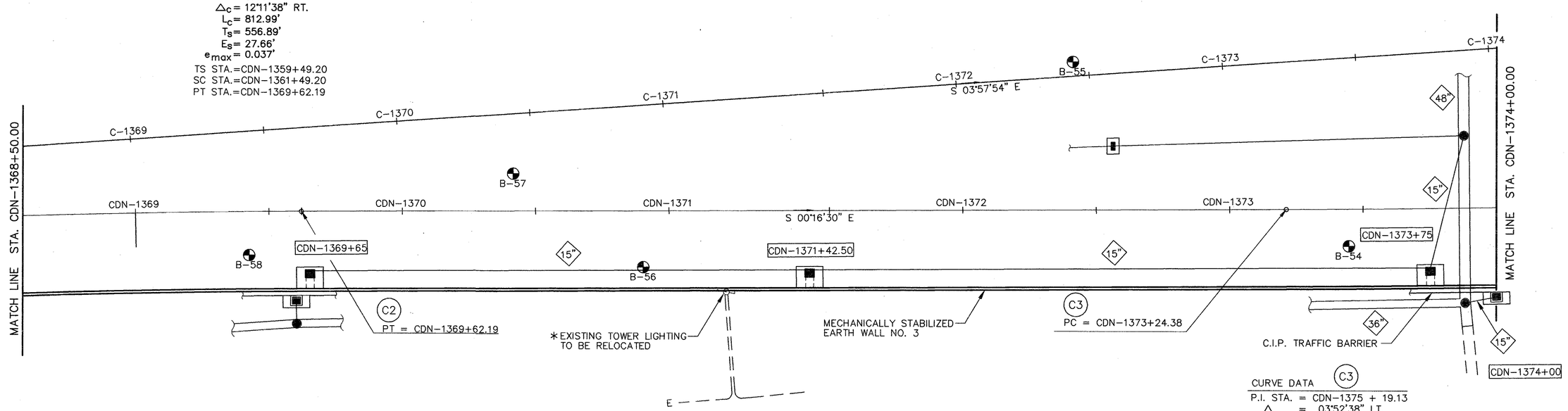

PLAN

CURVE DATA (C3)

P.I. STA. = CDN–1375 + 19.13
Δ = 03°52'38" LT.
D_p = 00° 59' 45"
R = 5753.58'
L = 389.35'
T = 194.75'
E = 3.30'
e_{max} = NC
P.C. STA.=CDN–1373+24.38
P.R.C. STA.=CDN–1377+13.73

* EXISTING TOP OF FOUNDATION EL. 854.46± REMOVE FOUNDATION TO EL. 849.0 COST OF REMOVAL SHALL BE INCLUDED WITH ITEM 202, LIGHT TOWER FOUNDATION REMOVED, AS PER PLAN. SEE LIGHTING GENERAL SUMMARY.

INDICATES LOCATION OF SUBSURFACE BORINGS

INDICATES APPROX. STATION OF DRAINAGE INLET.

INDICATES SIZE OF PROPOSED/EXIST. STORM DRAIN PIPE. SEE RDWY CROSS–SECTIONS FOR ELEVATIONS.

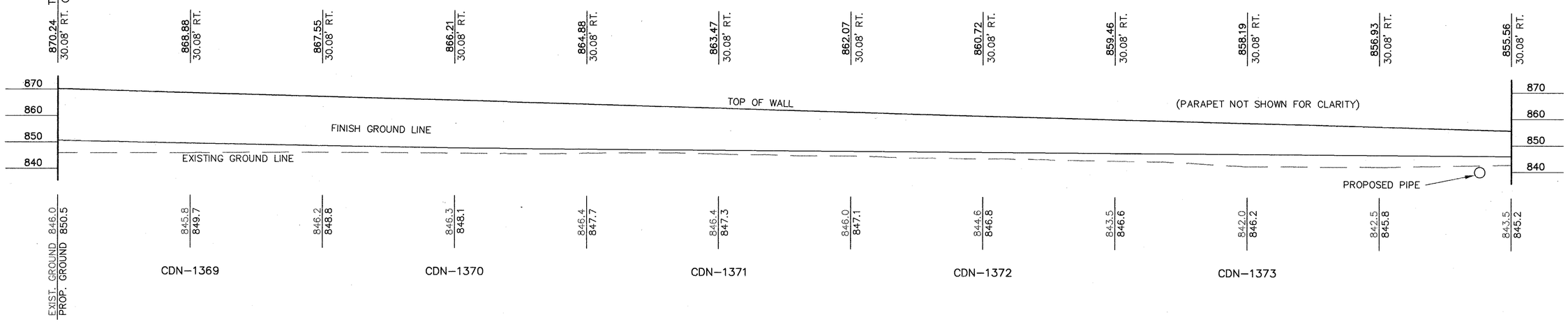

PROFILE WALL NO.3

PLOT SCALE=1" = 20'
COL #19 C:\DRAWING\0609230G\PROFILE\RAMPCPD.DWG FEBRUARY-08-1995

prepared by
ms consultants, inc.
CONSULTING ENGINEERS & PLANNERS
4500 DORR BOULEVARD, COLUMBUS, OHIO

DESIGNED	DRAWN	REVIEWED	DATE
C.H.	C.H.	J.A.B.	3–94
CHECKED	REVISED	STRUCTURE FILE NO.	
R.B.		N/A	

WALL NO. 3
MECHANICALLY STABILIZED EARTH WALLS
STA. CDN–1368+50 to STA. CDN–1374+00

FRA–270–32.46

10 / 37

441 / 593

NOTE: SEE SHEET 15/37 FOR DETAIL OF SECTION A-A & B-B.

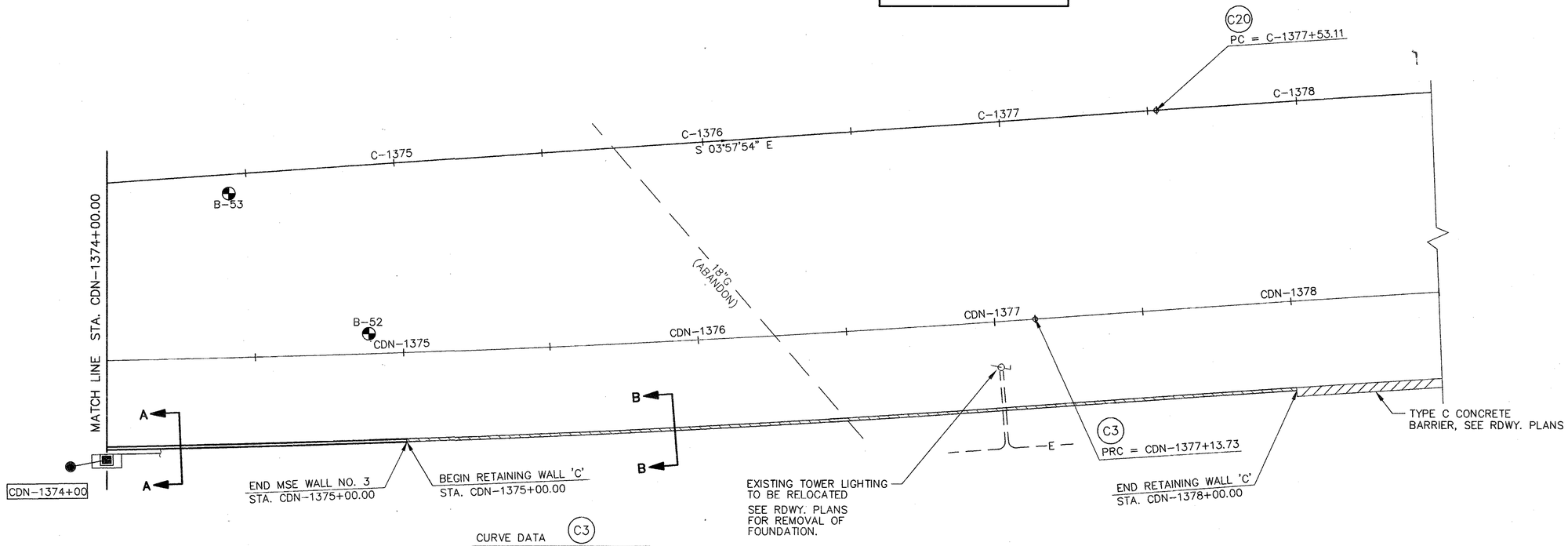

CURVE DATA (C3)

P.I. STA. = CDN-1375 + 19.13
Δ = 03°52'38" LT.
D_c = 00° 59' 45"
R = 5753.58'
L = 389.35'
T = 194.75'
E = 3.30'
e_{max} = NC
P.C. STA.=CDN-1373+24.38
P.R.C. STA.=CDN-1377+13.73

PLAN

INDICATES LOCATION OF SUBSURFACE BORINGS

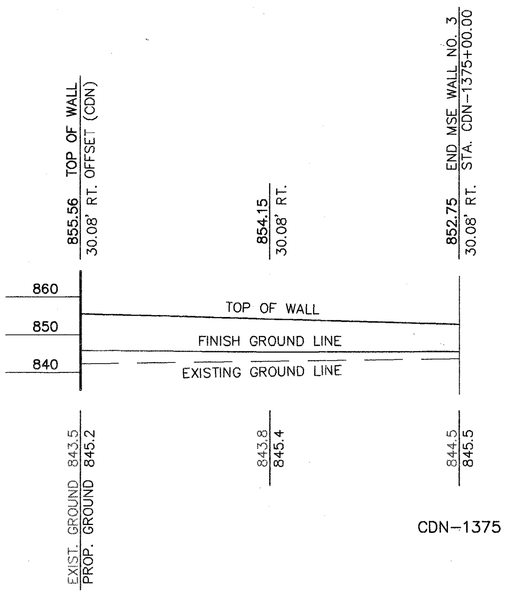

PROFILE WALL NO.3

PLOT SCALE..1" = 20'
COL #19 C:\DRAWING\06092306\PROFILE\RAMPCO.DWG FEBRUARY-08-1995

PREPARED BY ms consultants, inc.
CONSULTING ENGINEERS & PLANNERS
6500 BUSCH BOULEVARD, COLUMBUS, OHIO

DESIGNED	DRAWN	REVIEWED	DATE
C.H.	C.H.	J.A.B.	3-94
CHECKED	REVISED	STRUCTURE FILE NO.	
R.B.		N/A	

WALL NO. 3
MECHANICALLY STABILIZED EARTH WALLS
STA. CDN-1374+00 to STA. CDN-1378+00

FRA-270-32.46

11/37

442/593

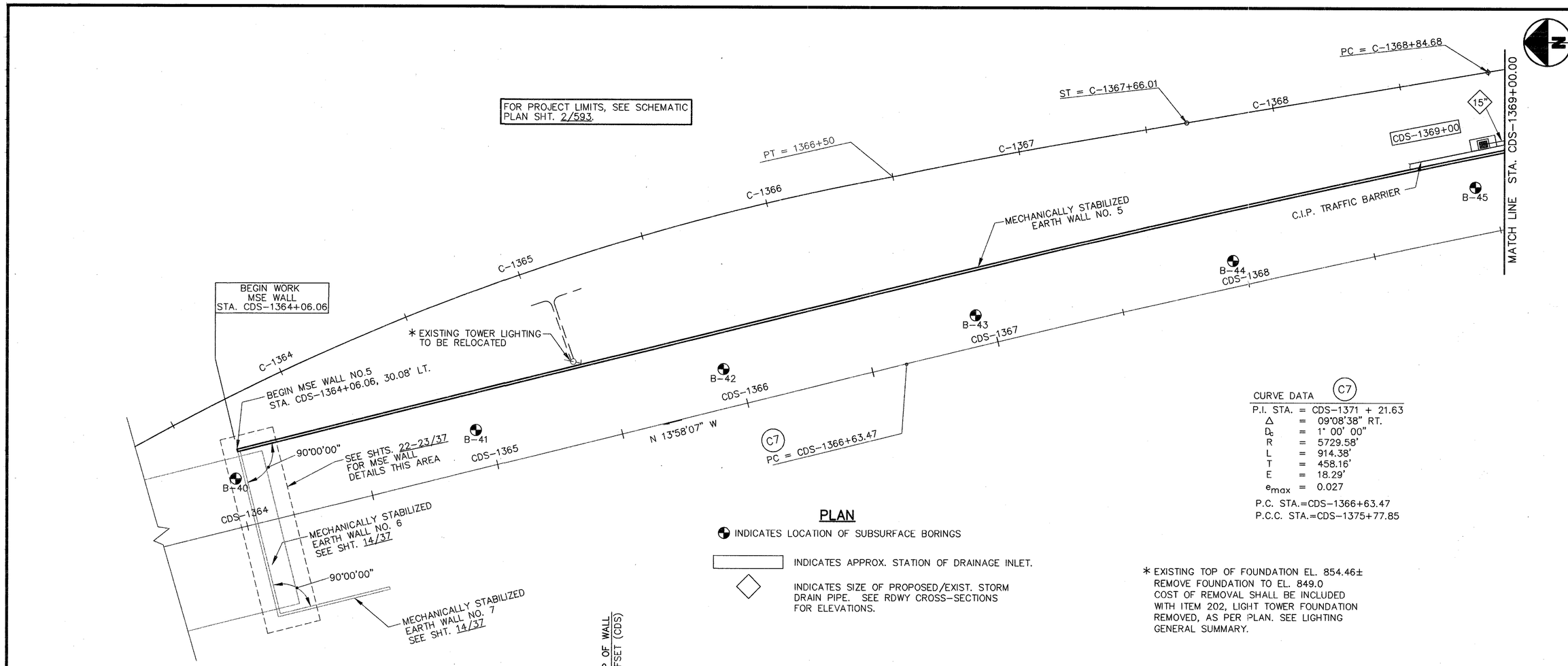

CURVE DATA (C7)

P.I. STA. = CDS-1371 + 21.63
Δ = 09°08'38" RT.
D_c = 1° 00' 00"
R = 5729.58'
L = 914.38'
T = 458.16'
E = 18.29'
e_{max} = 0.027
P.C. STA.=CDS-1366+63.47
P.C.C. STA.=CDS-1375+77.85

PLAN

INDICATES LOCATION OF SUBSURFACE BORINGS

INDICATES APPROX. STATION OF DRAINAGE INLET.

INDICATES SIZE OF PROPOSED/EXIST. STORM DRAIN PIPE. SEE RDWY CROSS-SECTIONS FOR ELEVATIONS.

* EXISTING TOP OF FOUNDATION EL. 854.46± REMOVE FOUNDATION TO EL. 849.0 COST OF REMOVAL SHALL BE INCLUDED WITH ITEM 202, LIGHT TOWER FOUNDATION REMOVED, AS PER PLAN. SEE LIGHTING GENERAL SUMMARY.

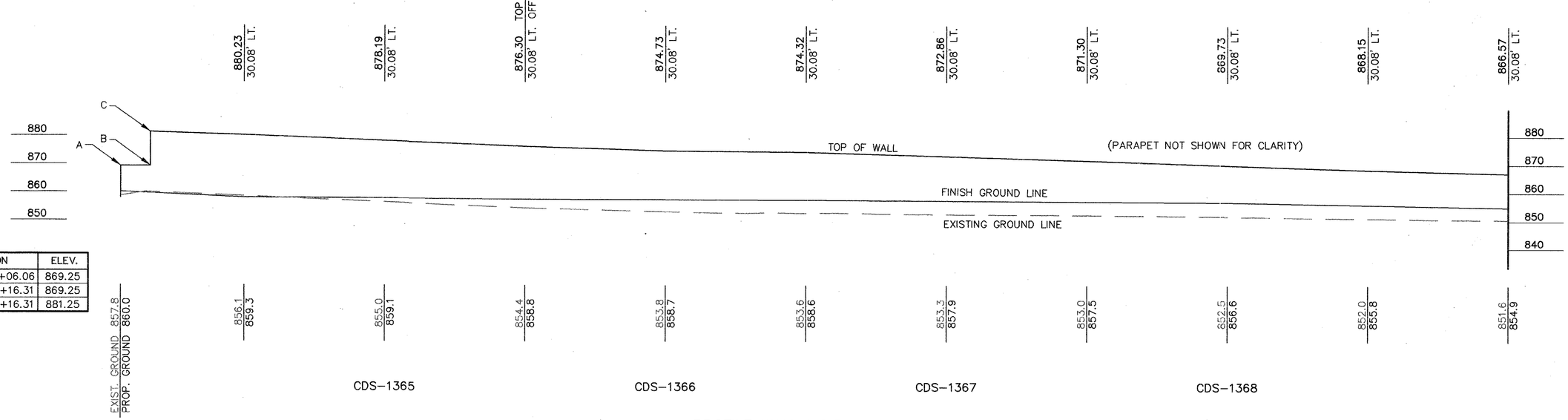

LOCATION	STATION	ELEV.
A	CDS-1364+06.06	869.25
B	CDS-1364+16.31	869.25
C	CDS-1364+16.31	881.25

PROFILE WALL NO.5

PLOT SCALE: 1" = 20'
COL #19 C:\DRAWING\06092306\PROFILE\RAMPCD.DWG FEBRUARY-08-1995

PREPARED BY ms consultants, inc. CONSULTING ENGINEERS & PLANNERS 6500 BUSCH BOULEVARD, COLUMBUS, OHIO

DESIGNED	DRAWN	REVIEWED	DATE
C.H.	C.H.	J.A.B.	3-94
CHECKED	REVISED	STRUCTURE FILE NO.	
R.B.		N/A	

WALL NO. 5
MECHANICALLY STABILIZED EARTH WALLS
STA. CDS-1364+06.06 to STA. CDS-1369+00

FRA-270-32.46

12/37

443/593

WALL NO. 5

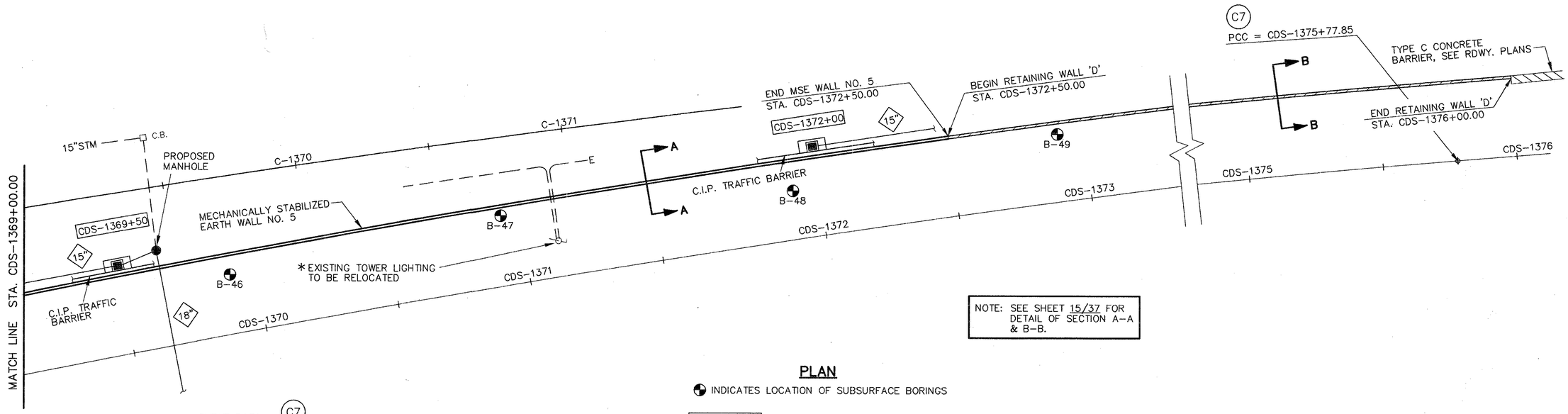

NOTE: SEE SHEET 15/37 FOR DETAIL OF SECTION A-A & B-B.

PLAN

INDICATES LOCATION OF SUBSURFACE BORINGS

INDICATES APPROX. STATION OF DRAINAGE INLET.

INDICATES SIZE OF PROPOSED/EXIST. STORM DRAIN PIPE. SEE RDWY CROSS-SECTIONS FOR ELEVATIONS.

CURVE DATA (C7)

P.I. STA. = CDS-1371 + 21.63
Δ = 09°08'38" RT.
D_c = 1° 00' 00"
R = 5729.58'
L = 914.38'
T = 458.16'
E = 18.29'
e_{max} = 0.027
P.C. STA.=CDS-1366+63.47
P.C.C. STA.=CDS-1375+77.85

* EXISTING TOP OF FOUNDATION EL. 854.46± REMOVE FOUNDATION TO EL. 849.0 COST OF REMOVAL SHALL BE INCLUDED WITH ITEM 202, LIGHT TOWER FOUNDATION REMOVED, AS PER PLAN. SEE LIGHTING GENERAL SUMMARY.

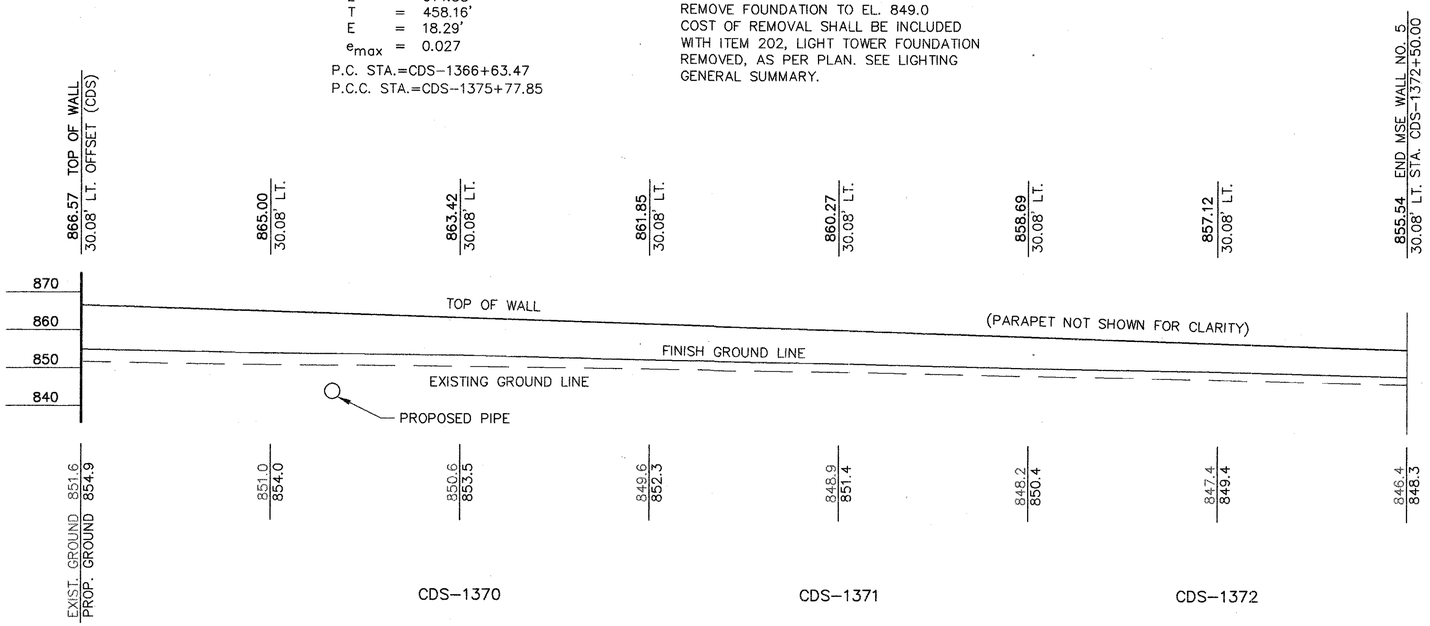

PROFILE WALL NO.5

PLOT SCALE: 1" = 20'
COL #19 C:\DRAWING\06092306\PROFILE\RAMPCO.DWG FEBRUARY-08-1995

PREPARED BY ms consultants, inc. CONSULTING ENGINEERS & PLANNERS 6500 BUSCH BOULEVARD, COLUMBUS, OHIO

DESIGNED	DRAWN	REVIEWED	DATE
C.H.	C.H.	J.A.B.	3-94
CHECKED	REVISED	STRUCTURE FILE NO.	
R.B.		N/A	

WALL NO. 5
MECHANICALLY STABILIZED EARTH WALLS
STA. CDS-1369+00 to STA. CDS-1374+50

FRA-270-32.46

13/37

444/593

WALL NO. 5

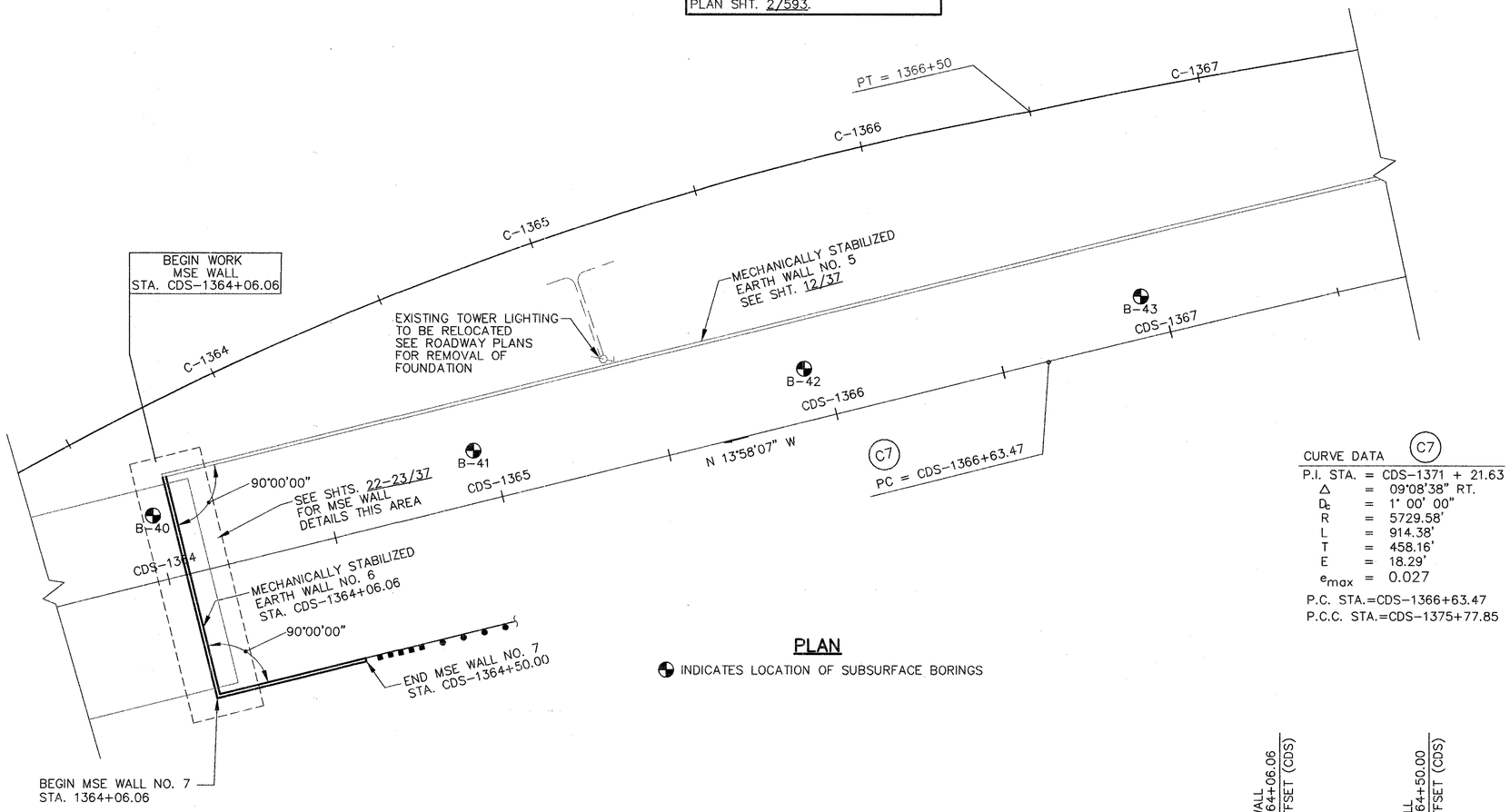

PLAN

INDICATES LOCATION OF SUBSURFACE BORINGS

CURVE DATA (C7)

P.I. STA.	=	CDS-1371 + 21.63
Δ	=	09°08'38" RT.
D_c	=	1° 00' 00"
R	=	5729.58'
L	=	914.38'
T	=	458.16'
E	=	18.29'
e_{max}	=	0.027

P.C. STA.=CDS-1366+63.47
P.C.C. STA.=CDS-1375+77.85

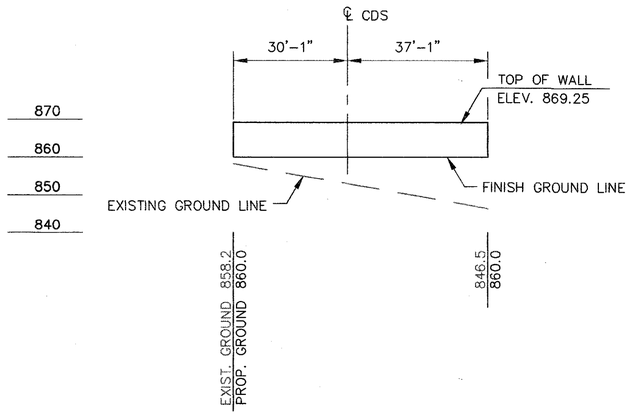

PROFILE WALL NO.6

LOCATION	STATION	ELEV.
A	CDS-1364+06.06	869.25
B	CDS-1364+16.31	869.25
C	CDS-1364+16.31	881.28
D	CDS-1364+50.00	880.28

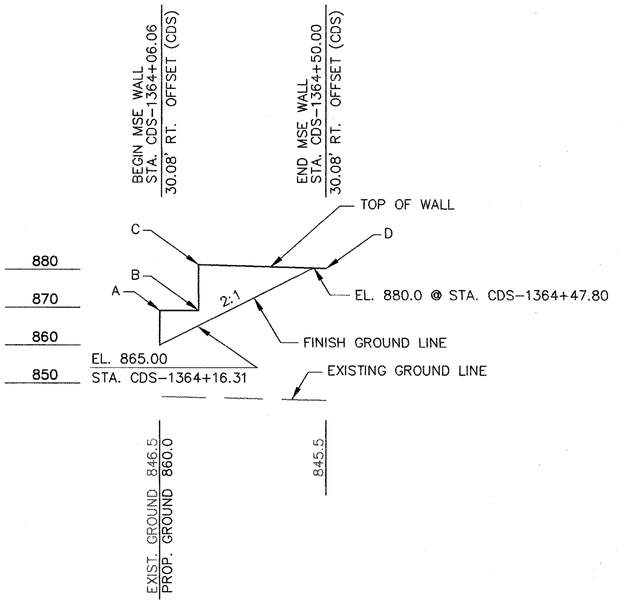

PROFILE WALL NO.7

PREPARED BY ms consultants, inc. CONSULTING ENGINEERS & PLANNERS 6500 BUSCH BOULEVARD, COLUMBUS, OHIO

DESIGNED	DRAWN	REVIEWED	DATE
C.H.	C.H.	J.A.B.	3-94
CHECKED	REVISED	STRUCTURE FILE NO.	
R.B.		N/A	

WALL NO. 6 & NO. 7
MECHANICALLY STABILIZED EARTH WALLS
STA. CDS-1364+06.06 to STA. CDS-1364+50

FRA-270-32.46

PLOT SCALE: 1" = 20'
COL #19 C:\DRAWING\06092306\PROFILE\RAMPCD.DWG FEBRUARY-08-1995

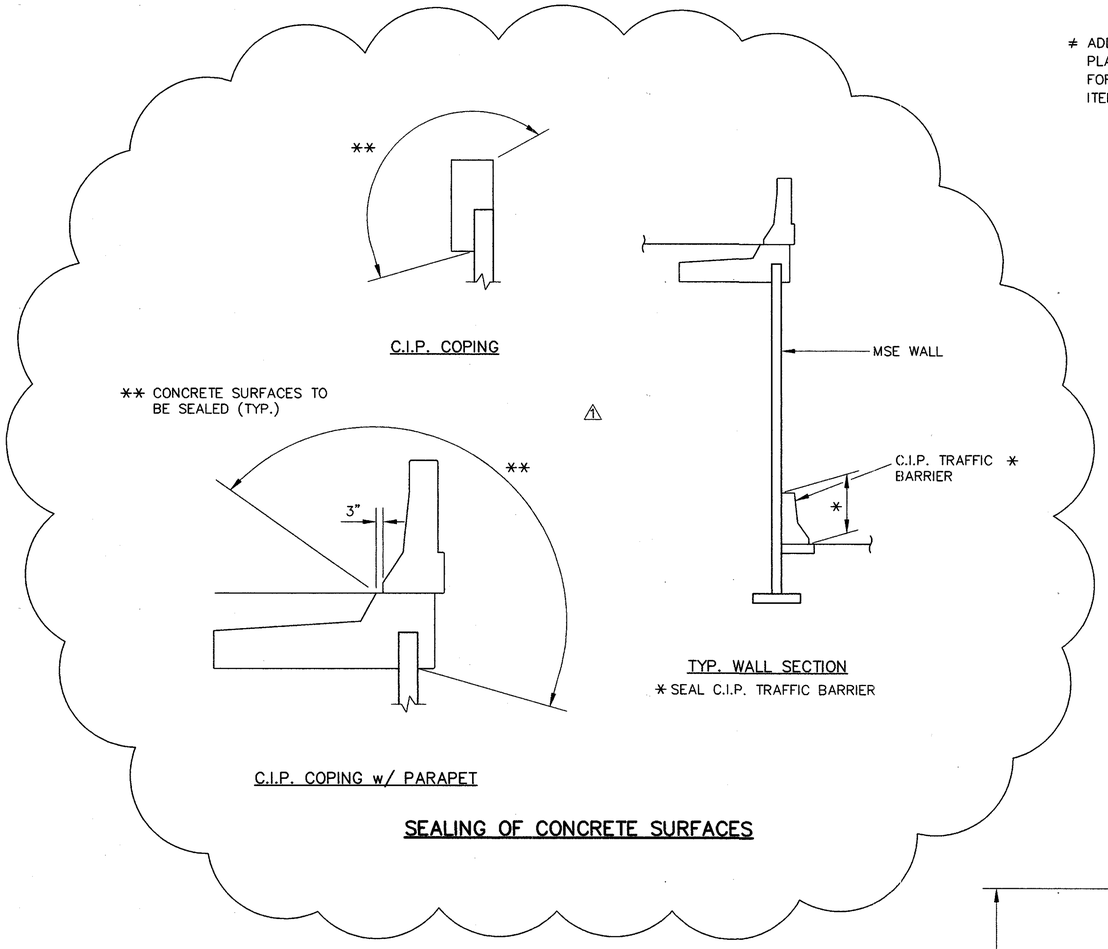

SEALING OF CONCRETE SURFACES

≠ ADDITIONAL REBARS AT POST LOCATIONS (2-V406 & V407 (SER.) PLACED SYMMETRICALLY ABOUT POST LOCATION (SEE SECTION E-E FOR DETAIL). AN ALLOWANCE OF 1000 POUNDS IS INCLUDED WITH ITEM 509 FOR THIS PURPOSE.

** INCLUDE WITH PAY ITEM 606, NOISE BARRIERS. SEE NOISE BARRIER DETAILS, SHTS. 538-543/593.

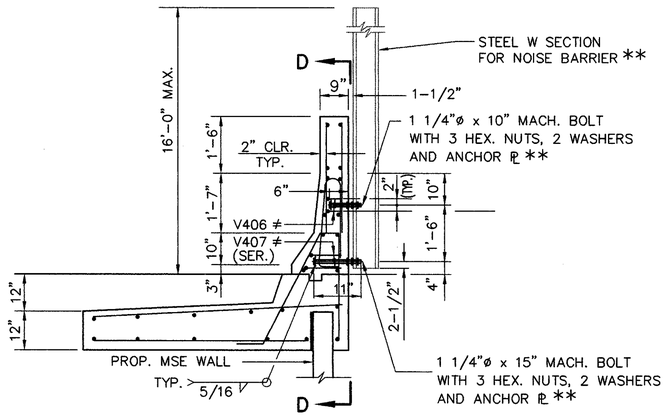

NOISE BARRIER MOUNTING DETAIL

1/2" = 1'-0"

NOTE: POST SPACING FOR NOISE BARRIERS SHALL BE 12'-0" MAX.

SEE SHTS. 538-543/593 FOR NOISE BARRIER DETAILS.

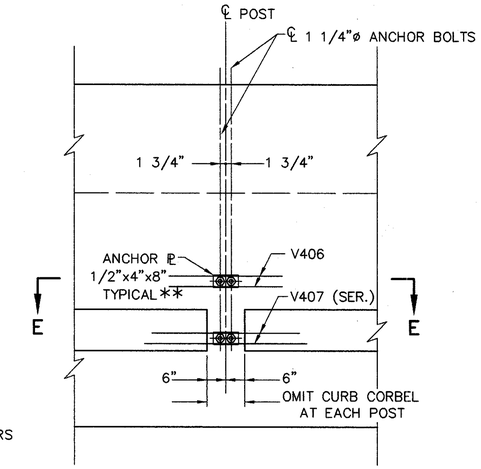

VIEW D-D

1/2" = 1'-0"

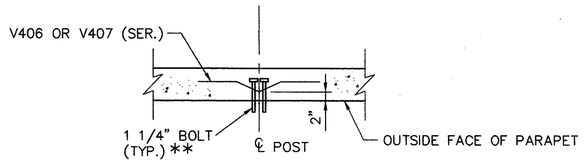

SECTION E-E

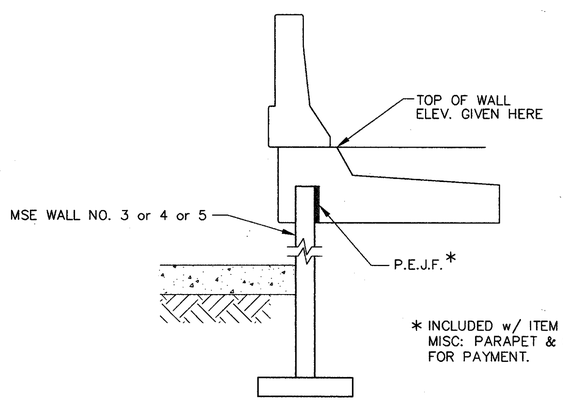

* INCLUDED w/ ITEM 511 'CLASS C CONCRETE, MISC: PARAPET & COPING, AS PER PLAN', FOR PAYMENT.

SECTION A-A

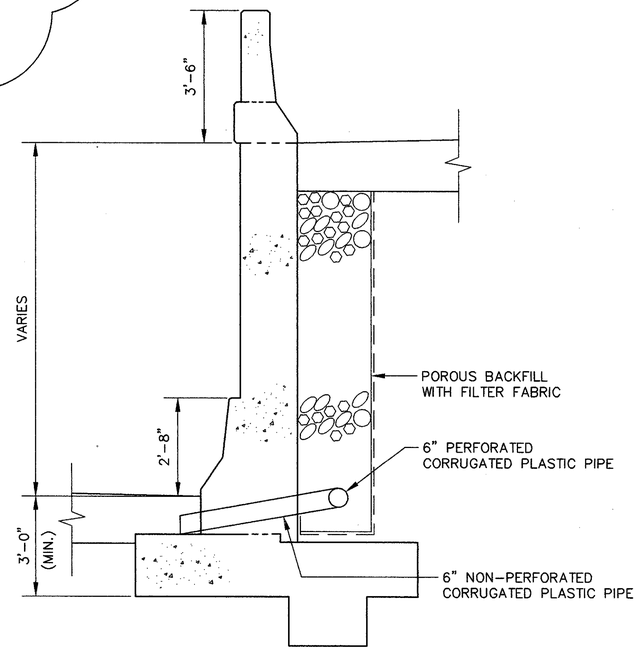

SECTION B-B

CAST-IN-PLACE RETAINING WALL. SEE RETAINING WALL PLANS FOR DETAILS.

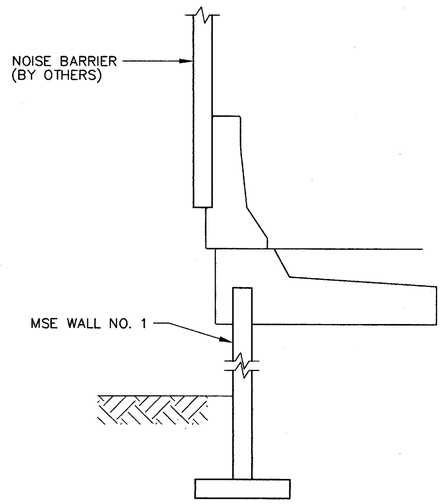

SECTION C-C

PLOT SCALE...1 = 20
COL. #19 C:\DRAWING\06092718\RAMPCD.DWG MAY 7, 1996

PREPARED BY ms consultants, inc. CONSULTING ENGINEERS & PLANNERS 6500 BUSCH BOULEVARD, COLUMBUS, OHIO

DESIGNED	DRAWN	REVIEWED	DATE
C.H.	C.H.	J.A.B.	8-94
CHECKED	REVISED	STRUCTURE FILE NO.	
R.B.	5-96	N/A	

WALL SECTIONS & MISC. DETAILS
MECHANICALLY STABILIZED EARTH WALLS

FRA-270-32.46

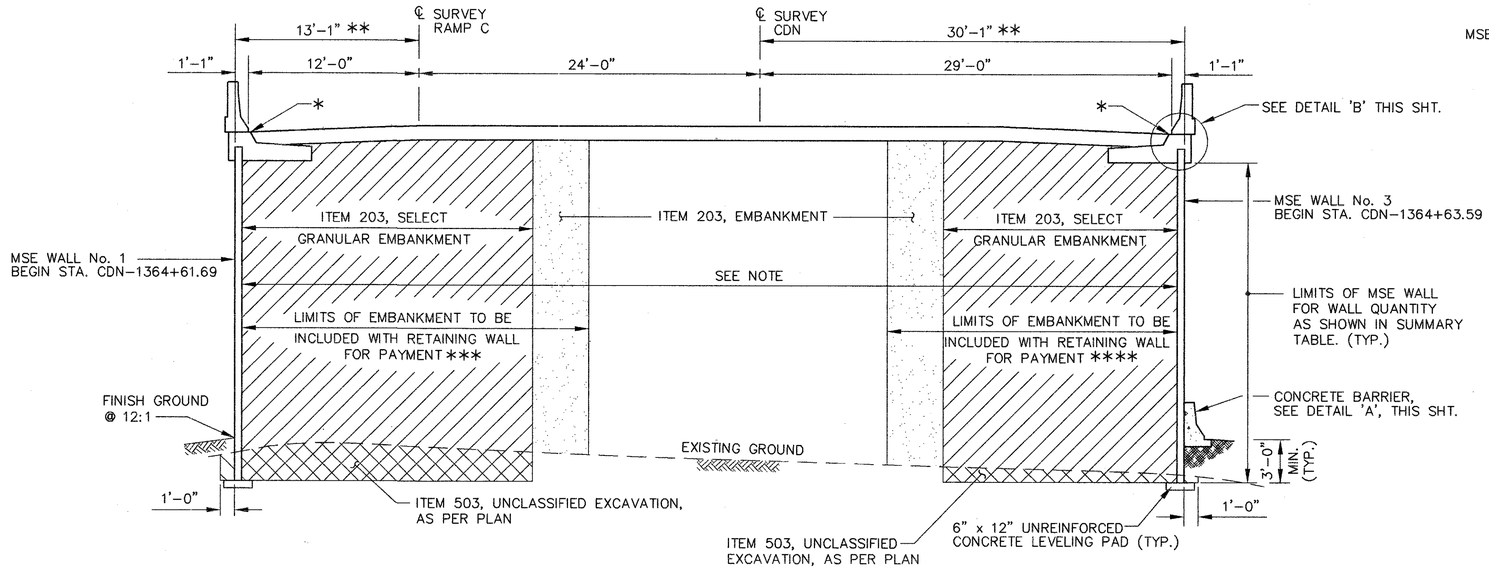

TYPICAL SECTION "A"

STA. CDN-1364+61.69 to STA. CDN-1367+39.45

*TOP OF WALL ELEVATION GIVEN AT THIS POINT

**OFFSET TO OUTSIDE FACE OF MSE WALL

***28'-0" STA. CDN-1365+00 TO STA. CDN-1367+00, 20'-0" STA. CDN-1367+00 TO STA. CDN-1367+39.45

****20'-0" STA. CDN-1365+00 TO STA. CDN-1367+39.45

NOTE: LIMITS OF EMBANKMENT TO BE INCLUDED WITH RETAINING WALL NO.'s 1, 2 & 3 SHALL INCLUDE ENTIRE WIDTH FROM INSIDE FACE OF WALL NO. 1 TO INSIDE FACE OF WALL NO. 3 FROM STA. CDN-1364+61.69 TO STA. CDN-1365+00. SEE TYPICAL SECTION 'M' ON SHT. 19/37.

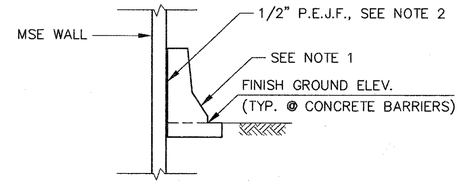

DETAIL 'A'

NOTES:

1.) CAST-IN-PLACE CONCRETE BARRIER (TYP.). PAYMENT FOR CONCRETE BARRIER AT BASE OF MSE WALL SHALL BE INCLUDED WITH ROADWAY ITEMS FOR PAYMENT AS ITEM 622 'CONCRETE BARRIER, TYPE D, AS PER PLAN A'. SEE ROADWAY GENERAL SUMMARY, SHTS. 54-59/593.

2.) COST FOR MATERIAL, LABOR AND INSTALLATION OF PREMOLDED EXPANSION JOINT FILLER (P.E.J.F.) SHALL BE INCLUDED WITH ITEM 622 'CONCRETE BARRIER, TYPE D, AS PER PLAN A'.

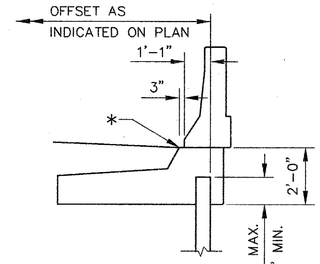

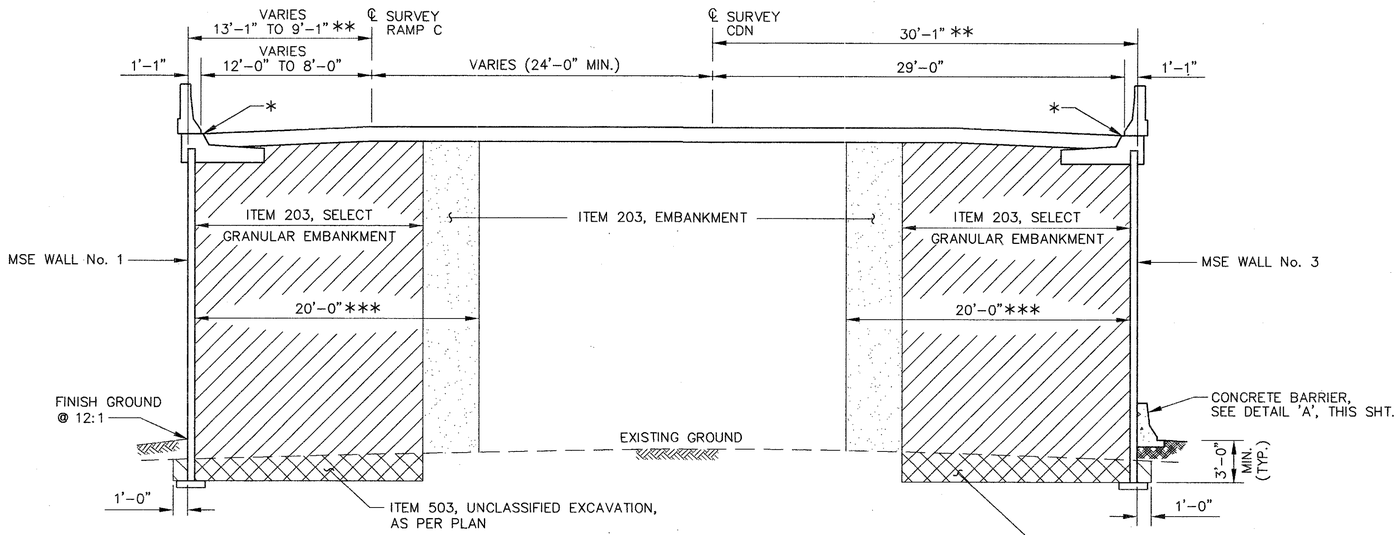

TYPICAL SECTION "B"

STA. CDN-1367+39.45 to STA. CDN-1368+99.45

*TOP OF WALL ELEVATION GIVEN AT THIS POINT

**OFFSET TO OUTSIDE FACE OF MSE WALL

***LIMITS OF EMBANKMENT TO BE INCLUDED WITH RETAINING WALL FOR PAYMENT

DETAIL 'B'

*TOP OF WALL ELEVATION GIVEN AT THIS POINT

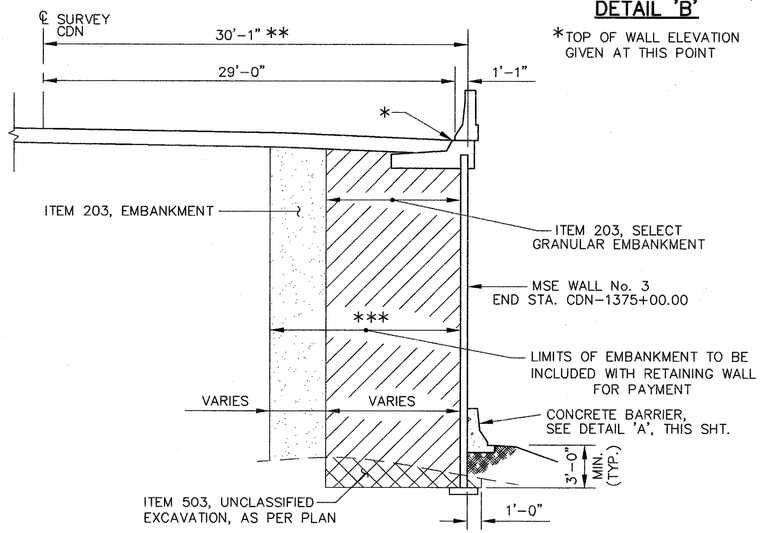

TYPICAL SECTION "C"

STA. CDN-1368+99.45 to STA. CDN-1375+00.00

*TOP OF WALL ELEVATION GIVEN AT THIS POINT

**OFFSET TO OUTSIDE FACE OF MSE WALL

***20'-0" STA. CDN-1368+99.45 TO STA. CDN-1373+00
12'-0" STA. CDN-1373+00 TO STA. CDN-1375+00

PREPARED BY ms consultants, inc. CONSULTING ENGINEERS & PLANNERS 4900 BEIDLER BOULEVARD, COLUMBUS, OHIO

DESIGNED C.H.	DRAWN C.H.	REVIEWED J.A.B.	DATE 3-94
CHECKED R.B.	REVISED	STRUCTURE FILE NO. N/A	

TYPICAL SECTIONS
MECHANICALLY STABILIZED EARTH WALLS

FRA-270-32.46

16/37

447/593

PLOT SCALE = 3/16" = 1"
COL #19 C:\DRAWING\06092303\SETWALL\SRWALL1X1.DWG FEBRUARY-09-1995

TYPICAL SECTIONS

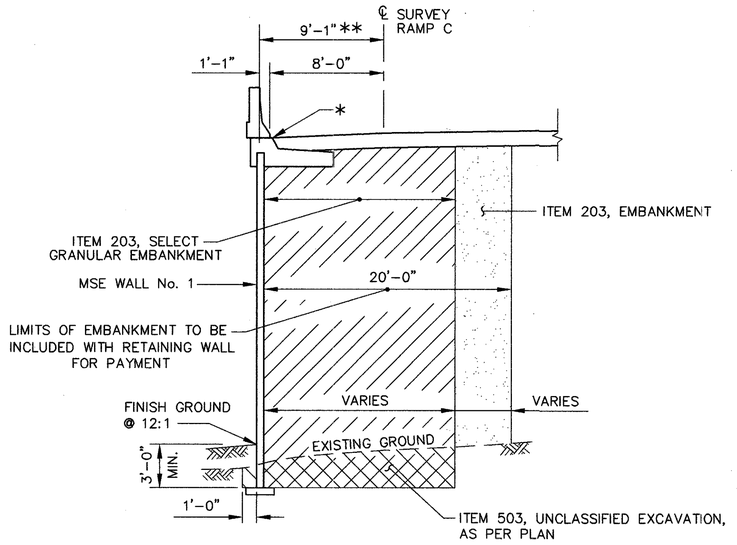

TYPICAL SECTION "D"

STA. C-1368+99.45 to STA. C-1376+50.00

*TOP OF WALL ELEVATION GIVEN AT THIS POINT

**OFFSET TO OUTSIDE FACE OF MSE WALL

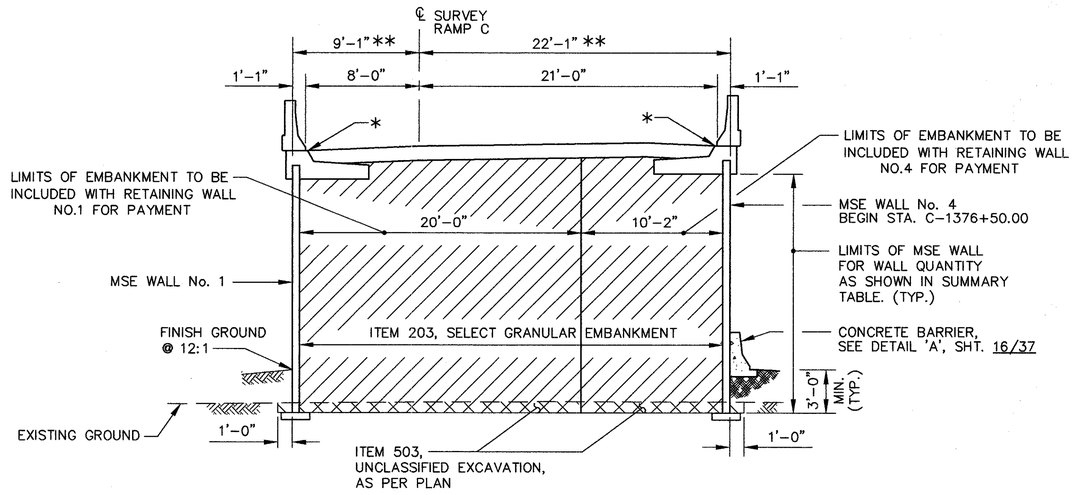

TYPICAL SECTION "E"

STA. C-1376+50.00 to STA. C-1378+91.55

*TOP OF WALL ELEVATION GIVEN AT THIS POINT

**OFFSET TO OUTSIDE FACE OF MSE WALL

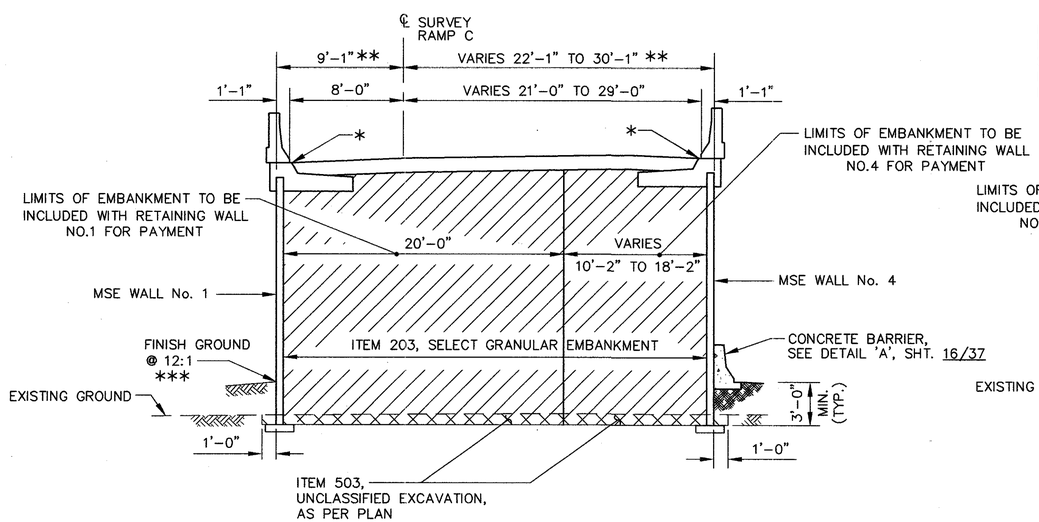

TYPICAL SECTION "F"

STA. C-1378+91.55 to STA. C-1384+12.67

*TOP OF WALL ELEVATION GIVEN AT THIS POINT

**OFFSET TO OUTSIDE FACE OF MSE WALL

***CAST-IN-PLACE TRAFFIC BARRIER STA. C-1382+50 TO STA. C-1384+12.67 SEE DETAIL 'A', SHT. 16/37.

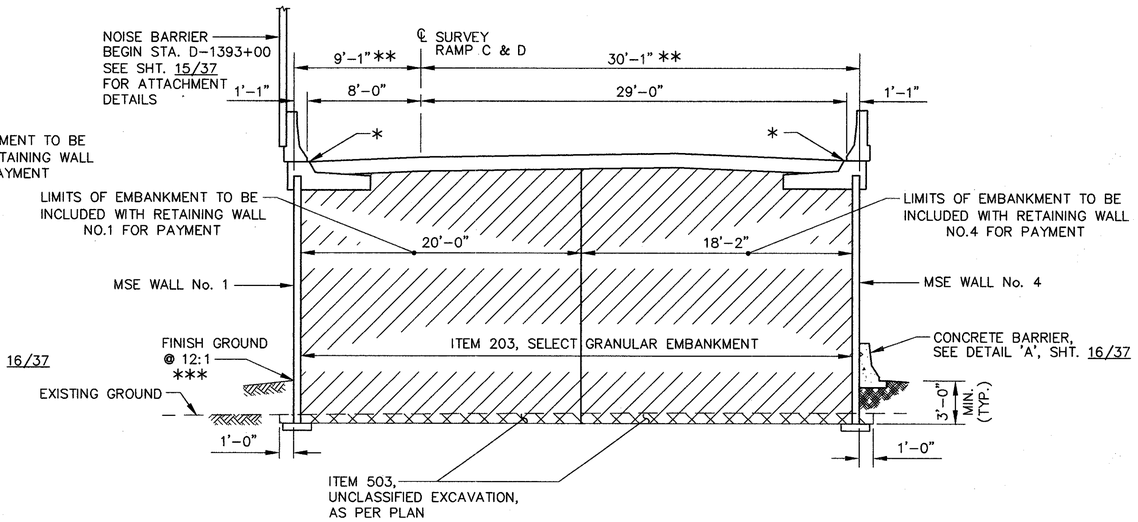

TYPICAL SECTION "G"

STA. C-1384+12.67 to STA. C-1388+96.67
STA. D-1391+42.02 to STA. D-1395+85.93

*TOP OF WALL ELEVATION GIVEN AT THIS POINT

**OFFSET TO OUTSIDE FACE OF MSE WALL

***CAST-IN-PLACE TRAFFIC BARRIER STA. C-1384+12.67 TO STA. C-1385+50 SEE DETAIL 'A', SHT. 16/37.

PREPARED BY ms consultants, inc. CONSULTING ENGINEERS & PLANNERS 6500 BUSCH BOULEVARD, COLUMBUS, OHIO

DESIGNED	DRAWN	REVIEWED	DATE
C.H.	C.H.	J.A.B.	3-94
CHECKED	REVISED	STRUCTURE FILE NO.	
R.B.		N/A	

TYPICAL SECTIONS
MECHANICALLY STABILIZED EARTH WALLS

FRA-270-32.46

17/37

448/593

PLOT SCALE...3/16" = 1'
COL #19 C:\DRAWING\06092308\RETWALLS\RWALLTY1.DWG FEBRUARY-09-1995

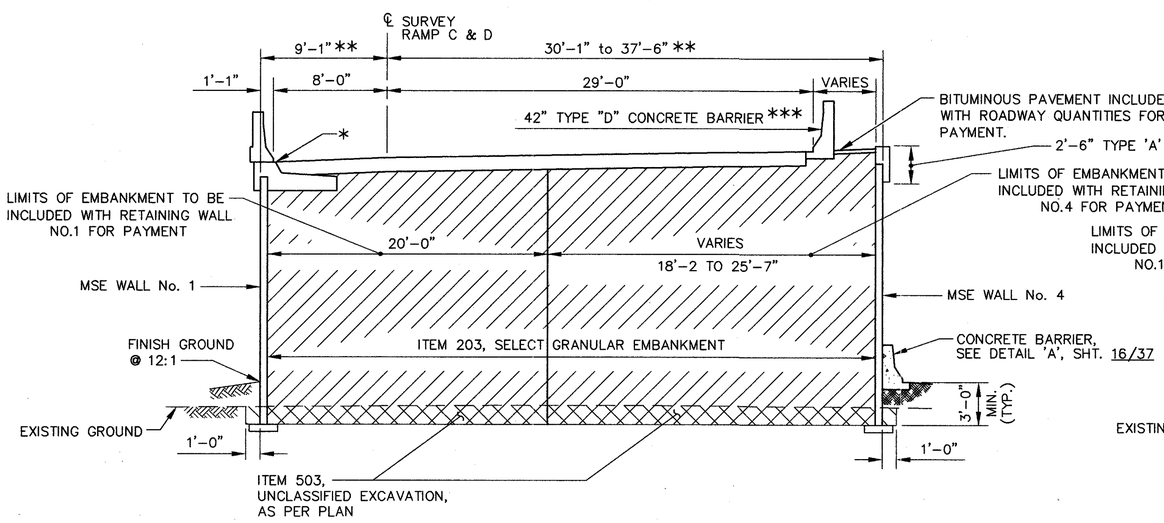

TYPICAL SECTION "H"

STA. C-1388+96.67 to STA. C-1389+60.12
STA. D-1390+78.58 to STA. D-1391+42.02

*TOP OF WALL ELEVATION GIVEN AT THIS POINT

**OFFSET TO OUTSIDE FACE OF MSE WALL

*** PAYMENT FOR 42" TYPE "D" CONCRETE BARRIER SHALL BE INCLUDED AS ITEM 622, 'CONCRETE BARRIER, TYPE D, AS PER PLAN B'. SEE ROADWAY GENERAL SUMMARY SHTS. 54-59/593.

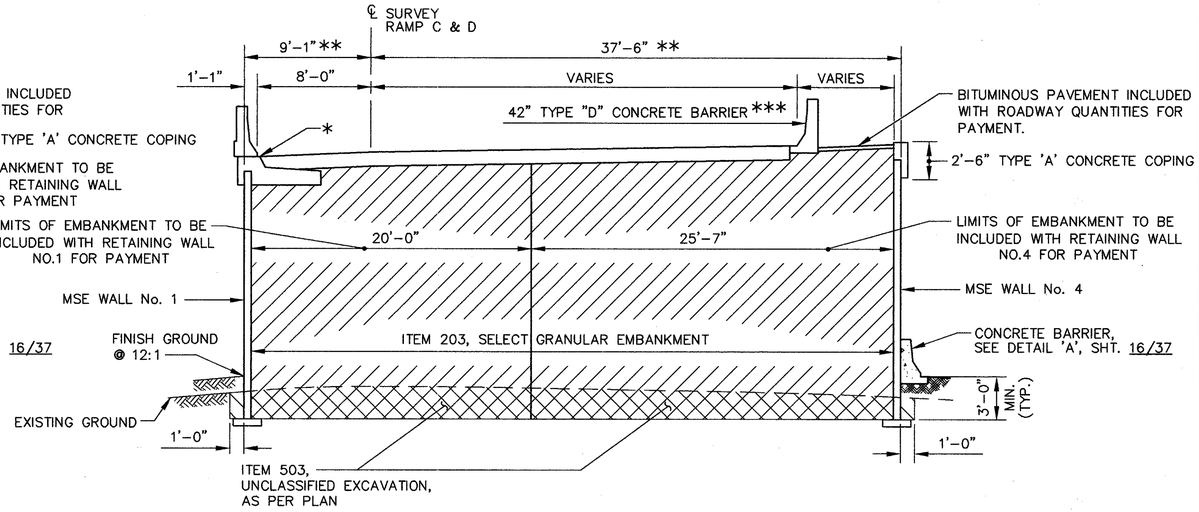

TYPICAL SECTION "I"

STA. C-1389+60.12 to STA. C-1389+76.32
STA. D-1390+55.32 to STA. D-1390+78.58

*TOP OF WALL ELEVATION GIVEN AT THIS POINT

**OFFSET TO OUTSIDE FACE OF MSE WALL

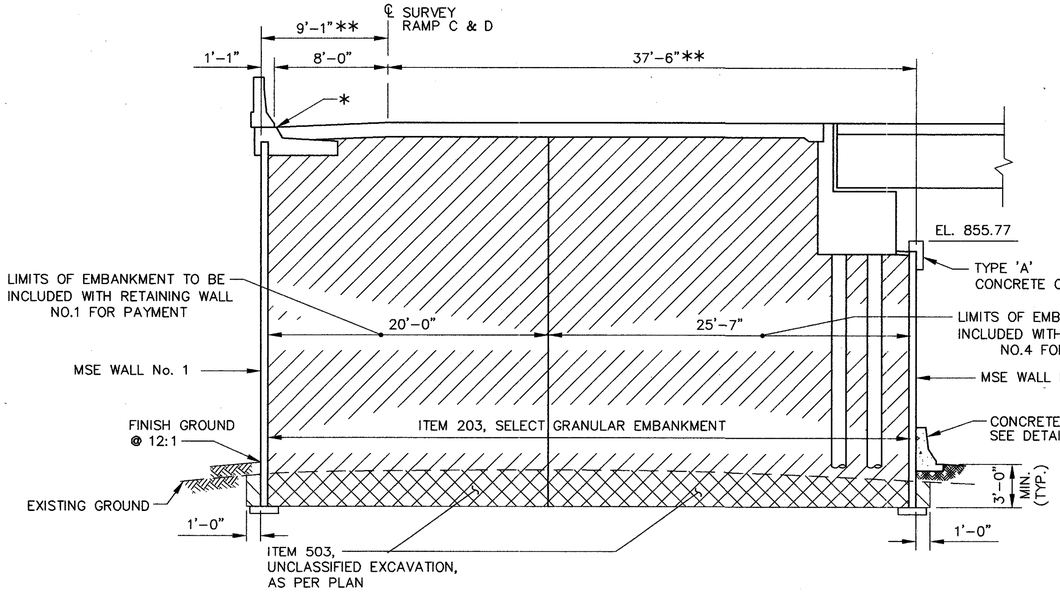

TYPICAL SECTION "J"

STA. C-1389+76.32 to STA. C-1390+14.39
STA. D-1390+14.39 to STA. D-1390+55.32

*TOP OF WALL ELEVATION GIVEN AT THIS POINT

**OFFSET TO OUTSIDE FACE OF MSE WALL

NOTE: CONTRACTOR TO PROVIDE PILE SLEEVES FOR ABUTMENT AS SHOWN ON SHT. 21/37. COST FOR PILE SLEEVES SHALL BE INCIDENTAL TO MECHANICALLY STABILIZED EARTH WALL.

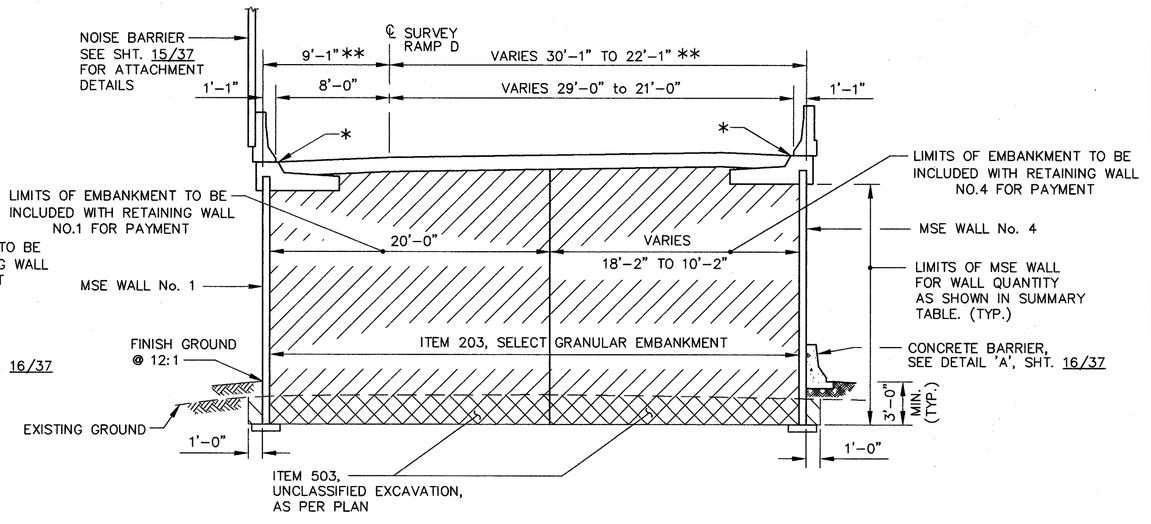

TYPICAL SECTION "K"

STA. D-1395+82.90 to STA. D-1396+93.19

*TOP OF WALL ELEVATION GIVEN AT THIS POINT

**OFFSET TO OUTSIDE FACE OF MSE WALL

PREPARED BY ms consultants, inc. CONSULTING ENGINEERS & PLANNERS 600 EMMY, WILLIAMSTON, MICHIGAN 48895

DESIGNED C.H.	DRAWN C.H.	REVIEWED J.A.B.	DATE 3-94
CHECKED R.B.	REVISED	STRUCTURE FILE NO. N/A	

TYPICAL SECTIONS
MECHANICALLY STABILIZED EARTH WALLS

FRA-270-32.46

18/37

449/593

PLOT SCALE = 3/16" = 1'
COLL #19 C:\DRAWINGS\9693908\RETWALLS\RWALLTYP.DWG FEBRUARY-09-1995

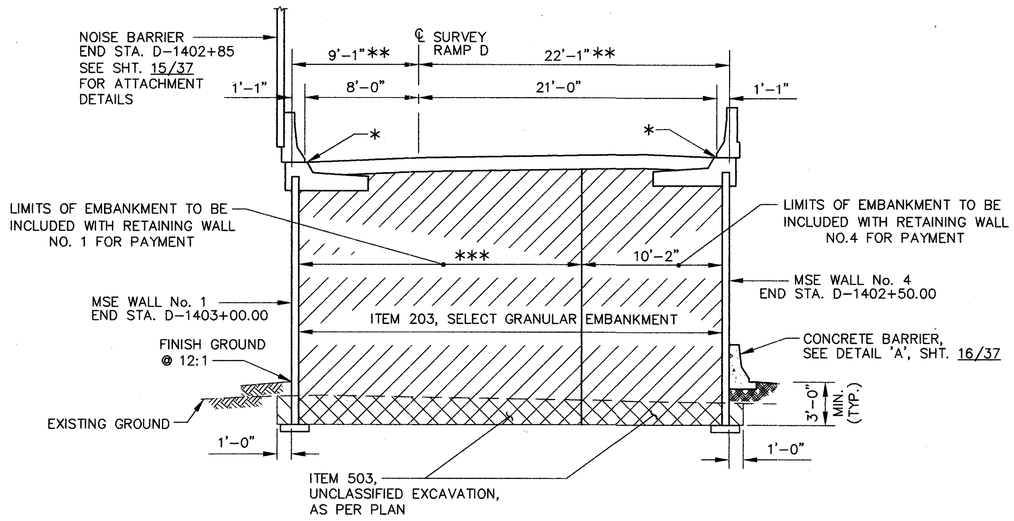

TYPICAL SECTION "L"

STA. D–1396+93.19 to STA. D–1403+00.00

*TOP OF WALL ELEVATION GIVEN AT THIS POINT

**OFFSET TO OUTSIDE FACE OF MSE WALL

***20'–0" STA. D–1396+93.19 TO STA. D–1402+50
12'–0" STA. D–1402+50 TO STA. D–1403+00

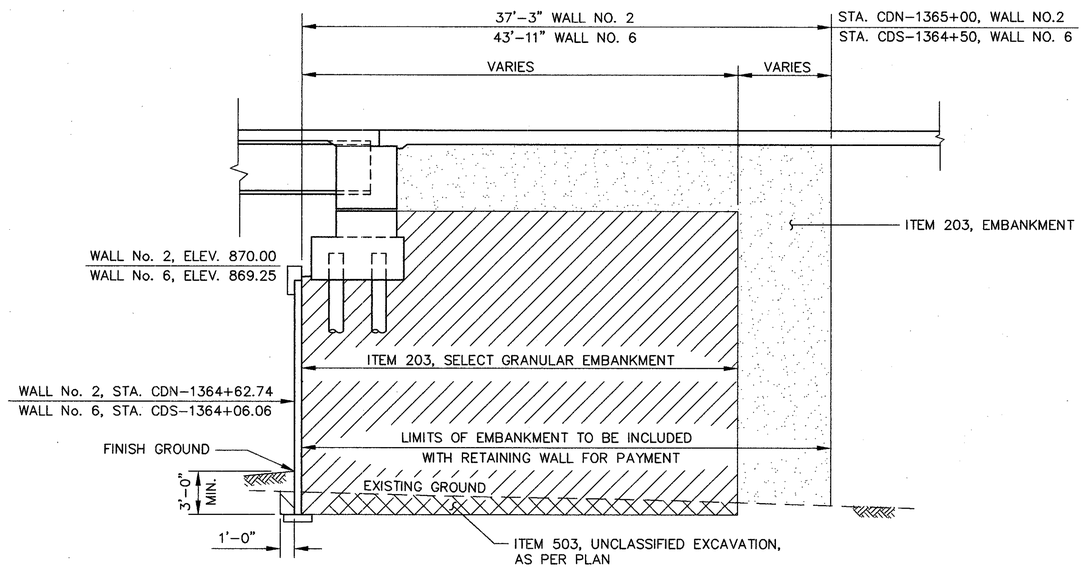

TYPICAL SECTION "M"

NOTE: PROPOSED BRIDGE STRUCTURE TO BE INCLUDED WITH PROJECT FRA–270–(31.01)(33.64). CONTRACTOR TO PROVIDE PILE SLEEVES FOR ABUTMENT AS SHOWN ON SHT. 21/37. COST FOR PILE SLEEVES SHALL BE INCIDENTAL TO MECHANICALLY STABILIZED EARTH WALL. SEE SHEET 35/37 FOR CONSTRUCTION PHASING.

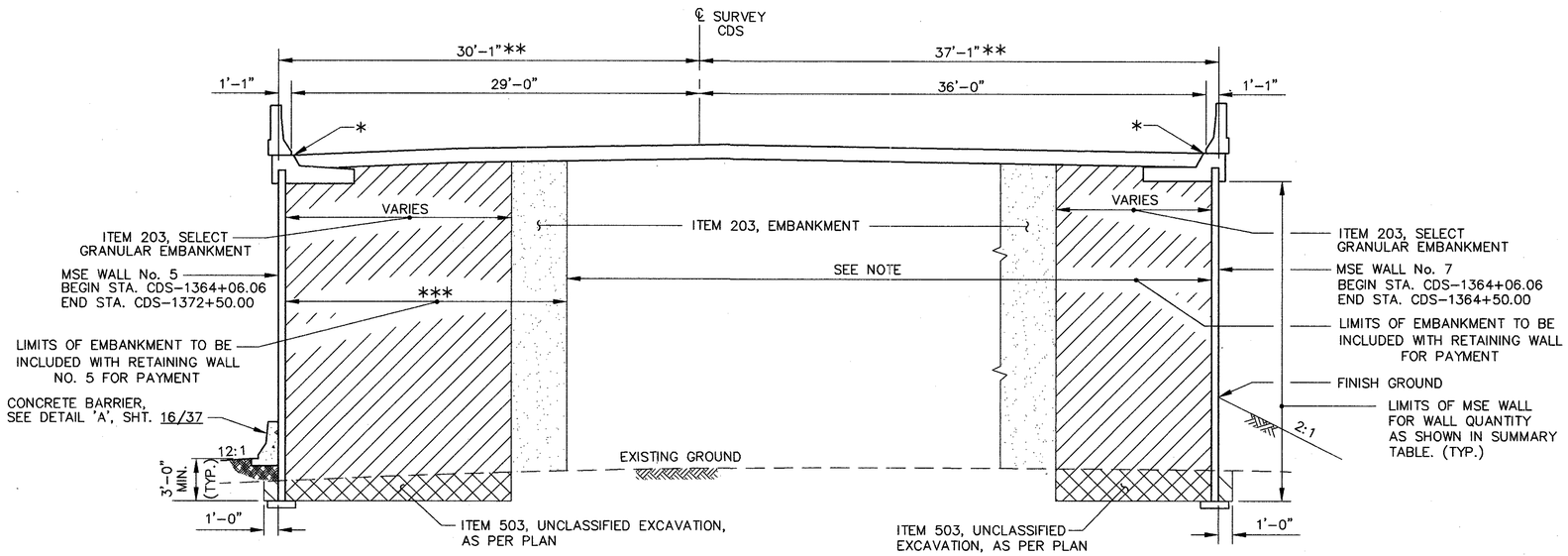

TYPICAL SECTION "N"

STA. CDS–1364+06.06 to STA. CDS–1372+50.00

*TOP OF WALL ELEVATION GIVEN AT THIS POINT

**OFFSET TO OUTSIDE FACE OF MSE WALL

***20'–0" STA. CDS–1364+50 TO STA. CDS–1369+50
12'–0" STA. CDS–1369+50 TO STA. CDS–1372+50

NOTE: LIMITS OF EMBANKMENT TO BE INCLUDED WITH RETAINING WALL NO.'s 5, 6 & 7 SHALL INCLUDE ENTIRE WIDTH FROM INSIDE FACE OF WALL NO. 5 TO INSIDE FACE OF WALL NO. 7 FROM STA. CDS–1364+06.06 TO STA. CDS–1364+50.00. SEE TYPICAL SECTION 'M' THIS SHT.

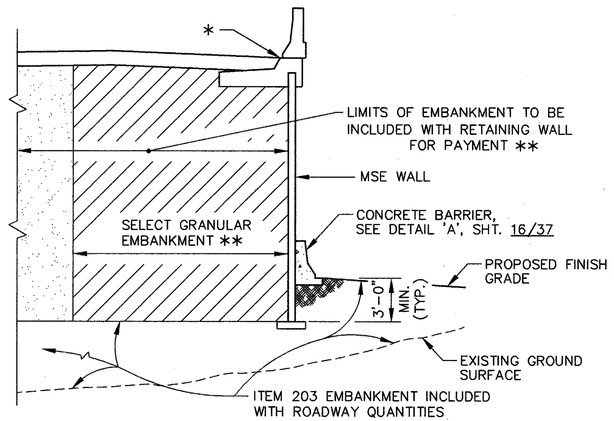

*TOP OF WALL ELEVATION GIVEN AT THIS POINT

**SEE OTHER TYPICAL SECTIONS FOR EMBANKMENT WIDTHS AT SPECIFIC LOCATIONS.

TYPICAL SECTION "O"

IN FILL AREAS
SEE ROADWAY CROSS–SECTIONS

PLOT SCALE = 3/16" = 1'
COL. #19
C:\DRAWING\06092308\RETWALLS\RWALL17.DWG FEBRUARY–09–1995

PREPARED BY
ms consultants, inc.
CONSULTING ENGINEERS & PLANNERS
6500 TAYLOR BOULEVARD, COLUMBUS, OHIO

DESIGNED C.H.	DRAWN C.H.	REVIEWED J.A.B.	DATE 3–94
CHECKED R.B.	REVISED	STRUCTURE FILE NO. N/A	

TYPICAL SECTIONS
MECHANICALLY STABILIZED EARTH WALLS

FRA–270–32.46

19/37

450/593

TYPICAL SECTIONS

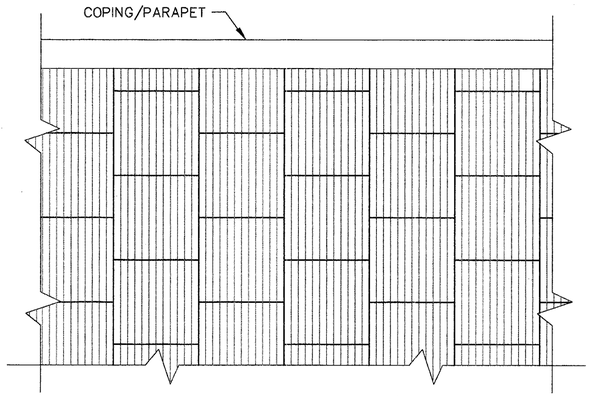

ELEVATION
RETAINED EARTH WALLS

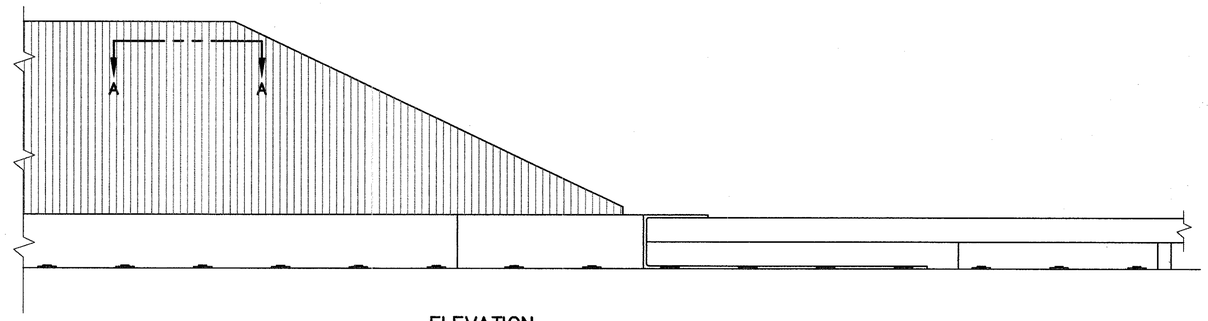

ELEVATION
CAST-IN-PLACE WALLS

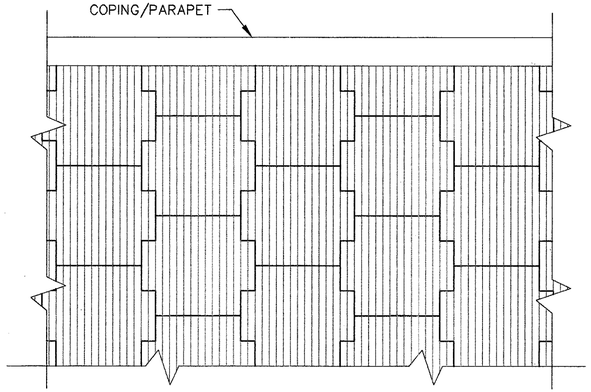

ELEVATION
REINFORCED EARTH WALLS

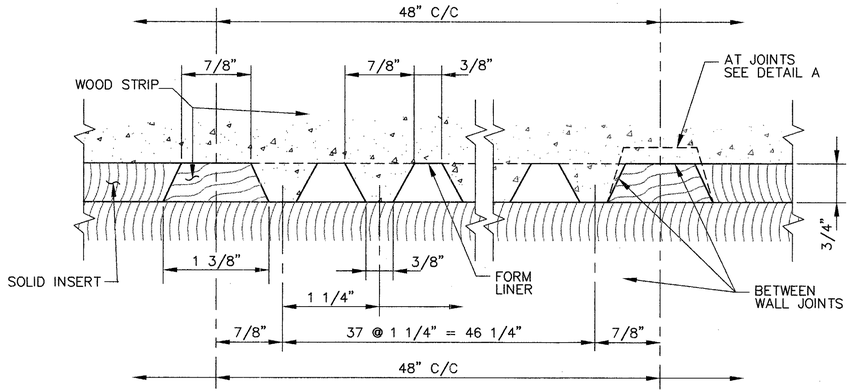

SECTION A–A

SURFACE FINISH

(A) SURFACE FINISH: THE EXPOSED VERTICAL SURFACES OF WALLS AND WALL TYPE ABUTMENTS SHALL BE VERTICALLY STRIATED AS INDICATED IN THE "ELEVATION" VIEWS SHOWN ON THIS SHEET. STRIATIONS SHALL PROTRUDE BEYOND THE NOMINAL SURFACE OF THE WALL OR WALL PANELS. SURFACE FINISH AND GROUT CLEANING SHALL CONFORM WITH 511.15.

(B) STRIATIONS SHALL BE OBTAINED BY THE USE OF APPROVED FORM LINERS. STRIATIONS SHOWN ARE "SYMONS" TRAPAZOIDAL DEEP RIB. SIMILAR STRIATIONS BY OTHER MANUFACTURERS MAY BE USED SUBJECT TO THE APPROVAL OF THE DIRECTOR.

(C) SHOP DRAWINGS OF FORMS SHOWING LINERS AND INSERTS ARE REQUIRED. THESE DRAWINGS SHALL BE SPECIFIC WITH RESPECT TO THE DIMENSIONS OF INSERTS FOR PANEL BOUNDARIES AND JOINT RUSTICATIONS.

(D) VIBRATION: CARE SHALL BE TAKEN TO ENSURE PROPER DISTRIBUTION OF CONCRETE ALONG STRIATED SURFACES WITHOUT ADVERSELY AFFECTING THE INTEGRITY OF THE FORM LINERS AND INSERTS. EVERY EFFORT SHALL BE MADE TO PRODUCE A SURFACE FREE FROM AIR BUBBLES, CAVITIES AND HONEYCOMB SPOTS AND OTHER IMPERFECTIONS TO OBVIATE THE NEED FOR SUBSEQUENT GROUT CLEANING.

(E) PAYMENT FOR SURFACE FINISH AND, WHERE REQUIRED, GROUT CLEANING SHALL BE INCLUDED IN THE COST OF THE CONCRETE OR CONCRETE PANELS FOR PAYMENT.

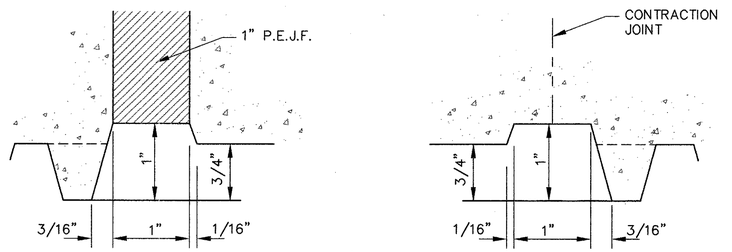

EXPANSION JOINT **CONTRACTION JOINT**

DETAIL A

PLOT SCALE.. 3/8" = 1"
COL #19 C:\DRAWING\06092308\WETWALLS\PWALLGMD.DWG FEBRUARY-09-1995

PREPARED BY
ms consultants, inc.
CONSULTING ENGINEERS & PLANNERS
8500 BEECH BOULEVARD, COLUMBUS, OHIO

DESIGNED C.H.	DRAWN C.H.	REVIEWED J.A.B.	DATE 3-94
CHECKED R.B.	REVISED	STRUCTURE FILE NO. N/A	

ARCHITECTURAL TREATMENT DETAILS
SURFACE FINISH

FRA-270-32.46

20/37

451/593

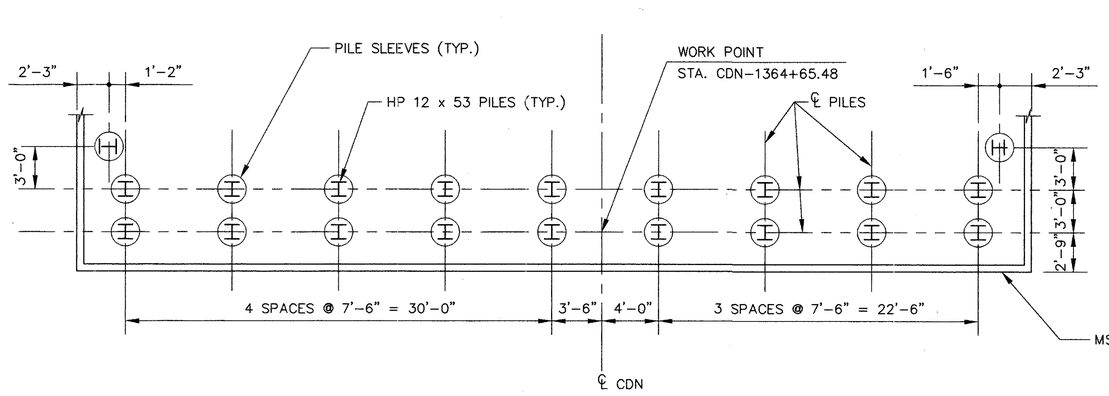

FORWARD ABUTMENT – CDN OVER RAMP B

SEE SHT. 35/37 FOR CONSTRUCTION PHASING

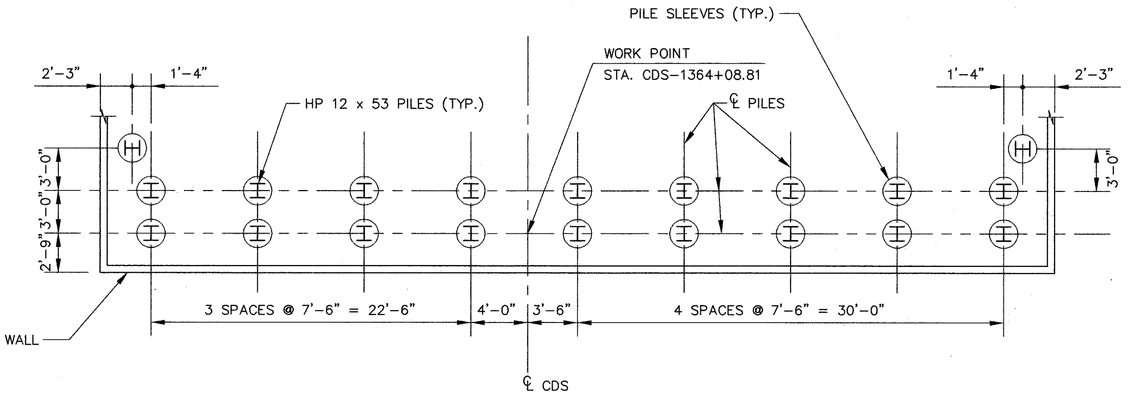

FORWARD ABUTMENT – CDS OVER RAMP C

SEE SHT. 35/37 FOR CONSTRUCTION PHASING

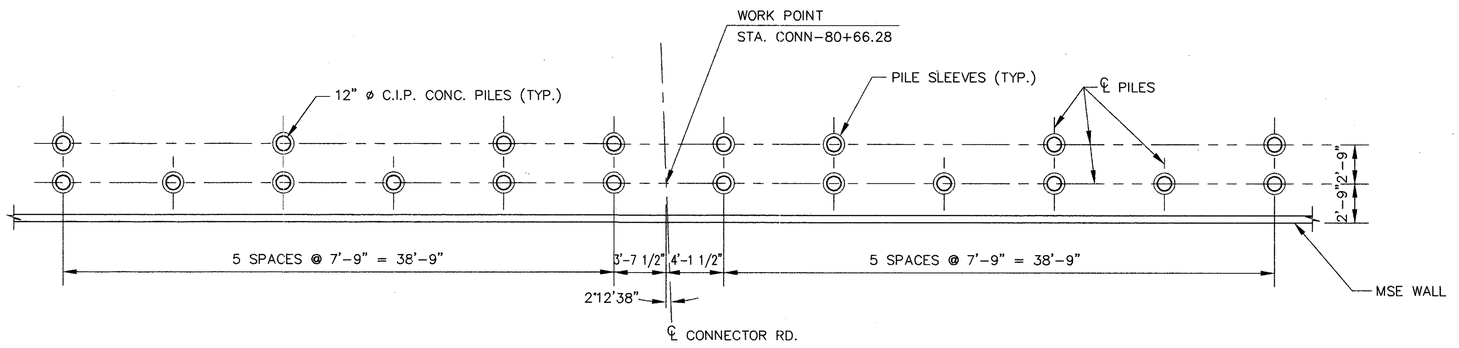

FORWARD ABUTMENT – CONNECTOR RD.

NOTES

1. CONTRACTOR SHALL PROVIDE PILE SLEEVES PER SECTION 6.0 OF MSE WALL SPECIAL PROVISIONS.

PLOT SCALE = 3/16" = 1'
COS #19 C:\DRAWINGS\0609230A\RETWALLS\RWALL1.DWG FEBRUARY-09-1995

PREPARED BY
ms consultants, inc.
CONSULTING ENGINEERS & PLANNERS
6500 BEECH DAUGHERTY, COLUMBUS, OHIO

DESIGNED C.H.	DRAWN C.H.	REVIEWED J.A.B.	DATE 7-94
CHECKED R.B.	REVISED		STRUCTURE FILE NO. N/A

PILE LAYOUT AT BRIDGE ABUTMENTS
MECHANICALLY STABILIZED EARTH WALLS

FRA-270-32.46

21/37

452/593

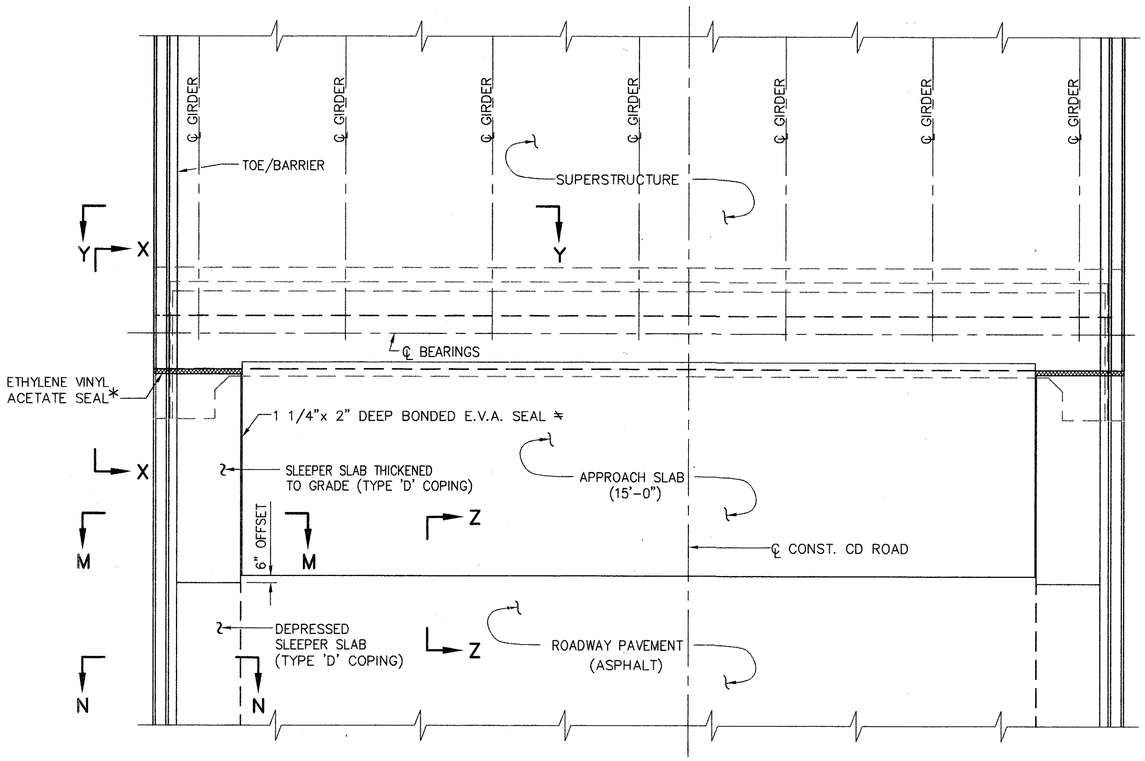

PLAN

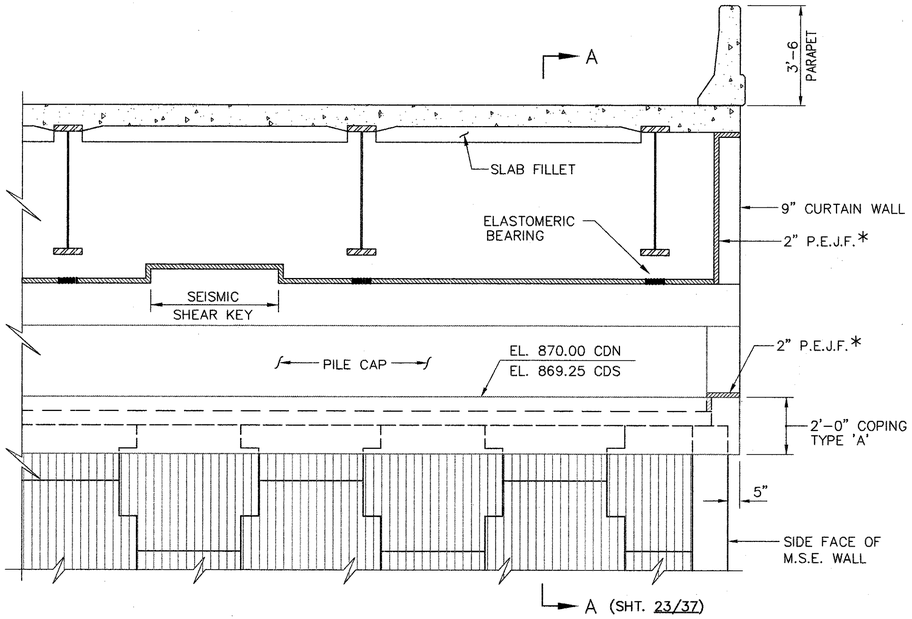

VIEW Y-Y

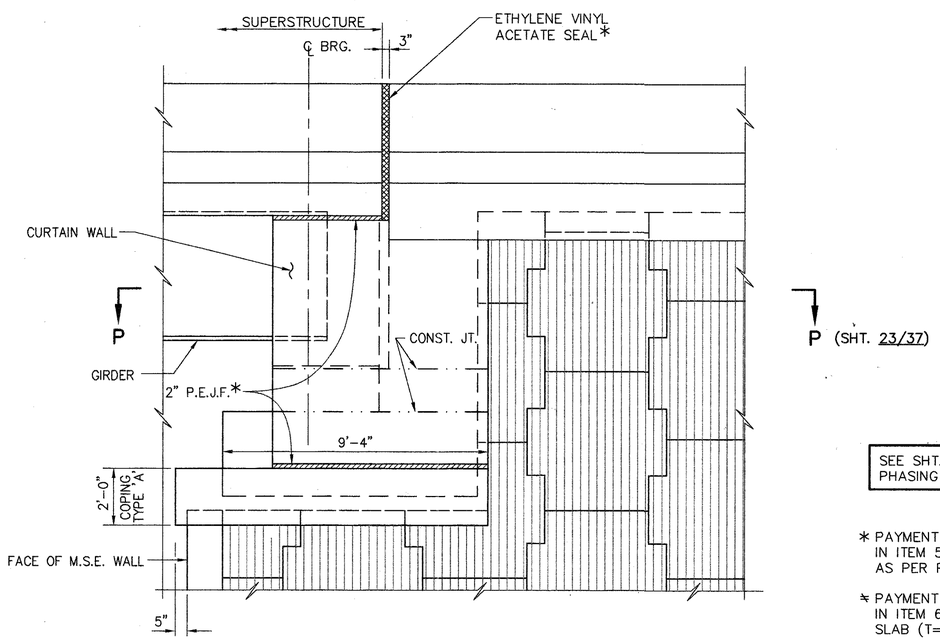

VIEW X-X

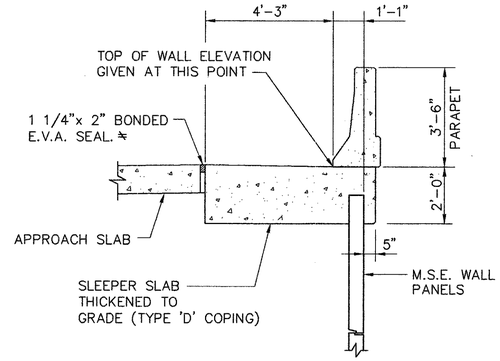

SECTION M-M

SEE SHT. 30/37 FOR DETAILS OF PARAPET WITH SLEEPER SLAB

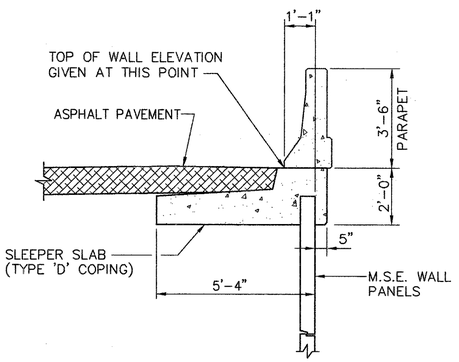

SECTION N-N

SEE SHT. 30/37 FOR DETAILS OF PARAPET WITH SLEEPER SLAB

SEE SHT. 35/37 FOR CONSTRUCTION PHASING BETWEEN PROJECTS AT ABUTMENT.

* PAYMENT FOR THIS ITEM SHALL BE INCLUDED IN ITEM 511, CLASS C CONCRETE, ABUTMENT, AS PER PLAN, PROJECT FRA-270-(31.01)(33.64).

≠ PAYMENT FOR THIS ITEM SHALL BE INCLUDED IN ITEM 611, REINFORCED CONCRETE APPROACH SLAB (T=12"), AS PER PLAN, PROJECT FRA-270-(31.01)(33.64).

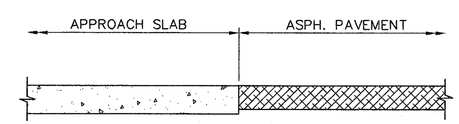

SECTION Z-Z

LEGEND

P.E.J.F. = PREFORMED EXPANSION JOINT FILLER

PREPARED BY ms consultants, inc. CONSULTING ENGINEERS & PLANNERS 6500 BUSCH BOULEVARD, COLUMBUS, OHIO

DESIGNED	DRAWN	REVIEWED	DATE
R.B.	COY	J.A.B.	7-94
CHECKED	REVISED	STRUCTURE FILE NO.	
W.H.		N/A	

WALL DETAILS AT ABUTMENTS
MECHANICALLY STABILIZED EARTH WALLS

FRA-270-32.46

22/37

453/593

PLOT SCALE... 1 = 64
COL #19 C:\DRAWING\06092308\RETWALLS\RWALLWD1.DWG FEBRUARY-09-1995

WALL DETAILS AT ABUTMENTS

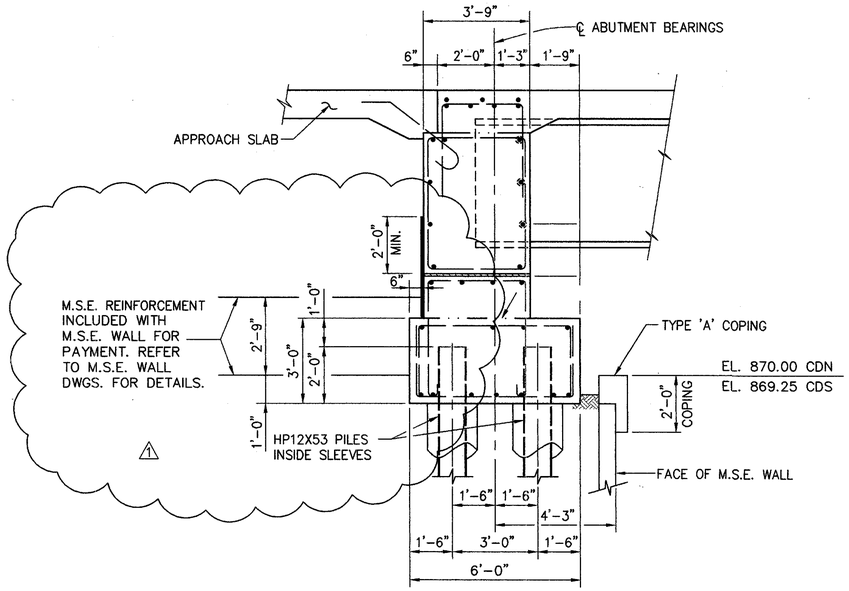

SECTION A–A

SEE SHT 22/37 FOR LOCATION

SEE SHT. 35/37 FOR CONSTRUCTION PHASING BETWEEN PROJECTS AT ABUTMENT.

* PAYMENT FOR THIS ITEM SHALL BE INCLUDED IN ITEM 511, CLASS C CONCRETE, ABUTMENT, AS PER PLAN, PROJECT FRA-270-(31.01)(33.64).

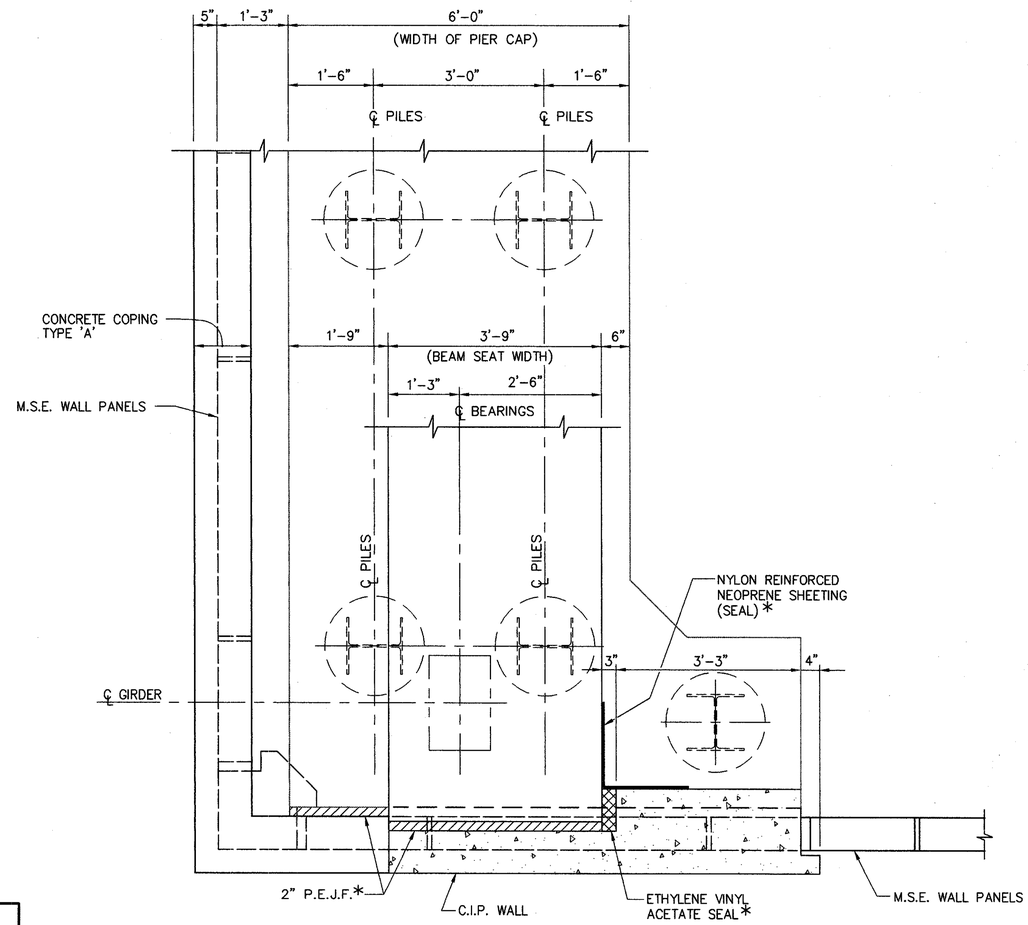

SECTION P–P

SEE SHT 22/37 FOR LOCATION

PREPARED BY ms consultants, inc. CONSULTING ENGINEERS & PLANNERS 6500 BUSCH BOULEVARD, COLUMBUS, OHIO

DESIGNED	DRAWN	REVIEWED	DATE
R.B.	COY	J.A.B.	7-94
CHECKED	REVISED	STRUCTURE FILE NO.	
W.H.	5-96	N/A	

WALL DETAILS AT ABUTMENTS
MECHANICALLY STABILIZED EARTH WALLS

FRA-270-32.46

PLOT SCALE: 1 = 64
COL #19 C:\DRAWING\06092718\RWALLWD1.DWG MAY 7, 1996

REINFORCING BAR SUB-SUMMARY

COPING TYPE	LENGTH OF SECTION	NO. SECTIONS	LONGITUDINAL 'A' BARS	TRANSVERSE COPING BARS	PARAPET BARS	COMMENTS
B	29'-11 1/4"	186	18-V504	20-V501, 30-V601, 39-V502	30-V503	INCLUDES 9 INLET SECTIONS, SEE DETAIL, SHT. 32-33/37
C	29'-11 1/4"	38	24-V504	20-V505, 39-V602, 30-V603	34-V506, 60-V507	INCLUDES 7 INLET SECTIONS, SEE DETAIL, SHT. 32-33/37
B	34'-11 1/4"	14	18-V516	24-V501, 35-V601, 47-V502	35-V503	
C	34'-11 1/4"	3	24-V516	24-V505, 47-V602, 35-V603	40-V506, 70-V507	
B	39'-11 1/4"	10	18-V517	27-V501, 40-V601, 53-V502	40-V503	
C	39'-11 1/4"	2	24-V517	27-V505, 53-V602, 40-V603	46-V506, 80-V507	
B	32'-0 3/8"	1	18-V518	22-V501, 32-V601, 43-V502	32-V503	
B	34'-1 7/8"	1	18-V520	23-V501, 34-V601, 45-V502	34-V503	
B	33'-2 7/8"	1	18-V521	22-V501, 33-V601, 44-V502	33-V503	
B	31'-5 7/8"	1	18-V553	21-V501, 32-V601, 42-V502	32-V503	
B	30'-2 1/2"	1	18-V560	20-V501, 30-V601, 39-V502	30-V503	

SEE SHT. 37/37 FOR REINFORCING STEEL LIST

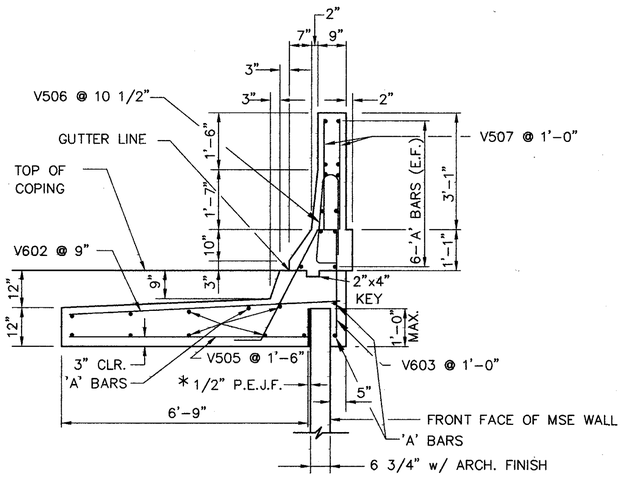

C.I.P. CONCRETE COPING TYPE 'C' w/ 50" PARAPET DETAIL

APPLIES: STA. C-1389+48.32 TO D-1403+00, MSE WALL NO. 1

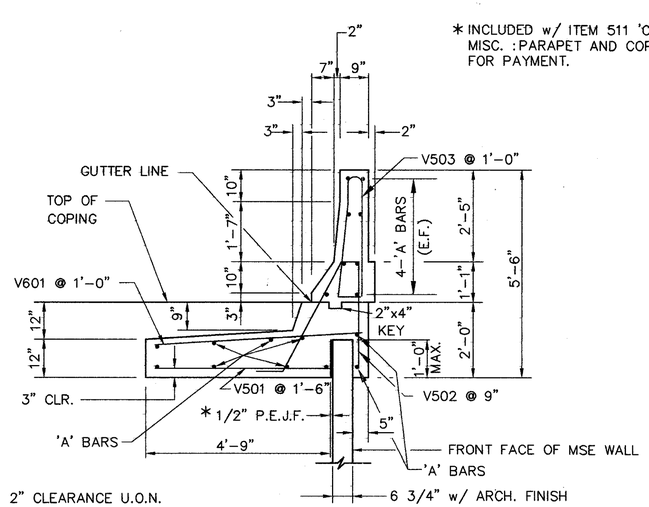

* INCLUDED w/ ITEM 511 'CLASS C CONCRETE, MISC. :PARAPET AND COPING, AS PER PLAN' FOR PAYMENT.

C.I.P. CONCRETE COPING TYPE 'B' w/ 42" PARAPET DETAIL

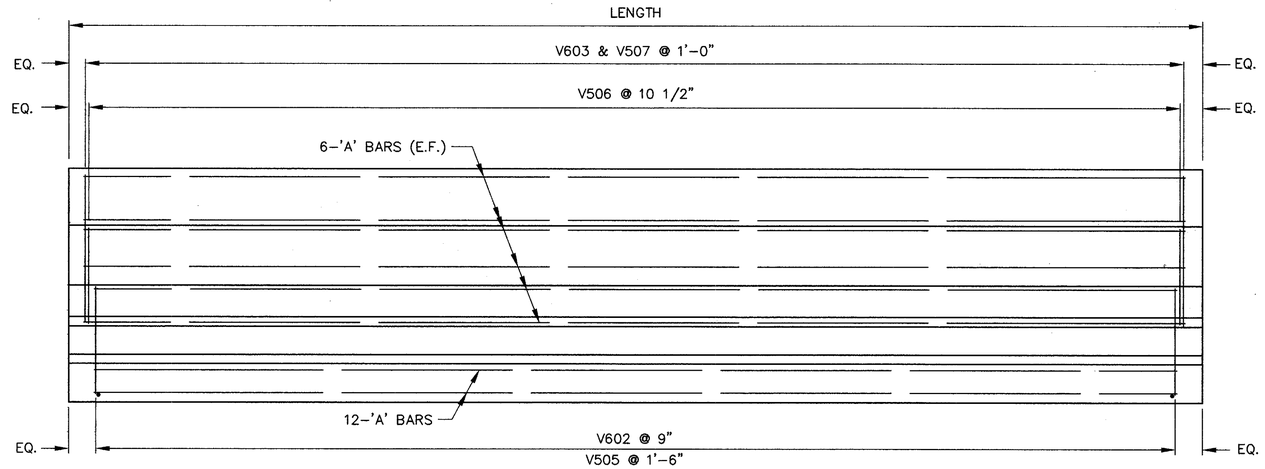

ELEVATION VIEW

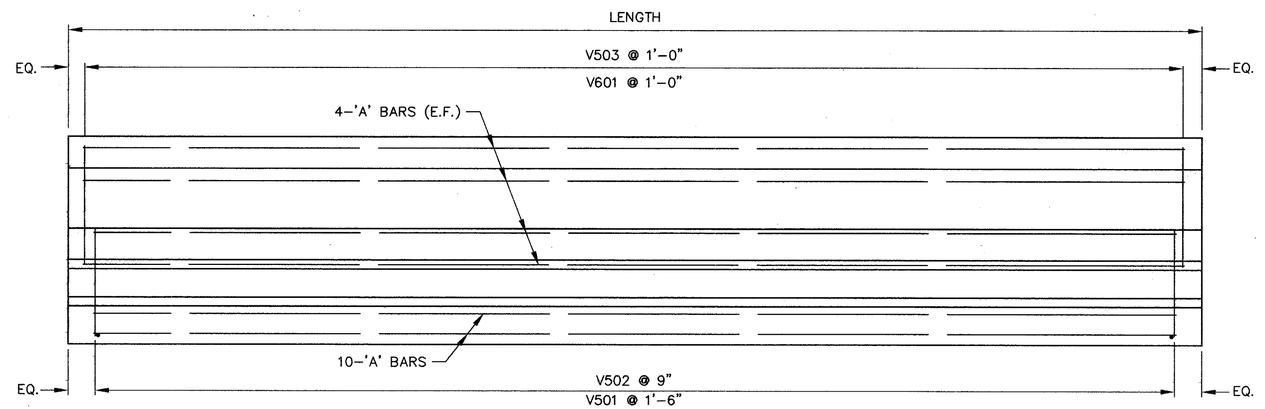

ELEVATION VIEW

LEGEND
EQ. = EQUAL
MAX. = MAXIMUM
E.F. = EACH FACE
U.O.N. = UNLESS OTHERWISE NOTED
P.E.J.F. = PREFORMED EXPANSION JOINT FILLER

PREPARED BY ms consultants, inc. CONSULTING ENGINEERS & PLANNERS 6500 BOSCH BOULEVARD, COLUMBUS, OHIO

DESIGNED R.B.	DRAWN D.S.	REVIEWED D.A.S.	DATE 6-94
CHECKED B.G.	REVISED	STRUCTURE FILE NO. N/A	

C.I.P. COPING & PARAPET DETAILS
VSL RETAINED EARTH WALLS

FRA-270-32.46

PLOT SCALE: 1 = 24
COL #19 C:\DRAWING\06092308\RETWALLS\RWALLCPD.DWG FEBRUARY-09-1995

C.I.P. COPING & PARAPET DETAILS

REINFORCING BAR SUB-SUMMARY

COPING TYPE	LENGTH OF SECTION	NO. SECTIONS	LONGITUDINAL 'A' BARS	TRANSVERSE COPING BARS	PARAPET BARS	COMMENTS
B	29'-5 1/2"	203	18--V504	20-V501, 30-V601, 39-V502	30-V503	INCLUDES 9 INLET SECTIONS, SEE DETAIL, SHT. 32-33/37
C	29'-5 1/2"	36	24--V504	20-V505, 39-V602, 30-V603	34-V506, 60-V507	INCLUDES 7 INLET SECTIONS, SEE DETAIL, SHT. 32-33/37
B	34'-4 1/2"	6	18--V516	23-V501, 35-V601, 46-V502	35-V503	
C	34'-4 1/2"	4	24--V516	23-V505, 46-V602, 35-V603	39-V506, 70-V507	
B	39'-2 1/2"	5	18--V517	26-V501, 40-V601, 52-V502	40-V503	
C	39'-2 1/2"	3	24--V517	26-V505, 52-V602, 40-V603	45-V506, 80-V507	
B	30'-1 3/4"	1	18--V518	21-V501, 31-V601, 41-V502	31-V503	
B	30'-5 3/8"	1	18--V560	21-V501, 31-V601, 41-V502	31-V503	
B	33'-5 7/8"	1	18--V520	23-V501, 34-V601, 45-V502	34-V503	
B	29'-0 5/8"	1	18--V521	20-V501, 29-V601, 39-V502	29-V503	
B	34'-4"	1	18--V516	23-V501, 35-V601, 46-V502	35-V503	
B	38'-10 5/8"	1	18--V553	26-V501, 39-V601, 52-V502	39-V503	

SEE SHT. 36/37 FOR REINFORCING STEEL LIST

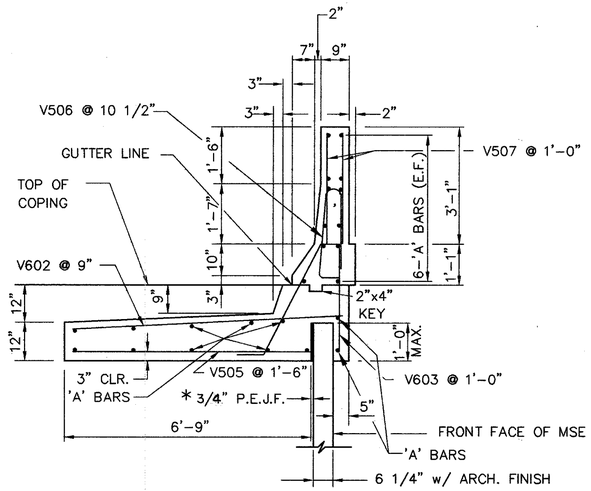

C.I.P. CONCRETE COPING TYPE 'C' w/ 50" PARAPET DETAIL

APPLIES: STA. C-1389+52.29 TO D-1403+00, MSE WALL NO. 1

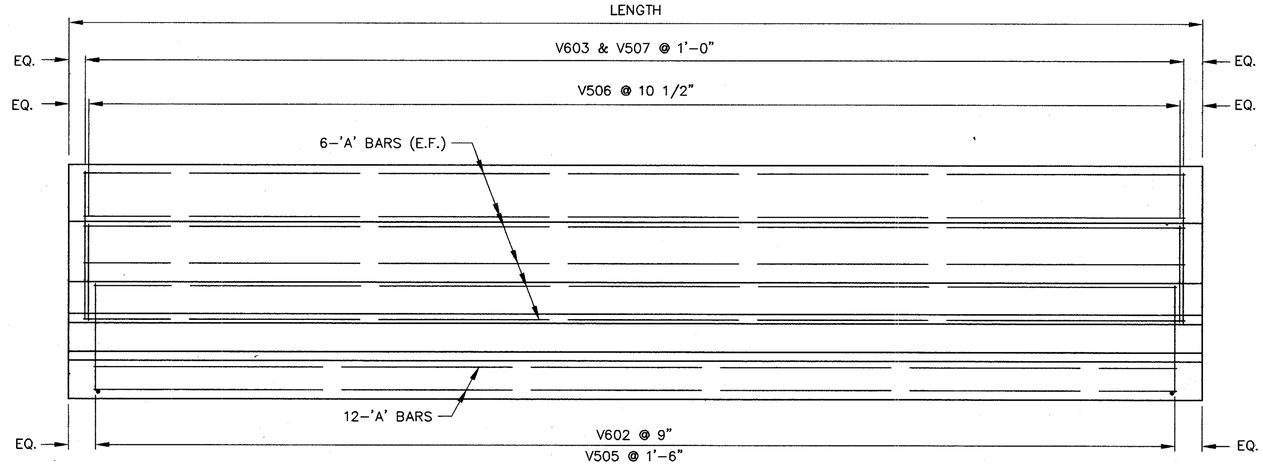

ELEVATION VIEW

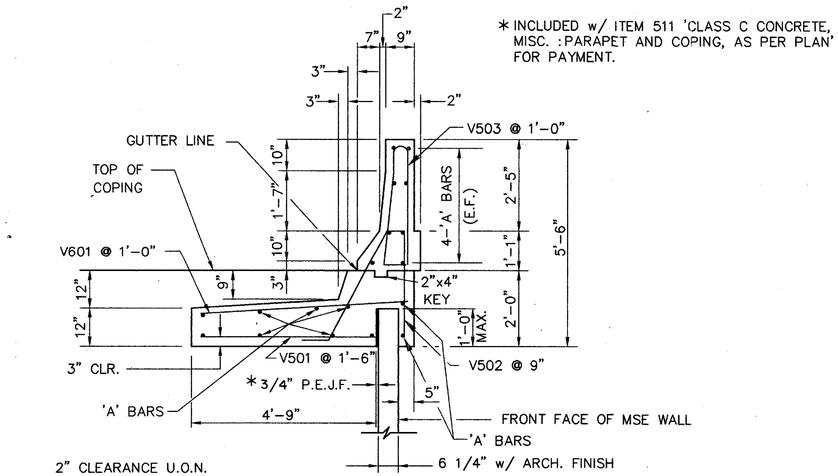

C.I.P. CONCRETE COPING TYPE 'B' w/ 42" PARAPET DETAIL

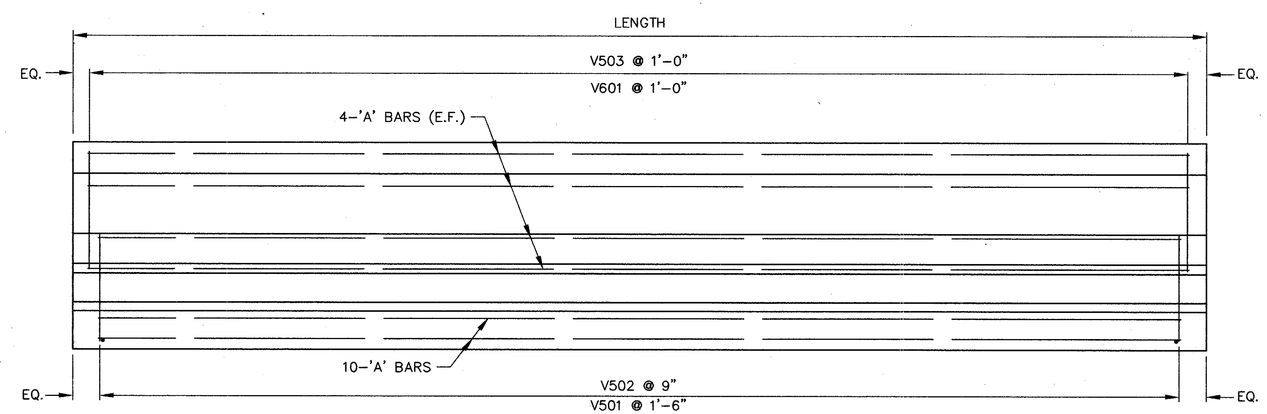

ELEVATION VIEW

LEGEND
EQ. = EQUAL
MAX. = MAXIMUM
E.F. = EACH FACE
U.O.N. = UNLESS OTHERWISE NOTED
P.E.J.F. = PREFORMED EXPANSION JOINT FILLER

PREPARED BY ms consultants, inc. CONSULTING ENGINEERS & PLANNERS 6500 BUSCH BOULEVARD, COLUMBUS, OHIO

DESIGNED R.B.	DRAWN D.S.	REVIEWED D.A.S.	DATE 6-94
CHECKED B.G.	REVISED	STRUCTURE FILE NO. N/A	

C.I.P. COPING & PARAPET DETAILS
REINFORCED EARTH WALLS

FRA-270-32.46

25/37

456/593

PLOT SCALE... 1 = 24
COL #19 C:\DRAWING\06092308\RETWALLS\RWALLCPD.DWG FEBRUARY-09-1995

C.I.P. COPING & PARAPET DETAILS

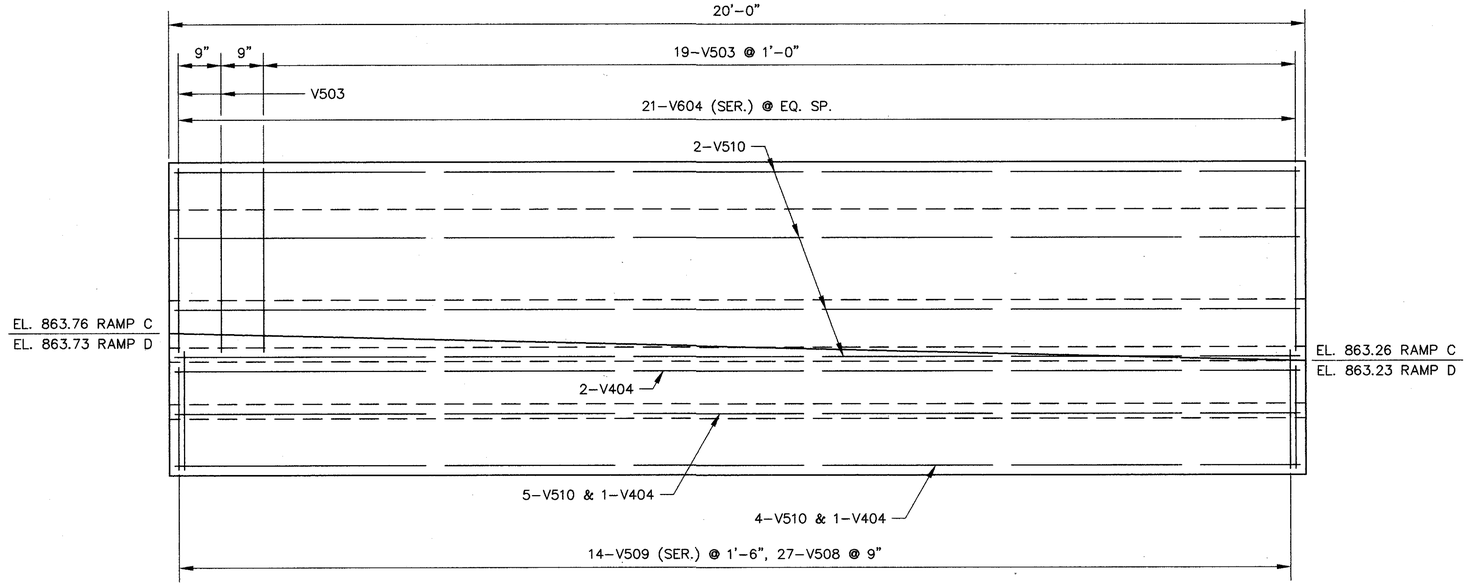

ELEVATION VIEW

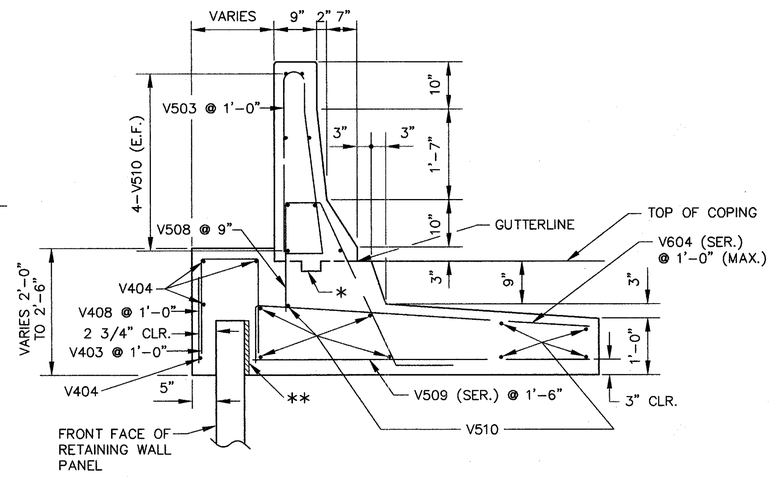

SECTION A-A

C.I.P. CONCRETE TRAFFIC BARRIER DETAIL

APPLIES:
STA. C-1388+96.67 TO STA. C-1389+16.67
STA. D-1391+22.02 TO STA. D-1391+42.02

NOTE: ALL REINFORCING BARS SHALL BE 2" CLEAR UNLESS OTHERWISE SHOWN.

* 2"x 4" KEY

** 3/4" P.E.J.F. REINFORCED EARTH WALLS
1/2" P.E.J.F. VSL RETAINED EARTH WALLS
INCLUDED w/ ITEM 511 'CLASS C, CONCRETE, MISC: PARAPET AND COPING, AS PER PLAN' FOR PAYMENT.

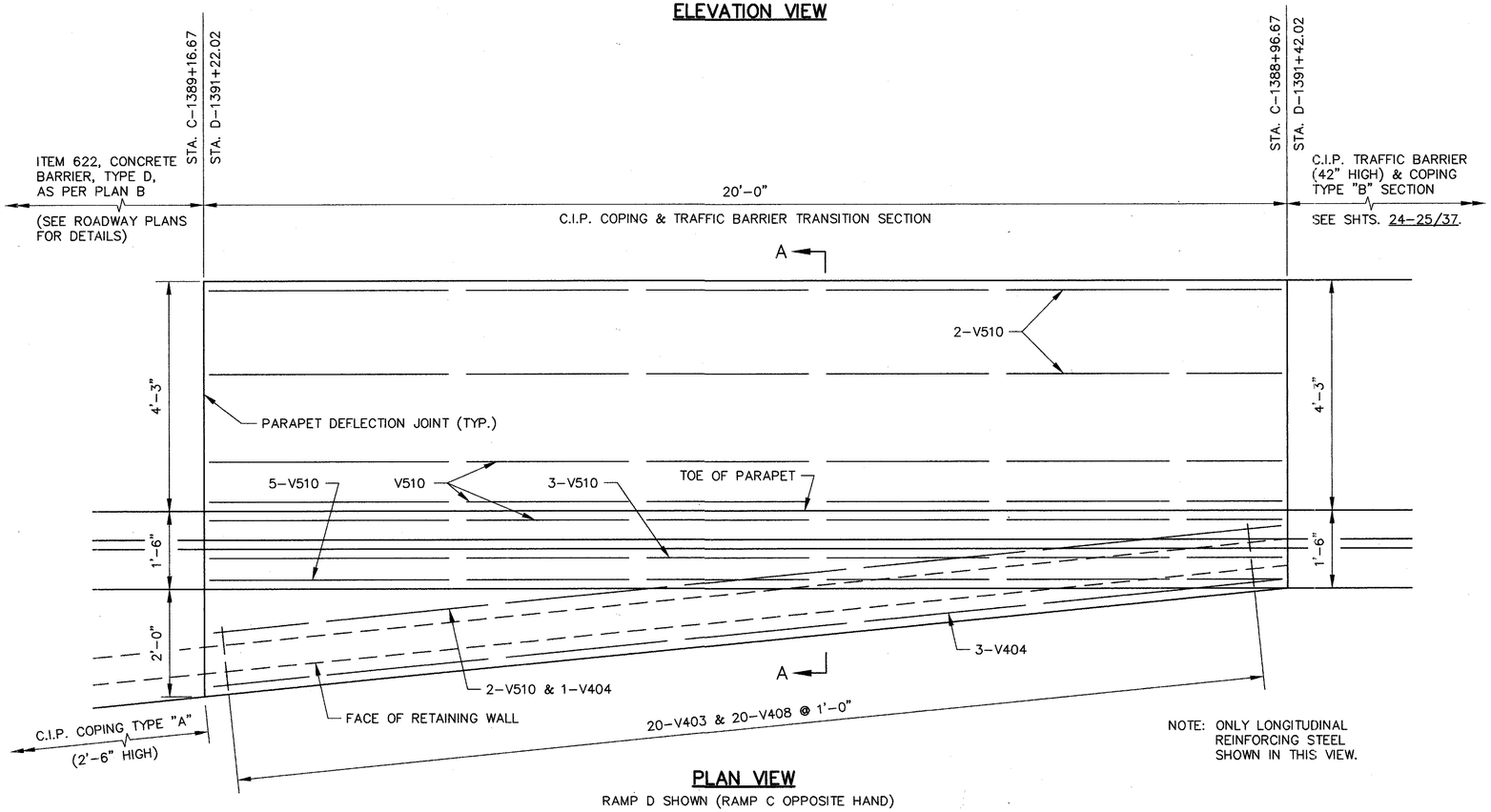

NOTE: ONLY LONGITUDINAL REINFORCING STEEL SHOWN IN THIS VIEW.

PLAN VIEW

RAMP D SHOWN (RAMP C OPPOSITE HAND)

LEGEND
SER. = SERIES
MAX. = MAXIMUM
E.F. = EACH FACE
EQ. SP. = EQUAL SPACING
C.I.P. = CAST-IN-PLACE
P.E.J.F. = PREFORMED EXPANSION JOINT FILLER

PLOT SCALE: 3/4" = 1'
COL. #19 C:\DRAWING\06092308\RETWALLS\RWALLPD1.DWG FEBRUARY-10-1995

PREPARED BY ms consultants, inc.
CONSULTING ENGINEERS & PLANNERS
6500 BUSCH BOULEVARD, COLUMBUS, OHIO

DESIGNED	DRAWN	REVIEWED	DATE
R.B.	C.H.	J.A.B.	7-94
CHECKED	REVISED	STRUCTURE FILE NO.	
W.H.		N/A	

CIP COPING & PARAPET DETAILS
MECHANICALLY STABILIZED EARTH WALLS

FRA-270-32.46

26/37

457/593

CIP COPING & PARAPET DETAILS

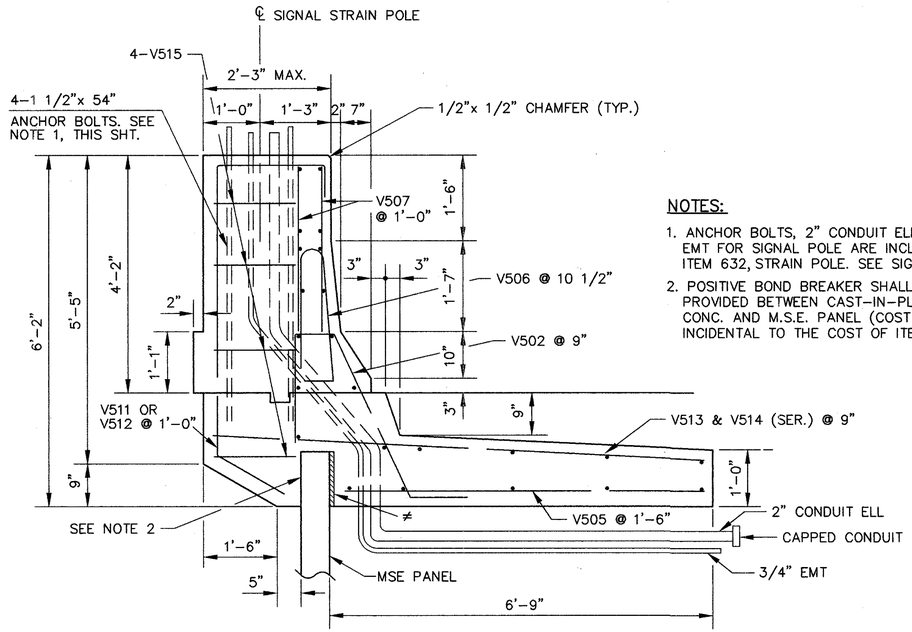

SECTION A–A

NOTES:

1. ANCHOR BOLTS, 2" CONDUIT ELL AND 3/4" EMT FOR SIGNAL POLE ARE INCLUDED WITH ITEM 632, STRAIN POLE. SEE SIGNAL PLANS.
2. POSITIVE BOND BREAKER SHALL BE PROVIDED BETWEEN CAST–IN–PLACE CONC. AND M.S.E. PANEL (COST INCIDENTAL TO THE COST OF ITEM 511).

≠ 3/4" P.E.J.F. REINFORCED EARTH WALLS
1/2" P.E.J.F. VSL RETAINED EARTH WALLS
INCLUDED w/ ITEM 511 'CLASS C, CONCRETE, MISC: PARAPET AND COPING, AS PER PLAN' FOR PAYMENT.

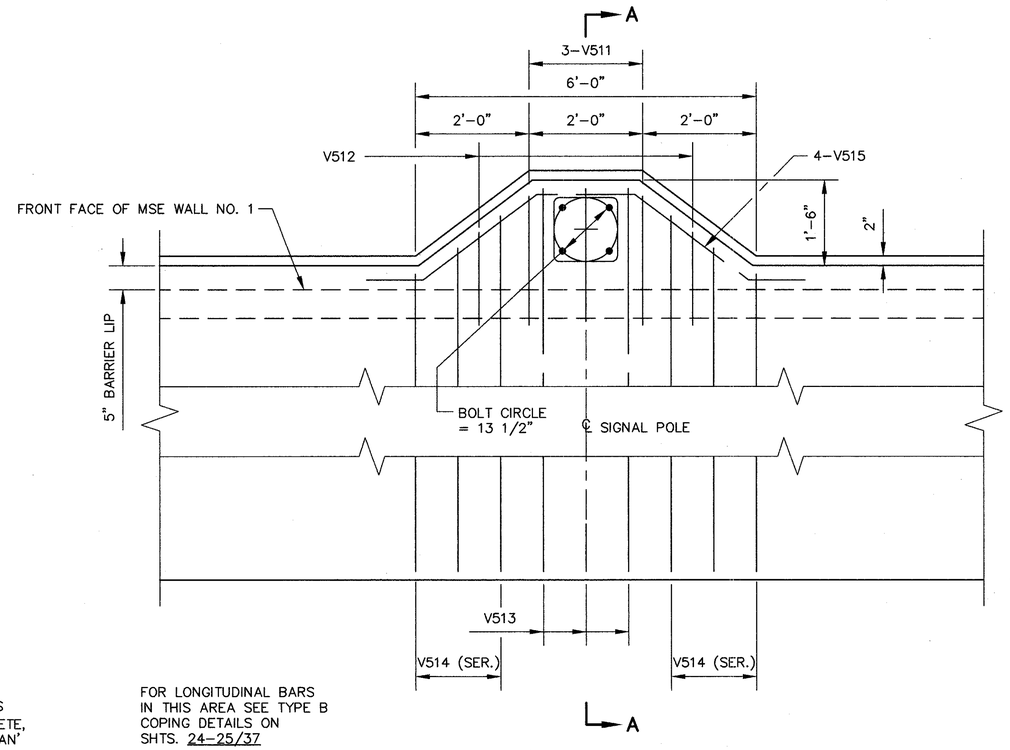

FOR LONGITUDINAL BARS IN THIS AREA SEE TYPE B COPING DETAILS ON SHTS. 24–25/37

PLAN VIEW AT SIGNAL STRAIN POLE

STA. D–1390+39.00

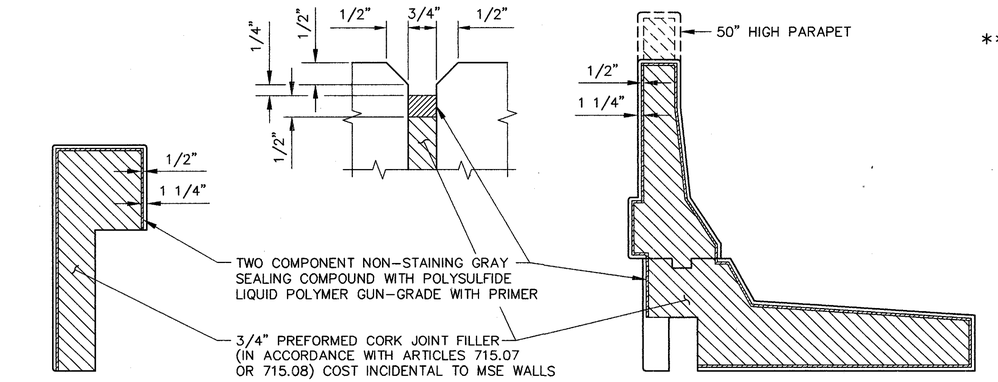

@ COPING TYPE "A"

@ COPING TYPE "B" & 42" TRAFFIC BARRIER
@ COPING TYPE "C" & 50" TRAFFIC BARRIER

PARAPET JOINT DETAIL

** JOINTS IN COPING SHALL BE AT 2 PANEL INTERVALS (TYP.) AND COINCIDE APPROXIMATELY WITH PANEL JOINTS. V402 BARS SHALL BE USED FOR COPING SECTIONS 2 PANEL UNITS OR LESS IN LENGTH. V405 BARS SHALL BE USED FOR COPING SECTIONS LONGER THAN 2 PANELS IN LENGTH. THE REINFORCING STEEL SHALL BE STOPPED 2" SHORT OF EITHER SIDE OF THE JOINTS. FIELD CUT ANY EXCESS BAR LENGTH.

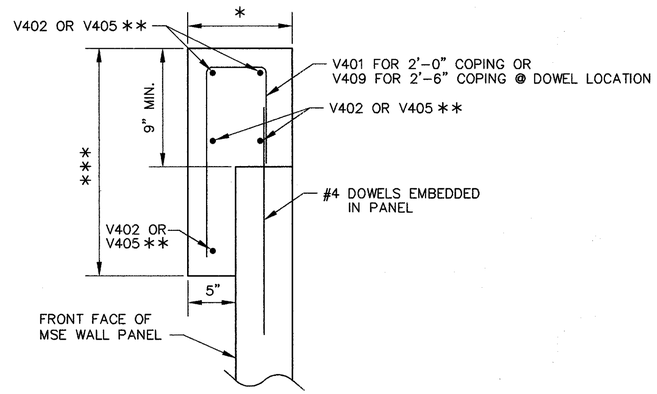

C.I.P. CONCRETE COPING TYPE "A" DETAIL

* 11 1/4" REINFORCED EARTH
11 3/4" VSL RETAINED EARTH

*** 2'–6" FROM STA. C–1389+16.67 TO STA. C–1389+75.25 AND FROM STA. D–1390+62.56 TO STA. D–1391+22.02
2'–0" ELSEWHERE

LEGEND
SER. = SERIES
TYP. = TYPICAL
MAX. = MAXIMUM
P.E.J.F. = PREFORMED EXPANSION JOINT FILLER

PREPARED BY ms consultants, inc. CONSULTING ENGINEERS & PLANNERS 6500 EMERGE BOULEVARD, COLUMBUS, OHIO

DESIGNED	DRAWN	REVIEWED	DATE
R.B.	C.H.	J.A.B.	7–94
CHECKED	REVISED	STRUCTURE FILE NO.	
W.H.		N/A	

C.I.P. COPING & PARAPET DETAILS
MECHANICALLY STABILIZED EARTH WALLS

FRA–270–32.46

27/37

458/593

PLOT SCALE = 3/4" = 1'
COL #19
C:\DRAWING\0609293\RETWALLS\RWALLP02.DWG FEBRUARY–13–1995

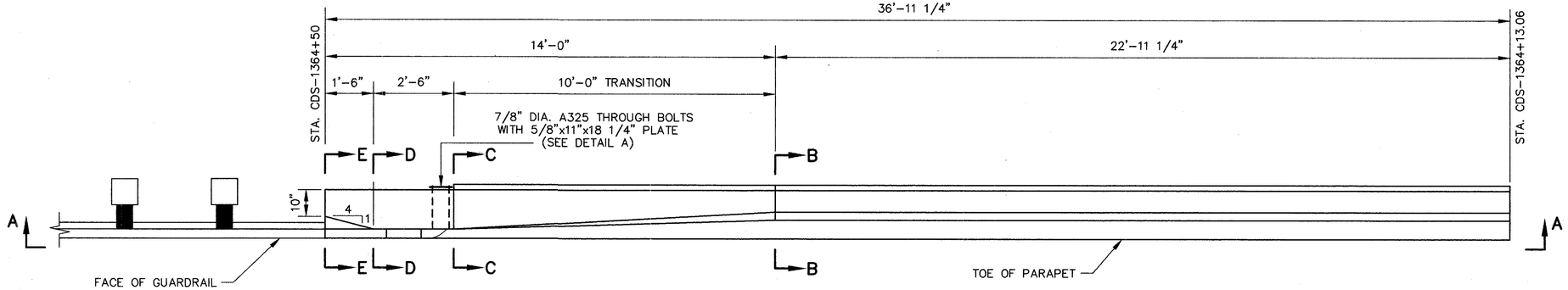

PLAN VIEW
M.S.E. WALL NO. 7 ONLY

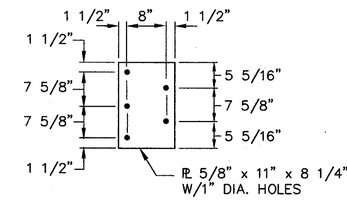

DETAIL A

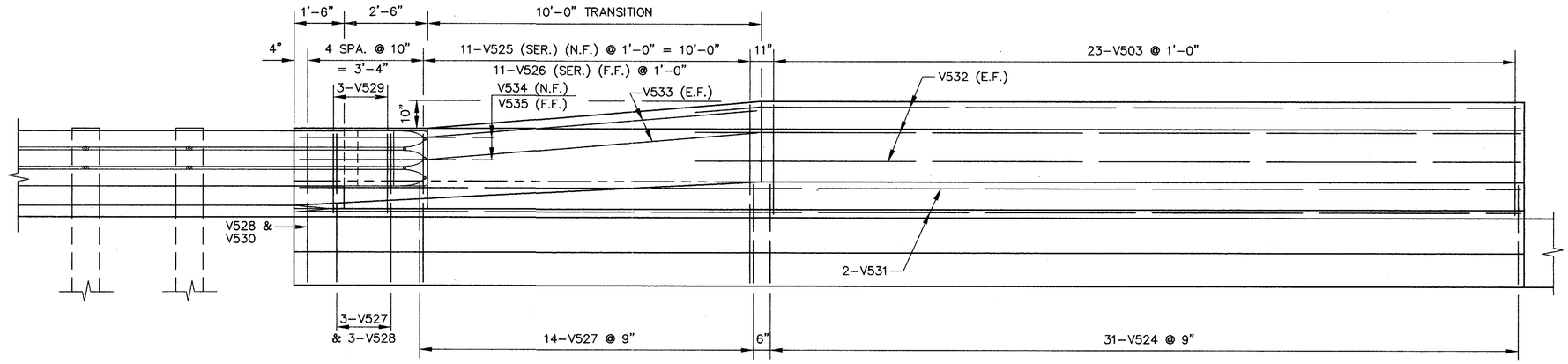

SECTION A-A
SEE SHT. 30/37 FOR DETAILS OF TYPE 'D' COPING

LEGEND
SPA. = SPACES
SER. = SERIES
N.F. = NEAR FACE
E.F. = EACH FACE
F.F. = FAR FACE
CJ = CONSTRUCTION JOINT
P.E.J.F. = PREFORMED EXPANSION JOINT FILLER

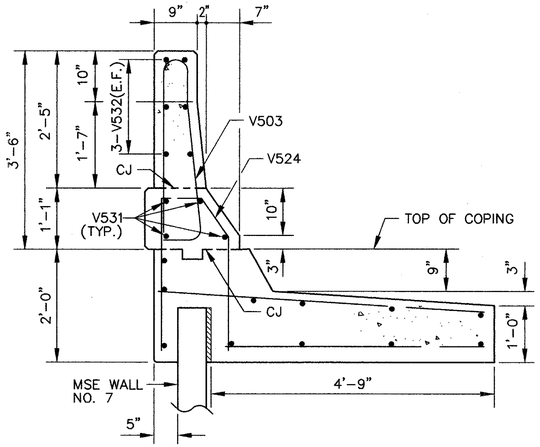

SECTION B-B

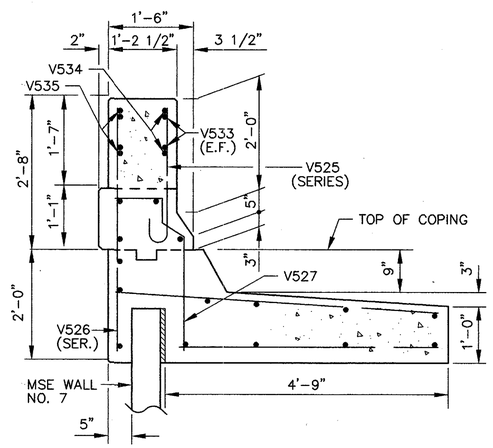

SECTION C-C

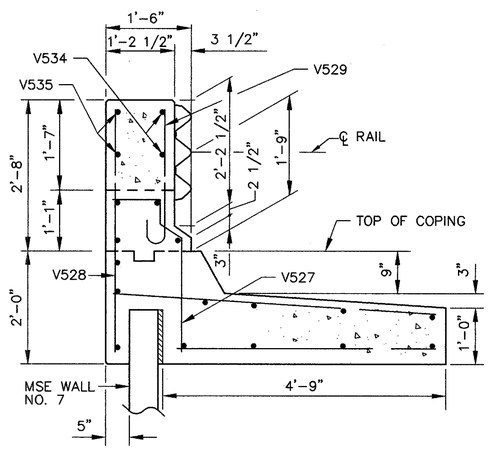

SECTION D-D

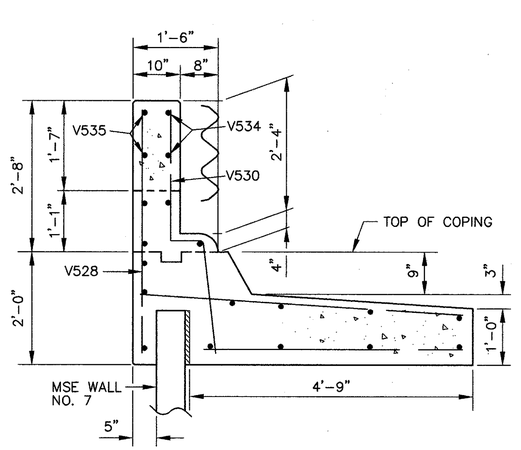

SECTION E-E

PLOT SCALE... 1" =2'
COL #19 C:\DRAWING\06092308\RETWALLS\RWALLBR1.DWG FEBRUARY-13-1995

PREPARED BY
ms consultants, inc.
CONSULTING ENGINEERS & PLANNERS
6500 BUSCH BOULEVARD, COLUMBUS, OHIO

DESIGNED	DRAWN	REVIEWED	DATE
R.B.	C.H.	J.A.B.	8-94
CHECKED	REVISED	STRUCTURE FILE NO.	
D.A.S.		N/A	

42" PARAPET END SECTION
MECHANICALLY STABILIZED EARTH WALLS

FRA-270-32.46

42" PARAPET END SECTION

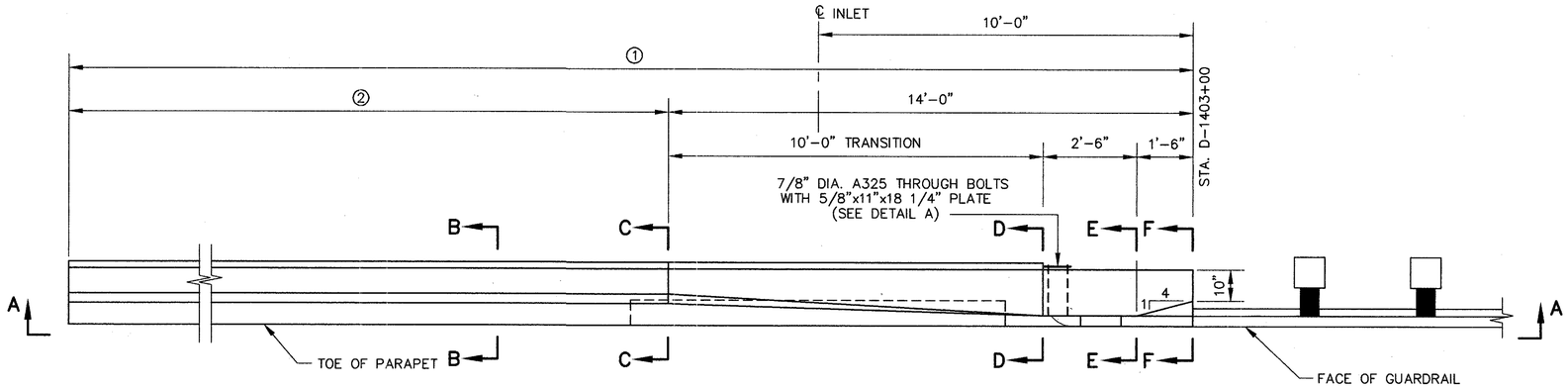

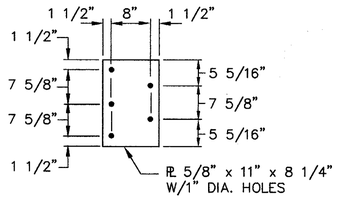

DETAIL A

PLAN VIEW

MSE WALL NO. 1 ONLY
FOR SECTION C-C SEE SHT. 33/37.

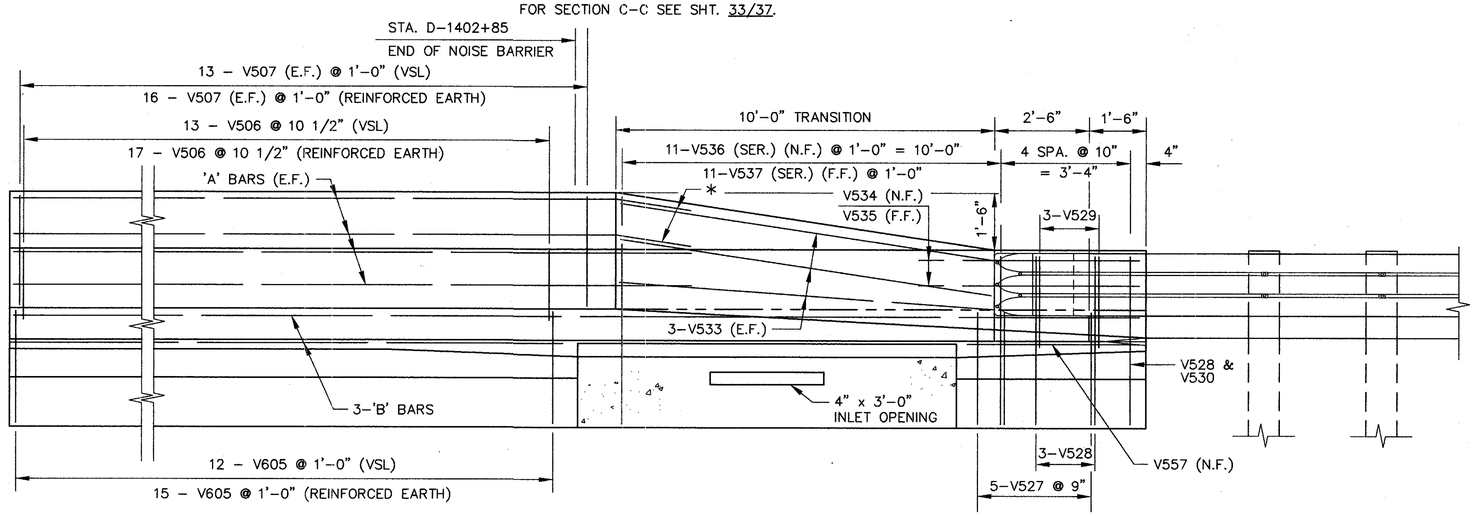

WALL CO.		VSL	REINFORCED EARTH
LENGTH	①	27'-1 1/2"	29'-5 7/8"
	②	13'-1 1/2"	15'-5 7/8"
'A' BARS	MARK	V554	V554
	LENGTH	15'-0"	17'-4"
'B' BARS	MARK	V558	V558
	LENGTH	26'-9"	29'-1"
'C' BARS	MARK	V552	V552
	LENGTH	11'-11"	14'-3"

SECTION A-A

* BEND BARS IN FIELD TO FIT

DRAINAGE INLET REINFORCING NOT SHOWN. SEE DRAINAGE INLET DETAILS, SHT. 32-33/37 FOR THE FOLLOWING REINFORCING: V542, V545, V547, V548, V549, V551, V555, & V556.

LEGEND
SER. = SERIES
N.F. = NEAR FACE
E.F. = EACH FACE
F.F. = FAR FACE
CJ = CONSTRUCTION JOINT
P.E.J.F. = PREFORMED EXPANSION JOINT FILLER

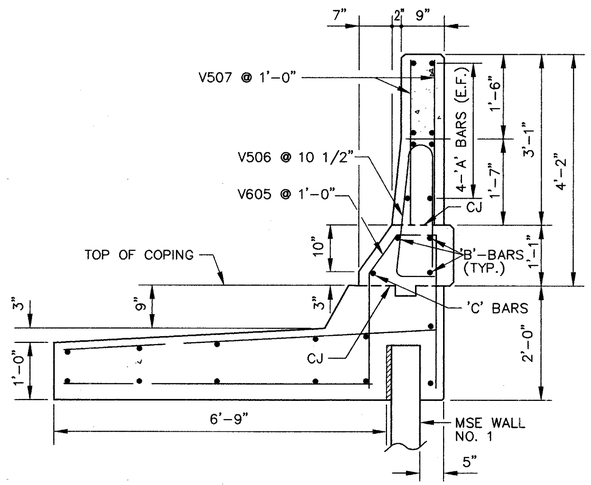

SECTION B-B

NOTE: NOISE BARRIER NOT SHOWN FOR CLARITY

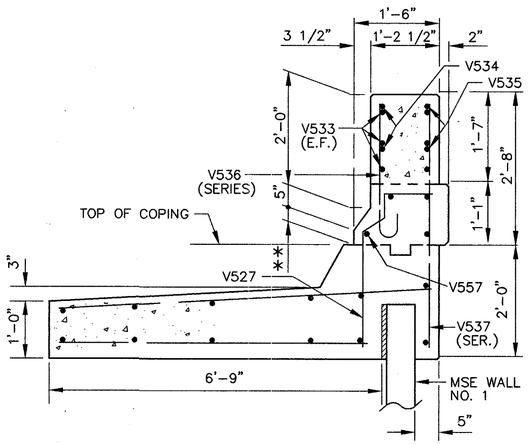

SECTION D-D

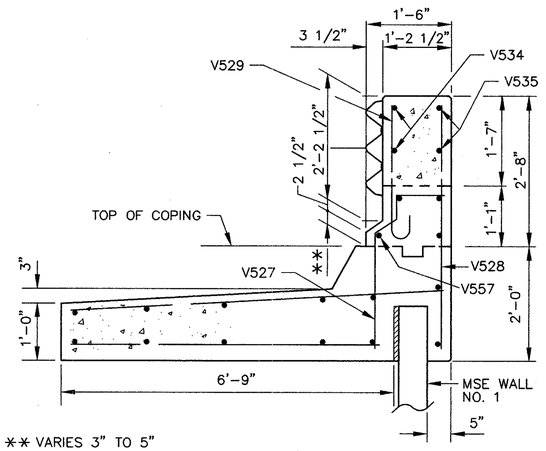

** VARIES 3" TO 5"

SECTION E-E

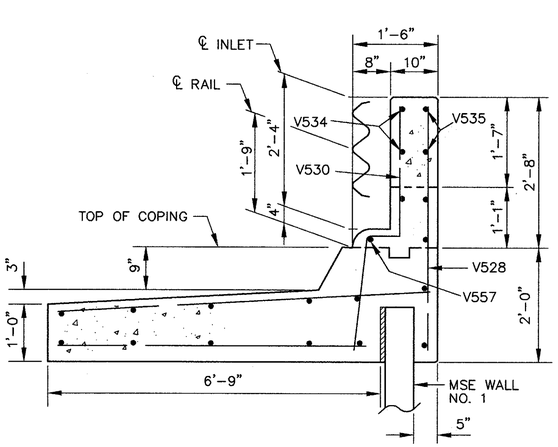

SECTION F-F

PLOT SCALE = 1"=2'
CSC #19 C:\DRAWING\06092308\RETWALLS\RWALLBR2.DWG FEBRUARY-13-1995

prepared by ms consultants, inc. CONSULTING ENGINEERS & PLANNERS OMAHA, NEBRASKA

REVIEWED J.A.B.	DATE 8-94	STRUCTURE FILE NO. N/A
DRAWN C.H.	REVISED	
DESIGNED R.B.	CHECKED D.A.S.	

50" PARAPET END SECTION
MECHANICALLY STABILIZED EARTH WALLS

FRA-270-32.46

29/37

460/593

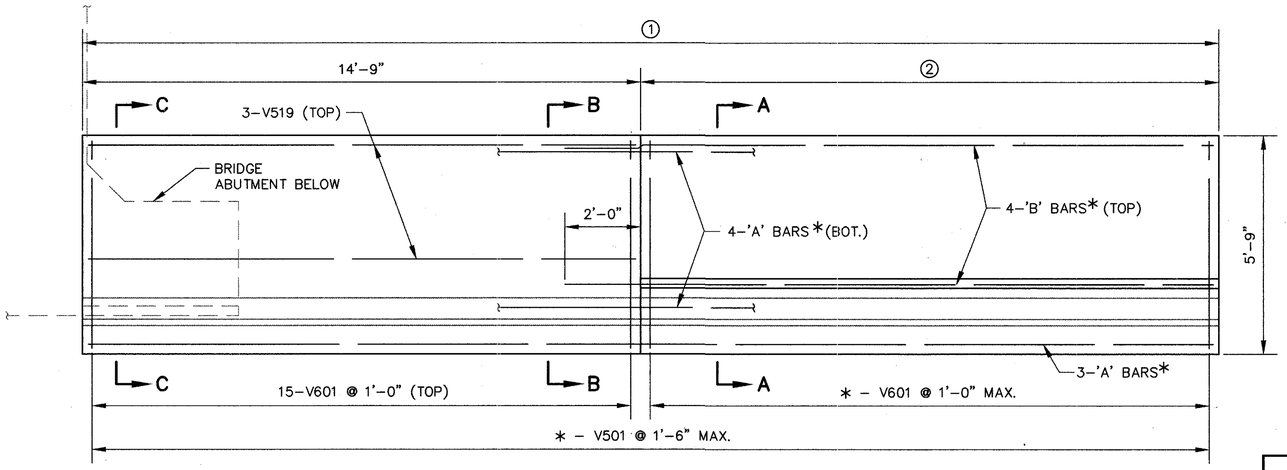

PLAN

TYPE 'D' COPING

NOTE: ONLY REINFORCING IN COPING SHOWN

COPING FOR MSE WALL NO.'S 3 & 7 SHOWN
(OPPOSITE HAND FOR MSE WALL NO.'S 1 & 5)

	COPING LENGTHS		
	WALL NO.	①	②
REINFORCED EARTH	1	37'-2 1/4"	22'-5 1/4"
	3	37'-2 1/4"	22'-5 1/4"
	5	37'-2 1/4"	22'-5 1/4"
	7	36'-11 1/4"	22'-2 1/4"
VSL	1	33'-2 5/8"	18'-5 5/8"
	3	33'-2 5/8"	18'-5 5/8"
	5	33'-2 5/8"	18'-5 5/8"
	7	36'-11 1/4"	22'-2 1/4"

	* COPING REINFORCING								
		V501 (BOT.)	V502	V503	V601 (TOP)	'A' BARS		'B' BARS	
	WALL NO.	NO. BARS	NO. BARS	NO. BARS	NO. BARS	MARK	LENGTH	MARK	LENGTH
REINFORCED EARTH	1	25	50	37	23	V538	36'-9"	V540	22'-1"
	3	25	50	37	23	V538	36'-9"	V540	22'-1"
	5	25	50	37	23	V538	36'-9"	V540	22'-1"
	7	25	- ①	23 ①	23	V539	36'-6"	V541	21'-10"
VSL	1	22	44	33	19	V538	32'-9"	V540	18'-1"
	3	22	44	33	19	V538	32'-9"	V540	18'-1"
	5	22	44	33	19	V538	32'-9"	V540	18'-1"
	7	25	- ①	23 ①	23	V539	36'-6"	V541	21'-10"

① SEE 42" END PARAPET SECTION, SHT. 28/37.

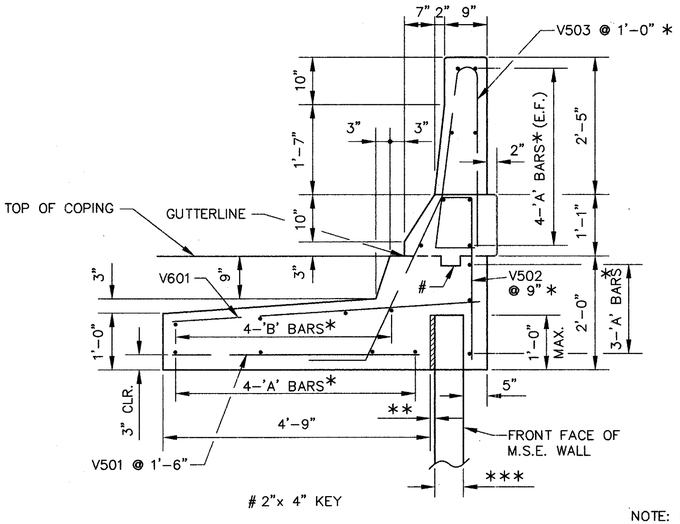

SECTION A-A

2" CLR. U.O.N.

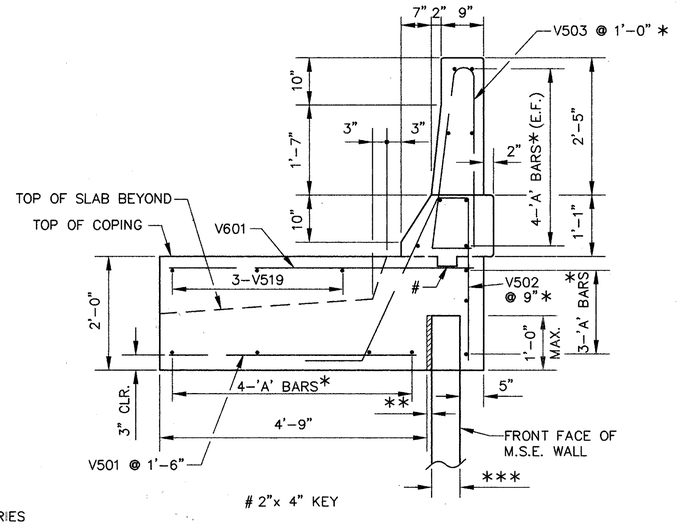

SECTION B-B

NOTE: HT. OF PARAPET VARIES
FOR MSE WALL NO. 7
SEE SHT. 28/37 FOR DETAILS

** 3/4" P.E.J.F. REINFORCED EARTH WALLS
1/2" P.E.J.F. VSL RETAINED EARTH WALLS
INCLUDED w/ ITEM 511 'CLASS C, CONCRETE, MISC: PARAPET AND COPING, AS PER PLAN' FOR PAYMENT.

*** 6 1/4" - REINFORCED EARTH w/ ARCH. FINISH
6 3/4" - VSL RETAINED EARTH w/ ARCH. FINISH

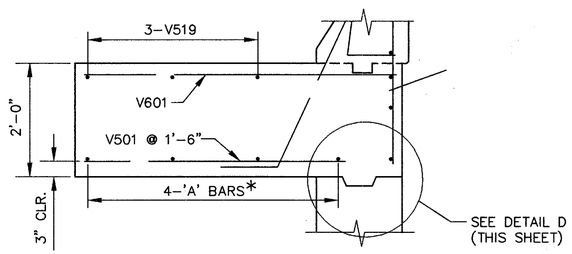

SECTION C-C

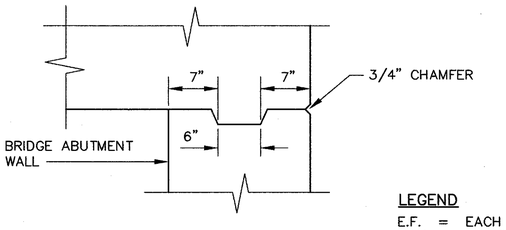

DETAIL D

LEGEND
E.F. = EACH FACE
MAX. = MAXIMUM
BOT. = BOTTOM
CLR. = CLEAR
U.O.N. = UNLESS OTHERWISE NOTED
P.E.J.F. = PREFORMED EXPANSION JOINT FILLER

PLOT SCALE... 3/4" = 1'
COL #19
C:\DRAWING\06092308\RETWALLS\RWALLPD3.DWG FEBRUARY-13-1995

PREPARED BY ms consultants, inc. CONSULTING ENGINEERS & PLANNERS 6500 BUSCH BOULEVARD, COLUMBUS, OHIO

DESIGNED R.B. | DRAWN C.H. | REVIEWED J.A.B. | DATE 7-94
CHECKED B.G. | REVISED | STRUCTURE FILE NO. N/A

TYPE 'D' COPING w/ PARAPET
MECHANICALLY STABILIZED EARTH WALLS

FRA-270-32.46

30/37

461/593

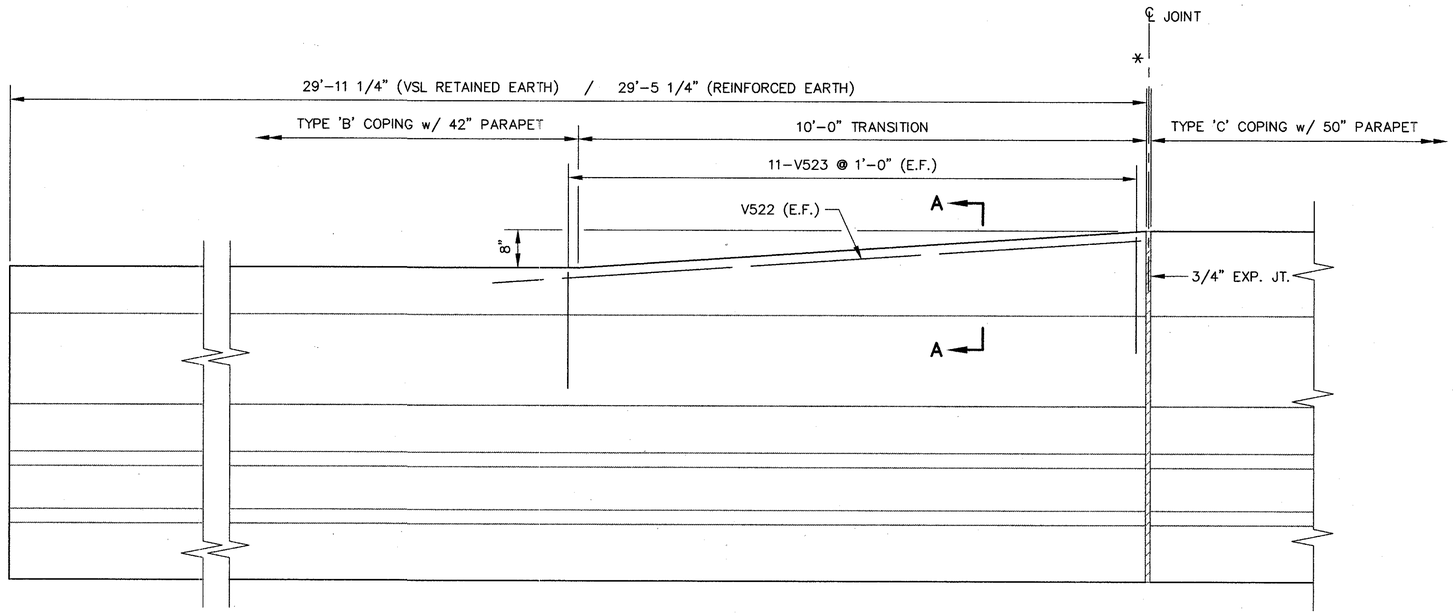

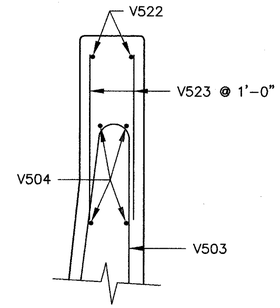

SECTION A-A

ELEVATION – PARAPET @ MSE WALL NO. 1

TRANSITION FROM 42" TO 50" PARAPET

NOTE: REINFORCING INDICATED ABOVE IS IN ADDITION TO REINFORCING FOR TYPICAL SECTIONS AS INDICATED ON SHT. NO.'S 24-25/37

* STA. C-1389+48.32 – VSL
STA. C-1389+52.29 – REINFORCED EARTH

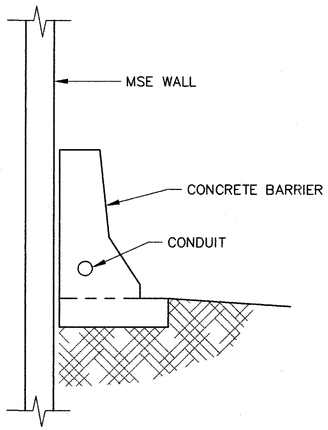

CONDUITS IN CONCRETE BARRIER

NOTES:

1.) CONDUITS SHALL BE LOCATED AS FOLLOWS:
MSE WALL NO. 4 – STA. C-1373+50 TO STA. C-1380+50

2.) SEE SURVEILLANCE SYSTEM DETAILS FOR LOCATION OF PULL BOXES.

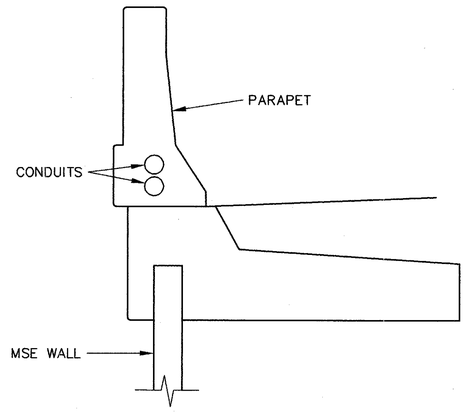

CONDUITS IN PARAPET

NOTES:

1.) CONDUITS SHALL BE LOCATED AS FOLLOWS:
MSE WALL NO. 3 – STA. CDN-1364+68 TO CDN-1375+00 *
MSE WALL NO. 4 – STA. D-1390+64 TO D-1393+57 *
MSE WALL NO. 5 – STA. CDS-1364+13.14 TO CDS-1372+50 **

* FOR SIZE OF CONDUIT SEE SIGNAL PLAN DETAILS. PAYMENT FOR LABOR, MATERIALS & INSTALLATION OF CONDUIT IS INCLUDED w/ ITEM 511 'CLASS C CONCRETE, MISC: PARAPET AND COPING, AS PER PLAN'.

** FOR NO. & SIZE OF CONDUITS, SEE SURVEILLANCE SYSTEM DETAILS. PAYMENT FOR LABOR, MATERIALS & INSTALLATION OF CONDUIT SHALL BE INCLUDED w/ SURVEILLANCE SYSTEM. SEE SURVEILLANCE SYSTEM SUB-SUMMARY & DETAILS.

2.) SEE SURVEILLANCE SYSTEM DETAILS FOR LOCATION OF PULL BOXES.

LEGEND
E.F. = EACH FACE
EXP. JT. = EXPANSION JOINT

PREPARED BY ms consultants, inc. CONSULTING ENGINEERS & PLANNERS 6500 SUNSET BOULEVARD, COLUMBUS, OHIO

DESIGNED R.B.	DRAWN C.H.	REVIEWED J.A.B.	DATE 8-94
CHECKED B.G.	REVISED	STRUCTURE FILE NO. N/A	

MISC. PARAPET DETAILS
MECHANICALLY STABILIZED EARTH WALLS

FRA-270-32.46

31/37

462/593

PLOT SCALE... 3/4" = 1'
COL #19 C:\DRAWING\06092308\RETWALLS\RWALLPD4.DWG FEBRUARY-13-1995

MISC. PARAPET DETAILS

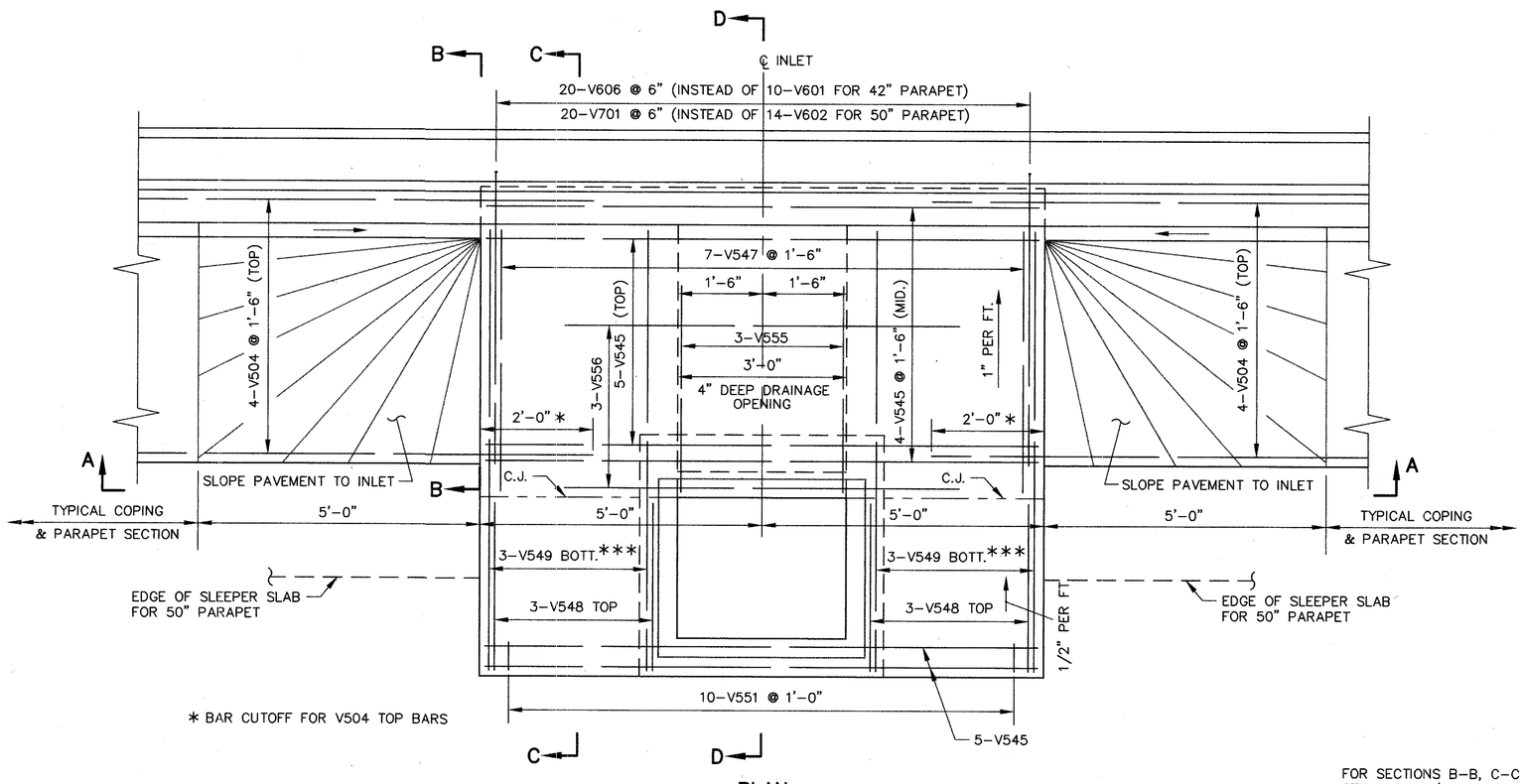

PLAN

@ 42" HIGH PARAPET (50" HIGH PARAPET SIMILAR)
REINFORCING FOR TYPICAL PARAPET & COPING NOT SHOWN UNLESS OTHERWISE NOTED.
***REPLACES 3-V501

FOR SECTIONS B-B, C-C & D-D SEE SHT. 33/37.

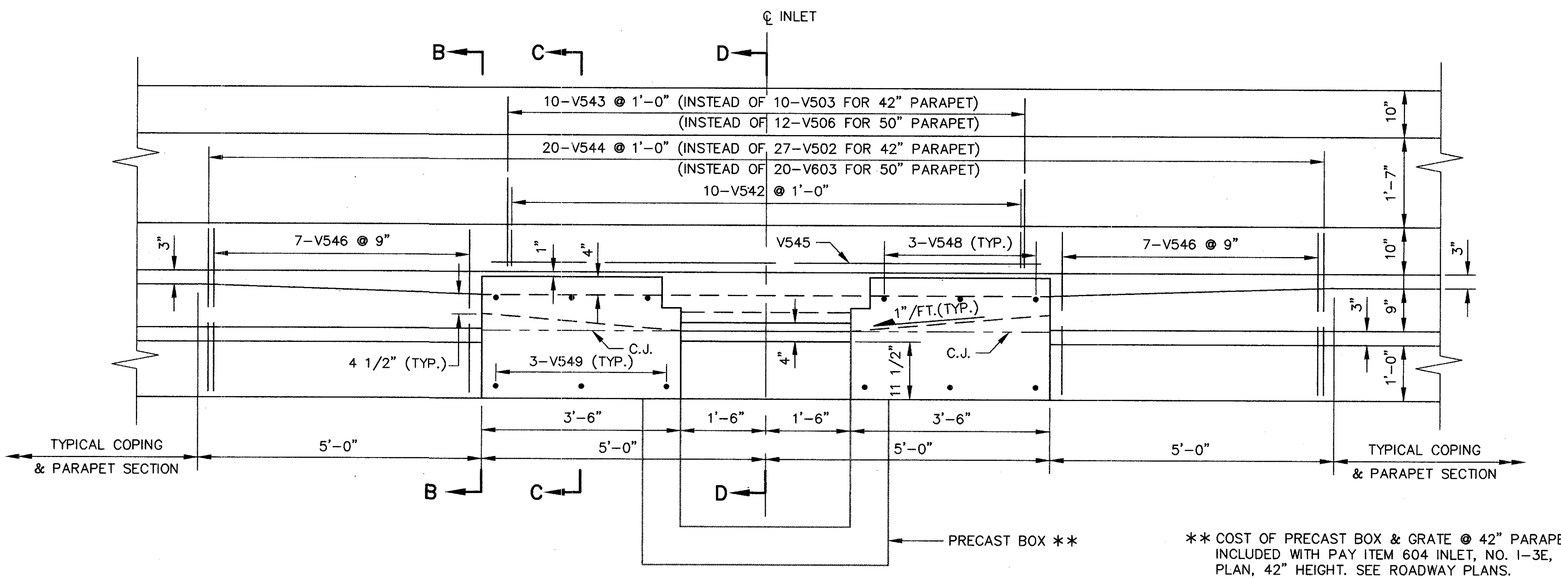

ELEVATION A-A

** COST OF PRECAST BOX & GRATE @ 42" PARAPET TO BE INCLUDED WITH PAY ITEM 604 INLET, NO. I-3E, AS PER PLAN, 42" HEIGHT. SEE ROADWAY PLANS.

COST OF PRECAST BOX & GRATE @ 50" PARAPET TO BE INCLUDED WITH PAY ITEM 604 INLET, NO. I-3E, AS PER PLAN, 50" HEIGHT. SEE ROADWAY PLANS.

LEGEND

TYP. = TYPICAL
C.J. = CONSTRUCTION JOINT
MID. = MIDDLE
BOTT. = BOTTOM

PREPARED BY ms consultants, inc. CONSULTING ENGINEERS & PLANNERS 6600 BUSCH BOULEVARD, COLUMBUS, OHIO

DESIGNED	DRAWN	REVIEWED	DATE
R.B.	CH	J.A.B.	10-94
CHECKED	REVISED		
B.G.			

DRAINAGE INLET PLAN & ELELVATION
MECHANICALLY STABILIZED EARTH WALLS

FRA-270-32.46

32/37

463/593

PLOT SCALE... 3/4" = 1'
COL #19 C:\DRAWING\06092308\RETWALLS\RWALLIPE.DWG FEBRUARY-13-1995

DRAINAGE INLET PLAN & ELEVATION

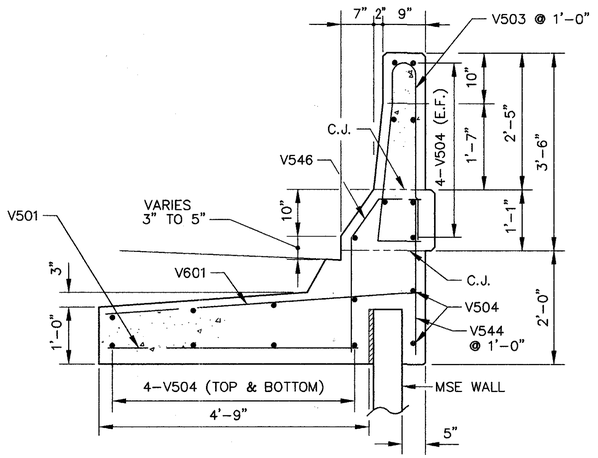

SECTION B-B
42" PARAPET

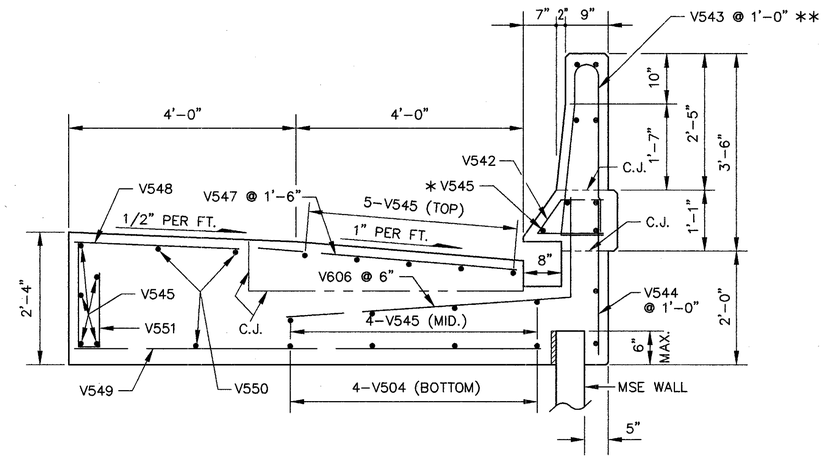

SECTION C-C
42" PARAPET SHOWN
50" PARAPET SIMILAR

* REPLACES V504 BAR @ CURB NOSING. FIELD CUT V504 BAR AT INLET SECTION.

** FOR 50" PARAPET, 12-V506 BARS SHALL BE REPLACED BY 12-V559 BARS.

*** 3-V556

**** FRAME FOR CASTING IS TO SET LEVEL ON STRUCTURE

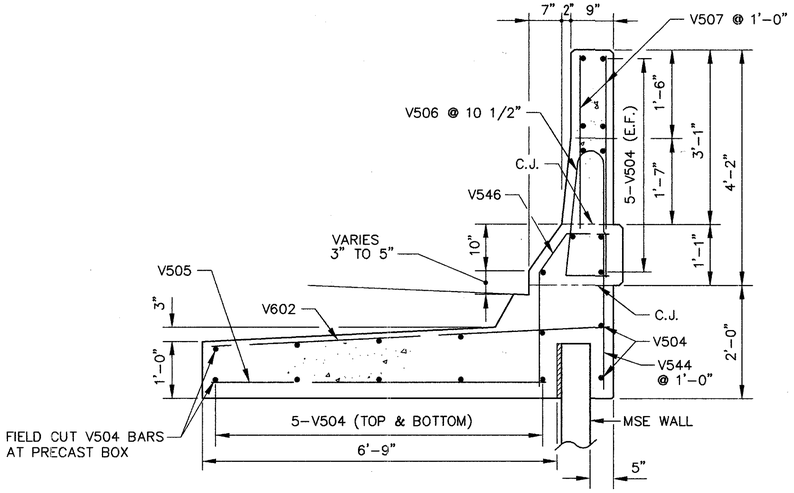

SECTION B-B
50" PARAPET

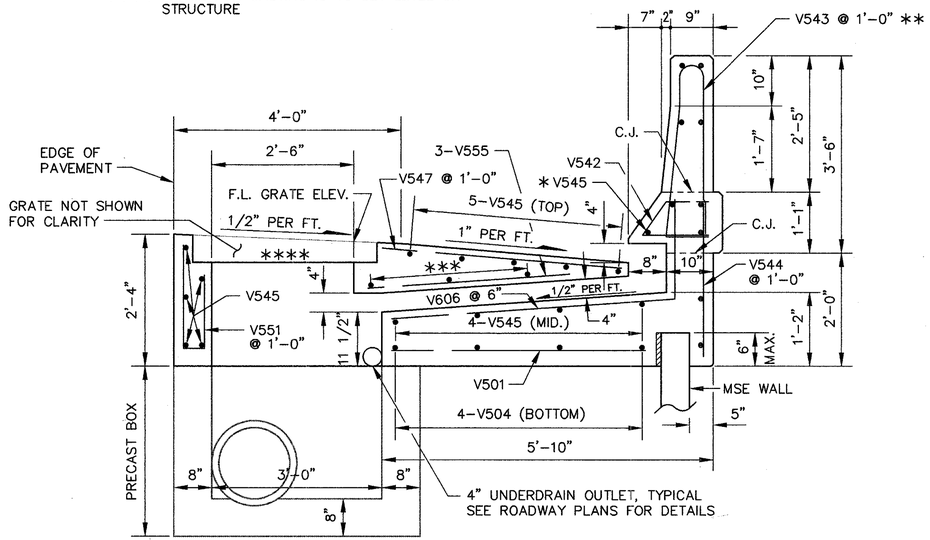

SECTION D-D
42" PARAPET SHOWN
50" PARAPET SIMILAR

** COST OF PRECAST BOX & GRATE @ 42" PARAPET TO BE INCLUDED WITH PAY ITEM 604 INLET, NO. I-3E, AS PER PLAN, 42" HEIGHT. SEE ROADWAY PLANS.

COST OF PRECAST BOX & GRATE @ 50" PARAPET TO BE INCLUDED WITH PAY ITEM 604 INLET, NO. I-3E, AS PER PLAN, 50" HEIGHT. SEE ROADWAY PLANS.

LEGEND

MID. = MIDDLE
C.J. = CONSTRUCTION JOINT
E.F. = EACH FACE
MAX. = MAXIMUM
F.L. = FLOW LINE

PLOT SCALE... 3/4" = 1'
COL #19 C:\DRAWING\0609230\RETWALLS\RWALLDID.DWG FEBRUARY-10-1995

PREPARED BY
ms consultants, inc.
CONSULTING ENGINEERS & PLANNERS
4900 BUSCH BOULEVARD, COLUMBUS, OHIO

DESIGNED	DRAWN	REVIEWED	DATE
R.B.	C.H.	J.A.B.	10-94
CHECKED	REVISED		
B.G.			

DRAINAGE INLET DETAILS
MECHANICALLY STABILIZED EARTH WALLS

FRA-270-32.46

33/37

464/593

DESIGN 1 RETAINED EARTH BY VSL CORP.

RAMPS C & D AND CDN

ESTIMATED QUANTITIES — WALLS # 1, 2 & 3

ITEM	ITEM EXT.	TOTAL	UNIT	DESCRIPTION
203	20000	6362	CU. YD.	EMBANKMENT
203	35001	58,599	CU. YD.	SELECT GRANULAR EMBANKMENT, AS PER PLAN **
503	21101	8091	CU. YD.	UNCLASSIFIED EXCAVATION, AS PER PLAN **
511	51101	2237	CU. YD.	CLASS C CONCRETE, MISC. : PARAPET AND COPING, AS PER PLAN
SPECIAL	61013500	86,458	SQ. FT.	RETAINED EARTH WALL BY VSL CORP. **
SPECIAL	51267501	7221	SQ. YD.	SEALING OF CONCRETE SURFACES, AS PER PLAN (SEE PROPOSAL NOTE)

RAMPS C & D WEST WALL

ESTIMATED QUANTITIES — WALL # 4

ITEM	ITEM EXT.	TOTAL	UNIT	DESCRIPTION
203	20000	0	CU. YD.	EMBANKMENT
203	35001	28,190	CU. YD.	SELECT GRANULAR EMBANKMENT, AS PER PLAN **
503	21101	7786	CU. YD.	UNCLASSIFIED EXCAVATION, AS PER PLAN **
511	51101	1020	CU. YD.	CLASS C CONCRETE, MISC. : PARAPET AND COPING, AS PER PLAN
SPECIAL	61013500	48,122	SQ. FT.	RETAINED EARTH WALL BY VSL CORP. **
SPECIAL	51267501	6148	SQ. YD.	SEALING OF CONCRETE SURFACES, AS PER PLAN (SEE PROPOSAL NOTE)

CDS

ESTIMATED QUANTITIES — WALLS # 5, 6 & 7

ITEM	ITEM EXT.	TOTAL	UNIT	DESCRIPTION
203	20000	0	CU. YD.	EMBANKMENT
203	35001	10,241	CU. YD.	SELECT GRANULAR EMBANKMENT, AS PER PLAN **
503	21101	105	CU. YD.	UNCLASSIFIED EXCAVATION, AS PER PLAN **
511	51101	375	CU. YD.	CLASS C CONCRETE, MISC. : PARAPET AND COPING, AS PER PLAN
SPECIAL	61013500	14,182	SQ. FT.	RETAINED EARTH WALL BY VSL CORP. **
SPECIAL	51267501	1861	SQ. YD.	SEALING OF CONCRETE SURFACES, AS PER PLAN (SEE PROPOSAL NOTE)

** SEE SPECIAL PROVISIONS FOR RETAINED EARTH WALLS.

DESIGN 2 REINFORCED EARTH WALL

ESTIMATED QUANTITIES — WALLS # 1, 2 & 3

ITEM	ITEM EXT.	TOTAL	UNIT	DESCRIPTION
203	20000	6362	CU. YD.	EMBANKMENT
203	35001	58,599	CU. YD.	SELECT GRANULAR EMBANKMENT, AS PER PLAN *
503	21101	8091	CU. YD.	UNCLASSIFIED EXCAVATION, AS PER PLAN *
511	51101	2237	CU. YD.	CLASS C CONCRETE, MISC. : PARAPET AND COPING, AS PER PLAN
SPECIAL	61013700	86,458	SQ. FT.	REINFORCED EARTH WALLS *
SPECIAL	51267501	6679	SQ. YD.	SEALING OF CONCRETE SURFACES, (NON-EPOXY) AS PER PLAN *** (1)

ESTIMATED QUANTITIES — WALL # 4

ITEM	ITEM EXT.	TOTAL	UNIT	DESCRIPTION
203	20000	0	CU. YD.	EMBANKMENT
203	35001	28,190	CU. YD.	SELECT GRANULAR EMBANKMENT, AS PER PLAN *
503	21101	7786	CU. YD.	UNCLASSIFIED EXCAVATION, AS PER PLAN *
511	51101	1020	CU. YD.	CLASS C CONCRETE, MISC. : PARAPET AND COPING, AS PER PLAN
SPECIAL	61013700	48,122	SQ. FT.	REINFORCED EARTH WALLS *
SPECIAL	51267501	4031	SQ. YD.	SEALING OF CONCRETE SURFACES, (NON-EPOXY) AS PER PLAN *** (1)

ESTIMATED QUANTITIES — WALLS # 5, 6 & 7

ITEM	ITEM EXT.	TOTAL	UNIT	DESCRIPTION
203	20000	0	CU. YD.	EMBANKMENT
203	35001	10,241	CU. YD.	SELECT GRANULAR EMBANKMENT, AS PER PLAN *
503	21101	105	CU. YD.	UNCLASSIFIED EXCAVATION, AS PER PLAN *
511	51101	375	CU. YD.	CLASS C CONCRETE, MISC. : PARAPET AND COPING, AS PER PLAN
SPECIAL	61013700	14,182	SQ. FT.	REINFORCED EARTH WALLS *
SPECIAL	51267501	1434	SQ. YD.	SEALING OF CONCRETE SURFACES, (NON-EPOXY) AS PER PLAN *** (1)

* SEE SPECIAL PROVISIONS FOR REINFORCED EARTH WALLS.

*** – SEE PROPOSAL NOTE. (1)

DESIGN NOTE:
THE ALLOWABLE SOIL BEARING PRESSURE FOR MECHANICALLY STABILIZED EARTH WALLS SHALL BE 6.5 ksf.

PLOT SCALE.. 1" =2'
COL #19 C:\DRAWING\06092718\RWALLEQ1.DWG MAY-06-1996

PREPARED BY ms consultants, inc. CONSULTING ENGINEERS & PLANNERS 6500 RIVER BOULEVARD, COLUMBUS, OHIO

DESIGNED R.B. | DRAWN C.H. | REVIEWED J.A.B. | DATE 10-94
CHECKED B.G. | REVISED 1 5-96 | STRUCTURE FILE NO. N/A

ESTIMATED QUANTITIES
MECHANICALLY STABILIZED EARTH WALLS

FRA-270-32.46

34/37

465/593

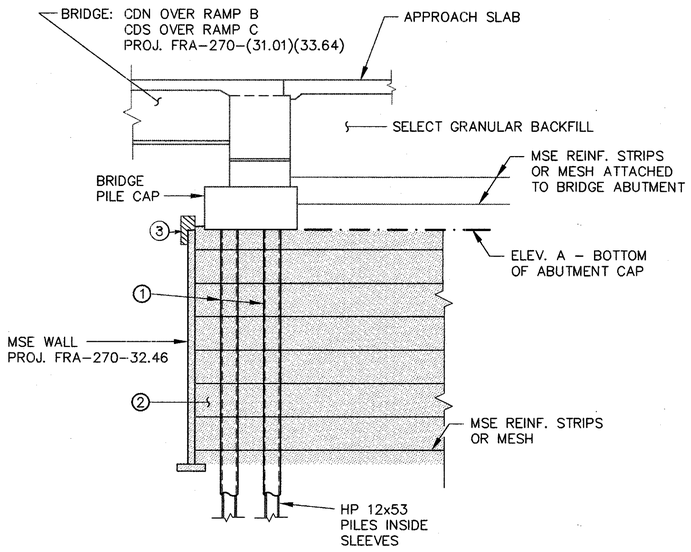

SECTION

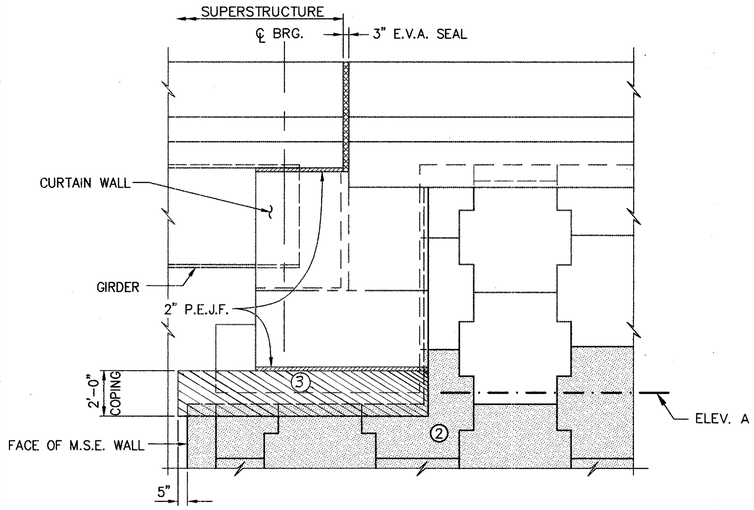

ELEVATION

PHASE I

SEQUENCE OF WORK

1. CONTRACTOR A: INSTALL PILE SLEEVES.
2. CONTRACTOR A: INSTALL MSE WALL & FILL w/ SELECT GRANULAR BACKFILL UP TO ELEV. A
3. CONTRACTOR A: INSTALL MSE WALL COPING.

CONTRACTOR A: CDMS PROJ. FRA-270-32.46
CONTRACTOR B: CDMS PROJ. FRA-270-(31.01)(33.64)

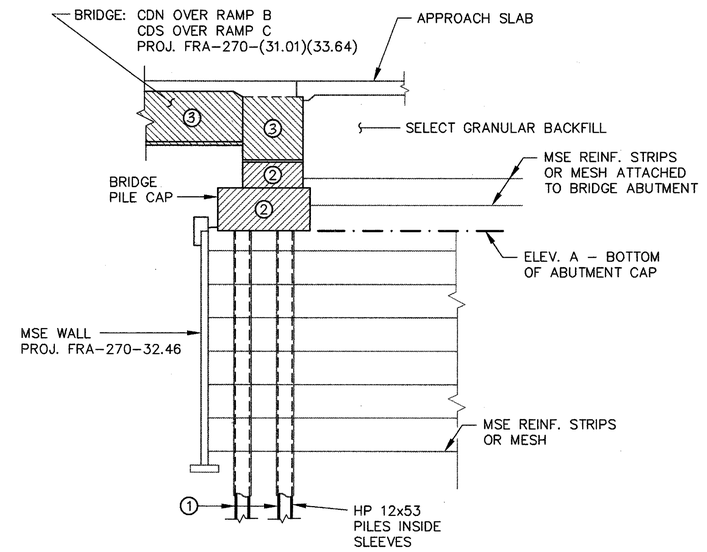

SECTION

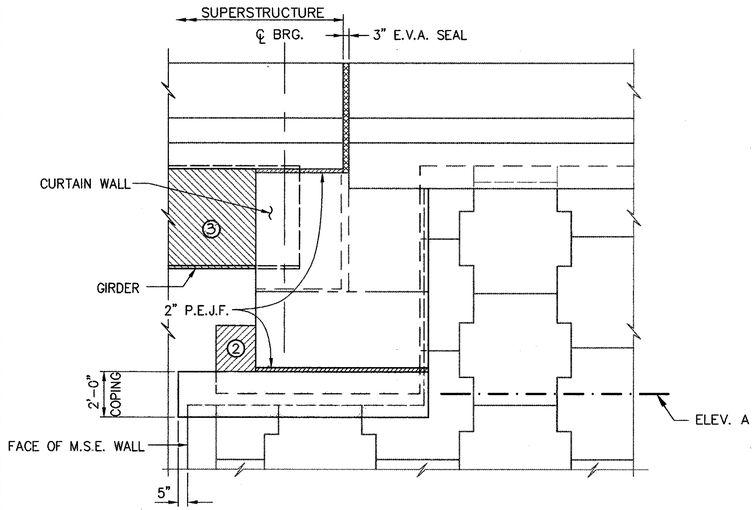

ELEVATION

PHASE II

SEQUENCE OF WORK

1. CONTRACTOR B: DRIVE HP 12x53 PILES & FILL PILE SLEEVES WITH BENTONITE SLURRY.
2. CONTRACTOR B: BUILD ABUTMENT & WINGWALL PILE CAP. CONTRACTOR SHALL BE RESPONSIBLE FOR INSTALLING CONNECTION HARDWARE FOR MSE WALL REINFORCING. CONTRACTOR A SUPPLIES THE CONNECTION HARDWARE.
3. CONTRACTOR B: ERECT STEEL GIRDERS AND CONSTRUCT ABUTMENT BACKWALL.

CONTRACTOR A: CDMS PROJ. FRA-270-32.46
CONTRACTOR B: CDMS PROJ. FRA-270-(31.01)(33.64)

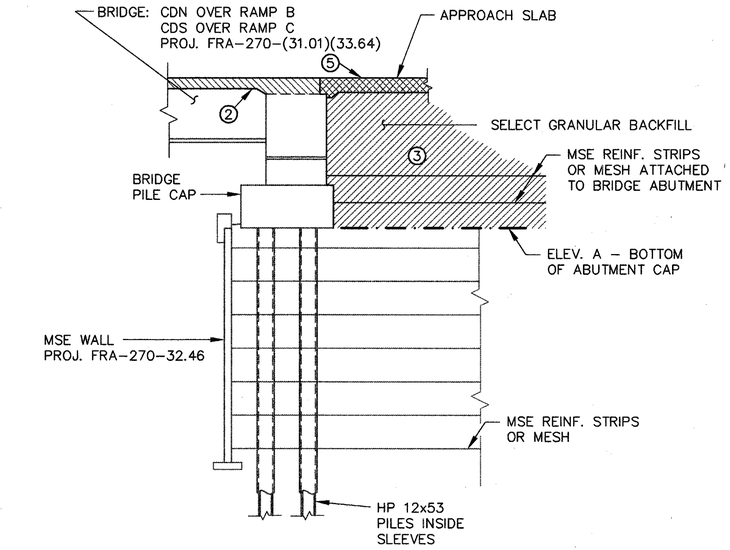

SECTION

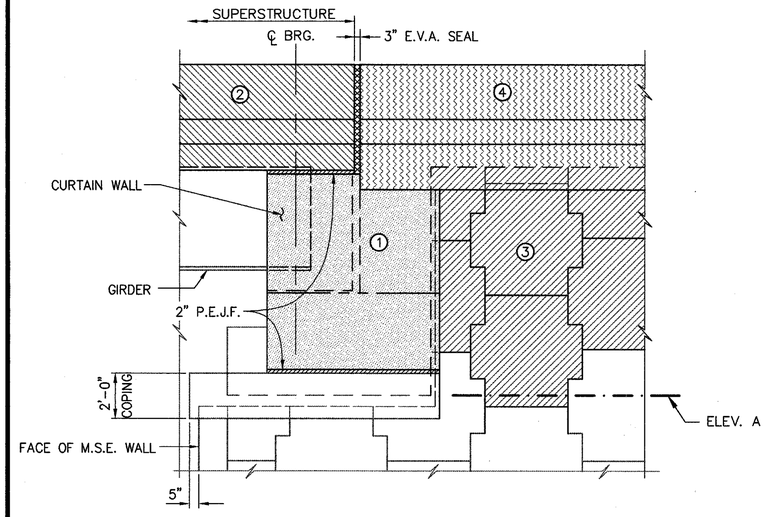

ELEVATION

PHASE III

SEQUENCE OF WORK

1. CONTRACTOR B: BUILD CURTAIN WALL OF ABUTMENT.
2. CONTRACTOR B: BUILD BRIDGE DECK & BRIDGE PARAPET.
3. CONTRACTOR A: COMPLETE MSE WALL, FILL w/ SELECT GRANULAR BACKFILL & BUILD SUB-GRADE.
4. CONTRACTOR A: CONSTRUCT COPING/SLEEPER SLAB & PARAPET.
5. CONTRACTOR B: CONSTRUCT APPROACH SLAB & ROADWAY.

CONTRACTOR A: CDMS PROJ. FRA-270-32.46
CONTRACTOR B: CDMS PROJ. FRA-270-(31.01)(33.64)

NOTE: SINCE PARTNERING IS A CONCEPT PROMOTED BY BOTH THE OCA AND ODOT PLEASE BE ADVISED THAT:

CONTRACTOR A AND CONTRACTOR B SHALL MAKE ALL NECESSARY ARRANGEMENTS TO ENSURE FULL COOPERATION IS GIVEN BY BOTH CONTRACTORS IN CONSTRUCTING ALL ITEMS AT THE INTERFACE OF PROJECT FRA-270-32.46 AND FRA-270-(31.01)(33.64).

PREPARED BY
ms consultants, inc.
CONSULTING ENGINEERS & PLANNERS
4900 BOSTON BOULEVARD, COLUMBUS, OHIO

DESIGNED R.B. | DRAWN C.H. | REVIEWED J.A.B. | DATE 11-94
CHECKED M.J. | REVISED | STRUCTURE FILE NO. N/A

CONSTRUCTION PHASING
MECHANICALLY STABILIZED EARTH WALLS

FRA-270-32.46

PLOT SCALE = 3/16" = 1'
COG. #89 C:\DRAWING\060923\06\RETWALLS\RWALLCPH.DWG FEBRUARY-13-1995

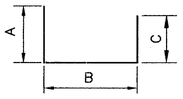

TYPE 1

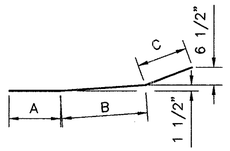

TYPE 2

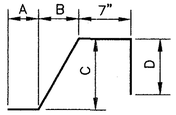

TYPE 3

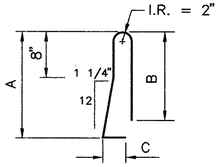

TYPE 4

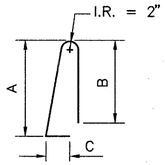

TYPE 5

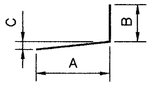

TYPE 6

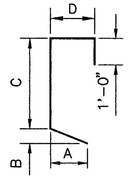

TYPE 7

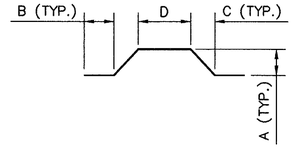

TYPE 8

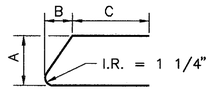

TYPE 9

REINFORCING STEEL LIST

MARK	NO.	LENGTH	TYPE	A	B	C	D	INC.	WEIGHT
V401	109	2'–10"	1	1'–8"	7"	9"			206
V402	175	9'–6"	STR.						1111
V403	40	4'–3"	1	1'–8"	1'–1"	1'–8"			114
V404	8	19'–9"	STR.						106
V405	20	11'–3"	STR.						150
V406	*	3'–1"	14	4"	6"				*
V407	*	4'–3" / 4'–8"	14	10" / 12"	10" / 12"			2"	*
V408	40	1'–6"	STR.						40
V409	49	3'–10"	1	2'–2"	7"	9"			125
V501	4508	4'–5"	STR.						20,766
V502	8624	7'–5"	3	1'–0"	1'–6 1/4"	2'–10"	2'–10"		66,712
V503	6785	7'–0"	4	3'–3"	3'–0"	8 1/4"			49,537
V504	4518	29'–1"	STR.						137,049
V505	890	6'–5"	STR.						5956
V506	1448	5'–3"	5	2'–5"	2'–2"	7 1/2"			7929
V507	2712	2'–11"	STR.						8250
V508	54	5'–5"	3	1'–0"	1'–6 1/4"	2'–10"	10"		305
V509	2 SETS OF 14	4'–5" / 6'–5"	STR.					1 7/8"	158
V510	34	19'–8"	STR.						697
V511	3	9'–1"	7	1'–4"	8"	5'–0"	1'–11"		28
V512	2	7'–9"	7	7"	8"	5'–0"	1'–2"		16
V513	3	8'–11"	STR.						28
V514	2 SETS OF 3	7'–5" / 8'–6"	STR.					6 1/2"	50
V515	4	7'–9"	8	1'–6"	1'–0"	1'–6"	1'–8"		32
V516	204	34'–0"	STR.						7234
V517	162	38'–10"	STR.						6562
V518	18	29'–8"	STR.						557
V519	12	14'–4"	STR.						179
V520	18	33'–2"	STR.						623
V521	18	28'–8"	STR.						538
V522	2	12'–0"	STR.						25
V523	22	2'–0"	STR.						46
V524	31	5'–11"	10	1'–11"	9"	6 1/2"	2'–8"		191
V525	11	3'–0" / 3'–10"	11	2'–5" / 3'–3"				1"	39
V526	11	4'–4" / 5'–2"	STR.					1"	54
V527	22	3'–5"	12	1'–11"	4"	5 1/2"	5 1/2"		78
V528	8	4'–4"	STR.						36
V529	6	3'–0"	11	2'–5"					19
V530	2	4'–6"	13	1'–11"	2 3/4"	6"	2'–4 1/2"		9
V531	4	36'–6"	STR.						152
V532	6	24'–8"	STR.						154
V533	10	10'–0"	STR.						104
V534	4	5'–8"	2	1'–10"	2'–5"	1'–5"			24
V535	4	5'–8"	STR.						24

MARK	NO.	LENGTH	TYPE	A	B	C	D	INC.	WEIGHT
V536	11	2'–10" / 4'–4"	11	2'–3" / 3'–9"				1 3/4"	41
V537	11	4'–4" / 5'–10"	STR.					1 3/4"	58
V538	45	36'–9"	STR.						1725
V539	15	36'–6"	STR.						571
V540	12	22'–1"	STR.						276
V541	4	21'–10"	STR.						91
V542	160	2'–8"	9	7 3/4"	4 1/4"	9"			445
V543	90	6'–9"	4	3'–0"	3'–0"	8"			634
V544	320	2'–10"	STR.						946
V545	240	9'–8"	STR.						2420
V546	224	3'–4"	10	2'–1"	9"	6 1/2"	0"		779
V547	112	3'–11"	STR.						458
V548	96	2'–10"	STR.						284
V549	96	8'–2"	STR.						818
V550	96	3'–2"	STR.						317
V551	160	3'–4"	1	1'–11"	4"	1'–4"			556
V552	1	14'–3"	STR.						15
V553	18	38'–6"	STR.						723
V554	8	17'–4"	STR.						145
V555	48	3'–6"	STR.						175
V556	48	7'–0"	STR.						350
V557	1	4'–8"	STR.						5
V558	3	29'–1"	STR.						91
V559	84	5'–0"	5	2'–2"	2'–2"	7 1/2"			438
V560	18	30'–1"	STR.						565
V601	6761	5'–5"	STR.						55,006
V602	1646	7'–5"	STR.						18,336
V603	1200	7'–5"	3	1'–0"	1'–6 1/4"	2'–10"	2'–10"		13,368
V604	2 SETS OF 21	5'–3" / 7'–3"	6	1'–0"	4'–4 3/4" / 6'–4 3/4"	3/4"		1 1/4"	394
V605	15	5'–10"	10	1'–11"	9"	6 1/2"	2'–8"		131
V606	140	6'–10"	6	5'–0"	2'–0"	2 1/2"			1437
V701	140	6'–10"	6	5'–0"	2'–0"	2 1/2"			1955
							TOTAL		419,566

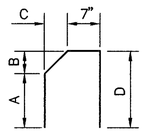

TYPE 10

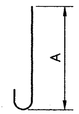

TYPE 11

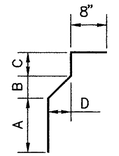

TYPE 12

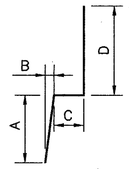

TYPE 13

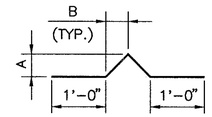

TYPE 14

NOTES:

ALL BARS TO BE EPOXY COATED.

ALL REINFORCING STEEL SHALL BE INCLUDED WITH ITEM 511 'CLASS C CONCRETE, MISC.: PARAPET AND COPING, AS PER PLAN' FOR PAYMENT.

* AN ALLOWANCE OF 1000 POUNDS IS INCLUDED WITH ITEM 509 FOR THIS PURPOSE.

PREPARED BY
ms consultants, inc.
CONSULTING ENGINEERS & PLANNERS
YOUNGSTOWN, OHIO

DESIGNED R.B.	DRAWN C.H.	REVIEWED J.A.B.	DATE 10-94
CHECKED B.G.	REVISED	STRUCTURE FILE NO. N/A	

REINFORCING STEEL LIST
REINFORCED EARTH

FRA-270-32.46

36/37

467/593

PLOT SCALE... 1 = 1
COL. #19 C:\DRAWINGS\0609238\RETWALLS\RWALL01.DWG FEBRUARY-13-1995

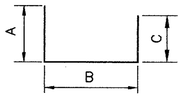

TYPE 1

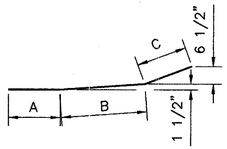

TYPE 2

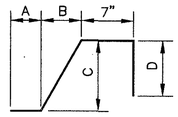

TYPE 3

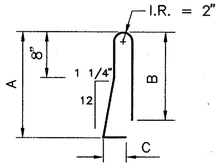

TYPE 4

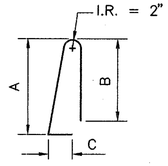

TYPE 5

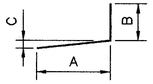

TYPE 6

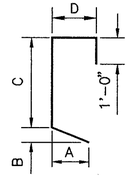

TYPE 7

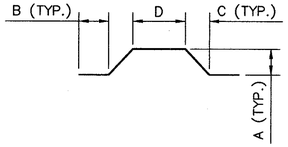

TYPE 8

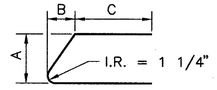

TYPE 9

REINFORCING STEEL LIST

MARK	NO.	LENGTH	TYPE	A	B	C	D	INC.	WEIGHT
V401	106	2'-10"	1	1'-8"	7"	9"			201
V402	180	9'-8"	STR.						1162
V403	40	4'-3"	1	1'-8"	1'-1"	1'-8"			114
V404	8	19'-9"	STR.						106
V405	15	11'-10"	STR.						119
V406	*	3'-1"	14	4"	6"				*
V407	*	4'-3" / 4'-8"	14	10" / 12"	10" / 12"			2"	*
V408	40	1'-6"	STR.						40
V409	47	3'-10"	1	2'-2"	7"	9"			120
V501	4471	4'-5"	STR.						20,596
V502	8544	7'-5"	3	1'-0"	1'-6 1/4"	2'-10"	2'-10"		66,093
V503	6705	7'-0"	4	3'-3"	3'-0"	8 1/4"			48,953
V504	4260	29'-7"	STR.						131,444
V505	886	6'-5"	STR.						5930
V506	1433	5'-3"	5	2'-5"	2'-2"	7 1/2"			7847
V507	2676	2'-11"	STR.						8141
V508	54	5'-5"	3	1'-0"	1'-6 1/4"	2'-10"	10"		305
V509	2 SETS OF 14	4'-5" / 6'-5"	STR.					1 7/8"	158
V510	34	19'-8"	STR.						697
V511	3	9'-1"	7	1'-4"	8"	5'-0"	1'-11"		28
V512	2	7'-9"	7	7"	8"	5'-0"	1'-2"		16
V513	3	8'-11"	STR.						28
V514	2 SETS OF 3	7'-5" / 8'-6"	STR.					6 1/2"	50
V515	4	7'-9"	8	1'-6"	1'-0"	1'-6"	1'-8"		32
V516	324	34'-7"	STR.						11,687
V517	228	39'-7"	STR.						9413
V518	18	31'-8"	STR.						595
V519	12	14'-4"	STR.						179
V520	18	33'-9"	STR.						634
V521	18	32'-10"	STR.						616
V522	2	12'-0"	STR.						25
V523	22	2'-0"	STR.						46
V524	31	5'-11"	10	1'-11"	9"	6 1/2"	2'-8"		191
V525	11	3'-0" / 3'-10"	11	2'-5" / 3'-3"				1"	39
V526	11	4'-4" / 5'-2"	STR.					1"	54
V527	22	3'-5"	12	1'-11"	4"	5 1/2"	5 1/2"		78
V528	8	4'-4"	STR.						36
V529	6	3'-0"	11	2'-5"					19
V530	2	4'-6"	13	1'-11"	2 3/4"	6"	2'-4 1/2"		9
V531	4	36'-6"	STR.						152
V532	6	24'-8"	STR.						154
V533	10	10'-0"	STR.						104
V534	4	5'-8"	2	1'-10"	2'-5"	1'-5"			24
V535	4	5'-8"	STR.						24
V536	11	2'-10" / 4'-4"	11	2'-3" / 3'-9"				1 3/4"	41
V537	11	4'-4" / 5'-10"	STR.					1 3/4"	58
V538	45	32'-9"	STR.						1537
V539	15	36'-6"	STR.						571
V540	12	18'-1"	STR.						226
V541	4	21'-10"	STR.						91
V542	160	2'-8"	9	7 3/4"	4 1/4"	9"			445
V543	90	6'-9"	4	3'-0"	3'-0"	8"			634
V544	320	2'-10"	STR.						946
V545	240	9'-8"	STR.						2420
V546	224	3'-4"	10	2'-1"	9"	6 1/2"	0"		779
V547	112	3'-11"	STR.						458
V548	96	2'-10"	STR.						284
V549	96	8'-2"	STR.						818
V550	96	3'-2"	STR.						317
V551	160	3'-4"	1	1'-11"	4"	1'-4"			556
V552	1	11'-11"	STR.						12
V553	18	31'-1"	STR.						584
V554	8	15'-0"	STR.						125
V555	48	3'-6"	STR.						175
V556	48	7'-0"	STR.						350
V557	1	4'-8"	STR.						5
V558	3	26'-9"	STR.						84
V559	84	5'-0"	5	2'-2"	2'-2"	7 1/2"			438
V560	18	29'-10"	STR.						560
V601	6681	5'-5"	STR.						54,356
V602	1631	7'-5"	STR.						18,169
V603	1185	7'-5"	3	1'-0"	1'-6 1/4"	2'-10"	2'-10"		13,201
V604	2 SETS OF 21	5'-3" / 7'-3"	6	1'-0"	4'-4 3/4" / 6'-4 3/4"	3/4"		1 1/4"	394
V605	12	5'-10"	10	1'-11"	9"	6 1/2"	2'-8"		105
V606	140	6'-10"	6	5'-0"	2'-0"	2 1/2"			1437
V701	140	6'-10"	6	5'-0"	2'-0"	2 1/2"			1955
								TOTAL	418,390

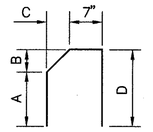

TYPE 10

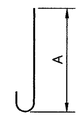

TYPE 11

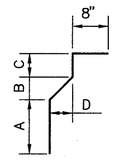

TYPE 12

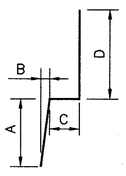

TYPE 13

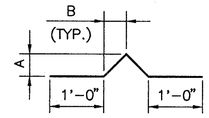

TYPE 14

NOTES:

ALL BARS TO BE EPOXY COATED.

ALL REINFORCING STEEL SHALL BE INCLUDED WITH ITEM 511 'CLASS C CONCRETE, MISC.: PARAPET AND COPING, AS PER PLAN' FOR PAYMENT.

* AN ALLOWANCE OF 1000 POUNDS IS INCLUDED WITH ITEM 509 FOR THIS PURPOSE.

PREPARED BY
ms consultants, inc.
CONSULTING ENGINEERS & PLANNERS
6500 RIVER ROAD,ROUND ROCK, TEXAS 78681

DESIGNED R.B. | DRAWN C.H. | CHECKED B.G. | REVIEWED J.A.B. | DATE 10-94 | STRUCTURE | FILE NO. N/A | REVISED

REINFORCING STEEL LIST
VSL RETAINED EARTH

FRA-270-32.46

37/37

468/593

PLOT SCALE = 1 = 1
COLOR
C:\DRAWING\06992308\RETWALLS\RWALL#2.DWG FEBRUARY-13-1995

FHWA REGION	STATE	PROJECT	
5	OHIO		

FRA-270-32.46

469
593

reinforced earth®

8614 WESTWOOD CENTER DRIVE, SUITE 1100, VIENNA, VIRGINIA 22182 (703) 821-1175

GENERAL NOTES

DESIGN CRITERIA

1. DESIGN IS BASED ON THE ASSUMPTION THAT THE MATERIAL WITHIN THE REINFORCED EARTH VOLUME, METHODS OF CONSTRUCTION AND QUALITY OF PREFABRICATED MATERIALS SHALL CONFORM TO THE CONTRACTING AGENCY'S TECHNICAL SPECIFICATIONS FOR REINFORCED EARTH WALLS.

2. SOILS CHARACTERISTICS ASSUMED FOR DESIGN:

   SELECT GRANULAR BACKFILL
   ϕ = 34 degrees, c = 0 p.s.f., γ = 125 p.c.f.

   RANDOM BACKFILL
   ϕ = 30 degrees, c = 0 p.s.f., γ = 125 p.c.f.

   FOUNDATION MATERIAL
   ϕ = 30 degrees, c = 0 p.s.f.

   IF THE ACTUAL CHARACTERISTICS OF THE SOIL MATERIALS DIFFER FROM THOSE ABOVE, THE REINFORCED EARTH COMPANY SHOULD BE NOTIFIED PRIOR TO CONSTRUCTION TO EVALUATE THE NEED FOR REDESIGN OF THE WALL.

3. THE MAXIMUM APPLIED BEARING PRESSURE AT THE FOUNDATION LEVEL IS AS SHOWN ON THE WALL ELEVATIONS FOR EACH DESIGN CASE. IT IS THE RESPONSIBILITY OF THE OWNER TO DETERMINE THAT THIS APPLIED BEARING PRESSURE IS ALLOWABLE FOR THAT LOCATION.

4. ANY UNSUITABLE FOUNDATION MATERIAL BELOW THE REINFORCED EARTH VOLUME, AS DETERMINED BY THE ENGINEER, SHALL BE EXCAVATED AND REPLACED WITH SUITABLE MATERIAL OR OTHERWISE STABILIZED AS DIRECTED BY THE ENGINEER.

5. REINFORCING STRIPS FOR REINFORCED EARTH WALLS SHALL BE 50mm WIDE AND 4mm THICK, AND SHALL CONFORM TO THE PHYSICAL AND MECHANICAL PROPERTIES OF ASTM A-572 GRADE 65. GALVANIZATION SHALL BE APPLIED IN ACCORDANCE WITH ASTM A-123.

WALL CONSTRUCTION

6. STATIONS SHOWN ARE ALONG CENTERLINE OF ROADWAY.

7. REINFORCED EARTH WALLS IN CURVES WILL FORM A SERIES OF SHORT CHORDS OF 4.92' EACH TO MATCH DESIRED WALL ALIGNMENT.

8. FOR LOCATION AND ALIGNMENT OF REINFORCED EARTH WALLS. SEE CONTRACT DRAWINGS.

9. IF MANHOLES AND DROP INLETS ARE PRESENT, THEY SHALL BE LOCATED AS SHOWN ON WALL ELEVATIONS.

10. IF PILES ARE LOCATED WITHIN THE REINFORCED EARTH VOLUME, THEY SHALL BE DRIVEN PRIOR TO CONSTRUCTION OF THE REINFORCED EARTH WALL UNLESS A METHOD TO PROTECT THE STRUCTURE, WHICH IS ACCEPTABLE TO THE ENGINEER AND THE REINFORCED EARTH COMPANY, AND IS PROPOSED AND APPROVED IN WRITING.

WALL CONSTRUCTION (CONT.)

11. BACKFILL MATERIAL SHALL BE COMPACTED IN ACCORDANCE WITH THE SPECIFICATIONS FOR REINFORCED EARTH WALLS TO A LEVEL OF 2" (±) ABOVE THE TIE STRIPS EMBEDDED IN THE PANELS. INSTALLATION OF REINFORCING STRIPS SHALL BE PERMITTED ONLY AFTER PLACEMENT AND COMPACTION OF THE BACKFILL MATERIAL HAS REACHED THE REQUIRED LEVEL.

12. COMPACTION AND OPERATION EQUIPMENT SHALL BE KEPT A MINIMUM DISTANCE OF 3'-0" FROM THE BACK FACE OF THE REINFORCED EARTH PANELS. COMPACTION WITHIN 3'-0" OF THE REINFORCED EARTH PANELS SHALL BE ACHIEVED WITH AT LEAST THREE (3) PASSES OF A LIGHTWEIGHT MECHANICAL TAMPER, ROLLER OR VIBRATORY SYSTEM. NO COMPACTION DENSITY TESTS SHALL BE TAKEN WITHIN THE 3 FT. ZONE.

13. IF STRUCTURES IN EXCESS OF 20' IN HEIGHT OCCUR, THE FINISHED GRADE IN FRONT OF THE WALL SHALL BE PLACED AND COMPACTED BEFORE WALL CONSTRUCTION EXCEEDS A HEIGHT OF 20'. FINISHED GRADE BACKFILL SHALL BE COMPACTED TO 95% OF ASTM D-698, METHODS 'C' OR 'D', UNLESS OTHERWISE DIRECTED BY THE ENGINEER.

14. IT IS THE CONTRACTOR'S RESPONSIBILITY TO DETERMINE THE LOCATION OF ANY GUARDRAIL POSTS BEHIND THE REINFORCED EARTH PANELS. PRIOR TO PLACEMENT OF THE TOP LAYER OF REINFORCING STRIPS, INDIVIDUAL STRIPS MAY BE SKEWED TO AVOID THE POST LOCATIONS IF AUTHORIZED BY THE REINFORCED EARTH COMPANY. ANY DAMAGE DONE TO THE REINFORCING STRIPS DUE TO THE INSTALLATION OF THE GUARDRAIL SHALL BE REPAIRED BY THE CONTRACTOR AT THE CONTRACTOR'S EXPENSE.

15. IF EXISTING OR FUTURE STRUCTURES, PIPES, FOUNDATIONS OR GUARDRAIL POSTS WHICH ARE WITHIN THE REINFORCED EARTH VOLUME INTERFERE WITH THE NORMAL PLACEMENT OF REINFORCING STRIPS AND SPECIFIC DIRECTION HAS NOT BEEN PROVIDED ON THE PLANS, THE CONTRACTOR SHALL NOTIFY THE REINFORCED EARTH COMPANY TO DETERMINE WHAT COURSE OF ACTION SHOULD BE TAKEN.

16. ALL DETAILING AND CHECKING OF REINFORCING STEEL FOR ANY C.I.P. CONCRETE WORK IS THE RESPONSIBILITY OF THE CONTRACTOR.

17. IF THERE IS CAST-IN-PLACE COPING, TOP PANELS SHALL HAVE #4 DOWELS PROTRUDING FROM THEIR TOP EDGE.

18. FOR OTHER INFORMATION PERTAINING TO WALL CONSTRUCTION PLEASE REFER TO THE REINFORCED EARTH CONSTRUCTION MANUAL.

19. THE CONTRACTOR IS RESPONSIBLE FOR GRADUALLY DEFLECTING UPPER REINFORCING STRIPS DOWNWARD TO AVOID CONFLICTS WITH PAVING AND SUBGRADE PREPARATION. THE CONTRACTOR'S ATTENTION IS DIRECTED ESPECIALLY TO SITUATIONS WHERE ROADWAY SUPERELEVATION AND/OR SOIL MIXING ARE ANTICIPATED.

20. THE CONTRACTOR IS RESPONSIBLE FOR CONTROLLING STORM WATER DRAINAGE IN THE VICINITY OF THE WALL DURING CONSTRUCTION. STORM WATER RUNOFF IS TO BE COLLECTED AND DISCHARGED AWAY FROM THE WALL AND REINFORCED BACKFILL.

MATERIALS NOTES

21. NOMINAL STRIP LENGTHS

    THE REINFORCING STRIP LENGTHS SHOWN ON THE PLANS, MEASURED FROM BACK FACE OF PANEL, ARE THE NOMINAL LENGTHS REQUIRED BY CALCULATION. THE ACTUAL FABRICATED STRIP LENGTHS ARE OFTEN LONGER (UP TO 6") DUE TO MANUFACTURING TOLERANCES. THE REQUIRED HORIZONTAL LIMIT OF GRANULAR BACKFILL IS EQUAL TO THE NOMINAL STRIP LENGTH. ADDITIONAL GRANULAR BACKFILL BEYOND THE NOMINAL STRIP LENGTH IS NOT REQUIRED BY CALCULATION.

22. SELECT BACKFILL QUANTITY

    THE SELECT BACKFILL QUANTITY INDICATED BY THE REINFORCED EARTH COMPANY IS CALCULATED BY MULTIPLYING THE NOMINAL STRIP LENGTHS SHOWN ON THE PLANS (PLUS 0 FT.) BY THEIR TRIBUTARY WALL SURFACE AREA AND CONVERTING THE RESULT TO A NEATLINE CUBIC YARD QUANTITY. THIS INFORMATION IS FURNISHED FOR THE CONTRACTOR'S INFORMATION ONLY AND IS NOT INTENDED TO REPRESENT THE ACTUAL QUANTITIES REQUIRED TO COMPLETE THE WORK. THE CONTRACTOR MUST CALCULATE HIS OWN EXCAVATION AND BACKFILL QUANTITIES BASED UPON THE SPECIFIC CONDITIONS OF THE PROJECT.

23. PANEL FINISH

    THE PRECAST PANELS FOR THIS PROJECT SHALL HAVE AN ARCHITECTURAL FINISH AS PER THE SPECIFICATIONS.

24. NOTE TO CONTRACTORS

    ONLY THE FOLLOWING MATERIALS ARE SUPPLIED BY THE REINFORCED EARTH COMPANY:

    - PRECAST CONCRETE FACING PANELS
    - REINFORCING STRIPS
    - BOLT SETS (FOR ATTACHING PANELS TO THE REINFORCING STRIPS)
    - BEARING BLOCKS
    - RUBBER SHIMS
    - FILTER CLOTH AND ADHESIVE (FOR PANEL JOINTS ONLY)

    ANY OTHER MATERIALS CALLED FOR IN THE CONTRACT PLANS OR SPECIFICATIONS ARE TO BE SUPPLIED BY THE CONTRACTOR. ANY JOINT MATERIALS SHOWN AT THE INTERFACE OF PRECAST PANELS AND CAST-IN-PLACE CONCRETE STRUCTURES ARE TO BE SUPPLIED BY THE ERECTION CONTRACTOR. ALL SANDBLASTING, PAINTING, SEALERS OR OTHER SPECIAL APPLIED COATINGS ARE ALSO SUPPLIED/INSTALLED BY THE CONTRACTOR IN THE FIELD FOLLOWING PANEL ERECTION.

INDEX	
NO.	DRAWING COVERS
2-7	WALL No.1 ELEVATION
8	WALLS No.1, 2 & 3 ELEVATION
9 & 10	WALL No.3 ELEVATION
11-15	WALL No.4 ELEVATION
16	WALL No.5 ELEVATION
17	WALLS No.5, 6 & 7 ELEVATION
18	DETAILS
19	DETAILS AT DRAINAGE STRUCTURES
20	STANDARD PANEL DETAILS

CERTIFIED WITH RESPECT TO INTERNAL STABILITY OF REINFORCED EARTH STRUCTURES ONLY.

This drawing contains information proprietary to The Reinforced Earth Company, and is being furnished for the use of the State of Ohio Dept. of Transporatation only in connection with this project, and the information contained is not to be transmitted to any other organization unless specifically authorized in writing by The Reinforced Earth Company. The Reinforced Earth Company is exclusive licensee in the United States under patents issued to Henri Vidal, and the furnishing of this drawing does not constitute an expressed or implied license under the Vidal patents.

The design contained on these drawings is based on information provided by the owner. On the basis of this information, The Reinforced Earth Company has designed, and is responsible for the internal stability of the structure only. External stability, including foundation and slope stability, is the responsibility of the owner.

The Reinforced Earth Company
reinforced earth®
8614 Westwood Center Drive
Suite 1100
Vienna, Virginia 22182
(703) 821-1175
FAX--(703) 821-1815

"REINFORCED EARTH" is the registered trademark of The Reinforced Earth Company.

DESIGNED BY: lbr				PROJECT NAME	BLENDON & MIFFLIN TOWNSHIPS	DATE	02/14/95
PROJECT ENGR:				LOCATION	FRANKLIN COUNTY, OHIO	CONTRACT NO.	RE5472
CHECKED BY:				OWNER	OHIO DEPT. OF TRANS.	DRAWING NO.	1 OF 20
ENG. MANAGER ajp	REV.	DATE	DESCRIPTION	DRAWING COVERS	GENERAL NOTES	SCALE	NONE

FHWA REGION	STATE	PROJECT	
5	OHIO		

470
593

FRA-270-32.46

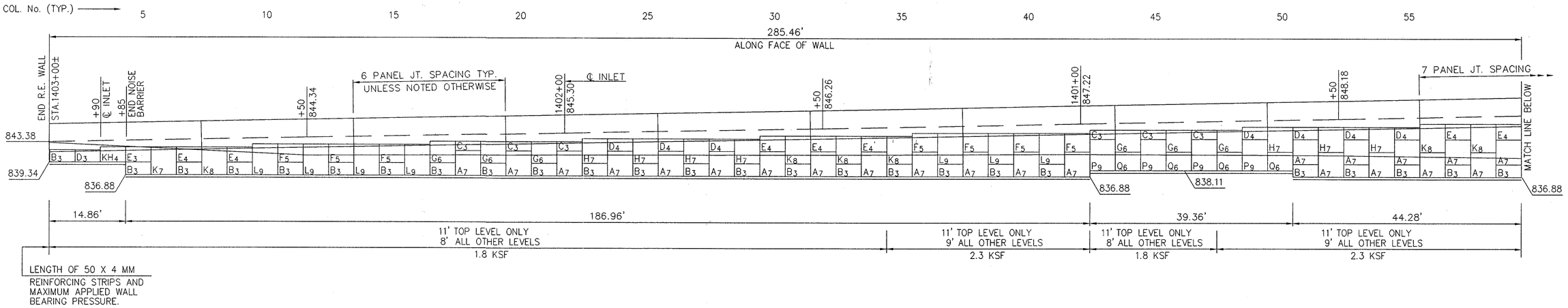

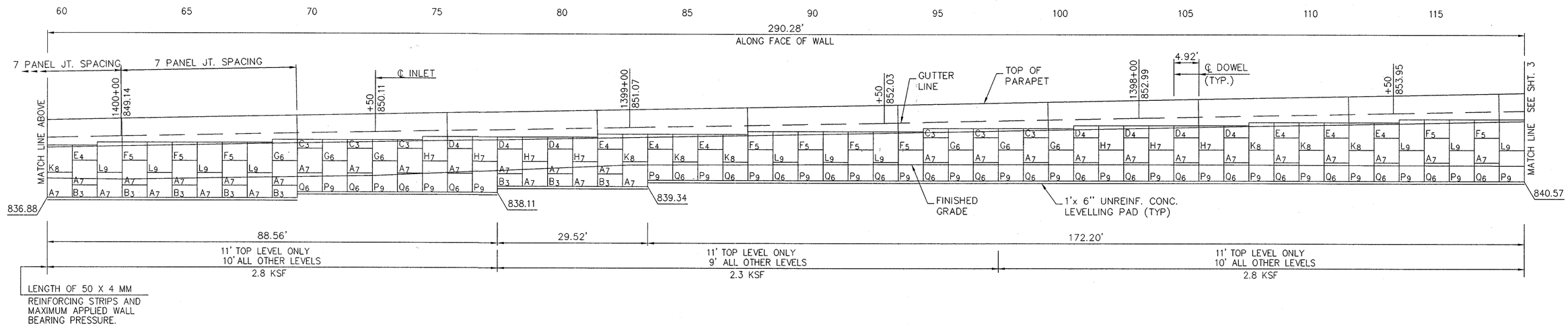

CERTIFIED WITH RESPECT TO INTERNAL STABILITY OF REINFORCED EARTH STRUCTURES ONLY.

ELEVATION – FRONT FACE WALL No.1

SCALE : 1" = 10'

This drawing contains information proprietary to The Reinforced Earth Company, and is being furnished for the use of the State of Ohio Dept. of Transporatation only in connection with this project, and the information contained is not to be transmitted to any other organization unless specifically authorized in writing by The Reinforced Earth Company. The Reinforced Earth Company is exclusive licensee in the United States under patents issued to Henri Vidal, and the furnishing of this drawing does not constitute an expressed or implied license under the Vidal patents.

The design contained on these drawings is based on information provided by the owner. On the basis of this information, The Reinforced Earth Company has designed, and is responsible for the internal stability of the structure only. External stability, including foundation and slope stability, is the responsibility of the owner.

The Reinforced Earth Company
reinforced earth®
8614 Westwood Center Drive
Suite 1100
Vienna, Virginia 22182
(703) 821-1175
FAX--(703) 821-1815

"REINFORCED EARTH" is the registered trademark of The Reinforced Earth Company.

DESIGNED BY:	REV.	DATE	DESCRIPTION
lbr			
PROJECT ENGR:			
CHECKED BY:			
ENG. MANAGER ajp			

PROJECT NAME	BLENDON & MIFFLIN TOWNSHIPS	DATE	02/14/95
LOCATION	FRANKLIN COUNTY, OHIO	CONTRACT NO.	RE5472
OWNER	OHIO DEPT. OF TRANS.	DRAWING NO.	2 OF 20
DRAWING COVERS	ELEVATION	SCALE	AS NOTED

FHWA REGION	STATE	PROJECT	
5	OHIO		

471
593

FRA-270-32.46

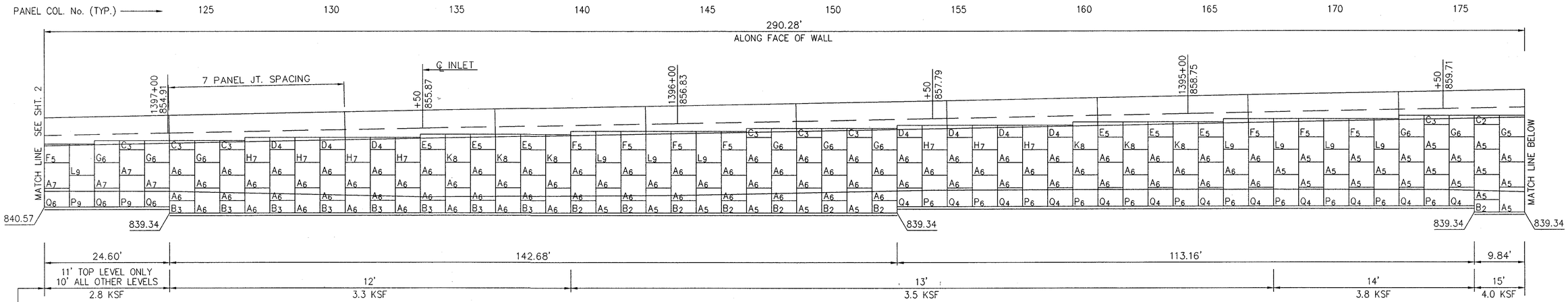

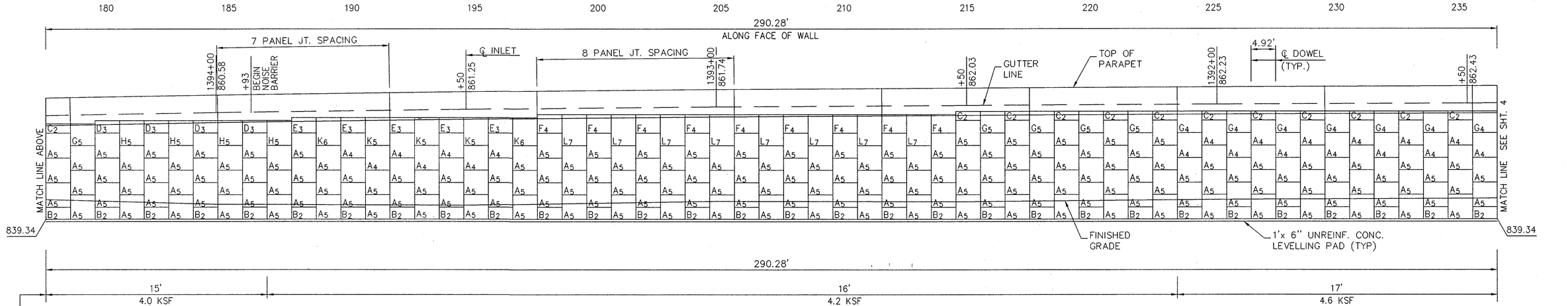

CERTIFIED WITH RESPECT TO INTERNAL STABILITY OF REINFORCED EARTH STRUCTURES ONLY.

ELEVATION - FRONT FACE WALL No.1

SCALE : 1" = 10'

This drawing contains information proprietary to The Reinforced Earth Company, and is being furnished for the use of the State of Ohio Dept. of Transporatation only in connection with this project, and the information contained is not to be transmitted to any other organization unless specifically authorized in writing by The Reinforced Earth Company. The Reinforced Earth Company is exclusive licensee in the United States under patents issued to Henri Vidal, and the furnishing of this drawing does not constitute an expressed or implied license under the Vidal patents.

The design contained on these drawings is based on information provided by the owner. On the basis of this information, The Reinforced Earth Company has designed, and is responsible for the internal stability of the structure only. External stability, including foundation and slope stability, is the responsibility of the owner.

The Reinforced Earth Company
reinforced earth®
8614 Westwood Center Drive
Suite 1100
Vienna, Virginia 22182
(703) 821-1175
FAX--(703) 821-1815

"REINFORCED EARTH" is the registered trademark of The Reinforced Earth Company.

DESIGNED BY:	REV.	DATE	DESCRIPTION
lbr			
PROJECT ENGR:			
CHECKED BY:			
ENG. MANAGER ajp			

PROJECT NAME	BLENDON & MIFFLIN TOWNSHIPS	DATE 02/14/95
LOCATION	FRANKLIN COUNTY, OHIO	CONTRACT NO. RE5472
OWNER	OHIO DEPT. OF TRANS.	DRAWING NO. 3 OF 20
DRAWING COVERS	ELEVATION	SCALE AS NOTED

FHWA REGION	STATE	PROJECT	
5	OHIO		

472
593

FRA-270-32.46

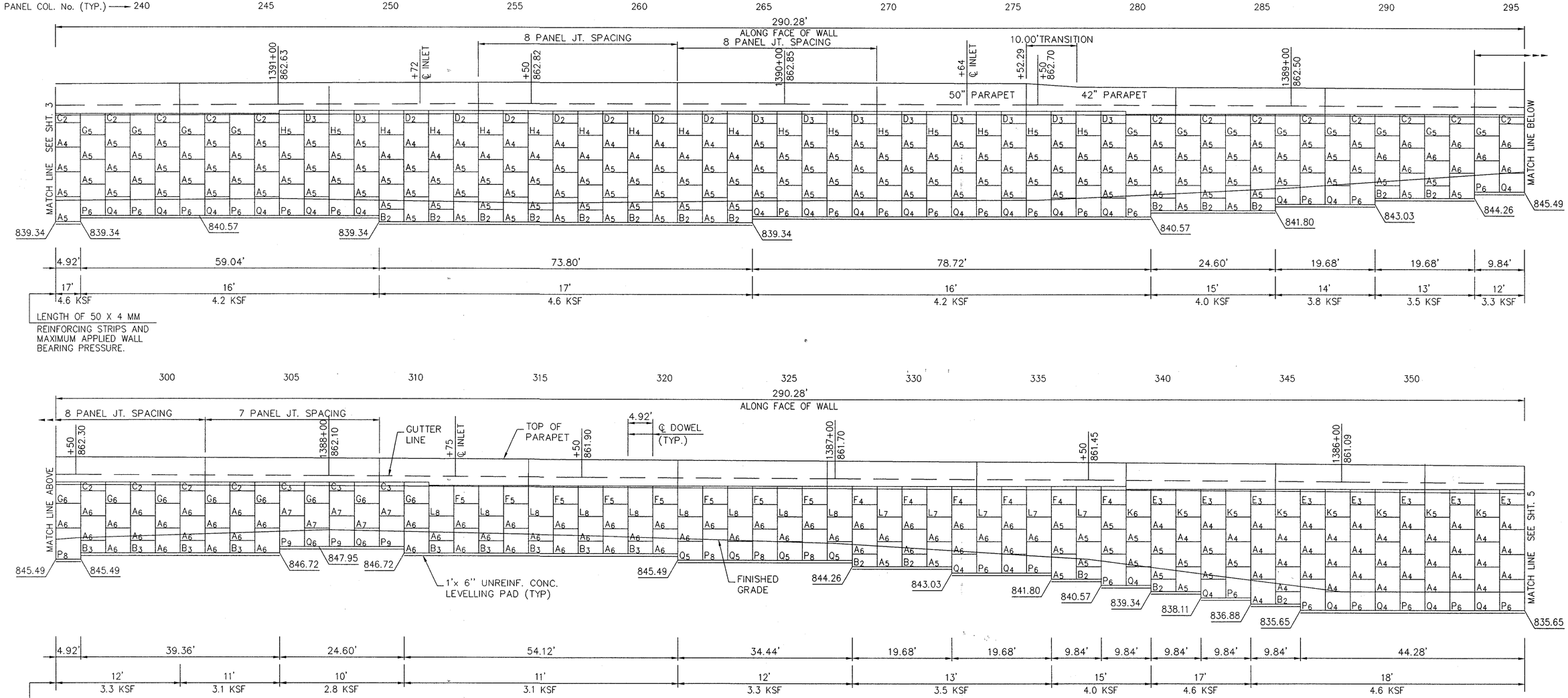

CERTIFIED WITH RESPECT TO INTERNAL STABILITY OF REINFORCED EARTH STRUCTURES ONLY.

ELEVATION - FRONT FACE WALL No.1

SCALE : 1" = 10'

This drawing contains information proprietary to The Reinforced Earth Company, and is being furnished for the use of the State of Ohio Dept. of Transporatation only in connection with this project, and the information contained is not to be transmitted to any other organization unless specifically authorized in writing by The Reinforced Earth Company. The Reinforced Earth Company is exclusive licensee in the United States under patents issued to Henri Vidal, and the furnishing of this drawing does not constitute an expressed or implied license under the Vidal patents.

The design contained on these drawings is based on information provided by the owner. On the basis of this information, The Reinforced Earth Company has designed, and is responsible for the internal stability of the structure only. External stability, including foundation and slope stability, is the responsibility of the owner.

The Reinforced Earth Company
reinforced earth®
8614 Westwood Center Drive
Suite 1100
Vienna, Virginia 22182
(703) 821-1175
FAX--(703) 821-1815

"REINFORCED EARTH" is the registered trademark of The Reinforced Earth Company.

DESIGNED BY: lbr				PROJECT NAME	BLENDON & MIFFLIN TOWNSHIPS	DATE	02/14/95
PROJECT ENGR:				LOCATION	FRANKLIN COUNTY, OHIO	CONTRACT NO.	RE5472
CHECKED BY:				OWNER	OHIO DEPT. OF TRANS.	DRAWING NO.	4 OF 20
ENG. MANAGER ajp	REV.	DATE	DESCRIPTION	DRAWING COVERS	ELEVATION	SCALE	AS NOTED

FHWA REGION	STATE	PROJECT	
5	OHIO		

473
593

FRA-270-32.46

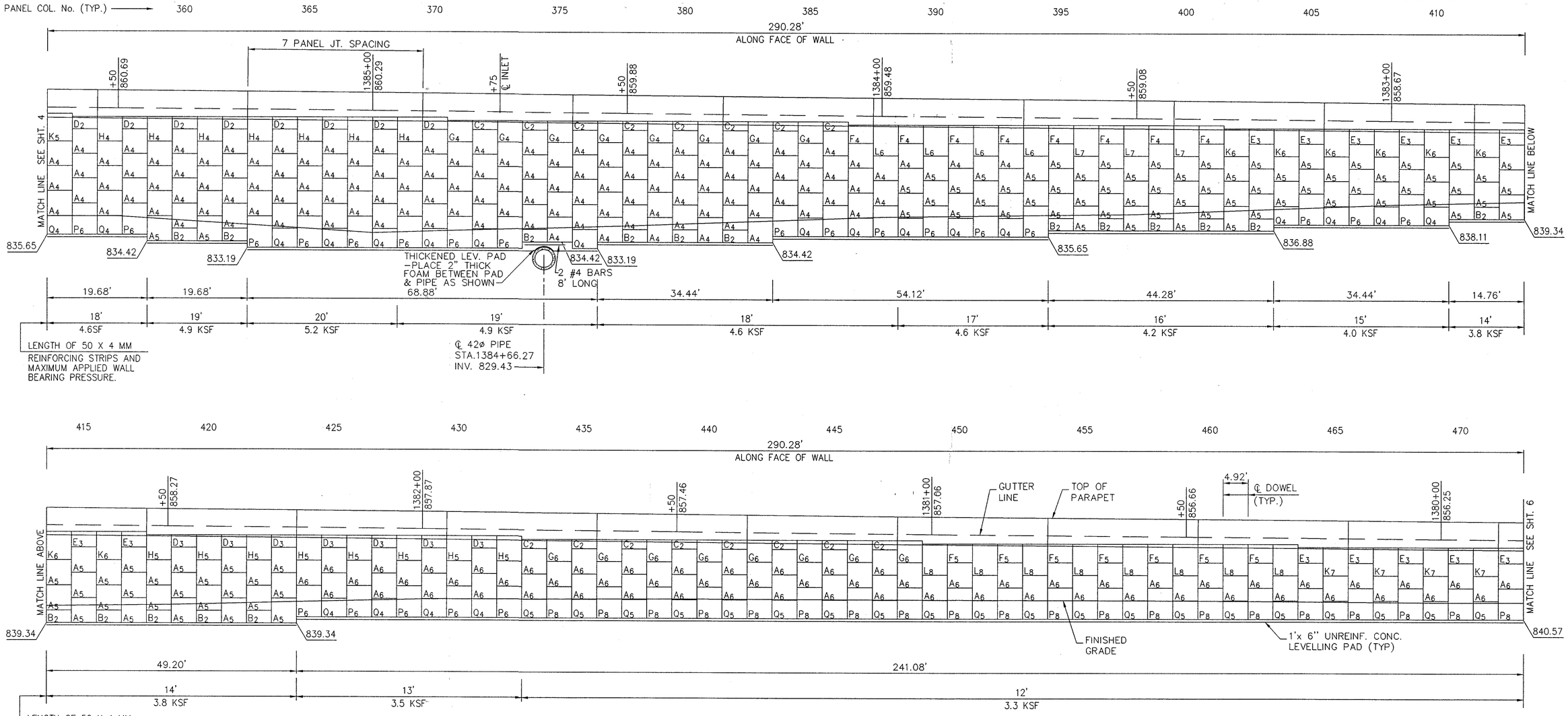

CERTIFIED WITH RESPECT TO INTERNAL STABILITY OF REINFORCED EARTH STRUCTURES ONLY.

ELEVATION – FRONT FACE WALL No.1

SCALE : 1" = 10'

This drawing contains information proprietary to The Reinforced Earth Company, and is being furnished for the use of the State of Ohio Dept. of Transporatation only in connection with this project, and the information contained is not to be transmitted to any other organization unless specifically authorized in writing by The Reinforced Earth Company. The Reinforced Earth Company is exclusive licensee in the United States under patents issued to Henri Vidal, and the furnishing of this drawing does not constitute an expressed or implied license under the Vidal patents.

The design contained on these drawings is based on information provided by the owner. On the basis of this information, The Reinforced Earth Company has designed, and is responsible for the internal stability of the structure only. External stability, including foundation and slope stability, is the responsibility of the owner.

The Reinforced Earth Company
reinforced earth®
8614 Westwood Center Drive
Suite 1100
Vienna, Virginia 22182
(703) 821-1175
FAX--(703) 821-1815

"REINFORCED EARTH" is the registered trademark of The Reinforced Earth Company.

DESIGNED BY:	REV.	DATE	DESCRIPTION
lbr			
PROJECT ENGR:			
CHECKED BY:			
ENG. MANAGER ajp			

PROJECT NAME	BLENDON & MIFFLIN TOWNSHIPS	DATE	02/14/95
LOCATION	FRANKLIN COUNTY, OHIO	CONTRACT NO.	RE5472
OWNER	OHIO DEPT. OF TRANS.	DRAWING NO.	5 OF 20
DRAWING COVERS	ELEVATION	SCALE	AS NOTED

FHWA REGION	STATE	PROJECT	
5	OHIO		

FRA-270-32.46

474
593

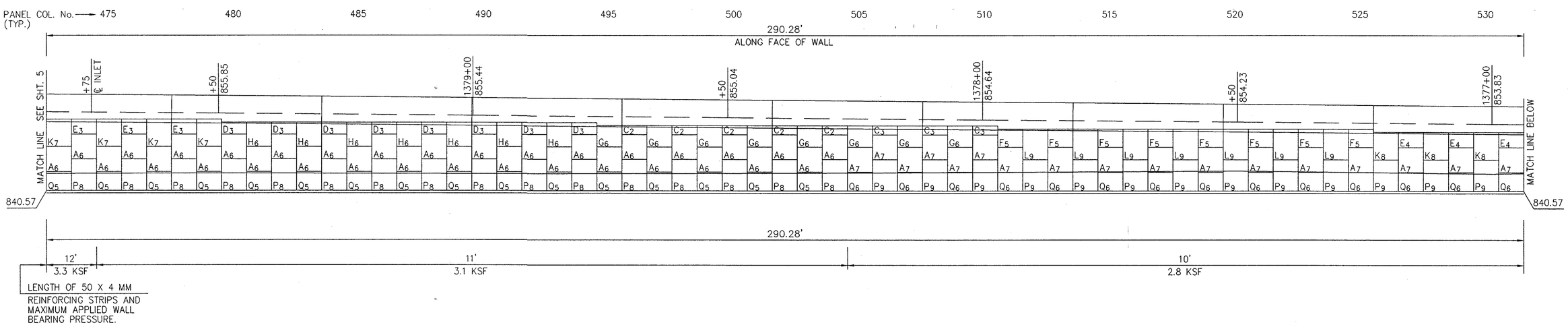

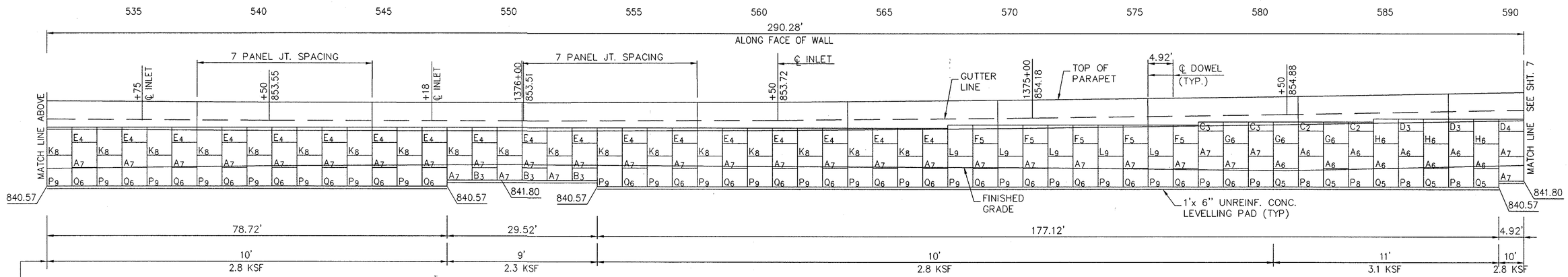

CERTIFIED WITH RESPECT TO INTERNAL STABILITY OF REINFORCED EARTH STRUCTURES ONLY.

ELEVATION – FRONT FACE WALL No.1

SCALE : 1" = 10'

This drawing contains information proprietary to The Reinforced Earth Company, and is being furnished for the use of the State of Ohio Dept. of Transporatation only in connection with this project, and the information contained is not to be transmitted to any other organization unless specifically authorized in writing by The Reinforced Earth Company. The Reinforced Earth Company is exclusive licensee in the United States under patents issued to Henri Vidal, and the furnishing of this drawing does not constitute an expressed or implied license under the Vidal patents.

The design contained on these drawings is based on information provided by the owner. On the basis of this information, The Reinforced Earth Company has designed, and is responsible for the internal stability of the structure only. External stability, including foundation and slope stability, is the responsibility of the owner.

The Reinforced Earth Company
reinforced earth®
8614 Westwood Center Drive
Suite 1100
Vienna, Virginia 22182
(703) 821-1175
FAX--(703) 821-1815

"REINFORCED EARTH" is the registered trademark of The Reinforced Earth Company.

DESIGNED BY:	REV.	DATE	DESCRIPTION
lbr			
PROJECT ENGR:			
CHECKED BY:			
ENG. MANAGER ajp			

PROJECT NAME	BLENDON & MIFFLIN TOWNSHIPS	DATE	02/14/95
LOCATION	FRANKLIN COUNTY, OHIO	CONTRACT NO.	RE5472
OWNER	OHIO DEPT. OF TRANS.	DRAWING NO.	6 OF 20
DRAWING COVERS	ELEVATION	SCALE	AS NOTED

FHWA REGION	STATE	PROJECT	
5	OHIO		

475
593

FRA-270-32.46

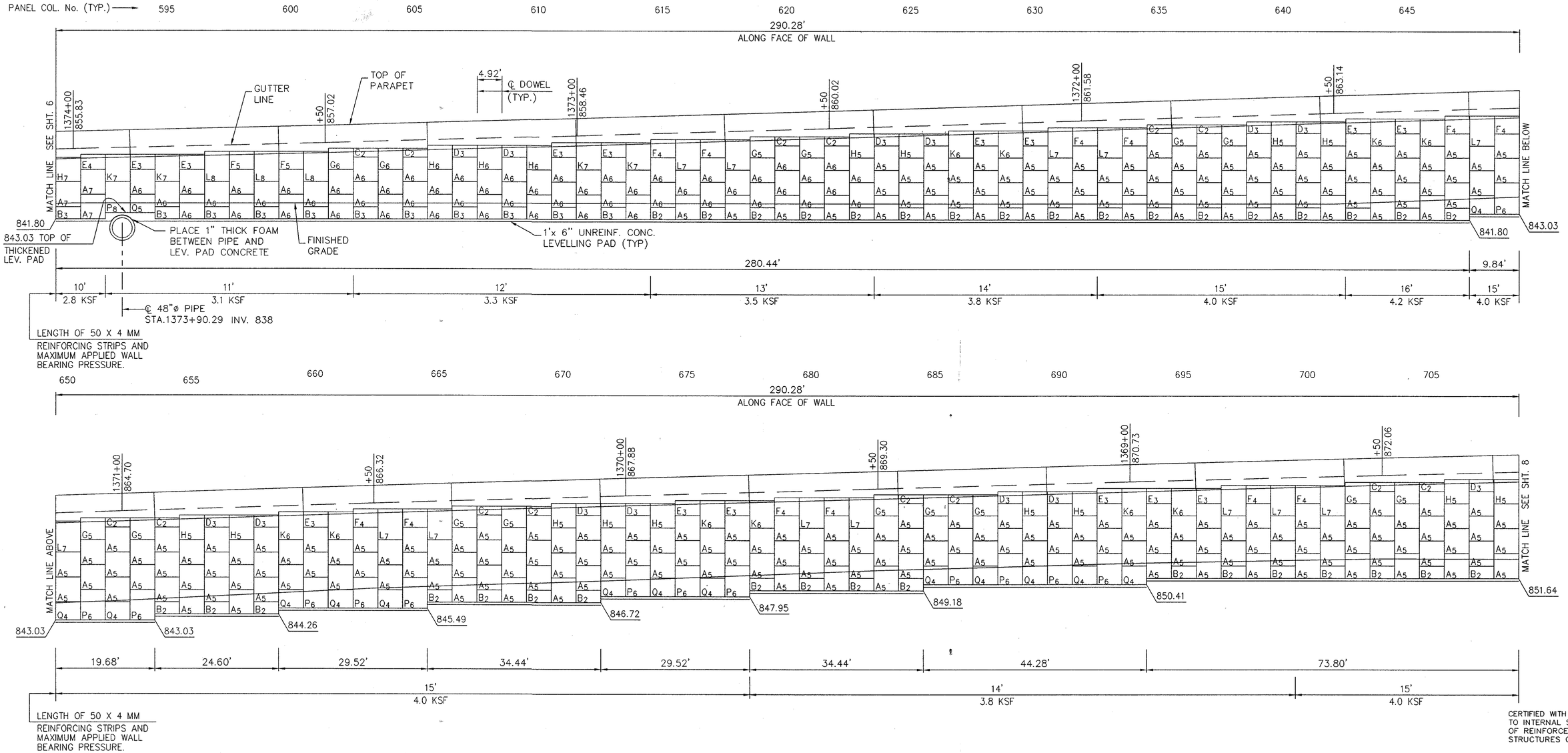

ELEVATION – FRONT FACE WALL No.1

SCALE : 1" = 10'

This drawing contains information proprietary to The Reinforced Earth Company, and is being furnished for the use of the State of Ohio Dept. of Transporatation only in connection with this project, and the information contained is not to be transmitted to any other organization unless specifically authorized in writing by The Reinforced Earth Company. The Reinforced Earth Company is exclusive licensee in the United States under patents issued to Henri Vidal, and the furnishing of this drawing does not constitute an expressed or implied license under the Vidal patents.

The design contained on these drawings is based on information provided by the owner. On the basis of this information, The Reinforced Earth Company has designed, and is responsible for the internal stability of the structure only. External stability, including foundation and slope stability, is the responsibility of the owner.

The Reinforced Earth Company
reinforced earth®
8614 Westwood Center Drive
Suite 1100
Vienna, Virginia 22182
(703) 821-1175
FAX--(703) 821-1815

"REINFORCED EARTH" is the registered trademark of The Reinforced Earth Company.

DESIGNED BY:	REV.	DATE	DESCRIPTION	PROJECT NAME	BLENDON & MIFFLIN TOWNSHIPS	DATE 02/14/95
lbr						
PROJECT ENGR:				LOCATION	FRANKLIN COUNTY, OHIO	CONTRACT NO. RE5472
CHECKED BY:				OWNER	OHIO DEPT. OF TRANS.	DRAWING NO. 7 OF 20
ENG. MANAGER ajp				DRAWING COVERS	ELEVATION	SCALE AS NOTED

FHWA REGION	STATE	PROJECT	
5	OHIO		

476
593

FRA-270-32.46

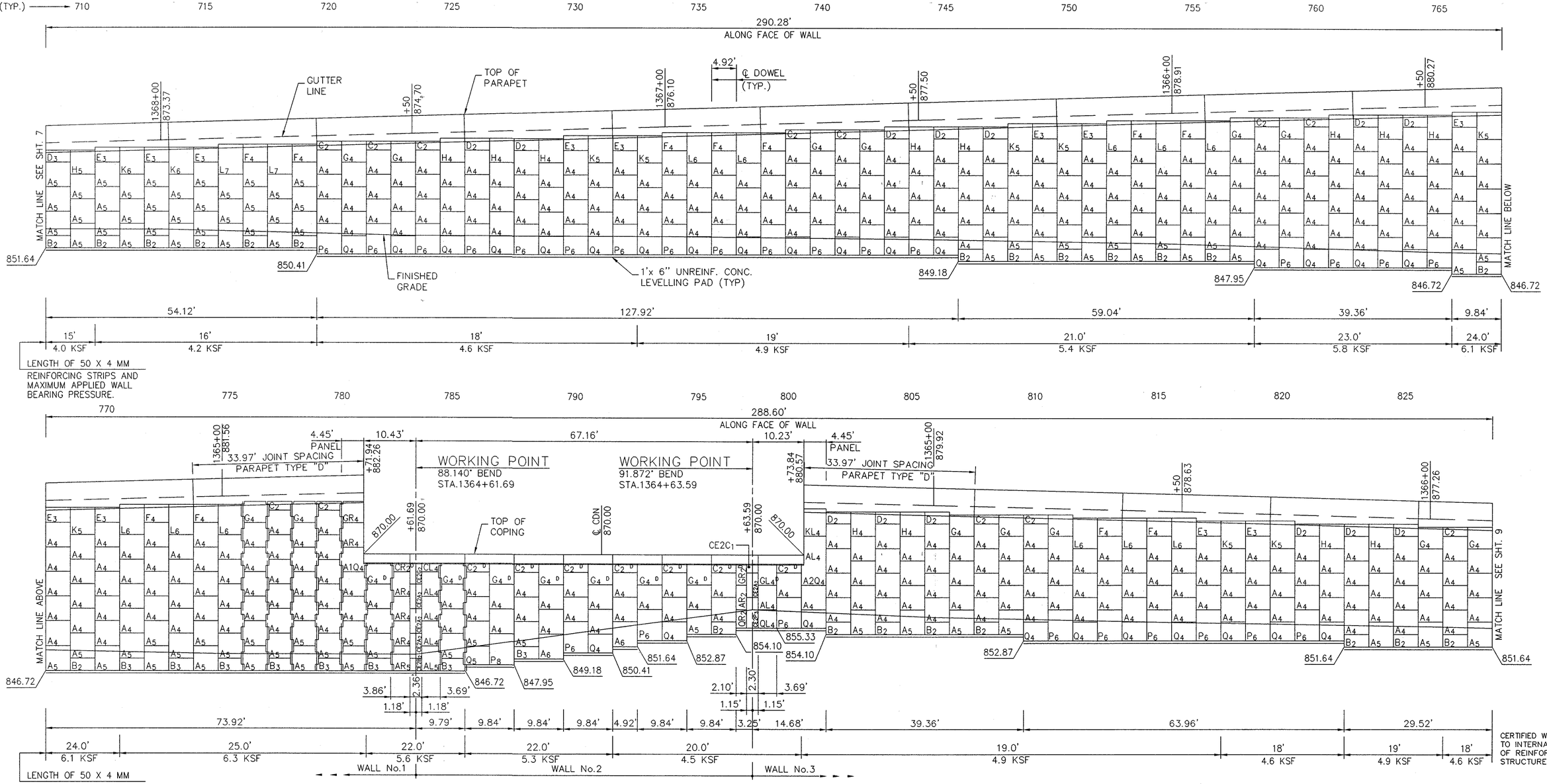

UNFOLDED ELEVATION – FRONT FACE WALLS No.1, 2 & 3

SCALE : 1" = 10'

This drawing contains information proprietary to The Reinforced Earth Company, and is being furnished for the use of the State of Ohio Dept. of Transporatation only in connection with this project, and the information contained is not to be transmitted to any other organization unless specifically authorized in writing by The Reinforced Earth Company. The Reinforced Earth Company is exclusive licensee in the United States under patents issued to Henri Vidal, and the furnishing of this drawing does not constitute an expressed or implied license under the Vidal patents.

The design contained on these drawings is based on information provided by the owner. On the basis of this information, The Reinforced Earth Company has designed, and is responsible for the internal stability of the structure only. External stability, including foundation and slope stability, is the responsibility of the owner.

The Reinforced Earth Company
reinforced earth®
8614 Westwood Center Drive
Suite 1100
Vienna, Virginia 22182
(703) 821-1175
FAX--(703) 821-1815

"REINFORCED EARTH" is the registered trademark of The Reinforced Earth Company.

DESIGNED BY:	REV.	DATE	DESCRIPTION
lbr			
PROJECT ENGR:			
CHECKED BY:			
ENG. MANAGER ajp			

PROJECT NAME	BLENDON & MIFFLIN TOWNSHIPS	DATE	02/14/95
LOCATION	FRANKLIN COUNTY, OHIO	CONTRACT NO.	RE5472
OWNER	OHIO DEPT. OF TRANS.	DRAWING NO.	8 OF 20
DRAWING COVERS	ELEVATION	SCALE	AS NOTED

FHWA REGION	STATE	PROJECT	
5	OHIO		

477
593

FRA-270-32.46

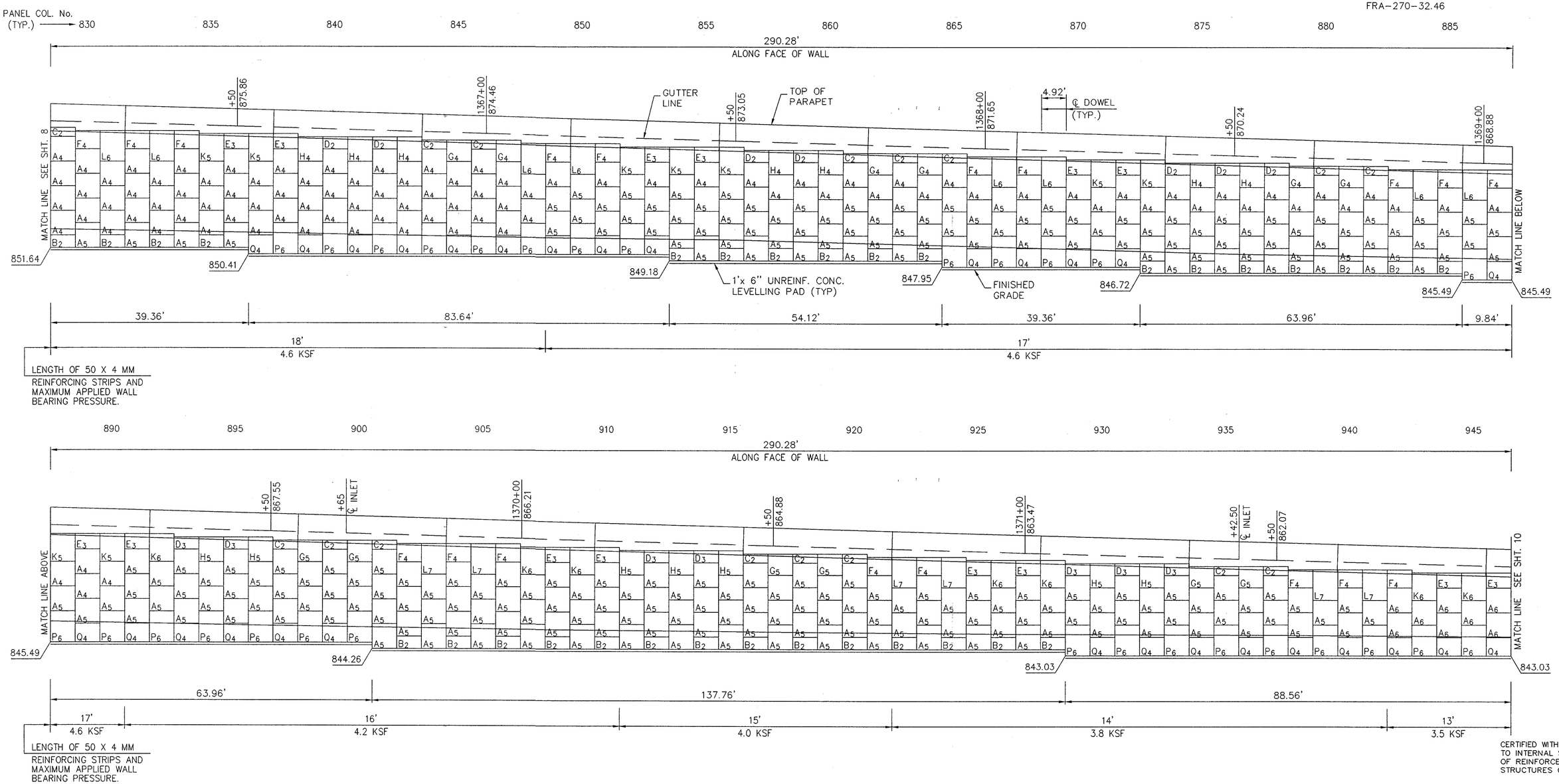

ELEVATION – FRONT FACE WALL No.3

SCALE : 1" = 10'

This drawing contains information proprietary to The Reinforced Earth Company, and is being furnished for the use of the State of Ohio Dept. of Transporation only in connection with this project, and the information contained is not to be transmitted to any other organization unless specifically authorized in writing by The Reinforced Earth Company. The Reinforced Earth Company is exclusive licensee in the United States under patents issued to Henri Vidal, and the furnishing of this drawing does not constitute an expressed or implied license under the Vidal patents.

The design contained on these drawings is based on information provided by the owner. On the basis of this information, The Reinforced Earth Company has designed, and is responsible for the internal stability of the structure only. External stability, including foundation and slope stability, is the responsibility of the owner.

The Reinforced Earth Company
reinforced earth®
8614 Westwood Center Drive
Suite 1100
Vienna, Virginia 22182
(703) 821-1175
FAX--(703) 821-1815

"REINFORCED EARTH" is the registered trademark of The Reinforced Earth Company.

DESIGNED BY:	REV.	DATE	DESCRIPTION	PROJECT NAME	BLENDON & MIFFLIN TOWNSHIPS	DATE 02/14/95
lbr						
PROJECT ENGR:				LOCATION	FRANKLIN COUNTY, OHIO	CONTRACT NO. RE5472
CHECKED BY:				OWNER	OHIO DEPT. OF TRANS.	DRAWING NO. 9 OF 20
ENG. MANAGER ajp				DRAWING COVERS	ELEVATION	SCALE AS NOTED

FHWA REGION	STATE	PROJECT	
5	OHIO		

478
593

FRA-270-32.46

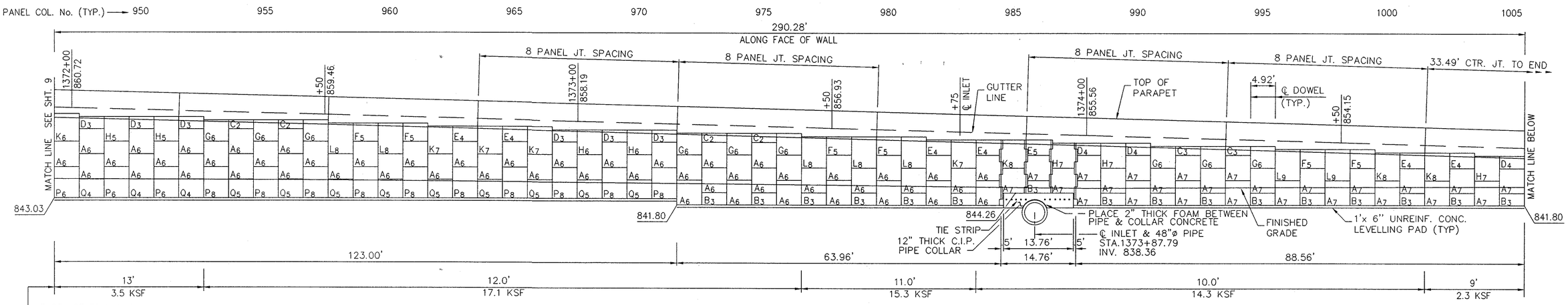

LENGTH OF 50 X 4 MM REINFORCING STRIPS AND MAXIMUM APPLIED WALL BEARING PRESSURE.

LENGTH OF 50 X 4 MM REINFORCING STRIPS AND MAXIMUM APPLIED WALL BEARING PRESSURE.

NOTES: LENGTH OF LEVELLING PAD IS BASED ON INDIVIDUAL PANEL WIDTHS, ℄ OF PIN TO ℄ OF PIN. USE THE STEP DETAIL ON SHEET No. 18 TO DETERMINE THE ACTUAL LEVELLING PAD STEP LOCATION.

FOR TYPICAL WALL SECTIONS SEE SHEET No.18.
FOR PRECAST CORNER ELEMENT DET. SEE SHT. No.18.
FOR DETAILS AT INLET SEE SHEET No. 19.

KEY: PANEL NAME H $^{D}_{4}$ D — COPING DOWELS; 4 — NO. OF TIE STRIPS

WALL 1, 2 & 3 PANEL SURFACE AREA = 85,350 S.F.

1%UWALL 1, 2 & 3 SELECT BACKFILL VOL. = 46,600 C.Y.

C.I.P. PIPE COLLAR NOTES:

1. CAST 11 TIE STRIPS INTO BACK OF COLLAR AS SHOWN HORIZONTALLY, AND VERTICALLY AT ELEV. 843.03. 3 1/2" OF TIE STRIP SHALL PROTRUDE FROM THE BACK FACE (SEE SIMILAR TIE STRIP PLACEMENT DETAIL ON SHT.18 OF 20.
2. ALL REBAR #4 PLACED ON 12" MAX. CENTER TO CENTER EACH WAY, FRONT AND BACK. PLACE #4 REBAR DIAGONALLY AROUND PIPE, FRONT AND BACK. ALL BARS SHALL HAVE 2" CLEARANCE.
3. BOLT 10' LONG REINFORCING STRIP TO EACH TIES STRIP SHOWN IN COLLAR.

CERTIFIED WITH RESPECT TO INTERNAL STABILITY OF REINFORCED EARTH STRUCTURES ONLY.

ELEVATION – FRONT FACE WALL No.3

SCALE : 1" = 10'

This drawing contains information proprietary to The Reinforced Earth Company, and is being furnished for the use of the State of Ohio Dept. of Transporatation only in connection with this project, and the information contained is not to be transmitted to any other organization unless specifically authorized in writing by The Reinforced Earth Company. The Reinforced Earth Company is exclusive licensee in the United States under patents issued to Henri Vidal, and the furnishing of this drawing does not constitute an expressed or implied license under the Vidal patents.

The design contained on these drawings is based on information provided by the owner. On the basis of this information, The Reinforced Earth Company has designed, and is responsible for the internal stability of the structure only. External stability, including foundation and slope stability, is the responsibility of the owner.

The Reinforced Earth Company
reinforced earth®
8614 Westwood Center Drive
Suite 1100
Vienna, Virginia 22182
(703) 821–1175
FAX––(703) 821–1815

"REINFORCED EARTH" is the registered trademark of The Reinforced Earth Company.

DESIGNED BY: lbr				PROJECT NAME	BLENDON & MIFFLIN TOWNSHIPS	DATE 02/14/95
PROJECT ENGR:				LOCATION	FRANKLIN COUNTY, OHIO	CONTRACT NO. RE5472
CHECKED BY:				OWNER	OHIO DEPT. OF TRANS.	DRAWING NO. 10 OF 20
ENG. MANAGER ajp	REV.	DATE	DESCRIPTION	DRAWING COVERS	ELEVATION	SCALE AS NOTED

FHWA REGION	STATE	PROJECT	
5	OHIO		

FRA-270-32.46

479
593

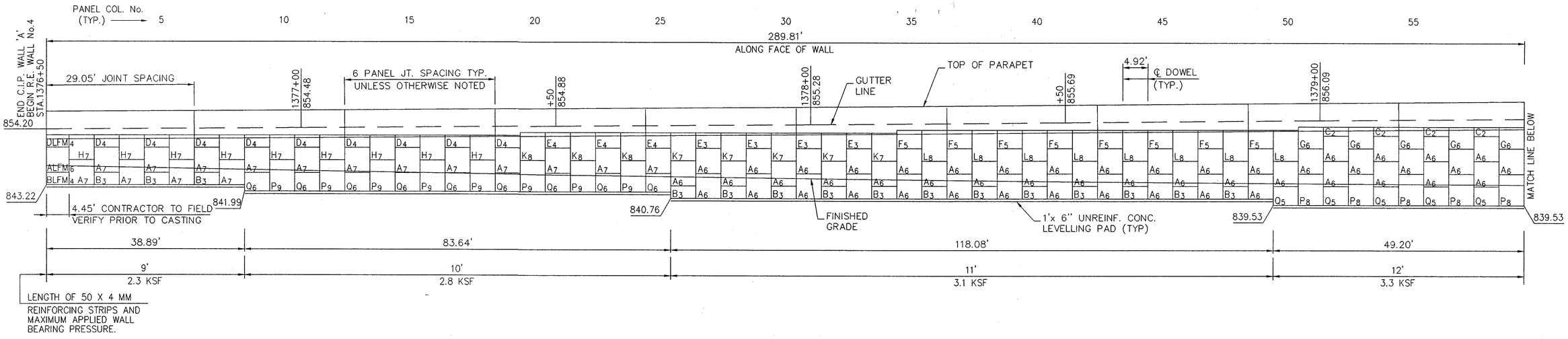

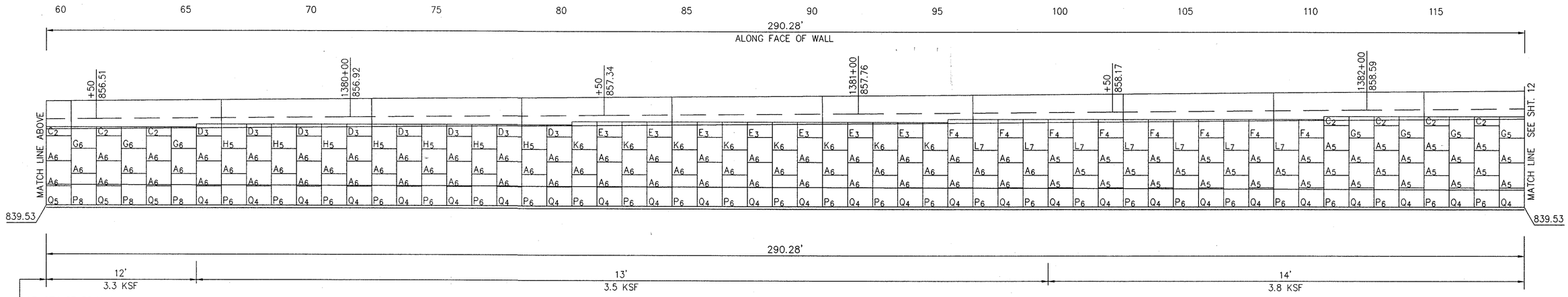

ELEVATION – FRONT FACE WALL No.4

SCALE : 1" = 10'

CERTIFIED WITH RESPECT TO INTERNAL STABILITY OF REINFORCED EARTH STRUCTURES ONLY.

This drawing contains information proprietary to The Reinforced Earth Company, and is being furnished for the use of the State of Ohio Dept. of Transporatation only in connection with this project, and the information contained is not to be transmitted to any other organization unless specifically authorized in writing by The Reinforced Earth Company. The Reinforced Earth Company is exclusive licensee in the United States under patents issued to Henri Vidal, and the furnishing of this drawing does not constitute an expressed or implied license under the Vidal patents.

The design contained on these drawings is based on information provided by the owner. On the basis of this information, The Reinforced Earth Company has designed, and is responsible for the internal stability of the structure only. External stability, including foundation and slope stability, is the responsibility of the owner.

The Reinforced Earth Company
reinforced earth®
8614 Westwood Center Drive
Suite 1100
Vienna, Virginia 22182
(703) 821-1175
FAX--(703) 821-1815

"REINFORCED EARTH" is the registered trademark of The Reinforced Earth Company.

DESIGNED BY:	REV.	DATE	DESCRIPTION
lbr			
PROJECT ENGR:			
CHECKED BY:			
ENG. MANAGER ajp			

PROJECT NAME	BLENDON & MIFFLIN TOWNSHIPS	DATE	02/14/95
LOCATION	FRANKLIN COUNTY, OHIO	CONTRACT NO.	RE5472
OWNER	OHIO DEPT. OF TRANS.	DRAWING NO.	11 OF 20
DRAWING COVERS	ELEVATION	SCALE	AS NOTED

FHWA REGION	STATE	PROJECT	
5	OHIO		

480
593

FRA-270-32.46

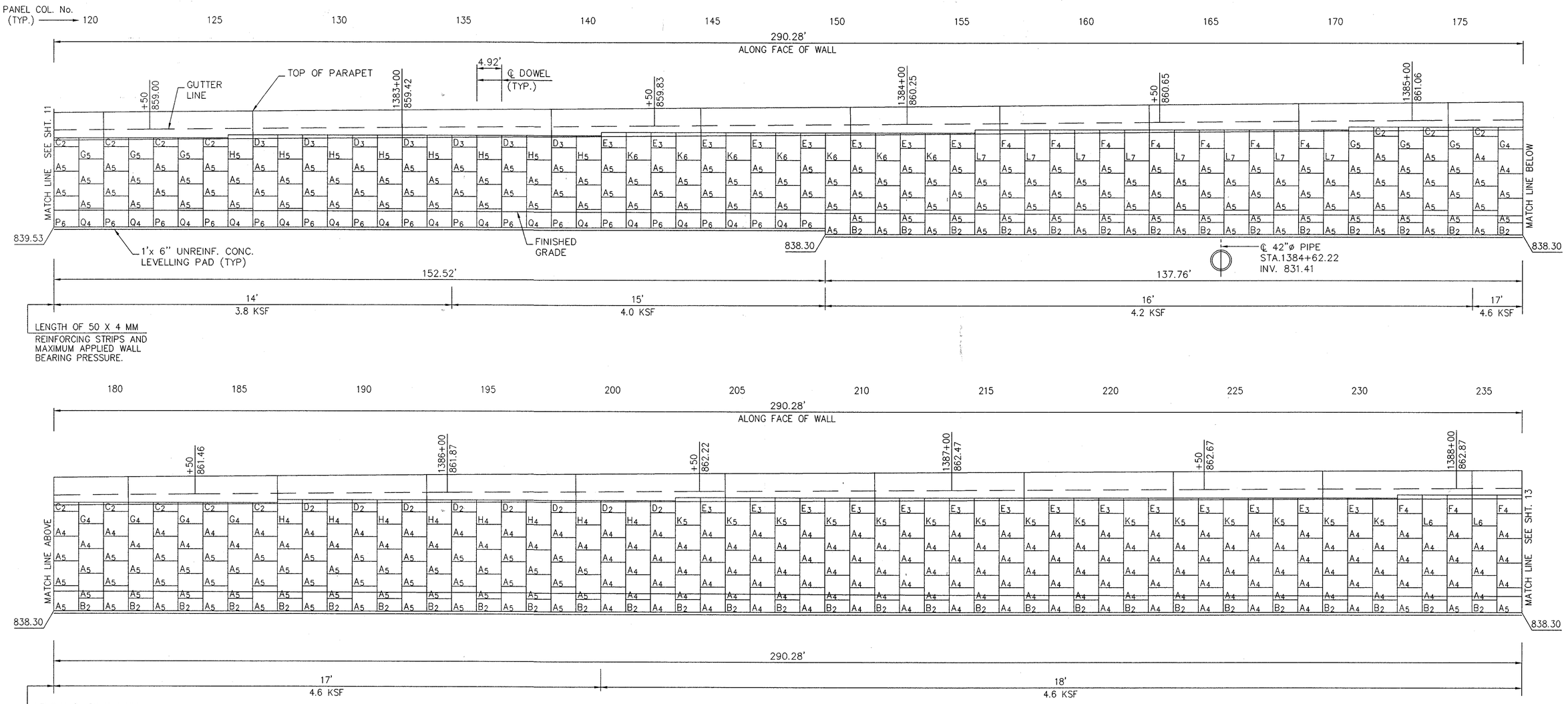

ELEVATION - FRONT FACE WALL No.4

SCALE : 1" = 10'

CERTIFIED WITH RESPECT TO INTERNAL STABILITY OF REINFORCED EARTH STRUCTURES ONLY.

This drawing contains information proprietary to The Reinforced Earth Company, and is being furnished for the use of the State of Ohio Dept. of Transporatation only in connection with this project, and the information contained is not to be transmitted to any other organization unless specifically authorized in writing by The Reinforced Earth Company. The Reinforced Earth Company is exclusive licensee in the United States under patents issued to Henri Vidal, and the furnishing of this drawing does not constitute an expressed or implied license under the Vidal patents.

The design contained on these drawings is based on information provided by the owner. On the basis of this information, The Reinforced Earth Company has designed, and is responsible for the internal stability of the structure only. External stability, including foundation and slope stability, is the responsibility of the owner.

The Reinforced Earth Company
reinforced earth®
8614 Westwood Center Drive
Suite 1100
Vienna, Virginia 22182
(703) 821-1175
FAX--(703) 821-1815

"REINFORCED EARTH" is the registered trademark of The Reinforced Earth Company.

DESIGNED BY:	REV.	DATE	DESCRIPTION
lbr			
PROJECT ENGR:			
CHECKED BY:			
ENG. MANAGER ajp			

PROJECT NAME	BLENDON & MIFFLIN TOWNSHIPS	DATE	02/14/95
LOCATION	FRANKLIN COUNTY, OHIO	CONTRACT NO.	RE5472
OWNER	OHIO DEPT. OF TRANS.	DRAWING NO.	12 OF 20
DRAWING COVERS	ELEVATION	SCALE	AS NOTED

FHWA REGION	STATE	PROJECT	
5	OHIO		

481
593

FRA-270-32.46

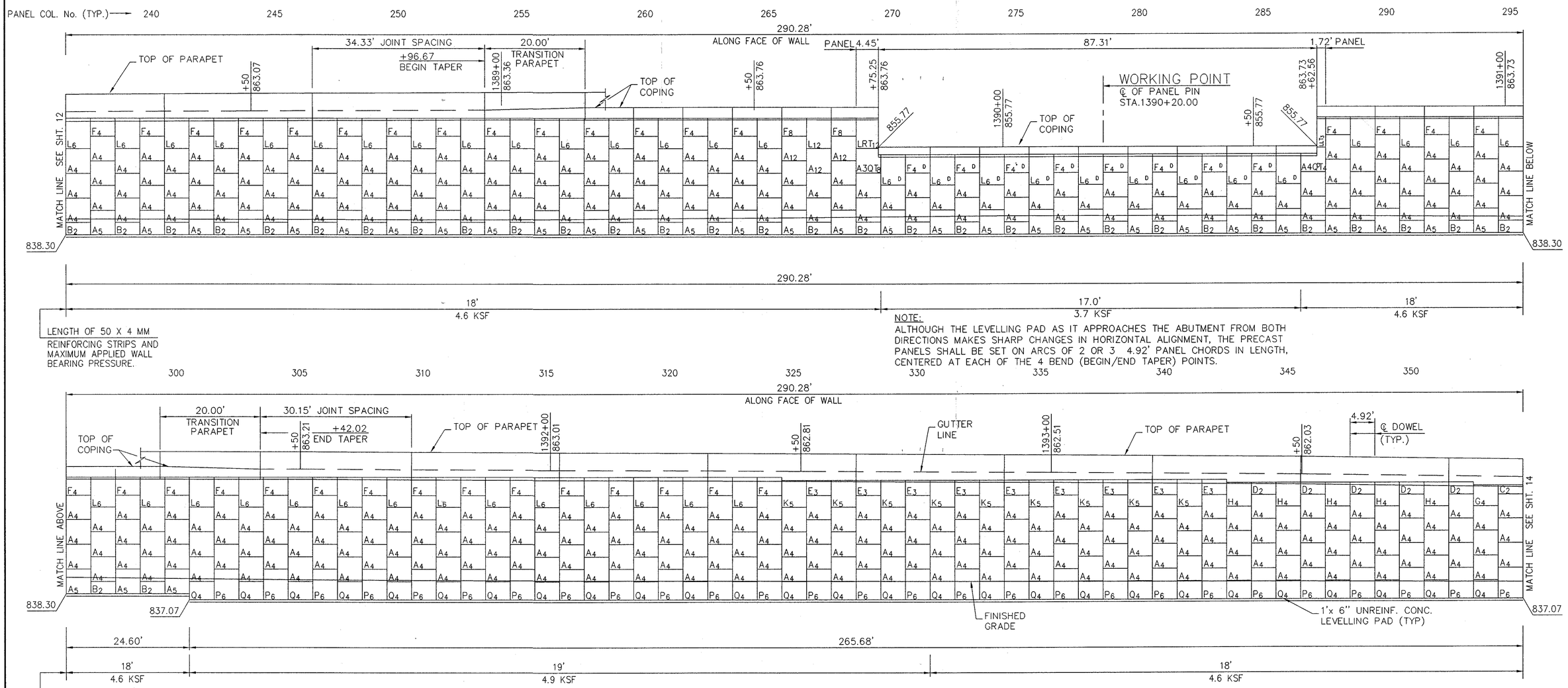

CERTIFIED WITH RESPECT TO INTERNAL STABILITY OF REINFORCED EARTH STRUCTURES ONLY.

NOTE:
ALTHOUGH THE LEVELLING PAD AS IT APPROACHES THE ABUTMENT FROM BOTH DIRECTIONS MAKES SHARP CHANGES IN HORIZONTAL ALIGNMENT, THE PRECAST PANELS SHALL BE SET ON ARCS OF 2 OR 3 4.92' PANEL CHORDS IN LENGTH, CENTERED AT EACH OF THE 4 BEND (BEGIN/END TAPER) POINTS.

ELEVATION – FRONT FACE WALL No.4

SCALE : 1" = 10'

This drawing contains information proprietary to The Reinforced Earth Company, and is being furnished for the use of the State of Ohio Dept. of Transporatation only in connection with this project, and the information contained is not to be transmitted to any other organization unless specifically authorized in writing by The Reinforced Earth Company. The Reinforced Earth Company is exclusive licensee in the United States under patents issued to Henri Vidal, and the furnishing of this drawing does not constitute an expressed or implied license under the Vidal patents.

The design contained on these drawings is based on information provided by the owner. On the basis of this information, The Reinforced Earth Company has designed, and is responsible for the internal stability of the structure only. External stability, including foundation and slope stability, is the responsibility of the owner.

The Reinforced Earth Company
reinforced earth®
8614 Westwood Center Drive
Suite 1100
Vienna, Virginia 22182
(703) 821-1175
FAX--(703) 821-1815

"REINFORCED EARTH" is the registered trademark of The Reinforced Earth Company.

DESIGNED BY:	REV.	DATE	DESCRIPTION
lbr			
PROJECT ENGR:			
CHECKED BY:			
ENG. MANAGER ajp			

PROJECT NAME	BLENDON & MIFFLIN TOWNSHIPS	DATE 02/14/95
LOCATION	FRANKLIN COUNTY, OHIO	CONTRACT NO. RE5472
OWNER	OHIO DEPT. OF TRANS.	DRAWING NO. 13 OF 20
DRAWING COVERS	ELEVATION	SCALE AS NOTED

FHWA REGION	STATE	PROJECT	
5	OHIO		

482
593

FRA-270-32.46

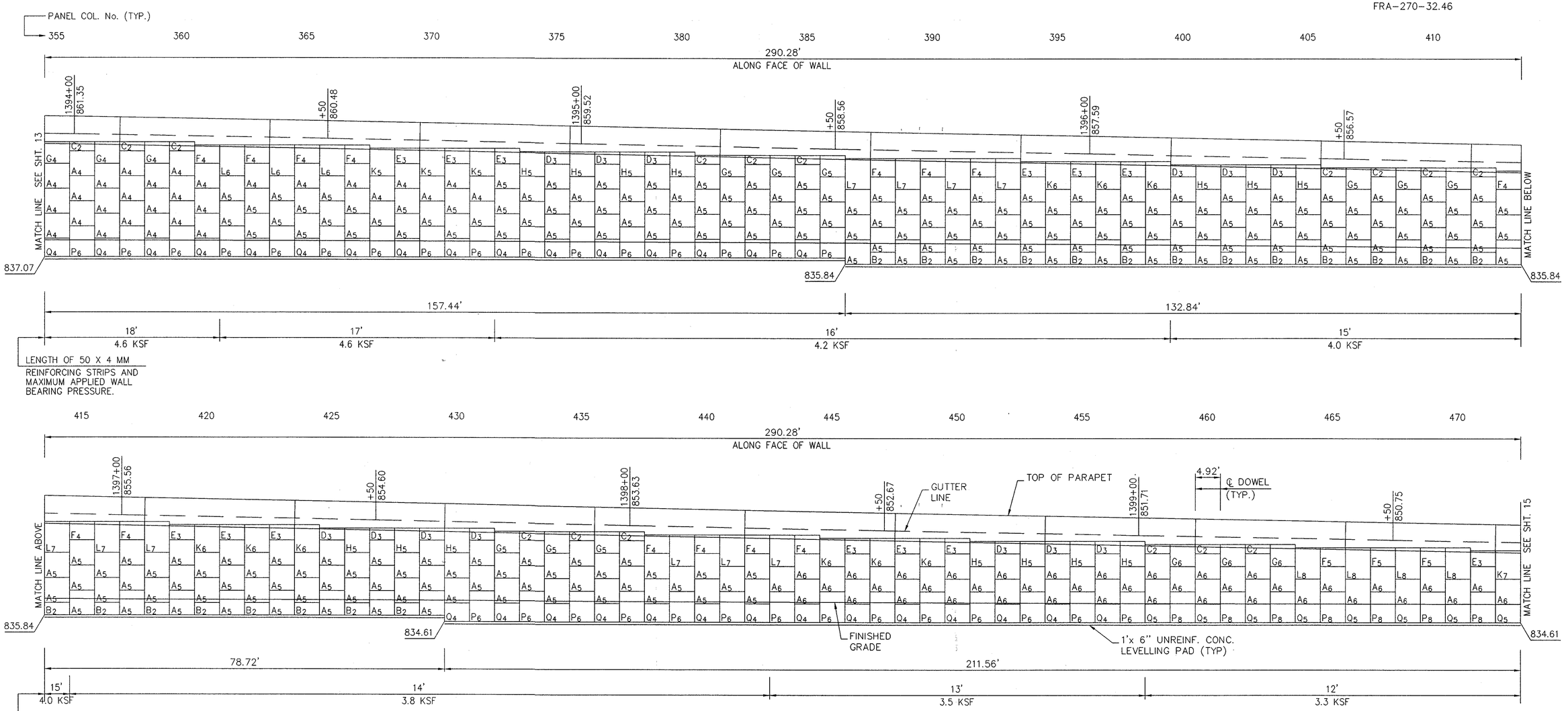

CERTIFIED WITH RESPECT TO INTERNAL STABILITY OF REINFORCED EARTH STRUCTURES ONLY.

ELEVATION – FRONT FACE WALL No.4

SCALE : 1" = 10'

This drawing contains information proprietary to The Reinforced Earth Company, and is being furnished for the use of the State of Ohio Dept. of Transporation only in connection with this project, and the information contained is not to be transmitted to any other organization unless specifically authorized in writing by The Reinforced Earth Company. The Reinforced Earth Company is exclusive licensee in the United States under patents issued to Henri Vidal, and the furnishing of this drawing does not constitute an expressed or implied license under the Vidal patents.

The design contained on these drawings is based on information provided by the owner. On the basis of this information, The Reinforced Earth Company has designed, and is responsible for the internal stability of the structure only. External stability, including foundation and slope stability, is the responsibility of the owner.

The Reinforced Earth Company
reinforced earth®
8614 Westwood Center Drive
Suite 1100
Vienna, Virginia 22182
(703) 821-1175
FAX--(703) 821-1815

"REINFORCED EARTH" is the registered trademark of The Reinforced Earth Company.

DESIGNED BY:	REV.	DATE	DESCRIPTION
lbr			
PROJECT ENGR:			
CHECKED BY:			
ENG. MANAGER ajp			

PROJECT NAME	BLENDON & MIFFLIN TOWNSHIPS
LOCATION	FRANKLIN COUNTY, OHIO
OWNER	OHIO DEPT. OF TRANS.
DRAWING COVERS	ELEVATION
DATE	02/14/95
CONTRACT NO.	RE5472
DRAWING NO.	14 OF 20
SCALE	AS NOTED

FHWA REGION	STATE	PROJECT	
5	OHIO		

FRA-270-32.46

483
593

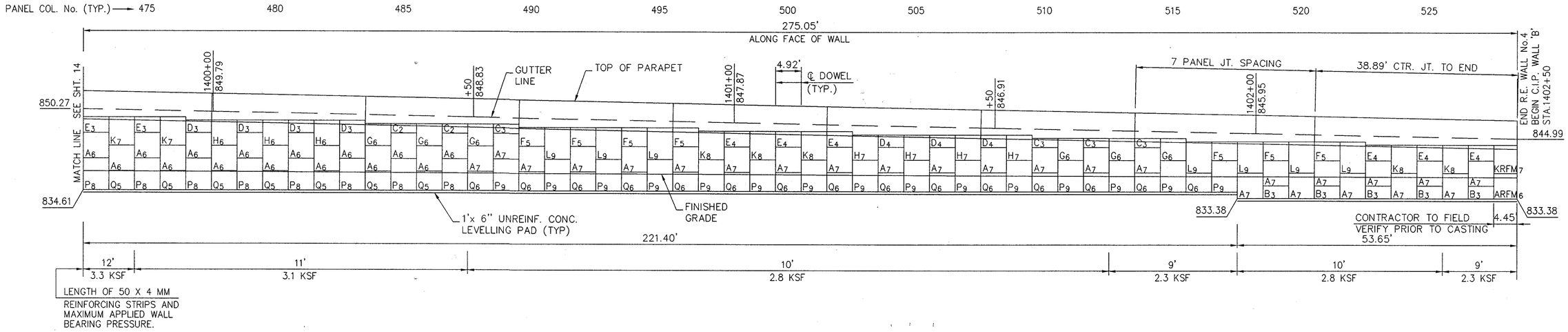

NOTES: LENGTH OF LEVELLING PAD IS BASED ON INDIVIDUAL PANEL WIDTHS, ℄ OF PIN TO ℄ OF PIN. USE THE STEP DETAIL ON SHEET No. 18 TO DETERMINE THE ACTUAL LEVELLING PAD STEP LOCATION.

FOR TYPICAL WALL SECTIONS SEE SHEET No.18.
FOR PRECAST CORNER ELEMENT DET. SEE SHT. No.18.

KEY: PANEL NAME — H (4) (0) — COPING DOWELS; NO. OF TIE STRIPS

WALL 4 PANEL SURFACE AREA = 47,774 S.F.

WALL 4 SELECT BACKFILL VOL. = 27,790 C.Y.

CERTIFIED WITH RESPECT TO INTERNAL STABILITY OF REINFORCED EARTH STRUCTURES ONLY.

ELEVATION – FRONT FACE WALL No.4

SCALE : 1" = 10'

This drawing contains information proprietary to The Reinforced Earth Company, and is being furnished for the use of the State of Ohio Dept. of Transporatation only in connection with this project, and the information contained is not to be transmitted to any other organization unless specifically authorized in writing by The Reinforced Earth Company. The Reinforced Earth Company is exclusive licensee in the United States under patents issued to Henri Vidal, and the furnishing of this drawing does not constitute an expressed or implied license under the Vidal patents.

The design contained on these drawings is based on information provided by the owner. On the basis of this information, The Reinforced Earth Company has designed, and is responsible for the internal stability of the structure only. External stability, including foundation and slope stability, is the responsibility of the owner.

The Reinforced Earth Company
reinforced earth®
8614 Westwood Center Drive
Suite 1100
Vienna, Virginia 22182
(703) 821-1175
FAX--(703) 821-1815

"REINFORCED EARTH" is the registered trademark of The Reinforced Earth Company.

DESIGNED BY:	REV.	DATE	DESCRIPTION	PROJECT NAME	BLENDON & MIFFLIN TOWNSHIPS	DATE 02/14/95
lbr						
PROJECT ENGR:				LOCATION	FRANKLIN COUNTY, OHIO	CONTRACT NO. RE5472
CHECKED BY:				OWNER	OHIO DEPT. OF TRANS.	DRAWING NO. 15 OF 20
ENG. MANAGER ajp				DRAWING COVERS	ELEVATION	SCALE AS NOTED

FHWA REGION	STATE	PROJECT	
5	OHIO		

484
593

FRA-270-32.46

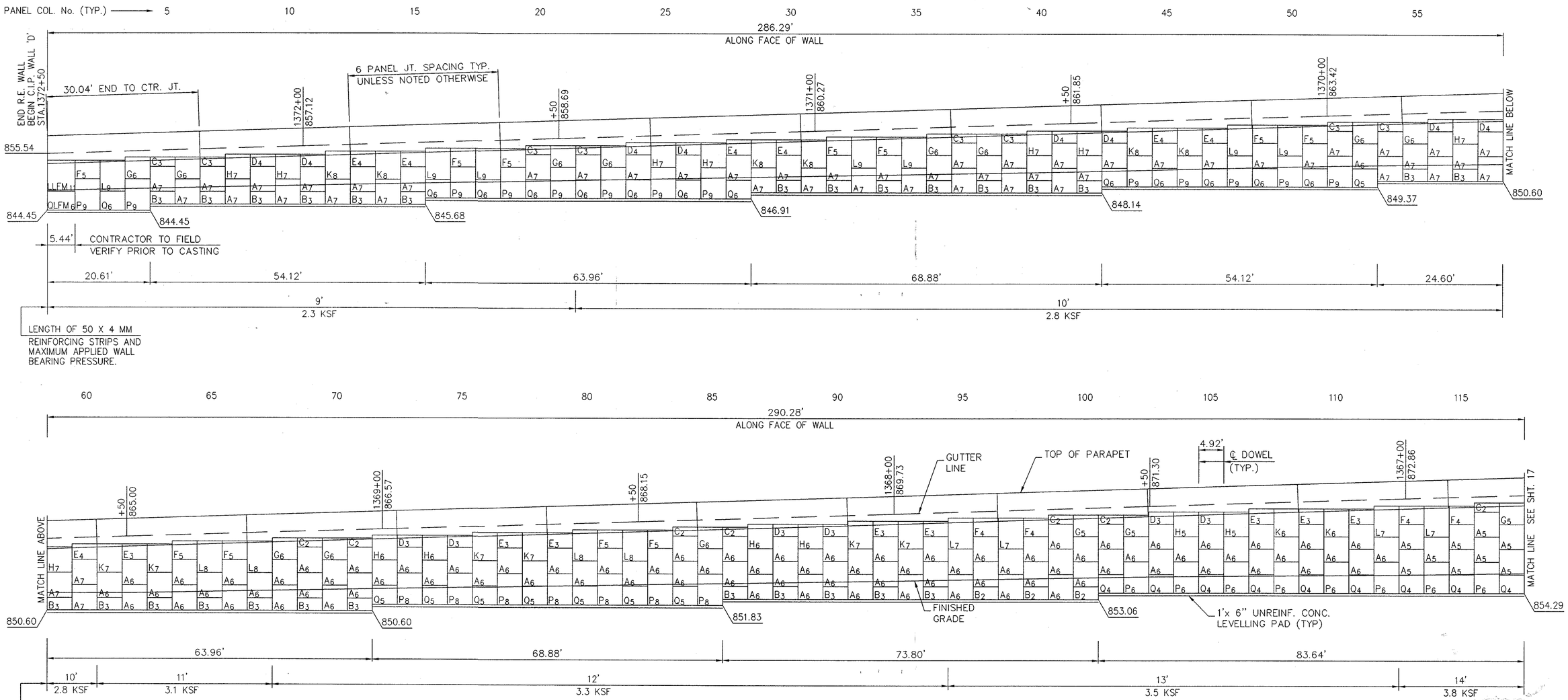

CERTIFIED WITH RESPECT TO INTERNAL STABILITY OF REINFORCED EARTH STRUCTURES ONLY.

ELEVATION – FRONT FACE WALL No.5

SCALE : 1" = 10'

This drawing contains information proprietary to The Reinforced Earth Company, and is being furnished for the use of the State of Ohio Dept. of Transporatation only in connection with this project, and the information contained is not to be transmitted to any other organization unless specifically authorized in writing by The Reinforced Earth Company. The Reinforced Earth Company is exclusive licensee in the United States under patents issued to Henri Vidal, and the furnishing of this drawing does not constitute an expressed or implied license under the Vidal patents.

The design contained on these drawings is based on information provided by the owner. On the basis of this information, The Reinforced Earth Company has designed, and is responsible for the internal stability of the structure only. External stability, including foundation and slope stability, is the responsibility of the owner.

The Reinforced Earth Company
reinforced earth®
8614 Westwood Center Drive
Suite 1100
Vienna, Virginia 22182
(703) 821-1175
FAX--(703) 821-1815

"REINFORCED EARTH" is the registered trademark of The Reinforced Earth Company.

DESIGNED BY:	REV.	DATE	DESCRIPTION
lbr			
PROJECT ENGR:			
CHECKED BY:			
ENG. MANAGER			
ojp			

PROJECT NAME	BLENDON & MIFFLIN TOWNSHIPS
LOCATION	FRANKLIN COUNTY, OHIO
OWNER	OHIO DEPT. OF TRANS.
DRAWING COVERS	ELEVATION
DATE	02/14/95
CONTRACT NO.	RE5472
DRAWING NO.	16 OF 20
SCALE	AS NOTED

FHWA REGION	STATE	PROJECT	
5	OHIO		

485
593

FRA-270-32.46

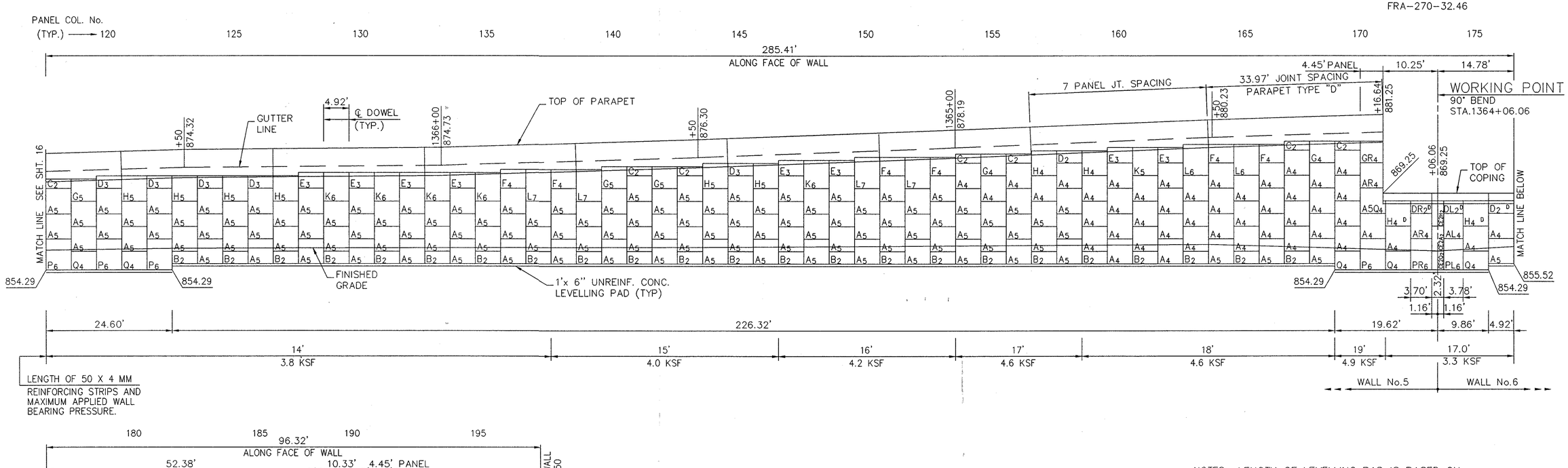

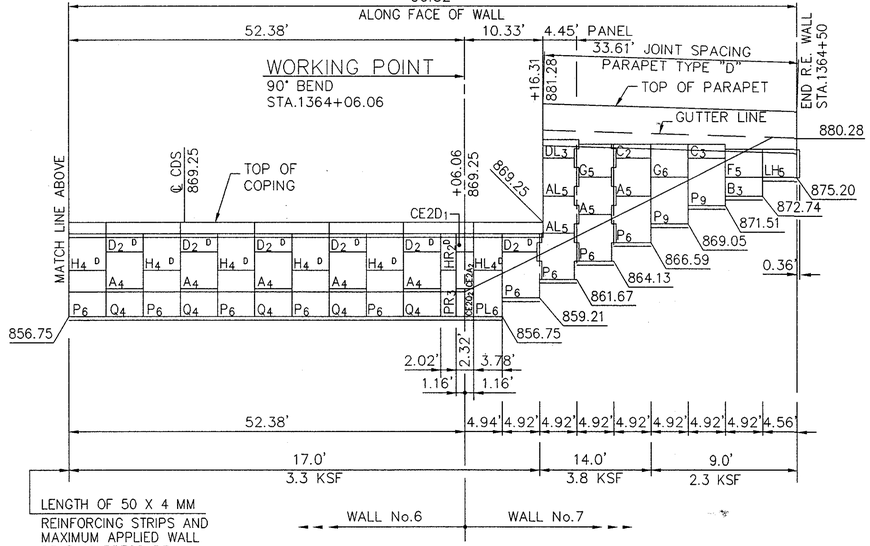

NOTES: LENGTH OF LEVELLING PAD IS BASED ON INDIVIDUAL PANEL WIDTHS, ℄ OF PIN TO ℄ OF PIN. USE THE STEP DETAIL ON SHEET No. 18 TO DETERMINE THE ACTUAL LEVELLING PAD STEP LOCATION.

FOR TYPICAL WALL SECTIONS SEE SHEET No.18.
FOR PRECAST CORNER ELEMENT DET. SEE SHT. No.18.

KEY: PANEL NAME — H (4) — D — COPING DOWELS; NO. OF TIE STRIPS

WALL 5, 6 & 7 PANEL SURFACE AREA = 14,053 S.F.

WALL 5, 6 & 7 SELECT BACKFILL VOL. = 7,000 C.Y.

CERTIFIED WITH RESPECT TO INTERNAL STABILITY OF REINFORCED EARTH STRUCTURES ONLY.

UNFOLDED ELEVATION – FRONT FACE WALLS No. 5, 6 & 7

SCALE : 1" = 10'

This drawing contains information proprietary to The Reinforced Earth Company, and is being furnished for the use of the State of Ohio Dept. of Transporatation only in connection with this project, and the information contained is not to be transmitted to any other organization unless specifically authorized in writing by The Reinforced Earth Company. The Reinforced Earth Company is exclusive licensee in the United States under patents issued to Henri Vidal, and the furnishing of this drawing does not constitute an expressed or implied license under the Vidal patents.

The design contained on these drawings is based on information provided by the owner. On the basis of this information, The Reinforced Earth Company has designed, and is responsible for the internal stability of the structure only. External stability, including foundation and slope stability, is the responsibility of the owner.

The Reinforced Earth Company
reinforced earth®
8614 Westwood Center Drive
Suite 1100
Vienna, Virginia 22182
(703) 821-1175
FAX--(703) 821-1815

"REINFORCED EARTH" is the registered trademark of The Reinforced Earth Company.

DESIGNED BY:	REV.	DATE	DESCRIPTION
lbr			
PROJECT ENGR:			
CHECKED BY:			
ENG. MANAGER ajp			

PROJECT NAME	BLENDON & MIFFLIN TOWNSHIPS	DATE	02/14/95
LOCATION	FRANKLIN COUNTY, OHIO	CONTRACT NO.	RE5472
OWNER	OHIO DEPT. OF TRANS.	DRAWING NO.	17 OF 20
DRAWING COVERS	ELEVATION	SCALE	AS NOTED

FHWA REGION	STATE	PROJECT	
5	OHIO		

FRA-270-32.46

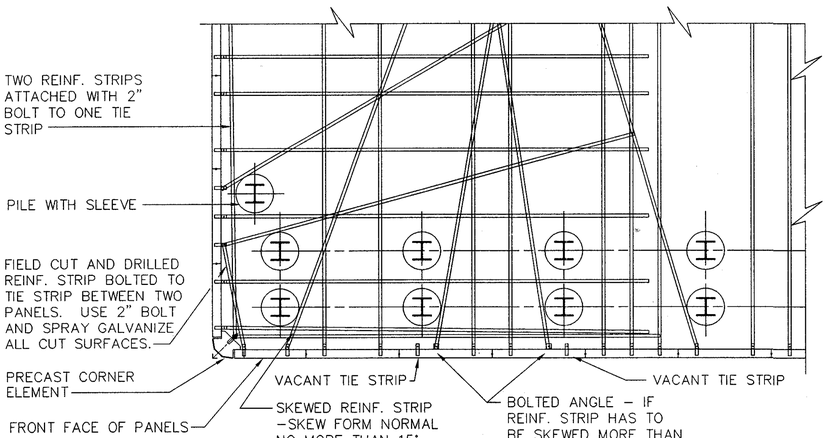

PARTIAL PLAN – REINF. STRIP LAYOUT AT ABUTMENT

SCALE: 1/4" = 1'-0"

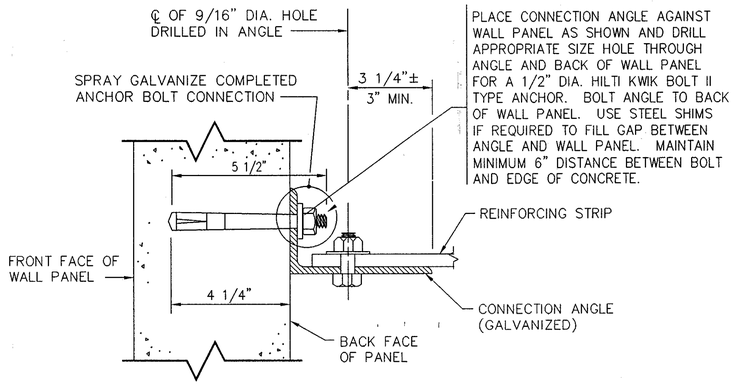

EXPANSION ANCHOR DETAIL

N.T.S.

THIS DETAIL HAS BEEN PROVIDED ON THESE PLANS IN THE EVENT AN INTERFERENCE PROBLEM OCCURS BETWEEN REINF. STRIPS AND ABUTMENT PILES. USING THIS BOLTED ANGLE A REINFORCING STRIP MAY BE SHIFTED FROM ITS ORIGINAL TIE STRIP LOCATION, LEAVING THAT TIE STRIP VACATE. BECAUSE THE QUANTITY OF ANGLES WITH BOLTS CAN ONLY BE APPROXIMATE; THE CONTRACTOR SHOULD FIELD DETERMINE AS SOON AS POSSIBLE A MORE ACCURATE QUANTITY AND REQUEST FROM THE REINFORCED EARTH COMPANY PROJECT MANAGER ADDITION ANGLES WITH BOLTS IF NECESSARY.

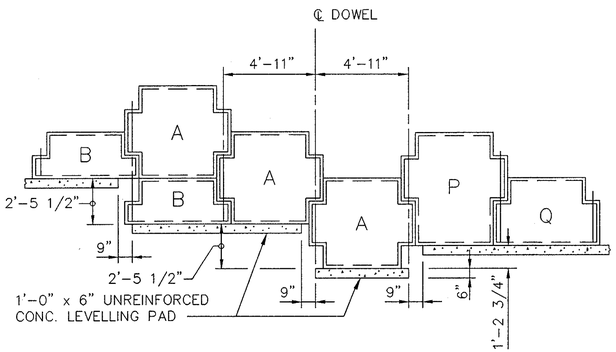

TYPICAL LEVELLING PAD STEP DETAIL

SCALE: 1/4" = 1'-0"

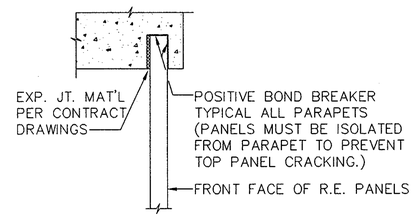

PARTAIL C.I.P. PARAPET SECTION

SCALE: 1" = 1'-0"

(SEE CONTRACT DRAWINGS FOR FULL PARAPET SECTIONS)

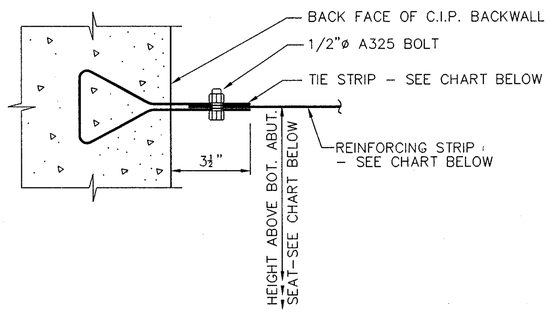

TIE STRIP PLACEMENT DETAIL IN ABUTMENT BACKWALL

NOT TO SCALE

WALL	HEIGHT BOT.	HEIGHT TOP	#REINF. STRIPS BOT.	#REINF. STRIPS TOP	STRIP LENGTH FEET	STRIP SPACING (CTR.) BOT. LEVEL	STRIP SPACING (CTR.) TOP LEVEL
2	3'-0"	4'-6"	40	40	24	1'-7 5/8"	1'-7 5/8"
4	3'-0"	4'-6"	40	55	24	2'-1 3/4"	1'-6 3/4"
6	3'-0"	4'-6"	35	40	24	1'-10 1/4"	1'-7 1/2"

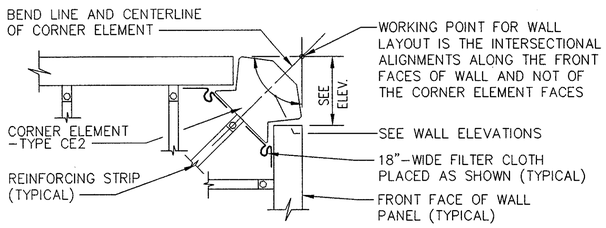

CORNER ELEMENT DETAIL

SCALE: 3/4" = 1'-0"

NOTE:

FOR TYPICAL WALL SECTIONS, FOR PARAPET & COPING DETAILS, SEE CONTRACT DRAWINGS.

CERTIFIED WITH RESPECT TO INTERNAL STABILITY OF REINFORCED EARTH STRUCTURES ONLY.

This drawing contains information proprietary to The Reinforced Earth Company, and is being furnished for the use of the State of Ohio Dept. of Transporatation only in connection with this project, and the information contained is not to be transmitted to any other organization unless specifically authorized in writing by The Reinforced Earth Company. The Reinforced Earth Company is exclusive licensee in the United States under patents issued to Henri Vidal, and the furnishing of this drawing does not constitute an expressed or implied license under the Vidal patents.

The design contained on these drawings is based on information provided by the owner. On the basis of this information, The Reinforced Earth Company has designed, and is responsible for the internal stability of the structure only. External stability, including foundation and slope stability, is the responsibility of the owner.

The Reinforced Earth Company
reinforced earth®
8614 Westwood Center Drive
Suite 1100
Vienna, Virginia 22182
(703) 821-1175
FAX--(703) 821-1815

"REINFORCED EARTH" is the registered trademark of The Reinforced Earth Company.

DESIGNED BY:	REV.	DATE	DESCRIPTION
lbr			
PROJECT ENGR:			
CHECKED BY:			
ENG. MANAGER ajp			

PROJECT NAME	BLENDON & MIFFLIN TOWNSHIPS
LOCATION	FRANKLIN COUNTY, OHIO
OWNER	OHIO DEPT. OF TRANS.
DRAWING COVERS	TYPICAL SECTION & DETAILS

DATE	02/14/95
CONTRACT NO.	RE5472
DRAWING NO.	18 OF 20
SCALE	AS NOTED

FHWA REGION	STATE	PROJECT	
5	OHIO		

487
593

FRA-270-32.46

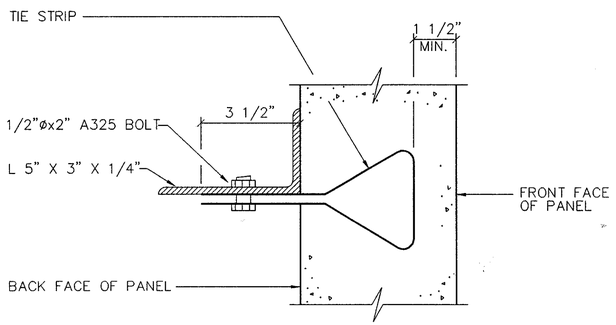

CONNECTION DETAIL
ANGLE BOLTED TO TIE STRIP (1)
SCALE: 3/8" = 1"

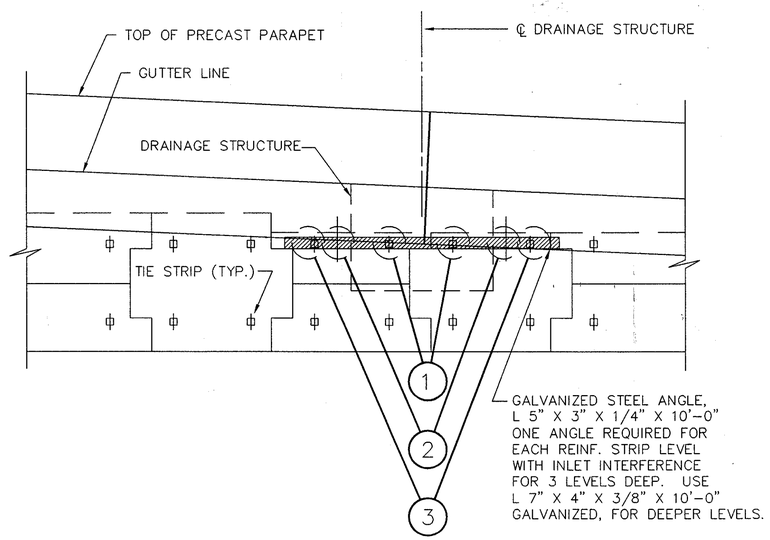

PARTIAL ELEVATION
SCALE: 1/2" = 1'-0"

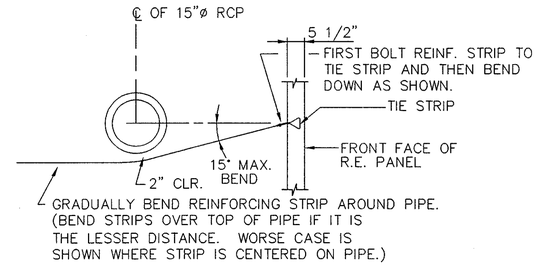

TYPICAL STRIP BENDING DETAIL AT 15"ø & 18"ø PIPES
SCALE: 1/2" = 1'-0"

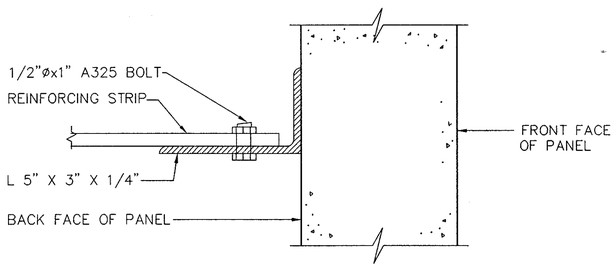

CONNECTION DETAIL
SHIFTED REINF. STRIP BOLTED TO ANGLE (2)
SCALE: 3/8" = 1"

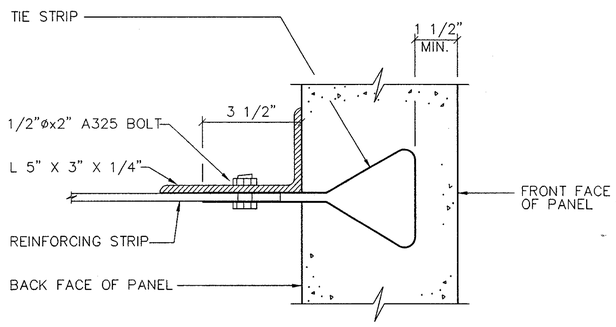

CONNECTION DETAIL
ANGLE BOLTED TO TIE STRIP WITH REINF. STRIP (3)
SCALE: 3/8" = 1"

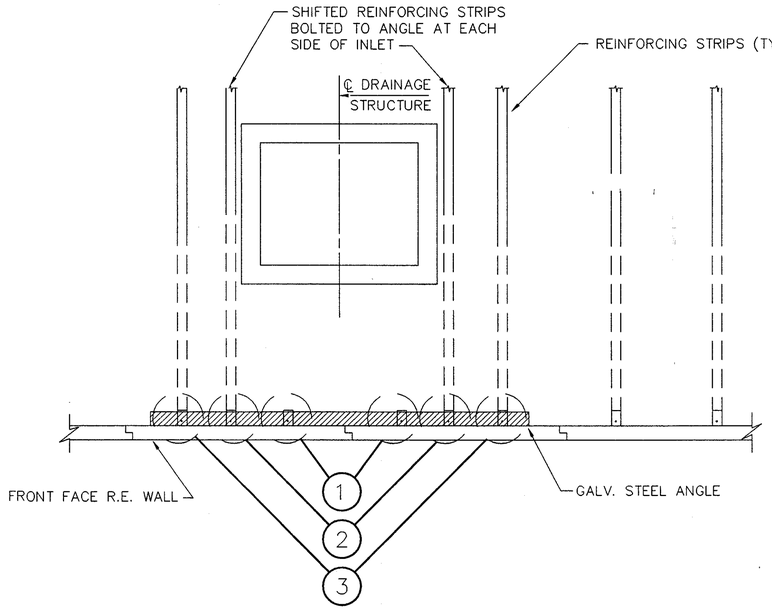

PARTIAL PLAN
SCALE: 1/2" = 1'-0"

CERTIFIED WITH RESPECT TO INTERNAL STABILITY OF REINFORCED EARTH STRUCTURES ONLY.

This drawing contains information proprietary to The Reinforced Earth Company, and is being furnished for the use of the State of Ohio Dept. of Transporatation only in connection with this project, and the information contained is not to be transmitted to any other organization unless specifically authorized in writing by The Reinforced Earth Company. The Reinforced Earth Company is exclusive licensee in the United States under patents issued to Henri Vidal, and the furnishing of this drawing does not constitute an expressed or implied license under the Vidal patents.

The design contained on these drawings is based on information provided by the owner. On the basis of this information, The Reinforced Earth Company has designed, and is responsible for the internal stability of the structure only. External stability, including foundation and slope stability, is the responsibility of the owner.

The Reinforced Earth Company
reinforced earth®
8614 Westwood Center Drive
Suite 1100
Vienna, Virginia 22182
(703) 821-1175
FAX--(703) 821-1815

"REINFORCED EARTH" is the registered trademark of The Reinforced Earth Company.

DESIGNED BY:	REV.	DATE	DESCRIPTION	PROJECT NAME	BLENDON & MIFFLIN TOWNSHIPS	DATE 02/14/95
lbr						
PROJECT ENGR:				LOCATION	FRANKLIN COUNTY, OHIO	CONTRACT NO. RE5472
CHECKED BY:				OWNER	OHIO DEPT. OF TRANS.	DRAWING NO. 19 OF 20
ENG. MANAGER ajp				DRAWING COVERS	DETAILS @ DRAINAGE STRUCTURES	SCALE AS NOTED

FHWA REGION	STATE	PROJECT	
5	OHIO		

FRA-270-32.46

488
593

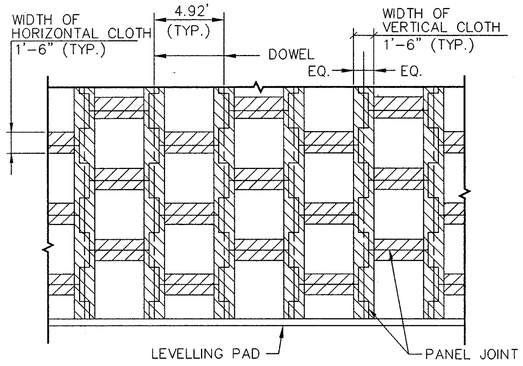

NOTE:
STRIPS OF FILTER CLOTH SHALL BE PLACED ON BACK FACE OF PANEL, OVER PANEL JOINTS. FILTER CLOTH SHALL BE ADHERED TO BACK FACE OF PANELS USING AN ADHESIVE COMPOUND SUPPLIED BY THE REINFORCED EARTH COMPANY.

FILTER CLOTH DETAIL
PARTIAL ELEVATION – BACK FACE
SCALE: 3/16" = 1'-0"

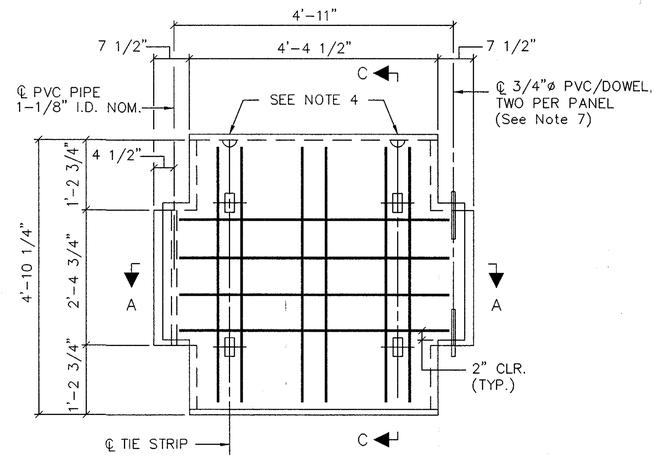

PANEL TYPE "A"
WITH R6 REINFORCEMENT
FRONT VIEW
SCALE: 3/4" = 1'-0"

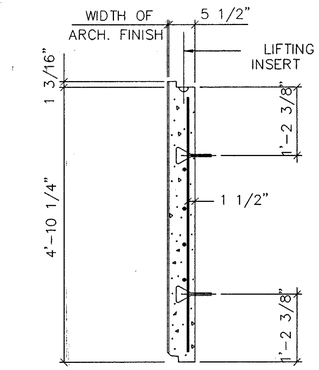

SECTION C–C
SCALE: 3/4" = 1'-0"

PANEL THICKNESS	REINFORCEMENT DESIGNATION	PANEL REINFORCEMENT	MAXIMUM ALLOWABLE HORIZONTAL STRESS AT FACING (KSF)
5 1/2"	R6	6–#3 VERTICAL 4–#4 HORIZONTAL	1.60
	R7	6–#4 VERTICAL 4–#6 HORIZONTAL	2.55

NOTES:

1. REINFORCING STEEL TO BE ASTM A615 GRADE 60.
2. 3/8" x 3/8" CHAMFER SHALL BE PROVIDED ON ALL EXPOSED EDGES (FRONT FACE ONLY).
3. ALL PANEL TYPES AND OTHER RELATED ELEMENTS WILL BE DETAILED ON SHOP DRAWINGS.
4. ALL PANELS SHALL HAVE TWO LIFTING INSERTS OF ONE TON CAPACITY EACH.
5. PANEL DESIGN THICKNESS IS 5 1/2". THICKNESS OF CONCRETE MUST INCREASE TO ACCOMODATE ANY ARCHITECTURAL SURFACE FINISH THAT MAY BE SPECIFIED.
6. ACTUAL PANEL REINFORCEMENT FOR ALL PANEL TYPES ON THIS PROJECT IS DESIGNATED ABOVE. R6 ILLUSTRATED FOR INFORMATION ONLY.
7. EACH 3/4" ø PVC DOWEL SHALL HAVE A TYP. LENGTH OF 10".

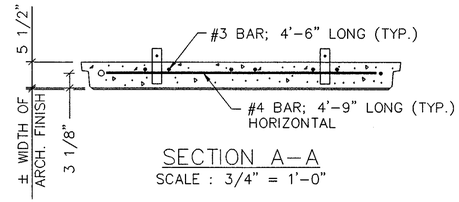

SECTION A–A
SCALE : 3/4" = 1'-0"

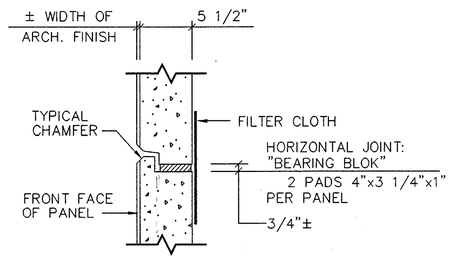

SECTION 1–1

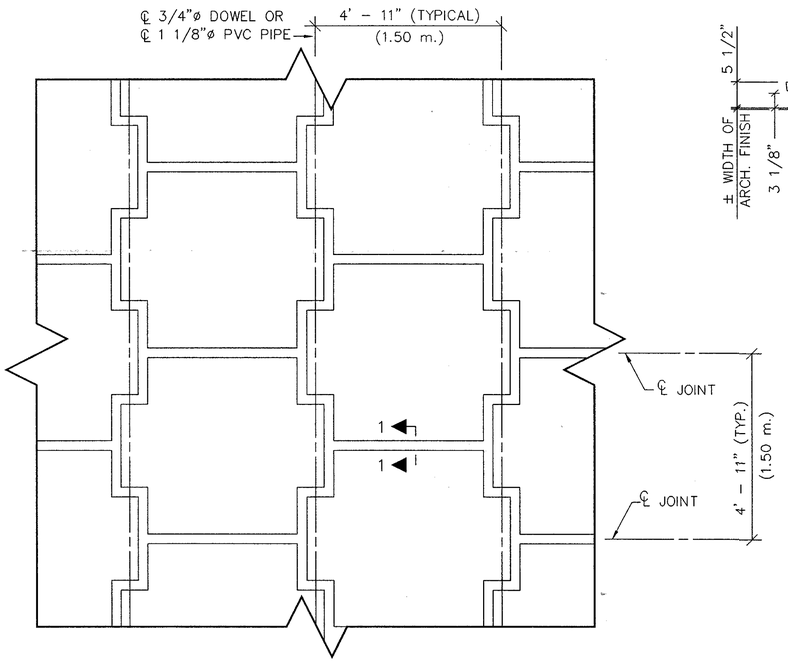

TYPICAL PANEL LAYOUT
PARTIAL ELEVATION – FRONT FACE
SCALE: 1/2" = 1'-0"

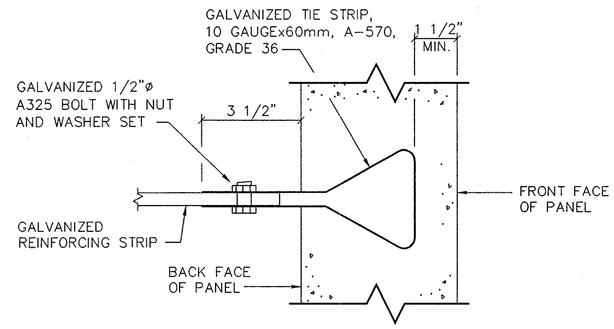

CONNECTION DETAIL
NO SCALE

CERTIFIED WITH RESPECT TO INTERNAL STABILITY OF REINFORCED EARTH STRUCTURES ONLY.

This drawing contains information proprietary to The Reinforced Earth Company, and is being furnished for the use of the State of Ohio Dept. of Transporatation only in connection with this project, and the information contained is not to be transmitted to any other organization unless specifically authorized in writing by The Reinforced Earth Company. The Reinforced Earth Company is exclusive licensee in the United States under patents issued to Henri Vidal, and the furnishing of this drawing does not constitute an expressed or implied license under the Vidal patents.

The design contained on these drawings is based on information provided by the owner. On the basis of this information, The Reinforced Earth Company has designed, and is responsible for the internal stability of the structure only. External stability, including foundation and slope stability, is the responsibility of the owner.

The Reinforced Earth Company
reinforced earth®
8614 Westwood Center Drive
Suite 1100
Vienna, Virginia 22182
(703) 821-1175
FAX--(703) 821-1815

"REINFORCED EARTH" is the registered trademark of The Reinforced Earth Company.

DESIGNED BY:	REV.	DATE	DESCRIPTION	PROJECT NAME	BLENDON & MIFFLIN TOWNSHIPS	DATE 02/14/95
lbr				LOCATION	FRANKLIN COUNTY, OHIO	CONTRACT NO. RE5472
PROJECT ENGR:				OWNER	OHIO DEPT. OF TRANS.	DRAWING NO. 20 OF 20
CHECKED BY:				DRAWING COVERS	STANDARD PANEL DETAILS	SCALE AS NOTED
ENG. MANAGER ajp						

CALC BY DATE	FRANKLIN COUNTY FRA-270-32.46	OHIO F.H.W.A. REGION	489/593
CHKD BY DATE			

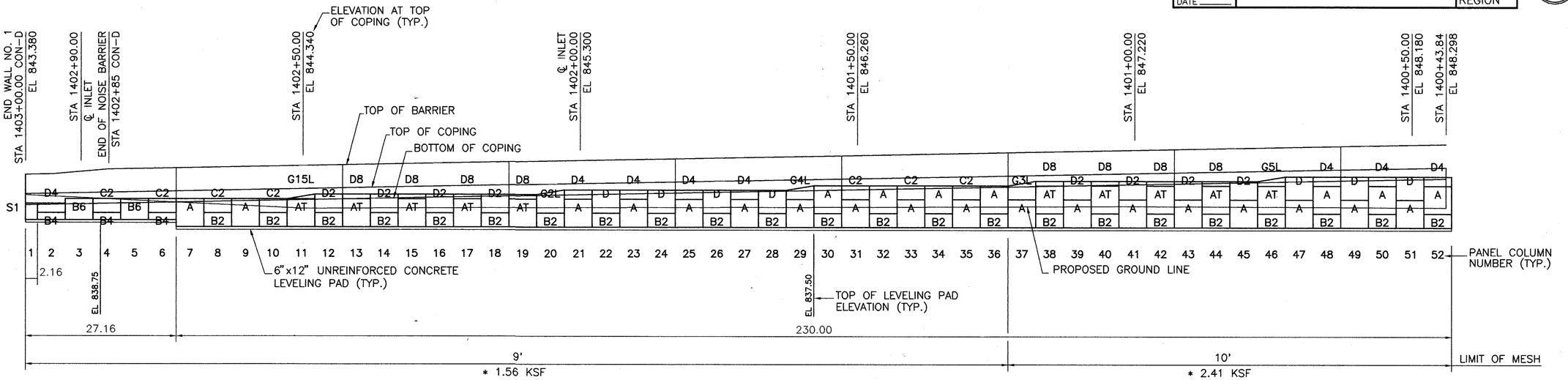

DEVELOPED ELEVATION WALL "NO.1" (FRONT FACE)

SCALE: 1"=10'-0"

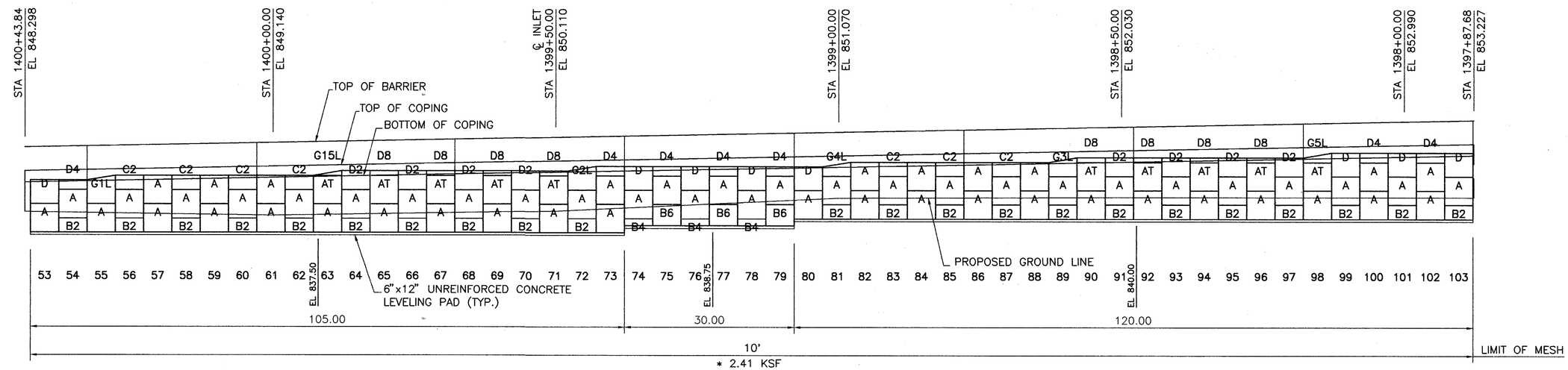

DEVELOPED ELEVATION WALL "NO.1" (FRONT FACE)

SCALE: 1"=10'-0"

* MAXIMUM FINAL BEARING PRESSURE

U.S. PATENT NUMBER 4,725,170

DESIGN OF ALL WALLS IS BASED ON THE ASSUMPTION THAT ALL MATERIALS, INCLUDING THE RETAINED EARTH BACKFILL AND METHODS OF CONSTRUCTION CONFORM TO THE SPECIFICATIONS FOR RETAINED EARTH WALLS.

THESE DRAWINGS ARE CERTIFIED WITH RESPECT TO INTERNAL STABILITY OF RETAINED EARTH STRUCTURES ONLY.

FABRICATOR:

REV. No.	DATE	DESCRIPTION	MADE BY

REVISION SCHEDULE

ODOT PROJECT No.

BRIDGE No. FRA-270-32.46

DATE	ISSUED FOR	PRINTS	SEPIAS

CONSULT. ENGR:

CONTRACTOR:

DRAWN BY LC	DATE 9-19-94	MATERIAL
CHK'D JN	DATE 9-19-94	DRAWING No.
TRACED	DATE	OF
APP'D	DATE	

NO.	DATE	REVISION	BY

DES	DRN	CHK
9-19-94 JN	9-19-94 LC	9-19-94 JN

VSL

Washington, DC office: 8008 HAUTE COURT SPRINGFIELD, VA 22150 Phone: 703/451-4300 Fax: 703/451-3862

Atlanta, GA / Campbell, CA / Dallas, TX / Denver, CO / Honolulu, HI / Los Angeles, CA / Miami, FL / Minneapolis, MN / Philadelphia, PA / Seattle, WA / Washington, DC

VSL Corporation ("VSL") owns all rights in this drawing, including but not limited to all copyright rights in all drawings, specifications and calculations in whatever form created. Reproduction of this sheet, in whole or in part, or the use of any information in this sheet or in the design thereof, is restricted to the use and purpose for which it was prepared and delivered by VSL. Any other use, including but not limited to reproduction, copying, alteration or disclosure to third parties, is strictly prohibited and VSL DISCLAIMS ANY LIABILITY therefore.

RETAINED EARTH

ELEVATION WALL NO. 1

BLENDON & MIFFLIN TOWNSHIPS

PID NO. 12510

FRANKLIN COUNTY, OH

JOB NO: OH-1844

SHEET: 1 OF 20

CALC BY ____ DATE ____	FRANKLIN COUNTY FRA-270-32.46	OHIO F.H.W.A. REGION
CHKD BY ____ DATE ____		

490
593

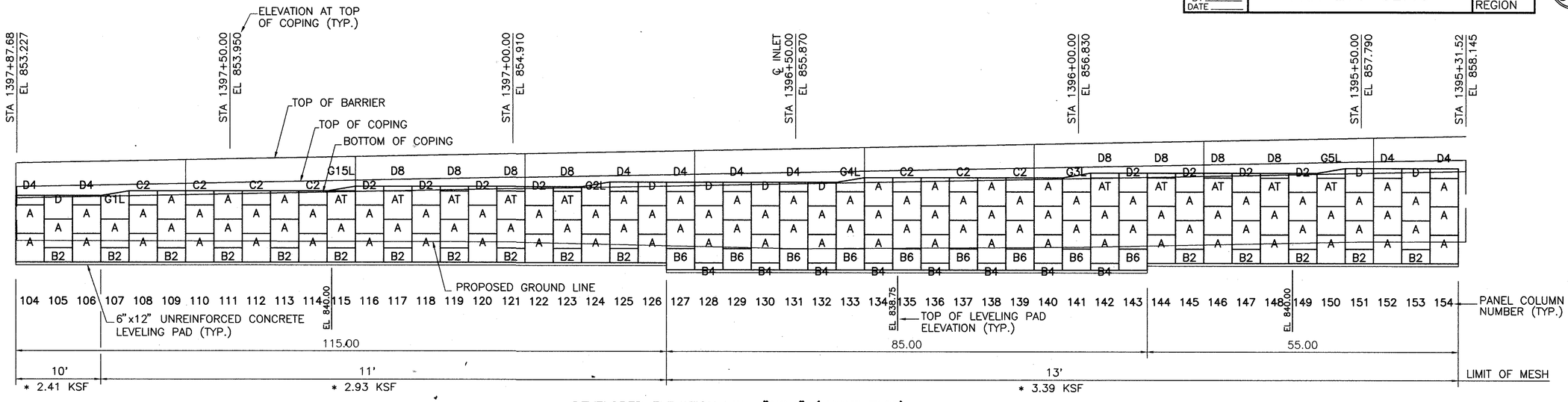

DEVELOPED ELEVATION WALL "NO.1" (FRONT FACE)
SCALE: 1"=10'-0"

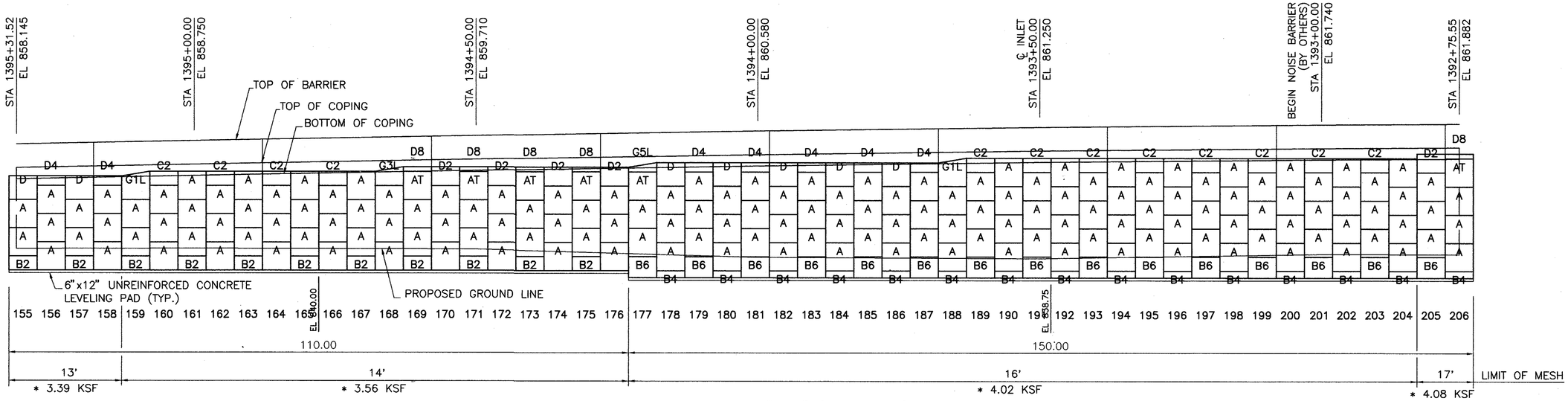

DEVELOPED ELEVATION WALL "NO.1" (FRONT FACE)
SCALE: 1"=10'-0"

* MAXIMUM FINAL BEARING PRESSURE

U.S. PATENT NUMBER 4,725,170

DESIGN OF ALL WALLS IS BASED ON THE ASSUMPTION THAT ALL MATERIALS, INCLUDING THE RETAINED EARTH BACKFILL AND METHODS OF CONSTRUCTION CONFORM TO THE SPECIFICATIONS FOR RETAINED EARTH WALLS.

THESE DRAWINGS ARE CERTIFIED WITH RESPECT TO INTERNAL STABILITY OF RETAINED EARTH STRUCTURES ONLY.

FABRICATOR:

REV. No.	DATE	DESCRIPTION	MADE BY

REVISION SCHEDULE

ODOT PROJECT No.

BRIDGE No. FRA-270-32.46

DATE	ISSUED FOR	PRINTS	SEPIAS

CONSULT. ENGR:

CONTRACTOR:

DRAWN BY LC	DATE 9-19-94	MATERIAL
CHK'D JN	DATE 9-19-94	DRAWING No.
TRACED	DATE	OF
APP'D	DATE	

NO.	DATE	REVISION	BY

DES	9-19-94	JN	
DRN	9-19-94	LC	
CHK	9-19-94	JN	

VSL
8008 HAUTE COURT
SPRINGFIELD, VA 22150
Phone: 703/451-4300
Fax: 703/451-0882
Washington, DC office:
Atlanta, GA / Campbell, CA / Dallas, TX / Denver, CO / Honolulu, HI / Los Angeles, CA / Miami, FL / Minneapolis, MN / Philadelphia, PA / Seattle, WA / Washington, DC

VSL Corporation ("VSL") claims a strict proprietary right in all drawings, specifications and other documents ("Information") set forth on this sheet. The use of such Information by any party for any purpose, or any reproduction thereof, is restricted to the terms of the agreement under which the Information was prepared and to the material (and/or service provided) described. Any use not strictly prohibited and VSL disclaims ANY LIABILITY therefore.

RETAINED EARTH
ELEVATION WALL NO. 1

BLENDON & MIFFLIN TOWNSHIPS
PID NO. 12510
FRANKLIN COUNTY, OH

JOB NO: OH-1844

SHEET: 2 OF 20

CALC BY ____ DATE ____	FRANKLIN COUNTY FRA-270-32.46	OHIO F.H.W.A. REGION	491/593
CHKD BY ____ DATE ____			

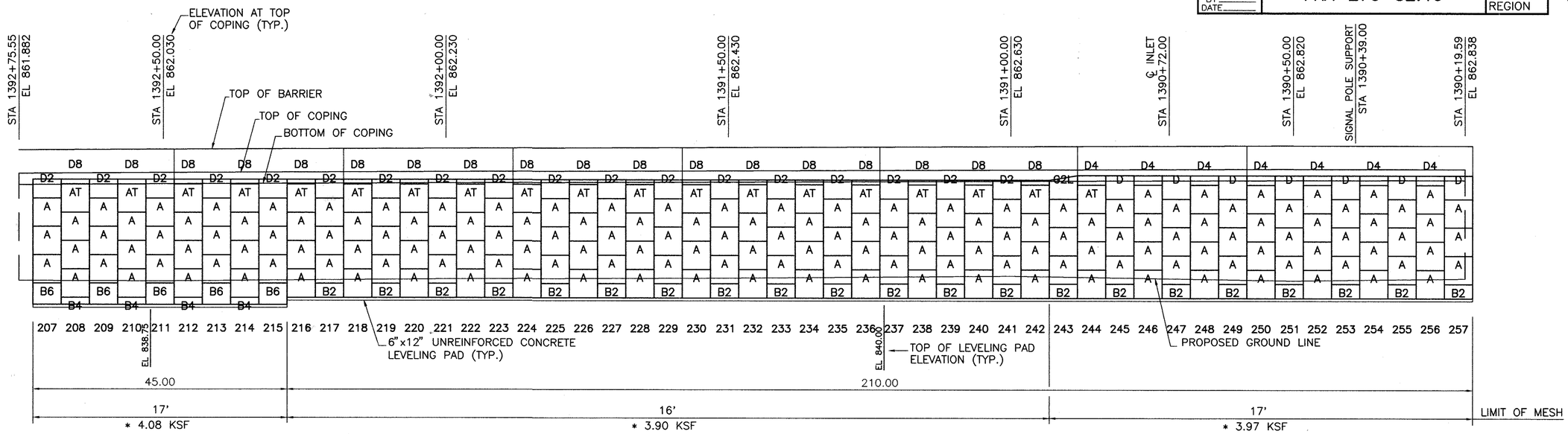

DEVELOPED ELEVATION WALL "NO.1" (FRONT FACE)
SCALE: 1"=10'-0"

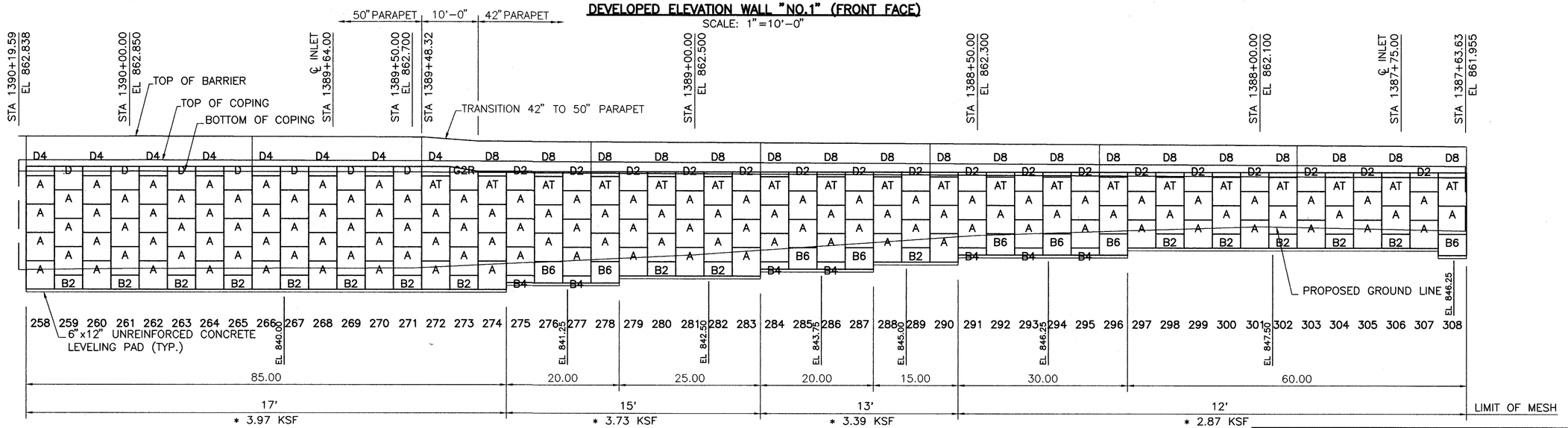

DEVELOPED ELEVATION WALL "NO.1" (FRONT FACE)
SCALE: 1"=10'-0"

* MAXIMUM FINAL BEARING PRESSURE

U.S. PATENT NUMBER 4,725,170

DESIGN OF ALL WALLS IS BASED ON THE ASSUMPTION THAT ALL MATERIALS, INCLUDING THE RETAINED EARTH BACKFILL AND METHODS OF CONSTRUCTION CONFORM TO THE SPECIFICATIONS FOR RETAINED EARTH WALLS.

THESE DRAWINGS ARE CERTIFIED WITH RESPECT TO INTERNAL STABILITY OF RETAINED EARTH STRUCTURES ONLY.

FABRICATOR:

REV. No.	DATE	DESCRIPTION	MADE BY

REVISION SCHEDULE

ODOT PROJECT No.

BRIDGE No. FRA-270-32.46

DATE	ISSUED FOR	PRINTS	SEPIAS

CONSULT. ENGR:

CONTRACTOR:

DRAWN BY LC	DATE 9-19-94	MATERIAL
CHK'D JN	DATE 9-19-94	DRAWING No.
TRACED	DATE	OF
APP'D	DATE	

NO.	DATE	REVISION	BY

DES	9-19-94	JN
DRN	9-19-94	LC
CHK	9-19-94	JN

VSL

Washington, DC office: 8006 HAUTE COURT SPRINGFIELD, VA 22150 Phone: 703/451-4300 Fax: 703/451-0862

Atlanta, GA / Campbell, CA / Dallas, TX / Denver, CO / Honolulu, HI / Los Angeles, CA / Miami, FL / Minneapolis, MN / Philadelphia, PA / Seattle, WA / Washington, DC

VSL Corporation ("VSL") claims a strict proprietary right in all drawings, specifications and calculations ("Information") set forth on this sheet. The use of such information in whole or in part, or any reproduction thereof, is restricted to the site for which it was prepared and to the material and/or service provided by VSL. Any other use is strictly prohibited and VSL DISCLAIMES ANY LIABILITY therefore.

RETAINED EARTH
ELEVATION WALL NO. 1

BLENDON & MIFFLIN TOWNSHIPS
PID NO. 12510
FRANKLIN COUNTY, OH

JOB NO: OH-1844

SHEET: 3 OF 20

CALC BY / DATE	FRANKLIN COUNTY FRA–270–32.46	OHIO F.H.W.A. REGION
CHKD BY / DATE		

492
593

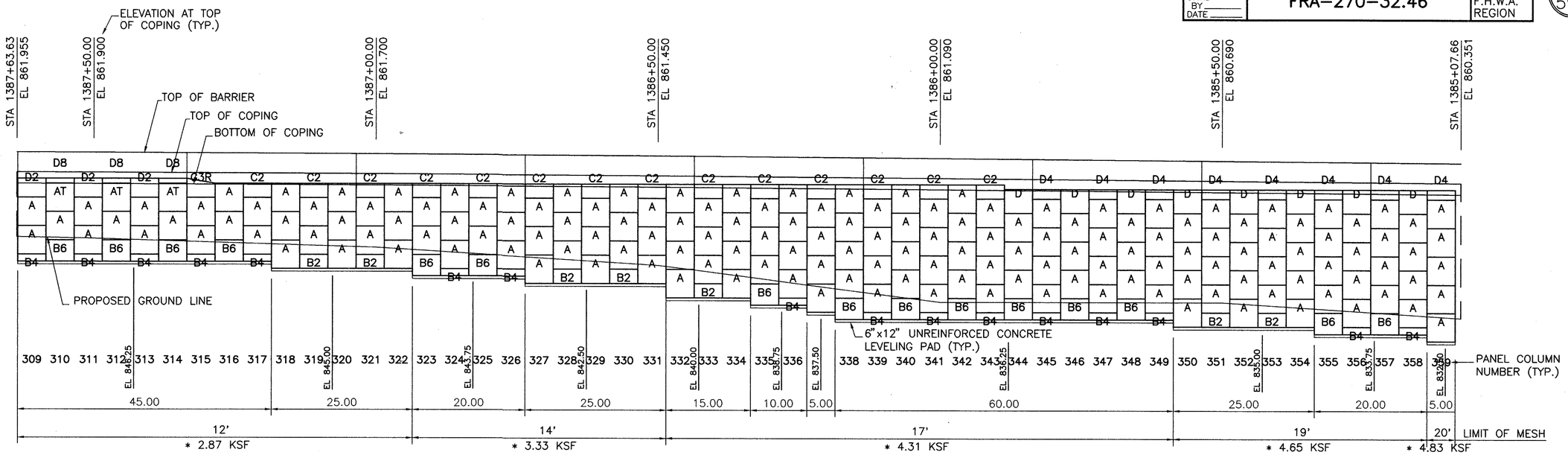

DEVELOPED ELEVATION WALL "NO.1" (FRONT FACE)

SCALE: 1"=10'-0"

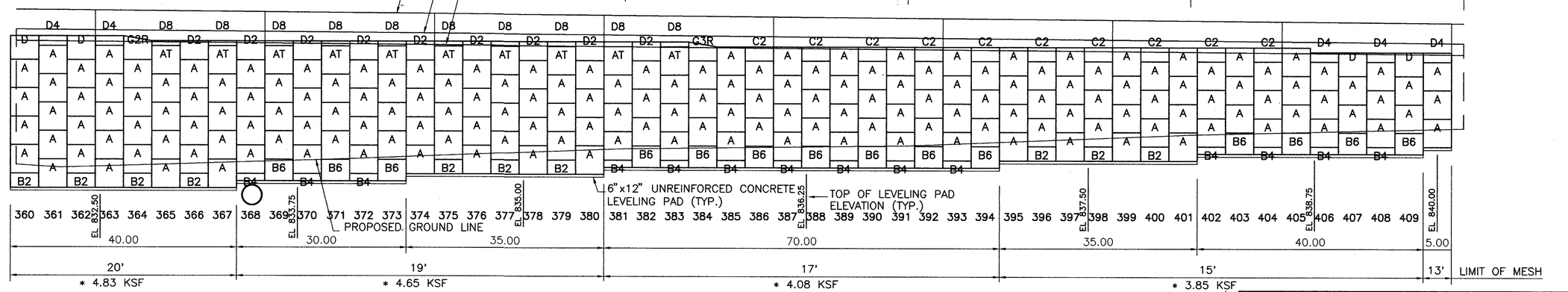

DEVELOPED ELEVATION WALL "NO.1" (FRONT FACE)

SCALE: 1"=10'-0"

U.S. PATENT NUMBER 4,725,170

DESIGN OF ALL WALLS IS BASED ON THE ASSUMPTION THAT ALL MATERIALS, INCLUDING THE RETAINED EARTH BACKFILL AND METHODS OF CONSTRUCTION CONFORM TO THE SPECIFICATIONS FOR RETAINED EARTH WALLS.

THESE DRAWINGS ARE CERTIFIED WITH RESPECT TO INTERNAL STABILITY OF RETAINED EARTH STRUCTURES ONLY.

FABRICATOR:

REV. No.	DATE	DESCRIPTION	MADE BY

REVISION SCHEDULE

ODOT PROJECT No.

BRIDGE No. FRA–270–32.46

DATE	ISSUED FOR	PRINTS	SEPIAS

CONSULT. ENGR:

CONTRACTOR:

DRAWN BY LC	DATE 9-19-94	MATERIAL
CHK'D JN	DATE 9-19-94	DRAWING No.
TRACED	DATE	OF
APP'D	DATE	

	BY	REVISION	DATE	NO.

DES	9-19-94	JN
DRN	9-19-94	LC
CHK	9-19-94	JN

VSL

8008 HAUTE COURT
SPRINGFIELD, VA 22150
Phone: 703/451-4300
Fax: 703/451-0862

Washington, DC office:
Atlanta, GA / Campbell, CA / Dallas, TX / Denver, CO / Honolulu, HI / Los Angles, CA / Miami, FL / Minneapolis, MN / Philadelphia, PA / Seattle, WA / Washington, DC

VSL Corporation ("VSL") retains all rights in this proprietary right in all drawings,specifications and calculations prepared by it. Reproduction on this sheet. The use of such information, in whole or in part, for any purpose not thereof, is restricted to the the site for which it was prepared and publication thereof, or any reuse for any purpose provided by VSL. Any other use is strictly prohibited. VSL DISCLAIMS ANY LIABILITY therefor.

RETAINED EARTH

ELEVATION WALL NO. 1

BLENDON & MIFFLIN TOWNSHIPS
PID NO. 12510
FRANKLIN COUNTY, OH

JOB NO: OH–1844

SHEET: 4 OF 20

CALC BY ____ DATE ____ CHKD BY ____ DATE ____	FRANKLIN COUNTY FRA-270-32.46	OHIO F.H.W.A. REGION	493/593

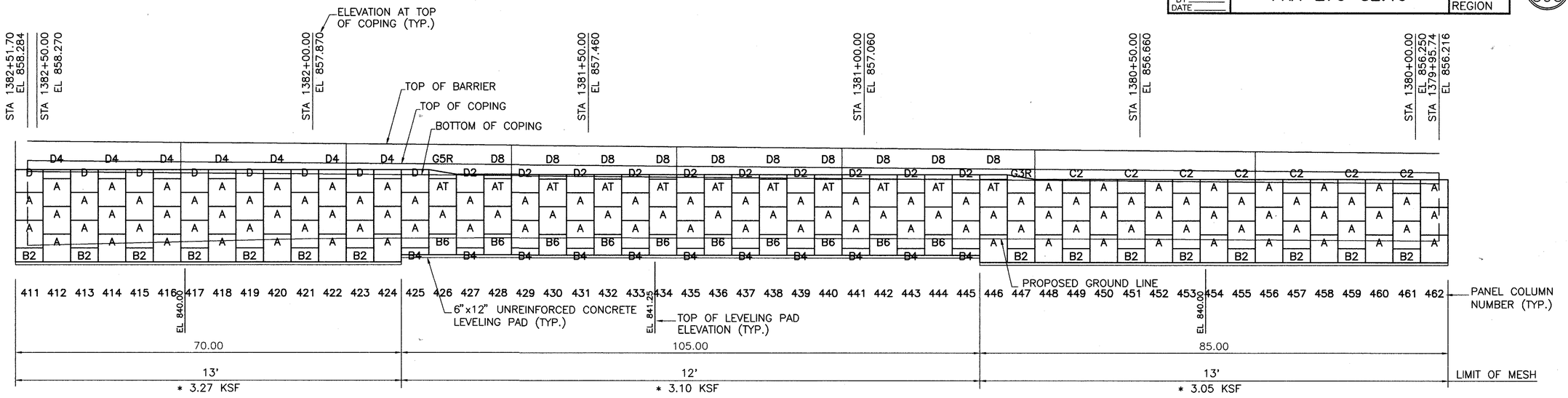

DEVELOPED ELEVATION WALL "NO.1" (FRONT FACE)
SCALE: 1"=10'-0"

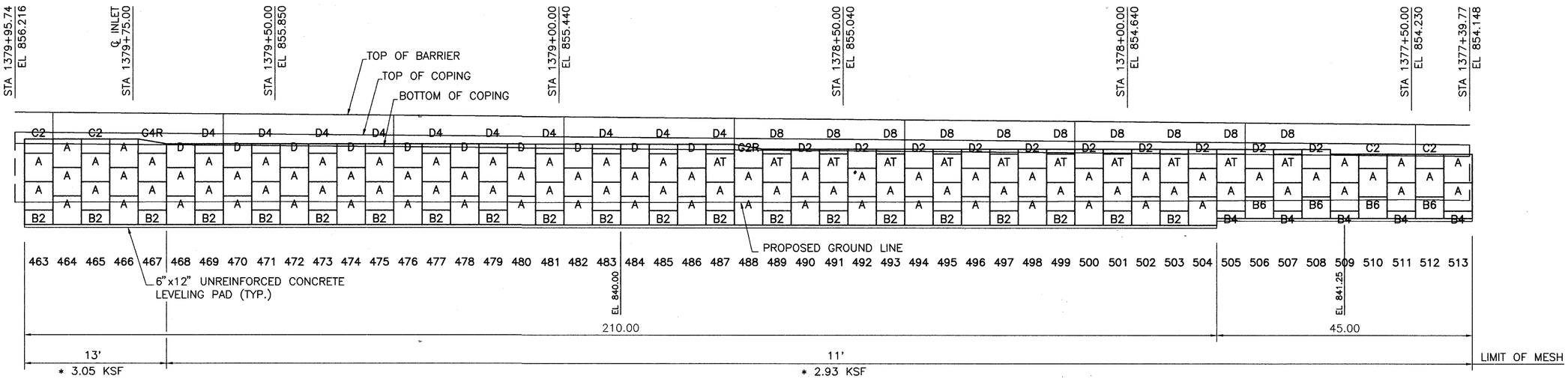

DEVELOPED ELEVATION WALL "NO.1" (FRONT FACE)
SCALE: 1"=10'-0"

* MAXIMUM FINAL BEARING PRESSURE

U.S. PATENT NUMBER 4,725,170

DESIGN OF ALL WALLS IS BASED ON THE ASSUMPTION THAT ALL MATERIALS, INCLUDING THE RETAINED EARTH BACKFILL AND METHODS OF CONSTRUCTION CONFORM TO THE SPECIFICATIONS FOR RETAINED EARTH WALLS.

THESE DRAWINGS ARE CERTIFIED WITH RESPECT TO INTERNAL STABILITY OF RETAINED EARTH STRUCTURES ONLY.

FABRICATOR:

REV. No.	DATE	DESCRIPTION	MADE BY

REVISION SCHEDULE

ODOT PROJECT No.

BRIDGE No. FRA-270-32.46

DATE	ISSUED FOR	PRINTS	SEPIAS

CONSULT. ENGR:
CONTRACTOR:

DRAWN BY LC	DATE 9-19-94	MATERIAL
CHK'D JN	DATE 9-19-94	DRAWING No.
TRACED	DATE	OF
APP'D	DATE	

NO.	DATE	REVISION	BY

DES	9-19-94	JN
DRN	9-19-94	LC
CHK	9-19-94	JN

VSL
Washington, DC office: 8006 HAUTE COURT SPRINGFIELD, VA 22150
Phone: 703/451-4300 Fax: 703/451-0862
Atlanta, GA / Campbell, CA / Dallas, TX / Denver, CO / Honolulu, HI / Los Angeles, CA / Miami, FL / Minneapolis, MN / Philadelphia, PA / Seattle, WA / Washington, DC

VSL Corporation ("VSL") claims a strict proprietary right in all drawings, specifications and calculations ("information") set forth on this sheet. The use of such information in whole or in part, or any reproduction thereof, is restricted to the site for which it was prepared and to the material and/or service provided by VSL. Any other use is strictly prohibited and VSL DISCLAIMES ANY LIABILITY therefore.

RETAINED EARTH
ELEVATION WALL NO. 1

BLENDON & MIFFLIN TOWNSHIPS
PID NO. 12510
FRANKLIN COUNTY, OH

JOB NO: OH-1844

SHEET: 5 OF 20

CALC BY ___ DATE ___ CHKD BY ___ DATE ___	FRANKLIN COUNTY FRA-270-32.46	OHIO F.H.W.A. REGION	494 / 593

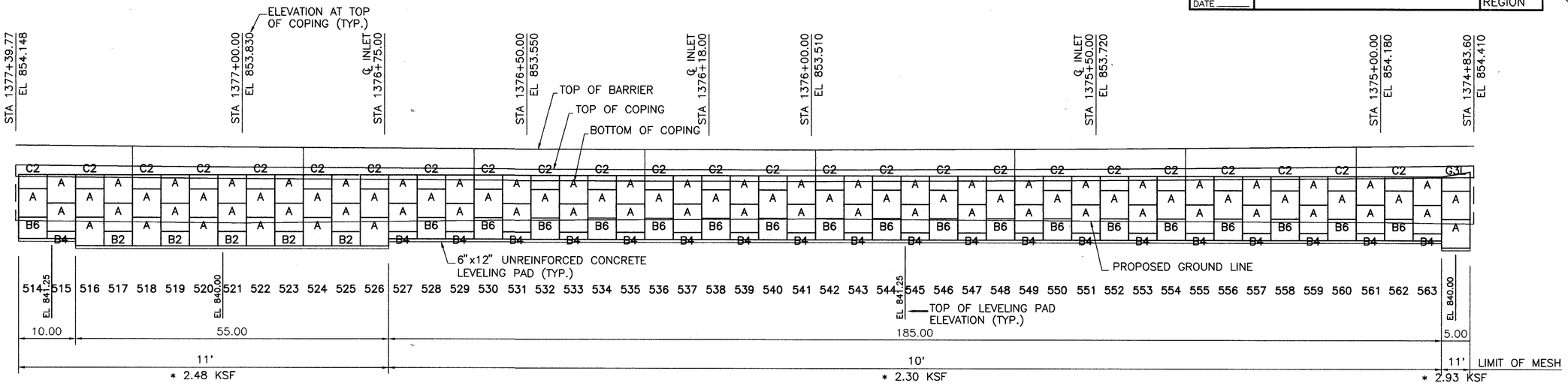

DEVELOPED ELEVATION WALL "NO.1" (FRONT FACE)
SCALE: 1"=10'-0"

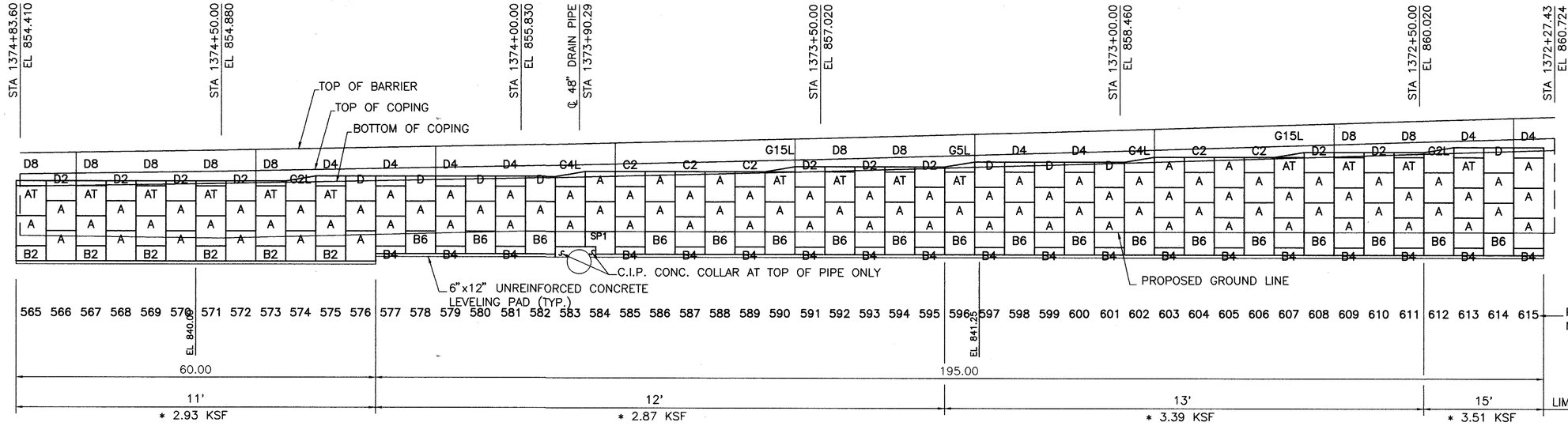

DEVELOPED ELEVATION WALL "NO.1" (FRONT FACE)
SCALE: 1"=10'-0"

* MAXIMUM FINAL BEARING PRESSURE

U.S. PATENT NUMBER 4,725,170

DESIGN OF ALL WALLS IS BASED ON THE ASSUMPTION THAT ALL MATERIALS, INCLUDING THE RETAINED EARTH BACKFILL AND METHODS OF CONSTRUCTION CONFORM TO THE SPECIFICATIONS FOR RETAINED EARTH WALLS.

THESE DRAWINGS ARE CERTIFIED WITH RESPECT TO INTERNAL STABILITY OF RETAINED EARTH STRUCTURES ONLY.

FABRICATOR:

REV. No.	DATE	DESCRIPTION	MADE BY

REVISION SCHEDULE

ODOT PROJECT No.

BRIDGE No. FRA-270-32.46

DATE	ISSUED FOR	PRINTS	SEPIAS

CONSULT. ENGR:
CONTRACTOR:

DRAWN BY LC	DATE 9-19-94	MATERIAL	
CHK'D JN	DATE 9-19-94	DRAWING No.	
TRACED	DATE	OF	
APP'D	DATE		

NO.	DATE	REVISION	BY

DES	9-19-94	JN
DRN	9-19-94	LC
CHK	9-19-94	JN

VSL
Washington, DC office: 8006 HAUTE COURT SPRINGFIELD, VA 22150
Phone: 703/451-4300 Fax: 703/451-0862
Atlanta, GA / Campbell, CA / Dallas, TX / Denver, CO / Honolulu, HI / Los Angeles, CA / Miami, FL / Minneapolis, MN / Philadelphia, PA / Seattle, WA / Washington, DC

VSL Corporation ("VSL") claims a strict proprietary right in all drawings,specifications and calculations ("information") set forth on this sheet. The use of such information in whole or in part, or any reproduction thereof, is restricted to the site for which it was prepared and to the material and/or service provided by VSL. Any other use is strictly prohibited,and VSL DISCLAIMS ANY LIABILITY therefore.

RETAINED EARTH
ELEVATION WALL NO. 1

BLENDON & MIFFLIN TOWNSHIPS
PID NO. 12510
FRANKLIN COUNTY, OH

JOB NO: OH-1844

SHEET: 6 OF 20

CALC BY ____ DATE ____	FRANKLIN COUNTY FRA-270-32.46	OHIO F.H.W.A. REGION
CHKD BY ____ DATE ____		

495
593

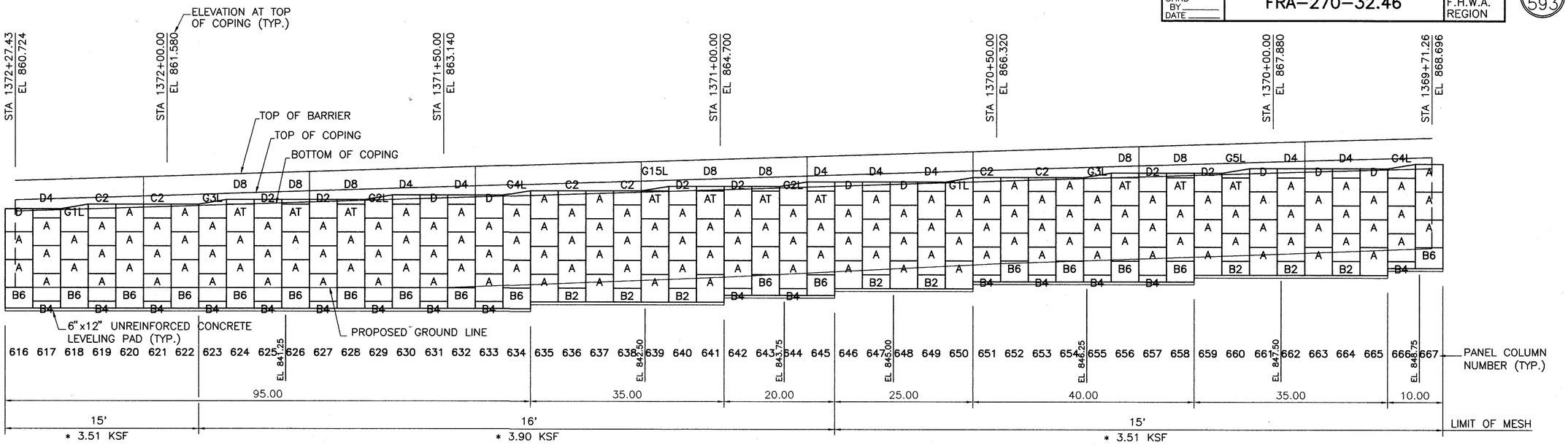

DEVELOPED ELEVATION WALL "NO.1" (FRONT FACE)

SCALE: 1"=10'-0"

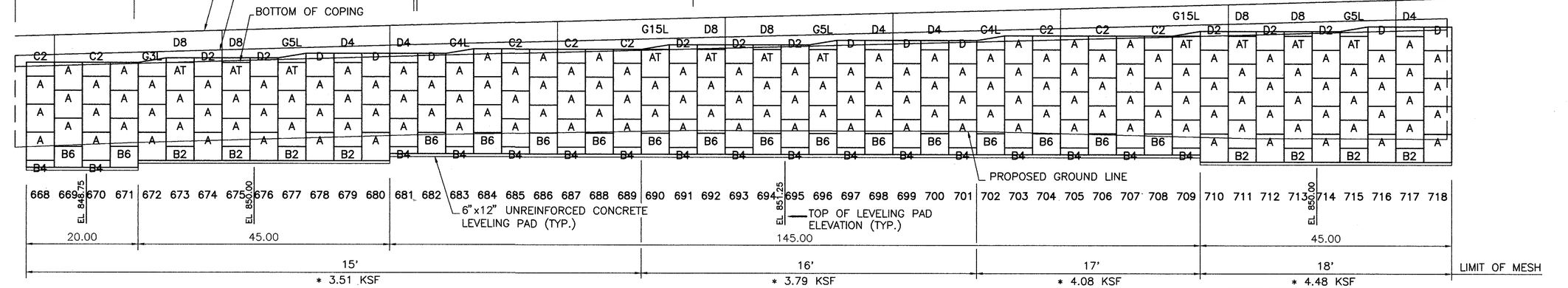

DEVELOPED ELEVATION WALL "NO.1" (FRONT FACE)

SCALE: 1"=10'-0"

* MAXIMUM FINAL BEARING PRESSURE

U.S. PATENT NUMBER 4,725,170

DESIGN OF ALL WALLS IS BASED ON THE ASSUMPTION THAT ALL MATERIALS, INCLUDING THE RETAINED EARTH BACKFILL AND METHODS OF CONSTRUCTION CONFORM TO THE SPECIFICATIONS FOR RETAINED EARTH WALLS.

THESE DRAWINGS ARE CERTIFIED WITH RESPECT TO INTERNAL STABILITY OF RETAINED EARTH STRUCTURES ONLY.

FABRICATOR:

REV. No.	DATE	DESCRIPTION	MADE BY

REVISION SCHEDULE

ODOT PROJECT No.

BRIDGE No. FRA-270-32.46

CONSULT. ENGR:				
CONTRACTOR:				
DRAWN BY LC	DATE 9-19-94	MATERIAL		
CHK'D JN	DATE 9-19-94	DRAWING No.		
TRACED	DATE	OF		
APP'D	DATE			

DATE	ISSUED FOR	PRINTS	SEPIAS

NO.	DATE	REVISION	BY

DES	9-19-94	JN
DRN	9-19-94	LC
CHK	9-19-94	JN

VSL

Washington, DC office: 8008 HAUTE COURT SPRINGFIELD, VA 22150 Phone: 703/451-4300 Fax: 703/451-0882

Atlanta, GA / Campbell, CA / Dallas, TX / Denver, CO / Honolulu, HI / Los Angeles, CA / Miami, FL / Minneapolis, MN / Philadelphia, PA / Seattle, WA / Washington, DC

VSL Corporation ("VSL") claims a strict proprietary right in information, calculations, and conclusions ("Information") set forth on this sheet. The use of such Information in whole or in part, or any reproduction thereof, for any project other than the one for which it was prepared and to be made by VSL, is prohibited and shall be at user's sole risk. All rights reserved under the Berne Convention and the U.S. Copyright Act of 1976. Therefore,

RETAINED EARTH
ELEVATION WALL NO. 1

BLENDON & MIFFLIN TOWNSHIPS
PID NO. 12510
FRANKLIN COUNTY, OH

JOB NO: 0H-1844

SHEET: 7 OF 20

CALC BY DATE	FRANKLIN COUNTY FRA-270-32.46	OHIO F.H.W.A. REGION	496 593
CHKD BY DATE			

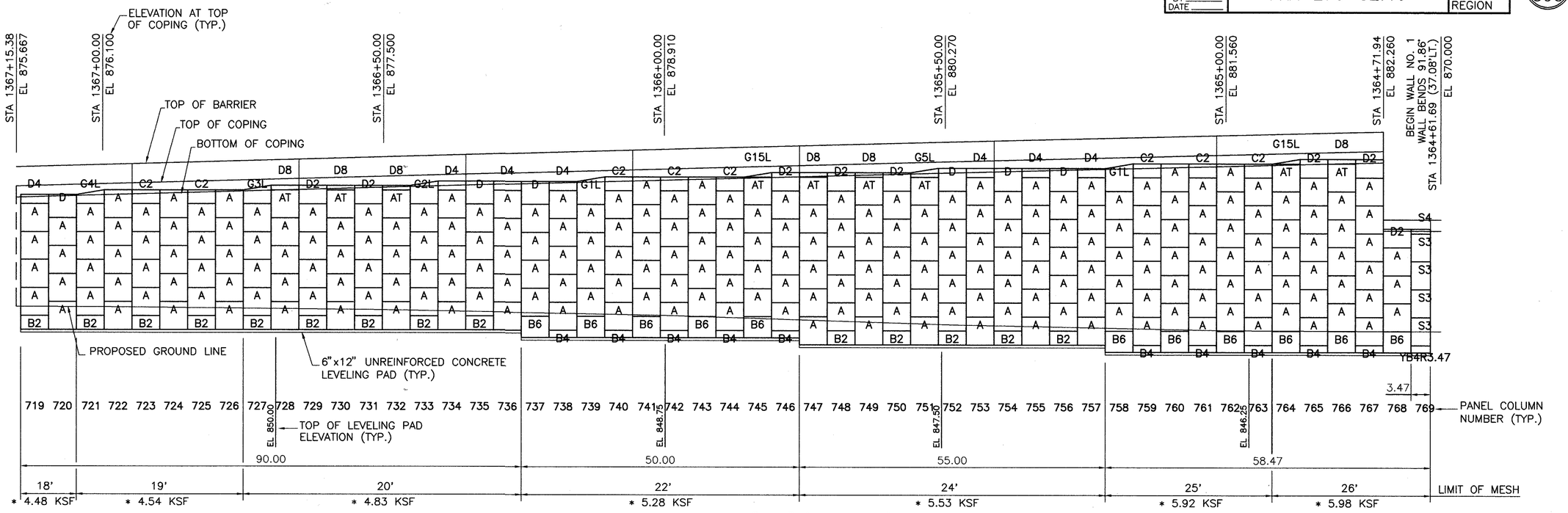

DEVELOPED ELEVATION WALL "NO.1" (FRONT FACE)

SCALE: 1"=10'-0"

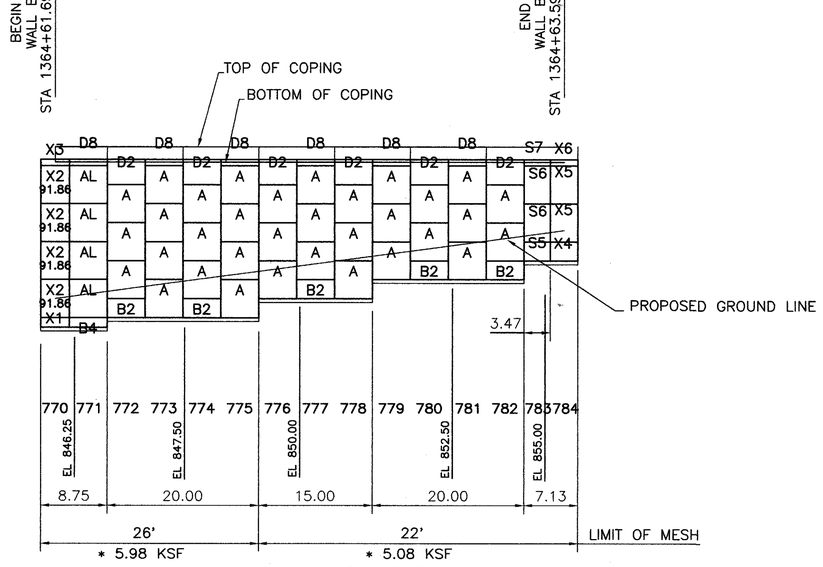

DEVELOPED ELEVATION WALL "NO.2" (FRONT FACE)

SCALE: 1"=10'-0"

* MAXIMUM FINAL BEARING PRESSURE

U.S. PATENT NUMBER 4,725,170

DESIGN OF ALL WALLS IS BASED ON THE ASSUMPTION THAT ALL MATERIALS, INCLUDING THE RETAINED EARTH BACKFILL AND METHODS OF CONSTRUCTION CONFORM TO THE SPECIFICATIONS FOR RETAINED EARTH WALLS.

THESE DRAWINGS ARE CERTIFIED WITH RESPECT TO INTERNAL STABILITY OF RETAINED EARTH STRUCTURES ONLY.

FABRICATOR:

REV. No.	DATE	DESCRIPTION	MADE BY

REVISION SCHEDULE

ODOT PROJECT No.

BRIDGE No. FRA-270-32.46

DATE	ISSUED FOR	PRINTS	SEPIAS

CONSULT. ENGR:

CONTRACTOR:

DRAWN BY	DATE	MATERIAL
LC	9-19-94	
CHK'D JN	9-19-94	DRAWING No.
TRACED	DATE	OF
APP'D	DATE	

NO.	DATE	REVISION	BY

DES	DRN	CHK
9-19-94 JN	9-19-94 LC	9-19-94 JN

VSL
8008 HAUTE COURT
SPRINGFIELD, VA 22150
Phone: 703/451-4300
Fax: 703/451-3662
Washington, DC office:
Atlanta, GA / Campbell, CA / Dallas, TX / Denver, CO / Honolulu, HI / Los Angles, CA / Minneapolis, MN / Philadelphia, PA / Seattle, WA / Washington, DC
Miami, FL / Minneapolis, MN / Philadelphia, PA / Seattle, WA / Washington, DC

VSL Corporation ("VSL") has exclusive proprietary right in all drawings,specifications and data relating thereto, but upon request and execution of its standard agreement, will grant a non-exclusive, limited right to use such information solely for the purpose of reviewing its potential interest in submitting a proposal for the design, manufacture, construction and installation of the VSL system. Any such use does not include the right to copy, publish, or make derivative use of this information. Any use, duplication or publication without the express written consent of VSL, any use for construction purposes, or any use for any purpose on any project for which VSL has not been employed to perform the work described herein is prohibited. In accepting this information, the recipient agrees to indemnify VSL against all liability with respect to such use, duplication or publication, and to defend VSL against any claims or lawsuits arising therefrom. VSL DISCLAIMS ANY LIABILITY WHATSOEVER.

RETAINED EARTH

ELEVATION WALLS NO. 1 & NO. 2

BLENDON & MIFFLIN TOWNSHIPS
PID NO. 12510
FRANKLIN COUNTY, OH

JOB NO: OH-1844

SHEET: 8 OF 20

CALC BY ____ DATE ____	FRANKLIN COUNTY FRA-270-32.46	OHIO F.H.W.A. REGION	497/593
CHKD BY ____ DATE ____			

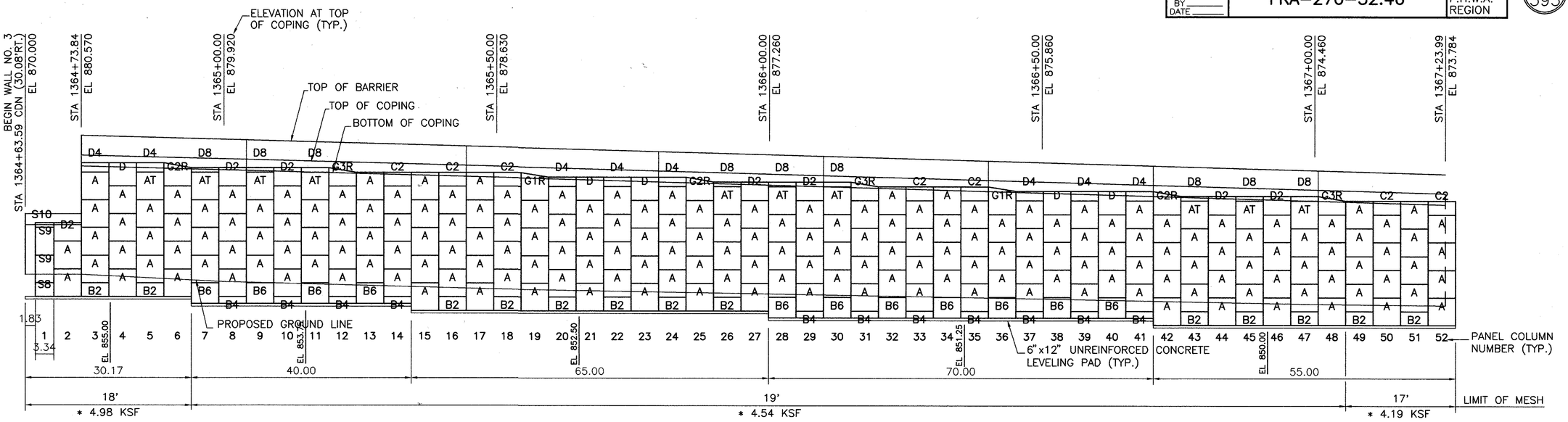

DEVELOPED ELEVATION WALL "NO.3" (FRONT FACE)
SCALE: 1"=10'-0"

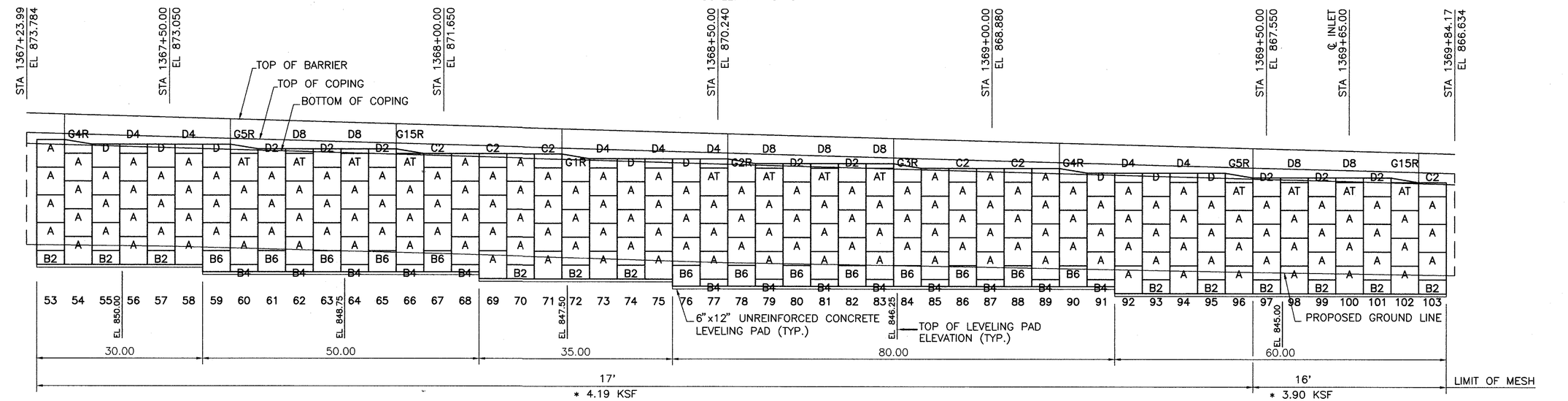

DEVELOPED ELEVATION WALL "NO.3" (FRONT FACE)
SCALE: 1"=10'-0"

U.S. PATENT NUMBER 4,725,170

DESIGN OF ALL WALLS IS BASED ON THE ASSUMPTION THAT ALL MATERIALS, INCLUDING THE RETAINED EARTH BACKFILL AND METHODS OF CONSTRUCTION CONFORM TO THE SPECIFICATIONS FOR RETAINED EARTH WALLS.

THESE DRAWINGS ARE CERTIFIED WITH RESPECT TO INTERNAL STABILITY OF RETAINED EARTH STRUCTURES ONLY.

* MAXIMUM FINAL BEARING PRESSURE

FABRICATOR:

REV. No.	DATE	DESCRIPTION	MADE BY

REVISION SCHEDULE

ODOT PROJECT No.

BRIDGE No. FRA-270-32.46

DATE	ISSUED FOR	PRINTS	SEPIAS

CONSULT. ENGR:

CONTRACTOR:

DRAWN BY LC	DATE 9-19-94	MATERIAL	
CHK'D JN	DATE 9-19-94	DRAWING No.	
TRACED	DATE	OF	
APP'D	DATE		

NO.	DATE	REVISION	BY

DES	9-19-94	JN
DRN	9-19-94	LC
CHK	9-19-94	JN

VSL

Washington, DC office: 8006 HAUTE COURT SPRINGFIELD, VA 22150 Phone: 703/451-4300 Fax: 703/451-0862

Atlanta, GA / Campbell, CA / Dallas, TX / Denver, CO / Honolulu, HI / Los Angeles, CA / Miami, FL / Minneapolis, MN / Philadelphia, PA / Seattle, WA / Washington, DC

VSL Corporation ("VSL") claims a strict proprietary right in all drawings, specifications and calculations ("Information") set forth on this sheet. The use of such information in whole or in part, or any reproduction thereof, is restricted to the site for which it was prepared and to the material and/or service provided by VSL. Any other use is strictly prohibited and VSL DISCLAIMES ANY LIABILITY therefore.

RETAINED EARTH
ELEVATION WALL NO. 3

BLENDON & MIFFLIN TOWNSHIPS
PID NO. 12510
FRANKLIN COUNTY, OH

JOB NO: OH-1844

SHEET: 9 OF 20

CALC BY DATE	FRANKLIN COUNTY	OHIO
CHKD BY DATE	FRA-270-32.46	F.H.W.A. REGION

498
593

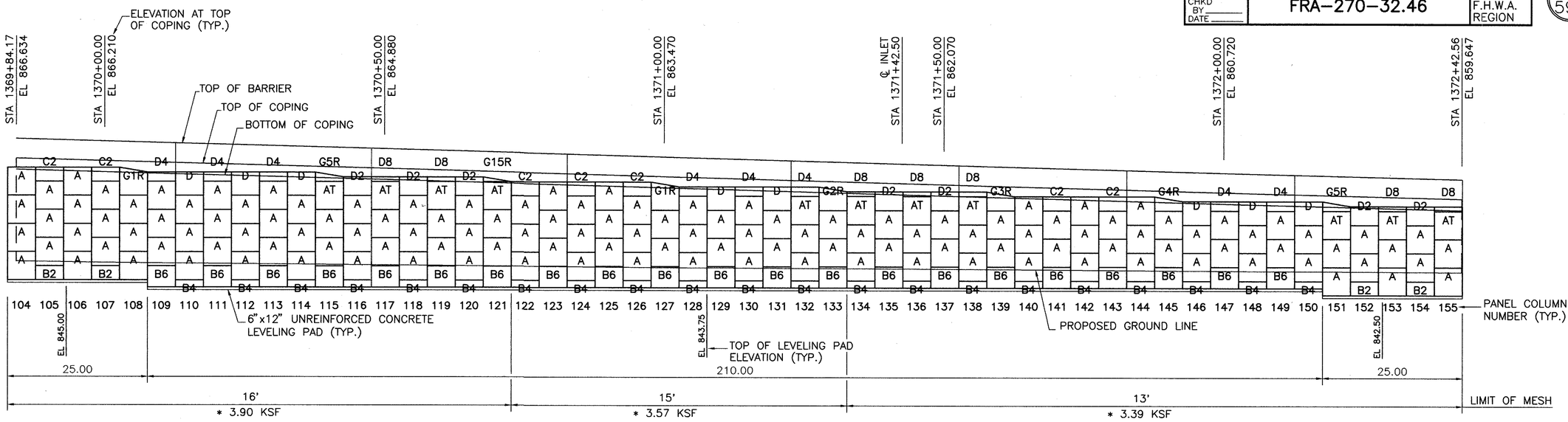
STA 1369+84.17
EL 866.634
STA 1370+00.00
EL 866.210
ELEVATION AT TOP OF COPING (TYP.)
STA 1370+50.00
EL 864.880
STA 1371+00.00
EL 863.470
℄ INLET
STA 1371+42.50
STA 1371+50.00
EL 862.070
STA 1372+00.00
EL 860.720
STA 1372+42.56
EL 859.647
TOP OF BARRIER
TOP OF COPING
BOTTOM OF COPING
C2 C2 D4 D4 D4 G5R D8 D8 G15R C2 C2 D4 D4 D4 D8 D8 D8 C2 C2 G4R D4 D4 G5R D8 D8
B2 B2 B6 B6 B6

CALC BY DATE	FRANKLIN COUNTY FRA-270-32.46	OHIO F.H.W.A. REGION
CHKD BY DATE		

499/593

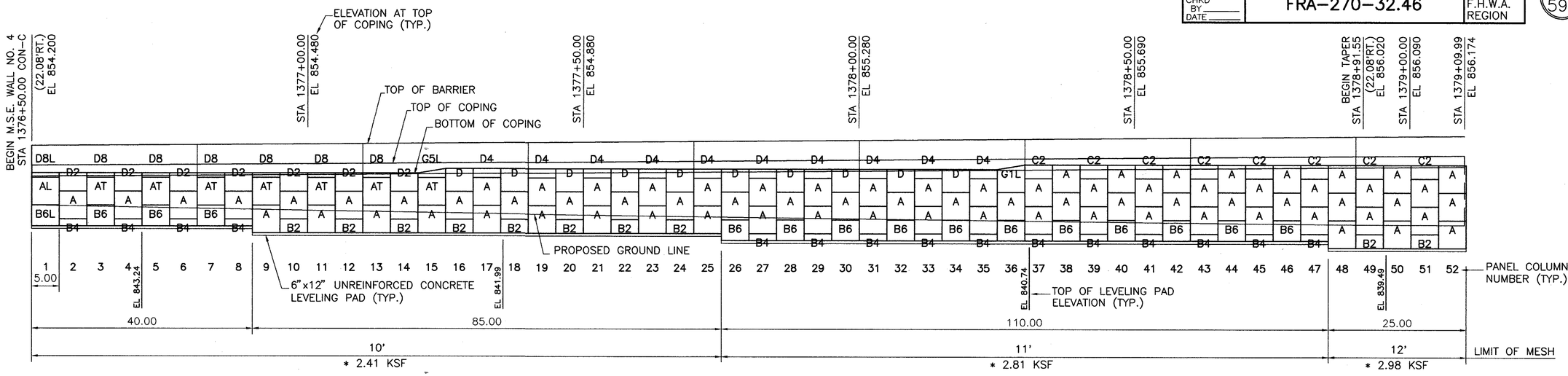

DEVELOPED ELEVATION WALL "NO.4" (FRONT FACE)
SCALE: 1"=10'-0"

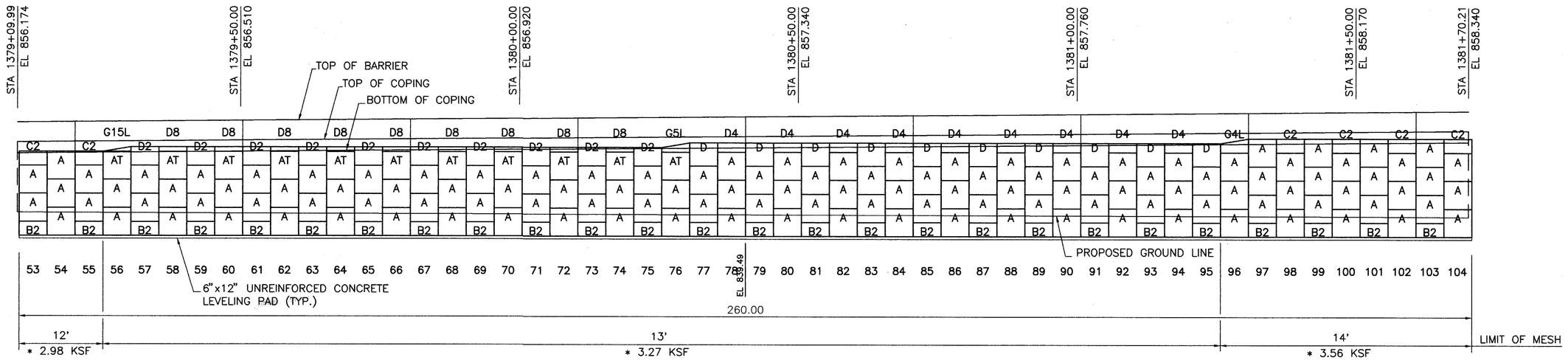

DEVELOPED ELEVATION WALL "NO.4" (FRONT FACE)
SCALE: 1"=10'-0"

* MAXIMUM FINAL BEARING PRESSURE

U.S. PATENT NUMBER 4,725,170

DESIGN OF ALL WALLS IS BASED ON THE ASSUMPTION THAT ALL MATERIALS, INCLUDING THE RETAINED EARTH BACKFILL AND METHODS OF CONSTRUCTION CONFORM TO THE SPECIFICATIONS FOR RETAINED EARTH WALLS.

THESE DRAWINGS ARE CERTIFIED WITH RESPECT TO INTERNAL STABILITY OF RETAINED EARTH STRUCTURES ONLY.

FABRICATOR:

REV. No.	DATE	DESCRIPTION	MADE BY

REVISION SCHEDULE

ODOT PROJECT No.

BRIDGE No. FRA-270-32.46

DATE	ISSUED FOR	PRINTS	SEPIAS

CONSULT. ENGR:

CONTRACTOR:

DRAWN BY LC	DATE 9-19-94	MATERIAL
CHK'D JN	DATE 9-19-94	DRAWING No.
TRACED	DATE	OF
APP'D	DATE	

NO.	DATE	REVISION	BY

DES	9-19-94	JN
DRN	9-19-94	LC
CHK	9-19-94	JN

VSL

8008 HAUTE COURT
SPRINGFIELD, VA 22150
Phone: 703/451-4300
Fax: 703/451-0862

Washington, DC office:
Atlanta, GA / Campbell, CA / Dallas, TX / Denver, CO / Honolulu, HI / Los Angeles, CA / Miami, FL / Minneapolis, MN / Philadelphia, PA / Seattle, WA / Washington, DC

VSL Corporation ("VSL") has provided this drawing and retains all copyright in all drawings, specifications and calculations relating thereto. The use of such information, in whole or in part, on any project other than that which it was prepared is restricted to the site for which it was prepared and is subject to prior written consent of VSL. Any other use is specifically prohibited and VSL DISCLAIMS ANY LIABILITY therefore.

RETAINED EARTH
ELEVATION WALL NO. 4

BLENDON & MIFFLIN TOWNSHIPS
PID NO. 12510
FRANKLIN COUNTY, OH

JOB NO: OH-1844

SHEET: 11 OF 20

CALC BY DATE	FRANKLIN COUNTY FRA-270-32.46	OHIO F.H.W.A. REGION
CHKD BY DATE		

500
593

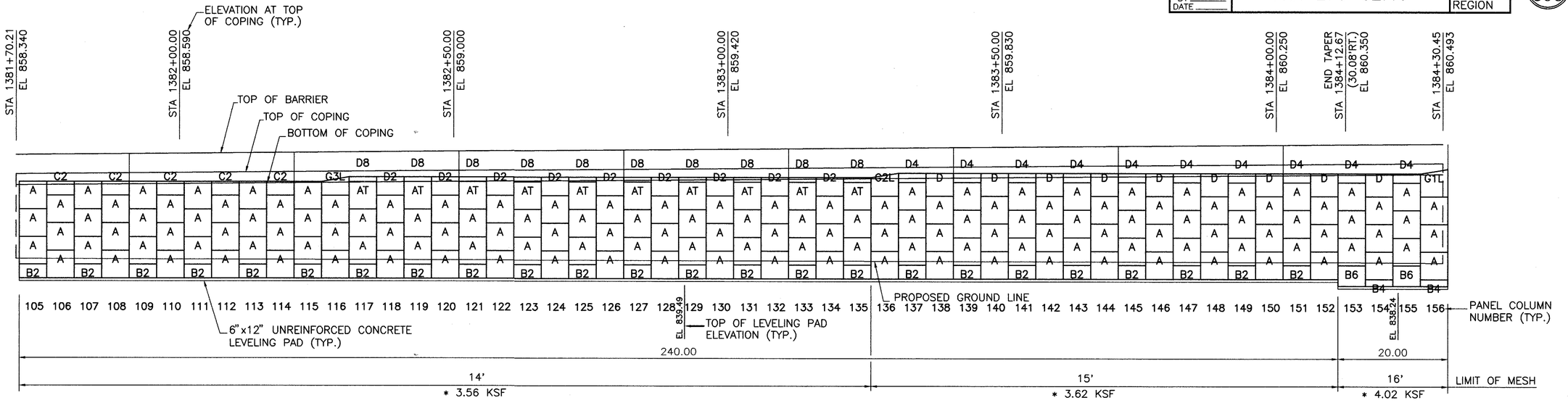

DEVELOPED ELEVATION WALL "NO.4" (FRONT FACE)
SCALE: 1"=10'-0"

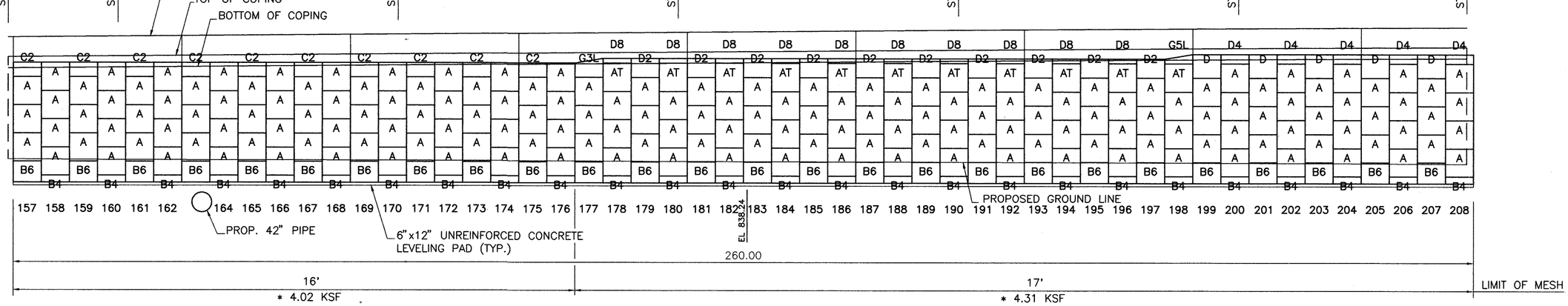

DEVELOPED ELEVATION WALL "NO.4" (FRONT FACE)
SCALE: 1"=10'-0"

* MAXIMUM FINAL BEARING PRESSURE

U.S. PATENT NUMBER 4,725,170

DESIGN OF ALL WALLS IS BASED ON THE ASSUMPTION THAT ALL MATERIALS, INCLUDING THE RETAINED EARTH BACKFILL AND METHODS OF CONSTRUCTION CONFORM TO THE SPECIFICATIONS FOR RETAINED EARTH WALLS.

THESE DRAWINGS ARE CERTIFIED WITH RESPECT TO INTERNAL STABILITY OF RETAINED EARTH STRUCTURES ONLY.

FABRICATOR:

REV. No.	DATE	DESCRIPTION	MADE BY

REVISION SCHEDULE

ODOT PROJECT No.

BRIDGE No. FRA-270-32.46

DATE	ISSUED FOR	PRINTS	SEPIAS

CONSULT. ENGR:

CONTRACTOR:

DRAWN BY LC	DATE 9-19-94	MATERIAL
CHK'D JN	DATE 9-19-94	DRAWING No.
TRACED	DATE	OF
APP'D	DATE	

NO.	DATE	REVISION	BY

DES	9-19-94	JN
DRN	9-19-94	LC
CHK	9-19-94	JN

VSL
8008 HAUTE COURT
SPRINGFIELD, VA 22150
Phone: 703/451-4300
Fax: 703/451-0662
Washington, DC office: Atlanta, GA / Campbell, CA / Dallas, TX / Denver, CO / Honolulu, HI / Los Angeles, CA / Miami, FL / Minneapolis, MN / Philadelphia, PA / Seattle, WA / Washington, DC

The Contractor (VSL) shall be responsible for the accuracy and correctness of the dimensions and details shown on these drawings. Notify the Engineer of any discrepancies found between these drawings and conditions in the field. These drawings are not to be used for construction purposes unless signed and dated by the Engineer.

RETAINED EARTH
ELEVATION WALL NO. 4
BLENDON & MIFFLIN TOWNSHIPS
PID NO. 12510
FRANKLIN COUNTY, OH

JOB NO: OH-1844

SHEET: 12 OF 20

CALC BY / DATE	FRANKLIN COUNTY FRA-270-32.46	OHIO
CHKD BY / DATE		F.H.W.A. REGION

501
593

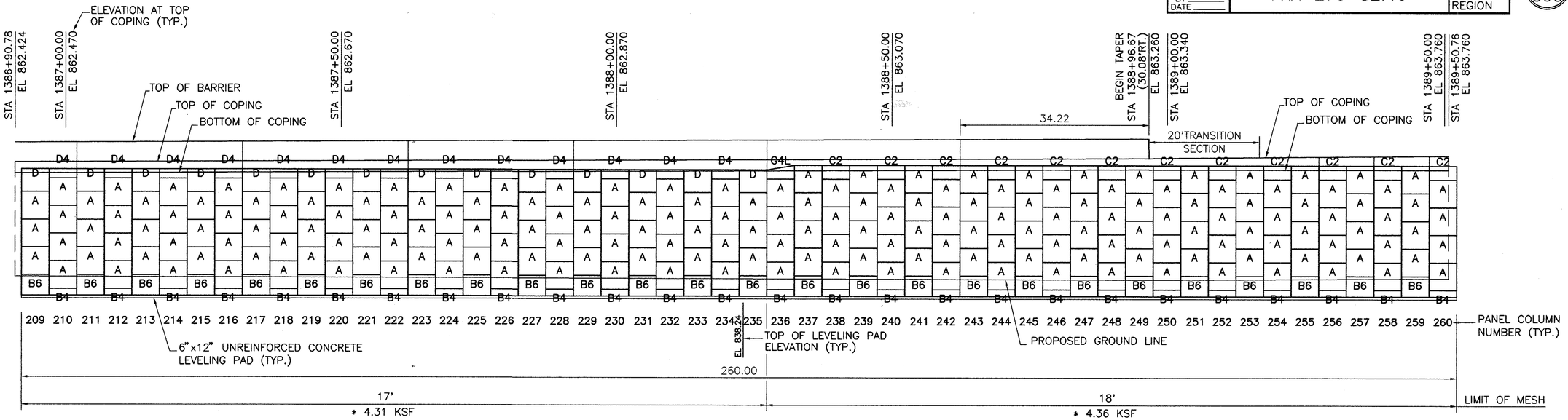

DEVELOPED ELEVATION WALL "NO.4" (FRONT FACE)

SCALE: 1"=10'-0"

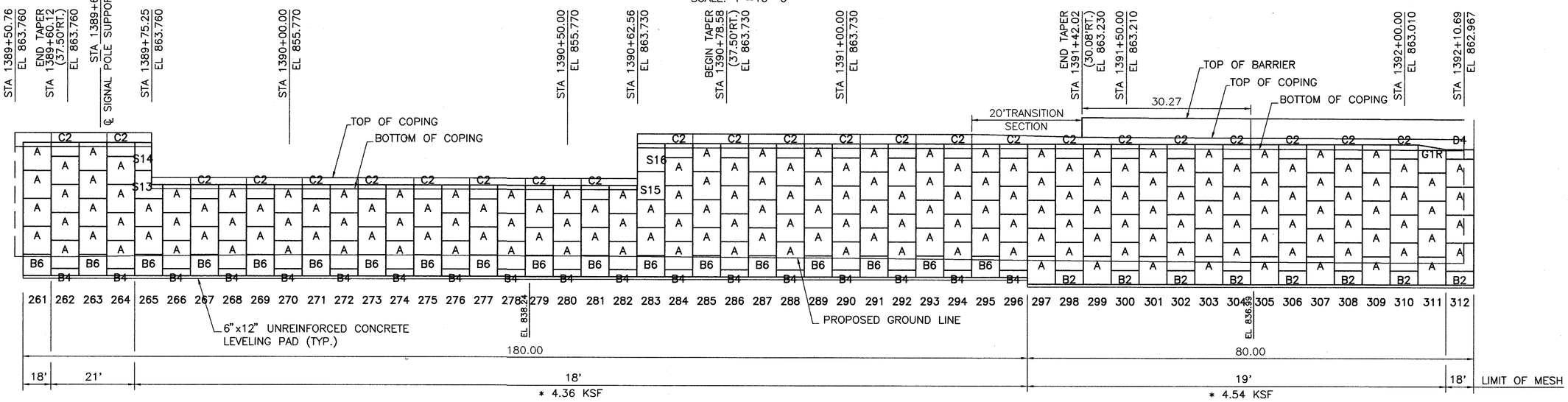

DEVELOPED ELEVATION WALL "NO.4" (FRONT FACE)

SCALE: 1"=10'-0"

U.S. PATENT NUMBER 4,725,170

DESIGN OF ALL WALLS IS BASED ON THE ASSUMPTION THAT ALL MATERIALS, INCLUDING THE RETAINED EARTH BACKFILL AND METHODS OF CONSTRUCTION CONFORM TO THE SPECIFICATIONS FOR RETAINED EARTH WALLS.

THESE DRAWINGS ARE CERTIFIED WITH RESPECT TO INTERNAL STABILITY OF RETAINED EARTH STRUCTURES ONLY.

* MAXIMUM FINAL BEARING PRESSURE

FABRICATOR:

REV. No.	DATE	DESCRIPTION	MADE BY

REVISION SCHEDULE

ODOT PROJECT No.

BRIDGE No. FRA-270-32.46

DATE	ISSUED FOR	PRINTS	SEPIAS	APP'D	DATE

CONSULT. ENGR:

CONTRACTOR:

DRAWN BY	DATE	MATERIAL
LC	9-19-94	
CHK'D JN	DATE 9-19-94	DRAWING No.
TRACED	DATE	OF

NO.	DATE	REVISION	BY

DES	9-19-94	JN
DRN	9-19-94	LC
CHK	9-19-94	JN

VSL

8008 HAUTE COURT
SPRINGFIELD, VA 22150
Phone: 703/451-4300
Fax: 703/451-3862

Washington, DC office:
Atlanta, GA / Campbell, CA / Dallas, TX / Denver, CO / Honolulu, HI / Los Angeles, CA / Minneapolis, MN / Philadelphia, PA / Seattle, WA / Washington, DC
Miami, FL /

VSL Corporation ("VSL") expressly reserves its property right in all drawings,specifications and other documents ("Instruments") used, prepared or produced by VSL, including on this sheet. The use of such Instruments in whole or in part, information contained therein, is restricted to the purpose for which it was prepared by VSL and is not to be used for any other purpose. Any unauthorized use, disclosure or retention of such Instruments is prohibited and VSL DISCLAIMS ANY LIABILITY therefor.

RETAINED EARTH
ELEVATION WALL NO. 4

BLENDON & MIFFLIN TOWNSHIPS
PID NO. 12510
FRANKLIN COUNTY, OH

JOB NO: OH-1844

SHEET: 13 OF 20

CALC BY		FRANKLIN COUNTY	OHIO
CHK'D BY		FRA-270-32.46	F.H.W.A. REGION
DATE			

502
593

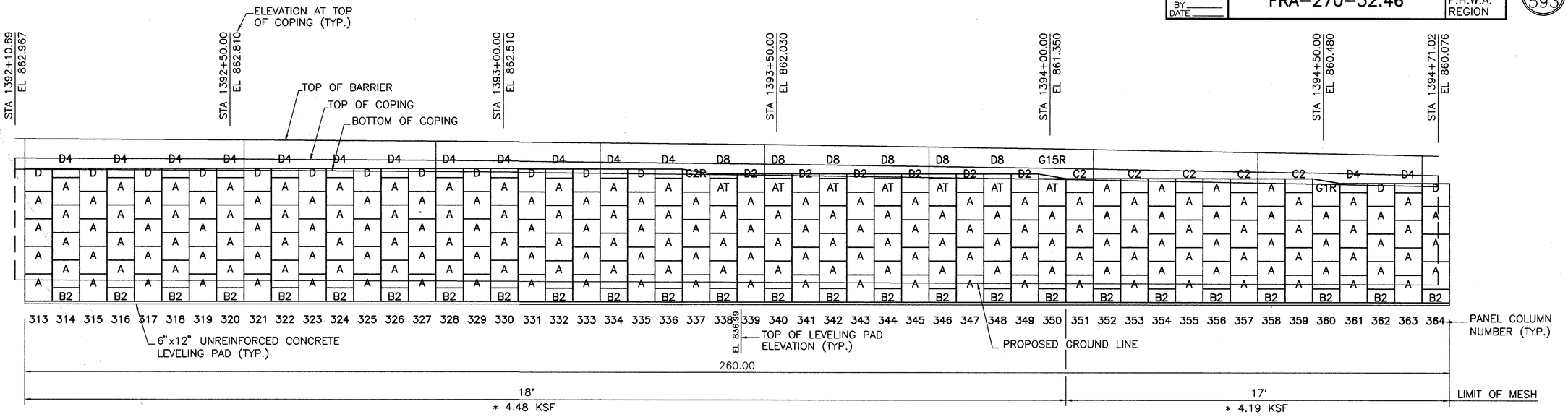

DEVELOPED ELEVATION WALL "NO.4" (FRONT FACE)

SCALE: 1"=10'-0"

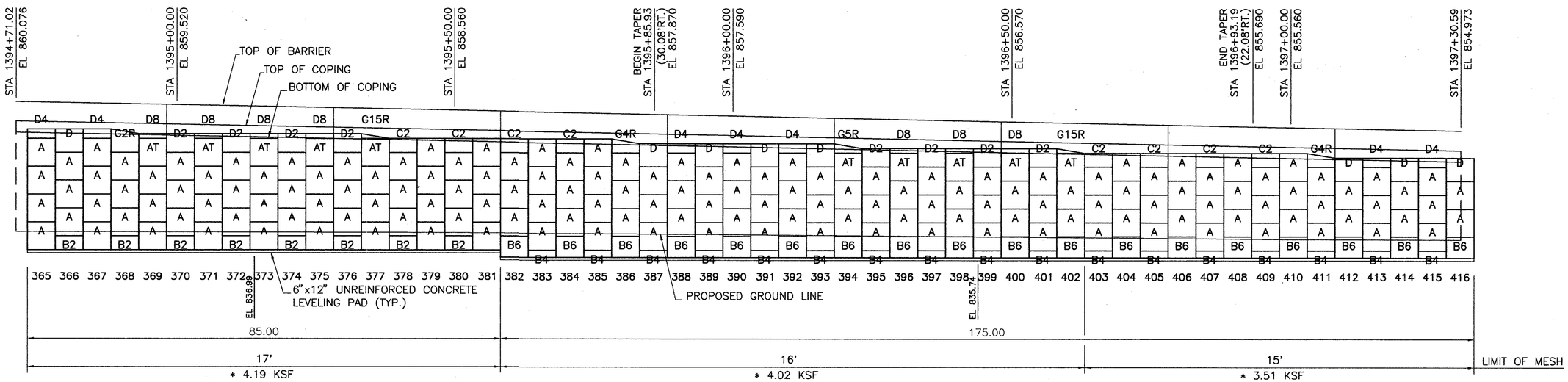

DEVELOPED ELEVATION WALL "NO.4" (FRONT FACE)

SCALE: 1"=10'-0"

* MAXIMUM FINAL BEARING PRESSURE

U.S. PATENT NUMBER 4,725,170

DESIGN OF ALL WALLS IS BASED ON THE ASSUMPTION THAT ALL MATERIALS, INCLUDING THE RETAINED EARTH BACKFILL AND METHODS OF CONSTRUCTION CONFORM TO THE SPECIFICATIONS FOR RETAINED EARTH WALLS.

THESE DRAWINGS ARE CERTIFIED WITH RESPECT TO INTERNAL STABILITY OF RETAINED EARTH STRUCTURES ONLY.

FABRICATOR:

REV. No.	DATE	DESCRIPTION	MADE BY

REVISION SCHEDULE

ODOT PROJECT No.

BRIDGE No. FRA-270-32.46

DATE	ISSUED FOR	PRINTS	SEPIAS

CONSULT. ENGR:

CONTRACTOR:

DRAWN BY LC	DATE 9-19-94	MATERIAL
CHK'D JN	DATE 9-19-94	DRAWING No.
TRACED	DATE	OF
APP'D	DATE	

NO.	DATE	REVISION	BY

DES	9-19-94	JN	
DRN	9-19-94	LC	
CHK	9-19-94	JN	

VSL

8008 HAUTE COURT
SPRINGFIELD, VA 22150
Phone: 703/451-4300
Fax: 703/451-0882

Washington, DC office: Atlanta, GA / Campbell, CA / Dallas, TX / Denver, CO / Honolulu, HI / Los Angeles, CA / Miami, FL / Minneapolis, MN / Philadelphia, PA / Seattle, WA / Washington, DC

VSL Corporation ("VSL") claims a strict proprietary right in all drawings,specifications and design concepts ("information") set forth on this sheet. The use of such information by any party, in part, or any reproduction thereof, is restricted to the terms of the agreement under which it was prepared and to the made-for-VSL-or-owner provided license. All other use is strictly prohibited,and VSL assumes no liability therefore.

RETAINED EARTH
ELEVATION WALL NO. 4

BLENDON & MIFFLIN TOWNSHIPS
PID NO. 12510
FRANKLIN COUNTY, OH

JOB NO: 0H-1844

SHEET: 14 OF 20

CALC BY _____ DATE _____
CHKD BY _____ DATE _____

FRANKLIN COUNTY
FRA-270-32.46

OHIO
F.H.W.A. REGION

503
593

ELEVATION AT TOP OF COPING (TYP.)

STA 1397+30.59 EL 854.973 | STA 1397+50.00 EL 854.600 | STA 1398+00.00 EL 853.630 | STA 1398+50.00 EL 852.670 | STA 1399+00.00 EL 851.710 | STA 1399+50.00 EL 850.750 | STA 1399+90.29 EL 849.976

TOP OF BARRIER
TOP OF COPING
BOTTOM OF COPING

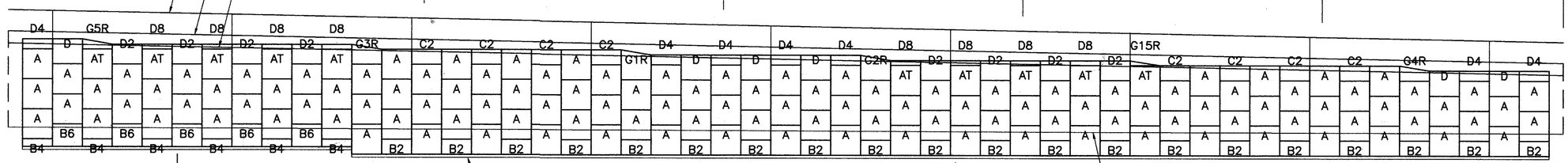
D4 G5R D8 D8 D8 D8 D8 G3R C2 C2 C2 C2 D4 D4 D4 D4 D8 D8 D8 D8 G15R C2 C2 C2 C2 G4R D4 D4
D D D2 D2 D2 D2 D2 D2 D2 G1R D D D C2R D2 D2 D2 D2 C2 C2 C2 C2 D D D
A AT A A A

5-9-R

CALC BY		FRANKLIN COUNTY	OHIO
CHKD BY		FRA-270-32.46	F.H.W.A. REGION
DATE			

504
593

END M.S.E. WALL NO. 5
STA 1372+50.00 CDS
(30.08' LT.)
EL 855.540

ELEVATION AT TOP OF COPING (TYP.)

STA 1372+00.00
EL 857.120

STA 1371+50.00
EL 858.690

STA 1371+00.00
EL 860.270

STA 1370+50.00
EL 861.850

STA 1370+39.36
EL 862.184

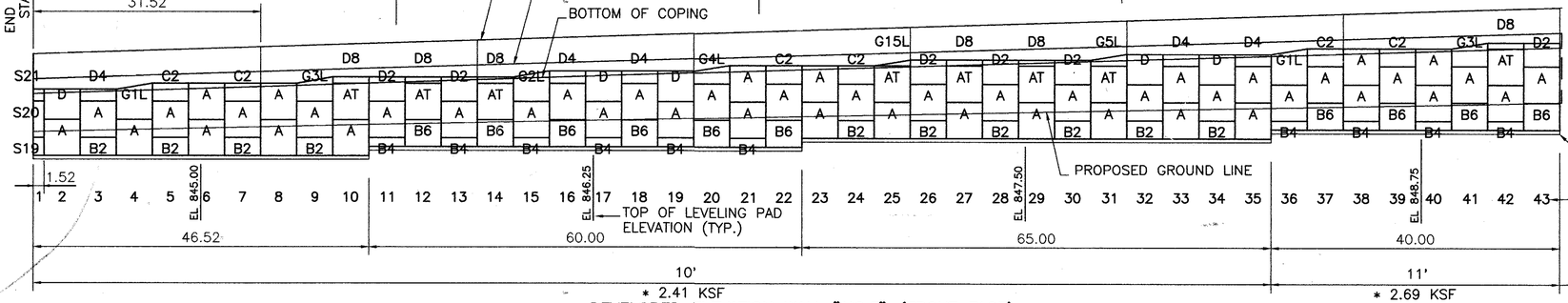

DEVELOPED ELEVATION WALL "NO.5" (FRONT FACE)

SCALE: 1"=10'-0"

STA 1370+39.36
EL 862.184

STA 1370+00.00
EL 863.420

STA 1369+50.00
EL 865.000

STA 1369+00.00
EL 866.570

STA 1368+50.00
EL 868.150

STA 1368+28.72
EL 868.822

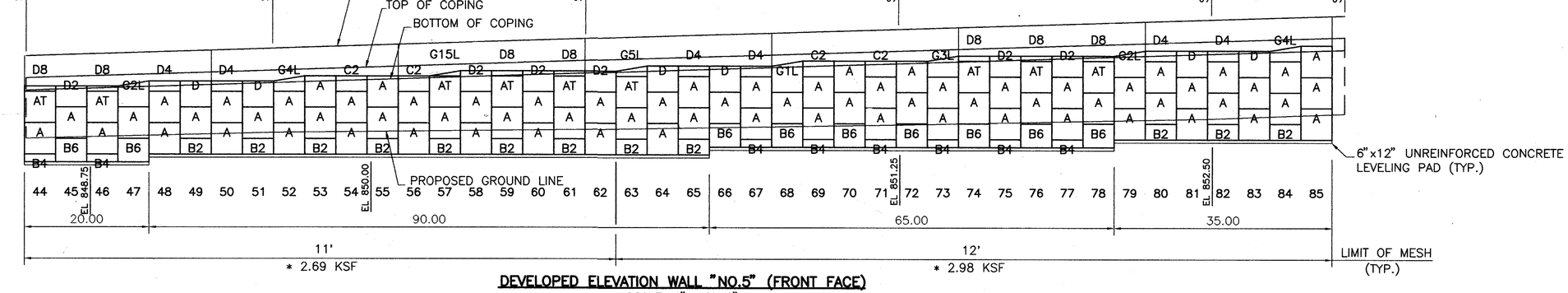

DEVELOPED ELEVATION WALL "NO.5" (FRONT FACE)

SCALE: 1"=10'-0"

STA 1368+28.72
EL 868.822

STA 1368+00.00
EL 869.730

STA 1367+50.00
EL 871.300

STA 1367+00.00
EL 872.860

STA 1366+50.00
EL 874.320

STA 1366+17.84
EL 874.584

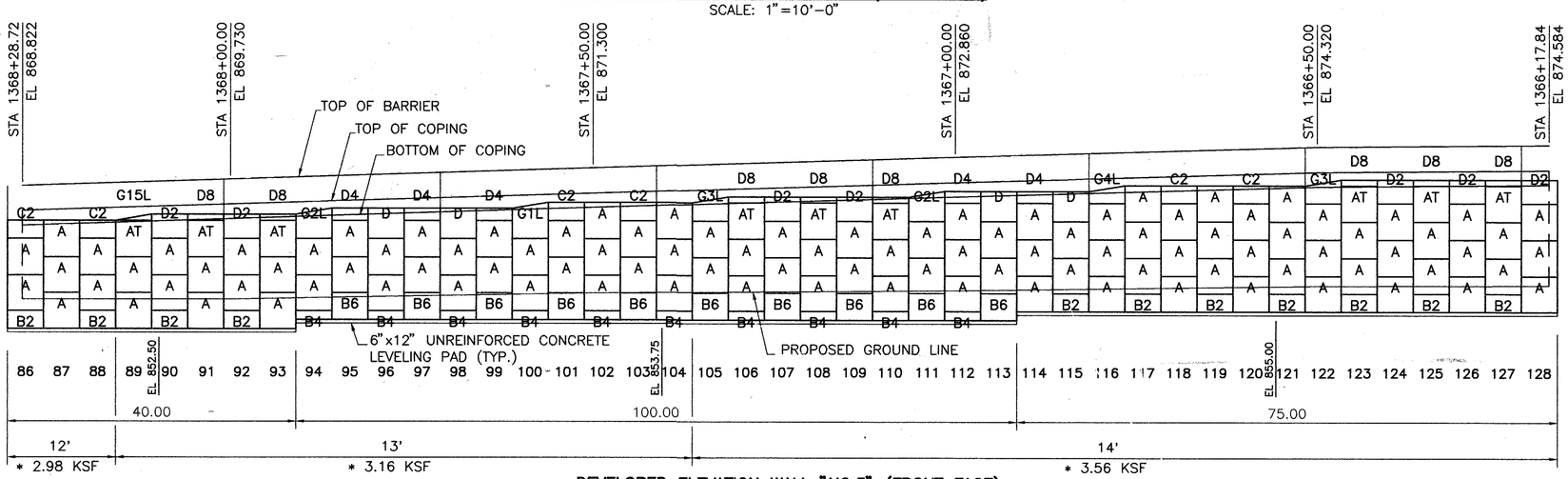

DEVELOPED ELEVATION WALL "NO.5" (FRONT FACE)

SCALE: 1"=10'-0"

* MAXIMUM FINAL BEARING PRESSURE

U.S. PATENT NUMBER 4,725,170

DESIGN OF ALL WALLS IS BASED ON THE ASSUMPTION THAT ALL MATERIALS, INCLUDING THE RETAINED EARTH BACKFILL AND METHODS OF CONSTRUCTION CONFORM TO THE SPECIFICATIONS FOR RETAINED EARTH WALLS.

THESE DRAWINGS ARE CERTIFIED WITH RESPECT TO INTERNAL STABILITY OF RETAINED EARTH STRUCTURES ONLY.

FABRICATOR:

REV. No.	DATE	DESCRIPTION	MADE BY

REVISION SCHEDULE

ODOT PROJECT No.

BRIDGE No. FRA-270-32.46

DATE	ISSUED FOR	PRINTS	SEPIAS

CONSULT. ENGR:

CONTRACTOR:

DRAWN BY LC	DATE 9-19-94	MATERIAL
CHK'D JN	DATE 9-19-94	DRAWING No.
TRACED	DATE	OF
APP'D	DATE	

NO.	DATE	REVISION	BY

DES	DRN	CHK
9-19-94	9-19-94	9-19-94
JN	LC	JN

VSL
8008 HAUTE COURT
SPRINGFIELD, VA 22150
Phone: 703/451-4300
Fax: 703/451-0882

Washington, DC office: Atlanta, GA / Campbell, CA / Dallas, TX / Denver, CO / Honolulu, HI / Los Angeles, CA / Miami, FL / Minneapolis, MN / Philadelphia, PA / Seattle, WA / Washington, DC

VSL Corporation (VSL) claims a strict proprietary right in all conceptions, designs, plans and computations ("Information") set forth on this sheet. The use of such Information, whether for in part, or any reproduction thereof, without the written consent of VSL is prohibited and to the maximum extent permitted by law, VSL disclaims any liability therefore.

RETAINED EARTH
ELEVATION WALL NO. 5

BLENDON & MIFFLIN TOWNSHIPS
PID NO. 12510
FRANKLIN COUNTY, OH

JOB NO: OH-1844

SHEET: 16 OF 20

CALC BY DATE	FRANKLIN COUNTY FRA-270-32.46	OHIO F.H.W.A. REGION	505/593
CHKD BY DATE			

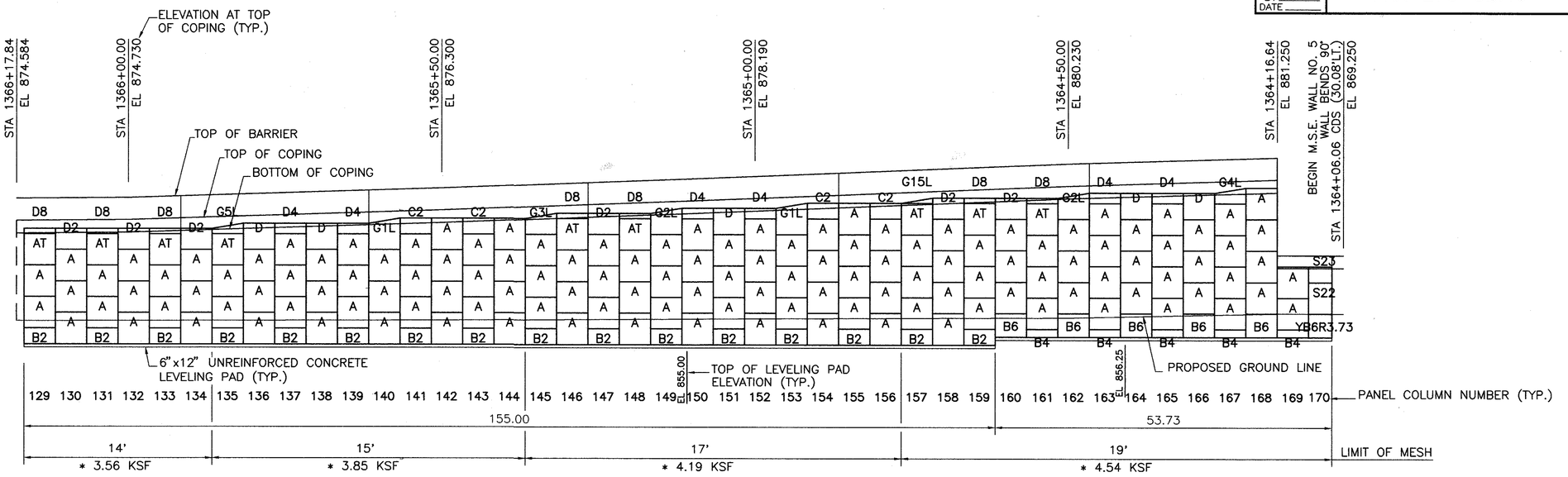

DEVELOPED ELEVATION WALL "NO.5" (FRONT FACE)
SCALE: 1"=10'-0"

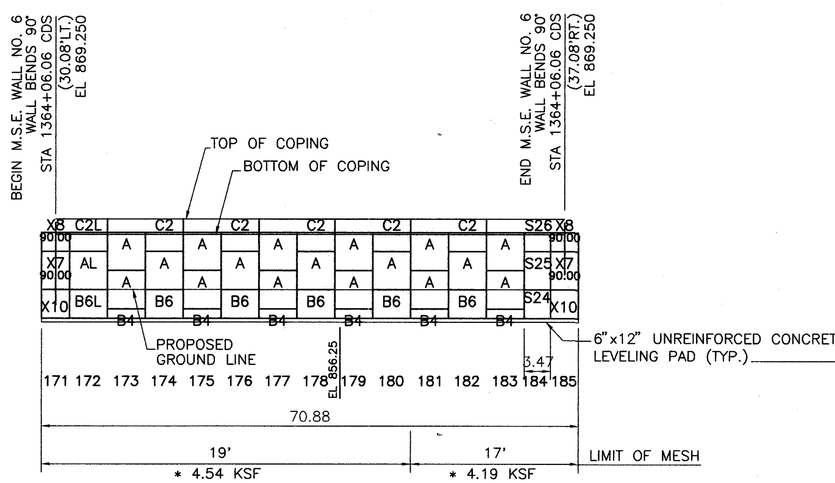

DEVELOPED ELEVATION WALL "NO.6" (FRONT FACE)
SCALE: 1"=10'-0"

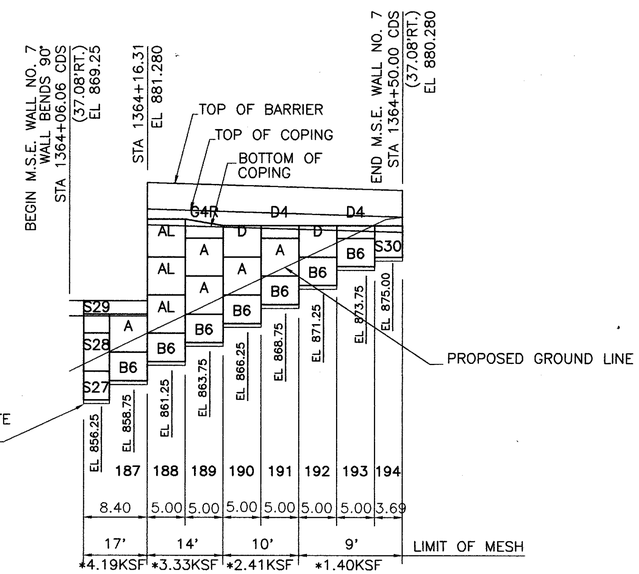

DEVELOPED ELEVATION WALL "NO.7" (FRONT FACE)
SCALE: 1"=10'-0"

U.S. PATENT NUMBER 4,725,170

DESIGN OF ALL WALLS IS BASED ON THE ASSUMPTION THAT ALL MATERIALS, INCLUDING THE RETAINED EARTH BACKFILL AND METHODS OF CONSTRUCTION CONFORM TO THE SPECIFICATIONS FOR RETAINED EARTH WALLS.

THESE DRAWINGS ARE CERTIFIED WITH RESPECT TO INTERNAL STABILITY OF RETAINED EARTH STRUCTURES ONLY.

* MAXIMUM FINAL BEARING PRESSURE

FABRICATOR:

REV. No.	DATE	DESCRIPTION	MADE BY

REVISION SCHEDULE

ODOT PROJECT No.

BRIDGE No. FRA-270-32.46

DATE	ISSUED FOR	PRINTS	SEPIAS

CONSULT. ENGR:
CONTRACTOR:

DRAWN BY LC	DATE 9-19-94	MATERIAL
CHK'D JN	DATE 9-19-94	DRAWING No.
TRACED	DATE	OF
APP'D	DATE	

NO.	DATE	REVISION	BY

DES	9-19-94	JN
DRN	9-19-94	LC
CHK	9-19-94	JN

VSL
Washington, DC office: 8006 HAUTE COURT SPRINGFIELD, VA 22150
Phone: 703/451-4300 Fax: 703/451-0862
Atlanta, GA / Campbell, CA / Dallas, TX / Denver, CO / Honolulu, HI / Los Angeles, CA / Miami, FL / Minneapolis, MN / Philadelphia, PA / Seattle, WA / Washington, DC

VSL Corporation ("VSL") claims a strict proprietary right in all drawings, specifications and calculations ("Information") set forth on this sheet. The use of such information in whole or in part, or any reproduction thereof, is restricted to the site for which it was prepared and to the material and/or service provided by VSL. Any other use is strictly prohibited, and VSL DISCLAIMES ANY LIABILITY therefore.

RETAINED EARTH
ELEVATION WALL NO. 5,6 & 7

BLENDON & MIFFLIN TOWNSHIPS
PID NO. 12510
FRANKLIN COUNTY, OH

JOB NO: OH-1844

SHEET: 17 OF 20

CALC BY		FRANKLIN COUNTY	OHIO
DATE		FRA-270-32.46	F.H.W.A. REGION
CHKD BY			
DATE			

506
593

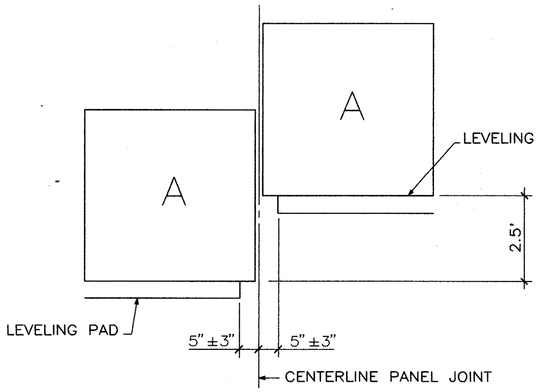

2.5' LEVELING PAD STEP DETAIL

N.T.S.

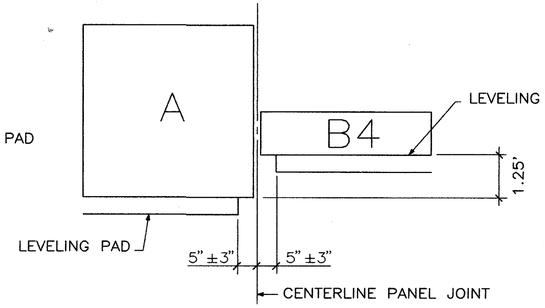

1.25' LEVELING PAD STEP DETAIL

N.T.S.

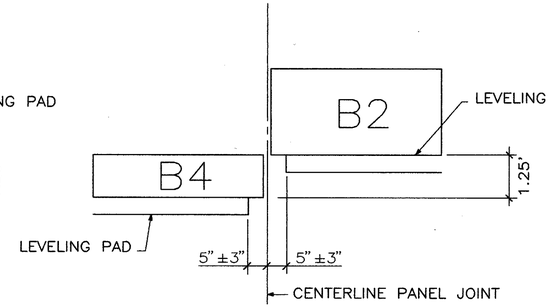

1.25' LEVELING PAD STEP DETAIL

N.T.S.

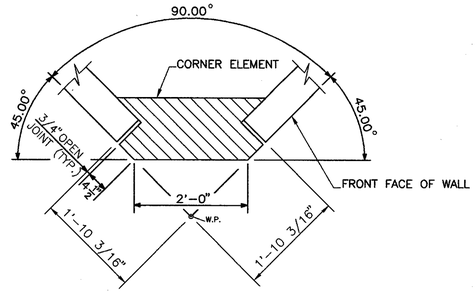

90° WALL BEND PLAN DETAIL

N.T.S.

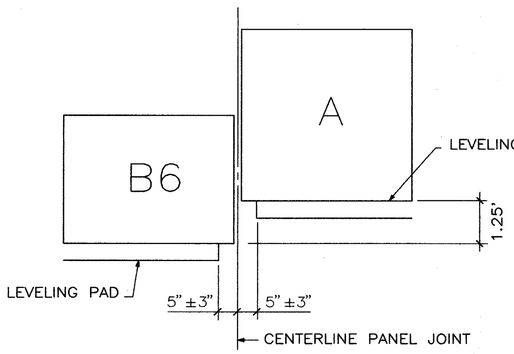

1.25' LEVELING PAD STEP DETAIL

N.T.S.

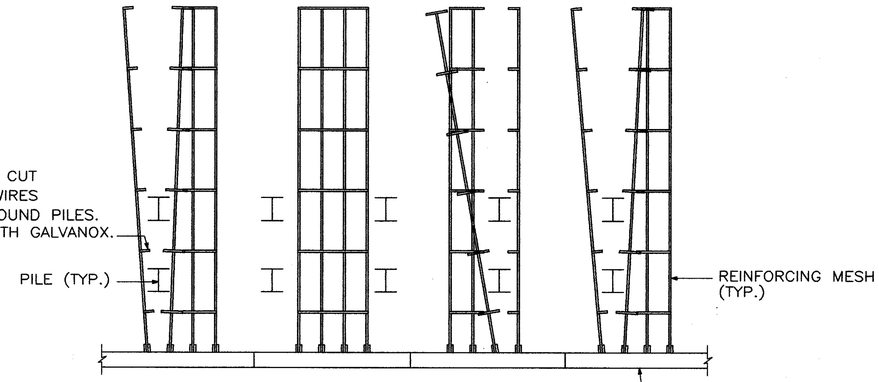

AVOID OBSTACLE DETAIL

N.T.S.

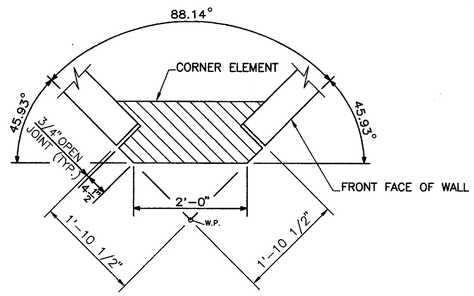

91.86° WALL BEND PLAN DETAIL

N.T.S.

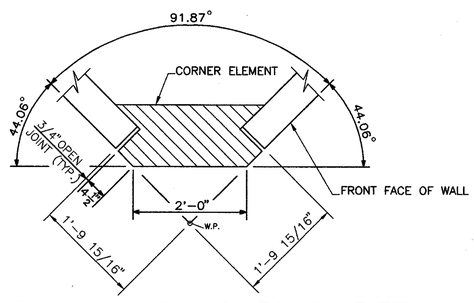

88.13° WALL BEND PLAN DETAIL

N.T.S.

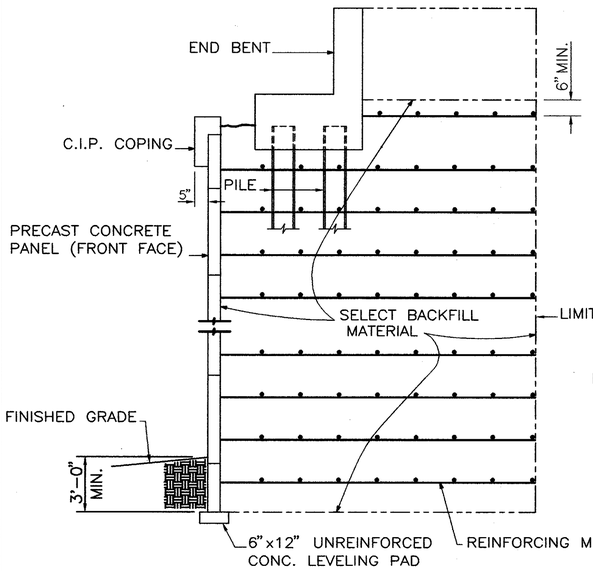

TYPICAL SECTION THRU ABUTMENT WALL

N.T.S.

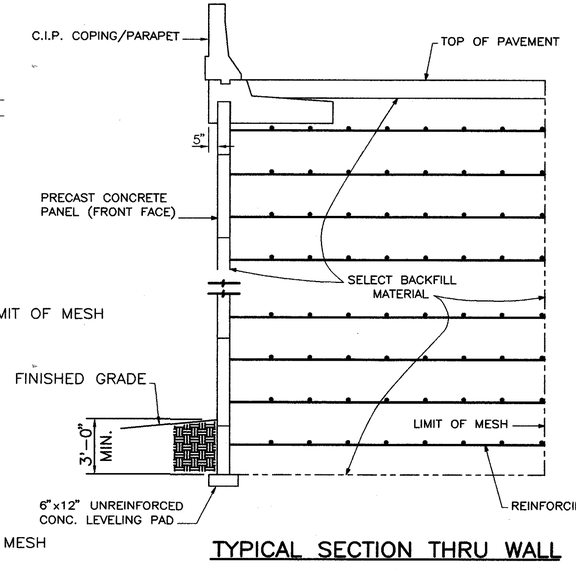

TYPICAL SECTION THRU WALL

N.T.S.

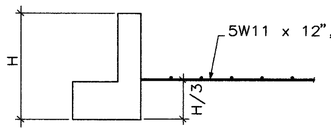

ABUTMENT	MESH LENGTH
FORWARD ABUTMENT CDN OVER RAMP B	18'
FORWARD ABUTMENT CDS OVER RAMP C	18'
FORWARD ABUTMENT CONNECTOR RD.	18'

ABUTMENT MESH

NOT TO SCALE

U.S. PATENT NUMBER 4,725,170

DESIGN OF ALL WALLS IS BASED ON THE ASSUMPTION THAT ALL MATERIALS, INCLUDING THE RETAINED EARTH BACKFILL AND METHODS OF CONSTRUCTION CONFORM TO THE SPECIFICATIONS FOR RETAINED EARTH WALLS.

THESE DRAWINGS ARE CERTIFIED WITH RESPECT TO INTERNAL STABILITY OF RETAINED EARTH STRUCTURES ONLY.

FABRICATOR:

REV. No.	DATE	DESCRIPTION	MADE BY

REVISION SCHEDULE

ODOT PROJECT No.

BRIDGE No. FRA-270-32.46

CONSULT. ENGR:

CONTRACTOR:

DATE	ISSUED FOR	PRINTS	SEPIAS

DRAWN BY LC	DATE 9-19-94	MATERIAL
CHK'D JN	DATE 9-19-94	DRAWING No.
TRACED	DATE	OF
APP'D	DATE	

NO.	DATE	REVISION	BY

DES	9-19-94	JN	
DRN	9-19-94	LC	
CHK	9-19-94	JN	

VSL
8008 HAUTE COURT
SPRINGFIELD, VA 22150
Phone: 703/451-4300
Fax: 703/451-0852
Washington, DC office: Atlanta, GA / Dallas, TX / Miami, FL / Philadelphia, PA / Raleigh, NC / San Jose, CA / Washington, DC

VSL Corporation ("VSL") has provided this drawing for its exclusive right in all drawings, specifications and calculations prepared or modified by VSL as instruments of service for use solely with respect to this sheet. This use of such information, in whole or in part, by any person or entity other than VSL, is restricted to the specific project and site for which it was prepared. Any unauthorized use, reproduction or publication thereof, is restricted to the site for which it was prepared. Any unauthorized use of and/or service provided by VSL to any third party is strictly prohibited and VSL DISCLAIMS ANY LIABILITY therefor.

RETAINED EARTH
TYPICAL DETAILS

BLENDON & MIFFLIN TOWNSHIPS
PID NO. 12510
FRANKLIN COUNTY, OH

JOB NO: OH-1844

SHEET: 18 OF 20

CALC BY DATE	FRANKLIN COUNTY FRA-270-32.46	OHIO F.H.W.A. REGION
CHKD BY DATE		

507
593

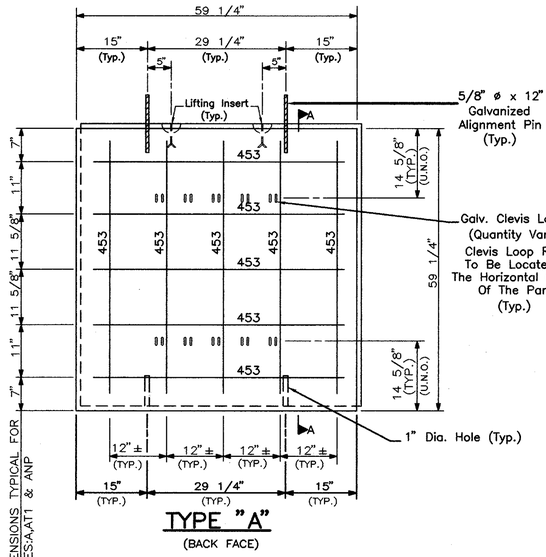

TYPE "A"
(BACK FACE)

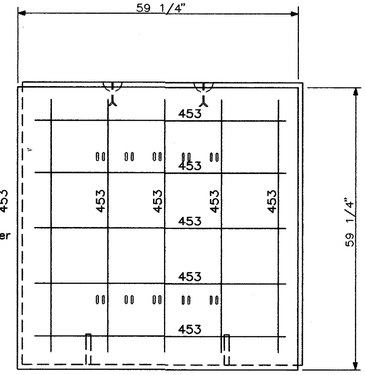

TYPES "AT1" /"ANP"
(BACK FACE)

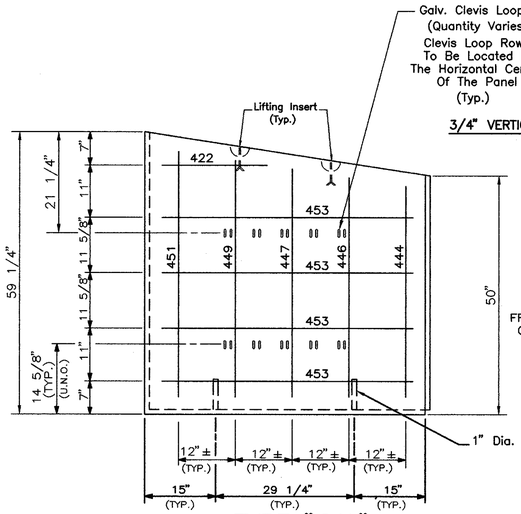

TYPE "G1L"
(BACK FACE)
"G1R" OPP. HAND

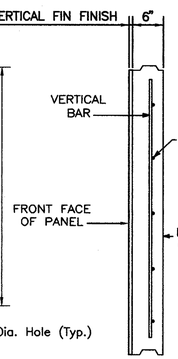

SECTION A-A

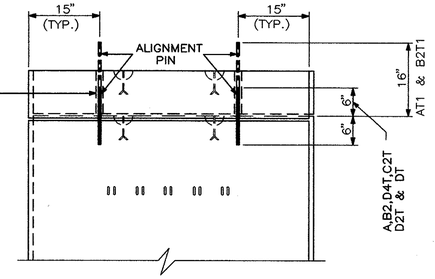

TYPES: A,B2,D4T,C2T,D2T,DT,AT1 & B2T1

NOTE: A,B2,D4T,C2T,D2T & DT PANELS HAVE 2-12"GALV.ALIGNMENT PINS.
AT1 & B2T1 PANELS HAVE 2-22"GALV.ALIGNMENT PINS.
ANP PANELS HAVE NO ALIGNMENT PINS.

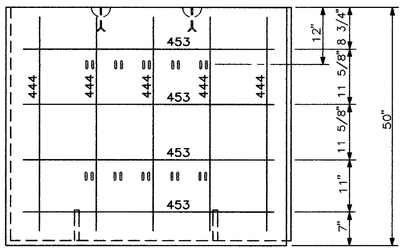

TYPE "D"
(BACK FACE)

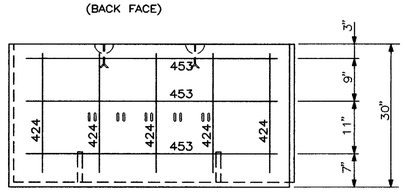

TYPE "C2"
(BACK FACE)

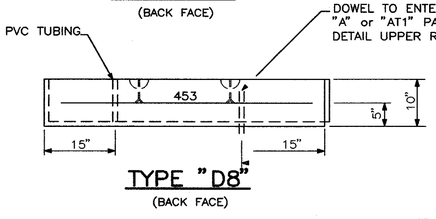

TYPE "D8"
(BACK FACE)

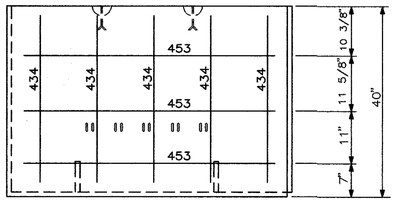

TYPE "D2"
(BACK FACE)

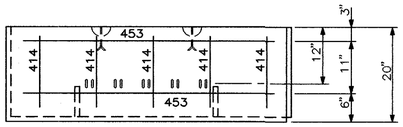

TYPE "D4"
(BACK FACE)

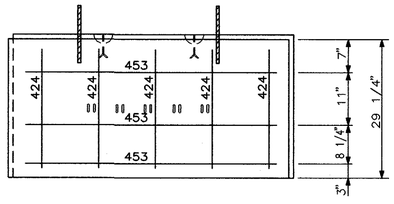

TYPE "B2"
(BACK FACE)

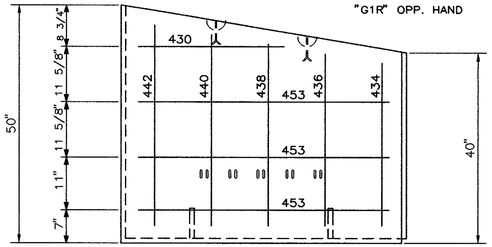

TYPE "G2L"
(BACK FACE)
"G2R" OPP. HAND

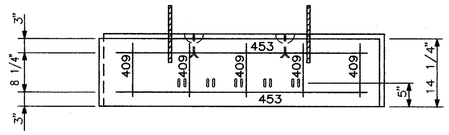

TYPE "B4"
(BACK FACE)

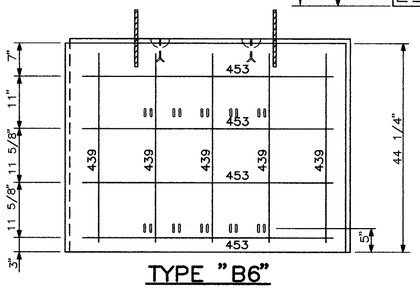

TYPE "B6"
(BACK FACE)

U.S. PATENT NUMBER 4,725,170

DESIGN OF ALL WALLS IS BASED ON THE ASSUMPTION THAT ALL MATERIALS, INCLUDING THE RETAINED EARTH BACKFILL AND METHODS OF CONSTRUCTION CONFORM TO THE SPECIFICATIONS FOR RETAINED EARTH WALLS.

THESE DRAWINGS ARE CERTIFIED WITH RESPECT TO INTERNAL STABILITY OF RETAINED EARTH STRUCTURES ONLY.

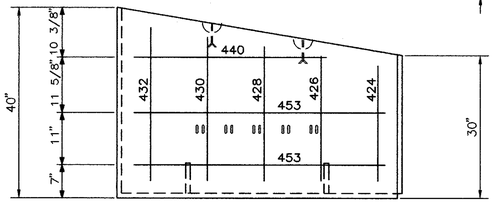

TYPE "G15L"
(BACK FACE)
"G15R" OPP. HAND

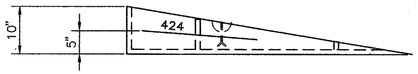

TYPE "G3L"
(BACK FACE)
"G3R" OPP. HAND

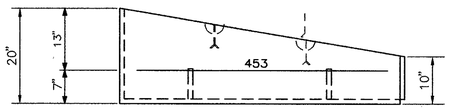

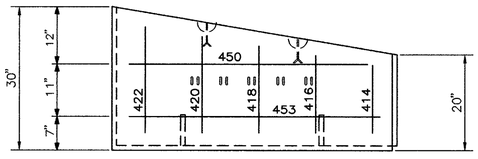

TYPE "G5L"
(BACK FACE)
"G5R" OPP. HAND

TYPE "G4L"
(BACK FACE)
"G4R" OPP. HAND

PANEL REINFORCEMENT (BACK FACE)

NOTES:
1. ALL REINFORCING STEEL TO BE #4 BARS.
2. ALL REINFORCING STEEL TO BE GRADE 60.
3. DIMENSIONS SHOWN ARE TO THE FRONT FACE UNLESS NOTED OTHERWISE.
4. HORIZONTAL BARS TO HAVE 2"(MIN.),2 1/2"(MAX.) CLEAR TO THE BACK FACE.
5. VERTICAL BARS TO HAVE 2 1/2"(MIN.),3"(MAX.) CLEAR TO THE BACK FACE.
6. ALL BARS TO HAVE 2" MIN. CLEAR TO SIDES.
7. REINFORCEMENT LABELS INDICATE BAR SIZE AND LENGTH. EXAMPLE: 453 IS A #4 BAR 53" LONG.
8. FOR LEFT END PANELS REMOVE THE ONE INCH VERTICAL MALE KEY FROM THE LEFT SIDE OF PANEL AS SEEN FROM THE FRONT FACE.

FABRICATOR:

REV. No.	DATE	DESCRIPTION	MADE BY

REVISION SCHEDULE

ODOT PROJECT No.

BRIDGE No. FRA-270-32.46

DATE	ISSUED FOR	PRINTS	SEPIAS

CONSULT. ENGR:

CONTRACTOR:

DRAWN BY	DATE	MATERIAL
LC	9-19-94	
CHK'D JN	DATE 9-19-94	DRAWING No.
TRACED	DATE	OF
APP'D	DATE	

NO.	DATE	REVISION	BY

DES	DRN	CHK
9-19-94	9-19-94	9-19-94
JN	LC	JN

VSL

BOOK HAUTE COURT
SPRINGFIELD, VA 22150
Phone: 703/451-4300
Fax: 703/451-0882

Washington, DC office: Atlanta, GA / Dallas, TX / Miami, FL / Philadelphia, PA
Raleigh, NC / San Jose, CA / Washington, DC

VSL Corporation ("VSL") claims a strict proprietary interest in all information, data, design and calculations ("information") set forth on this sheet. The use of such information by any person, or any reproduction thereof, for any purpose other than the one for which it was prepared and to the most extent permitted by law, is strictly prohibited and VSL disclaims any liability therefor.

RETAINED EARTH
PANEL REINFORCEMENT DETAILS

BLENDON & MIFFLIN TOWNSHIPS
PID NO. 12510
FRANKLIN COUNTY, OH

JOB NO: OH-1844

SHEET: 19 OF 20

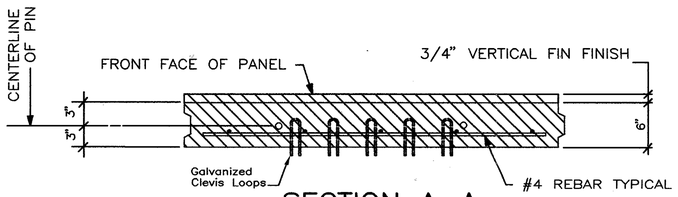

SECTION A–A

N.T.S.

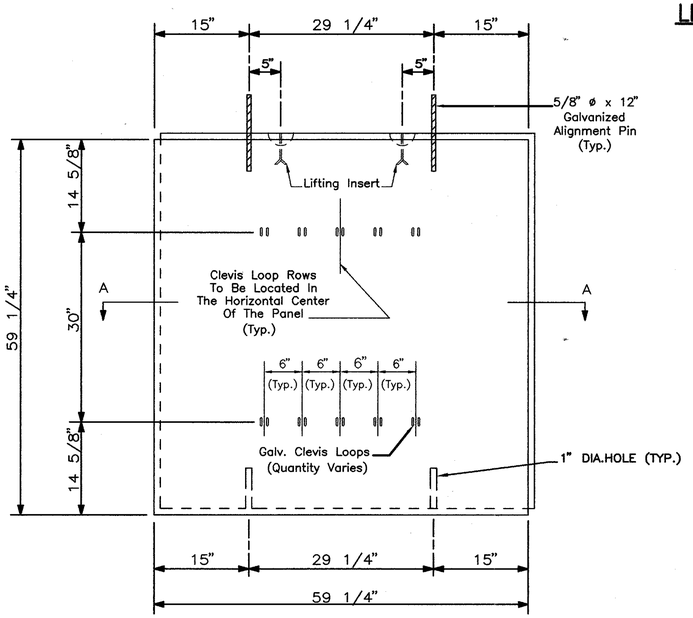

STANDARD "A" PANEL

Back Face View

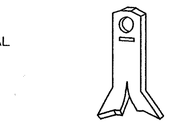

LIFTING INSERT DETAIL

(BURKE® SPREAD ANCHOR)
(ONE TON)

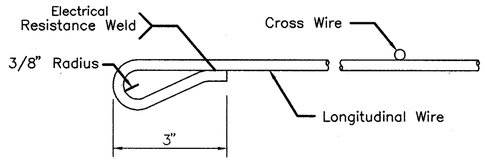

WIRE MESH LOOP DETAIL

N.T.S.

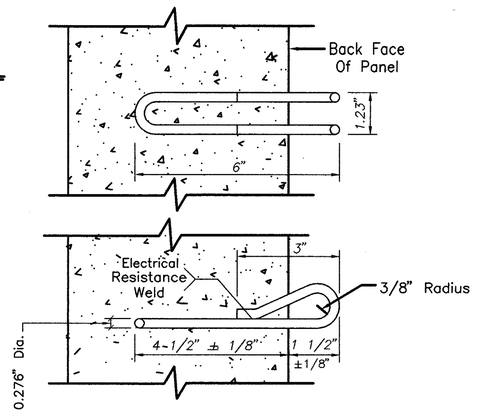

CLEVIS LOOP DETAIL

N.T.S.

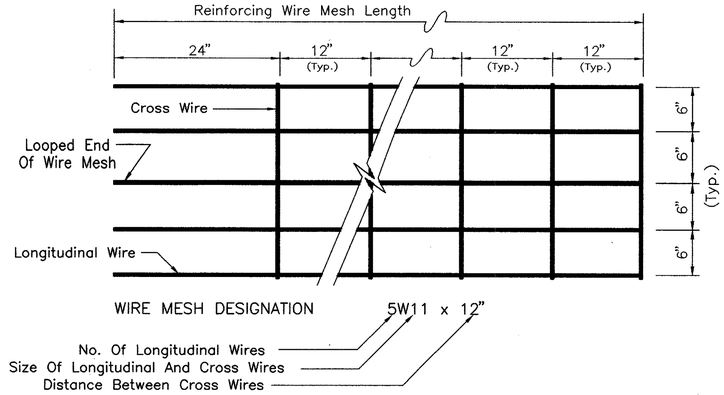

REINFORCING MESH DETAIL

(5W11 MESH SHOWN)

NOTES :

1. 5W11 Mesh Shown, Mesh Configuration Varies. In 5W11, 5 Designates The No. Of Longitudinal Members Per Unit, While W11 Is The ASTM Standard Wire Reinforcement Designation. See Wall Elevations For Individual Mesh Configurations.
2. Number Of Mesh Wire Loops Varies According To Mesh Configuration.
3. All Panel Joints On Back Face Of Panels To Be Covered With Filter Fabric. Refer To Partial Wall Elevation Detail, This Sheet.
4. Use 2"x2" Polyurethane Foam Strips In The Vertical Panel Joints.
5. All Connections Must Align Within 1/8 Inch Of Alignment.

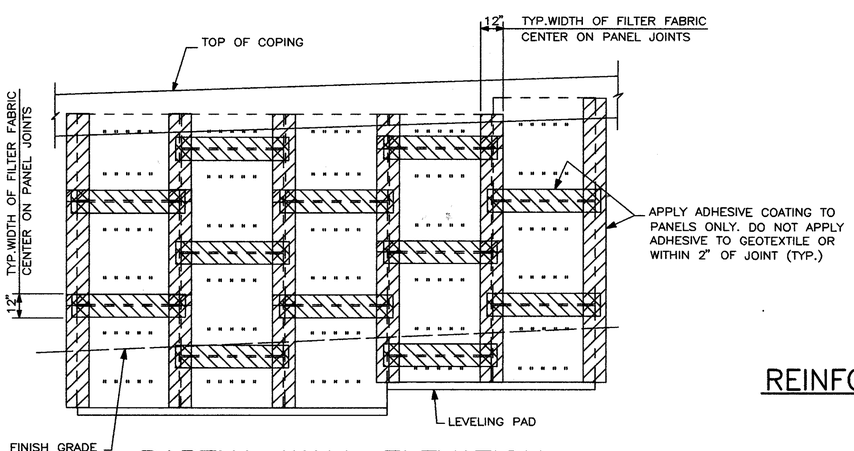

PARTIAL WALL ELEVATION

(BACK FACE)

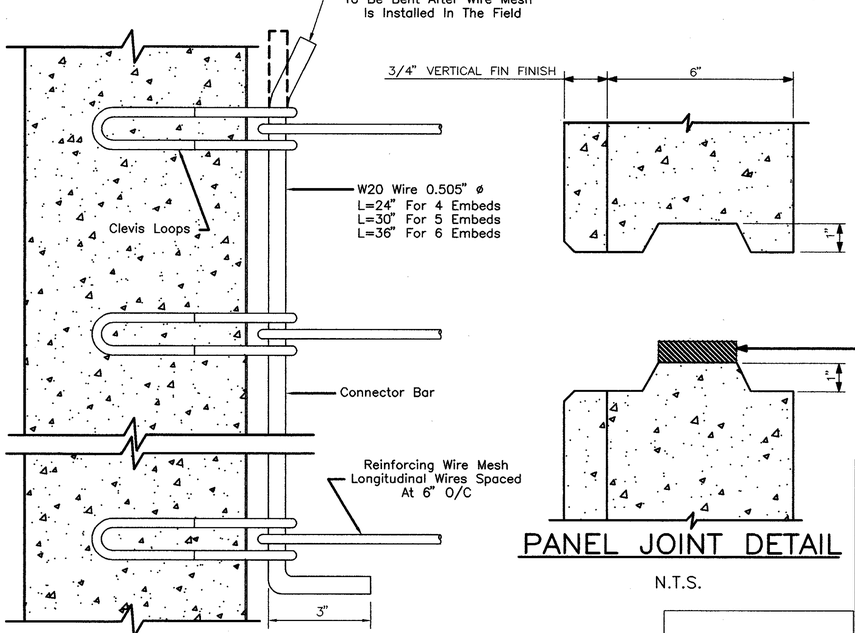

REINFORCING MESH CONNECTION DETAIL

N.T.S.

PANEL JOINT DETAIL

N.T.S.

U.S. PATENT NUMBER 4,725,170

DESIGN OF ALL WALLS IS BASED ON THE ASSUMPTION THAT ALL MATERIALS, INCLUDING THE RETAINED EARTH BACKFILL AND METHODS OF CONSTRUCTION CONFORM TO THE SPECIFICATIONS FOR RETAINED EARTH WALLS.

THESE DRAWINGS ARE CERTIFIED WITH RESPECT TO INTERNAL STABILITY OF RETAINED EARTH STRUCTURES ONLY.

CALC BY _____ DATE _____
CHKD BY _____ DATE _____

FRANKLIN COUNTY
FRA–270–32.46

OHIO
F.H.W.A. REGION

508
593

NO.	DATE	REVISION	BY

DES	DRN	CHK
9-19-94	9-19-94	9-19-94
JN	LC	JN

VSL
Washington, DC office: 8008 WHITE OAK COURT SPRINGFIELD, VA 22150
Atlanta, GA / Dallas, TX / Miami, FL / Philadelphia, PA
Raleigh, NC / San Jose, CA / Washington, DC
Phone: 703/451-4300
Fax: 703/451-0852

VSL Corporation ("VSL") claims a strict proprietary right in all drawings/specifications/electronic media ("information") set forth on this sheet. The use of such information by any method or for any purpose, is restricted to the specific project for which it was prepared and to the mutual and/or service provided by VSL. Any other use is strictly prohibited and VSL specifically disclaims any liability therefore.

RETAINED EARTH

STANDARD DETAIL SHEET

BLENDON & MIFFLIN TOWNSHIPS
PID NO. 12510
FRANKLIN COUNTY, OH

FABRICATOR:

REV. No.	DATE	DESCRIPTION	MADE BY

REVISION SCHEDULE

ODOT PROJECT No.

BRIDGE No. FRA–270–32.46

CONSULT. ENGR:

CONTRACTOR:

DRAWN BY	DATE	MATERIAL
LC	9-19-94	
CHK'D JN	DATE 9-19-94	DRAWING No.
TRACED	DATE	OF
APP'D	DATE	

DATE	ISSUED FOR	PRINTS	SEPIAS

JOB NO: OH–1844

SHEET: 20 OF 20

RETAINING WALLS A, B, C & D

GENERAL NOTES & ESTIMATED QUANTITIES

GENERAL NOTES

DESIGN SPECIFICATIONS: THIS STRUCTURE CONFORMS TO "STANDARD SPECIFICATIONS FOR HIGHWAY BRIDGES" ADOPTED BY THE AMERICAN ASSOCIATION OF STATE HIGHWAY AND TRANSPORTATION OFFICIALS, 1993 AND THE ODOT BRIDGE DESIGN MANUAL.

DESIGN DATA:

WALL TYPE	EQUIVALENT FLUID PRESSURE (lb./c.f.)		COEFF. OF FRICTION
	ACTIVE	PASSIVE	
A, B, C & D	50	360	0.45

DESIGN STRESSES:
CONCRETE CLASS C – COMPRESSIVE STRENGTH 4000 P.S.I.

REINFORCING STEEL – ASTM A615, A616 OR A617 GRADE 60 MINIMUM YIELD STRENGTH 60,000 P.S.I. (ALL STEEL SHALL BE EPOXY COATED)

ITEM SPECIAL, SEALING OF CONCRETE SURFACES: A CONCRETE SEALER SHALL BE APPLIED TO THE CONCRETE SURFACES SHOWN ON SHEET 8/15. SEE THE PROPOSAL NOTE FOR SURFACE PREPARATION REQUIREMENTS, APPLICATION RATES, MATERIAL REQUIREMENTS AND APPLICATION PROCEDURE.

FOUNDATION BEARING PRESSURE: WALL FOOTINGS, AS DESIGNED, PRODUCE A MAXIMUM BEARING PRESSURE OF 1.3 TONS PER SQUARE FOOT.

BAR SPLICES: MINIMUM REINFORCING BAR SPLICE LENGTHS SHALL BE NOT LESS THAN THE FOLLOWING:
NO. 5 BARS – 2'–0"
NO. 7 BARS – 3'–0"

COVER: BOTTOM REINFORCEMENT FOR FOOTINGS SHALL HAVE A 3" MINIMUM CONCRETE COVER. ALL OTHER REINFORCEMENT SHALL HAVE A 2" MINIMUM CONCRETE COVER, UNLESS OTHERWISE NOTED.

FOOTING KEY: FOOTING KEY SHALL BE PLACED AGAINST UNDISTURBED EARTH, SEE CMS SECTION 503.04.

POROUS BACKFILL WITH FILTER FABRIC: 2'–0" THICK POROUS BACKFILL SHALL EXTEND FROM 6" BELOW THE FLOW LINE OF THE 6" PERFORATED C.P.P. UP TO THE PLANE OF SUBGRADE, AND LATERALLY TO THE ENDS OF THE WALLS. GEOTEXTILE FABRIC SHALL CONFORM WITH 712.09, TYPE A. THE BOTTOM OF THE POROUS BACKFILL SHALL BE SLOPED (1 IN. PER FT. MIN.) LATERALLY TO DRAIN. GEOTEXTILE FABRIC IS INCLUDED WITH POROUS BACKFILL FOR PAYMENT.

CONCRETE PARAPETS: WITHIN 48 HOURS AFTER PLACEMENT OF PARAPET CONCRETE SAWCUT 1 INCH DEEP JOINTS INTO THE CONCRETE PARAPET AT LOCATIONS AS DETAILED IN THE PLANS. THE SAW CUT SHALL BE MADE IN THE COMPLETE CIRCUMFERENCE OF THE PARAPET, STARTING AND ENDING AT THE ELEVATION OF THE CONCRETE DECK, AND THE COMPLETED SAWCUT SHALL BE FILLED WITH A CAULKING MATERIAL CONFORMING TO FEDERAL SPECIFICATION TT–S–00227E. THE BOTTOM HALF INCH OF THE ONE INCH DEEP SAWED JOINT IN BOTH THE INSIDE AND OUTSIDE FACES OF THE PARAPET SHOULD BE LEFT UNSEALED TO ALLOW ANY WATER WHICH MAY ENTER THE JOINT TO ESCAPE.

PAYMENT FOR LABOR, MATERIALS AND INSTALLATION OF CAULKING MATERIAL SHALL BE INCLUDED IN ITEM 511 CLASS C CONCRETE RETAINING WALL OR WINGWALL, AS PER PLAN.

INDEX	SHEET NO.
GENERAL NOTES & ESTIMATED QUANTITIES	1/15
SITE PLANS	2–3/15
PLANS & ELEVATIONS	4–7/15
TYPICAL SECTIONS & TYPICAL ELEVATION	8/15
TRANSITION DETAILS	9–11/15
DRAINAGE DETAILS	12–13/15
DRAINAGE DETAILS & REINFORCING SUB–SUMMARY	14/15
REINFORCING STEEL LIST	15/15

ESTIMATED QUANTITIES

CALC. BY: B.G. DATE: 10–94
CHKD. BY: R.B. DATE: 10–94

ITEM	ITEM EXT.	TOTAL	UNIT	DESCRIPTION
503	21101	1248	CU. YD.	UNCLASSIFIED EXCAVATION, AS PER PLAN
509	15830	110,936	POUND	EPOXY COATED REINFORCING STEEL, GRADE 60
511	46001	646	CU. YD.	CLASS C CONCRETE, RETAINING WALL OR WINGWALL, AS PER PLAN *
511	46500	617	CU. YD.	CLASS C CONCRETE, FOOTING
SPECIAL	51267502	1698	SQ. YD.	SEALING OF CONCRETE SURFACES (1) (NON–EPOXY), (SEE PROPOSAL NOTE)
516	30501	61	LIN. FT.	PVC WATERSTOP, AS PER PLAN
516	13600	17	SQ. FT.	1" PREFORMED EXPANSION JOINT FILLER
518	21200	388	CU. YD.	POROUS BACKFILL WITH FILTER FABRIC
518	40001	1137	LIN. FT.	6" PERFORATED CORRUGATED PLASTIC PIPE, AS PER PLAN
518	40011	387	LIN. FT.	6" NON–PERFORATED CORRUGATED PLASTIC PIPE, INCLUDING SPECIALS, AS PER PLAN

* NO DEDUCTION HAS BEEN MADE FOR THE WALL CONCRETE AT THE INLET LOCATIONS.

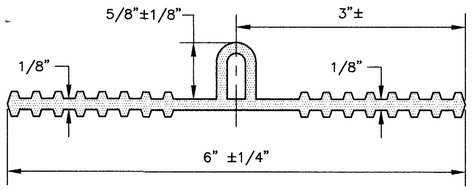

WATERSTOP DETAIL 'A–1'

≠ FOR THE FIRST POUR, THE WATERSTOP SHOULD BE HELD SECURELY IN PLACE BY THE USE OF SPLIT FORMS AND TIE WIRES. FOR THE SECOND POUR, SECURE THE FREE END OF THE WATERSTOP IN THE PROPER POSITION WITH TIE WIRES. ALTERNATE METHODS, AS APPROVED BY THE ENGINEER, MAY BE USED TO ENSURE THE CORRECT POSITIONING OF THE WATERSTOP.

WATERSTOP SHALL BE DUO–PVC BY W.R. MEADOWS, INC., ELGIN ILLINOIS: A.H. HARRIS & SONS, INC., LATHAM, NEW YORK, OR AN APPROVED ALTERNATE.

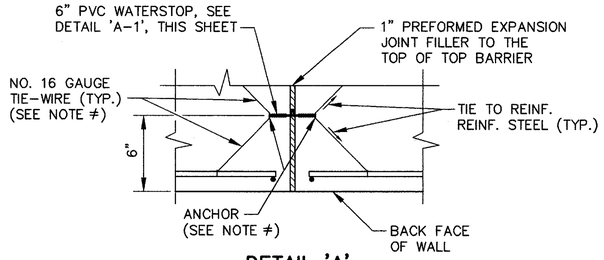

DETAIL 'A'

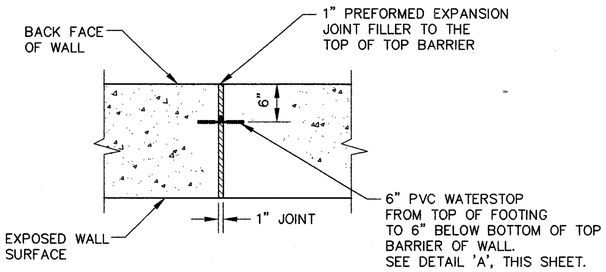

EXPANSION JOINT

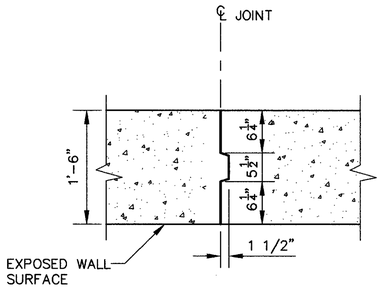

CONTRACTION JOINT

(SHOWN AT SECTION OF WALL THAT IS 1'–6")

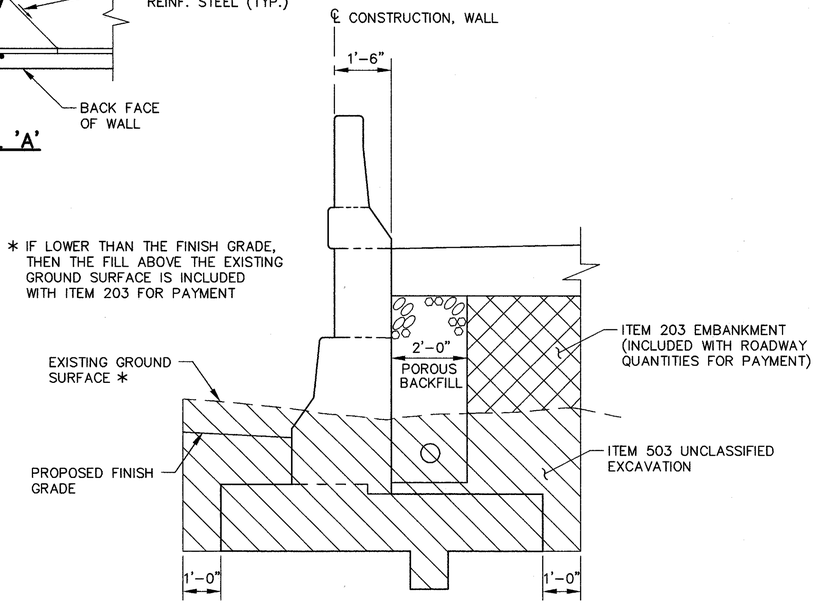

PAY LIMITS FOR UNCLASSIFIED EXCAVATION

NOTE: FOR A FILL SECTION, THERE IS NO UNCLASSIFIED EXCAVATION

PLOT SCALE = 1 = 1
COL #19 C:\DRAWING\0609278\A–D GNLDWG MAY–08–1996

PREPARED BY ms consultants, inc. CONSULTING ENGINEERS & PLANNERS 8900 BEDFORD BOULEVARD, COLUMBUS, OHIO

DESIGNED B.G. DRAWN C.H. CHECKED R.B. REVIEWED J.A.B. DATE 10–94 REVISED 5–96

GENERAL NOTES & ESTIMATED QUANTITIES
RETAINING WALLS A, B, C & D

FRA–270–32.46

1/15

509/593

C.B.
EX. STORM/DETENTION POND
WOODED AREA 12" TO 36" TREES
STONE LANDSCAPING WALL
PIPE
STA C-1373+50.00
END TYPE C BARRIER
BEGIN CIP WALL
4:1
12:1
22:1
19:1
2:1
MSE WALL-1
EXISTING 20' UTILITY EASEMENT
LA-R/W
C-1373
S 03°57'54" E
STA. C-1372+59.59=
STA. CDN-1372+58.60
BEGIN TYPE C BARRIER
8'
5'
16'
C-1374
RIB-53
B/L CONSTRUCTION RAMP C
C-1375
C-1376
C-1377
C-1378
PC = C-1377+53.11
= 1377+50.56, 190.50' LT.
RETAINING WALL "A"
MSE WALL-4
21"SAN.
STA. CDN-1372+58.60
22.00' LT.
WOODED AREA 1" TO 6" TREES
STA C-1376+50
END CIP WALL,
BEGIN MSE WALL &
TYPE D BARRIER
MH
CDN-1373
EX. LA-R/W
S 00°16'29" E
10'
12'
12'
17'
CDN-1374
C3
C/L CONSTRUCTION CDN
CDN-1375
RIB-52
CDN-1376
1" TO 3" OAK TREES
CDN-1377
PRC = CDN-1377+13.73
= 1377+10.26, 123.50' LT.
CDN-1378
4" ELM
RIB-54
PC = CDN-1373+24.37
= 1373+25.61, 142.76' LT.
18"G (ABANDONED)
R-2
MSE WALL-3
24:1
VAR.
9'
117°
E
6" UNDERDRAIN
STA CDN-1375+00
END MSE WALL &
TYPE D BARRIER
BEGIN CIP WALL
STA CDN-1378+00.00
END CIP WALL,
BEGIN TYPE C BARRIER
B-1373
I-270 NORTHBOUND
RETAINING WALL "A"

LIMREA
CONST. LIMITS
PRIVATE DRIVE ASPHALT PAVEMENT
MSE WALL-1
LA-R/W
D-1401
S 04°14'59" W
D-1402
D-1403
D-1404
D-1405
D-1406
STA D-1403+00.00
END MSE WALL, LT.
14" MAPLE
C22
PC = D-1402+94.25
= 1402+66.57, 180.82' LT.
B/L CONSTRUCTION RAMP D
MSE WALL-4
RETAINING WALL "B"
3" MAPLE
2" MAPLE
EX. LA-R/W
STA D-1402+50.00, RT.
END MSE WALL & TYPE D
BARRIER, BEGIN CIP WALL
STA D-1404+50.00, RT.
END CIP WALL
9" OAK
6" ELM
R-13
R-15
CDN-1401
CDN-1402
CDN-1403
CDN-1404
CDN-1405
CDN-1406
S 04°31'48" W
S 03°34'46" W
C/L CONSTRUCTION CDN
PI STA. CDN-1402+81.83
DEF. 00°57'02" LT.
= 1402+61.59, 110.50' LT.
2.5'
17'
36'
SIGN
6" UNDERDRAIN
I-270 NORTHBOUND
RETAINING WALL "B"

PLOT SCALE=1" = 20'
C:\DRAWING\06092306\LA-DWALLS\6092WAB.DWG
FEBRUARY-08-1995

PREPARED BY
ms consultants, inc.
CONSULTING ENGINEERS & PLANNERS
4000 EMBER BOULEVARD, COLUMBUS, OHIO

DATE 10-94
REVIEWED J.A.B.
DRAWN D.J.H.
REVISED
DESIGNED B.G.
CHECKED R.B.

SITE PLAN
RETAINING WALLS "A" & "B"

FRA-270-32.46

2/15

510/593

SITE PLAN

S 03°57'54" E

MSE WALL-4

21"SAN

STA C-1376+50
END CIP WALL,
BEGIN MSE WALL &
TYPE D BARRIER

BEGIN TAPER
STA. C-1378+91.55,
16.00' RT.

B/L CONSTRUCTION
RAMP C

WOODED AREA
1" TO 6" TREES

CDN-1374

C3

CDN-1375

C/L CONSTRUCTION CDN

RIB-52

1" TO 3" OAK TREES

CDN-1376

18"G
(ABANDONED)

CDN-1377

PRC = CDN-1377+13.73
= 1377+10.26, 123.50' LT.

C3

R-2

CDN-1378

C4

CDN-1379

WOODED AREA
1" TO 6" TREES

EX. LA-R/W

MSE WALL-3

RETAINING WALL "C"

6" UNDERDRAIN

STA CDN-1375+00
END MSE WALL &
TYPE D BARRIER
BEGIN CIP WALL

I-270 NORTHBOUND

STA CDN-1378+00.00
END CIP WALL,
BEGIN TYPE C BARRIER

I-270 NORTHBOUND

1374+00 1375+00 1376+00 1377+00 1378+00 1379+00

C1 C1

C/L SURVEY I-270 C/L SURVEY I-270

RETAINING WALL "C"

I-270 SOUTHBOUND

STA CDS-1372+50.00
END MSE WALL &
TYPE D BARRIER
BEGIN CIP WALL

FRA-270-31.41
PCC = CDN-1373+45.65,
90.00' LT.

I-270 SOUTHBOUND

STA CDS-1376+00.00
END CIP WALL
BEGIN TYPE C BARRIER

FRA-270-31.41
B/L CONSTRUCTION RAMP C

6" UNDERDRAIN

RETAINING WALL "D"

MSE WALL-5

RIB-48 RIB-49 RIB-50 R-1

STA. CDS-1375+35.34, 24.00' RT.
= 1375+23.20, 158.58' RT.

PCC = CDS-1375+77.85
= 1375+66.08, 134.50' RT.

CDS-1372 CDS-1373 CDS-1374 CDS-1375 CDS-1376 CDS-1377

C7 C7 C8

4" OAK

C/L CONSTRUCTION CDS C/L CONSTRUCTION CDS

2" TO 4" PINES 2" TO 4" PINES 2" TO 4" PINES

2" MAPLE 3" OAK 3" ELM

4" MAPLE 6" MAPLE 4" MAPLES 6" MAPLE 6" MAPLES 3" MAPLE 4" ELM 3" ELM 3" MAPLE

EX. LA-R/W

PC = A-1376+35.64=
STA. CDS-1376+35.64,
36.00' RT.

B/L CONSTRUCTION
RAMP A

(TO BE ABANDONED)

A-1377

C13

BEGIN TAPER
+35.34, 34' RT.

END TAPER
+35.64, 8' RT.

WOODED AREA
6" TO 24" TREES

EX. LA-R/W

(TO BE ABANDONED)

HW-4

8" TILE

LA-R/W LA-R/W

RETAINING WALL "D"

PLOT SCALE=1" = 20'
COL #49
C:\DRAWING\06092306\A-DWALLS\6092WCO.DWG
FEBRUARY-08-1995

PREPARED BY
ms consultants, inc.
CONSULTING ENGINEERS & PLANNERS
4000 EMBASSY BOULEVARD, COLUMBUS, OHIO

DESIGNED B.G. | DRAWN D.J.H. | REVIEWED J.A.B. | DATE 10-94
CHECKED R.B. | REVISED

SITE PLAN
RETAINING WALLS "C" & "D"

FRA-270-32.46

3 / 15

511
593

SITE PLAN

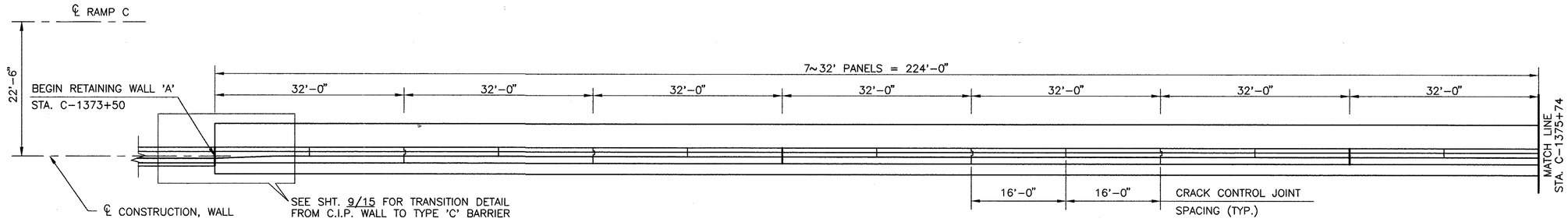

PLAN

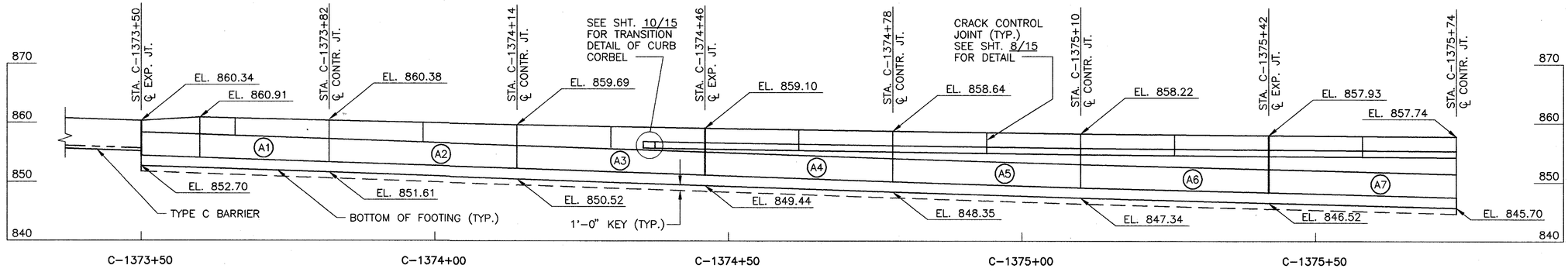

ELEVATION

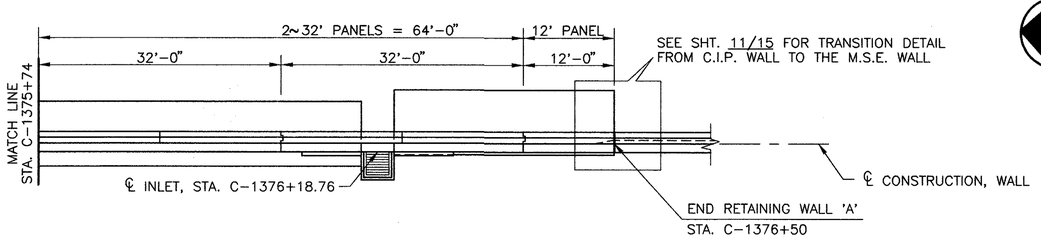

PLAN

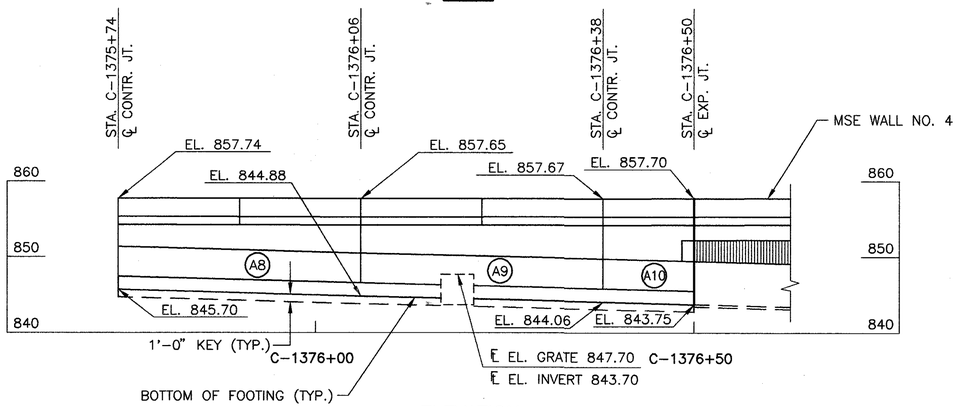

ELEVATION

LEGEND
CONTR. JT. = CONTRACTION JOINT
EXP. JT. = EXPANSION JOINT
TYP. = TYPICAL
M.S.E. = MECHANICALLY STABILIZED EARTH
C.I.P. = CAST-IN-PLACE

PLOT SCALE 1" = 10'
COL #19 C:\DRAWING\06092306\VA-DWALLS\VA-D_PE1.DWG FEBRUARY-08-1995

PREPARED BY
ms consultants, inc.
CONSULTING ENGINEERS & PLANNERS
4000 EUCLID BOULEVARD, COLUMBUS, OHIO

DESIGNED B.C.
DRAWN C.H.
REVIEWED J.A.B.
DATE 10-94
CHECKED R.B.
REVISED

PLAN & ELEVATION
RETAINING WALL 'A'
STA. C-1373+50 TO STA. C-1376+50

FRA-270-32.46

4/15

512
593

PLAN & ELEVATION

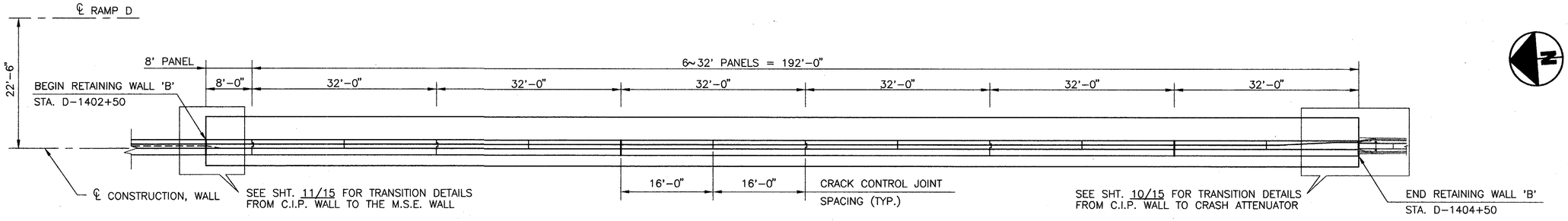

PLAN

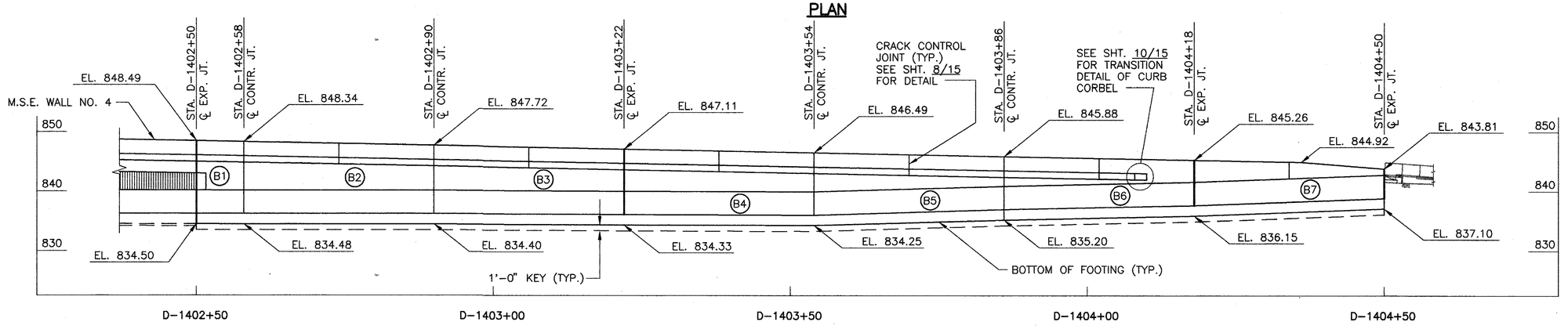

ELEVATION

ITEM 518 ~ 6" P.C.P.P. AND N.P.C.P.P.

WALL TYPE	STATION TO STATION	OUTLET CONNECTION TYPE	INSTALLATION PROCEDURE	OUTLET STATION	ITEM 518 N.P.C.P.P.	ITEM 518 P.C.P.P.
A	C-1373+50 TO C-1376+18.76	A	①	C-1376+18.76	5	264
	C-1376+18.76 TO C-1376+50	A	②	C-1376+18.76	5	27
B	D-1402+50 TO D-1404+50	B	①	D-1402+00	50	200
C	CDN-1375+00 TO CDN-1378+00	B	①	CDN-1379+00	100	300
D	CDS-1372+50 TO CDS-1373+89.37	A	①	CDS-1373+89.37	5	135
	CDS-1373+89.37 TO CDS-1376+00	B	①	CDS-1378+10	210	211
	2'-10" N.P.C.P.P. FOR THE CONNECTION THROUGH THE WALL INTO THE INLET (4 LOCATIONS)				12	–
				TOTAL	387	1137

CONNECTION TYPES & INSTALLATION PROCEDURES FOR PIPE DRAIN OUTLETS

OUTLET CONNECTION:

A) WHEN INLETS ARE LOCATED ON THE OPPOSITE SIDE OF THE RETAINING WALL BACKFILL, P.C.P.P. SHALL STOP 5' BEFORE THE SPECIFIED INLET LOCATION AND N.P.C.P.P. SHALL CONTINUE TO THE INLET.

OR B) WHEN NO INLET IS AVAILABLE WITHIN A SPECIFIED RUN, P.C.P.P. SHALL STOP AT THE RETAINING WALL END AND CONTINUE WITH N.P.C.P.P. TO THE INLET LOCATION.

FOR THE CONNECTION THROUGH THE WALL INTO THE INLET, 2'-10" OF N.P.C.P.P. HAS BEEN PROVIDED AT EACH SUCH LOCATION. THE COST OF PROVIDING P.C.P.P. AND N.P.C.P.P. AND FITTINGS SHALL BE INCLUDED WITH RESPECTIVE 518 ITEMS FOR PAYMENT. THE TOTALS ARE CARRIED TO SHT. 1/15 IN THE ESTIMATED QUANTITIES TABLE.

INSTALLATION PROCEDURE:

① CAP THE HIGHER END OF 6" P.C.P.P. A MINIMUM OF 0.24% OR PROFILE GRADE SLOPE WHICHEVER IS GREATER SHALL BE USED FOR P.C.P.P. A MINIMUM OF 1% SLOPE SHALL BE USED FOR N.P.C.P.P.

OR ② CONSTRUCT AGAINST GRADE AT A SLOPE OF 1%.

THE INVERT OF 6" N.P.C.P.P. OUTLETTING INTO AN INLET SHALL BE AT LEAST 1' ABOVE THE LOWEST INVERT OF THE INLET OR AS DIRECTED BY THE ENGINEER.

LEGEND

CONTR. JT. = CONTRACTION JOINT
EXP. JT. = EXPANSION JOINT
TYP. = TYPICAL
M.S.E. = MECHANICALLY STABILIZED EARTH
C.I.P. = CAST-IN-PLACE
N.P.C.P.P. = NON-PERFORATED CORRUGATED PLASTIC PIPE
P.C.P.P. = PERFORATED CORRUGATED PLASTIC PIPE

PLOT SCALE .1" = 10'
COL #19
C:\DRAWING\06092306\VA-DWALLS\VA-D_PE1.DWG FEBRUARY-08-1995

PREPARED BY
ms consultants, inc.
CONSULTING ENGINEERS & PLANNERS
4080 EMPIRE BOULEVARD, COLUMBUS, OHIO

DESIGNED B.G. | DRAWN C.H. | REVIEWED J.A.B. | DATE 10-94 | REVISED | CHECKED R.B.

PLAN & ELEVATION
RETAINING WALL 'B'
STA. D-1402+50 TO STA. D-1404+50

FRA-270-32.46

5/15

513
593

PLAN & ELEVATION

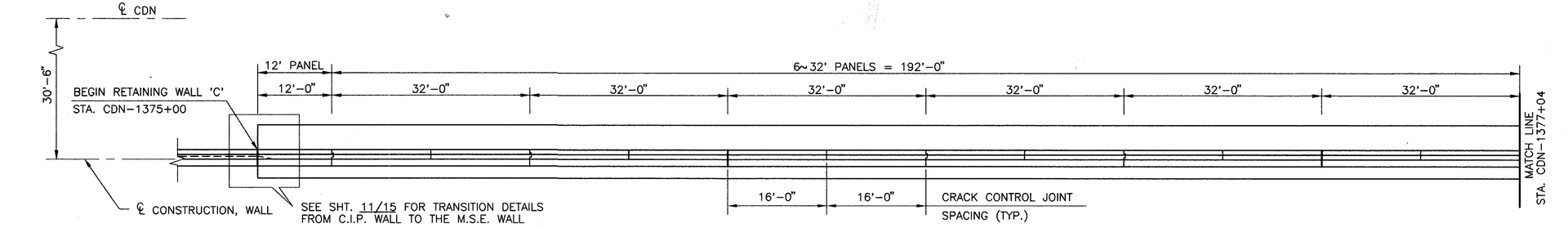

PLAN

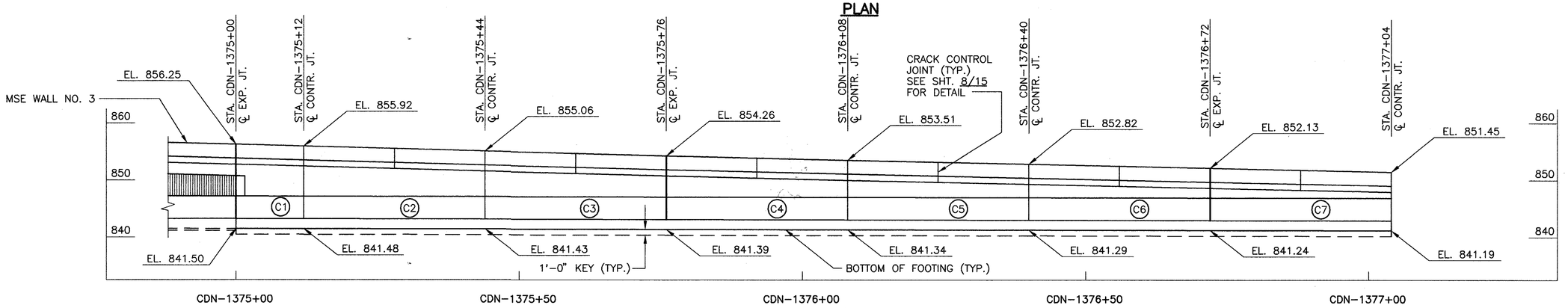

ELEVATION

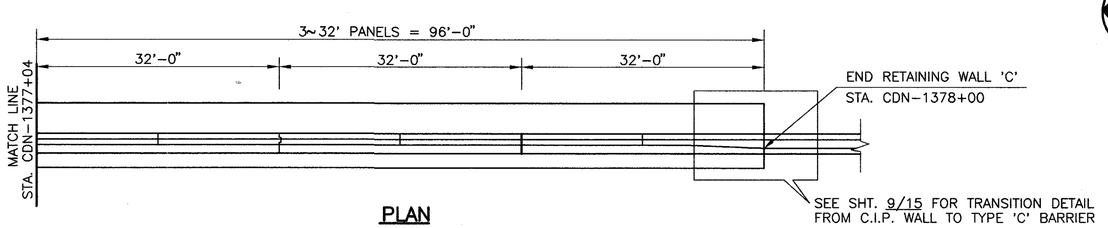

PLAN

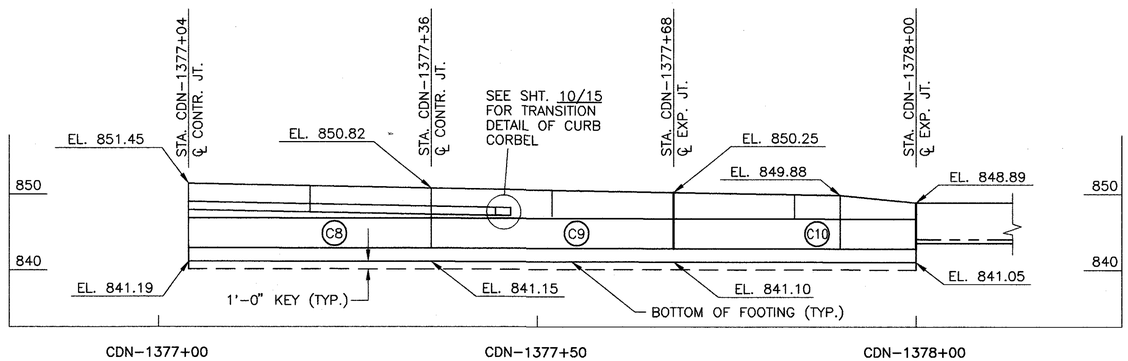

ELEVATION

LEGEND
CONTR. JT. = CONTRACTION JOINT
EXP. JT. = EXPANSION JOINT
TYP. = TYPICAL
M.S.E. = MECHANICALLY STABILIZED EARTH
C.I.P. = CAST-IN-PLACE

PLOT SCALE 1" = 10'
COL #19 C:\DRAWING\06092306\A-DWALLS\A-D_PE1.DWG FEBRUARY-06-1995

PREPARED BY
ms consultants, inc.
CONSULTING ENGINEERS & PLANNERS
4600 MORSE ROAD,PARK, COLUMBUS, OHIO

DESIGNED B.G.
DRAWN C.H.
CHECKED R.B.
REVIEWED J.A.B.
DATE 10-94
REVISED

PLAN & ELEVATION
RETAINING WALL 'C'
STA. CDN-1375+00 TO STA. CDN-1378+00

FRA-270-32.46

6/15

514/593

PLAN & ELEVATION

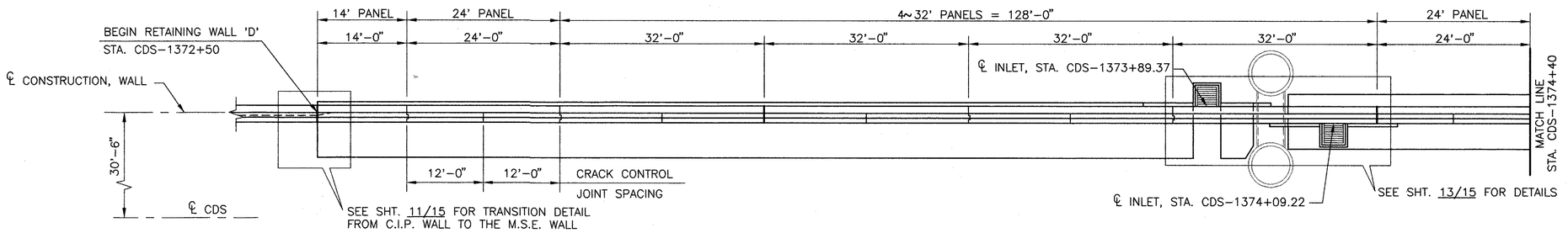

PLAN

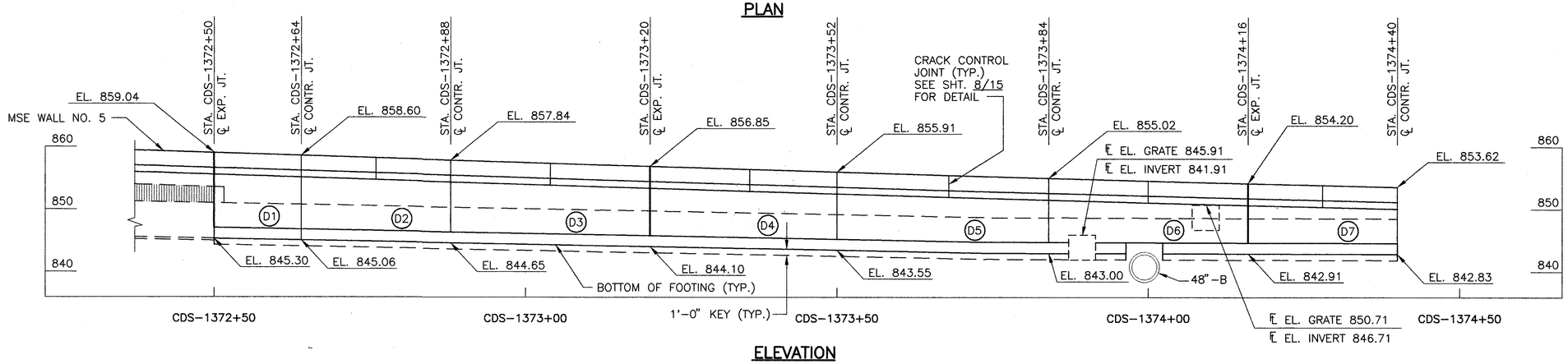

ELEVATION

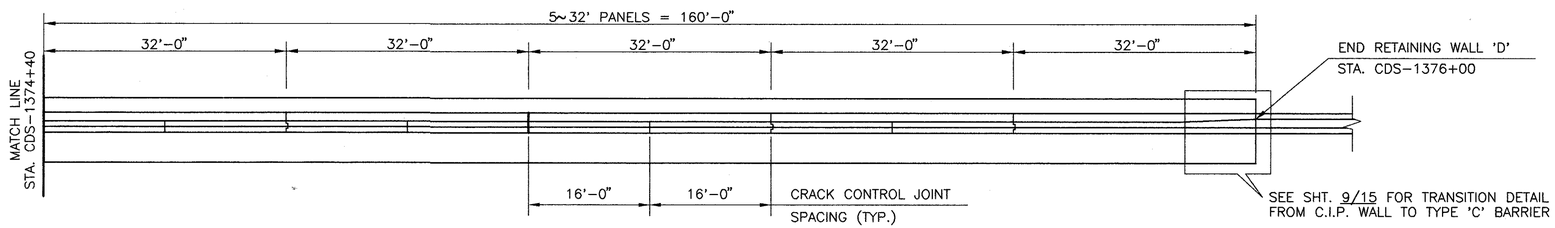

PLAN

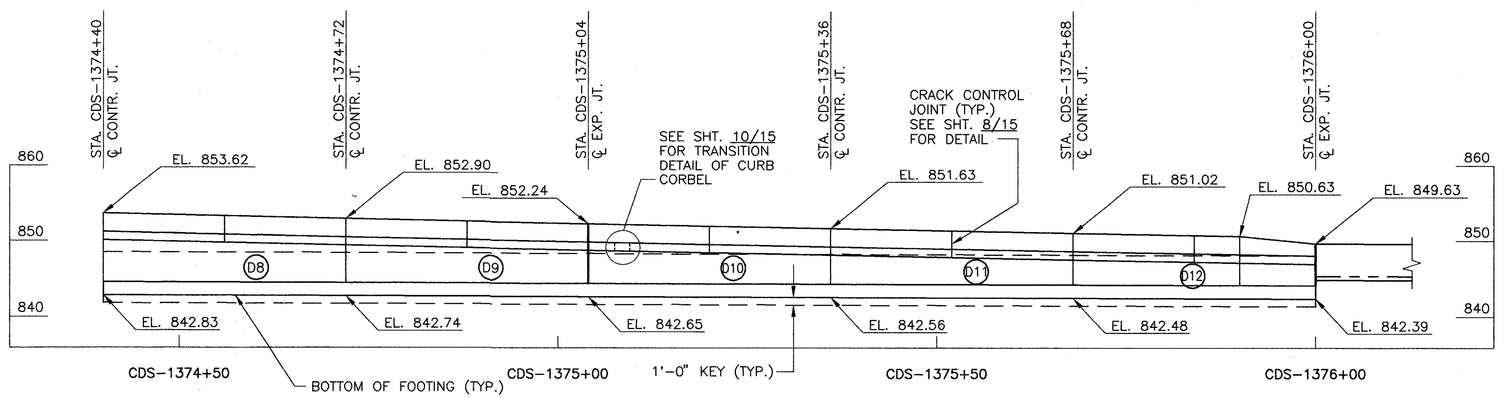

ELEVATION

LEGEND
CONTR. JT. = CONTRACTION JOINT
EXP. JT. = EXPANSION JOINT
TYP. = TYPICAL
M.S.E. = MECHANICALLY STABILIZED EARTH
C.I.P. = CAST-IN-PLACE

PLOT SCALE 1" = 10'
COL #19 C:\DRAWING\06092306\A-DWALLS\A-D_PE1.DWG FEBRUARY-08-1995

PREPARED BY
ms consultants, inc.
CONSULTING ENGINEERS & PLANNERS
4600 MORSE BOULEVARD, COLUMBUS, OHIO

DESIGNED B.G.
DRAWN C.H.
CHECKED R.B.
REVIEWED J.A.B.
DATE 10-94
REVISED

PLAN & ELEVATION
RETAINING WALL 'D'
STA. CDS-1372+50 TO STA. CDS-1376+00

FRA-270-32.46

7/15

515/593

PLAN & ELEVATION

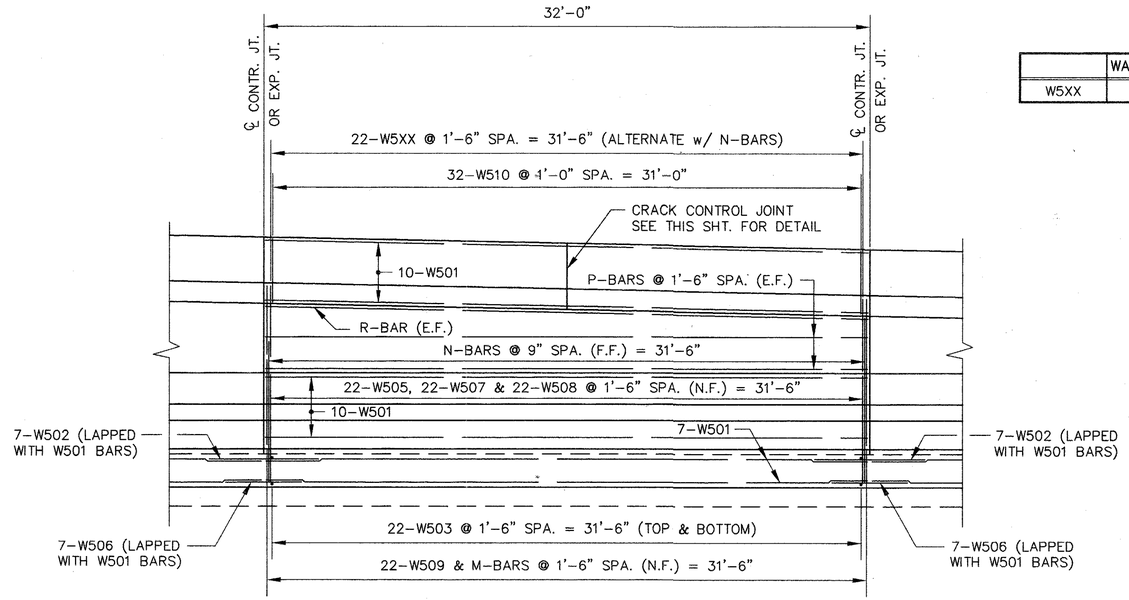

TYPICAL ELEVATION
(TYPE "1"), (TYPE "2") ~ 32' PANEL

	WALLS A, B & C	WALL D
W5XX	W504	W572

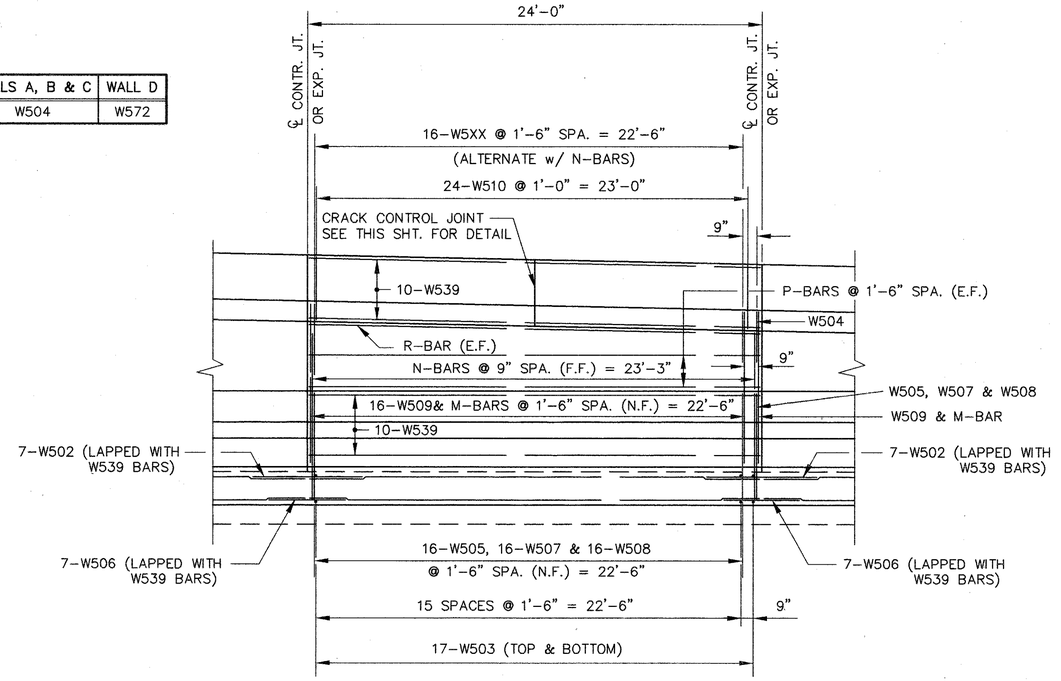

TYPICAL ELEVATION
(TYPE "1"), (TYPE "2") ~ 24' PANEL

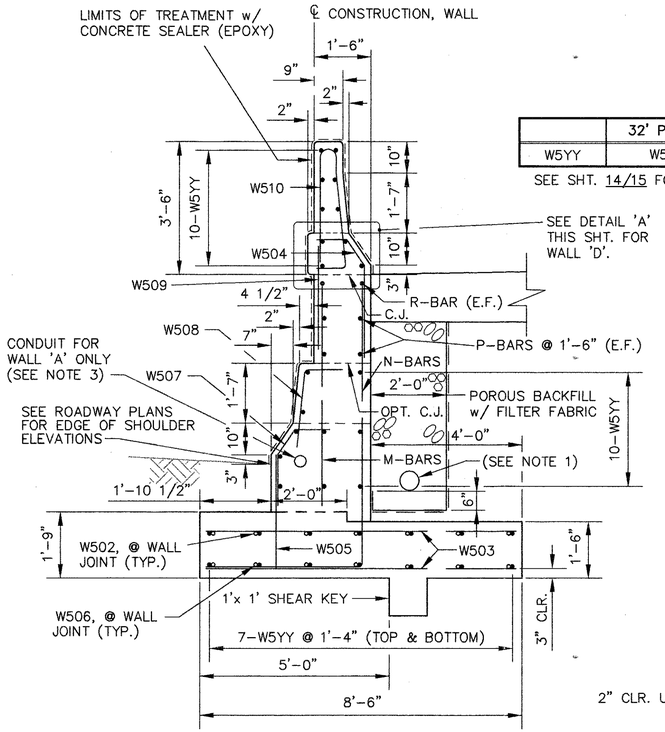

	32' PANEL	24' PANEL
W5YY	W501	W539

SEE SHT. 14/15 FOR M, N, P & R BARS

2" CLR. UNLESS OTHERWISE NOTED.

TYPICAL WALL SECTION
(TYPE 1)

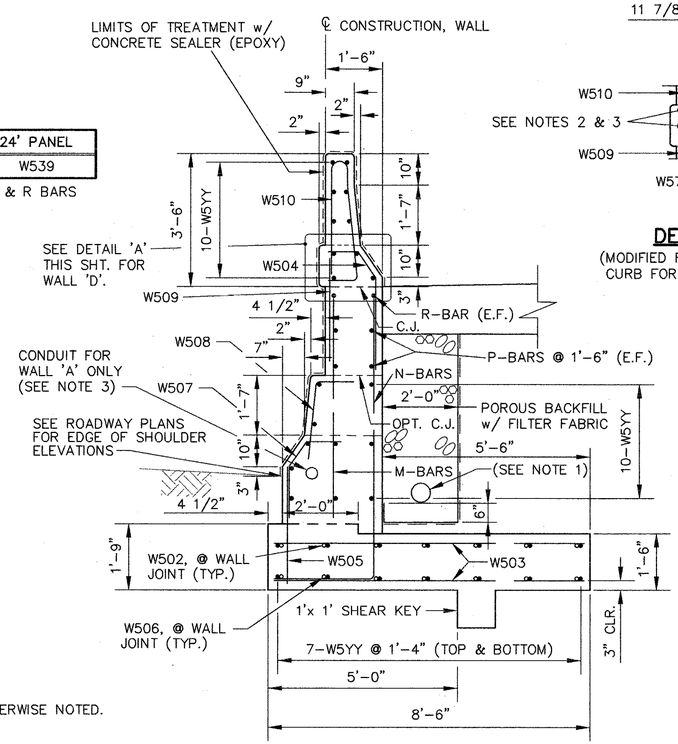

TYPICAL WALL SECTION
(TYPE 2)

DETAIL A
(MODIFIED REBAR DETAIL IN THE CURB FOR WALL 'D')

LIMITS OF TYPE '1' & '2' SECTIONS			
WALL NO.	FROM STATION	TO STATION	TYPE OF SECTION
A	C-1373+50.00	C-1376+16.51	1
	C-1376+21.01	C-1376+50.00	2
D	CDS-1372+50.00	CDS-1373+87.12	2
	CDS-1373+91.62	CDS-1373+96.22	2
	CDS-1374+02.33	CDS-1376+00.00	1

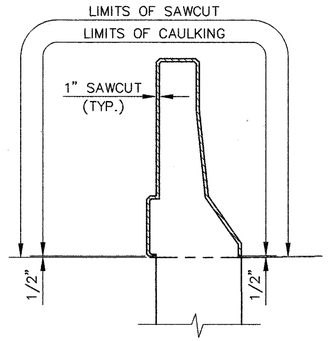

CRACK CONTROL JOINT DETAIL
SEE GENERAL NOTE FOR CONCRETE PARAPETS ON SHT. 1/15.

NOTES:

(1) 6" PERFORATED CORRUGATED PLASTIC PIPE. SEE SHT. 5/15 FOR OUTLET PIPE CONNECTIONS

(2) 2'-4"ø CONDUITS FOR WALL 'D' ONLY. PAYMENT FOR LABOR, MATERIALS & INSTALLATION OF CONDUIT SHALL BE INCLUDED w/ SURVEILLANCE SYSTEM. SEE SURVEILLANCE SYS. SUB-SUMMARY & DETAILS.

(3) SEE SURVEILLANCE SYSTEM DETAILS FOR LOCATION OF PULL BOXES.

LEGEND

CONTR. JT. = CONTRACTION JOINT
TYP. = TYPICAL
SPA. = SPACING
OPT. = OPTIONAL
E.F. = EACH FACE
N.F. = NEAR FACE
F.F. = FAR FACE
EXP. JT. = EXPANSION JT.
CLR. = CLEAR
C.J. = CONSTRUCTION JOINT

PLOT SCALE = 1.0' = 4'
COL #19 C:\DRAWING\06092306\A-DWALLS\A-D_TYP.DWG FEBRUARY-09-1995

PREPARED BY
ms consultants, inc.
CONSULTING ENGINEERS & PLANNERS
6560 RIDGE BOULEVARD, COLORADO, 0809

DATE 10-94
REVIEWED J.A.B.
DRAWN C.H.
REVISED
DESIGNED B.G.
CHECKED R.B.

D
TYPICAL SECTIONS
RETAINING WALLS A, B, C & D

FRA-270-32.46

8/15

516/593

TYPICAL SECTIONS

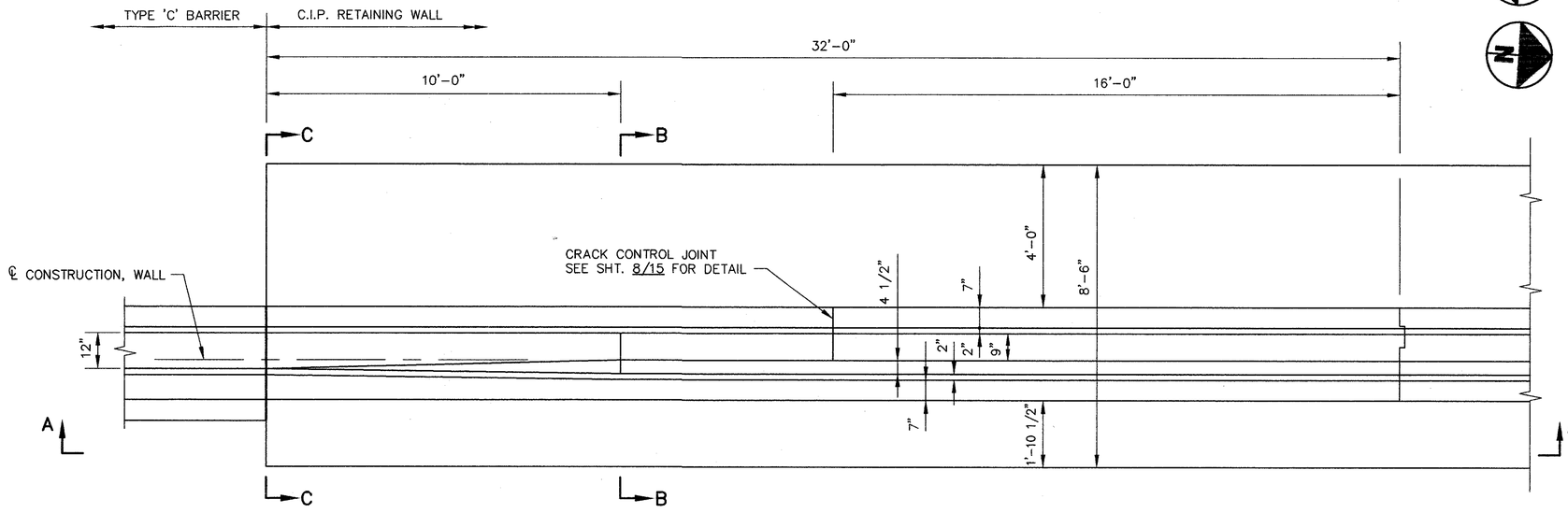

PLAN

WALL 'A'

WALL 'C' & 'D'

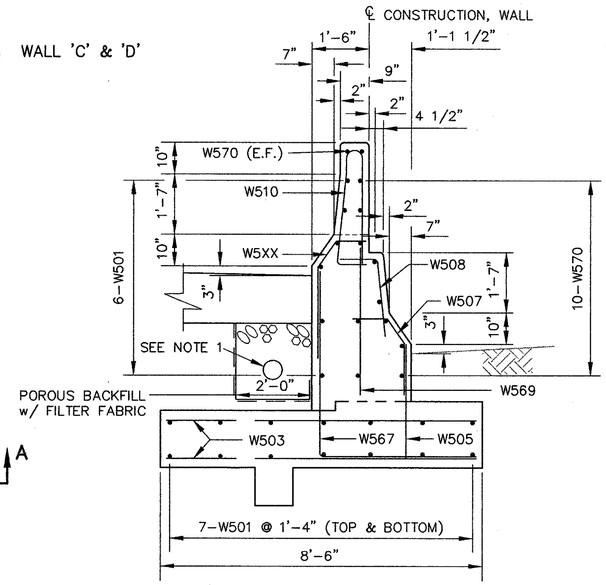

SECTION B-B

** 1" P.E.J.F. INCLUDED WITH ITEM 511, CLASS 'C' CONCRETE RETAINING WALL OR WINGWALL FOR PAYMENT

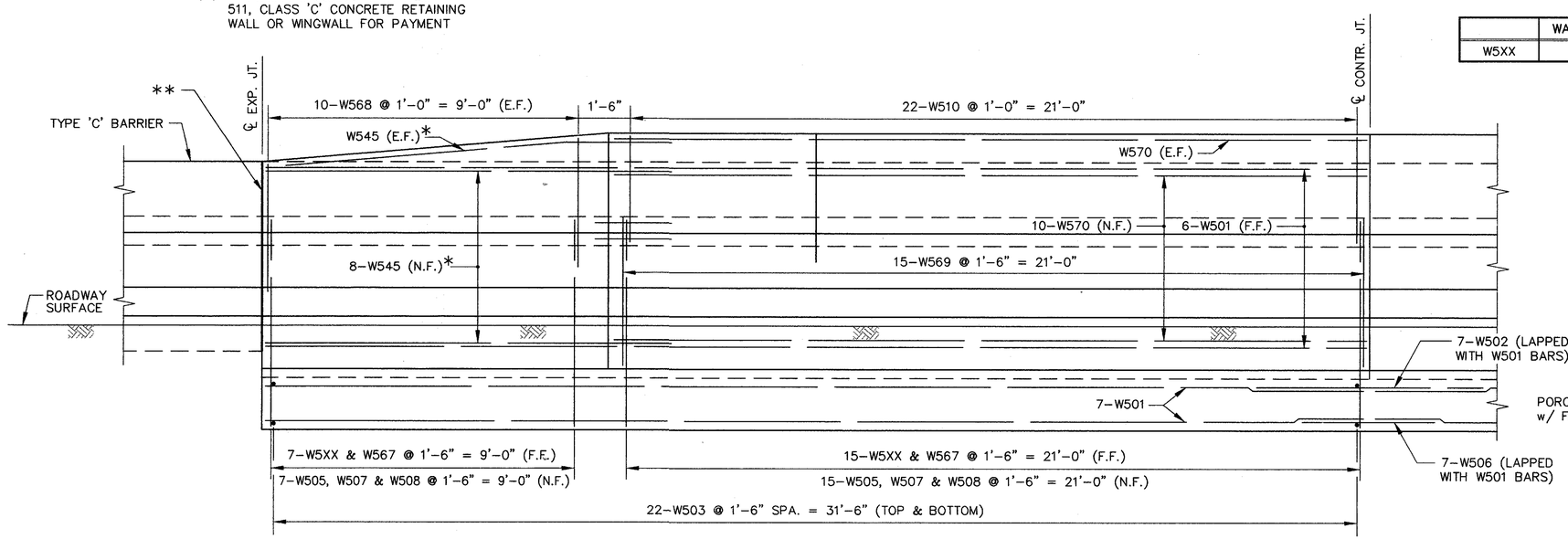

ELEVATION A-A

TRANSITION DETAIL FROM C.I.P. WALL TO TYPE 'C' BARRIER (TYP.)

*BEND IN FIELD AS NECESSARY

	WALLS A & C	WALL D
W5XX	W504	W572

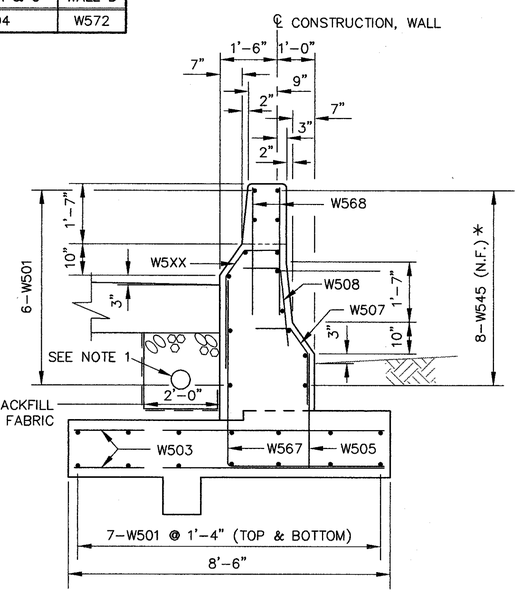

SECTION C-C

NOTE:

(1) 6" PERFORATED CORRUGATED PLASTIC PIPE. SEE SHT. 5/15 FOR OUTLET PIPE CONNECTIONS

LEGEND

N.F. = NEAR FACE
E.F. = EACH FACE
F.F. = FAR FACE
P.E.J.F. = PREFORMED EXPANSION JOINT FILLER

PLOT SCALE .1" = 2'
COL #19
C:\DRAWING\06092306\A-DWALLS\A-D_TR2.DWG FEBRUARY-08-1995

PREPARED BY
ms consultants, inc.
CONSULTING ENGINEERS & PLANNERS
4600 SINTON BOULEVARD, COLUMBUS, OHIO

DATE 10-94
REVIEWED J.A.B.
DRAWN C.H.
REVISED
DESIGNED B.G.
CHECKED R.B.

TRANSITION DETAILS
RETAINING WALLS A, C & D

FRA-270-32.46

9/15

517/593

TRANSITION DETAILS

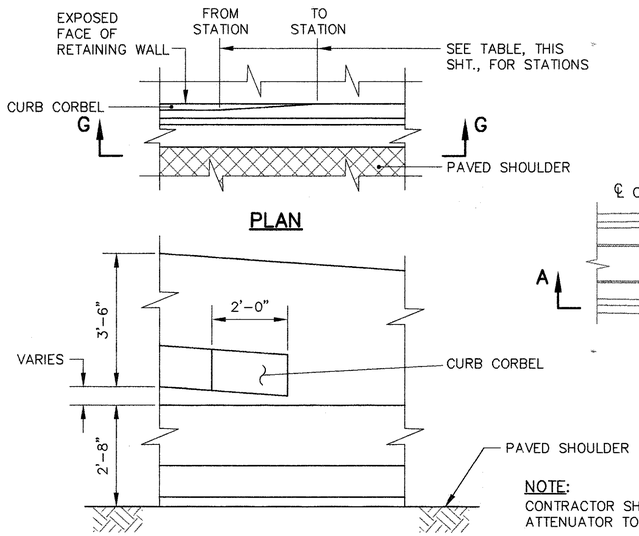

NOTE:
CONTRACTOR SHALL COORDINATE CONNECTION OF CRASH ATTENUATOR TO WALL w/ ATTENUATOR MANUFACTURER

TRANSITION DETAIL AT THE END OF CURB CORBEL (TYP.)

(RETAINING WALLS A, B, C & D)

CURB CORBEL TRANSITION		
WALL TYPE	FROM STATION	TO STATION
A	C-1374+35.50	C-1374+37.50
B	D-1404+08.00	D-1404+10.00
C	CDN-1377+44.50	CDN-1377+46.50
D	CDS-1375+07.50	CDS-1375+09.50

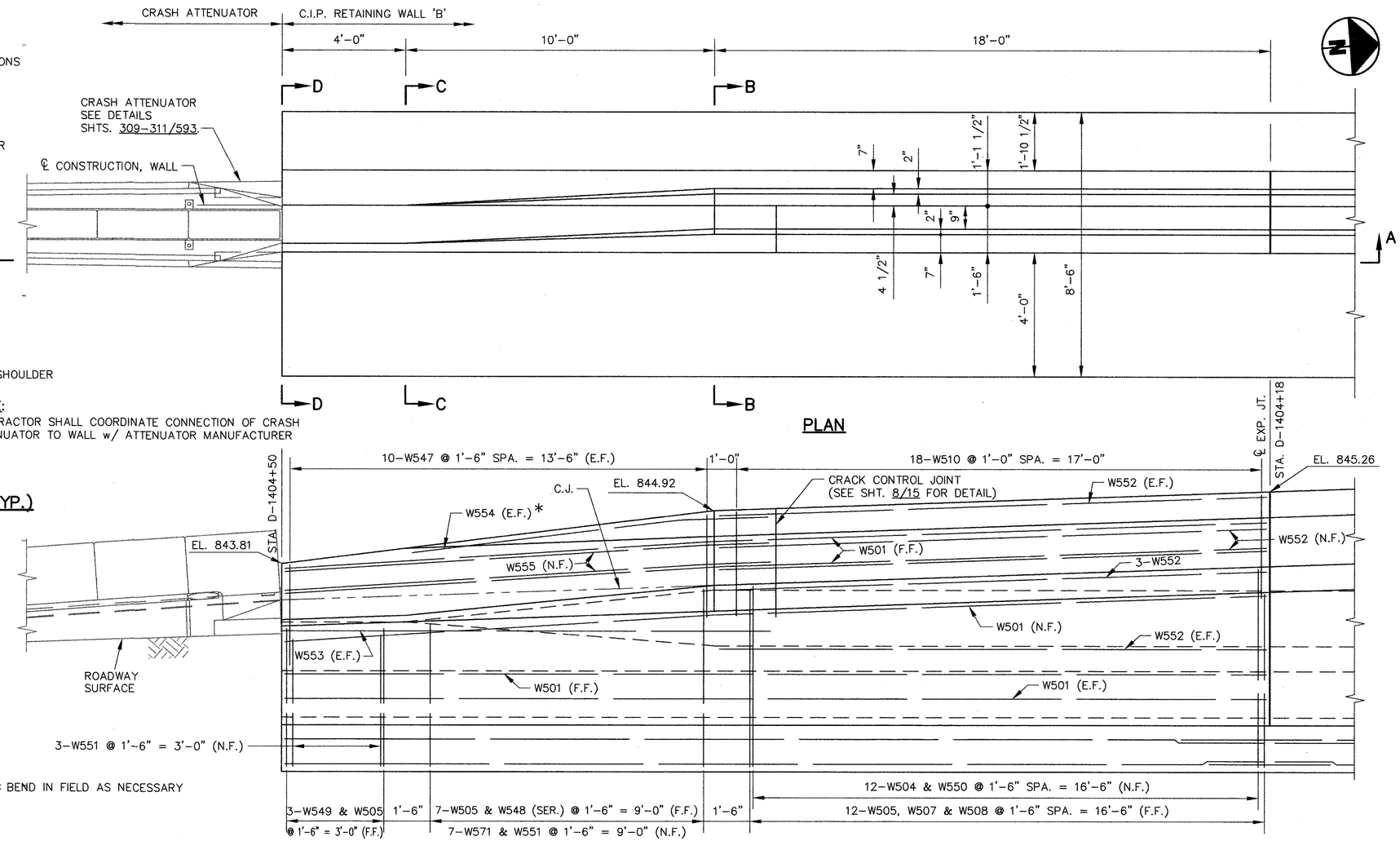

* BEND IN FIELD AS NECESSARY

ELEVATION A-A

TRANSITION DETAIL FROM C.I.P. WALL 'B' TO CRASH ATTENUATOR

NOTE: FOOTING SHEAR KEY NOT SHOWN FOR CLARITY.

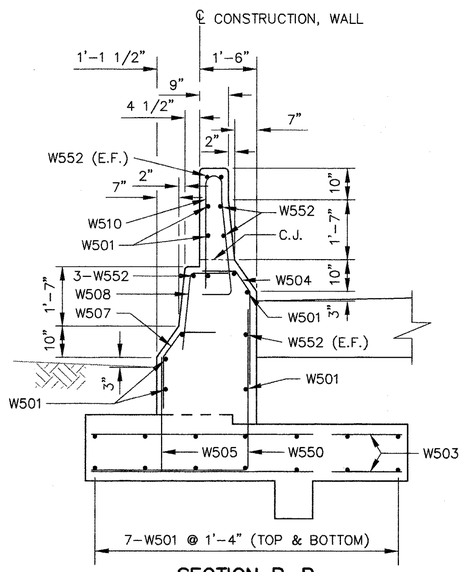

SECTION B-B

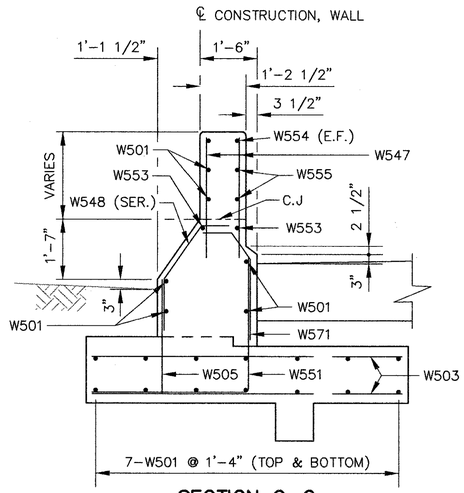

SECTION C-C

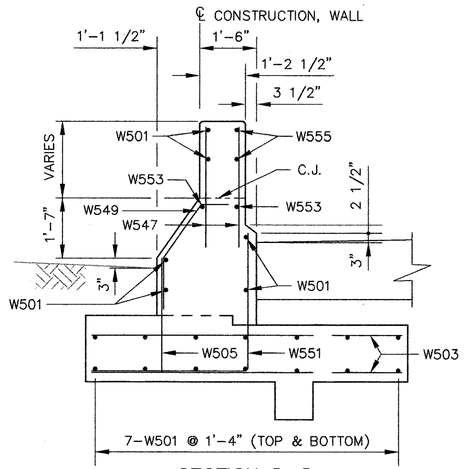

SECTION D-D

LEGEND

OPT. = OPTIONAL
F.F. = FAR FACE
N.F. = NEAR FACE
E.F. = EACH FACE
EXP. JT. = EXPANSION JT.
CLR. = CLEAR
C.J. = CONSTRUCTION JOINT
C.I.P. = CAST-IN-PLACE
SER. = SERIES

PREPARED BY ms consultants, inc. CONSULTING ENGINEERS & PLANNERS 6500 BUSCH BOULEVARD, COLUMBUS, OHIO

DESIGNED	DRAWN	REVIEWED	DATE
B.G.	C.H.	J.A.B.	10-94
CHECKED	REVISED		
R.B.			

TRANSITION DETAILS
RETAINING WALL B

FRA-270-32.46

10/15

518/593

TRANSITION DETAILS

PLOT SCALE...1" = 2'
COL #19 C:\DRAWING\06092306\A-DWALLS\A-D_TR1.DWG FEBRUARY-08-1995

WALL 'A'

WALL 'B', 'C' & 'D'

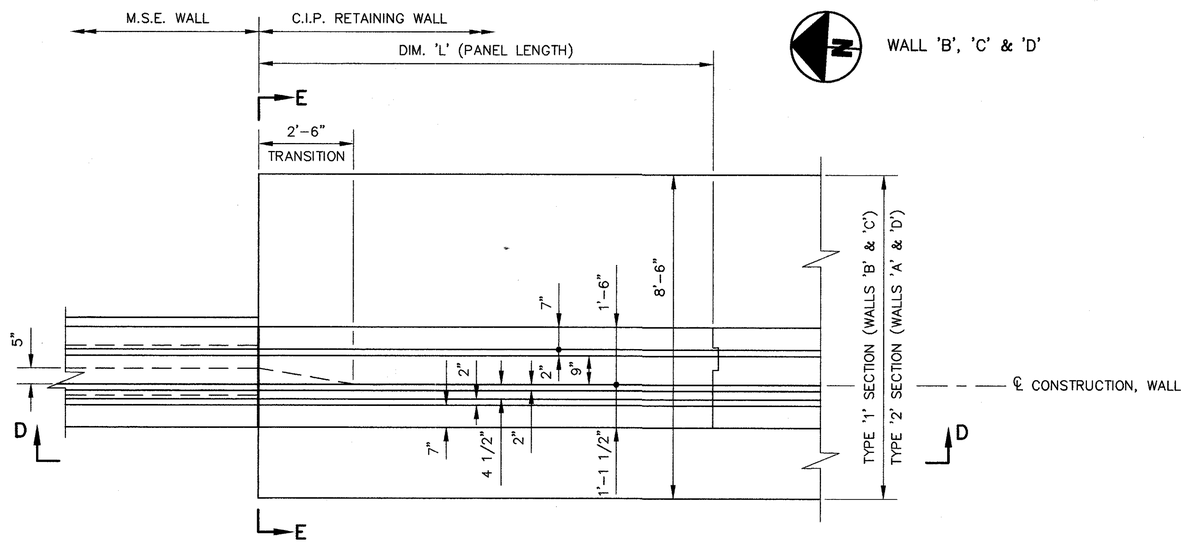

PLAN

TABLE OF REINFORCEMENT				
WALL TYPE & PANEL NO.	A (PANEL A10)	B (PANEL B1)	C (PANEL C1)	D (PANEL D1)
DIM 'L'	12'-0"	8'-0"	12'-0"	14'-0"
M-BARS	9-W560 @ 1'-5" = 11'-4"	6-W561 @ 1'-6" = 7'-6"	9-W562 @ 1'-5" = 11'-4"	10-W563 @ 1'-6" = 13'-6"
N-BARS	17-W627 @ 8 1/2" = 11'-4"	11-W628 @ 9" = 7'-6"	17-W629 @ 8 1/2" = 11'-4"	19-W630 @ 9" = 13'-6"
P-BARS	3-W557 (F.F.) 2-W564 (N.F.)	3-W558 (F.F.) 2-W565 (N.F.)	3-W557 (F.F.) 2-W564 (N.F.)	3-W559 (F.F.) 2-W556 (N.F.)
R-BARS	W557	W558	W557	W559
W5XX	W504	W504	W504	W572
W5YY	W557	W558	W557	W559
1	9-W504 @ 1'-5" = 11'-4"	6-W504 @ 1'-6" = 7'-6"	9-W504 @ 1'-5" = 11'-4"	10-W572 @ 1'-6" = 13'-6"
2	7-W509 @ 1'-5"	4-W509 @ 1'-6"	7-W509 @ 1'-5"	8-W509 @ 1'-6"
3	9-W505, W507 & W508 @ 1'-5" = 11'-4"	6-W505, W507 & W508 @ 1'-6" = 7'-6"	9-W505, W507 & W508 @ 1'-5" = 11'-4"	10-W505, W507 & W508 @ 1'-6" = 13'-6"
4	9-W503 @ 1'-5" = 11'-4"	6-W503 @ 1'-6" = 7'-6"	9-W503 @ 1'-5" = 11'-4"	10-W503 @ 1'-6" = 13'-6"
5	12-W510 @ 1'-0" = 11'-0"	8-W510 @ 1'-0" = 7'-0"	12-W510 @ 1'-0" = 11'-0"	14-W510 @ 1'-0" = 13'-0"

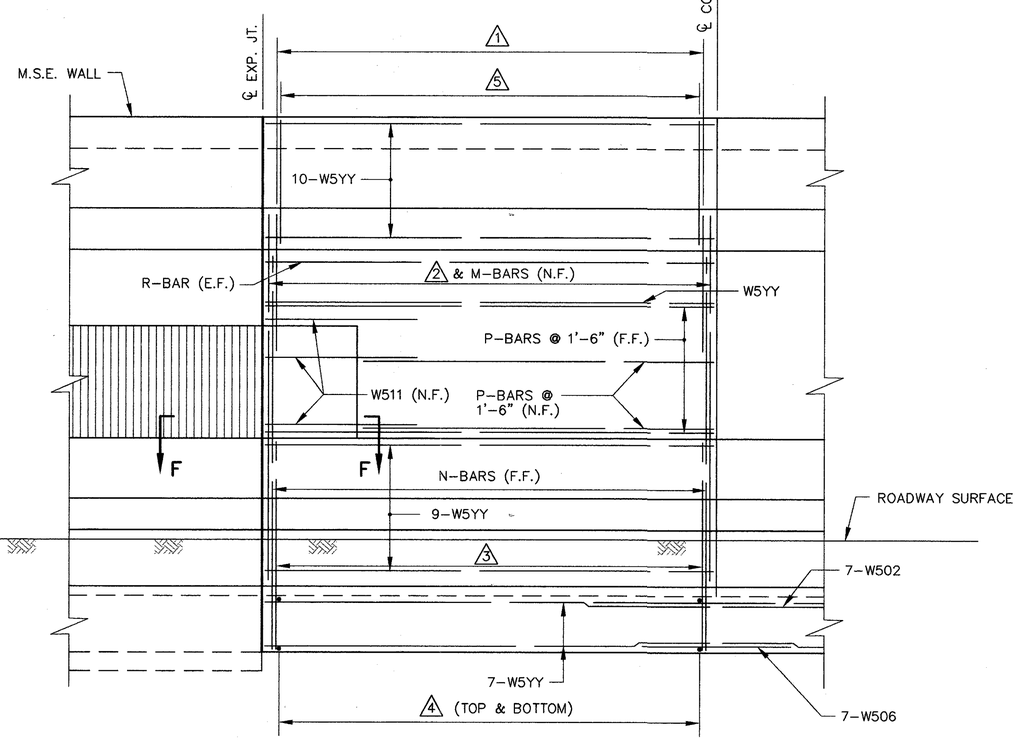

ELEVATION D-D

TRANSITION DETAIL FROM C.I.P. WALL TO M.S.E. WALL

(SHEAR KEY NOT SHOWN FOR CLARITY)

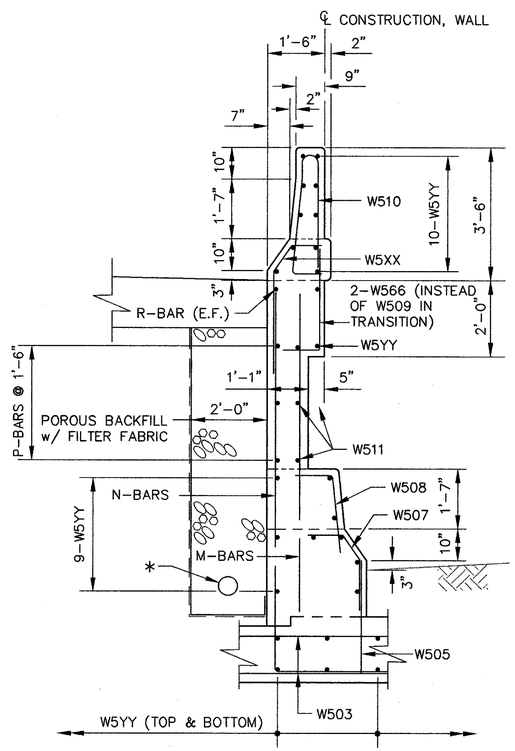

SECTION E-E

*6" PERFORATED CORRUGATED PLASTIC PIPE. SEE SHT. 5/15 FOR OUTLET PIPE CONNECTIONS

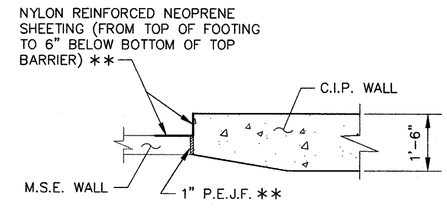

SECTION F-F

** INCLUDED WITH ITEM 511, CLASS 'C' CONCRETE RETAINING WALL OR WINGWALL FOR PAYMENT.

LEGEND

N.F. = NEAR FACE
E.F. = EACH FACE
F.F. = FAR FACE
C.I.P. = CAST-IN-PLACE
EXP. JT. = EXPANSION JOINT
CONTR. JT. = CONTRACTION JOINT
M.S.E. = MECHANICALLY STABILIZED EARTH

PLOT SCALE=1" = 2'
COL #19 C:\DRAWING\9809306\A-DWALLS\A-D_TR3.DWG FEBRUARY-08-1995

PREPARED BY
ms consultants, inc.
CONSULTING ENGINEERS & PLANNERS
4000 MAIN BOULEVARD, COLUMBUS, OHIO

DESIGNED B.S.
DRAWN C.H.
REVIEWED J.A.B.
DATE 10-94
CHECKED R.B.
REVISED

TRANSITION DETAILS
RETAINING WALLS A, B, C & D

FRA-270-32.46

11/15

519/593

TRANSITION DETAILS

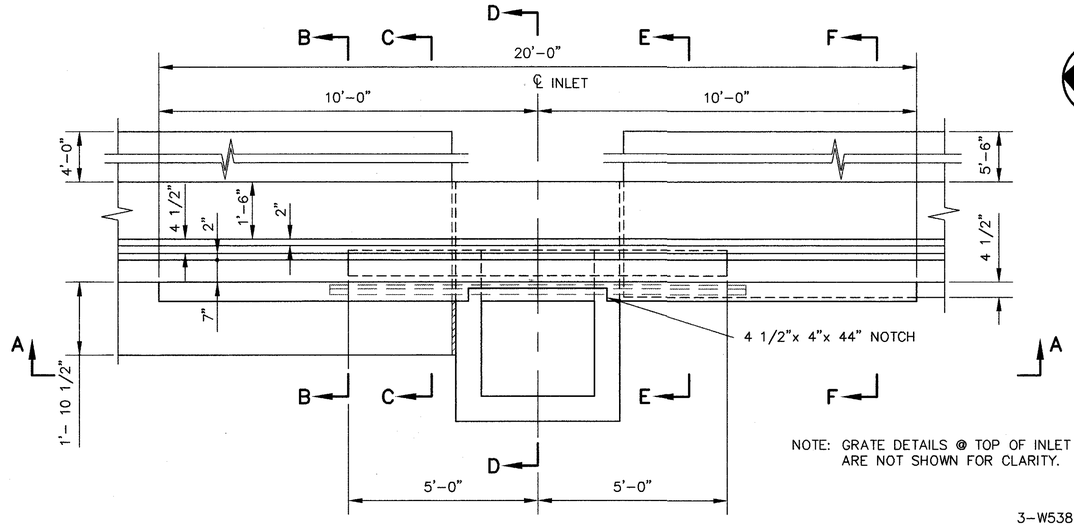

PLAN

NOTE: GRATE DETAILS @ TOP OF INLET ARE NOT SHOWN FOR CLARITY.

	WALL 'A'	WALL 'D'
W6YY	W622	W623

SEE SHT. 13/15 & 14/15 FOR DRAINAGE DETAILS OF WALL 'D'

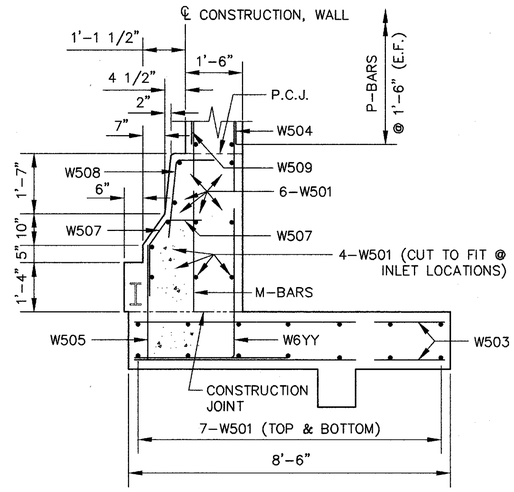

SECTION F-F

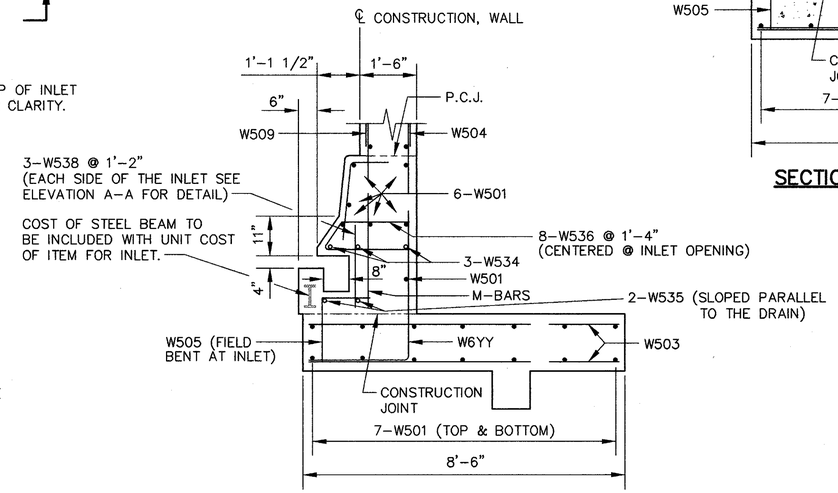

SECTION E-E

NOTES:

(1) 6" PVC WATERSTOP AT THE INLET LOCATION. SEE DETAIL 'A' ON SHT. 1/15.

(2) INLET BOX, GRATE, STEEL BEAM & 1" P.E.J.F. SHALL BE INCLUDED WITH PAY ITEM 604 INLET, NO. 1-3E, HEIGHT VARIES. FOR ADDITIONAL DETAILS OF INLET SEE ROADWAY PLANS.

LEGEND

RAD. = RADIUS
E.F. = EACH FACE
P.C.J. = PERMISSIBLE CONSTRUCTION JOINT
P.E.J.F. = PREFORMED EXPANSION JOINT FILLER
N.P.C.P.P. = NON-PERFORATED CORRUGATED PLASTIC PIPE

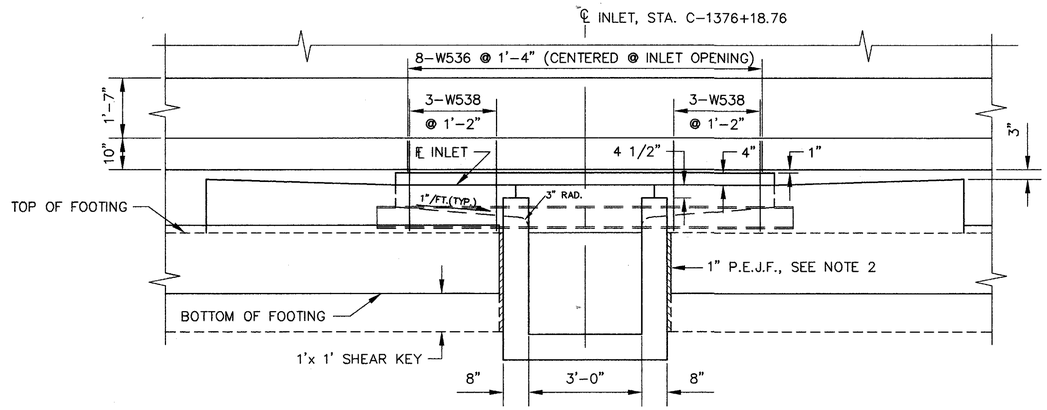

ELEVATION A-A

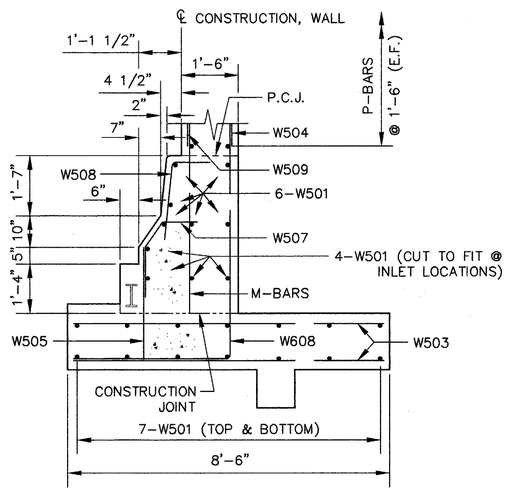

SECTION B-B

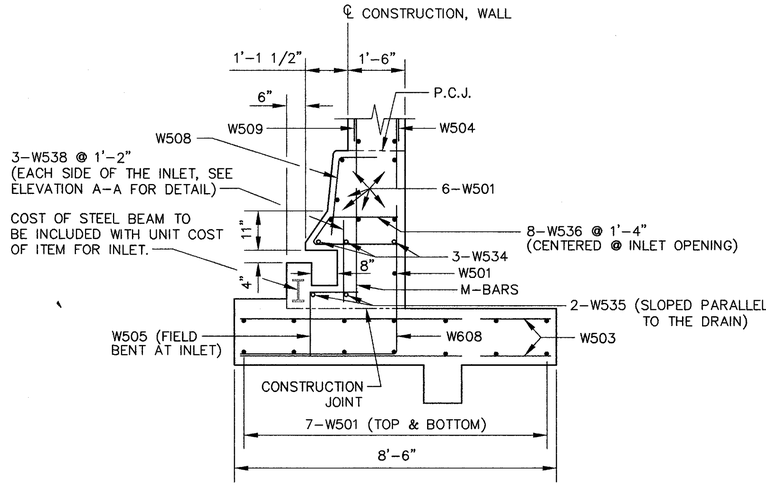

SECTION C-C

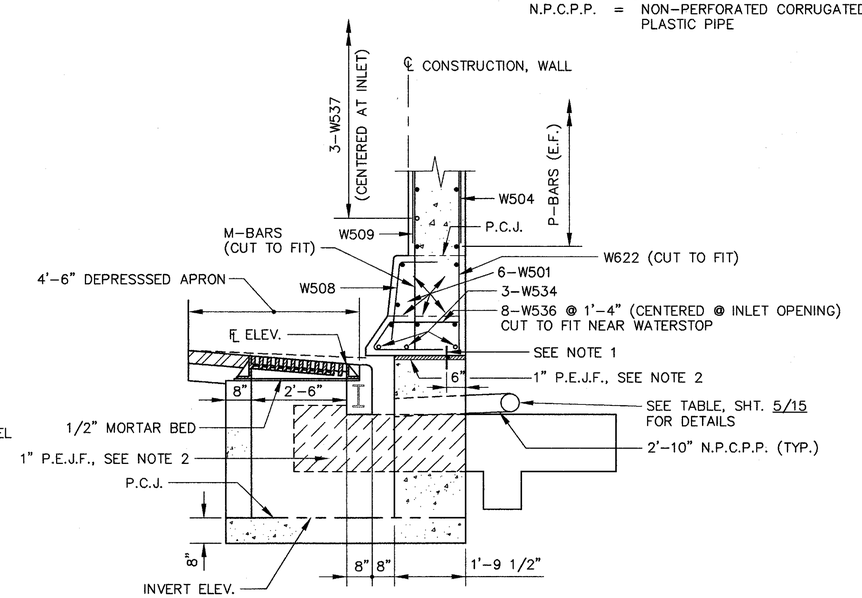

SECTION D-D

PLOT SCALE = 1/2" = 1'
COL #19
C:\DRAWING\06092306\A-DWALLS\A-D_D01.DWG FEBRUARY-08-1995

PREPARED BY
ms consultants, inc.
CONSULTING ENGINEERS & PLANNERS
6500 BOSSE BOULEVARD, COLUMBUS, OHIO

DATE 10-94
REVIEWED J.A.B.
DRAWN C.H.
REVISED
DESIGNED B.G.
CHECKED R.B.

DRAINAGE DETAILS
RETAINING WALL 'A'

FRA-270-32.46

12/15

520/593

DRAINAGE DETAILS

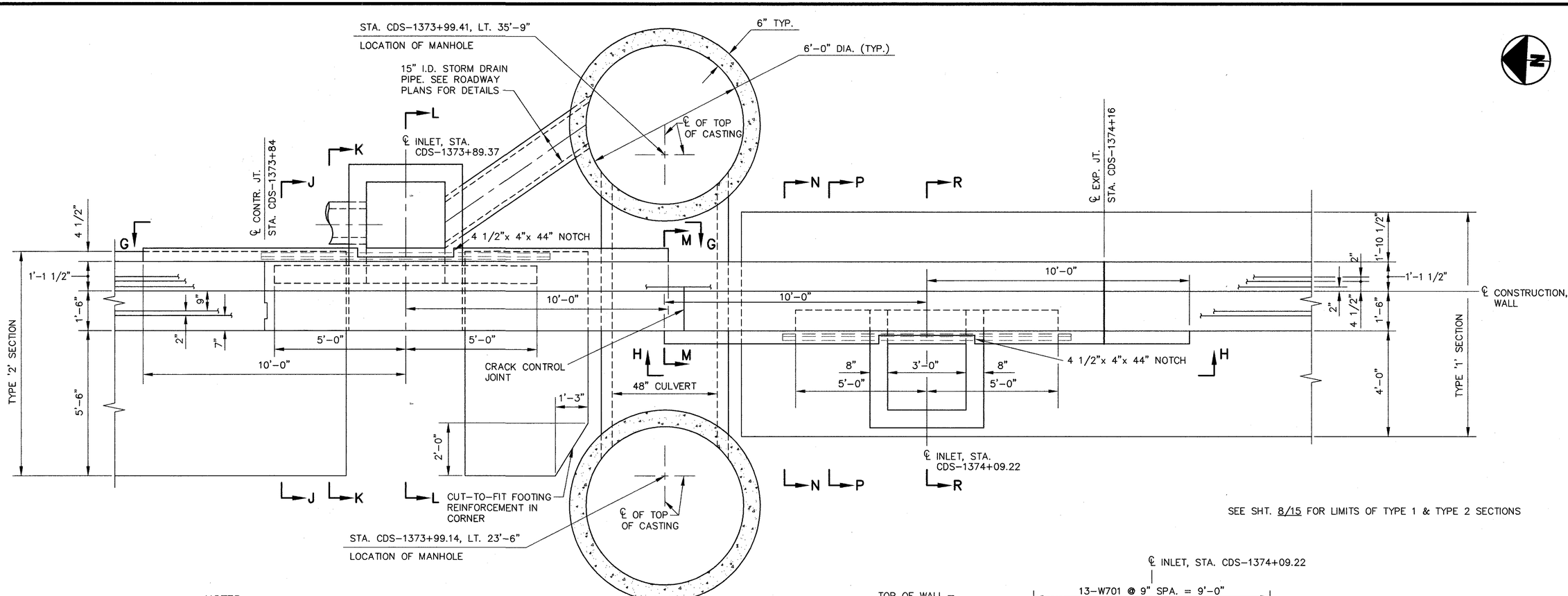

PLAN

NOTES:

(1) SECTION J-J IS SAME AS SECTION F-F AND SECTION K-K IS SAME AS SECTION E-E FOR WALL A (SEE SHT. 12/15 FOR DETAILS)

(2) GRATE DETAILS @ TOP OF INLET ARE NOT SHOWN FOR CLARITY.

(3) INLET BOX, GRATE, STEEL BEAM & 1" P.E.J.F. SHALL BE INCLUDED WITH PAY ITEM 604 INLET, NO. I-3E, HEIGHT VARIES. FOR ADDITIONAL DETAILS OF INLET SEE ROADWAY PLANS.

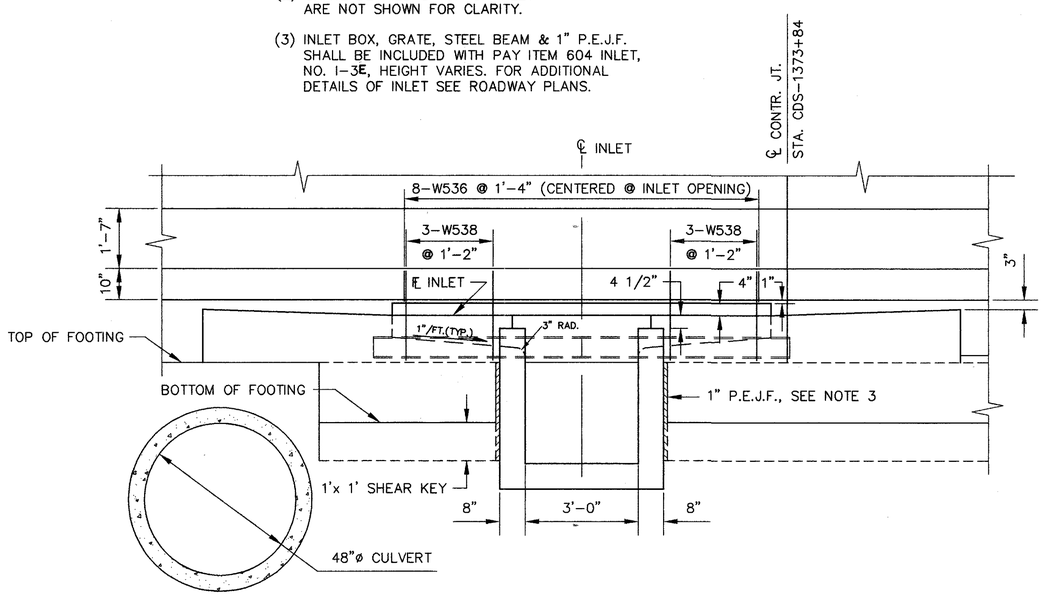

ELEVATION G-G

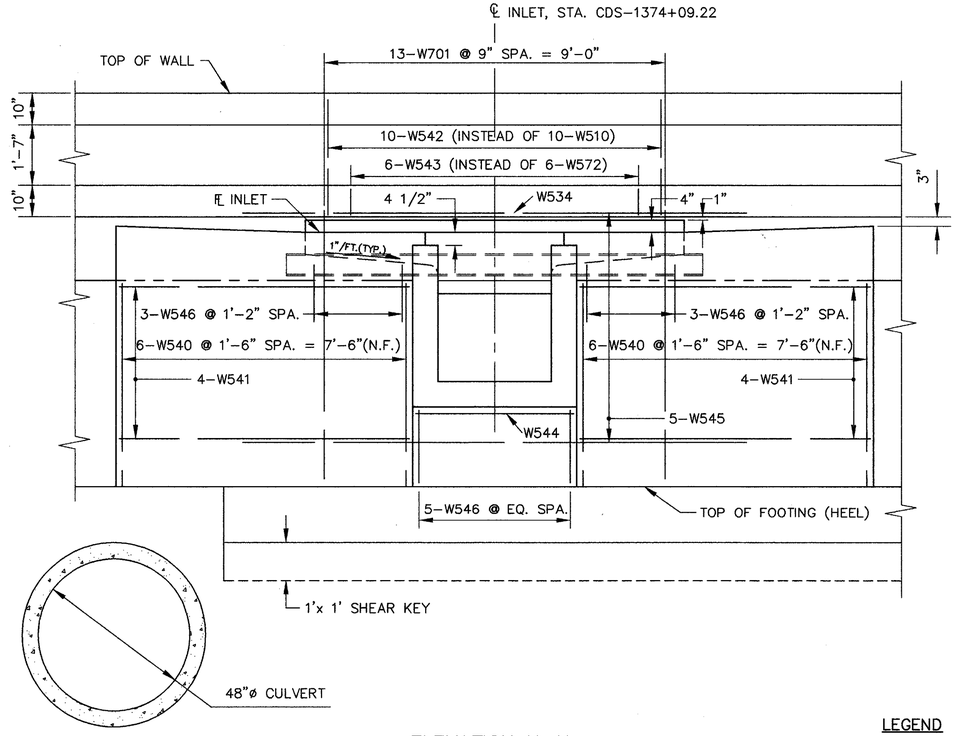

ELEVATION H-H

LEGEND
I.D. = INNER DIAMETER

PREPARED BY ms consultants, inc. CONSULTING ENGINEERS & PLANNERS 6500 BUSCH BOULEVARD, COLUMBUS, OHIO

DESIGNED	DRAWN	REVIEWED	DATE
B.G.	C.H.	J.A.B.	10-94
CHECKED	REVISED		
R.B.			

DRAINAGE DETAILS
RETAINING WALL 'D'

FRA-270-32.46

13/15

521/593

PLOT SCALE... 1/2" = 1'
COL #19 C:\DRAWING\06092306\A-DWALLS\A-D_DD2.DWG FEBRUARY-08-1995

DRAINAGE DETAILS

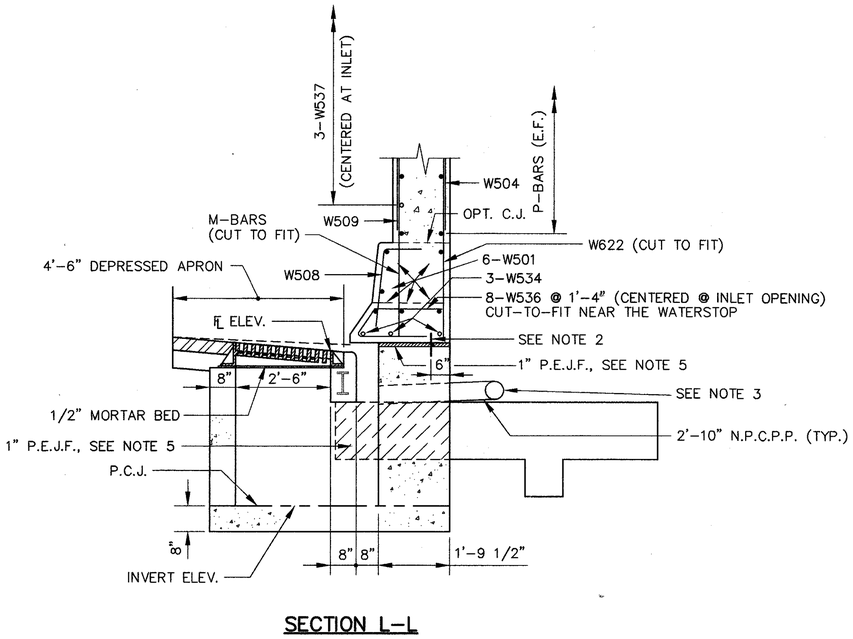

SECTION L–L

NOTE: FOR ADDITIONAL DETAILS OF INLET SEE ROADWAY PLANS.

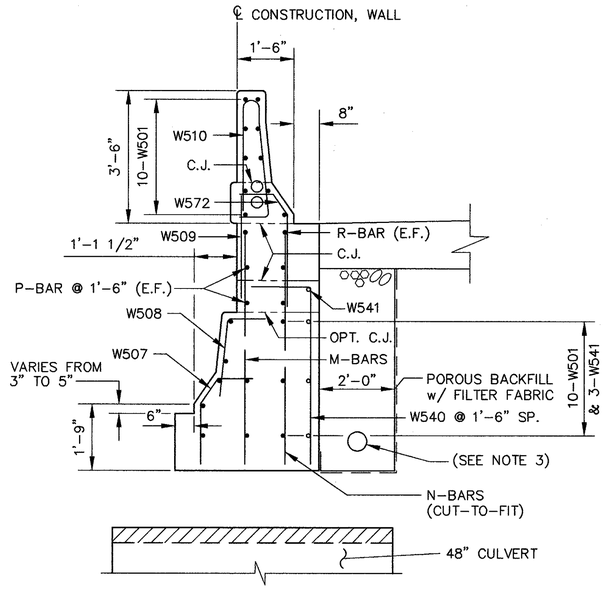

SECTION M–M

FOR LOCATION OF SECTIONS L–L, M–M, N–N, P–P & R–R SEE SHT. 12/15.

REINFORCING BAR SUB-SUMMARY

STATION TO STATION		WALL PANEL	M-BARS	N-BARS	P-BARS	R-BARS
FROM	TO					
C-1373+82	C-1374+14	A2	22-W512	43-W601	–	–
C-1374+14	C-1374+46	A3	22-W513	43-W602	–	–
C-1374+46	C-1374+78	A4	22-W514	43-W603	–	W501
C-1374+78	C-1375+10	A5	22-W515	43-W604	W501	W501
C-1375+10	C-1375+42	A6	22-W516	43-W605	W501	W501
C-1375+42	C-1375+74	A7	22-W517	43-W606	2-W501	W501
C-1375+74	C-1376+06	A8	22-W518	43-W607	2-W501	W501
C-1376+06	C-1376+38	A9	22-W519	15-W608 & 28-W622	3-W501	W501
D-1402+58	D-1402+90	B2	22-W520	43-W609	3-W501	W501
D-1402+90	D-1403+22	B3	22-W519	43-W608	3-W501	W501
D-1403+22	D-1403+54	B4	22-W521	43-W610	2-W501	W501
D-1403+54	D-1403+86	B5	22-W522	43-W611	W501	W501
D-1403+86	D-1404+18	B6	22-W523	43-W612	–	W501
CDN-1375+12	CDN-1375+44	C2	22-W524	43-W613	3-W501	W501
CDN-1375+44	CDN-1375+76	C3	22-W525	43-W614	3-W501	W501
CDN-1375+76	CDN-1376+08	C4	22-W526	43-W615	2-W501	W501
CDN-1376+08	CDN-1376+40	C5	22-W527	43-W616	2-W501	W501
CDN-1376+40	CDN-1376+72	C6	22-W516	43-W605	W501	W501
CDN-1376+72	CDN-1377+04	C7	22-W515	43-W604	W501	W501
CDN-1377+04	CDN-1377+36	C8	22-W514	43-W603	–	W501
CDN-1377+36	CDN-1377+68	C9	22-W513	43-W602	–	–
CDS-1372+64	CDS-1372+88	D2	16-W528	32-W624	3-W539	W539
CDS-1372+88	CDS-1373+20	D3	22-W519	43-W622	3-W501	W501
CDS-1373+20	CDS-1373+52	D4	22-W520	43-W617	2-W501	W501
CDS-1373+52	CDS-1373+84	D5	22-W518	43-W625	2-W501	W501
CDS-1373+84	CDS-1374+16	D6	22-W533	18-W626 & 25-W623	2-W501	W501
CDS-1374+16	CDS-1374+40	D7	16-W529	32-W618	W539	W539
CDS-1374+40	CDS-1374+72	D8	22-W530	43-W619	W501	W501
CDS-1374+72	CDS-1375+04	D9	22-W531	43-W620	–	W501
CDS-1375+04	CDS-1375+36	D10	22-W523	43-W612	–	–
CDS-1375+36	CDS-1375+68	D11	22-W532	43-W621	–	–

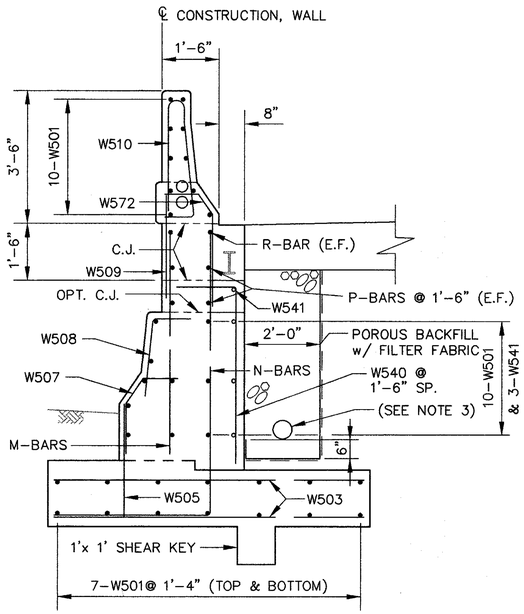

SECTION N–N

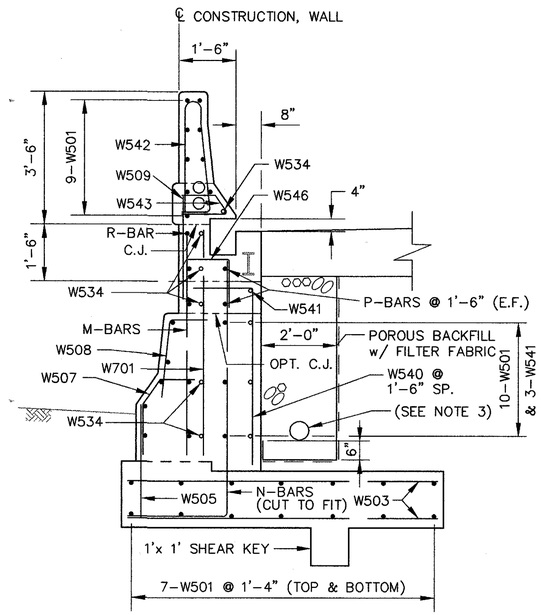

SECTION P–P

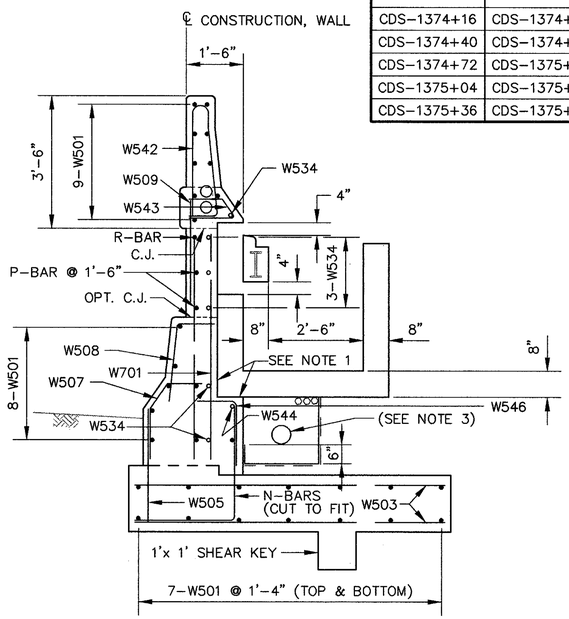

SECTION R–R

NOTE: W501 BARS SHOULD BE CUT TO FIT AT INLET LOCATION.

NOTES:

(1) TYPE 'A' WATERPROOFING SHALL BE APPLIED TO THE ENTIRE AREA OF THE WALL BACKFACE WHICH COMES INTO CONTACT WITH THE INLET.
PAYMENT FOR TYPE 'A' WATERPROOFING SHALL BE INCLUDED WITH ITEM 511, CLASS 'C' CONCRETE FOR RETAINING WALL OR WINGWALL FOR PAYMENT.

(2) 6" PVC WATERSTOP AT THE INLET LOCATION. SEE DETAIL 'A' ON SHT. 1/15.

(3) 6" PERFORATED CORRUGATED PLASTIC PIPE. SEE SHT. 5/15 FOR OUTLET PIPE CONNECTIONS.

(4) 2" CLR. UNLESS OTHERWISE NOTED.

(5) INLET BOX, GRATE, STEEL BEAM & 1" P.E.J.F. SHALL BE INCLUDED WITH PAY ITEM 604 INLET, NO. I-3E, HEIGHT VARIES. FOR ADDITIONAL DETAILS OF INLET SEE ROADWAY PLANS.

LEGEND

OPT. = OPTIONAL
E.F. = EACH FACE
C.J. = CONSTRUCTION JOINT
CLR. = CLEAR
TYP. = TYPICAL
SP. = SPACING
P.E.J.F. = PREFORMED EXPANSION JOINT FILLER

PREPARED BY
ms consultants, inc.
CONSULTING ENGINEERS & PLANNERS
4000 EMBASSY PARKWAY, COLUMBUS, OHIO

DESIGNED	DRAWN	REVIEWED	DATE
B.G.	C.H.	J.A.B.	10-94
CHECKED	REVISED		
R.B.			

DRAINAGE DETAILS & REINF. SUB-SUMMARY
RETAINING WALLS A. B. C & D

FRA-270-32.46

14/15

522/593

PLOT SCALE = 1/2" = 1'
COL #12 C:\DRAWING\06092306\A-DWALLSVA-D_RS1.DWG FEBRUARY-08-1995

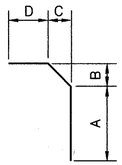

TYPE 1

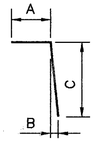

TYPE 2

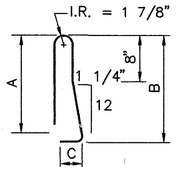

TYPE 3

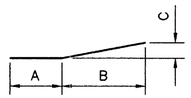

TYPE 4

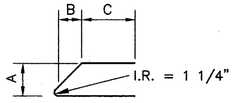

TYPE 5

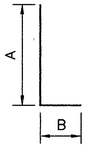

TYPE 6



TYPE 7

RETAINING WALL										RETAINING WALL									
MARK	NO.	LENGTH	TYPE	A	B	C	D	INC.	WEIGHT	MARK	NO.	LENGTH	TYPE	A	B	C	D	INC.	WEIGHT
W501	1194	31'-8"	STR.						39,436	W559	39	13'-8"	STR.						556
W502	245	6'-2"	STR.						1576	W560	9	8'-2"	STR.						77
W503	1588	8'-2"	STR.						13,526	W561	6	8'-5"	STR.						53
W504	542	4'-10"	1	3'-3"	8 1/2"	6"	9"		2732	W562	9	9'-0"	STR.						84
W505	794	3'-0"	STR.						2484	W563	10	8'-1"	STR.						84
W506	245	4'-4"	STR.						1107	W564	4	9'-4"	STR.						39
W507	784	2'-11"	1	1'-4"	8 1/2"	6"	9"		2385	W565	2	5'-4"	STR.						11
W508	784	2'-10"	2	1'-0"	2 1/2"	2'-0"			2317	W566	8	3'-6"	6	2'-8"	1'-0"				29
W509	706	3'-10"	STR.						2823	W567	66	8'-5"	6	4'-5"	4'-2"				579
W510	1096	6'-7"	3	3'-0"	3'-3"	8 1/4"			7526	W568	60	3'-6"	STR.						219
W511	12	3'-10"	4	1'-6"	2'-4"	4 3/4"			48	W569	45	3'-11"	STR.						184
W512	22	3'-4"	STR.						77	W570	12	21'-8"	STR.						271
W513	44	3'-9"	STR.						172	W571	7	4'-3"	1	2'-8"	8 1/2"	6"			31
W514	44	4'-3"	STR.						195	W572	234	4'-8"	1	3'-3"	6 1/2"	5"	10"		1139
W515	44	4'-10"	STR.						222										
W516	44	5'-6"	STR.						252										
W517	22	6'-0"	STR.						138										
W518	44	6'-7"	STR.						302	W601	43	8'-10"	6	4'-10"	4'-2"				571
W519	66	7'-4"	STR.						505	W602	86	9'-3"	6	5'-3"	4'-2"				1195
W520	44	7'-11"	STR.						363	W603	86	9'-9"	6	5'-9"	4'-2"				1259
W521	22	6'-10"	STR.						157	W604	86	10'-4"	6	6'-4"	4'-2"				1335
W522	22	5'-3"	STR.						120	W605	86	11'-0"	6	7'-0"	4'-2"				1421
W523	44	3'-8"	STR.						168	W606	43	11'-6"	6	7'-6"	4'-2"				743
W524	22	8'-3"	STR.						189	W607	43	12'-1"	6	8'-1"	4'-2"				780
W525	22	7'-5"	STR.						170	W608	58	12'-10"	6	8'-10"	4'-2"				1118
W526	22	6'-9"	STR.						155	W609	43	13'-5"	6	9'-5"	4'-2"				867
W527	22	6'-1"	STR.						140	W610	43	12'-4"	6	8'-4"	4'-2"				797
W528	17	7'-9"	STR.						137	W611	43	10'-9"	6	6'-9"	4'-2"				694
W529	17	5'-4"	STR.						95	W612	86	9'-2"	6	5'-2"	4'-2"				1184
W530	22	4'-9"	STR.						109	W613	43	13'-9"	6	9'-9"	4'-2"				888
W531	22	4'-2"	STR.						96	W614	43	12'-11"	6	8'-11"	4'-2"				834
W532	22	3'-1"	STR.						71	W615	43	12'-3"	6	8'-3"	4'-2"				791
W533	22	5'-10"	STR.						134	W616	43	11'-7"	6	7'-7"	4'-2"				748
W534	12	13'-0"	STR.						163	W617	43	11'-11"	6	9'-5"	2'-8"				770
W535	8	4'-9"	STR.						40	W618	32	10'-10"	6	6'-10"	4'-2"				521
W536	16	4'-4"	5	7 3/4"	4 1/4"	1'-8 1/2"			72	W619	43	10'-3"	6	6'-3"	4'-2"				662
W537	6	7'-6"	STR.						47	W620	43	9'-8"	6	5'-8"	4'-2"				624
W538	12	2'-3"	STR.						28	W621	43	8'-7"	6	4'-7"	4'-2"				554
W539	80	23'-8"	STR.						1975	W622	71	11'-4"	6	8'-10"	2'-8"				1209
W540	12	5'-11"	6	4'-7"	1'-6"				74	W623	25	9'-10"	6	7'-4"	2'-8"				369
W541	8	7'-6"	STR.						63	W624	32	11'-9"	6	9'-3"	2'-8"				565
W542	10	6'-3"	3	2'-10"	3'-1"	8 1/4"			65	W625	43	10'-7"	6	8'-1"	2'-8"				684
W543	6	2'-0"	5	5 3/4"	4 1/4"	7"			13	W626	18	11'-4"	6	7'-4"	4'-2"				306
W544	1	4'-0"	STR.						4	W627	17	12'-2"	6	9'-8"	2'-8"				311
W545	30	11'-4"	STR.						355	W628	11	13'-11"	6	9'-11"	4'-2"				230
W546	11	2'-4"	6	1'-6"	1'-0"				27	W629	17	14'-6"	6	10'-6"	4'-2"				370
W547	20	4'-0"	STR.						83	W630	19	12'-1"	6	9'-7"	2'-8"				345
W548	1 SET OF 7	2'-11" / 3'-10"	1	1'-4"	8 1/2" / 1'-5 1/2"	6" / 1'-0 1/2"		B = 1 1/2" C = 1 1/8"	25										
W549	3	3'-10"	1	1'-4"	1'-5 1/2"	1'-0 1/2"			12										
W550	12	8'-7"	6	4'-7"	4'-2"				107										
W551	10	7'-11"	6	3'-11"	4'-2"				83	W701	13	5'-11"	STR.						157
W552	9	17'-8"	STR.						166										
W553	2	15'-4"	STR.						32										
W554	2	11'-6"	STR.						24								TOTAL WEIGHT		110,960
W555	2	15'-4"	7						32										
W556	2	11'-4"	STR.						24										
W557	78	11'-8"	STR.						949										
W558	39	7'-8"	STR.						312										

SHEET NOTES:

BAR SIZE: THE BAR SIZE IS INDICATED IN THE BAR MARK. THE FIRST DIGIT INDICATES THE BAR SIZE NUMBER.
EXAMPLE: W509 IS A NO. 5 SIZE BAR.

ALL REINFORCING STEEL SHALL BE EPOXY COATED.

PLOT SCALE 1 = 1
COL #19
C:\DRAWING\0609230R\A-DWALLS\A-D_RLI.DWG FEBRUARY-28-1995

PREPARED BY
ms consultants, inc.
CONSULTING ENGINEERS & PLANNERS
4600 BOONE BOULEVARD, COLUMBUS, OHIO

DESIGNED B.G.
DRAWN C.H.
CHECKED R.B.
REVIEWED J.A.B.
DATE 10-94
REVISED

REINFORCING STEEL LIST
RETAINING WALL A, B, C & D

FRA-270-32.46

15/15

523
593

REINFORCING STEEL LIST

RETAINING WALL 'E' (STA. CDS-1413+00 TO CDS-1429+00)

GENERAL NOTES & ESTIMATED QUANTITIES

GENERAL NOTES

DESIGN SPECIFICATIONS: THIS STRUCTURE CONFORMS TO "STANDARD SPECIFICATIONS FOR HIGHWAY BRIDGES" ADOPTED BY THE AMERICAN ASSOCIATION OF STATE HIGHWAY AND TRANSPORTATION OFFICIALS, 1993 AND THE ODOT BRIDGE DESIGN MANUAL.

DESIGN DATA:
ACTIVE & PASSIVE PRESSURES: ϕ = 30° ; W = 120 lb/cu. ft.

DESIGN STRESSES:
CONCRETE CLASS C – COMPRESSIVE STRENGTH 4000 P.S.I.

REINFORCING STEEL – ASTM A615, A616 OR A617
GRADE 60 MINIMUM YIELD STRENGTH 60,000 P.S.I.
(ALL STEEL SHALL BE EPOXY COATED)

ITEM SPECIAL, SEALING OF CONCRETE SURFACES: A CONCRETE SEALER SHALL BE APPLIED TO THE CONCRETE SURFACES SHOWN ON SHEET 9/14. SEE THE PROPOSAL NOTE FOR SURFACE PREPARATION REQUIREMENTS, APPLICATION RATES, MATERIAL REQUIREMENTS AND APPLICATION PROCEDURE.

FOUNDATION BEARING PRESSURE: WALL FOOTINGS, AS DESIGNED, PRODUCE A MAXIMUM BEARING PRESSURE OF 1.1 TONS PER SQUARE FEET.

BAR SPLICES: MINIMUM REINFORCING BAR SPLICE LENGTHS SHALL BE NOT LESS THAN THE FOLLOWING; UNLESS OTHERWISE NOTED.
NO. 5 BARS – 2'-0"
NO. 7 BARS – 3'-0"

COVER: BOTTOM REINFORCEMENT FOR FOOTINGS SHALL HAVE A 3" MINIMUM CONCRETE COVER. ALL OTHER REINFORCEMENT SHALL HAVE A 2" MINIMUM CONCRETE COVER, UNLESS OTHERWISE NOTED.

FOOTING KEY: FOOTING KEY SHALL BE PLACED AGAINST UNDISTURBED EARTH, SEE CMS SECTION 503.04.

POROUS BACKFILL WITH FILTER FABRIC: 2'-0" THICK POROUS BACKFILL SHALL EXTEND FROM 6" BELOW THE FLOW LINE OF THE 6" PERFORATED C.P.P. UP TO ONE FOOT BELOW THE EMBANKMENT SURFACE, AND LATERALLY TO THE ENDS OF THE WALLS (WALL TYPE "A" ONLY). GEOTEXTILE FABRIC SHALL CONFORM WITH 712.09, TYPE A. THE BOTTOM OF THE POROUS BACKFILL SHALL BE SLOPED (1 IN. PER FT. MIN.) LATERALLY TO DRAIN. GEOTEXTILE FABRIC IS INCLUDED WITH POROUS BACKFILL FOR PAYMENT.

WALL SURFACE FINISHES: THE EXPOSED VERTICAL SURFACES OF WALLS SHALL BE FINISHED AS SHOWN ON THIS SHEET. STRIATIONS SHALL PROTRUDE BEYOND NOMINAL SURFACE OF THE WALL PANELS. PANELS OR AREAS NOT STRIATED SHALL HAVE A SMOOTH FINISH. SURFACE FINISH AND GROUT CLEANING SHALL CONFORM TO 511.15. STRIATIONS SHALL BE OBTAINED BY THE USE OF APPROVED FORM LINERS.

FORM LINERS SHALL BE APPROVED BY THE PROJECT ENGINEER TO USE. CARE SHALL BE TAKEN TO ENSURE PROPER DISTRIBUTION OF CONCRETE ALONG STRIATED SURFACES WITHOUT ADVERSELY AFFECTING THE INTEGRITY OF THE FORM LINERS AND INSERTS. EVERY EFFORT SHALL BE MADE TO PRODUCE A SURFACE FREE FROM AIR BUBBLES, CAVITIES AND HONEYCOMB SPOTS AND OTHER IMPERFECTIONS TO OBVIATE THE NEED FOR SUBSEQUENT GROUT CLEANING.

PAYMENT FOR SURFACE FINISH AND, WHERE REQUIRED, GROUT CLEANING SHALL INCLUDE THE COST OF THE CONCRETE FOR WALL, ITEM 511 CLASS C CONCRETE, RETAINING WALL, AS PER PLAN.

INDEX

INDEX	SHEET NO.
GENERAL NOTES & ESTIMATED QUANTITIES	1/14
SITE PLAN & ELEVATIONS	2–4/14
PLAN & ELEVATIONS	5–8/14
TYPICAL SECTIONS & TYPICAL ELEVATION	9/14
TRANSITION DETAIL	10/14
TRANSITION DETAIL & REINFORCING SUB-SUMMARY	11/14
DRAINAGE DETAILS	12/14
MISC. DETAILS	13/14
REINFORCING STEEL LIST	14/14

ESTIMATED QUANTITIES

CALC. BY: B.G. DATE: 8-94
CHKD. BY: R.B. DATE: 8-94

ITEM	ITEM EXT.	TOTAL	UNIT	DESCRIPTION
503	11101	LUMP	LUMP	COFFERDAMS, CRIBS AND SHEETING, AS PER PLAN
503	21102	5,551	CU. YD.	UNCLASSIFIED EXCAVATION, INCLUDING SHALE
509	15830	116,009	POUND	EPOXY COATED REINFORCING STEEL, GRADE 60
511	46001	2287	CU. YD.	CLASS C CONCRETE, RETAINING WALL OR WINGWALL, AS PER PLAN *
511	46500	1215	CU. YD.	CLASS C CONCRETE, FOOTING *
SPECIAL	51267502	1526	SQ. YD.	SEALING OF CONCRETE SURFACES (NON-EPOXY), (SEE PROPOSAL NOTE) 1
516	30501	148	LIN. FT.	PVC WATERSTOP, AS PER PLAN
516	13600	230	SQ. FT.	1" PREFORMED EXPANSION JOINT FILLER
518	21200	320	CU. YD.	POROUS BACKFILL WITH FILTER FABRIC
518	40001	720	LIN. FT.	6" PERFORATED CORRUGATED PLASTIC PIPE, AS PER PLAN
518	40011	38	LIN. FT.	6" NON-PERFORATED CORRUGATED PLASTIC PIPE, INCLUDING SPECIALS, AS PER PLAN

* NO DEDUCTION HAS BEEN MADE FOR THE FOOTING AND WALL CONCRETE AT THE INLET LOCATIONS.

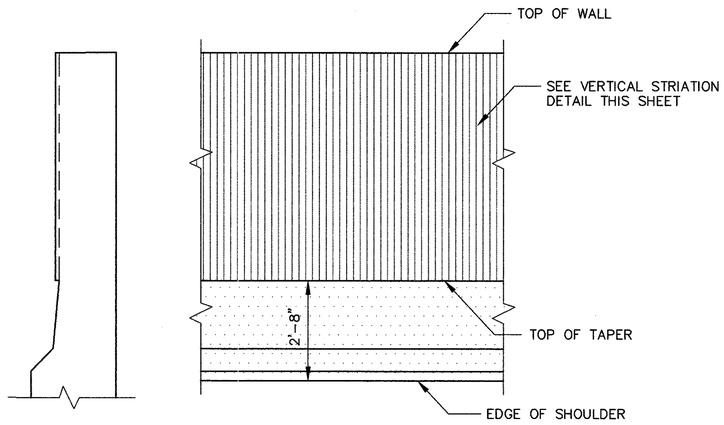

TYPICAL EXPOSED WALL FINISH

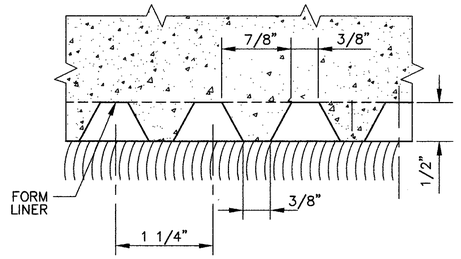

VERTICAL STRIATION DETAIL

LEGEND
C.P.P. = CORRUGATED PLASTIC PIPE
= HAND RUBBED SMOOTH FINISH

PLOT SCALE: 1 = 1
COL #13
C:\DRAWING\0609218\ROSSIGN.DWG MAY-06-1996

PREPARED BY ms consultants, inc.
CONSULTING ENGINEERS & PLANNERS
8800 ESSER BOULEVARD, COLUMBUS, OHIO

DESIGNED BG | DRAWN CH | CHECKED RB | REVIEWED JAB | DATE 8-94
REVISED 5-96

GENERAL NOTES & ESTIMATED QUANTITIES
RETAINING WALL 'E'

FRA-270-32.46

1/14

524
593

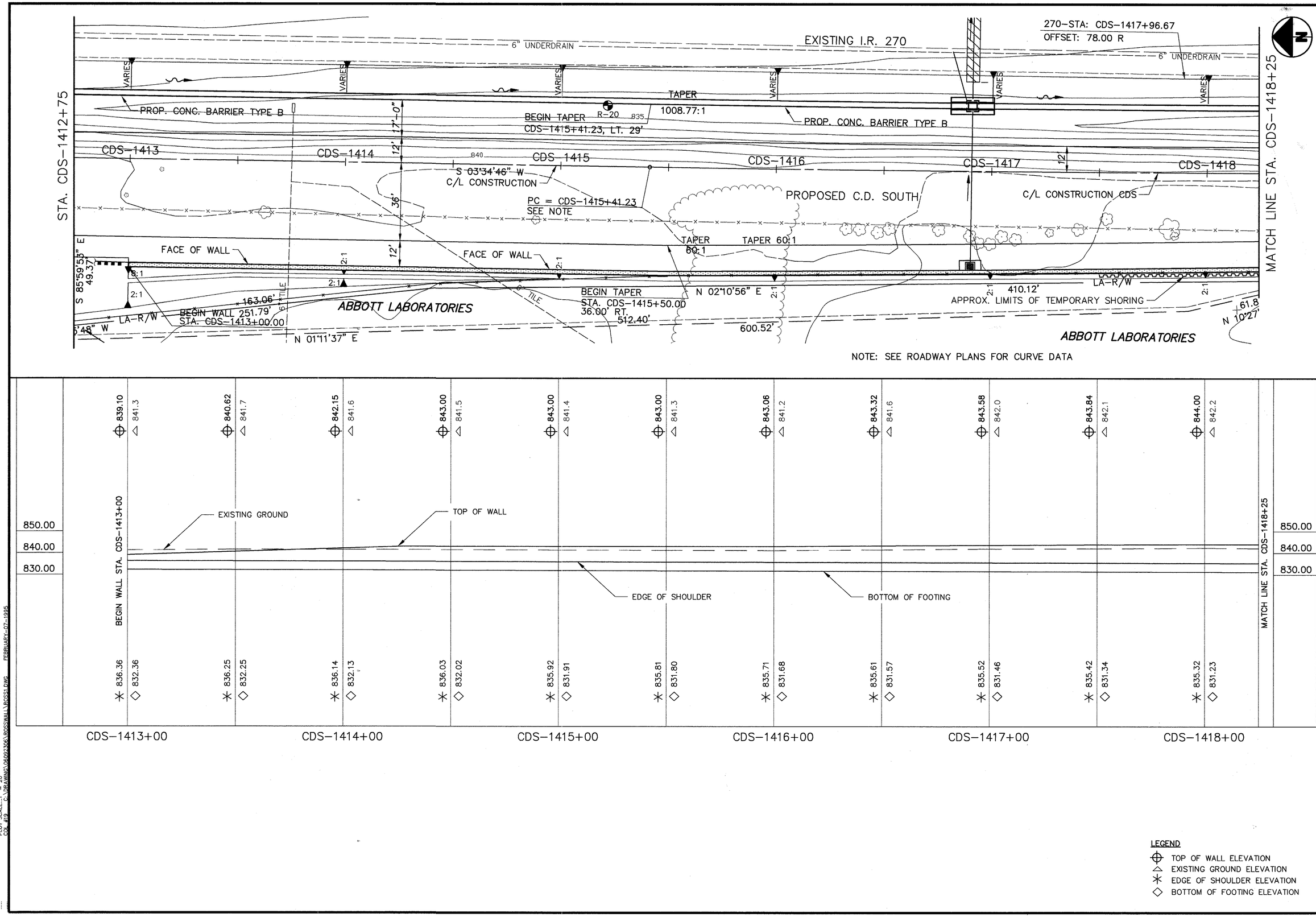

PLOT SCALE...1" = 20'
COL #19 C:\DRAWING\06092306\ROSSWALL\ROSS1.DWG FEBRUARY-07-1995

PREPARED BY
ms consultants, inc.
CONSULTING ENGINEERS & PLANNERS
6500 BUSCH BOULEVARD, COLUMBUS, OHIO

DESIGNED	DRAWN	REVIEWED	DATE
RB	CH	JAB	8-94
CHECKED	REVISED		
MJ			

SITE PLAN
RETAINING WALL 'E'
STA. CDS-1413+00 to CDS-1418+25

FRA-270-32.46

2/14

525/593

SITE PLAN

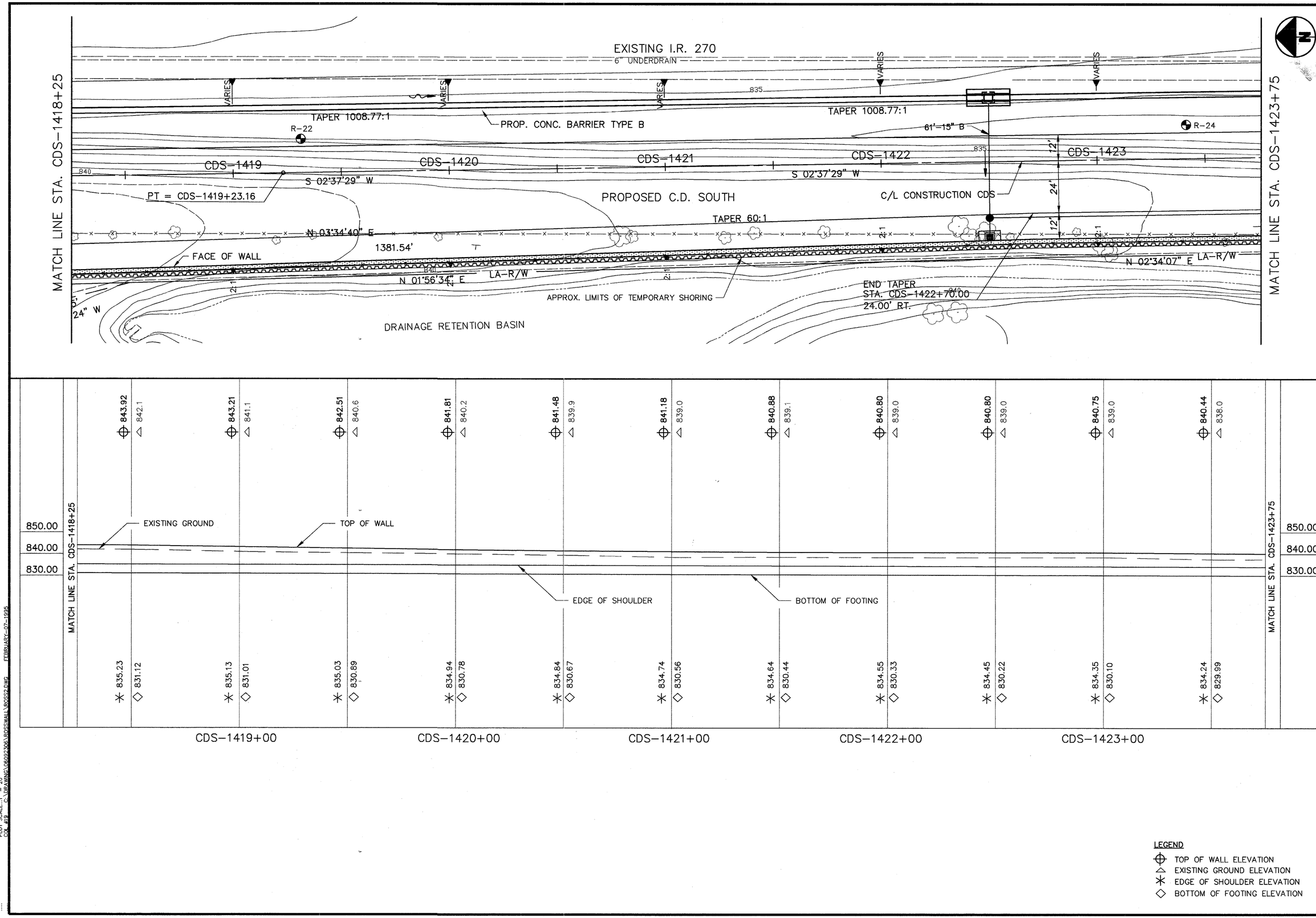

PREPARED BY
ms consultants, inc.
CONSULTING ENGINEERS & PLANNERS
4500 BOSCH BOULEVARD, COLUMBUS, OHIO

DESIGNED	DRAWN	REVIEWED	DATE
RB	CH	J.A.B.	8-94
CHECKED	REVISED		
MJ			

SITE PLAN
RETAINING WALL 'E'
STA. CDS-1418+25 to CDS-1423+75

FRA-270-32.46

3/14

526/593

PLOT SCALE: 1" = 20'
COL #19 C:\DRAWING\06092306\ROSSWALL\ROSS2.DWG FEBRUARY-07-1995

SITE PLAN

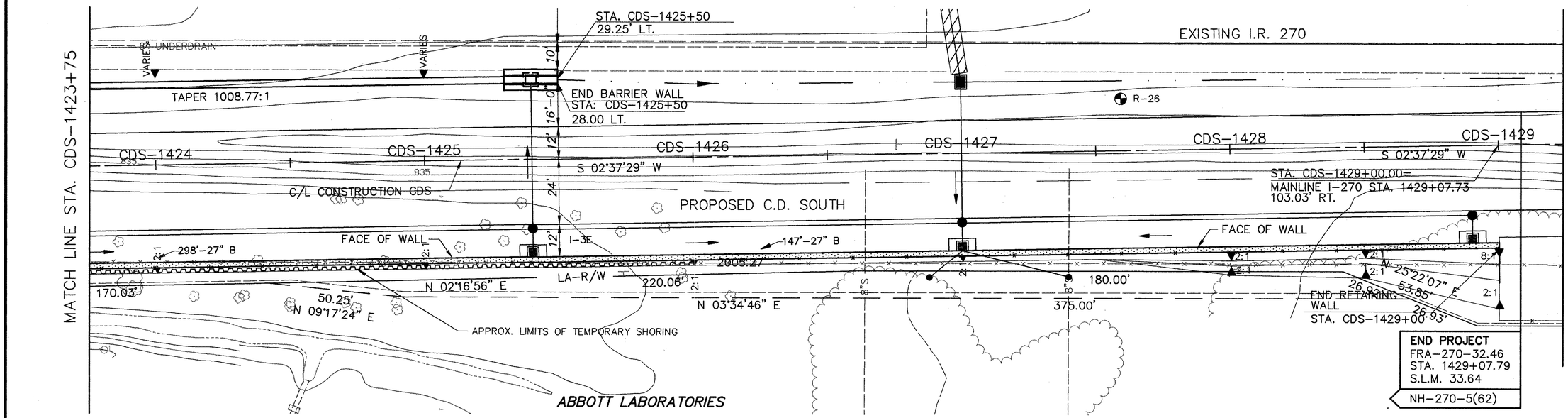

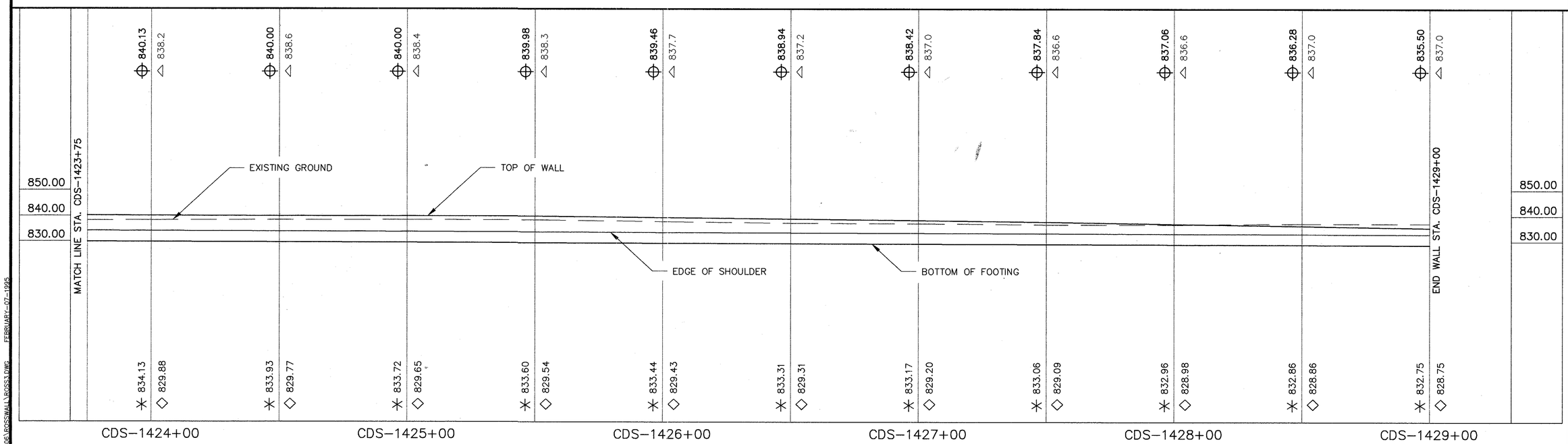

LEGEND
- ⊕ TOP OF WALL ELEVATION
- △ EXISTING GROUND ELEVATION
- ✳ EDGE OF SHOULDER ELEVATION
- ◇ BOTTOM OF FOOTING ELEVATION

PREPARED BY
ms consultants, inc.
CONSULTING ENGINEERS & PLANNERS
4500 BEECH BOULEVARD, COLUMBUS, OHIO

DESIGNED	DRAWN	REVIEWED	DATE
RB	CH	JAB	8-94
CHECKED	REVISED		
MJ			

SITE PLAN
RETAINING WALL 'E'
STA. CDS-1423+75 to CDS-1429+00

FRA-270-32.46

4/14

527/593

PLOT SCALE .1" = 20'
COS. #12 C:\DRAWING\0609206\BOSSWALL\BOSS3.DWG FEBRUARY-07-1995

SITE PLAN

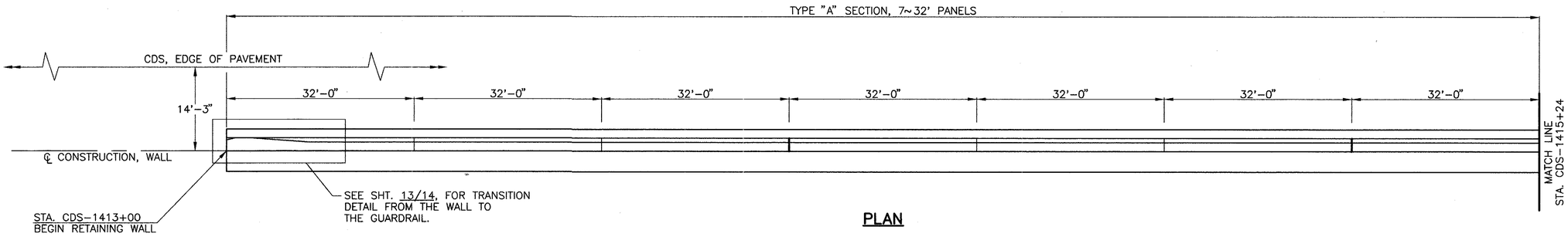

PLAN

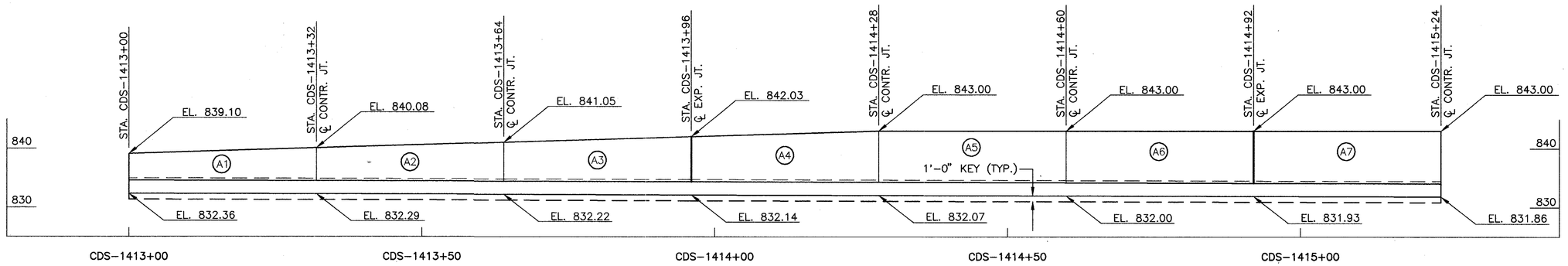

ELEVATION

LEGEND
CONTR. JT. = CONTRACTION JOINT
EXP. JT. = EXPANSION JOINT
TYP. = TYPICAL

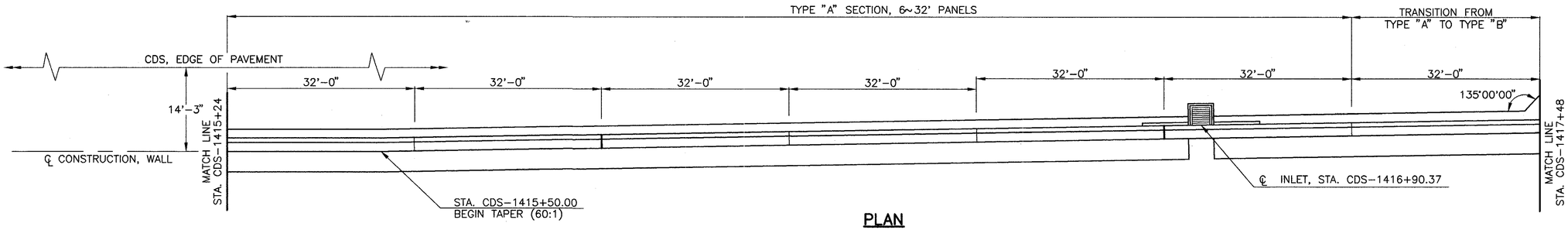

PLAN

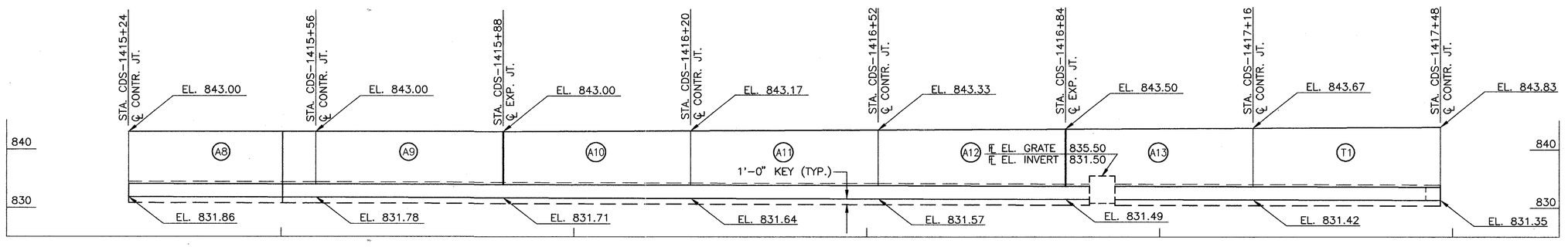

ELEVATION

PLOT SCALE 1" = 10'
COL #19 C:\DRAWING\06092306\ROSSWALL\ROSSRW1.DWG FEBRUARY-07-1995

PREPARED BY
ms consultants, inc.
CONSULTING ENGINEERS & PLANNERS
4600 ENTERPRISE BOULEVARD, COLUMBUS, OHIO

DESIGNED	DRAWN	REVIEWED	DATE
BG	MCR	JAB	9-94
CHECKED	REVISED		
RB			

PLAN & ELEVATION
RETAINING WALL 'E'
STA. CDS-1413+00 TO STA. CDS-1417+48

FRA-270-32.46

5/14

528/593

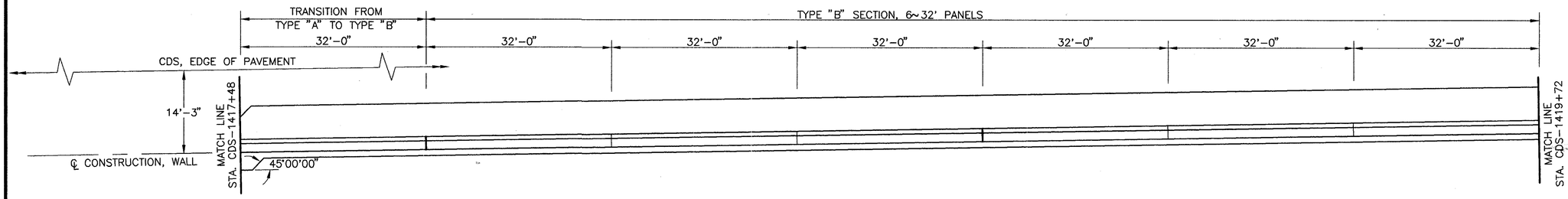

PLAN

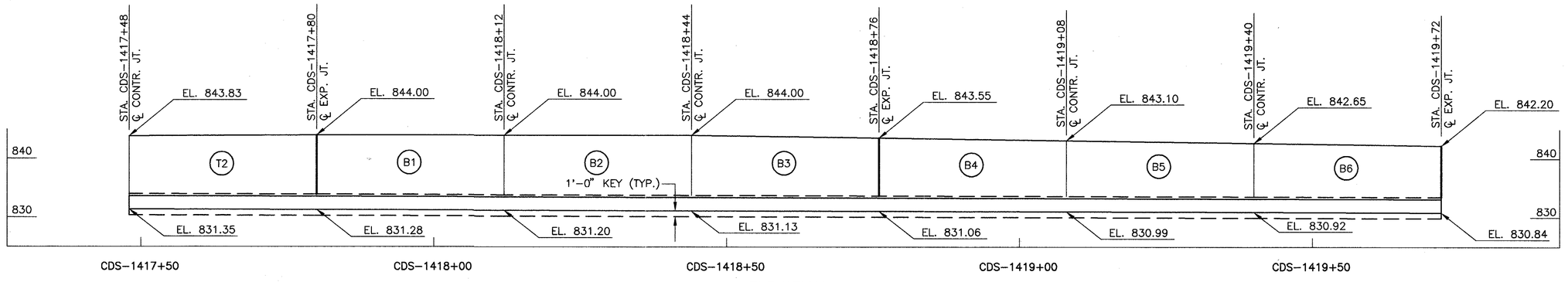

ELEVATION

LEGEND
CONTR. JT. = CONTRACTION JOINT
EXP. JT. = EXPANSION JOINT
TYP. = TYPICAL

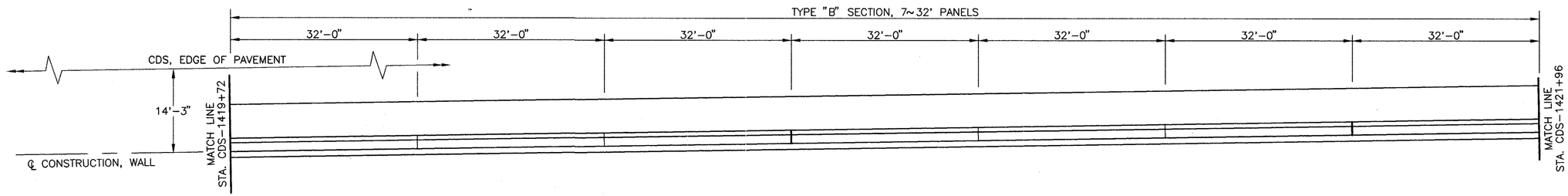

PLAN

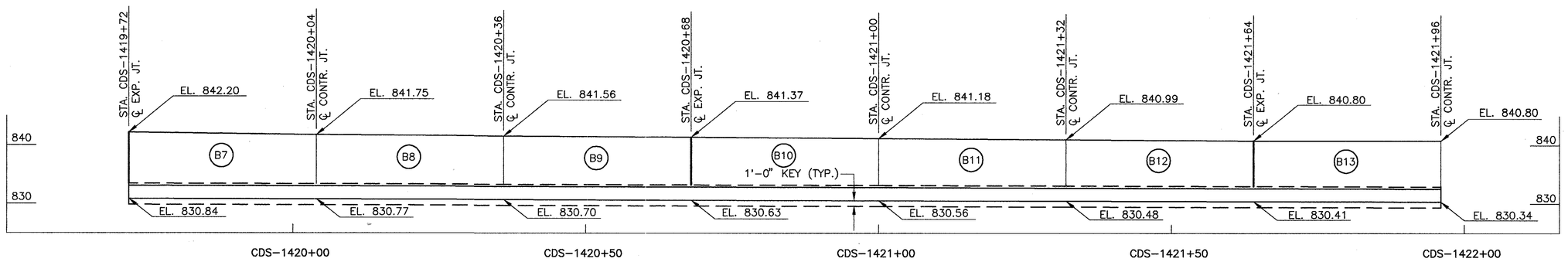

ELEVATION

PLOT SCALE 1" = 10'
COL #19 C:\DRAWING\06092306\ROSSWALL\ROSSRW2.DWG FEBRUARY-07-1995

PREPARED BY
ms consultants, inc.
CONSULTING ENGINEERS & PLANNERS
6500 EMORY BOULEVARD, COLUMBUS, OHIO

DESIGNED BG
DRAWN MCR
CHECKED RB
REVIEWED JAB
DATE 9-94
REVISED

PLAN & ELEVATION
RETAINING WALL 'E'
STA. CDS-1417+48 TO STA. CDS-1421+96

FRA-270-32.46

6/14

529
593

PLAN & ELEVATION

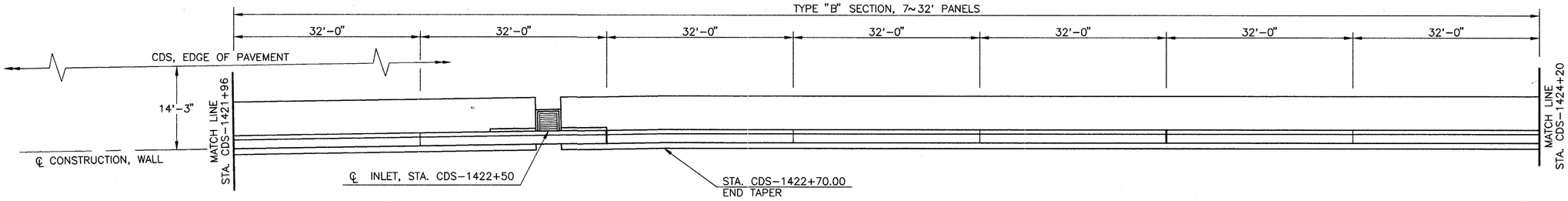

PLAN

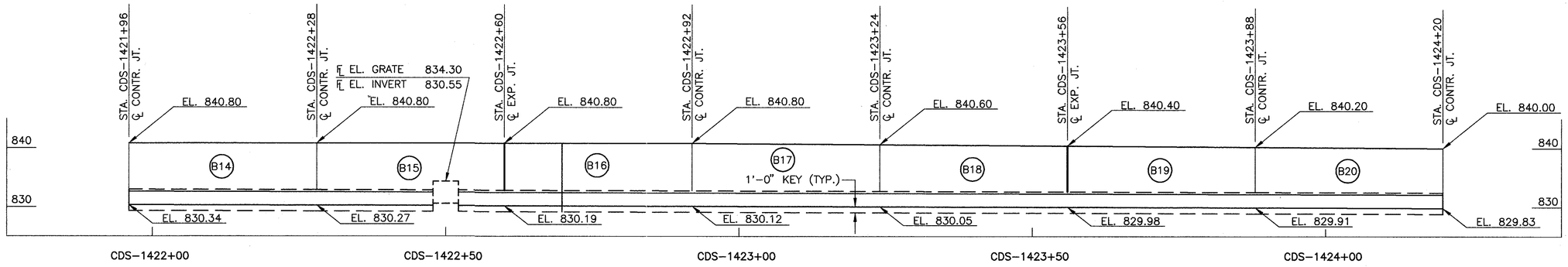

ELEVATION

LEGEND
CONTR. JT. = CONTRACTION JOINT
EXP. JT. = EXPANSION JOINT
TYP. = TYPICAL

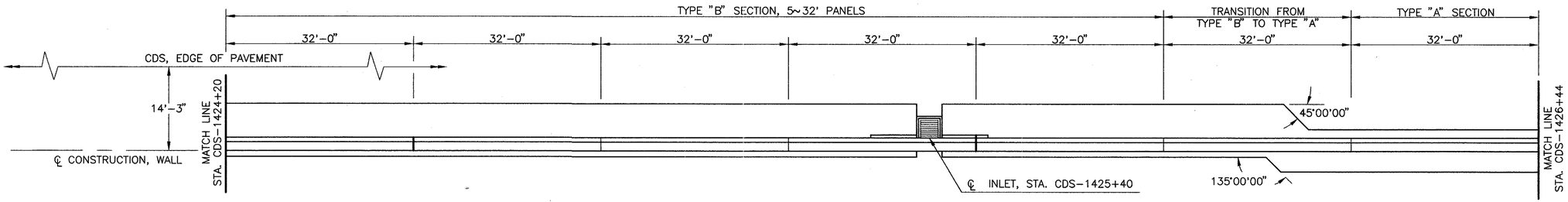

PLAN

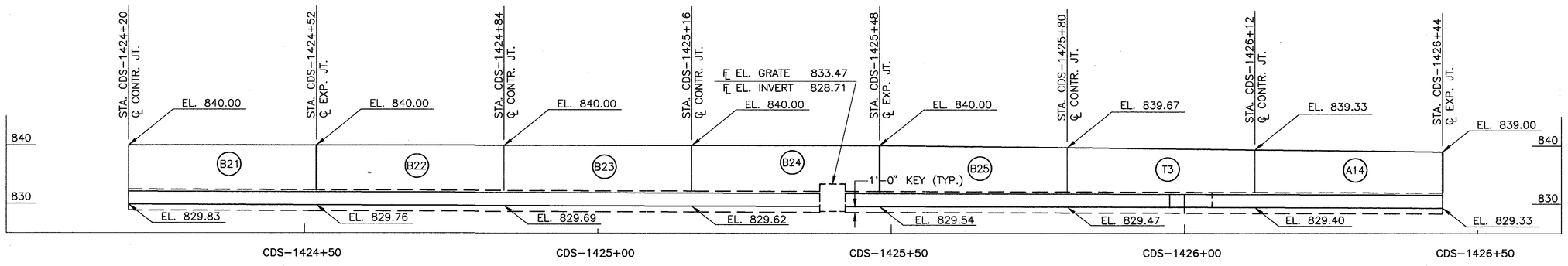

ELEVATION

PLOT SCALE 1" = 10'
COL #19 C:\DRAWING\06092306\ROSSWALL\ROSSRW3.DWG FEBRUARY-07-1995

PREPARED BY
ms consultants, inc.
CONSULTING ENGINEERS & PLANNERS
4000 EMBER BOULEVARD, COLUMBUS, OHIO

DESIGNED	DRAWN	REVIEWED	DATE
BG	MCR	JAB	9-94
CHECKED	REVISED		
RB			

PLAN & ELEVATION
RETAINING WALL 'E'
STA. CDS-1421+96 TO STA. CDS-1426+44

FRA-270-32.46

7/14

530/593

PLAN & ELEVATION

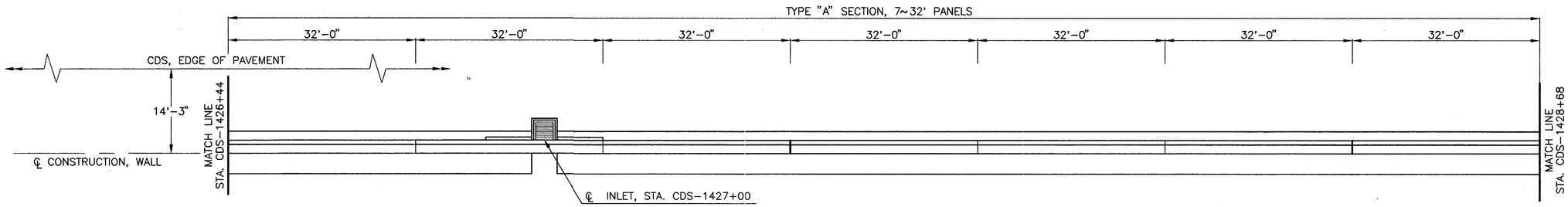

PLAN

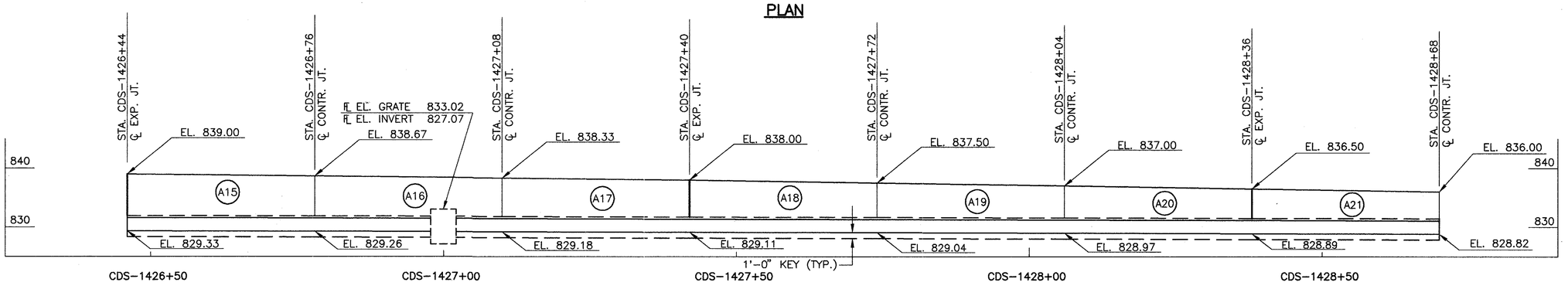

ELEVATION

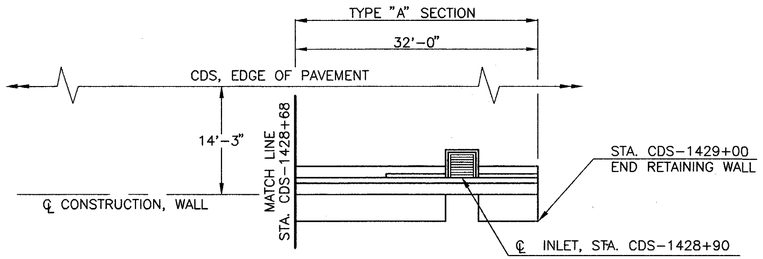

PLAN

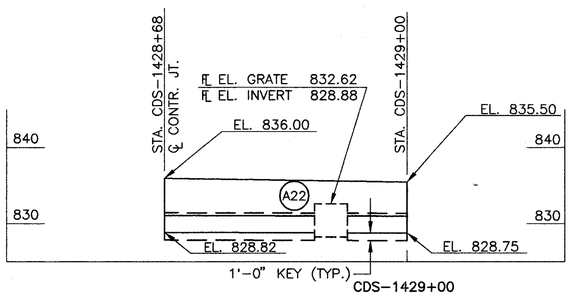

ELEVATION

ITEM 518 ~ 6" P.C.P.P. AND N.P.C.P.P.

STATION TO STATION	INSTALLATION PROCEDURE	OUTLET STATION	ITEM 518 N.P.C.P.P.	ITEM 518 P.C.P.P.
CDS-1413+00 TO CDS-1416+90	①	CDS-1416+90	5	385
CDS-1416+90 TO CDS-1417+50	②	CDS-1416+90	5	55
CDS-1417+50 TO CDS-1426+00	NO BACKFILL DRAINAGE			
CDS-1426+00 TO CDS-1427+00	①	CDS-1427+00	5	95
CDS-1427+05 TO CDS-1428+90	①	CDS-1428+90	5	180
CDS-1428+90 TO CDS-1429+00	②	CDS-1428+90	5	5
2'-5" N.P.C.P.P. FOR THE CONNECTION THROUGH THE WALL INTO THE INLET (5 LOCATIONS)			13	
		TOTAL	38	720

TYPICAL OUTLET CONNECTION: P.C.P.P. SHALL STOP 5' BEFORE THE SPECIFIED INLET LOCATION AND N.P.C.P.P. SHALL CONTINUE TO THE INLET. FOR THE CONNECTION THROUGH THE WALL INTO THE INLET 2'-5" OF N.P.C.P.P. HAS BEEN PROVIDED AT EACH SUCH LOCATION. THE COST OF PROVIDING P.C.P.P. AND N.P.C.P.P. AND FITTINGS SHALL BE INCLUDED WITH RESPECTIVE 518 ITEMS FOR PAYMENT. THE TOTALS ARE CARRIED TO SHT. 1/14 IN THE ESTIMATED QUANTITIES TABLE.

INSTALLATION PROCEDURE:

① CAP THE HIGHER END OF 6" P.C.P.P. A MINIMUM OF 0.24% OR PROFILE GRADE SLOPE WHICHEVER IS GREATER SHALL BE USED FOR P.C.P.P. A MINIMUM OF 1% SLOPE SHALL BE USED FOR N.P.C.P.P.

OR ② CONSTRUCT AGAINST GRADE AT A SLOPE OF 1%.

THE INVERT OF 6" N.P.C.P.P. OUTLETTING INTO AN INLET SHALL BE AT LEAST 1' ABOVE THE LOWEST INVERT OF THE INLET OR AS DIRECTED BY THE ENGINEER.

LEGEND

TYP. = TYPICAL
CONTR. JT. = CONTRACTION JOINT
EXP. JT. = EXPANSION JOINT
N.P.C.P.P. = NON-PERFORATED CORRUGATED PLASTIC PIPE
P.C.P.P. = PERFORATED CORRUGATED PLASTIC PIPE

PREPARED BY ms consultants, inc. CONSULTING ENGINEERS & PLANNERS 4600 MEDICAL BOULEVARD, COLUMBUS, OHIO

DESIGNED BG | DRAWN MCR | REVIEWED JAB | DATE 9-94 | CHECKED RB | REVISED

PLAN & ELEVATION
RETAINING WALL 'E'
STA. CDS-1426+44 TO STA. CDS-1429+00

FRA-270-32.46

8/14

531/593

PLOT SCALE 1" = 10'
COL #19 C:\DRAWING\06092306\ROSSWALL\ROSSRW4.DWG NOVEMBER-16-1994

SHEET NOTES:

1. 6–W502 (TYPE "A") OR 9–W502 (TYPE "B") (LAPPED WITH W501 BARS)
2. 6–W509 (TYPE "A") OR 9–W509 (TYPE "B") (LAPPED WITH W501 BARS)

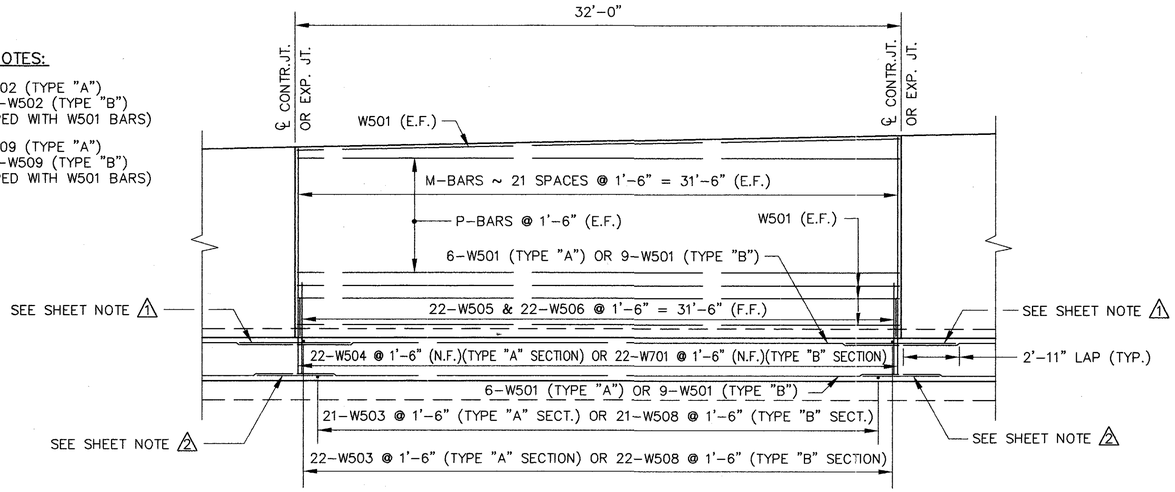

TYPICAL ELEVATION

(TYPE "A"), (TYPE "B") ~ 32' PANEL

STATION	OFFSET
CDS–1413+00 TO CDS–1415+50	50'–3"
CDS–1416+00	49'–5"
CDS–1416+50	48'–7"
CDS–1417+00	47'–9"
CDS–1417+50	46'–11"
CDS–1418+00	46'–1"
CDS–1418+50	45'–3"
CDS–1419+00	44'–5"
CDS–1419+50	43'–7"
CDS–1420+00	42'–9"
CDS–1420+50	41'–11"
CDS–1421+00	41'–1"
CDS–1421+50	40'–3"
CDS–1422+00	39'–5"
CDS–1422+50	38'–7"
CDS–1422+70 TO CDS–1429+00	38'–3"

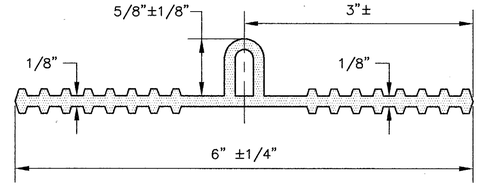

WATERSTOP DETAIL 'A–1'

≠ FOR THE FIRST POUR, THE WATERSTOP SHOULD BE HELD SECURELY IN PLACE BY THE USE OF SPLIT FORMS AND TIE WIRES. FOR THE SECOND POUR, SECURE THE FREE END OF THE WATERSTOP IN THE PROPER POSITION WITH TIE WIRES. ALTERNATE METHODS, AS APPROVED BY THE ENGINEER, MAY BE USED TO ENSURE THE CORRECT POSITIONING OF THE WATERSTOP.

WATERSTOP SHALL BE DUO–PVC BY W.R. MEADOWS, INC., ELGIN ILLINOIS: A.H. HARRIS & SONS, INC., LATHAM, NEW YORK, OR AN APPROVED ALTERNATE.

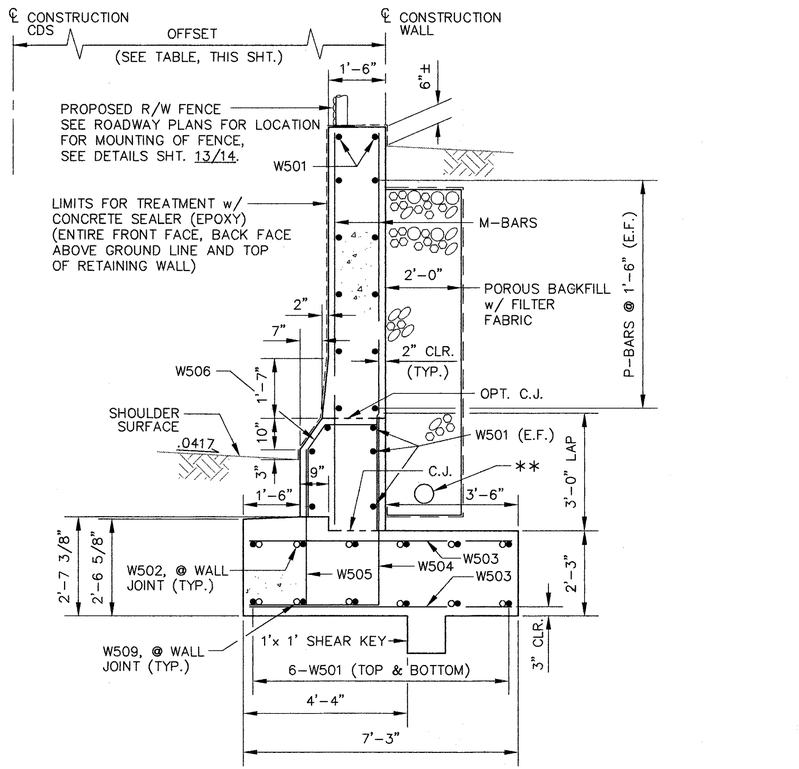

TYPICAL WALL SECTION

(TYPE "A")

STA. CDS–1413+00 TO CDS–1417+50
STA. CDS–1426+00 TO CDS–1429+00

** 6" PERFORATED CORRUGATED PLASTIC PIPE. SEE SHT. 8/14 FOR OUTLET PIPE CONNECTIONS.

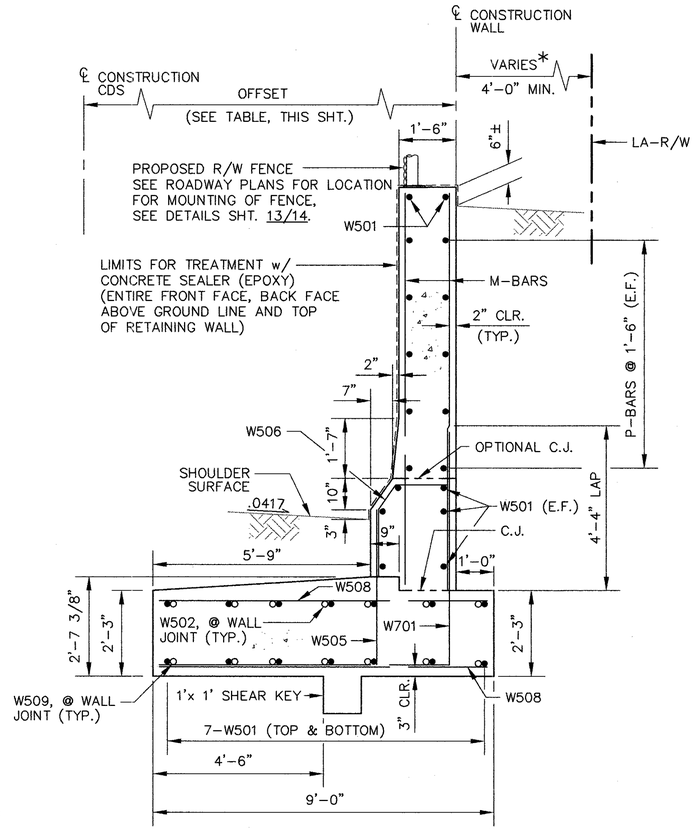

TYPICAL WALL SECTION

(TYPE "B")

STA. CDS–1417+50 TO CDS–1426+00

* THE TEMPORARY SHORING SHALL BE CONFINED WITHIN THIS DIMENSION. THE SHORING SHALL NOT DISTURB OR ALTER THE FUNCTION OF THE ADJACENT DRAINAGE RETENTION BASIN.

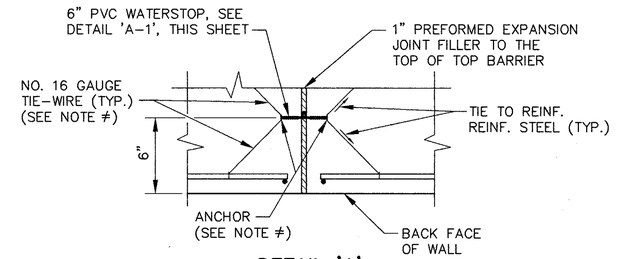

DETAIL 'A'

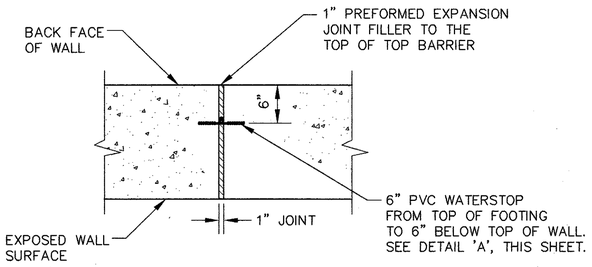

EXPANSION JOINT

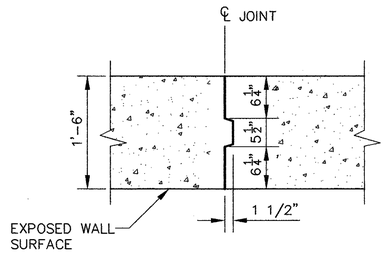

CONTRACTION JOINT

(SHOWN AT SECTION OF WALL THAT IS 1'–6")

NOTE: VERTICAL STRIATIONS NOT SHOWN FOR CLARITY.

LEGEND

N.F. = NEAR FACE
E.F. = EACH FACE
F.F. = FAR FACE
SECT. = SECTION
EXP. JT. = EXPANSION JT.
CLR. = CLEAR
C.J. = CONSTRUCTION JOINT
CONTR. JT. = CONTRACTION JOINT
P.E.J.F. = PREFORMED EXPANSION JOINT FILLER

PLOT SCALE=1" = 4'
COL. #19
C:\DRAWING\08092306\ROSSWALL\ROSSTY1.DWG NOVEMBER-16-1994

PREPARED BY
ms consultants, inc.
CONSULTING ENGINEERS & PLANNERS
4600 ROCKE BOULEVARD, COLUMBUS, OHIO

DESIGNED BG
DRAWN CH
CHECKED RB
REVIEWED JAB
DATE 8-94
REVISED

TYPICAL SECTIONS
RETAINING WALL 'E'

FRA–270–32.46

9 / 14

532
593

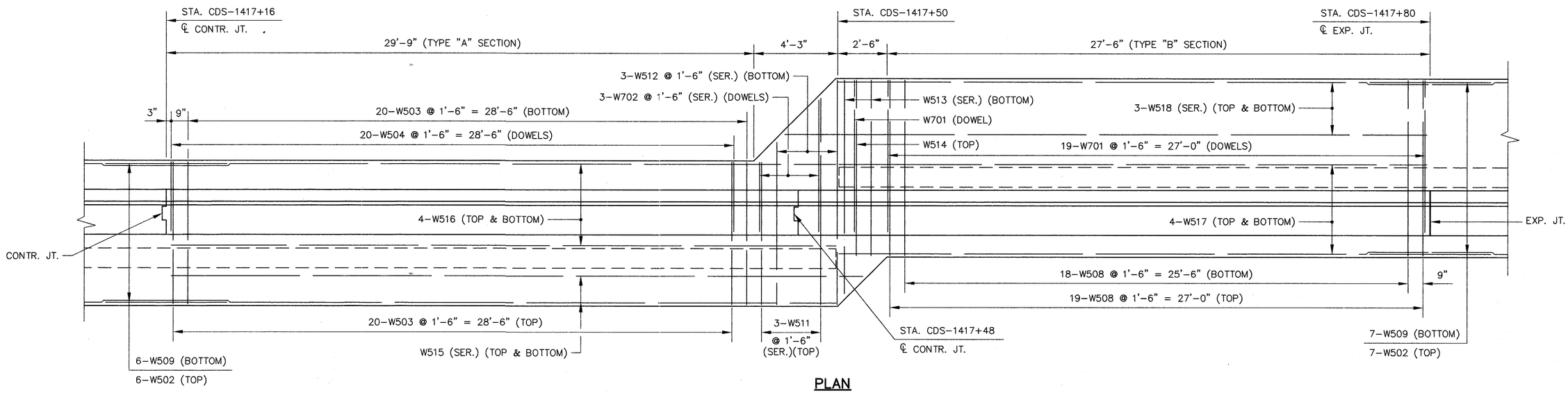

PLAN
(STEM REINFORCEMENT NOT SHOWN)

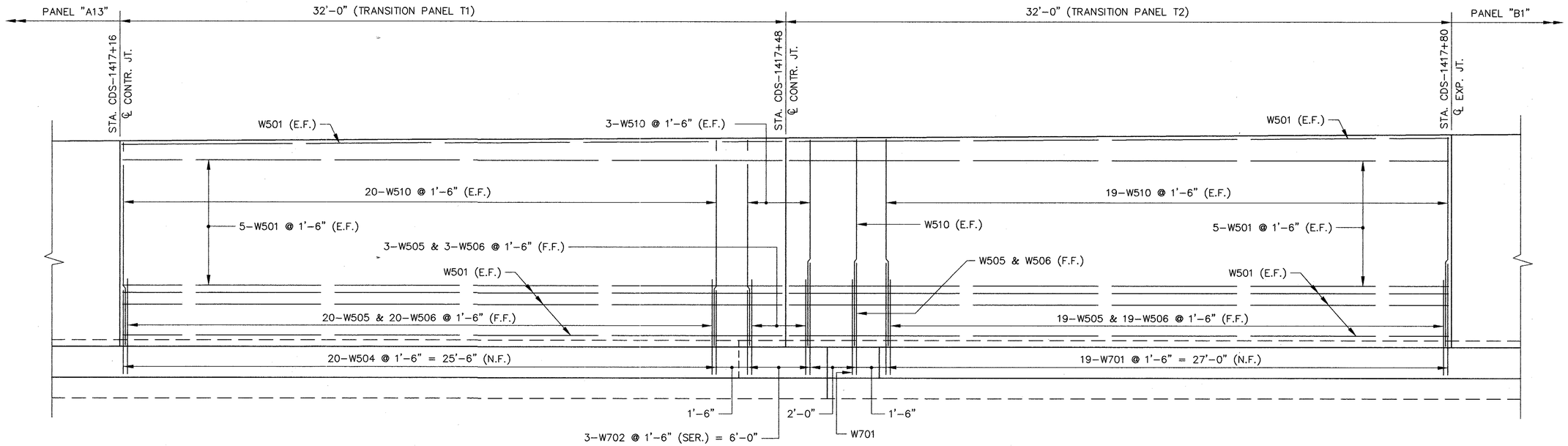

ELEVATION
(FOOTING REINFORCEMENT NOT SHOWN)

LEGEND
N.F. = NEAR FACE
E.F. = EACH FACE
F.F. = FAR FACE
CONTR. JT. = CONTRACTION JOINT
P.E.J.F. = PREFORMED EXPANSION JOINT FILLER

PREPARED BY
ms consultants, inc.
CONSULTING ENGINEERS & PLANNERS
6500 BUSCH BOULEVARD, COLUMBUS, OHIO

DESIGNED	DRAWN	REVIEWED	DATE
BG	CH	JAB	8-94
CHECKED	REVISED		
RB			

TRANSITION DETAIL @ STA. CDS-1417+50
RETAINING WALL 'E'

FRA-270-32.46

PLOT SCALE: 3/8" = 1'
COL #19 C:\DRAWING\06092306\ROSSWALL\ROSSTD1.DWG FEBRUARY-07-1995

TRANSITION DETAIL @ STA. CDS-1417+50

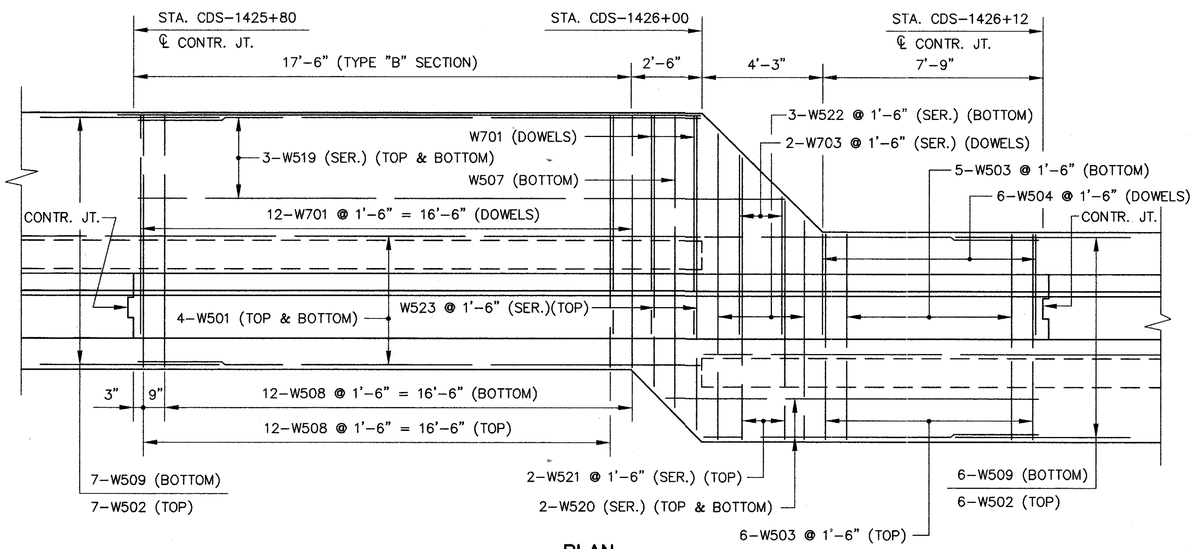

PLAN

(STEM REINFORCING NOT SHOWN)

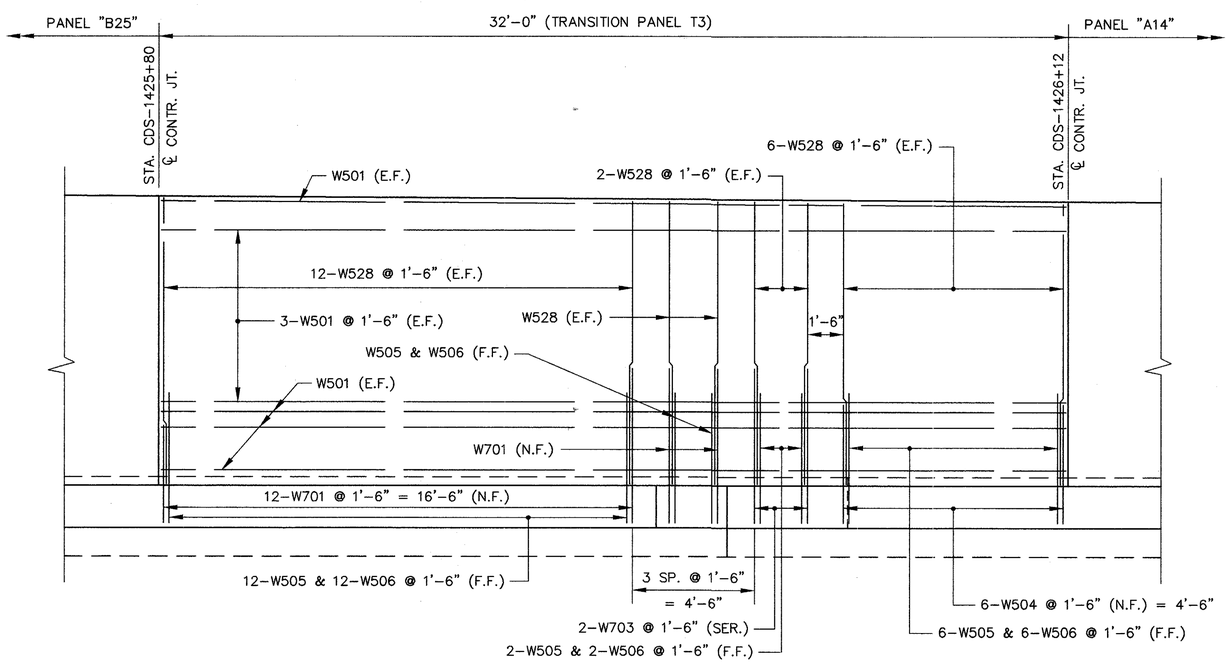

ELEVATION

(FOOTING REINFORCING NOT SHOWN)

REINFORCING BAR SUB-SUMMARY

STATION TO STATION		TYPE "A" SECTION			STATION TO STATION		TYPE "B" SECTION		
FROM	TO	PANEL	M-BARS	P-BARS	FROM	TO	PANEL	M-BARS	P-BARS
CDS-1413+00	CDS-1413+32	A1	W525	2-W501	CDS-1417+80	CDS-1418+12	B1	W534	5-W501
CDS-1413+32	CDS-1413+64	A2	W526	2-W501	CDS-1418+12	CDS-1418+44	B2	W534	5-W501
CDS-1413+64	CDS-1413+96	A3	W527	3-W501	CDS-1418+44	CDS-1418+76	B3	W534	5-W501
CDS-1413+96	CDS-1414+28	A4	W528	3-W501	CDS-1418+76	CDS-1419+08	B4	W534	5-W501
CDS-1414+28	CDS-1414+60	A5	W529	4-W501	CDS-1419+08	CDS-1419+40	B5	W535	5-W501
CDS-1414+60	CDS-1414+92	A6	W529	4-W501	CDS-1419+40	CDS-1419+72	B6	W535	4-W501
CDS-1414+92	CDS-1415+24	A7	W529	4-W501	CDS-1419+72	CDS-1420+04	B7	W529	4-W501
CDS-1415+24	CDS-1415+56	A8	W529	4-W501	CDS-1420+04	CDS-1420+36	B8	W529	4-W501
CDS-1415+56	CDS-1415+88	A9	W529	4-W501	CDS-1420+36	CDS-1420+68	B9	W536	4-W501
CDS-1415+88	CDS-1416+20	A10	W529	4-W501	CDS-1420+68	CDS-1421+00	B10	W536	4-W501
CDS-1416+20	CDS-1416+52	A11	W530	4-W501	CDS-1421+00	CDS-1421+32	B11	W536	4-W501
CDS-1416+52	CDS-1416+84	A12	W530	5-W501	CDS-1421+32	CDS-1421+64	B12	W524	4-W501
CDS-1416+84	CDS-1417+16	A13	W530	5-W501	CDS-1421+64	CDS-1421+96	B13	W524	4-W501
CDS-1426+12	CDS-1426+44	A14	W531	3-W501	CDS-1421+96	CDS-1422+28	B14	W524	4-W501
CDS-1426+44	CDS-1426+76	A15	W531	3-W501	CDS-1422+28	CDS-1422+60	B15	W524	4-W501
CDS-1426+76	CDS-1427+08	A16	W527	3-W501	CDS-1422+60	CDS-1422+92	B16	W524	4-W501
CDS-1427+08	CDS-1427+40	A17	W527	3-W501	CDS-1422+92	CDS-1423+24	B17	W524	4-W501
CDS-1427+40	CDS-1427+72	A18	W532	3-W501	CDS-1423+24	CDS-1423+56	B18	W524	4-W501
CDS-1427+72	CDS-1428+04	A19	W526	2-W501	CDS-1423+56	CDS-1423+88	B19	W524	4-W501
CDS-1428+04	CDS-1428+36	A20	W533	2-W501	CDS-1423+88	CDS-1424+20	B20	W524	3-W501
CDS-1428+36	CDS-1428+68	A21	W525	2-W501	CDS-1424+20	CDS-1424+52	B21	W524	3-W501
CDS-1428+68	CDS-1429+00	A22	W525	W501	CDS-1424+52	CDS-1424+84	B22	W524	4-W501
					CDS-1424+84	CDS-1425+16	B23	W524	4-W501
					CDS-1425+16	CDS-1425+48	B24	W524	4-W501
					CDS-1425+48	CDS-1425+80	B25	W524	4-W501

LEGEND

N.F. = NEAR FACE
E.F. = EACH FACE
F.F. = FAR FACE
SER. = SERIES
SP. = SPACES
CONTR. JT. = CONTRACTION JOINT
EXP. JT. = EXPANSION JT.

PLOT SCALE = 1/8" = 1'
COL #19 C:\DRAWING\06092306\ROSSWALL\ROSSTD2.DWG FEBRUARY-07-1995

PREPARED BY
ms consultants, inc.
CONSULTING ENGINEERS & PLANNERS
4600 BRIDGE BOULEVARD, COLUMBUS, OHIO

REVIEWED JAB
DATE 8-94
DRAWN CH
REVISED
DESIGNED BG
CHECKED RB

TRANSITION DETAIL & REINFORCING
RETAINING WALL 'E'

FRA-270-32.46

11/14

534/593

TRANSITION DETAIL & REINFORCING SUB-SUMMARY

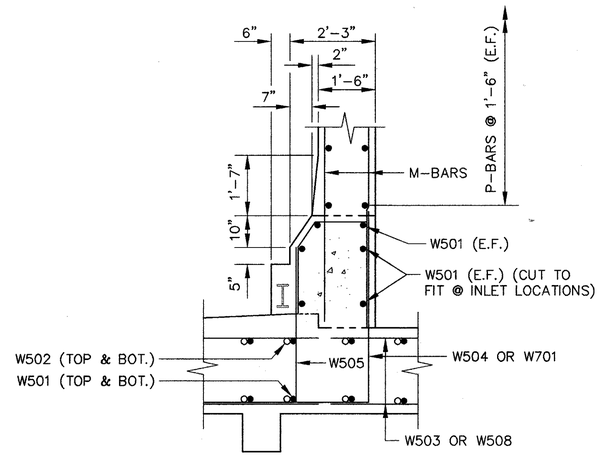

SECTION B-B

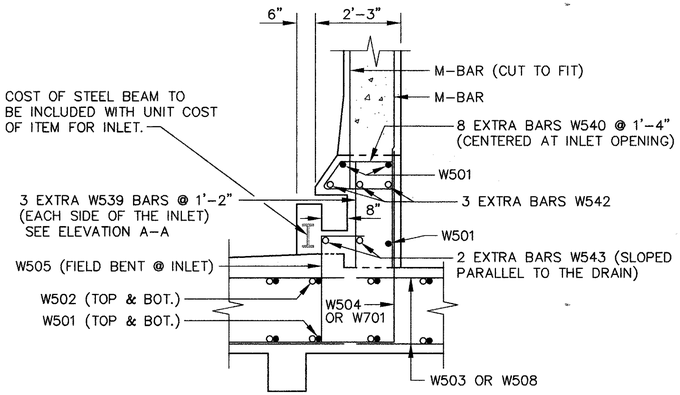

SECTION C-C

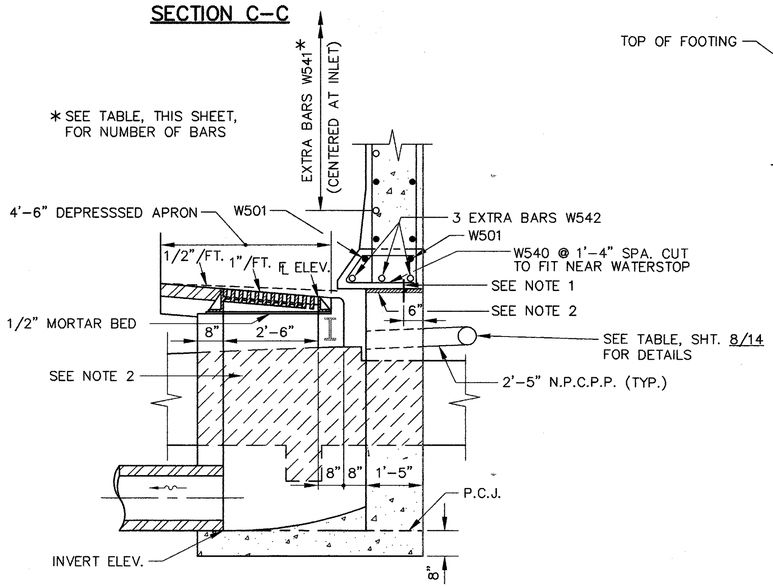

SECTION D-D

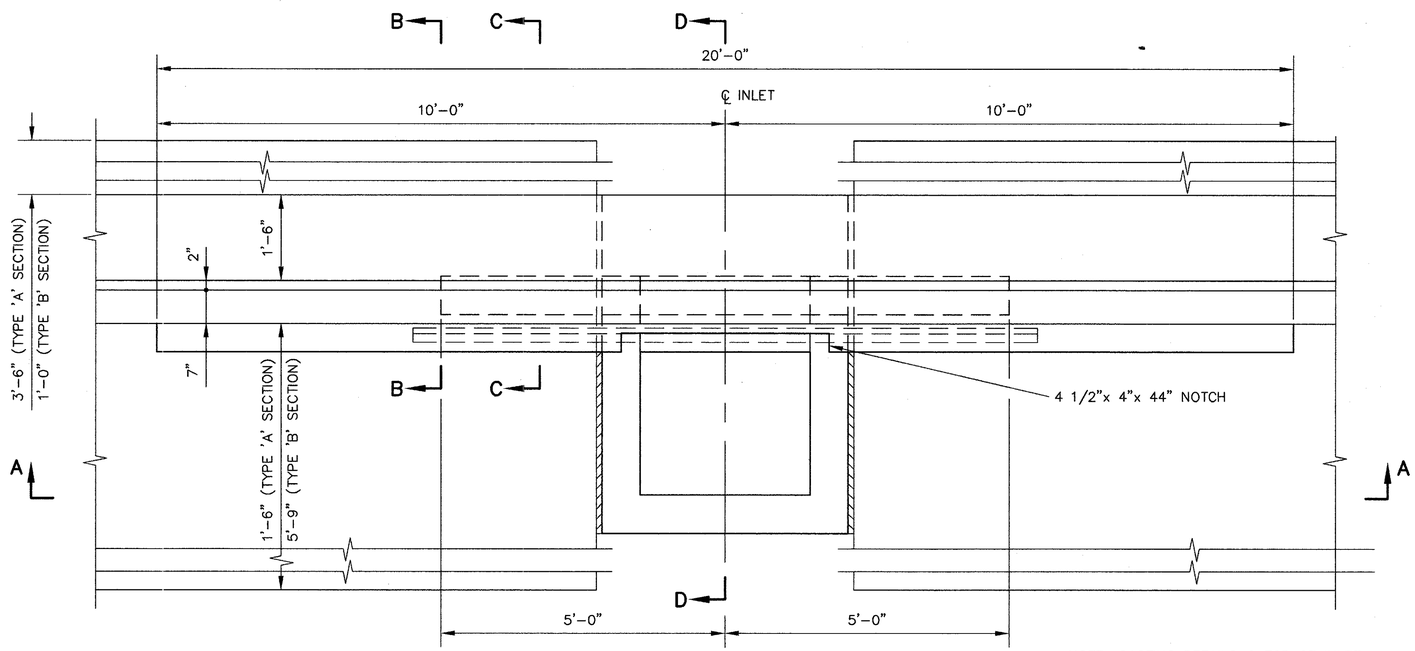

NOTE: CASTING DETAILS @ TOP OF INLET ARE NOT SHOWN FOR CLARITY.

PLAN

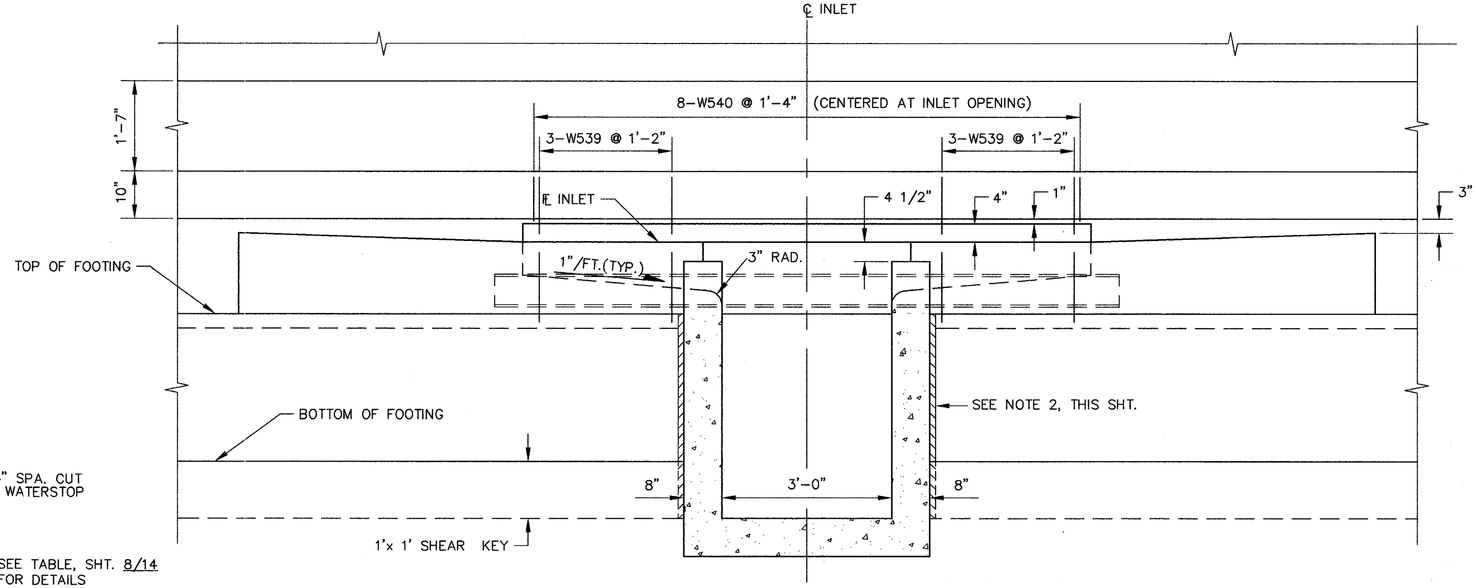

ELEVATION A-A

INLET STATION	NO. OF W541 BARS
CDS-1416+90.37	4
CDS-1422+50	3
CDS-1425+40	3
CDS-1427+00	2
CDS-1428+90	–

NOTES:

1.) 6" PVC WATERSTOP AT THE INLET LOCATION. SEE DETAIL 'A' ON SHT. 9/14.

2.) 1" P.E.J.F. COST TO BE INCLUDED WITH UNIT COST OF ITEM FOR INLET STRUCTURE (TYP. AT ALL LOCATIONS).

3.) FOR ADDITIONAL DETAILS OF INLET SEE ROADWAY PLANS. INLETS SHALL BE PAID FOR AS ITEM 604, NO. I-3E, HEIGHT VARIES. SEE ROADWAY SUMMARY.

LEGEND

RAD. = RADIUS
E.F. = EACH FACE
P.C.J. = PERMISSIBLE CONSTRUCTION JOINT
P.E.J.F. = PREFORMED EXPANSION JOINT FILLER
N.P.C.P.P. = NON-PERFORATED CORRUGATED PLASTIC PIPE

PREPARED BY ms consultants, inc. CONSULTING ENGINEERS & PLANNERS 6000 BUSCH BOULEVARD, COLUMBUS, OHIO

DESIGNED	DRAWN	REVIEWED	DATE
BG	CH	JAB	8-94
CHECKED	REVISED		
RB			

DRAINAGE DETAILS
RETAINING WALL 'E'

FRA-270-32.46

12/14

535/593

PLOT SCALE... 3/4" = 1'
COL #19 C:\DRAWING\06092306\ROSSWALL\ROSSDD1.DWG FEBRUARY-07-1995

DRAINAGE DETAILS

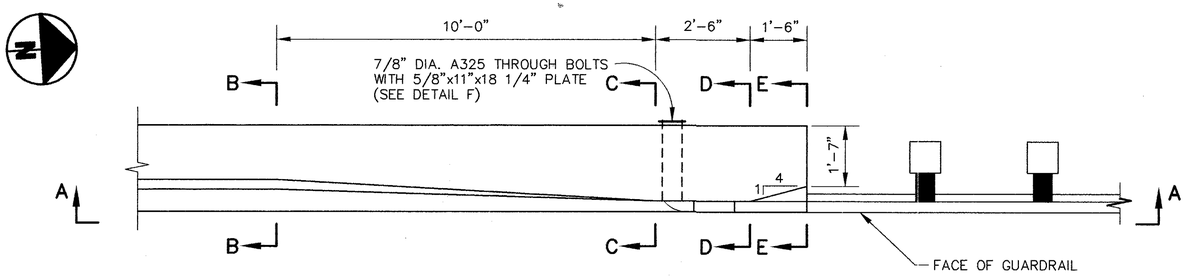

PART PLAN

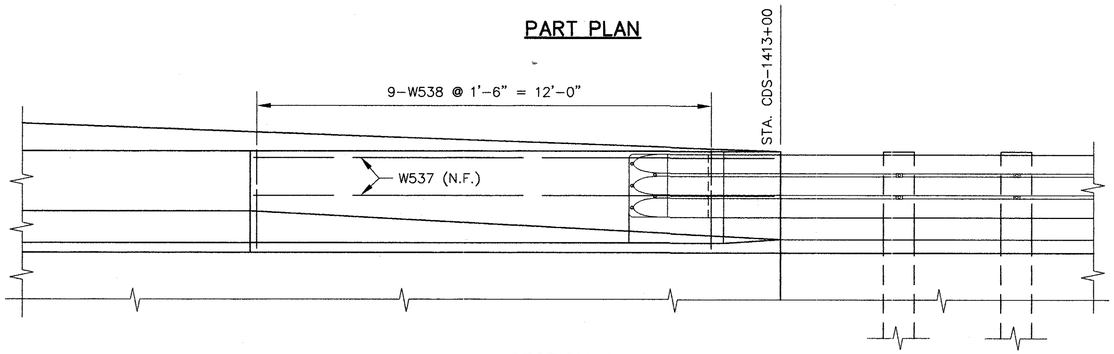

SECTION A-A

TYPICAL REINFORCING NOT SHOWN. SEE TYPICAL SECTION ON SHT. 9/14.

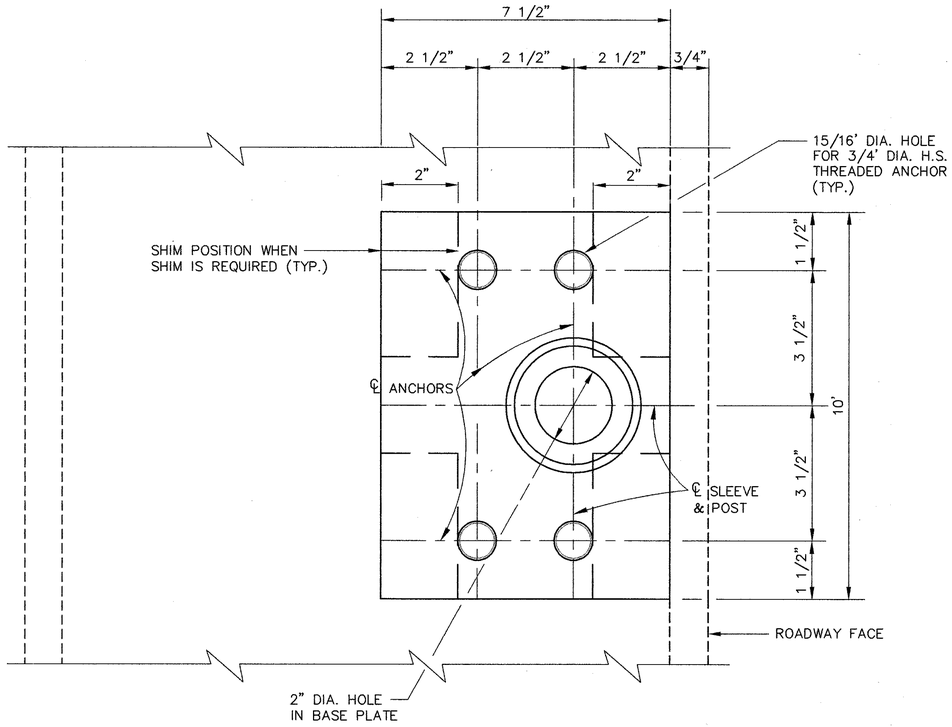

PLAN - R/W FENCE POST BASE PLATE

(SHIM POSITIONS SHOWN)

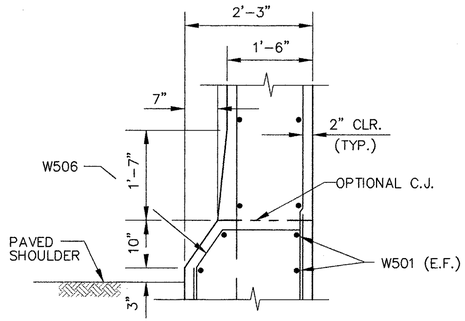

SECTION B-B

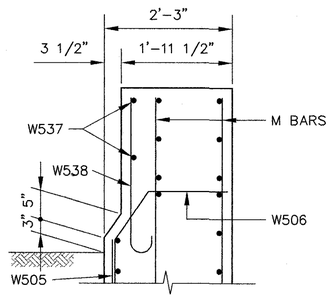

SECTION C-C

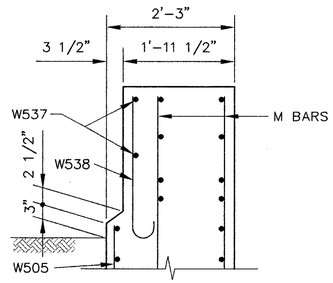

SECTION D-D

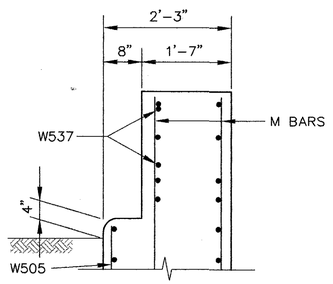

SECTION E-E

NOTE: ALL HORIZONTAL REINFORCING IS W501 UNLESS OTHERWISE NOTED.

NOTES

BASE PLATES SHALL CLEAR THE CONTRACTION & EXPANSION JOINTS BY 2" MIN.

ANCHORS, POST AND SET SCREWS NOT SHOWN.

FOR NOTES AND DETAILS NOT SHOWN, SEE STD. DWG. VPF-1-90.

* BASE PLATE REQUIRES A SLEEVE. SEE POST SLEEVE DETAILS ON SHEET 2/6, STD. DWG. VPF-1-90.

** DRILLED ANCHOR HOLE SHALL BE 6 5/8" DEEP OR AS RECOMMENDED BY THE FASTENER MANUFACTURER. INSERTS SHALL BE APPROVED BY THE DIRECTOR.

BASE PLATES, SLEEVES & ANCHORS SHALL BE INCLUDED WITH ITEM 607 FENCE, TYPE CL AS PER PLAN, FOR PAYMENT.

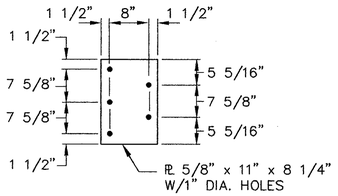

DETAIL F

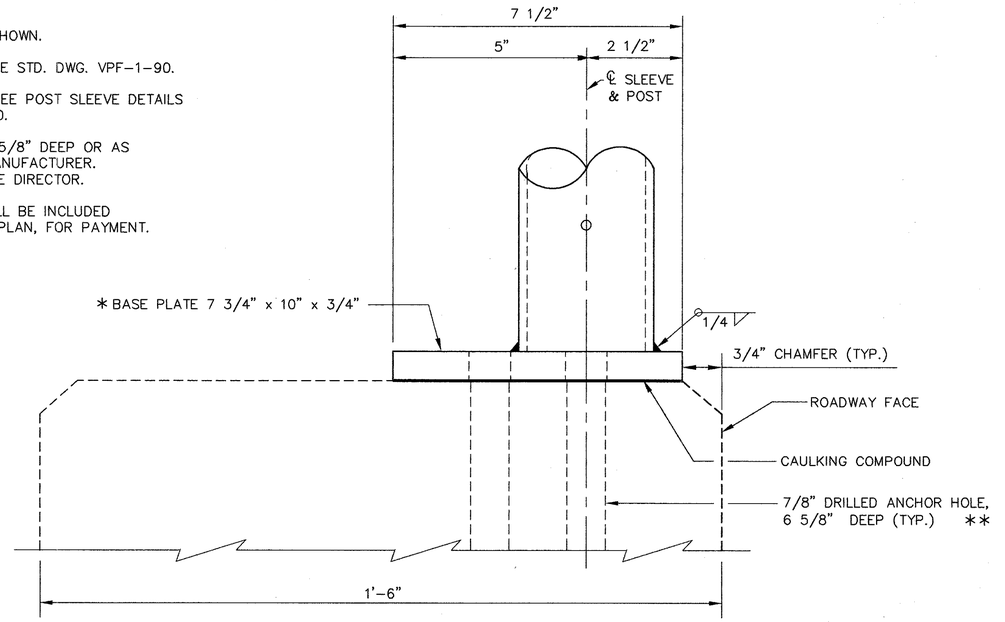

END VIEW - R/W FENCE POST BASE PLATE

LEGEND

N.F. = NEAR FACE
E.F. = EACH FACE
TYP. = TYPICAL
C.J. = CONSTRUCTION JOINT
R/W = RIGHT-OF-WAY

PLOT SCALE .1" = 2'
COL #19 C:\DRAWING\06092306\ROSSWALL\ROSSBR1.DWG FEBRUARY-07-1995

PREPARED BY
ms consultants, inc.
CONSULTING ENGINEERS & PLANNERS
6500 RIVER BOULEVARD, COLUMBUS, OHIO

DESIGNED	DRAWN	REVIEWED	DATE
BG	CH	JAB	8-94
CHECKED	REVISED		
RB			

MISCELLANEOUS DETAILS
RETAINING WALL "E"

FRA-270-32.46

13/14

536/593

MISCELLANEOUS DETAILS

RETAINING WALL

MARK	NO.	LENGTH	TYPE	A	B	C	D	INC.	WEIGHT
W501	1394	31'-8"	STR.						46,041
W502	314	6'-2"	STR.						2020
W503	997	6'-11"	STR.						7192
W504	510	8'-3"	1	5'-0"	3'-5"				4388
W505	1099	3'-9"	STR.						4298
W506	1099	3'-6"	2						4012
W507	1	10'-2"	STR.						11
W508	1136	8'-8"	STR.						10,269
W509	314	4'-4"	STR.						1419
W510	86	9'-10"	STR.						882
W511	1 SET OF 3	7'-5" / 10'-5"	STR.					1'-6"	28
W512	1 SET OF 3	8'-2" / 11'-2"	STR.					1'-6"	30
W513	1 SET OF 2	9'-2" / 10'-8"	STR.					1'-6"	21
W514	1	9'-11"	STR.						10
W515	2 SETS OF 2	33'-11" / 35'-3"	STR.					1'-4"	144
W516	8	33'-10"	STR.						282
W517	8	29'-10"	STR.						249
W518	2 SETS OF 3	29'-11" / 32'-9"	STR.					1'-5"	196
W519	2 SETS OF 3	19'-11" / 22'-10"	STR.					1'-5 1/2"	134
W520	2 SETS OF 2	11'-11" / 13'-3"	STR.					1'-4"	52
W521	1 SET OF 2	8'-5" / 9'-11"	STR.					1'-6"	19
W522	1 SET OF 3	7'-8" / 10'-8"	STR.					1'-6"	29
W523	1 SET OF 2	9'-5" / 10'-11"	STR.					1'-6"	21
W524	616	7'-9"	STR.						4979
W525	132	4'-4"	STR.						597
W526	88	5'-4"	STR.						490
W527	132	6'-5"	STR.						883
W528	88	7'-6"	STR.						688
W529	352	8'-6"	STR.						3121
W530	132	9'-1"	STR.						1251
W531	88	7'-0"	STR.						642
W532	44	6'-0"	STR.						275
W533	44	5'-2"	STR.						237
W534	176	10'-1"	STR.						1851
W535	88	8'-11"	STR.						818
W536	132	8'-1"	STR.						1113
W537	2	13'-8"	3						29
W538	9	3'-0"	4						28
W539	30	2'-8"	STR.						83
W540	40	3'-7"	5	7 3/4"	4 1/4"	1'-4"			150
W541	12	7'-6"	STR.						94
W542	15	13'-0"	STR.						203
W543	20	4'-9"	STR.						99
W701	584	13'-10"	1	6'-4"	7'-8"				16,513
W702	1 SET OF 3	9'-11" / 12'-11"	1	6'-4"	3'-9" / 6'-9"			1'-6"	70
W703	1 SET OF 2	10'-11" / 12'-5"	1	6'-4"	4'-9" / 6'-3"			1'-6"	48
						TOTAL WEIGHT			116,009

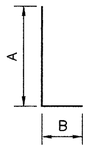

TYPE 1

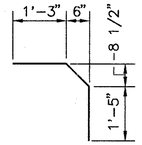

TYPE 2

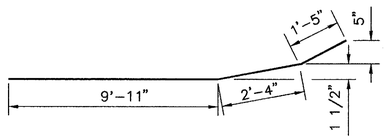

TYPE 3

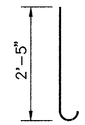

TYPE 4

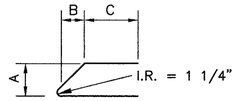

TYPE 5

SHEET NOTES:

BAR SIZE: THE BAR SIZE IS INDICATED IN THE BAR MARK. THE FIRST DIGIT INDICATES THE BAR SIZE NUMBER.
EXAMPLE: W509 IS A NO. 5 SIZE BAR.

ALL REINFORCING STEEL SHALL BE EPOXY COATED.

PLOT SCALE = 1 = 1
COLOR #49 C:\DRAWING\0609206\ROSSWALL\ROSSRLL.DWG FEBRUARY-07-1995

PREPARED BY
ms consultants, inc.
CONSULTING ENGINEERS & PLANNERS
4000 EMBER BOULEVARD, COLUMBUS, OHIO

DESIGNED BG | DRAWN CH | REVIEWED JAB | DATE 8-94
CHECKED RB | REVISED

REINFORCING STEEL LIST
RETAINING WALL 'E'

FRA-270-32.46

14/14

537/593

REINFORCING STEEL LIST

GENERAL NOTES

Noise Barrier

I. Description
II. Posts
III. Barrier Materials
IV. Construction Methods
V. Architectural Textured Stone Finish
VI. Method of Measurement
VII. Basis of Payment

Item Special-Noise Barrier

I. Description

This work shall consist of furnishing and installing noise barriers including all material, labor and equipment required in accordance with these provisions and applicable standards and in conformity with the dimensions, lines and grades shown on the plans.

No mixing of barrier material types or colors at any one noise barrier will be allowed, except where a run of noise barrier includes placement on a bridge.

Barrier material type may be any of those covered by the approved drawings listed on sheet 2of6 unless otherwise specified.

Barrier fabrication and erection details, except for posts, shall be as per approved drawings listed on sheet 2of6. Posts and foundations are detailed in these plans. These post and foundation details govern should any conflict arise between them and the approved drawings.

Post spacing shown in the material suppliers approved drawings may be allowed in lieu of the post spacing shown in the plans.

Copies of the appropiate material supplier drawings, listed on sheet 2of6, and detail erection plans shall be submitted to the Engineer for her/his information.

The barrier and the associated work shall conform to sections 499 and 501 of the CMS as appropriate.

II. Posts

A. Steel Posts

All exposed posts, including ASTM A588 and A572, shall be painted or flashed to match panel color. Any alternative to this note must be approved by the Director. Painting shall conform to Item 514 of the CMS. Any modification to this requirement shall be subject to the the approval of the Engineer.

Steel posts shall be in accordance with Item 513 of the CMS. The posts except as otherwise specified shall conform to ASTM A588. All post surfaces exposed to earth shall have coal tar epoxy paint applied to them. Minimum surface coverage shall be from 6" below the top of the concrete encasement to 6" above finished ground. Painting shall be done prior to erection. Steel surfaces shall be sand blasted to the near-white grade, conforming to Steel Structure Painting Council Specification SSPC-SP10. The paint shall be a coal tar epoxy paint, conforming to SSPC - Paint 16 (black). The paint shall be applied in accordance with the manufacturer's recommendations. The paint shall be applied in two coats to a dry film thickness of 16 mils at its thinnest spot.

As an alternate to the above, the contractor may supply posts as per ASTM A572 grade 50, hot dipped galvanized per ASTM AL23 and omit the coal tar epoxy paint but the posts shall be covered by flashing. Parapet mounted posts shall conform to this alternate.

B. Concrete Posts, Pedestals, Spread Footings, and Drilled Shafts

Reinforcing steel shall be ASTM A615, A616, or A617, Grade 40 or Grade 60.

Concrete shall be in accordance with Item 511 of the CMS, Class C except for drilled shafts which shall conform to Item E.

Concrete for posts shall contain an admixture to color the concrete integrally.

Color of concrete posts shall be similar to barrier material furnished.

C. Prestressed Concrete Posts

Item 515 of the CMS shall apply except as modified below. Prestressed Concrete; compressive strength - 5,000 PSI, compressive strength at transfer of prestress - 4,000 PSI, prestressing strand - ASTM A416. Ultimate strength F's = 270,000 PSI. Initial stress = 0.70 F's.

Prestressing strand shall be 1/2" diameter with an area of 0.154. An initial tensile force of 28,900 lbs. shall be applied to each strand. Exposed strand ends shall be painted with an approved epoxy. See paragraph A. above for specifications and application rates.

Concrete for posts shall contain an admixture to color the concrete integrally. Color of concrete shall be similar to barrier material furnished.

D. Reinforced Masonry Posts

Reinforcing steel shall be as per II.B. above. Concrete pea gravel for posts shall conform to ASTM C 476. Portland Cement, Type I, II or III, shall be used in the grout mix.

Posts shall be faced either with brick or concrete block. Color and texture shall be similar to barrier material furnished.

For additional masonry notes, see masonry wall plans.

E. Concrete for Drilled Shafts

Concrete for all drilled shafts shall be Class S Concrete and shall be in accordance with Item 511 except as modified and supplemented herein. The required slump is seven (7) inches, plus or minus one-half (1/2) inch. The maximum water to cement ratio shall be 0.50 for concrete placed under water. The requirements of adding 10 percent more cement to the concrete mix shall be waived. The top 10 feet of concrete in the drilled shafts are required to be vibrated. Only a minimal vibratory effort is necessary. SPECIAL CARE shall be taken NOT to OVER-VIBRATE the drilled shaft concrete.

NOTE: If the casing is removed using a vibratory hammer no other vibratory effort is needed.

The concrete for the drilled shaft shall be placed as per 511 except as modified by the plans. The concrete placement operation shall be continuous from the start to finish. The concrete for the drilled shaft shall be placed promptly after the final inspection of the shaft. If practicable, the concrete shall be placed in a clean dry excavation. Care shall be taken to ensure that concrete is not being placed in moving water. The concrete can be placed in a dry drilled shaft excavation by the free fall method provided the concrete falls to its final position through air without striking the sides of the hole, the reinforcing steel cage or any other obstruction. The free fall method allows the concrete to be dropped from the top through a centering chute to the concrete's final position.

If the engineer determines that dewatering is not practicable the contractor will be given permission to place the concrete under water. The drilled shaft excavation shall be filled with water to such a depth that all water motion has ceased. The concrete shall then be placed by means of a concrete pump. The concrete pump pipe shall have a diameter that is not less than 4 inches. The concrete pump equipment shall be so arranged that no vibrations result which might damage fresh concrete. Pipes carrying concrete from the pump to the shaft should be arranged with a minimum number of bends. The pipe used to convey the concrete to the bottom of the drilled shaft excavation shall be anchored to the steel casing to prevent the pipe from undulating during the initial placement of the concrete.

The pumping equipment shall be suitable in kind and adequate in capacity for the work required. The use of aluminum pipe as a conveyance for the concrete will not be permitted. An adequate quantity of grout, mortar, or concrete with coarse aggregate omitted shall be pumped through the the equipment ahead of the specification concrete to provide lubrication to the pumping system. The concrete used for lubrication shall not be placed in the shaft. The lubrication process will not be repeated as long as the pumping operations are continuous. The operation of the pump shall be such that a continuous stream of concrete without air pockets is produced. In order to prevent the contamination of the concrete placed initially at the bottom of the shaft, the outlet end of the pumping pipe shall be sealed with a diaphragm or plug that is flushed out when the hydrostatic pressure from the column of concrete exceeds that of the water in the shaft. The initial rate of concrete placement must be carefully controlled so as not to lift or displace the cage of reinforcing steel. The conveying system shall be water tight and the outlet end shall always remain well below the top of the freshly placed concrete. The preferred concrete placement procedure is to maintain the outlet end of the pumping system at approximately 10 feet below the top of the fresh concrete. When the concrete reaches the top of the drilled shaft column all laitance shall be removed.

III. Barrier Materials

For listing of acceptable barrier materials and designs, see sheet 2 of 6.

IV. Construction Methods

A. Noise barriers shall be installed in accordance with the plans. Joints and connections shall be secured in such a manner as to be structurally sound with no visible openings for sound transmission.

B. Marred, chipped, scratched, spalled or damaged areas of noise barriers shall be repaired or replaced in accordance with the manufacturer's recommendations and as directed by the Engineer at the Contractor's expense.

C. All excess excavation shall be disposed of in a manner satisfactory to the Engineer.

D. After erection of the noise barrier, the disturbed area shall be left in a finished condition at the direction of the Engineer and a growth of grass established, at the Contractor's expense, in accordance with CMS Item 659.

E. Tolerances
1. Posts (measured at top)
   a. Vertical alignment shall be within 0.05 inch/ft. of height.
   b. Posts shall be set within ± 1/2 inch of their specified location.
2. Noise barriers
   a. Vertical alignment shall be within 0.05 inch/ft. of height.

F. For noise barriers that are built on top of earth berms, the berms shall be constructed of earthwork fill material in accordance with Item 203 of the CMS.

G. Concrete Epoxy Sealer

Where Noise Barriers are constructed adjacent to mse wall parapet and the Noise Barrier is not constructed to the ground line, the exposed concrete surface shall be coated with a concrete epoxy sealer of a color matching that of the noise barrier. The sealer shall be applied in accordance with the manufacturer's recommendation. A urethane top coat sealer shall also be applied over the concrete areas coated with epoxy sealer. The urethane coating shall be applied in accordance with the manufacturer's recommendation.

V. Architectural Textured Stone Finish

A textured finish shall be provided on both sides (facing traffic and residential) of the noise barrier panels. The texture shall conform to the Ashlar Stone texture * 167 5' x 5' pattern (as designated by the Scott System , Inc.) or approved equal.

VI. Method of Measurement

Noise barriers shall be measured in square feet of barrier using a height from bottom of wall to top of wall as detailed in these plans and a length from post to post, installed, complete, and in place.

Quantities in this plan are reduced for construction adjacent to concrete parapet or barrier. Noise barrier types requiring construction to the ground are acceptable with no change in quantities, see barrier profiles for locations.

VII. Basis of Payment

Noise barriers, complete and in place, will be paid for at the contract unit price per square foot, which shall be full compensation for all materials, labor and equipment necessary to construct the barrier and, inclusive of, all excavation, backfill with suitable material, concrete epoxy sealer and urethane top coat sealer where necessary, aggregate drains, compaction, disposal of surplus or unsuitable materials, seeding, fertilizing and mulching of disturbed areas.

Item	Description	Unit
Special	Noise Barrier, 10 ft.ht. and under	Sq.ft.
Special	Noise Barrier, over 10 to 14 ft.ht.	Sq.ft.
Special	Noise Barrier, over 14 ft.ht.	Sq.ft.

ABBREVIATIONS

AITC - American Institute of Timber Construction
ASTM - American Society for Testing and Materials
AWPA - American Wood Preservers' Association
BIA - Brick Institute of America
CCA - Cromated Copper Arsenate
CMS - Construction and Materials Specifications of ODOT
ILI - Indiana Limestone Institute
LPG - Volatile Petroleum Solvent (liquid propane gas)
SSPC - Structural Steel Painting Council
VPS - Voluntary Product Standard

DRN. RNA BY: DATE: 2/3/95
CHK. MFL DATE: 2/3/95

NOISE BARRIER GENERAL NOTES

FRA-270-32.46

OHIO DEPARTMENT OF TRANSPORTATION

NOISE BARRIER DETAILS

DATE
3/19/92
9/17/92
12/10/92
3/09/93
11/01/93
2/25/94
2/10/95

SHEET 1 / 6

538
593

CONCRETE

SUPPLIERS	DRAWINGS & NOTES	VARIABLES COLOR TEXTURE PATTERN BRICK STYLE
Faddis Concrete Products 3515 Kings Hwy. Downingtown, PA 19335 Telephone: (800) 777-7973 Fax: 1-215-873-8431	USDOT-1 Sheets 1-6 Nov. 1993 Note: up to 225 lbs. per linear foot on structures Note: Panels per Evercrete Limited	Color = Natural concrete Texture = Ashlar Stone Texture (both sides)
The Reinforced Earth Company Midwest Region 760 Pasquinelli Drive Suite 344 Westmount, Ill. 60559 Telephone: (708) 655-0044 Fax: (708) 655-0064	FW-1 & FW-2 of 3 (5/17/83) Fanwall/Durisol Technical Handbook (10/1/89) with ODOT posts	
Concrete Tech. Inc. 95 Mound Park Drive Springboro, Ohio 45066 Telephone: (513) 224-1867	Sheet #1 & P-3 (10/22/83)	
Price Brothers Company Utilities Systems Division P.O. Box 825 367 West Second Street Dayton, Ohio 45401 Telephone: (513) 226-8842	50-001 (11/21/83)	
Easi-Set Industries P.O. Box 300 Midland, Va. 22728 Telephone: (703) 439-8911	Sheet 1 of 2 & 2 of 2 (3/1/90)	
Trenwa Inc. 1419 Alexandria Pike Fort Thomas, KY 41075 Telephone (606) 781-0831	Sheet #SB-24120 Sheet #10159 > (8-20-92)	
Superior Concrete Pipe Corp. 7925 Empire Pkwy. Macedonia, Ohio 44056-2144 (216) 467-7890	Drawing #001 (option) #2 (4-27-92)	
Baxter Concrete Products, Inc. 3370 Port Union Road Hamilton, Ohio 45014 Telephone: (513) 860-3593	#92202-Sheets 1-17 (10-5-92)	
Advanced Storage Technology 4043 Maple Road, Suite 110 Amherst, NY 14226 Telephone: (716) 833-6212	Soundcore - Standard Hollowcore Precast Noise Barriers Drawing No. 1 thru 4 (12-1-92)	
Concrete Products, Inc. P.O. Box 2799 Redmond, Washington 98073 Telephone: (206) 881-7910	Precast Noise Abatement Wall System 1 — January 13, 1994 Precast Noise Abatement Wall System 2 — January 13, 1994 Precast Noise Abatement Wall System 3 — January 13, 1994	
Prestress Engineering Corp. P.O. Box 609 Algonquin, Illinois 60102-0609 Telephone: (708) 658-4541	Precast Noise Abatement Wall — January, 1994	
Sidley Precast Div. P.O. Box 70 Thompson, Ohio 44086 Telephone: (216) 298-3232	Noise Barrier — March 04, 1994	

CONCRETE

DRN. BY: RWA DATE: 2/3/95
CHK. BY: MFJ DATE: 2/3/95

NOISE BARRIER SUPPLIERS

FRA-270-32.46

OHIO DEPARTMENT OF TRANSPORTATION

NOISE BARRIER SUPPLIERS

DATE
2/22/91
3/19/92
5/20/92
8/3/92
9/16/92
6/23/94
2/10/95

SHEET 2/6

539
593

NOISE BARRIER TABLE (POST AND PANEL CONSTRUCTION)

BARRIER HEIGHT (Feet)	POST SPACING (Feet)				PANEL GROUP	POST SIZE	SOIL TYPE	FOUNDATION DEPTH (Feet)	
	8 & Under	Over 8 Thru 12	Over 12 Thru 16	Over 16 Thru 24					PROJECT 1
	12 and Less	10 and Less	8 and Less	6 and Less	I	Steel W8x13	TRANSVERSE GROUND SLOPE	LEVEL	7'-0" (1)
								SLOPED (5)	9'-0" (2)
						Reinforced Concrete 12"x16" W/6 #4			
						Prestressed Concrete 12"x14" W/4 strands			
						Masonry △ 8 3/4" x12 3/4" W/4-#6			
	Greater Than 12 Thru 16	Greater Than 10 Thru 14	Greater Than 8 Thru 12	Greater Than 6 Thru 10	II	Steel W8x18		LEVEL	7'-0" (1)
								SLOPED (5)	9'-0" (2)
						Reinforced Concrete 12"x16" W/6 #6			
						Prestressed Concrete 12"x14" W/4 strands			
						Masonry △ 8 3/4" x12 3/4" W/4-#7			
	Greater Than 16 Thru 20	Greater Than 14 Thru 20	Greater Than 12 Thru 16	Greater Than 10 Thru 14	III	Steel W8x28		LEVEL	9'-0" (3)
								SLOPED (5)	12'-0" (4)
						Reinforced Concrete 12"x16" W/6 #9			
						Prestressed Concrete 12"x14" W/4 strands			
						Masonry △ 8 3/4" x16 3/4" W/4-#9			
			Greater Than 16 Thru 20	Greater Than 14 Thru 20	IV	Steel W14x38		LEVEL	9'-0" (3)
								SLOPED (5)	12'-0" (4)
						Reinforced Concrete 12"x20" W/6 #9			
						Prestressed Concrete 12"x20" W/4 strands			
						Masonry △ 8 3/4" x16 3/4" W/4-#11			

NOTES:

(1) If bedrock is encountered, the minimum bedrock socket length shall be 2.5 ft. except that the total depth of the shaft shall no less than 5 ft.

(2) If bedrock is encountered, the minimum bedrock socket length shall be 3.5 ft. except that the total depth of the shaft shall no less than 6.5 ft.

(3) If bedrock is encountered, the minimum bedrock socket length shall be 5.5 ft. except that the total depth of the shaft shall no less than 8 ft.

(4) If bedrock is encountered, the minimum bedrock socket length shall be 7 ft. except that the total depth of the shaft shall no less than 10 ft.

(5) Embankment with a slope equal to or steeper than 4:1 is considered "sloped". All other embankment is considered "level".

POST SPACING: For all posts mounted on mse wall parapets, the maximum post spacing shall be 12'-0".

PARTIAL POST EMBEDMENT: Embedment of posts into the drilled shafts shall not be less than 3'-6", except for concrete posts which shall be embedded not less than 3'-0".

MATERIAL: All machine bolts, nuts, washers and plates shall conform to the physical properties of ASTM A325 except that the minimum elongation shall be 10%. The chemical properties are waived.

LEGEND: △ Core dimensions only

Noise barrier height is the distance from the top of drilled shaft to the top of the higher barrier wall at that post, rounded to the nearest foot.

All posts and panel noise barriers shall utilize drilled shaft foundations unless otherwise indicated on the plans or directed by the Engineer.

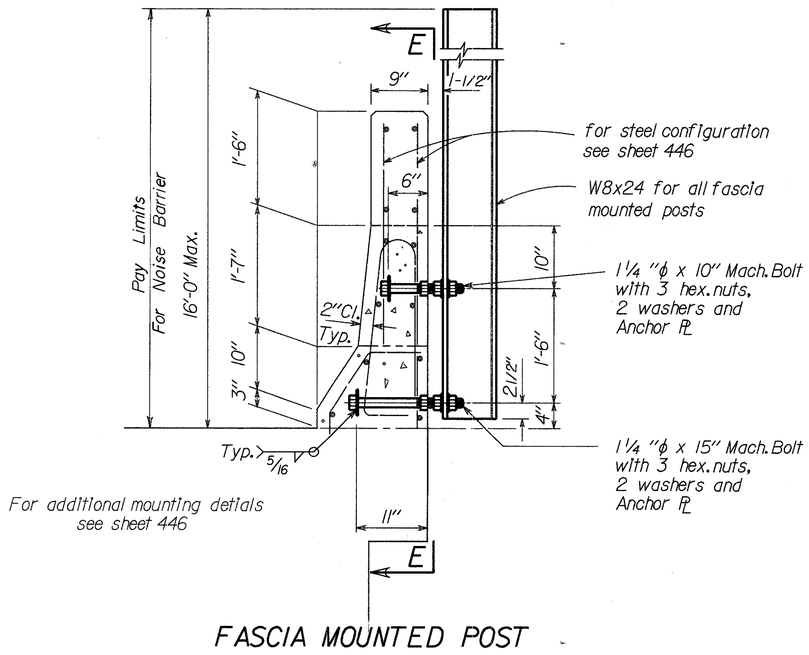

FASCIA MOUNTED POST

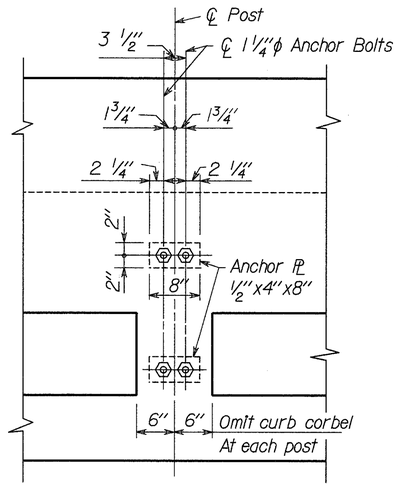

VIEW E-E

OHIO DEPARTMENT OF TRANSPORTATION

NOISE BARRIER DETAILS

DATE 3/19/92 9/17/92 3/09/93 11/01/93 11/28/94 2/10/95

SHEET 3/6

DRN. RWA BY DATE: 2/3/95
CHK. MFJ DATE: 2/3/95

NOISE BARRIER DETAILS

FRA-270-32.46

540
593

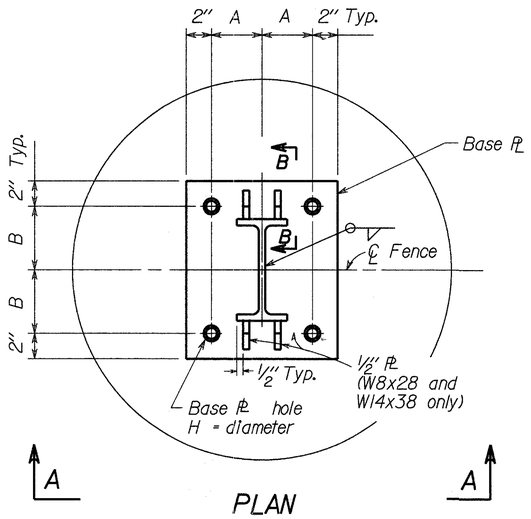

PLAN

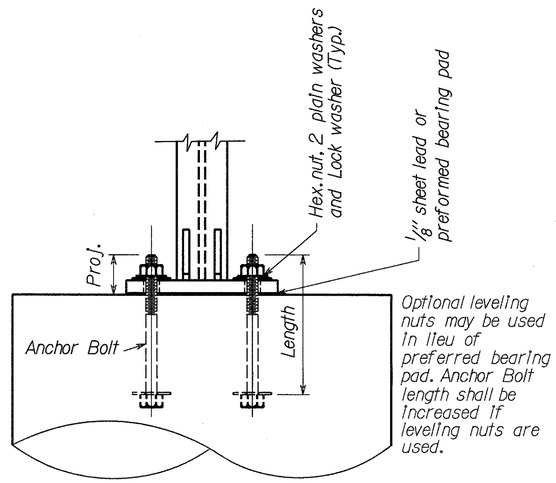

PARTIAL ELEVATION A-A

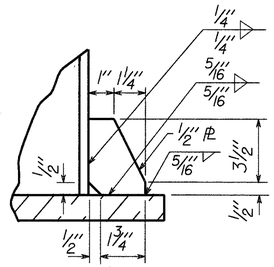

SECTION B-B

OPTIONAL POST ATTACHMENT

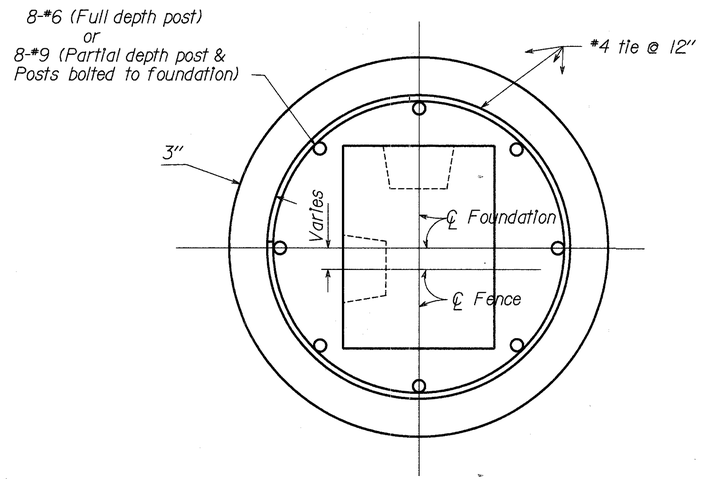

TYPICAL DRILLED SHAFT CROSS-SECTION

TABLE - OPTIONAL POST MOUNTING DETAILS BOLTED CONNECTION

Steel Post	Base Plate	Dim. A	Dim. B	Min. Weld Size	Anchor Bolts	Proj.	Threaded Length	Base PL Hole Dim. H
W 8x13	12"x14"x 5/8"	4"	5"	1/4"	4 - 5/8" ϕ x 12"	2"	4"	7/8"
W 8x18	12"x14"x1"	4"	5"	1/4"	4 - 7/8" ϕ x 14"	2 1/2"	4 1/2"	1 1/4"
W 8x28	14"x14"x13/8"	5"	5"	5/16"	4- 1 1/4" ϕ x 17"	3 1/4"	5 1/4"	1 3/4"
W 14x38	14"x20"x1 1/2"	5"	8"	5/16"	4- 1 3/8" ϕ x 18"	3 1/2"	5 1/2"	1 7/8"

Note: All anchor bolts, nuts, plain washers and lock washers shall be galvanized and conform to the physical properties of ASTM A325 except that the minimum elongation shall be 10%. The chemical properties are waived.

OHIO DEPARTMENT OF TRANSPORTATION

NOISE BARRIER DETAILS

DATE
3/19/92
9/17/92
3/09/93
11/01/93
2/10/95

SHEET 4/6

DRN. RWA DATE: 2/3/95
CHD. MFJ DATE: 2/3/95

NOISE BARRIER DETAILS

FRA-270-32.46

541
593

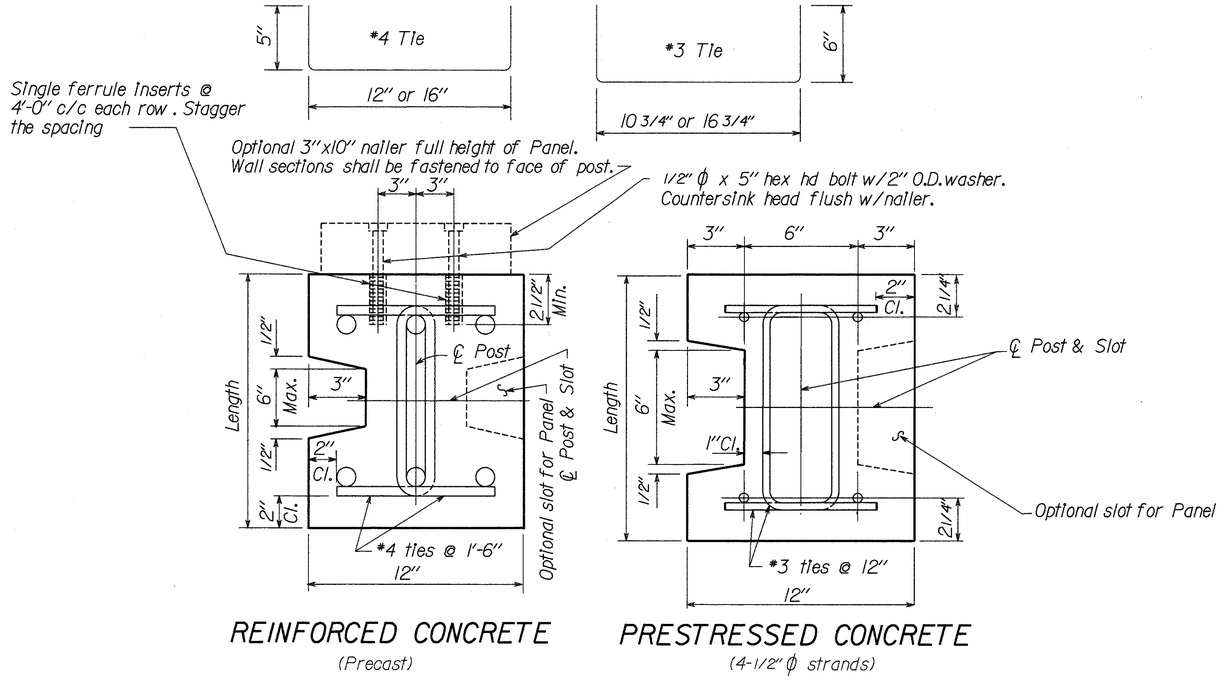

REINFORCED CONCRETE
(Precast)

PRESTRESSED CONCRETE
(4-1/2" ϕ strands)

LINE POST DETAILS

NOTE: For post sizes and concrete post reinforcement, see Noise Barrier Table.

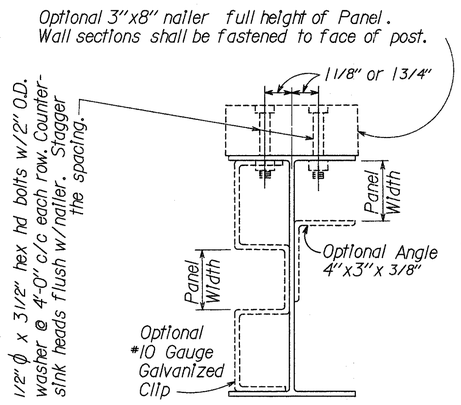

STEEL

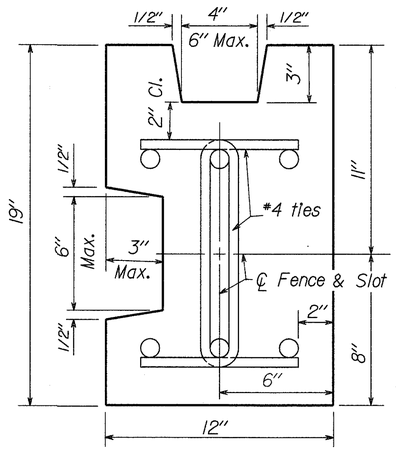

REINFORCED CONCRETE
CORNER POST

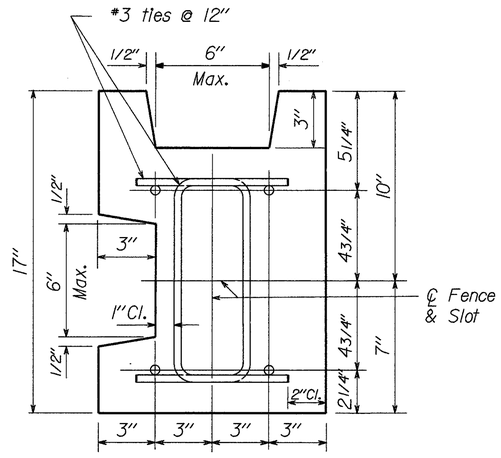

PRESTRESSED CONCRETE
CORNER POST

OHIO DEPARTMENT OF TRANSPORTATION

NOISE BARRIER DETAILS

DATE
3/19/92
9/17/92
2/10/95

SHEET 5 / 6

ORIG. RWA DATE: 2/3/95
CHD. MFJ DATE: 2/3/95

NOISE BARRIER DETAILS

FRA-270-32.46

542
593

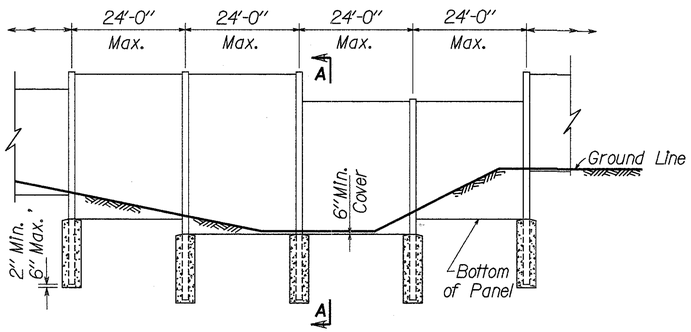

FRONT ELEVATION
(Post and Panel Noise Barrier)

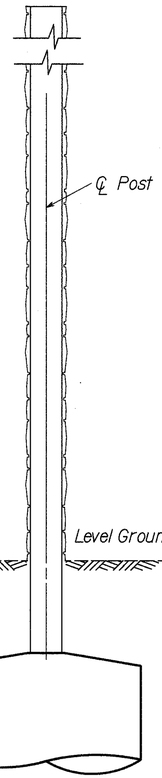

TYPICAL SECTION - CONCEPTUAL
(Noise Barrier with Concrete Barrier)

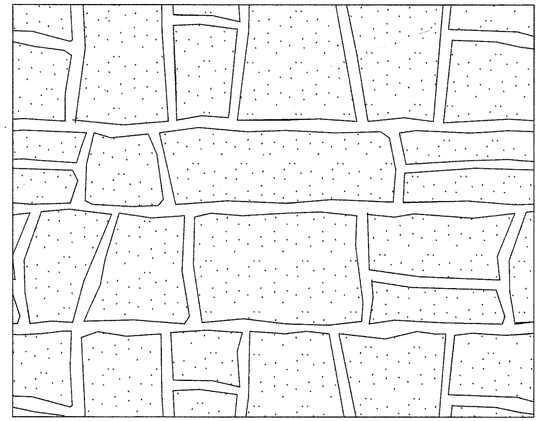

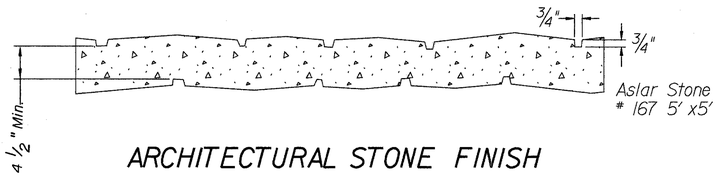

ARCHITECTURAL STONE FINISH
(CONCEPTUAL)

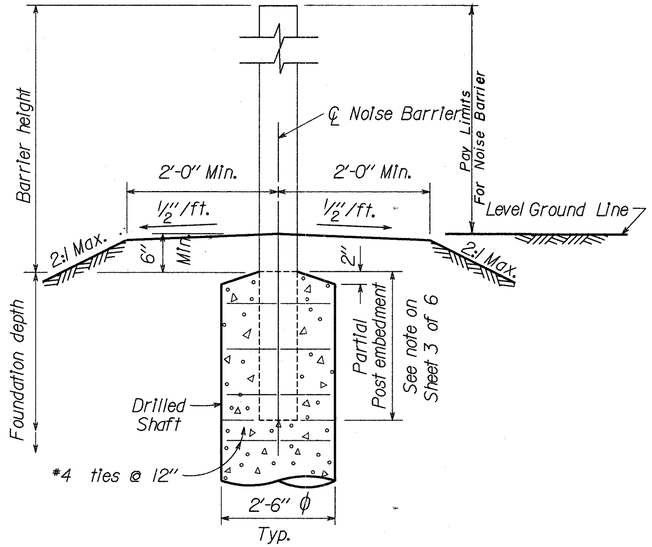

SECTION A-A

OHIO DEPARTMENT OF TRANSPORTATION

NOISE BARRIER DETAILS

DATE
3/19/92
9/17/92
3/10/93
2/10/95

SHEET 6/6

DRN. RWA DATE: 2/3/95
CKD. MFJ DATE: 2/3/95

NOISE BARRIER

FRA-270-32.46

543
593

CENTERLINE SURVEY PLAT

FRANKLIN COUNTY
CITY OF COLUMBUS, CITY OF GAHANNA
MIFFLIN TOWNSHIP
SECTION 1
T–1N, R–17W
UNITED STATES MILITARY LANDS

CENTERLINE MONUMENTS ARE TO BE SET DURING CONSTRUCTION AT THE FOLLOWING STATIONS AT A TOLERANCE OF + 0.02 FT.
CONNECTOR ROAD OFFSET MONUMENTS PC STA 60+31.07, 125' LT, RT PT STA 72+23.52, 55' LT, RT
CONNECTOR ROAD ℄ REFERENCE MONUMENTS ℄ STA 60+00.00 PC STA 70+48.68 PT STA 73+41.13 ℄ STA 81+00.00

THIS IMPROVEMENT IS ESPECIALLY DESIGNED FOR THROUGH TRAFFIC AND HAS BEEN DECLARED A LIMITED ACCESS HIGHWAY OR FREEWAY BY ACTION OF THE DIRECTOR IN ACCORDANCE WITH THE PROVISIONS OF SECTION 5511.02 OF THE OHIO REVISED CODE.

CENTERLINE MONUMENTS AND CENTERLINE REFERENCE MONUMENTS ARE SHOWN ON STANDARD CONSTRUCTION DRAWING MC–1 (REV. 6–13–69) OF THE OHIO DEPARTMENT OF TRANSPORTATION. THE PLACING OF THE MONUMENTS SHALL BE UNDER THE DIRECTION OF A REGISTERED SURVEYOR AND ARE TO BE SET, AS SHOWN, BY THE HIGHWAY CONTRACTOR AT THE TIME OF CONSTRUCTION. ANY ALTERATIONS, WITH PRIOR APPROVAL OF THE DEPARTMENT OF TRANSPORTATION, SHALL BE NOTED AND O.D.O.T. SHALL BE NOTIFIED OF THE NEW LOCATIONS.

○ INDICATES CENTERLINE MONUMENT TO BE SET.
CL MON ⊡ INDICATES CENTERLINE MONUMENT FOUND

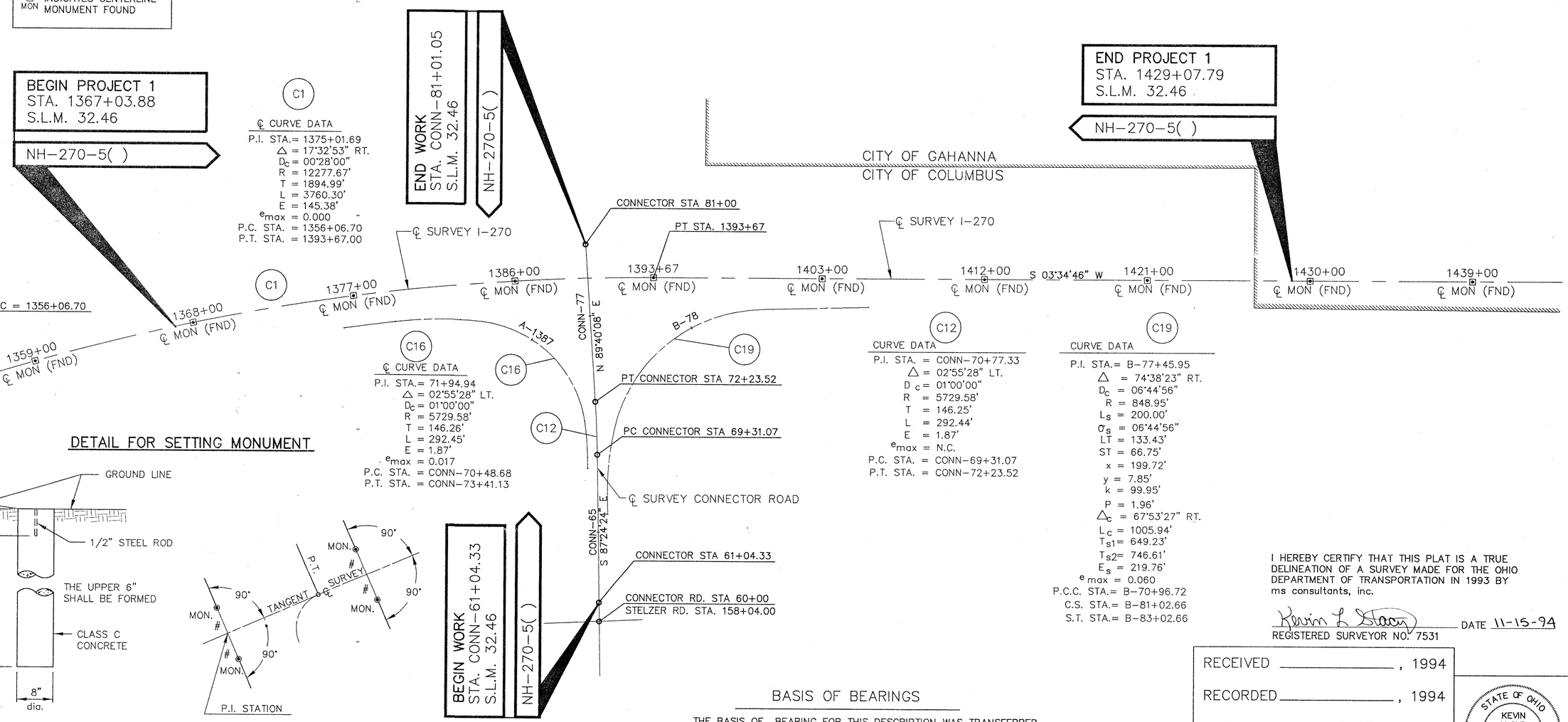

C1
℄ CURVE DATA
P.I. STA.= 1375+01.69
△ = 17°32'53" RT.
D_c = 00°28'00"
R = 12277.67'
T = 1894.99'
L = 3760.30'
E = 145.38'
e_{max} = 0.000
P.C. STA. = 1356+06.70
P.T. STA. = 1393+67.00

C16
℄ CURVE DATA
P.I. STA.= 71+94.94
△ = 02°55'28" LT.
D_c = 01°00'00"
R = 5729.58'
T = 146.26'
L = 292.45'
E = 1.87'
e_{max} = 0.017
P.C. STA. = CONN–70+48.68
P.T. STA. = CONN–73+41.13

C12
CURVE DATA
P.I. STA. = CONN–70+77.33
△ = 02°55'28" LT.
D_c = 01°00'00"
R = 5729.58'
T = 146.25'
L = 292.44'
E = 1.87'
e_{max} = N.C.
P.C. STA. = CONN–69+31.07
P.T. STA. = CONN–72+23.52

C19
CURVE DATA
P.I. STA.= B–77+45.95
△ = 74°38'23" RT.
D_c = 06°44'56"
R = 848.95'
L_s = 200.00'
σ_s = 06°44'56"
LT = 133.43'
ST = 66.75'
x = 199.72'
y = 7.85'
k = 99.95'
P = 1.96'
$\triangle_c$ = 67°53'27" RT.
L_c = 1005.94'
T_{s1} = 649.23'
T_{s2} = 746.61'
E_s = 219.76'
e_{max} = 0.060
P.C.C. STA.= B–70+96.72
C.S. STA.= B–81+02.66
S.T. STA.= B–83+02.66

DETAIL FOR SETTING MONUMENT

℄ REFERENCE MONUMENT

OHIO DEPARTMENT OF TRANSPORTATION STANDARD CONSTRUCTION DRAWING MC–1

TYPICAL REFERENCE

= OFFSET DISTANCE, SEE TABLE

BASIS OF BEARINGS

THE BASIS OF BEARING FOR THIS DESCRIPTION WAS TRANSFERRED FROM A GPS SURVEY FOR THE FRANKLIN COUNTY AUDITOR'S OFFICE ORIGINATING AT CONTROL MONUMENTS FRANK 65 AND FRANK 165 AND IS BASED ON THE NAD83 STATE PLANE COORDINATE SYSTEM, OHIO SOUTH ZONE.

I HEREBY CERTIFY THAT THIS PLAT IS A TRUE DELINEATION OF A SURVEY MADE FOR THE OHIO DEPARTMENT OF TRANSPORTATION IN 1993 BY ms consultants, inc.

Kevin L Stacy DATE 11-15-94
REGISTERED SURVEYOR NO. 7531

RECEIVED _____, 1994
RECORDED _____, 1994
BOOK _____ PAGE _____
FRANKLIN COUNTY RECORDER

STATE OF OHIO
KEVIN LLOYD STACY
7531
REGISTERED
PROFESSIONAL SURVEYOR

N

0 150 300 600 SCALE IN FEET

FEDERAL PROJECT NO. NH–270–5( )

STATE JOB NO. 06022(0)

CENTERLINE SURVEY PLAT

FRA–270–32.46

1 / 50

544 / 593

PLOT SCALE = 1" = 200'
COL. #27 C:\DRAWING\06092306\CENTPLAT.DWG NOVEMBER–14–1994

PROPERTY MAP

FRANKLIN COUNTY
CITY OF COLUMBUS, CITY OF GAHANNA
MIFFLIN TOWNSHIP
SECTION 1
T–1N, R–17W
UNITED STATES MILITARY LANDS

STRUCTURE KEY

RESIDENTIAL BUILDING

COMMERCIAL BUILDING

UTILITY COMPANIES
CITY & STATE SERVICES

AMERITECH
(FORMERLY OHIO BELL TELEPHONE)
150 E. GAY ST., ROOM 6C
COLUMBUS, OHIO 43215
614–223–8535 (TRUNK)

COLUMBIA GAS OF OHIO, INC.
939 W. GOODALE BLVD.
COLUMBUS, OHIO 43212
614–460–2079

COLUMBIA GAS TRANSMISSION CORP.
SUNBURY WOODS OFFICE PARK
4111 EXECUTIVE PARKWAY
WESTERVILLE, OHIO 43085
614–895–5033

COLUMBUS SOUTHERN POWER COMPANY
215 N. FRONT STREET
COLUMBUS, OHIO 43215
614–464–7911

DIVISION OF WATER–CITY OF COLUMBUS
910 DUBLIN ROAD
COLUMBUS, OHIO 43215
614–645–7788

DIVISION OF WATER–CITY OF GAHANNA
200 S. HAMILTON RD.
GAHANNA, OHIO 43230
614–471–0805

OHIO DEPT. OF TRANSPORTATION
ROGER GREEN, ENGINEER
RESEARCH & DEVELOPMENT
25 SOUTH FRONT STREET
COLUMBUS, OHIO

OHIO DEPARTMENT OF TRANSPORTATION
ATTN: JOHN BURNES
ROAD LIGHTING
25 SOUTH FRONT STREET
COLUMBUS, OHIO 43215

SEWERAGE & DRAINAGE–CITY OF COLUMBUS
910 DUBLIN ROAD
COLUMBUS, OHIO 43215
614–645–7102

SEWERAGE & DRAINAGE–CITY OF GAHANNA
200 S. HAMILTON RD.
GAHANNA, OHIO 43230
614–471–0805

WARNER CABLE COMMUNICATIONS
1266 DUBLIN ROAD
COLUMBUS, OHIO 43215
614–481–5263

NOTE:
SEE INSET FOR PERIPHERY OF LIMREA PROPERTY

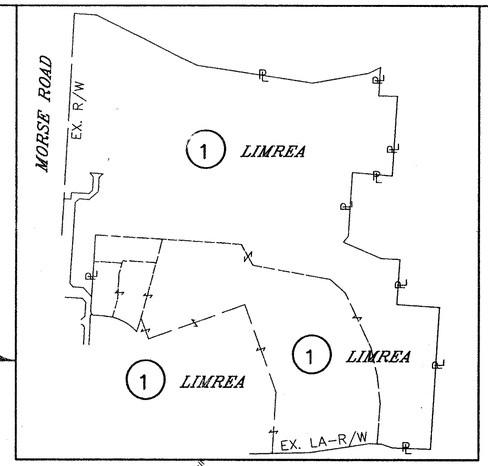

MORSE ROAD
EX. R/W

BEGIN ACQUISITION
FRA–270–32.46
STA. 1361+00.82

BEGIN WORK
FRA–270–32.46
STA. 1362+77.00

BEGIN PROJECT
FRA–270–32.46
STA. 1367+03.88

1 LIMREA
10 ROBERT E. LINDEMANN TR.
11 LIMREA
ALADDIN AAONMS

CONN. RAMP "C"
CONN RAMP "A"
CONN RAMP "B"
CONN. RAMP "D"

EX. LA R/W
LA R/W
CDN
℄ SURVEY I–270
NORTHBOUND I–270
SOUTHBOUND I–270
CDS
EX. LA-R/W
EX. R/W

1365+00
1370+00
1380+00
1390+00
1400+00
70+00
80+00
66+24.03 ℄ SURVEY

CONNECTOR ROAD
STELZER ROAD

VIRGINIA TERRACE
CITY OF COLUMBUS
CITY OF GAHANNA
CREEKWOOD VILLAGE SECTION NO.2
HINES RD.
CRENSHAW DR.
GALLERY ST.
DEVANEY CT.
TRINITY CT.
FAWICK CT.
BOCA CT.
BLUE LARGO CT.

1 LIMREA
2
3

11 LIMREA

BEGIN WORK
CONNECTOR ROAD
STA–CONN–61+04.33

PARCEL NO.	OWNERSHIP
1	*LIMREA PROPERTIES LIMITED*
	PARTNERSHIP
2	*NORMAN & DEBRA SELLERS*
3	*STEVEN & SHIRLEY BENNINGER*
10	*ROBERT E. LINDEMANN*
11	*LIMREA PROPERTIES LIMITED*
	PARTNERSHIP

MATCHLINE STA 1405+00 SEE SHEET 03

REV.	DATE	DESCRIPTION
1	1–27–95	REVISED PARCELS 1
DATE OF COMPLETION		NOVEMBER 14, 1994

SCALE 0 200 400 SCALE IN FEET

FEDERAL PROJECT NO. NH–270–5()

STATE JOB NO. 06022(0)

PROPERTY MAP
STA. 1361+00.82 TO STA. 1405+00

FRA–270–32.46

2/50

545/593

SCALE 1"=200'
COL. #27 C:\DRAWNG\06092305\06092MP1.DWG NOVEMBER-14-1994

STRUCTURE KEY

RESIDENTIAL BUILDING

COMMERCIAL BUILDING

PROPERTY MAP

FRANKLIN COUNTY
CITY OF COLUMBUS, CITY OF GAHANNA
MIFFLIN TOWNSHIP
SECTION 1
T–1N, R–17W
UNITED STATES MILITARY LANDS

PARCEL NO.	OWNERSHIP
1	LIMREA PROPERTIES LIMITED
	PARTNERSHIP
4	CREEKWOOD VILLAGE COMMUNITIES
5	LIMREA PROPERTIES LIMITED
	PARTNERSHIP
6	HIGHPOINT FARMS
7	LIMREA PROPERTIES LIMITED
	PARTNERSHIP
8	RALPH E. BOSO
11	LIMREA PROPERTIES LIMITED
	PARTNERSHIP
12	ABBOTT LABORATORIES

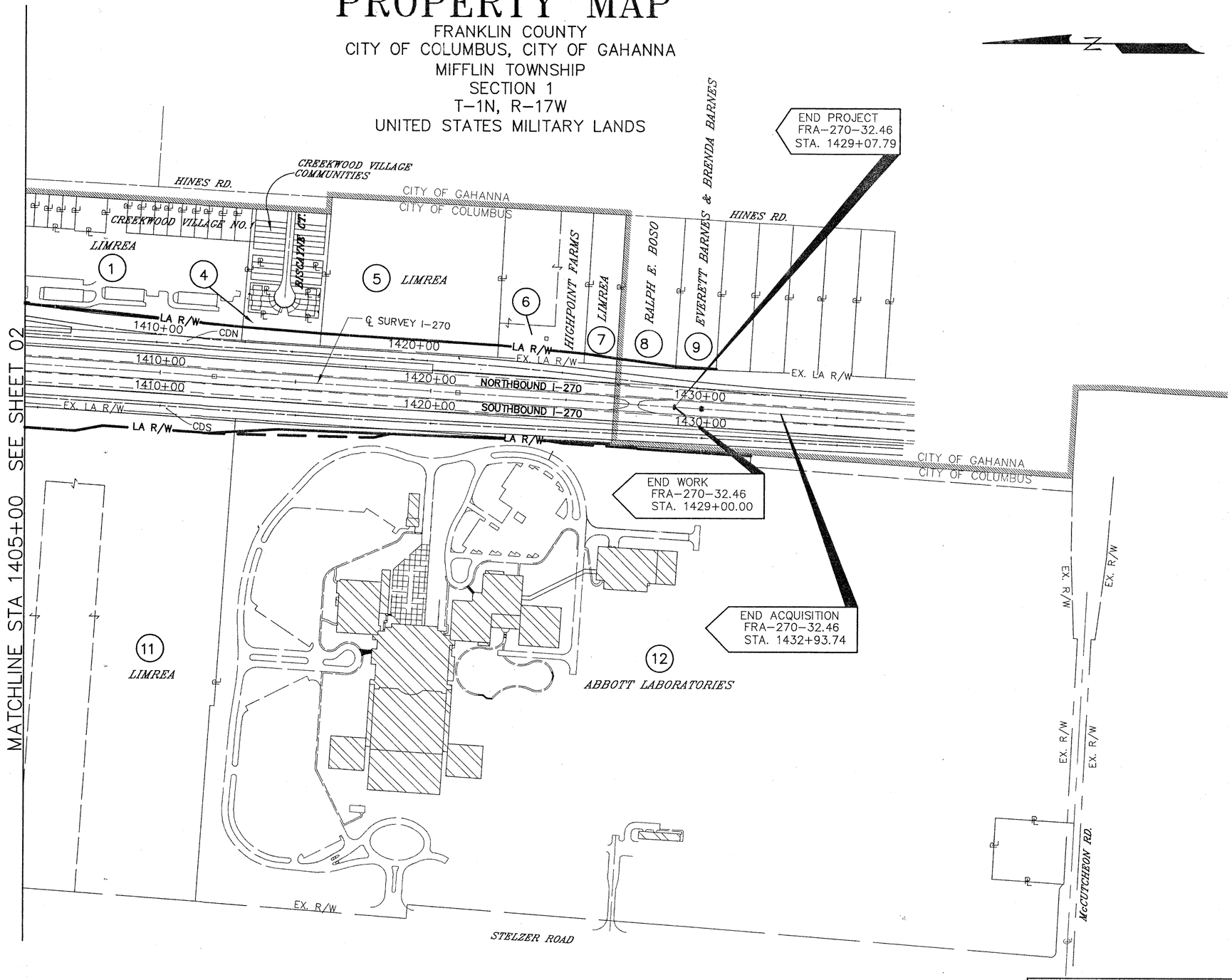

SCALE IN FEET: 0, 200, 100, 400

FEDERAL PROJECT NO. NH–270–5()

STATE JOB NO. 06022(0)

PROPERTY MAP
STA. 1405+00 TO STA. 1435+00

FRA–270–32.46

3/50

546/593

REV.	DATE	DESCRIPTION
DATE OF COMPLETION		NOVEMBER 14, 1994

PLOT SCALE
COL #27 C:\DRAWNG\06092306\06092MP2.DWG NOVEMBER-14-1994

LIMREA

STRUCTURE KEY

RESIDENTIAL BUILDING

COMMERCIAL BUILDING

PROPERTY MAP

FRANKLIN COUNTY
CITY OF COLUMBUS, CITY OF GAHANNA
MIFFLIN TOWNSHIP
SECTION 1
T-1N, R-17W
UNITED STATES MILITARY LANDS

STELZER ROAD

EX. R/W

12

ABBOTT LABORATORIES

EX. R/W

TEMPORARY

TEMPORARY

EX. R/W

EX. R/W

16+00

18+00

20+00

22+00

24+00

26+00

28+00

30+00

32+00

34+00

TEMPORARY

R/W

TEMPORARY

EX. R/W

℄ SURVEY
McCUTCHEON RD.

BEGIN WORK
McCUTCHEON RD.
STA 15+34.00

CITY OF COLUMBUS
CITY OF GAHANNA

EX LA R/W

SOUTHBOUND I-270

NORTHBOUND I-270

1440+00

1445+00

1450+00

℄ SURVEY I-270

EX LA R/W

EX LA R/W

ROBERT RITTINGER & BRENDA SUE RITTINGER

THELMA L. HULET

HINES ROAD

END WORK
McCUTCHEON RD.
STA 29+25.00

14

EX. R/W

TEMPORARY
AMESBURY DRIVE

EX. R/W

EX. R/W

McCUTCHEON ROAD

EX. R/W

EX. R/W

PARCEL NO.	OWNERSHIP
12	ABBOTT LABORATORIES
13	ABBOTT LABORATORIES
14	MARC STETZER & ANGELA CORNELL

13

ABBOTT LABORATORIES

EX. R/W

N

SCALE IN FEET
0 50 100 200

FEDERAL PROJECT NO. NH-270-5()

STATE JOB NO. 06022(0)

PROPERTY MAP
McCUTCHEON ROAD

FRA-270-32.46

4 /50

547
593

REV.	DATE	DESCRIPTION
DATE OF COMPLETION		NOVEMBER 14, 1994

PLOT SCALE:
COL #27 C:\DRAWING\06092306\06092MP3.DWG NOVEMBER-14-1994

UTILITY PLAN

FRANKLIN COUNTY
CITY OF COLUMBUS, CITY OF GAHANNA
MIFFLIN TOWNSHIP
SECTION 1
T-1N, R-17W
UNITED STATES MILITARY LANDS

STRUCTURE KEY

RESIDENTIAL BUILDING

COMMERCIAL BUILDING

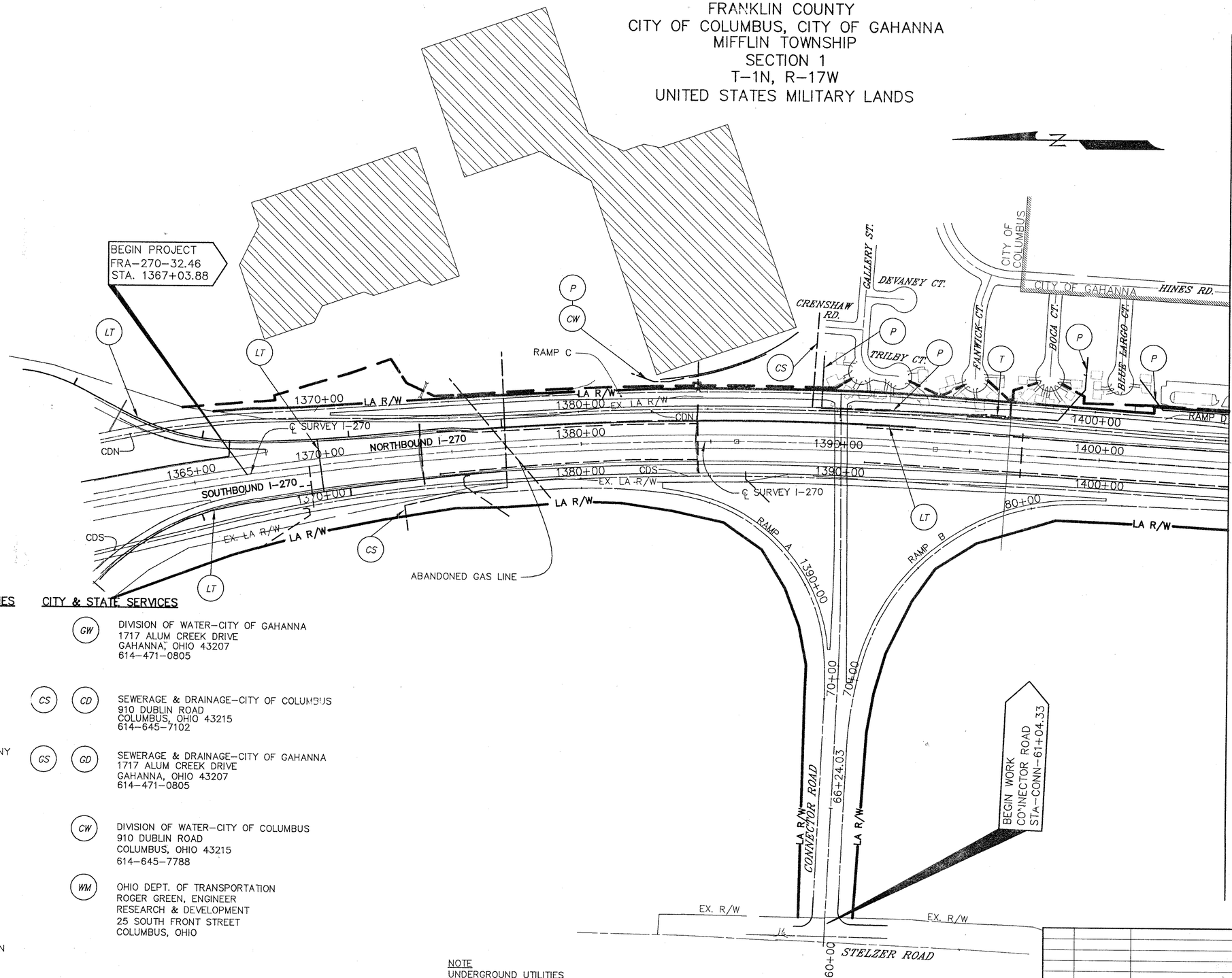

UTILITY COMPANIES

(G) COLUMBIA GAS OF OHIO, INC.
939 W. GOODALE BLVD.
COLUMBUS, OHIO 43215
614-460-2079

(GT) COLUMBIA GAS TRANSMISSION CORP.
SUNBURY WOODS OFFICE PARK
4111 EXECUTIVE PARKWAY
WESTERVILLE, OHIO 43085
614-895-5033

(P) COLUMBUS SOUTHERN POWER COMPANY
215 N. FRONT STREET
COLUMBUS, OHIO 43215
614-464-7911

(C) WARNER CABLE COMMUNICATIONS
1266 DUBLIN ROAD
COLUMBUS, OHIO 43215
614-481-5263

(T) AMERITECH
150 E. GAY ST.
COLUMBUS, OHIO 43215
614-223-6985 (CONDUIT)
614-223-8482 (TRUNK)

(LT) OHIO DEPARTMENT OF TRANSPORTATION
ATTN: JOHN BURNES
ROAD LIGHTING
25 SOUTH FRONT STREET
COLUMBUS, OHIO 43215

CITY & STATE SERVICES

(GW) DIVISION OF WATER-CITY OF GAHANNA
1717 ALUM CREEK DRIVE
GAHANNA, OHIO 43207
614-471-0805

(CS) (CD) SEWERAGE & DRAINAGE-CITY OF COLUMBUS
910 DUBLIN ROAD
COLUMBUS, OHIO 43215
614-645-7102

(GS) (GD) SEWERAGE & DRAINAGE-CITY OF GAHANNA
1717 ALUM CREEK DRIVE
GAHANNA, OHIO 43207
614-471-0805

(CW) DIVISION OF WATER-CITY OF COLUMBUS
910 DUBLIN ROAD
COLUMBUS, OHIO 43215
614-645-7788

(WM) OHIO DEPT. OF TRANSPORTATION
ROGER GREEN, ENGINEER
RESEARCH & DEVELOPMENT
25 SOUTH FRONT STREET
COLUMBUS, OHIO

NOTE
UNDERGROUND UTILITIES
THE LOCATIONS OF THE UNDERGROUND UTILITIES SHOWN ON THE PLANS ARE AS OBTAINED FROM OWNERS OF THE UTILITY AS REQUIRED BY SECTION 153.64 O.R.C.

REV.	DATE	DESCRIPTION
DATE OF COMPLETION		NOVEMBER 14, 1994

SCALE 1"=200'
COL #27
C:\DRAWING\06092306\06092UTI.DWG
NOVEMBER-14-1994

0 100 200 400 SCALE IN FEET

FEDERAL PROJECT NO. NH-270-.5()

STATE JOB NO. 06022(0)

UTILITY PLAN
STA. 1361+00.82 TO STA. 1405+00

FRA-270-32.46

5/50

548
593

STRUCTURE KEY

RESIDENTIAL BUILDING

COMMERCIAL BUILDING

UTILITY PLAN

FRANKLIN COUNTY
CIYT OF COLUMBUS, CITY OF GAHANNA
MIFFLIN TOWNSHIP
SECTION 1
T-1N, R-17W
UNITED STATES MILITARY LANDS

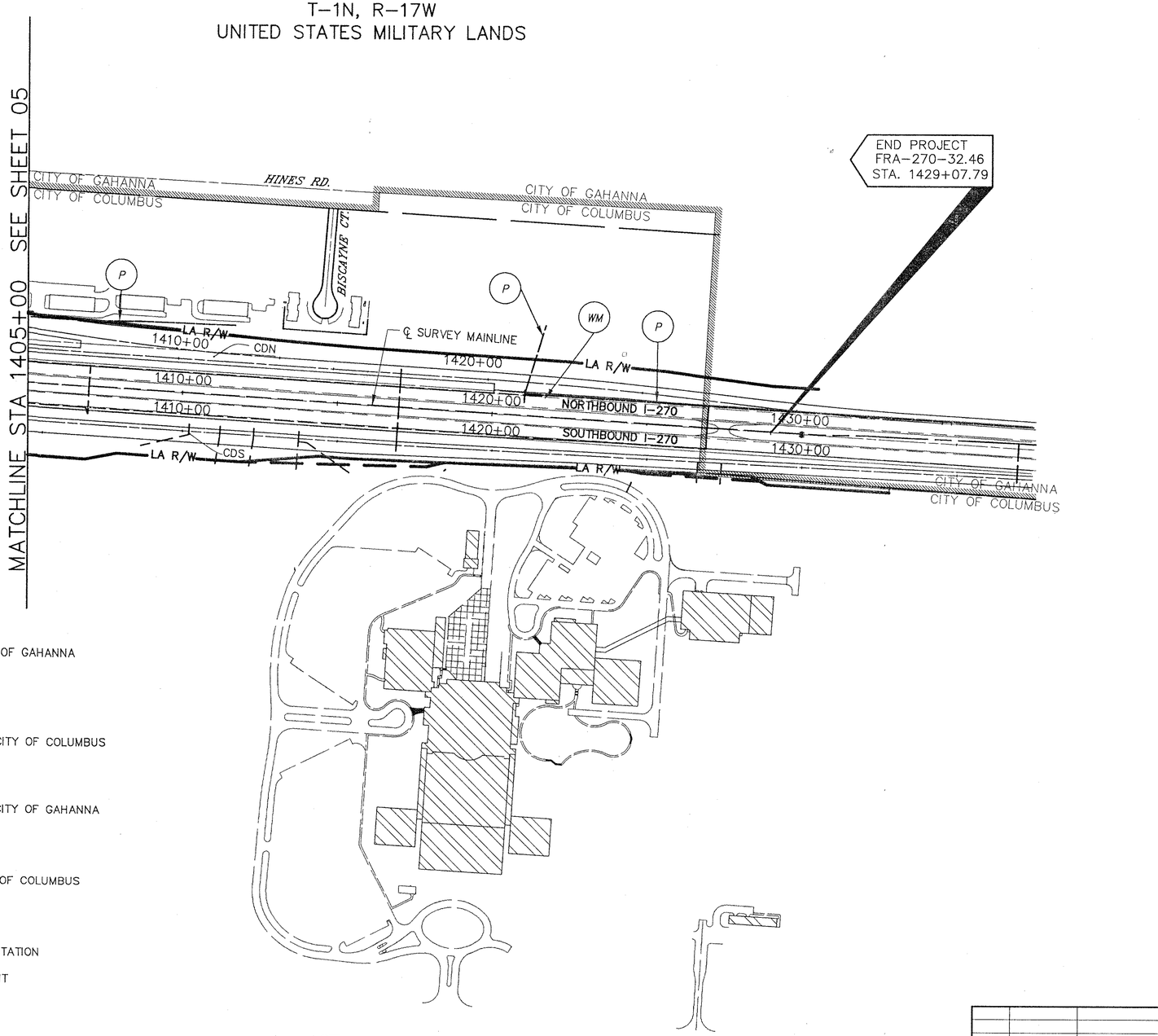

UTILITY COMPANIES

(G) COLUMBIA GAS OF OHIO, INC.
939 W. GOODALE BLVD.
COLUMBUS, OHIO 43215
614-460-2079

(GT) COLUMBIA GAS TRANSMISSION CORP.
SUNBURY WOODS OFFICE PARK
4111 EXECUTIVE PARKWAY
WESTERVILLE, OHIO 43085
614-895-5033

(P) COLUMBUS SOUTHERN POWER COMPANY
215 N. FRONT STREET
COLUMBUS, OHIO 43215
614-464-7911

(C) WARNER CABLE COMMUNICATIONS
1266 DUBLIN ROAD
COLUMBUS, OHIO 43215
614-481-5263

(T) AMERITECH
150 E. GAY ST.
COLUMBUS, OHIO 43215
614-223-6985 (CONDUIT)
614-223-8482 (TRUNK)

(LT) OHIO DEPARTMENT OF TRANSPORTATION
ATTN: JOHN BURNES
ROAD LIGHTING
25 SOUTH FRONT STREET
COLUMBUS, OHIO 43215

CITY & STATE SERVICES

(GW) DIVISION OF WATER-CITY OF GAHANNA
1717 ALUM CREEK DRIVE
GAHANNA, OHIO 43207
614-471-0805

(CS) (CD) SEWERAGE & DRAINAGE-CITY OF COLUMBUS
910 DUBLIN ROAD
COLUMBUS, OHIO 43215
614-645-7102

(GS) (GD) SEWERAGE & DRAINAGE-CITY OF GAHANNA
1717 ALUM CREEK DRIVE
GAHANNA, OHIO 43207
614-471-0805

(CW) DIVISION OF WATER-CITY OF COLUMBUS
910 DUBLIN ROAD
COLUMBUS, OHIO 43215
614-645-7788

(WM) OHIO DEPT. OF TRANSPORTATION
ROGER GREEN, ENGINEER
RESEARCH & DEVELOPMENT
25 SOUTH FRONT STREET
COLUMBUS, OHIO

NOTE
UNDERGROUND UTILITIES
THE LOCATIONS OF THE UNDERGROUND UTILITIES SHOWN ON THE PLANS ARE AS OBTAINED FROM OWNERS OF THE UTILITY AS REQUIRED BY SECTION 153.64 O.R.C.

REV.	DATE	DESCRIPTION
DATE OF COMPLETION		NOVEMBER 14, 1994

SCALE IN FEET 0 100 200 400

FEDERAL PROJECT NO. NH-270-5()

STATE JOB NO. 06022(0)

UTILITY PLAN
STA. 1405+00 TO STA. 1430+44.59

FRA-270-32.46

6/50

549/593

PLOT SCALE... COL #27 C:\DRAWING\06092306\06092UT2.DWG NOVEMBER-14-1994

TOTAL NUMBER OF
10 OWNERSHIPS
12 TOTAL TAKES
3 OWNERSHIPS WITH STRUCTURES INVOLVED
7 OWNERSHIPS WITH "P" ITEMS

SUMMARY OF ADDITIONAL RIGHT OF WAY

PARCEL NO.	OWNER	SHEET NO.	OWNERS RECORD BOOK	OWNERS RECORD PAGE	AUDITOR'S PARCEL	RECORD AREA(A.C.)	TOTAL P.R.O.	GROSS TAKE	P.R.O. IN TAKE	NET TAKE	STRUC-TURE	NET RESIDUE LEFT	NET RESIDUE RIGHT	TYPE FUND	REMARKS AND PERSONALTY	AS ACQUIRED BOOK	AS ACQUIRED PAGE
1WL	LIMREA PROPERTIES LIMITED PARTNERSHIP	14–18	08981	C09,C12	520–103929	84.247	—	1.236	—	1.236		81.684	—				
	LIMREA PROPERTIES LIMITED PARTNERSHIP		08981	C09,C12	520–201407	84.247	—	1.321	—	1.321	Y	81.684	—		REMOVE SIGNS, POWER POLES		
	LIMREA PROPERTIES LIMITED PARTNERSHIP		05567	B03–B07	520–117498	117.808	—	0.681	—	0.681	Y	117.127	—		REMOVE FENCE, LIGHT POLES		
1T	LIMREA PROPERTIES LIMITED PARTNERSHIP	13–18	08981	C09,C12	520–103929		—	1.566	—	1.566	Y	—	—		REMOVE SIGNS, LIGHT POLE		
	LIMREA PROPERTIES LIMITED PARTNERSHIP		08981	C09,C12	520–201407		—	0.226	—	0.226	Y	—	—		REMOVE SIGN		
	LIMREA PROPERTIES LIMITED PARTNERSHIP		05567	B03–B07	520–117498		—	0.115	—	0.115	N	—	—		TO CONSTRUCT AND GRADE SLOPE, DITCHES		
1WL–1	LIMREA PROPERTIES LIMITED PARTNERSHIP	18	20876	G07	520–182589	0.182	—	0.014	—	0.014	Y	0.168	—		PREVIOUS OWNER MARTIN HAMPTON & LINDA HAMPTON		
															LOT 255, VIRGINA TERRACE SEC. 3, PB. 55 PG. 94,		
															20' ESMT, PB 55, PG 94, REMOVE WOOD FENCE, & GAZEBO		
															1 STY. BRICK & FRAME HSE.		
1T–1	LIMREA PROPERTIES LIMITED PARTNERSHIP	18	20876	G07	520–182589		—	0.168	—	0.168	Y	—	—		REMOVE WOOD FENCE, METAL SHED, GAZEBO		
1E–1	LIMREA PROPERTIES LIMITED PARTNERSHIP	18	20876	G07	520–182589			0.168		0.168	Y						
1WL–2	LIMREA PROPERTIES LIMITED PARTNERSHIP	18	20493	C05	520–182588	0.270	—	0.205	—	0.205	Y	—	—		PREVIOUS OWNER ROBERT CHANEY & BETTY CHANEY		
															LOT 254, VIRGINIA TERRACE SEC. 3, PB. 55 PG. 94		
															15' & 20' ESMT, PB. 55 PG 94, REMOVE 1 STY. BRICK &		
															FRAME HSE, REMOVE SHEDS, WOODEN FENCE		
1T–2	LIMREA PROPERTIES LIMITED PARTNERSHIP	18	20493	C05	520–182588		—	0.065	—	0.065	Y	—	—		REMOVE 1 STY. BRICK & FRAME HSE., WOODEN FENCE,		
															DRIVEWAY, MAILBOX AND GRADE LOTS		
1E–2	LIMREA PROPERTIES LIMITED PARTNERSHIP	18	20493	C05	520–182588		—	0.065	—	0.065		—	—				
1WL–3	LIMREA PROPERTIES LIMITED PARTNERSHIP	18	20432	E08	520–182587	0.188	—	0.143	—	0.143	Y	—	—		PREVIOUS OWNER DELBERT BACKUS, LOT 253, VIRGINIA		
															TERRACE SEC. 3, PB. 55 PG. 94, REMOVE SPLIT LEVEL		
															FRAME HSE., 15' ESTM., PB 55, PG 94, REMOVE SHED		
															REMOVE WOODEN FENCE		
1T–3	LIMREA PROPERTIES LIMITED PARTNERSHIP	18	20432	E08	520–182587		—	0.045	—	0.045	N	—	—		REMOVE SPLIT LEVEL FRAME HSE., DRIVEWAY, MAILBOX		
															AND GRADE LOTS		
1E–3	LIMREA PROPERTIES LIMITED PARTNERSHIP	18	20432	E08	520–182587		—	0.045	—	0.045		—	—				
1WL–4	LIMREA PROPERTIES LIMITED PARTNERSHIP	18, 19	21249	H14	520–182586	0.176	—	0.120	—	0.120	Y	—	—		PREVIOUS OWNER DOUG SWEITERMAN, LOT 252, VIRGINIA		
															TERRACE SEC 3, PB 55 PG. 94, 15' ESMT., PB 55 PG 94		
1T–4	LIMREA PROPERTIES LIMITED PARTNERSHIP	18, 19	21249	H14	520–182586		—	0.056	—	0.056	N	—	—		1 STY. BRICK & FRAME HSE., REMOVE CHAIN LINK FENCE		
															REMOVE 1 STY. BRICK & FRAME HSE., DRIVEWAY, MAILBOX		
1E–4	LIMREA PROPERTIES LIMITED PARTNERSHIP	18, 19	21249	H14	520–182586		—	0.056	—	0.056	N	—	—		AND GRADE LOTS		
1WL–5	LIMREA PROPERTIES LIMITED PARTNERSHIP	19	20991	F11	520–182585	0.193	—	0.169	—	0.169	Y	—	—		PREVIOUS OWNER BRUCE RAINEY & JANET RAINEY		
															LOT 251, VIRGINA TERRACE SEC.3 PB. 55 PG. 94, 15' ESMT		
															PB 55 PG 94, 2 STY. SPLIT LEVEL BRICK & FRAME HSE.,		
															REMOVE WOODEN SIGN, & CHAIN LINK FENCE		
1T–5	LIMREA PROPERTIES LIMITED PARTNERSHIP	19	20991	F11	520–182585		—	0.024	—	0.024	N	—	—		REMOVE 2 STY. BRICK & FRAME HSE., DRIVEWAY, MAILBOX		
															AND GRADE LOTS		
1E–5	LIMREA PROPERTIES LIMITED PARTNERSHIP	19	20991	F11	520–182585		—	0.024	—	0.024		—	—				

NOTE: UNDER NO CIRCUMSTANCES ARE TEMPORARY EASEMENTS ACQUIRED FOR THE PURPOSE OF STRUCTURE REMOVAL TO BE USED FOR STORAGE OF MATERIAL OR EQUIPMENT BY THE CONTRACTOR. UPON COMPLETION OF THE WORK REQUIRED FOR SUCH REMOVAL AND SUBSEQUENT RECLAMATION, THE EASEMENT SHALL BE VACATED IMMEDIATELY.

NOTE: (RECORD AREA AFTER OUTSALES) – (TOTAL P.R.O.) – (NET TAKE) = NET RESIDUE

NOTE: ALL TEMPORARY PARCELS TO BE OF 24 MONTHS DURATION.

NOTE: ALL AREAS LISTED ARE IN ACRES

REV.	DATE	DESCRIPTION
1	2–1–95	ADDED 1E–1 & REVISED 1T–1

DATE OF COMPLETION NOVEMBER 14, 1994

FEDERAL PROJECT NO. NH–270–5(
PID NO. 12510
STATE JOB NO. 06022(Q)

SUMMARY OF ADDITIONAL RIGHT OF WAY

FRA–270–32.46

7/50

550/593

PLOT SCALE: C:\DRAWN\06092306\06091SU1.DWG FEBRUARY–01–1995
COL #16

SUMMARY OF ADDITIONAL RIGHT OF WAY

PARCEL NO.	OWNER	SHEET NO.	OWNERS RECORD BOOK	OWNERS RECORD PAGE	AUDITOR'S PARCEL	RECORD AREA(A.C.)	TOTAL P.R.O.	GROSS TAKE	P.R.O. IN TAKE	NET TAKE	STRUCTURE	NET RESIDUE LEFT	NET RESIDUE RIGHT	TYPE FUND	REMARKS AND PERSONALTY	AS ACQUIRED BOOK	AS ACQUIRED PAGE
1WL-6	LIMREA PROPERTIES LIMITED PARTNERSHIP	19	02100	F14	520-182584	0.234	—	0.148	—	0.148	Y	—	—		PREVIOUS OWNER JAMES E. DIXON JR. & MARGARET DIXON		
															LOT 250, VIRGINA TERRACE SEC. 3, PB. 55 PG. 94, 15' &		
															20' ESMT., PB. 55 PG. 94, 2 STY. FRAME HSE.		
															REMOVE GARAGE, & CHAIN LINK FENCE		
1T-6	LIMREA PROPERTIES LIMITED PARTNERSHIP	19	02100	F14	520-182584		—	0.086	—	0.086	Y	—	—		REMOVE 2 STY. FRAME HSE., DRIVEWAY, MAILBOX AND		
															GRADE LOT		
1E-6	LIMREA PROPERTIES LIMITED PARTNERSHIP	19	02100	F14	520-182584		—	0.086	—	0.086	N	—	—				
1WL-7	LIMREA PROPERTIES LIMITED PARTNERSHIP	19	21019	I04	520-168749	0.273	—	0.196	—	0.196	Y	—	—		PREVIOUS OWNER THOMAS CRISTER & JULIE CRISTER		
															LOT 10, VIRGINA TERRACE, PB 49 PG.92, 10' ESMT., 1 STY.		
															BRICK & FRAME HSE. REMOVE WOOD & CHAIN LINK FENCES		
1T-7	LIMREA PROPERTIES LIMITED PARTNERSHIP	19	21019	I04	520-168749		—	0.077	—	0.077	Y	—	—		REMOVE 1 STY. BRICK & FRAME HSE., FENCES, DRIVEWAY,		
															MAILBOX AND GRADE LOT		
1E-7	LIMREA PROPERTIES LIMITED PARTNERSHIP	19	21019	I04	520-168749		—	0.077	—	0.077		—	—				
1WL-8	LIMREA PROPERTIES LIMITED PARTNERSHIP	19	21281	I12	520-168748	0.190	—	0.149	—	0.149	Y	—	—		PREVIOUS OWNER RONALD L. SAGSTETTER		
															LOT 9, VIRGINA TERRACE, PB 49 PG.92		
															1 STY. BRICK & FRAME HSE., REMOVE WOOD FENCES		
1T-8	LIMREA PROPERTIES LIMITED PARTNERSHIP	19	21281	I12	520-168748		—	0.041	—	0.041		—	—		REMOVE 1 STY. BRICK & FRAME HSE., DRIVEWAY, MAILBOX		
															AND GRADE LOT		
1E-8	LIMREA PROPERTIES LIMITED PARTNERSHIP	19	21281	I12	520-168748		—	0.041	—	0.041		—	—				
1WL-9	LIMREA PROPERTIES LIMITED PARTNERSHIP	19	21408	G09	520-168747	0.235	—	0.136	—	0.136	Y	—	—		PREVIOUS OWNER KARL RICHARD STRINGER, P.S. SHARP		
															LOT 8, VIRGINA TERRACE, PB 49 PG.92		
															1 STY. BRICK & FRAME HSE., REMOVE CHAIN LINK FENCE		
1T-9	LIMREA PROPERTIES LIMITED PARTNERSHIP	19	21408	G09	520-168747		—	0.099	—	0.099	N	—	—		REMOVE 1 STY. BRICK & FRAME HSE., DRIVEWAY, MAILBOX		
															AND GRADE LOTS		
1E-9	LIMREA PROPERTIES LIMITED PARTNERSHIP	19	21408	G09	520-168747		—	0.099	—	0.099		—	—				
1WL-10	LIMREA PROPERTIES LIMITED PARTNERSHIP	19	21551	J08	520-197610	0.161	—	0.040	—	0.040	Y	—	—		PREVIOUS OWNER RONALD SEIG & RUTH SEIG, LOT 62,		
															AMENDED PLAT OF CREEKWOOD VILLAGE, SEC 2 RESUB		
															LOT 31-70, 10' ESMT., PB 61 PG 41, 2 STY. BRICK &		
															FRAME HSE., REMOVE CHAIN LINK FENCES		
1T-10	LIMREA PROPERTIES LIMITED PARTNERSHIP	19	21551	J08	520-197610		—	0.121	—	0.121	Y	—	—		REMOVE 2 STY. BRICK & FRAME HSE., WOOD SHED, CHAIN		
															LINK FENCE, WOOD DECK, DRIVEWAY, MAILBOX AND		
															GRADE LOTS		
1E-10	LIMREA PROPERTIES LIMITED PARTNERSHIP	19	21551	J08	520-197610		—	0.121	—	0.121		—	—				
1WL-11	LIMREA PROPERTIES LIMITED PARTNERSHIP	20	21339	G17	520-197609	0.183	—	0.121	—	0.121	Y	—	—		PREVIOUS OWNER HAROLD LLOYD JR. & PATRICA LLOYD		
															LOT 61, AMENDED PLAT OF CREEKWOOD VILLAGE SEC. 2		
															PB 61, PG 41, 10' ESMT., PB 61 PG 41 2 STY. BRICK &		
															FRAME HSE., REMOVE CHAIN LINK FENCE		
1T-11	LIMREA PROPERTIES LIMITED PARTNERSHIP	20	21339	G17	520-197609		—	0.062	—	0.062	Y	—	—		REMOVE 2 STY. BRICK & FRAME HSE., FENCE, MAILBOX,		
															DRIVEWAY AND GRADE LOTS		
1E-11	LIMREA PROPERTIES LIMITED PARTNERSHIP	20	21339	G17	520-197609		—	0.062	—	0.062		—	—				

NOTE: UNDER NO CIRCUMSTANCES ARE TEMPORARY EASEMENTS ACQUIRED FOR THE PURPOSE OF STRUCTURE REMOVAL TO BE USED FOR STORAGE OF MATERIAL OR EQUIPMENT BY THE CONTRACTOR. UPON COMPLETION OF THE WORK REQUIRED FOR SUCH REMOVAL AND SUBSEQUENT RECLAMATION, THE EASEMENT SHALL BE VACATED IMMEDIATELY.

NOTE: (RECOTD AREA AFTER OUTSALES) – (TOTAL P.R.O.) – (NET TAKE) = NET RESIDUE

NOTE: ALL TEMPORARY PARCELS TO BE OF 24 MONTHS DURATION.

NOTE: ALL AREAS LISTED ARE IN ACRES

REV.	DATE	DESCRIPTION
1	1-20-95	CORRECTED AREA IW-7

DATE OF COMPLETION NOVEMBER 14, 1994

FEDERAL PROJECT NO. NH-270-5()

PID NO. 12510

STATE JOB NO. 06022(0)

SUMMARY OF ADDITIONAL RIGHT OF WAY

FRA-270-32.46

8/50

551/593

PLOT SCALE: COL #27
C:\DRAWING\06092306\06091SU2.DWG NOVEMBER-14-1994

SUMMARY OF ADDITIONAL RIGHT OF WAY

PARCEL	OWNER	SHEET	OWNERS RECORD BOOK	OWNERS RECORD PAGE	AUDITOR'S PARCEL	RECORD AREA	TOTAL P.R.O.	GROSS TAKE	P.R.O. IN TAKE	NET TAKE	STRUC-TURE	NET RESIDUE LEFT	NET RESIDUE RIGHT	TYPE FUND	REMARKS AND PERSONALTY	AS ACQUIRED BOOK	AS ACQUIRED PAGE
1WL-12	LIMREA PROPERTIES LIMITED PARTNERSHIP	20	20973	J14	520-197608	0.147	—	0.098	—	0.098	Y	—	—		PREVIOUS OWNER KENNETH GRANVILLE & LINDA GRANVILLE		
															LOT 60, AMENDED PLAT OF CREEKWOOD VILLAGE SEC. 2		
															PB 61, PG 41, 10' ESMT, PB 61 PG 41, 2 STY. FRAME		
															HSE., REMOVE CHAIN LINK & WOOD FENCE		
1T-12	LIMREA PROPERTIES LIMITED PARTNERSHIP	20	20973	J14	520-197608		—	0.049	—	0.049	Y	—	—		REMOVE 2 STY. FRAME HSE, DRIVEWAY, WOOD DECK		
															MAILBOX AND GRADE LOT		
1E-12	LIMREA PROPERTIES LIMITED PARTNERSHIP	20	20973	J14	520-197608		—	0.049	—	0.049		—	—				
1WL-13	LIMREA PROPERTIES LIMITED PARTNERSHIP	20	20856	F08	520-197607	0.120	—	0.072	—	0.072	Y	—	—		PREVIOUS OWNER MICHAEL STONE & APRIL STONE		
															LOT 59, AMENDED PLAT OF CREEKWOOD VILLAGE SEC. 2		
															PB 61, PG 41, 10' ESMT, PB 61 PG 41, 2 STY. BRICK		
															& FRAME HSE., REMOVE WOOD FENCE		
1T-13	LIMREA PROPERTIES LIMITED PARTNERSHIP	20	20856	F08	520-197607		—	0.048	—	0.048	Y	—	—		REMOVE 1 STY. BRICK & FRAME HSE., DRIVEWAY,		
															MAILBOX AND GRADE LOT		
1E-13	LIMREA PROPERTIES LIMITED PARTNERSHIP	20	20856	F08	520-197607		—	0.048	—	0.048		—	—				
1WL-14	LIMREA PROPERTIES LIMITED PARTNERSHIP	20	21339	G18	520-197606	0.129	—	0.009	—	0.009	N	0.120	—		PREVIOUS OWNER DEBORAH COSSIN, LOT 58, AMENDED		
															PLAT OF CREEKWOOD VILLAGE, SEC 2,PB 61, PG 41		
															10' ESMT., PB 61 PG 41, 2 STY. BRICK & FRAME HSE.		
1T-14	LIMREA PROPERTIES LIMITED PARTNERSHIP	20	21339	G18	520-197606		—	0.013	—	0.013	Y	—	—		REMOVE WOOD FENCE AND GRADE		
1WL-15	LIMREA PROPERTIES LIMITED PARTNERSHIP	20	23016	G15	520-197619	.703	—	0.436	—	0.436	Y	0.267	—		PREVIOUS OWNER BRENT JONES & TAMARA JONES,		
															PLATTED OPEN SPACE, AMENDED PLAT OF CREEKWOOD		
															VILLAGE SEC 2, PB 61, PG 41,VAR. ESMT., PB 61 PG 41,		
															REMOVE WOOD FENCE, WOOD SHED		
1WD-15	LIMREA PROPERTIES LIMITED PARTNERSHIP	20	23016	G15	520-197619	.703	—	0.158	—	0.158	N	—	—		TO CONSTRUCT & MAINTAIN SWALE		
1E-15	LIMREA PROPERTIES LIMITED PARTNERSHIP	20	23016	G15	520-197619	.703	—	0.109	—	0.109	N						
1WL-16	LIMREA PROPERTIES LIMITED PARTNERSHIP	20-22	18033	D03-D05	520-109336	4.668	—	1.026	—	1.026	Y	3.642	—		REMOVE LIGHT POLES, PLAY SET		
	LIMREA PROPERTIES LIMITED PARTNERSHIP	20-22	18033	D03-D05	520-202066	4.793	—	0.767	—	0.767	Y	4.026	—		REMOVE FLOOD LIGHTS, WOOD SIGN, CHAIN LINK FENCE		
															PLAY SET, WOOD POST		
1T-16	LIMREA PROPERTIES LIMITED PARTNERSHIP	20-22	18033	D03-D05	520-109336		—	0.034	—	0.034	N	—	—		TO CONSTRUCT NOISE BARRIES, DO NOT RESTRICT ACCESS		
															TO GARAGES		
2WL	NORMAN SELLERS & DEBRA L. SELLERS	19	00032	B10	520-168750	0.159	—	0.002	—	0.002	Y	0.157	—		LOT 11, VIRGINA TERRACE, PB 49, PG. 92, 10' ESMT., PB 49		
															PG 92 SPLIT LEVEL BRICK & FRAME HSE., REMOVE CHAIN		
2T	NORMAN SELLERS & DEBRA L. SELLERS	19	00032	B10	520-168750	0.159	—	0.005	—	0.005	N	—	—		LINK FENCE TO GRADE SLOPE		
3WL	STEVEN J. BENNINGER & SHIRLEY A. BENNINGER	19	07844	H11	520-168746	0.156	—	* 9.70	—	* 9.70	N	0.156	—		LOT 7, VIRGINA TERRACE, PB 49, PG. 92, 10' ESMT.,		
															PB 49 PG 92		
3T	STEVEN J. BENNINGER & SHIRLEY A. BENNINGER	19	07844	H11	520-168746		—	0.003	—	0.003	N	—	—		TO CONSTRUCT, GRADE SLOPE, AND DITCHES		

NOTE: UNDER NO CIRCUMSTANCES ARE TEMPORARY EASEMENTS ACQUIRED FOR THE PURPOSE OF STRUCTURE REMOVAL TO BE USED FOR STORAGE OF MATERIAL OR EQUIPMENT BY THE CONTRACTOR. UPON COMPLETION OF THE WORK REQUIRED FOR SUCH REMOVAL AND SUBSEQUENT RECLAMATION, THE EASEMENT SHALL BE VACATED IMMEDIATELY.

NOTE: (RECORD AREA AFTER OUTSALES) – (TOTAL P.R.O.) – (NET TAKE) = NET RESIDUE

NOTE: ALL TEMPORARY PARCELS TO BE OF 24 MONTHS DURATION.

NOTE: ALL AREAS LISTED ARE IN ACRES UNLESS NOTED WITH A *

* REPRESENTS AREA IN SQUARE FEET

REV.	DATE	DESCRIPTION
1	1-26-95	ADDED PARCELS 1E-15 & 1WD-15 AMENDED 1SL-15

DATE OF COMPLETION NOVEMBER 14, 1994

FEDERAL PROJECT NO. NH-270-5()

PID NO. 12510

STATE JOB NO. 06022(0)

SUMMARY OF ADDITIONAL RIGHT OF WAY

FRA-270-32.46

9/50

552
593

PLOT SCALE... FEBRUARY-01-1995
COS #15 C:\DRAWING\06022306\0601SU3.DWG

SUMMARY OF ADDITIONAL RIGHT OF WAY

PARCEL NO.	OWNER	SHEET NO.	OWNERS RECORD BOOK	OWNERS RECORD PAGE	AUDITOR'S PARCEL	RECORD AREA	TOTAL P.R.O.	GROSS TAKE	P.R.O. IN TAKE	NET TAKE	STRUC-TURE	NET RESIDUE LEFT	NET RESIDUE RIGHT	TYPE FUND	REMARKS AND PERSONALTY	AS ACQUIRED BOOK	AS ACQUIRED PAGE
4WL	CREEKWOOD COMMUNITIES, INC.	22,23	3783	55	520-186795	1.17	—	0.320	—	0.320	Y	0.797	—		REMOVE WOODEN LAYMAN HOME SIGN,		
															DO NOT DISTURB EVERGREEN ROW		
5WL	LIMREA PROPERTIES	23,24	11293	E01-E10	520-146505	8.188	—	0.681	—	0.681	Y	7.507	—		REMOVE FENCE		
6WL	HIGH POINT FARMS	24,25	10253	A03,A04	520-111181	2.090	—	0.295	—	0.295	N	1.795	—				
7WL	LIMREA PROPERTIES LIMITED PARTNERSHIP	25	14172	J12,J13	520-108803	1.520	—	0.080	—	0.080	N	1.440	—				
8WL	RALPH E. BOSO	25	2474	139	025-4285	2.542	—	0.072	—	0.072	Y	2.470	—		REMOVE WIRE FENCE, SIGN		
9WL	EVERETT R. BARNES JR. AND BRENDA S. BARNES	25,26	05926	J08,J09	025-1924	1.878	—	0.009	—	0.009	N	1.869	—				
10WL	ROBERT E. LINDEMANN, TRUSTEE	27-29	12518	D06-D10	010-147168	49.506	—	1.438	—	1.438	N	—	48.068		25' ESMT., VOL. 3451 PG 41,		
11WL	LIMREA PROPERTIES LIMITED PARTNERSHIP	29-36 41-46	11293	E01-E10	520-105164	509.952	—	19.173	—	19.173	N	—	490.779		25' ESMT., VOL. 3443 PG 41, REMOVE METAL SIGNS		
	LIMREA PROPERTIES LIMITED PARTNERSHIP		10102	H10-H14	520-146503	39.020	—	3.405	—	3.405	N	—	35.615				
11U	LIMREA PROPERTIES LIMITED PARTNERSHIP	29,30	11293	E01-E10	520-105164	509.952	—	0.238	—	0.238	N	—	—		RELOCATION AND CONSTRUCTION OF SANITARY SEWER		
11-T	LIMREA PROPERTIES LIMITED PARTNERSHIP	36	10102	H10-H14	520-146503			0.007		0.007	N	—	—		TO CONSTRUCT AND GRADE SLOPES		
12WL	ABBOTT LABORATORIES	36-39	10102	H15-I06	520-208795	48.672	—	0.555	—	0.555	N	—	48.117				
12T	ABBOTT LABORATORIES	36-37	10102	H15-I06	520-208795		—	0.192	—	0.192	N	—	—		TO CONSTRUCT AND GRADE SLOPES		
12T-1	ABBOTT LABORATORIES	39	10102	H15-I06	520-208795	80.735	—	0.079	—	0.079	N	—	—		TO CONSTRUCT AND GRADE SLOPES		
12WL-1	ABBOTT LABORATORIES	39,40	10102	H15-I06	520-208795	80.735	—	0.010	—	0.010	N	—	80.725		REMOVE METAL SIGN		
		39,40	10102	H15-I06	520-146504	37.116	—	0.182	—	0.182	N	—	36.934				
12T-2	ABBOTT LABORATORIES	48	10102	H15-I06	520-146504		—	0.015	—	0.015	N	—	—		TO CONSTRUCT DRIVE		
12SL	ABBOTT LABORATORIES	47	10102	H15-I06	520-146504	37.116	—	0.049	—	0.049	N	—	—		TO CONSTRUCT GRADE AND MAINTAIN SLOPES		
13WD	ABBOTT LABORATORIES	47	10102	H15-I06	520-122666	91.329	—	0.012	—	0.012	N	—	91.317				
13T	ABBOTT LABORATORIES	47	10102	H15-I06	520-122666		—	0.014	—	0.014	N	—	—		TO CONSTRUCT DRIVEWAY		
13SL	ABBOTT LABORATORIES	47	10102	H15-I06	520-122666	91.329	—	0.048	—	0.048	N	—	—		TO CONSTRUCT GRADE AND MAINTAIN		
14T	MARC STETZER AND ANGELA CORNELL	49	26640	I08	025-3501	.140	—	0.003	—	0.003	N	—	—		TO RECONSTRUCT DRIVEWAY		

NOTE: UNDER NO CIRCUMSTANCES ARE TEMPORARY EASEMENTS ACQUIRED FOR THE PURPOSE OF STRUCTURE REMOVAL TO BE USED FOR STORAGE OF MATERIAL OR EQUIPMENT BY THE CONTRACTOR. UPON COMPLETION OF THE WORK REQUIRED FOR SUCH REMOVAL AND SUBSEQUENT RECLAMATION, THE EASEMENT SHALL BE VACATED IMMEDIATELY.

NOTE: (RECORD AREA AFTER OUTSALES) – (TOTAL P.R.O.) – (NET TAKE) = NET RESIDUE

NOTE: ALL TEMPORARY PARCELS TO BE OF 24 MONTHS DURATION.

NOTE: ALL AREAS LISTED ARE IN ACRES

REV.	DATE	DESCRIPTION
1	1-20-95	CORRECTED DB & PG & AREA

DATE OF COMPLETION NOVEMBER 14, 1994

FEDERAL PROJECT NO. NH-270-5()

PID NO. 12510

STATE JOB NO. 06022(0)

SUMMARY OF ADDITIONAL RIGHT OF WAY

FRA-270-32.46

10/50

553/593

PLOT SCALE = 1.0000 / 1 IN
PLOT DATE = 14 NOVEMBER 1994
C:\DRAWING\06092306\06091SU4.DWG NOVEMBER-14-1994

SCHEMATIC PLAN

FRANKLIN COUNTY
CITY OF COLUMBUS, CITY OF GAHANNA
MIFFLIN TOWNSHIP
SECTION 1
T-1N, R-17W
UNITED STATES MILITARY LANDS

N

SCALE IN FEET
0 100 200 400

FEDERAL PROJECT NO. NH-270-5( )

STATE JOB NO. 06022(0)

SCHEMATIC PLAN
STA. 1361+00.82 TO 1408+00.00

FRA-270-32.46

11/50

554
593

LIMREA
LIMREA
LIMREA
LIMREA
LIMREA
LIMREA
LIMREA
LIMREA
ROBERT E. LINDEMANN TR.

CITY OF COLUMBUS
CITY OF GAHANNA
GALLERY ST.
DEVANEY CT.
CRENSHAW RD.
VIRGINIA TERRACE SECTION 3 & 2
PANWICK CT.
TRILBY CT.
BOCA CT.
CREEKWOOD VILLAGE NO. 1
BLUE LARGO CT.
HINES RD.
STELZER ROAD

RAMP C
RAMP A
RAMP B
RAMP D
CONN-75
CONN-70
CONN-65
CONN-60
B-70
B-75
B-80
B-85
SURVEY I-270
LA-R/W

C-1370 CDN-1370 CDS-1370 A-1370
C-1375 CDN-1375 CDS-1375
C-1380 CDN-1380 CDS-1380 A-1380
C-1385 CDN-1385 CDS-1385 A-1385
CDN-1390 CDS-1390 A-1390
CDN-1395 CDS-1395
CDN-1400 CDS-1400
D-1405 CDN-1405 CDS-1405

1360+00 1365+00 1370+00 1375+00 1380+00 1385+00 1390+00 1395+00 1400+00 1405+00

13 14 15 16 17 18 19 20 21
27 28 29 30 31 32 33 34 35
40 42 43 44 45 46

BEGIN PROJECT
FRA-270-32.46
STA. 1367+03.88

BEGIN WORK
CONNECTOR ROAD
STA-CONN-61+04.33

MATCHLINE STA. 1408+00 SEE SHEET 8

REV.	DATE	DESCRIPTION
DATE OF COMPLETION		NOVEMBER 14, 1994

SCALE 1"=200'
COL #27 C:\DRAWING\06092306\06092SC1.DWG NOVEMBER-14-1994

SCHEMATIC PLAN

FRANKLIN COUNTY
CITY OF COLUMBUS, CITY OF GAHANNA
MIFFLIN TOWNSHIP
SECTION 1
T-1N, R-17W
UNITED STATES MILITARY LANDS

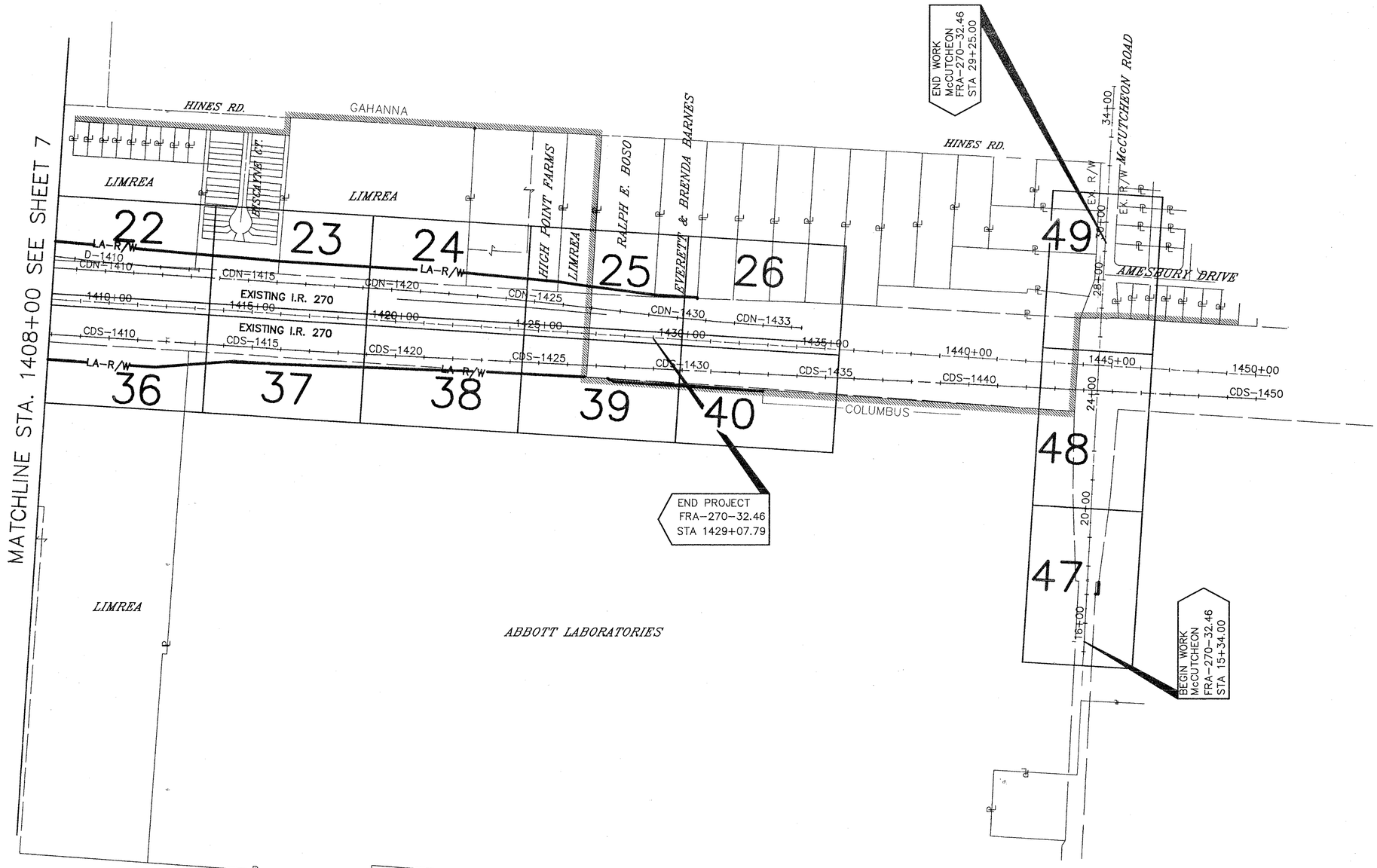

SCALE 1"=200'
COL #27 C:\DRAWING\06092306\0609225C2.DWG NOVEMBER-14-1994

REV.	DATE	DESCRIPTION
DATE OF COMPLETION		NOVEMBER 14, 1994

N

0 100 200 400
SCALE IN FEET

FEDERAL PROJECT NO. NH-270-5( )

STATE JOB NO. 06022(0)

SCHEMATIC PLAN
STA. 1408+00.00 TO 1450+00.00

FRA-270-32.46

12/50

555
593

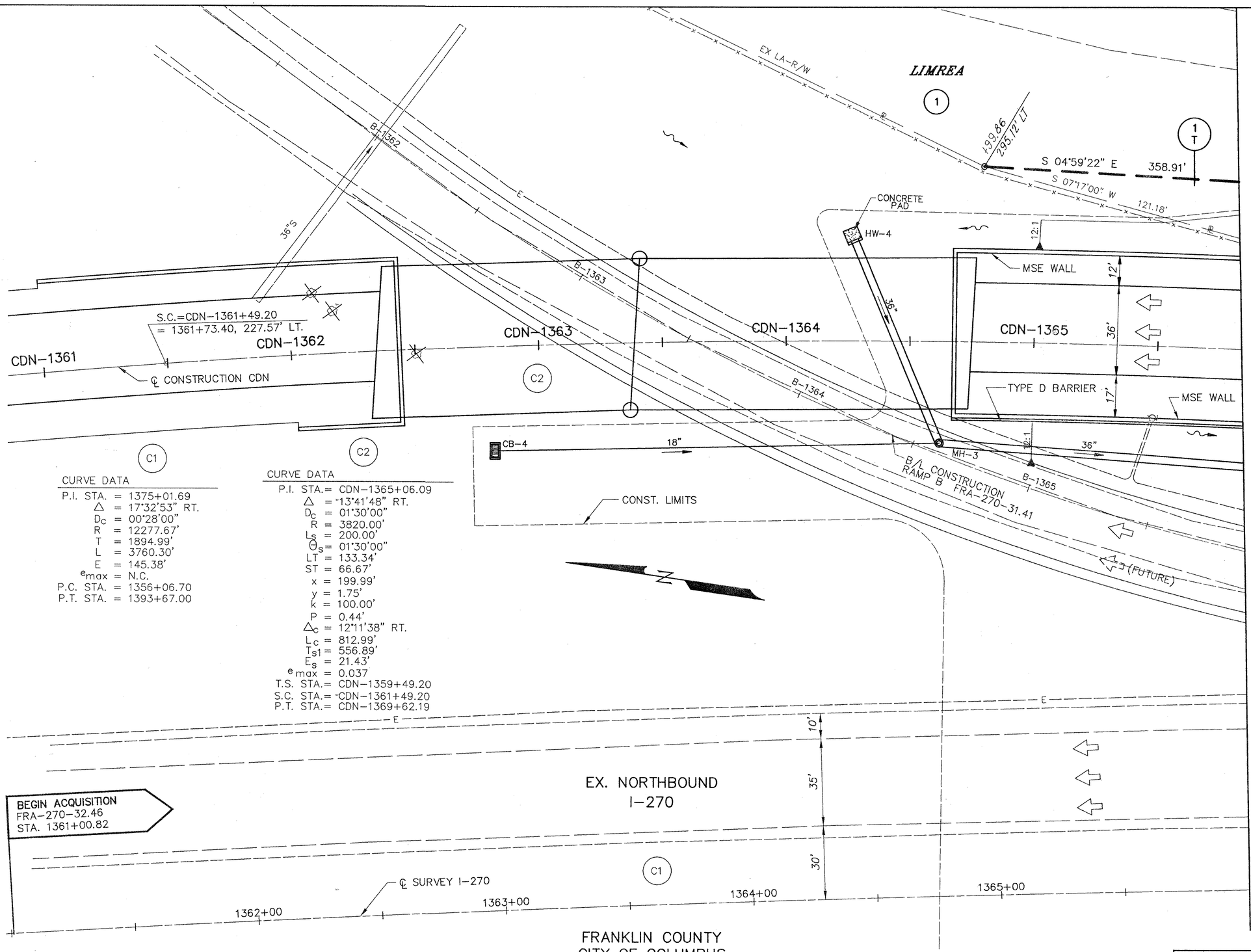

CURVE DATA

P.I. STA. = 1375+01.69
△ = 17°32'53" RT.
D_C = 00°28'00"
R = 12277.67'
T = 1894.99'
L = 3760.30'
E = 145.38'
e_{max} = N.C.
P.C. STA. = 1356+06.70
P.T. STA. = 1393+67.00

CURVE DATA

P.I. STA.= CDN-1365+06.09
△ = 13°41'48" RT.
D_C = 01°30'00"
R = 3820.00'
L_S = 200.00'
Θ_S = 01°30'00"
LT = 133.34'
ST = 66.67'
x = 199.99'
y = 1.75'
k = 100.00'
P = 0.44'
Δ_C = 12°11'38" RT.
L_C = 812.99'
T_{S1} = 556.89'
E_S = 21.43'
e_{max} = 0.037
T.S. STA.= CDN-1359+49.20
S.C. STA.= CDN-1361+49.20
P.T. STA.= CDN-1369+62.19

FRANKLIN COUNTY
CITY OF COLUMBUS
MIFFLIN TOWNSHIP
N.E. 1/4, SEC.1
T-1N R-17W
UNITED STATES MILITARY LANDS

NOTE: STATIONS AND OFFSETS SHOWN ON THESE PLANS ARE CALCULATED FROM THE EXISTING ℄ OF I-270.

o IRON PIN FOUND

REV.	DATE	DESCRIPTION
1	1-20-95	REVISED STA. - OFFSET
DATE OF COMPLETION		NOVEMBER 14, 1994

HORIZONTAL SCALE IN FEET
0 20 40

FEDERAL PROJECT NO. NH-270-5()

STATE JOB NO. 06022(0)

RIGHT OF WAY PLAN
STA. 1361+00.82 TO STA. 1366+00 (LT)

FRA-270-32.46

13/50

556
593

PLOT SCALE 1" = 20'
COL #27 C:\DRAWING\06092308\06092R42.DWG NOVEMBER-14-1994

MATCH LINE STA. ℄ 1366+00 SEE SHEET 13

MATCH LINE STA. ℄ 1370+85 SEE SHEET 15

SIGN

C1

CURVE DATA
P.I. STA. = 1375+01.69
△ = 17°32'53" RT.
D_c = 00°28'00"
R = 12277.67'
T = 1894.99'
L = 3760.30'
E = 145.38'
e_{max} = N.C.
P.C. STA. = 1356+06.70
P.T. STA. = 1393+67.00

1 PRIVATE DRIVE ASPHALT PAVEMENT

SIGN

LIMREA

+13.43
259.94' LT

S 04°59'22" E 358.91'

1 WL

+50.00
290.00' LT

+50.00
270.00' LT

S 17°03'19" E 155.71'

N 81°50'01" E
20.00'

1 T

+00.00
315.00' LT

S 16°20'13" E 156.02'

CONST. LIMITS

EX. STORM/ DETENTION POND

METAL & PLASTIC ILLUMINATED SIGN

THE LIMITED SIGN (REMOVED)

STA. C-1370+42.41,
16.00' RT.=
STA. CDN-1370+41.54,
21.00' LT.

STA. CDN-1370+41.54
12.00' LT.

+50.00
230.00' LT

S 04°52'27" E 139.76'

+50.00
250.00' LT

12:1

MSE WALL

S 02°33'53" E 204.89'

S 04°04'30"E 814.41'

LA-R/W

4:1

C-1368

C-1369

C-1370

STA: C-1367+39.45=
STA: CDN-1367+39.45
24.00' LT.

S 03°57'54" E

B/L CONSTRUCTION RAMP C

C2

CDN-1366

CDN-1367

C/L CONSTRUCTION CDN

CDN-1368

CDN-1369

CDN-1370

S 07°17'00" W 197.88'

+00.00
205.00' LT

S 01°37'40" W 308.47'

S 00°16'29" E

EX. LA R/W

PT = CDN-1369+62.19
= 1369+70.47, 183.77' LT.

24'

12'

17'

8'

16'

12'

17'

MSE WALL

TYPE D BARRIER

36"

MH-3

B-1366

B-1367

B-1368

B-1369

B-1370

B/L CONSTRUCTION RAMP B, FRA-270-31.41

(FUTURE)

ELEC. BOX

VARIES

16'

36'

30'

SUSPEND PROJECT
FRA-270-(31.01)(33.64)
STA. 1367+03.88

BEGIN PROJECT
FRA-270-32.46
STA. 1367+03.88

EX. NORTHBOUND
I-270

1367+00

1368+00

1369+00

1370+00

CB

C/L SURVEY I-270

C2

CURVE DATA
P.I. STA.= CDN-1365+06.09
△ = 13°41'48" RT.
D_c = 01°30'00"
R = 3820.00'
L_s = 200.00'
Θ_s = 01°30'00"
LT = 133.34'
ST = 66.67'

x = 199.99'
y = 1.75'
k = 100.00'
P = 0.44'
Δ_c = 12°11'38" RT.
L_c = 812.99'
T_{s1} = 556.89'
E_s = 21.43'
e_{max} = 0.037
T.S. STA.= CDN-1359+49.20
S.C. STA.= CDN-1361+49.20
P.T. STA.= CDN-1369+62.19

FRANKLIN COUNTY
CITY OF COLUMBUS
MIFFLIN TOWNSHIP
N.E. 1/4, SEC.1
T-1N R-17W
UNITED STATES MILITARY LANDS

NOTE: STATIONS AND OFFSETS SHOWN ON THESE PLANS ARE CALCULATED FROM THE EXISTING ℄ OF I-270.

o IRON PIN FOUND

REV.	DATE	DESCRIPTION
DATE OF COMPLETION		NOVEMBER 14, 1994

HORIZONTAL SCALE IN FEET
0 10 20 40

FEDERAL PROJECT NO. NH-270-5()

STATE JOB NO. 06022(0)

RIGHT OF WAY PLAN
STA. 1366+00 TO STA. 1370+85 (LT)

FRA-270-32.46

14/50

557
593

PLOT SCALE 1" = 20'
COG #27 C:\DRAWING\06092306\06092R26.DWG NOVEMBER-14-1994

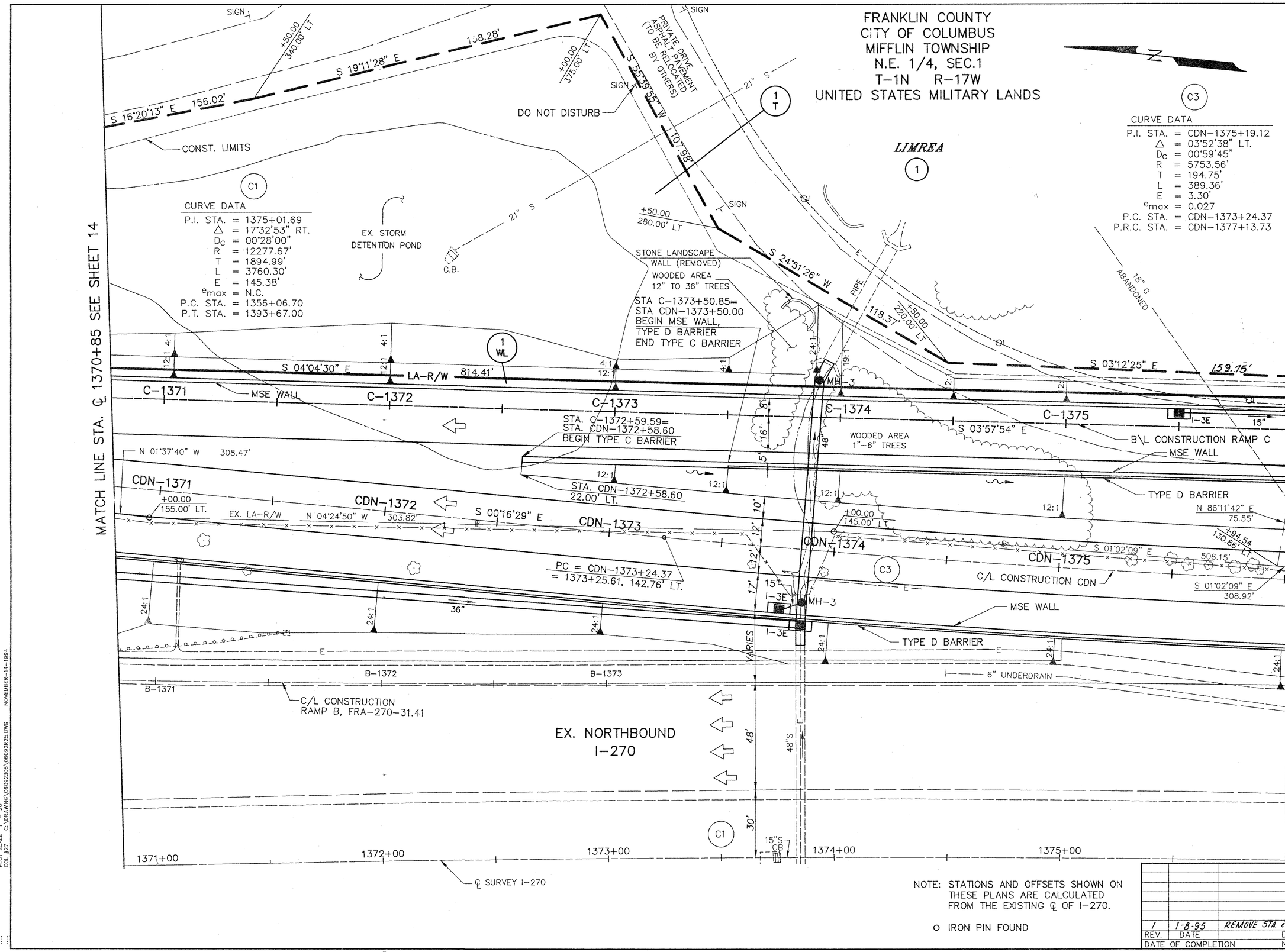

NOTE: STATIONS AND OFFSETS SHOWN ON THESE PLANS ARE CALCULATED FROM THE EXISTING ℄ OF I-270.

o IRON PIN FOUND

REV.	DATE	DESCRIPTION
1	1-8-95	REMOVE STA. & OFFSET

DATE OF COMPLETION NOVEMBER 14, 1994

HORIZONTAL SCALE IN FEET 0 10 20 40

FEDERAL PROJECT NO. NH-270-5()

STATE JOB NO. 06022(0)

RIGHT OF WAY PLAN
STA. 1370+85 TO STA. 1376+00 (LT)

FRA-270-32.46

15/50

558/593

PLOT SCALE 1" = 20'
COL #27 C:\DRAWING\06092306\06092R25.DWG NOVEMBER-14-1994

FRANKLIN COUNTY
CITY OF COLUMBUS
MIFFLIN TOWNSHIP
N.E. 1/4, SEC.1
T-1N R-17W
UNITED STATES MILITARY LANDS

C4

CURVE DATA
P.I. STA.= CDN-1386+55.99
Δ = 08°40'56" RT.
D_c = 00°27'43"
R = 12401.17'
L_s = 200.00'
Θ_s = 00°27'43"
LT = 133.33'
ST = 66.67'
x = 200.00'
y = 0.54'
k = 100.00'
P = 0.13'
Δ_c = 08°13'13" RT.
L_c = 1779.18'
T_{s1} = 942.26'
T_{s2} = 1040.55'
E_s = 35.74'
e_{max} = N.C.
P.R.C. STA.= CDN-1377+13.73
C.S. STA.= CDN-1394+92.91
S.T. STA.= CDN-1396+92.91

C20

CURVE DATA
P.I. STA. = C-1383+85.77
Δ = 05°48'41" RT.
D_c = 00°27'35"
R = 12464.17'
T = 632.66'
L = 1264.24'
E = 16.05'
e_{max} = N.C.
P.C. STA. = C-1377+53.11
P.T. STA. = C-1390+17.35

PRIVATE DRIVE
CURVE DATA
Δ = 03°02'00"
R = 12492.67'
T = 330.77'
L = 661.38'
CH = S 03°08'59" E
661.31'

PARKING AREA
ASPHALT PAVEMENT

20' EASEMENT
(NOT RECORDED)

MSE WALL

LIMREA

SODDED AREA

PRIVATE DRIVE ASPHALT PAVEMENT
(TO BE RELOCATED BY OTHERS)

+06.89
215.00' LT

+05.52
205.59' LT

+50.00
205.00' LT

+00.00
215.00' LT

S 03°57'02" E 298.23'

S 02°26'59" E 356.12'

S 04°04'30" E 814.41'

S 02°40'59" E 559.14'

MH-3

LA-R/W

CONST. LIMITS

C-1377 C-1378 C-1379 C-1380 C-1381

N 86°11'42" E
75.55'

S 03°57'54" E

PC = C-1377+53.11
= 1377+50.56, 190.49' LT. C20

B/L CONSTRUCTION
RAMP C

MSE WALL

WOODED AREA
1" TO 6" TREES

TYPE D BARRIER

WOOD SIGN-SPEED
LIMIT 25 MPH

MH

WOODED AREA
1" TO 6" TREES

S 01°02'09" E 506.15'

PRC = CDN-1377+13.73
= 1377+10.26, 123.50' LT.

CDN-1377 CDN-1378 CDN-1379 CDN-1380 CDN-1381

EX. LA-R/W

S 08°51'45" E 509.41'

C/L CONSTRUCTION CDN

(ABANDONED)

C3

C4

+00.00
115.00 LT.

MSE WALL

TYPE D BARRIER

6" UNDERDRAIN

STA CDN-1378+00.00
END MSE WALL,
END TYPE D BARRIER
BEGIN TYPE C BARRIER,

(FUTURE)

EX. NORTHBOUND
I-270

6" UNDERDRAIN

C1 C3 C1

1377+00 1378+00 1379+00 1380+00 1381+00

C/L SURVEY I-270

MATCH LINE STA. ℄ 1376+00 SEE SHEET 15

MATCH LINE STA. ℄ 1381+15 SEE SHEET 17

CURVE DATA
P.I. STA. = 1375+01.69
Δ = 17°32'53" RT.
D_c = 00°28'00"
R = 12277.67'
T = 1894.99'
L = 3760.30'
E = 145.38'
e_{max} = N.C.
P.C. STA. = 1356+06.70
P.T. STA. = 1393+67.00

CURVE DATA
P.I. STA. = CDN-1375+19.12
Δ = 03°52'38" LT.
D_c = 00°59'45"
R = 5753.56'
T = 194.75'
L = 389.36'
E = 3.30'
e_{max} = 0.027
P.C. STA. = CDN-1373+24.37
P.R.C. STA. = CDN-1377+13.73

NOTE: STATIONS AND OFFSETS SHOWN ON THESE PLANS ARE CALCULATED FROM THE EXISTING ℄ OF I-270.

O IRON PIN FOUND

REV.	DATE	DESCRIPTION
DATE OF COMPLETION		NOVEMBER 14, 1994

FEDERAL PROJECT NO. NH-270-5()
STATE JOB NO. 06022(0)
RIGHT OF WAY PLAN
STA. 1376+00 TO STA. 1381+15 (LT)
FRA-270-32.46
16/50
559
593

PLOT SCALE 1" = 20'
COL #27 C:\DRAWING\06092306\06092R24.DWG NOVEMBER-14-1994

C1

CURVE DATA

P.I. STA. = 1375+01.69
△ = 17°32'53" RT.
D_C = 00°28'00"
R = 12277.67'
T = 1894.99'
L = 3760.30'
E = 145.38'
e_{max} = N.C.
P.C. STA. = 1356+06.70
P.T. STA. = 1393+67.00

C20

CURVE DATA

P.I. STA. = C-1383+85.77
△ = 05°48'41" RT.
D_C = 00°27'35"
R = 12464.17'
T = 632.66'
L = 1264.24'
E = 16.05'
e_{max} = N.C.
P.C. STA. = C-1377+53.11
P.T. STA. = C-1390+17.35

LIMITED DISTRIBUTION CENTER
#2

LIMREA

MATCH LINE STA. ℄ 1381+15 SEE SHEET 16

MATCH LINE STA. ℄ 1386+35 SEE SHEET 18

SIGN-NO TRUCKS

PRIVATE DRIVE
ASPHALT PAVEMENT
(TO BE RELOCATED BY OTHERS)

PRIVATE DRIVE
ASPHALT PAVEMENT

CONST. LIMITS

S 02°26'59" E 356.12'

N 02°40'59" W 559.14'

S 01°12'05" E 188.24'

S 02°05'41" W 50.92'

S 04°25'39" E 50.92'

S 00°45'44" E 74.51'

S 00°05'35" E 244.20'

S 00°26'41" W 451.35'

S 85°10'06" E 342.53'

S 85°10'06" E 9.82'

TYPE 6 CURB

WOOD
SIGN-SPEED
LIMIT 25 MPH

LA-R/W

EX. LA-R/W

N 02°07'23" E 101.53'

N 02°07'23" E 30.30'

N 18°50'14" E 107.13'

S 02°18'43" W 317.16'

C-1382 C-1383 C-1384 C-1385 C-1386

CDN-1382 CDN-1383 CDN-1384 CDN-1385 CDN-1386

WOODED AREA
1" TO 6" TREES

WOODED AREA
6" TO 24" TREES

MSE WALL

B\L CONSTRUCTION
RAMP C

C\L CONSTRUCTION CDN

TYPE D BARRIER

TYPE B BARRIER

I-3E

I-3D

MH-3

M.H.

CB

+00.00 175.00' LT.

+00.00 170.00' LT.

+00.00 135.00' LT.

+50.00 215.00' LT.

+00.00 205.00' LT.

+50.00 202.00' LT.

+74.22 215.00' LT.

+73.29 205.00' LT.

VARIES

EJB

6" UNDERDRAIN

STA CDN-1382+00.00
END TYPE C BARRIER
BEGIN TYPE B BARRIER

EX. NORTHBOUND
I-270

C4

CURVE DATA

P.I. STA.= CDN-1386+55.99
△ = 08°40'56" RT.
D_C = 00°27'43"
R = 12401.17'
L_S = 200.00'
Θ_S = 00°27'43"
LT = 133.33'
ST = 66.67'
x = 200.00'
y = 0.54'
k = 100.00'
P = 0.13'
Δ_C = 08°13'13" RT.
L_C = 1779.18'
T_{S1} = 942.26'
T_{S2} = 1040.55'
E_S = 35.74'
e_{max} = N.C.
P.R.C. STA.= CDN-1377+13.73
C.S. STA.= CDN-1394+92.91
S.T. STA.= CDN-1396+92.91

1382+00 1383+00 1384+00 1385+00 1386+00

C/L SURVEY I-270

TABLE FOR T LINES
AROUND M.H. @ 1384+52.71, 210.50' LT.

	BEARING	DIST.	STA.	OFFSET
			+35.00	215.00' LT.
A	S 89°13'49" W	10.00'		
			+35.00	225.00' LT.
B	S 00°42'41" E	25.46'		
			+60.00	225.00' LT.
C	S 89°20'49" W	10.00'		
			+60.00	215.00' LT.

FRANKLIN COUNTY
CITY OF COLUMBUS
MIFFLIN TOWNSHIP
N.E. 1/4, SEC.1
T-1N R-17W
UNITED STATES MILITARY LANDS

NOTE: STATIONS AND OFFSETS SHOWN ON THESE PLANS ARE CALCULATED FROM THE EXISTING ℄ OF I-270.

O IRON PIN FOUND

REV.	DATE	DESCRIPTION
DATE OF COMPLETION		NOVEMBER 14, 1994

N

HORIZONTAL SCALE IN FEET
0 20 40

FEDERAL PROJECT NO. NH-270-5()

STATE JOB NO. 06022(0)

RIGHT OF WAY PLAN
STA. 1381+15 TO STA. 1386+35 (LT)

FRA-270-32.46

17/50

560
593

PLOT SCALE 1" = 20'
COL #27
C:\DRAWNS\06092306\06092R23.DWG NOVEMBER-14-1994

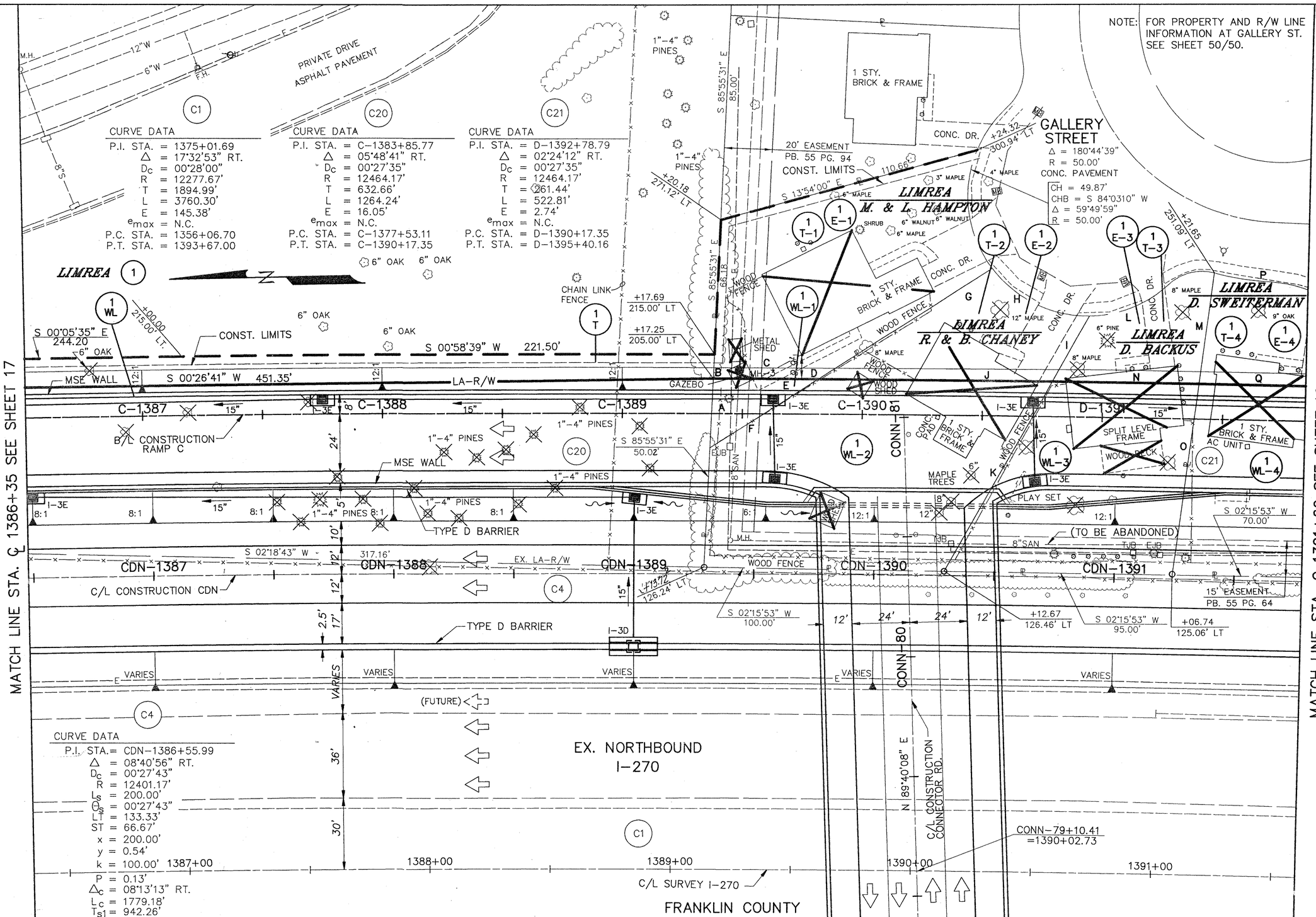

CURVE DATA

P.I. STA. = 1375+01.69
Δ = 17°32'53" RT.
D_c = 00°28'00"
R = 12277.67'
T = 1894.99'
L = 3760.30'
E = 145.38'
e_{max} = N.C.
P.C. STA. = 1356+06.70
P.T. STA. = 1393+67.00

CURVE DATA

P.I. STA. = C-1383+85.77
Δ = 05°48'41" RT.
D_c = 00°27'35"
R = 12464.17'
T = 632.66'
L = 1264.24'
E = 16.05'
e_{max} = N.C.
P.C. STA. = C-1377+53.11
P.T. STA. = C-1390+17.35

CURVE DATA

P.I. STA. = D-1392+78.79
Δ = 02°24'12" RT.
D_c = 00°27'35"
R = 12464.17'
T = 261.44'
L = 522.81'
E = 2.74'
e_{max} = N.C.
P.C. STA. = D-1390+17.35
P.T. STA. = D-1395+40.16

CURVE DATA

P.I. STA.= CDN-1386+55.99
Δ = 08°40'56" RT.
D_c = 00°27'43"
R = 12401.17'
L_s = 200.00'
Θ_s = 00°27'43"
LT = 133.33'
ST = 66.67'
x = 200.00'
y = 0.54'
k = 100.00'
P = 0.13'
Δ_c = 08°13'13" RT.
L_c = 1779.18'
T_{s1} = 942.26'
T_{s2} = 1040.55'
E_s = 35.74'
e_{max} = N.C.
P.R.C. STA.= CDN-1377+13.73
C.S. STA.= CDN-1394+92.91
S.T. STA.= CDN-1396+92.91

FRANKLIN COUNTY
CITY OF COLUMBUS
MIFFLIN TOWNSHIP
N.E. 1/4, SEC.1
T-1N R-17W
UNITED STATES MILITARY LANDS

NOTE: STATIONS AND OFFSETS SHOWN ON THESE PLANS ARE CALCULATED FROM THE EXISTING ℄ OF I-270.

o IRON PIN FOUND

REV.	DATE	DESCRIPTION
3	3-8-95	REVISED STA. & OFFSET
2	1-26-95	ADDED 1E-1, AMENDED 1T-1
1	1-20-95	CORRECTED STATION & OFFSET

DATE OF COMPLETION NOVEMBER 14, 1994

HORIZONTAL SCALE IN FEET 0 10 20 40

FEDERAL PROJECT NO. NH-270-5()

STATE JOB NO. 06022(0)

RIGHT OF WAY PLAN
STA. 1386+35 TO STA. 1391+60 (LT)

FRA-270-32.46

18/50

561/593

PLOT SCALE 1" = 20'
COL #16 C:\DRAWING\06092306\06092R22.DWG FEBRUARY-01-1995

HEIGHT TABLE FOR NOISE BARRIER ON MSE WALL (FROM EXIST. GROUND TO TOP OF NOISE BARRIER)		
FROM STA.	TO STA.	HEIGHT
D-1393+00	D-1394+00.00	28'
D-1394+00	D-1395+00.00	28'
D-1395+00	D-396+00.00	24'
D-1396+00	D-1397+00.00	21'
D-1397+00	D-1397+27.64	19'

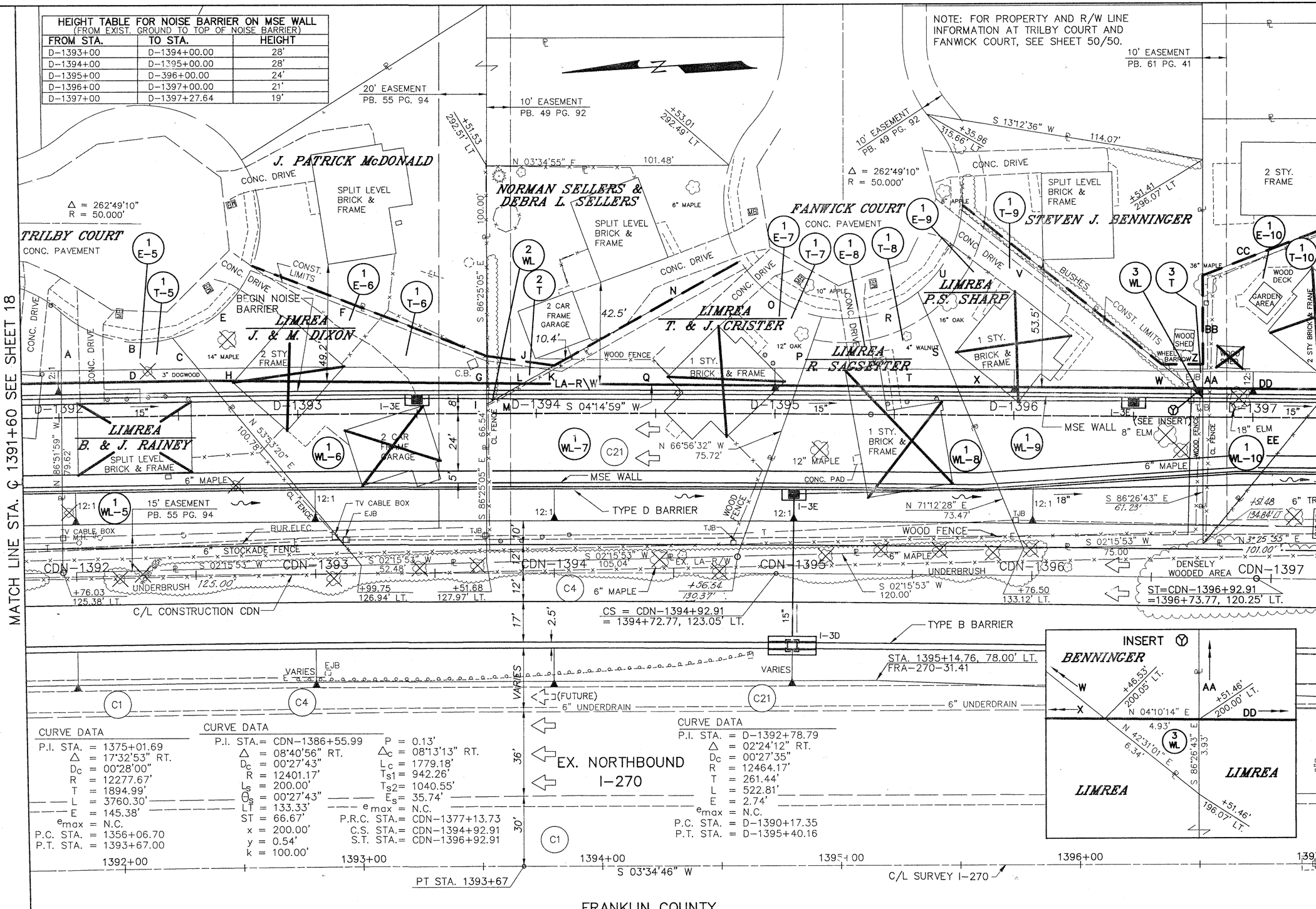

CURVE DATA
P.I. STA. = 1375+01.69
Δ = 17°32'53" RT.
D_c = 00°28'00"
R = 12277.67'
T = 1894.99'
L = 3760.30'
E = 145.38'
e_{max} = N.C.
P.C. STA. = 1356+06.70
P.T. STA. = 1393+67.00

CURVE DATA
P.I. STA.= CDN-1386+55.99
Δ = 08°40'56" RT.
D_c = 00°27'43"
R = 12401.17'
L_s = 200.00'
Θ_s = 00°27'43"
LT = 133.33'
ST = 66.67'
x = 200.00'
y = 0.54'
k = 100.00'
P = 0.13'
Δ_c = 08°13'13" RT.
L_c = 1779.18'
T_{s1} = 942.26'
T_{s2} = 1040.55'
E_s = 35.74'
e_{max} = N.C.
P.R.C. STA.= CDN-1377+13.73
C.S. STA.= CDN-1394+92.91
S.T. STA.= CDN-1396+92.91

CURVE DATA
P.I. STA. = D-1392+78.79
Δ = 02°24'12" RT.
D_c = 00°27'35"
R = 12464.17'
T = 261.44'
L = 522.81'
E = 2.74'
e_{max} = N.C.
P.C. STA. = D-1390+17.35
P.T. STA. = D-1395+40.16

FRANKLIN COUNTY
CITY OF COLUMBUS
MIFFLIN TOWNSHIP
N.E. 1/4, SEC.1
T-1N R-17W
UNITED STATES MILITARY LANDS

NOTE: STATIONS AND OFFSETS SHOWN ON THESE PLANS ARE CALCULATED FROM THE EXISTING ℄ OF I-270.

o IRON PIN FOUND

REV.	DATE	DESCRIPTION
1	7-20-95	CORRECTED STA. & OFFSETS

DATE OF COMPLETION NOVEMBER 14, 1994

HORIZONTAL SCALE IN FEET 0 10 20 40

FEDERAL PROJECT NO. NH-270-5()

STATE JOB NO. 06022(0)

RIGHT OF WAY PLAN
STA. 1391+60 TO STA. 1397+00 (LT)

FRA-270-32.46

19/50

562/593

PLOT SCALE 1" = 20'
COL #27 C:\DRAWING\06092306\06092R21.DWG NOVEMBER-14-1994

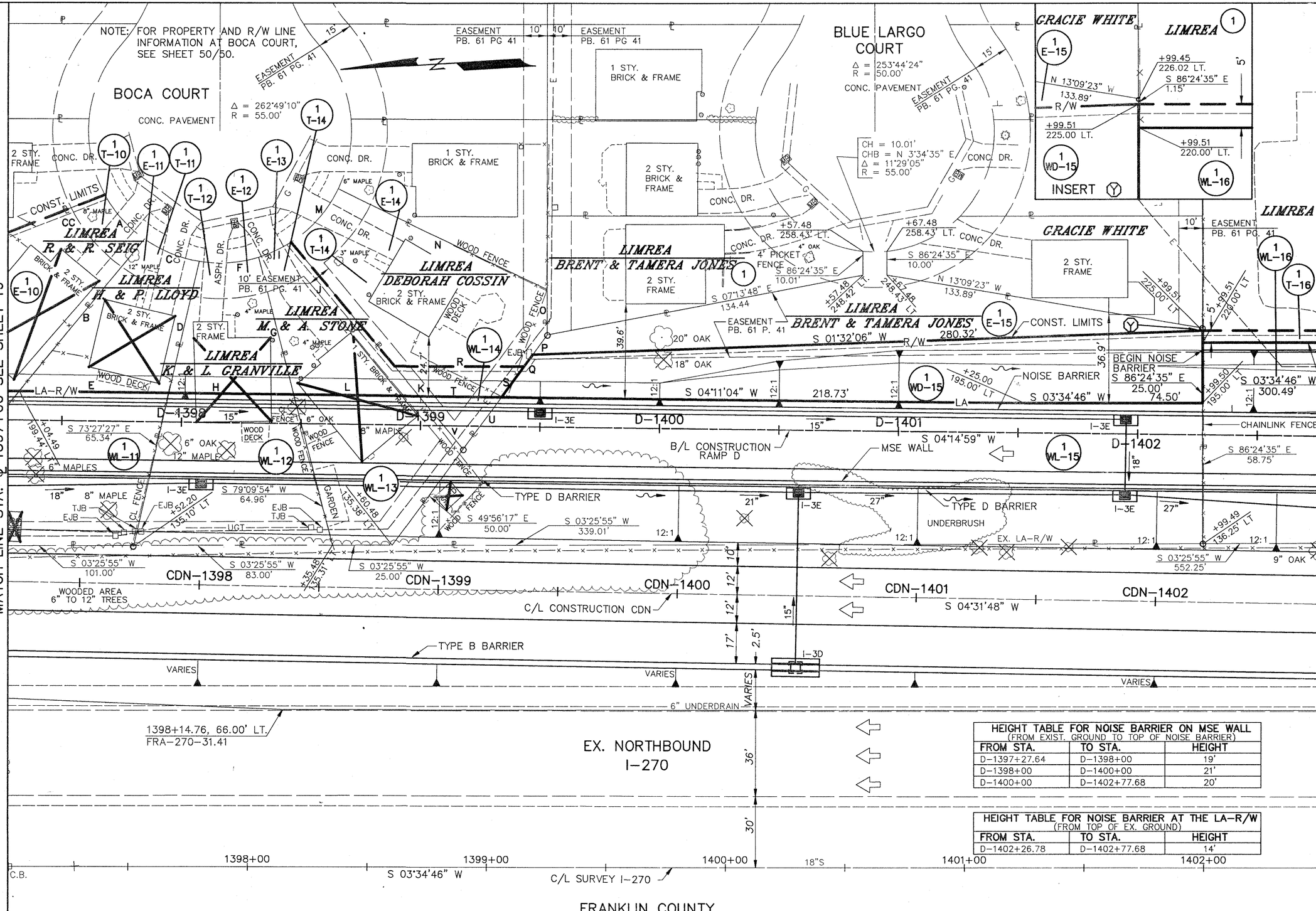

HEIGHT TABLE FOR NOISE BARRIER ON MSE WALL (FROM EXIST. GROUND TO TOP OF NOISE BARRIER)		
FROM STA.	TO STA.	HEIGHT
D-1397+27.64	D-1398+00	19'
D-1398+00	D-1400+00	21'
D-1400+00	D-1402+77.68	20'

HEIGHT TABLE FOR NOISE BARRIER AT THE LA-R/W (FROM TOP OF EX. GROUND)		
FROM STA.	TO STA.	HEIGHT
D-1402+26.78	D-1402+77.68	14'

FRANKLIN COUNTY
CITY OF COLUMBUS
MIFFLIN TOWNSHIP
N.E. 1/4, SEC.1
T-1N R-17W
UNITED STATES MILITARY LANDS

NOTE: STATIONS AND OFFSETS SHOWN ON THESE PLANS ARE CALCULATED FROM THE EXISTING ℄ OF I-270.

o IRON PIN FOUND

REV.	DATE	DESCRIPTION
2	1-26-95	ADDED PARCELS 1WD-1 & 1E-15
1	1-20-95	CORRECTED STATIONS & OFFSETS

DATE OF COMPLETION NOVEMBER 14, 1994

HORIZONTAL SCALE IN FEET 0 10 20 40

FEDERAL PROJECT NO. NH-270-5()

STATE JOB NO. 06022(0)

RIGHT OF WAY PLAN
STA. 1397+00 TO STA. 1402+50 (LT)

FRA-270-32.46

20/50

563/593

PLOT SCALE 1" = 20'
COL #16 C:\DRAWING\06092306\06092R20.DWG FEBRUARY-01-1995

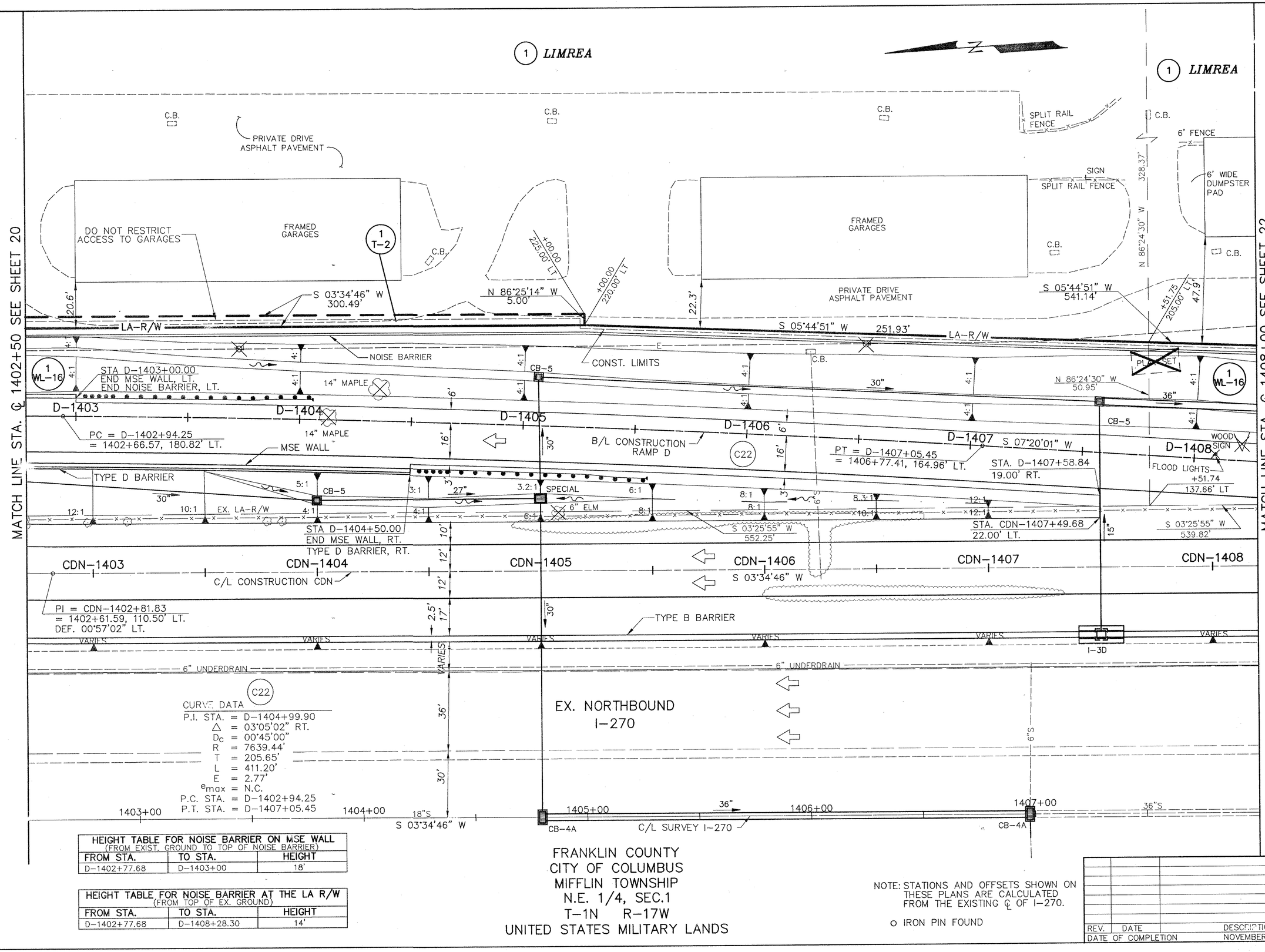

HEIGHT TABLE FOR NOISE BARRIER ON MSE WALL (FROM EXIST. GROUND TO TOP OF NOISE BARRIER)		
FROM STA.	TO STA.	HEIGHT
D-1402+77.68	D-1403+00	18'

HEIGHT TABLE FOR NOISE BARRIER AT THE LA R/W (FROM TOP OF EX. GROUND)		
FROM STA.	TO STA.	HEIGHT
D-1402+77.68	D-1408+28.30	14'

FRANKLIN COUNTY
CITY OF COLUMBUS
MIFFLIN TOWNSHIP
N.E. 1/4, SEC.1
T-1N R-17W
UNITED STATES MILITARY LANDS

NOTE: STATIONS AND OFFSETS SHOWN ON THESE PLANS ARE CALCULATED FROM THE EXISTING ℄ OF I-270.

O IRON PIN FOUND

REV.	DATE	DESCRIPTION
DATE OF COMPLETION		NOVEMBER 14, 1994

N

HORIZONTAL SCALE IN FEET 0 10 20 40

FEDERAL PROJECT NO. NH-270-5(

STATE JOB NO. 06022(0)

RIGHT OF WAY PLAN
STA. 1402+50 TO STA. 1408+00 (LT)

FRA-270-32.46

21/50

564
593

PLOT SCALE 1" = 20'
COL #26
D:\DRAWING\06092306\06092R19.DWG
OCTOBER-19-1994

FRANKLIN COUNTY
CITY OF COLUMBUS
MIFFLIN TOWNSHIP
N.E. 1/4, SEC.1
T-1N R-17W
UNITED STATES MILITARY LANDS

MATCH LINE STA. ℄ 1408+00 SEE SHEET 21

MATCH LINE STA. ℄ 1413+50 SEE SHEET 23

FRAMED GARAGES

PRIVATE DRIVE ASPHALT PAVEMENT

C.B.

PRIVATE DRIVE ASPHALT PAVEMENT

SHRUBS

CREEKWOOD VILLAGE COMMUNITIES

5' EASEMENT PB. 57 PG. 102

59.4'

65.5'

15' EASEMENT PB. 57 PG. 102

1 LIMREA

1 WL-16

CONST. LIMITS

LA-R/W

S 05°44'51" W 541.14'

NOISE BARRIER

CHAINLINK FENCE

DO NOT DISTURB

6" TO 10" EVERGREENS (48 TREES IN A STAGGERED ROW)

+92.56 190.00' LT

4 WL

N 85°21'12" W 50.95'

S 04°34'03" W 290.01'

10' EASEMENT PB. 57 PG. 102

4:1 2:1 36" 2:1 CB-5 2:1 36" 2:1

8:1 8:1 8:1 8:1 8:1 8:1

FLOOD LIGHTS

D-1409 D-1410 D-1411 D-1412 D-1413

8' 16'

S 03°25'55" W 539.82'

EX. LA-R/W

PC = D-1409+20.10
= 1408+91.60, 150.89' LT.

B/L CONSTRUCTION RAMP D

C23

+91.56 139.06' LT

S 03°25'55" W 290.07'

CDN-1409 CDN-1410 CDN-1411 CDN-1412 CDN-1413

12' 12'

S 03°34'46" W

C/L CONSTRUCTION CDN

2.5' 17'

TYPE B BARRIER

VARIES VARIES VARIES

6" UNDERDRAIN 6" UNDERDRAIN

36' VARIES

30'

C23

CURVE DATA
P.I. STA. = D-1411+70.48
Δ = 03°45'15" LT.
D_C = 00°45'00"
R = 7639.44'
T = 250.37'
L = 500.57'
E = 4.10'
e_{max} = N.C.
P.C. STA. = D-1409+20.10
P.T. STA. = D-1414+20.67

EX. NORTHBOUND I-270

NOISE BARRIER HEIGHT TABLE-LA.-R/W
(FROM TOP OF GROUND)

FROM STA.	TO STA.	HEIGHT
D-1408+28.30	D-1413+78.86	14'

1409+00 1410+00 36"S 1411+00 1412+00 1413+00

S 03°34'46" W

C/L SURVEY I-270

MH-3

15"

NOTE: STATIONS AND OFFSETS SHOWN ON THESE PLANS ARE CALCULATED FROM THE EXISTING ℄ OF I-270.

o IRON PIN FOUND

REV.	DATE	DESCRIPTION
1	1-20-95	CORRECTED STA & OFFSET
DATE OF COMPLETION		NOVEMBER 14, 1994

HORIZONTAL SCALE IN FEET 0 10 20 40

FEDERAL PROJECT NO. NH-270-5()

STATE JOB NO. 06022(0)

RIGHT OF WAY PLAN
STA. 1408+00 TO STA. 1413+50

FRA-270-32.46

22/50

565
593

PLOT SCALE 1" = 20'
COL #27
C:\DRAWING\06092308\06092R18.DWG NOVEMBER-14-1994

FRANKLIN COUNTY
CITY OF COLUMBUS
MIFFLIN TOWNSHIP
N.E. 1/4, SEC.1
T-1N R-17W
UNITED STATES MILITARY LANDS

BISCAYNE COURT
CONC. PAVEMENT
Δ = 253°44'24"
R = 39.50'
25' EASEMENT PB. 57 PG. 102
CREEKWOOD VILLAGE, SECTION 1
CREEKWOOD VILLAGE COMMUNITIES (4)
OVERFLOW EASEMENTS PB. 57 PG. 102
5' EASEMENT PB. 57 PG. 102
15' EASEMENT PB. 57 PG. 102
10' EASEMENT PB. 57 PG. 102
10' EASEMENT PB. 57 PG. 102
61.8'
E
S 85°21'12" E 486.16'
WOODED AREA 8" TO 36" TREES
10" EVERGREENS (48 TREES IN A STAGGERED ROW) DO NOT DISTURB
4 WL
5 WL
OPEN SPACE
LIMREA (5)
END NOISE BARRIER STA CDN-1418+00.00
+82.47 185.00' LT
S 04°34'03" W 290.01'
LA-R/W
S 03°34'46" W 654.98'
NOISE BARRIER
2:1
36'
CB-5A
WOODED AREA
36"
CONST. LIMITS
21"
8:1
10' EASEMENT PB. 57 PG. 102
S 85°21'12" E 45.20'
EX. LA-R/W
S 03°35'10" W 656.26'
S 03°25'55" W 290.07'
D-1414
C23
+81.63 139.81' LT
42"
CDN-1414
PT = D-1414+20.67=
= 1413+91.82, 134.50' LT.
CDN-1415
CDN-1416
CDN-1417
CDN-1418
CDN-1419
S 03°34'46" W
C/L CONSTRUCTION CDN
15"
24'
12'
2.5'
17'
TYPE B BARRIER
VARIES
I-3D
VARIES
3'
6" UNDERDRAIN
36'
30'
EX. NORTHBOUND I-270
1414+00
1415+00
36"S
1416+00
1417+00
1418+00
42"S
S 03°34'46" W
C/L SURVEY I-270
CB-4A
C.B.
S 03°34'46" W

CURVE DATA
P.I. STA. = D-1411+70.48
Δ = 03°45'15" LT.
D_C = 00°45'00"
R = 7639.44'
T = 250.37'
L = 500.57'
E = 4.10'
e_{max} = N.C.
P.C. STA. = D-1409+20.10
P.T. STA. = D-1414+20.67

HEIGHT TABLE FOR NOISE BARRIER AT THE LA R/W
(FROM TOP OF EX. GROUND)

FROM STA.	TO STA.	HEIGHT
D-1413+78.86	D-1418+00	14'

MATCH LINE STA. ℄ 1413+50 SEE SHEET 22
MATCH LINE STA. ℄ 1419+00 SEE SHEET 24

NOTE: STATIONS AND OFFSETS SHOWN ON THESE PLANS ARE CALCULATED FROM THE EXISTING ℄ OF I-270.

o IRON PIN FOUND

REV.	DATE	DESCRIPTION
DATE OF COMPLETION		NOVEMBER 14, 1994

RIGHT OF WAY PLAN
STA. 1413+50 TO STA. 1419+00 (LT)

STATE JOB NO. 06022(0)

FEDERAL PROJECT NO. NH-270-5()

FRA-270-32.46

23/50

566
593

HORIZONTAL SCALE IN FEET
0 10 20 40

PLOT SCALE 1" = 20'
COL. #27
C:\DRAWING\06092306\06092817.DWG NOVEMBER-14-1994

FRANKLIN COUNTY
CITY OF COLUMBUS
MIFFLIN TOWNSHIP
N.E. 1/4, SEC.1
T-1N R-17W
UNITED STATES MILITARY LANDS

C5

CURVE DATA

P.I. STA. = CDN-1423+03.16
Δ = 03°00'00" RT.
D_c = 00°32'00"
R = 10742.96'
T = 281.31'
L = 562.50'
E = 3.68'
e_{max} = N.C.
P.C. STA. = CDN-1420+21.85
P.T. STA. = CDN-1425+84.35

MATCH LINE STA. ℄ 1419+00 SEE SHEET 23

MATCH LINE STA. ℄ 1424+50 SEE SHEET 25

LIMREA
5

HIGH POINT FARMS
6

WOODED AREA

STONE

WIRE FENCE

S 86°58'12" E
45.27'

+37.45
185.00' LT.

+37.89
149.79' LT.

10" ELM

WOOD SHED

35.2'

12" OAK

10" MAPLE

8" OAK

8" OAK

5 WL

6 WL

S 03°34'46" W 654.98'

LA-R/W

CONST. LIMITS

S 05°22'19" W 319.71'

S 03°33'54" W 319.13'

21"

CB-5

2:1

8:1

S 03°35'10" W 656.26'

EX. LA-R/W

10'

24'

12'

2.5'

17'

VARIES

3'

36'

30'

15"

PC = CDN-1420+21.85
= 1420+01.61, 110.50' LT.

C5

CDN-1420

CDN-1421

CDN-1422

CDN-1423

CDN-1424

S 03°34'46" W

C/L CONSTRUCTION CDN

STA. CDN-1420+21.85
12.00' RT.

I-3D

VARIES

WIM SCALE CONTROL BOX

EXISTING SIGN FOUNDATION

6" UNDERDRAIN

6" UNDERDRAIN

GUTTER
STA. CDN-1424+49.70
24.00' RT.

WIM SCALE

END TYPE B BARRIER
BEGIN GUTTER IN GORE AREA
STA. CDN-1420+21.85
32.50' RT.
STA. CDN-1420+21.85
44.50' RT.

EX. NORTHBOUND
I-270

1420+00

1421+00

MON

S 03°34'46" W

42"S

C/L SURVEY I-270

1422+00

1423+00

1424+00

NOTE: STATIONS AND OFFSETS SHOWN ON THESE PLANS ARE CALCULATED FROM THE EXISTING ℄ OF I-270.

o IRON PIN FOUND

REV.	DATE	DESCRIPTION
DATE OF COMPLETION		NOVEMBER 14, 1994

N

0 10 20 40 HORIZONTAL SCALE IN FEET

FEDERAL PROJECT NO. NH-270-5()

STATE JOB NO. 06022(0)

RIGHT OF WAY PLAN
STA. 1419+00 TO STA. 1424+50 (LT)

FRA-270-32.46

24/50

367
593

PLOT SCALE 1" = 20'
COL. 127
C:\DRAWING\06092306\06092R16.DWG NOVEMBER-14-1994

FRANKLIN COUNTY
CITY OF COLUMBUS
MIFFLIN TOWNSHIP
N.E. 1/4, SEC.1
T-1N R-17W
UNITED STATES MILITARY LANDS

MATCH LINE STA. ℄ 1424+50 SEE SHEET 24

MATCH LINE STA. ℄ 1430+00 SEE SHEET 26

HIGH POINT FARMS (6)

LIMREA (7)

RALPH E. BOSO (8)

EVERETT R. BARNES JR. & BRENDA S. BARNES (9)

S 86°26'12" E 554.69' ℄

S 86°26'12" E 553.50' ℄

S 86°26'12" E 555.76' ℄

CITY OF COLUMBUS
CITY OF CAHANNA

WIRE FENCE

WOODED AREA
8" TO 12" MAPLES

CONST. LIMITS

EX. LA-R/W

LA-R/W

WOOD SIGN
FOR SALE

6 WL

7 WL

8 WL

9 WL

+57.01
175.00' LT
S 86°26'12" E
35.19'
+57.02
139.81' LT

+76.29
165.00' LT
S 86°26'12" E
23.38'
+76.22
141.62' LT

+95.51
150.00' LT
S 86°26'12" E
5.04'
+95.51
144.96' LT

S 05°22'19" W 319.71'

S 08°22'29" W 119.62'

S 07°29'33" W 219.81'

S 03°58'03" W 149.00'

S 03°33'54" W 319.13'

S 02°42'32" W 119.22'

S 02°42'32" W 219.32'

S 02°01'45" W 149.05'

2:1

8:1

10'

24'

12'

36'

30'

C5

C6

CURVE DATA

P.I. STA. = CDN-1423+03.16
△ = 03°00'00" RT.
D_c = 00°32'00"
R = 10742.96'
T = 281.31'
L = 562.50'
E = 3.68'
e_{max} = N.C.
P.C. STA. = CDN-1420+21.85
P.T. STA. = CDN-1425+84.35

CURVE DATA

P.I. STA. = CDN-1431+53.31
△ = 03°00'00" LT.
D_c = 00°32'00"
R = 10742.96'
T = 281.31'
L = 562.50'
E = 3.68'
e_{max} = N.C.
P.C. STA. = CDN-1428+72.00
P.T. STA. = CDN-1434+34.50

PT = CDN-1425+84.35
= 1425+63.85, 95.78' LT.

CDN-1425

CDN-1426

C/L CONSTRUCTION CDN

CDN-1427

CDN-1428

CDN-1429

CDN-1430

PC = CDN-1428+72.00
= 1428+51.11, 80.72' LT

MODIFIED INLET

MODIFIED INLET

E

S.H.

15"

15"

6"S & 4"S

42"S

END DRAINAGE SWALE
STA. CDN-1427+52.49
16.50' RT.

EX. NORTHBOUND
I-270

1425+00

1426+00
C/L SURVEY I-270

1427+00
C.B.

1428+00
S 03°34'46" W

1429+00

MON

END PROJECT
FRA-270-32.46
STA. 1429+07.79

RESUME PROJECT
FRA-270-(31.01)(33.64)
STA. 1429+07.79

NOTE: STATIONS AND OFFSETS SHOWN ON THESE PLANS ARE CALCULATED FROM THE EXISTING ℄ OF I-270.

O IRON PIN FOUND

REV.	DATE	DESCRIPTION
DATE OF COMPLETION		NOVEMBER 14, 1994

N

HORIZONTAL SCALE IN FEET
0 10 20 40

FEDERAL PROJECT NO. NH-270-5()

STATE JOB NO. 06022(0)

RIGHT OF WAY PLAN
STA. 1424+50 TO STA. 1430+00 (LT)

FRA-270-32.46

25/50

568
593

PLOT SCALE 1" = 20'
COL #27 C:\DRAWING\06092306\06092R15.DWG NOVEMBER-14-1994

FRANKLIN COUNTY
CITY OF GAHANNA
MIFFLIN TOWNSHIP
N.E. 1/4, SEC.1
T-1N R-17W
UNITED STATES MILITARY LANDS

C6

CURVE DATA

P.I. STA. = CDN-1431+53.31
△ = 03°00'00" LT.
D_c = 00°32'00"
R = 10742.96'
T = 281.31'
L = 562.50'
E = 3.68'
e_{max} = N.C.
P.C. STA. = CDN-1428+72.00
P.T. STA. = CDN-1434+34.50

MATCH LINE STA. ℄ 1+30+00 SEE SHEET 25

EVERETT R. BARNES JR.
BRENDA S. BARNES

9

9 WL

CARL F. LINDENMAYER &
SUSAN L. LINDENMAYER

LAWRENCE E. CARROLL

ANNA B. EING

PITRINA M. LIND

S 86°26'12" E 551.83'

S 86°26'13" E 546.22'

PINE TREES

TREES 4" TO 6"

TREES 6" TO 24"

DENSE UNDERBRUSH

END WORK
FRA-270-32.46
STA. CDN-1434+34.50

S 03°58'04" W
149.00'

+44.51
149.00' LT

+69.51
152.16' LT

PINE TREES

S 02°07'37" W 125.04'

EX. LA-R/W

LA-R/W

CONST. LIMITS

S 02°01'45" W
149.05'

2:1

8:1

E

C/L CONSTRUCTION CDN

CDN-1431 CDN-1432 CDN-1433 CDN-1434 CDN-1435

△ 111

EJB

10'

24'

36'

30'

C6

EX. NORTHBOUND
I-270

END ACQUISITION
FRA-270-32.46
STA. 1432+93.74

PT = CDN-1434+34.50
= 1434+13.35, 66.00' LT.

42"S

1431+00 1432+00 1433+00 1434+00 1435+00

C/L SURVEY I-270

S 03°34'46" W

NOTE: STATIONS AND OFFSETS SHOWN ON THESE PLANS ARE CALCULATED FROM THE EXISTING ℄ OF I-270.

O IRON PIN FOUND

REV.	DATE	DESCRIPTION
DATE OF COMPLETION		NOVEMBER 14, 1994

N

0 20 40
HORIZONTAL
SCALE IN FEET

FEDERAL PROJECT NO. NH-270-5()

STATE JOB NO. 06022(0)

RIGHT OF WAY PLAN
STA. 1430+00 TO STA. 1434+50 (LT)

FRA-270-32.46

26/50

569
593

PLOT SCALE 1" = 20'
COL #27
C:\DRAWING\06092308\06092814.DWG NOVEMBER-14-1994

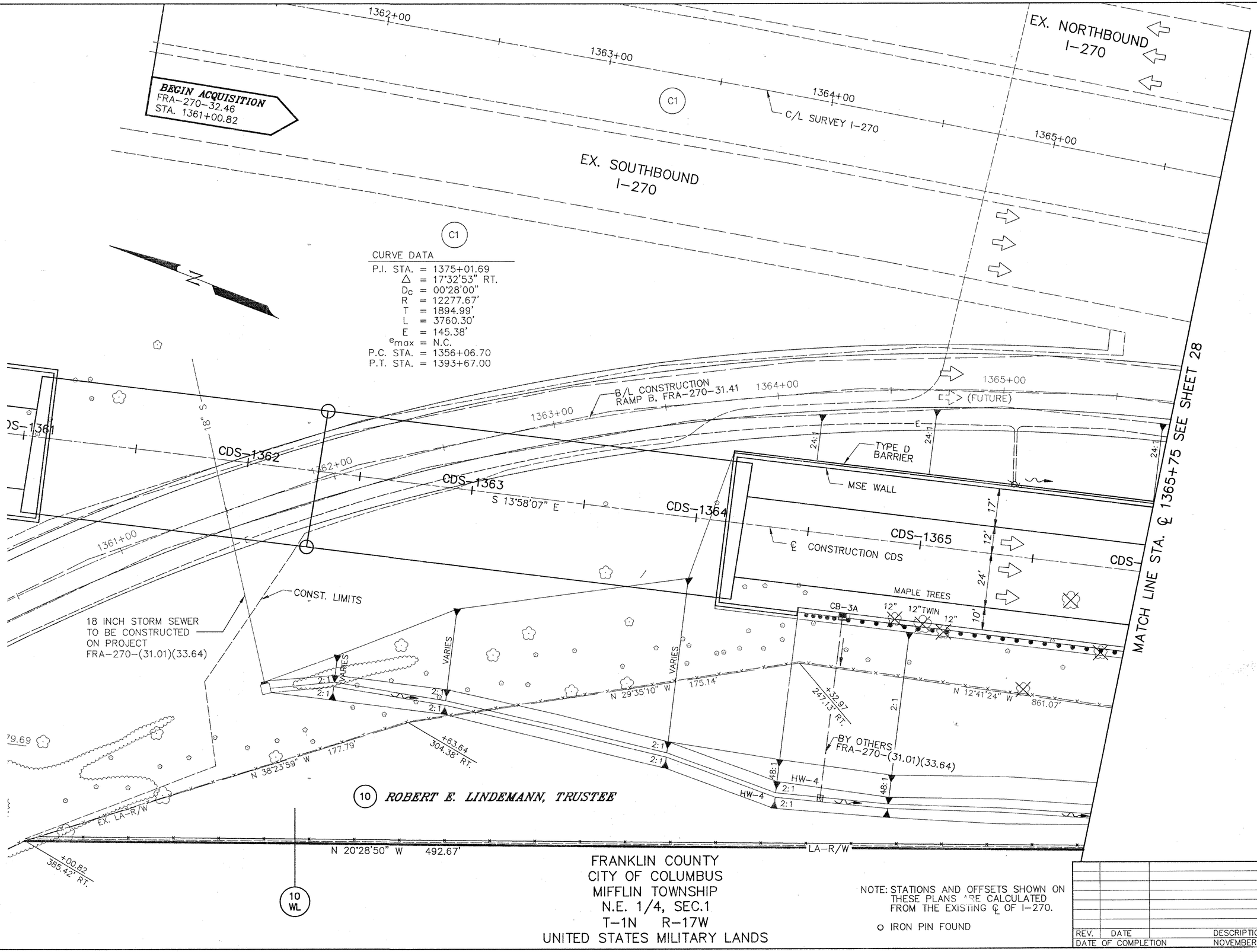
BEGIN ACQUISITION
FRA-270-32.46
STA. 1361+00.82
EX. SOUTHBOUND
I-270
EX. NORTHBOUND
I-270
C/L SURVEY I-270
1362+00
1363+00
1364+00
1365+00
C1
CURVE DATA
P.I. STA. = 1375+01.69
Δ = 17°32'53" RT.
Dc = 00°28'00"
R = 12277.67'
T = 1894.99'
L = 3760.30'
E = 145.38'
emax = N.C.
P.C. STA. = 1356+06.70
P.T. STA. = 1393+67.00
B/L CONSTRUCTION
RAMP B, FRA-270-31.41
(FUTURE)
SEE SHEET 28
MATCH LINE STA. ℄ 1365+75
CDS-1361
CDS-1362
CDS-1363
CDS-1364
CDS-1365
S 13°58'07" E
18" S
TYPE D
BARRIER
MSE WALL
℄ CONSTRUCTION CDS
MAPLE TREES
CB-3A
12"
12"TWIN
12"
CONST. LIMITS
18 INCH STORM SEWER
TO BE CONSTRUCTED
ON PROJECT
FRA-270-(31.01)(33.64)
VARIES
2:1
24:1
48:1
HW-4
N 29°35'10" W 175.14'
N 12°41'24" W 861.07'
+32.97
247.13' RT.
+63.64
304.38' RT.
N 38°23'59" W 177.79'
BY OTHERS
FRA-270-(31.01)(33.64)
10 ROBERT E. LINDEMANN, TRUSTEE
EX. LA-R/W
LA-R/W
N 20°28'50" W 492.67'
+00.82
385.42' RT.
10
WL
FRANKLIN COUNTY
CITY OF COLUMBUS
MIFFLIN TOWNSHIP
N.E. 1/4, SEC.1
T-1N R-17W
UNITED STATES MILITARY LANDS
NOTE: STATIONS AND OFFSETS SHOWN ON THESE PLANS ARE CALCULATED FROM THE EXISTING ℄ OF I-270.
o IRON PIN FOUND
N
0 10 20 40
HORIZONTAL SCALE IN FEET
FEDERAL PROJECT NO. NH-270-5()
STATE JOB NO. 06022(0)
RIGHT OF WAY PLAN
STA. 1361+00.82 TO STA. 1365+75 (RT)
FRA-270-32.46
27/50
570
593
REV. DATE DESCRIPTION
DATE OF COMPLETION NOVEMBER 14, 1994
PLOT SCALE 1" = 20'
COL #27 C:\DRAWING\06092306\06092R41.DWG NOVEMBER-14-1994

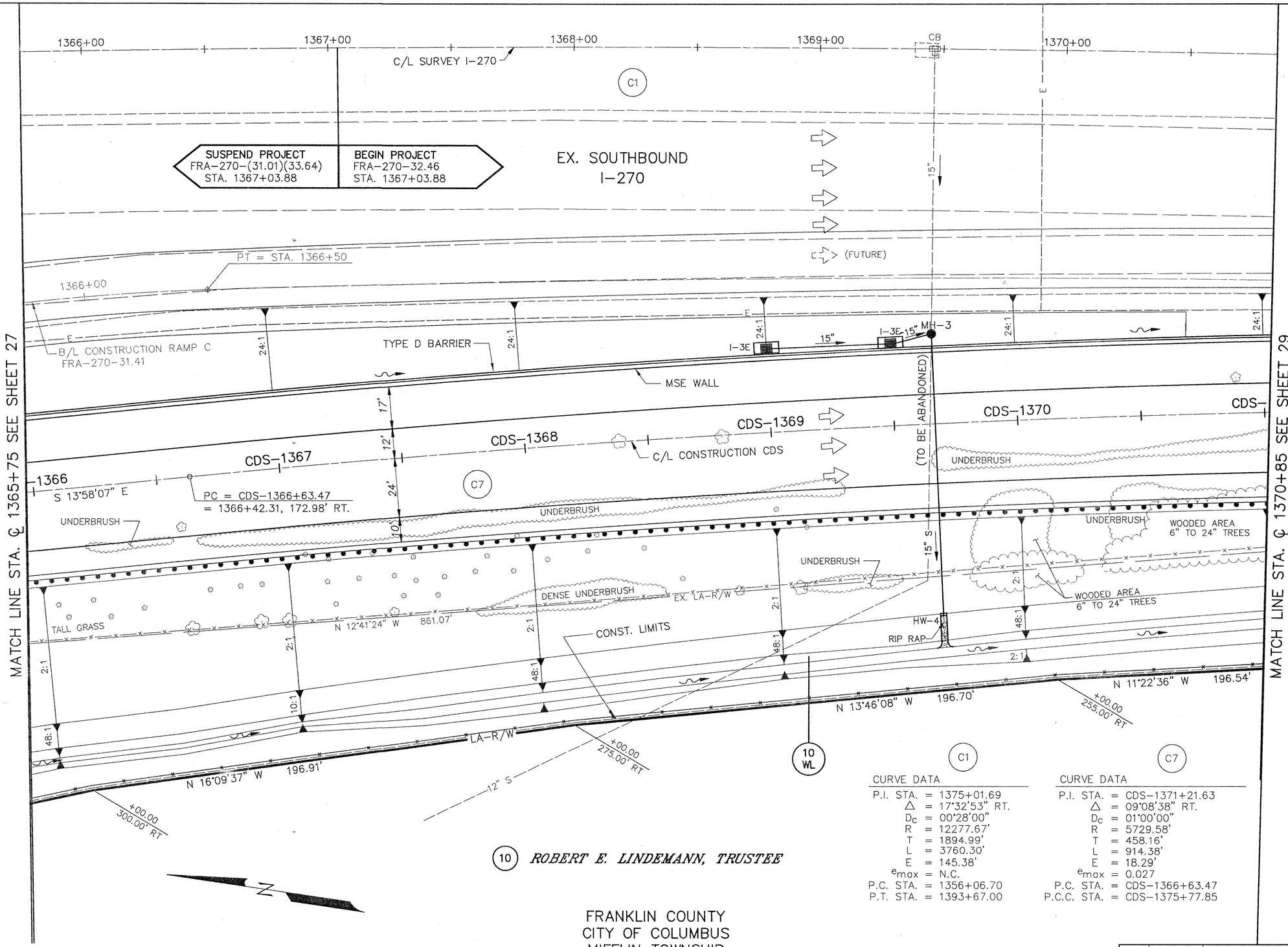

(10) *ROBERT E. LINDEMANN, TRUSTEE*

C1

CURVE DATA

P.I. STA.	= 1375+01.69
△	= 17°32'53" RT.
D_C	= 00°28'00"
R	= 12277.67'
T	= 1894.99'
L	= 3760.30'
E	= 145.38'
e_{max}	= N.C.
P.C. STA.	= 1356+06.70
P.T. STA.	= 1393+67.00

C7

CURVE DATA

P.I. STA.	= CDS-1371+21.63
△	= 09°08'38" RT.
D_C	= 01°00'00"
R	= 5729.58'
T	= 458.16'
L	= 914.38'
E	= 18.29'
e_{max}	= 0.027
P.C. STA.	= CDS-1366+63.47
P.C.C. STA.	= CDS-1375+77.85

FRANKLIN COUNTY
CITY OF COLUMBUS
MIFFLIN TOWNSHIP
N.E. 1/4, SEC.1
T-1N R-17W
UNITED STATES MILITARY LANDS

NOTE: STATIONS AND OFFSETS SHOWN ON THESE PLANS ARE CALCULATED FROM THE EXISTING ℄ OF I-270.

o IRON PIN FOUND

REV.	DATE	DESCRIPTION
DATE OF COMPLETION		NOVEMBER 14, 1994

RIGHT OF WAY PLAN
STA. 1365+75 TO STA. 1370+85

FRA-270-32.46

28/50

571
593

HORIZONTAL SCALE IN FEET
0 10 20 40

FEDERAL PROJECT NO. NH-270-5()

STATE JOB NO. 06022(0)

PLOT SCALE 1" = 20'
CDL #27 C:\DRAWING\06092306\06092R01.DWG NOVEMBER-14-1994

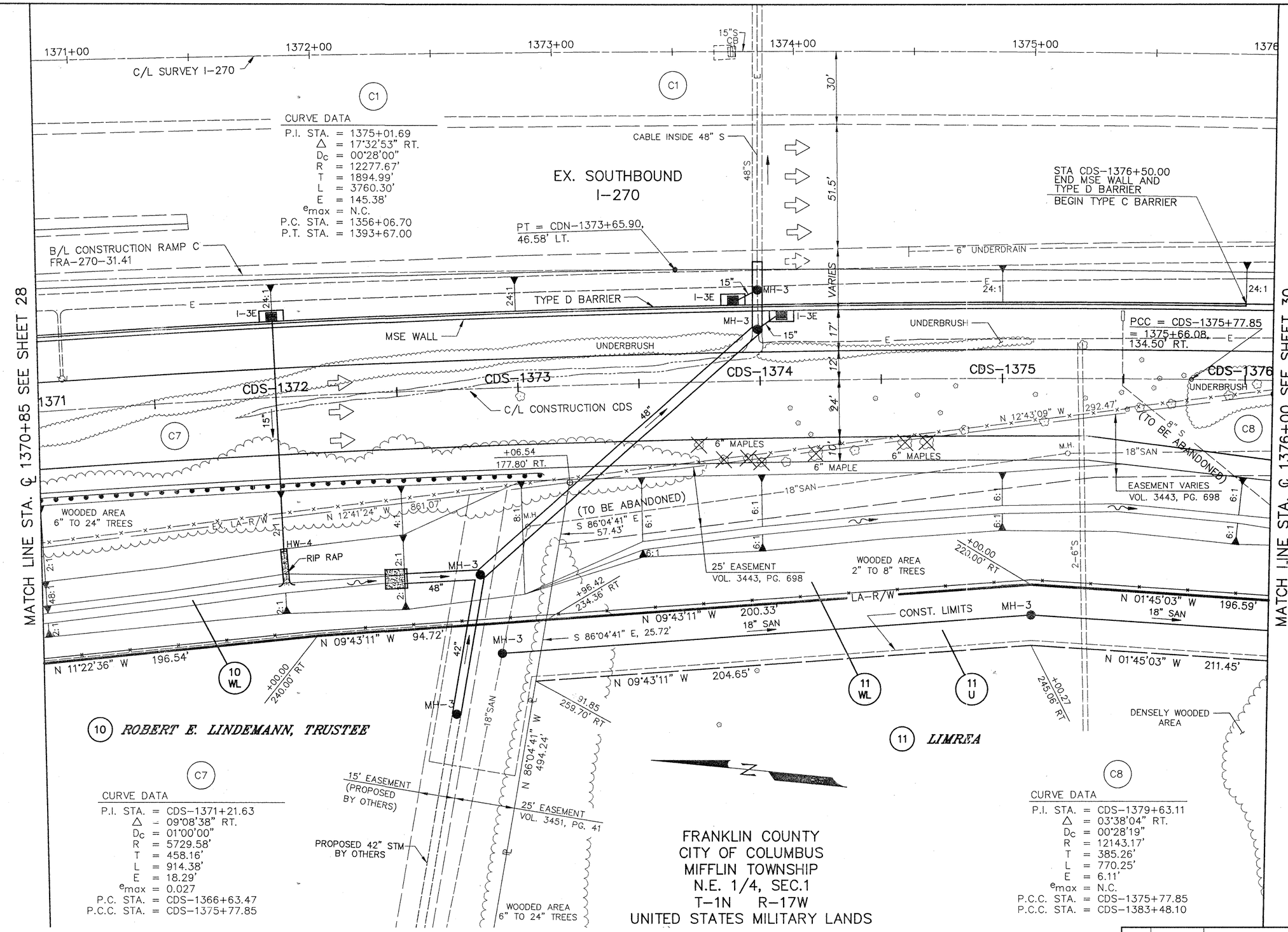

C7

CURVE DATA

P.I. STA. = CDS-1371+21.63
△ = 09°08'38" RT.
Dc = 01°00'00"
R = 5729.58'
T = 458.16'
L = 914.38'
E = 18.29'
emax = 0.027
P.C. STA. = CDS-1366+63.47
P.C.C. STA. = CDS-1375+77.85

C8

CURVE DATA

P.I. STA. = CDS-1379+63.11
△ = 03°38'04" RT.
Dc = 00°28'19"
R = 12143.17'
T = 385.26'
L = 770.25'
E = 6.11'
emax = N.C.
P.C.C. STA. = CDS-1375+77.85
P.C.C. STA. = CDS-1383+48.10

FRANKLIN COUNTY
CITY OF COLUMBUS
MIFFLIN TOWNSHIP
N.E. 1/4, SEC.1
T-1N R-17W
UNITED STATES MILITARY LANDS

NOTE: STATIONS AND OFFSETS SHOWN ON THESE PLANS ARE CALCULATED FROM THE EXISTING ℄ OF I-270.

O IRON PIN FOUND

REV.	DATE	DESCRIPTION
DATE OF COMPLETION		NOVEMBER 14, 1994

RIGHT OF WAY PLAN
STA. 1370+85 TO STA. 1376+00 (RT)

STATE JOB NO. 06022(0)

FEDERAL PROJECT NO. NH-270-5()

FRA-270-32.46

29/50

572
593

HORIZONTAL SCALE IN FEET
0 10 20 40

PLOT SCALE 1" = 20'
COL #27
C:\DRAWING\06092306\06092R02.DWG NOVEMBER-14-1994

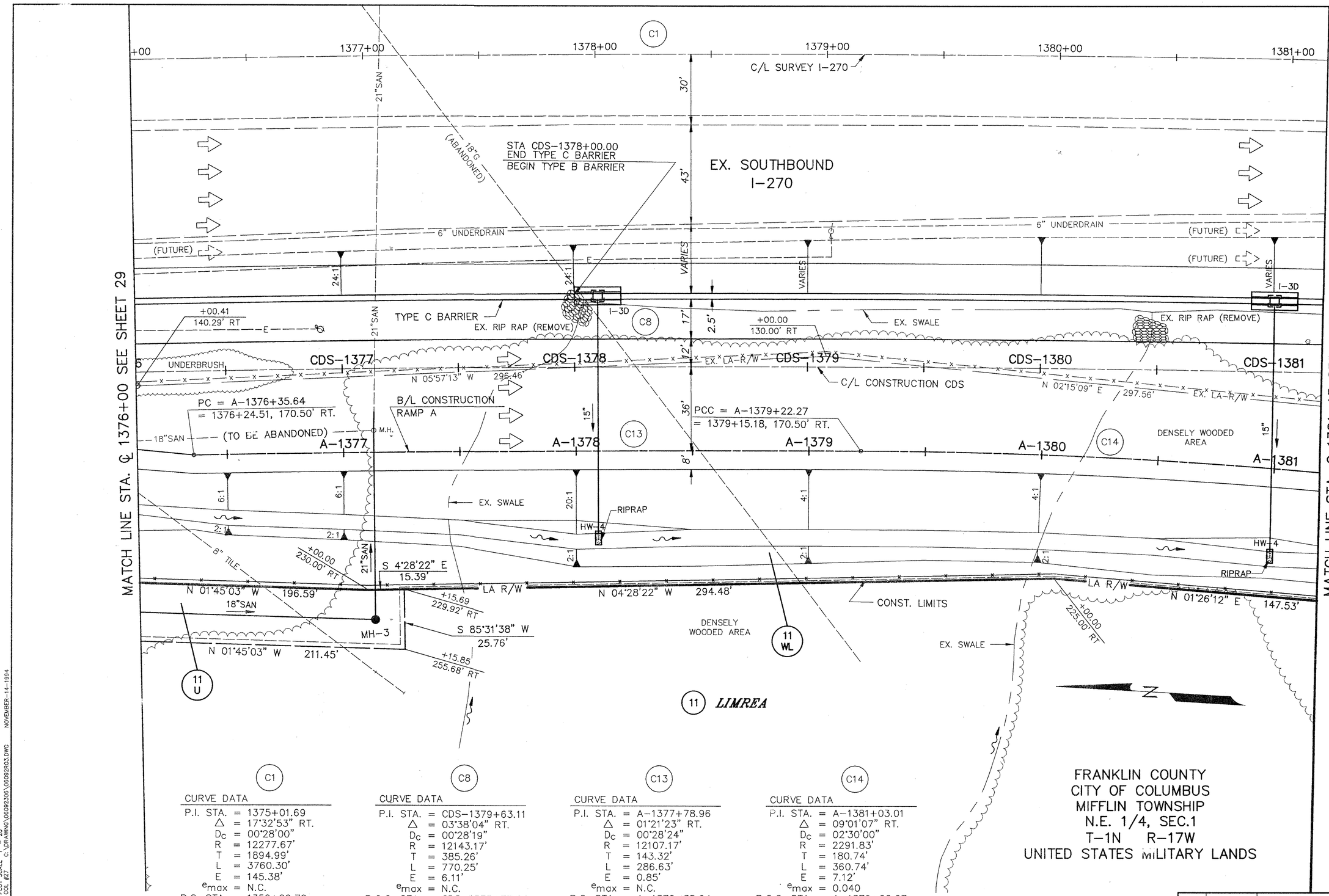

C1

CURVE DATA

P.I. STA. = 1375+01.69
△ = 17°32'53" RT.
D_C = 00°28'00"
R = 12277.67'
T = 1894.99'
L = 3760.30'
E = 145.38'
e_{max} = N.C.
P.C. STA. = 1356+06.70
P.T. STA. = 1393+67.00

C8

CURVE DATA

P.I. STA. = CDS-1379+63.11
△ = 03°38'04" RT.
D_C = 00°28'19"
R = 12143.17'
T = 385.26'
L = 770.25'
E = 6.11'
e_{max} = N.C.
P.C.C. STA. = CDS-1375+77.85
P.C.C. STA. = CDS-1383+18.10

C13

CURVE DATA

P.I. STA. = A-1377+78.96
△ = 01°21'23" RT.
D_C = 00°28'24"
R = 12107.17'
T = 143.32'
L = 286.63'
E = 0.85'
e_{max} = N.C.
P.C. STA. = A-1376+35.64
P.C.C. STA. = A-1379+22.27

C14

CURVE DATA

P.I. STA. = A-1381+03.01
△ = 09°01'07" RT.
D_C = 02°30'00"
R = 2291.83'
T = 180.74'
L = 360.74'
E = 7.12'
e_{max} = 0.040
P.C.C. STA. = A-1379+22.27
C.S. STA. = A-1382+83.01

FRANKLIN COUNTY
CITY OF COLUMBUS
MIFFLIN TOWNSHIP
N.E. 1/4, SEC.1
T-1N R-17W
UNITED STATES MILITARY LANDS

NOTE: STATIONS AND OFFSETS SHOWN ON THESE PLANS ARE CALCULATED FROM THE EXISTING ℄ OF I-270.

o IRON PIN FOUND

REV.	DATE	DESCRIPTION
DATE OF COMPLETION		NOVEMBER 14, 1994

PLOT SCALE .1" = 20'
COL #27 C:\DRAWING\06092306\06092R03.DWG NOVEMBER-14-1994

HORIZONTAL SCALE IN FEET
0 10 20 40

FEDERAL PROJECT NO. NH-270-5()

STATE JOB NO. 06022(0)

PLAN
1381+15 (RT)

RIGHT OF WAY PLAN
STA. 1376+00 TO STA. 1381+15

FRA-270-32.46

30/50

573
593

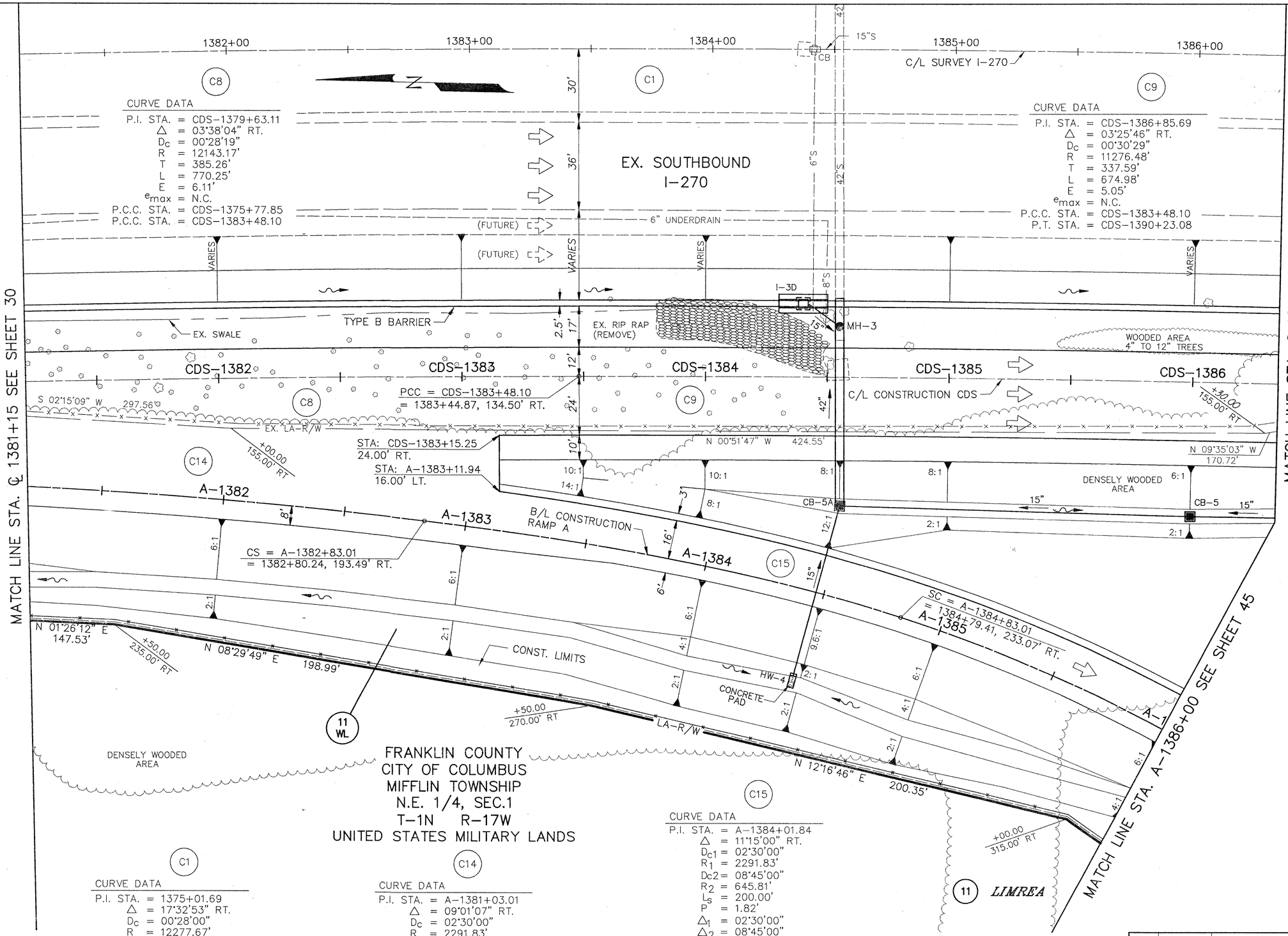

C1

CURVE DATA

P.I. STA. = 1375+01.69
Δ = 17°32'53" RT.
Dc = 00°28'00"
R = 12277.67'
T = 1894.99'
L = 3760.30'
E = 145.38'
emax = N.C.
P.C. STA. = 1356+06.70
P.T. STA. = 1393+67.00

C14

CURVE DATA

P.I. STA. = A-1381+03.01
Δ = 09°01'07" RT.
Dc = 02°30'00"
R = 2291.83'
T = 180.74'
L = 360.74'
E = 7.12'
emax = 0.040
P.C.C. STA. = A-1379+22.27
C.S. STA. = A-1382+83.01

C15

CURVE DATA

P.I. STA. = A-1384+01.84
Δ = 11°15'00" RT.
Dc1 = 02°30'00"
R1 = 2291.83'
Dc2 = 08°45'00"
R2 = 645.81'
Ls = 200.00'
P = 1.82'
Δ1 = 02°30'00"
Δ2 = 08°45'00"
T1 = 118.83'
T2 = 81.77'
e1 = 0.040
e2 = 0.060
C.S. STA. = A-1382+83.01
S.C. STA. = A-1384+83.01

NOTE: STATIONS AND OFFSETS SHOWN ON THESE PLANS ARE CALCULATED FROM THE EXISTING ℄ OF I-270.

O IRON PIN FOUND

REV.	DATE	DESCRIPTION
1	1-20-95	CORRECTED STA. & OFFSET
DATE OF COMPLETION		NOVEMBER 14, 1994

HORIZONTAL SCALE IN FEET 0 10 20 40

FEDERAL PROJECT NO. NH-270-5()

STATE JOB NO. 06022(0)

RIGHT OF WAY PLAN
STA. 1381+15 TO STA. 1386+35 (RT)

FRA-270-32.46

31.1/50

574
593

PLOT SCALE 1" = 20'
COL #27 C:\DRAWING\06092306\06092R04.DWG NOVEMBER-14-1994

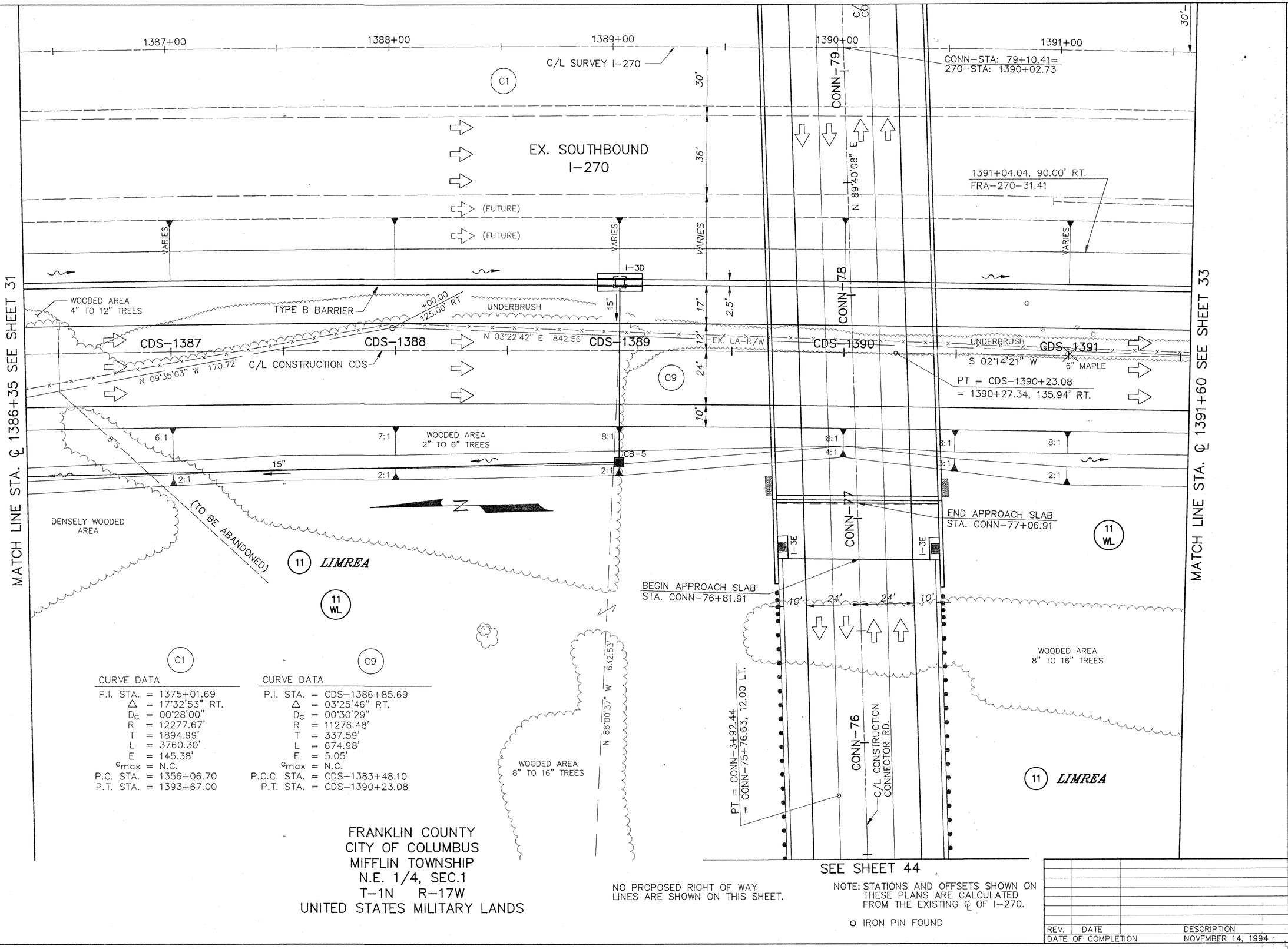

C1

CURVE DATA

P.I. STA. = 1375+01.69
△ = 17°32'53" RT.
Dc = 00°28'00"
R = 12277.67'
T = 1894.99'
L = 3760.30'
E = 145.38'
emax = N.C.
P.C. STA. = 1356+06.70
P.T. STA. = 1393+67.00

C9

CURVE DATA

P.I. STA. = CDS-1386+85.69
△ = 03°25'46" RT.
Dc = 00°30'29"
R = 11276.48'
T = 337.59'
L = 674.98'
E = 5.05'
emax = N.C.
P.C.C. STA. = CDS-1383+48.10
P.T. STA. = CDS-1390+23.08

FRANKLIN COUNTY
CITY OF COLUMBUS
MIFFLIN TOWNSHIP
N.E. 1/4, SEC.1
T-1N R-17W
UNITED STATES MILITARY LANDS

NO PROPOSED RIGHT OF WAY LINES ARE SHOWN ON THIS SHEET.

NOTE: STATIONS AND OFFSETS SHOWN ON THESE PLANS ARE CALCULATED FROM THE EXISTING ℄ OF I-270.

o IRON PIN FOUND

REV.	DATE	DESCRIPTION
DATE OF COMPLETION		NOVEMBER 14, 1994

HORIZONTAL SCALE IN FEET
0 20 40

FEDERAL PROJECT NO. NH-270-5()

STATE JOB NO. 06022(0)

RIGHT OF WAY PLAN
STA. 1386+35 TO STA. 1391+60 (RT)

FRA-270-32.46

32/50

575/593

PLOT SCALE 1" = 20'
COL #27 C:\DRAWNG\06092308\06092R05.DWG NOVEMBER-14-1994

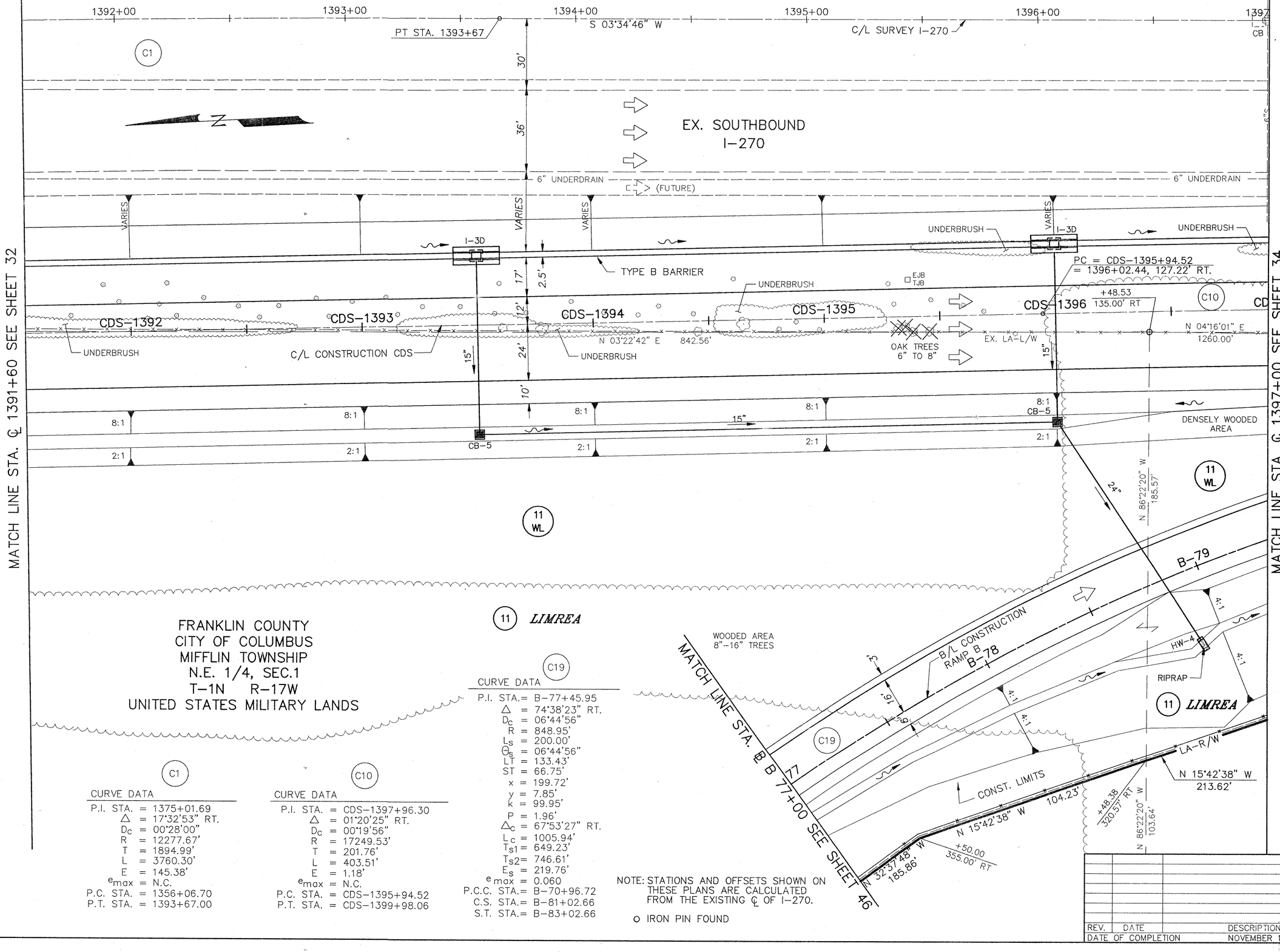

FRANKLIN COUNTY
CITY OF COLUMBUS
MIFFLIN TOWNSHIP
N.E. 1/4, SEC.1
T-1N R-17W
UNITED STATES MILITARY LANDS

C1

CURVE DATA

P.I. STA.	= 1375+01.69
△	= 17°32'53" RT.
D_c	= 00°28'00"
R	= 12277.67'
T	= 1894.99'
L	= 3760.30'
E	= 145.38'
e_{max}	= N.C.
P.C. STA.	= 1356+06.70
P.T. STA.	= 1393+67.00

C10

CURVE DATA

P.I. STA.	= CDS-1397+96.30
△	= 01°20'25" RT.
D_c	= 00°19'56"
R	= 17249.53'
T	= 201.76'
L	= 403.51'
E	= 1.18'
e_{max}	= N.C.
P.C. STA.	= CDS-1395+94.52
P.T. STA.	= CDS-1399+98.06

C19

CURVE DATA

P.I. STA.	= B-77+45.95
△	= 74°38'23" RT.
D_c	= 06°44'56"
R	= 848.95'
L_s	= 200.00'
Θ_s	= 06°44'56"
LT	= 133.43'
ST	= 66.75'
x	= 199.72'
y	= 7.85'
k	= 99.95'
P	= 1.96'
$\triangle_c$	= 67°53'27" RT.
L_c	= 1005.94'
T_{s1}	= 649.23'
T_{s2}	= 746.61'
E_s	= 219.76'
e max	= 0.060
P.C.C. STA.	= B-70+96.72
C.S. STA.	= B-81+02.66
S.T. STA.	= B-83+02.66

NOTE: STATIONS AND OFFSETS SHOWN ON THESE PLANS ARE CALCULATED FROM THE EXISTING ℄ OF I-270.

O IRON PIN FOUND

PLOT SCALE 1" = 20'
CAL #27 C:\DRAWING\06092306\06092R06.DWG NOVEMBER-14-1994

REV.	DATE	DESCRIPTION
DATE OF COMPLETION		NOVEMBER 14, 1994

HORIZONTAL SCALE IN FEET
0 10 20 40

FEDERAL PROJECT NO. NH-270-5()

STATE JOB NO. 06022(0)

RIGHT OF WAY PLAN
STA. 1391+60 TO STA. 1397+00 (RT)

FRA-270-32.46

33/50

576/593

MATCH LINE STA. ℄ 1397+00 SEE SHEET 33

MATCH LINE STA. ℄ 1402+50 SEE SHEET 35

+00 | 1398+00 | 1399+00 | 1400+00 | 1401+00 | 1402+00

C.B.

S 03°34'46" W

C/L SURVEY I-270

18"S

30'

36'

EX. SOUTHBOUND
I-270

1397+96.67, 78.00' RT.
FRA-270-31.41

6" UNDERDRAIN

(FUTURE)

VARIES

I-3D

UNDERBRUSH

2.5'

17'

TYPE B BARRIER

PT = CDS-1399+98.06
= 1400+05.94, 122.50' RT.

S-1397 | CDS-1398 | CDS-1399 | CDS-1400 | CDS-1401 | CDS-1402

12'

24'

C10

C/L CONSTRUCTION CDS

S 03°34'46" W

WOODED AREA
6" TO 12" TREES

STA: CDS-1400+30.70
24.00' RT

UNDERBRUSH

6" 6" 8"

MAPLE TREES

EX. LA-R/W

N 04°16'01" E 1260.00'

STA: CDS-1398+38.57
34.00' RT

STA: B-80+87.62
19.00' LT

STA: B-82+77.44
16.00' LT

ST = B-83+02.66
= 1400+64.12, 170.85' RT.

10'

10:1

12:1

24:1

21:1

3'

16'

C19

B-81

B-82

B-83

B-84

S 02°08'49" W

15"

B/L CONSTRUCTION
RAMP B

B-80

CS = B-81+02.66
= 1398+64.76, 183.68' RT.

4:1

6:1

23:1

HW-4

2:1

RIPRAP

DENSELY WOODED
AREA

CONST. LIMITS

LA-R/W

N 01°40'13" E 450.25'

+50.00
250.00' RT

N 15°42'38" W 213.62'

11
WL

N

11 *LIMREA*

C19

CURVE DATA

P.I. STA.= B-77+45.95
Δ = 74°38'23" RT.
D_C = 06°44'56"
R = 848.95'
L_S = 200.00'
Θ_S = 06°44'56"
LT = 133.43'
ST = 66.75'
x = 199.72'
y = 7.85'
k = 99.95'
P = 1.96'
Δ_C = 67°53'27" RT.
L_C = 1005.94'
T_{S1} = 649.23'
T_{S2} = 746.61'
E_S = 219.76'
e_{max} = 0.060
P.C.C. STA.= B-70+96.72
C.S. STA.= B-81+02.66
S.T. STA.= B-83+02.66

C10

CURVE DATA

P.I. STA. = CDS-1397+96.30
Δ = 01°20'25" RT.
D_C = 00°19'56"
R = 17249.53'
T = 201.76'
L = 403.51'
E = 1.18'
e_{max} = N.C.
P.C. STA. = CDS-1395+94.52
P.T. STA. = CDS-1399+98.06

FRANKLIN COUNTY
CITY OF COLUMBUS
MIFFLIN TOWNSHIP
N.E. 1/4, SEC.1
T-1N R-17W
UNITED STATES MILITARY LANDS

NOTE: STATIONS AND OFFSETS SHOWN ON THESE PLANS ARE CALCULATED FROM THE EXISTING ℄ OF I-270.

o IRON PIN FOUND

REV.	DATE	DESCRIPTION
DATE OF COMPLETION		NOVEMBER 14, 1994

HORIZONTAL SCALE IN FEET
0 20 40

FEDERAL PROJECT NO. NH-270-5()

STATE JOB NO. 06022(0)

FRA-270-32.46

RIGHT OF WAY PLAN
STA. 1397+00 TO STA. 1402+50 (RT)

34/50

577
593

PLOT SCALE 1" = 20'
COL #27
C:\DRAWNG\06092306\06092R07.DWG NOVEMBER-14-1994

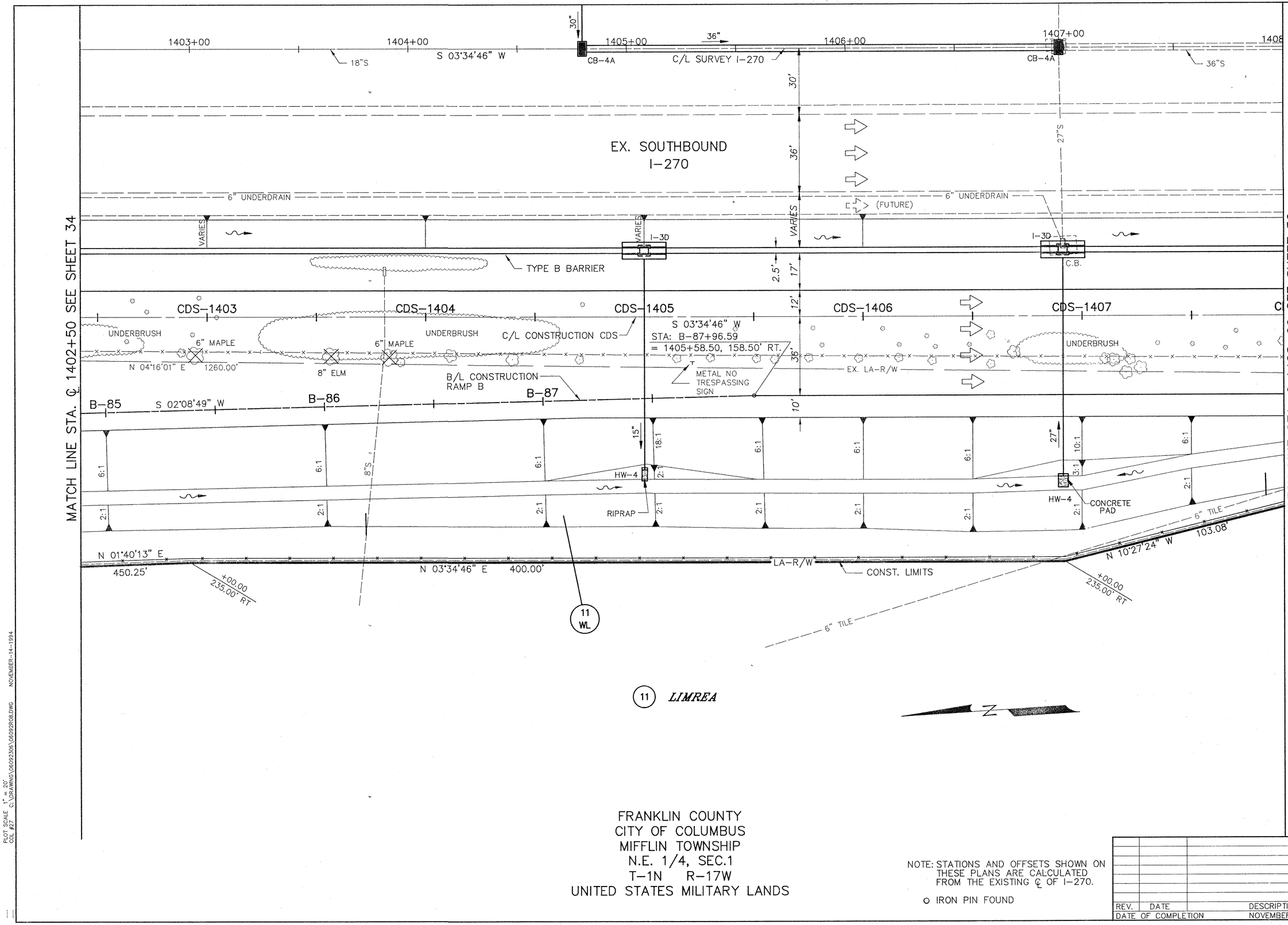

FRANKLIN COUNTY
CITY OF COLUMBUS
MIFFLIN TOWNSHIP
N.E. 1/4, SEC.1
T-1N R-17W
UNITED STATES MILITARY LANDS

NOTE: STATIONS AND OFFSETS SHOWN ON THESE PLANS ARE CALCULATED FROM THE EXISTING ℄ OF I-270.

o IRON PIN FOUND

REV.	DATE	DESCRIPTION
DATE OF COMPLETION		NOVEMBER 14, 1994

RIGHT OF WAY PLAN
STA. 1402+50 TO STA. 1408+00 (RT)

FEDERAL PROJECT NO. NH-270-5()

STATE JOB NO. 06022(0)

FRA-270-32.46

35/50

578
593

PLOT SCALE 1" = 20'
COL #27
C:\DRAWING\06092306\06092R08.DWG NOVEMBER-14-1994

MATCH LINE STA. ℄ 1408+00 SEE SHEET 35

MATCH LINE STA. ℄ 1413+50 SEE SHEET 37

+00 | 1409+00 | 1410+00 | 1411+00 | 1412+00 | 1413+00

S 03°34'46" W

C/L SURVEY I-270

36"S

MH-3

36"S

EX. SOUTHBOUND
I-270

30'

36'

18"

6" UNDERDRAIN

(FUTURE)

6" UNDERDRAIN

VARIES

VARIES

VARIES

I-3D

VARIES

TYPE B BARRIER

17'

12'

2.5"

CDS-1408

CDS-1409

C/L CONSTRUCTION CDS

CDS-1410

CDS-1411

CDS-1412

CDS-1413

+08.44
150.12' RT

S 03°34'46" W

UNDERBRUSH

UNDERBRUSH

UNDERBRUSH

15'

36'

+88.46
150.06' RT

BEGIN RETAINING WALL
STA. CDS-1413+00.00
48.00' RT.

N 04°16'01" E 1260.00'

EX. LA-R/W

N 03°34'11" E 380.02'

N 03°34'40" E
1381.54'

METAL SIGN
NO TRESPASSING

10'

N 85°59'53" W
49.37'

8:1

6" TILE

8:1

8:1

8:1

8:1

2:1

HW-4

8:1

8:1

2:1

2:1

2:1

2:1

2:1

2:1

2:1

CONCRETE PAD

6" CMP

6" CMP

+88.10
199.43' RT

CONST. LIMITS

N 03°15'48" W 163.06'

N 01°11'37" E
512.40'

A

B

C

LA-R/W

N 03°34'46" E 400.00'

+00.00
210.00' RT

11
WL

UNDERBRUSH

+00.00
210.00' RT

11
T

12
T

12
WL

12 *ABBOTT LABORATORIES*

11 *LIMREA*

TABLE FOR TEMPORARY TAKE ON LIMREA PROPERTY

	BEARING	DIST.	STA.	OFFSET
			1412+00.00	210.00' RT.
A	N 03°15'48" W	88.73'		
			1412+88.10	199.43' RT.
B	N 85°59'53" W	6.90'		
			1412+88.05	206.33' RT.
C	N 01°11'37" E	88.12'		

FRANKLIN COUNTY
CITY OF COLUMBUS
MIFFLIN TOWNSHIP
N.E. 1/4, SEC.1
T-1N R-17W
UNITED STATES MILITARY LANDS

NOTE: STATIONS AND OFFSETS SHOWN ON THESE PLANS ARE CALCULATED FROM THE EXISTING ℄ OF I-270.

o IRON PIN FOUND

REV.	DATE	DESCRIPTION
1	1-20-95	CORRECTED STA & OFFSET
DATE OF COMPLETION		NOVEMBER 14, 1994

N

0 10 20 40
HORIZONTAL SCALE IN FEET

FEDERAL PROJECT NO. NH-270-5()

STATE JOB NO. 06022(0)

RIGHT OF WAY PLAN
STA. 1408+00 TO STA. 1413+50 (RT)

FRA-270-32.46

36/50

579
593

PLOT SCALE 1" = 20'
COL. #27
C:\DRAWING\06092306\06092R09.DWG NOVEMBER-14-1994

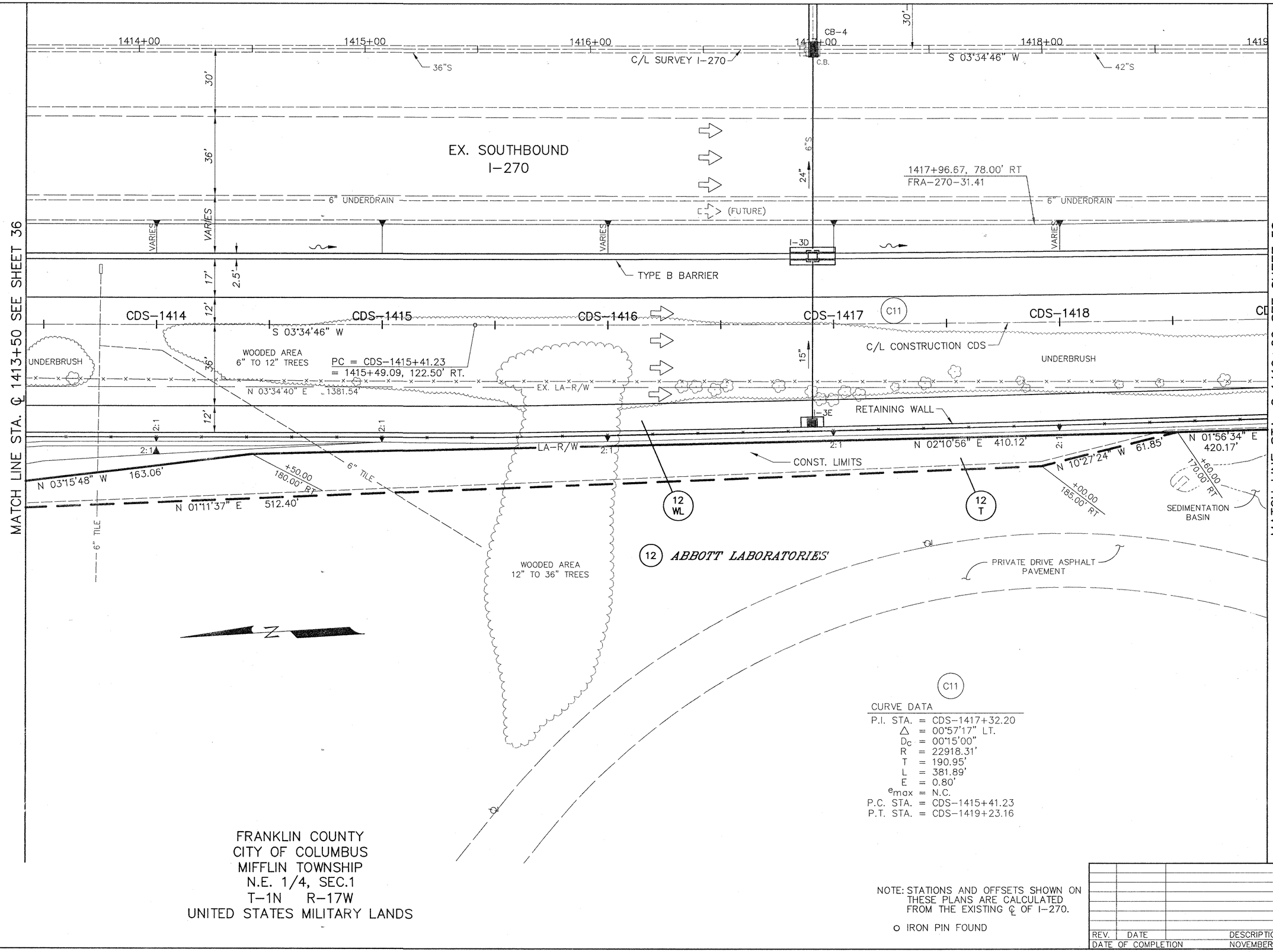

C11

CURVE DATA

P.I. STA.	=	CDS-1417+32.20
△	=	00°57'17" LT.
D_C	=	00°15'00"
R	=	22918.31'
T	=	190.95'
L	=	381.89'
E	=	0.80'
e_{max}	=	N.C.
P.C. STA.	=	CDS-1415+41.23
P.T. STA.	=	CDS-1419+23.16

FRANKLIN COUNTY
CITY OF COLUMBUS
MIFFLIN TOWNSHIP
N.E. 1/4, SEC.1
T-1N R-17W
UNITED STATES MILITARY LANDS

NOTE: STATIONS AND OFFSETS SHOWN ON THESE PLANS ARE CALCULATED FROM THE EXISTING ℄ OF I-270.

o IRON PIN FOUND

REV.	DATE	DESCRIPTION
DATE OF COMPLETION		NOVEMBER 14, 1994

HORIZONTAL SCALE IN FEET
0 10 20 40

FEDERAL PROJECT NO. NH-270-5()

STATE JOB NO. 06022(0)

RIGHT OF WAY PLAN
STA. 1413+50 TO STA. 1419+00 (RT)

FRA-270-32.46

37/50

580
593

PLOT SCALE 1" = 20'
CDL #27
C:\DRAWNG\06092306\06092R10.DWG NOVEMBER-14-1994

MATCH LINE STA. ℄ 1419+00 SEE SHEET 37

+00 | 1420+00 | 1421+00 | 1422+00 | 1423+00 | 1424+00

42"S

S 03°34'46" W

NOTE

C/L SURVEY I-270

EX. SOUTHBOUND
I-270

6" UNDERDRAIN

(FUTURE)

VARIES

TYPE B BARRIER

I-3D

CDS-1419 | CDS-1420 | CDS-1421 | CDS-1422 | CDS-1423 | CDS-1424

S 02°37'29" W

15"

12'

24'

12'

C/L CONSTRUCTION CDS

PT = CDS-1419+23.16
= 1419+31.02, 119.32' RT.

C11

UNDERBRUSH

METAL SIGN-NO TRESPASSING

6" MAPLE

I-3E

27"

N 03°34'40" E 1381.54

EX. LA-R/W

LA-R/W

N 01°56'34"E 420.17'

CONST. LIMITS

12" MAPLE

N 02°34'07"E 170.03'

+80.00
158.00' RT

12
WL

SEDIMENTATION BASIN

18" RCP
PIPE

12" PVC

C.B.

PRIVATE DRIVE
ASPHALT PAVEMENT

PARKING
ISLAND

ASPHALT
PARKING AREA

MATCH LINE STA. ℄ 1424+50 SEE SHEET 39

C11

CURVE DATA

P.I. STA.	=	CDS-1417+32.20
△	=	00°57'17" LT.
D_c	=	00°15'00"
R	=	22918.31'
T	=	190.95'
L	=	381.89'
E	=	0.80'
e_{max}	=	N.C.
P.C. STA.	=	CDS-1415+41.23
P.T. STA.	=	CDS-1419+23.16

12 *ABBOTT LABORATORIES*

FRANKLIN COUNTY
CITY OF COLUMBUS
MIFFLIN TOWNSHIP
N.E. 1/4, SEC.1
T-1N R-17W
UNITED STATES MILITARY LANDS

NOTE: STATIONS AND OFFSETS SHOWN ON THESE PLANS ARE CALCULATED FROM THE EXISTING ℄ OF I-270.

o IRON PIN FOUND

REV.	DATE	DESCRIPTION
DATE OF COMPLETION		NOVEMBER 14, 1994

N

0 10 20 40
HORIZONTAL
SCALE IN FEET

FEDERAL PROJECT NO. NH-270-5()

STATE JOB NO. 06022(0)

RIGHT OF WAY PLAN
STA. 1419+00 TO STA. 1424+50 (RT)

FRA-270-32.46

38/50

581
593

PLOT SCALE 1" = 20'
COL #27 C:\DRAWING\06092306\06092R11.DWG NOVEMBER-14-1994

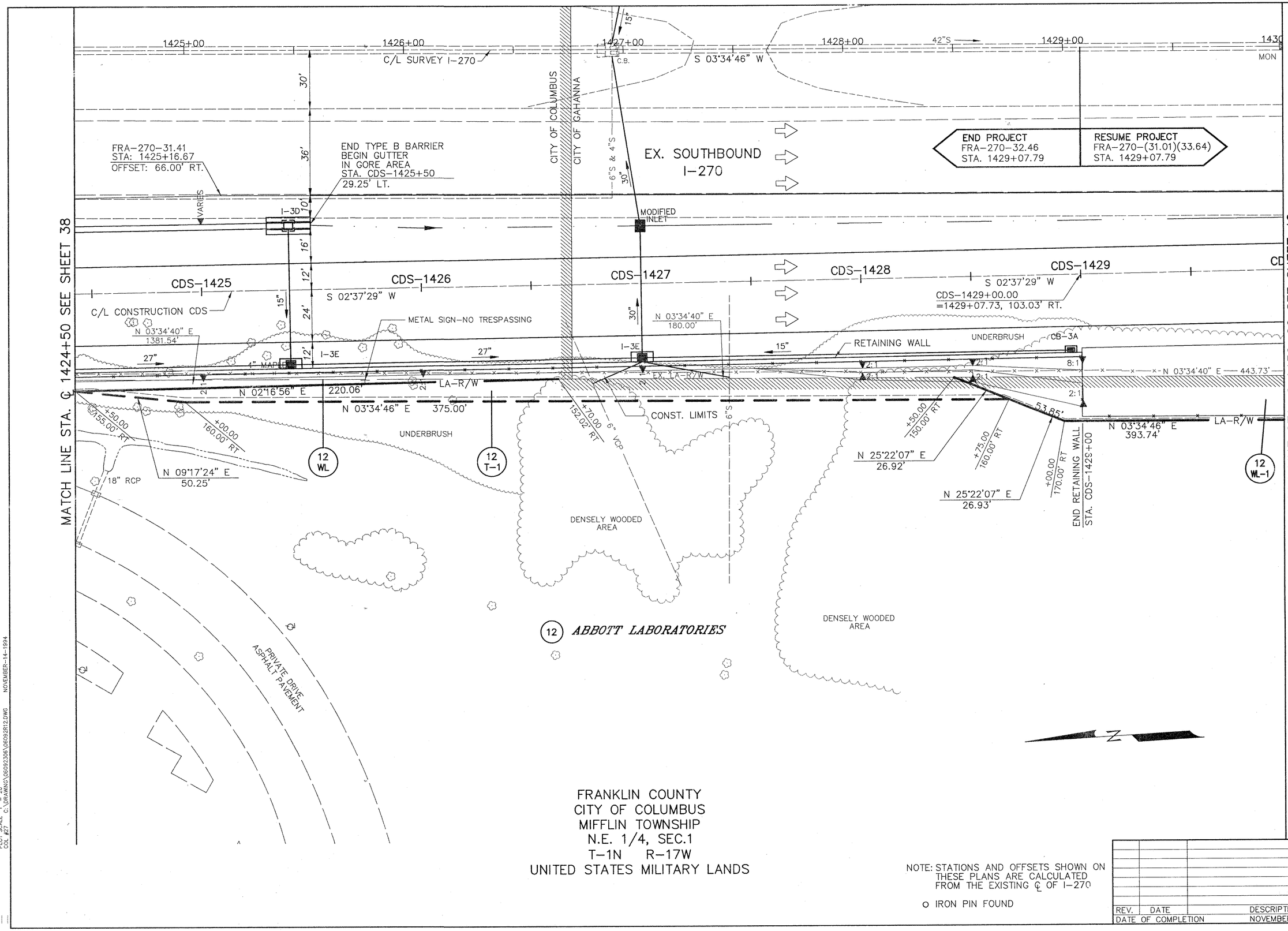

FRANKLIN COUNTY
CITY OF COLUMBUS
MIFFLIN TOWNSHIP
N.E. 1/4, SEC.1
T-1N R-17W
UNITED STATES MILITARY LANDS

NOTE: STATIONS AND OFFSETS SHOWN ON THESE PLANS ARE CALCULATED FROM THE EXISTING ℄ OF I-270

o IRON PIN FOUND

REV.	DATE	DESCRIPTION
DATE OF COMPLETION		NOVEMBER 14, 1994

HORIZONTAL SCALE IN FEET
0 20 40

FEDERAL PROJECT NO. NH-270-5()

STATE JOB NO. 06022(0)

RIGHT OF WAY PLAN
STA. 1424+50 TO STA. 1430+00 (RT)

FRA-270-32.46

39/50

582
593

PLOT SCALE 1" = 20'
COL #27 C:\DRAWNG\06092306\06092R12.DWG NOVEMBER-14-1994

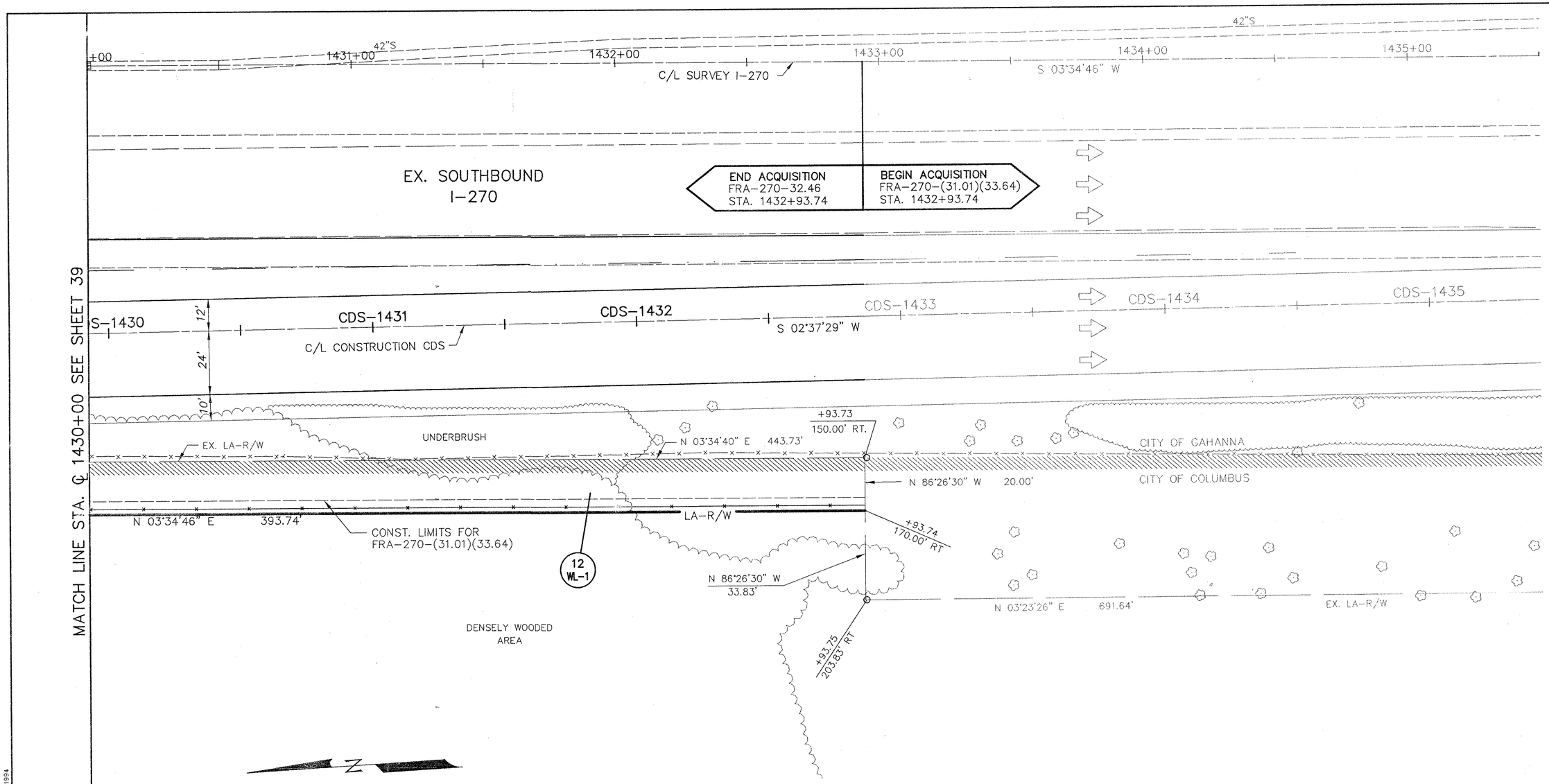

FRANKLIN COUNTY
CITY OF COLUMBUS
MIFFLIN TOWNSHIP
N.E. 1/4, SEC.1
T-1N R-17W
UNITED STATES MILITARY LANDS

NOTE: STATIONS AND OFFSETS SHOWN ON THESE PLANS ARE CALCULATED FROM THE EXISTING ℄ OF I-270.

o IRON PIN FOUND

REV.	DATE	DESCRIPTION
DATE OF COMPLETION		NOVEMBER 14, 1994

HORIZONTAL SCALE IN FEET 0 20 40

FEDERAL PROJECT NO. NH-270-5()

STATE JOB NO. 06022(0)

RIGHT OF WAY PLAN
STA. 1430+00 TO STA. 1435+50 (RT)

FRA-270-32.46

40/50

583
593

PLOT SCALE 1" = 20'
COL #27 C:\DRAWING\06092306\06092R13.DWG NOVEMBER-14-1994

FRANKLIN COUNTY
CITY OF COLUMBUS
MIFFLIN TOWNSHIP
N.E. 1/4, SEC.1
T-1N R-17W
UNITED STATES MILITARY LANDS

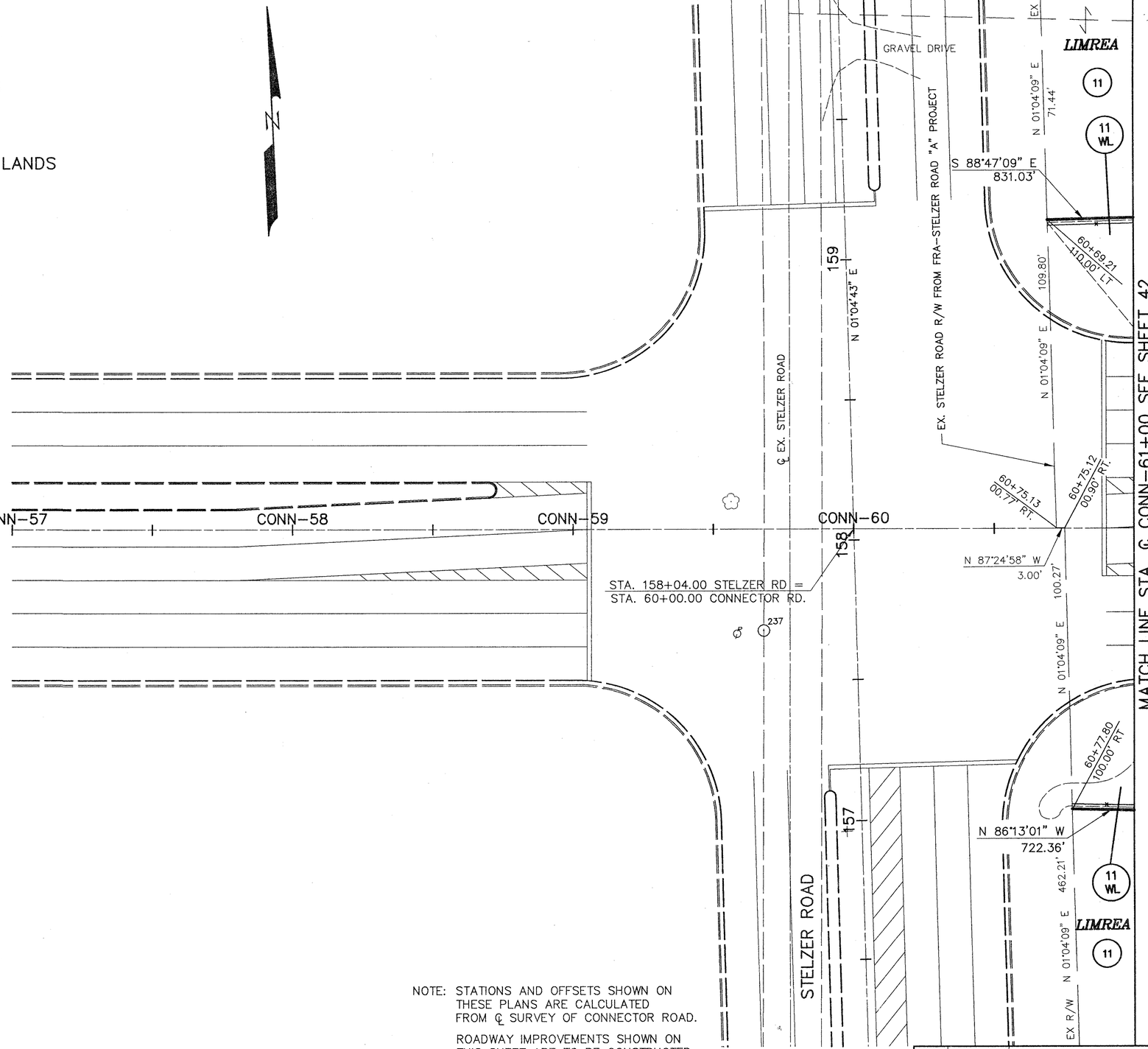

NOTE: STATIONS AND OFFSETS SHOWN ON THESE PLANS ARE CALCULATED FROM ℄ SURVEY OF CONNECTOR ROAD.

ROADWAY IMPROVEMENTS SHOWN ON THIS SHEET ARE TO BE CONSTRUCTED BY OTHERS.
(ODOT FRA-STELZER ROAD "A")

o IRON PIN FOUND

REV.	DATE	DESCRIPTION
DATE OF COMPLETION		

HORIZONTAL SCALE IN FEET
0 10 20 40

FEDERAL PROJECT NO. NH-270-5()

STATE JOB NO. 06022(0)

RIGHT OF WAY PLAN
STA. CONN-57+00 TO STA. CONN-61+00

FRA-270-32.46

41/50

584
593

PLOT SCALE 1" = 20'
COL #27
C:\DRAWNG\06092306\06092627.DWG NOVEMBER-14-1994

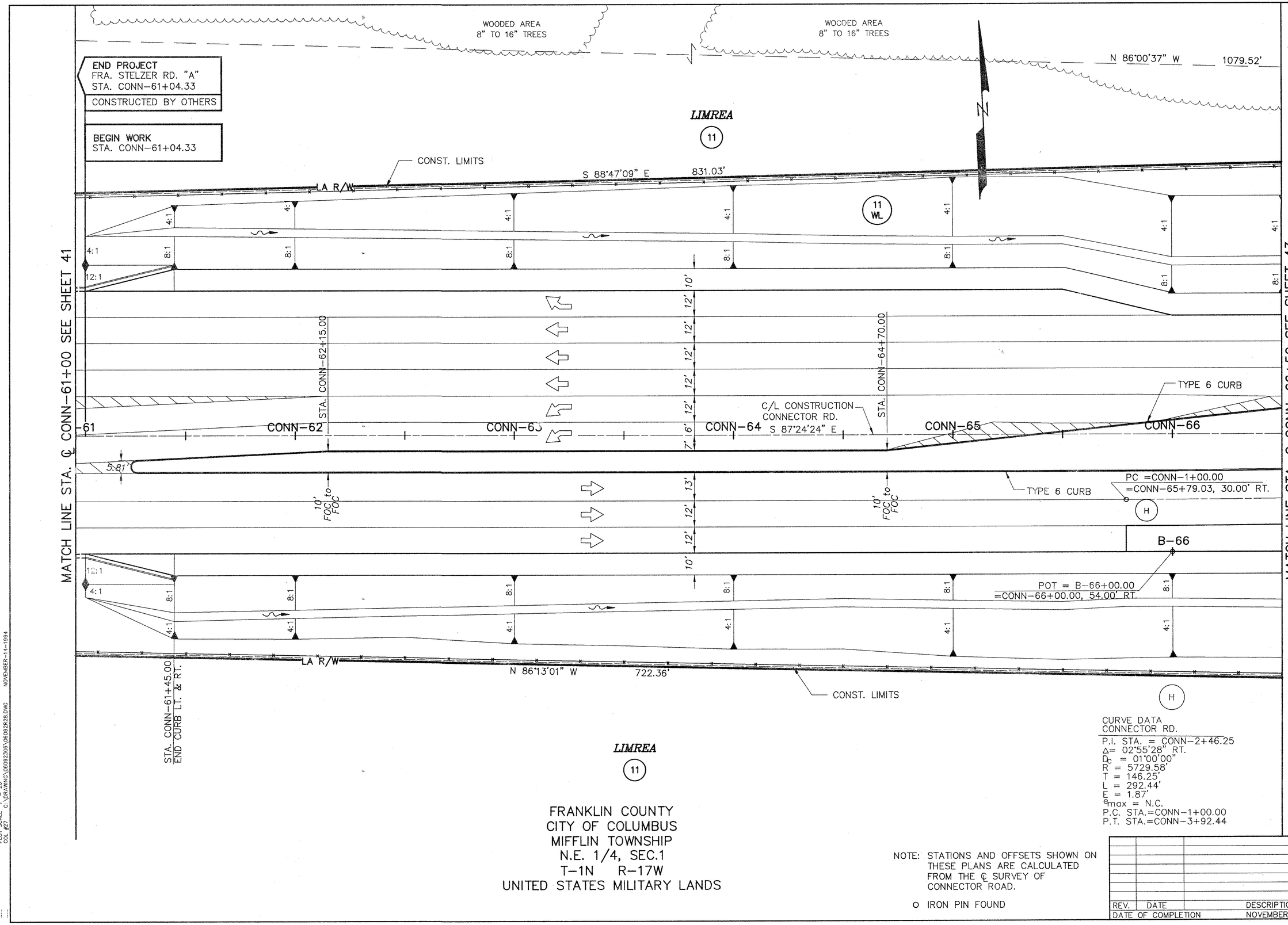

CURVE DATA
CONNECTOR RD.

P.I. STA. = CONN-2+46.25
Δ= 02°55'28" RT.
D_c = 01°00'00"
R = 5729.58'
T = 146.25'
L = 292.44'
E = 1.87'
e_{max} = N.C.
P.C. STA.=CONN-1+00.00
P.T. STA.=CONN-3+92.44

FRANKLIN COUNTY
CITY OF COLUMBUS
MIFFLIN TOWNSHIP
N.E. 1/4, SEC.1
T-1N R-17W
UNITED STATES MILITARY LANDS

NOTE: STATIONS AND OFFSETS SHOWN ON THESE PLANS ARE CALCULATED FROM THE ℄ SURVEY OF CONNECTOR ROAD.

o IRON PIN FOUND

REV.	DATE	DESCRIPTION
DATE OF COMPLETION		NOVEMBER 14, 1994

HORIZONTAL SCALE IN FEET
0 10 20 40

FEDERAL PROJECT NO. NH-270-5()

STATE JOB NO. 06022(0)

RIGHT OF WAY PLAN
STA. CONN-61+00 TO STA. CONN-66+50

FRA-270-32.46

42/50

585/593

PLOT SCALE 1" = 20'
COL. #27 C:\DRAWING\06092306\06092828.DWG NOVEMBER-14-1994

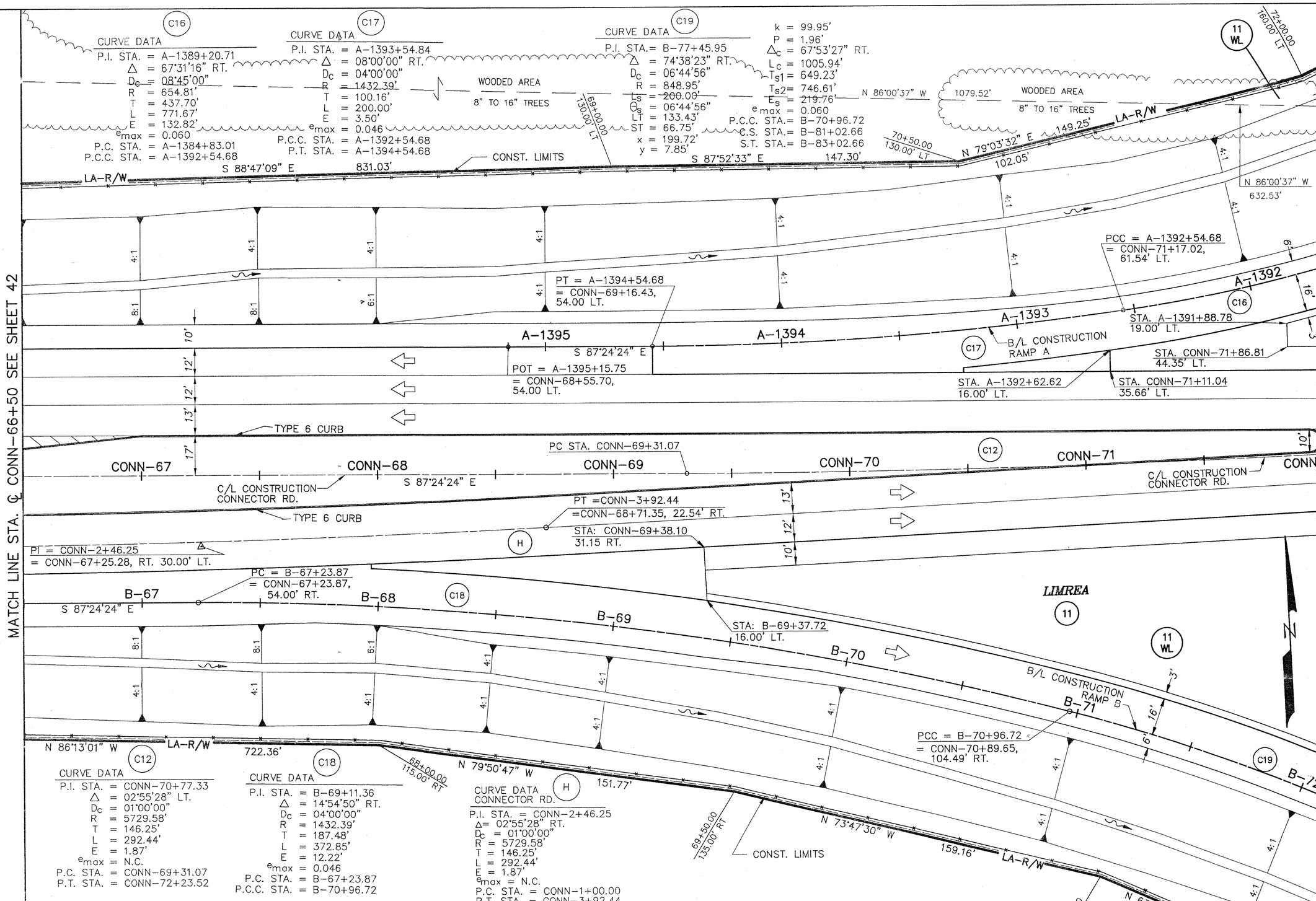

FRANKLIN COUNTY
CITY OF COLUMBUS
MIFFLIN TOWNSHIP
N.E. 1/4, SEC.1
T-1N R-17W
UNITED STATES MILITARY LANDS

NOTE: STATIONS AND OFFSETS SHOWN ON THESE PLANS ARE CALCULATED FROM THE ℄ SURVEY OF CONNECTOR ROAD.

o IRON PIN FOUND

REV.	DATE	DESCRIPTION
DATE OF COMPLETION		NOVEMBER 14, 1994

HORIZONTAL SCALE IN FEET 0 10 20 40

FEDERAL PROJECT NO. NH-270-5()

STATE JOB NO. 06022(0)

RIGHT OF WAY PLAN
STA. CONN-66+50 TO STA. CONN-72+00

FRA-270-32.46

43/50

586/593

PLOT SCALE 1" = 20'
COL #27 C:\DRAWING\06092306\06092R29.DWG NOVEMBER-14-1994

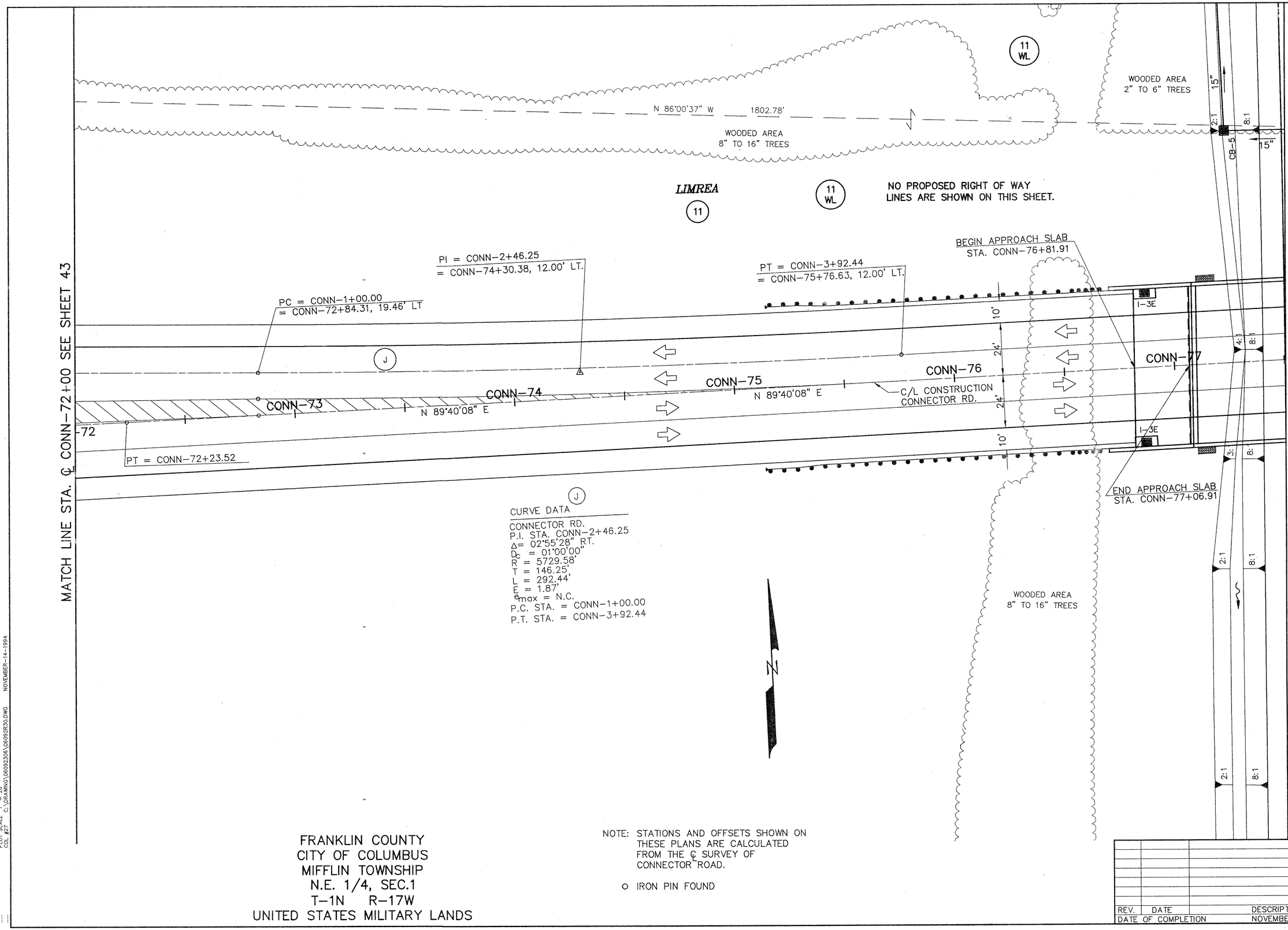

FRANKLIN COUNTY
CITY OF COLUMBUS
MIFFLIN TOWNSHIP
N.E. 1/4, SEC.1
T-1N R-17W
UNITED STATES MILITARY LANDS

NOTE: STATIONS AND OFFSETS SHOWN ON THESE PLANS ARE CALCULATED FROM THE ℄ SURVEY OF CONNECTOR ROAD.

o IRON PIN FOUND

REV.	DATE	DESCRIPTION
DATE OF COMPLETION		NOVEMBER 14, 1994

HORIZONTAL SCALE IN FEET
0 10 20 40

FEDERAL PROJECT NO. NH-270-5()
STATE JOB NO. 06022(0)
FRA-270-32.46

RIGHT OF WAY PLAN
STA. CONN-72+00 TO STA. CONN-77+50

44/50
587/593

PLOT SCALE 1" = 20'
COL #27 C:\DRAWING\06092306\06092R30.DWG NOVEMBER-14-1994

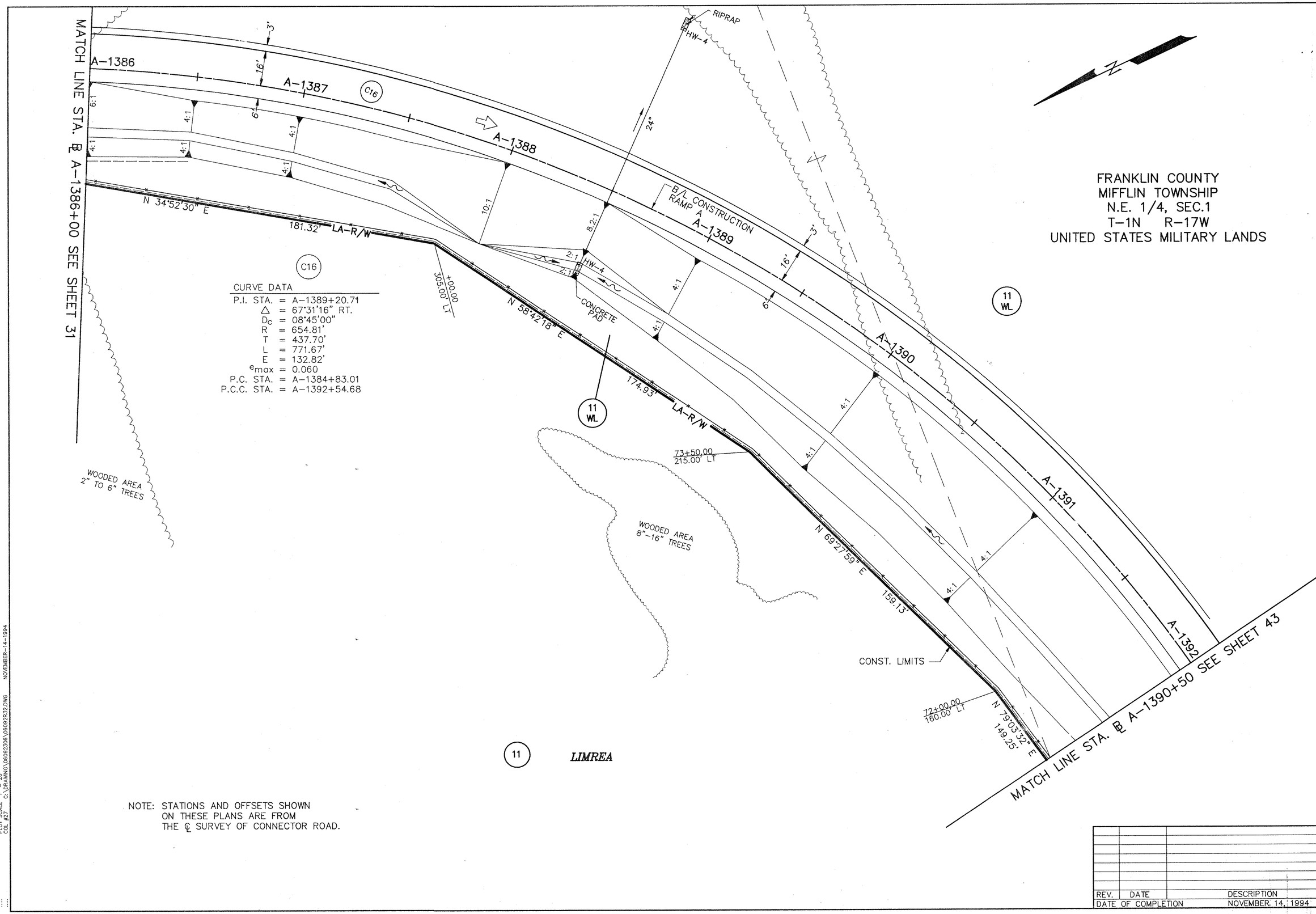

CURVE DATA

P.I. STA.	=	A-1389+20.71
Δ	=	67°31'16" RT.
D_c	=	08°45'00"
R	=	654.81'
T	=	437.70'
L	=	771.67'
E	=	132.82'
e_{max}	=	0.060
P.C. STA.	=	A-1384+83.01
P.C.C. STA.	=	A-1392+54.68

NOTE: STATIONS AND OFFSETS SHOWN ON THESE PLANS ARE FROM THE ℄ SURVEY OF CONNECTOR ROAD.

REV.	DATE	DESCRIPTION
DATE OF COMPLETION		NOVEMBER 14, 1994

HORIZONTAL SCALE IN FEET 0 10 20 40

FEDERAL PROJECT NO. NH-270-5()

STATE JOB NO. 06022(0)

RIGHT OF WAY PLAN
STA. A-1386+00 TO STA. A-1390+50

FRA-270-32.46

45/50

588/593

PLOT SCALE 1" = 20'
COL #27 C:\DRAWING\06092306\06092R32.DWG NOVEMBER-14-1994

FRANKLIN COUNTY
MIFFLIN TOWNSHIP
N.E. 1/4, SEC.1
T-1N R-17W
UNITED STATES MILITARY LANDS

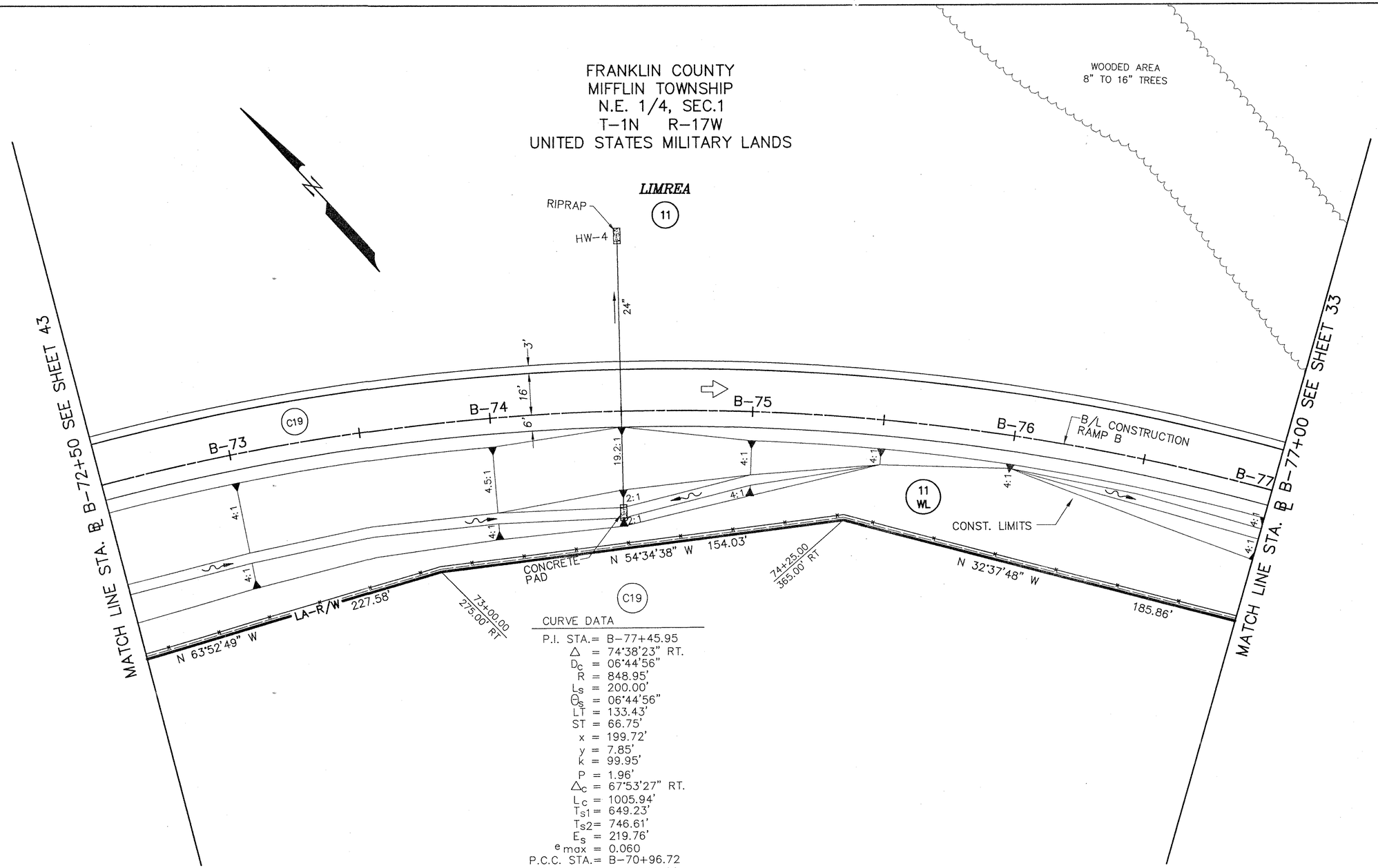

C19

CURVE DATA

P.I. STA.=	B-77+45.95
Δ =	74°38'23" RT.
D_c =	06°44'56"
R =	848.95'
L_s =	200.00'
Θ_s =	06°44'56"
LT =	133.43'
ST =	66.75'
x =	199.72'
y =	7.85'
k =	99.95'
P =	1.96'
Δ_c =	67°53'27" RT.
L_c =	1005.94'
T_{s1} =	649.23'
T_{s2} =	746.61'
E_s =	219.76'
e_{max} =	0.060
P.C.C. STA.=	B-70+96.72
C.S. STA.=	B-81+02.66
S.T. STA.=	B-83+02.66

NOTE: STATIONS AND OFFSETS SHOWN ON THESE PLANS ARE FROM THE ℄ SURVEY OF CONNECTOR ROAD.

REV.	DATE	DESCRIPTION
DATE OF COMPLETION		NOVEMBER 14, 1994

HORIZONTAL SCALE IN FEET
0 10 20 40

FEDERAL PROJECT NO. NH-270-5()

STATE JOB NO. 06022(0)

RIGHT OF WAY PLAN
STA. B-72+50 TO STA. B-77+00

FRA-270-32.46

46/50

589
593

PLOT SCALE 1" = 20'
COL #27 C:\DRAWINGS\06092306\06092R33.DWG NOVEMBER-14-1994

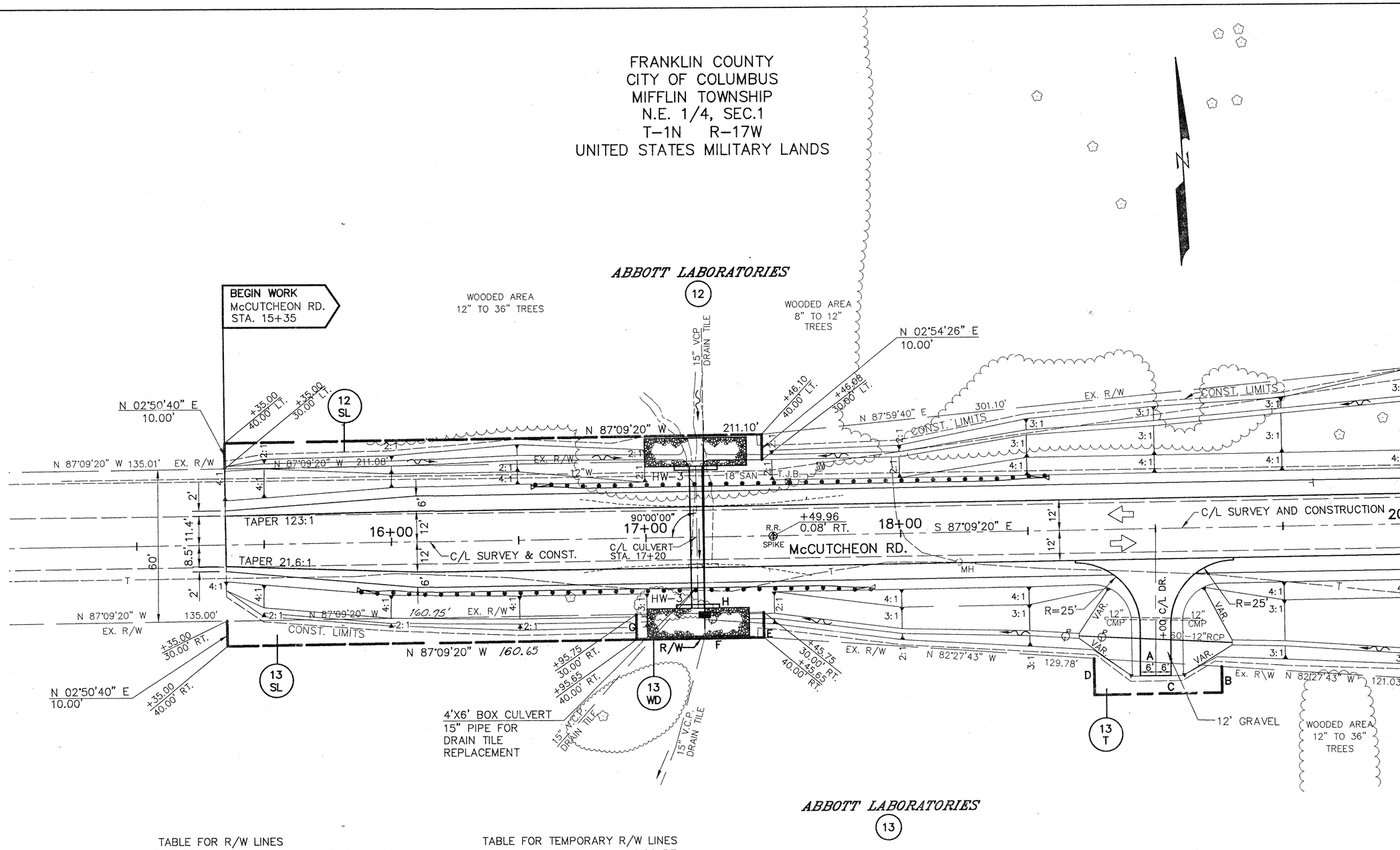

TABLE FOR R/W LINES
AROUND SOUTH END OF THE BOX CULVERT @ 17+20.00 RT.

	BEARING	DIST.	STA.	OFFSET
			17+45.75	30.00' RT.
E	S 03°24'32" W	10.00		
			17+45.65	40.00' RT.
F	N 87°09'20" W	50.00'		
			16+95.65	40.00' RT.
G	N 03°24'32" E	10.00'		
			16+95.75	30.00' RT.
H	S 87°09'20" E	50.00'		
			17+45.75	30.00' RT.

TABLE FOR TEMPORARY R/W LINES
AROUND DRIVEWAY @ 19+00.00 RT.

	BEARING	DIST.	STA.	OFFSET
			18+75.00	50.62' RT.
A	N 82°27'43" W	50.17'		
			19+25.00	54.72' RT.
B	S 02°50'40" W	10.28'		
			19+25.00	65.00' RT.
C	N 87°09'20" W	50.00'		
			18+75.00	65.00' RT.
D	N 02°50'40" E	14.38'		
			18+75.00	50.62' RT.

NOTE: STATIONS AND OFFSETS SHOWN ON THESE PLANS ARE CALCULATED FROM THE EXISTING ℄ OF McCUTCHEON ROAD.

o IRON PIN FOUND

REV.	DATE	DESCRIPTION
1	1-20-95	CORRECTED DISTANCE

DATE OF COMPLETION NOVEMBER 14, 1994

HORIZONTAL SCALE IN FEET 0 10 20 40

FEDERAL PROJECT NO. NH-270-5()

STATE JOB NO. 06022(0)

RIGHT OF WAY PLAN
STA. 15+34 TO STA. 20+00

FRA-270-32.46
McCUTCHEON RD.

PLOT SCALE 1" = 20'
COL #27 C:\DRAWING\06092306\06092R35.DWG NOVEMBER-14-1994

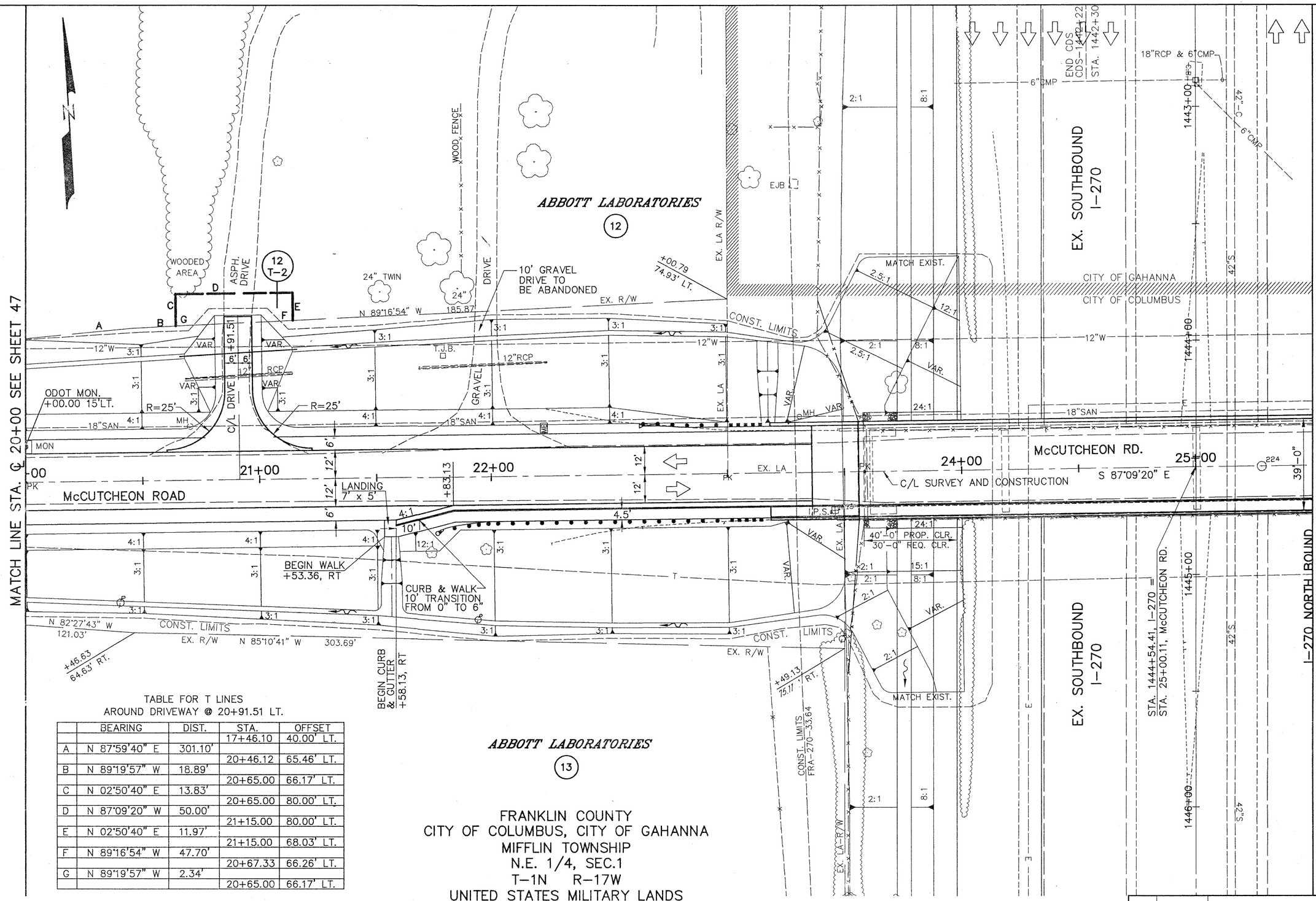

TABLE FOR T LINES
AROUND DRIVEWAY @ 20+91.51 LT.

	BEARING	DIST.	STA.	OFFSET
			17+46.10	40.00' LT.
A	N 87°59'40" E	301.10'		
			20+46.12	65.46' LT.
B	N 89°19'57" W	18.89'		
			20+65.00	66.17' LT.
C	N 02°50'40" E	13.83'		
			20+65.00	80.00' LT.
D	N 87°09'20" W	50.00'		
			21+15.00	80.00' LT.
E	N 02°50'40" E	11.97'		
			21+15.00	68.03' LT.
F	N 89°16'54" W	47.70'		
			20+67.33	66.26' LT.
G	N 89°19'57" W	2.34'		
			20+65.00	66.17' LT.

ABBOTT LABORATORIES
(13)

FRANKLIN COUNTY
CITY OF COLUMBUS, CITY OF GAHANNA
MIFFLIN TOWNSHIP
N.E. 1/4, SEC.1
T-1N R-17W
UNITED STATES MILITARY LANDS

NOTE: STATIONS AND OFFSETS SHOWN ON THESE PLANS ARE CALCULATED FROM THE EXISTING ℄ OF McCUTCHEON ROAD.

O IRON PIN FOUND

REV.	DATE	DESCRIPTION
1	1-20-95	CORRECTED STA & OFFSET
DATE OF COMPLETION		NOVEMBER 14, 1994

HORIZONTAL SCALE IN FEET
0 10 20 40

FEDERAL PROJECT NO. NH-270-5()

STATE JOB NO. 06022(0)

RIGHT OF WAY PLAN
STA. 20+00 TO STA. 25+50

FRA-270-32.46
McCUTCHEON RD.

48/50

591
593

PLOT SCALE 1" = 20'
COL #27
C:\DRAWNG\06092306\06092936.DWG NOVEMBER-14-1994

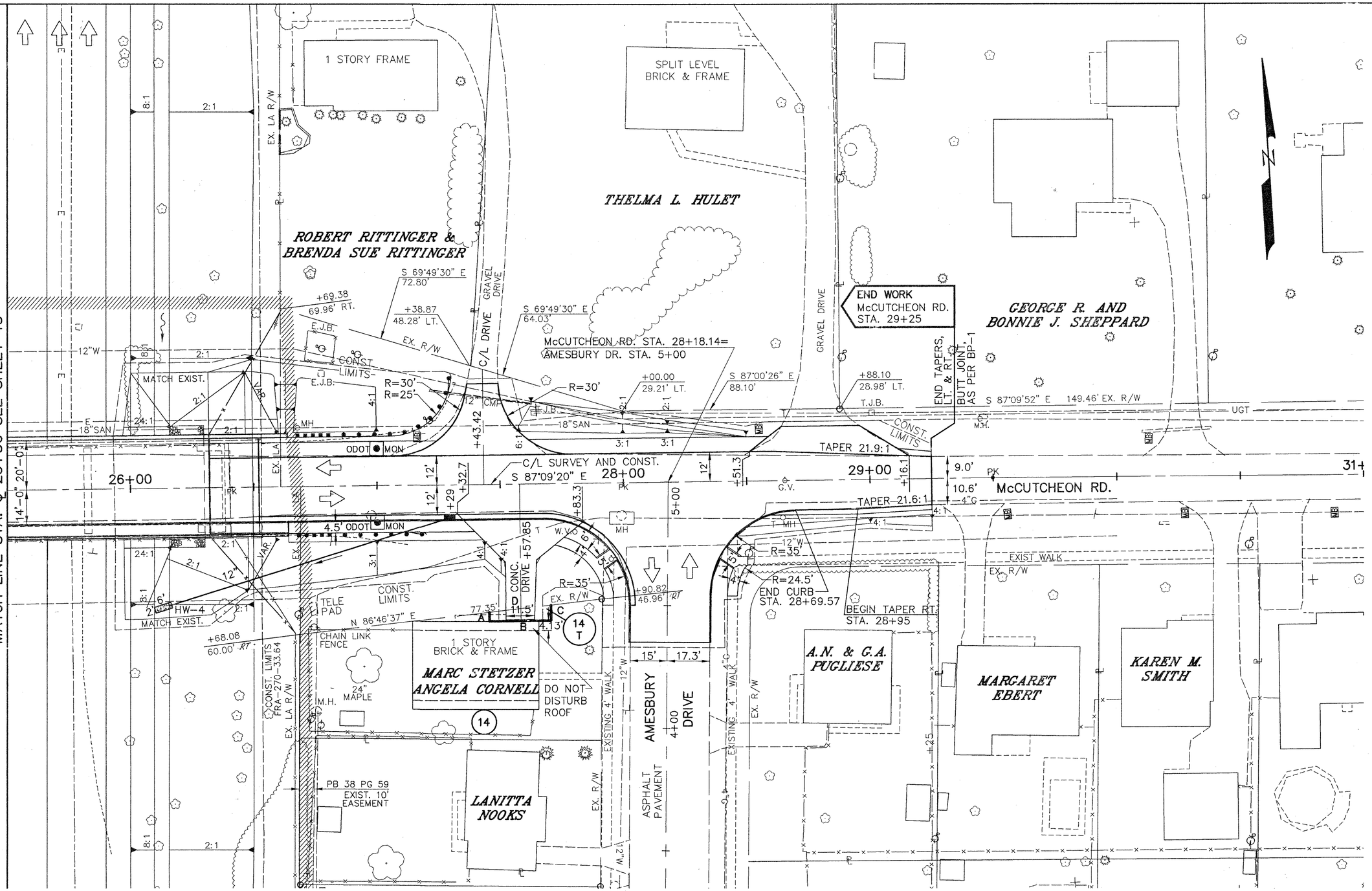

TABLE FOR T LINES
AROUND DRIVEWAY @ 27+57.85 RT.

	BEARING	DIST.	STA.	OFFSET
			27+45.00	51.83' RT.
A	N 02°50'40" E	3.64'		
			27+45.00	55.46' RT.
B	N 87°09'20" W	25.00'		
			27+70.00	55.46' RT.
C	N 02°50'40" W	6.29'		
			27+70.00	49.17' RT.
D	N 86°46'37" E	25.14'		
			27+45.00	51.83' RT.

FRANKLIN COUNTY
CITY OF GAHANNA
MIFFLIN TOWNSHIP
N.E. 1/4, SEC.1
T-1N R-17W
UNITED STATES MILITARY LANDS

NOTE: STATIONS AND OFFSETS SHOWN ON THESE PLANS ARE FROM THE EXISTING ℄ OF McCUTCHEON ROAD.

○ IRON PIN FOUND

REV.	DATE	DESCRIPTION
1	1-20-95	CORRECT OFFSET DIRECTION
DATE OF COMPLETION		NOVEMBER 14, 1994

HORIZONTAL SCALE IN FEET 0 10 20 40

FEDERAL PROJECT NO. NH-270-5()

STATE JOB NO. 06022(0)

RIGHT OF WAY PLAN
STA. 25+50 TO STA. 29+25

FRA-270-32.46
McCUTCHEON RD.

49/50

592
593

PLOT SCALE 1" = 20'
COL #27
C:\DRAWING\06092306\06092R37.DWG NOVEMBER-14-1994

TABLE FOR PROPERTY AND R/W LINES AT GALLERY STREET

	BEARING	DIST.	STA.	OFFSET
			1389+15.96	176.21' LT.
A	S 85°55'31" E	28.82'		
			1389+17.25	205.00' LT.
B	S 85°55'31" E	10.01'		
			1389+17.69	215.00' LT.
C	S 02°33'40" W	57.44'		
			1389+74.14	214.04' LT.
D	S 31°00'42" E	16.72'		
			1389+17.25	205.00' LT.
E	S 01°34'52" W	43.78'		
			1389+60.30	205.00' LT.
F	N 31°00'42" W	53.45'		
			1389+15.96	176.21' LT.
			1389+60.30	205.00' LT.
G	S 31°00'42" E	85.79		
			1390+31.06	251.55' LT.
H	Δ =53°26'15"	ARC L=46.67'		
			1390+71.00	232.40' LT.
I	N 59°02'06" W	31.27'		
			1390+56.20	205.00' LT.
J	N 01°54'19" E	97.50'		
			1389+60.30	205.00' LT.
			1389+56.20	205.00' LT.
K	N 59°02'06" W	91.12'		
			1390+12.67	126.46' LT.
			1390+71.00	232.40' LT.
L	Δ_1 =41°50'40"	ARC L_L =36.52		
			1391+03.32	246.16' LT.
	Δ_2 =57°47'45"	ARC L_R=20.17'		
			1391+21.65	251.09' LT.
M	N 80°45'08" W	46.42'		
			1391+16.23	205.00' LT.
N	N 02°16'09" E	61.03'		
			1391+56.20	205.00' LT.
			1391+16.23	205.00' LT.
O	N 80°45'08" W	80.51'		
			1391+06.74	125.06' LT.
			1391+21.65	251.09' LT.
P	Δ_1 =12°25'18"	ARC L_1=23.85'		
			1391+44.75	247.86' LT.
	Δ_2 =41°24'35"	ARC L_2=36.14'		
			1391+76.86	234.52' LT.
			1391+16.23	205.00' LT.
Q	S 02°33'01" W	61.42'		
			1391+76.64	205.00' LT.

TABLE FOR PROPERTY AND R/W LINES AT TRILBY COURT AND FANWICK COURT

	BEARING	DIST.	STA.	OFFSET
			1391+76.64	205.00' LT.
A	N 86°51'59" W	29.53'		
			1391+76.86	234.52' LT.
B	Δ =57°22'13"	ARC L=50.07'		
			1392+22.59	222.91' LT.
C	N 53°53'20" E	23.06'		
			1392+36.87	205.00' LT.
D	S 02°49'54" W	61.23'		
			1391+76.64	205.00' LT.
			1392+22.59	222.91' LT.
E	Δ =53°29'15"	ARC L=46.68'		
			1392+55.59	252.79' LT.
F	S 24°37'34" W	105.25'		
			1393+51.79	214.48' LT.
G	S 86°25'05" E	11.38'		
			1393+51.79	203.10' LT.
H	S 04°10'14" W	116.84'		
			1393+51.78	203.10' LT.
I	S 86°25'05" E	8.60'		
			1393+51.52	194.51' LT.
			1393+51.79	214.48' LT.
J	S 11°44'24" W	28.66'		
			1393+79.89	210.41' LT.
K	S 25°42'25" E	15.27'		
			1393+66.58	202.94' LT.
L	S 04°10'14" W	15.05'		
			1393+51.78	203.10' LT.
			1393+66.58	202.94' LT.
M	S 25°42'25" E	17.26'		
			1393+51.52	194.50' LT.
			1393+79.89	210.41' LT.
N	S 25°42'25" E	102.43'		
			1394+59.41'	252.65' LT.
O	Δ =49°08'14"	ARC L=42.88'		
			1394+92.92	231.13' LT.
P	N 66°56'32" W	31.16'		
			1394+81.78	201.75' LT.
Q	S 04°10'14" W	115.21'		
			1393+70.08	202.90' LT.
			1394+91.92	230.41' LT.
R	Δ =48°21'34"	ARC L=42.20'		
			1395+32.25	242.20' LT.
S	N 71°12'28" E	44.49'		
			1395+48.54	201.06' LT.
T	S 04°10'14" W	66.76'		
			1394+81.78	201.75' LT.
			1395+32.25	240.64' LT.
U	Δ =47°09'22"	ARC L=41.15'		
			1395+51.20	277.07' LT.
V	S 42°31'01" W	106.73'		
			1396+34.32	210.00' LT.
W	S 42°31'01" W	15.83'		
			1396+46.53	200.05' LT.
X	S 04°10'14" W	97.99'		
			1395+48.54	201.06' LT.
Ⓨ	SEE PLAN INSERT			
			1396+34.32	210.00' LT.
Z	S 03°34'46" W	17.23'		
			1396+51.45	210.00' LT.
AA	S 86°26'43" E	10.00'		
			1396+51.46	200.00' LT.
			1396+51.44	247.26' LT.
BB	S 86°26'43" E	37.25'		
			1396+51.45	210.00' LT.
CC	S 17°33'51" E	95.25'		
			1397+40.27	281.61' LT.
			1396+51.46	200.00' LT.
DD	S 04°11'04" W	53.03'		
			1397+04.48	199.44' LT.
			1396+51.48	134.84' LT.
EE	S 47°03'09" E	83.56		
			1397+56.81	263.21' LT.

TABLE FOR PROPERTY AND R/W LINES AT BOCA COURT

	BEARING	DIST.	STA.	OFFSET
			1396+51.45	210.00' LT.
CC	S 17°33'51" E	95.25'		
			1397+40.27	281.61' LT.
A	Δ =25°59'42"	ARC L=24.95		
			1397+04.49	199.44' LT.
B	S 47°03'09" E	82.49'		
			1397+56.81	263.21' LT.
C	Δ =26°02'36"	ARC L=25.00'		
			1397+79.83	253.89' LT.
D	S 73°27'27" E	56.56'		
			1397+67.14	198.78' LT.
E	S 04°11'04" W	62.65'		
			1397+04.49	199.44' LT.
F	Δ =26°02'36"	ARC L=25.00'		
			1398+04.55	255.65' LT.
G	N 79°09'54" E	59.29'		
			1398+19.31	198.23' LT.
H	S 04°11'04" W	52.17'		
			1397+67.14	198.78' LT.
I	Δ =15°37'58"	ARC L=15.00'		
			1398+18.12	261.95' LT.
J	S 53°43'34" W	67.66'		
			1398+61.48	210.00' LT.
K	S 53°43'34" W	16.06'		
			1398+71.77	197.67' LT.
L	S 04°11'04" W	52.46'		
			1398+19.31	198.23' LT.
M	Δ =31°15'07"	ARC L=30.00'		
			1398+37.81	284.08' LT.
N	S 29°07'21" W	97.11'		
			1399+25.43	242.20' LT.
O	N 86°24'35" W	19.15'		
			1399+25.42	223.20' LT.
P	N 49°56'17" E	10.14'		
			1399+19.36	215.00' LT.
Q	S 49°56'17" E	6.22'		
			1399+15.66	210.00' LT.
R	S 03°34'46" W	54.18'		
			1398+61.48	210.00' LT.
S	S 49°56'17" E	15.78'		
			1399+06.28	197.31' LT.
T	N 04°10'14"W	34.51'		
			1399+06.28	197.31' LT.
U	S 49°56'17" E	27.03'		
			1398+90.21	175.58' LT.
V	S 53°43'34" W	28.78'		

PLOT SCALE... COL #27
C:\DRAWNG\06092306\06092TBL.DWG NOVEMBER-14-1994

FEDERAL PROJECT NO. NH-270-5()
STATE PROJECT NO. 06022(0)

RIGHT OF WAY PLAN
PROPERTY AND R/W LINE DESCRIPTION

FRA-270-32.46

50/50

593/593

STELZER ROAD

PB-19 STA. 60+67 CONNECTOR 97' LT.

STA. 158+10.00 STELZER ROAD = STA. 60+00.00 EASTON

Ⓢ STA. 159+07 STELZER RD. 200 WATTS (SIGN NO. 26)

PB-22

SA-2

2-NO. 6

61+55 82' LT. PB-22

SIGNAL POWER PULL BOX

SEE SIGNAL PLANS FOR CONTINUATION

INTERCONNECT PULL BOX

2-NO. 6, 4-NO. 4

2-3" CONDUIT IN SAME TRENCH

STUBBED AND CAPPED CONDUIT AT STELZER RD. STA. 157+17, 85' RT.

PROPOSED POWER SERVICE 'S' STA. 157+12, STELZER RD., 85' RT

PROPOSED POWER SERVICE 'E' STA. 157+08, STELZER RD., 85' RT

157+17 STELZER RD. 85' RT. (INSTALL AT END OF EXISTING STUBBED & CAPPED 3" CONDUIT) PB-18

157+09 STELZER RD. 88' RT. PB-21

EXISTING 3" CONDUIT AND 480 VOLT POWER FEED. INSTALLED IN PROJ. FRA-STELZER RD.-PHASE 'A' PLAN.

EXISTING 3" CONDUIT WITH 480 VOLT POWER FEED INSTALLED IN PROJ. FRA-STELZER RD.-PHASE 'A' PLAN.

EXIST. 480 VOLT CONTROL SITE PAD MOUNTED. LOCATED AND INSTALLED IN FRA-STELZER RD.-PHASE 'A' PLAN.

EXISTING 18" PULL BOX STA. 153+58, 52' RT. INSTALLED IN PROJ. FRA-STELZER RD.-PHASE 'A' PLAN.

EXIST. 24" PULL BOX STA. 153+55, LT. INSTALLED IN PROJ. FRA-STELZER RD.-PHASE 'A' PLAN.

151+85

65+10 XTRA 18" PB FOR EASTBD BR. LTG.

CIR. EN (2-NO.4) IN SAME TRENCH W/SIGNAL POWER

STA. 61+50, 12' LT., AT 400 W, II, 12', 41.7 SA-2

STA. 63+40, 12' LT., AT 400 W, II, 12', 41.7 SA-4

STA. 65+30, 12' LT., AT 400 W, II, 12', 41.7 SA-6

STA. 67+30, 12' LT., AT 400 W, II, 12', 41.7 SA-8

SA-10 STA. 69+20, 12' LT., AT 400 W, II, 12', 41.7

SIGNAL POWER PULL BOX

EASTON

A-1395

A-1394

MATCH LINE STA. 70+00 SEE SHEET 601

RAISED MEDIAN

INTERCONNECT PULL BOX

B-66

B-67

B-68

B-69

RAMP 'B'

CIR. EN (2-NO.4) IN SAME TRENCH W/INTERCONNECT

CIR. ES (2-NO.4) IN SAME TRENCH W/INTERCONNECT

62+50 FUTURE SIGN TRUSS

STA. 63+40, 12' RT., AT 400 W, II, 12', 41.7 SA-3

STA. 61+50, 12' RT., AT 400 W, II, 12', 41.7 SA-1

STA. 65+30, 12' RT., AT 400 W, II, 12', 41.7 SA-5

STA. 67+30, 12' RT., AT 400 W, II, 12', 41.7 SA-7

STA. 68+00 CONNECTOR Ⓢ 675 WATTS (SIGN NO. 31)

STA. 68+10 RAMP B 11' RT. PB-20

STA. 69+20 RAMP B, 10' RT., AT 400 W, II, 10', 41.7 SA-9

ODOT AS-BUILT INFO.

NOTES:
FOR LIGHTING LEGEND SEE SHEET 369
FOR QUANTITIES SEE SHEETS 365-367, 599
FOR SIGNAL QUANTITIES SEE SHEET 357
FOR INTERCONNECT QUANTITIES SEE SHEETS 340 & 357

HORIZONTAL SCALE IN FEET 0 25 50 100

CALC. BY: DATE: CHKD. BY: DATE:

LIGHTING PLAN ENHANCEMENTS
STA. 57+00 TO STA. 70+00 EASTON

FRA-270-32.46

600
601

POLE NO.	STATION	NO. OF 175W MH LUMINAIRES (BY OTHERS)
EN-1	77+03.5 LT.	5
EN-2	77+37.5 LT.	2
EN-3	77+71.5 LT.	2
EN-4	78+05.5 LT.	5
EN-5	78+40.5 LT.	2
EN-6	78+75.5 LT.	2
EN-7	79+10.5 LT.	5
EN-8	79+41.4 LT.	2
EN-9	79+72.3 LT.	2
EN-10	80+03.2 LT.	5
EN-11	80+33.1 LT.	2
EN-12	80+63.0 LT.	5
ES-1	77+03.5 RT.	5
ES-2	77+37.5 RT.	2
ES-3	77+71.5 RT.	2
ES-4	78+05.5 RT.	5
ES-5	78+40.5 RT.	2
ES-6	78+75.5 RT.	2
ES-7	79+10.5 RT.	5
ES-8	79+41.4 RT.	2
ES-9	79+72.3 RT.	2
ES-10	80+03.2 RT.	5
ES-11	80+33.1 RT.	2
ES-12	80+63.0 RT.	5

LEGEND

• BRIDGE MOUNTED DECORATIVE LIGHT POLES, 13.7 ' MOUNTING HEIGHT. (BY OTHERS)

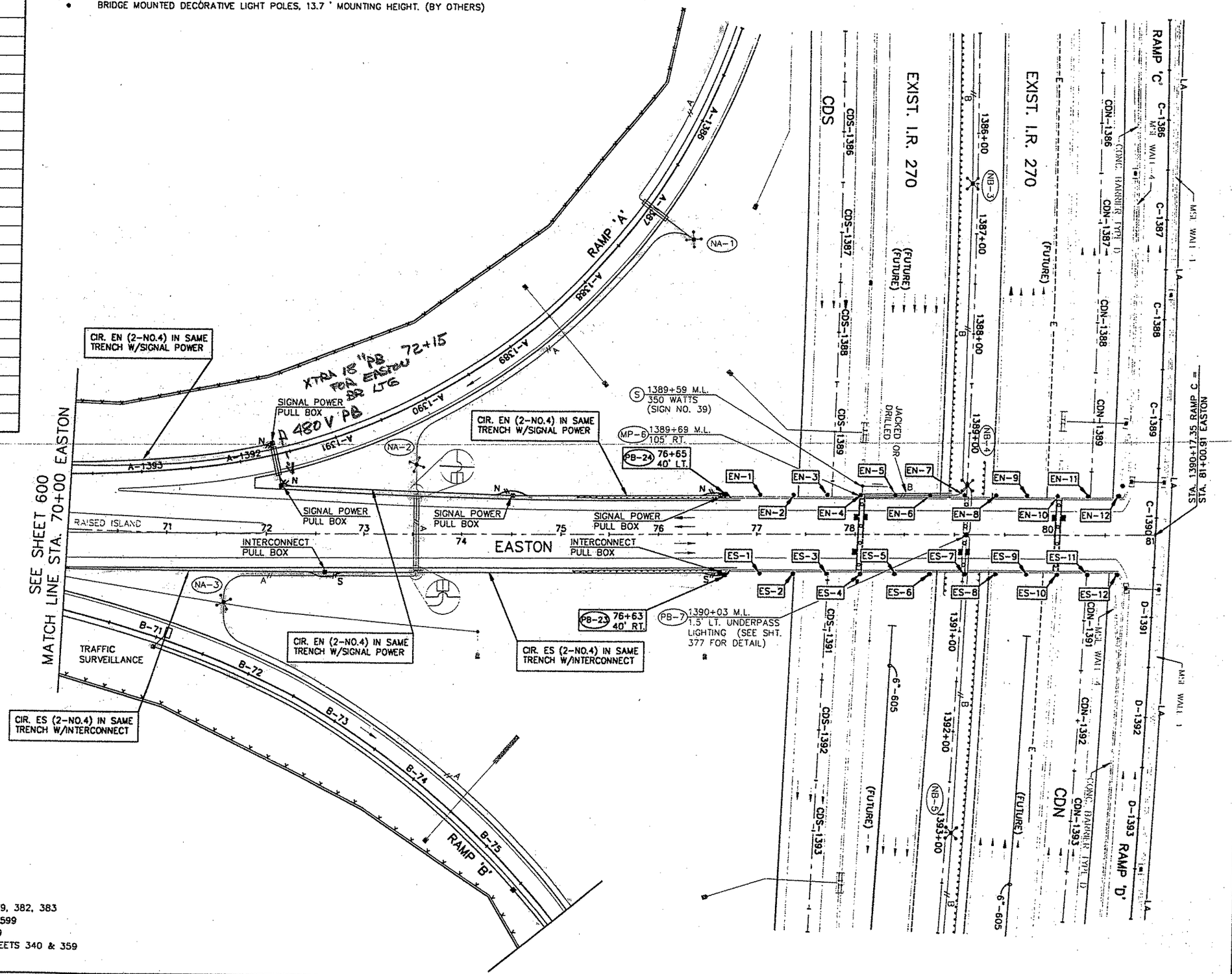

NOTES

FOR LIGHTING LEGEND SEE SHEET 369
FOR TOWER ELEVATIONS SEE SHEETS 379, 382, 383
FOR QUANTITIES SEE SHEETS 365-367, 599
FOR SIGNAL QUANTITIES, SEE SHEET 359
FOR INTERCONNECT QUANTITIES, SEE SHEETS 340 & 359

0 25 50 100 HORIZONTAL SCALE IN FEET

CALC. BY: DATE:
CHKD. BY: DATE:

LIGHTING PLAN ENHANCEMENTS
STA. 70+00 TO STA. 81+01 EASTON

FRA-270-32.46

601
601

INDEX OF SHEETS

Title Sheet	1
Maintenance of Traffic Notes	2
Traffic Control Notes	2–4
Traffic Control General Summary	4
Stelzer and Easton Way Signal	5–7
Easton Way and Ramp 'D' Signal	8
Mast Arm Orientation Sheet	9
Lighting Modification Plan	10–12

STATE OF OHIO
DEPARTMENT OF TRANSPORTATION

FRA-270 @ EASTON WAY

CITY OF COLUMBUS
MIFFLIN TOWNSHIP
FRANKLIN COUNTY

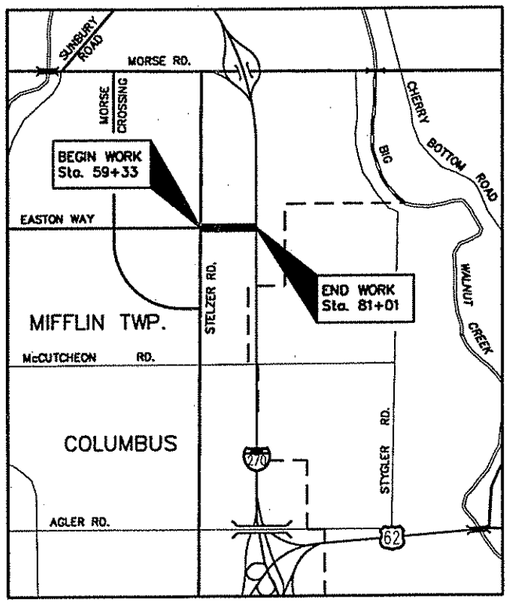

LOCATION MAP

SCALE IN MILES

PORTION TO BE IMPROVED

STATE & FEDERAL ROUTES

OTHER ROADS

PROJECT DESCRIPTION

Modification of signal installations at Easton Way & Stelzer Rd. and Easton Way & I-270 N/B Ramps. Relocation of lighting control centers at Easton Way & Stelzer Rd. in conjuction with streetscape upgrades.

LIMITED ACCESS

This improvement is especially designed for through traffic and has been declared a limited access highway or freeway by action of the director in accordance with the provisions of section 5511.02 of the Revised Code of Ohio.

1997 SPECIFICATIONS

The standard specifications of the State of Ohio, Department of Transportation, including changes and supplemental specifications listed in the proposal shall govern this improvement.

FEDERAL PROJECT NO.	NONE
PID NO.	NONE
CONSTRUCTION PROJECT NO.	NONE
RAILROAD INVOLVEMENT	NONE

FRA-270 @ EASTON WAY

1/12

PREPARED BY

ms consultants, inc.

CONSULTING ENGINEERS & PLANNERS

6500 BUSCH BOULEVARD, COLUMBUS, OHIO

FORMERLY MOSURE & SYRAKIS CO.

Registered Engineer _____ Date _____

THE FOLLOWING STANDARD CONSTRUCTION DRAWINGS SHALL BE CONSIDERED A PART THEREOF:

SUPPLEMENTAL PRINTS OF STANDARD CONSTRUCTION DRAWINGS								SUPPLEMENTAL SPECIFICATIONS	
ODOT								ODOT	
MT-35.10M	1/30/95	HL-20.11M	3/31/95	TC-41.20M	7/01/94	TC-81.20M	11/24/93		
MT-35.11M	1/30/95	HL-30.11M	3/31/95	TC-41.40M	3/31/94	TC-83.10M	11/24/93		
MT-95.30M	4/25/94	HL-40.10M	5/01/95	TC-41.41M	3/31/94	TC-83.20M	11/24/93		
MT-105.10M	4/25/94	HL-60.11M	5/01/95	TC-52.10M	7/29/94	TC-85.10M	11/24/93		
MT-105.11M	4/25/94	HL-60.12M	3/31/95	TC-52.20M	7/29/94	TC-85.20M	11/24/93		

ISSUED

MS CONSULTANTS, INC.
COLUMBUS, OHIO

JAN 12, 2000

Electronic Files (cd) sent to City of Columbus Traffic 10/16/01.

SPAN WIRE TO MAST ARM & HL CC RELOCATION June 1998

UNDERGROUND UTILITIES
TWO WORKING DAYS BEFORE YOU DIG
CALL TOLL FREE 800-362-2764
OHIO UTILITIES PROTECTION SERVICE

AS SENT TO ODOT w/ PERMIT APPL

PLOT SCALE... COL #23
C:\DRAWINGS\102221TD\MASTER\102221TL.DWG JUNE-03-1998-09:28

GENERAL

CONVERSION OF METRIC STANDARD DRAWINGS

THE METRIC STANDARD DRAWINGS REFERENCED IN THIS PLAN SHALL BE CONVERTED TO ENGLISH UNITS USING THE SI (METRIC) TO ENGLISH CONVERSION FACTORS PROVIDED IN SECTION 109.011 OF CONSTRUCTION AND MATERIALS SPECIFICATIONS. THE APPENDIX OF ASTM E-380 SHALL BE UTILIZED FOR ANY ADDITIONAL CONVERSION FACTORS REQUIRED. CONVERSIONS SHALL BE APPROPRIATELY PRECISE AND SHALL REFLECT STANDARD INDUSTRY ENGLISH VALUES WHERE SUITABLE.

UTILITIES

THE IDENTITY AND LOCATION OF THE EXISTING UNDERGROUND UTILITY FACILITIES KNOWN TO BE LOCATED IN THE CONSTRUCTION AREA HAVE BEEN SHOWN ON THE PLANS. THE ENGINEER ASSUMES NO RESPONSIBILITY AS TO THE ACCURACY OR THE DEPTHS OF THE UNDERGROUND FACILITIES SHOWN ON THE PLANS.

UTILITIES SHOWN ARE FROM THE BEST AVAILABLE RECORDS AND FIELD INVESTIGATION, AND ARE NOT NECESSARILY COMPLETE OR EXACT. THE CONTRACTOR IS RESPONSIBLE FOR THE INVESTIGATION, LOCATION, SUPPORT, PROTECTION, AND RESTORATION OF ALL EXISTING UTILITIES AND APPURTENANCE WHETHER SHOWN ON THESE PLANS OR NOT. THE CONTRACTOR SHALL EXPOSE ALL UTILITIES OR STRUCTURES PRIOR TO CONSTRUCTION TO VERIFY THE VERTICAL AND HORIZONTAL EFFECT ON THE PROPOSED CONSTRUCTION. THE CONSTRUCTION OF THIS WORK SHALL BE INCLUDED IN THE PRICE FOR BID OF THE VARIOUS ITEMS.

THE CONTRACTOR SHALL CALL, TOLL FREE, THE OHIO UTILITIES PROTECTION SERVICE (1-800-362-2764) 72 HOURS PRIOR TO CONSTRUCTION AND SHALL NOTIFY ALL UTILITY COMPANIES AT LEAST 48 HOURS PRIOR TO WORK IN THE VICINITY OF THEIR UNDERGROUND LINES.

LISTED BELOW ARE ALL UTILITIES LOCATED WITHIN THE PROJECT CONSTRUCTION LIMITS TOGETHER WITH THEIR RESPECTIVE OWNERS:

AMERICAN ELECTRIC POWER
215 N. FRONT STREET
COLUMBUS, OHIO 43215
(614) 464-7666

AMERITECH
150 E. GAY ST., RM. 6C
COLUMBUS, OHIO 43215
(614) 223-8535

COAXIAL COMMUNICATIONS
3770 EAST LIVINGSTON AVE.
COLUMBUS, OHIO 43227
(614) 236-1292

WARNER CABLE
1166 DUBLIN RD.
COLUMBUS, OHIO 43215
(614) 481-5263

COLUMBIA GAS OF OHIO, INC.
939 WEST GOODALE STREET
COLUMBUS, OHIO 43215
(614) 460-2318

COLUMBIA GAS TRANSMISSION CORP.
1440 McNAUGHTEN RD.
COLUMBUS, OHIO 43232
(614) 460-6904

CITY OF COLUMBUS
DIVISION OF WATER
910 DUBLIN ROAD, 2ND FLOOR
COLUMBUS, OHIO 43215
(614) 645-7611

CITY OF COLUMBUS
DIV. OF TRAFFIC ENGINEERING
109 N. FRONT ST., 2ND FLOOR
COLUMBUS, OHIO 43215
(614) 645-7790

CITY OF COLUMBUS
DIV. OF SEWERAGE & DRAINAGE
910 DUBLIN ROAD, 3RD FLOOR
COLUMBUS, OHIO 43215
(614) 645-7176

METRO COM AXS
50 W. BROAD ST., SUITE M-18
COLUMBUS, OHIO 43215
(614) 221-9230

OHIO DEPT OF TRANSPORTATION
DISTRICT SIX
400 EAST WILLIAMS STREET
DELAWARE, OHIO 43015
(740) 363-1251

THE LOCATION OF THE UNDERGROUND UTILITIES SHOWN ON THE PLANS ARE AS OBTAINED FROM THE OWNERS AS REQUIRED BY SECTION 153.64 O.R.C.

MAINTAINING TRAFFIC

ITEM 614 MAINTAINING TRAFFIC

THE CONTRACTOR SHALL MAINTAIN TRAFFIC AT ALL TIMES ON THE PROJECT IN ACCORDANCE WITH ITEM 614 MAINTAINING TRAFFIC AND AS DESCRIBED BELOW.

ALL SIGNS, BARRICADES, SIGN SUPPORTS, DRUMS, AND INCIDENTALS SHALL BE FURNISHED, ERECTED, MAINTAINED, AND REMOVED BY THE CONTRACTOR IN CONFORMANCE WITH THE MOST RECENT REVISION, CURRENT EDITION OF THE OHIO MANUAL OF UNIFORM TRAFFIC CONTROL DEVICES FOR STREETS AND HIGHWAYS (OMUTCD). ALL SIGNS USED FOR THE MAINTENANCE OF TRAFFIC SHALL BE NEW OR LIKE NEW CONDITION SUBJECT TO THE APPROVAL OF THE ENGINEER. DEVICES USED TO MAINTAIN TRAFFIC SHALL BE REMOVED IMMEDIATELY AFTER THE TERMINATION OF SAID WORK. ALL WORK SHALL OCCUR DURING DAYLIGHT HOURS. WORK BEHIND THE BERM SHALL BE PROTECTED BY DRUMS.

WHEN WORK VEHICLES ARE PARKED ON THE EASTON WAY OR I-270 RAMP SHOULDER, SIGNS, SAFETY FLAGS AND CONES AS SHOWN IN FIGURE C-12 OF THE OMUTCD SHALL BE USED.

SIGNAL SUPPORT INSTALLATION

THE CONTRACTOR SHALL BEGIN THE PROCESS OF REMOVAL OF THE EXISTING STRAIN POLE INSTALLATION AND ERECTION OF NEW SIGNAL SUPPORTS AT THE INTERSECTION OF STELZER ROAD & EASTON WAY AT 6:30 AM AND CONTINUE WORKING UNTIL THE REVISED SIGNAL IS IN OPERATION. TWO LAW ENFORCEMENT OFFICERS WITH PATROL CARS SHALL BE AT THE SITE FOR ASSISTANCE IN CONTROLLING TRAFFIC AT ALL TIMES.

THE CONTRACTOR SHALL BEGIN THE PROCESS OF REMOVAL OF THE EXISTING STRAIN POLE INSTALLATION AND ERECTION OF NEW SIGNAL SUPPORTS AT THE INTERSECTION OF EASTON WAY & THE I-270 RAMPS AT 9:00 AM AND CONTINUE WORKING UNTIL THE REVISED SIGNAL IS IN OPERATION. A LAW ENFORCEMENT OFFICER WITH PATROL CAR SHALL BE AT THE SITE FOR ASSISTANCE IN CONTROLLING TRAFFIC AT ALL TIMES.

IT SHALL BE THE CONTRACTOR'S RESPONSIBILITY TO PROVIDE THE SERVICES AND SCHEDULING OF SAID LAW ENFORCEMENT OFFICER WITH PATROL CAR.

WHEN IT IS NECESSARY TO BLOCK A LANE, THE CONTRACTOR SHALL USE MT-95.30, SUBJECT TO THE APPROVAL OF THE ENGINEER. A FLASHING ARROW PANEL, AS PER MT-35.10, SHALL BE USED. ALL LANE BLOCKAGES SHALL BE REMOVED WHEN THE WORKDAY IS COMPLETED. NO LANE BLOCKAGES SHALL OCCUR ON THE I-270 MAINLINE.

IF IT IS NECESSARY TO STOP ALL TRAFFIC FOR THE ERECTION OF SIGNAL SUPPORTS, THE WORK SHALL BE SO ARRANGED THAT STOPPAGE IS LESS THAN TEN (10) MINUTES IN ONE (1) THIRTY (30) MINUTE PERIOD.

PAYMENT FOR THIS ITEM OF WORK, UNLESS SPECIFICALLY PAID FOR ELSEWHERE, SHALL BE INCLUDED IN THE LUMP SUM BID PRICE FOR ITEM 614 MAINTAINING TRAFFIC, INCLUDING PROVIDING LAW ENFORCEMENT OFFICER(S) WITH PATROL CAR(S) AS REQUIRED.

SIGNING

ITEM 630 SIGN HANGER ASSEMBLY, MAST ARM, AS PER PLAN

THIS ITEM OF WORK SHALL BE AS PER 630 EXCEPT IT SHALL BE FINISHED DARK BLUE SMOOTH, GLOSSY BY TIGER DRYLAC (COLOR SPECIFICATION #349/41040). THE FINISH SHALL BE AN ELECTROSTATICALLY APPLIED POLYESTER OR URETHANE POWDER COAT, OVEN CURED AND BONDED AT APPROXIMATELY 400° F. TO A DRY FILM THICKNESS OF 2-4 MILS.

PAYMENT SHALL BE AS PER 630.

ITEM 630 SIGN, FLAT SHEET, TYPE G, AS PER PLAN

THIS ITEM OF WORK SHALL BE AS PER 630 EXCEPT THAT ALL SIGNS SHALL BE BLUE AS SHOWN AND DESCRIBED BY THE DETAIL ON SHEET 8.

ITEM 630 SIGN SUPPORT ASSEMBLY, POLE MOUNTED, AS PER PLAN

THIS ITEM OF WORK SHALL BE AS PER 630 EXCEPT THAT BANDS, BRACKETS, HARDWARE AND POSTS SUFFICIENT TO ATTACH EACH SIGN OR SET OF SIGNS TO AN INDIVIDUAL POLE OR PEDESTAL SHALL BE DARK BLUE, SMOOTH GLOSSY BY TIGER DRYLAC (COLOR SPECIFICATION #349/41040).

TRAFFIC SIGNALS

ACCEPTANCE OF SIGNAL

THE SYSTEMS ENGINEER FOR THE DIVISION OF TRAFFIC ENGINEERING, CITY OF COLUMBUS, SHALL BE THE SOLE PERSON TO ACCEPT ANY TRAFFIC SIGNAL INSTALLATION ON BEHALF OF THE CITY. (614-645-7790)

SIGNAL PRECONSTRUCTION CONFERENCE

THE CONTRACTOR SHALL CONTACT THE CITY OF COLUMBUS, DIVISION OF TRAFFIC ENGINEERING, TO ARRANGE A TIME AND DATE FOR A PRE-CONSTRUCTION CONFERENCE. THE MEETING WILL BE HELD AT 109 NORTH FRONT STREET, 2ND FLOOR. NO WORK SHALL START PRIOR TO THIS MEETING. THE DIVISION'S PROJECT ENGINEER SHALL AUTHORIZE A START DATE. MATERIAL CUT SHEETS SHALL BE SUBMITTED TO THE PROJECT ENGINEER AT THIS TIME.

PLAN AND SPECIFICATION COMPLIANCE

THE CONTRACTOR SHALL FURNISH AND INSTALL TRAFFIC SIGNAL DEVICES IN COMPLIANCE WITH THESE PLANS AND SPECIFICATIONS, THE 1997 ODOT CONSTRUCTION AND MATERIAL SPECIFICATIONS AND ITS SUPPLEMENTAL SPECIFICATIONS, OHIO MANUAL OF UNIFORM TRAFFIC CONTROL DEVICES FOR STREETS AND HIGHWAYS, AND THE "TC" STANDARD CONSTRUCTION DRAWINGS ISSUED BY THE ODOT BUREAU OF DESIGN SERVICES (SUPPLEMENTS THE PLAN SPECIFICATIONS). THESE SPECIFICATIONS SET FORTH THE DESIGN AND MINIMUM OPERATING REQUIREMENTS FOR TRAFFIC SIGNAL EQUIPMENT. THE SYSTEMS ENGINEER, CITY OF COLUMBUS, DIVISION OF TRAFFIC ENGINEERING, SHALL DETERMINE WHETHER THE SUPPLIED ITEMS MEET OR EXCEED THESE REQUIREMENTS.

TRAFFIC SIGNAL CONTROL EQUIPMENT SHALL MEET OR EXCEED THE STANDARDS SPECIFIED IN THE FOLLOWING DOCUMENTS.

(A) SPECIFICATIONS LISTED IN THIS PLAN

(B) NEMA STANDARDS PUBLICATION NO. TS2-1992 (OR CURRENT NEMA ISSUE) AND/OR TS1-1989 : SECTIONS 1, 2, 5, 6, 8, 11, 13 AND 14

(C) 1997 ODOT CONSTRUCTION AND MATERIAL SPECIFICATIONS 625, 632, 633, 732 & 733

IN CASE OF A CONFLICTING SPECIFICATION STATEMENT, THE SPECIFICATION DOCUMENT HIERARCHY SHALL BE IN THE ORDER LISTED FROM (A), HIGHEST, TO (C), LOWEST.

CONTRACTOR ACCESS TO EXISTING CONTROL CABINET

A REPRESENTATIVE FROM THE DIVISION OF TRAFFIC ENGINEERING SHALL BE PRESENT ANYTIME THE CONTRACTOR REQUIRES ENTRY INTO AN EXISTING CONTROL CABINET. THE CONTRACTOR SHALL CONTACT THE DIVISION'S ELECTRONIC SHOP SUPERVISOR AT 614-645-7393 TO MAKE ARRANGEMENTS. A THREE (3) WORKDAY NOTICE SHALL BE GIVEN. THE REPRESENTATIVE SHALL ACT IN A SUPERVISORY AND/OR INFORMATIONAL CAPACITY ONLY UNLESS OTHERWISE STATED IN THESE PLANS. EXISTING CABINET WIRING WHICH WAS PREVIOUSLY DISCONNECTED BY THIS DIVISION SHALL BE CONNECTED BY THIS DIVISION IF CONNECTION IS REQUIRED FOR PROPER OPERATION OF THE TRAFFIC SIGNAL. ALL CONTRACTOR INSTALLED CABLE SHALL BE CONNECTED BY THE CONTRACTOR BUT OVERSEEN BY THE DIVISION'S REPRESENTATIVE.

MATERIAL INFORMATION SUBMITTAL

THE CONTRACTOR SHALL SUBMIT FOR APPROVAL BY THE CHIEF TRAFFIC ENGINEER, (ATTN. SYSTEMS ENGINEER), CITY OF COLUMBUS, DIVISION OF TRAFFIC ENGINEERING, 109 NORTH FRONT STREET, COLUMBUS, OHIO 43215-9024, ONE (1) COMPLETE SET OF CATALOG CUTS, DIAGRAMS, SHOP DRAWINGS, BROCHURES OR OTHER DESCRIPTIVE MATERIAL FOR THE SIGNAL ITEMS THE CONTRACTOR INTENDS TO FURNISH THAT HAVE NOT BEEN SPECIFICALLY NAMED BY PRODUCT NUMBER. THE CONTRACTOR SHALL ALSO PROVIDE A DETAILED LIST OF ALL VARIANCES FROM ODOT SPECIFICATIONS AND FROM THE SPECIFICATIONS CONTAINED HEREIN FOR EACH NON-SPECIFIED ITEM THAT DOES NOT COMPLY 100% WITH THESE SPECIFICATIONS. UNLESS OTHERWISE STATED BY THE CONTRACTOR THE SUPPLIED ITEMS WILL BE CONSIDERED AS BEING IN STRICT ACCORDANCE WITH ALL SPECIFICATIONS.

TEN DAY TEST REQUIREMENTS

THE CITY OF COLUMBUS, DIVISION OF TRAFFIC ENGINEERING, REQUIRES A 10 DAY TEST TO START AFTER THE SIGNAL INSTALLATION IS 100% COMPLETE [WHICH INCLUDES ESTABLISHING DATA COMMUNICATION]. NO PARTIAL TESTS WILL BE CONDUCTED. THE CONTRACTOR SHALL SUBMIT A WRITTEN REQUEST TO THE DIVISION'S SYSTEMS ENGINEER AT 109 N. FRONT STREET, 2ND FLOOR; COLUMBUS, OH 43215-9024 STATING THAT THE SIGNAL INSTALLATION IS 100% COMPLETE AND A START DATE FOR THE TEN DAY TEST IS REQUESTED. THIS DIVISION SHALL MONITOR THE TEST AND SHALL BE THE SOLE DIVISION TO ACCEPT THE SIGNAL INSTALLATION ON BEHALF OF THE CITY. IF LESS THAN 100% COMPLETION IS DETECTED UPON INSPECTION BY THIS DIVISION OR ANY MALFUNCTION IS DETECTED, THEN THE TEN DAY TEST SHALL BE COMPLETELY RESTARTED. FAX TRANSMISSION IS ACCEPTABLE. FAX NUMBER IS 614-645-7921.

INSTALLATION LAYOUT

THE TRAFFIC SIGNAL PEDESTALS AND ALL OTHER STATIONED SIGNAL ITEMS SHALL BE LOCATED AND MARKED BY A PROFESSIONAL SURVEYOR USING THE STATION NUMBERS AND OFFSETS PROVIDED IN THESE PLANS. COSTS INCURRED FOR THIS SERVICE SHALL BE INCIDENTAL TO THE COST OF THE PROJECT OR PROVIDED UNDER A CONSTRUCTION LAYOUT STAKES ITEM. THE SURVEYOR SHALL SET PROPER POLE AND CABINET FOUNDATION ELEVATIONS. THE DIVISION OF TRAFFIC ENGINEERING PERSONNEL SHALL APPROVE ALL PEDESTAL FOUNDATION LOCATIONS AND ELEVATIONS PRIOR TO THE CONTRACTOR INSTALLING ANY FOUNDATION.

ITEM 632 PEDESTRIAN PUSHBUTTON, AS PER PLAN

THE PUSHBUTTON SHALL BE A REES MODEL #01371-312, ECONOLITE "ADA" MODEL, AN AMERICAN POLE STRUCTURES MODEL #APS 1681.A OR #APS 1682, OR EQUIVALENT. USE OF MICRO SWITCHES ARE NOT ACCEPTABLE. A CLEAR BEAD OF SILICON SEALANT SHALL BE APPLIED TO THE TOP OF THE PUSHBUTTON HOUSING (1 INCH EACH SIDE OF TOP CENTER) AGAINST THE POLE TO PREVENT WATER FROM ENTERING THE BACK OF THE PUSHBUTTON HOUSING. TWO ALUMINUM SIGNS SHALL BE SUPPLIED WITH EACH PUSHBUTTON (SEE DETAILS ON SHEETS 5 & 8). MOUNT THE PUSHBUTTON 42" ABOVE GROUND LEVEL.

ITEM 632 REMOVAL OF TRAFFIC SIGNAL INSTALLATION, AS PER PLAN

THE CONTRACTOR SHALL DELIVER THE FOLLOWING ITEMS FROM THE INTERSECTIONS OF STELZER & EASTON WAY AND EASTON WAY & N/B OFF RAMP TO THE CITY OF COLUMBUS, DIVISION OF TRAFFIC ENGINEERING, AT 1820 EAST 17TH AVENUE: VEHICULAR SIGNAL HEADS ALONG WITH ALL MOUNTING HARDWARE, PUSHBUTTONS AND SIGNS, SPAN ATTACHED SIGNS AND SIX (6) ANCHOR BASE STRAIN POLES. THE CONTRACTOR SHALL PROPERLY DISPOSE OF ALL OTHER ITEMS UNLESS OTHERWISE SPECIFIED. SEE SIGNAL PLAN SHEETS 5 AND 8 FOR COMPLETE LIST OF REMOVAL ITEMS.

DRAWN BY: MRS DATE: 4/98
CHKD BY: DRB DATE: 4/98

TRAFFIC CONTROL GENERAL NOTES

FRA-270 @ EASTON WAY

2/12

PLOT SCALE: 1.0000 / IN.
COL #23 C:\DRAWING\1022210\TC\0222TCN1.DWG JUNE-09-1998-08:43

ITEM 614 MAINTENANCE OF TRAFFIC SIGNAL INSTALLATIONS

WHEN AN OPERATING TRAFFIC SIGNAL MUST BE TAKEN OUT-OF-SERVICE BY THE CONTRACTOR BECAUSE OF CONSTRUCTION PROCEDURES, BOTH THE PROJECT ENGINEER AND THE SYSTEMS ENGINEER, DIVISION OF TRAFFIC ENGINEERING (614-645-7790), SHALL BE NOTIFIED. THE TRAFFIC SIGNAL SHALL NOT BE OUT-OF-SERVICE BETWEEN THE HOURS OF 7:00 AM TO 8:30 AM AND 4:30 PM TO 6:00 PM MONDAY THROUGH FRIDAY, EXCEPT AS DESCRIBED IN ITEM 614 MAINTAINING TRAFFIC. OFF DUTY UNIFORMED POLICE OFFICER(S), HIRED BY THE CONTRACTOR, SHALL BE REQUIRED TO DIRECT TRAFFIC AT ALL INTERSECTIONS TAKEN OUT-OF-SERVICE BY THE CONTRACTOR.

A) PROPOSED TRAFFIC SIGNAL INSTALLATION

THE CONTRACTOR SHALL BE RESPONSIBLE FOR MAINTAINING ALL PROPOSED TRAFFIC SIGNAL DEVICES UNDER THE FOLLOWING CONDITIONS FROM THE TIME OF INSTALLATION UNTIL THE DEVICE HAS BEEN ACCEPTED BY THE SYSTEMS ENGINEER.

THE CONTRACTOR SHALL PROVIDE ONE OR MORE CONTACT PERSONS WHO CAN RECEIVE ALL DEVICE OUT-OF-SERVICE CALLS THAT FALL UNDER THE CONTRACTOR'S RESPONSIBILITY. THE CONTRACTOR SHALL DISPATCH MAINTENANCE PERSONNEL TO CORRECT THE PROBLEM. THE CONTRACTOR SHALL PROVIDE THE SYSTEMS ENGINEER AND PROJECT ENGINEER WITH ADDRESSES AND PHONE NUMBERS OF THESE CONTACT PERSONS. MAINTENANCE PERSONNEL MAY BE USED TO PERFORM OTHER DUTIES AS LONG AS PROMPT ATTENTION IS GIVEN TO THESE CALLS AND A PERSON IS CONTINUOUSLY AVAILABLE TWENTY-FOUR (24) HOURS A DAY AND SEVEN (7) DAYS A WEEK. THE CONTRACTOR SHALL PROVIDE MAINTENANCE SERVICE ENTIRELY WITH HIS PERSONNEL.

THE CONTRACTOR SHALL CORRECT ALL BULB OUTAGES, DEVICE MALFUNCTIONS OF ANY TYPE, INTERNAL CABINET POWER LOSES, SPAN OR CABLE PROBLEMS AND MIS ALIGNED OR DAMAGED VEHICULAR SIGNAL HEADS WITHIN TWO (2) HOURS AFTER THE CONTRACTOR'S CONTACT PERSON HAS BEEN NOTIFIED OF ANY ONE OF THE ABOVE. IN THE EVENT A NEW SIGNAL DEVICE IS DAMAGED PRIOR TO ACCEPTANCE, THE DAMAGED DEVICE EXCEPT POLES SHALL BE REPLACED OR REPAIRED BY THE CONTRACTOR TO THE SATISFACTION OF THE SYSTEMS ENGINEER. ANY DAMAGED CABINET ASSEMBLY DEVICE IF REPAIRED SHALL BE TESTED ONCE AGAIN BY THE DIVISION OF TRAFFIC ENGINEERING BEFORE THE DEVICE CAN BE INSTALLED.

IN THE EVENT OF A LOSS OF POWER TO THE SIGNAL INDICATIONS OTHER THAN AN ELECTRIC COMPANY GENERAL POWER OUTAGE, THE CONTRACTOR AT HIS EXPENSE SHALL IMMEDIATELY TAKE ACTION (WITHIN 30 MINUTES) TO PROPERLY ERECT TEMPORARY STOP SIGN(S) AND PROVIDE POLICE OFFICER(S) TO DIRECT TRAFFIC UNTIL THE SIGNAL IS BACK ON "FLASH" OR OPERATING PROPERLY.

IF A TRAFFIC SIGNAL POLE IS DAMAGED AND THAT DAMAGE CAUSED POLE INSTABILITY, THEN THE CONTRACTOR SHALL TAKE IMMEDIATE ACTION (WITHIN 2 HOURS) TO STABILIZE THE POLE. THE CONTRACTOR SHALL STILL BE RESPONSIBLE FOR PROVIDING THE PROJECT WITH A NEW UNDAMAGED POLE.

WHERE OUT-OF-SERVICE CALLS ARE THE DIRECT RESULT OF A VEHICULAR ACCIDENT THE RESPONSE OF THE CONTRACTOR SHALL BE AS OUTLINED ABOVE. THE CONTRACTOR SHALL BE RESPONSIBLE FOR THE COLLECTION OF ANY COMPENSATION FROM THOSE PARTIES RESPONSIBLE FOR THE DAMAGE TO THE CONTRACTOR'S MATERIALS.

WHERE THE CONTRACTOR HAS FAILED TO RESPOND OR CANNOT RESPOND TO AN OUT-OF-SERVICE CALL WITHIN THE TIME PERIOD SPECIFIED ABOVE AT LOCATIONS UNDER HIS RESPONSIBILITY, THE DIVISION OF TRAFFIC ENGINEERING MAY TAKE ACTION AS IT DEEMS NECESSARY TO CORRECT THE SITUATION. THIS ACTION MAY INCLUDE CONTROLLING THE INTERSECTION USING COLUMBUS POLICE OFFICERS, COMPLETELY REMOVING OR REPLACING ANY MALFUNCTIONING TRAFFIC CONTROL DEVICE, AND/OR INSTALLING ANY DEVICE'S) REQUIRED TO RETURN THE INTERSECTION TO REGULAR SIGNAL OPERATION. ALL COSTS ASSOCIATED WITH THESE ACTIONS SHALL BE BILLED DIRECTLY TO THE CONTRACTOR AND NOT INCLUDED IN ITEM 614.

ANY NON-OPERATING VEHICULAR SIGNAL HEAD SHALL BE COVERED PER ODOT 632.24. ALL SIGNAL HEADS WHILE COVERED SHALL BE DARK EITHER BY REMOVING, UNSCREWING, OR DISCONNECTING THE POWER TO THE BULBS. NO COVERED HEAD SHALL BLOCK THE VIEW OF AN OPERATING HEAD. A MINIMUM OF TWO (2) VEHICULAR SIGNAL HEADS PER TRAVELED DIRECTION (SPACED 8' APART MINIMUM) SHALL BE OPERATING AT ALL TIMES. NO EXCEPTIONS!

B) EXISTING TRAFFIC SIGNAL DEVICES

THE CITY OF COLUMBUS, DIVISION OF TRAFFIC ENGINEERING (MAIN OFFICE: 645-7790, MAINTENANCE SHOP: 645-7393), SHALL PERFORM ROUTINE MAINTENANCE FOR ALL EXISTING CABINET ASSEMBLY ITEMS AND OTHER EXISTING TRAFFIC SIGNAL DEVICES. IF, IN THE COURSE OF WORK, THE CONTRACTOR CAUSED DAMAGE TO ANY EXISTING TRAFFIC SIGNAL DEVICE, THIS DIVISION SHALL REPAIR AND/OR REPLACE THE DAMAGED DEVICE AND BILL THE CONTRACTOR FOR ALL COSTS ASSOCIATED WITH THE REPAIR AND/OR REPLACEMENT. THE CONTRACTOR SHALL BE REQUIRED TO SUBMIT IN WRITING A LIST DETAILING ANY AND ALL EXISTING SIGNAL DEVICE DAMAGE TO THE PROJECT ENGINEER PRIOR TO THE START OF ANY SIGNAL WORK BY THE CONTRACTOR. FAILURE TO REPORT EXISTING DAMAGE MAY RESULT IN THE DAMAGE NOT BEING RECOGNIZED AS EXISTING DAMAGE AND ALL COSTS ASSOCIATED WITH SAID DAMAGE REPAIRS BEING CHARGED TO THE CONTRACTOR.

ITEM 625 PULL BOX, MISC.:, CONNECTION TO EXISTING PULL BOX

THIS ITEM OF WORK SHALL CONSIST OF PROVIDING A CONNECTION TO AN EXISTING CONCRETE PULL BOX AS REQUIRED BY THE PLAN. THIS ITEM SHALL PERMIT THE ENTRANCE OF THE NUMBER AND SIZE OF CONDUITS SHOWN INTO THE FOLLOWING FOUR (4) PULL BOXES:

PULLBOX	CONDUITS
157+11, 57' RT.	1-2"
157+14, 70' LT.	1-2"
158+93, 58' LT.	1-2"
61+17, 70' LT.	1-2"

CONNECTIONS TO THE EXISTING PULL BOX SHALL BE PROVIDED VIA KNOCK OUTS OR BY DRILLING A HOLE IN THE SIDE OF THE PULL BOX. IN THE EVENT THAT THE PULL BOX SHOULD BE DAMAGED, THE DAMAGE SHALL BE REPAIRED AS DIRECTED BY THE ENGINEER. THE COST OF REPAIRS TO OR REPLACEMENT OF THE EXISTING PULL BOX WILL BE INCIDENTAL TO THE COST OF THE CONNECTION. CARE SHOULD BE TAKEN TO NOT DISTURB THE EXISTING WIRING IN THE PULL BOX.

PAYMENT FOR 625 PULL BOX, MISC.:, CONNECTION TO EXISTING PULL BOX WILL BE MADE AT THE CONTRACT UNIT PRICE FOR EACH CONNECTION MADE, INCLUDING ALL LABOR, EQUIPMENT, MATERIALS AND INCIDENTALS REQUIRED TO PERFORM THE COMPLETE ITEM OF WORK.

ITEM 632 REROUTING OF SIGNAL CABLE

THE CONTRACTOR FOR THIS PROJECT IS RESPONSIBLE FOR REROUTING THE EXISTING SIGNAL CABLE IN EACH OF THE FOUR (4) STRAIN POLES AT STELZER & EASTON WAY WHICH TERMINATE AT THE VEHICULAR SIGNAL HEADS CLOSEST TO EACH POLE AND AT THE PEDESTRIAN PUSHBUTTON MOUNTED ON EACH POLE. THE CONTRACTOR SHALL DISCONNECT THE EXISTING CABLES AT THE SIGNAL HEADS/ PUSHBUTTONS AND CAREFULLY PULL THE CABLES OUT OF THE BASE OF THE STRAIN POLES. IMMEDIATELY UPON REPLACEMENT OF THE STRAIN POLES WITH THE NEW MAST ARM SUPPORTS, THE CONTRACTOR SHALL REROUTE THE EXISTING CABLES INSIDE EACH POLE AND ARM AND CONNECT TO THE NEW SIGNAL HEADS/PUSHBUTTONS. THE EXISTING COIL OF 9/C CABLE IN THE BOTTOM OF EACH POLE FOR FUTURE PEDESTRIAN SIGNALS SHALL BE RECOILED IN NEW POLE BASES.

ANY DAMAGE DONE TO THE CABLE INSULATION DURING THE REROUTING PROCESS SHALL REQUIRE THE ENTIRE LENGTH OF CABLE TO BE REPLACED AT THE CONTRACTOR'S EXPENSE.

PAYMENT FOR THIS ITEM OF WORK SHALL BE AT THE LUMP SUM PRICE BID FOR ITEM 632 REROUTING OF EXISTING SIGNAL CABLE AND SHALL INCLUDE ALL LABOR, MATERIALS AND EQUIPMENT REQUIRED TO COMPLETE THIS ITEM OF WORK.

ITEM 632 VEHICULAR SIGNAL HEAD, _ SECTION, 12" LENS, 1-WAY, BLUE, AS PER PLAN.

THIS ITEM OF WORK SHALL BE AS PER ITEM 632, EXCEPT THE BACK, SIDES & BOTTOM OF THE HEAD AND ALL VISIBLE ELEMENTS OF MOUNTING HARDWARE INCLUDING BANDS AND CLAMPS SHALL BE FINISHED DARK BLUE, SMOOTH, GLOSSY BY TIGER DRYLAC (COLOR SPECIFICATION #349/41040). THE ENTIRE SIGNAL HEAD FACE INCLUDING DOOR SHALL REMAIN STANDARD YELLOW, AND THE VISORS SHALL REMAIN YELLOW AND BLACK AS PER 632.

ALL VEHICULAR SIGNAL HEADS SHALL BE SUPPLIED WITH GLASS LENSES. ALL BOLTS AND WASHERS FOR SECURING SECTIONS TOGETHER, MOUNTING HARDWARE FOR THE LENS, DOOR LATCHING BOLTS, AND HINGE PINS SHALL BE STAINLESS STEEL. DOOR LATCHING BOLTS SHALL FIT THROUGH A SLOT IN THE DOOR PER CITY OF COLUMBUS, DIVISION OF TRAFFIC ENGINEERING, SPECIFICATIONS. CONTACT THE PROJECT ENGINEER FOR SPECIFICATION DETAILS. AN ALUMINUM, WEATHERPROOF TRI-STUD SINGLE WIRE ENTRANCE WITH THREE (3) 5/16" x 1-7/16" STAINLESS STEEL STUDS, LOCK WASHERS, AND HEX NUTS SHALL BE PROVIDED WITH EACH SIGNAL HEAD. THE WEATHERHEAD ENTRANCE SHALL HAVE A MINIMUM INSIDE DIAMETER OPENING OF 1-1/2", INCLUDING ANY RUBBER OR PLASTIC GROMMET THAT MAY BE NECESSARY TO PROTECT THE CABLE. THE OPENING AT THE TRI-STUD END MAY BE IRREGULARLY SHAPED, BUT IT MUST HAVE A MINIMUM OPENING OF 1-1/2" AT ITS WIDEST POINT AND A MINIMUM OPENING OF 11/16" AT ITS NARROWEST POINT. THE TRI-STUD WASHER MUST HAVE THE SAME OPENING AT THE ENTRANCE. THE TOP OF THE ENTRANCE SHALL HAVE ONLY ONE (1) CLEVIS HOLE AND IT MUST ACCOMMODATE A 5/8" STAINLESS STEEL CLEVIS PIN. THE CLEVIS ATTACHMENT SHALL BE NO GREATER THAN 5/8" THICK OR GREATER THAN 1-3/4" IN WIDTH MEASURED AT THE CENTER OF THE CLEVIS HOLE.

A MAST ARM HANGER, PROVIDED WITH EACH SIGNAL HEAD, SHALL ALLOW THE SIGNAL HEAD TO BE SUSPENDED BELOW THE MAST ARM ALLOWING ONLY FRONT-BACK AND LEFT-RIGHT FREE SWINGING MOVEMENT.

ITEM 632 VEHICULAR SIGNAL HEAD, 3 SECTION, 12" LENS, 1 WAY, BLUE, FURNISH ONLY, AS PER PLAN

THIS ITEM OF WORK SHALL BE AS PER ITEM 632 VEHICULAR SIGNAL HEAD, _ SECTION, 12" LENS, 1 WAY, BLUE, AS PER PLAN EXCEPT THAT THE CONTRACTOR SHALL PROVIDE THE FUTURE SIGNAL HEADS (1A, 5A, 6A, 10A, 18A, 23A) SHOWN ON SHEET 6 FOR THE PURPOSE OF INSTALLATION BY THE CITY OF COLUMBUS WHEN ADDITIONAL LEFT TURN INDICATIONS ARE NECESSARY. THE VEHICULAR SIGNAL HEADS SHALL BE COMPLETE WITH BLUE MAST ARM CLAMPS.

THE CONTRACTOR SHALL CONTACT THE EASTON PROPERTY CO. (MR. BRIAN EZZELL 614-415-7486), TO MAKE DELIVERY ARRANGEMENTS.

PAYMENT SHALL INCLUDE ALL COSTS FURNISHED AND DELIVERED.

ITEM 632 PEDESTRIAN PUSHBUTTON LEAD-IN CABLE, AS PER PLAN

PEDESTRIAN PUSHBUTTON LEAD-IN CABLE SHALL BE THE SAME AS ITEM 632 LOOP DETECTOR LEAD-IN CABLE.

PAYMENT SHALL BE AS PER 632.

ITEM 632 PEDESTAL, MISC.: 13.7', BLUE, AS PER PLAN

THIS ITEM SHALL BE AS PER ITEM 632 AND 732 EXCEPT THAT THE PEDESTAL, MOUNTING HARDWARE AND BASE SHALL BE ALUMINUM AS DETAILED ON SHEET 6 AND FINISHED DARK BLUE SMOOTH, GLOSSY BY TIGER DRYLAC (COLOR SPECIFICATION #349/41040). THE FINISH SHALL BE AN ELECTROSTATICALLY APPLIED POLYESTER OR URETHANE POWDER COAT, OVEN CURED AND BONDED AT APPROXIMATELY 400° F TO A DRY FILM THICKNESS OF 2-4 MILS. THE PEDESTAL SHALL INCLUDE ORNAMENTAL HUB ASSEMBLIES AS MANUFACTURED BY PELCO PRODUCTS, INC. (PART NO. SE-3209) AND ALL OTHER NECESSARY MOUNTING HARDWARE REQUIRED TO COMPLETE THIS ITEM OF WORK.

ITEM 632 PEDESTAL FOUNDATION, AS PER PLAN

THIS ITEM SHALL BE AS PER ITEM 632 AND TC-83.20 EXCEPT THAT THE BOLT CIRCLE SHALL BE SHOWN ON THE PEDESTAL DETAIL ON SHEET 6.

ITEM 632 SIGNAL SUPPORT, TYPE TC-81.20, DESIGN 1, BLUE, AS PER PLAN

THIS ITEM SHALL BE AS PER 632 AND TC-81.20, EXCEPT THAT NO MULTI-SIDED POLES ARE PERMITTED. ANCHOR BOLTS ARE NOT REQUIRED. HOWEVER, BOLT COVERS SHALL BE INSTALLED. ALL SIGNAL CABLES SHALL BE RUN INSIDE THE SIGNAL SUPPORTS. SEE SHEET 9 FOR BASE PLATE ORIENTATION IN ORDER TO PROPERLY INSTALL POLES ON THE EXISTING ANCHOR BOLT FOUNDATIONS. SIGNAL SUPPORTS, ARMS, & BOLT COVERS SHALL BE FINISHED DARK BLUE, SMOOTH, GLOSSY BY TIGER DRYLAC (COLOR SPECIFICATION #349/41040). THE FINISH SHALL BE AN ELECTROSTATICALLY APPLIED POLYESTER OR URETHANE POWDER COAT, OVEN CURED AND BONDED AT APPROXIMATELY 400° F. TO A DRY FILM THICKNESS OF 2-4 MILS. ALL FINISH PAINTED POLES SHALL BE SHIPPED IN A MANNER TO MINIMIZE DAMAGE IN TRANSIT. POLE SURFACES WILL BE PROTECTED BY FOAM PADDING, BY CARDBOARD WRAPPING, BY SPIRAL WRAPPING WITH WAXED PAPER, BY CRATING OR BY A COMBINATION OF THESE. THE METHOD USED SHALL BE SELECTED BY THE SUPPORT MANUFACTURER AS MOST APPROPRIATE FOR THE PROJECT BASED ON POLE SIZES, QUANTITIES, CONFIGURATIONS, AND METHOD OF TRANSPORTATION.
THE CONTRACTOR SHALL EXERCISE CARE WHEN HANDLING THE POLES AND ARMS SO AS TO MINIMIZE SCRATCHING THE PAINTED SURFACE AND SHALL TOUCH-UP ANY SCRATCHED SURFACES UPON INSTALLATION.

ITEM 632 SIGNAL SUPPORT, MISC.: TYPE TC-81.20, DESIGN 12, A.P.P. (23.5 IN. BOLT CIRCLE) SM16-V00V230-XX-GVFP-HH-2.5"AB, BLUE, AS PER PLAN

THIS ITEM SHALL BE AS PER ITEM 632 SIGNAL SUPPORT, TYPE TC-81.20, DESIGN 1, BLUE, AS PER PLAN, EXCEPT THAT THE POLES AND ARMS SHALL BE MANUFACTURED BY VALMONT INDUSTRIES, HIGHWAY 275, VALLEY, NEBRASKA, 68064 [CONTACT PERSON: MR. MARK MINIC OF DEAN-LAWLESS LIGHTING SYSTEMS, INC. PHONE: 614-860-0040] PART NO.SM16-V00V230-(ARM LENGTH)-GVFP-HH-2.5" AB. THE POLE BASE SHALL FIT ON AN EXISTING FOUNDATION HAVING A 23.5 INCH BOLT CIRCLE, WITH 2.5" DIAMETER ANCHOR BOLTS. THE ARMS SHALL BE THE LENGTH AS SPECIFIED ON SHEET 9. ALL POLES SHALL BE THE SAME SIZE AND GAUGE AS REQUIRED BY THE MANUFACTURER TO SUPPORT THE LONGEST ARM. ALL ARM PLATES MUST BE THE SAME FOR THE ARMS LENGTHS SPECIFIED FOR EASE OF REPLACEMENT BY THE CITY OF COLUMBUS.

ITEM 632 SIGNAL SUPPORT, MISC.: TYPE TC-81.20, DESIGN 12, A.P.P. (23.5 IN BOLT CIRCLE), SM16-V00V230-79-GVFP-HH-2.5"AB, BLUE, FURNISH ONLY, AS PER PLAN

THIS ITEM SHALL BE AS PER ITEM 632 SIGNAL SUPPORT, MISC.: TYPE TC-81.20, DESIGN 12, A.P.P. (23.5 IN BOLT CIRCLE), DESIGN SM16-V00V230-XX-GVFP-HH-2.5" AB, BLUE, AS PER PLAN, EXCEPT THAT THE CONTRACTOR SHALL PROVIDE ONE (1) SPARE SIGNAL SUPPORT WITH A 79 FOOT MAST ARM FOR THE PURPOSE OF REPLACEMENT BY THE CITY OF COLUMBUS. THE CONTRACTOR SHALL CONTACT THE EASTON PROPERTY CO. (MR. BRIAN EZZELL, 614-415-7486).

PAYMENT SHALL INCLUDE ALL COSTS FURNISHED AND DELIVERED.

ITEM 633 CONTROLLER, MISC.:, REUSE OF EXISTING CONTROLLER

THE CONTRACTOR SHALL REMOVE AND RELOCATE THE EXISTING CONTROLLER AND CABINET ON THE NORTHWEST CORNER OF EASTON WAY & N/B OFF-RAMP. THE CONTROLLER AND CABINET SHALL BE REINSTALLED ON THE NEW SIGNAL SUPPORT TO BE ERECTED ON THE SAME FOUNDATION AS THE STRAIN POLE BEING REMOVED. THE CONTRACTOR IS RESPONSIBLE FOR REPLACEMENT OF ANY EQUIPMENT DAMAGED DURING THE REMOVAL AND REINSTALLATION ON THE NEW SIGNAL SUPPORT.

48 HOURS BEFORE REMOVAL OF THE CONTROLLER AND CABINET, THE CONTRACTOR SHALL CONTACT AMERICAN ELECTRIC POWER (614-464-7666) TO ARRANGE A TIME FOR DISCONNECTION & RECONNECTION OF EXISTING POWER SERVICE. UNDER NO CIRCUMSTANCES SHALL THE CONTRACTOR DO THIS HIMSELF. THIS DISCONNECTION & RECONNECTION SHALL BE INCIDENTAL TO THE REMOVAL & REUSE OF THE EXISTING CONTROLLER.

PAYMENT FOR ITEM 633 CONTROLLER, MISC.:, REUSE OF EXISTING CONTROLLER WILL BE MADE AT THE CONTRACT UNIT PRICE FOR EACH CONTROLLER REMOVED, REINSTALLED AND ACCEPTED.

DRAWN BY: MRS DATE: 4/98
CHKD BY: DRB DATE: 6/98

TRAFFIC CONTROL GENERAL NOTES

FRA-270 @ EASTON WAY

3
12

PLOT SCALE... 1.0000 '/ INCH
PLOT DATE... JUNE-17-1998-09:25
COL #23 C:\DRAWING\1022110\TC\02221GN2.DWG

TOTAL FROM SHEET NO. 3		6		8	ITEM	ITEM EXT.	GRAND TOTAL	UNIT	DESCRIPTION	SEE SHT. NO.
									SIGNALS	
		91			625		91	LIN. FT.	CONDUIT, 2", 713.07, SCHEDULE 40	
		91			625		91	LIN. FT.	TRENCH	
		4			625		4	EACH	PULL BOX, MISC:, CONNECTION TO EXISTING PULL BOX	
		4			625		4	EACH	GROUND ROD	
		1		2	630		3	EACH	SIGN SUPPORT ASSEMBLY, POLE MOUNTED, AS PER PLAN	2
		2			630		2	EACH	SIGN HANGER ASSEMBLY, MAST ARM, AS PER PLAN	2
		15		20	630		35	LIN. FT.	SIGN, FLAT SHEET, TYPE G, AS PER PLAN	2
		11		4	632		15	EACH	VEHICULAR SIGNAL HEAD, 3 SECTION, 12" LENS, 1-WAY, BLUE, AS PER PLAN	3
		8			632		8	EACH	VEHICULAR SIGNAL HEAD, 5 SECTION, 12" LENS, 1-WAY, BLUE, AS PER PLAN	3
		2			632		2	EACH	VEHICULAR SIGNAL HEAD, 3-12"/5-12" LENS, 2-WAY, BLUE, AS PER PLAN	3
		6			632		6	EACH	VEHICULAR SIGNAL HEAD, 3 SECTION, 12" LENS, 1-WAY, BLUE, FURNISH ONLY, AS PER PLAN	3
		7			632		7	EACH	PEDESTRIAN PUSHBUTTON, AS PER PLAN	2
LUMP					632			LUMP	REROUTING OF EXISTING SIGNAL CABLE	
		322		71	632		393	LIN. FT.	SIGNAL CABLE, 5 CONDUCTOR, NO. 14 AWG	
		1394		223	632		1617	LIN. FT.	SIGNAL CABLE, 7 CONDUCTOR, NO. 14 AWG	
		701			632		701	LIN. FT.	SIGNAL CABLE, 9 CONDUCTOR, NO. 14 AWG	
		187			632		187	LIN. FT.	PEDESTRIAN PUSHBUTTON LEAD-IN CABLE, AS PER PLAN	3
		4			632		4	EACH	PEDESTAL FOUNDATION, AS PER PLAN	3
				1	632		1	EACH	SIGNAL SUPPORT, TC-81.20, DESIGN 1, 18' ARM, BLUE, A.P.P.	3
				1	632		1	EACH	SIGNAL SUPPORT, TC-81.20, DESIGN 1, 26' ARM, BLUE, A.P.P.	3
		1			632		1	EACH	SIGNAL SUPPORT, MISC:, TYPE TC-81.20, DESIGN 12, (23.5 IN. BOLT CIRCLE), SM16-V00V230-69-GVFP-HH-2.5"AB, BLUE, AS PER PLAN	3
		3			632		3	EACH	SIGNAL SUPPORT, MISC:, TYPE TC-81.20, DESIGN 12, (23.5 IN. BOLT CIRCLE), SM16-V00V230-79-GVFP-HH-2.5"AB, BLUE, AS PER PLAN	3
		1			632		1	EACH	SIGNAL SUPPORT, MISC:, TYPE TC-81.20, DESIGN 12, (23.5 IN. BOLT CIRCLE), SM16-V00V230-79-GVFP-HH-2.5"AB BLUE, FURNISH ONLY, AS PER PLAN	3
		4			632		4	EACH	PEDESTAL, MISC:, 13.7 FEET, BLUE, AS PER PLAN	3
		1		1	632		2	EACH	REMOVAL OF TRAFFIC SIGNAL INSTALLATION, AS PER PLAN	2
				1	633		1	EACH	CONTROLLER, MISC:, REUSE OF EXISTING CONTROLLER	
									FOR LIGHTING QUANTITIES, SEE SHEET 10	

CALC. BY: MDL DATE: 4/98
CHKD. BY: DRB DATE: 6/98

TRAFFIC CONTROL GENERAL SUMMARY

FRA-270 @ EASTON WAY

PLOT SCALE... COL #23 C:\DRAWING\10222110\TC\0222TNCS.DWG JUNE-17-1998-13:34

NOTE: TWO CM-R73 SIGNS SHALL BE PROVIDED & INSTALLED WITH EACH PEDESTRIAN PUSHBUTTON.

PUSH BUTTON TO CROSS STELZER RD. — CM-R73 — 1.5" EASTON BLUE BORDER

TYPICAL PUSHBUTTON INSTALLATION

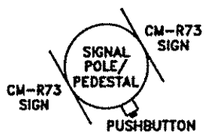

NOTES:

1. SIGNAL HEADS SHALL BE FREE SWINGING AND SUSPENDED BELOW THE MAST ARM.
2. ALL SIGNAL SUPPORTS SHALL BE THE SAME DESIGN, BUT SHALL BE USED WITH DIFFERENT LENGTH MAST ARMS. THE FINAL DESIGN OF THE POLES SHALL BE DETERMINED BY THE FUTURE FULL BUILD SIGNAL DESIGN AS SHOWN ON SHT 6.
3. NEW WHITE ON BLUE STREET NAME SIGNS TO BE INSTALLED BY OTHERS.

HORIZONTAL SCALE IN FEET: 0, 10, 20, 40

CALC BY MDL DATE 4/98 — CHKD BY DRB DATE 4/98

2" CONDUIT W/(1)-2/C & (1)-5/C IN TRENCH = 32'

PEDESTAL 'E' W/(1) PED PUSHBUTTON & (1) VEHICULAR SIGNAL HEAD STA. 157+41, 85' LT

EXISTING CONDUIT W/EXISTING SIGNAL CABLES

EXISTING CONDUIT EMPTY FOR FUTURE INTERCONNECT

EXISTING PULL BOX STA 58+97, 58' RT

(2)-EXISTING CONDUITS W/ EXISTING SIGNAL CABLES & NEW (1)-5/C & (1)-7/C = 182'

EXISTING PULL BOX STA 58+95, 59' LT

EXISTING CONDUIT W/ EXISTING SIGNAL CABLES

POLE 'A' SIGNAL SUPPORT ON EXISTING FOUNDATION W/ PED. PUSHBUTTON STA 157+22, 63' LT

POLE 'B' SIGNAL SUPPORT ON EXISTING FOUNDATION W/PED. PUSHBUTTON STA 158+77, 80' LT

EXISTING CONDUIT W/EXISTING SIGNAL CABLES & NEW (1)-2/C & (1)-7/C = 11'

CONNECTION TO EXISTING PULL BOX, STA 157+14, 70' LT

EXISTING CONDUIT W/EXISTING SIGNAL CABLES & NEW (1)-2/C & (1)-7/C = 27'

CONNECTION TO EXISTING PULL BOX, STA 158+93, 58' LT

EXISTING CONDUIT W/EXISTING SIGNAL CABLES & NEW (1)-5/C & (1)-7/C = 9'

2" CONDUIT W/(1)-2/C & (1)-5/C IN TRENCH = 9'

EXISTING GROUND MOUNTED CONTROL CABINET STA 157+10, 77' LT

PEDESTAL 'F' W/(1) PED PUSHBUTTON & (1) VEHICULAR SIGNAL HEAD, STA 159+01, 61' LT

(2)-EXISTING CONDUITS W/EXISTING POWER CABLE, EXISTING SIGNAL CABLE & NEW (1)-5/C, (3)-7/C & (2)-9/C = 21'

(2)-EXISTING CONDUITS W/ EXISTING SIGNAL CABLES

EXISTING PULL BOX STA 160+02, 56' LT

EXISTING CONDUIT W/EXISTING POWER CABLE

EXISTING PULL BOX STA 159+32, 58' LT

(2)-EXISTING CONDUITS W/ EXISTING SIGNAL CABLES

EXISTING CONDUIT W/ EXISTING INTERCONNECT

EXISTING PULL BOX STA 157+11, 56' LT

EXISTING STEEL CONDUIT W/ EXISTING POWER CABLE

EXISTING PULL BOX STA 162+22, 56' LT

38" x 60" H.E. STM

48" STM

4' WALK

EX 48" WATER

EX OBT CONDUIT

E (LTG)

EX 15" CONC

W.V.

P5 P6 P7 P8 P9 P10

EX 2' G

4' CONC. MEDIAN

157+00

156+00

154+00

159+00

160+00

162+00

STA. 158+04.00 ℄ STELZER RD = STA. 60+00.00 ℄ EASTON WAY

NO TURN ON RED EXCEPT CURB LANE

R-RP-23-24(A.P.P.) 30"x36"

L-1 L-2 L-3 L-4 L-5 L-6 L-7 L-8

STELZER ROAD

ONLY

P1 P2 P3 P4

LEFT TURN SIGNAL

R-25E(L)-24(A.P.P.) 30"X36"

158+00

60+00

48" W

27" STM

E (LGT)

4' WALK

175'

131'

R/W

CB

61+00

L-14 L-13 L-12 L-11 L-10 L-9

(RAISED ISLAND)

EASTON WAY

(BERM)

ONLY ONLY

15" STM

EXISTING PULL BOX STA 153+86, 56' RT

EXISTING CONDUIT W/ SIGNAL CABLE

EXISTING PULL BOX STA 156+06, 56' RT

(3)-EXISTING CONDUITS: (1) W/EXISTING POWER CABLE, (1) W/EXISTING INTERCONNECT CABLE & (1) W/EXISTING SIGNAL CABLES & NEW (2)-7/C & (2)-9/C = 114'

EXISTING CONDUIT W/ EXISTING SIGNAL CABLES

PEDESTAL 'H' W/(1) PED PUSHBUTTON & (1) VEHICULAR SIGNAL HEAD STA 156+93, 59' RT

2" CONDUIT W/(1)-2/C & (1)-9/C IN TRENCH = 17'

CONNECTION TO EXISTING PULL BOX, STA 157+11, 57' RT

(2) EXISTING CONDUITS W/EXISTING SIGNAL CABLES & NEW (1)-2/C & (1)-7/C = 28'

POLE 'D' SIGNAL SUPPORT ON EXISTING FOUNDATION W/PED. PUSHBUTTON STA 157+29.5, 76.5' RT

EXISTING CONDUIT W/EXISTING SIGNAL CABLES

EXISTING CONDUIT W/EXISTING SIGNAL CABLES & NEW (1)-7/C & (1)-9/C = 100'

EXISTING PULL BOX STA 61+16, 58' RT

EXISTING PULL BOX STA 61+54, 69' RT

EXISTING INTERCONNECT TO RAMP SIGNAL

EXISTING CONDUIT W/EXISTING SIGNAL CABLES, EXISTING POWER CABLE & NEW (1)-7/C & (1)-9/C = 152'

NOTE: THIS RIGHT TURN ONLY LANE ENDS AT STA 166+00.

POLE 'C' SIGNAL SUPPORT ON EXISTING FOUNDATION W/(1) PED. PUSHBUTTON STA. 158+91.5, 71.5' RT.

PEDESTAL 'G' W/(1) VEHICULAR SIGNAL HEAD STA. 158+77, 86' RT.

2" CONDUIT W/(1)-9/C IN TRENCH = 33'

EXISTING CONDUIT W/EXISTING SIGNAL CABLES & NEW (1)-7/C = 52'

CONNECTION TO EXISTING PULL BOX, STA 61+17, 70' LT

EXISTING CONDUIT W/EXISTING SIGNAL CABLES & NEW (1)-7/C & (1)-9/C = 40'

EXISTING PULL BOX (FOR POWER) STA 61+55, 82' LT

EXISTING POWER TO RAMP SIGNAL

L-4 R/W

HEADS

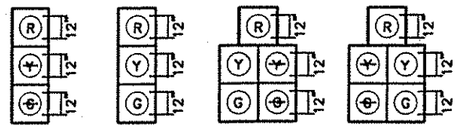

11,12,16,17 — 2,7,8,9,13,14, 15,19,20 — 3,4,21,22 — 1,5,6,10,18,23

632 REMOVAL OF TRAFFIC SIGNAL INSTALLATION A.P.P.

DESCRIPTION OF ITEM TO BE REMOVED BY CONTRACTOR	STORED FOR CITY OF COLUMBUS	DISPOSED OF BY CONTRACTOR
MESSENGER WIRE		X
(2) SPAN MTD. SIGNS	X	
(4) POLE MTD. ST. NAME SIGNS	X	
(4) PED. PUSHBUTTONS	X	
(9) 3 SEC, 1 WAY & (5) 5 SEC, 1 WAY VEHICULAR SIGNAL HEADS	X	
(4) STRAIN POLES	X	

MAST ARM SIGNAL INSTALLATION
STELZER RD. & EASTON WAY

FRA-270 @ EASTON WAY

5/12

PLOT SCALE: COL #23 — C:\DRAWING\1022211P\LIC\1022211P2.DWG — JUNE-09-1998-11:08

FUTURE FULL BUILD SIGNAL DETAIL

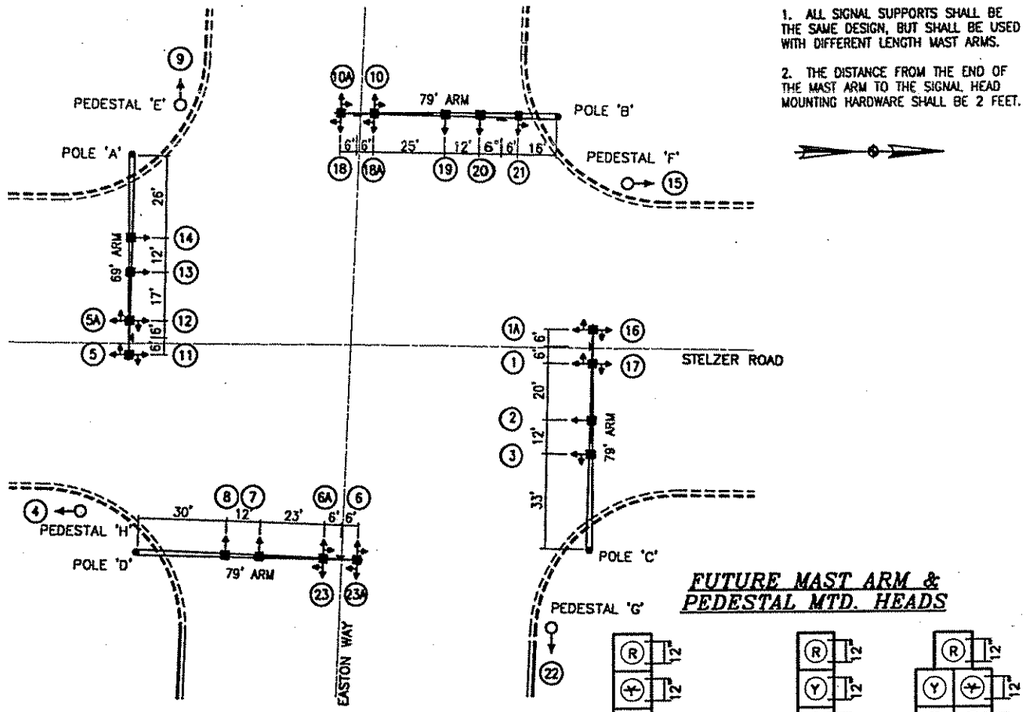

NOTES:

1. ALL SIGNAL SUPPORTS SHALL BE THE SAME DESIGN, BUT SHALL BE USED WITH DIFFERENT LENGTH MAST ARMS.
2. THE DISTANCE FROM THE END OF THE MAST ARM TO THE SIGNAL HEAD MOUNTING HARDWARE SHALL BE 2 FEET.

FUTURE MAST ARM & PEDESTAL MTD. HEADS

1,1A,5,5A,6,6A,10,10A, 11,12,16,17,18,18A,23,23A — 2,7,8,9,13,14,15,19,20 — 3,4,21,22

SIGNAL HEAD FIELD WIRING HOOKUP PER APPROACH

SIGNAL DISPLAY	WIRE COLOR
THRU R	RED
THRU Y	ORANGE
THRU G	GREEN
L/T R	BLACK
L/T Y	WHITE W/BLACK TRACER
L/T G	BLUE
R/T R	NOT USED BY CITY
R/T Y	RED W/BLACK TRACER
R/T G	GREEN W/BLACK TRACER

WHITE SHALL BE USED FOR GROUND (COMMON). SPLICE ALL WIRES IN THE SIGNAL HEAD OR PED UNIT. USE #14 AWG 2 WIRE SPADE TERMINAL OR #14 AWG 1 WIRE SPADE TERMINAL TO CONNECT ALL WIRES TO FIELD TERMINALS. USE BUT SPLICES ON ALL THROUGH WIRES. ALL UNUSED WIRES SHALL BE SPLICED THROUGH AND SHALL HAVE A DEAD-END TERMINAL AT THE END OF THE WIRE.

SUB-SUMMARY OF TRAFFIC SIGNAL ITEMS

REFERENCE LETTER	ITEM DESCRIPTION	ITEM NUMBER	UNIT	QUANTITY
	CONDUIT, 2", 713.07, SCHEDULE 40	625	L.F.	91
	TRENCH	625	L.F.	91
	PULL BOX, MISC:, CONNECTION TO EXISTING PULL BOX	625	EA.	4
	GROUND ROD	625	EA.	4
	SIGN SUPPORT ASSEMBLY, POLE MOUNTED, AS PER PLAN	630	EA.	1
	SIGN HANGER ASSEMBLY, MAST ARM, AS PER PLAN	630	EA.	2
	SIGN, FLAT SHEET, TYPE G, AS PER PLAN	630	S.F.	23
	VEHICULAR SIGNAL HEAD, 3 SECTION, 12" LENS, 1-WAY, BLUE FURNISH ONLY, AS PER PLAN	632	EA.	6
	VEHICULAR SIGNAL HEAD, 3 SECTION, 12" LENS, 1-WAY, BLUE, A.P.P.	632	EA.	11
	VEHICULAR SIGNAL HEAD, 5 SECTION, 12" LENS, 1-WAY, BLUE, A.P.P.	632	EA.	8
	VEHICULAR SIGNAL HEAD, 3-12"/5-12" LENS, 2-WAY, BLUE, A.P.P.	632	EA.	2
	PEDESTRIAN PUSHBUTTON, AS PER PLAN	632	EA.	7
	SIGNAL CABLE, 5 CONDUCTOR, NO. 14 AWG	632	L.F.	322
	SIGNAL CABLE, 7 CONDUCTOR, NO. 14 AWG	632	L.F.	1394
	SIGNAL CABLE, 9 CONDUCTOR, NO. 14 AWG	632	L.F.	701
	PEDESTRIAN PUSHBUTTON LEAD-IN CABLE, AS PER PLAN	632	L.F.	187
	PEDESTAL FOUNDATION, AS PER PLAN	632	EA.	4
A	SIGNAL SUPPORT, MISC.: TYPE TC-81.20, DESIGN 12, (23.5 IN. BOLT CIRCLE), SM16-V00V230-69-GVFP-HH-2.5"AB, BLUE, AS PER PLAN	632	EA.	1
B,C,D	SIGNAL SUPPORT, MISC.: TYPE TC-81.20, DESIGN 12, (23.5 IN. BOLT CIRCLE), SM16-V00V230-79-GVFP-HH-2.5"AB, BLUE, AS PER PLAN	632	EA.	3
	SIGNAL SUPPORT, MISC.: TYPE TC-81.20, DESIGN 12, (23.5 IN. BOLT CIRCLE), SM16-V00V230-79-GVFP-HH-2.5"AB, BLUE, FURNISH ONLY, AS PER PLAN	632	EA.	1
	PEDESTAL, MISC.: 13.7 FEET, BLUE, AS PER PLAN	632	EA.	4
	REMOVAL OF TRAFFIC SIGNAL INSTALLATION, AS PER PLAN	632	EA.	1

EXISTING DETECTOR ASSIGNMENTS (TO REMAIN)

DETECTOR # MAGS	DETECTOR # LOOPS	RACK 1 (LT) OUTPUT CH# MAGS	RACK 1 (LT) OUTPUT CH# LOOPS	PHASE MAGS	PHASE LOOPS	SYS DET PROBES	SYS DET LOOPS	2 TURNS LOOP SIZE	DELAY DATA LOOP SEC	DELAY DATA # GRN INHIBIT	DET UNIT RACK & CABLE LABEL MAG	DET UNIT RACK & CABLE LABEL LOOP
P1\P2	L1	1	11	6	1		B1	5x25	3	#1	NB(F)	NBLT
P3\P4	L2\L3	3	12	6	5	A1	B2	5x25\5x25	3	#5	NB(N)	SBLT
P5\P6\P7	L4	5	15	2	8	A2		5x36	12	#8	SB(N)	EB(R)
P8\P9\P10	L5\L6	7	16	2	8			5x38\5x40	3	#8	SB(F)	EB
	L7\L8		9		3		C1	5x25\5x25	3	#3+#8		EBLT
	L9\L10		13		4		C2	5x34\5x36	12	#4		WBRT
	L11\L12		14		4		D1	5x38\5x40	3	#4		WB
	L13\L14		10		7		D2	5x25\5x25	3	#4+#7		WBLT

EXISTING SIGNAL TIMING IN SECONDS (TO REMAIN)

TIMING INTERVAL	NBLT #1	SB #2	EBLT #3	WB #4	SBLT #5	NB #6	WBLT #7	EB #8
MAX. GREEN I	20	60	20	40	50	40	20	40
MAX. GREEN II	–	–	–	–	–	–	–	–
YELLOW CLEAR	3.6	4.3	3.6	3.8	3.6	4.3	3.6	3.8
RED CLEAR	2.5	2.6	2.5	2.3	2.5	2.6	2.5	2.3
MAX. INITIAL	–	–	–	–	–	–	–	–
MIN. INITIAL	10	20	10	10	10	20	10	10
ADDED INITIAL/ACT.	–	–	–	–	–	–	–	–
PRESET EXTENSION	3.7	2.8	3.7	3.7	3.7	2.8	3.7	3.7
MIN. EXTENSION	–	–	–	–	–	–	–	–
TIME BEFORE REDUCT	–	–	–	–	–	–	–	–
TIME TO MIN. EXT.	–	–	–	–	–	–	–	–
PED. WALK	–	–	–	4	–	–	–	4
PED. CLEAR	–	–	–	24	–	–	–	24
RECALL/MEMORY MODE	NON-LOCK	RECALL	NON-LOCK	NON-LOCK	NON-LOCK	RECALL	NON-LOCK	NON-LOCK

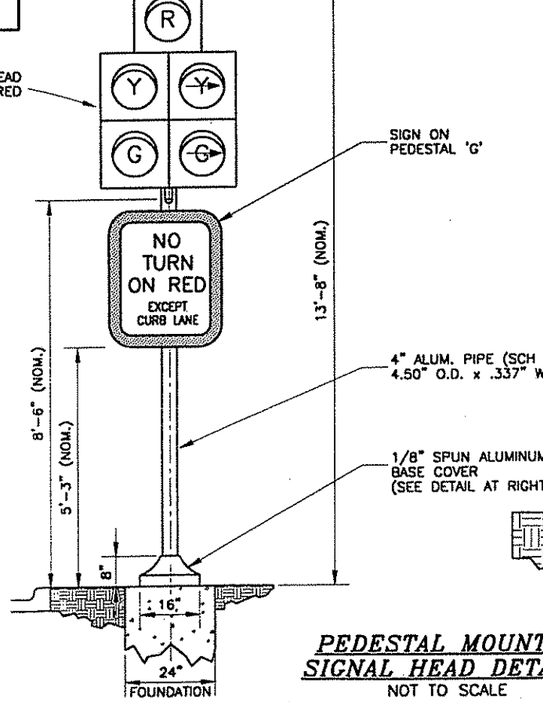

PEDESTAL MOUNTED SIGNAL HEAD DETAILS
NOT TO SCALE

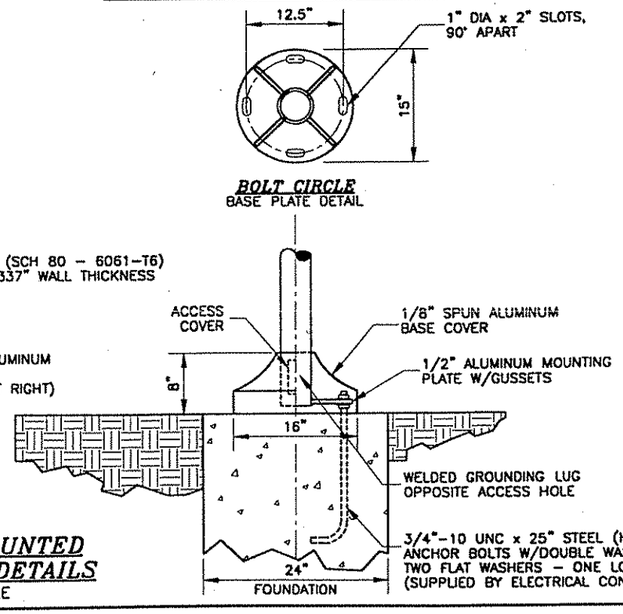

NO SCALE

CAD MDL DATE: 4/98
CHK'D BY: DRB DATE: 6/98

MAST ARM SIGNAL INSTALLATION
STELZER RD. & EASTON WAY

FRA-270 @ EASTON WAY

6/12

PLOT SCALE: 1.000 '/ INCH
PLOT DATE: JUNE-17-1998-08:5
C:\DRAWING\U022210\TCU022P2A.DWG

MR 509
Permit No.__06-0271-02

C-5

Office Use Only
County or Jurisdiction FRA
Rte 270 Log Pt 3292
AccCat

State of Ohio
Department of Transportation
Permit

[1] Subject to all terms, conditions, and restrictions printed, written below and on the reverse side hereof, or attached,

Name: MJB Electric Service Address: 804 Bush Ct., Columbus, Ohio 43229 Home: () is hereby granted a permit under Section 5515.01 and 5515.02 of Ohio Revised Code, and permission to perform work necessary in the manner described and at the location indicated in the following or a attached to this permit.

Light Pole Repair (see attached sheet)
Franklin County I-270, @ Easton Way Bridge

[2] This permit shall be in the possession of employees on site at all times who are in charge of the work and shall be shown, upon request, to any employee of the Department of Transportation.

Contact County Manager 10 days before work begins, also contact County Manager when work is completed for final inspection.

[3] No work authorized by this permit shall begin until the permittee has contacted and received instructions from

County Manager Ned Kerstetter **Phone 614-876-2045**
(Authorized ODOT Employee)

NOTE: Any work performed by the permittee may be stopped if this requirement is not met.

[4] Prior to any excavation in the highway right-of-way, the Ohio Utilities Protection Service (OUPS) must be contacted in accordance with ORC Section 3781.25 to 3781.32. OUPS can be reached at 1-800-362-2764.

[5] All work requiring men or vehicles within ODOT right of way shall comply with all applicable requirements of the Ohio Manual of Traffic Control Devices and Item 614 (Maintaining Traffic) of the Construction and Material Specifications, latest editions. Failure to comply with these requirements will be cause for immediate revocation or suspension of the permit until the proper traffic control devices have been provided.

[6] The permittee accepts the conditions, terms, and requirements printed, written on, or attached to this permit and understands that failure to comply fully with those conditions, terms, and requirements or any change in the use of the permit inconsistent with its terms and conditions will be considered a violation and cause for suspension, revocation, or annulment of the permit thereby rendering the permit illegal and subject to appropriate Department action, up to an including removal of the installation at the permittee's expense.

[7] Performance Bond Required? _____ Yes _____ No Company_____
Effective Date _____ Expiration Date _____ Amount $ _____

[8] This permit shall be void if the work described herein does not comply with the conditions, terms, and requirements applicable to this permit, and if the work is not completed by 4/23/02_____

Dated this _23__ day of ___October __2001

District Deputy Director Jack R. Marchbanks

Rev 3/20/00

(See Other Side)

FUTURE FULL BUILD SIGNAL DETAIL

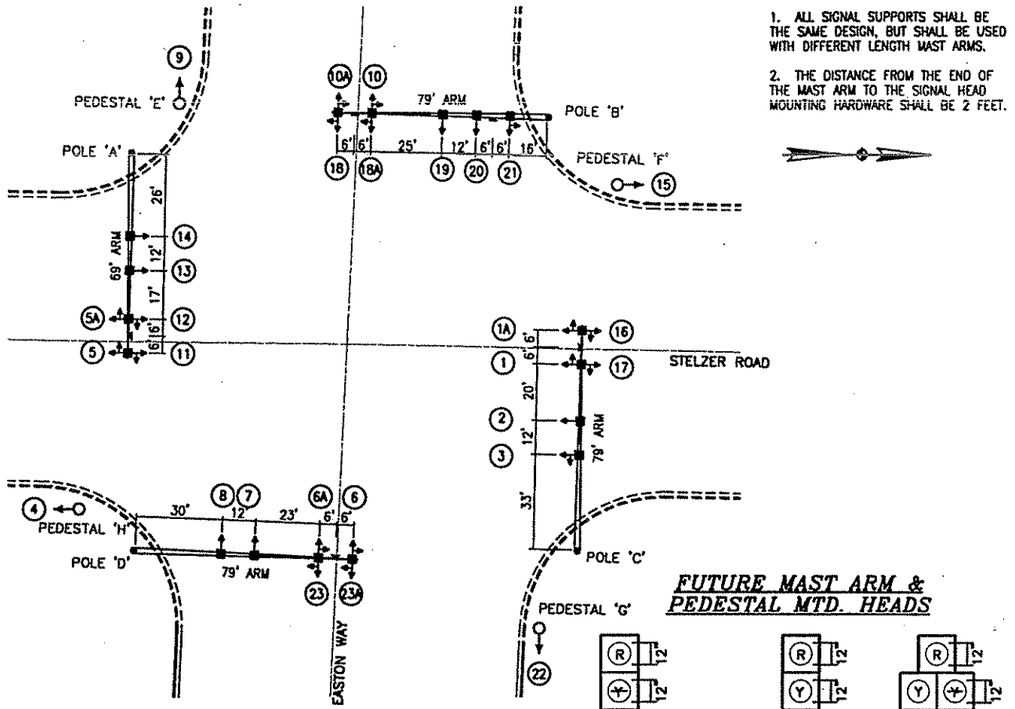

FUTURE MAST ARM & PEDESTAL MTD. HEADS

1,1A,5,5A,6,6A,10,10A, 11,12,16,17,18,18A,23,23A — 2,7,8,9,13,14,15,19,20 — 3,4,21,22

NOTES:

1. ALL SIGNAL SUPPORTS SHALL BE THE SAME DESIGN, BUT SHALL BE USED WITH DIFFERENT LENGTH MAST ARMS.
2. THE DISTANCE FROM THE END OF THE MAST ARM TO THE SIGNAL HEAD MOUNTING HARDWARE SHALL BE 2 FEET.

SIGNAL HEAD FIELD WIRING HOOKUP PER APPROACH

SIGNAL DISPLAY	WIRE COLOR
THRU R	RED
THRU Y	ORANGE
THRU G	GREEN
L/T R	BLACK
L/T Y	WHITE W/BLACK TRACER
L/T G	BLUE
R/T R	NOT USED BY CITY
R/T Y	RED W/BLACK TRACER
R/T G	GREEN W/BLACK TRACER

WHITE SHALL BE USED FOR GROUND (COMMON). SPLICE ALL WIRES IN THE SIGNAL HEAD OR PED UNIT. USE #14 AWG 2 WIRE SPADE TERMINAL OR #14 AWG 1 WIRE SPADE TERMINAL TO CONNECT ALL WIRES TO FIELD TERMINALS. USE BUTT SPLICES ON ALL THROUGH WIRES. ALL UNUSED WIRES SHALL BE SPLICED THROUGH AND SHALL HAVE A DEAD-END TERMINAL AT THE END OF THE WIRE.

SUB-SUMMARY OF TRAFFIC SIGNAL ITEMS

REFERENCE LETTER	ITEM DESCRIPTION	ITEM NUMBER	UNIT	QUANTITY
	CONDUIT, 2", 713.07, SCHEDULE 40	625	L.F.	91
	TRENCH	625	L.F.	91
	PULL BOX, MISC:, CONNECTION TO EXISTING PULL BOX	625	EA.	4
	GROUND ROD	625	EA.	4
	SIGN SUPPORT ASSEMBLY, POLE MOUNTED, AS PER PLAN	630	EA.	1
	SIGN HANGER ASSEMBLY, MAST ARM, AS PER PLAN	630	EA.	2
	SIGN, FLAT SHEET, TYPE G, AS PER PLAN	630	S.F.	23
	VEHICULAR SIGNAL HEAD, 3 SECTION, 12" LENS, 1-WAY, BLUE	632	EA.	6
	FURNISH ONLY, AS PER PLAN			
	VEHICULAR SIGNAL HEAD, 3 SECTION, 12" LENS, 1-WAY, BLUE, A.P.P.	632	EA.	11
	VEHICULAR SIGNAL HEAD, 5 SECTION, 12" LENS, 1-WAY, BLUE, A.P.P.	632	EA.	8
	VEHICULAR SIGNAL HEAD, 3-12"/5-12" LENS, 2-WAY, BLUE, A.P.P.	632	EA.	2
	PEDESTRIAN PUSHBUTTON, AS PER PLAN	632	EA.	7
	SIGNAL CABLE, 5 CONDUCTOR, NO. 14 AWG	632	L.F.	322
	SIGNAL CABLE, 7 CONDUCTOR, NO. 14 AWG	632	L.F.	1394
	SIGNAL CABLE, 9 CONDUCTOR, NO. 14 AWG	632	L.F.	701
	PEDESTRIAN PUSHBUTTON LEAD-IN CABLE, AS PER PLAN	632	L.F.	187
	PEDESTAL FOUNDATION, AS PER PLAN	632	EA.	4
A	SIGNAL SUPPORT, MISC.: TYPE TC-81.20, DESIGN 12, (23.5 IN. BOLT CIRCLE), SM16-V00V230-69-GVFP-HH-2.5"AB, BLUE, AS PER PLAN	632	EA.	1
B,C,D	SIGNAL SUPPORT, MISC.: TYPE TC-81.20, DESIGN 12, (23.5 IN. BOLT CIRCLE), SM16-V00V230-79-GVFP-HH-2.5"AB, BLUE, AS PER PLAN	632	EA.	3
	SIGNAL SUPPORT, MISC.: TYPE TC-81.20, DESIGN 12, (23.5 IN. BOLT CIRCLE), SM16-V00V230-79-GVFP-HH-2.5"AB, BLUE, FURNISH ONLY, AS PER PLAN	632	EA.	1
	PEDESTAL, MISC.: 13.7 FEET, BLUE, AS PER PLAN	632	EA.	4
	REMOVAL OF TRAFFIC SIGNAL INSTALLATION, AS PER PLAN	632	EA.	1

EXISTING DETECTOR ASSIGNMENTS (TO REMAIN)

DETECTOR # MAGS	DETECTOR # LOOPS	RACK 1 (LT) OUTPUT CH# MAGS	RACK 1 (LT) OUTPUT CH# LOOPS	PHASE MAGS	PHASE LOOPS	SYS DET PROBES	SYS DET LOOPS	2 TURNS LOOP SIZE	DELAY DATA LOOP SEC	DELAY DATA # GRN INHIBIT	DET UNIT RACK & CABLE LABEL MAG	DET UNIT RACK & CABLE LABEL LOOP
P1\P2	L1	1	11	6	1		B1	5x25	3	#1	NB(F)	NBLT
P3\P4	L2\L3	3	12	6	5	A1	B2	5x25\5x25	3	#5	NB(N)	SBLT
P5\P6\P7	L4	5	15	2	8	A2		5x36	12	#8	SB(N)	EB(R)
P8\P9\P10	L5\L6	7	16	2	8			5x38\5x40	3	#8	SB(F)	EB
	L7\L8		9		3		C1	5x25\5x25	3	#3+#8		EBLT
	L9\L10		13		4		C2	5x34\5x36	12	#4		WBRT
	L11\L12		14		4		D1	5x38\5x40	3	#4		WB
	L13\L14		10		7		D2	5x25\5x25	3	#4+#7		WBLT

EXISTING SIGNAL TIMING IN SECONDS (TO REMAIN)

TIMING INTERVAL	NBLT #1	SB #2	EBLT #3	WB #4	SBLT #5	NB #6	WBLT #7	EB #8
MAX. GREEN I	20	60	20	40	50	40	20	40
MAX. GREEN II	–	–	–	–	–	–	–	–
YELLOW CLEAR	3.6	4.3	3.6	3.8	3.6	4.3	3.6	3.8
RED CLEAR	2.5	2.6	2.5	2.3	2.5	2.6	2.5	2.3
MAX. INITIAL	–	–	–	–	–	–	–	–
MIN. INITIAL	10	20	10	10	10	20	10	10
ADDED INITIAL/ACT.	–	–	–	–	–	–	–	–
PRESET EXTENSION	3.7	2.8	3.7	3.7	3.7	2.8	3.7	3.7
MIN. EXTENSION	–	–	–	–	–	–	–	–
TIME BEFORE REDUCT	–	–	–	–	–	–	–	–
TIME TO MIN. EXT.	–	–	–	–	–	–	–	–
PED. WALK	–	–	–	4	–	–	–	4
PED. CLEAR	–	–	–	24	–	–	–	24
RECALL/MEMORY MODE	NON-LOCK	RECALL	NON-LOCK	NON-LOCK	NON-LOCK	RECALL	NON-LOCK	NON-LOCK

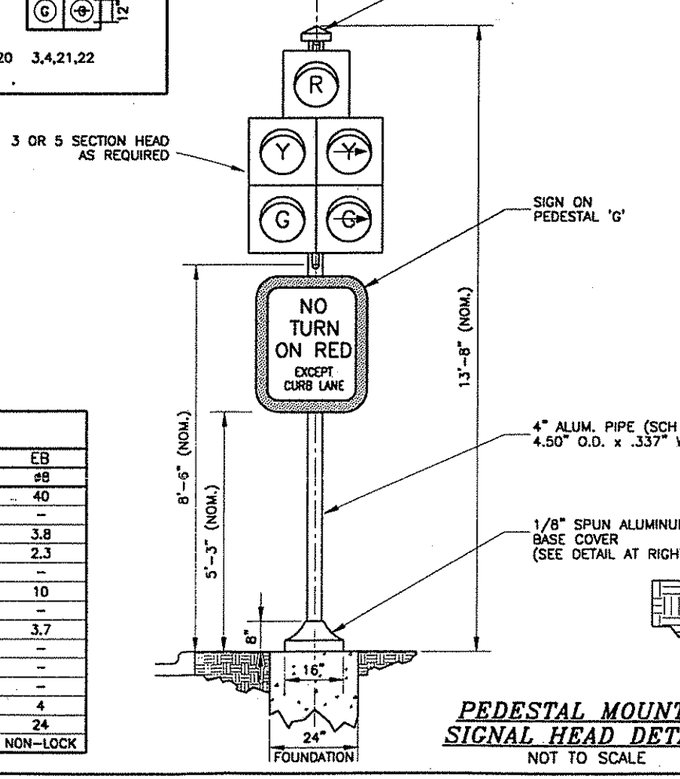

PEDESTAL MOUNTED SIGNAL HEAD DETAILS

NOT TO SCALE

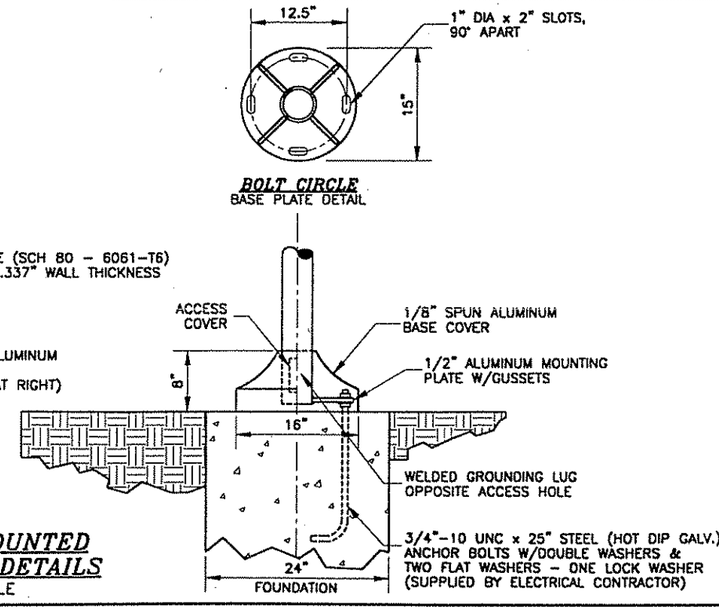

NO SCALE

CALC BY: M.O.L. DATE: 4/98
CHKD BY: D.R.B. DATE: 5/98

MAST ARM SIGNAL INSTALLATION
STELZER RD. & EASTON WAY

FRA-270 @ EASTON WAY

6/12

PLOT SCALE: COL #23
C:\DRAWNG\1022210\TC\0222TP2A.DWG JUNE-17-1998-09:5

WIRING DIAGRAM LEGEND

- VEHICULAR SIGNAL HEAD
- VEHICULAR SIGNAL HEAD W/ TURN ARROW
- FUTURE VEHICULAR SIGNAL HEAD W/ TURN ARROW
- PEDESTAL MOUNTED VEHICULAR SIGNAL HEAD
- (L-7) EXISTING VEHICLE LOOP DETECTOR
- P1 EXISTING MAGNETOMETER PROBE SET
- (W) FUTURE PEDESTRIAN SIGNAL HEAD
- EXISTING 15' COIL OF 9/C WIRE FOR FUTURE PED HEADS
- (B) PEDESTRIAN PUSHBUTTON
- (P) EXISTING POWER
- (2) EXISTING 2/C #14 AWG.
- (2) 2/C #14 AWG.
- (4) EXISTING 4/C #14 AWG.
- (5) EXISTING 5/C #14 AWG.
- (5) 5/C #14 AWG.
- (7) EXISTING 7/C #14 AWG.
- (7) 7/C #14 AWG.
- (9) EXISTING 9/C #14 AWG.
- (9) 9/C #14 AWG.
- EX INT EXISTING INTERCONNECT CABLE

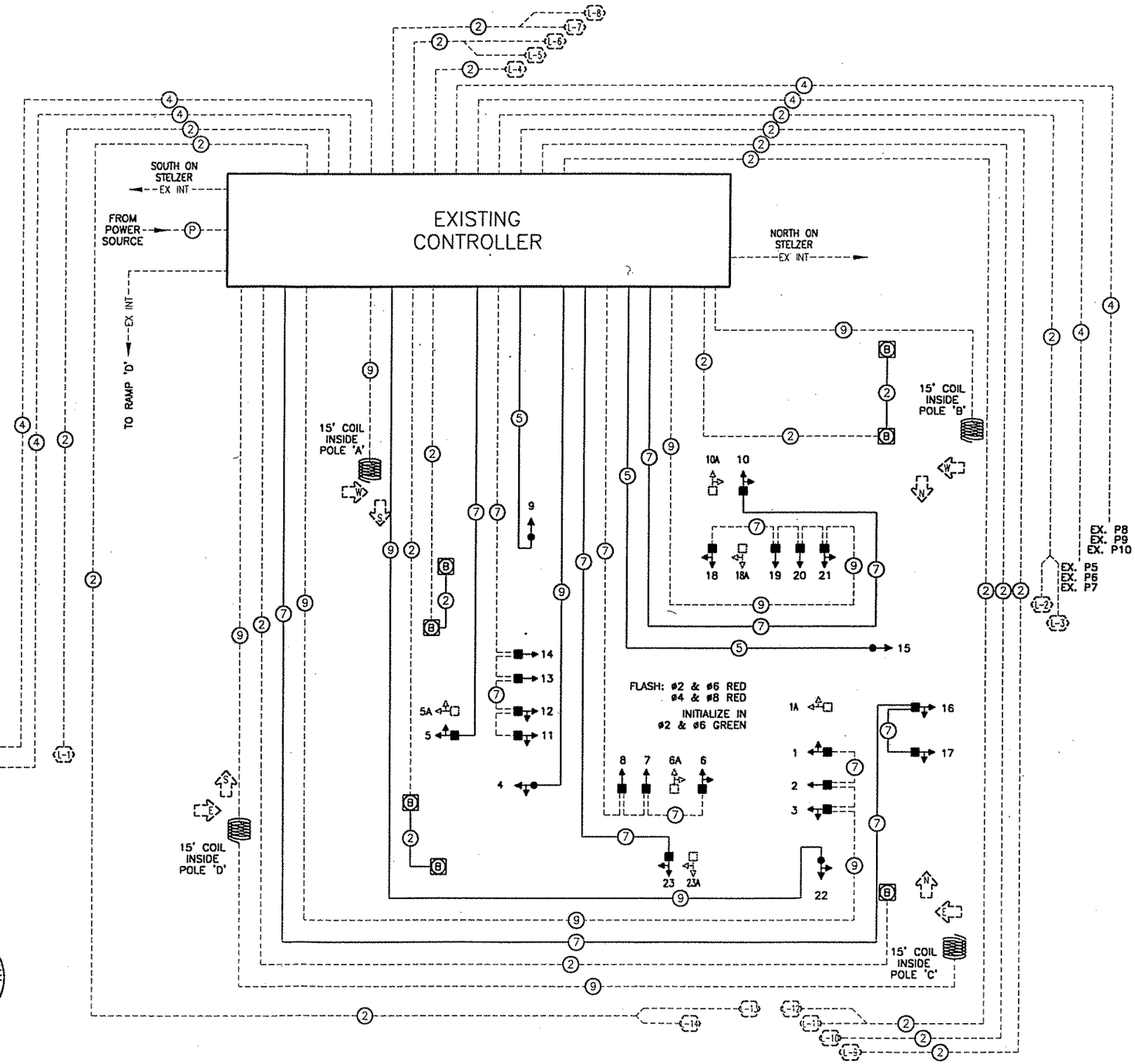

WIRING DIAGRAM

EXISTING SIGNAL PHASING (TO REMAIN)

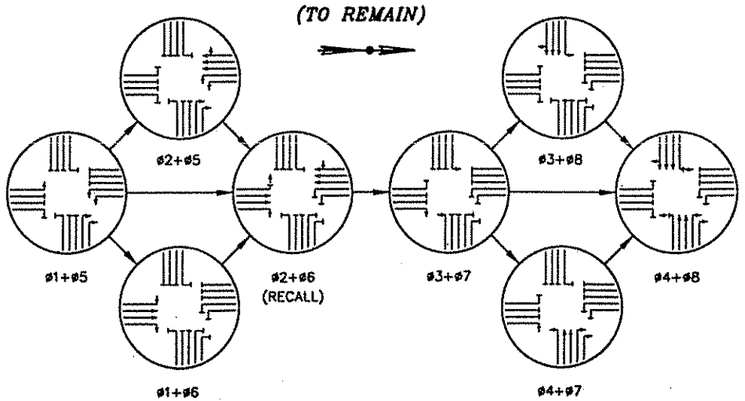

PLOT SCALE...
COL #23 C:\DRAWING\1022210\TC\1222TP2B.DWG APRIL-24-1998-08:52

NO SCALE

DRAWN BY MRS DATE 4/98
CHK'D BY MDL DATE 4/98

MAST ARM SIGNAL INSTALLATION
STELZER RD. & EASTON WAY

FRA-270 @
EASTON WAY

7/12

EXISTING DETECTOR ASSIGNMENTS (TO REMAIN)

DET # MAGS	DET # LOOPS	RACK 1 (LT) OUTPUT CH# MAGS	RACK 1 (LT) OUTPUT CH# LOOPS	PHASE MAGS	PHASE LOOPS	SYS DET PROBES	SYS DET LOOPS	2 TURNS LOOP SIZE	DELAY DATA LOOP SEC	DELAY DATA ø GRN INHIBIT	DET UNIT RACK & CABLE LABEL MAG	DET UNIT RACK & CABLE LABEL LOOP
P1/P2	L-1	1	7	1	2		B1	5' x 25'		ø2	EB(F)	NB(R)
P3/P4	L-2	3	7	1	2	A1	A2	5' x 25'		ø2	EB(N)	NBLT(L)
	L-3		8		2		B2	25' x 5'				NB

FLASH: ø1 YELLOW
ø2 RED

INITIALIZE IN
ø1 GREEN

NOTES:

1. SIGNAL HEADS SHALL BE FREE SWINGING & SUSPENDED BELOW THE MAST ARM.
2. NEW WHITE ON BLUE STREET NAME SIGNS TO BE INSTALLED BY OTHERS.

SUB-SUMMARY OF TRAFFIC SIGNAL ITEMS

REFERENCE LETTER	ITEM DESCRIPTION		UNIT	QUANTITY
	SIGN, FLAT SHEET, TYPE G, AS PER PLAN	630	S.F.	19.5
	SIGN SUPPORT ASSEMBLY, POLE MOUNTED, AS PER PLAN	630	EA.	2
	VEHICULAR SIGNAL HEAD, 3 SECTION, 12" LENS, 1 WAY, BLUE, A.P.P.	632	EA.	4
B	SIGNAL SUPPORT, TC-81.20, DESIGN 1, 18' ARM, BLUE, A.P.P.	632	EA.	1
A	SIGNAL SUPPORT, TC-81.20, DESIGN 1, 26' ARM, BLUE, A.P.P.	632	EA.	1
	SIGNAL CABLE, 5 CONDUCTOR, No. 14 AWG	632	L.F.	71
	SIGNAL CABLE, 7 CONDUCTOR No. 14 AWG	632	L.F.	223
	REMOVAL OF TRAFFIC SIGNAL INSTALLATION, AS PER PLAN	632	EA.	1
	CONTROLLER, MISC.: REUSE OF EXISTING CONTROLLER	632	EA.	1

HORIZONTAL SCALE IN FEET: 0, 10, 20, 40

DESIGN: DRB DATE: 6/98
CHKD: DRB DATE: 6/98
DRWN: MCR DATE: 4/98

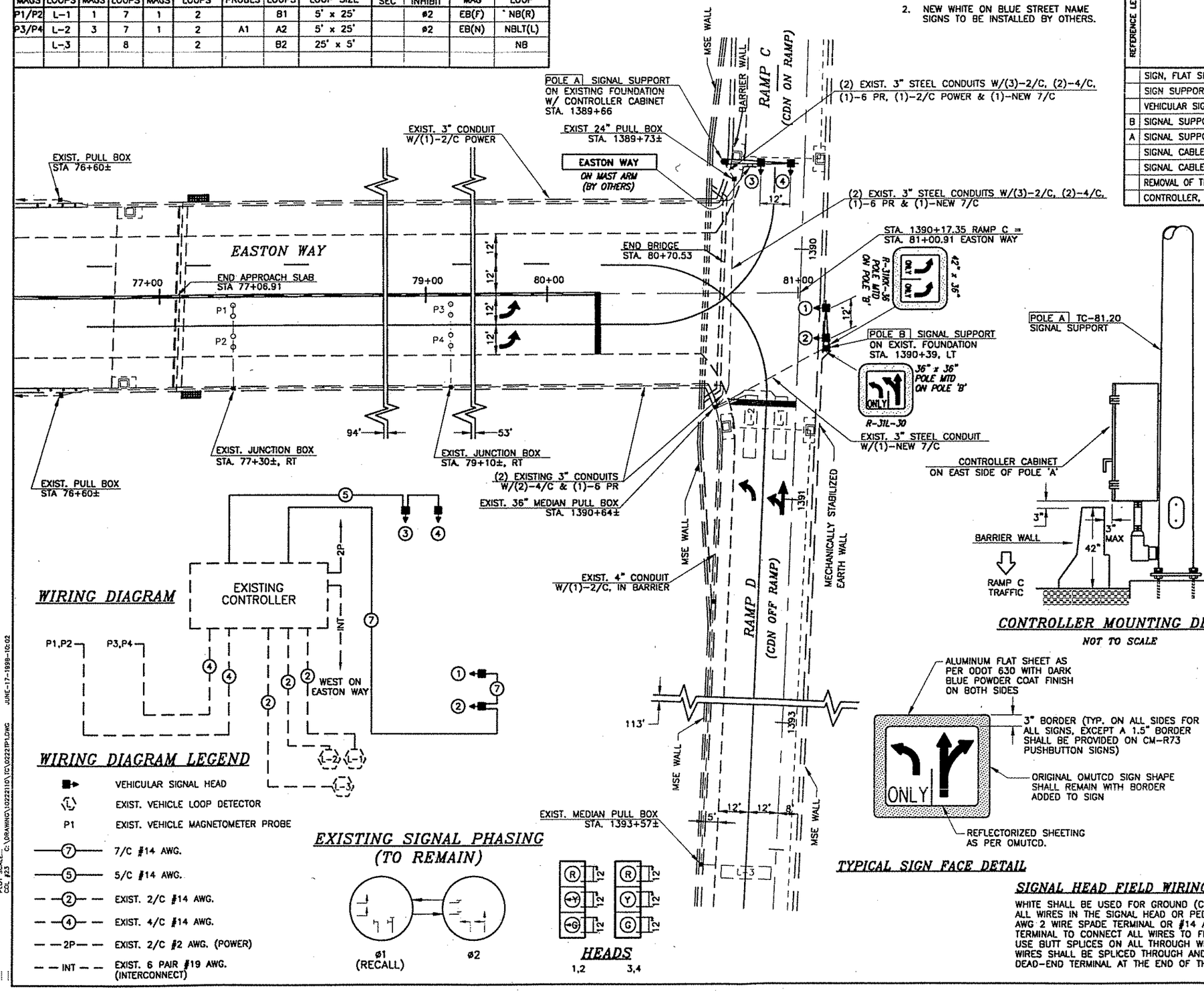

WIRING DIAGRAM

WIRING DIAGRAM LEGEND

- VEHICULAR SIGNAL HEAD
- EXIST. VEHICLE LOOP DETECTOR
- P1 EXIST. VEHICLE MAGNETOMETER PROBE
- (7) 7/C #14 AWG.
- (5) 5/C #14 AWG.
- (2) EXIST. 2/C #14 AWG.
- (4) EXIST. 4/C #14 AWG.
- 2P EXIST. 2/C #2 AWG. (POWER)
- INT EXIST. 6 PAIR #19 AWG. (INTERCONNECT)

EXISTING SIGNAL PHASING (TO REMAIN)

CONTROLLER MOUNTING DETAIL

NOT TO SCALE

TYPICAL SIGN FACE DETAIL

SIGNAL HEAD FIELD WIRING NOTES

WHITE SHALL BE USED FOR GROUND (COMMON). SPLICE ALL WIRES IN THE SIGNAL HEAD OR PED UNIT. USE #14 AWG 2 WIRE SPADE TERMINAL OR #14 AWG 1 WIRE SPADE TERMINAL TO CONNECT ALL WIRES TO FIELD TERMINALS. USE BUTT SPLICES ON ALL THROUGH WIRES. ALL UNUSED WIRES SHALL BE SPLICED THROUGH AND SHALL HAVE A DEAD-END TERMINAL AT THE END OF THE WIRE.

EXISTING SIGNAL TIMING IN SECONDS (TO REMAIN)

TIMING INTERVAL	EASTON ø1	N/B RAMP ø2
MAX. GREEN I	30	30
MAX. GREEN II	–	–
YELLOW CLEAR	3.8	3.8
RED CLEAR	1.5	1.5
MAX. INITIAL	–	–
MIN. INITIAL	–	–
ADDED INITIAL/ACT.	–	–
PRESET EXTENSION	1.5	3.7
MIN. EXTENSION	–	–
TIME BEFORE REDUCT	–	–
TIME TO MIN. EXT.	–	–
PED. WALK	N/A	N/A
PED. CLEAR	N/A	N/A
RECALL/MEMORY MODE	RECALL	NON-LOCK

EXISTING SIGNAL DISPLAYS (TO REMAIN)

PHASE	SIGNAL NUMBER 1	2	3	4	DESCRIPTION OF INTERVAL
ø1	G	G	R	R	GREEN
	Y	Y	R	R	YELLOW CLEAR
	R	R	R	R	RED CLEAR
ø2	R	R	G	G	GREEN
	R	R	Y	Y	YELLOW CLEAR
	R	R	R	R	RED CLEAR
FLASH	→Y	→Y	R	R	FLASH

632 REMOVAL OF TRAFFIC SIGNAL INSTALLATION, A.P.P.

DESCRIPTION OF ITEM TO BE REMOVED BY CONTRACTOR	STORED FOR CITY OF COLUMBUS	DISPOSED OF BY CONTRACTOR
SIGNAL CABLE ON SPAN		X
MESSENGER WIRE		X
(4) 3 SEC, 1 WAY VEHICULAR SIGNAL HEADS	X	
(2) STRAIN POLES	X	
(2) POLE MTD. SIGNS	X	
(1) POLE MTD. ST. NAME SIGN	X	

SIGNAL HEAD FIELD WIRING HOOKUP PER APPROACH

SIGNAL DISPLAY	WIRE COLOR
THRU R	RED
THRU Y	ORANGE
THRU G	GREEN
L/T R	BLACK
L/T →Y	WHITE W/BLACK TRACER
L/T →G	BLUE
R/T R	NOT USED BY CITY

PLOT SCALE: 1.0000 '/ IN.
PLOT DATE: JUNE-17-1998-10:02
COL #25 C:\DRAWING\10222110\TC\0222P1.DWG

MAST ARM SIGNAL INSTALLATION PLAN
EASTON WAY & N/B OFF-RAMP (RAMP "D")

FRA-270 @
EASTON WAY

8/12

SUPPORT LOCATION				SUPPORT DATA				MAST ARM "A" DATA							POLE FABRICATION ACCESSORY LOCATIONS -CLOCKWISE FROM MAST ARM "A" OR PEDESTAL ACCESS DOOR							FIELD ORIENTATION			
INTERSECTION	SUPPORT	STATION	OFFSET (FEET) & SIDE	PEDESTAL, TRANSFORMER BASE	TC-81.20 DESIGN NO.	ARM ATTACHMENT HEIGHT (FEET)	TOTAL HEIGHT (FEET)	OVERALL LENGTH (2 SECTION ARMS) (FEET)	ARM OR SECTION LENGTH (FEET)	TC-16.20 DESIGN NO.	TC-81.20 DESIGN NO.	SIGNAL NUMBER	DISTANCE FROM ARM BUTT (FEET)	SIGN CODE	DISTANCE FROM ARM BUTT (FEET)	HANDHOLE	2-1/2" B.H.C. FOR CONTROLLER CABINET AS PER TC-83.10		PEDESTAL MTD. VEHICULAR SIGNAL HEAD	BASE PLATE	PEDESTRIAN PUSHBUTTON		UNUSED FOUNDATION CONDUIT ELL 2" DIA.	MAST ARM "A" ORIENTATION ANGLE	ANCHOR BOLTS	PEDESTAL BASE ACCESS DOOR
STELZER RD.	A*	157+22	LT		*	21.5	23	59'			**	14	26'	R-25E(L)	61'	180°					135°		90° (EXIST)	0°	0° (EXIST)	
&												13	38'													
EASTON WAY												12	55'													
												5,11	67'													
	B*	158+77	LT		*	21.5	23	79'			**	21	16'	R-RP-23	22'	180°					135°		90° (EXIST)	90°	0° (EXIST)	
												20	28'													
												19	40'													
												10	65'													
* SUPPORT FDNS ARE EXISTING TO BE REUSED W/NEW SUPPORTS												18	77'													
	C*	158+91.5	RT		*	21.5	23	79'			**	3	33'			180°					135°		0° (EXIST)	0°	0° (EXIST)	
												2	45'													
												1,17	65'													
												16	77'													
	D*	157+29.5	RT		*	21.5	23	79'			**	8	30'			180°					135°		0° (EXIST)	90°	0° (EXIST)	
												7	42'													
												23	65'													
												6	77'													
	E	157+41	85' LT	1			13'-8"					9							90°		0°				0°	90°
	F	159+01	61' LT	1			13'-8"					15							90°		0°				0°	180°
	G	158+77	86' RT	1			13'-8"					22							180°		-				0°	0°
	H	156+93	59' RT.	1			13'-8"					4							90°		0°				0°	180°
EASTON WAY	A*	1389+66	32.5' RT		1	21.5	23	26'			1	3	13'			270°	0°							0°	45° (EXIST)	
&												4	25'													
N/B RAMP	B*	1390+39	11.1' LT		1	17	19	18'			1	2	4'			270°								90°	0° (EXIST)	
												1	16'													

SEE NOTE 2 BELOW FOR BASE PLATE INFO

** SEE NOTE ON SHEET 3 FOR INFORMATION REGARDING DESIGN OF TC-81.20 SIGNAL SUPPORTS. ALL SIGNAL SUPPORTS SHALL BE THE SAME DESIGN, BUT SHALL BE USED WITH DIFFERENT LENGTH MAST ARMS. THE FINAL DESIGN OF THE POLES SHALL BE DETERMINED BY THE FUTURE FULL BUILD SIGNAL DESIGN AS SHOWN ON SHEET 6.

EXISTING SIGNAL DISPLAYS (TO REMAIN)

PHASE	SIGNAL NUMBER 1	2	3	4	5	6	7	8	9	10	11	12	13	14	15	16	17	18	19	20	21	22	23	DESCRIPTION OF INTERVAL
ø1+ø5	~~G~~ R	R	R	R	~~G~~ R	R	R	R	R	R	~~G~~	~~G~~	R	R	R	~~G~~	~~G~~	R	R	R	R ~~G~~	R ~~G~~	R	GREEN
	~~Y~~ R	R	R	R	~~Y~~ R	R	R	R	R	R	~~G~~	~~G~~	R	R	R	~~G~~	~~G~~	R	R	R	R ~~G~~	R ~~G~~	R	YELLOW CLEAR TO ø2 + ø5
	R	R	R	R	R	R	R	R	R	R	~~G~~	~~G~~	R	R	R	~~G~~	~~G~~	R	R	R	R ~~G~~	R ~~G~~	R	RED CLEAR TO ø2 + ø5
	~~G~~ R	R	R	R	~~G~~ R	R	R	R	R	R	~~Y~~	~~Y~~	R	R	R	~~Y~~	~~Y~~	R	R	R	R ~~Y~~	R ~~Y~~	R	YELLOW CLEAR TO ø1 + ø6
	~~G~~ R	R	R	R	~~G~~ R	R	R	R	R	R	R	R	R	R	R	R	R	R	R	R	R	R	R	RED CLEAR TO ø1 + ø6
	~~Y~~ R	R	R	R	~~Y~~ R	R	R	R	R	R	~~Y~~	~~Y~~	R	R	R	~~Y~~	~~Y~~	R	R	R	R ~~Y~~	R ~~Y~~	R	YELLOW CLEAR TO ø2 + ø6
	R	R	R	R	R	R	R	R	R	R	R	R	R	R	R	R	R	R	R	R	R	R	R	RED CLEAR TO ø2 + ø6
ø2+ø5	R	R	R	R	R	R	R	R	R	R	~~G~~	~~G~~	G	G	G	~~G~~	~~G~~	R	R	R	R ~~G~~	R ~~G~~	R	GREEN
	R	R	R	R	R	R	R	R	R	R	~~Y~~	~~Y~~	G	G	G	~~Y~~	~~Y~~	R	R	R	R ~~Y~~	R ~~Y~~	R	YELLOW CLEAR TO ø2 + ø6
	R	R	R	R	R	R	R	R	R	R	R	R	G	G	G	R	R	R	R	R	R	R	R	RED CLEAR TO ø2 + ø6
ø1+ø6	~~G~~ G	G	R	G	~~G~~ G	R	R	R	R	R	R	R	R	R	R	R	R	R	R	R	R	R	R	GREEN
	~~G~~ G	G	R	G	~~G~~ G	R	R	R	R	R	R	R	R	R	R	R	R	R	R	R	R	R	R	YELLOW CLEAR TO ø2 + ø6
	G	G	R	G	G	R	R	R	R	R	R	R	R	R	R	R	R	R	R	R	R	R	R	RED CLEAR TO ø2 + ø6
ø2+ø6 (RECALL)	G	G	G	G	G	R	R	R	R	R	R	R	G	G	G	R	R	R	R	R	R	R	R	GREEN
	Y	Y	Y	Y	Y	R	R	R	R	R	R	R	Y	Y	Y	R	R	R	R	R	R	R	R	YELLOW CLEAR
	R	R	R	R	R	R	R	R	R	R	R	R	R	R	R	R	R	R	R	R	R	R	R	RED CLEAR
ø3+ø7	R	R	R ~~G~~	R ~~G~~	R	~~G~~ R	R	R	R	~~G~~ R	R	R	R	R	R	R	R	~~G~~ R	R	R	R	R	~~G~~ R	GREEN
	R	R	R ~~Y~~	R ~~Y~~	R	~~G~~ R	R	R	R	~~G~~ R	R	R	R	R	R	R	R	~~Y~~ R	R	R	R	R	~~Y~~ R	YELLOW CLEAR TO ø3 + ø8
	R	R	R	R	R	~~G~~ R	R	R	R	~~G~~ R	R	R	R	R	R	R	R	R	R	R	R	R	R	RED CLEAR TO ø3 + ø8
	R	R	R ~~G~~	R ~~G~~	R	~~Y~~ R	R	R	R	~~Y~~ R	R	R	R	R	R	R	R	~~G~~ R	R	R	R	R	~~G~~ R	YELLOW CLEAR TO ø4 + ø7
	R	R	R ~~G~~	R ~~G~~	R	R	R	R	R	R	R	R	R	R	R	R	R	~~G~~ R	R	R	R	R	~~G~~ R	RED CLEAR TO ø4 + ø7
	R	R	R ~~Y~~	R ~~Y~~	R	~~Y~~ R	R	R	R	~~Y~~ R	R	R	R	R	R	R	R	~~Y~~ R	R	R	R	R	~~Y~~ R	YELLOW CLEAR TO OTHERS
	R	R	R	R	R	R	R	R	R	R	R	R	R	R	R	R	R	R	R	R	R	R	R	RED CLEAR TO OTHERS
ø3+ø8	R	R	R	R	R	~~G~~ G	G	G	G	~~G~~ G	R	R	R	R	R	R	R	R	R	R	R	R	R	GREEN
	R	R	R	R	R	~~Y~~ G	G	G	G	~~Y~~ G	R	R	R	R	R	R	R	R	R	R	R	R	R	YELLOW CLEAR TO ø4 + ø8
	R	R	R	R	R	G	G	G	G	G	R	R	R	R	R	R	R	R	R	R	R	R	R	RED CLEAR TO ø4 + ø8
	R	R	R	R	R	~~Y~~ Y	Y	Y	Y	~~Y~~ Y	R	R	R	R	R	R	R	R	R	R	R	R	R	YELLOW CLEAR TO OTHERS
	R	R	R	R	R	R	R	R	R	R	R	R	R	R	R	R	R	R	R	R	R	R	R	RED CLEAR TO OTHERS
ø4+ø7	R	R ~~G~~	R ~~G~~	R	R	R	R	R	R	R	R	R	R	R	R	R	R	~~G~~ G	G	G	G	G	~~G~~ G	GREEN
	R	R ~~Y~~	R ~~Y~~	R	R	R	R	R	R	R	R	R	R	R	R	R	R	~~Y~~ G	G	G	G	G	~~Y~~ G	YELLOW CLEAR TO ø4 + ø8
	R	R	R	R	R	R	R	R	R	R	R	R	R	R	R	R	R	G	G	G	G	G	R	RED CLEAR TO ø4 + ø8
	R	R ~~Y~~	R ~~Y~~	R	R	R	R	R	R	R	R	R	R	R	R	R	R	~~Y~~ Y	Y	Y	Y	Y	~~Y~~ Y	YELLOW CLEAR TO OTHERS
	R	R	R	R	R	R	R	R	R	R	R	R	R	R	R	R	R	R	R	R	R	R	R	RED CLEAR TO OTHERS
ø4+ø8	R	R	R	R	R	G	G	G	G	G	R	R	R	R	R	R	R	G	G	G	G	G	G	GREEN
	R	R	R	R	R	Y	Y	Y	Y	Y	R	R	R	R	R	R	R	Y	Y	Y	Y	Y	Y	YELLOW CLEAR
	R	R	R	R	R	R	R	R	R	R	R	R	R	R	R	R	R	R	R	R	R	R	R	RED CLEAR
FLASH	R	R	R	R	R	R	R	R	R	R	R	R	R	R	R	R	R	R	R	R	R	R	R	FLASH

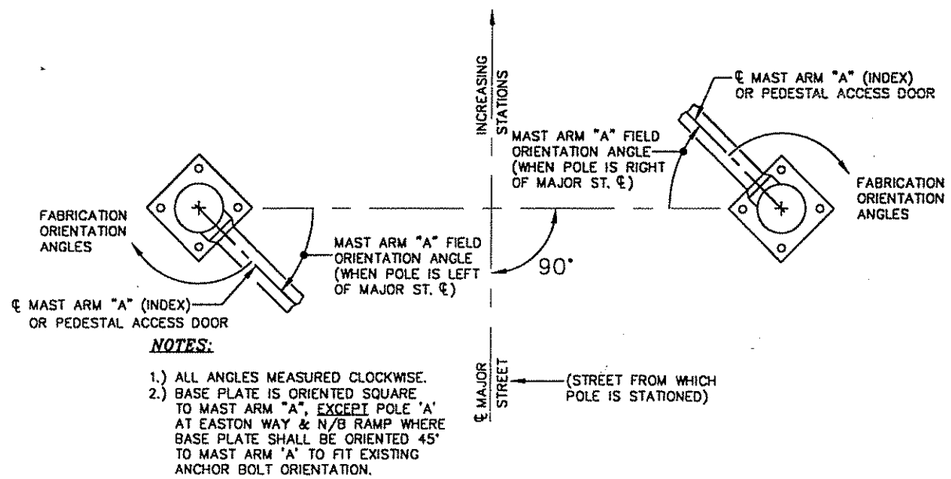

NOTES:

1.) ALL ANGLES MEASURED CLOCKWISE.
2.) BASE PLATE IS ORIENTED SQUARE TO MAST ARM "A", EXCEPT POLE 'A' AT EASTON WAY & N/B RAMP WHERE BASE PLATE SHALL BE ORIENTED 45° TO MAST ARM 'A' TO FIT EXISTING ANCHOR BOLT ORIENTATION.

SIGNAL SUPPORT ORIENTATION DETAIL

CALC BY: MDL DATE: 4/98
CHKD BY: DRB DATE: 6/98

STELZER & EASTON WAY SIGNAL DISPLAYS
SIGNAL SUPPORT DATA, MAST ARM DATA AND ORIENTATION ANGLES

FRA-270 @ EASTON WAY

9
12

PLOT SCALE = 1.0000 '/ UNIT
PLOT DATE = 6/ 9/98
C:\DRAWING\1022210\10\0222MA0.DWG
JUNE-17-1998-13:32

POWER SERVICE

THE POWER SUPPLYING AGENCY FOR THIS PROJECT IS:

AMERICAN ELECTRIC POWER
215 NORTH FRONT STREET
COLUMBUS OHIO 43215
(614) 464-7666

POWER SERVICE ELECTRICAL ENERGY ACCOUNTS SHALL REMAIN WITH THE EXISTING MAINTAINING AGENCIES NOTED IN THE PLANS.

INSPECTION

FIVE (5) WORKING DAYS PRIOR TO BEGINNING WORK, THE CONTRACTOR SHALL NOTIFY JIM BERGANDINE AT ODOT DISTRICT 6 (614-363-1251, EXT 426) IN ORDER THAT ODOT MAY BE PRESENT DURING CONSTRUCTION AND CAN SCHEDULE A FINAL INSPECTION OF THE LIGHTING WORK.

CONVERSION OF METRIC STANDARD DRAWINGS

THE METRIC STANDARD DRAWINGS REFERENCED IN THIS PLAN SHALL BE CONVERTED TO ENGLISH UNITS USING THE SI (METRIC) TO ENGLISH CONVERSION FACTORS PROVIDED IN SECTION 109.011 OF THE 1997 CONSTRUCTION AND MATERIALS SPECIFICATIONS. THE APPENDIX OF ASTM E-380 SHALL BE UTILIZED FOR ANY ADDITIONAL CONVERSION FACTORS REQUIRED. CONVERSIONS SHALL BE APPROPRIATELY PRECISE AND SHALL REFLECT STANDARD INDUSTRY ENGLISH VALUES WHERE SUITABLE.

UNDERDRAINS FOR PULL BOXES

REFERENCE IS MADE TO STANDARD DRAWING HL-30.11 FOR DETAILS OF DRAINING PULL BOXES. UNDERDRAINS FOR PULL BOXES SHALL BE USED AS DIRECTED BY THE ENGINEER AND SHALL BE PROVIDED WHERE THE LENGTH REQUIRED FOR A SATISFACTORY OUTLET DOES NOT EXCEED APPROXIMATELY 20 FEET. AN ESTIMATED QUANTITY OF "ITEM 603, 4" CONDUIT, TYPE E" IS INCLUDED IN THE LIGHTING GENERAL SUMMARY FOR THIS PURPOSE.

ITEM 625 HIGH VOLTAGE TEST

A HIGH VOLTAGE TEST, AS DESCRIBED IN 625.22, SHALL BE PERFORMED ON ALL LIGHTING CIRCUITS TO BE MODIFIED ON THIS PROJECT.

A LUMP SUM PAYMENT FOR ITEM 625 HIGH VOLTAGE TEST HAS BEEN INCLUDED IN THE GENERAL SUMMARY.

ITEM 625 PULL BOX, MISC.: CONNECTION TO EXISTING PULL BOX

THIS ITEM OF WORK SHALL CONSIST OF PROVIDING A CONNECTION TO AN EXISTING CONCRETE PULL BOX AS REQUIRED BY THE PLAN. THE CONNECTION SHALL PERMIT THE ENTRANCE OF THE NEW 3-INCH CONDUIT RUN AS SHOWN IN THE PLAN.

CONNECTION TO THE EXISTING CONCRETE PULL BOX SHALL BE PROVIDED BY DIRECTING THE CONDUIT/DUCT CABLE UPWARD THROUGH THE PULL BOX FLOOR WITHOUT DISTURBING THE PULL BOX OR BY DRILLING A HOLE IN THE SIDE OF THE PULL BOX. IN THE EVENT THAT THE PULL BOX SHOULD BE DAMAGED, THE DAMAGE SHALL BE REPAIRED AS DIRECTED BY THE ENGINEER. THE COST OF REPAIRS TO OR REPLACEMENT OF THE EXISTING PULL BOX WILL BE INCIDENTAL TO THE COST OF THE CONNECTION. CARE SHOULD BE TAKEN TO NOT DISTURB THE EXISTING WIRING IN THE PULL BOX EXCEPT AS REQUIRED BY THE PLANS.

PAYMENT FOR ITEM 625 PULL BOX, MISC.:CONNECTION TO EXISTING PULL BOX WILL BE MADE AT THE UNIT PRICE FOR EACH CONDUIT CONNECTED INCLUDING ALL LABOR, EQUIPMENT, MATERIALS, AND INCIDENTALS REQUIRED TO PERFORM THE COMPLETE ITEM OF WORK.

ITEM 625 CONDUIT CLEANED AND CABLES REMOVED

THIS ITEM SHALL CONSIST OF LOCATING AND CLEANING AN EXISTING CONDUIT OF ALL EXISTING CABLES, MUD AND DEBRIS TO THE SATISFACTION OF THE ENGINEER BEFORE NEW DUCT CABLE OR DISTRIBUTION CABLE IS PULLED THROUGH THE CONDUIT. DRAIN OUTLETS SHALL BE FREE OF ALL OBSTRUCTIONS.

THIS ITEM SHALL INCLUDE CUTTING AND REAMING ANY BURRS AND INSTALLING BUSHINGS OR COUPLINGS TO PROVIDE A FREE RACEWAY FOR PULLING DUCT CABLE OR DISTRIBUTION CABLE THROUGH THE CONDUIT.

MATERIAL REMOVED SHALL BECOME THE PROPERTY OF THE CONTRACTOR AND SHALL BE DISPOSED OF OFF OF THE PROJECT SITE. DISTURBED AREAS SHALL BE PROPERLY RESTORED.

PAYMENT WILL BE MADE FOR EACH LINEAR FOOT OF ITEM 625 "CONDUIT CLEANED AND CABLES REMOVED" AND SHALL BE FULL COMPENSATION FOR ALL LABOR, MATERIALS, AND INCIDENTALS REQUIRED TO COMPLETE THE WORK IN A SATISFACTORY MANNER.

ITEM 625 CONDUIT, MISC.: CABLES REMOVED AND REROUTED

THIS ITEM SHALL CONSIST OF LOCATING AN EXISTING STEEL CONDUIT AND, UPON DISCONNECTING THE CIRCUITS AT THE EXISTING POWER SERVICE LOCATION (STA. 60+88 RT), CAREFULLY REMOVING THE FOUR (4) CIRCUIT "S" AND "N" CABLES FROM THE CONDUIT AT PULLBOX PB-5 (STA. 61+57 RT) WITHOUT CUTTING OR DAMAGING THE CABLES, REROUTING THE FOUR (4) CABLES THROUGH THE NEW 3" STEEL CONDUIT TO THE NEW POWER SERVICE LOCATION (STA. 61+40 RT), AND RECONNECTING.

PAYMENT WILL BE MADE FOR EACH LINEAR FOOT OF ITEM 625 CONDUIT, MISC.: CABLES REMOVED AND REROUTED, AND SHALL BE FULL COMPENSATION FOR ALL MATERIALS, LABOR AND INCIDENTALS REQUIRED TO COMPLETE THE WORK IN A SATISFACTORY MANNER.

ITEM SPECIAL - DISCONNECT EXISTING CIRCUIT

THIS ITEM OF WORK SHALL CONSIST OF DISCONNECTING EXISTING CIRCUIT(S) IN AN EXISTING LIGHT POLE OR PULL BOX. DISCONNECTION IN A PULL BOX SHALL CONSIST OF CUTTING CIRCUIT CABLES AND REMOVING SPLICE KITS AND CABLES OF CIRCUIT(S) TO BE ABANDONED. CABLES OF CIRCUIT(S) TO BE REUSED SHALL BE CUT IN SUCH A MANNER THAT SUFFICIENT CABLE REMAINS FOR MAKING RECONNECTION SPLICES.

DISCONNECTIONS IN LIGHT POLES SHALL CONSIST OF REMOVING THE ENDS OF CABLES OF CIRCUIT(S) TO BE ABANDONED. THOSE ENDS OF CONNECTOR KITS FROM WHICH THE ABANDONED CABLES ARE REMOVED SHALL BE PLUGGED AND TAPED SHUT.

PAYMENT WILL BE MADE AT THE UNIT PRICE BID FOR "ITEM SPECIAL - DISCONNECT EXISTING CIRCUIT" WHICH SHALL BE FULL COMPENSATION FOR ALL LABOR, MATERIALS, AND INCIDENTALS REQUIRED FOR COMPLETING THE WORK IN A SATISFACTORY MANNER.

ITEM 625 RELOCATION OF POWER SERVICE "S" AND "E", AS PER PLAN

THIS ITEM OF WORK SHALL CONFORM TO 625.18 AND 713.19 EXCEPT THAT THE CONTROL CENTER MOUNTINGS SHALL BE AS DETAILED ON SHEET 11, INCLUDING THE 96" X 48" CONCRETE PAD. IN ADDITION, ALL EXPOSED ABOVE GROUND PIPE, CONDUIT, AND FITTINGS SHALL BE FINISHED DARK BLUE, SMOOTH, GLOSSY BY TIGER DRYLAC (COLOR SPECIFICATION 349/41040). THE FINISH SHALL BE AN ELECTROSTATICALLY APPLIED POLYESTER OR URETHANE POWDER COAT, OVEN CURED AND BONDED AT APPROXIMATELY 400°F TO A DRY FILM THICKNESS OF 2 - 4 MILS. A WOOD SERVICE POLE IS NOT REQUIRED. THE CONTRACTOR SHALL REMOVE AND REUSE THE CONTROL CENTER CABINETS AND PE CELLS FROM THE EXISTING POWER SERVICE "S" AND "E" LOCATION AT EASTON WAY STA. 60+88 RT. IN ADDITION, THE EXISTING STEP-DOWN TRANSFORMER SHALL BE REUSED WITH POWER SERVICE "E", HOWEVER, A WEATHERTIGHT NEMA TYPE 4 ENCLOSURE AS PER 713.19 SHALL BE PROVIDED AS PART OF THE TRANSFORMER REINSTALLATION. THE CONTRACTOR SHALL NOTIFY THE AMERICAN ELECTRIC POWER COMPANY (AEP) WHEN THE CIRCUITS ARE READY FOR POWER AND AEP WILL MAKE THE POWER SERVICE CONNECTIONS AT THE POWER COMPANY'S SERVICE TRANSFORMERS.

POWER SUPPLIED SHALL BE 480 VOLT, TWO-WIRE GROUNDED NEUTRAL.

PAYMENT SHALL BE AS PER ITEM 625.

TOTAL FROM PLAN SHT NO. / SUB-SUMMARY SHT NO.					ITEM	ITEM EXT.	GRAND TOTAL	UNIT	DESCRIPTION	SEE SHT. NO.
		11/12								
									LIGHTING	
		40			603		40	LIN. FT.	4" CONDUIT, TYPE E	
		1			625		1	EACH	CONNECTOR KIT, TYPE II	
		1			625		1	EACH	CONNECTOR KIT, TYPE III	
		2			625		2	EACH	CONNECTOR KIT, TYPE VIIB	
		90			625		90	LIN. FT.	NO. 6 AWG 5000 VOLT DISTRIBUTION CABLE	
		3044			625		3044	LIN. FT.	NO. 2 AWG 5000 VOLT DISTRIBUTION CABLE	
		30			625		30	LIN. FT.	CONDUIT, 2", 713.04	
		126			625		126	LIN. FT.	CONDUIT, 3", 713.04	
		2700			625		2700	LIN. FT.	CONDUIT CLEANED AND CABLES REMOVED	
		288			625		288	LIN. FT.	CONDUIT, MISC: CABLES REMOVED AND REROUTED	
		146			625		146	LIN. FT.	TRENCH, 24" DEEP	
		2			625		2	EACH	PULL BOX, 713.08, 18"	
		2			625		2	EACH	PULL BOX REMOVED	
		1			625		1	EACH	RELOCATION OF POWER SERVICE "S" AND "E", AS PER PLAN	
		1			625		1	EACH	REMOVAL OF POWER SERVICE	
					625		LUMP		HIGH VOLTAGE TEST	
		2			625		2	EACH	PULL BOX, MISC.: CONNECTION TO EXISTING PULL BOX	
		3			SPECIAL		3	EACH	DISCONNECT EXISTING CIRCUIT	
									FOR TRAFFIC CONTROL QUANTITIES, SEE SHEET 4	

AS BUILT DRAWINGS

THE CONTRACTOR WILL KEEP AN UPDATED COPY OF THE LIGHTING PLAN DURING CONSTRUCTION SHOWING ANY CHANGES IN CIRCUIT LOCATION OR TO THE MATERIALS. AT THE END OF THE PROJECT, AN AS-BUILT SET OF PLANS WILL BE GIVEN TO THE PROJECT ENGINEER AND IS TO BE USED TO DETERMINE THAT THE INTENDED RELIABLE SYSTEM HAS BEEN INSTALLED AND COMPLETED. AFTER THE LIGHTING HAS BEEN COMPLETED AND APPROVED, THE ENGINEER WILL GIVE A COPY OF THE AS-BUILT TO THE MAINTAINING AGENCY WHEN THE SYSTEM IS TURNED OVER TO THEM.

ITEM 625 REMOVAL OF POWER SERVICE

THIS ITEM OF WORK INCLUDES THE REMOVAL AND PROPER DISPOSAL OF ALL REMAINING ITEMS AT THE EXISTING PS"S" AND PS"E" LOCATION (STA 60+88 RT) INCLUDING 8' x 4' x 6" CONCRETE PAD, CONDUIT ELLS, 4" DIA. PIPE, PIPE FOUNDATIONS AND MISCELLANEOUS ITEMS. THE CONTRACTOR SHALL RELOCATE THE CONTROL CENTER CABINETS, PE CELLS, AND STEP-DOWN TRANSFORMER AS DESCRIBED IN ITEM 625 RELOCATION OF POWER SERVICE "S" AND "E", AS PER PLAN.

PAYMENT WILL BE MADE AT THE UNIT PRICE BID FOR "ITEM 625 REMOVAL OF POWER SERVICE" WHICH SHALL BE FULL COMPENSATION FOR ALL LABOR, MATERIALS, AND INCIDENTALS REQUIRED FOR COMPLETING THE WORK IN A SATISFACTORY MANNER.

ITEM 625 PULL BOX, 713.08, 18"

THE PULL BOXES SHALL BE SUPPLIED WITH THE WORD "ELECTRIC" FORMED ON THE SURFACE.

PRO. BY: MRS DATE: 4/98
CHKD. BY: DRB DATE: 4/98

LIGHTING NOTES & GENERAL SUMMARY

FRA-270 @ EASTON WAY

10
12

PLOT SCALE = 1.0000 '/ IN
COL #23
C:\DRAWINGS\10222110\RL\0222LN05.DWG
JUNE-10-1998-11:34

LOCATION * 4 CABLES	CIRCUIT NODES	603	625																SPECIAL	
		4" CONDUIT, TYPE E	PULL BOX, 713.08, 18"	PULL BOX REMOVED	TRENCH, 24" DEEP	CONDUIT, 2", 713.04	CONDUIT, 3", 713.04	CONDUIT, MISC: CABLES REMOVED AND REROUTED	CONDUIT CLEANED AND CABLES REMOVED	No.2 AWG 5000 VOLT DISTRIBUTION CABLE	No.6 AWG 5000 VOLT DISTRIBUTION CABLE	PULL BOX, MISC.: CONNECTION TO EXISTING PULL BOX	CONNECTOR KIT, TYPE II	CONNECTOR KIT, TYPE III	CONNECTOR KIT, TYPE VIIB		RELOCATION OF POWER SERVICE 'S' AND 'E', A.P.P.	REMOVAL OF POWER SERVICE	DISCONNECT EXISTING CIRCUIT	
FROM – TO		L.F.	EA.	EA.	L.F.	L.F.	L.F.	L.F.	L.F.	L.F.	L.F.	EA.	EA.	EA.	EA.		EA.	EA.	EA.	
STELZER RD.																				
151+85 LT – 157+05 LT	AEP TRANS TO PB–1								2140*	2200*										
157+05 LT – 157+04 RT	PB–1 TO PB–2								440*	460*										
157+04 RT	PB–2											1								
157+04 RT – 61+35 RT E. WAY	PB–2 TO PB–3				76		76			324*										
157+04 RT – 60+88 RT	PB–2 TO EXIST PS 'S'/PS 'E'								120											
EASTON WAY																				
61+35 RT	PB–3	20	1																	
61+35 RT – 61+40 RT	PB–3 TO RELOC PS 'S'/PS 'E'				5		10			40*										
61+40 RT	RELOC PS 'S'/PS 'E'																1			
61+40 RT – 61+45 RT	RELOC PS 'S'/PS 'E' TO PB–4				5		10			20	20									
61+45 RT	PB–4	20	1																	
61+45 RT – 61+50 RT	PB–4 TO POLE SA–1				30	30					70									
61+50 RT	POLE SA–1												1	1	2				1	
61+45 RT – 61+57 RT	PB–4 TO PB–5				30		30													
61+57 RT	PB–5											1								
60+83 RT	PB–6			1																
60+88 RT	PB–7			1																
60+88 RT	EXIST PS 'S'/PS 'E'																	1	2	
60+88 RT – 61+50 RT	PB–7 TO POLE SA–1							288*												
60+88 RT – 61+57 RT	PB–7 TO PB–5																			
	TOTAL	40	2	2	146	30	126	288	2700	3044	90	2	1	1	2		1	1	3	

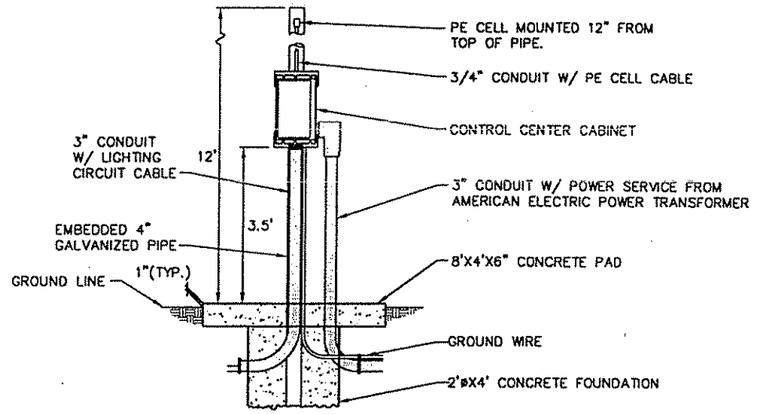

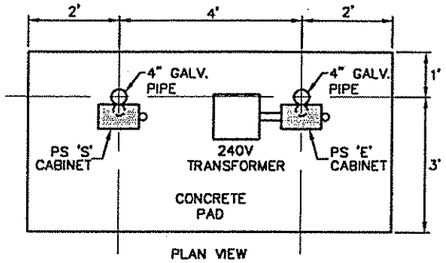

TYPICAL POWER SERVICE DETAIL

NOT TO SCALE – ELEVATION VIEW

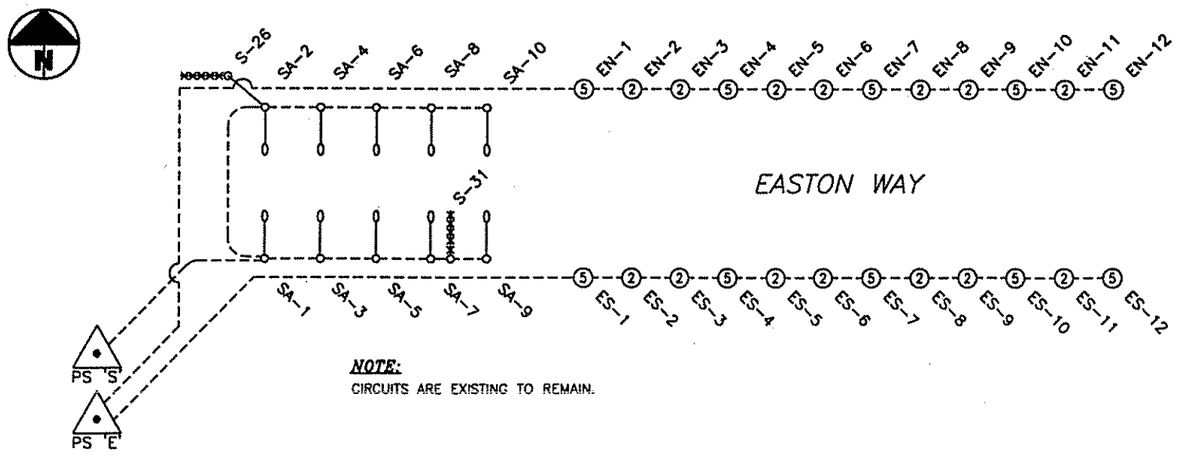

NOTE:
CIRCUITS ARE EXISTING TO REMAIN.

SCHEMATIC LEGEND

- ⑤ EXIST. BRIDGE MOUNTED LIGHT POLES (# – NO. OF 175 W MH LUMINAIRES ON POLE)
- EXIST. LIGHT POLE W/(1)–400 W HPS LUMINAIRE
- EXIST. OVERHEAD LIGHTED SIGN INSTALLATION
- POWER SERVICE

POWER SERVICE DATA

RELOCATED POWER SERVICE LOCATION	LINE VOLTS	CONNECTED LOAD (KVA)	ENCLOSURE RATING (AMPS)	CIRCUIT NO.	CIRCUIT LOAD AMPS	CIRCUIT FUSE SIZE AMPS	MAINTAINING AGENCY
'S' 61+40, RT EASTON WAY	480**	**	**	A	**	**	O.D.O.T.**
'E' 61+40, RT EASTON WAY	240**	**	**	N	**	**	CITY OF COLUMBUS**
				S	**	**	

NOTE: FOR ADDITIONAL POWER SERVICE DETAILS, SEE STANDARD DRAWINGS

** EXISTING (NO CONTROL CENTER CABINET OR CIRCUITRY CHANGES)

DRN BY MCR DATE 4/98
CHKD BY DRB DATE 4/98

LIGHTING QUANTITIES SUB–SUMMARY & DETAILS

FRA–270 @ EASTON WAY

11/12

PLOT SCALE = 1.000 '/ IN.
COL #23 C:\DRAWING\1022210\ML\0229HLS1.DWG APRIL–24–1998–10:35

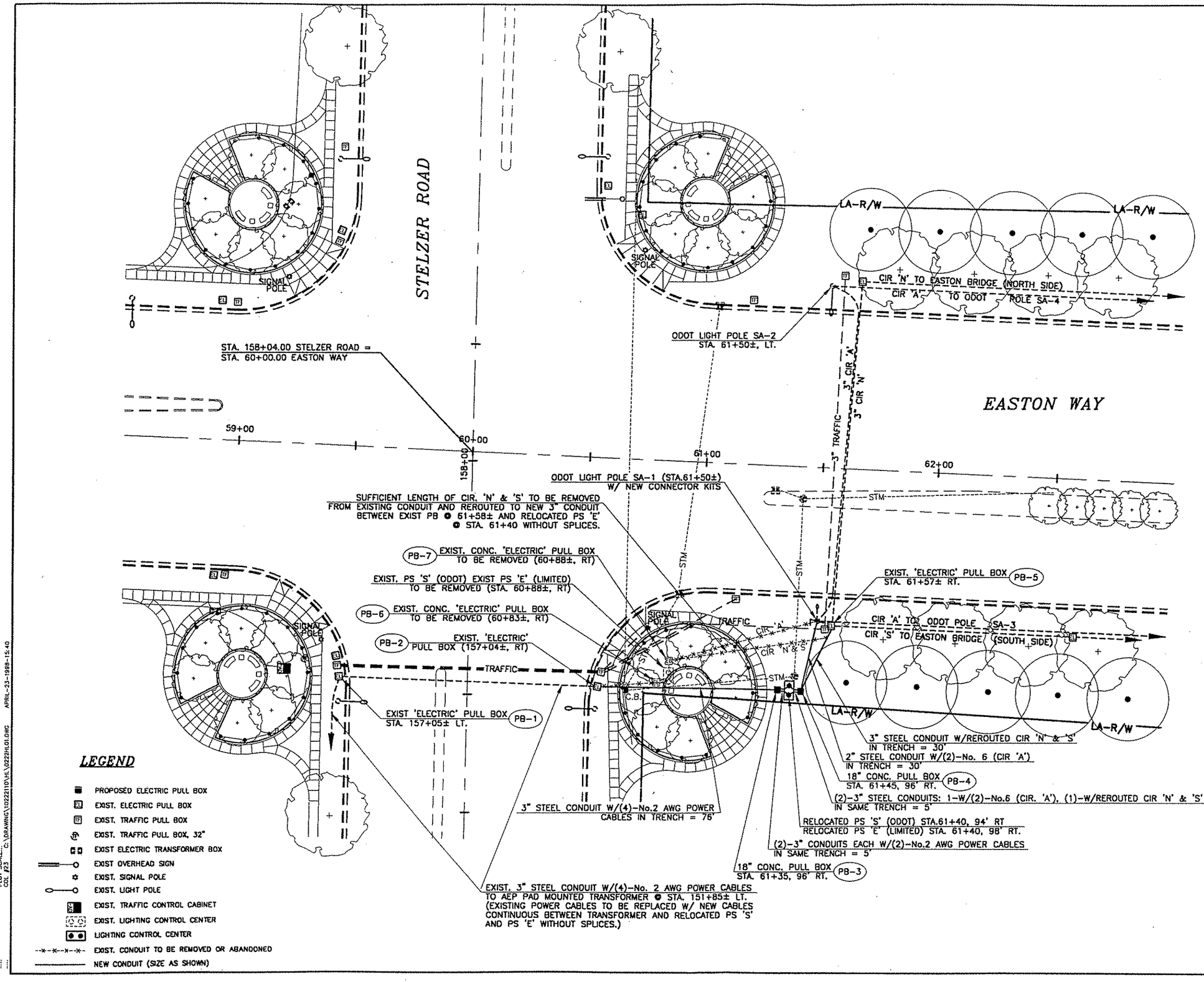
STELZER ROAD
EASTON WAY
SIGNAL POLE
SIGNAL POLE
SIGNAL POLE
SIGNAL POLE
LA-R/W
LA-R/W
LA-R/W
LA-R/W
CIR 'N' TO EASTON BRIDGE (NORTH SIDE)
CIR 'A' TO ODOT POLE SA-4
ODOT LIGHT POLE SA-2
STA. 61+50±, LT.
STA. 158+04.00 STELZER ROAD =
STA. 60+00.00 EASTON WAY
59+00
60+00
61+00
62+00
158+00
3" CIR 'A'
3" CIR 'N'
3" TRAFFIC
ODOT LIGHT POLE SA-1 (STA.61+50±)
W/ NEW CONNECTOR KITS
SUFFICIENT LENGTH OF CIR. 'N' & 'S' TO BE REMOVED
FROM EXISTING CONDUIT AND REROUTED TO NEW 3" CONDUIT
BETWEEN EXIST PB ● 61+58± AND RELOCATED PS 'E'
● STA. 61+40 WITHOUT SPLICES.
STM
STM
STM
STM
PB-7 EXIST. CONC. 'ELECTRIC' PULL BOX
TO BE REMOVED (60+88±, RT)
EXIST. PS 'S' (ODOT) EXIST PS 'E' (LIMITED)
TO BE REMOVED (STA. 60+88±, RT)
PB-6 EXIST. CONC. 'ELECTRIC' PULL BOX
TO BE REMOVED (60+83±, RT)
PB-2 EXIST. 'ELECTRIC'
PULL BOX (157+04±, RT)
TRAFFIC
EXIST 'ELECTRIC' PULL BOX PB-1
STA. 157+05± LT.
C.B.
TRAFFIC
CIR 'A'
CIR 'N' & 'S'
EXIST. 'ELECTRIC' PULL BOX PB-5
STA. 61+57± RT.
CIR 'A' TO ODOT POLE SA-3
CIR 'S' TO EASTON BRIDGE (SOUTH SIDE)
3" STEEL CONDUIT W/REROUTED CIR 'N' & 'S'
IN TRENCH = 30'
2" STEEL CONDUIT W/(2)-No. 6 (CIR 'A')
IN TRENCH = 30'
18" CONC. PULL BOX PB-4
STA. 61+45, 96' RT.
(2)-3" STEEL CONDUITS: 1-W/(2)-No.6 (CIR. 'A'), (1)-W/REROUTED CIR 'N' & 'S'
IN SAME TRENCH = 5'
3" STEEL CONDUIT W/(4)-No.2 AWG POWER
CABLES IN TRENCH = 76'
RELOCATED PS 'S' (ODOT) STA.61+40, 94' RT
RELOCATED PS 'E' (LIMITED) STA. 61+40, 98' RT.
(2)-3" CONDUITS EACH W/(2)-No.2 AWG POWER CABLES
IN SAME TRENCH = 5'
18" CONC. PULL BOX PB-3
STA. 61+35, 96' RT.
EXIST. 3" STEEL CONDUIT W/(4)-No. 2 AWG POWER CABLES
TO AEP PAD MOUNTED TRANSFORMER ● STA. 151+85± LT.
(EXISTING POWER CABLES TO BE REPLACED W/ NEW CABLES
CONTINUOUS BETWEEN TRANSFORMER AND RELOCATED PS 'S'
AND PS 'E' WITHOUT SPLICES.)
LEGEND
PROPOSED ELECTRIC PULL BOX
EXIST. ELECTRIC PULL BOX
EXIST. TRAFFIC PULL BOX
EXIST. TRAFFIC PULL BOX, 32"
EXIST ELECTRIC TRANSFORMER BOX
EXIST OVERHEAD SIGN
EXIST. SIGNAL POLE
EXIST. LIGHT POLE
EXIST. TRAFFIC CONTROL CABINET
EXIST. LIGHTING CONTROL CENTER
LIGHTING CONTROL CENTER
EXIST. CONDUIT TO BE REMOVED OR ABANDONED
NEW CONDUIT (SIZE AS SHOWN)
0 10 20 40
SCALE IN FEET
DSGN BY: DRB DATE: 4/98
DRWN BY: M.CR DATE: 4/98
CHKD. BY: DATE:
LIGHTING MODIFICATION PLAN
CONTROL CENTER RELOCATION
FRA-270 @
EASTON WAY
12
12
PLOT SCALE: 1
PLOT #23
C:\DRAWING\1022210\ML\1022ML01.DWG
APRIL-23-1998-15:40

MR 509
Permit No.__06-0271-02

C-5

Office Use Only
County or Jurisdiction FRA
Rte 270 Log Pt 3292
AccCat

State of Ohio
Department of Transportation
Permit

[1] Subject to all terms, conditions, and restrictions printed, written below and on the reverse side hereof, or attached,

Name: MJB Electric Service Address: 804 Bush Ct., Columbus, Ohio 43229 Home: () is hereby granted a permit under Section 5515.01 and 5515.02 of Ohio Revised Code, and permission to perform work necessary in the manner described and at the location indicated in the following or a attached to this permit.

Light Pole Repair (see attached sheet)
Franklin County I-270, @ Easton Way Bridge

[2] This permit shall be in the possession of employees on site at all times who are in charge of the work and shall be shown, upon request, to any employee of the Department of Transportation.
Contact County Manager 10 days before work begins, also contact County Manager when work is completed for final inspection.

[3] No work authorized by this permit shall begin until the permittee has contacted and received instructions from
County Manager Ned Kerstetter Phone 614-876-2045
(Authorized ODOT Employee)

NOTE: Any work performed by the permittee may be stopped if this requirement is not met.

[4] Prior to any excavation in the highway right-of-way, the Ohio Utilities Protection Service (OUPS) must be contacted in accordance with ORC Section 3781.25 to 3781.32. OUPS can be reached at 1-800-362-2764.

[5] All work requiring men or vehicles within ODOT right of way shall comply with all applicable requirements of the Ohio Manual of Traffic Control Devices and Item 614 (Maintaining Traffic) of the Construction and Material Specifications, latest editions. Failure to comply with these requirements will be cause for immediate revocation or suspension of the permit until the proper traffic control devices have been provided.

[6] The permittee accepts the conditions, terms, and requirements printed, written on, or attached to this permit and understands that failure to comply fully with those conditions, terms, and requirements or any change in the use of the permit inconsistent with its terms and conditions will be considered a violation and cause for suspension, revocation, or annulment of the permit thereby rendering the permit illegal and subject to appropriate Department action, up to an including removal of the installation at the permittee's expense.

[7] Performance Bond Required? _____ Yes _____ No Company_____
Effective Date _____ Expiration Date _____ Amount $ _____

[8] This permit shall be void if the work described herein does not comply with the conditions, terms, and requirements applicable to this permit, and if the work is not completed by 4/23/02_____

Dated this _23__ day of ___October __2001

District Deputy Director Jack R. Marchbanks

Rev 3/20/00

(See Other Side)

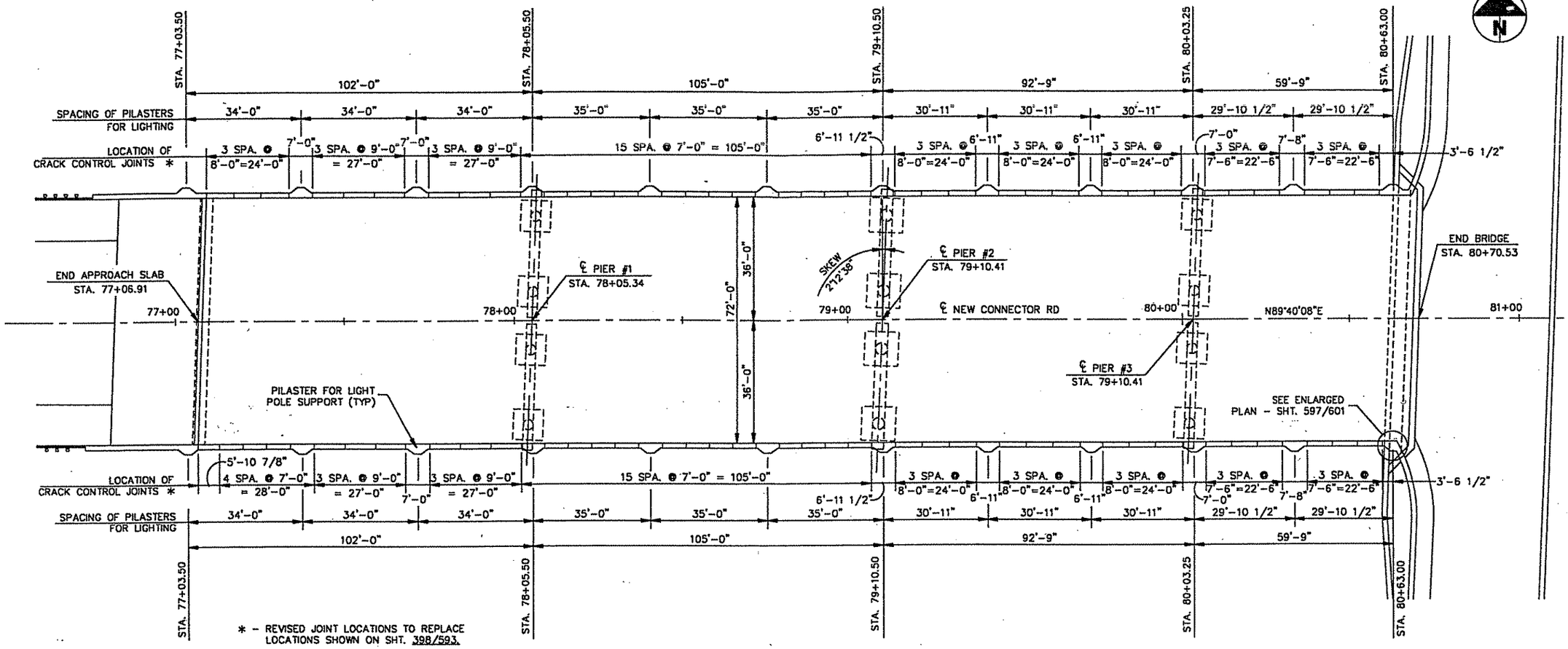

PLAN

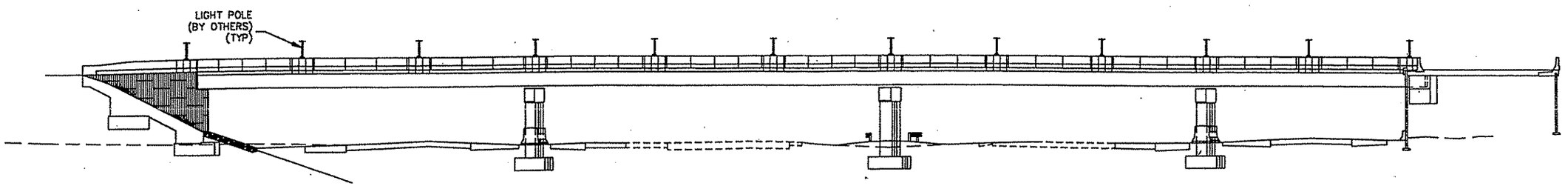

ELEVATION

PLOT SCALE... 1" = 16'
COL #19 C:\DRAWING\06092720\EASTPE1.DWG JANUARY-23-1996

ms consultants, inc.
CONSULTING ENGINEERS & PLANNERS

REVIEWED J.A.B. DATE 12/95
STRUCTURE FILE NO. 2512041
DRAWN RWD
REVISED
DESIGNED B.G.
CHECKED R.B.

PILASTER ELEVATION & LOCATION
BR. NO. FRA-270-3291
I.R. 270 UNDER NEW CONNECTOR ROAD

FRA-270-32.46

595
601

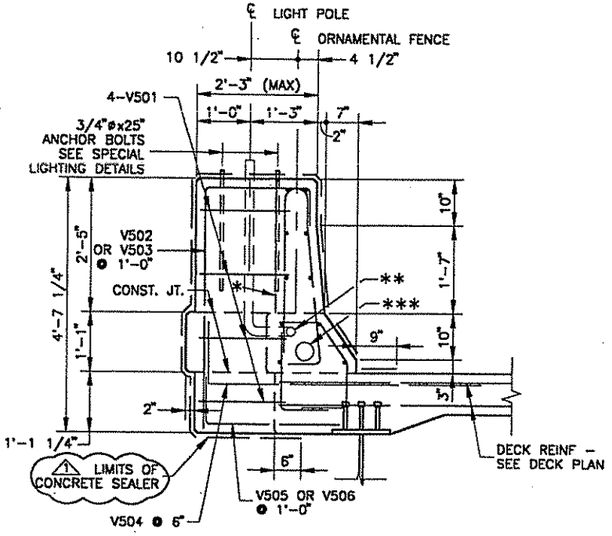

SECTION A–A

NOTE: FOR REINFORCING NOT LABELED, SEE SHTS. 397/593.

* – OUTSIDE FACE OF PARAPET BEYOND.

** – 2"ø CONDUIT FOR BRIDGE DECORATIVE LIGHTING SEE LIGHTING SUMMARY SHEET

*** – CONDUITS. SEE SHT. 397/593.

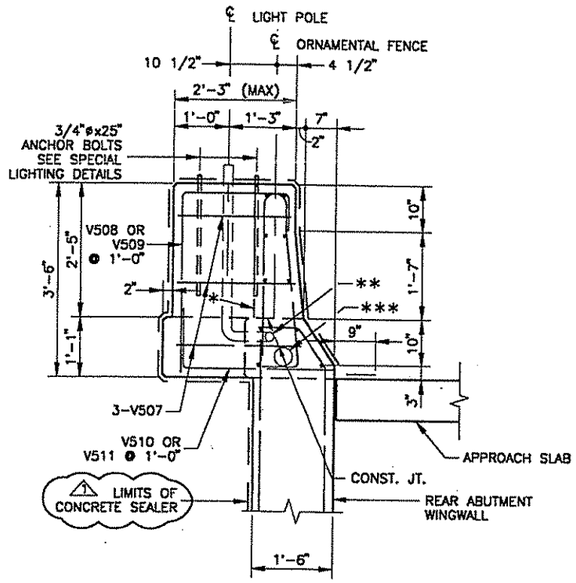

SECTION B–B

NOTE: FOR REINFORCING NOT LABELED, SEE SHTS. 390/593 + 391/593.

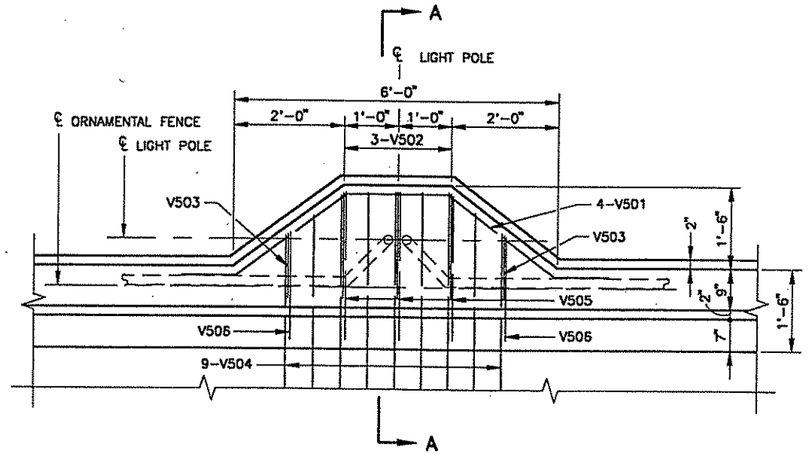

PLAN VIEW

PILASTER @ BRIDGE PARAPET

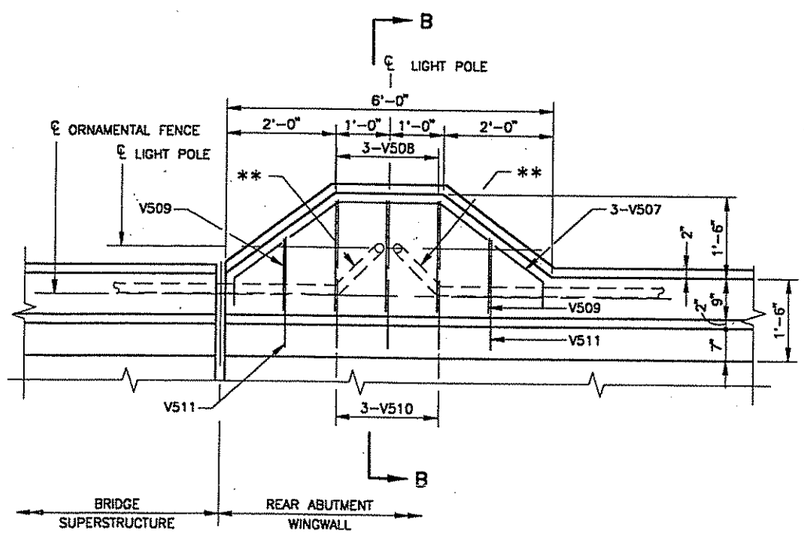

PLAN VIEW

@ REAR ABUTMENT WINGWALL

NOTE: SOUTH WINGWALL SHOWN, NORTH WINGWALL SIMILAR

PLOT SCALE 3/4" = 1'
COL #19 C:\DRAWING\08092720\EASTP01.DWG MAY-06-1998

PREPARED BY ms consultants, inc.
CONSULTING ENGINEERS & PLANNERS
9600 BOUCK HOUSTON, OKLAHOMA 77036

DESIGNED	DRAWN	REVIEWED	DATE
B.G.	R.W.D.	J.A.B.	12/95
CHECKED	REVISED	STRUCTURE FILE NO.	
R.B.	1 5-96	2512041	

PILASTER DETAILS

BR. NO. FRA-270-3291
I.R. 270 UNDER NEW CONNECTOR ROAD

FRA-270-32.46

596/601

ESTIMATED QUANTITIES

ITEM	ITEM EXT.	TOTAL	UNIT	DESCRIPTION	SUPER.	ABUTS.
509	15800	3,241	POUND	EPOXY COATED REINFORCING STEEL, GRADE 60 *	3,103	138
SPECIAL	51149500	23	CU. YD.	HIGH PERFORMANCE CONCRETE, MISC.: PILASTERS *	23	
511	44100	2	CU. YD.	CLASS C CONCRETE, ABUTMENT NOT INCLUDING FOOTING *	-	2
SPECIAL	51267500	45	SQ. YD.	SEALING OF CONCRETE SURFACES * (NON-EPOXY) 1	41	4
SPECIAL	51400610	625,309	POUND	PAINTING OF NEW STEEL, SYSTEM IZEU, (SEE NOTE)	625,309	

*-THESE ITEMS AND QUANTITIES ARE IN ADDITION TO THOSE LISTED IN THE ESTIMATED QUANTITIES ON SHT. 386/593.

NOTE
ITEM SPECIAL, PAINTING OF NEW STEEL, SYSTEM IZEU: THE PAINTING OF THE STRUCTURAL STEEL SHALL BE AS PER PROPOSAL NOTE "ITEM 514-FIELD PAINTING OF NEW STEEL, SYSTEM IZEU-04/15/93" EXCEPT THE COLOR OF THE URETHANE FINISH COAT SHALL MATCH THE FOLLOWING COLOR: #349/41040, DARK BLUE, SMOOTH, GLOSSY BY TIGER DRYLAC (COLOR SAMPLES TO BE PROVIDED). THE URETHANE FINISH COAT SHALL MEET THE REQUIREMENTS OF THE PROPOSAL NOTE AND SUPPLEMENTAL SPECIFICATION 910.

PILASTER REINFORCING SCHEDULE

MARK	NO.	LENGTH	TYPE	A	B	C	D	INC.	WEIGHT
V501	84	8'-7"	1	1'-6"	1'-0"	2'-0"	1'-8"		752
V502	65	6'-11"	2	1'-11"	4'-3"				469
V503	43	6'-2"	2	1'-2"	4'-3"				277
V504	194	5'-10"	3	5'-0"					1,180
V505	65	3'-10"	3	3'-0"					260
V506	43	3'-1"	3	2'-3"					138
V507	6	7'-7"	4	1'-6"	1'-8"	2'-0"			47
V508	6	5'-10"	2	1'-11"	3'-2"				37
V509	4	5'-1"	2	1'-2"	3'-2"				21
V510	6	3'-6"	3	2'-8"					22
V511	4	2'-9"	3	1'-11"					11
V512	4	6'-7"	5	1'-6"	2'-2"	2'-0"	1'-0"		27
								TOTAL	3,241

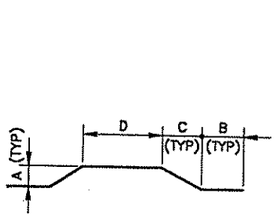

TYPE 1

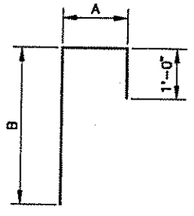

TYPE 2

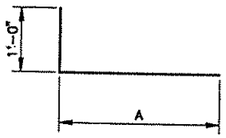

TYPE 3

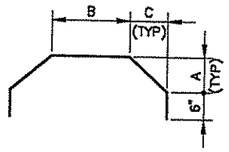

TYPE 4

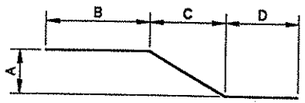

TYPE 5

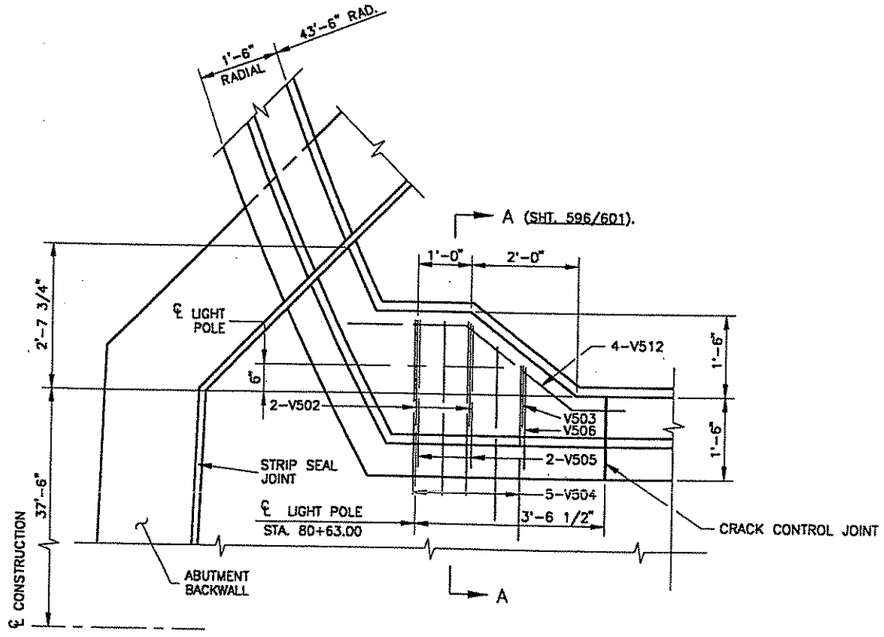

PLAN VIEW
PILASTER ⊙ SOUTHEAST CORNER

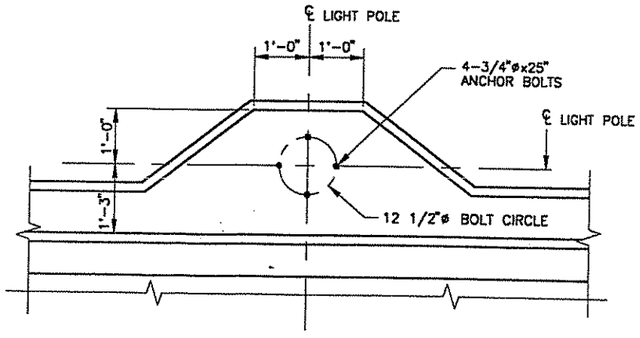

BOLT PATTERN FOR LIGHT POLE

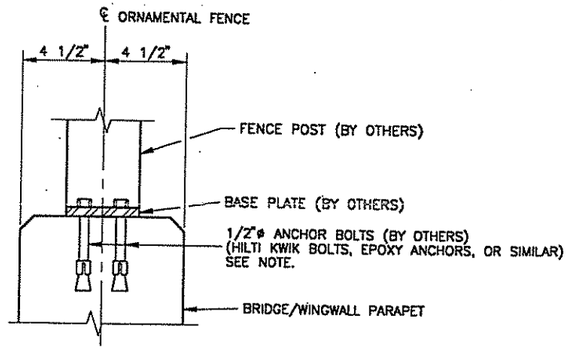

DETAIL
MOUNTING OF ORNAMENTAL FENCE

NOTE: ANCHOR BOLTS TO BE FURNISHED & INSTALLED BY FENCE CONTRACTOR. THE FENCE CONTRACTOR SHALL FIELD VERIFY THE LOCATIONS OF THE FENCE POSTS AND ANCHOR BOLTS PRIOR TO INSTALLING THE ANCHOR BOLTS.

PLOT SCALE = 3/4" = 1'
COL. #19 G:\DRAWING\06092220\EASTPIL1.DWG MAY-05-1995

PREPARED BY ms consultants, inc. CONSULTING ENGINEERS & PLANNERS 2686 SOUTH MORAINE, COLUMBUS, OHIO

DESIGNED B.G.
DRAWN R.W.D.
CHECKED R.B.
REVIEWED J.A.B.
DATE 12/95
REVISED 5-96
STRUCTURE FILE NO. 2512041

MISC. DETAILS & QUANTITIES
BR. NO. FRA-270-3291
I.R. 270 UNDER NEW CONNECTOR ROAD

FRA-270-32.46

597
601

LIGHTING GENERAL NOTES

625 POWER SERVICE "E", AS PER PLAN

THIS ITEM OF WORK SHALL CONFORM TO 625.18 AND 713.19 EXCEPT THAT THE CONTROL CENTER MOUNTING SHALL BE AS DETAILED BELOW INCLUDING THE 48" X 48" CONCRETE PAD. A WOOD SERVICE POLE IS NOT REQUIRED. THE CONTRACTOR SHALL NOTIFY THE COLUMBUS SOUTHERN POWER COMPANY (CSP) WHEN THE CIRCUIT IS READY FOR POWER AND CSP WILL MAKE THE POWER SERVICE CONNECTION AT THE POWER COMPANY'S SERVICE TRANSFORMER OR PEDESTAL.

POWER SUPPLIED SHALL BE 480 VOLT, TWO-WIRE GROUNDED NEUTRAL.

PAYMENT SHALL BE AS PER ITEM 625.

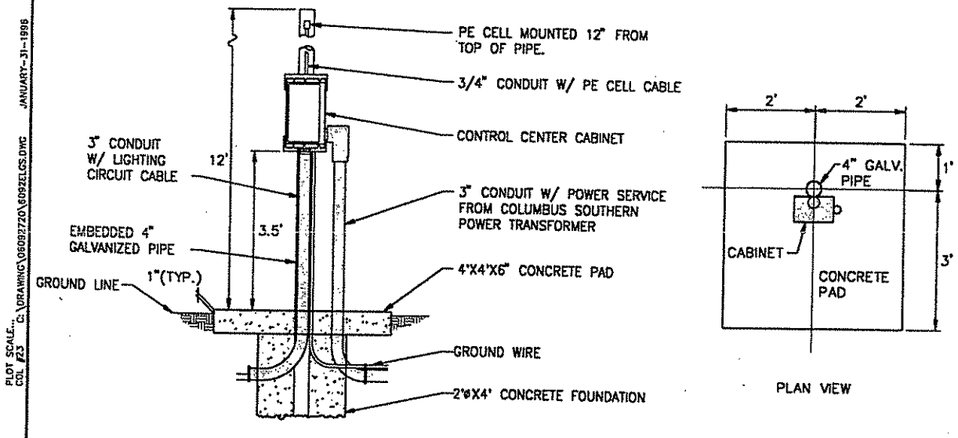

POWER SERVICE 'E' DETAIL

NOT TO SCALE – ELEVATION VIEW

LIGHTING GENERAL SUMMARY

TOTAL FROM SHEET NO./ ON SUB-SUMMARY SHT. NO.						PARTICIPATION SUB-TOTAL		ITEM	ITEM EXT.	GRAND TOTAL	UNIT	DESCRIPTION	SEE SHT. NO.
	600 / 599	601 / 599											
	40	40						603	00400	80	LIN. FT.	4" CONDUIT, TYPE E	
		96						625	10600	96	EACH	LIGHT POLE ANCHOR L-BOLTS	
	2044	1368						625	24100	3412	LIN. FT.	1 1/2" DUCT CABLE WITH TWO NO.4 AWG 5000 VOLT CABLES	
		800						625	25400	800	LIN. FT.	CONDUIT, 2", 713.04	
	156	30						625	25500	186	LIN. FT.	CONDUIT, 3", 713.04	
	87	50						625	29002	137	LIN. FT.	TRENCH, 24" DEEP	
	2	2						625	30700	4	EACH	PULL BOX, 713.08, 18"	
	1							625	34000	1	EACH	POWER SERVICE 'E', AS PER PLAN	598

CALC. BY: RAK DATE: 1/96
CHKD. BY: DRB DATE: 1/96

LIGHTING ENHANCEMENTS GENERAL NOTES AND GENERAL SUMMARY

FRA-270-32.46

PLOT SCALE... COL #23 C:\DRAWING\06092720\6092ELGS.DWG JANUARY-31-1996

LOCATION A = RAMP A	CIRCUIT NODES * = MATCH LINE	625							603								
		1 1/2" DUCT CABLE WITH 2-NO.4 AWG, 5000 VOLT CABLE	TRENCH, 24" DEEP	PULL BOX, 18"	POWER SERVICE 'E', A.P.P.	CONDUIT 2", 713.04	CONDUIT 3", 713.04	LIGHT POLE ANCHOR L-BOLTS	CONDUIT 4", TYPE E								
FROM – TO		L.F.	L.F.	EA.	EA.	L.F.	L.F.	EA.	L.F.								
STELZER ROAD																	
157+08 RT	PS-E				1												
157+08 RT – 157+09 RT	PS-E TO PB-21	14	4														
157+09 RT	PB-21			1					20								
157+09 RT – 61+55 LT	PB-21 TO PB-22	215	44				126										
157+09 RT – 70+00 RT	PB-21 TO *	970	24				30										
EASTON																	
61+55 LT	PB-22			1					20								
61+55 LT – 70+00 LT	PB-22 TO *	845	15														
TOTAL SHEET NO. 600		2044	87	2	1		156		40								
EASTON																	
70+00 LT – 76+65 LT	* TO PB-24	700	21				30										
70+00 RT – 76+63 RT	* TO PB-23	668	9														
76+63 RT	PB-23			1					20								
76+65 LT	PB-24			1					20								
76+63 RT – 77+03.5 RT	PB-24 TO EN-1		10			41											
76+65 LT – 77+03.5 LT	PB-23 TO ES-1		10			39											
77+03.5 RT	ES-1							4									
77+03.5 LT	EN-1							4									
77+03.5 RT – 77+37.5 RT	ES-1 TO ES-2					34											
77+03.5 LT – 77+37.5 LT	EN-1 TO EN-2					34											
77+37.5 RT	ES-2							4									
77+37.5 LT	EN-2							4									
77+37.5 RT – 77+71.5 RT	ES-2 TO ES-3					34											
77+37.5 LT – 77+71.5 LT	EN-2 TO EN-3					34											
77+71.5 RT	ES-3							4									
77+71.5 LT	EN-3							4									
77+71.5 RT – 78+05.5 RT	ES-3 TO ES-4					34											
77+71.5 LT – 78+05.5 LT	EN-3 TO EN-4					34											
78+05.5 RT	ES-4							4									
78+05.5 LT	EN-4							4									
78+05.5 RT – 78+40.5 RT	ES-4 TO ES-5					35											
78+05.5 LT – 78+40.5 LT	EN-4 TO EN-5					35											
78+40.5 RT	ES-5							4									
78+40.5 LT	EN-5							4									
78+40.5 RT – 78+75.5 RT	ES-5 TO ES-6					35											
78+40.5 LT – 78+75.5 LT	EN-5 TO EN-6					35											
78+75.5 RT	ES-6							4									
78+75.5 LT	EN-6							4									
78+75.5 RT – 79+10.5 RT	ES-6 TO ES-7					35											
78+75.5 LT – 79+10.5 LT	EN-6 TO EN-7					35											
79+10.5 RT	ES-7							4									
79+10.5 LT	EN-7							4									
79+10.5 RT – 79+41.4 RT	ES-7 TO ES-8					31											
79+10.5 LT – 79+41.4 LT	EN-7 TO EN-8					31											
79+41.4 RT	ES-8							4									
79+41.4 LT	EN-8							4									
79+41.4 RT – 79+72.3 RT	ES-8 TO ES-9					31											
79+41.4 LT – 79+72.3 LT	EN-8 TO EN-9					31											
79+72.3 RT	ES-9							4									
79+72.3 LT	EN-9							4									
79+72.3 RT – 80+03.2 RT	ES-9 TO ES-10					31											
79+72.3 LT – 80+03.2 LT	EN-9 TO EN-10					31											
80+03.2 RT	ES-10							4									
80+03.2 LT	EN-10							4									
80+03.2 RT – 80+33.1 RT	ES-10 TO ES-11					30											
80+03.2 LT – 80+33.1 LT	EN-10 TO EN-11					30											
80+33.1 RT	ES-11							4									
80+33.1 LT	EN-11							4									
80+33.1 RT – 80+63.0 RT	ES-11 TO ES-12					30											
80+33.1 LT – 80+63.0 LT	EN-11 TO EN-12					30											
80+63.0 RT	ES-12							4									
80+63.0 LT	EN-12							4									
TOTAL SHEET NO. 601		1368	50	2		800	30	96	40								

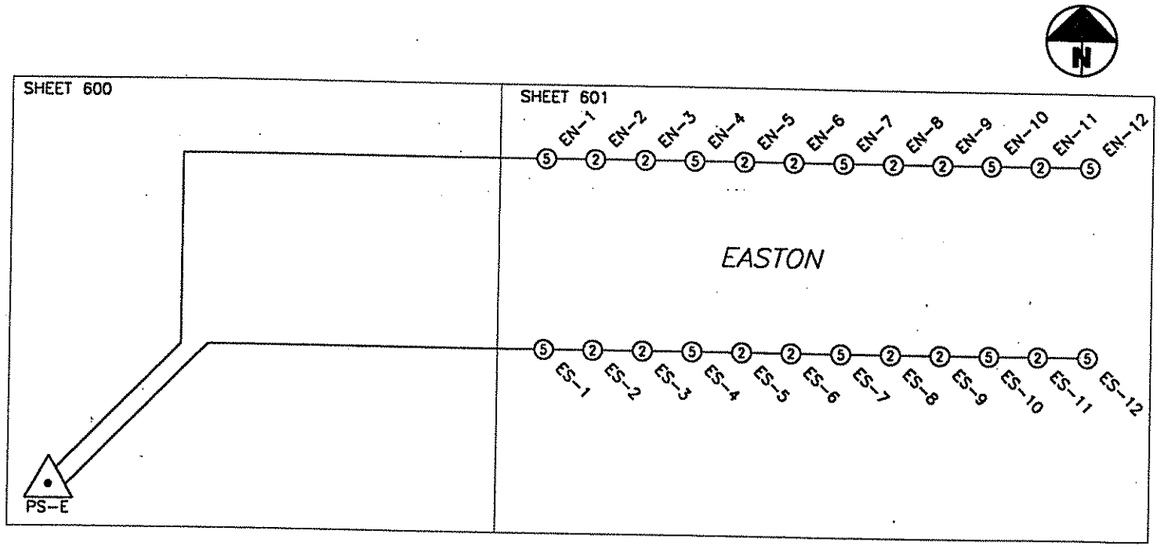

SCHEMATIC LEGEND

⑤ BRIDGE MOUNTED LIGHT POLES (# – NO. OF LUMINAIRES ON POLE)

△ POWER SERVICE

POWER SERVICE DATA

POWER SERVICE LOCATION	LINE VOLTS	CONNECTED LOAD (KVA)	ENCLOSURE RATING (AMPS)	CIRCUIT NO.	CIRCUIT LOAD AMPS	CIRCUIT FUSE SIZE AMPS	MAINTAINING AGENCY
'E' 157+08 RT STELZER RD	480	18.6	60	N	19.5	30	CITY OF COLUMBUS
				S	19.5	30	

NOTE: FOR ADDITIONAL POWER SERVICE DETAILS, SEE STANDARD DRAWINGS

CALC BY: RAK DATE: 12/95
CHKD BY: DRB DATE: 1/96

LIGHTING SCHEMATIC & QUANTITIES SUB-SUMMARY

FRA-270-32.46

599
601

PLOT SCALE: 1.0000 '/ IN.
PLOT DATE: JANUARY-24-1996
C:\DRAWING\0609227D\0609ELS1.DWG

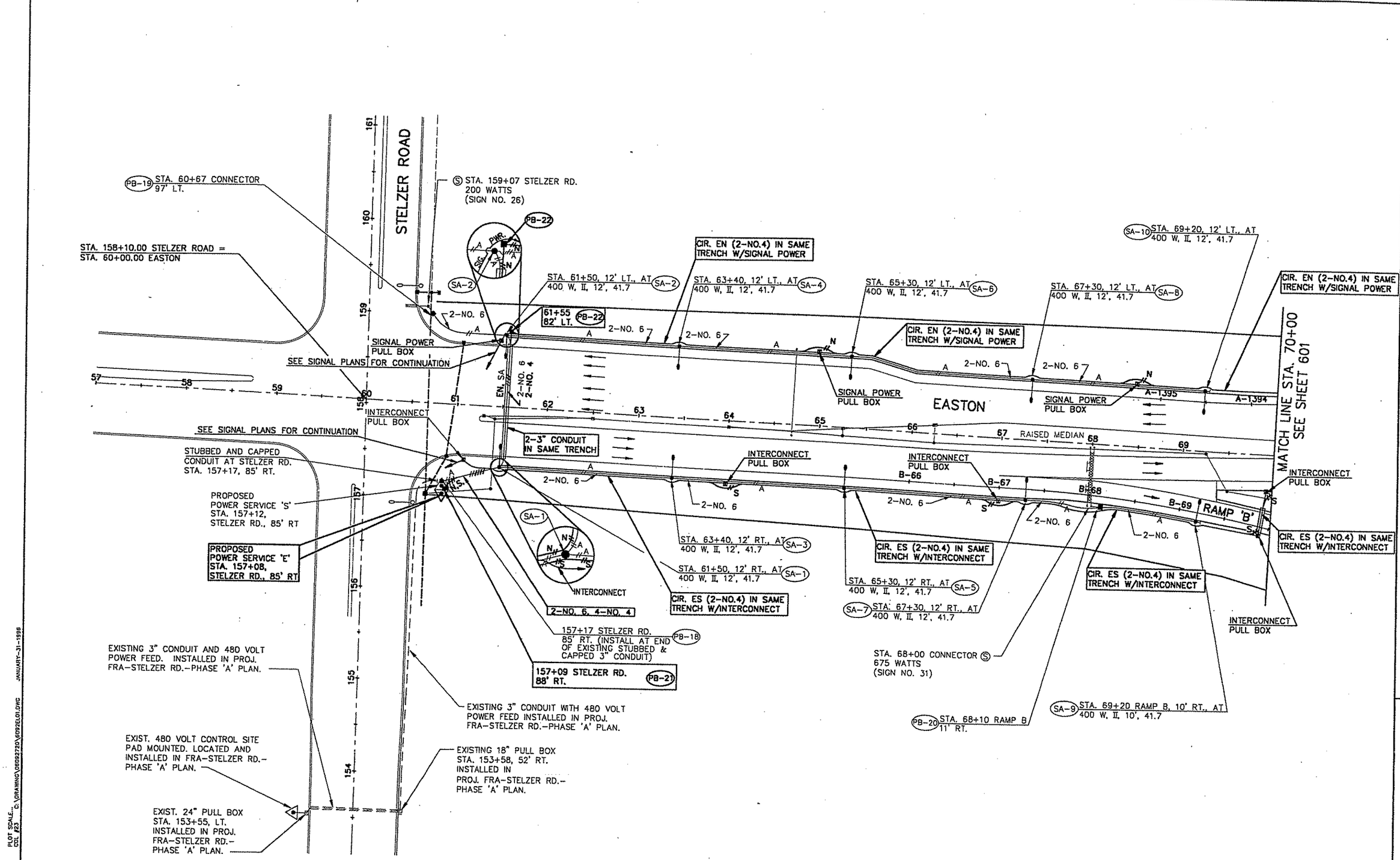

NOTES:

FOR LIGHTING LEGEND SEE SHEET 369
FOR QUANTITIES SEE SHEETS 365-367, 599
FOR SIGNAL QUANTITIES SEE SHEET 357
FOR INTERCONNECT QUANTITIES SEE SHEETS 340 & 357

POLE NO.	STATION	NO. OF 175W MH LUMINAIRES (BY OTHERS)
EN-1	77+03.5 LT.	5
EN-2	77+37.5 LT.	2
EN-3	77+71.5 LT.	2
EN-4	78+05.5 LT.	5
EN-5	78+40.5 LT.	2
EN-6	78+75.5 LT.	2
EN-7	79+10.5 LT.	5
EN-8	79+41.4 LT.	2
EN-9	79+72.3 LT.	2
EN-10	80+03.2 LT.	5
EN-11	80+33.1 LT.	2
EN-12	80+63.0 LT.	5
ES-1	77+03.5 RT.	5
ES-2	77+37.5 RT.	2
ES-3	77+71.5 RT.	2
ES-4	78+05.5 RT.	5
ES-5	78+40.5 RT.	2
ES-6	78+75.5 RT.	2
ES-7	79+10.5 RT.	5
ES-8	79+41.4 RT.	2
ES-9	79+72.3 RT.	2
ES-10	80+03.2 RT.	5
ES-11	80+33.1 RT.	2
ES-12	80+63.0 RT.	5

LEGEND

- BRIDGE MOUNTED DECORATIVE LIGHT POLES, 13.7 ' MOUNTING HEIGHT. (BY OTHERS)

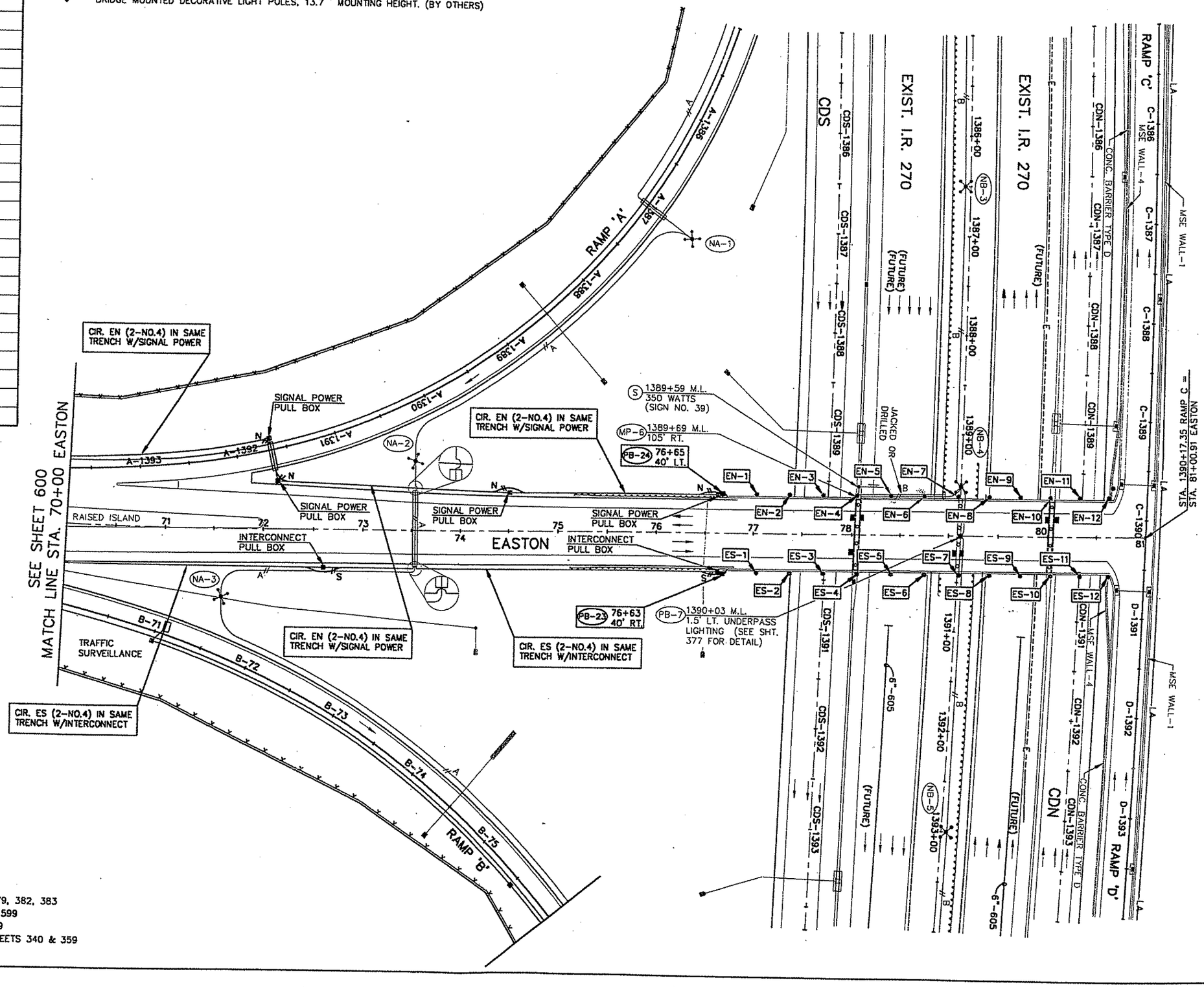

NOTES

FOR LIGHTING LEGEND SEE SHEET 369
FOR TOWER ELEVATIONS SEE SHEETS 379, 382, 383
FOR QUANTITIES SEE SHEETS 365-367, 599
FOR SIGNAL QUANTITIES, SEE SHEET 359
FOR INTERCONNECT QUANTITIES, SEE SHEETS 340 & 359

LIGHTING PLAN ENHANCEMENTS
STA. 70+00 TO STA. 81+01 EASTON

FRA-270-32.46

601/601

PLOT SCALE... COL #23 C:\DRAWING\06092720\6092EL02.DWG JANUARY-31-1996

OPTIMA OUTPUT
BARRIER A
May, 1994

FRA-270 CDMS BARRIER A North of McCutcheon Road
(a single residential receiver)

R E S U L T S
****

REC	REC ID	LEQ	LEQ(Z(0))	IL
37	ISO1	65.5	74.5	9.0
38	ISO2	66.4	74.4	7.9

BARRIER TYPE	COST	AREA (SQ. FT.)
FH-BERM	0.	0.
press RETURN to continue.		
FH-MASON	0.	0.
FH-WOOD	0.	0.
FH-CONC	0.	0.
FH-STEEL	0.	0.
ODOT-GEN	20000.	2001.
TOTALS:	$ 20000.	2001.

CDMS NOISE BARRIER REPORT

FRA-270-31.01
FRA-270-32.46
FRA-270-33.64
Collector-Distributor/Morse/Stelzer
Project 1 and Project 3

Prepared for: The Ohio Department Of Transportation
District 6

Prepared by: **ms consultants, inc.**
4150 Belden Village Street, N.W.
Suite 300
Canton, Ohio 44718

December, 1994

ms project # 06092.306
06098.306

bridges over Morse Road and Sunbury Road. Barrier C, Barrier D, and Barrier E will be used to reduce noise levels in residential areas on both sides of I-270 and the new CD lanes.

Barrier A

The northern section of Barrier A protects a single residence just north of McCutcheon Road. It begins at I-270 station 1442+25.00 and terminates at the McCutcheon Road overpass embankment (roughly station 1442+35.00). The southern section begins at the McCutcheon Road overpass embankment (roughly station 1442+70.00) and runs south to I-270 station 1481+50.00. Both sections of Barrier A are located at the L/A line.

Barrier C

Barrier C is required to mitigate highway generated noise at the apartment buildings east of I-270 near the existing Morse Road northbound on-ramp. This barrier will also protect several undeveloped single family home lots.

Barrier C will begin at CDN station 1327+50.00 and end at CDN station 1348+50.00. It will run along the edge of the CDN shoulder ending at the new bridge over the Morse Road on-ramp. Barrier C will continue along the L/A of the on-ramp as part of CDMS Project 6.

Barrier D

Barrier D will reduce highway generated noise at the single family homes and duplexes west of I-270 along Watt Road and Magnolia Blossom Boulevard. The barrier also will protect several apartment buildings located near the SR 161 interchange.

Upon completion of all CDMS projects this barrier will begin in Project 11. However, the exact starting point will not be determined until Project 11 plans advance. Currently, Barrier D will begin at the start of FRA-270-31.01, CDS station 1293+50.00. It will run along the edge of the CDS shoulder or atop the MSE retaining wall to CDS station 1324+0.00. No barrier will be constructed on the new Sunbury Road bridge due to cost constraints.

Barrier E

Barrier E is required to reduce highway generated noise at the residential receivers east of I-270 and opposite Barrier D. This area is primarily single family homes and undeveloped lots.

Upon completion of all CDMS projects this barrier will begin in Project 11. However, the exact starting point will not be determined until Project 11 plans advance. Currently, Barrier E will begin at the start of FRA-270-31.01, CDN station 1285+50.00. It will run along the edge of the CDN shoulder and end at CDN station 1306+0.00.

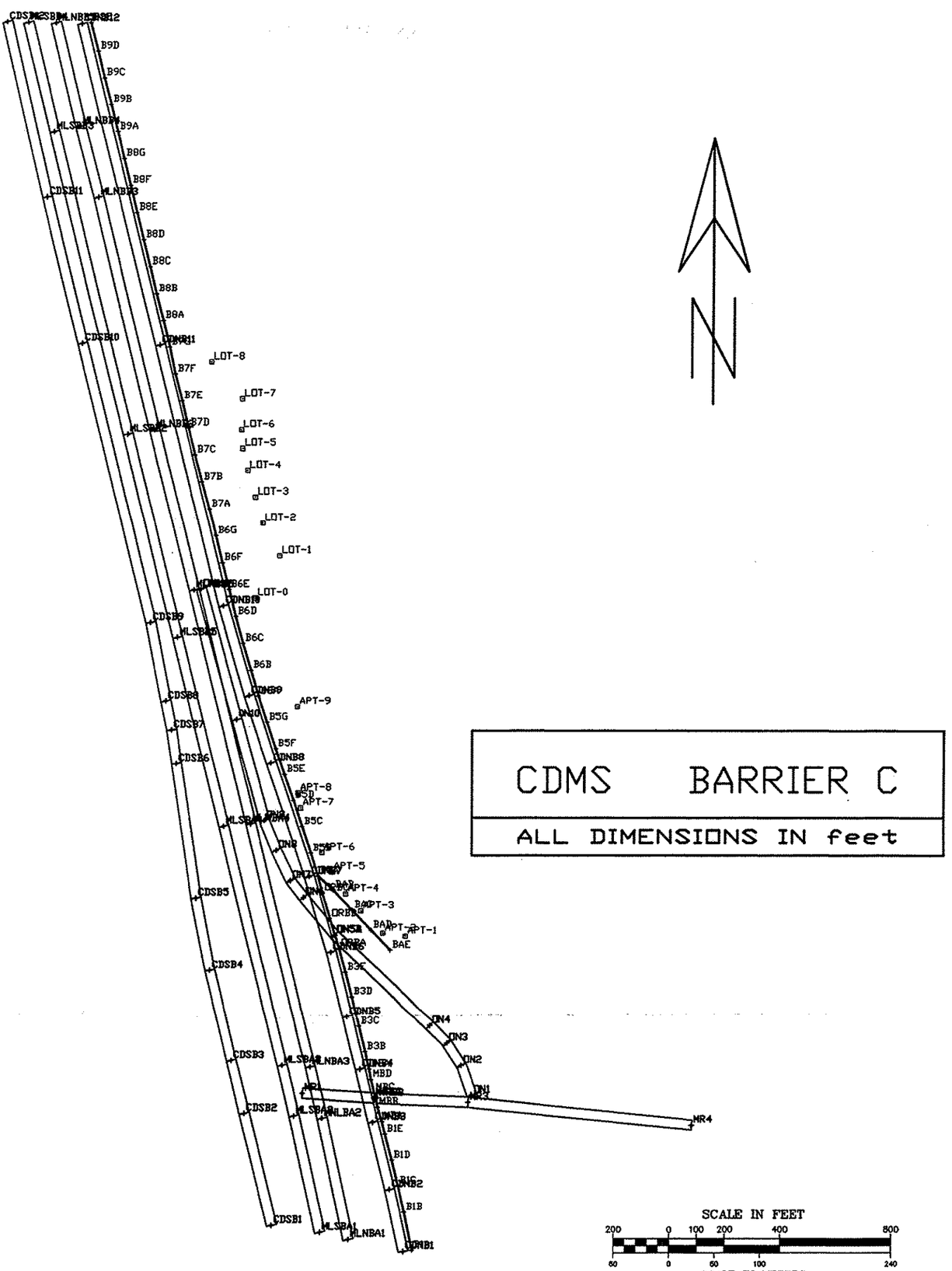

CDMS BARRIER C

ALL DIMENSIONS IN feet

SCALE IN FEET

200 0 100 200 400 800

60 0 60 100 240

SCALE IN METERS

ms consultants, inc.

engineers * architects * planners

Barrier E Location

FRA–270–31.01

BARRIER AT EDGE OF SHOULDER	Station #	ID	Height	CL Offset	Bott. Elev	Top Elev
	1285+50.	–	10	38	859	869
	1286	n/a	10	38	860	870
	1287	E3D	10	38	861	871
	1288+50.	E3C	10	38	862	872
	1289	n/a	10	38	863	873
	1290	E3B	10	38	863	873
	1291	E3A	10	38	863	873
	1292	E2I	8	38	864	872
CDN STATIONS	1293	E2H	8	38	865	873
	1294	E2G	8	38	866	874
	1295	E2F	8	38	866	874
	1296	E2E	8	38	867	875
	1297	E2D	10	38	867	877
	1298	E2C	8	38	868	876
	1299	E2B	8	38	869	877
	1300	E2A	8	38	870	878
	1301	E1I	8	38	871	879
	1302	E1H	8	38	871	879
	1303	E1G	10	38	872	882
	1304	E1F	8	38	873	881
	1305	E1E	8	38	874	882
	1306	E1D	8	38	875	883

This Barrier will begin in Project 11.

Barrier A Location

FRA–270–33.64

BARRIER ON L/A LINE	Station #	ID	Height	CL Offset	Bott. Elev	Top Elev
	1442+25.	–	12	160	842	854
	1443	BARISOD	12	162	842	854
	1443+50.	BARISOC	12	163	842	854
North of	1444	BARISOB	10	164	842	852
McCutcheon	1444+35.*	BARISOA	6	164	842	848
	1444+70.*	–	16	165	840	856
South of	1445	A5G	16	165	840	856
McCutcheon	1446	A5F	16	164	840	856
	1447	A5E	14	164	840	854
	1448	A5D	12	164	840	852
	1449	A5C	12	164	840	852
	1450	A5B	14	164	840	854
	1451	A5A	14	164	840	854
	1452	A4I	14	162	840	854
	1453	A4H	14	162	840	854
	1454	A4G	14	162	840	854
	1455	A4F	14	162	840	854
	1456	A4E	14	162	840	854
	1457	A4D	14	160	840	854
	1458	A4C	12	160	840	852
	1459	A4B	12	158	840	852
	1460	A4A	14	158	840	854
	1461	A3I	14	159	840	854
	1462	A3H	14	159	840	854
	1463	A3G	14	158	838	852
	1464	A3F	14	157	838	852
	1465	A3E	12	156	838	850
	1466	A3D	10	155	838	848
	1467	A3C	14	156	838	852
	1468	A3B	14	157	838	852
	1469	A3A	14	156	838	852
	1470	A2I	12	156	838	850
	1471	A2H	14	156	838	852
	1472	A2G	12	156	838	850
	1473	A2F	10	157	837	847
	1474	A2E	10	171	837	847
	1475	A2D	10	174	837	847
	1476	A2C	10	176	836	846
	1477	A2B	10	177	836	846
	1478	A2A	12	178	835	847
	1479	A1I	12	180	835	847
	1480	A1H	12	182	835	847
	1481	A1G	12	183	834	846
	1481+50.	A1F	12	183	833	845

* McCutcheon Road Overpass Embankment.
Existing I–270 stations.

R E S U L T S
****

REC	REC ID	LEQ	LEQ(Z(0))	IL
1	RX-1	62.8	63.3	.4
2	RX-2	64.2	65.1	.9
3	R-1	65.0	73.5	8.5
4	R-2	64.4	73.3	8.9
5	R-3	64.1	69.6	5.5
6	R-4	63.9	69.8	5.9
7	R-5	63.8	69.1	5.3
8	POOL	63.1	69.9	6.7
9	R-6	64.1	69.5	5.4
10	R-7	63.8	68.9	5.1
11	R-8	63.3	67.1	3.8
12	CHURCH	62.1	65.8	3.7
13	R-9	62.0	67.0	5.0
14	R-10	61.6	67.1	5.4
15	R-11	62.0	67.3	5.3
16	R-12	62.5	68.3	5.8
17	SF-1	62.5	68.3	5.8
18	SF-2	62.8	68.6	5.8
19	SF-3	62.7	68.3	5.7
20	SF-4	62.7	68.4	5.7
21	SF-5	62.3	68.0	5.7
22	SF-6	62.2	68.0	5.8
23	SF-7	62.7	68.4	5.7
24	SF-8	62.8	68.6	5.8
25	SF-9	63.3	69.3	6.0
26	SF-10	63.5	69.6	6.1
27	SF-11	63.7	70.1	6.4
28	SF-12	63.9	70.5	6.5
29	SF-13	63.9	70.6	6.7
30	SF-14	64.5	72.0	7.5
31	SF-15	64.9	72.4	7.5
32	SF-16	65.0	72.2	7.3
33	APT-1	65.3	73.4	8.1
34	APT-2	65.2	72.6	7.4
35	APT-3	63.2	68.2	5.0
36	APT-4	64.8	74.9	10.1
37	APT-5	66.1	73.1	7.1
38	RX-3	65.0	67.0	2.0

OPTIMA OUTPUT
BARRIER D
June, 1994

BARRIER TYPE	COST	AREA (SQ. FT.)
FH-BERM	0.	0.
press RETURN to continue.		
FH-MASON	0.	0.
FH-WOOD	0.	0.
FH-CONC	0.	0.
FH-STEEL	0.	0.
ODOT-GEN	399700.	39974.
TOTALS:	$ 399700.	39974.

ms consultants, inc.
engineers • architects • planners

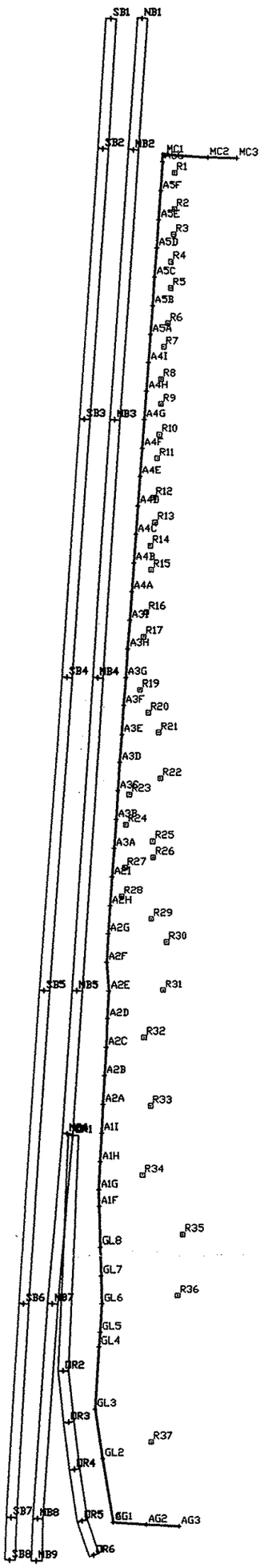



CDMS BARRIER A

ALL DIMENSIONS IN feet

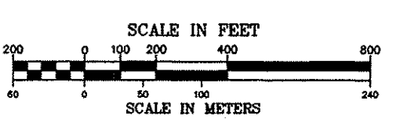

ms consultants, inc.
engineers * architects * planners

FRA-270 CDMS BARRIER A South of McCutcheon Rd.

test

BARRIER HEIGHT INDEX FOR EACH BARRIER SECTION

```
  1  1  1  1  1  1  1  1  1  1  5  5  5  5  5  4  4  4  4  4  5  6  5  6  6
  6  4  5  6  6  6  6  6  5  5  6  6  6  6  6  6  6  6  5  5  6  7  7  1  1
```

CORRESPONDING BARRIER HEIGHTS FOR EACH SECTION

```
 0. 0. 0. 0. 0. 0. 0. 0. 0. 0.12.12.12.12.12.10.10.10.10.10.12.14.12.14.14.
14.10.12.14.14.14.14.14.12.12.14.14.14.14.14.14.14.14.12.12.14.16.16. 0. 0.
```

press RETURN to continue.

press RETURN to continue.

R E S U L T S
****

REC	REC ID	LEQ	LEQ(Z(0))	IL
1	R1	66.0	73.3	7.2
2	R2	65.3	72.7	7.4
3	R3	65.3	72.4	7.0
4	R4	65.5	72.5	7.0
5	R5	65.4	72.4	7.0
6	R6	65.1	72.4	7.4
7	R7	65.2	72.9	7.7
8	R8	65.2	73.0	7.8
9	R9	65.1	72.6	7.5
10	R10	65.0	72.5	7.5
11	R11	65.1	72.6	7.4
12	R12	65.1	72.6	7.6
13	R13	65.1	72.1	7.0
14	R14	65.0	72.4	7.5
15	R15	64.5	71.9	7.5
16	R16	65.1	72.5	7.4
17	R17	64.8	72.6	7.8
18	R19	65.4	72.8	7.4
19	R20	64.9	71.4	6.5
20	R21	64.2	70.0	5.8
21	R22	63.6	69.4	5.8
22	R23	65.8	73.5	7.7
23	R24	65.2	73.7	8.5
24	R25	63.3	69.5	6.2
25	R26	63.3	69.3	6.0
26	R27	65.1	73.0	7.9
27	R28	65.6	73.4	7.8
28	R29	64.1	69.3	5.2
29	R30	63.1	67.9	4.8
30	R31	63.1	67.9	4.8
31	R32	63.4	68.8	5.5
32	R33	62.9	68.1	5.2
33	R34	64.3	68.5	4.2
34	R35	64.3	65.9	1.6
35	R36	65.5	66.1	.6

Below FHWA NAC ↓

OPTIMA OUTPUT
BARRIER A
May, 1994

BARRIER TYPE	COST	AREA (SQ. FT.)
FH-BERM	0.	0.
FH-MASON	0.	0.
FH-WOOD	0.	0.
FH-CONC	0.	0.
FH-STEEL	0.	0.
ODOT-GEN	477000.	47702.
TOTALS:	$ 477000.	47702.

ms consultants, inc.
engineers • architects • planners

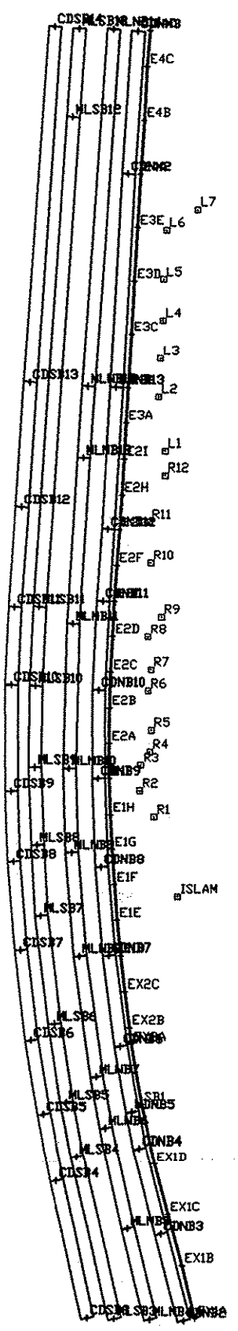



CDMS BARRIER E

ALL DIMENSIONS IN feet

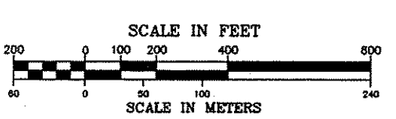

ms consultants, inc.
engineers * architects * planners

Barrier C Location

FRA–270–31.01

BARRIER AT EDGE OF SHOULDER	Station #	ID	Height	CL Offset	Bott. Elev	Top Elev
	1327+50.	–	14	38	861	875
	1328+50.	B7G	14	37	860	874
	1329+50.	B7F	14	36	859	873
	1330+50.	B7E	14	35	858	872
	1331+50.	B7D	14	35	857	871
	1332+50.	B7C	14	35	857	871
	1333+50.	B7B	14	35	856	870
	1334+50.	B7A	14	38	856	870
CDN	1335+50	B6G	14	38	854	868
STATIONS	1336+50	B6F	16	38	854	870
	1337+50.	B6E	16	38	854	870
	1338+50.	B6D	16	38	855	871
	1339+50.	B6C	14	38	856	870
	1340+50.	B6B	8	38	857	865
	1341+50.	B6A	8	38	860	868
	1342+50.	B5G	8	38	863	871
	1343+50.	B5F	12	38	866	878
	1344+50.	B5E	12	38	869	881
	1345+50.	B5D	12	38	872	884
	1346+50.	B5C	12	38	876	888
	1347+50.	B5B	14	38	879	893
	1348+50.*	B5A	14	37	881	895

* This barrier to end at bridge over Morse Road northbound on–ramp and meet Project 6 (on–ramp L/A line) barrier at bridge.

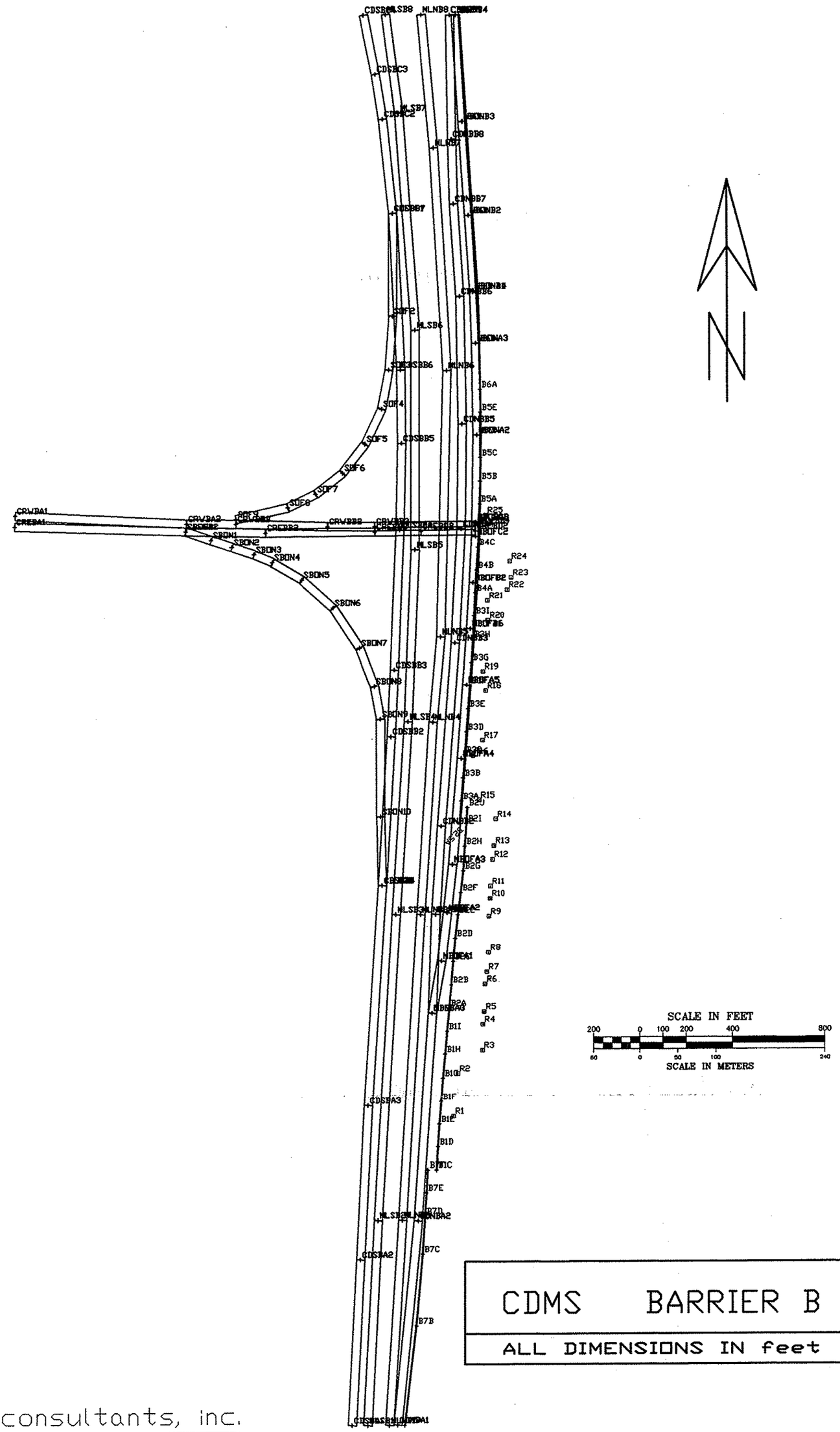

CDMS BARRIER B

ALL DIMENSIONS IN feet

ms consultants, inc.
engineers * architects * planners

CDMS NOISE BARRIER REPORT

INTRODUCTION

The Ohio Department of Transportation is improving the transportation network serving the northeastern portion of the Columbus, Ohio metropolitan area. This project designated Collector-Distributor/Morse/Stelzer (CDMS) is separated into a series of construction projects. The *FRA-270-30.00 Noise Impact Assessment* (**ms consultants, inc.**, 1993) demonstrated that a 14-foot high "conceptual" noise wall placed between I-270 and impacted first-row receivers would reduce highway generated noise to below FHWA criteria.

This report presents the results of a refined noise barrier analysis conducted via FHWA's Stamina 2.0 and Optima computer program. The construction plans for FRA-270-31.01, FRA-270-32.46, and FRA-270-33.64 were used to determine the specific roadway, barrier, and receiver locations. Stamina 2.0 calculated the noise level at individual receivers and the Insertion Loss (IL) of various noise barrier configurations. Optima was used to determine the most cost effective barrier heights. The Optima output tables, barrier location tables, and Stamina 2.0 model graphics are intended to aid the ODOT review process.

CDMS PROJECT 1

FRA-270-32.46 is Project 1 in the CDMS project schedule. It involves construction of Collector-Distributor (CD) lanes parallel to existing I-270, a new connector roadway between I-270 and Stelzer Road, and new ramps to access the new connector road.

Barrier B is required to mitigate highway generated noise at the residential receivers east of I-270 adjacent to Project 1. This area is a combination of single family homes and apartment buildings.

Barrier B will begin at off-ramp D station 1393+0.00. One section will run along the top of the Mechanically Stabilized Earth (MSE) retaining wall to off-ramp D station 1403+0.00. A second section of Barrier B will begin at off-ramp station D 1402+27.00. This section will run along the L/A line to CDN station 1418+0.00.

CDMS PROJECT 3

FRA-270-31.01 and FRA-270-33.64 are Project 3 in the CDMS project schedule. FRA-270-33.64 involves constructing additional lanes south of Project 1, near McCutcheon Road. East of I-270 are a number single family homes and a few apartment buildings. Barrier A will decrease noise levels in this residential area.

FRA-270-31.01 involves the construction of new collector-distributor lanes east and west of existing I-270. This project also involves the construction of new

R E S U L T S
****

REC	REC ID	LEQ	LEQ(Z(0))	IL
1	APT-1	63.6	65.4	1.8
2	APT-2	62.4	67.3	4.9
3	APT-3	62.7	68.8	6.0
4	APT-4	63.3	69.2	6.0
5	APT-5	63.9	69.6	5.7
6	APT-6	61.1	65.7	4.6
7	APT-7	60.0	64.0	3.9
8	APT-8	60.3	66.2	5.9
9	APT-9	64.3	70.6	6.4
10	LOT-0	65.2	73.7	8.5
11	LOT-1	63.7	68.5	4.8
12	LOT-2	63.9	69.3	5.4
13	LOT-3	63.8	69.2	5.5
14	LOT-4	63.8	69.3	5.5
15	LOT-6	63.6	69.0	5.4
16	LOT-5	63.6	69.2	5.6
17	LOT-7	63.5	68.4	4.9
18	LOT-8	64.6	70.0	5.4

BARRIER TYPE	COST	AREA (SQ. FT.)
FH-BERM	0.	0.
FH-MASON	0.	0.
FH-WOOD	0.	0.
FH-CONC	0.	0.
FH-STEEL	0.	0.
ODOT-GEN	346200.	34625.
TOTALS:	$ 346200.	34625.

DO YOU WANT TO VIEW THE SOUND LEVEL CONTRIBUTION AT ANY OR ALL RECEIVERS
(Y OR N)

OPTIMA OUTPUT
BARRIER C
May, 1994

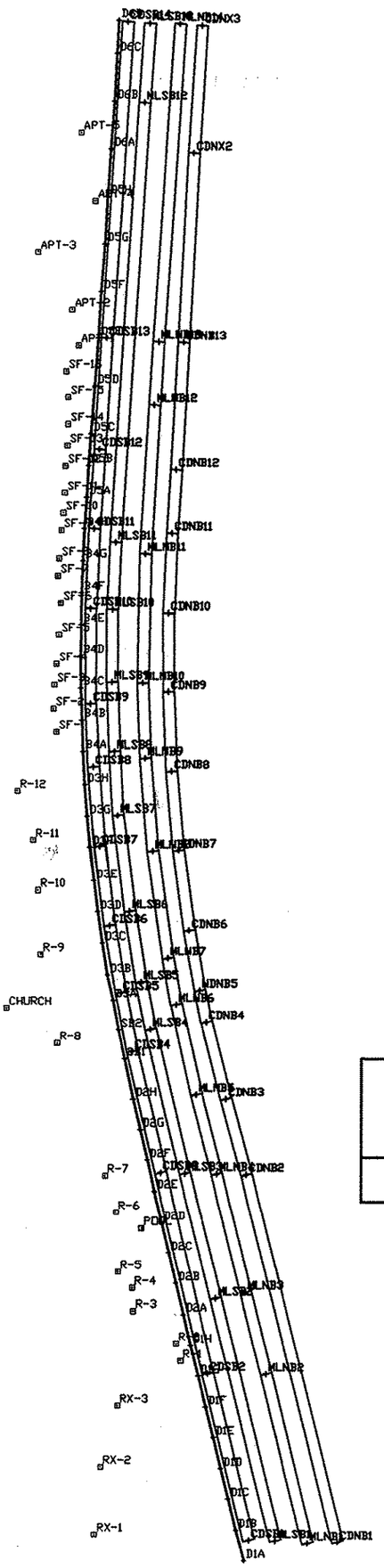

CDMS BARRIER D

ALL DIMENSIONS IN feet

SCALE IN FEET

200 0 100 200 400 800

60 0 50 100 240

SCALE IN METERS

ms consultants, inc.

engineers * architects * planners

R E S U L T S
****

REC	REC ID	LEQ	LEQ(Z(0))	IL
1	R1	66.1	75.1	9.0
2	R2	65.4	74.2	8.8
3	R3	65.3	71.7	6.4
4	R4	65.2	72.0	6.7
5	R5	65.3	72.1	6.8
6	R6	65.4	72.4	7.0
7	R7	65.4	72.4	7.0
8	R8	65.4	72.4	7.0
9	R9	65.7	72.9	7.2
10	R10	65.7	72.9	7.2
11	R11	65.6	72.8	7.3
12	R12	65.5	72.7	7.2
13	R13	65.2	72.4	7.2
14	R14	64.5	71.5	7.0
15	R15	64.3	73.0	8.6
16	R16	64.9	73.5	8.6
17	R17	64.4	71.7	7.2
18	R18	64.4	70.2	5.9
19	R19	63.7	70.1	6.4
20	R20	62.0	67.3	5.3
21	R21	61.6	65.9	4.3
22	R22	62.3	64.9	2.6
23	R23	62.2	64.3	2.2
24	R24	62.2	63.9	1.7
25	R25	61.4	61.7	.3

↓ Below FHWA NAC

BARRIER TYPE	COST	AREA (SQ. FT.)
FH-BERM	0.	0.
FH-MASON	0.	0.
FH-WOOD	0.	0.
FH-CONC	0.	0.
FH-STEEL	0.	0.
ODOT-GEN	330600.	33065.
TOTALS:	$ 330600.	33065.

DO YOU WANT TO VIEW THE SOUND LEVEL CONTRIBUTION AT ANY OR ALL RECEIVERS (Y OR N)

OPTIMA OUTPUT
BARRIER B
September, 1994

Barrier D Location

FRA–270–31.01

BARRIER AT EDGE OF SHOULDER	Station #	ID	Height	CL Offset	Bott. Elev	Top Elev.
	1293+50.	–	8	37	865	873
	1294	D5B	8	37	866	874
	1295	D5A	8	37	867	875
	1296	B4H	8	37	869	877
	1297	B4G	8	37	870	878
	1298	B4F	8	37	871	879
	1299	B4E	8	37	872	880
	1300	B4D	8	37	873	881
CDS STATIONS	1301	B4C	8	37	874	882
	1302	B4B	8	37	875	883
	1303	B4A	8	37	875	883
	1304	D3H	8	38	876	884
	1305	D3G	8	38	877	885
	1306	D3F	10	38	878	888
	1307	D3E	10	38	879	889
	1308	D3D	10	38	879	889
	1309	D3C	12	38	879	891
	1310	D3B	12	38	879	891
	1310+70.*	D3A	12	38	879	891
		SUNBURY	*ROAD*	*BRIDGES*		
	1312+60.*	–	8	38	879	887
	1314	D2H	8	38	877	885
	1315	D2G	8	38	876	884
	1316	D2F	8	38	875	883
	1317	D2E	8	38	874	882
	1318	D2D	8	38	873	881
	1319	D2C	10	38	871	881
	1320	D2B	12	38	870	882
	1321	D2A	12	38	869	881
	1322	D1H	10	38	868	878
	1323	D1G	10	38	867	877
	1324	D1F	8	38	866	874

* Approximate ends of the Sunbury Road Bridge.
No noise barrier on bridge except standard parapet.

This Barrier will begin in Project 11.

Barrier B Location

FRA–270–32.46

	Station #	ID	Height	CL Offset	Bott. Elev	Top Elev
BARRIER ON MSE WALL	1393	–	8	10	863	871
	1394	B3I	8	10	861	869
	1395	B3H	10	10	859	869
RAMP–D STATIONS	1396	B3G	8	10	857	865
	1397	B3F	6	10	855	861
	1398	B3E	8	10	853	861
	1399	B3D	12	10	851	863
	1400	B3C	12	10	849	861
	1401	B3B	14	10	848	862
	1402	B2.5B/B3A	14	10	846	860
	1403	B25.A	14	10	846	860
BARRIER AT L/A LINE	1402+27.	–	14	36	842	856
	1403	B2I	14	37	842	856
	1404	B2H	14	38	841	855
	1405	B2G	14	40	841	855
	1406	B2F	14	42	840	854
RAMP–D STATIONS	1407	B2E	14	42	840	854
	1408	B2D	14	43	841	855
	1409	B2C	14	50	841	855
	1410	B2B	14	50	841	855
	1411	B1J/B2A	14	52	841	855
	1412	B1I	14	53	842	856
	1413	B1H	14	52	841	855
	1414	B1G	14	75	842	856
CDN STATIONS	1415	B1F	14	73	842	856
	1416	B1E	14	72	840	854
	1417	B1D	14	72	840	854
	1418	B1C	14	72	840	854

press RETURN to continue.

R E S U L T S
****

REC	REC ID	LEQ	LEQ(Z(0))	IL
1	R1	63.5	68.7	5.1
2	R2	63.1	68.7	5.6
3	R3	63.3	68.8	5.5
4	R4	63.6	68.9	5.3
5	R5	63.8	69.0	5.2
6	R6	64.4	69.8	5.4
7	R7	64.2	69.6	5.4
8	R8	63.4	69.2	5.9
9	R9	63.8	69.0	5.2
10	R10	64.7	70.2	5.5
11	R11	64.7	70.4	5.8
12	R12	64.5	69.6	5.0
13	L1	64.5	69.6	5.2
14	L2	64.2	70.0	5.7
15	L3	63.3	68.9	5.7
16	L4	63.0	68.6	5.6
17	L5	62.9	68.6	5.7
18	L6	62.9	68.4	5.5
19	L7	64.0	67.0	3.0
20	ISLAM	64.5	67.8	3.3

OPTIMA OUTPUT
BARRIER E
June, 1994

BARRIER TYPE	COST	AREA (SQ. FT.)
FH-BERM	0.	0.
FH-MASON	0.	0.
FH-WOOD	0.	0.
FH-CONC	0.	0.
FH-STEEL	0.	0.
ODOT-GEN	193800.	19384.
TOTALS:	$ 193800.	19384.

DO YOU WANT TO VIEW THE SOUND LEVEL CONTRIBUTION AT ANY OR ALL RECEIVERS (Y OR N)