CITY OF COLUMBUS, OHIO
DEPARTMENT OF PUBLIC SERVICE
DIVISION OF DESIGN AND CONSTRUCTION

WILSON ROAD PEDESTRIAN SAFETY IMPROVEMENT & DECK REPLACEMENT OF BRIDGE NO. FRA-25-0.63 OVER CAMP CHASE RAILROAD

LOCATION MAP

P.O.B. = LATITUDE: 39°56'34" N LONGITUDE: 83°05'39" W

SCALE IN MILES

0 1/2 1 1-1/2

PORTION TO BE IMPROVED

DESIGN DESIGNATION

	WILSON ROAD
CURRENT ADT (2010)	12,850
DESIGN YEAR ADT (2017)	14,442
DESIGN HOURLY VOLUME (2037)	14,673
DIRECTIONAL DISTRIBUTION	50%
TRUCKS (24 HOUR B&C)	5%
DESIGN SPEED	55 MPH
LEGAL SPEED	50 MPH
SHARED USE PATH DESIGN SPEED	25 MPH
DESIGN FUNCTIONAL CLASSIFICATION:	URBAN MINOR ARTERIAL

NHS PROJECT ..... NO

DESIGN EXCEPTIONS

NONE

SHARED USE PATH FROM SULLIVANT AVENUE TO BROAD STREET
ROAD WIDENING FROM 40 FEET SOUTH OF WILSON PARK WAY TO
655 FEET NORTH OF FREMONT STREET

INDEX OF SHEETS:

TITLE SHEET 1
ALIGNMENT INFORMATION 2
SCHEMATIC PLAN 3
TYPICAL SECTIONS 4-7
GENERAL NOTES 8-9
MAINTENANCE OF TRAFFIC 10-12
GENERAL SUMMARY 13-15
PAVEMENT CALCULATIONS 16
POST CONST. STORM POLLUTION CONTROL FACILITIES 17
STORMWATER POLLUTION PREVENTION PLAN 17-19
PLAN AND PROFILE 20-32
CROSS SECTIONS 33-53
SUPERELEVATION TABLE 54
INTERSECTION DETAILS 55-58
DRIVE DETAILS 59
STORM SEWER PROFILES AND COORDINATE DATA 60-61
SIGNING AND PAVEMENT MARKING 62-67
LIGHTING PHOTOMETRICS 68
STRUCTURE PLANS 69-97

PROJECT DESCRIPTION

CONSTRUCT A SHARED USE PATH (SUP) ON THE WEST SIDE OF WILSON ROAD FROM SULLIVANT AVENUE TO BROAD STREET. MODIFICATIONS WILL BE MADE TO THE EXISTING BRIDGE AND THE ALIGNMENT OF THE ROADWAY TO ACCOMMODATE THE PATH ADDITION. THE ROADWAY WILL BE WIDENED NORTH OF FREMONT STREET TO ACCOMMODATE A SOUTHBOUND LEFT TURN LANE. OPPOSITE THE NEW TURN LANE, A RAISED GRASSED MEDIAN WILL BE PLACED BETWEEN FREMONT AND WILSON PARK WAY TO SUPPORT A PATH CROSSING AT FREEMONT STREET.

EARTH DISTURBED AREAS

TOTAL ESTIMATED EARTH DISTURBED AREA	8.5 ACRES
PRE-CONSTRUCTION IMPERVIOUS AREA	2.6 ACRES
POST-CONSTRUCTION IMPERVIOUS AREA	3.8 ACRES

2012 SPECIFICATIONS

THE CITY OF COLUMBUS CONSTRUCTION AND MATERIALS SPECIFICATIONS (CMSC), 2012 EDITION INCLUDING ALL REVISIONS AND SUPPLEMENTS THERETO, SHALL GOVERN ALL CONSTRUCTION ITEMS THAT ARE A PART OF THIS PLAN UNLESS NOTED OTHERWISE.

2016 SPECIFICATIONS

THE 2016 STANDARD SPECIFICATIONS, REVISED 7/21/2016, OF THE STATE OF OHIO, DEPARTMENT OF TRANSPORTATION, INCLUDING CHANGES AND SUPPLEMENTAL SPECIFICATIONS LISTED IN THE PROPOSAL SHALL GOVERN ALL CONSTRUCTION ITEMS FOR THE IMPROVEMENT OF THE STRUCTURE RFA-CR 25-0063.

FRANKLIN COUNTY ENGINEER DATE

FRANKLIN COUNTY DEPUTY ENGINEER DATE

FRANKLIN COUNTY COMMISSIONER DATE

FRANKLIN COUNTY COMMISSIONER DATE

FRANKLIN COUNTY COMMISSIONER DATE

CITY OF COLUMBUS APPROVALS

CITY OF COLUMBUS SIGNATURES ON THIS PLAN SIGNIFY ONLY CONCURRENCE WITH THE GENERAL PURPOSES AND GENERAL LOCATION OF THE PROJECT. ALL TECHNICAL DETAILS REMAIN THE RESPONSIBILITY OF THE ENGINEER PREPARING THE PLANS.

DESIGN SECTION ENGINEER, DIVISION OF DESIGN AND CONSTRUCTION DATE

ADMINISTRATOR, DIVISION OF POWER DATE

ADMINISTRATOR, DIVISION OF SEWERAGE AND DRAINAGE DATE

ADMINISTRATOR, DIVISION OF WATER DATE

DIRECTOR, DEPARTMENT OF PUBLIC UTILITIES DATE

FIRE PREVENTION BUREAU, DIVISION OF FIRE DATE

ENGINEERING SUPERVISOR, DEPARTMENT OF TECHNOLOGY DATE

DIRECTOR, DEPARTMENT OF RECREATION AND PARKS DATE

CITY ENGINEER/ADMINISTRATOR, DIVISION OF DESIGN AND CONSTRUCTION DATE

DIRECTOR, DEPARTMENT OF PUBLIC SERVICE DATE

ROADWAY DESIGN	STRUCTURAL DESIGN

REGISTERED ENGINEER DATE REGISTERED ENGINEER DATE

COLUMBUS STANDARD CONSTRUCTION DRAWINGS

1441	12/1/14	2130	6/1/13	1520	9/15/15		HW-2.2	1/15/16	MGS-1.1	7/19/13
2000	6/1/14	2170	6/1/113	1540	9/15/15		RM-4.5	7/18/14	MGS-2.1	7/19/13
2203	12/1/14	2171	6/1/13	1550	9/15/15		DM-1.1	1/15/16	MGS-3.1	7/18/13
2303	6/1/13	2179	6/1/13	MIS-121	5/92		AS-1-15	7/17/15	MGS-3.2	7/18/13
2310	6/1/14	2185	12/1/13	MIS-072	5/92		AS-2-15	7/17/15	MGS-4.2	7/19/13
2319	6/1/13	2300	6/1/14	AA-S112	12/6/13		GSD-1-96	7/19/02	MGS-5.3	7/15/16
2331	6/1/13	1500	9/15/15	AA-S151	7/9/12		PCB-91	1/18/13	MGS-6.1	7/19/13
4300	5/1/14	1510	9/15/15	AA-S166	7/9/12		BR-1-13	1/17/14	HL-30.32	1/17/14
4020	5/1/14	1511	9/15/15	AA-133A	8/8/14		SICD-2-14	7/18/14		
4022	5/1/14	AA-S149	10/15/14	AA-123	8/8/14		SICD-1-14	7/18/14		
		AA-S165	7/9/12	AA-S169	12/6/13		VPF-1-90	7/17/15		
							DM-4.2	7/20/12		

ODOT STANDARD CONSTRUCTION DRAWINGS

COLUMBUS SUPPLEMENTAL SPECIFICATIONS

1100	8/1/16		
1501	7/8/02		
1630	11/13/09		

ODOT SUPPLEMENTAL SPECIFICATIONS

800	7/15/16		

WOOLPERT
DESIGN | GEOSPATIAL | INFRASTRUCTURE
ONE EASTON OVAL
SUITE 310
COLUMBUS, OH 43219
T 614-476-6000
F 614-476-6225

OHIO Utilities Protection SERVICE
Click, Call or Tap Before You Dig
800-362-2764 OR 8-1-1
WWW.OUPS.ORG

REV NO	REVISION DESCRIPTION	SHEET(S)	INITIAL	DATE

STAGE 3 REVIEW, DATE 10/17/16

3233-E

HORIZONTAL SCALE IN FEET 20 0 10 20

PROJECT NUMBER 590105-100083

CALCULATED CAG CHECKED JDB

TITLE SHEET

WILSON ROAD

\\Columbus\SRVLN\DE\Clients\OH_City_of_Columbus\073707_WILSON_RD\Design\Roadway\Sheets\073707_GT001.dgn 10/17/2016 3:35:27 PM keatingm

SUP CURVE 1
P.I.Sta. 20+09.06
Δ = 8° 17′ 33″ (RT)
Dc = 45° 50′ 12″
R = 125.00′
T = 9.06′
L = 18.09′
E = 0.33′
C = 18.08′
C.B. = N 7° 22′ 34″ W

SUP CURVE 2
P.I.Sta. 28+67.42
Δ = 10° 42′ 25″ (RT)
Dc = 49° 49′ 21″
R = 115.00′
T = 10.78′
L = 21.49′
E = 0.50′
C = 21.46′
C.B. = N 2° 07′ 26″ E

SUP CURVE 3
P.I.Sta. 29+69.14
Δ = 10° 34′ 45″ (LT)
Dc = 49° 49′ 21″
R = 115.00′
T = 10.65′
L = 21.23′
E = 0.49′
C = 21.20′
C.B. = N 2° 11′ 16″ E

SUP CURVE 4
P.I.Sta. 35+09.40
Δ = 13° 09′ 32″ (RT)
Dc = 45° 50′ 12″
R = 125.00′
T = 14.42′
L = 28.71′
E = 0.83′
C = 28.65′
C.B. = N 3° 29′ 31″ E

SUP CURVE 5
P.I.Sta. 40+02.86
Δ = 1° 58′ 32″ (LT)
Dc = 34° 30′ 56″
R = 166.00′
T = 2.86′
L = 5.72′
E = 0.02′
C = 5.72′
C.B. = N 21° 11′ 05″ W

SUP CURVE 6
P.I.Sta. 40+62.88
Δ = 16° 49′ 53″ (RT)
Dc = 32° 33′ 16″
R = 176.00′
T = 26.04′
L = 51.70′
E = 1.92′
C = 51.52′
C.B. = N 13° 45′ 24″ W

SUP CURVE 7
P.I.Sta. 43+01.03
Δ = 14° 18′ 04″ (RT)
Dc = 32° 33′ 16″
R = 176.00′
T = 22.08′
L = 43.93′
E = 1.38′
C = 43.82′
C.B. = N 1° 48′ 06″ E

SUP CURVE 8
P.I.Sta. 44+59.72
Δ = 15° 26′ 50″ (LT)
Dc = 34° 30′ 56″
R = 166.00′
T = 22.51′
L = 44.75′
E = 1.52′
C = 44.62′
C.B. = N 2° 39′ 19″ E

ROAD CURVE 1
P.I.Sta. 115+36.44
Δ = 1° 04′ 16″ (LT)
Dc = 0° 29′ 57″
R = 11,477.96′
T = 107.28′
L = 214.55′
E = 0.50′
C = 214.55′
C.B. = N 4° 52′ 24″ W

ROAD CURVE 2
P.I.Sta. 132+93.38
Δ = 10° 38′ 52″ (RT)
Dc = 3° 02′ 36″
R = 1,882.61′
T = 175.44′
L = 349.86′
E = 8.16′
C = 349.36′
C.B. = N 1° 19′ 37″ E

ROAD CURVE 3
P.I. Sta. 138+97.72
Δ = 5° 45′ 24″ (RT)
Dc = 4° 00′ 00″
R = 1,432.39′
T = 72.02′
L = 143.92′
E = 1.81′
C = 143.86′
C.B. = N 8° 29′ 18″ E

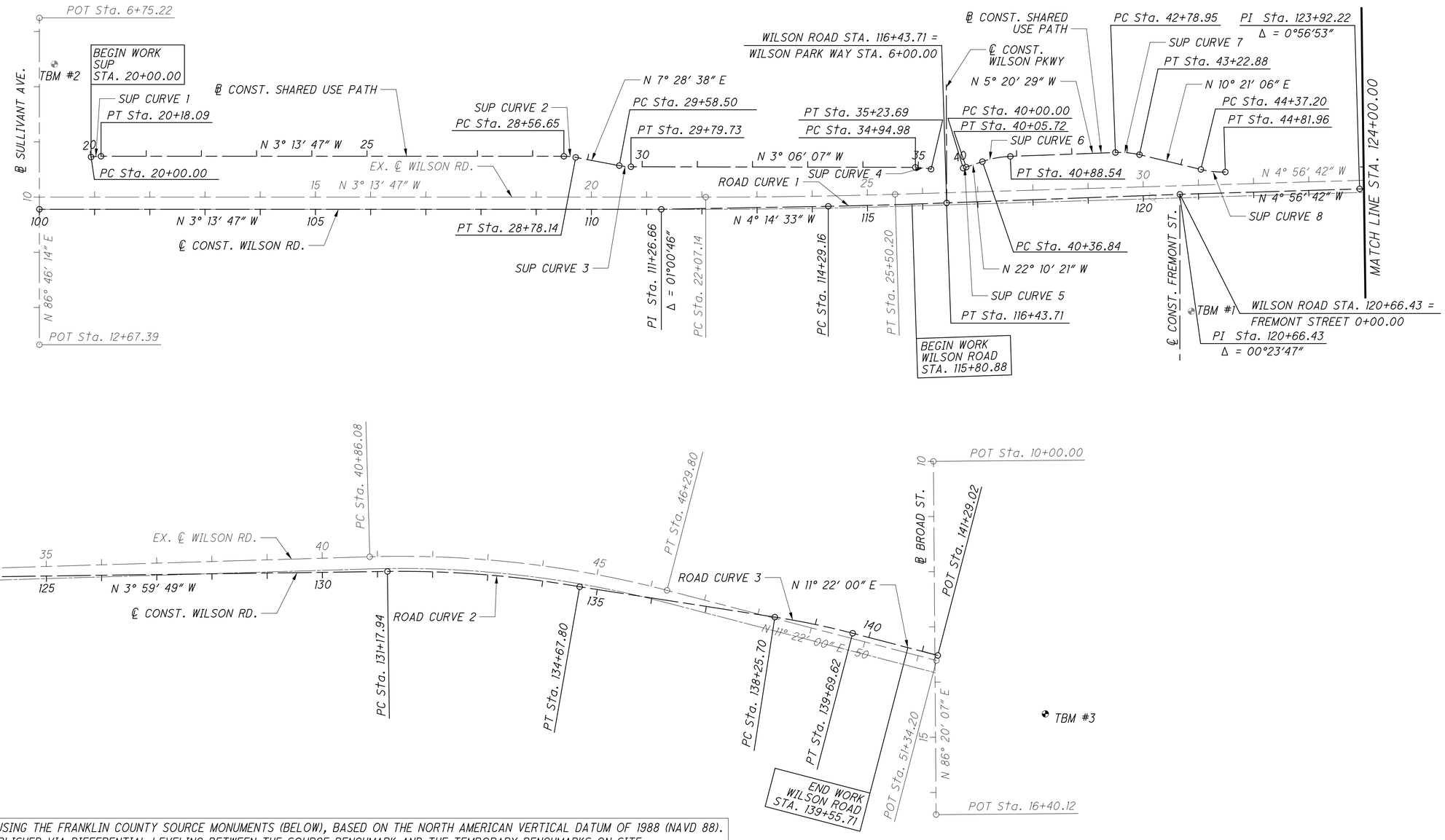

VERTICAL CONTROL WAS SET USING THE FRANKLIN COUNTY SOURCE MONUMENTS (BELOW), BASED ON THE NORTH AMERICAN VERTICAL DATUM OF 1988 (NAVD 88). VERTICAL CONTROL WAS ESTABLISHED VIA DIFFERENTIAL LEVELING BETWEEN THE SOURCE BENCHMARK AND THE TEMPORARY BENCHMARKS ON SITE.				
BENCHMARK	DESCRIPTION	NORTHING	EASTING	ELEVATION
SOURCE BENCHMARK	ALUMINUM PLUG IN NORTHEAST CORNER OF NORTH ABUTMENT OF WILSON ROAD BRIDGE FRA 25-0.63, OVER A RAILROAD, 0.10 MILES SOUTH OF U.S. 40 WEST BROAD STREET, 23.0 FEET EAST OF THE CENTERLINE OF WILSON ROAD.	711562.419	1801700.260	868.628
TBM #1	RAILROAD SPIKE NEAR SOUTH FACE OF LIGHT POLE, FREMONT ST, 2+11.87, 20.91 LT	710209.512	1801964.228	838.848
TBM #2	RAILROAD SPIKE IN UTILITY POLE #SW949, WILSON RD, 100+27.34, 262.81 LT	708127.997	1801633.371	843.545
TBM #3	CONCRETE SQUARE CUT IN SIDEWALK, WILSON RD, 141+29.02, 54.66 RT	712427.518	1801866.549	837.902

FOR HORIZONTAL DATA, SEE SHEET 3

HORIZONTAL SCALE IN FEET 50 0 50 100

CALCULATED CAG
CHECKED JDB

ALIGNMENT INFORMATION
STA. 100+00.00 TO STA. 141+29.02

WILSON ROAD

\\Columbus\SRVLN\DE\Clients\OH_City_of_Columbus\073707_WILSON_RD\Design\Roadway\Sheets\073707_GB002.dgn 10/17/2016 3:35:31 PM keatingm

VERTICAL CONTROL WAS SET USING THE FRANKLIN COUNTY SOURCE MONUMENTS (BELOW), BASED ON THE NORTH AMERICAN VERTICAL DATUM OF 1988 (NAVD 88). VERTICAL CONTROL WAS ESTABLISHED VIA DIFFERENTIAL LEVELING BETWEEN THE SOURCE BENCHMARK AND THE TEMPORARY BENCHMARKS ON SITE.

BENCHMARK	DESCRIPTION	NORTHING	EASTING	ELEVATION
SOURCE BENCHMARK	ALUMINUM PLUG IN NORTHEAST CORNER OF NORTH ABUTMENT OF WILSON ROAD BRIDGE FRA 25-0.63, OVER A RAILROAD, 0.10 MILES SOUTH OF U.S. 40 WEST BROAD STREET, 23.0 FEET EAST OF THE CENTERLINE OF WILSON ROAD.	711562.419	1801700.260	868.628
TBM #1	RAILROAD SPIKE NEAR SOUTH FACE OF LIGHT POLE, FREMONT ST, 2+11.87, 20.91 LT	710209.512	1801964.228	838.848
TBM #2	RAILROAD SPIKE IN UTILITY POLE #SW949, WILSON RD, 100+27.34, 262.81 LT	708127.997	1801633.371	843.545
TBM #3	CONCRETE SQUARE CUT IN SIDEWALK, WILSON RD, 141+29.02, 54.66 RT	712427.518	1801866.549	837.902

ROAD CURVE 1
P.I.Sta. 115+36.44
Δ = 1° 04′ 16″ (LT)
Dc = 0° 29′ 57″
R = 11,477.96′
T = 107.28′
L = 214.55′
E = 0.50′
C = 214.55′
C.B. = N 4° 52′ 24″ W

ROAD CURVE 2
P.I.Sta. 132+93.38
Δ = 10° 38′ 52″ (RT)
Dc = 3° 02′ 36″
R = 1,882.61′
T = 175.44′
L = 349.86′
E = 8.16′
C = 349.36′
C.B. = N 1° 19′ 37″ E

ROAD CURVE 3
P.I. Sta. 138+97.72
Δ = 5° 45′ 24″ (RT)
Dc = 4° 00′ 00″
R = 1,432.39′
T = 72.02′
L = 143.92′
E = 1.81′
C = 143.86′
C.B. = N 8° 29′ 18″ E

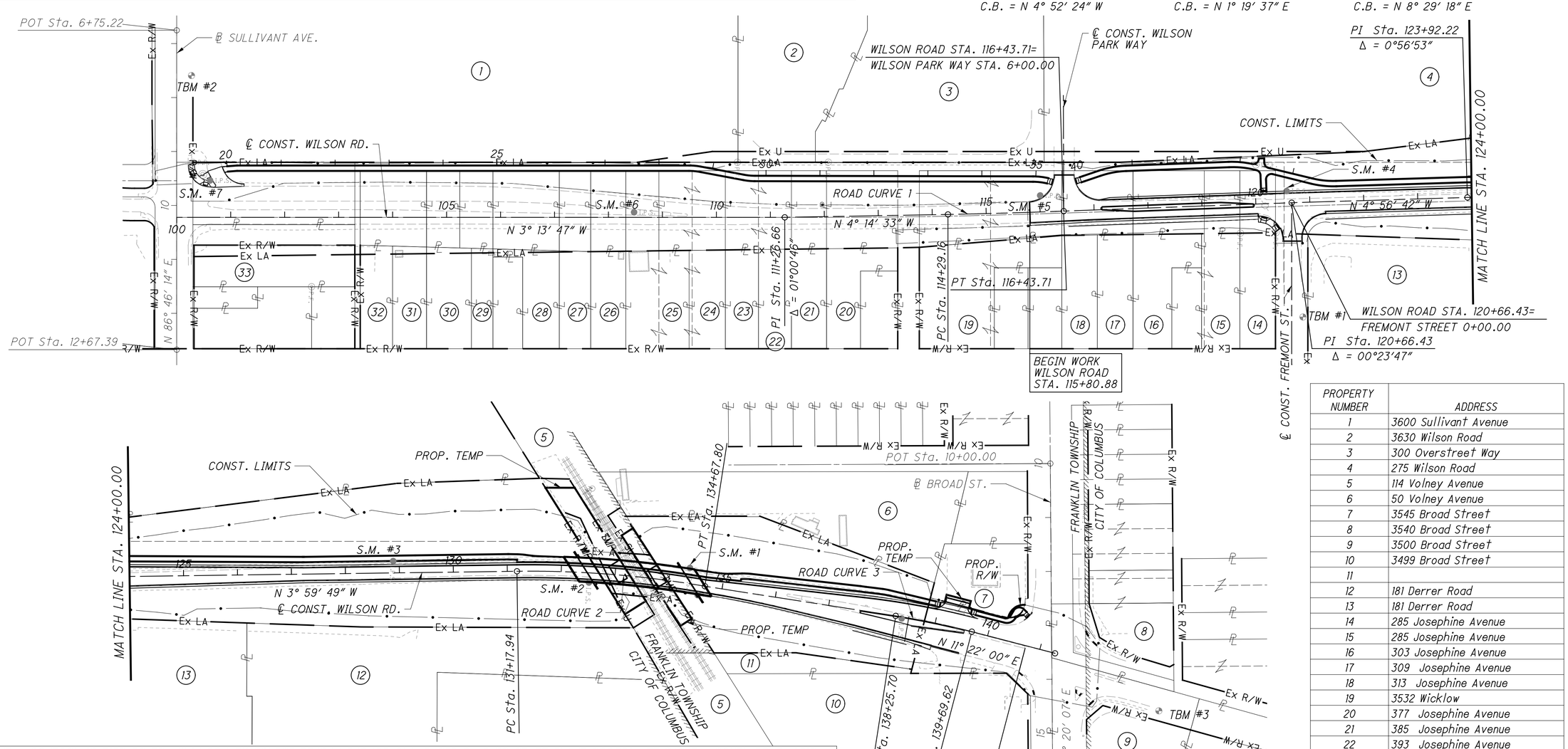

HORIZONTAL CONTROL IS TIED TO FRANKLIN COUNTY SOURCE BENCHMARKS (BELOW), BASED ON OHIO STATE PLANE COORDINATE SYSTEM, SOUTH ZONE, GRID COORDINATES, NAD83 (2007). HORIZONTAL CONTROL WAS ESTABLISHED VIA GPS METHODS BASED UPON FRANKLIN COUNTY MONUMENT "FRANK52" WITH A MONUMENT "COLUMBUS CORS ARP".

CONTROL POINT	DESCRIPTION	NORTHING	EASTING	ELEVATION
SOURCE MONUMENT	IRON PIN SET, WILSON RD, 138+37.37, 2.98 RT	711941.979	1801722.434	848.139
#1	IRON PIN SET, WILSON RD, 134+35.38, 28.98 LT	711545.126	1801650.978	869.860
#2	IRON PIN SET, WILSON RD, 132+52.49, 17.95 RT	711359.648	1801688.581	873.830
#3	IRON PIN SET, WILSON RD, 128+89.01, 22.08 LT	710995.316	1801669.188	870.571
#4	IRON PIN SET, WILSON RD, 120+57.89, 21.94 LT	710166.150	1801732.823	841.480
#5	IRON PIN SET, WILSON RD, 116+01.15, 30.65 LT	709710.658	1801766.641	840.745
#6	IRON PIN SET, WILSON RD, 108+47.49, 9.41 LT	708961.113	1801840.167	842.229
#7	IRON PIN SET, WILSON RD, 100+61.83, 68.29 LT	708173.385	1801825.638	840.195

PROPERTY NUMBER	ADDRESS
1	3600 Sullivant Avenue
2	3630 Wilson Road
3	300 Overstreet Way
4	275 Wilson Road
5	114 Volney Avenue
6	50 Volney Avenue
7	3545 Broad Street
8	3540 Broad Street
9	3500 Broad Street
10	3499 Broad Street
11	
12	181 Derrer Road
13	181 Derrer Road
14	285 Josephine Avenue
15	285 Josephine Avenue
16	303 Josephine Avenue
17	309 Josephine Avenue
18	313 Josephine Avenue
19	3532 Wicklow
20	377 Josephine Avenue
21	385 Josephine Avenue
22	393 Josephine Avenue
23	405 Josephine Avenue
24	411 Josephine Avenue
25	439 Josephine Avenue
26	435 Josephine Avenue
27	443 Josephine Avenue
28	451 Josephine Avenue
29	465 Josephine Avenue
30	477 Josephine Avenue
31	487 Josephine Avenue
32	3556 Sullivant Avenue
33	3556 Sullivant Avenue

3233-E

HORIZONTAL SCALE IN FEET 0 50 100

CALCULATED CAG
CHECKED JDB

SCHEMATIC PLAN
STA. 100+00.00 TO STA. 141+29.02
WILSON ROAD

\\Columbus\SRVLN\DE\Clients\OH_City_of_Columbus\073707_WILSON_RD\Design\Roadway\Sheets\073707_GB001.dgn 10/17/2016 3:35:36 PM keatingm

A - PROPOSED DITCH WORK FROM STA. 101+22 TO STA. 113+47.50 ALONG THE LEFT SIDE OF WILSON ROAD

B - PROPOSED DITCH WORK FROM STA. 116+00 TO STA. 117+12.50 ALONG THE RIGHT SIDE OF WILSON ROAD

C - STA. 115+80.88 TO STA. 116+89.10 = 19.50′ TO 18.00′
STA. 116+89.10 TO STA. 117+12.50 = 18.00′

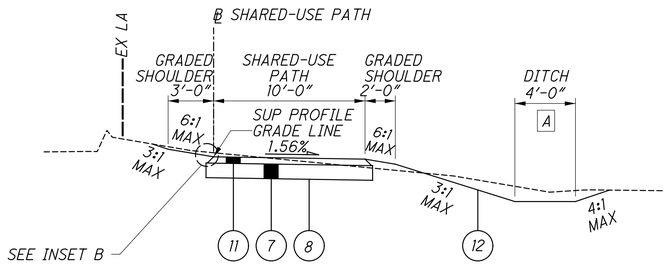

SHARED-USE PATH - WILSON ROAD

STA. 20+00.00 TO STA. 35+23.69 = 1523.69′

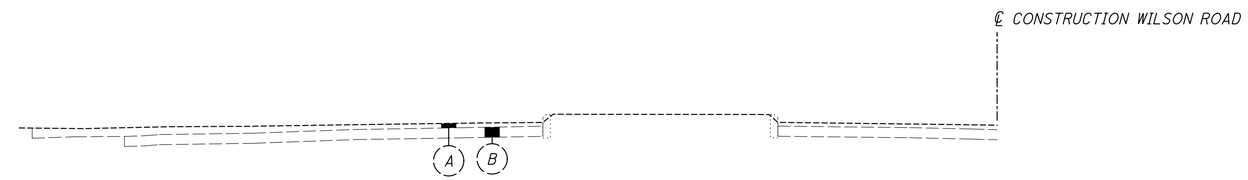

EXISTING SECTION - WILSON ROAD

PAVEMENT REPAIR DETAIL

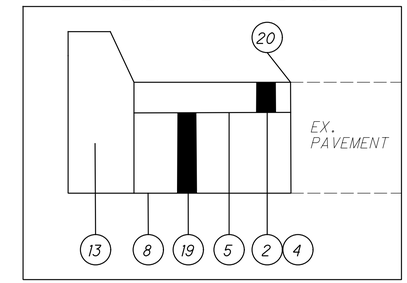

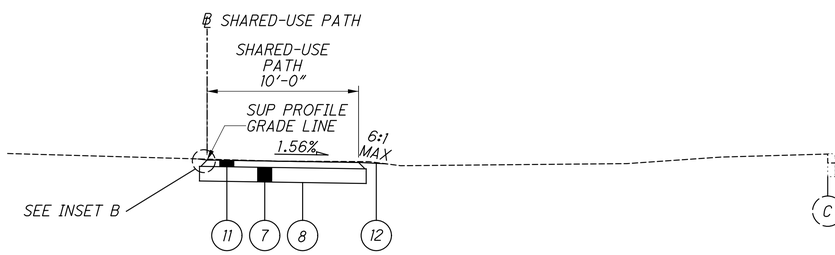

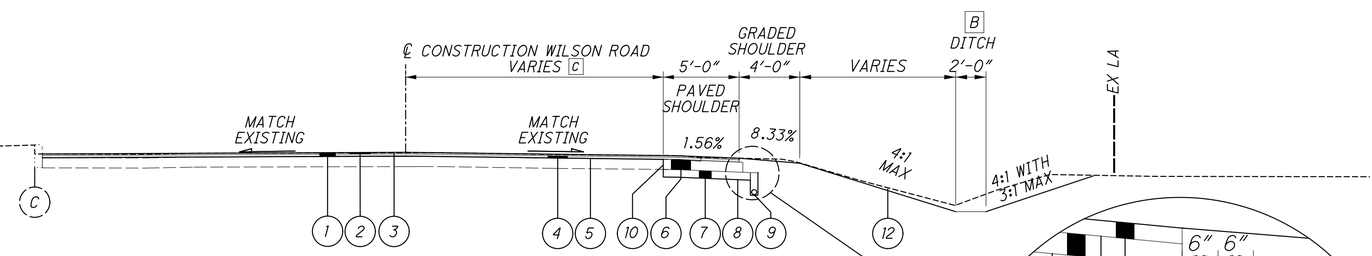

RESURFACING SECTION WITH SHARED-USE PATH - WILSON ROAD

STA. 115+80.88 TO STA. 117+12.50 = 132.62′

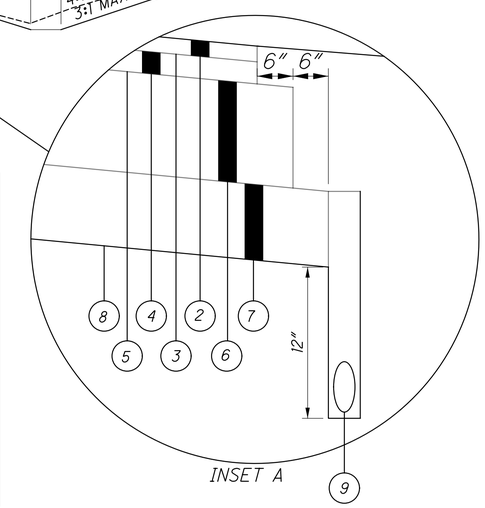

INSET A

LEGEND

1. ITEM 254 - PAVEMENT PLANING, ASPHALT CONCRETE (3″± TO TOP OF CONCRETE BASE)
2. ITEM 448 - 1.25″ ASPHALT CONCRETE SURFACE COURSE (MEDIUM TRAFFIC), PG70-22M
3. ITEM 407 - TACK COAT (0.08 GAL/SY)
4. ITEM 448 - VARIABLE DEPTH (1.75″ MIN) ASPHALT INTERMEDIATE COURSE (MEDIUM TRAFFIC), PG64-22 (SEE NOTE "B")
5. ITEM 407 - TACK COAT FOR INT. COURSE, 702.13 (RUBBERIZED) (0.08 GAL/SY)
6. ITEM 305 - 8″ CONCRETE BASE
7. ITEM 304 - 6″ AGGREGATE BASE
8. ITEM 204 - SUBGRADE COMPACTION
9. ITEM 605 - 4″ PIPE UNDERDRAINS
10. FULL DEPTH SAWCUT (SAWCUT TO SOUND PAVEMENT)
11. ITEM 448 - 2.5″ ASPHALT CONCRETE SURFACE COURSE (LIGHT TRAFFIC), PG64-22M
12. ITEM 659 - SEEDING & MULCHING (SEE NOTE "D")
13. ITEM 609 - CURB, STRAIGHT 18″
14. ITEM 606 - GUARDRAIL, TYPE MGS, SEE ODOT SCD MGS-1.1
15. ITEM 606 - GUARDRAIL, TYPE MGS, LONG POST, SEE ODOT SCD MGS-1.1
16. ITEM 606 - CONCRETE BARRIER, TYPE D , SEE ODOT SCD RM-4.5
17. ITEM 526 - REINFORCED APPROACH SLAB (15″ THICK)
18. SLEEPER SLAB
19. ITEM 259 - PERMANENT PAVEMENT REPLACEMENT, TYPE I, AS PER PLAN
20. ITEM 423 - CRACK SEAL, TYPE 1

(A) EXISTING 3″± ASPHALT CONCRETE
(B) EXISTING 8″± CONCRETE BASE
(C) EXISTING CURB

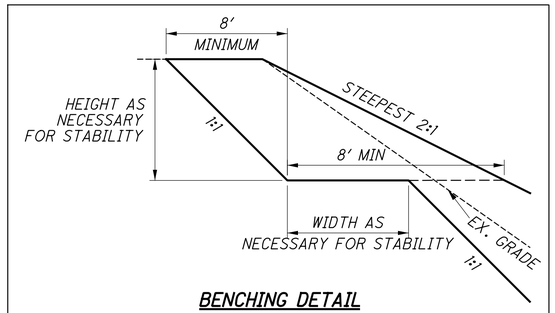

BENCHING DETAIL

REFER TO ODOT GEOTECHNICAL BULLETIN #2 FOR MORE INFORMATION

NOTE "A"

THE EXISTING PAVEMENT EDGES SHALL BE SAWCUT TO LOCATE A SOUND PAVEMENT EDGE PER 203.04(F) OF THE CMS. FOR ESTIMATING PURPOSES, PAVEMENT CALCULATIONS INCLUDED IN THE PLAN INDICATE AN AVERAGE OF 1 FT. OF EXISTING PAVEMENT BEING REPLACED

NOTE "D"

PER THE CITY OF COLUMBUS SPEC. 659, FOR SLOPES STEEPER THAN 3:1 CLASS 3C SEED MIXTURE SHALL BE USED. FOR ALL OTHER SLOPES CLASS 3A SEED MIXTURE SHALL BE USED.

NOTE "B"

ITEM 448 - VARYING DEPTH ASPHALT INTERMEDIATE COURSE (MEDIUM TRAFFIC), PG64-22, IS TO BE USED AS A LEVELING COURSE TO ESTABLISH A 1.56% CROSS SLOPE UNLESS SPECIFIED OTHERWISE IN SUPERELEVATION TABLE. OBSERVE MAXIMUM LIFT THICKNESS OF 3″. IF MORE THAN 3″ ARE REQUIRED, PLACE IN TWO COURSES WITH FIRST COURSE VARYING IN THICKNESS AND SECOND COURSE HELD AT A CONSTANT 1.75″ THICKNESS. ESTIMATED QUANTITIES HAVE BEEN CALCULATED BASED ON CROSS-SECTIONS SHOWN ON SHEETS 33-53.

NOTE "C"

ITEM 259 - PERMANENT PAVEMENT, TYPE I, AS PER PLAN WILL BE USED IN SOME AREAS AS SHOWN ON THE PLAN & PROFILES, SHEETS 20-30.

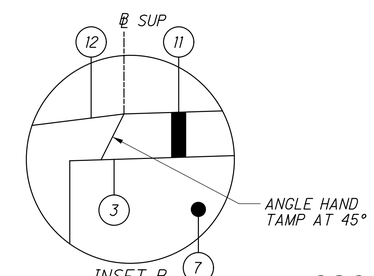

INSET B

CALCULATED CAG
CHECKED JDB

TYPICAL SECTIONS

WILSON ROAD

3233-E

\\Columbus\SRVLN\DE\Clients\OH_City_of_Columbus\073707_WILSON_RD\Design\Roadway\Sheets\073707_GY001.dgn 10/17/2016 3:35:41 PM keatingm

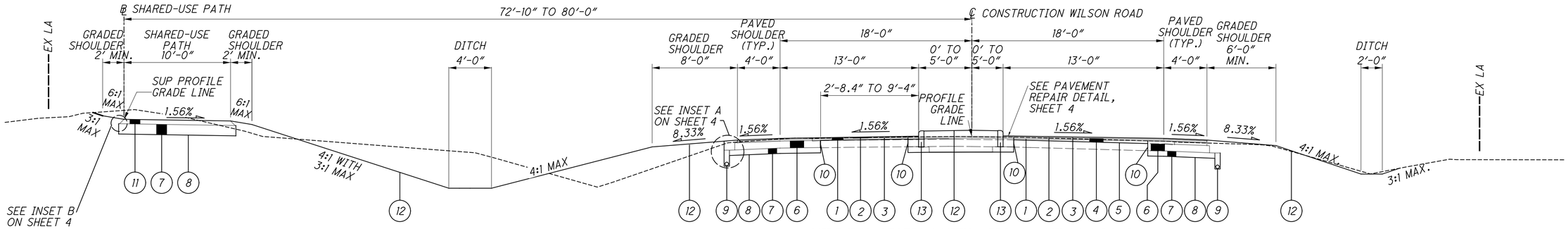

WIDENING SECTION WITH MEDIAN - WILSON ROAD

STA. 117+12.50 TO 119+97.40 STA. = 284.90'

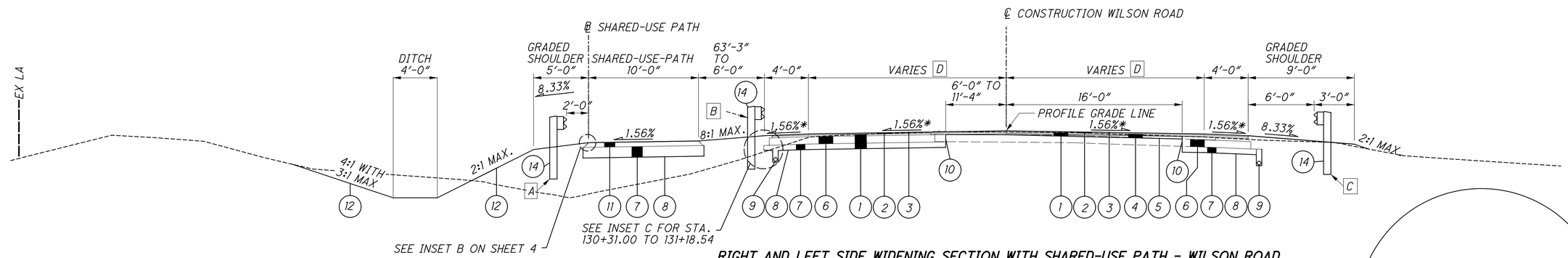

RIGHT AND LEFT SIDE WIDENING SECTION WITH SHARED-USE PATH - WILSON ROAD

STA. 119+97.40 TO STA. 131+18.54= 1121.14'

A - PROPOSED GUARDRAIL FROM STA. 123+94.13 TO STA. 132+04.93 ALONG THE LEFT SIDE OF WILSON ROAD

B - PROPOSED GUARDRAIL FROM STA. 130+31.05 TO STA. 131+18.54 ALONG THE LEFT SIDE OF WILSON ROAD

C - PROPOSED GUARDRAIL FROM STA. 122+58.22 TO STA. 132+34.35 ALONG THE RIGHT SIDE OF WILSON ROAD

D STA. 119+97.40 TO 123+92.22 = 18.0'
STA. 123+92.22 TO 127+22.22 = 18.0' TO 12.0'
STA. 127+22.22 TO 131+18.54 = 12.0'

* - REFER SUPER ELEVATION TABLE FOR CROSS SLOPES (SEE SHEET 54)

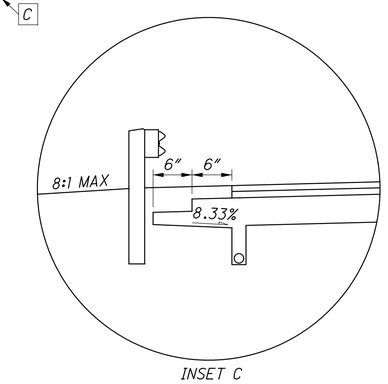

INSET C

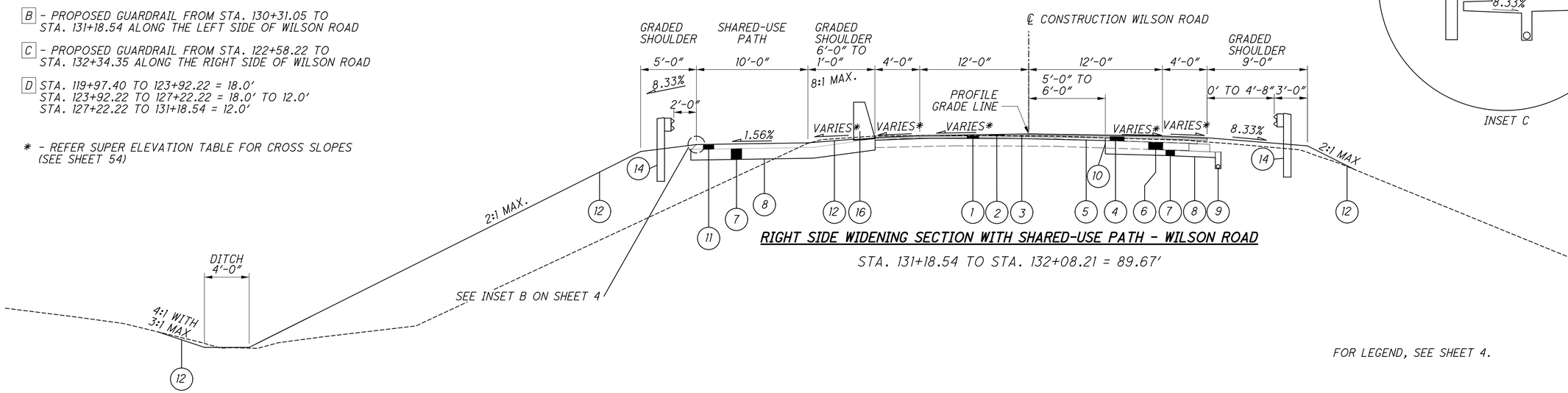

RIGHT SIDE WIDENING SECTION WITH SHARED-USE PATH - WILSON ROAD

STA. 131+18.54 TO STA. 132+08.21 = 89.67'

FOR LEGEND, SEE SHEET 4.

CALCULATED CAG
CHECKED JBD

TYPICAL SECTIONS

WILSON ROAD

3233-E

\\Columbus\SRVLN\DE\Clients\OH_City_of_Columbus\073707_WILSON_RD\Design\Roadway\Sheets\073707_GY002.dgn 10/17/2016 3:35:44 PM keatingm

A FULL DEPTH PAVEMENT REPLACEMENT FOR CONCRETE MEDIAN REMOVAL FROM STA. 136+19.40 TO STA. 137+58.50 = 139.10′

B PROPOSED GUARDRAIL FROM STA. 135+32.17 TO STA. 136+57.00

C PROPOSED CONCRETE BARRIER FROM STA. 134+53.64 TO STA. 135+32.17

D STA. 134+82.15 TO 137+58.50 = 12.0′ TO 24.45′

E STA. 134+82.15 TO 137+58.50 = 12.0′ TO 29.54′

F FROM STA. 131+79.93 TO STA. 135+06.90, TRANSITION AT NO MORE THAN 1.00% OVER 5 FT.

* - REFER TO SUPER ELEVATION TABLE FOR CROSS SLOPES (SEE SHEET 54)

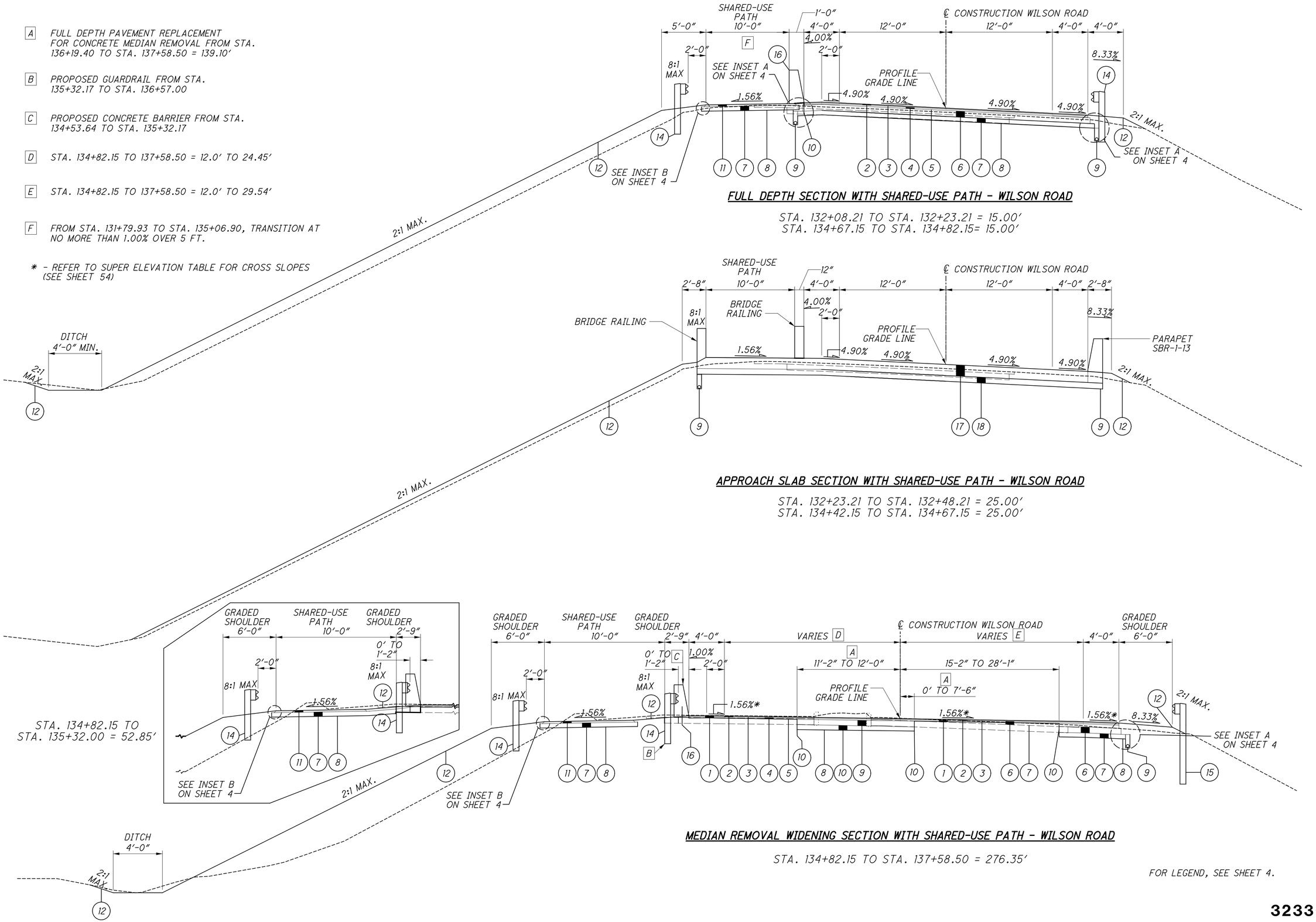

FOR LEGEND, SEE SHEET 4.

3233-E

CALCULATED CAG
CHECKED JDB

TYPICAL SECTIONS

WILSON ROAD

\\Columbus\SRVLN\DEV\Clients\OH_City_of_Columbus\073707_WILSON_RD\Design\Roadway\Sheets\073707_GY003.dgn 10/17/2016 3:35:44 PM keatingm

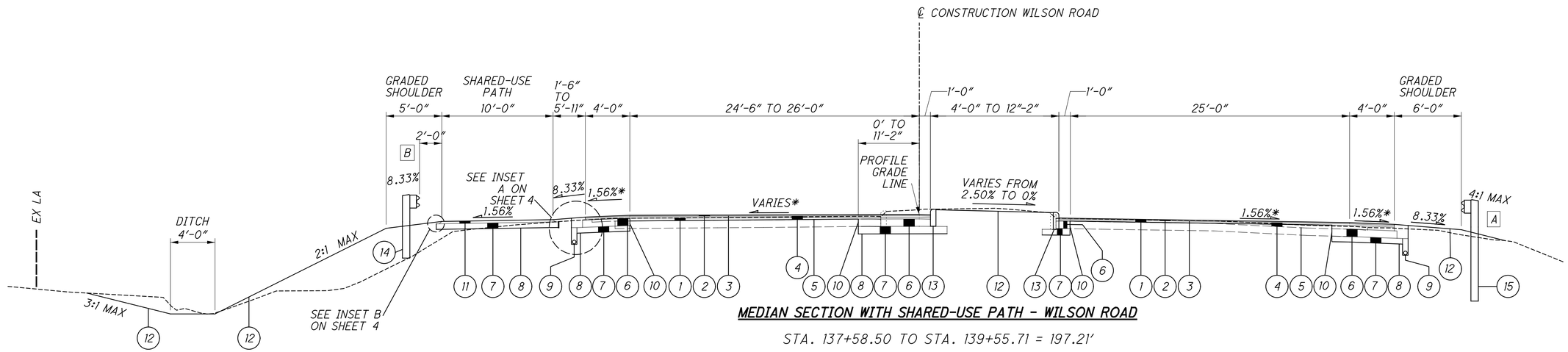

MEDIAN SECTION WITH SHARED-USE PATH - WILSON ROAD

STA. 137+58.50 TO STA. 139+55.71 = 197.21'

A - PROPOSED GUARDRAIL FROM STA. 134+82.86 TO STA. 138+81.83

B - PROPOSED GUARDRAIL FROM STA. 134+45.00 TO STA. 138+78.00

* - CHECK SUPER ELEVATION TABLE FOR CROSS SLOPES (SEE SHEET 54)

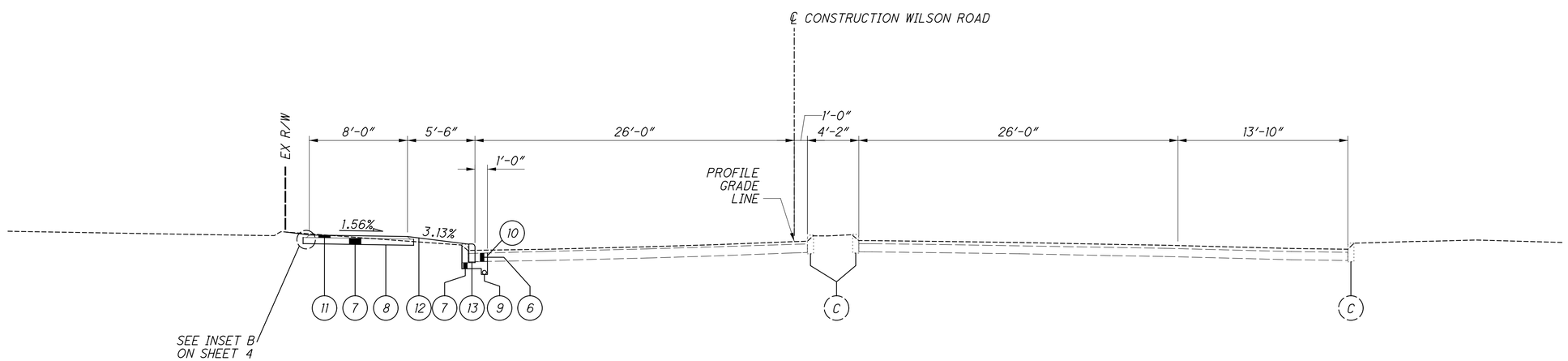

SHARED-USE PATH - WILSON ROAD

STA. 139+55.71 TO STA. 140+73.00 = 117.29'

FOR LEGEND, SEE SHEET 4.

CALCULATED CAG
CHECKED JDB

TYPICAL SECTIONS

WILSON ROAD

3233-E

7/97

\\Columbus\SRVLN\DE\Clients\OH_City_of_Columbus\073707_WILSON_RD\Design\Roadway\Sheets\073707_GY004.dgn 10/17/2016 3:35:45 PM keatingm

REFERENCE SPECIFICATIONS

THE CITY OF COLUMBUS CONSTRUCTION AND MATERIALS SPECIFICATIONS (CMSC), 2012 EDITION INCLUDING ALL REVISIONS AND SUPPLEMENTS THERETO, SHALL GOVERN ALL CONSTRUCTION ITEMS THAT ARE A PART OF THE PLANS UNLESS NOTED OTHERWISE.

THE FOLLOWING ITEMS SHALL BE CONSTRUCTED PER THE 2016 ODOT CONSTRUCTION AND MATERIALS SPECIFICATIONS INCLUDING ALL REVISIONS AND SUPPLEMENTS THERETO:

- ALL BRIDGE AND APPROACH SLABS RELATED ITEMS
- ALL GUARDRAIL RELATED ITEMS

PERMITS

WHEN EXCAVATING WITHIN COLUMBUS PUBLIC RIGHT OF WAY LIMITS, THE CONTRACTOR SHALL OBTAIN AN EXCAVATION PERMIT FROM CITY OF COLUMBUS, DEPARTMENT OF PUBLIC SERVICE- PERMIT OFFICE BETWEEN THE HOURS OF 7:30 AM AND 4:00 PM MONDAY THROUGH FRIDAY. PHONE (614) 645-7497; FAX: (614) 645-1876; EMAIL: COLSPERMITS@COLUMBUS.GOV

UTILITIES

THE IDENTITY AND LOCATION OF EXISTING UNDERGROUND UTILITIES LOCATED IN AND AROUND THE CONSTRUCTION AREA HAVE BEEN SHOWN AND LABELED ON THE PLANS BY USING INFORMATION PROVIDED BY THE RESPECTIVE UTILITY OWNERS. THE CITY OF COLUMBUS OR THE CONSULTING ENGINEER WILL NOT ASSUME RESPONSIBILITY FOR THE ACCURACY OF LOCATION OR DEPTH OF EXISTING UNDERGROUND UTILITIES AS SHOWN ON THE PLAN.

SUPPORT AND PROTECTION OF ALL UTILITIES AND APPURTENANCES SHALL BE THE RESPONSIBILITY OF THE CONTRACTOR. COSTS FOR THE REPAIR AND RESTORATION OF EXISTING UTILITIES DAMAGED BY THE CONTRACTOR SHALL BE THE RESPONSIBILITY OF THE CONTRACTOR. THE CITY OF COLUMBUS UTILITIES WILL ONLY LOCATE AND MARK MAIN LINE FACILITIES. THE CONTRACTOR IS RESPONSIBLE FOR LOCATING ALL SERVICE LATERAL AND LINES. COSTS ASSOCIATED WITH THE ABOVE WORK AND RESPONSIBILITIES SHALL BE INCLUDED IN THE PRICE BID FOR VARIOUS ITEMS.

PRIOR TO EXCAVATION, THE CONTRACTOR SHALL GIVE A 48-HOUR NOTICE TO THE OHIO UTILITIES PROTECTION SERVICE (OUPS) BY CALLING (800) 362-2764. A 48-HOUR NOTICE SHALL BE GIVEN TO THE OWNERS OF UNDERGROUND UTILITIES SHOWN ON THE PLANS WHO ARE NOT MEMBERS OF A REGISTERED UNDERGROUND PROTECTION SERVICE.

LISTED BELOW ARE UTILITY COMPANIES THAT HAVE FACILITIES LOCATED WITHIN THE WORK LIMITS OF THIS PROJECT AND SUBSCRIBE TO OUPS.

AT&T (TELECOM)
CONTACT: DWIGHT THOMASON
111 NORTH 4TH ST
COLUMBUS, OH 43215
TELEPHONE: 614-223-5316
AT&T REPAIR SERVICE: 888-611-4466
DAMAGE PREVENTION: 937-296-3929

COLUMBUS FIBERNET
CONTACT: BILL VERHOFF
1600 WALCUTT RD.
COLUMBUS, OH 43288
TELEPHONE: 614-223-4362

COLUMBIA GAS OF OHIO
CONTACT: MIKE SUCHARSKI
3350 JOHNNY APPLESEED CT.
COLUMBUS, OH 43231
TELEPHONE: 614-818-2104
CUSTOMER SERVICE: 800-344-4077
DAMAGE PREVENTION: 866-632-6243

CITY OF COLUMBUS - COTA
CONTACT: EMANUAL TILIAKOS
33 NORTH HIGH ST, 8TH FLOOR
WILLIAM J. LHOTA BUILDING
COLUMBUS, OH 43215
TELEPHONE: 614-308-4231

AEP COLUMBUS
SOUTHERN POWER
CONTACT: ROD SLONEKER
850 TECH CENTER DR.
GAHANNA, OH 43230
TELEPHONE: 614-883-6817
AEP SOLUTION CENTER: 800-277-2177

FIBERTECH NETWORKS
CONTACT: JON TARNOSKI
470-B SCHROCK RD.
COLUMBUS, OH 43229
TELEPHONE: 585-445-5813

CITY OF COLUMBUS
DIVISION OF POWER
CONTACT: CHRIS VOGEL
3500 INDIANOLA AVENUE
COLUMBUS, OH 43214
TELEPHONE: 614-645-6963

CITY OF COLUMBUS
DIVISION OF WATER
910 DUBLIN RD
COLUMBUS, OH 43215
TELEPHONE: 614-645-7788

CITY OF COLUMBUS
DEPARTMENT OF TECHNOLOGY
1355 McKINLEY AVENUE
BUILDING C
COLUMBUS, OH 43222
CONTR. LINE: 614-645-7756

CITY OF COLUMBUS
SUPPORT SERVICES DIVISION - COMMUNICATIONS
4211 GROVES ROAD
COLUMBUS, OH 43232
TELEPHONE: 614-724-7047
RADIO ROOM: 614-724-4006

TIME WARNER COMMUNICATIONS
CONTACT: RAY MAURER
3760 INTERCHANGE RD.
COLUMBUS, OH 43204
OFFICE: 614-481-5262

CITY OF COLUMBUS
TRAFFIC MGMT SECTION
CONTACT: MARK STEPHENHOFF
50 WEST GAY ST
COLUMBUS, OH 43215
TELEPHONE: 614-645-2684

CITY OF COLUMBUS
DIV. OF POWER - DIST.
CONTACT: ROBERT SCHNEIDER
3568 INDIANOLA AVE
COLUMBUS, OH 43214
TELEPHONE: 614-645-7534

CITY OF COLUMBUS
DIVISION OF SEWERAGE AND DRAINAGE
1250 FAIRWOOD AVE
COLUMBUS, OH 43206
FOR 24 HR EMERGENCY RESPONSE
TELEPHONE: 614-645-7102

CITY OF COLUMBUS
DEPT. OF PUBLIC SERVICE
TRAFFIC MAINTENANCE
1355 McKINLEY AVENUE
BUILDING C
COLUMBUS, OH 43222
CONTR. LINE: 614-645-7756

WOW! (TELECOM)
CONTACT: MARK FREY
3675 CORPORATE DR.
COLUMBUS, OH 43231
OFFICE: 614-948-4616
FAX: 614-645-5967

FRANKLIN COUNTY ENGINEER
CONTACT: STEPHEN RENNER
280 E. BROAD ST., STE. 201
COLUMBUS, OH 43215
TELEPHONE: 614-525-5850

VERIZON BUSINESS (MCI)
CONTACT: AL GUEST
120 RAVINE ST.
AKRON, OH 44303
TELEPHONE: 330-253-8267

AT&T LNS CORE
CONTACT: GREG BELEW
5980-G WILCOX PLACE
DUBLIN, OH 43016
TELEPHONE: 740-906-2685

ODOT D6 TRAFFIC
CONTACT: EDIE ADAMS
400 E. WILLIAM ST.
DELAWARE, OH 43015
OFFICE: 740-833-8172
FAX: 614-645-5967

NE OHIO NATURAL GAS CORP
CONTACT: MARK CALLAHAN
5640 LANCASTER-NEWARK RD.
PLEASANTVILLE, OH 43015
OFFICE: 740-833-8172
FAX: 614-645-5967

INLAND CORPORATION
CONTACT: HANK ALEXANDER
525 FRITZTOWN RD.
SINKING SPRING, PA 43148
OFFICE: 215-246-8568
FAX: 614-645-5967

EMERGENCY PROVISIONS

THE CONTRACTOR SHALL PROVIDE TO THE CITY OF COLUMBUS PROJECT REPRESENTATIVE A LIST OF 24 HOUR EMERGENCY TELEPHONE NUMBERS (IN WRITING) PRIOR TO THE START OF CONSTRUCTION.

SECURING EXCAVATIONS & TRENCHES FOR NON-WORKING HOURS

EXCAVATIONS AND TRENCHES OVER 24 INCHES DEEP SHALL BE SECURELY PLATED OR BACKFILLED DURING NON-WORKING HOURS.

BENCHING OF FOUNDATION SLOPES

ALTHOUGH CROSS-SECTIONS INDICATE SPECIFIC DIMENSIONS FOR PROPOSED BENCHING OF THE EMBANKMENT FOUNDATIONS IN CERTAIN AREAS, NO WAIVER OF THE SPECIFICATIONS IS INTENDED. BENCH ALL OTHER SLOPED EMBANKMENT AREAS AS SET FORTH IN 203.05. NO ADDITIONAL PAYMENT WILL BE MADE FOR BENCHING REQUIRED UNDER THE PROVISIONS OF 203.05.

MISCELLANEOUS WORK ITEMS

THE CONTRACTOR SHALL PERFORM ALL ITEMS OF WORK CALLED FOR ON THE PLANS, FOR WHICH NO SPECIFIC METHOD OF PAYMENT IS PROVIDED. THE COST OF THESE ITEMS SHALL BE INCLUDED IN THE VARIOUS UNIT PRICES BID FOR THE PROJECT IMPROVEMENT.

BENCHMARKS AND SURVEY MONUMENTS

DO NOT DISTURB ANY FRANKLIN COUNTY CERTIFIED BENCHMARKS (VERTICAL AND/OR HORIZONTAL) LOCATED WITHIN THE WORKING LIMITS OF THE PROJECT. CONTRACTOR SHALL CONTACT THE FRANKLIN COUNTY SURVEY DEPARTMENT (614)-462-3026, PRIOR TO CONSTRUCTION, TO COORDINATE THE PROPER PROCEDURES FOR THE RESETTING, RELOCATION, OR REPLACEMENT OF ANY FRANKLIN COUNTY CERTIFIED BENCHMARK OR SURVEY MONUMENT.

LEGEND

EXISTING CONDITIONS

EX. LIGHT POLE
EX. POWER POLE
EX. TELEPHONE POLE
EX. LIGHT/POWER POLE
EX. POWER/TELE. POLE
EX. LIGHT/POWER/TELE. POLE
EX. MANHOLE
EX. MANHOLE (ELECTRIC)
EX. PULLBOX (INTERSECTION)
EX. MANHOLE (SANITARY)
EX. MANHOLE (TELEPHONE)
EX. MANHOLE (WATER)
EX. PULLBOX (ELECTRIC)
EX. CATCH BASIN
EX. GAS METER
EX. GAS VALVE
EX. UTILITY VALVE (UNKNOWN)
EX. FIRE HYDRANT
EX. WATER VALVE
EX. TRAFFIC CONTROL BOX
EX. VAULT (TELECOM)
EX. FLOW ARROW

EX. BUSH
EX. BUSH TO BE REMOVED
EX. TREE
EX. TREE TO BE REMOVED
EX. SHRUBS
EX. STUMP
EX. POST
EX. EDGE OF PAVEMENT
EX. COMBINED STORM LINE — —CS— —
EX. FENCE LINE ——x——
EX. GAS LINE — — —G— -
EX. LIGHTING CIRCUIT LINE -----UG-----
EX. LIGHTING CONDUIT LINE ::::::::UG::::::::
EX. OH/UG ELECTRIC LINE — — — —E-
EX. OH/UG FIBER OPTICS LINE - —FO— —
EX. PROPERTY LINE
EX. RIGHT-OF-WAY —Ex R/W—
EX. LA EASEMENT —Ex LA—
EX. SANITARY LINE - —SAN— —
EX. STORM LINE -STM— — —
EX. TELEPHONE LINE — — — —T-
EX. WATER LINE — — — —W-

PROPOSED CONDITIONS

PROP. UNDERDRAIN
CONSTRUCTION LIMITS
PROP. FLOW ARROWS
PROP. CURB
PROP. EDGE OF PAVEMENT
PROP. EDGE OF SHOULDER
PROP. SIDEWALK
PROP. SHARED-USE PATH
PROP. STORM LINE PROP. STM
PROP. INLET

TEMP. CONST. EASEMENT TMP
PROP. RIGHT-OF-WAY R/W
PROP. GUARDRAIL
PROP. DETECTABLE WARNING
PROP. TRAFFIC PULLBOX TR
PROP. LIGHTING PULLBOX LT
PROP. DITCH
PROP. HEADWALL
PROP. UNDERDRAIN OUTLET
PROP. MANHOLE
PROP. CATCH BASIN

ABBREVIATIONS

RT.....	RIGHT
LT.....	LEFT
PR, PROP.....	PROPOSED
EX.....	EXISTING
1" GAS.....	1" GAS LINE
1" GS.....	1" GAS SERVICE
6" SAN.....	6" SANITARY SERVICE
12" SEWER.....	12" SEWER SERVICE
1" W.....	1" WATER SERVICE
CABLE.....	CABLE TELEVISION
FO.....	FIBER OPTICS
OH.....	OVERHEAD
UG.....	UNDERGROUND
(RTG).....	RECONSTRUCT TO GRADE
(TBA).....	TO BE ABANDONED (BY CONTRACTOR)
(TBR).....	TO BE REMOVED
BTA.....	BRIDGE TERMINAL ASSEMBLY
(TBRL).....	TO BE RELOCATED
(TBRP).....	TO BE REPLACED BY OTHERS (PRIVATE UTILITIES)
(ABAN).....	TO BE ABANDONED
(ABO).....	TO BE ABANDONED BY OTHERS (PRIVATE UTILITIES)
(ATG).....	ADJUST TO GRADE
(ATGO).....	ADJUST TO GRADE BY OWNER
(DND).....	DO NOT DISTURB
(ENC).....	ENCROACHMENT TO REMAIN UNLESS OTHERWISE DIRECTED BY THE ENGINEER-IN-CHARGE
(ENC-TBR).....	ENCROACHMENT TO BE REMOVED BY THIS PROJECT
(PA).....	PREVIOUSLY ABANDONED
GUARDRAIL MGS	MIDWEST GUARDRAIL SYSTEM
AA.....	ANCHOR ASSEMBLY

CALCULATED CAG
CHECKED JDB

GENERAL NOTES/LEGEND

WILSON ROAD

3233-E

\\Columbus\SRVLN\DE\Clients\OH_City_of_Columbus\073707_WILSON_RD\Design\Roadway\Sheets\073707_GN001.dgn 10/17/2016 3:35:46 PM keatingm

CONSTRUCTION LIMITS

THE CONSTRUCTION LIMITS SHOWN ON THESE PLANS ARE FOR PHYSICAL CONSTRUCTION ONLY. THE INSTALLATION AND OPERATION OF ALL TEMPORARY TRAFFIC CONTROL DEVICES R EQUIRED BY THESE PLANS SHALL BE PROVIDED BY THE CONTRACTOR WHETHER INSIDE OR OUTSIDE OF THESE CONSTRUCTION LIMITS.

SAW CUTTING IS INCLUDED

THE COST OF SAW CUTTING FOR THE REMOVAL OF PAVEMENT, CURB, WALKS, ETC. SHALL BE INCLUDED IN THE CONTRACT PRICE FOR ITEM 202 WORK ITEMS. SAW CUTTING IS REQUIRED TO PROVIDE SMOOTH STRAIGHT EDGES FOR REMOVAL PURPOSES.

PAVEMENT CUTTING, SAWING AND EXCAVATION OPERATIONS NOTE:

ALL PUBLIC AGENCIES AND PRIVATE CONTRACTORS PERFORMING PAVEMENT-CUTTING OPERATIONS ON CITY OF COLUMBUS STREETS AND ROADWAYS SHALL PROTECT THE ENVIRONMENT FROM DISCHARGES CREATED BY THEIR PAVEMENT CUTTING OPERATIONS. NOTE THAT COLUMBUS CITY CODE 1145 PROHIBITS NON-STORMWATER DISCHARGE INTO THE CITY OF COLUMBUS SEWER SYSTEM, CURB INLETS AND ANY PART OF ITS MS4 (MUNICIPAL SEPARATE STORM SEWER SYSTEM).

THE REQUIREMENT INCLUDES BUT IS NOT LIMITED TO WET OR DRY SAW-CUTTING, JACK HAMMERING, EXCAVATION EQUIPMENT USE, ETC. THE PUBLIC AGENCY AND/OR PRIVATE CONTRACTOR WORK CREWS SHALL RECOVER AND DISPOSE OF DETRITUS, POLLUTED WATERS, OR OTHER SUCH DISCHARGES RESULTING FROM THEIR PAVEMENT CUTTING OPERATIONS AND PROTECT ALL STORM SEWER INLETS FROM RECEIVING ANY DISCHARGES FROM THE CONSTRUCTION OPERATIONS. THE AGENCY OR CONTRACTOR RESPONSIBLE FOR EACH PAVEMENT CUTTING ACTIVITY SHALL BE LIABLE FOR NOTICE OF VIOLATIONS (NOV/S) AND FINES ISSUED BY CITY OF COLUMBUS AND/OR STATE OF OHIO AUTHORITIES.

EQUIPMENT, MATERIALS AND METHODS SHALL BE PROVIDED BY THE RESPONSIBLE PUBLIC AGENCY AND/OR PRIVATE CONTRACTOR TO WORK CREWS PERFORMING THE PAVEMENT CUTTING ACTIVITY AND MADE AVAILABLE TO WORK CREWS FOR USE IN CLEANING UP DISCHARGES RESULTING FROM SUCH CUTTING ACTIVITIES AND PREVENTING RUNOFF. ALL WORK CREWS SHALL BE TRAINED TO EXERCISE AND EMPLOY EQUIPMENT, MATERIALS, AND ENVIRONMENTAL PROTECTIVE MEASURES TO PREVENT POLLUTED DISCHARGES FROM ENTERING THE CITY OF COLUMBUS STORM SEWER SYSTEM AND WATER OF THE STATE OF OHIO.

THE PUBLIC AGENCY AND/OR PRIVATE CONTRACTOR IS SOLELY RESPONSIBLE FOR ENSURING THAT THE INLET PROTECTION IS ADEQUATE. THE MOST STRINGENT PROJECT PLANS, NOTES AND/OR DRAWINGS INCLUDING STORMWATER POLLUTION PREVENTION PLAN (SWP3) OR SPILL PREVENTION/REMEDIATION PLAN SHALL APPLY TO ALL PAVEMENT CUTTING, SAWING OR EXCAVATION OPERATIONS. FOR STORMWATER POLLUTION PREVENTION PLANS, SEE SHEET 22-24.

CONTINGENCY QUANTITIES

THE CONTRACTOR SHALL NOT ORDER MATERIALS OR PERFORM WORK SHOWN, LABELED, OR LISTED AS 'CONTINGENCY' OR REFERENCED BY PLAN NOTE TO BE USED 'AS DIRECTED BY THE ENGINEER,' UNLESS AUTHORIZED BY THE ENGINEER, OR A REPRESENTATIVE OF THE CITY OF COLUMBUS, DIVISION OF DESIGN AND CONSTRUCTION. SEE SIDE NOTE.

CONCRETE WALKS

ALL EXISTING CONCRETE SIDEWALKS BEING REPLACED WITH NEW CONCRETE SIDEWALKS SHALL BE REMOVED AT AN EXISTING JOINT AND REPLACED PER STANDARD DRAWING 2300. INSTALL EXPANSION JOINT WHERE NEW CONCRETE ADJOINS EXISTING SIDEWALK.

ALL EXISTING CONCRETE SIDEWALKS NOT SCHEDULES FOR REPLACEMENT BUT BEING CROSSED BY THE INSTALLATION OF TRAFFIC ITEMS, ELECTRICAL CONDUIT, PIPING, ETC. SHALL BE FULLY REMOVED AT AN EXISTING JOINT AND REPLACED PER STANDARD DRAWING 2300 UNLESS NOTED OTHERWISE.

PAYMENT SHALL BE INCLUDED IN THE PRICE BID FOR ITEM 608 - CONCRETE WALK.

DIVISION OF POWER NOTES

THE DIVISION OF POWER (DOP) MAY HAVE UNDERGROUND OR OVERHEAD STREET LIGHTING IN THE PROJECT AREA. THE CONTRACTOR IS HEREBY REQUIRED TO CONTACT OUPS AT 1-800-362-2764 FORTY-EIGHT HOURS PRIOR TO CONDUCTING ANY ACTIVITY WITHIN THE CONSTRUCTION AREA. THE DOP DISPATCH OFFICE NUMBER IS: (614) 645-7627 (VOICE).

ANY REQUIRED RELOCATION, SUPPORT, PROTECTION, OR ANY OTHER ACTIVITY CONCERNED WITH THE CITY'S ELECTRICAL FACILITIES IN THE CONSTRUCTION AREA IS TO BE PERFORMED BY THE CONTRACTOR UNDER THE DIRECTION OF DOP PERSONNEL AND AT THE EXPENSE OF THE PROJECT. DOP SHALL MAKE ALL FINAL CONNECTIONS TO DOP'S EXISTING ELECTRICAL SYSTEM AT THE EXPENSE OF THE PROJECT. THE CONTRACTOR SHALL USE MATERIAL AND MAKE REPAIRS TO A CITY OF COLUMBUS STREET LIGHTING SYSTEM BY FOLLOWING DOP'S "MATERIAL AND INSTALLATION SPECIFICATIONS" (MIS) AND THE CITY OF COLUMBUS "CONSTRUCTION AND MATERIAL SPECIFICATIONS - CITY OF COLUMBUS" (CMSC). ANY NEW OR RE-INSTALLED UNDERGROUND STREETLIGHT SYSTEM SHALL REQUIRE TESTING AS REFERRED TO IN SECTION 1000.18 OF THE CMSC MANUAL. THE CONTRACTOR SHALL CONFORM TO DOP'S EXISTING CONDUCTOR SAFETY POLICY AND HOLD CARD SYSTEM, MIS-95, COPIES OF WHICH ARE AVAILABLE FROM DOP. IF YOU HAVE ANY QUESTIONS, CALL SCOTT WOLFE AT (614) 724-4351 OR CHRIS VOGEL AT (614) 645-6963.

IF ANY ELECTRIC FACILITY BELONGING TO DOP IS DAMAGED IN ANY MANNER BY THE CONTRACTOR, ITS AGENTS, SERVANTS, OR EMPLOYEES, AND REQUIRES EMERGENCY REPAIRS, DOP SHALL MAKE ALL NECESSARY REPAIRS, AND THE EXPENSE OF SUCH REPAIRS AND OTHER RELATED COSTS SHALL BE PAID BY THE CONTRACTOR TO THE DIVISION OF POWER, CITY OF COLUMBUS, OHIO.

DIVISION OF WATER NOTES

FOR ANY EMERGENCIES INVOLVING THE WATER DISTRIBUTION SYSTEM, PLEASE CONTACT THE DIVISION OF WATER DISTRIBUTION MAINTENANCE OFFICE AT 614-645-7788.

WHEN CONTROLLED DENSITY FILL (ITEM 613) IS TO BE USED AS BACKFILL, THE CONTRACTOR SHALL PROVIDE SIZE NO. 57 CRUSHED CARBONATE STONE (CCS) 1 FOOT BELOW TO 1 FOOT ABOVE THE EXISTING WATER LINE.

THE CONTRACTOR SHALL OBTAIN THE PROPER HYDRANT PERMIT(S), AND PAY ANY APPLICABLE FEES, FOR ANY APPROVED HYDRANT USAGE DEEMED NECESSARY FOR WORK UNDER THIS IMPROVEMENT. PERMITS MAY BE OBTAINED THROUGH THE DIVISION OF WATER PERMIT OFFICE (645-7330). THE CONTRACTOR SHALL ADHERE TO ALL RULES & REGULATIONS GOVERNING SAID PERMIT AND MUST HAVE THE ORIGINAL PERMIT ON SITE ANYTIME IN WHICH THE HYDRANT IS IN USE. COST TO BE INCLUDED IN THE VARIOUS BID ITEMS.

ALL WATER LINE VALVE BOXES, SERVICE BOXES, TEST STATIONS, PITOMETER TAP STRUCTURES, METER PIT COVERS, AND OTHER SURFACE UTILITY STRUCTURES WITHIN THE DISTURBED AREA SHALL BE ADJUSTED TO GRADE. ANY OF THESE STRUCTURES LOCATED WITHIN PAVEMENT, DRIVEWAYS, OR OTHER TRAVELED AREAS, WHETHER EXISTING OR PROPOSED, SHALL BE EQUIPPED WITH A TRAFFIC RATED, HEAVY DUTY VALVE BOX AND/OR COVER IN ACCORDANCE WITH THE STANDARD DRAWINGS. EXISTING WATER SERVICE BOXES TO REMAIN THAT ARE ENCOUNTERED WITHIN THE PROJECT LIMITS SHALL BE CLEANED OUT, CENTERED OVER THE CURB STOP, AND ADJUSTED TO THE PROPOSED GRADE.

WHERE NEW CONDUIT IS PROPOSED TO CROSS AN EXISTING OR PROPOSED WATER MAIN OR WATER SERVICE, A MINIMUM OF 12-INCHES OF VERTICAL CLEARANCE SHALL BE MAINTAINED BETWEEN THE CONDUIT AND THE WATER MAIN OR SERVICE. A MINIMUM OF 3 FEET HORIZONTAL CLEARANCE (OUT TO OUT) IS REQUIRED AT LOCATIONS WHERE THE CONDUIT IS PARALLEL TO THE WATER MAIN AND AT LOCATIONS OF WATER LINE THRUST BLOCKS.

A MINIMUM OF 3 FEET HORIZONTAL CLEARANCE (OUT TO OUT) SHALL BE MAINTAINED BETWEEN ALL EXISTING WATER MAINS AND FOUNDATIONS FOR POLES, PULL BOXES, PUSH BUTTON PEDESTALS, AND ANY OTHER MISCELLANEOUS ELECTRICAL STRUCTURE.

TRAFFIC SIGNALS

ITEM 625 - PULL BOX, 32", AS PER PLAN

IN ADDITION TO THE REQUIREMENTS OF 625.11, 725.08, AND SCD 4022, ALL PULL BOXES SHALL HAVE "TRAFFIC" EMBOSSED ON THE LID. SEPARATE OR BONDED TAGS WILL NOT BE PERMITTED. DRAINS SHALL BE INSTALLED AS PER SCD 4020 BUT MAY BE NON-PERFORMED UPON THE DIRECTION OF THE ENGINEER. FRAMES AND LIDS SHALL BE NEENAH R-1792-HL. THE FRAME SHALL BE 5900-0013 AND THE LID SHALL BE 5900-5004.THE PULL BOXES SHALL BE OF PRE-CAST CONSTRUCTION. IN HIGH TRAFFIC AREAS, WORK AND RESTORATION SHALL BE PLANNED TO MINIMIZE ROADWAY/SIDEWALK CLOSURE DURATION AND EXPEDITE STEEL PLATE REMOVAL.

ONE COAT OF HYDROZO ENVIROSEAL 40, RAINSTOPPER 140, OR CHEMTRETE BSM40 SHALL BE APPLIED TO THE INSIDE AND OUTSIDE OF THE PULL BOX. THE LID SHALL HAVE A LIP FOR LIFTING. ALL CONDUITS THAT CONNECT A PULL BOX DIRECTLY TO ANY EQUIPMENT CABINET SHALL BE SEALED USING LAYERS OF ALTERNATING STEEL WOOL AND DUCT SEAL AT BOTH ENDS, WITHIN THE PULLBOX AND THE CABINET. ANY SLACK OR EXCESS CABLE TO BE COILED IN THE PULL BOX SHALL BE PLACED AROUND THE INSIDE BOX PERIMETER. ALL COILED CABLES SHALL BE TIE WRAPPED AND CLEARLY IDENTIFIED WITHIN THE PULL BOX. THE WORK AS DESCRIBED WILL BE MEASURED AS THE NUMBER OF PULL BOXES FURNISHED AND INSTALLED, COMPLETE IN PLACE.

ITEM 632 DETECTOR LOOP, AS PER PLAN

ALL WIRES SHALL BE SOLDERED AT ALL LOOP WIRE SPLICES AND AT ALL LEAD-IN CABLE TERMINAL CONNECTORS. LOOP WIRE SHALL MEET IMSA 51-5 SPECIFICATIONS AND THE ENCASING TUBE SHALL BE POLYETHYLENE. THE LOOP SEALANT USED SHALL BE 3M DETECTOR LOOP SEALANT 5000 OR 3M BONDO P-606 FLEXIBLE LOOP SEALER. THE CONTRACTOR SHALL TAKE CARE IN THE PLACEMENT OF LOOP SEALANT TO ENSURE THAT ALL SEALANT IS PLACED IN THE SAW SLOT.

CONTINGENCY ITEMS

IN ADDITION TO THE AREAS NOTED IN THE PLANS FOR ITEM 259 - PERMANENT PAVEMENT, TYPE I, AS PER PLAN THE FOLLOWING IS CARRIED TO THE GENERAL SUMMARY AS A CONTINGENCY ITEM FOR THE REPAIR OF THE EXISTING CONCRETE BASE AS DIRECTED BY THE ENGINEER.

ITEM 259 - PERMANENT PAVEMENT REPLACEMENT, TYPE I, AS PER PLAN 3071 SY

RECREATION & PARKS

FILTER FABRIC NOTE

CONTACT TINA MOHN AT TMMOHN@COLUMBUS.GOV AND DON EVANS AT DEEVANS@COLUMBUS.GOV NO LESS THAN 48 HOURS PRIOR TO WORK COMMENCING WHERE WORK IS TO BE PERFORMED ON PARK PROPERTY.

ITEM 259 - PERMANENT PAVEMENT REPLACEMENT, TYPE 1, AS PER PLAN

ALL MATERIAL LAID OUT IN ITEM 259 - PERMANENT PAVEMENT REPLACEMENT SHALL APPLY WITH THE EXCEPTION OF 259.03, WHERE 7" OF ITEM 305 - PORTLAND CEMENT CONCRETE BASE, IS TO BE REPLACED WITH 8" OF ITEM 305 - PORTLAND CEMENT CONCRETE BASE.

ODOT PERMIT

ODOT OWNS BROAD STREET AND THE TRAFFIC SIGNAL AT BROAD STREET AND WILSON ROAD. THE CONTRACTOR SHALL MAKE APPLICATION TO ODOT DISTRICT 6 FOR A PERMIT TO WORK WITHIN THEIR RIGHT OF WAY. THE PERMIT CAN BE FOUND AT HTTP://WWW.DOT.STATE.OH.US/DISTRICTS/D06/PERMITS/DOCUMENTS/MR505.PDF

CALCULATED NRH CHECKED NGF

GENERAL NOTES

WILSON ROAD

\\Columbus\SRVLN\DEV\Clients\OH_City_of_Columbus\073707_WILSON_RD\Design\Roadway\Sheets\073707_GN002.dgn 10/17/2016 3:35:47 PM keatingrn

ITEM 614, MAINTAINING TRAFFIC

THE REPLACEMENT OF FRA-CR 25-0063 BRIDGE OVER CAMP CHASE INDUSTRIAL RAILROAD WILL REQUIRE THE TOTAL CLOSURE OF WILSON ROAD. TRAFFIC WILL BE MAINTAINED BY THE USE OF A SIGNED DETOUR ROUTE. TRAFFIC FOR WILSON ROAD NORTH WILL BE DETOURED FROM SULLIVANT AVENUE WEST TO GEORGESVILLE ROAD NORTH TO BROAD STREET EAST. TRAFFIC FOR WILSON ROAD SOUTH WILL BE DETOURED FROM BROAD STREET WEST TO GEORGESVILLE ROAD SOUTH TO SULLIVANT AVENUE EAST.

ACCESS TO THE "HILLTOP SENIOR VILLAGE" ON WILSON PARK WAY (WEST SIDE OF WILSON ROAD) AND TO "ASHTON PINES TOWNHOMES" ON FREEMONT STREET (EAST SIDE OF WILSON ROAD) SHALL BE MAINTAINED AT ALL TIMES. ACCESS SHALL BE PROVIDED VIA THE EXISTING AND PROPOSED PAVEMENT. IF EXISTING AREA BEYOND THE CONSTRUCTION LIMITS ARE DAMAGED OR DESTROYED DUE TO CONTRACTOR'S NEGLIGENCE OR FAILURE TO PROVIDE ADEQUATE SIGNS, DRUMS OR OTHER TRAFFIC CONTROL DEVICES, THE RESTORATION OF AFFECTED AREAS WILL BE AT CONTRACTOR'S EXPENSE.

ALL TEMPORARY TRAFFIC CONTROL (TTC) DEVICES SHALL BE FURNISHED, ERECTED, MAINTAINED AND REMOVED BY THE CONTRACTOR IN ACCORDANCE WITH THE OHIO MANUAL OF UNIFORM TRAFFIC CONTROL DEVICES FOR STREETS AND HIGHWAYS (OMUTCD), (CURRENT EDITION). COPIES ARE AVAILABLE FROM THE OHIO DEPARTMENT OF TRANSPORTATION, OFFICE OF CONTRACTS, 1980 WEST BROAD STREET, COLUMBUS, OHIO, 43216. NOTE: ALL DEVICES SHALL COMPLY, FOR CONDITION AND LOCATION, WITH THE CURRENT EDITION OF THE NCHRP 350 CRASH TESTING GUIDELINES. PAYMENT FOR ALL LABOR, EQUIPMENT AND MATERIALS SHALL BE INCLUDED IN THE LUMP SUM CONTRACT PRICE FOR ITEM 614, MAINTAINING TRAFFIC, UNLESS SEPARATELY ITEMIZED IN THE PLAN.

CONSTRUCTION OPERATIONS SHALL NOT BEGIN UNTIL ALL TRAFFIC CONTROL IS IN PLACE AND APPROVED BY THE DEPARTMENT OF PUBLIC SERVICE INSPECTOR. IF THE CONTRACTOR DOES NOT COMPLY WITH THE STANDARDS, INCLUDING THE INSTALLATION OF TEMPORARY PAVEMENT MARKINGS AND THE REMOVAL OF CONFLICTING TRAFFIC CONTROLS, THEIR PERMIT SHALL BE REVOKED AND ALL WORK SHALL BE TERMINATED. TEMPORARY PAVEMENT MARKINGS TO INCLUDE, BUT NOT LIMITED TO, CHANNELIZING LINES, EDGE LINES, AND CENTERLINES SHALL BE INSTALLED AND MAINTAINED ON ALL CONSTRUCTION OPERATIONS LASTING A MINIMUM OF 14 CALENDAR DAYS OR AS DIRECTED BY THE TEMPORARY TRAFFIC CONTROL COORDINATOR OR THE PROJECT ENGINEER.

THE CONTRACTOR SHALL GIVE ADVANCE NOTIFICATION (WRITTEN AND VERBALLY) TO THE TEMPORARY TRAFFIC CONTROL COORDINATOR AT 645-6269 OR 645 5845, THE COLUMBUS PAVING THE WAY PROGRAM COORDINATOR AT 645-7283 OR 645 6016, OR pavingtheway@columbus.gov, AND THE PROJECT ENGINEER, INFORMING THEM OF ALL UPCOMING MAINTENANCE OF TRAFFIC CHANGES ON A WEEKLY BASIS. NOTIFICATION SHALL INCLUDE, BUT NOT LIMITED TO, WHAT, WHERE, WHEN, AND HOW PEDESTRIAN AND VEHICULAR TRAFFIC WILL BE AFFECTED, AND THE TEMPORARY TRAFFIC CONTROL PROCEDURES THE CONTRACTOR IS PLANNING TO USE. THE TYPE OF TRAFFIC CHANGES SHALL DETERMINE THE LENGTH OF ADVANCE NOTIFICATION REQUIRED:

ITEM 614, MAINTAINING TRAFFIC (CONTINUED)

TYPE OF CHANGE	ADVANCE NOTIFICATION NEEDED
DETOURS / ROAD CLOSURES	30-DAY NOTIFICATION PRIOR TO CLOSURE
LANE CLOSURE LASTING TWO WEEKS OR MORE	2-WEEKS
LANE CLOSURES LESS THAN TWO WEEKS	3-DAYS
LANE CLOSURE OF TWO DAYS OR LESS	1-DAY

THE COLUMBUS PAVING THE WAY PROGRAM COORDINATOR SHALL BE SUPPLIED COPIES OF ALL NOTIFICATION LETTERS SENT TO AREA BUSINESSES AND RESIDENTS.

THE COTA SENIOR SERVICE PLANNER SHALL BE CONTACTED 30 DAYS PRIOR TO ANY PLANNED CLOSURE ON ASSIGNED COTA ROUTES. ANY OTHER UNFORSEEN IMPACTS TO TRAFFIC SHALL BE IMMEDIATELY REPORTED AS THEY OCCUR.

ACCESS FOR PEDESTRIAN AND VEHICULAR TRAFFIC TO ALL ADJOINING PROPERTIES SHALL BE MAINTAINED AT ALL TIMES.

THE CONTRACTOR SHALL BE RESPONSIBLE FOR THE PROTECTION AND SAFE MOVEMENT OF PEDESTRIANS THROUGH, AROUND, OR DETOURED AWAY FROM THE CONSTRUCTION SITE. TRAFFIC CONTROL FOR PEDESTRIAN MOVEMENT SHALL BE AS PER FIGURES 6H-28 (TA-28) AND 6H-29 (TA-29) OF PART VI OF THE OMUTCD. ALL SIDEWALK DIVERSIONS SHALL BE PRE-APPROVED BY THE PROJECT ENGINEER OR THE TEMPORARY TRAFFIC CONTROL COORDINATOR.

ANY WORK DONE BY THE DEPARTMENT OF PUBLIC SERVICE, INCLUDING INSTALLATION, RELOCATION, REMOVAL AND/OR REPLACEMENT OF TEMPORARY TRAFFIC CONTROL DEVICES AS A RESULT IF WORK DONE BY THE CONTRACTOR OR AS A RESULT OF NEGLIGENCE OF THE CONTRACTOR, SHALL BE AT THE CONTRACTOR'S EXPENSE.

THE ROADWAY SHALL NOT BE OPENED TO NON-CONSTRUCTION TRAFFIC UNTIL THE CRITICAL PERMANENT TRAFFIC CONTROL ARE IN PLACE OR UNTIL TEMPORARY TRAFFIC CONTROLS APPROVED BY THE ENGINEER, ARE INSTALLED. THE CRITICAL PERMANENT TRAFFIC CONTROL ARE STOP, YIELD, ONE-WAY, DON NOT ENTER, AND RESTRICTED TURN SIGNS. THE CONTRACTOR ASSUMES ALL LIABILITY FOR THE PREMATURE REMOVAL OF TEMPORARY TRAFFIC CONTROLS.

ALL COSTS THAT CONSIST OF MAINTAINING AND PROTECTING VEHICULAR AND PEDESTRIAN TRAFFIC ACCORDING TO THE LATEST EDITION OF THE CITY OF COLUMBUS CONSTRUCTION AND MATERIAL SPECIFICATIONS, THE OHIO MANUAL OF UNIFORM TRAFFIC CONTROL DEVICES FOR STREETS AND HIGHWAYS (OMUTCD), AND PER THE REQUIREMENTS DESIGNATED IN THE PLAN INCLUDING ALL LAW ENFORCEMENT OFFICER (LEO) AND FLAGGER HOURS SHALL BE INCLUDED IN THE LUMP SUM ITEM 614.

IN ADDITION TO THE REQUIREMENTS HEREIN, AND THE LATEST EDITION OF THE OHIO MANUAL OF UNIFORM TRAFFIC CONTROL DEVICES, A UNIFORMED LAW ENFORCEMENT OFFICER SHALL BE PROVIDED FOR CONTROLLING TRAFFIC UNDER THE FOLLOWING CONDITIONS:

- WORK WITHIN A SIGNALIZED INTERSECTION, DEFINED AS THE AREA BOUNDED BY THE REAR X-WALK LINES

- WHEN FLAGGING WITH THE INTERSECTION OF TWO ARTERIAL ROADWAYS

- WHEN SPECIFIED IN THE MAINTENANCE OF TRAFFIC PLAN OR AS DIRECTED BY THE ENGINEER

ITEM 614, MAINTAINING TRAFFIC (CONTINUED)

A FLAGGER SHALL BE UTILIZED TO ASSIST IN CONTROLLING TRAFFIC WHILE EQUIPMENT IS ENTERING OR EXITING AN INTERSECTION OR WORK ZONE. THE CONTRACTOR MAY UTILIZE HIS OWN OR LEO UNDER PAY ITEM 614 MAINTAINING TRAFFIC, LUMP SUM.

FLAGGER'S AND LEO'S SHALL BE EQUIPPED ACCORDING TO THE STANDARDS FOR FLAGGING TRAFFIC CONTAINED IN THE OMUTCD. FLAGGING OPERATIONS PERFORMED BY LEO'S OR DESIGNATED FLAGGERS SHALL ONLY BE PERMITTED AS LONG AS ALL TRAFFIC CONTROL IS IN PLACE ACCORDING TO FIGURE 6H-10 (TA-10) IN THE OHIO MANUAL. PATROL CARS SHALL NOT BE USED IN FLAGGING OPERATIONS.

IF THE CONTRACTOR WISHES TO UTILIZE LEO'S FOR TRAFFIC CONTROL OTHER THAN FOR THE REQUIRED IN THE PLANS, THEY DO SO AT THEIR OWN EXPENSE. THE CONTRACTOR SHALL MAKE ARRANGEMENT THROUGH THE COLUMBUS POLICE DIVISION AT (614) 645-4795.

LEO'S SHALL BE CONSIDERED TO BE EMPLOYED BY THE CONTRACTOR AND THE CONTRACTOR SHALL BE RESPONSIBLE FOR THEIR ACTIONS. ALTHOUGH EMPLOYED BY THE CONTRACTOR, THE CITY REPRESENTATIVE SHALL HAVE CONTROL OVER THEIR PLACEMENT. LEO'S SHALL NOT HAVE THE AUTHORITY TO CHANGE, EDIT, OR MODIFY ANY MAINTENANCE OF TRAFFIC SCHEME WITHOUT THE PERMISSION OF THE TEMPORARY TRAFFIC CONTROL COORDINATOR OR PROJECT ENGINEER UNLESS AN EMERGENCY DEVELOPS.

IF A SAFETY HAZARD DEVELOPS, A LEO MAY BE ASSIGNED BY THE COLUMBUS SAFETY AND SERVICES DIRECTOR AT THE CONTRACTOR'S EXPENSE.

THE CONTRACTOR SHALL BE RESPONSIBLE FOR REINSTALLATION AND/OR REPLACEMENT OF ALL PERMANENT TRAFFIC CONTROL DEVICES DAMAGED OR REMOVED DURING CONSTRUCTION. PERMANENT TRAFFIC CONTROL NO LONGER IN CONFLICT WITH TEMPORARY TRAFFIC CONTROL SHALL BE REPLACED IMMEDIATELY.

THE CONTRACTOR SHALL REPLACE ALL PAVEMENT MARKINGS, INCLUDING RAISED PAVEMENT MARKERS SHOWN IN CONFLICT, REMOVED DUE TO CONSTRUCTION OR MAINTENANCE OF TRAFFIC SET UP, DESTROYED, OR RENDERED UNSERVICEABLE BY THE PROJECT ENGINEER OR THE PUBLIC SERVICE PAVEMENT MARKING MANAGER. ALL PAVEMENT MARKING MATERIALS SHALL BE REPLACED IN-LIKE KIND IF NOT SHOWN IN THE PLAN OR PERMIT INCLUDING RAISED PAVEMENT MARKERS. ALL PAVEMENT MARKINGS SHALL BE REPLACED WITHOUT REMOVING THE ENTIRE MARKING BY USE OF WATER BLAST METHOD. REMOVAL BY ABRASIVE WHEEL GRINDING SHALL ONLY BE APPROVED BY PUBLIC SERVICE PAVEMENT MARKING MANAGER.

NOTICE OF CLOSURE SIGNS, AS DETAILED IN THESE PLANS, SHALL BE ERECTED BY THE CONTRACTOR AT LEAST ONE WEEK IN ADVANCE OF THE SCHEDULED ROAD CLOSURE. THE SIGNS SHALL BE ERECTED ON THE RIGHT-HAND SIDE OF THE ROAD FACING TRAFFIC. THEY SHALL BE PLACED SO AS NOT TO INTERFERE WITH THE VISIBILITY OF ANY OTHER TRAFFIC CONTROL SIGNS. ON ROADWAYS, THEY SHOULD BE ERECTED AT THE POINT OF CLOSURE.

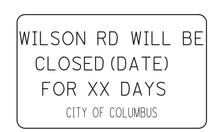

W20-H14-60

CALCULATED JEP CHECKED

MAINTENANCE OF TRAFFIC GENERAL NOTES

WILSON ROAD

3233-E

10/97

Q:\Transportation\Projects\Local\City of Columbus\Wilson Road Bridge Rehab\12345\roadway\sheets\073707_MN001.dgn 10/17/2016 12:21:41 PM JPerchinske

ITEM 614, MAINTAINING TRAFFIC (CONTINUED)

THE CONTRACTOR SHALL PROVIDE, ERECT AND MAINTAIN STANDARD 48 X 30 INCH ROAD CLOSED SIGNS, SIGN SUPPORTS, BARRICADES AND LIGHTS, AS DETAILED IN SCD MT-101.60 AT THE FOLLOWING LOCATIONS DURING PERIODS IN WHICH THE AFFECTED ROADS ARE CLOSED TO TRAFFIC.

AT THE INTERSECTION ON THE NORTH SIDE OF WILSON ROAD AND SULLIVANT AVENUE
AT THE INTERSECTION ON THE SOUTH SIDE OF WILSON ROAD AND BROAD STREET

THE CONTRACTOR SHALL PROVIDE, ERECT AND MAINTAIN SIGNS AND SIGN SUPPORTS, AS DETAILED IN THE OHIO MANUAL OF UNIFORM TRAFFIC CONTROL DEVICES, AND TYPE III BARRICADES OF THE TYPE AND LOCATION AS FOLLOWS:

AT THE INTERSECTION ON THE NORTH SIDE OF WILSON ROAD AND SULLIVANT AVENUE
AT THE INTERSECTION ON THE SOUTH SIDE OF WILSON ROAD AND BROAD STREET

ITEM 614, LAW ENFORCEMENT OFFICER (LEO) WITH PATROL CAR, AS PER PLAN

IN ADDITION TO THE LEO AND FLAGGER HOURS INCLUDED IN ITEM 614 MAINTAINING TRAFFIC, LUMP SUM; THE FOLLOWING QUANTITIES HAVE BEEN CARRIED OVER TO THE GENERAL SUMMARY TO BE USED AS DIRECTED BY THE ENGINEER OR AN ACCEPTABLE REPRESENTATIVE OF THE CITY OF COLUMBUS. THE OFFICAL PATROL CAR WITH WORKING TOP MOUNTED EMERGENCY FLASHING LIGHTS SHALL BE A PUBLIC SAFETY VEHICLE AS REQUIRED BY THE OHIO REVISED CODE. THE CONTRACTOR SHALL BE PAID FOR THIS BID ITEM ONLY IF DIRECTED BY THE ENGINEER.

ITEM 614, LAW ENFORCEMENT OFFICER WITH PATROL CAR, AS PER PLAN — 50 HOURS

CITY OF COLUMBUS PHASING, LANE AND WORK RESTRICTIONS

BROAD ST AT WILSON RD

THE CONTRACTOR SHALL CLOSE THE WESTBOUND LEFT TURN LANE FROM BROAD ST TO SOUTHBOUND WILSON RD PRIOR TO CLOSING SOUTHBOUND WILSON RD TO THROUGH TRAFFIC. THIS CLOSURE SHALL BE IN EFFECT UNTIL THE OPENING OF SOUTHBOUND WILSON RD. ALL TURN RESTRICTION SIGNAGE, GROUND MOUNTED AND OVERHEAD SHALL BE INSTALLED. ALL CONFLICTING SIGNS SHALL BE COVERED OR REMOVED. THE EASTBOUND RIGHT CURB LANE SHALL BE CLOSED PER THE CITY OF COLUMBUS MOT SCD 1510 DURING WORKING HOURS, 9:00AM TO 4:00PM MONDAY THROUGH FRIDAY DURING THE CONSTRUCTION OF THE SOUTHWEST CORNER. THE EASTBOUND THROUGH MOVEMENT SHALL BE MAINTAINED DURING NON-WORKING HOURS AND THE EASTBOUND RIGHT TURN SHALL BE BANNED DURING THE WILSON RD CLOSURE. ALL TURN RESTRICTION SIGNAGE, GROUND MOUNTED AND OVERHEAD SHALL BE INSTALLED. ALL CONFLICTING SIGNS SHALL BE COVERED OR REMOVED. IF THE CONSTRUCTION OF THE SOUTHWEST CORNER IS COMPLETED PRIOR TO THE OPENING OF SOUTHBOUND WILSON RD THE EASTBOUND RIGHT CURB LANE SHALL BE OPENED TO THROUGH TRAFFIC ONLY AT ALL TIMES. DURING THE WILSON RD CLOSURE, THE SOUTHBOUND THROUGH LANE NORTH OF BROAD ST SHALL BE CLOSED. ALL TURN RESTRICTION SIGNAGE, GROUND MOUNTED AND OVERHEAD SHALL BE INSTALLED. ALL CONFLICTING SIGNS INCLUDING OVERHEAD LANE CONTROL SIGNS SHALL BE COVERED OR REMOVED.

SULLIVANT AVE AT WILSON RD

RIGHT LANE CLOSURES SHALL BE USED DURING RAMP CONSTRUCTION AS PER CITY OF COLUMBUS MOT SCD 1510 DURING WORKING HOURS, 9:00AM TO 4:00PM MONDAY THROUGH FRIDAY ALL LANES SHALL BE OPEN DURING NON-WORKING HOURS.

FREMONT ST. DETOUR

THE CONTRACTOR SHALL SUBMIT A DETAILED VEHICULAR DETOUR PLAN, TO INCLUDE DURATION OF CLOSURE, ALL TYPICAL AND SPECIAL SIGNAGE, TYPE III SOLID AND TYPE III PORTABLE BARRICADE PLACEMENTS, AND THE USE OF LAW ENFORCEMENT OFFICER(S) IF REQUIRED TO THE TEMPORARY TRAFFIC CONTROL COORDINATOR FOR APPROVAL, PRIOR TO THE CLOSURE OF FREMONT ST.

CITY OF COLUMBUS PHASING, LANE AND WORK RESTRICTIONS (CONTINUED)

PEDESTRIAN DETOUR

THE CONTRACTOR SHALL SUBMIT A DETAILED PEDESTRIAN DETOUR PLAN, INCLUDING THE LOCATION AND PHASE OF EACH CLOSURE, ALL TYPICAL AND SPECIAL SIGNAGE FOR SIDEWALK AND CROSSWALK DETOURS AND CLOSURES, TYPE I AND/OR TYPE II BARRICADE PLACEMENTS, AND THE USE OF LAW ENFORCEMENT OFFICER(S) IF REQUIRED TO THE TEMPORARY TRAFFIC CONTROL COORDINATOR FOR APPROVAL, PRIOR TO ANY SIDEWALK/CROSSWALK CLOSURE /DETOURS.

BIKE PATH DETOUR

THE CONTRACTOR SHALL SUBMIT A DETAILED PEDESTRIAN DETOUR PLAN, INCLUDING THE LOCATION AND PHASE OF EACH CLOSURE, ALL TYPICAL AND SPECIAL SIGNAGE FOR BIKE PATH DETOURS AND CLOSURES, TYPE I AND/OR TYPE II BARRICADE PLACEMENTS, AND THE USE OF LAW ENFORCEMENT OFFICER(S) IF REQUIRED TO THE TEMPORARY TRAFFIC CONTROL COORDINATOR FOR APPROVAL, PRIOR TO ANY BIKE PATH CLOSURE /DETOURS. THE SUBMITTED PLAN SHALL CLOSE THE BIKE PATH AT COMMERCE SQUARE/EXCHANGE DR AND AT DERRER RD AND DETOUR BIKE TRAFFIC ON TO SULLIVANT AVE. THE BIKE PATH SHALL BE CLOSED DURING ALL BRIDGE DEMOLITION, PAINTING, AND BRIDGE CONSTRUCTION. ADDITIONALLY, THE CONTRACTOR SHALL TAKE APPROPRIATE MEASURES TO PROTECT THE PATH DURING CONSTRUCTION. ANY DAMAGE CAUSED TO THE PATH WILL BE REPAIRED BY THE CONTRACTOR AT NO ADDITIONAL COST TO THE PROJECT.

RAILROAD TRAFFIC

THE CONTRACTOR SHALL COORDINATE THE WORK WITH THE RAILROAD COMPANY AND THEIR APPOINTED REPRESENTATIVE. RAIL TRAFFIC IS TO BE MAINTAINED AT ALL TIMES. SHOULD A TEMPORARY CLOSURE BE REQUIRED, THE CONTACTOR SHALL COORDINATE SUCH CLOSURE WITH THE RAILROAD COMPANY'S REPRESENTATIVE. THE CONTRACTOR SHALL INSTALL ALL SHORING AND/OR OTHER PROTECTIVE MEASURES TO PROTECT THE RAILROAD TRACKS AND SHALL NOT STORE EQUIPMENT OR MATERIALS WITHIN RAILROAD RIGHT OF WAY. THE CONTRACTOR SHALL NOT OPERATE EQUIPMENT ON THE RAILROAD TRACKS. A RAILROAD FLAGGER WILL BE REQUIRED TO BE ONSITE WHEN WORKING NEAR THE RAILROAD TRACKS AND PAYMENT FOR THE FLAGGING OPERATION IS TO BE INCLUDED UNDER ITEM SPECIAL - RAILROAD FLAGGER ON A PER HOUR BASIS.

ITEM 614, DETOUR SIGNING

THE CONTRACTOR SHALL BE RESPONSIBLE FOR THE PLACEMENT, MAINTENANCE AND REMOVAL OF ALL DETOUR SIGNING AND BARRICADES WHEN DETOURS ARE IN PLACE. SIGNING AND BARRICADES SHALL CONFORM TO THE DETOUR PLAN AND OMUTCD. PAYMENT FOR THIS WORK SHALL BE INCLUDED IN THE LUMP SUM BID FOR ITEM 614, DETOUR SIGNING AND SHALL INCLUDE FURNISHING, ERECTING, MAINTAINING AND REMOVING THE SIGNS INCLUDING SUPPORTS.

ODOT PERMIT

ODOT OWNS BROAD STREET AND THE TRAFFIC SIGNAL AT BROAD STREET AND WILSON ROAD. THE CONTACTOR SHALL MAKE APPLICATION TO ODOT DISTRICT 6 FOR A PERMIT TO WORK WITHIN THEIR RIGHT OF WAY. THE PERMIT CAN BE FOUND AT HTTP://WWW.DOT.STATE.OH.US/DISTRICTS/D06/PERMITS/DOCUMENTS/MR505.PDF

Q:\Transportation\Projects\Local\City of Columbus\Wilson Road Bridge Rehab\12345\roadway\sheets\073707_MN001.dgn 10/17/2016 12:21:41 PM JPerchinske

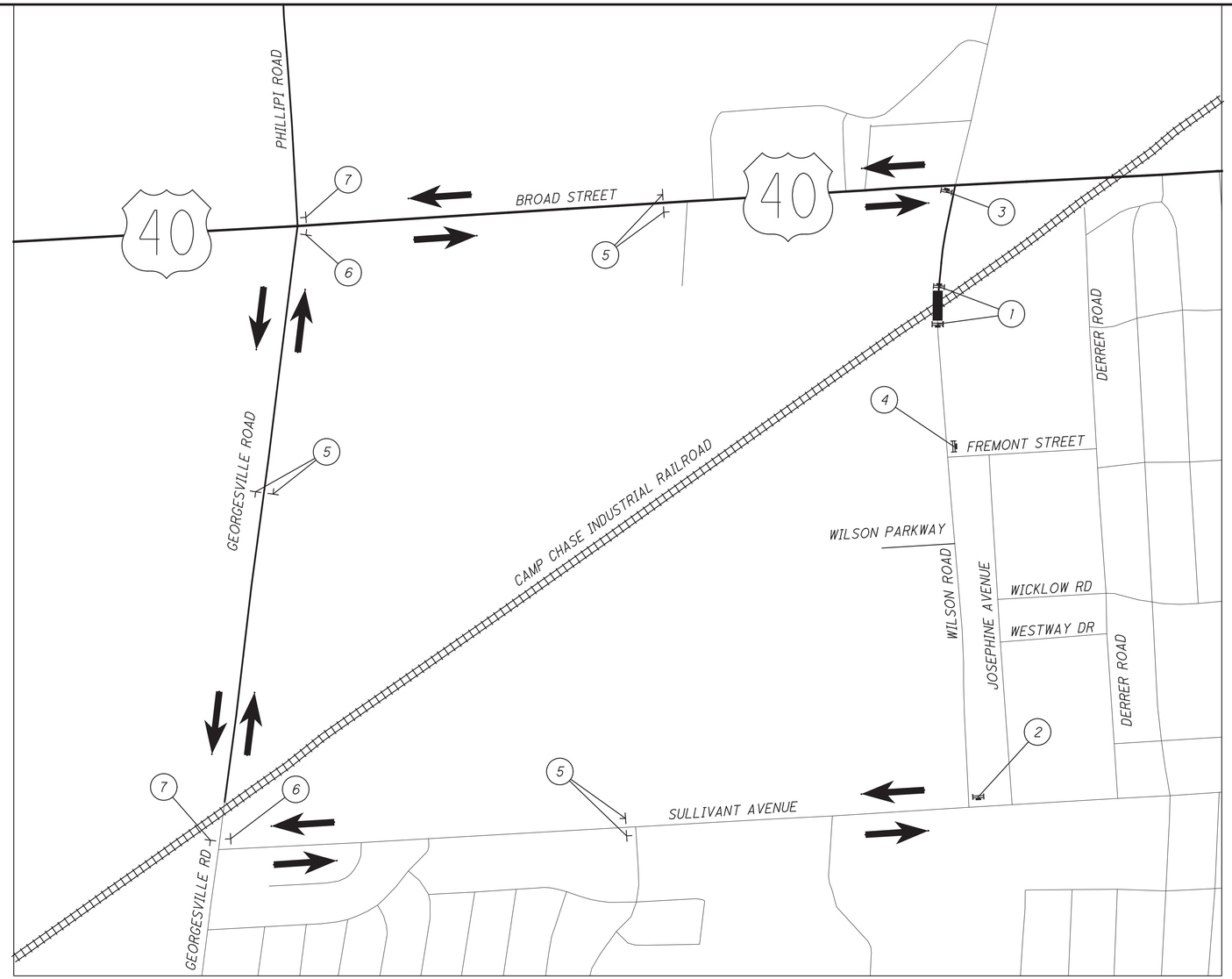

LEGEND

- (X) SIGN
- SIGN ON TYPE 3 BARRICADE
- SIGN ON POST
- WORK AREA

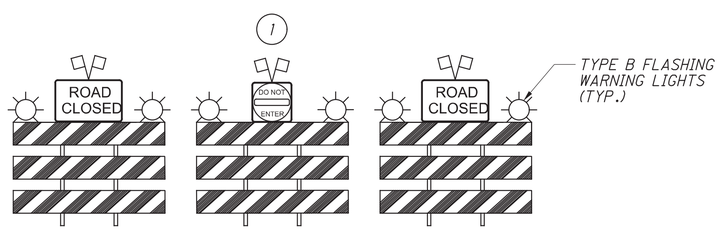

TYPE 3 BARRICADE ACROSS ROAD

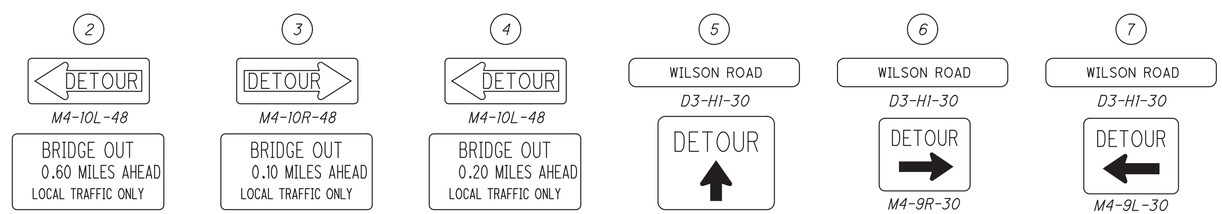

MAINTENANCE OF TRAFFIC DETOUR MAP

WILSON ROAD

3233-E

Q:\Transportation\Projects\Local\City of Columbus\Wilson Road Bridge Rehab\12345\roadway\sheets\073707_MD001.dgn 10/17/2016 12:21:42 PM JPerchinske

SHEET NUMBER 9	16	20	21	22	23	24	25	26	27	28	29	30	ODOT ITEM	CITY ITEM	GRAND TOTAL	UNIT	DESCRIPTION	SEE SHEET NO.
																	ROADWAY	
														201	LUMP	LS	CLEARING AND GRUBBING	
												1		202	1	EA	ANCHOR ASSEMBLY REMOVED, TYPE A	
											1			202	1	EA	CATCH BASIN OR INLET REMOVED	
		183				59	70				404	299		202	1015	FT	CURB REMOVED	
								782.8	800.1	507.3	701.5	59.6		202	2851.3	FT	GUARDRAIL REMOVED	
	2131								6					202	2137	SY	PAVEMENT REMOVED	
								20	7		10			202	37	FT	PIPE REMOVED	
												2		202	2	EA	PRIVATE LIGHT POSTS REMOVED	
												1		202	1	EA	TREE REMOVED	
		626		44	1557	706								202	2933	SF	WALK REMOVED	
														203	13139	CY	EXCAVATION	
														203	22186	CY	EMBANKMENT	
														203	535	CY	*EMBANKMENT	
														203	1070	CY	GEOTEXTILE FABRIC, TYPE D	
														203	535	CY	*EXCAVATION OF SUBGRADE	
	3447	191	444	446	441	383	510	446	445	250	395	148		204	7546	SY	SUBGRADE COMPACTION	
	4													204	4	HR	PROOF ROLLING	
	6897													254	6897	SY	PAVEMENT PLANING, AS PER PLAN	
	83	9				17	11				40	19		259	179	CY	PERMANENT PAVEMENT REPLACEMENT, TYPE I, AS PER PLAN	
3071														259	3071	CY	PERMANENT PAVEMENT REPLACEMENT, TYPE I, AS PER PLAN*	9
	576	32	74	74	73	63	86	74	74	17	66	24		304	1233	CY	AGGREGATE BASE	
	715													305	715	CY	8" CONCRETE BASE	
	253													407	253	GAL	TACK COAT (0.08 GAL/SY)	
	265													407	265	GAL	TACK COAT FOR INTERMEDIATE COURSE (RUBBERIZED 0.08 GAL/SY)	
	92													423	92	SY	CRACK SEALING, TYPE I	
	211													448	211	CY	ASPHALT CONCRETE INTERMEDIATE COURSE (MEDIUM TRAFFIC), PG64-22	
		13	31	31	31	26	35	31	31	42	28	10		448	309	CY	ASPHALT CONCRETE SURFACE COURSE (LIGHT TRAFFIC) PG 64-22	
	12													448	12	CY	ASPHALT CONCRETE INTERMEDIATE COURSE (MEDIUM TRAFFIC), PG70-22	
	95													452	95	SY	8" NON-REINFORCED CONCRETE PAVEMENT	
								647.2	819.00	464.7	477.0	29.6		606	2437.5	FT	GUARDRAIL, TYPE MGS	
										18	350.8	31.2		606	400.0	FT	GUARDRAIL, TYPE MGS, LONG POSTS	
								2	1		1	1		606	5	EA	ANCHOR ASSEMBLY, MGS, TYPE E	
												1		606	1	EA	ANCHOR ASSEMBLY, MGS, TYPE T	
										3				606	3	EA	BRIDGE TERMINAL ASSEMBLY, TYPE 1	
										2				606	2	EA	BRIDGE TERMINAL ASSEMBLY, TYPE 2	
		908				120	556					303		608	1887	SF	8" CONCRETE WALK	
		2				2	3					3		608	10	EA	CURB RAMP	
												121		608	121	SF	DETECTABLE WARNING, TYPE D	
		32				40	60					48		608	180	SF	DETECTABLE WARNING, TYPE E	
		163				310	372				185	381		609	1411	FT	CURB, STRAIGHT 18"	
		1				1								609	2	EA	MANHOLE, TYPE C(48)	
										140	33			622	173	FT	CONCRETE BARRIER, SINGLE SLOPE, TYPE D	
		2												632	2	EA	DETECTOR LOOP, AS PER PLAN	
					1		3							807	4	EA	VALVE BOXES ADJUSTED TO GRADE	

* = CONTINGENCY QUANTITY

CALCULATED NRH
CHECKED JDB

GENERAL SUMMARY

WILSON ROAD

3233-E

\\Columbus\SRVLN\DE\Clients\OH_City_of_Columbus\073707_WILSON_RD\Design\Roadway\Sheets\073707_GG001.dgn 10/17/2016 3:35:47 PM keatingm

SHEET NUMBER 18	24	25	26	27	28	29	30	ODOT ITEM	CITY ITEM	GRAND TOTAL	UNIT	DESCRIPTION	SEE SHEET NO.
												EROSION CONTROL	
8635									207	8635	FT	PERIMETER FILTER FABRIC FENCE	
870									207	870	FT	CONSTRUCTION FENCE	
3									207	3	EA	CURB INLET PROTECTION	
3									207	3	EA	CATCH BASIN PROTECTION	
4									207	4	EA	FILTER FABRIC CATCH BASIN PROTECTION	
1									207	1	EA	CONCRETE WASHOUT AREA	
									27	9	EA	ROCK CHANNEL PROTECTION	
									659	50	MSF	MOWING	
									659	25295	SY	SEEDING AND MULCHING	
									659	2447	CY	TOPSOIL	
									659	2	EA	SOIL ANALYSIS TEST	
									659	3.07	TON	COMMERCIAL FERTILIZER	
									659	122	MGAL	WATER	
									659	1102	SY	INTER SEEDING	
									659	4.55	ACRE	LIME	
									659	1102	SY	REPAIR SEEDING AND MULCHING	
												MAINTENANCE OF TRAFFIC	
									614	1	LS	MAINTENANCE OF TRAFFIC	
									614	1	LS	DETOUR SIGNING	
									614	50	HR	LAW ENFORCEMENT OFFICER (LEO) WITH PATROL CAR, AS PER PLAN	11
									614	25	HR	LAW ENFORCEMENT OFFICER (LEO) WITHOUT PATROL CAR, AS PER PLAN	11
												DRAINAGE	
				3		5			601	8	SY	RIPRAP, 6" REINFORCED CONCRETE SLAB	
	32	16	32		67		32		601	179	SY	TIED CONCRETE BLOCK MAT, TYPE I	
	2	2		1		2			602	7	CY	CONCRETE MASONRY	
	29	16	49				53		603	147	FT	4" CONDUIT, TYPE F (FOR UNDERDRAIN OUTLETS)	
		1				1			604	2	EA	INLET, TYPE AA-S133A	
						2			604	2	EA	INLET, TYPE AA-S125A	
	396	673	800	800	408	702	153		605	3932	FT	4" PIPE UNDERDRAINS	
	2	1	2				2		605	7	EA	4" PREFABRICATED EDGE UNDERDRAINS	
									SPEC	1	LS	SURVEY COORDINATES	
		112				97			901	209	FT	12" PIPE, WITH TYPE 1 BEDDING, WITH ITEM 912 - COMPACTED GRANULAR BACKFILL	
	43								901	43	FT	18" PIPE, WITH TYPE 1 BEDDING, WITH ITEM 912 - COMPACTED GRANULAR BACKFILL	
				7					901	7	FT	30" PIPE, WITH TYPE 1 BEDDING WITH ITEM 912 - COMPACTED GRANULAR BACKFILL	
												LIGHTING	
					2				1001	2	EA	MEDIUM DUTY PULLBOX (10"X15") - (MIS 121)	

CALCULATED NRH
CHECKED JDB

GENERAL SUMMARY

WILSON ROAD

3233-E

\\Columbus\SRVLN\DE\Clients\OH_City_of_Columbus\073707_WILSON_RD\Design\Roadway\Sheets\073707_GG002.dgn 10/17/2016 4:02:06 PM keatingm

SHEET NUMBER 28	66	67	ODOT ITEM	CITY ITEM	GRAND TOTAL	UNIT	DESCRIPTION	SEE SHEET NO.
							TRAFFIC CONTROL	
	52			621	52	EA	RAISED PAVEMENT MARKER REMOVED	
	28			621	28	EA	RAISED PAVEMENT MARKER INSTALLED (YELLOW/YELLOW)	
	17			621	17	EA	RAISED PAVEMENT MARKER INSTALLED (WHITE/RED)	
	36			626	36	EA	BARRIER REFLECTOR, TYPE A	
	9			626	9	EA	BARRIER REFLECTOR, TYPE B	
		188		630	188	FT	GROUND MOUNTED POST SUPPORT, NO. 3 POST	
		80		630	80	FT	GROUND MOUNTED POST SUPPORT, NO. 3 POST, AS PER PLAN	
		105.33		630	105.33	SF	SIGN, FLAT SHEET	
		2		630	2	EA	SIGN SUPPORT ASSEMBLY, POLE MOUNTED	
		9		630	9	SF	SIGN, DOUBLE FACED, STREET NAME	
		39		630	39	FT	STREET NAME SUPPORT, 4" PIPE	
		2		630	2	FT	REMOVAL OF GROUND MOUNTED SIGN AND REERECTION	
		20		630	20	EA	REMOVAL OF GROUND MOUNTED SIGN AND STORAGE	
		16		630	16	EA	REMOVAL OF GROUND MOUNTED POST SUPPORT AND DISPOSAL	
		2		630	2	EA	REMOVAL OF GROUND MOUNTED PIPE SUPPORT AND DISPOSAL	
		3		630	3	EA	SIGNING, MISC.: CORPORATION SIGNS, INSTALL ONLY, AS PER PLAN	
	413			644	413	FT	REMOVAL OF PAVEMENT MARKING	
	4			644	4	EA	LANE ARROW	
	3			644	3	EA	WORD ON PAVEMENT, 96"	
	141			644	141	SF	ISLAND MARKING	
	294			644	294	FT	CHANNELIZING LINE, 10"	
	176			644	176	FT	STOP LINE, 20"	
	324			644	324	FT	CROSSWALK LINE, WHITE, 10"	
	163			644	163	FT	TRANSVERSE/DIAGONAL LINE, YELLOW, 20"	
	0.74			644	0.74	MI	EDGE LINE, WHITE, 5"	
	0.22			644	0.22	MI	EDGE LINE, YELLOW, 5"	
	0.12			644	0.12	MI	LANE LINE, 5"	
	0.39			644	0.39	MI	CENTER LINE, DOUBLE SOLID, YELLOW, 5"	
	0.10			646	0.1	MI	EDGE LINE, WHITE 5", TYPE B 90	
	0.05			646	0.05	MI	CENTER LINE, DOUBLE SOLID, YELLOW 5", TYPE B 90	
							SIGNALS	
2				625	2	EA	PULLBOX, 32", AS PER PLAN	
							MISCELLANEOUS	
				108.03	1	LS	TYPE B CPM PROGRESS SCHEDULE	
				623	1	LS	CONSTRUCTION LAYOUT STAKES	
				624	1	LS	MOBILIZATION	
				SPEC	2	EA	CONSTRUCTION BOND SIGNS	
				SPEC	525	HR	RAILROAD FLAGGING	
							FOR STRUCTURES GENERAL SUMMARY, SEE SHEET 72	

CALCULATED NRH
CHECKED JDB

GENERAL SUMMARY

WILSON ROAD

\\Columbus\SRVLN\DE\Clients\OH_City_of_Columbus\073707_WILSON_RD\Design\Roadway\Sheets\073707_GG003.dgn 10/17/2016 4:01:58 PM keatingm

STATION FROM	STATION TO	SIDE	NORMAL SECTION LENGTH (L) FT	AVERAGE WIDTH (W) FT	PAVEMENT SURFACE AREA (A = L X W) SF	CADD AREA SF	202 PAVEMENT REMOVED SY	204 SUBGRADE COMPACTION SY	254 PAVEMENT PLANING, AS PER PLAN SY	259 PERM. PAVEMENT REPLACEMENT, TYPE I, AS PER PLAN (D = 1.00') CY	304 AGGREGATE BASE (4" DEPTH FOR DRIVES) (6" DEPTH FOR ROADWAY) CY	305 8" CONCRETE BASE CY	407 TACK COAT (0.08 GAL/SY) GAL	407 TACK COAT FOR INTERMEDIATE COURSE, 702.13 (RUBBERIZED) (0.08 GAL/SY) (3" WIDER) GAL	423 CRACK SEALING, TYPE I SY	448 ASPHALT CONC. INTERMEDIATE COURSE (MED. TRAFFIC), PG64-22 (VARIABLE DEPTH) CY	448 ASPHALT CONC. SURFACE COURSE (MED. TRAFFIC), PG64-22 [VARIABLE DEPTH (1.75" MIN)] CY	452 ASPHALT CONC. SURFACE COURSE (MED. TRAFFIC), PG70-22 [VARIABLE DEPTH] CY	452 8" NON-REINFORCED CONCRETE PAVEMENT SY
PROPOSED PAVEMENT																			
100+19.31	101+24.92	LT	125.53	2.00	251.06					9.30					2.48				
WILSON RD DRIVE AT STA. 101+38.30																			
100+69.42	101+24.82	LT				1,478.09					19.48				0.49	18.87	18.25	5.00	
115+80.88	119+98.33	RT	417.45	1.60	667.92			74.21			12.37	16.49	5.94	6.86	7.78	4.12	3.61		
		RT	417.45	4.25	1,774.16			231.92			38.65	46.38	15.77	16.70		10.95	9.58		
116+19.82	116+31.81	LT	29.65	3.00	88.95					3.29					0.69				
116+62.21	116+73.96	LT	30.30	3.00	90.90					3.37					0.71				
117+09.77	131+95.73	LT	1,321.60	6.80	8,986.88			998.54			166.42	221.90	79.88	82.82	26.27	55.47	48.54		
		LT	1,321.60	4.00	5,286.40			697.51			97.90	130.53	46.99	46.99		65.26	28.55		
117+11.21	119+98.33	LTRT	589.00	1.00	589.00					21.81					10.91				
120+03.65	120+45.00	RT				192.15				7.12					1.00				
120+80.91	121+28.63	RT				349.42				12.94					1.53				
121+28.63	132+14.65	RT	1,086.02	3.60	3,909.67			434.41			72.40	96.54	34.75	37.17	7.53	24.13	21.12		
		RT	1,086.02	4.00	4,344.08			573.18			95.53	113.97	38.61	41.03		16.76	26.82		
134+95.64	139+00.87	RT	405.23	2.25	911.77			101.31			16.88	22.51	8.10	9.01	7.68	5.63	4.92		
		RT	405.23	4.45	1,803.27			234.13			39.02	47.03	16.03	16.93		6.96	11.13		
137+44.16	139+01.67	LT	157.51	4.00	630.04			83.13			13.86	16.53	5.60	5.95	5.36	2.43	3.89		
137+60.50	139+55.71	RT	195.21	2.50	488.02					18.07					12.78				
138+88.48	139+73.52	LT	85.04	1.25	106.30			18.90			3.15	3.15	0.94	1.13	2.77	0.41	0.66		
WILSON RD DRIVE AT STA. 139+29.86																			
138+88.48	139+73.50	LT	54.13	15.75	852.55										0.76				94.73
138+88.48	140+21.33	LT	132.85	1.25	166.06					6.15					2.53				
140+60.01	140+70.72	LT	18.60	2.00	37.20					1.38					0.71				
PAVEMENT REMOVAL																			
INT. AT WILSON RD AND WILSON PARK WAY RADIUS RETURN TO RADIUS RETURN																			
115+80.88	117+11.50	LTRT				7,229.43			803.27										
117+10.94	119+98.46	RT	287.48	11.10	3,191.03				354.56										
117+11.50	119+98.33	LT	286.87	5.65	1,620.82				180.09										
INTERSECTION AT WILSON RD AND FREMONT ST RADIUS RETURN TO RADIUS RETURN																			
119+98.33	121+28.85	LTRT				5,808.76			645.42										
121+28.78	132+09.16	RT	1,080.00	10.86	11,728.80				1,303.20										
121+28.78	130+31.06	LT	902.21	8.82	7,957.49				884.17										
130+31.06	132+05.09	LT	166.80	16.20	2,702.16				300.24									1.39	
134+66.98	136+20.28	LTRT	128.20	35.75	4,583.15				509.24										
136+20.00	140+70.46	LT	451.32	20.11	9,076.05				1,008.45										
136+19.00	139+01.77	RT	281.80	21.28	5,996.70				666.30										
139+01.77	139+55.71	RT	53.94	40.32	2,174.86				241.65										
WILSON RD DRIVE AT STA. 100+92.28																			
100+58.50	101+24.92	LT				1,478.09	178.23												
115+80.88	120+45.22	RT	474.40	2.06	977.26		148.12												
117+09.62	130+31.08	LT	1321.46	3.41	4,506.18		610.81												
117+12.45	119+97.34	LTRT	284.94	8.84	2,518.87		279.87												
120+80.80	132+10.14	RT	1,158.85	2.68	3,105.72		441.65												
134+96.84	136+87.93	RT	190.00	0.43	81.70		24.91											1.35	
135+32.16	136+56.93	LT	124.88	4.70	586.94		75.62												
136+19.37	139+59.58	LTRT	480.00	2.00	960.00		146.67												
136+87.93	139+01.06	RT	211.00	1.37	289.07		49.70												
137+44.16	139+73.52	LT	229.36			1,406.96	175.16											4.59	
TOTALS CARRIED TO GENERAL SUMMARY							2,131	3,447	6,897	83	576	715	253	265	92	211	177	12	95

CALCULATED NRH
CHECKED NGF

PAVEMENT CALCULATIONS

WILSON ROAD

\\Columbus\SRVLN\DE\Clients\OH_City_of_Columbus\073707_WILSON_RD\Design\Roadway\Sheets\073707_GC001.dgn 10/17/2016 3:44:19 PM keatingm

EROSION AND SEDIMENT CONTROL

EROSION AND SEDIMENT CONTROL MEASURES ARE REQUIRED AS PART OF THIS PROJECT. EROSION AND SEDIMENT CONTROL MEASURES SPECIFIC TO THIS SITE MAY BE FOUND ON SHEET NO. 18 OF THIS PLAN. LAND-DISTURBING ACTIVITIES MUST COMPLY WITH ALL PROVISIONS OF THE DIVISION OF SEWERAGE AND DRAINAGE EROSION AND SEDIMENT CONTROL REGULATION. ALL LAND-DISTURBING ACTIVITIES SHALL BE SUBJECT TO INSPECTION AND SITE INVESTIGATION BY THE CITY OF COLUMBUS AND/OR THE OHIO EPA.

ALL EROSION SEDIMENTATION CONTROL PRACTICES ARE SUBJECT TO FIELD MODIFICATIONS AT THE DISCRETION OF THE CITY OF COLUMBUS, PROJECT ENGINEER AND/OR THE OHIO EPA.

IT IS THE RESPONSIBILITY OF THE CONTRACTOR TO NOTIFY THE CITY OF COLUMBUS TWO (2) WORKING DAYS PRIOR TO COMMENCEMENT OF INITIAL SITE LAND DISTURBANCE ON ANY SITE OF ONE (1) OR MORE ACRES. THIS INCLUDES SITE CLEARING, GRUBBING, AND ANY EARTH MOVING. PRIMARY EROSION AND SEDIMENT CONTROL PRACTICES ARE MANDATED BY REGULATIONS TO BE IN PLACE FROM THE BEGINNING OF THE CONSTRUCTION ACTIVITY. PLEASE CONTACT THE STORMWATER MANAGEMENT OFFICE AT 614-645-6700 OR BY FAX AT 614-645-1506. DETAILS OF THIS REQUIREMENT MAY BE FOUND IN THE EROSION AND SEDIMENT POLLUTION CONTROL REGULATION (ADOPTED JUNE 1, 1994). FAILURE TO COMPLY MAY RESULT IN ENFORCEMENT ACTION AS DETAILED IN THE COLUMBUS CITY CODES SECTION 1145.80.

THE NPDES PERMIT HOLDER SHALL PROVIDE QUALIFIED PERSONNEL TO CONDUCT SITE INSPECTIONS ENSURING PROPER FUNCTIONALITY OF THE EROSION AND SEDIMENTATION CONTROLS. ALL EROSION AND SEDIMENTATION CONTROLS ARE TO BE INSPECTED ONCE EVERY SEVEN (7) CALENDAR DAYS AND WITHIN 24 HOURS OF A ½" STORM EVENT OR GREATER THAT OCCURS OVER A 24 HR PERIOD. RECORD OF THE SITE INSPECTIONS SHALL BE KEPT BY THE CONTRACTOR AND MADE AVAILABLE TO JURISDICTIONAL AGENCIES IF REQUIRED.

THIS PLAN MUST BE POSTED ON SITE. A COPY OF THE SWPPP PLAN AND THE APPROVED EPA STORMWATER PERMIT (WITH THE SITE-SPECIFIC NOI NUMBER) SHALL BE KEPT ON SITE AT ALL TIMES.

DISCHARGE SET-UP FOR PUMPING MUDDY WATER

THE PUMPING OR DIRECT DISCHARGE OF SEDIMENT-LADEN (MUDDY) WATER TO THE CITY'S SEWER SYSTEM OR A RECEIVING STREAM IS A VIOLATION OF OHIO EPA AND CITY OF COLUMBUS REGULATIONS.

ALL INLETS RECEIVING FLOW FROM RUNOFF, PUMPING ACTIVITIES, OR OTHER DIRECT DISCHARGES SHALL BE FITTED WITH AN INLET: PROTECTION DEVICE THAT IS PROPERLY SIZED AND SECURED TO REDUCE THE DISCHARGE OF SEDIMENT INTO THE STORM SEWER SYSTEM AND RECEIVING STREAM. INLET PROTECTION IS REQUIRED ON ALL INLETS RECEIVING DISCHARGE REGARDLESS OF WHETHER OR NOT THE INLET IS TRIBUTARY TO ANY DOWNSTREAM EROSION AND SEDIMENT CONTROLS.

DISCHARGE HOSES USED DURING PUMPING ACTIVITIES SHALL BE FITTED WITH SEDIMENT BAGS THAT ARE PROPERLY SIZED PER MANUFACTURER'S RECOMMENDATIONS REGARDLESS OF WHAT OTHER SEDIMENT CONTROLS ARE IN PLACE FURHTER DOWNSTREAM. SEDIMENT BAGS MUST BE PROPERLY SECURED TO THE DISCHARGE HOSE AND PLACED OVER VEGETATED AREAS, WHERE FEASIBLE, DURING DISCHARGE. SEE DETAIL BELOW OF A TYPICAL SEDIMENT BAG INSTALLATION.

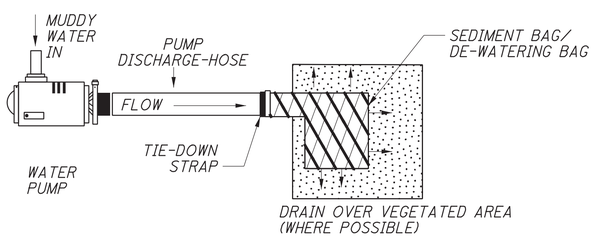

SUGGESTED DISCHARGE SET-UP FOR PUMPING MUDDY WATER

SUGGESTED CONSTRUCTION SEQUENCE:

1. ESTABLISH PROJECT LIMITS EACH PHASE.
   A. INSTALL PERIMETER FILTER FABRIC FENCE AS SHOWN ON PLANS.
   B. INSTALL ORANGE CONSTRUCTION FENCE ADJACENT TO WETLANDS AT EXISTING R/W LINE AS SHOWN ON PLANS.
   C. INSTALL INLET FILTERS AS SHOWN ON PLANS.
   D. INSTALL TEMPORARY TREE PROTECTION AS SHOWN ON PLANS.
2. DEMOLISH PAVEMENTS, CURBS, AND GUTTERS AS INDICATED.
3. INSTALL UNDERGROUND UTILITIES ALL PHASES.
4. CONSTRUCT PAVEMENT AND CURBS.
5. MILL AND RESURFACE PAVEMENTS AS INDICATED.
6. PERMANENT SEEDING AND MULCHING ALL PHASES.
7. PERFORM CONTINUING MAINTENANCE ALL PHASES.
8. REMOVE SEDIMENT CONTROLS AFTER VEGETATION GROWTH IS ESTABLISHED ALL PHASES.
9. AT THE COMPLETION OF FINAL GRADING OPERATIONS IN THESE AREAS, PERMAMNENT SEEDING AND MULCHING SHALL BE APPLIED, REGARDLESS OF PROJECT SCHEDULE.

NOTES:

THE CONTRACTOR SHALL BE RESPONSIBLE FOR ALL ON-SITE DRAINAGE AT ALL TIMES DURING CONSTRUCTION. NO SEPARATE PAYMENT SHALL BE MADE FOR MAINTAINING DRAINAGE.

DIRECT DISCHARGE OF SEDIMENT LADEN WATER TO THE CITY'S SEWER SYSTEM OR A RECEIVING STREAM IS A VIOLATION OF OHIO EPA AND CITY OF COLUMBUS REGULATIONS; THE CONTRACTOR WILL BE HELD LIABLE FOR THE VIOLATION AND SUBSEQUENT FINES.

STREET CLEANING (ON AN AS-NEEDED BASIS) IS REQUIRED THROUGH THE DURATION OF THE PROJECT. THIS INCLUDES SWEEPING, POWER CLEANING AND (IF NECESSARY) MANUAL REMOVAL OF DIRT OR MUD IN THE STREET GUTTERS.

THE USE OF PORTABLE CONCRETE WASHOUT UNITS IS APPROVED (AND ENCOURAGED) FOR ALL CONSTRUCTION AREAS IN THE CITY OF COLUMBUS.

THE USE OF STRAW WATTLES HAS PROVEN TO BE A VERSATILE AND EFFECTIVE ESC BMP, ESPECIALLY IN RESIDENTIAL SETTINGS. STRAW WATTLES MAY BE SUSTITUTED FOR SILT FENCE.

ADDITIONALLY:
THE USE OF COMPOST FILTER SOCKS AND COMPOST BLANKETS ARE GAINING WIDER ACCEPTANCE NATIONWIDE. THEY ARE NOW APPROVED FOR USE ON ALL COLUMBUS SWP3 PLANS AND CONSTRUCTION SITES.

ALL EROSION AND SEDIMENT CONTROL PRACTICES ARE SUBJECT TO FIELD MODIFICATION AT THE DISCRETION OF THE CITY OF COLUMBUS AND/OR THE OHIO EPA.

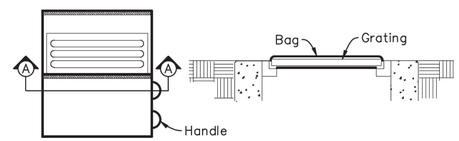

INLET PROTECTION TYPE-1
SCALE: NTS

SECTION A-A
DANDY BAG

INSTALLATION OF DANDY BAG:

STAND GRATE ON END. PLACE DANDY BAG OVER GRATE. FLIP GRATE OVER SO THAT OPEN END IS UP. PULL UP SLACK. TUCK FLAP IN. BE SURE END OF GRATE IS COMPLETELY COVERED BY FLAP OR DANDY BAG WILL NOT FIT PROPERLY. HOLDING HANDLES, CAREFULLY PLACE DANDY BAG WITH GRATE INSERTED INTO CATCH BASIN FRAME SO THAT RED DOT ON THE TOP OF DANDY BAG IS VISIBLE.

MAINTENANCE:

AFTER SILT HAS DRIED, REMOVE IT FROM THE SURFACE OF DANDY BAG WITH A STIFF BRISTLE BROOM.

SOIL STABILIZATION

STABILIZATION OF DISTURBED AREAS SHALL, AT A MINIMUM, BE INITIATED IN ACCORDANCE WITH THE TIME FRAMES SPECIFIED IN THE FOLLOWING TABLES:

TABLE 1: PERMANENT STABILIZATION

AREA REQUIRING PERMANENT STABILIZATION	TIME FRAME TO APPLY EROSION CONTROLS
ANY AREAS THAT WILL LIE DORMANT FOR ONE YEAR OR MORE	WITHIN SEVEN DAYS OF THE MOST RECENT DISTURBANCE
ANY AREAS WITHIN 50 FEET OF A SURFACE WATER OF THE STATE AND AT FINAL GRADE	WITHIN TWO DAYS OF REACHING FINAL GRADE
ANY OTHER AREAS AT FINAL GRADE	WITHIN SEVEN DAYS OF REACHING FINAL GRADE WITHIN THAT AREA

TABLE 2: TEMPORARY STABILIZATION

AREA REQUIRING PERMANENT STABILIZATION	TIME FRAME TO APPLY EROSION CONTROLS
ANY DISTURBED AREAS WITHIN 50 FEET OF A SURFACE WATER OF THE STATE AND NOT AT FINAL GRADE	WITHIN TWO DAYS OF THE MOST RECENT DISTURBANCE IF THE AREA WILL REMAIN IDLE FOR MORE THAN 14 DAYS
FOR ALL CONSTRUCTION ACTIVITIES, ANY DISTURBED AREAS THAT WILL BE DORMANT FOR MORE THAN 14 DAYS BUT LESS THAN ONE YEAR, AND NOT WITHIN 50 FEET OF A SURFACE WATER OF THE STATE	WITHIN SEVEN DAYS OF THE MOST RECENT DISTURBANCE WITHIN THE AREA FOR RESIDENTIAL SUBDIVISIONS, DISTURBED AREAS MUST BE STABILIZED AT LEAST SEVEN DAYS PRIOR TO TRANSFER OF PERMIT COVERAGE FOR THE INDIVIDUAL LOT(S).
DISTURBED AREAS THAT WILL BE IDLE OVER WINTER	PRIOR TO THE ONESET OF WINTER WEATHER

WHERE VEGETATIVE STABILIZATION TECHNIQUES MAY CAUSE STRUCTURAL INSTABILITY OR ARE OTHERWISE UNOBTAINABLE, ALTERNATIVE STABILIZATION TECHNIQUES MUST BE EMPLOYED. PERMANENT AND TEMPORARY STABILIZATION ARE DEFINED IN PART VII OF OHIO EPA PERMIT NO.:OHC000004.

ON-SITE CONTACT:	CITY OF COLUMBUS, DEPARTMENT OF PUBLIC SERVICE DIVISION OF DESIGN AND CONSTRUCTION 50 WEST GAY STREET COLUMBUS, OHIO 43215 JONTHAN M. KOESTER PHONE: 614.645.8125 FAX: 614.645.2680
PLAN DESIGNER:	PRIME AE GROUP, INC. 8415 PULSAR PLACE, STE. 300 COLUMBUS, OH 43240
OWNER/DEVELOPER:	CITY OF COLUMBUS 757 CAROLYN AVENUE COLUMBUS, OH 43224 ANDY BEARD 614-645-8458 (PHONE) 614-645-0082 (FAX) ASBEARD@COLUMBUS.GOV
PROJECT DESCRIPTION:	ADDITION OF A SHARED USE PATH ON THE WEST SIDE OF WILSON ROAD AND MODIFICATIONS TO THE EXISTING BRIDGE AND ROADWAY ALIGNMENT.
EXISTING SITE CONDITIONS:	THE SITE CONSISTS OF 4.55 ACRES OF ROADWAY ALONG WILSON ROAD.
ADJACENT AREAS:	NORTH: W BROAD STREET EAST: RESIDENTIAL PROPERTIES SOUTH: SULLIVANT AVENUE WEST: COMMERCIAL PROPERTIES
CRITICAL AREAS:	WETLANDS ADJACENT TO PROJECT (DO NOT DISTURB)
GRADING REQUIREMENTS:	DISTURBED AREAS WILL BE PROTECTED BY PERIMETER FILTER FABRIC FENCE AND INLET PROTECTION AS SHOWN ONTHE PLANS. AREAS WILL BE STABILIZED WHEN GRADED TO PREVENT EROSION OF THE SITE.
EROSION AND SEDIMENT MEASURES:	A COMBINATION OF ITEMS WILL BE USED TO PERFORM SEDIMENT AND EROSION CONTROL. THESE MEASURES INCLUDE INLET PROTECTION, SILT FENCE, STABILIZED CONSTRUCTION ENTRANCE, AND SEEDING. REFER TO DETAILS ON THIS SHEET.
PERMANENT STABILIZATION:	THE SITE WILL BE STABILIZED WITH PERMANENT SEEDING IN GRASS AREAS.
MAINTENANCE:	ALL SEDIMENT AND EROSION CONTROL METHODS AND DEVICES ARE TO BE INSPECTED BY THE CONSTRUCTION SUPERINTENDENT WEEKLY AND AFTER SIGNIFICANT RAINFALLS. ANY DAMAGED FACILITIES ARE TO BE REPAIRED/REPLACED IMMEDIATELY BY THE CONTRACTOR AS MAY BE NECESSARY.
GENERAL CONSTRUCTION SCHEDULE:	ALL EROSION AND SEDIMENT CONTROL PRACTICES ARE SUBJECT TO FIELD MODIFICATION AT THE DISCRETION OF THE CITY OF COLUMBUS AND/OR THE OHIO EPA.
SCHEDULE:	THE CONTRACTOR SHALL PROVIDE A SCHEDULE OF OPERATIONS TO THE OWNER. SEDIMENT AND EROSION CONTROL MEASURES SHALL BE PLACED IN ACCORDANCE WITH THIS SCHEDULE.
OEPA NOI:	8.5 ACRES

EROSION AND SEDIMENT CONTROL QUANTITIES

ITEM	SHEET 18	TOTAL	UNIT	
207	8635	8635	FEET	PERIMETER FILTER FABRIC FENCE
207	870	870	FEET	CONSTRUCTION FENCE
207	3	3	EACH	CURB INLET PROTECTION
207	3	3	EACH	CATCH BASIN PROTECTION
207	4	4	EACH	FILTER FABRIC CATCH BASIN PROTECTION
207	9	9	EACH	ROCK CHECK DAM
207	1	1	EACH	CONCRETE WASHOUT AREA

SUMMARY OF POST-CONSTRUCTION STORMWATER CONTROL FACILITIES

CONTROL/OUTLET STRUCTURE NO. (AS REFERENCED ON PLANS)	CONTROL FUNCTIONS	DRAINAGE AREA TO CONTROL FACILITY (ACRES)	FACILITY TYPES	GI (SF)
N/A	N/A	N/A	N/A	N/A
N/A	N/A	N/A	N/A	N/A

STORMWATER QUANTITY AND QUALITY (WQv = 2,245 CF AT A 2-YR EVENT) FOR THIS PROJECT WILL BE PROVIDED IN A COMBINED BASIN ON THE BINNS. BLVD SIDEWALKS PROJECT 3201-E.

3233-E

HORIZ SCALE 0 25 50 100

CALCULATED JEP CHECKED

STORM WATER POLLUTION PREVENTION PLAN

WILSON ROAD

Q:\Transportation\Projects\Local\City of Columbus\Wilson Road Bridge Rehab\12345\drainage\sheets\073707_DE001.dgn 10/17/2016 12:21:42 PM JPerchinske

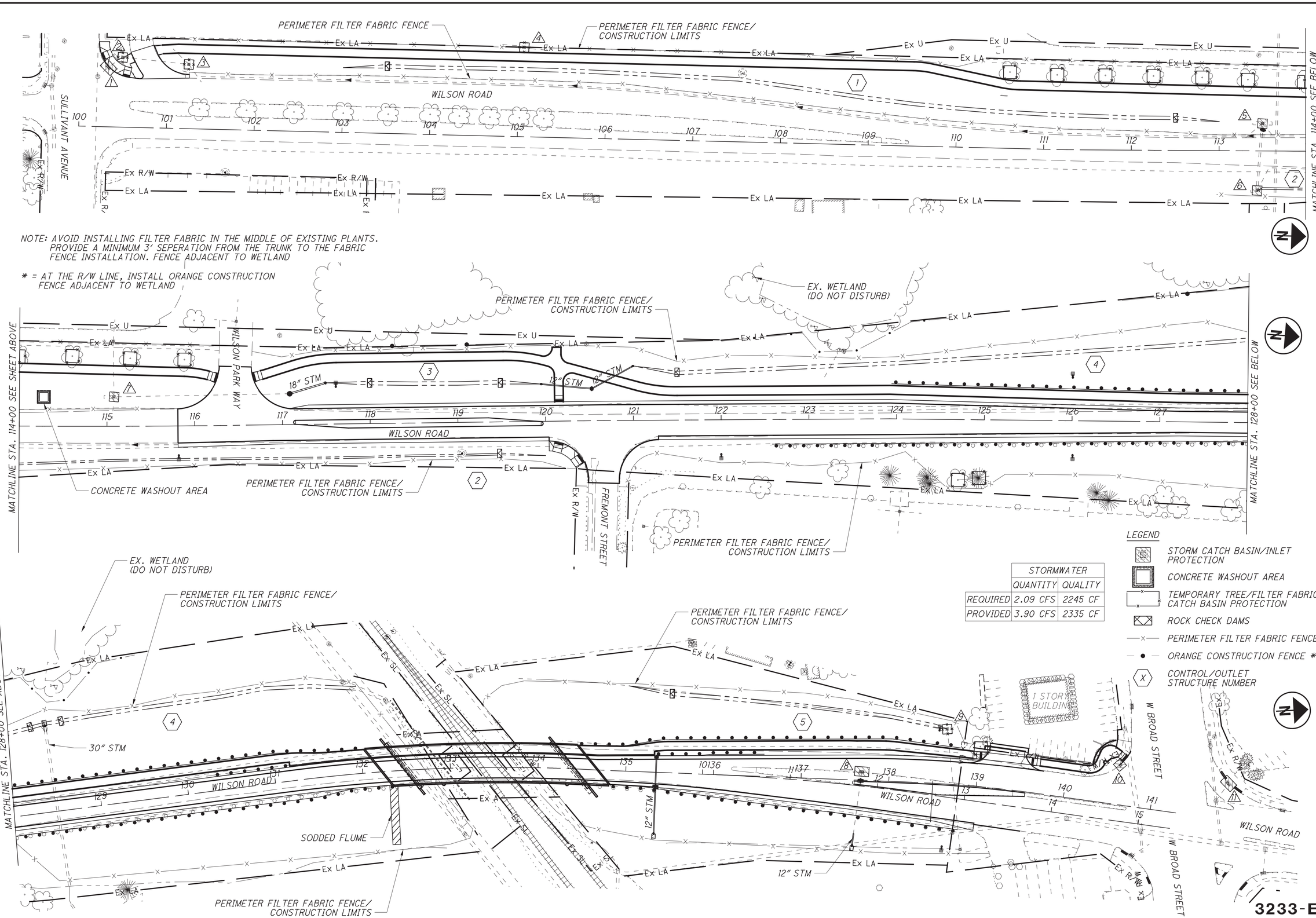

	STORMWATER	
	QUANTITY	QUALITY
REQUIRED	2.09 CFS	2245 CF
PROVIDED	3.90 CFS	2335 CF

HORIZ SCALE 0 25 50 100

CALCULATED JEP CHECKED

STORM WATER POLLUTION PREVENTION PLAN

WILSON ROAD

Q:\Transportation\Projects\Local\City of Columbus\Wilson Road Bridge Rehab\12345\drainage\sheets\073707_DE002.dgn 10/17/2016 12:23:27 PM JPerchinske

NOTES:
THE USE OF PORTABLE CONCRETE WASHOUT UNITS IS APPROVED (AND ENCOURAGED) FOR ALL CONSTRUCTION AREAS IN THE CITY OF COLUMBUS.

CATCH BASIN PROTECTION

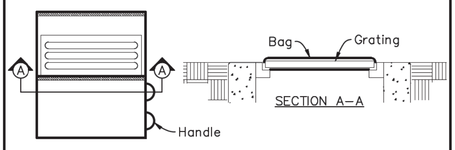

MAINTENANCE:
With a stiff bristle broom or square point shovel remove silt & other debris off surface after each event.

USE FOR CATCH BASINS:
5-7

ROCK CHECK DAM

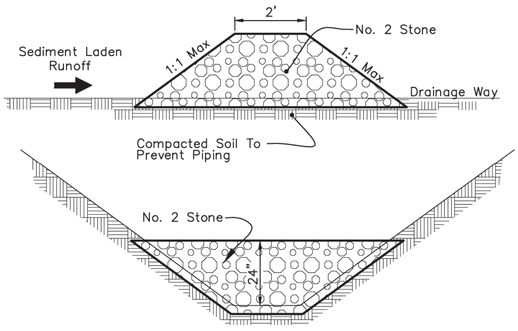

MAINTENANCE:

Aggregate check dams shall be inspected immediately after each rainfall and at least daily during prolonged rainfall.

Close attention shall be paid to the repair of damaged check dams, end runs and undercutting beneath dams.

Necessary repairs to check dams shall be accomplished promptly.

Sediment deposits should be removed after each rainfall. They must be removed when the level of deposition reaches approximately one–half the height of the barrier.

Any sediment deposits remaining in place after the aggregate is no longer required shall be dressed to conform to the existing grade, prepared and seeded.

CONCRETE WASHOUT AREA

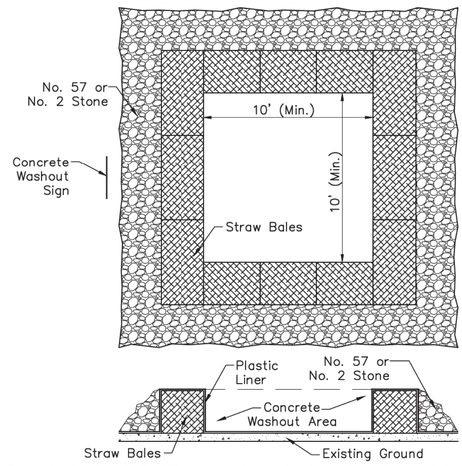

Concrete trucks shall utilize areas to washout trucks. Accumulated concrete shall be removed from the site and disposed of properly.

As an alternative, contractor shall use a roll off box with liner.

CURB INLET PROTECTION WITH GRATE

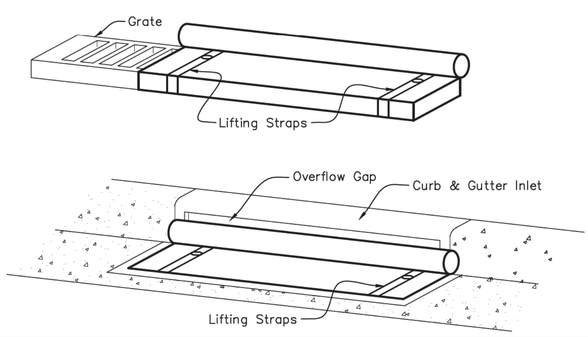

MAINTENANCE:
With a stiff bristle broom sweep silt and other debris off surface after each event.

USE FOR INLETS:
1,8,10-11 SEE SHEET (18)

SEDIMENT FENCE

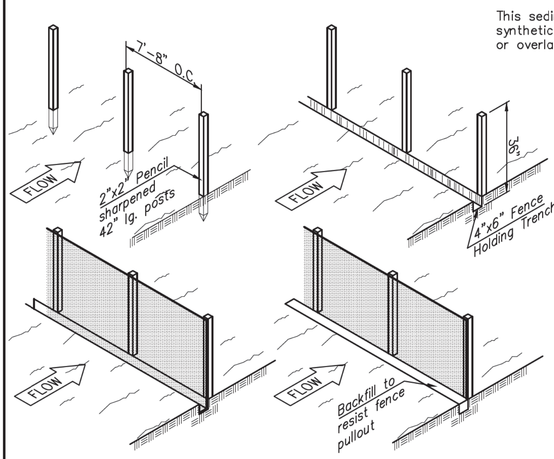

SILT FENCE:

This sediment barrier utilizes standard strength or extra strength synthetic filter fabrics. It is designed for situations in which only sheet or overland flows are expected.

MATERIAL PROPERTIES ARE:

1. The height of a silt fence shall not exceed 36 inches (higher fences may impound volumes of water sufficient to cause failure of the structure).
2. The filter fabric shall be purchased in a continuous roll cut to the length of the barrier to avoid the use of joints. When joints are necessary, filter cloth shall be spliced together only at a support post, with a minimum of a 6 inch overlap, and securely sealed.
3. Posts shall be spaced a maximum of 10 feet apart at the barrier location and driven securely into the ground (minimum of 12 inches). Wood posts will be a minimum of 32" long When extra strength fabric is used without the wire support fence, post spacing shall not exceed 6 feet.
4. A trench shall be excavated approximately 4 inches wide and 6 inches deep along the line of posts and upslope from the barrier.
5. When standard strength filter fabric is used, a wire mesh support fence shall be fastened securely to the upslope side of the posts using heavy duty wire staples at least 1–inch long, tie wires or hog rings. The wire shall extend into the trench a minimum of 2 inches and shall not extend more than 36 inches above the original ground surface.
6. The standard strength filter fabric shall be stapled or wired to the fence, and 8 inches of the fabric shall be extended into the trench. The fabric shall not extend more than 36 inches above the original ground surface. Filter fabric shall not be stapled to existing trees.
7. When extra strength filter fabric and closer post spacing are used, the wire mesh support fence may be eliminated. In such a case, the filter fabric is stapled or wired directly to the posts with all other provisions of Item No. 6 applying.
8. The trench shall be backfilled and soil compacted over the filter fabric. Silt fences shall be removed when they have served their useful purpose, but not before the upslope area has been permanently stabilized.
9. Silt fences and filter barriers shall be inspected immediately after each rainfall and at least daily during prolonged rainfall. Any required repairs shall be made immediately.
10. To prevent water ponded by the silt fence from flowing around the ends, each end shall be constructed upslope so that the ends are at a higher elevation.

FABRIC PROPERTIES	VALUES	TEST METHOD
Grab Tensile Strength	90 lb. Minimum	ASTM 1682
Mullen Burst Strength	190 psi Minimum	ASTM 3786
Slurry Flow Rate	0.3 gal./min./f^2 Max	
Equivalent Opening Size	40–80	U.S. Std. Sieve CW–02215
Ultraviolet Radiation Stability	90% Minimum	ASTM–G–26

Note: The use of straw wattles has proven to be a versatile and effective ESC BMP, especially in residential settings. Straw wattles may be substituted for silt fence in linear installations. See detail, Sheet XX. The use of compost filter socks and compost blankets are gaining wider acceptance nationwide. they are now approved for use on all Columbus SWP3 plans and construction sites.

MAINTENANCE:
Should the fabric on a silt fence or filter barrier decompose or become ineffective prior to the end of the expected usable life and the barrier is still necessary, the fabric shall be replaced promptly.

Sediment deposits should be removed after each storm event. They must be removed when deposits reach approximately one–half the height of the barrier.

Any sediment deposits remaining in place after the silt fence or filter barrier is no longer required shall be dressed to conform with the existing grade, prepared and seeded.

FILTER FABRIC CATCH BASIN PROTECTION

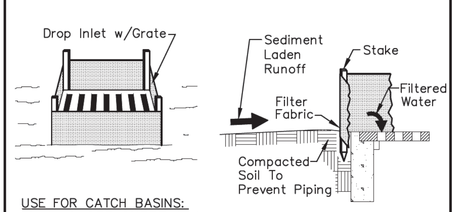

USE FOR CATCH BASINS:
2-4, 9 SEE SHEET (18)

SPECIFIC APPLICATION:
This method of inlet protection is applicable where the inlet drains a relatively flat area (slopes no greater than 5 percent) where sheet or overland flows (not exceeding 0.5 cfs) are typical. This method shall not apply to inlets receiving concentrated flows, such as in street and highway medians.

3233-E

DRIVE CURVE
P.I. Sta. 11+10.48
Δ = 39° 23′ 25″ (RT)
Dc = 85° 40′ 33″
R = 66.88′
T = 23.94′
L = 45.98′
E = 4.16′
C = 45.08′
C.B. = S 67° 04′ 30″ W

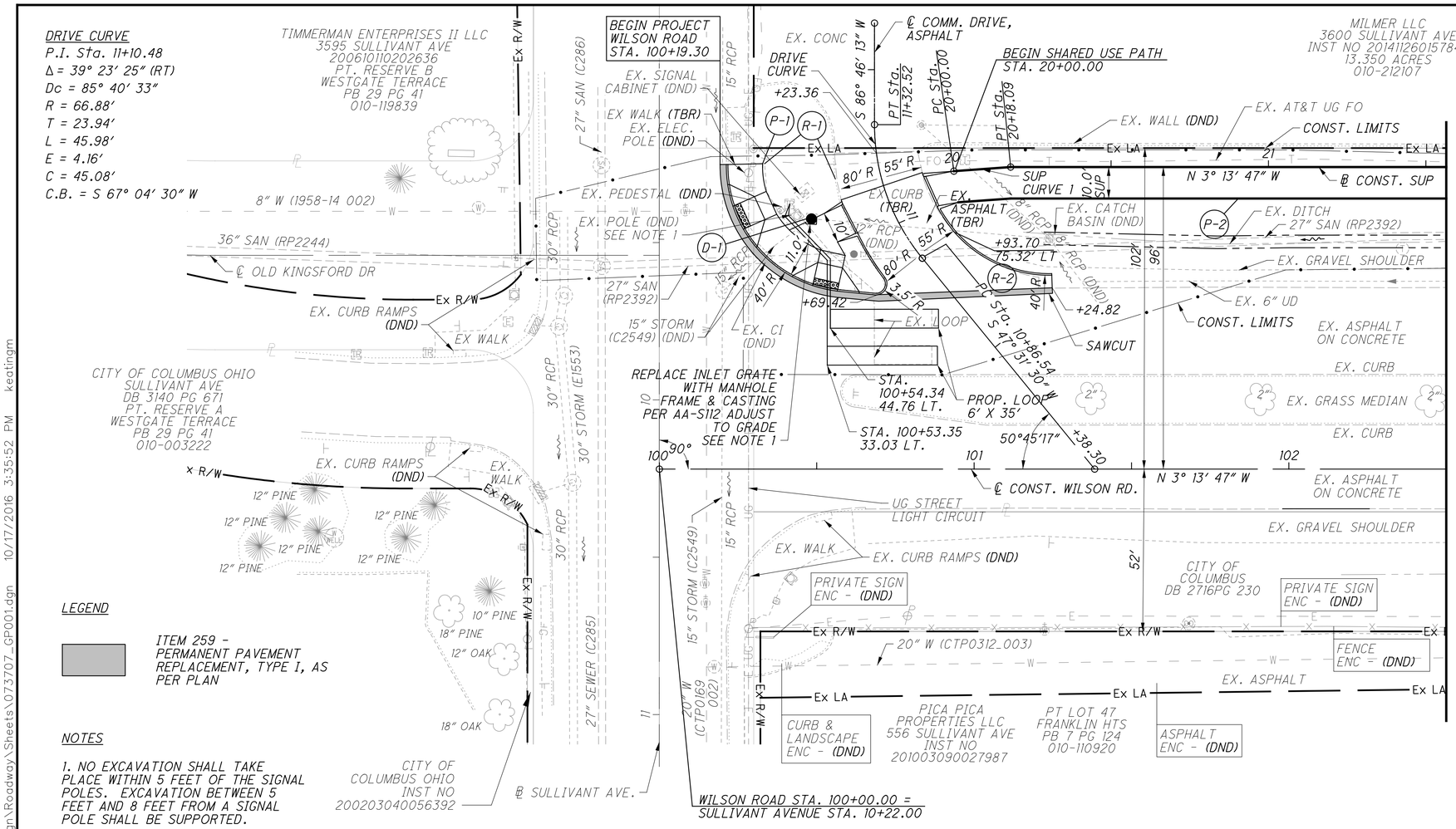

FOR SHARED-USE PATH BASELINE INFORMATION, SEE SHEET 3

FOR SHEET LEGEND, SEE SHEET 8

FOR PAVEMENT QUANTITY CALCULATIONS, SEE SHEET 16

FOR SHARED-USE PATH PROFILE INFORMATION, SEE SHEET 31-32

FOR INTERSECTION AND CURB RAMP DETAILS, SEE SHEET 55

FOR DRIVE DETAIL AND PROFILE, SEE SHEET 59

FOR SIGNING AND PAVEMENT MARKINGS, SEE SHEET 62-65

LEGEND

ITEM 259 - PERMANENT PAVEMENT REPLACEMENT, TYPE I, AS PER PLAN

NOTES

1. NO EXCAVATION SHALL TAKE PLACE WITHIN 5 FEET OF THE SIGNAL POLES. EXCAVATION BETWEEN 5 FEET AND 8 FEET FROM A SIGNAL POLE SHALL BE SUPPORTED.

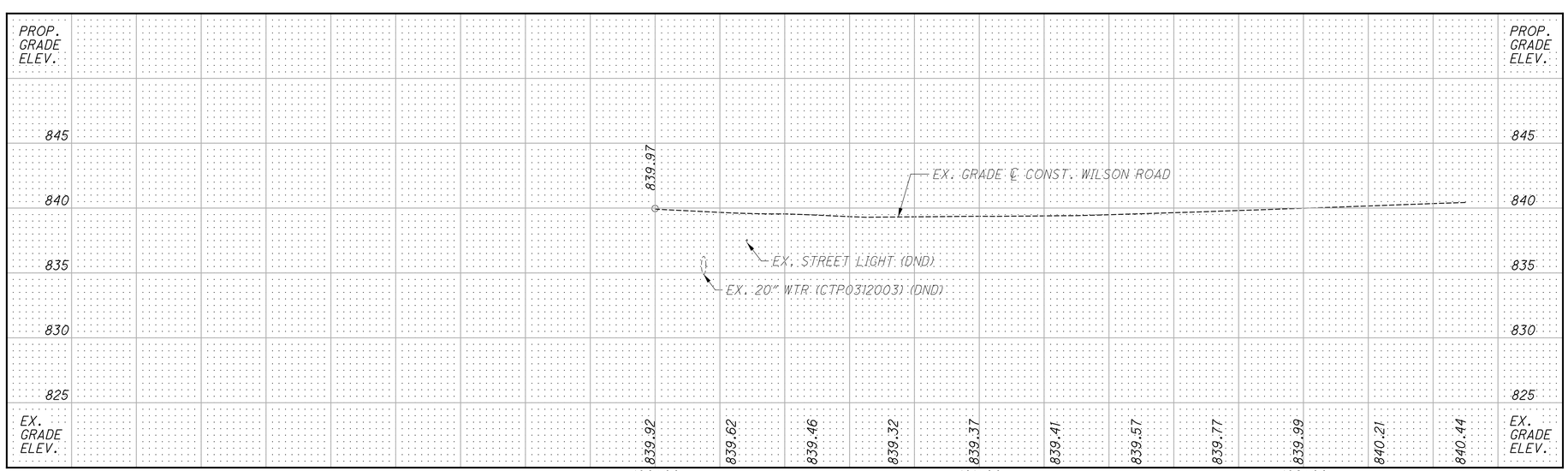

REF. NO.	STATION FROM	STATION TO	SIDE	202 WALK REMOVED SF 626	202 CURB REMOVED FT 183	259 PERMANENT PAVEMENT REPLACEMENT, TYPE I, AS PER PLAN CY 9	608 8″ CONCRETE WALK SF 908	608 CURB RAMP EA 2	608 DETECT. WARN., TYPE E SF 32	609 CURB, STRAIGHT 18″ FT 163	609 MANHOLE, ADJUSTED TO GRADE EA 1	632 DETECTOR LOOP, AS PER PLAN EA 2	204 SUBGRADE COMPACTION SY 191	304 AGGREGATE BASE CY 32	448 2.5″ ASPHALT CONCRETE SURFACE COURSE (LIGHT TRAFFIC), PG 64-22 CY 13
R-1	100+19	100+72	LT												
R-2	100+69	101+25	LT												
P-1	101+21	100+72	LT												
P-2	100+85	102+50	LT												
D-1	100+48		LT												
TOTALS CARRIED TO GENERAL SUMMARY				626	183	9	908	2	32	163	1	2	191	32	13

3233-E

HORIZONTAL SCALE IN FEET 20 0 10 20

CALCULATED CAG
CHECKED JDB

PLAN & PROFILE
STA. 100+00 TO STA. 102+50
WILSON ROAD

\\Columbus\SRVLN\DE\Clients\OH_City_of_Columbus\073707_WILSON_RD\Design\Roadway\Sheets\073707_GP001.dgn 10/17/2016 3:35:52 PM keatingm

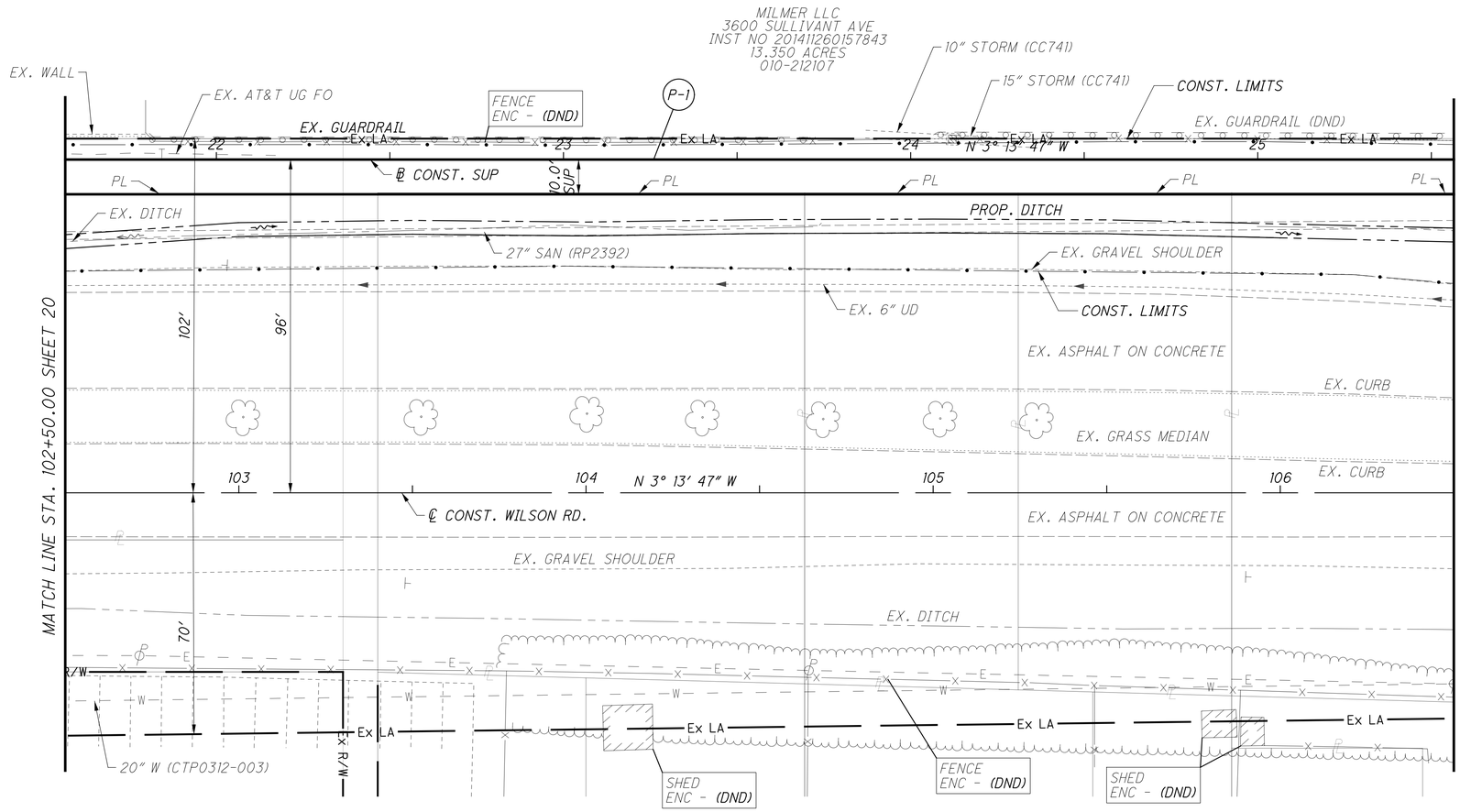

FOR SHARED-USE PATH BASELINE INFORMATION, SEE SHEET 3

FOR SHEET LEGEND, SEE SHEET 8

FOR PAVEMENT QUANTITY CALCULATIONS, SEE SHEET 16

FOR SHARED-USE PATH PROFILE INFORMATION, SEE SHEET 31-32

FOR SIGNING AND PAVEMENT MARKINGS, SEE SHEET 62-65

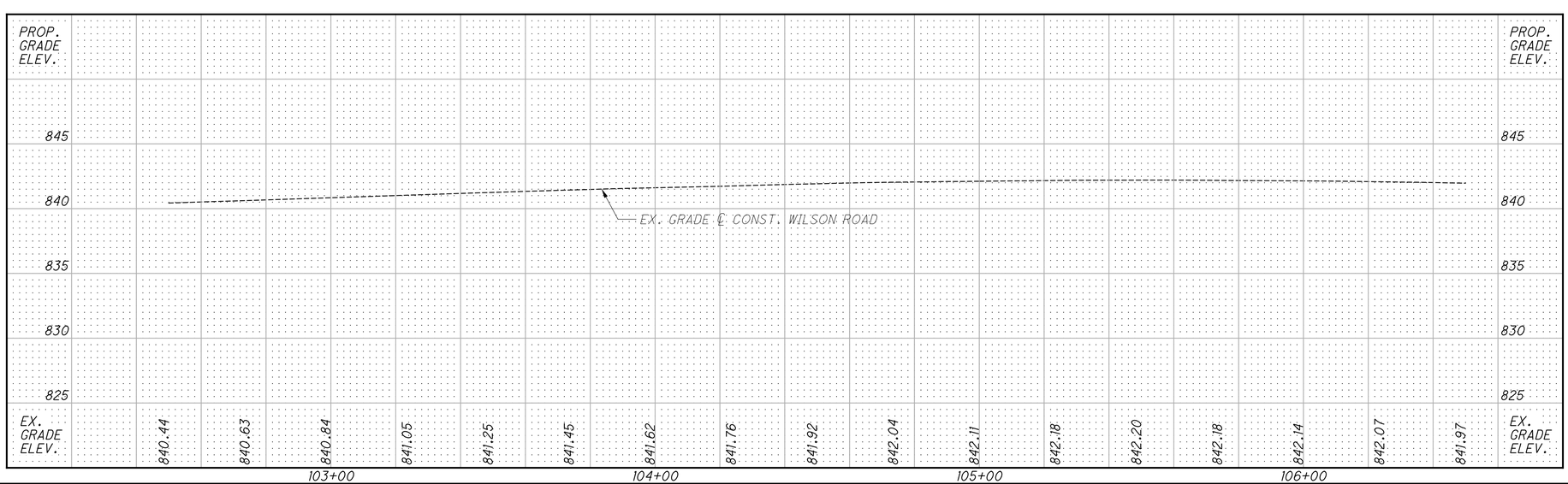

REF. NO.	STATION FROM 102+50	STATION TO 106+50	SIDE	204 SUBGRADE COMPACTION SY	304 AGGREGATE BASE CY	448 2.5" ASPHALT CONCRETE SURFACE COURSE (LIGHT TRAFFIC), PG 64-22 CY
P-1			LT	444	74	31
TOTALS CARRIED TO GENERAL SUMMARY				444	74	31

3233-E

HORIZONTAL SCALE IN FEET 20 0 10 20

CALCULATED CAG CHECKED JDB

PLAN & PROFILE
STA. 102+50 TO STA. 106+50

WILSON ROAD

\\Columbus\SRVLNNDE\Clients\OH_City_of_Columbus\073707_WILSON_RD\Design\Roadway\Sheets\073707_GP002.dgn 10/17/2016 3:35:55 PM keatingm

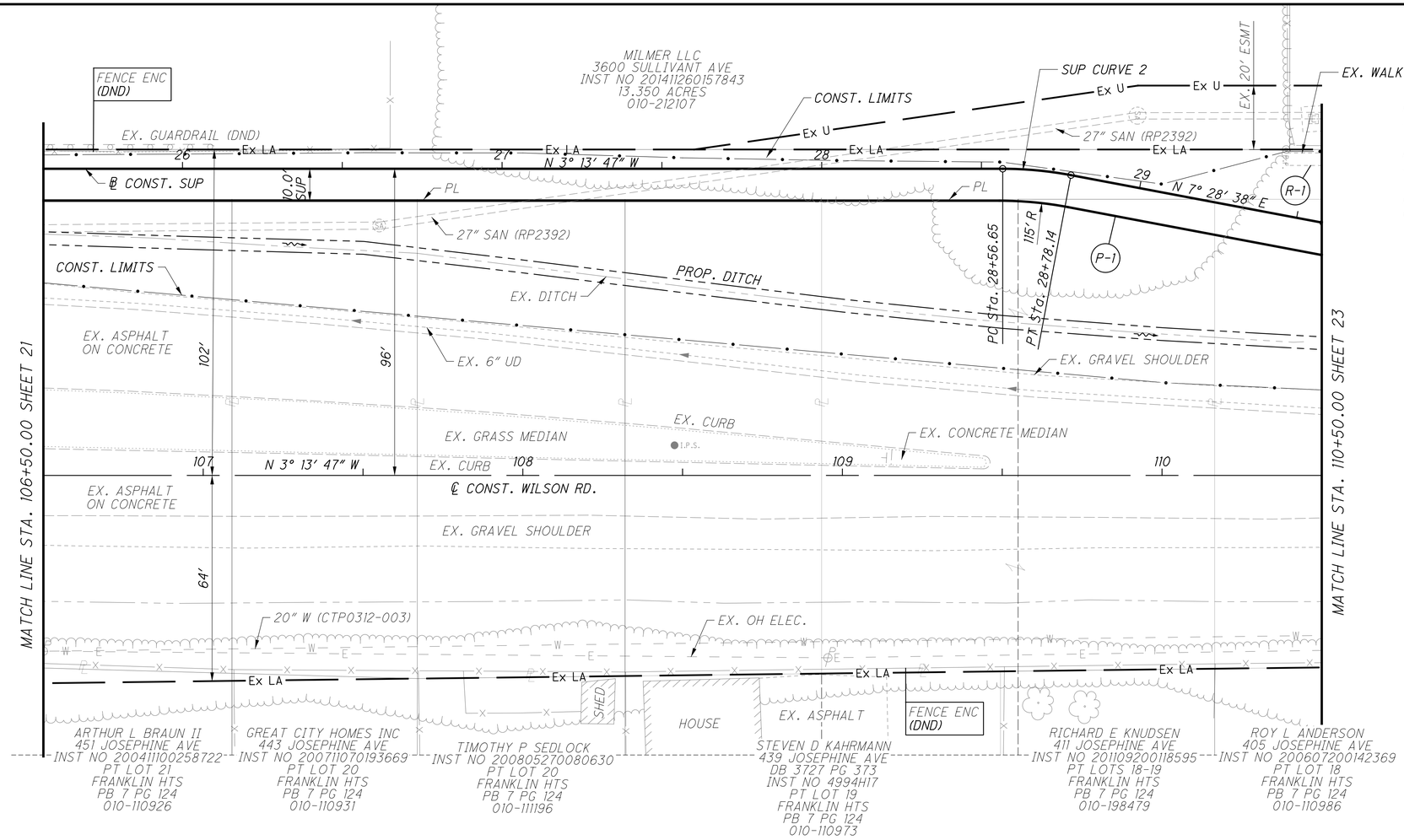

FOR SHARED-USE PATH BASELINE INFORMATION, SEE SHEET 3

FOR SHARED-USE PATH PROFILE INFORMATION, SEE SHEET 31-32

FOR SHEET LEGEND, SEE SHEET 8

FOR SIGNING AND PAVEMENT MARKINGS, SEE SHEET 62-65

FOR PAVEMENT QUANTITY CALCULATIONS, SEE SHEET 16

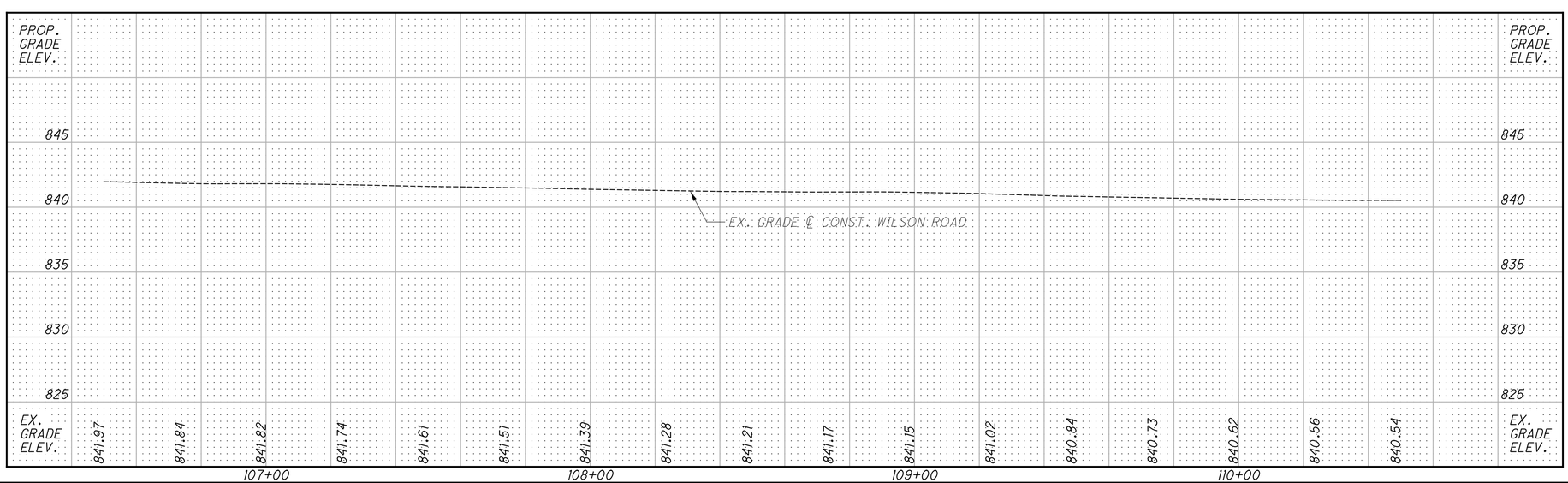

REF. NO.	STATION FROM	STATION TO	SIDE	202 WALK REMOVED (SF)	204 SUBGRADE COMPACTION (SY)	304 AGGREGATE BASE (CY)	448 2.5" ASPHALT CONCRETE SURFACE COURSE (LIGHT TRAFFIC), PG 64-22 (CY)
R-1	110+39	110+50	LT	44	446	74	31
P-1	106+50	110+50	LT				
TOTALS CARRIED TO GENERAL SUMMARY				44	446	74	31

3233-E

HORIZONTAL SCALE IN FEET 20 0 10 20

CALCULATED CAG
CHECKED JDB

PLAN & PROFILE
STA. 106+50 TO STA. 110+50

WILSON ROAD

\\Columbus\SRVLN\DE\Clients\OH_City_of_Columbus\073707_WILSON_RD\Design\Roadway\Sheets\073707_GP003.dgn 10/17/2016 3:35:56 PM keatingm

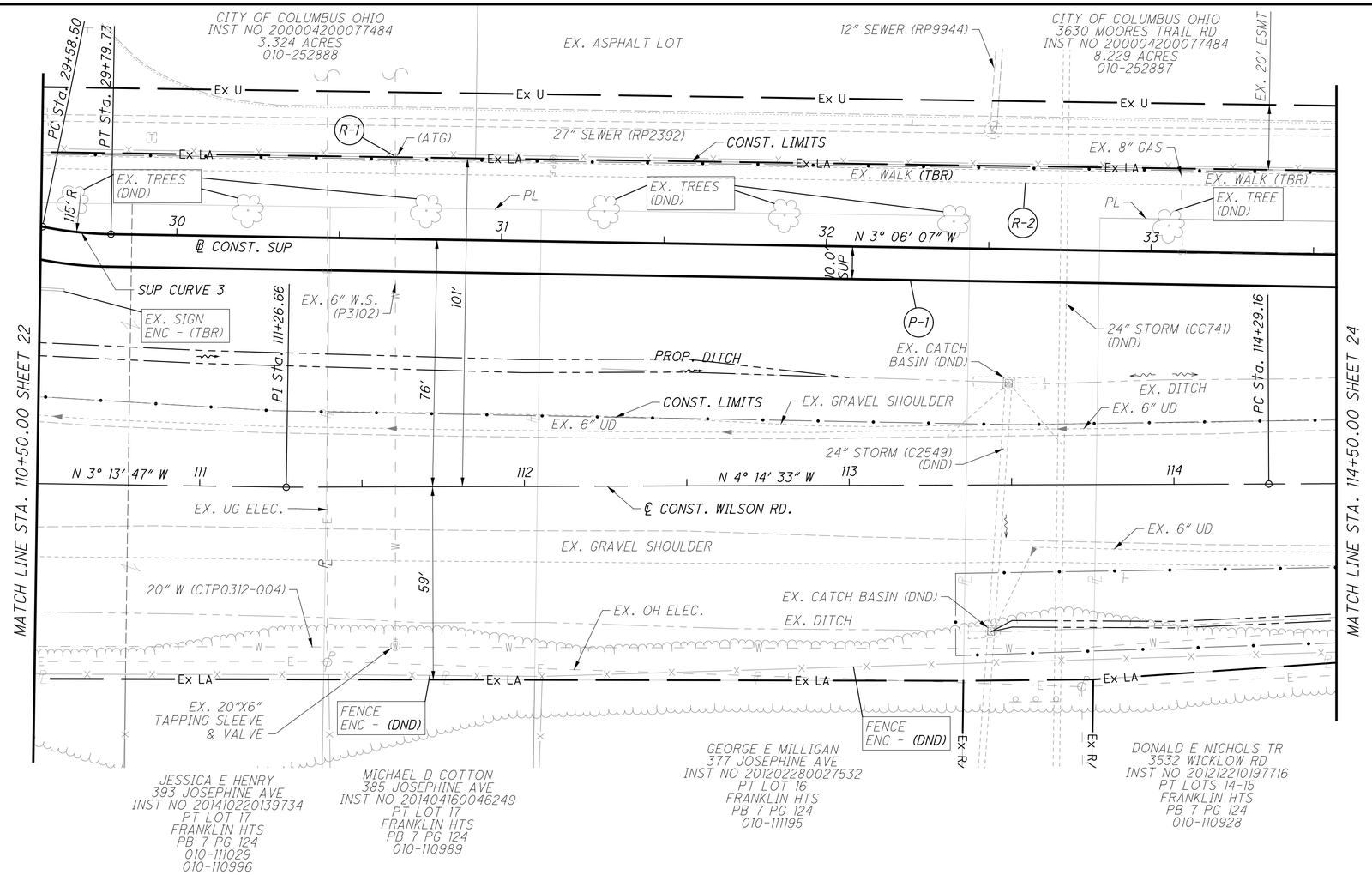

FOR SHARED-USE PATH BASELINE INFORMATION, SEE SHEET 3

FOR SHEET LEGEND, SEE SHEET 8

FOR PAVEMENT QUANTITY CALCULATIONS, SEE SHEET 16

FOR SHARED-USE PATH PROFILE INFORMATION, SEE SHEET 31-32

FOR SIGNING AND PAVEMENT MARKINGS, SEE SHEET 62-65

REF. NO.	STATION FROM	STATION TO	SIDE	202 WALK REMOVED SF	807 VALVE BOXES ADJUSTED TO GRADE EA	204 SUBGRADE COMPACTION SY	304 AGGREGATE BASE CY	448 2.5" ASPHALT CONCRETE SURFACE COURSE (LIGHT TRAFFIC), PG 64-22 CY
R-1	111+10		LT	1557	1			
R-2	110+50	114+50	LT			441	73	31
P-1	110+50	114+50	LT					
TOTALS CARRIED TO GENERAL SUMMARY				1557	1	441	73	31

3233-E

CALCULATED CAG
CHECKED JDB

HORIZONTAL SCALE IN FEET 20 0 10 20

PLAN & PROFILE
STA. 110+50 TO STA. 114+50

WILSON ROAD

\\Columbus\SRVLN\DE\Clients\OH_City_of_Columbus\073707_WILSON_RD\Design\Roadway\Sheets\073707_GP004.dgn 10/17/2016 3:35:57 PM keatingm

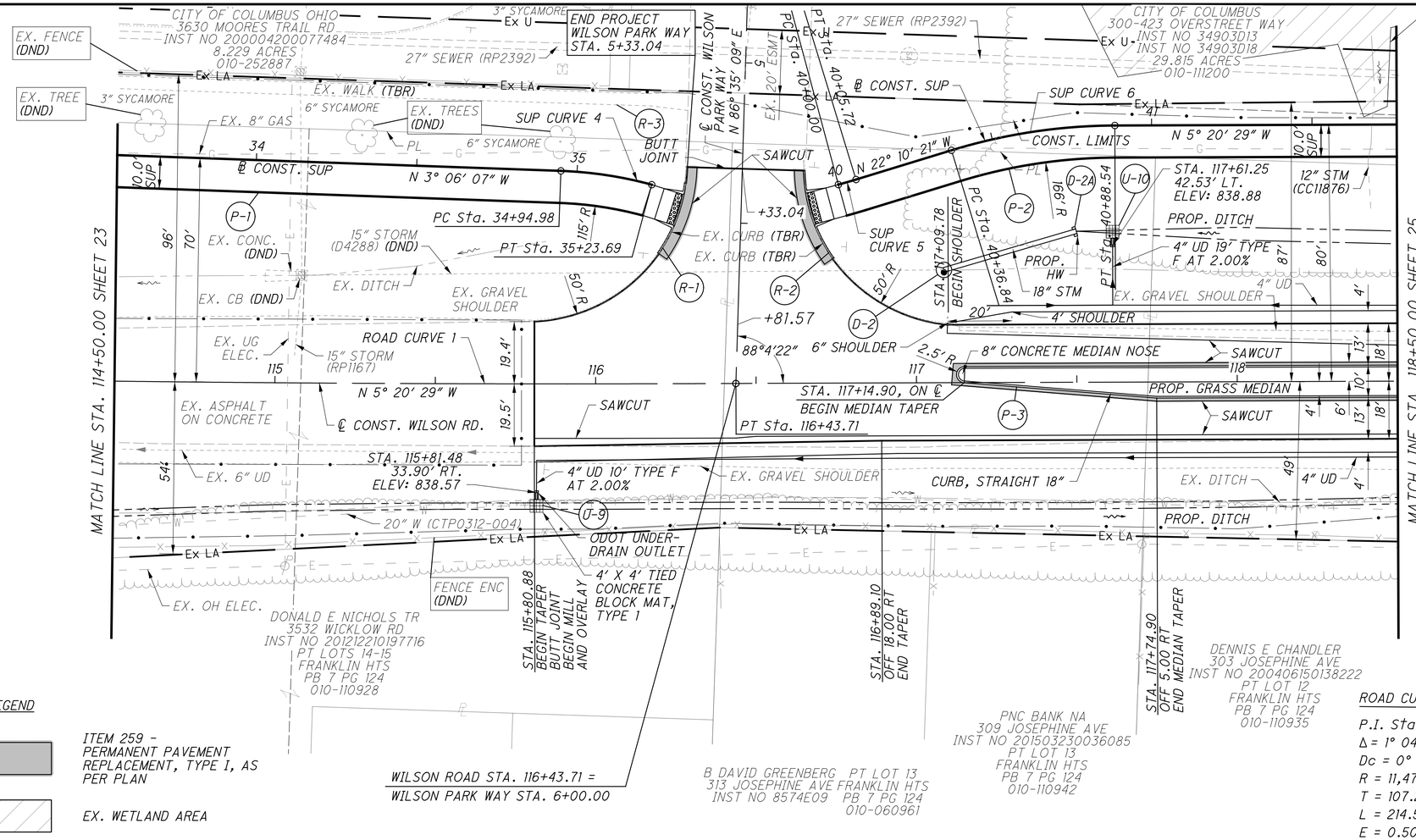

FOR SHARED-USE PATH BASELINE INFORMATION, SEE SHEET 3

FOR SHEET LEGEND, SEE SHEET 8

FOR PAVEMENT QUANTITY CALCULATIONS, SEE SHEET 16

FOR STORM PROFILES, SEE SHEET 60

FOR SHARED-USE PATH PROFILE INFORMATION, SEE SHEET 31-32

FOR INTERSECTION AND CURB RAMP DETAILS, SEE SHEET 56

FOR SIGNING AND PAVEMENT MARKINGS, SEE SHEET 62-65

LEGEND

ITEM 259 - PERMANENT PAVEMENT REPLACEMENT, TYPE I, AS PER PLAN

EX. WETLAND AREA

ROAD CURVE 1

P.I. Sta. 115+36.44
Δ = 1° 04' 16" (LT)
Dc = 0° 29' 57"
R = 11,477.96'
T = 107.28'
L = 214.55'
E = 0.50'
C = 214.55'
C.B. = N 4° 52' 24" W

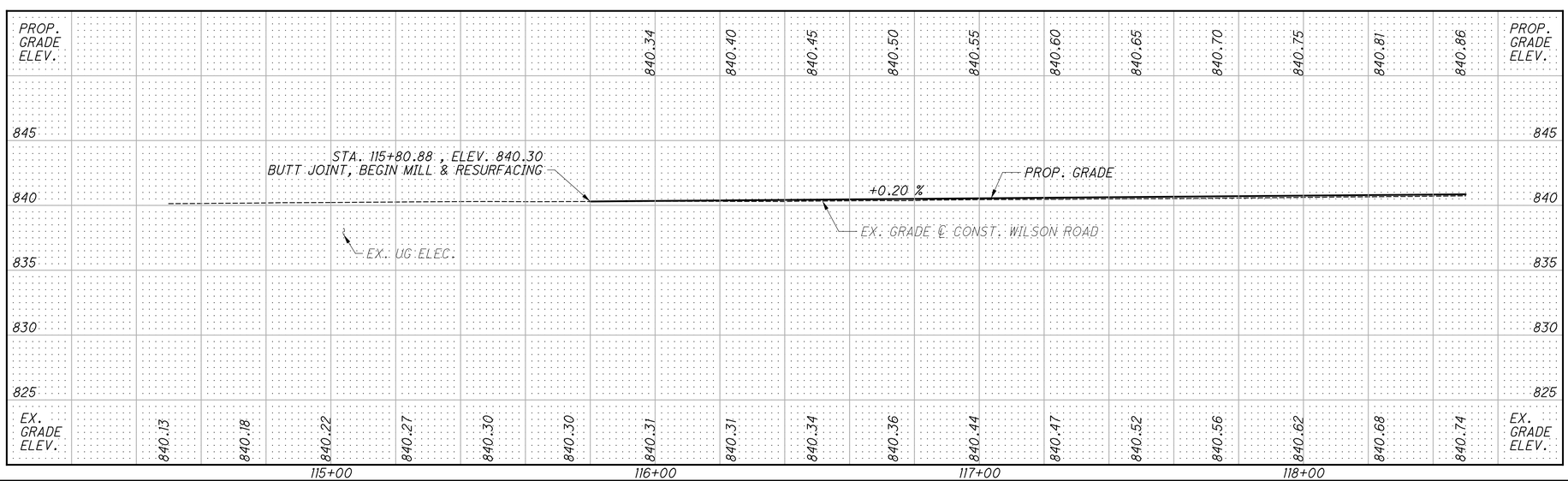

REF. NO.	STATION FROM	STATION TO	SIDE	601 TIED CONCRETE BLOCK MAT, TYPE 1 (SY)	605 4' PREFABRICATED EDGE DRAIN (EA)	603 4" CONDUIT, TYPE F FOR UNDERDRAIN OUTLETS (FT)	FOR INFORMATION ONLY, 605 4" PIPE UNDERDRAIN BENDS (EA)	605 4" PIPE UNDERDRAIN (FT)	901 18" PIPE, W/ TYPE 1 BEDDING, W/ ITEM 912 - COMPACTED GRANULAR BACKFILL (FT)	448 2.5" ASPHALT CONCRETE SURFACE COURSE (LIGHT TRAFFIC), PG 64-22 (CY)	304 AGGREGATE BASE (CY)	204 SUBGRADE COMPACTION (SY)	609 MANHOLE, TYPE C(48) (EA)	609 CURB, STRAIGHT 18" (FT)	608 DETECTABLE WARNING, TYPE E (SF)	608 CURB RAMP (EA)	608 8" CONCRETE WALK (SF)	602 CONCRETE MASONRY (CY)	259 PERMANENT PAVEMENT REMOVED, TYPE 1, AS PER PLAN (CY)	254 PAVEMENT PLANING, AS PER PLAN (SY)	253 WALK REMOVED (CF)	202 CURB REMOVED (FT)
R-1	116+19	116+28	LT																		29	
R-2	116+65	116+74	LT																		30	
R-3	114+50	116+29	LT																	706		
P-1	114+50	116+28	LT																3			
P-2	116+65	118+50	LT																3			
P-3	117+13	118+50	LTRT																11			
D-2	117+09		LT																			
D-2A	117+50		LT															2				
U-9	115+81		RT																			
U-10	117+61		LT																			
TOTALS CARRIED TO GENERAL SUMMARY				32	2	29	2	396	43	26	63	383	1	310	40	2	120	2	17	0	706	59

HORIZONTAL SCALE IN FEET 0 10 20

CALCULATED CAG
CHECKED JDB

PLAN & PROFILE
STA. 114+50 TO STA. 118+50

WILSON ROAD

3233-E

\\Columbus\SRVLN\DE\Clients\OH_City_of_Columbus\073707_WILSON_RD\Design\Roadway\Sheets\073707_GP005.dgn 10/17/2016 3:35:58 PM keatingm

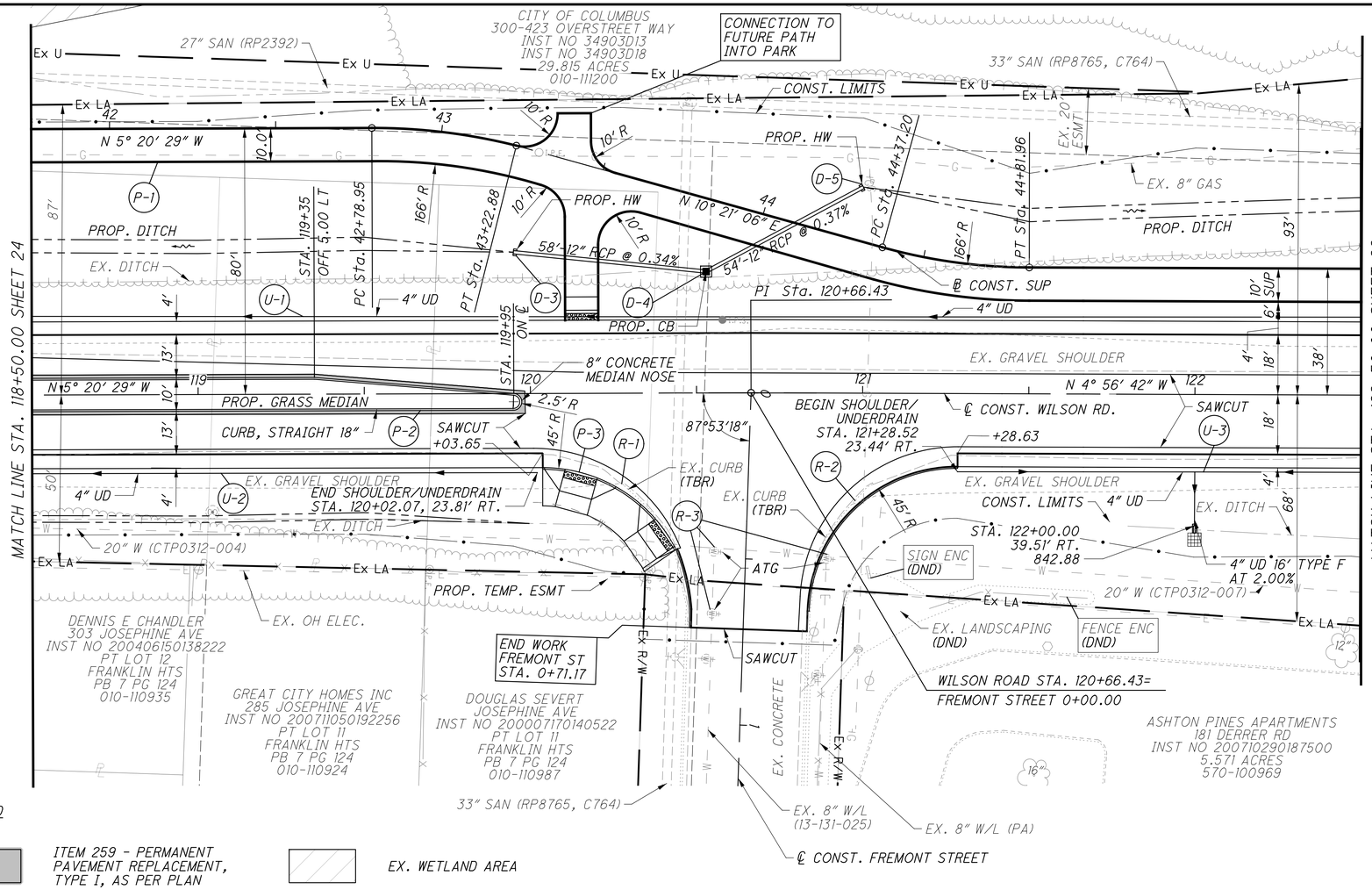

FOR SHARED-USE PATH BASELINE INFORMATION, SEE SHEET 3

FOR SHEET LEGEND, SEE SHEET 8

FOR PAVEMENT QUANTITY CALCULATIONS, SEE SHEET 16

FOR STORM PROFILES, SEE SHEET 60

FOR SHARED-USE PATH PROFILE INFORMATION, SEE SHEET 31-32

FOR INTERSECTION AND CURB RAMP DETAILS, SEE SHEET 57

FOR SIGNING AND PAVEMENT MARKINGS, SEE SHEET 62-65

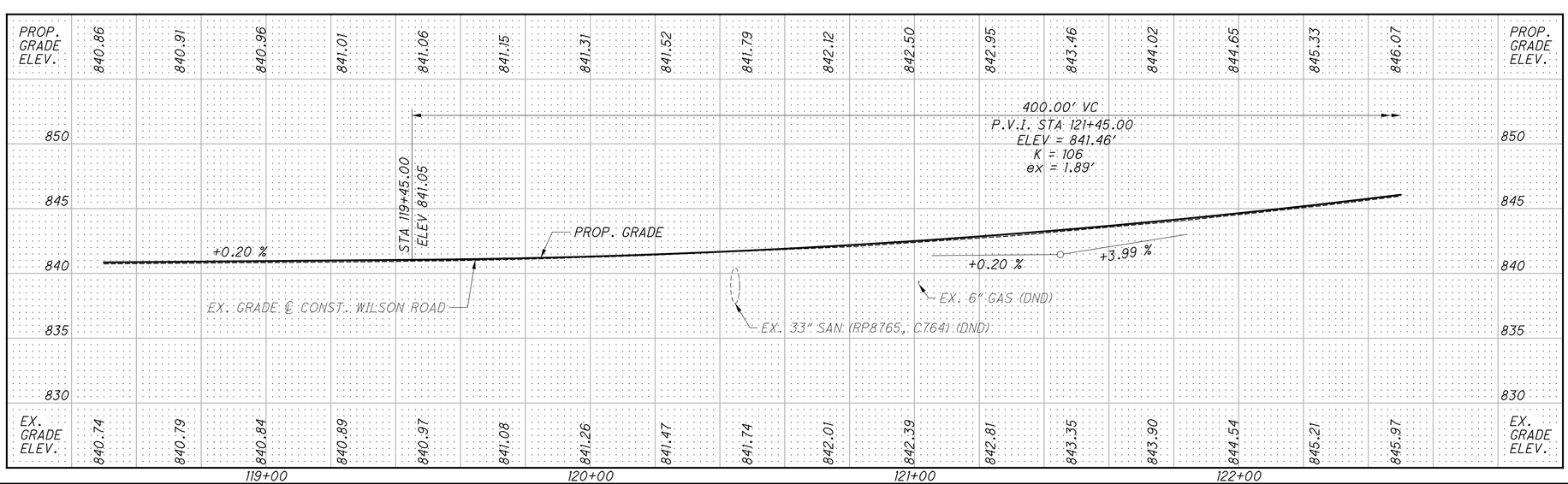

REF. NO.	STATION FROM	STATION TO	SIDE	202 CURB REMOVED (FT)	259 PERMANENT PAVEMENT REPLACEMENT, TYPE I, AS PER PLAN (CY)	602 CONCRETE MASONRY (CY)	604 CATCH BASIN, 12" DIA (AA-S133A) (EA)	608 8" CONCRETE WALK (SF)	608 CURB RAMP (EA)	608 DETECTABLE WARNING, TYPE E (SF)	609 CURB, STRAIGHT 18" (FT)	807 VALVE BOXES ADJUSTED TO GRADE (EA)	901 12" PIPE, W/ TYPE I BEDDING, W/ ITEM 912 - COMPACTED GRANULAR BACKFILL (FT)	204 SUBGRADE COMPACTION (SY)	304 AGGREGATE BASE (CY)	448 2.5" ASPHALT CONCRETE SURFACE COURSE (LIGHT TRAFFIC), PG 64-22 (CY)	605 4" PIPE UNDERDRAIN (FT)	FOR INFORMATION ONLY, 605 4" PIPE UNDERDRAIN BENDS (EA)	603 4" CONDUIT, TYPE F FOR UNDERDRAIN OUTLETS (FT)	605 4" PREFABRICATED EDGE DRAIN (EA)	601 TIED CONCRETE BLOCK MAT, TYPE I (SY)
R-1	120+28	120+43	RT	26																	
R-2	120+84	121+03	RT	44																	
R-3	120+54	120+89	RT																		
P-1	118+50	122+50	LT												35						
P-2	118+50	119+75	LT		11					20	1	74		510	86						
P-3	120+03	120+44	RT						2	40		298									
D-3	119+95	120+53	LT			1							58								
D-4	120+53	121+00	LT			1	1						54								
D-5	121+00	122+50	LT			1											400				
U-1	118+50	122+50	LT					70		20	1	74					152				
U-2	118+50	120+02	RT														121				
U-3	121+29	122+50	RT																		
TOTALS CARRIED TO GENERAL SUMMARY				70	11	2	1	556	3	60	372	3	112	510	86	35	673	1	16	1	16

202	259	602	604	608	608	608	609	807	901	204	304	448	605	FOR INFORMATION ONLY, 605	603	605	601
CURB REMOVED (FT)	PERMANENT PAVEMENT REPLACEMENT, TYPE I, AS PER PLAN (CY)	CONCRETE MASONRY (CY)	CATCH BASIN, 12" DIA (AA-S133A) (EA)	8" CONCRETE WALK (SF)	CURB RAMP (EA)	DETECTABLE WARNING, TYPE E (SF)	CURB, STRAIGHT 18" (FT)	VALVE BOXES ADJUSTED TO GRADE (EA)	12" PIPE, W/ TYPE I BEDDING, W/ ITEM 912 - COMPACTED GRANULAR BACKFILL (FT)	SUBGRADE COMPACTION (SY)	AGGREGATE BASE (CY)	2.5" ASPHALT CONCRETE SURFACE COURSE (LIGHT TRAFFIC), PG 64-22 (CY)	4" PIPE UNDERDRAIN (FT)	4" PIPE UNDERDRAIN BENDS (EA)	4" CONDUIT, TYPE F FOR UNDERDRAIN OUTLETS (FT)	4" PREFABRICATED EDGE DRAIN (EA)	TIED CONCRETE BLOCK MAT, TYPE I (SY)

HORIZONTAL SCALE IN FEET
20 0 10 20

CALCULATED CAG
CHECKED JDB

PLAN & PROFILE
STA. 118+50 TO STA. 122+50
WILSON ROAD

3233-E

\\Columbus\SRVLN\DE\Clients\OH_City_of_Columbus\073707_WILSON_RD\Design\Roadway\Sheets\073707_GP006.dgn 10/17/2016 3:35:59 PM keatingm

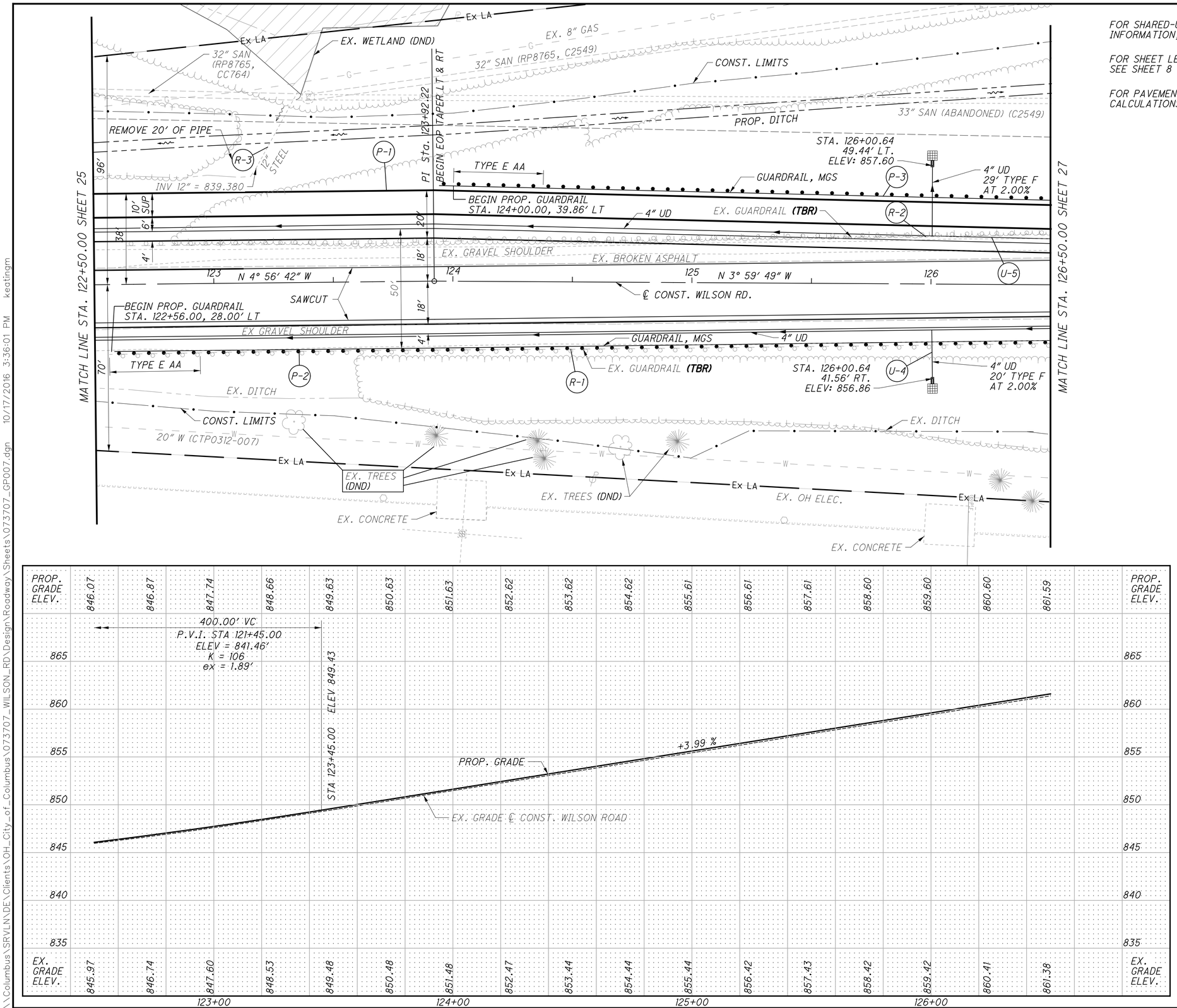

FOR SHARED-USE PATH BASELINE INFORMATION, SEE SHEET 3

FOR SHEET LEGEND, SEE SHEET 8

FOR PAVEMENT QUANTITY CALCULATIONS, SEE SHEET 16

FOR SHARED-USE PATH PROFILE INFORMATION, SEE SHEET 31-32

FOR SIGNING AND PAVEMENT MARKINGS, SEE SHEET 62-65

LEGEND

EX. WETLAND AREA

REF. NO.	STATION FROM	STATION TO	SIDE	202 GUARDRAIL REMOVED (FT)	202 PIPE REMOVED (FT)	606 GUARDRAIL, TYPE MGS (FT)	606 ANCHOR ASSEMBLY, MGS, TYPE E (EA)	204 SUBGRADE COMPACTION (SY)	304 AGGREGATE BASE (CY)	448 2.5" ASPHALT CONCRETE SURFACE COURSE (LIGHT TRAFFIC), PG 64-22 (CY)	605 4" PIPE UNDERDRAIN (FT)	FOR INFORMATION ONLY, 605 4" PIPE UNDERDRAIN BENDS (EA)	603 4" CONDUIT, TYPE F (FOR UNDERDRAIN OUTLETS) (FT)	605 4" PREFABRICATED EDGE DRAIN (EA)	601 TIED CONCRETE BLOCK MAT, TYPE 1 (SY)
R-1	Y22+56	Y26+50	RT	393.7											
R-2	Y22+61	Y26+50	LT	389.1											
R-3	Y23+18	Y23+28	LT		20										
P-1	Y22+50	Y26+50	LT					446	74	31					
P-2	Y22+56	Y26+50	RT			391.4	1				400	1	20	1	16
P-3	Y24+00	Y26+50	LT			255.8	1				400	1	29	1	16
U-4	Y22+50	Y26+50	RT												
U-5	Y22+50	Y26+50	LT												
TOTALS CARRIED TO GENERAL SUMMARY				782.8	20	647.2	2	446	74	31	800	2	49	2	32

3233-E

N

HORIZONTAL SCALE IN FEET 20 0 10 20

CALCULATED CAG
CHECKED JDB

PLAN & PROFILE STA. 122+50 TO STA. 126+50

WILSON ROAD

\\Columbus\SRVLN\DE\Clients\OH_City_of_Columbus\073707_WILSON_RD\Design\Roadway\Sheets\073707_GP007.dgn 10/17/2016 3:36:01 PM keatingm

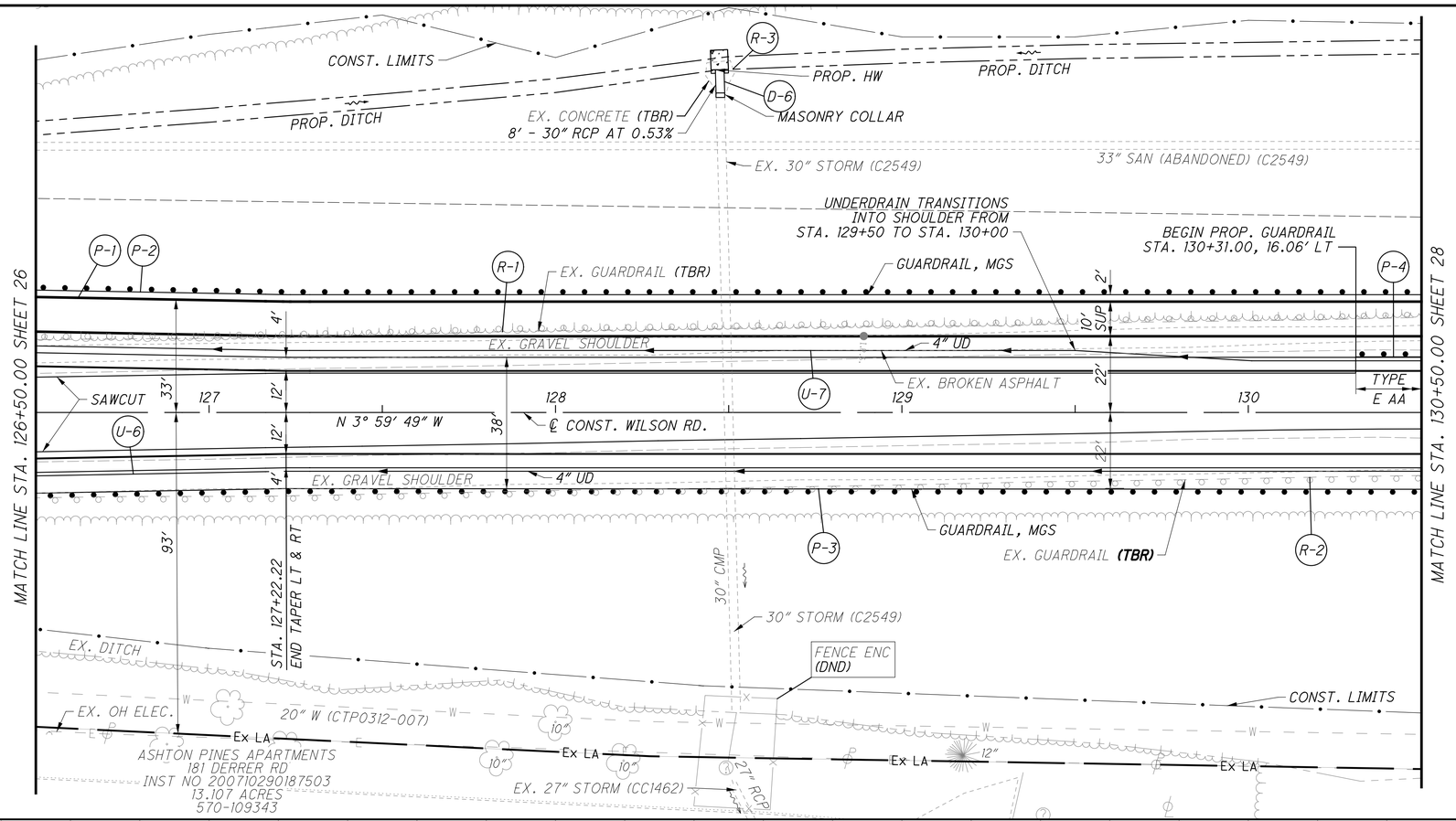

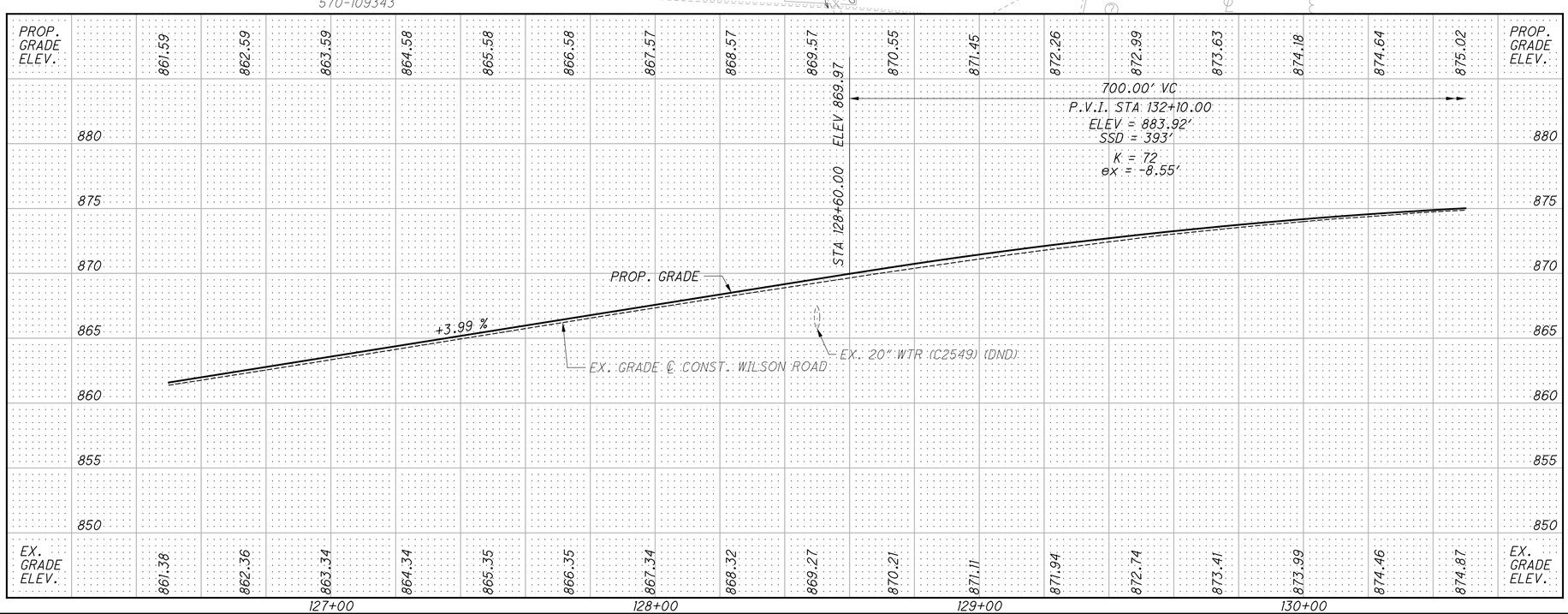

FOR SHARED-USE PATH BASELINE INFORMATION, SEE SHEET 3

FOR SHARED-USE PATH PROFILE INFORMATION, SEE SHEET 31-32

FOR SHEET LEGEND, SEE SHEET 8

FOR SIGNING AND PAVEMENT MARKINGS, SEE SHEET 62-65

FOR PAVEMENT QUANTITY CALCULATIONS, SEE SHEET 16

FOR STORM PROFILES, SEE SHEET 60

REF. NO.	STATION FROM	STATION TO	SIDE	202 GUARDRAIL REMOVED (FT)	202 PAVEMENT REMOVED (SY)	202 PIPE REMOVED (FT)	601 TIED CONCRETE BLOCK MATS, TYPE 1 (SY)	603 4' PREFABRICATED EDGE DRAIN (EA)	603 4" CONDUIT, TYPE F FOR UNDERDRAIN OUTLETS (FT)	605 4" PIPE UNDERDRAIN (FT)	448 2.5" ASPHALT CONCRETE SURFACE COURSE (LIGHT TRAFFIC), PG 64-22 (CY)	304 AGGREGATE BASE (CY)	204 SUBGRADE COMPACTION (SY)	901 30" PIPE, W/ TYPE 1 BEDDING, W/ ITEM 912 - COMPACTED GRANULAR BACKFILL (FT)	606 GUARDRAIL, TYPE MGS (FT)	606 ANCHOR ASSEMBLY, MGS, TYPE E (EA)	602 CONCRETE MASONRY (CY)	601 RIPRAP, 6" REINFORCED CONCRETE SLAB (FT)	202 PIPE REMOVED (FT)	202 PAVEMENT REMOVED (SY)	202 GUARDRAIL REMOVED (FT)
R-1	126+50	130+50	LT	400.1																	
R-2	126+50	130+50	RT	400.1																	
R-3	128+47		LT			7															
P-1	126+50	130+50	LT		6						31										
P-2	126+50	130+50	LT									74									
P-3	126+50	130+50	RT										445								
P-4	130+31	130+50	LT												400.0						
D-6	128+47		LT												400.0						
U-6	126+50	130+50	RT												19.0	1	1				
U-7	126+50	130+50	LT											7				3			
TOTALS CARRIED TO GENERAL SUMMARY				800.1	6	7	7	0	0	800	31	74	445	7	819.0	1	1	3	7	6	800.1

HORIZONTAL SCALE IN FEET 20 10 0 20

CALCULATED CAG
CHECKED JDB

PLAN & PROFILE
STA. 126+50 TO STA. 130+50

WILSON ROAD

3233-E

\\Columbus\SRVLNNDE\Clients\OH_City_of_Columbus\073707_WILSON_RD\Design\Roadway\Sheets\073707_GP008.dgn 10/17/2016 3:36:02 PM keatingm

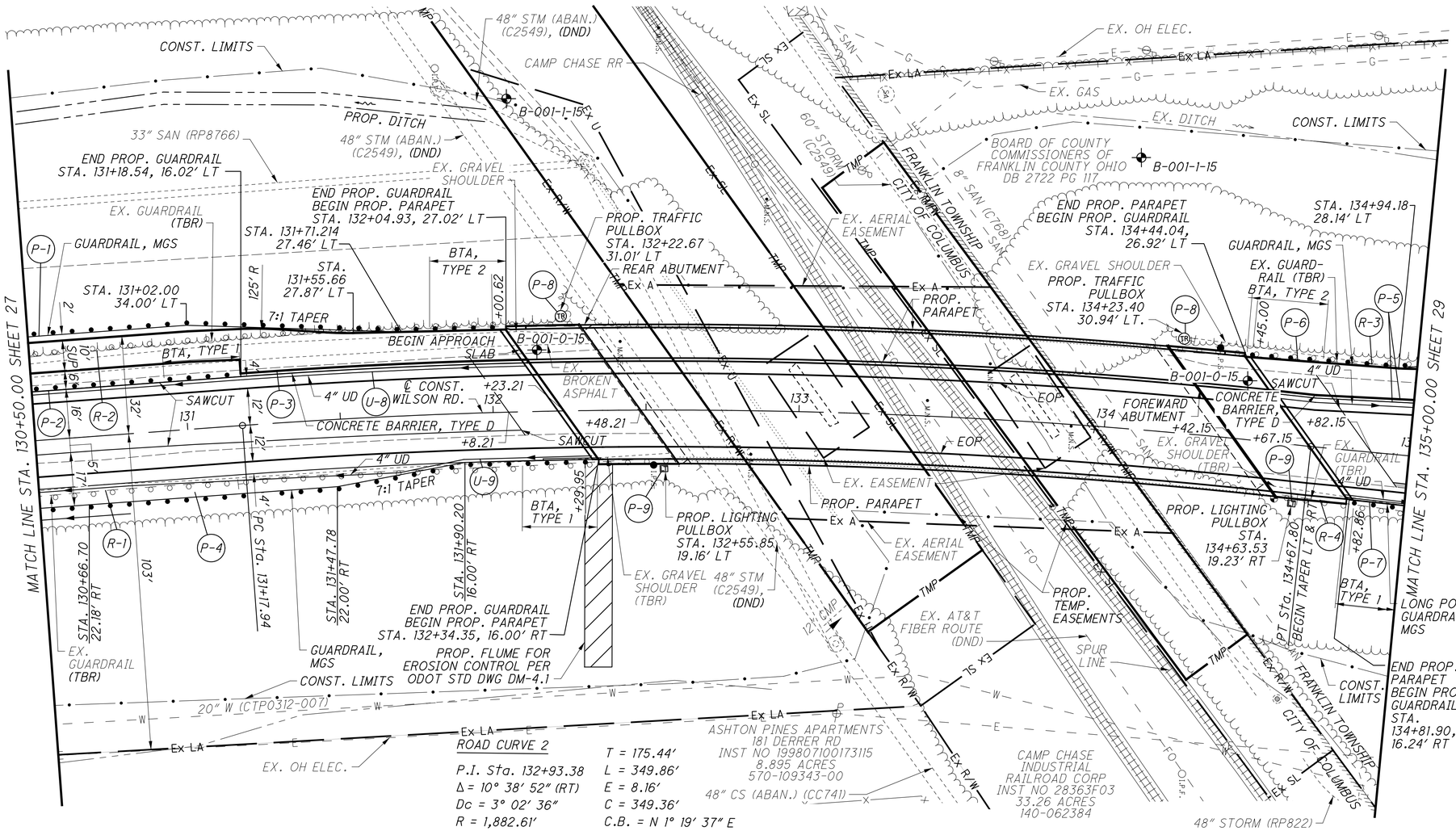

FOR SHARED-USE PATH BASELINE INFORMATION, SEE SHEET 3

FOR SHEET LEGEND, SEE SHEET 8

FOR SHARED-USE PATH PROFILE INFORMATION, SEE SHEET 31-32

FOR PAVEMENT QUANTITY CALCULATIONS, SEE SHEET 16

FOR SIGNING AND PAVEMENT MARKINGS, SEE SHEET 62-65

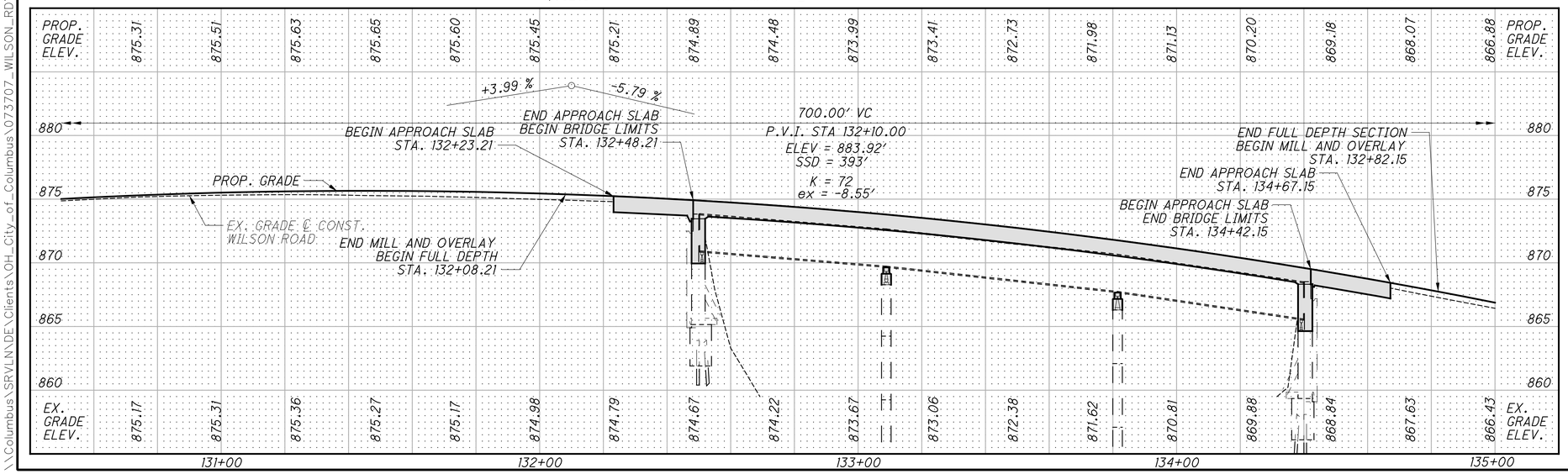

REF. NO.	STATION FROM	STATION TO	SIDE	202 GUARDRAIL REMOVED (FT)	606 GUARDRAIL, TYPE MGS (FT)	606 GUARDRAIL, TYPE MGS, LONG POSTS (FT)	606 MGS BRIDGE TERMINAL ASSEMBLY, TYPE 1 (EA)	606 MGS BRIDGE TERMINAL ASSEMBLY, TYPE 2 (EA)	622 CONCRETE BARRIER, SINGLE SLOPE, TYPE D (FT)	204 SUBGRADE COMPACTION (SY)	304 AGGREGATE BASE (CY)	448 2.5" ASPHALT CONCRETE SURFACE COURSE (LIGHT TRAFFIC), PG 64-22 (CY)	605 4" PIPE UNDERDRAIN (FT)	603 4" CONDUIT, TYPE F FOR UNDERDRAIN OUTLETS (FT)	605 4" PREFABRICATED EDGE DRAIN (EA)	601 TIED CONCRETE BLOCK MAT, TYPE 1 (SY)	625 TRAFFIC PULLBOX 32", AS PER PLAN (EA)	1001 MEDIUM DUTY PULLBOX (10"X15") - (MIS 121) (EA)
R-1	130+50	132+58	RT	207.1														
R-2	130+50	132+05	LT	178.9														
R-3	134+45	135+00	LT	79.4														
R-4	134+83	135+00	RT	42.0														
P-1	130+50	132+05	LT		156.6			1	140	191	32	13						
P-2	130+50	131+19	LT		68.6		1											
P-3	130+50	131+56	LT															
P-4	130+50	132+34	RT		183.6		1					4						
P-5	134+54	135+00	LT							59	10							
P-6	134+44	135+00	LT		55.9			1										
P-7	134+82	135+00	RT			18.0	1											
P-8	132+56		RT															
P-9	134+64		RT															
U-8	130+50	135+00	LT										201			67	2	
U-9	130+50	135+00	RT										207					
TOTALS CARRIED TO GENERAL SUMMARY				507.3	464.7	18.0	3	2	140	250	42	17	408	0	0	67	2	2

N

HORIZONTAL SCALE IN FEET 0 10 20

CALCULATED CAG
CHECKED JDB

PLAN & PROFILE STA. 130+50 TO STA. 135+00

WILSON ROAD

3233-E

\\Columbus\SRVLN\DE\Clients\OH_City_of_Columbus\073707_WILSON_RD\Design\Roadway\Sheets\073707_GP009.dgn 10/17/2016 3:36:03 PM keatingm

ROAD CURVE 3

P.I. Sta. 138+97.72
Δ = 5° 45′ 24″ (RT)
Dc = 4° 00′ 00″
R = 1,432.39′
T = 72.02′
L = 143.92′
E = 1.81′
C = 143.86′
C.B. = N 8° 29′ 18″ E

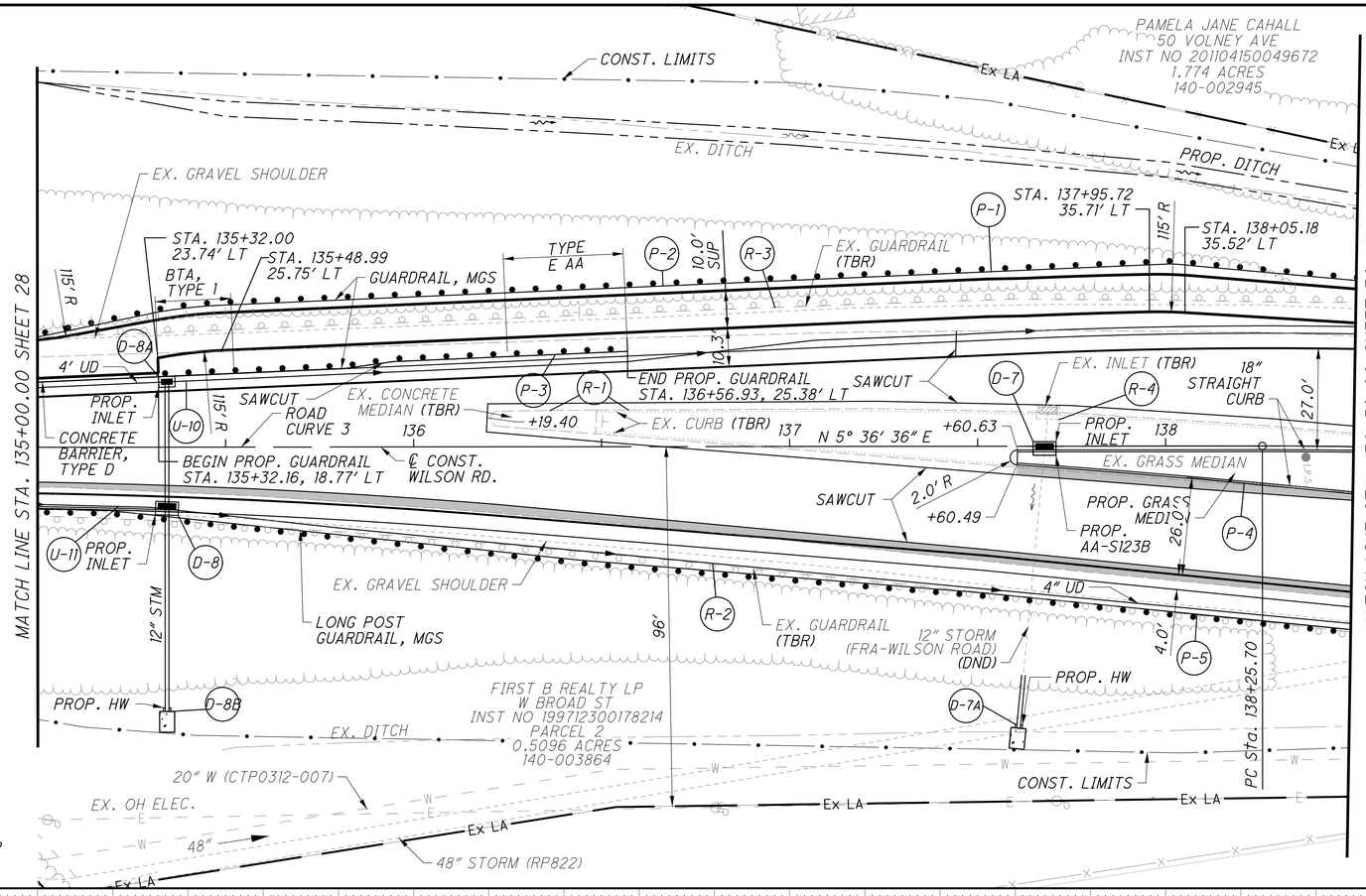

FOR SHARED-USE PATH BASELINE INFORMATION, SEE SHEET 3

FOR SHEET LEGEND, SEE SHEET 8

FOR PAVEMENT QUANTITY CALCULATIONS, SEE SHEET 16

FOR STORM PROFILES, SEE SHEET 61

FOR SHARED-USE PATH PROFILE INFORMATION, SEE SHEET 31-32

FOR SIGNING AND PAVEMENT MARKINGS, SEE SHEET 62-65

LEGEND

ITEM 259 - PERMANENT PAVEMENT REPLACEMENT, TYPE I, AS PER PLAN

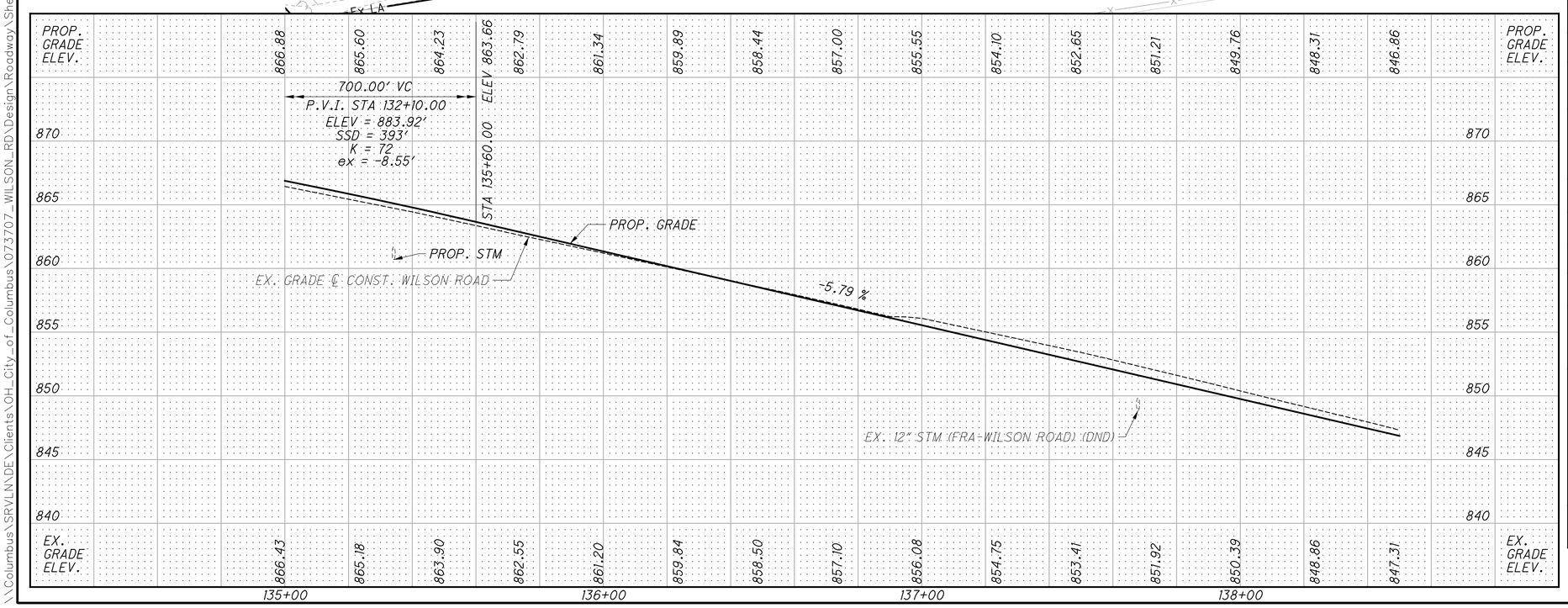

REF. NO.	STATION FROM	STATION TO	SIDE	601 TIED CONCRETE BLOCK MAT, TYPE 1 (SY)	603 4″ PREFABRICATED EDGE DRAIN (EA)	603 4″ CONDUIT, TYPE F FOR UNDERDRAIN OUTLETS (FT)	605 4″ PIPE UNDERDRAIN (FT)	901 12″ PIPE, W/ TYPE 1 BEDDING, W/ ITEM 912 - COMPACTED GRANULAR BACKFILL (CY)	448 2.5″ ASPHALT CONCRETE SURFACE COURSE (LIGHT TRAFFIC), PG 64-22 (CY)	304 AGGREGATE BASE (CY)	204 SUBGRADE COMPACTION (SY)	622 CONCRETE BARRIER, SINGLE SLOPE, TYPE D (FT)	609 CURB, STRAIGHT 18″ (FT)	606 ANCHOR ASSEMBLY, MGS, TYPE E (EA)	606 GUARDRAIL, TYPE MGS, LONG POSTS (FT)	606 GUARDRAIL, TYPE MGS (FT)	604 INLET, TYPE AA-S133A (EA)	604 INLET, TYPE AA-S125A (EA)	602 CONCRETE MASONRY (CY)	602 MGS BRIDGE TERMINAL ASSEMBLY, TYPE 1 (EA)	259 PERMANENT PAVEMENT REPLACEMENT, TYPE I, AS PER PLAN (CY)	202 GUARDRAIL REMOVED (FT)	202 CATCH BASIN OR INLET REMOVED (EA)	202 PIPE REMOVED (FT)	202 CURB REMOVED (FT)
R-1	136+21	138+50	LT/RT																					404
R-2	135+00	138+50	RT																		350.7			
R-3	135+00	138+50	LT																		350.9			
R-4	137+68	137+69	LT																			1		
P-1	135+00	138+50	LT																				10	
P-2	135+00	138+50	LT																					
P-3	135+32	136+57	LT											1						1				
P-4	137+59	138+50	RT																					
P-5	135+00	138+50	RT						8 32				33	185		350.8								
D-7	137+68		RT															1	1					
D-7A	137+61		RT														1							
D-8	135+35		RT															1	1					
D-8A	135+35		LT																					
D-8B	135+35		RT														1							
U-10	135+00	138+50	LT																					
U-11	135+00	138+50	RT																					
TOTALS CARRIED TO GENERAL SUMMARY				0	0	0	702	97	28	66	395	33	185	1	350.8	477.0	1	2	2	1	701.5	1	10	404

HORIZONTAL SCALE IN FEET 10 0 10 20

CALCULATED CAG
CHECKED JDB

PLAN & PROFILE
STA. 135+00 TO STA. 138+50
WILSON ROAD

3233-E

\\Columbus\SRVLN\DE\Clients\OH_City_of_Columbus\073707_WILSON_RD\Design\Roadway\Sheets\073707_GP010.dgn 10/17/2016 3:36:04 PM keatingm

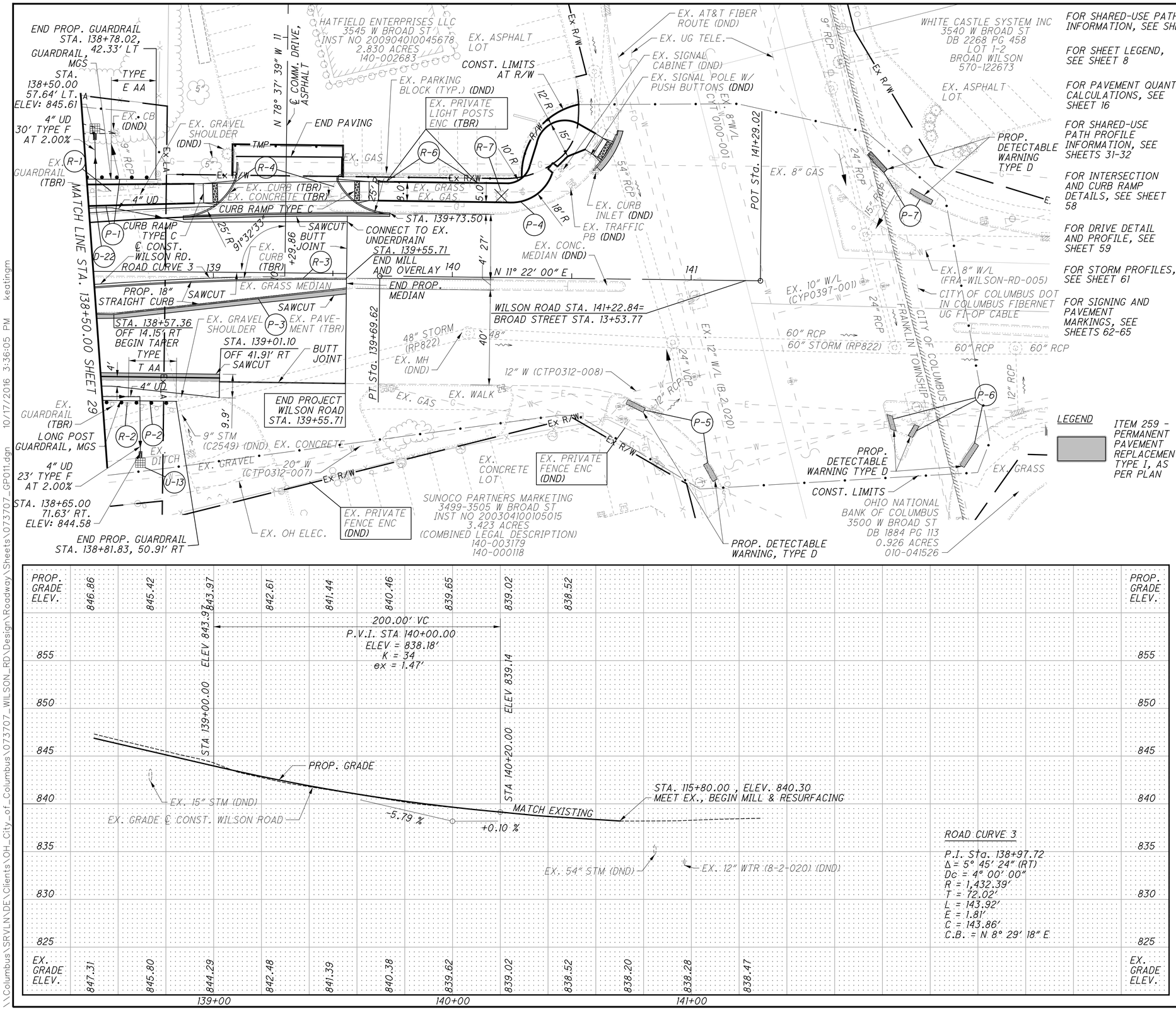

FOR SHARED-USE PATH BASELINE INFORMATION, SEE SHEET 3

FOR SHEET LEGEND, SEE SHEET 8

FOR PAVEMENT QUANTITY CALCULATIONS, SEE SHEET 16

FOR SHARED-USE PATH PROFILE INFORMATION, SEE SHEETS 31-32

FOR INTERSECTION AND CURB RAMP DETAILS, SEE SHEET 58

FOR DRIVE DETAIL AND PROFILE, SEE SHEET 59

FOR STORM PROFILES, SEE SHEET 61

FOR SIGNING AND PAVEMENT MARKINGS, SEE SHEETS 62-65

LEGEND

ITEM 259 - PERMANENT PAVEMENT REPLACEMENT, TYPE I, AS PER PLAN

REF. NO.	STATION FROM	STATION TO	SIDE	202 TREE REMOVED, 4" SIZE (EA)	202 CURB REMOVED (FT)	202 GUARDRAIL REMOVED (FT)	202 PRIVATE LIGHT POSTS REMOVED (EA)	202 ANCHOR ASSEMBLY REMOVED, TYPE A (EA)	259 PERMANENT PAVEMENT REPLACEMENT, TYPE I, AS PER PLAN (CY)	606 GUARDRAIL, TYPE MGS (FT)	606 GUARD-RAIL, TYPE MGS, LONG POSTS (FT)	606 ANCHOR ASSEMBLY, MGS, TYPE E (EA)	606 ANCHOR ASSEMBLY, MGS, TYPE T (EA)	608 CURB RAMP (EA)	608 DETECT. WARN., TYPE D (SF)	608 DETECT. WARN., TYPE E (SF)	608 8" CONC. WALK (SF)	609 CURB, STRAIGHT 18" (FT)	609 MANHOLE, ADJUSTED TO GRADE (EA)	204 SUBGRADE COMPACTION (SY)	304 AGGREGATE BASE (CY)	448 2.5" ASPHALT CONCRETE SURFACE COURSE (LIGHT TRAFFIC), PG 64-22 (CY)	605 PREFABRICATED EDGE DRAIN (EA)	605 4" PIPE UNDERDRAIN (FT)	FOR INFORMATION ONLY, 605 4" PIPE UNDERDRAIN BENDS (EA)	601 TIED CONCRETE BLOCK MAT, TYPE 1 (SY)	605 4" CONDUIT, TYPE F FOR UNDERDRAIN OUTLETS (FT)	TOTALS CARRIED TO GENERAL SUMMARY
R-1	138+50	138+78	LT		28.7			1																					
R-2	138+50	138+82	RT		30.9																								
R-3	138+50	140+73	LTRT			211																							
R-4	138+88	140+68	LT			88																							
R-6	139+73	140+10	LT				2																						
R-7	140+21		LT	1																									
P-1	138+50	138+78	LT						1	29.6		1		2			233	152		7	3			1	1	30	23		53
P-2	138+50	138+82	RT						5																				
P-3	138+50	139+58	RT						7		31.2									17	7								24
P-4	139+52	140+68	RT						6											105									148
P-5	140+77	141+09	RT																										
P-6	141+65	142+18	RT																										
P-7	141+78	141+95	LT																										
U-12	138+50	140+22	LT																										
U-13	138+50	138+65	RT																										
TOTALS CARRIED TO GENERAL SUMMARY				1	299	59.6	2	1	19	29.6	31.2	1	1	3	121	48	303	381	0	148	24	10	153	2	1	16	16	32	53

HORIZONTAL SCALE IN FEET 10 0 10 20

CALCULATED CAG
CHECKED JDB

PLAN & PROFILE
STA. 138+50 TO STA. 140+73

WILSON ROAD

3233-E

\\Columbus\SRVLN\DE\Clients\OH_City_of_Columbus\073707_WILSON_RD\Design\Roadway\Sheets\073707_GP011.dgn 10/17/2016 3:36:05 PM keatingm

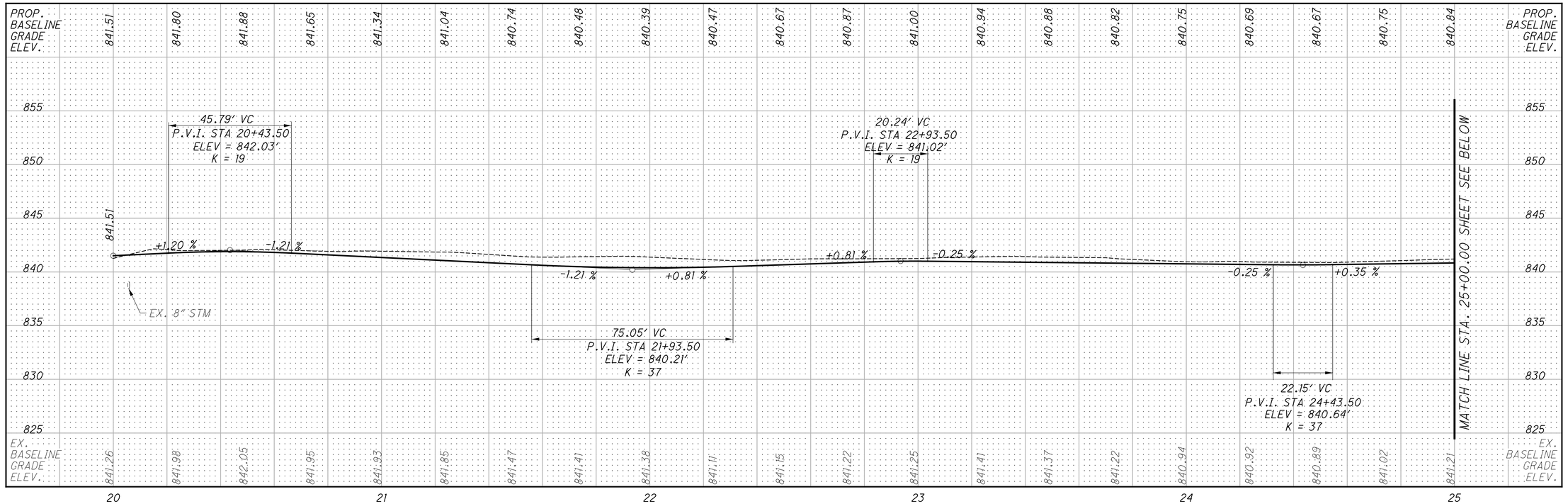

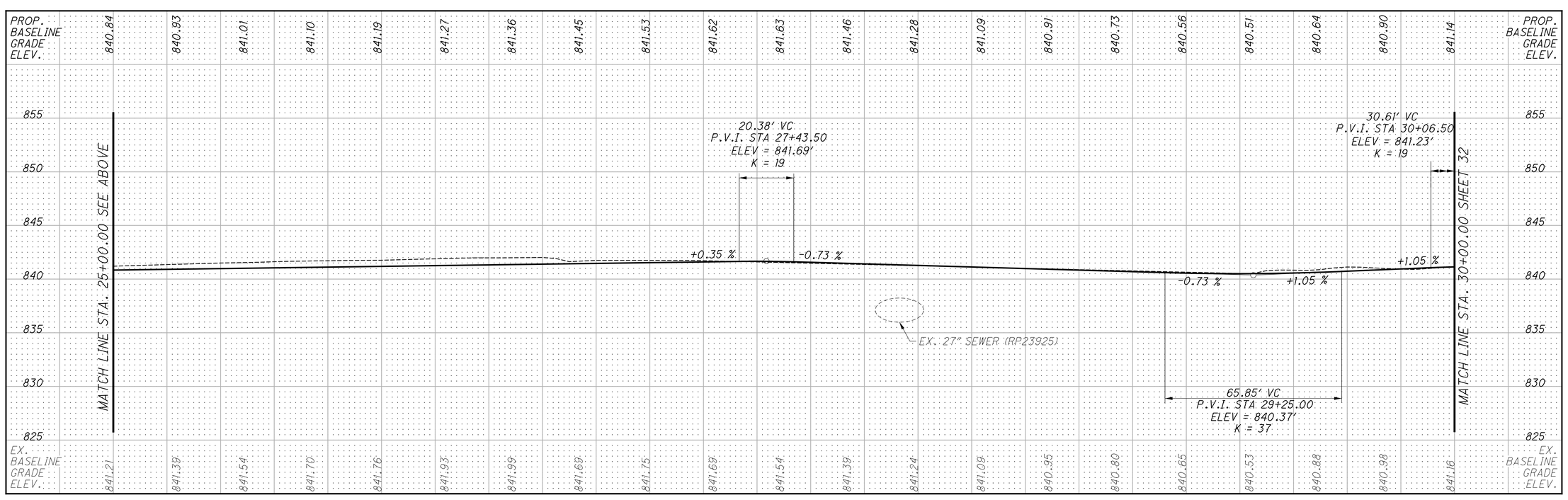

3233-E

HORIZONTAL SCALE IN FEET
20 0 20
10

CALCULATED CAG
CHECKED JDB

PROFILE - SHARED USE PATH
STA. 20+00 TO STA. 30+00

WILSON ROAD

\\Columbus\SRVLN\DE\Clients\OH_City_of_Columbus\073707_WILSON_RD\Design\Roadway\Sheets\073707_GF001.dgn 10/17/2016 3:36:09 PM keatingm

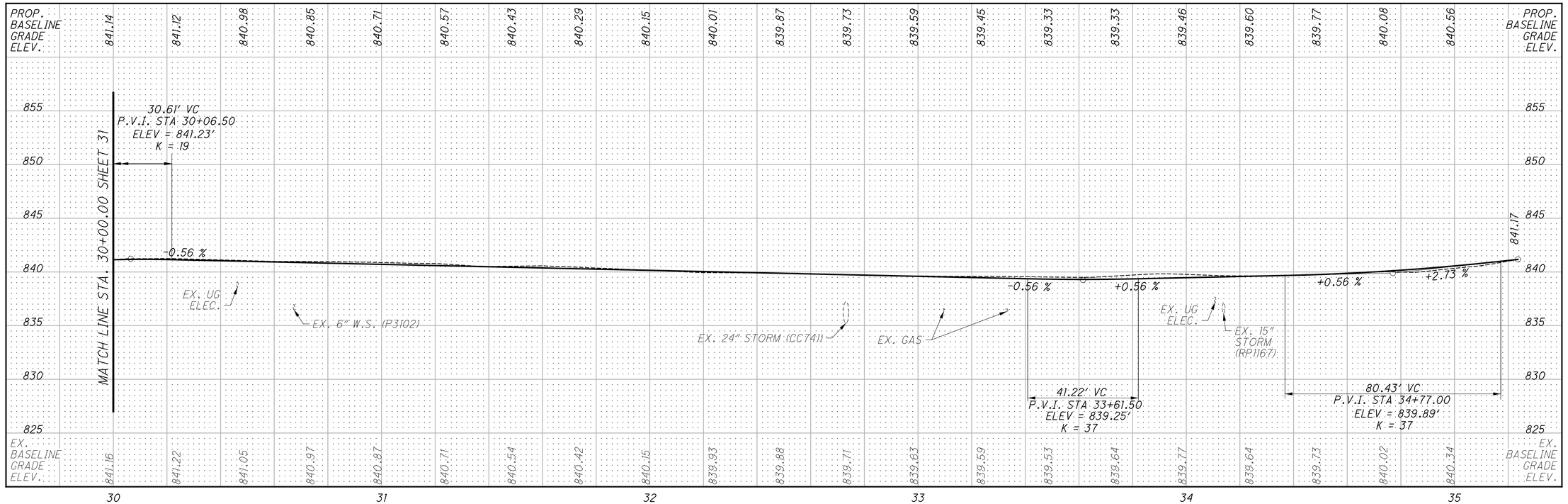

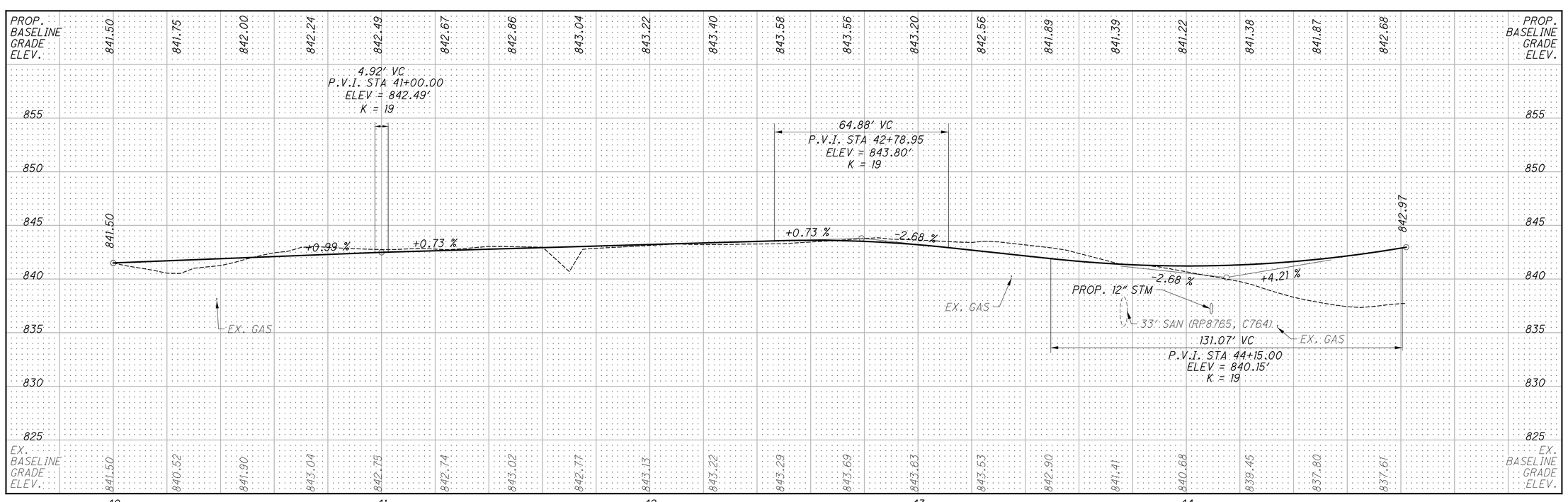

3233-E

HORIZONTAL SCALE IN FEET
20 10 0 20

CALCULATED CAG
CHECKED JDB

PROFILE - SHARED USE PATH STA. 30+00 TO STA. 45+00

WILSON ROAD

\\Columbus\SRVLN\DE\Clients\OH_City_of_Columbus\073707_WILSON_RD\Design\Roadway\Sheets\073707_GF002.dgn 10/17/2016 3:36:12 PM keatingm

SEEDING END WIDTH	SEEDING SQ. YDS.	END AREA CUT	END AREA FILL	VOLUME CUT	VOLUME FILL
20	103	7	8	11	19
17	47	5	13	5	12
0	0	0	0	0	0
0		0	0		
37	150	12	21	16	31

CALCULATED CAG
CHECKED JDB

HORIZ AND VERT SCALE IN FEET

CROSS SECTIONS - WILSON ROAD
STA. 100+19.30 TO STA. 102+00.00

WILSON ROAD

3233-E

33/97

\\Columbus\SRVLN\DE\Clients\OH_City_of_Columbus\073707_WILSON_RD\Design\Roadway\Sheets\073707_XS002.dgn 10/17/2016 3:36:14 PM keatingm

SEEDING END WIDTH	SEEDING SQ. YDS.	END AREA CUT	END AREA FILL	VOLUME CUT	VOLUME FILL
19	89	8	7	15	12
13		8	6		
14	75	6	7	13	12
16	83	8	6	13	12
	100	30	26	55	49
62	347				

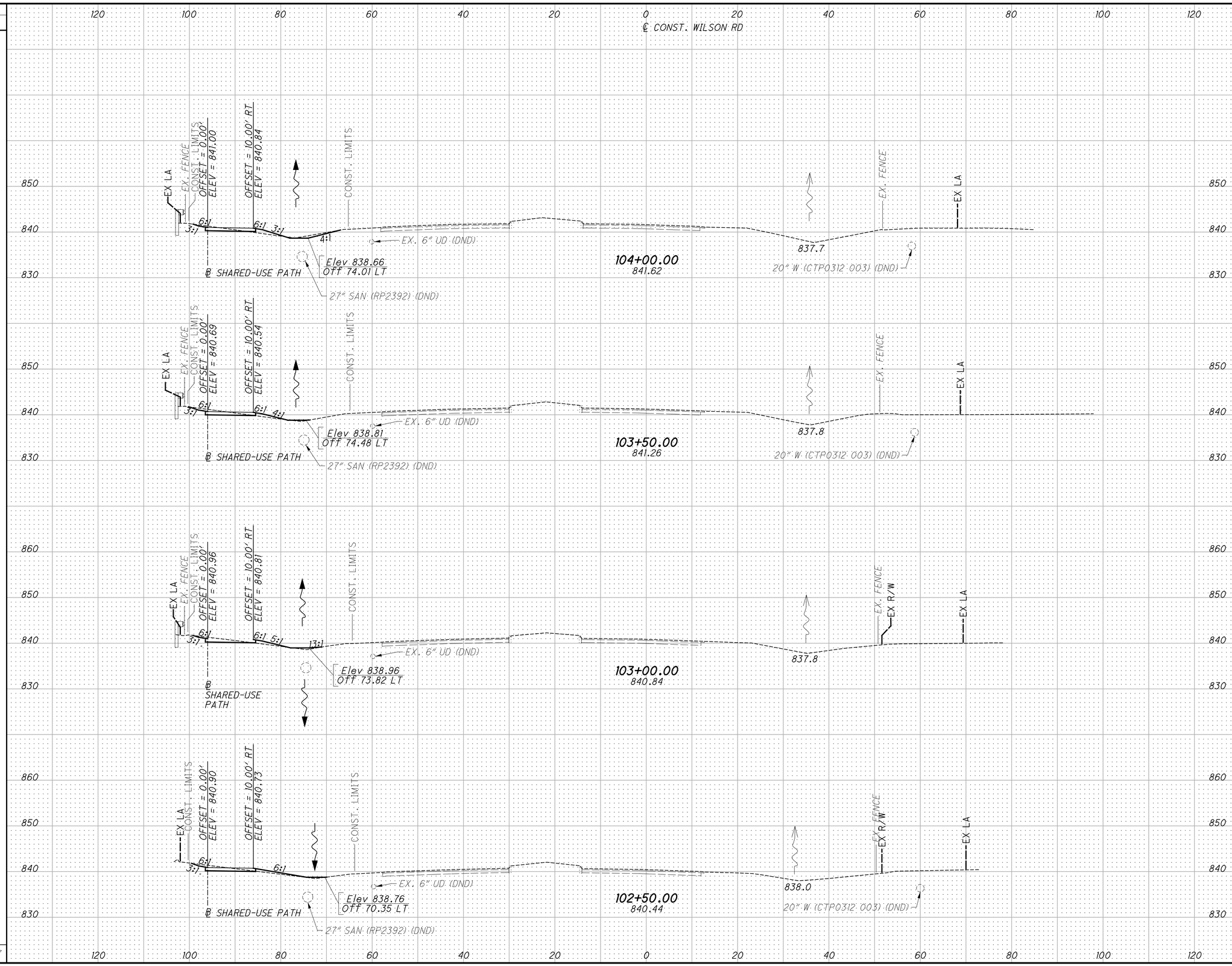

CALCULATED CAG
CHECKED JDB

HORIZ AND VERT SCALE IN FEET
10 5 0 5 10

CROSS SECTIONS - WILSON ROAD
STA. 102+50.00 TO STA. 104+00.00

WILSON ROAD

3233-E

34/97

\\Columbus\SRVLN\DE\Clients\OH_City_of_Columbus\073707_WILSON_RD\Design\Roadway\Sheets\073707_XS002.dgn 10/17/2016 3:36:16 PM keatingm

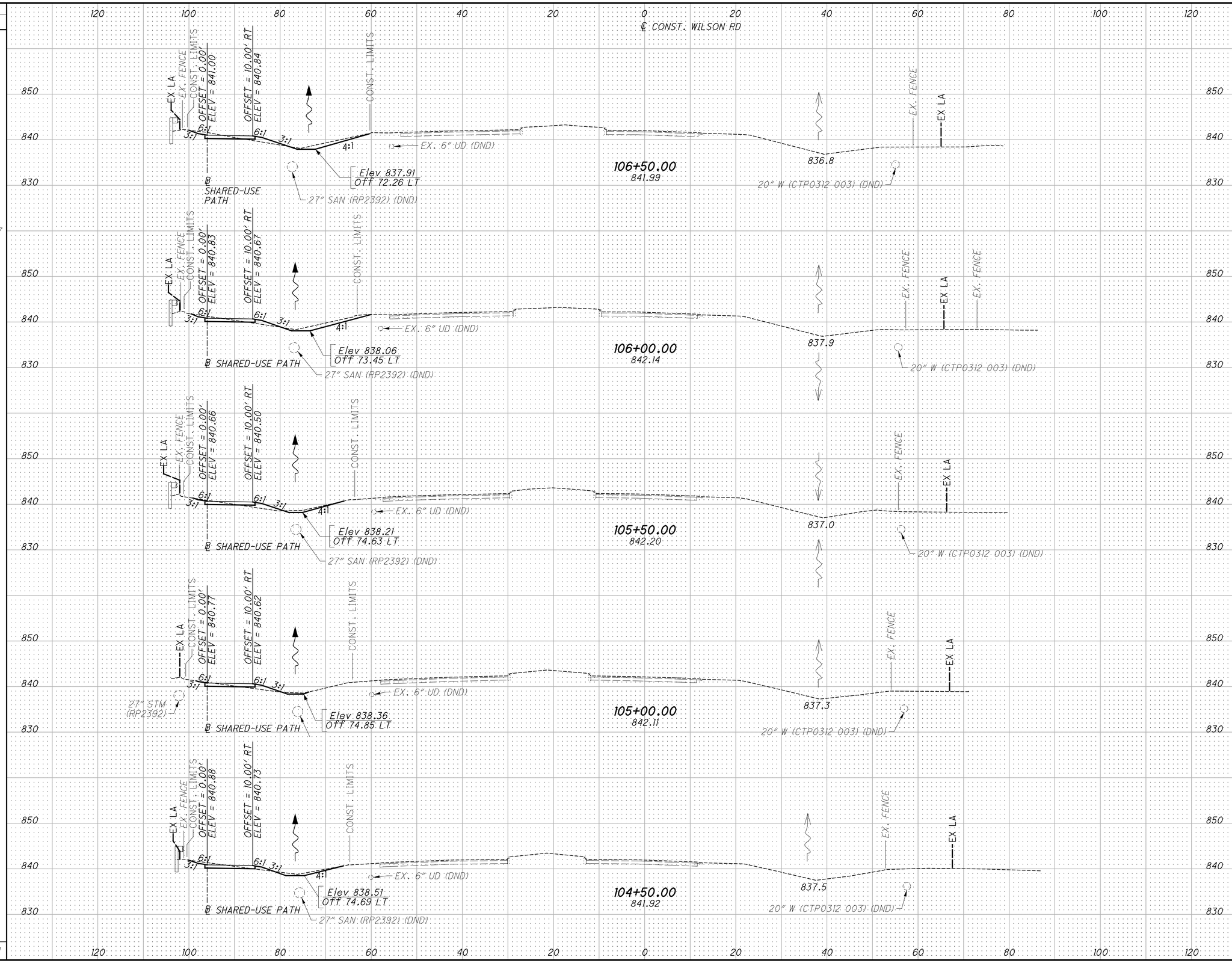

SEEDING END WIDTH	SEEDING SQ. YDS.
26	147
27	131
20	86
11	89
21	111
105	564

END AREA CUT	END AREA FILL	VOLUME CUT	VOLUME FILL
15	9	31	15
18	7	24	16
8	10	12	18
5	9	17	13
13	5	19	11
59	40	103	73

CALCULATED CAG
CHECKED JDB

HORIZ AND VERT SCALE IN FEET
10 5 0 5 10

CROSS SECTIONS - WILSON ROAD
STA. 104+50.00 TO STA. 106+50.00

WILSON ROAD

3233-E

35/97

\\Columbus\SRVLN\DEV\Clients\OH_City_of_Columbus\073707_WILSON_RD\Design\Roadway\Sheets\073707_XS002.dgn 10/17/2016 3:36:19 PM keatingm

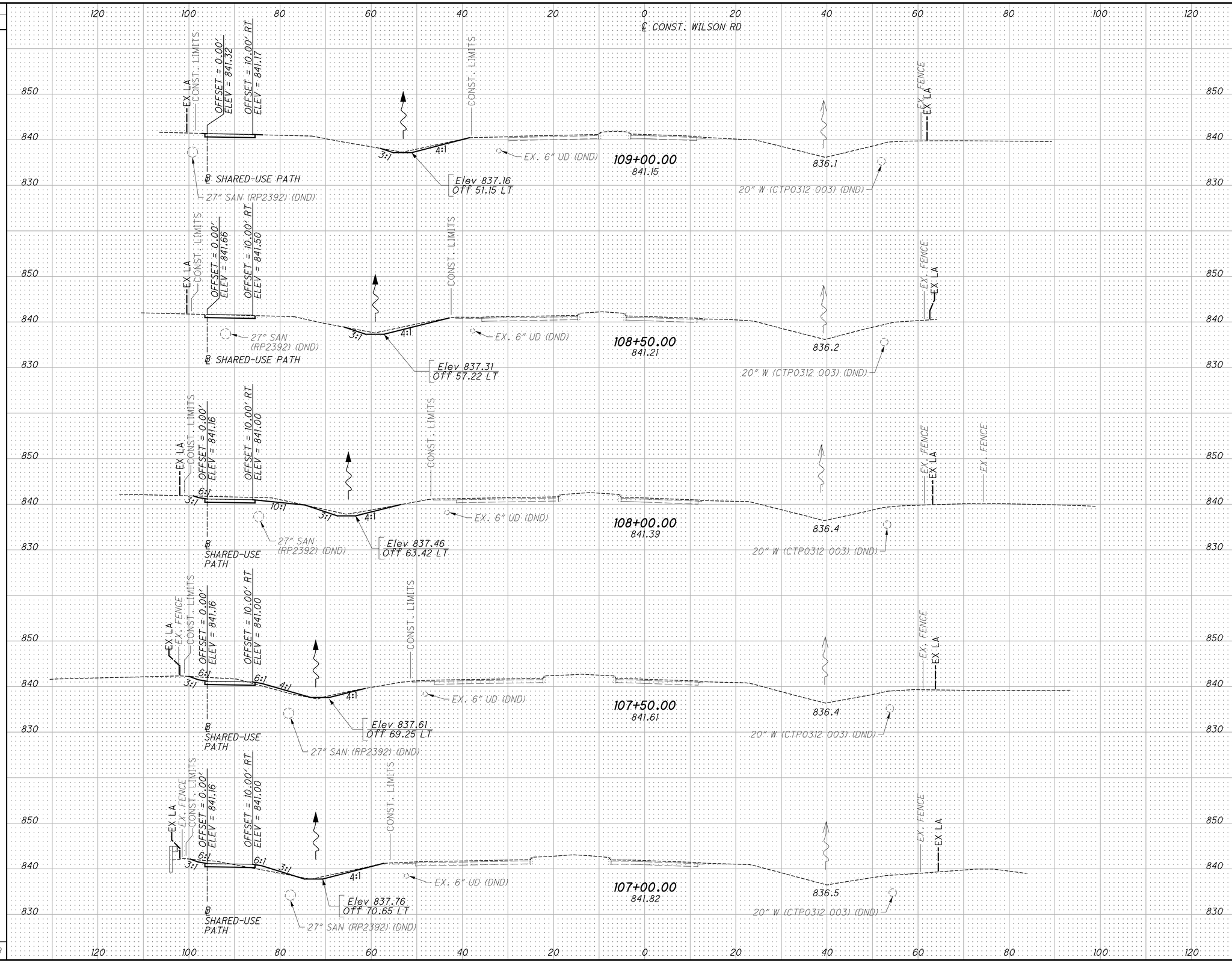

SEEDING END WIDTH	SEEDING SQ. YDS.
16	
	100
20	
	150
34	
	167
26	
	156
30	
156	
126	729

END AREA CUT	END AREA FILL	VOLUME CUT	VOLUME FILL
13	0		
		28	0
17	0		
		41	0
27	0		
		41	6
17	6		
		28	12
13	7		
		26	15
87	13	164	33

CALCULATED CAG
CHECKED JDB

HORIZ AND VERT SCALE IN FEET

CROSS SECTIONS - WILSON ROAD
STA. 107+00.00 TO STA. 109+00.00

WILSON ROAD

3233-E

36/97

\\Columbus\SRVLN\DEV\Clients\OH_City_of_Columbus\073707_WILSON_RD\Design\Roadway\Sheets\073707_XS002.dgn 10/17/2016 3:36:22 PM keatingm

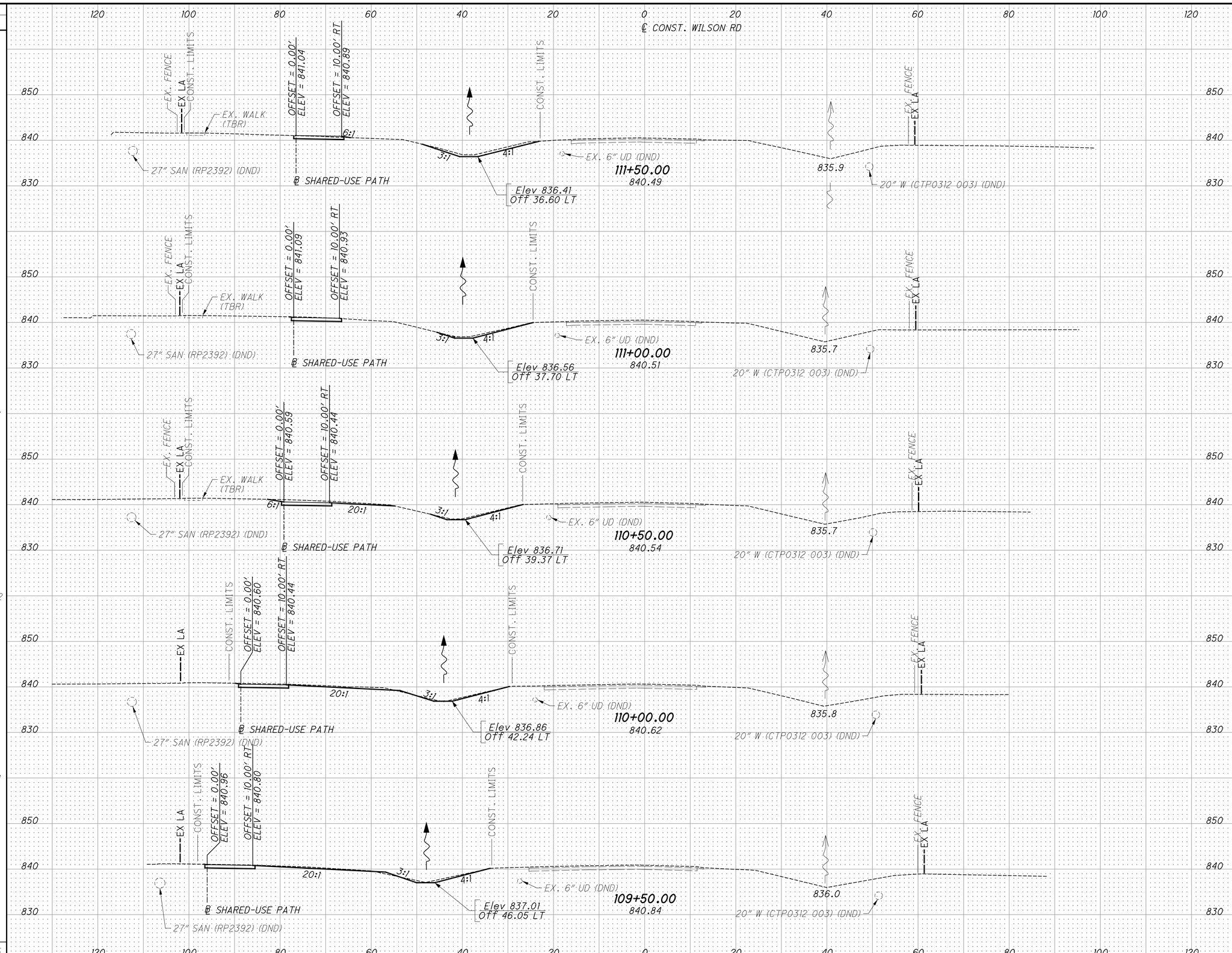

SEEDING END WIDTH	SEEDING SQ. YDS.
23	
	114
18	
	147
35	
	222
45	
	261
49	
	181
170	925

END AREA CUT	END AREA FILL	VOLUME CUT	VOLUME FILL
17	0		
		29	0
14	0		
		32	0
21	0		
		37	0
19	0		
		33	1
17	1		
		28	1
88	1	159	2

CALCULATED CAG
CHECKED JDB

HORIZ AND VERT SCALE IN FEET

CROSS SECTIONS - WILSON ROAD
STA. 109+50.00 TO STA. 111+50.00

WILSON ROAD

3233-E

37/97

\\Columbus\SRVLN\DEV\Clients\OH_City_of_Columbus\073707_WILSON_RD\Design\Roadway\Sheets\073707_XS002.dgn 10/17/2016 3:36:25 PM keatingm

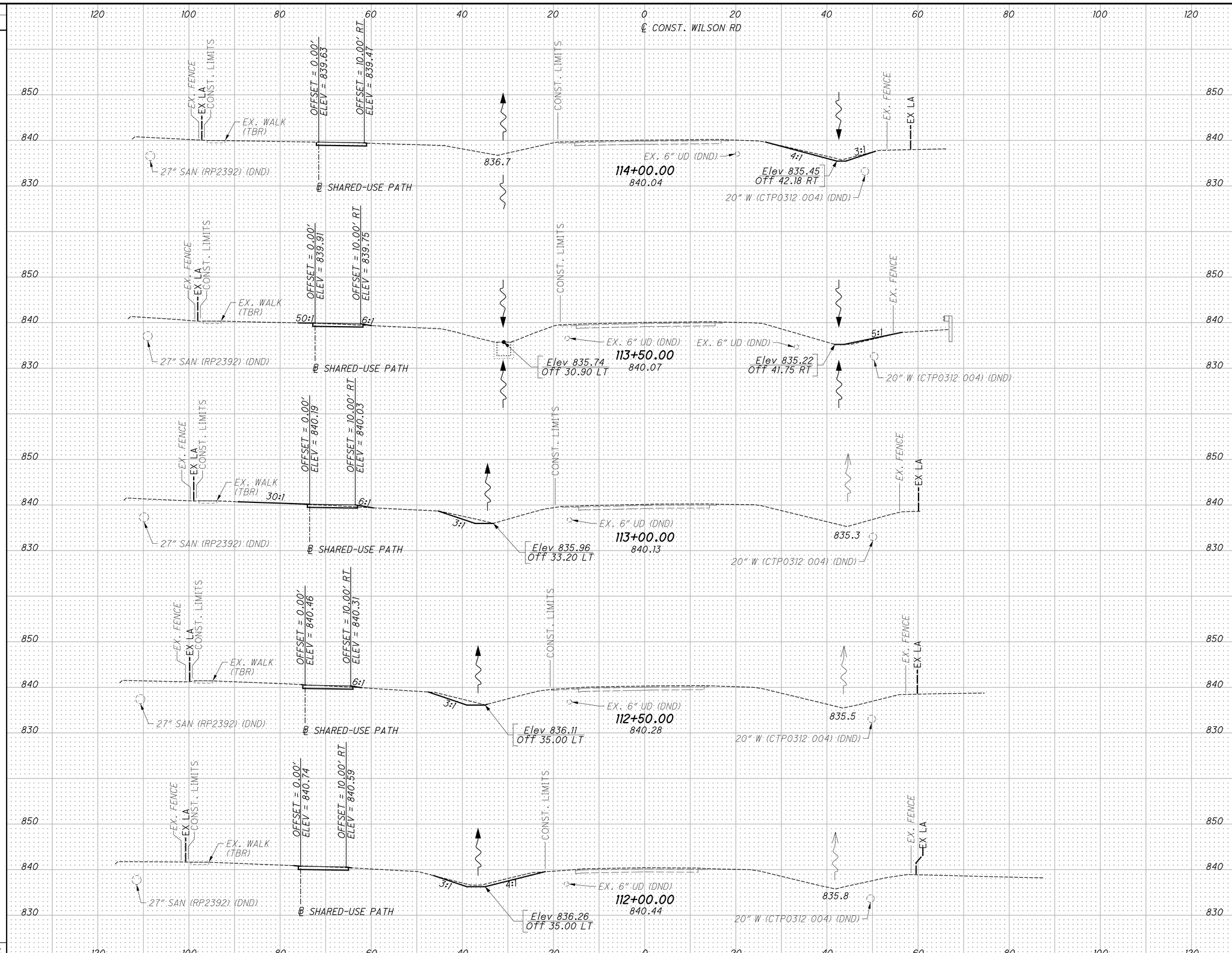

SEEDING END WIDTH	SEEDING SQ. YDS.
23	
	117
19	
	133
29	
	111
11	
	94
23	
	128
105	583

END AREA CUT	END AREA FILL	VOLUME CUT	VOLUME FILL
14	0		
		19	4
6	4		
		16	7
11	4		
		23	4
14	0		
		29	0
17	0		
		31	0
64	8	118	15

3233-E

CALCULATED CAG
CHECKED JDB

HORIZ AND VERT SCALE IN FEET

CROSS SECTIONS - WILSON ROAD
STA. 112+00.00 TO STA. 114+00.00

WILSON ROAD

38/97

\\Columbus\SRVLN\DEV\Clients\OH_City_of_Columbus\073707_WILSON_RD\Design\Roadway\Sheets\073707_XS002.dgn 10/17/2016 3:36:28 PM keatingm

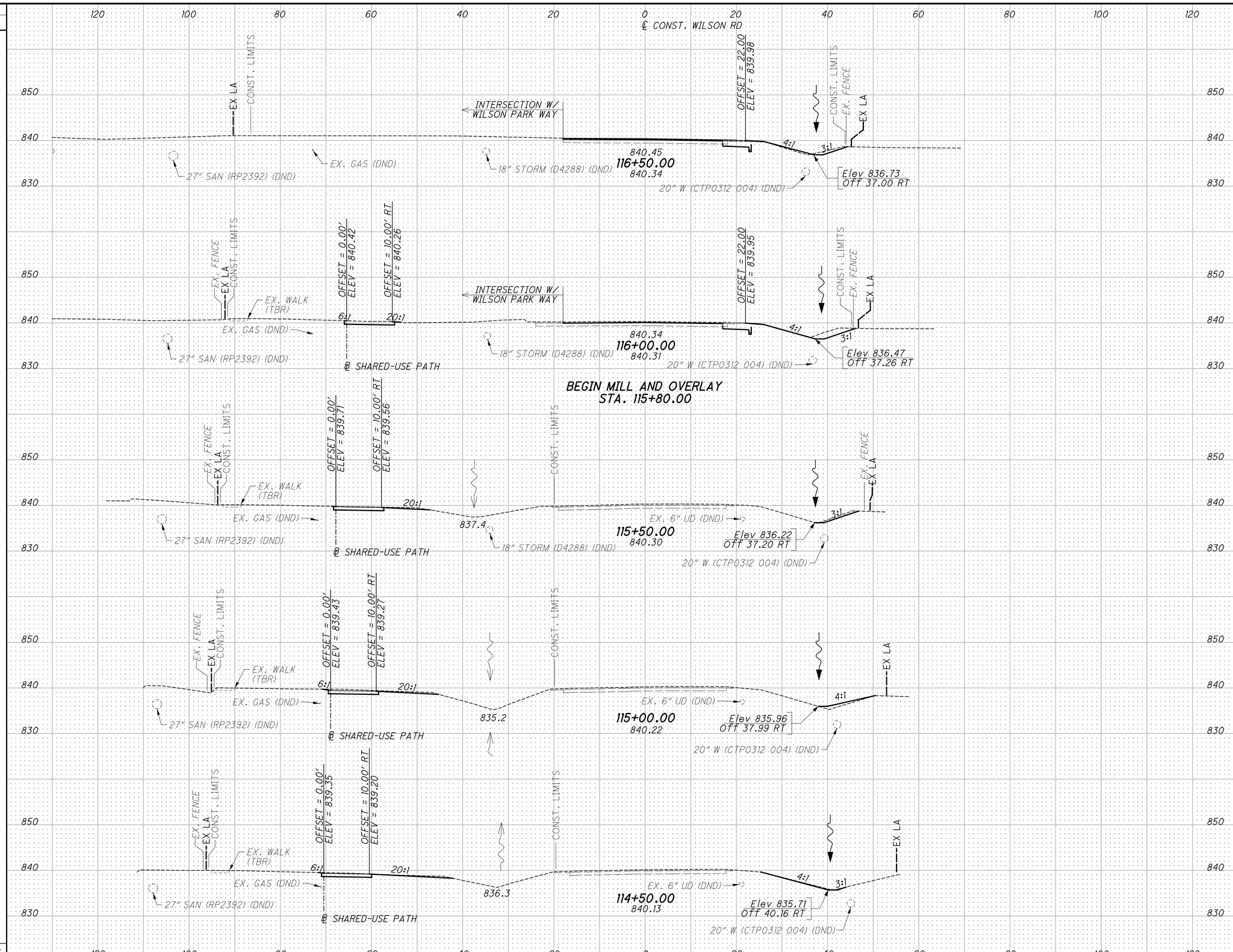

SEEDING END WIDTH	SEEDING SQ. YDS.
22	131
25	125
20	128
26	175
37	167
130	726

END AREA CUT	END AREA FILL	VOLUME CUT	VOLUME FILL
10	3	31	3
23	0	34	0
14	0	26	5
14	5	23	5
11	0	23	0
72	8	137	13

CALCULATED CAG
CHECKED JDB

HORIZ AND VERT SCALE IN FEET

CROSS SECTIONS - WILSON ROAD
STA. 114+50.00 TO 116+00.00

WILSON ROAD

3233-E

39/97

\\Columbus\SRVLN\DE\Clients\OH_City_of_Columbus\073707_WILSON_RD\Design\Roadway\Sheets\073707_XS002.dgn 10/17/2016 3:36:30 PM keatingm

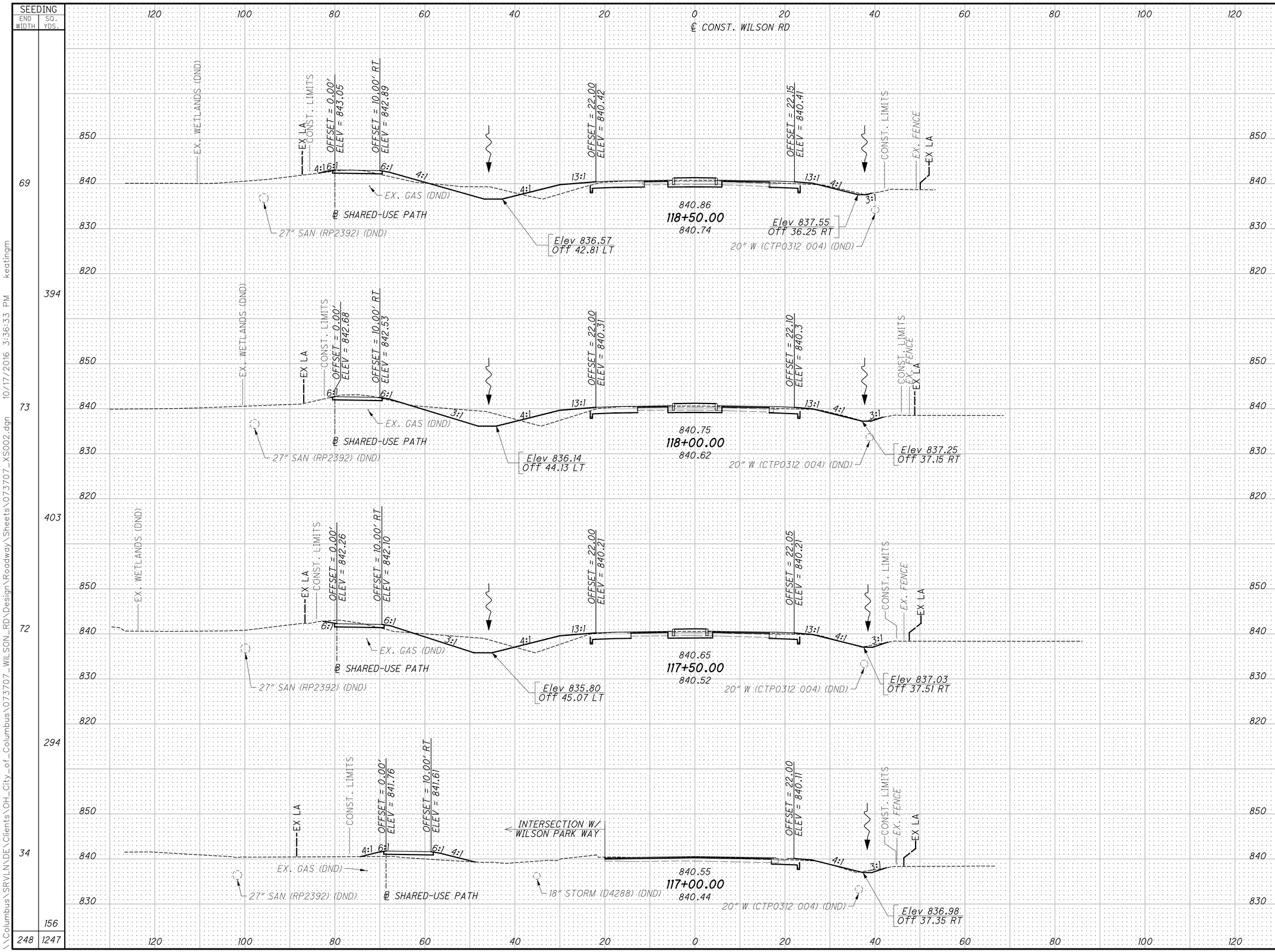

SEEDING END WIDTH	SEEDING SQ. YDS.	END AREA CUT	END AREA FILL	VOLUME CUT	VOLUME FILL
69		65	50		
	394			137	86
73		83	43		
72	403	78	39	149	76
	294			79	63
34		7	29		
	156			16	30
248	1247	233	161	381	255

3233-E

CALCULATED CAG
CHECKED JDB

HORIZ AND VERT SCALE IN FEET

CROSS SECTIONS - WILSON ROAD
STA. 117+00.00 TO STA. 118+50.00

WILSON ROAD

40/97

\\Columbus\SRVLN\DE\Clients\OH_City_of_Columbus\073707_WILSON_RD\Design\Roadway\Sheets\073707_XS002.dgn 10/17/2016 3:36:33 PM keatingm

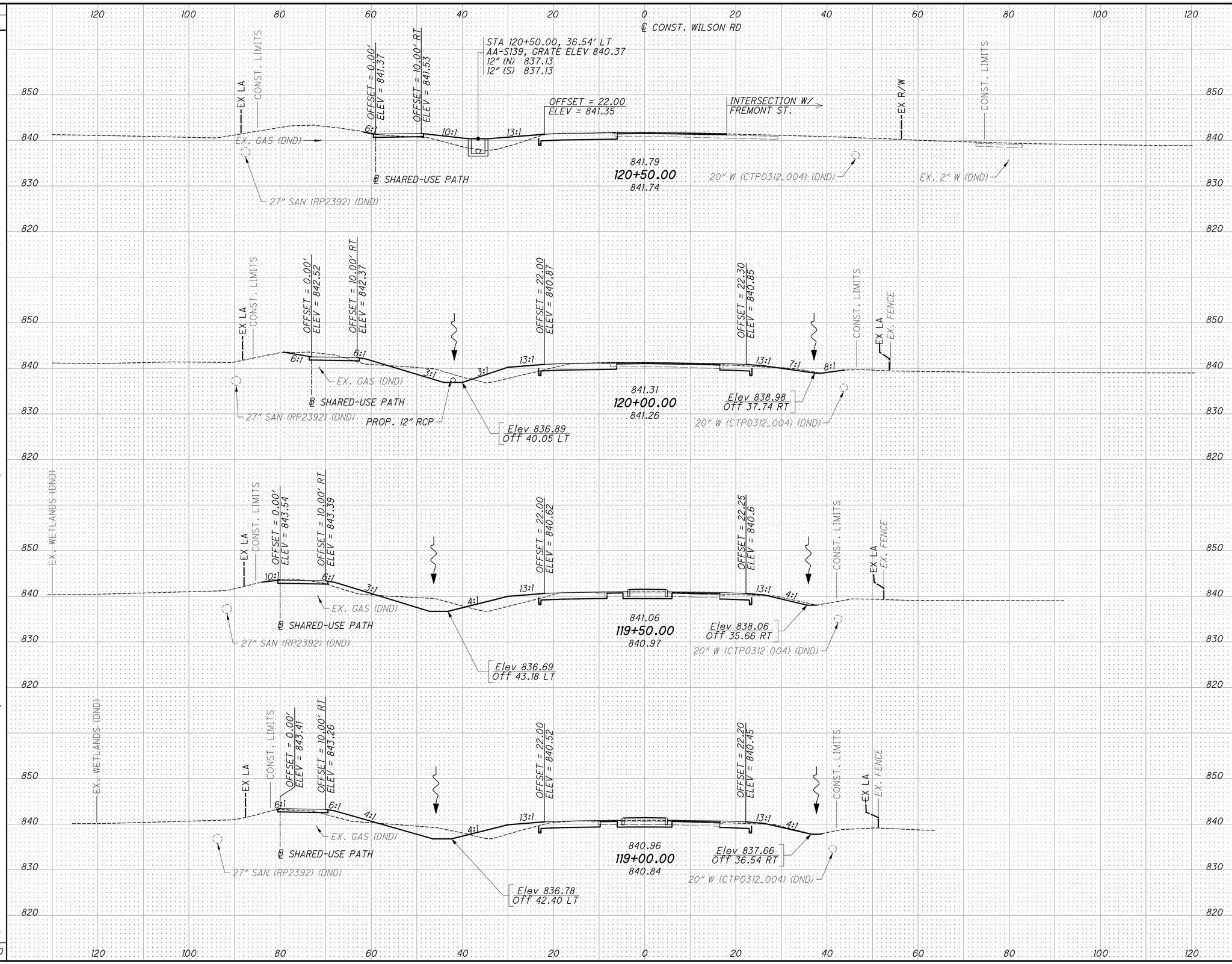

SEEDING END WIDTH	SEEDING SQ. YDS.	END AREA CUT	END AREA FILL	VOLUME CUT	VOLUME FILL
30	264	27	48	87	81
65	364	67	40	127	85
66	367	70	52	123	99
66	375	63	55	119	97
227	1370	227	195	456	362

CALCULATED CAG
CHECKED JDB

HORIZ AND VERT SCALE IN FEET

CROSS SECTIONS - WILSON ROAD
STA. 119+00.00 TO STA. 120+50.00

WILSON ROAD

3233-E

41/97

\\Columbus\SRVLN\DE\Clients\OH_City_of_Columbus\073707_WILSON_RD\Design\Roadway\Sheets\073707_XS002.dgn 10/17/2016 3:36:36 PM keatingm

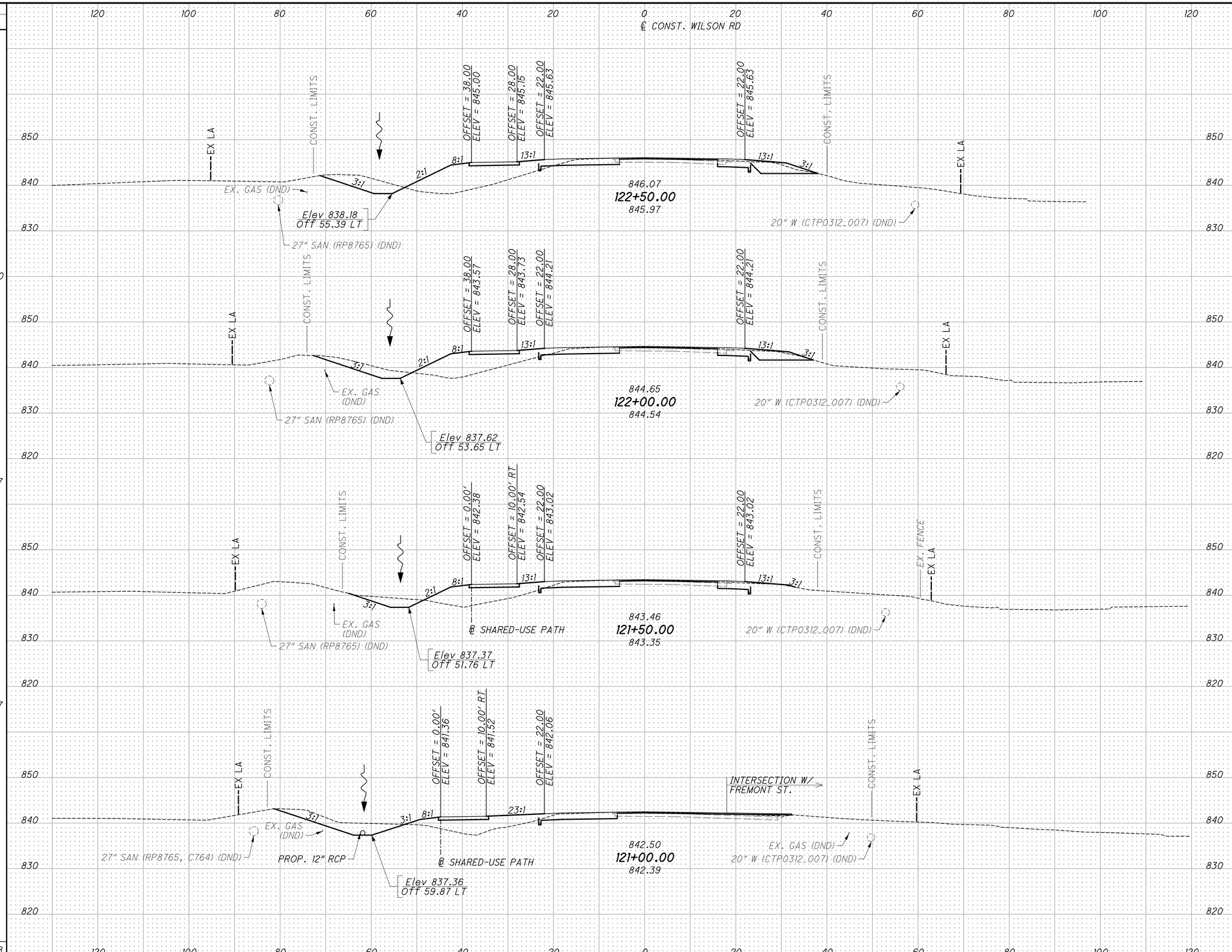

SEEDING END WIDTH	SEEDING SQ. YDS.	END AREA CUT	END AREA FILL	VOLUME CUT	VOLUME FILL
54	300	84	161	146	246
54		74	105		
42	267	46	89	111	180
47	247	68	77	106	154
	214			88	116
197	1028	272	432	451	696

CALCULATED CAG
CHECKED JDB

HORIZ AND VERT SCALE IN FEET

CROSS SECTIONS - WILSON ROAD
STA. 121+00.00 TO STA. 122+50.00

WILSON ROAD

3233-E

42/97

\\Columbus\SRVLN\DEV\Clients\OH_City_of_Columbus\073707_WILSON_RD\Design\Roadway\Sheets\073707_XS002.dgn 10/17/2016 3:36:38 PM keatingm

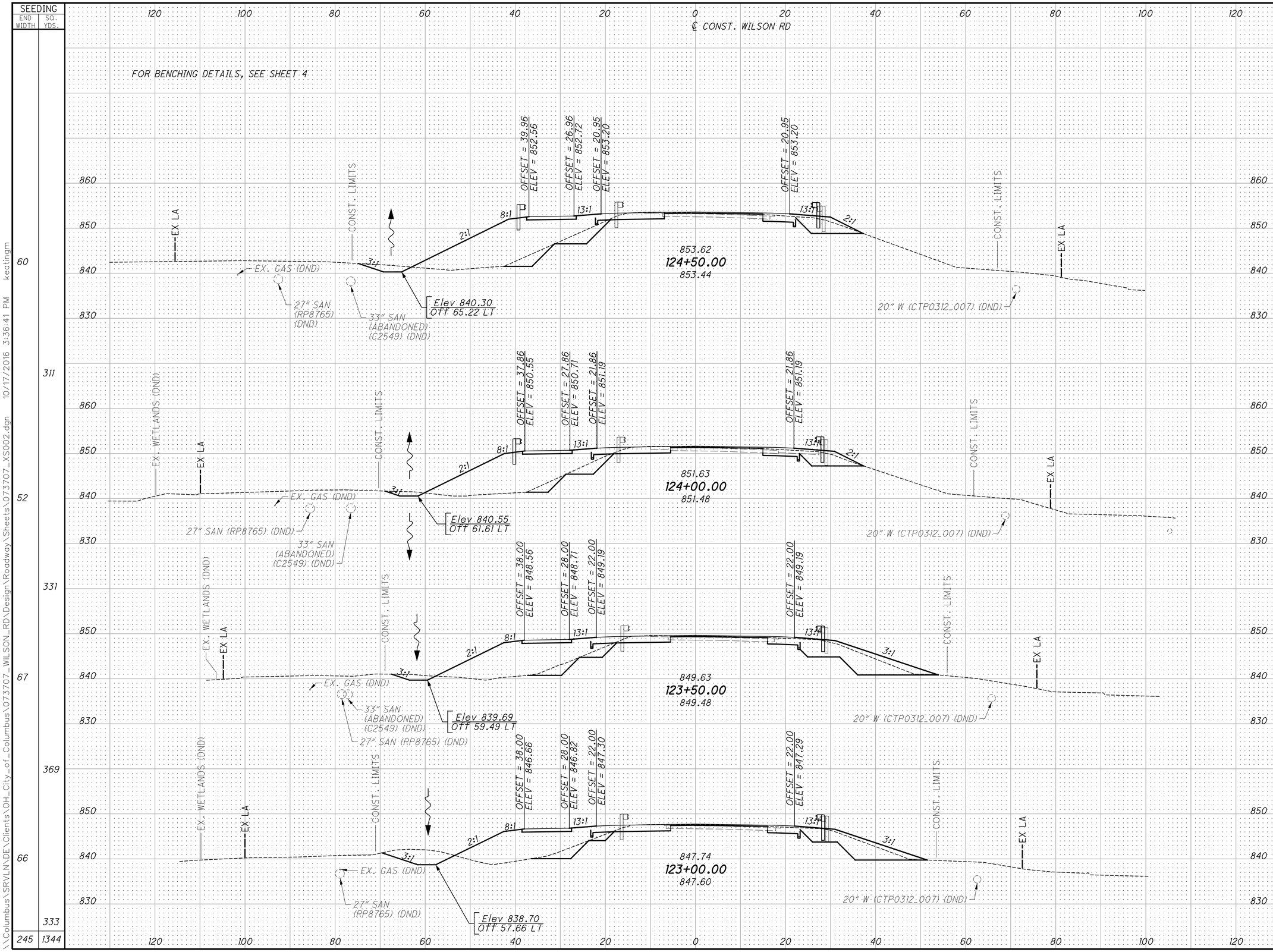
SEEDING
END WIDTH
SQ. YDS.
℄ CONST. WILSON RD
FOR BENCHING DETAILS, SEE SHEET 4
OFFSET = 39.96
ELEV = 852.56
OFFSET = 26.96
ELEV = 852.72
OFFSET = 20.95
ELEV = 853.20
853.62
124+50.00
853.44
Elev 840.30
Off 65.22 LT
OFFSET = 37.86
ELEV = 850.55
OFFSET = 27.86
ELEV = 850.71
OFFSET = 21.86
ELEV = 851.19
851.63
124+00.00
851.48
Elev 840.55
Off 61.61 LT
OFFSET = 38.00
ELEV = 848.56
OFFSET = 28.00
ELEV = 848.71
OFFSET = 22.00
ELEV = 849.19
849.63
123+50.00
849.48
Elev 839.69
Off 59.49 LT
OFFSET = 38.00
ELEV = 846.66
OFFSET = 28.00
ELEV = 846.82
OFFSET = 22.00
ELEV = 847.30
OFFSET = 22.00
ELEV = 847.29
847.74
123+00.00
847.60
Elev 838.70
Off 57.66 LT
EX LA
CONST. LIMITS
EX. WETLANDS (DND)
EX. GAS (DND)
27" SAN (RP8765) (DND)
33" SAN (ABANDONED) (C2549) (DND)
20" W (CTP0312_007) (DND)
8:1
13:1
2:1
3:1
860
850
840
830
60
311
52
331
67
369
66
333
245
1344
END AREA
CUT
FILL
VOLUME
CUT
FILL
84
161
160
544
74
105
191
542
132
311
250
517
138
247
206
378
272
432
451
596
CALCULATED CAG
CHECKED JDB
HORIZ AND VERT SCALE IN FEET
CROSS SECTIONS - WILSON ROAD
STA. 123+00.00 TO STA. 124+50.00
WILSON ROAD
3233-E
43
97
\\Columbus\SRVLN\DE\Clients\OH_City_of_Columbus\073707_WILSON_RD\Design\Roadway\Sheets\073707_XS002.dgn 10/17/2016 3:36:41 PM keatingm

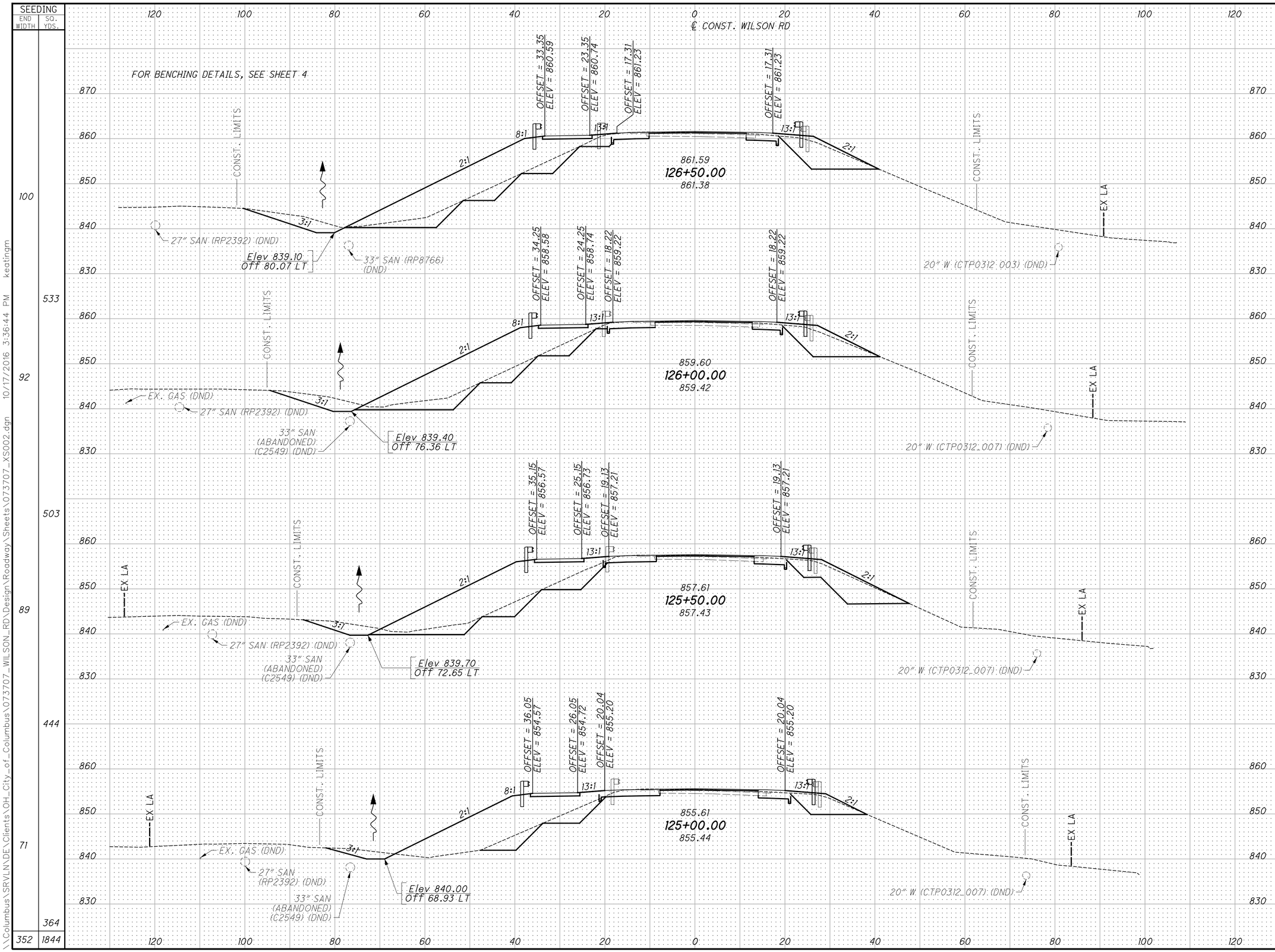
SEEDING
END WIDTH
SQ. YDS.
℄ CONST. WILSON RD
FOR BENCHING DETAILS, SEE SHEET 4
CONST. LIMITS
OFFSET = 33.35
ELEV = 860.59
OFFSET = 23.35
ELEV = 860.74
OFFSET = 17.31
ELEV = 861.23
8:1
13:1
2:1
3:1
861.59
126+50.00
861.38
27" SAN (RP2392) (DND)
Elev 839.10
Off 80.07 LT
33" SAN (RP8766) (DND)
20" W (CTP0312_003) (DND)
EX. LA
OFFSET = 34.25
ELEV = 858.58
OFFSET = 24.25
ELEV = 858.74
OFFSET = 18.22
ELEV = 859.22
859.60
126+00.00
859.42
EX. GAS (DND)
27" SAN (RP2392) (DND)
33" SAN (ABANDONED) (C2549) (DND)
Elev 839.40
Off 76.36 LT
20" W (CTP0312_007) (DND)
OFFSET = 35.16
ELEV = 856.57
OFFSET = 25.15
ELEV = 856.73
OFFSET = 19.13
ELEV = 857.21
857.61
125+50.00
857.43
Elev 839.70
Off 72.65 LT
OFFSET = 36.05
ELEV = 854.57
OFFSET = 26.05
ELEV = 854.72
OFFSET = 20.04
ELEV = 855.20
855.61
125+00.00
855.44
Elev 840.00
Off 68.93 LT
END AREA
CUT
FILL
VOLUME
CUT
FILL
213 458
391 840
209 449
401 845
224 464
330 758
132 355
214 619
778 1726 1336 3062
CALCULATED CAG
CHECKED JDB
HORIZ AND VERT SCALE IN FEET
CROSS SECTIONS - WILSON ROAD
STA. 125+00.00 TO STA. 126+50.00
WILSON ROAD
3233-E
49
97
\\Columbus\SRVLN\DE\Clients\OH_City_of_Columbus\073707_WILSON_RD\Design\Roadway\Sheets\073707_XS002.dgn 10/17/2016 3:36:44 PM keatingm

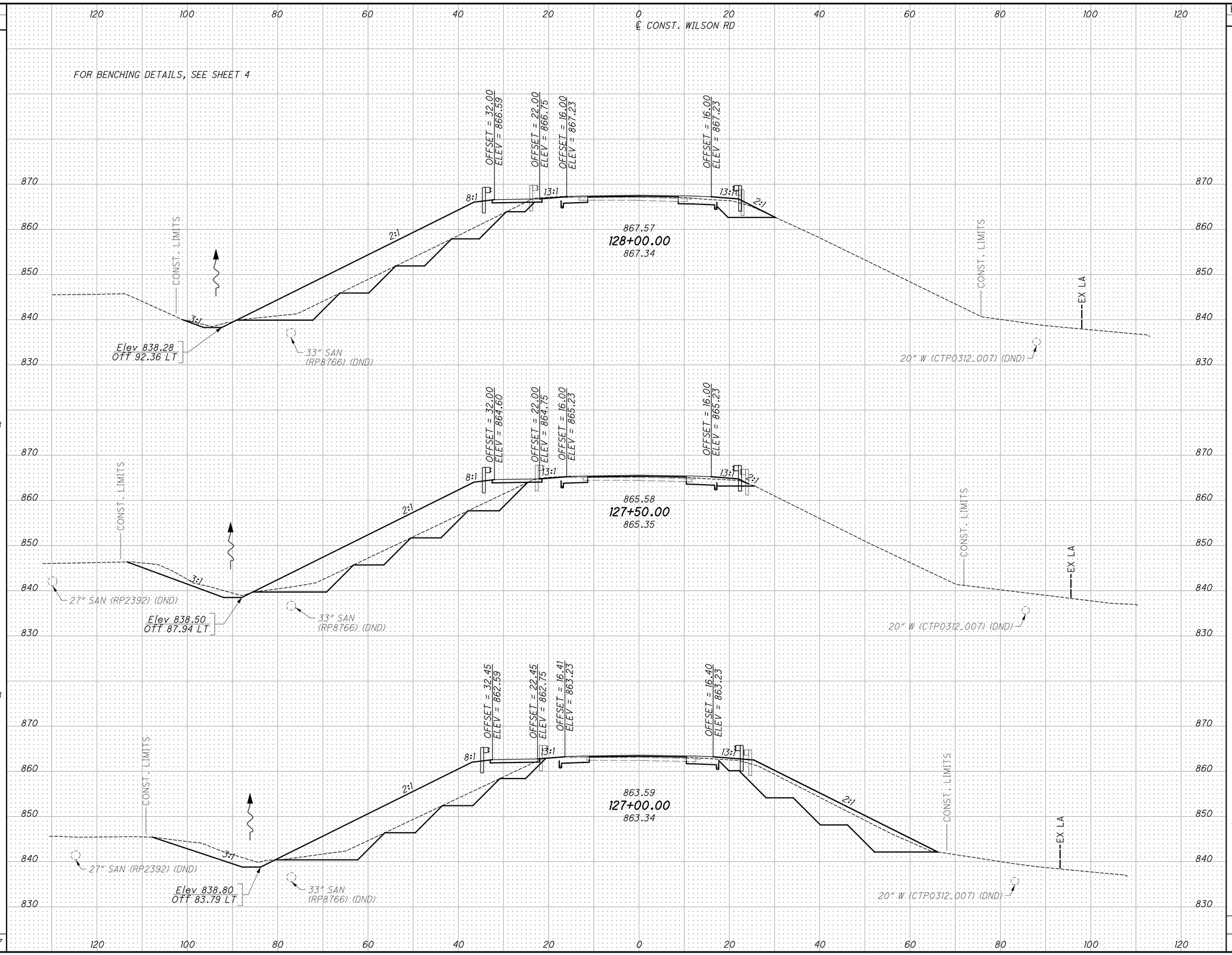

SEEDING END WIDTH	SEEDING SQ. YDS.	END AREA CUT	END AREA FILL	VOLUME CUT	VOLUME FILL
91		142	410		
	528			269	716
99		149	363		
	658			435	869
138		321	576		
	661			494	957
328	1847	612	1349	1198	2542

CALCULATED CAG
CHECKED JDB

HORIZ AND VERT SCALE IN FEET

CROSS SECTIONS - WILSON ROAD
STA. 127+00.00 TO STA. 128+00.00

WILSON ROAD

3233-E

45/97

\\Columbus\SRVLN\DEV\Clients\OH_City_of_Columbus\073707_WILSON_RD\Design\Roadway\Sheets\073707_XS002.dgn 10/17/2016 3:36:46 PM keatingm

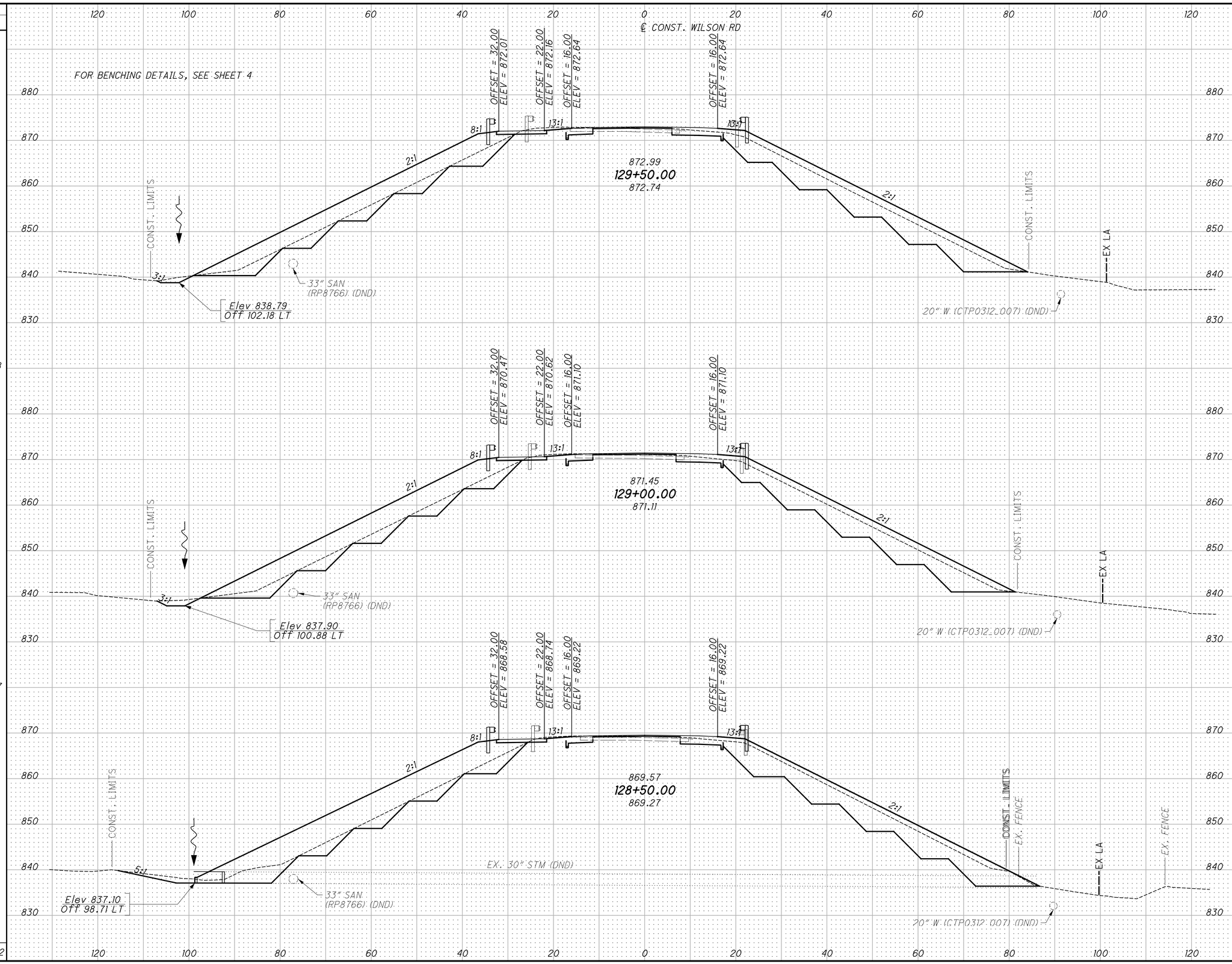

SEEDING END WIDTH	SEEDING SQ. YDS.	END AREA CUT	END AREA FILL	VOLUME CUT	VOLUME FILL
160	878	364	678	669	1273
156	897	359	697	732	1404
167	717	432	819	531	1138
483	2492	1155	2194	1932	3815

CALCULATED CAG
CHECKED JDB

HORIZ AND VERT SCALE IN FEET

CROSS SECTIONS - WILSON ROAD
STA. 128+50.00 TO STA. 129+50.00

WILSON ROAD

3233-E

\\Columbus\SRVLN\DE\Clients\OH_City_of_Columbus\073707_WILSON_RD\Design\Roadway\Sheets\073707_XS002.dgn 10/17/2016 3:36:48 PM keatingm

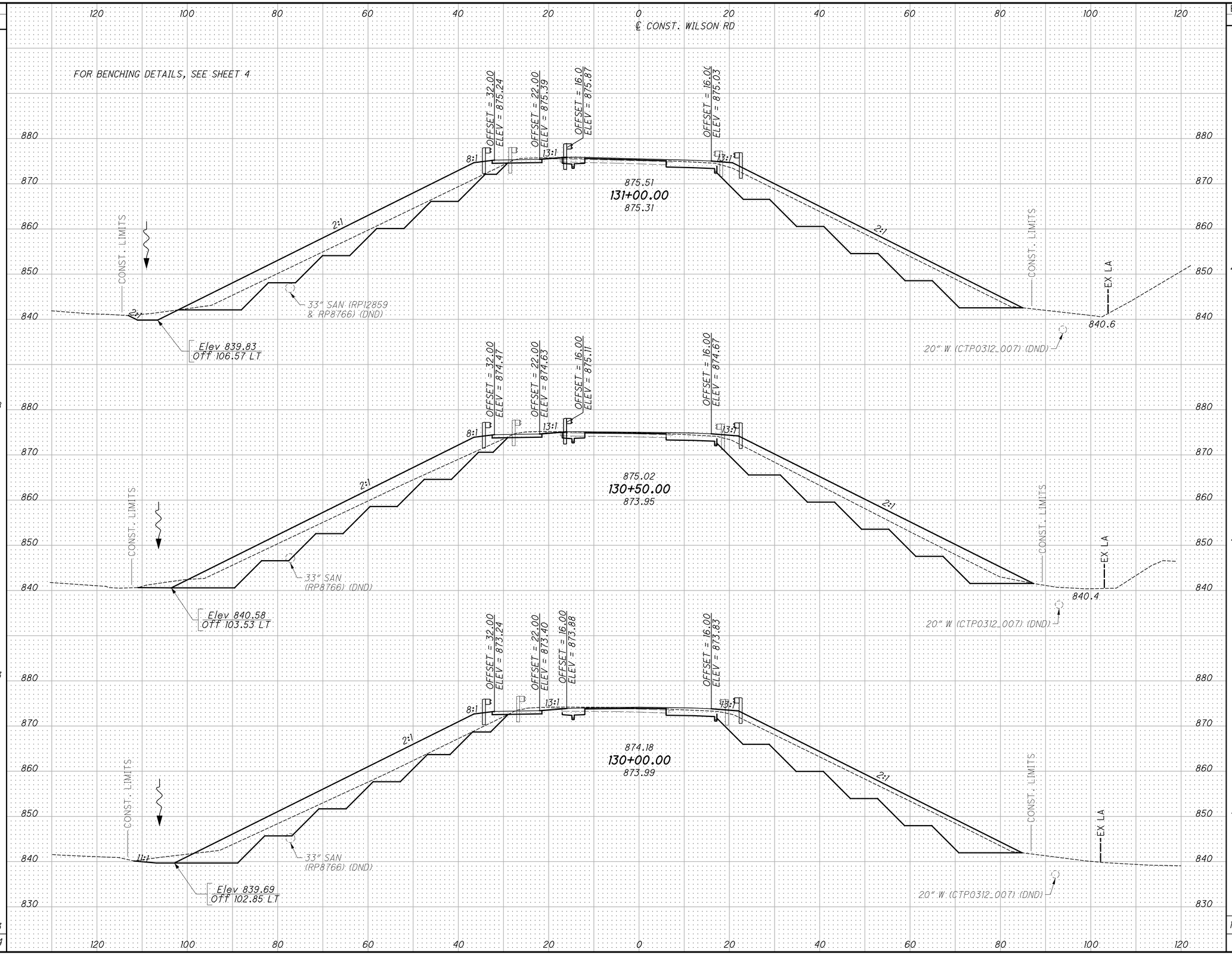

SEEDING END WIDTH	SEEDING SQ. YDS.	END AREA CUT	END AREA FILL	VOLUME CUT	VOLUME FILL
167	908	442	692	836	1310
160	903	461	723	855	1309
165	903	462	691	765	1268
492	2714	1365	2106	2456	3887

CALCULATED CAG
CHECKED JDB

HORIZ AND VERT SCALE IN FEET

CROSS SECTIONS - WILSON ROAD
STA. 130+00.00 TO STA. 131+00.00

WILSON ROAD

3233-E

\\Columbus\SRVLN\DEV\Clients\OH_City_of_Columbus\073707_WILSON_RD\Design\Roadway\Sheets\073707_XS002.dgn 10/17/2016 3:36:50 PM keatingm

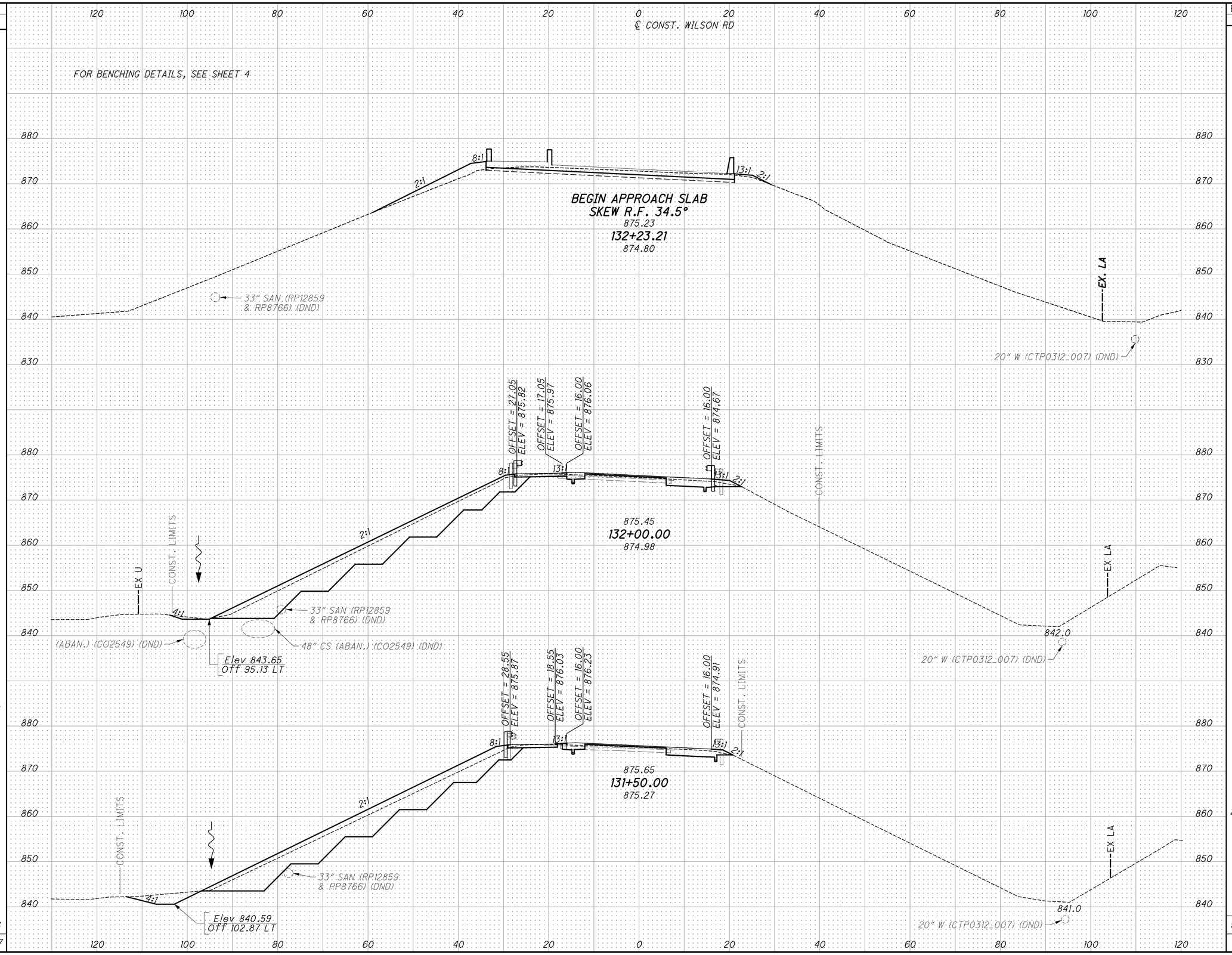

SEEDING END WIDTH	SEEDING SQ. YDS.	END AREA CUT	END AREA FILL	VOLUME CUT	VOLUME FILL
36		0	33		
86	156	275	320	118	152
97	508	280	328	514	600
	733	555	648	669	944
219	1397			1301	1696

CALCULATED CAG
CHECKED JDB

HORIZ AND VERT SCALE IN FEET

CROSS SECTIONS - WILSON ROAD
STA. 131+50.00 TO STA. 132+23.22

WILSON ROAD

3233-E

48/97

\\Columbus\SRVLN\DE\Clients\OH_City_of_Columbus\073707_WILSON_RD\Design\Roadway\Sheets\073707_XS002.dgn 10/17/2016 3:36:53 PM keatingm

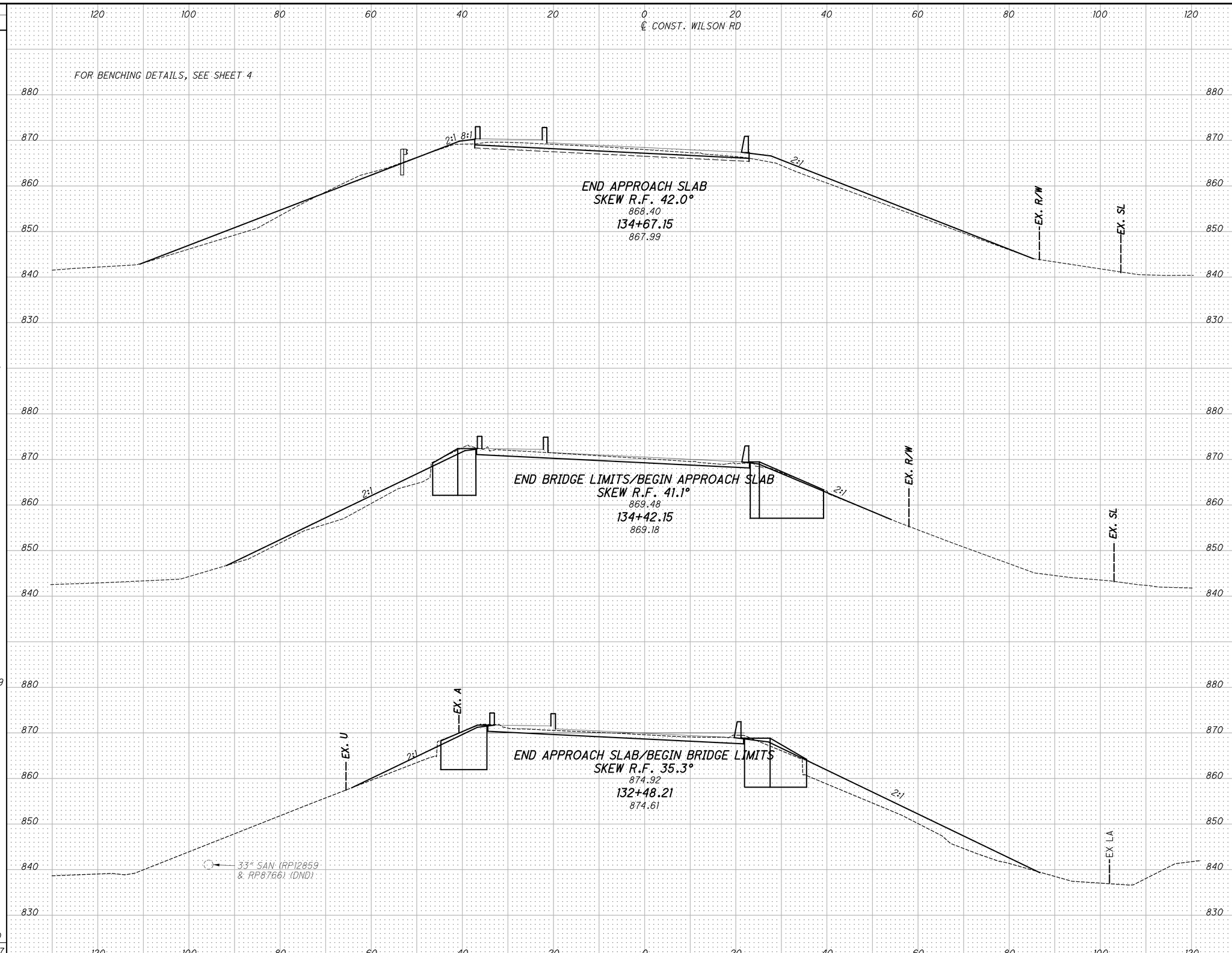

SEEDING END WIDTH	SEEDING SQ. YDS.	END AREA CUT	END AREA FILL	VOLUME CUT	VOLUME FILL
147		8	90		
	338			69	282
96		12	59		
	2199			75	772
108		9	156		
				4	88
	200	29	305	88	929
351	2737				

CALCULATED CAG
CHECKED JDB

HORIZ AND VERT SCALE IN FEET
10 5 0 10

CROSS SECTIONS - WILSON ROAD
STA. 132+48.21 TO STA. 134+67.80

WILSON ROAD

3233-E

49/97

\\Columbus\SRVLN\DEV\Clients\OH_City_of_Columbus\073707_WILSON_RD\Design\Roadway\Sheets\073707_XS002.dgn 10/17/2016 3:36:55 PM keatingm

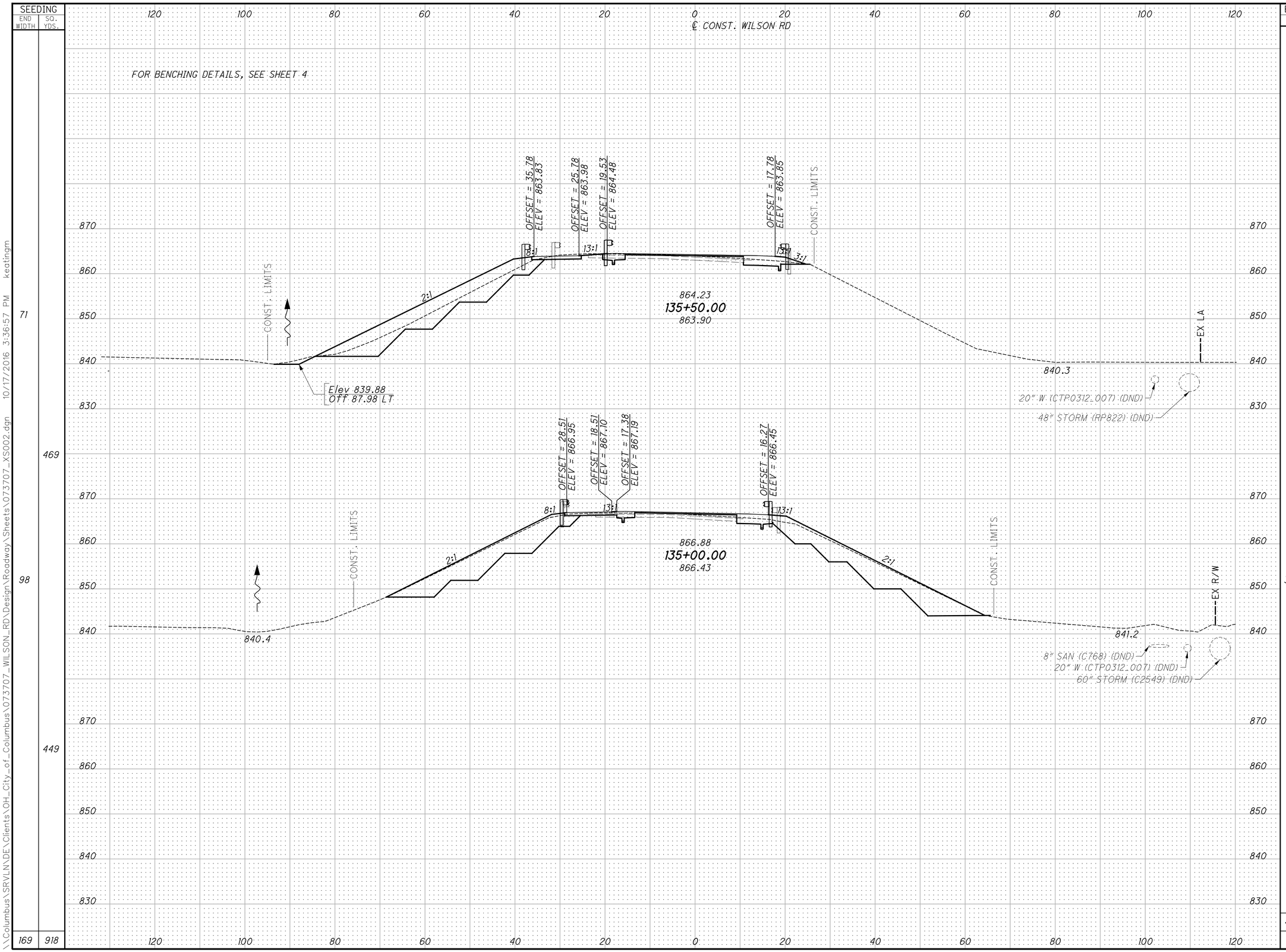

SEEDING END WIDTH	SEEDING SQ. YDS.	END AREA CUT	END AREA FILL	VOLUME CUT	VOLUME FILL
71	469	132	231	448	560
98	449	352	374	219	282
169	918	484	605	667	842

CALCULATED CAG
CHECKED JDB

HORIZ AND VERT SCALE IN FEET
10 5 0 5 10

CROSS SECTIONS - WILSON ROAD
STA. 135+00.00 TO STA. 135+50.00

WILSON ROAD

3233-E

50/97

\\Columbus\SRVLN\DE\Clients\OH_City_of_Columbus\073707_WILSON_RD\Design\Roadway\Sheets\073707_XS002.dgn 10/17/2016 3:36:57 PM keatingm

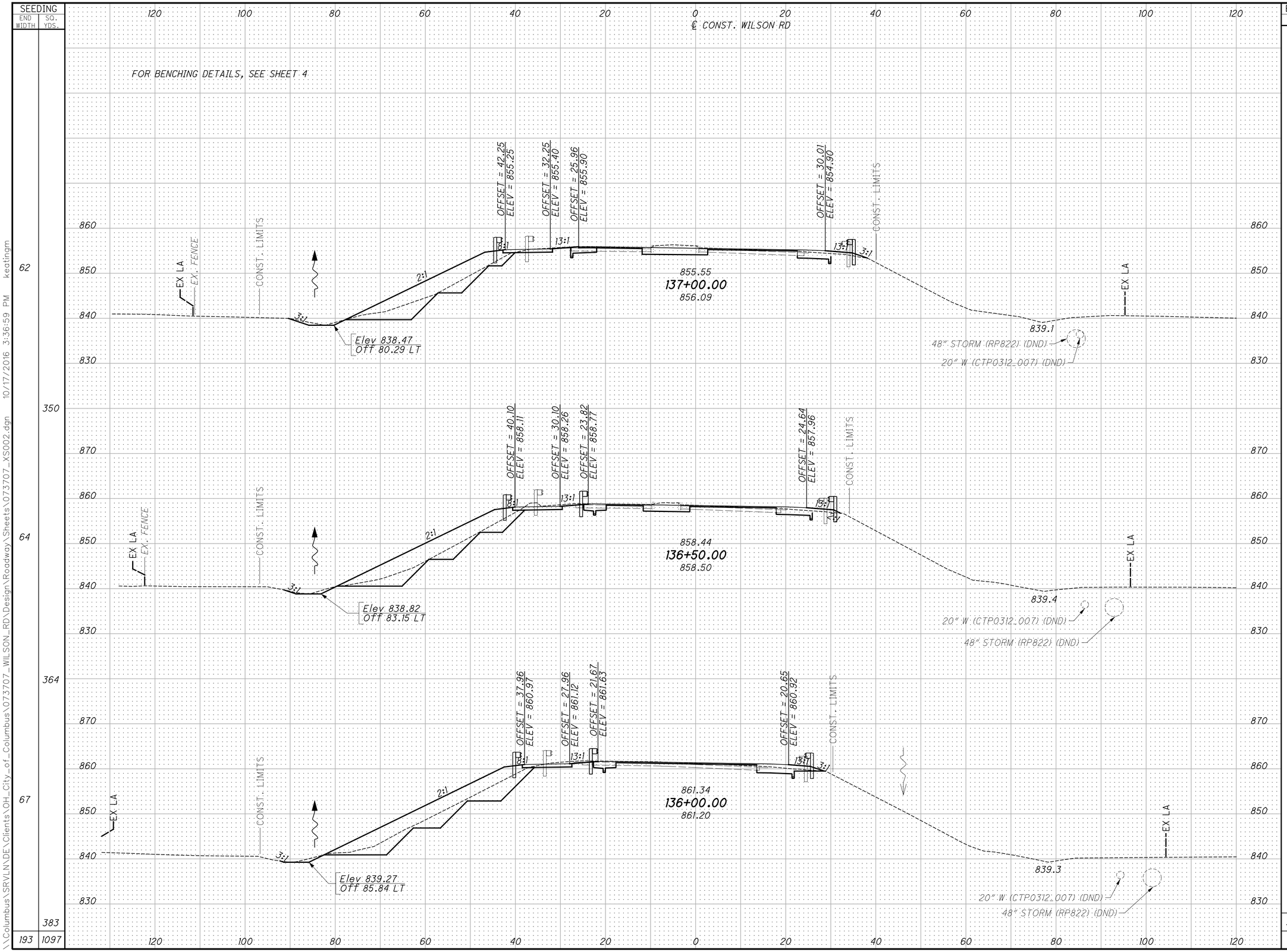

SEEDING END WIDTH	SEEDING SQ. YDS.	END AREA CUT	END AREA FILL	VOLUME CUT	VOLUME FILL
62		97	161		
	350			178	318
64		95	182		
	364			194	369
67		114	216		
	383			228	414
193	1097	306	559	600	1101

CALCULATED CAG
CHECKED JDB

HORIZ AND VERT SCALE IN FEET
10 5 0 5 10

CROSS SECTIONS - WILSON ROAD
STA. 136+00.00 TO STA. 137+00.00

WILSON ROAD

3233-E

51/97

\\Columbus\SRVLN\DE\Clients\OH_City_of_Columbus\073707_WILSON_RD\Design\Roadway\Sheets\073707_XS002.dgn 10/17/2016 3:36:59 PM keatingm

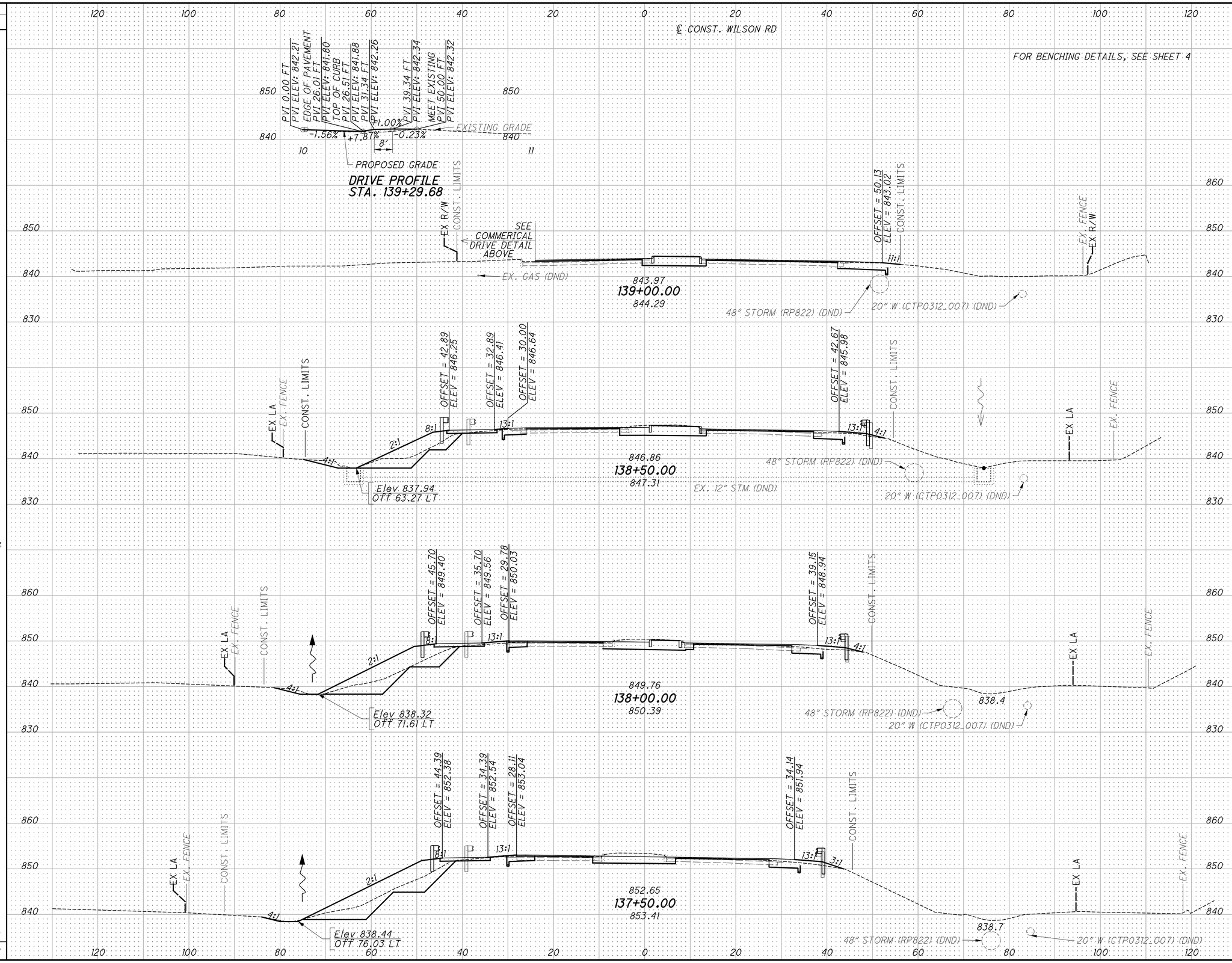

SEEDING END WIDTH	SEEDING SQ. YDS.	END AREA CUT	END AREA FILL	VOLUME CUT	VOLUME FILL
14	186	39	0	120	70
53	303	91	76	175	188
56	311	98	127	184	256
56	328	101	150	183	288
179	1128	329	353	662	732

CALCULATED CAG
CHECKED JDB

HORIZ AND VERT SCALE IN FEET

CROSS SECTIONS - WILSON ROAD
STA. 137+50.00 TO STA. 139+00.00

WILSON ROAD

52
97

3233-E

\\Columbus\SRVLN\DE\Clients\OH_City_of_Columbus\073707_WILSON_RD\Design\Roadway\Sheets\073707_XS002.dgn 10/17/2016 3:37:01 PM keatingm

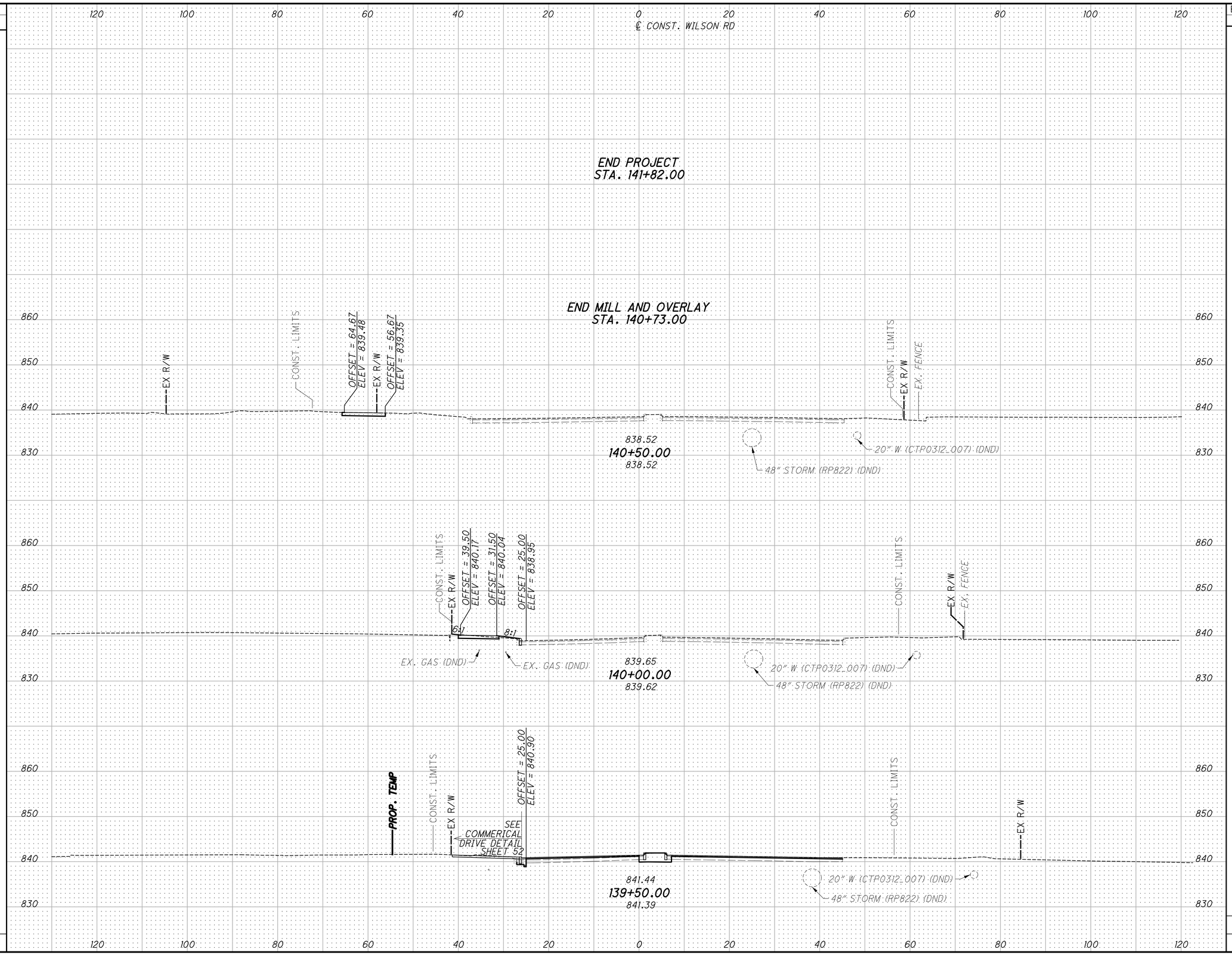

SEEDING END WIDTH	SEEDING SQ. YDS.	END AREA CUT	END AREA FILL	VOLUME CUT	VOLUME FILL
1		0	0		
6	19	8	0	7	0
6	33	1	0	8	0
	56			37	0
13	108	9	0	52	0

CALCULATED CAG
CHECKED JDB

HORIZ AND VERT SCALE IN FEET

CROSS SECTIONS - WILSON ROAD
STA. 139+50.00 TO STA. 141+82.00

WILSON ROAD

3233-E

53/97

\\Columbus\SRVLN\DE\Clients\OH_City_of_Columbus\073707_WILSON_RD\Design\Roadway\Sheets\073707_XS002.dgn 10/17/2016 3:37:04 PM keatingm

SUPERELEVATION TABLE

P.I. STA. 132+93.38 | Dc = 3° 02′ 36″

LEFT SIDE					CENTERLINE CONTROL		RIGHT SIDE					
EDGE ELEVATION	TRANSITION RATE	ELEVATION CORRECTION	CROSS SLOPE	WIDTH	STATION	PROFILE GRADE	WIDTH	CROSS SLOPE	ELEVATION CORRECTION	TRANSITION RATE	EDGE ELEVATION	REMARKS
872.80		-0.19	-0.0156	12.00	129+50.00	872.99	12.00	-0.0156	-0.19		872.80	
873.44		-0.19	-0.0156	12.00	129+75.00	873.63	12.00	-0.0156	-0.19		873.44	
873.79		-0.19	-0.0156	12.00	129+90.41	873.98	12.00	-0.0156	-0.19		873.79	
874.04		-0.14	-0.0118	12.00	130+00.00	874.18	12.00	-0.0156	-0.19		873.99	
874.62		-0.02	-0.0021	12.00	130+25.00	874.64	12.00	-0.0156	-0.19		874.46	
875.11		0.09	0.0077	12.00	130+50.00	875.02	12.00	-0.0156	-0.19		874.83	
875.45		0.19	0.0157	12.00	130+70.41	875.26	12.00	-0.0156	-0.19		875.08	
875.52		0.21	0.0175	12.00	130+75.00	875.31	12.00	-0.0174	-0.21		875.10	
875.84		0.33	0.0273	12.00	131+00.00	875.51	12.00	-0.0272	-0.33		875.19	
876.02		0.41	0.0343	12.00	131+17.94	875.60	12.00	-0.0343	-0.41		875.19	
876.07		0.45	0.0371	12.00	131+25.00	875.63	12.00	-0.0371	-0.44		875.18	
876.22		0.56	0.0469	12.00	131+50.00	875.65	12.00	-0.0469	-0.56		875.09	
876.24		0.59	0.0490	12.00	131+55.41	875.65	12.00	-0.0490	-0.59		875.06	
876.18		0.59	0.0490	12.00	131+75.00	875.60	12.00	-0.0490	-0.59		875.01	
876.04		0.59	0.0490	12.00	132+00.00	875.45	12.00	-0.0490	-0.59		874.86	
875.80		0.59	0.0490	12.00	132+25.00	875.21	12.00	-0.0490	-0.59		874.63	
875.48		0.59	0.0490	12.00	132+50.00	874.89	12.00	-0.0490	-0.59		874.31	
875.07		0.59	0.0490	12.00	132+75.00	874.48	12.00	-0.0490	-0.59		873.90	
874.58		0.59	0.0490	12.00	133+00.00	873.99	12.00	-0.0490	-0.59		873.40	
873.99		0.59	0.0490	12.00	133+25.00	873.41	12.00	-0.0490	-0.59		872.82	
873.32		0.59	0.0490	12.00	133+50.00	872.73	12.00	-0.0490	-0.59		872.15	
872.56		0.59	0.0490	12.00	133+75.00	871.98	12.00	-0.0490	-0.59		871.39	
871.72		0.59	0.0490	12.00	134+00.00	871.13	12.00	-0.0490	-0.59		870.54	
870.79		0.59	0.0490	12.00	134+25.00	870.20	12.00	-0.0490	-0.59		869.61	
870.58		0.59	0.0490	12.00	134+30.00	869.99	12.00	-0.0490	-0.59		869.40	
869.67		0.50	0.0413	12.00	134+50.00	869.18	12.00	-0.0413	-0.49		868.68	

SUPERELEVATION TABLE

P.I. STA. 138+97.72 | Dc = 4 00′ 00″

LEFT SIDE					CENTERLINE CONTROL		RIGHT SIDE					
EDGE ELEVATION	TRANSITION RATE	ELEVATION CORRECTION	CROSS SLOPE	WIDTH	STATION	PROFILE GRADE	WIDTH	CROSS SLOPE	ELEVATION CORRECTION	TRANSITION RATE	EDGE ELEVATION	REMARKS
868.80		0.40	0.0333	12.00	134+67.80	868.40	12.00	-0.0343	-0.41		867.99	
868.46		0.39	0.0314	12.31	134+75.00	868.07	12.00	-0.0314	-0.38		867.69	
867.17		0.29	0.0216	13.39	135+00.00	866.88	12.26	-0.0216	-0.26		866.61	
866.32		0.22	0.0156	14.04	135+15.30	866.10	12.58	-0.0156	-0.20		865.91	
865.82		0.23	0.0156	14.46	135+25.00	865.60	12.85	-0.0156	-0.20		865.40	
864.47		0.24	0.0156	15.53	135+50.00	864.23	13.77	-0.0156	-0.21		864.01	
863.05		0.26	0.0156	16.61	135+75.00	862.79	15.03	-0.0156	-0.23		862.55	
861.62		0.28	0.0156	17.68	136+00.00	861.34	16.63	-0.0156	-0.26		861.08	
860.18		0.29	0.0156	18.75	136+25.00	859.89	18.55	-0.0156	-0.29		859.60	
858.75		0.31	0.0156	19.82	136+50.00	858.44	20.62	-0.0156	-0.32		858.12	
857.32		0.33	0.0156	20.90	136+75.00	857.00	22.68	-0.0156	-0.35		856.64	
855.89		0.34	0.0156	21.97	137+00.00	855.55	24.74	-0.0156	-0.39		855.16	
854.46		0.36	0.0156	23.04	137+25.00	854.10	26.80	-0.0156	-0.42		853.68	
853.03		0.38	0.0156	24.12	137+50.00	852.65	28.87	-0.0156	-0.45		852.20	
852.43		0.38	0.0156	24.57	137+60.50	852.05	29.89	-0.0156	-0.47		851.58	
851.60		0.39	0.0156	25.14	137+75.00	851.21	31.35	-0.0156	-0.49		850.72	
851.26		0.40	0.0156	25.33	137+80.9	850.87	31.94	-0.0156	-0.50		850.37	
850.03		0.27	0.0106	25.79	138+00.00	849.76	33.87	-0.0156	-0.53		849.23	
848.42		0.10	0.0040	26.00	138+25.00	848.31	36.39	-0.0156	-0.57		847.74	
848.37		0.10	0.0038	26.00	138+25.70	848.27	36.46	-0.0156	-0.57		847.70	
847.43		0.00	0.0000	26.00	138+40.28	847.43	37.82	-0.0156	-0.59		846.84	
846.80		-0.07	-0.0025	26.00	138+50.00	846.86	38.64	-0.0156	-0.60		846.26	
846.32		-0.12	-0.0045	26.00	138+57.35	846.44	39.22	-0.0156	-0.61		845.83	
845.18		-0.24	-0.0091	26.00	138+75.00	845.42	40.46	-0.0156	-0.63		844.79	
843.56		-0.41	-0.0156	26.00	139+00.00	843.97	41.86	-0.0156	-0.65		843.32	
842.21		-0.41	-0.0156	26.00	139+25.00	842.61	44.45	-0.0156	-0.69		841.92	
841.04		-0.41	-0.0156	26.00	139+50.00	841.44	45.03	-0.0156	-0.70		840.74	

CALCULATED CAG
CHECKED JDB

SUPERELEVATION TABLE
WILSON ROAD

WILSON ROAD

\\Columbus\SRVLN\DE\Clients\OH_City_of_Columbus\073707_WILSON_RD\Design\Roadway\Sheets\073707_GE001.dgn 10/17/2016 3:37:06 PM keatingm

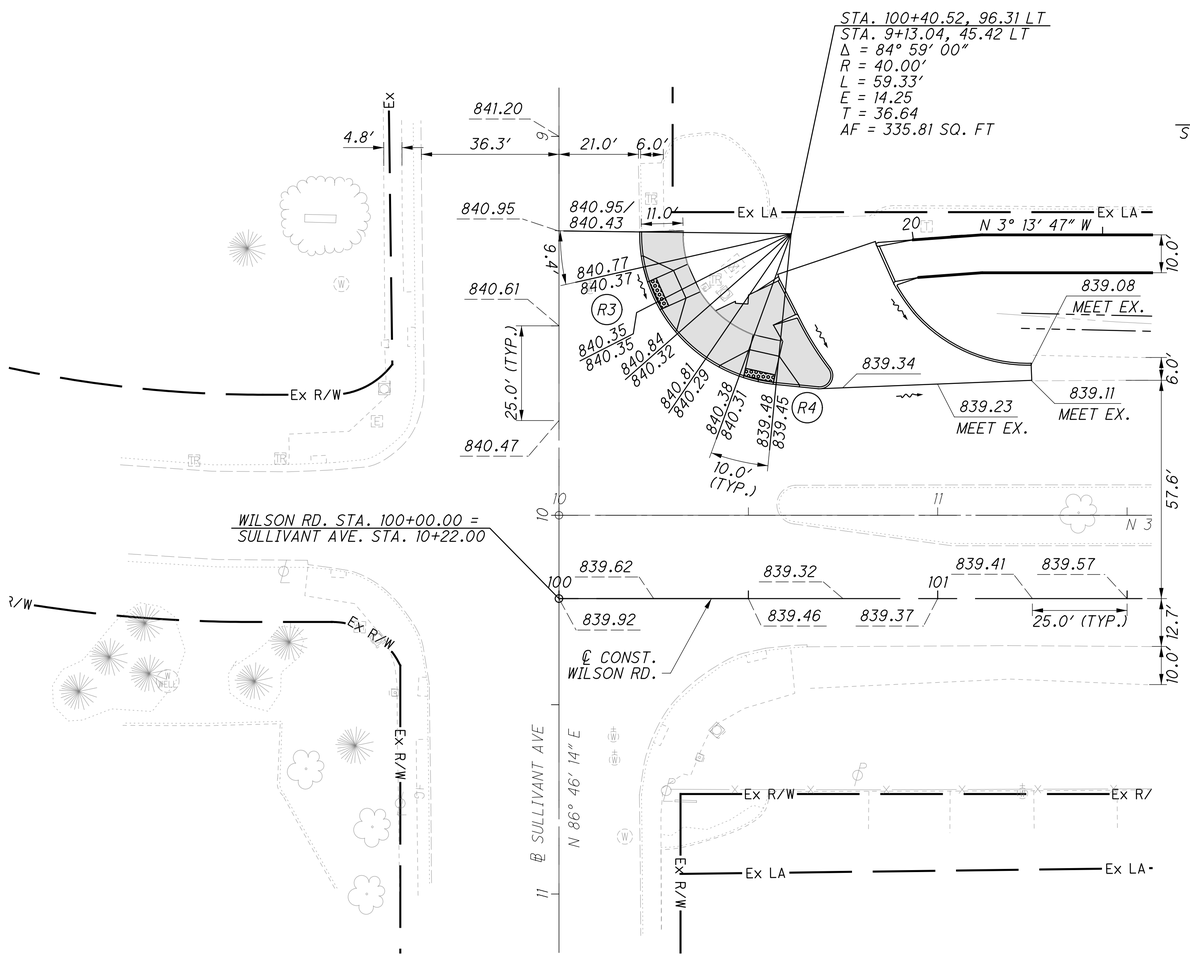

WILSON ROAD AT SULLIVANT AVENUE
SCALE: 1" = 20'

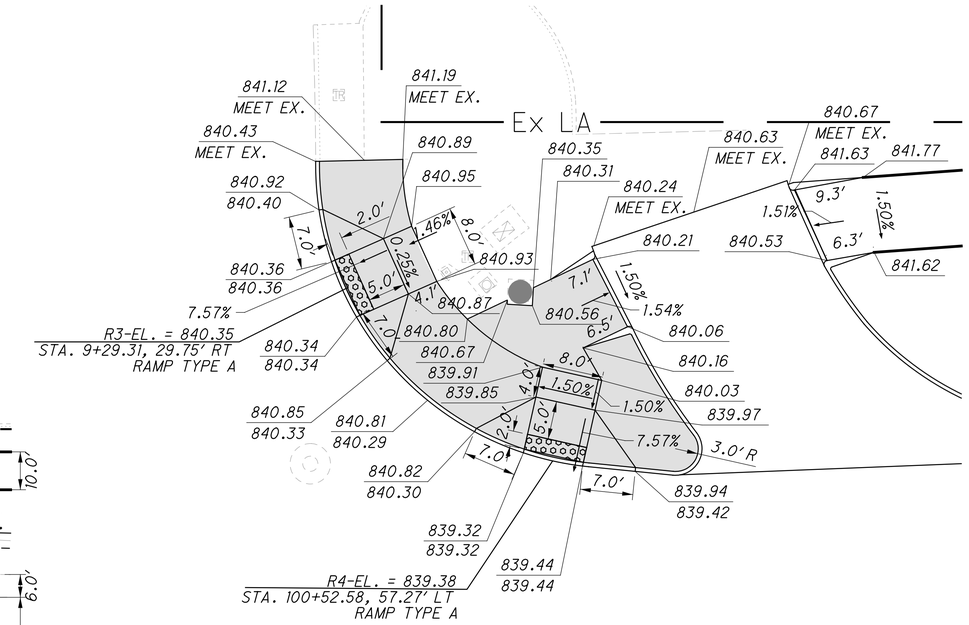

SCALE: 1" = 10'

LEGEND

8″ CONCRETE WALK	
XXX.XX	EXISTING SPOT SHOT ELEVATION
XXX.XX MEET EX.	
XXX.XX	PROPOSED SPOT SHOT ELEVATION
XXX.XX/ XXX.XX	PROPOSED TOP OF CURB / PROPOSED BOTTOM OF CURB ELEVATIONS
XXX.XX / XXX.XX	
XXX.XX / XXX.XX	

HORIZONTAL SCALE IN FEET 0 10 20 40

CALCULATED NRH
CHECKED JDB

INTERSECTION DETAIL
WILSON ROAD AT SULLIVANT AVENUE

WILSON ROAD

3233-E

\\Columbus\SRVLN\DE\Clients\OH_City_of_Columbus\073707_WILSON_RD\Design\Roadway\Sheets\073707_GI001.dgn 10/17/2016 3:37:07 PM keatingm

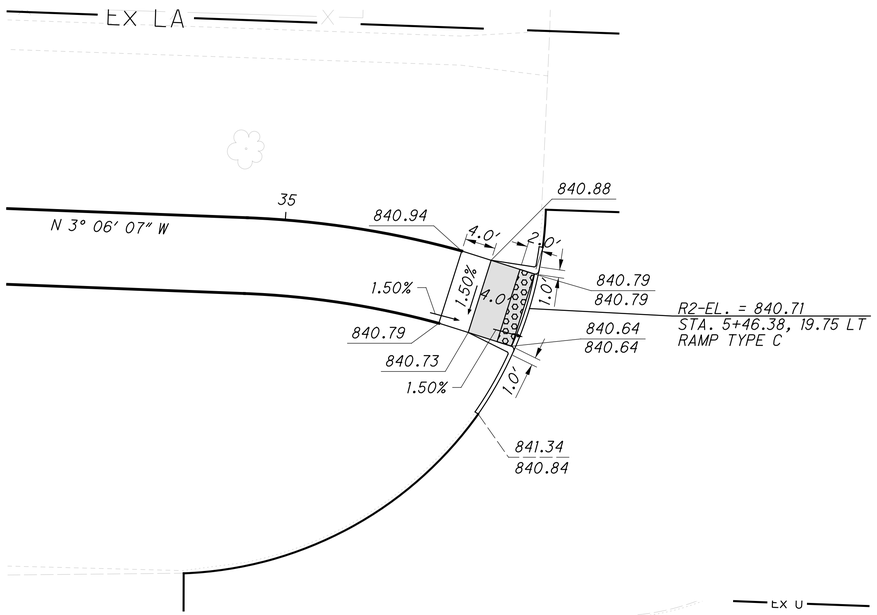

SCALE: 1" = 10'

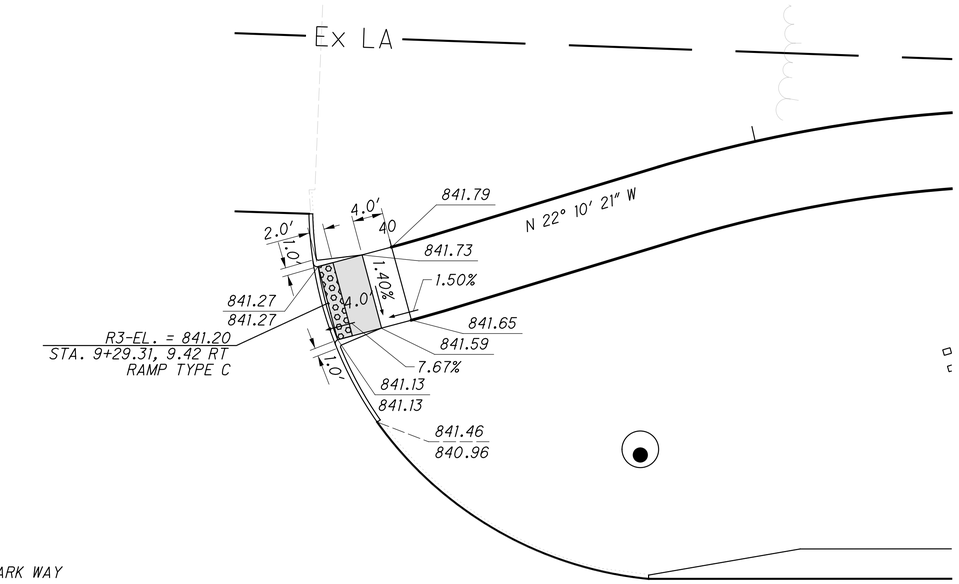

SCALE: 1" = 10'

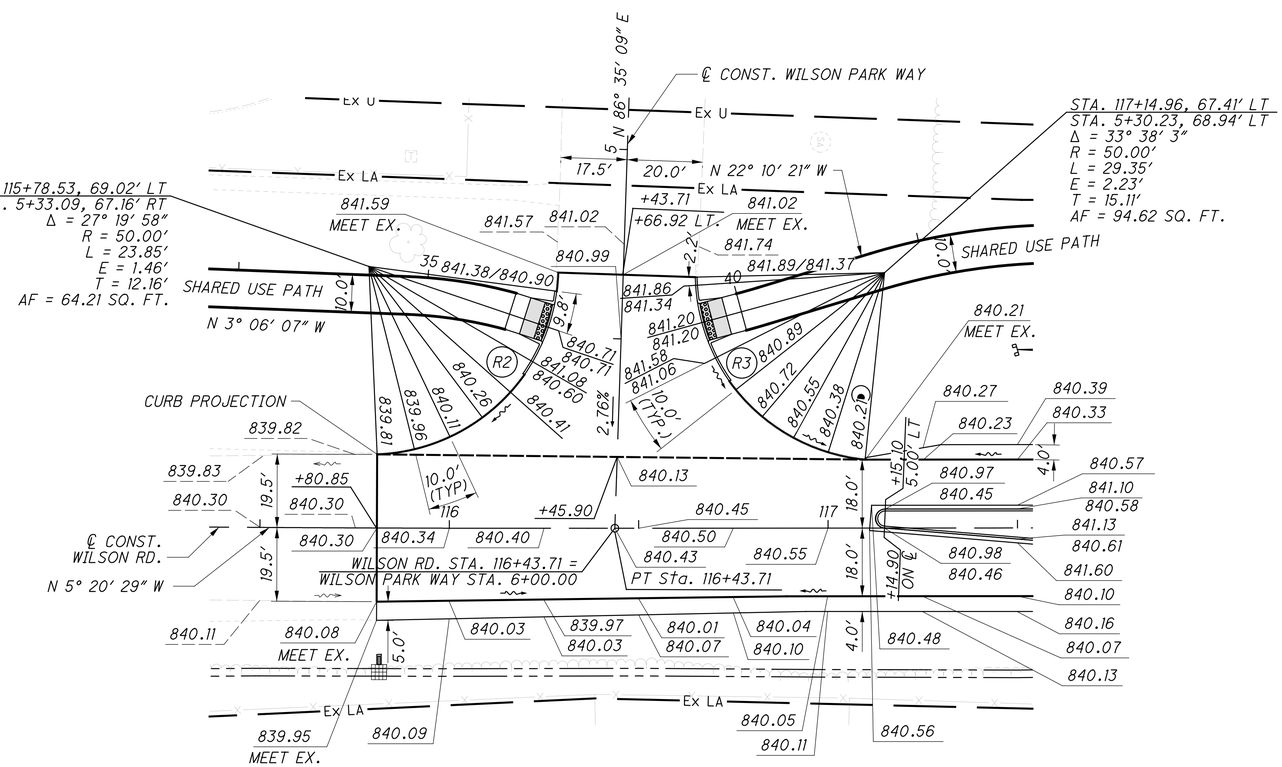

WILSON ROAD AT WILSON PARK WAY
SCALE: 1" = 20'

8" CONCRETE WALK	XXX.XX — PROPOSED SPOT SHOT ELEVATION
XXX.XX — EXISTING SPOT SHOT ELEVATION	XXX.XX / XXX.XX — PROPOSED TOP OF CURB / PROPOSED BOTTOM OF CURB ELEVATIONS
XXX.XX / MEET EX.	XXX.XX / XXX.XX

3233-E

HORIZONTAL SCALE IN FEET 0 10 20 40

CALCULATED NRH
CHECKED JDB

INTERSECTION DETAIL
WILSON ROAD AT WILSON PARK WAY

WILSON ROAD

\\Columbus\SRVLN\DE\Clients\OH_City_of_Columbus\073707_WILSON_RD\Design\Roadway\Sheets\073707_GI002.dgn 10/17/2016 3:37:08 PM keatingm

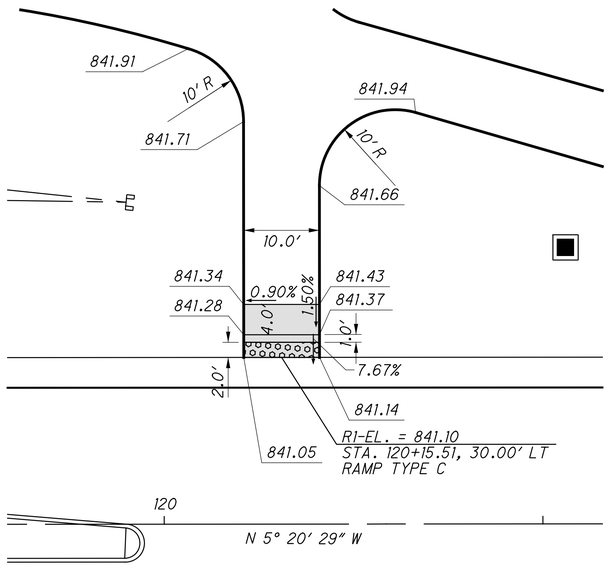

SCALE: 1" = 10'

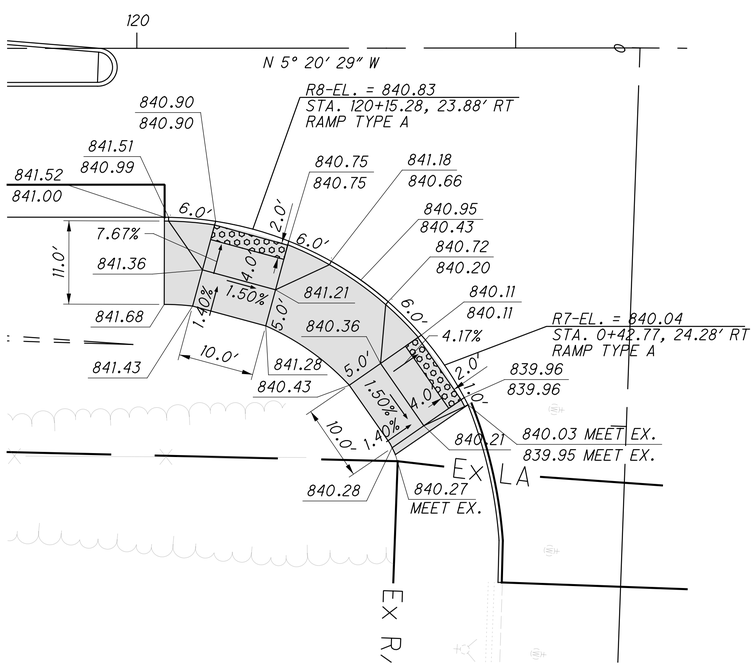

SCALE: 1" = 10'

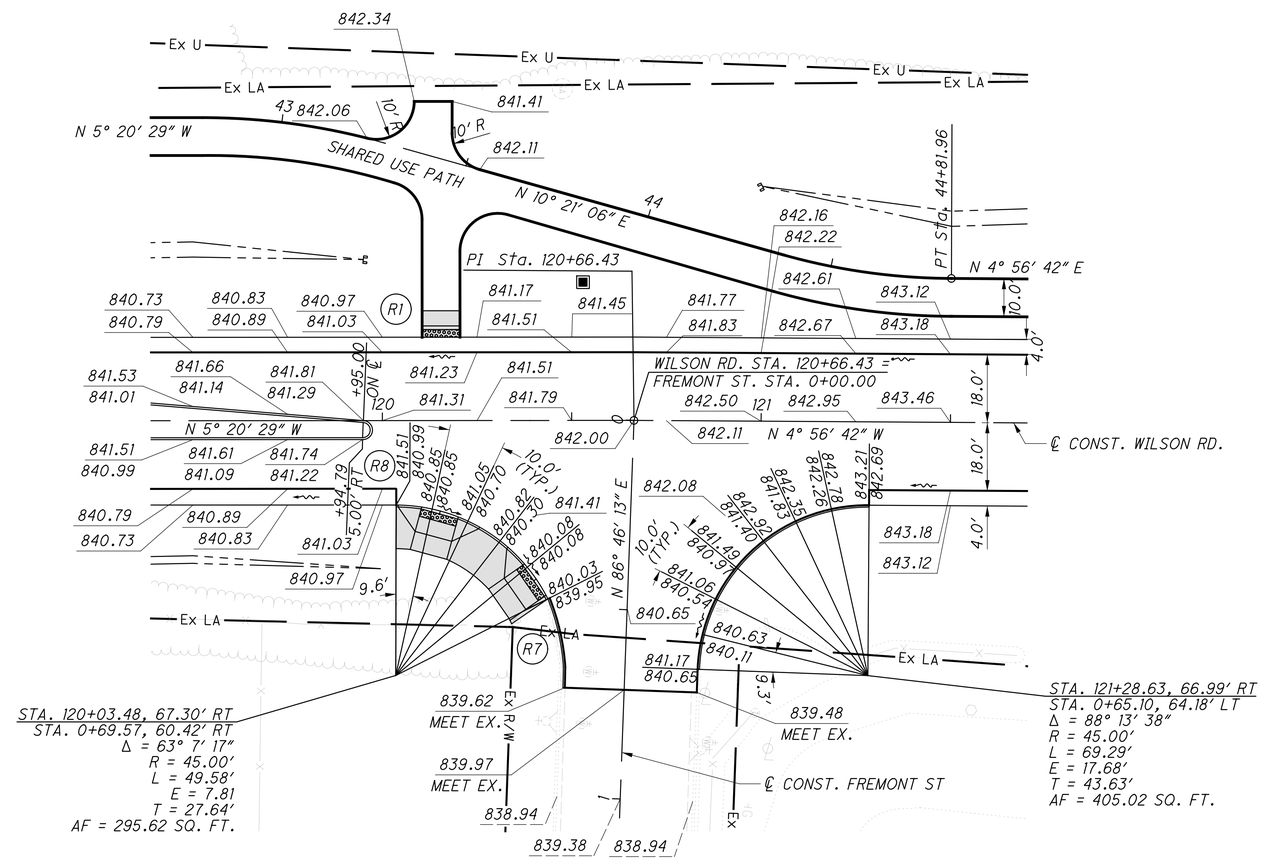

WILSON ROAD AT FREMONT STREET
SCALE: 1" = 20'

8" CONCRETE WALK	
XXX.XX	EXISTING SPOT SHOT ELEVATION
XXX.XX MEET EX.	
XXX.XX	PROPOSED SPOT SHOT ELEVATION
XXX.XX/ XXX.XX	PROPOSED TOP OF CURB / PROPOSED BOTTOM OF CURB ELEVATIONS
XXX.XX / XXX.XX	
XXX.XX / XXX.XX	

HORIZONTAL SCALE IN FEET 0 10 20 40

CALCULATED NRH
CHECKED JDB

INTERSECTION DETAIL
WILSON ROAD AT FREMONT STREET

WILSON ROAD

3233-E

\\Columbus\SRVLN\DE\Clients\OH_City_of_Columbus\073707_WILSON_RD\Design\Roadway\Sheets\073707_GI003.dgn 10/17/2016 3:37:09 PM keatingm

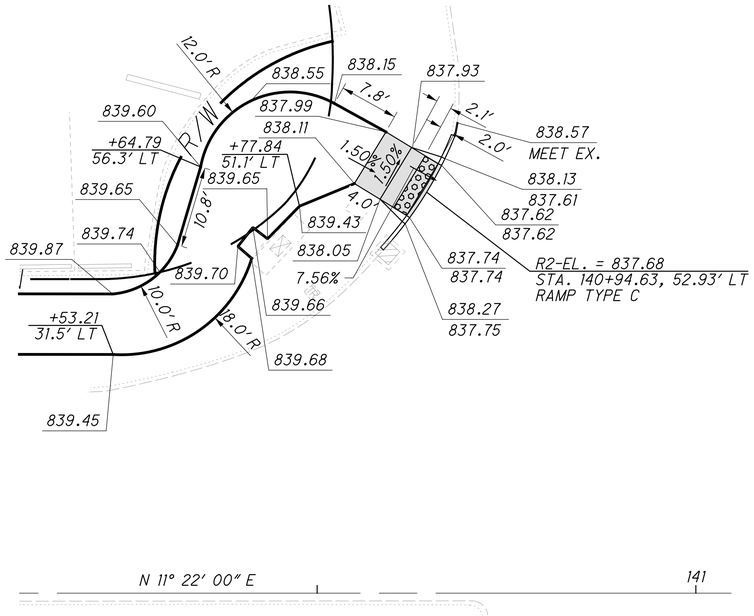

SCALE: 1" = 10'

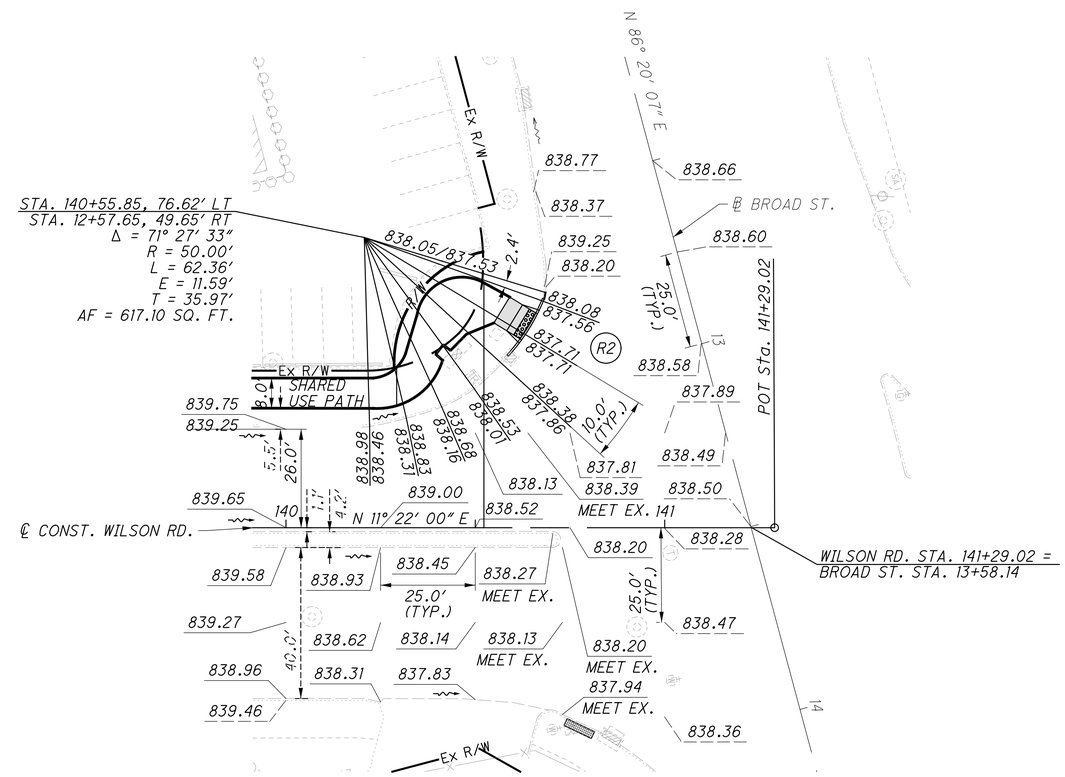

WILSON ROAD AT BROAD STREET
SCALE: 1" = 20'

	8" CONCRETE WALK	XXX.XX	PROPOSED SPOT SHOT ELEVATION
XXX.XX	EXISTING SPOT SHOT ELEVATION	XXX.XX/ XXX.XX	PROPOSED TOP OF CURB / PROPOSED BOTTOM OF CURB ELEVATIONS
XXX.XX MEET EX.		XXX.XX / XXX.XX	

HORIZONTAL SCALE IN FEET 0 10 20 40

CALCULATED NRH
CHECKED JDB

INTERSECTION DETAIL
WILSON ROAD AT BROAD STREET

WILSON ROAD

3233-E

\\Columbus\SRVLN\DE\Clients\OH_City_of_Columbus\073707_WILSON_RD\Design\Roadway\Sheets\073707_GI004.dgn 10/17/2016 3:37:10 PM keatingm

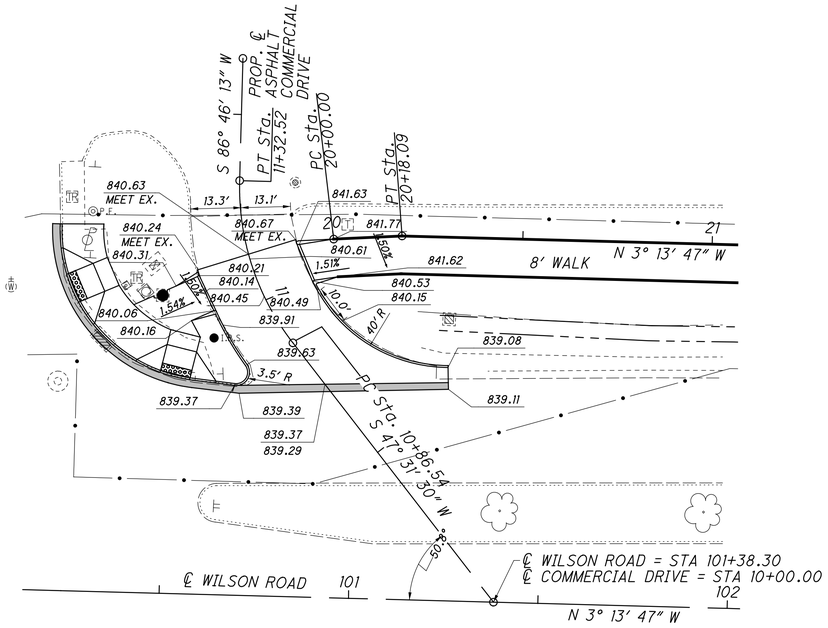

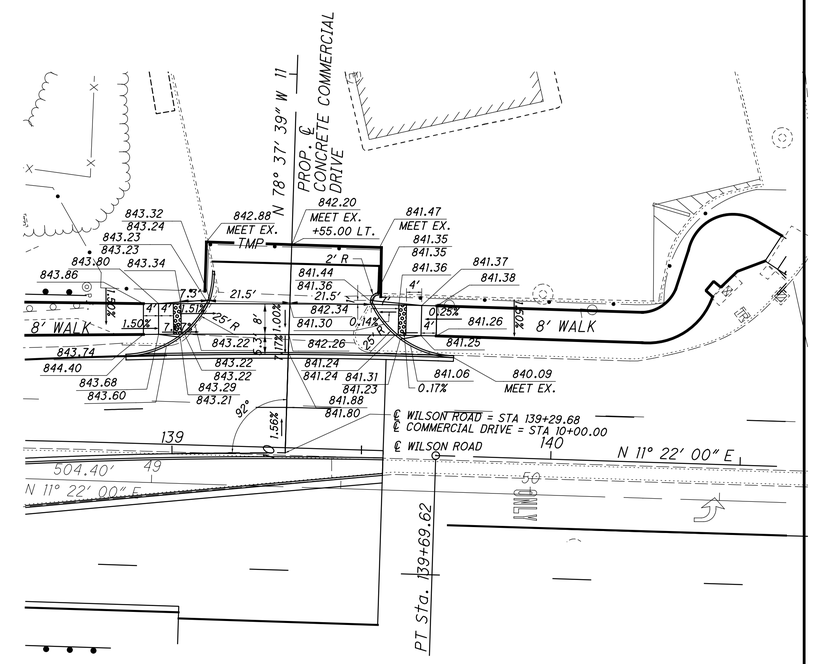

HORIZONTAL SCALE IN FEET
0 10 20

CALCULATED CAG
CHECKED JDB

DRIVE DETAILS

WILSON ROAD

3233-E

\\Columbus\SRVLN\DE\Clients\OH_City_of_Columbus\073707_WILSON_RD\Design\Roadway\Sheets\073707_GD001.dgn 10/17/2016 3:37:11 PM keatingm

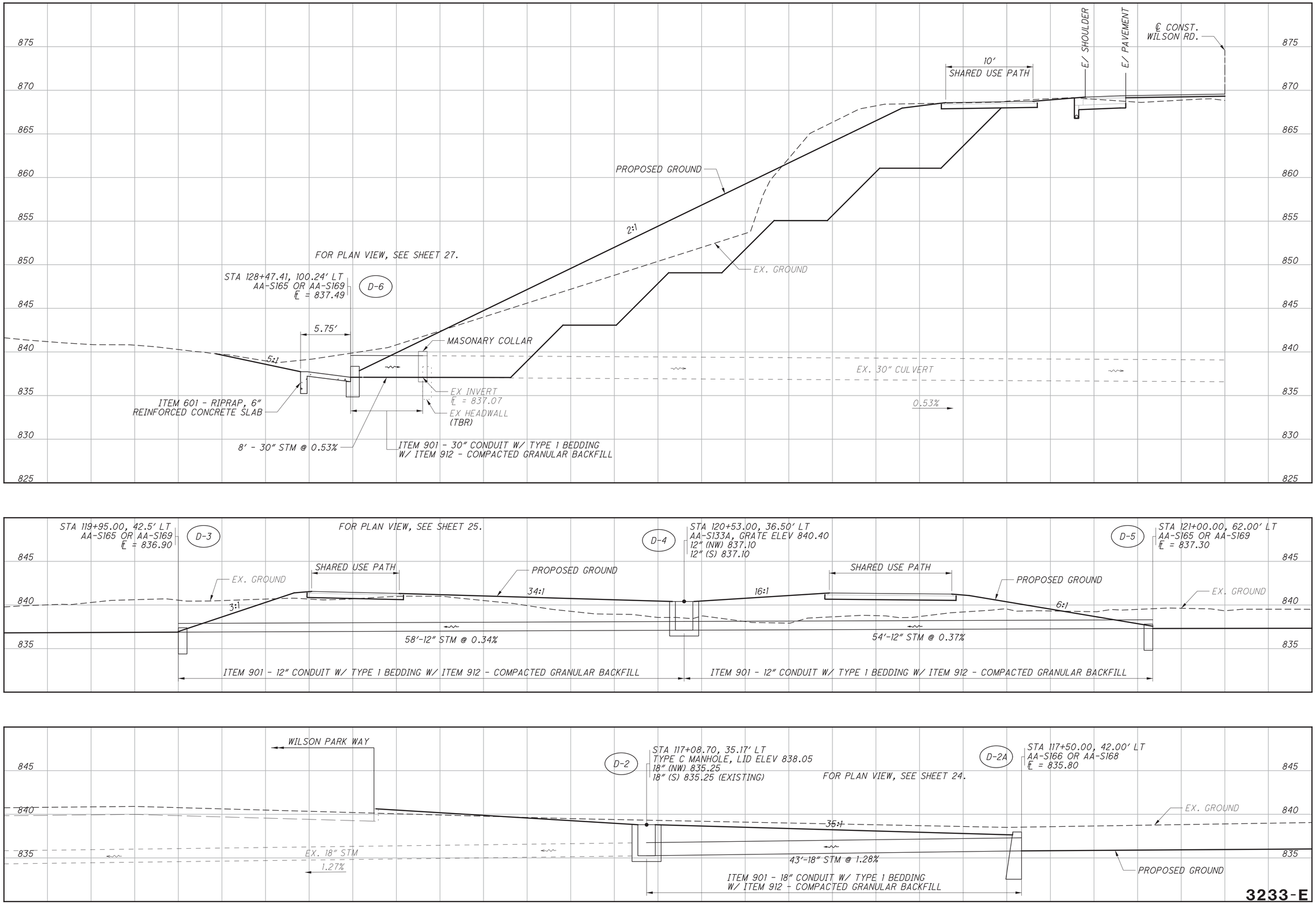

CALCULATED JEP CHECKED

PROFILE

STA. 177+08.70 TO STA. 121+00.00 AND STA. 128+49.96

WILSON ROAD

Q:\Transportation\Projects\Local\City of Columbus\Wilson Road Bridge Rehab\12345\drainage\streets\073707_DF001.dgn 10/17/2016 12:26:45 PM JPerchinske

STORM SEWER COORDINATE DATA						
PROPOSED				AS BUILT		
STRUCTURE	NORTHING	EASTING	ELEVATION	NORTHING	EASTING	ELEVATION
D-2	709817.2499	1801752.1594	838.05			
D-2A	709857.2600	1801736.4366	835.80			
D-3	710101.6244	1801718.2099	836.90			
D-4	710159.9311	1801718.7847	840.40			
D-5	710204.8011	1801689.2131	837.30			
D-6	710948.4636	1801595.3553	837.49			
D-8A	711642.5322	1801671.7335	865.35			
D-8	711639.1410	1801706.3887	864.74			
D-8B	711633.8827	1801759.7899	842.55			
D-7	711872.9631	1801713.6001	851.62			
D-7A	711858.7508	1801786.5803	839.14			

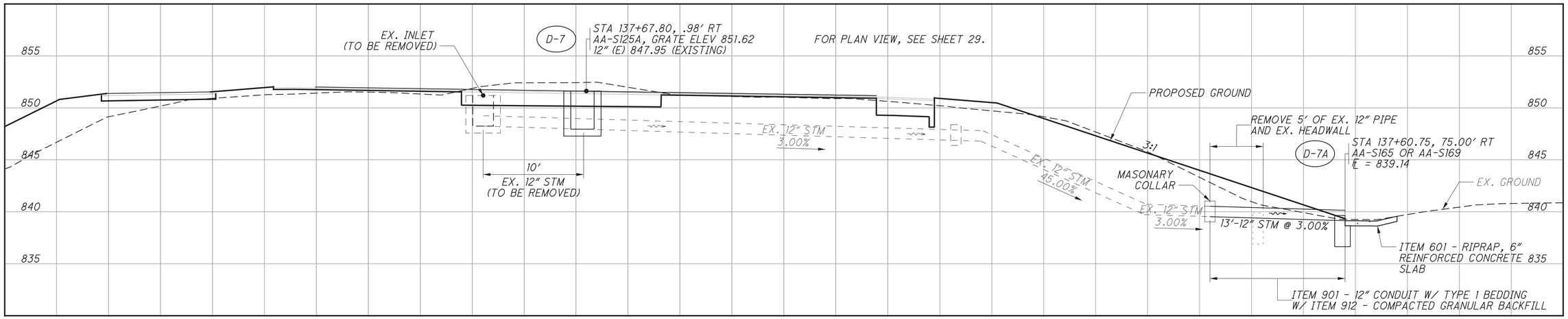

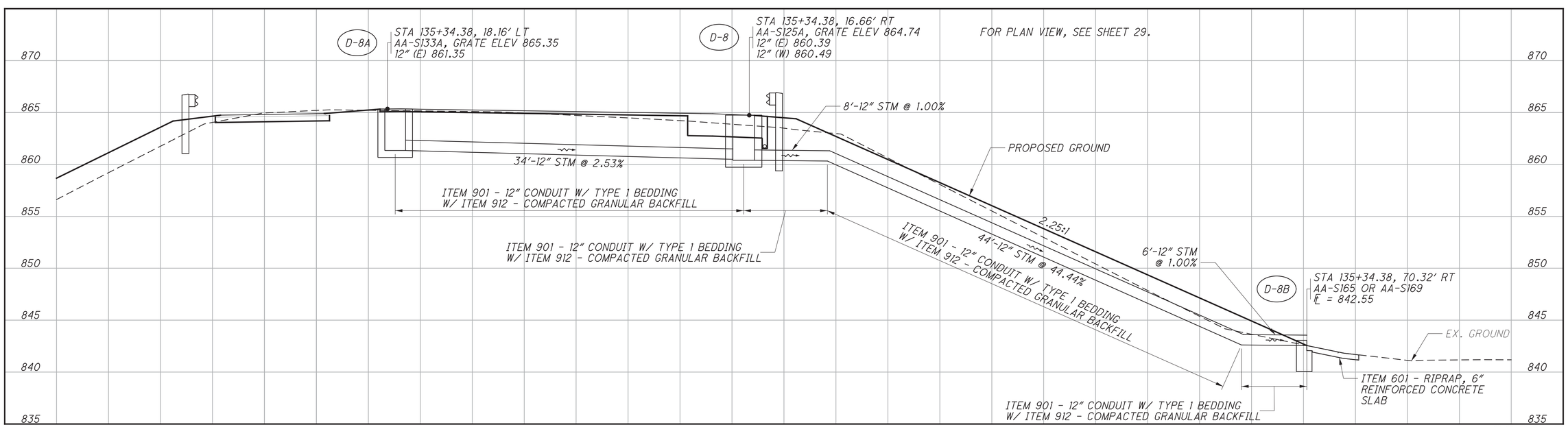

3233-E

CALCULATED JEP CHECKED

PROFILE & STORM SEWER COORDINATE DATA

STA. 135+34.38, 137+67.80

WILSON ROAD

Q:\Transportation\Projects\Local\City of Columbus\Wilson Road Bridge Rehab\12345\drainage\sheets\073707_DF002.dgn 10/17/2016 12:26:45 PM JPerchinske

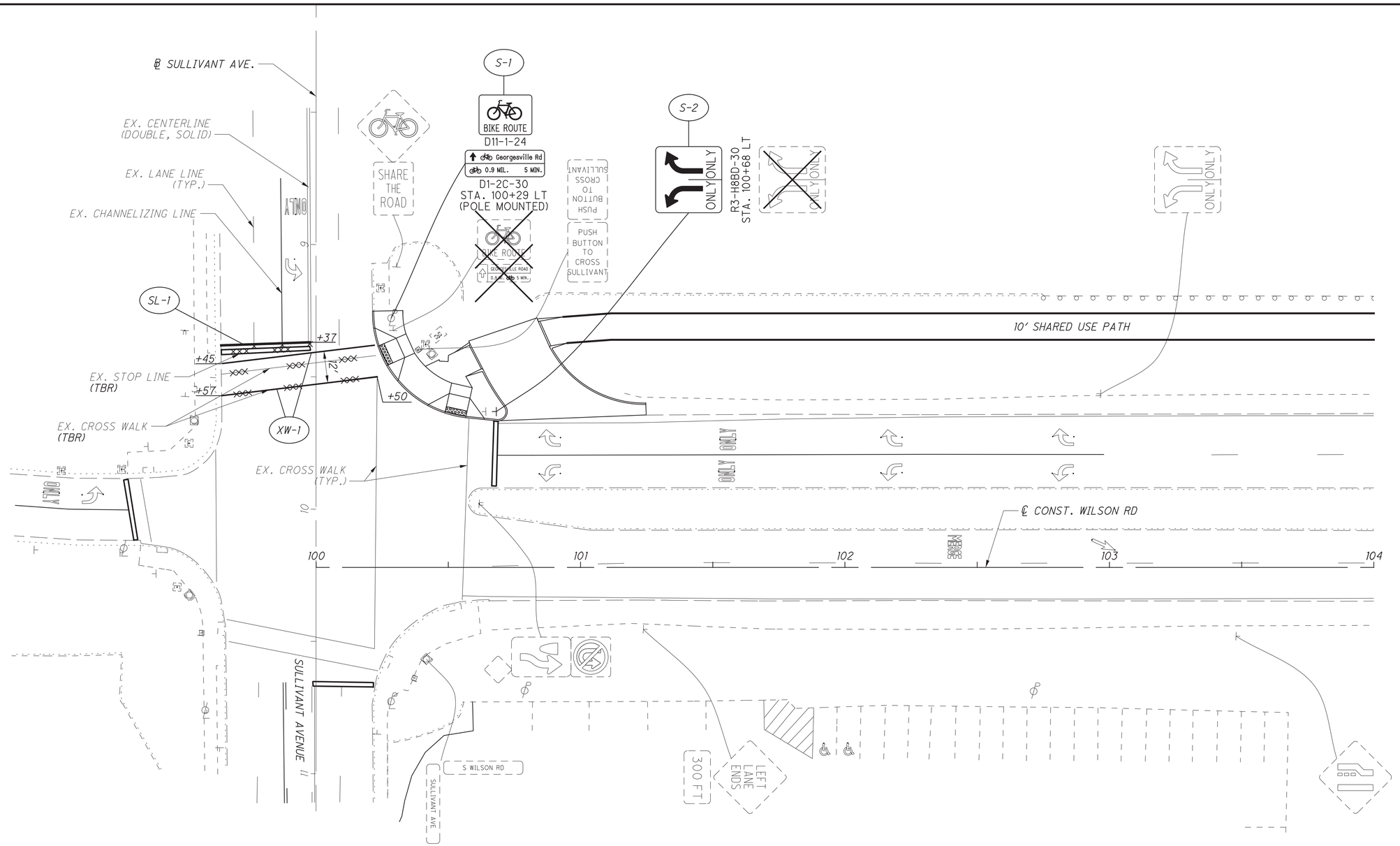

LEGEND

PROPOSED SIGN	XW — CROSSWALK LINE (WHITE)
EX. SIGN TO REMAIN	SL — STOP LINE (WHITE)
EX. SIGN TO BE REMOVED	xxx — EX. PAVEMENT MARKINGS TO BE REMOVED BY WATER BLASTING METHOD ONLY

3233-E

HORIZ SCALE 0 10 20 40

CALCULATED JEP
CHECKED

SIGNING AND PAVEMENT MARKING PLAN
SULLIVANT AVENUE

WILSON ROAD

Q:\Transportation\Projects\Local\City of Columbus\Wilson Road Bridge Rehab\12345\roadway\sheets\073707_TP000.dgn 10/17/2016 12:26:47 PM JPerchinske

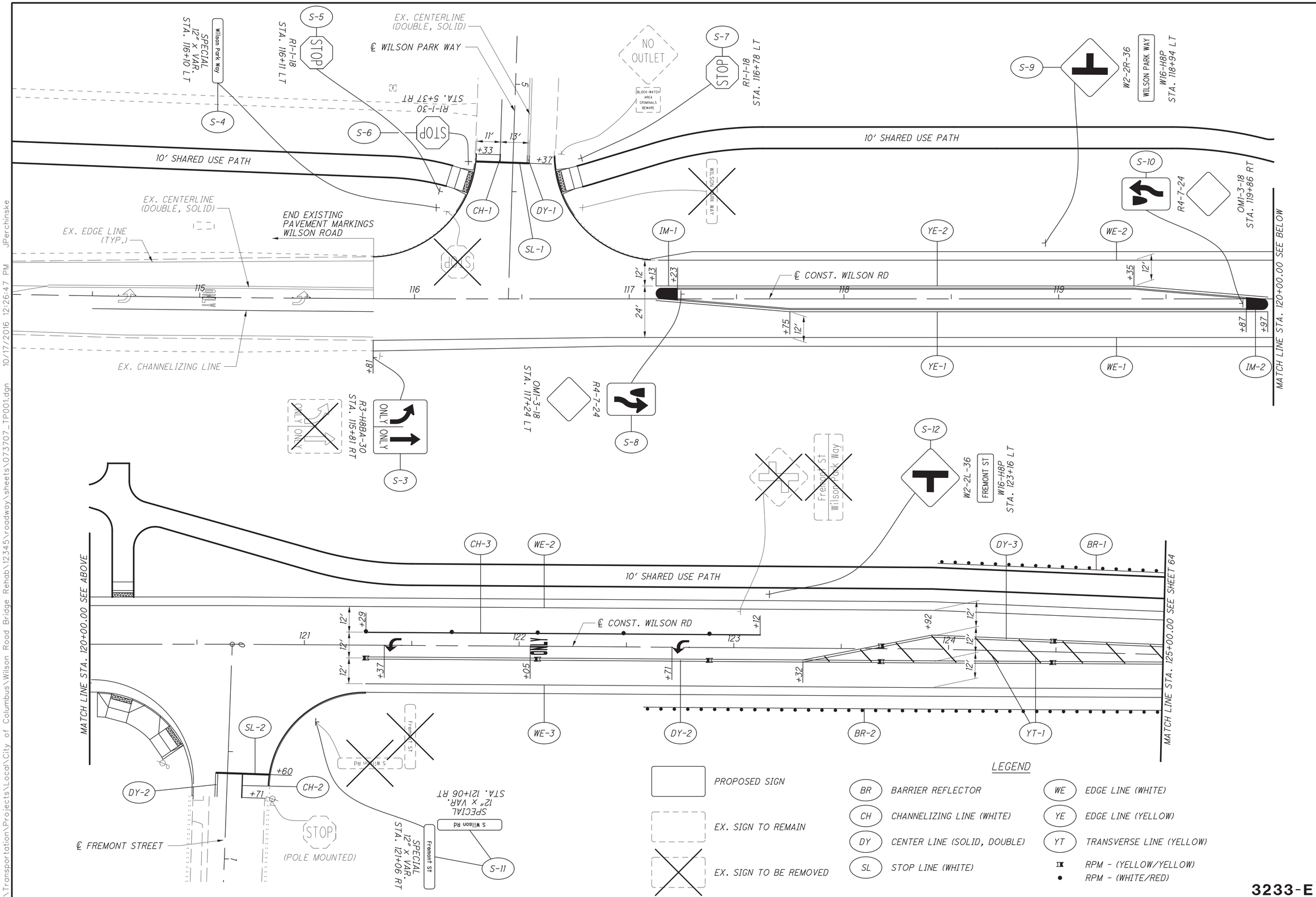

3233-E

HORIZ SCALE 0 10 20 40

CALCULATED JEP
CHECKED

SIGNING AND PAVEMENT MARKING PLAN
STA. 115+81.00 TO STA. 125+00.00

WILSON ROAD

Q:\Transportation\Projects\Local\City of Columbus\Wilson Road Bridge Rehab\12345\roadway\sheets\073707_TP001.dgn 10/17/2016 12:26:47 PM JPerchinske

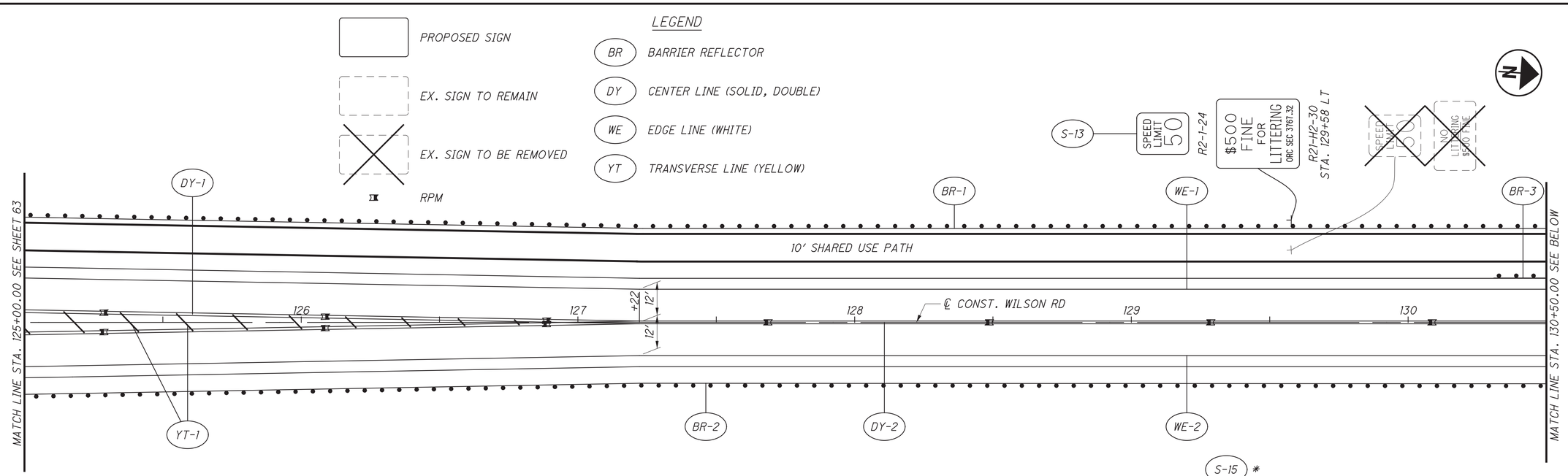

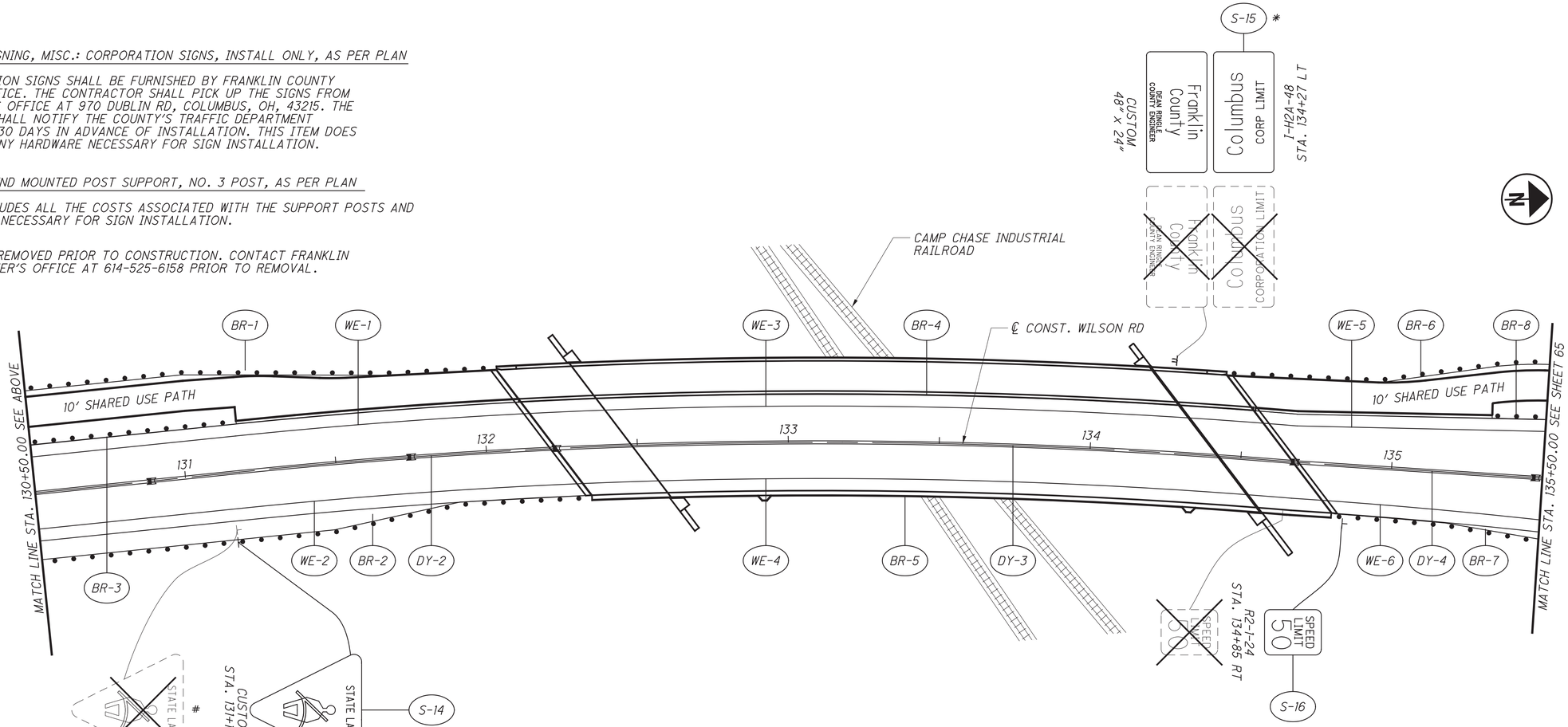

* ITEM 630 SIGNING, MISC.: CORPORATION SIGNS, INSTALL ONLY, AS PER PLAN

ALL CORPORATION SIGNS SHALL BE FURNISHED BY FRANKLIN COUNTY ENGINEER'S OFFICE. THE CONTRACTOR SHALL PICK UP THE SIGNS FROM THE ENGINEER'S OFFICE AT 970 DUBLIN RD, COLUMBUS, OH, 43215. THE CONTRACTOR SHALL NOTIFY THE COUNTY'S TRAFFIC DEPARTMENT (614-462-5318) 30 DAYS IN ADVANCE OF INSTALLATION. THIS ITEM DOES NOT INCLUDE ANY HARDWARE NECESSARY FOR SIGN INSTALLATION.

ITEM 630 GROUND MOUNTED POST SUPPORT, NO. 3 POST, AS PER PLAN

THIS ITEM INCLUDES ALL THE COSTS ASSOCIATED WITH THE SUPPORT POSTS AND ANY HARDWARE NECESSARY FOR SIGN INSTALLATION.

\# SIGN TO BE REMOVED PRIOR TO CONSTRUCTION. CONTACT FRANKLIN COUNTY ENGINEER'S OFFICE AT 614-525-6158 PRIOR TO REMOVAL.

HORIZ SCALE 0 10 20 40

CALCULATED JEP CHECKED

SIGNING AND PAVEMENT MARKING PLAN
STA. 125+00.00 TO STA. 135+50.00

WILSON ROAD

3233-E

Q:\Transportation\Projects\Local\City of Columbus\Wilson Road Bridge Rehab\12345\roadway\sheets\073707_TP002.dgn 10/17/2016 12:26:48 PM JPerchinske

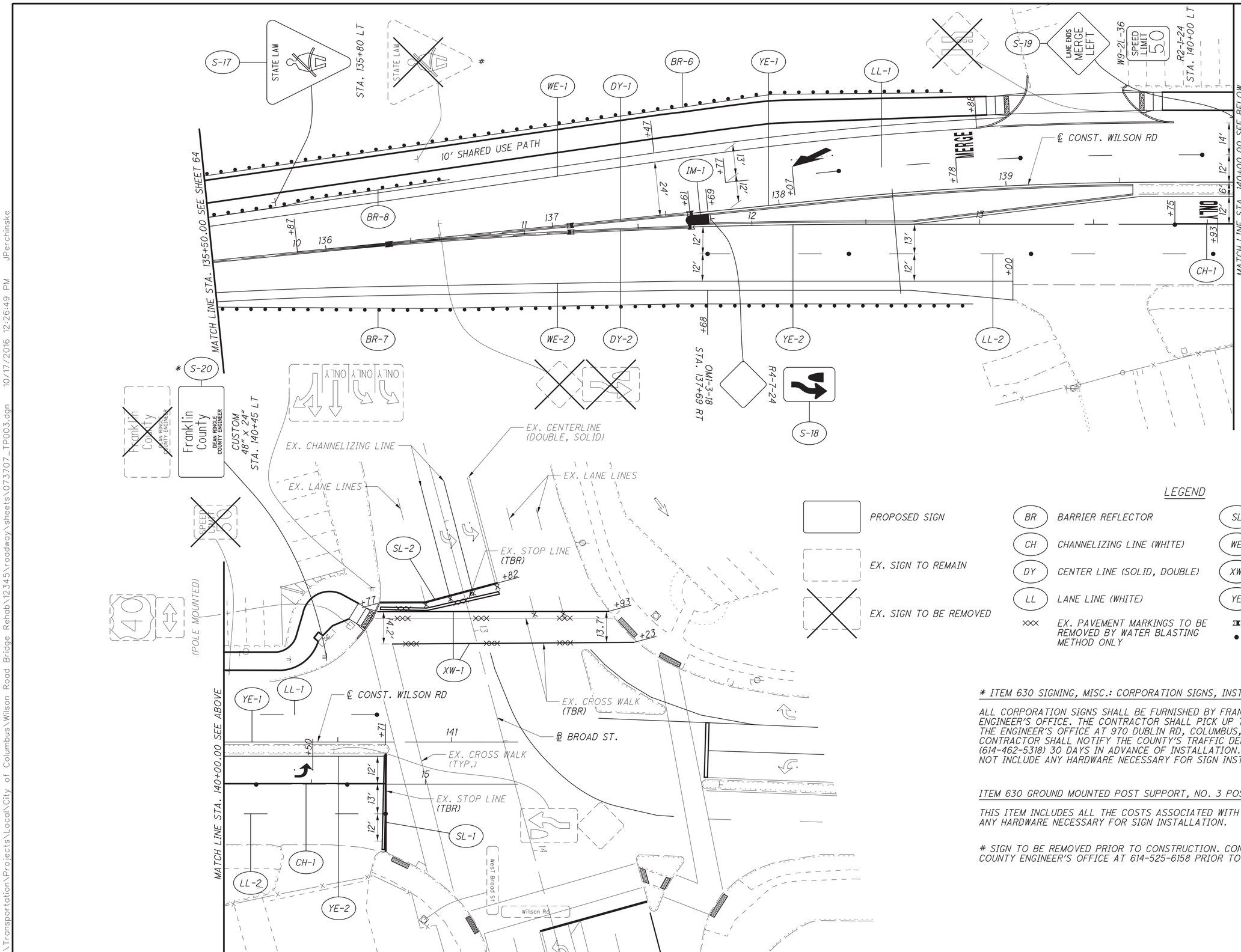

* ITEM 630 SIGNING, MISC.: CORPORATION SIGNS, INSTALL ONLY, AS PER PLAN

ALL CORPORATION SIGNS SHALL BE FURNISHED BY FRANKLIN COUNTY ENGINEER'S OFFICE. THE CONTRACTOR SHALL PICK UP THE SIGNS FROM THE ENGINEER'S OFFICE AT 970 DUBLIN RD, COLUMBUS, OH, 43215. THE CONTRACTOR SHALL NOTIFY THE COUNTY'S TRAFFIC DEPARTMENT (614-462-5318) 30 DAYS IN ADVANCE OF INSTALLATION. THIS ITEM DOES NOT INCLUDE ANY HARDWARE NECESSARY FOR SIGN INSTALLATION.

ITEM 630 GROUND MOUNTED POST SUPPORT, NO. 3 POST, AS PER PLAN

THIS ITEM INCLUDES ALL THE COSTS ASSOCIATED WITH THE SUPPORT POSTS AND ANY HARDWARE NECESSARY FOR SIGN INSTALLATION.

\# SIGN TO BE REMOVED PRIOR TO CONSTRUCTION. CONTACT FRANKLIN COUNTY ENGINEER'S OFFICE AT 614-525-6158 PRIOR TO REMOVAL.

HORIZ SCALE 0 10 20 40

CALCULATED JEP
CHECKED

SIGNING AND PAVEMENT MARKING PLAN
STA. 135+50.00 TO END

WILSON ROAD

3233-E

Q:\Transportation\Projects\Local\City of Columbus\Wilson Road Bridge Rehab\12345\roadway\sheets\073707_TP003.dgn 10/17/2016 12:26:49 PM JPerchinske

SHEET NO.	REFERENCE NO.	LOCATION	STATION FROM	STATION TO	SIDE	621 RAISED PAVEMENT MARKER REMOVED	621 RAISED PAVEMENT MARKER INSTALLED (YELLOW/YELLOW)	621 RAISED PAVEMENT MARKER INSTALLED (WHITE/RED)	626 BARRIER REFLECTOR, TYPE A	626 BARRIER REFLECTOR, TYPE B	644 REMOVAL OF PAVEMENT MARKING	644 LANE ARROW	644 WORD ON PAVEMENT, 96"	644 ISLAND MARKING	644 CHANNELIZING LINE, 10"	644 STOP LINE, 20"	644 CROSSWALK LINE, WHITE, 10"	644 TRANSVERSE/DIAGONAL LINE, YELLOW, 20"	644 EDGE LINE, WHITE, 5"	644 EDGE LINE, YELLOW, 5"	644 LANE LINE, 5"	644 CENTER LINE, DOUBLE SOLID, YELLOW, 5"	647 EDGE LINE, WHITE, 5", TYPE B 90	647 CENTER LINE, DOUBLE SOLID, YELLOW, 5", TYPE B 90	
						EACH	EACH	EACH	EACH	EACH	FT	EACH	EACH	SQ FT	FT	FT	FT	FT	MI	MI	MI	MI	MI	MI	
62	SL-1	SULLIVANT AVENUE	9+37		RT						34					34									
62	XW-1	SULLIVANT AVENUE	9+37	9+57	LT/RT						117						117								
63	CH-1	WILSON PARK WAY	5+33	5+37	RT										4										
63	DY-1	WILSON PARK WAY	5+33	5+37	LT																	0.01			
63	SL-1	WILSON PARK WAY	5+37		LT/RT											24									
63	CH-2	FREMONT STREET	0+60	0+71	LT										11										
63	DY-2	FREMONT STREET	0+60	0+71	RT																	0.01			
63	SL-2	FREMONT STREET	0+60		LT/RT											24									
63	BR-1	WILSON ROAD	124+00	132+05	LT				9																
63	BR-2	WILSON ROAD	122+56	132+34	RT				11																
63	CH-3	WILSON ROAD	121+29	123+12	LT			5				2	1		183										
63	DY-2	WILSON ROAD	121+29	125+00	RT	4	5															0.07			
63	DY-3	WILSON ROAD	123+32	125+00	LT/RT	4	2															0.03			
63	IM-1	WILSON ROAD	117+13	117+23	LT									50											
63	IM-2	WILSON ROAD	119+87	119+97	RT									50											
63	WE-1	WILSON ROAD	115+81	120+00	RT														0.08						
63	WE-2	WILSON ROAD	117+13	125+00	LT														0.15						
63	WE-3	WILSON ROAD	121+29	125+00	RT														0.07						
63	YE-1	WILSON ROAD	117+13	119+97	RT															0.05					
63	YE-2	WILSON ROAD	117+13	119+97	LT															0.05					
63	YT-1	WILSON ROAD	123+32	125+00	LT/RT													106							
64	BR-3	WILSON ROAD	130+31	131+19	LT				2																
64	BR-4	WILSON ROAD	131+19	135+32	LT					5															
64	BR-5	WILSON ROAD	132+34	134+81	RT					4															
64	BR-6	WILSON ROAD	134+44	138+78	LT				6																
64	BR-7	WILSON ROAD	134+81	138+82	RT				5																
64	DY-1	WILSON ROAD	125+00	127+22	LT	4	3															0.04			
64	DY-2	WILSON ROAD	125+00	132+23	CL	35	10															0.14			
64	DY-3	WILSON ROAD	132+23	134+68	CL																			0.05	
64	DY-4	WILSON ROAD	134+68	135+50	CL	1	2															0.02			
64	WE-1	WILSON ROAD	125+00	132+15	LT														0.14						
64	WE-2	WILSON ROAD	125+00	132+32	RT														0.14						
64	WE-3	WILSON ROAD	132+15	134+56	LT																		0.05		
64	WE-4	WILSON ROAD	132+32	134+78	RT																		0.05		
64	WE-5	WILSON ROAD	134+56	135+50	LT														0.02						
64	WE-6	WILSON ROAD	134+78	135+50	RT														0.01						
64	YT-1	WILSON ROAD	125+00	127+22	LT/RT													57							
65	BR-8	WILSON ROAD	135+32	136+57	LT				3																
65	CH-1	WILSON ROAD	139+75	140+71	RT			3				1	1		96										
65	DY-1	WILSON ROAD	135+50	137+61	CL	1	3															0.04			
65	DY-2	WILSON ROAD	135+87	137+61	RT	3	3															0.03			
65	IM-1	WILSON ROAD	137+59	137+69	RT									41											
65	LL-1	WILSON ROAD	137+77	140+71	LT			4				1	1								0.06				
65	LL-2	WILSON ROAD	137+68	140+71	RT			5													0.06				
65	SL-1	WILSON ROAD	140+71		RT											42									
65	WE-1	WILSON ROAD	135+50	138+88	LT														0.06						
65	WE-2	WILSON ROAD	135+50	139+00	RT														0.07						
65	YE-1	WILSON ROAD	137+61	140+71	CL															0.06					
65	YE-2	WILSON ROAD	137+61	140+71	RT															0.06					
65	SL-2	BROAD STREET	12+77	12+82	LT/RT						52					52									
65	XW-1	BROAD STREET	12+93	13+23	LT/RT						210						207								
			SUBTOTALS				28	17											0.74	0.22					
TOTALS CARRIED TO GENERAL SUMMARY						52	45		36	9	413	4	3	141	294	176	324	163	0.96		0.12	0.39	0.10	0.05	

CALCULATED JEP
CHECKED

PAVEMENT MARKING SUBSUMMARY

WILSON ROAD

3233-E

Q:\Transportation\Projects\Local\City of Columbus\Wilson Road Bridge Rehab\12345\roadway\sheets\073707_TS001.dgn 10/17/2016 12:26:49 PM JPerchinske

SHEET NO.	REFERENCE NO.	LOCATION	STATION	SIDE	CODE	SIZE (INCHES)	630 GROUND MOUNTED POST SUPPORT, NO. 3 POST	GROUND MOUNTED POST SUPPORT, NO. 3 POST, AS PER PLAN	SIGN, FLAT SHEET	SIGN SUPPORT ASSEMBLY, POLE MOUNTED	SIGNING, MISC.: CORPORATION SIGNS, INSTALL ONLY, AS PER PLAN	SIGN, DOUBLE FACED, STREET NAME	STREET NAME SUPPORT, 4" PIPE	REMOVAL OF GROUND MOUNTED SIGN AND REERECTION	REMOVAL OF GROUND MOUNTED SIGN AND STORAGE	REMOVAL OF GROUND MOUNTED POST SUPPORT AND DISPOSAL	REMOVAL OF GROUND MOUNTED PIPE SUPPORT AND DISPOSAL				
							FT	FT	SQ FT	EACH	EACH	SQ FT	FT	EACH	EACH	EACH	EACH				
62	S-1	WILSON ROAD	100+29	LT	D11-1-24	24" x 18"			3.00	1					2	1					
					D1-2C-30	30" x 12"			2.50	1											
62	S-2	WILSON ROAD	100+68	LT	R3-H8BD-30	30" x 30"	13.0		6.25						1	1					
63	S-3	WILSON ROAD	115+81	RT	R3-H8BA-30	30" x 30"	13.0		6.25						1	1					
63	S-4	WILSON ROAD	116+10	LT	SPECIAL	12" x VAR						3	19		1		1				
63	S-5	WILSON ROAD	116+11	LT	R1-1-18	18" x 18"	12.0		2.25												
63	S-6	WILSON PARK WAY	5+37	RT	R1-1-30	30" x 30"	13.0		6.25						1	1					
63	S-7	WILSON ROAD	116+78	LT	R1-1-18	18" x 18"	12.0		2.25												
63	S-8	WILSON ROAD	117+24	LT	R4-7-24	24" x 30"	15.5		5.00												
					OM1-3-18	18" x 18"			2.25												
63	S-9	WILSON ROAD	118+94	LT	W2-2R-36	36" x 36"	16.0		9.00												
					W16-H8P	48" x 8"			2.67												
63	S-10	WILSON ROAD	119+86	RT	R4-7-24	24" x 30"	15.5		5.00												
					OM1-3-18	18" x 18"			2.25												
63	S-11	WILSON ROAD	121+06	RT	SPECIAL	12" x VAR						3	20		2		1				
					SPECIAL	12" x VAR						3									
63	S-12	WILSON ROAD	123+16	LT	W2-2L-36	36" x 36"	16.0		9.00						2	1					
					W16-H8P	48" x 8"			2.67												
64	S-13	WILSON ROAD	129+58	LT	R2-1-24	24" x 30"	16.0		5.00						2	1					
					R21-H2-30	30" x 36"			7.50												
64	S-14	WILSON ROAD	131+15	RT	CUSTOM	36" x 36"		13.0						1		1					
64	S-15	WILSON ROAD	134+27	LT	I-H2A-48	48" x 24"		14.5/14.5			1				2	2					
					CUSTOM	48" x 24"					1										
64	S-16	WILSON ROAD	134+85	RT	R2-1-24	24" x 30"	13.0		5.00						1	1					
65	S-17	WILSON ROAD	135+80	LT	CUSTOM	36" x 36"		13.0						1		1					
65	S-18	WILSON ROAD	137+69	RT	R4-7-24	24" x 30"	15.5		5.00						2	1					
					OM1-3-18	18" x 18"			2.25												
65	S-19	WILSON ROAD	140+00	LT	W9-2L-36	36" x 36"	17.5		9.00						1	1					
					R2-1-24	24" x 30"			5.00						1	1					
65	S-20	WILSON ROAD	140+45	LT	CUSTOM	48" x 24"		12.5/12.5			1				1	2					
TOTALS CARRIED TO GENERAL SUMMARY							188	80	105.33	2	3	9	39	2	20	16	2				

CALCULATED JEP
CHECKED

SIGNING SUBSUMMARY

WILSON ROAD

3233-E

Q:\Transportation\Projects\Local\City of Columbus\Wilson Road Bridge Rehab\12345\roadway\sheets\073707_TS002.dgn 10/17/2016 12:26:50 PM JPerchinske

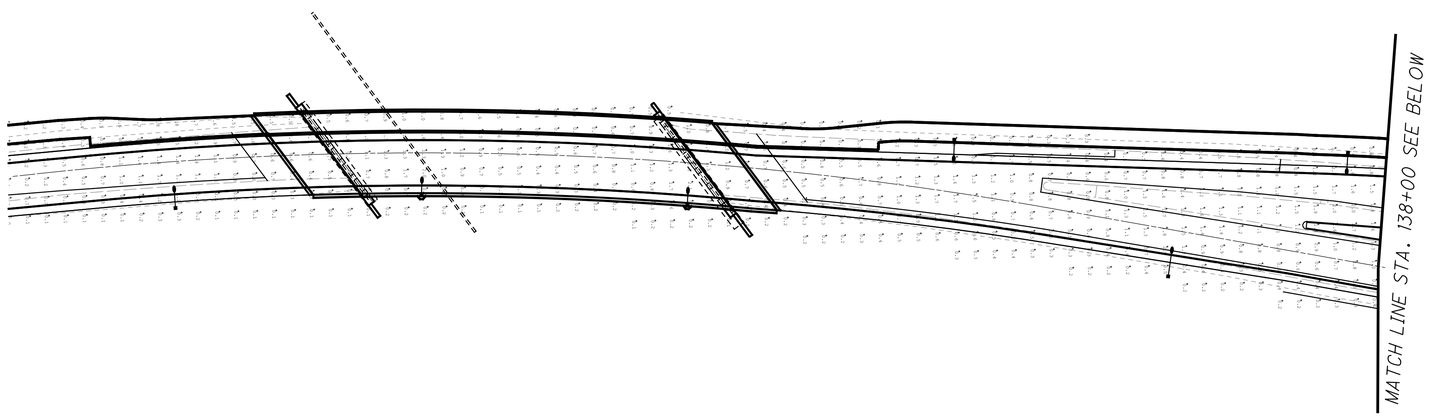

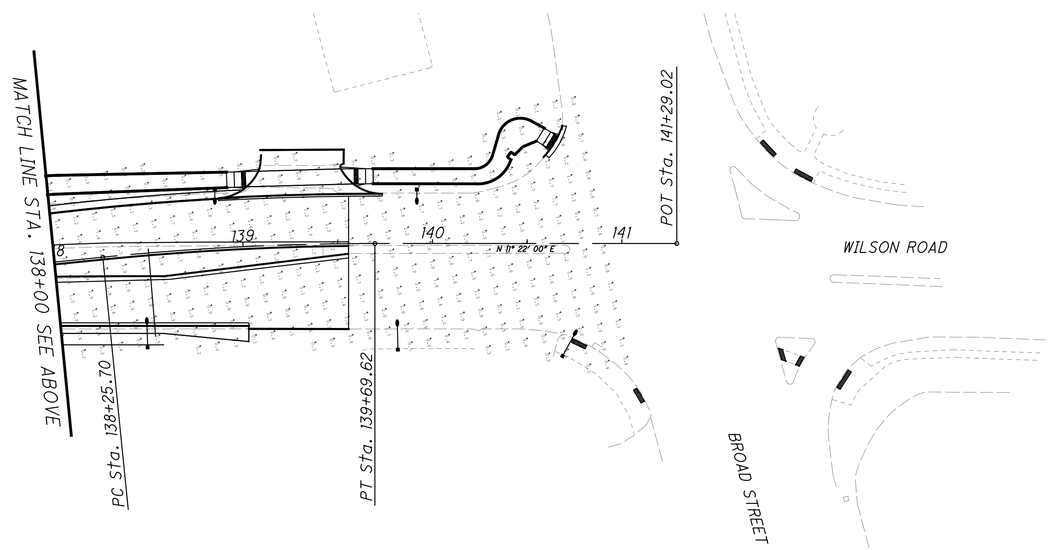

LUMINAIRE SCHEDULE						
LABEL	QTY	DESCRIPTION	LAMP	LUMENS	LLF	WATTS
A1	11	MIS-197 (MOD)	2 LEDS, 4K, 81W, 480V	ABSOLUTE	0.8	81

STATISTICS						
DESCRIPTION	CITY DESIGN STANDARD	AVG	MAX	MIN	MAX/MIN	AVG/MIN
WILSON ROAD - SOUTH OF BRIDGE	0.9 FC	0.94 FC	1.7 FC	0.4 FC	4.25:1	2.35:1
WILSON ROAD - BRIDGE	0.9 FC	1.00 FC	2.1 FC	0.4 FC	5.25:1	2.50:1
WILSON ROAD - NORTH OF BRIDGE	0.9 FC	0.92 FC	2.1 FC	0.4 FC	5.25:1	2.30:1
WILSON ROAD - NORTH BOUND LANE	0.9 FC	1.31 FC	2.1 FC	0.6 FC	3.50:1	2.18:1
WILSON ROAD - SOUTH BOUND LANE	0.9 FC	1.49 FC	2.3 FC	0.7 FC	3.29:1	2.13:1

NOTE:

PHOTOMETRICS PROVIDED TO SHOW POSSIBLE FUTURE LAYOUT SO THAT PILASTERS CAN BE LOCATED ON BRIDGE.

STREET LIGHTS ARE NOT BEING INSTALLED ON THE BRIDGE.

PHOTOMETRIC CALCULATIONS WERE PERFORMED USING AMERICAN ELECTRIC AUTOBAHN SERIES #ATBM-C-480-R3-P7-SH. COOPER LIGHTING-STREETWORKS VERDEON SERIES #VERD-A02-D-8-T3-10K-4N7-AP ALSO MEETS DESIGN GUIDELINES.

3233-E

40 0 40
20
HORIZONTAL SCALE IN FEET

CALCULATED CAG
CHECKED JDB

LIGHTING PHOTOMETRICS - WILSON ROAD
STA. 131+00 TO STA. 141+00

WILSON ROAD

\\Columbus\SRVLN\DE\Clients\OH_City_of_Columbus\073707_WILSON_RD\Design\Lighting\Sheets\073707_LD001.dgn 10/17/2016 3:37:14 PM keatingm

END STATION	FIRST POST STATION
1 STA. 134+04.93	6 STA. 134+03.96
2 STA. 134+34.35	7 STA. 134+33.39
3 STA. 134+44.04	8 STA. 134+45.00
4 STA. 134+81.90	9 STA. 134+82.86
5 STA. 135+32.17	10 STA. 135+33.13
11 STA. 131+18.55	12 STA. 131+17.59

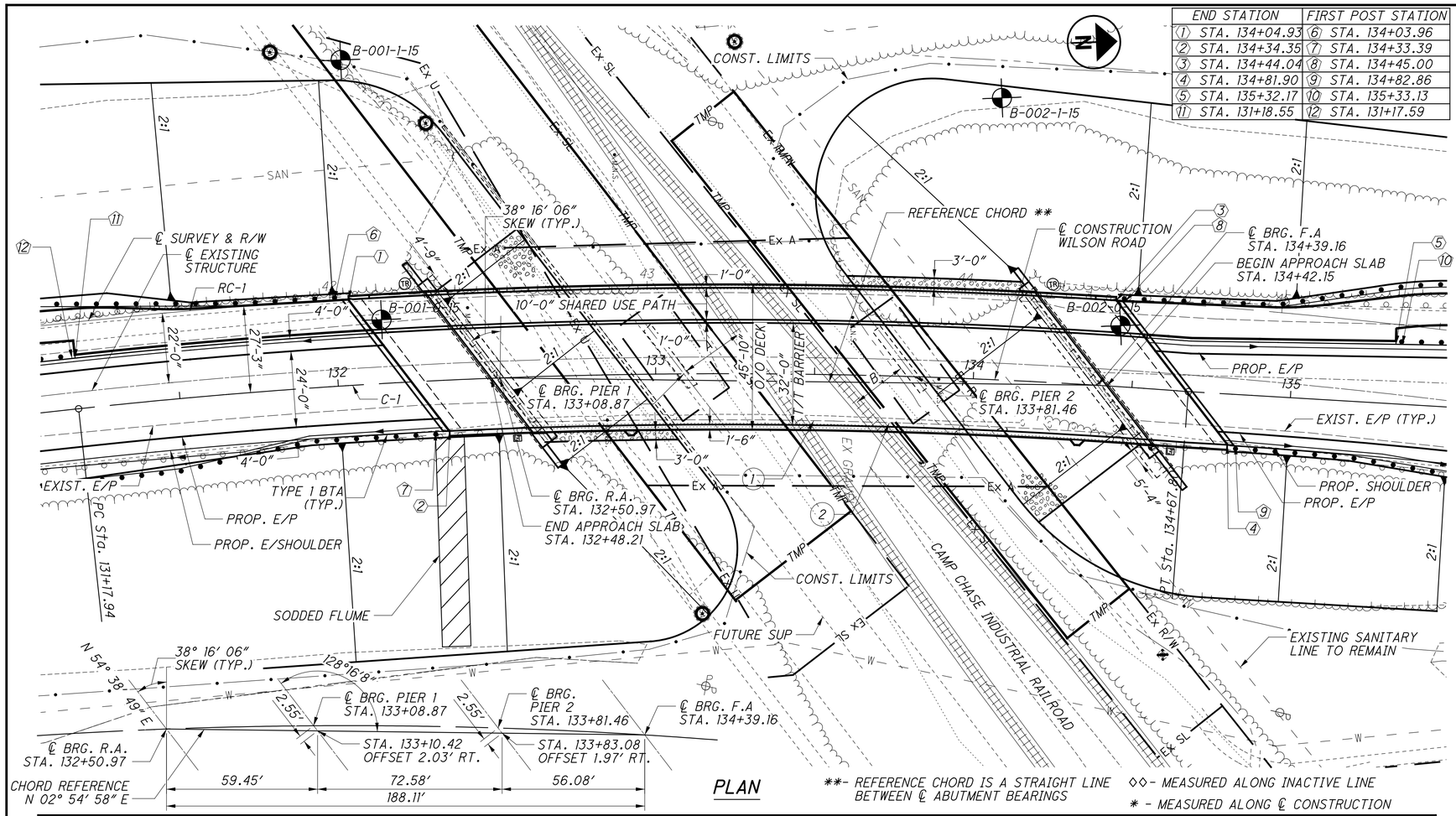

PLAN

**- REFERENCE CHORD IS A STRAIGHT LINE BETWEEN ℄ ABUTMENT BEARINGS

◊◊- MEASURED ALONG INACTIVE LINE

* - MEASURED ALONG ℄ CONSTRUCTION

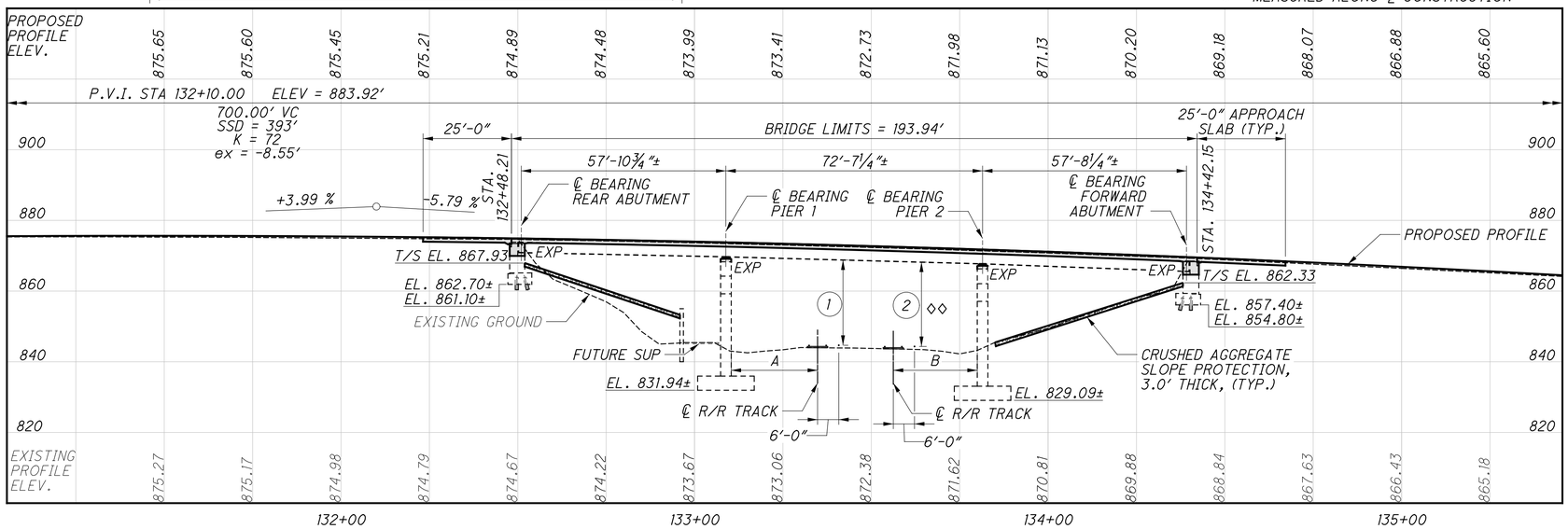

PROFILE ALONG ℄ CONSTRUCTION WILSON RD (CR 25)

3233-E

BENCHMARK DATA

BM 2 STA. 100+27.34,	ELEV. 843.54,	OFFSET 262.81′ LT
BM 3 STA. 141+29.02,	ELEV. 837.90,	OFFSET 54.66′ RT

FOR ADDITIONAL BENCHMARK INFORMATION. SEE ROADWAY PLAN SHEET 2/97

NOTES

1. EARTHWORK LIMITS SHOWN ARE APPROXIMATE. ACTUAL SLOPES SHALL CONFORM TO PLAN CROSS SECTIONS.
2. BOTTOM OF FOOTING ELEVATIONS SHOWN ARE TAKEN FROM ORIGINAL CONSTRUCTION PLANS DATED 1968 AND ADJUSTED FOR THE 1988 DATUM. THE CORRECTION FACTOR IS -0.60 FT.

DESIGN TRAFFIC:

2010 ADT = 12,850 2010 ADTT = 643

2037 ADT = 14,442 2037 ADTT = 722

DIRECTIONAL DISTRIBUTION = 50%

LEGEND

CURVE R-C1	ROAD CURVE 2
P.I. Sta. 43+59.79	P.I. Sta. 132+93.38
Δ = 16° 18′ 42″ (RT)	Δ = 10° 38′ 52″ (RT)
Dc = 3° 00′ 00″	Dc = 3° 02′ 36″
R = 1,909.86′	R = 1,882.61′
T = 273.71′	T = 175.44′
L = 543.72′	L = 349.86′
E = 19.51′	E = 8.16′
C = 541.89′	C = 349.36′
C.B. = N 3° 12′ 39″ E	C.B. = N 1° 19′ 37″ E

✦ PROPOSED BORING LOCATION

(1) EXISTING MINIMUM VERTICAL CLEARANCE = 22.7′
REQUIRED MINIMUM VERTICAL CLEARANCE = 23.0′
PROPOSED MINIMUM VERTICAL CLEARANCE = 23.0′
STATION 133+55.78, 14.8′ RT

(2) EXISTING MINIMUM VERTICAL CLEARANCE = 22.3′
REQUIRED MINIMUM VERTICAL CLEARANCE = 23.0′
PROPOSED MINIMUM VERTICAL CLEARANCE = 22.6′ ◊◊
STATION 133+80.44, 14.5′ RT

A = ACTUAL HORIZONTAL CLEARANCE = 19.5′±, MIN. REQ'D = 18.0′

B = ACTUAL HORIZONTAL CLEARANCE = 16.7′±, MIN. REQ'D = 18.0′ ◊◊

EXISTING STRUCTURE

TYPE: CONTINUOUS STEEL BEAM BRIDGE WITH CONCRETE DECK AND SUBSTRUCTURE

SPANS: 57′-10¾″±, 72′-7¼″±, 57′-8¼″± C/C BEARINGS

ROADWAY: 42′-4″± F/F PARAPETS

LOADING: C.F. 2000 (57)

SKEW: 38° 16′ 06″ R.F.

APPROACH SLABS: 25′-0″ LONG (AS-1-54)

WEARING SURFACE: 1″ MONOLITHIC CONCRETE

ALIGNMENT: 3° 00′ 00″ SIMPLE HORIZONTAL CURVE

CROWN: 0.049 FT/FT SUPERELEVATION

STRUCTURAL FILE NUMBER: 2531852

DATE BUILT: 1968

DISPOSITION: MAJOR REHABILITATION (REPLACE SUPERSTRUCTURE)

PROPOSED STRUCTURE

PROPOSED WORK: REPLACE EXISTING DECK WITH NEW COMPOSITE REINFORCED CONCRETE DECK AND CONVERT ABUTMENTS TO SEMI-INTEGRAL.

SPANS: 57′-10¾″±, 72′-7¼″±, 57′-8¼″± C/C BEARINGS *

ROADWAY: 32′-0″ T/T PARAPETS AND 10′-0″ SHARED USE PATH

LOADING: HS-20-44 CASE II & ALTERNATE MILITARY, 60 PSF FWS AND 60 PSF PEDESTRIAN LOAD

SKEW: 38° 16′ 06″ R.F.

APPROACH SLABS: 25′-0″ LONG (AS-1-15)

WEARING SURFACE: 1″ MONOLITHIC CONCRETE

ALIGNMENT: 3°02′36″ CURVE

CROWN: 0.049 FT/FT

COORDINATES: LATITUDE 39°57′07″ N
LONGITUDE 83°05′42″ W

DESIGN AGENCY
PRIME AE
8415 Pulsar Place, Suite 300
Columbus Ohio 43240

DESIGNED	DRAWN	REVIEWED	DATE
AMD	AMD	GTB	07/15/2016
CHECKED	REVISED	STRUCTURE FILE NUMBER	
RG		2531852	

FRANKLIN COUNTY
STA. 132+48.21
STA. 134+42.15

SITE PLAN
FRA-CR 25-0063
WILSON ROAD BRIDGE OVER CAMP CHASE RAILROAD

WILSON ROAD
CIP No. 590105-100083

GENERAL NOTES:

DESIGN SPECIFICATIONS:

THIS STRUCTURE CONFORMS TO "STANDARD SPECIFICATIONS FOR HIGHWAY BRIDGES" ADOPTED BY THE AMERICAN ASSOCIATION OF STATE HIGHWAY AND TRANSPORTATION OFFICIALS, 17th EDITION, 2002, AND THE ODOT BRIDGE DESIGN MANUAL, 2004, REVISED 7/15/2016.

REFERENCE SHALL BE MADE TO THE FOLLOWING STANDARD BRIDGE DRAWINGS:

AS-1-15	REVISED 7/17/15	BR-1-13	REVISED 1/17/14
AS-2-15	REVISED 7/17/15	SICD-2-14	DATED 7/18/14
GSD-1-96	REVISED 7/19/02	SICD-1-14	REVISED 7/18/14
PCB-91	REVISED 1/18/13	VPF-1-90	REVISED 7/17/15

2016 CONSTRUCTION SPECIFICATIONS:

THE 2016 STANDARD SPECIFICATIONS, REVISED 7/21/2016, OF THE STATE OF OHIO, DEPARTMENT OF TRANSPORTATION, INCLUDING CHANGES AND SUPPLEMENTAL SPECIFICATIONS LISTED IN THE PROPOSAL SHALL GOVERN ALL CONSTRUCTION ITEMS FOR THE IMPROVEMENT OF THE STRUCTURE RFA-CR 25-0063.

DESIGN LOADING:

HS20, CASE II AND THE ALTERNATE MILITARY LOADING, PEDESTRIAN LOAD OF 60 PSF AND FUTURE WEARING SURFACE (FWS) OF 60 PSF

DESIGN DATA:

CONCRETE, QC/QA CLASS QSC2 - COMPRESSIVE STRENGTH 4.5 KSI (SUPERSTRUCTURE)
CONCRETE, QC/QA CLASS QSC1 - COMPRESSIVE STRENGTH 4.0 KSI (SUBSTRUCTURE)

NEW REINFORCING STEEL - ASTM A615 OR A996 GRADE 60 MINIMUM YIELD STRENGTH 60 KSI
EXISTING REINFORCING STEEL - MINIMUM YIELD STRENGTH 33 KSI
NEW STRUCTURAL STEEL - ASTM A709 GRADE 50W - YIELD STRENGTH 50 KSI
EXISTING STRUCTURAL STEEL - ASTM A36 STEEL - MINIMUM YIELD STRENGTH 36 KSI

DECK PROTECTION METHOD:

EPOXY COATED REINFORCING STEEL
2½" CONCRETE COVER

MONOLITHIC WEARING SURFACE:

IS ASSUMED, FOR DESIGN PURPOSES, TO BE 1 INCH THICK.

EXISTING STRUCTURE VERIFICATION:

DETAILS AND DIMENSIONS SHOWN ON THESE PLANS PERTAINING TO THE EXISTING STRUCTURE HAVE BEEN OBTAINED FROM PLANS OF THE EXISTING STRUCTURE AND FROM FIELD OBSERVATIONS AND MEASUREMENTS. CONSEQUENTLY, THEY ARE INDICATIVE OF THE EXISTING STRUCTURE AND THE PROPOSED WORK BUT THEY SHALL BE CONSIDERED TENTATIVE AND APPROXIMATE. THE CONTRACTOR IS REFERRED TO CMS SECTIONS 102.05, 105.02, AND 513.04.

BASE CONTRACT BID PRICES UPON A RECOGNITION OF THE UNCERTAINTIES DESCRIBED ABOVE AND UPON A PREBID EXAMINATION OF THE EXISTING STRUCTURE. HOWEVER, THE DEPARTMENT WILL PAY FOR ALL PROJECT WORK BASED UPON ACTUAL DETAILS AND DIMENSIONS WHICH HAVE BEEN VERIFIED IN THE FIELD.

EXISTING STRUCTURE PLANS:

THE ORIGINAL CONSTRUCTION PLANS FOR WILSON ROAD BRIDGE FRA-CR25-0.63 DATED 1968, MAY BE EXAMINED AT THE FRANKLIN COUNTY ENGINEER WEBSITE AT THE ADDRESS BELOW
http://www.franklincountyengineer.org/construction/notice-to-contractors/index

PROPOSED WORK: MAJOR REHABILITATION

1.) THE EXISTING WILSON ROAD BRIDGE, SHALL HAVE THE SUPERSTRUCTURE DECK REMOVED AND REPLACED WITH NEW DECK AND SIDEWALK.
2.) THE NEW DECK WILL BE REINFORCED CONCRETE COMPOSITE DECK.
3.) EXISTING BEARINGS WILL BE REMOVED AND REPLACED WITH NEW ELASTOMERIC BEARINGS.
4.) THE EXISTING ABUTMENT BACK WALLS WILL BE REMOVED TO THE EXISTING BEAM SEATS AND WINGWALLS WILL REMOVED.
5.) THE ABUTMENTS WILL BE RECONSTRUCTED AS SEMI-INTEGRAL ABUTMENTS WITH NEW WINGWALLS.
6.) THE EXISTING PIER CAPS WILL BE MODIFIED TO SUPPORT THE NEW ELASTOMERIC BEARINGS AS SHOWN ON THE PLANS.
7.) THE EXISTING STRUCTURE STEEL WILL BE PAINTED.

UTILITY LINES

THE UTILITIES SHALL BEAR ALL EXPENSE INVOLVED IN RELOCATING (INSTALLING) THE AFFECTED UTILITY LINES. THE CONTRACTOR AND UTILITIES ARE TO COOPERATE BY ARRANGING THEIR WORK IN SUCH A MANNER THAT INCONVENIENCE TO EITHER WILL BE HELD TO A MINIMUM.

MAINTENANCE OF TRAFFIC

FOR MAINTENANCE OF TRAFFIC, SEE PROJECT MAINTENANCE OF TRAFFIC PLANS SHEETS 10/97 TO 12/97.

ITEM 202, PORTIONS OF STRUCTURE REMOVED, OVER 20 FOOT SPAN, AS PER PLAN:

THIS ITEM SHALL INCLUDE THE ELEMENTS INDICATED IN THE PLANS AND GENERAL NOTES AND THAT ARE NOT SEPARATELY LISTED FOR PAYMENT. ITEMS TO BE REMOVED INCLUDE ALL EXISTING MATERIALS BEING REPLACED BY NEW CONSTRUCTION AND MISCELLANEOUS ITEMS THAT ARE NOT SHOWN TO BE INCORPORATED INTO THE FINAL CONSTRUCTION PLANS AND ARE DIRECTED TO BE REMOVED BY THE ENGINEER.

A. THE REMOVAL OF ENTIRE EXISTING DECK, PARAPETS, AND BEARINGS. PERFORM WORK CAREFULLY DURING DECK REMOVALS TO PROTECT PORTIONS OF SUCH SYSTEMS THAT ARE TO BE SALVAGED AND INCORPORATED INTO PROPOSED STRUCTURE.

B. REMOVAL OF PORTIONS OF ABUTMENTS INCLUDING BACKWALLS AND WINGWALLS ABOVE THE EXISTING BEAM SEAT AND PLUG WEEPHOLES, AS SHOWN ON PLANS.

C. MODIFY EXISTING PIERS AS SHOWN ON PLANS.

D. REMOVAL METHODS: THE CONTRACTOR MAY REMOVE CONCRETE BY CUTTING AND BY MEANS OF HAND OPERATED PNEUMATIC HAMMERS EMPLOYING POINTED OR BLUNTED CHISEL TYPE TOOLS. FOR REMOVALS OVER STRUCTURAL MEMBERS, I-BEAM, STEEL BEAM, ETC, THE CONTRACTOR MAY USE A HAMMER HEAVIER THAN 35 POUNDS BUT NOT TO EXCEED 90 POUNDS UNLESS APPROVED BY THE ENGINEER. REMOVAL METHODS OVER STRUCTURAL MEMBERS SHALL ENSURE ADEQUATE DEPTH CONTROL AND PREVENT NICKING OR GOUGING THE PRIMARY STRUCTURAL MEMBERS.

DUE TO THE POSSIBLE PRESENCE OF ATTACHMENTS (E.G., FINISHING MACHINE, SCUPPER AND FORM SUPPORTS, ETC. TO EXISTING STRUCTURAL MEMBERS, PERFORM WORK CAREFULLY DURING DECK REMOVAL TO AVOID DAMAGING STRUCTURAL MEMBERS THAT ARE TO REMAIN. REPLACE OR REPAIR STRUCTURAL MEMBERS DAMAGED BY THE REMOVAL OPERATIONS AT NO COST TO THE PROJECT.

E. PROTECTION OF TRAFFIC: PRIOR TO DEMOLITION OF ANY PORTIONS OF THE EXISTING SUPERSTRUCTURE, SUBMIT PLANS FOR THE PROTECTION OF TRAFFIC (VEHICULAR, PEDESTRIAN, RAILROAD TRACKS, ETC.) ADJACENT TO AND/OR UNDER THE STRUCTURE TO THE DIRECTOR AND RAILROAD AT LEAST 30 DAYS BEFORE CONSTRUCTION BEGINS. THESE PLANS SHALL INCLUDE PROVISIONS FOR ANY DEVICES AND STRUCTURES THAT MAY BE NECESSARY TO ENSURE SUCH PROTECTION. MAINTAIN THE TEMPORARY VERTICAL CLEARANCES SPECIFIED ON THE PLANS OR IN THE PROPOSAL AT ALL TIMES EXCEPT AS OTHERWISE APPROVED BY THE DIRECTOR AND RAILROAD. ALL COSTS ASSOCIATED WITH THIS TRAFFIC PROTECTION WILL BE INCLUDED WITH ITEM 202 FOR PAYMENT.

F. CUT LINE CONSTRUCTION JOINT PREPARATION: SAW CUT BOUNDARIES OF PROPOSED CONCRETE REMOVALS 1 INCH DEEP. REMOVE CONCRETE TO A ROUGH SURFACE. LEAVE THE EXISTING REINFORCING STEEL, IF REQUIRED IN THE PLANS, IN PLACE. INSTALL DOWEL BARS IF SPECIFIED. PRIOR TO CONCRETE PLACEMENT ABRASIVELY CLEAN JOINT SURFACES AND EXISTING EXPOSED REINFORCEMENT TO REMOVE LOOSE AND DISINTEGRATED CONCRETE AND LOOSE RUST. THOROUGHLY CLEAN THE JOINT SURFACE AND EXPOSED REINFORCEMENT OF ALL DIRT, DUST, RUST OR OTHER FOREIGN MATERIAL BY THE USE OF WATER, AIR UNDER PRESSURE, OR OTHER METHODS THAT PRODUCE SATISFACTORY RESULTS. EXISTING REINFORCING STEEL DOES NOT HAVE TO HAVE A BRIGHT STEEL FINISH, BUT REMOVE ALL PACK AND LOOSE RUST. THOROUGHLY DRENCH EXISTING CONCRETE SURFACES WITH CLEAN WATER AND ALLOW TO DRY TO A DAMP CONDITION BEFORE PLACING NEW CONCRETE.

G. SUBSTRUCTURE CONCRETE REMOVAL: REMOVE CONCRETE BY MEANS OF APPROVED PNEUMATIC HAMMERS EMPLOYING POINTED AND BLUNT CHISEL TOOLS. HYDRAULIC HOE-RAM TYPE HAMMERS WILL NOT BE PERMITTED. THE WEIGHT OF THE HAMMER SHALL NOT BE MORE THAN 35 POUNDS FOR REMOVAL WITHIN 18 INCHES OF PORTIONS TO BE PRESERVED. OUTSIDE THE 18 INCH LIMIT, THE CONTRACTOR MAY USE HAMMERS NOT EXCEEDING 90 POUNDS UPON THE APPROVAL OF THE ENGINEER. DO NOT PLACE PNEUMATIC HAMMERS IN DIRECT CONTACT WITH REINFORCING STEEL THAT IS TO BE RETAINED IN THE REBUILT STRUCTURE.

H. EXISTING WELDED ATTACHMENTS: REMOVE EXISTING WELDED ATTACHMENTS (E.G., FINISHING MACHINE AND FORM SUPPORTS; AND SUPPORTS FOR SCUPPERS AND BULB ANGLES WHICH ARE TO BE REMOVED) LOCATED IN THE DESIGNATED TENSION PORTIONS OF THE TOP FLANGES OF EXISTING STEEL MEMBERS AND GRIND THE FLANGE SURFACES SMOOTH. CAREFULLY GRIND PARALLEL TO THE FLANGES. PAYMENT FOR GRINDING WILL BE PAID PER ITEM 514-GRINDING FINS, TEARS, SLIVERS ON EXISTING STRUCTURAL STEEL.

ITEM 202, PORTIONS OF STRUCTURE REMOVED, OVER 20 FOOT SPAN, AS PER PLAN: (CON'T)

I. MEASUREMENT & PAYMENT: THE DEPARTMENT WILL MEASURE THE QUANTITY OF REMOVALS ON A LUMP SUM BASIS. THE DEPARTMENT WILL PAY FOR THE ACCEPTED QUANTITIES OF REMOVALS AT THE CONTRACT PRICE FOR ITEM 202, PORTIONS OF STRUCTURE REMOVED, OVER 20 FOOT SPAN, AS PER PLAN.

AT LEAST 7 DAYS BEFORE PERFORMING REPAIR WORK, SUBMIT A PROPOSED REPAIR PLAN, DEVELOPED BY AN OHIO REGISTERED PROFESSIONAL ENGINEER TO THE DIRECTOR. OBTAIN THE DIRECTOR'S APPROVAL BEFORE PERFORMING THE REPAIR.

PROTECTION OF STEEL SUPPORT SYSTEMS

BEFORE DECK SLAB CUTTING IS PERMITTED, DRAW THE OUTLINE OF PRIMARY STEEL MEMBERS IN CONTACT WITH THE BOTTOM OF THE DECK ON THE SURFACE OF DECK. DRILL SMALL DIAMETER PILOT HOLES 2 INCHES OUTSIDE THESE LINES TO CONFIRM THE LOCATION OF FLANGE EDGES. DECK CUTS OVER OR WITHIN 2 INCHES OF FLANGE EDGES SHALL NOT EXTEND LOWER THAN THE BOTTOM LAYER OF DECK SLAB REINFORCING STEEL. CUTS MADE OUTSIDE 2 INCHES OF FLANGE EDGES MAY EXTEND THE FULL DEPTH OF THE DECK. PERFORM WORK CAREFULLY DURING CUTTING OF THE DECK SLAB TO AVOID DAMAGING STEEL MEMBERS THAT ARE TO BE INCORPORATED INTO THE PROPOSED STRUCTURE. REPLACE OR REPAIR STEEL MEMBERS DAMAGED BY THE DECK SLAB CUTTING OPERATIONS AT NO COST TO THE PROJECT. AT LEAST 7 DAYS BEFORE PERFORMING REPAIR WORK, SUBMIT A PROPOSED REPAIR PLAN, DEVELOPED BY AN OHIO REGISTERED PROFESSIONAL ENGINEER TO THE DIRECTOR. OBTAIN THE DIRECTOR'S APPROVAL BEFORE PERFORMING THE REPAIR.

INSPECTION OF EXISTING STRUCTURAL STEEL:

THE ENGINEER WILL VISUALLY INSPECT ALL EXISTING BUTT-WELDED SPLICES AND/OR TOP FLANGE COVER PLATE FILLET WELDS TO ENSURE THE WELDS, PLATES AND BEAMS OR GIRDERS ARE FREE OF DEFECTS AND CRACKS. IF NECESSARY, REMOVE ALL DECK SLAB HAUNCH FORMS IMMEDIATELY ADJACENT TO SUCH WELDS THAT MAY INTERFERE WITH THE ENGINEER'S INSPECTION. THE INSPECTION WILL NOT TAKE PLACE UNTIL THE TOP FLANGES ARE CLEANED ACCORDING TO 511.10, BUT TI WILL BE DONE BEFORE THE DECK SLAB REINFORCEMENT IS INSTALLED. THE DEPARTMENT WILL PAY FOR THE COST ASSOCIATED WITH THIS INSPECTION WITH ITEM 511, CLASS QC2 CONCRETE WITH QC/QA, BRIDGE DECK. THE ENGINEER WILL REPORT ALL CRACKS FOUND TO THE OFFICE OF CONSTRUCTION ADMINISTRATION, BRIDGE CONSTRUCTION SPECIALIST, ALONG WITH SPECIFIC INFORMATION ON LOCATION OF THE CRACKS, LENGTH AND DEPTH SO AN EVALUATION AND REPAIR OR REPLACEMENT RECOMMENDATION CAN BE MADE.

ITEM 516, JACKING AND TEMPORARY SUPPORT OF SUPERSTRUCTURE, AS PER PLAN:

THIS WORK CONSISTS OF RAISING OR REPOSITIONING EXISTING STRUCTURES TO THE DIMENSIONS AND REQUIREMENTS DEFINED IN THE PROJECT PLANS.

SUBMIT CONSTRUCTION PLANS IN ACCORDANCE WITH CMS 501.05.

THE DEPARTMENT WILL MEASURE THIS WORK ON A LUMP SUM BASIS AND WILL PAY FOR THE WORK AT THE CONTRACT PRICE FOR ITEM 516, JACKING AND TEMPORARY SUPPORT OF SUPERSTRUCTURE, AS PER PLAN.

3233-E

DESIGN AGENCY
PRIME AE
8415 Pulsar Place, Suite 300
Columbus Ohio 43240

DESIGNED	DRAWN	REVIEWED	DATE
EDW	EDW	RG	07/15/2016
CHECKED	REVISED	STRUCTURE FILE NUMBER	
CCJ		2531852	

GENERAL NOTES
FRA-CR 25-0063
WILSON ROAD BRIDGE OVER CAMP CHASE RAILROAD

WILSON ROAD
CIP NO. 590105-100083

Q:\Transportation\Projects\Local\City of Columbus\Wilson Road Bridge Rehab\12345\structures\Wilson Road\sheets\Wilson RoadCGN001.dgn 10/17/2016 2:03:48 PM JPerchinske

GENERAL NOTES (CONTINUED):

CONSTRUCTION CLEARANCE

MANTAIN A MINIMUM CONSTRUCTION CLEARANCE OF 8 FEET HORIZONTALLY FROM THE CENTER OF TRACKS AND 22 FEET VERTICALLY FROM A POINT LEVEL WITH THE TOP OF THE HIGHER RAIL, AND 23 FEET FROM THE CENTER OF TRACKS AT ALL TIMES.

RIGHT OF ENTRY

IN ORDER TO MODIFY THE WILSON ROAD BRIDGE PIERS, CONTRACTOR CAN ACCESS THE CAMP CHASE RAILROAD, LLC RIGHT OF WAY USING THE ACCESS ROAD LOCATED ON THE SOUTH SIDE OF TRACKS FROM DERRER ROAD.

A CAMP CHASE RAILROAD, LLC 'RIGHT OF ENTRY' APPLICATION (ATTACHED TO THE SPECIAL CLAUSES IN THE BID PROPOSAL) MUST BE SUBMITTED BY THE CONTRACTOR AND APPROVED BY CAMP CHASE RAILROAD BEFORE CONTRACTOR CAN BEGIN WORK WITHIN THE CAMP CHASE RAILROAD, LLC RIGHT OF WAY. THE APPROVAL OF THE RIGHT OF ENTRY CAN TAKE UP TO 12 WEEKS ONCE THE APPLICATION HAS BEEN SUBMITTED.

ADDITIONALLY, TO MODIFY PIER 2 OF THE WILSON ROAD BRIDGE, THE CONTRACTOR WILL NEED TO PREPARE A TEMPORARY ACCESS PLAN FOR CROSSING THE TRACKS AND SUBMIT TO CAMP CHASE RAILROAD, LLC 'PRIVATE ROAD CROSSING' APPLICATION (ATTACHED TO THE SPECIAL CLAUSES IN THE BID PROPOSAL). APPROVAL OF THE TEMPORARY ACCESS DRIVES CAN TAKE AN ADDITIONAL 12 WEEKS IN ADDITION TO THE TIMEFRAME FOR APPROVAL OF THE RIGHT OF ENTRY APPLICATION.

DECK PLACEMENT DESIGN ASSUMPTIONS:

THE FOLLOWING ASSUMPTIONS OF CONSTRUCTION MEANS AND METHODS WERE MADE FOR THE ANALYSIS AND DESIGN OF THE SUPERSTRUCTURE. THE CONTRACTOR IS RESPONSIBLE FOR THE DESIGN OF THE FALSEWORK SUPPORT SYSTEM WITHIN THESE PARAMETERS AND WILL ASSUME RESPONSIBILITY FOR SUPERSTRUCTURE ANALYSIS FOR DEVIATION FROM THESE DESIGN ASSUMPTIONS.

AN EIGHT WHEEL MACHINE WITH A MAXIMUM WHEEL LOAD OF 2.6 KIPS FOR A TOTAL MACHINE LOAD OF 20.80 KIPS.
A MINIMUM OUT-TO-OUT WHEEL SPACING AT EACH END OF THE MACHINE OF 103".
A MAXIMUM SPACING OF OVERHANG FALSEWORK BRACKETS OF 48 INCHES.
A MAXIMUM DISTANCE FROM THE CENTERLINE OF THE FASCIA BEAM TO THE FACE OF THE SAFETY HANDRAIL OF 65".

STANDARD ABBREVIATIONS:

BRGS.	-	BEARINGS
C/C	-	CENTER TO CENTER
C.J.	-	CONSTRUCTION JOINT
CPP.	-	CORRUGATED PLASTIC PIPE
CLR.	-	CLEAR
DIA.	-	DIAMETER
E.F.	-	EACH FACE
EL.	-	ELEVATION
EQ.	-	EQUAL
EXIST.	-	EXISTING
EXP.	-	EXPANSION
F.A.	-	FORWARD ABUTMENT
F.F.	-	FAR FACE
F.S.	-	FIELD SPLICE
MIN.	-	MINIMUM
N.F.	-	NEAR FACE
PEJF	-	PERFORMED EXPANSION JOINT FILLER
R.A.	-	REAR ABUTMENT
SPA.	-	SPACING/SPACES
TYP.	-	TYPICAL

3233-E

Q:\Transportation\Projects\Local\City of Columbus\Wilson Road Bridge Rehab\12345\structures\Wilson Road\sheets\Wilson RoadCGN002.dgn 10/17/2016 2:03:49 PM JPerchinske

DESIGN AGENCY
PRIME AE
8415 Pulsar Place, Suite 300
Columbus Ohio 43240

DESIGNED	DRAWN	REVIEWED	DATE
EDW	EDW	RG	07/15/2016
CHECKED	REVISED	STRUCTURE FILE NUMBER	
CCJ		2531852	

GENERAL NOTES - 2
FRA-CR 25-0063
WILSON ROAD BRIDGE OVER CAMP CHASE RAILROAD

WILSON ROAD
CIP NO. 590105-100083

** THE 2016 STANDARD SPECIFICATION OF THE STATE OF OHIO, DEPARTMENT OF TRANSPORTATION SHALL GOVERN ALL CONSTRUCTION ITEMS FOR THE IMPROVEMENT OF THIS STRUCTURE.

WILSON ROAD BRIDGE ESTIMATED QUANTITIES

MADE BY AMD DATE 07/08/16 | CHECKED BY RG

** ITEM	ITEM EXT.	TOTAL	UNITS	DESCRIPTION	** SPECIFICATION	WILSON ROAD BRIDGE ABUTS.	PIERS	SUPER.	GENERAL	SHT. REF.
202	11203	LUMP		PORTIONS OF STRUCTURE REMOVED, OVER 20 FOOT SPAN, AS PER PLAN	ODOT CMS				LUMP	2
202	22900	133	SQ YD	APPROACH SLAB REMOVED	ODOT CMS				133	
503	11100	LUMP		COFFERDAMS AND EXCAVATION BRACING	ODOT CMS				LUMP	
503	21100	200	CU YD	UNCLASSIFIED EXCAVATION	ODOT CMS				200	
509	10000	98484	LB	EPOXY COATED REINFORCING STEEL	ODOT CMS	4523	2770	91191		
510	10000	512	EACH	DOWEL HOLES WITH NON-SHRINK, NONMETALLIC GROUT	ODOT CMS	264	248			
511	33500	2	EACH	SEMI-INTEGRAL DIAPHRAGM GUIDE	ODOT CMS	2				
511	34424	2327	SQ FT	CLASS QC2 CONCRETE WITH QC/QA, SIDEWALK WEARING SURFACE	ODOT CMS			2327		
511	34446	302	CU YD	CLASS QC2 CONCRETE WITH QC/QA, BRIDGE DECK	ODOT CMS			302		
511	34448	87	CU YD	CLASS QC2 CONCRETE, BRIDGE DECK (PARAPET)	ODOT CMS			87		
511	41010	15	CU YD	CLASS QC1 CONCRETE, PIER ABOVE FOOTINGS	ODOT CMS			15.00		
511	43510	66	CU YD	CLASS QC1 CONCRETE, ABUTMENT INCLUDING FOOTING	ODOT CMS			66		
511	51512	2327	CU YD	CLASS QC2 CONCRETE WITH QC/QA, SIDEWALK	ODOT CMS			2327		
512	10050	814	SQ YD	SEALING OF CONCRETE SURFACES (NON-EPOXY)	ODOT CMS			814		
512	10100	867	SQ YD	SEALING OF CONCRETE SURFACES (EPOXY-URETHANE)	ODOT CMS	122	745			
512	33300	17	SQ YD	TYPE A WATERPROOFING	ODOT CMS	17				
512	10400	688	SQ YD	TREATING OF CONCRETE BRIDGE DECK WITH SRS	ODOT CMS			688		
513	20000	3420	EACH	WELDED STUD SHEAR CONNECTORS	ODOT CMS			3420		
514	00050	12100	SQ FT	SURFACE PREPARATION OF EXISTING STRUCTURAL STEEL	ODOT CMS			12100		
514	00056	12100	SQ FT	FIELD PAINTING STRUCTURAL STEEL, PRIME COAT	ODOT CMS			12100		
514	00060	12100	SQ FT	FIELD PAINTING STRUCTURAL STEEL, INTERMEDIATE COAT	ODOT CMS			12100		
514	00066	12100	SQ FT	FIELD PAINTING STRUCTURAL STEEL, FINISH COAT	ODOT CMS			12100		
514	00504	19	MN HR	GRINDING FINS, TEARS, SLIVERS ON EXISTING STRUCTURAL STEEL	ODOT CMS			19		
514	10000	10	EACH	FINAL INSPECTION REPAIR	ODOT CMS			10		
516	10010	112	FT	ARMORLESS PREFORMED JOINT SEAL	ODOT CMS				112	
516	13600	20	SQ FT	1" PREFORMED EXPANSION JOINT FILLER	ODOT CMS				20	
516	13900	100	SQ FT	2" PREFORMED EXPANSION JOINT FILLER	ODOT CMS				100	
516	14020	146	FT	SEMI-INTEGRAL ABUTMENT EXPANSION JOINT SEAL	ODOT CMS				146	
516	44101	12	EACH	ELASTOMERIC BEARINGS WITH INTERNAL LAMINATES (13"x21"x2.81") AND LOAD PLATE (14"x22"x2.00") (NEOPRENE), AS PER PLAN	ODOT CMS		12			15
516	44201	12	EACH	ELASTOMERIC BEARINGS WITH INTERNAL LAMINATES (12"x19"x3.32") AND LOAD PLATE (13"x20"x1.50") (NEOPRENE), AS PER PLAN	ODOT CMS	12				15
516	47001	LUMP		JACKING AND TEMPORARY SUPPORT OF SUPERSTRUCTURE, AS PER PLAN	ODOT CMS				LUMP	2
518	21200	120	CU YD	POROUS BACKFILL WITH GEOTEXTILE FABRIC	ODOT CMS				120	
518	40000	167	FT	6" PERFORATED CORRUGATED PLASTIC PIPE	ODOT CMS				167	
518	40010	40	FT	6" NON-PERFORATED CORRUGATED PLASTIC PIPE, INCLUDING SPECIALS	ODOT CMS				40	
526	25001	254	SQ YD	REINFORCED CONCRETE APPROACH SLABS(T=15"), AS PER PLAN	ODOT CMS				254	26
526	90030	112	FT	TYPE C INSTALLATION (T=15")	ODOT CMS				112	
601	20000	620	SQ YD	CRUSHED AGGREGATE SLOPE PROTECTION (3' THICK)	ODOT CMS				620	
607	39920	190	FT	VANDAL PROTECTION FENCE, 10' CURVED, COATED FABRIC	ODOT CMS				190	
625	25300	192	FT	CONDUIT, 1-1/2", 725.04	ODOT CMS				192	
625	25400	390	FT	CONDUIT, 2", 725.04	ODOT CMS				390	
625	25500	384	FT	CONDUIT, 3", 725.04	ODOT CMS				384	

3233-E

DESIGN AGENCY
PRIME AE
8415 Pulsar Place, Suite 300
Columbus Ohio 43240

REVIEWED	DATE
CCJ	7/15/2016
STRUCTURE FILE NUMBER	
2531852	

DRAWN	REVISED
AMD	

DESIGNED	CHECKED
AMD	RG

ESTIMATED QUANTITIES
FRA-CR 25-0063
WILSON ROAD BRIDGE OVER CAMP CHASE RAILROAD

WILSON ROAD
CIP NO. 590105-100083

Q:\Transportation\Projects\Local\City of Columbus\Wilson Road Bridge Rehab\12345\structures\Wilson Road\sheets\Wilson RoadCEQ001.dgn 10/17/2016 2:03:49 PM JPerchinske

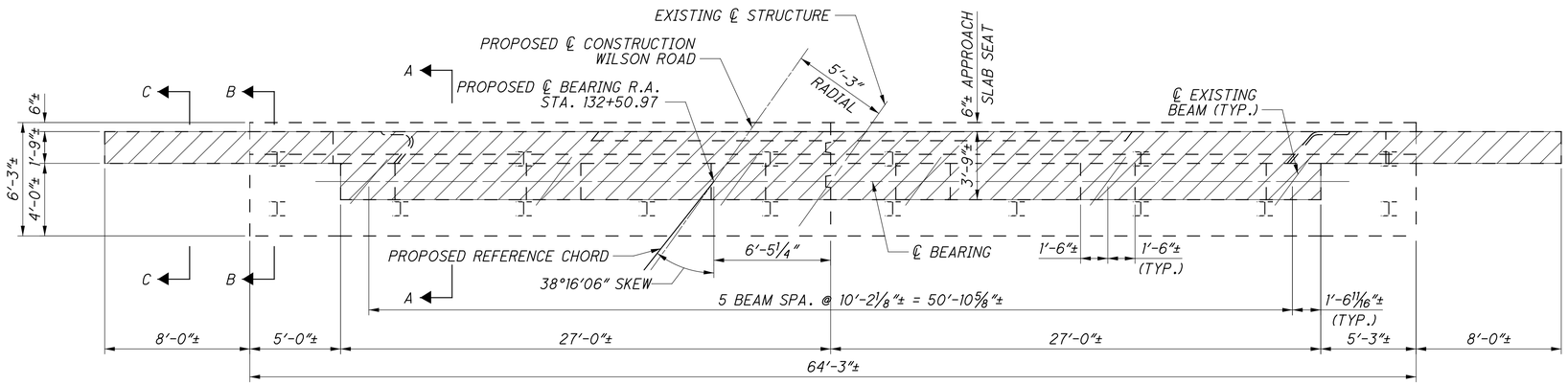

ABUTMENT REMOVAL PLAN

LEGEND

LIMITS OF REMOVAL

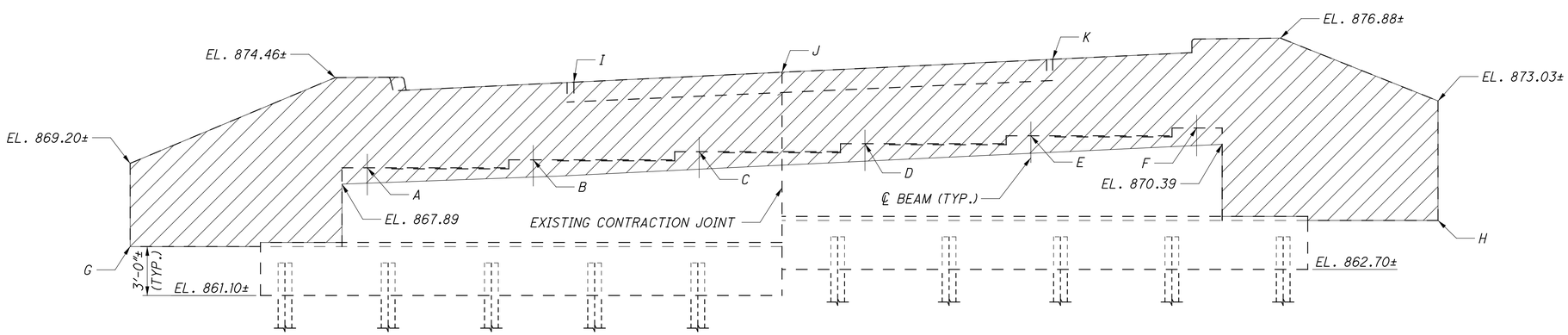

ELEVATION

ELEVATION TABLE (FIELD SURVEYED)											
LOCATION	A	B	C	D	E	F	G	H	I	J	K
R.A.	868.89±	869.39±	869.89±	870.37±	870.83±	871.39±	864.10±	865.70±	874.16±	874.80±	875.56±

NOTE:

1. FOR SECTIONS A-A THRU C-C, SEE SHEET 7/29 .

3233-E

DESIGN AGENCY
PRIME AE
8415 Pulsar Place, Suite 300
Columbus Ohio 43240

DESIGNED	DRAWN	REVIEWED	DATE
KDC	KDC	RG	07/15/2016
CHECKED	REVISED	STRUCTURE FILE NUMBER	
BTJ		2531852	

REMOVAL PLAN - REAR ABUTMENT
FRA-CR 25-0063
WILSON ROAD BRIDGE OVER CAMP CHASE RAILROAD

WILSON ROAD
CIP NO. 590105-100083

Q:\Transportation\Projects\Local\City of Columbus\Wilson Road Bridge Rehab\12345\structures\Wilson Road\sheets\Wilson RoadCRE001.dgn 10/17/2016 2:03:50 PM JPerchinske

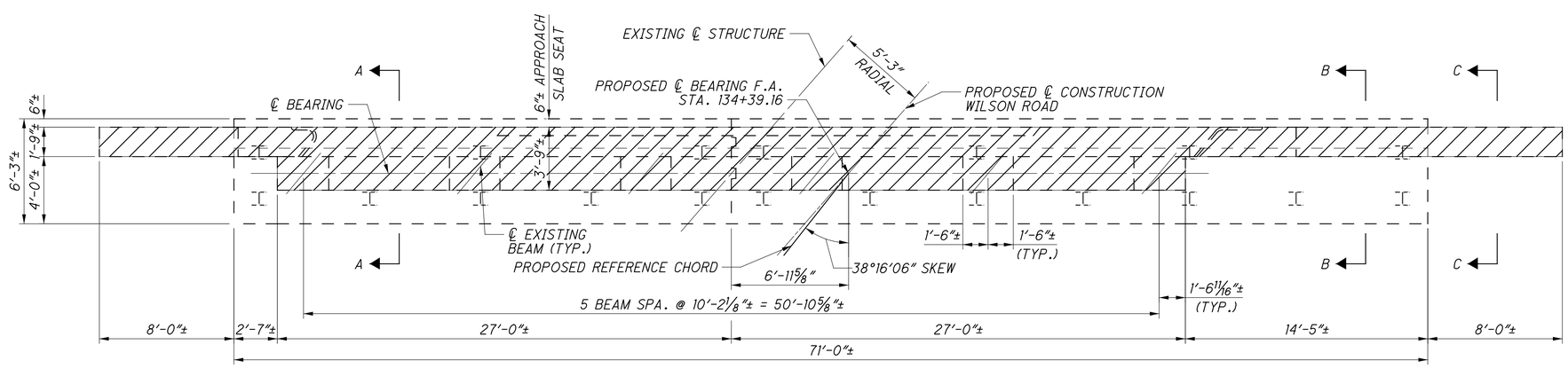

ABUTMENT REMOVAL PLAN

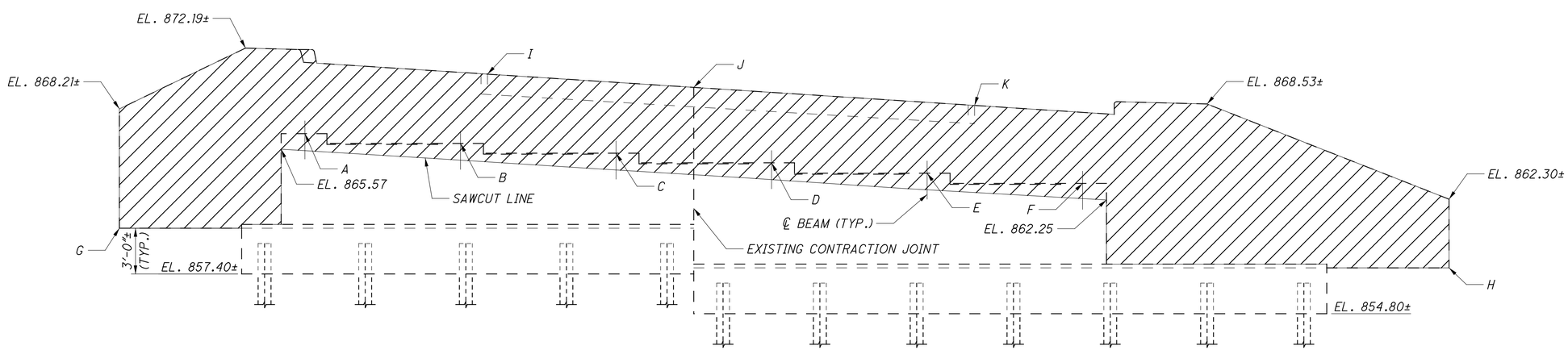

ELEVATION

ELEVATION TABLE (FIELD SURVEYED)											
LOCATION	A	B	C	D	E	F	G	H	I	J	K
F.A.	866.57±	865.89±	865.23±	864.65±	863.91±	863.25±	860.40±	857.80±	870.50±	869.65±	868.45±

LEGEND

LIMITS OF REMOVAL

NOTE:

1. FOR SECTIONS A-A THRU C-C, SEE SHEET 7/29.

3233-E

DESIGN AGENCY
PRIME AE
8415 Pulsar Place, Suite 300
Columbus Ohio 43240

DESIGNED	DRAWN	REVIEWED	DATE
KDC	KDC	RG	07/15/2016
CHECKED	REVISED	STRUCTURE FILE NUMBER	
BTJ		2531852	

REMOVAL PLAN - FORWARD ABUTMENT
FRA-CR 25-0063
WILSON ROAD BRIDGE OVER CAMP CHASE RAILROAD

WILSON ROAD
CIP NO. 590105-100083

Q:\Transportation\Projects\Local\City of Columbus\Wilson Road Bridge Rehab\12345\structures\Wilson Road\sheets\Wilson RoadCRE002.dgn 10/17/2016 2:03:50 PM JPerchinske

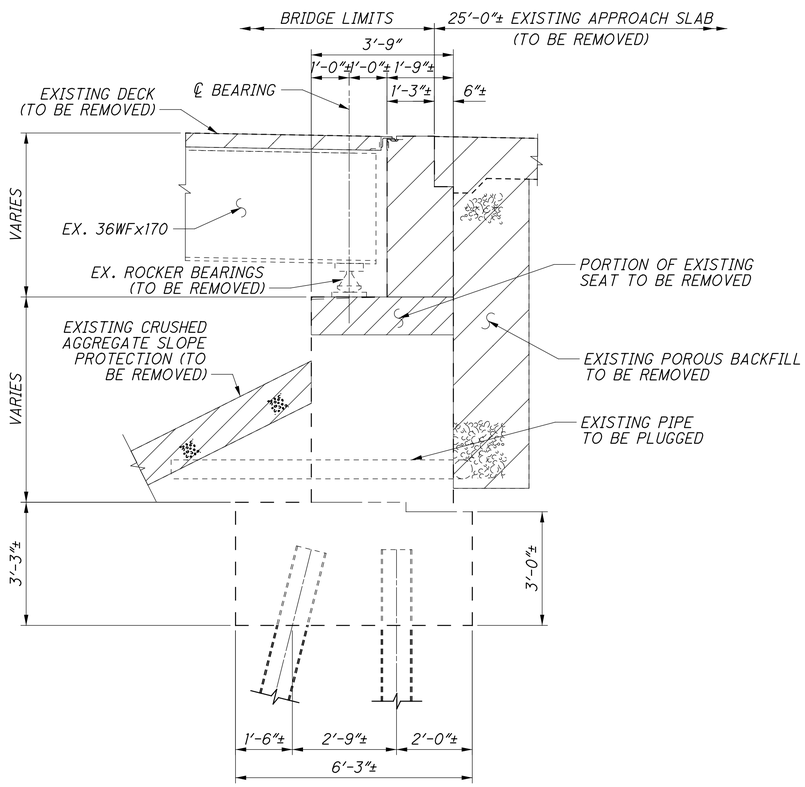

SECTION A-A

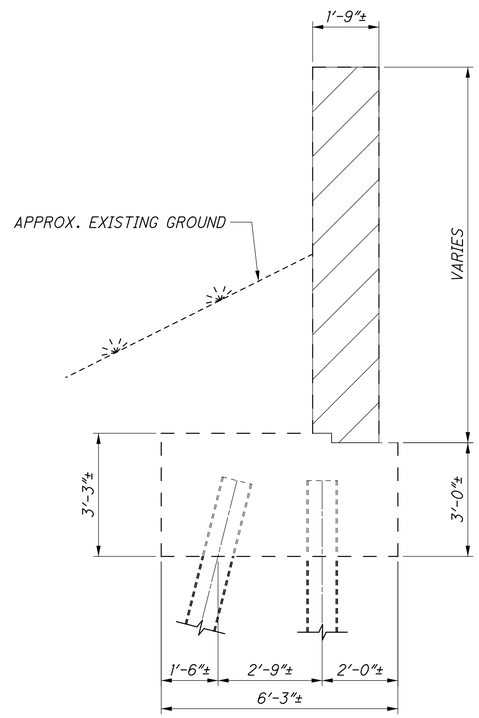

SECTION B-B

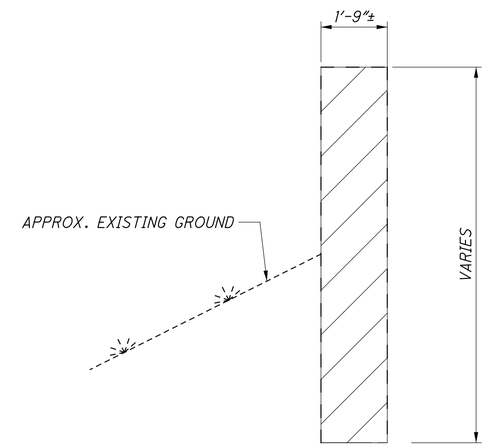

SECTION C-C

LEGEND

LIMITS OF REMOVAL

NOTE:

1. FOR LOCATION OF SECTIONS A-A THRU C-C, SEE SHEETS 5/29 & 6/29.
2. PAYMENT FOR PLUGGING WEEPHOLES TO BE INCLUDED WITH ITEM 202, PORTIONS OF STRUCTURE REMOVED, AS PER PLAN.

3233-E

DESIGN AGENCY
PRIME AE
8415 Pulsar Place, Suite 300
Columbus Ohio 43240

DESIGNED	DRAWN	REVIEWED	DATE
KDC	KDC	RG	07/15/2016
CHECKED	REVISED	STRUCTURE FILE NUMBER	
BTJ		2531852	

REMOVAL DETAILS
FRA-CR 25-0063
WILSON ROAD BRIDGE OVER CAMP CHASE RAILROAD

WILSON ROAD
CIP NO. 590105-100083

Q:\Transportation\Projects\Local\City of Columbus\Wilson Road Bridge Rehab\12345\structures\Wilson Road\sheets\Wilson RoadCRE003.dgn 10/17/2016 2:03:51 PM JPerchinske

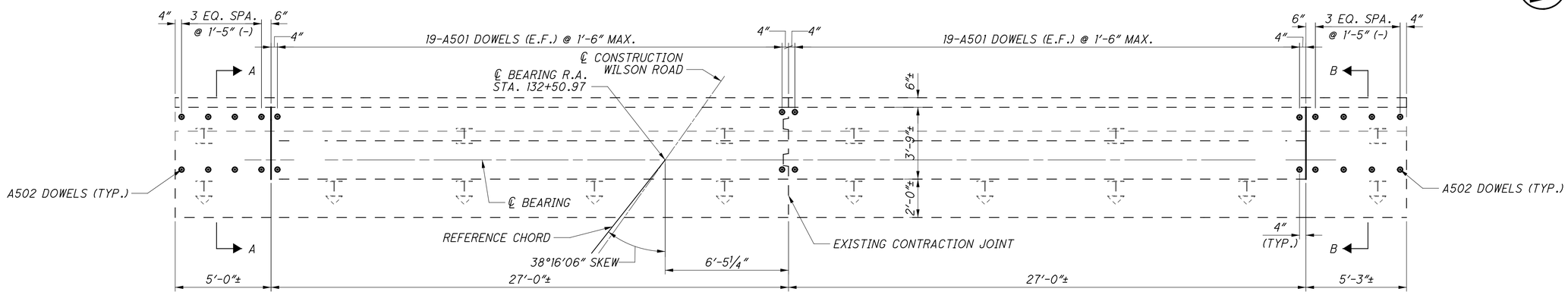

PLAN

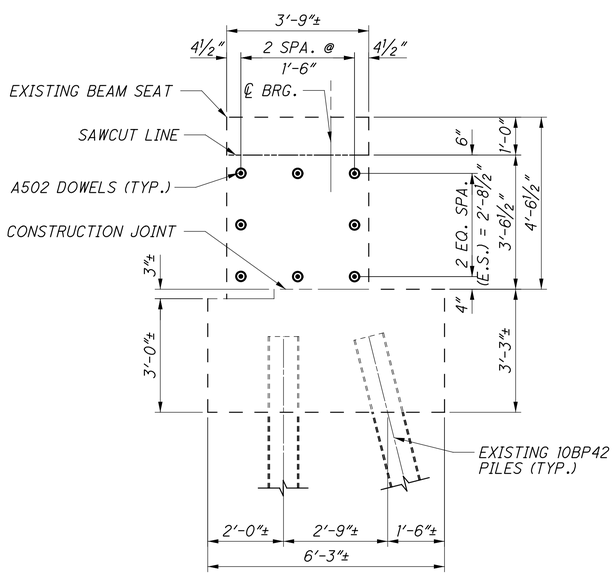

VIEW A-A
(EXISTING STRUCTURE)

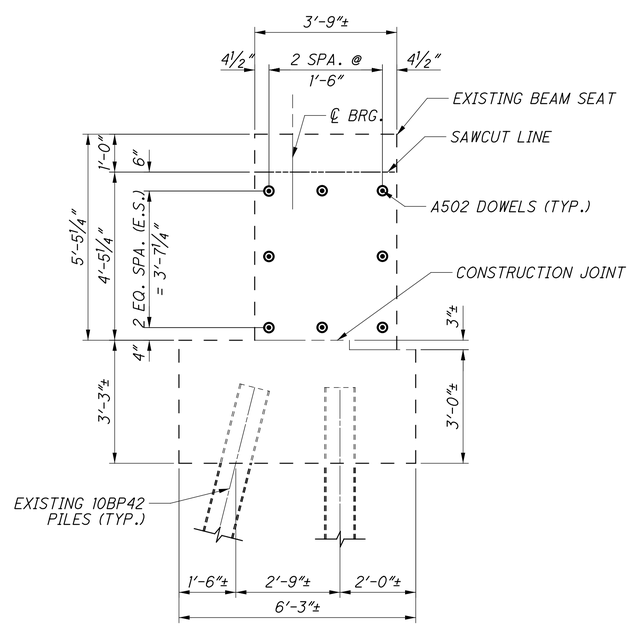

VIEW B-B
(EXISTING STRUCTURE)

LEGEND:

- EXISTING PILE
- EXISTING BATTERED PILE
- ¾″ DIA. X 1′-3″ DEEP DOWEL HOLE WITH NON-SHRINK, NON-METALLIC GROUT

3233-E

DESIGN AGENCY
PRIME AE
8415 Pulsar Place, Suite 300
Columbus Ohio 43240

DESIGNED	DRAWN	REVIEWED	DATE
KDC	KDC	RG	07/15/2016
CHECKED	REVISED	STRUCTURE FILE NUMBER	
BTJ		2531852	

REAR ABUTMENT DOWEL LAYOUT DETAIL
FRA-CR 25-0063
WILSON ROAD BRIDGE OVER CAMP CHASE RAILROAD

WILSON ROAD
CIP NO. 590105-100083

Q:\Transportation\Projects\Local\City of Columbus\Wilson Road Bridge Rehab\12345\structures\Wilson Road\sheets\Wilson RoadCFP001.dgn 10/17/2016 2:03:53 PM JPerchinske

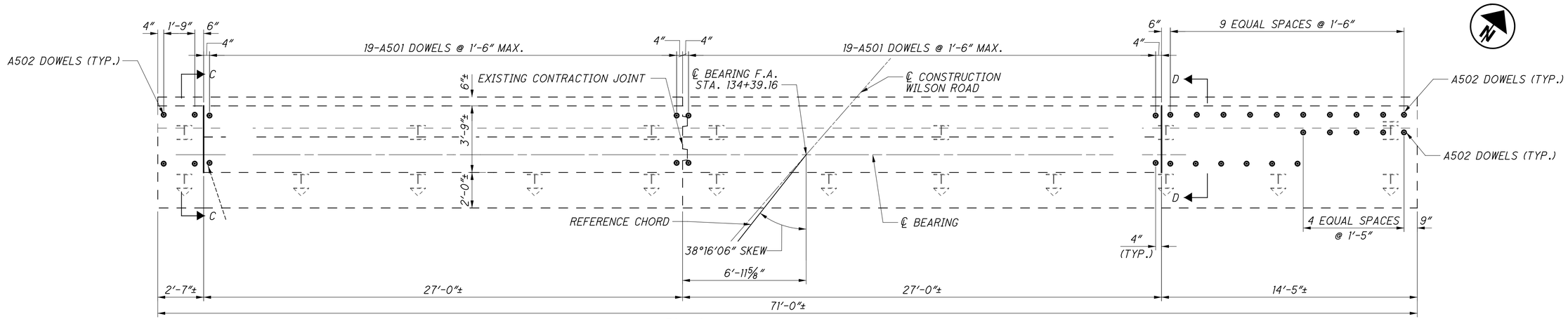

PLAN

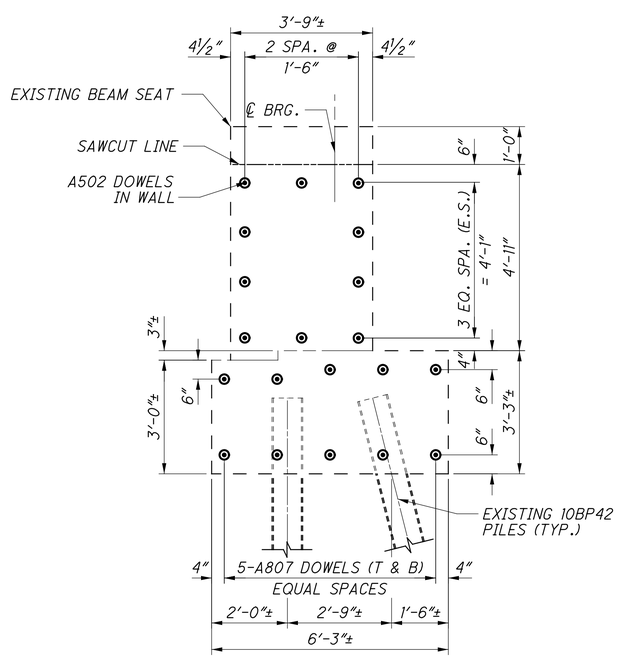

VIEW C-C

(EXISTING STRUCTURE)

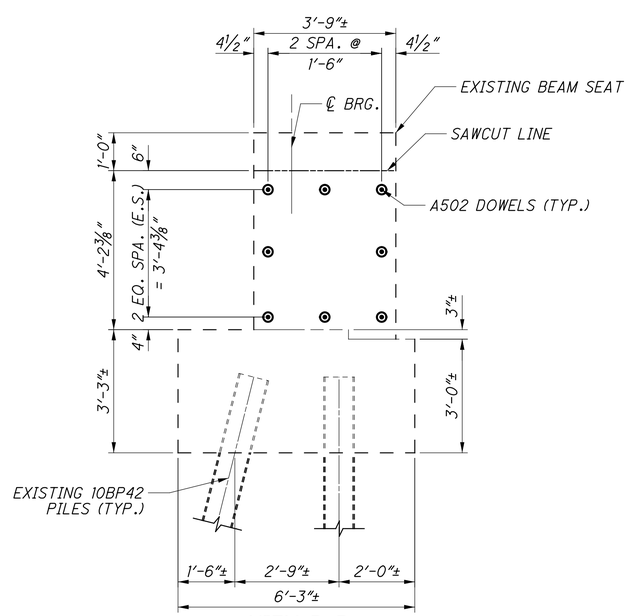

VIEW D-D

(EXISTING STRUCTURE)

LEGEND

- EXISTING PILE
- EXISTING BATTERED PILE
- ¾" DIA. X 1'-3" DEEP DOWEL HOLE WITH NON-SHRINK, NON-METALLIC GROUT

3233-E

DESIGN AGENCY
PRIME AE
8415 Pulsar Place, Suite 300
Columbus Ohio 43240

DESIGNED	DRAWN	REVIEWED	DATE
KDC	KDC	RG	07/15/2016
CHECKED	REVISED	STRUCTURE FILE NUMBER	
BTJ		2531852	

FORWARD ABUTMENT DOWEL LAYOUT DETAIL

FRA-CR 25-0063
WILSON ROAD BRIDGE OVER CAMP CHASE RAILROAD

WILSON ROAD
CIP NO. 590105-100083

Q:\Transportation\Projects\Local\City of Columbus\Wilson Road Bridge Rehab\12345\structures\Wilson Road\sheets\Wilson RoadCFP002.dgn 10/17/2016 2:03:54 PM JPerchinske

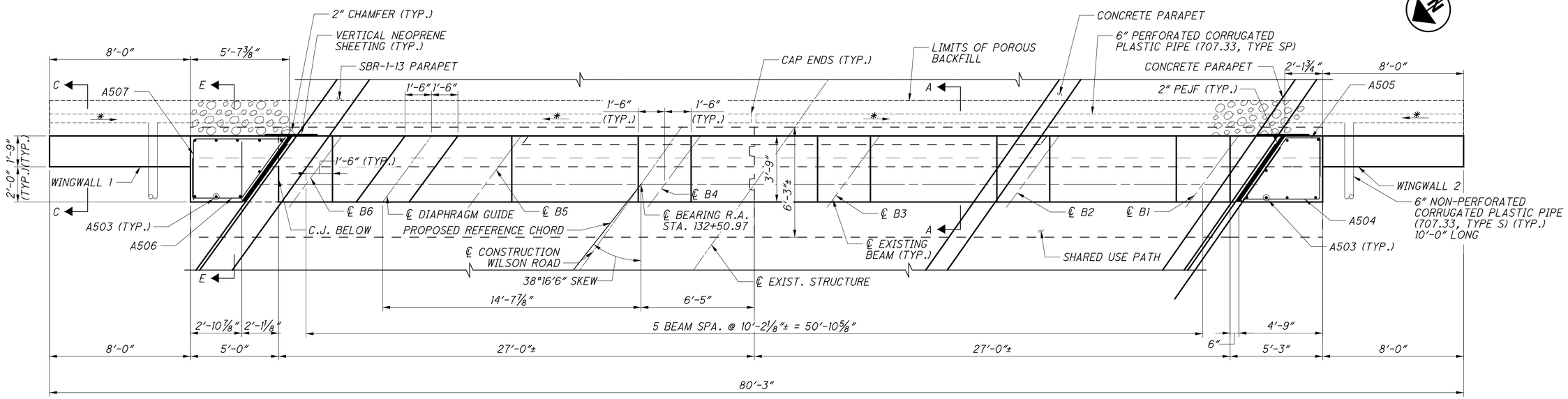

PLAN

(DIAPHRAGM NOT SHOWN)

LEGEND

* MINIMUM SLOPE OF PIPE IS 1/8"/FT.
** ELEVATIONS SHOWN ARE AT ℄ BEARING

MINIMUM LAP LENGTHS:
#5 = 2'-6"
#8 = 5'-0"

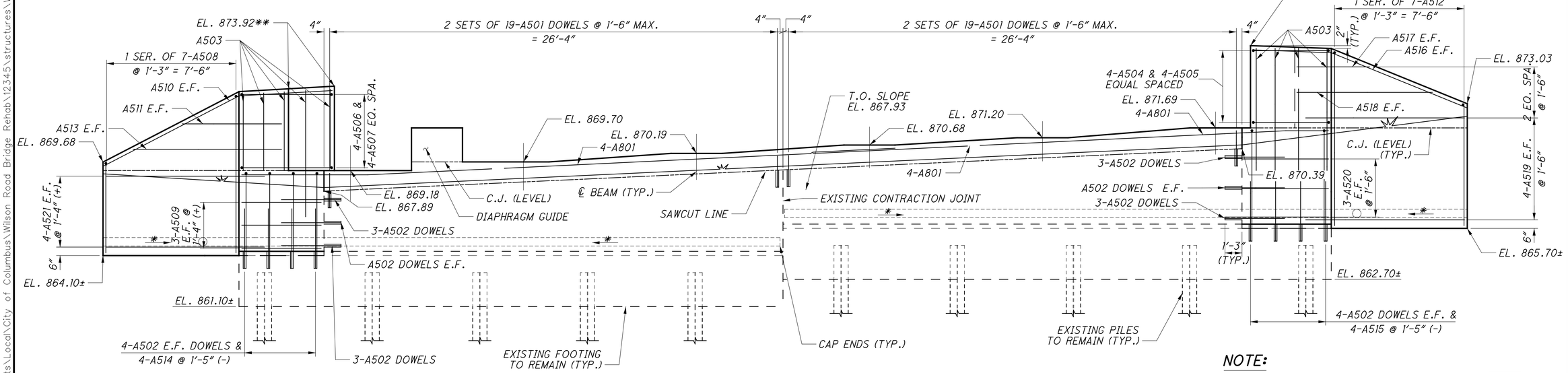

ELEVATION

(DIAPHRAGM NOT SHOWN)

NOTE:

1. FOR SECTIONS A-A, C-C, AND E-E SEE SHEET 12/29.
2. FOR DOWEL HOLE LAYOUT PLAN, SEE SHEET 8/29.
3. FOR DIAPHRAGM GUIDE DETAILS, SEE SHEET 14/29.

3233-E

DESIGN AGENCY
PRIME AE
8415 Pulsar Place, Suite 300
Columbus Ohio 43240

DESIGNED	DRAWN	REVIEWED	DATE
KDC	KDC	RG	07/15/2016
CHECKED	REVISED	STRUCTURE FILE NUMBER	
BTJ		2531852	

REAR ABUTMENT PLAN AND ELEVATION
FRA-CR 25-0063
WILSON ROAD BRIDGE OVER CAMP CHASE RAILROAD

WILSON ROAD
CIP NO. 590105-100083

10/29

78/97

Q:\Transportation\Projects\Local\City of Columbus\Wilson Road Bridge Rehab\12345\structures\Wilson Road\sheets\Wilson RoadCAR001.dgn 10/17/2016 2:03:55 PM JPerchinske

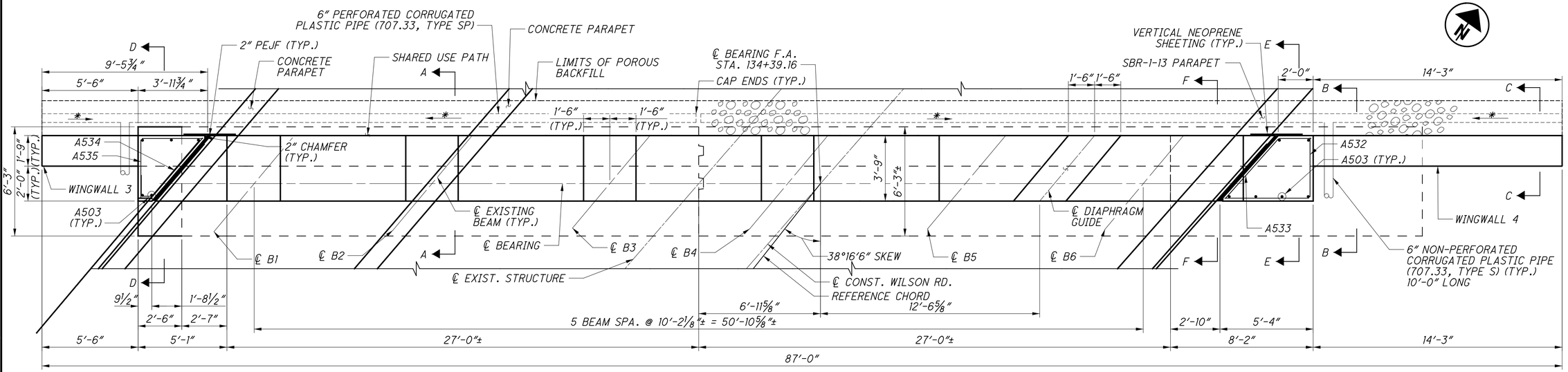

PLAN

(DIAPHRAGM NOT SHOWN)

LEGEND

* MINIMUM SLOPE OF PIPE IS 1/8"/FT.
** ELEVATIONS SHOWN ARE AT ℄ BEARING

MINIMUM LAP LENGTHS:
#5 = 2'-6"
#8 = 5'-0"

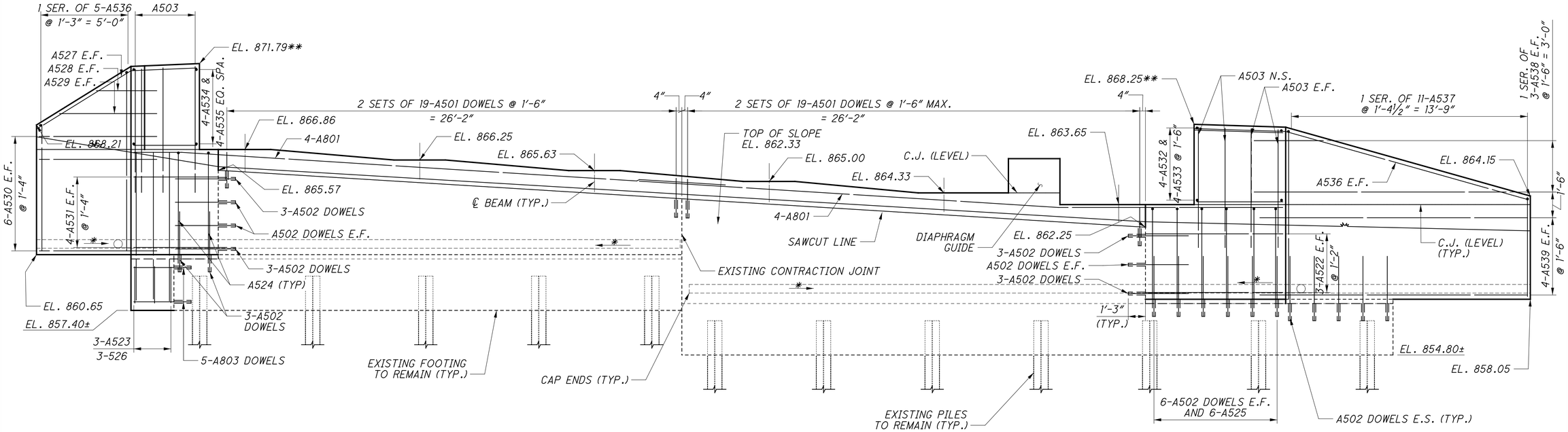

ELEVATION

(DIAPHRAGM NOT SHOWN)

NOTE:

1. FOR SECTIONS A-A, B-B, C-C, D-D, E-E, AND F-F SEE SHEET 12/29.
2. FOR DOWEL HOLE LAYOUT PLAN, SEE SHEET 9/29.
3. FOR DIAPHRAGM GUIDE DETAILS, SEE SHEET 14/29.

3233-E

DESIGN AGENCY
PRIME AE
8415 Pulsar Place, Suite 300
Columbus Ohio 43240

DESIGNED	DRAWN	REVIEWED	DATE
KDC	KDC	RG	07/12/2016
CHECKED	REVISED	STRUCTURE FILE NUMBER	
BTJ		2531852	

FORWARD ABUTMENT PLAN AND ELEVATION

FRA-CR 25-0063
WILSON ROAD BRIDGE OVER CAMP CHASE RAILROAD

WILSON ROAD
CIP NO. 590105-100083

Q:\Transportation\Projects\Local\City of Columbus\Wilson Road Bridge Rehab\12345\structures\Wilson Road\sheets\Wilson RoadCAF001.dgn 10/17/2016 2:03:57 PM JPerchinske

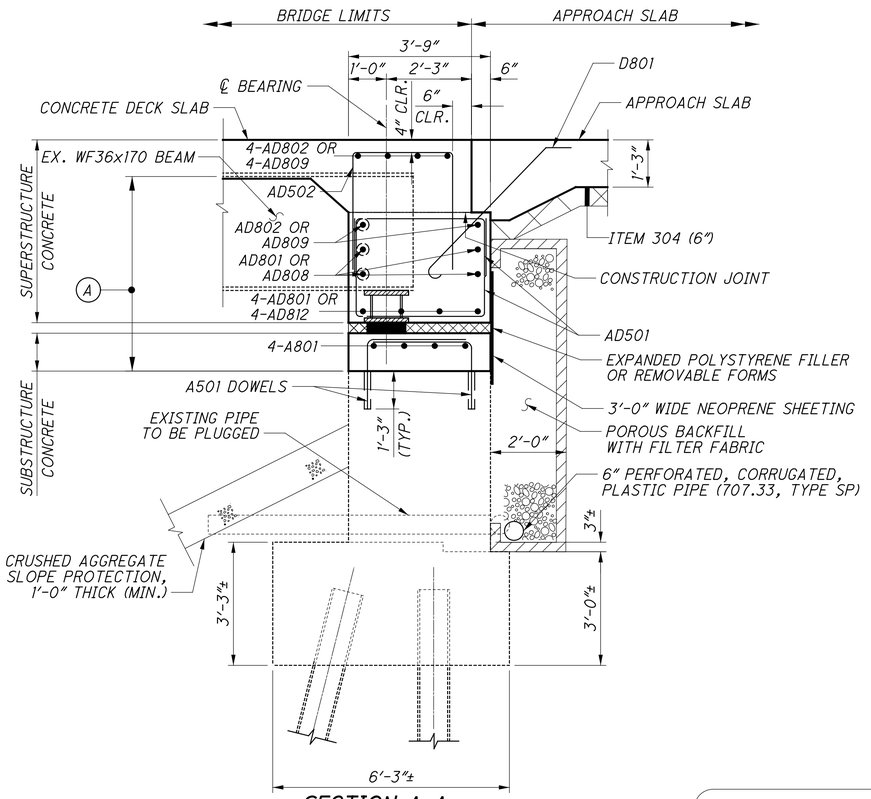

SECTION A-A

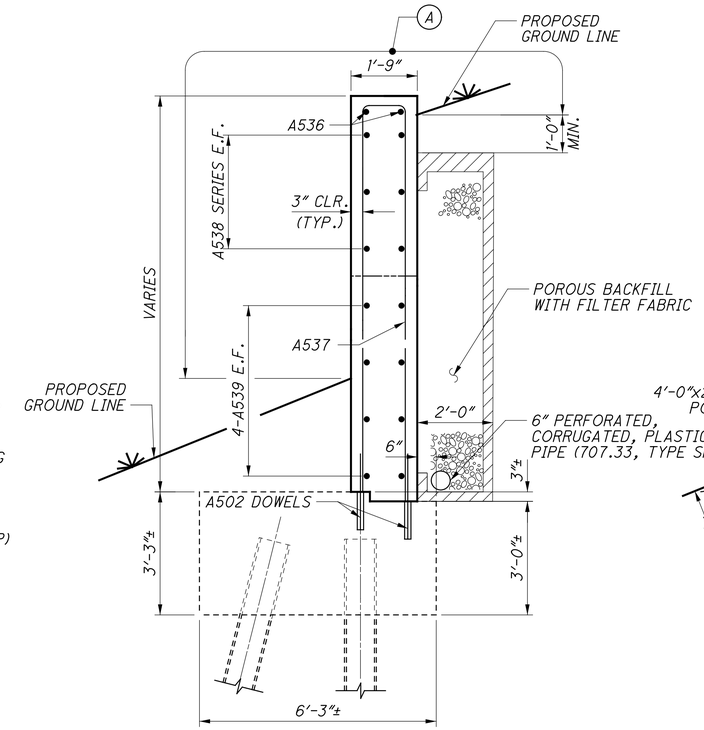

SECTION B-B

(WINGWALL 4 SHOWN, OTHERS SIMILAR)

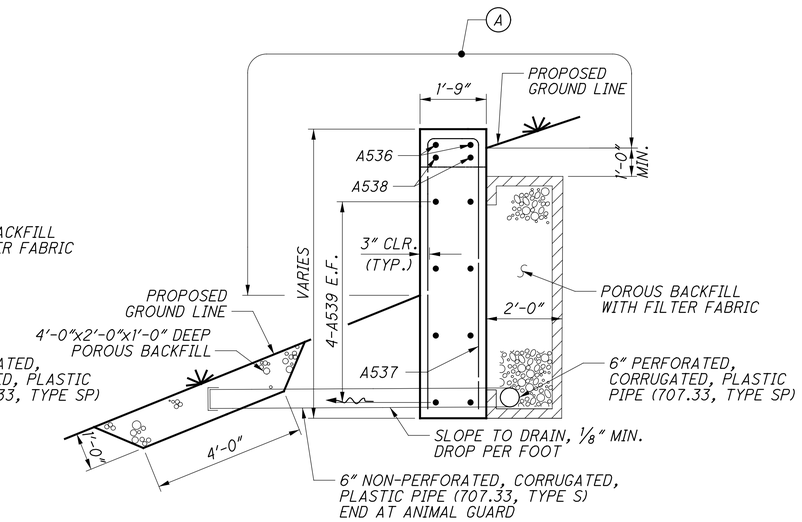

SECTION C-C

(WINGWALL 4 SHOWN, OTHERS SIMILAR)

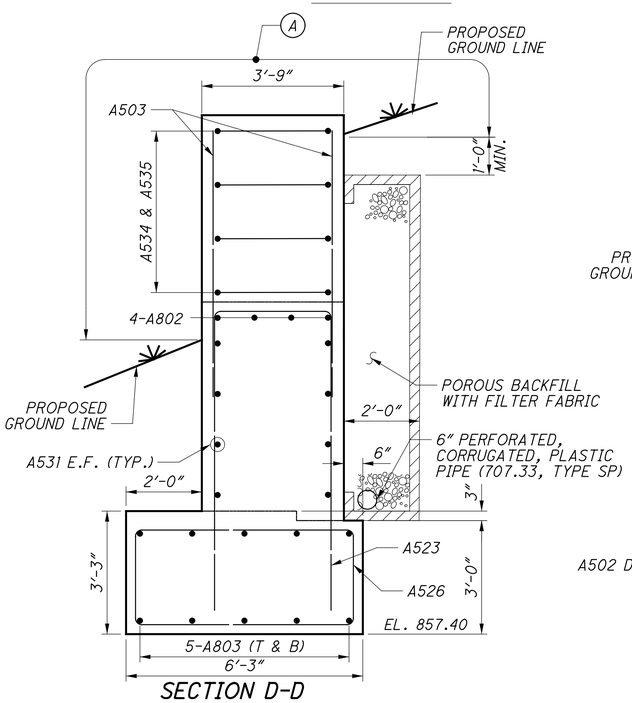

SECTION D-D

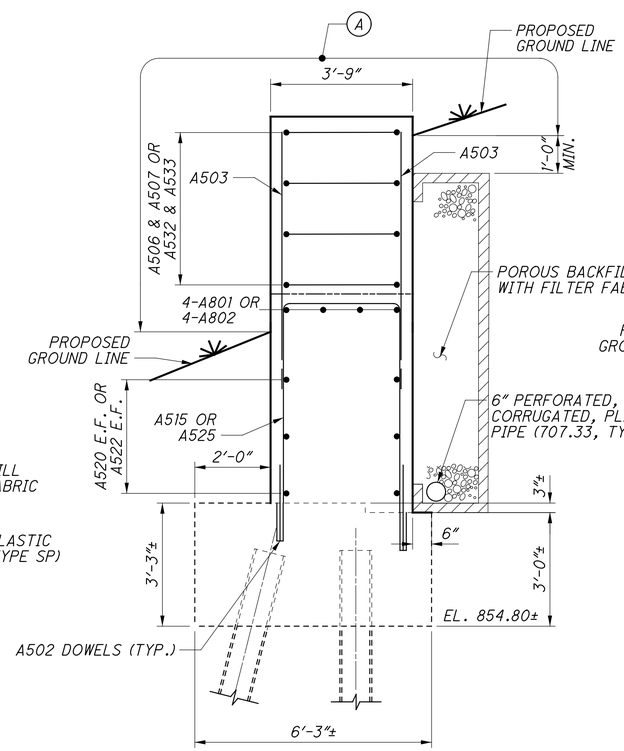

SECTION E-E

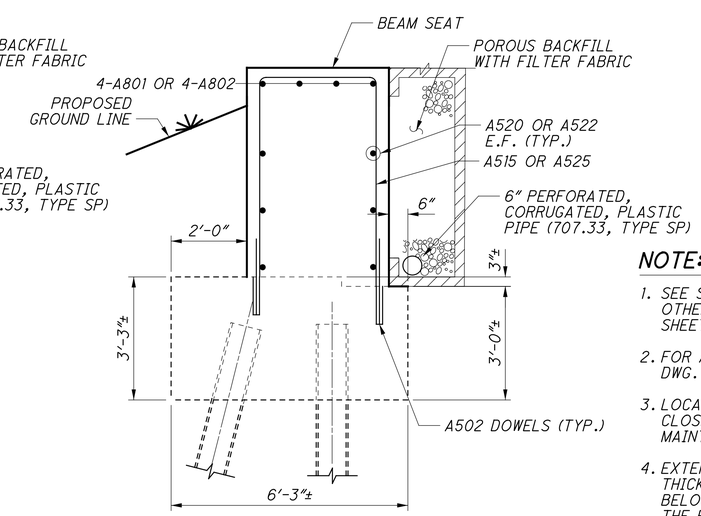

SECTION F-F

(DIAPHRAGM NOT SHOWN)

LEGEND:

(A) - SEALING OF CONCRETE SURFACES (EPOXY-URETHANE)

NOTE:

1. SEE STD. DWG. SICD-1-96 FOR NEOPRENE SHEETING AND OTHER DETAILS NOT SHOWN. PAYMENT FOR NEOPRENE SHEETING SHALL BE INCIDENTAL TO ITEM 511.
2. FOR ADDITIONAL DIAPHRAGM GUIDE DETAILS, SEE STD. DWG. SICD-2-14.
3. LOCATE 6" PERFORATED CORRUGATED PLASTIC PIPE AS CLOSE TO THE TOP OF FOOTING AS PRACTICAL WHILE MAINTAINING A 1/8" PER FOOT SLOPE TOWARDS OUTLET.
4. EXTEND POROUS BACKFILL WITH FILTER FABRIC, 2 FEET THICK, UP TO THE PLANE OF THE SUBGRADE, TO 1 FOOT BELOW THE EMBANKMENT SURFACE, AND LATERALLY TO THE END OF WINGWALL 1'-0" INSIDE OF FOOTING. TURN FILTER FABRIC 6" UP BACK FACE OF WALL.

3233-E

DESIGN AGENCY
PRIME AE
8415 Pulsar Place, Suite 300
Columbus Ohio 43240

DESIGNED	DRAWN	REVIEWED	DATE
KDC	KDC	RG	07/15/2016
CHECKED	REVISED	STRUCTURE FILE NUMBER	
BTJ		2531852	

ABUTMENT DETAILS
FRA-CR 25-0063
WILSON ROAD BRIDGE OVER CAMP CHASE RAILROAD

WILSON ROAD
CIP NO. 590105-100083

Q:\Transportation\Projects\Local\City of Columbus\Wilson Road Bridge Rehab\12345\structures\Wilson Road\sheets\Wilson RoadCAR002.dgn 10/17/2016 2:03:58 PM JPerchinske

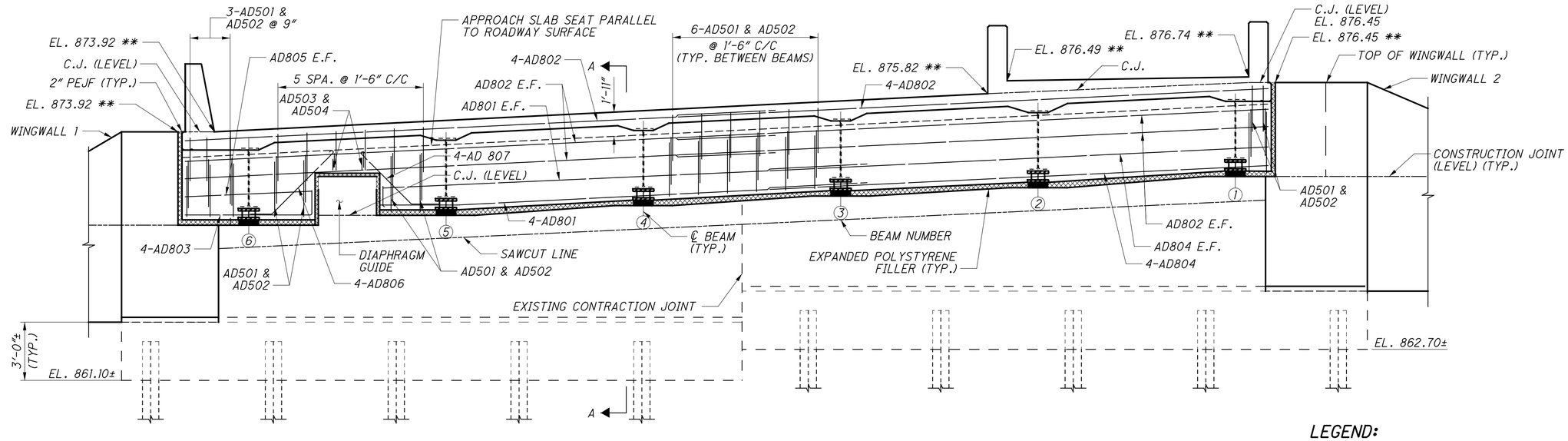

REAR ABUTMENT DIAPHRAGM ELEVATION

LEGEND:

** ELEVATIONS SHOWN ARE AT ℄ BEARING

MINIMUM LAP LENGTHS:

#5 = 2'-6"
#8 = 5'-0"

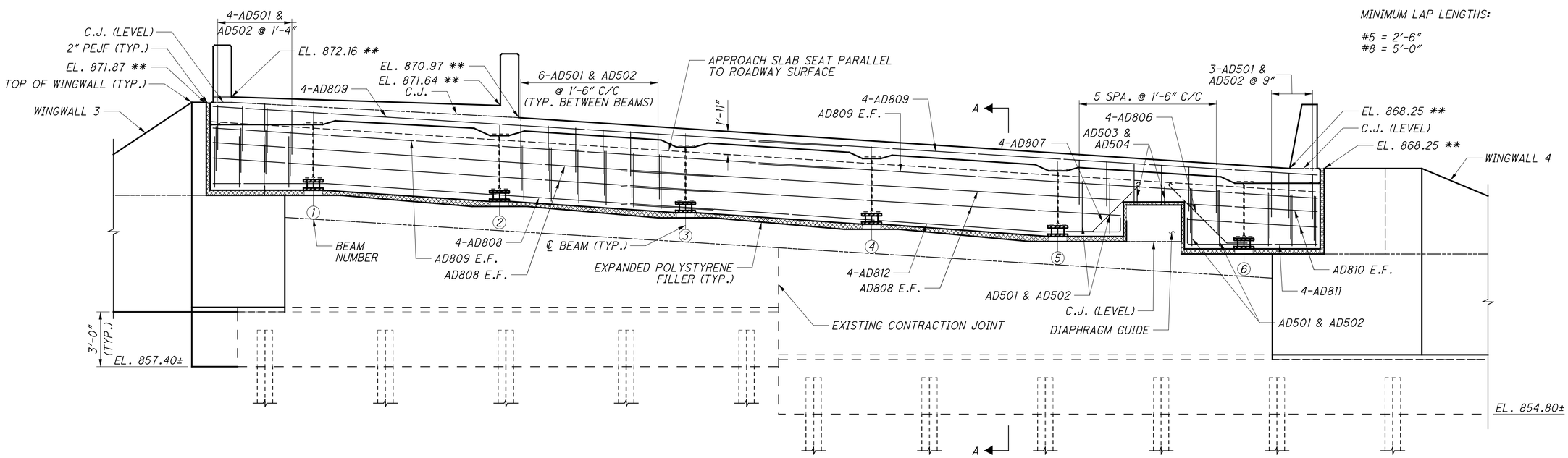

FORWARD ABUTMENT DIAPHRAGM ELEVATION

TABLE OF SEAT ELEVATIONS						
LOCATION	BEAM 1	BEAM 2	BEAM 3	BEAM 4	BEAM 5	BEAM 6
R.A.	871.69	871.20	870.68	870.19	869.70	869.18
F.A.	866.86	866.25	865.63	865.00	864.33	863.65

ABUTMENT DIAPHRAGM CONCRETE:

PLACE THE DIAPHRAGM CONCRETE ENCASING THE STRUCTURAL MEMBER ENDS AFTER THE DECK PLACEMENT IN THE ADJACENT SPAN IS COMPLETE. PROCEDURES THAT PLACE THE ABUTMENT DIAPHRAGM WITH THE DECK CONCRETE MAY BE APPROVED BY THE ENGINEER IF THE PLACEMENT SUBMITTAL CAN ASSURE THAT THE DECK CONCRETE IN THE ADJACENT SPAN WILL BE PLACED BEFORE CONCRETE IN THE DIAPHRAGM HAS REACHED ITS INITIAL SET.

NOTE:

1. FOR SECTION A-A, SEE SHEET 12/29.
2. FOR DOWEL LAYOUT PLAN, SEE SHEETS 8/29 AND 9/29.
3. FOR WINGWALL DETAILS, SEE SHEETS 10/29 AND 11/29.
4. VERTICAL DIAPHRAGM REINFORCING SHALL BE PLACED PARALLEL TO THE SKEW.
5. FOR DIAPHRAGM GUIDE DETAILS, SEE SHEET 14/29.

3233-E

DESIGN AGENCY
PRIME AE
8415 Pulsar Place, Suite 300
Columbus Ohio 43240

DESIGNED	DRAWN	REVIEWED	DATE
KDC	KDC	RG	07/15/2016
CHECKED	REVISED	STRUCTURE FILE NUMBER	
BTJ		2531852	

ABUTMENT DIAPHRAGM DETAILS
FRA-CR 25-0063
WILSON ROAD BRIDGE OVER CAMP CHASE RAILROAD

WILSON ROAD
CIP NO. 590105-100083

Q:\Transportation\Projects\Local\City of Columbus\Wilson Road Bridge Rehab\12345\structures\Wilson Road\sheets\Wilson RoadCAD001.dgn 10/17/2016 2:03:58 PM JPerchinske

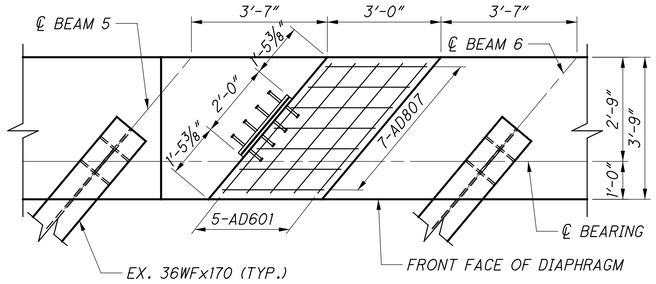

DIAPHRAGM GUIDE PLAN

(FORWARD ABUTMENT SHOWN, REAR ABUTMENT SIMILAR)

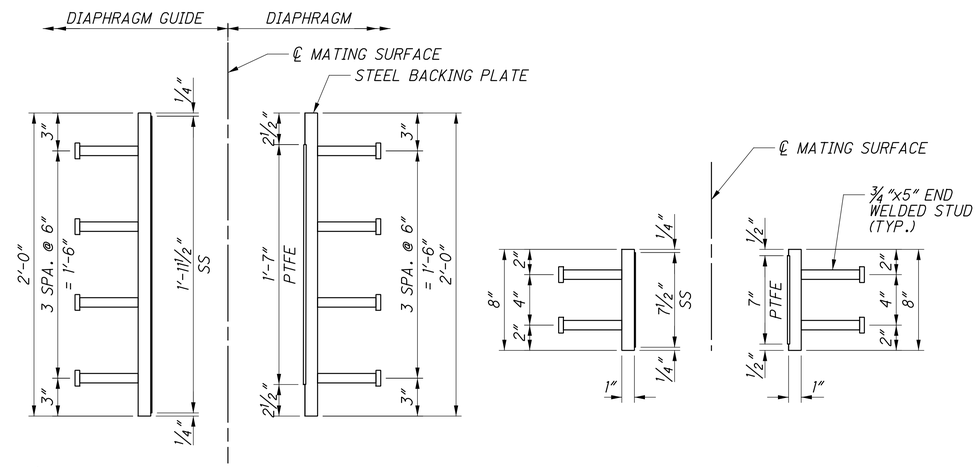

RUB PLATE DETAILS

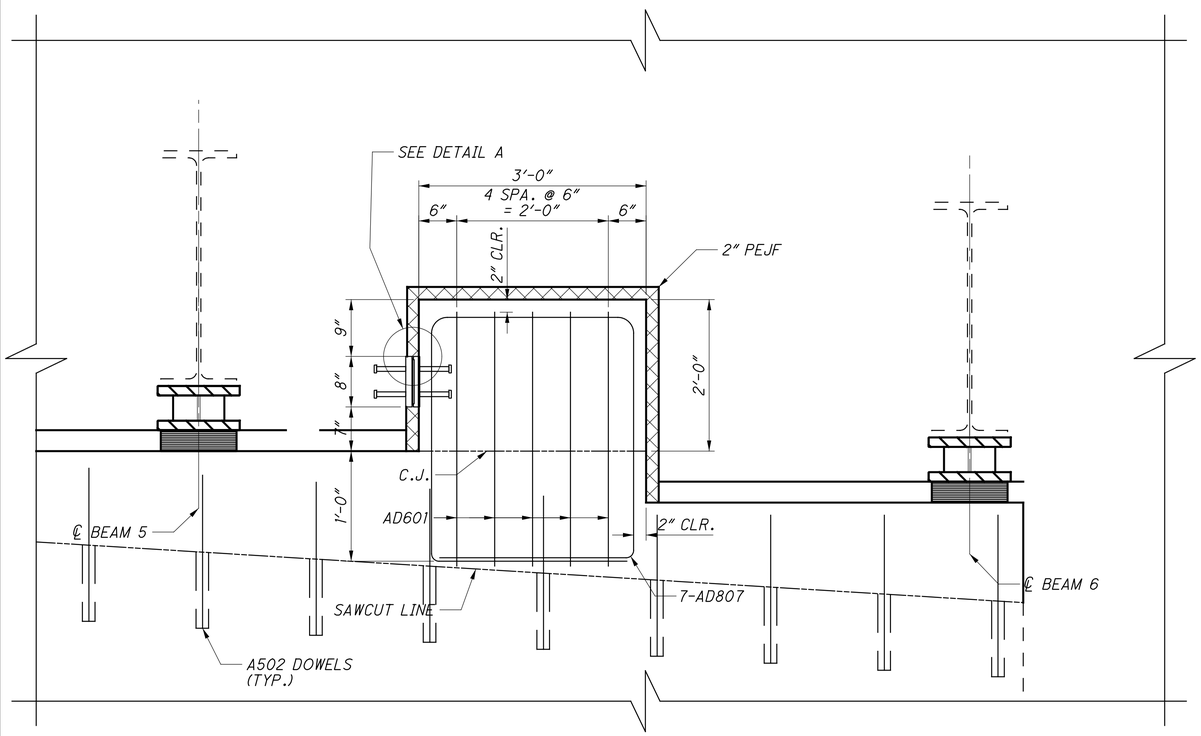

DIAPHRAGM GUIDE ELEVATION

(FORWARD ABUTMENT SHOWN, REAR ABUTMENT SIMILAR)

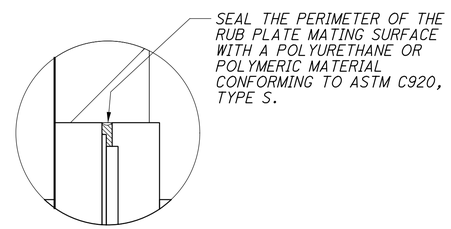

DETAIL A

LEGEND:

SS - STAINLESS STEEL

PTFE - POLYTETRAFLUOROETHYLENE

NOTE:

1. SEE STD. DWG. SICD-1-96 FOR NEOPRENE SHEETING AND OTHER DETAILS NOT SHOWN.
2. FOR ADDITIONAL DIAPHRAGM GUIDE DETAILS, SEE STD. DWG. SICD-2-14.

MARK	NUMBER			LENGTH	WEIGHT	TYPE	DIMENSION					
	REAR	FORWARD	TOTAL				A	B	C	D	E	INCR.
AD601	5	5	10	15'-0"	**	3	4'-3"	2'-10"				
AD807	7	7	14	11'-11"	**	5	2'-8"	2'-8 1/2"	2'-4 "			

** INCLUDED WITH ITEM 511 - SEMI-INTEGRAL DIAPHRAGM GUIDE FOR PAYMENT

3233-E

DESIGN AGENCY
PRIME AE
8415 Pulsar Place, Suite 300
Columbus Ohio 43240

DESIGNED	DRAWN	REVIEWED	DATE
KDC	KDC	RG	07/15/2016
CHECKED	REVISED	STRUCTURE FILE NUMBER	
BTJ		2531852	

ABUTMENT DIAPHRAGM DETAILS (2 OF 2)

FRA-CR 25-0063

WILSON ROAD BRIDGE OVER CAMP CHASE RAILROAD

WILSON ROAD

CIP NO. 590105-100083

Q:\Transportation\Projects\Local\City of Columbus\Wilson Road Bridge Rehab\12345\structures\Wilson Road\streets\Wilson RoadCAD002.dgn 10/17/2016 2:04:04 PM JPerchinske

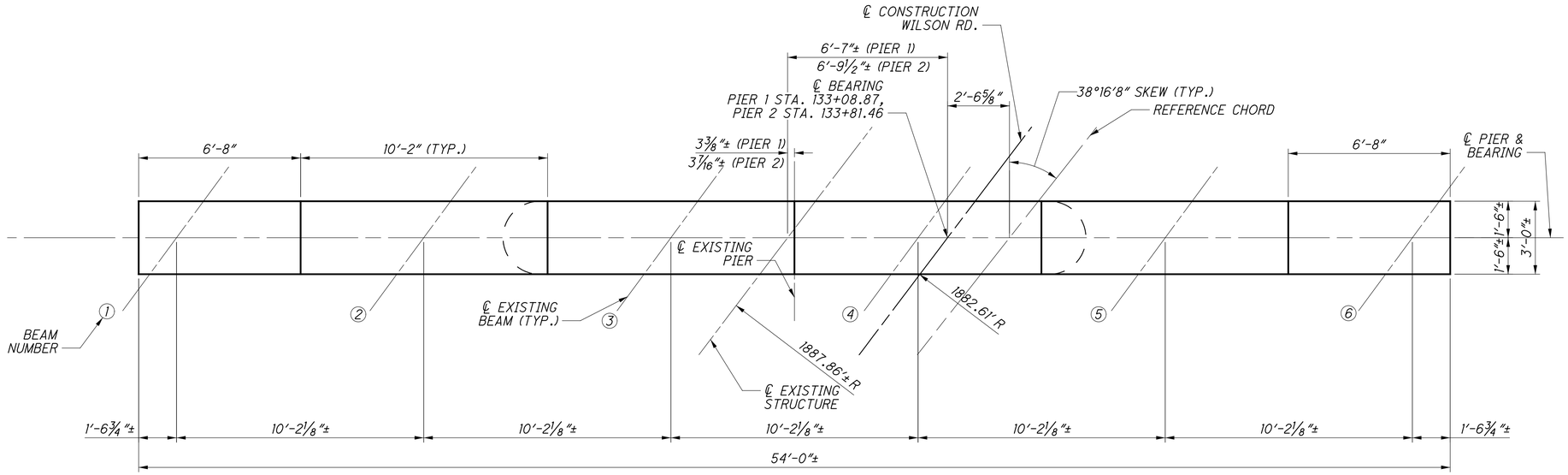

PLAN

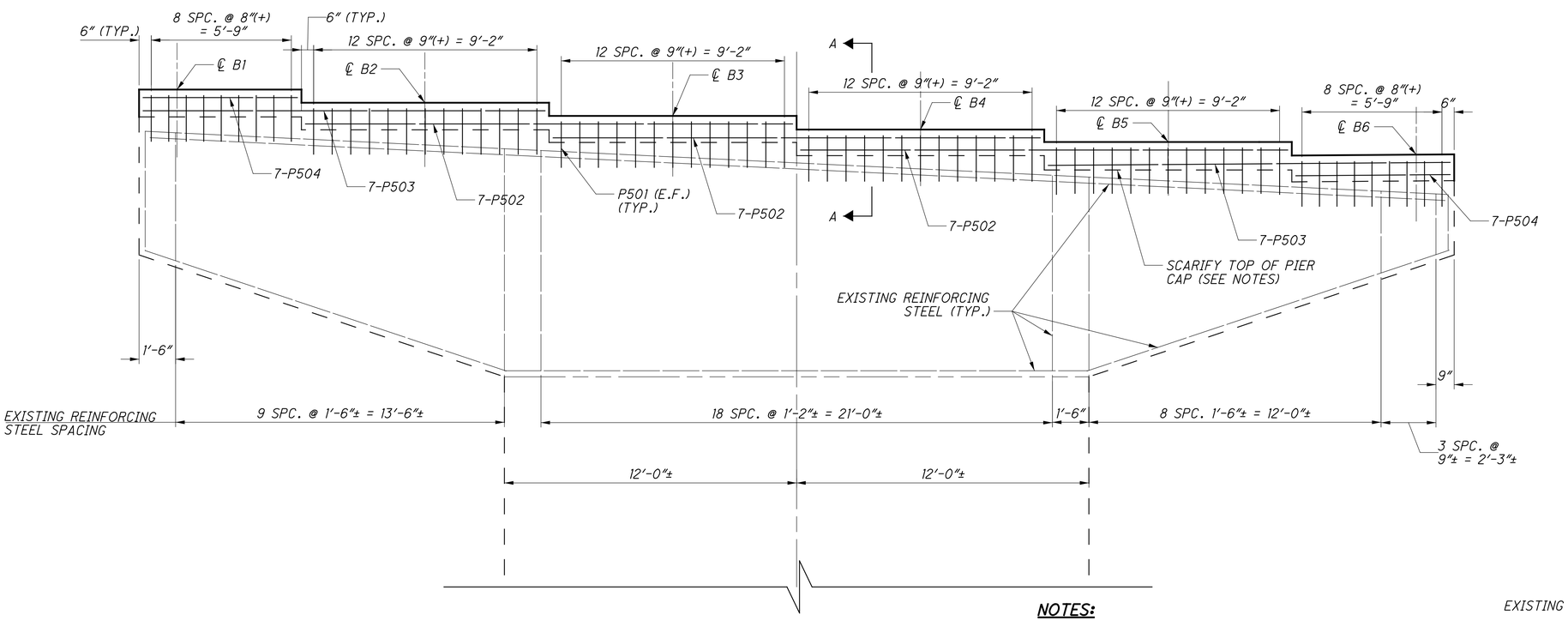

ELEVATION

TABLE OF EXISTING SEAT ELEVATIONS						
LOCATION	BEAM 1	BEAM 2	BEAM 3	BEAM 4	BEAM 5	BEAM 6
PIER 1	869.87±	869.38±	868.84±	868.30±	867.68±	867.12±
PIER 2	867.91±	867.44±	866.87±	866.30±	865.58±	864.98±

TABLE OF PROPOSED SEAT ELEVATIONS						
LOCATION	BEAM 1	BEAM 2	BEAM 3	BEAM 4	BEAM 5	BEAM 6
PIER 1	870.98	870.45	869.91	869.39	868.84	868.28
PIER 2	869.27	868.71	868.11	867.50	866.86	866.26

NOTES:

1. SCARIFY EXISTING CONCRETE BRIDGE SEAT AREA TO ROUGH SURFACE APPROXIMATELY ¼" DEEP. ABRASIVELY CLEAN THE JOINT SURFACE AND REMOVE ANY LOOSE CONCRETE AND RUST. CONCRETE BONDING SURFACE SHALL BE WET AS CONCRETE IS PLACED. PAYMENT FOR REMOVAL AND ROUGHENING TO BE INCLUDED IN ITEM 202, PORTIONS OF STRUCTURE REMOVED, AS PER PLAN.

2. ALL EXPOSED SURFACES OF PIERS EXCEPT TOP OF PIER CAP SHALL BE SEALED WITH "ITEM 512 - SEALING OF CONCRETE SURFACES (EPOXY-URETHANE)"

MINIMUM LAP LENGTHS:
#5 = 2'-6"

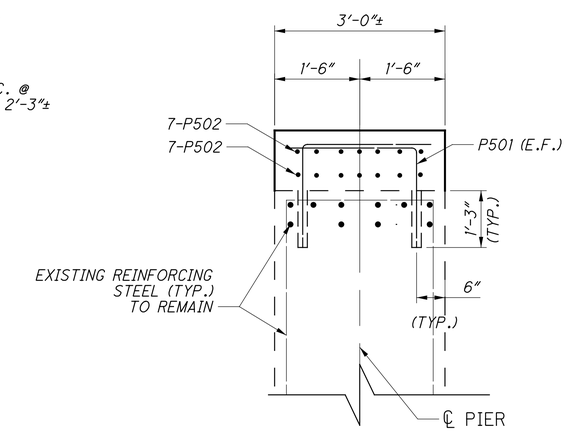

SECTION A-A

3233-E

DESIGN AGENCY
PRIME AE
8415 Pulsar Place, Suite 300
Columbus Ohio 43240

DESIGNED	DRAWN	REVIEWED	DATE
AMD	AMD	RG	07/15/2016
CHECKED	REVISED	STRUCTURE FILE NUMBER	
CCJ		2531852	

PIER DETIALS
FRA-CR 25-0063
WILSON ROAD BRIDGE OVER CAMP CHASE RAILROAD

WILSON ROAD
CIP NO. 590105-100083

Q:\Transportation\Projects\Local\City of Columbus\Wilson Road Bridge Rehab\12345\structures\Wilson Road\sheets\Wilson RoadCPI001.dgn 10/17/2016 2:04:09 PM JPerchinske

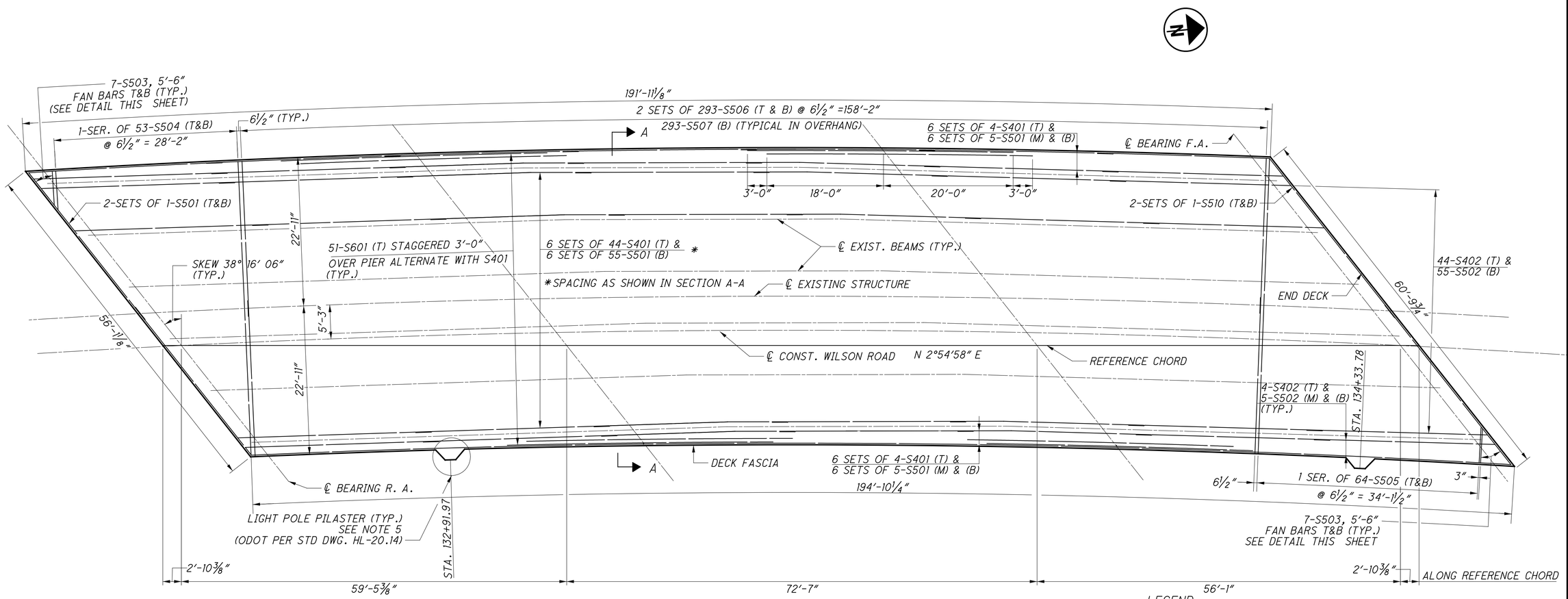

SLAB PLAN

(SHARED-USE-PATH REINFORCING STEEL NOT SHOWN)

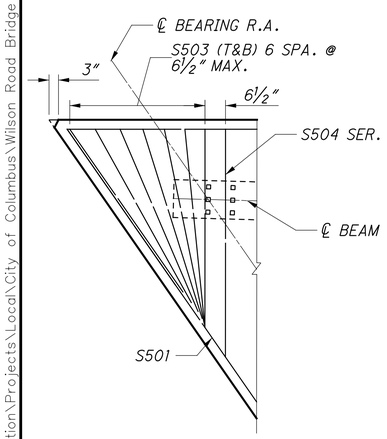

FANNED BAR DETAIL

(TYPICAL BOTH ACUTE CORNERS)

LOCATION	VARIABLE HAUNCH DEPTH TABLE (IN)												
	LOCATION ALONG BEAM LINE												
	R.A	1/4 PT	1/2 PT	3/4 PT	PIER 1	1/4 PT	1/2 PT	3/4 PT	PIER 2	1/4 PT	1/2 PT	3/4 PT	F.A
BEAM B1	1.53	1.66	1.91	2.68	3.58	3.62	3.36	2.70	2.08	3.07	3.07	3.01	2.67
BEAM B2	1.68	1.33	1.56	1.94	3.65	2.59	2.31	2.17	1.85	2.31	2.27	2.30	2.44
BEAM B3	2.04	2.00	2.03	2.41	3.74	3.27	2.91	2.52	1.95	2.69	2.76	2.65	2.20
BEAM B4	2.03	1.63	1.97	2.41	3.56	3.75	2.95	3.25	2.16	2.79	2.82	2.83	2.03
BEAM B5	2.04	2.20	2.58	2.47	3.73	3.51	3.05	3.20	2.70	2.51	2.66	2.73	2.22
BEAM B6	2.25	2.35	2.11	2.19	3.90	3.08	3.18	3.71	2.56	3.53	3.10	3.66	2.50

LEGEND

T - TOP BARS.

B - BOTTOM BARS.

NOTES:

1. FOR BEAM DETAILS, SEE SHEET 18/29.
2. FOR SECTION A-A, SEE SHEET 17/29.
3. MINIMUM BAR LAP LENGTH FOR #4 BARS IS 2'-0".
4. MINIMUM BAR LAP LENGTH FOR #5 BARS IS 2'-6".
5. FOR PILASTER DETAILS, SEE SHEET 17/29.
6. DECK SLAB CONCRETE QUANTITY: THE ESTIMATED QUANTITY OF DECK SLAB CONCRETE IS BASED ON THE CONSTANT DECK SLAB THICKNESS, AS SHOWN, ON TRANSVERSE SECTION PLUS THE QUANTITY OF CONCRETE THAT FORMS EACH BEAM HAUNCH. THE ESTIMATE ASSUMES A VARIABLE HAUNCH THICKNESS AS SHOWN ON THIS SHEET AND A CONSTANT HAUNCH WIDTH OUTSIDE THE EDGE OF EACH BEAM FLANGE OF 9 INCHES. DEVIATE FROM THIS HAUNCH THICKNESS AS NECESSARY TO PLACE THE DECK SURFACE AT THE FINISHED GRADE. THE ALLOWABLE TOLERANCE FOR THE HAUNCH WIDTH OUTSIDE THE EDGE OF EACH BEAM FLANGE IS +/- 3 INCHES.
7. THE HAUNCH THICKNESS WAS MEASURED AT THE CENTERLINE OFTHE BEAM, FROM THE SURFACE OF THE DECK TO THE BOTTOM OF THE TOP FLANGE MINUS THE DECK SLAB THICKNESS. THE AREA OF ALL EMBEDDED STEEL PLATES HAS BEEN DEDUCTED FROM THE HAUNCH QUANTITY IN ACCORDANCE WITH 511.24. ALL STEEL CLEARANCES ARE 2 INCHES UNLESS SHOWN OTHERWISE.

3233-E

DESIGN AGENCY
PRIME AE
8415 Pulsar Place, Suite 300
Columbus Ohio 43240

DESIGNED	DRAWN	REVIEWED	DATE
RG	RG	GTB	07/15/2016
CHECKED	REVISED	STRUCTURE FILE NUMBER	
BTJ		2531852	

DECK PLAN
FRA-CR 25-0063
WILSON ROAD BRIDGE OVER CAMP CHASE RAILROAD

WILSON ROAD
CIP NO. 590105-100083

16/29

84/97

Q:\Transportation\Projects\Local\City of Columbus\Wilson Road Bridge Rehab\12345\structures\Wilson Road\sheets\Wilson RoadCDP001.dgn 10/17/2016 2:04:10 PM JPerchinske

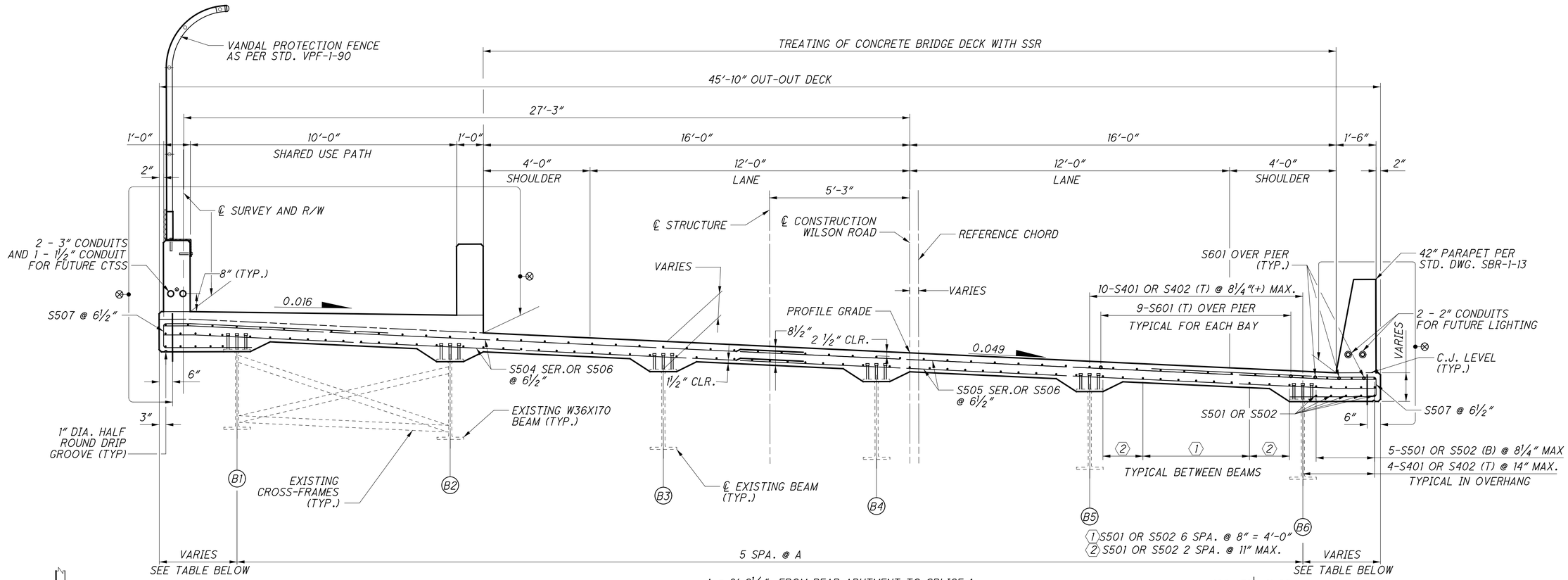

A = 8'-2¼" FROM REAR ABUTMENT TO SPLICE 1
8'-0" FROM SPLICE 1 TO SPLICE 2
7'-9⅝" FROM SPLICE 2 TO FORWARD ABUTMENT

TRANSVERSE SECTION A-A

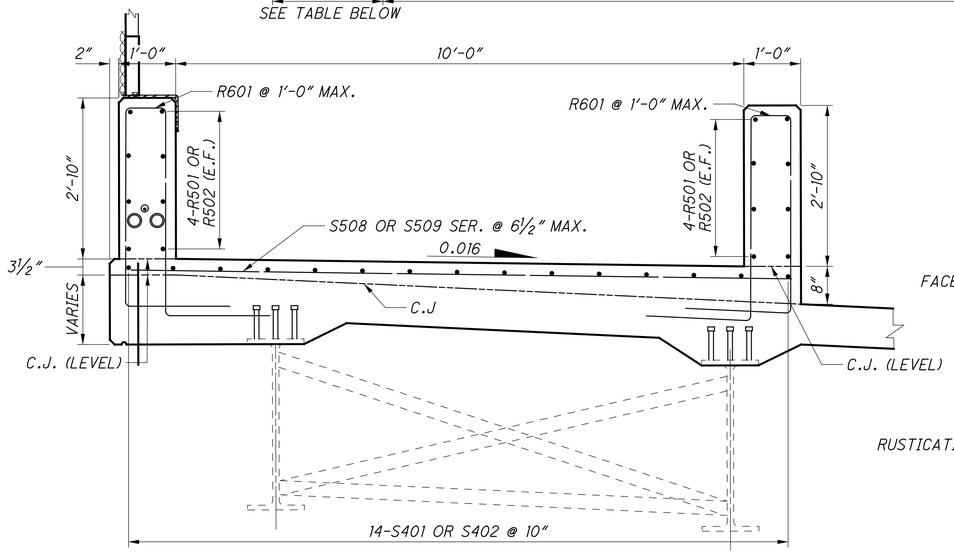

SHARED-USE-PATH SECTION

(DECK REINFORCING STEEL NOT SHOWN)

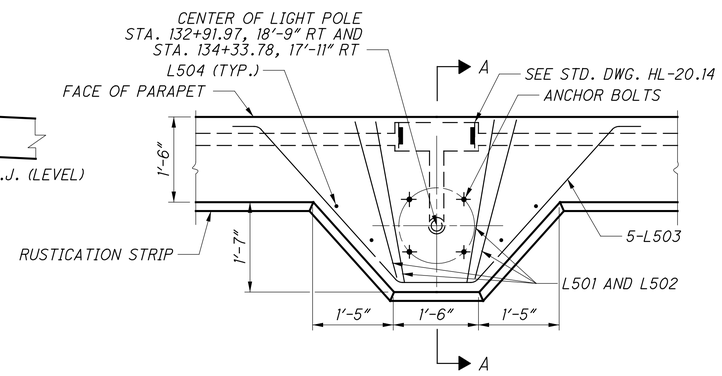

PILASTER PLAN

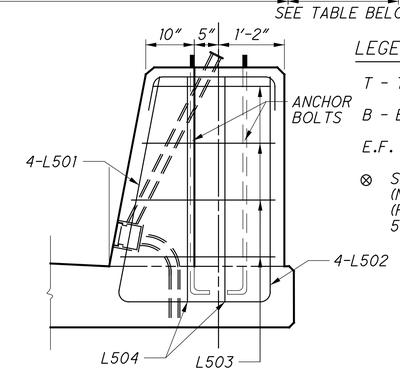

SECTION A-A

LEGEND

T - TOP BARS.

B - BOTTOM BARS.

E.F. - EACH FACE

⊗ SEALING OF CONCRETE SURFACES (NON-EPOXY) (TYP) (FEDERAL STANDARD COLOR 595B-27722, BUFF SEMIGLOSS)

NOTES

1. FOR FRAMING PLAN & GIRDER DETAILS SEE SHEET 18/29 .
3. MINIMUM BAR LAP LENGTH FOR #4 BAR IS 2'-0"
4. MINIMUM BAR LAP LENGTH FOR #5 BAR IS 2'-6"
5. FOR ADDITIONAL DECK SLAB NOTES SEE SHEET 16/29 .

OVERHANG DIMENSION																	
LOCATION		A	1	2	3	P1	FS1	4	5	6	FS2	P2	7	8	9	B
LEFT DECK EDGE TO CL BEAM B1	STATION	132+38.52	132+53.00	132+67.40	132+81.72	132+95.96	133+10.36	133+13.78	133+31.80	133+49.68	133+52.81	133+67.79	133+82.14	133+96.41	134+10.58	134+24.67
	OVERHANG DIMENSION	2'-3/8"	2'-3/4"	2'-7/8"	3'	3'	2'-7/8"	3'	3'-1/4"	3'-1/4"	3'-1/4"	3'-5/8"	3'-7/8"	4'	4'	3'-7/8"
RIGHT DECK EDGE TO CL BEAM B6	STATION	132+62.46	132+77.13	132+91.80	133+06.47	133+21.14	133+36.05	133+39.53	133+57.93	133+76.34	133+79.57	133+94.74	134+09.37	134+24.01	134+38.64	134+53.29
	OVERHANG DIMENSION	2'-1/4"	2'-1/8"	2'-1/8"	2'-1/4"	2'-1/2"	2'-3/4"	2'-3/4"	2'-7/8"	3'-1/8"	3'-1/8"	3'-1/8"	3'-1/8"	3'-1/4"	3'-1/2"	3'-3/4"

3233-E

DESIGN AGENCY
PRIME AE
8415 Pulsar Place, Suite 300
Columbus Ohio 43240

DESIGNED	DRAWN	REVIEWED	DATE
AMD	AMD	GTB	07/15/2016
CHECKED	REVISED	STRUCTURE FILE NUMBER	
RG		2531852	

TRANSVERSE SECTION
FRA-CR 25-0063
WILSON ROAD BRIDGE OVER CAMP CHASE RAILROAD

WILSON ROAD
CIP NO. 590105-100083

17/29

85/97

Q:\Transportation\Projects\Local\City of Columbus\Wilson Road Bridge Rehab\12345\structures\Wilson Road\sheets\Wilson RoadCTS002.dgn 10/17/2016 2:04:12 PM JPerchinske

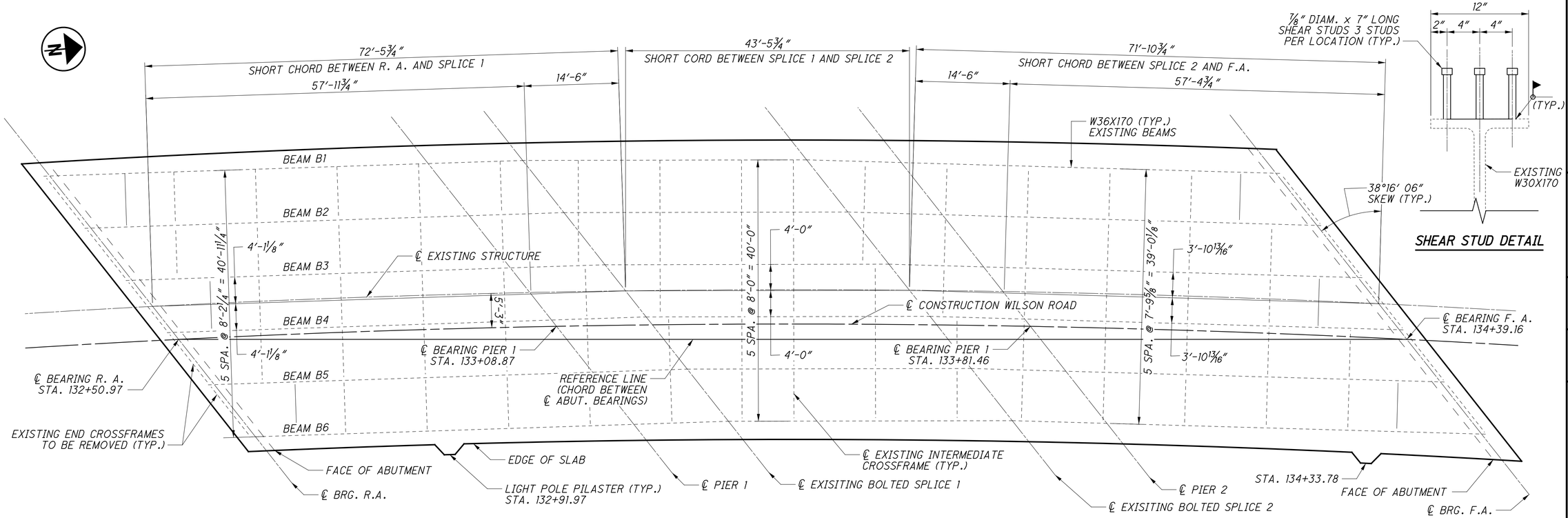

FRAMING PLAN

SHEAR STUD SPACING TABLE	
A	4 SPA. @ 1′-5″ = 5′-8″
B	3 SPA. @ 1′-6″ = 4′-6″

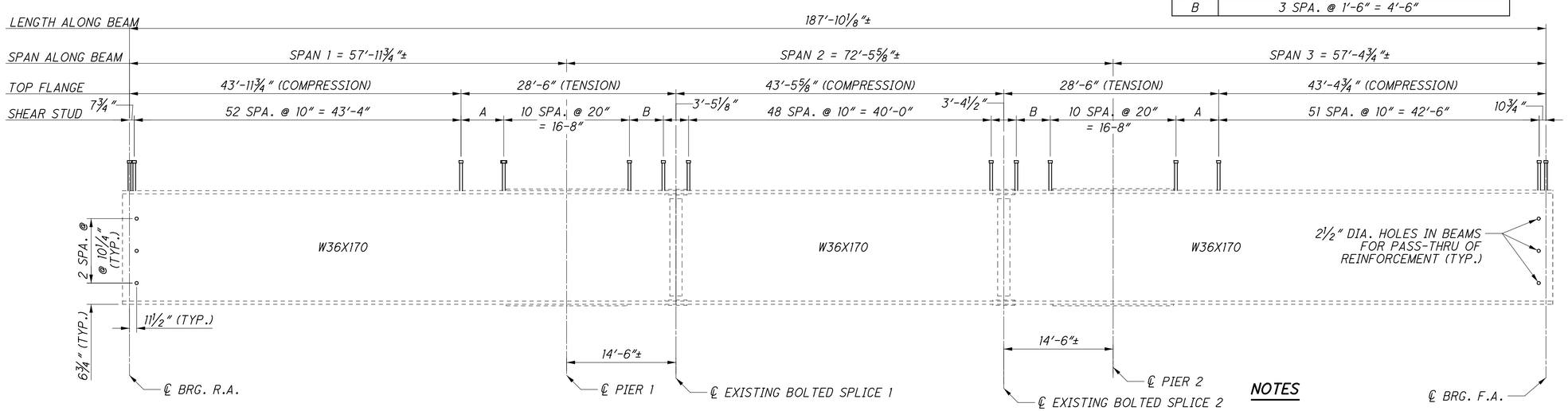

TYPICAL EXISTING BEAM ELEVATION

(BEAM B1 THRU. BEAM B6)

NOTES

1. WELD ATTACHMENT OF SUPPORTS FOR CONCRETE DECK FINISHING MACHINE TO AREAS OF THE FASCIA BEAM FLANGES DESIGNATED "COMPRESSION." DO NOT WELD ATTACHMENTS TO AREAS DESIGNATED "TENSION." FILLET WELDS TO COMPRESSION FLANGES SHALL BE AT LEAST 1″ FROM EDGE OF FLANGE, BE NO MORE THAN 2″ LONG, AND BE AT LEAST ¼″ FOR THICKNESSES UP TO ¾″ OR 5⁄16″ FOR GREATER THAN ¾″ THICK.
2. ALL EXISTING STRUCTURAL STEEL IS Fy = 36 KSI

3233-E

DESIGN AGENCY: PRIME AE, 8415 Pulsar Place, Suite 300, Columbus Ohio 43240

DESIGNED	DRAWN	REVIEWED	DATE
RG	RG	CCJ	07/16/2016
CHECKED	REVISED	STRUCTURE FILE NUMBER	
BTJ		2531852	

FRAMING PLAN
FRA-CR 25-0063
WILSON ROAD BRIDGE OVER CAMP CHASE RAILROAD

WILSON ROAD
CIP NO. 590105-100083

Q:\Transportation\Projects\Local\City of Columbus\Wilson Road Bridge Rehab\12345\structures\Wilson Road\sheets\Wilson RoadCSD001.dgn 10/17/2016 2:04:12 PM JPerchinske

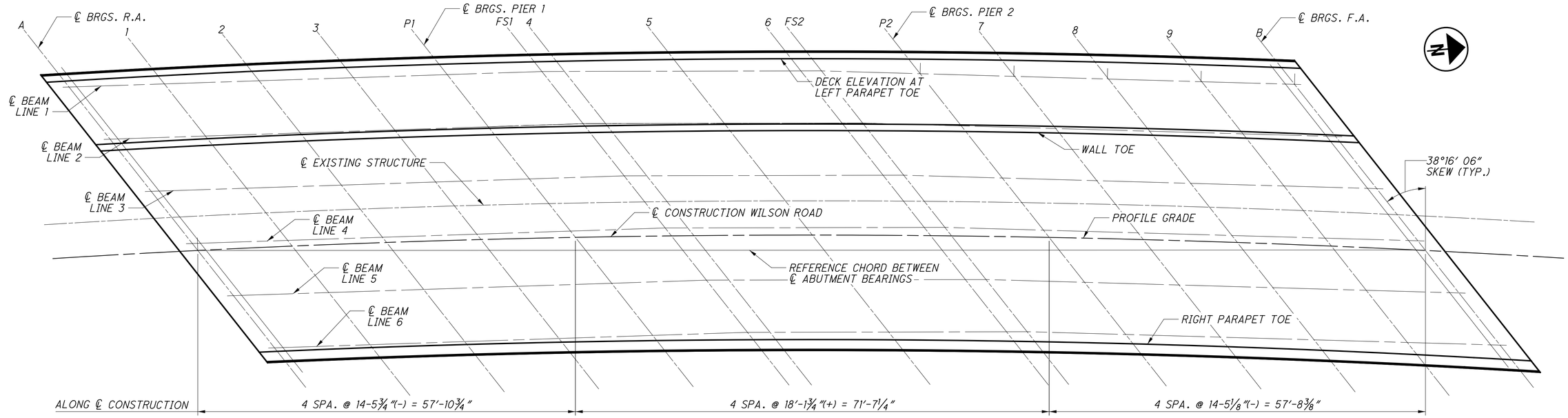

SCREED, HAUNCH, AND FINISHED DECK ELEVATION LOCATION PLAN

NOTES

SCREED ELEVATIONS SHOWN REPRESENT THE THEORETICAL DECK SURFACE LOCATION PRIOR TO DEFLECTIONS CAUSED BY DECK PLACEMENT AND OTHER ANTICIPATED DEAD LOADS.

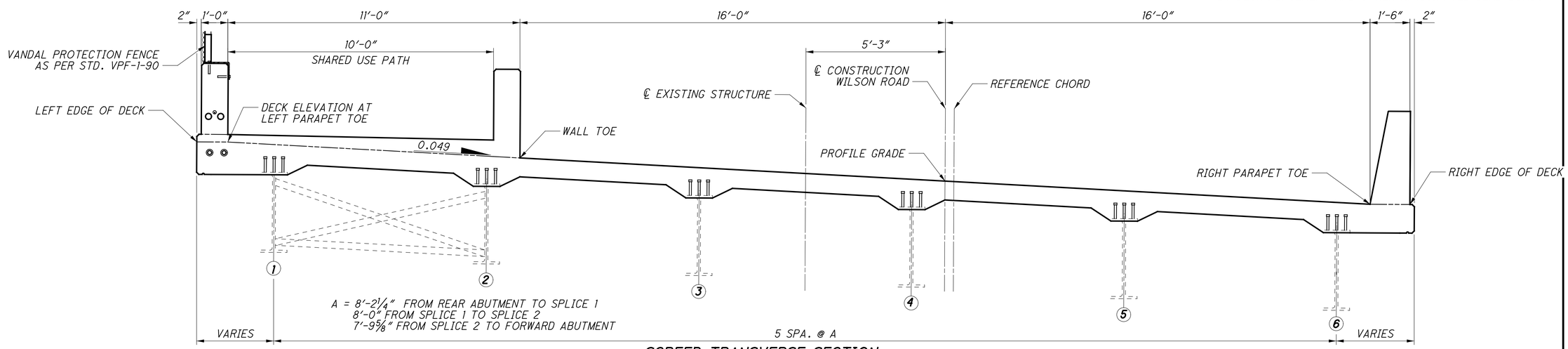

SCREED TRANSVERSE SECTION

		SCREED ELEVATIONS														
LOCATION		A	1	2	3	P1	FS1	4	5	6	FS2	P2	7	8	9	B
LEFT EDGE OF DECK	STATION	132+31.32	132+45.47	132+59.63	132+73.78	132+87.92	133+02.30	133+05.65	133+23.37	133+41.09	133+44.20	133+58.80	133+72.87	133+86.93	134+00.99	134+15.05
	SCREED ELEVATION	876.52	876.37	876.16	875.90	875.62	875.33	875.27	874.86	874.38	874.29	873.86	873.44	873.00	872.50	871.96
LEFT PARAPET TOE	STATION	132+32.12	132+46.29	132+60.45	132+74.61	132+88.77	133+03.16	133+06.52	133+24.26	133+41.99	133+45.11	133+59.72	133+73.80	133+87.88	134+01.95	134+16.03
	SCREED ELEVATION	876.45	876.30	876.09	875.83	875.54	875.26	875.19	874.78	874.30	874.21	873.77	873.35	872.91	872.41	871.87
WALL TOE	STATION	132+39.72	132+54.01	132+68.30	132+82.59	132+96.87	133+11.39	133+14.78	133+32.68	133+50.58	133+53.73	133+68.48	133+82.69	133+96.91	134+11.12	134+25.34
	SCREED ELEVATION	875.82	875.65	875.42	875.14	874.84	874.53	874.46	874.03	873.52	873.43	872.97	872.52	872.06	871.54	870.97
PROFILE GRADE	STATION	132+50.97	132+64.80	132+79.32	132+93.77	133+08.14	133+22.64	133+26.10	133+44.27	133+62.31	133+65.46	133+80.57	133+95.05	134+09.43	134+23.72	134+37.92
	SCREED ELEVATION	874.94	874.73	874.47	874.17	873.86	873.53	873.45	872.99	872.45	872.35	871.85	871.37	870.87	870.33	869.75
RIGHT PARAPET TOE	STATION	132+62.46	132+77.13	132+91.80	133+06.47	133+21.14	133+36.05	133+39.53	133+57.93	133+76.34	133+79.57	133+94.74	134+09.37	134+24.01	134+38.64	134+53.29
	SCREED ELEVATION	873.92	873.69	873.41	873.07	872.72	872.35	872.26	871.75	871.17	871.06	870.53	870.02	869.48	868.95	868.40
RIGHT EDGE OF DECK	STATION	132+63.56	132+78.24	132+92.92	133+07.61	133+22.30	133+37.24	133+40.72	133+59.14	133+77.57	133+80.81	133+96.00	134+10.65	134+25.31	134+39.97	134+54.64
	SCREED ELEVATION	873.82	873.59	873.31	872.97	872.61	872.24	872.15	871.64	871.05	870.94	870.42	869.90	869.36	868.77	868.12

SCREED ELEVATIONS TABLE

3233-E

DESIGN AGENCY
PRIME AE
8415 Pulsar Place, Suite 300
Columbus Ohio 43240

DESIGNED	DRAWN	REVIEWED	DATE
RG	RG	CCJ	07/15/2016
CHECKED	REVISED	STRUCTURE FILE NUMBER	
BTJ		2531852	

SCREED ELEVATIONS LAYOUT
FRA-CR 25-0063
WILSON ROAD BRIDGE OVER CAMP CHASE RAILROAD

WILSON ROAD
CIP NO. 590105-100083

19/29

87/97

Q:\Transportation\Projects\Local\City of Columbus\Wilson Road Bridge Rehab\12345\structures\Wilson Road\sheets\Wilson RoadCSD002.dgn 10/17/2016 2:04:13 PM JPerchinske

FINISHED DECK ELEVATIONS																
LOCATION		A	1	2	3	P1	FS1	4	5	6	FS2	P2	7	8	9	B
LEFT EDGE OF DECK	STATION	132+31.32	132+45.47	132+59.63	132+73.78	132+87.92	133+02.30	133+05.65	133+23.37	133+41.09	133+44.20	133+58.80	133+72.87	133+86.93	134+00.99	134+15.05
	FINAL DECK ELEVATION	876.52	876.34	876.13	875.89	875.62	875.32	875.24	874.83	874.36	874.28	873.86	873.42	872.96	872.48	871.96
LEFT PARAPET TOE	STATION	132+32.12	132+46.29	132+60.45	132+74.61	132+88.77	133+03.16	133+06.52	133+24.26	133+41.99	133+45.11	133+59.72	133+73.80	133+87.88	134+01.95	134+16.03
	FINAL DECK ELEVATION	876.45	876.27	876.06	875.81	875.54	875.24	875.17	874.75	874.28	874.20	873.77	873.34	872.88	872.38	871.87
BEAM B1	STATION	132+32.76	132+47.18	132+61.52	132+75.78	132+89.96	133+04.29	133+07.69	133+25.63	133+43.44	133+46.56	133+61.48	133+75.77	133+89.98	134+04.09	134+18.12
	FINAL DECK ELEVATION	876.40	876.19	875.96	875.71	875.44	875.14	875.06	874.62	874.15	874.06	873.61	873.15	872.68	872.18	871.67
BEAM B2	STATION	132+38.52	132+53.00	132+67.40	132+81.72	132+95.96	133+10.36	133+13.78	133+31.80	133+49.68	133+52.81	133+67.79	133+82.14	133+96.41	134+10.58	134+24.67
	FINAL DECK ELEVATION	875.92	875.70	875.46	875.20	874.92	874.61	874.53	874.07	873.58	873.49	873.03	872.56	872.07	871.56	871.03
WALL TOE	STATION	132+39.72	132+54.01	132+68.30	132+82.59	132+96.87	133+11.39	133+14.78	133+32.68	133+50.58	133+53.73	133+68.48	133+82.69	133+96.91	134+11.12	134+25.34
	FINAL DECK ELEVATION	875.82	875.62	875.39	875.13	874.84	874.52	874.44	873.99	873.50	873.41	872.97	872.51	872.02	871.51	870.97
BEAM B3	STATION	132+44.33	132+58.87	132+73.34	132+87.72	133+02.02	133+16.48	133+19.91	133+38.01	133+55.97	133+59.11	133+74.15	133+88.57	134+02.89	134+17.12	134+31.27
	FINAL DECK ELEVATION	875.43	875.21	874.96	874.68	874.39	874.07	873.98	873.51	873.01	872.92	872.44	871.96	871.46	870.94	870.39
BEAM B4	STATION	132+50.19	132+64.80	132+79.32	132+93.77	133+08.14	133+22.64	133+26.10	133+44.27	133+62.31	133+65.46	133+80.57	133+95.05	134+09.43	134+23.72	134+37.92
	FINAL DECK ELEVATION	874.94	874.71	874.44	874.16	873.86	873.52	873.44	872.95	872.43	872.34	871.85	871.35	870.84	870.31	869.75
PROFILE GRADE	STATION	132+50.97	132+65.45	132+79.92	132+94.40	133+08.87	133+23.59	133+27.02	133+45.17	133+63.32	133+66.51	133+81.46	133+95.88	134+10.31	134+24.73	134+39.16
BEAM B5	STATION	132+56.10	132+70.77	132+85.37	132+99.88	133+14.30	133+28.88	133+32.34	133+50.59	133+68.70	133+71.87	133+87.04	134+01.58	134+16.02	134+30.37	134+44.62
	FINAL DECK ELEVATION	874.45	874.20	873.93	873.63	873.32	872.97	872.88	872.38	871.85	871.75	871.25	870.74	870.21	869.67	869.14
BEAM B6	STATION	132+62.06	132+76.80	132+91.46	133+06.03	133+20.52	133+35.16	133+38.64	133+56.97	133+75.15	133+78.34	133+93.57	134+08.16	134+22.66	134+37.07	134+51.39
	FINAL DECK ELEVATION	873.95	873.69	873.41	873.10	872.77	872.41	872.32	871.81	871.26	871.16	870.64	870.12	869.58	869.06	868.55
RIGHT PARAPET TOE	STATION	132+62.46	132+77.13	132+91.80	133+06.47	133+21.14	133+36.05	133+39.53	133+57.93	133+76.34	133+79.57	133+94.74	134+09.37	134+24.01	134+38.64	134+53.29
	FINAL DECK ELEVATION	873.92	873.66	873.38	873.06	872.72	872.34	872.24	871.72	871.15	871.04	870.53	870.01	869.45	868.92	868.40
RIGHT EDGE OF DECK	STATION	132+63.56	132+78.24	132+92.92	133+07.61	133+22.30	133+37.24	133+40.72	133+59.14	133+77.57	133+80.81	133+96.00	134+10.65	134+25.31	134+39.97	134+54.64
	FINAL DECK ELEVATION	873.82	873.57	873.28	872.96	872.61	872.23	872.14	871.61	871.04	870.93	870.42	869.89	869.33	868.74	868.12

FINISHED DECK ELEVATIONS TABLE

TOP OF HAUNCH ELEVATIONS																
LOCATION		A	1	2	3	P1	FS1	4	5	6	FS2	P2	7	8	9	B
BEAM B1	STATION	132+32.76	132+47.18	132+61.52	132+75.78	132+89.96	133+04.29	133+07.69	133+25.63	133+43.44	133+46.56	133+61.48	133+75.77	133+89.98	134+04.09	134+18.12
	TOP OF HAUNCH ELEV.	875.69	875.51	875.29	875.02	874.73	875.16	874.38	873.95	873.46	874.08	872.90	872.46	872.00	871.50	870.96
BEAM B2	STATION	132+38.52	132+53.00	132+67.40	132+81.72	132+95.96	133+10.36	133+13.78	133+31.80	133+49.68	133+52.81	133+67.79	133+82.14	133+96.41	134+10.58	134+24.67
	TOP OF HAUNCH ELEV.	875.21	875.02	874.79	874.51	874.21	874.62	873.84	873.40	872.90	873.51	872.32	871.87	871.40	870.88	870.33
BEAM B3	STATION	132+44.33	132+58.87	132+73.34	132+87.72	133+02.02	133+16.48	133+19.91	133+38.01	133+55.97	133+59.11	133+74.15	133+88.57	134+02.89	134+17.12	134+31.27
	TOP OF HAUNCH ELEV.	874.73	874.52	874.28	873.99	873.68	874.08	873.29	872.84	872.32	872.93	871.73	871.27	870.78	870.25	869.69
BEAM B4	STATION	132+50.19	132+64.80	132+79.32	132+93.77	133+08.14	133+22.64	133+26.10	133+44.27	133+62.31	133+65.46	133+80.57	133+95.05	134+09.43	134+23.72	134+37.92
	TOP OF HAUNCH ELEV.	874.24	874.02	873.77	873.47	873.15	873.53	872.75	872.28	871.74	872.35	871.14	870.66	870.16	869.62	869.04
BEAM B5	STATION	132+56.10	132+70.77	132+85.37	132+99.88	133+14.30	133+28.88	133+32.34	133+50.59	133+68.70	133+71.87	133+87.04	134+01.58	134+16.02	134+30.37	134+44.62
	TOP OF HAUNCH ELEV.	873.74	873.52	873.25	872.94	872.61	872.98	872.19	871.71	871.16	871.77	870.54	870.05	869.54	868.98	868.43
BEAM B6	STATION	132+62.06	132+76.80	132+91.46	133+06.03	133+20.52	133+35.16	133+38.64	133+56.97	133+75.15	133+78.34	133+93.57	134+08.16	134+22.66	134+37.07	134+51.39
	TOP OF HAUNCH ELEV.	873.24	873.01	872.73	872.40	872.06	872.43	871.63	871.13	870.57	871.17	869.93	869.43	868.90	868.38	867.85

TOP OF HAUNCH ELEVATIONS TABLE

NOTES

1. FINAL DECK SURFACE ELEVATIONS SHOWN REPRESENT THE DECK SURFACE LOCATION AFTER ALL ANTICIPATED DEAD LOAD DEFLECTIONS HAVE OCCURRED.
2. TOP OF HAUNCH ELEVATIONS SHOWN REPRESENT THE THEORETICAL LOCATION OF THE BOTTOM OF THE DECK ABOVE THE BEAM/GIRDER HAUNCH PRIOR TO DEFLECTIONS CAUSED BY DECK PLACEMENT AND OTHER ANTICIPATED DEAD LOADS.

3233-E

DESIGN AGENCY
PRIME AE
8415 Pulsar Place, Suite 300
Columbus Ohio 43240

DESIGNED	DRAWN	REVIEWED	DATE
AMD	AMD	RG	07/15/2016
CHECKED	REVISED	STRUCTURE FILE NUMBER	
CCJ		2531852	

FINISHED DECK AND TOP OF HAUNCH ELEVATIONS
FRA-CR 25-0063
WILSON ROAD BRIDGE OVER CAMP CHASE RAILROAD

WILSON ROAD
CIP NO. 590105-100083

Q:\Transportation\Projects\Local\City of Columbus\Wilson Road Bridge Rehab\12345\structures\Wilson Road\sheets\Wilson RoadCSD003.dgn 10/17/2016 2:04:14 PM JPerchinske

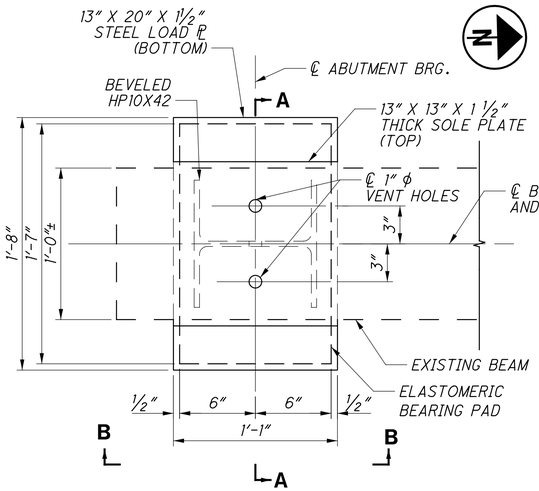

PLAN ABUTMENT BEARING

(REAR ABUTMENT SHOWN, FORWARD ABUTMENT OPPOSITE HAND)

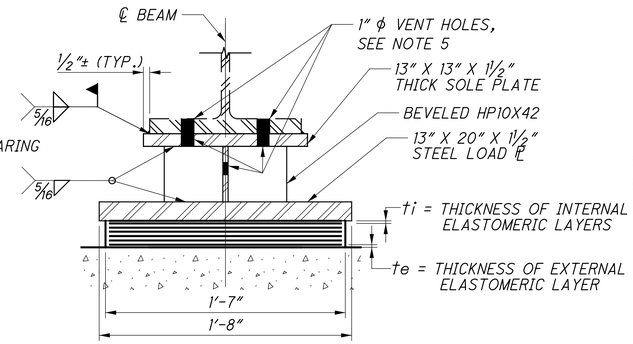

SECTION A-A

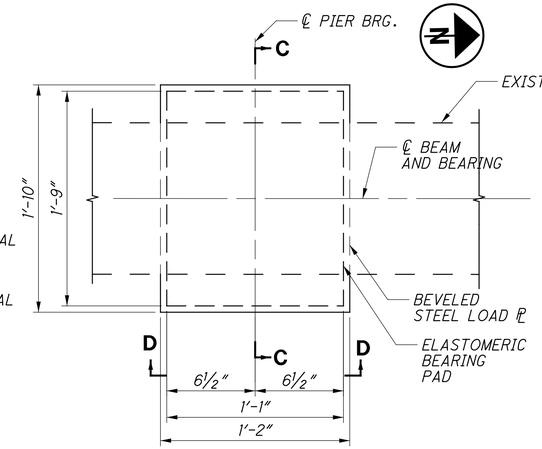

PLAN PIER BEARING

(TYPICAL FOR PIERS 1 & 2)

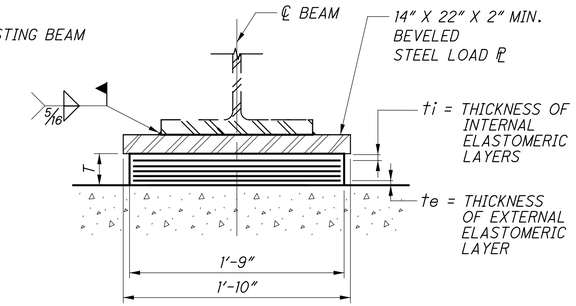

SECTION C-C

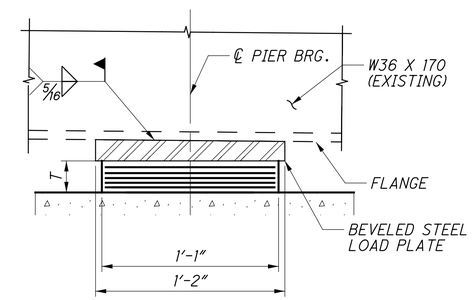

VIEW D-D

PIER BEARING DETAILS

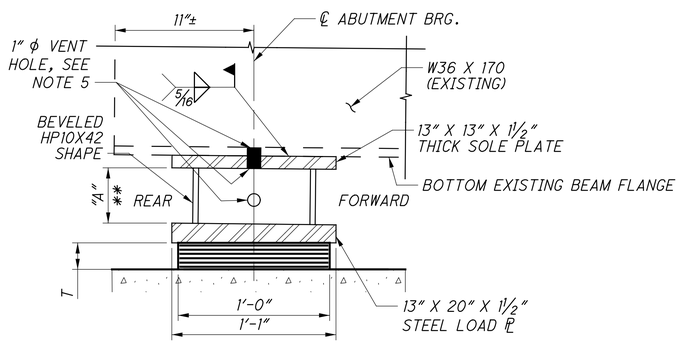

VIEW B-B

** VERTICAL DIMENSION BETWEEN PLATES ALONG ℄ ABUTMENT BEARING. SEE BEVELED HP SECTION TABLE DIMENSIONS "A"

ABUTMENT BEARING DETAILS

BEVELED HP SECTION DIMENSIONS "A" (INCHES)			
LOCATION	REAR	℄	FORWARD
R. ABUT.	4 1/8	4	3 7/8
F. ABUT.	3 13/16	4	4 3/16

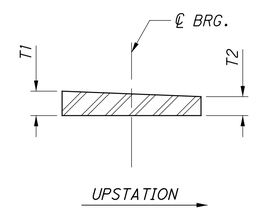

BEVELED LOAD PLATE

PIERS
(NOT TO SCALE)

BEVELED PLATE DIMENSIONS (INCHES)			
LOCATION	T1	℄	T2
PIER 1	2 3/16	2	1 13/16
PIER 2	2 1/14	2	1 3/4

NOTES

1. ELASTOMERIC BEARINGS:
   THE ELASTOMER SHALL HAVE A HARDNESS OF 50 DUROMETER. ALL BEARINGS WERE DESIGNED UNDER DIVISION 1, SECTION 14.6.6 (METHOD A) OF THE AASHTO STANDARD SPECIFICATIONS FOR HIGHWAY BRIDGES.
2. LOAD PLATES:
   THE STEEL LOAD PLATES SHALL CONFORM TO THE REQUIREMENTS OF ASTM A709 GRADE 50 AND SHALL BE BONDED TO THE ELASTOMER BY VULCANIZATION DURING THE MOLDING PROCESS.
3. BASIS OF PAYMENT:
   THE UNIT BID PRICE SHALL INCLUDE ALL MATERIALS (BEARING, LOAD PLATES, HP SHAPES, ETC.), LABOR AND INCIDENTALS NECESSARY TO FURNISH AND INSTALL ELASTOMERIC BEARINGS. PAYMENT WILL BE AT THE CONTRACT PRICE FOR ITEM 516, EACH, ELASTOMERIC BEARING WITH INTERNAL LAMINATES AND LOAD PLATE, AS PER PLAN, AS LISTED UNDER THE ESTIMATED QUANTITIES.
4. MARKINGS:
   ALL BEARINGS SHALL BE MARKED PRIOR TO SHIPPING. THE MARKS SHALL INCLUDE THE BEARING LOCATION ON THE BRIDGE, AND A DIRECTION ARROW THAT POINTS UP-STATION. ALL MARKS SHALL BE PERMANENT AND BE VISIBLE AFTER THE BEARING IS INSTALLED.
5. VENT HOLES:
   PAYMENT FOR VENT HOLES IN EXISTING BEAMS BOTTOM FLANGES SHALL BE INCLUDED WITH ITEM 202, PORTIONS OF STRUCTURE REMOVED, OVER 20 FOOT SPAN.
6. PAINTING:
   THE LOAD PLATES SHALL BE PAINTED IN ACCORDANCE WITH ITEM 514 AND C&MS 708. THE FINISH COAT SHALL BE FEDERAL STANDARD COLOR 595B-15450 (LIGHT BLUE, GLOSS). PAYMENT FOR PAINTING PLATES TO BE INCLUDED WITH ITEM 516, ELASTOMERIC BEARINGS WITH INTERNAL LAMINATES AND LOAD PLATE (NEOPRENE), AS PER PLAN.

LEGEND

R. ABUT. = REAR ABUTMENT

F. ABUT. = FORWARD ABUTMENT

BRG. = BEARING

= CONCRETE

* = LIVE LOAD WITHOUT IMPACT

BEARING SCHEDULE

LOCATION	BEARING TYPE	NO. OF BRGS	ELASTOMERIC BEARING PAD SIZE L x W x T	No. OF STEEL LAMINATES 0.0747" THICK (14 GAGE)	INTERNAL LAYERS ti	No.	EXTERNAL LAYERS te	No.	STEEL LOAD PLATE SIZE	DESIGN ROTATION, θ	UNFACTORED DESIGN LOADS DEAD LOAD IN KIPS	*LIVE LOAD IN KIPS	TOTAL LOADS IN KIPS
R. ABUT.	EXP.	6	12" X 19" X 3.32"	6	0.4375"	6	0.250"	1	13" X 20" X 1½"	0.0079	86.2	58.0	144.2
PIER 1	EXP.	6	13" X 21" X 2.81"	5	0.4375"	5	0.250"	1	14" X 22" X 2" AVG.	0.0079	140.2	80.8	221.0
PIER 2	EXP.	6	13" X 21" X 2.81"	5	0.4375"	5	0.250"	1	14" X 22" X 2" AVG.	0.0079	140.2	80.8	221.0
F. ABUT.	EXP.	6	12" X 19" X 3.32"	6	0.4375"	6	0.250"	1	13" X 20" X 1½"	0.0079	86.2	58.0	144.2

3233-E

DESIGN AGENCY
PRIME AE
8415 Pulsar Place, Suite 300
Columbus Ohio 43240

DESIGNED	DRAWN	REVIEWED	DATE
EDW	EDW	RG	07/15/2016
CHECKED	REVISED	STRUCTURE FILE NUMBER	
BTJ		2531852	

BEARING DETAILS
FRA-CR 25-0063
WILSON ROAD BRIDGE OVER CAMP CHASE RAILROAD

WILSON ROAD
CIP NO. 590105-100083

Q:\Transportation\Projects\Local\City of Columbus\Wilson Road Bridge Rehab\12345\structures\Wilson Road\sheets\Wilson RoadCBR001.dgn 10/17/2016 2:04:14 PM JPerchinske

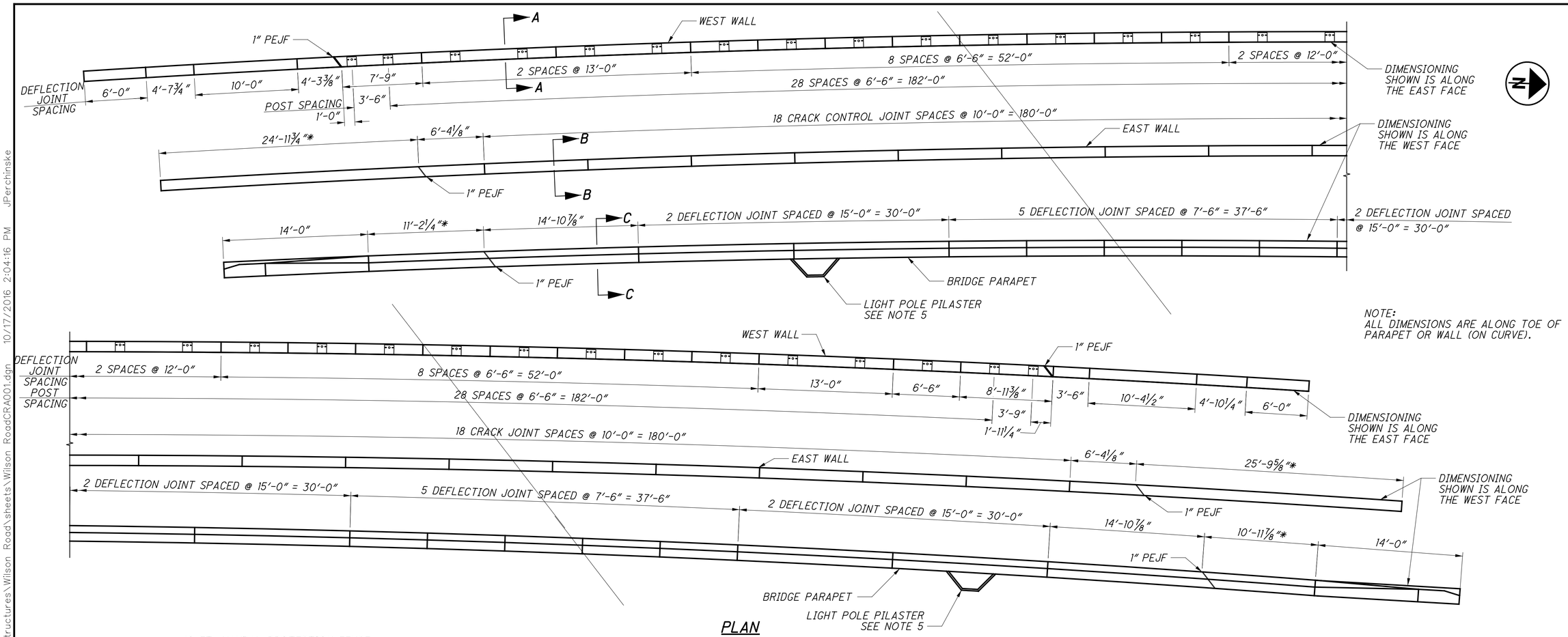

PLAN

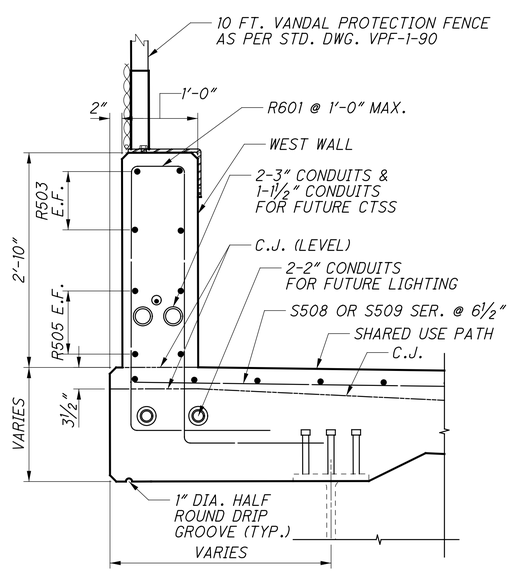

SECTION A-A

(DECK SLAB REINFORCING NOT SHOWN)

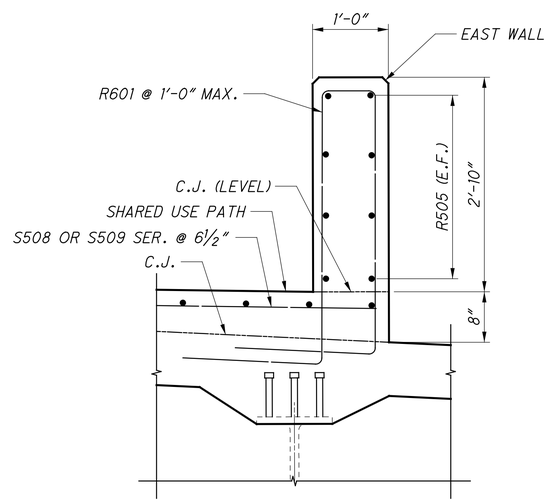

SECTION B-B

(DECK SLAB REINFORCING NOT SHOWN)

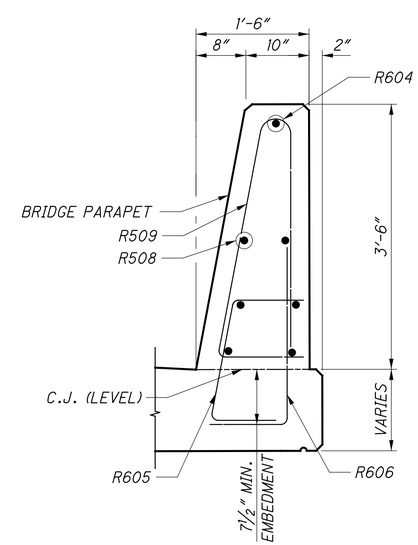

SECTION C-C

(DECK SLAB REINFORCING NOT SHOWN)

LEGEND:

* - DIMENSION INCLUDES 1" PEJF

NOTES:

1. SEE STANDARD DRAWING VPF-1-90 FOR VANDAL PROTECTION FENCE DETAILS.
2. FOR ADDITIONAL PARAPET NOTES AND DETAILS, SEE STANDARD DRAWING BR-2-98 & SBR-1-13.
3. FOR PARAPET DETAILS ON APPROACH SLABS, SEE SHEET 25/29.
4. FOR SEALING LIMITS, SEE SHEET 17/29.
5. FOR PILASTER DETAILS, SEE SHEET 17/29.

3233-E

DESIGN AGENCY
PRIME AE
8415 Pulsar Place, Suite 300
Columbus, Ohio 43240

DESIGNED	DRAWN	REVIEWED	DATE
KDC	KDC	RG	07/15/2016
CHECKED	REVISED	STRUCTURE FILE NUMBER	
BTJ		2531852	

PARAPET DETAILS
FRA-CR 25-0063
WILSON ROAD BRIDGE OVER CAMP CHASE RAILROAD

WILSON ROAD
CIP NO. 590105-100083

Q:\Transportation\Projects\Local\City of Columbus\Wilson Road Bridge Rehab\12345\structures\Wilson Road\sheets\Wilson RoadCRA001.dgn 10/17/2016 2:04:16 PM JPerchinske

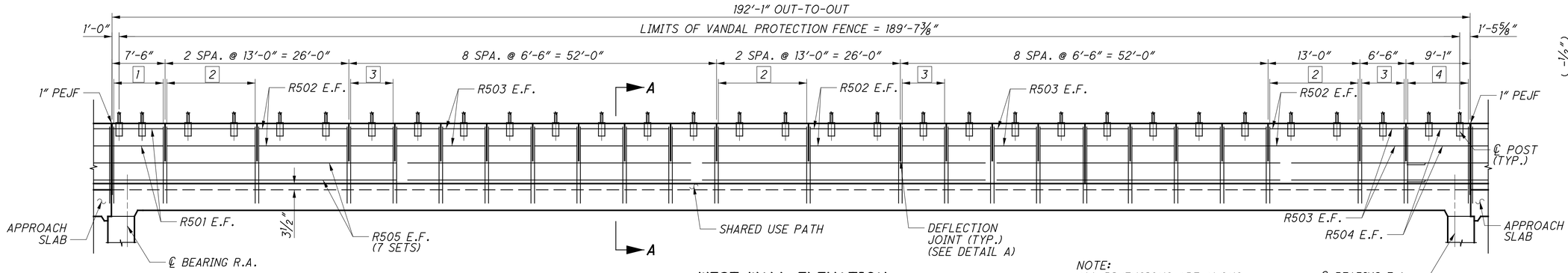

WEST WALL ELEVATION
(LOOKING WEST)

NOTE:
ALL DIMENSIONS ARE ALONG TOE OF PARAPET (ON CURVE)

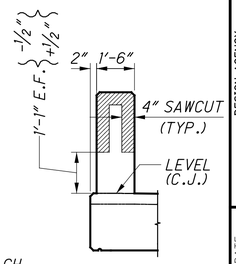

DETAIL A

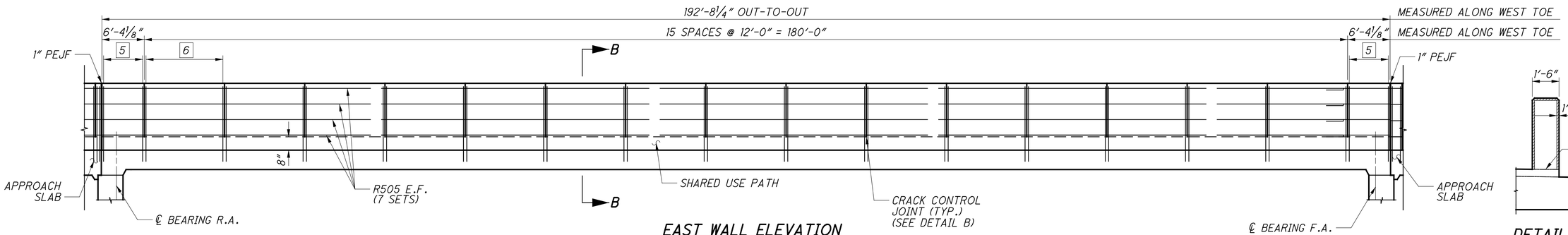

EAST WALL ELEVATION
(LOOKING WEST)

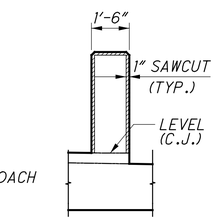

DETAIL B

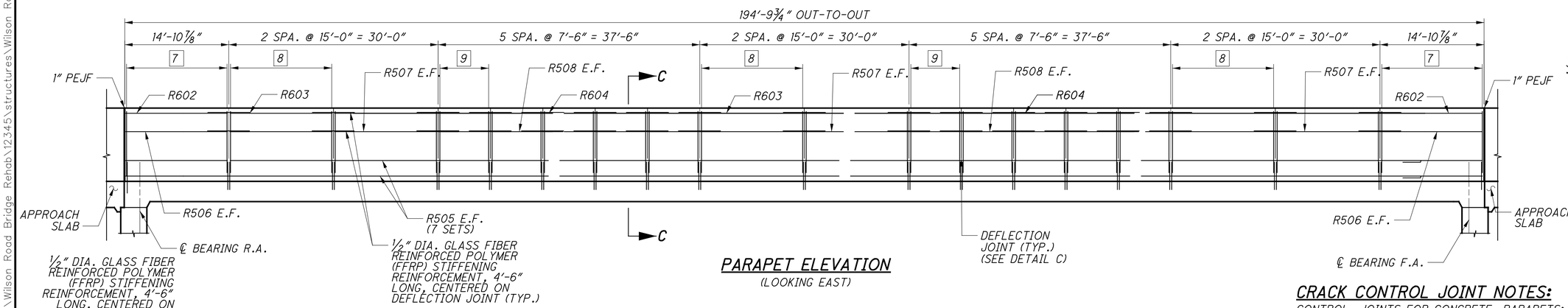

PARAPET ELEVATION
(LOOKING EAST)

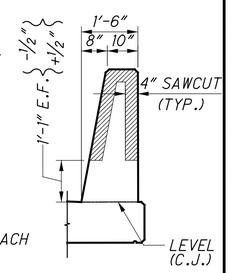

DETAIL C

1/2" DIA. GLASS FIBER REINFORCED POLYMER (FFRP) STIFFENING REINFORCEMENT, 4'-6" LONG, CENTERED ON DEFLECTION JOINT (TYP.) (PARAPET ONLY)

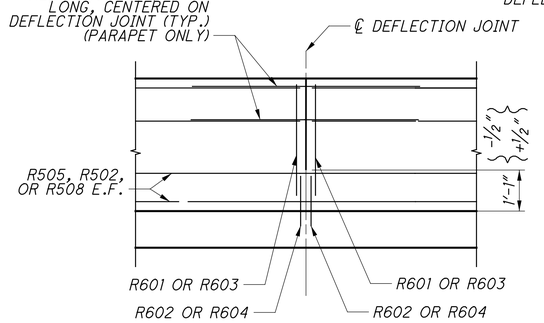

DEFLECTION JOINT DETAIL
(WEST WALL AND PARAPET ONLY)

LEGEND:

1. 8-R601 SPA. @ 1'-0" =7'-0"
2. 14-R601 SPA. @ 11 1/2" (+) = 12'-6"
3. 7-R601 SPA. @ 1'-0" =6'-0"
4. 10-R601 SPA. @ 11 1/2" (-) = 8'-7"
5. 7-R601 SPA. @ 1'-0" = 6'-0"
6. 13-R601 SPA. @ 11 1/2" (-) = 11'-6"
7. 16-R509, R605 & R606 SPA. @ 11 1/2" = 14'-4 1/2"
8. 16-R509, R605 & R606 SPA. @ 11 1/2"(+) = 14'-6"
9. 8-R509, R605 & R606 SPA. @ 1'-0" = 7'-0"

CRACK CONTROL JOINT NOTES:

CONTROL JOINTS FOR CONCRETE PARAPETS: SAWCUT 1 INCH DEEP CONTROL JOINTS ALONG THE PERIMETER OF THE PARAPET AS SOON AS THE SAW CAN BE OPERATED WITHOUT DAMAGING THE CONCRETE.

USE AN EDGE GUIDE, FENCE OR JIG TO ENSURE THAT THE CUT JOINT IS STRAIGHT, TRUE AND ALIGNED ON ALL FACES OF THE PARAPET. THE JOINT WIDTH SHALL BE THE WIDTH OF THE SAW SAW BLADE, A NOMINAL WIDTH OF 1/4 INCH.

SEAL THE PERIMETER OF THE CONTROL JOINT TO A MINIMUM DEPTH OF 1 INCH WITH A POLYURETHANE OR POLYMERIC MATERIAL CONFORMING TO ASTM C920, TYPE S. LEAVE THE BOTTOM ONE-HALF INCH OF BOTH THE INSIDE AND OUTSIDE FACES OF THE PARAPET UNSEALED TO ALLOW ANY WATER WHICH MAY ENTER THE JOINT TO ESCAPE .

NOTES:

1. FOR SECTIONS A-A THRU C-C, SEE SHEET 22/29 .
2. FOR PARAPET DETAILS ON APPROACH SLAB, SEE SHEET 25/29 .

3233-E

DESIGN AGENCY
PRIME AE
8415 Pulsar Place, Suite 300
Columbus Ohio 43240

DATE	REVIEWED	STRUCTURE FILE NUMBER
07/15/2016	RG	2531852

DRAWN	REVISED
KDC	

DESIGNED	CHECKED
KDC	BTJ

PARAPET DETAILS
FRA-CR 25-0063
WILSON ROAD BRIDGE OVER CAMP CHASE RAILROAD

WILSON ROAD
CIP NO. 590105-100083

Q:\Transportation\Projects\Local\City of Columbus\Wilson Road Bridge Rehab\12345\structures\Wilson Road\sheets\Wilson RoadCRA002.dgn 10/17/2016 2:04:16 PM JPerchinske

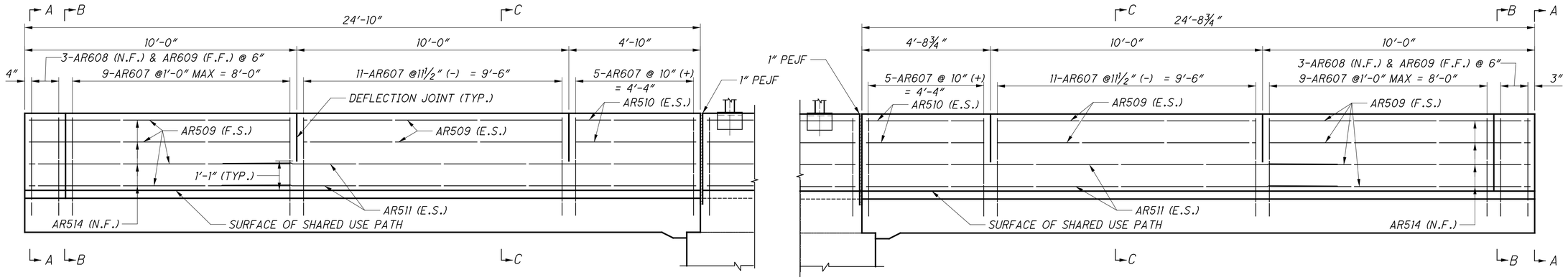

WEST WALL ON APPROACH SLAB

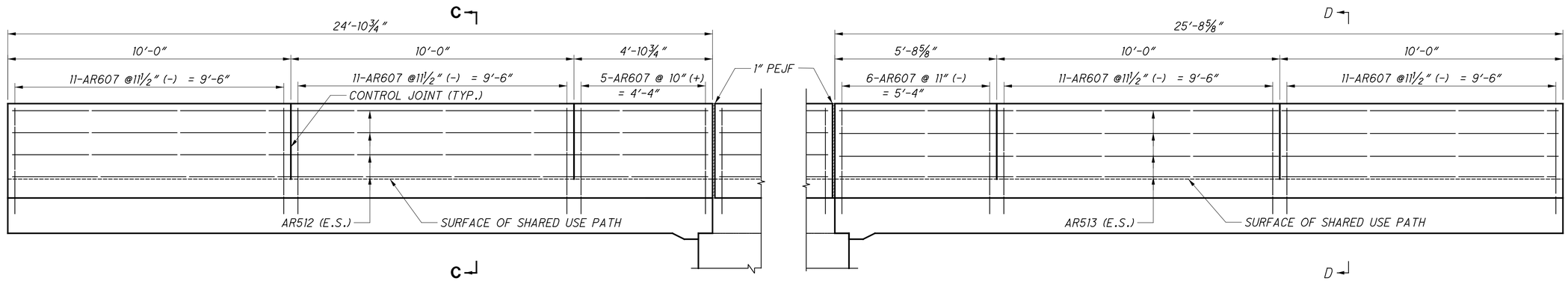

EAST WALL ON APPROACH SLAB

(LOOKING WEST)

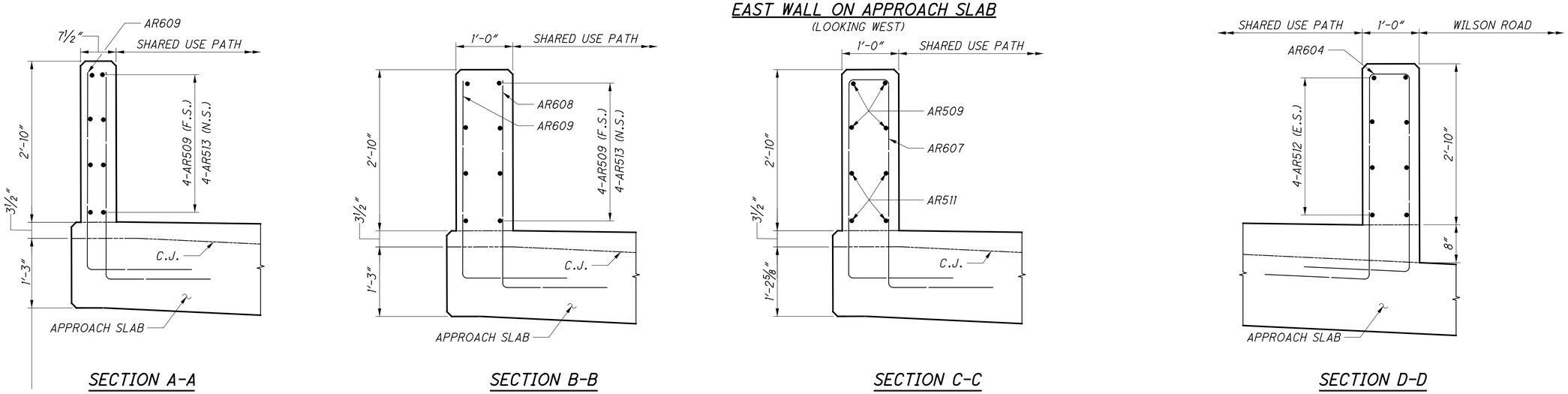

SECTION A-A

SECTION B-B

SECTION C-C

SECTION D-D

3233-E

DESIGN AGENCY
PRIME AE
8415 Pulsar Place, Suite 300
Columbus Ohio 43240

DESIGNED	DRAWN	REVIEWED	DATE
KRC	KRC	RG	07/15/2016
CHECKED	REVISED	STRUCTURE FILE NUMBER	
BT		2531852	

PARAPET DETAILS
FRA-CR 25-0063
WILSON ROAD BRIDGE OVER CAMP CHASE RAILROAD

WILSON ROAD
CIP NO. 590105-100083

24/29

92/97

Q:\Transportation\Projects\Local\City of Columbus\Wilson Road Bridge Rehab\12345\structures\Wilson Road\sheets\Wilson RoadCRA003.dgn 10/17/2016 2:04:18 PM JPerchinske

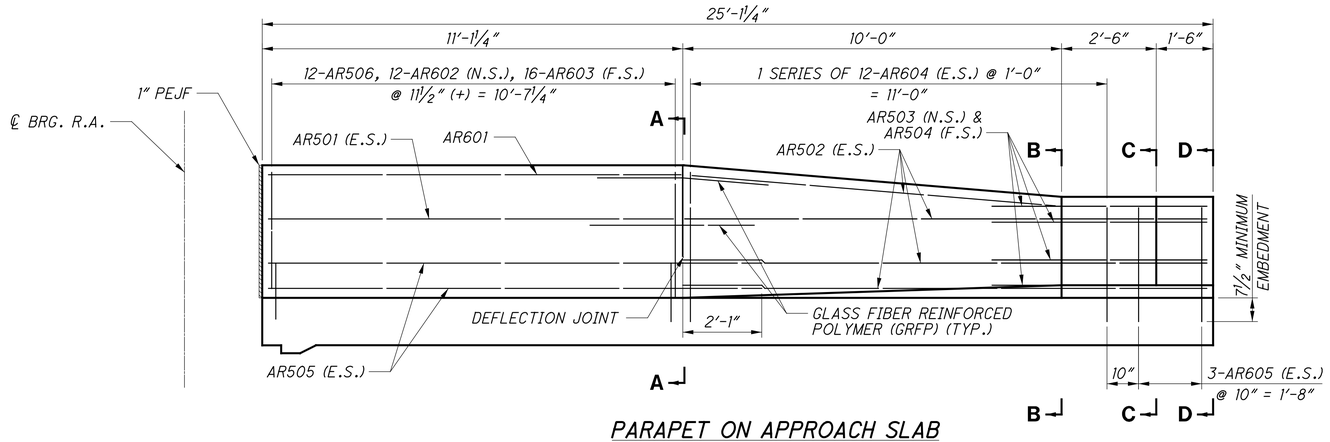

PARAPET ON APPROACH SLAB

(REAR APPROACH SLAB)

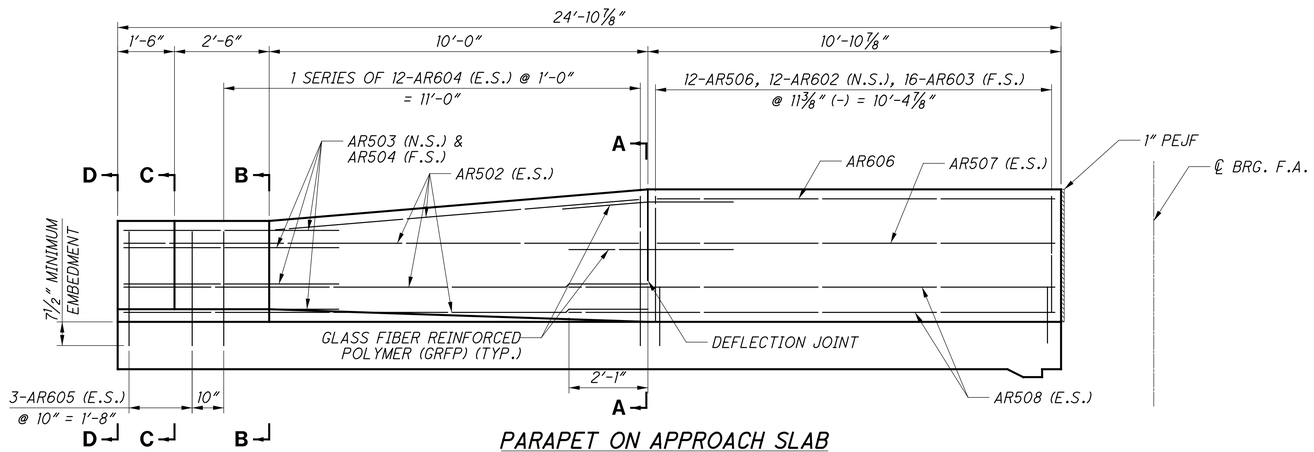

PARAPET ON APPROACH SLAB

(FORWARD APPROACH SLAB)

NOTES:

1. FOR DETAILS NOT SHOWN, SEE STD. DWG. SBR-1-13.
2. FOR BRIDGE TERMINAL ASSEMBLY, SEE STD. DWGS. MGS-3.1 AND MGS-3.2.

⊗ SEALING OF CONCRETE SURFACES (EPOXY URETHANE) (TYP. ALL SECTIONS)

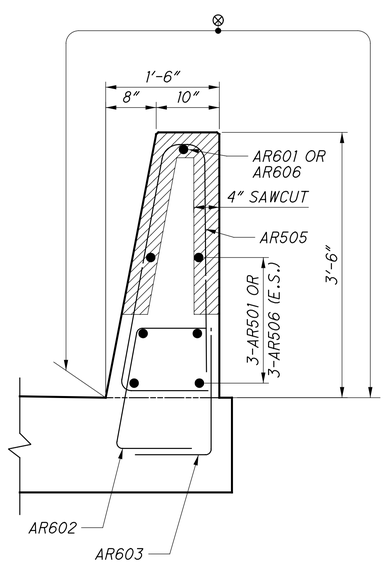

SECTION A-A

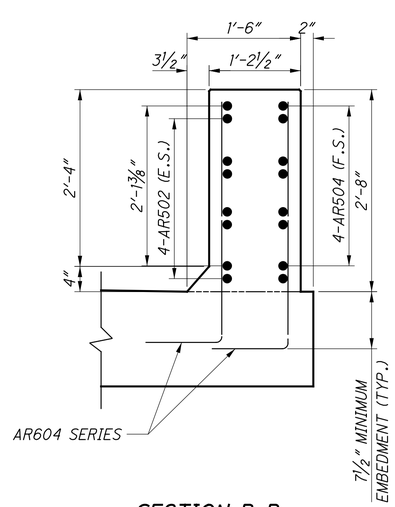

SECTION B-B

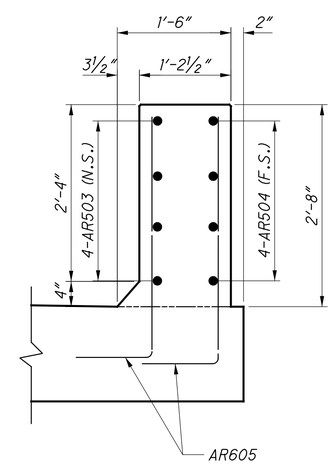

SECTION C-C

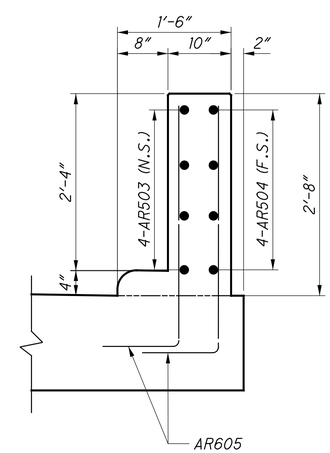

SECTION D-D

3233-E

DESIGN AGENCY
PRIME AE
8415 Pulsar Place, Suite 300
Columbus Ohio 43240

DESIGNED	DRAWN	REVIEWED	DATE
KDC	KDC	RG	07/15/2016
CHECKED	REVISED	STRUCTURE FILE NUMBER	
BTJ		2531852	

APPROACH SLAB DETAILS (1 OF 3)

FRA-CR 25-0063

WILSON ROAD BRIDGE OVER CAMP CHASE RAILROAD

WILSON ROAD

CIP NO. 590105-100083

25/29

93/97

Q:\Transportation\Projects\Local\City of Columbus\Wilson Road Bridge Rehab\12345\structures\Wilson Road\sheets\Wilson RoadCAS002.dgn 10/17/2016 2:04:18 PM JPerchinske

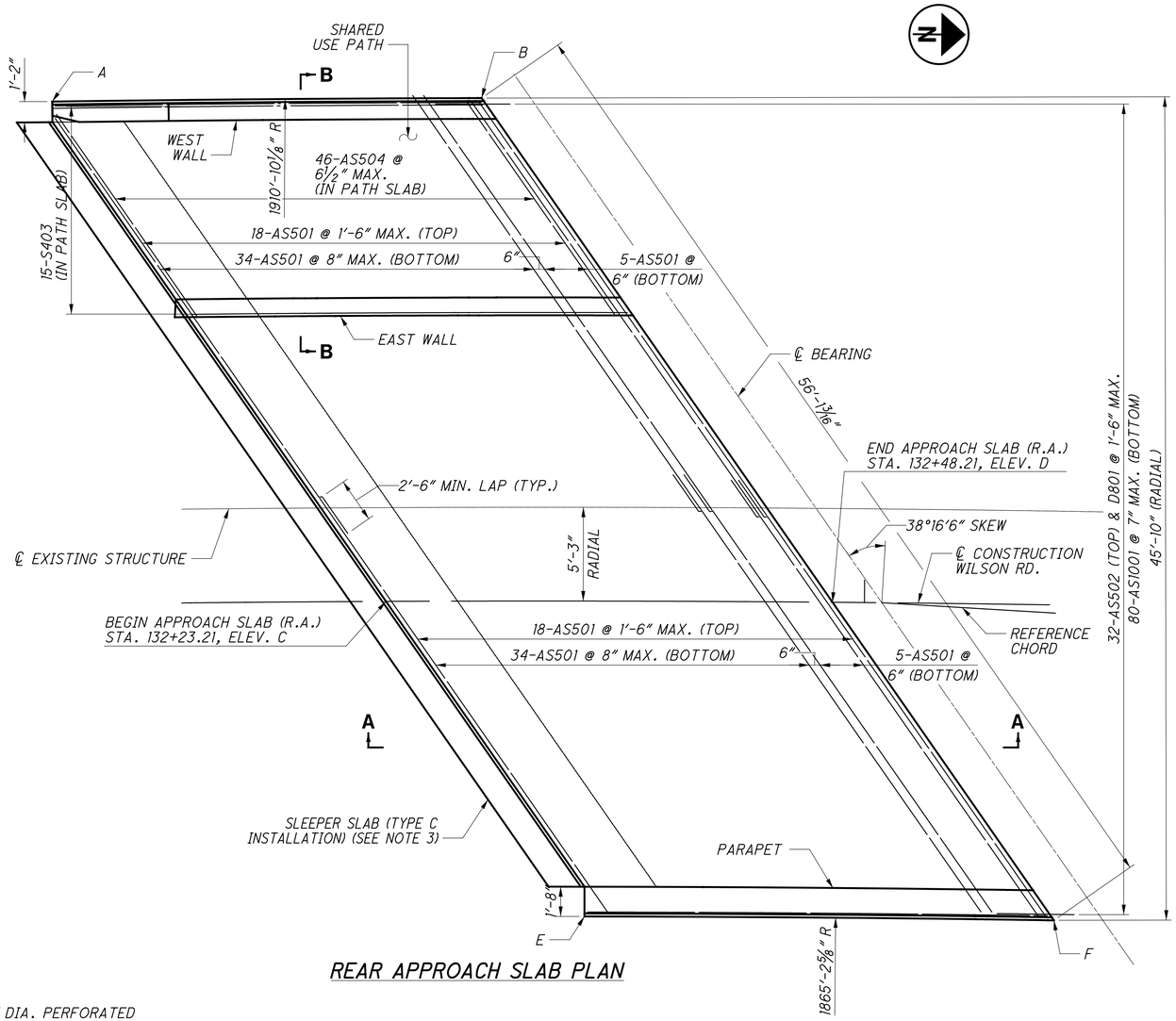

REAR APPROACH SLAB PLAN

APPROACH SLAB ELEVATIONS	
LOCATION	REAR ABUTMENT
A	876.73
B	876.50
C	875.23
D	874.92
E	874.32
F	873.94

NOTES:

1. SEE SHEET 25/29 FOR PARAPET ON APPROACH SLAB DETAILS.
2. SEE STD. DWG. AS-1-15 FOR ADDITIONAL NOTES AND DETAILS.
3. FOR TYPE C INSTALLATION NOTES & DETAILS, SEE STD. DWG. AS-2-15.
4. TRIM BARS IN FIELD AS NECESSARY TO PROVIDE 3" CLEARANCE.
5. APPROACH SLAB ELEVATIONS ARE TO TOP OF APPROACH SLAB.

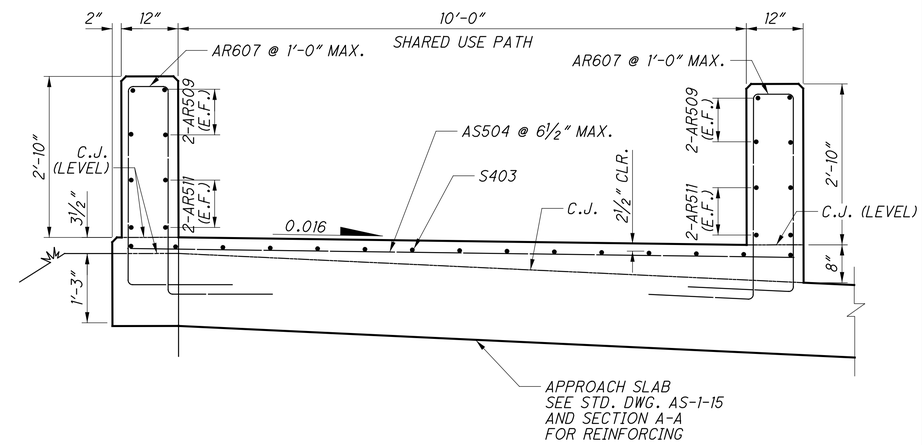

SECTION B-B

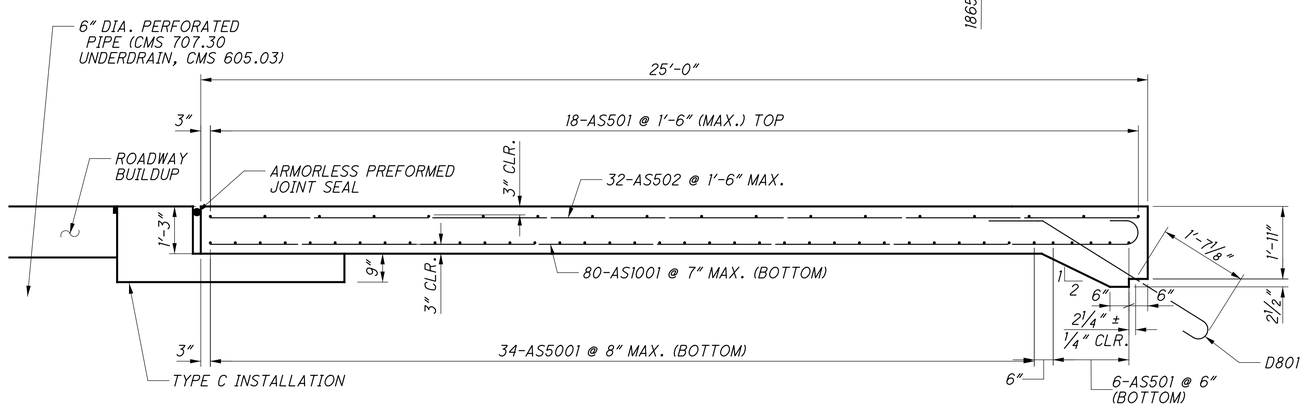

SECTION A-A

REAR APPROACH SLAB REINFORCING STEEL LIST								
MARK	NUMBER	LENGTH	WEIGHT	TYPE	DIMENSION			INCR.
					A	B	C	
APPROACH SLAB								
AS501	114	39'-10"	*	STR				
AS502	32	24'-6"	*	STR				
AS503	46	11'-10"	*	STR				
D801	32	4'-11"	*	18	2'-9"	1'-0"	1'-0"	
AS1001	80	25'-11"	*	16	24'-6"			
		TOTAL	*	* INCLUDED WITH ITEM 526 FOR PAYMENT				

NOTE: D801 INSTALLED WITH ABUTMENT DIAPHRAGM.

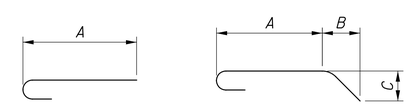

TYPE-16 TYPE-18

3233-E

DESIGN AGENCY
PRIME AE
8415 Pulsar Place, Suite 300
Columbus Ohio 43240

DESIGNED	DRAWN	REVIEWED	DATE
KDC	KDC	RG	07/15/2016
CHECKED	REVISED	STRUCTURE FILE NUMBER	
BTJ		2531852	

APPROACH SLAB DETAILS (2 OF 3)
FRA-CR 25-0063
WILSON ROAD BRIDGE OVER CAMP CHASE RAILROAD

WILSON ROAD
CIP NO. 590105-100083

26/29

94/97

Q:\Transportation\Projects\Local\City of Columbus\Wilson Road Bridge Rehab\12345\structures\Wilson Road\sheets\Wilson RoadCAS001.dgn 10/17/2016 2:04:19 PM JPerchinske

Q:\Transportation\Projects\Local\City of Columbus\Wilson Road Bridge Rehab\12345\structures\Wilson Road\sheets\Wilson RoadCAS003.dgn 10/17/2016 2:04:30 PM JPerchinske

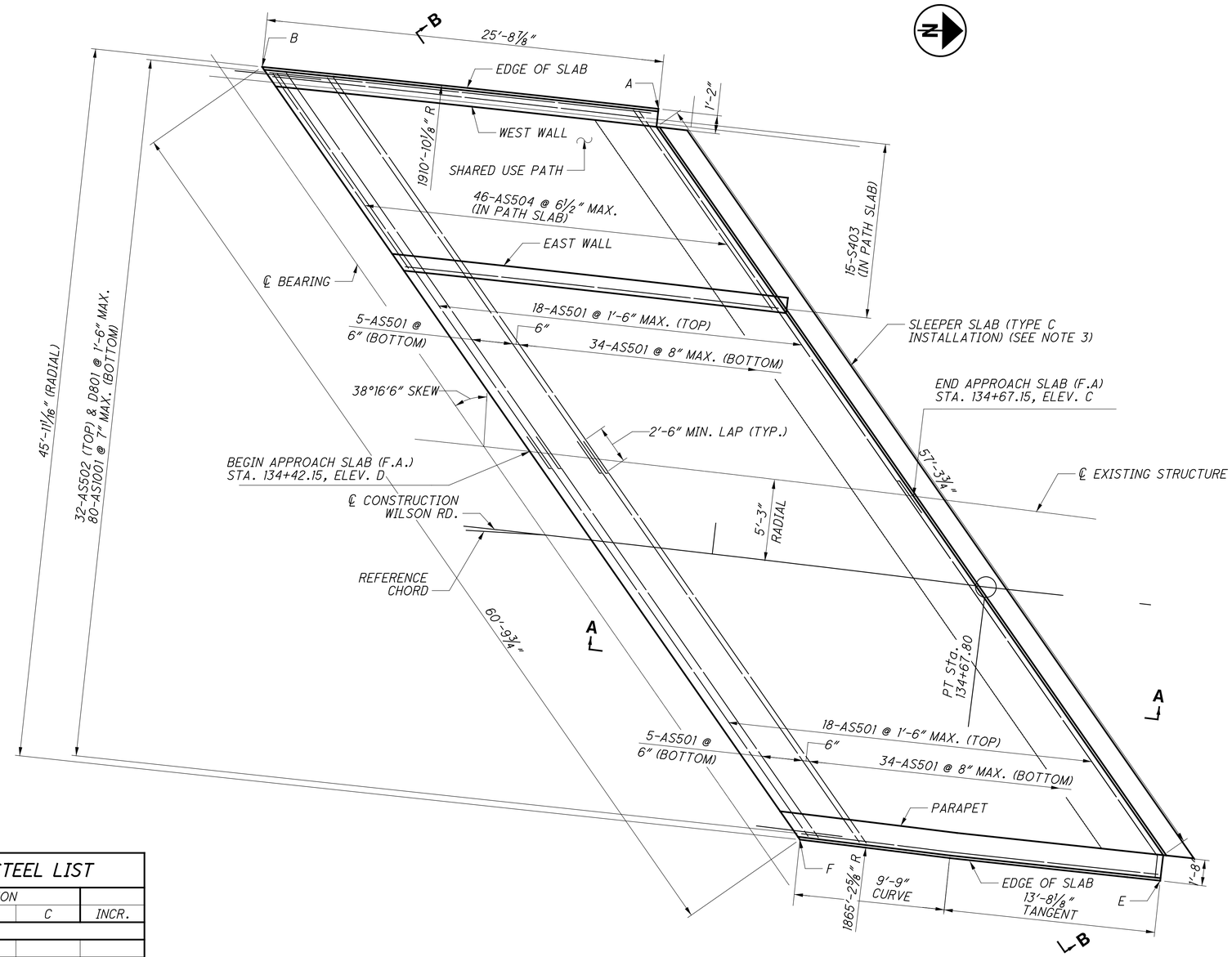

FORWARD APPROACH SLAB PLAN

APPROACH SLAB ELEVATIONS	
LOCATION	FORWARD ABUTMENT
A	870.78
B	871.19
C	868.43
D	869.51
E	867.79
F	868.06

FORWARD APPROACH SLAB REINFORCING STEEL LIST								
MARK	NUMBER	LENGTH	WEIGHT	TYPE	DIMENSION A	DIMENSION B	DIMENSION C	INCR.
APPROACH SLAB								
AS501	114	39'-10"	*	STR				
AS502	32	24'-6"	*	STR				
AS503	46	11'-10"	*	STR				
D801	32	4'-11"	*	18	2'-9"	1'-0"	1'-0"	
AS1001	80	25'-11"	*	16	24'-6"			
		TOTAL	*	* INCLUDED WITH ITEM 526 FOR PAYMENT				

NOTE: D801 INSTALLED WITH ABUTMENT DIAPHRAGM.

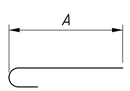

TYPE-16

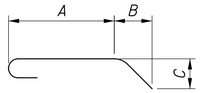

TYPE-18

NOTES:

1. SEE SHEET 25/29 FOR PARAPET ON APPROACH SLAB DETAILS.
2. SEE STD. DWG. AS-1-15 FOR ADDITIONAL NOTES AND DETAILS.
3. FOR TYPE C INSTALLATION NOTES & DETAILS, SEE STD. DWG. AS-2-15.
4. TRIM BARS IN FIELD AS NECESSARY TO PROVIDE 3" CLEARANCE.
5. APPROACH SLAB ELEVATIONS ARE TO TOP OF APPROACH SLAB.
5. SEE SHEET 26/29 FOR SECTION A-A AND B-B.

3233-E

DESIGN AGENCY
PRIME AE
845 Pulsar Place, Suite 300
Columbus Ohio 43240

DESIGNED	DRAWN	REVIEWED	DATE
KDC	KDC	RG	07/15/2016
CHECKED	REVISED	STRUCTURE FILE NUMBER	
BTJ		2531852	

APPROACH SLAB DETAILS (3 OF 3)
FRA-CR 25-0063
WILSON ROAD BRIDGE OVER CAMP CHASE RAILROAD

WILSON ROAD
CIP NO. 590105-100083

MARK	NUMBER			LENGTH	WEIGHT	TYPE	DIMENSION					
	REAR	FORWARD	TOTAL				A	B	C	D	E	INCR.
ABUTMENTS												
A501	76	76	152	4'-11"	786	1	2'-4 "	2'-9"				
A502	32	43	75	3'-6"	274	STR						
A503	16	11	27	7'-3"	204	STR						
A504	4		4	7'-8"	32	1	4'-4 "	3'-5"				
A505	4		4	7'-11"	33	10	2'-4 "	3'-5"	1'-11"	2'-0"		
A506	4		4	8'-9 "	36	10	2'-5"	3'-5"	2'-9"			
A507	4		4	8'-7 "	36	1	3'-5"	5'-3"				
	1		1	11'-8"			5'-3"	1'-5"	5'-3"			
A508	SER.		SER	TO	113	2	TO	TO	TO			1'-3"
	7		7	19'-2"			9'-0"	1'-5"	9'-0"			
A509	6		6	4'-8"	29	STR						
A510	2		2	11'-5 "	24	19	2'-6"	7'-10"	4'-3"			
A511	2		2	5'-9"	12	STR						
	1		1	15'-4 "			7'-1 "	1'-5"	7'-1 "			
A512	SER		SER	TO	134	2	TO	TO	TO			1'-0 1/4"
	7		7	21'-6"			10'-2"	1'-5"	10'-2"			
A513	2		2	8'-8"	18	STR						
A514	4		4	12'-6"	52	2	4'-8"	3'-5"	4'-8"			
A515	4		4	14'-7"	61	2	5'-7"	3'-5"	5'-10"			
A516	2		2	10'-8"	22	19	2'-0"	8'-0"	3'-5"			
A517	2		2	4'-4 "	9	STR						
A518	2		2	8'-0"	17	STR						
A519	8		2	8'-11"	19	STR						
A520	6		6	4'-11"	31	STR						
A521	8		8	10'-4 "	86	STR						
A522		6	6	8'-0"	50	STR						
A523		3	3	21'-4 "	67	2	9'-1 "	3'-5"	9'-1 "			
A524		2	2	15'-4 "	32	2	6'-1 "	3'-5"	6'-1 "			
A525		6	6	14'-0"	88	2	5'-5 "	3'-5"	5'-5 "			
A526		3	3	17'-4 "	54	3	5'-9"	2'-7 "				
A527		2	2	8'-11"	19	19	2'-6"	5'-4 "	3'-7 "			
A528		2	2	4'-5"	9	STR						
A529		2	2	6'-7 "	14	STR						
A530		12	12	7'-10"	98	STR						
A531		8	8	4'-11"	41	STR						
A532		4	4	8'-4 "	35	1	5'-0"	3'-5"				
A533		4	4	8'-4"	35	10	2'-11"	3'-5"	2'-0"	2'-0"		
A534		4	4	6'-9"	28	10	2'-10"	3'-5"	0'-6"			
A535		4	4	6'-7"	28	1	3'-4 "	3'-5"				
A536		2	2	8'-11"	19	19	1'-10"	14'-0"	4'-1"			
		1	1	16'-0"			7'-5"	1'-5"	7'-5"			
A537		SER	SER	TO	100	2	TO	TO	TO			
		5	5	22'-2"			10'-6"	1'-5"	10'-6"			
		1	1	13'-0"			5'-11"	1'-5"	5'-11"			
A538		SER	SER	TO	192	2	TO	TO	TO			
		11	11	20'-6"			9'-8"	1'-5"	9'-8"			
		1	1	4'-2"								
A539		SER	SER	TO	30	STR						
		3	3	14'-9"								
A801	8		8	34'-0"	726	STR						
A802		8	8	34'-6"	737	STR						
A803		10	10	3'-6"	93	STR						
			ABUTMENTS TOTAL		4523							

MARK	TOTAL	LENGTH	WEIGHT	TYPE	DIMENSION				
					A	B	C	R	INCR.
PIER 1									
P501	140	4'-2"	614	1	2'-4 "	2'-0"			
P502	21	20'-0"	438	STR					
P503	14	16'-6"	241	STR					
P504	14	6'-4"	92	STR					
		PIER 1 TOTAL	1385						

MARK	TOTAL	LENGTH	WEIGHT	TYPE	DIMENSION				
					A	B	C	R	INCR.
PIER 2									
P501	140	4'-2"	614	1	2'-4 "	2'-0"			
P502	21	20'-0"	438	STR					
P503	14	16'-6"	241	STR					
P504	14	6'-4"	92	STR					
		PIER 2 TOTAL	1385						

DESIGN AGENCY

DESIGNED	DATE	REVIEWED	STRUCTURE FILE NUMBER
CHECKED		DRAWN KES	REVISED

REINFORCING STEEL LIST (1 OF 2)

FRA-CR 25-0063

WILSON ROAD BRIDGE OVER CAMP CHASE RAILROAD

WILSON ROAD

CIP NO. 590105-100083

Q:\Transportation\Projects\Local\City of Columbus\Wilson Road Bridge Rehab\12345\structures\Wilson Road\sheets\Wilson RoadRL001.dgn 10/17/2016 2:04:36 PM JPerchinske

MARK	TOTAL	LENGTH	WEIGHT	TYPE	DIMENSION A	B	C	D	INCR.
DECK									
S401	396	30'-0"	7936	STR					
S402	66	26'-6"	1168	STR					
S403	30	24'-6"	491	STR					
S501	450	30'-0"	14081	STR					
S502	75	29'-6"	2308	STR					
S503	28	5'-6"	161	STR					
	2	6'-0"							
S504	SER.	TO	2847	STR					0'-9"
	53	45'-6"							
	2	5'-6"							
S505	SER.	TO	3404	STR					0'-7 1/2"
	64	45'-6"							
S506	1172	24'-0"	29338	STR					
S507	693	13'-5"	9698	2	3'-6"	0'-8"	9'-6"		
S508	338	11'-10"	4172	STR					
	2	1'-0"							
S509	SER	TO	100	STR					1'-5 1/4"
	8	11'-0"							
S601	102	41'-0"	6281	STR					
L501	4	3'-0"	13	2	2'-1"	0'-7"	0'-7"		
L502	4	10'-9 "	45	9	0'-8"	4'-1 1/2"	2'-8"	4'-1 1/2"	
L503	4	9'-2"	38	21	1'-4"	2'-5"	0'-6"	2'-9"	
L504	4	4'-2 "	17	STR					
SUPERSTRUCTURE TOTAL			82098						

MARK	NUMBER REAR	FORWARD	TOTAL	LENGTH	WEIGHT	TYPE	DIMENSION A	B	C	D	INCR.
SUPERSTRUCTURE DIAPHRAGM											
AD501	66	70	136	7'-10"	1111	2	2'-4 "	3'-5"	2'-4 "		
AD502	33	35	68	9'-2 "	650	2	3'-5"	2'-7 "	3'-5"		
AD503	2	2	4	3'-10"	16	2	0'-4 "	3'-5"	0'-4 "		
AD504	2	2	4	6'-10"	29	2	2'-3 "	2'-7 "	2'-3 "		
AD801	6		6	26'-7 "	426	1	25'-9"	1'-1 "			
AD802	16		16	30'-6"	1303	STR					
AD803	4		4	7'-1 "	76	1	6'-3"	1'-1 "			
AD804	6		6	25'-9"	413	STR					
AD805	2		2	6'-3"	33	STR					
AD806	4	4	8	7'-1 "	151	18	4'-7 "	1'-1 "	1'-1 "		
AD807	4	4	8	6'-2"	132	18	3'-10"	1'-1 "	1'-1 "		
AD808		12	12	27'-0"	865	STR					
AD809		12	12	32'-9"	1049	STR					
AD810		4	4	8'-5"	90	STR					
AD811		4	4	9'-4 "	100	1	8'-5"	1'-1 "			
AD812		4	4	27'-10"	297	1	27'-0"	1'-1 "			
			DIAPHRAGM TOTAL		6741						

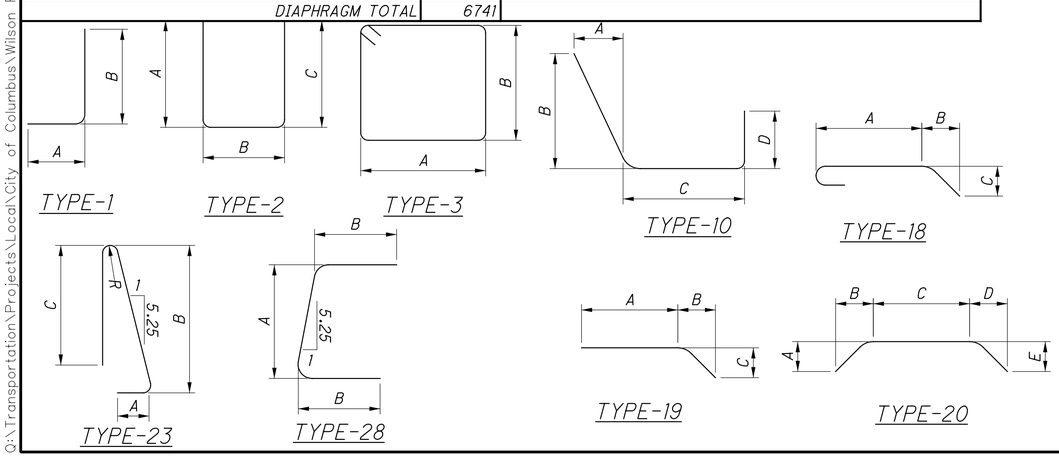

MARK	WEST WALL	EAST WALL	PARAPET	TOTAL	LENGTH	WEIGHT	TYPE	DIMENSION A	B	C	D	R	INCR.
SUPERSTRUCTURE PARAPETS													
R501	4		24	28	7'-0"	204	STR						
R502	20			20	12'-6"	261	STR						
R503	68			68	6'-0"	426	STR						
R504	4			4	8'-7 "	36	STR						
R505	28	56	28	112	30'-0"	3504	STR						
R506			4	4	14'-4 "	60	STR						
R507			12	12	14'-6"	181	STR						
R508			20	20	7'-0"	146	STR						
R509			208	208	7'-4 "	1591	23	0'-11"	3'-3"	3'-0"		0'-2 3/4"	
R601	207	209	416	2	11'-0"	33	30	1'-10"	0'-8"	3'-9"	3'-7 "		
R602			2	2	14'-4 "	43	STR						
R603			6	6	14'-6"	131	STR						
R604			10	10	7'-0"	105	STR						
R605			208	208	3'-2"	989	28	1'-6 1/2"	0'-11"	1'-0"			
R606			208	208	2'-5 "	742	1	1'-6 1/2"	1'-0"				
SUPERSTRUCTURE PARAPETS TOTAL						8452							

MARK	SHARED WEST	SHARED EAST	PARAPET	TOTAL	LENGTH	WEIGHT	TYPE	DIMENSION A	B	C	D	R	INCR.
APPROACH SLAB PARAPETS													
AR501			2	2	13'-3"	28	STR						
AR502			16	16	10'-0"	167	STR						
AR503			8	8	6'-3"	52	STR						
AR504			8	8	5'-8"	47	STR						
AR505			8	8	13'-4 "	111	STR						
AR506			24	24	7'-4 "	184	23	0'-11"	3'-3"	3'-0"		0'-2 3/4"	
AR507			2	2	10'-4 "	22	STR						
AR509	16			16	9'-6"	159	STR						
AR510	8			8	4'-4 "	36	STR						
AR511	8			8	4'-4 "	36	STR						
AR512		8		8	24'-4 "	203	STR						
AR513		8		8	25'-3"	211	STR						
AR514	4			4	9'-7 "	40	19	8'-3"	1'-4 "	0'-4 "			
AR601			1	1	10'-9"	16	STR						
AR602			24	24	3'-2"	114	28	1'-6 1/2"	0'-11"	1'-0"			
AR603			32	32	2'-5 "	114	1	1'-6 1/2"	1'-0"				
			4	4	4'-9"				3'-11"				
AR604			SER.	SER.	TO	312	1	1'-0"	TO				
			12	12	3'-11"				3'-1 "				
AR605			12	12	3'-11"	71	1	1'-0"	3'-1"				
AR606			1	1	10'-7 "	16	STR						
AR607	50	55		105	1'-10"	289	30	1'-10"	0'-8"	3'-9"	3'-7 "		
AR608	3			3	5'-5 "	24	1	1'-10"	3'-9 "				
AR609	3			3	5'-3 "	24	1	1'-10"	3'-7 "				
APPROACH SLAB PARAPETS TOTAL						2276							

NOTES:

1. ALL REINFORCING STEEL SHALL BE EPOXY COATED.
2. BAR SIZE: THE BAR SIZE IS INDICATED IN THE BAR MARK. THE MARK BEGINS WITH ONE OR TWO LETTERS THAT IDENTIFY THE BAR LOCATION. THE NEXT ONE OR TWO DIGITS INDICATE THE BAR SIZE, AND THE REMAINING TWO DIGITS ARE THE SEQUENCE NUMBER.

   EXAMPLE: A501
   S = SUPERSTRUCTURE BAR
   5 = #5 BAR
   01 = BAR SEQUENCE NUMBER 1
3. BAR DIMENSIONS SHOWN ARE OUT TO OUT UNLESS NOTED OTHERWISE.
4. "STR" IN THE BAR TYPE COLUMN INDICATES A STRAIGHT BAR.
5. INC INDICATES THE LENGTH INCREMENT FOR SERIES BARS.
6. AN APPROVED TYPE OF MECHANICAL CONNECTOR FOR REINFORCING SHALL BE PROVIDED. INSTALLATION OF THE CONNECTORS SHALL CONFORM WITH RECOMMENDED MANUFACTURER'S PROCEDURES. IF A DOWEL BAR SPLICE IS FURNISHED, THE MINIMUM DOWEL BAR LENGTH TO BE INCLUDED WITH THE CONNECTOR SHALL BE GIVEN BY THE DIMENSION "L" SHOWN BELOW.
   NO. 5 REINFORCING STEEL BAR L = 2'-6"
   NO. 8 REINFORCING STEEL BAR L = 5'-0"

DESIGN AGENCY

REVIEWED DATE STRUCTURE FILE NUMBER

DRAWN KES REVISED

DESIGNED CHECKED

REINFORCING STEEL LIST (2 OF 2)
FRA-CR 25-0063
WILSON ROAD BRIDGE OVER CAMP CHASE RAILROAD

WILSON ROAD
CIP NO. 590105-100083

97/97

Q:\Transportation\Projects\Local\City of Columbus\Wilson Road Bridge Rehab\12345\structures\Wilson Road\sheets\Wilson RoadRL002.dgn 10/17/2016 2:04:36 PM JPerchinske