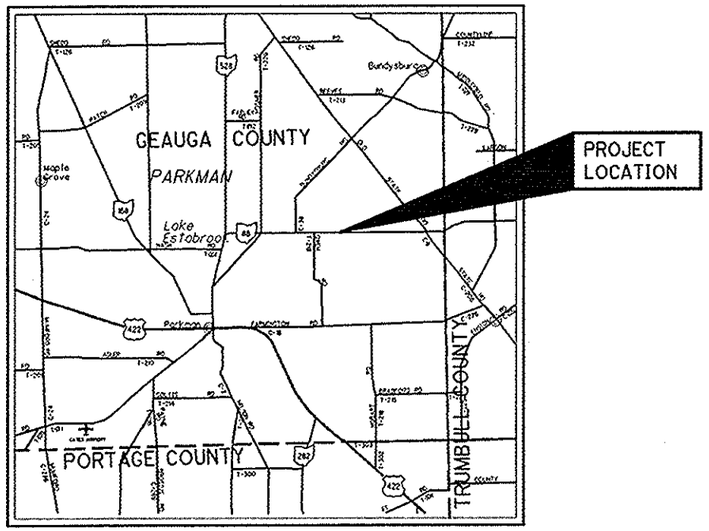

LOCATION MAP

LATITUDE: N41°23'20" LONGITUDE: W81°01'50"

SCALE IN MILES

0 1 2 3 4

N

PORTION TO BE IMPROVED
INTERSTATE HIGHWAY
FEDERAL ROUTES
STATE ROUTES
COUNTY & TOWNSHIP ROADS
OTHER ROADS

DESIGN DESIGNATION

CURRENT ADT (2014)	2140
DESIGN YEAR ADT (2034)	2790
DESIGN HOURLY VOLUME (2034)	310
DIRECTIONAL DISTRIBUTION	80%
TRUCKS (24 HOUR B&C)	9%
DESIGN SPEED	55 MPH
LEGAL SPEED	55 MPH
DESIGN FUNCTIONAL CLASSIFICATION: RURAL MINOR ARTERIAL	
NHS PROJECT	YES

DESIGN EXCEPTIONS

DESIGN FEATURE	APPROVAL DATE	SHEET NO.
SSD	08-02-12	12

UNDERGROUND UTILITIES

CONTACT BOTH SERVICES
CALL TWO WORKING DAYS
BEFORE YOU DIG

CALL
1-800-362-2764
(TOLL FREE)
OHIO UTILITIES PROTECTION SERVICE
NON-MEMBERS
MUST BE CALLED DIRECTLY

OIL & GAS PRODUCERS UNDERGROUND
PROTECTION SERVICE CALL: 1-800-925-0988

1976 TF AFFILIATES HAUL PROPERTIES BY Thomas Fok & Associates, Inc. Consulting Engineers & Surveyors EDGE Software 1555 Manchester Ave | Cuyahoga Falls OH | 44515 | 330.799.1501

STATE OF OHIO
DEPARTMENT OF TRANSPORTATION

GEA-88-4.96 (PART 1)

PARKMAN TOWNSHIP

GEAUGA COUNTY

FOR PART 2, SEE GEA-608-10.53

INDEX OF SHEETS:

TITLE SHEET	1
TYPICAL SECTIONS	2
GENERAL NOTES	3 - 4
MAINTENACE OF TRAFFIC	5 - 8
GENERAL SUMMARY	9 - 10
SUBSUMMARIES	11
PLAN & PROFILE	12
CROSS SECTIONS	13 - 15
MISCELLANEOUS DETAILS	16 - 20
TRAFFIC CONTROL	21
STRUCTURES (UNDER 20')	22 - 26, 26A
RIGHT OF WAY	27 - 30
FOUNDATION EXPLORATION	

ENGINEERS SEAL:
SHEETS 1-21
STATE OF OHIO STEPHEN D. LETTERI E-60070 REGISTERED PROFESSIONAL ENGINEER
SIGNED: Stephen D. Letteri
DATE: March 6, 2014

ENGINEERS SEAL:
SHEETS 22-26, 26A
STATE OF OHIO WEI-HSIANG TSENG E-55888 REGISTERED PROFESSIONAL ENGINEER
SIGNED: Wei-Hsiang Tseng
DATE: 3/6/2014

STANDARD CONSTRUCTION DRAWINGS							SUPPLEMENTAL SPECIFICATIONS		SPECIAL PROVISIONS
BP-3.1	4/20/12	MT-96.11	7/19/13				800-2013	1-21-15	
DM-1.1	1/18/13	MT-96.20	7/19/13				832	1-17-14	
DM-4.3	7/19/13	MT-101.60	7/19/13				940	4-19-13	
DM-4.4	7/20/12	MT-101.70	7/19/13						
		MT-105.10	7/19/13						

PROJECT DESCRIPTION

IMPROVING 0.1 MILES OF SR 88 (NASH ROAD) BY THE REPLACEMENT OF THE TWO EXISTING 9'-0" CORRUGATED METAL PIPE CULVERTS OVER AN UNNAMED STREAM WITH A 14' x 5' PRECAST CONCRETE BOX CULVERT WITH FULL HEIGHT HEADWALLS.

PROJECT EARTH DISTURBED AREA: 0.30 ACRES
ESTIMATED CONTRACTOR EARTH DISTURBED AREA: 0.25 ACRES
NOTICE OF INTENT EARTH DISTURBED AREA:
N/A (NOI not required)

2013 SPECIFICATIONS

THE STANDARD SPECIFICATIONS OF THE STATE OF OHIO, DEPARTMENT OF TRANSPORTATION, INCLUDING CHANGES AND SUPPLEMENTAL SPECIFICATIONS LISTED IN THE PROPOSAL SHALL GOVERN THIS IMPROVEMENT.

I HEREBY APPROVED THESE PLANS AND DECLARE THAT THE MAKING OF THIS IMPROVEMENT WILL NOT REQUIRE THE CLOSING TO TRAFFIC OF THE HIGHWAY AND THAT PROVISIONS FOR THE MAINTENANCE AND SAFETY OF TRAFFIC WILL BE AS SET FORTH ON THE PLANS AND ESTIMATES.

APPROVED Myron S. Al
DATE 12-05-14 DISTRICT DEPUTY DIRECTOR

APPROVED Jerry Wray
DATE 1-28-15 DIRECTOR, DEPARTMENT OF TRANSPORTATION

FEDERAL PROJECT NO. E110(306)
PID NO. 90222
CONSTRUCTION PROJECT NO.
RAILROAD INVOLVEMENT NONE
GEA-88-4.96
1/30

GEA - SR 88/SR 6080-04.96/10.53
158009 PID - 90222
Dist 12 4/9/2015

Contract Proposal Available @ www.contracts.dot.state.oh.us/home

DATE: 06-MAR-14 12:43
FILE: P:\GEA\90222 (GEA-088-0496)
SCALE: 1 : 1E

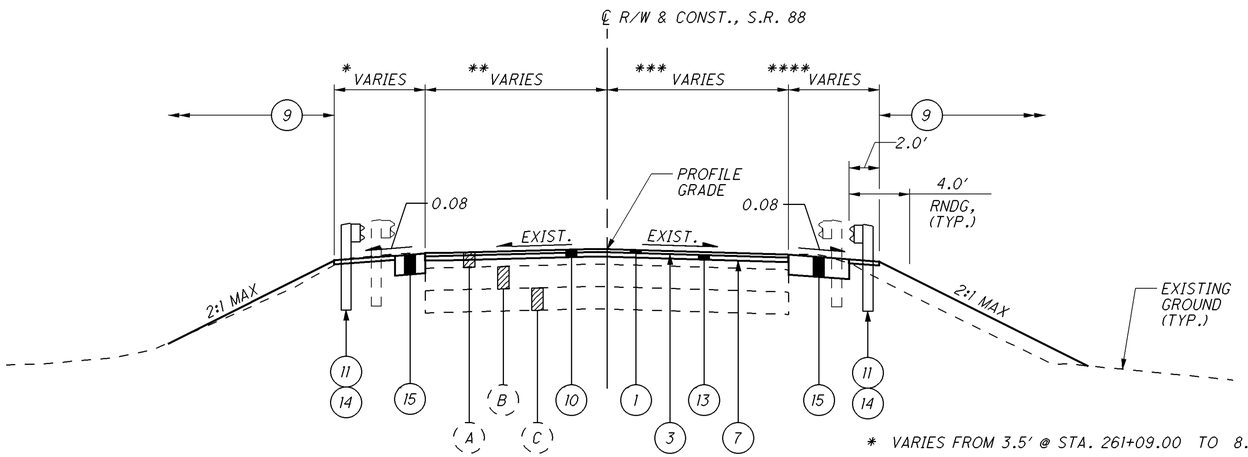

* VARIES FROM 3.5′ @ STA. 261+09.00 TO 8.0′ @ STA. 261+65.00
** VARIES FROM 12.5′ @ STA. 261+25.00 TO 12.0′ @ STA. 261+65.00
*** VARIES FROM 12.0′ @ STA. 261+25.00 TO 12.0′ @ STA. 261+65.00
**** VARIES FROM 4.1′ @ STA. 261+09.00 TO 8.0′ @ STA. 261+65.00

RESURFACING SECTION - S.R. 88

STA. 261+25.00 TO STA. 261+65.00
STA. 262+12.00 TO STA. 263+00.00

* VARIES FROM 8.0′ @ STA. 262+12.00 TO 3.5′ @ STA. 263+00.00
** VARIES FROM 12.0′ @ STA. 262+12.00 TO 12.0′ @ STA. 263+00.00
*** VARIES FROM 12.0′ @ STA. 262+12.00 TO 12.7′ @ STA. 263+00.00
**** VARIES FROM 8.0′ @ STA. 262+12.00 TO 3.3′ @ STA. 263+00.00

LEGEND

1. ITEM 441 - 1 1/4″ ASPHALT CONCRETE SURFACE COURSE, TYPE 1, (448), AS PER PLAN
2. ITEM 441 - 1 3/4″ ASPHALT CONCRETE INTERMEDIATE COURSE, TYPE 2, (448)
3. ITEM 407 - TACK COAT FOR INTERMEDIATE COURSE (@ 0.040 GAL./S.Y.)
4. ITEM 301 - 7″ ASPHALT CONCRETE BASE, PG64-22
5. NOT USED
6. ITEM 304 - 6″ AGGREGATE BASE
7. ITEM 407 - TACK COAT (@ 0.075 GAL./S.Y.)
8. ITEM 204 - SUBGRADE COMPACTION
9. ITEM 659 - SEEDING AND MULCHING
10. ITEM 254 - PAVEMENT PLANING, ASPHALT CONCRETE (T VARIES 0″ TO 3″)
11. ITEM 606 - GUARDRAIL, TYPE 5
12. ITEM 605 - AGGREGATE DRAINS
13. ITEM 441 - ASPHALT CONCRETE INTERMEDIATE COURSE, TYPE 2, (448), AS PER PLAN
14. ITEM 441 - 3″ ASPHALT CONCRETE INTERMEDIATE COURSE, TYPE 1, (448), (UNDER GUARDRAIL), AS PER PLAN
15. ITEM 615 - PAVEMENT FOR MAINTAINGING TRAFFIC, CLASS A, A.P.P.

A. 6″± EXISTING ASPHALT PAVEMENT
B. 10″ TO 16″ EXISTING ASPHALT BASE
C. 24″ TO 30″ EXISTING AGGREGATE BASE

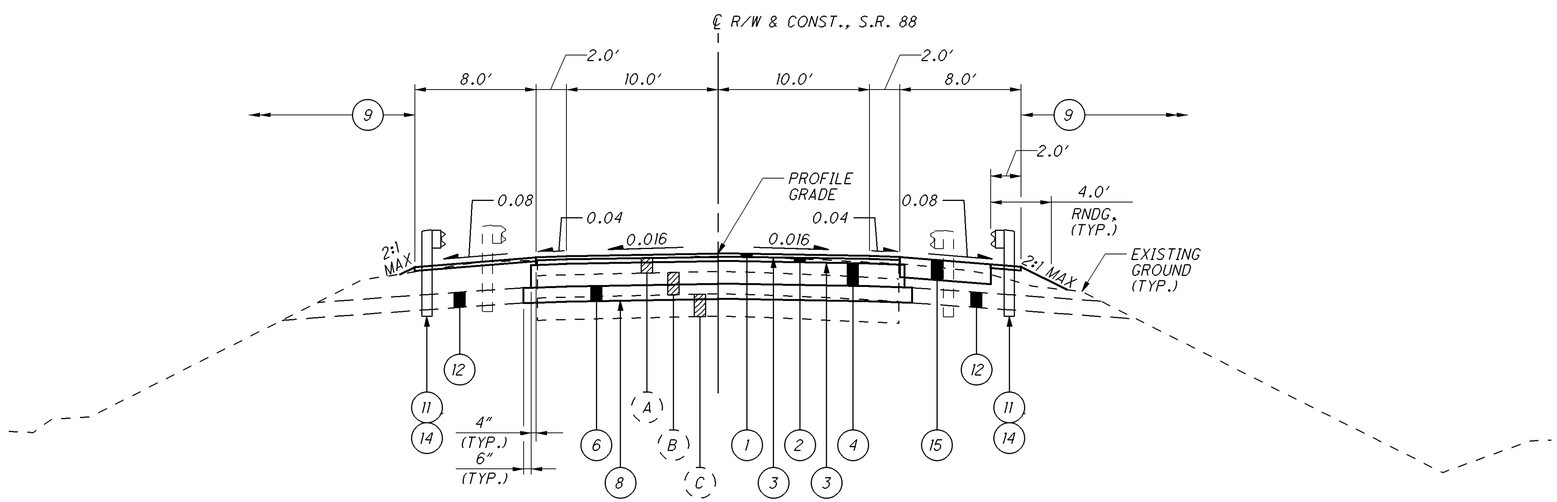

NORMAL SECTION - S.R. 88

STA. 261+65.00 TO STA. 262+12.00

TYPICAL SECTIONS

GEA-88-4.96

DATE: 30-AUG-12 12:45
FILE: J:\PROJECTS\GEA\90222 (GEA-088-0496)\ROADWAY\SHEETS\90222GY001.DGN
SCALE: 1 = 5E

UTILITIES

LISTED BELOW ARE ALL UTILITIES LOCATED WITHIN THE PROJECT CONSTRUCTION LIMITS TOGETHER WITH THEIR RESPECTIVE OWNERS:

SUDDENLINK
23 W. BROAD ST.
NEWTON FALLS, OHIO 44444
(330) 207-0894
ATTN: JERRY WALSH

OHIO EDISON, ENGINEERING DEPARTMENT
2231 WEST MARKET STREET
WARREN, OHIO 44485
(330) 841-2148
ATTN: JANET KITCH

THE LOCATION OF THE UNDERGROUND UTILITIES SHOWN ON THE PLANS ARE AS OBTAINED FROM THE OWNERS AS REQUIRED BY SECTION 153.64 O.R.C.

CONSTRUCTION NOISE

ACTIVITIES AND LAND USE ADJACENT TO THIS PROJECT MAY BE AFFECTED BY CONSTRUCTION NOISE. IN ORDER TO MINIMIZE ANY ADVERSE CONSTRUCTION NOISE IMPACTS, DO NOT OPERATE POWER-OPERATED CONSTRUCTION-TYPE DEVICES BETWEEN THE HOURS OF 7:00 PM AND 8:00 AM. IN ADDITION, DO NOT OPERATE AT ANY TIME ANY DEVICE IN SUCH A MANNER THAT THE NOISE CREATED SUBSTANTIALLY EXCEEDS THE NOISE CUSTOMARILY AND NECESSARILY ATTENDANT TO THE REASONABLE AND EFFICIENT PERFORMANCE OF SUCH EQUIPMENT.

CLEARING AND GRUBBING

ALTHOUGH THERE ARE NO TREES OR STUMPS SPECIFICALLY MARKED FOR REMOVAL WITHIN THE LIMITS OF THE PROJECT, A LUMP SUM QUANTITY IS INCLUDED IN THE GENERAL SUMMARY FOR ITEM 201, CLEARING AND GRUBBING. ALL PROVISIONS AS SET FORTH IN THE SPECIFICATIONS UNDER THIS ITEM ARE INCLUDED IN THE LUMP SUM PRICE BID FOR ITEM 201, CLEARING AND GRUBBING.

WORK LIMITS

THE WORK LIMITS SHOWN ON THESE PLANS ARE FOR PHYSICAL CONSTRUCTION ONLY. PROVIDE THE INSTALLATION AND OPERATION OF ALL WORK ZONE TRAFFIC CONTROL AND WORK ZONE TRAFFIC CONTROL DEVICES REQUIRED BY THESE PLANS WHETHER INSIDE OR OUTSIDE THESE WORK LIMITS.

CONNECTION BETWEEN EXISTING AND PROPOSED GUARDRAIL

WHEN IT IS NECESSARY TO SPLICE PROPOSED GUARDRAIL TO EXISTING GUARDRAIL, ONLY THE EXISTING GUARDRAIL SHALL BE CUT, DRILLED, OR PUNCHED. THE CONNECTION SHALL BE MADE USING A W-BEAM, BEAM SPLICE AS SHOWN IN AASHTO M 180-12, EXCEPT THE BEAM WASHERS ARE NOT TO BE USED. PAYMENT SHALL BE INCLUDED IN THE CONTRACT PRICE FOR THE RESPECTIVE GUARDRAIL ITEMS.

INDIANA BAT

CLEARING OF ANY TREES THAT HAVE SUITABLE SUMMER BROOD REARING OR ROOSTING HABITAT FOR THE FEDERALLY ENDANGERED INDIANA BAT (E.G. TREES WITH EXFOLIATING BARK AND/OR CAVITIES), SHALL OCCUR BEFORE MARCH 30TH OR AFTER OCTOBER 1ST WHEN THE BATS WOULD NOT BE USING SUCH HABITAT.

ITEM SPECIAL - NOTIFICATION OF DEMOLITION AND RENOVATION

AN ASBESTOS SURVEY WAS CONDUCTED ON THE GEA-88-4.96 BRIDGE OVER AN UNNAMED STREAM. THE SURVEY WAS COMPLETED ON MAY 3, 2012 BY A CERTIFIED ASBESTOS HAZARD EVALUATION. THE SURVEY DID NOT IDENTIFY ANY ASBESTOS CONTAINING MATERIALS ON THE BRIDGE.

IF UNIDENTIFIED ASBESTOS CONTAINING MATERIAL (ACM) IS ENCOUNTERED DURING CONSTRUCTION OF THE BRIDGES, REMOVAL AND DISPOSAL OF ACM MUST COMPLY WITH THE OHIO ADMINISTRATIVE CODE, THE OCCUPATIONAL SAFETY AND HEALTH ADMINISTRATION (OSHA) REGULATIONS, AND THE NATIONAL EMISSION STANDARD FOR HAZARDOUS AIR POLLUTANTS (NESHAP) STANDARDS FOR ASBESTOS.

A COPY OF THE OHIO ENVIRONMENTAL PROTECTION AGENCY (OEPA) NOTIFICATION OF DEMOLITION AND RENOVATION FORM WITH SECTIONS I-VII COMPLETED IS INCLUDED WITH THE BID PACKAGE. THE CONTRACTOR WILL COMPLETE SECTIONS VIII-XVIII OF THE FORM AND SUBMIT THE COMPLETED FORM TO THE LOCAL AIR AUTHORITY AT LEAST TEN (10) DAYS PRIOR TO DEMOLITION OF THE BRIDGE. THE CONTRACTOR WILL PROVIDE A COPY OF THE COMPLETED FORM TO THE ENGINEER.
THE LOCAL AIR AUTHORITY IS:

ATTN: BERT MECHENBIER
LAKE COUNTY
AIR POLLUTION CONTROL
33 MILL STREET
PAINESVILLE, OHIO 44077

THE CONTRACTOR SHALL FURNISH ALL LABOR, EQUIPMENT, AND MATERIALS NECESSARY TO COMPLETE, SUBMIT, AND COMPLY WITH THE OEPA NOTIFICATION FORM. PAYMENT OF THIS WORK SHALL BE INCLUDED IN THE BID LUMP SUM PRICE ITEM SPECIAL - ASBESTOS ABATEMENT.

ITEM	UNIT
ITEM SPECIAL - ASBESTOS ABATEMENT	LUMP SUM

SURVEYING PARAMETERS

USE THE FOLLOWING VERTICAL POSITIONING AND HORIZONTAL POSITIONING PARAMETERS FOR ALL SURVEYING:

VERTICAL POSITIONING

ORTHOMETRIC HEIGHT DATUM: NAVD 88
GEOID: 2009

HORIZONTAL POSITIONING

REFERENCE FRAME: NAD 83 (CORS 96)
ELLIPSOID: GRS 80
MAP PROJECTION: LAMBERT CONFORMAL CONIC
COORDINATE SYSTEM: OHIO STATE PLANE, NORTH ZONE (3401)
COMBINED SCALE FACTOR: 0.999908150

UNITS ARE IN U.S. SURVEY FEET. USE THE FOLLOWING CONVERSION FACTOR: 1 METER = 3.280833333 U.S. SURVEY FEET.

ITEM 614, MAINTAINING TRAFFIC

ALTERNATE ONE-WAY TRAFFIC ALONG S.R. 88 SHALL BE MAINTAINED AS DETAILED IN THE PLANS FOR THE FOLLOWING PHASES OF WORK:

MAINTENANCE OF TRAFFIC, PHASE 1
BEFORE COMMENCING ANY CONSTRUCTION WHICH REQUIRES CLOSING THE EXISTING PAVEMENT TO TRAFFIC, PAVEMENT FOR MAINTAINING TRAFFIC SHALL BE CONSTRUCTED AND ALL WORK ZONE SIGNALS, SIGNS, PAVEMENT MARKINGS, LIGHTS AND PORTABLE CONCRETE BARRIER SHALL BE FURNISHED.

AFTER ALL WORK ZONE TRAFFIC CONTROL DEVICES ARE INSTALLED, THE CONTRACTOR SHALL CONSTRUCT THE SOUTHERLY PORTIONS OF THE PROJECT BY REMOVING THE EXISTING 9'-0" TWIN CMP CONDUITS AND CONSTRUCTING THE PROPOSED 14' X 5' CONCRETE BOX CULVERT AS SHOWN ON SHEET 6.

MAINTENANCE OF TRAFFIC, PHASE 2
THE CONTRACTOR SHALL CONSTRUCT PAVEMENT FOR MAINTAINING TRAFFIC PRIOR TO RELOCATING ANY WORK ZONE TRAFFIC CONTROL DEVICES. RELOCATION OF ALL WORK ZONE TRAFFIC CONTROL DEVICES SHALL BE ACCOMPLISHED IN ONE WORKING DAY. FLAGGERS SHALL BE UTILIZED FOR PROTECTION OF TRAFFIC UNTIL THE PHASE 2 WORK ZONE ITEMS HAVE BEEN COMPLETED IN PLACE AND APPROVED BY THE ENGINEER.

AFTER TRAFFIC HAS BEEN RE-ROUTED AS INDICATED ON SHEET 7, THE CONTRACTOR SHALL REMOVE THE NORTHERLY PORTIONS OF THE EXISTING 9'-0" TWIN CMP CONDUITS AND CONSTRUCT THE REMAINING PORTIONS OF THE 14' X 5' CONCRETE BOX CULVERT.

ALL WORK AND TRAFFIC CONTROL DEVICES SHALL BE IN ACCORDANCE WITH CMS 614 AND OTHER APPLICABLE PORTIONS OF THE SPECIFICATIONS, AS WELL AS THE OHIO MANUAL OF UNIFORM TRAFFIC CONTROL DEVICES. PAYMENT FOR ALL LABOR, EQUIPMENT AND MATERIALS SHALL BE INCLUDED IN THE LUMP SUM CONTRACT PRICE FOR ITEM 614, MAINTAINING TRAFFIC, UNLESS SEPARATELY ITEMIZED IN THE PLAN.

DUST CONTROL

THE CONTRACTOR SHALL FURNISH AND APPLY WATER FOR DUST CONTROL AS DIRECTED BY THE ENGINEER. THE FOLLOWING ESTIMATED QUANTITIES HAVE BEEN INCLUDED FOR DUST CONTROL PURPOSES:

ITEM 616, WATER 3 M. GAL

ITEM 614, BARRIER REFLECTORS AND/OR OBJECT MARKERS

BARRIER REFLECTORS AND/OR OBJECT MARKERS SHALL BE INSTALLED ON ALL PORTABLE BARRIER (PB) USED FOR TRAFFIC CONTROL. BARRIER REFLECTORS, OBJECT MARKERS AND THEIR INSTALLATION SHALL CONFORM TO CMS 626, EXCEPT THAT THE SPACING SHALL BE 50 FEET.

EARTHWORK FOR MAINTAINING TRAFFIC

THE FOLLOWING QUANTITIES HAVE BEEN INCLUDED IN THE PLAN FOR INFORMATION ONLY:

EXCAVATION FOR MAINTAINING TRAFFIC 35 CU. YD.

WHEN UNDERCUTS ARE NECESSARY FOR MAINLINE PAVEMENT OR EMBANKMENT CONSTRUCTION, EVALUATE THE NEED FOR TEMPORARY ROAD UNDERCUTS IF WITHIN A CLOSE PROXIMITY TO THE MAINLINE UNDERCUTS. A GEOTECHNICAL EVALUATION SHOULD BE CONSIDERED TO DETERMINE IF THE EXISTING SOIL CONDITIONS ARE ADEQUATE TO SUPPORT THE TEMPORARY ROAD. ADDITIONAL SOIL BORINGS ALONG THE TEMPORARY ROAD ARE NOT NORMALLY REQUIRED.

ITEM 615, PAVEMENT FOR MAINTAINING TRAFFIC, CLASS A, A.P.P.

THE PAVEMENT FOR MAINTAINING TRAFFIC COMPOSITION SHALL BE FLEXIBLE CONFORMING TO THE MINIMUM REQUIREMENTS OF CMS 615.05. THIS ITEM SHALL REMAIN IN PLACE UNLESS SUPERCEDED BY OTHER PROPOSED WORK.

PAYMENT FOR ALL LABOR, EQUIPMENT, AND MATERIALS NECESSARY TO COMPLETE THE WORK DESCRIBED ABOVE SHALL BE INCLUDED IN THE CONTRACT UNIT BID PRICE FOR ITEM 615, PAVEMENT FOR MAINTAINING TRAFFIC, CLASS A, A.P.P.

ITEM 605 - AGGREGATE DRAINS

AGGREGATE DRAINS SHALL BE PLACED AT 50 FOOT INTERVALS ON EACH SIDE OF NORMAL CROWNED SECTIONS, STAGGERED SO THAT EACH DRAIN IS 25 FEET FROM THE ADJACENT DRAIN ON THE OPPOSITE SIDE, AND AT 25 FOOT INTERVALS ON THE LOW SIDE ONLY OF SUPERELEVATED SECTIONS. AN AGGREGATE DRAIN SHALL BE PLACED AT THE LOW POINT OF EACH SAG VERTICAL CURVE.

STATION	LENGTH
STA. 261+70	11 FT
STA. 262+07	10 FT
TOTAL =	21 FT

TOTAL CARRIED TO GENERAL SUMMARY.

SEEDING AND MULCHING

THE FOLLOWING QUANTITIES ARE PROVIDED TO PROMOTE GROWTH AND CARE OF PERMANENT SEEDED AREAS:

659, SOIL ANALYSIS TEST 2 EACH

659, TOPSOIL 71 CU. YD.

659, SEEDING AND MULCHING 639 SQ. YD.

659, REPAIR SEEDING AND MULCHING 32 SQ. YD

659, INTER-SEEDING 32 SQ. YD.

659, COMMERCIAL FERTILIZER 0.10 TON

659, LIME 0.13 ACRES

659, WATER 4 M. GAL.

SEEDING AND MULCHING SHALL BE APPLIED TO ALL AREAS OF EXPOSED SOIL BETWEEN THE RIGHT-OF-WAY LINES, AND WITHIN THE CONSTRUCTION LIMITS FOR AREAS OUTSIDE THE RIGHT-OF-WAY LINES COVERED BY WORK AGREEMENT OR SLOPE EASEMENT. QUANTITY CALCULATIONS FOR SEEDING AND MULCHING ARE BASED ON THESE LIMITS.

CALCULATED SDL CHECKED WT

GENERAL NOTES

GEA-88-4.96

DATE: 03-OCT-12 15:34
FILE: J:\PROJECTS\GEA\90222 (GEA-088-04496)\ROADWAY\SHEETS\90222GN001.DGN
SCALE: 1 - 1E

PAVING UNDER GUARDRAIL

THIS OPERATION SHALL INCLUDE PREPARATION OF THE GRADED SHOULDER USING 209, LINEAR GRADING AS PER PLAN, AND PAVING UNDER THE GUARDRAIL USING 441 ASPHALT CONCRETE INTERMEDIATE COURSE, TYPE 1, (448), UNDER GUARDRAIL, AS PER PLAN.

ITEM 209, LINEAR GRADING AS PER PLAN, SHALL CONSIST OF EXCAVATING TOPSOIL, AND PLACING GRANULAR MATERIAL.

ALL COLLECTED DEBRIS AND TOPSOIL, INCLUDING RHIZOMES, ROOTS AND OTHER VEGETATIVE PLANT MATERIAL SHALL BE REMOVED AND DISPOSED OF AS SPECIFIED IN 105.17.

THE REMOVED MATERIAL SHALL BE REPLACED WITH COMPACTABLE GRANULAR MATERIAL CONFORMING TO 703.16 PLACED TO GRADE AS DETAILED ON THE TYPICAL SECTION OR AS APPROVED BY THE ENGINEER.

ALL EQUIPMENT, MATERIALS AND LABOR REQUIRED TO PERFORM THE WORK OUTLINED ABOVE SHALL BE INCLUDED FOR PAYMENT UNDER ITEM 209, LINEAR GRADING, AS PER PLAN.

PAVING UNDER GUARDRAIL SHALL CONSIST OF PLACING ITEM 441 TO THE DEPTH SPECIFIED USING ONE OF THE FOLLOWING METHODS:

METHOD A:
1. SET GUARDRAIL POSTS
2. PLACE ITEM 441

METHOD B:
1. PLACE ITEM 441
2. BORE ASPHALT AT POST LOCATIONS (MAY BE OMITTED IF STEEL POSTS ARE USED)
3. SET GUARDRAIL POSTS
4. PATCH AROUND POSTS. THE MATERIALS USED FOR PATCHING SHALL BE AN ASPHALT CONCRETE APPROVED BY THE ENGINEER. PATCHED AREAS SHALL BE COMPACTED USING EITHER HAND OR MECHANICAL METHODS. FINISHED SURFACES SHALL BE SMOOTH AND SLOPED TO DRAIN AWAY FROM THE POSTS.

ALL EQUIPMENT, MATERIALS AND LABOR REQUIRED TO PERFORM THE WORK OUTLINED ABOVE, WITH THE EXCEPTION OF SETTING GUARDRAIL POSTS, SHALL BE INCLUDED FOR PAYMENT UNDER ITEM 441, ASPHALT CONCRETE, INTERMEDIATE COURSE, TYPE 1, (448), UNDER GUARDRAIL, AS PER PLAN.

REVIEW OF DRAINAGE FACILITIES

BEFORE ANY WORK IS STARTED ON THE PROJECT AND AGAIN BEFORE FINAL ACCEPTANCE BY THE STATE, REPRESENTATIVES OF THE STATE AND THE CONTRACTOR, ALONG WITH LOCAL REPRESENTATIVES, SHALL MAKE AN INSPECTION OF ALL EXISTING SEWERS WHICH ARE TO REMAIN IN SERVICE AND WHICH MAY BE AFFECTED BY THE WORK. THE CONDITION OF THE EXISTING CONDUITS AND THEIR APPURTENANCE SHALL BE DETERMINED FROM FIELD OBSERVATIONS. RECORDS OF THE INSPECTION SHALL BE KEPT IN WRITING BY THE STATE.

ALL NEW CONDUITS, INLETS, CATCH BASINS, AND MANHOLES CONSTRUCTED AS A PART OF THE PROJECT SHALL BE FREE OF ALL FOREIGN MATTER AND IN A CLEAN CONDITION BEFORE THE PROJECT WILL BE ACCEPTED BY THE STATE.

ALL EXISTING SEWERS INSPECTED INITIALLY BY THE ABOVE MENTIONED PARTIES SHALL BE MAINTAINED AND LEFT IN A CONDITION REASONABLY COMPARABLE TO THAT DETERMINED BY THE ORIGINAL INSPECTION. ANY CHANGE IN THE CONDITION RESULTING FROM THE CONTRACTOR'S OPERATIONS SHALL BE CORRECTED BY THE CONTRACTOR TO THE SATISFACTION OF THE ENGINEER.

PAYMENT FOR ALL OPERATIONS DESCRIBED ABOVE SHALL BE INCLUDED IN THE CONTRACT PRICE FOR THE PERTINENT 611 CONDUIT ITEMS.

ITEM - 619 FIELD OFFICE, TYPE B, AS PER PLAN

A TYPE B FIELD OFFICE IS REQUIRED FOR THIS PROJECT

THE FOLLOWING REVISIONS TO EQUIPMENT SUPPLIED WITH THE TYPE B FIELD OFFICE, AS SPECIFIED IN TABLE 619.02-1 FIELD OFFICE, SHALL APPLY:

THE MULTI-FUNCTION COPIER SUPPLIED MUST MEET THE REQUIREMENTS OF THE MULTI-FUNCTION COPIER SUPPLIED WITH THE TYPE C FIELD OFFICE.

THE BROADBAND INTERNET CONNECTION MUST MEET THE REQUIREMENTS OF THE MINIMUM DOWNLOAD SPEED SUPPLIED WITH THE TYPE C FIELD OFFICE.

ALL OTHER FIELD OFFICE ITEMS SUPPLIED SHALL MEET THE REQUIREMENTS OF A TYPE B FIELD OFFICE.

ASPHALT CONCRETE SURFACE COURSE SEALING REQUIREMENTS

IN ADDITION TO THE GUTTER SEALING REQUIREMENTS SPECIFIED IN SCD BP-3.1 AND C&MS 401.15, AFTER COMPLETION OF THE SURFACE COURSE, THE CONTRACTOR SHALL USE A CERTIFIED 702.01 PG BINDER TO SEAL THE FOLLOWING LOCATIONS:

- ALL CASTINGS INCLUDING BUT NOT LIMITED TO MONUMENTS, MANHOLES, WATER VALVES, CATCH BASINS, CURB INLETS.
- BUTT JOINTS AND FEATHER JOINTS INCLUDING BRIDGE APPROACHES.
- FORWARD JOINT FOR DRIVEWAY ASPHALT AND TRAILING JOINT WHEN BUTTING TO EXISTING ASPHALT DRIVE.
- PERIMETER OF ALL PAVEMENT REPAIRS OR OTHER ASPHALT INLAYS WHEN PAVEMENT REPAIRS/INLAYS ARE NOT OVERLAID WITH AN ASPHALT CONCRETE SURFACE COURSE.
- ALL COLD LONGITUDINAL JOINTS BETWEEN PAVED SHOULDERS AND GUARDRAIL ASPHALT.

THE MATERIAL USED SHALL BE A CERTIFIED 702.01 PG BINDER. THE WIDTH OF THE SEALER SHALL BE 2-3 INCHES.

ANY ADDITIONAL COSTS ASSOCIATED WITH THE WORK IDENTIFIED IN THIS NOTE SHALL BE INCLUDED IN THE APPROPRIATE ASPHALT CONCRETE SURFACE COURSE ITEM OF WORK.

ITEM 441 - ASPHALT CONCRETE SURFACE COURSE, TYPE 1, (448), AS PER PLAN

THE COARSE VIRGIN AGGREGATE FOR THIS ITEM SHALL CONSIST OF A BLEND OF 60% MIN. AIR COOLED BLAST FURNACE SLAG (ACBFS) OR TRAP ROCK FROM ONTARIO WITH LIMESTONE COMPRISING THE REMAINING PERCENTAGE.

USE A PG70-22M BINDER.

ITEM 441 - ASPHALT CONCRETE INTERMEDIATE COURSE, TYPE 2, (448), AS PER PLAN

THIS ITEM IS INTENDED TO BE PLACED AS A VARIABLE DEPTH COURSE. THE MINIMUM LIFT THICKNESS WILL BE 1¾" BUT WILL INCREASE, AS DIRECTED BY THE ENGINEER, TO REDUCE THE SEVERITY OF THE SAG VERTICAL CURVE, AS INDICATED IN THE PROPOSED WORK FOR THIS PROJECT.

USE A PG64-22 BINDER.

CALCULATED SDL CHECKED WT

GENERAL NOTES

GEA-88-4.96

DATE: 03-OCT-12 15:34
FILE: J:\PROJECTS\GEA\90222 (GEA-088-0496)\ROADWAY\SHEETS\90222GN001.DGN
SCALE: 1 = 1E

SHEET NO.	REF NO.	PHASE	STATION TO STATION	614							615		622	
				BARRIER REFLECTOR, TYPE B2	OBJECT MARKER, TWO-WAY	WORK ZONE IMPACT ATTENUATOR	WORK ZONE CENTER LINE, CLASS 1, 642 PAINT	WORK ZONE EDGE LINE, CLASS 1, 642 PAINT	WORK ZONE STOP LINE, CLASS 1, 642 PAINT		PAVEMENT FOR MAINTAINING TRAFFIC, CLASS A, A.P.P.		PORTABLE BARRIER, 32"	
				EACH	EACH	EACH	MILE	MILE	FT		SQ YD		FT	
6	CL1	PHASE 1	258+40 TO 259+90				0.03							
6	CL2	PHASE 1	263+62 TO 265+12				0.03							
6	EL1	PHASE 1	260+15 TO 263+62					0.07						
6	EL2	PHASE 1	260+65 TO 262+62					0.04						
6	IA1	PHASE 1	260+40 TO 260+65			1								
6	IA2	PHASE 1	262+62 TO 262+87			1								
6	PB1	PHASE 1	260+65 TO 262+62	5	4								200	
6	SL1	PHASE 1	259+90						10					
6	SL2	PHASE 1	263+62						10					
6	TP1	PHASE 1	260+15 TO 263+62								45			
7	EL3	PHASE 2	260+90 TO 263+12				0.04							
7	EL4	PHASE 2	260+15 TO 263+12				0.06							
7	IA3	PHASE 2	260+90 TO 261+15			1								
7	IA4	PHASE 2	263+12 TO 263+37			1								
7	PB2	PHASE 2	261+15 TO 263+12	5	4								200	
7	TP2	PHASE 2	260+15 TO 263+00								113			
TOTALS CARRIED TO GENERAL SUMMARY				10	8	4	0.16	0.11	20		158		400	

CALCULATED SDL
CHECKED WT

MAINTENANCE OF TRAFFIC SUBSUMMARY

GEA-88-4.96

DATE: 06-MAR-14 11:15
FILE: P:\GEA\90222 (GEA-088-0496)\ROADWAY\SHEETS\MOT\90222MS001.DGN
SCALE: 1 = 1E

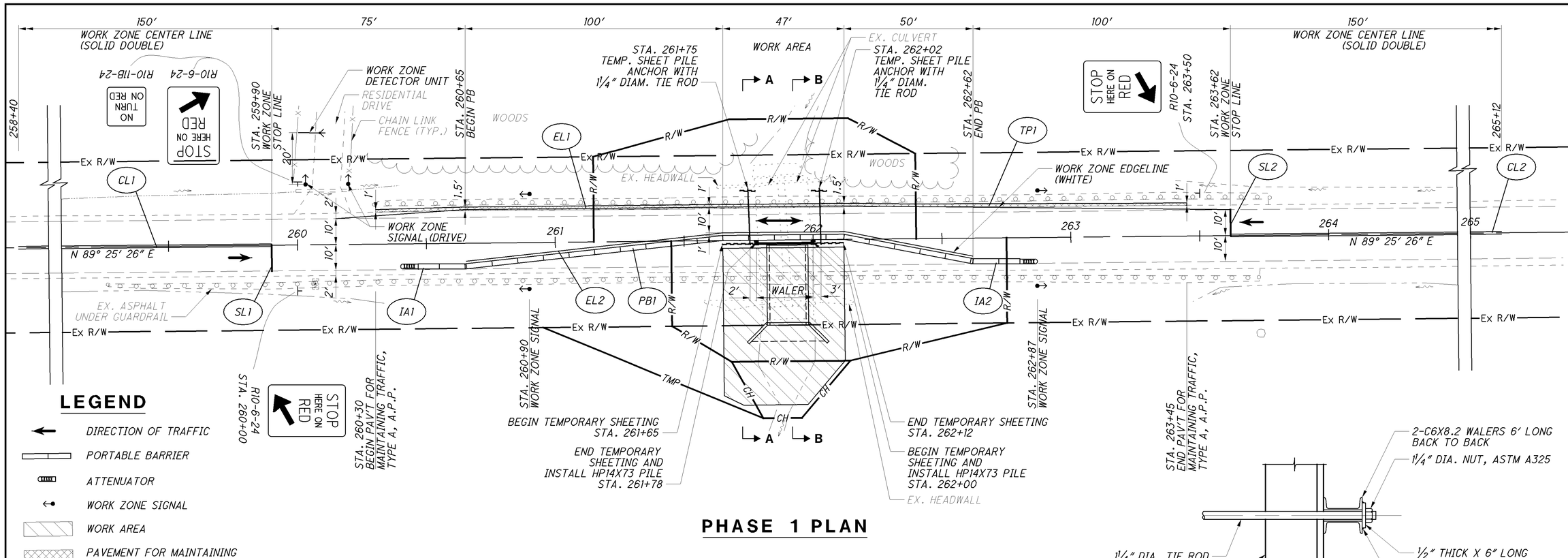

PHASE 1 PLAN

LEGEND

- DIRECTION OF TRAFFIC
- PORTABLE BARRIER
- ATTENUATOR
- WORK ZONE SIGNAL
- WORK AREA
- PAVEMENT FOR MAINTAINING TRAFFIC, TYPE A, A.P.P.

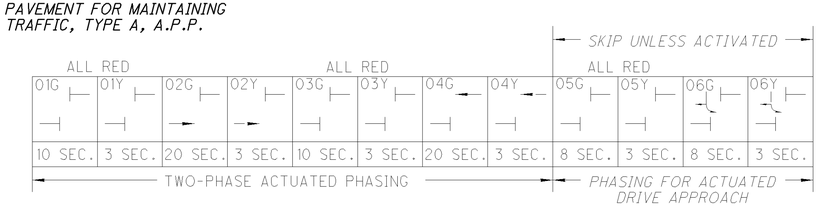

NOTES:
1. SEE SCD MT-96.11 FOR SIGNAL DETAILS.
2. SEE SCD MT-96.11 FOR SIGNING LOCATIONS AND DETAILS.
3. SEE SHEET NO. 5 FOR ESTIMATED QUANTITIES.
4. SEE SHEET NO. 8 FOR SHORING ELEVATION VIEW.

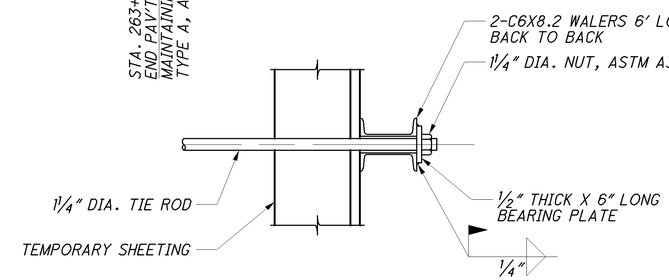

TIE ROD END DETAIL

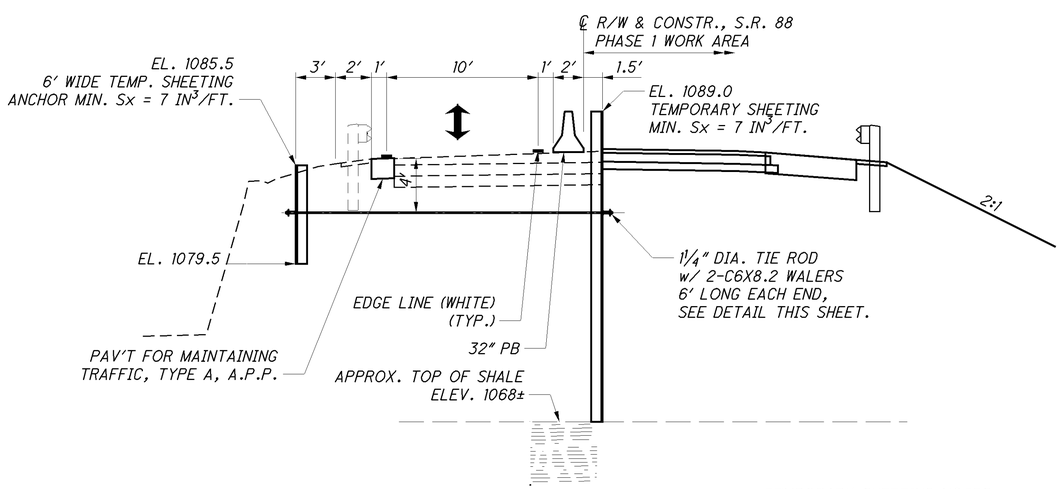

SECTION A-A

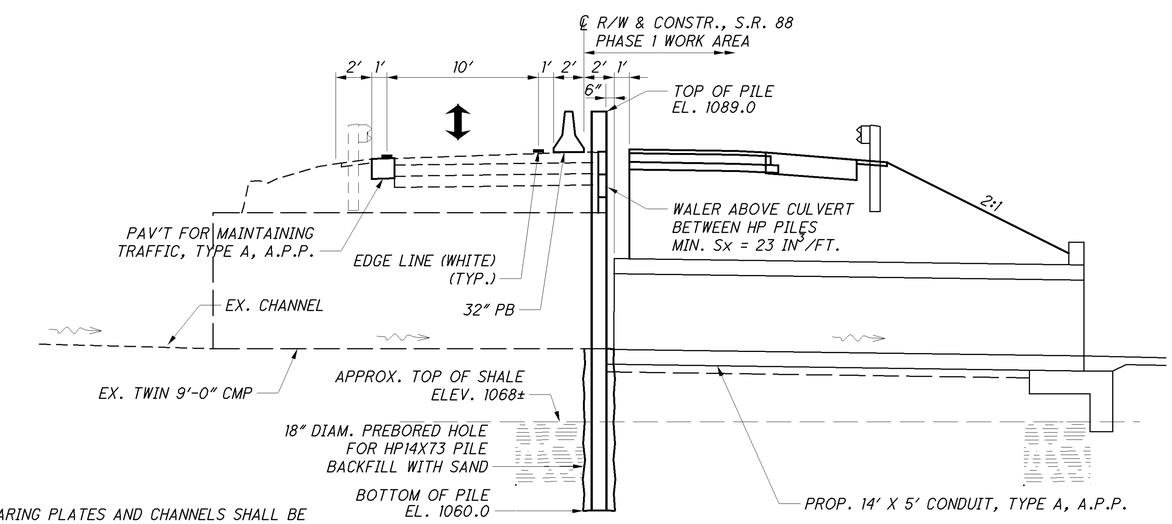

SECTION B-B

TEMPORARY SHEETING NOTES:
1. ALL SHEET PILING, TIE RODS, BEARING PLATES AND CHANNELS SHALL BE ASTM A572 GR50 STEEL.
2. PAYMENT FOR ALL LABOR AND MATERIALS FOR TEMPORARY SHORING SHALL BE INCLUDED WITH ITEM 503, COFFERDAMS AND EXCAVATION BRACING.

HORIZONTAL SCALE IN FEET 0 10 20 40

CALCULATED SDL CHECKED WT

MAINTENANCE OF TRAFFIC (PHASE 1) SIGNALIZED CLOSING 1-LANE OF 2-LANE HIGHWAY

GEA-88-4.96

DATE: 06-MAR-14 13:14
FILE: P:\GEA\90222 (GEA-088-0496)\ROADWAY\SHEETS\MOT\90222MP001.DGN
SCALE: 1 = 1E

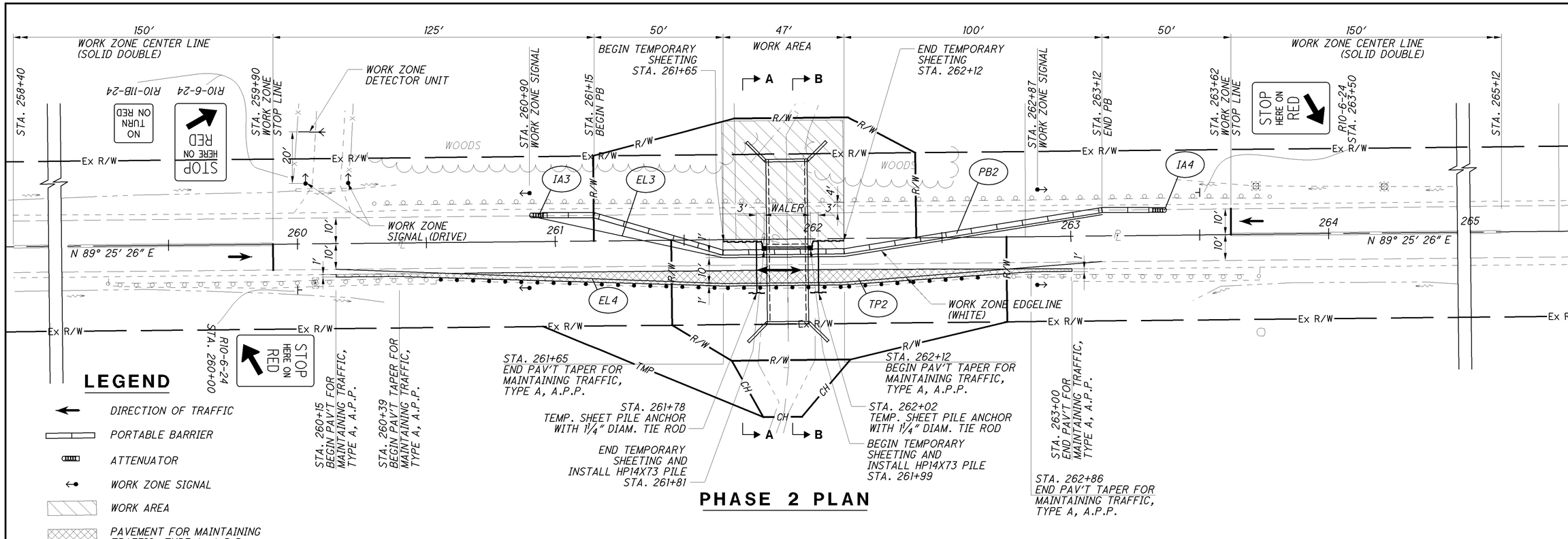

PHASE 2 PLAN

LEGEND

- DIRECTION OF TRAFFIC
- PORTABLE BARRIER
- ATTENUATOR
- WORK ZONE SIGNAL
- WORK AREA
- PAVEMENT FOR MAINTAINING TRAFFIC, TYPE A, A.P.P.

ALL RED		ALL RED		ALL RED				SKIP UNLESS ACTIVATED			
01G	01Y	02G	02Y	03G	03Y	04G	04Y	05G	05Y	06G	06Y
10 SEC.	3 SEC.	20 SEC.	3 SEC.	10 SEC.	3 SEC.	20 SEC.	3 SEC.	8 SEC.	3 SEC.	8 SEC.	3 SEC.
TWO-PHASE ACTUATED PHASING								PHASING FOR ACTUATED DRIVE APPROACH			

NOTES:
1. SEE SCD MT-96.11 FOR SIGNAL DETAILS.
2. SEE SCD MT-96.11 FOR SIGNING LOCATIONS AND DETAILS.
3. SEE SHEET NO. 5 FOR ESTIMATED QUANTITIES.
4. SEE SHEET NO. 8 FOR SHORING ELEVATION VIEW.

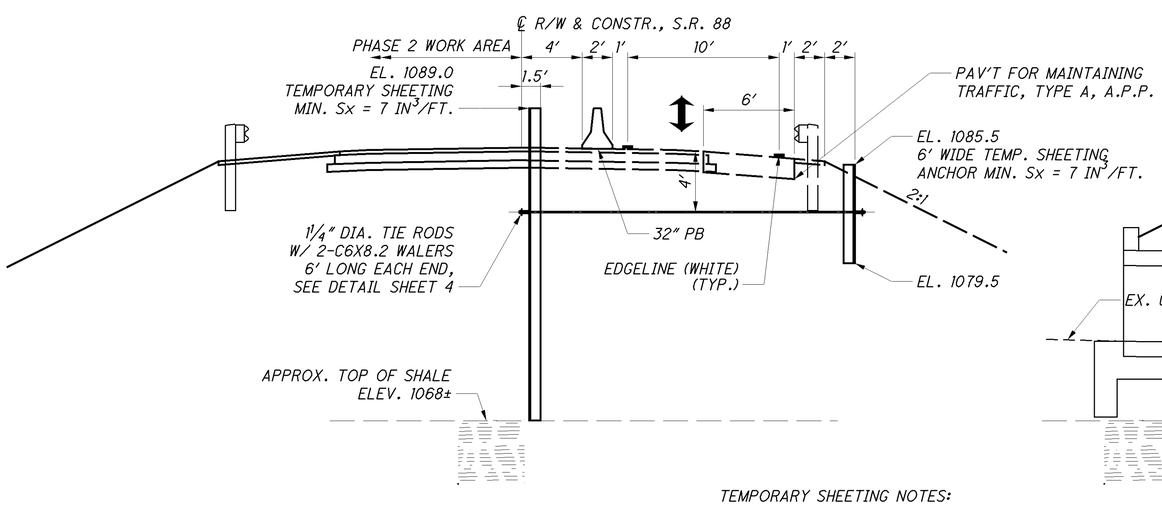

SECTION A-A

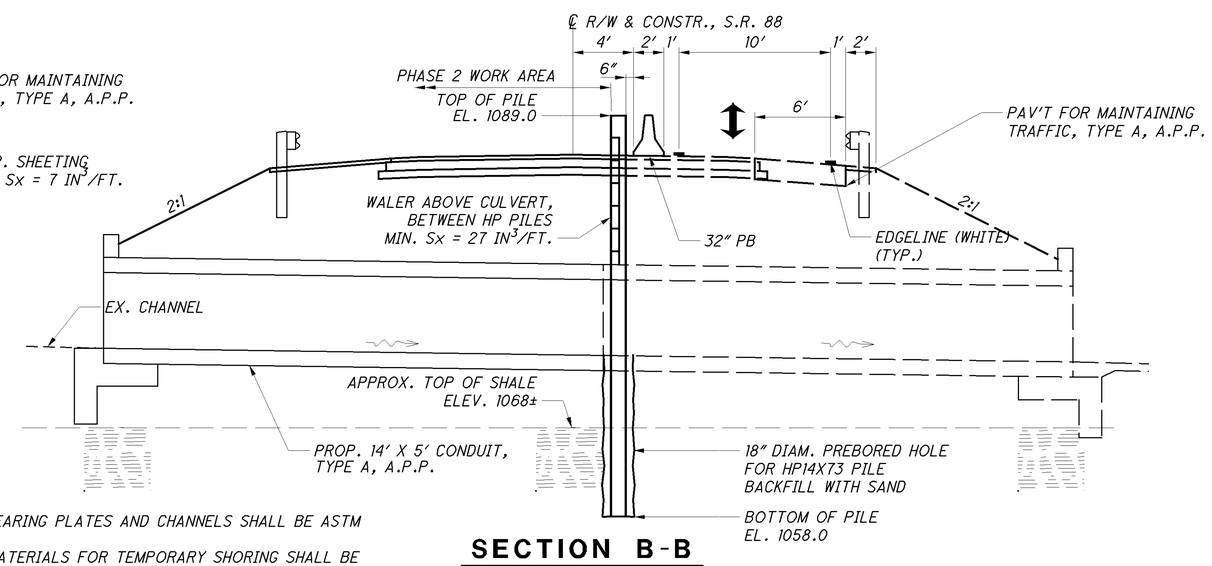

SECTION B-B

TEMPORARY SHEETING NOTES:
1. ALL SHEET PILING, TIE RODS, BEARING PLATES AND CHANNELS SHALL BE ASTM A572 GR50 STEEL.
2. PAYMENT FOR ALL LABOR AND MATERIALS FOR TEMPORARY SHORING SHALL BE INCLUDED WITH ITEM 503, COFFERDAMS AND EXCAVATION BRACING.

HORIZONTAL SCALE IN FEET 0 10 20 40

CALCULATED SDL CHECKED WT

MAINTENANCE OF TRAFFIC (PHASE 2)
SIGNALIZED CLOSING 1-LANE OF 2-LANE HIGHWAY

GEA-88-4.96

DATE: 06-MAR-14 13:34
FILE: P:\GEA\90222 (GEA-088-0496)\ROADWAY\SHEETS\MOT\90222MP002.DGN
SCALE: 1 = 1E

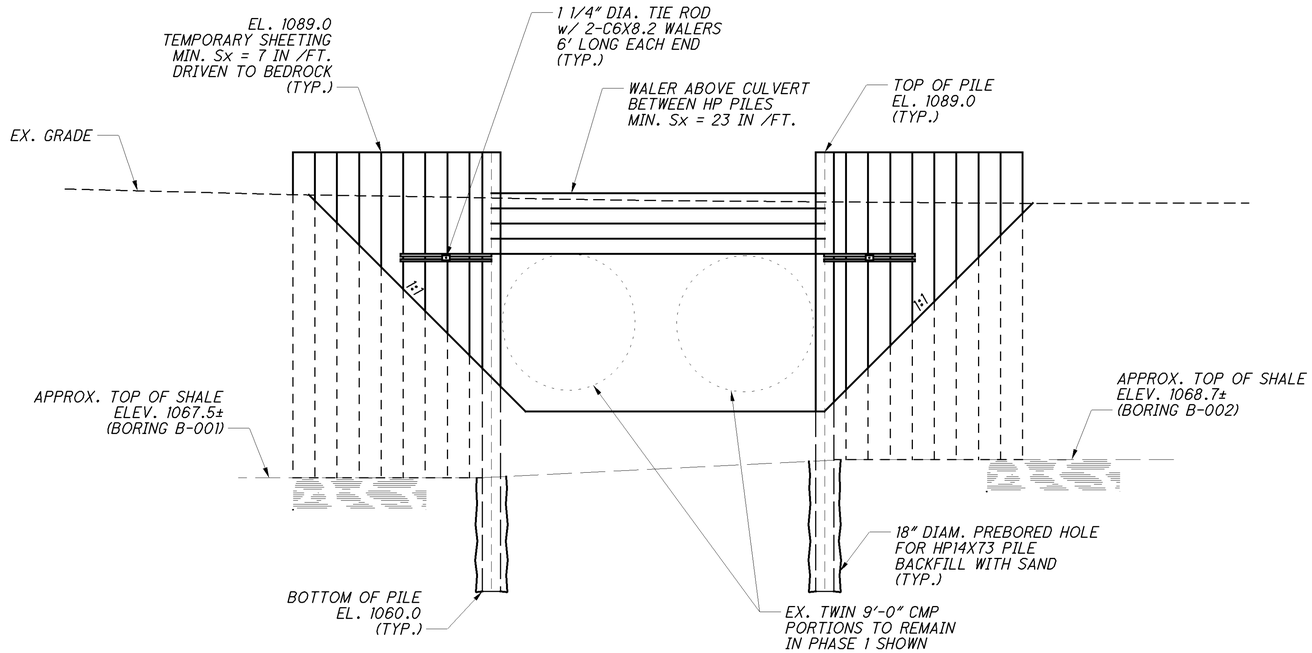

PHASE 1 - SHORING NORTH ELEVATION

SCALE: 1"=5'

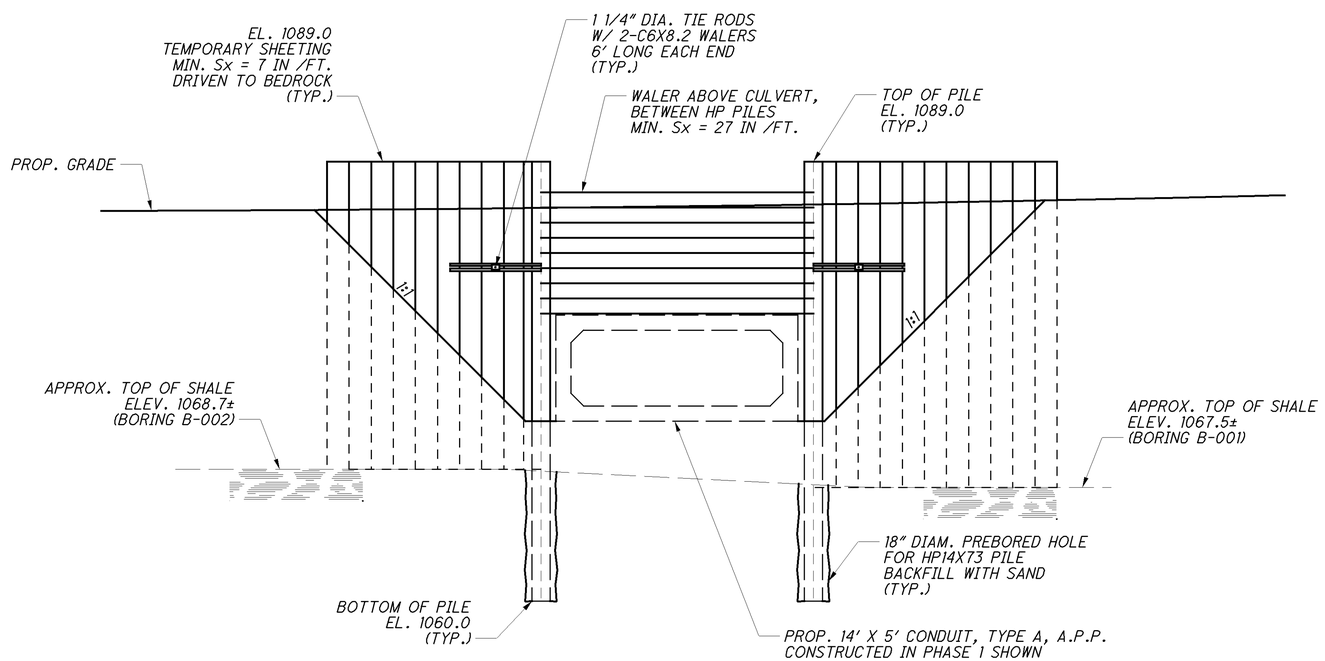

PHASE 2 - SHORING SOUTH ELEVATION

SCALE: 1"=5'

CALCULATED SDL
CHECKED WT

MAINTENANCE OF TRAFFIC - SHORING ELEVATIONS

GEA-88-4.96

DATE: 06-MAR-14 13:35
FILE: P:\GEA\90222 (GEA-088-0496)\ROADWAY\SHEETS\MOT\90222MP003.DGN
SCALE: 1 - 1E

SHEET NUMBER									PARTICIPATION	ITEM	ITEM EXT.	GRAND TOTAL	UNIT	DESCRIPTION	SEE SHEET NO.
	3		11					OFFICE CALCS	01/STR/BR						
														ROADWAY	
	LUMP								LUMP	201	11000	LUMP		CLEARING AND GRUBBING	
			376						376	202	38000	376	FT	GUARDRAIL REMOVED	
			445						445	203	10000	445	CU YD	EXCAVATION	
			505						505	203	20000	505	CU YD	EMBANKMENT	
								141	141	204	10000	141	SQ YD	SUBGRADE COMPACTION	
			375						375	606	13000	375	FT	GUARDRAIL, TYPE 5	
	LUMP								LUMP	SPECIAL	690E71000	LUMP		ASBESTOS ABATEMENT	
														EROSION CONTROL	
			18						18	601	11000	18	SQ YD	RIPRAP USING 6" REINFORCED CONCRETE SLAB	
			61						61	601	32110	61	CU YD	ROCK CHANNEL PROTECTION, TYPE B WITH AGGREGATE FILTER	
	2								2	659	00100	2	EACH	SOIL ANALYSIS TEST	
	71								71	659	00300	71	CU YD	TOPSOIL	
	639								639	659	10000	639	SQ YD	SEEDING AND MULCHING	
	32								32	659	14000	32	SQ YD	REPAIR SEEDING AND MULCHING	
	32								32	659	15000	32	SQ YD	INTER-SEEDING	
	0.10								0.10	659	20000	0.10	TON	COMMERCIAL FERTILIZER	
	0.13								0.13	659	31000	0.13	ACRE	LIME	
	4								4	659	35000	4	M GAL	WATER	
								2700	2700	832	30000	2700	EACH	EROSION CONTROL	
														DRAINAGE	
	21								21	605	31100	21	FT	AGGREGATE DRAINS	
														PAVEMENT	
								346	346	254	01000	346	SQ YD	PAVEMENT PLANING, ASPHALT CONCRETE	
								25	25	301	46000	25	CU YD	ASPHALT CONCRETE BASE, PG64-22	
								22	22	304	20000	22	CU YD	AGGREGATE BASE	
								26	26	407	10000	26	GALLON	TACK COAT	
								24	24	407	14000	24	GALLON	TACK COAT FOR INTERMEDIATE COURSE	
								16	16	441	50101	16	CU YD	ASPHALT CONCRETE SURFACE COURSE, TYPE 1, (448), AS PER PLAN	4
								23	23	441	50300	23	CU YD	ASPHALT CONCRETE INTERMEDIATE COURSE, TYPE 2, (448)	
								7	7	441	50301	7	CU YD	ASPHALT CONCRETE INTERMEDIATE COURSE, TYPE 2, (448), AS PER PLAN	4
								12	12	441	50701	12	CU YD	ASPHALT CONCRETE INTERMEDIATE COURSE, TYPE 1, (448),	4
														(UNDER GUARDRAIL), AS PER PLAN	

CALCULATED DAB
CHECKED SDL

GENERAL SUMMARY

GEA-88-4.96

DATE: 07-Mar-14 12:44
FILE: P:\GEA\90222 (GEA-088-0496)\ROADWAY\SHEETS\90222GG001.DGN
SCALE: 1 = 1E

SHEET NUMBER									PARTICIPATION	ITEM	ITEM EXT.	GRAND TOTAL	UNIT	DESCRIPTION	SEE SHEET NO.
	3	5		21		23		OFFICE CALCS	01/STR/BR						
														TRAFFIC CONTROL	
				0.06					0.06	642	00090	0.06	MILE	EDGE LINE, 4"	
				0.03					0.03	642	00290	0.03	MILE	CENTER LINE	
														STRUCTURES (UNDER 20')	
						LUMP			LUMP	202	11000	LUMP		STRUCTURE REMOVED	
						LUMP			LUMP	503	11100	LUMP		COFFERDAMS AND EXCAVATION BRACING	
						LUMP			LUMP	503	21320	LUMP		UNCLASSIFIED EXCAVATION, INCLUDING ROCK	
						4333			4333	509	10000	4333	LB	EPOXY COATED REINFORCING STEEL	
						11			11	511	46010	11	CU YD	CLASS QC1 CONCRETE	
						32			32	511	46510	32	CU YD	CLASS QC1 CONCRETE, FOOTING	
						2			2	511	46610	2	CU YD	CLASS QC1 CONCRETE, HEADWALL	
						56			56	512	10100	56	SQ YD	SEALING OF CONCRETE SURFACES (EPOXY-URETHANE)	
						224			224	512	33000	224	SQ YD	TYPE 2 WATERPROOFING	
						34			34	516	13600	34	SQ FT	1" PREFORMED EXPANSION JOINT FILLER	
						7			7	518	21200	7	CU YD	POROUS BACKFILL WITH FILTER FABRIC	
						64			64	611	96311	64	FT	14' X 5' CONDUIT, TYPE A, 706.05, AS PER PLAN	23
						177			177	613	41200	177	CU YD	LOW STRENGH MORTAR BACKFILL	
														MAINTENANCE OF TRAFFIC	
		4							4	614	12350	4	EACH	WORK ZONE IMPACT ATTENUATOR	
		10							10	614	13302	10	EACH	BARRIER REFLECTOR, TYPE B2	
		8							8	614	13360	8	EACH	OBJECT MARKER, TWO-WAY	
		0.16							0.16	614	21100	0.16	MILE	WORK ZONE CENTER LINE, CLASS 1, 642 PAINT	
		0.11							0.11	614	22100	0.11	MILE	WORK ZONE EDGE LINE, CLASS 1, 642 PAINT	
		20							20	614	26200	20	FT	WORK ZONE STOP LINE, CLASS 1, 642 PAINT	
		158							158	615	20001	158	SQ YD	PAVEMENT FOR MAINTAINING TRAFFIC, CLASS A, AS PER PLAN	3
	3								3	616	10000	3	MGAL	WATER	
		400							400	622	41000	400	FT	PORTABLE BARRIER, 32"	
	LUMP								LUMP	614	11000	LUMP		MAINTAINING TRAFFIC	
									9	619	16011	9	MONTH	FIELD OFFICE, TYPE B, AS PER PLAN	4
									LUMP	623	10000	LUMP		CONSTRUCTION LAYOUT STAKES AND SURVEYING	
									LUMP	624	10000	LUMP		MOBILIZATION	

CALCULATED DAB
CHECKED WHT

GENERAL SUMMARY

GEA-88-4.96

DATE: 07-MAR-14 12:38
FILE: P:\GEA\90222 (GEA-088-0496)\ROADWAY\SHEETS\90222GG002.DGN
SCALE: 1 = 1E

REF NO.	SHEET NO.	STATION FROM	STATION TO	SIDE		202 GUARDRAIL REMOVED		601 ROCK CHANNEL PROTECTION, TYPE B WITH AGGREGATE FILTER		601 RIPRAP USING 6" REINFORCED CONCRETE SLAB		606 GUARDRAIL, TYPE 5
						FT		CU YD		SQ YD		FT
R-1	12	260+57	262+70	RT		213						
R-2	12	261+07	262+70	LT		163						
GR-1	12	260+57	262+70	RT								212.5
GR-2	12	261+07	262+70	LT								162.5
E-1	12	261+74	261+85	RT				12.3				
E-2	12	261+82	261+96	RT				23.0				
E-3	12	261+75	262+05	RT						17.9		
E-4	12	261+90	262+06	RT				13.9				
E-5	12	261+75	261+87	LT				7.8				
E-6	12	261+98	262+05	LT				3.7				
TOTALS						376		60.7		17.9		375
TOTALS CARRIED TO GENERAL SUMMARY						376		61		18		375

EXCAVATION, EMBANKMENT, AND SEEDING AND MULCHING SUB-SUMMARY

	SHEET NO.	203 EXCAVATION	203 EMBANKMENT	659 SEEDING AND MULCHING
		CU YD	CU YD	SQ YD
	13	1	56	111
	14	440	373	302
	15	4	76	226
TOTALS CARRIED TO GENERAL SUMMARY		445	505	
TOTAL CARRIED TO SHEET NO. 3				639

ITEM 659 - TOPSOIL
111 CU YD x 639 SQ YD / 1000 SQ YD = 70.9 CU YD — USE: 71 CU YD

ITEM 659 - SOIL ANALYSIS TEST
71 CU YD / 10000 CU YD = 2 TESTS MINIMUM — USE: 2 EACH

ITEM 659 - REPAIR SEEDING AND MULCHING
0.05 x 639 SQ YD = 31.9 SQ YD — USE: 32 SQ YD

ITEM 659 - INTER-SEEDING
0.05 x 639 SQ YD = 31.9 SQ YD — USE: 32 SQ YD

ITEM 659 - COMMERCIAL FERTILIZER
1 TON x 639 SQ YD / 7410 SQ YD = 0.09 TON
1 TON x 32 SQ YD / 11,111 SQ YD = 0.01 TON — USE: 0.10 TON

ITEM 659 - LIME
639 SQ YD / 4840 ACRES/SQ YD = 0.13 ACRES — USE: 0.13 ACRES

ITEM 659 - WATER
2 x 639 SQ YD x 0.0027 M GAL/SQ YD = 3.45 M GAL
1 x 32 SQ YD x 0.0027 M GAL/SQ YD = 0.09 M GAL — USE: 4 M GAL

TOTALS CARRIED TO GENERAL NOTES SHEET 3.

CALCULATED SDL
CHECKED WHT

SUB-SUMMARY

GEA-88-4.96

DATE: 17-OCT-13 09:03
FILE: J:\PROJECTS\TRU\84457(TRU-CH-313)\ROADWAY\SHEETS\84457GS001.DGN
SCALE: 1 - 1E

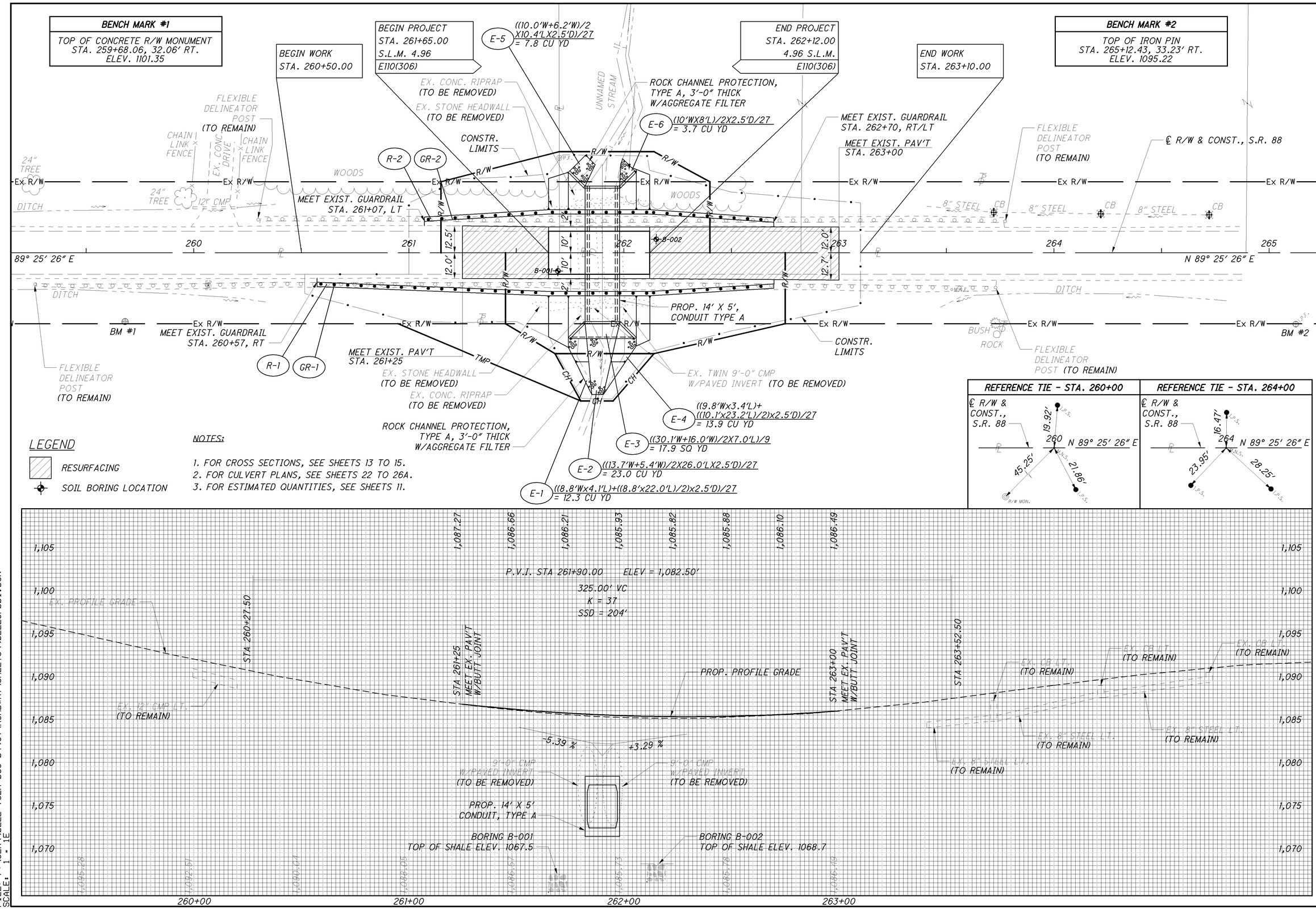

HORIZONTAL SCALE IN FEET

CALCULATED DAB
CHECKED SDL

PLAN AND PROFILE
STA. 259+20 TO STA. 265+20

GEA-88-4.96

DATE: 06-MAR-14 15:25
FILE: P:\GEA\90222 (GEA-088-0496)\ROADWAY\SHEETS\90222GP001.DGN
SCALE: 1 - 1E

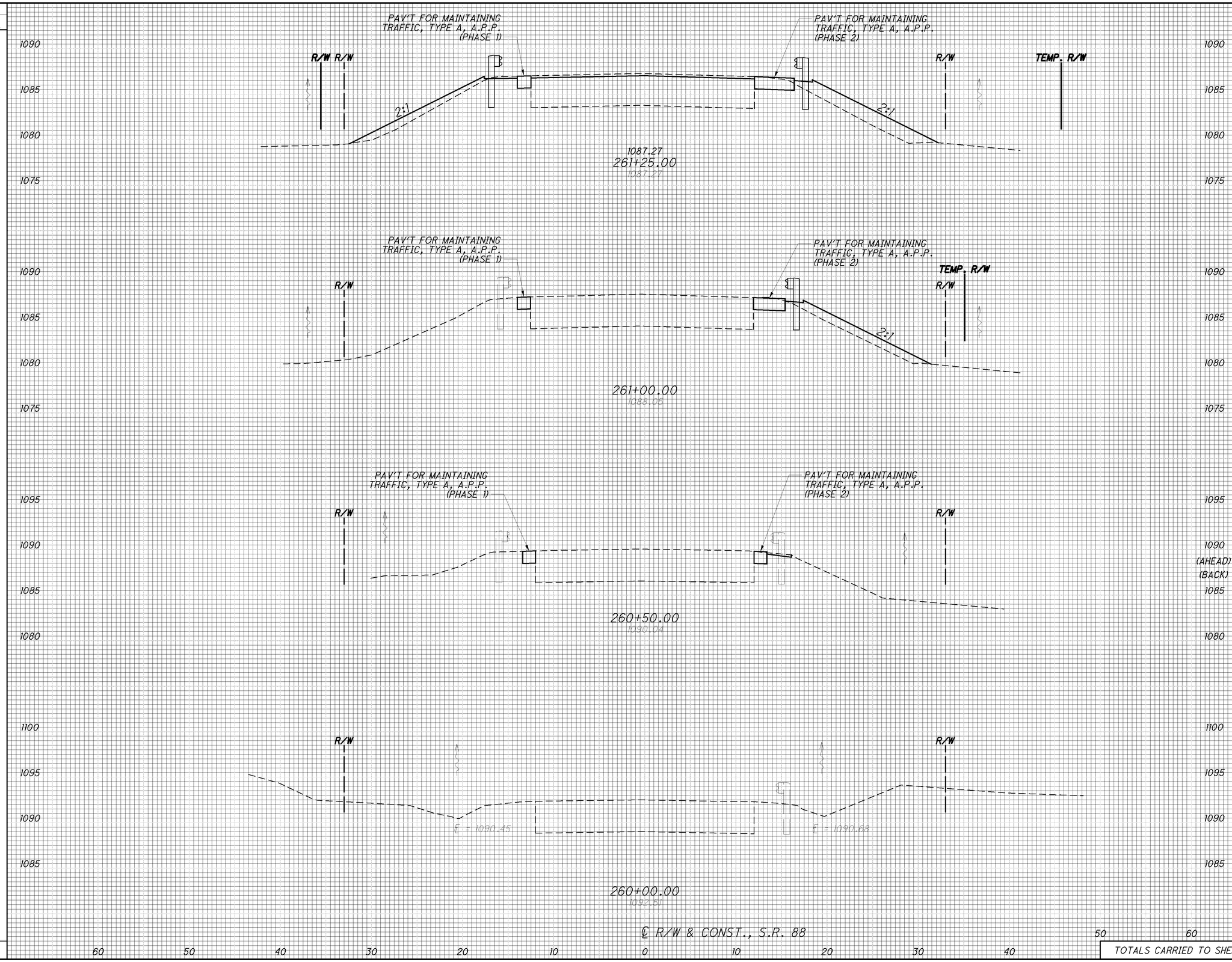

SEEDING END WIDTH	SEEDING SQ. YDS.	END AREA CUT	END AREA FILL	VOLUME CUT	VOLUME FILL
32		1	32		
	67			0	43
16		0	14		
	44			1	13
0		(AHEAD) 1 / (BACK) 0	0 / 0		
				0	0
		0	0		
	111	TOTALS CARRIED TO SHEET NO. 11		1	56

CALCULATED DAB
CHECKED SDL

CROSS SECTIONS
STA. 260+00 TO STA. 261+25

GEA-88-4.96

DATE: 06-MAR-14 15:29
FILE: P:\GEA\90222 (GEA-088-0496)\ROADWAY\SHEETS\90222XA001.DGN
SCALE: 1 - 5E

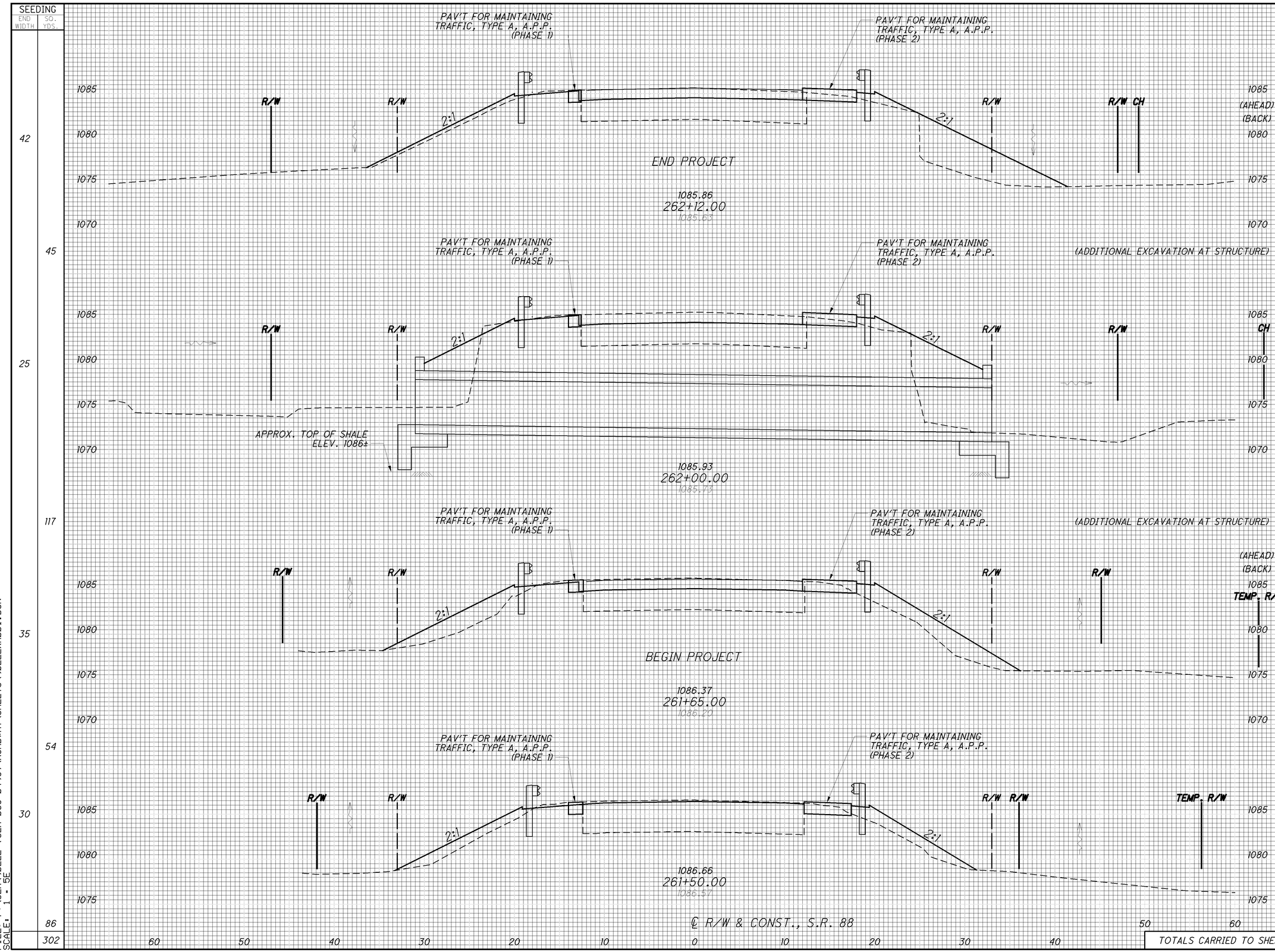

END AREA CUT	END AREA FILL	VOLUME CUT	VOLUME FILL
(AHEAD) 3	63		
(BACK) 28	63		
		78	
		72	83
296	310		
		211	237
		78	
(AHEAD) 31	56		
(BACK) 3	56		
		1	24
1	31		
		0	29
TOTALS CARRIED TO SHEET NO. 11		440	373

CALCULATED DAB
CHECKED SDL

CROSS SECTIONS
STA. 261+50 TO STA. 262+12

GEA-88-4.96

DATE: 06-MAR-14 15:29
FILE: P:\GEA\90222 (GEA-088-0496)\ROADWAY\SHEETS\90222XA001.DGN
SCALE: 1 - 5E

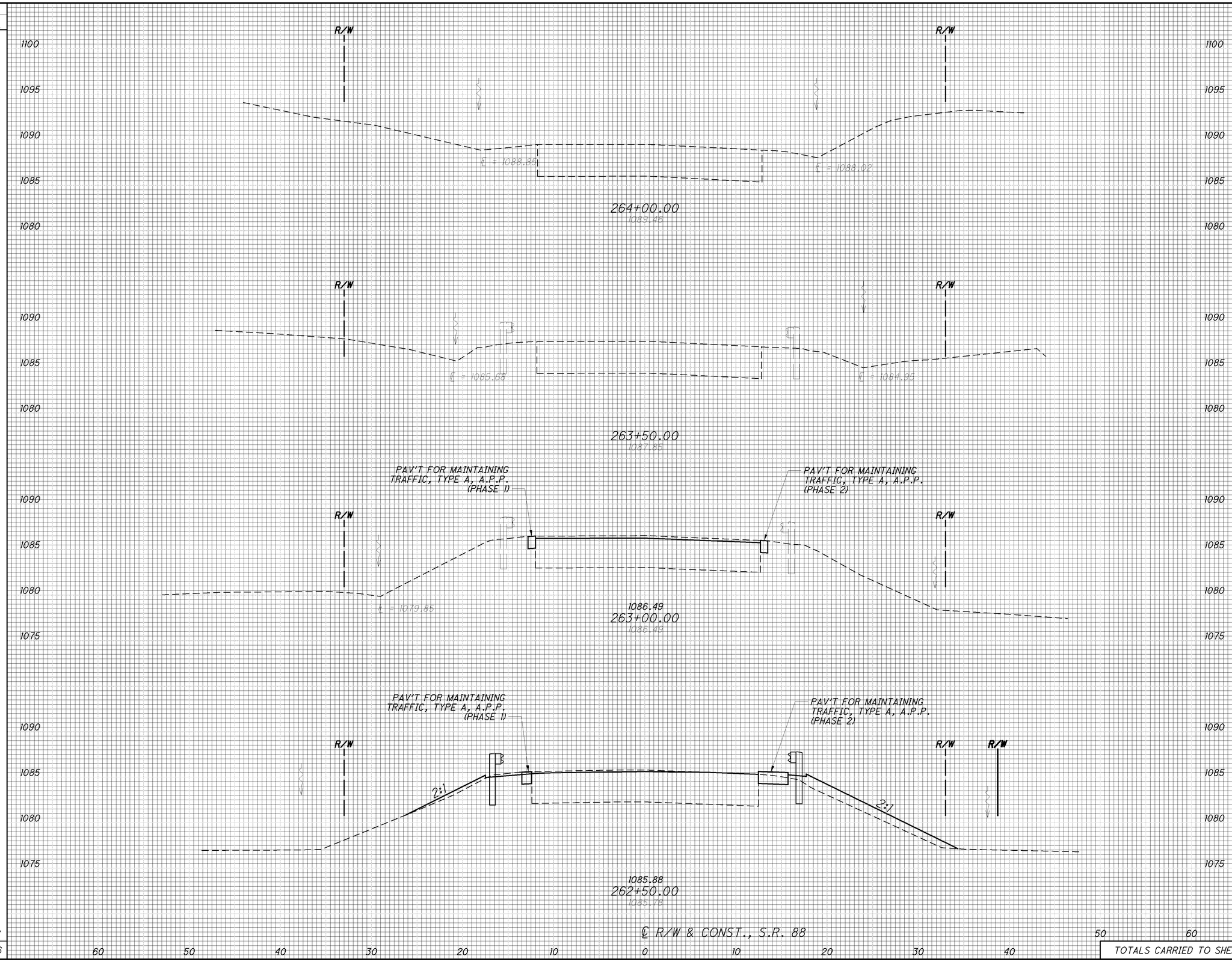

SEEDING END WIDTH	SEEDING SQ. YDS.	END AREA CUT	END AREA FILL	VOLUME CUT	VOLUME FILL
0		0	0		
	0			0	0
0		0	0		
	0			0	0
0		0	0		
	78			1	18
28		1	19		
	148			3	58
	226			4	76

TOTALS CARRIED TO SHEET NO. 11

CALCULATED DAB
CHECKED SDL

CROSS SECTIONS
STA. 262+50 TO STA. 264+00

GEA-88-4.96

DATE: 06-MAR-14 15:29
FILE: P:\GEA\90222 (GEA-088-0496)\ROADWAY\SHEETS\90222XA001.DGN
SCALE: 1 - 5E

NOTES

GENERAL: Components shown on this drawing are used in a variety of guardrail systems. See individual guardrail drawing for specific applications.

See CMS 606 for guardrail specifications not covered on these drawings.

Refer to AASHTO M 180 for dimensional details of W-Beam and Thrie-Beam rail elements, related buffer and end sections, beam splices, post and splice bolts, nuts, and Type 1 W-Beam to Thrie-Beam Transition sections.

RAIL ELEMENTS: W-Beam Rail has an effective length of 12'-6" unless otherwise specified, with ¾" x 2½" post bolt slots on 6'-3" centers regardless of post spacing. Field punch or drill bolt holes or slots for irregularly spaced posts as specified in CMS 606.04.

RAIL SPLICES: Lap splices between two rail elements or between a rail and terminal connector in the direction of traffic. Lap the buffer or flared end sections in the direction of traffic.

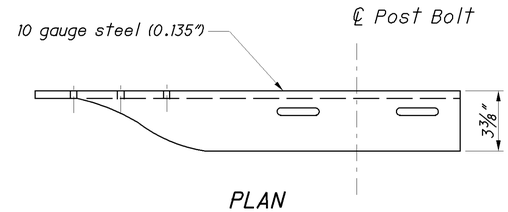

PLAN

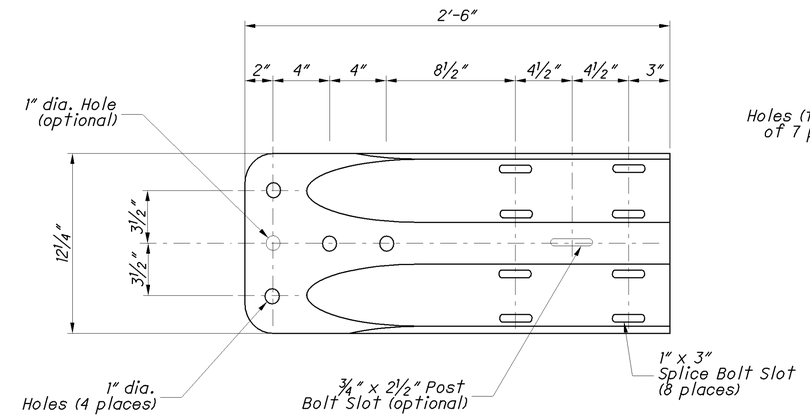

ELEVATION

W-BEAM TERMINAL CONNECTOR

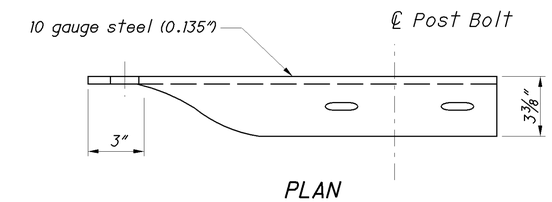

PLAN

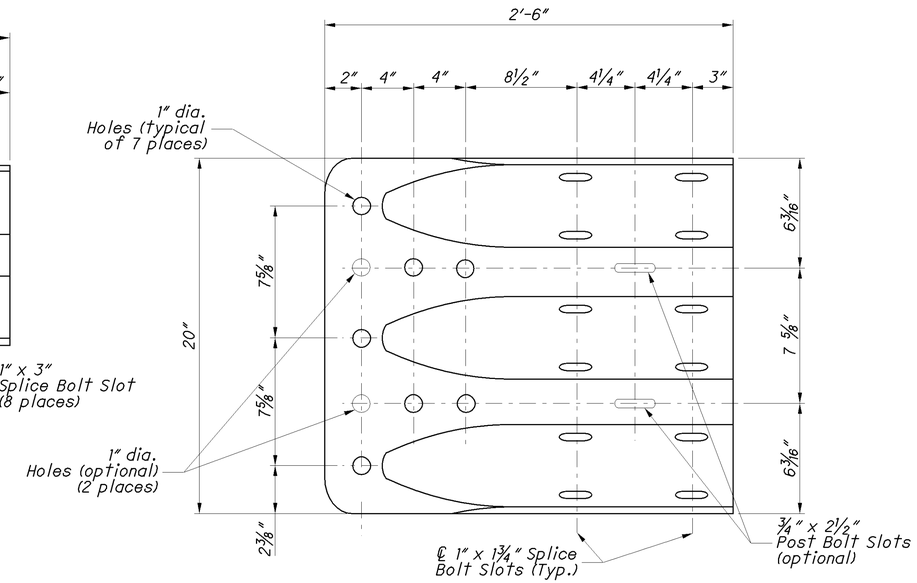

ELEVATION

THRIE-BEAM TERMINAL CONNECTOR

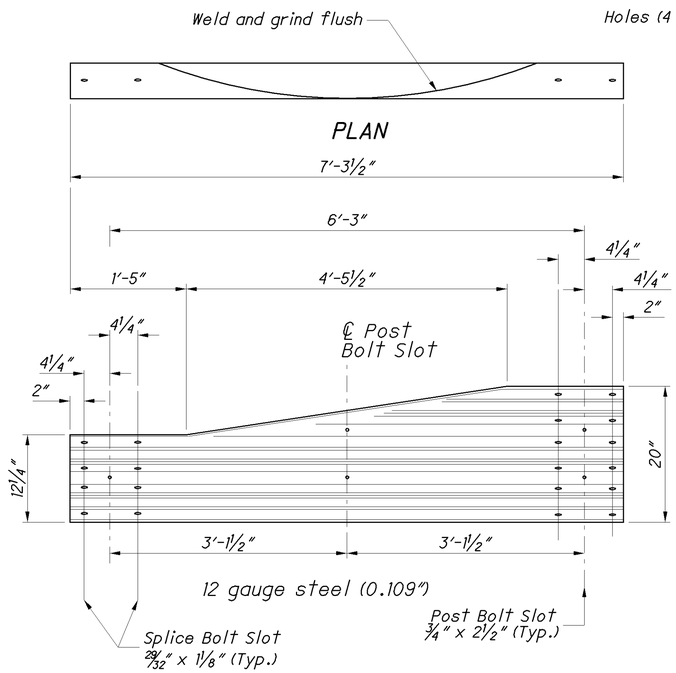

ELEVATION

TYPE 2 TRANSITION SECTION

(Asymmetric W to Thrie-Beam)

For details of Type 1 Transition Section (Symmetric), refer to AASHTO M 180, Figure 4.

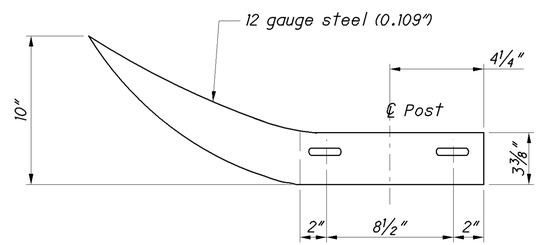

PLAN

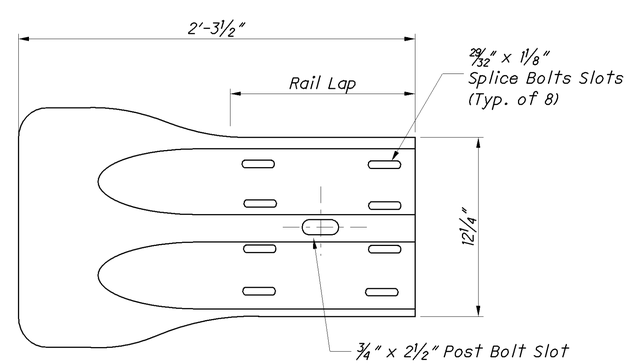

ELEVATION

W-BEAM FLARED END SECTION

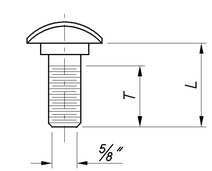

GUARDRAIL BOLT (For Post and Splice Bolts)		
L	T min.	Bolt Use
18" (Standard Rail)	4"	Type 5: WP/WB, PB
26" (Barrier Rail)		
10"	4"	Type 5: SP/WB, PB
1¼"	1⅛"	Splice Bolt

WP = Wood Post WB = Wood Blockout
SP = Steel Post PB = Plastic Blockout

Longer Bolt may be needed for round Wood Post larger than 8" dia.

OFFICE OF ROADWAY ENGINEERING

DESIGNED | REVIEWED | REVISION DATE | CHECKED | PIS NUMBER

PLAN INSERT SHEET

GUARDRAIL DETAILS (Rail Components)

PIS GR-1.1

1 / 3

16 / 30

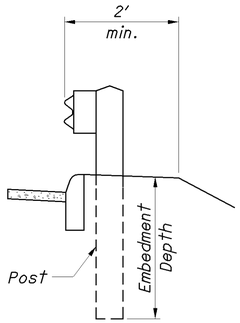

DETAIL A

See POST EMBEDMENT DEPTH Note

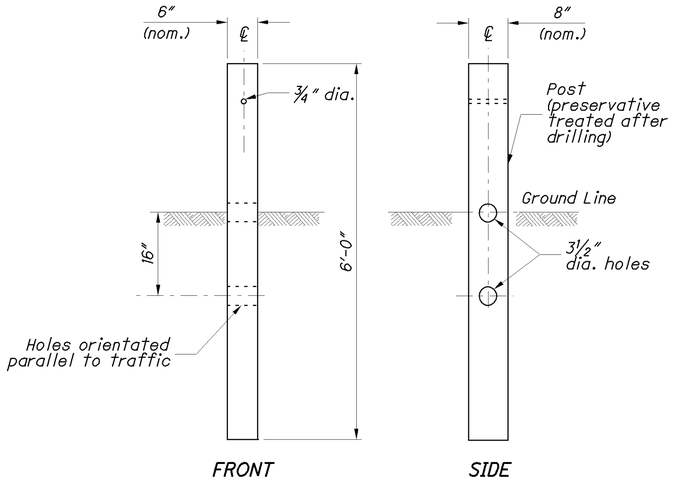

TYPE 1 BREAKAWAY CRT POST

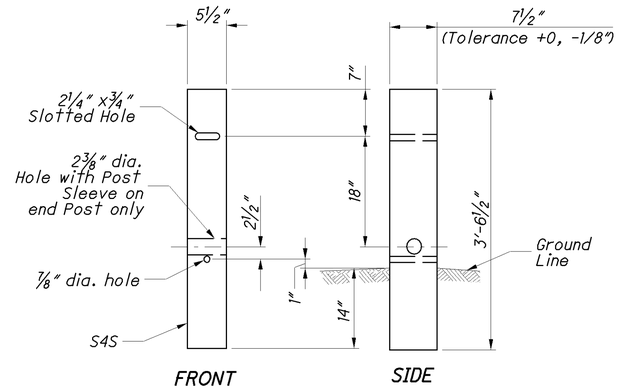

TYPE 2 BREAKAWAY CRT POST

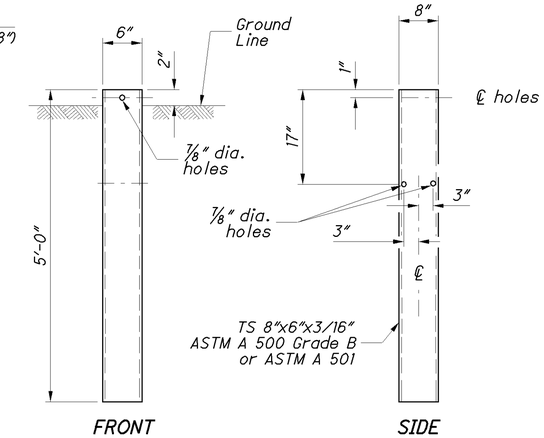

STEEL GROUND TUBE

NOTES

GUARDRAIL HEIGHT: For initial installation, construct the guardrail within ± 1″ of the standard height, h, or **29″** to the top of W-Beam rail. (See MEASURING GUARDRAIL HEIGHT Detail.)
When subsequent projects, such as resurfacings, affect the height of existing guardrail, the finished height is to be within ±2.5″ of the standard height.

POST EMBEDMENT DEPTH: Standard embedment is 3′-5″ min. Where less than 2′ of graded shoulder width (10:1 or flatter) exists, measured from the face of the guardrail (see DETAIL "A"), use longer posts so that a minimum of 5′-5″ embedment depth is provided. Payment for the longer posts will be made at the unit price bid for **ITEM 606 - GUARDRAIL POST, 9′, Each.**

SPECIAL POST MOUNTINGS: Install posts located over a drainage inlet or structure as shown in the FOOTING ANCHOR Detail, or anchor per the details shown on **SCD GR-2.2.**

Install posts located over a footing with a cover of less than 2′-6″ with a footing anchor as detailed here. (A plate, as detailed on SECTION B-B of **SCD GR-2.2**, may be used as an alternative attachment method.) Where the cover is between 2′-6″ and 3′-5″, the footing anchor may be omitted and the post encased instead with 4″ (min.) of concrete.

Do not drive posts located over a culvert with less than 4′-3″ of cover; instead set in drilled or dug holes. Where the available post embedment depth is less than 3′-5″, encase the post with a minimum of 4″ concrete.

All costs associated with special post mountings are included in the unit price bid of Item 606 Guardrail of the type specified in the plans.

ANCHORS: Holes and grouting shall comply with CMS 510. Use either cement or non-shrink, nonmetallic grout.

Expansion shield anchors as specified in CMS 712.01 may be substituted except where concrete deterioration has occurred, as determined by the Engineer. Where self-drilling anchors are used, drill the holes with the expansion shield (not by a drill bit) and install the shield flush with the concrete surface.

PROTECTIVE COATING: In lieu of the complying with CMS 710.06, coat expansion shields, anchors and concrete insert anchor assemblies embedded in concrete in accordance with ASTM A 153 or be of stainless steel. Any bolts screwed into these devices shall meet CMS 710.06. (See sheet 3 for Concrete Insert Anchor Assembly Detail.)

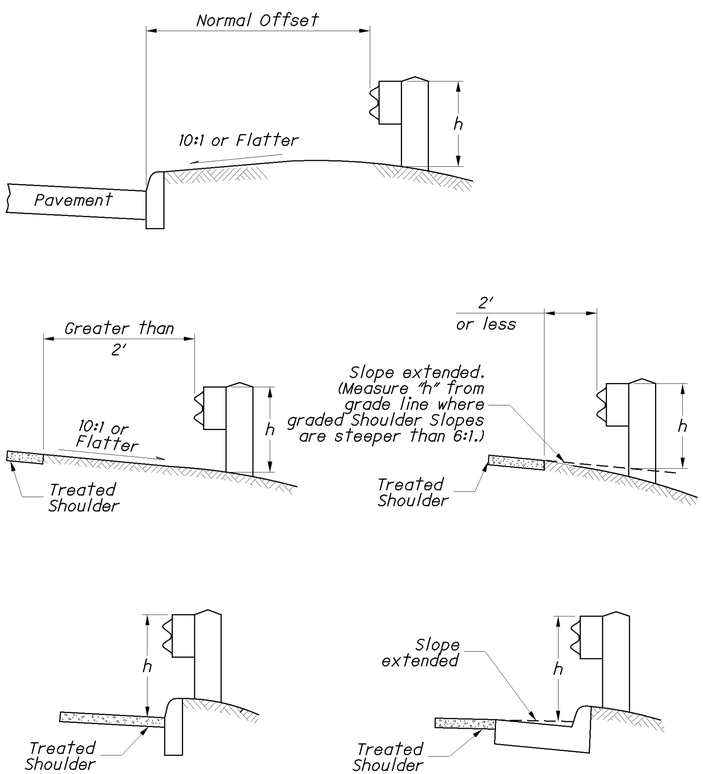

h = Standard Height (See GUARDRAIL HEIGHT Note)

MEASURING GUARDRAIL HEIGHT

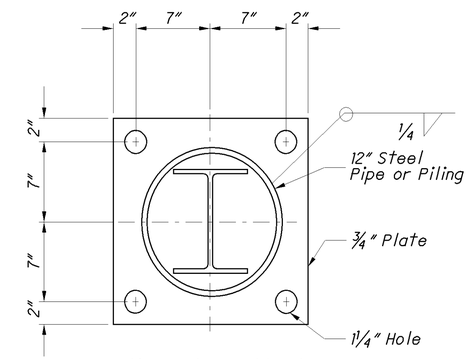

Footing Anchor and hardware need not be galvanized

SECTION A-A

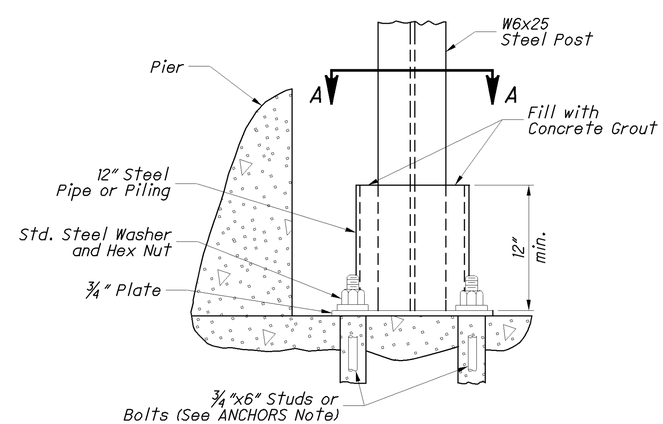

ELEVATION
FOOTING ANCHOR

See SPECIAL POST MOUNTINGS Note.

OFFICE OF ROADWAY ENGINEERING

DESIGNED | REVIEWED | REVISION DATE | CHECKED | PIS NUMBER

PLAN INSERT SHEET

GUARDRAIL DETAILS (Rail Components)

PIS GR-1.1

2 / 3

17 / 30

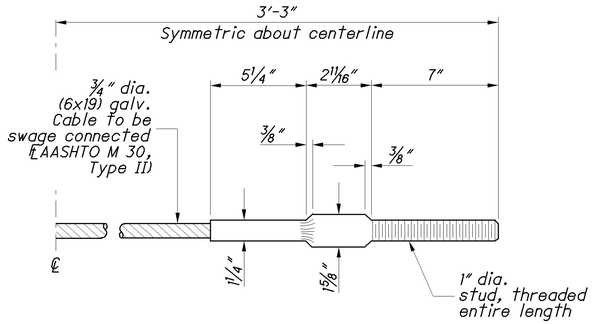

STANDARD SWAGED FITTING AND STUD

CABLE ANCHOR

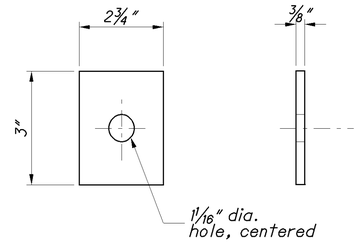

END PLATE

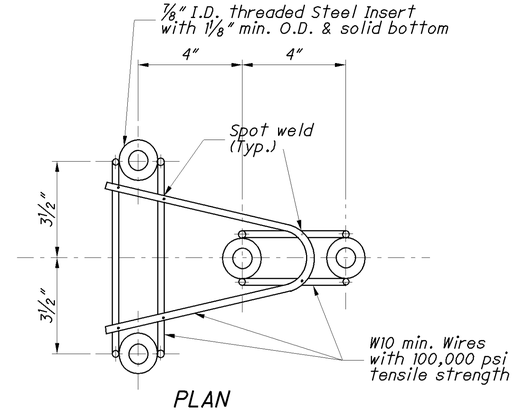

PLAN

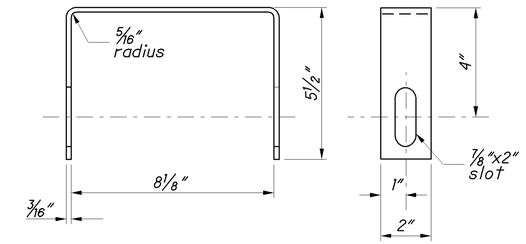

YOKE

Two required in Assembly

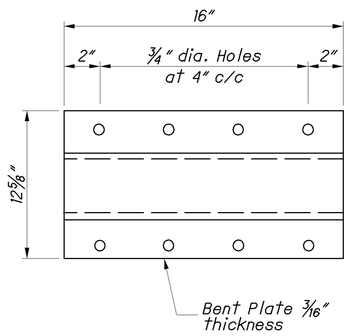

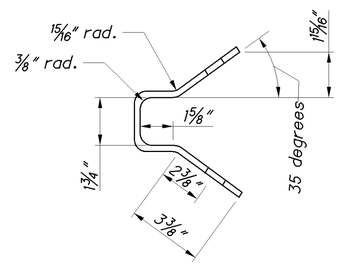

ANCHOR BRACKET

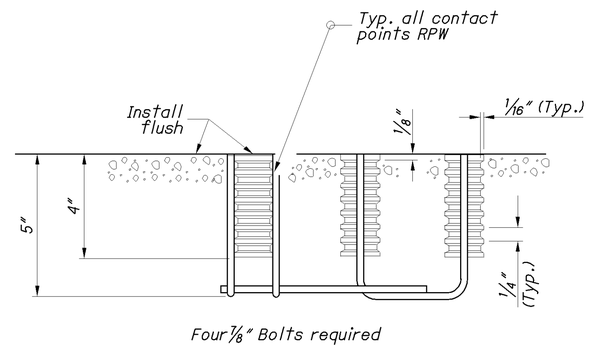

Four ⅞" Bolts required

ELEVATION

CONCRETE INSERT ANCHOR ASSEMBLY (W-BEAM ONLY)

See ANCHORS and PROTECTIVE COATINGS Notes on Sheet 2

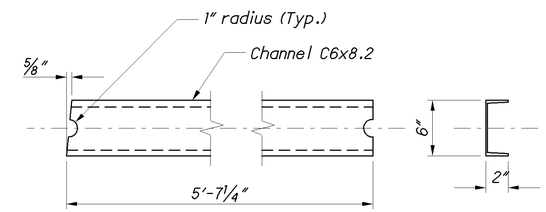

STRUT

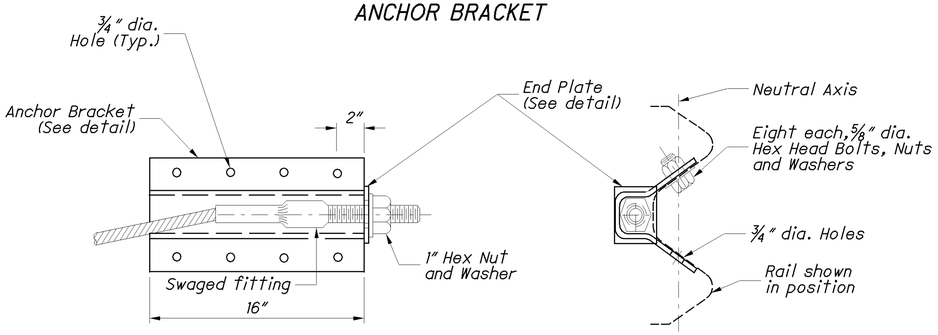

ANCHOR BRACKET ASSEMBLY DETAILS

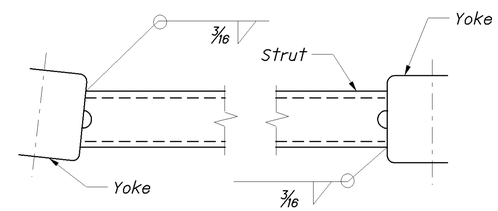

Channel legs shown down. For opposite hand, install Channel legs up.

STRUT AND YOKE ASSEMBLY

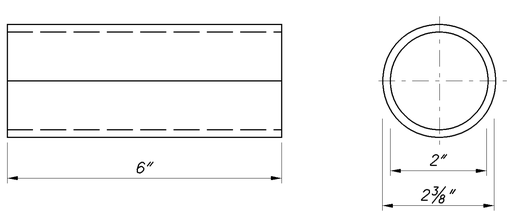

POST SLEEVE

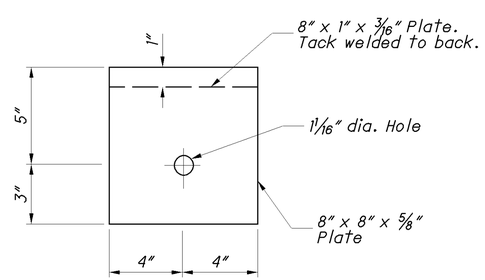

BEARING PLATE

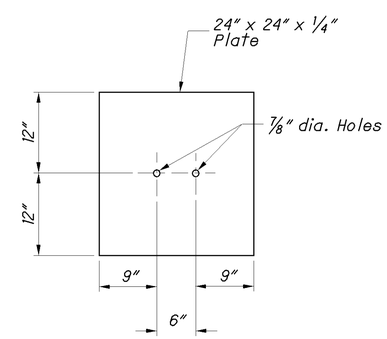

SOIL PLATE

OFFICE OF ROADWAY ENGINEERING

DESIGNED | REVIEWED | REVISION DATE | CHECKED | P1S NUMBER

PLAN INSERT SHEET

GUARDRAIL DETAILS (Rail Components)

PIS GR-1.1

3 / 3

18 / 30

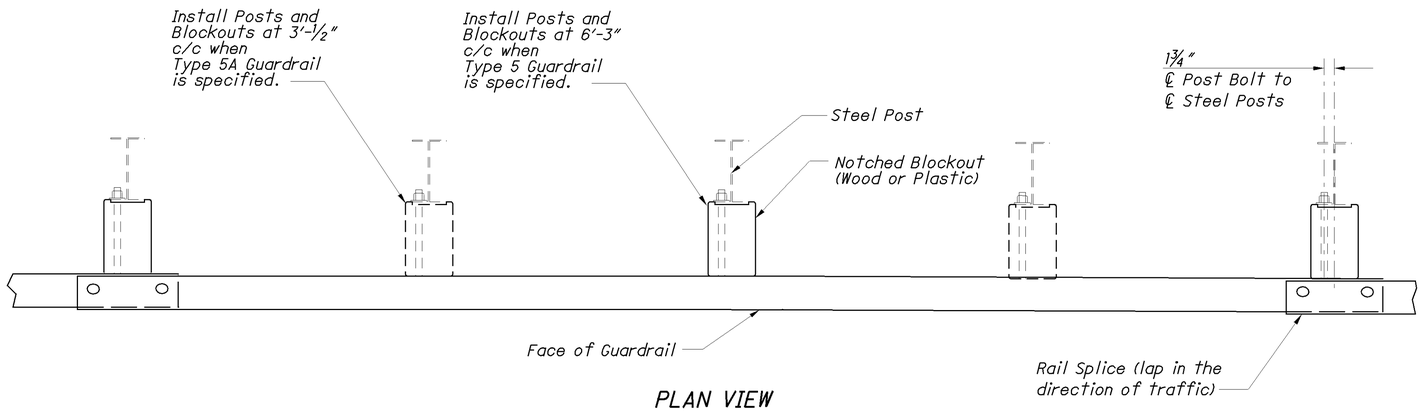

PLAN VIEW
(Steel Posts shown)

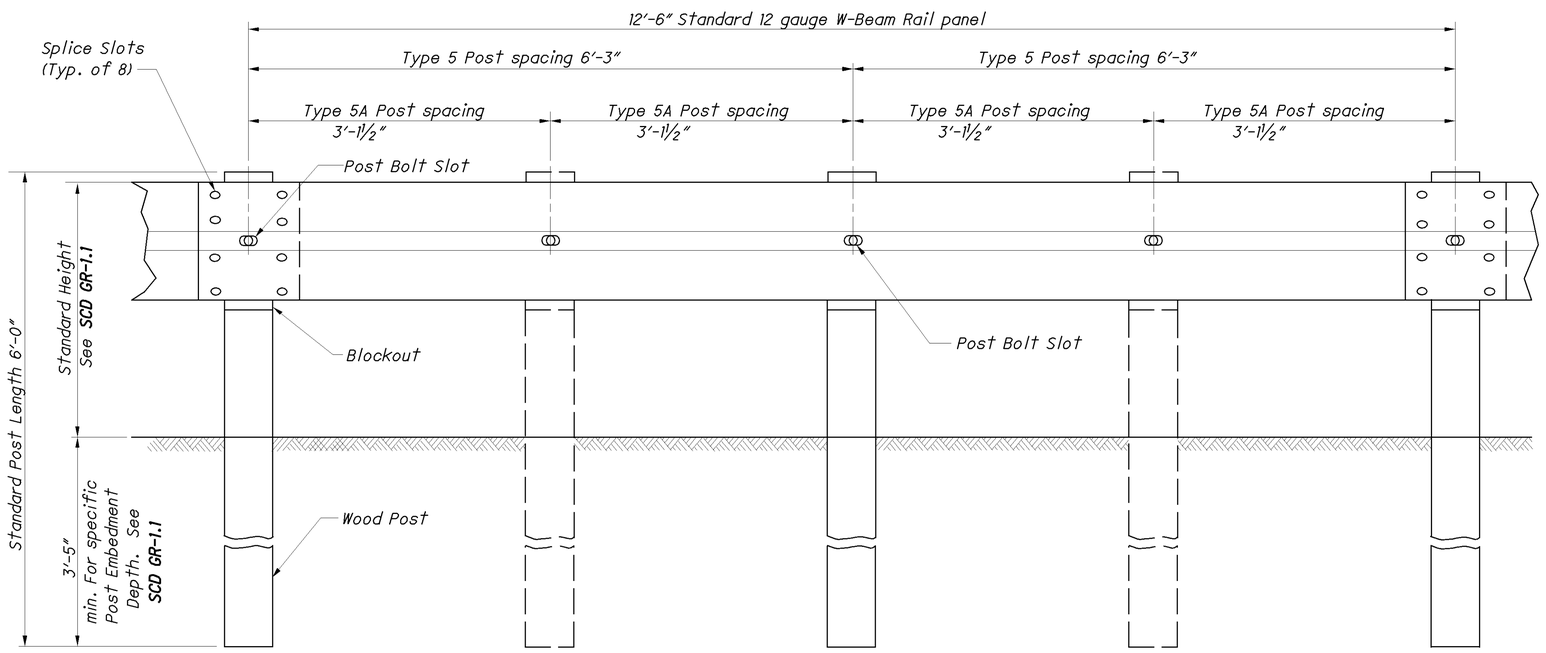

ELEVATION
(Wood Posts shown)

NOTES

RAIL: Use W-Beam rail meeting AASHTO M 180 Type II Class A, as specified in CMS 606.

POSTS: Posts may be constructed of wood or steel. Wood posts may be round or 6"x8" square-sawed.

Use round wood posts on runs of single-sided rail. The round posts shall be 8"±1 in diameter at the top and not more than 3" larger at the butt with a uniform taper.

Fabricated wood posts with square ends. Posts shall be pressure-treated as per CMS 710.14. Bore bolt holes and, if required, trim the tops of posts after the posts are set.

Steel posts are to be W6x9 or W6x8.5 galvanized steel. Use the same type of post throughout the length of the project unless otherwise specified in the plans or permitted by the Engineer.

All posts are 6'-0" long unless specified otherwise in the Contract Document. Posts may be set in drilled holes or may be driven to grade.

WELDED BEAM POSTS: Welded beam guardrail posts may be used for Item 606, Guardrail, provided the web and flange sizes are as shown here. Welding of the web to the flanges must comply with ASTM A 769, Class 1, using Grade 36 steel [250 MPa yield point] with the following exceptions:

Sec. 7.2 Test reports of tensile properties for each lot shall accompany each shipment.

Sec. 12 Beams that have imperfections repaired by welding shall not be accepted for use in Item 606.

Sec. 13 Random samples shall be tested by the Department from materials delivered to the project site, or other locations designated by the Laboratory.

ALTERNATE POSTS: Engineered guardrail posts having met NCHRP 350 criteria, and listed on the **Office of Materials Management's** Approved List are permitted as an equal alternate when installed according to the Manufacturer's instructions and within the limitations shown on the Approved List.

BLOCKOUTS: Blockout dimensions are dependent on post used. Wood Blockouts are to be pressure treated as specified in CMS 710.14. Bore bolt holes. Approved alternate blockouts may be used in lieu of the wood blockouts shown. The approved list is maintained by the **Office of Roadway Engineering.**

WASHERS: Install appropriate sized standard galvanized steel washers on the nut side of bolts installed on wood posts.

DELINEATION: For barrier reflectors, see CMS 626.

MISCELLANEOUS: For other guardrail details, see **SCD GR-1.1.**

STEEL BEAM POSTS (English)				
Size	Beam depth	Flange width	Flange thickness	Web thickness
Rolled W6x8.5	5.8"	3.94"	0.193"	0.170"
Rolled W6x9	5.9"	3.94"	0.215"	0.170"
Welded 6x8.5	6.0"	3.94"	0.193"	0.170"
Welded 6x9	6.0"	3.94"	0.215"	0.170"

OFFICE OF ROADWAY ENGINEERING

DESIGNED | REVIEWED | REVISION DATE | CHECKED | PIS NUMBER

PLAN INSERT SHEET

GUARDRAIL TYPE 5 & 5A

PIS GR-2.1

1/2

19/30

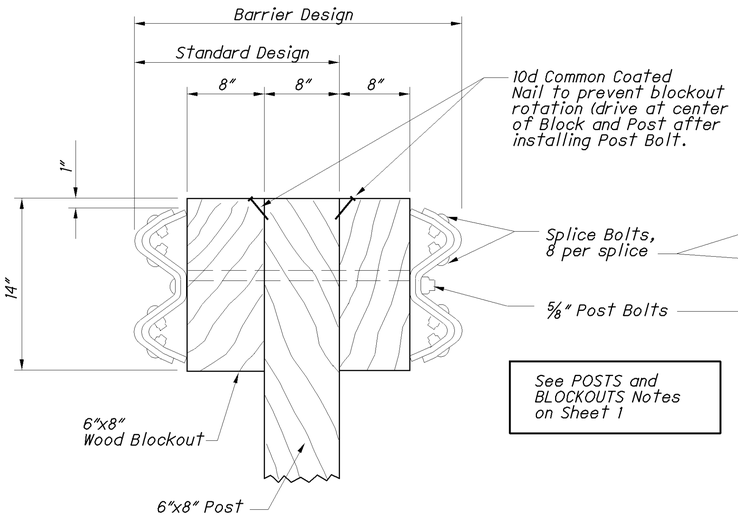

SQUARE WOOD POST

See POSTS and BLOCKOUTS Notes on Sheet 1

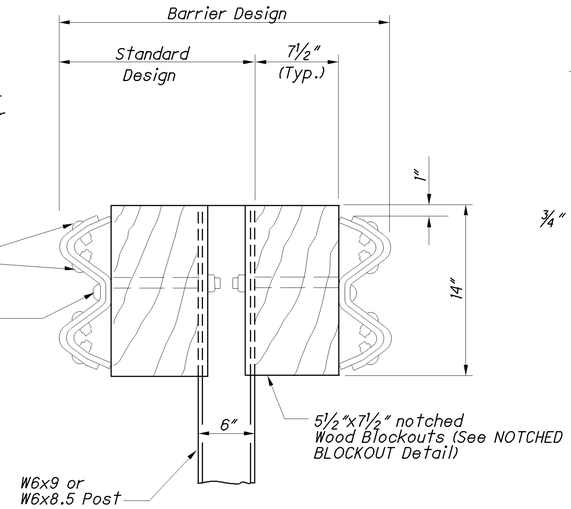

STEEL POST

See POSTS Note, Sheet 1

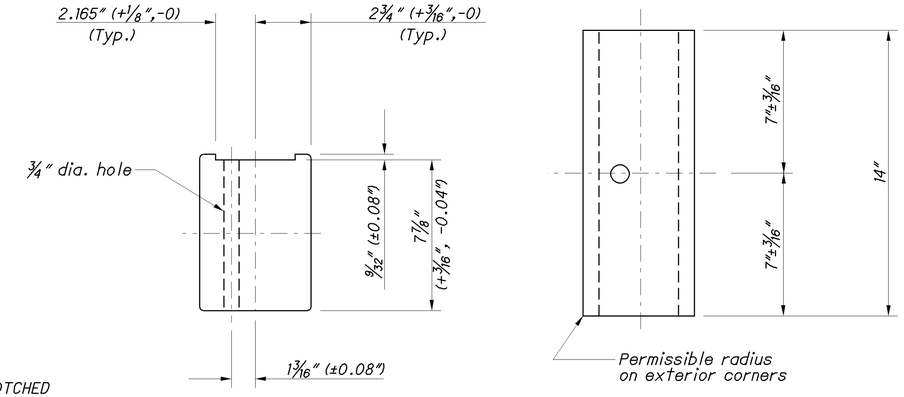

PLAN

ELEVATION

NOTCHED BLOCKOUTS FOR STEEL POSTS

See BLOCKOUTS Note on Sheet 1

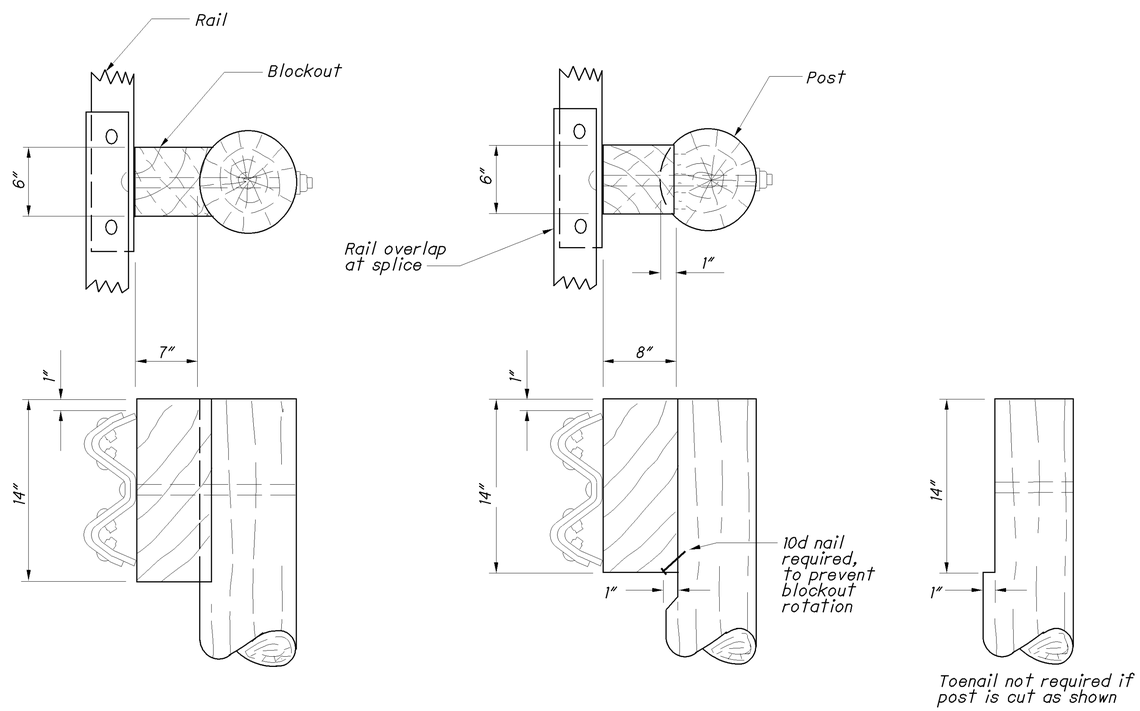

Method 1
Routed Blockout

Method 2
Notched Post

Alternate methods of placing the Blockouts on round Posts may be submitted for consideration and approved by the Engineer.

ROUND WOOD POSTS

Single Sided runs only (Standard Design)

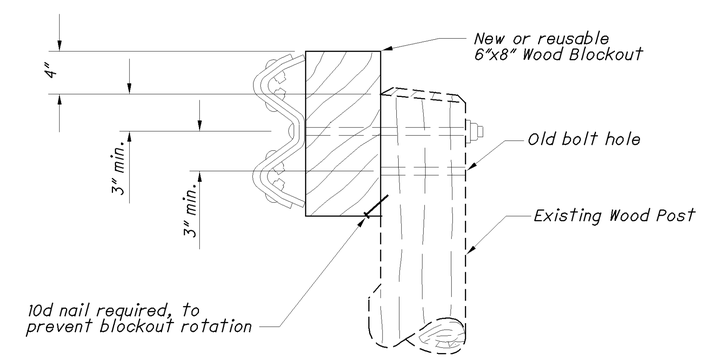

WOOD POSTS WITH WOOD BLOCK
RAISING EXISTING GUARDRAIL HEIGHT

OFFICE OF ROADWAY ENGINEERING

DESIGNED | REVIEWED | REVISION DATE | CHECKED | PIS NUMBER

PLAN INSERT SHEET

GUARDRAIL TYPE 5 & 5A

PIS GR-2.1

PAVEMENT MARKING LEGEND

(C) CENTER LINE, DOUBLE SOLID, YELLOW

(E) EDGE LINE, WHITE

PAVEMENT MARKING SUB-SUMMARY				
STATION		SIDE	642	
			EDGE LINE, 4"	CENTER LINE
FROM	TO		MILE	MILE
STA. 261+25	STA. 263+00	℄		0.03
STA. 261+25	STA. 263+00	LT	0.03	
STA. 261+25	STA. 263+00	RT	0.03	
TOTALS CARRIED TO GENERAL SUMMARY			0.06	0.03

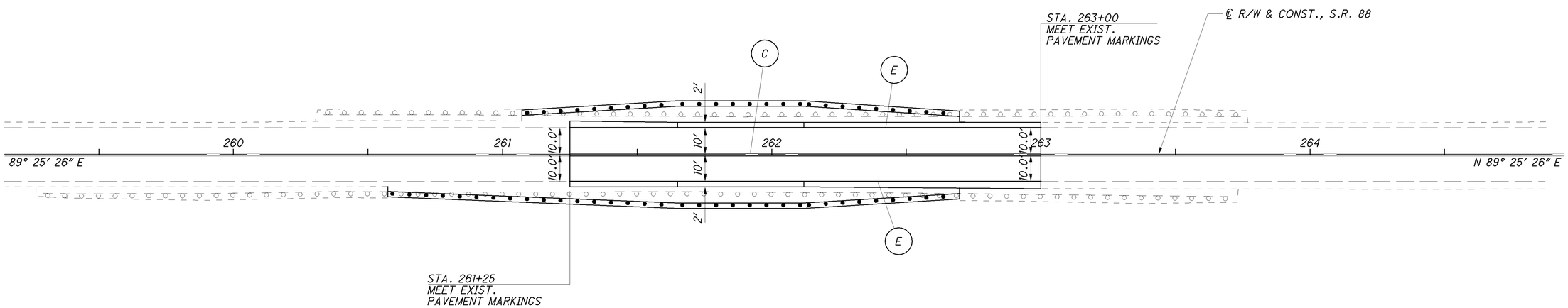

HORIZONTAL SCALE IN FEET 0 10 20 40

CALCULATED DAB
CHECKED SDL

PAVEMENT MARKING PLAN

GEA-88-4.96

DATE: 17-OCT-13 09:12
FILE: J:\PROJECTS\TRU\84457(TRU-CH-313)\ROADWAY\SHEETS\84457TP001.DGN
SCALE: 1 = 1E

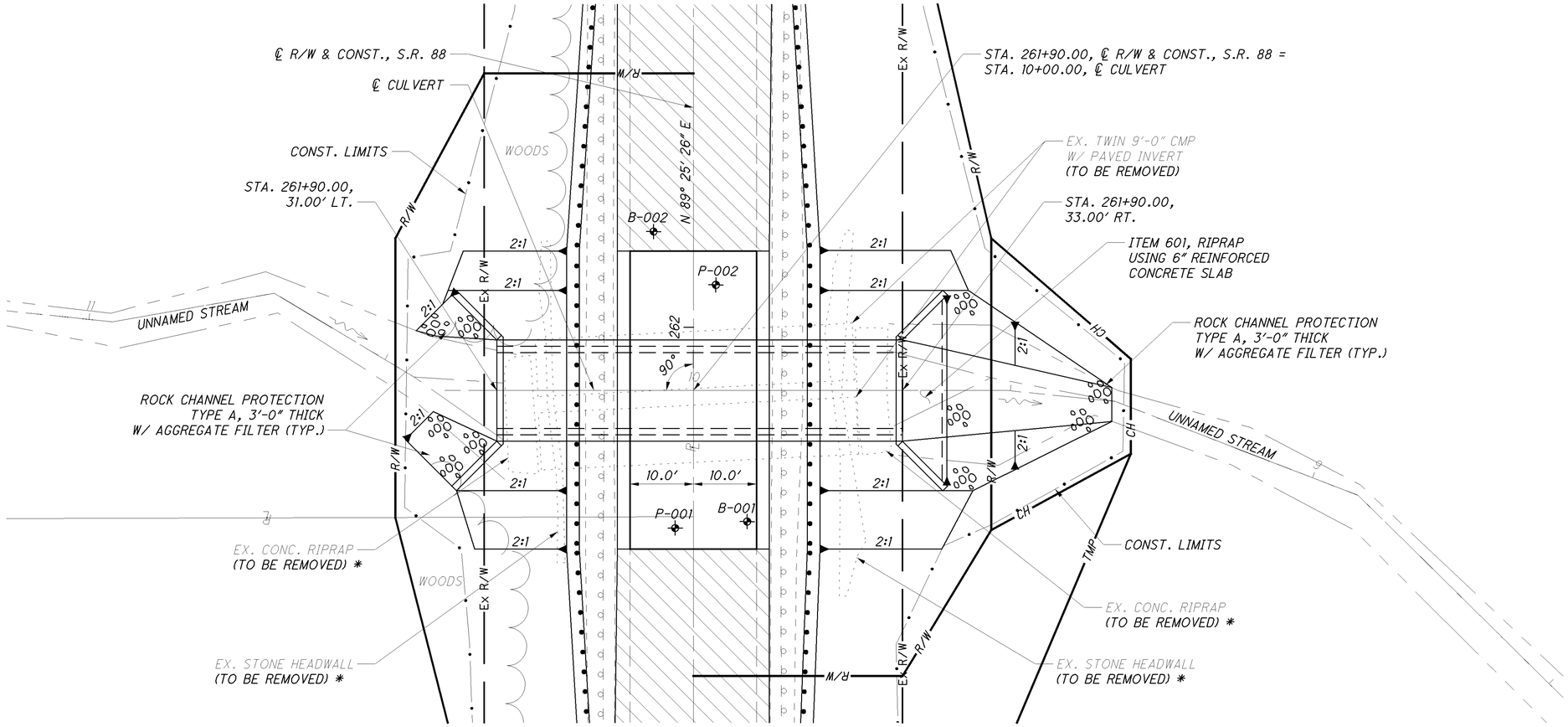

PLAN

* - INCLUDE WITH ITEM 202, STRUCTURE REMOVED, FOR PAYMENT

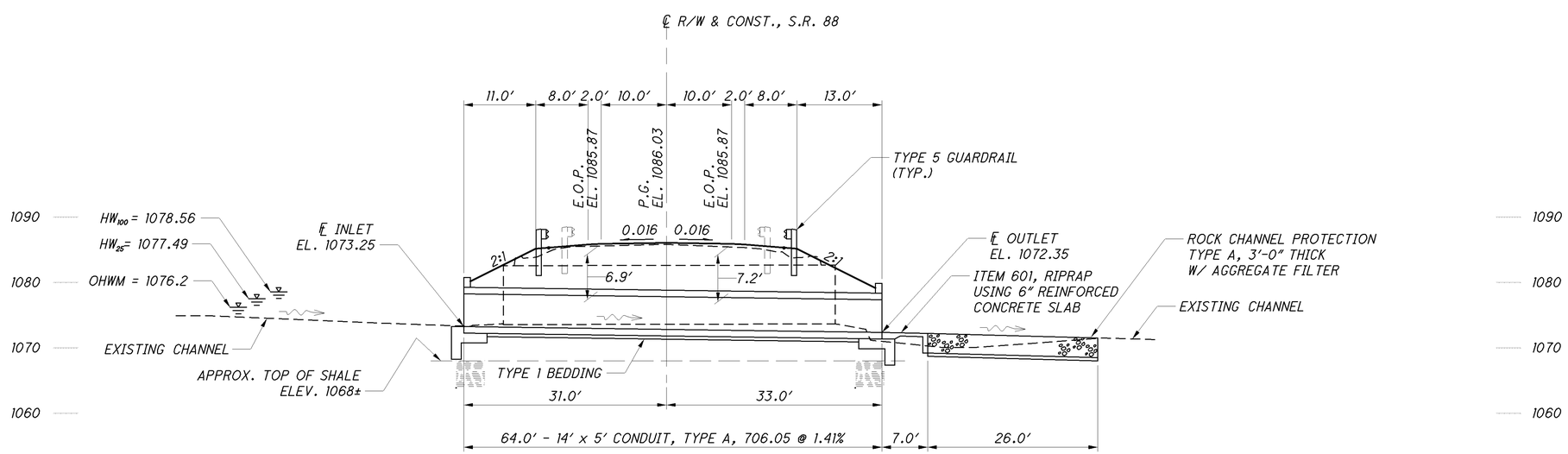

PROFILE ALONG ℄ CULVERT

HYDRAULIC DATA

DRAINAGE AREA = 1.03 SQ. MILES
Q (25) = 348 CFS
Q (100) = 476 CFS
V (25) = 13.21 FT/S
V (100) = 14.27 FT/S
HW (25) = 1077.49
HW (100) = 1078.56

EXISTING STRUCTURE

TYPE: TWIN CORRUGATED METAL PIPES WITH STONE AND CONCRETE HEADWALLS

SPANS: 9′-0″± DIAMETER
ROADWAY: 28′-0″± F/F GUARDRAIL
LOADING: H-20
SKEW: NONE
APPROACH SLABS: NONE
ALIGNMENT: TANGENT
CROWN: 0.016 FT/FT±
WEARING SURFACE: 6″± ASPHALT CONCRETE
STRUCTURE FILE NUMBER: 2800993
YEAR BUILT: 1948

PROPOSED STRUCTURE

TYPE: PRECAST FOUR-SIDED REINFORCED CONCRETE BOX CULVERT 14′ SPAN X 5′ RISE

LENGTH: 64′ PLUS FIT-UP
ROADWAY: 36′-0″ F/F RAILING
LOADING: HL-93 AND 0.06 KSF FWS
SKEW: NONE
ALIGNMENT: TANGENT
CROWN: 0.016 FT/FT
WEARING SURFACE: ASPHALT CONCRETE
STRUCTURE FILE NUMBER: 2801000
COORDINATES: LATITUDE: N41°23′18″
LONGITUDE: W81°01′48″

DESIGN AGENCY
Thomas Fox & Associates, Inc.
Consulting Engineers & Surveyors
EDGE CERTIFIED
A.J. FOX PTC
35995 Mastodon Ave | Youngstown OH | 44512 | 330.965.1515

DESIGNED	DRAWN	REVIEWED	DATE
WHT	DAB	DAK	11-4-13
CHECKED	REVISED	STRUCTURE FILE NUMBER	
SDL		2801000	

CULVERT PLAN AND PROFILE

BRIDGE NO. GEA-088-0496
OVER UNNAMED STREAM

GEA-88-4.96
PID No. 90222

DATE: 06-MAR-14 14:17
FILE: P:\GEA\90222 (GEA-088-0496)\STRUCTURES\SHEETS\088_0496DP001.DGN
SCALE: 1 - 1E

GENERAL NOTES

DESIGN SPECIFICATIONS: THIS STRUCTURE CONFORMS TO THE "LRFD BRIDGE DESIGN SPECIFICATIONS" ADOPTED BY THE AMERICAN ASSOCIATION OF STATE HIGHWAY AND TRANSPORTATION OFFICIALS, 2012, INCLUDING THE 2013 INTERIMS, AND THE ODOT BRIDGE DESIGN MANUAL 2007.

DESIGN LOADING:

HL-93
FUTURE WEARING SURFACE (FWS) OF 0.06 KIPS/SQ.FT.

DESIGN DATA:

CONCRETE CLASS QC-MISC - COMPRESSIVE STRENGTH 4 KSI (FOOTING, WINGWALL AND FORESLOPE WALL)

REINFORCING STEEL - MINIMUM YIELD STRENGTH 60 KSI (ALL REINFORCING SHALL BE EPOXY COATED)

FOUNDATION BEARING RESISTANCE: WINGWALL FOOTINGS, AS DESIGNED, PRODUCE A MAXIMUM SERVICE LOAD PRESSURE OF 2.0 KIPS PER SQUARE FOOT AND A MAXIMUM STRENGTH LOAD PRESSURE OF 2.8 KIPS PER SQUARE FOOT. THE FACTORED BEARING RESISTANCE IS 5.7 KIPS PER SQUARE FOOT.

PRECAST CONCRETE: AT THE OPTION OF THE CONTRACTOR, PRECAST WINGWALLS MAY BE USED PROVIDED THEY ARE SIZED TO MEET THE SOIL PARAMETERS AND MEET OR EXCEED THE MATERIAL STRENGTHS SPECIFIED HEREIN. THE CONTRACTOR SHALL SUBMIT DESIGNS AND SHOP DRAWINGS TO THE OFFICE OF STRUCTURAL ENGINEERING FOR APPROVAL.

FORESLOPE WALL ANCHOR DOWELS: ANCHOR PER CMS 510 WITH NONSHRINK, NONMETALLIC GROUT CONFORMING TO CMS 705.20 AND TO A DEPTH OF 5". PAYMENT FOR DOWEL HOLES, GROUT AND INSTALLATION IS INCLUDED WITH ITEM 511.

AS AN ALTERNATIVE TO RESIN BONDING, THREADED INSERTS OR NONPROTRUDING MECHANICAL CONNECTORS CAST INTO THE CULVERT BY THE MANUFACTURER MAY BE USED PROVIDED THEY CAN RESIST AN ULTIMATE PULL-OUT STRENGTH OF 12 KIPS AND MAINTAIN A MINIMUM COVER OF 3 INCHES AT THE BOTTOM OF THE CULVERT SLAB. MECHANICAL CONNECTORS MUST PROVIDE AN "L-SHAPED" BAR INSIDE THE CULVERT WITH A MINIMUM HORIZONTAL LENGTH OF 12 INCHES. PAYMENT FOR INSERTS OR MECHANICAL CONNECTORS IS INCLUDED WITH ITEM 611.

BACKFILL LIMITATION: WHEN THE DESIGN HEIGHT IS GREATER THAN 10 FT, DO NOT PLACE THE BACKFILL BEHIND THE WINGWALLS HIGHER THAN THE ELEVATION OF THE SOIL ABOVE THE TOE. WHEN THE SOIL ABOVE THE TOE IS AT ITS FINISHED ELEVATION, PLACE THE REMAINDER OF THE BACKFILL.

POROUS BACKFILL WITH FILTER FABRIC: PLACE 1'-6" THICK BEHIND THE WINGWALLS ONLY AND EXTEND TO 12" BELOW THE EMBANKMENT SURFACE. PLACE GEOTEXTILE FABRIC BETWEEN THE POROUS BACKFILL AND REPLACED EXCAVATION ADJACENT TO THE STRUCTURE. IT TURNS UNDER THE BOTTOM OF THE POROUS BACKFILL AND RETURNS 6" ABOVE THE TOP ELEVATION OF THE WEEPHOLE.

PLACE WEEPHOLES 6" TO 12" ABOVE THE NORMAL WATER ELEVATION OR GROUND LINE WITH A MAXIMUM SPACING OF 10'-0". PROVIDE A MINIMUM OF ONE WEEPHOLE PER WINGWALL.

PREFORMED EXPANSION JOINT FILLER: PLACE PREFORMED EXPANSION JOINT FILLER (PEJF) CONFORMING TO CMS 705.03, 1 INCH THICK, ABOVE THE FOOTING BETWEEN THE SIDES OF THE BOX CULVERT AND THE ENDS OF THE WINGWALLS. PAYMENT FOR MATERIALS AND INSTALLATION IS INCLUDED WITH ITEM 516 - 1" PREFORMED EXPANSION JOINT FILLER.

SEALING OF FORESLOPE WALL AND WINGWALLS: SEAL ALL EXPOSED FORESLOPE WALL AND WINGWALL CONCRETE WITH EPOXY-URETHANE SEALER. THE DIAGRAMS BELOW SHOW THE LIMITS. PAYMENT FOR THE EPOXY-URETHANE SEALER IS PER ITEM 512 - SEALING OF CONCRETE SURFACES.

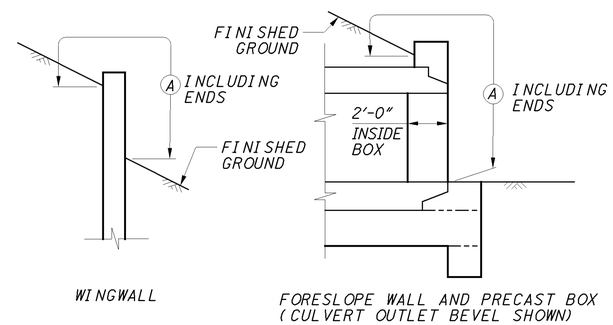

LIMITS OF ITEM 512-SEALING CONCRETE SURFACES

(A) - SEAL ENTIRE CONCRETE SURFACE AREA

WATERPROOFING: TYPE 2 WATERPROOFING, PER CMS 512.08 AND 711.25, EXTENDS VERTICALLY DOWN THE ENTIRE SIDES OF THE PRECAST CULVERT SECTIONS FOR ALL PORTIONS OF THE CULVERT WHICH WILL BE IN CONTACT WITH THE BACKFILL. PAYMENT FOR THE MEMBRANE WATERPROOFING IS AT THE CONTRACT PRICE BID PER SQUARE YARD FOR ITEM 512 - TYPE 2 WATERPROOFING.

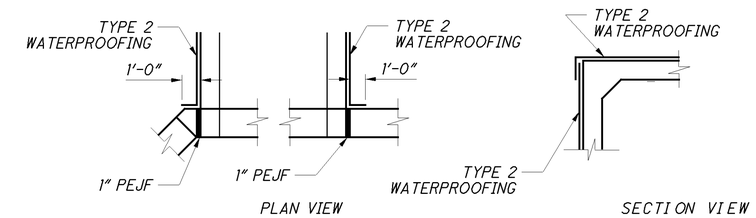

WATERPROOFING DETAILS

BASIS OF PAYMENT: ALL LABOR, EQUIPMENT AND INCIDENTALS REQUIRED TO CONSTRUCT THE FOOTING, CUTOFF WALL, WINGWALLS AND FORESLOPE WALLS ARE INCLUDED WITH EACH ITEM 511 - CLASS QC-MISC. CONCRETE. PAYMENT FOR REINFORCING STEEL IS INCLUDED WITH ITEM 509 - EPOXY COATED REINFORCING STEEL.

ITEM 611 - 14'X 5' CONDUIT, TYPE A, 706.05, AS PER PLAN. ALL REQUIREMENTS OF 706.05 SHALL BE MET EXCEPT AS DETAILED IN SUPPLEMENTAL SPECIFICATION 940.

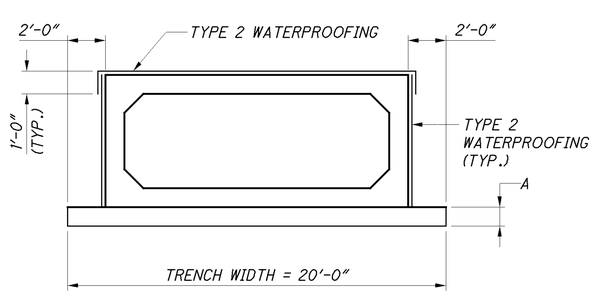

BOX CULVERT FOUNDATION

A = 6" TYPE 1 BEDDING, 611.06
FOR WINGWALL FOUNDATION, SEE SHEET 4 OF 6

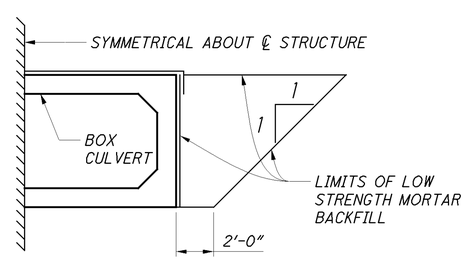

ITEM 613 - LOW STRENGTH MORTAR BACKFILL

ESTIMATED QUANTITIES

ITEM	ITEM EXT	TOTAL	UNIT	DESCRIPTION	SEE SHT.
202	11000	LUMP		STRUCTURE REMOVED	
503	11100	LUMP		COFFERDAMS AND EXCAVATION BRACING	
503	21320	LUMP		UNCLASSIFIED EXCAVATION, INCLUDING ROCK	
509	10000	4333	LB	EPOXY COATED REINFORCING STEEL	
511	46010	11	CU YD	CLASS QC1 CONCRETE	
511	46510	32	CU YD	CLASS QC1 CONCRETE, FOOTING	
511	46610	2	CU YD	CLASS QC1 CONCRETE, HEADWALL	
512	10100	56	SQ YD	SEALING OF CONCRETE SURFACES (EPOXY-URETHANE)	
512	33000	224	SQ YD	TYPE 2 WATERPROOFING	
516	13600	34	SQ FT	1" PREFORMED EXPANSION JOINT FILLER	
518	21200	7	CU YD	POROUS BACKFILL WITH FILTER FABRIC	
611	96311	64	FT	14' X 5' CONDUIT, TYPE A, 706.05, AS PER PLAN	2 OF 6
613	41200	177	CU YD	LOW STRENGH MORTAR BACKFILL	

NOTE: TOTALS CARRIED TO GENERAL SUMMARY SHEET

DESIGN AGENCY
TF Thomas Fok & Associates, Inc.
Consulting Engineers & Surveyors
EDGE CERTIFIED
S.B. 211 CERTIFIED
5555 Naiman Pkwy | Youngstown OH 44511 | 330.965.9191

DESIGNED	DRAWN	REVIEWED	DATE
WHT	DAB	DAK	11-4-13
CHECKED	REVISED	STRUCTURE FILE NUMBER	
SDL		2801000	

GENERAL NOTES & ESTIMATED QUANTITIES
BRIDGE NO. GEA-088-0496
OVER UNNAMED STREAM

GEA-88-4.96
PID No. 90222

DATE: 06-MAR-14 13:56
FILE: P:\GEA\90222 (GEA-088-0496)\STRUCTURES\SHEETS\088_0496GN001.DGN
SCALE: 1 = 1E

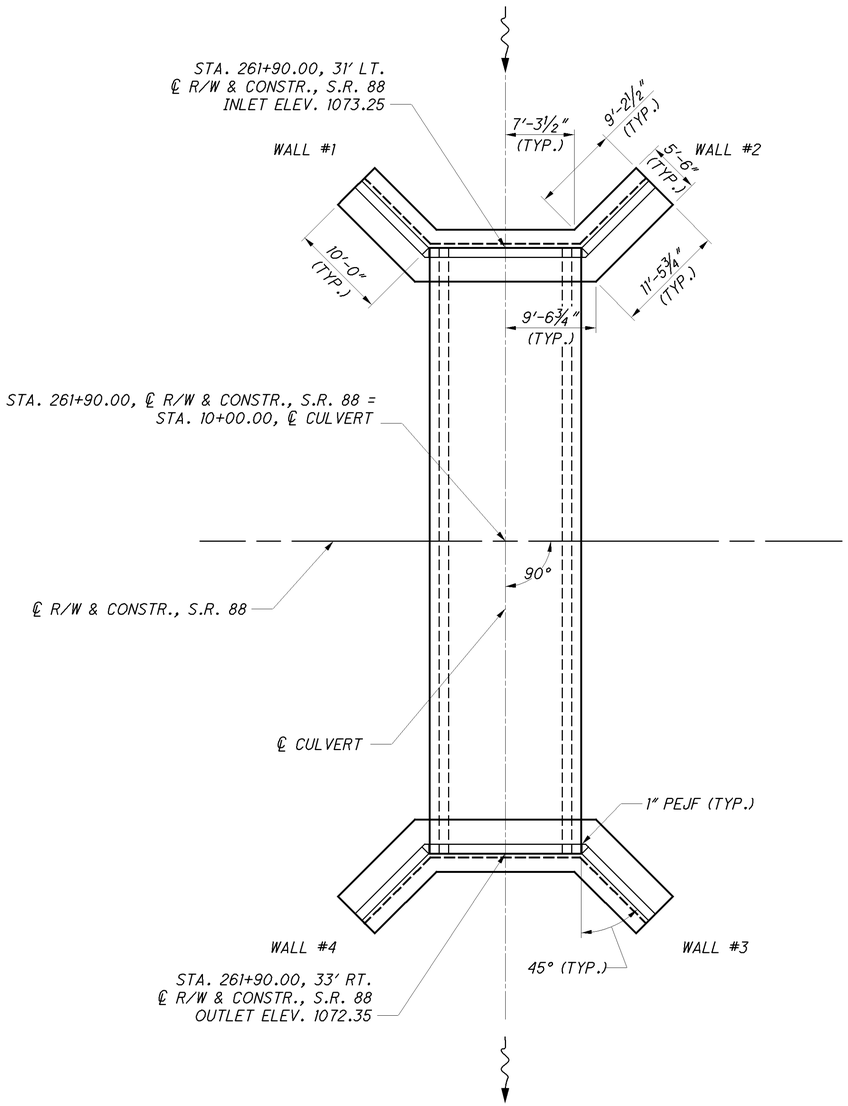

CULVERT & WINGWALL LAYOUT

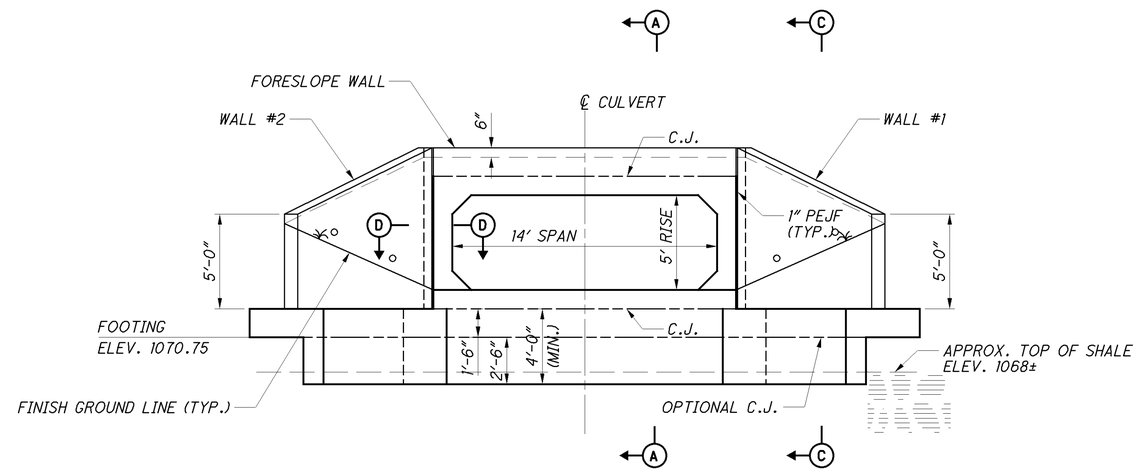

INLET ELEVATION

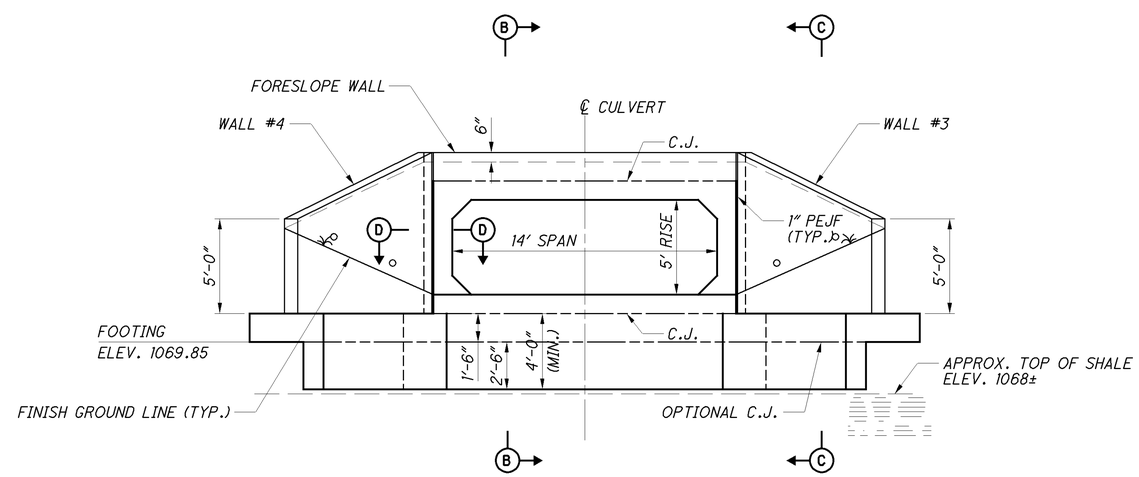

OUTLET ELEVATION

NOTES

1. FOR SECTION A-A, B-B AND FOOTING PLAN, SEE SHEET 4 OF 6.
2. FOR SECTION C-C AND D-D, SEE SHEET 5 OF 6.
3. FOR LEGEND, SEE SHEET 4 OF 6.

DATE: 03-MAY-13 10:12
FILE: J:\PROJECTS\GEA\90222 (GEA-088-0496)\STRUCTURES\088_0496FP001.DGN
SCALE: 1 = 1E

DESIGN AGENCY
Thomas Fok & Associates, Inc.
Consulting Engineers & Surveyors
EDGE CERTIFIED
3300 Mahoning Ave | Youngstown OH | 44515 | 330.965.3100

DESIGNED	DRAWN	REVIEWED	DATE
WHT	DAB	DAK	11-4-13
CHECKED	REVISED	STRUCTURE FILE NUMBER	
SDL		2801000	

WINGWALL LAYOUT AND ELEVATIONS
BRIDGE NO. GEA-088-0496
OVER UNNAMED STREAM

GEA-88-4.96
PID No. 90222

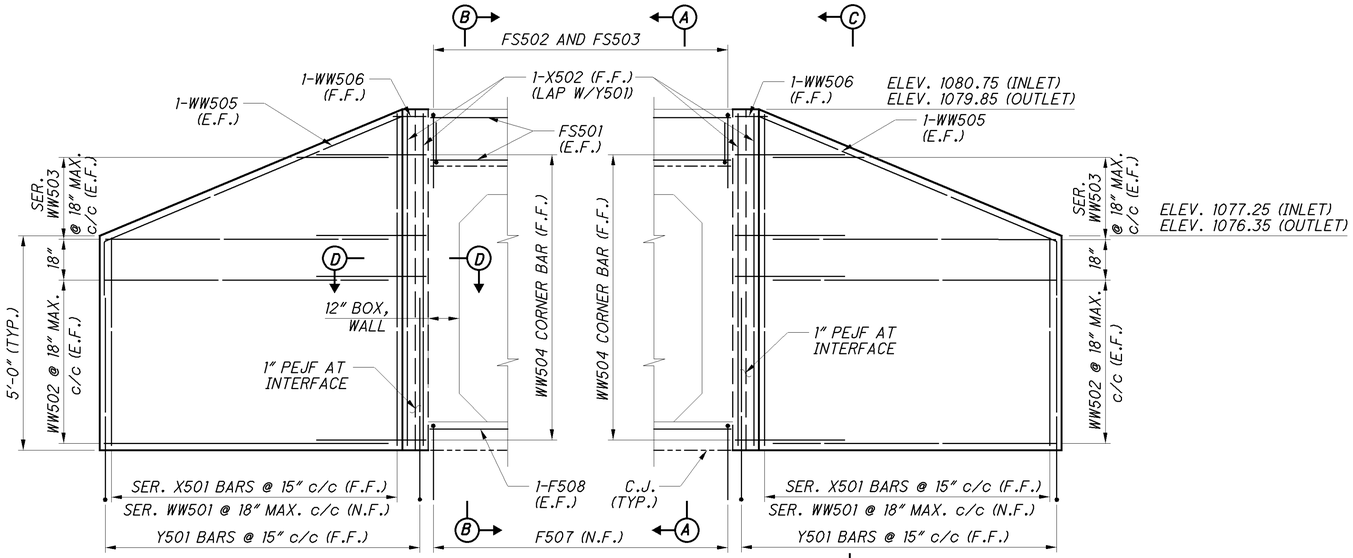

WINGWALL ELEVATION

(FOOTING NOT SHOWN)

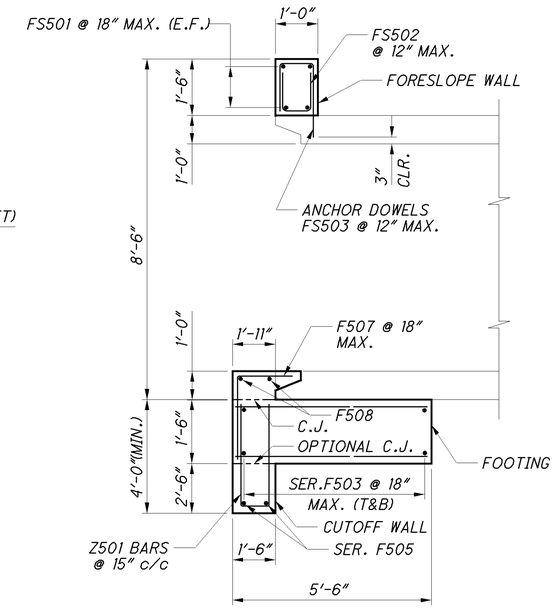

SECTION A-A

(CULVERT INLET BEVEL SHOWN)

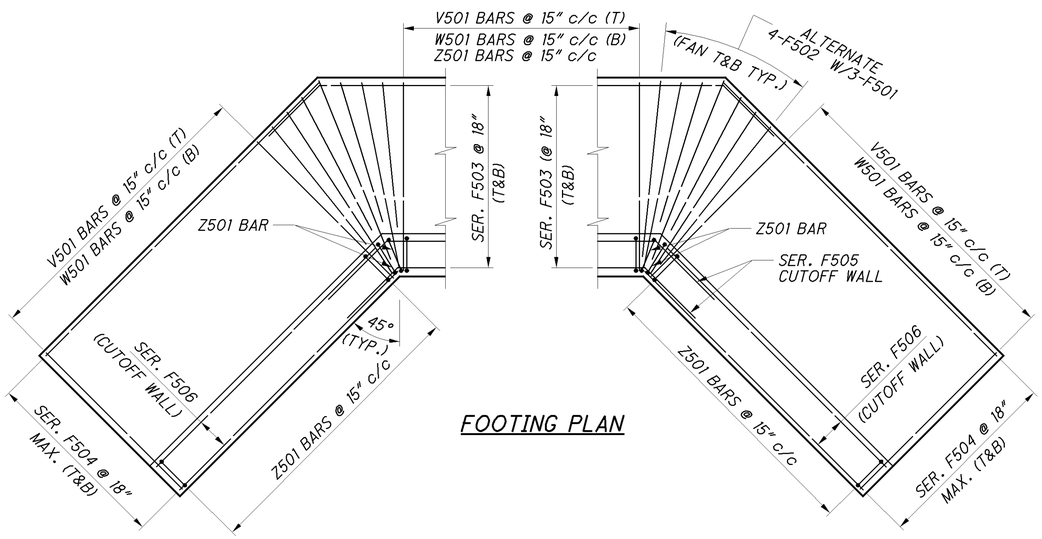

FOOTING PLAN

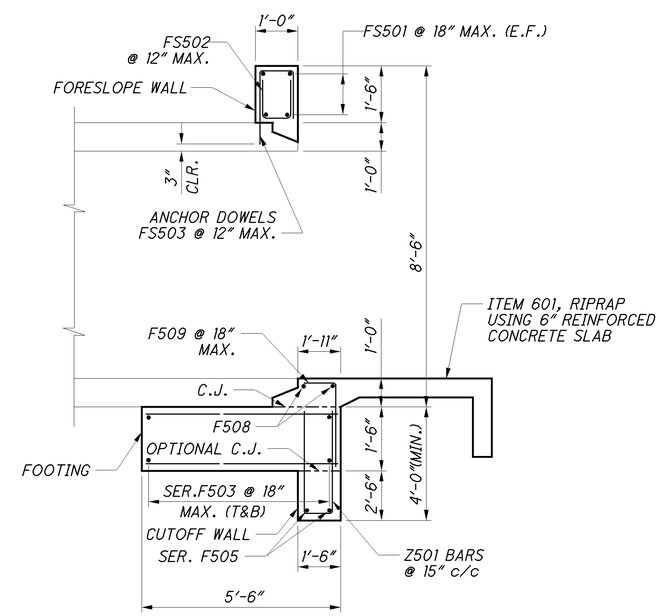

SECTION B-B

(CULVERT OUTLET BEVEL SHOWN)

NOTES

1. FOR CULVERT LOCATION PLAN, SEE SHEET 3/6.
2. FOR SECTIONS C-C AND D-D, SEE SHEET 5/6.
3. THE LAP SPLICE LENGTHS USED IN THESE DETAILS ARE AS FOLLOWS: 2'-5" FOR #5 BARS.

LEGEND:

C.J.	CONSTRUCTION JOINT	N.F.	NEAR FACE
CLR.	CLEAR	SER.	SERIES
DIA.	DIAMETER	STR.	STRAIGHT
E.F.	EACH FACE	(T)	TOP
F.F.	FAR FACE	(B)	BOTTOM
MAX.	MAXIMUM	T&B	TOP AND BOTTOM
MIN.	MINIMUM	TYP.	TYPICAL
PEJF	PREFORMED EXPANSION JOINT FILLER	INC.	INCREMENT

DESIGN AGENCY
Thomas Fox & Associates, Inc.
Consulting Engineers & Surveyors
EDGE CERTIFIED
SMALL BUSINESS ECONOMY
3596 Mahoning Ave | Youngstown OH | 44515 | 330.965.1010

DESIGNED	DRAWN	REVIEWED	DATE
WHT	DAK	DAK	11-4-13
CHECKED	REVISED	STRUCTURE FILE NUMBER	
SDL		2801000	

FOOTING PLAN & WINGWALL ELEVATION

BRIDGE NO. GEA-088-0496
OVER UNNAMED STREAM

GEA-88-4.96
PID No. 90222

DATE: 03-MAY-13 13:15
FILE: J:\PROJECTS\GEA\90222 (GEA-088-0496)\STRUCTURES\088_0496MD001.DGN
SCALE: 1 = 1E

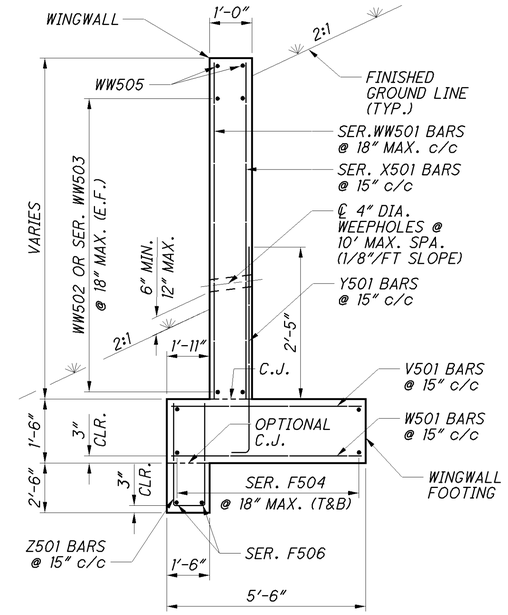

SECTION C-C

(POROUS BACKFILL NOT SHOWN, SEE DETAIL THIS SHEET)

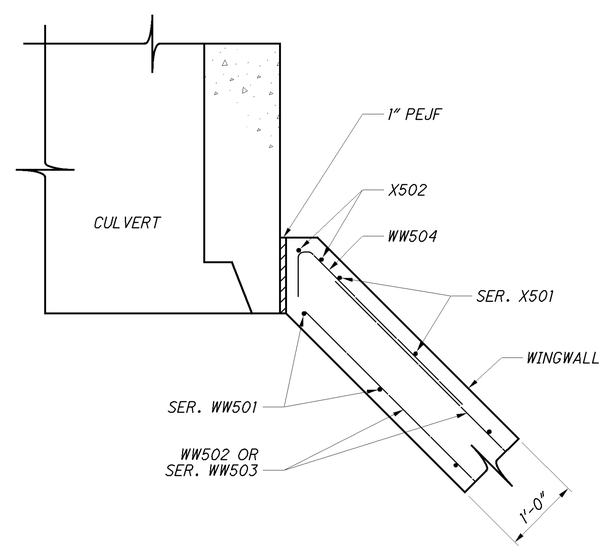

SECTION D-D

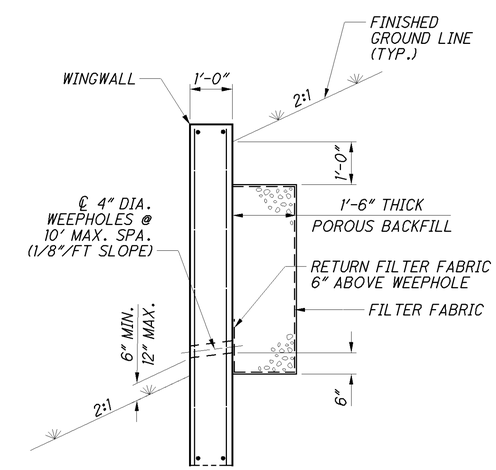

POROUS BACKFILL DETAIL

(FOOTING NOT SHOWN)

NOTES

1. FOR CULVERT LOCATION PLAN, SEE SHEET 3/6.
2. THE LAP SPLICE LENGTHS USED IN THESE DETAILS ARE AS FOLLOWS: 2'-5" FOR #5 BARS.
3. FOR ADDITIONAL NOTES, SEE SHEET 2/6.
4. FOR LEGEND, SEE SHEET 4/6.

DATE: 03-MAY-13 14:12
FILE: J:\PROJECTS\GEA\90222 (GEA-088-0496)\STRUCTURES\088_0496MD002.DGN
SCALE: 1 = 1E

DESIGN AGENCY
Thomas Fok & Associates, Inc.
Consulting Engineers & Surveyors
A.S.C.E. CERTIFIED
3996 Mahoning Ave | Youngstown OH | 44515 | 330.965.1370
EDGE CERTIFIED
A.S.C.E. CERTIFIED
3996 Mahoning Ave | Youngstown OH | 44515 | 330.965.1370

DESIGNED	DRAWN	REVIEWED	DATE
WHT	DAB	DAK	11-4-13
CHECKED	REVISED	STRUCTURE FILE NUMBER	
SDL		2801000	

STRUCTURE DETAILS
BRIDGE NO. GEA-088-0496
OVER UNNAMED STREAM

GEA-88-4.96
PID No. 90222

HEADWALL REINFORCING SCHEDULE

BAR MARK	NUMBER INLET	NUMBER OUTLET	NUMBER TOTAL	LENGTH	WEIGHT (LBS.)	TYPE	BAR TYPE DIMENSIONS A	B	C	D	INC.
WINGWALLS											
	2	2	4	4'-10"							
X501	SERIES	SERIES	SERIES	TO	248	STR.					0'-5¼"
	OF 9	OF 9	OF 9	8'-4"							
X502	4	4	8	8'-4"	70	STR.					
Y501	22	22	44	4'-1"	188	1	0'-6"	3'-8"			
	2	2	4	4'-10"							
WW501	SERIES	SERIES	SERIES	TO	220	STR.					0'-6"
	OF 8	OF 8	OF 8	8'-4"							
WW502	16	16	32	9'-8"	323	STR.					
	4	4	8	3'-3"							
WW503	SERIES	SERIES	SERIES	TO	162	STR.					3'-2½"
	OF 3	OF 3	OF 3	9'-8"							
WW504	14	14	28	3'-6"	103	2	0'-7"	0'-2"	2'-0¼"	2'-10"	
WW505	4	4	8	12'-8"	106	3	2'-5"	3'-4"	9'-8"		
WW506	2	2	4	1'-1"	5	4	0'-7"	0'-2"			
FOOTING & CUTOFF WALL											
V501	27	27	54	5'-2"	291	STR.					
W501	27	27	54	5'-2"	291	STR.					
Z501	31	31	62	8'-1"	523	5	3'-7"	1'-2"			
F501	12	12	24	4'-8"	117	STR.					
F502	16	16	32	3'-8"	123	STR.					
	2	2	4	19'-8"					14'-8¾"		
F503	SERIES	SERIES	SERIES	TO	455	6	1'-9"	1'-9"	TO		1'-0⅞"
	OF 5	OF 5	OF 5	23'-11"					19'-0"		
	4	4	8	9'-1"							
F504	SERIES	SERIES	SERIES	TO	423	STR.					0'-6¼"
	OF 5	OF 5	OF 5	11'-2"							
	1	1	2	19'-8"					14'-8¾"		
F505	SERIES	SERIES	SERIES	TO	84	6	1'-9"	1'-9"	TO		0'-11½"
	OF 2	OF 2	OF 2	20'-7"					15'-8¼"		
	2	2	4	9'-1"							
F506	SERIES	SERIES	SERIES	TO	78	STR.					0'-5"
	OF 2	OF 2	OF 2	9'-6"							
F507	12		12	4'-0"	51	1	1'-11"	2'-2"			
F508	2	2	4	15'-8"	66	STR.					
F509		12	12	3'-8"	46	1	1'-7"	2'-2"			
FORESLOPE WALL											
FS501	4	4	8	15'-8"	131	STR.					
FS502	17	17	34	2'-9"	98	5	1'-2"	0'-8"			
FS503	17	17	34	3'-8"	131	7	1'-2"	0'-8"	2'-1"		
				TOTAL	4333						

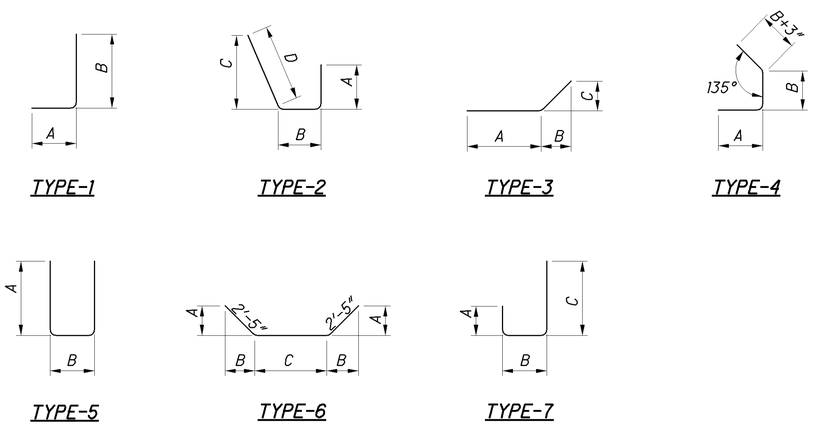

NOTES:

1. THE PLANS SPECIFY THE BAR SIZE NUMBER IN THE BAR MARK COLUMN. THE FIRST DIGIT INDICATES THE BAR SIZE NUMBER. FOR EXAMPLE, WW501 IS A NO. 5 BAR. BAR DIMENSIONS SHOWN ARE OUT TO OUT.
2. ALL REINFORCING STEEL SHALL BE EPOXY COATED.
3. "STR" IN THE TYPE COLUMN INDICATES STRAIGHT BARS.
4. REFER TO C.M.S. SECTION 509.05 FOR STANDARD BEND DIMENSIONS.
5. ALL REINFORCING STEEL CLEARANCES ARE 2" UNLESS OTHERWISE NOTED.

DESIGN AGENCY
Thomas Fox & Associates, Inc.
Consulting Engineers & Surveyors
A.G. CERTIFIED
EDGE CERTIFIED ECONOMIC DEV
3595 Maplecrest Ave | Youngstown OH | 44511 | 330.965.3100

DESIGNED	DRAWN	REVIEWED	DATE
WHT	DAB	DAK	11-4-13
CHECKED	REVISED	STRUCTURE FILE NUMBER	
SDL		2801000	

REINFORCING STEEL LIST
BRIDGE NO. GEA-088-0496
OVER UNNAMED STREAM

GEA-88-4.96
PID No. 90222

DATE: 13-MAR-13 16:09
FILE: J:\PROJECTS\GEA\90222 (GEA-088-0496)\STRUCTURES\088_0496RL001.DGN
SCALE: 1" = 1E

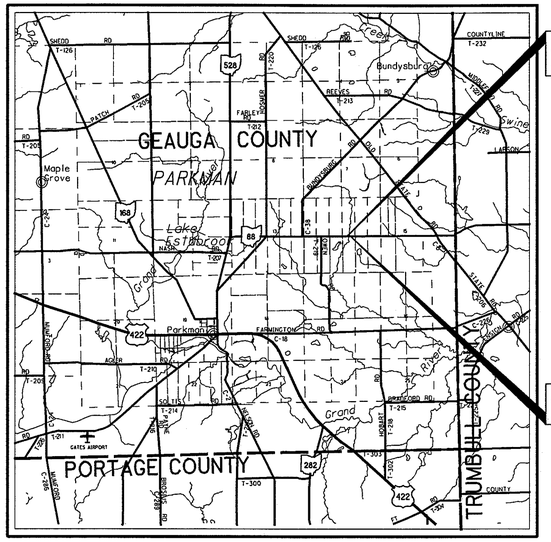

LOCATION MAP

LATITUDE: N41°23'20" LONGITUDE: W81°01'50"

SCALE IN MILES

0 1 2 3 4

RIGHT OF WAY LEGEND SHEET GEA-88-4.96

GEAUGA COUNTY

PARKMAN TOWNSHIP

ORIGINAL PARKMAN TOWNSHIP LOTS 4 & 9

SECTION 14

T. 6 N., R. 6 W.

PROJECT DESCRIPTION

IMPROVING 0.1 MILES OF SR 88 (NASH ROAD) BY THE REPLACEMENT OF THE TWO EXISTING 9'-0" CORRUGATED METAL PIPE CULVERTS OVER AN UNNAMED CREEK WITH A 14' x 5' PRECAST CONCRETE BOX CULVERT WITH FULL HEIGHT HEADWALLS.

THE EXISTING AND PROPOSED RIGHT OF WAY SHALL BE REFERENCED FROM THE CENTERLINE OF RIGHT OF WAY OF SR88 (NASH ROAD).

UTILITY OWNERS	
TYPE	NAME & ADDRESS
ELECTRIC	OHIO EDISON, ENGINEERING DEPARTMENT 2231 WEST MARKET STREET WARREN, OHIO 44485 PHONE: (330) 841-2148 ATTN: JANET KITCH
TELECOMM.	SUDDENLINK 23 W. BROAD ST. NEWTON FALLS, OHIO 44444 PHONE: (330) 207-0894 ATTN: JERRY WALSH

NOTES: THE LOCATION OF THE UNDERGROUND UTILITIES SHOWN ON THE PLANS ARE OBTAINED FROM THE OWNER OF THE UTILITIES AS REQUIRED BY SECTION 153.64 O.R.C.

INDEX OF SHEETS:

LEGEND SHEET	1
CENTERLINE PLAT	2
PROPERTY MAP/SUMMARY OF ADDITIONAL RIGHT OF WAY	3
RIGHT OF WAY DETAIL SHEET	4

PLANS PREPARED BY:

FIRM NAME: THOMAS FOK & ASSOCIATES, INC.

R/W DESIGNER: JOSEPH P. SLIFKA

R/W REVIEWER: WILLIAM J. SALA

FIELD REVIEWER: WILLIAM J. SALA/CARL KANTOR

PRELIMINARY FIELD REVIEW DATE: 06/04/13

TRACINGS FIELD REVIEW DATE: 11/06/13

OWNERSHIP UPDATED BY: JOSEPH P. SLIFKA

DATE COMPLETED: 11/06/13

PLAN COMPLETION DATE: 11/08/13

CONVENTIONAL SYMBOLS

County Line
Township Line
Section Line
Corporation Line or
Fence Line (Ex) (Pr)
Center Line
Right of Way (Ex) Ex R/W
Right of Way (Pr) R/W
Standard Highway Ease.(Ex) Ex SH
Temporary Right of Way TMP
Channel Ease. (Pr) CH
Utility Ease. (Ex) Ex U
Railroad or
Guardrail (Ex) (Pr)
Construction Limits
Edge of Pavement (Ex)
Edge of Pavement (Pr)
Edge of Shoulder (Ex)
Edge of Shoulder (Pr)
Ditch / Creek (Ex)
Ditch / Creek (Pr)
Tree Line (Ex)
Ownership Hook Symbol , Example
Property Line Symbol , Example
Break Line Symbol , Example
Tree (Pr) , Tree (Ex) , Shrub (Ex)
Tree (Remove) , Shrub (Remove)
Evergreen (Ex) , Stump
Evergreen (Remove) , Stump (Remove)
Wetland (Pr) , Grass (Pr) , Aerial Target
Post (Ex) , Mailbox (Ex) , Mailbox (Pr)
Light (Ex) , Telephone Marker (Ex) TEL
Fire Hydrant (Ex) , Water Meter (Ex)
Water Valve (Ex) , Utility Valve Unknown (Ex.)
Telephone Pole (Ex) , Power Pole (Ex)
Light Pole (Ex)

I, William J. Sala, P. S. have conducted a survey of the existing conditions for the Ohio Department of Transportation on FEBRUARY 2012. The results of that survey are contained herein.

Underground utility locations are shown for information purposes only. Though they are believed to be accurate, thier location is marked on the ground by the utility company per OUPS Confirmation Number A205201257.

The horizontal coordinates expressed herein are based on the Ohio State Plane Coordinates system, NORTH Zone NAD83 (CORS96). The Project Coordinates (US Survey feet) are relative to State Plane Grid Coordinates (US Survey feet) by a Project Adjustment Factor multiplier of 0.999908150.

As a part of this project I have reestablished the locations of the existing property lines and the existing centerline of Right of Way for property takes contained herein.

As a part of this project I have established the proposed property lines, calculated the Gross Take, present roadway occupied (PRO), Net Take and Net Residue; as well as prepared the legal descriptions necessary to acquire the parcels as shown herein.

As a part of this work I have set monuments at the proposed Property corners, Section Corners and other points shown herein.

All of my work contained herein was conducted in accordance with Ohio Administrative Code 4733-37 commonly known as "A Minimum Standards for Boundary Surveys in the State of Ohio" unless noted.
The words I and my as used herein are to mean either myself or someone working under my direct supervision.

William J. Sala, Professional Land Surveyor No. S-6542 Date: 11-08-2013

TYPES OF TITLE LEGEND:
WD = WARRANTY DEED
CH = CHANNEL EASEMENT
T = TEMPORARY EASEMENT

STRUCTURE KEY

RESIDENTIAL

COMMERCIAL

OUT-BUILDING

SURVEYORS SEAL

STATE OF OHIO William J. Sala 6542 REGISTERED SURVEYOR

FEDERAL PROJECT NO. E110(306)

PID NO. 90222

CALCULATED JPS CHECKED WJS

RIGHT OF WAY LEGEND SHEET

GEA-88-4.96

1/4

27/30

DATE: 06-NOV-13 11:30
FILE: J:\JOB\8134 GEA-88-4.96 GEA-608-10.53\PLAN_SHEETS\PLAN\GEA-88-4.96\24_RIGHT_OF_WAY\01_LEGEND\90222RL001.DGN
SCALE: 1 = 1E

GEA-88-4.96

GEAUGA COUNTY
PARKMAN TOWNSHIP
ORIGINAL PARKMAN
TOWNSHIP LOTS 4 & 9
SECTION 14
T. 6 N., R. 6 W.

NOTE: THE EXISTING R/W WIDTH AND LOCATION WERE DETERMINED USING:
GEAUGA COUNTY TAX MAPS
PLATS - A PLACE IN PARKMAN SUBDIVISION, PLAT BOOK No. 11 PG. 140
RECORD DEEDS
ODOT PLAN: I.C.H. 35 SEC. K GEAUGA COUNTY, 1928

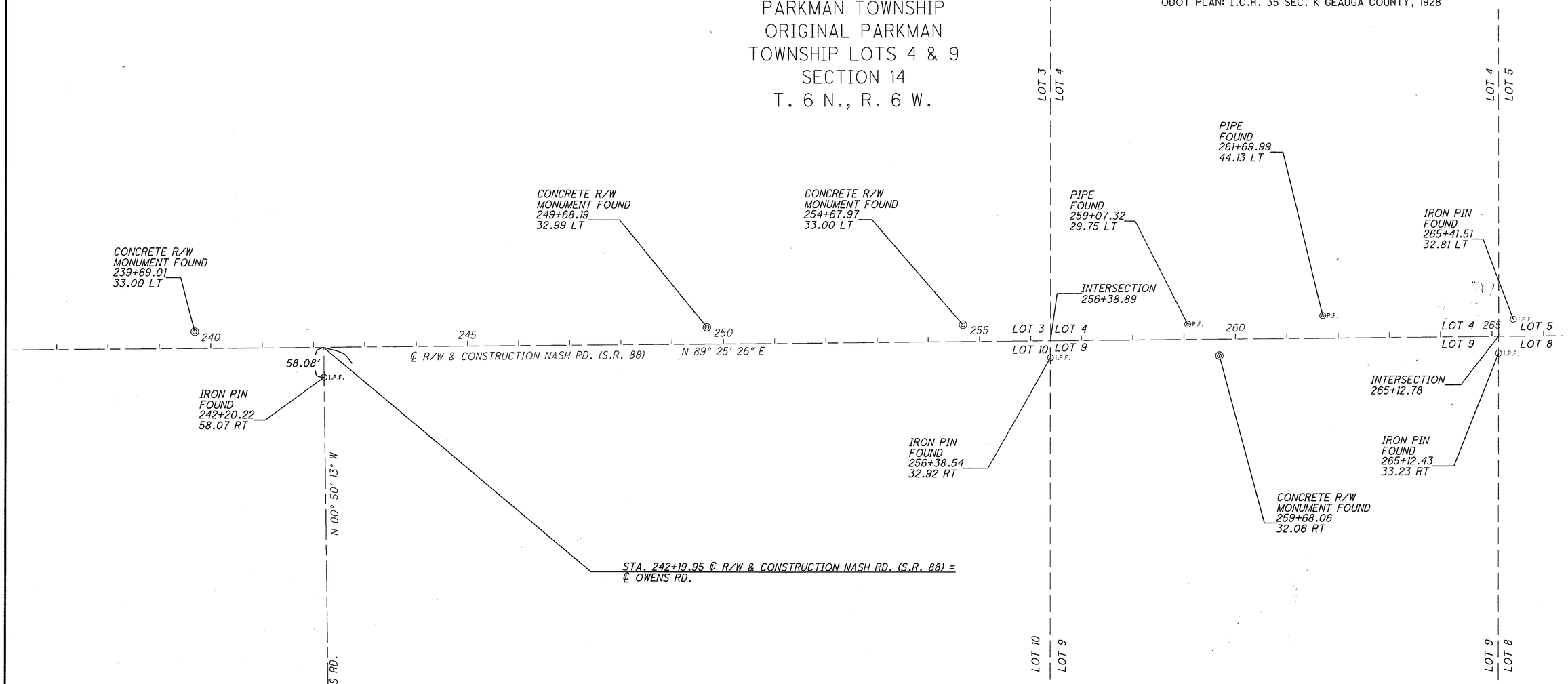

MONUMENT LEGEND

- ◎ CONCRETE R/W MONUMENT FOUND
- ○I.P.F. EXISTING IRON PIN FOUND
- ◎P.F. EXISTING PIPE FOUND

RECEIVED _____, 20___
RECORDED _____, 20___
BOOK _____ PAGE _____

COUNTY RECORDER

BASIS FOR BEARINGS:

BEARINGS SHOWN HEREON ARE BASED UPON GRID NORTH OBSERVED FOR THE OHIO DEPARTMENT OF TRANSPORTATION USING GPS RECEIVERS. HORIZONTAL DATUM NAD83(CORS96).

I, William J. Sala, P. S. have conducted a survey of the existing conditions for the Ohio Department of Transportation on FEBRUARY 2012. The results of that survey are contained herein.

Underground utility locations are shown for information purposes only. Though they are believed to be accurate, thier location is marked on the ground by the utility company per OUPS Confirmation Number A205201257.

The horizontal coordinates expressed herein are based on the Ohio State Plane Coordinates system, NORTH Zone NAD83 (CORS96). The Project Coordinates (US Survey feet) are relative to State Plane Grid Coordinates (US Survey feet) by a Project Adjustment Factor multiplier of 0.999908150.

As a part of this project I have reestablished the locations of the existing property lines and the existing centerline of Right of Way for property takes contained herein.

As a part of this project I have established the proposed property lines, calculated the Gross Take, present roadway occupied (PRO), Net Take and Net Residue; as well as prepared the legal descriptions necessary to acquire the parcels as shown herein.

As a part of this work I have set monuments at the proposed Property corners, Section Corners and other points shown herein.

All of my work contained herein was conducted in accordance with Ohio Administrative Code 4733-37 commonly known as "A Minimum Standards for Boundary Surveys in the State of Ohio" unless noted.
The words I and my as used herein are to mean either myself or someone working under my direct supervision.

William J. Sala, Professional Land Surveyor No. S-6542

Date: 11-08-2013

STATE OF OHIO
William J. Sala
6542
REGISTERED
SURVEYOR

HORIZONTAL SCALE IN FEET
0 50 100 200

PID NO. 90222

R/W DESIGNER JPS
R/W REVIEWER WJS

CENTERLINE PLAT

GEA-88-4.96

DATE: 06-NOV-13 11:00
FILE: J:\JOB\8134 GEA-88-4.96 GEA-608-10.53\PLAN_SHEETS\PLAN\GEA-88-4.96\24_RIGHT_OF_WAY\02_CL_PLAT\90222RC001.DGN
SCALE: 1 - 100E

GEAUGA COUNTY
PARKMAN TOWNSHIP
ORIGINAL PARKMAN TOWNSHIP LOTS 4 & 9
SECTION 14
T. 6 N., R. 6 W.

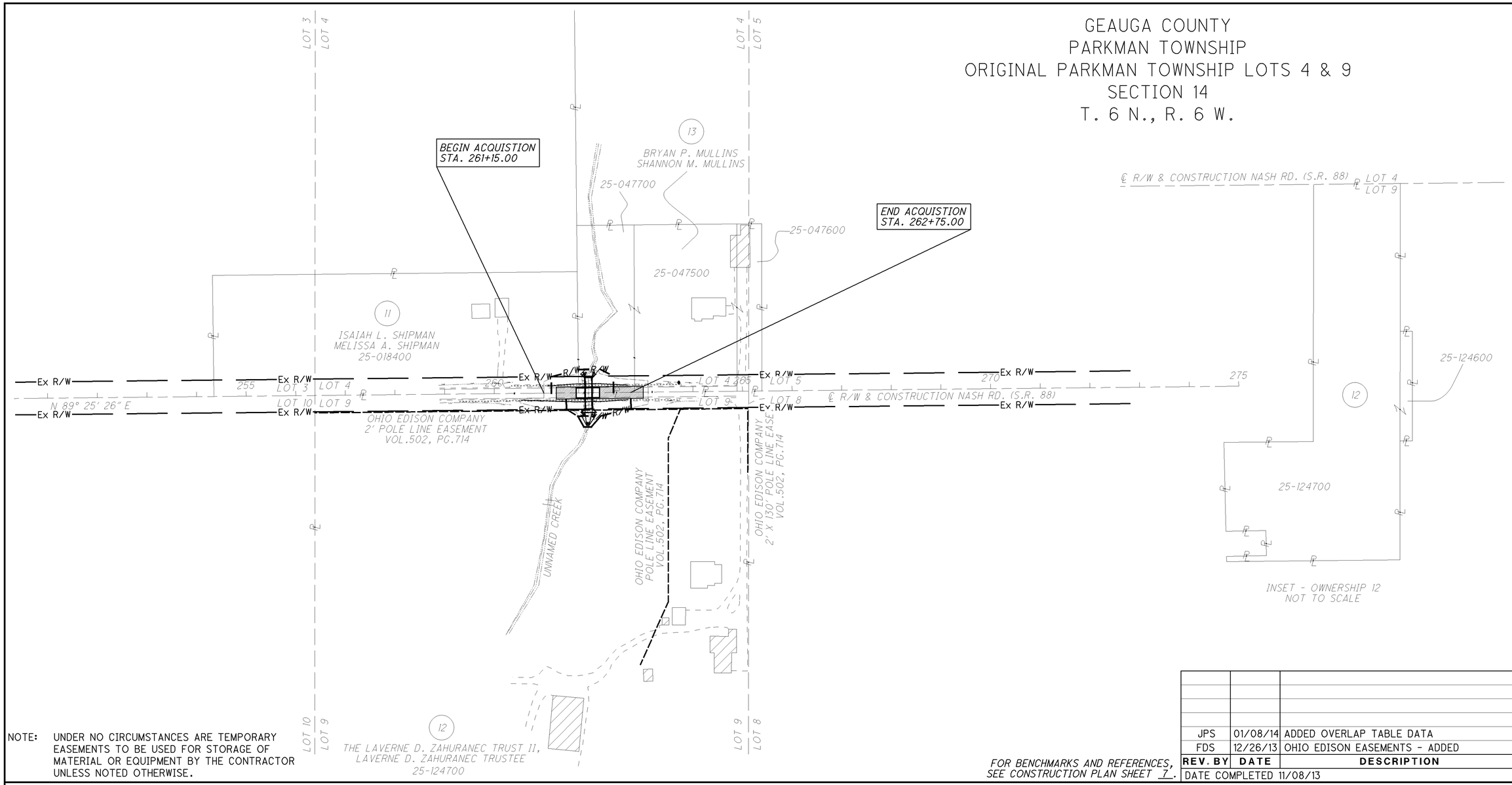

NOTE: UNDER NO CIRCUMSTANCES ARE TEMPORARY EASEMENTS TO BE USED FOR STORAGE OF MATERIAL OR EQUIPMENT BY THE CONTRACTOR UNLESS NOTED OTHERWISE.

FOR BENCHMARKS AND REFERENCES, SEE CONSTRUCTION PLAN SHEET 7.

REV. BY	DATE	DESCRIPTION
JPS	01/08/14	ADDED OVERLAP TABLE DATA
FDS	12/26/13	OHIO EDISON EASEMENTS - ADDED

DATE COMPLETED 11/08/13

TOTAL NUMBER OF :

3 OWNERSHIPS
5 PARCELS
0 TOTAL TAKES
0 OWNERSHIPS W/ STRUCTURES INVOLVED

TYPES OF TITLE LEGEND:
WD = WARRANTY DEED
CH = CHANNEL EASEMENT
T = TEMPORARY EASEMENT
DV = DEED VOLUME
OR = OFFICIAL RECORD

NET RESIDUE = RECORD AREA - TOTAL PRO - NET TAKE

NOTE: ALL TEMPORARY PARCELS TO BE OF 12 MONTH DURATION.

* DENOTES RIGHT OF WAY ENCROACHMENT
(c) = CALCULATED AREA

GRANTEE:
ALL RIGHT OF WAY ACQUIRED IN THE NAME OF THE STATE OF OHIO DEPARTMENT OF TRANSPORTATION UNLESS OTHERWISE SHOWN.

ALL AREAS IN ACRES

PARCEL NO.	OWNER	SHEET NO.	OWNERS RECORD BOOK	OWNERS RECORD PAGE	AUDITOR'S PARCEL	RECORD AREA	TOTAL P.R.O.	GROSS TAKE	P.R.O. IN TAKE	NET TAKE	STRU-CTURE	NET RESIDUE LEFT	NET RESIDUE RIGHT	TYPE FUND	REMARKS	AS ACQUIRED BOOK	AS ACQUIRED PAGE
1-10	NUMBER NOT USED																
11-WD	ISAIAH L. SHIPMAN	4	OR1569	448	25-018400	3.000	0.557	0.051	0.042	0.009		2.434					
	MELISSA A. SHIPMAN																
12-WD	THE LAVERNE D. ZAHURANEC TRUST II,	4	DV867	647	25-124700	103.710	0.662	0.127	0.099	0.028					12-WD: OVERLAP OF 248.00 SF WITH OHIO EDISON EASEMENT		
	LAVERNE D. ZAHURANEC TRUSTEE				25-124600	2.000	0.000	0.000	0.000	0.000							
12-CH							0.000	0.015	0.000	0.015							
	TOTAL:					105.710	0.662	0.142	0.099	0.043			105.005	100% STATE	12-T: OVERLAP OF 98.56 SF WITH OHIO EDISON EASEMENT		
12-T								0.025	0.000	0.025					PERFORM GRADING AND CULVERT CONSTRICTION		
13-WD	BRYAN P. MULLINS	4	OR1849	973	25-047700	0.880	0.085	0.071	0.053	0.018							
	SHANNON M. MULLINS				25-047500	1.550	0.157	0.000	0.000	0.000							
					25-047600	0.390	0.038	0.000	0.000	0.000							
	TOTAL:					2.820	0.280	0.071	0.053	0.018		2.522					

HORIZONTAL SCALE IN FEET 0 50 100 200

FEDERAL PROJECT NO. E110(306)

PID NO. 90222

STATE JOB NO. 520397

R/W DESIGNER JPS
R/W REVIEWER WJS

PROPERTY MAP/ SUM. OF ADD. R/W

GEA-88-4.96

3 / 4

29 / 30

DATE: 08-JAN-14 08:55
FILE: J:\JOB\8134 GEA-88-4.96 GEA-608-10.53\PLAN_SHEETS\PLAN\GEA-88-4.96\24_RIGHT_OF_WAY\03_PR_MAP\90222RM001.DGN
SCALE: 1 = 100E

GEAUGA COUNTY
PARKMAN TOWNSHIP
ORIGINAL PARKMAN TOWNSHIP LOTS 4 & 9
SECTION 14
T. 6 N., R. 6 W.

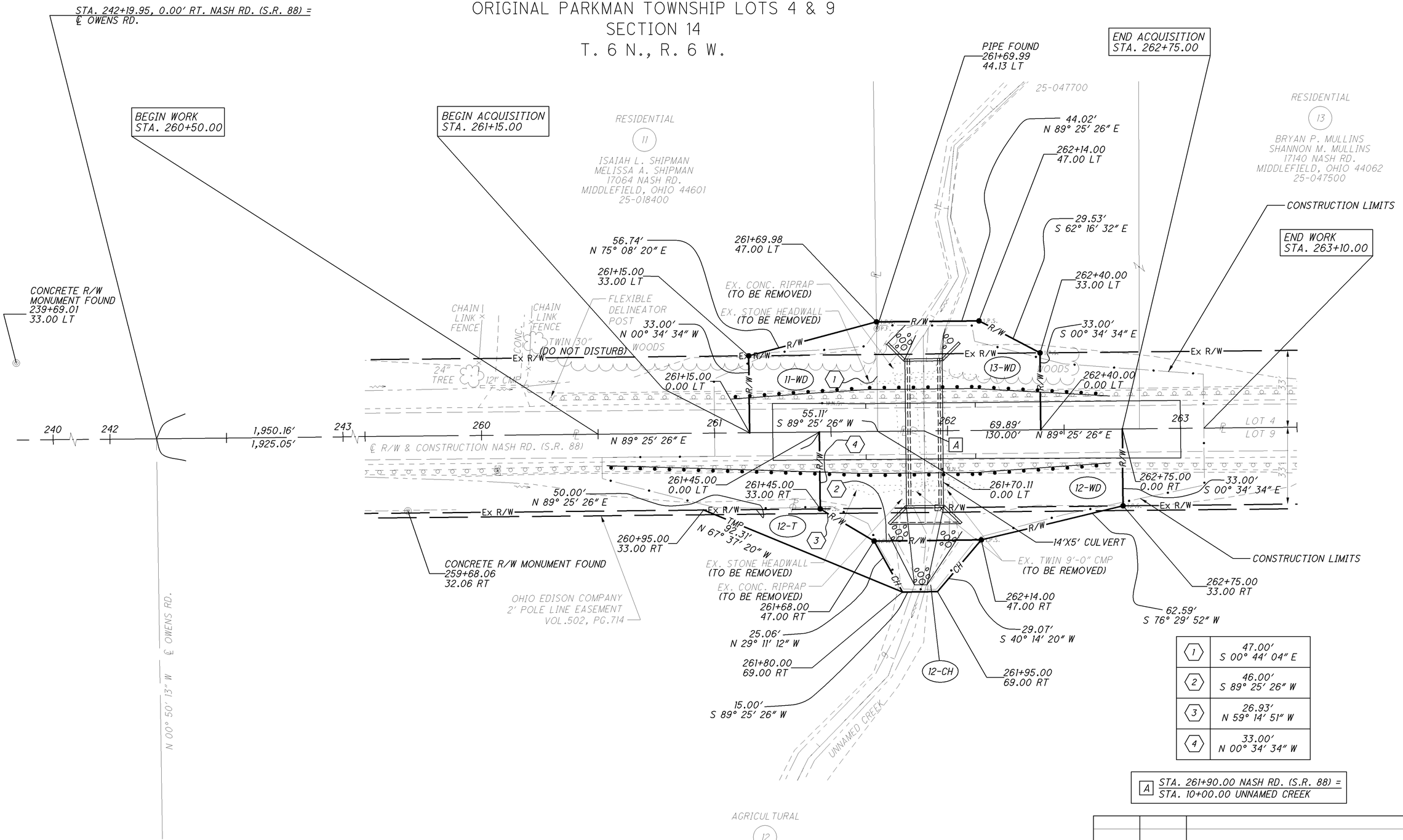

1	47.00' S 00° 44' 04" E
2	46.00' S 89° 25' 26" W
3	26.93' N 59° 14' 51" W
4	33.00' N 00° 34' 34" W

A STA. 261+90.00 NASH RD. (S.R. 88) = STA. 10+00.00 UNNAMED CREEK

MONUMENT LEGEND

- ◎ CONCRETE R/W MONUMENT FOUND
- ◎P.F. IRON PIPE FOUND
- ●I.P.S. ¾"X30" REINFORCING ROD WITH 2" DIAM. ALUMINIUM CAP STAMPED "ODOT R/W, SALA S-6542".

PARCEL NO.	TAKE REQUIRED	TOTAL AREA (SQ. FT.)	AREA OF OVERLAP (SQ. FT.) OHIO EDISON EASEMENT
12-T	TEMP.	1069.00	98.56
12-WD	FEE	5522.00	248.00

REV. BY	DATE	DESCRIPTION
JPS	01/08/14	ADDED OVERLAP TABLE
FDS	12/26/13	OHIO EDISON EASEMENT - ADDED

DATE COMPLETED 11/08/13

HORIZONTAL SCALE IN FEET 0 10 20 40

PID NO. 90222

R/W DESIGNER JPS
R/W REVIEWER WJS

RIGHT OF WAY DETAIL PLAN
STA. 242+00 TO STA. 263+50

GEA-88-4.96

4 / 4

30 / 30

DATE: 08-JAN-14 08:44
FILE: J:\JOB\8134 GEA-88-4.96 GEA-608-10.53\PLAN_SHEETS\PLAN_SHEETS\PLAN\GEA-88-4.96\24_RIGHT_OF_WAY\05_PLAN_SHEETS\90222RD001.DGN
SCALE: 1 = 20E

PROJECT DESCRIPTION

THE PROJECT SITE IS LOCATED ALONG SR 88 IN PARKMAN TOWNSHIP, GEAUGA COUNTY, OHIO BETWEEN TOWNSHIP HIGHWAY 219 TO THE WEST AND COUNTY ROAD 6 TO THE EAST. SR 88 IN THE PROJECT AREA IS A TWO-LANE, ASPHALT PAVED, ROADWAY. NTH UNDERSTANDS THE EXISTING DOUBLE-BARREL CORRUGATED METAL CULVERT WILL BE REPLACED AS PART OF THIS PROJECT. THE SELECTED ALTERNATIVE FOR THE NEW STRUCTURE IS A FOUR-SIDED BOX CULVERT.

HISTORIC RECORDS

NO PREVIOUS GEOTECHNICAL DATA WAS AVAILABLE FOR THIS PROJECT.

GEOLOGY

BASED UPON THE "PHYSIOGRAPHIC REGIONS OF OHIO" MAP, THE NATURAL SOILS AT THE SITE TYPICALLY CONSIST OF GRAVELLY SILTY CLAYS (HIRAM TILL) FROM THE LATE WISCONSIAN AGE. GEOLOGIC PUBLICATIONS BY THE OHIO DEPARTMENT OF NATURAL RESOURCES INDICATE THESE SOIL DEPOSITS GENERALLY OVERLIE BEREA SANDSTONE AND / OR BEDFORD SHALE OF MISSISSIPPIAN AGE. AVAILABLE BEDROCK TOPOGRAPHY MAPS SUGGEST WEATHERED ROCK COULD BE ENCOUNTERED AT A DEPTH OF ABOUT 20 FEET BELOW THE EXISTING GROUND SURFACE.

RECONNAISSANCE

NTH PERSONNEL VISITED THE SITE ON MARCH 19, 2012 TO PERFORM SITE RECONNAISSANCE AND BORING LAYOUT. THE EXISTING STRUCTURE CONSISTS OF DOUBLE-BARREL CORRUGATED METAL PIPES WITH DIAMETER OF APPROXIMATELY 9 FEET.

SUBSURFACE EXPLORATION

(1) SOIL SAMPLING
THE TEST BORINGS WERE DRILLED USING A TRUCK-MOUNTED DRILLING RIG. THE TEST BORINGS WERE ADVANCED USING 3-1/4-INCH INSIDE DIAMETER HOLLOW STEM AUGERS. SOIL SAMPLES WERE OBTAINED AT 2-1/2 FOOT INTERVALS TO A DEPTH OF ABOUT 6 FEET, AT WHICH POINT BEDROCK WAS ENCOUNTERED. OVERBURDEN SOIL SAMPLES WERE OBTAINED USING A STANDARD SPLIT SPOON SAMPLER AND THE STANDARD PENETRATION TEST (SPT) METHOD. THE SPT METHOD (ASTM D-1586) CONSISTS OF DRIVING A TWO-INCH OUTSIDE DIAMETER SPLIT-BARREL SAMPLER INTO THE SOIL WITH A 140-POUND WEIGHT FALLING FREELY THROUGH A DISTANCE OF 30 INCHES. THE SAMPLER IS GENERALLY DRIVEN THREE SUCCESSIVE SIX-INCH INCREMENTS, WITH THE NUMBER OF BLOWS FOR EACH INCREMENT BEING RECORDED. THE NUMBER OF BLOWS REQUIRED TO ADVANCE THE SAMPLER THE LAST 12 INCHES IS TERMED THE STANDARD PENETRATION RESISTANCE (N). THE AUTOMATIC HAMMER ON THE RIG WAS CALIBRATED AND REPORTED TO HAVE AN EFFICIENCY RATING OF 89.0 PERCENT. WE HAVE CORRECTED N-VALUES TO AN EQUIVALENT ROD ENERGY RATIO OF 60 PERCENT, N_{60}

(2) ROCK SAMPLING
NTH'S DRILLING SUBCONTRACTOR UTILIZED ROTARY ROCK CORING METHODS TO ADVANCE BOREHOLES THROUGH BEDROCK TO THEIR PLANNED TERMINATION DEPTHS. THE SAMPLING PROCEDURES USED WITHIN THE ROCK INCLUDED AN NX-SIZE DIAMOND CORE BARREL WITH A DIAMOND TIPPED DISCHARGE BIT. THE NX CORE BARREL CUT A 3-INCH DIAMETER BOREHOLE AND RECOVERED APPROXIMATELY 2-1/8-INCH DIAMETER ROCK CORE. THE LENGTH OF THE ROCK CORE RUNS WAS 5 FEET. UPON REMOVAL OF EACH CORE FROM THE BOREHOLE, THE ROCK CORES WERE PLACED IN THE SAME ORDER THEY WERE RETRIEVED FROM THE BARREL. IMMEDIATELY AFTER PLACING THE CORE INTO ITS RESPECTIVE BOX, THE FIELD REPRESENTATIVE RECORDED THE PERCENT RECOVERY, FRACTURES PER FOOT OF CORE RECOVERED, OBTAINED PHOTOGRAPHS OF THE CORES WITHIN THE SAMPLE BOXES, AND DETERMINED THE ROCK QUALITY DESIGNATION (RQD) VALUE FOR EACH CORE RUN.

EXPLORATION FINDINGS

IN GENERAL, ASPHALT PAVEMENT WAS PRESENT AT THE GROUND SURFACE OF BOTH BORING LOCATIONS. BASED ON OUR MEASUREMENTS, THE PAVEMENT THICKNESS AT THE BORING LOCATIONS VARIED FROM ABOUT 16 TO 18 INCHES. BELOW THE EXISTING PAVEMENT, VERY LOOSE TO MEDIUM DENSE FILLS, INCLUDING SANDY SILT (A-4A), COARSE AND FINE SAND (A-3A), AND GRAVEL WITH SAND AND SILT (A-1-B), WERE GENERALLY ENCOUNTERED TO A DEPTH OF ABOUT 13 FEET BELOW EXISTING GRADE. BELOW THE FILL AND PAVEMENT SECTION, MEDIUM DENSE SANDY SILT (A-4A) AND COARSE AND FINE SAND (A-3A) WAS ENCOUNTERED TO DEPTHS RANGING FROM ABOUT 17 TO 19 FEET (ELEVATIONS 1069 TO 1073 FEET) BELOW THE EXISTING GROUND SURFACE. UNDERLYING THE SANDY SILT (A-4A) AND COARSE AND FINE SAND (A-3A), INTERBEDDED GRAY WEATHERED SHALE AND SILTSTONE (BEDROCK) WAS ENCOUNTERED. THE WEATHERED SHALE AND SILTSTONE BEDROCK HAD RECOVERY RANGING FROM 80 TO 100 PERCENT, AND RQD VALUES RANGING FROM ZERO TO 49 PERCENT.

SPECIFICATIONS

THIS GEOTECHNICAL EXPLORATION WAS PERFORMED IN ACCORDANCE WITH THE STATE OF OHIO, DEPARTMENT OF TRANSPORTATION, OFFICE OF GEOTECHNICAL ENGINEERING, SPECIFICATIONS FOR GEOTECHNICAL EXPLORATIONS, DATED JULY 2011.

AVAILABLE INFORMATION

ALL AVAILABLE SOIL AND BEDROCK INFORMATION THAT CAN BE CONVENIENTLY SHOWN ON THE GEOTECHNICAL EXPLORATION SHEETS HAS BEEN SO REPORTED. ADDITIONAL EXPLORATIONS MAY HAVE BEEN MADE TO STUDY SOME SPECIAL ASPECT OF THE PROJECT. COPIES OF THIS DATA, IF ANY, MAY BE INSPECTED IN THE DISTRICT DEPUTY DIRECTOR'S OFFICE, THE OFFICE OF GEOTECHNICAL ENGINEERING AT 1600 WEST BROAD STREET OR THE OFFICE OF STRUCTURAL ENGINEERING AT 1980 WEST BROAD STREET.

LEGEND

DESCRIPTION	ODOT CLASS	CLASSIFIED MECH.	CLASSIFIED VISUAL
GRAVEL AND/OR STONE FRAGS.	*A-1-a*	*1*	
GRAVEL AND/OR STONE FRAGS. WITH SAND & SILT	*A-2-4*	*1*	
COURSE & FINE SAND	*A-3a*		*2*
SANDY SILT	*A-4a*	*3*	*3*
SILT & CLAY	*A-6a*		*1*
	TOTAL	*5*	*6*
SHALE	*VISUAL*		
INTERBEDED SHALE (50%) AND SILTSTONE (50%)	*VISUAL*		
PAVEMENT OR BASE = X = APPROXIMATE THICKNESS	*VISUAL*		
SOD AND TOPSOIL = X = APPROXIMATE THICKNESS	*VISUAL*		

PAVEMENT CORING LOCATION - PLAN VIEW.

BORING LOCATION - PLAN VIEW.

DRIVE SAMPLE AND/OR ROCK CORE BORING PLOTTED TO VERTICAL SCALE ONLY. HORIZONTAL BAR INDICATES A CHANGE IN STRATIGRAPHY.

WC INDICATES WATER CONTENT IN PERCENT.

N_{60} INDICATES STANDARD PENETRATION RESISTANCE NORMALIZED TO 60% DRILL ROD ENERGY RATIO.

X/Y/Z NUMBER OF BLOWS FOR STANDARD PENETRATION TEST (SPT):
X= NUMBER OF BLOWS FOR FIRST 6 INCHES.
Y= NUMBER OF BLOWS FOR SECOND 6 INCHES.
Z= NUMBER OF BLOWS FOR THIRD 6 INCHES.

W— INDICATES FREE WATER ELEVATION.

● INDICATES A PLASTIC MATERIAL WITH A MOISTURE CONTENT EQUAL TO OR GREATER THAN THE LIQUID LIMIT MINUS 3.

SS INDICATES A SPLIT SPOON SAMPLE.

NP INDICATES A NON-PLASTIC SAMPLE.

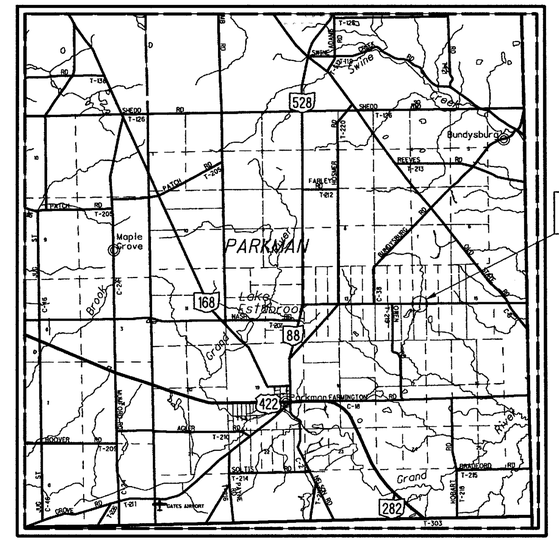

LOCATION MAP

SCALE IN MILES

0 1 2 3 4

N

PARTICLE SIZE DEFINITIONS

BOULDERS	12"	COBBLES	3"	GRAVEL	2.0 mm (No. 10 SIEVE)	COARSE SAND	0.42 mm (No. 40 SIEVE)	FINE SAND	0.074 mm (No. 200 SIEVE)	SILT	0.005 mm	CLAY

SUMMARY OF SOIL TEST DATA *GEA-88-04.96*

STATION & OFFSET		FROM TO	SAMPLE ID	% REC	% GR	% CS	% FS	% SILT	% CLAY	LL	PL	PI	% WC	ODOT CLASS
261+69.38	*8.5' RT*	*08.5 - 10.0*	*02*	*72*	*-*	*-*	*-*	*-*	*-*	*24*	*19*	*5*	*16*	*A-4a*
261+69.38	*8.5' RT*	*08.5 - 10.0*	*04*	*99*	*5*	*14*	*26*	*33*	*22*	*26*	*19*	*7*	*19*	*A-4a*
262+15.02	*6.3' RT*	*01.5 - 03.0*	*01*	*72*	*63*	*21*	*8*	*-*	*-*	*NP*	*NP*	*NP*	*7*	*A-1a*
262+15.02	*6.3' RT*	*04.0 - 05.5*	*02*	*44*	*11*	*12*	*17*	*28*	*32*	*28*	*20*	*8*	*17*	*A-4a*
262+15.02	*6.3' RT*	*06.5 - 08.0*	*03*	*72*	*14*	*13*	*25*	*32*	*16*	*NP*	*NP*	*NP*	*17*	*A-4a*
262+15.02	*6.3' RT*	*13.5 - 15.0*	*05*	*99*	*23*	*9*	*33*	*26*	*9*	*NP*	*NP*	*NP*	*21*	*A-2-4*

D_{50} Values

Boring No.	Sample No.	Elevation	D_{50} Value
01-00-12	SS-4	1077.5	.043
02-00-12	SS-1	1084.2	4.0
02-00-12	SS-2	1081.7	.026
02-00-12	SS-3	1079.2	.085
02-00-12	SS-5	1072.2	.16

RECON. - PSL 03/19/2012
DRILLING - B&P 03/19 - 03/20/2012
DRAWN - TCG
REVIEWED - PSL

DESIGN AGENCY
NTH CONSULTANTS, LTD.
820 W. SUPERIOR AVE. SUITE 320
CLEVELAND OH. 44113

PID NO. **90222**

STRUCTURE FOUNDATION EXPLORATION

GEA-88-04.96

J:\Active Projects\86-111284 GEA\GEA-88-04.96\CAD\90222ZC-001.dgn 11/6/2013 5:47:15 PM tgregory

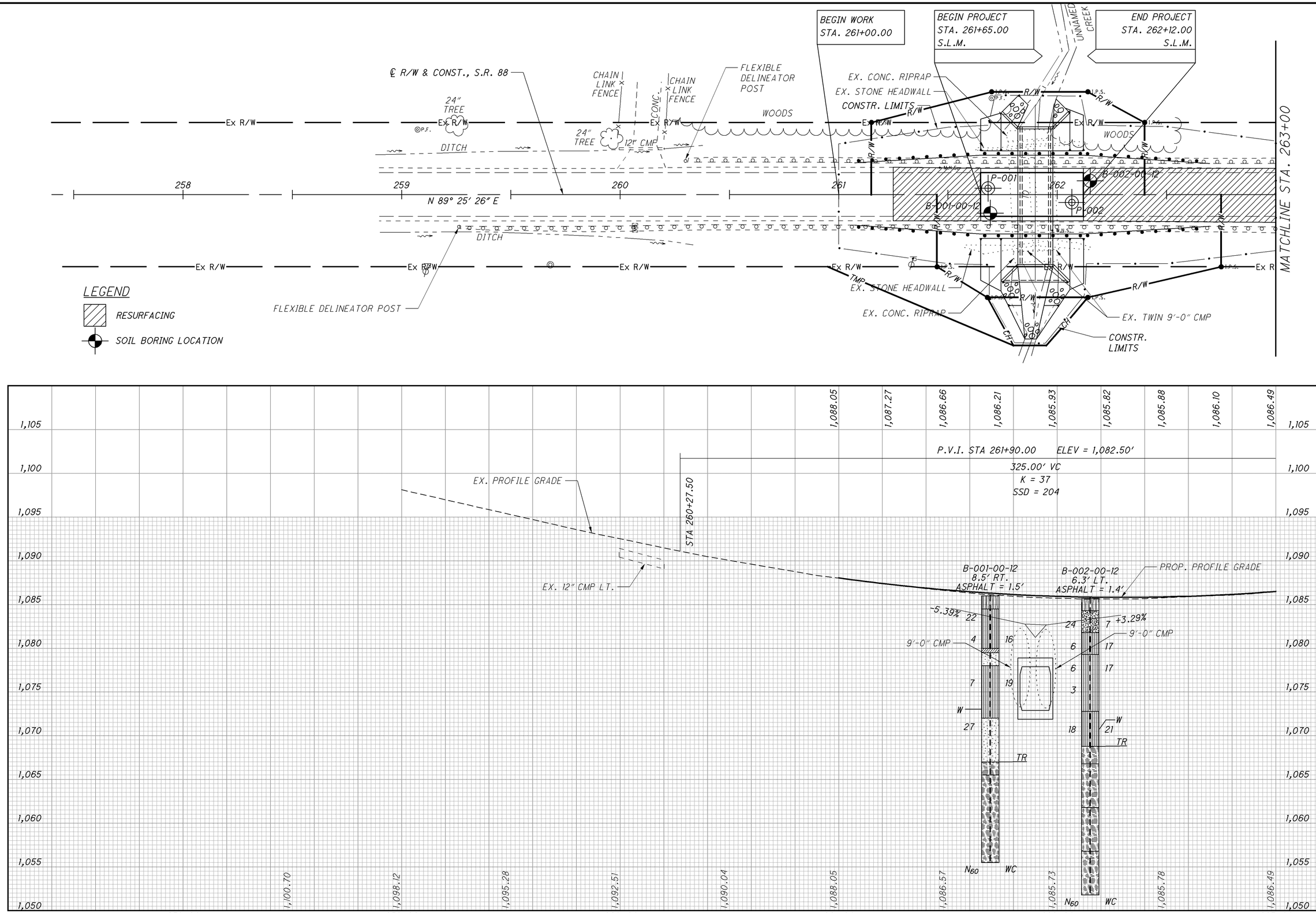

HORIZONTAL SCALE IN FEET

DRAWN TCG CHECKED PSL

STRUCTURE FOUNDATION EXPLORATION
STA. 257+50.00 TO STA. 263+00.00

GEA-88-04.96

2 / 4

Z:\Active Projects\86-111284 GEA\GEA-88-04.96\CAD\90222FP001.dgn 3/6/2014 4:54:02 PM srose

PROJECT: GEA-88-04.96	DRILLING FIRM / OPERATOR: B&P / R. WEBB	DRILL RIG: MOBILE B-61 TRUCK	STATION / OFFSET: 261+69, 9 RT	EXPLORATION ID B-001-00-12
TYPE: BRIDGE REPLACEMENT	SAMPLING FIRM / LOGGER: NTH / KRAL	HAMMER: AUTOMATIC HAMMER	ALIGNMENT: CL SR 88	
PID: 90222 BR ID:	DRILLING METHOD: 3.25" HSA / NX	CALIBRATION DATE: N/A	ELEVATION: 1086.0 (MSL) EOB: 30.0 ft.	PAGE 1 OF 2
START: 3/19/12 END: 3/19/12	SAMPLING METHOD: SPT/NX	ENERGY RATIO (%): 89	COORD: 630908.680 N, 2371910.370 E	

MATERIAL DESCRIPTION AND NOTES	ELEV. 1086.0	DEPTHS	SPT/ RQD	N_{60}	REC (%)	SAMPLE ID	HP (tsf)	GRADATION (%) GR	CS	FS	SI	CL	ATTERBERG LL	PL	PI	WC	ODOT CLASS (GI)	HOLE SEALED
18" Asphalt	1084.5																	
MEDIUM DENSE, BROWN AND BLACK, **SANDY SILT**, SOME CLAY, LITTLE GRAVEL (FILL)	1082.5	1 2 3	40 9 6	22	72	SS-1	-	-	-	-	-	-	-	-	-	-	A-4a (V)	
VERY LOOSE, BROWN, **SANDY SILT**, SOME CLAY, LITTLE GRAVEL, WET (FILL)	1080.0	4 5	2 2 1	4	72	SS-2	-	-	-	-	-	-	24	19	5	16	A-4a (V)	
MEDIUM STIFF TO STIFF, BROWN AND GRAY, **SILT AND CLAY**, SOME SAND, TRACE GRAVEL, DAMP (FILL)	1079.5	6	3	-	100	SS-3A	1.50	-	-	-	-	-	-	-	-	-	A-6a (V)	
MEDIUM DENSE, GRAY AND BROWN, **COARSE AND FINE SAND**, TRACE CLAY, TRACE GRAVEL, DAMP (FILL)	1078.5	7 8	9 9	27	83	SS-3B	-	-	-	-	-	-	-	-	-	-	A-3a (V)	
MEDIUM STIFF TO STIFF, BROWN AND GRAY, **SANDY SILT**, SOME CLAY, TRACE GRAVEL, DAMP (FILL)	1072.5	W 9 10 11 12 13	2 2 3	7	100	SS-4	1.25	5	14	26	33	22	26	19	7	19	A-4a (4)	
MEDIUM DENSE, BROWN AND GRAY, **COARSE AND FINE SAND**, SOME GRAVEL, TRACE SILT, WET	1067.5	14 15 16 17 18	4 7 11	27	83	SS-5	-	-	-	-	-	-	-	-	-	-	A-3a (V)	
SHALE, GRAY, SLIGHTLY WEATHERED, WEAK, FINE GRAINED, THINLY LAMINATED, ARENACEOUS; RQD 0%, REC 0%.	1066.0	TR 19	10 42 50/2"	-	100	SS-6	-	-	-	-	-	-	-	-	-	-	Rock (V)	
INTERBEDDED SHALE (50%) AND SILTSTONE (50%), RQD 10%, REC. 94%; **SHALE**, GRAY, SLIGHTLY WEATHERED, MODERATELY STRONG TO STRONG, FINE GRAINED, MEDIUM BEDDED, ARENACEOUS; **SILTSTONE**, GRAY, SLIGHTLY WEATHERED, MODERATELY STRONG, FINE GRAINED, MEDIUM BEDDED, ARENACEOUS.	1061.0	20 21 22 23 24	10		80	NX-1											CORE	

PID: 90222	BR ID:	PROJECT: GEA-88-04.96	STATION / OFFSET: 261+69, 9 RT	START: 3/19/12	END: 3/19/12	PG 2 OF 2	B-001-00-12

MATERIAL DESCRIPTION AND NOTES	ELEV. 1061.0	DEPTHS	SPT/ RQD	N_{60}	REC (%)	SAMPLE ID	HP (tsf)	GRADATION (%) GR	CS	FS	SI	CL	ATTERBERG LL	PL	PI	WC	ODOT CLASS (GI)	HOLE SEALED
INTERBEDDED SHALE (50%) AND SILTSTONE (50%), RQD 49%, REC. 100%; **SHALE**, GRAY, SLIGHTLY WEATHERED, WEAK TO SLIGHTLY STRONG, FINE GRAINED, THINLY LAMINATED, ARENACEOUS; **SILTSTONE**, GRAY, SLIGHTLY WEATHERED, MODERATELY STRONG, FINE GRAINED, MEDIUM BEDDED, ARENACEOUS.	1056.0	26 27 28 29 EOB 30	48		100	NX-2											CORE	

NOTES: NONE

ABANDONMENT METHODS, MATERIALS, QUANTITIES: PUMPED 12 GAL. BENTONITE GROUT

STANDARD ODOT SOIL BORING LOG (8.5 X 11) - OH DOT.GDT - 11/4/13 09:50 - S:\SHARED\TECHNICAL SOFTWARE\GINT\PROJECTS\2012\ODOT\86-111284-01A.GPJ

STANDARD ODOT SOIL BORING LOG (8.5 X 11) - OH DOT.GDT - 11/4/13 09:50 - S:\SHARED\TECHNICAL SOFTWARE\GINT\PROJECTS\2012\ODOT\86-111284-01A.GPJ

PROJECT: GEA-88-04.96	DRILLING FIRM / OPERATOR: B&P / R. WEBB	DRILL RIG: MOBILE B-61 TRUCK	STATION / OFFSET: 262+15, 6 LT	EXPLORATION ID B-002-00-12
TYPE: BRIDGE REPLACEMENT	SAMPLING FIRM / LOGGER: NTH / KRAL	HAMMER: AUTOMATIC HAMMER	ALIGNMENT: CL SR 88	
PID: 90222 BR ID:	DRILLING METHOD: 3.25" HSA / NX	CALIBRATION DATE: N/A	ELEVATION: 1085.7 (MSL) EOB: 34.0 ft.	PAGE 1 OF 2
START: 3/20/12 END: 3/20/12	SAMPLING METHOD: SPT/NX	ENERGY RATIO (%): 89	COORD: 630923.910 N, 2371955.950 E	

MATERIAL DESCRIPTION AND NOTES	ELEV. 1085.7	DEPTHS	SPT/ RQD	N_{60}	REC (%)	SAMPLE ID	HP (tsf)	GRADATION (%) GR	CS	FS	SI	CL	ATTERBERG LL	PL	PI	WC	ODOT CLASS (GI)	HOLE SEALED
16.5" Asphalt	1084.3																	
MEDIUM DENSE, BLACK AND BROWN, **GRAVEL AND STONE FRAGMENTS**, CONTAINS MANY ASPHALT FRAGMENTS, MOIST (FILL)	1081.7	1 2 3	9 8 8	24	72	SS-1	-	63	21	8	-	8 -	NP	NP	NP	7	A-1-a (0)	
MEDIUM STIFF TO STIFF, BROWN, **SANDY SILT**, SOME CLAY, LITTLE GRAVEL, DAMP (FILL)	1079.2	4 5 6	2 2 2	6	44	SS-2	-	11	12	17	28	32	28	20	8	17	A-4a (5)	
VERY LOOSE TO LOOSE, GRAY AND BLACK, **SANDY SILT**, LITTLE CLAY, DAMP (FILL)	1072.7	7 8 9 10 11 12 13	2 2 2	6	72	SS-3	-	14	13	25	32	16	NP	NP	NP	17	A-4a (3)	
			2 1 1	3	100	SS-4	-	-	-	-	-	-	-	-	-	-	A-4a (V)	
MEDIUM DENSE, GRAY, **GRAVEL AND STONE FRAGMENTS WITH SAND AND SILT**, TRACE CLAY, WET	1068.7	W 14 15 16	4 6 6	18	100	SS-5	-	23	9	33	26	9	NP	NP	NP	21	A-2-4 (0)	
SHALE, GRAY, SLIGHTLY WEATHERED, VERY WEAK, FINE GRAINED, LAMINATED, ARENACEOUS; RQD 0%, REC 100%.	1066.7	TR 17 18	28 50/0"	-	100	SS-6	-	-	-	-	-	-	-	-	-	-	Rock (V)	
SHALE, GRAY, SLIGHTLY WEATHERED, VERY WEAK, FINE GRAINED, LAMINATED, ARENACEOUS; RQD 0%, REC 100%.	1061.7	19 20 21 22 23 24	0		100	NX-1											CORE	

PID: 90222	BR ID:	PROJECT: GEA-88-04.96	STATION / OFFSET: 262+15, 6 LT	START: 3/20/12	END: 3/20/12	PG 2 OF 2	B-002-00-12

MATERIAL DESCRIPTION AND NOTES	ELEV. 1060.7	DEPTHS	SPT/ RQD	N_{60}	REC (%)	SAMPLE ID	HP (tsf)	GRADATION (%) GR	CS	FS	SI	CL	ATTERBERG LL	PL	PI	WC	ODOT CLASS (GI)	HOLE SEALED
INTERBEDDED SHALE (70%) AND SILTSTONE (30%), RQD 0%, REC. 100%; **SHALE**, GRAY, SLIGHTLY WEATHERED, WEAK TO SLIGHTLY STRONG, FINE GRAINED, LAMINATED TO THIN BEDDED, ARENACEOUS; **SILTSTONE**, GRAY, UNWEATHERED TO SLIGHTLY WEATHERED, MODERATELY STRONG TO STRONG, FINE GRAINED, MEDIUM BEDDED, ARENACEOUS. *(continued)*	1056.7	26 27 28 29	20		100	NX-2											CORE	
INTERBEDDED SHALE (50%) AND SILTSTONE (50%), RQD 20%, REC. 100%; **SHALE**, GRAY, SLIGHTLY WEATHERED, SLIGHTLY STRONG, FINE GRAINED, LAMINATED TO THIN BEDDED, ARENACEOUS; **SILTSTONE**, GRAY, UNWEATHERED, MODERATELY STRONG TO STRONG, FINE GRAINED, MEDIUM BEDDED, ARENACEOUS.	1051.7	30 31 32 33 EOB 34	48		100	NX-3											CORE	

NOTES: NONE

ABANDONMENT METHODS, MATERIALS, QUANTITIES: PUMPED 14 GAL. BENTONITE GROUT

STANDARD ODOT SOIL BORING LOG (8.5 X 11) - OH DOT.GDT - 11/4/13 09:50 - S:\SHARED\TECHNICAL SOFTWAREIGINT\PROJECTS\2012\ODOT\86-111284-01A.GPJ

STANDARD ODOT SOIL BORING LOG (8.5 X 11) - OH DOT.GDT - 11/4/13 09:50 - S:\SHARED\TECHNICAL SOFTWAREIGINT\PROJECTS\2012\ODOT\86-111284-01A.GPJ

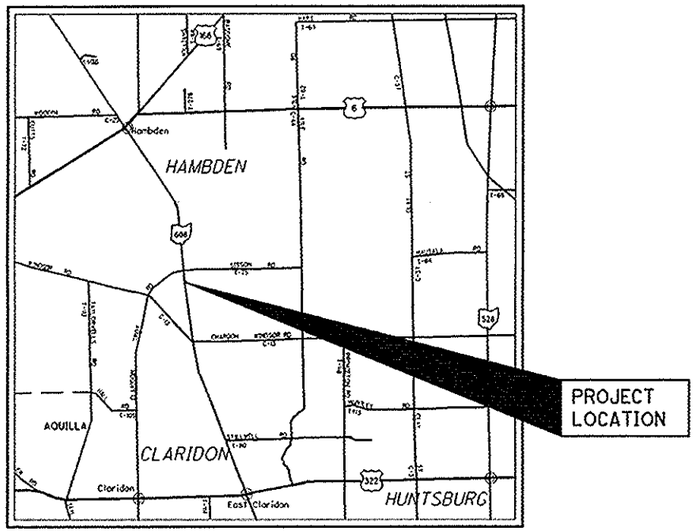

LOCATION MAP

LATITUDE: N41°34'25" LONGITUDE: W81°07'55"

SCALE IN MILES

0 1 2 3 4

N

PORTION TO BE IMPROVED
INTERSTATE HIGHWAY
FEDERAL ROUTES
STATE ROUTES
COUNTY & TOWNSHIP ROADS
OTHER ROADS

DESIGN DESIGNATION

CURRENT ADT (2014)	3270
DESIGN YEAR ADT (2034)	3970
DESIGN HOURLY VOLUME (2034)	400
DIRECTIONAL DISTRIBUTION	57%
TRUCKS (24 HOUR B&C)	7%
DESIGN SPEED	55 MPH
LEGAL SPEED	55 MPH
DESIGN FUNCTIONAL CLASSIFICATION: RURAL MAJOR COLLECTOR	
NHS PROJECT	YES

DESIGN EXCEPTIONS

DESIGN FEATURE	APPROVAL DATE	SHEET NO.
SSD	08-02-12	9

UNDERGROUND UTILITIES

CONTACT BOTH SERVICES
CALL TWO WORKING DAYS
BEFORE YOU DIG

CALL
1-800-362-2764
(TOLL FREE)

OHIO UTILITIES PROTECTION SERVICE
NON-MEMBERS
MUST BE CALLED DIRECTLY

OIL & GAS PRODUCERS UNDERGROUND
PROTECTION SERVICE CALL: 1-800-925-0988

1320 FILE PREPARED BY: Thomas Fok & Associates, Inc. (Consulting Engineers & Surveyors) EDGE Engineering 1165 Wadsworth Avenue | Akron, Ohio 44515 | 330.793.1501

STATE OF OHIO
DEPARTMENT OF TRANSPORTATION

GEA-608-10.53 (PART 2)

HAMBDEN TOWNSHIP

GEAUGA COUNTY

FOR PART 1, SEE GEA-88-4.96

INDEX OF SHEETS:

TITLE SHEET	1
TYPICAL SECTIONS	2
GENERAL NOTES	3 - 4
MAINTENACE OF TRAFFIC	5
GENERAL SUMMARY	6 - 7
SUBSUMMARIES	8
PLAN & PROFILE	9
CROSS SECTIONS	10 - 13
DRIVE DETAILS	14
MISCELLANEOUS DETAILS	15 - 24
TRAFFIC CONTROL	25
STRUCTURES (UNDER 20')	26 - 31
FOUNDATION EXPLORATION	

ENGINEERS SEAL:
SHEETS 1-25

STATE OF OHIO · STEPHEN D. LISTIERI · E-64079 · REGISTERED · PROFESSIONAL ENGINEER

SIGNED: Stephen D. Listieri
DATE: March 6, 2014

ENGINEERS SEAL:
SHEETS 26-31

STATE OF OHIO · MARK ADAMS · E-68008 · REGISTERED · PROFESSIONAL ENGINEER

SIGNED: Mark Adams
DATE: 3/6/2014

STANDARD CONSTRUCTION DRAWINGS					SUPPLEMENTAL SPECIFICATIONS	SPECIAL PROVISIONS
	SEE PART 1					

PROJECT DESCRIPTION

IMPROVING 0.1 MILES OF SR 608 BY THE REPLACEMENT OF THE EXISTING BRIDGE OVER SISSON CREEK WITH A 16' x 6' PRECAST CONCRETE BOX CULVERT WITH FULL HEIGHT HEADWALLS.

PROJECT EARTH DISTURBED AREA: 0.19 ACRES
ESTIMATED CONTRACTOR EARTH DISTURBED AREA: 0.25 ACRES
NOTICE OF INTENT EARTH DISTURBED AREA:
N/A (NOI not required)

2013 SPECIFICATIONS

THE STANDARD SPECIFICATIONS OF THE STATE OF OHIO, DEPARTMENT OF TRANSPORTATION, INCLUDING CHANGES AND SUPPLEMENTAL SPECIFICATIONS LISTED IN THE PROPOSAL SHALL GOVERN THIS IMPROVEMENT.

I HEREBY APPROVE THESE PLANS AND DECLARE THAT THE MAKING OF THIS IMPROVEMENT WILL REQUIRE THE CLOSING TO TRAFFIC OF THE HIGHWAY AND THAT DETOURS WILL BE PROVIDED AS INDICATED ON SHEET 5.

APPROVED
DATE 12-05-14 DISTRICT DEPUTY DIRECTOR

APPROVED
DATE 1-28-15 DIRECTOR, DEPARTMENT OF TRANSPORTATION

FEDERAL PROJECT NO. E110(306)

PID NO. 90222

CONSTRUCTION PROJECT NO.

RAILROAD INVOLVEMENT NONE

GEA-608-10.53

DATE: 05-MAR-14 16:02
FILE: P:\GEA\90222\GEA-608-10531\ROADWAY\SHEETS\90222GT001.DGN
SCALE: 1 : 1E

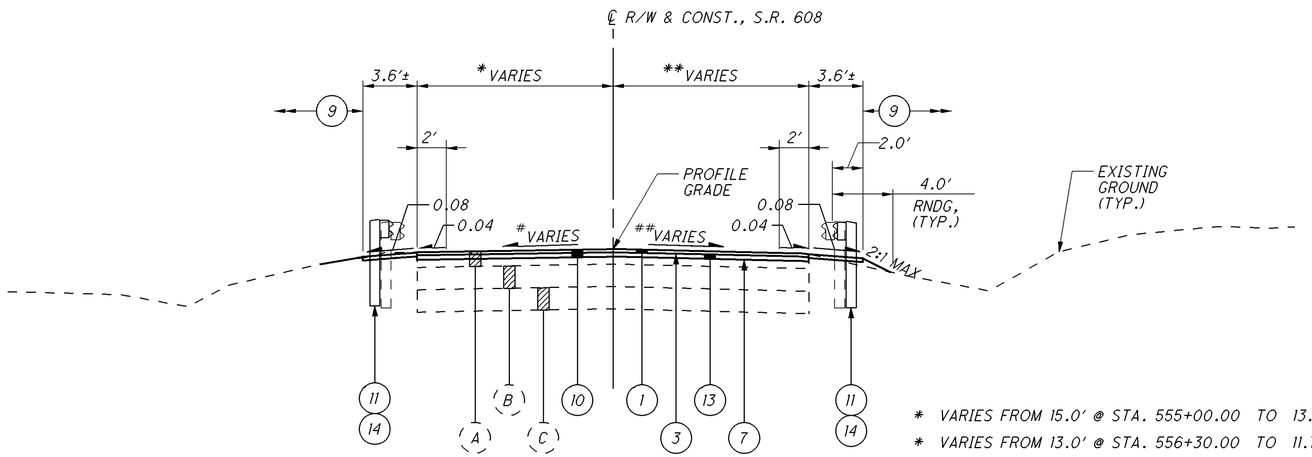

RESURFACING SECTION - S.R. 608

STA. 555+00.00 TO STA. 555+85.00

STA. 556+30.00 TO STA. 557+00.00

* VARIES FROM 15.0' @ STA. 555+00.00 TO 13.0' @ STA. 555+85.00

* VARIES FROM 13.0' @ STA. 556+30.00 TO 11.7' @ STA. 557+00.00

** VARIES FROM 12.6' @ STA. 555+00.00 TO 13.0' @ STA. 555+85.00

** VARIES FROM 13.0' @ STA. 556+30.00 TO 14.3' @ STA. 557+00.00

\# VARIES FROM -0.020 @ STA. 555+00.00 TO -.016 @ STA. 555+50.00

\# VARIES FROM -.016 @ STA. 556+50.00 TO +.003 @ STA. 557+00.00

\#\# VARIES FROM -.025 @ STA. 555+00.00 TO -.016 @ STA. 555+50.00

\#\# VARIES FROM -.016 @ STA. 556+50.00 TO -.035 @ STA. 557+00.00

LEGEND

1. ITEM 441 - 1 1/4" ASPHALT CONCRETE SURFACE COURSE, TYPE 1, (448), AS PER PLAN
2. ITEM 441 - 1 3/4" ASPHALT CONCRETE INTERMEDIATE COURSE, TYPE 2, (448)
3. ITEM 407 - TACK COAT FOR INTERMEDIATE COURSE (@ 0.040 GAL./S.Y.)
4. ITEM 301 - 8" ASPHALT CONCRETE BASE, PG64-22
5. NOT USED
6. ITEM 304 - 6" AGGREGATE BASE
7. ITEM 407 - TACK COAT (@ 0.075 GAL./S.Y.)
8. ITEM 204 - SUBGRADE COMPACTION
9. ITEM 659 - SEEDING AND MULCHING
10. ITEM 254 - PAVEMENT PLANING, ASPHALT CONCRETE (T VARIES 0" TO 3")
11. ITEM 606 - GUARDRAIL, TYPE 5
12. ITEM 605 - AGGREGATE DRAINS
13. ITEM 441 - ASPHALT CONCRETE INTERMEDIATE COURSE, TYPE 2, (448), AS PER PLAN
14. ITEM 441 - 3" ASPHALT CONCRETE INTERMEDIATE COURSE, TYPE 1, (448), (UNDER GUARDRAIL), AS PER PLAN

A. 6"± EXISTING ASPHALT PAVEMENT

B. 6" TO 18" EXISTING ASPHALT BASE

C. 18" TO 24" EXISTING AGGREGATE BASE

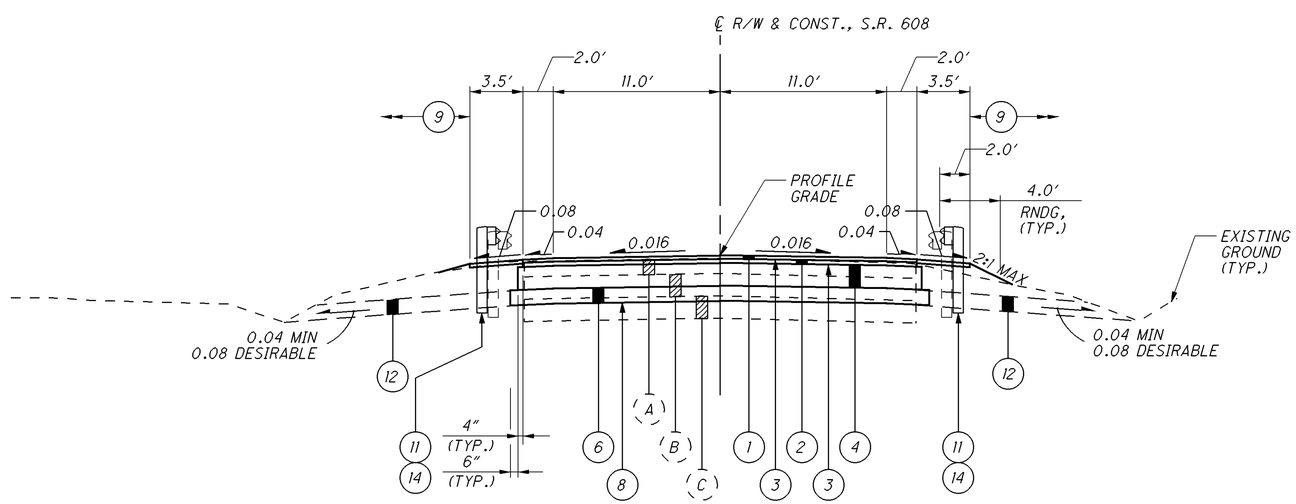

NORMAL SECTION - S.R. 608

STA. 555+85.00 TO STA. 556+30.00

TYPICAL SECTIONS

GEA-608-10.53

DATE: 09-MAR-12 10:43
FILE: J:\JOB\8132 OTT-002-0016\ROADWAY\SHEETS\8696GY001.DGN
SCALE: 1 = 5E

ROUNDING

THE ROUNDING AT SLOPE BREAKPOINTS SHOWN ON THE TYPICAL SECTIONS APPLIES TO ALL CROSS-SECTIONS EVEN THOUGH OTHERWISE SHOWN.

UTILITIES

LISTED BELOW ARE ALL UTILITIES LOCATED WITHIN THE PROJECT CONSTRUCTION LIMITS TOGETHER WITH THEIR RESPECTIVE OWNERS:

G4S TECHNOLOGY LLC
4 WALKER WAY, SUITE 1
ALBANY, NY 12205
(518) 869-5353
(518) 869-3839
ATTN.: MICHAEL DANDARAW

ILLUMINATING CO.
6896 MILLER ROAD
BRECKSVILLE, OHIO 44141
(440) 717-6845
(440) 546-8780
ATTN: MARK ROBINSON

TIME WARNER CABLE
4352 YOUNGSTOWN ROAD SE
WARREN, OH 44484
(330) 369-7107
ATTN.: DOUG LAWRENTZ

THE LOCATION OF THE UNDERGROUND UTILITIES SHOWN ON THE PLANS ARE AS OBTAINED FROM THE OWNERS AS REQUIRED BY SECTION 153.64 O.R.C.

CONSTRUCTION NOISE

ACTIVITIES AND LAND USE ADJACENT TO THIS PROJECT MAY BE AFFECTED BY CONSTRUCTION NOISE. IN ORDER TO MINIMIZE ANY ADVERSE CONSTRUCTION NOISE IMPACTS, DO NOT OPERATE POWER-OPERATED CONSTRUCTION-TYPE DEVICES BETWEEN THE HOURS OF 7:00 PM AND 8:00 AM. IN ADDITION, DO NOT OPERATE AT ANY TIME ANY DEVICE IN SUCH A MANNER THAT THE NOISE CREATED SUBSTANTIALLY EXCEEDS THE NOISE CUSTOMARILY AND NECESSARILY ATTENDANT TO THE REASONABLE AND EFFICIENT PERFORMANCE OF SUCH EQUIPMENT.

CLEARING AND GRUBBING

ALTHOUGH THERE ARE NO TREES OR STUMPS SPECIFICALLY MARKED FOR REMOVAL WITHIN THE LIMITS OF THE PROJECT, A LUMP SUM QUANTITY IS INCLUDED IN THE GENERAL SUMMARY FOR ITEM 201, CLEARING AND GRUBBING. ALL PROVISIONS AS SET FORTH IN THE SPECIFICATIONS UNDER THIS ITEM ARE INCLUDED IN THE LUMP SUM PRICE BID FOR ITEM 201, CLEARING AND GRUBBING.

WORK LIMITS

THE WORK LIMITS SHOWN ON THESE PLANS ARE FOR PHYSICAL CONSTRUCTION ONLY. PROVIDE THE INSTALLATION AND OPERATION OF ALL WORK ZONE TRAFFIC CONTROL AND WORK ZONE TRAFFIC CONTROL DEVICES REQUIRED BY THESE PLANS WHETHER INSIDE OR OUTSIDE THESE WORK LIMITS.

ITEM SPECIAL - NOTIFICATION OF DEMOLITION AND RENOVATION

AN ASBESTOS SURVEY WAS CONDUCTED ON THE GEA-608-10.53 BRIDGE OVER SISSON CREEK. THE SURVEY WAS COMPLETED ON AUGUST 31, 2012 BY A CERTIFIED ASBESTOS HAZARD EVALUATION. THE SURVEY DID NOT IDENTIFY ANY ASBESTOS CONTAINING MATERIALS ON THE BRIDGE.

IF UNIDENTIFIED ASBESTOS CONTAINING MATERIAL (ACM) IS ENCOUNTERED DURING CONSTRUCTION OF THE BRIDGES, REMOVAL AND DISPOSAL OF ACM MUST COMPLY WITH THE OHIO ADMINISTRATIVE CODE, THE OCCUPATIONAL SAFETY AND HEALTH ADMINISTRATION (OSHA) REGULATIONS, AND THE NATIONAL EMISSION STANDARD FOR HAZARDOUS AIR POLLUTANTS (NESHAP) STANDARDS FOR ASBESTOS.

A COPY OF THE OHIO ENVIRONMENTAL PROTECTION AGENCY (OEPA) NOTIFICATION OF DEMOLITION AND RENOVATION FORM WITH SECTIONS I-VII COMPLETED IS INCLUDED WITH THE BID PACKAGE. THE CONTRACTOR WILL COMPLETE SECTIONS VIII-XVIII OF THE FORM AND SUBMIT THE COMPLETED FORM TO THE LOCAL AIR AUTHORITY AT LEAST TEN (10) DAYS PRIOR TO DEMOLITION OF THE BRIDGE. THE CONTRACTOR WILL PROVIDE A COPY OF THE COMPLETED FORM TO THE ENGINEER.
THE LOCAL AIR AUTHORITY IS:

ATTN: BERT MECHENBIER
LAKE COUNTY
AIR POLLUTION CONTROL
33 MILL STREET
PAINESVILLE, OHIO 44077

THE CONTRACTOR SHALL FURNISH ALL LABOR, EQUIPMENT, AND MATERIALS NECESSARY TO COMPLETE, SUBMIT, AND COMPLY WITH THE OEPA NOTIFICATION FORM. PAYMENT OF THIS WORK SHALL BE INCLUDED IN THE BID LUMP SUM PRICE ITEM SPECIAL - ASBESTOS ABATEMENT.

ITEM	UNIT
ITEM SPECIAL - ASBESTOS ABATEMENT	LUMP SUM

SURVEYING PARAMETERS

USE THE FOLLOWING VERTICAL POSITIONING AND HORIZONTAL POSITIONING PARAMETERS FOR ALL SURVEYING:

VERTICAL POSITIONING

ORTHOMETRIC HEIGHT DATUM: NAVD 88
GEOID: 2009

HORIZONTAL POSITIONING

REFERENCE FRAME: NAD 83 (CORS 96)
ELLIPSOID: GRS 80
MAP PROJECTION: LAMBERT CONFORMAL CONIC
COORDINATE SYSTEM: OHIO STATE PLANE, NORTH ZONE (3401)
COMBINED SCALE FACTOR: 0.999926990

UNITS ARE IN U.S. SURVEY FEET. USE THE FOLLOWING CONVERSION FACTOR: 1 METER = 3.280833333 U.S. SURVEY FEET.

CONNECTION BETWEEN EXISTING AND PROPOSED GUARDRAIL

WHEN IT IS NECESSARY TO SPLICE PROPOSED GUARDRAIL TO EXISTING GUARDRAIL, ONLY THE EXISTING GUARDRAIL SHALL BE CUT, DRILLED, OR PUNCHED. THE CONNECTION SHALL BE MADE USING A W-BEAM, BEAM SPLICE AS SHOWN IN AASHTO M 180-12, EXCEPT THE BEAM WASHERS ARE NOT TO BE USED. PAYMENT SHALL BE INCLUDED IN THE CONTRACT PRICE FOR THE RESPECTIVE GUARDRAIL ITEMS.

ITEM 614, MAINTAINING TRAFFIC (NOTICE OF CLOSURE SIGN)

NOTICE OF CLOSURE SIGNS, AS DETAILED IN THESE PLANS, SHALL BE ERECTED BY THE CONTRACTOR AT LEAST ONE WEEK IN ADVANCE OF THE SCHEDULED ROAD OR RAMP CLOSURE. THE SIGNS SHALL BE ERECTED ON THE RIGHT-HAND SIDE OF THE ROAD/RAMP FACING TRAFFIC. THEY SHALL BE PLACED SO AS NOT TO INTERFERE WITH THE VISIBILITY OF ANY OTHER TRAFFIC CONTROL SIGNS. ON ROADWAYS, THEY SHOULD BE ERECTED AT THE POINT OF CLOSURE. THE SIGNS MAY BE ERECTED ANYWHERE ON RAMPS AS LONG AS THEY ARE VISIBLE TO THE MOTORISTS USING THE RAMP. ON ENTRANCE RAMPS, THE SIGN SHALL BE ERECTED WELL IN ADVANCE OF THE MERGE AREA TO AVOID DISTRACTING MOTORISTS.

DETOUR NOTIFICATION

THE CONTRACTOR SHALL ADVISE ALL LOCAL AUTHORITIES FOURTEEN (14) DAYS IN ADVANCE OF WHEN THE DETOUR ROUTE SHOULD BE IN EFFECT. LOCAL AUTHORITIES SHALL INCLUDE BUT NOT BE LIMITED TO EMERGENCY RESPONDERS, SCHOOL BOARDS, TOWNSHIP TRUSTEES AND HOSPITALS.

INDIANA BAT

CLEARING OF ANY TREES THAT HAVE SUITABLE SUMMER BROOD REARING OR ROOSTING HABITAT FOR THE FEDERALLY ENDANGERED INDIANA BAT (E.G. TREES WITH EXFOLIATING BARK AND/OR CAVITIES), SHALL OCCUR BEFORE MARCH 30TH OR AFTER OCTOBER 1ST WHEN THE BATS WOULD NOT BE USING SUCH HABITAT.

REVIEW OF DRAINAGE FACILITIES

BEFORE ANY WORK IS STARTED ON THE PROJECT AND AGAIN BEFORE FINAL ACCEPTANCE BY THE STATE, REPRESENTATIVES OF THE STATE AND THE CONTRACTOR, ALONG WITH LOCAL REPRESENTATIVES, SHALL MAKE AN INSPECTION OF ALL EXISTING SEWERS WHICH ARE TO REMAIN IN SERVICE AND WHICH MAY BE AFFECTED BY THE WORK. THE CONDITION OF THE EXISTING CONDUITS AND THEIR APPURTENANCE SHALL BE DETERMINED FROM FIELD OBSERVATIONS. RECORDS OF THE INSPECTION SHALL BE KEPT IN WRITING BY THE STATE.

ALL NEW CONDUITS, INLETS, CATCH BASINS, AND MANHOLES CONSTRUCTED AS A PART OF THE PROJECT SHALL BE FREE OF ALL FOREIGN MATTER AND IN A CLEAN CONDITION BEFORE THE PROJECT WILL BE ACCEPTED BY THE STATE.

ALL EXISTING SEWERS INSPECTED INITIALLY BY THE ABOVE MENTIONED PARTIES SHALL BE MAINTAINED AND LEFT IN A CONDITION REASONABLY COMPARABLE TO THAT DETERMINED BY THE ORIGINAL INSPECTION. ANY CHANGE IN THE CONDITION RESULTING FROM THE CONTRACTOR'S OPERATIONS SHALL BE CORRECTED BY THE CONTRACTOR TO THE SATISFACTION OF THE ENGINEER.

PAYMENT FOR ALL OPERATIONS DESCRIBED ABOVE SHALL BE INCLUDED IN THE CONTRACT PRICE FOR THE PERTINENT 611 CONDUIT ITEMS.

ITEM 605 - AGGREGATE DRAINS

AGGREGATE DRAINS SHALL BE PLACED AT 50 FOOT INTERVALS ON EACH SIDE OF NORMAL CROWNED SECTIONS, STAGGERED SO THAT EACH DRAIN IS 25 FEET FROM THE ADJACENT DRAIN ON THE OPPOSITE SIDE, AND AT 25 FOOT INTERVALS ON THE LOW SIDE ONLY OF SUPERELEVATED SECTIONS. AN AGGREGATE DRAIN SHALL BE PLACED AT THE LOW POINT OF EACH SAG VERTICAL CURVE.

STATION	SIDE	LENGTH
STA. 555+90	RT	8 FT
STA. 556+25	LT	6 FT
	TOTAL =	14 FT

TOTAL CARRIED TO GENERAL SUMMARY.

SEEDING AND MULCHING

THE FOLLOWING QUANTITIES ARE PROVIDED TO PROMOTE GROWTH AND CARE OF PERMANENT SEEDED AREAS:

659, SOIL ANALYSIS TEST 2 EACH

659, TOPSOIL 19 CU. YD.

659, SEEDING AND MULCHING 169 SQ. YD.

659, REPAIR SEEDING AND MULCHING 8 SQ. YD

659, INTER-SEEDING 8 SQ. YD.

659, COMMERCIAL FERTILIZER 0.02 TON

659, LIME 0.03 ACRES

659, WATER 1 M. GAL.

SEEDING AND MULCHING SHALL BE APPLIED TO ALL AREAS OF EXPOSED SOIL BETWEEN THE RIGHT-OF-WAY LINES, AND WITHIN THE CONSTRUCTION LIMITS FOR AREAS OUTSIDE THE RIGHT-OF-WAY LINES COVERED BY WORK AGREEMENT OR SLOPE EASEMENT. QUANTITY CALCULATIONS FOR SEEDING AND MULCHING ARE BASED ON THESE LIMITS.

DUST CONTROL

THE CONTRACTOR SHALL FURNISH AND APPLY WATER FOR DUST CONTROL AS DIRECTED BY THE ENGINEER. THE FOLLOWING ESTIMATED QUANTITIES HAVE BEEN INCLUDED FOR DUST CONTROL PURPOSES:

ITEM 616, WATER 1 M. GAL

DATE: 03-OCT-12 15:34
FILE: J:\PROJECTS\GEA\90222 (GEA-088-0496)\ROADWAY\SHEETS\90222GN001.DGN
SCALE: 1 = 1E

PAVING UNDER GUARDRAIL

THIS OPERATION SHALL INCLUDE PREPARATION OF THE GRADED SHOULDER USING 209, LINEAR GRADING AS PER PLAN, AND PAVING UNDER THE GUARDRAIL USING 441 ASPHALT CONCRETE INTERMEDIATE COURSE, TYPE 1, (448), UNDER GUARDRAIL, AS PER PLAN.

ITEM 209, LINEAR GRADING AS PER PLAN, SHALL CONSIST OF EXCAVATING TOPSOIL, AND PLACING GRANULAR MATERIAL.

ALL COLLECTED DEBRIS AND TOPSOIL, INCLUDING RHIZOMES, ROOTS AND OTHER VEGETATIVE PLANT MATERIAL SHALL BE REMOVED AND DISPOSED OF AS SPECIFIED IN 105.17.

THE REMOVED MATERIAL SHALL BE REPLACED WITH COMPACTABLE GRANULAR MATERIAL CONFORMING TO 703.16 PLACED TO GRADE AS DETAILED ON THE TYPICAL SECTION OR AS APPROVED BY THE ENGINEER.

ALL EQUIPMENT, MATERIALS AND LABOR REQUIRED TO PERFORM THE WORK OUTLINED ABOVE SHALL BE INCLUDED FOR PAYMENT UNDER ITEM 209, LINEAR GRADING, AS PER PLAN.

PAVING UNDER GUARDRAIL SHALL CONSIST OF PLACING ITEM 441 TO THE DEPTH SPECIFIED USING ONE OF THE FOLLOWING METHODS:

METHOD A:
1. SET GUARDRAIL POSTS
2. PLACE ITEM 441

METHOD B:
1. PLACE ITEM 441
2. BORE ASPHALT AT POST LOCATIONS (MAY BE OMITTED IF STEEL POSTS ARE USED)
3. SET GUARDRAIL POSTS
4. PATCH AROUND POSTS. THE MATERIALS USED FOR PATCHING SHALL BE AN ASPHALT CONCRETE APPROVED BY THE ENGINEER. PATCHED AREAS SHALL BE COMPACTED USING EITHER HAND OR MECHANICAL METHODS. FINISHED SURFACES SHALL BE SMOOTH AND SLOPED TO DRAIN AWAY FROM THE POSTS.

ALL EQUIPMENT, MATERIALS AND LABOR REQUIRED TO PERFORM THE WORK OUTLINED ABOVE, WITH THE EXCEPTION OF SETTING GUARDRAIL POSTS, SHALL BE INCLUDED FOR PAYMENT UNDER ITEM 441, ASPHALT CONCRETE, INTERMEDIATE COURSE, TYPE 1, (448), UNDER GUARDRAIL, AS PER PLAN.

ASPHALT CONCRETE SURFACE COURSE SEALING REQUIREMENTS

IN ADDITION TO THE GUTTER SEALING REQUIREMENTS SPECIFIED IN SCD BP-3.1 AND C&MS 401.15, AFTER COMPLETION OF THE SURFACE COURSE, THE CONTRACTOR SHALL USE A CERTIFIED 702.01 PG BINDER TO SEAL THE FOLLOWING LOCATIONS:

- ALL CASTINGS INCLUDING BUT NOT LIMITED TO MONUMENTS, MANHOLES, WATER VALVES, CATCH BASINS, CURB INLETS.
- BUTT JOINTS AND FEATHER JOINTS INCLUDING BRIDGE APPROACHES.
- FORWARD JOINT FOR DRIVEWAY ASPHALT AND TRAILING JOINT WHEN BUTTING TO EXISTING ASPHALT DRIVE.
- PERIMETER OF ALL PAVEMENT REPAIRS OR OTHER ASPHALT INLAYS WHEN PAVEMENT REPAIRS/INLAYS ARE NOT OVERLAID WITH AN ASPHALT CONCRETE SURFACE COURSE.
- ALL COLD LONGITUDINAL JOINTS BETWEEN PAVED SHOULDERS AND GUARDRAIL ASPHALT.

THE MATERIAL USED SHALL BE A CERTIFIED 702.01 PG BINDER. THE WIDTH OF THE SEALER SHALL BE 2-3 INCHES.

ANY ADDITIONAL COSTS ASSOCIATED WITH THE WORK IDENTIFIED IN THIS NOTE SHALL BE INCLUDED IN THE APPROPRIATE ASPHALT CONCRETE SURFACE COURSE ITEM OF WORK.

ITEM 441 - ASPHALT CONCRETE SURFACE COURSE, TYPE 1, (448), AS PER PLAN

THE COARSE VIRGIN AGGREGATE FOR THIS ITEM SHALL CONSIST OF A BLEND OF 60% MIN. AIR COOLED BLAST FURNACE SLAG (ACBFS) OR TRAP ROCK FROM ONTARIO WITH LIMESTONE COMPRISING THE REMAINING PERCENTAGE.

USE A PG70-22M BINDER.

ITEM 441 - ASPHALT CONCRETE INTERMEDIATE COURSE, TYPE 1, (448), AS PER PLAN

THIS ITEM IS INTENDED TO BE PLACED AS A VARIABLE DEPTH COURSE. THE MINIMUM LIFT THICKNESS WILL BE 1¾" BUT WILL INCREASE, AS DIRECTED BY THE ENGINEER, TO REDUCE THE SEVERITY OF THE SAG VERTICAL CURVE, AS INDICATED IN THE PROPOSED WORK FOR THIS PROJECT.

USE A PG64-22 BINDER.

CALCULATED SDL CHECKED WT

GENERAL NOTES

GEA-608-10.53

DATE: 03-OCT-12 15:34
FILE: J:\PROJECTS\GEA\90222 (GEA-088-0496)\ROADWAY\SHEETS\90222GN001.DGN
SCALE: 1 - 1E

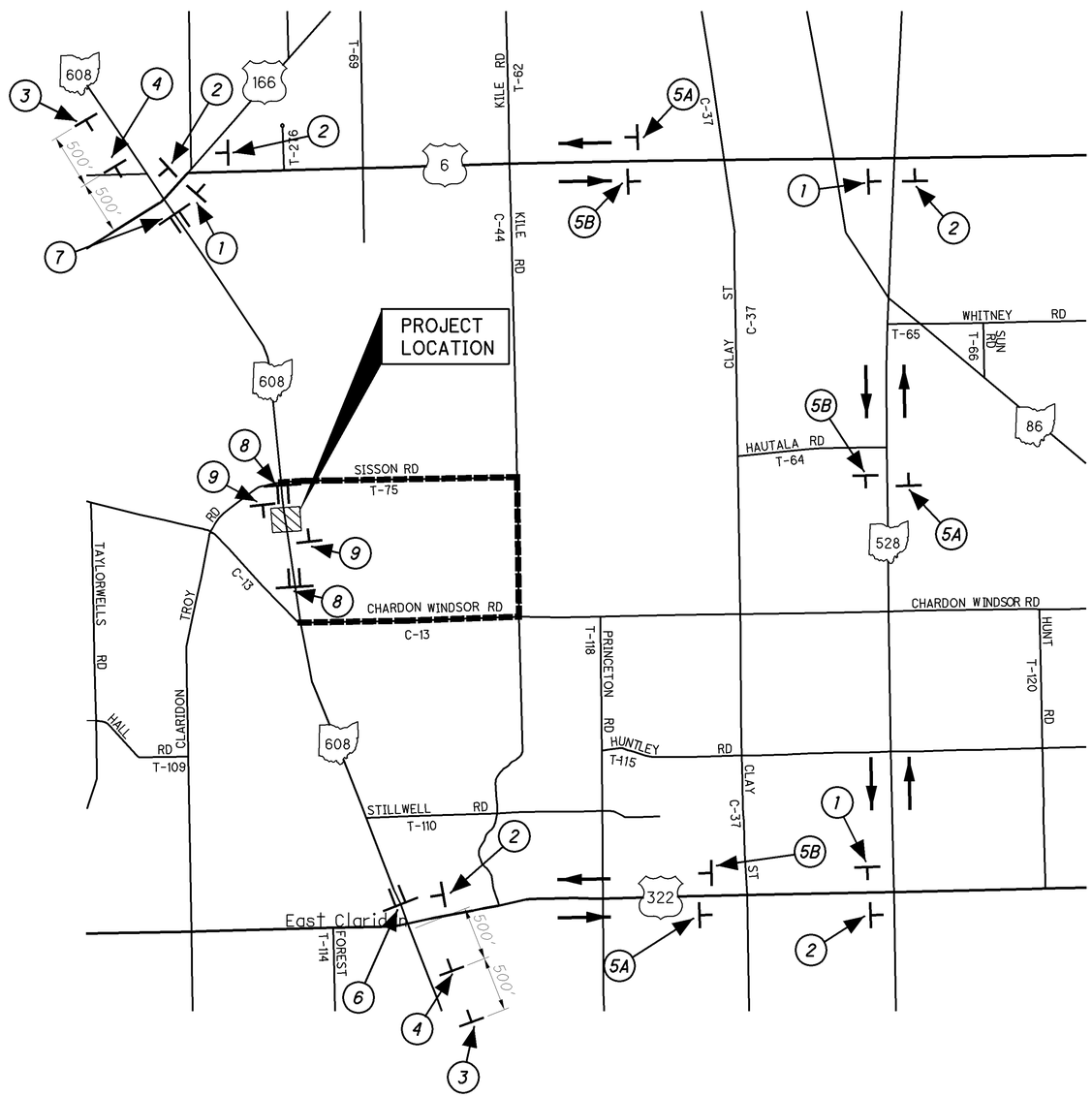

LEGEND

CLOSED PER MT-101.60

DETOUR ROUTE

* ON GATES AND BARRICADES
\# ON TYPE III BARRICADE

LOCAL ALTERNATE DETOUR ROUTE:
C-13 (WINDSOR ROAD) TO C-44 (KLINE ROAD)
TO T-75 (SISSION ROAD)

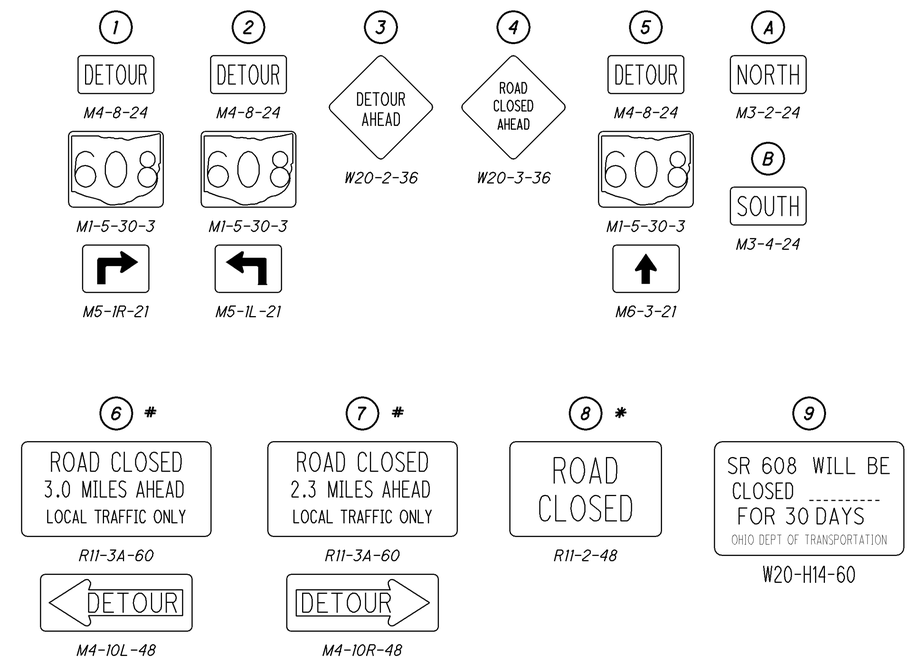

DETOUR DURATION

THE MAXIMUM LENGTH OF TIME FOR THE DETOUR ROUTE TO BE IN EFFECT FOR ALL PHASES OF CONSTRUCTION SHALL BE 30 CONSECUTIVE DAYS. CONSTRUCTION WORK MAY BE PERFORMED BEFORE AND AFTER THE DETOUR LIMITATION DATES, BUT THERE SHALL BE NO RESTRICTIONS (LANE WIDTH REDUCTIONS, TEMPORARY ROADWAYS, OR ONE WAY TRAFFIC) TO THROUGH OR LOCAL TRAFFIC. IT SHALL BE THE RESPONSIBILITY OF THE CONTRACTOR TO SCHEDULE AND PERFORM THE CONSTRUCTION WORK WITHIN THE DETOUR LIMITATION TIME. THE FAILURE OF THE CONTRACTOR TO MEET THE DETOUR LIMITATION DATES WILL CAUSE SEPARATE LIQUIDATED DAMAGES OF $5,000 PER CALENDAR DAY OF OVERRUN OF DETOUR LIMITATION TIME TO BE ASSESSED. THE CONTRACTOR WILL COMPLY WITH ALL PROVISIONS OF 108.07 OF THE DEPARTMENT OF TRANSPORTATION CONSTRUCTION AND MATERIAL SPECIFICATIONS.

DETOUR NOTIFICATION

THE CONTRACTOR SHALL ADVISE THE ODOT DISTRICT OFFICE (216-581-2100) AND GEAUGA COUNTY ENGINEERS OFFICE (440-286-3936) EIGHTEEN (18) DAYS IN ADVANCE OF WHEN THE DETOUR ROUTE SHOULD BE IN EFFECT. ALL WORK ZONE DEVICES REQUIRED SHALL BE FURNISHED, ERECTED, MAINTAINED, AND SUBSEQUENTLY REMOVED BY THE CONTRACTOR.

PAYMENT FOR ALL MATERIAL, LABOR, AND EQUIPMENT TO PERFORM THIS WORK SHALL BE INCLUDED IN THE LUMP SUM BID FOR ITEM 614 - DETOUR SIGNING.

N

HORIZONTAL SCALE IN FEET

CALCULATED SDL
CHECKED WT

MAINTENANCE OF TRAFFIC
DETOUR PLAN

GEA-608-10.53

DATE: 18-JUL-13 16:22
FILE: P:\GEA\90222 (GEA-608-1053)\ROADWAY\SHEETS\90222MD001.DGN
SCALE: 1 = 1E

SHEET NUMBER									PARTICIPATION	ITEM	ITEM EXT.	GRAND TOTAL	UNIT	DESCRIPTION	SEE SHEET NO.
	3		8		14			OFFICE CALCS	02/BRO/BR						
														ROADWAY	
	LUMP								LUMP	201	11000	LUMP		CLEARING AND GRUBBING	
			200						200	202	38000	200	FT	GUARDRAIL REMOVED	
			189		2				191	203	10000	191	CU YD	EXCAVATION	
			58						58	203	20000	58	CU YD	EMBANKMENT	
					10			145	155	204	10000	155	SQ YD	SUBGRADE COMPACTION	
			150						150	606	13000	150	FT	GUARDRAIL, TYPE 5	
			50						50	606	13040	50	FT	GUARDRAIL, NESTED TYPE 5 WITH TUBULAR BACKUP	
			1						1	606	26500	1	EACH	ANCHOR ASSEMBLY, TYPE T	
			4						4	606	35140	4	EACH	BRIDGE TERMINAL ASSEMBLY, TYPE 4	
	LUMP								LUMP	SPECIAL	690E71000	LUMP		ASBESTOS ABATEMENT	
														EROSION CONTROL	
			23						23	601	11000	23	SQ YD	RIPRAP USING 6" REINFORCED CONCRETE SLAB	
			7						7	601	32104	7	CU YD	ROCK CHANNEL PROTECTION, TYPE B WITH FABRIC FILTER	
			54						54	601	32110	54	CU YD	ROCK CHANNEL PROTECTION, TYPE B WITH AGGREGATE FILTER	
	2								2	659	00100	2	EACH	SOIL ANALYSIS TEST	
	19								19	659	00300	19	CU YD	TOPSOIL	
	169								169	659	10000	169	SQ YD	SEEDING AND MULCHING	
	8								8	659	14000	8	SQ YD	REPAIR SEEDING AND MULCHING	
	8								8	659	15000	8	SQ YD	INTER-SEEDING	
	0.02								0.02	659	20000	0.02	TON	COMMERCIAL FERTILIZER	
	0.03								0.03	659	31000	0.03	ACRE	LIME	
	1								1	659	35000	1	M GAL	WATER	
								2300	2300	832	30000	2300	EACH	EROSION CONTROL	
														DRAINAGE	
	14								14	605	31100	14	FT	AGGREGATE DRAINS	
														PAVEMENT	
								455	455	254	01000	455	SQ YD	PAVEMENT PLANING, ASPHALT CONCRETE	
								30	30	301	46000	30	CU YD	ASPHALT CONCRETE BASE, PG64-22	
								23	23	304	20000	23	CU YD	AGGREGATE BASE	
								34	34	407	10000	34	GALLON	TACK COAT	
								29	29	407	14000	29	GALLON	TACK COAT FOR INTERMEDIATE COURSE	
					2				2	411	10000	2	CU YD	STABILIZED CRUSHED AGGREGATE	
								20	20	441	50101	20	CU YD	ASPHALT CONCRETE SURFACE COURSE, TYPE 1, (448), AS PER PLAN	4
								28	28	441	50300	28	CU YD	ASPHALT CONCRETE INTERMEDIATE COURSE, TYPE 2, (448)	
								15	15	441	50300	15	CU YD	ASPHALT CONCRETE INTERMEDIATE COURSE, TYPE 2, (448), AS PER PLAN	4
								15	15	441	50701	15	CU YD	ASPHALT CONCRETE INTERMEDIATE COURSE, TYPE 1, (448),	4
														(UNDER GUARDRAIL), AS PER PLAN	

CALCULATED DAB
CHECKED SDL

GENERAL SUMMARY

GEA-608-10.53

DATE: 07-Mar-14 13:10
FILE: P:\GEA\90222 (GEA-608-1053)\ROADWAY\SHEETS\90222GG001.DGN
SCALE: 1 = 1E

SHEET NUMBER									PARTICIPATION	ITEM	ITEM EXT.	GRAND TOTAL	UNIT	DESCRIPTION	SEE SHEET NO.
	3	5		25		27		OFFICE CALCS	02/BRO/BR						
														TRAFFIC CONTROL	
				0.08					0.08	642	00090	0.08	MILE	EDGE LINE, 4"	
				0.04					0.04	642	00290	0.04	MILE	CENTER LINE	
														STRUCTURES (UNDER 20')	
						LUMP			LUMP	202	11000	LUMP		STRUCTURE REMOVED	
						67			67	202	23010	67	SQ YD	PAVEMENT REMOVED, ASPHALT	
						LUMP			LUMP	503	11100	LUMP		COFFERDAMS AND EXCAVATION BRACING	
						LUMP			LUMP	503	21300	LUMP		UNCLASSIFIED EXCAVATION	
						5208			5208	509	10000	5208	LB	EPOXY COATED REINFORCING STEEL	
						15			15	511	46010	15	CU YD	CLASS QC1 CONCRETE	
						45			45	511	46510	45	CU YD	CLASS QC1 CONCRETE, FOOTING	
						2			2	511	46610	2	CU YD	CLASS QC1 CONCRETE, HEADWALL	
						61			61	512	10100	61	SQ YD	SEALING OF CONCRETE SURFACES (EPOXY-URETHANE)	
						172			172	512	33000	172	SQ YD	TYPE 2 WATERPROOFING	
						38			38	516	13600	38	SQ FT	1" PREFORMED EXPANSION JOINT FILLER	
						9			9	518	21200	9	CU YD	POROUS BACKFILL WITH FILTER FABRIC	
						44			44	611	96441	44	FT	16' X 6' CONDUIT, TYPE A, 706.05, AS PER PLAN	27
						144			144	613	41200	144	CU YD	LOW STRENGH MORTAR BACKFILL	
														MAINTENANCE OF TRAFFIC	
		LUMP							LUMP	614	12420	LUMP		DETOUR SIGNING	
	1								1	616	10000	1	MGAL	WATER	
									LUMP	614	11000	LUMP		MAINTAINING TRAFFIC	
									LUMP	623	10000	LUMP		CONSTRUCTION LAYOUT STAKES AND SURVEYING	
									LUMP	624	10000	LUMP		MOBILIZATION	

CALCULATED DAB
CHECKED WHT

GENERAL SUMMARY

GEA-608-10.53

DATE: 07-MAR-14 13:11
FILE: P:\GEA\90222 (GEA-608-1053)\ROADWAY\SHEETS\90222GG002.DGN
SCALE: 1 = 1E

REF NO.	SHEET NO.	STATION FROM	STATION TO	SIDE		202 GUARDRAIL REMOVED (FT)		601 ROCK CHANNEL PROTECTION, TYPE B WITH AGGREGATE FILTER (CU YD)	601 ROCK CHANNEL PROTECTION, TYPE B WITH FABRIC FILTER (CU YD)	601 RIPRAP USING 6" REINFORCED CONCRETE SLAB (SQ YD)		606 GUARDRAIL, TYPE 5 (FT)	606 GUARDRAIL, NESTED TYPE 5 WITH TUBULAR BACKUP (FT)	606 BRIDGE TERMINAL ASSEMBLY, TYPE 4 (EACH)	606 ANCHOR ASSEMBLY, TYPE T (EACH)
R-1	9	555+47	556+60	RT		113									
R-2	9	555+55	556+42	LT		87									
GR-1	9	555+42	556+60	RT								87.5	25	2	1
GR-2	9	555+55	556+42	LT								62.5	25	2	
E-1	9	555+84	555+95	LT				8.4							
E-2	9	555+94	556+13	LT						11.5					
E-3	9	555+94	556+12	LT				18.6							
E-4	9	556+10	556+24	LT				9.1							
E-5	9	556+20	556+38	LT					6.7						
E-6	9	555+92	556+05	RT				7.2							
E-7	9	556+03	556+22	RT						11.5					
E-8	9	556+21	556+32	RT				10.6							
TOTALS						200		53.9	6.7	23.0		150	50	4	1
TOTALS CARRIED TO GENERAL SUMMARY						200		54	7	23		150	50	4	1

EXCAVATION, EMBANKMENT, AND SEEDING AND MULCHING SUB-SUMMARY

	SHEET NO.	203 EXCAVATION (CU YD)	203 EMBANKMENT (CU YD)	659 SEEDING AND MULCHING (SQ YD)
	10	0	1	6
	11	137	25	99
	12	51	32	61
	13	1	0	3
TOTALS CARRIED TO GENERAL SUMMARY		189	58	
TOTAL CARRIED TO SHEET NO. 3				169

ITEM 659 - TOPSOIL
111 CU YD x 169 SQ YD / 1000 SQ YD = 18.8 CU YD — USE: 19 CU YD

ITEM 659 - SOIL ANALYSIS TEST
19 CU YD / 10000 CU YD = 2 TESTS MINIMUM — USE: 2 EACH

ITEM 659 - REPAIR SEEDING AND MULCHING
0.05 x 169 SQ YD = 8.4 SQ YD — USE: 8 SQ YD

ITEM 659 - INTER-SEEDING
0.05 x 169 SQ YD = 8.4 SQ YD — USE: 8 SQ YD

ITEM 659 - COMMERCIAL FERTILIZER
1 TON x 169 SQ YD / 7410 SQ YD = 0.02 TON
1 TON x 8 SQ YD / 11,111 SQ YD = 0.00 TON — USE: 0.02 TON

ITEM 659 - LIME
169 SQ YD / 4840 ACRES/SQ YD = 0.03 ACRES — USE: 0.03 ACRES

ITEM 659 - WATER
2 x 169 SQ YD x 0.0027 M GAL/SQ YD = 0.91 M GAL
1 x 8 SQ YD x 0.0027 M GAL/SQ YD = 0.02 M GAL — USE: 1 M GAL

TOTALS CARRIED TO GENERAL NOTES SHEET 3.

CALCULATED SDL
CHECKED WHT

SUB-SUMMARY

GEA-608-10.53

DATE: 17-OCT-13 09:03
FILE: J:\PROJECTS\TRU\84457(TRU-CH-313)\ROADWAY\SHEETS\84457GS001.DGN
SCALE: 1 - 1E

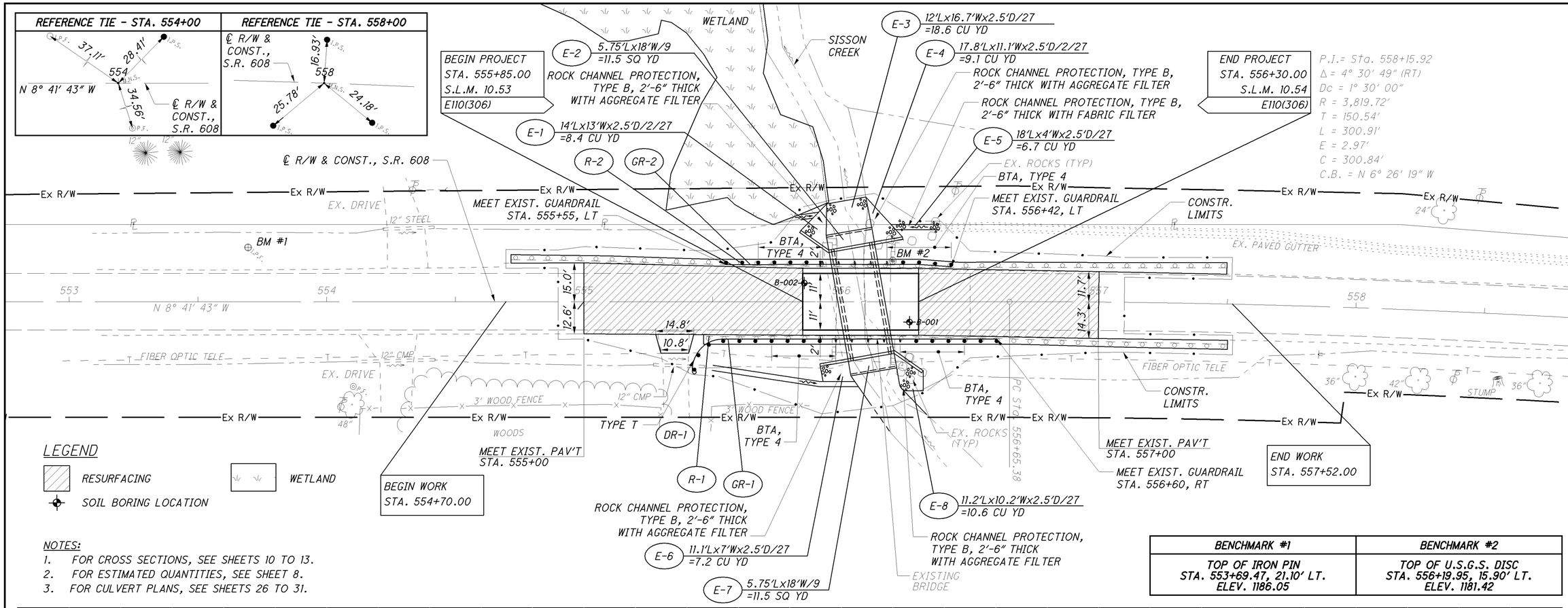

LEGEND

- RESURFACING
- SOIL BORING LOCATION
- WETLAND

NOTES:

1. FOR CROSS SECTIONS, SEE SHEETS 10 TO 13.
2. FOR ESTIMATED QUANTITIES, SEE SHEET 8.
3. FOR CULVERT PLANS, SEE SHEETS 26 TO 31.

BENCHMARK #1	BENCHMARK #2
TOP OF IRON PIN STA. 553+69.47, 21.10' LT. ELEV. 1186.05	TOP OF U.S.G.S. DISC STA. 556+19.95, 15.90' LT. ELEV. 1181.42

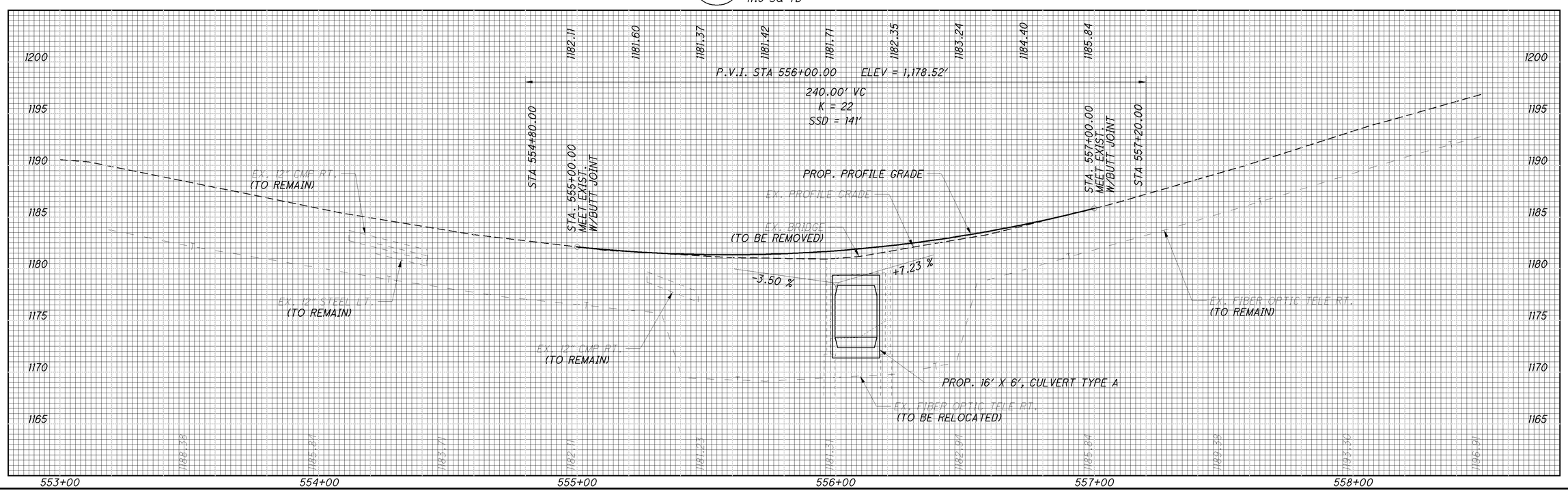

HORIZONTAL SCALE IN FEET 0 10 20 40

CALCULATED DAB
CHECKED SDL

PLAN AND PROFILE
STA. 553+00.00 TO STA. 558+50.00

GEA-608-10.53

DATE: 06-MAR-14 15:30
FILE: P:\GEA\90222 (GEA-608-1053)\ROADWAY\SHEETS\90222GP001.DGN
SCALE: 1 = 20E

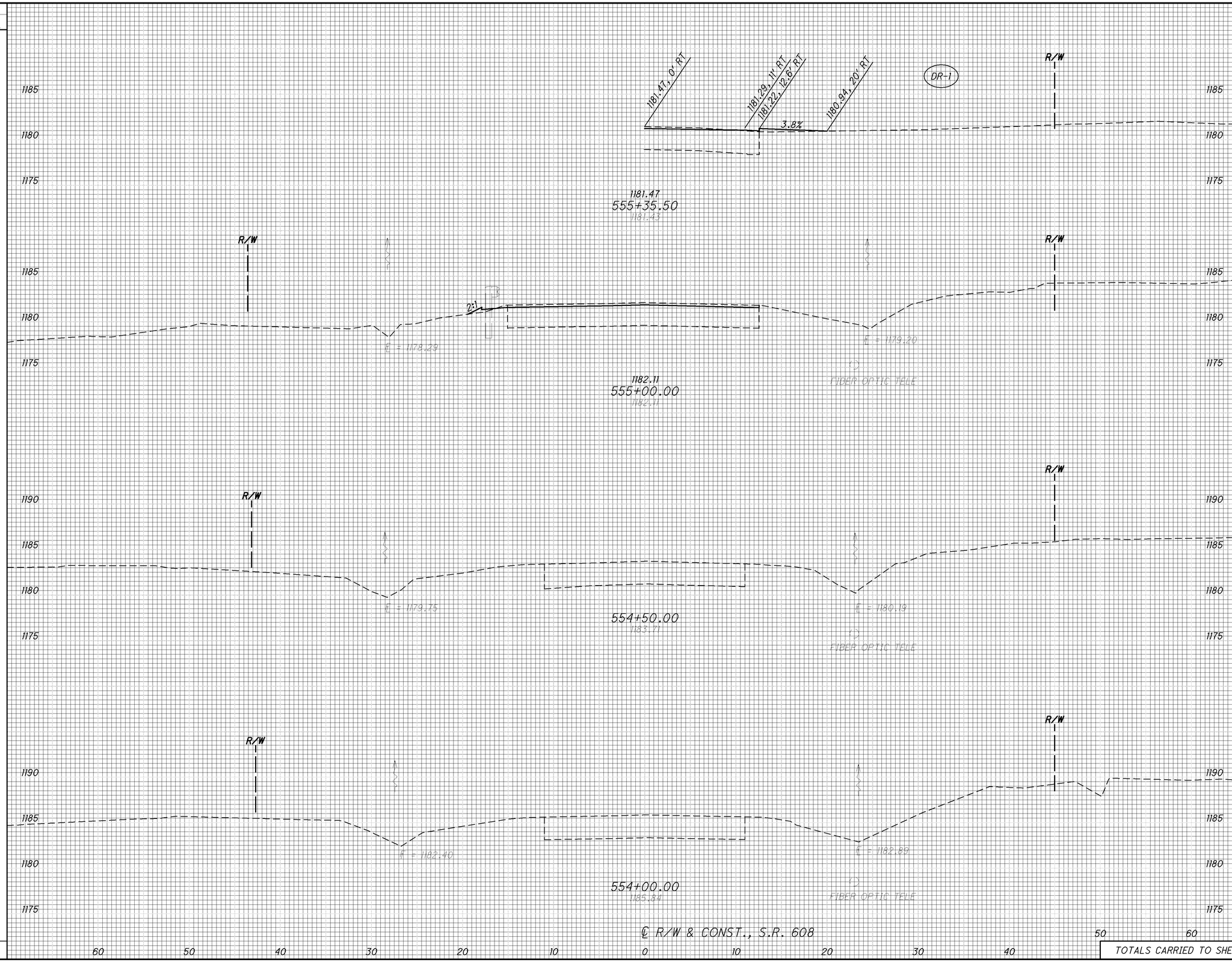

SEEDING END WIDTH	SEEDING SQ. YDS.	END AREA CUT	END AREA FILL	VOLUME CUT	VOLUME FILL
2		0	1		
	6			0	1
0		0	0		
	6			TOTALS CARRIED TO SHEET NO. 8	0 1

CALCULATED DAB
CHECKED SDL

CROSS SECTIONS

STA. 554+00 TO STA. 555+00

GEA-608-10.53

DATE: 06-MAR-14 15:32
FILE: P:\GEA\90222 (GEA-608-1053)\ROADWAY\SHEETS\90222XA001.DGN
SCALE: 1 - 5E

SEEDING END WIDTH	SEEDING SQ. YDS.	END AREA CUT	END AREA FILL	VOLUME CUT	VOLUME FILL
				54	
10		53	46		
	28			24	16
24		(AHEAD) 35	10		
		(BACK) 8	10		
	54			5	7
4		0	1		
	17			0	2
99				TOTALS CARRIED TO SHEET NO. 8	137 / 25

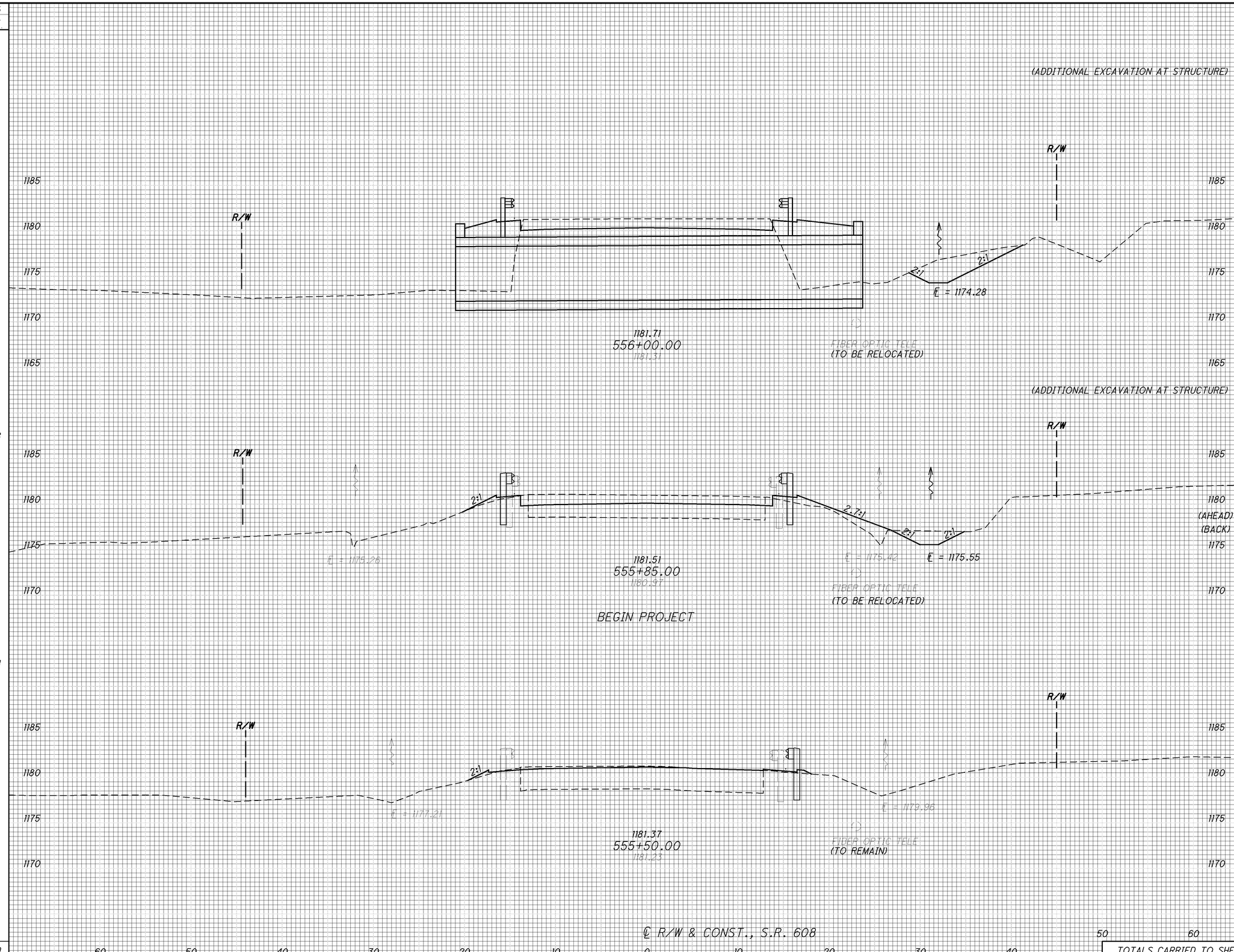

CALCULATED DAB
CHECKED SDL

CROSS SECTIONS
STA. 555+50 TO STA. 556+00

GEA-608-10.53

DATE: 06-MAR-14 15:32
FILE: P:\GEA\90222 (GEA-608-1053)\ROADWAY\SHEETS\90222XA001.DGN
SCALE: 1 - 5E

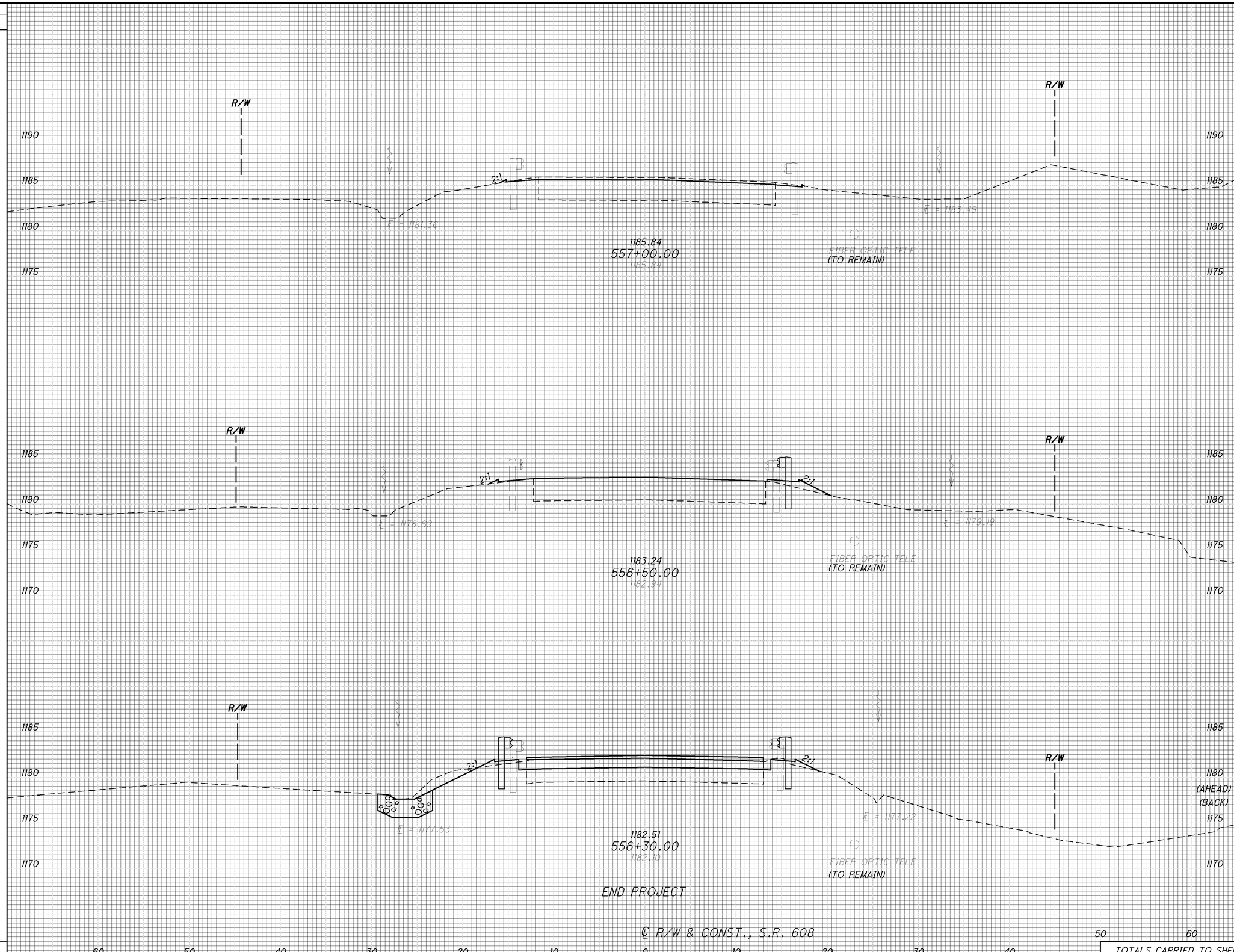

SEEDING END WIDTH	SEEDING SQ. YDS.	END AREA CUT	END AREA FILL	VOLUME CUT	VOLUME FILL
1	8	1	0	1	2
5	18	0	4	2	3
11	35	(AHEAD) 6 (BACK) 33	(AHEAD) 3 (BACK) 3	48	27
61				51	32

TOTALS CARRIED TO SHEET NO. 8

CALCULATED DAB
CHECKED SDL

CROSS SECTIONS
STA. 556+30 TO STA. 557+00

GEA-608-10.53

DATE: 06-MAR-14 15:32
FILE: P:\GEA\90222 (GEA-608-1053)\ROADWAY\SHEETS\90222XA001.DGN
SCALE: 1 - 5E

SEEDING		END AREA		VOLUME	
END WIDTH	SQ. YDS.	CUT	FILL	CUT	FILL
0	0	0	0	0	0
0	0	0	0	0	0
3	3			1	0
				1	0

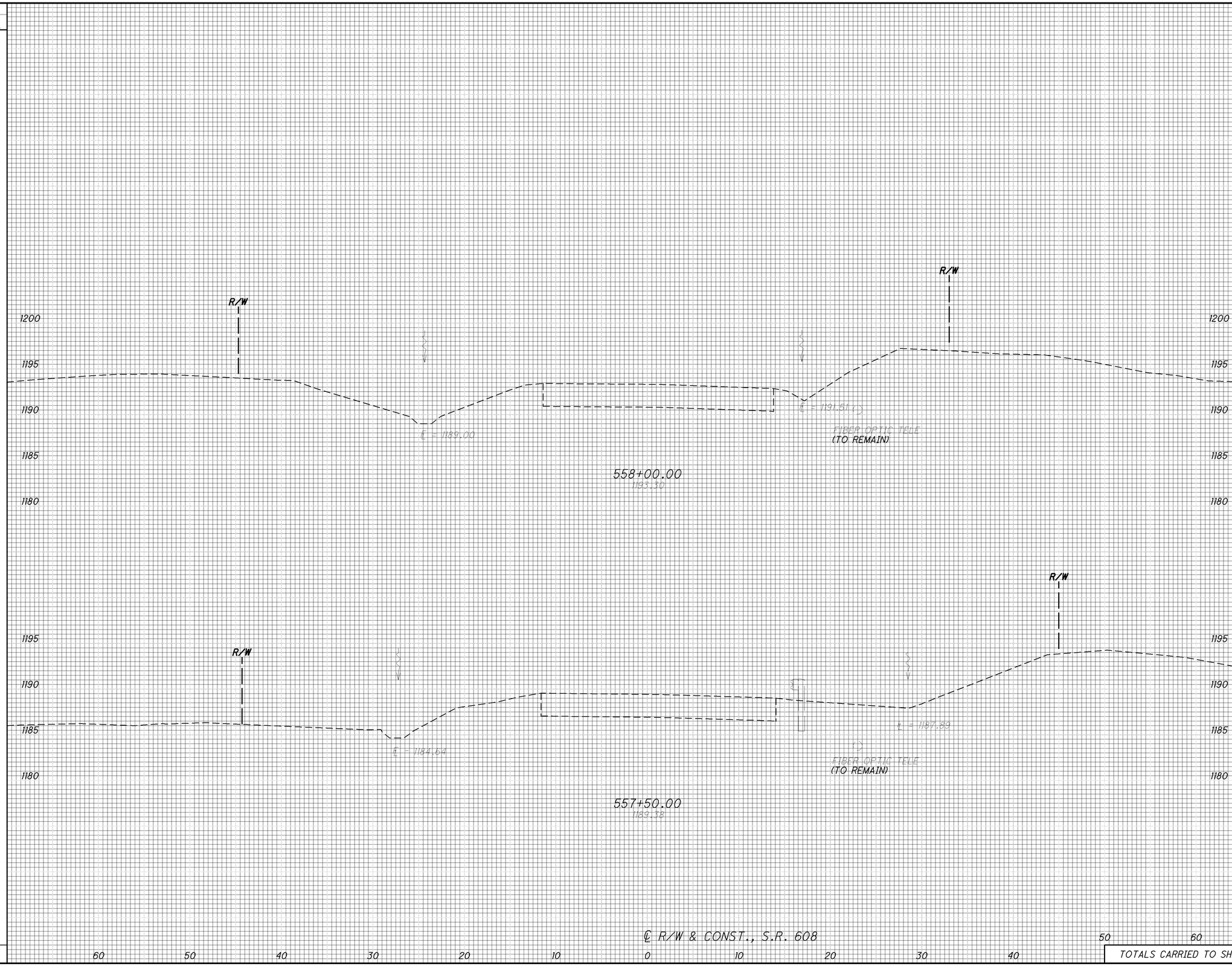

TOTALS CARRIED TO SHEET NO. 8

CALCULATED DAB
CHECKED SDL

CROSS SECTIONS
STA. 557+50 TO STA. 558+00

GEA-608-10.53

DATE: 06-MAR-14 15:32
FILE: P:\GEA\90222 (GEA-608-1053)\ROADWAY\SHEETS\90222XA001.DGN
SCALE: 1 = 5E

LEGEND

RESURFACING

PROPOSED FIELD DRIVE:

ITEM 411 - 6" STABILIZED CRUSHED AGGREGATE

NOTE: FOR DETAILS NOT SHOWN HEREIN, SEE STANDARD CONSTRUCTION DRAWING BP-4.1.

PLAN SHEET NO.	PROFILE SHEET NO.	REFERENCE NO.	DRIVEWAY ℄ STATION	SIDE	DRIVE TYPE	EXISTING MATERIAL	DRIVE ANGLE	DRIVEWAY LENGTH	WIDTH AT DRIVE	WIDTH AT PAVEMENT	CADD GENERATED SURFACE AREA	203 EXCAVATION	204 SUBGRADE COMPACTION		411 6" STABILIZED CRUSHED AGGREGATE	
							DEG.	FT	FT	FT	SQ FT	CU YD	SQ YD		CU YD	
10	12	DR-1	555+35.30	RT.	FIELD	AGGR.	90°	7.3	10.8	14.8	93	1.7	10.3		1.7	
SUB-TOTALS												1.7	10.3		1.7	
TOTALS CARRIED TO GENERAL SUMMARY												2	10		2	

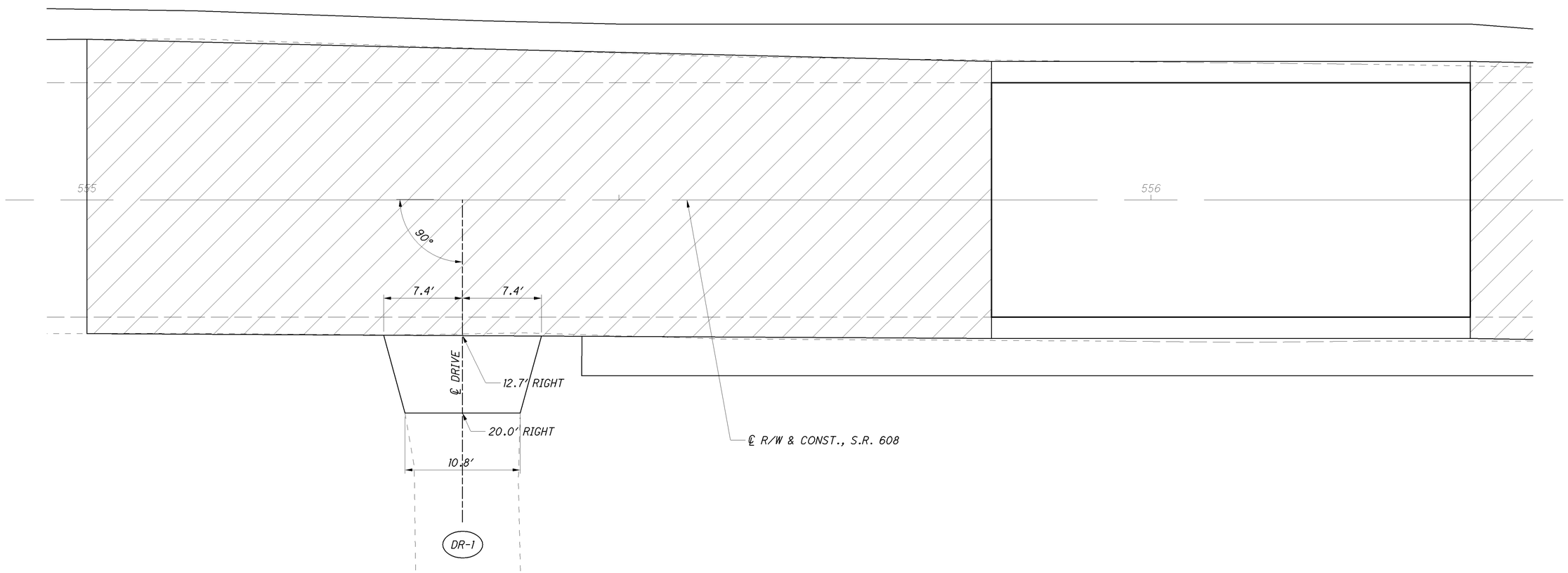

CALCULATED DAB
CHECKED SDL

DRIVE DETAILS

GEA-608-10.53

DATE: 17-OCT-13 08:55
FILE: J:\PROJECTS\TRU\84457(TRU-CH-313)\ROADWAY\SHEETS\84457GD001.DGN
SCALE: 1 = 1E

NOTES

GENERAL: Components shown on this drawing are used in a variety of guardrail systems. See individual guardrail drawing for specific applications.

See CMS 606 for guardrail specifications not covered on these drawings.

Refer to AASHTO M 180 for dimensional details of W-Beam and Thrie-Beam rail elements, related buffer and end sections, beam splices, post and splice bolts, nuts, and Type 1 W-Beam to Thrie-Beam Transition sections.

RAIL ELEMENTS: W-Beam Rail has an effective length of 12'-6" unless otherwise specified, with ¾" x 2½" post bolt slots on 6'-3" centers regardless of post spacing. Field punch or drill bolt holes or slots for irregularly spaced posts as specified in CMS 606.04.

RAIL SPLICES: Lap splices between two rail elements or between a rail and terminal connector in the direction of traffic. Lap the buffer or flared end sections in the direction of traffic.

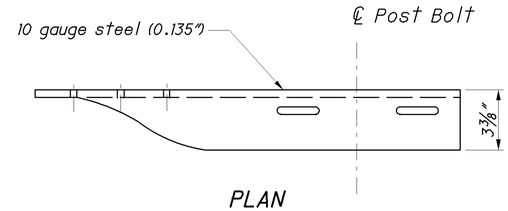

PLAN

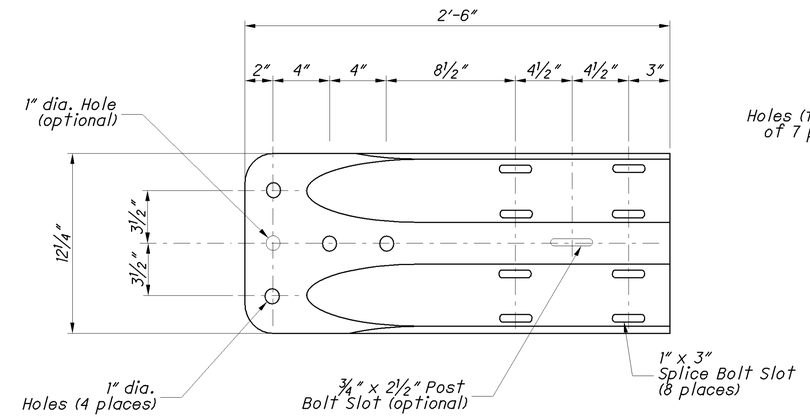

ELEVATION

W-BEAM TERMINAL CONNECTOR

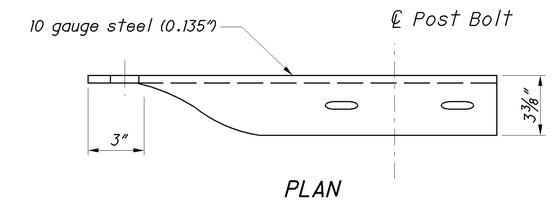

PLAN

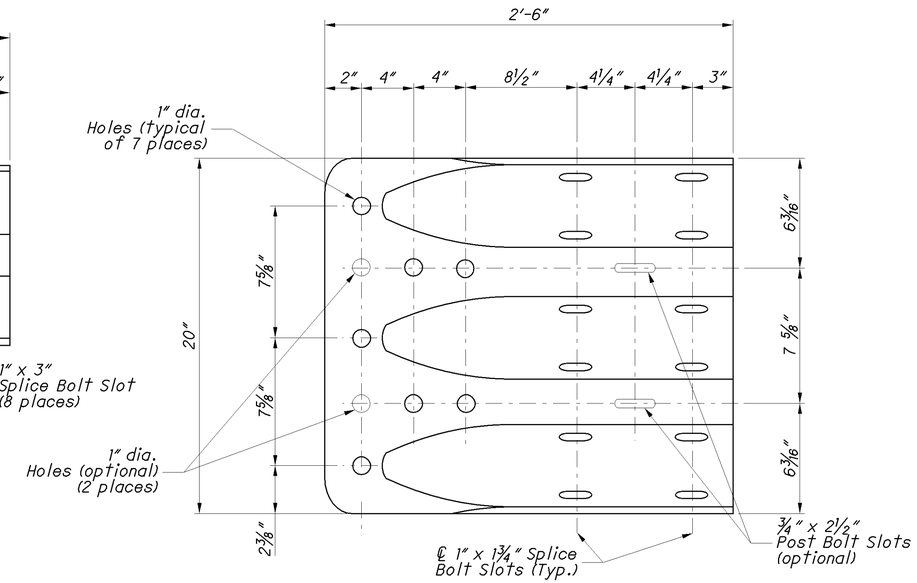

ELEVATION

THRIE-BEAM TERMINAL CONNECTOR

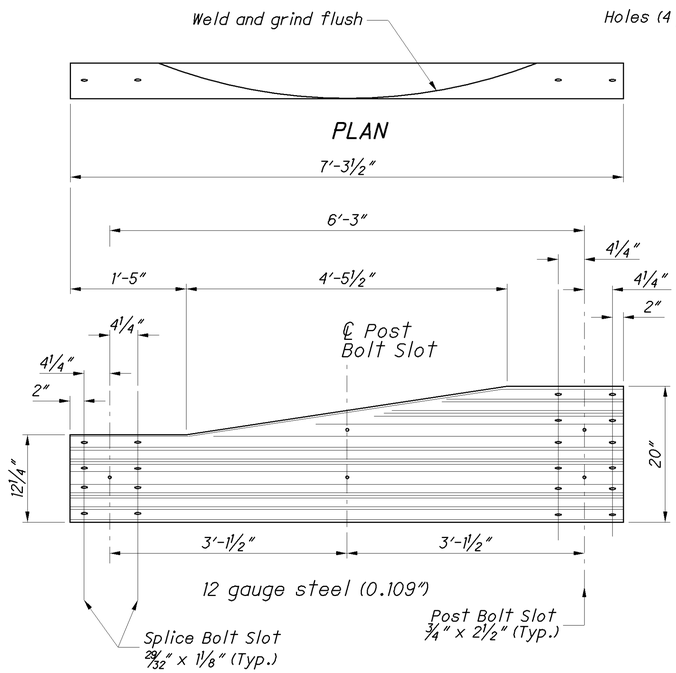

ELEVATION

TYPE 2 TRANSITION SECTION

(Asymmetric W to Thrie-Beam)

For details of Type 1 Transition Section (Symmetric), refer to AASHTO M 180, Figure 4.

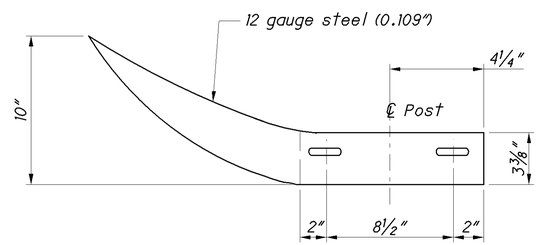

PLAN

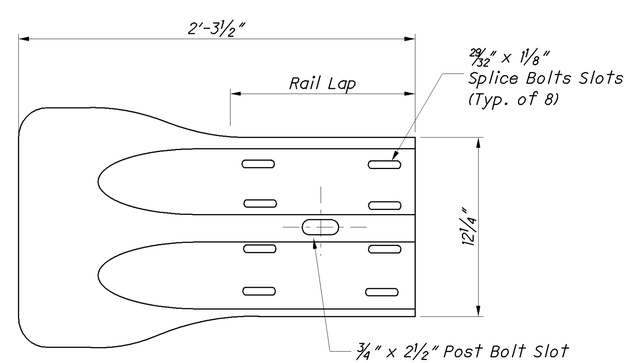

ELEVATION

W-BEAM FLARED END SECTION

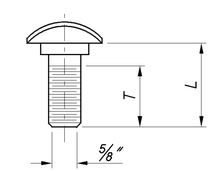

GUARDRAIL BOLT (For Post and Splice Bolts)		
L	T min.	Bolt Use
18" (Standard Rail)	4"	Type 5: WP/WB, PB
26" (Barrier Rail)		
10"	4"	Type 5: SP/WB, PB
1¼"	1⅛"	Splice Bolt

WP = Wood Post WB = Wood Blockout
SP = Steel Post PB = Plastic Blockout

Longer Bolt may be needed for round Wood Post larger than 8" dia.

OFFICE OF ROADWAY ENGINEERING

DESIGNED | REVIEWED | REVISION DATE | CHECKED | PIS NUMBER

PLAN INSERT SHEET

GUARDRAIL DETAILS (Rail Components)

PIS GR-1.1

1 / 3

15 / 31

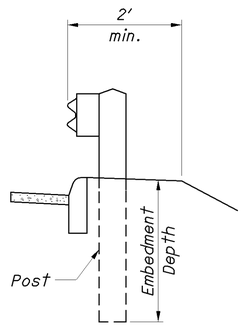

DETAIL A

See POST EMBEDMENT DEPTH Note

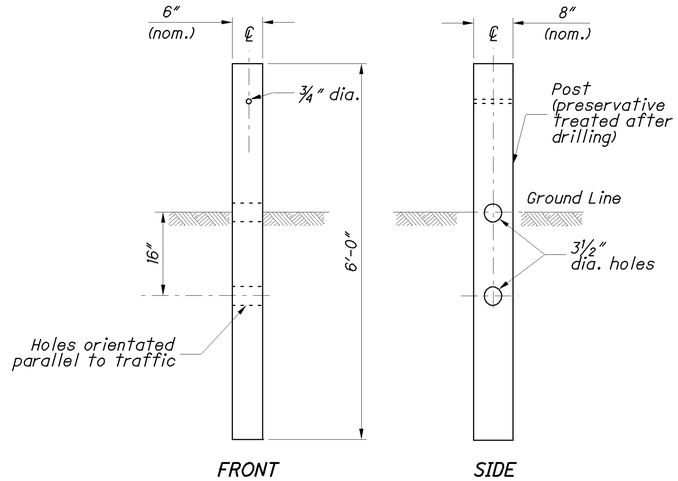

TYPE 1 BREAKAWAY CRT POST

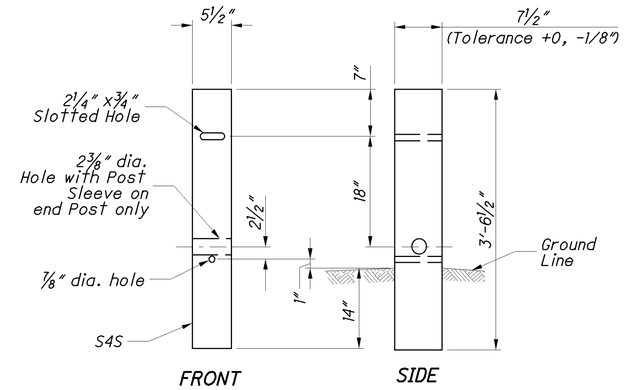

TYPE 2 BREAKAWAY CRT POST

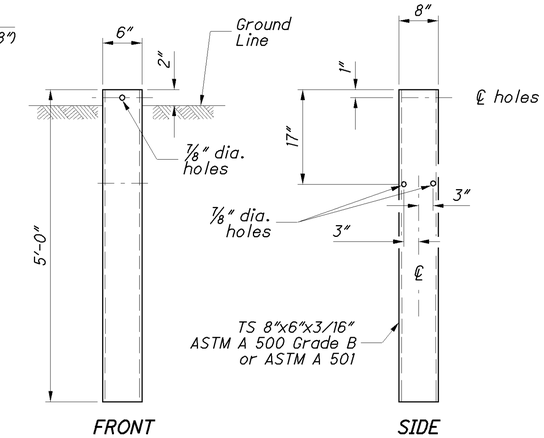

STEEL GROUND TUBE

NOTES

GUARDRAIL HEIGHT: For initial installation, construct the guardrail within ± 1″ of the standard height, h, or **29″** to the top of W-Beam rail. (See MEASURING GUARDRAIL HEIGHT Detail.)
When subsequent projects, such as resurfacings, affect the height of existing guardrail, the finished height is to be within ±2.5″ of the standard height.

POST EMBEDMENT DEPTH: Standard embedment is 3′-5″ min. Where less than 2′ of graded shoulder width (10:1 or flatter) exists, measured from the face of the guardrail (see DETAIL "A"), use longer posts so that a minimum of 5′-5″ embedment depth is provided. Payment for the longer posts will be made at the unit price bid for **ITEM 606 - GUARDRAIL POST, 9′, Each.**

SPECIAL POST MOUNTINGS: Install posts located over a drainage inlet or structure as shown in the FOOTING ANCHOR Detail, or anchor per the details shown on **SCD GR-2.2.**

Install posts located over a footing with a cover of less than 2′-6″ with a footing anchor as detailed here. (A plate, as detailed on SECTION B-B of **SCD GR-2.2**, may be used as an alternative attachment method.) Where the cover is between 2′-6″ and 3′-5″, the footing anchor may be omitted and the post encased instead with 4″ (min.) of concrete.

Do not drive posts located over a culvert with less than 4′-3″ of cover; instead set in drilled or dug holes. Where the available post embedment depth is less than 3′-5″, encase the post with a minimum of 4″ concrete.

All costs associated with special post mountings are included in the unit price bid of Item 606 Guardrail of the type specified in the plans.

ANCHORS: Holes and grouting shall comply with CMS 510. Use either cement or non-shrink, nonmetallic grout.

Expansion shield anchors as specified in CMS 712.01 may be substituted except where concrete deterioration has occurred, as determined by the Engineer. Where self-drilling anchors are used, drill the holes with the expansion shield (not by a drill bit) and install the shield flush with the concrete surface.

PROTECTIVE COATING: In lieu of the complying with CMS 710.06, coat expansion shields, anchors and concrete insert anchor assemblies embedded in concrete in accordance with ASTM A 153 or be of stainless steel. Any bolts screwed into these devices shall meet CMS 710.06. (See sheet 3 for Concrete Insert Anchor Assembly Detail.)

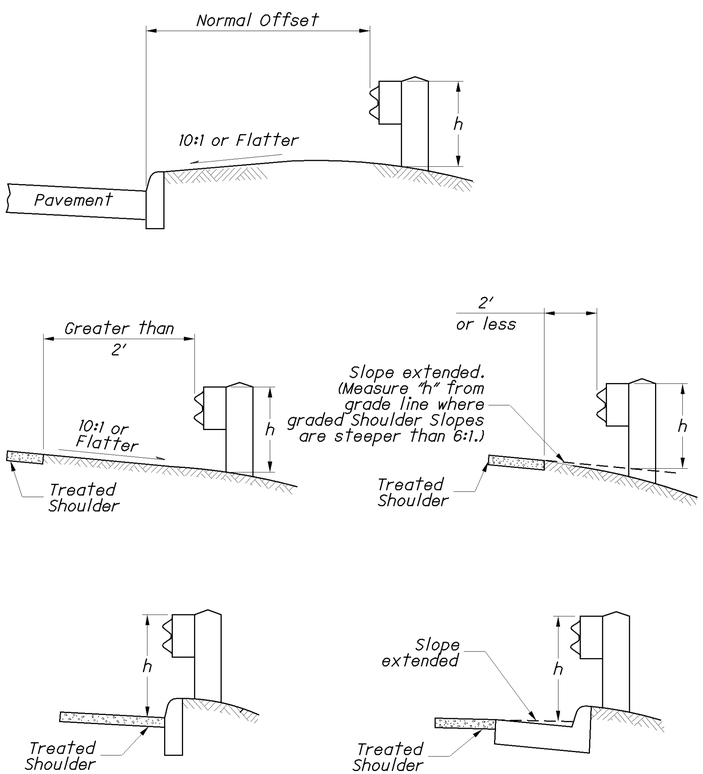

h = Standard Height (See GUARDRAIL HEIGHT Note)

MEASURING GUARDRAIL HEIGHT

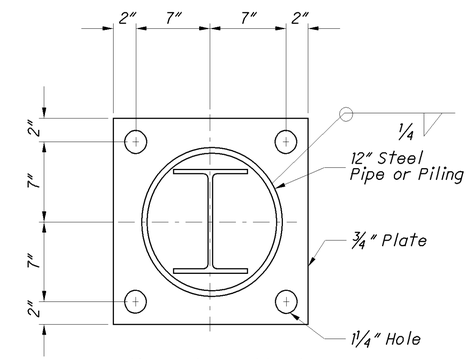

Footing Anchor and hardware need not be galvanized

SECTION A-A

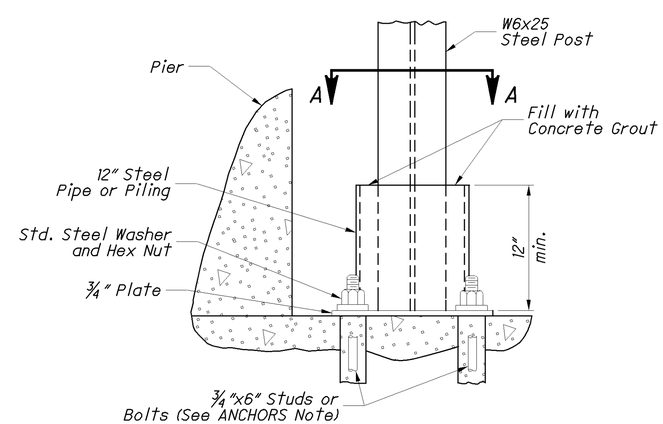

ELEVATION
FOOTING ANCHOR

See SPECIAL POST MOUNTINGS Note.

OFFICE OF ROADWAY ENGINEERING

DESIGNED | REVIEWED | REVISION DATE | CHECKED | PIS NUMBER

PLAN INSERT SHEET

GUARDRAIL DETAILS (Rail Components)

PIS GR-1.1

2 / 3

16 / 31

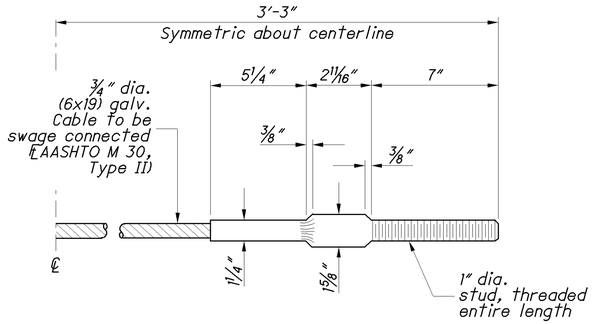

STANDARD SWAGED FITTING AND STUD

CABLE ANCHOR

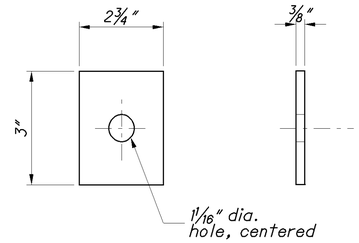

END PLATE

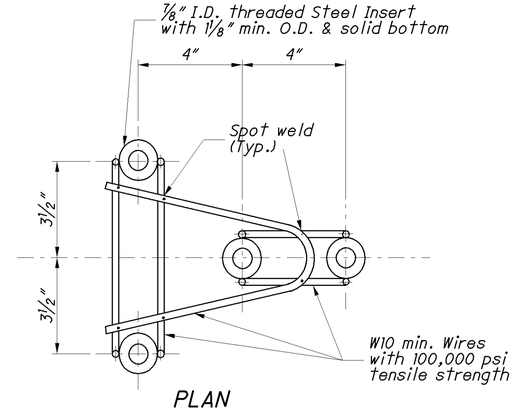

PLAN

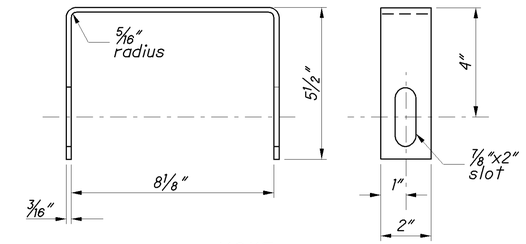

YOKE

Two required in Assembly

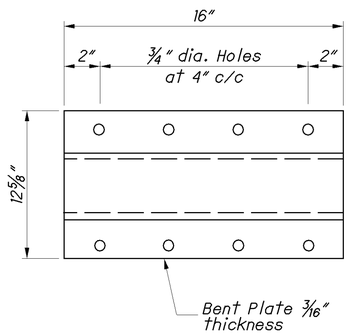

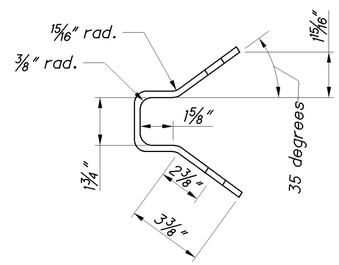

ANCHOR BRACKET

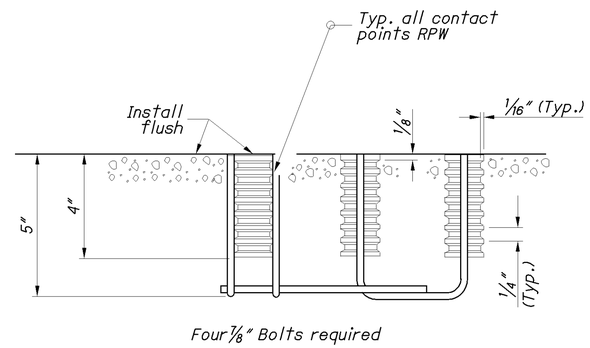

Four ⅞" Bolts required

ELEVATION

CONCRETE INSERT ANCHOR ASSEMBLY (W-BEAM ONLY)

See ANCHORS and PROTECTIVE COATINGS Notes on Sheet 2

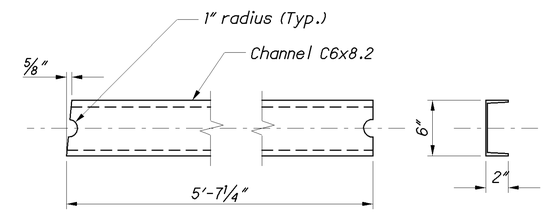

STRUT

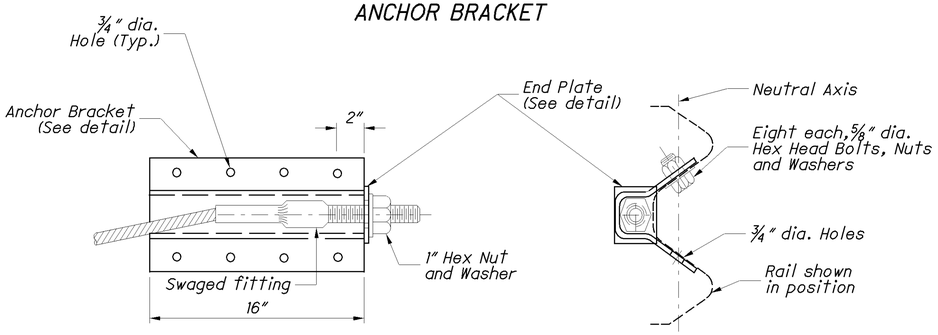

ANCHOR BRACKET ASSEMBLY DETAILS

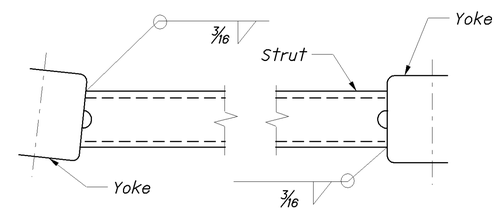

Channel legs shown down. For opposite hand, install Channel legs up.

STRUT AND YOKE ASSEMBLY

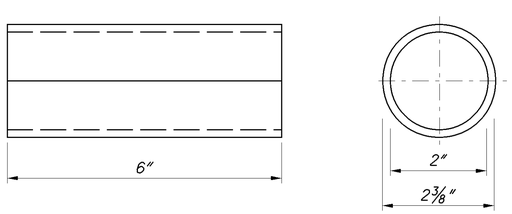

POST SLEEVE

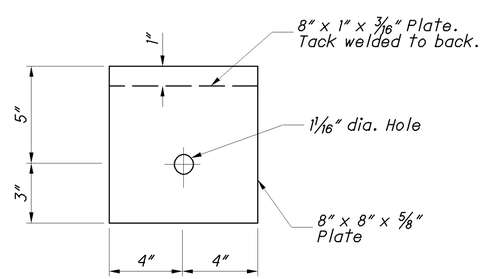

BEARING PLATE

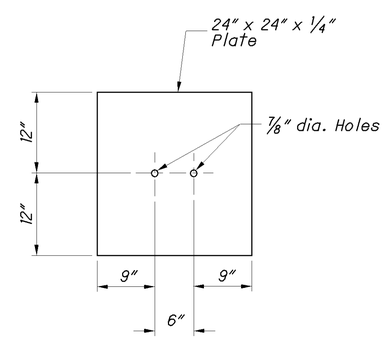

SOIL PLATE

OFFICE OF ROADWAY ENGINEERING

DESIGNED | REVIEWED | REVISION DATE | CHECKED | P1S NUMBER

PLAN INSERT SHEET

GUARDRAIL DETAILS (Rail Components)

PIS GR-1.1

3 / 3

17 / 31

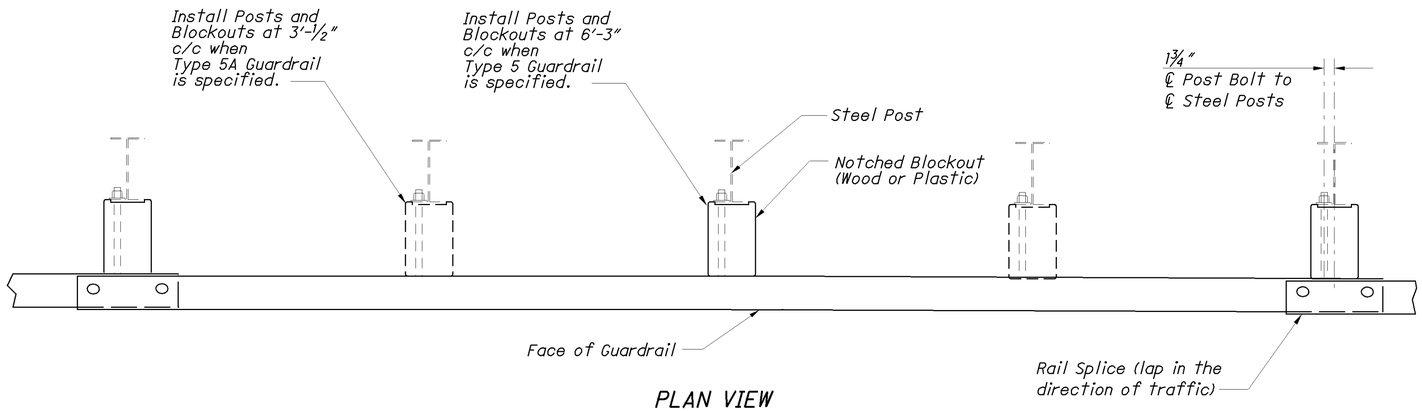

PLAN VIEW
(Steel Posts shown)

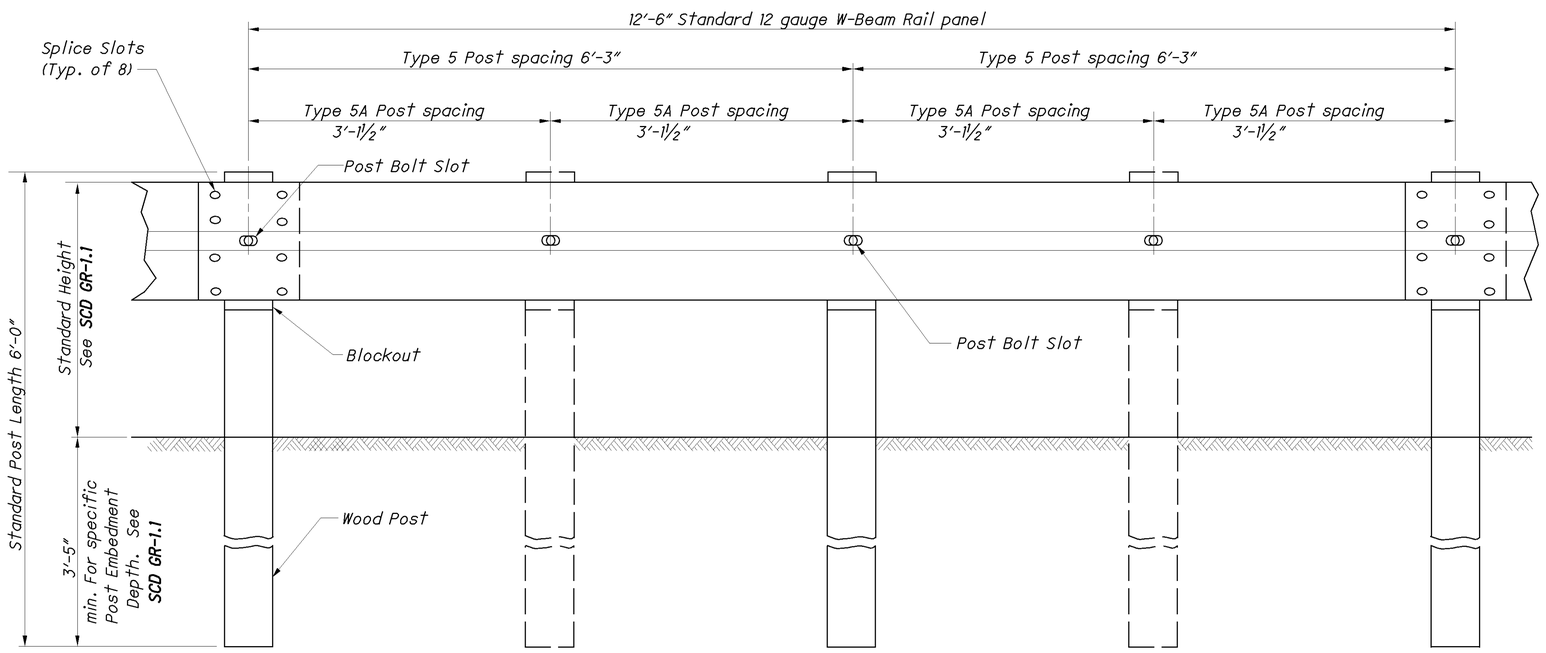

ELEVATION
(Wood Posts shown)

NOTES

RAIL: Use W-Beam rail meeting AASHTO M 180 Type II Class A, as specified in CMS 606.

POSTS: Posts may be constructed of wood or steel. Wood posts may be round or 6"x8" square-sawed.

Use round wood posts on runs of single-sided rail. The round posts shall be 8"±1 in diameter at the top and not more than 3" larger at the butt with a uniform taper.

Fabricated wood posts with square ends. Posts shall be pressure-treated as per CMS 710.14. Bore bolt holes and, if required, trim the tops of posts after the posts are set.

Steel posts are to be W6x9 or W6x8.5 galvanized steel. Use the same type of post throughout the length of the project unless otherwise specified in the plans or permitted by the Engineer.

All posts are 6'-0" long unless specified otherwise in the Contract Document. Posts may be set in drilled holes or may be driven to grade.

WELDED BEAM POSTS: Welded beam guardrail posts may be used for Item 606, Guardrail, provided the web and flange sizes are as shown here. Welding of the web to the flanges must comply with ASTM A 769, Class 1, using Grade 36 steel [250 MPa yield point] with the following exceptions:

Sec. 7.2 Test reports of tensile properties for each lot shall accompany each shipment.

Sec. 12 Beams that have imperfections repaired by welding shall not be accepted for use in Item 606.

Sec. 13 Random samples shall be tested by the Department from materials delivered to the project site, or other locations designated by the Laboratory.

ALTERNATE POSTS: Engineered guardrail posts having met NCHRP 350 criteria, and listed on the **Office of Materials Management's** Approved List are permitted as an equal alternate when installed according to the Manufacturer's instructions and within the limitations shown on the Approved List.

BLOCKOUTS: Blockout dimensions are dependent on post used. Wood Blockouts are to be pressure treated as specified in CMS 710.14. Bore bolt holes. Approved alternate blockouts may be used in lieu of the wood blockouts shown. The approved list is maintained by the **Office of Roadway Engineering.**

WASHERS: Install appropriate sized standard galvanized steel washers on the nut side of bolts installed on wood posts.

DELINEATION: For barrier reflectors, see CMS 626.

MISCELLANEOUS: For other guardrail details, see **SCD GR-1.1.**

STEEL BEAM POSTS (English)				
Size	Beam depth	Flange width	Flange thickness	Web thickness
Rolled W6x8.5	5.8"	3.94"	0.193"	0.170"
Rolled W6x9	5.9"	3.94"	0.215"	0.170"
Welded 6x8.5	6.0"	3.94"	0.193"	0.170"
Welded 6x9	6.0"	3.94"	0.215"	0.170"

OFFICE OF ROADWAY ENGINEERING

DESIGNED | REVIEWED | REVISION DATE | CHECKED | PIS NUMBER

PLAN INSERT SHEET

GUARDRAIL TYPE 5 & 5A

PIS GR-2.1

1/2

18/31

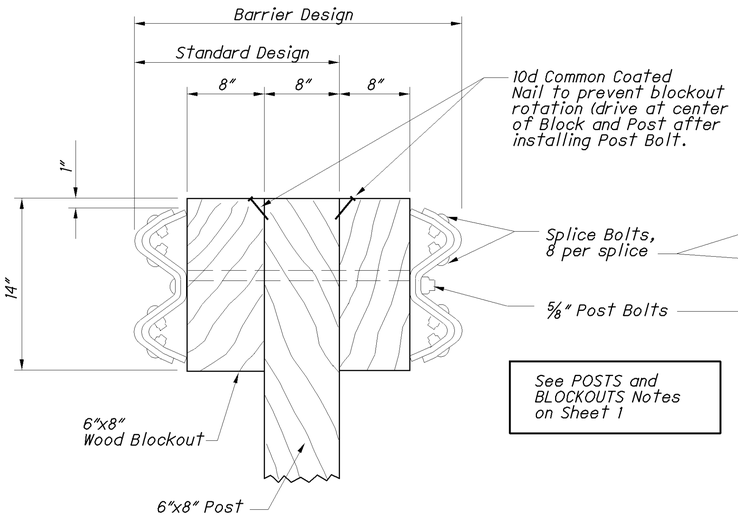

SQUARE WOOD POST

See POSTS and BLOCKOUTS Notes on Sheet 1

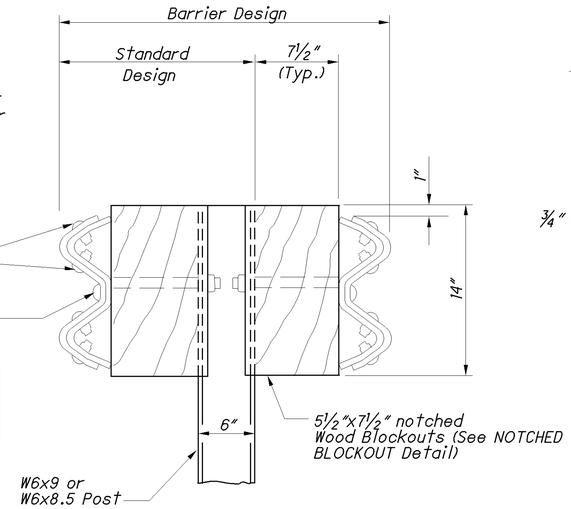

STEEL POST

See POSTS Note, Sheet 1

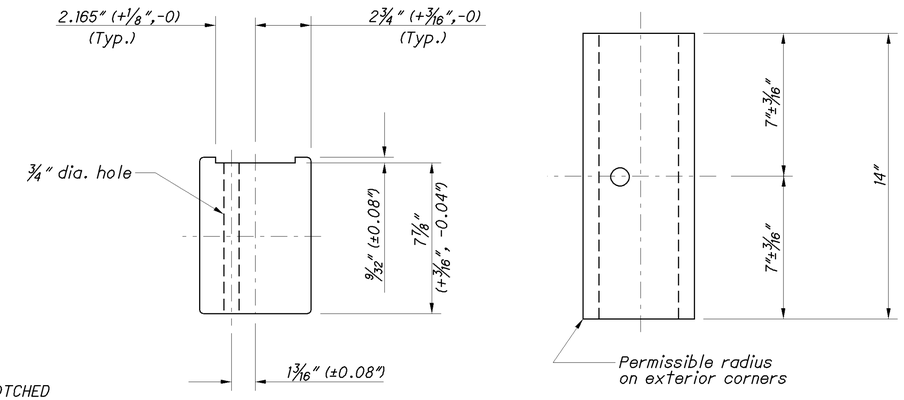

PLAN

ELEVATION

NOTCHED BLOCKOUTS FOR STEEL POSTS

See BLOCKOUTS Note on Sheet 1

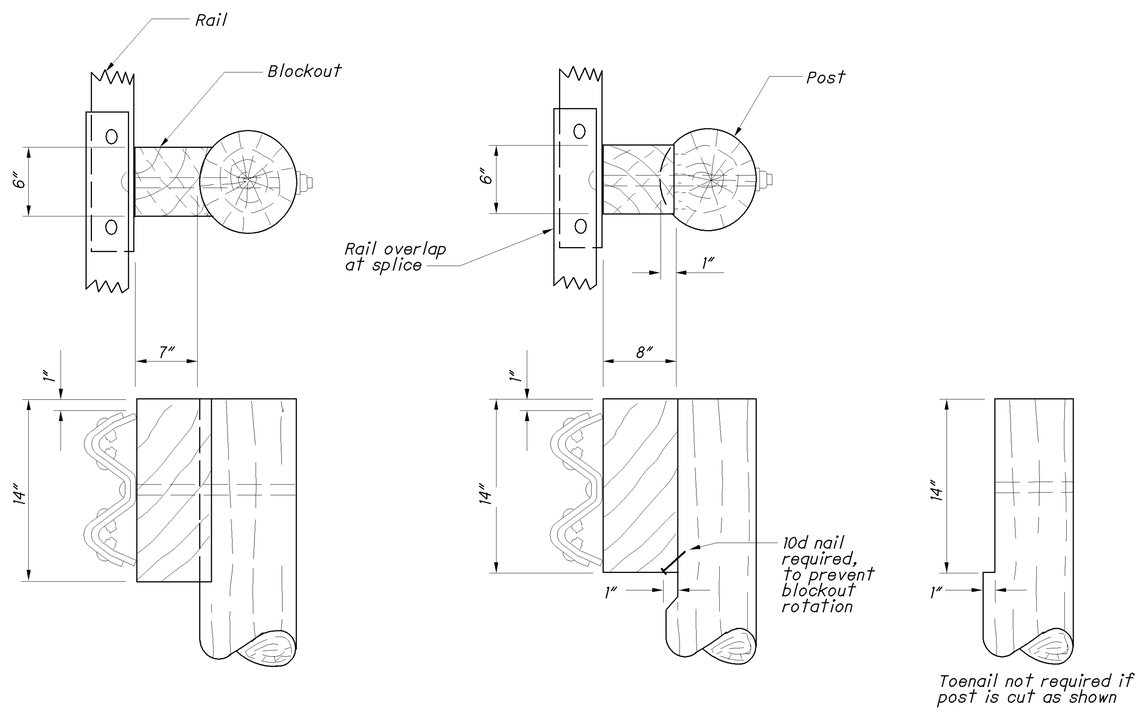

Method 1
Routed Blockout

Method 2
Notched Post

Alternate methods of placing the Blockouts on round Posts may be submitted for consideration and approved by the Engineer.

ROUND WOOD POSTS

Single Sided runs only (Standard Design)

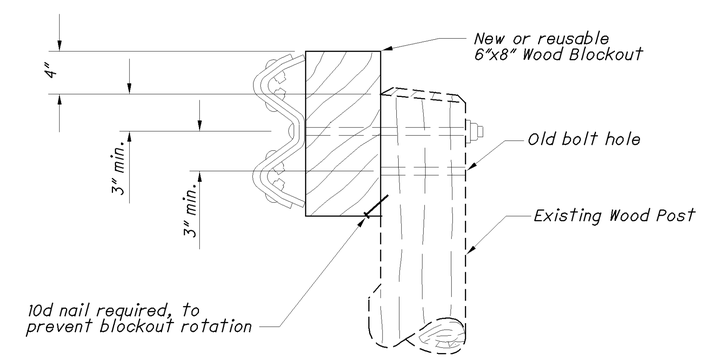

WOOD POSTS WITH WOOD BLOCK RAISING EXISTING GUARDRAIL HEIGHT

OFFICE OF ROADWAY ENGINEERING

DESIGNED | REVIEWED | REVISION DATE | CHECKED | PIS NUMBER

PLAN INSERT SHEET

GUARDRAIL TYPE 5 & 5A

PIS GR-2.1

2 / 2

19 / 31

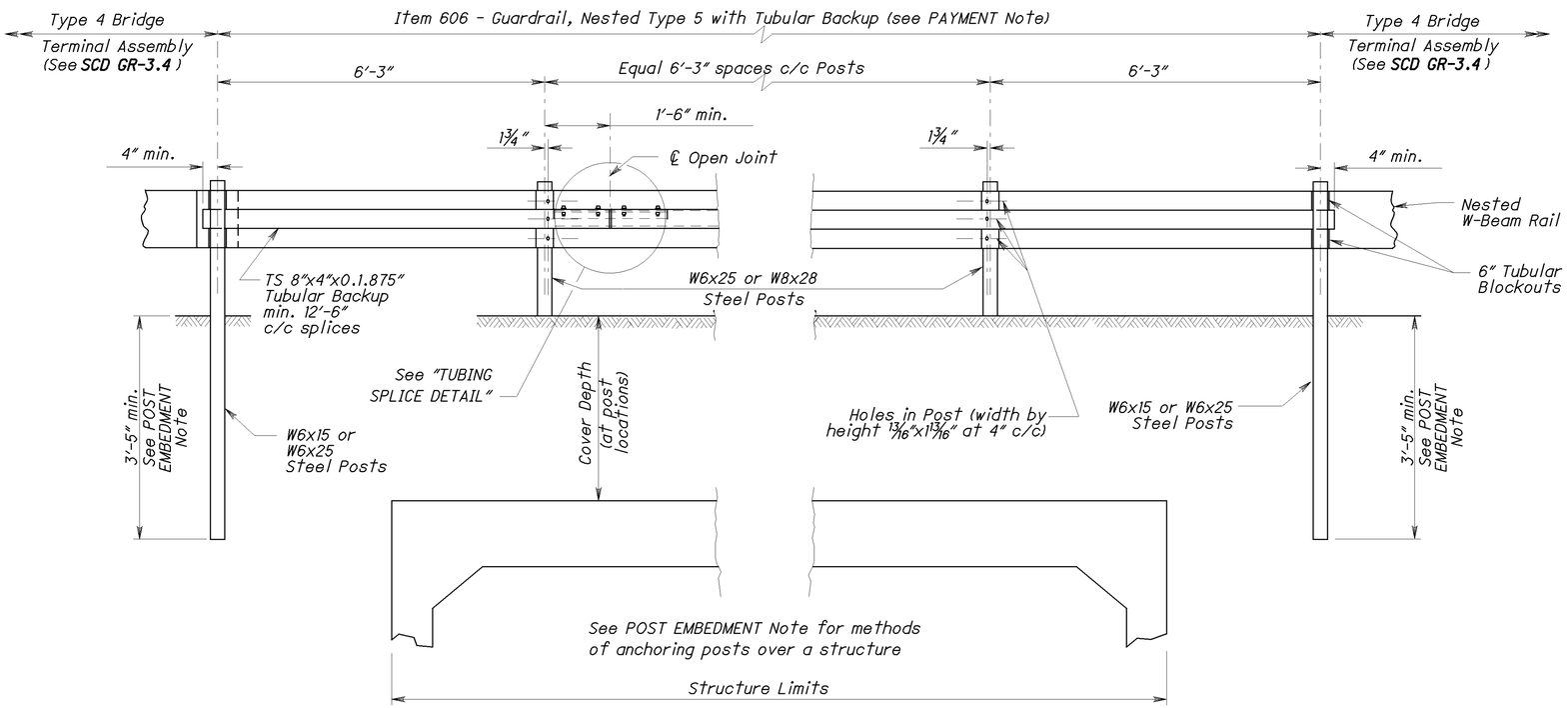

NOTES

APPLICATION: Nested Type 5 Guardrail with Tubular Backup is accepted to NCHRP 350 Test Level 3. The only Bridge Terminal Assembly that is permitted to be used with this system is detailed on **SCD GR-3.4.**

GALVANIZING: Rails, posts, base plates, bolts, nuts, washers and all tubular steel are to be galvanized as specified in CMS 711.02.

POST EMBEDMENT: Normal embedment depth is 3'-5" (See **SCD GR-1.1**). For installation methods for posts of various cover over structures, see Sheet 2.

ANCHORING: Partial-depth anchoring is preferred to through-bolting. For partial depth anchoring use non-shrink, non-metallic grout as specified in CMS 705.20. Minimum embedment depths are 9" for ⅞" bolts and 10" for 1¼" bolts.

THROUGH-BOLTING: Drilling methods that cause spalling of the concrete where the bit passes through the underside of the slab is not permitted. In haunches 6:1 or flatter, use beveled plate washers on the bottom surface to compensate for the slope. Through-bolting is not permitted in haunch areas with a slope greater than 6:1.

SIDE-MOUNTED POST ANCHORAGES TO STRUCTURES: Install anchorages according to **Structural Engineering's Standard Drawing DBR-2-73** and is paid under **Item 517 - Railing.**

PAYMENT: **Item 606 - Guardrail, Nested Type 5 with Tubular Backup** is paid in Feet for the length specified in the plans and shall include tubular backup as per Item 707.10, rails, posts and all other hardware, material and labor required to construct the guardrail as shown. The specified lengths should be for full W-Beam panels (i.e. evenly divisible by 12'6".

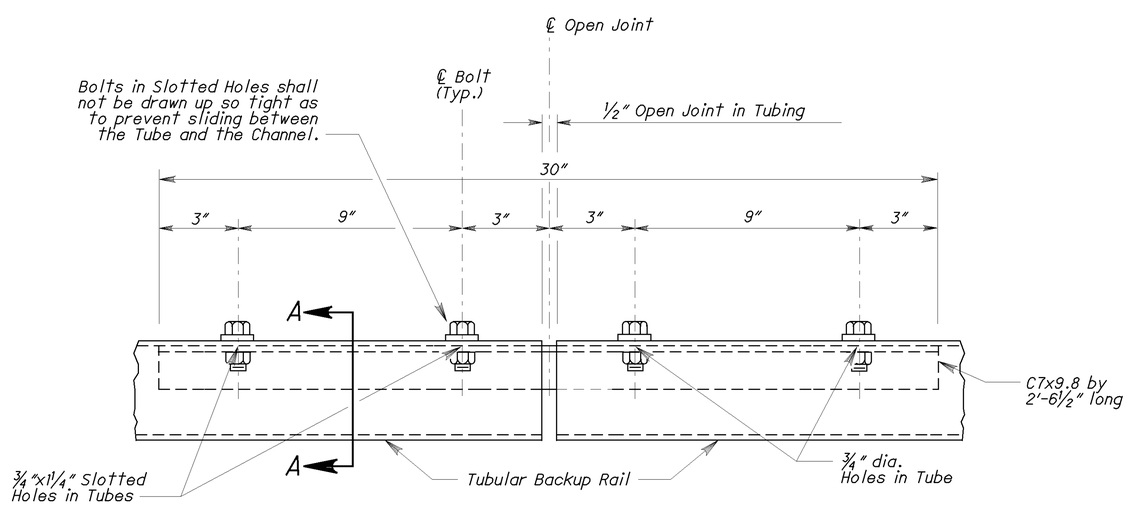

TUBING SPLICE DETAIL

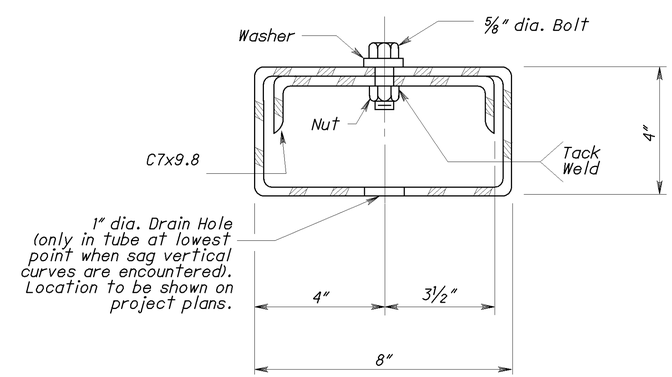

SECTION A-A

OFFICE OF ROADWAY ENGINEERING

DESIGNED | REVIEWED | CHECKED | REVISION DATE | PIS NUMBER

PLAN INSERT SHEET

NESTED TYPE 5 GUARDRAIL WITH TUBULAR BACKUP

PIS GR-2.2

1 / 2

20 / 31

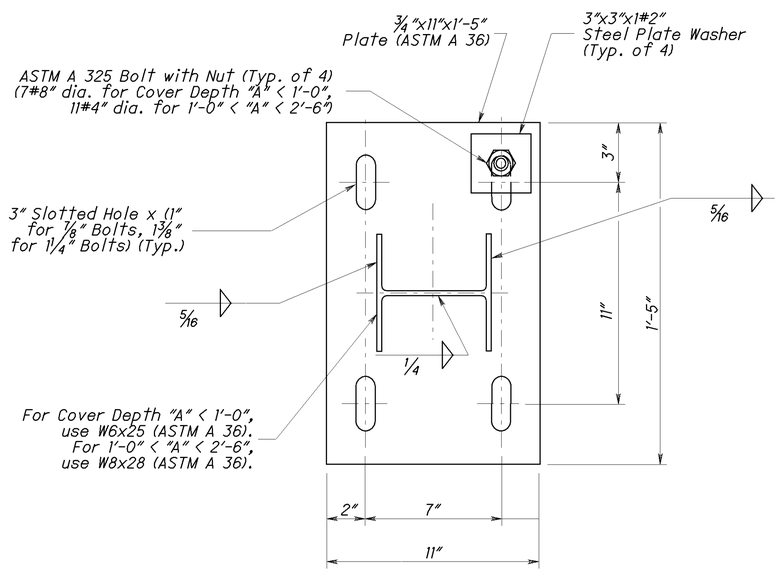

SECTION B-B

LEGEND

1 For details of special washer, see AASHTO M 180.

2 Embed plate in sealant as per Federal Specification TT-S-00230C, Type II.

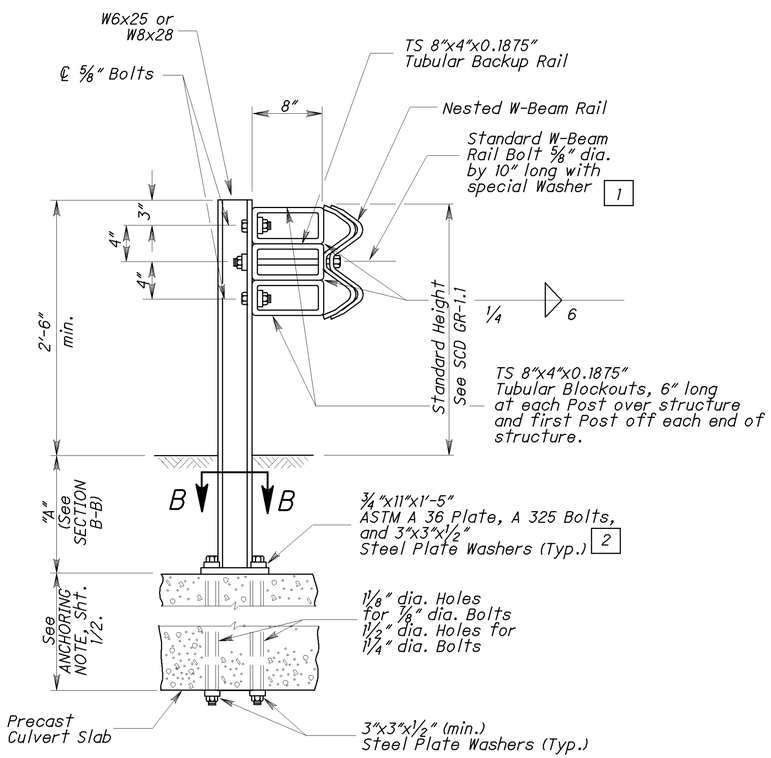

COVER DEPTH LESS THAN 2'-6"

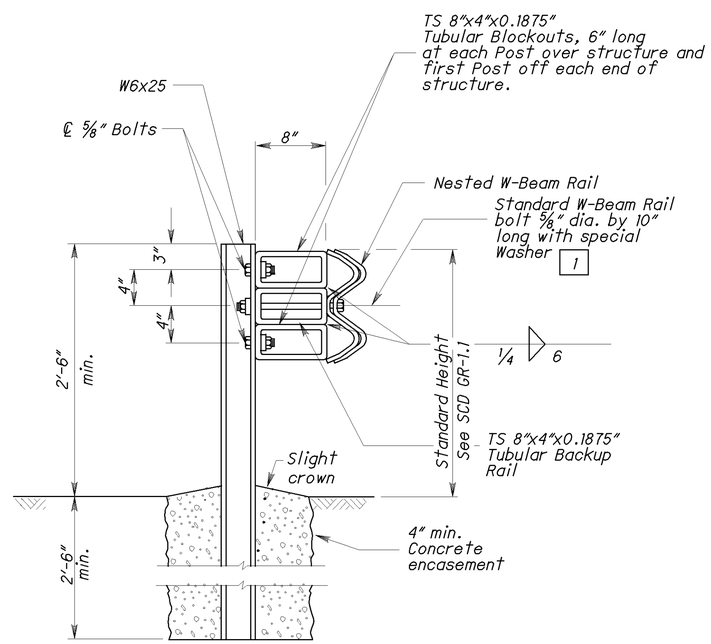

COVER DEPTH EQUAL TO OR GREATER THAN 2'-6", BUT LESS THAN 3'-5"

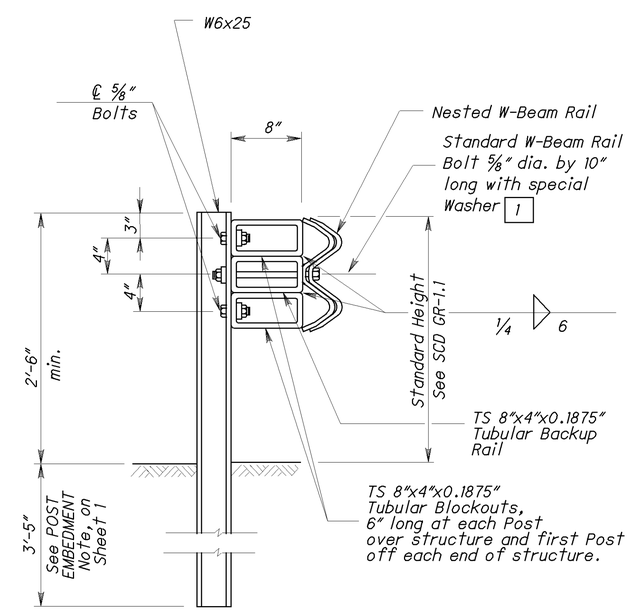

COVER DEPTH GREATER THAN OR EQUAL TO 3'-5"

METHODS FOR ANCHORING POSTS

OFFICE OF ROADWAY ENGINEERING

DESIGNED | REVIEWED

REVISION DATE | CHECKED

P1S NUMBER

PLAN INSERT SHEET

NESTED TYPE 5 GUARDRAIL WITH TUBULAR BACKUP

PIS GR-2.2

2 / 2

21 / 31

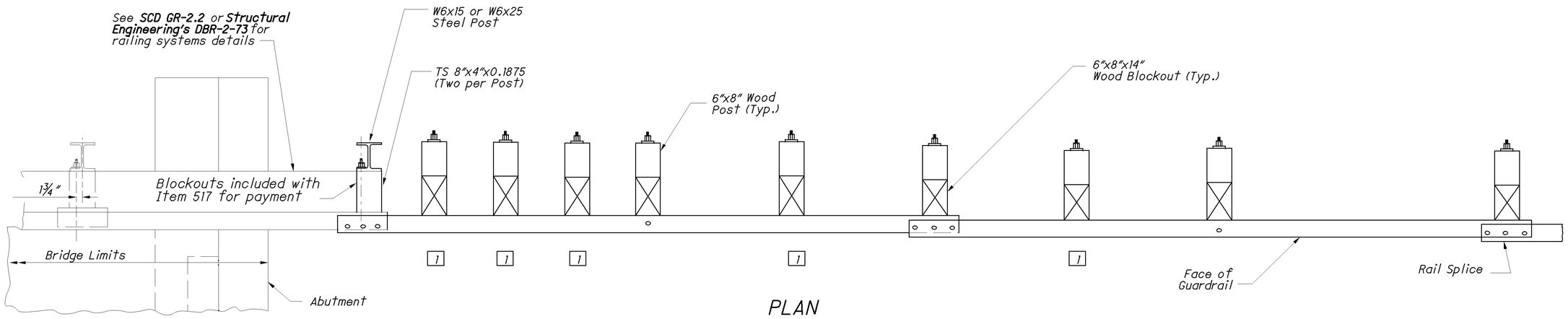

PLAN

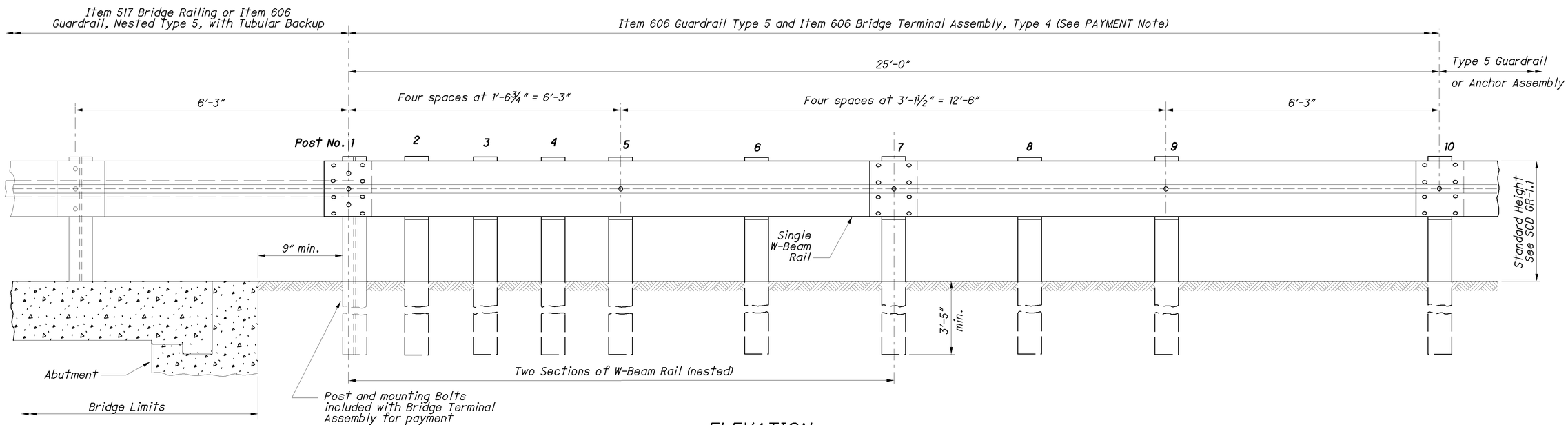

ELEVATION

NOTES

GENERAL: For additional details, see **SCD GR-1.1.**

APPLICATION: The Type 4 Bridge Terminal Assembly shall connect Type 5 Guardrail runs to Type 5 Guardrail with Tubular Backup or to Deep Beam Bridge Guardrail (as shown on **Structural Engineering SCD DBR-2-73**).

DETAIL INFORMATION: The first post off the bridge shall be steel (W6x15 or W6x25). All holes in the off-structure end of the approach panel rail section spanning the abutment are slotted ¾"x2½". Tighten the bolts as specified for expansion joints in Item 606.05.

POSTS: Posts may be set in drilled holes or driven to grade. See **SCD GR-1.1** for additional Post embedment details. Guardrail is not attached to certian posts (see LEGEND).

WOOD POSTS - Use square sawed pressure treated wood as specified in CMS 710.14 and fabricated with square ends. Bore bolt holes and trim the tops of posts, if required after the posts are set.

STEEL POSTS - are allowed as an alternate. Use W6x9 or W6x8.5 in lieu of the 6"x8" wood post. Use same post material through-out assembly.

BLOCKOUTS: Use wood blockouts only. Steel or plastic blockouts are not permitted. Notched wood blockouts are used with steel posts.

FLARED GUARDRAIL: Start Standard Guardrail Flares as shown on **SCD GR-5.1** at or beyond Post No. 10; however, the flare may begin at Post No. 7.

PAYMENT: Item 606 - Bridge Terminal Assembly, Type 4, Each, includes the cost of extra components in excess of normal guardrail, such as additional posts and other hardware. The TS 8"x4" spacers and tubular backup rail extending to the first post off the bridge is included with **Item 517 - Railing,** or **Item 606 - Guardrail, Nested Type 5 with Tubular Backup,** for payment.

LEGEND

1 Guardrail is not attached to posts at Posts 2, 3, 4, 6, and 8. Blockout is fastened to post with standard Post Bolt.

OFFICE OF ROADWAY ENGINEERING

DESIGNED | REVIEWED | REVISION DATE | CHECKED | P1S NUMBER

PLAN INSERT SHEET

BRIDGE TERMINAL ASSEMBLY, TYPE 4

PIS GR-3.4

1/1

22/31

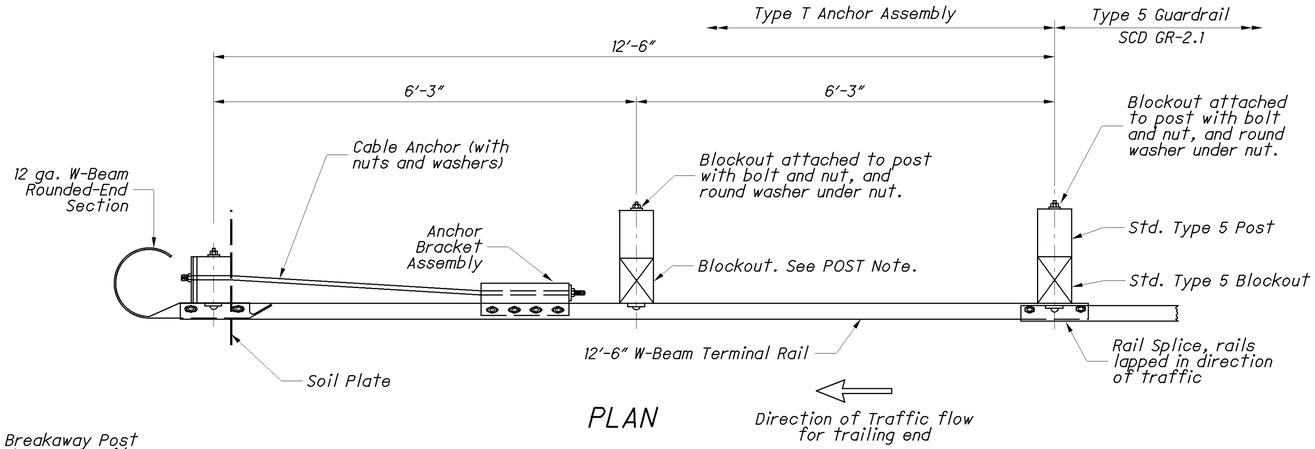

PLAN

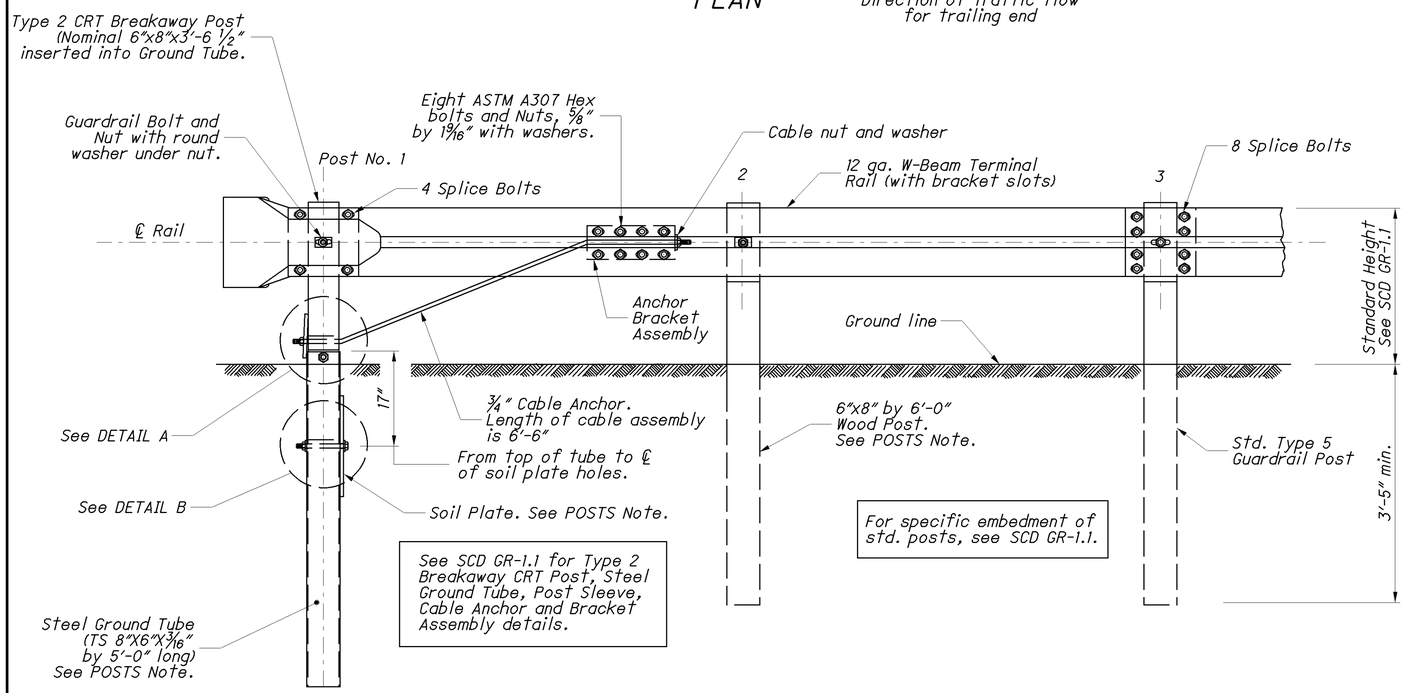

ELEVATION - FOUNDATION TUBE

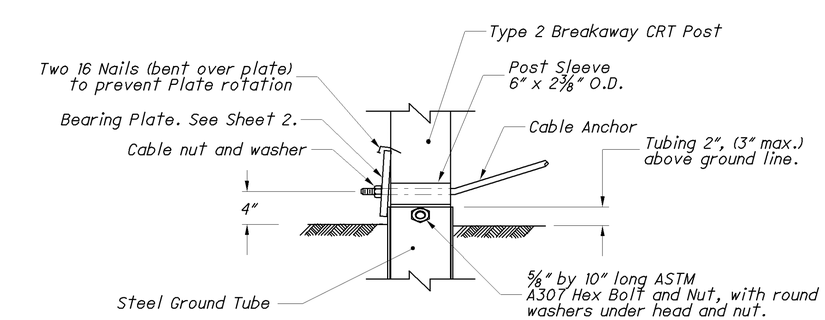

DETAIL A

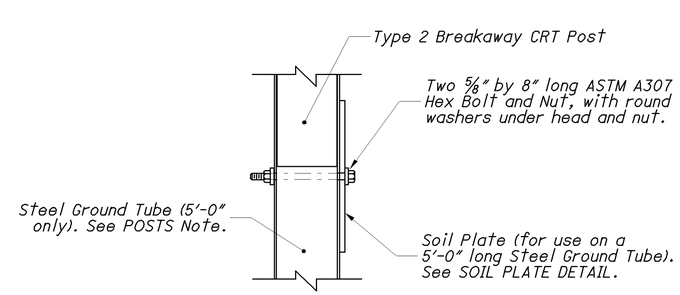

DETAIL B

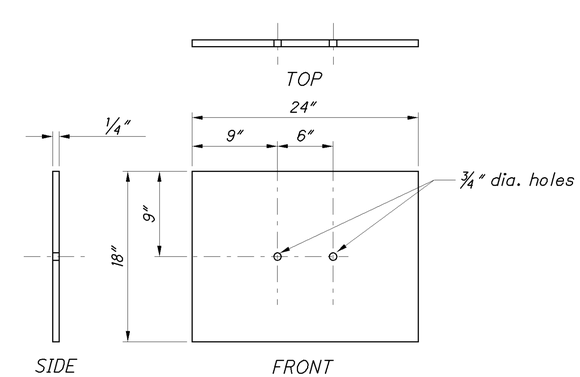

SOIL PLATE DETAIL

NOTES

APPLICATION: Use Type T Anchor Assemblies on the trailing end of guardrail runs, located outside of the clear zone of opposing traffic. The assembly is 12'-6" long, none of which can be considered the Length of Need for the guardrail run.

For termination requirements at driveways, see DRIVEWAY OPENING Detail on Sheet 2. For side road approaches and Terminals at Structures, see Location & Design Manual, Volume 1, Figure 603-3.

ANCHORING OPTIONS: Contractor may choose either the foundation tube (shown on this Sheet) or the concrete footing option (Sheet 2) to construct this anchor assembly.

If the foundation tube option is chosen, the contractor will take proper care to insure that the Soil Plate fasteners are not broken during the driving process.

Concrete footings may be cast-in-place or precast. Compact fill after placing precast unit.

MATERIALS: See **SCD GR-1.1** for parts used on this anchor, including the CRT Breakaway Posts, Steel Ground Tube, Post Sleeve, Cable Anchor and Bracket Assembly.

Bearing Plate and Soil Plate is ASTM A709 Grade 36. Steel Ground Tube shall be ASTM A500, Grade B, and meet CMS 707.10. All angles, channels and plates shall meet CMS 711.01. All structural steel shall be galvanized as specified in CMS 711.02. All bolt washers indicated are standard galvanized steel of the appropriate size.

Concrete shall be class C.

Components on this anchor that are not detailed on SCD GR-1.1 include: 1) 12'-6" W-Beam Terminal Rail (standard part RWM14a), and 2) W-Beam Rounded End Section (RWE03a). For complete details and specifications, see part descriptions in the **AASHTO/AGC/ARTBA Standardized Hardware Guide.**

POSTS: Post No. 1 may be an 8'-0" long Steel Ground Tube without a Soil Plate in lieu of the 5'-0" tube with Soil Plate.

Post No. 2 can be W6x9 (or W6x8.5) with notched wood blockouts or a standard Type 5 post and blockout. Recycled plastic blockouts are permitted.

PAYMENT: All labor and materials, including the W-Beam Rounded End Section and the W-Beam Terminal Rail for the 12'-6" anchor assembly shall be included in the unit price bid for

Item 606 - Anchor Assembly, Type T, Each.

OFFICE OF ROADWAY ENGINEERING

DESIGNED | REVIEWED | REVISION DATE | CHECKED | PIS NUMBER

PLAN INSERT SHEET

TYPE T ANCHOR ASSEMBLY (Foundation Tube Option)

PIS GR-4.2

1 / 2

23 / 31

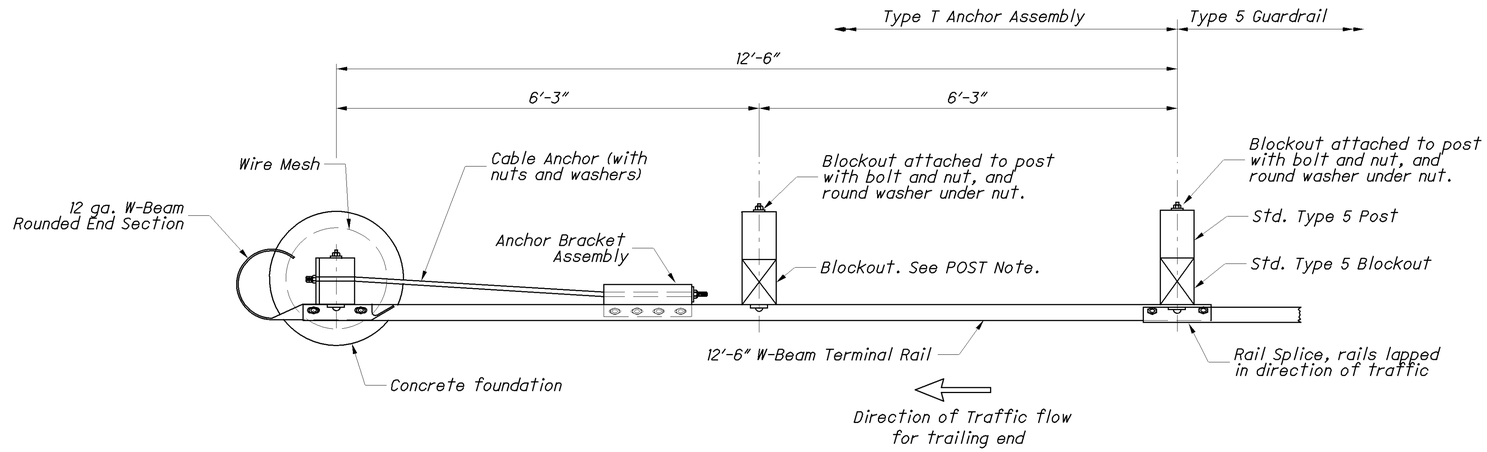

PLAN

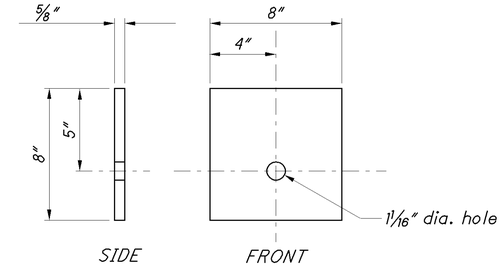

BEARING PLATE DETAIL

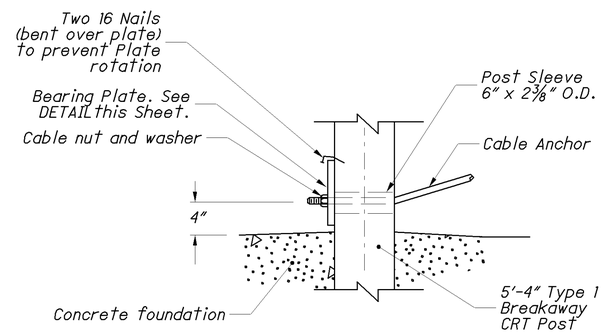

DETAIL C

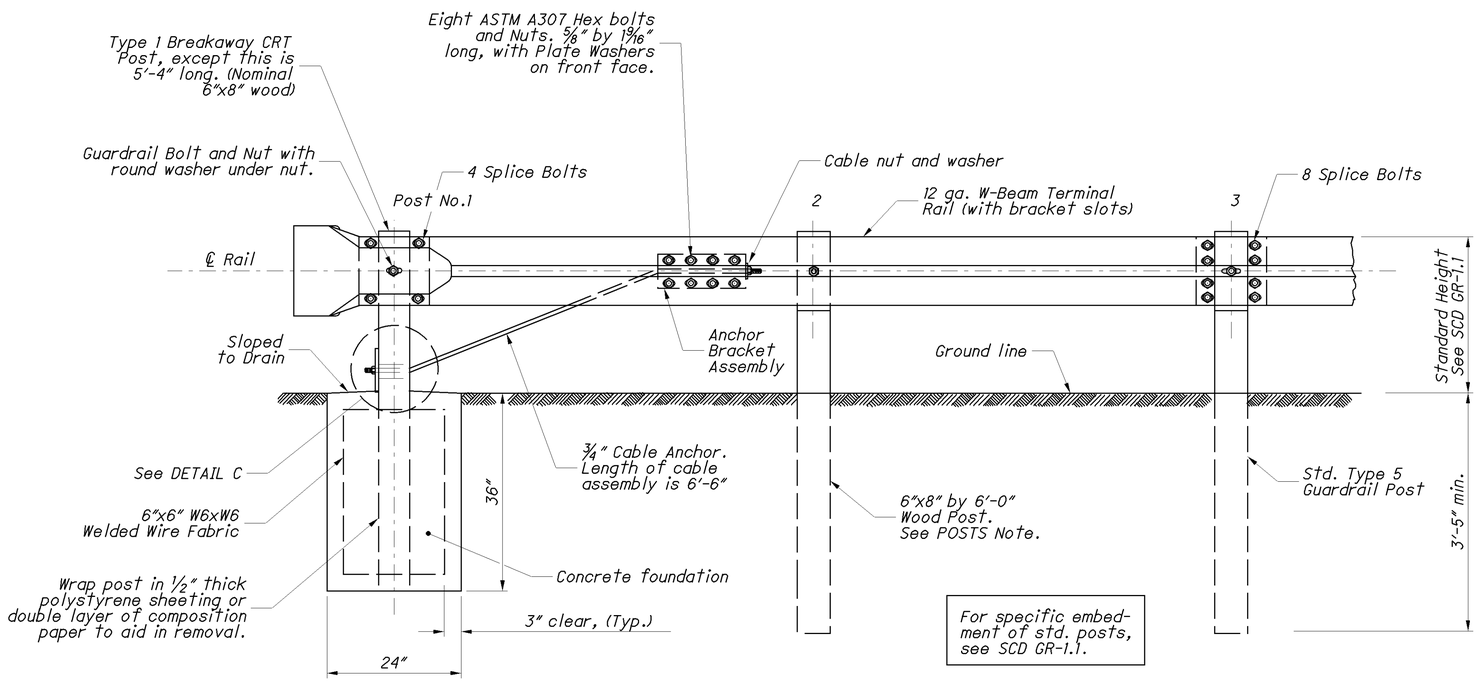

See SCD GR-1.1 for Type 1 Breakaway CRT Post, Steel Ground Tube, Post Sleeve, Cable Anchor and Bracket Assembly details.

ELEVATION - CONCRETE FOOTER

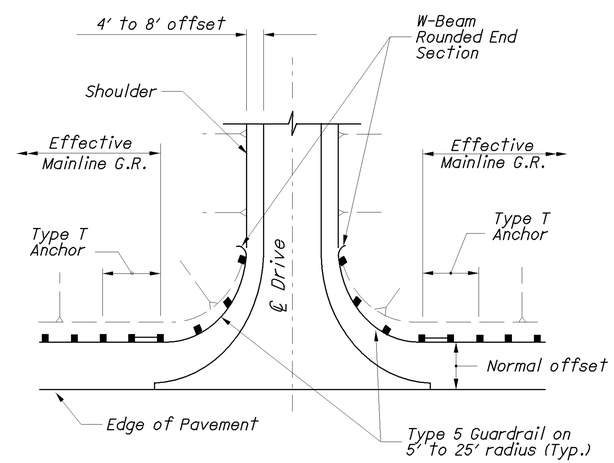

DRIVEWAY OPENING

OFFICE OF ROADWAY ENGINEERING

DESIGNED | REVIEWED | REVISION DATE | CHECKED | PIS NUMBER

PLAN INSERT SHEET

TYPE T ANCHOR ASSEMBLY (Foundation Tube Option)

PIS GR-4.2

2 / 2

24 / 31

PAVEMENT MARKING LEGEND

(C) CENTER LINE, DOUBLE SOLID, YELLOW

(E) EDGE LINE, WHITE

PAVEMENT MARKING SUB-SUMMARY				
STATION		SIDE	642	
			EDGE LINE, 4"	CENTER LINE
FROM	TO		MILE	MILE
STA. 555+00	STA. 557+00	℄		0.04
STA. 555+00	STA. 557+00	LT	0.04	
STA. 555+00	STA. 557+00	RT	0.04	
TOTALS CARRIED TO GENERAL SUMMARY			0.08	0.04

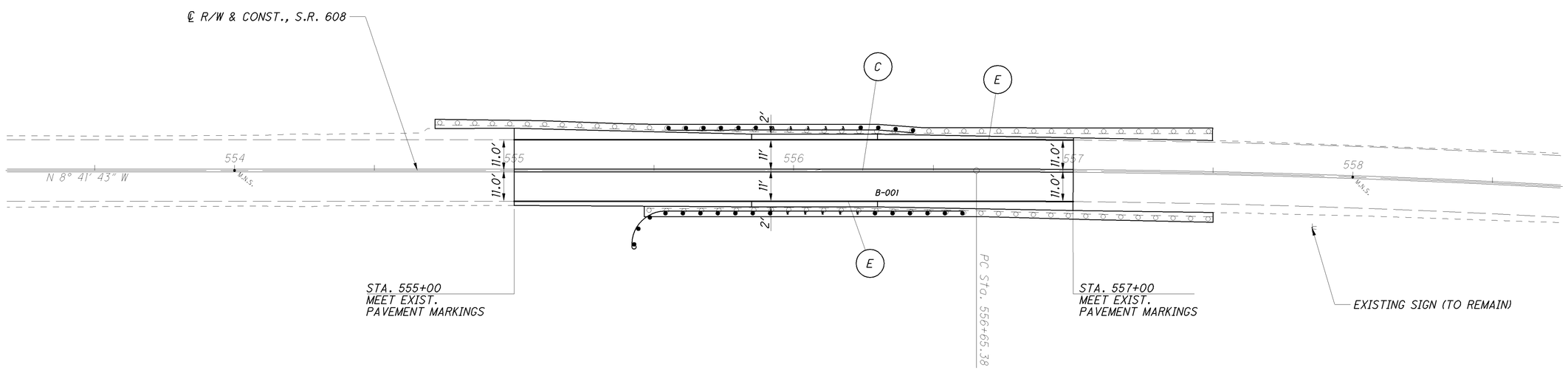

HORIZONTAL SCALE IN FEET 0 10 20 40

CALCULATED DAB
CHECKED SDL

PAVEMENT MARKING PLAN

GEA-608-10.53

DATE: 17-OCT-13 09:12
FILE: J:\PROJECTS\TRU\84457(TRU-CH-313)\ROADWAY\SHEETS\84457TP001.DGN
SCALE: 1 = 1E

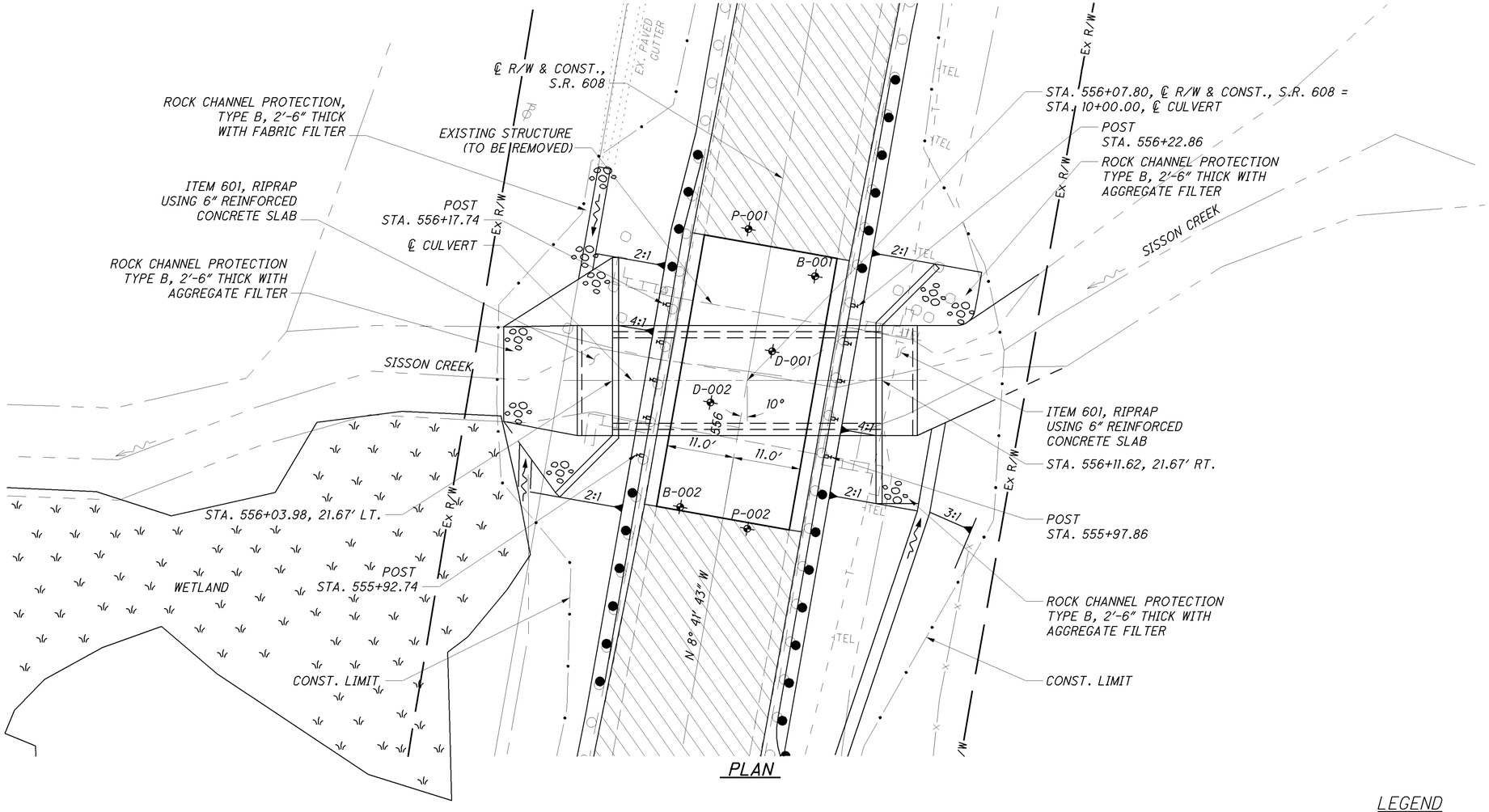

PLAN

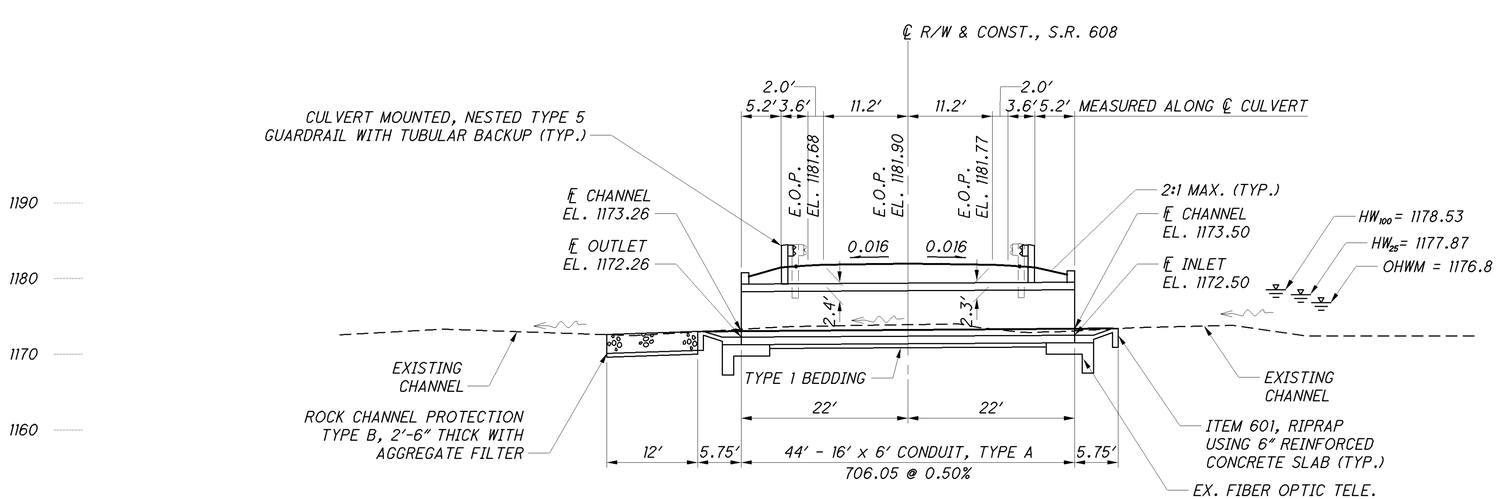

PROFILE ALONG ℄ CULVERT)

HYDRAULIC DATA

DRAINAGE AREA = 2.53 SQ. MILES
Q (25) = 351 CFS
Q (100) = 453 CFS
V (25) = 5.54 FT/S
V (100) = 6.50 FT/S
HW (25) = 1177.87
HW (100) = 1178.53

EXISTING STRUCTURE

TYPE: SINGLE SPAN CONCRETE SLAB BRIDGE ON STONE AND CONCRETE WALL ABUTMENTS
SPANS: 21'-0"±
ROADWAY: 27'-0"± F/F GUARDRAIL
LOADING: HS-20
SKEW: NONE
APPROACH SLABS: NONE
ALIGNMENT: TANGENT
CROWN: 0.016 FT/FT±
WEARING SURFACE: 6"± ASPHALT CONCRETE
YEAR BUILT: 1948

PROPOSED STRUCTURE

TYPE: PRECAST FOUR-SIDED REINFORCED CONCRETE BOX CULVERT 16' SPAN X 6' RISE
LENGTH: 44' PLUS FIT-UP
ROADWAY: 29'-0" F/F RAILING
LOADING: HL-93 AND 0.06 KSF FWS
SKEW: 10° R.F.
ALIGNMENT: TANGENT
CROWN: 0.016 FT/FT
WEARING SURFACE: ASPHALT CONCRETE
COORDINATES: LATITUDE: N41°34'24" LONGITUDE: W81°07'54"

LEGEND

RESURFACING
SOIL BORING LOCATION
WETLAND

DESIGN SERVICES
Thomas Fox & Associates, Inc.
Consulting Engineers & Surveyors
EDGE CERTIFIED
A.S.C.E. CERTIFIED
5555 Mastodon Ave | Youngstown OH 44512 | 330.965.0100

DESIGNED	DRAWN	REVIEWED	DATE
WHT	DAB	DAK	11-4-13
CHECKED	REVISED	STRUCTURE FILE NUMBER	
SDL		2802309	

CULVERT PLAN AND PROFILE

BRIDGE NO. GEA-608-1053
OVER SISSON CREEK

GEA-608-10.53
PID No. 90222

DATE: 09-MAY-13 11:45
FILE: J:\PROJECTS\GEA\90222 (GEA-608-1053)\STRUCTURES\608_1053DP001.DGN
SCALE: 1 = 1E

GENERAL NOTES

DESIGN SPECIFICATIONS: THIS STRUCTURE CONFORMS TO THE "LRFD BRIDGE DESIGN SPECIFICATIONS" ADOPTED BY THE AMERICAN ASSOCIATION OF STATE HIGHWAY AND TRANSPORTATION OFFICIALS, 2012, INCLUDING THE 2013 INTERIMS, AND THE ODOT BRIDGE DESIGN MANUAL 2007.

DESIGN LOADING:

HL-93
FUTURE WEARING SURFACE (FWS) OF 0.06 KIPS/SQ.FT.

DESIGN DATA:

CONCRETE CLASS QC-MISC - COMPRESSIVE STRENGTH 4 KSI (FOOTING, WINGWALL AND FORESLOPE WALL)

REINFORCING STEEL - MINIMUM YIELD STRENGTH 60 KSI (ALL REINFORCING SHALL BE EPOXY COATED)

FOUNDATION BEARING RESISTANCE: WINGWALL FOOTINGS, AS DESIGNED, PRODUCE A MAXIMUM SERVICE LOAD PRESSURE OF 1.6 KIPS PER SQUARE FOOT AND A MAXIMUM STRENGTH LOAD PRESSURE OF 2.3 KIPS PER SQUARE FOOT. THE FACTORED BEARING RESISTANCE IS 8.9 KIPS PER SQUARE FOOT.

PRECAST CONCRETE: AT THE OPTION OF THE CONTRACTOR, PRECAST WINGWALLS MAY BE USED PROVIDED THEY ARE SIZED TO MEET THE SOIL PARAMETERS AND MEET OR EXCEED THE MATERIAL STRENGTHS SPECIFIED HEREIN. THE CONTRACTOR SHALL SUBMIT DESIGNS AND SHOP DRAWINGS TO THE OFFICE OF STRUCTURAL ENGINEERING FOR APPROVAL.

FORESLOPE WALL ANCHOR DOWELS: ANCHOR PER CMS 510 WITH NONSHRINK, NONMETALLIC GROUT CONFORMING TO CMS 705.20 AND TO A DEPTH OF 5". PAYMENT FOR DOWEL HOLES, GROUT AND INSTALLATION IS INCLUDED WITH ITEM 511.

AS AN ALTERNATIVE TO RESIN BONDING, THREADED INSERTS OR NONPROTRUDING MECHANICAL CONNECTORS CAST INTO THE CULVERT BY THE MANUFACTURER MAY BE USED PROVIDED THEY CAN RESIST AN ULTIMATE PULL-OUT STRENGTH OF 12 KIPS AND MAINTAIN A MINIMUM COVER OF 3 INCHES AT THE BOTTOM OF THE CULVERT SLAB. MECHANICAL CONNECTORS MUST PROVIDE AN "L-SHAPED" BAR INSIDE THE CULVERT WITH A MINIMUM HORIZONTAL LENGTH OF 12 INCHES. PAYMENT FOR INSERTS OR MECHANICAL CONNECTORS IS INCLUDED WITH ITEM 611.

BACKFILL LIMITATION: WHEN THE DESIGN HEIGHT IS GREATER THAN 10 FT, DO NOT PLACE THE BACKFILL BEHIND THE WINGWALLS HIGHER THAN THE ELEVATION OF THE SOIL ABOVE THE TOE. WHEN THE SOIL ABOVE THE TOE IS AT ITS FINISHED ELEVATION, PLACE THE REMAINDER OF THE BACKFILL.

POROUS BACKFILL WITH FILTER FABRIC: PLACE 1'-6" THICK BEHIND THE WINGWALLS ONLY AND EXTEND TO 12" BELOW THE EMBANKMENT SURFACE. PLACE GEOTEXTILE FABRIC BETWEEN THE POROUS BACKFILL AND REPLACED EXCAVATION ADJACENT TO THE STRUCTURE. IT TURNS UNDER THE BOTTOM OF THE POROUS BACKFILL AND RETURNS 6" ABOVE THE TOP ELEVATION OF THE WEEPHOLE.

PLACE WEEPHOLES 6" TO 12" ABOVE THE NORMAL WATER ELEVATION OR GROUND LINE WITH A MAXIMUM SPACING OF 10'-0". PROVIDE A MINIMUM OF ONE WEEPHOLE PER WINGWALL.

PREFORMED EXPANSION JOINT FILLER: PLACE PREFORMED EXPANSION JOINT FILLER (PEJF) CONFORMING TO CMS 705.03, 1 INCH THICK, ABOVE THE FOOTING BETWEEN THE SIDES OF THE BOX CULVERT AND THE ENDS OF THE WINGWALLS. PAYMENT FOR MATERIALS AND INSTALLATION IS INCLUDED WITH ITEM 516 - 1" PREFORMED EXPANSION JOINT FILLER.

SEALING OF FORESLOPE WALL AND WINGWALLS: SEAL ALL EXPOSED FORESLOPE WALL AND WINGWALL CONCRETE WITH EPOXY-URETHANE SEALER. THE DIAGRAMS BELOW SHOW THE LIMITS. PAYMENT FOR THE EPOXY-URETHANE SEALER IS PER ITEM 512 - SEALING OF CONCRETE SURFACES.

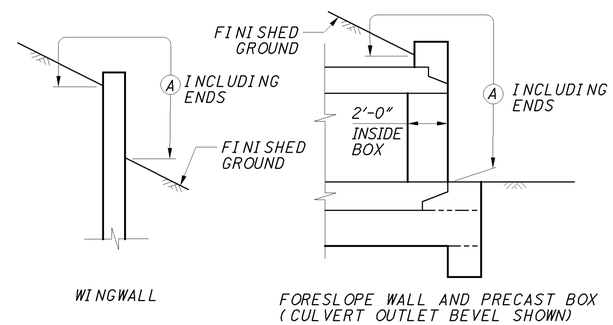

LIMITS OF ITEM 512-SEALING CONCRETE SURFACES

(A) - SEAL ENTIRE CONCRETE SURFACE AREA

WATERPROOFING: TYPE 2 WATERPROOFING, PER CMS 512.08 AND 711.25, EXTENDS VERTICALLY DOWN THE ENTIRE SIDES OF THE PRECAST CULVERT SECTIONS FOR ALL PORTIONS OF THE CULVERT WHICH WILL BE IN CONTACT WITH THE BACKFILL. PAYMENT FOR THE MEMBRANE WATERPROOFING IS AT THE CONTRACT PRICE BID PER SQUARE YARD FOR ITEM 512 - TYPE 2 WATERPROOFING.

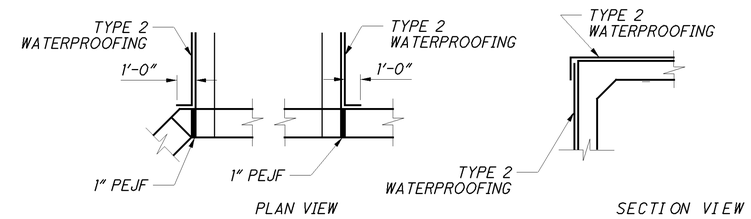

WATERPROOFING DETAILS

BASIS OF PAYMENT: ALL LABOR, EQUIPMENT AND INCIDENTALS REQUIRED TO CONSTRUCT THE FOOTING, CUTOFF WALL, WINGWALLS AND FORESLOPE WALLS ARE INCLUDED WITH EACH ITEM 511 - CLASS QC-MISC CONCRETE. PAYMENT FOR REINFORCING STEEL IS INCLUDED WITH ITEM 509 - EPOXY COATED REINFORCING STEEL.

ITEM 611 - 16'X6' CONDUIT, TYPE A, 706.05, AS PER PLAN. ALL REQUIREMENTS OF 706.05 SHALL BE MET EXCEPT AS DETAILED IN SUPPLEMENTAL SPECIFICATION 940.

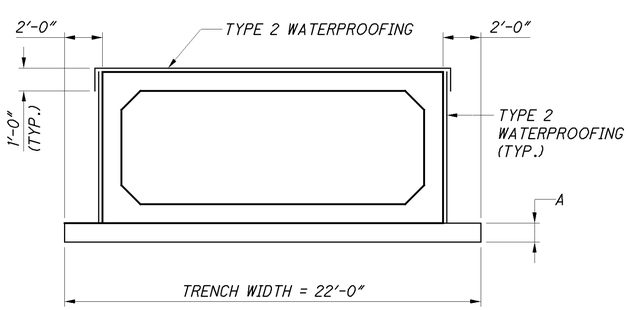

BOX CULVERT FOUNDATION

A = 6" TYPE 1 BEDDING, 611.06
FOR WINGWALL FOUNDATION, SEE SHEET 4 OF 6

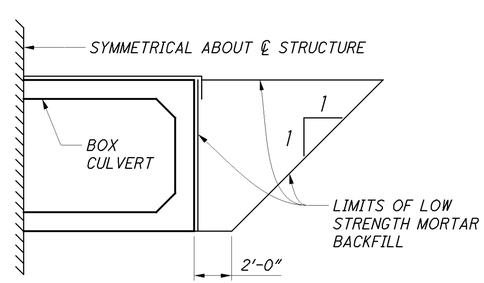

ITEM 613 - LOW STRENGTH MORTAR BACKFILL

ESTIMATED QUANTITIES

ITEM	ITEM EXT	TOTAL	UNIT	DESCRIPTION	SEE SHT.
202	11000	LUMP		STRUCTURE REMOVED	
202	23010	67	SQ YD	PAVEMENT REMOVED, ASPHALT	
503	11100	LUMP		COFFERDAMS AND EXCAVATION BRACING	
503	21300	LUMP		UNCLASSIFIED EXCAVATION	
509	10000	5208	LB	EPOXY COATED REINFORCING STEEL	
511	46010	15	CU YD	CLASS QC1 CONCRETE	
511	46510	45	CU YD	CLASS QC1 CONCRETE, FOOTING	
511	46610	2	CU YD	CLASS QC1 CONCRETE, HEADWALL	
512	10100	61	SQ YD	SEALING OF CONCRETE SURFACES (EPOXY-URETHANE)	
512	33000	172	SQ YD	TYPE 2 WATERPROOFING	
516	13600	38	SQ FT	1" PREFORMED EXPANSION JOINT FILLER	
518	21200	9	CU YD	POROUS BACKFILL WITH FILTER FABRIC	
611	96441	44	FT	16' X 6' CONDUIT, TYPE A, 706.05, AS PER PLAN	2 OF 6
613	41200	144	CU YD	LOW STRENGH MORTAR BACKFILL	

NOTE: TOTALS CARRIED TO GENERAL SUMMARY SHEET

DESIGN AGENCY
Thomas Fok & Associates, Inc.
Consulting Engineers & Surveyors
EDGE CERTIFIED
S.B. 350 CERTIFIED
35995 Mastodon Ave | Youngstown OH | 44512 | 330.953.0100

DESIGNED	DRAWN	REVIEWED	DATE
WHT	DAB	DAK	11-4-13
CHECKED	REVISED	STRUCTURE FILE NUMBER	
SDL		2802309	

GENERAL NOTES & ESTIMATED QUANTITIES
BRIDGE NO. GEA-608-1053
OVER SISSON CREEK

GEA-608-10.53
PID No. 90222

DATE: 20-AUG-13 10:36
FILE: J:\PROJECTS\GEA\90222 (GEA-608-1053)\STRUCTURES\608_1053GN001.DGN
SCALE: 1 = 1E

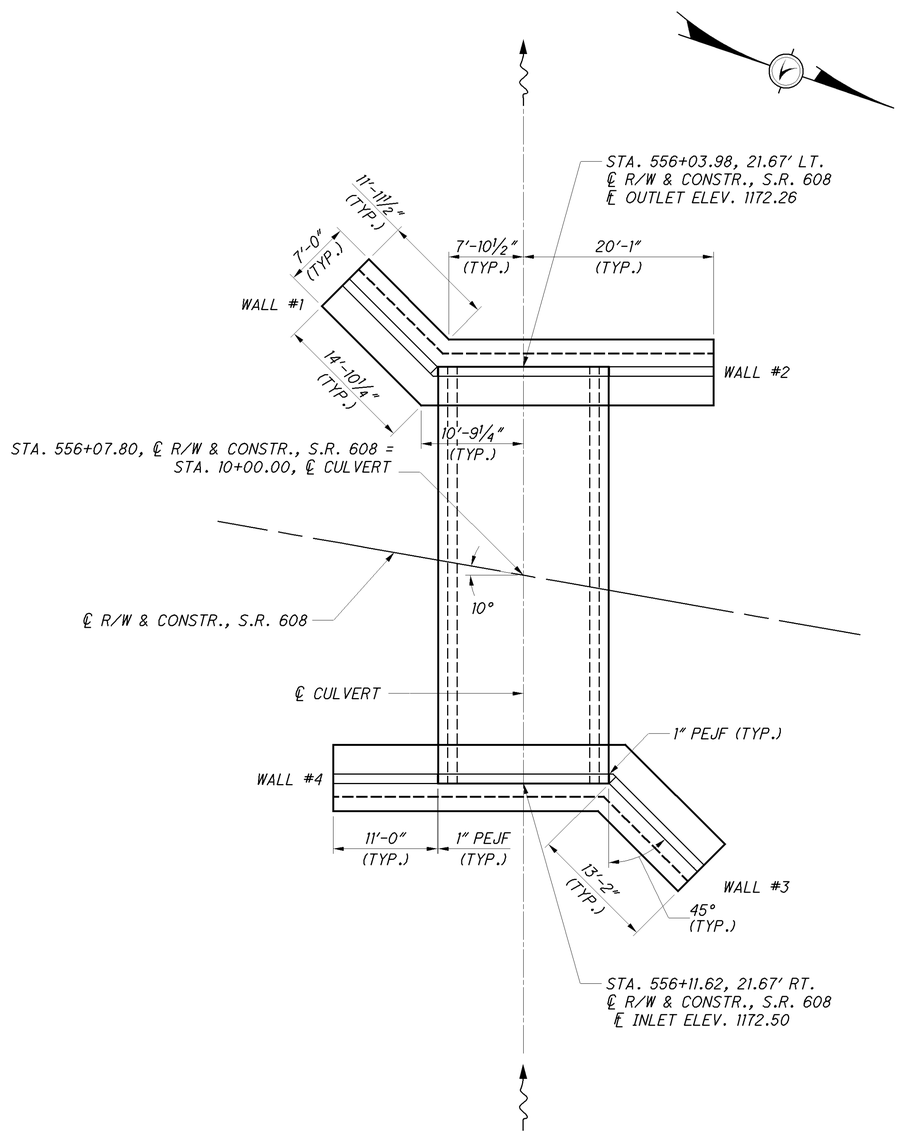

CULVERT & WINGWALL LAYOUT

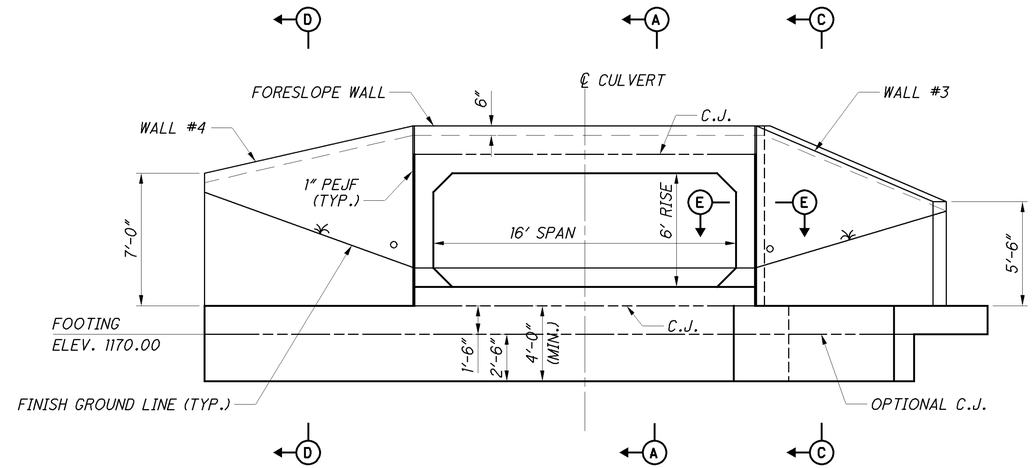

INLET ELEVATION

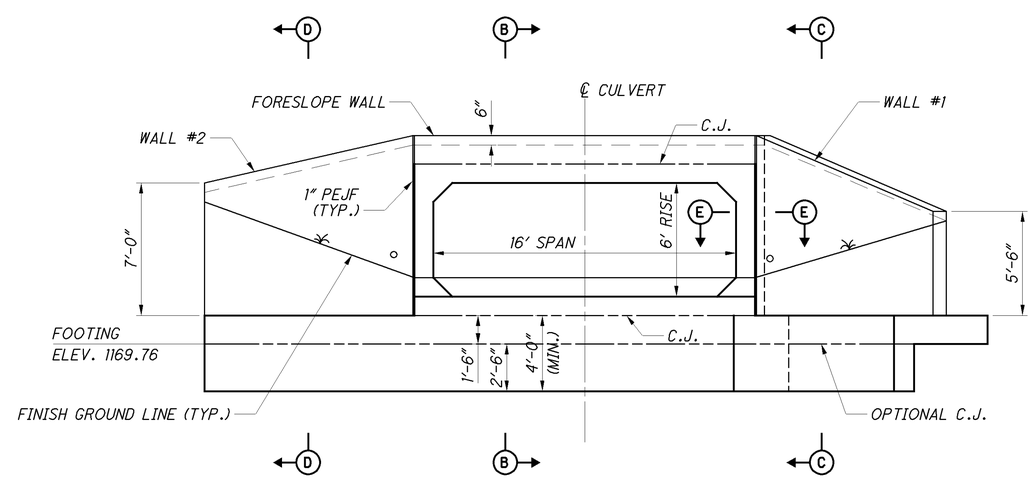

OUTLET ELEVATION

NOTES

1. FOR SECTION A-A, B-B AND FOOTING PLAN, SEE SHEET 4 OF 6.
2. FOR SECTION C-C, D-D AND E-E, SEE SHEET 5 OF 6.
2. FOR LEGEND, SEE SHEET 4 OF 6.

DATE: 30-APR-13 14:20
FILE: J:\PROJECTS\GEA\90222 (GEA-608-1053)\STRUCTURES\608_1053FP001.DGN
SCALE: 1 = 1E

DESIGN AGENCY
Thomas Fok & Associates, Inc.
Consulting Engineers & Surveyors
A.G.F. CERTIFIED
3595 Mahoning Ave | Youngstown OH | 44515 | 330.965.1515
EDGE CERTIFIED
CONSULTANT

DESIGNED	DRAWN	REVIEWED	DATE
WHT	DAK	DAK	11-4-13
CHECKED	REVISED	STRUCTURE FILE NUMBER	
SDL		2802309	

WINGWALL LAYOUT AND ELEVATIONS
BRIDGE NO. GEA-608-1053
OVER SISSON CREEK

GEA-608-10.53
PID No. 90222

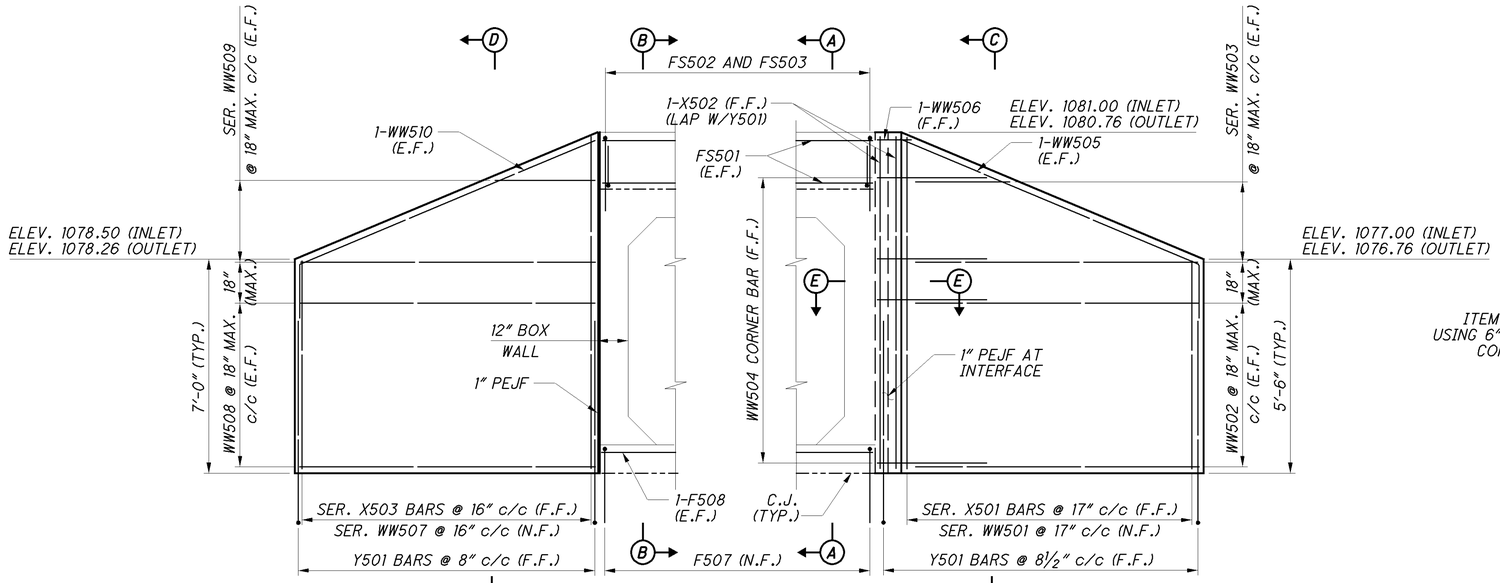

WINGWALL ELEVATION

(FOOTING NOT SHOWN)

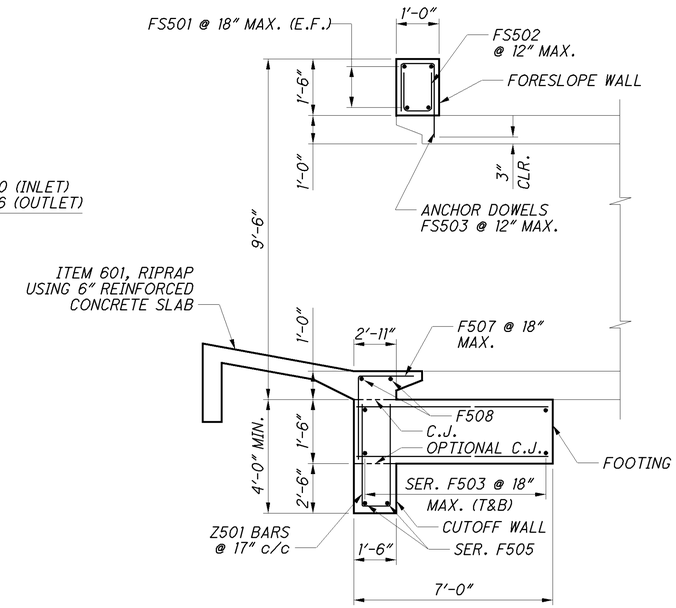

SECTION A-A

(CULVERT INLET BEVEL SHOWN)

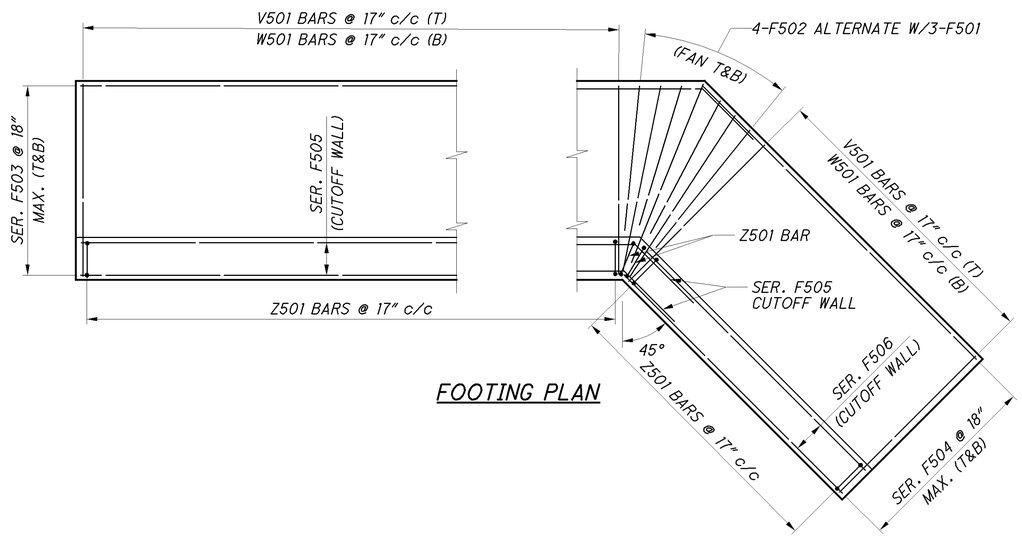

FOOTING PLAN

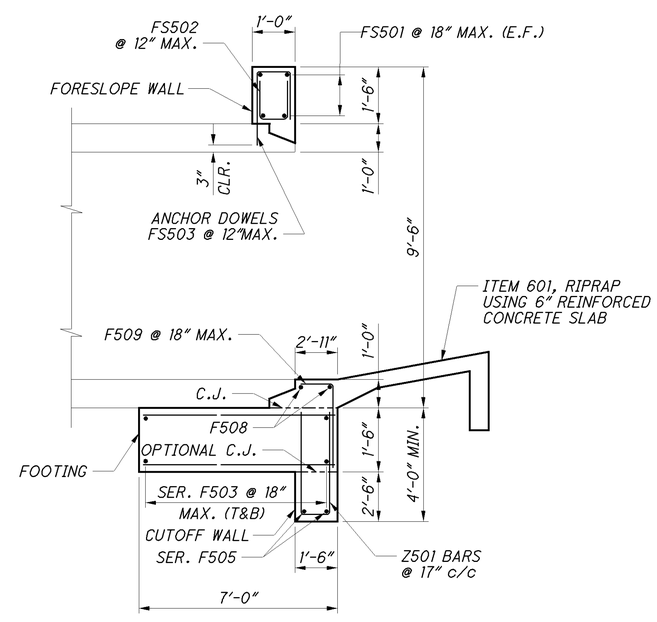

SECTION B-B

(CULVERT OUTLET BEVEL SHOWN)

NOTES

1. FOR CULVERT LOCATION PLAN, SEE SHEET 3/6.
2. FOR SECTIONS C-C, D-D AND E-E, SEE SHEET 5/6.
3. THE LAP SPLICE LENGTHS USED IN THESE DETAILS ARE AS FOLLOWS: 2'-5" FOR #5 BARS.

LEGEND:

C.J.	CONSTRUCTION JOINT	N.F.	NEAR FACE
CLR.	CLEAR	SER.	SERIES
DIA.	DIAMETER	STR.	STRAIGHT
E.F.	EACH FACE	(T)	TOP
F.F.	FAR FACE	(B)	BOTTOM
MAX.	MAXIMUM	T&B	TOP AND BOTTOM
MIN.	MINIMUM	TYP.	TYPICAL
PEJF	PREFORMED EXPANSION JOINT FILLER	INC.	INCREMENT

DATE: 05-MAR-14 16:10
FILE: P:\GEA\90222 (GEA-608-1053)\STRUCTURES\SHEETS\608_1053MD001.DGN
SCALE: 1 = 1E

DESIGN AGENCY
Thomas Fok & Associates, Inc.
Consulting Engineers & Surveyors
EDGE CERTIFIED
3590 Massillon Road | Youngstown OH 44312 | 330.896.9110

DESIGNED	DRAWN	REVIEWED	DATE
WHT	DAK	DAK	11-4-13
CHECKED	REVISED	STRUCTURE FILE NUMBER	
SDL		2802309	

FOOTING PLAN & WINGWALL ELEVATION
BRIDGE NO. GEA-608-1053
OVER SISSON CREEK

GEA-608-10.53
PID No. 90222

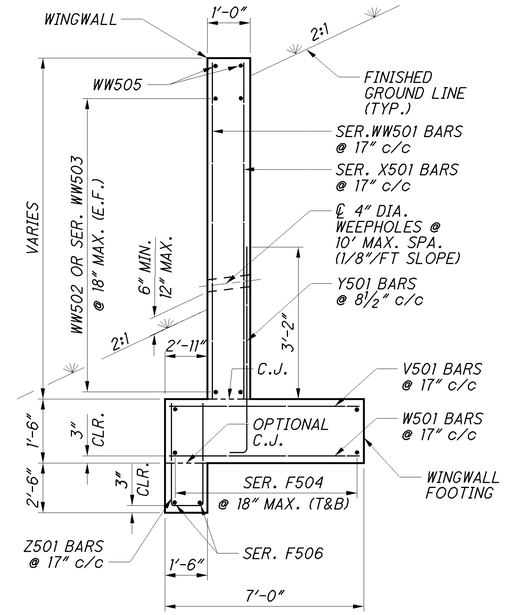

SECTION C-C

(POROUS BACKFILL NOT SHOWN, SEE DETAIL THIS SHEET)

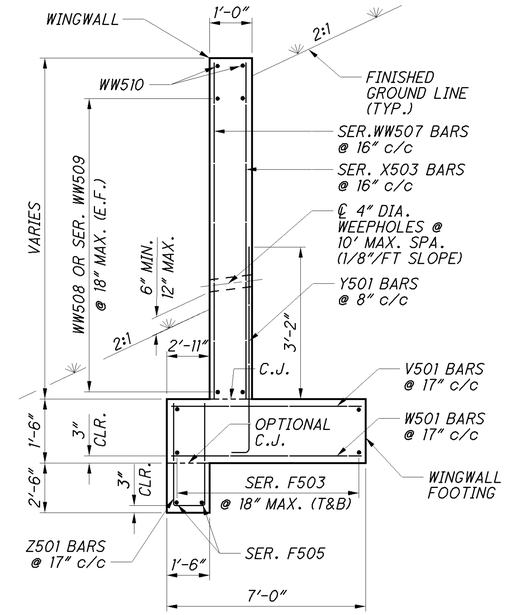

SECTION D-D

(POROUS BACKFILL NOT SHOWN, SEE DETAIL THIS SHEET)

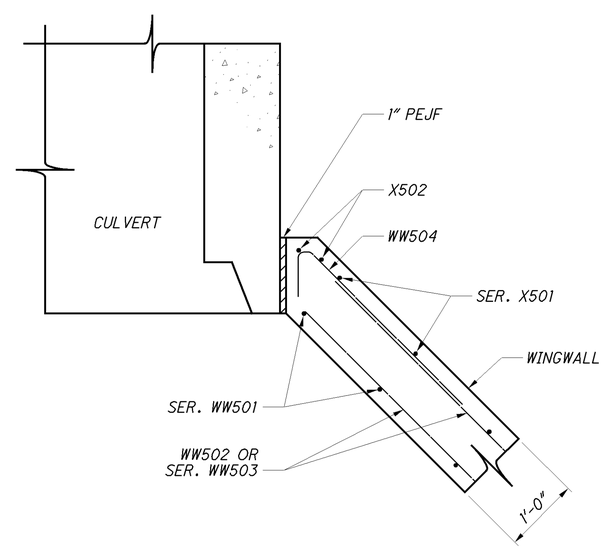

SECTION E-E

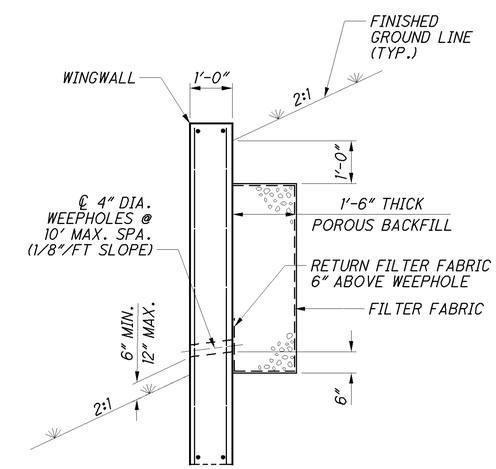

POROUS BACKFILL DETAIL

(FOOTING NOT SHOWN)

NOTES

1. FOR CULVERT LOCATION PLAN, SEE SHEET 3/6.
2. THE LAP SPLICE LENGTHS USED IN THESE DETAILS ARE AS FOLLOWS: 2'-5" FOR #5 BARS.
3. FOR ADDITIONAL NOTES, SEE SHEET 2/6.
4. FOR LEGEND, SEE SHEET 4/6.

DATE: 05-MAR-14 16:11
FILE: P:\GEA\90222 (GEA-608-1053)\STRUCTURES\SHEETS\608_1053MD002.DGN
SCALE: 1 = 1E

DESIGN AGENCY
Thomas Fox & Associates, Inc.
Consulting Engineers & Surveyors
EDGE CERTIFIED
A.S.T.E.C.
3996 Mahoning Ave | Youngstown OH | 44515 | 330.965.1010

DESIGNED	DRAWN	REVIEWED	DATE
WHT	DAB	DAK	11-4-13
CHECKED	REVISED	STRUCTURE FILE NUMBER	
SDL		2802309	

STRUCTURE DETAILS
BRIDGE NO. GEA-608-1053
OVER SISSON CREEK

GEA-608-10.53
PID No. 90222

HEADWALL REINFORCING SCHEDULE

BAR MARK	NUMBER INLET	NUMBER OUTLET	NUMBER TOTAL	LENGTH	WEIGHT (LBS.)	TYPE	BAR TYPE DIMENSIONS A	B	C	D	INC.
				WINGWALLS							
	1	1	2	5′-4″							
X501	SERIES	SERIES	SERIES	TO	153	STR.					0′-5⅜″
	OF 10	OF 10	OF 10	9′-4″							
X502	2	2	4	9′-4″	39	STR.					
	1	1	2	6′-10″							
X503	SERIES	SERIES	SERIES	TO	152	STR.					0′-3¾″
	OF 9	OF 9	OF 9	9′-4″							
Y501	37	37	74	4′-9″	367	1	0′-6″	4′-5″			
	1	1	2	5′-4″							
WW501	SERIES	SERIES	SERIES	TO	153	STR.					0′-5⅜″
	OF 10	OF 10	OF 10	9′-4″							
WW502	8	8	16	12′-10″	215	STR.					
	2	2	4	4′-4″							
WW503	SERIES	SERIES	SERIES	TO	108	STR.					4′-3″
	OF 3	OF 3	OF 3	12′-10″							
WW504	7	7	14	3′-6″	52	2	0′-7″	0′-2″	2′-0¼″	2′-10″	
WW505	2	2	4	15′-10″	67	3	2′-5″	3′-10″	12′-10″		
WW506	1	1	2	1′-1″	3	8	0′-7″	0′-2″			
	1	1	2	6′-10″							
WW507	SERIES	SERIES	SERIES	TO	152	STR.					0′-3¾″
	OF 9	OF 9	OF 9	9′-4″							
WW508	10	10	20	10′-9″	225	STR.					
	2	2	4	5′-5″							
WW509	SERIES	SERIES	SERIES	TO	68	STR.					5′-4″
	OF 2	OF 2	OF 2	10′-9″							
WW510	2	2	4	13′-5″	56	3	2′-5″	2′-4″	10′-9″		
				FOOTING & CUTOFF WALL							
V501	29	29	58	6′-8″	404	STR.					
W501	29	29	58	6′-8″	404	STR.					
Z501	31	31	62	8′-1″	523	5	3′-7″	1′-2″			
F501	6	6	12	6′-0″	76	STR.					
F502	8	8	16	4′-8″	78	STR.					
	2	2	4	30′-3″			27′-9½″				
F503	SERIES	SERIES	SERIES	TO	792	3	TO	1′-8¾″	1′-8¾″		0′-6⅝″
	OF 6	OF 6	OF 6	33′-0″			30′-6½″				
	2	2	4	11′-10″							
F504	SERIES	SERIES	SERIES	TO	331	STR.					0′-6⅝″
	OF 6	OF 6	OF 6	14′-7″							
	1	1	2	30′-3″			27′-9½″				
F505	SERIES	SERIES	SERIES	TO	128	3	TO	1′-8¾″	1′-8¾″		0′-6″
	OF 2	OF 2	OF 2	30′-9″			28′-3¼″				
	1	1	2	11′-10″							
F506	SERIES	SERIES	SERIES	TO	51	STR.					0′-5″
	OF 2	OF 2	OF 2	12′-3″							
F507	13		13	5′-0″	68	1	2′-11″	2′-2″			
F508	2	2	4	17′-9″	75	STR.					
F509		13	13	4′-8″	64	1	2′-7″	2′-2″			

HEADWALL REINFORCING SCHEDULE CON'T

BAR MARK	NUMBER INLET	NUMBER OUTLET	NUMBER TOTAL	LENGTH	WEIGHT (LBS.)	TYPE	BAR TYPE DIMENSIONS A	B	C	INC.
				FORESLOPE WALL						
FS501	4	4	8	17′-9″	149	STR.				
FS502	19	19	38	2′-9″	109	5	1′-2″	0′-8″		
FS503	19	19	38	3′-8″	146	7	1′-2″	0′-8″	2′-1″	
				TOTAL	5208					

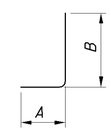

TYPE-1

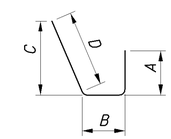

TYPE-2

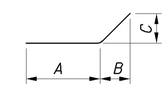

TYPE-3

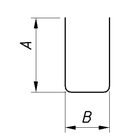

TYPE-5

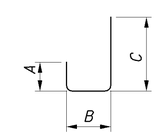

TYPE-7

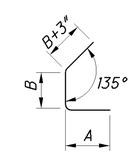

TYPE-8

NOTES:

1. THE PLANS SPECIFY THE BAR SIZE NUMBER IN THE BAR MARK COLUMN. THE FIRST DIGIT INDICATES THE BAR SIZE NUMBER. FOR EXAMPLE, WW501 IS A NO. 5 BAR. BAR DIMENSIONS SHOWN ARE OUT TO OUT.
2. ALL REINFORCING STEEL SHALL BE EPOXY COATED.
3. "STR" IN THE TYPE COLUMN INDICATES STRAIGHT BARS.
4. REFER TO C.M.S. SECTION 509.05 FOR STANDARD BEND DIMENSIONS.
5. ALL REINFORCING STEEL CLEARANCES ARE 2″ UNLESS OTHERWISE NOTED.

DESIGN AGENCY
Thomas Fox & Associates, Inc.
Consulting Engineers & Surveyors
EDGE CERTIFIED
S.B. 175 CERTIFIED
3596 Mahoning Ave | Youngstown OH | 44515 | 330.965.3015

DESIGNED	DRAWN	REVIEWED	DATE
WHT	DAB	DAK	11-4-13
CHECKED	REVISED	STRUCTURE FILE NUMBER	
SDL		2802309	

REINFORCING STEEL LIST
BRIDGE NO. GEA-608-1053
OVER SISSON CREEK

GEA-608-10.53
PID No. 90222

DATE: 05-MAR-14 16:12
FILE: P:\GEA\90222 (GEA-608-1053)\STRUCTURES\SHEETS\608_1053RL001.DGN
SCALE: 1 = 1E

PROJECT DESCRIPTION

THE PROJECT SITE IS LOCATED ALONG SR 608 IN HAMBDEN TOWNSHIP, GEAUGA COUNTY, OHIO BETWEEN SISSON ROAD TO THE NORTH AND CHARDON WINDSOR ROAD TO THE SOUTH. SR 608 IN THE PROJECT AREA IS A TWO-LANE, ASPHALT-PAVED, ROADWAY. NTH UNDERSTANDS THAT THERE IS AN EXISTING CONCRETE SLAB BRIDGE THAT WILL BE REPLACED AS PART OF THIS PROJECT, AND UNDERSTAND ODOT HAS SELECTED A FOUR SIDED BOX CULVERT TO REPLACE THE EXISTING CONCRETE SLAB BRIDGE.

HISTORIC RECORDS

NO PREVIOUS GEOTECHNICAL DATA WAS AVAILABLE FOR THIS PROJECT.

SITE GEOLOGY

BASED UPON THE "PHYSIOGRAPHIC REGIONS OF OHIO" MAP, THE NATURAL SOILS IN THE VICINITY OF THE SITE TYPICALLY CONSIST OF GRAVELLY SILTY CLAYS (HIRAM TILL) FROM THE LATE WISCONSIAN AGE. GEOLOGIC PUBLICATIONS BY THE OHIO DEPARTMENT OF NATURAL RESOURCES INDICATE THESE SOIL DEPOSITS GENERALLY OVERLIE SHALE AND SANDSTONE BEDROCK FROM THE ALLEGHENY POTTSVILLE AND CUYAHOGA FORMATIONS OF THE PENNSYLVANIAN AND MISSISSIPPIAN AGE. BASED ON AVAILABLE BEDROCK TOPOGRAPHY MAPS, TOP OF ROCK MAY BE ENCOUNTERED AT RELATIVELY SHALLOW DEPTHS OF ABOUT 10 FEET BELOW THE EXISTING GROUND SURFACE.

RECONNAISSANCE

NTH PERSONNEL VISITED THE SITE ON MARCH 19, 2012 TO PERFORM SITE RECONNAISSANCE AND BORING LAYOUT. THE EXISTING STRUCTURE CONSISTS OF SLAB BRIDGE BEARING ON DRILLED SHAFTS.

SUBSURFACE EXPLORATION

(1) SOIL SAMPLING
THE TEST BORINGS WERE DRILLED USING A TRUCK-MOUNTED DRILLING RIG. THE TEST BORINGS WERE ADVANCED USING 3-1/4-INCH INSIDE DIAMETER HOLLOW STEM AUGERS. SOIL SAMPLES WERE OBTAINED AT 2-1/2 FOOT INTERVALS TO A DEPTH OF ABOUT 6 FEET, AT WHICH POINT BEDROCK WAS ENCOUNTERED. OVERBURDEN SOIL SAMPLES WERE OBTAINED USING A STANDARD SPLIT SPOON SAMPLER AND THE STANDARD PENETRATION TEST (SPT) METHOD. THE SPT METHOD (ASTM D-1586) CONSISTS OF DRIVING A TWO-INCH OUTSIDE DIAMETER SPLIT-BARREL SAMPLER INTO THE SOIL WITH A 140-POUND WEIGHT FALLING FREELY THROUGH A DISTANCE OF 30 INCHES. THE SAMPLER IS GENERALLY DRIVEN THREE SUCCESSIVE SIX-INCH INCREMENTS, WITH THE NUMBER OF BLOWS FOR EACH INCREMENT BEING RECORDED. THE NUMBER OF BLOWS REQUIRED TO ADVANCE THE SAMPLER THE LAST 12 INCHES IS TERMED THE STANDARD PENETRATION RESISTANCE (N). B&P UTILIZED AN AUTOMATIC HAMMER TO PERFORM SPT TESTING. THIS AUTOMATIC HAMMER ON THE RIG WAS CALIBRATED AND REPORTED TO HAVE AN EFFICIENCY RATING OF 89.0 PERCENT. WE HAVE CORRECTED N-VALUES TO AN EQUIVALENT ROD ENERGY RATIO OF 60 PERCENT, N_{60}

(2) ROCK SAMPLING
NTH'S DRILLING SUBCONTRACTOR UTILIZED ROTARY ROCK CORING METHODS TO ADVANCE BOREHOLES THROUGH BEDROCK TO THEIR PLANNED TERMINATION DEPTHS. THE SAMPLING PROCEDURES USED WITHIN THE ROCK INCLUDED AN NX-SIZE DIAMOND CORE BARREL WITH A DIAMOND TIPPED DISCHARGE BIT. THE NX CORE BARREL CUT A 3-INCH DIAMETER BOREHOLE AND RECOVERED APPROXIMATELY 2-1/8-INCH DIAMETER ROCK CORE. THE LENGTH OF THE ROCK CORE RUNS WAS 5 FEET. UPON REMOVAL OF EACH CORE FROM THE BOREHOLE, THE ROCK CORES WERE PLACED IN THE SAME ORDER THEY WERE RETRIEVED FROM THE BARREL. IMMEDIATELY AFTER PLACING THE CORE INTO ITS RESPECTIVE BOX, THE FIELD REPRESENTATIVE RECORDED THE PERCENT RECOVERY, FRACTURES PER FOOT OF CORE RECOVERED, OBTAINED PHOTOGRAPHS OF THE CORES WITHIN THE SAMPLE BOXES, AND DETERMINED THE ROCK QUALITY DESIGNATION (RQD) VALUE FOR EACH CORE RUN.

EXPLORATION FINDINGS

*IN GENERAL, ASPHALT PAVEMENT WAS ENCOUNTERED AT THE GROUND SURFACE OF THE BORING LOCATIONS. BASED ON THE RECOVERED CORES, PAVEMENT THICKNESS AT THE BORING LOCATIONS RANGED BETWEEN APPROXIMATELY 12 AND 24 INCHES. BELOW THE EXISTING PAVEMENT, VERY LOOSE TO MEDIUM DENSE FILLS, INCLUDING COARSE AND FINE SAND (A-3A), SANDY SILT (A-4A), AND GRAVEL AND STONE FRAGMENTS WITH SAND AND SILT (A-1-A AND A-2-4), WERE ENCOUNTERED TO A DEPTH OF ABOUT 12 FEET BELOW EXISTING GRADE (ABOUT ELEVATIONS 1169 TO 1170). BELOW THE FILL, MEDIUM DENSE TO VERY DENSE GRAY SANDY SILT (A-4A), FINE SAND (A-3), AND COARSE TO FINE SAND (A-3A) WERE ENCOUNTERED TO DEPTHS RANGING FROM ABOUT 38*TO 39* FEET (ELEVATIONS 1142 FEET) BELOW THE EXISTING GROUND SURFACE. THE MEDIUM DENSE TO VERY DENSE GRANULAR SOILS WERE UNDERLAIN BY HARD GRAY SILT (A-4B) TO THE TERMINATION DEPTH OF 50 FEET. DURING DRILLING, GROUNDWATER WAS OBSERVED IN B-001 AND B-002 AT DEPTHS RANGING FROM ABOUT 8 TO 12 FEET BELOW THE EXISTING GROUND SURFACE.*

SPECIFICATIONS

THIS GEOTECHNICAL EXPLORATION WAS PERFORMED IN ACCORDANCE WITH THE STATE OF OHIO, DEPARTMENT OF TRANSPORTATION, OFFICE OF GEOTECHNICAL ENGINEERING, SPECIFICATIONS FOR GEOTECHNICAL EXPLORATIONS, DATED JULY 2011.

AVAILABLE INFORMATION

ALL AVAILABLE SOIL AND BEDROCK INFORMATION THAT CAN BE CONVENIENTLY SHOWN ON THE GEOTECHNICAL EXPLORATION SHEETS HAS BEEN SO REPORTED. ADDITIONAL EXPLORATIONS MAY HAVE BEEN MADE TO STUDY SOME SPECIAL ASPECT OF THE PROJECT. COPIES OF THIS DATA, IF ANY, MAY BE INSPECTED IN THE DISTRICT DEPUTY DIRECTOR'S OFFICE, THE OFFICE OF GEOTECHNICAL ENGINEERING AT 1600 WEST BROAD STREET OR THE OFFICE OF STRUCTURAL ENGINEERING AT 1980 WEST BROAD STREET.

LEGEND

DESCRIPTION	ODOT CLASS	CLASSIFIED MECH.	CLASSIFIED VISUAL
GRAVEL AND/OR STONE FRAGS.	*A-1a*	*1*	*1*
GRAVEL AND/OR STONE FRAGS. WITH SAND & SILT	*A-2-4*	*1*	*1*
FINE SAND	*A-3*	*0*	*4*
COURSE & FINE SAND	*A-3a*	*0*	*7*
SANDY SILT	*A-4a*	*2*	*2*
SILT	*A-4b*	*2*	*4*
	TOTAL	*6*	*19*

PAVEMENT OR BASE = X = APPROXIMATE THICKNESS — *VISUAL*

SOD AND TOPSOIL = X = APPROXIMATE THICKNESS — *VISUAL*

PAVEMENT CORE / DECK CORE LOCATION - PLAN VIEW

BORING LOCATION - PLAN VIEW.

DRIVE SAMPLE AND/OR ROCK CORE BORING PLOTTED TO VERTICAL SCALE ONLY. HORIZONTAL BAR INDICATES A CHANGE IN STRATIGRAPHY.

WC INDICATES WATER CONTENT IN PERCENT.

N_{60} INDICATES STANDARD PENETRATION RESISTANCE NORMALIZED TO 60% DRILL ROD ENERGY RATIO.

X/Y/Z NUMBER OF BLOWS FOR STANDARD PENETRATION TEST (SPT):
X= NUMBER OF BLOWS FOR FIRST 6 INCHES.
Y= NUMBER OF BLOWS FOR SECOND 6 INCHES.
Z= NUMBER OF BLOWS FOR THIRD 6 INCHES.

W— INDICATES FREE WATER ELEVATION.

● INDICATES A PLASTIC MATERIAL WITH A MOISTURE CONTENT EQUAL TO OR GREATER THAN THE LIQUID LIMIT MINUS 3.

⊖ INDICATES A NON-PLASTIC MATERIAL WITH A MOISTURE CONTENT GREATER THAN 25 % OR GREATER THAN 19 % WITH A WET APPEARANCE.

SS INDICATES A SPLIT SPOON SAMPLE.

NP INDICATES A NON-PLASTIC SAMPLE.

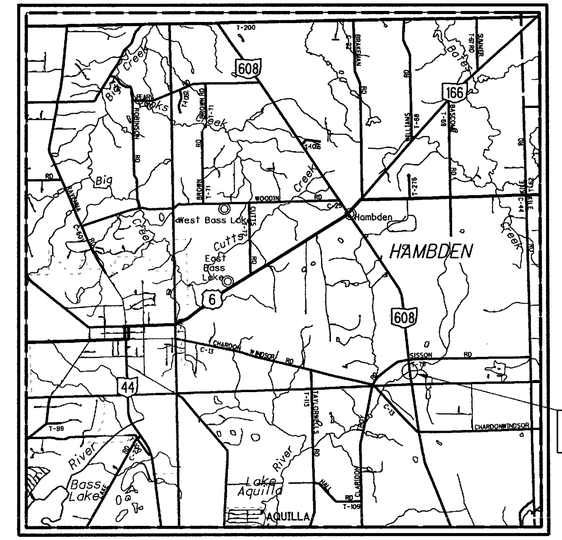

LOCATION MAP

SCALE IN MILES

0 1 2 3 4

N

PARTICLE SIZE DEFINITIONS

BOULDERS	12"	COBBLES	3"	GRAVEL	2.0 mm (No. 10 SIEVE)	COARSE SAND	0.42 mm (No. 40 SIEVE)	FINE SAND	0.074 mm (No. 200 SIEVE)	SILT	0.005 mm	CLAY

SUMMARY OF SOIL TEST DATA *GEA-608-10.53*

STATION & OFFSET		FROM TO	SAMPLE ID	% REC	% GR	% CS	% FS	% SILT	% CLAY	LL	PL	PI	% WC	ODOT CLASS
556+26.48	*8.0' RT*	*06.0 - 07.5*	*3*	*83*	*27*	*12*	*27*	*19*	*15*	*21*	*17*	*4*	*16*	*A-2-4*
556+26.48	*8.0' RT*	*13.5 - 15.0*	*5*	*89*	*5*	*8*	*33*	*41*	*13*	*NP*	*NP*	*NP*	*12*	*A-4a*
556+26.48	*8.0' RT*	*48.5 - 50.0*	*12*	*99*	*0*	*3*	*7*	*50*	*40*	*26*	*19*	*7*	*14*	*A-4b*
555+85.58	*7.2' LT*	*03.5 - 05.0*	*2*	*78*	*12*	*11*	*35*	*28*	*14*	*NP*	*NP*	*NP*	*13*	*A-4a*
555+85.58	*7.2' LT*	*06.0 - 07.5*	*3*	*33*	*83*	*5*	*7*	*-*	*5 -*	*NP*	*NP*	*NP*	*-*	*A-1a*
555+84.08	*7.2' LT*	*38.5 - 40.0*	*10*	*89*	*0*	*0*	*2*	*73*	*25*	*26*	*20*	*6*	*21*	*A-4b*

Sampler: Type SS Dia. 3¼"

D_{50} Values

Boring No.	Sample No.	Elevation	D_{50} Value
01-00-12	SS-2	1178.2	.081
01-00-12	SS-3	1175.7	.22
01-00-12	SS-5	1168.2	.062
01-00-12	SS-11	1138.2	.022
02-00-12	SS-2	1177.6	.125
02-00-12	SS-3	1175.1	23
02-02-12	SS-10	1142.1	.017

RECON. - PSL 03/19/2012
DRILLING - B&P 03/21 - 03/22/2012
DRAWN - TCG
REVIEWED - PSL

DESIGN AGENCY
NTH CONSULTANTS, LTD.
820 W. SUPERIOR AVE. SUITE 320
CLEVELAND OH. 44113

PID NO. **90222**

STRUCTURE FOUNDATION EXPLORATION

GEA-608-10.53

J:\Active Projects\86-111284 GEA\GEA-608-10.53\CAD\902222ZC-002.dgn 11/6/2013 7:10:43 PM tgregory

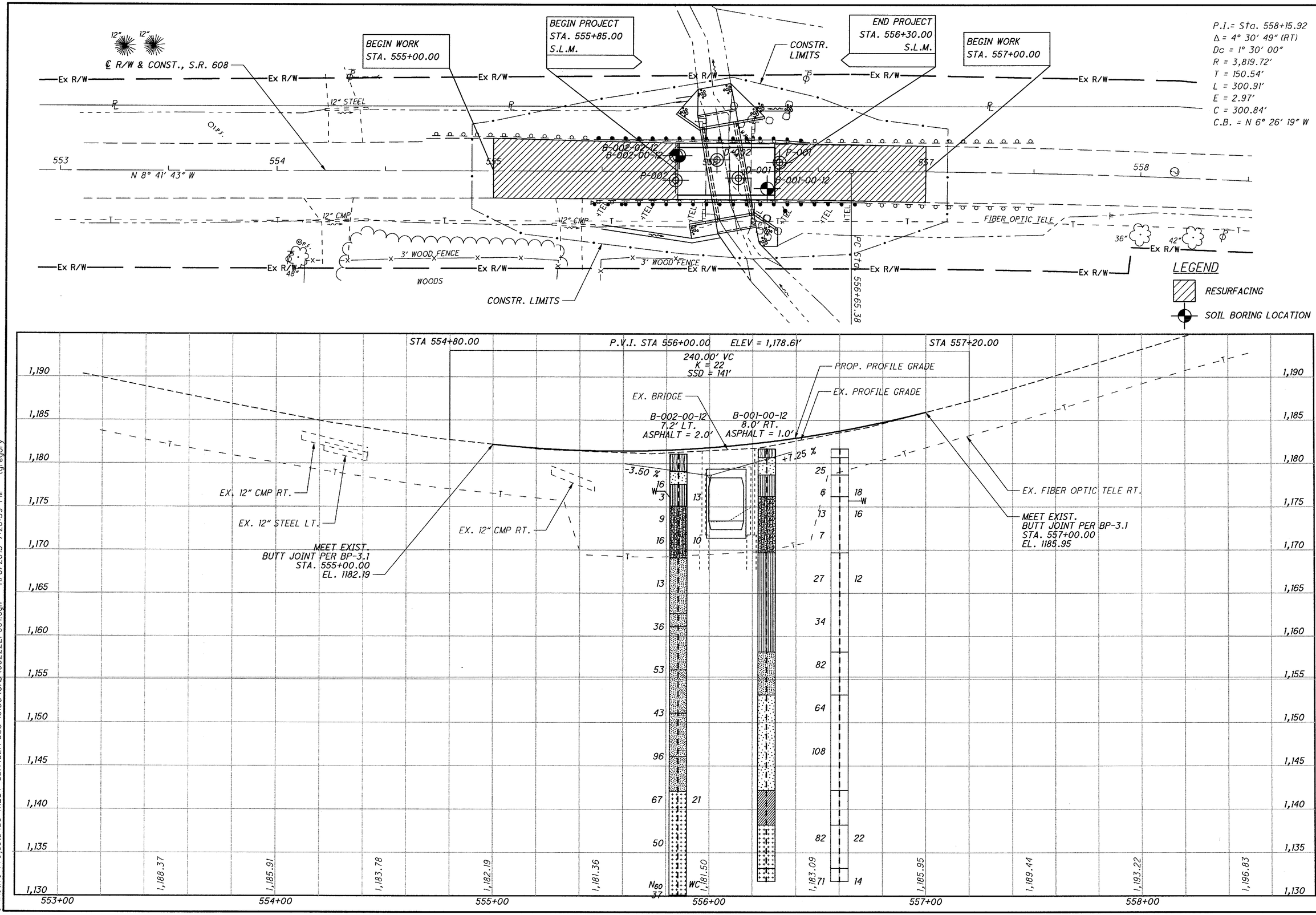

DRAWN TCG
CHECKED PSL

STRUCTURE FOUNDATION EXPLORATION
STA. 553+00.00 TO STA. 558+50.00

GEA-608-10.53

2/5

J:\Active Projects\86-111284 GEA\GEA-608-10.53\CAD\902222P001.dgn 11/6/2013 7:20:39 PM tgregory

PROJECT: GEA-608-10.53	DRILLING FIRM / OPERATOR: B&P / R. WEBB	DRILL RIG: MOBILE B-61 TRUCK	STATION / OFFSET: 556+26, 8 RT	EXPLORATION ID B-001-00-12
TYPE: BRIDGE REPLACEMENT	SAMPLING FIRM / LOGGER: NTH / KRAL	HAMMER: AUTOMATIC HAMMER	ALIGNMENT: CL SR 608	
PID: 90222 BR ID:	DRILLING METHOD: 3.25" HSA	CALIBRATION DATE: N/A	ELEVATION: 1181.7 (MSL) EOB: 50.0 ft.	PAGE 1 OF 2
START: 3/21/12 END: 3/21/12	SAMPLING METHOD: SPT	ENERGY RATIO (%): 89	COORD: 697915.490 N, 2343133.370 E	

MATERIAL DESCRIPTION AND NOTES	ELEV. 1181.7	DEPTHS	SPT/ RQD	N_{60}	REC (%)	SAMPLE ID	HP (tsf)	GRADATION (%) GR	CS	FS	SI	CL	ATTERBERG LL	PL	PI	WC	ODOT CLASS (GI)	HOLE SEALED
12" ASPHALT	1180.7																	
MEDIUM DENSE, BLACK, **COARSE AND FINE SAND**, TRACE ASPHALT (FILL)	1178.7	1 2	25 9 8	25	44	SS-1	-	-	-	-	-	-	-	-	-	-	A-3a (V)	
VERY LOOSE, BROWN, **SANDY SILT**, TRACE CLAY (FILL)	1176.2	3 4 5	2 2 2	6	83	SS-2	-	8	5	39	33	15	NP	NP	NP	18	A-4a (3)	
LOOSE TO MEDIUM DENSE, GRAY, **GRAVEL AND STONE FRAGMENTS WITH SAND AND SILT**, LITTLE CLAY (FILL)	1169.7	W 6 7 8 9 10 11 12 13	2 3 6	13	83	SS-3	-	27	12	27	19	15	21	17	4	16	A-2-4 (0)	
			4 2 3	7	33	SS-4	-	-	-	-	-	-	-	-	-	-	A-2-4 (V)	
MEDIUM DENSE TO DENSE, GRAY, **SANDY SILT**, LITTLE CLAY, TRACE GRAVEL	1158.2	14 15 16 17 18 19 20 21 22 23	2 7 11	27	89	SS-5	-	5	8	33	41	13	NP	NP	NP	12	A-4a (4)	
			9 11 12	34	100	SS-6	-	-	-	-	-	-	-	-	-	-	A-4a (V)	
VERY DENSE, GRAY, **FINE SAND**, SOME SILT		24	14 22 33	82	100	SS-7	-	-	-	-	-	-	-	-	-	-	A-3 (V)	

STANDARD ODOT SOIL BORING LOG (8.5 X 11) - OH DOT.GDT - 11/4/13 13:48 - S:\SHARED\TECHNICAL SOFTWARE\GINT\PROJECTS\2012\ODOT\86-111284-01B.GPJ

PID: 90222	BR ID:	PROJECT: GEA-608-10.53	STATION / OFFSET: 556+26, 8 RT	START: 3/21/12	END: 3/21/12	PG 2 OF 2	B-001-00-12

MATERIAL DESCRIPTION AND NOTES	ELEV. 1156.7	DEPTHS	SPT/ RQD	N_{60}	REC (%)	SAMPLE ID	HP (tsf)	GRADATION (%) GR	CS	FS	SI	CL	ATTERBERG LL	PL	PI	WC	ODOT CLASS (GI)	HOLE SEALED
VERY DENSE, GRAY, **FINE SAND**, SOME SILT *(continued)*	1153.2	26 27 28																
DENSE TO VERY DENSE, GRAY, **COARSE AND FINE SAND**, TRACE SILT	1142.2	29 30 31 32 33 34 35 36 37 38 39	3 14 29	64	100	SS-8	-	-	-	-	-	-	-	-	-	-	A-3a (V)	
			33 34 39	108	100	SS-9	-	-	-	-	-	-	-	-	-	-	A-3a (V)	
			13 33 39	-	100	SS-10A	-	-	-	-	-	-	-	-	-	-	A-3a (V)	
HARD, GRAY, **SILT**, TRACE CLAY, TRACE SAND	1133.2	40 41 42 43 44 45 46 47 48			50	SS-10B	4.50	-	-	-	-	-	25	20	5	-	A-4b (V)	
			12 21 34	82	100	SS-11	-	0	0	1	84	15	NP	NP	NP	22	A-4b (8)	
HARD, GRAY, **SILT**, AND CLAY, TRACE TO LITTEL SAND	1131.7	49 50 EOB	10 21 27	71	100	SS-12	4.50	0	3	7	50	40	26	19	7	14	A-4b (8)	

STANDARD ODOT SOIL BORING LOG (8.5 X 11) - OH DOT.GDT - 11/4/13 13:48 - S:\SHARED\TECHNICAL SOFTWARE\GINT\PROJECTS\2012\ODOT\86-111284-01B.GPJ

NOTES: NONE

ABANDONMENT METHODS, MATERIALS, QUANTITIES: PUMPED 20 GAL. BENTONITE GROUT

PROJECT: GEA-608-10.53	DRILLING FIRM / OPERATOR: B&P / R. WEBB	DRILL RIG: MOBILE B-61 TRUCK	STATION / OFFSET: 555+86, 7 LT	EXPLORATION ID B-002-00-12
TYPE: BRIDGE REPLACEMENT	SAMPLING FIRM / LOGGER: NTH / KRAL	HAMMER: AUTOMATIC HAMMER	ALIGNMENT: CL SR 608	
PID: 90222 BR ID:	DRILLING METHOD: 3.25" HSA	CALIBRATION DATE: N/A	ELEVATION: 1181.1 (MSL) EOB: 35.0 ft.	PAGE 1 OF 2
START: 3/22/12 END: 3/22/12	SAMPLING METHOD: SPT	ENERGY RATIO (%): 89	COORD: 697872.760 N, 2343124.560 E	

MATERIAL DESCRIPTION AND NOTES	ELEV. 1181.1	DEPTHS	SPT/ RQD	N_{60}	REC (%)	SAMPLE ID	HP (tsf)	GRADATION (%) GR	CS	FS	SI	CL	ATTERBERG LL	PL	PI	WC	ODOT CLASS (GI)	HOLE SEALED
24" ASPHALT	1179.1																	
MEDIUM DENSE, BROWN AND GRAY, **COARSE AND FINE SAND**, LITTLE GRAVEL, LITTLE CLAY (FILL)	1177.6	2–3	9 8 3	16	33	SS-1	-	-	-	-	-	-	-	-	-	-	A-3a (V)	
VERY LOOSE, GRAY, **SANDY SILT**, LITTLE CLAY, LITTLE GRAVEL (FILL)	1175.1	4–5 (W)	1 1 1	3	78	SS-2	-	12	11	35	28	14	NP	NP	NP	13	A-4a (1)	
LOOSE TO MEDIUM DENSE, GRAY, **GRAVEL AND STONE FRAGMENTS**, LITTLE SAND, CONTAINS WOOD FIBERS, TRACE SILT AND CLAY (FILL)	1169.1	6–7	1 2 4	9	33	SS-3	-	83	5	7	- 5	-	NP	NP	NP	-	A-1-a (0)	
		9–10	4 5 6	16	33	SS-4	-	-	-	-	-	-	-	-	-	10	A-1-a (V)	
MEDIUM DENSE, GRAY, **FINE SAND**, TRACE SILTY CLAY, TRACE GRAVEL (F S)	1162.6	14–15	3 4 5	13	56	SS-5	-	-	-	-	-	-	-	-	-	-	A-3 (V)	
DENSE, GRAY, **FINE SAND**, LITTLE SILT, TRACE GRAVEL (F S)	1161.1	19–20	9 11 13	36	89	SS-6	-	-	-	-	-	-	-	-	-	-	A-3 (V)	
VERY DENSE, GRAY, **FINE SAND**, SOME SILT, TRACE CLAY (F S)	1156.1	24	15 18 18	53	100	SS-7	-	-	-	-	-	-	-	-	-	-	A-3 (V)	

PID: 90222	BR ID:	PROJECT: GEA-608-10.53	STATION / OFFSET: 555+86, 7 LT	START: 3/22/12 END: 3/22/12	PG 2 OF 2 B-002-00-12

MATERIAL DESCRIPTION AND NOTES	ELEV. 1156.1	DEPTHS	SPT/ RQD	N_{60}	REC (%)	SAMPLE ID	HP (tsf)	GRADATION (%) GR	CS	FS	SI	CL	ATTERBERG LL	PL	PI	WC	ODOT CLASS (GI)	HOLE SEALED
DENSE, GRAY, **COARSE AND FINE SAND**, LITTLE SILT, TRACE FINE GRAVEL	1151.1	29–30	7 12 17	43	100	SS-8	-	-	-	-	-	-	-	-	-	-	A-3a (V)	
VERY DENSE, GRAY, **COARSE AND FINE SAND**, SOME GRAVEL, TRACE SILT	1146.1	34–35 (EOB)	17 35 30	96	100	SS-9	-	-	-	-	-	-	-	-	-	-	A-3a (V)	

NOTES: WATER WAS ADDED TO COUNTERBALANCE HEAVING SAND AT 28.5'. BOREHOLE WAS ABANDONED DUE TO HEAVING SAND.

ABANDONMENT METHODS, MATERIALS, QUANTITIES: PUMPED 15 GAL. BENTONITE GROUT

STANDARD ODOT SOIL BORING LOG (8.5 X 11) - OH DOT.GDT - 11/4/13 13:48 - S:\SHARED\TECHNICAL SOFTWARE\GINT\PROJECTS\2012\ODOT\86-111284-01B.GPJ

STANDARD ODOT SOIL BORING LOG (8.5 X 11) - OH DOT.GDT - 11/4/13 13:48 - S:\SHARED\TECHNICAL SOFTWARE\GINT\PROJECTS\2012\ODOT\86-111284-01B.GPJ

PROJECT: GEA-608-10.53	DRILLING FIRM / OPERATOR: B&P / R. WEBB	DRILL RIG: MOBILE B-61 TRUCK	STATION / OFFSET: 555+84, 7 LT	EXPLORATION ID B-002-02-12
TYPE: BRIDGE REPLACEMENT	SAMPLING FIRM / LOGGER: NTH / KRAL	HAMMER: AUTOMATIC HAMMER	ALIGNMENT: CL SR 608	
PID: 90222 BR ID:	DRILLING METHOD: 3.25" HSA	CALIBRATION DATE: N/A	ELEVATION: 1180.6 (MSL) EOB: 50.5 ft.	PAGE 1 OF 2
START: 3/22/12 END: 3/22/12	SAMPLING METHOD: SPT	ENERGY RATIO (%): 89	COORD: 697871.250 N, 2343124.780 E	

MATERIAL DESCRIPTION AND NOTES	ELEV. 1180.6	DEPTHS	SPT/ RQD	N_{60}	REC (%)	SAMPLE ID	HP (tsf)	GRADATION (%) GR	CS	FS	SI	CL	ATTERBERG LL	PL	PI	WC	ODOT CLASS (GI)	HOLE SEALED
Profile drill		1 2 3 4 5 6 7 8 9 10 11 12 13 14 15 16 17 18 19 20 21 22 23 24																
	1155.6																	

PID: 90222	BR ID:	PROJECT: GEA-608-10.53	STATION / OFFSET: 555+84, 7 LT	START: 3/22/12	END: 3/22/12	PG 2 OF 2	B-002-02-12

MATERIAL DESCRIPTION AND NOTES	ELEV. 1155.6	DEPTHS	SPT/ RQD	N_{60}	REC (%)	SAMPLE ID	HP (tsf)	GR	CS	FS	SI	CL	LL	PL	PI	WC	ODOT CLASS (GI)	HOLE SEALED
Profile drill		26 27 28 29 30 31 32 33 34 35 36 37 38																
	1142.1																	
DENSE, GRAY, **SILT**, SOME BROWN FINE SAND, TRACE TO LITTLE CLAY IN POCKET AND SEAM		39 40	11 18 27	67	89	SS-10	-	0	0	2	73	25	26	20	6	21	A-4b (8)	
		41 42 43 44 45	13 17 17	50	89	SS-11	-	-	-	-	-	-	-	-	-	-	A-4b (V)	
		46 47 48 49 50	12 11 14 21	37	-	SS-12	-	-	-	-	-	-	-	-	-	-	A-4b (V)	
	1130.1	EOB																

NOTES: WATER WAS ADDED TO COUNTERBALANCE HEAVING SAND AT 25'.

ABANDONMENT METHODS, MATERIALS, QUANTITIES: PUMPED 20 GAL. BENTONITE GROUT

STANDARD ODOT SOIL BORING LOG (8.5 X 11) - OH DOT.GDT - 11/4/13 13:48 - S:\SHARED\TECHNICAL SOFTWARE\GINT\PROJECTS\2012\ODOT\86-111284-01B.GPJ

STANDARD ODOT SOIL BORING LOG (8.5 X 11) - OH DOT.GDT - 11/4/13 13:48 - S:\SHARED\TECHNICAL SOFTWARE\GINT\PROJECTS\2012\ODOT\86-111284-01B.GPJ