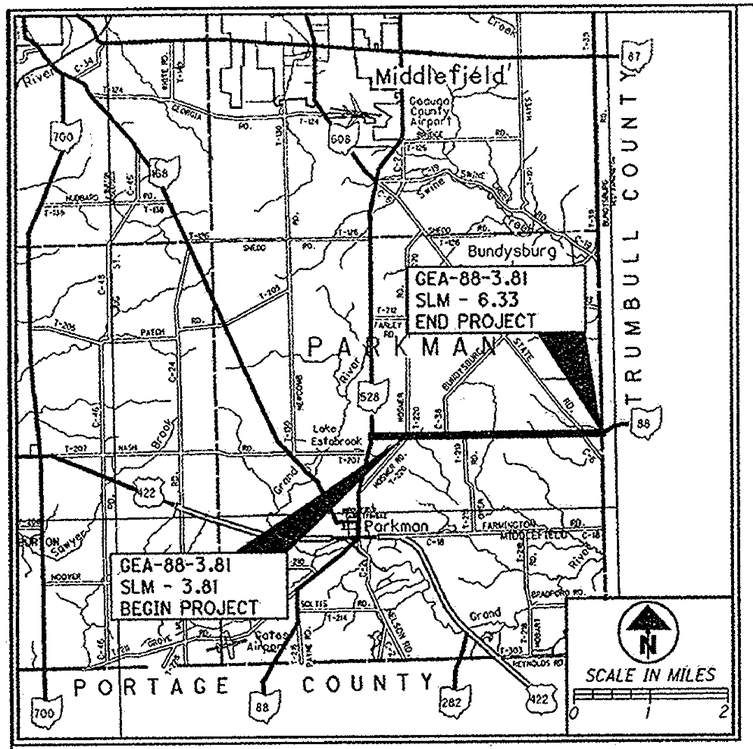


LOCATION MAP

LATITUDE: N 41°23'24"± LONGITUDE: W 81°03'40"±

PORTION TO BE IMPROVED
INTERSTATE & DIVIDED HIGHWAY
UNDIVIDED STATE & FEDERAL ROUTES
OTHER ROADS

| DESIGN DESIGNATION | S.L.M. 03.81 - 06.33 |
|---|---|
| CURRENT ADT (2007) (AVG) | 2130 |
| TRUCKS (24 HOUR B&C) | 9.4% |
| DESIGN SPEED | 55 MPH |
| LEGAL SPEED | 55 MPH |

DESIGN FUNCTIONAL CLASSIFICATION:
RURAL MINOR ARTERIAL

DESIGN EXCEPTIONS
NONE REQUIRED

**UNDERGROUND UTILITIES**
CONTACT BOTH SERVICES
CALL TWO WORKING DAYS
**BEFORE YOU DIG**
CALL
1-800-362-2764
(TOLL FREE)
OHIO UTILITIES PROTECTION SERVICE
NON-MEMBERS
MUST BE CALLED DIRECTLY
OIL & GAS PRODUCERS PROTECTIVE SERVICE CALL: 1-800-925-0988

PLAN PREPARED BY:
**ODOT DISTRICT 12**
**PRODUCTION DEPARTMENT**

# STATE OF OHIO
# DEPARTMENT OF TRANSPORTATION

# GEA-88-3.81

## PARKMAN TOWNSHIP

PROJECT DESCRIPTION

THIS PROJECT CONSISTS OF THE RESURFACING OF 2.52 MILES OF S.R.-88 (NASH RD.) FROM SLM 3.81 AT HOSMER RD. TO SLM 6.33 AT THE TRUMBULL COUNTY LINE IN GEAUGA COUNTY AND THE EXTENSION OF A CULVERT AT SLM 3.83.

| | |
|---|---|
| PROJECT EARTH DISTURBED AREA: | N/A (MAINTENANCE PROJECT) |
| ESTIMATED CONTRACTOR EARTH DISTRUBED AREA: | N/A (MAINTENANCE PROJECT) |
| NOTICE OF INTENT EARTH DISTURBED AREA: | N/A (MAINTENANCE PROJECT) |

INDEX OF SHEETS:


TITLE SHEET . . . . . 1
SCHEMATIC PLAN . . . . . 2 - 5
TYPICAL SECTION / PAVEMENT DETAILS. . . 6
PAVEMENT SUB-SUMMARY . . . . . 7
GENERAL NOTES . . . . . 8 - 15
GUARDRAIL DETAIL SHEETS . . . . . 16 - 21
CULVERT EXTENSION DETAILS . . . . . 22 - 27
GENERAL SUMMARY . . . . . 28


2008 SPECIFICATIONS

THE STANDARD SPECIFICATIONS OF THE STATE OF OHIO, DEPARTMENT OF TRANSPORTATION, INCLUDING CHANGES AND SUPPLEMENTAL SPECIFICATIONS LISTED IN THE PROPOSAL SHALL GOVERN THIS IMPROVEMENT.

I HEREBY APPROVE THESE PLANS AND DECLARE THAT THE MAKING OF THIS IMPROVEMENT WILL NOT REQUIRE THE CLOSING TO TRAFFIC OF THE HIGHWAY AND THAT PROVISIONS FOR THE MAINTENANCE AND SAFETY WILL BE AS SET FORTH ON PLANS AND ESTIMATES.

ENGINEERS SEAL:

STATE OF OHIO
LOUIS D. HAZAPIS
E-53285
REGISTERED
PROFESSIONAL ENGINEER

SIGNED: Louis D. Hazapis
Louis D. Hazapis
DATE: 10/15/09

STANDARD CONSTRUCTION DRAWINGS

| | | | | | | | | | |
|---|---|---|---|---|---|---|---|---|---|
| BP-3.1 | 10-19-07 | GR-1.1 | 07-16-04 | MT-35.10 | 04-20-01 | TC-65.10 | 01-21-05 | | |
| BP-4.1 | 06-16-04 | GR-2.1 | 01-16-04 | MT-97.10 | 04-17-09 | TC-65.11 | 01-21-05 | | |
| | | GR-2.3 | 04-18-03 | MT-97.11 | 04-17-09 | TC-73.10 | 01-19-01 | | |
| | | GR-2.4 | 04-18-03 | MT-99.20 | 01-16-09 | TC-82.10 | 04-19-02 | | |
| | | GR-4.1 | 04-18-03 | MT-105.10 | 01-16-09 | | | | |
| | | GR-4.2 | 01-19-07 | | | | | | |
| | | GR-5.1 | 04-18-03 | | | | | | |
| | | GR-5.2 | 01-16-04 | | | | | | |
| DM-1.1 | 04-21-06 | GR-5.3 | 01-16-04 | | | | | | |
| DM-1.4 | 04-21-06 | GR-6.1 | 04-18-03 | | | | | | |

SUPPLEMENTAL SPECIFICATIONS

| | |
|---|---|
| 800 | 10-16-09 |
| 832 | 05-05-09 |

SPECIAL PROVISIONS

APPROVED: Bryan J. Jones
DATE: 10/13/09 DISTRICT DEPUTY DIRECTOR

APPROVED: Jolene M. Molitoris
DATE: 10-28-09 DIRECTOR, DEPARTMENT OF TRANSPORTATION

FEDERAL PROJECT NO. NON-FEDERAL
PID NO. 81267
CONSTRUCTION PROJECT NO.
RAILROAD INVOLVEMENT NONE
GEA-88-3.81
1/28

GEA - SR-88.3.81
100021 PID - 81267
Dist 12 1/14/2010

I:\PROJECTS\PID81267\DGN\81267GT001.dgn 13-OCT-2

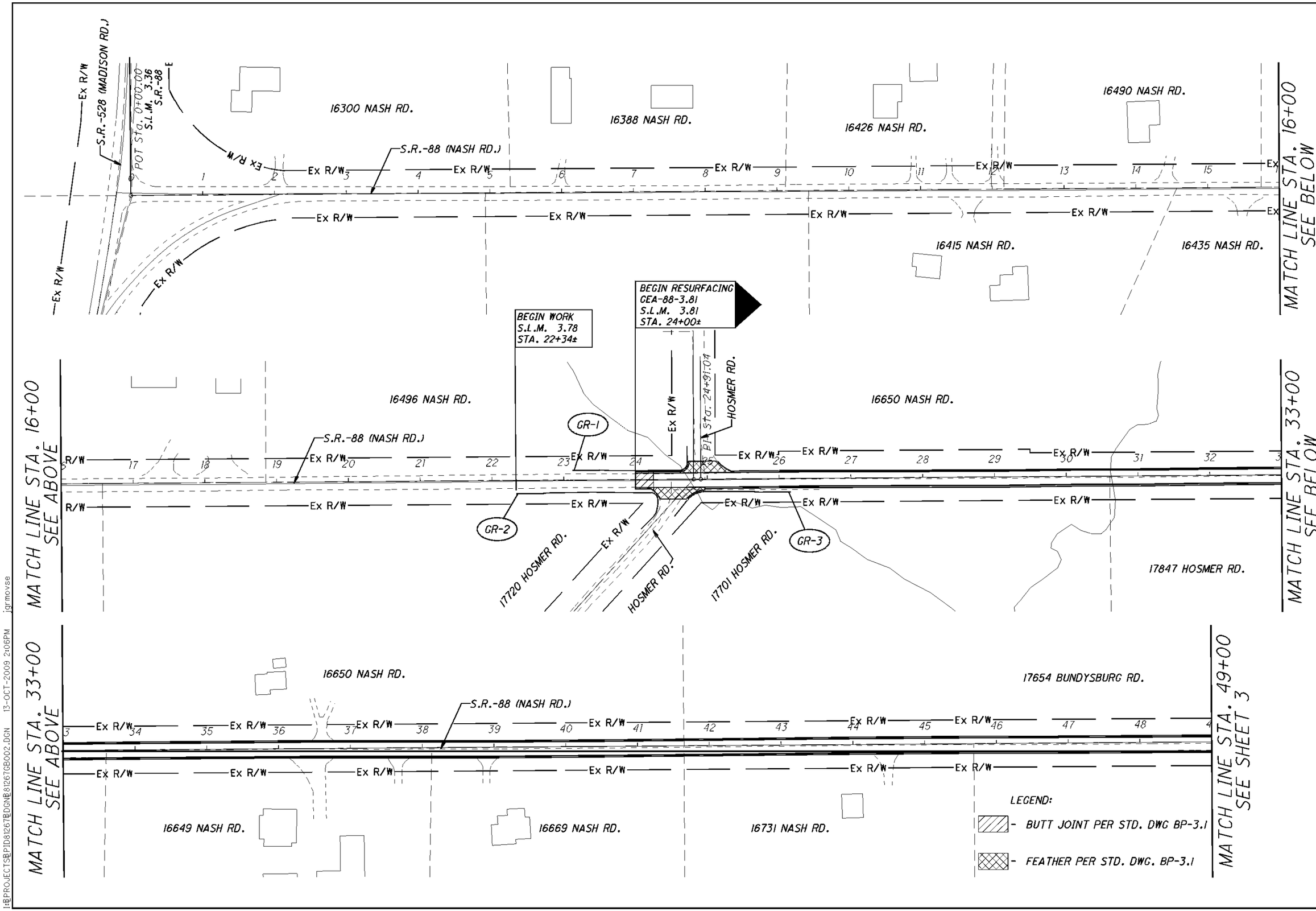


**SCHEMATIC PLAN**
**S.R.-88 (NASH RD.)**

**GEA-88-3.81**



H:\PROJECTS\BP\D8126T\DGN\D8126TGB002.DGN 13-OCT-2009 2:06PM jgrmovse

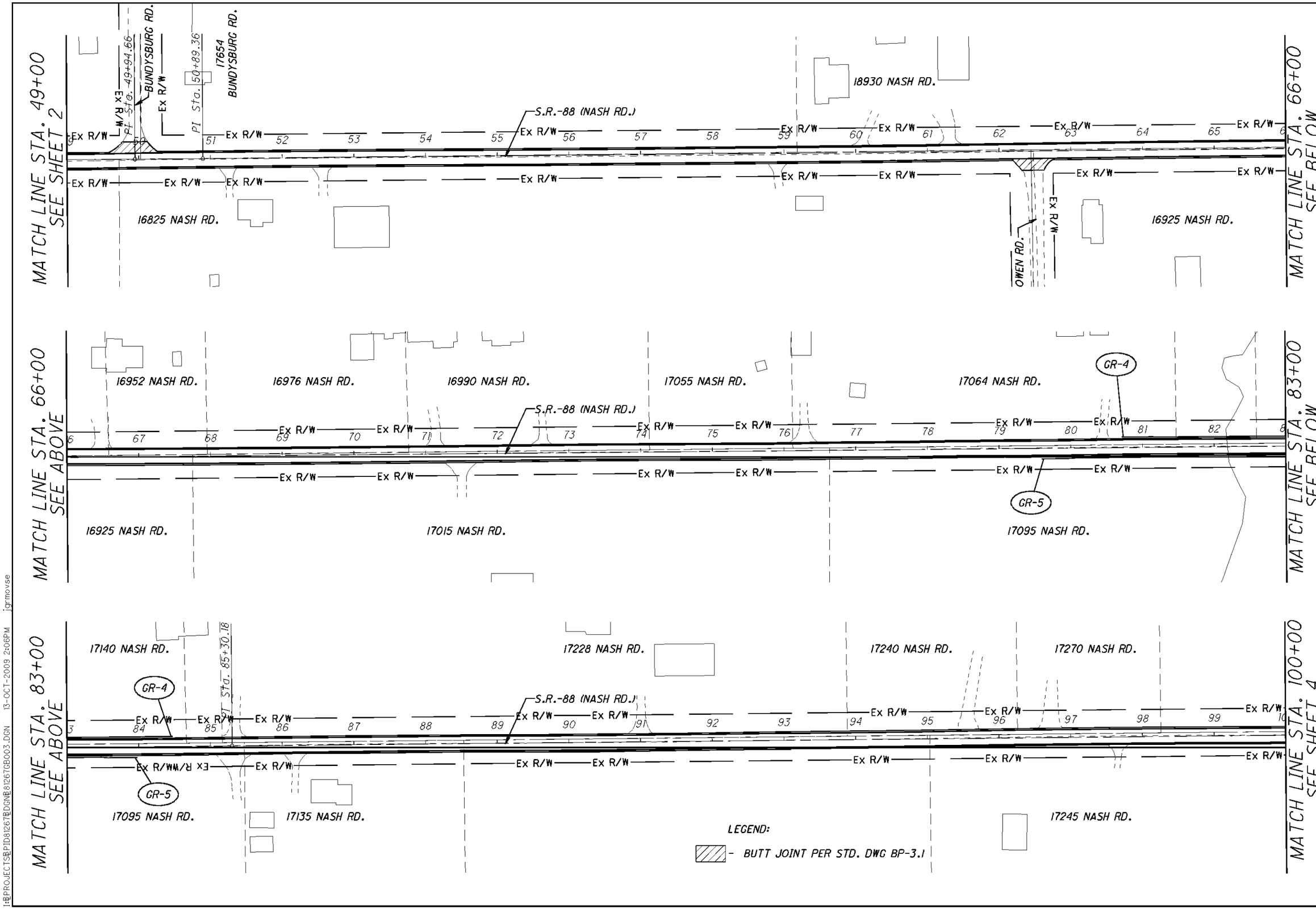


# SCHEMATIC PLAN
## S.R.-88 (NASH RD.)

GEA-88-3.81



I:\PROJECTS\PID81267\DGN\81267GB003.DGN 13-OCT-2009 2:06PM jgrmovse

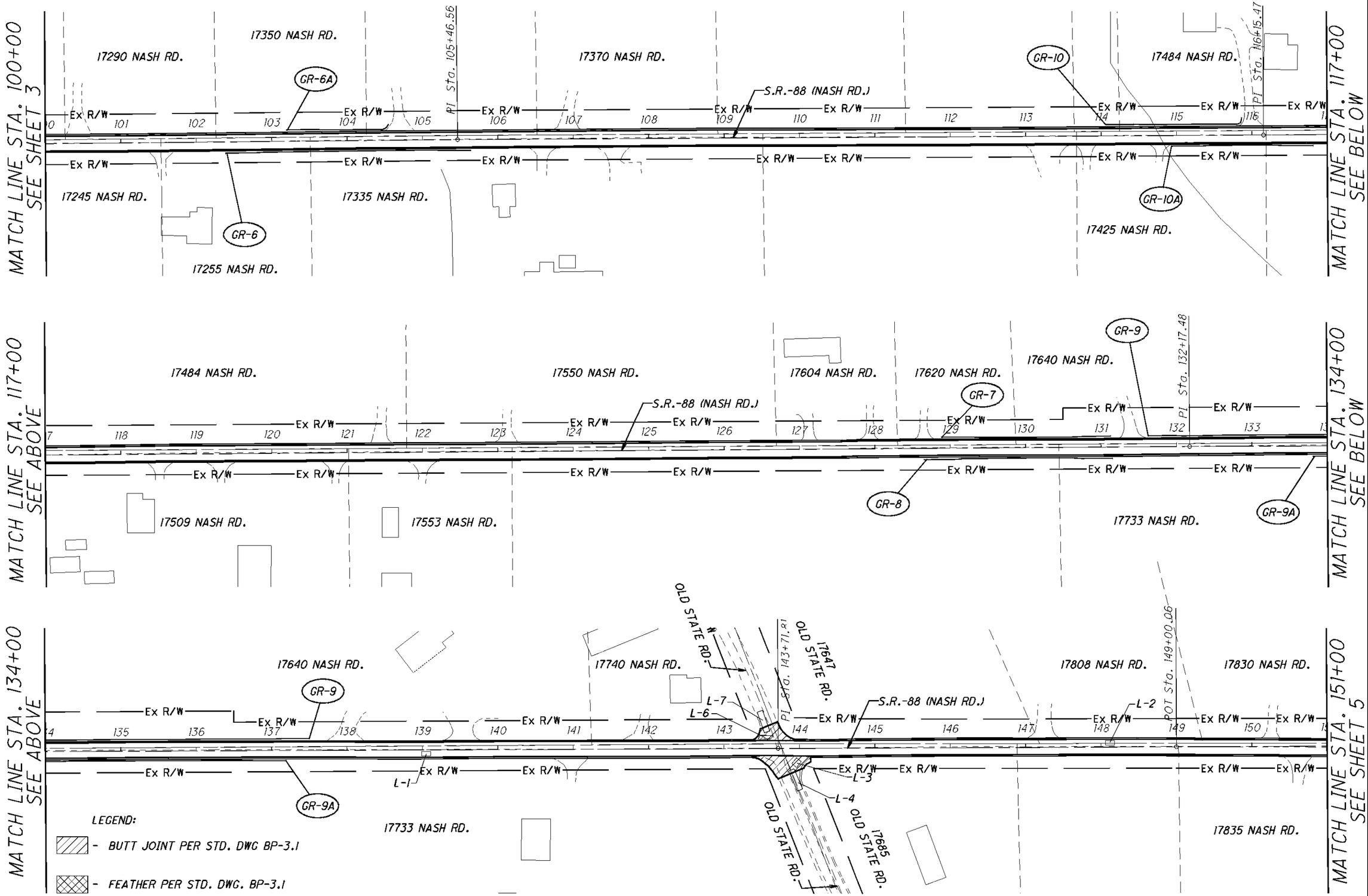


**SCHEMATIC PLAN**
**S.R.-88 (NASH RD.)**

**GEA-88-3.81**



I:\PROJECTS\PID81267\DGN\81267GB004.DGN 13-OCT-2009 2:06PM jgrmovse

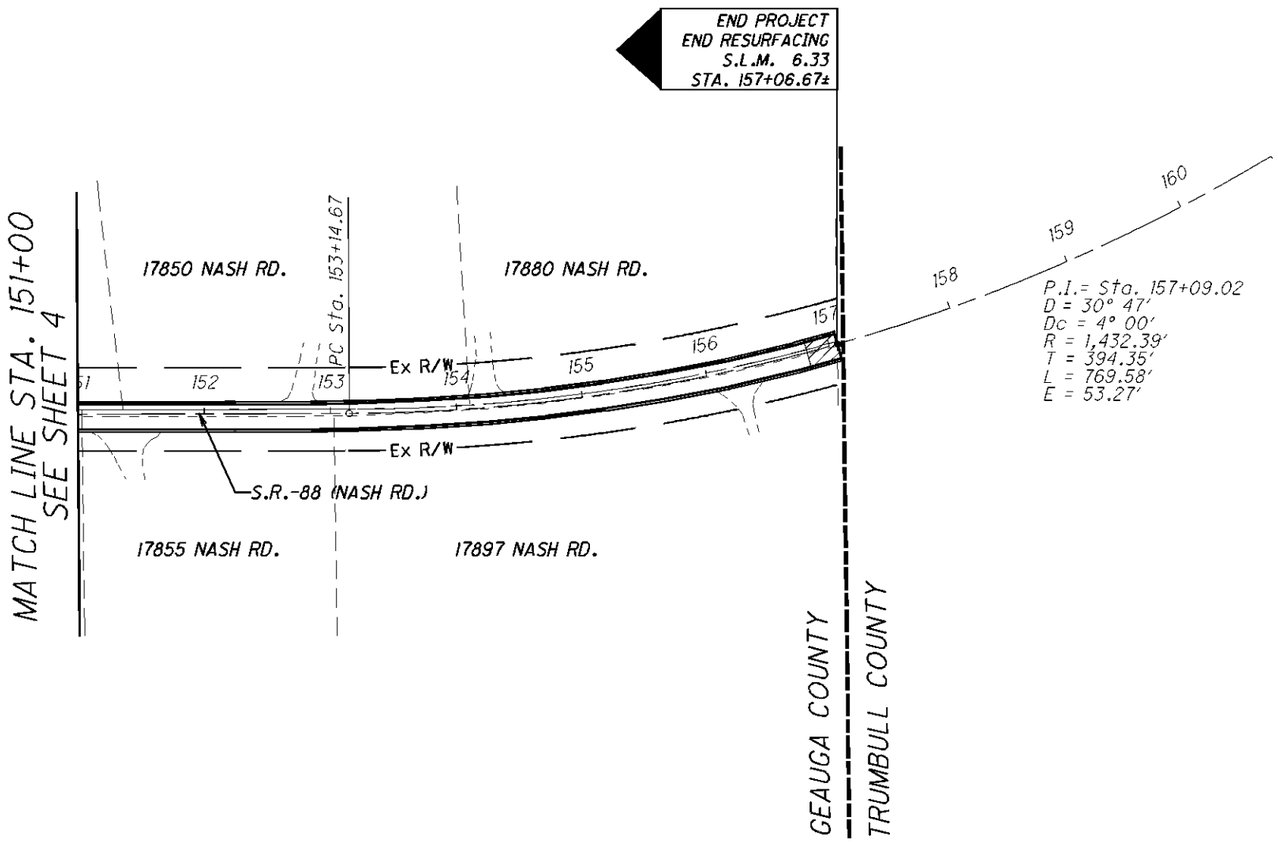


LEGEND:

- BUTT JOINT PER STD. DWG BP-3.1
- FEATHER PER STD. DWG. BP-3.1

SCALE 0 30 60 120

CALCULATED

CHECKED

**SCHEMATIC PLAN**
**S.R.-88 (NASH RD.)**

**GEA-88-3.81**



I:\PROJECTS\PID81267\DGN\81267GB004.DGN 13-OCT-2009 2:06PM jgrmovse

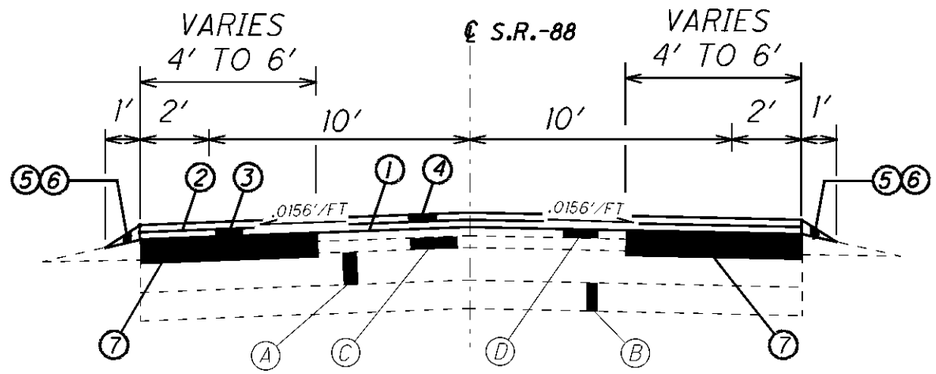


FOR SLM 3.81 - SLM 6.33, L1=10' AND L2=10'

## TYPICAL 1

EXISTING LEGEND:

- (A) ASPHALT CONCRETE (VARIES 2 1/2"-4")
- (B) BITUMINOUS AGREGATE (4"±)
- (C) ITEM 403-ASPHALT CONCRETE, AC-20
- (D) ITEM SPECIAL-ASPHALT CONCRETE W/SBR LATEX, SURFACE COURSE, TYPE 1, AC-10

PROPOSED LEGEND:

1. TACK COAT (0.10 GAL/SQ.YD.)
2. TACK COAT, INTERMEDIATE COURSE (0.07 GAL/SQ.YD.)
3. ¾" ASPHALT CONCRETE, INTERMEDIATE COURSE, TYPE 1, PG64-22 ( VAR. )
4. 1.5" ASPHALT CONCRETE SURFACE COURSE, TYPE 1, PG70-22M, AS PER PLAN
5. COMPACTED AGGREGATE, TYPE A
6. LINEAR GRADING, METHOD A, AS PER PLAN
7. PAVEMENT REPAIR, AS PER PLAN "A"

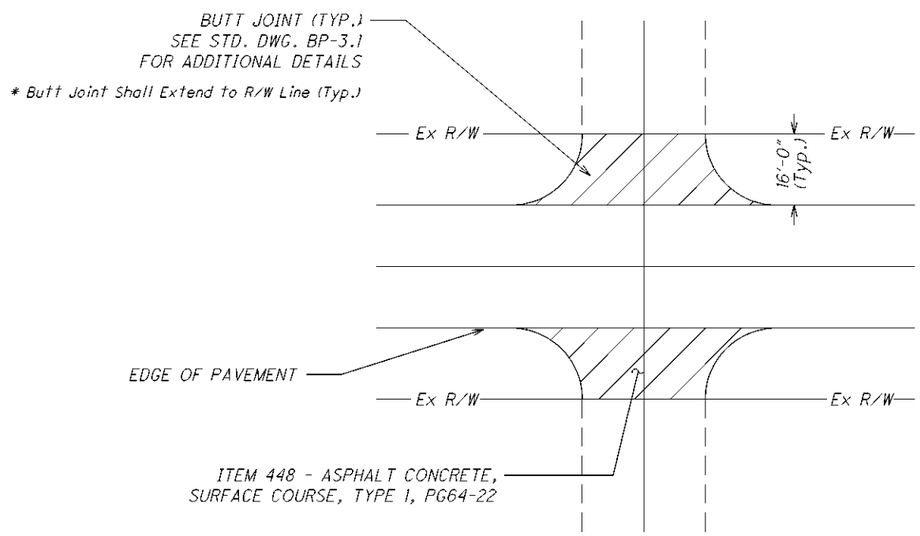


TYPICAL ASPHALT INTERSECTION DETAIL

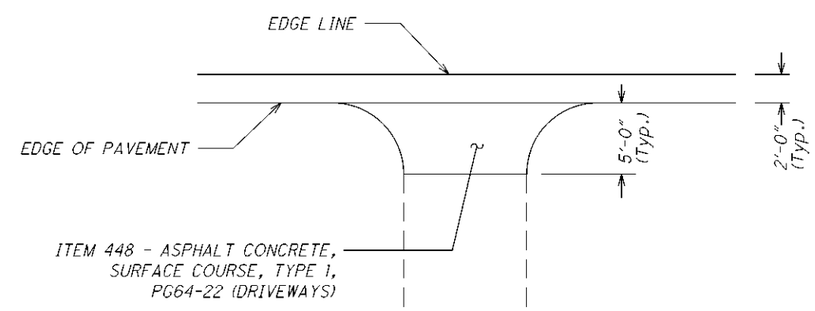


DRIVEWAY APRON DETAIL

CALCULATED
CHECKED

TYPICAL SECTIONS / PAVEMENT DETAILS

GEA-88-3.81



I:\PROJECTS\PID81267\DGN\81267GY001.dgn 13-OCT-2009 2:06PM jgrmovse

| | ROUTE | LOG POINT TO LOG POINT | | LENGTH MILE | LENGTH LIN. FT. | AVERAGE WIDTH W (SIDE) | TYPICAL | EXISTING | SURFACE AREA | PAVEMENT PLANING, ASPHALT CONCRETE, ( 1-1/2") | TACK COAT RATE = 0.10 GAL / SQ. YD. | TACK COAT FOR INTERMEDIATE COURSE RATE = .07 GAL / SQ. YD. | 3/4" ASPHALT CONCRETE INTERMEDIATE COURSE, TYPE 1, PG-64-22 ( VAR. ) | 1.5" ASPHALT CONCRETE SURFACE COURSE TYPE 1, PG 70-22M, AS PER PLAN | | COMPACTED AGGREGATE, AS PER PLAN (1' WIDTH, PER SIDE) | LINEAR GRADING, AS PER PLAN "A" (1' WIDTH, PER SIDE) | ASPHALT CONCRETE SURFACE COURSE, TYPE 1, PG64-22 | ASPHALT CONCRETE SURFACE COURSE, TYPE 1, PG64-22 (DRIVEWAYS) |
|---|---|---|---|---|---|---|---|---|---|---|---|---|---|---|---|---|---|---|---|
| | | | | | | | | | LEGEND | 254 | 407 | | 448 | 446 | | 617 | 209 | 448 | 448 |
| | | | | | | | | | | | 1 | 2 | 3 | 5 | | 5 | 6 | | |
| | | | | | | | | | SQ. YD. | SQ. YD. | GALLON | GALLON | CU .YD. | CU .YD. | | CU .YD. | STATION | CU .YD. | CU .YD. |
| | PAVEMENT DATA | | | | | | | | | | | | | | | | | | |
| | SR-88 | 3.81 | 6.33 | 2.52 | 13307 | 20 | 1 | 404 | 29571 | 222 | 2957 | 2070 | 615 | 1233 | | | | | |
| | | (STA. 24+00) | (STA. 157+07) | | | | | | | | | | | | | | | | |
| PAVED SHOULDERS (BOTH SIDES) | | | | | | SHLDR | | | | | | | | | | | | | |
| | | | | | | WIDTH | | | | | | | | | | | | | |
| | | | | | | PER SIDE | | | | | | | | | | | | | |
| | SR-88 (LT & RT) | 3.81 | 6.33 | 2.52 | 26614 | 2 | | | | | | | | | | | | | |
| | | (STA. 24+00) | (STA. 157+07) | | | | | | | | | | | | | | | | |
| | (DEDUCT FOR INTERSECTIONS) | | | | -381 | | | | | | | | | | | | | | |
| | | | | TOTAL: | 26233 | 2 | 1 | 404 | 5830 | 44 | 583 | 408 | 121 | 243 | | | | | |
| COMPACTED AGGREGATE BERM (BOTH SIDES) | | | | | | SHLDR | | | | | | | | | | | | | |
| | | | | | | WIDTH | | | | | | | | | | | | | |
| | | | | | | PER SIDE | | | | | | | | | | | | | |
| | SR-88 (LT & RT) | 3.81 | 6.33 | 2.52 | 26614 | 1 | | | | | | | | | | | | | |
| | | (STA. 24+00) | (STA. 157+07) | | | | | | | | | | | | | | | | |
| | (DEDUCT FOR INTERSECTIONS) | | | | -381 | | | | | | | | | | | | | | |
| | (DEDUCT FOR DRIVES) | | | | -1932 | | | | | | | | | | | | | | |
| | (DEDUCT FOR GUARDRAIL RUNS W/AC UNDER GR) | | | | -3128 | | | | | | | | | | | | | | |
| | | | | TOTAL: | 21173 | 1 | 1 | | 2353 | | | | | | | 147 | 212 | | |
| INTERSECTIONS (BOTH SIDES) | | | | | | | | | | | | | | | | | | | |
| | SR-88 | HOSMER RD. (NORTH SIDE) | | | | | | | 86 | 86 | 9 | | | | | | | 5 | |
| | SR-88 | HOSMER RD. (SOUTH SIDE) | | | | | | | 84 | 84 | 8 | | | | | | | 5 | |
| | SR-88 | BUNDYSBURG RD. (NORTH SIDE) | | | | | | | 96 | 96 | 10 | | | | | | | 5 | |
| | SR-88 | OWEN RD. (SOUTH SIDE) | | | | | | | 82 | 82 | 8 | | | | | | | 5 | |
| | SR-88 | OLD STATE RD. (NORTH SIDE) | | | | | | | 86 | 86 | 9 | | | | | | | 5 | |
| | SR-88 | OLD STATE RD. (SOUTH SIDE) | | | | | | | 152 | 152 | 15 | | | | | | | 8 | |
| DRIVES (BOTH SIDES) | | | | | | | | | | | | | | | | | | | |
| | SR-88 (LT & RT) | 3.81 | 6.33 | 2.52 | | | | | 1027 | | 103 | | | | | | | | 64 |
| TOTALS THIS SHEET: | | | | | | | | | | 852 | 3702 | 2478 | 736 | 1476 | | 147 | 212 | 33 | 64 |

CALCULATED

CHECKED

PAVEMENT QUANTITY SHEET

GEA-88-3.81



I:\PROJECTS\PID81267\DGN\81267GS001.dgn 13-OCT-2009 2:06PM jgrmovse

# GENERAL

**PROJECT DESCRIPTION**

THIS PROJECT ON SR-88 (NASH RD.) FROM SLM 3.81 TO SLM 6.33 (TRUMBULL COUNTY LINE) IN PARKMAN TOWNSHIP, GEAUGA COUNTY INVOLVES PLACING A 1-1/2" ASPHALT CONCRETE SURFACE COURSE, TYPE 1, PG70-22M, AS PER PLAN ON A 3/4" ASPHALT CONCRETE INTERMEDIATE COURSE, TYPE 1, PG64-22 (VARIABLE).

THE ALIGNMENT OF THE EXISTING PAVEMENT WILL NOT BE CHANGED. THE PROFILE OF THE PROPOSED SURFACE WILL BE SIMILAR TO THAT OF THE EXISTING PAVEMENT.

**RIGHT OF WAY**

ALL WORK IS TO BE PERFORMED WITHIN THE EXISTING RIGHT OF WAY OR EASEMENTS.

**EXISTING TYPICAL SECTIONS**

EXISTING TYPICAL SECTIONS HAVE BEEN TAKEN FROM THE RECORDS AND ARE BELIEVED TO REPRESENT THE EXISTING PAVEMENT, BUT THE STATE DOES NOT GUARANTEE THE ACCURACY OF THE SECTION.

FOR FURTHER INFORMATION IN REGARD TO THE EXISTING TYPICAL SECTIONS, THE CONTRACTOR SHALL REFER TO THE PREVIOUS CONSTRUCTION PLANS.

THESE PLANS MAY BE REVIEWED AT:
OHIO DEPARTMENT OF TRANSPORTATION
DISTRICT 12 OFFICE
5500 TRANSPORTATION BOULEVARD
GARFIELD HEIGHTS, OHIO 44125

**PLAN SHEET STATIONING**

THE ROADWAY WAS NOT SURVEYED PRIOR TO THE PREPARATION OF THESE PLANS. PREVIOUS CONSTRUCTION PLAN STATIONING WAS USED TO PREPARE PLAN SHEETS AND CALCULATE ESTIMATED PAVEMENT AREA QUANTITIES AND PAVEMENT MARKING QUANTITIES.

**CONTINGENCY QUANTITIES**

THE CONTRACTOR SHALL NOT ORDER MATERIALS OR PERFORM WORK FOR ITEMS DESIGNATED BY PLAN NOTE TO BE USED "AS DIRECTED BY THE ENGINEER" UNLESS AUTHORIZED BY THE ENGINEER. THE ACTUAL WORK LOCATIONS AND QUANTITIES USED FOR SUCH ITEMS SHALL BE INCORPORATED INTO THE FINAL CHANGE ORDER GOVERNING

**WORK LIMITS**

THE WORK LIMITS SHOWN ON THESE PLANS ARE FOR PHYSICAL CONSTRUCTION ONLY. THE INSTALLATION AND OPERATION OF ALL TEMPORARY TRAFFIC CONTROL AND TEMPORARY TRAFFIC CONTROL DEVICES REQUIRED BY THESE PLANS SHALL BE PROVIDED BY THE CONTRACTOR WHETHER INSIDE OR OUTSIDE THESE WORK LIMITS.

**CONSTRUCTION NOISE**

ACTIVITIES AND LAND USE ADJACENT TO THIS PROJECT MAY BE AFFECTED BY CONSTRUCTION NOISE. IN ORDER TO MINIMIZE ANY ADVERSE CONSTRUCTION NOISE IMPACTS, DO NOT OPERATE POWER-OPERATED CONSTRUCTION-TYPE DEVICES BETWEEN THE HOURS OF 9:00pm AND 7:00am. IN ADDITION, DO NOT OPERATE AT ANY TIME ANY DEVICE IN SUCH A MANNER THAT THE NOISE CREATED SUBSTANTIALLY EXCEEDS THE NOISE CUSTOMARILY AND NECESSARILY ATTENDANT TO THE REASONABLE AND EFFICIENT PERFORMANCE OF SUCH EQUIPMENT.

**EQUIPMENT OPERATION AND MATERIAL STORAGE**

IN ORDER TO PROVIDE FOR THE SAFETY OF THE TRAVELING PUBLIC, THE CONTRACTOR'S ATTENTION IS DIRECTED TO 614.03. IN ADDITION, THE FOLLOWING PROVISIONS SHALL APPLY:

1) ANY REMOVED ITEMS SHALL NOT BE STORED ON THE RIGHT OF-WAY FOR MORE THAN THIRTY DAYS.

2) THE STORAGE OF EQUIPMENT, MATERIALS, AND VEHICLES WITHIN THE HIGHWAY RIGHT-OF-WAY WILL BE PERMITTED. THE NUMBER OF AREAS AND EXACT LOCATIONS SHALL BE APPROVED BY THE ENGINEER.

3) ALL DISTURBED AREAS SHALL BE RETURNED TO THEIR ORIGINAL CONDITION AT NO EXPENSE TO THE STATE.

4) ALL WORK VEHICLES AND EQUIPMENT THAT ENTERS THE WORK ZONE MORE THAN ONCE A DAY MUST BE EQUIPPED WITH AT LEAST ONE FLASHING, ROTATING, OR OSCILLATING AMBER LIGHT THAT IS VISIBLE IN ALL DIRECTIONS OF TRAFFIC FOR AT LEAST ONE QUARTER OF A MILE, DAY OR NIGHT.

5) VEHICLES AND EQUIPMENT SHALL ALWAYS MOVE WITH, AND NOT ACROSS OR AGAINST THE FLOW OF TRAFFIC. VEHICLES AND OTHER EQUIPMENT SHALL NOT PARK OR STOP EXCEPT WITHIN DESIGNATED WORK AREAS, AND SHALL NOT ENTER AND LEAVE WORK AREAS IN A MANNER WHICH WILL BE HAZARDOUS TO, OR INTERFERE WITH THE NORMAL TRAFFIC FLOW. PERSONAL VEHICLES WILL NOT BE PERMITTED TO PARK WITHIN THE RIGHT-OF-WAY EXCEPT IN SPECIFIC AREAS DESIGNATED BY THE ENGINEER.

6) EQUIPMENT, VEHICLES AND MATERIALS SHALL NOT BE STORED OR PARKED WITHIN 30 FEET OF THE TRAVELED WAY UNLESS 6 FEET BEHIND PCB OR GUARDRAIL.

7) ALL CONSTRUCTION TRAFFIC SHALL USE ACCEPTABLE TRUCK ROUTES TO ACCESS THE CONSTRUCTION AREA. USE OF LOCAL RESIDENTAL STREETS IS STRICTLY PROHIBITED UNLESS ALLOWED IN WRITING BY THE LOCAL ENFORCEMENT AUTHORITY.

**STAGING AREAS**

THERE ARE NO SPECIFIC AREAS GIVEN IN THE PLANS FOR THE CONTRACTOR TO USE AS A STAGING AREA(S). IF THE CONTRACTOR WANTS TO USE AN AREA(S) FOR STAGING, REGARDLESS IF IT FALLS WITHIN THE PROJECT LIMITS OR NOT, THE CONTRACTOR IS TO CONTACT JILL POWERS AT 216-584-2195 AT DISTRICT 12 IN ORDER TO APPLY FOR A PERMIT PER SECTION 107.02 OF THE CMS.

IF A PERMIT IS GRANTED, ALL CONDITIONS OF THE PERMIT SHALL BE MET IN ADDITION TO THE REQUIREMENTS OF 104.04 OF THE CMS, AT NO ADDITIONAL COST TO THE STATE. IF THE PROJECT ENGINEER DEEMS THAT ALL THE CONDITIONS OF THE PERMIT WERE NOT MET, THEN 10% OF THE CONTRACT BID AMOUNT FOR MOBILIZATION SHALL BE WITHHELD UNTIL ALL THE CONDITIONS OF THE PERMIT ARE SATISFIED.

**UTILITIES**

THERE ARE NO UNDERGROUND UTILTIIES SHOWN ON THIS PLAN.

THE FOLLOWING UTILITIES AND OWNERS ARE LOCATED WITHIN THE WORK LIMITS OF THIS PROJECT. THE OHIO DEPARTMENT OF TRANSPORTATION HAS USED THE BEST AVAILABLE INFORMATION TO DETERMINE THE UTILITY COMPANIES SERVING THIS AREA, BUT CANNOT GUARANTEE THE UTILITY COMPANY LIST IS COMPLETE.

BRAINARD GAS CORP.
4369 BRAINARD ROAD
ORANGE VILLAGE, OH 44022
ATTN: ED BONK
PHONE: (216) 591-9110

O.D.O.T. DISTRICT 12
TRAFFIC DEPARTMENT
5500 TRANSPORTATION BLVD.
GARFIELD HEIGHTS, OH 44125
ATTN: TRAVIS BONNETT, P.E.
PHONE: (216) 584-2220
FAX: (216) 584-2278

OHIO EDISON
730 SOUTH AVE.
YOUNGSTOWN, OHIO 44646
ATTN: WILLIAM SPEECE
PHONE: (330) 740-7635
FAX: (330) 740-7518

SUDDENLINK
23 W. BROAD
YOUNGSTOWN, OHIO 44515
PHONE:

WINDSTREAM WESTERN RESERVE INC.
245 NORTH MAIN ST.
HUDSON, OHIO 44236
PHONE: (330) 650-8000

**ITEM 619 - FIELD OFFICE, TYPE B**

A TYPE B FIELD OFFICE IS REQUIRED FOR THIS PROJECT.

THE FOLLOWING ESTIMATED QUANTITY HAS BEEN CARRIED TO THE GENERAL SUMMARY:

ITEM 619 - FIELD OFFICE, TYPE B . . . . . **5 MONTH**

**COOPERATION AMONG CONTRACTORS**

THE CONTRACTOR SHALL COOPERATE AND COORDINATE HIS/HER OPERATIONS WITH THE CONTRACTORS ON OTHER PROJECTS THAT MAY BE IN FORCE DURING THE LIFE OF THE CONTRACT. NO WAIVER OF ANY PROVISIONS OF 105.08 OF THE CONSTRUCTION AND MATERIAL SPECIFICATIONS IS INTENDED.





I:\PROJECTS\PID81267\DGN\81267GN001.dgn 13-OCT-2009 2:07PM jgrmovse

# ROADWAY

**ITEM 606 - ANCHOR ASSEMBLY, TYPE E-98**

THIS ITEM SHALL CONSIST OF FURNISHING AND INSTALLING EITHER OF THE FOLLOWING GUARDRAIL END TERMINALS, OR AN APPROVED EQUAL AS LISTED ON ROADWAY ENGINEERING'S WEB PAGE AT WWW.DOT.STATE.OH.US/DRRC/ UNDER ROADSIDE SAFETY DEVICES FOR APPROVED GUARDRAIL END TREATMENTS:

1) THE ET-2000 (1997) MANUFACTURED BY TRINITY INDUSTRY, 1170 N. STATE STREET, GIRARD, OHIO 44420 (TELEPHONE: 330-545-4373).

THE LENGTH OF THE ET-2000 (1997) SYSTEM IS CONSIDERED TO BE 50'-0" [15.24 M] INCLUSIVE OF TWO 25'-0" [7.62 M] LONG RAIL ELEMENTS. INSTALLATION SHALL BE AT THE LOCATIONS SPECIFIED IN THE PLANS, IN ACCORDANCE WITH THE MANUFACTURER'S SPECIFICATIONS AS DETAILED ON THE FOLLOWING PRE-APPROVED SHOP DRAWINGS:

| DWG. # | DRAWING NAME | DWG./REV. DATE | ODOT APPROVAL DATE |
|---|---|---|---|
| SS373 | ET-PLUS-50'-0" WITH 25' OR 12'-6" PANELS, 7 SYT POSTS & 1 HBA POST PLAN, ELEVATION & SECTIONS | 1/20/09 | 1/23/09 |
| SS330 | ET-PLUS,PLAN, ELEVATION & SECTION,50' LG WITH 25' PANELS, HBA STRUT POST SLEEVES 1-4 WITHOUT SOIL PL | 8/9/01 | 3/28/06 |
| SS142 | ET-2000 PLUS 50'-0" PLAN, ELEVATION, & SECTION 25'-0" RAIL, SLEEVE W/PL POSTS 1-4 | 4/12/00 | 7/31/00 |
| SS141 | ET-2000 PLUS PLAN, ELEVATION, & SECTION 25'-0" RAIL, HBA POSTS 1-4 | 2/29/00 | 7/31/00 |
| SS158 | ET-2000 PLUS 50'-0" WITH 12'-6" PANELS & HBA POSTS 1-4 PLAN, ELEVATION, & SECTION | 5/22/00 | 7/31/00 |

2) THE SKT-350 MANUFACTURED BY ROAD SYSTEMS, INC., 2516 MALLORY LANE, STOW, OHIO 44224 (TELEPHONE: 330-346-0721)

THE LENGTH OF THE SKT-350 SYSTEM IS CONSIDERED TO BE 50'-0" [15.24 M] INCLUSIVE OF FOUR 12'-6" [7.62 M] LONG RAIL ELEMENTS. INSTALLATION SHALL BE AT THE LOCATIONS SPECIFIED IN THE PLANS, IN ACCORDANCE WITH THE MANUFACTURER'S SPECIFICATIONS AS DETAILED ON THE FOLLOWING PRE-APPROVED SHOP DRAWINGS:

| DWG. # | DRAWING NAME | DWG./REV. DATE | ODOT APPROVAL DATE |
|---|---|---|---|
| SKT-4M | SEQUENTIAL KINKING TERMINAL (SKT-350) ASSEMBLY WITH 4 FOUNDATION TUBES | 12/11/97 | 3/6/98 |
| SKT HINGE CRT | SEQUENTIAL KINKING TERMINAL SKT ASSEMBLY, HINGE CRT SYSTEM | 4/30/06 | 5/23/06 |
| SKT-SP-S-375 | SKT TERMINAL, 27-3/4" TOP OF RAIL, SINGLE ANCHOR, 7 POST SYSTEM | 3/04/09 | 3/30/09 |

THE FACE OF THE TYPE E-98 IMPACT HEAD SHALL BE COVERED WITH A SHEET OF TYPE G REFLECTIVE SHEETING, PER CMS 730.19, APPROXIMATELY 18" X 18" [450 MM X 450 MM], OR 12" [300 MM] X 18" [450 MM] IF APPLIED TO A RECTANGULAR ET-2000 "PLUS" EXTRUDER HEAD.

REFER TO THE MANUFACTURER'S INSTRUCTION REGARDING THE INSTALLATION OF, AND THE GRADING AROUND, THE FOUNDATION TUBES AND GROUND STRUT. THE TOP OF ANY FOUNDATION TUBES SHOULD BE AN APPROPRIATE DEPTH BELOW THE LEVEL LINE IN ORDER TO MAINTAIN THE FINISHED GUARDRAIL HEIGHT OF 27-3/4-INCHES [706 MM] FROM THE EDGE OF THE SHOULDER.

ON-SITE GRADING IS REQUIRED IF THE TOP OF THE FOUNDATION TUBES OR TOP OF THE GROUND STRUT DOES PROJECT MORE THAN 4-INCHES [100 MM] ABOVE THE GROUND LINE.

PAYMENT FOR THE ABOVE WORK SHALL BE MADE AT THE UNIT PRICE BID FOR ITEM 606, ANCHOR ASSEMBLY, TYPE E-98, EACH, AND SHALL INCLUDE ALL LABOR, TOOLS, EQUIPMENT AND MATERIALS NECESSARY TO CONSTRUCT A COMPLETE AND FUNCTIONAL ANCHOR ASSEMBLY SYSTEM, INCLUDING ALL RELATED TRANSITIONS, REFLECTIVE SHEETING, HARDWARE, GRADING, EMBANKMENT, AND EXCAVATION NOT SEPARATELY SPECIFIED, AS REQUIRED BY THE MANUFACTURER.

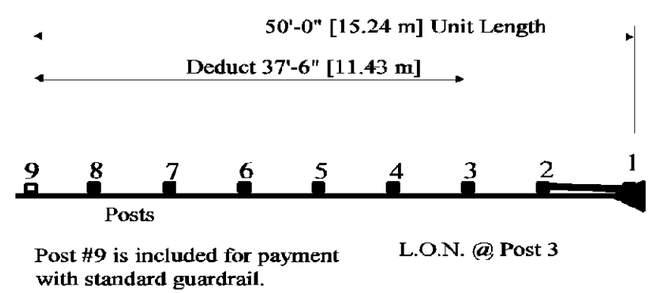


**ITEM 202 - GUARDRAIL REMOVED**

THIS ITEM SHALL INCLUDE BOTH STANDARD AND BARRIER TYPE RAILS AND THRIE BEAM RAILS INCLUDING ALL ANCHOR ASSEMBLIES AND TERMINAL ASSEMBLIES.

THE ITEM 202 - ANCHOR ASSEMBLY REMOVED, TYPE A HAS BEEN INCLUDED IN THE PLANS TO COMPENSATE THE CONTRACTOR FOR THE REMOVAL AND AREA RESTORATION OF THE ENTIRE FOUNDATION REMOVAL OF THE ANCHOR ASSEMBLY.

**ITEM 202 - ANCHOR ASSEMBLY REMOVED, TYPE A**

THIS ITEM SHALL INCLUDE THE REMOVAL OF THE EXISTING TYPE A, ANCHOR ASSEMBLY INCLUDING ALL POSTS, HARDWARE, RAIL ELEMENTS, AND CONCRETE ANCHORS. ALL ITEMS REMOVED SHALL BECOME THE PROPERTY OF THE CONTRACTOR AND SHALL BE PROPERLY DISPOSED OF.

THE EXISTING CONCRETE ANCHOR AND CONCRETE AT POSTS SHALL BE REMOVED ENTIRELY. ALL HOLES REMAINING AFTER REMOVAL SHALL BE FILLED WITH GRANULAR MATERIAL OR EXCESS MATERIAL RESULTING FROM GUARDRAIL CONSTRUCTION. ALL FILL MATERIAL SHALL BE THOROUGHLY COMPACTED AND LEVELED, AS DIRECTED BY THE ENGINEER.

PAYMENT FOR ALL OF THE ABOVE SHALL BE INCLUDED IN THE UNIT BID PRICE FOR ITEM 202, ANCHOR ASSEMBLY REMOVED, TYPE A.





i:\PROJECTS\PID81267\DGN\81267GN001.dgn 13-OCT-2009 2:07PM jgrmovse

# ROADWAY (CONT'D)

**ITEM 209 - LINEAR GRADING, AS PER PLAN "A"**

THIS ITEM SHALL BE USED TO PREPARE THE SHOULDER PER SECTION 617.04 OF THE CMS PRIOR TO PLACING THE COMPACTED AGGREGATE, TYPE A.

ALL EQUIPMENT, MATERIALS, AND LABOR REQUIRED TO PERFORM THE WORK OUTLINED ABOVE SHALL BE INCLUDED FOR PAYMENT UNDER ITEM 209 - LINEAR GRADING, AS PER PLAN "A".

PAYMENT FOR ALL THE ABOVE SHALL BE INCLUDED IN THE UNIT PRICE BID FOR ITEM 209 - LINEAR GRADING, AS PER PLAN "A"

**209 - LINEAR GRADING, AS PER PLAN "B"**
**ITEM 448 - ASPHALT CONCRETE INTERMEDIATE COURSE, TYPE 1, PG64-22, UNDER GUARDRAIL, AS PER PLAN**

THIS OPERATION SHALL INCLUDE REMOVAL OF THE EXISTING ASPHALT UNDER GUARDAIL, PLACING 1-1/2" OF GRANULAR MATERIAL, AND PREPARATION OF THE GRADED SHOULDER USING ITEM 209, LINEAR GRADING, AS PER PLAN AND PAVING UNDER THE GUARDRAIL USING ITEM 448 ASPHALT CONCRETE INTERMEDIATE COURSE, TYPE 1, PG64-22, UNDER GUARDRAIL, AS PER PLAN "B".

ITEM 209 - LINEAR GRADING, AS PER PLAN "B" SHALL CONSIST OF EXCAVATING TOPSOIL AND/OR EXISTING ASPHALT UNDER GUARDRAIL, PLACING GRANULAR MATERIAL AND APPLYING HERBICIDE AS SPECIFIED IN THE PLANS AND IN ACCORDANCE WITH THE FOLLOWING:

ALL COLLECTED DEBRIS AND TOPSOIL, INCLUDING OLD ASPHALT UNDER GUARDRAIL, RHIZOMES, ROOTS, AND OTHER VEGETATIVE PLANT MATERIAL SHALL BE REMOVED AND DISPOSED OF AS SPECIFIED IN 105.17.

THE REMOVED MATERIAL SHALL BE REPLACED WITH COMPACTABLE GRANULAR MATERIAL CONFORMING TO 703.16 PLACED TO GRADE AS DETAILED ON THE TYPICAL SECTION OR AS APPROVED BY THE ENGINEER.

HERBICIDE SHALL BE EPA APPROVED FOR PAVING UNDER GUARDRAIL. IT SHALL BE APPLIED TO THE PREPARED AREA AFTER FINAL LEVELING AND GRADING HAS BEEN COMPLETED. THE APPLICATION SHALL BE JUST PRIOR TO PAVING AND SHALL STRICTLY ADHERE TO THE MANUFACTURER'S INSTRUCTIONS.

EACH SUCCESSFUL BIDDER MUST BE LICENSED BY THE OHIO DEPARTMENT OF AGRICULTURE AS A COMMERCIAL APPLICATOR AND ALL PERSONS INVOLVED IN THE ACTUAL SPRAYING SHALL BE LICENSED AS COMMERCIAL OPERATORS IN THE APPROPRIATE SPRAY CATEGORY.

HERBICIDE LABEL, MATERIAL SAFETY DATA SHEET AND COPY OF APPLICATORS LICENSES SHALL BE SUBMITTED TO THE ENGINEER FOR VERIFICATION PRIOR TO COMMENCING WORK.

ALL EQUIPMENT, MATERIALS, AND LABOR REQUIRED TO PERFORM THE WORK OUTLINED ABOVE SHALL BE INCLUDED FOR PAYMENT UNDER ITEM 209 - LINEAR GRADING, AS PER PLAN "B".

PAVING UNDER GUARDRAIL SHALL CONSIST OF PLACING ITEM 448 TO THE DEPTH SPECIFIED USING THE FOLLOWING METHODS:

METHOD A:
1) SET GUARDRAIL POSTS
2) PLACE ITEM 448

METHOD B:
1) PLACE ITEM 448
2) BORE ASPHALT AT POST LOCATIONS (MAY BE OMITTED IF STEEL POSTS ARE USED)
3) SET GUARDRAIL POSTS
4) PATCH AROUND POSTS. THE MATERIALS USED FOR PATCHING SHALL BE ASPHALT CONCRETE APPROVED BY THE ENGINEER. PATCHED AREAS SHALL BE COMPACTED USING EITHER HAND OR MECHANICAL METHODS. FINISHED SURFACES SHALL BE SMOOTH AND SLOPED TO DRAIN AWAY FROM THE POSTS.

ALL EQUIPMENT, MATERIALS AND LABOR REQUIRED TO PERFORM THE WORK OUTLINED ABOVE, WITH THE EXCEPTION OF SETTING GUARDRAIL POSTS, SHALL BE INCLUDED FOR PAYMENT UNDER ITEM 448 ASPHALT CONCRETE INTERMEDIATE COURSE, TYPE 1, UNDER GUARDRAIL, PG64-22, AS PER PLAN.

**GUARDRAIL REPLACEMENT AND PUBLIC SAFETY**

THE LOCATION OF GUARDRAIL RUNS ARE SUBJECT TO ADJUSTMENTS TO ASSURE THAT THE PLANNED INSTALLATIONS WILL AFFORD MAXIMUM PROTECTION FOR TRAFFIC. THE INTENT IS TO UPGRADE AND REPLACE GUARDRAIL, GENERALLY AT EXISTING LOCATIONS. STATIONS OF THE PROPOSED END TREATMENTS ARE APPROXIMATE. THE ENGINEER SHALL BE SATISFIED THAT ALL INSTALLATIONS WILL AFFORD MAXIMUM PROTECTION FOR TRAFFIC.

NO HAZARD SHALL BE LEFT UNPROTECTED EXCEPT FOR THE ACTUAL TIME NECESSARY TO REMOVE THE EXISTING GUARDRAIL, PREPARE THE SITE, AND INSTALL NEW GUARDRAIL IN A CONTINUOUS OPERATION. THE REMOVAL OF ALL GUARDRAIL SHALL BE AS DIRECTED BY THE ENGINEER. NO GUARDRAIL SHALL BE REMOVED UNTIL THE REPLACEMENT MATERIAL IS ON THE SITE AND READY FOR INSTALLATION. INSTALLATION OF THE NEW RAIL SHALL BEGIN IMMEDIATELY AFTER THE REMOVAL OPERATION HAS TAKEN PLACE. THE MAXIMUM GAP LENGTH IN ANY RAIL RUN SHALL BE 50 FEET. NO GAPS SHALL BE LEFT OPEN AT THE END OF THE WORK PERIOD. BARRELS MAY NOT BE SUBSTITUTED FOR GUARDRAIL. FAILURE TO COMPLY WITH THESE REQUIREMENTS SHALL BE DEEMED SUFFICIENT CAUSE TO ORDER WORK SUSPENDED ON THIS PROJECT UNTIL SUCH TIME THAT THE ENGINEER IS ASSURED COMPLIANCE.

**ITEM 209 - BORROW**

THE CONTRACTOR SHALL BE RESPONSIBLE FOR THE PLACEMENT OF BORROW MATERIAL (TOPSOIL, CLAY OR ODOT ITEMS 304, 411 OR 617 GRANULAR MATERIAL) TO CORRECT THE GUARDRAIL HEIGHT OR LOW SHOULDER CONDITION, "AS DIRECTED BY THE ENGINEER". THE MATERIAL SHALL BE PLACED AND COMPACTED TO CORRECT THE SHOULDER TO THE SATISFACTION OF THE ENGINEER. THE EMBANKMENT MATERIAL SHALL EXTEND TO THE BACK OF THE GUARDRAIL POSTS AT A SLOPE OF ONE (1) INCH PER FOOT AND THEN MAKE A SMOOTH TRANSITION INTO THE EXISTING EMBANKMENT SLOPES.

EMBANKMENT PLACED IMMEDIATELY IN FRONT OF A RESIDENCE SHALL BE GRADED AND FINISHED AS SET FORTH UNDER ITEM 659.10. THE CONTRACTOR SHALL REMOVE FROM THE LIMITS OF THE PROJECT ALL VISIBLE STONE, BRICK, AND OTHER GARBAGE OR DEBRIS IN ACCORDANCE WITH ITEM 659.10. THE COST OF REMOVAL AND DISPOSAL SHALL BE INCLUDED IN THE UNIT COST OF ITEM 203 - BORROW, AS PER PLAN

**ITEM 202 - PORTIONS OF STRUCTURE REMOVED, AS PER PLAN**

THIS ITEM OF WORK SHALL INCLUDE ALL EQUIPMENT, MATERIALS AND LABOR REQUIRED TO PERFORM THE WORK AS DESCRIBED BELOW FOR THE ( 3 ) EXISTING HEADWALL STRUCTURES LOCATED AT THE BELOW LOCATIONS ON S.R.-88 (NASH RD.):

STA. 88+54, S.L.M. 5.05 (NORTH SIDE)

STA. 147+65, S.L.M. 6.15 (NORTH SIDE)

STA. 147+65, S.L.M. 6.15 (SOUTH SIDE)

THE CONTRACTOR SHALL REMOVE THE TOP PORTION OF THE REINFORCED CONCRETE HEADWALLS TO AN APPROXIMATE DEPTH AS SHOWN IN THE DETAIL "A" BELOW. THE DEPTH OF REMOVAL MAY BE ADJUSTED ONLY AS DIRECTED BY THE ENGINEER. THE CONTRACTOR SHALL PERFORM THE REMOVAL WORK IN A MANNER THAT WILL LEAVE THE REMAINING DRAINAGE STRUCTURE UNDAMAGED. THE CONTRACTOR SHALL PERFORM THE REMOVAL WORK AS DIRECTED BY THE PROJECT ENGINEER. REMOVAL WORK SHALL INCLUDE A TWO INCH DEEP HORIZONTAL SAW CUT AROUND THE PERIPHERY OF THE PORTION OF HEADWALL TO BE REMOVED SO THAT A NEAT EDGE WILL RESULT. ALL REINFORCING STEEL EXPOSED BY THE REMOVAL WORK SHALL BE CUT FLUSH WITH THE SURFACE OF THE REMAINING CONCRETE.

AFTER THE REMOVAL WORK HAS BEEN COMPLETED, THE REMAINING CONCRETE SURFACE SHALL BE CAPPED WITH A 2-INCH MINIMUM THICKNESS OF MAGNESIUM PHOSPHATE CONCRETE TO PROVIDEA SMOOTH AND LEVEL SURFACE AS WELL AS A MINIMUM 2-INCH COVER OVER ALL EXPOSED REINFORCING. THEN, ALL EXPOSED CONCRETE SURFACES SHALL BE SEALED WITH AN EPOXY SEALER. ALL REQUIRED SURFACE PREPARATION, MIXING, AND APPLICATION OF BOTH THE MAGNESIUM PHOSPHATE CONCRETE AND THE EPOXY SEALER SHALL BE IN ACCORDANCE WITH THE MANUFACTURER'S SPECIFICATIONS AND RECOMMENDATIONS.

ALL COSTS ASSOCIATED WITH THE WORK DESCRIBED SHALL BE INCLUDED FOR PAYMENT IN THE LUMP SUM BID FOR ITEM 202 - PORTIONS OF STRUCTURES REMOVED, AS PER PLAN.

THE FOLLOWING PAY ITEM HAS BEEN PROVIDED IN THE GENREAL SUMMARY FOR THE COMPLETION OF THIS WORK.

ITEM 202 - PORTIONS OF STRUCTURE REMOVED,
AS PER PLAN . . . . . LUMP SUM

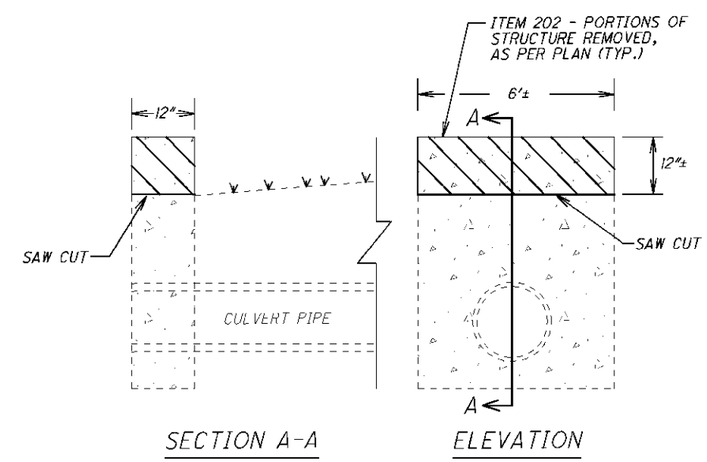


CALCULATED
CHECKED

GENERAL NOTES

GEA-88-3.81



I:\PROJECTS\PID81267\DGN\81267GN001.dgn 13-OCT-2009 2:07PM jgrmovse

# PAVEMENT

**ITEM 251 - PARTIAL DEPTH PAVEMENT REPAIR**

THIS WORK SHALL BE PERFORMED PRIOR TO RESURFACING. THE QUANTITIES PROVIDED ARE TO REPAIR UNSOUND OR COLD-PATCH AREAS OR POP-OUTS. THICKNESS WILL BE 3" OR "AS DIRECTED BY THE ENGINEER".

ALL LABOR AND MATERIALS NECESSARY TO PERFORM THIS WORK ACCORDING TO THE CMS SHALL BE INCLUDED FOR PAYMENT UNDER:

ITEM 251 - PARTIAL DEPTH PAVEMENT REPAIR . . . . **415 SQ.YD.**

**ITEM 253 - PAVEMENT REPAIR, AS PER PLAN "A"**

THIS WORK ITEM IS FOR USE "AS DIRECTED BY THE ENGINEER" FOR THE PURPOSE OF PAVEMENT REPAIR BEFORE RESURFACING. ALL LABOR AND MATERIAL NECESSARY TO PERFORM THIS WORK AND SECTION 250 OF THE CMS SHALL BE INCLUDED FOR PAYMENT UNDER ITEM 253.

DEPTH OF PAVEMENT REPAIR REMOVAL SHALL TYPICALLY BE 4 INCHES. THE DEPTH OF REPAIR SHALL BE DIRECTED BY THE ENGINEER IF UNSOUND MATERIAL IS ENCOUNTERED AFTER THE REMOVAL OF THE 4 INCHES.

THE FOLLOWING ITEM HAS BEEN CARRIED TO THE GENERAL SUMMARY:

ITEM 253 - PAVEMENT REPAIR, AS PER PLAN . . . **120 CU.YD.**

**ITEM 253 - PAVEMENT REPAIR, AS PER PLAN "B"**

THIS ITEM OF WORK SHALL BE PERFORMED BEFORE THE RESURFACING AND GUARDRAIL INSTALLATION.

THIS WORK ITEM AND QUANTITIES ARE FOR USE "AS DIRECTED BY THE ENGINEER" FOR THE PURPOSE OF PAVEMENT REPAIR IN AREAS OF SEVERE BERM DETERIORATION ALONGSIDE THE PAVEMENT SHOULDER.

REMOVE EXISTING ASPHALT AND/OR BITUMINOUS AGGREGATE BASE (AT SOME PREVIOUS REPAIRS)TO A MINIMUM OF 5" BELOW THE SURFACE OF EXISTING PAVEMENT OR TO THE TOP OF EXISTING SUBBASE, WHICHEVER IS LESS.

REMOVAL LIMITS SHALL BE SAW CUT TO LEAVE A NEAT, VERTICAL SURFACE.

PLACE ASPHALT CONCRETE IN ACCORDANCE WITH THE PROVISIONS OF 252.04, EXCEPT THAT 2 OR MORE LIFTS ARE REQUIRED.

FOR **AS PER PLAN "B"** REPAIRS: MAKE REPAIRS AT LEAST 2' WIDE BUT LESS THAN OR EQUAL TO 4' WIDE. THE ENGINEER WILL DETERMINE THE LENGTH OF REPAIR.

IF, AFTER REMOVAL OF EXISTING PAVEMENT, THE ENGINEER DETERMINES THAT THE SUBBASE OR SUBGRADE HAS FAILED OR IS PUMPING, HE SHALL DIRECT THE CONTRACTOR TO EXCAVATE 6" OF THE UNSUITABLE MATERIAL AND REPLACE IT WITH 6" OF COMPACTED AGGREGATE. QUANTITITES OF ITEM 203 EXCAVATION AND ITEM 304 AGGREGATE BASE HAVE BEEN PROVIDED TO REPAIR FAILED SUBBASE OR SUBGRADE AREAS.

IF IN PAVED SHOULDER REPAIR AREAS THE BERM IS DETERIORATED, REFER TO THE GENERAL NOTES ITEM "BERM REPAIR" FOR THE PLACEMENT OF ITEM 209 - BORROW AND ITEM 601 - ROCK CHANNEL PROTECTION, TYPE D WITH FILTER FABRIC (1.5' DEEP).

THE PAVEMENT REPAIRS SHALL BE COMPLETED IN ONE DAY (I.E. NO OLD ASPHALT SHALL BE MILLED OR REMOVED AND OPENED TO TRAFFIC WITHOUT THE PROPOSED ASPHALT IN PLACE).

THE DEPARTMENT WILL PAY FOR ACCEPTED QUANTITIES ON A SQUARE AREA BASIS, BASED ON FIELD MEASUREMENTS AT EACH REPAIR.

ITEM 448 ASPHALT CONCRETE INTERMEDIATE COURSE, TYPE 2, PG64-22 SHALL BE USED AS THE ASPHALT CONCRETE FOR THIS ITEM.

THE FOLLOWING QUANTITIES ARE CARRIED TO THE GENERAL SUMMARY TO ACCOMPLISH THIS ITEM OF WORK IN ADDITION TO THOSE QUANTITIES FOR LOCATIONS ON THE GUARDRAIL DETAIL SHEETS.

ITEM 253 - PAVEMENT REPAIR, AS PER PLAN "B" . . **44 SQ.YD.**
ITEM 203 - EXCAVATION . . . . . **8 CU.YD.**
ITEM 304 - AGGREGATE BASE . . . . . **8 CU.YD.**

**BERM REPAIR**

THE BELOW ITEMS AND ASSOCIATED QUANTITIES SHALL BE USED "AS DIRECTED BY THE ENGINEER" FOR THE RESTORATION OF DETERIORATED BERMS.

THE DEPTH, WIDTH, AND LENGTH ALONG THE SHOULDER OF THE PLACEMENT OF ITEM 209 - BORROW SHALL BE DIRECTED BY THE ENGINEER. PLACE BORROW TO RE-ESTABLISH A BASE FOR THE PROPOSED COMPACTED AGGREGATE BERM OR GUARDRAIL INSTALLATION ITEMS. TO ESTABLISH GRADING FOR GUARDRAIL AREAS, ADDITIONAL BORROW AND SEEDING AND MULCHING QUANTITIES ARE ALSO INCLUDED ON THE GUARDRAIL DETAIL SHEETS.

BORROW PLACED "AS DIRECTED BY THE ENGINEER" SHALL ALSO BE USED FOR PLACEMENT BEHIND CONCRETE HEADWALLS AND WINGWALLS UNTIL THE BORROW IS FLUSH WITH THE TOP. ITEM 659 - SEEDING AND MULCHING SHALL BE USED FOR RESTORATION OF HEADWALLS AND WINGWALL AREAS AFTER GRADING HAS BEEN PERFORMED.

THE DEPTH OF THE ITEM 601 - ROCK CHANNEL PROTECTION, TYPE D WITH FABRIC FILTER SHALL BE PLACED A MINIMUM OF 1.5' DEEP. THE WIDTH OF THE R.C.P. PLACEMENT AND THE LENGTH MEASURED ALONG THE SHOULDER SHALL BE "DETERMINED BY THE ENGINEER".

ALL EQUIPMENT, MATERIALS, AND LABOR REQUIRED TO PERFORM THE PLACEMENT OF THE BELOW ITEMS SHALL BE INCLUDED IN THE UNIT BID PRICE FOR EACH ITEM.

THE FOLLOWING ESTIMATED QUANTITIES HAVE BEEN CARRIED TO THE GENERAL SUMMARY TO BE USED AS DIRECTED BY THE ENGINEER:

ITEM 209 - BORROW . . . . . **24 CU.YD.**

ITEM 601 - ROCK CHANNEL PROTECTION,
TYPE D WITH FABRIC FILTER . . . . . **19 CU.YD.**

ITEM 659 - SEEDING AND MULCHING . . . . . **44 SQ.YD.**

**ITEM 446 - ASPHALT CONCRETE SURFACE COURSE, TYPE 1, PG70-22M, AS PER PLAN**

THE COURSE AGGREGATE FOR THIS ITEM SHALL BE A BLEND OF 50% MINIMUM AIR COOLED BLAST FURNACE SLAG (ACBFS) OR TRAP ROCK FROM ONTARIO WITH LIMESTONE COMPRISING THE REMAINING PERCENTAGE.

**ITEM 407 - TACK COAT**

THE RATE OF APPLICATION OF THE 407 - TACK COAT SHALL BE SUBJECT TO ADJUSTMENTS, AS DIRECTED BY THE ENGINEER. PLAN QUANTITIES INDICATE AN AVERAGE APPLICATION RATE OF 0.10 GAL/SQ.YD. FOR ESTIMATION PURPOSES ONLY.

**ITEM 407 - TACK COAT FOR INTERMEDIATE COURSE**

THE RATE OF APPLICATION OF THE 407 - TACK COAT FOR INTERMEDIATE COURSE SHALL BE SUBJECT TO ADJUSTMENTS, AS DIRECTED BY THE ENGINEER. PLAN QUANTITIES INDICATE AN AVERAGE APPLICATION RATE OF 0.07 GAL/SQ.YD. FOR ESTIMATION PURPOSES ONLY.

**ASPHALT CONCRETE SURFACE COURSES**

IN ADDITION TO THE GUTTER SEALING REQUIREMENTS SPECIFIED ON SCD BP-3.1 AND IN 401.15, AFTER COMPLETION OF THE SURFACE COURSE, THE CONTRACTOR SHALL SEAL, WITH A CERTIFIED PG BINDER, THE FOLLOWING LOCATIONS:

- ALL CASTINGS INCLUDING BUT NOT LIMITED TO MONUMENTS, MANHOLES, WATER VALVES, CATCH BASINS.
- BUTT JOINTS AND FEATHER JOINTS INCLUDING BRIDGE APPROACHES.
- FOREWORD JOINT FOR DRIVEWAY ASPHALT AND TRAILING JOINT WHEN BUTTING TO EXISTING ASPHALT DRIVE.
- PERIMETER OF ALL PAVEMENT REPAIRS WHEN PAVMENT REPAIRS ARE NOT OVERLAID WITH ASPHALT CONCRETE.

THE MATERIAL USED SHALL BE A CERTIFIED CMS 702.01 PG BINDER. THE WIDTH OF THE SEALER SHALL BE 2 INCHES.

ANY ADDITIONAL COSTS ASSOCIATED WITH THE WORK IDENTIFIED IN THIS NOTE SHALL BE INCLUDED IN THE APPROPRIATE ASPHALT CONCRETE SURFACE COURSE ITEM OF WORK.



I:\PROJECTS\PID81267\DGN\81267GN001.dgn 02-NOV-2009 8:35AM jgrmovse

# PAVEMENT (CONT'D)

**ITEM 617 - COMPACTED AGGREGATE, AS PER PLAN**

THIS ITEM SHALL BE USED ALONG THE SHOULDERS. MATERIALS SHALL BE LIMITED TO RECYCLED ASPHALT GRINDINGS.

THE ACTUAL DEPTH USED WILL VARY DEPENDING UPON EXISTING CONDITIONS. FOR ESTIMATING PURPOSES, AN AVERAGE DEPTH OF 2-1/4" INCH WILL BE USED.

**ITEM 448 - ASPHALT CONCRETE SURFACE COURSE, TYPE 1, PG64-22, (DRIVEWAYS)**

THIS ITEM OF WORK SHALL CONSIST OF PAVING ALL EXISTING DRIVEWAYS A DISTANCE OF AN ESTIMATED 5 FT. FROM THE EDGE OF PAVED SHOULDER UNLESS OTHERWISE DIRECTED BY THE ENGINEER. THE PLAN QUANTITIES ARE BASED ON 16 FT. WIDE FOR RESIDENTIAL DRIVES AND 40 FT. FOR COMMERCIAL DRIVES. ASPHALT CONCRETE AVERAGE THICKNESS SHALL BE 2 IN. FOR AGGREGATE DRIVEWAYS, AND 1 IN. FOR IMPROVED DRIVEWAYS. ALL GRADING, TACK COAT, TOOLS, EQUIPMENT, MATERIAL, AND INCIDENTALS REQUIRED TO LAYOUT AND CONSTRUCT THE DRIVEWAYS AND MAILBOX APPROACHS SHALL BE INCLUDED IN THE UNIT BID FOR ITEM 448 - ASPHALT CONCRETE SURFACE COURSE,TYPE 1,PG64-22 (DRIVEWAYS).

# DRAINAGE

**REVIEW OF DRAINAGE FACILITIES**

BEFORE ANY WORK IS STARTED ON THE PROJECT AND AGAIN BEFORE FINAL ACCEPTANCE BY THE STATE, REPRESENATIVES OF THE STATE AND THE CONTRACTOR, ALONG WITH LOCAL REPRESENATIVES, SHALL MAKE AN INSPECTION OF EXISTING SEWERS WHICH ARE TO REMAIN IN SERVICE AND WHICH MAY BE AFFECTED BY THE WORK. THE CONDITION OF THE EXISTING CONDUITS AND THEIR APPURTENANCES SHALL BE DETERMINED FROM FIELD OBSERVATIONS. RECORDS OF THE INSPECTION SHALL BE KEPT IN WRITING BY THE STATE.

ALL INLETS, CULVERTS, CATCH BASINS, AND MANHOLES CONSTRUCTED AS A PART OF THE PROJECT SHALL BE FREE OF ALL FOREIGN MATTER AND IN A CLEAN CONDITION BEFORE THE PROJECT WILL BE ACCEPTED BY THE STATE.

ALL EXISTING DRAINAGE STRUCTURES INSPECTED INITIALLY BY THE ABOVE MENTIONED PARTIES SHALL BE MAINTAINED AND LEFT IN A CONDITION REASONABLY COMPARABLE TO THAT DETERMINED BY THE ORIGINAL INSPECTION. ANY CHANGE IN THE CONDITION RESULTING FROM THE CONTRACTOR'S OPERATIONS SHALL BE CORRECTED BY THE CONTRACTOR TO THE SATISFACTION OF THE ENGINEER.

**ITEM 203 - 15" CONDUIT, TYPE D, AS PER PLAN**

BEFORE ORDERING ANY MATERIALS TO PERFORM THIS ITEM OF WORK, THIS ITEM OF WORK SHALL HAVE THE CONTRACTOR VERIFY AND MATCH THE MATERIAL OF THE EXISTING 15" DRIVEWAY DRAINAGE PIPE.

THE CONTRACTOR SHALL COORDINATE THE EXTENDING OF THE DRIVEWAY PIPE WITH THE LAYOUT OF THE PROPOSED GUARDRAIL RADIUS INTO THE DRIVEWAY.

SEE SHEET 18 FOR LAYOUT AND QUANTITIES THAT HAVE BEEN CARRIED TO THE GENERAL SUMMARY.

# TRAFFIC CONTROL

**ITEM 632 - DETECTOR LOOP, AS PER PLAN**

PRIOR TO PLANING THE PAVEMENT, THE CONTRACTOR SHALL FIELD SURVEY THE LOCATIONS OF THE EXISTING LOOP DETECTORS WITHIN THE PROJECT LIMITS. THE PROJECT ENGINEER AND THE O.D.O.T. DISTRICT 12 - TRAFFIC DEPARTMENT SHALL CONFIRM THESE LOCATIONS. THE SURVEY SHALL INCLUDE THE LOCATION OF THE LOOP, SIZE OF THE LOOP, OFFSET FROM CURB AND/OR CENTERLINE AND THE LOCATION OF THE STUB. A COPY OF THIS SURVEY SHALL BE GIVEN TO THE PROJECT ENGINEER.

RECORD PLANS OF THE TRAFFIC SIGNAL INSTALLATION AT THE INTERSECTION OF SR-88 (NASH RD.) AND OLD STATE ROAD MENTIONS THAT OHIO EDISON RECORDS SHOW A BURIED ELECTRIC UTILITY IN THE VICINITY OF THE INTERSECTION. THE SHEET NOTE STATES THAT THE LOCATION OF THE SERVICE IS UNCLEAR FROM RECORD INFORMATION AND MUST BE LOCATED BY O.U.P.S. REQUEST.

AN ESTIMATED QUANTITY OF ITEM 632 - DETECTOR LOOP, AS PER PLAN HAS BEEN PROVIDED AS A CONTINGENCY WHEN WIRE IS CUT, BROKEN, OR DESTROYED DUE TO PAVEMENT PLANING,SHOULDER RECONSTRUCTION OR BUTT JOINT OPERATIONS.

NEW LOOP DETECTORS SHALL BE PLACED AT THE SAME LOCATIONS AND SAME SIZE AS THE EXISTING.

WHEN REPLACING THE LOOP DETECTORS, THE LOOP DETECTOR WIRE SHALL BE REPLACED TO THE PULL BOX OR POLE, WHICHEVER IS APPLICABLE, UNDER ITEM 632 AND TC-82.10 . THE NEW CABLE SPLICE KITS SHALL BE INCLUDED IN THIS PAY ITEM.

THE CONTRACTOR SHALL CONTACT:

O.D.O.T. DISTRICT 12
TRAFFIC DEPARTMENT
5500 TRANSPORTATION BLVD.
GARFIELD HEIGHTS, OH 44125
ATTN: TRAVIS BONNETT, P.E.
PHONE: (216) 584-2220
FAX: (216) 584-2278

7 DAYS PRIOR TO PLANING THROUGH AN INTERSECTION TO ADJUST SIGNAL OPERATION AS NEEDED. THE DISTRICT 12 - TRAFFIC DEPARTMENT AND THE PROJECT ENGINEER SHALL CONCUR WITH THE LOCATION OF THE REPLACEMENT LOOPS.

THE DETECTOR LOOPS SHALL BE PLACED IN THE SURFACE COURSE. TRAFFIC LOOPS MUST BE PLACED BACK INTO SERVICE WITHIN 30 DAYS AFTER PLACEMENT OF SURFACE COURSE OF ASPHALT.

THE FOLLOWING ESTIMATED QUANTITY HAVE BEEN CARRIED TO THE GENERAL SUMMARY TO BE USED "AS DIRECTED BY THE ENGINEER":

ITEM 632 - DETECTOR LOOP, AS PER PLAN . . . . . **6 EACH**

**DETECTOR LOOP LOCATIONS:**

| LOCATION REF.NO. | ROUTE | TRAFFIC DIRECTION | INTERSECTION | 12' X 6' LOOP SIZE | 10' X 8' LOOP SIZE | 30' X 7' LOOP SIZE | DESCRIPTION |
|---|---|---|---|---|---|---|---|
| | | | | EA. | EA. | EA. | |
| L-1 | S.R. 88 | EB | OLD STATE RD. | 1 | | | EASTBOUND LANE ( 467' +/- WEST OF OLD STATE RD.) (TO BE OVERLAYED - CONTINGENCY |
| L-6 | S.R. 88 | SB | OLD STATE RD. | | 1 | | SOUTHBOUND APROACH OLD STATE RD. |
| L-7 | S.R. 88 | SB | OLD STATE RD. | | | 1 | SOUTHBOUND APROACH OLD STATE RD. |
| L-3 | S.R. 88 | NB | OLD STATE RD. | | 1 | | NORTHBOUND APROACH OLD STATE RD. |
| L-4 | S.R. 88 | NB | OLD STATE RD. | | | 1 | NORTHBOUND APROACH OLD STATE RD. |
| L-2 | S.R. 88 | WB | OLD STATE RD. | 1 | | | WESTBOUND LANE ( 440' +/- EAST OF OLD STATE RD.) (TO BE OVERLAYED - CONTINGENCY |

**ITEM 621 - RAISED PAVEMENT MARKER (RPM)**

FOR ESTIMATING PURPOSES, THE RPM QUANTITY HAS BEEN CALCULATED AT 20' SPACING THROUGH THE CURVES FROM SLM 0.35 TO SLM 1.00, AND 80' SPACING ELSEWHERE. THE CONTRACTOR SHALL SPACE THE RPMS PER STANDARD CONSTRUCTION DRAWINGS TC-65.10 AND TC-65.11.

THE FOLLOWING IS AN ESTIMATED QUANTITY TO BE USED AS DIRECTED BY THE ENGINEER TO PLACE PROPOSED RAISED PAVEMENT MARKERS.

ITEM 621 RPM . . . . . **198 EACH**

**ITEM 621 - RAISED PAVEMENT MARKER REMOVED**

THE FOLLOWING IS AN ESTIMATED QUANTITY TO BE USED AS DIRECTED BY THE ENGINEER TO REMOVE EXISTING RAISED PAVEMENT MARKER CASTINGS.

ITEM 621 RAISED PAVEMENT MARKER REMOVED . . . . . **198 EACH**

**ITEM 646 - EPOXY PAVEMENT MARKING**

THE CONTRACTOR MUST LAY OUT ALL CENTER LINES USING THE MOST RECENT COPY OF THE CENTER LINE LOG. COPIES OF THE CENTER LINE LOG MAY BE OBTAINED FROM THE DISTRICT 12 ROADWAY SERVICES DEPARTMENT.

THE FOLLOWING ESTIMATED QUANTITY IS CARRIED TO THE GENERAL SUMMARY IN ORDER TO PLACE PAVEMENT MARKINGS WITHIN THE LIMITS OF THIS PROJECT:

ITEM 646 EDGE LINE . . . . . **5.04 MILE**
ITEM 646 CENTER LINE . . . . . **2.52 MILE**
ITEM 646 STOP LINE . . . . . **175 FEET**

**ITEM SPECIAL - MISC.: INVENTORY EXISTING PAVEMENT MARKINGS**

PRIOR TO ANY PLANING AND PAVING OPERATIONS, THE CONTRACTOR IS RESPONSIBLE FOR CONDUCTING A FIELD SURVEY OF THE EXISTING PERMANENT MARKINGS. THIS INVENTORY SHALL BE USED FOR THE PLACEMENT OF TEMPORARY MARKINGS AND PROPOSED FINAL PAVEMENT MARKINGS. IT IS THE INTENT OF THIS PLAN TO REPLACE THE PAVEMENT MARKINGS IN THE SAME LOCATION AS THE EXISTING PAVEMENT MARKINGS. ANY STAKING OR MARKING REQUIRED TO ESTABLISH CONTROL POINTS TO ENSURE THAT MARKINGS ARE ACCURATELY PLACED IS THE RESPONSIBILITY OF THE CONTRACTOR. THE ENGINEER WILL VERIFY ALL PERMANENT MARKING LOCATIONS PRIOR TO THE ACTUAL INSTALLATION.

THE CONTRACTOR MUST LAY OUT ALL CENTER LINES USING THE MOST RECENT COPY OF THE CENTER LINE LOG. COPIES OF THE CENTER LINE LOG MAY BE OBTAINED FROM THE DISTRICT 12 ROADWAY SERVICES DEPARTMENT. IF ANY DISCREPANCIES OCCUR BETWEEN THE EXISTING PAVEMENT MARKINGS AND THE CENTER LINE LOG, THE CENTER LINE LOG SHALL GOVERN.

THE FOLLOWING QUANTITY IS CARRIED TO THE GENERAL SUMMARY TO ACCOMPLISH THE ABOVE ITEMS OF WORK AS DIRECTED BY THE ENGINEER:

ITEM SPECIAL MISC.: INVENTORY EXISTING PAVEMENT MARKINGS . . . . . **LUMP SUM**





I:\PROJECTS\PID81267\DGN\81267GN001.dgn 13-OCT-2009 2:08PM jgrmovse

# MAINTENANCE OF TRAFFIC

**ITEM 614 - MAINTAINING TRAFFIC**

GENERALLY THE CONTRACTOR SHALL CONDUCT HIS OPERATIONS AS TO COMPLETE THE PROPOSED IMPROVEMENT WITH A MINIMUM OF HAZARD, DELAY AND INCONVENIENCE TO THE MOTORISTS USING THE HIGHWAY AFFECTED BY THE WORK DONE UNDER THIS CONTRACT. IN ADDITION TO THE CONSTRUCTION AND MATERIAL SPECIFICATIONS, THE FOLLOWING SPECIFIC PROVISIONS ARE MANDATORY.

**I. NOTIFICATION**

SINCE FUNCTIONAL TRAFFIC CONTROL IS A MAJOR CONCERN ON THIS PROJECT, IT IS ESSENTIAL THAT THE MOTORING PUBLIC BE ADEQUATELY FOREWARNED OF FUTURE LANE CLOSURES AND TRAFFIC CONSTRICTIONS. THEREFORE, THE CONTRACTOR SHALL SUBMIT A WRITTEN SCHEDULE TO THE ENGINEER, RESPONSIBLE LAW ENFORCEMENT AGENCIES, AND THE ODOT PUBLIC INFORMATION OFFICE (216-584-2007) INDICATING THE LOCATIONS AND DATES OF THE LANE CLOSURES AT LEAST 3 DAYS PRIOR TO THE IMPLEMENTATION OF ANY SUCH CLOSURES.

**II. WORK HOURS**

NIGHT WORK IS NOT PERMITTED DUE TO THE RESIDENTIAL NATURE OF THE SURROUNDING AREAS.

**III. LANE CLOSURE, PLANING AND PAVING RESTRICTIONS**

1. MAINTAIN A MINIMUM OF ONE 11' LANE USING FLAGGERS.

**IV. MAINTENANCE OF TRAFFIC SYSTEMS**

A. WHEN REQUIRED

WHENEVER ANY PART OF THE TRAVELED SURFACE IS BEING WORKED UPON OR IS OTHERWISE NOT SUITABLE FOR SAFE AND CONVENIENT USE BY VEHICLES, TRAFFIC CONTROL DEVICES SUFFICIENT TO PROTECT SUCH AREAS TO ASSURE THE SAFE AND CONVENIENT PASSAGE OF VEHICULAR TRAFFIC SHALL BE INSTALLED AND MAINTAINED. SUCH TRAFFIC CONTROL DEVICES AND THE MANNER IN WHICH THEY ARE USED SHALL BE CONSISTENT WITH THESE PLANS AND THE OHIO MANUAL OF UNIFORM TRAFFIC CONTROL DEVICES FOR STREETS AND HIGHWAYS, HEREINAFTER REFERRED TO AS THE OMUTCD. THE TRAFFIC CONTROL DEVICE SYSTEM SHALL CONSTITUTE THE MINIMUM PROVISIONS FOR TRAFFIC CONTROL FOR EACH PARTICULAR SITUATION. WHENEVER THE ENGINEER DEEMS IT NECESSARY ESPECIALLY WHERE A GRADE, CURVE, OR MERGE CONDITIONS EXISTS, HE MAY DIRECT THAT ADDITIONAL OR ALTERNATIVE DEVICES BE USED.

B. CONDITIONS

DURING ALL PARTS OF THIS PROJECT, FLAGGERS, SIGNING, BARRICADES, FLASHING ARROWS, ETC. SHALL BE LOCATED AS INDICATED IN THE OMUTCD OR AS SHOWN IN THE STANDARD CONSTRUCTION DRAWINGS. TWO-WAY TRAFFIC SHALL BE MAINTAINED AT ALL TIMES.

C. ADVANCE WARNING SIGNS

ALL ADVANCE WARNING SIGNS FOR ANY CONDITION WHICH RESTRICTS TRAFFIC SHALL BE ERECTED BEFORE ANY SUCH RESTRICTION IS PUT INTO EFFECT. ALL SUCH SIGNS SHALL BE COVERED OR REMOVED FROM THE VIEW OF TRAFFIC WHENEVER THEY ARE NOT APPLICABLE.

D. FLASHING ARROW REQUIREMENT

WHENEVER ANY PART OF THE TRAVELED SURFACE IS CLOSED, THE MOTORISTS SHALL BE WARNED AND DIRECTED BY THE CONTRACTOR THROUGH THE USE OF ONE FLASHING ARROW FOR EACH LANE CLOSED. ADDITIONALLY, THE PROVISIONS SET FORTH IN THE OMUTCD AND THE APPLICABLE STANDARD CONSTRUCTION DRAWINGS SHALL BE MET.

E. FLAGGERS AND LAW ENFORCEMENT OFFICERS

THE CONTRACTOR SHALL FURNISH ADDITIONAL FLAGGERS AS DIRECTED BY THE ENGINEER. LAW ENFORCEMENT OFFICERS (LEO'S) SHALL BE REQUIRED FOR TRAFFIC DIRECTION ONLY UNDER THE FOLLOWING CIRCUMSTANCES: (1) IF SIGNALS ARE NON-OPERATIONAL, OR (2) IF TRAFFIC MUST MOVE AGAINST SIGNAL PHASING.

F. PROTECTION OF PUBLIC

PERSONAL CARS SHALL NOT BE PARKED WITHIN THE R/W.

G. FAILURE TO COMPLY

IF THERE IS ANY FAILURE TO COMPLY WITH PROVISIONS FOR TRAFFIC CONTROL SET OUT IN THESE PLANS AND NOTES, OR WITH THE PROVISIONS OF THE OMUTCD, THE HIGHWAY IN THE VICINITY OF THE WORK AREA SHALL NOT BE CONSIDERED IN A CONDITION FOR THE SAFE AND CONVENIENT USE BY THE TRAVELING PUBLIC. ANY FAILURE TO KEEP THE HIGHWAY, IN THE VICINITY OF THE WORK AREA, IN A CONDITION FOR THE SAFE AND CONVENIENT USE BY THE TRAVELING PUBLIC SHALL BE CONSIDERED A BREACH OF THIS CONTRACT. WORK SHALL BE SUSPENDED UNTIL THE CONTRACTOR COMPLIES WITH THE PROVISIONS OF THE AFOREMENTIONED ITEMS.

**V. MAINTENANCE OF TRAFFIC MATERIALS**

A. SIGNS

SIGN DIMENSIONS AND SPECIFICATIONS, INCLUDING LETTER SIZES SHALL BE AS PROVIDED IN THE OMUTCD, OR IN DESIGN DRAWINGS PROVIDED BY THE DEPARTMENT OF TRANSPORTATION. THE SIGNS SHALL BE SUBJECT TO APPROVAL OF THE ENGINEER PRIOR TO THE START OF THE PROJECT.

B. SIGN SUPPORTS

SIGN SUPPORTS SHALL BE OF SUFFICIENT SIZE AND HEIGHT AS TO SUPPORT THE SIGNS AT THE APPROPRIATE HEIGHT. SUPPORTS SHALL BE ADEQUATE IN MASS AND STABILITY TO PREVENT THE SIGNS FROM BEING BLOWN OVER BY WIND OR VEHICULAR GENERATED AIR TURBULENCE.

C. FLASHING ARROWS

WHENEVER ANY PART OF THE TRAVELED SURFACE IS CLOSED, THE MOTORIST SHALL BE WARNED AND DIVERTED BY THE CONTRACTOR THROUGH THE USE OF ONE FLASHING ARROW BARRICADE FOR EACH LANE CLOSED. THE CONTRACTOR SHALL REFER TO STANDARD CONSTRUCTION DRAWING MT-35.10 AND THE PROVISIONS SET FORTH IN THE OMUTCD FOR ALL INFORMATION REGARDING FURNISHING, MAINTAINING, AND USE OF FLASHING ARROW BARRICADES. PAYMENT FOR THE ABOVE SHALL BE INCLUDED IN THE LUMP SUM BID FOR ITEM 614 MAINTAINING TRAFFIC.

D. DRUMS

DRUMS SHALL BE IN ACCORDANCE WITH PERTINENT SECTIONS OF THE OMUTCD. ALL COSTS FOR INSTALLING, MAINTAINING AND SUBSEQUENT REMOVAL OF SAID DRUMS SHALL BE INCLUDED IN THE LUMP SUM BID PRICE FOR ITEM 614 MAINTAINING TRAFFIC.

E. CONES

CONES SHALL BE LOCATED AS SHOWN IN THE OMUTCD AND THE STANDARD CONSTRUCTION DRAWINGS.

F. FLASHERS

FLASHERS SHALL BE 12 VOLT BATTERY-OPERATED MODELS WITH 7 INCH DIAMETER YELLOW LENSES ILLUMINATED BY RAPID INTERMITTENT FLASHERS OF SHORT DURATION AND SHALL BE PLACED ON ALL SIGNS AT ALL TIMES AS REQUIRED BY THE OMUTCD AND THE STANDARD CONSTRUCTION DRAWINGS.

**VI. PAYMENT**

PAYMENT FOR PROVIDING, ERECTING, MAINTAINING AND REMOVING TEMPORARY MAINTENANCE OF TRAFFIC CONTROL DEVICES SHALL BE MADE UNDER THE LUMP SUM PRICE BID FOR ITEM 614 MAINTAINING TRAFFIC.

**LANES OPEN DURING HOLIDAYS OR SPECIAL EVENTS**

NO WORK SHALL BE PERFORMED AND ALL EXISTING LANES SHALL BE OPEN TO TRAFFIC DURING THE FOLLOWING DESIGNATED HOLIDAYS OR EVENTS:

| | |
|---|---|
| CHRISTMAS | FOURTH OF JULY |
| NEW YEARS | LABOR DAY |
| MEMORIAL DAY | THANKSGIVING |

THE PERIOD OF TIME THAT THE LANES ARE TO BE OPEN DEPENDS ON THE DAY OF THE WEEK ON WHICH THE HOLIDAY OR EVENT FALLS. THE FOLLOWING SCHEDULE SHALL BE USED TO DETERMINE THIS PERIOD:

| DAY OF THE WEEK | TIMES ALL LANES MUST BE OPEN TO TRAFFIC |
|---|---|
| SUNDAY | 12:00 NOON FRIDAY THROUGH 12:00 NOON MONDAY |
| MONDAY | 12:00 NOON FRIDAY THROUGH 12:00 NOON TUESDAY |
| TUESDAY | 12:00 NOON MONDAY THROUGH 12:00 NOON WEDNESDAY |
| WEDNESDAY | 12:00 NOON TUESDAY THROUGH 12:00 NOON THURSDAY |
| THURSDAY | 12:00 NOON WEDNESDAY THROUGH 12:00 NOON MONDAY |
| FRIDAY | 12:00 NOON THURSDAY THROUGH 12:00 NOON MONDAY |
| SATURDAY | 12:00 NOON FRIDAY THROUGH 12:00 NOON MONDAY |

NO EXTENSIONS OF TIME SHALL BE GRANTED FOR DELAYS IN MATERIAL DELIVERIES, UNLESS SUCH DELAYS ARE INDUSTRY-WIDE, OR FOR LABOR STRIKES, UNLESS SUCH STRIKES ARE AREA-WIDE. SHOULD THE CONTRACTOR FAIL TO MEET ANY OF THESE REQUIREMENTS, THE CONTRACTOR SHALL BE ASSESSED LIQUIDATED DAMAGES IN ACCORDANCE WITH CMS 108.07.





I:\PROJECTS\PID81267\DGN\81267GN001.dgn 13-OCT-2009 2:08PM jgrmovse

# MAINTENANCE OF TRAFFIC (CONT'D)

**SUSPENSION OF WORK**

IF THE CONTRACTOR FAILS TO COMPLY WITH THE PROVISIONS FOR TRAFFIC CONTROL AS SET FORTH IN THESE PLANS OR WITH PROVISIONS OF THE OMUTCD, THE ENGINEER SHALL SUSPEND WORK UNTIL THE CONTRACTOR COMPLIES WITH THE NECESSARY REQUIREMENTS.

**ALTERNATE METHODS**

IF THE CONTRACTOR SO ELECTS, HE MAY SUBMIT ALTERNATE METHODS FOR THE MAINTENANCE OF TRAFFIC, PROVIDED THE INTENT OF THE PROVISIONS IS FOLLOWED AND NO ADDITIONAL INCONVENIENCE TO THE TRAVELING PUBLIC RESULTS THERE FROM. NO ALTERNATE PLAN SHALL BE PLACED INTO EFFECT UNTIL APPROVAL HAS BEEN GRANTED IN WRITING, BY THE DIRECTOR.

**MAINTENANCE OF TRAFFIC CONTROL ZONES**

THE CONTRACTOR SHALL BE RESPONSIBLE TO MAINTAIN THE SIGNS, DRUMS AND TEMPORARY PAVEMENT MARKINGS AT THE LOCATIONS DETAILED IN THE PLANS OR SPECIFIED IN THE STANDARD DRAWINGS. WHEN THE CONTRACTOR IS NOTIFIED OF DEFICIENCIES HE SHALL CORRECT THE DEFICIENCIES AS SOON AS POSSIBLE, PREFERABLY WITHIN 12 HOURS AND NO LATER THAN 24 HOURS.

**WORK ZONE PAVEMENT MARKINGS**

THE FOLLOWING ESTIMATED QUANTITIES SHALL BE USED TO PLACE WORK ZONE PAVEMENT MARKINGS PRIOR TO PLACING THE PERMANENT MARKINGS:

ITEM 614 - WORK ZONE CENTER LINE, CLASS I, 642 PAINT . . . . **5.04 MILE**
ITEM 614 - WORK ZONE EDGE LINE, CLASS I, 642 PAINT . . . . . **10.08 MILE**
ITEM 614 - WORK ZONE STOP LINE, CLASS I, 642 PAINT . . . . . **175 FEET**

**ITEM 614 - ASPHALT CONCRETE FOR MAINTAINING TRAFFIC**

A QUANTITY OF ITEM 614 - ASPHALT CONCRETE FOR MAINTAINING TRAFFIC HAS BEEN PROVIDED TO PROTECT THE TRAFFIC FROM OBSTRUCTIONS INCLUDING, BUT NOT LIMITED TO, POTHOLES, DRIVEWAYS, INTERSECTIONS, CASTINGS AND INLETS AND TO MAINTAIN TRAFFIC OVER RUTS AND LOW AREAS WHICH ARE LEFT EXPOSED DUE TO PAVEMENT PLANING OPERATIONS. THE CASTING ELEVATIONS SHALL NOT BE GREATER THAN 2 IN. WHEN EXPOSED TO TRAFFIC. THE FOLLOWING CONTINGENCY QUANTITY HAS BEEN CARRIED TO THE GENERAL SUMMARY:

ITEM 614 - ASPHALT CONCRETE FOR
MAINTAINING TRAFFIC . . . . . **50 CU.YD.**

**CONTINUOUS ACCESS**

THE CONTRACTOR SHALL MAINTAIN SAFE AND ADEQUATE DRIVEWAYS AND WALKWAYS IN ORDER TO PROVIDE CONTINUOUS ACCESS FOR PEDESTRIANS, PASSENGER VEHICLES, TRUCKS AND SAFETY EQUIPMENT TO ALL ADJOINING PROPERTIES.

THE COST FOR ALL MATERIALS, EQUIPMENT AND LABOR NECESSARY TO PROVIDE CONTINUOUS ACCESS SHALL BE INCLUDED IN THE LUMP SUM PRICE BID FOR ITEM 614 - MAINTAINING TRAFFIC.

**ITEM 614 PORTABLE CHANGEABLE MESSAGE SIGN, AS PER PLAN**

THE CONTRACTOR SHALL FURNISH, INSTALL, MAINTAIN, AND REMOVE WHEN NO LONGER NEEDED A PORTABLE CHANGEABLE MESSAGE SIGN(S). THE PCMS SHALL BE OF THE TYPE SHOWN ON THE LIST OF APPROVED PCMS MAINTAINED BY THE DIRECTOR. THE PCMS SHALL BE A CLASS I OR II TYPE UNIT.

THE PORTABLE CHANGEABLE MESSAGE SIGN SHALL BE MOUNTED ON A TRAILER. THE LOCATION OF THE PCMS SHALL BE AS DIRECTED BY THE ENGINEER. THE ENGINEER SHALL BE PROVIDED ACCESS TO EACH SIGN UNIT AND SHALL BE PROVIDED WITH APPROPRIATE TRAINING AND OPERATION INSTRUCTIONS. THE PCMS SHALL CONTAIN A CELLULAR TELEPHONE LINK WHICH WILL ALLOW REMOTE SIGN ACTIVATION, DEACTIVATION, MESSAGE CHANGES, MESSAGE ADDITIONS AND REVISIONS TO TIME OF DAY PROGRAMS. THE SYSTEM SHALL ALSO PERMIT VERIFICATION OF CURRENT AND PROGRAMMED MESSAGES.

THE CONTRACTOR SHALL PROVIDE TO THE ENGINEER THE SOFTWARE NECESSARY TO CONTROL THE PCMS REMOTELY.

THE PCMS SHALL BE EQUIPPED WITH A MYRIAD SAFETY BEAM OR AN APPROVED EQUAL AS DETERMINED BY THE ENGINEER. THE MYRIAD SAFETY BEAM SENDS OUT A SIGNAL THAT ACTIVATES RADAR DETECTORS. THE BEAM IS APPROVED BY THE FCC. THE MYRIAD SAFETY BEAM SHALL USE THE SAME POWER SUPPLY AS THE PCMS. THE MYRIAD SAFETY BEAM SHALL BE ABLE TO BE ACTIVATED WITH THE PCMS RUNNING OR NOT. THE MYRIAD SAFETY BEAM IS DISTRIBUTED BY THE TRIPLEX GROUP, INC., PO BOX 42,. NEW HOPE, PA, 18938, TELEPHONE (215) 862-5077.

NO FLIP DISK UNITS ARE ALLOWED.

AT THE DIRECTION OF THE ENGINEER THE PCMS MAY BE REMOVED FOR PERIODS OR TIMES WHEN NOT IN USE. NO PAYMENT WILL BE MADE FOR THESE TIMES (EX. WINTER MONTHS).
THERE SHALL BE TWO **(2)** CLASS I OR II CHANGEABLE MESSAGE SIGN AT **3** MONTHS EACH.

ITEM 614 - PORTABLE CHANGEABLE MESSAGE SIGN,
AS PER PLAN . . . . . **6 SIGN-MONTHS**

**SURFACE CONDITION SIGNS**

THE CONTRACTOR SHALL ERECT A "GROOVED PAVEMENT" SIGN (W8-H15) 250 FEET (75M) IN ADVANCE OF ANY SECTION OF ROADWAY WHERE TRAFFIC MUST TRAVEL ON A PLANED SURFACE.

ENSURE THESE SIGNS ARE IN PLACE BEFORE OPENING THE ROADWAY TO TRAFFIC. ERECT THESE SIGNS ON EACH ENTRANCE RAMP AND AT INTERSECTIONS OF THROUGH ROUTES TO WARN TRAFFIC OF THIS SURFACE CONDITION.

PAYMENT SHALL BE MADE UNDER THE LUMP SUM BID FOR ITEM 614 - MAINTAINING TRAFFIC.

**ITEM 614 - LAW ENFORCEMENT OFFICER (WITH PATROL CAR) FOR ASSISTANCE DURING CONSTRUCTION OPERATIONS**

USE OF LAW ENFORCEMENT OFFICERS (LEOS) BY CONTRACTORS OTHER THAN THE USES SPECIFIED BELOW WILL NOT BE PERMITTED AT PROJECT COST. LEOS SHOULD NOT BE USED WHERE THE OMUTCD INTENDS THAT FLAGGERS BE USED.

IN ADDITION TO THE REQUIREMENTS OF CMS 614 AND THE OMUTCD, A UNIFORMED LEO WITH AN OFFICIAL PATROL CAR (CAR WITH TOP-MOUNTED EMERGENCY FLASHING LIGHTS AND COMPLETE MARKINGS OF THE APPROPRIATE LAW ENFORCEMENT AGENCY) SHALL BE PROVIDED FOR THE FOLLOWING TRAFFIC CONTROL TASKS:

- DURING THE ENTIRE ADVANCE PREPARATION AND CLOSURE SEQUENCE WHERE COMPLETE BLOCKAGE OF TRAFFIC IS REQUIRED.
- DURING A TRAFFIC SIGNAL INSTALLATION WHEN IMPACTING THE NORMAL FUNCTION OF THE SIGNAL OR THE FLOW OF TRAFFIC OR WHEN TRAFFIC NEEDS TO BE DIRECTED THROUGH AN ENERGIZED TRAFFIC SIGNAL CONTRARY TO THE SIGNAL DISPLAY (E.G., DIRECTING MOTORISTS THROUGH A RED LIGHT).

IN ADDITION TO THE REQUIREMENT OF CMS 614 AND THE OMUTCD, A UNIFORMED LEO WITH AN OFFICIAL PATROL CAR (CAR WITH TOP-MOUNTED EMERGENCY FLASHING LIGHTS AND COMPLETE MARKINGS OF THE APPROPRIATE LAW ENFORCEMENT AGENCY) SHOULD BE PROVIDED FOR THE FOLLOWING TRAFFIC CONTROL TASKS:

- FOR LANE CLOSURES: DURING INITIAL SET-UP PERIODS, TEAR DOWN PERIODS, SUBSTANTIAL SHIFTS OF A CLOSURE POINT OR WHEN NEW LANE CLOSURE ARRANGEMENTS ARE INITIATED FOR LONG-TERM LANE CLOSURES/SHIFTS (FOR THE FIRST AND LAST DAY OF MAJOR CHANGES IN TRAFFIC CONTROL SETUP). IN GENERAL, LEOS SHOULD BE POSITIONED AT THE POINT OF LANE RESTRICTION OR ROAD CLOSURE AND TO MANUALLY CONTROL TRAFFIC MOVEMENTS THROUGH INTERSECTIONS IN WORK ZONES.

- WHEN CONSTRUCTION VEHICLES ARE ENTERING/EXITING THE ZONE DIRECTLY FROM/INTO AN OPEN LANE OF TRAFFIC. IF A LANE HAS BEEN CLOSED TO PROVIDE AN ACCELERATION/DECELERATION LANE FOR THE VEHICLE, THE LEO WILL NOT BE REQUIRED.

LEOS SHOULD NOT FORGO THEIR TRAFFIC CONTROL RESPONSIBILITIES TO APPREHEND MOTORISTS FOR ROUTINE TRAFFIC VIOLATIONS. HOWEVER, IF A MOTORIST'S ACTIONS ARE CONSIDERED TO BE RECKLESS, THEN PURSUIT OF THE MOTORIST IS APPROPRIATE.

THE LEOS WORK AT THE DIRECTION OF THE CONTRACTOR. THE CONTRACTOR IS RESPONSIBLE FOR SECURING THE SERVICES OF THE LEOS WITH THE APPROPRIATE AGENCIES AND COMMUNICATING THE INTENTIONS OF THE PLANS WITH RESPECT TO DUTIES OF THE LEOS. THE ENGINEER SHALL HAVE FINAL CONTROL OVER THE LEOS' DUTIES AND PLACEMENT, AND WILL RESOLVE ANY ISSUES THAT MAY ARISE BETWEEN THE TWO PARTIES.

THE LEO SHOULD REPORT IN TO THE CONTRACTOR PRIOR TO THE START OF THE SHIFT, IN ORDER TO RECEIVE INSTRUCTIONS REGARDING SPECIFIC WORK ASSIGNMENTS DURING HIS/HER SHIFT. THE LEO IS EXPECTED TO STAY AT THE PROJECT SITE FOR THE ENTIRE DURATION OF HIS/HER SHIFT. THE LEO SHALL REPORT TO THE CONTRACTOR AT THE END OF HIS/HER SHIFT. ONCE THE LEO HAS COMPLETED THE DUTIES DESCRIBED ABOVE AND STILL HAS TIME REMAINING ON HIS/HER SHIFT, THE LEO MAY BE ASKED TO PATROL THROUGH THE WORK ZONE (WITH FLASHING LIGHTS OFF) OR BE PLACED AT A LOCATION TO DETER MOTORISTS FROM SPEEDING. SHOULD IT BE NECESSARY TO LEAVE THE PROJECT SITE, THE LEO SHALL NOTIFY THE ENGINEER. THE CONTRACTOR SHALL PROVIDE THE LEO WITH A TWO-WAY COMMUNICATION DEVICE WHICH SHALL BE RETURNED TO THE CONTRACTOR AT THE END OF HIS/HER SHIFT.

LEOS WITH PATROL CAR REQUIRED BY THE TRAFFIC MAINTENANCE TASKS ABOVE SHALL BE PAID FOR ON A UNIT PRICE (HOURLY) BASIS UNDER ITEM 614, LAW ENFORCEMENT OFFICER WITH PATROL CAR FOR ASSISTANCE. THE FOLLOWING ESTIMATED QUANTITIES HAVE BEEN CARRIED TO THE GENERAL SUMMARY.

ITEM 614 - LAW ENFORCEMENT OFFICER WITH PATROL CAR
FOR ASSISTANCE . . . . . **80 HOURS**

CALCULATED
CHECKED

GENERAL NOTES

GEA-88-3.81



I:\PROJECTS\PID81267\DGN\81267GN001.dgn 13-OCT-2009 2:08PM jgrmovse

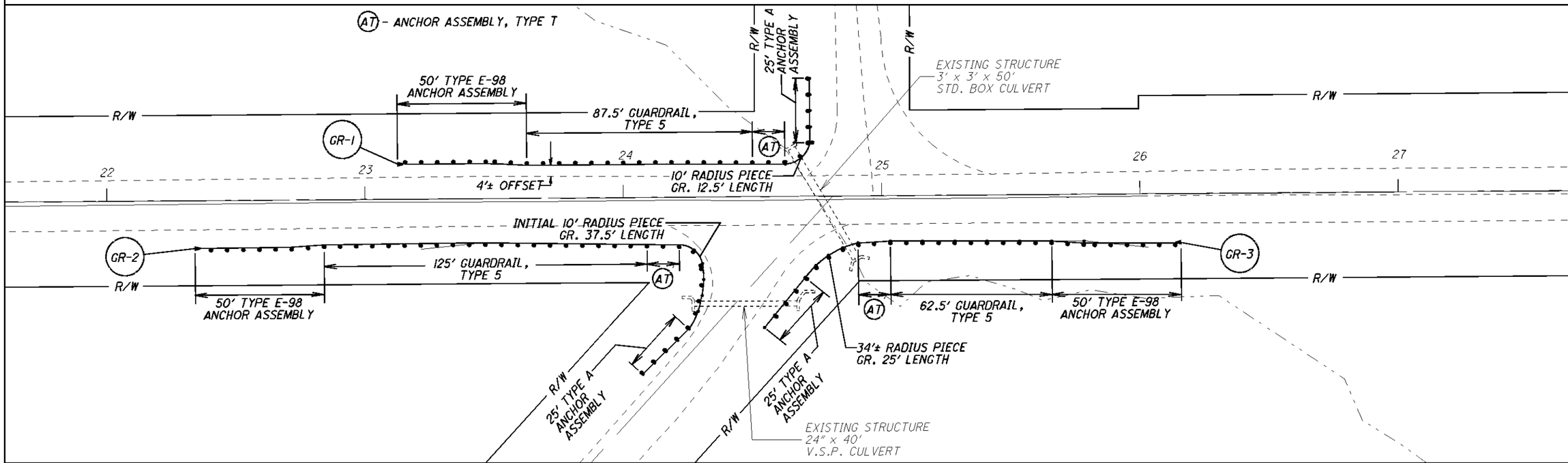


| REFERENCE NO. | LOCATIONS - FROM PLAN RECORD | | 202 | | 202 | 209 | 209 | 448 | 606 | 606 | | 606 | 606 | 620 | 626 | 659 | | 253 | 203 | 304 | 601 | 601 |
|---|---|---|---|---|---|---|---|---|---|---|---|---|---|---|---|---|---|---|---|---|---|---|
| | LOCATIONS<br>STATIONING IS APPROXIMATE FOR ESTIMATING | | GUARDRAIL REMOVED | | ANCHOR ASSEMBLY REMOVED, TYPE A | BORROW | LINEAR GRADING, AS PER PLAN "B" | ASPHALT CONCRETE INTERMEDIATE COURSE, TYPE 1, PG64-22, UNDER GUARDRAIL, A.P.P. | GUARDRAIL, TYPE 5 USING 9' POSTS | ANCHOR ASSEMBLY, TYPE T | | ANCHOR ASSEMBLY, TYPE E-98 | ANCHOR ASSEMBLY, TYPE A | DELINEATOR, POST MOUNTED | BARRIER REFLECTORS, TYPE A2 | SEEDING AND MULCHING | | PAVEMENT REPAIR, AS PER PLAN "B" | EXCAVATION | AGGREGATE BASE | ROCK CHANNEL PROTECTION, TYPE D, WITH FABRIC FILTER | ROCK CHANNEL PROTECTION, TYPE C, WITH GROUT |
| | BEGIN STATION | END STATION | L.F. | | EACH | C.Y. | STA | C.Y. | L.F. | EACH | | EACH | EACH | EACH | FOOT | S.Y. | | S.Y. | C.Y. | C.Y. | C.Y. | C.Y. |
| GR-1 | 23+38 | 24+72.5 | 112.5 | | 2 | | | | | | | | | | | | | | | | | |
| GR-1 | 23+13 | 24+72.5 | | | | 18 | 1.9 | 7.7 | 100 | 1 | | 1 | 1 | 1 | 4 | 42 | | | | | | |
| GR-2 | 23+21.5 | 104' RT ON HOSMER RD. | 106 | | 2 | | | | | | | | | | | | | | | | | |
| GR-2 | 22+34 | 104' RT ON HOSMER RD. | | | | 11.4 | 2.5 | 10 | 162.5 | 1 | | 1 | 1 | 1 | 5 | 57 | | | | | | |
| GR-3 | 24+54 | 26+03 | 112.5 | | 2 | | | | | | | | | | | | | | | | | |
| GR-3 | 24+54 | 26+15.5 | | | | 17 | 1.8 | 7.25 | 87.5 | 1 | | 1 | 1 | 1 | 4 | 40 | | | | | | |
| | SHOULDER PAVEMENT REPAIRS "AS DIRECTED BY THE ENGINEER" | | | | | | | | | | | | | | | | | | | | | |
| GR-1 | 23+30 | 23+50 | | | | 5 | | | | | | | | | | 9 | | 9 | 2 | 2 | 4 | |
| GR-1 | 24+56 | 24+70 | | | | 6 | | | | | | | | | | 11 | | 11 | 2 | 2 | 21 | 21 |
| GR-1 | 23+13 | 23+30 | | | | | | | | | | | | | | | | | | | 4 | |
| TOTALS TO GENERAL SUMMARY | | | 331 | | 6 | 57.4 | 6.2 | 25.0 | 350 | 3 | | 3 | 3 | 3 | 13 | 159.0 | | 20 | 4 | 4 | 29 | 21 |

# GUARDRAIL SITE LOCATIONS (NASH RD.) S.R.-88

GEA-88-3.81

SCALE 0 10 20 40

CALCULATED

CHECKED



I:\PROJECTS\PID81267\DGN\81267GR001.DGN 13-OCT-2009 2:08PM jgrmovse

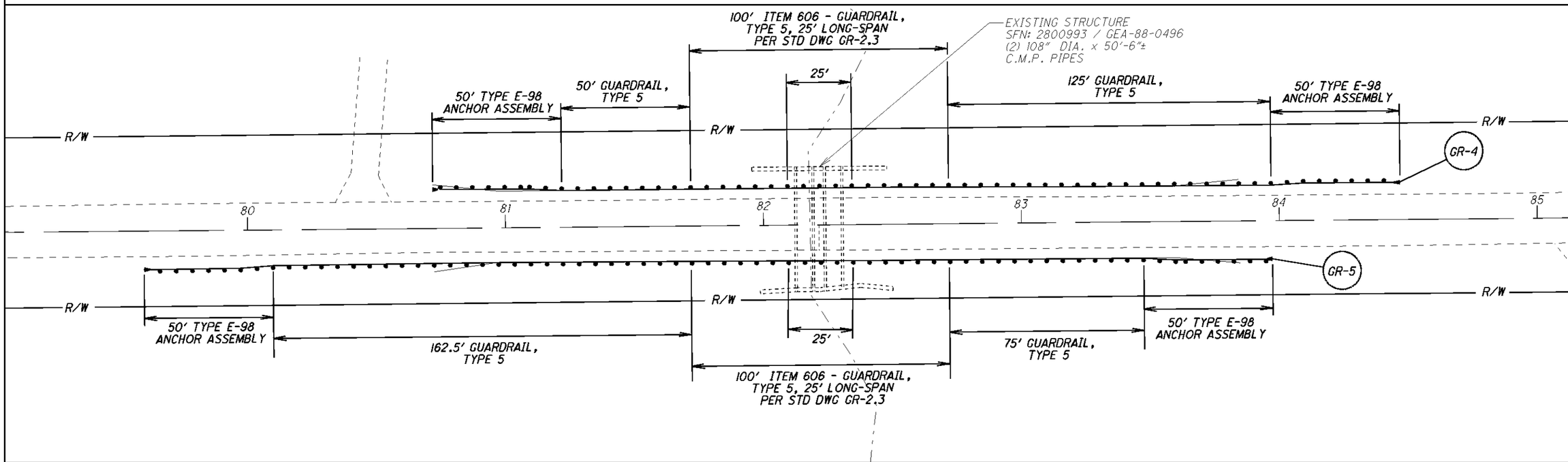


| REFERENCE NO. | LOCATIONS - FROM PLAN RECORD | | 202 | | 202 | 209 | 209 | 448 | 606 | | 606 | 606 | | 620 | 626 | 659 | |
|---|---|---|---|---|---|---|---|---|---|---|---|---|---|---|---|---|---|
| | LOCATIONS<br>STATIONING IS APPROXIMATE FOR ESTIMATING | | GUARDRAIL REMOVED | | ANCHOR ASSEMBLY REMOVED, TYPE A | BORROW | LINEAR GRADING, AS PER PLAN "B" | ASPHALT CONCRETE INTERMEDIATE COURSE, TYPE 1, PG64-22, UNDER GUARDRAIL, A.P.P. | GUARDRAIL, TYPE 5 USING 9' POSTS | | GUARDRAIL, TYPE 5, 25' LONGSPAN | ANCHOR ASSEMBLY, TYPE E-98 | | DELINEATOR, POST MOUNTED | BARRIER REFLECTORS, TYPE A2 | SEEDING AND MULCHING | |
| | BEGIN STATION | END STATION | L.F. | | EACH | C.Y. | STA | C.Y. | L.F. | | L.F. | EACH | | EACH | FOOT | S.Y. | |
| GR-4 | 80+72 | 83+84 | 262.5 | | 2 | | | | | | | | | | | | |
| GR-4 | 80+72 | 84+47 | | | | 36 | 3.8 | 15 | 175 | | 100 | 2 | | 2 | 8 | 85 | |
| GR-5 | 80+72 | 83+85 | 262.5 | | 2 | | | | | | | | | | | | |
| GR-5 | 79+60 | 83+97 | | | | 43 | 5.2 | 18 | 237.5 | | 100 | 2 | | 2 | 9 | 97 | |
| TOTALS TO GENERAL SUMMARY | | | 525 | | 4 | 79 | 9 | 33 | 412.5 | | 200 | 4 | | 4 | 17 | 182 | |

# GUARDRAIL SITE LOCATIONS
## S.R.-88 (NASH RD.)

GEA-88-3.81



I:\PROJECTS\PID8126\7\DGN\8126GR001.DGN 13-OCT-2009 2:08PM jgrmoyse

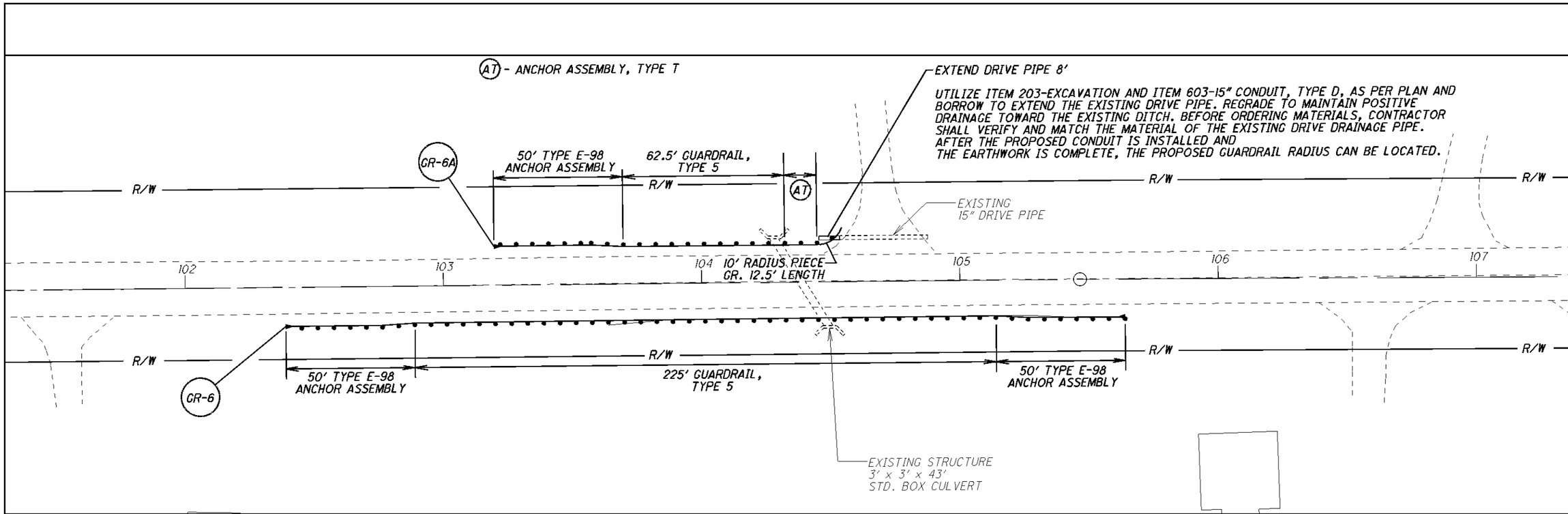


| REFERENCE NO. | LOCATIONS - FROM PLAN RECORD | | 202 | | 202 | 209 | 209 | 448 | 606 | 606 | | 606 | | 620 | 626 | 659 | 203 | 603 |
|---|---|---|---|---|---|---|---|---|---|---|---|---|---|---|---|---|---|---|
| | LOCATIONS<br>STATIONING IS APPROXIMATE FOR ESTIMATING | | GUARDRAIL REMOVED | | ANCHOR ASSEMBLY REMOVED, TYPE A | BORROW | LINEAR GRADING, AS PER PLAN "B" | ASPHALT CONCRETE INTERMEDIATE COURSE, TYPE 1, PG64-22, UNDER GUARDRAIL, A.P.P. | GUARDRAIL, TYPE 5 USING 9' POSTS | ANCHOR ASSEMBLY, TYPE T | | ANCHOR ASSEMBLY, TYPE E-98 | | DELINEATOR, POST MOUNTED | BARRIER REFLECTORS, TYPE A2 | SEEDING AND MULCHING | EXCAVATION | 15" CONDUIT, TYPE D, AS PER PLAN |
| | BEGIN STATION | END STATION | L.F. | | EACH | C.Y. | STA | C.Y. | L.F. | EACH | | EACH | | EACH | FOOT | S.Y. | C.Y. | FT. |
| GR-6 | 103+64 | 105+51.5 | 225 | | 2 | | | | | | | | | | | | | |
| GR-6 | 102+39 | 105+64 | | | | 31.5 | 3.3 | 10.5 | 225 | | | 2 | | 2 | 7 | 74 | | |
| GR-6A | 103+20 | 104+54.5 | | | | 13.5 | 1.4 | 5.8 | 75 | 1 | | 1 | | 1 | 4 | 32 | 1 | 8 |
| TOTALS TO GENERAL SUMMARY | | | 225 | | 2 | 45 | 5 | 16 | 300 | 1 | | 3 | | 3 | 11 | 106 | 1 | 8 |

SCALE 0 10 20 40

CALCULATED

CHECKED

# GUARDRAIL SITE LOCATIONS (NASH RD.)
S.R.-88

GEA-88-3.81



I:\PROJECTS\PID81267\DGN\81267GR001.DGN 13-OCT-2009 2:08PM jgrmoyse

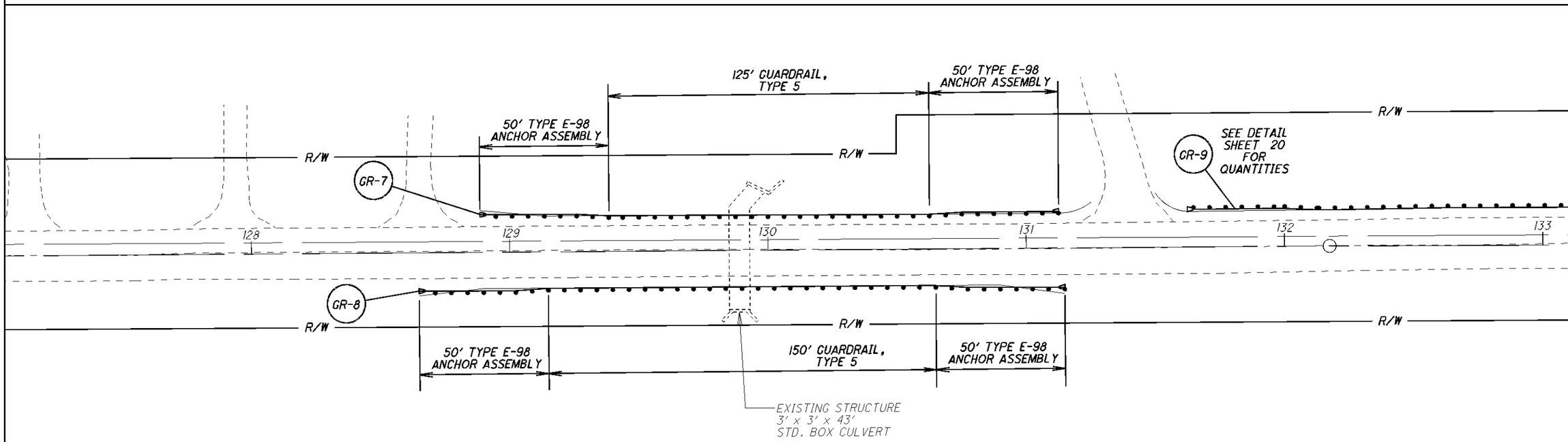


| REFERENCE NO. | LOCATIONS - FROM PLAN RECORD | | 202 | 202 | 202 | 209 | 209 | 448 | 606 | | | 606 | | 620 | 626 | 659 | |
|---|---|---|---|---|---|---|---|---|---|---|---|---|---|---|---|---|---|
| | LOCATIONS<br>STATIONING IS APPROXIMATE FOR ESTIMATING | | GUARDRAIL REMOVED | ANCHOR ASSEMBLY REMOVED, TYPE T | ANCHOR ASSEMBLY REMOVED, TYPE A | BORROW | LINEAR GRADING, AS PER PLAN "B" | ASPHALT CONCRETE INTERMEDIATE COURSE, TYPE 1, PG64-22, UNDER GUARDRAIL, A.P.P. | GUARDRAIL, TYPE 5 USING 9' POSTS | | | ANCHOR ASSEMBLY, TYPE E-98 | | DELINEATOR, POST MOUNTED | BARRIER REFLECTORS, TYPE A2 | SEEDING AND MULCHING | |
| | BEGIN STATION | END STATION | L.F. | EACH | EACH | C.Y. | STA | C.Y. | L.F. | | | EACH | | EACH | FOOT | S.Y. | |
| GR-7 | 128+88.5 | 131+25 | 200 | 1 | 1 | | | | | | | | | | | | |
| GR-7 | 128+88.5 | 131+12.5 | | | | 22 | 2.3 | 9.7 | 125 | | | 2 | | 2 | 5 | 51 | |
| GR-8 | 128+65 | 131+15 | 200 | | 2 | | | | | | | | | | | | |
| GR-8 | 128+65 | 131+15 | | | | 25 | 2.6 | 10.6 | 150 | | | 2 | | 2 | 4 | 57 | |
| TOTALS TO GENERAL SUMMARY | | | 400 | 1 | 3 | 47 | 5 | 20 | 275 | | | 4 | | 4 | 9 | 108 | |

SCALE 0 10 20 40

CALCULATED

CHECKED

# GUARDRAIL SITE LOCATIONS S.R.-88 (NASH RD.)

GEA-88-3.81



I:\PROJECTS\PID81267\DGN\81267GR001.DGN 13-OCT-2009 2:09PM jgrmovse

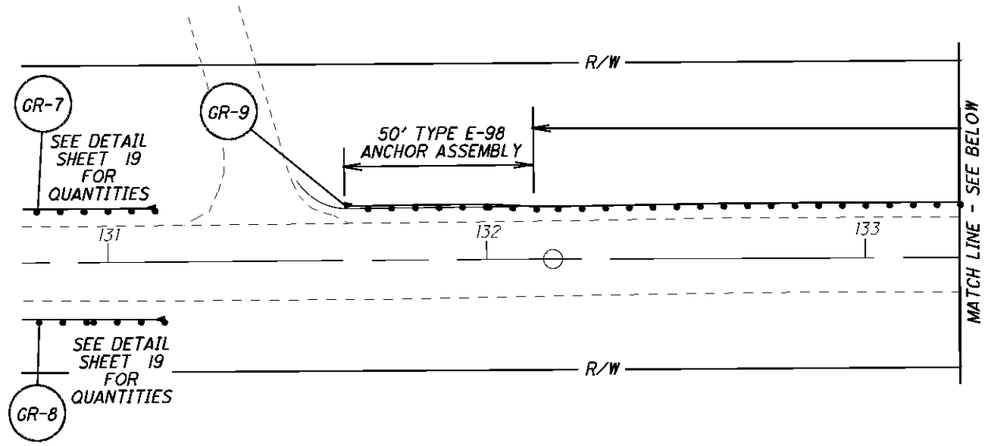


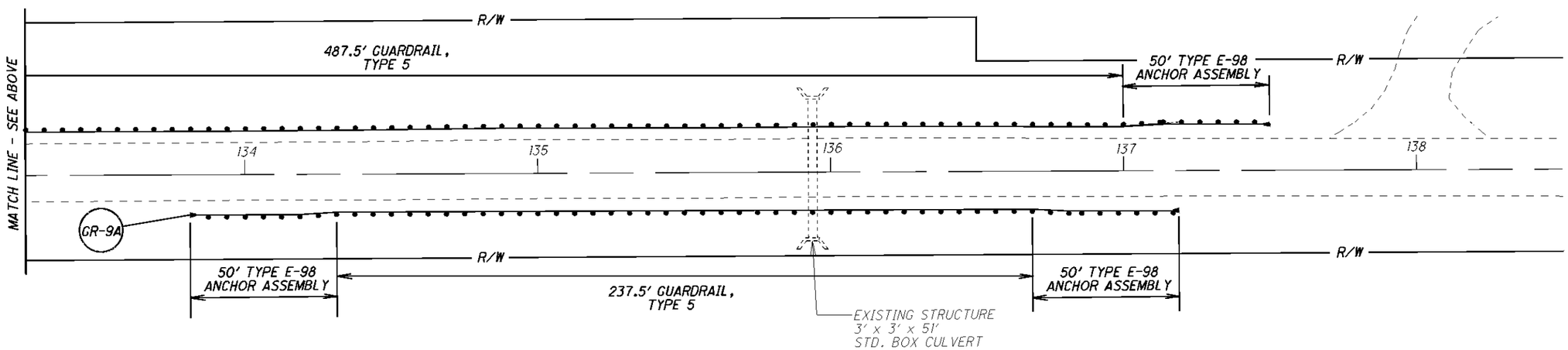


| REFERENCE NO. | LOCATIONS - FROM PLAN RECORD | | 202 | 202 | 202 | 209 | 209 | 448 | 606 | | | 606 | 620 | 626 | 659 | |
|---|---|---|---|---|---|---|---|---|---|---|---|---|---|---|---|---|
| | LOCATIONS<br>STATIONING IS APPROXIMATE FOR ESTIMATING | | GUARDRAIL REMOVED | ANCHOR ASSEMBLY REMOVED, TYPE T | ANCHOR ASSEMBLY REMOVED, TYPE A | BORROW | LINEAR GRADING, AS PER PLAN "B" | ASPHALT CONCRETE INTERMEDIATE COURSE, TYPE 1, PG64-22, UNDER GUARDRAIL, A.P.P. | GUARDRAIL, TYPE 5 USING 9' POSTS | | | ANCHOR ASSEMBLY, TYPE E-98 | DELINEATOR, POST MOUNTED | BARRIER REFLECTORS, TYPE A2 | SEEDING AND MULCHING | |
| | BEGIN STATION | END STATION | L.F. | EACH | EACH | C.Y. | STA | C.Y. | L.F. | | | EACH | EACH | FOOT | S.Y. | |
| GR-9 | 131+50 | 137+19 | 531.5 | 1 | 1 | | | | | | | | | | | |
| GR-9 | 131+62.5 | 137+50 | | | | 54 | 5.9 | 23 | 487.5 | | | 2 | 2 | 12 | 134 | |
| GR-9A | 133+81.5 | 137+19 | | | | 33 | 3.4 | 14 | 237.5 | | | 2 | 2 | 7 | 76 | |
| TOTALS TO GENERAL SUMMARY | | | 532 | 1 | 1 | 87 | 9.3 | 37.0 | 725 | | | 4 | 4 | 19 | 210 | |

SCALE 0 10 20 40

CALCULATED

CHECKED

# GUARDRAIL SITE LOCATIONS
S.R.-88 (NASH RD.)

GEA-88-3.81



I:\PROJECTS\PID8126T\DGN\8126TGR001.DGN 13-OCT-2009 2:09PM jqrmoyse

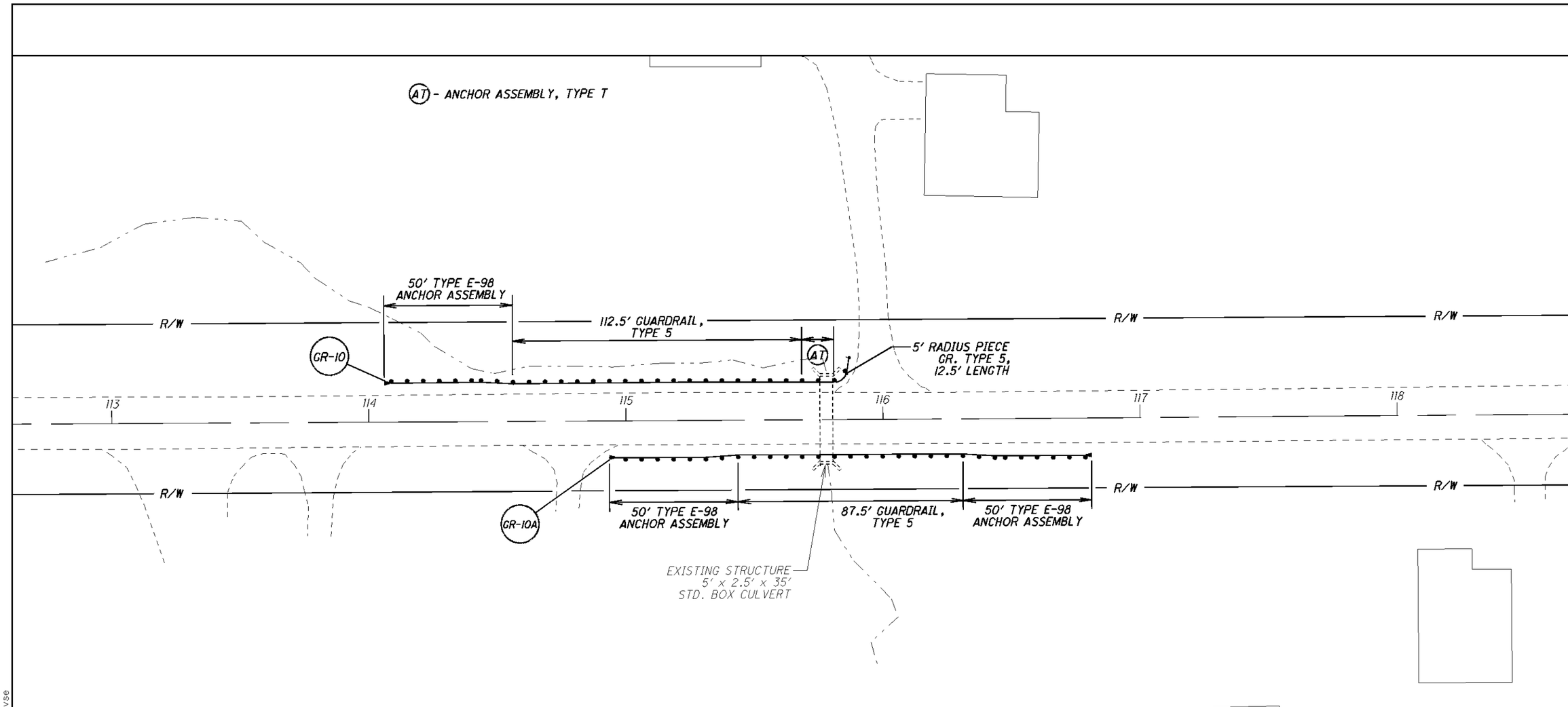


| REFERENCE NO. | LOCATIONS - FROM PLAN RECORD | | | | | 209 | 209 | 448 | 606 | 606 | | 606 | | 620 | 626 | 659 | | 253 | 203 | 304 | 601 | |
|---|---|---|---|---|---|---|---|---|---|---|---|---|---|---|---|---|---|---|---|---|---|---|
| | LOCATIONS<br>STATIONING IS APPROXIMATE FOR ESTIMATING | | | | | BORROW | LINEAR GRADING, AS PER PLAN "B" | ASPHALT CONCRETE INTERMEDIATE COURSE, TYPE 1, PG64-22, UNDER GUARDRAIL, A.P.P. | GUARDRAIL, TYPE 5 USING 9' POSTS | ANCHOR ASSEMBLY, TYPE T | | ANCHOR ASSEMBLY, TYPE E-98 | | DELINEATOR, POST MOUNTED | BARRIER REFLECTORS, TYPE A2 | SEEDING AND MULCHING | | PAVEMENT REPAIR, AS PER PLAN "B" | EXCAVATION | AGGREGATE BASE | ROCK CHANNEL PROTECTION, TYPE D, WITH FABRIC FILTER | |
| | BEGIN STATION | END STATION | | | | C.Y. | STA | C.Y. | L.F. | EACH | | EACH | | EACH | FOOT | S.Y. | | S.Y. | C.Y. | C.Y. | C.Y. | |
| GR-10 | 114+06 | 115+87 | | | | 17 | 2 | 7 | 125 | 1 | | 1 | | 1 | 4 | 40 | | | | | | |
| GR-10A | 114+93.5 | 116+81 | | | | 20 | 2 | 9 | 87.5 | | | 2 | | 2 | 4 | 43 | | | | | | |
| | SHOULDER PAVEMENT REPAIRS "AS DIRECTED BY THE ENGINEER" | | | | | | | | | | | | | | | | | | | | | |
| GR-10 | 114+25 | 115+00 | | | | 18 | | | | | | | | | | 33 | | 34 | 11 | 11 | 14 | |
| GR-10 | 115+00 | 115+75 | | | | | | | | | | | | | | 33 | | | | | 14 | |
| TOTALS TO GENERAL SUMMARY | | | | | | 55 | 4 | 16 | 212.5 | 1 | | 3 | | 3 | 8 | 149 | | 34 | 11 | 11 | 28 | |

SCALE 0 10 20 40

CALCULATED

CHECKED

# GUARDRAIL SITE LOCATIONS S.R.-88 (NASH RD.)

GEA-88-3.81



I:\PROJECTS\PID81267\DGN\81267GR001.DGN 13-OCT-2009 2:09PM jgrmovse

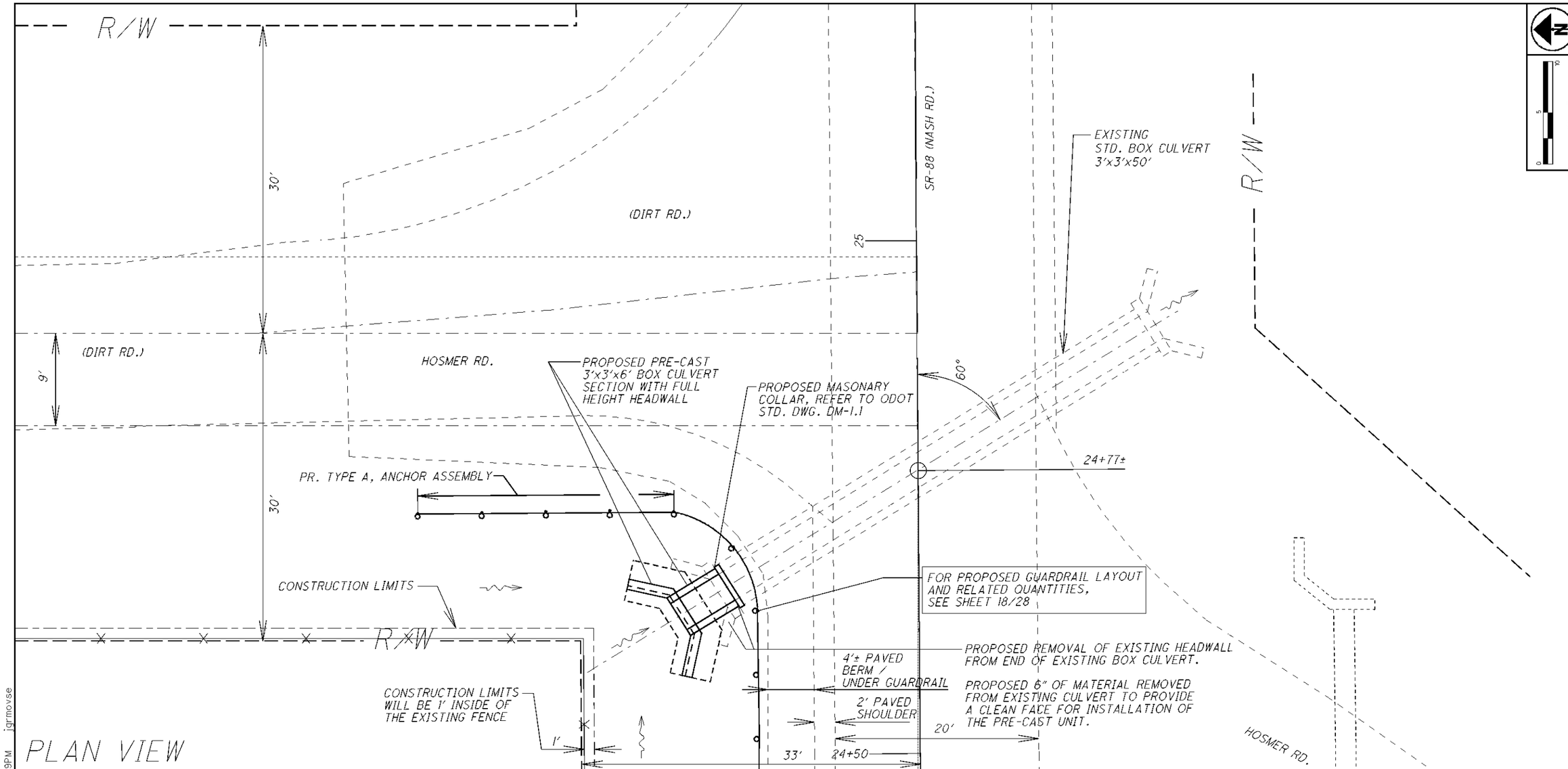


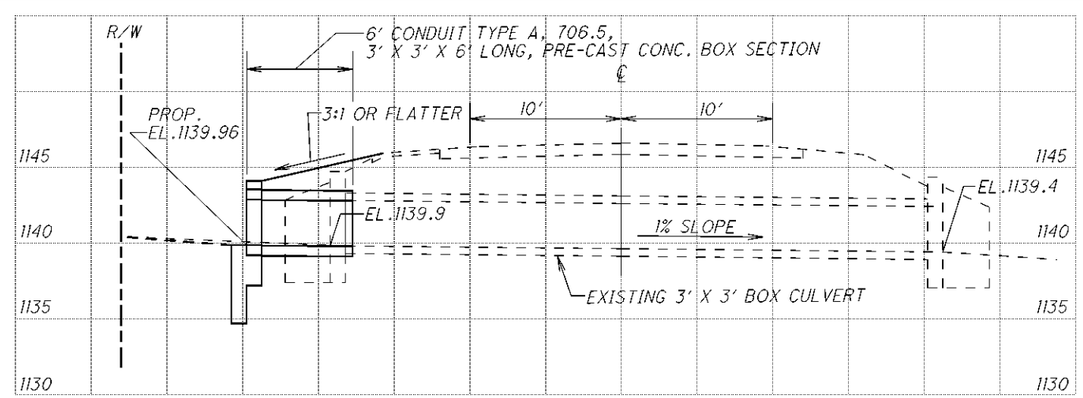


NOTES:

ELEVATIONS SHOWN ARE BASED ON RECORD PLANS. CONTRACTOR TO PERFORM SURVEY WORK TO ESTABLISH CONSTRUCTION ELEVATIONS AND RIGHT-OF-WAY, AND CONSTRUCTION LIMITS.

CONTRACTOR SHALL LAYOUT AND INSTALL CULVERT EXTENSION AND HEADWALL TO MAINTAIN EXISTING CULVERT DRAINAGE SLOPE.

UNDERGROUND UTILITIES MAY EXIST IN THE WORK AREA.
BEFORE COMMENCING ANY EXCAVATION WORK, THE CONTRACTOR SHALL CONTACT O.U.P.S. TO HAVE UNDERGROUND UTILITIES LOCATED AND MARKED.

SCALE 0 5 10

DESIGN AGENCY
O.D.O.T. DISTRICT TWELVE
PRODUCTION DEPARTMENT

| DESIGNED | DRAWN | REVIEWED | DATE |
|---|---|---|---|
| MKM | JAG | | |
| CHECKED | REVISED | STRUCTURE FILE NUMBER | |
| | | N/A | |

STA. 24+77

**SITE PLAN**
CULVERT PLAN AND PROFILE
CULVERT EXTENSION
S.R.-88 (NASH RD.), S.L.M. 3.83

**GEA-88-3.81**
**PID No. 81267**

1/6

22/28

13-OCT-2009 2:09PM jgrmovse
I:\PROJECTS\PID81267\DGN\81267DP001.DGN

## Design Loading

HS 20-44 and the Alternate Military Loading.

## Design Stresses

Cast-in-place structures
Concrete Class C - f'c =4,000 psi Substructure
Reinforcing Steel - ASTM A615, A616, or A617 fy =60,000 psi.

Precast structures: for box and pipe culverts see CMS Section 603.

## Removal of Existing Structure

When no longer needed to maintain traffic, the existing structure shall be removed with the concurrence of the Engineer.

## Item 503 - Unclassified Excavation

Excavation limits for the proposed structure shall be as defined in 503.10. Excavation outside these limits necessary to remove the existing structure shall be included in Item 202 for payment.

## Item 603 - Conduit Misc.: 3'x3' Conduit, Type A, 706.05, As Per Plan

Before ordering the (6' long) 3' Span x 3' Rise box culvert section, the contractor shall verify dimensions of existing box culvert section.

In addition to 706.05, the contractor shall furnish pre-cast box culvert sections meeting the requirements of A.S.T.M. C-850 for the above box culvert size.

The contractor shall submit, the method in which the new section will be connected to the existing box culvert, to the project engineer for approval prior to ordering the new culvert section.

The costs associated with the installation of the masonary collar bridging the proposed and existing box culvert sections, shall be incidental and included in the bid price for the above listed item of work.

This item shall include restoration of pavement and paved shoulders. The related contingency quantities to Item 253 - Pavement Repair, As Per Plan "B" have been shown on this sheet for the restoration of pavement shoulder and berm if pavement removal and replacement is "determined by the Engineer", for the installation of the culvert section and headwall / footing.

Beginning and ending box culvert sections shall be fabricated with the standard tongue and groove on both ends of the sections.

End sections shall be fabricated with mechanical connectors embedded in the top of the box section to anchor the proposed headwall. Bars H503 and H513 shall be compatible with these connectors.

## Utility Lines

All expenses involved in relocating (installing) the affected utility lines shall be borne by the owner(s). The contractor and owner(s) are requested to cooperate by arranging their work in such a manner that inconvenience to either will be held to a minimum.

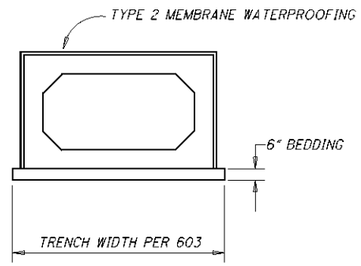


**BOX CULVERT FOUNDATION**

### CULVERT STRUCTURE SUMMARY (GEA-88-3.83)

| ITEM | ITEM EXT | TOTAL | UNIT | DESCRIPTION | SEE SHEET NO. |
|---|---|---|---|---|---|
| 202 | 11000 | LUMP | LUMP | STRUCTURE REMOVED | |
| 503 | 11100 | LUMP | LUMP | COFFERDAMS, CRIBS, AND SHEETING | |
| 503 | 21300 | LUMP | LUMP | UNCLASSIFIED EXCAVATION | |
| 509 | 10000 | 561 | LB. | EPOXY COATED REINFORCING STEEL | |
| 511 | 46000 | 1.2 | CU. YD. | CLASS C CONCRETE, RETAINING WALL OR WINGWALL | |
| 511 | 46500 | 5.4 | CU. YD. | CLASS C CONCRETE, FOOTING | |
| 511 | 46600 | 0.1 | CU. YD. | CLASS C CONCRETE, HEADWALL | |
| 512 | 33000 | 45 | SQ. YD. | TYPE 2 WATERPROOFING | |
| 516 | 13600 | 18 | SQ. FT. | 1" PREFORMED EXPANSION JOINT FILLER | |
| 518 | 21231 | LUMP | LUMP | POROUS BACKFILL WITH FILTER FABRIC, AS PER PLAN | 4/6 |
| 603 | 98300 | 6 | FT. | CONDUIT MISC.: 3' X 3' CONDUIT, TYPE A, 706.05, AS PER PLAN | 2/6 |
| 512 | 10100 | 37 | SQ. YD. | SEALING OF CONCRETE SURFACES (EPOXY-URETHANE), WINGWALL | |

| QUANTITIES FOR CULVERT EXTENSION RESTORATION | 659 | | 253 | 203 | 304 | 601 | 601 | |
|---|---|---|---|---|---|---|---|---|
| | SEEDING AND MULCHING | | PAVEMENT REPAIR, AS PER PLAN "B" | EXCAVATION | AGGREGATE BASE | ROCK CHANNEL PROTECTION, TYPE D, WITH FABRIC FILTER | ROCK CHANNEL PROTECTION, TYPE C, WITH GROUT | REMARKS |
| | S.Y. | | S.Y. | C.Y. | C.Y. | C.Y. | C.Y. | |
| SHOULDER PAVEMENT REPAIRS "AS DIRECTED BY THE ENGINEER" | 33 | | 33 | 6 | 6 | 9 | 22 | GROUTED AREA ABOVE HEADWALL |
| TOTALS CARRIED TO GENERAL SUMMARY | 33.0 | | 33 | 6 | 6 | 9 | 22 | |

DESIGN AGENCY
O.D.O.T. DISTRICT TWELVE
PRODUCTION DEPARTMENT

DRAWN JAG | REVIEWED | DATE
DESIGNED MKM | CHECKED | REVISED
STRUCTURE FILE NUMBER N/A

STA. 24+77

**CULVERT DETAILS**
CULVERT PLAN AND PROFILE
CULVERT EXTENSION
S.R.-88 (NASH RD.), S.L.M. 3.83

**GEA-88-3.81**
**PID No. 81267**

2/6

23/28

I:\PROJECTS\PID81267\DGN\81267DP002.DGN 02-NOV-2009 9:49AM jgrmovse

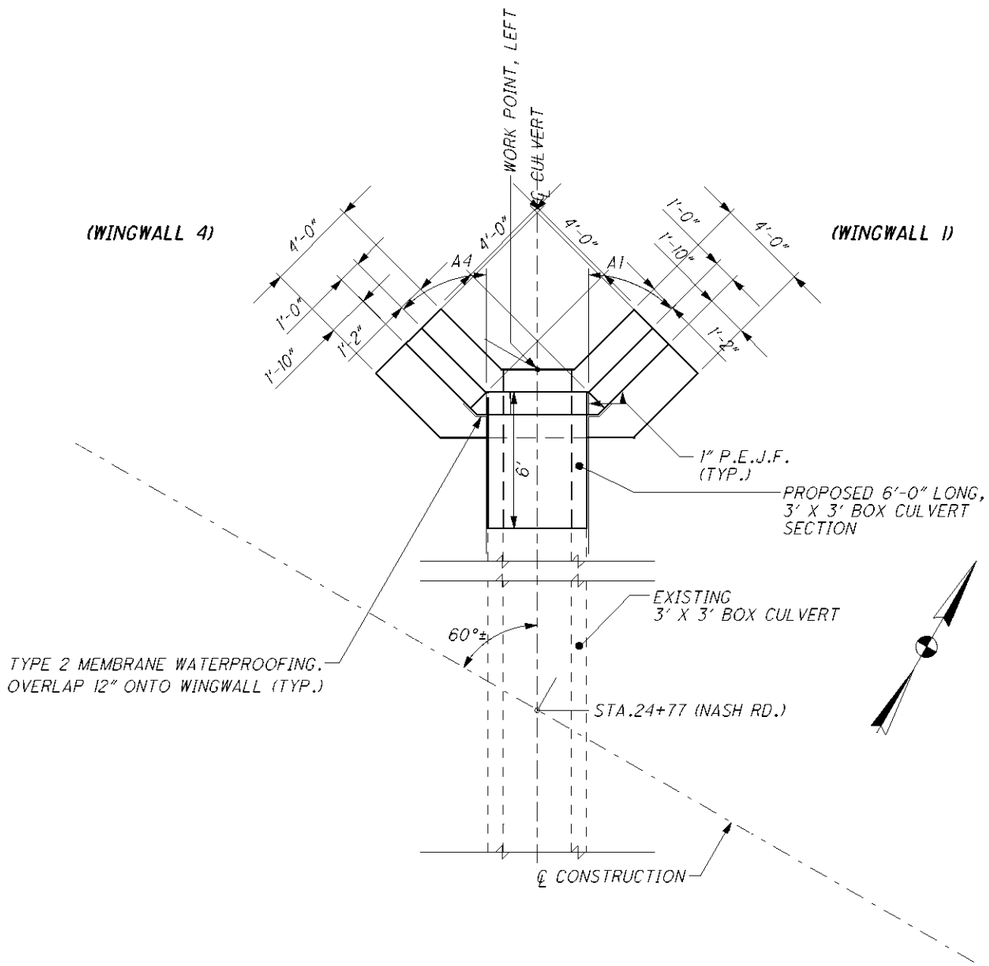


CULVERT & WINGWALL LAYOUT

| WINGWALL ANGLES | |
|---|---|
| A1 | 45°0'0" |
| A4 | 45°0'0" |
| | |
| | |

| WORK POINTS | | |
|---|---|---|
| LOCATION | STATION | OFFSET |
| LEFT | 24+64 | 22'-6 1/2" |
| | | |

DESIGN AGENCY
O.D.O.T. DISTRICT TWELVE
PRODUCTION DEPARTMENT

| DESIGNED | DRAWN | REVIEWED | DATE |
|---|---|---|---|
| MKM | JAG | | |
| CHECKED | REVISED | STRUCTURE FILE NUMBER | |
| | | N/A | |

STA. 24+77

**SITE PLAN**
CULVERT PLAN AND PROFILE
CULVERT EXTENSION
S.R.-88 (NASH RD.), S.L.M. 3.83

**GEA-88-3.81**
**PID No. 81267**



I:\PROJECTS\PID81267\DGN\81267DP002.DGN 13-OCT-2009 2:09PM jgrmovse

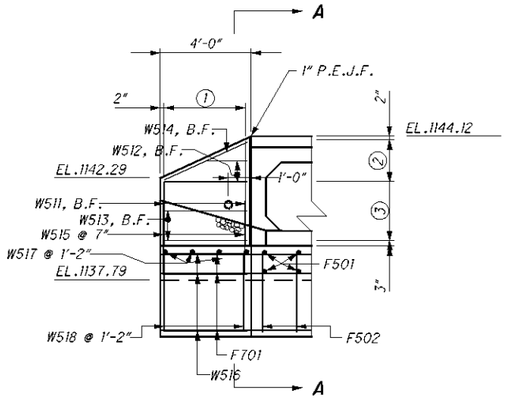


WINGWALL 1 ELEVATION

NOTE: 4" DIA. WEEPHOLE
ELEV. = 1140.940

1 SER. OF 4 @ 1'-2"
2 2 SPACES @ 11"
3 2 SPACES @ 1'-4"

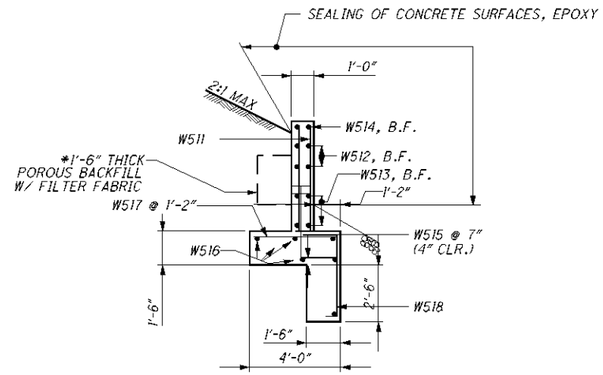


SECTION A-A

*SEE NOTES, THIS SHEET

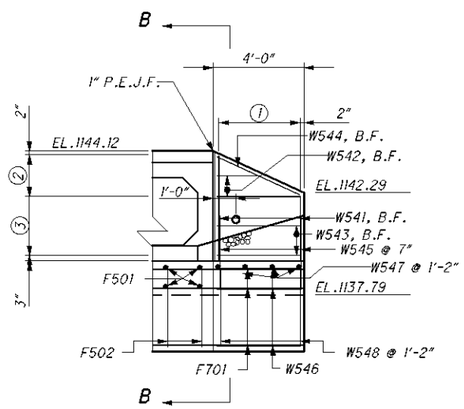


WINGWALL 4 ELEVATION

NOTE: 4" DIA. WEEPHOLE
ELEV. = 1140.940

1 SER. OF 4 @ 1'-2"
2 2 SPACES @ 11"
3 2 SPACES @ 1'-4"

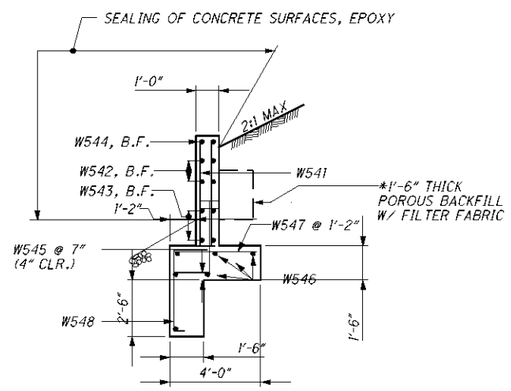


SECTION B-B

## NOTES:

**ITEM 518, POROUS BACKFILL WITH FILTER FABRIC, AS PER PLAN**
1'-6" THICK SHALL BE PLACED BEHIND THE WINGWALLS ONLY AND SHALL EXTEND 12" BELOW THE EMBANKMENT SURFACE. GEOTEXTILE FABRIC SHALL BE PLACED BETWEEN THE POROUS BACKFILL AND REPLACED EXCAVATION ADJACENT TO THE STRUCTURE. IT SHALL TURN UNDER THE BOTTOM OF THE POROUS BACKFILL AND RETURN 6" ABOVE THE TOP ELEVATION OF THE WEEPHOLE.

1" PREFORMED EXPANSION JOINT FILLER SHALL BE EXTENDED FROM TOP OF FOOTING TO TOP OF WALL.

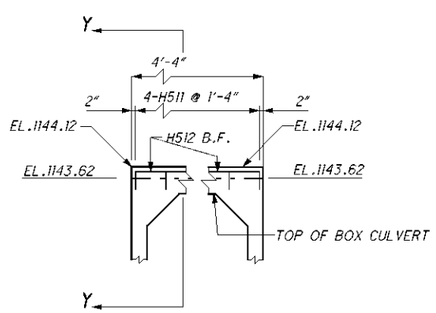


INLET HEADWALL REINFORCING DETAIL

SEE THIS SHEET FOR SECTION Y-Y

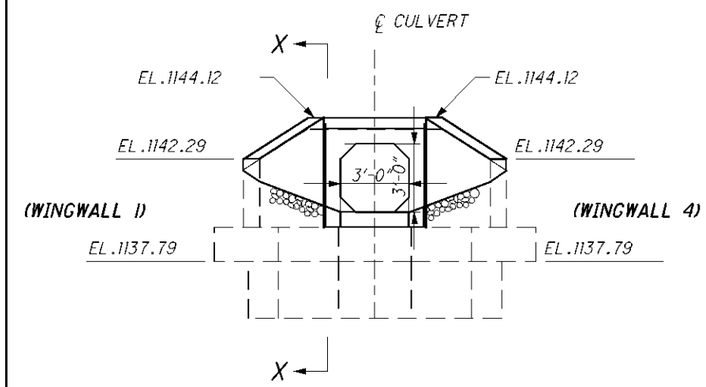


INLET ELEVATION

FLOWLINE ELEVATION: EL.1139.96

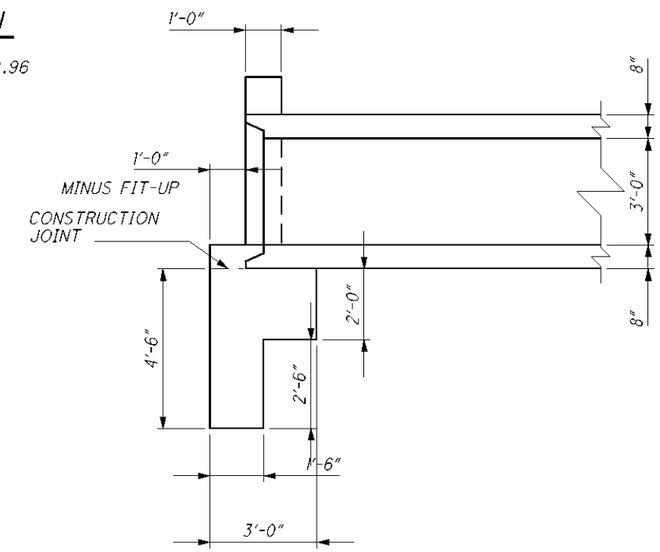


SECTION X-X

LEGEND

F.F. - FRONT FACE
R.F. - REAR FACE
B.F. - BOTH FACES

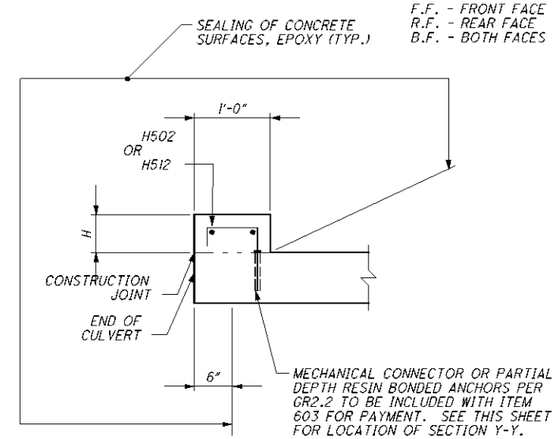


SECTION Y-Y

H =6" INLET HEADWALL

DESIGN AGENCY
O.D.O.T. DISTRICT TWELVE
PRODUCTION DEPARTMENT

| DESIGNED | DRAWN | REVIEWED | DATE |
|---|---|---|---|
| MKM | JAG | | |
| CHECKED | REVISED | STRUCTURE FILE NUMBER | |
| | | N/A | |

STA. 24+77

**SITE PLAN**
CULVERT PLAN AND PROFILE
CULVERT EXTENSION
S.R.-88 (NASH RD.), S.L.M. 3.83

**GEA-88-3.81**
**PID No. 81267**

4 / 6

25 / 28

I:\PROJECTS\PID81267\DGN\81267DP002.DGN 13-OCT-2009 2:09PM jgrmovse

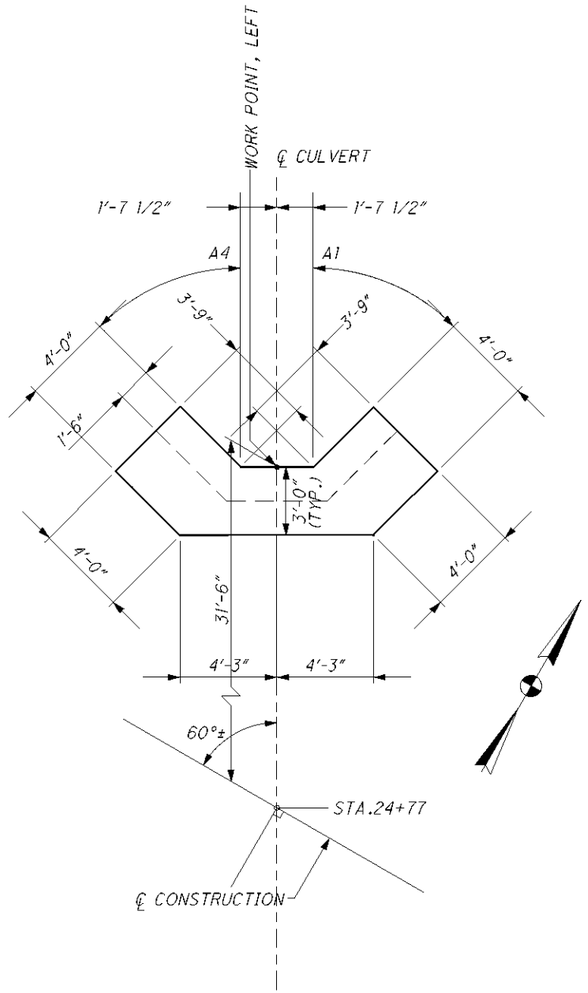


## FOOTING LAYOUT

SEE TABLE ON SHEET 3/6 FOR VALUES OF A1 THRU A4
FOR WORKPOINT STATIONS AND OFFSETS SEE SHEET 3/6

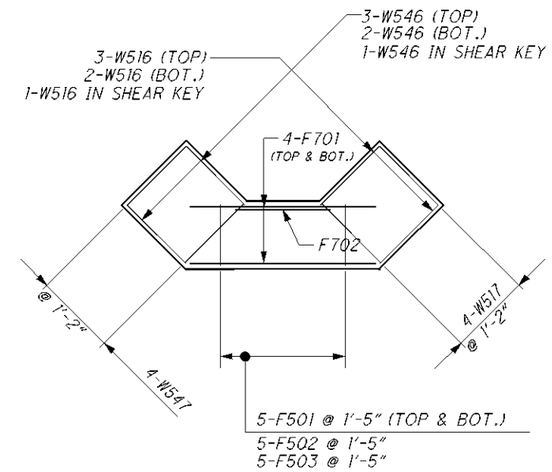


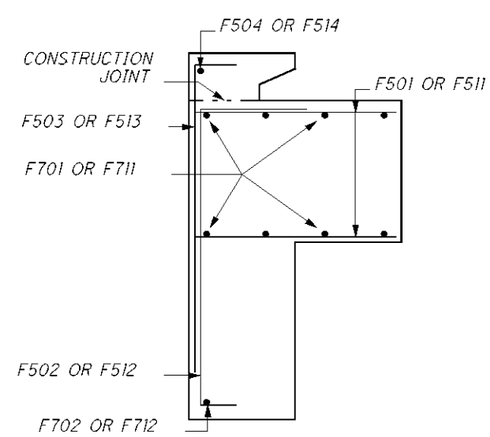


## FOOTING REINFORCING DETAIL

DESIGN AGENCY
O.D.O.T. DISTRICT TWELVE
PRODUCTION DEPARTMENT

| DESIGNED | DRAWN | REVIEWED | DATE |
|---|---|---|---|
| MKM | JAG | | |
| CHECKED | REVISED | STRUCTURE FILE NUMBER | |
| | | N/A | |

STA. 24+77

**SITE PLAN**
CULVERT PLAN AND PROFILE
CULVERT EXTENSION
S.R.-88 (NASH RD.), S.L.M. 3.83

**GEA-88-3.81**
**PID No. 81267**

5/6

26/28

I:\PROJECTS\PID81267\DGN\81267DP002.DGN 13-OCT-2009 2:09PM jgrmoyse

## EPOXY COATED REINFORCING STEEL LIST

| MARK | NO. | LENGTH | WEIGHT | TYPE | A | B | C | INCR |
|---|---|---|---|---|---|---|---|---|
| | | | | **WINGWALL 1** | | | | |
| W511 | 2 | 2'-10" | 31 | STR | | | | 7 1/2" |
| | S.O. | TO | | | | | | |
| | 4 | 4'-8" | | | | | | |
| W512 | 2 | 1'-9" | 11 | STR | | | | 1'-10" |
| | S.O. | TO | | | | | | |
| | 2 | 3'-7" | | | | | | |
| W513 | 4 | 3'-7" | 15 | STR | | | | |
| W514 | 2 | 3'-11" | 8 | STR | | | | |
| W515 | 7 | 4'-8" | 34 | 3 | 3'-2" | 1'-8" | | |
| W516 | 6 | 3'-8" | 23 | STR | | | | |
| W517 | 5 | 3'-8" | 19 | STR | | | | |
| W518 | 4 | 5'-4" | 22 | 4 | 1'-6" | 3'-7" | 6" | |
| | | | | | | | | |
| | SUBTOTAL | = 163 LBS | | | | | | |
| | | | | | | | | |
| | | | | **WINGWALL 4** | | | | |
| W541 | 2 | 2'-10" | 31 | STR | | | | 7 1/2" |
| | S.O. | TO | | | | | | |
| | 4 | 4'-8" | | | | | | |
| W542 | 2 | 1'-9" | 11 | STR | | | | 1'-10" |
| | S.O. | TO | | | | | | |
| | 2 | 3'-7" | | | | | | |
| W543 | 4 | 3'-7" | 15 | STR | | | | |
| W544 | 2 | 3'-11" | 8 | STR | | | | |
| W545 | 7 | 4'-8" | 34 | 3 | 3'-2" | 1'-8" | | |
| W546 | 6 | 3'-8" | 23 | STR | | | | |
| W547 | 5 | 3'-8" | 19 | STR | | | | |
| W548 | 4 | 5'-4" | 22 | 4 | 1'-6" | 3'-7" | 6" | |
| | | | | | | | | |
| | SUBTOTAL | = 163 LBS | | | | | | |
| | | | | | | | | |
| | | | | | | | | |
| | | | | **CULVERT FOOTING** | | | | |
| F501 | 10 | 2'-8" | 28 | STR | | | | |
| F502 | 5 | 5'-5" | 28 | 4 | 6" | 3'-8" | 1'-6" | |
| F503 | 5 | 3'-7" | 19 | 3 | 3'-0" | 9" | | |
| F504 | 1 | 2'-8" | 3 | STR | | | | |
| | | | | | | | | |
| | | | | | | | | |
| F701 | 8 | 8'-2" | 134 | STR | | | | |
| F702 | 1 | 4'-2" | 9 | STR | | | | |
| | | | | | | | | |
| | SUBTOTAL | = 221 LBS | | | | | | |
| | | | | | | | | |
| | | | | | | | | |
| | | | | | | | | |
| | | | | | | | | |
| | | | | | | | | |
| | | | | | | | | |
| | | | | **HEADWALL** | | | | |
| | | | | | | | | |
| H511 | 4 | 1'-5" | 6 | 4 | 10" | 8" | 2" | |
| H512 | 2 | 4'-0" | 8 | STR | | | | |
| | | | | | | | | |
| | SUBTOTAL | = 14 LBS | | | | | | |

THE BAR SIZE NUMBER IS SPECIFIED ON THE PLANS IN THE BAR MARK COLUMN. THE FIRST DIGIT WHERE THREE DIGITS ARE USED, AND THE FIRST TWO DIGITS WHERE FOUR ARE USED, INDICATES THE BAR SIZE NUMBER. FOR EXAMPLE, W601 IS A NO. 6 BAR. BAR DIMENSIONS SHOWN ARE OUT TO OUT UNLESS OTHERWISE INDICATED. R INDICATES INSIDE RADIUS, UNLESS OTHERWISE NOTED. "STD." WRITTEN IN PLACE OF A DIMENSION INDICATES A STANDARD BEND AT THE END OF THE BAR.

ALL REINFORCING STEEL TO BE EXOXY COATED.

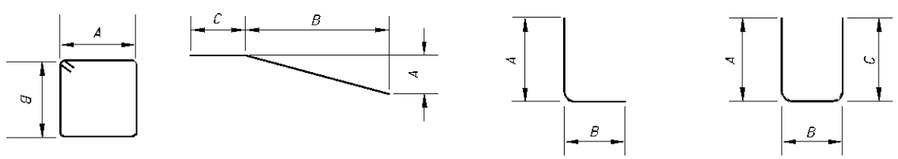


TYPE 1 TYPE 2 TYPE 3 TYPE 4

**BENDING DIAGRAMS**

S.O. - SERIES OF

DESIGN AGENCY
O.D.O.T. DISTRICT TWELVE
PRODUCTION DEPARTMENT

REVIEWED DATE
STRUCTURE FILE NUMBER N/A

DRAWN JAG REVISED

DESIGNED MKM CHECKED

STA. 24+77

**SITE PLAN**
CULVERT PLAN AND PROFILE
CULVERT EXTENSION
S.R.-88 (NASH RD.), S.L.M. 3.83

**GEA-88-3.81**
**PID No. 81267**

6/6

27/28

I:\PROJECTS\PID81267\DGN\81267DP002.DGN 13-OCT-2009 2:09PM jgrmovse

| SHEET NUMBER | | | | | | | | | | | | | | PARTICIPATION | | ITEM | ITEM EXT. | GRAND TOTAL | UNIT | PARTICIPATION I = 100% STATE | SEE SHEET NO. |
|---|---|---|---|---|---|---|---|---|---|---|---|---|---|---|---|---|---|---|---|---|---|
| 7 | 8 | 10 | 11 | 13 | 15 | | 16 | 17 | 18 | 19 | 20 | 21 | 23 | I | | | | | | DESCRIPTION | |
| | | | | | | | | | | | | | | | | | | | | **ROADWAY** | |
| | | LUMP | | | | | | | | | | | | LUMP | | 202 | 11201 | LUMP | LUMP | PORTIONS OF STRUCTURE REMOVED, AS PER PLAN | 10 |
| | | | | | | | 331 | 525 | 225 | 400 | 532 | | | 2013 | | 202 | 38000 | 2013 | FT | GUARDRAIL REMOVED | |
| | | | | | | | 6 | 4 | 2 | 3 | 1 | | | 16 | | 202 | 42000 | 16 | EACH | ANCHOR ASSEMBLY REMOVED, TYPE A | |
| | | | | | | | | | | 1 | 1 | | | 2 | | 202 | 42040 | 2 | EACH | ANCHOR ASSEMBLY REMOVED, TYPE T | |
| | | | 8 | | | | 4 | | 1 | | | 11 | 6 | 30 | | 203 | 10000 | 30 | CU YD | EXCAVATION | |
| 212 | | | | | | | | | | | | | | 212 | | 209 | 60201 | 212 | STATION | LINEAR GRADING, AS PER PLAN "A" | 10 |
| | | | | | | | 6.2 | 9 | 5 | 5 | 9.3 | 4 | | 38.5 | | 209 | 60201 | 38.5 | STATION | LINEAR GRADING, AS PER PLAN "B" | 10 |
| | | | 24 | | | | 57.4 | 79 | 45 | 47 | 87 | 55 | | 394.4 | | 209 | 70000 | 394.4 | CU YD | BORROW | 10 |
| | | | | | | | | | | | | | | | | | | | | | |
| | | | | | | | 350 | 412.5 | 300 | 275 | 725 | 212.5 | | 2275 | | 606 | 13030 | 2275 | FT | GUARDRAIL, TYPE 5, USING 9 FOOT POSTS | |
| | | | | | | | | 200 | | | | | | 200 | | 606 | 17300 | 200 | FT | GUARDRAIL, TYPE 5, 25' LONG-SPAN | |
| | | | | | | | 3 | 4 | 3 | 4 | 4 | 3 | | 21 | | 606 | 22010 | 21 | EACH | ANCHOR ASSEMBLY, TYPE E-98 | |
| | | | | | | | 3 | | | | | | | 3 | | 606 | 25000 | 3 | EACH | ANCHOR ASSEMBLY, TYPE A | |
| | | | | | | | 3 | | 1 | | | 1 | | 5 | | 606 | 26500 | 5 | EACH | ANCHOR ASSEMBLY, TYPE T | |
| | | | | | | | | | | | | | | | | | | | | | |
| | | | | | | | | | | | | | | | | | | | | **EROSION CONTROL** | |
| | | | 19 | | | | 29 | | | | | 28 | 9 | 85 | | 601 | 32304 | 85 | CU YD | ROCK CHANNEL PROTECTION, TYPE D WITH FABRIC FILTER | |
| | | | | | | | 21 | | | | | | 22 | 43 | | 601 | 34400 | 43 | CU YD | ROCK CHANNEL PROTECTION, TYPE C WITH GROUT | |
| | | | 44 | | | | 159 | 182 | 106 | 108 | 210 | 149 | 33 | 991 | | 659 | 10000 | 991 | SQ YD | SEEDING AND MULCHING | |
| | | | | | | | | | | | | | | 1000 | | 832 | 30000 | 1000 | EACH | EROSION CONTROL | |
| | | | | | | | | | | | | | | | | | | | | | |
| | | | | | | | | | | | | | | | | | | | | **DRAINAGE** | |
| | | | | | | | | | 8 | | | | | 8 | | 603 | 06401 | 8 | FT | 15" CONDUIT, TYPE D, AS PER PLAN | 12 |
| | | | | | | | | | | | | | | | | | | | | | |
| | | | | | | | | | | | | | | | | | | | | **PAVEMENT** | |
| | | | 415 | | | | | | | | | | | 415 | | 251 | 01000 | 415 | SQ YD | PARTIAL DEPTH PAVEMENT REPAIR | |
| | | | 120 | | | | | | | | | | | 120 | | 253 | 02001 | 120 | CU YD | PAVEMENT REPAIR, AS PER PLAN "A" | 11 |
| | | | 44 | | | | 20 | | | | | 34 | 33 | 131 | | 253 | 02001 | 131 | CU YD | PAVEMENT REPAIR, AS PER PLAN "B" | 11 |
| 852 | | | | | | | | | | | | | | 852 | | 254 | 01000 | 852 | SQ YD | PAVEMENT PLANING, ASPHALT CONCRETE | |
| | | | | | | | | | | | | | | | | | | | | | |
| | | | 8 | | | | 4 | | | | | 11 | 6 | 29 | | 304 | 20000 | 29 | CU YD | AGGREGATE BASE | |
| | | | | | | | | | | | | | | | | | | | | | |
| 3702 | | | | | | | | | | | | | | 3702 | | 407 | 10000 | 3702 | GAL | TACK COAT | |
| 2478 | | | | | | | | | | | | | | 2478 | | 407 | 14000 | 2478 | GAL | TACK COAT FOR INTERMEDIATE COURSE | |
| 1476 | | | | | | | | | | | | | | 1476 | | 446 | 47029 | 1476 | CU YD | ASPHALT CONCRETE SURFACE COURSE, TYPE 1, PG70-22M, AS PER PLAN | 11 |
| 736 | | | | | | | | | | | | | | 736 | | 448 | 46020 | 736 | CU YD | ASPHALT CONCRETE INTERMEDIATE COURSE, TYPE 1, PG64-22 (VARIABLE) | |
| 33 | | | | | | | | | | | | | | 33 | | 448 | 47020 | 33 | CU YD | ASPHALT CONCRETE SURFACE COURSE, TYPE 1, PG64-22 | |
| 64 | | | | | | | | | | | | | | 64 | | 448 | 48020 | 64 | CU YD | ASPHALT CONCRETE SURFACE COURSE, TYPE 1, PG64-22 (DRIVEWAYS) | |
| | | | | | | | 25 | 33 | 16 | 20 | 37 | 16 | | 147 | | 448 | 46061 | 147 | CU YD | ASPHALT CONCRETE INTERMEDIATE COURSE, TYPE 1, UNDER GUARDRAIL, PG64-22, AS PER PLAN | 10 |
| 147 | | | | | | | | | | | | | | 147 | | 617 | 10101 | 147 | CU YD | COMPACTED AGGREGATE, AS PER PLAN | 12 |
| | | | | | | | | | | | | | | | | | | | | **STRUCTURES** | |
| | | | | | | | | | | | | | | | | | | | | FOR CULVERT STRUCTURE EXTENSION **GEA-88-3.83**. SEE SHEET **23** | |
| | | | | | | | | | | | | | | | | | | | | | |
| | | | | | | | | | | | | | | | | | | | | **TRAFFIC CONTROL** | |
| | | | | | | | 3 | 4 | 3 | 4 | 4 | 3 | | 21 | | 620 | 00500 | 21 | EACH | DELINEATOR, POST MOUNTED | |
| | | | | 198 | | | | | | | | | | 198 | | 621 | 00100 | 198 | EACH | RPM | |
| | | | | 198 | | | | | | | | | | 198 | | 621 | 54000 | 198 | EACH | RAISED PAVEMENT MARKER REMOVED | |
| | | | | | | | | | | | | | | | | | | | | | |
| | | | | | | | 13 | 17 | 11 | 9 | 19 | 8 | | 77 | | 626 | 00100 | 77 | EACH | BARRIER REFLECTOR | |
| | | | | 6 | | | | | | | | | | 6 | | 632 | 26501 | 6 | EACH | DETECTOR LOOP, AS PER PLAN | 13 |
| | | | | 5.04 | | | | | | | | | | 5.04 | | 646 | 10000 | 5.04 | MILE | EDGE LINE | |
| | | | | 2.52 | | | | | | | | | | 2.52 | | 646 | 10200 | 2.52 | MILE | CENTER LINE | |
| | | | | 175 | | | | | | | | | | 175 | | 646 | 10400 | 175 | FT | STOP LINE | |
| | | | | LUMP | | | | | | | | | | LUMP | | 690 | 98400 | LUMP | LUMP | SPECIAL-MISC: INVENTORY EXISTING PAVEMENT MARKINGS | 13 |
| | | | | | | | | | | | | | | | | | | | | | |
| | | | | | | | | | | | | | | | | | | | | **MAINTENANCE OF TRAFFIC** | |
| | | | | | 80 | | | | | | | | | 80 | | 614 | 11110 | 80 | HOUR | LAW ENFORCEMENT OFFICER WITH PATROL CAR FOR ASSISTANCE | |
| | | | | | 50 | | | | | | | | | 50 | | 614 | 13000 | 50 | CU YD | ASPHALT CONCRETE FOR MAINTAINING TRAFFIC | |
| | | | | | 6 | | | | | | | | | 6 | | 614 | 18601 | 6 | SN MT | PORTABLE CHANGEABLE MESSAGE SIGN. AS PER PLAN | 15 |
| | | | | | 5.04 | | | | | | | | | 5.04 | | 614 | 21100 | 5.04 | MILE | WORK ZONE CENTER LINE, CLASS I, 642 PAINT | |
| | | | | | 10.08 | | | | | | | | | 10.08 | | 614 | 22100 | 10.08 | MILE | WORK ZONE EDGE LINE, CLASS I, 642 PAINT | |
| | | | | | 175 | | | | | | | | | 175 | | 614 | 26200 | 175 | FT | WORK ZONE STOP LINE, CLASS I, 642 PAINT | |
| | | | | | | | | | | | | | | LUMP | | 614 | 11000 | LUMP | LUMP | MAINTAINING TRAFFIC | |
| | 5 | | | | | | | | | | | | | 5 | | 619 | 16010 | 5 | MONTH | FIELD OFFICE, TYPE B | |
| | | | | | | | | | | | | | | LUMP | | 623 | 10000 | LUMP | LUMP | CONSTRUCTION LAYOUT STAKES | |
| | | | | | | | | | | | | | | LUMP | | 624 | 10000 | LUMP | LUMP | MOBILIZATION | |

CALCULATED

CHECKED

**GENERAL SUMMARY**

**GEA-88-3.81**



I:\PROJECTS\P1D81267\DGN\81267G001.dgn 02-NOV-2009 9:56AM jgrmovse