GEA - SR 88/528 - 0.00/1.29
060484 PID - 21753
Dist 12 11/1/2006

# OHIO DEPARTMENT OF TRANSPORTATION

## GEA-88/528-0.00/1.29 RESURFACING

| PART | COUNTY | ROUTE | SECTIONS | PROJECT TERMINII BEGIN | PROJECT TERMINII END | NET LENGTH MILES | TOWNSHIP | CITY |
|---|---|---|---|---|---|---|---|---|
| 1 | GEA | 88 | (0.00 - 3.36) | 0.00 | 3.36 | 3.36 | PARKMAN TWP. | |
| 2 | GEA | 528 | (1.29 - 6.35) | 1.29 | 6.35 | 5.06 | PARKMAN TWP. MIDDLEFIELD TWP. | |
| | | | | | | | | |
| 3 | GEA | 88 | (3.36 - 3.83) | 3.36 | 3.83 | .47 | PARKMAN TWP. | |

PROJECT EARTH DISTURBED AREA = N/A (MAINTENANCE PROJECT)
ESTIMATED CONTRACTOR EARTH DISTURBED AREA = N/A (MAINTENANCE PROJECT)
NOTICE OF INTENT EARTH DISTURBED AREA = N/A (MAINTENANCE PROJECT)

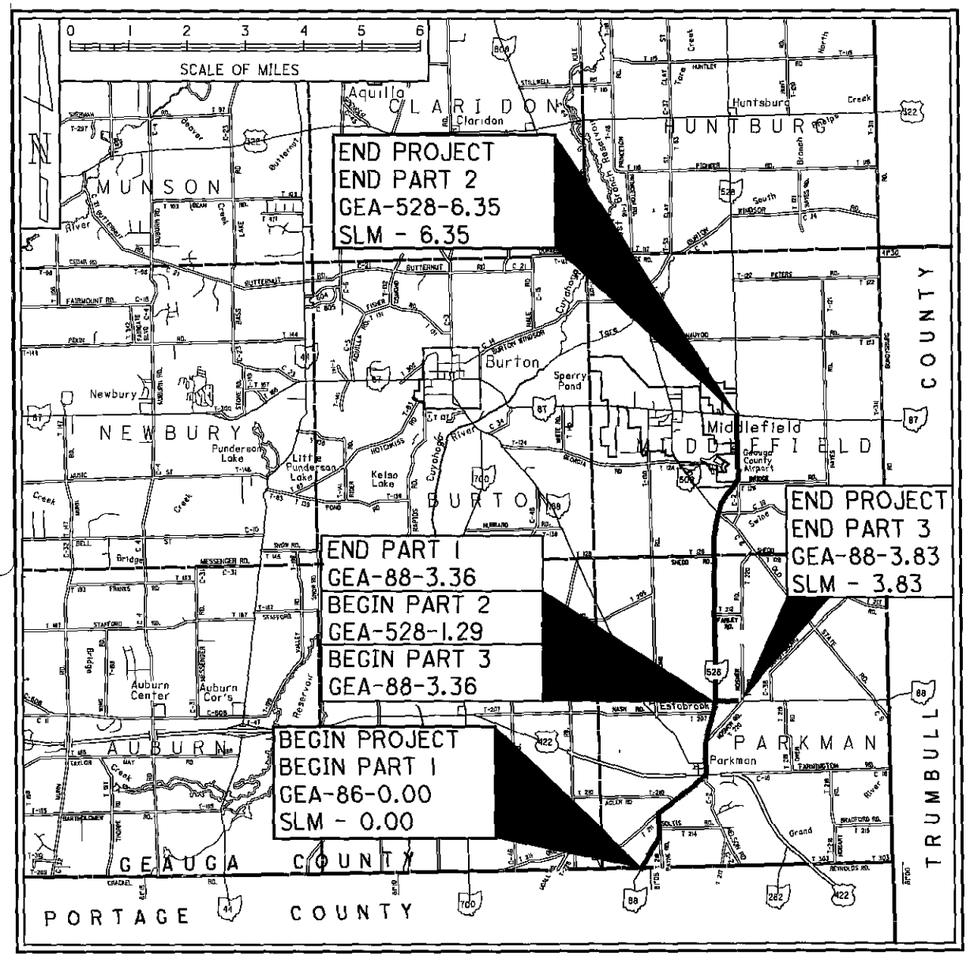


LATITIUDE: N 41°20'49"± LONGITUDE: W 81°05'11"±

INDEX OF SHEETS:


| | |
|---|---|
| TITLE SHEET | 1 |
| TYPICAL SECTION | 2 - 4 |
| PAVEMENT SUB-SUMMARY | 5 |
| PAVEMENT TRANSITION DETAIL SHEET | 6 |
| PLAN SHEET (PART 1 & PART 2) | 7 |
| PLAN SHEET/TYPICAL SECTION/PAVT. SUB-SUMMARY (PART 3) | 8 |
| GENERAL NOTES | 9 - 15 |
| GUARDRAIL SUB-SUMMARY | 16 |
| BRIDGE TERMINAL ASSEMBLY DETAIL SHEET | 17 |
| PAVEMENT MARKING SUB-SUMMARY | 18 |
| PAVEMENT SENSOR DETAIL SHEET | 19 |
| CURB RAMP SUB-SUMMARY SHEET | 20 |
| CURB RAMP DETAIL SHEETS | 21 - 23 |
| GENERAL SUMMARY | 24 |


STATE OF OHIO
LOUIS D. HAZAPIS
E-53285
REGISTERED
PROFESSIONAL ENGINEER

LOUIS D. HAZAPIS

PLAN PREPARED BY:

**ODOT DISTRICT 12 PRODUCTION DEPARTMENT**

### PROJECT DESCRIPTION

THIS PROJECT WILL RESTORE THE PAVEMENT SURFACE BY APPLYING A TWO COURSE OVERLAY ON SECTIONS OF SR-88 & SR-528

### 2005 SPECIFICATIONS

The standard specificatons of the State of Ohio, Department of Transportation, including changes and supplemental specifications listed in the proposal shall govern this improvement.

I hereby approve these plans and declare that the making of this improvement will not require the closing to traffic of the highway and that provisions for the maintenance and safety will be as set forth on plans and estimates

Approved
Date 10 JAN 2006 District Deputy Director of Transportation

Approved
Date 8-28-06 Director, Department of Transportation

| DESIGN DESIGNATION | PART 1 S.R. 88 S.L.M 0.00-3.36 | PART 2 S.R. 528 S.L.M. 1.29-6.35 | PART 3 S.R 88 S.L.M 3.36-3.83 |
|---|---|---|---|
| CURRENT ADT (2005) | 6910 | 6450 | 1640 |
| TRUCKS (24 HOUR B&C) | 1 1% | 8% | 1 1% |
| DESIGN SPEED | 55 MPH | 55 MPH | 55 MPH |
| LEGAL SPEED | 40 MPH | 55 MPH | 55 MPH |

DESIGN FUNCTIONAL CLASSIFICATION - RURAL MAJOR COLLECTOR

UNDERGROUND UTILITIES
TWO WORKING DAYS
BEFORE YOU DIG
CALL 1-800-362-2764 (TOLL FREE)
OHIO UTILITIES PROTECTION SERVICE
NON-MEMBERS
MUST BE CALLED DIRECTLY

| STANDARD DRAWINGS | | STANDARD DRAWINGS | | SUPPLEMENTAL SPECIFICATIONS | |
|---|---|---|---|---|---|
| BP-3.1 | 7-28-00 | TC-65.11 | 01-21-05 | 800 | 10-21-06 |
| BP-4.1 | 07-16-04 | TC-71.10 | 01-21-05 | 832 | 04-25-06 |
| GR-1.1 | 07-16-04 | TC-73.10 | 01-19-01 | | |
| GR-2.1 | 01-16-04 | MT-35.10 | 04-20-01 | | |
| GR-4.1 | 04-18-03 | MT-97.10 | 04-19-02 | SPECIAL PROVISIONS | |
| GR-4.2 | 04-15-05 | MT-97.11 | 04-19-02 | | |
| GR-5.3 | 01-16-04 | MT-99.20M | 01-30-95 | | |
| | | MT-105.10 | 10-18-02 | | |
| TC-65.10 | 01-21-05 | MT-105.11 | 10-18-02 | | |

FEDERAL PROJECT NO. 100% STATE
PID NO 21753
CONSTRUCTION PROJECT NO
RAILROAD INVOLVEMENT NONE
GEA-88/528-0.00/1.29



I:\PROJECTS\PID21753\DGN\21753gtaV8.dgn 09-JAN-2006 12:28PM jgrmovse

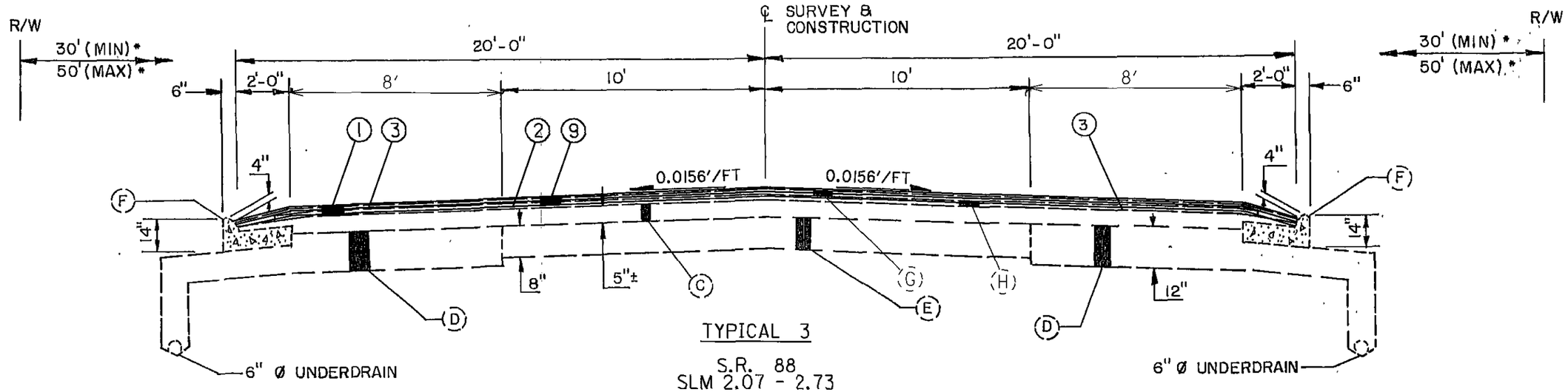


TYPICAL 3

S.R. 88
SLM 2.07 - 2.73

* - TO ℄ SURVEY

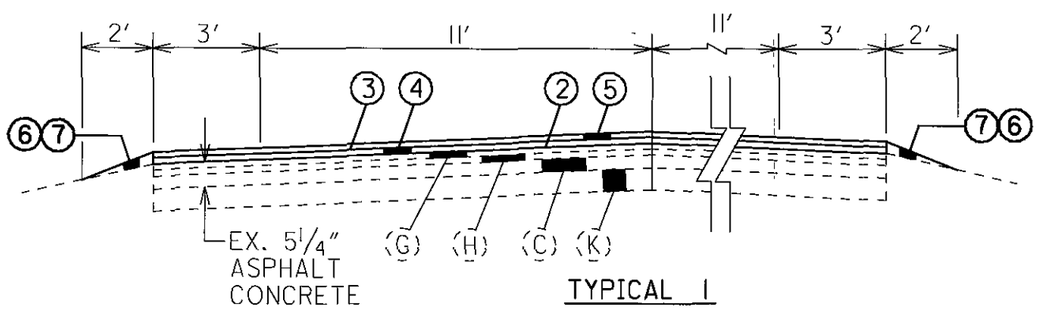


TYPICAL 1

S.R. 88
SLM 0.00 - 1.91

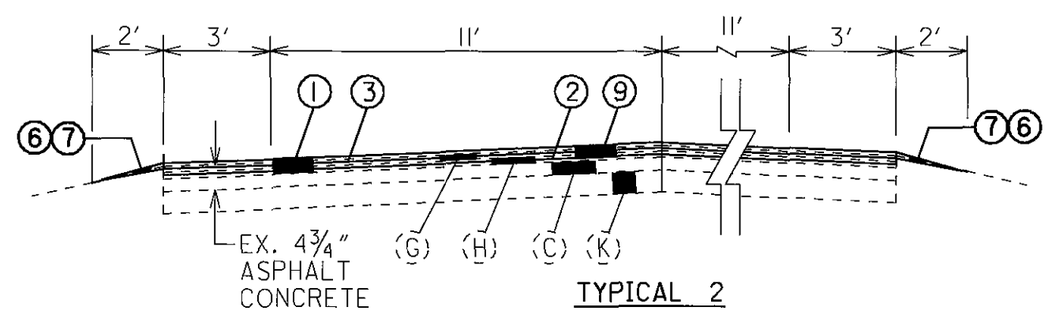


TYPICAL 2

S.R. 88
SLM 1.91 - 2.07

EXISTING LEGEND:

- (A) AGGREGATE BASE
- (B) ASPHALT SHOULDER
- (C) ASPHALT CONCRETE
- (D) AGGREGATE BASE
- (E) AGGREGATE
- (F) CURB AND GUTTER
- (G) 1-1/4" ASPHALT CONCRETE
- (H) ASPHALT CONCRETE, AC-20
- (J) 5" BITUMINOUS AGGREGATE BASE, AC-20
- (K) MACADAM BASE

PROPOSED LEGEND:

1. PAVEMENT PLANING, ASPHALT CONCRETE, AS PER PLAN ( 3" )
2. TACK COAT (0.10 GAL/SQ.YD.)
3. TACK COAT, INTERMEDIATE COURSE (0.07 GAL/SQ.YD.)
4. ¾" ASPHALT CONCRETE, INTERMEDIATE COURSE, TYPE I, PG64-28, AS PER PLAN (0" MIN)
5. 1.5" ASPHALT CONCRETE SURFACE COURSE, TYPE I, PG70-22, AS PER PLAN
6. COMPACTED AGGREGATE, TYPE A
7. LINEAR GRADING, METHOD A OR B, AS PER PLAN
8. GUARDRAIL (WITH LINEAR GRADING, METHOD B, A.P.P. & ASPHALT UNDER GUARDRAIL)
9. 3" ASPHALT CONCRETE SURFACE COURSE, 12.5 MM, TYPE A (446), AS PER PLAN ( OVERLAY IS 3" PLACED IN TWO, 1-1/2" LIFTS )

CALCULATED
CHECKED

TYPICAL SECTIONS

GEA-88/528-0.00/1.29



I:\PROJECTS\PID21753\DGN\21753gyaV8.dgn 11-JAN-2006 8:47AM jgrmovse

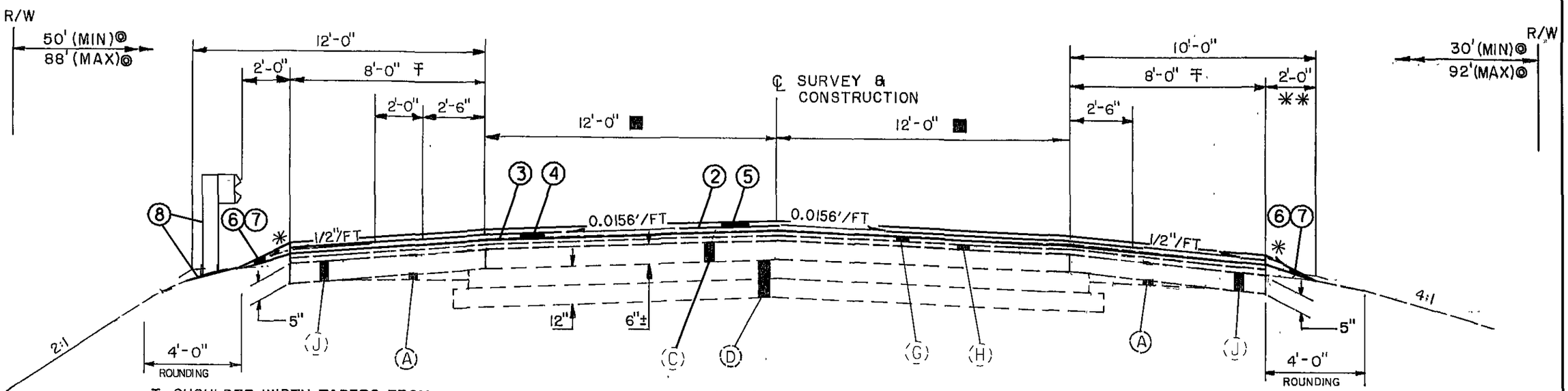


∓ SHOULDER WIDTH TAPERS FROM 2'-0" AT S.L.M. 2.72± TO 8'-0" AT S.L.M. 2.75±

■ PAVEMENT WIDTH TAPERS FROM 18'-0" AT S.L.M. 2.72± TO 12'-0" AT S.L.M. 2.75±

◎ TO ℄ SURVEY

TYPICAL 4

SR 88/528
SLM 2.73-3.28

SR 528
SLM 1.38-3.78
SLM 3.88-4.05
SLM 4.23-4.59
SLM 4.89-5.06
SLM 5.41-5.48
SLM 5.50-6.35

✳ 1"/FT (MAX)
✳✳ OR AS DIRECTED BY THE ENGINEER

SEE SHEET 2 FOR LEGEND

CALCULATED
CHECKED

TYPICAL SECTIONS

GEA-88/528-0.00/1.29



I:\PROJECTS\P1D21753\DGN\21753gyoV8.dgn 11-JAN-2006 8:47AM jgrmovse

● = 1/2"/FT OR RATE OF SUPERELEVATION IF GREATER
✳ = 1"/FT (MAX)
✳✳ OR AS DIRECTED BY THE ENGINEER
■ = TO ℄ SURVEY

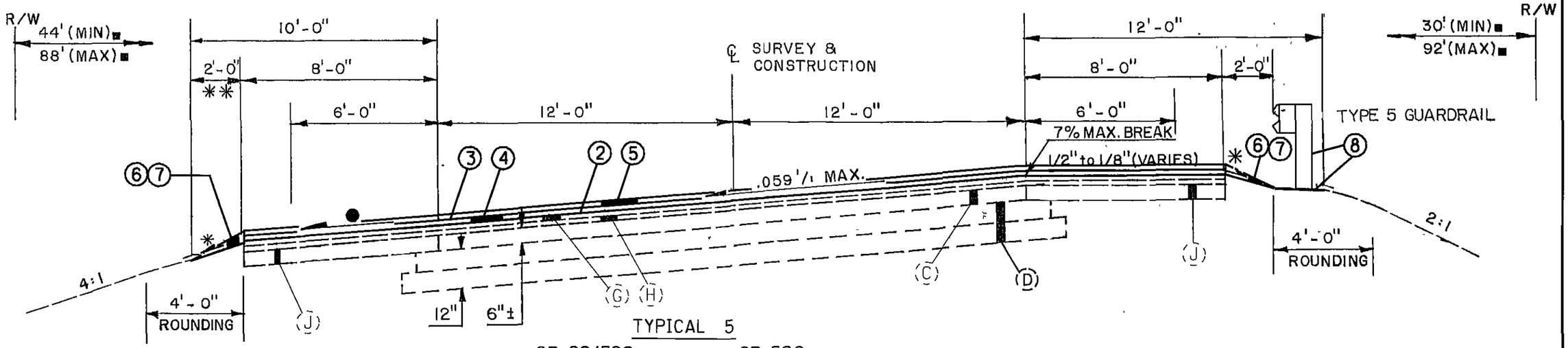


TYPICAL 5

SR 88/528
SLM 3.28-3.35

SR 528
SLM 1.31- 1.38
SLM 3.78-3.88
SLM 4.05-4.12
SLM 4.16-4.23
SLM 4.59-4.67
SLM 4.82-4.89
SLM 5.06-5.13
SLM 5.34-5.41
SLM 5.48-5.50

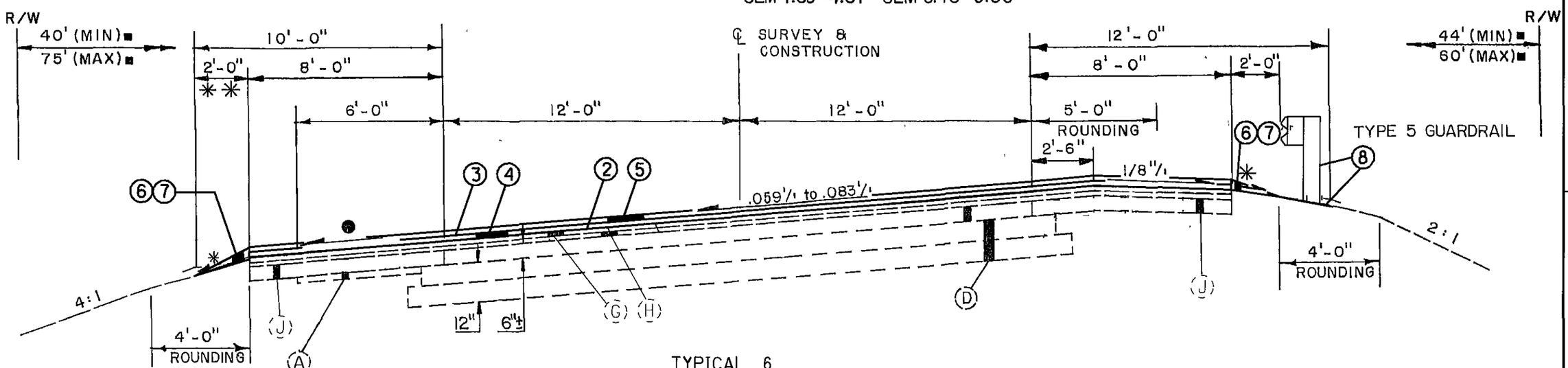


TYPICAL 6

SR 88/528
SLM 3.35-1.31

SR 528
SLM 4.12-4.16
SLM 4.67-4.82
SLM 5.13-5.34

SEE SHEET 2 FOR LEGEND

CALCULATED
CHECKED

TYPICAL SECTIONS

GEA-88/528-0.00/1.29



I:\PROJECTS\P1D21753\DGN\21753gyaV8.dgn 11-JAN-2006 8:47AM jgrmovse

| PART | ROUTE | LOG POINT TO LOG POINT | | LENGTH MILE | LENGTH LIN. FT. | AVERAGE WIDTH W (SIDE) | TYPICAL | EXISTING | SURFACE AREA A A=L x W | PAVEMENT PLANING, ASPHALT CONCRETE, AS PER PLAN (3") ** = (0" to 2-1/4") | TACK COAT RATE = 0.10 GAL / SQ. YD. | TACK COAT FOR INTERMEDIATE COURSE RATE = .07 GAL / SQ. YD. | 3/4" ASPHALT CONCRETE INTERMEDIATE COURSE, TYPE 1, PG-64-28, AS PER PLAN (0" MIN) | 1.5" ASPHALT CONCRETE SURFACE COURSE TYPE 1, PG 70-22, AS PER PLAN | | COMPACTED AGGREGATE, TYPE A (2' WIDTH, PER SIDE) | LINEAR GRADING, METHOD A, AS PER PLAN (2' WIDTH, PER SIDE) | 2 1/4" ASPHALT CONCRETE SURFACE COURSE, TYPE 1, PG64-22 (DRIVEWAYS) | 3" ASPHALT CONCRETE SURFACE COURSE, 12.5 MM, TYPE A (446), AS PER PLAN (2 LIFTS) | | | |
|---|---|---|---|---|---|---|---|---|---|---|---|---|---|---|---|---|---|---|---|---|---|---|
| | | | | | | | | LEGEND | | 254 | 407 | | 448 | 446 | | 617 | 209 | 448 | 442 | | | |
| | | | | | | | | | | 1 | 2 | 3 | 4 | 5 | | 6 | 7 | 8 | 9 | | | |
| | | | | | | | | | SQ. YD. | SQ. YD. | GALLON | GALLON | CU .YD. | CU .YD. | | CU .YD. | STATION | CU .YD. | CU .YD. | | | |
| | | PAVEMENT DATA | | | | | | | | | | | | | | | | | | | | |
| PART 1 | | | | | | | | | | | | | | | | | | | | | | |
| 1 | SR-88 | 0.00 | 1 91 | *1.87 | 9898 | 22 | 1 | 404 | 24195 | 244** | 2420 | 1694 | 503 | 1009 | | | | | | | | |
| 1 | SR-88 | 1.91 | 2.07 | 0.16 | 845 | 22 | 2 | 404 | 2066 | 2066 | 207 | 145 | | | | | | | 172.1 | | | |
| 1 | SR-88 | 2.07 | 2 73 | 0.66 | 3485 | 40 | 3 | 404 | 15489 | 15489 | 1549 | 1084 | | | | | | | 1290.2 | | | |
| 1 | SR-88 | 2 73 | 2 77 | 0.04 | 211 | 30 | 3 | 404 | 703 | 167** | 70 | 49 | 15 | 29 | | | | | | | | |
| 1 | SR-88 | 2 77 | 3.36 | 0.59 | 3115 | 24 | 4,5,6 | 404 | 8307 | NO PLANE | 831 | 581 | 173 | 346 | | | | | | | | |
| * - BRIDGE LENGTH OF 186 5 IS DEDUCTED | | | | | | | | | | | | | | | | | | | | | | |
| 1 | ADDITIONAL AREAS, INTERSECTIONS· | | | | | | | | 2500 | | 250 | 175 | 52 | 104 | | | | | | | | |
| PART 2 | | | | | | | | | | | | | | | | | | | | | | |
| 2 | SR-528 | 1 29 | 6 35 | 5.06 | 26717 | 24 | 4,5,6 | 404 | 71245 | 133** | 7125 | 4987 | 1484 | 2968 | | | | | | | | |
| 2 | ADDITIONAL AREAS, INTERSECTIONS | | | | | | | | 3500 | | 350 | 245 | 73 | 146 | | | | | | | | |
| | | PAVED SHOULDER DATA | | | | | | | | | | | | | | | | | | | | |
| PART 1 | | | | | | SHLDR | | | | | | | | | | | | | | | | |
| PAVED SHOULDERS | | | | | | WIDTH | | | | | | | | | | | | | | | | |
| | | | | | | PER SIDE | | | | | | | | | | | | | | | | |
| 1 | SR-88 (LT & RT) | 0 00 | 1 91 | *1.87 | 9898 | 3 | 1 | 404 | 6599 | 66** | 660 | 462 | 137 | 275 | | 122 | 198.0 | | | | | |
| 1 | SR-88 (LT & RT) | 1.91 | 2.07 | 0 16 | 845 | 3 | 2 | 404 | 563 | 282 | 56 | 39 | | | | 10 | 16.9 | | 46.9 | | | |
| 1 | SR-88 (LT & RT) | 2 73 | 2.77 | 0 04 | 211 | 8 | 3 | 301 | 375 | 89** | 38 | 26 | 8 | 16 | | 3 | 4 2 | | | | | |
| 1 | SR-88 (LT & RT) | 2 77 | 3 36 | 0.59 | 3115 | 8 | 4,5,6 | 301 | 5538 | NO PLANE | 554 | 388 | 115 | 231 | | 38 | 62 3 | | | | | |
| 1 | ADDITIONAL AREAS - DRIVES | | | | | | | | 1500 | | 150 | | | | | | | 94 | | | | |
| DEDUCT FOR INTERSECTIONS, DRIVES | | | | | | | | | | | | | | | | -13 | -20 | | | | | |
| DEDUCT FOR GUARDRAIL ITEMS | | | | | | | | | | | | | | | | -14 | -23 | | | | | |
| PART 2 | | | | | | SHLDR | | | | | | | | | | | | | | | | |
| PAVED SHOULDERS | | | | | | WIDTH | | | | | | | | | | | | | | | | |
| | | | | | | PER SIDE | | | | | | | | | | | | | | | | |
| 2 | SR-528 (LT & RT) | 1 29 | 6 35 | 5.06 | 26717 | 8 | 4,5,6 | 301 | 47497 | 89** | 4750 | 3325 | 988 | 1979 | | 330 | 534.3 | | | | | |
| 2 | ADDITIONAL AREAS - DRIVES | | | | | | | | 1000 | | 100 | | | | | | | 63 | | | | |
| DEDUCT FOR INTERSECTIONS, DRIVES | | | | | | | | | | | | | | | | -8 | -13 | | | | | |
| DEDUCT FOR GUARDRAIL ITEMS | | | | | | | | | | | | | | | | -42 | -67 | | | | | |
| TOTALS THIS SHEET: | | | | | | | | | | 18625 | 19110 | 13200 | 3548 | 7103 | | 426 | 692 7 | 157 | 1509.2 | | | |

CALCULATED

CHECKED

# PAVEMENT QUANTITY SHEET

GEA-88/528-
0.00/1.29



I:\PROJECTS\PID21753\DGN\21753gcaV8.dgn 11-JAN-2006 8:47AM jgrmovse

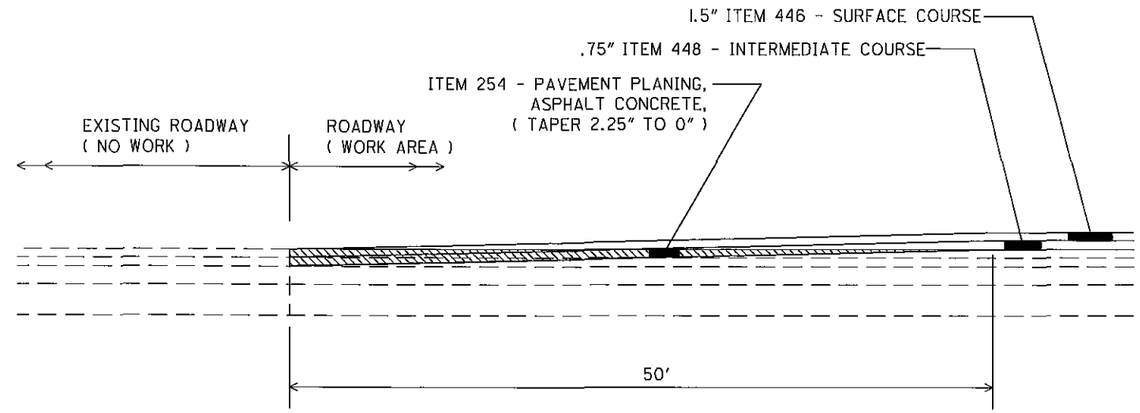


TYPICAL OVERLAY DETAIL AT ROADWAY
VARIABLE PLANING LOCATIONS
GEA-88-0.00
GEA-528-6.35
GEA-88-3.78 (PART 3 AT HOSMER RD.)

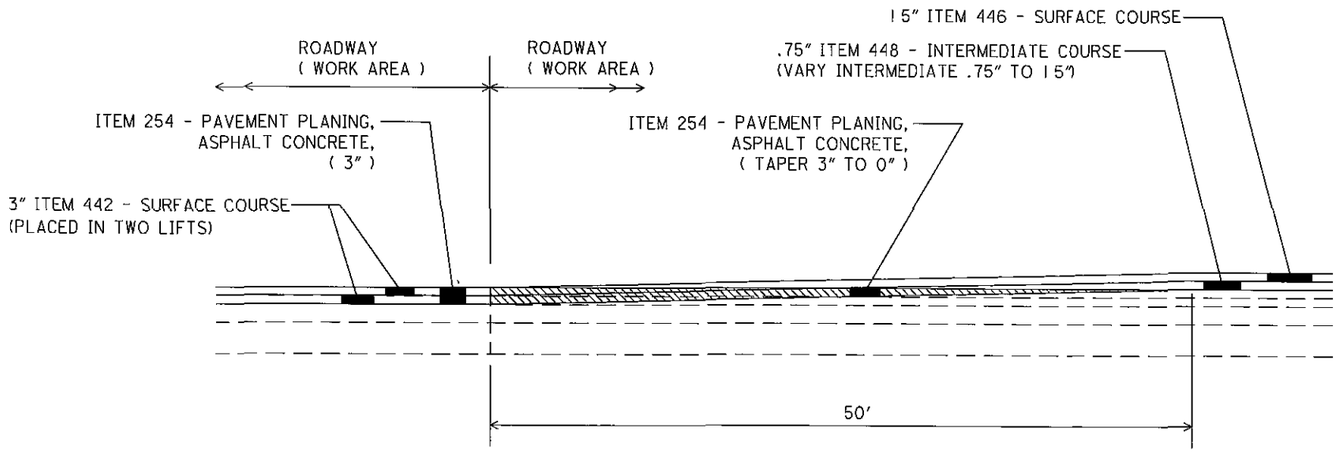


TYPICAL OVERLAY DETAIL AT ROADWAY
VARIABLE PLANING LOCATION
GEA-88-2.73

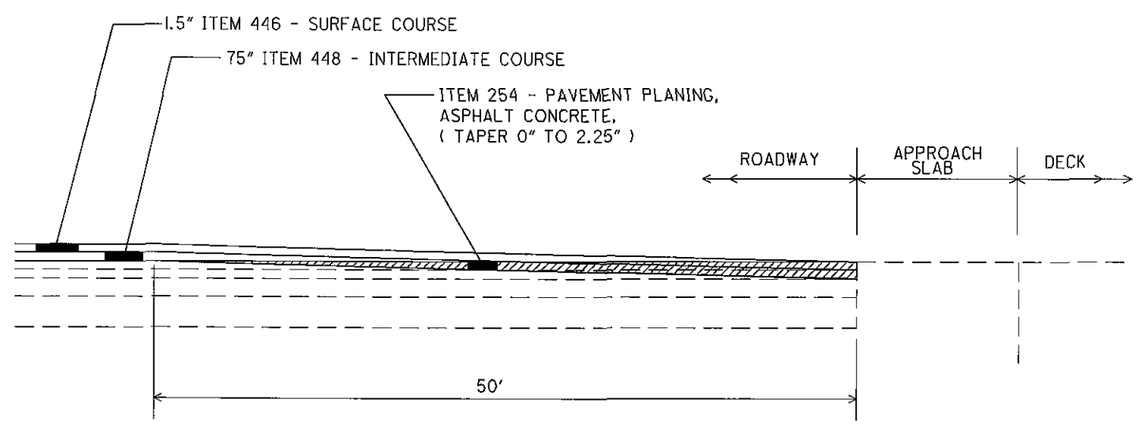


TYPICAL OVERLAY DETAIL AT BRIDGE
GEA-88-1.88
( SOUTH END )

CALCULATED
CHECKED

# PAVEMENT TRANSITION DETAILS

GEA-88/528-
0.00/1.29



I:\PROJECTS\PID21753\DGN\21753gmav8.dgn 11-JAN-2006 8:47AM rgrmoyse

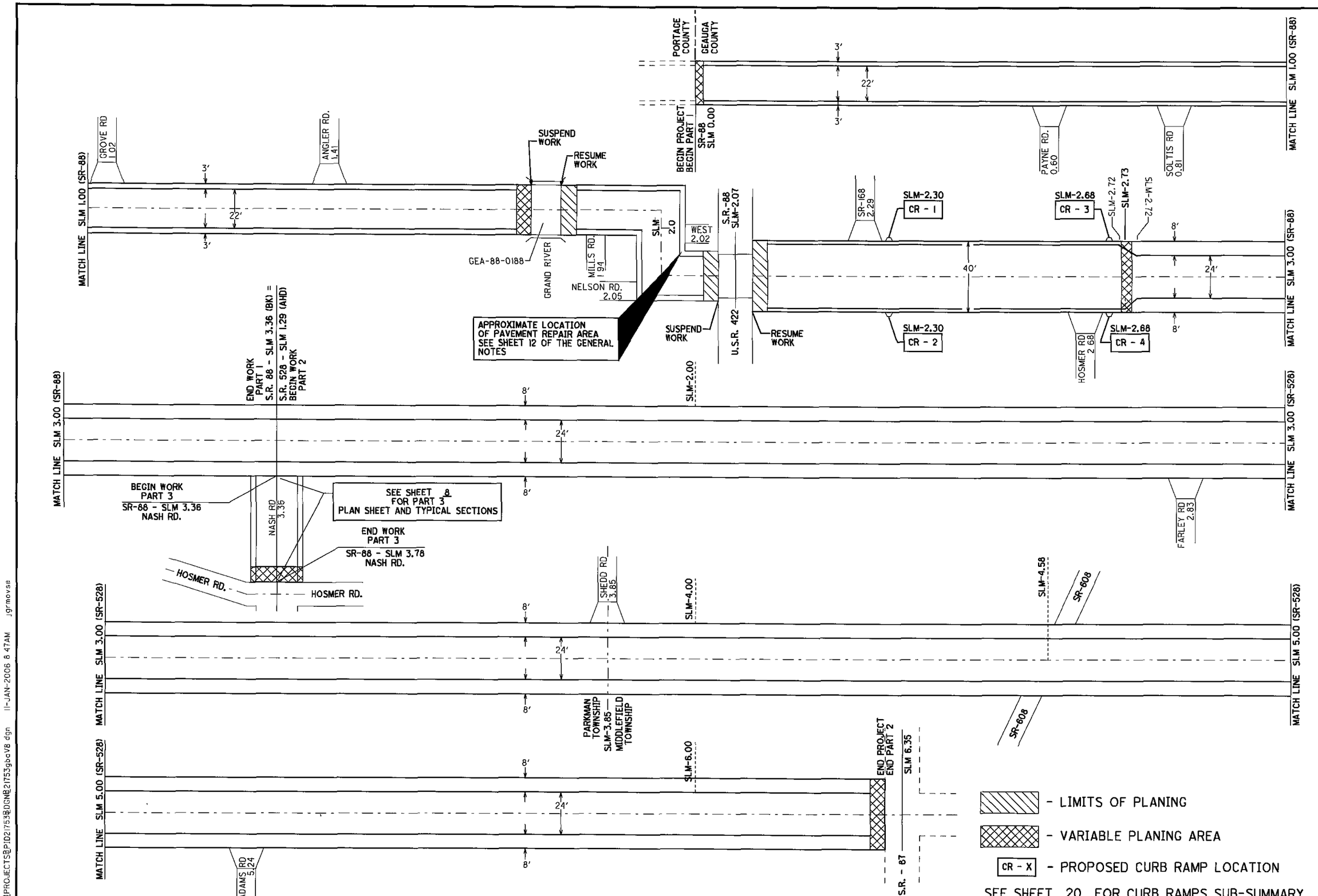


CALCULATED

CHECKED

# PLAN SHEET

GEA-88/528-
0.00/1.29



I:\PROJECTS\PID21753\DGNS\21753gbov8.dgn 11-JAN-2006 8:47AM jgrmoyse

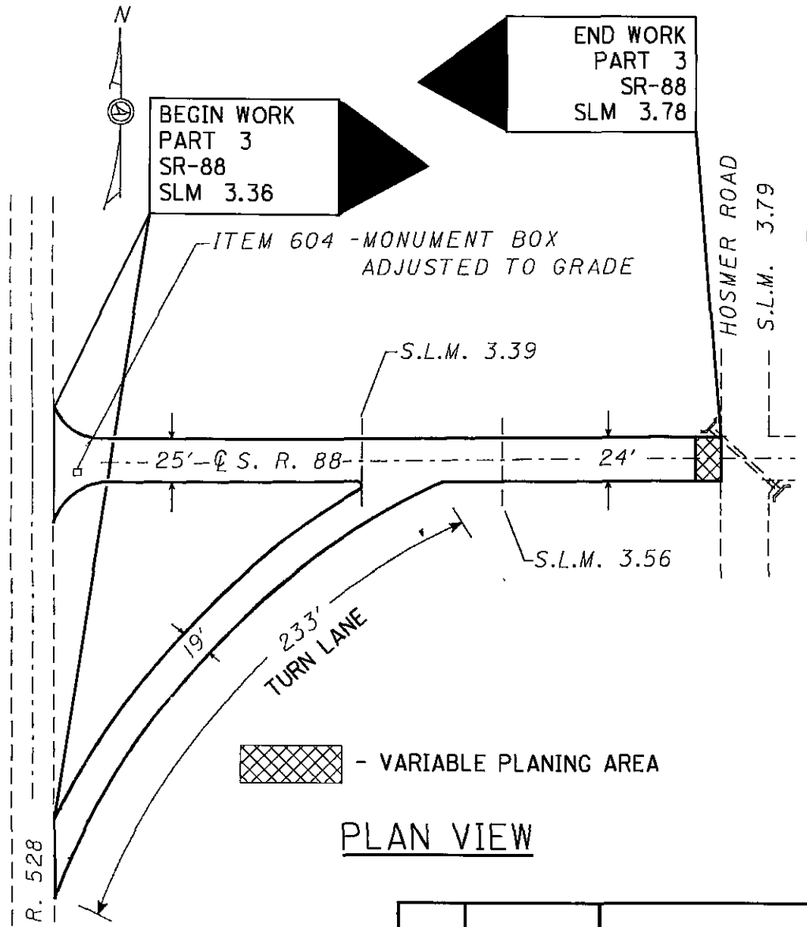


PLAN VIEW

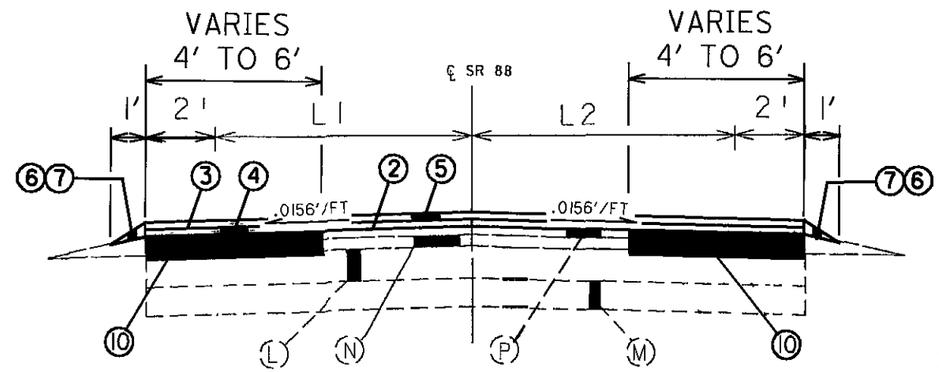


FOR SLM 3.36 - SLM 3.39, L1=11' AND L2=10'
FOR SLM 3 39 - SLM 3.78, L1=10' AND L2=10'

TYPICAL 7

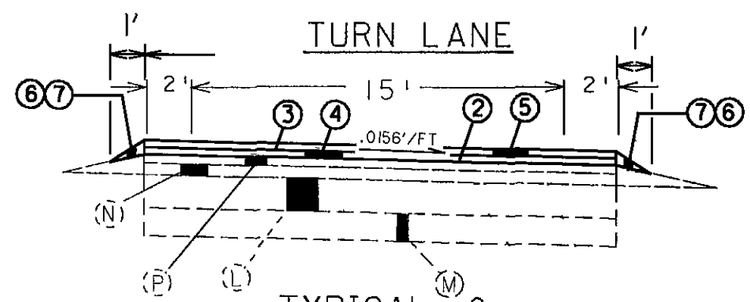


TYPICAL 8

## EXISTING

- (L) ASPHALT CONCRETE (VARIES 2½"-4")
- (M) BITUMINOUS AGGREGATE (4"±)
- (N) ITEM 403-ASPHALT CONCRETE, AC-20
- (P) ITEM SPECIAL-ASPHALT CONCRETE W/ SBR LATEX, SURFACE COURSE, TYPE I, AC-10

**PROPOSED LEGEND:**

- (2) TACK COAT (0.10 GAL/SQ.YD.)
- (3) TACK COAT, INTERMEDIATE COURSE (0.07 GAL/SQ.YD.)
- (4) ¾" ASPHALT CONCRETE, INTERMEDIATE COURSE, TYPE I, PG64-28, AS PER PLAN (0" MIN)
- (5) 1.5" ASPHALT CONCRETE SURFACE COURSE, TYPE I, PG70-22, AS PER PLAN
- (6) COMPACTED AGGREGATE, TYPE A
- (7) LINEAR GRADING, METHOD A, AS PER PLAN
- (10) PARTIAL DEPTH PAVEMENT REPAIR

| PART | ROUTE | LOG POINT TO LOG POINT | | LENGTH MILE | LENGTH LIN. FT. | AVERAGE WIDTH W (SIDE) | TYPICAL | EXISTING | SURFACE AREA A A=L x W | PAVEMENT PLANING, ASPHALT CONCRETE, AS PER PLAN (2 1/4") | TACK COAT RATE = 0.10 GAL / SQ. YD. | TACK COAT FOR INTERMEDIATE COURSE RATE = .07 GAL / SQ. YD. | 3/4" ASPHALT CONCRETE INTERMEDIATE COURSE, TYPE 1, PG-64-28, AS PER PLAN (0" MIN) | 1.5" ASPHALT CONCRETE SURFACE COURSE TYPE 1, PG 70-22, AS PER PLAN | COMPACTED AGGREGATE, TYPE A (1' WIDTH, PER SIDE) | LINEAR GRADING, METHOD A, AS PER PLAN (1' WIDTH, PER SIDE) | 2 1/4" ASPHALT CONCRETE SURFACE COURSE, TYPE 1, PG64-22 (DRIVEWAYS) |
|---|---|---|---|---|---|---|---|---|---|---|---|---|---|---|---|---|---|
| | | | | | | | | LEGEND | | 254 1 | 407 2 | 407 3 | 448 4 | 446 5 | 617 6 | 209 7 | 448 8 |
| | | | | | | | | | SQ. YD. | SQ. YD. | GALLON | GALLON | CU .YD. | CU .YD. | CU .YD. | STATION | CU .YD. |
| **PAVEMENT DATA** | | | | | | | | | | | | | | | | | |
| PART 3 | | | | | | | | | | | | | | | | | |
| 3 | SR-88 | 3 36 | 3 39 | 0 03 | 159 | 21 | 7 | 404 | 371 | | 37 | 26 | 8 | 15 | | | |
| | TURN LANE | | | | | | | | | | | | | | | | |
| 3 | SR-88 | TURN LANE | | 0 04 | 233 | 15 | 8 | 404 | 388 | | 39 | 27 | 8 | 16 | | | |
| 3 | SR-88 | 3 39 | 3 78 | 0 39 | 2060 | 20 | 7 | 404 | 4578 | 111 | 458 | 320 | 95 | 191 | | | |
| **PAVED SHOULDER DATA** | | | | | | | | | | | | | | | | | |
| PART 3 | | | | | | SHLDR | | | | | | | | | | | |
| PAVED SHOULDERS | | | | | | WIDTH | | | | | | | | | | | |
| | | | | | | PER SIDE | | | | | | | | | | | |
| 3 | SR-88 (LT & RT) | 3 36 | 3 78 | 0 42 | 2219 | 2 | 7 | 404 | 986 | 22 | 99 | 69 | 21 | 41 | 13 4 | 43.4 | |
| | EXTRA AREAS | | | | | | | | | | | | | | | | |
| 3 | SR-88 | TURN LANE | | 0 04 | 233 | 2 | 8 | 404 | 104 | | 10 | 7 | 2 | 4 | 1 4 | 4 7 | |
| 3 | SR-88 | DRIVES | | | | | | | 85 | | 9 | | | | | | 5 |
| **TOTALS THIS SHEET:** | | | | | | | | | | 133 | 652 | 449 | 134 | 267 | 15 | 48 1 | 5 |

CALCULATED
CHECKED

PART 3 - TYPICAL SECTIONS / PLAN SHEET

GEA-88/528-
0.00/1.29



I:\PROJECTS\PID21753\DGN\21753gbov8.dgn 11-JAN-2006 8:48AM jgrmovse

# GENERAL

**PROJECT DESCRIPTION**

THE PROJECT INVOLVES RESURFACING THE EXISTING PAVEMENT USING AN ASPHALT CONCRETE OVERLAY.

THE ALIGNMENT OF THE EXISTING PAVEMENT WILL NOT BE CHANGED. THE PROFILE OF THE PROPOSED SURFACE WILL BE SIMILAR TO THAT OF THE EXISTING PAVEMENT.

**RIGHT OF WAY**

ALL WORK IS TO BE PERFORMED WITHIN THE EXISTING RIGHT OF WAY

**CONTINGENCY QUANTITIES**

THE CONTRACTOR SHALL NOT ORDER MATERIALS OR PERFORM WORK FOR ITEMS DESIGNATED BY PLAN NOTE TO BE USED "AS DIRECTED BY THE ENGINEER" UNLESS AUTHORIZED BY THE ENGINEER. THE ACTUAL WORK LOCATIONS AND QUANTITIES USED FOR SUCH ITEMS SHALL BE INCORPORATED INTO THE FINAL CHANGE ORDER GOVERNING COMPLETION OF THIS PROJECT.

**WORK LIMITS**

THE WORK LIMITS SHOWN ON THESE PLANS ARE FOR PHYSICAL CONSTRUCTION ONLY. THE INSTALLATION AND OPERATION OF ALL TEMPORARY TRAFFIC CONTROL AND TEMPORARY TRAFFIC CONTROL DEVICES REQUIRED BY THESE PLANS SHALL BE PROVIDED BY THE CONTRACTOR WHETHER INSIDE OR OUTSIDE THESE WORK LIMITS.

**ALTERNATE METHODS**

IF THE CONTRACTOR SO ELECTS, HE MAY SUBMIT ALTERNATE METHODS FOR THE MAINTENANCE OF TRAFFIC, PROVIDED THE INTENT OF THE PROVISIONS IS FOLLOWED AND NO ADDITIONAL INCONVENIENCE TO THE TRAVELING PUBLIC RESULTS THERE FROM. NO ALTERNATE PLAN SHALL BE PLACED INTO EFFECT UNTIL APPROVAL HAS BEEN GRANTED IN WRITING, BY THE DIRECTOR.

**EQUIPMENT OPERATION AND MATERIAL STORAGE**

IN ORDER TO PROVIDE FOR THE SAFETY OF THE TRAVELING PUBLIC, THE CONTRACTOR'S ATTENTION IS DIRECTED TO 614.03. IN ADDITION, THE FOLLOWING PROVISIONS SHALL APPLY:

1) ANY REMOVED ITEMS SHALL NOT BE STORED ON THE RIGHT OF-WAY FOR MORE THAN THIRTY DAYS.

2) THE STORAGE OF EQUIPMENT, MATERIALS, AND VEHICLES WITHIN THE HIGHWAY RIGHT-OF-WAY WILL BE PERMITTED. THE NUMBER OF AREAS AND EXACT LOCATIONS SHALL BE APPROVED BY THE ENGINEER.

3) ALL DISTURBED AREAS SHALL BE RETURNED TO THEIR ORIGINAL CONDITION AT NO EXPENSE TO THE STATE.

4) ALL WORK VEHICLES AND EQUIPMENT THAT ENTERS THE WORK ZONE MORE THAN ONCE A DAY MUST BE EQUIPPED WITH AT LEAST ONE FLASHING, ROTATING, OR OSCILLATING AMBER LIGHT THAT IS VISIBLE IN ALL DIRECTIONS OF TRAFFIC FOR AT LEAST ONE QUARTER OF A MILE, DAY OR NIGHT.

5) VEHICLES AND EQUIPMENT SHALL ALWAYS MOVE WITH, AND NOT ACROSS OR AGAINST THE FLOW OF TRAFFIC. VEHICLES AND OTHER EQUIPMENT SHALL NOT PARK OR STOP EXCEPT WITHIN DESIGNATED WORK AREAS, AND SHALL NOT ENTER OR LEAVE WORK AREAS IN A MANNER WHICH WILL BE HAZARDOUS TO, OR INTERFERE WITH THE NORMAL TRAFFIC FLOW. PERSONAL VEHICLES WILL NOT BE PERMITTED TO PARK WITHIN THE RIGHT-OF-WAY EXCEPT IN SPECIFIC AREAS DESIGNATED BY THE ENGINEER.

EQUIPMENT, VEHICLES AND MATERIALS SHALL NOT BE STORED OR PARKED WITHIN 30 FEET OF THE TRAVELED WAY UNLESS 6 FEET BEHIND PCB OR GUARDRAIL.

**ITEM 619 - FIELD OFFICE, TYPE B, AS PER PLAN**

A TYPE B FIELD OFFICE IS REQUIRED FOR THIS PROJECT. IN ADDITION TO THE REQUIREMENTS AS DESCRIBED IN ITEM 619 OF CMS, THE FIELD OFFICE SHALL ALSO INCLUDE BROADBAND (CABLE OR DSL) INTERNET ACCESS.

THE FOLLOWING ESTIMATED QUANTITY HAS BEEN CARRIED TO THE GENERAL SUMMARY:

ITEM 619 - FIELD OFFICE, TYPE B, AS PER PLAN . **6 MONTH**

**COOPERATION AMONG CONTRACTORS**

THE CONTRACTOR SHALL COOPERATE AND COORDINATE HIS/HER OPERATIONS WITH THE CONTRACTORS ON OTHER PROJECTS THAT MAY BE IN FORCE DURING THE LIFE OF THE CONTRACT. NO WAIVER OF ANY PROVISIONS OF 105.08 OF THE CONSTRUCTION AND MATERIAL SPECIFICATIONS IS INTENDED.

**EXISTING TYPICAL SECTIONS**

EXISTING TYPICAL SECTIONS HAVE BEEN TAKEN FROM THE RECORDS AND ARE BELIEVED TO REPRESENT THE EXISTING PAVEMENT, BUT THE STATE DOES NOT GUARANTEE THE ACCURACY OF THE SECTION. FOR FURTHER INFORMATION IN REGARD TO THE EXISTING TYPICAL SECTIONS, THE CONTRACTOR SHALL REFER TO THE PREVIOUS CONSTRUCTION PLANS.
THESE PLANS MAY BE REVIEWED AT:
OHIO DEPARTMENT OF TRANSPORTATION
DISTRICT 12 OFFICE
5500 TRANSPORTATION BOULEVARD
GARFIELD HEIGHTS, OHIO 44125

**PLAN SHEET STATIONING**

THE ROADWAY WAS NOT SURVEYED PRIOR TO THE PREPARATION OF THESE PLANS. PREVIOUS CONSTRUCTION PLAN STATIONING WAS USED TO PREPARE PLAN SHEETS AND CALCULATE ESTIMATED PAVEMENT AREA QUANTITIES AND PAVEMENT MARKING QUANTITIES.

**UTILITIES**

THE FOLLOWING UTILITIES AND OWNERS ARE LOCATED WITHIN THE WORK LIMITS OF THIS PROJECT. THE OHIO DEPARTMENT OF TRANSPORTATION HAS USED THE BEST AVAILABLE INFORMATION TO DETERMINE THE UTILITY COMPANIES SERVING THIS AREA, BUT CANNOT GUARANTEE THE UTILITY COMPANY LIST IS COMPLETE.

ADELPHIA
14300 SOUTH INDUSTRIAL PARKWAY
MAPLE HEIGHTS, OHIO 44137
PHONE: (216) 663-4003
FAX: (216) 581-3262

ALLTEL
245 NORTH MAIN ST.
HUDSON, OHIO 44236
PHONE: (440) 993-1621
FAX: (440) 993-1750

BRAINARD GAS CORP.
4369 BRAINARD RD.
ORANGE VILLAGE, OHIO 44022
PHONE: (216) 591-9110

COLUMBIA GAS TRANSMISSION
P.O. BOX 629
MEDINA, OHIO 44258
PHONE: (330) 723-4900

COX CABLE
1221 PLAZA DRIVE
PARMA, OHIO 44130
PHONE: (216) 535-3359

DOMINION EAST OHIO GAS COMPANY
1201 EAST 55TH STREET
CLEVELAND, OHIO 44103
PHONE: (216) 736-6675
FAX: (216) 736-6883

GEAUGA COUNTY SANITARY ENGINEER
COURTHOUSE ANNEX
237 MAIN ST.
CHRDON, OHIO 44024
PHONE: (440) 285-2222

THE ILLUMINATING COMPANY
6896 MILLER ROAD
BRECKSVILLE, OHIO 44141
PHONE: (440) 546-8748
FAX: (440) 546-8775

OHIO EDISON
730 SOUTH AVE
YOUNGSTOWN, OHIO 44646
PHONE: (330) 740-7635
FAX: (330) 740-7518

SBC
13630 LORAIN AVE. - 4TH FLOOR
CLEVELAND, OHIO 44111
PHONE: (216) 476-6142
FAX: (216) 476-6013





I:\PROJECTS\PID21753\DGN\21753gnoV8.dgn 11-JAN-2006 8:48AM jgrmovse

# ROADWAY

**ITEM 209 - LINEAR GRADING, NETHOD A, AS PER PLAN**

THIS ITEM SHALL BE USED TO PREPARE THE SHOULDER PER SECTION 617.04 OF THE CMS PRIOR TO PLACING THE COMPACTED AGGREGATE, TYPE A.

ALL EQUIPMENT, MATERIALS, AND LABOR REQUIRED TO PERFORM THE WORK OUTLINED ABOVE SHALL BE INCLUDED FOR PAYMENT UNDER ITEM 209 LINEAR GRADING, METHOD A, AS PER PLAN.

PAYMENT FOR ALL THE ABOVE SHALL BE INCLIUDED IN THE UNIT PRICE BID FOR ITEM 209, LINEAR GRADING, METHOD A, AS PER PLAN.

**ITEM 209 - LINEAR GRADING, METHOD B, AS PER PLAN**

THIS ITEM SHALL BE USED TO PREPARE PROPOSED GUARDRAIL AND EXISTING GUARDRAIL RUNS FOR PAVING UNDER GUARDRAIL.

THE CONTRACTOR IS CAUTIONED TO AVOID DAMAGING THE SHOULDER ADJACENT TO EXISTING ASPHALT UNDER GUARDRAIL. THE CONTRACTOR MAY OPT TO PROVIDE A SAWCUT TO PREVENT SHOULDER DAMAGE. THE COST OF THE SAWCUT WILL BE INCLUDED IN THE UNIT PRICE BID FOR THIS ITEM. ANY SHOULDER DAMAGE WILL BE REPAIRED, AT NO COST TO THE STATE, TO THE SATISFACTION OF THE ENGINEER.

ALL HOLES REMAINING AFTER REMOVAL OF GUARDRAIL POSTS AND ANCHOR ASSEMBLIES SHALL BE FILLED WITH GRANULAR MATERIAL. FILL MATERIAL CONTAINING SOD SHALL NOT BE USED. ALL FILL MATERIAL SHALL BE APPROVED BY THE ENGINEER, MATERIAL SHALL BE COMPACTED AS DIRECTED BY THE ENGINEER. PAYMENT FOR THE ABOVE SHALL BE INCLUDED IN THE APPLICABLE GUARDRAIL ITEM.

ALL COLLECTED DEBRIS SHALL BE REMOVED AND DISPOSED OF AS SPECIFIED IN SECTION 209.01 OF THE CMS.

HERBICIDE SHALL BE EPA APPROVED FOR PAVING UNDER GUARDRAIL. IT SHALL BE APPLIED TO THE PREPARED AREA AFTER FINAL LEVELING AND GRADING HAS BEEN COMPLETED. THE APPLICATION SHALL BE JUST PRIOR TO PAVING AND SHALL STRICTLY ADHERE TO THE MANUFACTURER'S INSTRUCTIONS.

EACH SUCCESSFUL BIDDER MUST BE LICENSED BY THE OHIO DEPARTMENT OF AGRICULTURE AS A COMMERCIAL APPLICATOR AND ALL PERSONS INVOLVED IN THE ACTUAL SPRAYING SHALL BE LICENSED AS COMMERCIAL OPERATORS IN THE APPROPRIATE SPRAY CATEGORY.

HERBICIDE LABEL, MATERIAL SAFETY DATA SHEET AND COPY OF APPLICATORS LICENSES SHALL BE SUBMITTED TO THE ENGINEER FOR VERIFICATION PRIOR TO COMMENCING WORK.

THIS ITEM SHALL BE MEASURED IN STATIONS PER EACH SIDE OF THE ROADWAY THAT THIS WORK IS PERFORMED.

PAYMENT FOR THE ABOVE WORK SHALL BE MADE AT THE UNIT BID STATION PRICE FOR ITEM 209-LINEAR GRADING, METHOD B, AS PER PLAN AND SHALL INCLUDE ALL LABOR, TOOLS, EQUIPMENT AND MATERIALS NECESSARY TO PERFORM THIS WORK.

**GUARDRAIL REPLACEMENT AND PUBLIC SAFETY**

THE LOCATION OF GUARDRAIL RUNS ARE SUBJECT TO ADJUSTMENTS TO ASSURE THAT THE PLANNED INSTALLATIONS WILL AFFORD MAXIMUM PROTECTION FOR TRAFFIC. THE INTENT IS TO UPGRADE AND REPLACE GUARDRAIL, GENERALLY AT EXISTING LOCATIONS. STATIONS OF THE PROPOSED END TREATMENTS ARE APPROXIMATE. THE ENGINEER SHALL BE SATISFIED THAT ALL INSTALLATIONS WILL AFFORD MAXIMUM PROTECTION FOR TRAFFIC.

NO HAZARD SHALL BE LEFT UNPROTECTED EXCEPT FOR THE ACTUAL TIME NECESSARY TO REMOVE THE EXISTING GUARDRAIL, PREPARE THE SITE, AND INSTALL NEW GUARDRAIL IN A CONTINUOUS OPERATION. THE REMOVAL OF ALL GUARDRAIL SHALL BE AS DIRECTED BY THE ENGINEER. NO GUARDRAIL SHALL BE REMOVED UNTIL THE REPLACEMENT MATERIAL IS ON THE SITE AND READY FOR INSTALLATION. INSTALLATION OF THE NEW RAIL SHALL BEGIN IMMEDIATELY AFTER THE REMOVAL OPERATION HAS TAKEN PLACE. THE MAXIMUM GAP LENGTH IN ANY RAIL RUN SHALL BE 50 FEET. NO GAPS SHALL BE LEFT OPEN AT THE END OF THE WORK PERIOD. BARRELS MAY NOT BE SUBSTITUTED FOR GUARDRAIL. FAILURE TO COMPLY WITH THESE REQUIREMENTS SHALL BE DEEMED SUFFICIENT CAUSE TO ORDER WORK SUSPENDED ON THIS PROJECT UNTIL SUCH TIME THAT THE ENGINEER IS ASSURED COMPLIANCE.

**ITEM 202 - GUARDRAIL REMOVED**

THIS ITEM SHALL INCLUDE BOTH STANDARD RAILS AND ANCHOR ASSEMBLIES AND TERMINAL ASSEMBLIES.

**ITEM 202 - GUARDRAIL REMOVED, AS PER PLAN**

THIS ITEM SHALL PROVIDE FOR THE **SALVAGING**, **STORING** AND **DELIVERY** OF USED GUARDRAIL COMPONENTS PER DIRECTION OF THE ENGINEER TO:

Ohio Department of Transportation - District 12
MUNSON MAINTENANCE YARD
12453 BASS LAKE RD.
MUNSON TWP, OHIO 44024
PHONE: (440)548-8452
YARD CONTACT PERSON: CARL SANDBORN, (440)834-4441
YARD LOCATION: (1.25 MILES WEST OF S.R.-44, NORTH OF U.S.322)

THE SALVAGED GUARDRAIL COMPONENTS SHALL INCLUDE THE FOLLOWING ITEMS:

(30) E-98 ANCHOR ASSEMBLIES (INCLUDING THE EXTRUDER, FIRST TWO 25' SPECIALTY GUARDRAIL PANELS, FIRST 4 WOODEN POSTS) (50' SHALL BE USED FOR PAYMENT QUANTITY FOR EACH ANCHOR ASSEMBLY; INCLUDING ALL ITEMS LISTED ABOVE)

(100) 12'-6", TYPE 5, GUARDRAIL PANELS (12.5' SHALL BE USED FOR PAYMENT QUANTITY FOR EACH GUARDRAIL PANEL)

THE ENGINEER SHALL DETERMINE THE CONDITION OF THE SALVAGED ITEMS AND IF THEY ARE SUITABLE FOR DELIVERY TO O.D.O.T..

THE FOLLOWING QUANTITY HAS BEEN CARRIED TO THE GENERAL SUMMARY TO PROVIDE PAYMENT FOR THE ABOVE WORK:

(30) X 50'-E98 = 1500'
(100) X 12.5'-TYP 5, GR = 1250'
---
TOTAL: 2750'

ITEM 202 - GUARDRAIL REMOVED, AS PER PLAN . . . . . **2750 FT**

ALL EQUIPMENT,LOADING,UNLOADING,DELIVERING AND LABOR REQUIRED TO PERFORM THE WORK LISTED ABOVE SHALL BE INCLUDED FOR PAYMENT UNDER ITEM 202 - GUARDRAIL REMOVED, AS PER PLAN

**LOCATION OF GUARDRAIL**

THE LOCATIONS OF THE GUARDRAIL RUNS, AS SHOWN IN THESE PLANS ARE SUBJECT TO ADJUSTMENT PRIOR TO FINAL ACCEPTANCE. THE ENGINEER SHALL BE SATISFIED THAT ALL INSTALLATIONS WILL AFFORD MAXIMUM PROTECTION FOR TRAFFIC.

**CONNECTION BETWEEN EXISTING AND PROPOSED GUARDRAIL**

WHEN IT IS NECESSARY TO SPLICE PROPOSED GUARDRAIL TO EXISTING GUARDRAIL, ONLY THE EXISTING GUARDRAIL SHALL BE CUT, DRILLED, OR PUNCHED. THE CONNECTION SHALL BE MADE USING A "W-BEAM RAIL SPLICE" AS SHOWN IN AASHTO M 180. PAYMENT SHALL BE INCLUDED IN THE CONTRACT PRICE FOR THE RESPECTIVE GUARDRAIL ITEMS.

IN LOCATIONS WHERE TYPE 5 GUARDRAIL, TERMINAL ASSEMBLIES, ETC ARE TO BE CONNECTED TO EXISTING RAIL, SOME MODIFICATIONS MAY BE REQUIRED INCLUDING EXTRA POSTS, DRILLING HOLES AND POSSIBLY PARTIAL SECTIONS OF ADDITIONAL RAIL ELEMENTS. THE COST OF THIS ADDITIONAL RAIL ELEMENTS. THE COST OF THIS ADDITIONAL WORK SHALL BE INCLUDED IN THE UNIT BID PRICE FOR THE RELATED 606 ITEM. IF ADDITIONAL PORTIONS OF RAIL ELEMENT ARE USED THE LINEAL FOOT MEASUREMENTS OF THIS ADDITIONAL PORTION SHALL BE ADDED FOR PAYMENT

CALCULATED
CHECKED

GENERAL NOTES

GEA-88/528-
0.00/1.29



I:\PROJECTS\PID21753\DGN\21753gnaV8.dgn 11-JAN-2006 8:48AM jgrmovsa

# ROADWAY (CONT'D)

**PAVING UNDER GUARDRAIL**

THIS OPERATION SHALL INCLUDE PREPARATION OF THE GRADED SHOULDER USING ITEM 209, LINEAR GRADING, METHOD B, AS PER PLAN AND PAVING UNDER THE GUARDRAIL USING ITEM 448-ASPHALT CONCRETE, INTERMEDIATE COURSE, TYPE 1, UNDER GUARDRAIL, PG64-22, AS PER PLAN

PAVING UNDER GUARDRAIL SHALL CONSIST OF PLACING ITEM 448 TO THE DEPTH SPECIFIED (3") USING ONE OF THE FOLLOWING METHODS:

METHOD A:
1) SET GUARDRAIL POSTS
2) PLACE ITEM 448

METHOD B:
1) PLACE ITEM 448
2) BORE ASPHALT AT POST LOCATIONS (MAY BE OMITTED IF STEEL POSTS ARE USED)
3) SET GUARDRAIL POSTS
4) PATCH AROUND POSTS.THE MATERIALS USED FOR PATCHING SHALL BE AN ASPHALT CONCRETE APPROVED BY THE ENGINEER. PATCHED AREAS SHALL BE COMPACTED USING EITHER HAND OR MECHANICAL METHODS. FINISHED SURFACES SHALL BE SMOOTH AND SLOPED TO DRAIN AWAY FROM THE POSTS.

ALL EQUIPMENT, MATERIALS AND LABOR REQUIRED TO PERFORM THE WORK OUTLINED ABOVE, WITH THE EXCEPTION OF SETTING GUARDRAIL POSTS, SHALL BE INCLUDED FOR PAYMENT UNDER ITEM 448-ASPHALT CONCRETE, INTERMEDIATE COURSE, TYPE 1, UNDER GUARDRAIL, PG64-22, AS PER PLAN.

**CURB RAMPS**

**ITEM 608 - CURB RAMP, AS PER PLAN**

IN ADDITION TO THE CMS REQUIREMENTS FOR ITEM 608, EXCAVATION FOR INSTALLATION OF CURB RAMP, A.P.P. SHALL INCLUDE ANY SAWCUTTING AND WALK/CURB REMOVAL IN AREAS WHERE IT IS ENCOUNTERED PER THE DIRECTION OF THE ENGINEER.

ALL EQUIPMENT, MATERIALS AND LABOR REQUIRED FOR THE GRADING AND SEEDING AND MULCHING TO RESTORE DISTURBED AREAS AROUND PROPOSED WALK/CURB RAMP INSTALLATIONS SHALL BE INCLUDED FOR PAYMENT UNDER ITEM 608 - CURB RAMP, AS PER PLAN. RESTORATION WORK WILL BE PERFORMED AT THE DIRECTION OF THE ENGINEER

SEE SHEET 20 FOR ESTIMATED QUANTITIES AND LOCATIONS OF PROPOSED CURB RAMPS.

SEE SHEET 21-23 FOR CURB RAMP DETAIL SHEETS.

**ITEM 606 - ANCHOR ASSEMBLY, TYPE E-98**

THIS ITEM SHALL CONSIST OF FURNISHING AND INSTALLING EITHER OF THE FOLLOWING GUARDRAIL END TERMINALS.

1) THE ET-2000 (1997) MANUFACTURED BY TRINITY INDUSTRY, 1170 N. STATE STREET, GIRARD, OHIO 44420 (TELEPHONE:330-545-4373).

THE LENGTH OF THE ET-2000 (1997) SYSTEM IS CONSIDERED TO BE 50'-0" [15.24 m], INCLUSIVE OF TWO 25'-0" [7.62 m] LONG RAIL ELEMENTS. INSTALLATION SHALL BE AT THE LOCATIONS SPECIFIED IN THE PLANS, IN ACCORDANCE WITH THE MANUFACTURER'S SPECIFICATIONS AS DETAILED ON THE FOLLOWING PRE-APPROVED SHOP DRAWINGS:

| DWG. # | DRAWING NAME | DWG./REV. DATE | ODOT APPROVAL DATE |
|---|---|---|---|
| SS265M | ET-2000 (1997) PLAN, ELEVATION & SECTIONS | 6/20/97 | 3/6/98 |
| SS142 | ET2000 PLUS 50'-0" PLAN, ELEVATION & SECTION 25'-0" RAIL, SLEEVE W/PL POSTS 1-4 | 4/12/00 | 7/31/00 |
| SS141 | ET2000 PLUS PLAN, ELEVATION & SECTION 25'-0" RAIL, HBA POSTS 1-4 | 2/29/00 | 7/31/00 |
| SS158 | ET2000 PLUS 50'-0" WITH 12'-6" PANELS & HBA POSTS 1-4 PLAN, ELEVATION & SECTION | 5/22/00 | 7/31/00 |

2) THE SKT-350 MANUFACTURED BY ROAD SYSTEMS, INC., 2516 MALLORY LANE, STOW, OHIO, 44224 (TELEPHONE:330-346-0721)

THE LENGTH OF THE SKT-350 SYSTEM IS CONSIDERED TO BE 50'-0" [15.24 m], INCLUSIVE OF FOUR 12'-6" [3.81 m] LONG RAIL ELEMENTS. INSTALLATION SHALL BE AT THE LOCATIONS SPECIFIED IN THE PLANS, IN ACCORDANCE WITH THE MANUFACTURER'S SPECIFICATIONS AS DETAILED ON THE FOLLOWING PRE-APPROVED SHOP DRAWINGS:

| DWG. # | DRAWING NAME | DWG./REV. DATE | ODOT APPROVAL DATE |
|---|---|---|---|
| SKT-4M | SEQUENTIAL KINKING TERMINAL (SKT-350) ASSEMBLY WITH 4 FOUNDATION TUBES | 12/11/97 | 3/6/98 |

THE FACE OF THE TYPE E-98 IMPACT HEAD SHALL BE COVERED WITH A SHEET OF TYPE G REFLECTIVE SHEETING, PER CMS 730.19, APPROXIMATELY 18" X 18" [450 mm X 450 mm.]

REFER TO THE MANUFACTURER'S INSTRUCTION REGARDING THE INSTALLATION OF, AND THE GRADING AROUND, THE FOUNDATION TUBES AND GROUND STRUT. THE TOP OF ANY FOUNDATION TUBE SHOULD BE LESS THAN 4-INCHES [100 mm] ABOVE THE GROUND. THE PLACEMENT OF THE FOUNDATION TUBES SHOULD BE AN APPROPRIATE DEPTH BELOW THE LEVEL LINE IN ORDER TO MAINTAIN THE FINISHED GUARDRAIL HEIGHT OF 27-3/4-INCHES [706 mm] FROM THE EDGE OF THE SHOULDER.

ON-SITE GRADING IS REQUIRED IF THE TOP OF THE FOUNDATION TUBES OR TOP OF THE GROUND STRUT DOES PROJECT MORE THAN 4-INCHES [100 mm] ABOVE THE GROUND LINE.

PAYMENT FOR THE ABOVE WORK SHALL BE MADE AT THE UNIT PRICE BID FOR ITEM 606, ANCHOR ASSEMBLY, TYPE E-98, EACH, AND SHALL INCLUDE ALL LABOR, TOOLS, EQUIPMENT AND MATERIALS NECESSARY TO CONSTRUCT A COMPLETE AND FUNCTIONAL ANCHOR ASSEMBLY SYSTEM, INCLUDING ALL RELATED TRANSITIONS, REFLECTIVE SHEETING, HARDWARE, GRADING, EMBANKMENT AND EXCAVATION NOT SEPARATELY SPECIFIED, AS REQUIRED BY THE MANUFACTURER.



I:\PROJECTS\PID21753\DGN\21753gnaV8.dgn 19-JAN-2006 10:07AM jgrmovse

# DRAINAGE AND EROSION CONTROL

**CASTINGS ADJUSTED TO GRADE**

ALL CASTINGS SHALL BE ADJUSTED TO THE FINISHED ROADWAY ELEVATION BY THE CONTRACTOR. THE TIME BETWEEN ADJUSTING THE CASTINGS AND RESURFACING SHALL BE KEPT TO AN ABSOLUTE MINIMUM. NO ADJUSTING RINGS SHALL BE PERMITTED. WHEN PERFORMING THIS WORK, THE PAVEMENT SHALL BE SAWCUT PRIOR TO REMOVAL AND HOOKBOLTS SHALL BE USED WHERE PRACTICAL TO CONNECT EXISTING PAVEMENT TO NEW CONCRETE. THE FOLLOWING QUANTITIES HAVE BEEN CARRIED TO THE GENERAL SUMMARY:

ITEM 604 - MONUMENT BOX ADJUSTED TO GRADE,
AS PER PLAN . . . . . **33 EA.**
ITEM 604 - CATCH BASIN ADJUSTED TO GRADE,
AS PER PLAN . . . . . **8 EA.**
ITEM 604 - MANHOLE ADJUSTED TO GRADE,
AS PER PLAN . . . . . **5 EA.**

**ITEM 604 - CATCH BASIN, MONUMENT BOX, OR MANHOLE RECONSTRUCTED TO GRADE**

THE CONTRACTOR AND FIELD ENGINEER SHALL FIELD CHECK ALL EXISTING CATCH BASINS, MANHOLES, OR MONUMENT BOXES LOCATED WITHIN THE LIMITS OF THE PROJECT. ANY CASTING FOUND THAT EXHIBITS SUBSTANTIAL DETERIORATION AND REQUIRES MORE WORK THAN IS SPECIFIED UNDER CASTINGS ADJUSTED TO GRADE, SHALL BE RECONSTRUCTED TO GRADE AS DIRECTED BY THE ENGINEER.

ITEM 604 - MONUMENT BOX RECONSTRUCTED TO GRADE. . **4 EA.**

ITEM 604 - CATCH BASIN RECONSTRUCTED TO GRADE . . **11 EA.**

**ITEM SPECIAL - MISCELLANEOUS METAL**

EXISTING CASTINGS MAY PROVE TO BE UNSUITABLE FOR REUSE, AS DETERMINED BY THE ENGINEER. IT SHALL BE THE CONTRACTOR'S RESPONSIBILITY TO PROVIDE THE CASTINGS OF THE REQUIRED TYPE, SIZE AND STRENGTH (HEAVY) FOR THE PARTICULAR STRUCTURE IN QUESTION. ALL MATERIALS SHALL MEET ITEM 604 OF THE SPECIFICATIONS AND SHALL HAVE THE PRIOR APPROVAL OF THE ENGINEER.

THE CONTRACTOR IS CAUTIONED TO USE EXTREME CARE IN THE REMOVAL, STORAGE AND REPLACEMENT OF ALL EXISTING CASTINGS. CASTINGS DAMAGED BY THE NEGLIGENCE OF THE CONTRACTOR, AS DETERMINED BY THE ENGINEER, SHALL BE REPLACED WITH THE PROPER NEW CASTINGS AT THE EXPENSE OF THE CONTRACTOR.

THE CONTRACTOR SHALL NOT ORDER MATERIALS UNTIL AUTHORIZED BY THE ENGINEER, AND IF NONE ARE NEEDED, THE ITEM SHALL BE NON-PERFORMED.

THE FOLLOWING ESTIMATED QUANTITY HAS BEEN CARRIED TO THE GENERAL SUMMARY FOR USE AS DIRECTED BY THE ENGINEER:

ITEM SPECIAL - MISCELLANEOUS METAL . . . . . **4000 LBS.**

# PAVEMENT

**ITEM 251 - PARTIAL DEPTH PAVEMENT REPAIR**

THIS WORK SHALL BE PERFORMED AFTER PLANING AND PRIOR TO RESURFACING. THE QUANTITIES PROVIDED ARE TO REPAIR UNSOUND OR COLD-PATCH AREAS OR POP-OUTS. THICKNESS WILL VARY FROM 2" TO 3".

ALL LABOR AND MATERIALS NECESSARY TO PERFORM THIS WORK ACCORDING TO THE CMS SHALL BE INCLUDED FOR PAYMENT UNDER:

ITEM 251 - PARTIAL DEPTH PAVEMENT REPAIR . . . **4525 SQ.YD.**

**ITEM 253 - PAVEMENT REPAIR, AS PER PLAN**

PRIOR TO PLACEMENT OF PROPOSED OVERLAY, THIS ITEM SHALL INCLUDE REMOVAL OF EXISTING MATERIAL, SAWCUTTING IF NECESSARY AND PLACEMENT OF 9" BITUMINOUS AGGREGATE BASE, AS DIRECTED BY THE ENGINEER.

THE APPROXIMATE LOCATION IF THIS REPAIR IS SHOWN ON PLAN SHEET 7 .

ALL COSTS FOR THIS ITEM SHALL INCLUDE ALL MATERIALS, EQUIPMENT AND LABOR SHALL BE INCLUDED IN ITEM 253 - PAVEMENT REPAIR, AS PER PLAN.

THE FOLLOWING ESTIMATED QUANTITY IS CARRIED TO THE GENERAL SUMMARY TO BE USED AS OUTLINED ABOVE.

ITEM 253 - PAVEMENT REPAIR, AS PER PLAN . . . . **10 SQ.YD.**

**ITEM 254 - PAVEMENT PLANING, ASPHALT CONCRETE, AS PER PLAN**

THIS ITEM SHALL BE USED TO REMOVE THE EXISTING ASPHALT OVERLAY FULL WIDTH TO A DEPTH OF (3") THREE INCHES AT LOCATIONS DETAILED IN THE PLANS.

AREAS WHICH HAVE TRANSVERSE WEDGES (BUTT JOINTS) ARE TO BE REMOVED IN TWO PASSES AS REQUIRED FOR MAINTAINING TRAFFIC. NO ADDITIONAL PAYMENT SHALL BE MADE FOR THE SECOND PASS.

PRIOR TO PLANING THE PAVEMENT, THE CONTRACTOR SHALL FIELD SURVEY THE LOCATIONS OF THE EXISTING PAVEMENT MARKINGS, RAISED PAVEMENT MARKERS AND TRAFFIC LOOP DETECTORS WITHIN THE PROJECT LIMITS FOR THE PLACEMENT OF TEMPORARY MARKINGS,PROPOSED FINAL PAVEMENT MARKINGS, PROPOSED RAISED PAVEMENT MARKERS AND RE-ESTABLISHING TRAFFIC LOOP DETECTORS. THE FIELD SURVEY SHALL BE USED IN CONJUNCTION WITH THE PLAN QUANTITIES. THE QUANTITIES WERE DEVELOPED BASED UPON PREVIOUS PLAN UPGRADES. AN EXACT FIELD SURVEY WAS NOT PERFORMED.
ANY DISCREPANCIES BETWEEN THE PLANS AND THE FIELD SURVEY, THE FIELD SURVEY SHALL DICTATE. ALL COSTS ASSOCIATED WITH THIS SURVEY SHALL BE INCLUDED IN THE UNIT BID PRICE FOR ITEM 254 - PAVEMENT PLANING BITUMINOUS, AS PER PLAN.

**PLANED SURFACES**

THE DURATION OF TIME BETWEEN MILLING AND PLACEMENT OF THE INTERMEDIATE COURSE SHALL BE NO LONGER THAN FOURTEEN (14) DAYS. THE TIME LIMIT SHALL BEGIN ON THE FIRST DAY OF PLANING, AND SHALL CONTINUE BASED ON CALENDAR DAYS, MINUS ANY BAD WEATHER DAYS, UNTIL COMPLETION OF THE ASPHALT CONCRETE SURFACE COURSE.

IF THE CONTRACTOR FAILS TO COMPLY WITH THE ABOVE REQUIREMENTS, THE CONTRACTOR SHALL BE ASSESSED DAMAGES FOR EACH DAY BEYOND THE FOURTEEN AS SHOWN IN TABLE 108.07-1 IN SECTION 108.07 OF THE CMS.

**ITEM 446 - ASPHALT SURFACE COURSE, TYPE 1, PG70-22, AS PER PLAN**

THE COURSE AGGREGATE FOR THIS ITEM SHALL BE LIMITED TO A BLEND OF AIR-COOLED BLAST FURNACE SLAG WITH LIMESTONE COMPRISING THE REMAINING THE REMAINING PERCENTAGE

THE MAXIMUM AMOUNT OF RECLAIMED ASPHALT CONCRETE PAVEMENT SHALL BE LIMITED TO TEN (10) PERCENT.

**ITEM 442 - ASPHALT SURFACE COURSE, 12.5 MM, TYPE A (446), AS PER PLAN**

THE COURSE AGGREGATE FOR THIS ITEM SHALL BE LIMITED TO A BLEND OF AIR-COOLED BLAST FURNACE SLAG WITH LIMESTONE COMPRISING THE REMAINING THE REMAINING PERCENTAGE

THE MAXIMUM AMOUNT OF RECLAIMED ASPHALT CONCRETE PAVEMENT SHALL BE LIMITED TO TEN (10) PERCENT.

**THE ASPHALT BINDER USED SHALL BE PG 76-22M.**
**THE THICKNESS OF THE SURFACE COURSE IS 3" AND SHALL BE PLACED IN TWO, 1-1/2" LIFTS.**

**ITEM 448 - ASPHALT CONCRETE INTERMEDIATE COURSE, TYPE 1, PG 64-28, AS PER PLAN**

ALL REQUIREMENTS OF ITEM 448 SHALL APPLY TO THIS ITEM EXCEPT IN ADDITION TO THE REQUIREMENTS OF 441.03, THE CONTRACTOR MAY USE UP TO A MAXIMUM OF 20% RECLAIMED ASPHALT CONCRETE PAVEMENT FOR THE INTERMEDIATE COURSE.

CALCULATED
CHECKED

GENERAL NOTES

GEA-88/528-
0.00/1.29



I:\PROJECTS\PID21753\DGN\21753gnrlV8.dgn 11-JAN-2006 8:48AM jgrmovse

# PAVEMENT (CONT'D)

**ITEM 448 - ASPHALT CONCRETE SURFACE COURSE, TYPE 1, PG 64-22, (DRIVEWAYS)**

THIS ITEM OF WORK SHALL CONSIST OF PAVING ALL EXISTING DRIVEWAYS A DISTANCE OF 5 FT. FROM THE EDGE OF PAVED SHOULDER UNLESS OTHERWISE DIRECTED BY THE ENGINEER. THE PLAN QUANTITIES ARE BASED ON 16 FT. WIDE FOR RESIDENTIAL DRIVES AND 40 FT. FOR COMMERCIAL DRIVES. ASPHALT CONCRETE AVERAGE THICKNESS SHALL BE 2 IN. FOR AGGREGATE DRIVEWAYS, AND 1 IN. FOR IMPROVED DRIVEWAYS. ALL GRADING, TACK COAT, TOOLS, EQUIPMENT, MATERIAL, AND INCIDENTALS REQUIRED TO LAYOUT AND CONSTRUCT THE DRIVEWAYS SHALL BE INCLUDED IN THE UNIT BID FOR ITEM 448 - ASPHLAT CONCRETE, SURFACE COURSE, TYPE 1, PG 64-22 (DRIVEWAYS).

PAYMENT FOR ALL THE ABOVE SHALL BE INCLUDED IN THE UNIT PRICE BID FOR ITEM 448 - ASPHALT CONCRETE, SURFACE COURSE, TYPE 1, PG 64-22 (DRIVEWAYS)

**ITEM 407 - TACK COAT**

THE RATE OF APPLICATION OF THE 407 - TACK COAT SHALL BE SUBJECT TO ADJUSTMENTS, AS DIRECTED BY THE ENGINEER. PLAN QUANTITIES INDICATE AN AVERAGE APPLICATION RATE OF 0.10 GAL/SQ.YD. FOR ESTIMATION PURPOSES ONLY.

**ITEM 407 - TACK COAT FOR INTERMEDIATE COURSE**

THE RATE OF APPLICATION OF THE 407 - TACK COAT FOR INTERMEDIATE COURSE SHALL BE SUBJECT TO ADJUSTMENTS, AS DIRECTED BY THE ENGINEER. PLAN QUANTITIES INDICATE AN AVERAGE APPLICATION RATE OF 0.07 GAL/SQ.YD. FOR ESTIMATION PURPOSES ONLY.

# TRAFFIC CONTROL

**ITEM 632 - DETECTOR LOOP, AS PER PLAN**

PRIOR TO PLANING THE PAVEMENT, THE CONTRACTOR SHALL FIELD SURVEY THE LOCATIONS OF THE EXISTING LOOP DETECTORS WITHIN THE PROJECT LIMITS. THE PROJECT ENGINEER SHALL CONFIRM THESE LOCATIONS. THE SURVEY SHALL INCLUDE THE LOCATION OF THE LOOP, SIZE OF THE LOOP, OFFSET FROM CURB AND/OR CENTERLINE AND THE LOCATION OF THE STUB. A COPY OF THIS SURVEY SHALL BE GIVEN TO THE PROJECT ENGINEER.

AN ESTIMATED QUANTITY OF ITEM 632 - DETECTOR LOOP, AS PER PLAN HAS BEEN PROVIDED AS A CONTINGENCY WHEN WIRE IS CUT, BROKEN, OR DESTROYED DUE TO PAVEMENT PLANING, OR BUTT JOINT OPERATIONS.

NEW LOOP DETECTORS SHALL BE PLACED AT THE SAME LOCATIONS AND SAME SIZE AS THE EXISTING.

WHEN REPLACING THE LOOP DETECTORS, THE LOOP DETECTOR WIRE SHALL BE REPLACED TO THE PULL BOX OR POLE, WHICHEVER IS APPLICABLE, UNDER ITEM 632 AND TC-82.10 . THE NEW CABLE SPLICE KITS SHALL BE INCLUDED IN THIS PAY ITEM.

THE FOLLOWING ESTIMATED QUANTITY HAVE BEEN CARRIED TO THE GENERAL SUMMARY TO BE USED AS DIRECTED BY THE ENGINEER:

ITEM 632 - DETECTOR LOOP, AS PER PLAN . . . . . **7 EACH**

| APPROXIMATE SIZE AND COUNT OF EXISTING DETECTOR LOOPS TO BE REPLACED: | 6.5' x 11' LOOP SIZE | 6' x 16' LOOP SIZE | 5' x 10' LOOP SIZE | |
|---|---|---|---|---|
| INTERSECTION | | | | |
| U.S. 422 | 3 | 1 | | |
| S.R. 608 | 2 | | | |
| S.R. 87 | 1 | | 2 | |
| | | | | |
| | | | | |
| TOTALS: | 6 | 1 | | |

**CONSTRUCTION TRAFFIC**

ALL CONSTRUCTION TRAFFIC SHALL USE ACCEPTABLE TRUCK ROUTES TO ACCESS THE CONSTRUCTION AREA. USE OF LOCAL RESIDENTAL STREETS IS STRICTLY PROHIBITED UNLESS ALLOWED IN WRITING BY THE LOCAL ENFORCEMENT AUTHORITY.

CALCULATED
CHECKED

GENERAL NOTES

GEA-88/528-0.00/1.29



I:\PROJECTS\PID21753\DGNS\21753gnav8.dgn 11-JAN-2006 8:48AM jgrmovse

# MAINTENANCE OF TRAFFIC

**ITEM 614 - MAINTAINING TRAFFIC**

GENERALLY THE CONTRACTOR SHALL CONDUCT HIS OPERATIONS AS TO MAKE THE PROPOSED REPAIR WITH A MINIMUM OF HAZARD DELAY AND INCONVENIENCE TO THE MOTORISTS USING THE HIGHWAY AFFECTED BY THE WORK DONE UNDER THIS CONTRACT:

FURTHERMORE, IN ADDITION TO THE CONSTRUCTION AND MATERIAL SPECIFICATIONS, THE FOLLOWING SPECIFIC PROVISIONS ARE MANDATORY.

I. NOTIFICATION

SINCE FUNCTIONAL TRAFFIC CONTROL IS A MAJOR CONCERN ON THIS PROJECT, IT IS ESSENTIAL THAT THE MOTORING PUBLIC BE ADEQUATELY FOREWARNED OF FUTURE LANE CLOSURES AND TRAFFIC CONSTRICTIONS. THEREFORE, THE CONTRACTOR SHALL SUBMIT A WRITTEN SCHEDULE TO THE ENGINEER, AND THE ODOT-DISTRICT 12-PUBLIC INFORMATION OFFICE (216-584-2007) INDICATING THE LOCATIONS AND DATES OF THE LANE CLOSURES AT LEAST 3 DAYS PRIOR TO THE IMPLEMENTATION OF ANY SUCH CLOSURES. USE PORTABLE CHANGEABLE MESSAGE SIGNS TO ALERT MOTORISTS 3 DAYS PRIOR TO THE IMPLEMENTATION OF ANY CHANGES SUCH AS LANE CLOSURES OR OTHER RESTRICTIONS.

II. NIGHTTIME WORK

THE CONTRACTOR IS NOT PERMITTED TO WORK AT NIGHT. (THE HOURS FROM SUNSET TO SUNRISE OR 9:00 P.M. TO 7:00 A.M. , MONDAY THROUGH FRIDAY, ON SATURDAY OR SUNDAY BETWEEN THE HOURS OF 9:00 P.M. AND 8:30 A.M.)

III. RESTRICTIONS

1. ALL CLOSURES SHALL BE IN ACCORDANCE WITH THE APPLICABLE STANDARD CONSTRUCTION DRAWING(S).
2. ALL THROUGH TRAFFIC LANES SHALL BE KEPT OPEN AT ALL TIMES EXCEPT DURING HOURS OF CONSTRUCTION.
3. PEDESTRIAN TRAFFIC SHALL BE PERMITTED AND ACCOMMODATED ON AT LEAST ONE SIDE AT ALL TIMES.

NOTWITHSTANDING THE ABOVE, NO LANE CLOSURES SHALL OCCUR DURING THE PERIOD BEGINNING AT 12:00 NOON ON THE DAY PRECEDING AND CONTINUING UNTIL NOON ON THE DAY FOLLOWING LEGAL HOLIDAYS AND HOLIDAY WEEKENDS SUCH AS MEMORIAL DAY, FOURTH OF JULY, AND LABOR DAY. FURTHERMORE, NO LANE CLOSURES SHALL BE IMPLEMENTED OR IN PLACE DURING INCREASED TRAFFIC VOLUMES CAUSED BY SPECIAL EVENTS OR WHEN THE ENGINEER DEEMS THE CLIMATOLOGICAL CONDITIONS TOO HAZARDOUS.

IV. MAINTENANCE OF TRAFFIC SYSTEMS

A. WHEN REQUIRED

WHENEVER ANY PART OF THE TRAVELED SURFACE IS BEING WORKED UPON OR IS OTHERWISE NOT SUITABLE FOR SAFE AND CONVENIENT USE BY VEHICLES, TRAFFIC CONTROL DEVICES SUFFICIENT TO PROTECT SUCH AREAS TO ASSURE THE SAFE AND CONVENIENT PASSAGE OF VEHICULAR TRAFFIC SHALL BE INSTALLED AND MAINTAINED. SUCH TRAFFIC CONTROL DEVICES AND THE MANNER IN WHICH THEY ARE USED SHALL BE CONSISTENT WITH THESE PLANS AND THE OHIO MANUAL OF UNIFORM TRAFFIC CONTROL DEVICES FOR STREETS AND HIGHWAYS, HERINAFTER REFERED TO AS THE "MANUAL". THE TRAFFIC CONTROL DEVICE SYSTEM SHALL CONSTITUTE THE MINIMUM PROVISIONS FOR TRAFFIC CONTROL FOR EACH PARTICULAR SITUATION. WHENEVER THE ENGINEER DEEMS IT NECESSARY ESPECIALLY WHERE A GRADE, CURVE, OR MERGE CONDITIONS EXISTS, HE MAY DIRECT THAT ADDITIONAL OR ALTERNATIVE DEVICES BE USED.

B. CONDITIONS

DURING ALL PARTS OF THIS PROJECT, FLAGGERS, SIGNING, BARRICADES, FLASHING ARROWS, ETC. SHALL BE LOCATED AS INDICATED IN THE MANUAL OR AS SHOWN IN THE STANDARD DRAWINGS. TWO-WAY TRAFFIC SHALL BE MAINTAINED ON ONE LANE AT LEAST 10' WIDE AT ALL TIMES.

C. ADVANCE WARNING SIGNS

ALL ADVANCE WARNING SIGNS FOR ANY CONDITION WHICH RESTRICTS TRAFFIC SHALL BE ERECTED BEFORE ANY SUCH RESTRICTION IS PUT INTO EFFECT. ALL SUCH SIGNS SHALL BE COVERED OR REMOVED FROM THE VIEW OF TRAFFIC WHENEVER THEY ARE NOT APPLICABLE.

D. FLAGGERS

AT LEAST TWO FLAGGERS ARE REQUIRED FOR EACH CLOSURE, THE CONTRACTOR SHALL FURNISH ADDITIONAL FLAGGERS AS DIRECTED BY THE ENGINEER.

E. PROTECTION OF PUBLIC

PERSONAL CARS SHALL NOT BE PARKED WITHIN THE R/W.

F. FAILURE TO COMPLY

IF THERE IS ANY FAILURE TO COMPLY WITH PROVISIONS FOR TRAFFIC CONTROL SET OUT IN THESE PLANS AND NOTES, OR WITH THE PROVISIONS OF THE "MANUAL", THE HIGHWAY IN THE VICINITY OF THE WORK AREA SHALL NOT BE CONSIDERED IN A CONDITION FOR THE SAFE AND CONVENIENT USE BY THE TRAVELING PUBLIC. ANY FAILURE TO KEEP THE HIGHWAY, IN THE VICINITY OF THE WORK AREA, IN A CONDITION FOR THE SAFE AND CONVENIENT USE BY THE TRAVELING PUBLIC SHALL BE CONSIDERED A BREACH OF THIS CONTRACT. WORK SHALL BE SUSPENDED UNTIL THE CONTRACTOR COMPLIES WITH THE PROVISIONS OF THE AFOREMENTIONED ITEMS.

V. MAINTENANCE OF TRAFFIC MATERIALS

A. SIGNS

SIGN DIMENSIONS AND SPECIFICATIONS, INCLUDING LETTER SIZES SHALL BE AS PROVIDED IN THE "MANUAL", OR IN DESIGN DRAWINGS PROVIDED BY THE DEPARTMENT OF TRANSPORTATION. THE SIGNS SHALL BE SUBJECT TO APPROVAL OF THE ENGINEER PRIOR TO THE START OF THE PROJECT.

B. SIGN SUPPORTS

SIGN SUPPORTS SHALL BE OF SUFFICIENT SIZE AND MASS AS TO FIRMLY SUPPORT THE SIGNS AT THE APPROPRIATE HEIGHT. SUPPORTS SHALL BE AS SHOWN ON THE STANDARD DRAWINGS.

C. FLASHING ARROWS

WHENEVER ANY PART OF THE TRAVELED SURFACE IS CLOSED, THE MOTORIST SHALL BE WARNED AND DIVERTED BY THE CONTRACTOR THROUGH THE USE OF ONE FLASHING ARROW BARRICADE FOR EACH LANE CLOSED. THE CONTRACTOR SHALL REFER TO STANDARD DRAWING MT-35.10 AND THE PROVISIONS SET FORTH IN THE "MANUAL" FOR ALL INFORMATION REGARDING FURNISHING, MAINTAINING, AND USE OF FLASHING ARROW BARRICADES. PAYMENT FOR THE ABOVE SHALL BE INCLUDED IN THE LUMP SUM BID FOR ITEM 614 - MAINTAINING TRAFFIC.

D. DRUMS

DRUMS SHALL BE IN ACCORDANCE WITH PERTINENT SECTIONS OF THE "MANUAL". ALL COSTS FOR INSTALLING, MAINTAINING AND SUBSEQUENT REMOVAL OF SAID DRUMS SHALL BE INCLUDED IN THE LUMP SUM BID PRICE FOR ITEM 614 - MAINTAINING TRAFFIC.

E. CONES

CONES, IF UTILIZED, SHALL BE LOCATED AS SHOWN IN THE "MANUAL" AND THE STANDARD DRAWINGS.

F. FLASHERS

FLASHERS SHALL BE 12 VOLT BATTERY-OPERATED MODELS WITH 7 INCH DIAMETER YELLOW LENSES ILLUMINATED BY RAPID INTERMITTENT FLASHES OF SHORT DURATION AND SHALL BE PLACED ON ALL SIGNS AT ALL TIMES AS REQUIRED BY THE "MANUAL" AND THE STANDARD CONSTRUCTION DRAWING.

VI. PAYMENT

PAYMENT FOR PROVIDING, ERECTING, MAINTAINING AND REMOVING TEMPORARY MAINTENANCE OF TRAFFIC CONTROL DEVICES SHALL BE MADE UNDER THE LUMP SUM PRICE BID FOR ITEM 614 - MAINTAINING TRAFFIC.

**ITEM 614 - ASPHALT CONCRETE FOR MAINTAINING TRAFFIC**

A QUANTITY OF ITEM 614 - ASPHALT CONCRETE FOR MAINTAINING TRAFFIC HAS BEEN PROVIDED TO PROTECT THE TRAFFIC FROM OBSTRUCTIONS INCLUDING, BUT NOT LIMITED TO, POTHOLES, DRIVEWAYS, INTERSECTIONS, CASTINGS AND INLETS AND TO MAINTAIN TRAFFIC OVER RUTS AND LOW AREAS WHICH ARE LEFT EXPOSED DUE TO PAVEMENT PLANING OPERATIONS. THE CASTING ELEVATIONS SHALL NOT BE GREATER THAN 2 IN. WHEN EXPOSED TO TRAFFIC. THE FOLLOWING CONTINGENCY QUANTITY HAS BEEN CARRIED TO THE GENERAL SUMMARY:

ITEM 614 - ASPHALT CONCRETE FOR MAINTAINING TRAFFIC . . . . . **25 CU.YD.**

CALCULATED
CHECKED

GENERAL NOTES

GEA-88/528-0.00/1.29



J:\PROJECTS\P1021753\DGN\21753gnaV8.dgn 11-JAN-2005 8:48AM jgrmovse

# MAINTENANCE OF TRAFFIC
# (CONT'D)

**ITEM 614 - WORK ZONE PAVEMENT MARKINGS**

WORK ZONE MARKINGS SHALL BE PLACED AT THE LOCATIONS OF THE PERMANENT MARKINGS ACCORDING TO THE PREVIOUSLY PERFORMED FIELD SURVEY CONDUCTED BEFORE THE START OF THE PLANING OPERATIONS.

AFTER THE PAVEMENT PLANING PROCESS IS COMPLETED, AND AGAIN AFTER THE ASPHALT INTERMEDIATE COURSE IS PLACED, THE FOLLOWING WORK ZONE MARKIGNS SHALL BE USED:

ITEM 614 - WORK ZONE CENTER LINE,
CLASS I, 642 PAINT . . . . . **9.62 MI.**
ITEM 614 - WORK ZONE STOP LINE,
CLASS I, 642 PAINT . . . . . **410 FT.**
ITEM 614 - WORK ZONE CROSS WALK,
CLASS I, 642 PAINT . . . . . **800 FT.**

AFTER THE SURFACE COURSE IS PLACED, THE FOLLOWING WORK ZONE MARKINGS SHALL BE USED:

ITEM 614 - WORK ZONE CENTER LINE,
CLASS II, 642 PAINT . . . . . **8.8 MI.**
ITEM 614 - WORK ZONE STOP LINE,
CLASS I, 642 PAINT . . . . . **210 FT.**
ITEM 614 - WORK ZONE CROSS WALK,
CLASS I, 642 PAINT . . . . . **400 FT.**
ITEM 614 - WORK ZONE SCHOOL SYMBOL MARKING,
72", CLASS I . . . . . **4 EA**

**CONTINUOUS ACCESS**

THE CONTRACTOR SHALL MAINTAIN SAFE AND ADEQUATE DRIVEWAYS AND WALKWAYS IN ORDER TO PROVIDE CONTINUOUS ACCESS FOR PEDESTRIANS, PASSENGER VEHICLES, TRUCKS AND SAFETY EQUIPMENT TO ALL ADJOINING PROPERTIES.

THE COST FOR ALL MATERIALS, EQUIPMENT AND LABOR NECESSARY TO PROVIDE CONTINUOUS ACCESS SHALL BE INCLUDED IN THE LUMP SUM PRICE BID FOR ITEM 614 - MAINTAINING TRAFFIC.

**ITEM 614 PORTABLE CHANGEABLE MESSAGE SIGN, AS PER PLAN**

THE CONTRACTOR SHALL FURNISH, INSTALL, MAINTAIN, AND REMOVE WHEN NO LONGER NEEDED A PORTABLE CHANGEABLE MESSAGE SIGN(S). THE PCMS SHALL BE OF THE TYPE SHOWN ON THE LIST OF APPROVED PCMS MAINTAINED BY THE DIRECTOR. THE PCMS SHALL BE A CLASS I OR II TYPE UNIT.

THE PORTABLE CHANGEABLE MESSAGE SIGN SHALL BE MOUNTED ON A TRAILER. THE LOCATION OF THE PCMS SHALL BE AS DIRECTED BY THE ENGINEER. THE ENGINEER SHALL BE PROVIDED ACCESS TO EACH SIGN UNIT AND SHALL BE PROVIDED WITH APPROPRIATE TRAINING AND OPERATION INSTRUCTIONS. THE PCMS SHALL CONTAIN A CELLULAR TELEPHONE LINK WHICH WILL ALLOW REMOTE SIGN ACTIVATION, DEACTIVATION, MESSAGE CHANGES, MESSAGE ADDITIONS AND REVISIONS TO TIME OF DAY PROGRAMS. THE SYSTEM SHALL ALSO PERMIT VERIFICATION OF CURRENT AND PROGRAMMED MESSAGES.

THE CONTRACTOR SHALL PROVIDE TO THE ENGINEER THE SOFTWARE NECESSARY TO CONTROL THE PCMS REMOTELY.

THE PCMS SHALL BE EQUIPPED WITH A MYRIAD SAFETY BEAM OR AN APPROVED EQUAL AS DETERMINED BY THE ENGINEER. THE MYRIAD SAFETY BEAM SENDS OUT A SIGNAL THAT ACTIVATES RADAR DETECTORS. THE BEAM IS APPROVED BY THE FCC. THE MYRIAD SAFETY BEAM SHALL USE THE SAME POWER SUPPLY AS THE PCMS. THE MYRIAD SAFETY BEAM SHALL BE ABLE TO BE ACTIVATED WITH THE PCMS RUNNING OR NOT. THE MYRIAD SAFETY BEAM IS DISTRIBUTED BY THE TRIPLEX GROUP, INC., PO BOX 42,. NEW HOPE, PA, 18938, TELEPHONE (215) 862-5077.

NO FLIP DISK UNITS ARE ALLOWED.

AT THE DIRECTION OF THE ENGINEER THE PCMS MAY BE REMOVED FOR PERIODS OR TIMES WHEN NOT IN USE. NO PAYMENT WILL BE MADE FOR THESE TIMES (EX. WINTER MONTHS).
THERE SHALL BE TWO **(2)** CLASS I OR II CHANGEABLE MESSAGE SIGN AT **4** MONTHS EACH.

ITEM 614 - PORTABLE CHANGEABLE MESSAGE SIGN,
AS PER PLAN . . . . . **8 SIGN-MONTHS**





I:\PROJECTS\PID21753\DGN\21753gnaV8.dgn 11-JAN-2006 8:48AM jgrmovse

| REF. NO. | PART | ROUTE | DIRECTION | SIDE | LOCATIONS - FROM PLAN RECORD EXISTING LOCATIONS (APPROXIMATE S.L.M. LOCATIONS) BEGIN SLM | END SLM | | 202 GUARDRAIL REMOVED FEET | 606 GUARDRAIL TYPE 5 FEET | 606 ANCHOR ASSEMBLY, TYPE E-98 EACH | 606 ANCHOR ASSEMBLY, TYPE T EACH | 606 BRIDGE TERMINAL ASSEMBLY, TYPE 4, AS PER PLAN EACH | 448 ASPHALT CONCRETE, INTERMEDIATE COURSE, TYPE 1, UNDER GUARDRAIL, AS PER PLAN CU. YD. | 203 LINEAR GRADING, METHOD B, AS PER PLAN FEET | | 626 BARRIER REFLECTOR, TYPE A EACH | 626 BARRIER REFLECTOR, TYPE B EACH | REMARKS |
|---|---|---|---|---|---|---|---|---|---|---|---|---|---|---|---|---|---|---|
| | | | | | **BEGIN E.B. SR-88** | | | | | | | | | | | | | |
| GR-1 | 1 | SR-88 | EB | RT | 1.87 | 1 87 | | 25 | | | | 1 | 0.8 | 28 | | 3 | 3 | TYPE B, REFLECTORS FOR BRIDGE PARAPET |
| GR-2 | 1 | SR-88 | EB | RT | 3 07 | 3 08 | | 106 | 50 | 1 | 2 | | 3.2 | 116 | | 3 | | |
| GR-3 | 1 | SR-88 | EB | RT | 3 09 | 3 21 | | 650 | 587 5 | 1 | 2 | | 18 1 | 653 | | 13 | | |
| | | | | | **BEGIN N.B. SR-528** | | | | | | | | | | | | | |
| GR-4 | 2 | SR-528 | NB | RT | 1 75 | 1 80 | | 256 | 162 5 | 2 | | | 7.5 | 269 | | 3 | | |
| GR-5 | 2 | SR-528 | NB | RT | 2 08 | 2 16 | | 375 | 275 | 2 | | | 10 6 | 381 | | 4 | | |
| GR-6 | 2 | SR-528 | NB | RT | 2 43 | 2 48 | | 250 | 150 | 2 | | | 7 1 | 256 | | 3 | | |
| GR-7 | 2 | SR-528 | NB | RT | 3.92 | 4.07 | | 800 | 775 | | 4 | | 22.4 | 806 | | 8 | | |
| GR-8 | 2 | SR-528 | NB | RT | 4.08 | 4.10 | | 163 | 100 | 1 | 2 | | 4.7 | 169 | | 3 | | |
| GR-9 | 2 | SR-528 | NB | RT | 4.19 | 4.26 | | 463 | 362 5 | 2 | | | 13.0 | 469 | | 5 | | |
| GR-10 | 2 | SR-528 | NB | RT | 4.58 | 4.64 | | 350 | 275 | 2 | 1 | | 10 6 | 381 | | 4 | | |
| GR-11 | 2 | SR-528 | NB | RT | 5.01 | 5 12 | | 575 | 475 | 2 | | | 16.1 | 581 | | 6 | | |
| | | | | | **BEGIN S.B. SR-528** | | | | | | | | | | | | | |
| GR-12 | 2 | SR-528 | SB | RT | 5.11 | 5 02 | | 475 | 375 | 2 | | | 13.4 | 481 | | 5 | | |
| GR-13 | 2 | SR-528 | SB | RT | 4.57 | 4 55 | | 225 | 150 | 2 | | | 7 1 | 256 | | 3 | | |
| GR-14 | 2 | SR-528 | SB | RT | 4.24 | 4.23 | | 75 | 25 | 1 | 2 | | 2 6 | 94 | | 3 | | |
| GR-15 | 2 | SR-528 | SB | RT | 4.22 | 4 17 | | 263 | 200 | 1 | 2 | | 7.5 | 269 | | 3 | | |
| GR-16 | 2 | SR-528 | SB | RT | 4.07 | 3.89 | | 975 | 875 | 2 | | | 27 3 | 981 | | 10 | | |
| GR-17 | 2 | SR-528 | SB | RT | 3.82 | 3.74 | | 425 | 325 | 2 | | | 12 0 | 431 | | 5 | | |
| GR-18 | 2 | SR-528 | SB | RT | 2.48 | 2.42 | | 275 | 175 | 2 | | | 7 8 | 281 | | 3 | | |
| GR-19 | 2 | SR-528 | SB | RT | 2.13 | 2.05 | | 463 | 362.5 | 2 | | | 13.0 | 469 | | 5 | | |
| GR-20 | 2 | SR-528 | SB | RT | 1.79 | 1.74 | | 275 | 175 | 2 | | | 7.8 | 281 | | 3 | | |
| | | | | | **BEGIN W.B. SR-88** | | | | | | | | | | | | | |
| GR-21 | 1 | SR-88 | WB | RT | 3.24 | 3.17 | | 375 | 325 | 1 | 1 | | 10.5 | 378 | | 4 | | |
| GR-22 | 1 | SR-88 | WB | RT | 3.16 | 3 07 | | 475 | 425 | 1 | 1 | | 13 3 | 478 | | 5 | | |
| GR-23 | 1 | SR-88 | WB | RT | 1.93 | 1 91 | | 125 | 50 | 1 | | 1 | 3 6 | 128 | | 3 | 3 | TYPE B, REFLECTORS FOR BRIDGE PARAPET |
| GR-24 | 1 | SR-88 | WB | RT | 1.87 | 1 85 | | 119 | 50 | 1 | | 1 | 3 6 | 128 | | 3 | | |
| GR-25 | 1 | SR-88 | WB | RT | 1.60 | 1.56 | | 269 | 212.5 | 2 | | | 8.9 | 319 | | 4 | | |
| GR-26 | 1 | SR-88 | WB | RT | 1.00 | 0.98 | | 150 | 150 | | 2 | | 4 9 | 175 | | 3 | | EX TYPE A, ANCHOR ASSEMBLY TO REMAIN |
| | | | | | **TOTALS CARRIED TO GENERAL SUMMARY:** | | | **8977** | **7087.5** | **37** | **19** | **3** | **257.4** | **9258** | | **117** | **6** | |
| | | | | | | | | | | | | | | **92.58 STA.** | | | | |

CALCULATED

CHECKED

# GUARDRAIL SUB-SUMMARY SHEET

GEA-88/528-
0.00/1.29



I:\PROJECTS\PID21753\DGN\21753gbbV8.dgn 11-JAN-2006 8:48AM jgrmovse

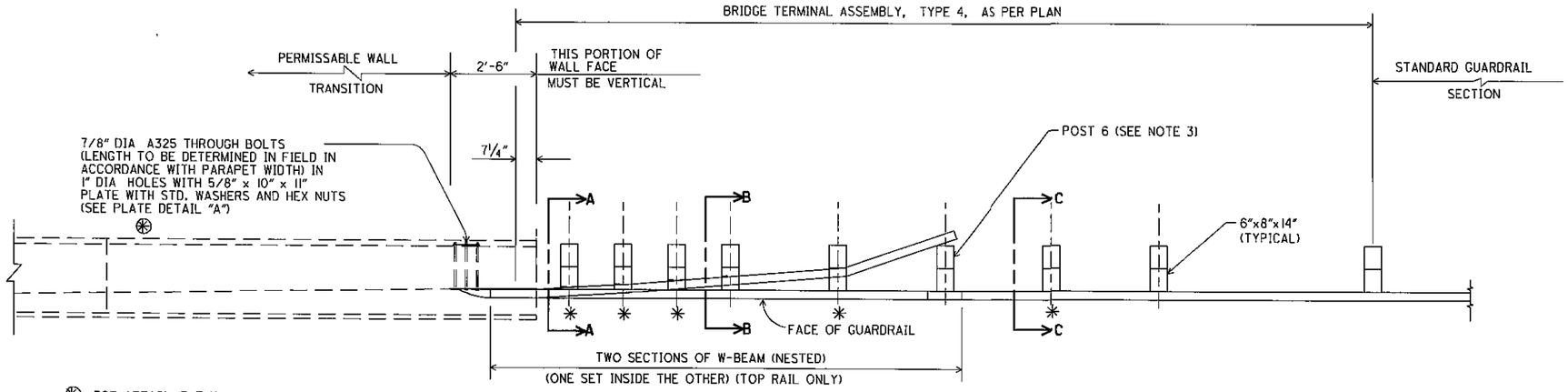


⊛—FOR ATTACHMENT TO ABUTMENT WALLS, THIS ITEM REQUIRES THE USE OF POLYESTER RESIN ANCHORS WITH FEMALE THREADED INSERTS (10" LONG) TO ACCEPT 7/8" DIAMETER BOLTS (PLATE DETAIL NOT REQUIRED)

## PLAN

✱ GUARDRAIL NOT ATTACHED TO POSTS BLOCKOUT FASTENED TO POST WITH STD. POST BOLT.

NCHRP REPORT 350 TL3

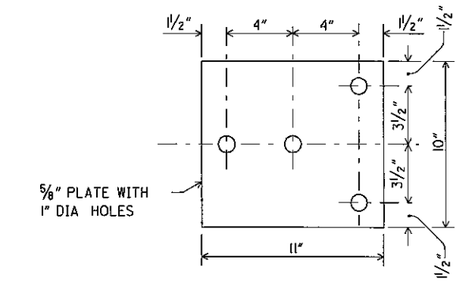


PLATE DETAIL "A"

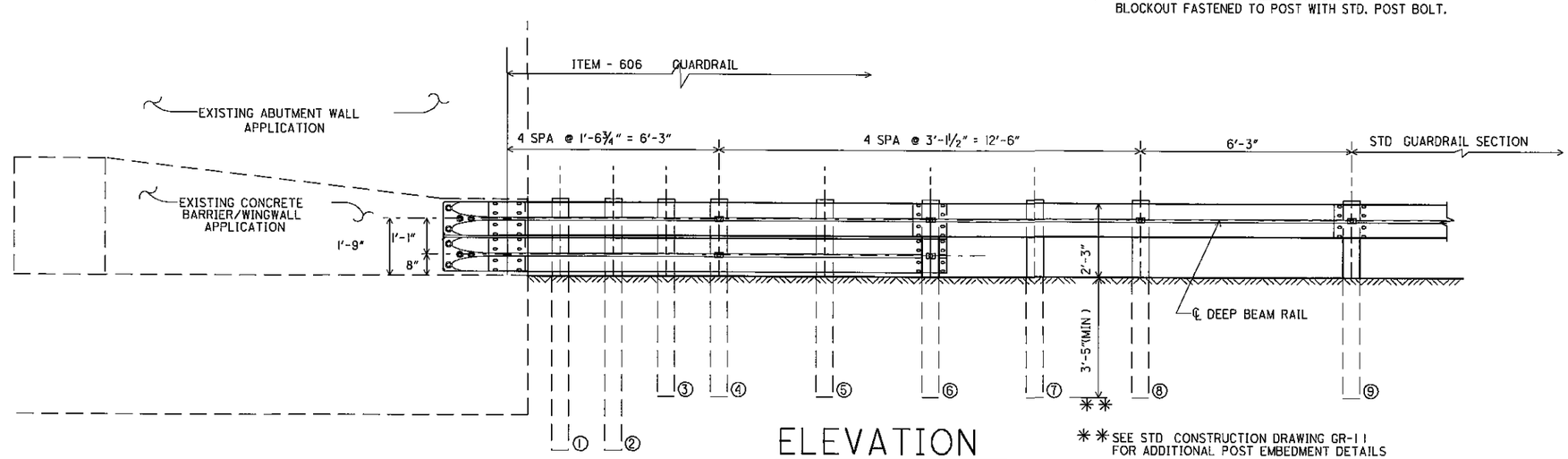


## ELEVATION

✱✱ SEE STD CONSTRUCTION DRAWING GR-1.1 FOR ADDITIONAL POST EMBEDMENT DETAILS

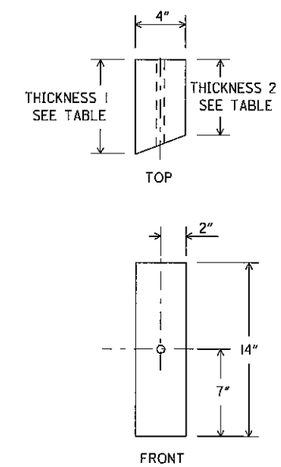


## WOOD BLOCK FOR RUBRAIL

| BLOCKOUT CHART BOTTOM BEAM WOOD BLOCKS 1'-2" X 4" | | |
|---|---|---|
| POST | THICKNESS 1 | THICKNESS 2 |
| ① | 6 1/2" | 6 1/4" |
| ② | 5 1/8" | 4 7/8" |
| ③ | 3 7/8" | 3 5/8" |
| ④ | 2 5/8" | 2 3/8" |
| ⑤ | NO BLOCK | NO BLOCK |

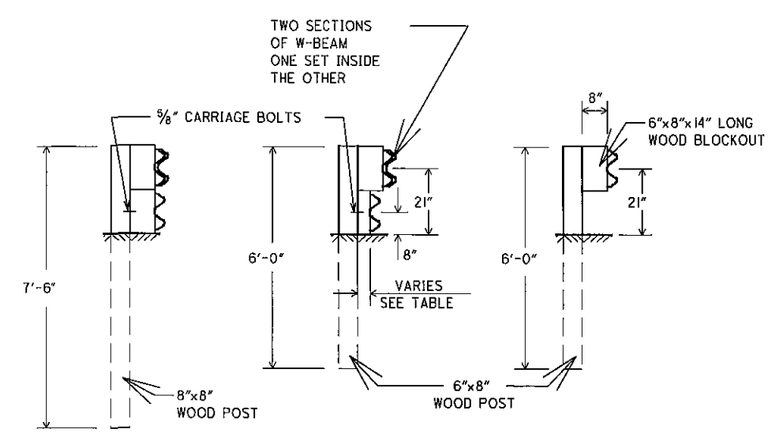


SECTION A-A SECTION B-B SECTION C-C

### GENERAL NOTES

1. THIS GUARDRAIL TRANSITION IS APPROPRIATE FOR CONNECTION TO A VERTICAL CONCRETE SHAPE AND AND SHOULD NOT BE CONNECTED DIRECTLY TO A CONCRETE SAFETY SHAPE CONCRETE SAFETY SHAPE BARRIERS SHOULD BE TRANSITIONED TO A VERTICAL SHAPE AT THE GUARDRAIL CONNECTION.
2. THE RUBRAIL MAY BE SHOP BENT IN THE LAST 3 FEET TO FACILITATE INSTALLATION
3. POSTS 1,2,3,4, AND 6 REQUIRE AN ADDITIONAL HOLE TO ATTACH LOWER BLOCKS AND/OR LOWER BEAM.
4. SEE STANDARD CONSTRUCTION DRAWINGS GR-1.1, GR-2.1 AND GR-3.4 FOR ADDITIONAL DETAILS.
5. DO NOT BOLT NESTED W BEAM OR RUBRAIL W BEAM TO POSTS AND BLOCKS ON POSTS 1, 2, 3, AND 5. BOLT BLOCKS DIRECTLY TO POSTS
6. USE OF PLATE WASHERS (FWR01) IS OPTIONAL.
7. CENTER DRILL WOOD BLOCKS FOR RUBRAIL TO SIT SQUARELY ON THE POST FOR POSTS 1 THROUGH 4 SECURE BLOCKS TO POSTS 1 THROUGH 3 WITH 5/8" CARRIAGE BOLTS.
8. POSTS 1 AND 2 ARE 8"X8"X7 5' POSTS 3 THROUGH 9 ARE 6"X8"X6'

THIS DETAIL MODIFIES A BRIDGE TERMINAL ASSEMBLY, TYPE 4 FOR CONNECTION TO A VERTICAL WALL

ALL DIMENSIONS AND DETAILS SHOWN ARE IN AGREEMENT WITH THE APPROVED CRASHWORTHY GUARDRAIL TRANSITION FOUND IN FHWA ACCEPTANCE LETTER HMHS-B65 DATED 2-14-00.

CALCULATED | CHECKED

# BRIDGE TERMINAL ASSEMBLY, TYPE 4, AS PER PLAN

GEA-88/528-0.00/1.29



I:\PROJECTS\PID21753\DGN\21753gre V8.dgn 11-JAN-2006 8:48AM jgrmovse

| PART | ROUTE | SIDE | LOCATIONS - FROM PLAN RECORD: LOCATIONS: BEGIN STATION | END STATION | 646 EDGE LINE | 646 CENTERLINE | 646 STOP LINE, (24") | 646 CROSSWALK LINES | 646 CHANNELIZING LINE, (WHITE) | 646 WORD ON PAVEMENT, 72", ("ONLY") | 646 LANE ARROW, "RIGHT TURN" | 646 SCHOOL SYMBOL MARKING, 72" | 646 TRANSVERSE / DIAGONAL LINE (WHITE) | 202 RPM, REMOVED AND DISPOSED | 621 RPM, TWO-WAY (YELLOW / YELLOW) | 621 RPM, TWO-WAY (YELLOW/RED) | 621 RPM, ONE-WAY (WHITE) | 621 RPM, TWO-WAY (WHITE / RED) | REMARKS |
|---|---|---|---|---|---|---|---|---|---|---|---|---|---|---|---|---|---|---|---|
| | | | | | MILE | MILE | FEET | FEET | FEET | EACH | EACH | EACH | FEET | EACH | | | | | |
| 1 | SR-88 | CL | SLM 0.00 | SLM 1.91 | 3.74 | 1.87 | | | | | | | | 300 | 178 | | | | |
| 1 | SR-88 | CL | SLM 1 91 | SLM 2 07 | 0 32 | 0 16 | | | | | | | | | 42 | | | | |
| 1 | SR-88 | CL | SLM 2 07 | SLM 2 18 | | 0 11 | | | | | | | | | | | | | |
| 1 | SR-88 | CL | SLM 2.18 | SLM 2.73 | 1 10 | 0.55 | | | | | | | | 100 | 85 | | | | |
| 1 | SR-88 | CL | SLM 2 73 | SLM 2 77 | 0 08 | 0 04 | | | | | | | | | | | | | |
| 1 | SR-88 | CL | SLM 2 77 | SLM 3 36 | 1 18 | 0 59 | | | | | | | | | | | | | |
| 2 | SR-528 | CL | SLM 1.29 | SLM 6.35 | 10.12 | 5 06 | | | | | | | | 300 | 332 | | | | |
| 3 | SR-88 | CL | SLM 3.36 | SLM 3.78 | 0.84 | 0.42 | 10 | | | | | | | 34 | 28 | | 16 | | |
| 3 | SR-88 | CL | TURN LANE | | 0 09 | | | | | | | | | | | 6 | | | |
| | | | | LOCATION | | | | | | | | | | | | | | | |
| 1 | SR-88 | RT | SLM 2 04 | (NELSON RD) | | | 14 | | | | | | | | | | | | |
| 1 | SR-88 | RT | SLM 2.07 | (US422, SOUTH SIDE) | | | 14 | 90 | | | | | | | | | 5 | | |
| 1 | SR-88 | LT | SLM 2 07 | (US422, NORTH SIDE) | | | 28 | 90 | 75 | 1 | 3 | | | | | | | 3 | |
| 1 | SR-88 | RT | SLM 2.19 | (SCHOOL SYMBOL) | | | | | | | | 1 | | | | | | | |
| 1 | SR-88 | CL | SLM 2 30 | (CROSSWALK) | | | | 80 | | | | | | | | | | | |
| 1 | SR-88 | LT | SLM 2.44 | (SCHOOL SYMBOL) | | | | | | | | 1 | | | | | | | |
| 1 | SR-88 | CL | SLM 2 69 | (CROSSWALK) | | | | 80 | | | | | | | | | | | |
| 2 | SR-528 | RT | SLM 4.58 | (SR-608, SOUTH SIDE) | | | 12 | | | | | | 50 | | | | 16 | | TRANSVERSE LINES ARE ON 8' PAVED SHLDF |
| 2 | SR-528 | LT | SLM 4 61 | (SR-608, NORTH SIDE) | | | 12 | | | | | | 50 | | | | 16 | | TRANSVERSE LINES ARE ON 8' PAVED SHLDF |
| 2 | SR-528 | RT | SLM 6 34 | (SR-87, SOUTH SIDE) | | | 12 | | | | | | 50 | | | | 16 | | TRANSVERSE LINES ARE ON 8' PAVED SHLDF |
| TOTALS CARRIED TO GENERAL SUMMARY: | | | | | 17.47 | 8.80 | 102 | 340 | 75 | 1 | 3 | 2 | 150 | 734 | 665 | 6 | 69 | 3 | |
| | | | | | | | | | | | | | | | 743 - RPM TOTAL | | | | |

CALCULATED

CHECKED

# PAVEMENT MARKING SUB-SUMMARY

GEA-88 / 528 - 0.00 / 1.29



I:\PROJECTS\PTD2175\DGN\2175sqV8.dgn 11-JAN-2006 8:48AM jgrmovse

REMOVAL OF EXISTING AND INSTALLATION OF PROPOSED PAVEMENT SENSOR

THIS WORK SHALL CONSIST OF THE REMOVAL OF AN EXISTING PAVEMENT SENSOR ON S R.-528 (NORTHBOUND LANE) SOUTH OF S R -87 AND THE INSTALLATION OF A NEW ROADWAY MOUNTED SENSOR. ALL MATERIALS AND INSTALLATION METHODS SHALL CONFORM TO SPECIFICATIONS OF NU-METRICS, 581 UNIVERSITY DR., UNIONTOWN, PA, 15401, (724-438-8750).

THE SENSOR CANISTERS SHALL BE INSTALLED USING THE CANISTER INSTALLATION TOOL AND SET 1/16 INCH MINIMUM AND 1/8 INCH MAXIMUM BELOW PAVEMENT GRADE. THE PAVEMENT SENSOR SHALL BE INSTALLED CENTERED IN THE DESIGNATED LANE, WITH THE CANISTER DIRECTION ARROWS POINTING IN THE DIRECTION OF TRAFFIC FLOW, AND IN A STRAIGHT LINE ACROSS THE ROADWAY THE PAVEMENT SENSORS SHALL BE IN DIRECT VIEW OF THE EQUIPMENT ENCLOSURE CABINET.

THE SENSOR SHALL BE INSTALLED IN ACCORDANCE WITH THE MANUFACTURERS INSTRUCTIONS USING BONDO # 70-84 TWO PART EPOXY, ATLANTA, GEORGIA, AS RECOMMENDED BY SENSOR MANUFACTURER . THE PAVEMENT TEMPERATURE SHALL NOT BE LESS THAN FORTY (40°) DEGREES FAHRENHEIT DURING SEALING, AND THE CONTRACTOR SHALL ENSURE THAT THE COMPLETE CURING OF THE SEALANT TAKES PLACE PRIOR TO OPENING THE LANE TO TRAFFIC PAYMENT FOR CANISTERS AND INSTALLATION SHALL BE INCLUDED IN SPECIAL ITEM

THE ENGINEER SHALL CONTACT THE ROADWAY SERVICES ENGINEER FIVE (5) WORKING DAYS PRIOR TO THE SENSOR REMOVAL AND SUBSEQUENT INSTALLATION OF THE NEW SENSOR THIS NOTICE WILL ALLOW THE DEPARTMENT TO DE-ENERGIZE THE AFFECTED CABLES AND MARK THE EXACT LOCATION FOR THE NEW SENSOR.

FOR THE REMOVAL AND REPLACEMENT OF THE PAVEMENT SENSOR, TRAFFIC SHALL BE MAINTAINED IN ACCORDANCE WITH THIS PLAN, ITEM 614 - MAINTAINING TRAFFIC AND THE OMUTCD.

ITEM SPECIAL - ROADWAY MOUNTED SENSOR

A QUANTITY OF ONE (1) EACH, ROADWAY MOUNTED GROUNDHOG MODEL G-4WX SHALL BE USED. THIS ITEM SHALL INCLUDE ALL THE MATERIALS, LABOR AND EQUIPMENT TO INSTALL THIS SENSOR CONFORMING TO THE SPECIFICATIONS OF NU-METRICS

ITEM SPECIAL 690 - MISC.: ROADWAY MOUNTED SENSOR . . . 1 EACH

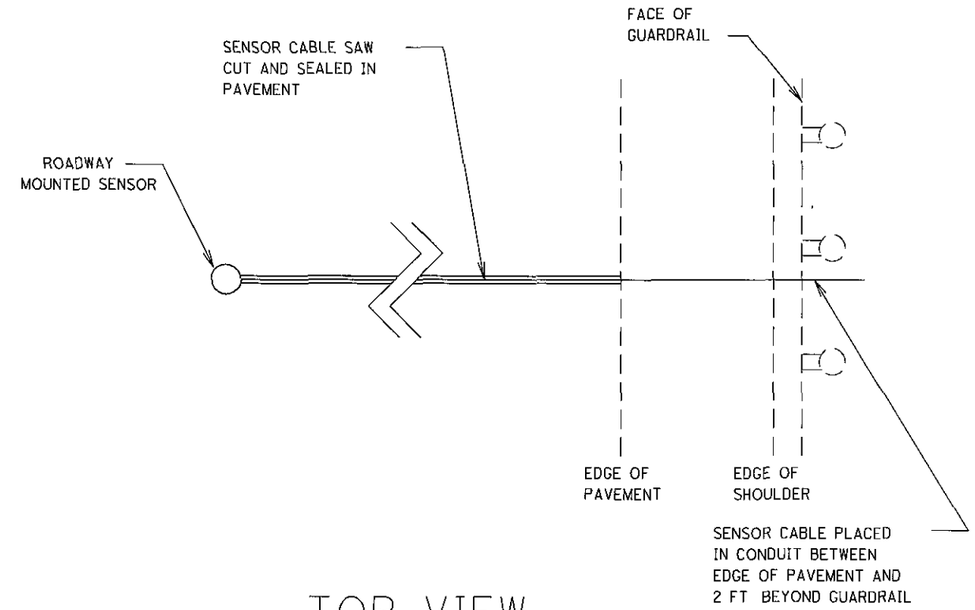


TOP VIEW

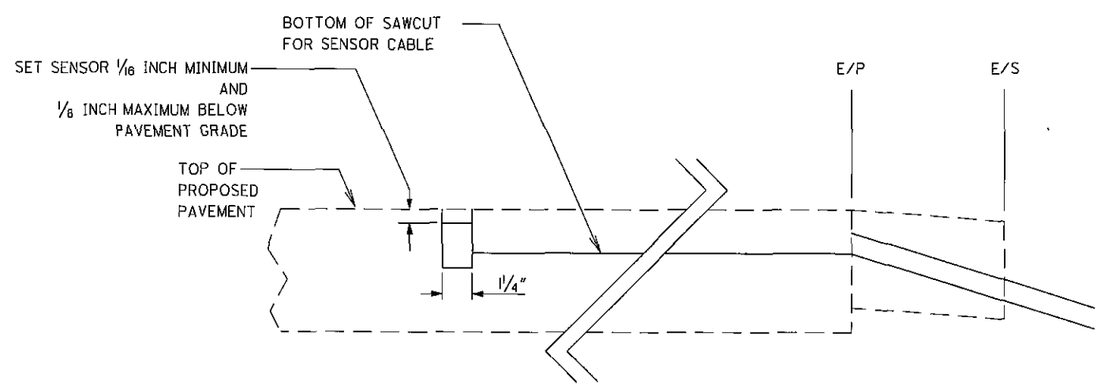


SIDE VIEW

CALCULATED
CHECKED

PAVEMENT SENSOR DETAIL

GEA-88/528-0.00/1.29



I:\PROJECTS\PID21753\DGN\21753tdav8.dgn 11-JAN-2006 8:48AM jgrmovse

| REF.NO. | LOCATION | | | | INTERSECTION CORNER | 202 WALK REMOVED | 202 CURB REMOVED | | 608 CURB RAMP, AS PER PLAN |
|---|---|---|---|---|---|---|---|---|---|
| | ROUTE | SIDE | S.L.M. | DESCRIPTION | | SQ FT | FT | | SQ FT |
| CR-1 | S.R. 88 | LT | 2 30 | AT CROSSWALK | SE | | 10 | | 50 |
| CR-2 | S.R. 88 | RT | 2 30 | AT CROSSWALK | NE | 100 | 10 | | 100 |
| CR-3 | S.R. 88 | LT | 2.68 | AT CROSSWALK | | | 10 | | 30 |
| CR-4 | S.R. 88 | RT | 2 68 | AT CROSSWALK | | | 10 | | 30 |
| | | | | TOTALS TO GENERAL SUMMARY: | | 100 | 40 | | 210 |

QUANTITY CALCULATIONS:

100 SQFT(AVG) x 1 RAMP = 100 SQFT(AVG)
**TOTAL: 100 SQFT ITEM 202 - WALK REMOVED**

10 FT(AVG) x 4 RAMPS = 40 FT(AVG)
**TOTAL: 40 FT ITEM 202 - CURB REMOVED**

30 SQFT(AVG) x 2 RAMPS = 60 SQFT(AVG)
50 SQFT(AVG) x 1 RAMP = 50 SQFT(AVG)
100 SQFT(AVG) x 1 RAMP = 100 SQFT(AVG)
**TOTAL: 210 SQFT ITEM 608 - CURB RAMP, AS PER PLAN**

CALCULATED

CHECKED

**CURB RAMP SUB-SUMMARY SHEET**

**GEA-88/528-0.00/1.29**



\PROJECTS\PID21753\DGN\21753gsov8.dgn 11-JAN-2006 8:48AM jgrmovse

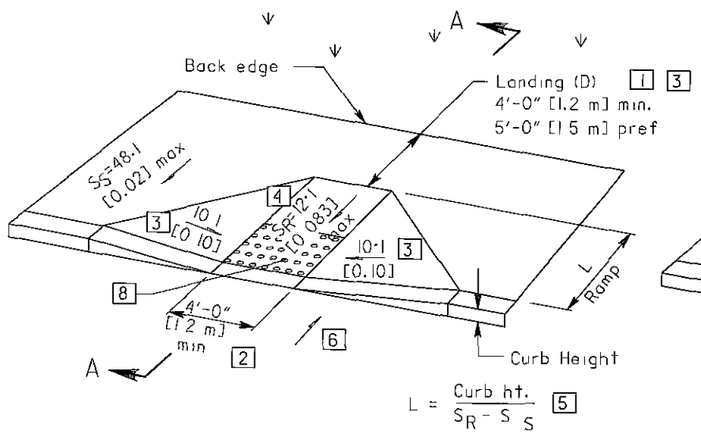


See Sht. 3/3 for SECTION A-A

PERPENDICULAR CURB RAMP DETAIL

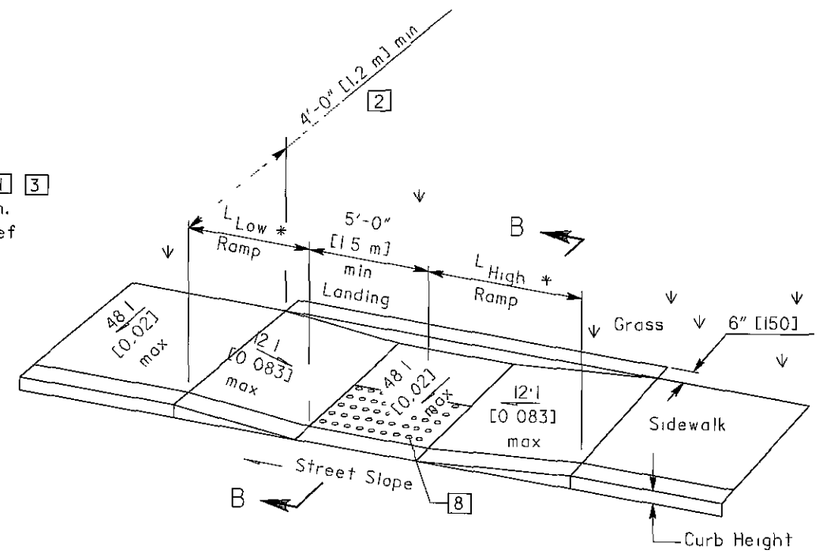


See Sht 3/3 for SECTION B-B

PARALLEL CURB RAMP DETAIL
(DOUBLE)

| Street Slope | Ramp Length @ 1"/ft [0.083] | |
|---|---|---|
| | L LOW SIDE* | L HIGH SIDE* |
| 0.01 | 5'-5" [1.6 m] | 6'-10" [2.1 m] |
| 0.02 | 4'-10" [1.5 m] | 7'-11" [2.4 m] |
| 0.03 | 4'-5" [1.3 m] | 9'-5" [2.9 m] |
| 0.04 | 4'-1" [1.2 m] | 11'-8" [3.6 m] |
| 0.05 | 3'-9" [1.1 m] | 15'-2" [4.6 m] |

* Measured along the back of a 6" [150] high curb

$$L_{HIGH} = \frac{\text{Curb ht}}{0.083 - \text{Street Slope}} \quad 7$$

$$L_{LOW} = \frac{\text{Curb ht.}}{0.083 + \text{Street Slope}} \quad 7$$

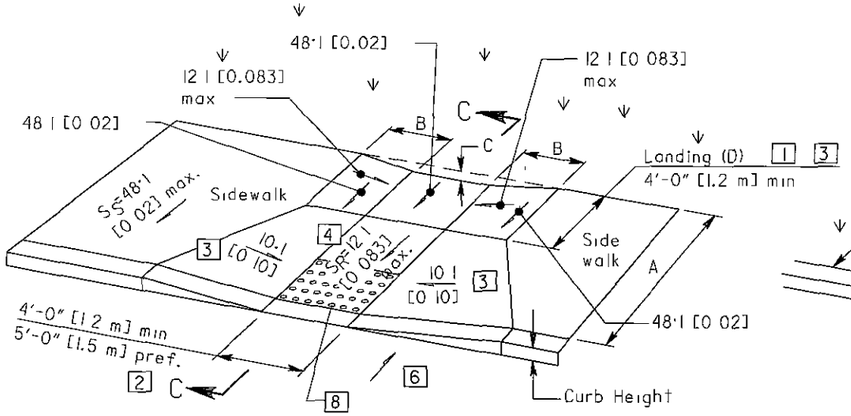


See Sht. 3/3 for SECTION C-C

COMBINED CURB RAMP DETAIL

$B = C / 0.083$

$C = [\text{Curb ht} + A(S_S)] - [(A-D)S_R + D(0.02)]$

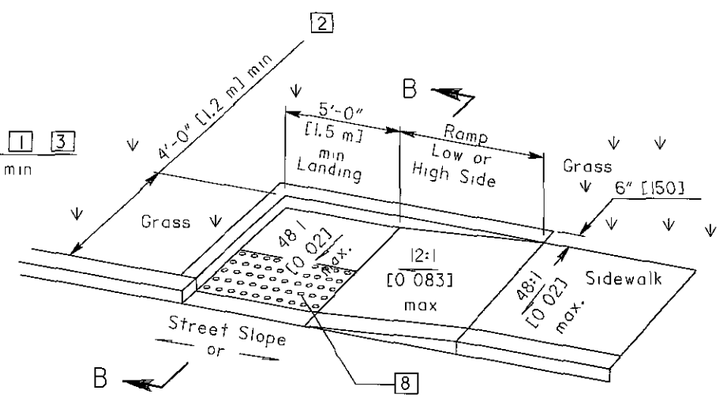


See Sht 3/3 for SECTION B-B

PARALLEL CURB RAMP DETAIL
(SINGLE)

## LEGEND

1. May be reduced to 3'-0" [915] in existing sidewalks if the landing is unconstrained along the back edge

2. May be reduced to 3'-4" [1.02 m] in existing sidewalks to better fit the walk configuration or where site conditions are restricted by narrow walks, pole foundations, drainage inlets, etc. The width may be tapered.

3. Where landing width (D) has been reduced to 3'-0" [915] the flared sides shall have a maximum slope of 12:1 [0.083].

   Flared sides are not required where the edges of a curb ramp are protected by landscaping or other barriers to travel by wheel chair users or pedestrians across the edge of the curb ramp. However, if the flared sides are used in these areas, they may be of any slope.

4. The slope of the ramp toward the curb is preferred to be 12:1 [0.083] or flatter related to the horizontal, but the maximum slope shall be 12:1 [0.083] relative to the existing or proposed walk slope

   In existing sidewalks, where the maximum ramp slope ($S_R$) is not feasible, it may be reduced as follows:

   A) 10:1 [0.10] for a max. rise of 6" [150],
   B) 8:1 [0.125] for a max. rise of 3" [75],
   C) 6:1 [0.167] over a max. run of 2'-0" [610] for historic areas where a flatter slope is not feasible.

5. The minimum length of a perpendicular ramp is 6' [2.0 m] from the back of a 6" [150] curb and may be increased where feasible to obtain a flatter ramp slope or to better blend with the walk configuration.

6. Gutter counter slopes at the foot of perpendicular curb ramps should not exceed 20:1 [0.05] over a distance of 2'-0" [610] from the curb

7. Dimensions derived by equation are nominal. Construct ramps to meet required slopes and existing conditions

8. Detectable Warnings (truncated domes) are to be installed in the location shown. Dimensions of the domes are 24" [610] from the back of the curb by the width of the ramp. See NOTES on sheet 3.

7-12-02

CURB RAMPS WITH TRUNCATED DOMES

GEA-88/528-0.00/1.29



I:\PROJECTS\P1D2\7533\DGN\bp7\pis07\203V8.dgn 11-JAN-2006 8:48AM jgrmovse

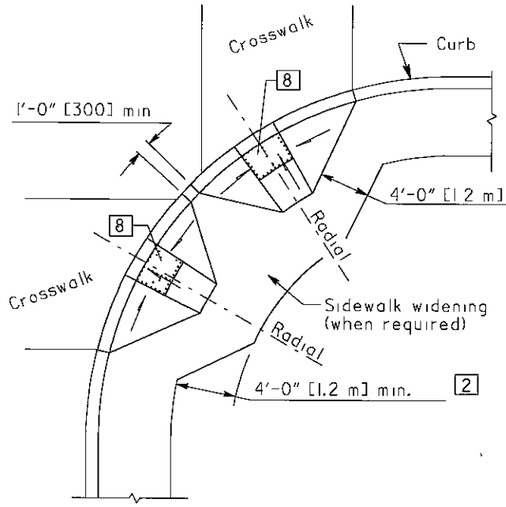


DESIGN A
PERPENDICULAR RAMP

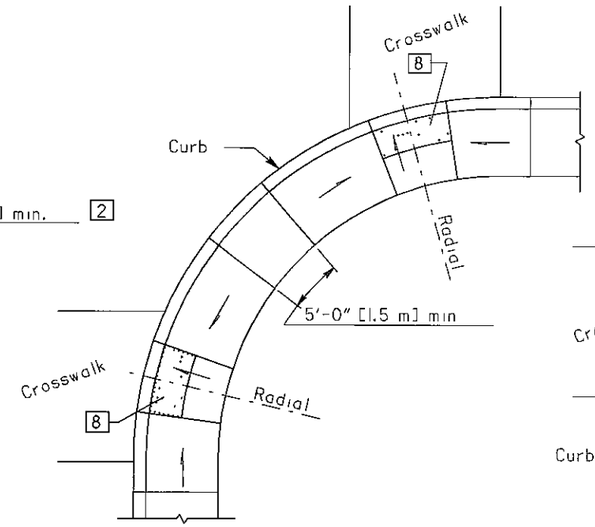


DESIGN B
PARALLEL RAMP

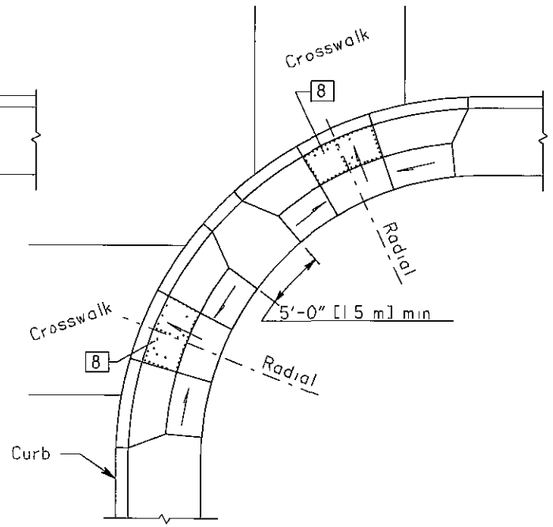


DESIGN C
COMBINATION RAMP

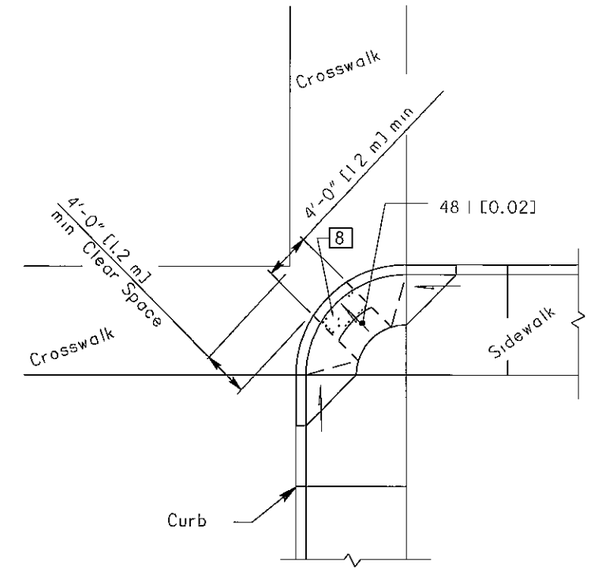


DESIGN D
DIAGONAL RAMP

Use in existing walks only and when site constraints prohibit other designs The diagonal ramp may be perpendcular, parallel or combination
Avoid using where curb radii are less than 20'-0" [6 0 m].

CORNER CURB RAMP DESIGNS

(See Curb Ramp Details on Sht 1/3 for additional requirements.)

For LEGEND, See sheet 1

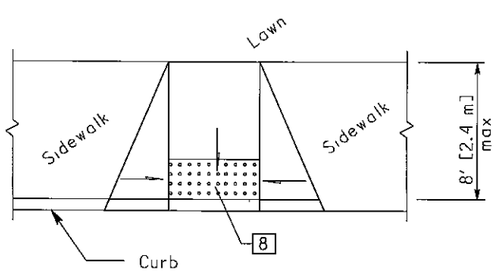


DESIGN E
PERPENDICULAR RAMP

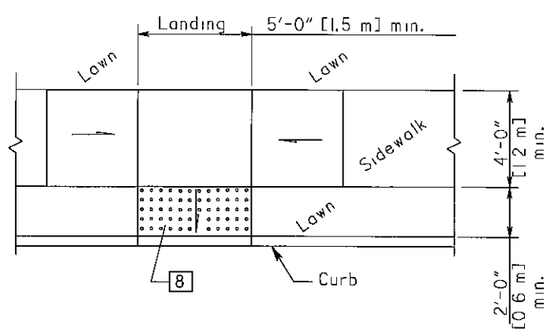


DESIGN F
PARALLEL RAMP

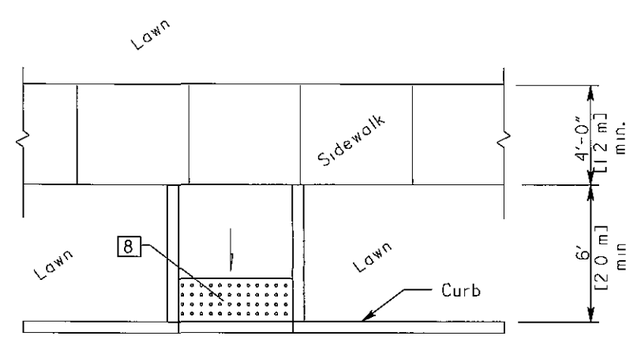


DESIGN G
PERPENDICULAR RAMPS
w/o FLARES

MID BLOCK CURB RAMP DESIGNS

(See Curb Ramp Details on Sht. 1/3 for additional requirements.)

7-12-02

CURB RAMPS WITH TRUNCATED DOMES

GEA-88/528-
0.00/1.29



I:\PROJECTS\PID21753\DGN\bp7lpis07\203V8.dgn 11-JAN-2006 8 48AM jgrmovse

# NOTES

SURFACE TEXTURE: Texture of concrete surfaces shall be obtained by coarse broaming transverse to the ramp slopes and shall be rougher than adjacent walk.

TRUNCATED DOMES Install detectable warnings (truncated domes) for a distance of 24" [610] from the back of the curb for the entire width of the ramp opening as shown on details on Sheet 1

Pavers will meet ASTM C 902 Class SX, Type 1, or C 936, or C 1272 Type R

Acceptable manufacturers and products are:

1) Whitacre-Greer Fireproofing Company,
   1400 S. Mahoning Ave, Alliance, OH, 44601, (800) WG PAVER
   ADA Paver, 4"x8"x2-1/4", Clear Red (Rustic) #30

2) Hanover Architectural Products,
   240 Bender Rd , Hanover, PA. 17331, (717) 637-0500
   Detectable Warning Paver, 12"x12"x2", or 24"x24"x2",
   Red or Quarry Red

3) Endicott Clay Products,
   PO Box 17, Fairbury, NE. 68352, (402) 729-5804
   Handicap Detectable Warning Paver,
   4"x8"x2-1/4", Red Blend

Pavers will laid on top of a 4" [100] unreinforced concrete base Setting bed and joints to be mortared in accordance with manufacturer's instruction, or with a maximum 1/2" [13] thick bed of latex modified cement mortar. Mortar joints to a width not greater than 5/32" [4] and not less than 1/16" [1.5]. Pavers shall not be directly touching each other unless they have spacing bars.

Mortared joints are to be flush with top surface and struck so as to give a smooth surface Pavers shall be laid such that joints are level with adjoining joints so as to provide a smooth transition from brick to brick and brick to concrete surface.

The surface of any two adjacent units should not differ by more than 1/8" [3] in height Bricks shall be placed in a running bond pattern Face of all brick shall be clean of cement and protected so as to avoid chipping during constructionn

EXPANSION JOINTS shall be provided in the curb ramp as extensions of walk joints and consistent with Item 608 03 requirements for a new concrete walk A 1/2" [13] Item 705 03 expansion joint filler shall be provided around the edge of ramps built in existing concrete walk Lines shown on this drawing indicate the ramp edge and slope changes and are not necessarily joint lines.

PAYMENT Walk and curb, Items 608 and 609, shall be measured through the curb ramp area paid for under their respective Items. Item 608 - Curb Ramp, As Per Plan, Each constructed in new curb and walk shall include the cost of any additional materials and installation (including truncated domes), grading, forming and finishing. Item 609 - Curb Ramp. As Per Plan, Square Foot [Meter], constructed in existing curb and walk shall include the cost of furnishing and installing all materials (including truncated domes), grading, forming, and finishing of the curb and walk of the curb ramp. Removal of existing curb and walk shall be paid for under Item 202

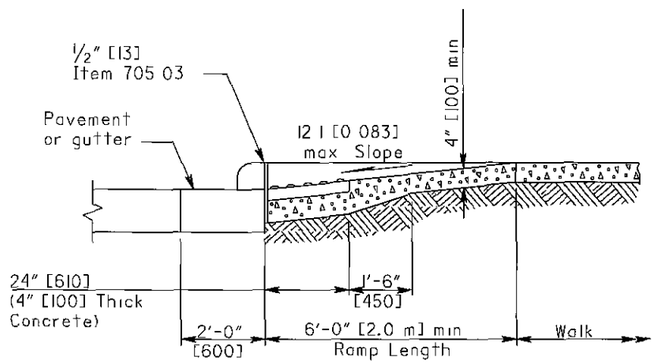


SECTION A-A
NORMAL DETAIL
See Sheet 1 of 3
(Gutter shown)

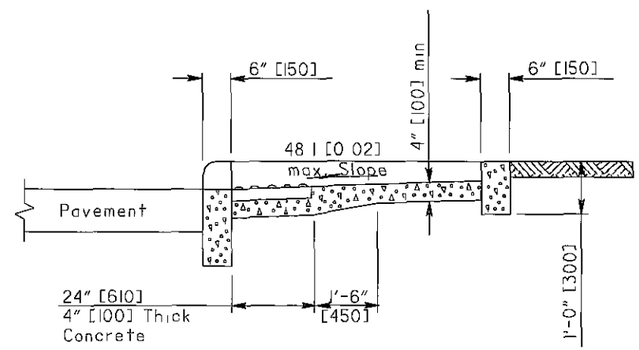


SECTION B-B
See Sheet 1 of 3

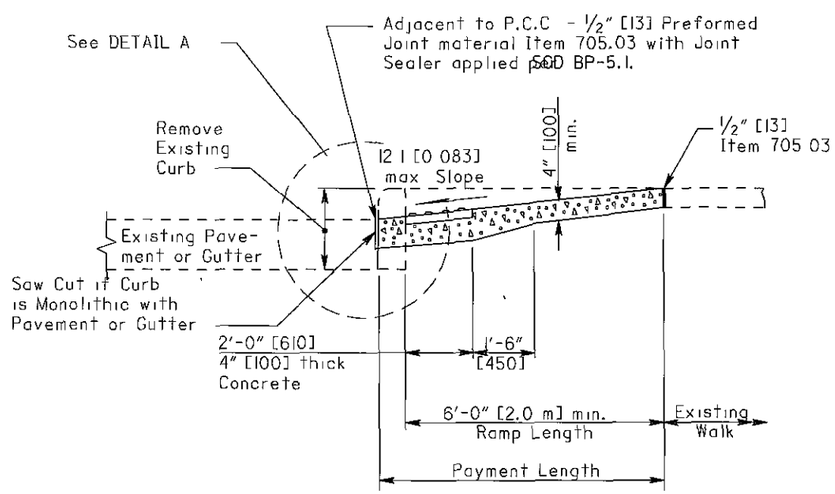


SECTION A-A
EXISTING WALK DETAIL
See Sheet 1 of 3.

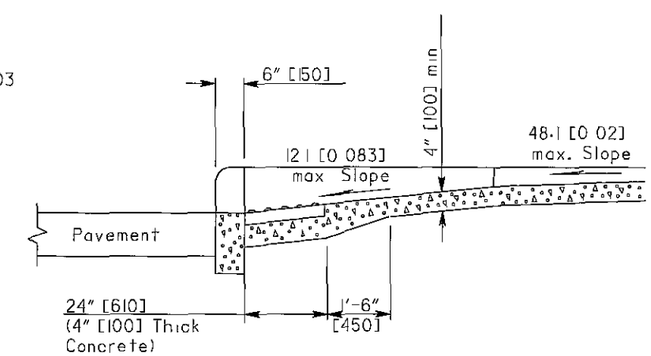


SECTION C-C
See Sheet 1 of 3.

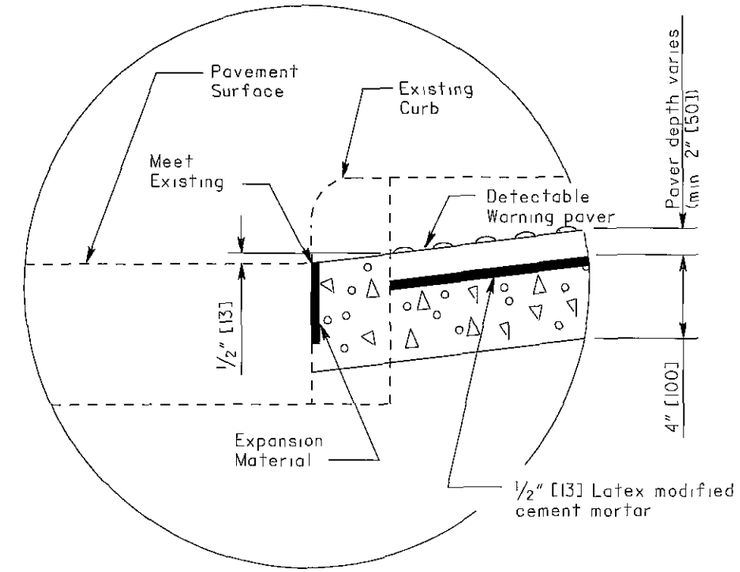


DETAIL A

7-12-02

CURB RAMPS WITH TRUNCATED DOMES

GEA-88/528-
0.00/1.29



I:\PROJECTS\PID21753\DGN\bp7lpis07\203V8.dgn 11-JAN-2006 8:48AM jgrmoose

| SHEET NUMBER 5 | 8 | 9 | 10 | 12 | 13 | 14 | 15 | 16 | 18 | 19 | 20 | ITEM | ITEM EXT. | GRAND TOTAL | UNIT | DESCRIPTION | SEE SHEET NO. |
|---|---|---|---|---|---|---|---|---|---|---|---|---|---|---|---|---|---|
| | | | | | | | | | | | | | | | | **ROADWAY** | |
| | | | | | | | | | | | 100 | 202 | 30000 | 100 | SQ FT | WALK REMOVED | |
| | | | | | | | | | | | 40 | 202 | 32000 | 40 | FT | CURB REMOVED | |
| | | | | | | | | 8977 | | | | 202 | 38000 | 8977 | FT | GUARDRAIL REMOVED | |
| | | | 2750 | | | | | | | | | 202 | 38001 | 2750 | FT | GUARDRAIL REMOVED, AS PER PLAN | 10 |
| | | | | | | | | | 734 | | | 202 | 54000 | 734 | EACH | RAISED PAVEMENT MARKER REMOVED | |
| 692 7 | 48 | | | | | | | | | | | 209 | 60201 | 741 | STATION | LINEAR GRADING, METHOD A, AS PER PLAN | 10 |
| | | | | | | | | 92.6 | | | | 209 | 60201 | 92 6 | STATION | LINEAR GRADING, METHOD B, AS PER PLAN | 10 |
| | | | | 33 | | | | | | | | 604 | 39501 | 33 | EACH | MONUMENT BOX ADJUSTED TO GRADE, AS PER PLAN | 12 |
| | | | | 4 | | | | | | | | 604 | 39600 | 4 | EACH | MONUMENT BOX RECONSTRUCTED TO GRADE | |
| | | | | | | | | 7088 | | | | 606 | 13000 | 7088 | FT | GUARDRAIL, TYPE 5 | |
| | | | | | | | | 37 | | | | 606 | 22010 | 37 | EACH | ANCHOR ASSEMBLY, TYPE E-98 | |
| | | | | | | | | 19 | | | | 606 | 26500 | 19 | EACH | ANCHOR ASSEMBLY, TYPE T | |
| | | | | | | | | 3 | | | | 606 | 35141 | 3 | EACH | BRIDGE TERMINAL ASSEMBLY, TYPE 4, AS PER PLAN | 17 |
| | | | | | | | | | | | 210 | 608 | 52001 | 210 | SQ FT | CURB RAMP, AS PER PLAN | 11 |
| | | | | | | | | | | 1 | | SPECIAL | 69098000 | 1 | EACH | MISC ROADWAY MOUNTED SENSOR | |
| | | | | | | | | | | | | | | | | **EROSION CONTROL** | |
| | | | | | | | | | | | | 832 | 30000 | 1000 | EACH | EROSION CONTROL | |
| | | | | | | | | | | | | | | | | **DRAINAGE** | |
| | | | | 8 | | | | | | | | 604 | 09001 | 8 | EACH | CATCH BASIN ADJUSTED TO GRADE, AS PER PLAN | 12 |
| | | | | 11 | | | | | | | | 604 | 09500 | 11 | EACH | CATCH BASIN RECONSTRUCTED TO GRADE | |
| | | | | 5 | | | | | | | | 604 | 34501 | 5 | EACH | MANHOLE ADJUSTED TO GRADE, AS PER PLAN | 12 |
| | | | | 4000 | | | | | | | | SPECIAL | 60450000 | 4000 | POUND | MISCELLANEOUS METAL | |
| | | | | | | | | | | | | | | | | **PAVEMENT** | |
| | | | | 4525 | | | | | | | | 251 | 01000 | 4525 | SQ YD | PARTIAL DEPTH PAVEMENT REPAIR | |
| | | | | 10 | | | | | | | | 253 | 01001 | 10 | SQ YD | PAVEMENT REPAIR, AS PER PLAN | 12 |
| 18625 | 133 | | | | | | | | | | | 254 | 01001 | 18758 | SQ YD | PAVEMENT PLANING, ASPHALT CONCRETE, AS PER PLAN | 12 |
| 19110 | 652 | | | | | | | | | | | 407 | 10000 | 19762 | GAL | TACK COAT | |
| 13200 | 449 | | | | | | | | | | | 407 | 14000 | 13649 | GAL | TACK COAT FOR INTERMEDIATE COURSE | |
| 1509 | | | | | | | | | | | | 442 | 10001 | 1509 | CU YD | ASPHALT CONCRETE SURFACE COURSE, 12 5 MM, TYPE A (446), AS PER PLAN | 12 |
| 7103 | 267 | | | | | | | | | | | 446 | 47025 | 7370 | CU YD | ASPHALT CONCRETE SURFACE COURSE, TYPE 1, PG70-22, AS PER PLAN | 12 |
| 3548 | 134 | | | | | | | | | | | 448 | 46011 | 3682 | CU YD | ASPHALT CONCRETE INTERMEDIATE COURSE, TYPE 1, PG64-28, AS PER PLAN | 12 |
| 157 | 5 | | | | | | | | | | | 448 | 48020 | 162 | CU YD | ASPHALT CONCRETE SURFACE COURSE, TYPE 1, PG64-22 (DRIVEWAYS) | |
| | | | | | | | | 257 | | | | 448 | 46061 | 257 | CU YD | ASPHALT CONCRETE INTERMEDIATE COURSE, TYPE 1, UNDER GUARDRAIL, PG64-22, AS PER PLA | 11 |
| 426 | 15 | | | | | | | | | | | 617 | 10100 | 441 | CU YD | COMPACTED AGGREGATE, TYPE A | |
| | | | | | | | | | | | | | | | | **TRAFFIC CONTROL** | |
| | | | | | | | | | 743 | | | 621 | 00100 | 743 | EACH | RPM | |
| | | | | | | | | 117 | | | | 626 | 00100 | 117 | EACH | BARRIER REFLECTOR, TYPE A | |
| | | | | | | | | 6 | | | | 626 | 00200 | 6 | EACH | BARRIER REFLECTOR, TYPE B | |
| | | | | | 7 | | | | | | | 632 | 26501 | 7 | EACH | DETECTOR LOOP, AS PER PLAN | 13 |
| | | | | | | | | | 17.47 | | | 646 | 10000 | 17 47 | MILE | EDGE LINE | |
| | | | | | | | | | 8 8 | | | 646 | 10200 | 8 80 | MILE | CENTER LINE | |
| | | | | | | | | | 75 | | | 646 | 10300 | 75 | FT | CHANNELIZING LINE | |
| | | | | | | | | | 102 | | | 646 | 10400 | 102 | FT | STOP LINE | |
| | | | | | | | | | 340 | | | 646 | 10500 | 340 | FT | CROSSWALK LINE | |
| | | | | | | | | | 150 | | | 646 | 10600 | 150 | FT | TRANSVERSE / DIAGONAL LINE | |
| | | | | | | | | | 2 | | | 646 | 20100 | 2 | EACH | SCHOOL SYMBOL MARKING, 72" | |
| | | | | | | | | | 3 | | | 646 | 20300 | 3 | EACH | LANE ARROW | |
| | | | | | | | | | 1 | | | 646 | 20400 | 1 | EACH | WORD ON PAVEMENT, 72" | |
| | | | | | | | | | | | | | | | | **MAINTENANCE OF TRAFFIC** | |
| | | | | | | 25 | | | | | | 614 | 13000 | 25 | CU YD | ASPHALT CONCRETE FOR MAINTAINING TRAFFIC | |
| | | | | | | | 9 62 | | - | | | 614 | 21100 | 9.62 | MILE | WORK ZONE CENTER LINE, CLASS I, 642 PAINT | |
| | | | | | | | 8.8 | | | | | 614 | 21500 | 8 8 | MILE | WORK ZONE CENTER LINE, CLASS I I, 642 PAINT | |
| | | | | | | | 620 | | | | | 614 | 26200 | 620 | FT | WORK ZONE STOP LINE, CLASS I, 642 PAINT | |
| | | | | | | | 1200 | | | | | 614 | 27200 | 1200 | FT | WORK ZONE CROSSWALK LINE, CLASS I, 642 PAINT | |
| | | | | | | | 4 | | | | | 614 | 31700 | 4 | EACH | WORK ZONE SCHOOL SYMBOL MARKING, 72", CLASS I | |
| | | | | | | | 8 | | | | | 614 | 18601 | 8 | SN MT | PORTABLE CHANGEABLE MESSAGE SIGN, AS PER PLAN | 15 |
| | | | | | | | | | | | | 614 | 11000 | LUMP | LUMP | MAINTAINING TRAFFIC | |
| | | 6 | | | | | | | | | | 619 | 16011 | 6 | MONTH | FIELD OFFICE, TYPE B, AS PER PLAN | 9 |
| | | | | | | | | | | | | 623 | 10000 | LUMP | | CONSTRUCTION LAYOUT STAKES | |
| | | | | | | | | | | | | 624 | 10000 | LUMP | | MOBILIZATION | |

CALCULATED

CHECKED

GENERAL SUMMARY

GEA-88 / 528 - 0.00/ 1.29



I:\PROJECTS\PID21753\DGN\21753ggov8.dgn 11-JAN-2006 8:49AM jgrmovse