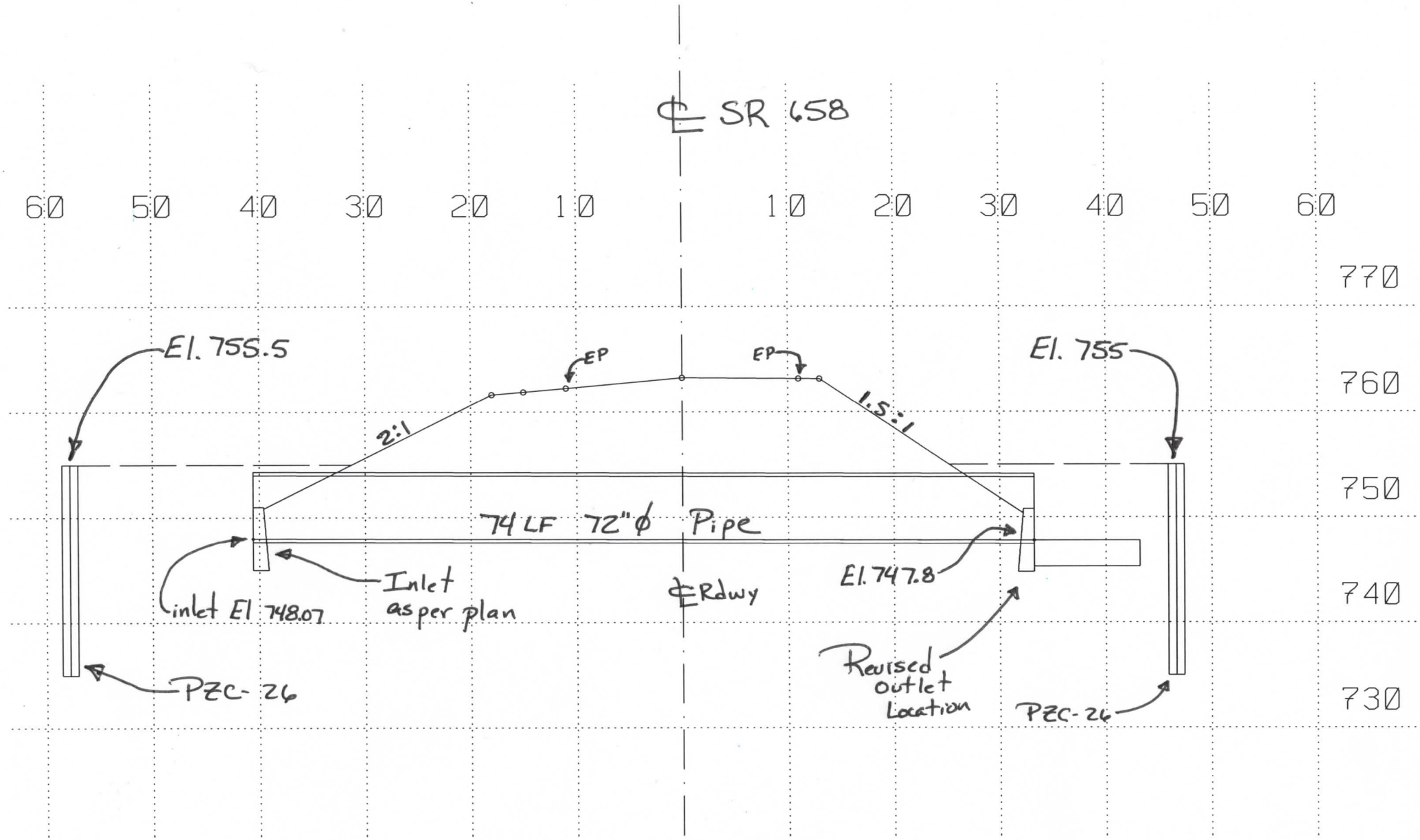

Roadway Section at Pipe

GUE-658-10.14
Guernsey Co. OH
Aug 2, 2022