GENERAL NOTES:

1. ALL STRUCTURAL STEEL, UNLESS OTHERWISE NOTED, SHALL BE ASTM A-36, MINIMUM YIELD STRENGTH 36,000 PSI.
2. ALL STRUCTURAL ALUMINUM MEMBERS, UNLESS OTHERWISE NOTED, SHALL BE OF ALLOY 6063-T5 OR GREATER.
3. ALL HOLES TO BE DRILLED OR PUNCHED.
4. STEEL WELDING SHALL CONFORM TO AMERICAN WELDING SOCIETY STANDARD D1.
1-10. ELECTRODES SHALL CONFORM TO AWS 5.1, CLASS E70S-5.
5. ALUMINUM WELDING SHALL CONFORM TO AMERICAN WELDING SOCIETY STANDARD
D1. 2-08. ELECTRODES SHALL CONFORM TO AWS/SFA 5.10 CLASS ER4043.
6. ALL WELDING TO BE DONE AT TOLAR MANUFACTURING COMPANY, INC. FACILITY.
7. ALL CORPORATE PROCEDURES, INCLUDING FABRICATION, MUST BE IN COMPLIANCE WITH TOLAR MANUFACTURING CO. INC'S QUALITY CONTROL MANUAL.
8. THE CONCRETE PAD SIZES SHOWN ARE STANDARD MINIMUM REQUIREMENTS AND ARE FOR REFERENCE ONLY. THE PAD MAY NEED TO BE REINFORCED OR ENLARGED DEPENDING ON LOCAL CODES AND LOADING CONDITIONS.

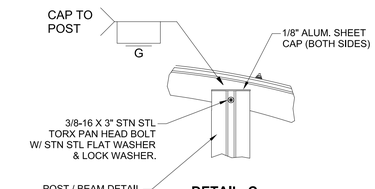

DETAIL C
FRONT POST TO ROOF CONNECTION DETAIL
(2 PLCS)

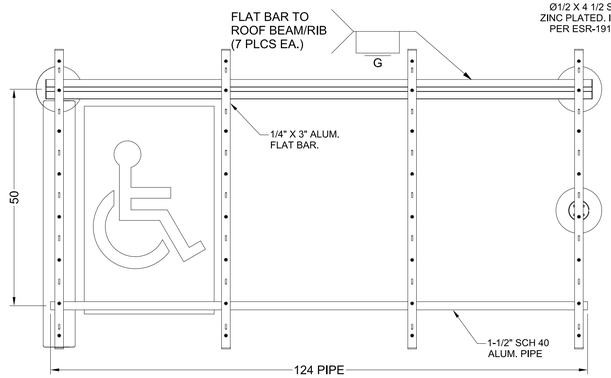

TOP VIEW
(SHOWN WITHOUT ROOF PANELS)

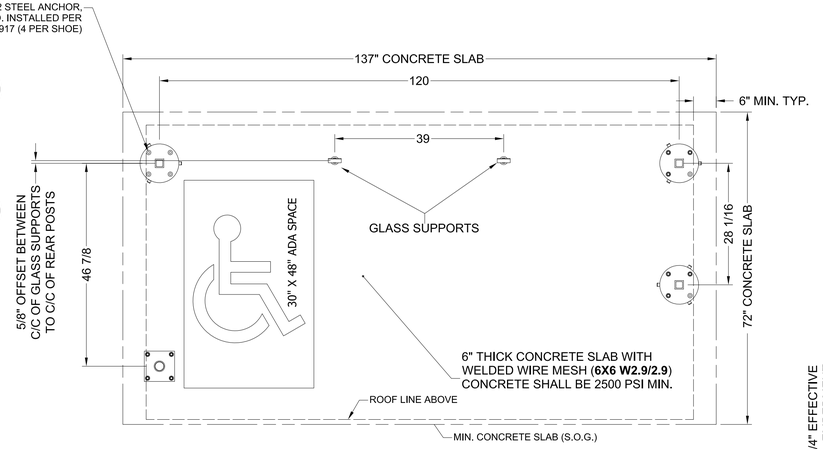

FLOOR / FOUNDATION PLAN

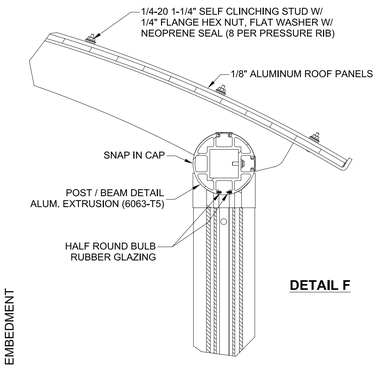

DETAIL F

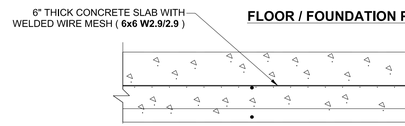

TYPICAL SLAB SECTION

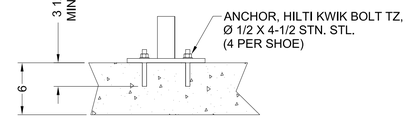

SECTION J-J
ANCHORING DETAIL

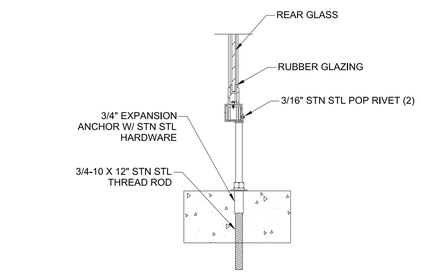

SECTION D-D
GLASS SUPPORT DETAIL
(1 PLC)

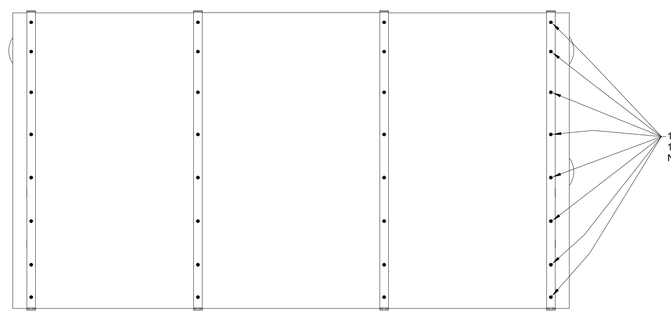

TOP ELEVATION

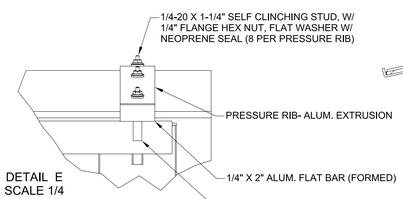

DETAIL E
SCALE 1/4

ROOF SECURITY LIGHTING

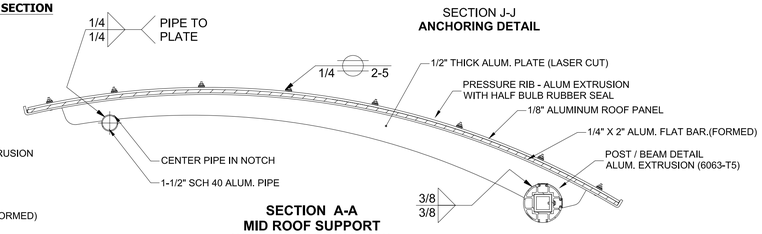

SECTION A-A
MID ROOF SUPPORT
WELDMENT DETAIL (X2)

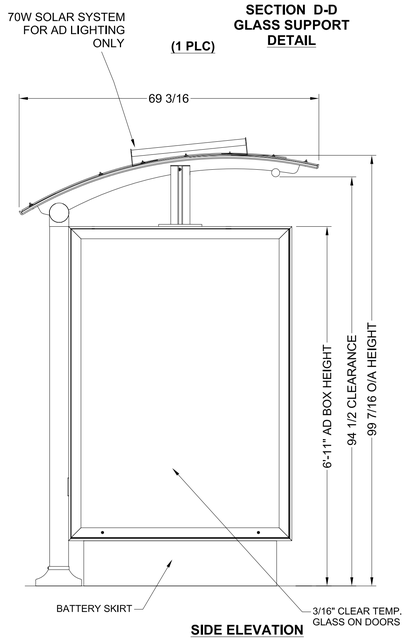

SIDE ELEVATION

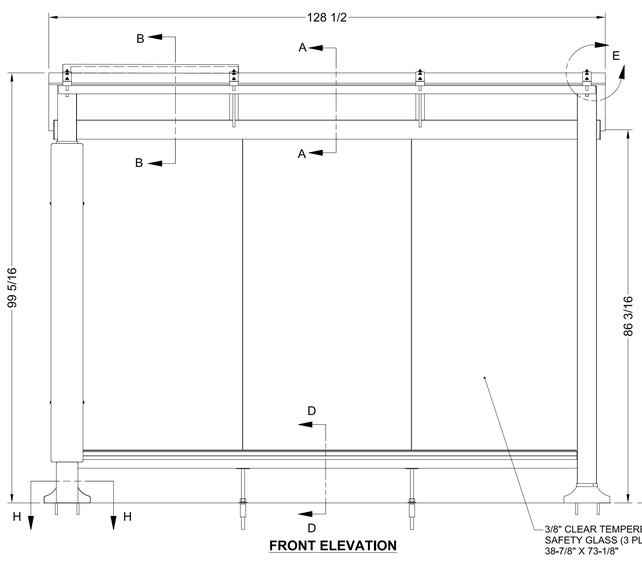

FRONT ELEVATION

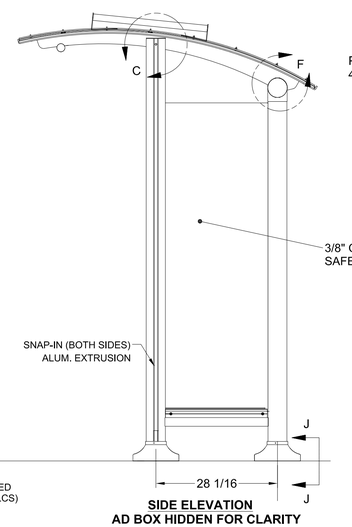

SIDE ELEVATION
AD BOX HIDDEN FOR CLARITY

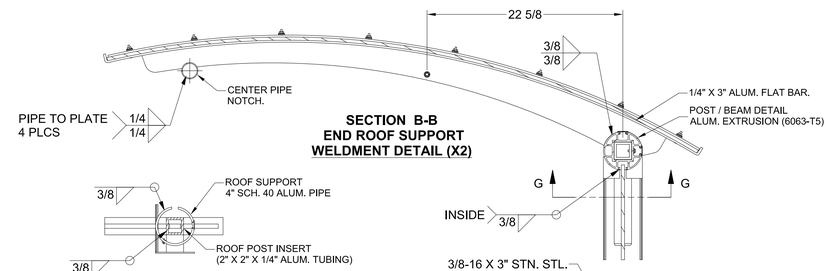

SECTION B-B
END ROOF SUPPORT
WELDMENT DETAIL (X2)

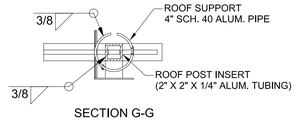

SECTION G-G

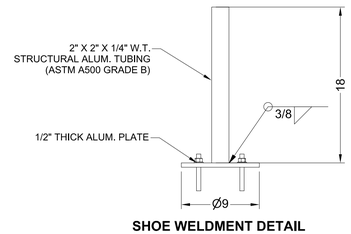

SHOE WELDMENT DETAIL
(4 PLCS)

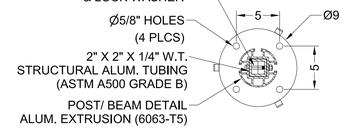

SECTION H-H
POST TO SHOE CONNECTION DETAIL

THE DESIGN AND DRAWINGS REMAIN THE INTELLECTUAL PROPERTY OF **TOLAR MFG.** AND ARE PROTECTED BY LAW. THEY MAY NOT BE ALTERED, REPRODUCED OR USED FOR FABRICATION WITHOUT EXPRESSED WRITTEN CONSENT FROM **TOLAR MFG.** ALL DOCUMENTS TO BE RETURNED TO TOLAR **MFG.**, AT COMPLETION OF WORK. CONTRACTOR TO SITE VERIFY ALL DETAILS AND DIMENSIONS AND REPORT ANY AND ALL DISCREPANCIES TO **TOLAR MFG.**. BEFORE COMMENCING WITH THAT RELATED PORTION OF THE WORK.

TOLAR MANUFACTURING COMPANY, INC
258 Mariah Circle, Corona CA. 92879

DESCRIPTION: 10' AD SUNSET SHELTER W. GLASS WALLS
CUSTOMER/VENDOR: ADSPOSURE, CINCINNATI, OH
SIZE: D | MATL. | DWG.NO. 29187-02 | REV
SCALE | DATE 7/7/2020 | DRAWN BY: RFarr