FED. RD. REGION	STATE	PROJECT	FISCAL YEAR
5	OHIO		

1/36

CITY OF CINCINNATI
DEPARTMENT OF PUBLIC WORKS
DIVISION OF ENGINEERING

MC MILLAN ST. BRIDGE

OVER READING RD. REHABILITATION

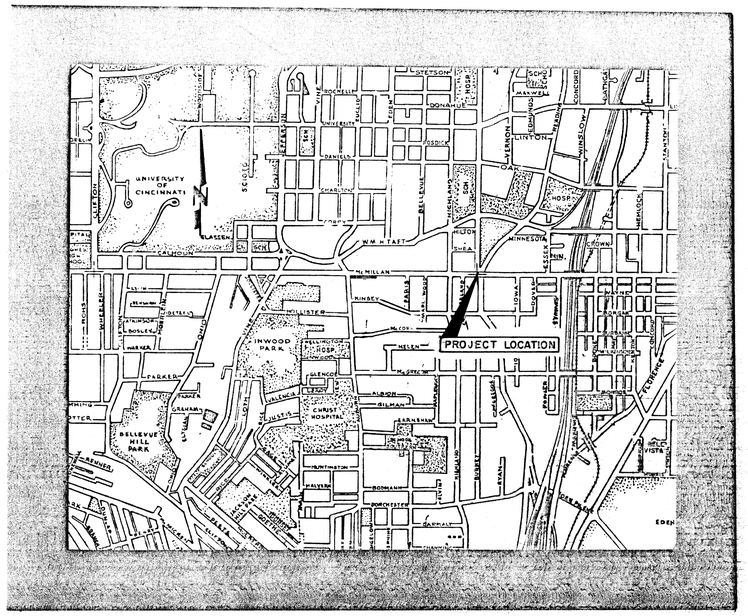

VICINITY MAP

0 500 1000 2000 3000 4000

SCALE 1" = 1000'

SUBMITTED: G C Flartman
PRINCIPAL STRUCTURAL DESIGN ENGINEER

RECOMMENDED: R F Corder
ACTING CITY ENGINEER

APPROVED: George Rowe
DIRECTOR OF PUBLIC WORKS

APPROVED: [illegible]
CITY MANAGER

APPROVED: Donald C. Lehrmann
HAMILTON COUNTY ENGINEER

CAUTION UNDERGROUND UTILITIES
2 WORKING DAYS
BEFORE YOU DIG
CALL 800-362-2764 (TOLL FREE)
OHIO UTILITIES PROTECTION SERVICE
CALL NON-SERVICE MEMBERS DIRECT:

SEWER	352-4866	CITY COM.:	352-2388
WATER	352-4653	WESTERN U.:	421-1876
LIGHTING	352-3705	CABLE TV.:	489-5001

CONTRACT DRAWING
PRINTS NOT BEARING THIS STAMP WERE MADE PRIOR TO ADVERTISING FOR BIDS AND ARE TO BE CONSIDERED OBSOLETE FOR CONTRACT PURPOSES.

STATE OF OHIO
THOMAS E. YOUNG
26962
REGISTERED PROFESSIONAL ENGINEER

ACC. NO. 26992

22-48-62

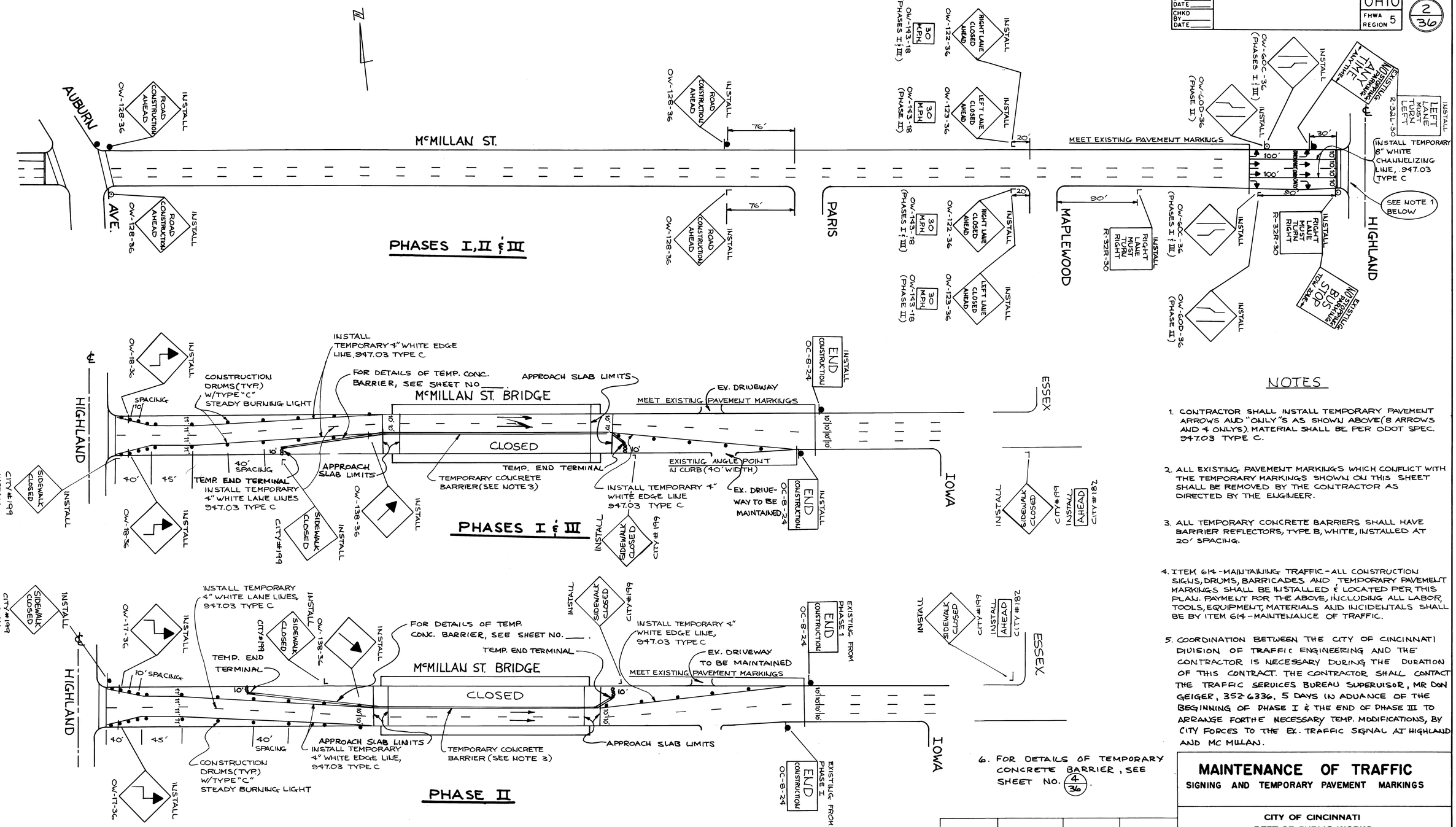

NOTES

1. CONTRACTOR SHALL INSTALL TEMPORARY PAVEMENT ARROWS AND "ONLY"S AS SHOWN ABOVE (8 ARROWS AND 4 ONLYS). MATERIAL SHALL BE PER ODOT SPEC. 947.03 TYPE C.

2. ALL EXISTING PAVEMENT MARKINGS WHICH CONFLICT WITH THE TEMPORARY MARKINGS SHOWN ON THIS SHEET SHALL BE REMOVED BY THE CONTRACTOR AS DIRECTED BY THE ENGINEER.

3. ALL TEMPORARY CONCRETE BARRIERS SHALL HAVE BARRIER REFLECTORS, TYPE B, WHITE, INSTALLED AT 20' SPACING.

4. ITEM 614 - MAINTAINING TRAFFIC - ALL CONSTRUCTION SIGNS, DRUMS, BARRICADES AND TEMPORARY PAVEMENT MARKINGS SHALL BE INSTALLED & LOCATED PER THIS PLAN. PAYMENT FOR THE ABOVE, INCLUDING ALL LABOR, TOOLS, EQUIPMENT, MATERIALS AND INCIDENTALS SHALL BE BY ITEM 614 - MAINTENANCE OF TRAFFIC.

5. COORDINATION BETWEEN THE CITY OF CINCINNATI DIVISION OF TRAFFIC ENGINEERING AND THE CONTRACTOR IS NECESSARY DURING THE DURATION OF THIS CONTRACT. THE CONTRACTOR SHALL CONTACT THE TRAFFIC SERVICES BUREAU SUPERVISOR, MR DON GEIGER, 352-6336, 5 DAYS IN ADVANCE OF THE BEGINNING OF PHASE I & THE END OF PHASE III TO ARRANGE FORTHE NECESSARY TEMP. MODIFICATIONS, BY CITY FORCES TO THE EX. TRAFFIC SIGNAL AT HIGHLAND AND MC MILLAN.

6. FOR DETAILS OF TEMPORARY CONCRETE BARRIER, SEE SHEET NO. 4/36.

CONTRACT DRAWING
PRINTS NOT BEARING THIS STAMP WERE MADE PRIOR TO ADVERTISING FOR BIDS AND ARE TO BE CONSIDERED OBSOLETE FOR CONTRACT PURPOSES.

STATE OF OHIO — THOMAS E. YOUNG 26962 — REGISTERED PROFESSIONAL ENGINEER

MAINTENANCE OF TRAFFIC
SIGNING AND TEMPORARY PAVEMENT MARKINGS

CITY OF CINCINNATI
DEPT. OF PUBLIC WORKS
DIV. OF TRAFFIC ENGR.

APPROVED B.W. McKay DATE 1/31/90
APPROVED ____ DATE ____

DESIGN	REVISION	DATE	WO #	SCALE	SOURCE	DRAWN	FILE NO.
S.I.N.	APPROVED	1-18-90		1" = 50'		B.C.P.	

22-48-63

FED. RD. REGION	STATE	PROJECT	FISCAL YEAR
5	OHIO		

3/36

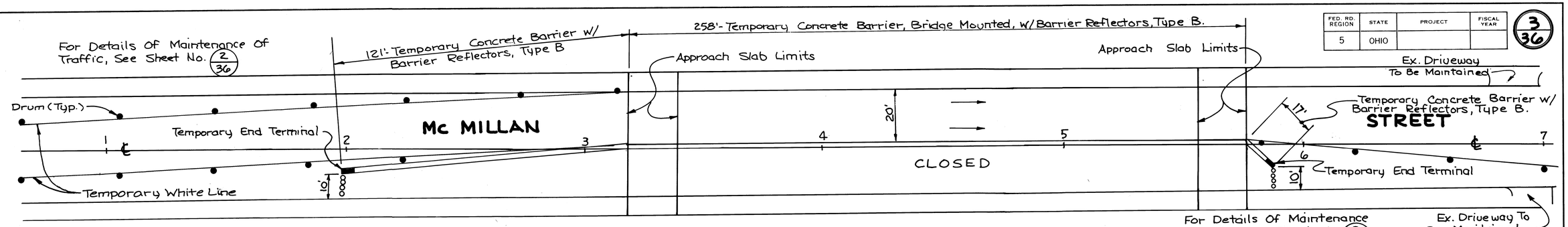

PLAN
Phase I

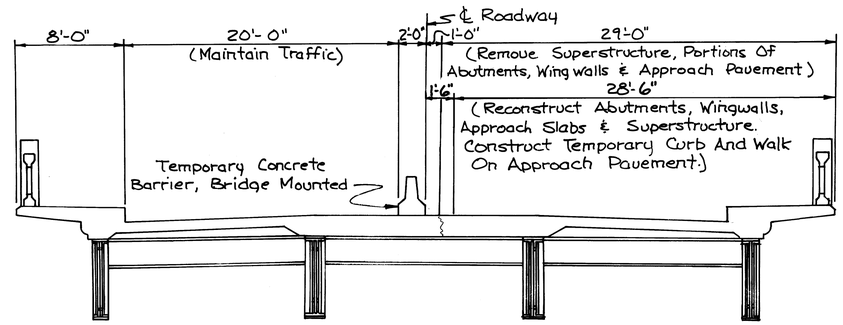

SECTION
Phase I

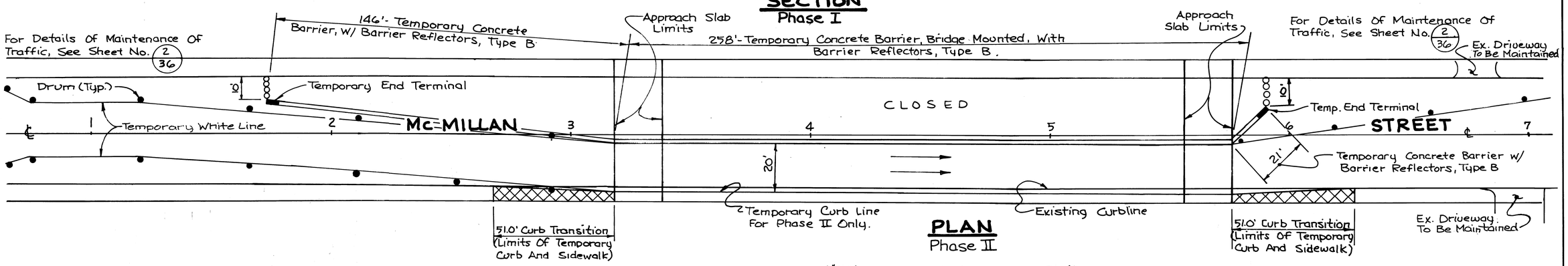

PLAN
Phase II

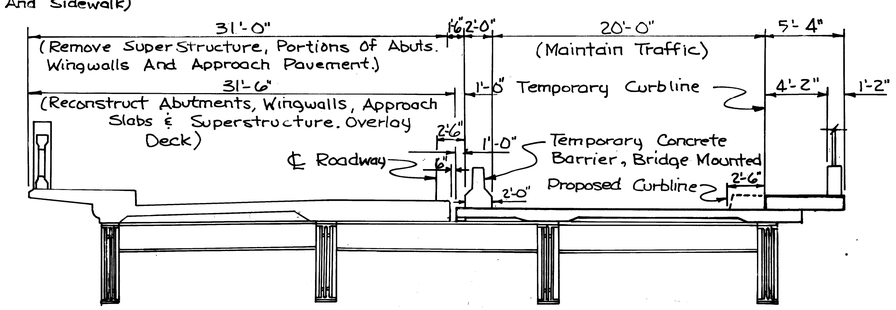

SECTION
Phase II

NOTES: Work This Sheet With Sheet No. 2/2 And Sheet No. 2/36.

STATE OF OHIO
THOMAS E. YOUNG
26962
REGISTERED
PROFESSIONAL ENGINEER

CONTRACT DRAWING

PRINTS NOT BEARING THIS STAMP WERE MADE PRIOR TO ADVERTISING FOR BIDS AND ARE TO BE CONSIDERED OBSOLETE FOR CONTRACT PURPOSES.

CITY OF CINCINNATI
DEPARTMENT OF PUBLIC WORKS
DIVISION OF ENGINEERING

1/2

CONSTRUCTION SEQUENCE

Mc MILLAN ST. BRIDGE OVER READING ROAD REHABILITATION

DESIGNED	DRAWN	TRACED	CHECKED	REVIEWED	DATE	REVISED
EAP	SJC	SJC	BHP	GCH	4-4-90	

22-48-64

FED. RD. REGION	STATE	PROJECT	FISCAL YEAR
5	OHIO		

4/36

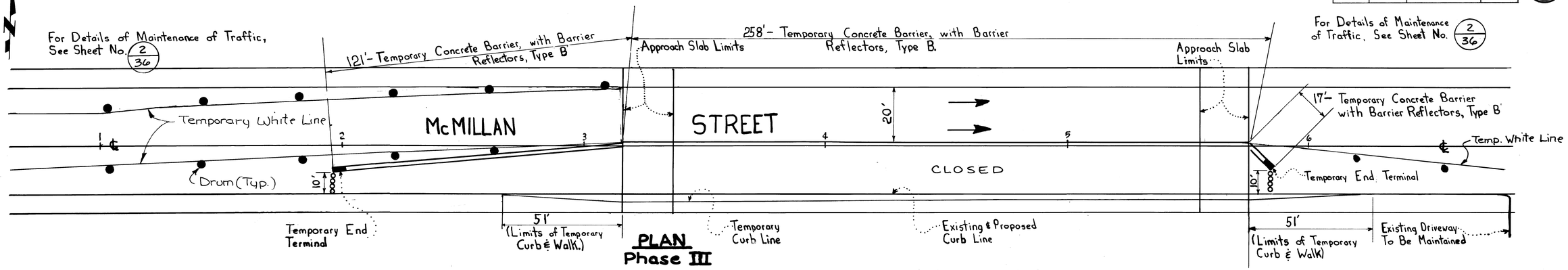

PLAN
Phase III

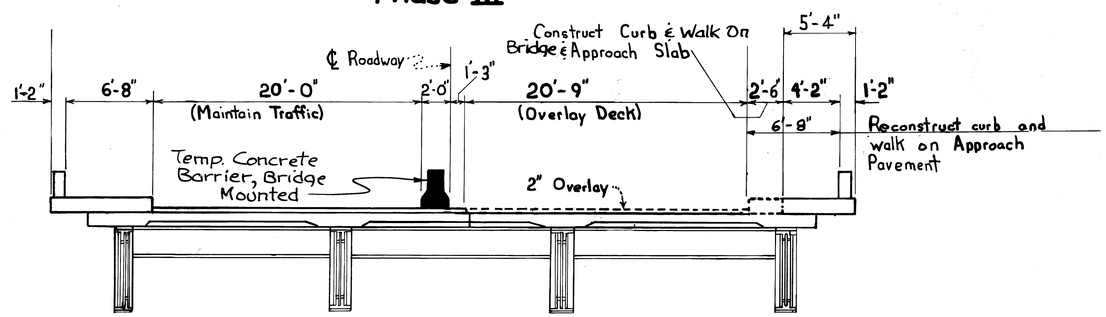

SECTION
Phase III

Temporary Concrete Barrier, Bridge Mounted Shall Not Be Anchored To Deck During Phase III

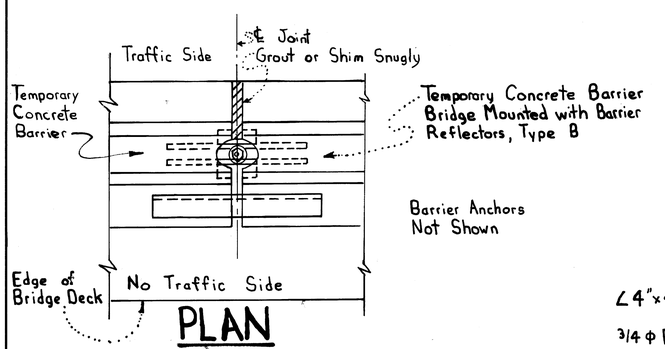

PLAN

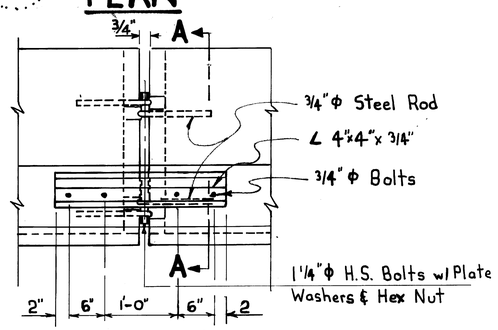

ELEVATION

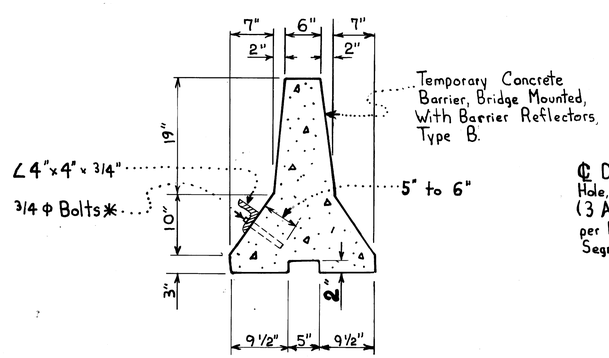

SECTION A-A

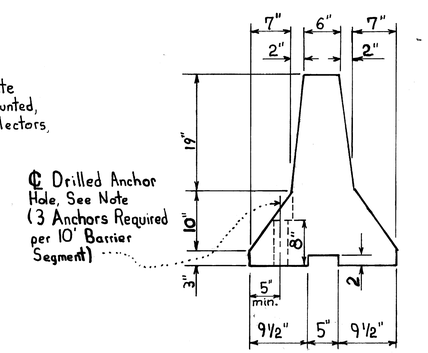

ANCHORAGE DETAIL**

In Order To Anchor The Temporary Concrete Barrier To The Bridge Deck 1 1/4" Minimum Diameter Holes Must Be Drilled Through The Barrier Toe At The Location Shown. Great care Shall Be Used In Drilling & Installing Barrier Segments, and Any Damage To Them Will Be Considered Cause for Their Rejection.

** For Temporary Concrete Barrier, Bridge Mounted,

* Expansion Bolts Per Construction & Material Specification 712.01 Or Embed With Non-Shrink Epoxy Mortar Per Supplemental Specification 853/956 Or Resin Anchors Per Supplemental Specification 852/952.

CONNECTION DETAILS
(For Temporary Concrete Barrier, Bridge Mounted)

NOTES: Work This Sheet With Sheet No. 1/2 & Sheet No. 2/36.

All Anchors Shall Be 1" Diameter, High Strength, Thru Bolts Or Approved Resin Anchors. When Resin Anchors Are Used They Must Be Embedded A Minimum Of 6" Into Firm Concrete.

STATE OF OHIO
THOMAS E. YOUNG
26962
REGISTERED
PROFESSIONAL ENGINEER

CONTRACT DRAWING
PRINTS NOT BEARING THIS SEAL WERE MADE FOR ADVERTISING FOR BIDS AND ARE TO BE CONSIDERED OBSOLETE FOR CONTRACT PURPOSES.

CITY OF CINCINNATI
DEPARTMENT OF PUBLIC WORKS
DIVISION OF ENGINEERING

2/2

CONSTRUCTION SEQUENCE
McMILLAN ST. BRIDGE OVER READING ROAD REHABILITATION

DESIGNED	DRAWN	TRACED	CHECKED	REVIEWED	DATE	REVISED
JGW	PTR	PTR	BHP	GCH	4-4-90	

22-48-65

CALC. BY		OHIO	5/36
DATE		FHWA REGION 5	
CHKD BY			
DATE			

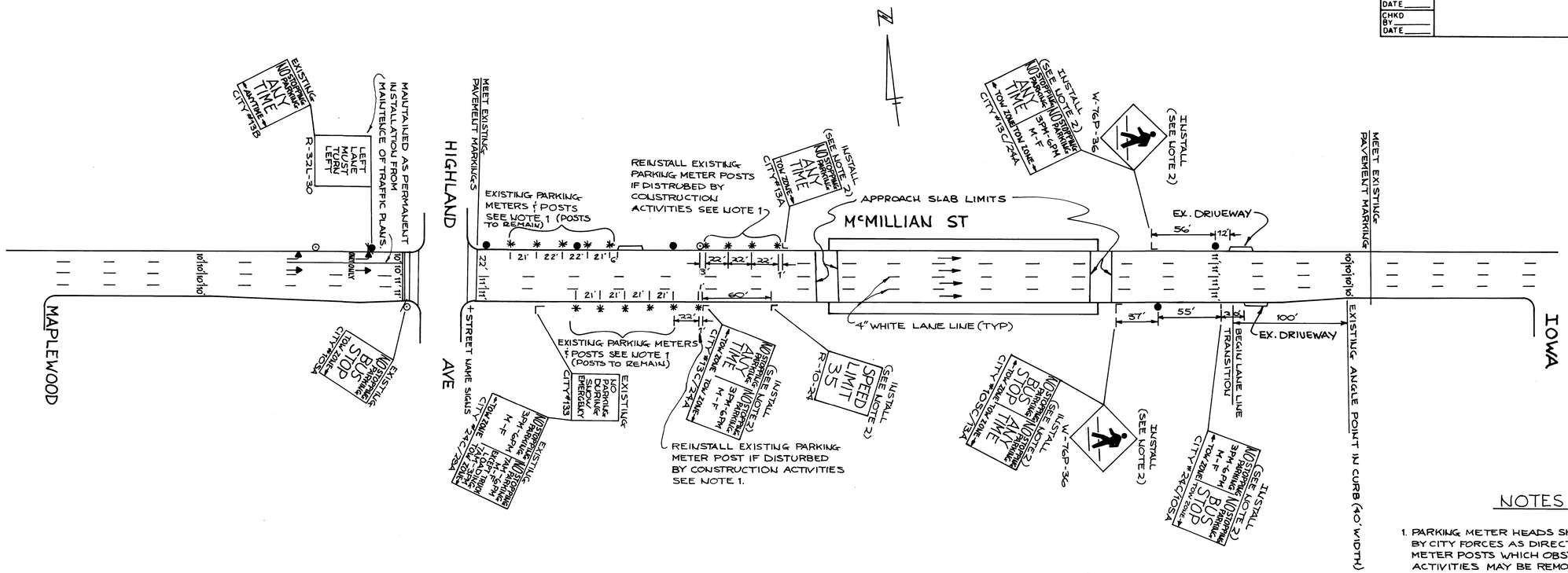

NOTES

1. PARKING METER HEADS SHALL BE REMOVED BY CITY FORCES AS DIRECTED BY THE ENGINEER. METER POSTS WHICH OBSTRUCT CONSTRUCTION ACTIVITIES MAY BE REMOVED BY THE CONTRACTOR (AFTER THE METER HEADS HAVE BEEN REMOVED). CONTRACTOR SHALL REINSTALL ALL METER POSTS REMOVED AS PER THE DETAILS AND LOCATIONS SHOWN ON THIS SHEET.
2. TRAFFIC CONTROL SIGNS AND THEIR SUPPORTS WHICH OBSTRUCT CONSTRUCTION ACTIVITIES MAY BE REMOVED BY THE CONTRACTOR. CONTRACTOR SHALL REINSTALL ALL TRAFFIC CONTROL SIGNS REMOVED AT THE LOCATIONS SHOWN ON THE SHEET.
3. PAYMENT FOR THE ABOVE SHALL BE BY ITEM 630, REMOVAL OF GR. MTD. SIGNS AND REERECTION, AND ITEM 630, REMOVAL OF GR. MTD. POST AND REERECTION. PAYMENT SHALL INCLUDE ALL LABOR, TOOLS, EQUIPMENT, MATERIALS AND INCIDENTALS.

GENERAL QUANITITY SUMMARY

McMILLAN ST. HIGHLAND TO IOWA		ITEM	GRAND TOTAL	UNIT	DESCRIPTION
6.25		630	6.25	SQ. FT.	SIGNS, FLAT SHEET
1		630	1	EA.	SIGN SUPPORT ASSEM. POLE MTD.
8		630	8	EA.	REMOVAL OF GR. MTD. SIGN & REERECTION
11		630	11	EA.	REMOVAL OF GR. MTD. POST & REERECTION
0.33		621	0.33	MILE	LANE LINES

THESE QUANTITIES HAVE BEEN CARRIED FORWARD TO THE ESTIMATED QUANTITIES ON SHEET NO. 6/36.

STATE OF OHIO THOMAS E. YOUNG 26962 REGISTERED PROFESSIONAL ENGINEER

CONTRACT DRAWING

PRINTS NOT BEARING THIS STAMP WERE MADE PRIOR TO ADVERTISING FOR BIDS AND ARE TO BE CONSIDERED OBSOLETE FOR CONTRACT PURPOSES.

FINAL PAVEMENT MARKING AND SIGNING PLAN

CITY OF CINCINNATI
DEPT. OF PUBLIC WORKS
DIV. OF TRAFFIC ENGR.

APPROVED Bruce Kay DATE 1/31/90
APPROVED _____ DATE _____

DESIGN	REVISION	DATE	WO #	SCALE	SOURCE	DRAWN	FILE NO.
S.I.N.	APPROVED	1-19-90		1" = 50'	~	B.C.P.	

22-48-66

FED. RD. REGION	STATE	PROJECT	FISCAL YEAR
5	OHIO		

6
36

ESTIMATED QUANTITIES

ITEM	TOTAL	UNIT	DESCRIPTION	CHECKED BY	CHECKED DATE
			GENERAL		
201	LUMP	L.S.	CLEARING AND GRUBBING.		
619	LUMP	L.S.	FIELD OFFICE		
SPECIAL	20	HOURS	LAW ENFORCEMENT OFFICER WITH PATROL CAR.		
			ROADWAY		
202	102	S.Y.	APPROACH SLAB REMOVED		
202	700	S.Y.	PAVEMENT REMOVED (RIGID)		
202	3650	S.F.	WALK REMOVED (CONCRETE)		
202	557	S.Y.	WEARING COURSE REMOVED		
202	95	L.F.	PIPE REMOVED		
202	4	EA.	INLETS REMOVED		
203	10	C.Y.	EMBANKMENT		
203	10	C.Y.	EXCAVATION, NOT INCLUDING EMBANKMENT CONSTRUCTION		
301	160	C.Y.	BITUMINOUS AGGREGATE BASE		
301	8	C.Y.	TEMPORARY BITUMINOUS AGGREGATE BASE		
403	31	C.Y.	ASPHALT CONCRETE (LEVELING COURSE)		
404	31	C.Y.	ASPHALT CONCRETE (SURFACE COURSE)		
407	113	GAL.	TACK COAT		
602	1	C.Y.	CONCRETE MASONRY, CLASS C		
602	1	C.Y.	BRICK MASONRY		
603	125	L.F.	12" CONDUIT, TYPE H		
604	1	EA.	PULLBOX ADJUSTED TO GRADE		
604	4	EA.	INLET, TYPE C.I.M.H. (ACC. № 49041)		
604	4	EA.	MANHOLES ADJUSTED TO GRADE		
604	2	EA.	VALVE CHAMBER ADJUSTED TO GRADE		
606	4	EA.	FLARED END SECTION		
606	182	L.F.	GUARDRAIL, TYPE 4, MODIFIED WITH HANDRAIL		
606	37.5	L.F.	GUARDRAIL, TYPE 5		
606	2	EA.	ANCHOR ASSEMBLY, TYPE A		
606	1	EA.	ANCHOR ASSEMBLY, TYPE T		
608	1243	S.F.	CONCRETE WALK (5" THICK)		
608	326	S.F.	CONCRETE WALK (6" MIN. THICK.)		
608	553	S.F.	TEMPORY BITUMINOUS WALK		
609	188	L.F.	CONCRETE CURB, TYPE S-1 (10" HIGH)		
609	102	L.F.	TEMPORARY ASPHALTIC CONCRETE CURB		
609	222	L.F.	CONCRETE CURB, TYPE S-1 (6" HIGH)		
611	30	S.Y.	REINFORCED CONCRETE APPROACH WALK (T=10" MIN.)		
611	230	S.Y.	REINFORCED CONCRETE APPROACH SLABS (T=13")		
611	26	S.Y.	REINFORCED CONCRETE APPROACH WALK (T=11")		
SPECIAL	57	C.Y.	INVERTED TOE WALL		
			TRAFFIC		
614	LUMP	L.S.	MAINTAINING TRAFFIC		
614	43	EA.	BARRIER REFLECTORS		
621	1743	L.F.	LANE LINES		
622	258	L.F.	TEMPORARY CONCRETE BARRIER, BRIDGE MOUNTED		
622	167	L.F.	TEMPORARY CONCRETE BARRIER		
630	6.25	S.F.	SIGNS, FLAT SHEET		
630	1	EA.	SIGN SUPPORT ASSEMBLY POLE MOUNTED		
630	8	EA.	REMOVAL OF GROUND MOUNTED SIGN & REERECTION		
630	11	EA.	REMOVAL OF GROUND MOUNTED POST & REERECTION		
			LIGHTING		
1314	LUMP	L.S.	MAINTENANCE OF EXISTING STREET LIGHTING CIRCUIT (SEE SPECIAL PROVISIONS)		
1320	2	EA.	GROUND ROD, AT EACH BOX		
1321	55	L.F.	CONDUIT, 3" RMC		
1321	525	L.F.	CONDUIT, 2" PVC		
1321	55	L.F.	TRENCH, 30" DEEP, PAVED AREA, INCLUDING RESTORATION		
1322	12	EA.	JUNCTION BOXES, 10" x 10" x 6"		
625	2	EA.	PULLBOXES, TYPE B, 18"x18"		

STATE OF OHIO
THOMAS E. YOUNG
26962
REGISTERED
PROFESSIONAL ENGINEER

CONTRACT DRAWING

PRINTS NOT BEARING THIS STAMP WERE MADE PRIOR TO ADVERTISEMENT FOR BIDS AND ARE TO BE CONSIDERED OBSOLETE FOR CONTRACT PURPOSES.

CITY OF CINCINNATI
DEPARTMENT OF PUBLIC WORKS
DIVISION OF ENGINEERING

ESTIMATED QUANTITIES
McMILLAN ST. BRIDGE OVER READING RD. REHABILITATION

DESIGNED	DRAWN	TRACED	CHECKED	REVIEWED	DATE	REVISED
EAP	EGP	BRB	JGW	GCH	4-4-90	

22-48-67

FED. RD. REGION	STATE	PROJECT	FISCAL YEAR
5	OHIO		

7
36

ESTIMATED QUANTITIES

ITEM	TOTAL	UNIT	DESCRIPTION	CHECKED BY	CHECKED DATE
			STRUCTURES		
202	LUMP	L.S.	PORTIONS OF CONCRETE STEPS REMOVED		
202	LUMP	L.S.	SUPERSTRUCTURE REMOVED		
202	60	C.Y.	PORTIONS OF STRUCTURES REMOVED		
202	124	L.F.	CONCRETE RAILING ON WINGWALLS REMOVED		
503	LUMP	L.S.	COFFERDAMS, CRIBS AND SHEETING		
509	10422	LBS.	REINFORCING STEEL, GRADE 60		
509	500	LBS.	REPLACEMENT REINFORCING STEEL, GRADE 60		
509	116248	LBS.	EPOXY COATED REINFORCING STEEL, GRADE 60		
510	1313	L.F.	DOWEL HOLES		
511	38	C.Y.	CLASS C CONCRETE, STAIRWAYS		
511	314	C.Y.	CLASS S CONCRETE, SUPERSTRUCTUCTURE		
511	48	C.Y.	CLASS C CONCRETE, ABUTMENT		
511	37	C.Y.	CLASS C CONCRETE, WALL FACE AND TIE ROD BEAM		
511	8	C.Y.	CLASS C CONCRETE, WINGWALL		
512	23	S.Y.	TYPE A WATERPROOFING		
512	54	S.Y.	TYPE B WATERPROOFING		
513	500	LBS	REPLACEMENT STRUCTURAL STEEL (SEE SPECIAL PROVISIONS)		
513	1350	LBS.	STRUCTURAL STEEL (SEE SPECIAL PROVISIONS)		
513	3612	EA.	WELDED STUD SHEAR CONNECTORS		
514	LUMP	L.S.	FIELD PAINTING OF EXISTING STRUCTURAL STEEL, SURFACE PREPARATION, SYSTEM A (SEE SPECIAL PROVISIONS)		
514	LUMP	L.S.	FIELD PAINTING OF EXISTING STRUCTURAL STEEL, COMPLETE PRIME COAT, SYSTEM A (SEE SPECIAL PROVISIONS)		
514	LUMP	L.S.	FIELD PAINTING OF EXISTING STRUCTURAL STEEL, COMPLETE FINISH COAT, SYSTEM A (SEE SPECIAL PROVISIONS)		
516	111	L.F.	STRUCTURAL EXPANSION JOINTS INCLUDING ELASTOMERIC STRIP SEAL		
516	4	EA.	LAMINATED ELASTOMERIC BEARINGS 10"x12"x2 3/8" PAD WITH 2'-0"x 1'-4"x 1 1/2" STEEL BASE PLATE		
516	4	EA.	LAMINATED ELASTOMERIC BEARING 10"x12"x2 3/8" PAD WITH 2'-5" x 1'-4"x 1 1/2" STEEL BASE PLATE		
516	16	EA.	ELASTOMERIC BEARING SHIMS		
517*	533	L.F.	RAILING (CONCRETE PARAPET WITH FENCING)		
517**	533	L.F.	DECORATIVE CONCRETE RAILING WITH FENCING, INCLUDING INCIDENTALS		
518	4	EA.	SCUPPERS, INCLUDING SUPPORTS		
518	50	C.Y.	POROUS BACKFILL		
520	1350	S.F.	PNEUMATICALLY PLACED MORTAR (SEE SPECIAL PROVISIONS)		
601	213	C.Y.	DUMPED ROCK FILL, TYPE D (12" THICK)		
603	18	L.F.	8" CONDUIT, TYPE G, DUCTILE IRON PIPE		
SPECIAL	1061	S.Y.	MICRO-SILICA MODIFIED CONCRETE OVERLAY (2" THICK) (SEE SPECIAL PROVISIONS)		
SPECIAL	8	C.Y.	MICRO-SILICA MODIFIED CONCRETE OVERLAY (PROFILE CORRECTION) (SEE SPECIAL PROVISIONS)		
SPECIAL	LUMP	L.S.	TEST SLAB (SEE SPECIAL PROVISIONS)		
SPECIAL	2462	S.Y.	SEALING CONCRETE SURFACES, NON-EPOXY (SEE SPECIAL PROVISIONS)		
SPECIAL	504	L.F.	TIE RODS		
SPECIAL	250	L.F.	COATING OF EXISTING REINFORCING STEEL		
SPECIAL	200	EA.	REPLACEMENT BOLTS		

* DENOTES ALTERNATE I
** DENOTES ALTERNATE II

STATE OF OHIO
THOMAS E. YOUNG
26962
REGISTERED
PROFESSIONAL ENGINEER

CONTRACT DRAWING

PRINTS NOT BEARING THIS STAMP WERE MADE PRIOR TO ADVERTISING FOR BIDS AND ARE TO BE CONSIDERED OBSOLETE FOR CONTRACT PURPOSES.

CITY OF CINCINNATI
DEPARTMENT OF PUBLIC WORKS
DIVISION OF ENGINEERING

ESTIMATED QUANTITIES
McMILLAN ST. BRIDGE OVER
READING RD. REHABILITATION

DESIGNED	DRAWN	TRACED	CHECKED	REVIEWED	DATE	REVISED
EAP	EGP	BRB	JGW	GCH	4-4-90	

22-48-68

GENERAL NOTES

Reference shall be made to standard drawings:

AS-1-81	dated	11-27-81
BR-2-82	dated	11-01-82
EXJ-4-87	dated	01-05-89
MC-9A	dated	01-11-85
SD-1-69	dated	04-12-69

and to supplemental specification

802	dated	05-04-88
852	dated	12-14-88
853	dated	06-26-78
952	dated	06-10-87
956	dated	06-26-78

DESIGN SPECIFICATIONS

The proposed structure modification conforms to "Standard Specifications for Highway Bridges" adopted by the American Association of State Highway and Transportation Officials, 1989, including the Ohio "Supplement" to these specifications.

DESIGN DATA

Design Loading - HS 20-44 Case II and the Alternate Military Loading

Concrete Class S - Compressive Strength = 4500 psi

Concrete Class C - Compressive Strength = 4000 psi

Reinforcing Steel - ASTM A615, A616, A617 Grade 60 minimum yield strength 60,000 psi

Structural Steel - ASTM A36, Yield Strength 36,000 psi

Deck Protection Method - 1. Epoxy coated reinforcing steel
2. 2" Micro-silica Modified Concrete Overlay

PLANS FOR EXISTING BRIDGE

Plans of the existing McMillan Street Bridge over Reading Road are available for inspection by the prospective bidders at the City of Cincinnati Engineering Division, Room 430, City Hall-Cincinnati.

EXISTING STRUCTURE VERIFICATION

Details and dimensions shown on these plans pertaining to the existing structure have been obtained from plans of the existing structure and/or from field observations and measurements. Consequently, they are indicative of the existing structure and the proposed work but they shall be considered tentative and approximate. The Contractor is referred to Construction and Material Specifications (CMS) Sections 102.05 and 105.02.

Contract bid prices shall be based upon a recognition of the uncertainties described above and beyond a prebid examination of the existing structure by the Contractor. However, all project work shall be based upon actual details and dimensions which have been verified by the Contractor in the field.

UTILITY LINES

All expense involved in relocating the affected utility lines shall be borne by owners. The contractor and owners are requested to cooperate by arranging their work in such a manner that inconvenience to either will be held to a minimum.

ITEMS 202

The description of this work shall apply to all 202 Items. The use of a wrecking ball or explosives will not be permitted. Removals shall be in accordance with Item 202.03 of the Specifications. The Contractor shall submit to the Project Engineer the method to be used in removing the portions of the existing structure and the demolition plans outlining the procedure for the safe removal. The Contractor shall have authorization to proceed with demolition prior to beginning work. Also, see CMS 107.07 and 107.12. Sufficient care shall be taken not to damage the existing or proposed portion of the structure.

ITEM 202 - SUPERSTRUCTURE REMOVED

This item includes the removal and disposal of the deck, sidewalk, railing, street railway ties, rails and plates, and all other parts of the superstructure within the limits shown on the plans.

ITEM 202 - PORTIONS OF STRUCTURES REMOVED

This item includes the removal and disposal of portions of the abutment, pylons, wingwalls and walls, to the elevations or limits shown on plans. Any sawcutting shown on the plans or work incidental to removals is included in this Item. The contractor shall exercise caution not to damage any reinforcing steel that is designated to remain within removal limits.

ITEM 202 - CONCRETE RAILING ON WINGWALLS REMOVED

This item includes removal and disposal of the existing concrete railing on the wingwalls to the limits shown on the plans.

ITEM 503 - COFFERDAMS, CRIBS AND SHEETING

This item shall be used to protect the existing roadway behind and adjacent to the abutment backwall during removal and construction operations and as directed by the Engineer. It can also be used as necessary during trenching for the tie rods.

ITEM 509 - REINFORCING STEEL, GRADE 60

ITEM 509 - EPOXY COATED REINFORCING STEEL, GRADE 60

Plan lengths of reinforcing steel for the bridge slab and abutment require the contractor to field bend and then straighten transverse reinforcing steel in order to clear existing concrete during Phase I. Any damage done to the epoxy coating shall be repaired in accordance with Item 509. The Contractor has the option to use epoxy coated mechanical splices that develope 125% yield strength of the spliced reinforcement. The cost of these splices and/or field bending shall be included for payment under Item 509.

ITEM 509 - REPLACEMENT REINFORCING STEEL

Work under this item shall consist of furnishing and placing in the pneumatically placed mortar and other areas of repair, reinforcing steel of the size, type and quantity designated by the Engineer in accordance with ITEM 509 REINFORCING STEEL - Grade 60 to replace any existing reinforcing steel which may be found to have an appreciable reduction in area upon removal of the existing concrete under ITEM 520 or under prior contracts. If it should be found necessary to weld the new reinforcing steel to the existing steel the weight of deposited weld metal shall be included in the quantity measured for this item.

ITEM 510 - DOWEL HOLES

Dowel holes for this item shall be drilled and grouted in accordance with Supplemental Specifications 853 and 956 or 852 and 952. Measurement and payment shall be included with and as specified in Item 510.

ITEM 511 - CLASS C CONCRETE, ABUTMENT

In addition to the provisions of Item 511, the treatment of existing concrete surfaces prior to placement of new concrete, as outlined below, shall be included with this item for payment.

Construction joint surfaces and existing concrete surfaces shall be scrubbed with cement grout (equal volumes of sand and cement with only enough water to make a thin paste) immediately prior to concrete placement.

ITEM 511 - CLASS S CONCRETE, SUPERSTRUCTURE

The sidewalk and parapet concrete shall not be placed until the slab concrete has attained 75 percent of its required 28 day strength to allow the composite section to support the sidewalk and parapet loads.

ITEM 516 - LAMINATED ELASTOMERIC BEARINGS

This item shall include furnishing and installing laminated elastomeric bearing pads including steel base plates, anchor bolts, and 1/8" sheet lead or 1/8" preformed bearing pad in accordance with the Plans, Specifications and as described herein. (Continued on sheet 9)

STATE OF OHIO
THOMAS E. YOUNG
26962
REGISTERED
PROFESSIONAL ENGINEER

CONTRACT DRAWING
PRINTS NOT BEARING THIS STAMP ARE MADE FREE TO ADVERTISING FOR BIDS AND ARE TO BE CONSIDERED ONLY LEFT FOR CONTRACT PURPOSES.

CITY OF CINCINNATI
DEPARTMENT OF PUBLIC WORKS
DIVISION OF ENGINEERING

GENERAL NOTES
McMILLAN STREET BRIDGE OVER READING ROAD REHABILITATION

DESIGNED	DRAWN	TRACED	CHECKED	REVIEWED	DATE	REVISED
JGW	EGP	EGP	BHP	GCH	4-4-90	

22-48-69

GENERAL NOTES

LAMINATED ELASTOMERIC BEARINGS (CONTINUED)

ANCHOR BOLT HOLES

If dowel holes are drilled for the anchor bolts, they shall be in accordance with Item 510 and supplemental specification 853/956 or 852/952. These dowel holes shall be included with Item 516 - Laminated Elastomeric Bearings for payment.

MATERIALS:

Elastomer shall be 50 durometer neoprene: internal laminate shall be ASTM A36.

TOLERANCES:

Individual Elastomer layer thickness ± 20% of Design Value (Not to exceed ± 1/8")

PLAN DIMENSIONS	-0. + 1/4"
DESIGN THICKNESS ≤ 1 1/4"	-0. + 1/8"
DESIGN THICKNESS > 1 1/4"	-0. + 1/4"
EDGE OVER OR EMBEDDED LAMINATED	-0. + 1/8"

BASE PLATE

The steel base plate shall be ASTM A36 and bonded by vulcanization to the elastomer during the molding process.

PROOF LOAD

The elastomeric bearing manufacturer shall supply a plain elastomeric pad for testing purposes. The pad shall be furnished from the same batch of neoprene that is used in the fabrication of the laminated elastomeric bearings and the fabricator shall certify the identity of the elastomer. The pad shall have a 1/2 inch thickness, and shall have minimum length and width dimensions of 6 inches. Payment for the test pad will be included in the price bid for the bearings.

ELASTOMERIC BEARING SHIMS

After all the proposed dead load has been placed on the structure (including microsilica concrete overlay and pedestrian fence), each rebuilt abutment seat below the girder shall be inspected to measure the gap between the bottom of the existing 3/4" steel bearing plate and the top of the rebuilt abutment seat. If this gap is greater than 4-1/8", then shims shall be placed on the abutment seat to make the gap between the bottom of the existing steel bearing plate and the top of the proposed laminated elastomeric bearing less than 1/8". The shims shall be 1/8" thick sheet lead, meeting the requirements of 711.19, or preformed bearing pads 1/8" thick meeting the requirements of 711.21. The shims shall be the same size as the base plate with individual holes in it for the anchor bolts.

It is the intent of this work to allow only liveloads (no dead loads) to be transmitted from the superstructure to the abutment.

The quantity for payment will be made on the basis of the total amount of elastomeric bearing shims installed under Item 516 - Elastomeric Bearings shims. This price will include furnishing and installing shim plates.

BASIS OF PAYMENT

ITEM	UNIT	DESCRIPTION
516	Each	Laminated Elastomeric Bearing, 10"x12"x2 3/8" Pad with 2'-0"x1'-4"x1 1/2" Steel Base Plate
516	Each	Laminated Elastomeric Bearing, 10" x 12" x 2 3/8" Pad with 2-'5"x1-'4"x1 1/2" steel base plate.
516	Each	Elastomeric Bearing Shims

ITEM 517 - RAILING (CONCRETE PARAPET WITH FENCING)
ITEM 517- DECORATIVE CONCRETE RAILING WITH FENCING

This item includes the furnishing of all materials, labor, equipment and incidentals necessary to construct and erect the reinforced concrete parapet with steel fence. This work shall be done in accordance with the applicable provisions of items 607, 513 and 517, except as modified by these notes and the plans.

All posts and rail sizes are noted in terms of the nominal inside diameter of standard weight steel pipe, schedule 40. Base plates and miscellaneous brackets for steel posts may be of any commercially weldable steel having a yield strength of not less than 33,000 psi. Steel base plates and sleeves shall be welded in the shop. The base plate assembly shall be thoroughly cleaned after all welding is completed, then galvanized in accordance with 711.02. Joints shall be checked for adequate slip clearance by the fabricator before and after galvanizing. Setscrew holes shall be drilled after galvanizing.

Fence posts, rails, stretcher bars, chain link fabric, tension bands, truss rods, ties and miscellaneous hardware shall be galvanized in accordance with 711.02. All of the above material including base plate and sleeves shall receive a 7 mil bonded polyvinyl chloride coating. Color samples of the P.V.C. coating shall be submitted to the Engineer for review and approval.

Stretcher bars and miscellaneous hardware shall be provided in accordance with fence industry standard. Stretcher bar bands shall be a minimum of 12 gauge steel by 7/8 inches wide, assembled with 5/16 inch diameter by 1-1/4 inch galvanized or cadmium plated bolts.
Chain link fabric to be one piece 11 (eleven) gauge galvanized vinyl coated wire in 1 inch mesh. Vinyl coat to be 7 mil thickness. Zinc coating shall conform to ASTM A641. P.V.C. coating shall be bonded to wire. Chain link fabric shall be color matched with framework material. Chain link fence fabric shall have knuckle salvage at bottom and knuckle salvage at top.

The method of measurement for payment for the railing will be the actual length of concrete parapet. The fencing on top of the parapet shall not be measured separately for payment, but is included for payment in the linear foot price for Item 517-Railing (Concrete Parapet with Fencing).

ITEM 518 - POROUS BACKFILL

This item shall be in accordance with the applicable provisions of Item 518 and as modified herein. A filter fabric (712.09, Type A) shall be placed around the porous backfill as shown in the plans. Material and installation of the filter fabric shall be included for payment with Item 518 - Porous Backfill.

ITEM 518 - SCUPPERS, INCLUDING SUPPORTS

This work shall be in accordance with the applicable provisions of Item 518, Standard Drawing SD-1-69 and as modified in the plans.

ITEM 520 - PNEUMATICALLY PLACED MORTAR (See Special Provisions)

This item shall be used to perform concrete repairs to the abutment, piers, pylons and stairways to remain.

ITEM 601 - DUMPED ROCK FILL, TYPE D (12" THICK)

This item shall be in accordance with Item 601 of the Construction and Material Specifications, except as modified and augmented herein. The Contractor may use material removed under Item 202 that meets the requirements for subsection 601.07, Type D.

The fill shall be placed under the bridge from the face of abutment to the concrete pier in the east-west direction. It shall be placed from edge of stairway to edge of stairway in the north-south direction. The dumped rock fill shall be placed on smooth graded earth and shall be of uniform thickness not less than 12 inches. Any regrading or filling required to match the proposed grades shall be included for payment under this item.

ITEM SPECIAL - SEALING CONCRETE SURFACES (SEE SPECIAL PROVISIONS)

All exposed concrete surfaces (deck, sidewalk on bridge, approach slabs, walls, railing, abutment, piers below the proposed sidewalks, etc.) above the existing ground line shall be sealed in accordance with Item Special - Sealing of Concrete Surfaces, Non-Epoxy. The top of deck between curbs shall not be sealed. All other exposed concrete surfaces shall be sealed with non-epoxy.

ITEM SPECIAL - COATING OF EXISTING REINFORCING STEEL

In areas where the concrete cover over the existing reinforcing steel will be less that one inch the reinforcing steel shall be coated with an anti-corrosion protective. The purpose of the proposed coating is to protect the existing steel bars against corrosion and not to be used as a bonding agent.

Application: After the delaminated concrete has been removed, the steel bar to be coated shall be dry before this material is applied. The coating shall only be applied to the reinforcing steel. The contractor shall adequately protect the adjacent concrete during the coating application. The reinforcing steel shall be cleaned as noted under Item-520-Pneumatically Placed Mortar. The proposed coating shall be SikaTop 108, Armatec, by the Sika Corporation or an approved equal. The coating shall be brush applied within 24 hours after cleaning and in accordance with the manufacturers instructions. The minimum thickness of the film shall be per manufacturers instructions. Care shall be taken to protect this film until the placement of new concrete. (Continued on sheet 10)

ITEM 517 - RAILING (CONCRETE PARAPET WITH FENCING)

ITEM 517 - DECORATIVE CONCRETE RAILING WITH FENCING

These items shall be in accordance with the Plans, specifications and as modified herein. The concrete parapet above the sidewalk shall have an exposed aggregate texture and color to match the existing concrete pylons that are to remain. The Contractor shall submit samples to the Engineer in the form of a 12"x12"x2" concrete slab to be reviewed and approved by the Engineer.

STATE OF OHIO
THOMAS E. YOUNG
26962
REGISTERED
PROFESSIONAL ENGINEER

CONTRACT SET
PRINTS NOT [illegible]
NEW [illegible]
FOR BIDDING [illegible]
OBSOLETE [illegible]

CITY OF CINCINNATI
DEPARTMENT OF PUBLIC WORKS
DIVISION OF ENGINEERING

GENERAL NOTES
Mc MILLAN STREET BRIDGE OVER READING ROAD REHABILITATION

DESIGNED	DRAWN	TRACED	CHECKED	REVIEWED	DATE	REVISED
JGW	EGP	EGP	BHP	GCH	4-4-90	

22-48-70

GENERAL NOTES

COATING OF EXISTING REINFORCING STEEL (CONTINUED)

MEASUREMENT:

The quantity shall be the actual length of reinforcing steel bar coated.

PAYMENT:

The payment will be made at the contract price bid for:

ITEM	UNIT	DESCRIPTION
Special	Lin. Ft.	Coating of Existing Reinforcing Steel

ITEM SPECIAL - REPLACEMENT BOLTS

After the concrete on the bridge deck has been removed, the Engineer shall inspect all the rivets on the top flange of all structural steel members. Any rivets which the Engineer deems to be severely deteriorated shall be removed and replaced with high strength bolts.

The rivet heads shall be removed with a pneumatic hammer or method approved by the Engineer that will not damage adjacent structural steel. The remainder of the rivet shall then be driven out with a backing-out punch. Any burrs in the area of the proposed bolt shall be ground off. The replacement bolt shall be 7/8" diameter A325 high strength bolt with hardened washer under turning element. Bolt installation shall be in accordance with subsection 513.15 of the Construction and Material Specifications. Only one (1) rivet per row may be replaced at a time without special permission from the Engineer.

The quantity shall be the actual number of high strength bolts installed. A quantity of 200 each has been estimated to establish a bid price.

Payment for work will be made at the contract prices for:

ITEM	UNIT	DESCRIPTION
Special	Each	Replacement Bolts

which shall include all materials, tools and equipment necessary to remove existing rivets and install high strength bolts.

ITEM SPECIAL - TIE RODS

DESCRIPTION: This item shall include the furnishing of all materials, tools, equipment, and necessary labor to fabricate, assemble, corrosion protect, construct, stress and install the wingwall tie rods of the size and type specified and to apply loads, as given in the plans. All work shall be in accordance with the plans and these specifications.

MATERIAL: Tie rod steel shall conform to the following:

HIGH-STRENGTH BARS. High-strength steel bars used shall be solid deformed threadbars conforming to the requirements of ASTM A722-75 "uncoated high-strength steel bar for prestressing concrete."

CORROSION PROTECTION: The acceptable protection method shall conform to one of the systems described below:

SYSTEM I: Bare high-strength bars and couplers shall be placed within PVC corrugated sheathing terminating with grout sleeves. Cement and water grout is then pumped into the void between the bar and the corrugated sheathing prior to installation. The grout sheathed bar is then placed inside a PVC smooth sheathing during installation as additional corrosion protection. This grouted, double sheathed bar and coupler shall then be placed in a steel pipe as protection from damage by compaction equipment. End treatment of the bar, double sheathing, and steel pipe at walls shall be as per plan. This system is available from Dywidag Systems International or an approved equal. (equality status to be evaluated and approved by the Engineer). System I is the system detailed in the plans.

SYSTEM II: High-strength bars and couplers shall be epoxy coated. A heat shrinkable polyethylene tube internally coated with a thixotropic sealant shall be applied by sliding it over the epoxy coated bar. When in position, this tube shall be exposed to heat in excess of 250 degrees F which causes it to shrink and tightly encapsulate the bar. Optional couplers with lock nuts shall be protected in a similar manner. The epoxy coated, heat shrinkable tube covered bars and coupler shall then be placed in a steel pipe as protection from damage by compaction equipment. End treatment of bar at walls shall be as per plan. This system is available through Schnabel Foundation Co. or an approved equal (equality status to be evaluated and approved by the Engineer.

MATERIALS: Heat shrinkable polyethylene tube shall be TPS-1000-84 as manufactured by Chemelex Division of the Raychem Corporation or a approved equal.

Grease seal shall be Bune-N seal as manufactured by the Potomac Rubber Co., Inc., or an approved equal.

Epoxy coating shall be electrosatatically applied and shall be in accordance with ASTM A-775-81.

Moldable sealant shall be Tapecoat Moldable Sealant as manufactured by the Tapecoat Co., Evanston, Illinois, or an approved equal.

Grease shall be Anti-Corrosion Grease PT-1, Viscono-Rust 2090 P-4 Filler Corrosion Preventative Grease as manufactured by Viscosity Oil Company, or an approved equal.

TIE STRESSING: Stressing operations shall not commence until the concrete in all the proposed wall faces and tie rod beams has attained its 28 day strength. Also, the concrete for the reinforced approach walk and the 5" approach walk on the north side of the roadway shall not be placed until all stressing operations are completed.

The ties shall be stressed by means of a hydraulic jack. The hydraulic jack shall be capable of stressing equally and simultaneously all stressed elements of the ties. Each jack shall be equipped with a pressure gauge for determining the jacking stress. The pressure gauge shall have an accurate reading dial at least six inches in diameter. The hydraulic jack and pressure gauge system shall be capable of measuring the tie load to an accuracy of ± 3% of the tie applied load. Thirty days prior to beginning stressing, the Contractor shall submit to the Engineer certified calibration data for the hydraulic jack and pressure gauge system. Jacks shall be calibrated, and load vs. gauge pressure curves provided for each pressure gauge for the maximum and minimum expected jack extensions. The stressing process shall be so conducted that the applied load and elongation of the tie may be measured at any time. Elongation measurements shall be measured with a precision of 0.001 inch. During any loading, the applied load, as measured by the elongation and the pressure gauge readings, shall be within ± 5% of agreement, and if not, stressing operations may be suspended by the Engineer until cause for the differences is found and corrected. Safety precautions shall be taken to prevent workers from standing behind the jacks when the ties are stressed. All tie stressing shall be done under the supervision of the Engineer. All data shall be recorded by the Contractor and made available to the Engineer. The stressing anchorage shall be capable of lift-off in order to check the force. The period between the stressing and lift-off will be determined by the Engineer.

TRENCHES: The contractor may excavate a trench in the roadway in order to install the tie rods. The trench and backfill shall meet the requirements of subsection 625.12 except the first 12 inches above the steel pipe shall be covered with lean concrete or mortar. All Labor and materials for trench and backfill shall be included with the price bid for Item Special-Tie Rods.

METHOD OF MEASUREMENT: The quantity shall be measured by the linear foot, complete in place within limits shown in the plans. This item includes the complete tie rod assembly and all hardware, steel sleeves, steel pipe, bearing plate, etc., and all bars necessary to complete this item.

BASIS OF PAYMENT: Payment will be made at contract price for:

ITEM	UNIT	DESCRIPTION
Special	Linear Foot	Tie Rods

STATE OF OHIO
THOMAS E. YOUNG
26962
REGISTERED
PROFESSIONAL ENGINEER

CONTRACT DRAWING
PRINTS NOT BEARING THIS STAMP WERE MADE PRIOR TO ADVERTISING FOR BIDS AND ARE TO BE CONSIDERED OBSOLETE FOR CONTRACT PURPOSES.

CITY OF CINCINNATI
DEPARTMENT OF PUBLIC WORKS
DIVISION OF ENGINEERING

GENERAL NOTES
McMILLAN STREET BRIDGE OVER READING ROAD REHABILITATION

DESIGNED	DRAWN	TRACED	CHECKED	REVIEWED	DATE	REVISED
JGW	EGP	EGP	BHP	GCH	4-4-90	

GENERAL NOTES

JOINT SEALERS

All references to 705-01 or 705.02, appearing on standard drawings or on the plans, shall be considered to read 705.04.

ITEM 202 - WEARING COURSE REMOVED

This Item includes the removal of the top two inches of the existing pavement within the limits shown on the plans. Immediately after the wearing course has been removed, the remaining pavement shall be investigated, by the Engineer, to determine if additional wearing course should be removed or if full depth pavement removal is necessary. Any additional wearing course removed shall be included under Item 202-Wearing Course Removed and any full depth removals shall be included under Item 202-Pavement Removed (rigid).

All material under the work of this item shall become the property of the Contractor and must be removed from the site to the satisfaction of the Engineer. No additional compensation will be paid for said removal.

The roadway shall be thoroughly cleaned of all material deposited on the roadway as a result of the wearing course removal. Such cleaning shall be carried out using power brooms, vacuum sweepers or by other approved methods immediately following the wearing course removal operation so that all removed material will be cleaned from the roadway at the end of each day's operations. Also, the Contractor shall cover the opening of inlets while removing the wearing course or immediately following the removal, clean all material from the inlets that may drop into them during the removal operation.

After removing the wearing course the Contractor shall immediately clean and tack an area at least 8' in diameter around all utility castings within the removal area and place an asphalt concrete wedge thoroughly compacted in accordance with Item 401 around the castings in this 8' diameter area. If the Contractor chooses, at the time the wearing course is removed, to leave at least an 8' diameter wedge of existing surface course around the utility castings to protect traffic, he may do so; but he will only be allowed to remove these wedges on a street the day previous to placing asphalt surfacing on the street. Where manholes or valve chambers within the area where wearing course is removed have previously been adjusted to grade with adjusting rings, the Contractor shall have the option of removing the adjusting ring, leaving at least an 8' diameter wedge of existing surface course around the casting or placing an 8' diameter wedge of asphalt concrete, as described above, around the manhole or valve chamber. If the Contractor chooses to remove previously installed adjusting rings, he shall re-install these rings immediately prior to the paving of the street.

No additional compensation will be paid for the placing of asphalt wedges, the removal and re-installation of previously placed adjusting rings or for separate removal of existing wearing course as described above; therefore, all costs are to be included in and paid for under Item 202 - Wearing Course Removed.

ITEM 202 - APPROACH SLAB REMOVED

ITEM 202 - PAVEMENT REMOVED (RIGID)

ITEM 202 - WALK REMOVED (CONCRETE)

These items shall be in accordance with the applicable provisions of Item 202 except as modified herein. The area of Item 202- Approach Slab removed shall also include the curb and sidewalk adjacent to the approach slab as shown in the Plans. The area of Item 202-Pavement Removed (Rigid) shall be measured from face of north curb to face of south curb. Removal of any street railway ties or rails shall be included in this item for payment. The area of Item 202-Walk Removed (Concrete) shall be measured from the face of curb to back of walk removed. Removal of any handrails within the walk removal limits shall be included with this item for payment.

Any excavation or embankment required to meet proposed subgrade elevations shall be in accordance with Item 203, but shall be included with the appropriate removal item for payment

SUBGRADE COMPACTION AND PROOF ROLLING

In areas where the roadway is being replaced, subgrade compaction and proof rolling which is required before embankment or new base is constructed, shall be considered incidental to the work required. The cost therefore, shall be included in the unit price bid for Item 301-Bituminous Aggregate Base or Item 611-Reinforced Concrete Approach Slab.

CONTINGENCY QUANTITIES

The following estimated quantities have been provided as contingency items. These quantities shall be used only at the direction of the engineer and will be non-performed in the event of their not being required. Estimated quantities have been carried to the General Summary.

ITEM	DESCRIPTION	QUANTITY
203	Embankment	10 C.Y.
203	Excavation, not including embankment construction	10 C.Y.

The Contractor shall not order materials or perform work for plan items set up to be used "as directed by the Engineer" unless authorized by the Engineer. The actual work locations and quantities used at the Engineer's discretion shall be made a matter of record by incorporation into the final change order governing completion of this project.

TEMPORARY ROADWAY ITEMS

ITEM 301 - TEMPORARY BITUMINOUS AGGREGATE BASE

ITEM 608 - TEMPORARY BITUMINOUS WALK

ITEM 609 - TEMPORARY ASPHALTIC CONCRETE CURB

These items of work shall be constructed as part of Phase I and shall be removed during Phase III. The cost of removing these items (including any necessary sawcutting) shall be included with the unit price bid for the appropriate Temporary Roadway Item.

ITEM 407 - TACK COAT

Estimated Quantity for Item 407-Tack Coat is based on a rate of 0.10 gallons per square yard.

ITEM 608 - CONCRETE WALK (6" MIN. THICK)

This item shall be in accordance with the Plans, Specifications and as modified herein. Any additional excavation or concrete required for the area below the proposed handrail shall be included with the unit price bid for this item.

ITEM 609 - CONCRETE CURB, TYPE S-1 (10" HIGH)

This curb shall be constructed as shown on City Accession No. 3890 except that the height from top of proposed roadway surface to top of curb shall be 10 inches. Also the batter at the face of the curb shall transition from a length of 10 feet to match the batter of the approach slab curb. The length where the curb height transitions from 6" to 10" as shown on the plan shall be measured for this Item.

ITEM SPECIAL - INVERTED TOE WALL

This item shall consist of forming, furnishing and placing, and finishing concrete (Class C) in accordance with the plans and applicable provisions of Item 511 and Item 608 and as described herein.

Any excavation required for construction of the vertical portions of the inverted toe wall shall be in accordance with Item 503, but shall be included with this item for payment. The concrete for the sidewalk portion shall be placed simultaneously with all the other concrete.

Measurement for this item will be made on the basis of the number of cubic yards of concrete placed, completed and accepted, measured from the back of curb to the back of walk.

Payment will be made at the contract unit price bid for:

ITEM	UNIT	DESCRIPTION
Special	Cu. Yd.	Inverted Toe Wall

STATE OF OHIO
THOMAS E. YOUNG
26962
REGISTERED
PROFESSIONAL ENGINEER

CONTRACT DRAWING

PRINTS NOT BEARING THIS STAMP WERE MADE PRIOR TO ADVERTISING FOR BIDS AND ARE TO BE CONSIDERED OBSOLETE FOR CONTRACT PURPOSES.

CITY OF CINCINNATI
DEPARTMENT OF PUBLIC WORKS
DIVISION OF ENGINEERING

GENERAL NOTES

McMILLAN STREET BRIDGE OVER READING ROAD REHABILITATION

DESIGNED	DRAWN	TRACED	CHECKED	REVIEWED	DATE	REVISED
JGW	EGP	EGP	BHP	GCK	4-4-90	

22-48-72

FED. RD REGION	STATE	PROJECT	FISCAL YEAR
5	OHIO		

12/36

GENERAL NOTES

ITEM 611 - REINFORCED CONCRETE APPROACH SLAB (T=13")

ITEM 611 - REINFORCED CONCRETE APPROACH WALK (T=11")

ITEM 611 - REINFORCED CONCRETE APPROACH WALK (T=10" MIN.)

These items shall be in accordance with the applicable provisions of Item 611, Standard Drawing AS-1-81 and as detailed in the plans. Item 611-Reinforced Concrete Approach Walk (T=10" min.) is for the walk placed on the south side of the approach slab and shall be measured from the face of curb to the back of walk.

ITEM 614 - MAINTAINING TRAFFIC

1. It is the intention to perform the required work with the least inconvenience to, and maximum safety of, the Contractor and the traveling public. Any variances from these Maintenance of Traffic notes must be approved in advance in writing by the Engineer. Except as modified below, the requirements for maintaining traffic as indicated in the "Ohio Manual of Uniform Traffic Control Devices for Streets and Highways", current edition, and pertinent items of specification and proposal shall apply.

2. In addition to Item 614, "Maintaining Traffic," as set forth in the State of Ohio Department of Transportation Construction and Material Specifications, the following notes shall also apply to the work carried out within the limits of this project.

   a. The Contractor will be required on interim and permanent basis, to provide, erect, maintain (in proper position, clean, legible and good working condition), and remove all lights, signs, barricades and all other traffic control devices necessary to the maintenance of traffic, which also includes all advance warning signing and regulatory signs. All signs shall be reflectorized or illuminated. Type "B" flashing barricade warning light shall be installed with every advance warning traffic control device.

   b. The standard device for closing any lanes to traffic shall be properly weighted, reflectorized, 30 or 55 gallon drums. Tapers for lane closures shall have reflectorized drums spaced 25 feet apart with construction arrows (OW-138) mounted on the first, fifth, and last drums.

   c. An electric flashing arrow board of a type shown on Standard Construction Drawing TC-35.10 shall be installed in each taper closing a lane of traffic, centered in the closed lane.

   d. Type "C" steady burning barricade warning lights shall be installed on every drum in the tapers for nighttime lane closures.

3. Before work begins, the Contractor shall submit to the Engineer the names and telephone numbers of the person or persons who can be contacted 24 hours a day by the City of Cincinnati and all interested police agencies. This person or persons shall be responsible for placing or replacing necessary traffic control devices to maintain the traveled pavement safely.

4. The Contractor will be required to give at least seven (7) days notice to the Engineer prior to the closure of any lane or roadway.

5. All vehicles, equipment, men and their activities are restricted at all times to one side of the pavement, unless other wise approved by the Engineer. Vehicles and equipment shall always move with, and not across or against, the flow of traffic. Vehicles and equipment shall not park or stop except within designated areas, and shall enter and leave work areas in a manner which will not be hazardous to, or interfere with, the normal flow of traffic. Personal vehicles will not be permitted to park within the right-of-way, except in specific areas designed by the Engineer.

6. Pedestrian protection and pedestrian access must be maintained at all times. Pedestrian safety is of utmost importance throughout the life of the contract. Pedestrians must be directed to the safest crossing point at all times, and their safety is the responsibility of the Contractor.

7. To assure maintenance of adequate traffic control at all times, no signs are to be installed or removed without the approval of the Project Engineer.

8. If temporary signs, which restrict parking, are installed, the local Police District must be notified at least 24 hours prior to installation.

9. Police and Fire access must be maintained at all times.

10. Access to abutting properties must be maintained at all times.

11. For additional signing, temporary pavement markings and maintenance of traffic details see the contract drawings.

The following restrictions on local streets shall apply to the construction involved in this project.

   a. On McMillan Street Bridge over Reading Road two ten (10 foot) lanes must be open and available for the movement of traffic at all times. No additional street space may be blocked.

ITEM SPECIAL - LAW ENFORCEMENT OFFICER WITH PATROL CAR

The Contractor shall provide the services of one law enforcement officer, with official patrol car, during the initial set-up periods and during tear-down periods for lane closures.

The law enforcement officers shall be considered to be employed by the Contractor and the Contractor shall be responsible for their actions. Although they are employed by the Contractor, the Project Engineer shall have control over their placement. When required for Maintenance of Traffic, the contractor shall provide the services of a law enforcement officer with patrol car. The contractor shall make arrangements for their services. The use of law enforcement officers, as stipulated in these notes does not preclude their use of other purposes in the project area. However, such usage is at the option of the contractor and all cost in connection therewith shall be included in the lump sum price bid for Item 614-Maintaining Traffic.

Payment shall be made at the unit price bid for the actual number of hours required for Item Special-Law Enforcement Officer with Patrol Car.

ITEM 614 - BARRIER REFLECTORS

These Reflectors and their mounting shall conform to Supplemental Specification 802 except that spacing shall be as shown on the plan. (50% of S.S. 802 spacing which will double the number of reflectors).

ITEM 622 - TEMPORARY CONCRETE BARRIER, BRIDGE MOUNTED

Item 622 - Temporary Concrete Barrier, Bridge Mounted, has been provided for maintaining traffic as shown in the plans. The quantities shown are for the maximum length of barrier required for one phase of maintaining traffic only. The Contractor shall utilize the same barriers in all phases of construction. Movement of the barriers between phases shall be accomplished in one working day. Flagmen shall be utilized for protection of vehicular traffic until movement of the barriers is complete and traffic is maintained. All costs involved in removing and re-erecting the barriers for maintaining traffic shall be included in the unit price bid for Item 622- Temporary Concrete Barrier, Bridge Mounted. The Temporary Concrete Barrier Bridge Mounted shall be anchored and connected as shown in the plans.

ITEM 622 - TEMPORARY CONCRETE BARRIER

Item 622 - Temporary Concrete Barrier, has been provided for maintaining traffic as shown in the plans. The quantities shown are for the maximum length of barrier required for one phase of maintaining traffic only. The Contractor shall utilize the same barriers in all phases of construction. Movement of the barriers between phases shall be accomplished in one working day. Flagmen shall be utilized for protection of vehicular traffic until movement of the barriers is complete and traffic is maintained. All costs involved in removing and re-erecting the barriers for maintaining traffic shall be included in the unit price bid for Item 622 - Temporary Concrete Barrier.

STATE OF OHIO THOMAS E. YOUNG 26962 REGISTERED PROFESSIONAL ENGINEER

CONTRACT DRAWING

PRINTS NOT BEARING THIS STAMP WERE MADE PRIOR TO ADVERTISING FOR BIDS AND ARE TO BE CONSIDERED OBSOLETE FOR CONTRACT PURPOSES.

CITY OF CINCINNATI
DEPARTMENT OF PUBLIC WORKS
DIVISION OF ENGINEERING

GENERAL NOTES

McMILLAN STREET BRIDGE OVER READING ROAD REHABILITATION

DESIGNED	DRAWN	TRACED	CHECKED	REVIEWED	DATE	REVISED
JGW	EGP	EGP	BHP	GCH	4-4-90	

22-48-73

FED. RD. REGION	STATE	PROJECT	FISCAL YEAR
5	OHIO		

13/36

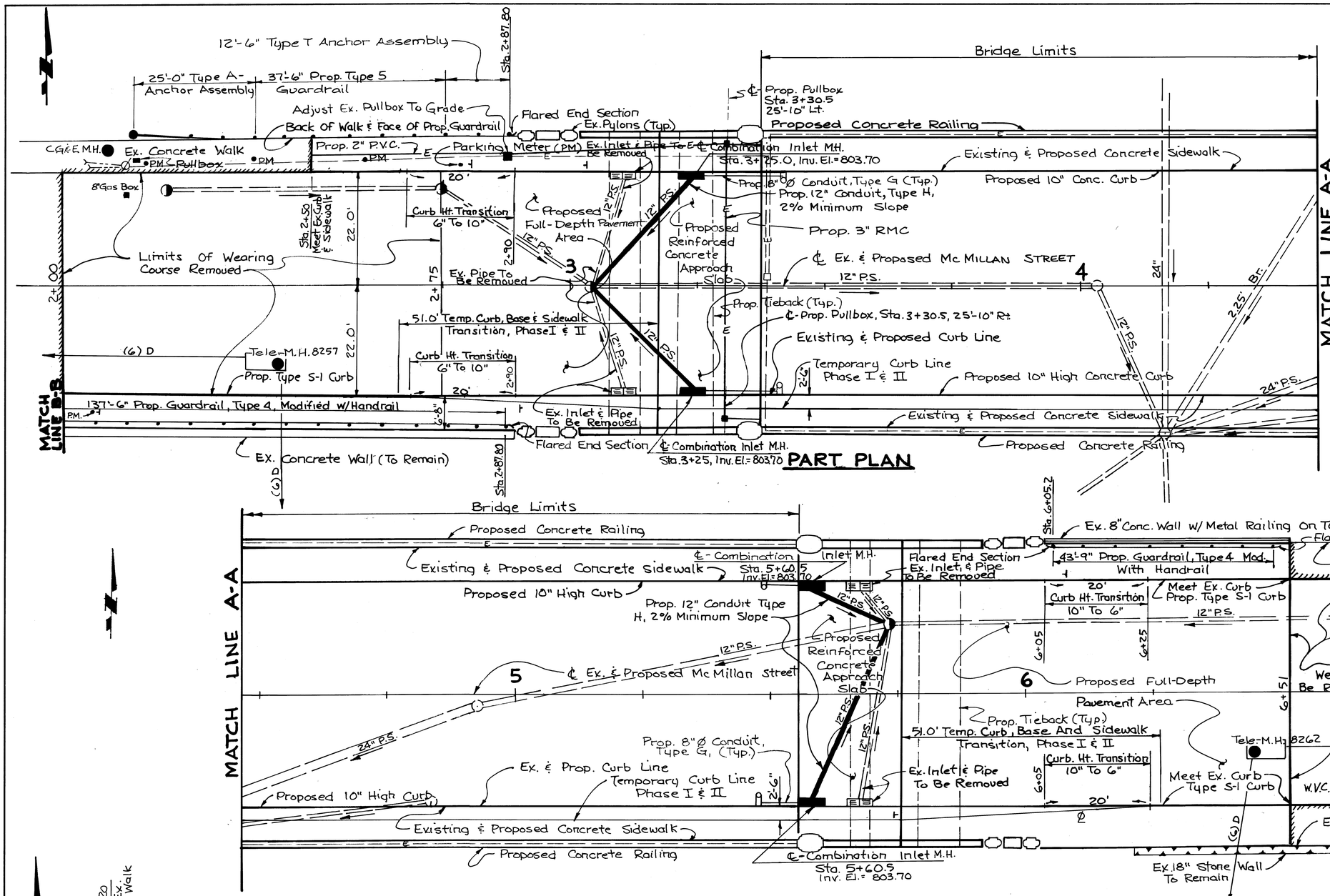

NOTES:

1) For Details Of Proposed Tiebacks, See Sheet No. 32 & 33/36.
2) Work This Sheet With Sheet No. 14-16/36.
3) For Right-Of-Way And City Owned Property Adjacent To Bridge, See Sheet No. 15/36.
4) For Additional Utilities And Profile See Sheet No. 19/36.
5) ● Denotes Utility Manhole To Be Adjusted By Others.

STATE OF OHIO THOMAS E. YOUNG 26962 REGISTERED PROFESSIONAL ENGINEER

CONTRACT DRAWING

PRINTS NOT BEARING THIS STAMP WERE MADE PRIOR TO ADVERTISING FOR BIDS AND ARE TO BE CONSIDERED OBSOLETE FOR CONTRACT PURPOSES.

CITY OF CINCINNATI
DEPARTMENT OF PUBLIC WORKS
DIVISION OF ENGINEERING

PLAN

Mc MILLAN ST. BRIDGE OVER READING ROAD REHABILITATION

DESIGNED	DRAWN	TRACED	CHECKED	REVIEWED	DATE	REVISED
EAP	SJC	SJC	BHP			

22-48-74

FED. RD. REGION	STATE	PROJECT	FISCAL YEAR
5	OHIO		

14/36

TYPICAL SECTIONS

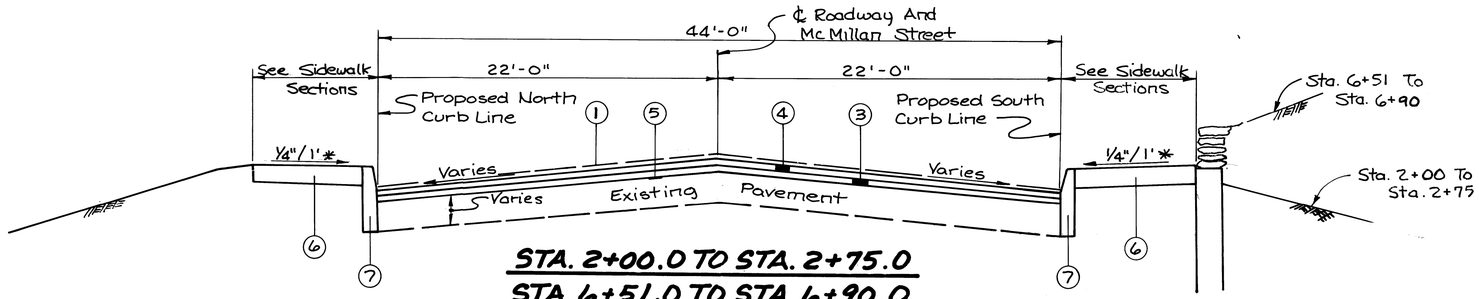

STA. 2+00.0 TO STA. 2+75.0
STA. 6+51.0 TO STA. 6+90.0

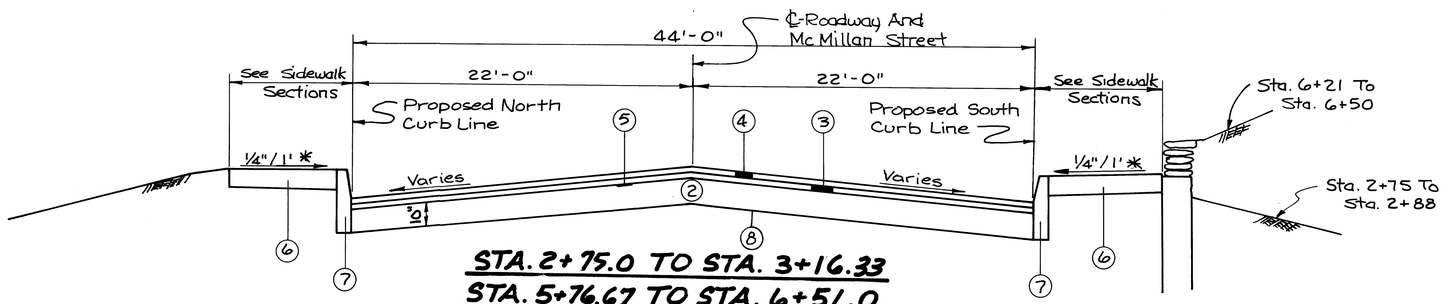

STA. 2+75.0 TO STA. 3+16.33
STA. 5+76.67 TO STA. 6+51.0

* Transition Slope To Meet Existing

PROPOSED ITEMS

1- Item 202- Wearing Course Removed, For Limits See Sheet No.
2- Item 301- 10" Bituminous Aggregate Base.
3- Item 403- 1" Minimum Variable Depth Asphalt Leveling Course.
4- Item 404- 1" Asphalt Surface Course.
5- Item 407- Tack Coat.
6- Item 608- Concrete Walk.
7- Item 609- Concrete Curb, Type S-1.
8- Item 203- Subgrade Compaction

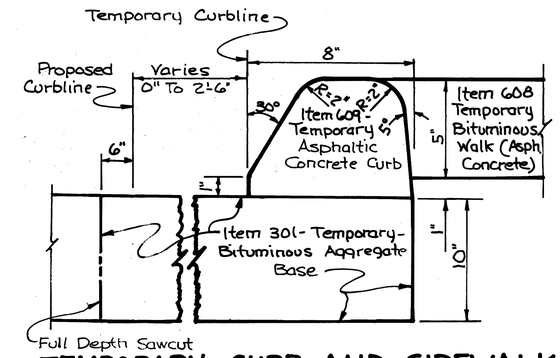

TEMPORARY CURB AND SIDEWALK

Temporary Curb & Sidewalk Shall Be Constructed During Phase I. Proposed Curbline Shall Be Constructed During Phase III.

NOTES: 1) Work This Sheet With Sheet No. 13/36.

2) For Details Of Guardrail Type 4, Modified With Handrail, See Sheet No. 15/36.

3) P.E.J.F. Denotes Preformed Expansion Joint Filler And Shall Be Included With Appropriate Concrete Item For Payment.

STATE OF OHIO THOMAS E. YOUNG 26962 REGISTERED PROFESSIONAL ENGINEER

CONTRACT DRAWING

PRINTS NOT BEARING THIS STAMP ARE NOT TO BE USED FOR BIDS AND ARE NOT TO BE CONSIDERED CONTRACT FOR CONTRACT PURPOSES.

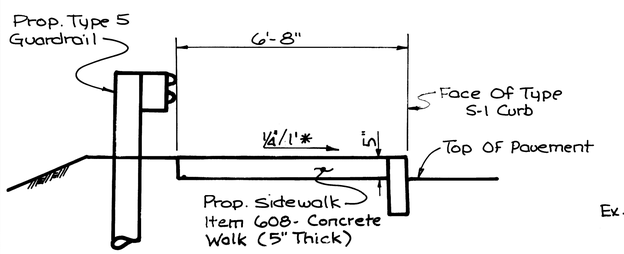

NORTHWEST SIDEWALK SECTION

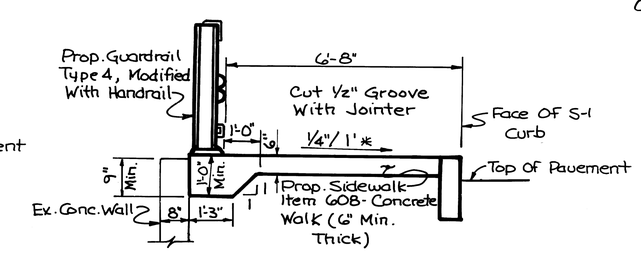

NORTHEAST SIDEWALK SECTION

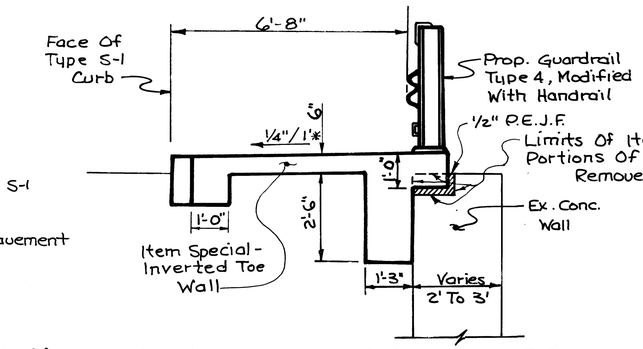

SOUTHWEST SIDEWALK SECTION

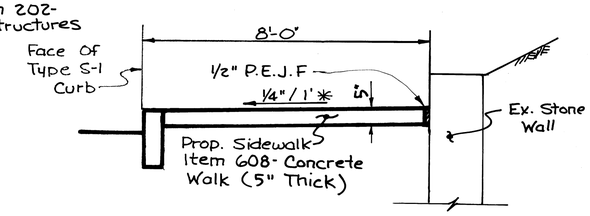

SOUTHEAST SIDEWALK SECTION

For Exact Locations Of Proposed Curb, Sidewalk And Guardrail, See Sheet No. 13/36.

22-48-75 ACC. NO. 26992

FED. RD. REGION	STATE	PROJECT	FISCAL YEAR
5	OHIO		

15/36

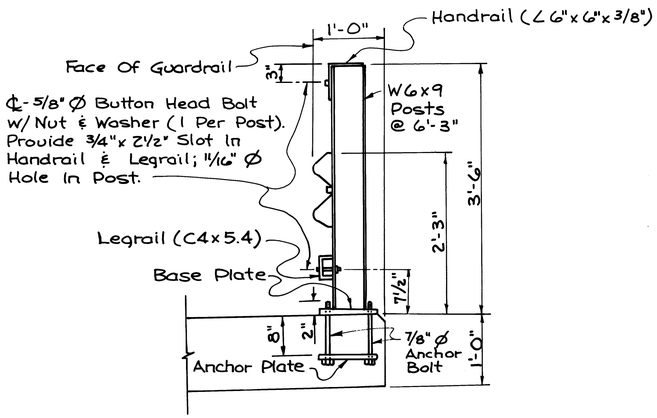

GUARDRAIL DETAIL

Type 4, Modified w/ Handrail

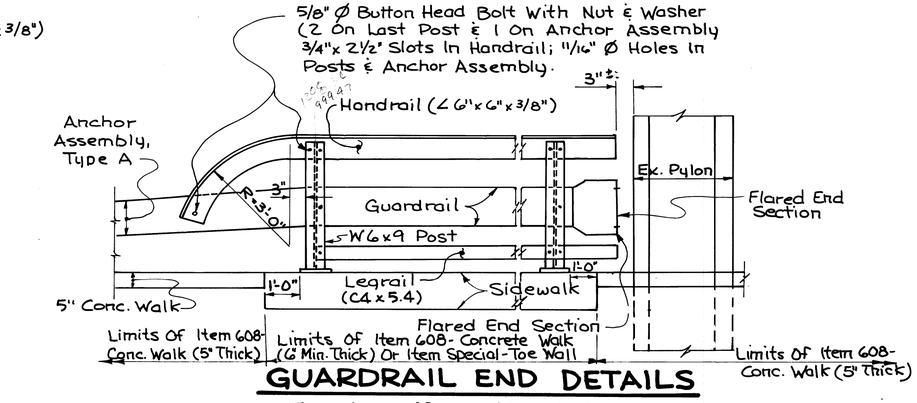

GUARDRAIL END DETAILS

Type 4, Modified w/ Handrail

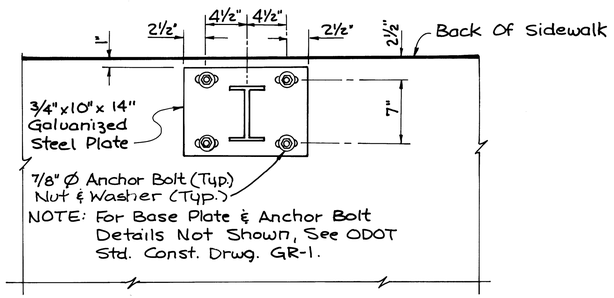

BASE PLATE PLAN

All Anchor Bolts Shall Be Galvanized, Including Chromate Treatment, In Accordance w/ 711.02.

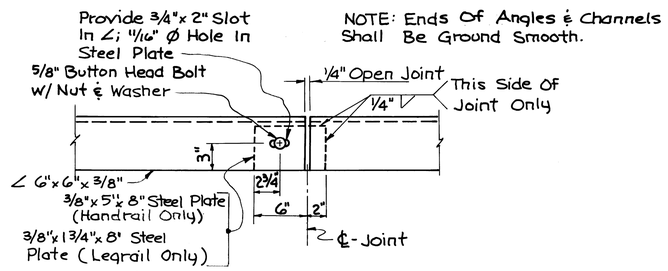

HANDRAIL EXPANSION JOINT

LEGRAIL EXPANSION JOINT SIMILAR

Joints Shall Be Placed @ 25' Intervals Midway Between Posts. All Handrail & Legrail Parts Shall Be Galvanized In Accordance w/ 711.02 After Fabrication.

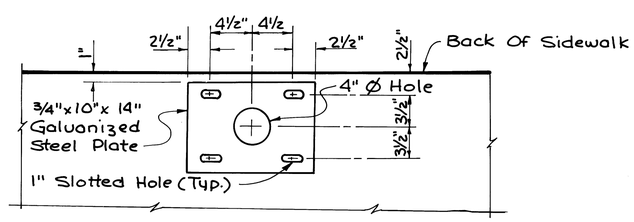

ANCHOR PLATE PLAN

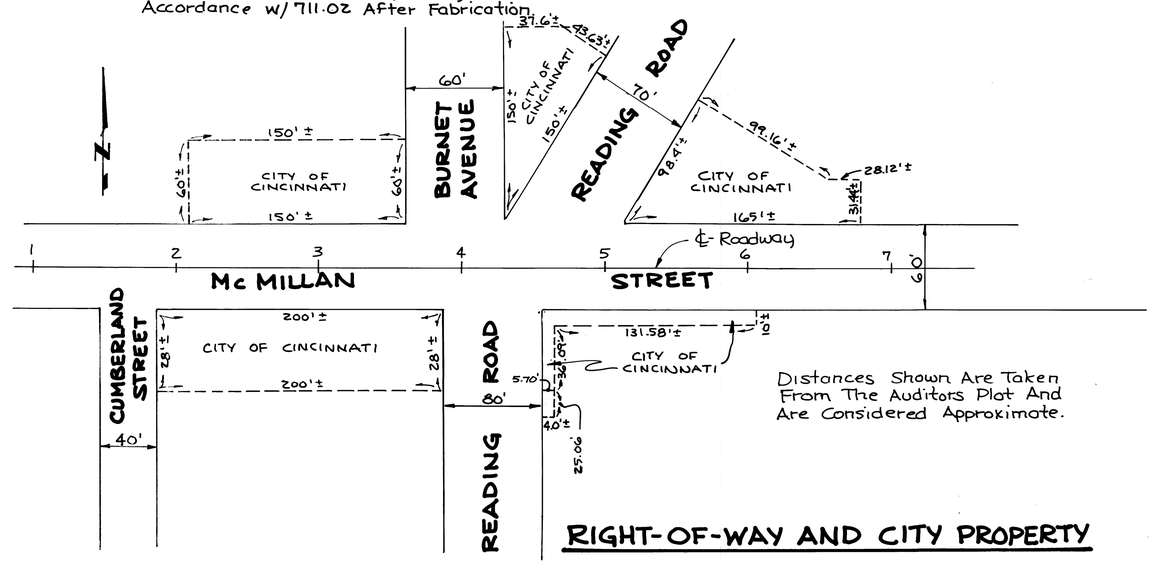

Distances Shown Are Taken From The Auditors Plat And Are Considered Approximate.

RIGHT-OF-WAY AND CITY PROPERTY

NOTES: Work This Sheet With Sheet No. 13-14/36

For Additional Guardrail Details See Std. Drwg. GR-2C.

STATE OF OHIO THOMAS E. YOUNG 26962 REGISTERED PROFESSIONAL ENGINEER

CONTRACT DRAWING

PRINTS NOT BEARING THIS STAMP WERE MADE PRIOR TO ADVERTISING FOR BIDS AND ARE TO BE CONSIDERED OBSOLETE FOR CONTRACT PURPOSES.

CITY OF CINCINNATI
DEPARTMENT OF PUBLIC WORKS
DIVISION OF ENGINEERING

DETAILS

Mc MILLAN STREET BRIDGE OVER READING ROAD REHABILITATION

DESIGNED	DRAWN	TRACED	CHECKED	REVIEWED	DATE	REVISED
JGW	SJC	SJC	BHP	GCH	4-4-90	

22-48-76

FED. RD. REGION	STATE	PROJECT	FISCAL YEAR
5	OHIO		

16/36

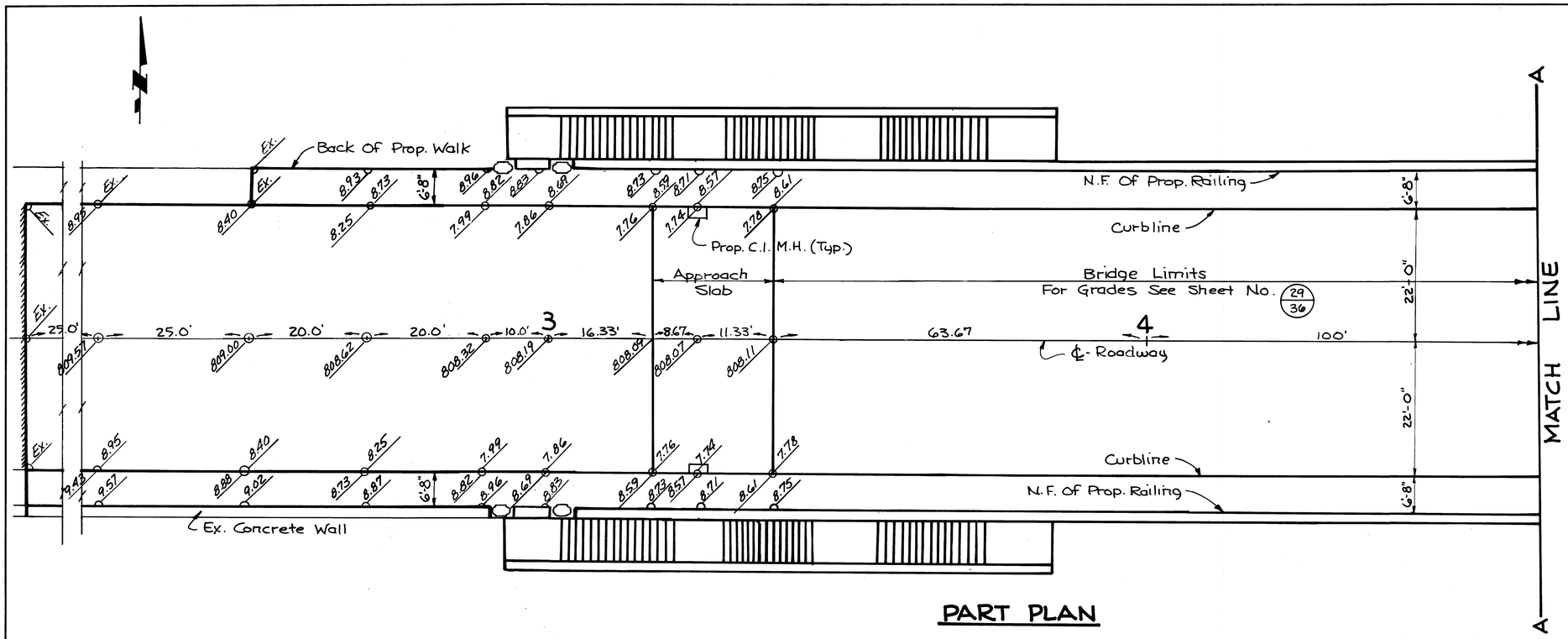

PART PLAN

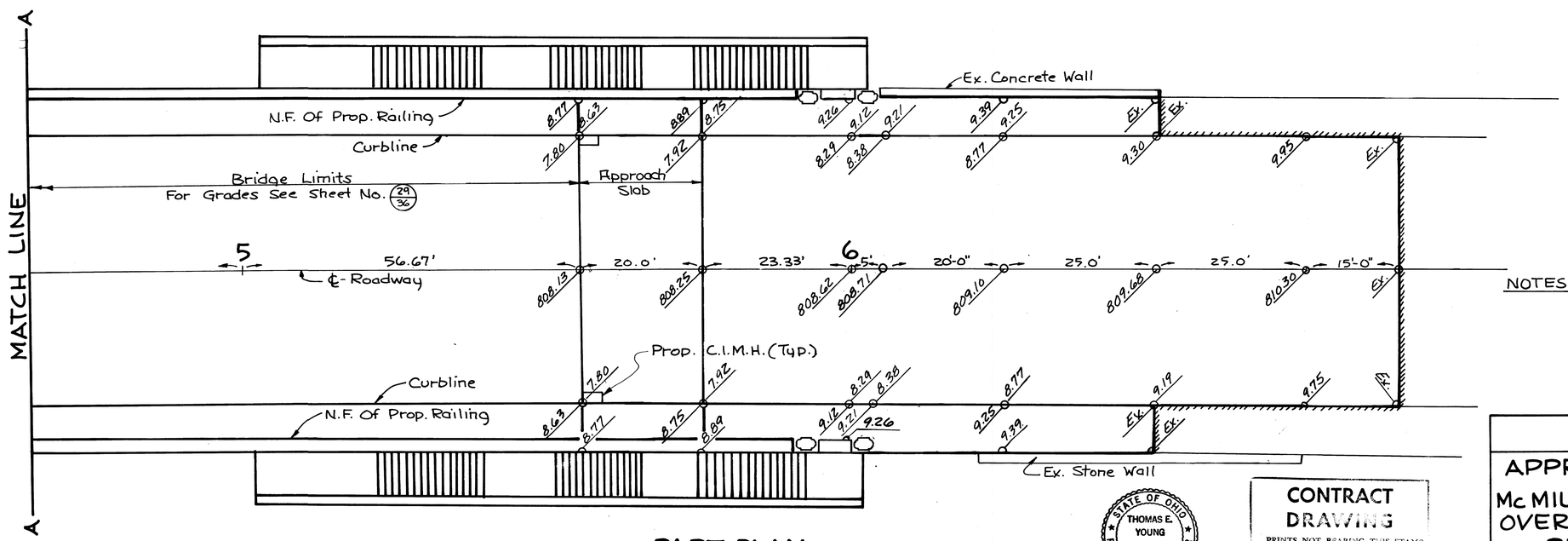

PART PLAN

NOTES: Work This Sheet With Sheet Nos. 13/36

For Existing Utilities See Sheet No. 13/36 & 19/36.

STATE OF OHIO
THOMAS E. YOUNG
26962
REGISTERED
PROFESSIONAL ENGINEER

CONTRACT DRAWING

PRINTS NOT BEARING THIS STAMP WERE MADE PRIOR TO ADVERTISING FOR BIDS AND ARE TO BE CONSIDERED INCOMPLETE FOR CONTRACT PURPOSES.

CITY OF CINCINNATI
DEPARTMENT OF PUBLIC WORKS
DIVISION OF ENGINEERING

APPROACH GRADES
Mc MILLAN ST. BRIDGE OVER READING ROAD REHABILITATION

DESIGNED	DRAWN	TRACED	CHECKED	REVIEWED	DATE	REVISED
EAP	SJC	SJC	BHP	GCH	4490	

22-48-77

FED. RD. REGION	STATE	PROJECT	FISCAL YEAR
5	OHIO		

17/36

REINFORCING STEEL LIST

MARK	TYPE	LENGTH	INC	TOTAL NUMBER	APPROACH SLABS EAST	APPROACH SLABS WEST
EAS401	STR	1'-6"		68	34	34
EAS402	STR	19'-8"		12	6	6
EAS403	1	2'-8"		28	14	14
EAS404	STR	3'-2"		28	14	14
EAS405	2	4'-3½"		28	14	14
EAS501	STR	28'-9"		92	46	46
EAS502	STR	23'-10"		92	46	46
EAS503	STR	19'-8"		70	35	35
EAS504	STR	5'-6"		34	17	17
EAS701	3	20'-6"		16	8	8
EAS1001	3	21'-1"		166	83	83

ESTIMATED QUANTITIES

ITEM	TOTAL	UNIT	DESCRIPTION	APPROACH SLABS EAST	APPROACH SLABS WEST
512	23	S.Y.	Type A Waterproofing	11.5	11.5
611	230	S.Y.	Reinforced Concrete Approach Slab (T=13")	115	115
611	30	S.Y.	Reinforced Concrete Approach Walk (T=10" min)	15	15
611	26	S.Y.	Reinforced Concrete Approach Walk (T=11")	13	13
Special	264	S.Y.	Sealing of Concrete Surfaces (See Special Provisions)	132	132

These Quantities Have Been Carried Forward To Estimated Quantities On Sheet No. 6-7/36.

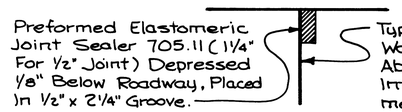

DETAIL A

The Preformed Elastomeric Joint Sealer Shall Be Continuous For The Full Width Of The Approach Slab And Walk

NOTES:

Dowel Holes Shall Be In Accordance With The Applicable Provisions Of Item 510. The Dowel Bars Shall Be Anchored With Non-Shrink Grout In Accordance With Supplemental Specification 853/956 Or 852/952. The Dowel Holes And Grout Shall Be Included With Item 611 For Payment.

For notes and details not shown, see Std. Drwg. AS-1-81

Unless otherwise noted, all hook bolts, curbs, sealers and P.E.J.F. shall be included with the approach slab and walk for payment.

All exposed curb and walk surfaces within the approach slab limits shall be sealed with epoxy or nonepoxy. The approach slab between curbs shall be sealed with nonepoxy only.

All sealers shall be included with approach slab for pavement.

Reference shall be made to Standard Drawings: AS-1-81, dated 11-27-81, BP-4 revised 10-1-87

DESIGN DATA:

Concrete Class C- Compressive strength 4000 p.s.i.
Reinforcing Steel- ASTM A615, A616 or A617 - Grade 60, Minimum Yield Strength 60,000 p.s.i.

For other General Notes, see Sheet Nos. 8-12/36.

Plan lengths of transverse reinforcing steel require the Contractor to field bend and then straighten reinforcing steel in order to clear existing concrete during Phase I. Any damage done to epoxy coating shall be repaired in accordance with Item 509. The Contractor has the option to use epoxy coated mechanical splices that develope 125% yield strength of the spliced reinforcement. The cost of these splices and/or field bending shall be included for payment under Item 611.

REINFORCING STEEL SAMPLES:

Refer to C.M.S. Sections 106.03, 700, 709.01 through 709.05 and 709.08. Sufficient additional reinforcing steel shall be provided for sampling. Random samples shall be replaced in structures by the additional steel, spliced in accordance with 509.08.

Bar marks with "E" denotes epoxy coated reinforcing steel. The epoxy coating of these bars, as per Item 509 shall be included in the price bid for the respective Items 611.

Bars shall be shaped to pertinent dimensions shown in the Table of Standard Bends, Page 202 of the State of Ohio Construction and Materials Specifications unless otherwise indicated.

MARK	A
EAS701	19'-8"
EAS1001	19'-8"

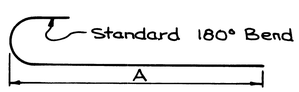

TYPE 3

MARK	A
EAS403	1'-6"

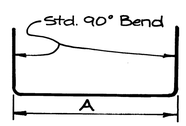

TYPE 1

MARK	A
EAS405	3'-9½"

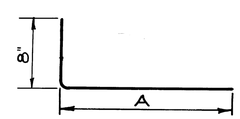

TYPE 2

STATE OF OHIO
THOMAS E. YOUNG
26962
REGISTERED
PROFESSIONAL ENGINEER

CONTRACT DRAWING

PRINTS NOT BEARING THIS STAMP ARE NOT CONTRACT TO ADVERTISING PURPOSES AND ARE TO BE CONSIDERED CONSULTATIVE FOR CONTRACT PURPOSES.

CITY OF CINCINNATI
DEPARTMENT OF PUBLIC WORKS
DIVISION OF ENGINEERING

1/2

APPROACH SLABS

McMILLAN STREET BRIDGE OVER READING ROAD REHABILITATION

DESIGNED	DRAWN	TRACED	CHECKED	REVIEWED	DATE	REVISED
EAP	SJC	SJC	BHP	GCH	4-4-90	

22-48-78

FED. RD. REGION	STATE	PROJECT	FISCAL YEAR
5	OHIO		

18/36

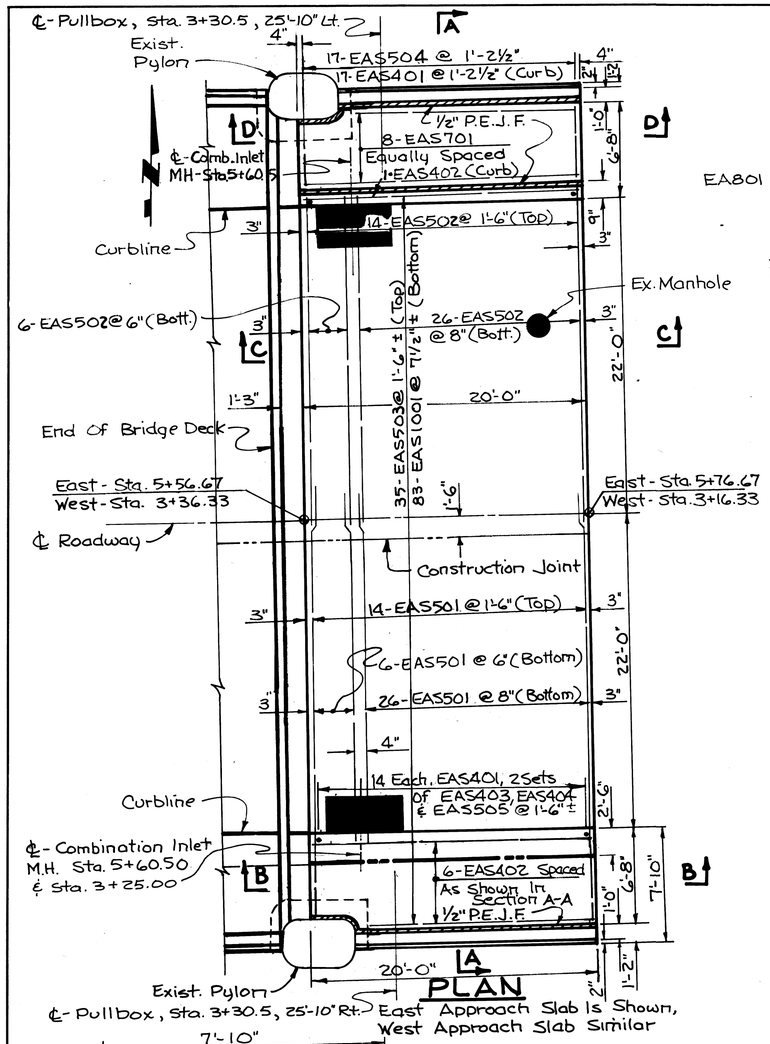

PLAN

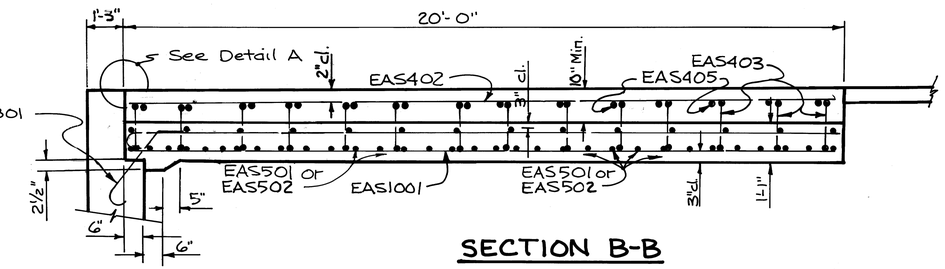

SECTION B-B

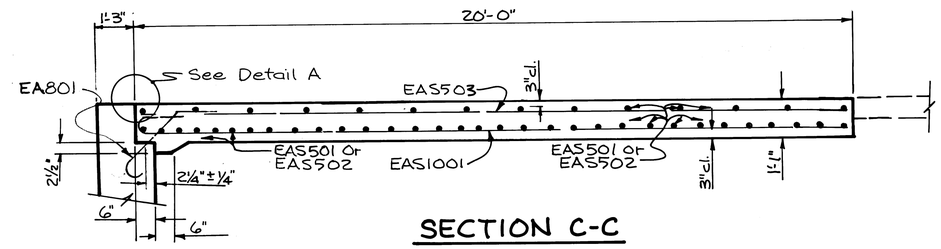

SECTION C-C

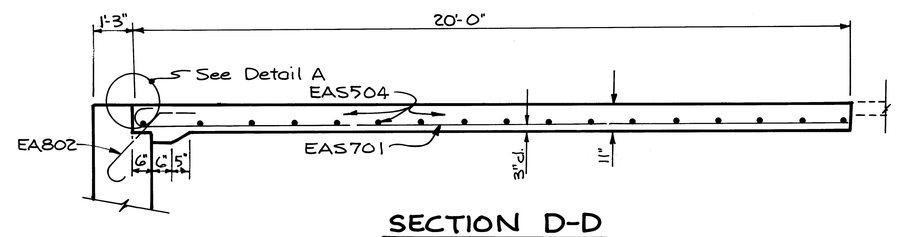

SECTION D-D

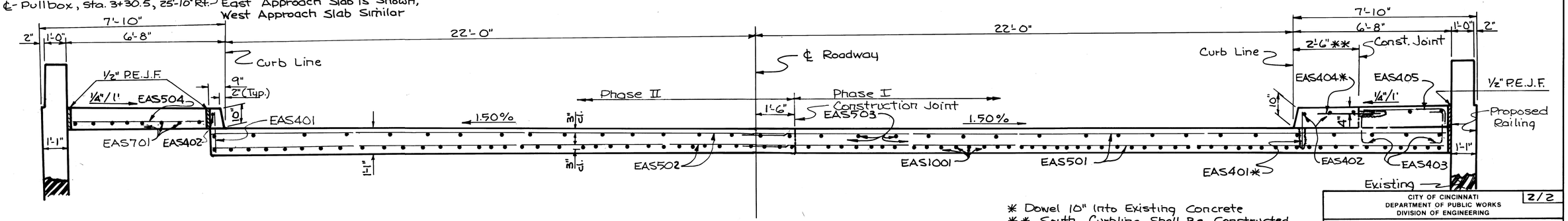

SECTION A-A

* Dowel 10" Into Existing Concrete
** South Curbline Shall Be Constructed During Phase III.

NOTES:

1) Reinforcing Bars Shall Be Cut In Field To Maintain 2" Clearance From Existing Manholes And Proposed Inlets. Repairs To Field Cut Epoxy Coated Bars Shall Be In Accordance With Item 509.10.
2) Work This Sheet With Sheet No. 1/2.
3) Reinforcing Steel In Sidewalk Adjacent To Existing Pylons Shall Be Cut In Field To Provide 2" Clearance.
4) For Details Of Approach Slab Adjacent To Existing Pylons See Sheet No. 21-22/36
5.) For Detail A, See Sheet No. 1/2.
6) For Details Of Wingwall Modifications And Proposed Railing, See Sheet No. 31-32/36
7) For Approach Slab Grades, See Sheet No. 16/36
8) Minimum Splice Length For EAS 5 Bars Is 2'-0".
9) P.E.J.F. Denotes Preformed Expansion Joint Filler And Is Paid For Under Appropriate Concrete Item.

STATE OF OHIO THOMAS E. YOUNG 26962 REGISTERED PROFESSIONAL ENGINEER

CONTRACT DRAWING

PRINTS NOT BEARING THIS STAMP ARE NOT TO BE USED FOR BIDDING PURPOSES AND ARE TO BE CONSIDERED OBSOLETE FOR CONTRACT PURPOSES.

CITY OF CINCINNATI
DEPARTMENT OF PUBLIC WORKS
DIVISION OF ENGINEERING

2/2

WEST AND EAST APPROACH SLABS
Mc MILLAN ST. BRIDGE OVER READING ROAD REHABILITATION

DESIGNED	DRAWN	TRACED	CHECKED	REVIEWED	DATE	REVISED
EAP	SJC	SJC	BHP	GCH	4-4-90	

22-48-79

FED. RD. REGION	STATE	PROJECT	FISCAL YEAR
5	OHIO		

19/36

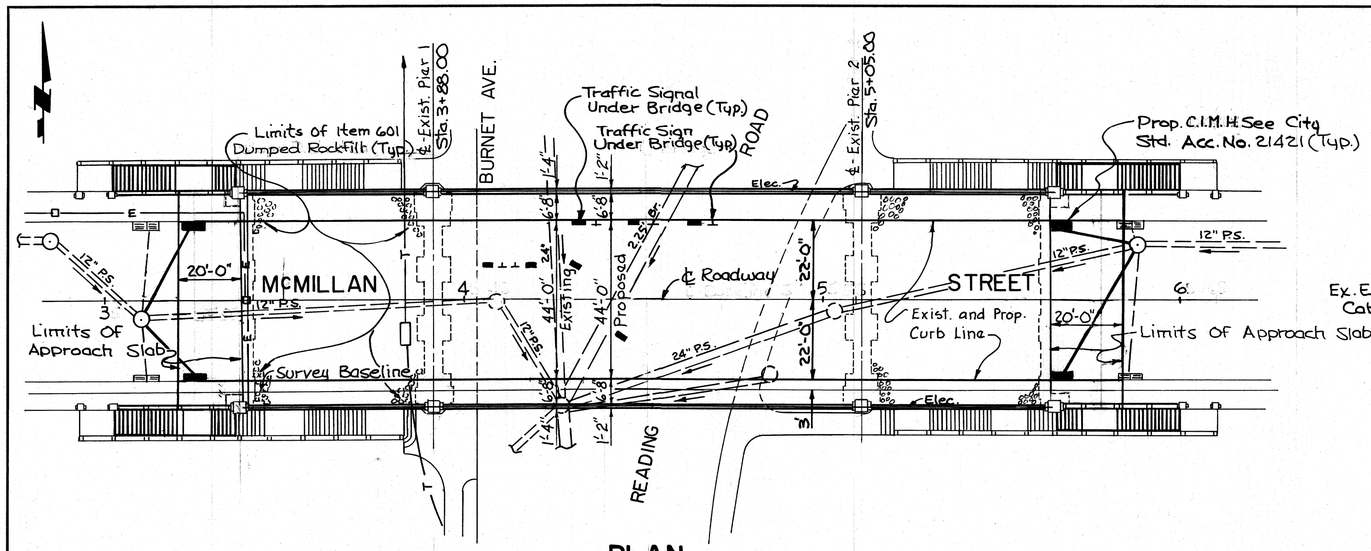

PLAN

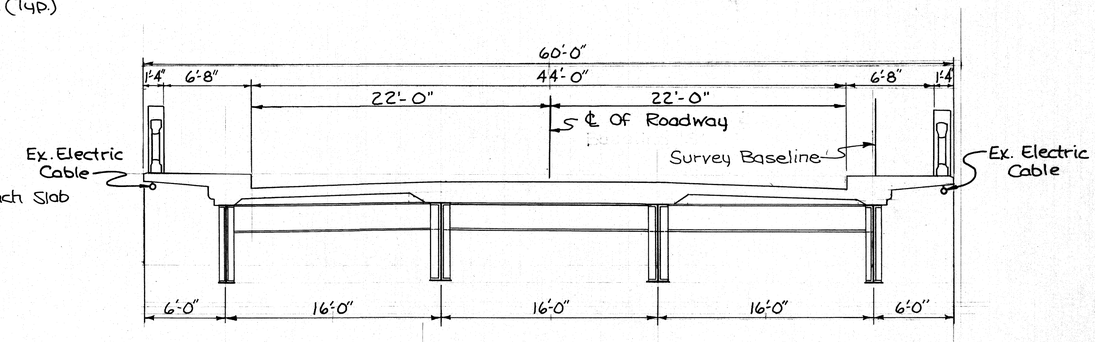

EXISTING SECTION

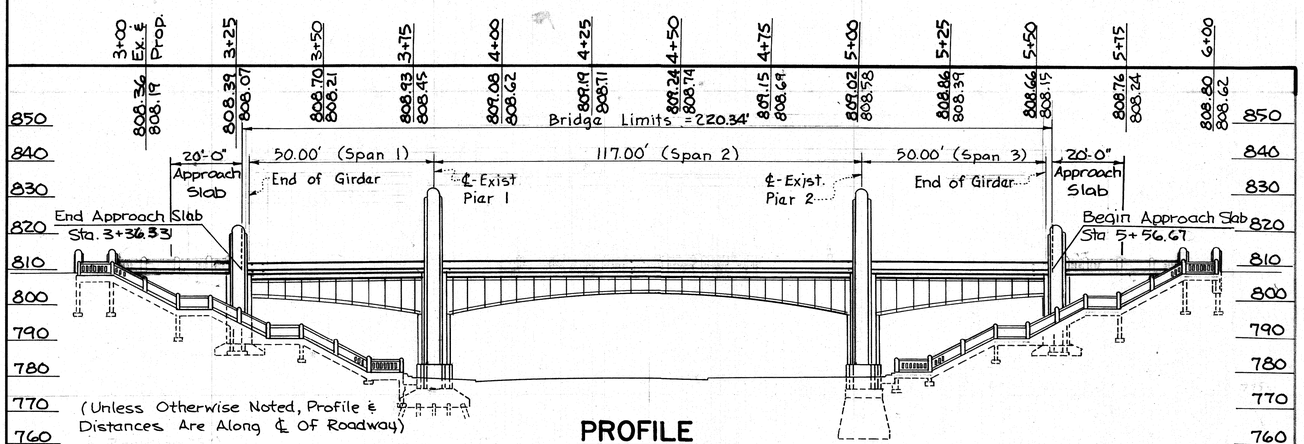

PROFILE

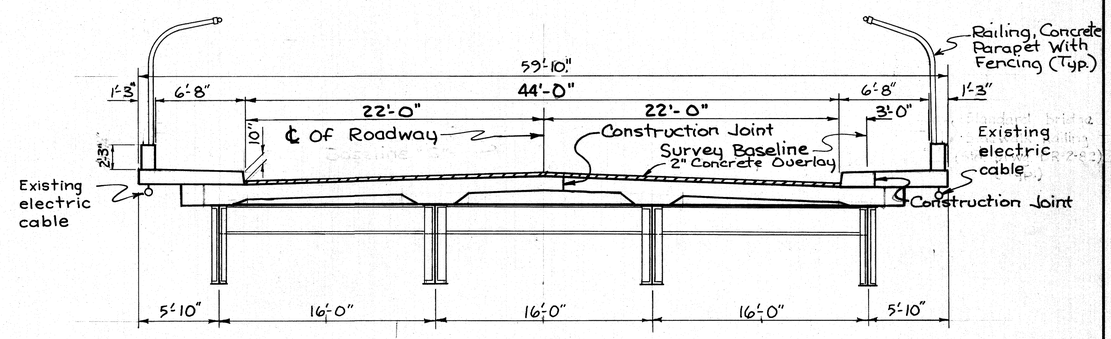

PROPOSED SECTION

EXISTING STRUCTURE

TYPE: Reinforced concrete slab supported by floor beams framed into main steel girders (haunched cantilever steel girder end spans, steel rigid frame) with steel piers (West pier on piles) and reinforced concrete substructure.

SPAN LENGTHS: 50.0', 117.0', 50.0'

ROADWAY WIDTH: 44'-0" f/f curbs with 2-6'-8" sidewalks.

DESIGN LOADING: H20-33 as per State of Ohio and E-50 as per Cincinnati St. Railway Co.

WEARING SURFACE: Asphaltic Concrete

ALIGNMENT: Tangent

DATE BUILT: 1937

STRUCTURAL FILE NO.: 3101231

PROPOSED STRUCTURE

TYPE: New concrete deck on existing steel beams and girders. New welded stud shear connectors on Ex. Steel beams & girders.

SPAN LENGTHS: As noted

ROADWAY WIDTH: 44'-0" f/f curbs with 2-6'-8" sidewalks.

DESIGN LOADING: HS20-44 Case II and Alternate Military Loading.

WEARING SURFACE: 2" Microsilica Concrete Overlay

APPROACH SLABS: AS-1-81, 20'-0" Long.

ALIGNMENT: Tangent

CONTRACT DRAWING

CITY OF CINCINNATI
DEPARTMENT OF PUBLIC WORKS
DIVISION OF ENGINEERING

1 / 17

SITE PLAN

Mc MILLAN ST. BRIDGE OVER READING ROAD REHABILITATION

DESIGNED	DRAWN	TRACED	CHECKED	REVIEWED	DATE	REVISED
JGW	JGW		EAP			

22-48-80

FED. RD. REGION	STATE	PROJECT	FISCAL YEAR
5	OHIO		

20/36

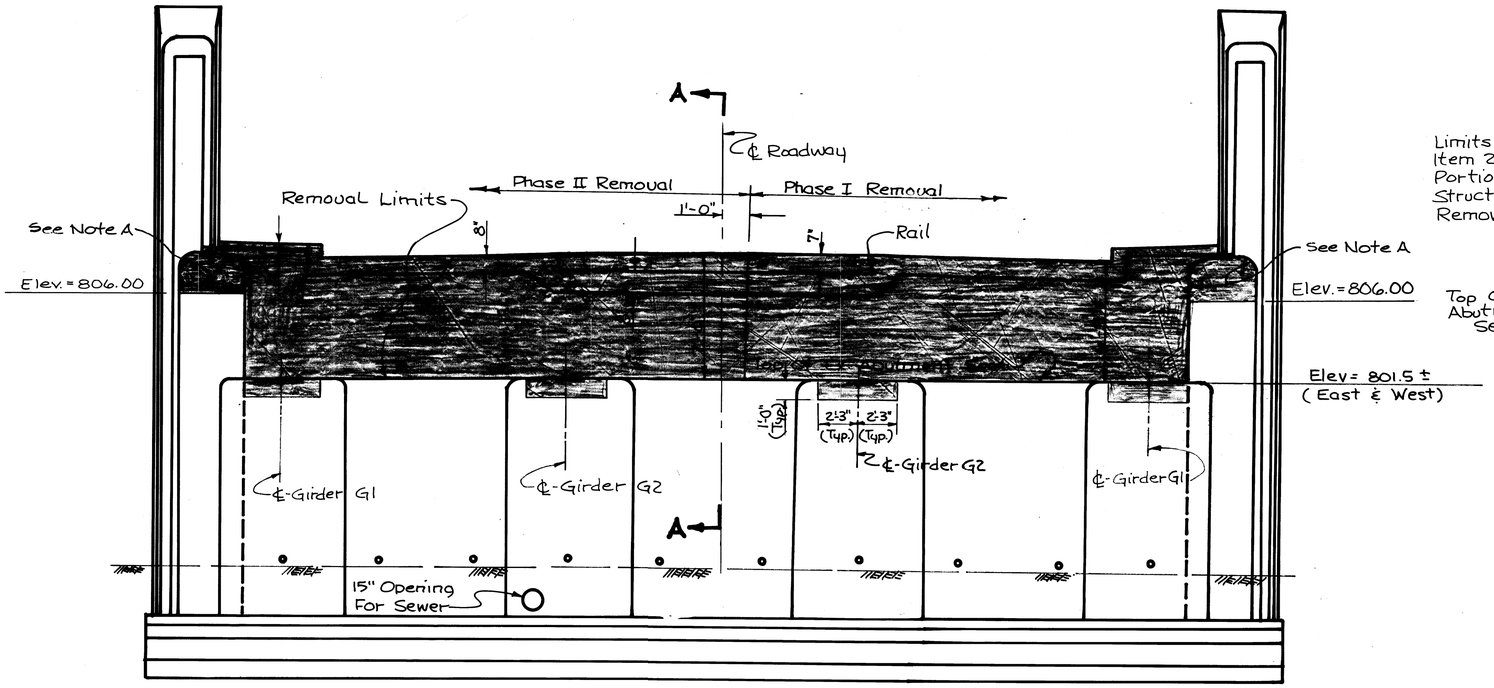

ELEVATION

East Abutment Shown, West Abutment Similar

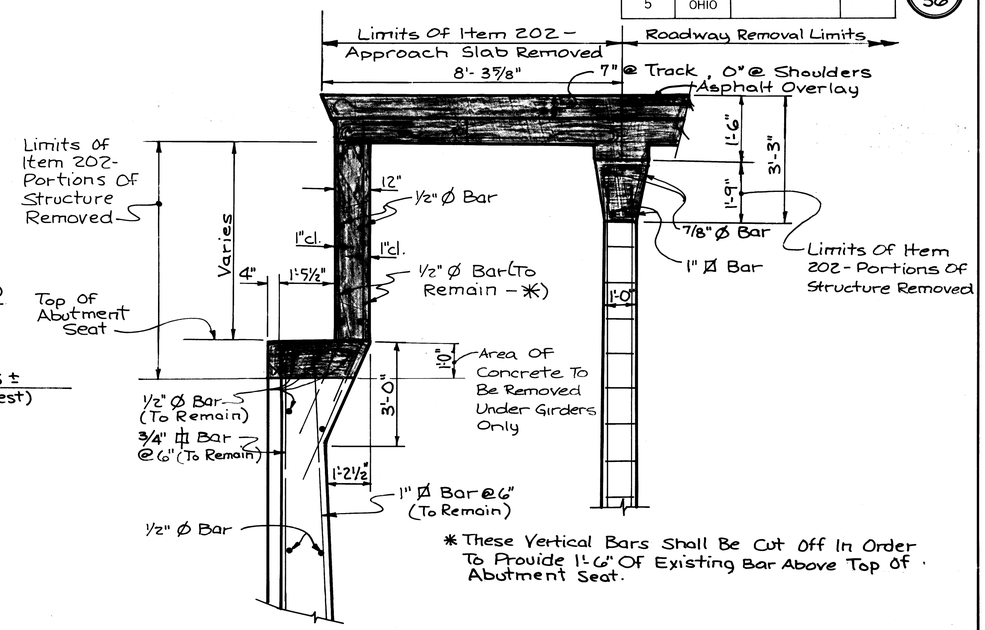

* These Vertical Bars Shall Be Cut Off In Order To Provide 1'-6" Of Existing Bar Above Top Of Abutment Seat.

SECTION A-A

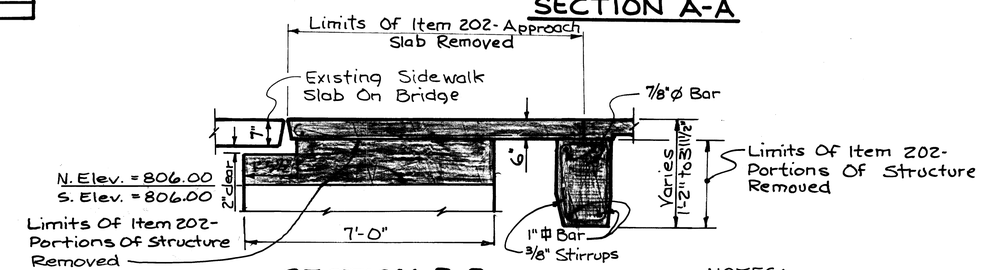

SECTION B-B

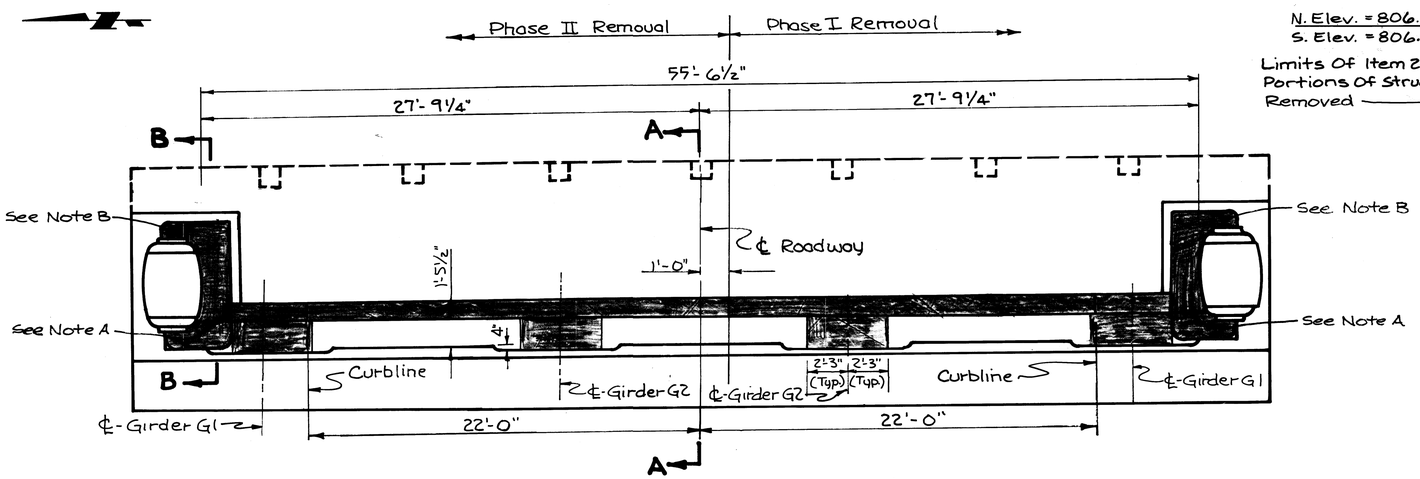

PLAN

East Abutment Shown, West Abutment Similar

NOTE A:
Existing Vertical Reinforcing Steel In This Area Shall Be Cut Off To Provide 2" Clearance From Top Of Proposed Concrete. For Additional Details, See Section E-E on Sheet No. 3-4/17.

NOTE B:
For Details Of Removals In This Area, See Sheet No. 13/17.

NOTES:
1) Denotes Conc. To Be Removed.
2) Unless Otherwise Noted, All Reinforcing Steel Within Removal Limits Must Be Removed.
3) Work This Sheet With Sheet No. 3-4/17.
4) Excavation Required For Abutment And Approach Slab Removals Shall Be In Accordance With Item 503. Payment For This Work Shall Be Included With The Appropriate Concrete Removal Item.
5) For Item 520 Quantities, See Sheet No. 13/17.

STATE OF OHIO
THOMAS E. YOUNG
26962
REGISTERED
PROFESSIONAL ENGINEER

CONTRACT DRAWING
PRINTS NOT BEARING THIS STAMP ARE FOR REVIEW PRIOR TO ADVERTISING ONLY AND ARE TO BE CONSIDERED INVALID FOR CONTRACT PURPOSES.

CITY OF CINCINNATI
DEPARTMENT OF PUBLIC WORKS
DIVISION OF ENGINEERING

2/17

EXISTING ABUTMENT

Mc MILLAN ST. BRIDGE OVER READING ROAD REHABILITATION

DESIGNED	DRAWN	TRACED	CHECKED	REVIEWED	DATE	REVISED
EAP	SJC	SJC	BHP	GCH	4-4-90	

22-48-81

FED. RD. REGION	STATE	PROJECT	FISCAL YEAR
5	OHIO		

21/36

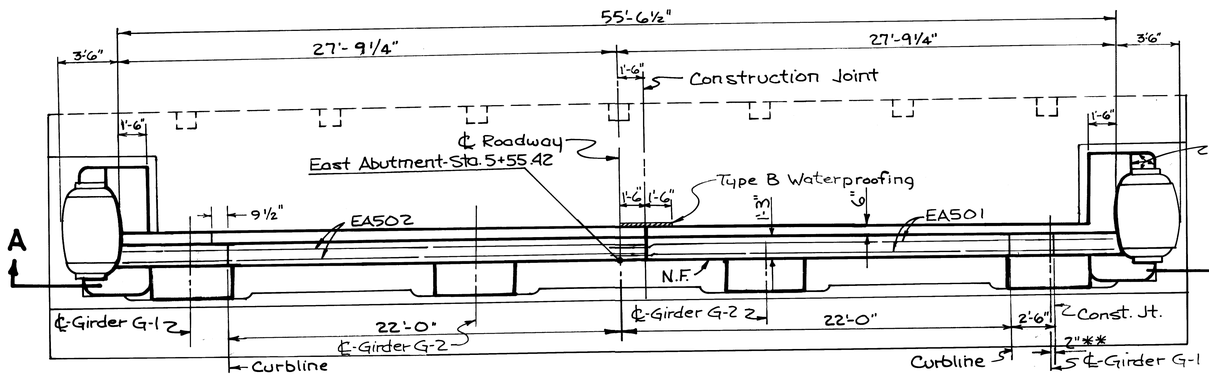

PLAN

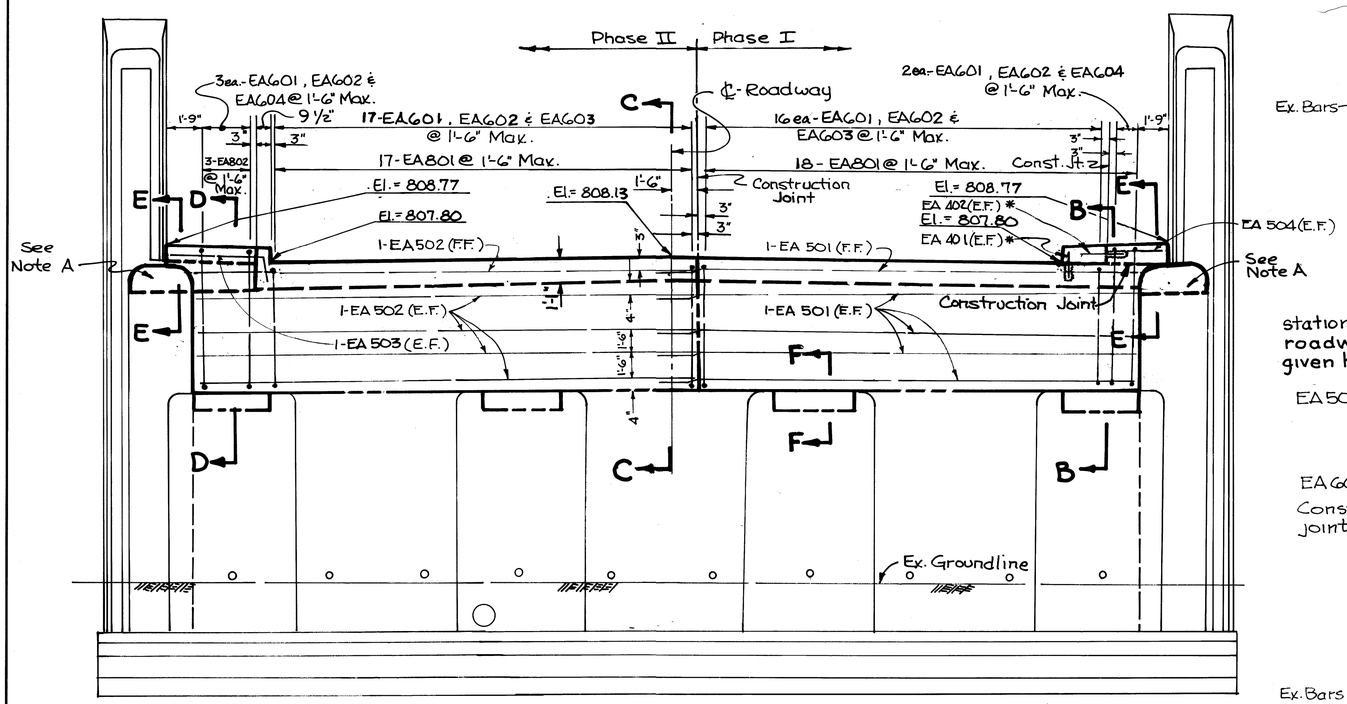

ELEVATION A-A

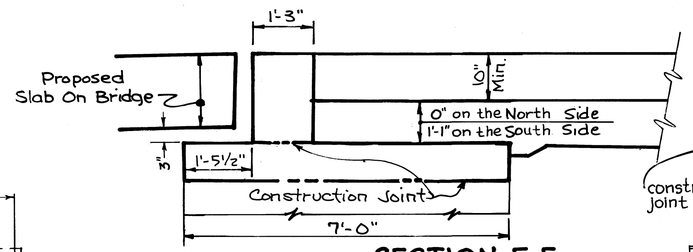

SECTION E-E

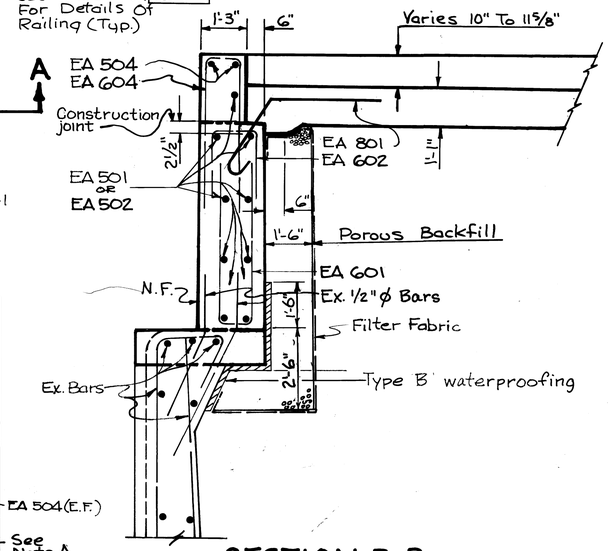

SECTION B-B

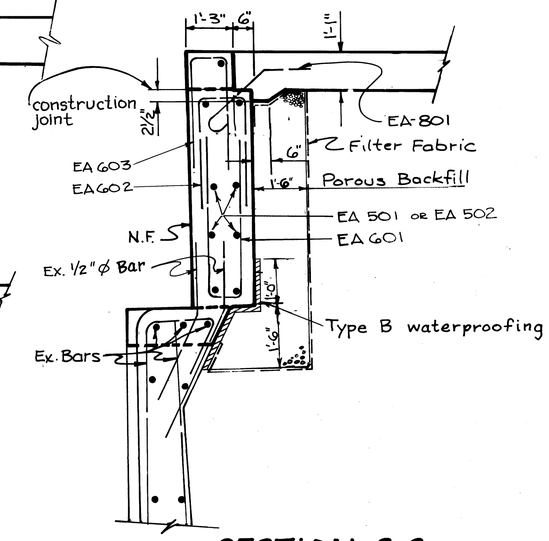

SECTION C-C

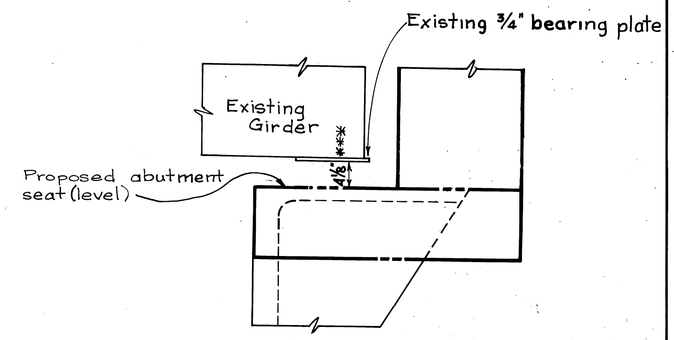

SECTION F-F

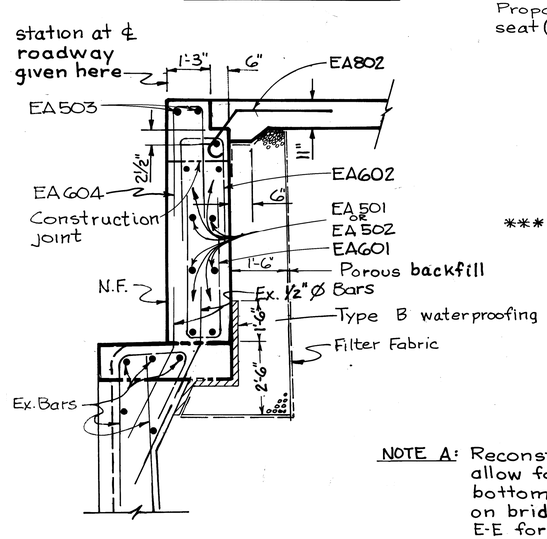

SECTION D-D

* Dowel 10" into existing concrete, fill with non-shrink grout

** Curb on south side of abutment shall be constructed during phase III.

*** To determine the elevation of the proposed abutment seat, this dimension shall be measured between the bottom of the existing ¾" bearing plate and the proposed top surface of the reconstructed abutment seat. It is to be measured at each girder after all the existing wood block bearings have been removed, but before any concrete on the superstructure is removed. The proposed laminated elastomeric bearings shall be installed after all the proposed concrete has been placed on the deck. See general notes for addition details.

NOTE A: Reconstruct pedestal to allow for 3" clearance to bottom of proposed slab on bridge, see section E-E for details. For Additional notes, See Sheet No. 4/17.

CONTRACT DRAWING
PRINTS NOT BEARING THIS STAMP ARE NOT APPROVED FOR BIDDING AND ARE TO BE CONSIDERED OBSOLETE FOR CONTRACT PURPOSES.

STATE OF OHIO
THOMAS E. YOUNG
26962
REGISTERED PROFESSIONAL ENGINEER

CITY OF CINCINNATI
DEPARTMENT OF PUBLIC WORKS
DIVISION OF ENGINEERING

3/17

EAST ABUTMENT MODIFICATIONS McMILLAN STREET BRIDGE OVER READING ROAD REHABILITATION

DESIGNED	DRAWN	TRACED	CHECKED	REVIEWED	DATE	REVISED
EAP	SJC	SJC	BHP	GCH	4-4-90	

22-48-82

FED. RD. REGION	STATE	PROJECT	FISCAL YEAR
5	OHIO		

22
36

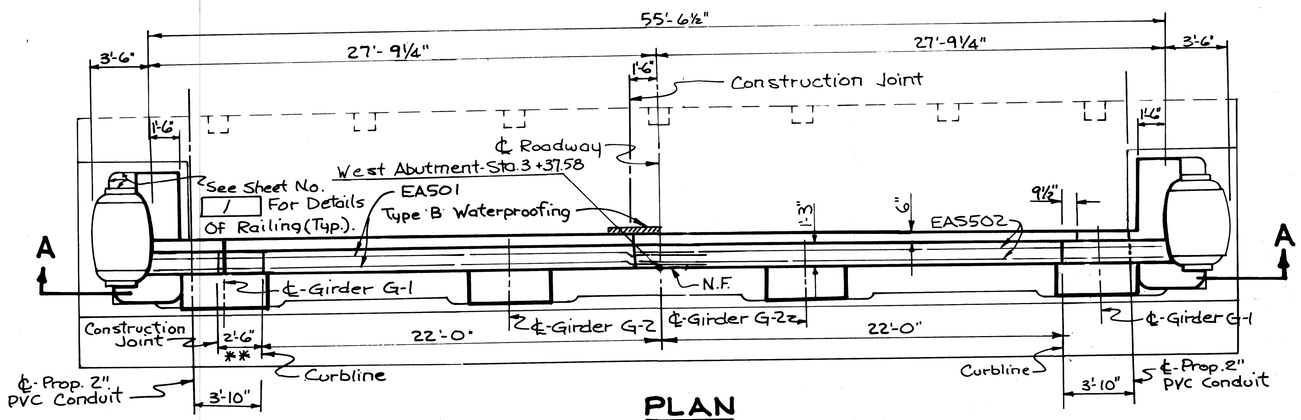

PLAN

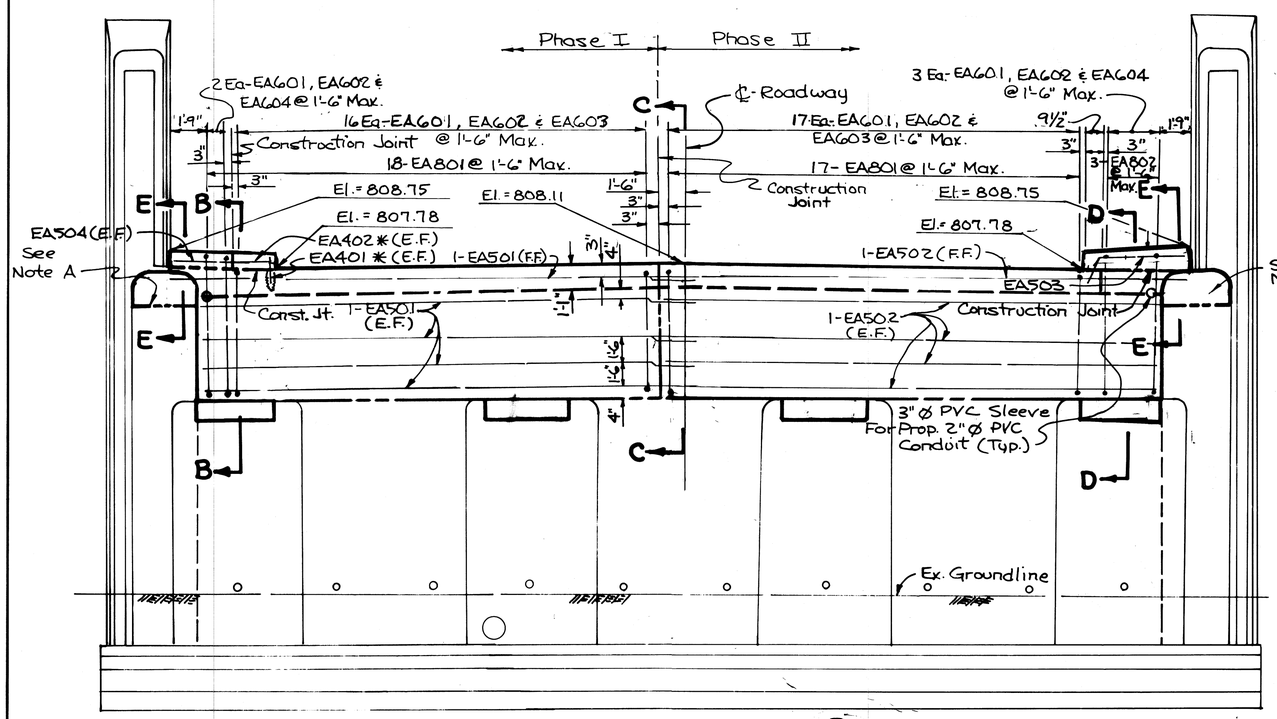

ELEVATION A-A

* Dowel 10" Into Existing Concrete & Fill w/ Non-Shrink Grout.

** Curb On South Side Of Abutment Shall Be Constructed During Phase III.

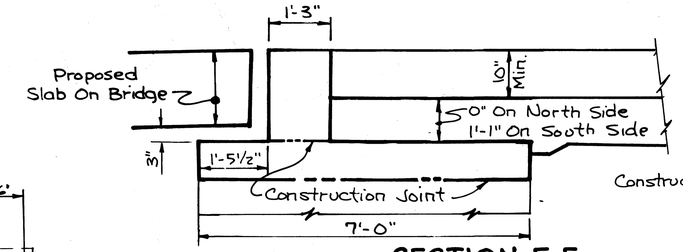

SECTION E-E

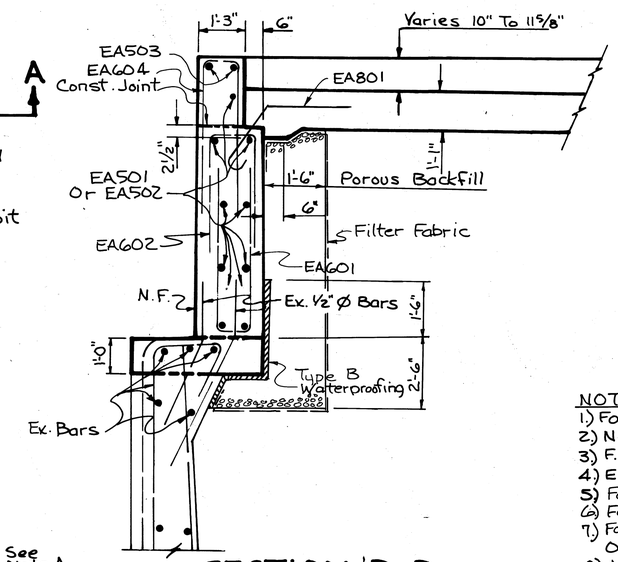

SECTION D-D

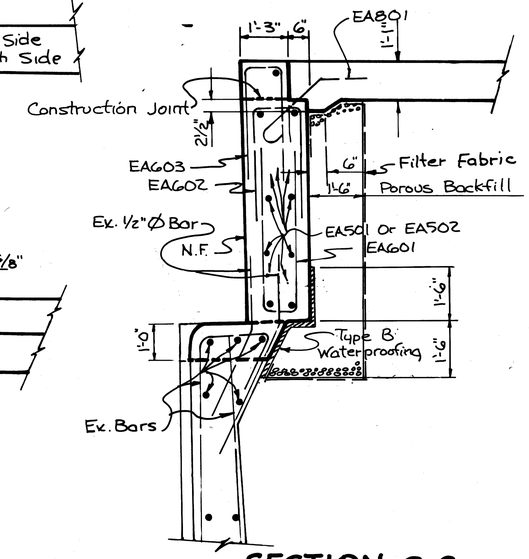

SECTION C-C

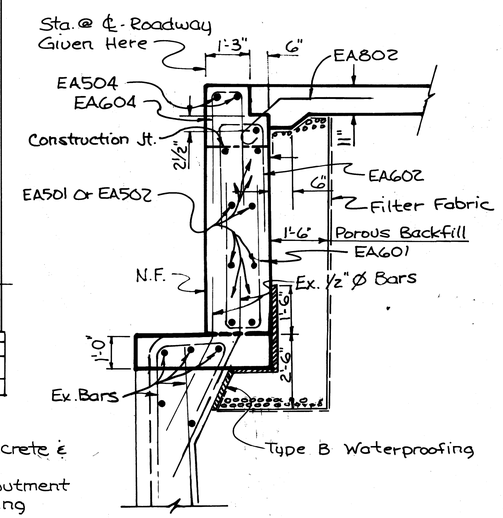

SECTION B-B

NOTES:

1.) For Section F-F, See Sheet No. 3/17.
2.) N.F. Denotes Near Face.
3.) F.F. Denotes Far Face.
4.) E.F. Denotes Each Face.
5.) For Reinforcing Steel List See Sheet No. 17/17.
6.) For Expansion Joint Details, See Sheet No. 8/17.
7.) For Laminated Elastomeric Bearing Details And Locations Of Anchor Bolts, See Sheet No. 9/17.
8.) Work This Sheet With Sheet No. 3/17.
9.) Any Additional Excavation Required For Installation Of Type B Waterproofing And Porous Backfill Shall Be In Accordance With Item 503 And Included For Payment With Item 518 - Porous Backfill.

NOTE A: Reconstruct Pedestal To Allow For 3" Clearance To Bottom Of Prop. Slab On Bridge, See Section E-E For Details.

STATE OF OHIO
THOMAS E. YOUNG
26962
REGISTERED
PROFESSIONAL ENGINEER

CONTRACT DRAWING

PRINTS NOT BEARING THIS STAMP WERE NOT USED FOR ADVERTISING FOR BIDS AND ARE TO BE CONSIDERED OBSOLETE FOR CONTRACT PURPOSES.

CITY OF CINCINNATI
DEPARTMENT OF PUBLIC WORKS
DIVISION OF ENGINEERING

4/17

WEST ABUTMENT MODIFICATIONS
Mc MILLAN STREET BRIDGE OVER READING ROAD REHABILITATION

DESIGNED	DRAWN	TRACED	CHECKED	REVIEWED	DATE	REVISED
EAP	SJC	SJC	BHP	GCH	4-4-90	

22-48-83

FED. RD. REGION	STATE	PROJECT	FISCAL YEAR
5	OHIO		

23/36

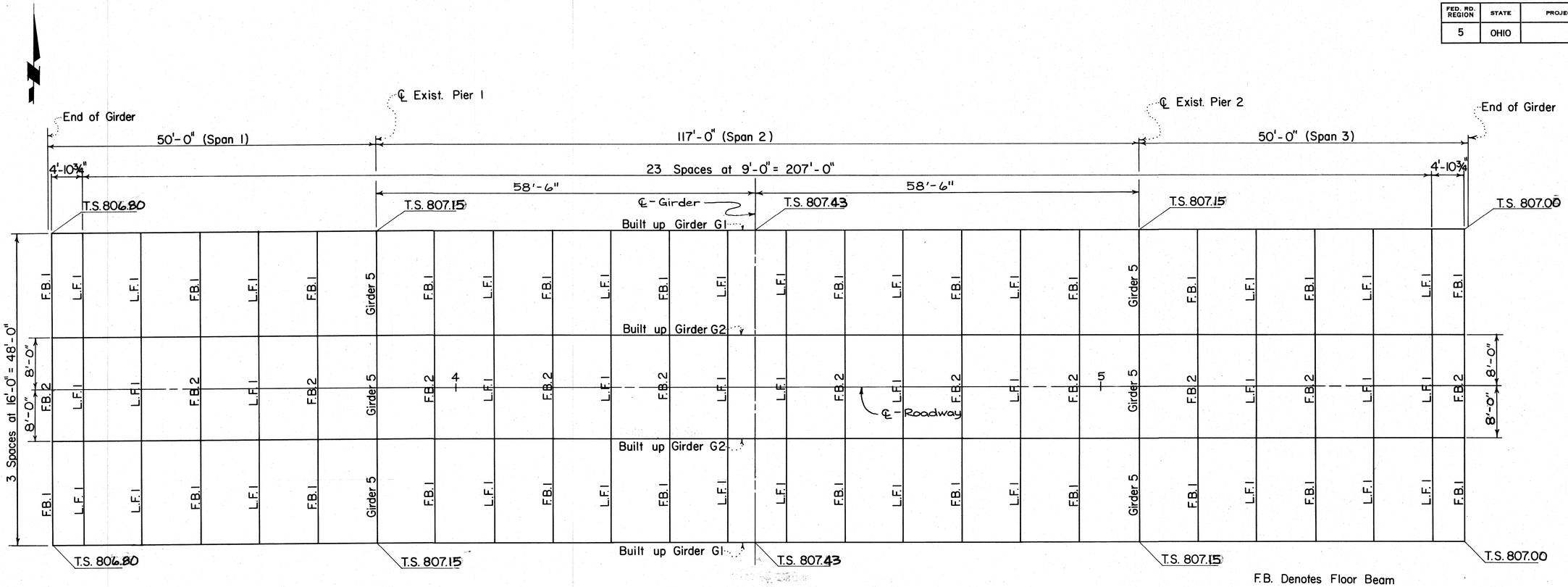

F.B. Denotes Floor Beam
L.F. Denotes Lateral Frames
T.S. Denotes Top of Existing Steel

PLAN

TABLE OF LATERAL FRAMES AND FLOOR BEAMS		
MARK	SECTION	
L.F.1	21"x8¼" I x 59 Lb.	(Top Beam)
	21"x8¼" I x 45 Lb.	(Bottom Beam)
F.B.1	21"x8¼" I x 63 Lb.	
F.B.2	21"x8¼" I x 73 Lb.	

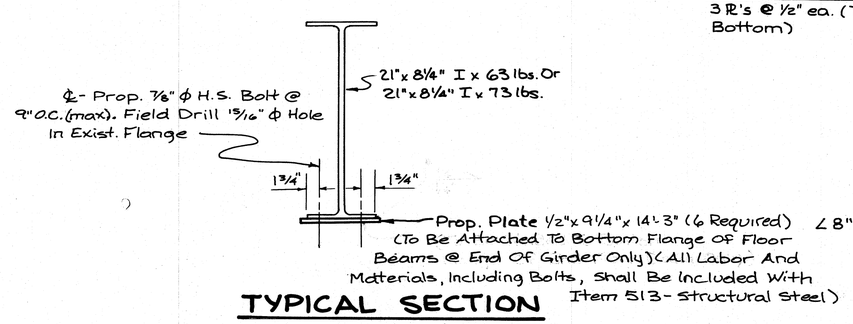

TYPICAL SECTION
(F.B.1 And F.B.2)

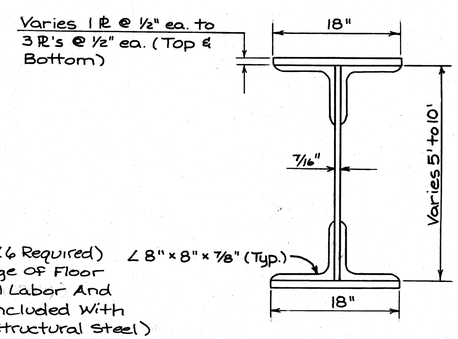

TYPICAL SECTION
Girder G2

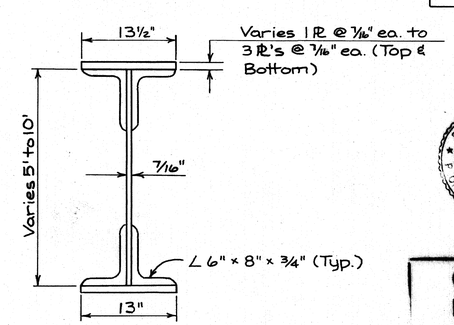

TYPICAL SECTION
Girder G1

NOTES:
1) Work This Sheet With Sheet No. 6-8/17
2) For Field Painting Of Structural Steel & Replacing Ex. Structural Steel, See Special Provisions.
3) For Removal & Replacement Of Deteriorated Rivets, See Item Special - Replacement Bolts In General Notes On Sheet No. 6-12/36.
4) For Details Of Proposed Shear Connectors See Sheet No. 6-7/17.

STATE OF OHIO
THOMAS E. YOUNG
26962
REGISTERED
PROFESSIONAL ENGINEER

CONTRACT DRAWING
PRINTS NOT BEARING THIS STAMP ARE NOT CONTRACT TO ADVERTISING FOR BIDS AND ARE TO BE CONSIDERED OBSOLETE FOR CONTRACT PURPOSES.

CITY OF CINCINNATI
DEPARTMENT OF PUBLIC WORKS
DIVISION OF ENGINEERING

5/17

EXISTING STEEL FRAMING DETAILS

McMILLAN ST. BRIDGE OVER READING ROAD REHABILITATION

DESIGNED	DRAWN	TRACED	CHECKED	REVIEWED	DATE	REVISED
JGW	JGW	EGP	BHP	GCH	4-4-90	

22-48-84

FED. RD. REGION	STATE	PROJECT	FISCAL YEAR
5	OHIO		

24/36

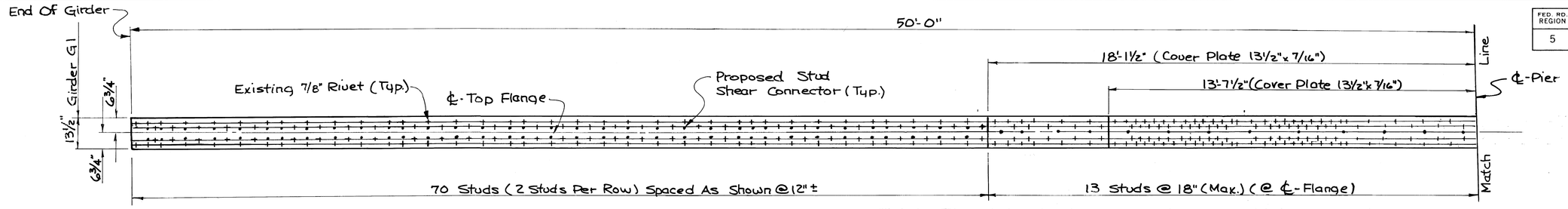

PLAN
TOP FLANGE G1

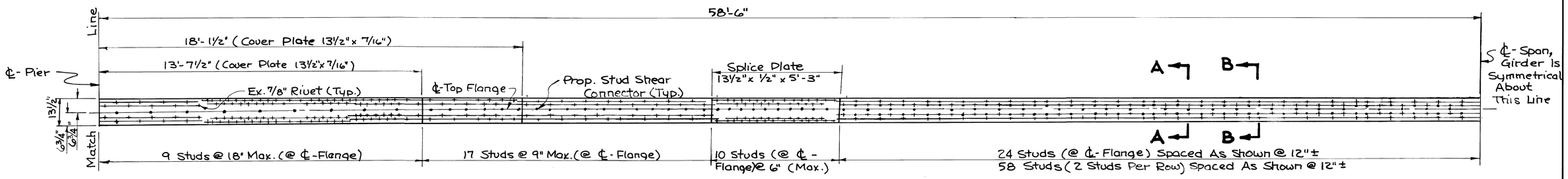

PLAN
TOP FLANGE G1

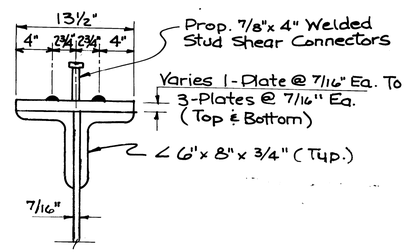

SECTION A-A

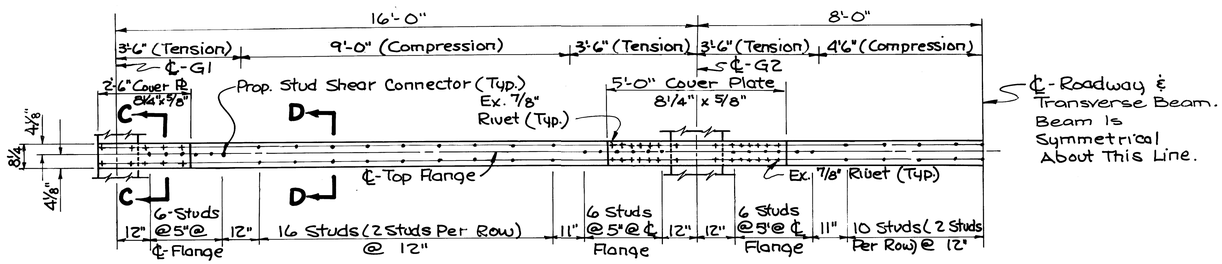

PLAN
TOP FLANGE, TRANSVERSE BEAMS

Shear Connectors Are Not Required On End Floor Beams With Expansion Joints.

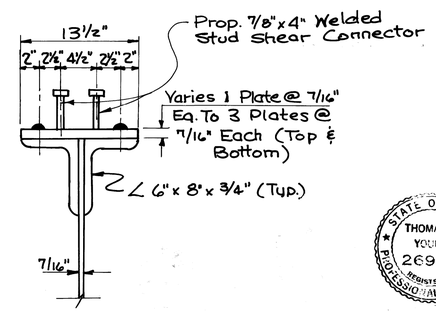

SECTION B-B

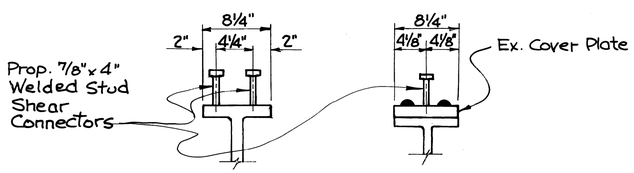

SECTION D-D SECTION C-C

NOTES:

1.- Work This Sheet With Sheet No. 5+7/17.

2.- Location Of Existing Rivets Shown Are Based On Original Plans.

3.- Welded Attachment Of Supports For Concrete Deck Finishing Machine Shall Not Be Allowed Anywhere On Girder G1 Or G2. However, It May Be Made To The Top Of Transverse Beams In The Areas Designated "Compression". Attachments Shall Not Be Made To Areas Designated "Tension".

STATE OF OHIO
THOMAS E. YOUNG
26962
REGISTERED
PROFESSIONAL ENGINEER

CONTRACT DRAWING
PRINTS OF THIS DRAWING MAY BE USED FOR CONTRACT PURPOSES.

CITY OF CINCINNATI
DEPARTMENT OF PUBLIC WORKS
DIVISION OF ENGINEERING

6/17

STRUCTURAL STEEL DETAILS SHEAR CONNECTORS, GIRDER G1 AND FLOOR BEAMS
McMILLAN STREET BRIDGE OVER READING ROAD REHABILITATION

DESIGNED	DRAWN	TRACED	CHECKED	REVIEWED	DATE	REVISED
JGW	PTR	PTR	BHP	GCH	4-4-90	

22-48-85

FED. RD. REGION	STATE	PROJECT	FISCAL YEAR
5	OHIO		

25/36

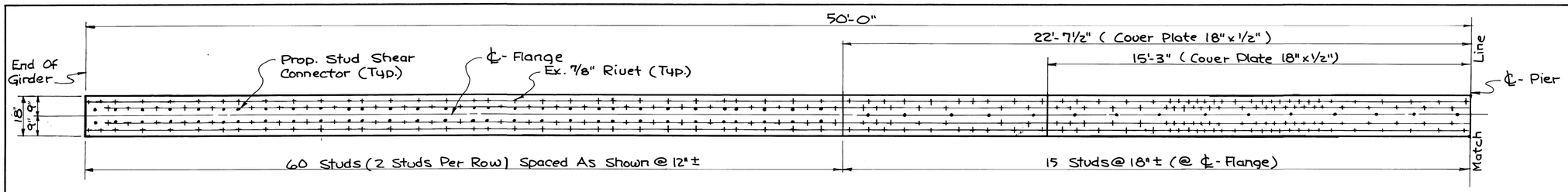

PLAN
TOP FLANGE G2

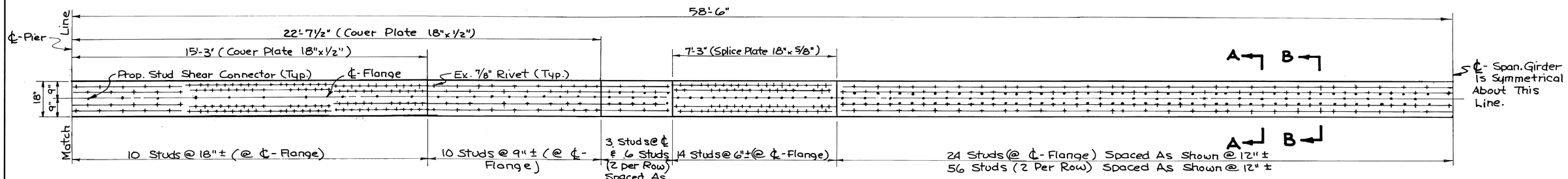

PLAN
TOP FLANGE G2

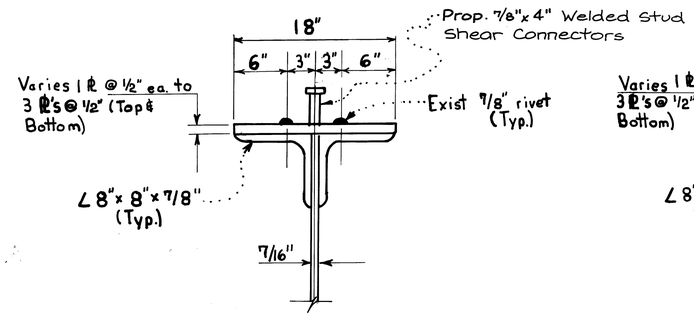

SECTION A-A

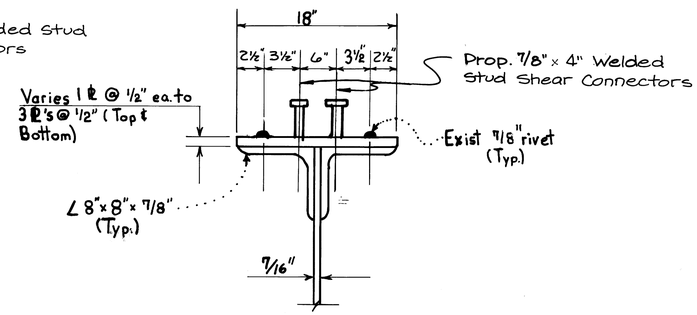

SECTION B-B

NOTES:

1.) Work This Sheet With Sheet No. 5-6/17.

2.) Location Of Existing Rivets Shown Are Based On Original Plans.

3.) Welded Attachment Of Supports For Concrete Deck Finishing Machine Shall Not Be Allowed Anywhere On Girder G1 Or G2. However; It May Be Made To The Top Of Transverse Beams In The Areas Designated "Compression" Attachments Shall Not Be Made To Areas Designated "Tension".

CITY OF CINCINNATI
DEPARTMENT OF PUBLIC WORKS
DIVISION OF ENGINEERING

7/17

STRUCTURAL STEEL DETAILS SHEAR CONNECTORS, GIRDER G2
McMILLAN STREET BRIDGE OVER READING ROAD REHABILITATION

DESIGNED	DRAWN	TRACED	CHECKED	REVIEWED	DATE	REVISED
JGW	PTR	PTR	BHP	GCH	4-4-90	

22-48-86

FED. RD. REGION	STATE	PROJECT	FISCAL YEAR
5	OHIO		

26/36

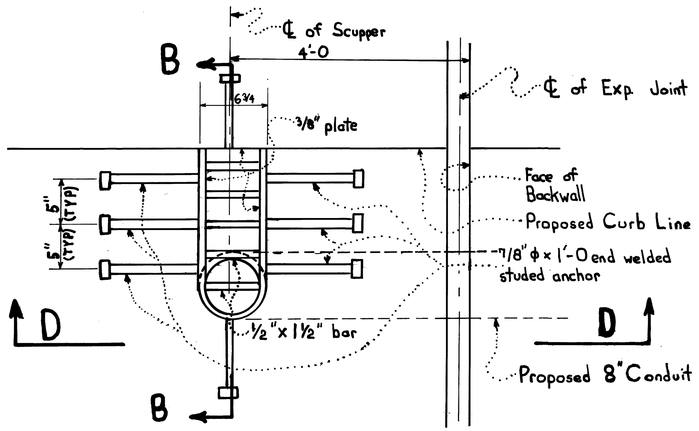

SCUPPER PLAN

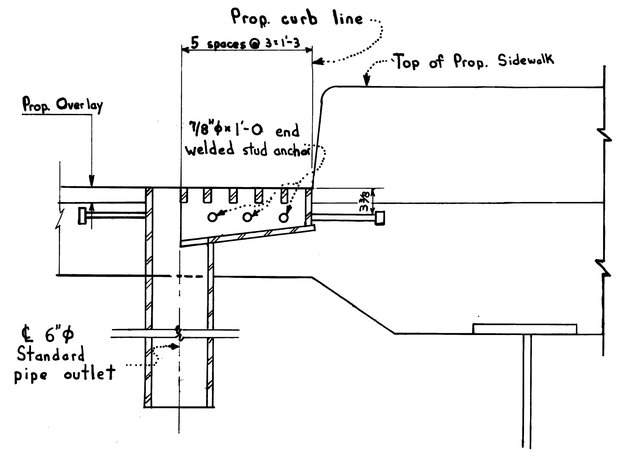

PROPOSED SECTION B-B

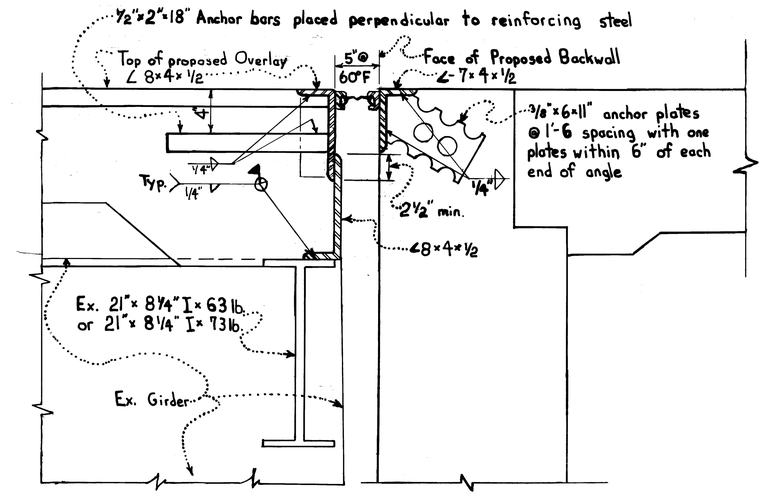

PROPOSED SECTION A-A

NOTES:

1) Angles, Straps Or Bars For Supporting Down Spouts Shall Be Alloy Steel Or Hot-Dipped Galvanized Steel. All Welding Shall Be Done Before Galvanizing. On Bolts, Galvanizing As Called For In ASTM A-123 Is Acceptable. (Item 711.02)
2) For Additional Expansion Joint Details See Std. Drwg. EXJ-4-87.
3) Joint Armor Shall Be Fabricated In Shop To Meet The Contour Of The Roadway Slab.
4) For Additional Scupper Details See Std. Drwg. SD-1-69, Sheet 3 Of 4.
5) Joint Armor Shall Be Installed In Phases. Strip Seal Shall Be Installed In One Continuous Piece.

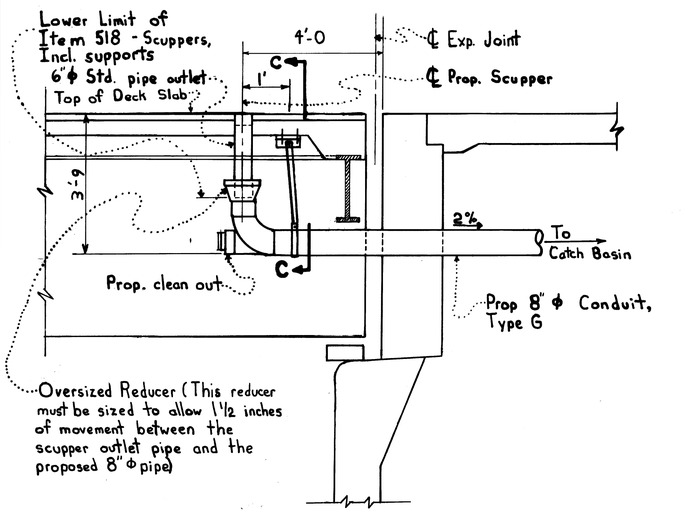

PROPOSED SECTION D-D

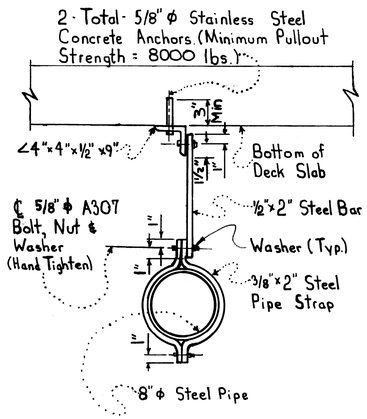

SECTION C-C

All Material Shown For Pipe Hanger Shall Be Included With Item 518-8" Ø Conduit, Type G, Including Incidentals

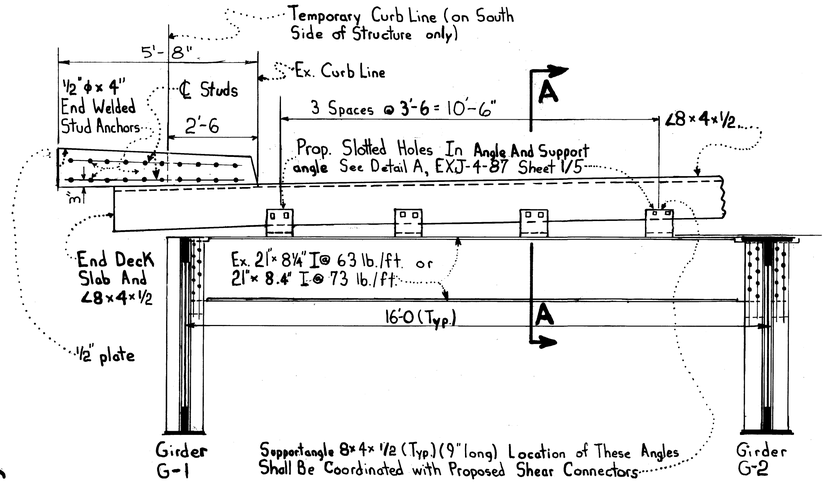

END FLOOR BEAM DETAIL

For Additional Plates and Details, see EXJ-4-87

STATE OF OHIO THOMAS C. YOUNG 26952 REGISTERED PROFESSIONAL ENGINEER

CONTRACT DRAWING

PRINTS NOT BEARING THIS STAMP WERE MADE PRIOR TO ADVERTISEMENT FOR BIDS AND ARE TO BE CONSIDERED OBSOLETE FOR CONTRACT PURPOSES.

CITY OF CINCINNATI
DEPARTMENT OF PUBLIC WORKS
DIVISION OF ENGINEERING

8 / 17

DRAINAGE AND EXPANSION JOINT DETAILS
McMILLAN ST. BRIDGE OVER READING ROAD REHABILITATION

DESIGNED	DRAWN	TRACED	CHECKED	REVIEWED	DATE	REVISED
JGW	PTR	PTR	BHP	GCH	4-490	

22-48-87

FED. RD. REGION	STATE	PROJECT	FISCAL YEAR
5	OHIO		

27/36

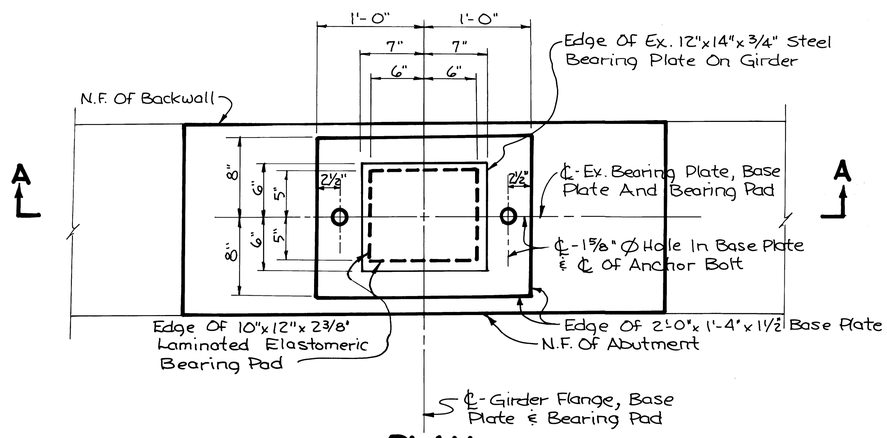

PLAN
GIRDER G1

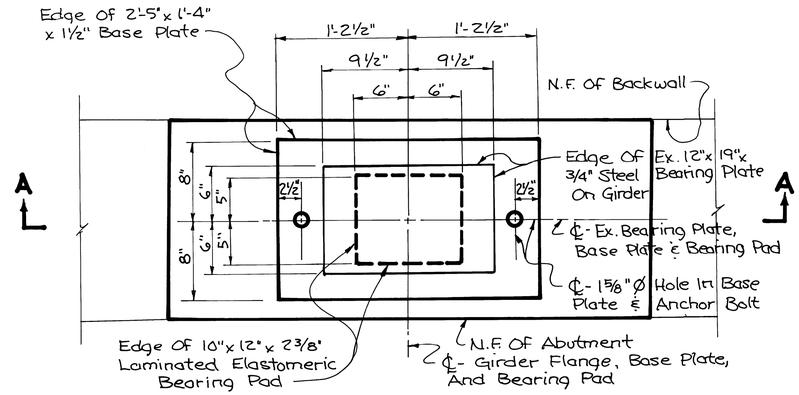

PLAN
GIRDER G2

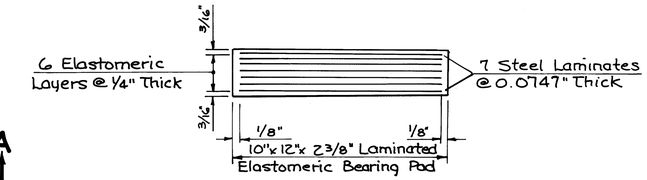

DETAIL A

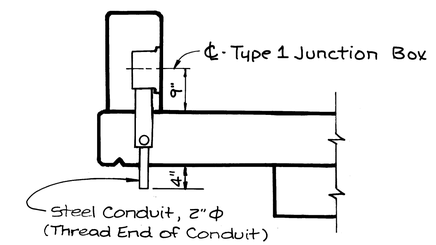

SECTION B-B
(Fence Not Shown)

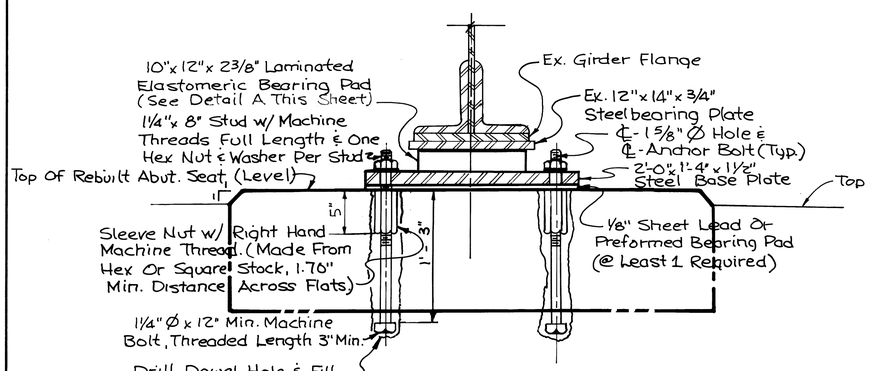

SECTION A-A
GIRDER G-1

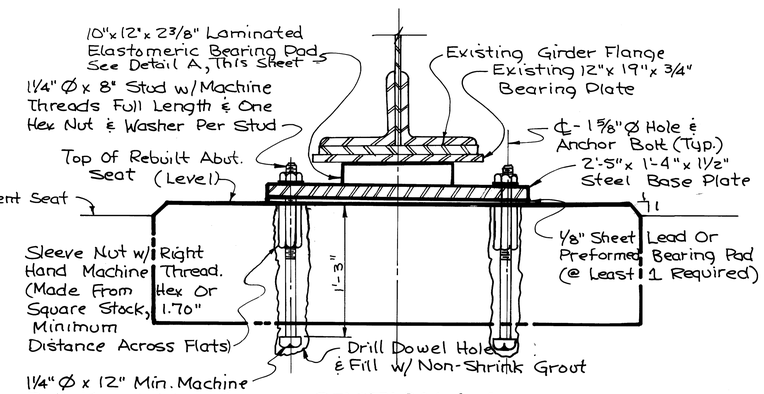

SECTION A-A
GIRDER G-2

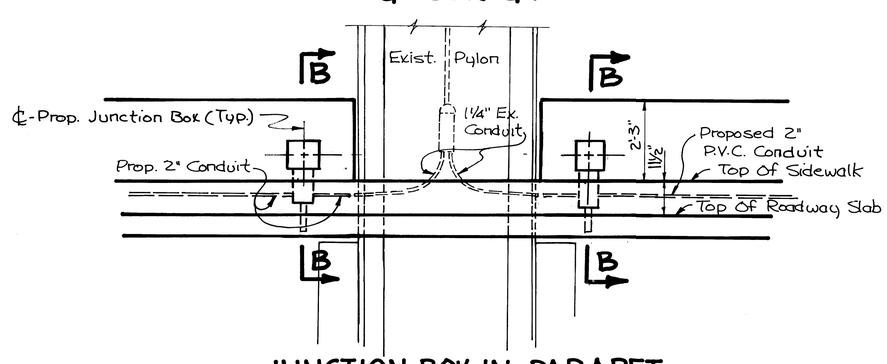

JUNCTION BOX IN PARAPET
At Existing Pier Pylon

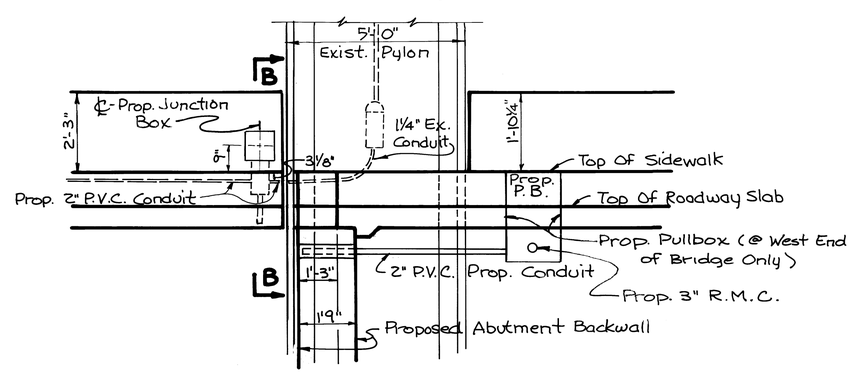

JUNCTION BOX IN PARAPET
At Existing Abutment Pylon

NOTES:

1.) Anchor Bolts, Nuts & Studs Shall Be ASTM A307, Galvanized In Accordance With 711.02.
2.) For Details Of Rebuilt Abutment Seats, See Sheet Nos. 3-4/17.
3.) For Additional Notes, See General Notes Sheet No. 8-12/36.
4.) For Location Of Proposed Junction Boxes, See Sheet No. 11/17.
5.) For Location Of Proposed Pull Boxes, See Sheet No. 13+18/36.
6.) For Additional Junction Box Details, See City Std. Drwg. ES-2-1.
7.) Anchor Bolts May Be Cast In Place At The Contractor's Option.
8.) Washers Shall Meet ASTM F436.

STATE OF OHIO — THOMAS C. YOUNG — 28962 — REGISTERED PROFESSIONAL ENGINEER

CONTRACT DRAWING
PRINTS NOT BEARING THIS STAMP WERE MADE PRIOR TO ADVERTISING FOR BIDS AND ARE TO BE CONSIDERED GENERALLY FOR CONTRACT PURPOSES.

CITY OF CINCINNATI
DEPARTMENT OF PUBLIC WORKS
DIVISION OF ENGINEERING

9/17

LAMINATED ELASTOMERIC BEARINGS AND LIGHTING DETAIL

McMILLAN STREET BRIDGE OVER READING ROAD REHABILITATION

DESIGNED	DRAWN	TRACED	CHECKED	REVIEWED	DATE	REVISED
JGW	SJC	SJC	JCY/BHP	GCH	4-4-90	

22-48-88

FED. RD. REGION	STATE	PROJECT	FISCAL YEAR
5	OHIO		

28/36

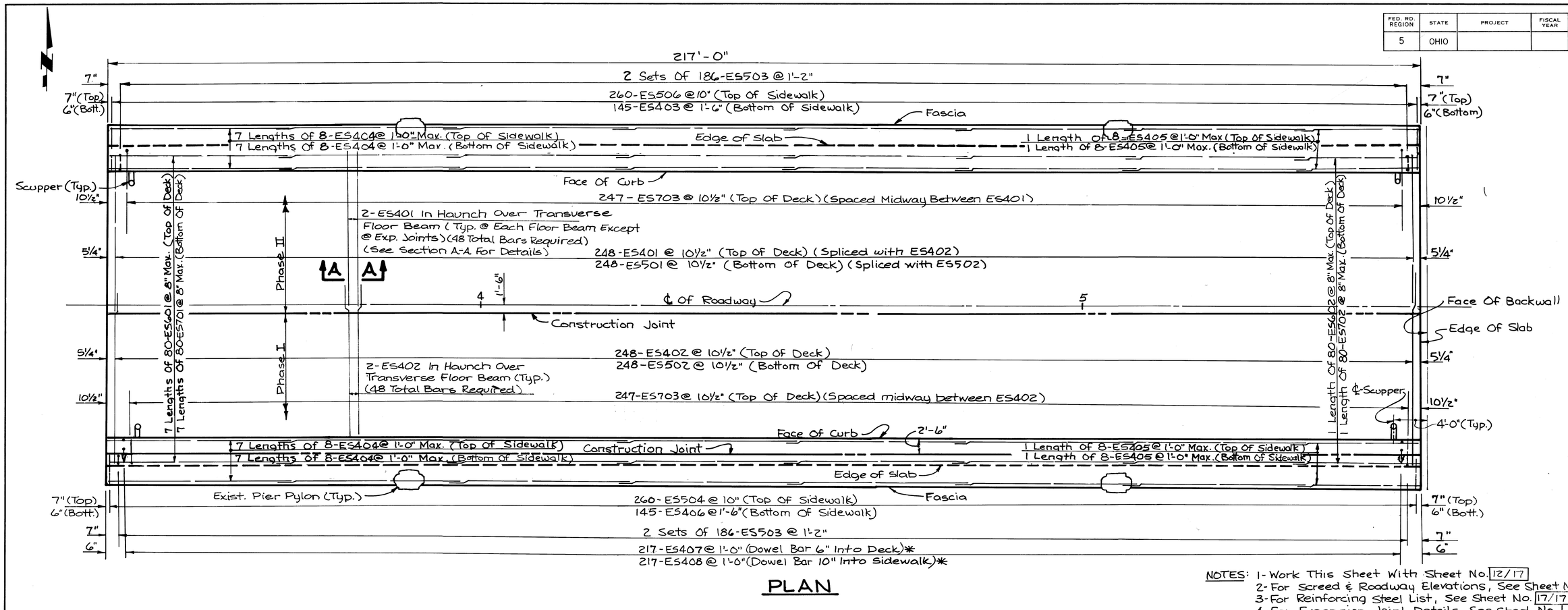

PLAN

NOTES:
1- Work This Sheet With Sheet No. 12/17
2- For Screed & Roadway Elevations, See Sheet No. 11/17
3- For Reinforcing Steel List, See Sheet No. 17/17.
4- For Expansion Joint Details, See Sheet No. 8/17.
5- Lap Distance For #4 Bars = 1'-6" Min. (Epoxy Coated).
6- Lap Distance For #5 Bars = 2'-0" Min. (Epoxy Coated).
7- Lap Distance For #6 Bars = 2'-5" Min. (Epoxy Coated).
8- Lap Distance For #7 Bars = 3'-0" Min. (Epoxy Coated).
9- Cut or Field Bend Bars In Sidewalk To Clear Existing Pier Pylons.
10- For Details Of Alternate I Railing, See Sheet No. 11/17, For Details Of Alternate II Railing, See Sheet No. 36A/36.

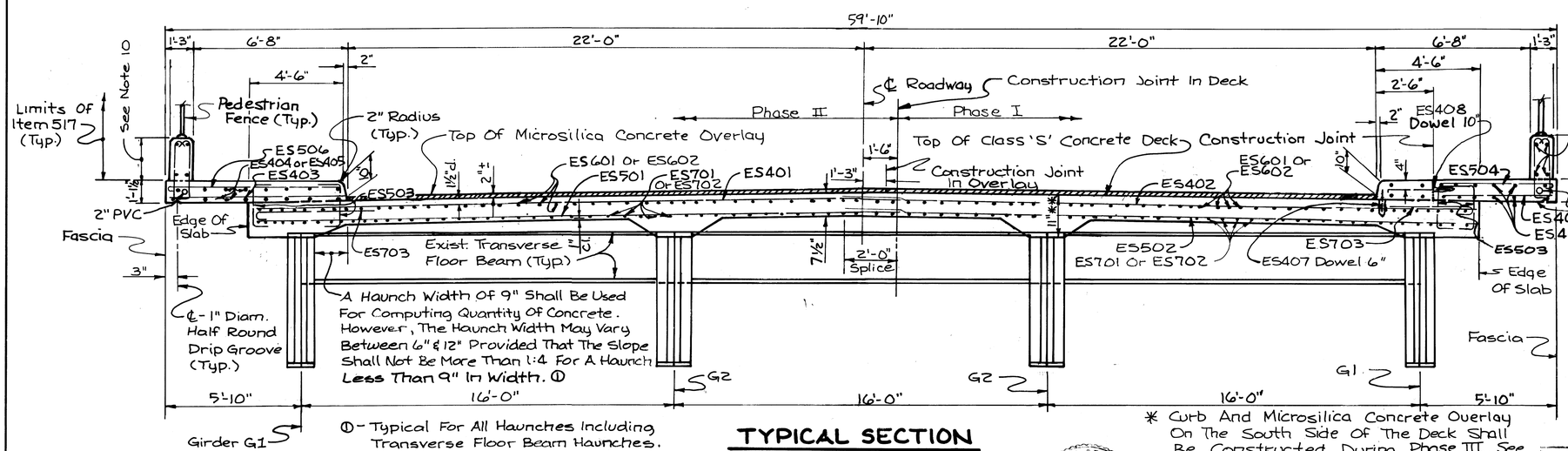

① - Typical For All Haunches Including Transverse Floor Beam Haunches.

TYPICAL SECTION

Proposed Shear Connectors Not Shown.

** The Distance Is The Average Dimension. The Quantity Of Deck Concrete To Be Paid For Shall Be Based Upon This Dimension Even Though Deviation From It Will Occur To Meet Proposed Grade Elevations. Typical For All Haunches Including Transverse Floor Beam Haunches.

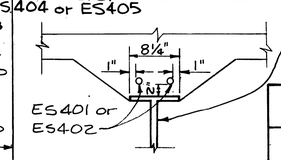

SECTION A-A

Reinforcing Steel In Deck & Shear Connectors Not Shown.

* Curb And Microsilica Concrete Overlay On The South Side Of The Deck Shall Be Constructed During Phase III. See Sheet No. 3-4/36 For Additional Details.

STATE OF OHIO THOMAS E. YOUNG 26962 REGISTERED PROFESSIONAL ENGINEER

22-48-89

CONTRACT DRAWING
PRINTS NOT BEARING THIS STAMP WERE MADE PRIOR TO ADVERTISING FOR BIDS AND ARE TO BE CONSIDERED OBSOLETE FOR CONTRACT PURPOSES

CITY OF CINCINNATI
DEPARTMENT OF PUBLIC WORKS
DIVISION OF ENGINEERING

10/17

SUPERSTRUCTURE DETAILS
Mc MILLAN ST. BRIDGE OVER READING ROAD REHABILITATION

DESIGNED	DRAWN	TRACED	CHECKED	REVIEWED	DATE	REVISED
EAP	SJC	SJC	BHP	GCH	4-4-90	

FED. RD. REGION	STATE	PROJECT	FISCAL YEAR
5	OHIO		

29/36

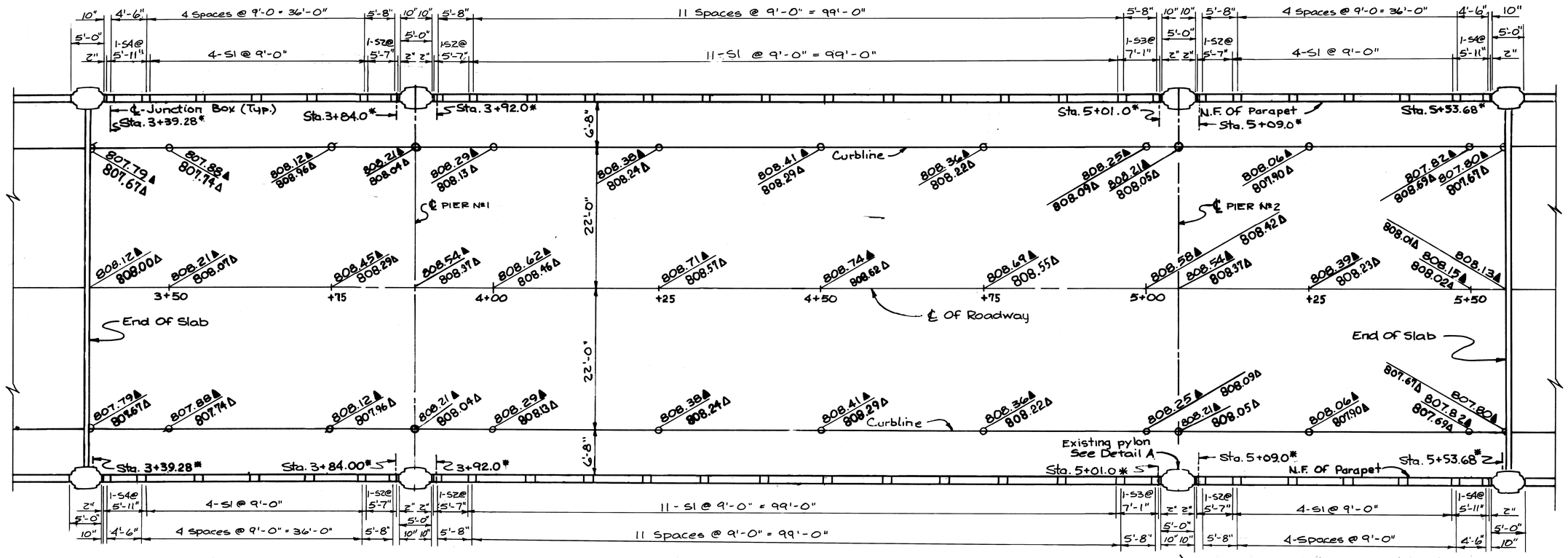

PLAN

*Indicates ℄ of junction box in parapet.

NOTES)

1.) For Fence Details, See Sheet No. 12/17.
2.) ▲ Denotes Top Of Microsilica Concrete Overlay Elevation.
3.) △ Denotes Screed Elevation For Class 'S' Concrete Deck. Screed Elevation Shown Equals Top Of Microsilica Concrete Overlay Elevation Minus 2" Plus Anticipated Dead Load Deflection Due To Weight Of Deck Concrete.
4.) * Station Shown Is To ℄ Of Junction Box In Parapet. For Details Of Junction Box, See Sheet No. 9/17.
5.) All Elevations Shown Are @ ℄ Of Piers, End Of Slab And At The Stations Shown Next To These Elevations.
6.) Work This Sheet With Sheet No. 10/17.

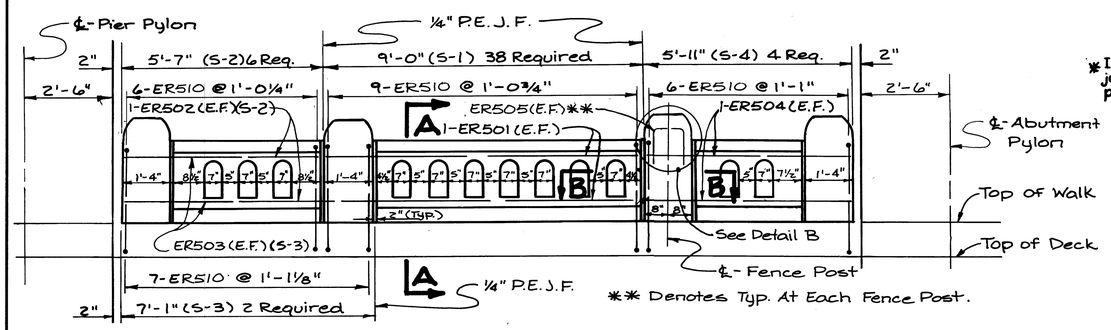

TYPICAL RAILING ELEVATION

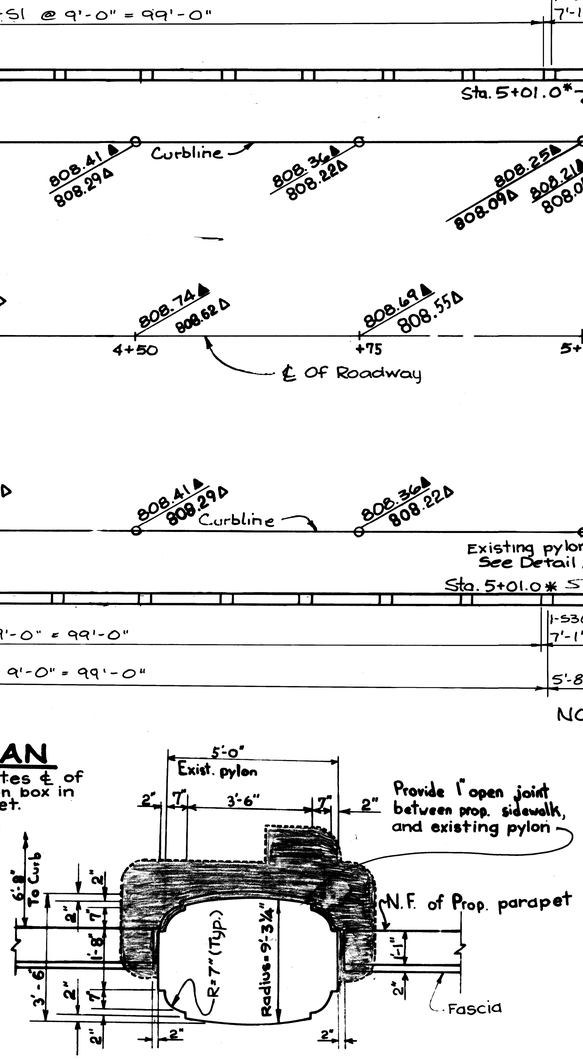

DETAIL A

Typical at all 4 pier pylons. Detail at abutment pylons similar.

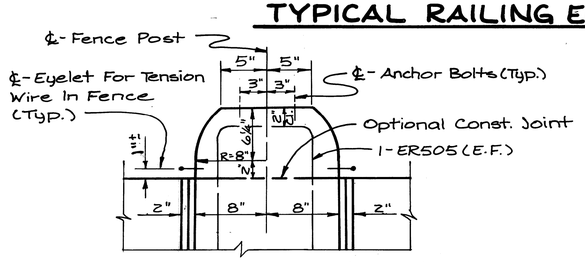

DETAIL B

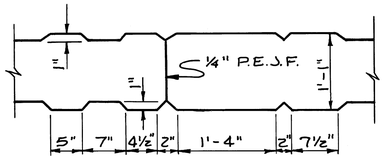

SECTION B-B

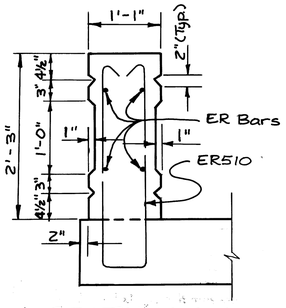

SECTION A-A

Remove Concrete In This Area Of Pier Pylon Under Sidewalk Slab To Elev. 807.50. Rebuild This Area To Provide 2" Clearance Between Bottom Of Sidewalk Slab And Top Of Rebuilt Pylon. Existing Concrete Removed Shall Be Paid For Under Item 202 - Portions Of Structure Removed. Proposed Concrete For Pylon Shall Be Paid For Under Item 511 - Class 'C' Concrete, Abutment.

CONTRACT DRAWING

PLANS NOT BEARING THIS STAMP ARE NOT TO BE USED FOR BIDDING, PUBLIC ADVERTISING OR CONTRACT PURPOSES AND ARE TO BE CONSIDERED OBSOLETE FOR CONTRACT PURPOSES

STATE OF OHIO THOMAS E. YOUNG 26962 REGISTERED PROFESSIONAL ENGINEER

ALTERNATE I RAILING DETAILS

CITY OF CINCINNATI
DEPARTMENT OF PUBLIC WORKS
DIVISION OF ENGINEERING

11/17

GRADE DETAILS AND RAILING DETAILS

McMILLAN ST. BRIDGE

OVER READING RD. REHABILITATION

DESIGNED	DRAWN	TRACED	CHECKED	REVIEWED	DATE	REVISED
EAP	EGP	EGP	BHP	GCH	4-4-90	

22-48-90

FED. RD. REGION	STATE	PROJECT	FISCAL YEAR
5	OHIO		

30/36

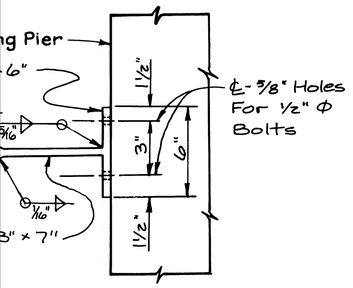

ECTION C-C

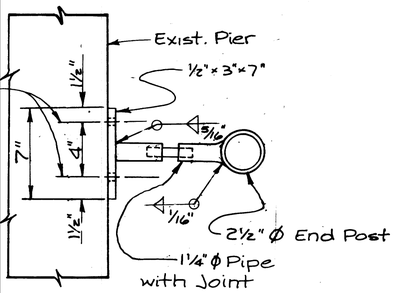

CTION D-D

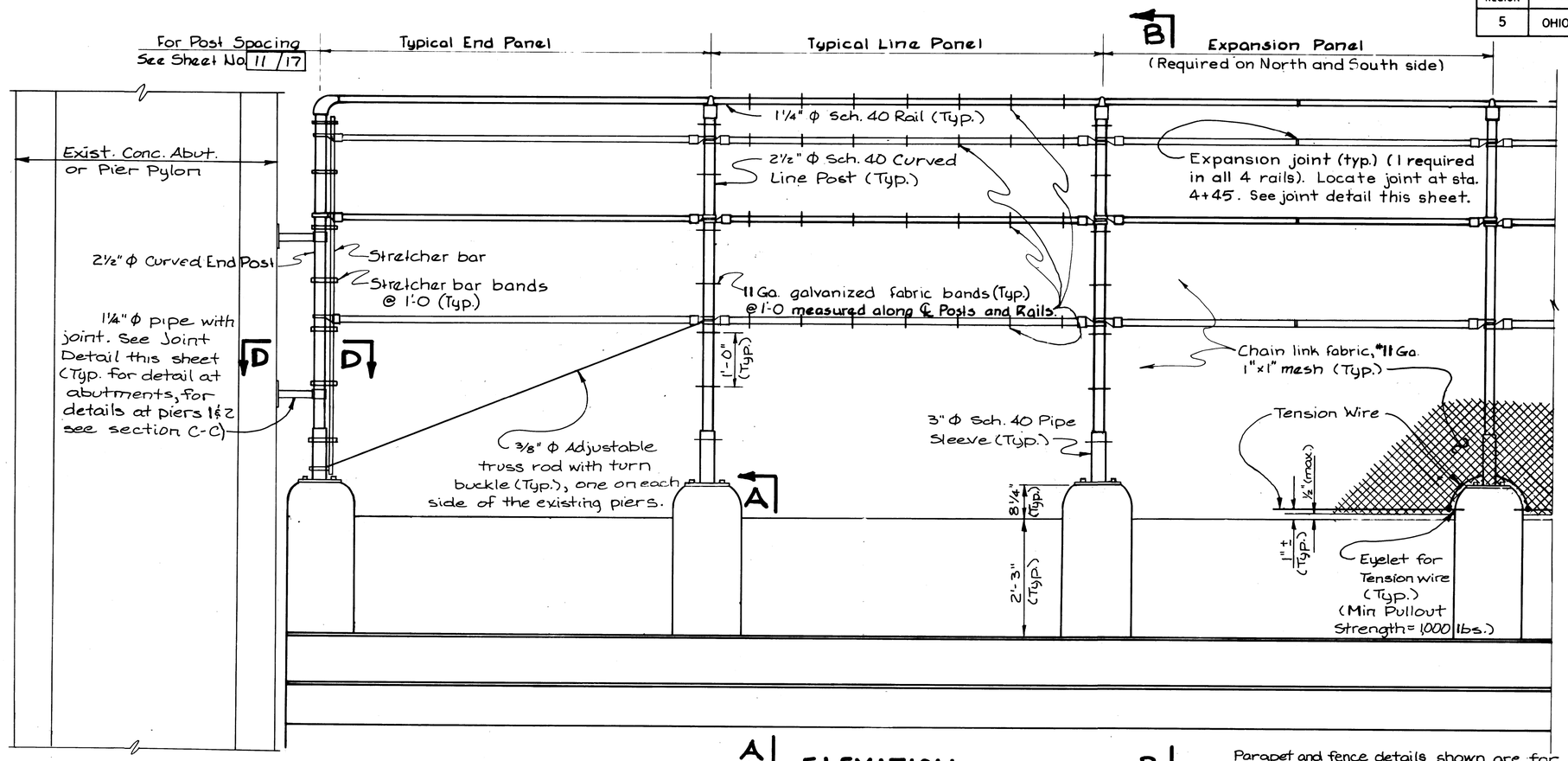

A **ELEVATION** B

(For additional details of concrete parapet see sheet no. 11/17.)

Parapet and fence details shown are for Alternate I. For details of Alternate II, see sheet No. 36A/36.
Fence posts and anchor bolts shall be perpendicular to grade. In order to accomplish this, it may be necessary to install shims under the base plates. If shims are necessary, they shall be ¼" or 1/16" multi-polymer plastic with a minimum compressive strength of 5000 psi..
Rails shall be parallel to grade.

Chain link fabric shall extend in front of existing concrete pylons.

For post locations see sheet 11/17.
For additional Fence details, See General Notes sheet No. 8-12/36.

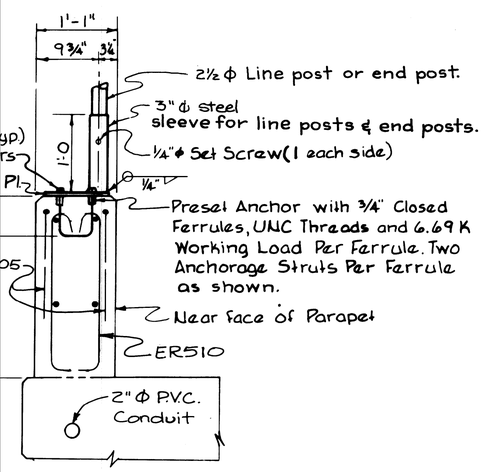

SECTION A-A

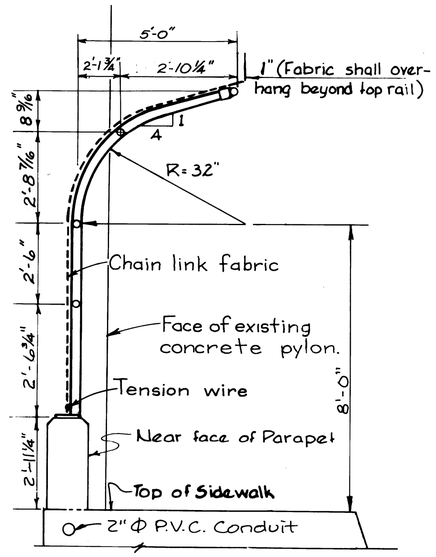

SECTION B-B

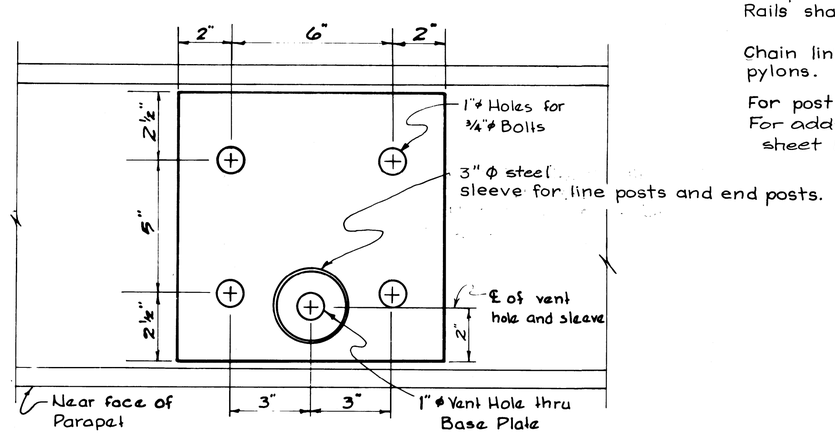

BASE PLATE PLAN

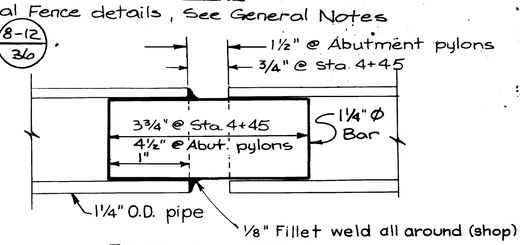

JOINT DETAIL

STATE OF OHIO
THOMAS E. YOUNG
26962
REGISTERED PROFESSIONAL ENGINEER

CONTRACT DRAWING
PRINTS NOT BEARING THIS STAMP WERE MADE PRIOR TO ADVERTISING FOR BIDS AND ARE TO BE CONSIDERED OBSOLETE FOR CONTRACT PURPOSES.

CITY OF CINCINNATI
DEPARTMENT OF PUBLIC WORKS
DIVISION OF ENGINEERING

12/17

FENCE DETAILS

McMILLAN ST. BRIDGE OVER READING ROAD REHABILITATION

DESIGNED	DRAWN	TRACED	CHECKED	REVIEWED	DATE	REVISED
	JLM	JLM	BHP	GCH	4-4-90	

22-48-91

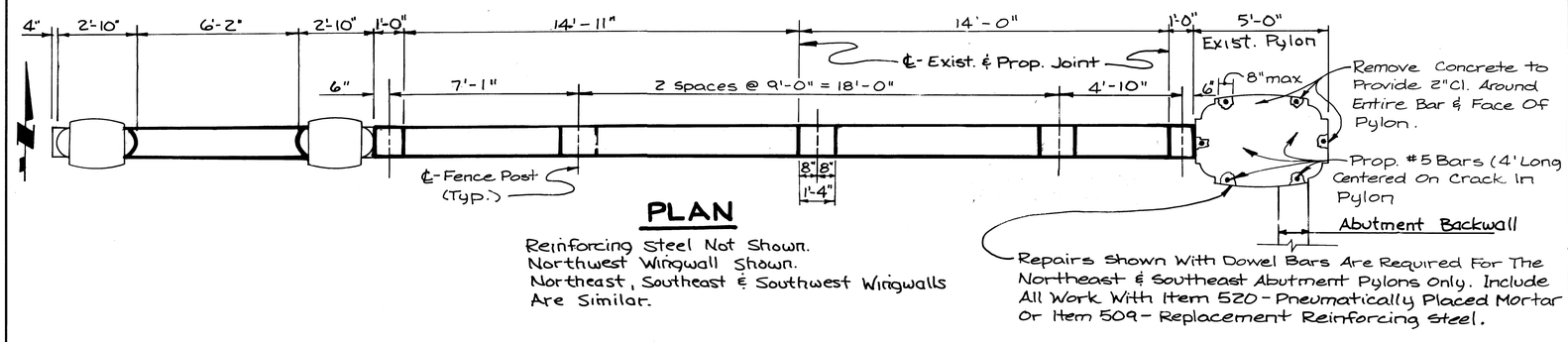

PLAN

Reinforcing Steel Not Shown.
Northwest Wingwall Shown.
Northeast, Southeast & Southwest Wingwalls Are Similar.

ESTIMATED QUANTITIES

For Item 520- Pneumatically Placed Mortar

Southeast Sq. Ft.	Northeast Sq. Ft.	Southwest Sq. Ft.	Northwest Sq. Ft.
ABUTMENT PYLON			
90	70	20	80
PIER PYLONS			
20	20	30	0
STAIRWAY			
80	60	60	30
EAST ~ SQ.FT.		WEST - SQ.FT.	
ABUTMENTS			
440		270	
CONCRETE PIERS			
50		30	
TOTAL = 1,350 SQ.FT. *			

* This Quantity Has Been Carried Forward To The Estimated Quantities On Sheet No. 6-7/36

FED. RD. REGION	STATE	PROJECT	FISCAL YEAR
5	OHIO		

31/36

NOTES:

1.) F.F. Denotes Far Face.
2.) N.F. Denotes Near Face.
3.) E.F. Denotes Each Face.
4.) Work This Sheet With Sheet No. 14/17.
5.) P.E.J.F. Denotes Preformed Expansion Joint Filler And Shall Be Included With Appropriate Concrete Item For Payment.
6.) ▒ - Denotes Area Of Concrete To Be Removed.
7.) Unless Otherwise Noted, All Reinforcing Steel Within Removal Limits Shall Be Removed.
8.) For Details Of Fence, See Sheet No. 12/17.
9.) For Reinforcing Steel List, See Sheet No. 12/17.

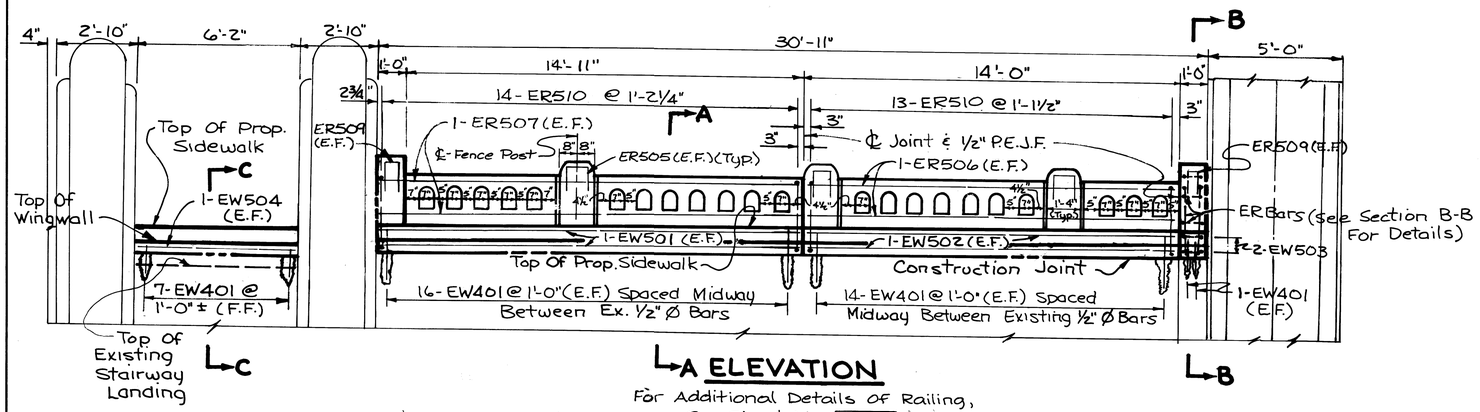

A ELEVATION

For Additional Details Of Railing, See Sheet No. 11/17.

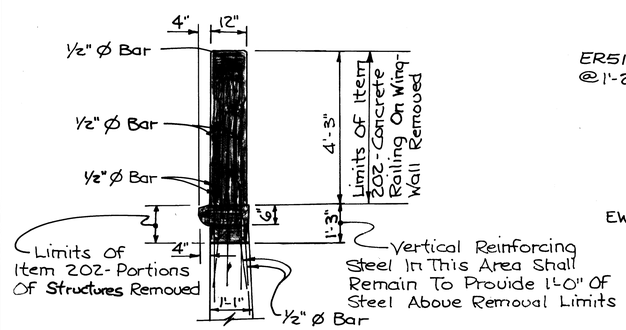

EXISTING SECTION A-A

Existing Section B-B Similar

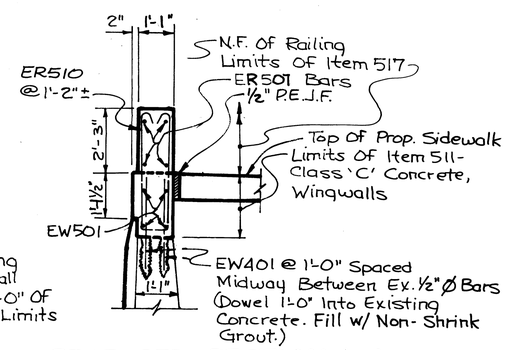

PROPOSED SECTION A-A

Existing ½" Ø Bars Not Shown.
For Proposed Sidewalk Grades See Sheet No. 16/36.

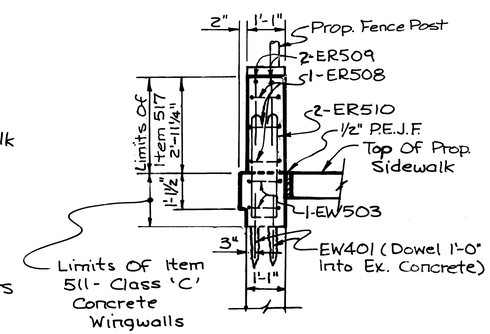

PROPOSED SECTION B-B

Existing Reinforcement Not Shown

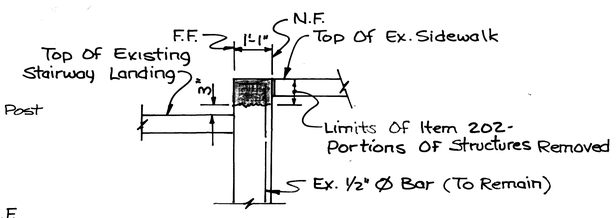

EXISTING SECTION C-C

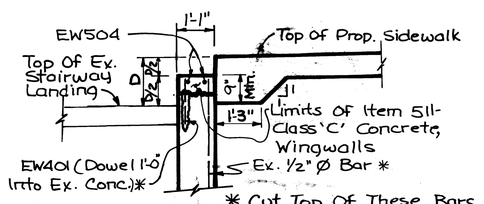

* Cut Top Of These Bars To Provide 2" Clearance From Top Of Proposed Concrete.

PROPOSED SECTION C-C

STATE OF OHIO
THOMAS E. YOUNG
26962
REGISTERED PROFESSIONAL ENGINEER

CONTRACT DRAWING

PRINTS NOT BEARING THIS STAMP WERE MADE PRIOR TO ADVERTISING FOR BIDS AND ARE TO BE CONSIDERED OBSOLETE FOR CONTRACT PURPOSES.

ALTERNATE I RAILING SHOWN

For Details Of Alternate II Railing, See Sheet No. 36A/36.

CITY OF CINCINNATI
DEPARTMENT OF PUBLIC WORKS
DIVISION OF ENGINEERING

13/17

WINGWALL MODIFICATIONS & RAILING DETAILS
Mc MILLAN STREET BRIDGE OVER READING ROAD REHABILITATION

DESIGNED	DRAWN	TRACED	CHECKED	REVIEWED	DATE	REVISED
EAP	SJC	SJC	BHP	GCH	4-4-90	

22-48-92

FED. RD. REGION	STATE	PROJECT	FISCAL YEAR
5	OHIO		

32/36

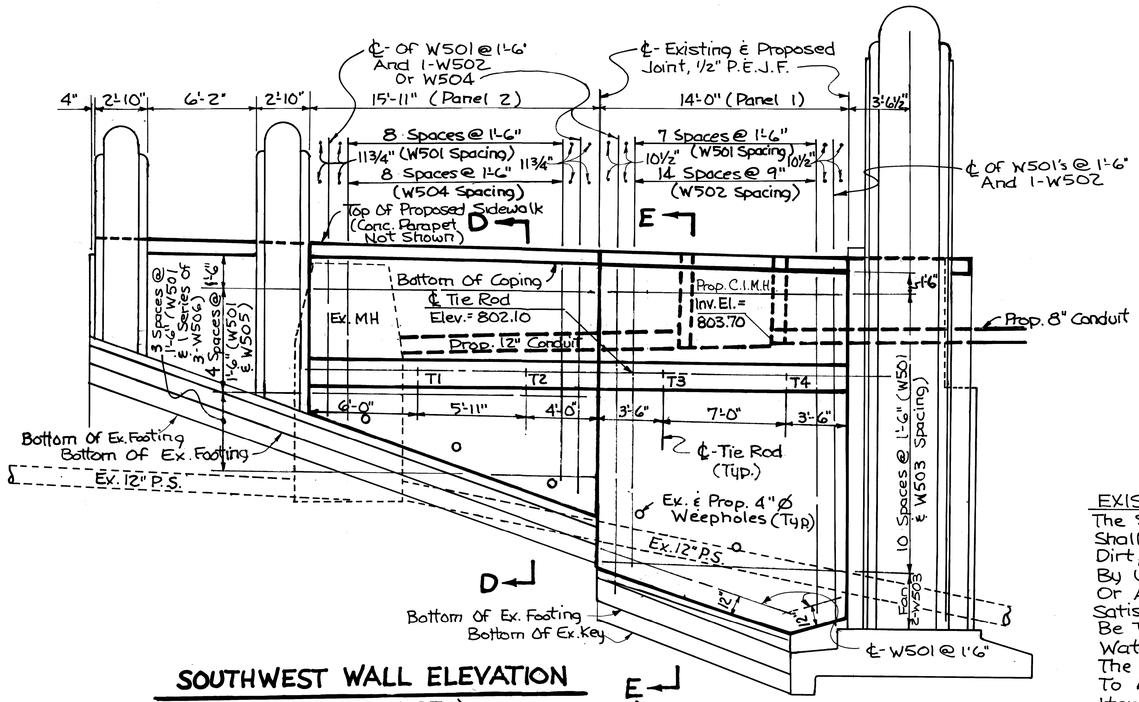

SOUTHWEST WALL ELEVATION

(LOOKING NORTH)
Northwest Wall Similar, But Opposite Hand

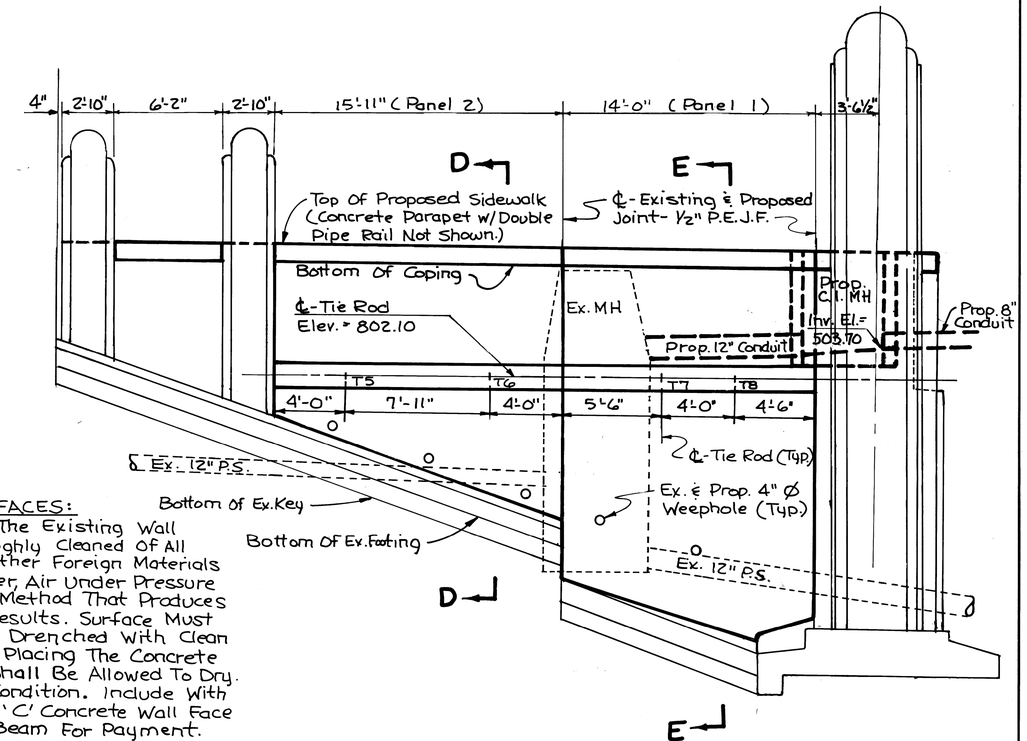

NORTHEAST WALL ELEVATION

(LOOKING SOUTH)
For Proposed Reinforcing Steel, See Southwest Wall Elevation.
Southeast Wall Similar But Opposite Hand.

EXISTING SURFACES:
The Surface Of The Existing Wall Shall Be Thoroughly Cleaned Of All Dirt, Dust Or Other Foreign Materials By Use Of Water, Air Under Pressure Or Any Other Method That Produces Satisfactory Results. Surface Must Be Thoroughly Drenched With Clean Water. Before Placing The Concrete The Surface Shall Be Allowed To Dry. To A Damp Condition. Include With Item 511-Class 'C' Concrete Wall Face And Tie Rod Beam For Payment.

Existing Concrete Stairways Are Not Shown On This Sheet. For Details Of Existing Stairways See Sheet No. 16/17.

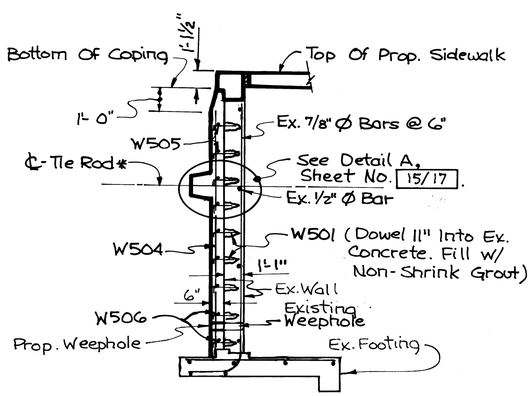

SECTION D-D

Concrete Parapet With Double Pipe Rail Not Shown. See Sheet No. 13/17.

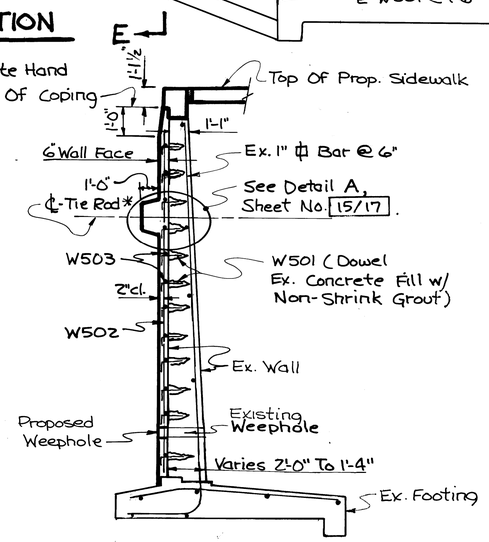

SECTION E-E

Concrete Parapet With Double Pipe Rail Not Shown. See Sheet No. 13/17.

TIEBACK LOADS	
Tie Rod Line	Applied Load
T1	37K
T2	19K
T3	42K
T4	42K
T5	28K
T6	28K
T7	52K
T8	32K

* Concrete For Tie Rod Beam Shall Be Placed Integral (Without Joint) With Proposed 6" Wall Face.

Loads Shown Are Maximum Loads. Tie Stressing Cease If Top Of Either Wall Panel Moves More Than 1/2".

NOTES:
1.) Work This Sheet With Sheet No. 13-15/17.
2.) P.E.J.F. Denotes Preformed Expansion Joint Filler And Shall Be Included With Appropriate Concrete Item For Payment.
3.) Any Excavation Required For Construction Of Wall Face And Tie Rod Beam Shall Be In Accordance With Item 503 And Included For Payment With Item 511-Class 'C' Concrete, Wall Face And Tie Rod Beam.

STATE OF OHIO THOMAS E YOUNG 26962 REGISTERED PROFESSIONAL ENGINEER

CONTRACT DRAWING
THOSE NOT BEARING THIS STAMP WERE MADE PRIOR TO ADVERTISING FOR BIDS AND ARE TO BE CONSIDERED STRICTLY FOR CONTRACT PURPOSES

CITY OF CINCINNATI
DEPARTMENT OF PUBLIC WORKS
DIVISION OF ENGINEERING

14/17

WINGWALL MODIFICATIONS AND TIEBACK DETAILS
McMILLAN STREET BRIDGE OVER READING ROAD REHABILITATION

DESIGNED	DRAWN	TRACED	CHECKED	REVIEWED	DATE	REVISED
JGW/EAP	PTR	PTR	BHP	GCH	4-4-90	

22-48-93

FED. RD. REGION	STATE	PROJECT	FISCAL YEAR
5	OHIO		

33/36

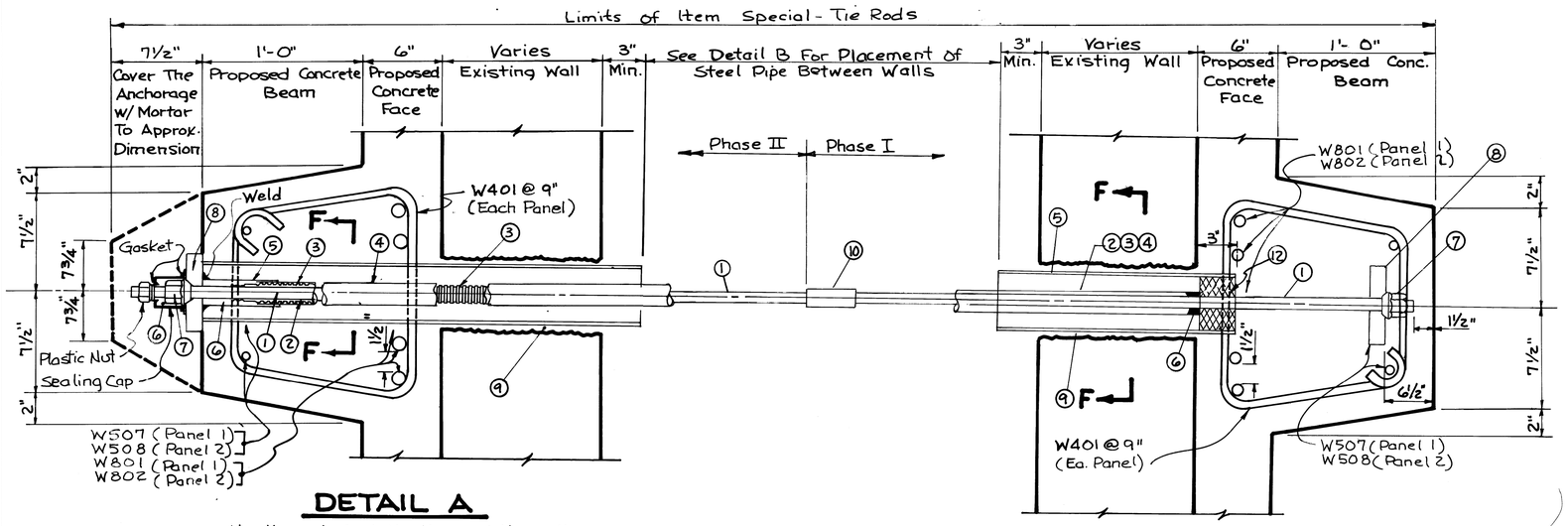

DETAIL A

Northwest And Northeast Wingwalls

DETAIL A

Southwest And Southeast Wingwalls

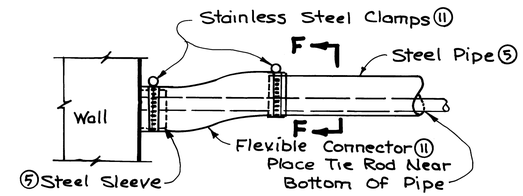

DETAIL B

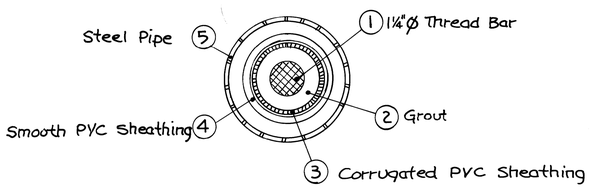

SECTION F-F

Work This Sheet With Sheet No. 8-12/36
Both Tiebacks In Each Panel Shall Be Stressed At The Same Time.
For Additional Details, See General Notes On Sheet No. 8-12/36

MATERIAL LEGEND:

1.) 1¼"Ø Thread Bar - A722 (Coat Area Of Bar Encased In Concrete Beam With Epoxy).
2.) Grout (Applied To Annular Space Between Bar And Corrugated Sheathing Prior To Installation.
3.) Corrugated PVC Sheathing (Installed Over Bar And Coupler).
4.) Smooth PVC Sheathing (Installed Over Corrugated Sheathing).
5.) Steel Pipe (A53). Diameter As Required, Schedule 40, Galvanized.
6.) Mastic Corrosion Inhibitor.
7.) Anchor Nut (A325), Galvanized
8.) Bearing Plate (A36), 8"x 8"x 1¼", Galvanized.
9.) Drill Hole Into Existing Wall. Diameter Of Hole Shall Be 1" Greater Than O.D. Of Steel Pipe. Fill Void w/ Non-Shrink Grout.
10.) Coupling
11.) Flexible PVC Connector With Stainless Steel Clamps.
12.) Styrofoam Or Other Filler To Prevent Intrusion Of Water From Concrete.

STATE OF OHIO
THOMAS E. YOUNG
26962
REGISTERED
PROFESSIONAL ENGINEER

CONTRACT DRAWING
PRINTS NOT BEARING THIS STAMP WERE NOT PRIOR TO ADVERTISING FOR BIDS AND ARE TO BE CONSIDERED OBSOLETE FOR CONTRACT PURPOSES.

CITY OF CINCINNATI
DEPARTMENT OF PUBLIC WORKS
DIVISION OF ENGINEERING

15/17

WINGWALL MODIFICATIONS & TIE BACK DETAILS

McMILLAN STREET BRIDGE OVER READING ROAD REHABILITATION

DESIGNED	DRAWN	TRACED	CHECKED	REVIEWED	DATE	REVISED
JGW	SJC	SJC	BHP	GCH	4-4-90	

22-48-94

FED. RD. REGION	STATE	PROJECT	FISCAL YEAR
5	OHIO		

34/36

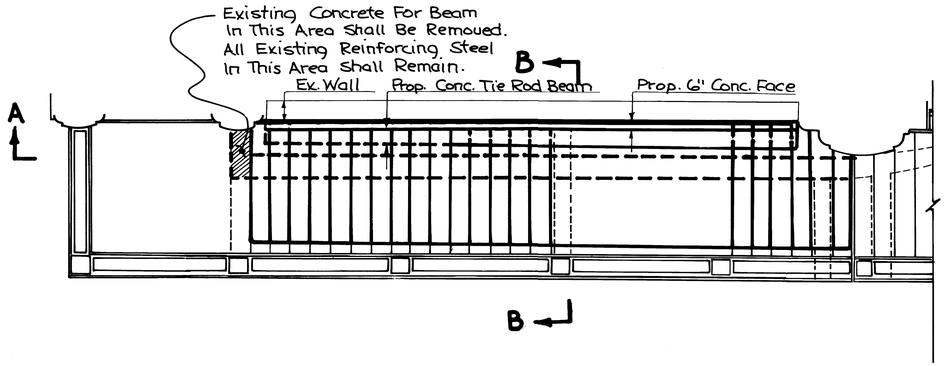

PLAN

Southwest Stairway Shown
Northwest, Southeast & Northeast Stairway Similar

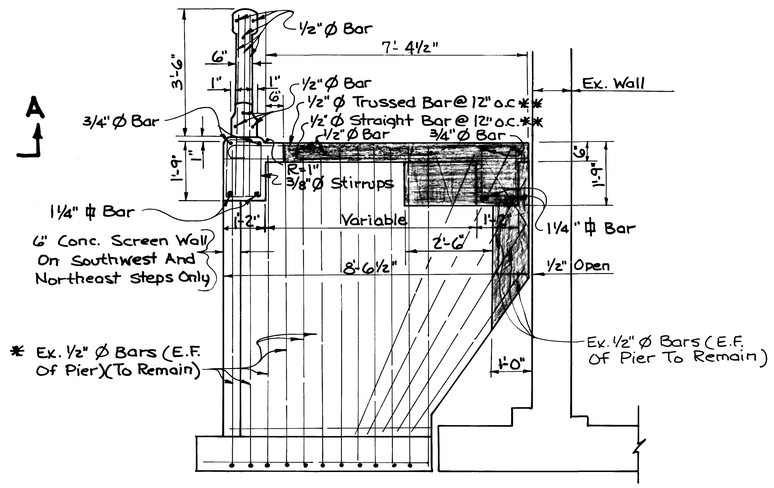

EXISTING SECTION B-B

* - Cut Bars As Necessary To Provide 2" Clearance From Proposed Concrete.

** - These Bars Shall Be Cut To Provide 1'-6" Of Splice Length w/ Proposed Bars.

▬ - Denotes Area Of Concrete To Be Removed Under Item 202- Portions Of Concrete Steps Removed. Unless Otherwise Noted All Reinforcing Steel Within These Limits Shall Be Removed.

The Contractor Shall Excercise Caution Not To Damage Remaining Concrete Steps And Railing During Removal And Construction Operations. The Contractor Will Be Required To Brace And Shore The Remaining Steps And Railing To The Satisfaction Of The Project Engineer. Any Damage Done To The Existing Steps And Railing Will Be Repaired By The Contractor At No Expense To The City.

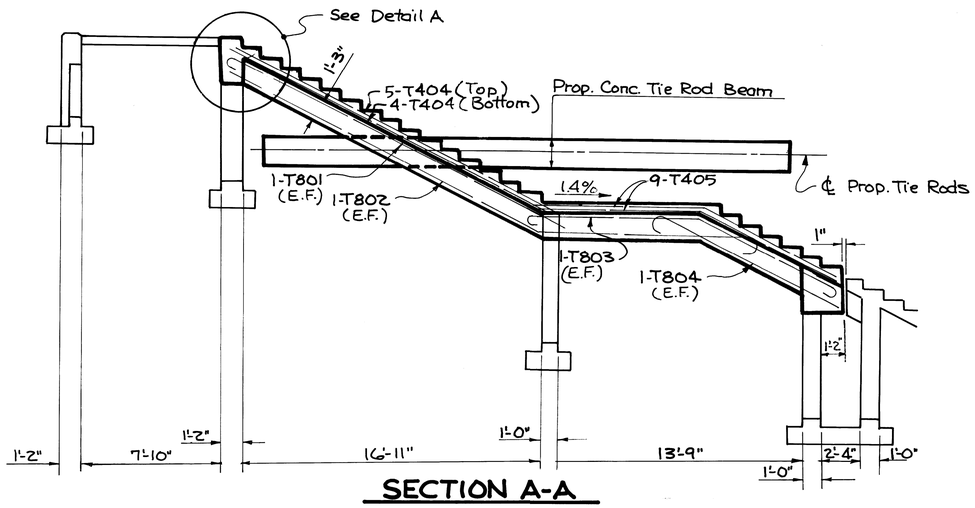

SECTION A-A

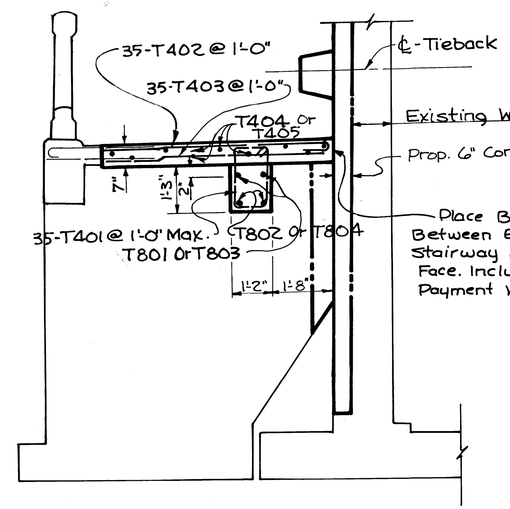

PROPOSED SECTION B-B

NOTES: Work This Sheet With Sheet Nos. 14-15/17.

At The Contractors Option, Concrete For The Proposed Stairway May Be Poured Against Compacted Earth Provided That The Minimum Thickness For The Steps And Landings Is Increased To 8" And The Depth And Width Of The Beam Is Increased To 1'-4". If This Option Is Chosen, The Concrete Cover Between The Reinforcing Steel And Earth Shall Be 3" Instead Of 2". Also, The Contractor Will Not Be Compensated For Any Additional Earth Or Concrete Needed.

Any Excavation Required For Removal Of Stairway Concrete Shall Be Included For Payment With Item 202 - Portions Of Concrete Steps Removed.

All Proposed Concrete For Stairway Modifications Shall Be Included For Payment With Item 511- Class 'C' Concrete, Stairways.

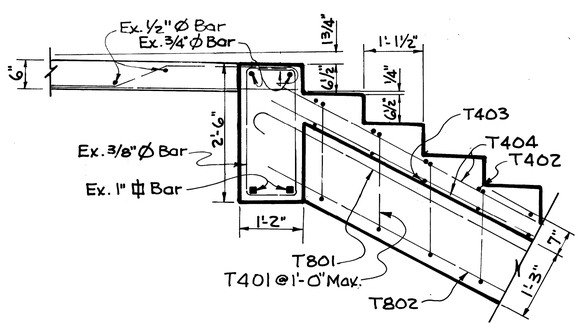

DETAIL A

Tread And Riser Dimensions Shown Are Approximate. Proposed Dimensions Shall Match Ex. Conditions

STATE OF OHIO
THOMAS E. YOUNG
26962
REGISTERED
PROFESSIONAL ENGINEER

CONTRACT DRAWING

PRINTS NOT BEARING THIS STAMP WERE MADE PRIOR TO ADVERTISING FOR BIDS AND ARE TO BE CONSIDERED INCOMPLETE FOR CONTRACT PURPOSES.

CITY OF CINCINNATI
DEPARTMENT OF PUBLIC WORKS
DIVISION OF ENGINEERING

16/17

STAIRWAY MODIFICATIONS

McMILLAN STREET BRIDGE OVER READING ROAD REHABILITATION

DESIGNED	DRAWN	TRACED	CHECKED	REVIEWED	DATE	REVISED
EAP	SJC	SJC	BHP	GCH	4-4-90	

22-48-95

FED. RD. REGION	STATE	PROJECT	FISCAL YEAR
5	OHIO		

35/36

REINFORCING STEEL LIST

MARK	TYPE	LENGTH	INC	NUMBER	WEIGHT
ABUTMENTS					
EA401	Str.	1'-6"		4	4
EA402	Str	3'-2"		4	8
EA501	Str.	28'-1"		18	527
EA502	Str.	29'-1"		18	546
EA503	4	6'-5"		4	27
EA504	Str.	2'-11"		4	12
EA601	1	10'-8"		76	1218
EA602	1	6'-2"		76	704
EA603	1	6'-2"		66	611
EA604	1	8'-2"		10	123
EA801	11	4'-1"		70	763
EA802	11	3'-10"		6	61
			Subtotal		4604
SUPERSTRUCTURE					
ES401	Str.	27'-9"		296	5487
ES402	Str.	27'-0"		296	5339
ES403	Str.	7'-6"		145	726
ES404	Str.	30'-0"		224	4489
ES405	Str.	17'-6"		32	374
ES406	Str.	5'-0"		145	484
ES407	Str.	1'-4"		217	193
ES408	Str.	3'-1"		217	447
ES501	Str.	27'-9"		248	7178
ES502	Str.	27'-0"		248	6984
ES503	1	3'-0"		744	2328
ES504	2	5'-7"		260	1514
ES506	2	8'-1"		260	2192
ES601	Str.	30'-0"		560	25234
ES602	Str.	24'-0"		80	2884
ES701	Str.	30'-0"		560	34339
ES702	Str.	28'-0"		80	4579
ES703	2	5'-10"		494	5890
			Subtotal		113659
RAILING					
ALTERNATE I					
ER501	Str.	8'-8"		152	*
ER502	Str.	5'-3"		24	*
ER503	Str.	6'-9"		8	*
ER504	Str.	5'-7"		16	*
ER505	1	4'-6"		136	*
ER506	Str.	13'-8"		16	*
ER507	Str.	15'-7"		16	*
ER508	5	3'-4"		12	*
ER509	10	4'-5"		16	*
ER510	9	7'-4"		532	*

* ER Bars And The Epoxy Coating Of These Bars Shall Be Included In The Price Bid For Item 517.

MARK	TYPE	LENGTH	INC	NUMBER	WEIGHT
WINGWALL MODIFICATIONS					
EW401	Str.	2'-3"		284	427
EW501	Str.	15'-7"		16	260
EW502	Str.	13'-8"		16	228
EW503	5	2'-4"		8	19
EW504	Str.	5'-10"		8	49
			Subtotal		983
WALL FACE & TIE ROD BEAM					
W401	3	5'-0"		160	534
W501	4	1'-8"		800	1391
W502	Str.	15'-0"		68	1064
W503	Str.	13'-8"		52	741
W504	Str.	6'-6" to 12'-0"	6 5/8"	4 Series of 11	425
W505	Str.	15'-7"		20	325
W506	Str.	2'-9" to 11'-3"	4'-3"	4 Series of 3	88
W507	Str.	13'-6"		8	113
W508	Str.	15'-5"		8	129
W801	Str.	13'-6"		16	577
W802	Str.	15'-5"		16	659
			Subtotal		6046
STAIRWAYS					
T401	5	5'-2"		140	483
T402	2	6'-8"		140	623
T403	Str.	6'-2"		140	577
T404	Str.	19'-3"		36	463
T405	6	17'-4"		36	417
T801	2	21'-5"		8	457
T802	7	31'-6"		8	673
T803	8	19'-7"		8	418
T804	2	12'-5"		8	265
			Subtotal		4376

TOTAL WEIGHT (Epoxy Coated Bars) 116,248

TOTAL WEIGHT (Uncoated Bars) 10,422

NOTES:

1.) Bar Marks Beginning With An "E" Shall Be Epoxy Coated In Accordance With Item 509.

2.) Bars Shall Be Carefully Shape To Pertinent Dimensions Shown In The Table Of Standard Bends, Sheet 202 Of The State Of Ohio Construction And Material Specifications Unless Otherwise Indicated.

3.) Reinforcing Steel Samples: Refer To C.M.S. Sections 106.03, 700, 709.01 Through 709.05 And 709.08. Sufficient Additional Reinforcing Steel Shall Be Provided For Sampling. Random Samples Shall Be Replaced In Structures By The Additional Steel, Spliced In Accordance With 509.08.

4.) For Alternate II Railing Reinforcement, See Sheet No. 36A/36.

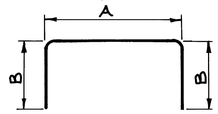

MARK	A	B
ES503	1'-5"	10½"
EA601	1'-5"	4'-9"
EA602	1'-5"	2'-6"
EA603	11"	2'-9"
EA604	11"	3'-9"
ER505	9"	2'-0"

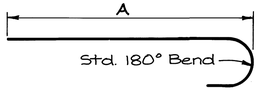

MARK	A
ES504	5'-0"
ES506	7'-6"
ES703	5'-0"
T402	6'-2"
T801	20'-6"
T804	11'-6"

TYPE 2

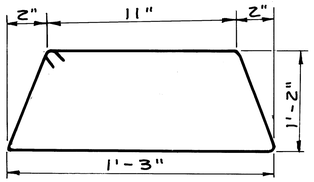

TYPE 3

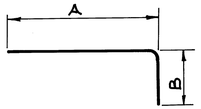

MARK	A	B
W501	1'-3"	6"
EA503	5'-5"	1'-1"

TYPE 4

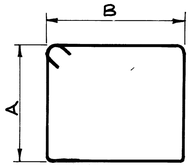

MARK	A	B
T401	1'-6"	10"
EW503	8"	8"
ER508	8"	9"

TYPE 5

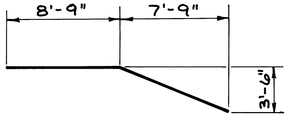

TYPE 6

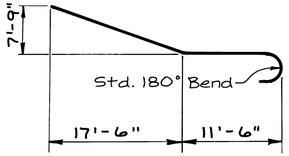

TYPE 7

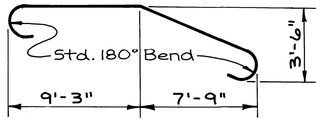

TYPE 8

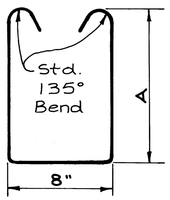

MARK	A
ER510	3'-0"

TYPE 9

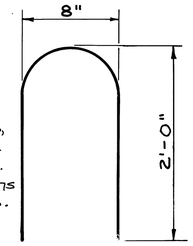

TYPE 10

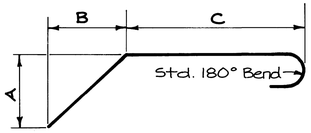

MARK	A	B	C
EA801	8½"	8½"	2'-4"
EA802	8½"	8½"	2'-1"

TYPE 11

STATE OF OHIO
THOMAS E. YOUNG
26962
REGISTERED PROFESSIONAL ENGINEER

CONTRACT DRAWING

PRINTS NOT BEARING THIS STAMP WERE MADE PRIOR TO ADVERTISING FOR BIDS AND ARE TO BE CONSIDERED OBSOLETE FOR CONTRACT PURPOSES.

CITY OF CINCINNATI
DEPARTMENT OF PUBLIC WORKS
DIVISION OF ENGINEERING

17/17

REINFORCING STEEL LIST

McMILLAN STREET BRIDGE OVER READING ROAD REHABILITATION

DESIGNED	DRAWN	TRACED	CHECKED	REVIEWED	DATE	REVISED
JGW	EGP	EGP	BHP	GCH	44-90	

22-48-96

FED. RD. REGION	STATE	PROJECT	FISCAL YEAR
5	OHIO		

36/36

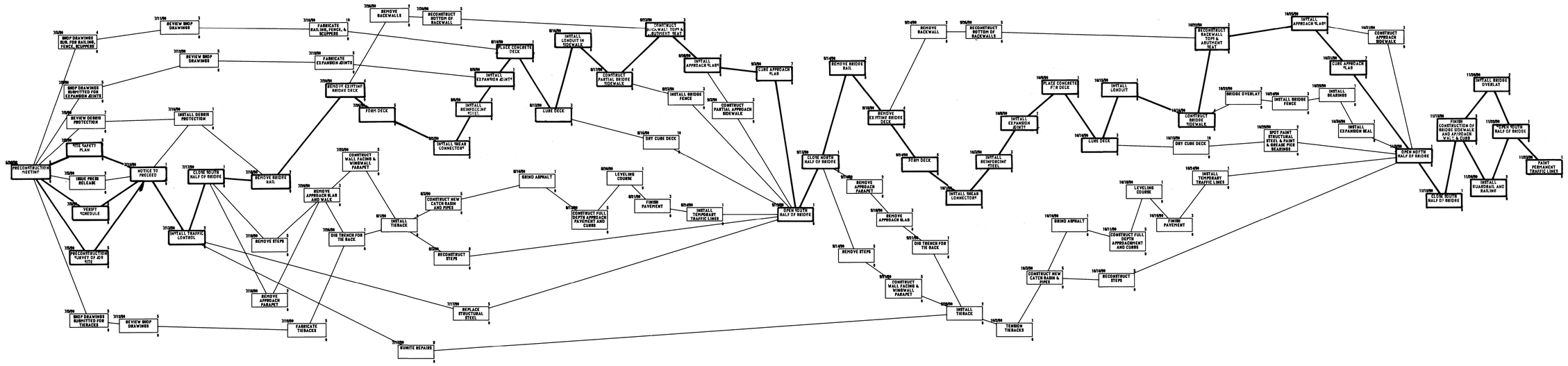

THE SCHEDULE IN THE CONTRACT PLANS HAS BEEN DEVELOPED TO ESTABLISH CONTRACT DURATION. THE CITY REQUIRES THE CONTRACTOR TO COMPLETE THE PROJECT BEFORE WINTER.
THE CONTRACTOR MAY ADOPT THIS SCHEDULE AS IS, MODIFY TASKS, DURATIONS OR DEPENDENCIES, OR SUBMIT AN EQUIVALENT SCHEDULE SHOWING AT LEAST THE SAME LEVEL OF DETAIL AND CONSTRAINTS. BAR CHARTS WILL NOT BE ACCEPTED.
THE CONTRACTOR IS RESPONSIBLE TO SCHEDULE ACTIVITIES, EQUIPMENT, CREWS, MATERIALS AND ALL OTHER WORK. THE CITY WILL TRACE PROGRESS AND REQUIRE THE CONTRACTOR TO WORK OVERTIME OR MULTIPLE SHIFTS AT NO ADDITIONAL COMPENSATION TO MAINTAIN SCHEDULED PROGRESS.
THE SCHEDULE WILL BE DISCUSSED IN DETAIL AT THE PRECONSTRUCTION MEETING AND WILL BE MODIFIED AND UPDATED REGULARLY TO REFLECT ACTUAL AND ANTICIPATED PROGRESS AND CONSTRAINTS.
THE CITY TAKES NO RESPONSIBILITY FOR LOGIC ERRORS IN THE PROPOSED SCHEDULE.

STATE OF OHIO
THOMAS E. YOUNG
26962
REGISTERED
PROFESSIONAL ENGINEER

CONTRACT DRAWING

PRINTS NOT BEARING THIS STAMP WERE MADE PRIOR TO ADVERTISING FOR BIDS AND ARE TO BE CONSIDERED OBSOLETE FOR CONTRACT PURPOSES.

CITY OF CINCINNATI
DEPARTMENT OF PUBLIC WORKS
DIVISION OF ENGINEERING

CONSTRUCTION SCHEDULE

McMILLAN STREET BRIDGE OVER READING ROAD REHABILITATION

DESIGNED	DRAWN	TRACED	CHECKED	REVIEWED	DATE	REVISED
MH	MH	MH	BHP	GCH	4-4-90	

22-48-97

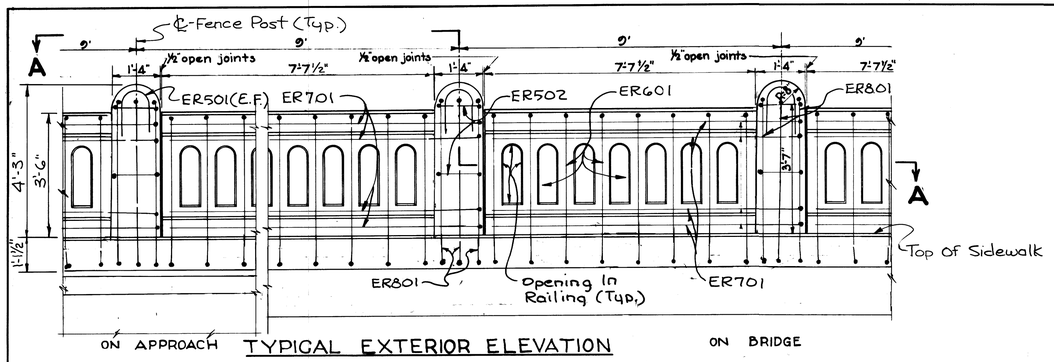

TYPICAL EXTERIOR ELEVATION

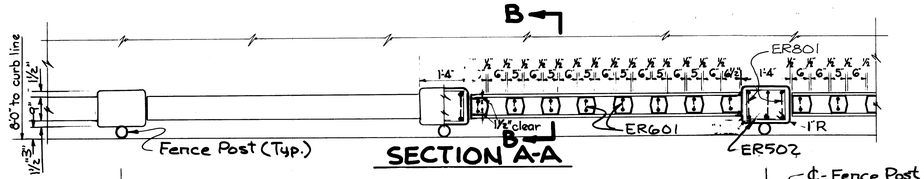

SECTION A-A

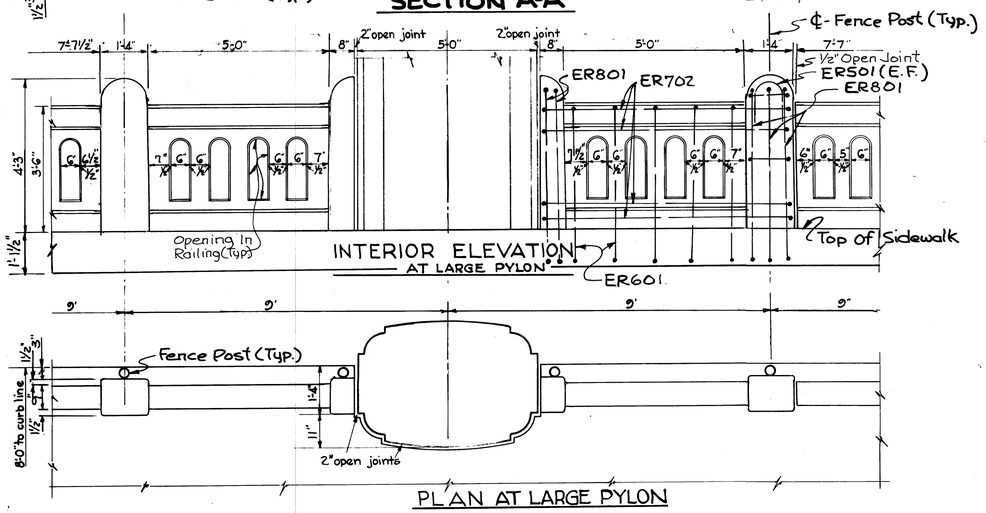

INTERIOR ELEVATION AT LARGE PYLON

PLAN AT LARGE PYLON

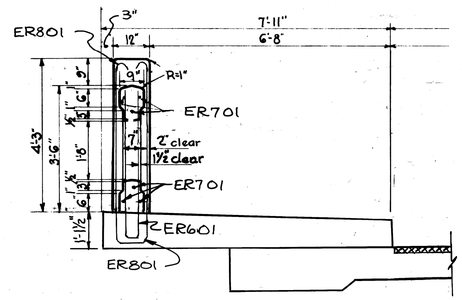

SECTION B-B

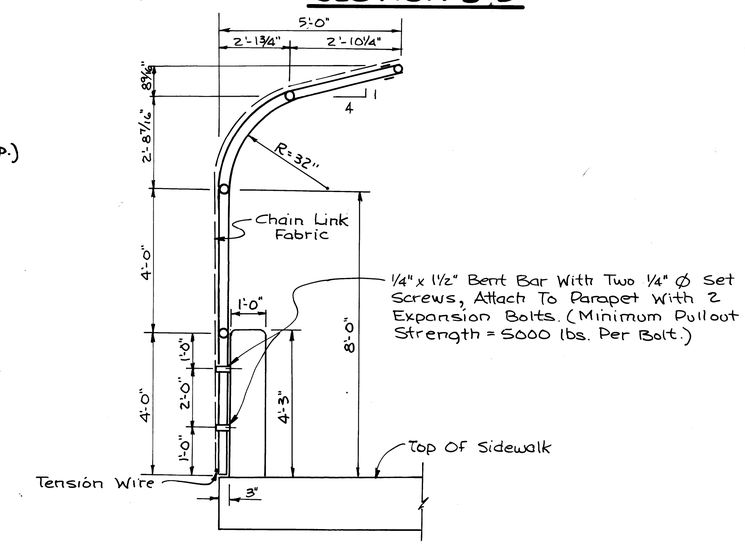

TYPICAL SECTION (SHOWING FENCE)

For Fence Details Not Shown, See Sheet No. 12/17.

REINFORCING STEEL LIST					
MARK	TYPE	LENGTH	INC	NUMBER	WEIGHT
ER501	1	5'-8"		112	
ER502	2	3'-10"		112	
ER601	1	8'-4"		468	
ER701	4	9'-5"		276	
ER702	5	8'-4"		48	
ER703	5	7'-2"		24	
ER704	4	5'-8"		24	
ER705	4	8'-7"		24	
ER801	3	11'-4"		200	

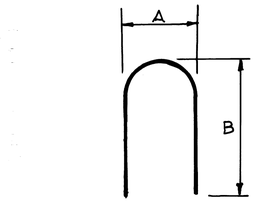

TYPE 1

MARK	A	B
ER501	1'-0"	2'-6"
ER601	4"	4'-1"

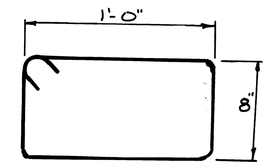

TYPE 2

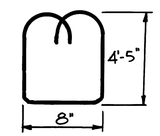

TYPE 3

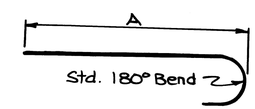

TYPE 4

MARK	A
ER701	8'-7"
ER704	4'-10"
ER705	7'-9"

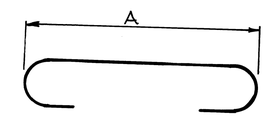

TYPE 5

MARK	A
ER702	6'-8"
ER703	5'-6"

NOTES:
1.) All bars shown on this sheet shall be included in the price bid for Item 517- Decorative Concrete Railing With Fencing, Including Incidentals. (Alternate II)
2.) For additional reinforcing steel notes, See Sheet No. 17/17.
3.) Alternate II railing may be precast if adequate anchorage details are submitted and approved by the Engineer. These details must be designed by a Professional Engineer registered in the State of Ohio. The anchorage must be able to develop an equivalent amount of reinforcing steel as shown in the existing sections.

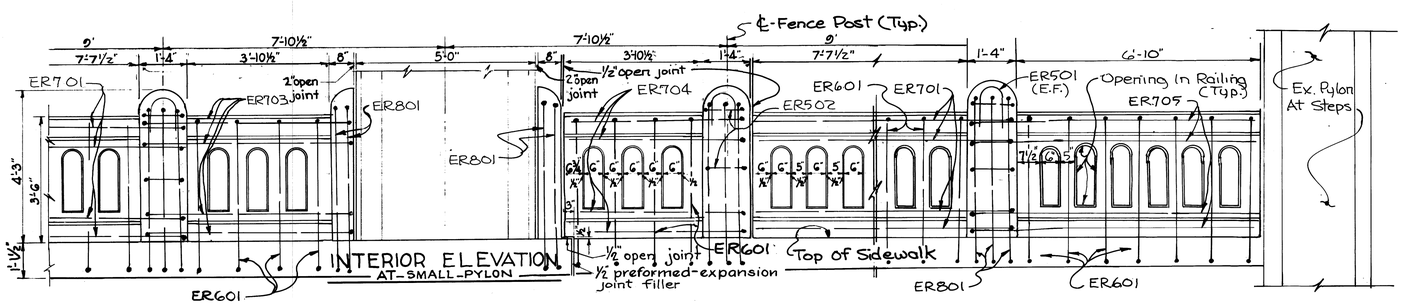

INTERIOR ELEVATION AT SMALL PYLON

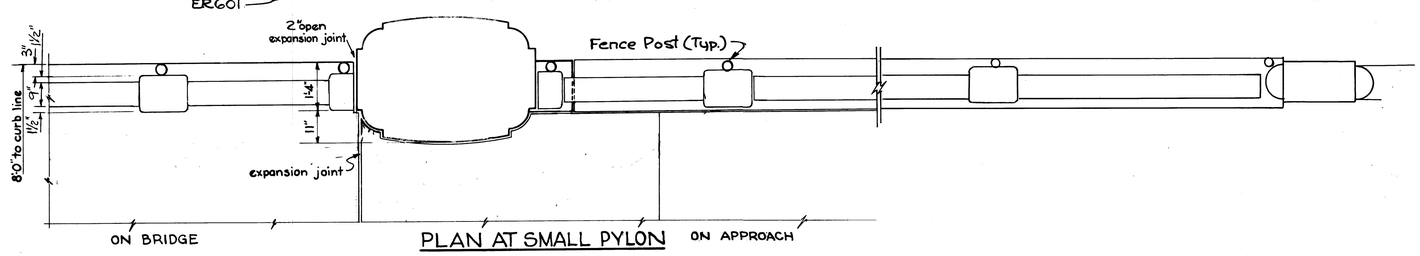

PLAN AT SMALL PYLON

RAILING DETAILS

½"

Pronin
Schulzinger
Aren

STATE OF OHIO
THOMAS E. YOUNG
26962
REGISTERED
PROFESSIONAL ENGINEER

CONTRACT DRAWING

PRINTS NOT BEARING THIS STAMP WERE ISSUED PRIOR TO ADVERTISING FOR BIDS AND ARE TO BE CONSIDERED OBSOLETE FOR CONTRACT PURPOSES.

CITY OF CINCINNATI
DEPARTMENT OF PUBLIC WORKS
DIVISION OF ENGINEERING

ALTERNATE II RAILING

McMILLAN STREET BRIDGE OVER READING ROAD REHABILITATION

DESIGNED	DRAWN	TRACED	CHECKED	REVIEWED	DATE	REVISED
JGW	EGP	EGP	BHP	GCH	4-4-90	

22-48-98