FED. RD. DIVISION	STATE	PROJECT	
2	OHIO		

281/303

HOCKING COUNTY
HOC-33-10.50

MICROFILMED
APR 6 1981

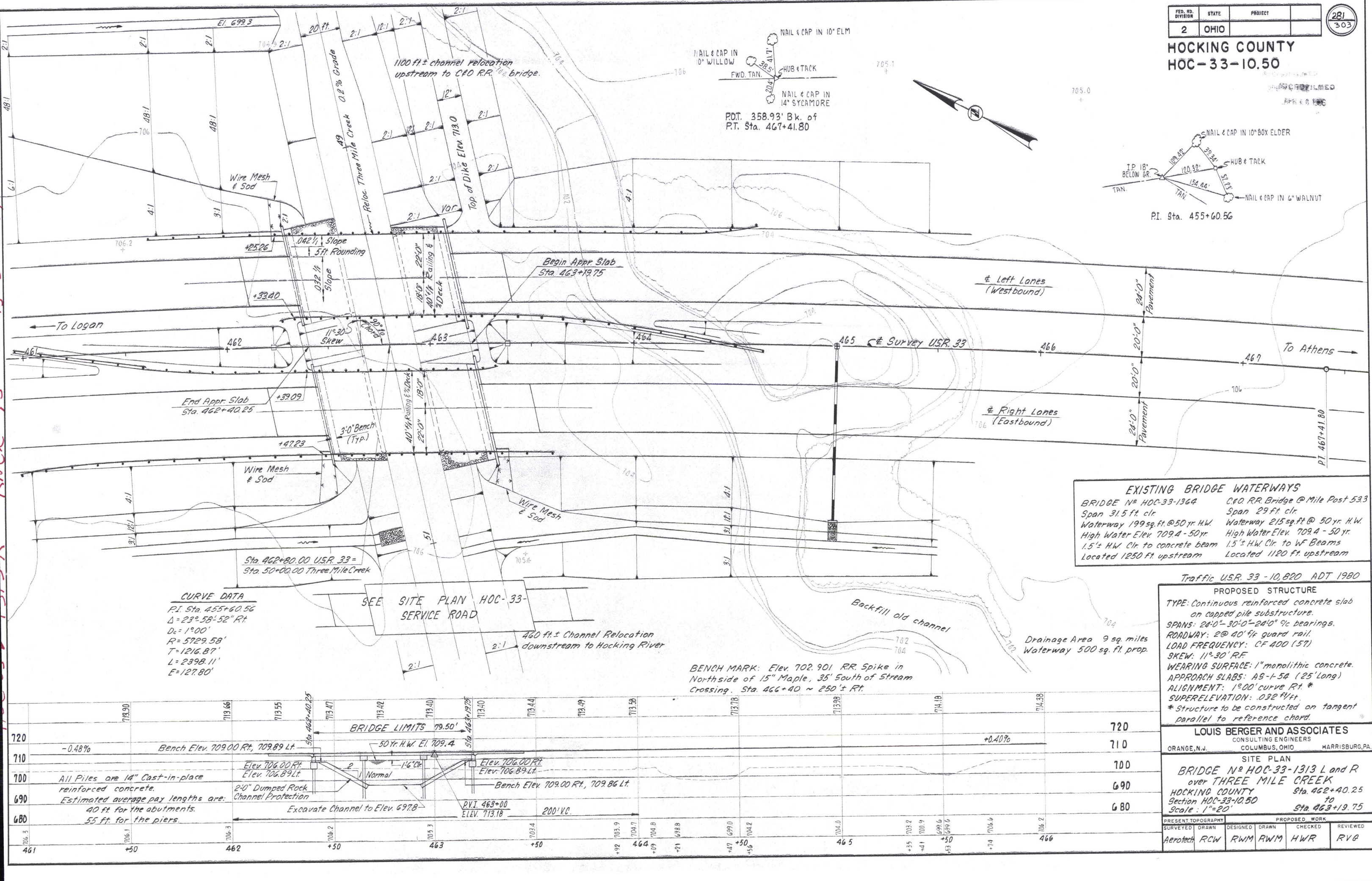

EXISTING BRIDGE WATERWAYS

BRIDGE Nº HOC-33-1364	C&O. RR. Bridge @ Mile Post 53.3
Span 31.5 ft. clr.	Span 29 ft. clr.
Waterway 199 sq. ft. @ 50 yr. H.W.	Waterway 215 sq. ft. @ 50 yr. H.W.
High Water Elev. 709.4 - 50 yr.	High Water Elev. 709.4 - 50 yr.
1.5'± H.W. Clr. to concrete beam	1.5'± H.W. Clr. to W.F. Beams
Located 1250 ft. upstream	Located 1120 ft. upstream

Traffic U.S.R. 33 - 10,820 ADT 1980

PROPOSED STRUCTURE

TYPE: Continuous reinforced concrete slab on capped pile substructure.
SPANS: 24'0"-30'0"-24'0" ℄ bearings.
ROADWAY: 2@ 40' ft guard rail.
LOAD FREQUENCY: CF 400 (57)
SKEW: 11°-30' R.F.
WEARING SURFACE: 1" monolithic concrete.
APPROACH SLABS: AS-1-54 (25' Long)
ALIGNMENT: 1°00' curve Rt. *
SUPERELEVATION: .032 ft/ft.
* Structure to be constructed on tangent parallel to reference chord.

LOUIS BERGER AND ASSOCIATES
CONSULTING ENGINEERS
ORANGE, N.J. COLUMBUS, OHIO HARRISBURG, PA.

SITE PLAN

BRIDGE Nº HOC-33-1313 L and R over THREE MILE CREEK
HOCKING COUNTY Sta. 462+40.25 to Sta. 463+19.75
Section HOC-33-10.50
Scale: 1"=20'

PRESENT TOPOGRAPHY		PROPOSED WORK			
SURVEYED	DRAWN	DESIGNED	DRAWN	CHECKED	REVIEWED
Aerotech	RCW	RWM	RWM	HWR	RVG

FED. RD. DIVISION	STATE	PROJECT	
2	OHIO		

282
303

HOCKING COUNTY
HOC-33-10.50

MICROFILMED

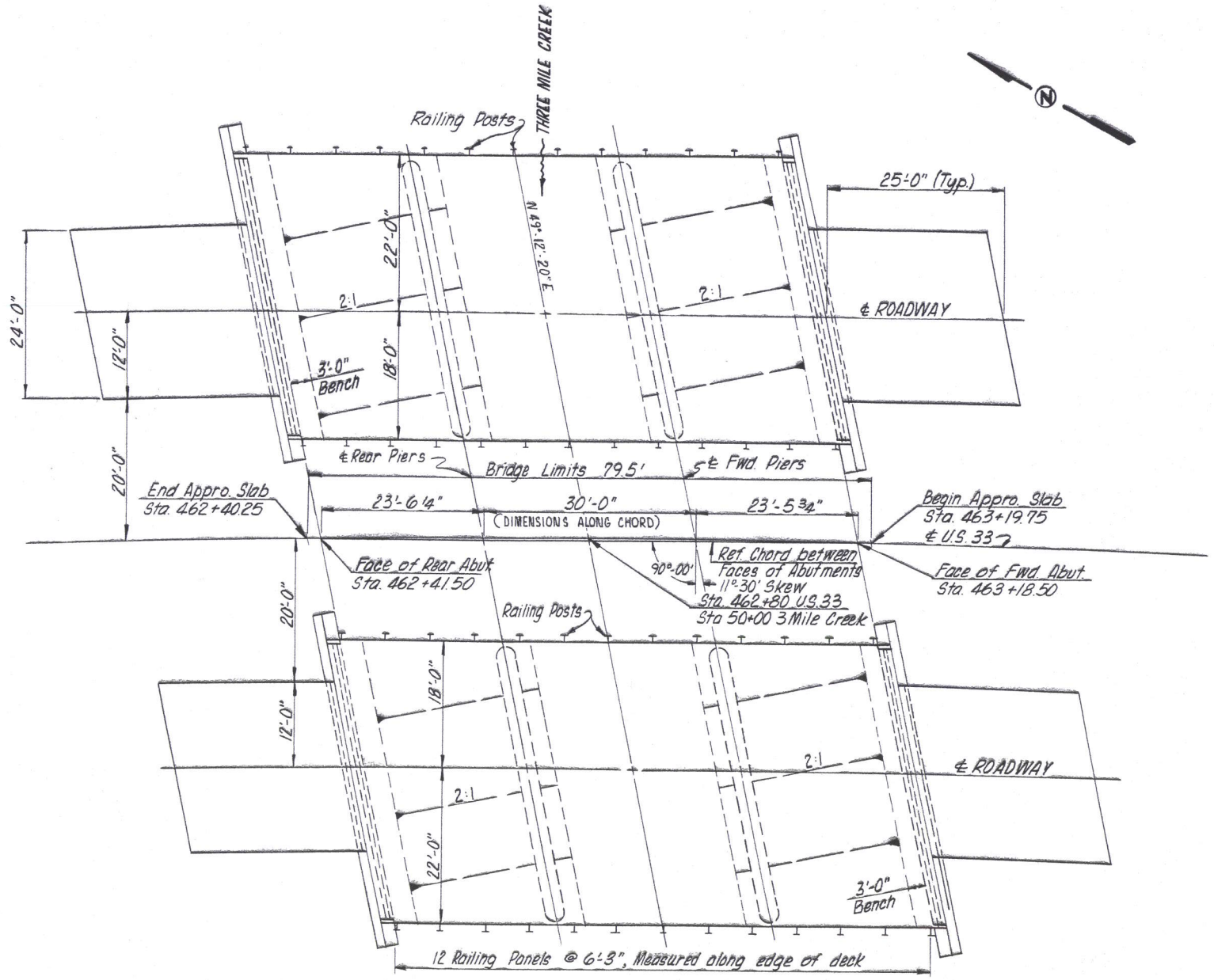

GENERAL PLAN

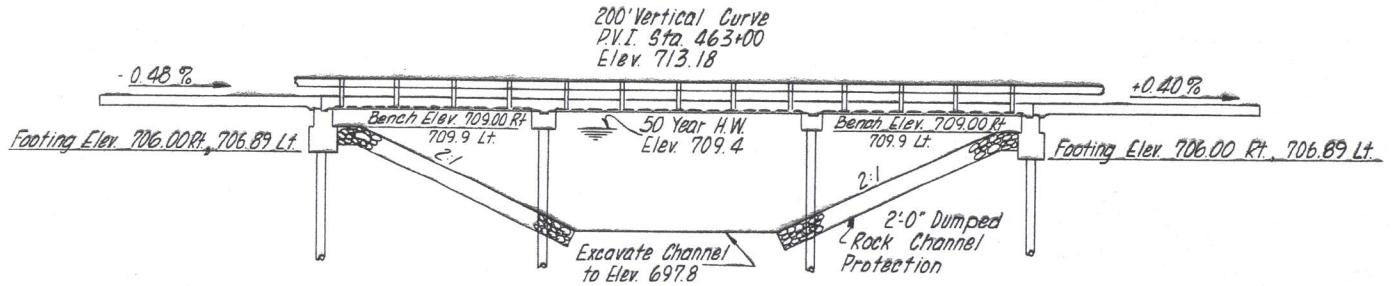

ELEVATION

ESTIMATED QUANTITIES for TWO BRIDGES

ITEM	TOTAL	UNIT	DESCRIPTION	SUPER.	ABUTS.	PIERS	GEN'L
503	109	Cu.Yd.	Unclassified excavation		109		
505	Lump	Sum	First test pile				Lump
507	2660	Lin.ft.	14" Cast-in-place reinforced concrete piles		1120	1540	
509	87,418	Lbs.	Reinforcing steel	68,826	10,467	8,125	
511	328	Cu.Yds.	Class "C" concrete, superstructure & pier caps	294		29	
511	108	Cu.Yds.	Class "E" concrete, abutments		108		
517	318	Lin.Ft.	Railing 606 Type 4 with steel bolts & posts	318			
518	31	Cu.Yds.	Porous backfill		31		
601	480	Cu.Yds.	Dumped rock channel protection				480
808	323	Units	Water-reducing, set retarding admixture	294		29	
825	754	Sq.Yds.	Concrete surface treatment	754			

Checked AMS 12-13-66

GENERAL NOTES

REFERENCE shall be made to Standard Drawings A-1-54 dated 11-8-65, P-1-54 dated 11-8-65 CS-1-65 dated 6-1-65 and to Supplemental Specifications 808 dated 1-13-67, 825 dated 1-1-67.

DESIGN SPECIFICATIONS: This Structure conforms to the requirements of "Design Specifications for Highway Structures" of the State of Ohio, Department of Highways, dated 9-1-57, together with current revisions thereof.

DESIGN DATA: Design Loading - CF 400 (57)
Concrete Class C - basic unit stress 1,333 p.s.i.
Concrete Class E - basic unit stress 1,133 psi
Reinforcing Steel - ASTM A15, A16, A160 Deformed, Intermediate or Hard Grade. Base unit stress 20,000 psi.

MACHINE FINISH: the concrete bridge deck shall be finished by the use of a finishing machine

EXCAVATION QUANTITY: includes the removal of fill material between the top of the earth bench and the bottom of the abutment crossbeam.

SLAB THICKNESS is 14 1/4" which includes 1" for monolithic wearing surface.

PILES shall be driven to a minimum bearing capacity of 25 Tons per pile for the abutments and 34 Tons per pile for the piers.

PIER PILE ENCASEMENT as shown on Std. Drawing No P-1-54 may be omitted provided that the tapered portion if any, of all pier piles does not extend above the stream bed or the proposed surface of the ground. If the tapered portion of any pile extends above these limitations, the encasement will be required for all pier piles. If the encasement is omitted the pile castings shall have a thickness of metal not less than No 7 gauge and the painting of the piles shall extend to low water elevation or if the proposed surface of the ground is above low water the painting shall extend to at least one foot below the proposed surface of the ground.

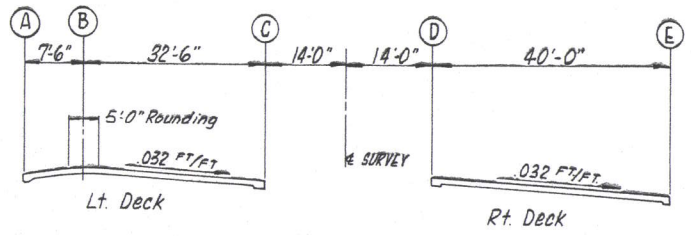

DECK ELEVATIONS AT PIERS & ABUTMENTS						
LOCATION	A	B	C	D	E
Rear Abut. (Edge/Slab)	714.07	714.34	713.32	713.69	712.38
Rear Pier (℄ brg)	714.00	714.26	713.26	713.63	712.34
Forward Pier (℄ brg)	713.95	714.21	713.21	713.59	712.31
Forward Abut (Edge/Slab)	713.93	714.20	713.21	713.59	712.32

LOUIS BERGER AND ASSOCIATES
CONSULTING ENGINEERS
ORANGE, N.J. COLUMBUS, OHIO HARRISBURG, PA.

GENERAL PLAN & ELEVATION
ESTIMATED QUANTITIES

BRIDGE No HOC-33-1313 L&R over THREE MILE CR.
HOCKING COUNTY
Sta. 462+43.50 to
Sta. 463+16.50

DESIGNED	DRAWN	TRACED	CHECKED	REVIEWED	DATE	REVISED
J.L.	J.L.	J.M.M.	H.W.R.	R.W.M.	1-11-67	

HILLS CO.—17-5153—50—9-64

PIER ELEVATIONS					ABUTMENT ELEVATIONS								
LOCATION	A	B	C	D	E	F	G	H	J	K	L	M	N
REAR	710.69	709.94	710.28	709.02	713.96	714.34	713.22	713.79	712.29	712.76	712.00	712.34	711.07
FORWARD	710.64	709.90	710.24	708.99	713.82	714.20	713.11	713.70	712.23	712.62	711.89	712.25	711.00

FED. RD. DIVISION	STATE	PROJECT		
2	OHIO			

283
303

HOCKING COUNTY
HOC-33-10.50

REINFORCING STEEL

MARK	NUMBER	LENGTH	WEIGHT	SHAPE
ABUTMENTS				
R401	112	5'-5"	405	B
R501	32	24'-1"	804	S
R502	272	6'-7"	1,868	B
R503	16	20'-7"	344	S
R504	12	5'-6"	69	S
R505	24	4'-9"	119	S
R506	12	6'-6"	81	S
R507	32	5'-1"	170	S
R508	44	6'-8"	306	B
R509	22	10'-7"	243	B
R510	22	8'-11"	205	B
R511	32	9'-11"	331	B
R512	18	8'-7"	161	B
R513	18	8'-11"	167	B
R514	4	12'-8"	53	S
R515	4	8'-10"	37	S
R516	4	8'-6"	35	S
R517	4	13'-0"	54	S
R801	32	24'-7"	2,100	S
R1001	32	21'-2"	2,915	S
REPLACEMENT BARS				
RE1001	1	8'2"		S
RE 901	2	7'-10"		S
RE 801	2	7'-6"		S
RE 701	1	7'-3"		S
RE 601	1	6'-11"		S
RE 501	1	6'-7"		S
RE 401	2	5'-5"		B

BENDING DIAGRAM

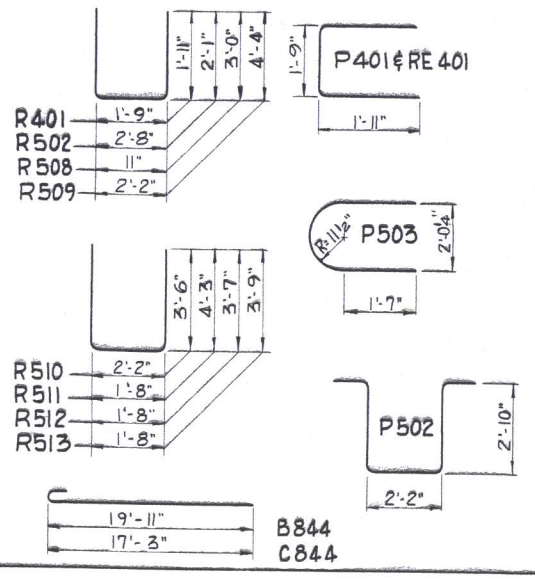

MARK	NUMBER	LENGTH	WEIGHT	SHAPE
PIERS				
P401	112	5'-5"	405	B
P501	8	37'-3"	311	S
P502	120	9'-0"	1,126	B
P503	16	6'-4"	106	B
P701	168	4'-0"	1,374	S
P901	16	37'-3"	2,026	S
P1001	16	40'-4"	2,777	S
SUPERSTRUCTURE				
A844	258	28'-1"	19,343	S
B844	76	21'-0"	4,261	B
C844	76	18'-4"	3,720	B
D844	38	19'-6"	1,979	S
E844	38	15'-10"	1,606	S
F944	156	24'-1"	12,774	S
G944	76	12'-1"	3,122	S
H944	76	9'-9"	2,519	S
J601	80	14'-8"	1,762	S
K601	40	10'-11"	656	S
M601	174	40'-4"	10,541	S
N601	108	40'-4"	6,543	S

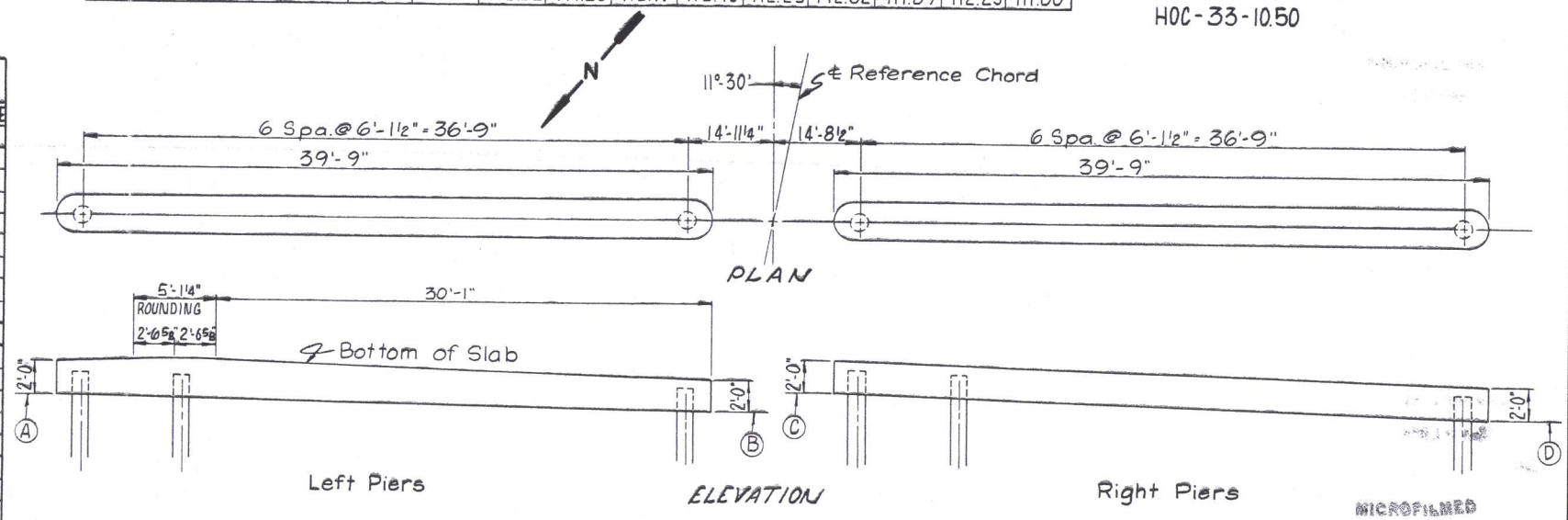

MICROFILMED
APR 16 1985

NOTE: For Details not shown See Std. Dwg. P-1-54.
All Piles 14" cast-in-place reinforced concrete.

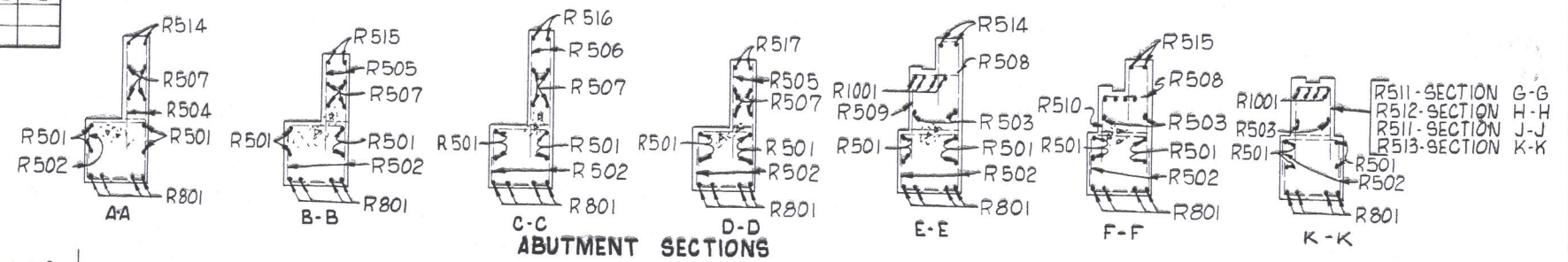

ABUTMENT SECTIONS

N Forward Abutments.

N Rear Abutments.

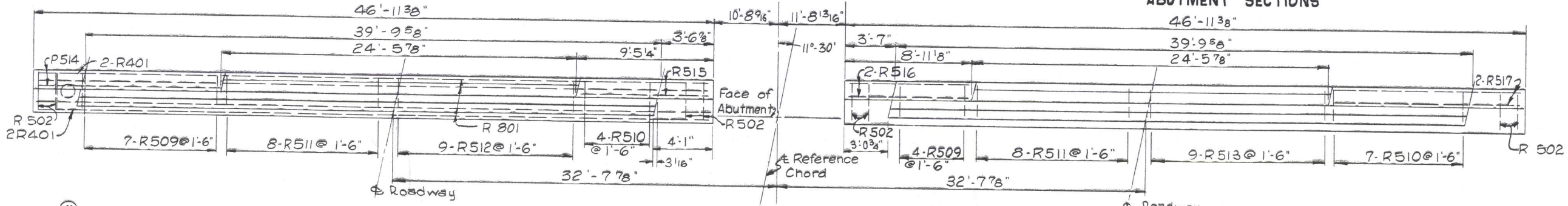

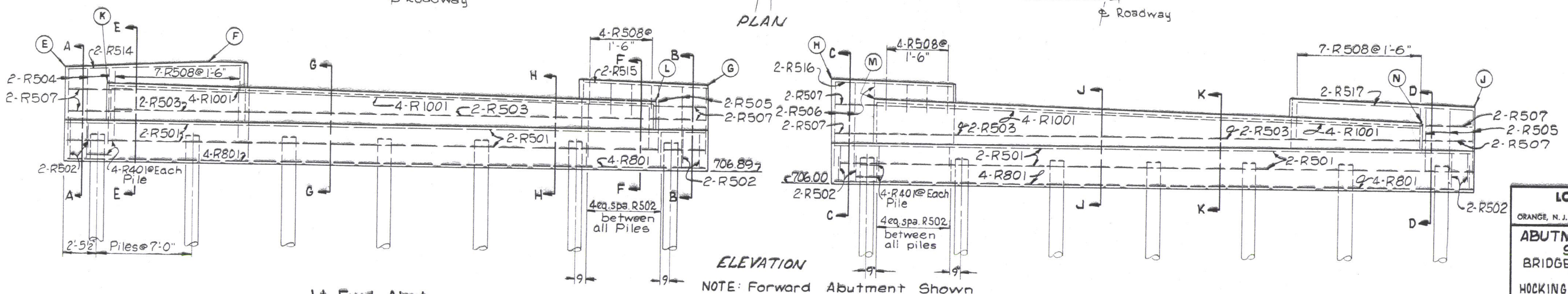

ELEVATION

NOTE: Forward Abutment Shown

All Piles 14" Cast-in-place Reinforced Concrete. For Dimensions not shown see Std. Dwg. A-1-54

LOUIS BERGER AND ASSOCIATES
CONSULTING ENGINEERS
ORANGE, N. J. COLUMBUS, OHIO HARRISBURG, PA.

ABUTMENT, PIER & REINFORCING STEEL DETAILS
BRIDGE Nº HOC-33-1313 L&R OVER THREE MILE CREEK
HOCKING COUNTY Sta 462+43.50 to
SECTION HOC-33-10.50 Sta. 463+16.50

DESIGNED	DRAWN	TRACED	CHECKED	REVIEWED	DATE	REVISED
J.L.	J.L.	J.M.M.	H.W.V.R.	R.W.M.	1-11-67	

HILLS CO.—17-5153—80—9-64

FED. RD. DIVISION	STATE	PROJECT	
2	OHIO		

286
303

HOCKING COUNTY
HOC-33-10.50
4.5 MILES S.E. OF LOGAN

MICROFILMED

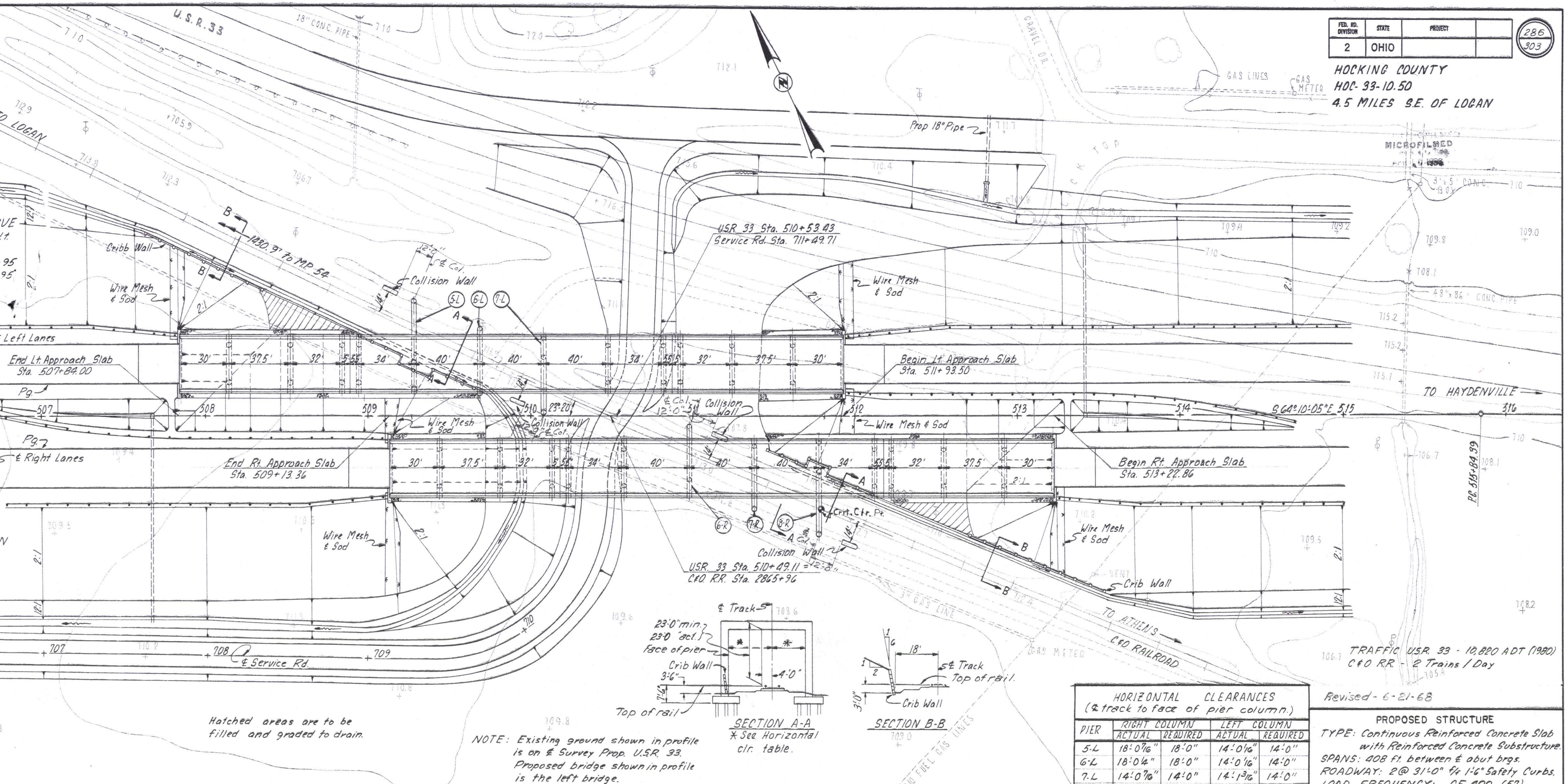

Hatched areas are to be filled and graded to drain.

NOTE: Existing ground shown in profile is on ℄ Survey Prop. U.S.R. 33. Proposed bridge shown in profile is the left bridge.

BENCH MARK: Chisled □ on N.E. Headwall of box culvert 145' Lt. of Sta. 515+40. ELEV 712.69

HORIZONTAL CLEARANCES (℄ track to face of pier column.)				
PIER	RIGHT COLUMN ACTUAL	RIGHT COLUMN REQUIRED	LEFT COLUMN ACTUAL	LEFT COLUMN REQUIRED
5-L	18'-0 7/16"	18'-0"	14'-0 1/16"	14'-0"
6-L	18'-0 1/4"	18'-0"	14'-0 1/16"	14'-0"
7-L	14'-0 7/16"	14'-0"	14'-1 3/16"	14'-0"
6-R	14'-0 1/4"	14'-0"	14'-0 1/8"	14'-0"
7-R	14'-0"	14'-0"	18'-0 1/8"	18'-0"
8-R	14'-0"	14'-0"	18'-0 1/8"	18'-0"

TRAFFIC U.S.R. 33 - 10,820 A.D.T. (1980)
C&O R.R. - 2 Trains / Day

Revised - 6-21-68

PROPOSED STRUCTURE
TYPE: Continuous Reinforced Concrete Slab with Reinforced Concrete Substructure.
SPANS: 408 ft. between ℄ abut brgs.
ROADWAY: 2@ 31'-0" ℄ 1'-6" Safety Curbs.
LOAD FREQUENCY: CF 400 (57)
WEARING SURFACE: 1" Monolithic Concrete.
APPROACH SLABS: AS-1-54 (25' Long).
ALIGNMENT: Tangent.
SKEW: None.

"C&O Ry. Designation Bridge FH 543"

LOUIS BERGER AND ASSOCIATES
CONSULTING ENGINEERS
ORANGE, N.J. COLUMBUS, OHIO HARRISBURG, PA.

SITE PLAN
BRIDGE NO. HOC-33-1400 L&R
Over C&O Railroad
SECTION: HOC-33-10.50 Scale 1"=30'
Eastbound Sta. 509+13.36 to Sta. 513+22.86
Westbound Sta. 507+84.00 to Sta. 511+93.50

PRESENT TOPOGRAPHY		PROPOSED WORK			
SURVEYED	DRAWN	DESIGNED	DRAWN	CHECKED	REVIEWED
MID-TECH	A.E.WALLACE	HWR	HWR	RWM	RVB

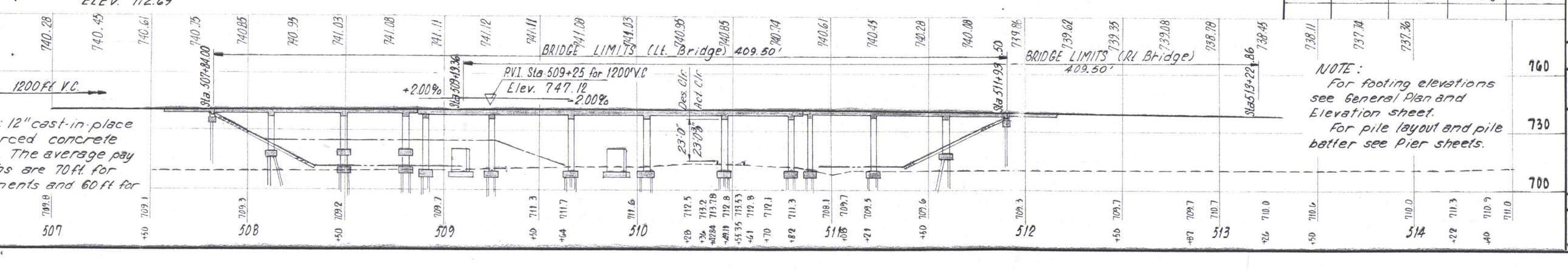

Hoc 33 1400 L R

FED. RD. DIVISION	STATE	PROJECT	
2	OHIO		

287
303

HOCKING COUNTY
HOC-33-10.50

MICROFILMED

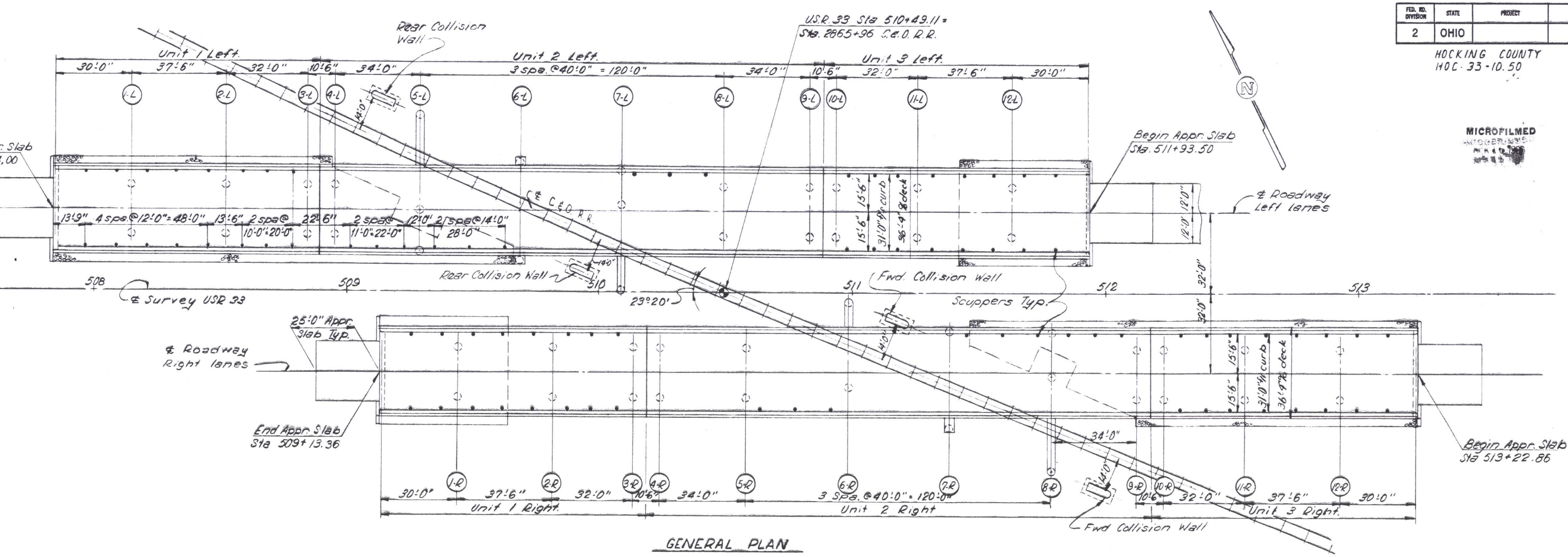

GENERAL PLAN

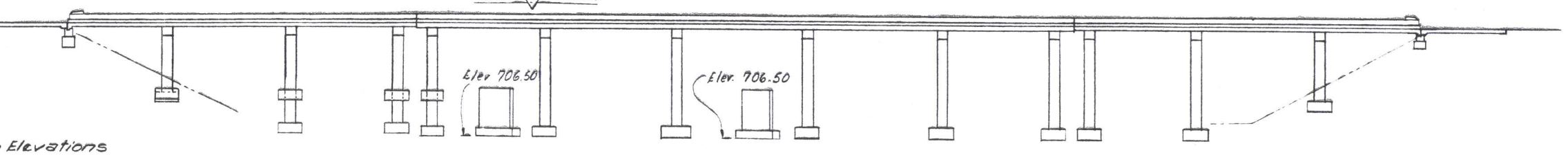

Elevations

mn.	733.00	716.70	707.28	707.34	706.50	706.50	706.50	706.50	706.50	706.50	706.50	706.50	715.83	732.13
mn.		717.31	717.28	717.34	717.35	706.50	706.50	706.50	706.50	706.50	706.50	706.50	715.83	

ELEVATION LEFT STRUCTURE
(Piles not shown)

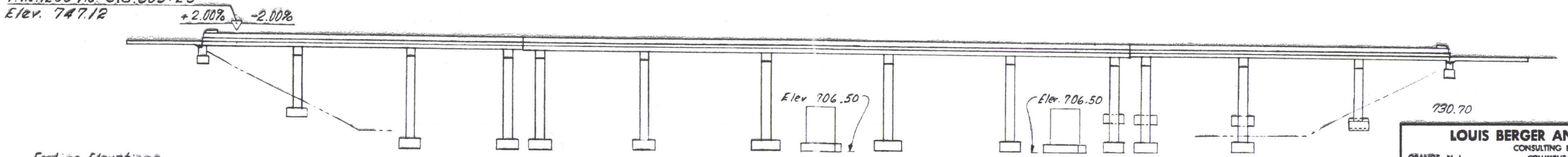

Footing Elevations

Lt. Column.	733.34	717.04	706.50	706.50	706.50	706.50	706.00	706.00	706.00	716.00	715.90	715.56	715.28
Rt. Column.		717.04	706.50	706.50	706.50	706.50	706.00	706.00	706.00	706.50	706.50	706.50	714.40

ELEVATION RIGHT STRUCTURE
(Piles not shown)

LOUIS BERGER AND ASSOCIATES
CONSULTING ENGINEERS
ORANGE, N. J. COLUMBUS, OHIO HARRISBURG, PA.

GENERAL PLAN & ELEVATION
BRIDGE Nº HOC-33-1400 L & R.
OVER C. & O. RAILROAD

HOCKING COUNTY

DESIGNED	DRAWN	TRACED	CHECKED	REVIEWED	DATE	REVISED
HWR	RCW		DSB	RWM	10/9/67	

NOTES

REFERENCE: shall be made to Standard Drawings BR-1-65 revised 11-24-65 Sheet 1; and to Supplemental Specifications 808 revised 1-13-67, 825 dated 1-1-67, 828 dated 1-1-67, 832 dated 5-25-67 and 931 dated 5-25-67.

DESIGN SPECIFICATIONS: This structure conforms to the requirements of "Design Specifications for Highway Structures" of the State of Ohio, Department of Highways dated 9-1-57 together with the current revisions there of.

PROCEDURE: The embankment shall be placed and compacted to the finished spill-thru slope and to the level of the subgrade for a distance of 200 ft. beyond the abutments, after which excavation shall be made for the abutments and piers, except as follows: Footings and columns adjacent to the cellular retaining walls for piers 4L, 5L, 6L, 8R and 9R shall be constructed with the walls.

EXCAVATION QUANTITY includes the removal of fill material required for construction of abutments and piers

AUGERING: At the Contractor's option and expense he may prebore through the proposed embankment materials to original ground at the abutments and piers located in the slopes before driving the piles.

PILES: shall be driven to a minimum bearing capacity of 30 tons per pile for abutments and 45 tons per pile per pier.

MACHINE FINISH: The concrete bridge deck shall be finished by the use of a finishing machine.

DESIGN LOADING: C F 400 (57)

CONCRETE CLASS "C" basic unit stress 1333 p.s.i.

CONCRETE CLASS "E" basic unit stress 1133 p.s.i.

STRUCTURAL STEEL - ASTM A 36 basic unit stress 20,000 p.s.i.

REINFORCING STEEL - ASTM A15, A16, A160: Deformed, Intermediate or Hard Grade. Basic unit stress 20,000 p.s.i. except spiral reinforcement which may be plain, Structural Grade with basic unit stress of 18,000 p.s.i.

CONSTRUCTION CLEARANCE: of 20ft. vertically above the top of the railroad rails and 8ft. horizontally from the center of tracks shall be maintained at all times.

SHEETING AND BRACING: Before construction is started, eight sets of prints showing details of the sheeting and bracing to be used for excavation adjacent to the railroad track shall be submitted to the Director for approval by the Department of Highways and by the Railroad Company.

ALIGNING RAILROAD TRACKS: After the Contractor has completed all excavation and backfill adjacent to the railroad in compliance with Sec. 503.04 and 503.09 of the Construction and Material Specifications, subject to the Supervision of the Railroad Company, nothing in Sec. 503.04, 503.09, 108.04 of the Specifications shall be construed to hold the Contractor liable for aligning and resurfacing the railroad tracks.

RAILROAD AERIAL LINES will be relocated by the railroad. The Contractor shall use all precautions necessary to see that the lines are not disturbed during the construction stage and shall co-operate with the railroad in the relocation of these lines. The cost of the relocation shall be included in the railroad force account work.

CURBS: shall be placed after the shoring under the slab has been released sufficiently to permit the slab spans to attain full dead load deflection

CONSTRUCTION JOINT One longitudinal joint on the centerline of roadway will be permitted. A horizontal construction joint shall be placed between each curb and the top of the slab.

CHAMBER of 1/800 of the span shall be provided in each span (in addition to any required for conformance with the profile of the highway) to allow for dead load deflection. This is the amount of chamber required before falsework is released. To obtain this, proper allowance shall be made for the deflection of falsework members.

WELDS on secondary stress carrying members are shown thus:

FED. RD. DIVISION	STATE	PROJECT	
2	OHIO		

288
303

HOCKING COUNTY
HOC-33-10.50

MICROFILMED
APR 18 19

ESTIMATED QUANTITIES (TWO BRIDGES)

ITEM	TOTAL	UNITS	DESCRIPTION	ABUTS	PIERS	SUPER.	GENERAL
503	Lump	Sum	Cofferdams, Cribs and Sheeting.				Lump
503	936	Cu. Yds	Unclassified Excavation	163	715		58
505	Lump	Sum	First test pile				Lump
506	Lump	Sum	First pile test load				Lump
506	3	Each	Subsequent pile test load				3
507	15,340	Lin.Ft.	12" Cast-in-place reinforced concrete piles	1,960	13,380		
509	~~620,046~~ 617,152	lbs.	Reinforcing Steel	9,859	~~467,873~~ 467,935	~~437,458~~ 436,673	~~2,659~~ 2,685
511	1,763	Cu. Yds.	Class "C" Concrete, superstructure			1,763	
511	580	Cu. Yds.	Class "C" Concrete, pier caps and columns		580		
511	100	Cu. Yds.	Class "E" Concrete, abutment	100			
511	315	Cu. Yds.	Class "E" Concrete, footings		315		
511	80	Cu. Yds.	Class "E" Concrete, collision walls				80
516	10,705	lbs.	*Structural expansion joint including field painting			10,705	
517	1,635	Lin.Ft.	Railing (Type "I")			1,635	
518	82	Each	Scuppers 4" W.I. or C.I. pipe			82	
518	30	Cu. Yds.	Porous backfill	30			
518	140	Lin.Ft.	6" Perforated, helical C.M.P. including specials 707.06	140			
518	72	Lin.Ft.	6" Non-perforated helical, C.M.P. 707.06	72			
601	2,166	Sq.Yds.	Crushed aggregate slope protection				2,166
808	1,763	Units	Water-reducing set-retarding admixture			1,763	
825	3694	Sq.Yds.	Concrete surface treatment			3,694	
828	124	Lin.Ft.	Joint sealer (End Dam)			124	

Checked R.M. 12/17/67

* According to Supplemental Specifcation 832

MICROFILMED

LOUIS BERGER AND ASSOCIATES
CONSULTING ENGINEERS
ORANGE, N.J. COLUMBUS, OHIO HARRISBURG, PA.

NOTES & ESTIMATED QUANTITIES
BRIDGE No HOC-33-1400 L&R
OVER C&O. R.R.

HOCKING COUNTY

DESIGNED	DRAWN	TRACED	CHECKED	REVIEWED	DATE	REVISED
R.W.M.	R.C.W.	J.M.M.	D.S.B.	R.W.M.	10-9-67	6-21-68

FED. RD. DIVISION	STATE	PROJECT	
2	OHIO		

289

HOCKING COUNTY
HOC - 33 - 10.50

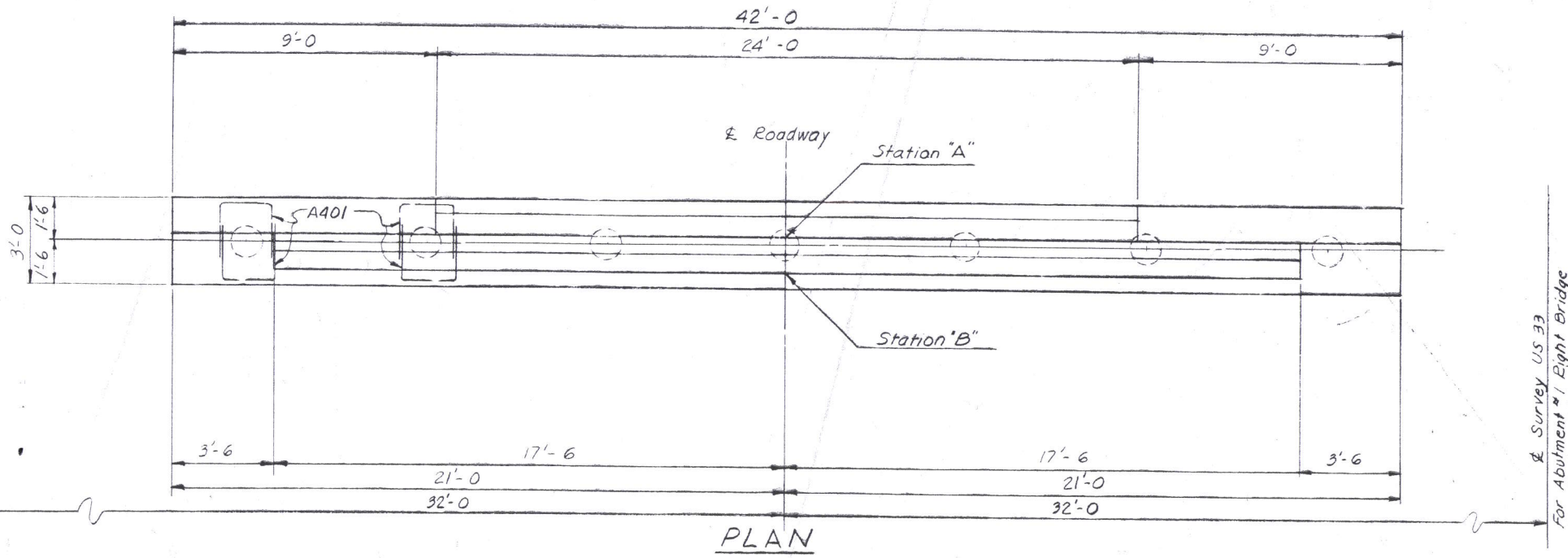

PLAN

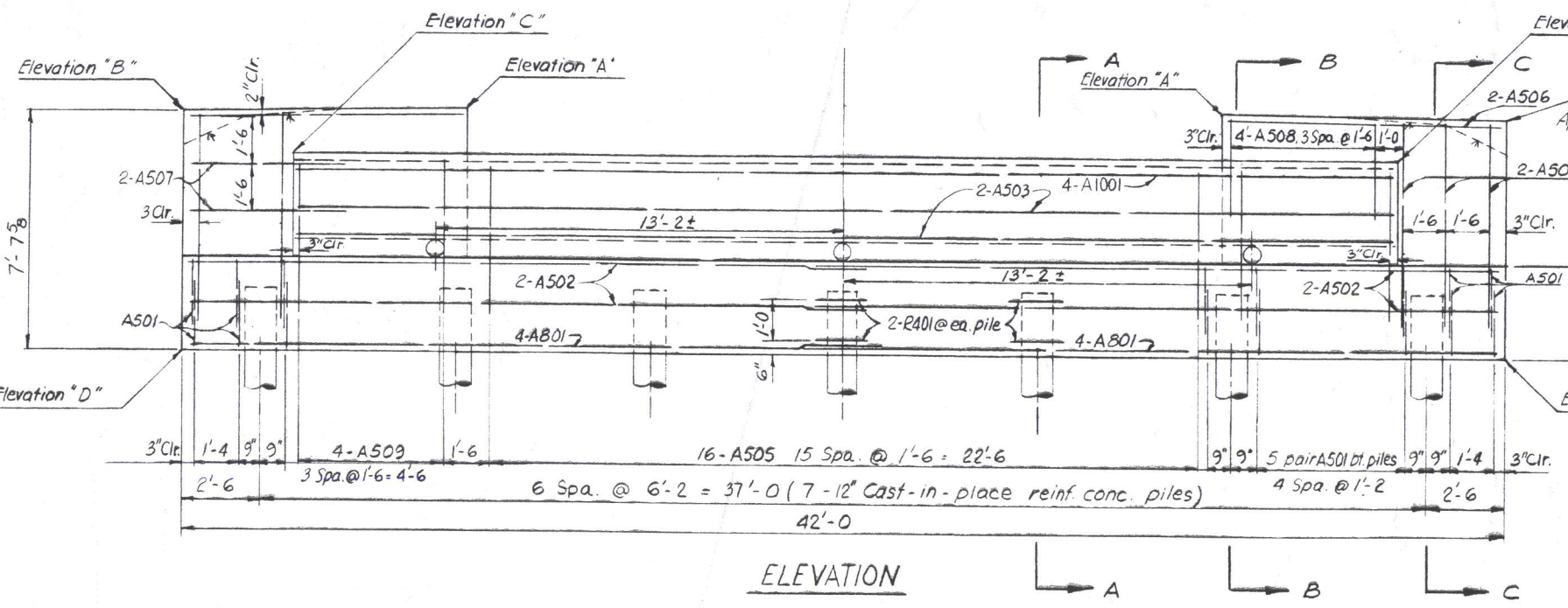

ELEVATION

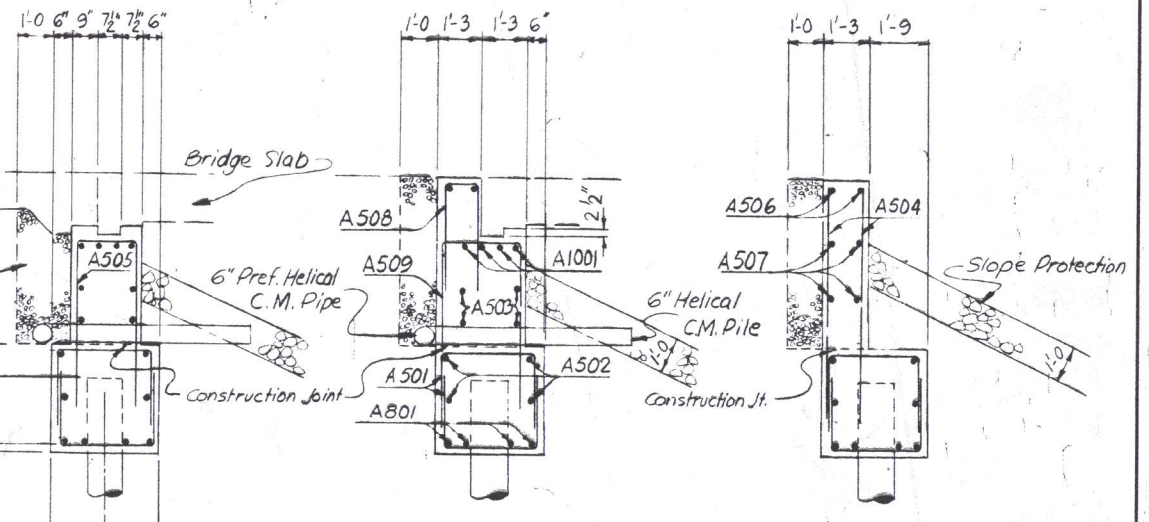

SECTION A-A

SECTION B-B

SECTION C-C

MICROFILMED

NOTES

CONCRETE shall be class "E" and payment will be made on this basis, t class "C" concrete may be used for any or all parts of the abutment.

POROUS BACKFILL shall extend upward to the approach slab and to the face of the earth shoulders, and outward to the surface of the embankment pes. Excavation therefore in excess of that required for construction of the utment, shall be considered as paid for in the bid price per cu yds. paid porous backfill.

LOCATION	STATION "A" Appr. Slab Sta.	STATION "B" Face Abut. Sta.	Elevation A	Elevation B	Elevation C	Elevation D
Abutment #1 Lt. Brg	507+84.00	507+85.25	740.78	740.64	739.30	733.00
Abutment #1 Rt. Brg.	509+13.36	509+14.61	741.12	740.98	739.64	733.34
Abutment #2 Lt. Brg.	511+93.50	511+92.25	739.91	739.77	738.43	732.13
Abutment #2 Rt. Brg.	513+22.86	513+21.61	738.48	738.34	737.00	730.70

LOUIS BERGER AND ASSOCIATES
CONSULTING ENGINEERS
ORANGE, N. J. COLUMBUS, OHIO HARRISBURG, PA.

ABUTMENT DETAILS
BRIDGE No HOC-33-1400 LT&RT.
OVER C&O R.R.

HOCKING COUNTY

DESIGNED	DRAWN	TRACED	CHECKED	REVIEWED	DATE	REVISED
RWM	AMS		D.S.B	RWM	10/9/67	

FED. RD. DIVISION	STATE	PROJECT		290 / 303
2	OHIO			

MICROFILMED
APR 1 0 1980

HOCKING COUNTY
HOC-33-10.50

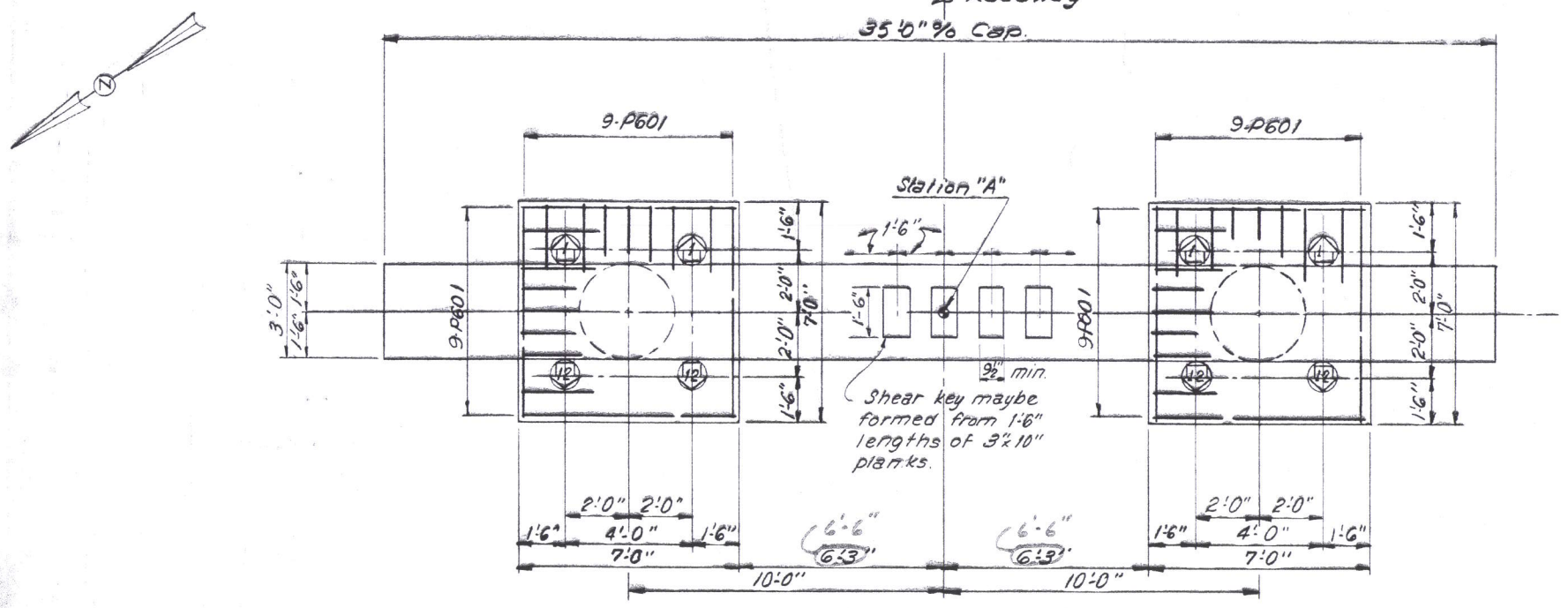

PLAN
(Shown with deck slab removed)

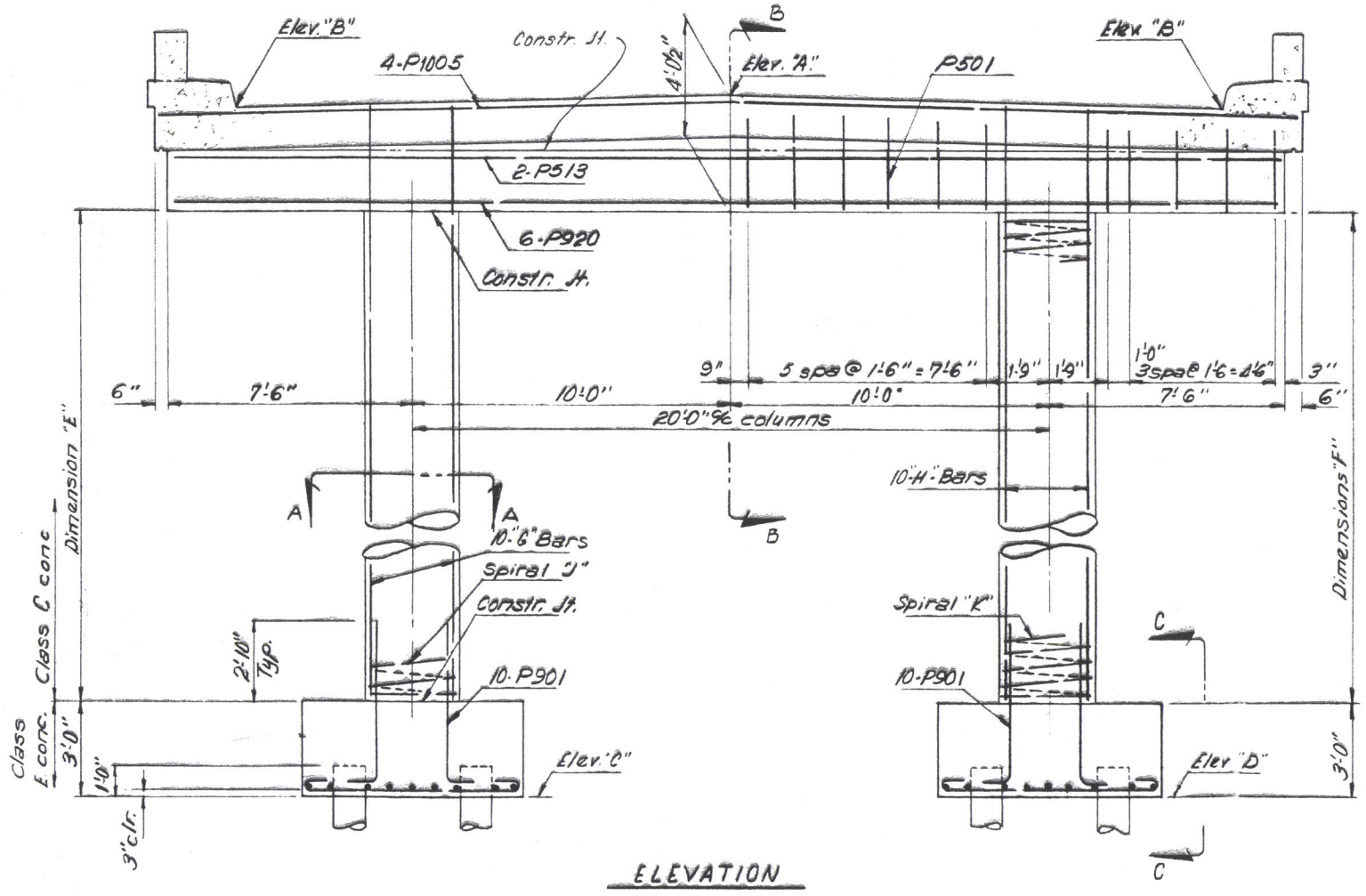

ELEVATION

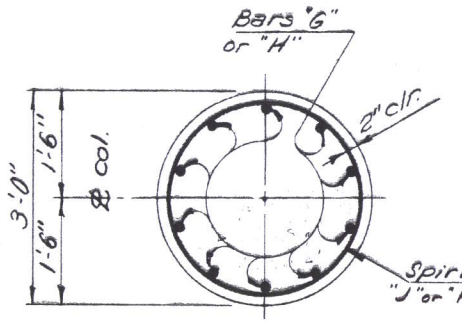

SECTION "A-A"

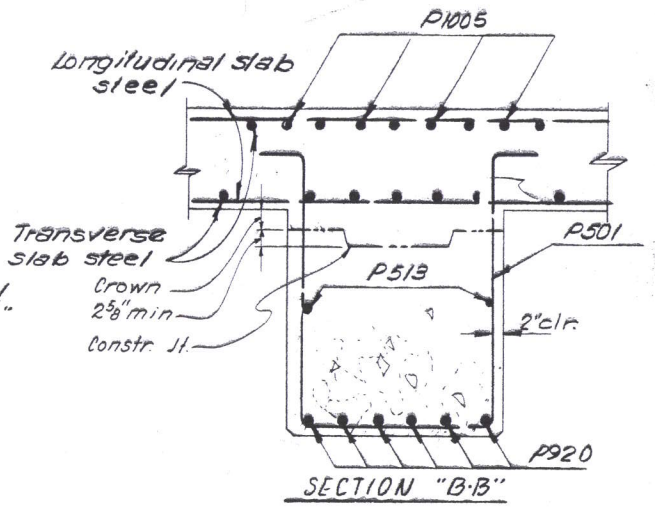

SECTION "B-B"

PIER DATA

PIER	STATION "A"	ELEV. A.	ELEV. B.	ELEV. C	ELEV. D.	DIMEN. E	DIMEN. F.	BAR. G.	BAR H.	SPIRAL J.	SPIRAL K.
1 - L	508+14.75 32' Lt.	741.10	740.86	716.70	717.31	17'-4⅜"	16'-9"	P912	P913	SP405	SP406
1 - R	509+44.11 32' Rt.	741.30	741.06	717.04	717.04	17'-2⅝"	17'-2⅝"	P919	P919	SP412	SP412
12 - L	511+62.75 32' Lt.	740.37	740.13	715.83	715.83	17'-6"	17'-6"	P912	P912	SP411	SP411
12 - R	512+92.11 32' Rt.	739.07	738.83	715.28	714.40	16'-9"	17'-7½"	P913	P915	SP406	SP411

NOTES

(1) Indicates Pile to be driven battered 1 to 4 in the direction of arrow for Piers 1-R & 1-L.

(12) Indicates Pile to be driven battered 1 to 4 in the direction of arrow for Piers 12-R & 12-L

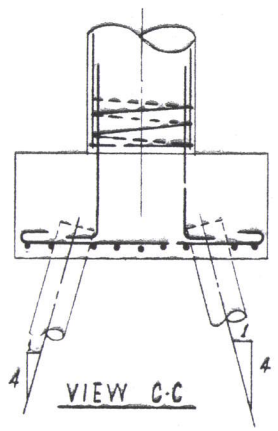

VIEW C-C

LOUIS BERGER AND ASSOCIATES
CONSULTING ENGINEERS
ORANGE, N. J. COLUMBUS, OHIO HARRISBURG, PA.

PIER 1-L, 1-R, 12-L & 12-R DETAILS

BRIDGE No. HOC-33-1400 L&R
OVER C&O RR
HOCKING COUNTY

DESIGNED	DRAWN	TRACED	CHECKED	REVIEWED	DATE	REVISED
R.W.M.	R.C.W.		D.S.B.	R.W.M.	10/9/67	6-21-68

FED. RD. DIVISION	STATE	PROJECT	
2	OHIO		

291
303

HOCKING COUNTY
HOC-33-10.50

MICROFILMED
APR 10 1968

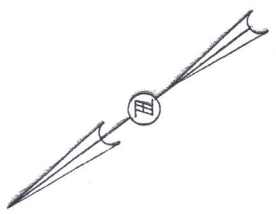

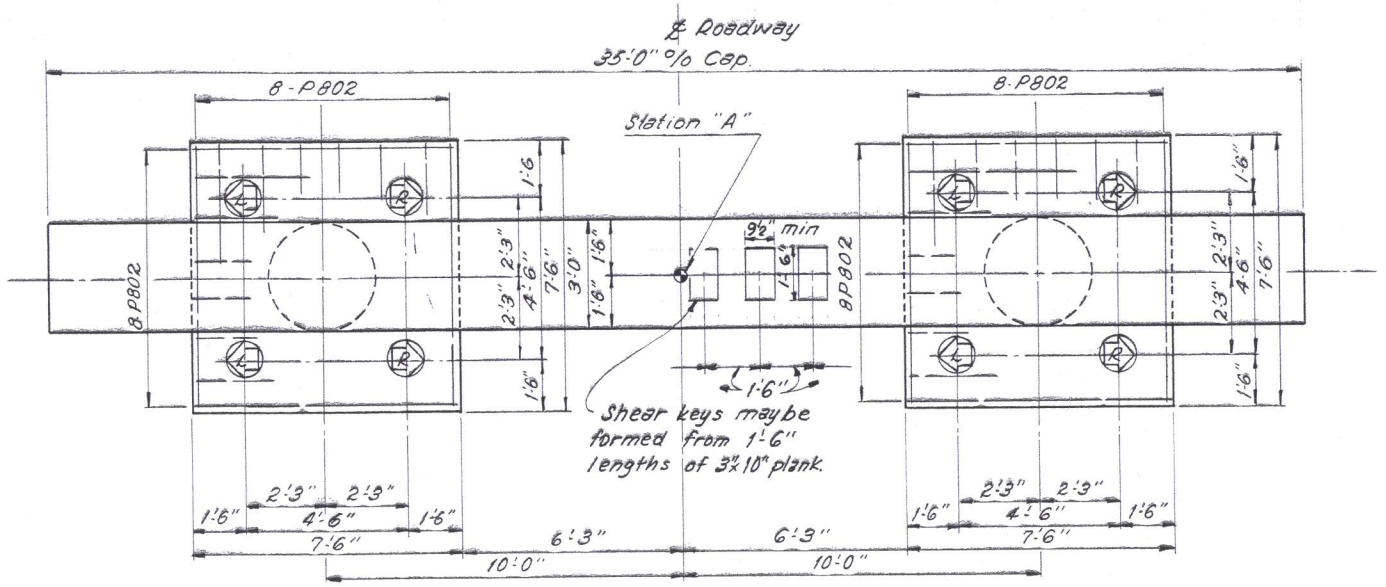

PLAN

(Shown with deck slab removed)

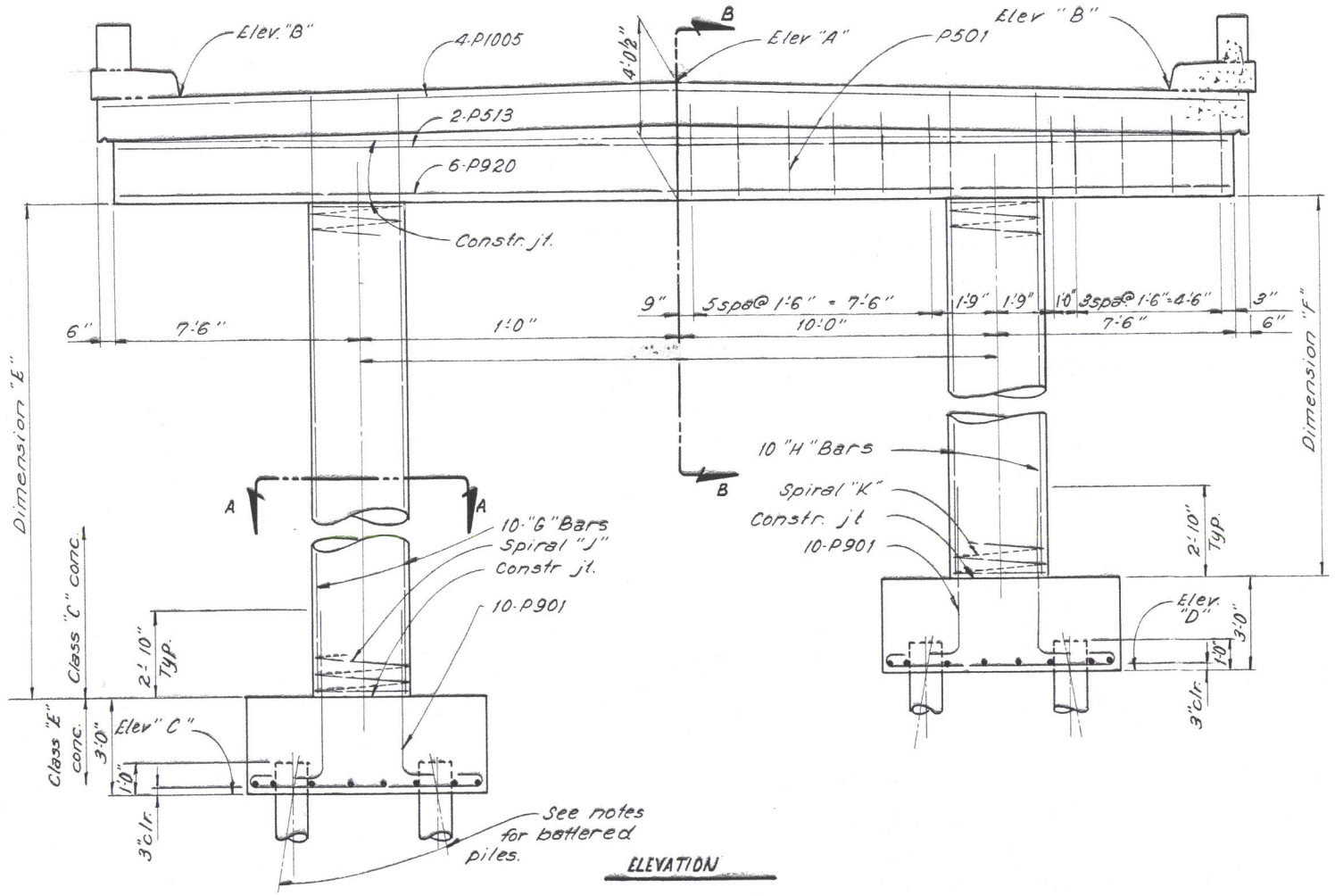

ELEVATION

PIER DATA

PIER	STATION	"A"	ELEV. A.	ELEV. B.	ELEV. C.	ELEV. D.	DIMEN. E.	DIMEN. F.	BAR. G.	BAR. H.	SPIRAL J.	SPIRAL K.
2-L	508+52.25	32' Lt.	741.22	740.98	707.28	717.28	26'-10 3/4"	16'-10 3/4"	P916	P914	SP 407	SP 408
3-L	508+84.25	32' Lt.	741.28	741.04	707.34	717.34	26'-10 3/4"	16'-10 3/4"	P916	P914	SP 407	SP 408
4-L	508+94.75	32' Lt.	741.29	741.05	706.50	717.35	27'-9"	16'-10 3/4"	P902	P914	SP 401	SP 408
9-R	512+12.11	32'	739.95	739.71	716.00	706.00	16'-10 7/8"	26'-10 7/8"	P914	P916	SP 408	SP 407
10-R	512+22.61	32'	739.84	739.60	715.90	706.50	16'-10 3/4"	26'-3 3/8"	P914	P917	SP 408	SP 409
11-R	512+54.61	32'	739.50	739.26	715.56	706.50	16'-10 3/4"	25'-11 1/2"	P914	P918	SP 408	SP 410

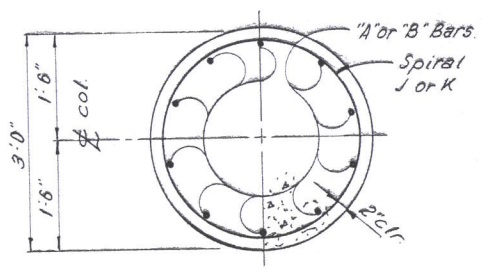

SECTION "A-A"

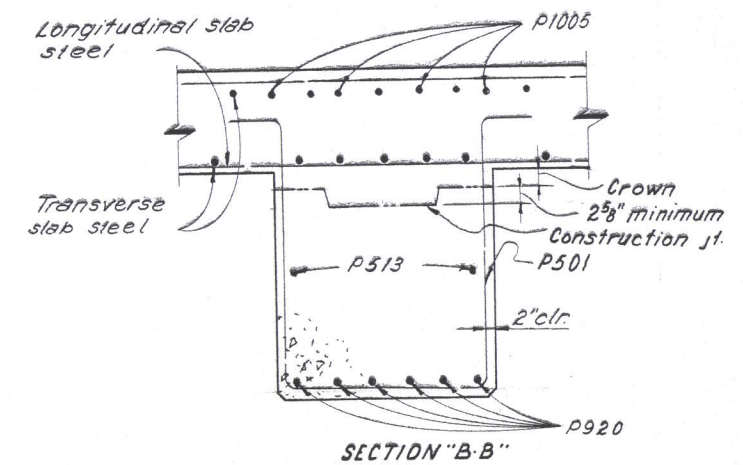

SECTION "B-B"

NOTES

(L) Indicates piles to be driven battered 1 to 6 in the direction of arrow for left pier.

(R) Indicates piles to be driven battered 1 to 6 in the direction of arrow for right pier.

LOUIS BERGER AND ASSOCIATES
CONSULTING ENGINEERS
ORANGE, N.J. COLUMBUS, OHIO HARRISBURG, PA.

PIER 2-L, 3-L, 4-L, 9-R, 10-R, and 11-R DETAILS

BRIDGE Nº HOC-33-14.00 L & R
HOCKING COUNTY OVER C & O. R.R.

DESIGNED	DRAWN	TRACED	CHECKED	REVIEWED	DATE	REVISED
RWM	RW	RW	DSB	RWM	10-9-67	

FED. RD. DIVISION	STATE	PROJECT	
2	OHIO		

292
303

HOCKING COUNTY
HOC-33-10.50

MICROFILMED
APR 10 1968

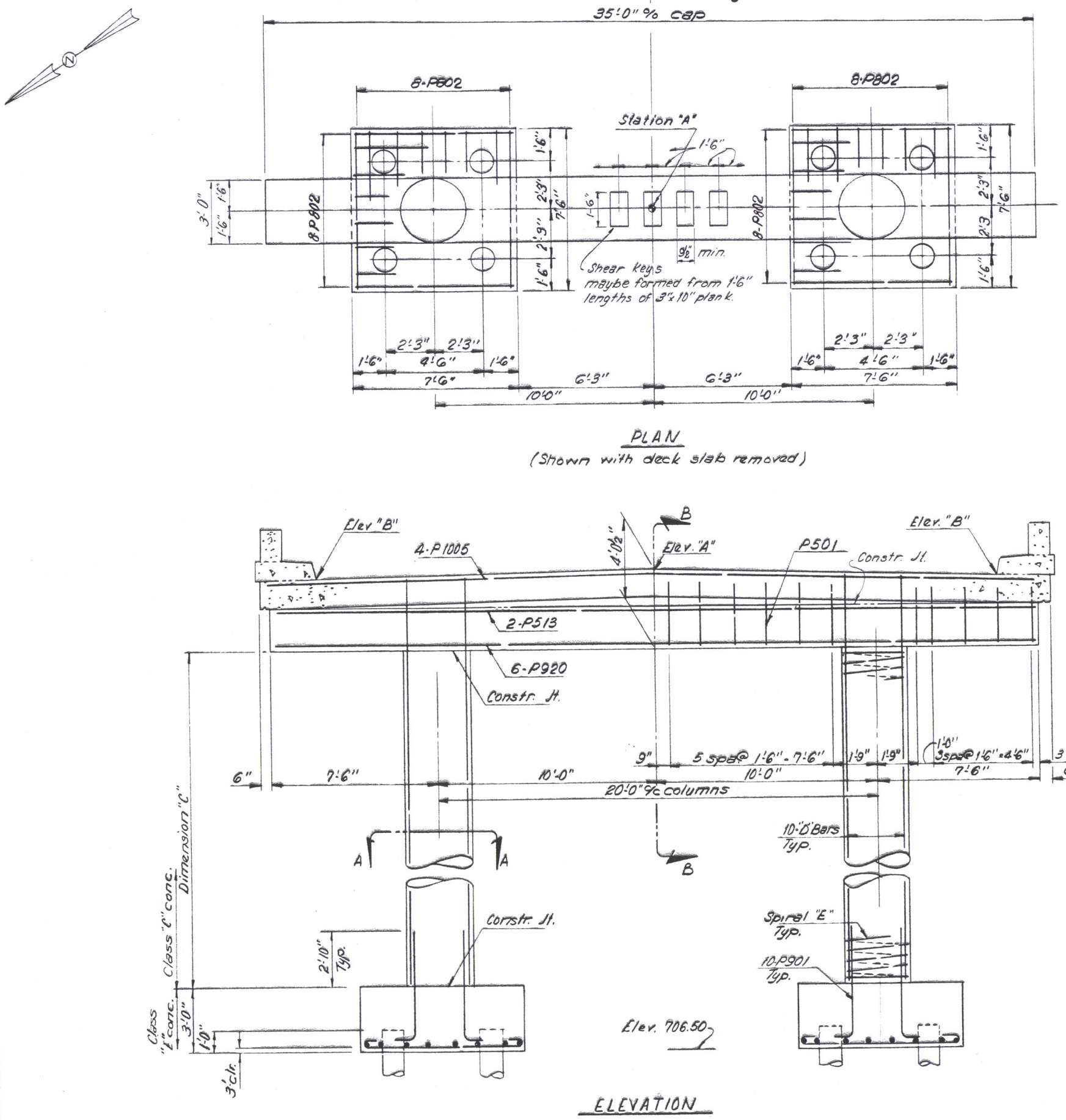

PLAN
(Shown with deck slab removed)

ELEVATION

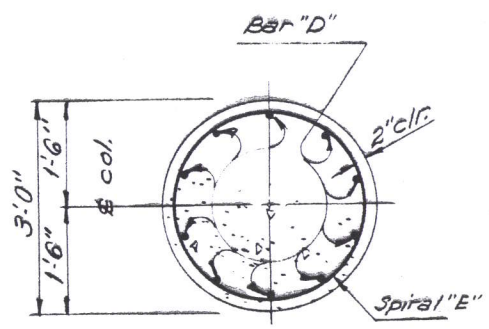

SECTION "A-A"

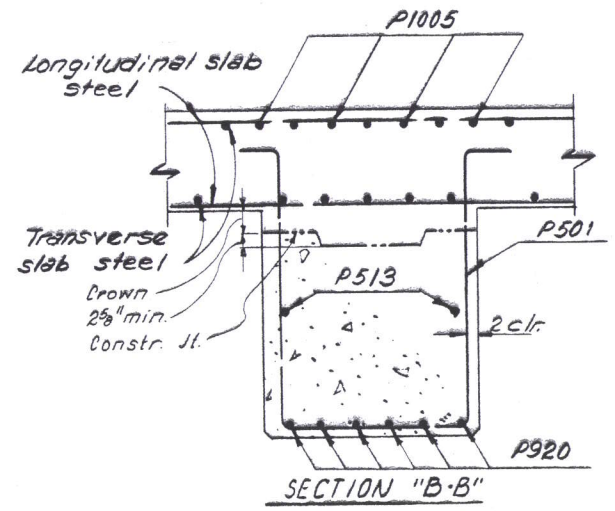

SECTION "B-B"

PIER DATA

PIER	STATION "A"	ELEV "A"	ELEV "B"	DIMEN. "C"	BAR "D"	SPIRAL "E"
2 - R	509+81.61 32' Rt.	741.27	741.03	27'-8¾"	P902	SP401
3 - R	510+13.61 32' Rt.	741.19	740.95	27'-7⅞"	P902	SP401
4 - R	510+24.11 32' Rt.	741.15	740.91	27'-7⅝"	P902	SP401
9 - L	510+82.75 32' Lt.	740.89	740.64	27'-4¼"	P905	SP402
10 - L	510+93.25 32' Lt.	740.83	740.59	27'-3⅝"	P908	SP402
11 - L	511+25.25 32' Lt.	740.63	740.39	27'-8⅛"	P902	SP404

LOUIS BERGER AND ASSOCIATES
CONSULTING ENGINEERS
ORANGE, N. J. COLUMBUS, OHIO HARRISBURG, PA.

PIER 2-R, 3-R, 4-R, 9-L, 10-L & 11-L DETAILS

BRIDGE Nº HOC-33-1400 L&R OVER C&O. RR.

HOCKING COUNTY

DESIGNED	DRAWN	TRACED	CHECKED	REVIEWED	DATE	REVISED
R.W.M.	R.C.W.		D.B.	RWM	10/9/67	

FED. RD. DIVISION	STATE	PROJECT	
2	OHIO		

293
309

HOCKING COUNTY
HOC-33-10.50

MICROFILMED
APR 1 0 1980

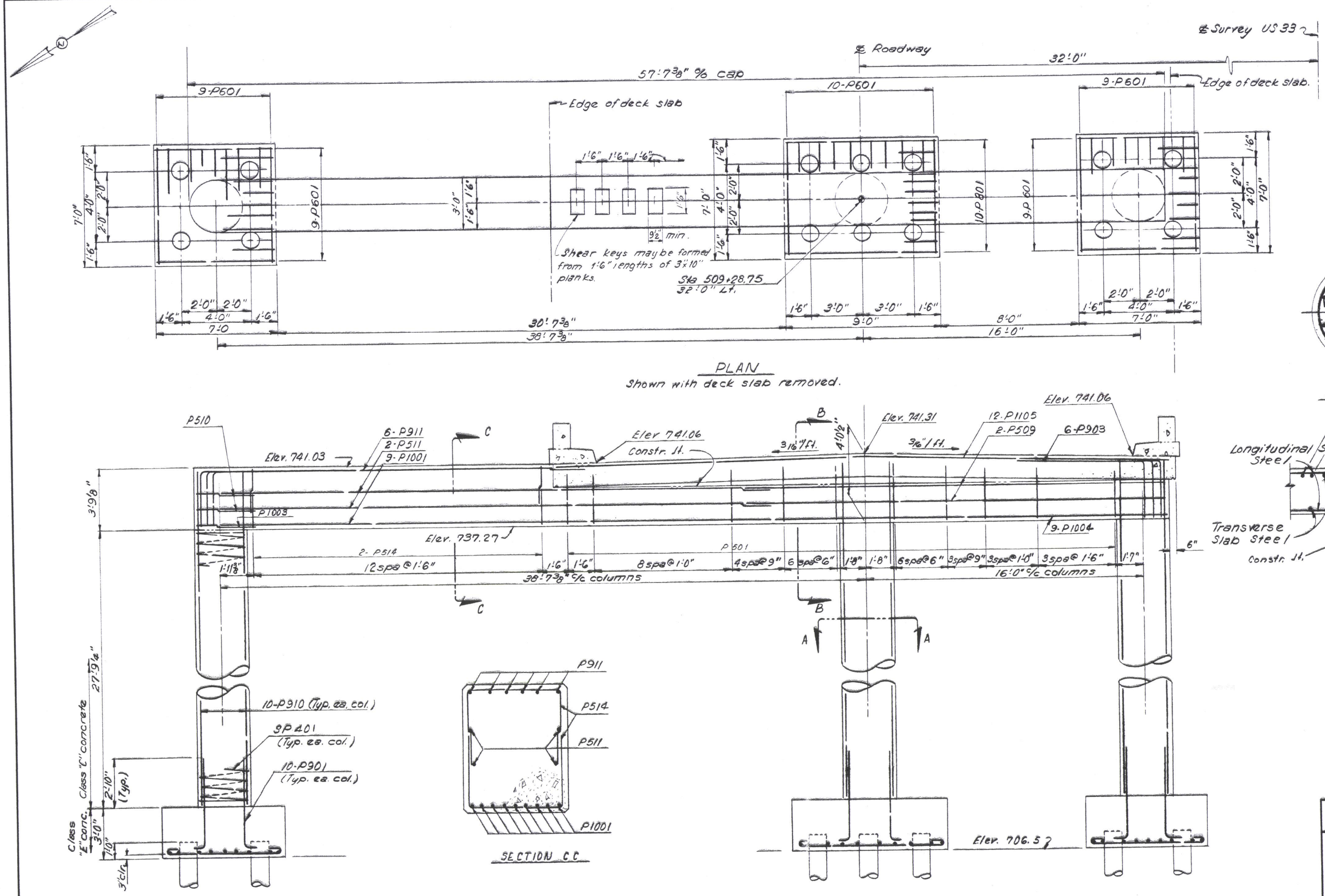

PLAN
Shown with deck slab removed.

SECTION "A-A"

SECTION C-C

ELEVATION

SECTION "B-B"

LOUIS BERGER AND ASSOCIATES
CONSULTING ENGINEERS
ORANGE, N. J. COLUMBUS, OHIO HARRISBURG, PA.

PIER 5L DETAILS
BRIDGE No HOC-33-1400 L.& R.
OVER C.&O. RR..
HOCKING COUNTY

DESIGNED	DRAWN	TRACED	CHECKED	REVIEWED	DATE	REVISED
RWM	RCW		DJB	RWM	10/9/67	

FED. RD. DIVISION	STATE	PROJECT	
2	OHIO		

294
303

HOCKING COUNTY
HOC-33-10.50

MICROFILMED
APR 10 1969

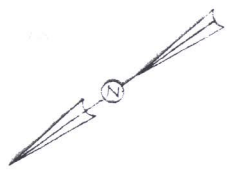

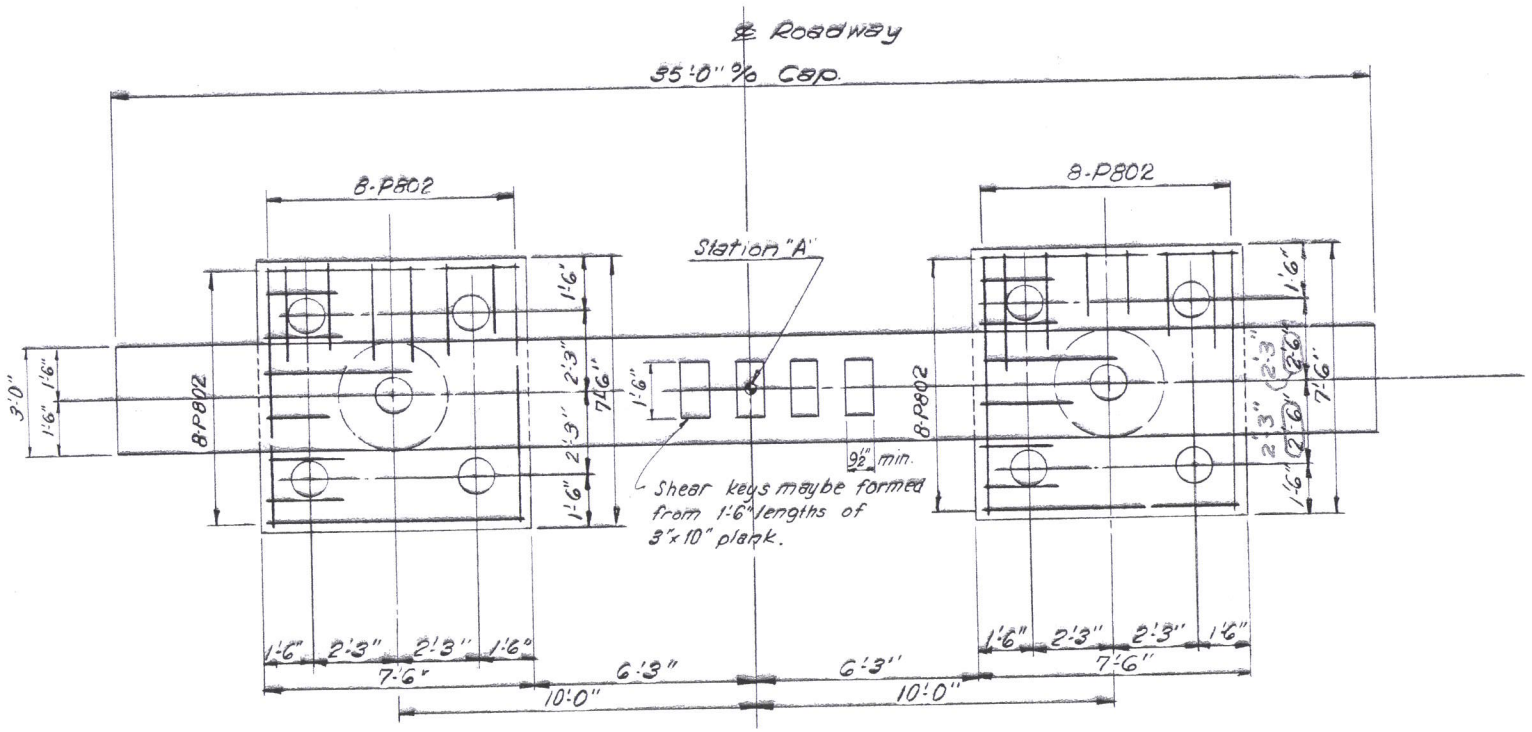

PLAN
(Shown with deck slab removed)

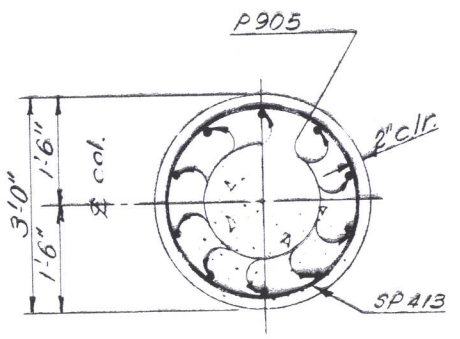

SECTION "A-A"

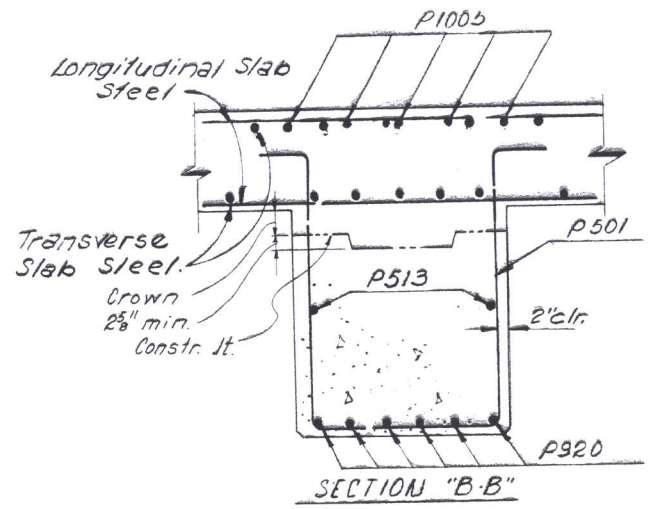

SECTION "B-B"

PIER DATA						
PIER	STATION "A"	ELEV. "A"	ELEV. "B"	DIMEN. "C"		
5-R	510+58.11 32' Rt.	741.02	740.78	27'-5¾"		
8-L	510+48.75 32' Lt.	741.05	740.81	27'-6⅛"		

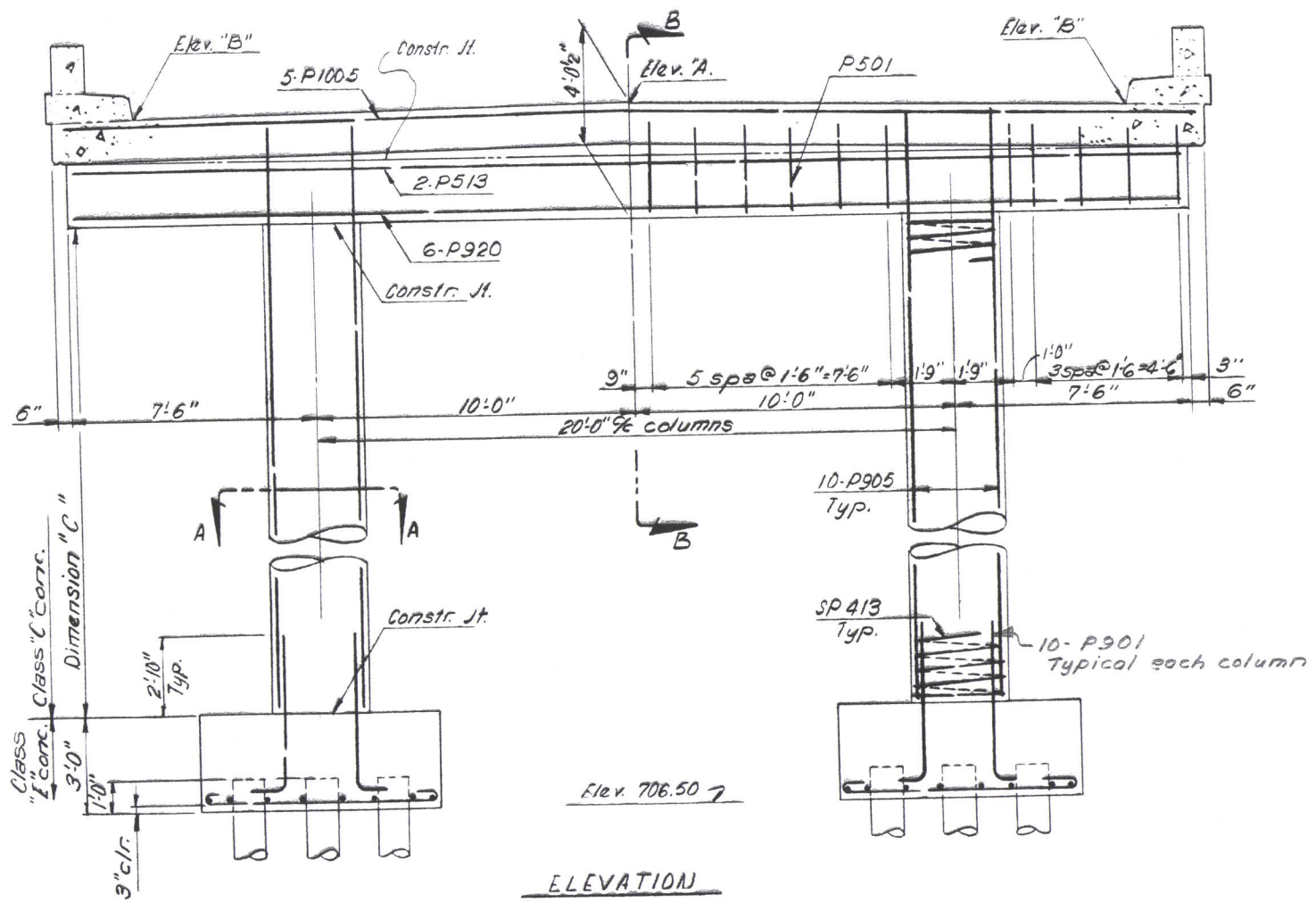

ELEVATION

LOUIS BERGER AND ASSOCIATES
CONSULTING ENGINEERS
ORANGE, N. J. COLUMBUS, OHIO HARRISBURG, PA.

PIER 5-R & B-L DETAILS

BRIDGE Nº HOC-33-1400 L&R
OVER C&O. R.R.
HOCKING COUNTY

DESIGNED	DRAWN	TRACED	CHECKED	REVIEWED	DATE	REVISED
R.W.M.	R.C.W.		D.S.B.	R.W.M.	10/9/67	6-21-68

FED. RD. DIVISION	STATE	PROJECT	
2	OHIO		

295
303

HOCKING COUNTY
HOC-33-10.50

MICROFILMED
APR 10 1980

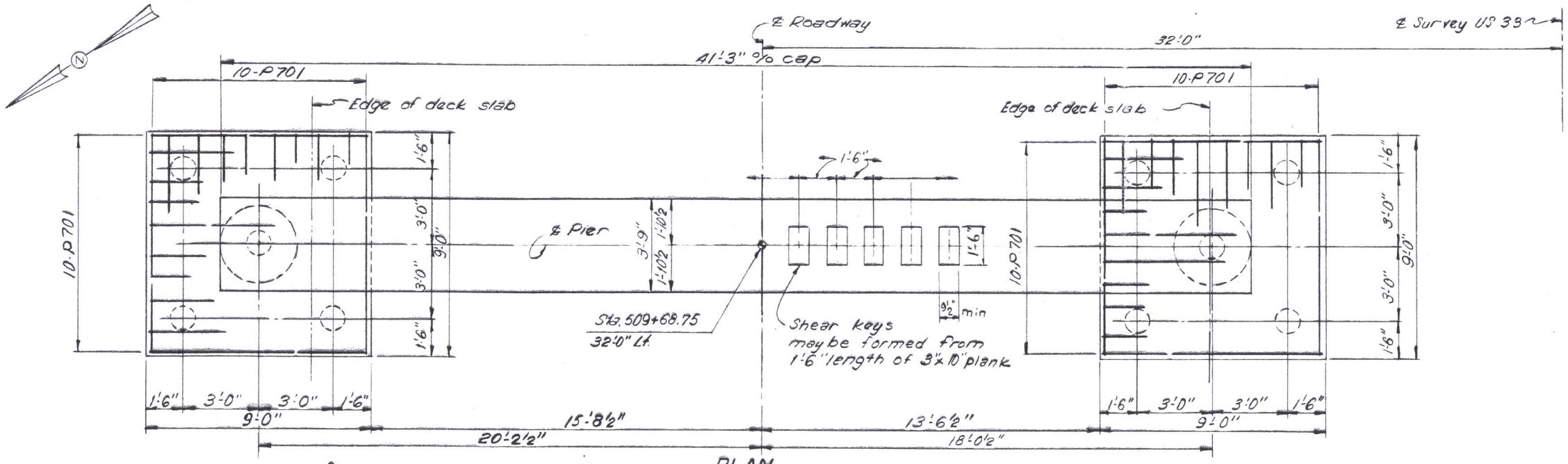

PLAN
Shown with deck slab removed

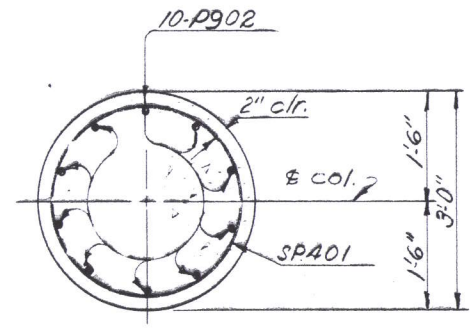

SECTION A-A

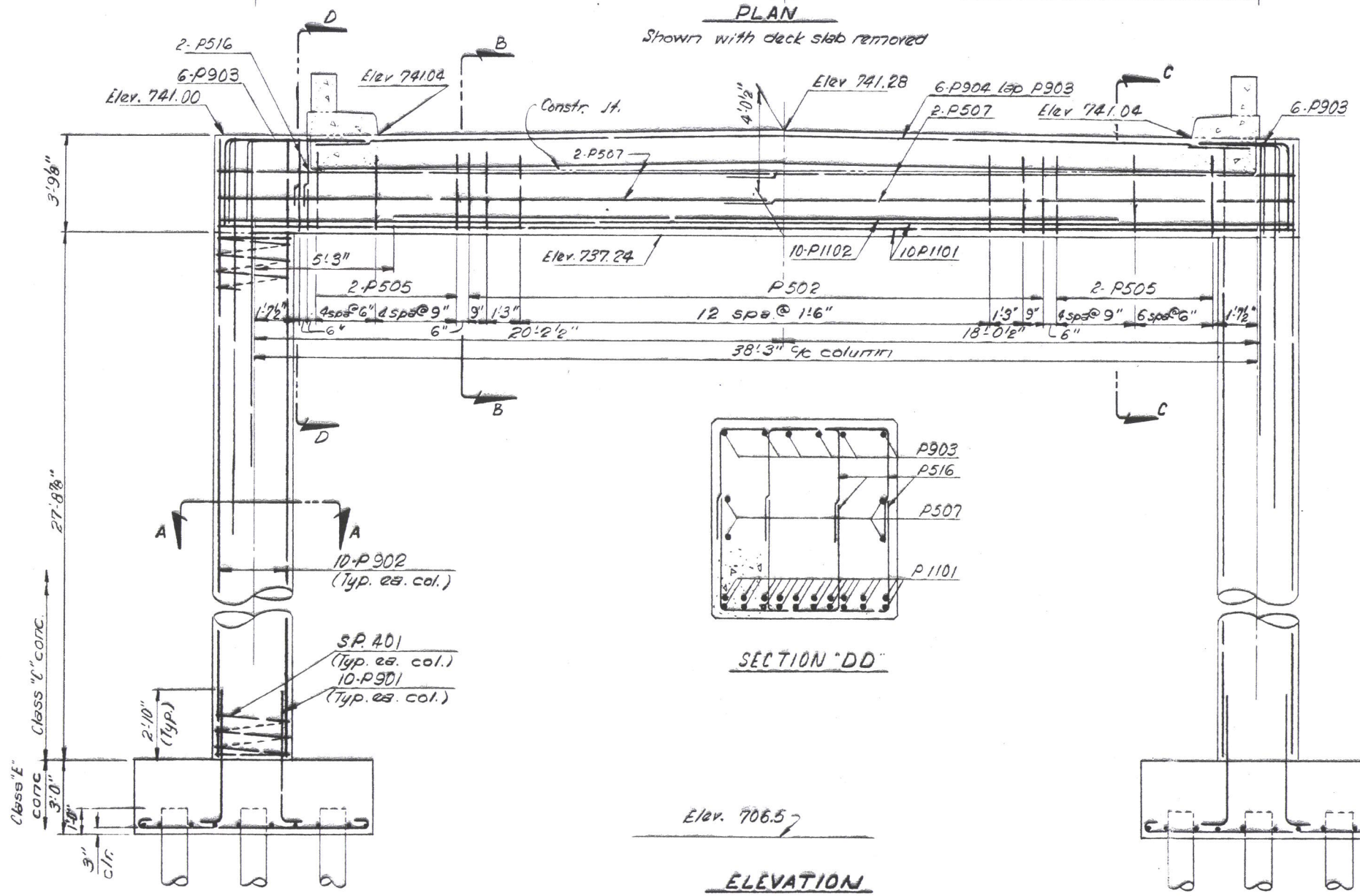

SECTION "DD"

ELEVATION

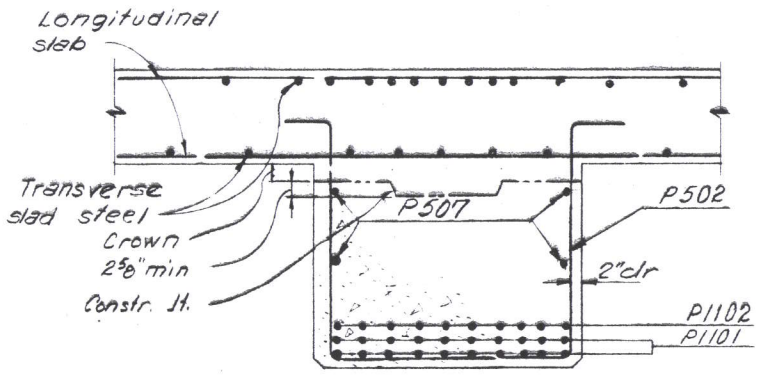

SECTION B-B

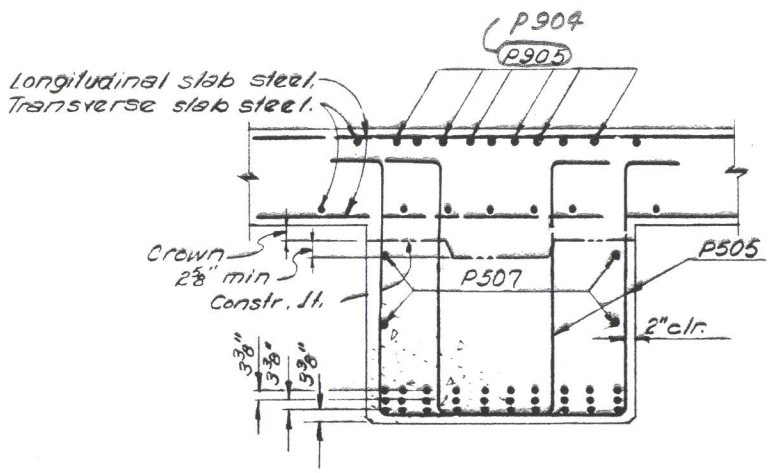

SECTION C-C

LOUIS BERGER AND ASSOCIATES
CONSULTING ENGINEERS
ORANGE, N. J. COLUMBUS, OHIO HARRISBURG, PA.

PIER 6L DETAILS

BRIDGE No. HOC-33-1400 L.&.R.
OVER C.&O. R.R.
HOCKING COUNTY

DESIGNED	DRAWN	TRACED	CHECKED	REVIEWED	DATE	REVISED
R.W.M.	R.C.W.		D.S.B.	R.W.M.	10/9/67	6-21-68

HILLS CO.—1000H—300—9-64

FED. RD. DIVISION	STATE	PROJECT	
2	OHIO		

296
303

HOCKING COUNTY
HOC-33-10.50

MICROFILMED
APR 1 0 1968

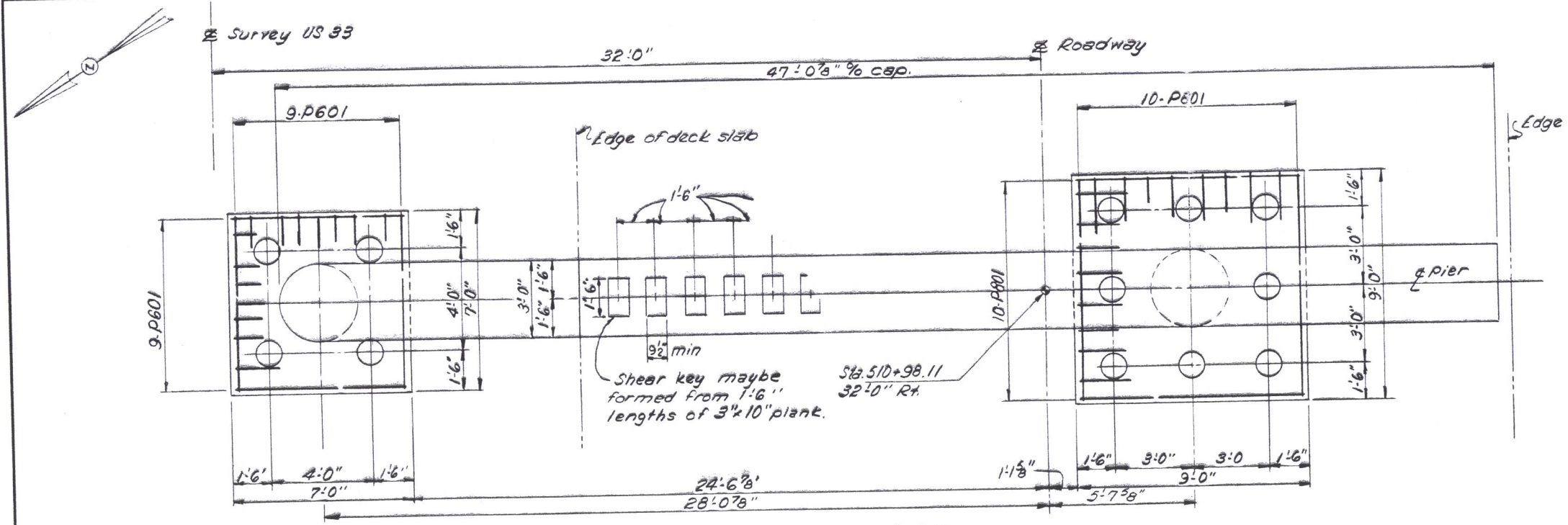

PLAN
(Shown with deck slab removed)

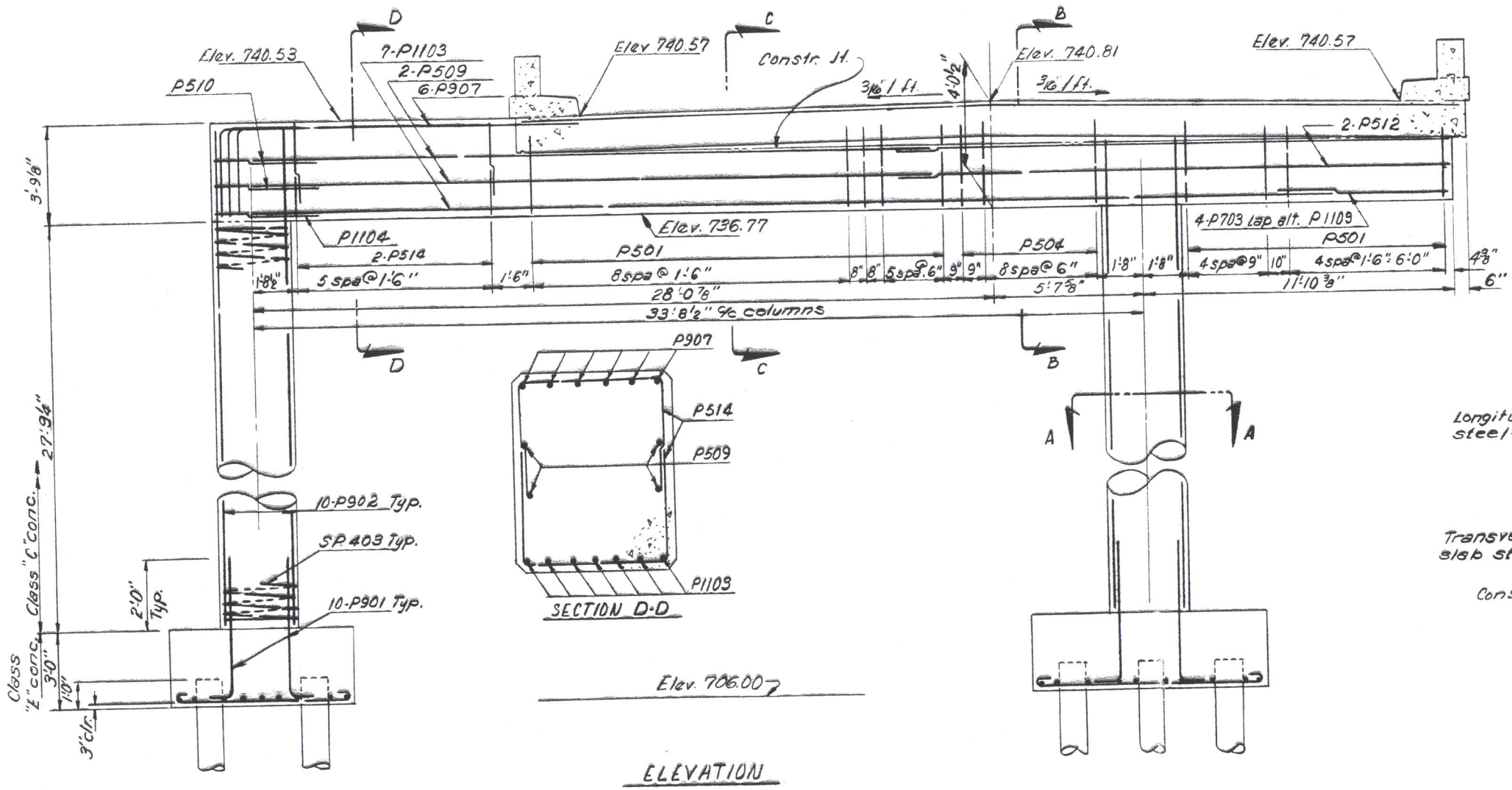

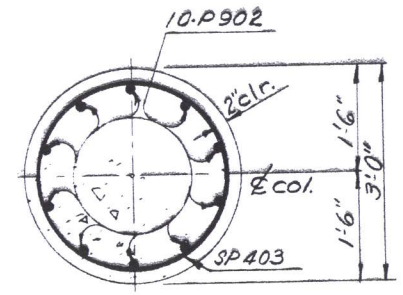

SECTION "AA"

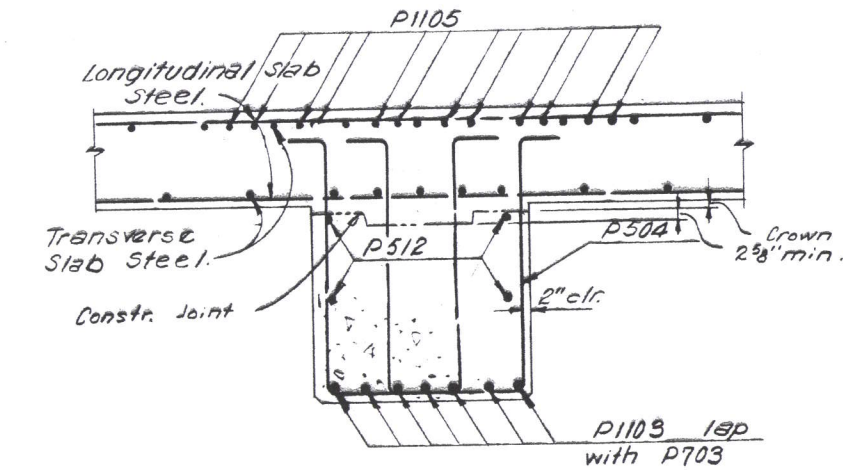

SECTION "B-B"

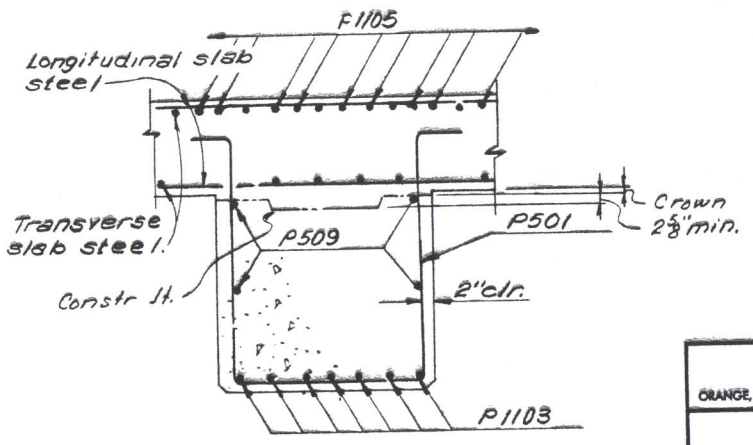

SECTION "C-C"

LOUIS BERGER AND ASSOCIATES
CONSULTING ENGINEERS
ORANGE, N. J. COLUMBUS, OHIO HARRISBURG, PA.

PIER 6R DETAILS

BRIDGE Nº HOC-33-1400 L & R.
OVER C. & O. R.R.

HOCKING COUNTY

DESIGNED	DRAWN	TRACED	CHECKED	REVIEWED	DATE	REVISED
R.W.M.	R.C.W.		D.S.B.	R.W.M.	10/9/67	

FED. RD. DIVISION	STATE	PROJECT	
2	OHIO		

HOCKING COUNTY
HOC-33-10.50

297
303

MICROFILMED
APR 10 1968

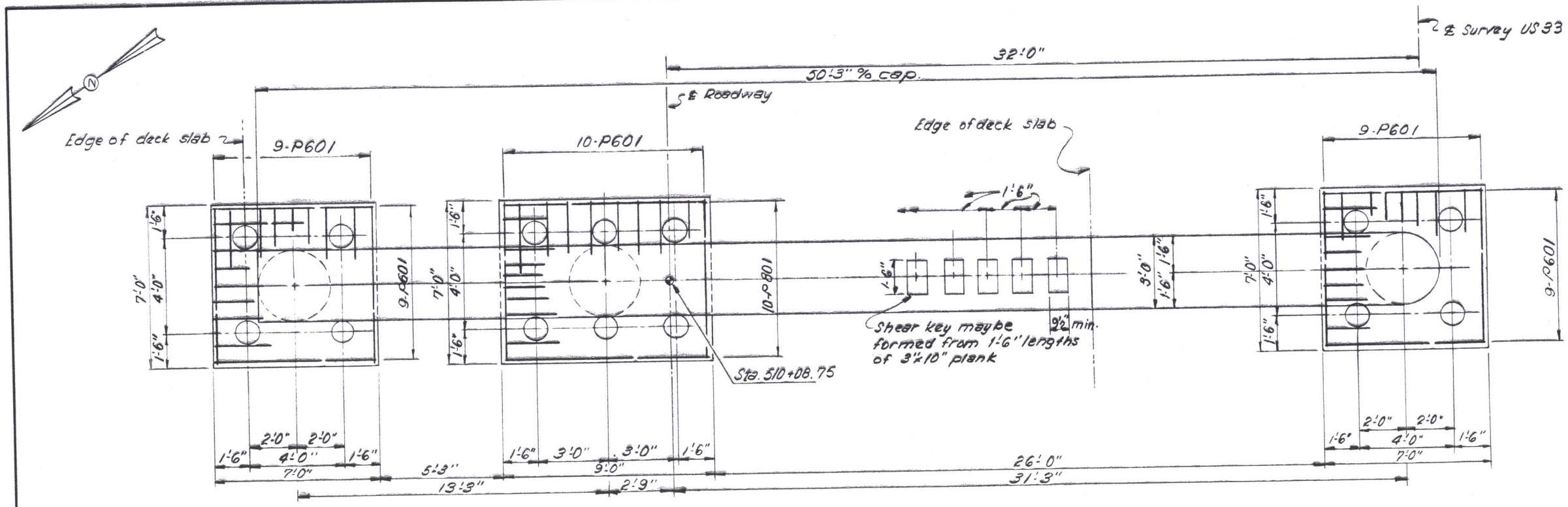

PLAN
Shown with deck slab removed

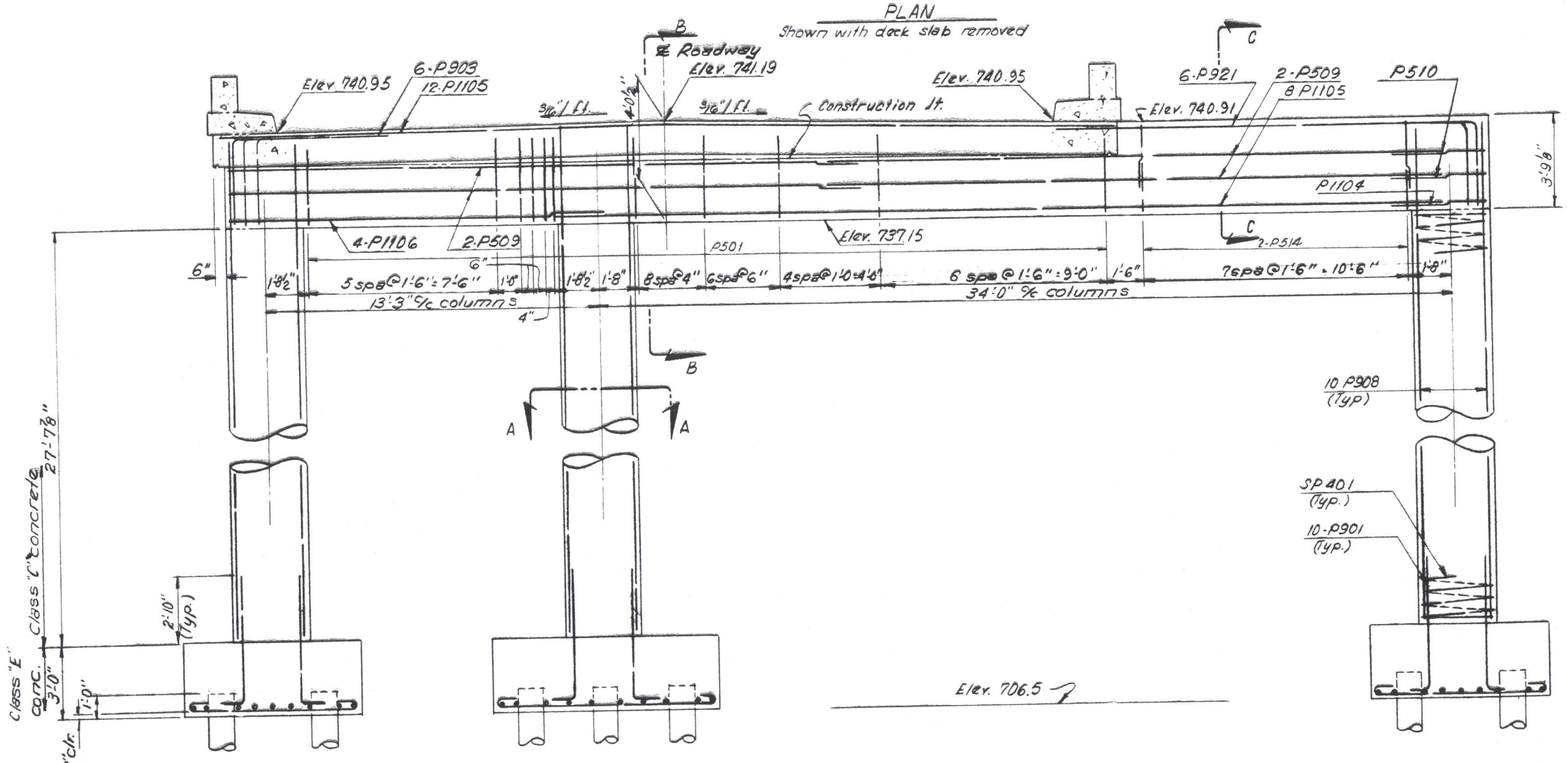

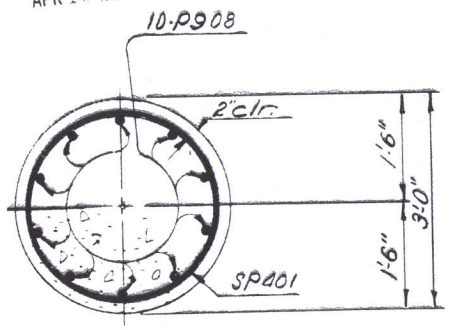

SECTION "A-A"

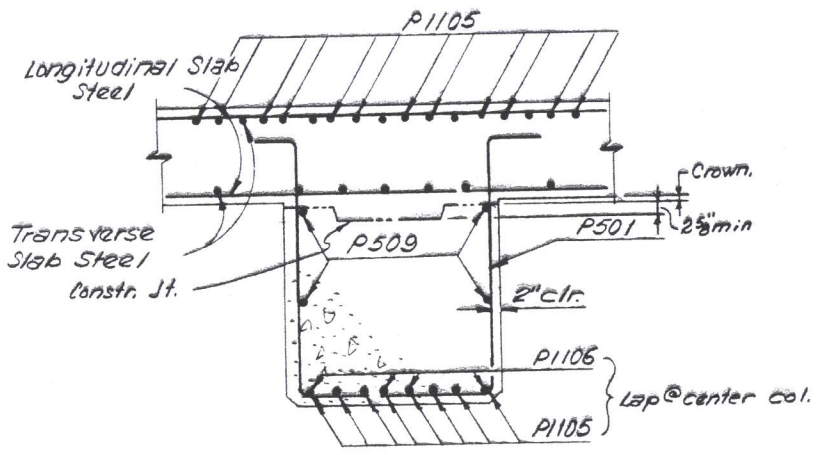

SECTION "B-B"

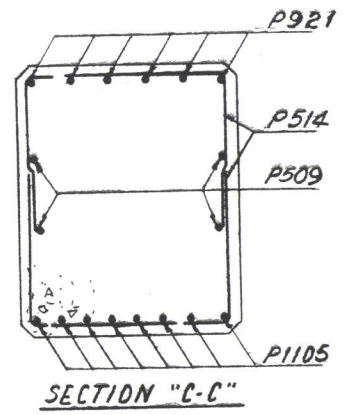

SECTION "C-C"

LOUIS BERGER AND ASSOCIATES
CONSULTING ENGINEERS
ORANGE, N. J. COLUMBUS, OHIO HARRISBURG, PA.

PIER 7L DETAILS

BRIDGE Nº HOC-33-1400 L & R
OVER C. & O. R.R.

HOCKING COUNTY

DESIGNED	DRAWN	TRACED	CHECKED	REVIEWED	DATE	REVISED
R.W.M.	R.C.W.		D.S.B.	R.W.M.	10/9/67	

FED. RD. DIVISION	STATE	PROJECT	
2	OHIO		

298/303

HOCKING COUNTY
HOC-33-10.50

MICROFILMED
APR 1 6 1968

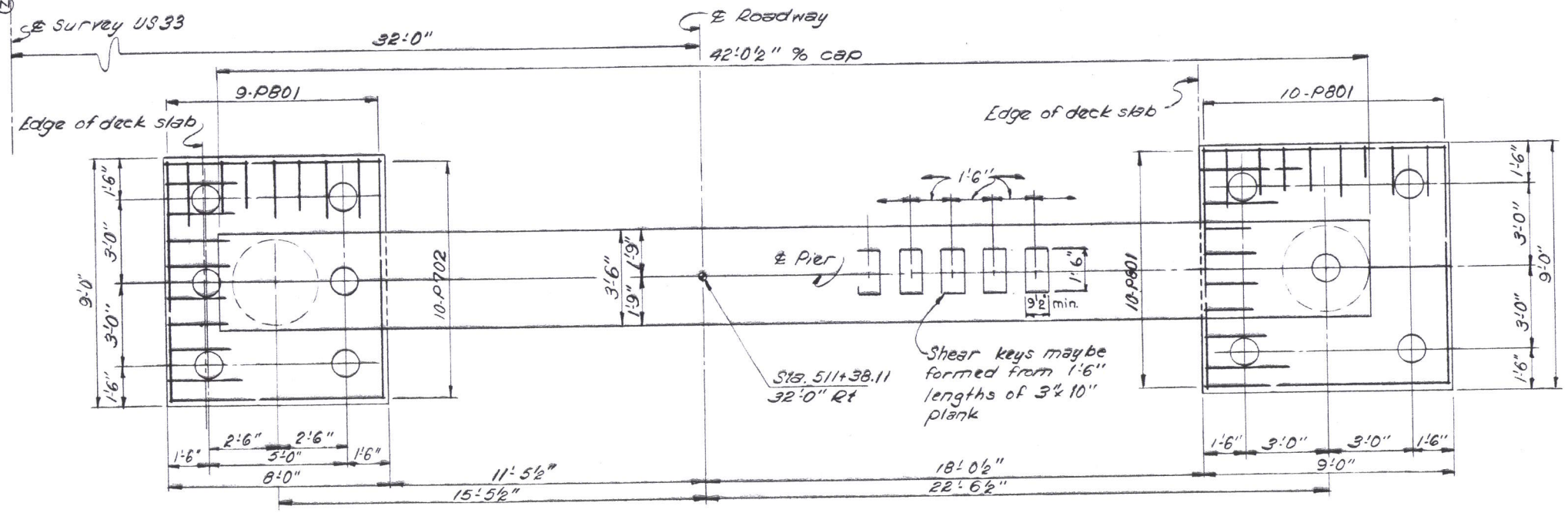

PLAN
Shown with deck slab removed

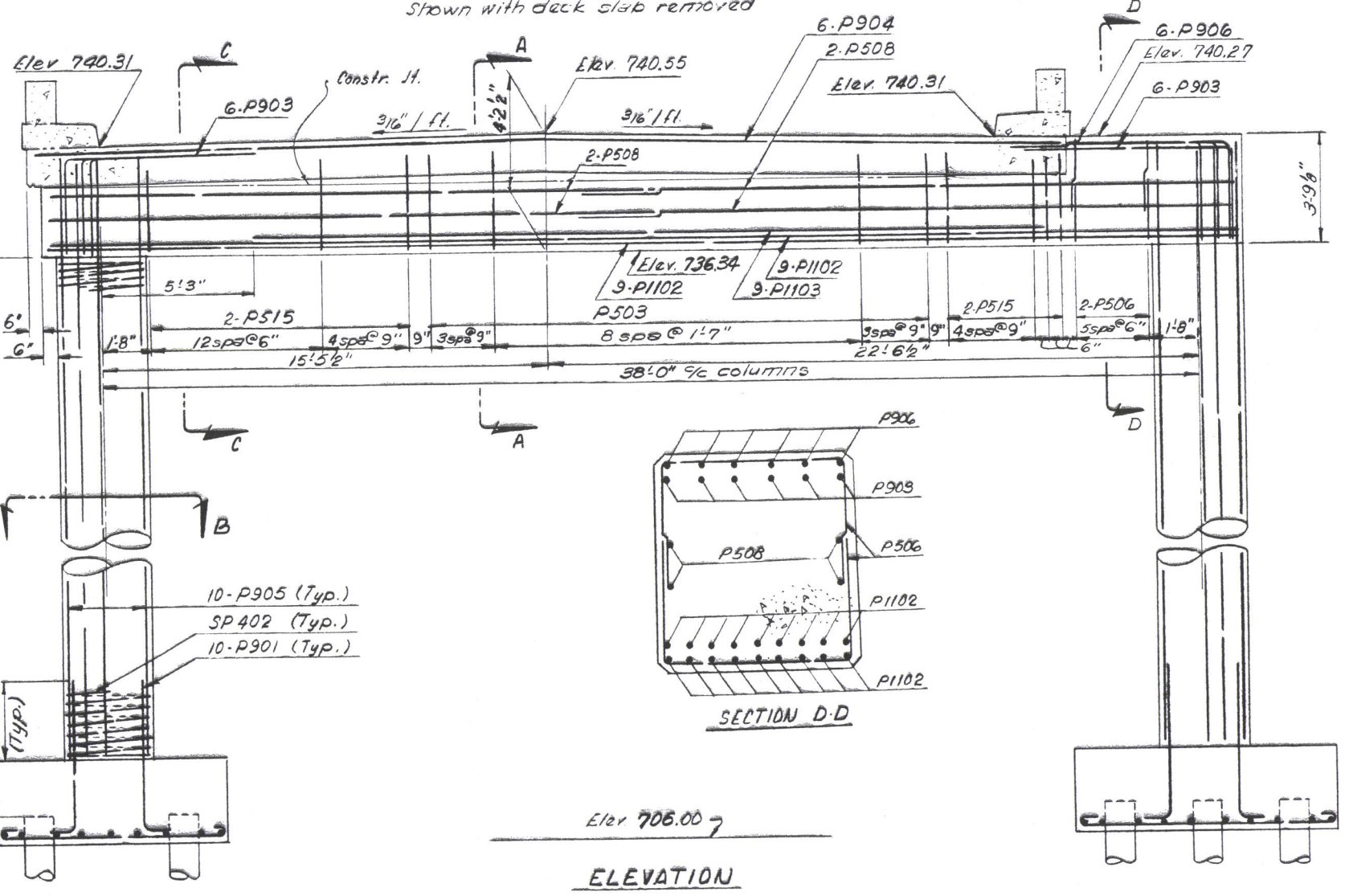

SECTION D-D

Elev 706.00

ELEVATION

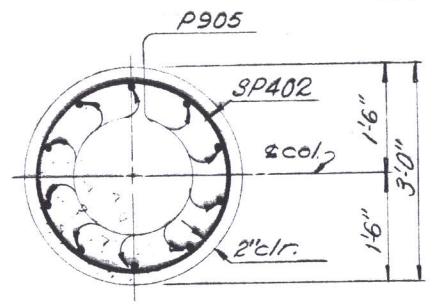

SECTION "B-B"

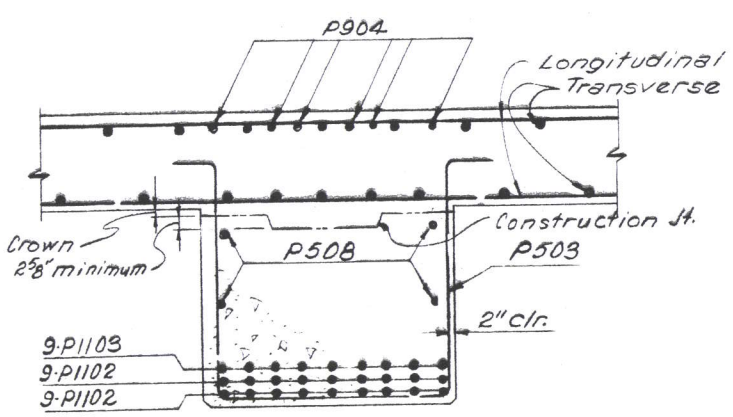

SECTION "A-A"

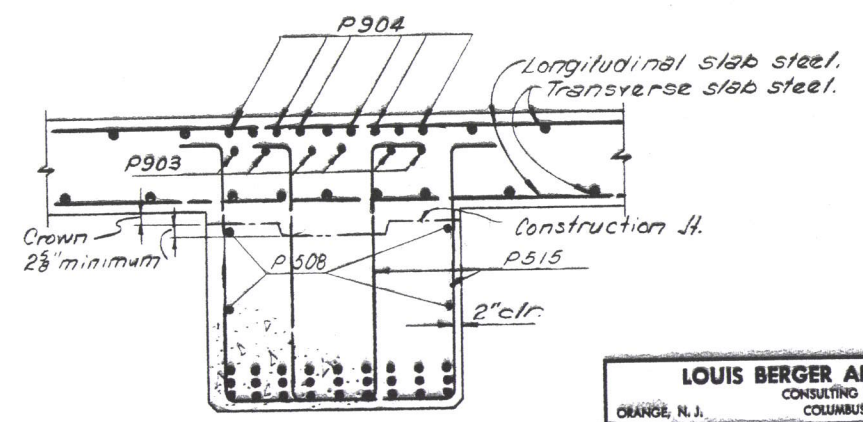

SECTION "C-C"

LOUIS BERGER AND ASSOCIATES
CONSULTING ENGINEERS
ORANGE, N. J. COLUMBUS, OHIO HARRISBURG, PA.

PIER 7R DETAILS

BRIDGE Nº HOC-33-1900 L&R
OVER C&O. R.R.
HOCKING COUNTY

DESIGNED	DRAWN	TRACED	CHECKED	REVIEWED	DATE	REVISED
RWM.	RCW.		DSB	RWM	10/9/67	

FED. RD. DIVISION	STATE	PROJECT	
2	OHIO		

299
303

HOCKING COUNTY
HOC-33-10.50

MICROFILMED
APR 1 0 1980

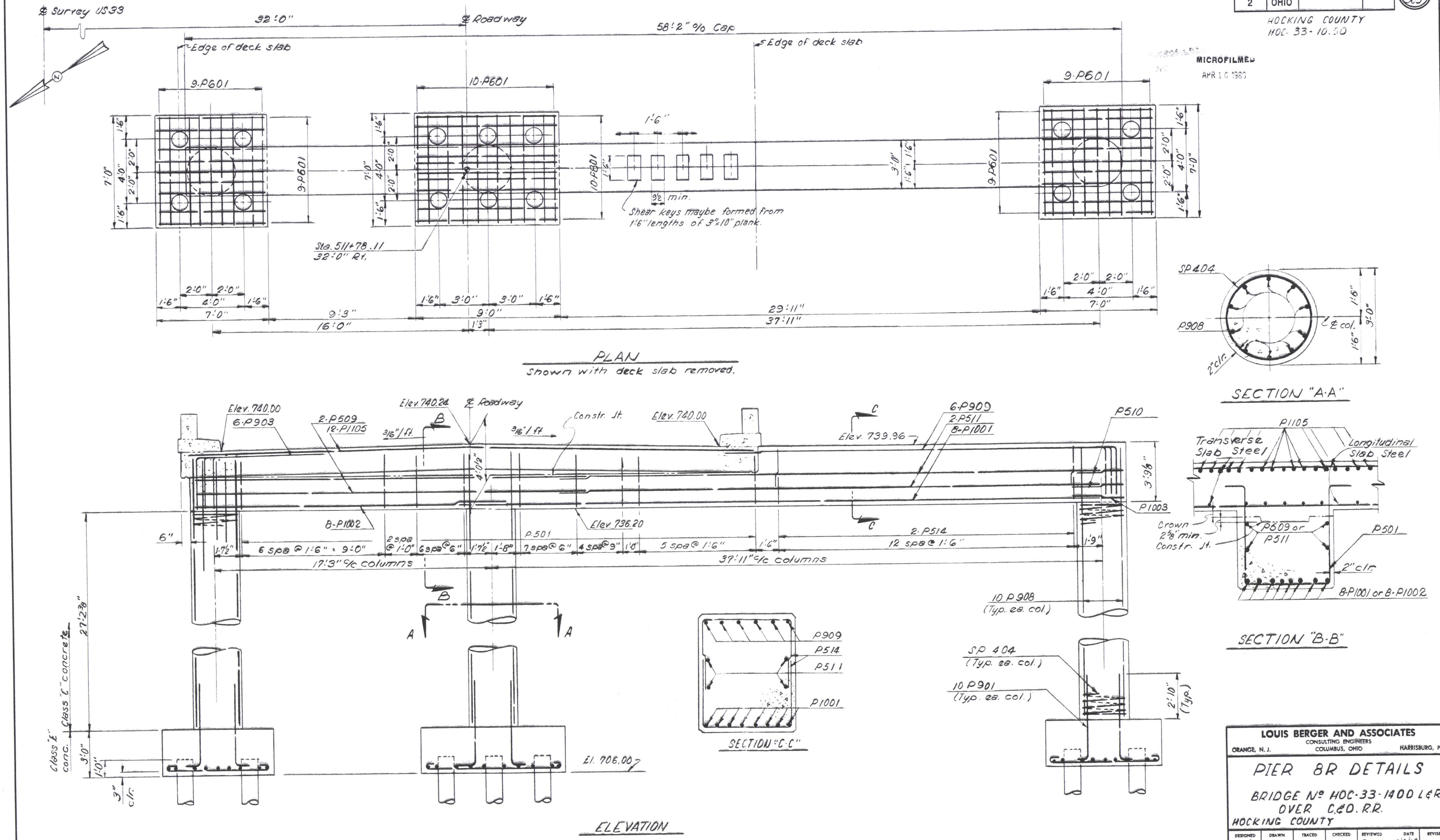

LOUIS BERGER AND ASSOCIATES
CONSULTING ENGINEERS
ORANGE, N. J. COLUMBUS, OHIO HARRISBURG, PA.

PIER 8R DETAILS

BRIDGE Nº HOC-33-1400 L&R
OVER C.&O. R.R.
HOCKING COUNTY

DESIGNED	DRAWN	TRACED	CHECKED	REVIEWED	DATE	REVISED
RWM	RCW		DSB	RWM	10/9/67	

FED. RD. DIVISION	STATE	PROJECT	
2	OHIO		

300
303

HOCKING COUNTY
HOC-33-10.50

MICROFILMED
APR 16 1993

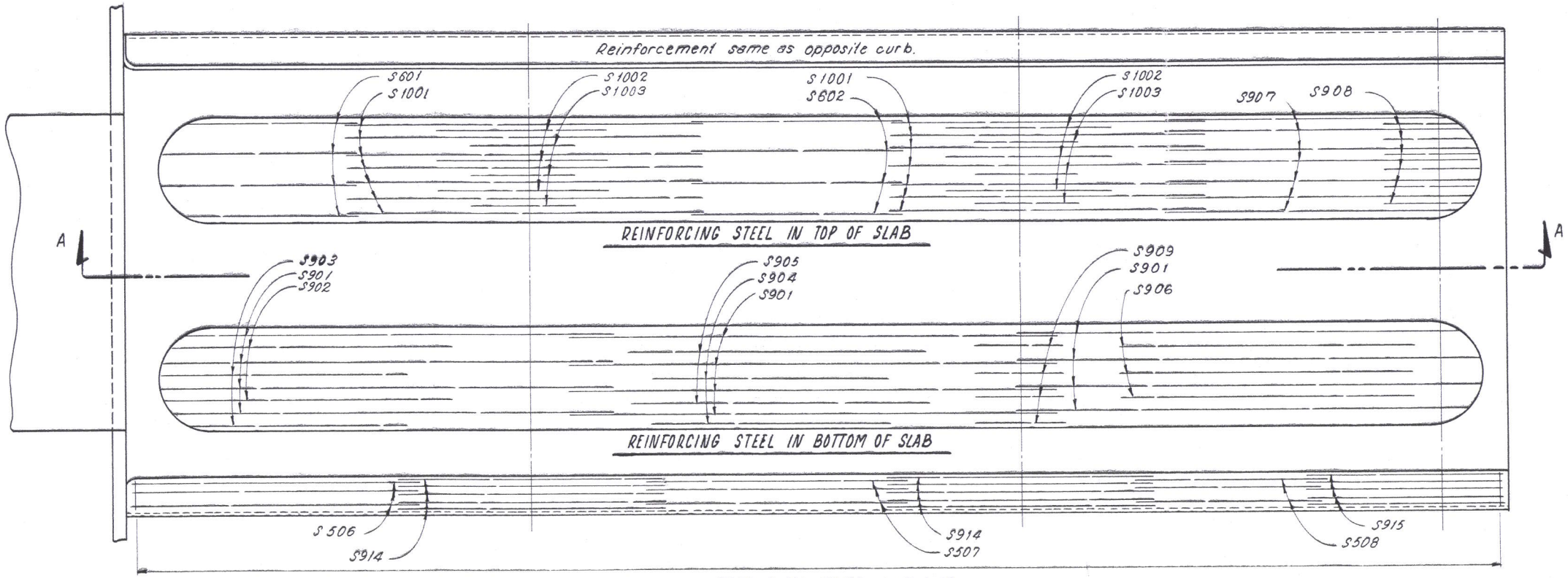

DECK PLAN UNITS 1&3 L&R

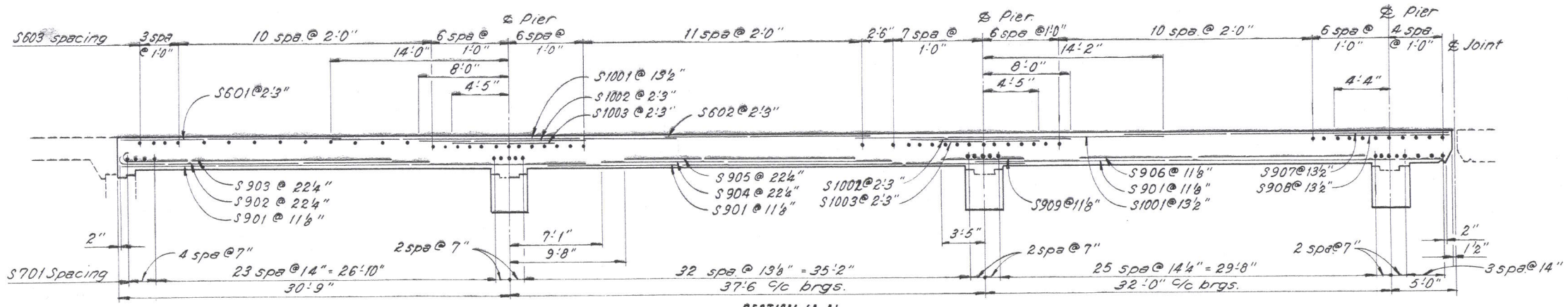

SECTION 'A-A'

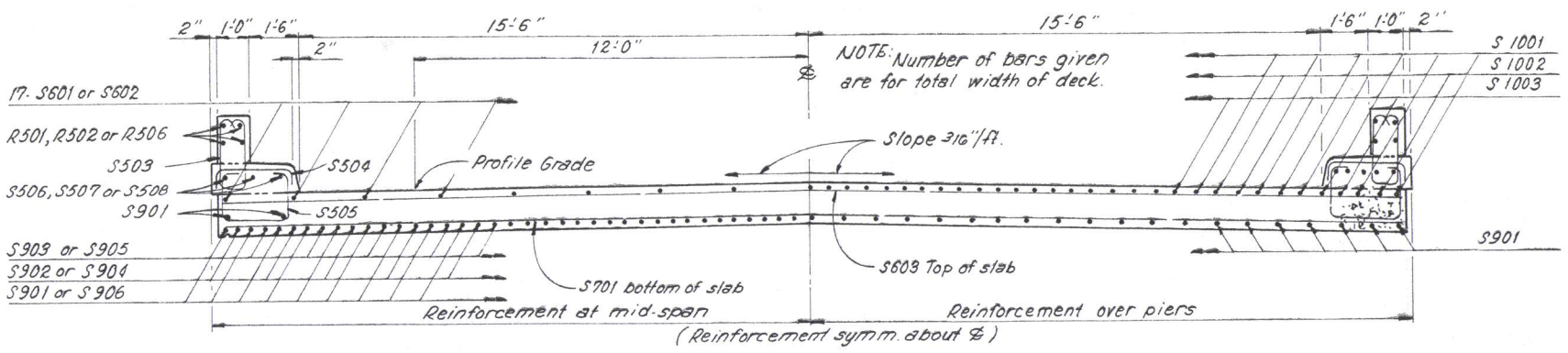

TYPICAL SECTION THRU DECK

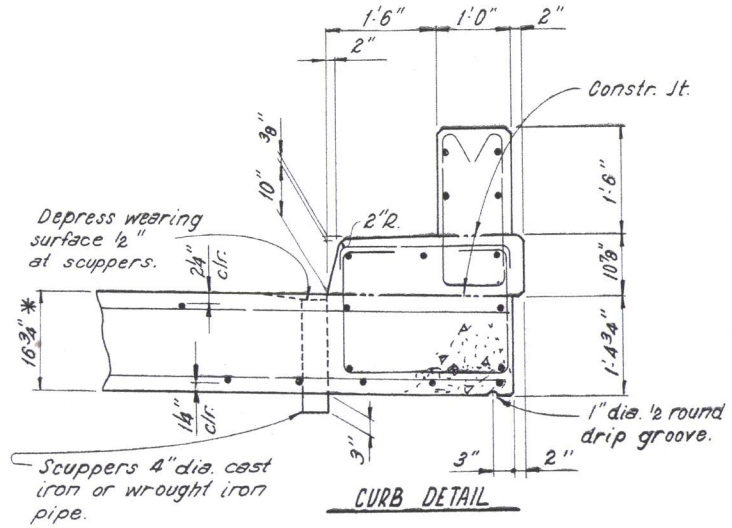

CURB DETAIL

* Slab thickness of 16¾" includes 1" for monolithic wearing surface.

LOUIS BERGER AND ASSOCIATES
CONSULTING ENGINEERS
ORANGE, N.J. COLUMBUS, OHIO HARRISBURG, PA.

SUPERSTRUCTURE DETAILS
BRIDGE Nº HOC-33-1400 L & R
OVER C. & O. R. R.

HOCKING COUNTY

DESIGNED	DRAWN	TRACED	CHECKED	REVIEWED	DATE	REVISED
HWD	RW	RW	DSB	RWM	10-9-67	

FED. RD. DIVISION	STATE	PROJECT	
2	OHIO		

301
303

HOCKING COUNTY
HOC- 33- 10.50

MICROFILMED
APR 16 1980

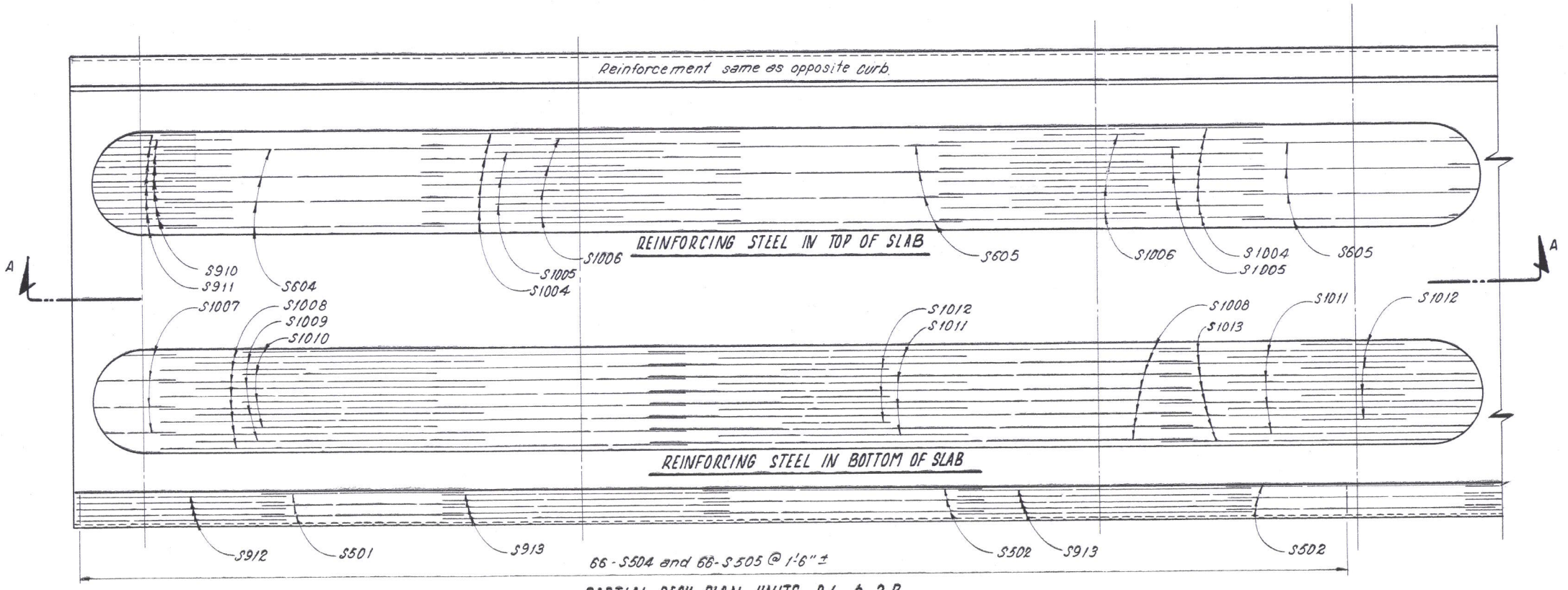

PARTIAL DECK PLAN UNITS 2-L & 2-R

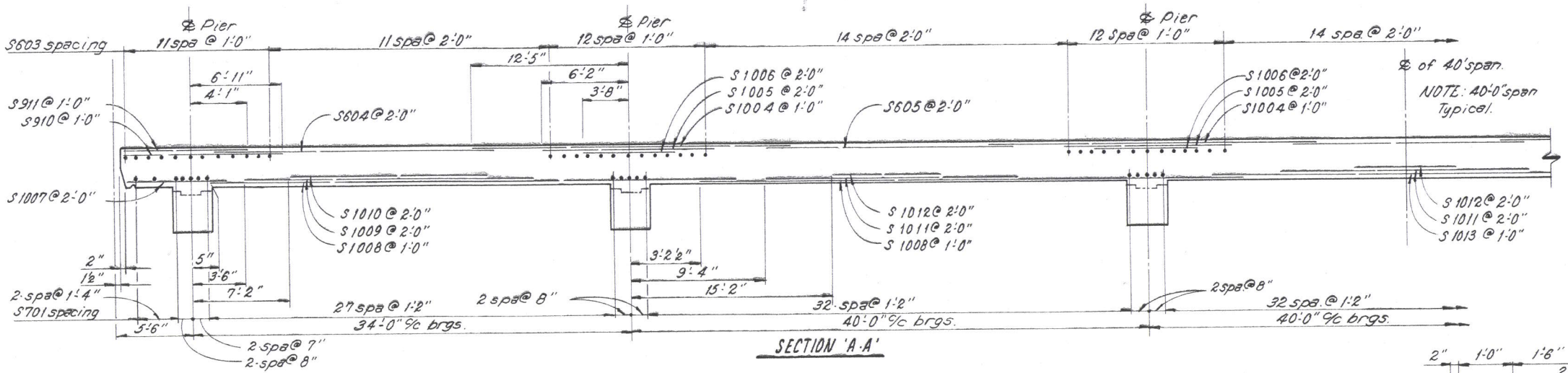

SECTION 'A-A'

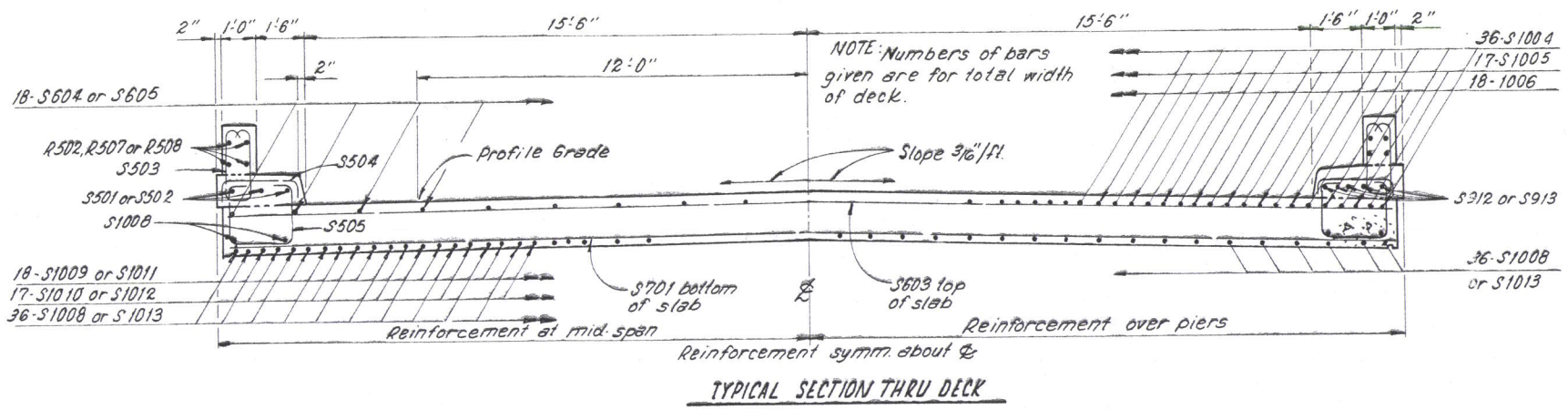

TYPICAL SECTION THRU DECK

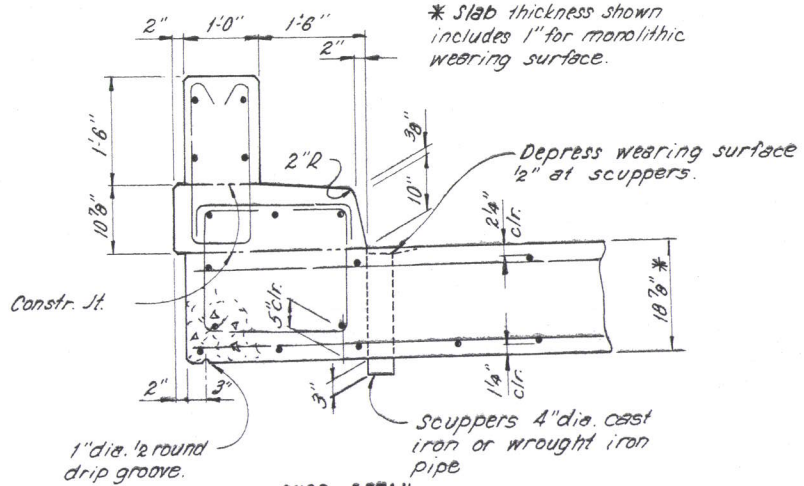

CURB DETAIL

LOUIS BERGER AND ASSOCIATES
CONSULTING ENGINEERS
ORANGE, N.J. COLUMBUS, OHIO HARRISBURG, PA.

SUPERSTRUCTURE DETAILS
BRIDGE No HOC-33-1400 L & R
OVER C. & O. R.R.

HOCKING COUNTY

DESIGNED	DRAWN	TRACED	CHECKED	REVIEWED	DATE	REVISED
HWR	RW	RW	DJB	RWM	10-9-67	

FED. RD. DIVISION	STATE	PROJECT	
2	OHIO		

302
303

HOCKING COUNTY
HOC-33-10.50

MICROFILMED
APR 16 1985

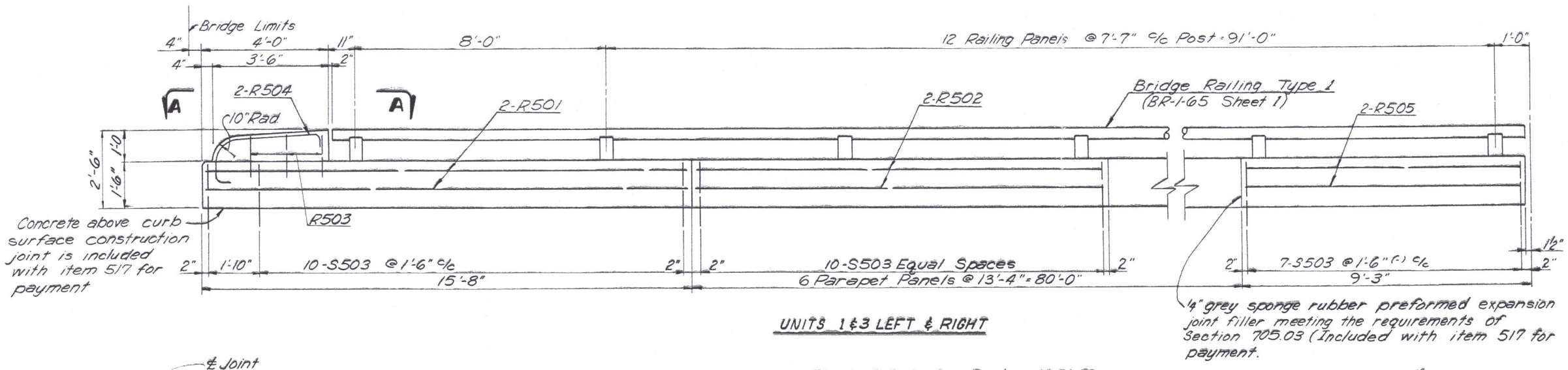

UNITS 1 & 3 LEFT & RIGHT

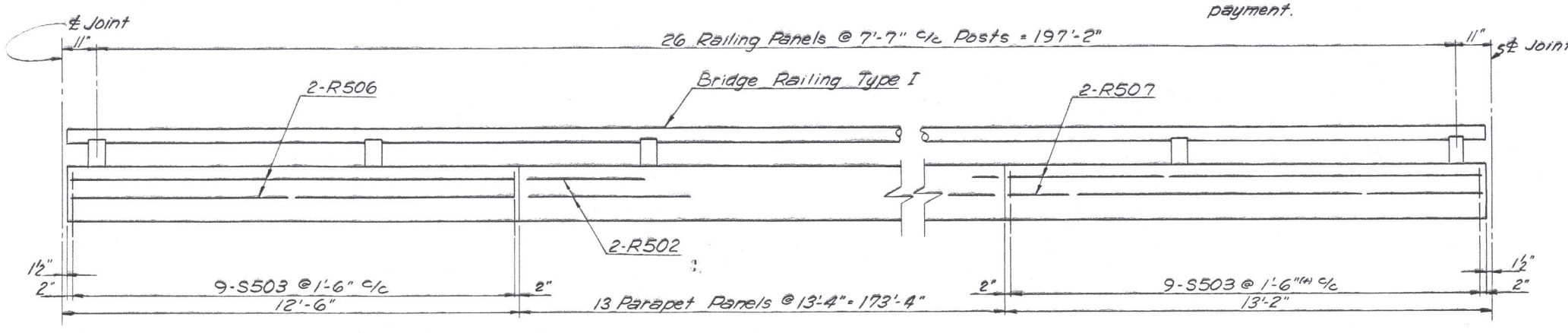

UNIT 2 LEFT & RIGHT

PARAPET & RAILING DETAILS

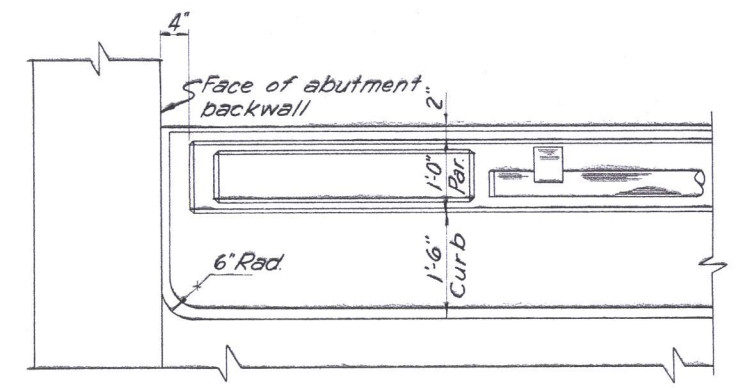

VIEW "AA"

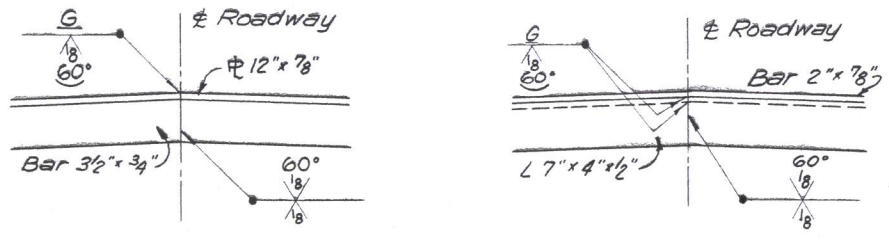

WELDED BUTT JOINT DETAILS

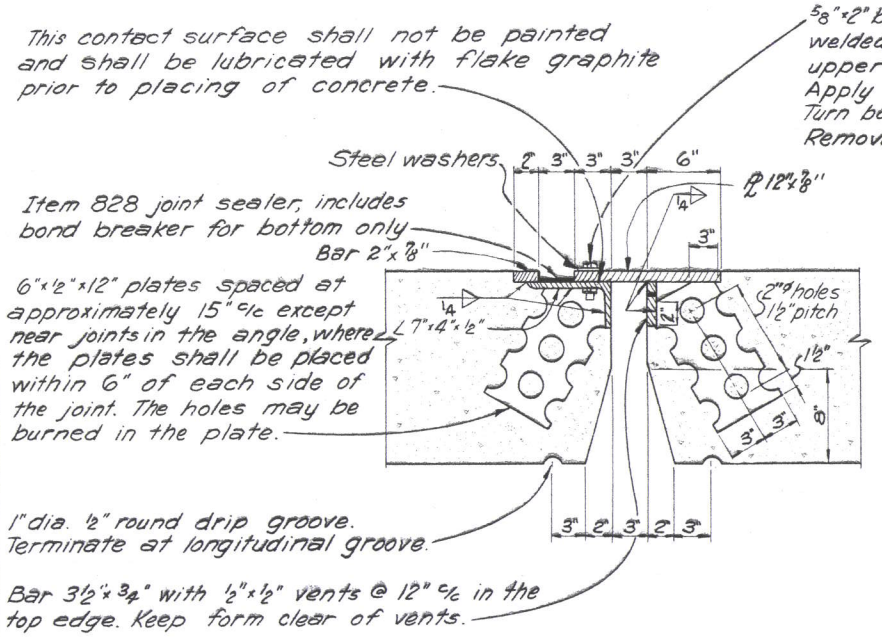

DETAILS OF ROADWAY EXPANSION JOINT

⅝" x 2" bolts are not more than 2'-0" c/c with nuts tack welded to under side of lower angle. 1 1/16" holes in upper plate. Center ⅝" bolt in 1 1/16" holes. Apply flake graphite between washers and plate. Turn bolts tight and release one-half turn. Remove bolts as soon as concrete has set, preferably within two hours after placing, to avoid damage due to temperature expansion or contraction of Superstructure. Fill holes with bituminous material.

Omit shop coat on all portions of end dam. Portions in contact with steel or with concrete shall not be painted. All other portions shall be cleaned and given the shop coat in the field as well as three field coats.

A butt welded joint in the end dam will be required at the centerline of roadway.

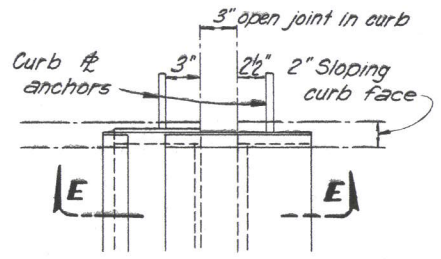

PART PLAN

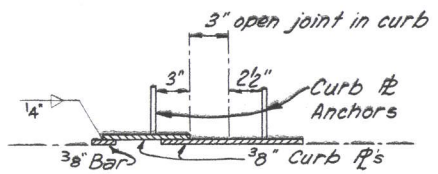

SECTION C-C

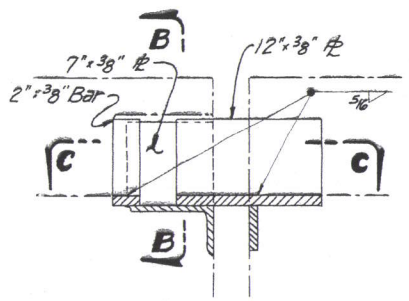

SECTION E-E

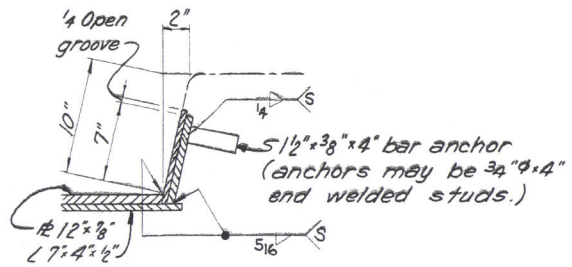

SECTION B-B

CURB PLATE DETAILS

LOUIS BERGER AND ASSOCIATES
CONSULTING ENGINEERS
ORANGE, N. J. COLUMBUS, OHIO HARRISBURG, PA.

SUPERSTRUCTURE DETAILS
BRIDGE Nº HOC-33-14.00 L&R
OVER C. & O. RR.

HOCKING COUNTY

DESIGNED	DRAWN	TRACED	CHECKED	REVIEWED	DATE	REVISED
RWM	RCW	JMM	DSB	RWM	10-9-81	

FED. RD. DIVISION	STATE	PROJECT	
2	OHIO		

303 / 303

HOCKING COUNTY
HOC 33 10.50

MICROFILMED
APR 16 1986

REINFORCING STEEL LIST

MARK	Nº	LENGTH	WEIGHT	SHP.
ABUTMENTS				
A 1001	16	34'8"	2387	S
A 801	32	22'11"	1958	S
A 501	272	6'7"	1868	B
A 502	32	21'7"	720	S
A 503	16	34'8"	579	S
A 504	48	6'8"	334	S
A 505	64	10'7"	706	B
A 506	16	8'8"	145	S
A 507	32	4'11"	164	S
A 508	32	6'8"	223	B
A 509	32	11'1"	370	B
A 401	112	5'5	405	B
SUPERSTRUCTURE				
S1001	256	27'2"	29926	S
S1002	128	13'11"	7665	S
S1003	128	8'10"	4865	S
S1004	288	24'10"	30775	S
S1005	144	12'4"	7642	S
S1006	136	7'4"	4292	S
S1007	72	8'0"	2479	S
S1008	328	40'0"	56455	S
S1009	72	22'3"	6893	S
S1010	68	13'10"	4048	S
S1011	108	20'4"	9449	S
S1012	102	9'0"	3950	S
S1013	72	33'7"	10404	S
S 901	516	36'11"	64767	S
S 902	76	25'1"	6480	B
S 903	76	22'0" (11)	5922 (5706)	B
S 904	76	23'4"	6029	S
S 905	76	18'2"	4694	S
S 906	152	22'6"	11628	S
S 907	128	25'10"	11243	S
S 908	128	8'8"	3772	S
S 909	152	6'10"	3531	S
S 910	144	9'5"	4610	S
S 911	144	12'4"	6038	S
S 912	40	16'4"	2221	S
S 913	80	22'0"	5984	S
S 914	80	20'8"	5621	S
S 915	40	15'0"	2040	S
S 701	754	35'8"	54968	S
S 601	68	18'7"	1898	S
S 602	68	15'4"	1566	S
S 603	554	35'8"	29678	S
S 604	72	20'11"	2262	S
S 605	108	19'0"	3082	S
S 501	24	15'2"	380	S
S 502	36	21'8"	795	S
S 503	1216	5'7"	7081	B
S 504	1092	2'11"	3322	B
S 505	1092	6'8" (2)	7393 (7024)	B
S 506	24	21'10"	546	S
S 507	24	20'0"	501	S
S 508	24	14'6"	363	S
COLLISION WALL				
W 601	48	5'6"	396	S
W 602	52	4'0" (4)	312 (338)	B
W 603	26	12'4"	482	S
W 604	26	11'10"	462	S
W 501	20	11'6"	240	S
W 502	28	12'5"	363	B
W 503	28	13'10"	404	B
RAILING				
R 501	32	15'4"	Included with railing for payment.	S
R 502	400	13'0"		S
R 503	24	4'2"		B
R 504	16	5'4"		B
R 505	32	8'9"		S
R 506	32	12'0"		S

MARK	Nº	LENGTH	WEIGHT	SHP.
RAILING				
R 507	32	12'9"	Conn.	S
REPLACEMENT BARS				
RE1101	2	8'7"		S
RE1001	9	8'2"		S
RE901	11	7'10"		S
RE801	1	7'6"		S
RE701	3	7'3"		S
RE601	3	6'11"		S
RE501	2	6'7"		S
RE401	2	5'5"		B
RESP401	2	6'3"		B

BENDING DIAGRAM

BAR SIZE is indicated in the bar mark. The first digit where three digits are used and the first 2 digits where four are used indicate the bar size number. For example S501 is a Nº5 size bar and P1001 is a Nº10 size bar.

SPIRAL REINFORCING BARS: The "Length" shown in the steel list for the spiral bars is the distance from the top of the footing to the bottom of pier cap. The "Nº of turns" is the "length" divided by the pitch plus 3 turns (total Nº of closed coils) expressed at the nearest whole number. Spiral reinforcing bars shall not be deformed but shall in other respects conform to Item 509. 1½ closed coils shall be provided at the ends of each spiral units. Four steel channel, tee or angle spacers, weighing approximately 0.68 lbs per lin. foot of spacer, shall be provided for each spiral unit. They be equally spaced along the periphery of the coil. The number of pounds of these spacers, based on 0.68 lbs per lin. foot, will be paid for as reinforcing steel and is included in the tabulated quantity of spiral bars.

PIERS

MARK	Nº	LENGTH	WEIGHT	SHP.	1-L	2-L	3-L	4-L	5-L	6-L	7-L	8-L	9-L	10-L	11-L	12-L	1-R	2-R	3-R	4-R	5-R	6-R	7-R	8-R	9-R	10-R	11-R	12-R
					PIERS FOR LEFT STRUCTURE												PIERS FOR RIGHT STRUCTURE											
P1101	20	40'9"	4330	S	–	–	–	–	–	20	–	–	–	–	–	–	–	–	–	–	–	–	–	–	–	–	–	–
P1102	19	27'9"	2802	S	–	–	–	–	–	10	–	–	–	–	–	–	–	–	–	–	–	–	9	–	–	–	–	–
P1103	25	41'7"	5523	S	–	–	–	–	–	–	–	–	–	–	–	–	–	–	–	–	–	7	18	–	–	–	–	–
P1104	2	10'0" (10'0")	112	B	(115)	–	–	–	–	–	1	–	–	–	–	–	–	–	–	–	–	1	–	–	–	–	–	–
P1105	56	35'8"	10612	S	–	–	–	–	12	–	20	–	–	–	–	–	–	–	–	–	–	12	–	12	–	–	–	–
P1106	4	15'2"	322	S	–	–	–	–	–	–	4	–	–	–	–	–	–	–	–	–	–	–	–	–	–	–	–	–
P1001	17	40'0"	2926	S	–	–	–	–	9	–	–	–	–	–	–	–	–	–	–	–	–	–	–	8	–	–	–	–
P1002	8	19'8"	677	S	–	–	–	–	–	–	–	–	–	–	–	–	–	–	–	–	–	–	–	8	–	–	–	–
P1003	2	9'9"	86.84	B	–	–	–	–	1	–	–	–	–	–	–	–	–	–	–	–	–	–	–	1	–	–	–	–
P1004	9	19'2"	743	S	–	–	–	–	9	–	–	–	–	–	–	–	–	–	–	–	–	–	–	–	–	–	–	–
P1005	74	35'8"	11357	S	4	4	4	4	–	–	–	5	4	4	4	4	4	4	4	4	5	–	–	–	4	4	4	4
P901	510 (130)	6'1"	10548 (13,812)	B	20	20	20	20	30	20	30	20	20	20	20	20	20	20	20	20	20	20	20	30	20	20	20	20
P902	110	31'3"	11687	S	–	–	–	10	–	20	–	–	–	–	20	–	–	20	20	20	–	20	–	–	–	–	–	–
P903	42	10'3"	1464	B	–	–	–	–	6	12	6	–	–	–	–	–	–	–	–	–	–	–	12	6	–	–	–	–
P904	12	35'8"	1455	S	–	–	–	–	–	6	–	–	–	–	–	–	–	–	–	–	–	–	6	–	–	–	–	–
P905	80	31'0"	8432	S	–	–	–	–	–	–	–	20	20	–	–	–	–	–	–	–	20	–	20	–	–	–	–	–
P906	6	12'1"	246	B	–	–	–	–	–	–	–	–	–	–	–	–	–	–	–	–	–	–	6	–	–	–	–	–
P907	6	16'11" (17'7")	345 (359)	B	–	–	–	–	–	–	–	–	–	–	–	–	–	–	–	–	–	6	–	–	–	–	–	–
P908	700 (80)	30'9"	10455 (8,364)	S	–	–	–	–	–	–	30	–	–	20	20	–	–	–	–	–	–	–	–	30	–	–	–	–
P909	6	28'2"	575 (588)	B	–	–	–	–	–	–	–	–	–	–	–	–	–	–	–	–	–	–	–	6	–	–	–	–
P910	30	30'4"	3094	S	–	–	–	–	30	–	–	–	–	–	–	–	–	–	–	–	–	–	–	–	–	–	–	–
P911	6	25'0" (24'8")	510 (503)	B	–	–	–	–	6	–	–	–	–	–	–	–	–	–	–	–	–	–	–	–	–	–	–	–
P912	30	21'0"	2142	S	10	–	–	–	–	–	–	–	–	–	–	20	–	–	–	–	–	–	–	–	–	–	–	–
P913	20	20'4"	1383	S	10	–	–	–	–	–	–	–	–	–	–	–	–	–	–	–	–	–	–	–	–	–	–	10
P914	60	20'6"	4182	S	–	10	10	10	–	–	–	–	–	–	–	–	–	–	–	–	–	–	–	–	10	10	10	–
P915	10	21'3"	722	S	–	–	–	–	–	–	–	–	–	–	–	–	–	–	–	–	–	–	–	–	–	–	–	10
P916	30	30'6"	3111	S	–	10	10	–	–	–	–	–	–	–	–	–	–	–	–	–	–	–	–	–	10	–	–	–
P917	10	29'11"	1017	S	–	–	–	–	–	–	–	–	–	–	–	–	–	–	–	–	–	–	–	–	–	10	–	–
P918	10	29'7"	1005	S	–	–	–	–	–	–	–	–	–	–	–	–	–	–	–	–	–	–	–	–	–	–	10	–
P919	20	20'10"	1417	S	–	–	–	–	–	–	–	–	–	–	–	–	20	–	–	–	–	–	–	–	–	–	–	–
P920	108	34'8"	12730	S	6	6	6	6	–	–	–	6	6	6	6	6	6	6	6	6	6	–	–	–	6	6	6	6
P921	6	20'11"	426	B	–	–	–	–	–	–	6	–	–	–	–	–	–	–	–	–	–	–	–	–	–	–	–	–
P801	79	10'8"	2250	B	–	–	–	–	10	–	10	–	–	–	–	–	–	–	–	–	–	20	29	10	–	–	–	–
P802	448	9'2	10965	B	–	32	32	32	–	–	–	32	32	32	32	–	–	32	32	32	32	–	–	–	32	32	32	–
P701	40	10'2"	831	B	–	–	–	–	–	40	–	–	–	–	–	–	–	–	–	–	–	–	–	–	–	–	–	–
P702	10	9'2"	187	B	–	–	–	–	–	–	–	–	–	–	–	–	–	–	–	–	–	–	10	–	–	–	–	–
P703	4	6'6"	53	S	–	–	–	–	–	–	–	–	–	–	–	–	–	–	–	–	–	4	–	–	–	–	–	–
P601	300	7'10"	3530	B	36	–	–	–	46	–	46	–	–	–	–	36	36	–	–	–	–	18	–	46	–	–	–	36
P501	526	10'4"	5669	B	22	22	22	22	36	–	35	22	22	22	22	22	22	22	22	22	22	26	–	33	22	22	22	22
P502	17	11'1"	197	B	–	–	–	–	–	17	–	–	–	–	–	–	–	–	–	–	–	–	–	–	–	–	–	–
P503	15	10'10"	158	B	–	–	–	–	–	–	–	–	–	–	–	–	–	–	–	–	–	–	15	–	–	–	–	–
P504	20	9'7"	200	B	–	–	–	–	–	–	–	–	–	–	–	–	–	–	–	–	–	20	–	–	–	–	–	–
P505	40	9'11"	414	B	–	–	–	–	–	40	–	–	–	–	–	–	–	–	–	–	–	–	–	–	–	–	–	–
P506	24	7'2"	179	B	–	–	–	–	–	–	–	–	–	–	–	–	–	–	–	–	–	–	24	–	–	–	–	–
P507	8	21'4"	177	S	–	–	–	–	–	8	–	–	–	–	–	–	–	–	–	–	–	–	–	–	–	–	–	–
P508	8	21'8"	181	S	–	–	–	–	–	–	–	–	–	–	–	–	–	–	–	–	–	–	8	–	–	–	–	–
P509	20	24'6"	511	S	–	–	–	–	4	–	8	–	–	–	–	–	–	–	–	–	–	4	–	4	–	–	–	–
P510	8	6'0" (6'10")	54 (57)	B	–	–	–	–	2	–	2	–	–	–	–	–	–	–	–	–	–	2	–	2	–	–	–	–
P511	8	33'7"	280	S	–	–	–	–	4	–	–	–	–	–	–	–	–	–	–	–	–	–	–	4	–	–	–	–
P512	4	22'6"	94	S	–	–	–	–	–	–	–	–	–	–	–	–	–	–	–	–	–	4	–	–	–	–	–	–
P513	36	34'8"	1302	S	2	2	2	2	–	–	–	2	2	2	2	2	2	2	2	2	2	–	–	–	2	2	2	2
P514	80	7'9"	646	B	–	–	–	–	26	–	16	–	–	–	–	–	–	–	–	–	–	12	–	26	–	–	–	–
P515	48	9'9"	488	B	–	–	–	–	–	–	–	–	–	–	–	–	–	–	–	–	–	–	48	–	–	–	–	–
P516	8	7'4"	61	B	–	–	–	–	–	8	–	–	–	–	–	–	–	–	–	–	–	–	–	–	–	–	–	–

SPIRAL BARS

MARK	Nº	LENGTH	WEIGHT	CORE	PITCH	Nº OF TURNS	1-L	2-L	3-L	4-L	5-L	6-L	7-L	8-L	9-L	10-L	11-L	12-L	1-R	2-R	3-R	4-R	5-R	6-R	7-R	8-R	9-R	10-R	11-R	12-R
SP401	15	27'9"	7607	32"	4½	77	–	–	–	1	3	2	3	–	–	–	–	–	–	2	2	2	–	–	–	–	–	–	–	–
SP402	6	27'4"	2999	32"	4½	76	–	–	–	–	–	–	–	–	2	2	–	–	–	–	–	–	–	–	2	–	–	–	–	–
SP403	2	27'3"	997	32"	4½	76	–	–	–	–	–	–	–	–	–	–	–	–	–	–	–	–	–	2	–	–	–	–	–	–
SP404	5	27'2"	2484	32"	4½	75	–	–	–	–	–	–	–	–	–	–	2	–	–	–	–	–	–	–	–	3	–	–	–	–
SP405	1	17'4"	323	32"	4½	49	1	–	–	–	–	–	–	–	–	–	–	–	–	–	–	–	–	–	–	–	–	–	–	–
SP406	2	16'9"	626	32"	4½	48	1	–	–	–	–	–	–	–	–	–	–	–	–	–	–	–	–	–	–	–	–	–	–	1
SP407	3	26'11"	1477	32"	4½	75	–	1	1	–	–	–	–	–	–	–	–	–	–	–	–	–	–	–	–	–	1	–	–	–
SP408	6	16'11"	1894	32"	4½	48	–	1	1	1	–	–	–	–	–	–	–	–	–	–	–	–	–	–	–	–	1	1	1	–
SP409	1	26'4"	482	32"	4½	73	–	–	–	–	–	–	–	–	–	–	–	–	–	–	–	–	–	–	–	–	–	1	–	–
SP410	1	26'0"	476	32"	4½	72	–	–	–	–	–	–	–	–	–	–	–	–	–	–	–	–	–	–	–	–	–	–	1	–
SP411	3	17'8"	987	32"	4½	50	–	–	–	–	–	–	–	–	–	–	–	2	–	–	–	–	–	–	–	–	–	–	–	1
SP412	2	17'3"	649	32"	4½	49	–	–	–	–	–	–	–	–	–	–	–	–	2	–	–	–	–	–	–	–	–	–	–	–
SP413	4	27'6"	2011	32"	4½	76	–	–	–	–	–	–	–	2	–	–	–	–	–	–	–	–	2	–	–	–	–	–	–	–

ELEVATION

SECTION "A-A"

COLLISION WALL

Concrete shall be class "E".

LEGEND
r. = rear
f. = forward

LOUIS BERGER AND ASSOCIATES
CONSULTING ENGINEERS
ORANGE, N. J. COLUMBUS, OHIO HARRISBURG, PA.

REINFORCING STEEL LIST & COLLISION WALL
BRIDGE Nº HOC-33-1400 L&R OVER C&O RR
HOCKING COUNTY

DESIGNED	DRAWN	TRACED	CHECKED	REVIEWED	DATE	REVISED
R.W.M.	R.C.W.		D.S.B.	RWM	10/9/67	6-21-68