OHIO DEPARTMENT OF TRANSPORTATION

metric units

LOCATION MAP

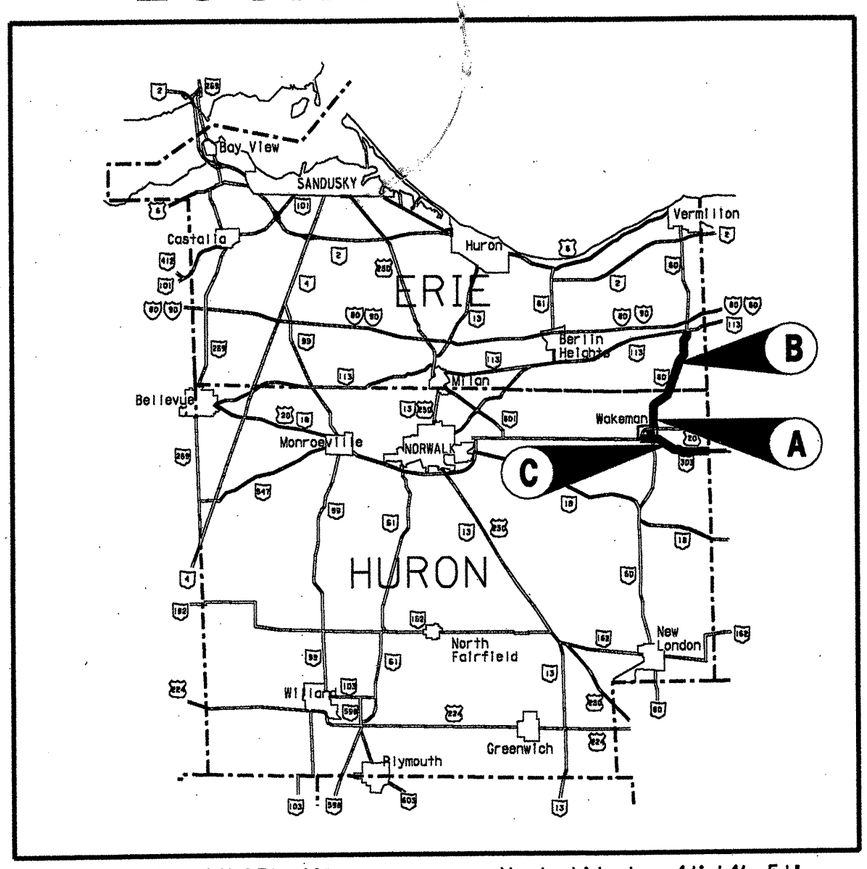

N

W. Longitude 82° 23′ 48″ N. Latitude 41° 14′ 51″

PART	COUNTY	ROUTE	SECTIONS	PROJECT TERMINI straight line kilometer BEGIN	END	NET LENGTH kilometer	CITY	VILLAGE
A	HUR	SR60	(20.809)(21.839)	20.809	25.685	4.667		Wakeman
B	ERI	SR60	0.000-3.460	0.000	5.552	5.552		
C	HUR	SR303	0.000-3.267	0.000B	5.922	6.116		Wakeman

Straight Line Kilometers have been converted from mileage - (references in the field are in miles)

PROJECT DESCRIPTION: This project will include resurfacing with an intermediate and a surface course of asphalt concrete, pavement widening where necessary, pavement planing where necessary, adjustment of castings where necessary, pavement markings and various structure work as detailed in the plan.

INDEX OF SHEETS:

1	-	TITLE SHEET
2,3,4	-	GENERAL SUMMARY
5,6	-	STRAIGHT LINE DIAGRAM
5,6	-	PAVEMENT DATA
7,8	-	TYPICAL SECTIONS
7,8	-	SHOULDER DATA
9	-	MAILBOX FACILITIES
10-21	-	GENERAL NOTES
22	-	BRIDGE TREATMENT
23,24,25	-	ESTIMATED QUANTITIES
26-29	-	STRUCTURE DETAILS
30,31,32	-	BRIDGE RAIL DETAILS
33-38	-	GUARDRAIL DETAILS
39	-	PAVEMENT MARKING DETAILS

1995 SPECIFICATIONS

THE STANDARD 1995 SPECIFICATIONS OF THE STATE OF OHIO DEPARTMENT OF TRANSPORTATION, INCLUDING CHANGES AND SUPPLEMENTAL SPECIFICATIONS LISTED IN THE PLANS AND THE PROPOSAL SHALL GOVERN THESE IMPROVEMENTS

I HEREBY APPROVE THESE PLANS AND DECLARE THAT THE MAKING OF THESE IMPROVEMENTS WILL REQUIRE THE CLOSING OF THE HIGHWAY ON PART C AND THE DETOUR WILL BE PROVIDED BY STATE FORCES. THE CLOSING TO TRAFFIC OF THE HIGHWAYS WILL NOT BE REQUIRED ON PARTS A AND B. PROVISIONS FOR THE MAINTENANCE AND SAFETY OF TRAFFIC WILL BE AS INDICATED IN THE PROPOSAL.

APPROVED DATE 12-30-96 Mary Ellen Kimbulis P.E.P.S.
DISTRICT DEPUTY DIRECTOR OF TRANSPORTATION

APPROVED DATE _____ _____
DIRECTOR, DEPARTMENT OF TRANSPORTATION

TWO WORKING DAYS BEFORE YOU DIG
Call 800-362-2764
TOLL FREE
OHIO UTILITIES PROTECTION SERVICE
NON-MEMBERS MUST BE CALLED DIRECTLY

PLANS PREPARED BY:
DISTRICT 3

STANDARD DRAWINGS		STANDARD DRAWINGS		STANDARD DRAWINGS	
BP-3.1M	10-28-94	DM-1. 1M	06-30-95	MT-97.11M	01-30-95
BP-4.1M	10-28-94			MT-99.10M	01-30-95
				MT-99.20M	01-30-95
GR-1.1M	11/30/94			MT-101.60M	04-25-94
GR-1.2M	01-03-96	TC-41.20M	07-01-94	MT-105.10M	04-25-94
GR-1.3M	11/30/94	TC-65.10M	11-01-95	MT-105.11M	04-25-94
GR-2.1M	11-30-94	TC-65.11M	11-01-95		
GR-3.4M	01-03-96	TC-65.12M	11-01-95	AS-1-81M	10-25-94
GR-4.1M	11-30-94	TC-71.10M	09-01-93	DBR-2-73M	08-18-95
GR-4.2M	04-21-95			EXJ-4-87M	03-20-95
		MT-97.10M	04-25-94	RB-1-55M	10-25-94

SUPPLEMENTAL SPECIFICATIONS	
802	03-23-95
944	12-07-95

FEDERAL PROJECT NO. NONE

PID NO. 16138

CONSTRUCTION PROJECT NO.

RAILROAD INVOLVEMENT NONE

HUR-SR60-20.809
ERI-SR60-0.000
HUR-303-0.000

DESIGN FILE: i:\dgn\ops\1997\he60h303.dgn
WORKSTATION: lwatkins DATE: 27 DEC 96

GENERAL SUMMARY

metric units

CALC BY TEW
CHK'D By JLB

SHEET NUMBER 5	6	8	9	10	23	24	25	39	ITEM	ITEM EXT.	TOTAL	UNIT	DESCRIPTION	REF. SHEET
													ROADWAY	
					63				202	22900	63	square meter	APPROACH SLAB REMOVED, AS PER PLAN	
					381.95				202	38000	381.95	meter	GUARDRAIL REMOVED	
					26.67				202	38501	26.67	meter	BRIDGE RAILING REMOVED, AS PER PLAN	30,31,32
					15				202	42000	15	each	ANCHOR ASSEMBLY REMOVED, TYPE A	15
								1040	202	54100	1040	each	RAISED PAVEMENT MARKER REMOVED FOR STORAGE	
					12				203	20001	12	cubic meter	EMBANKMENT, AS PER PLAN	15
					79				203	50000	79	square meter	SUBGRADE COMPACTION	
		12102							203	60001	12102	meter	LINEAR GRADING	
			99						203	60007	99	each	GRADING MAILBOX APPROACHES	
						539.12			606	13000	539.12	meter	GUARDRAIL, TYPE 5	
						323.85			606	17000	323.85	meter	RAISING TYPE 5 GUARDRAIL	
						200			606	18500	200	each	GUARDRAIL POST, 2.75 METER	
						8			606	25000	8	each	ANCHOR ASSEMBLY, TYPE A	
						7			606	26500	7	each	ANCHOR ASSEMBLY, TYPE T	
						3			606	27801	3	each	ANCHOR ASSEMBLY REBUILT, TYPE A, AS PER PLAN	18
						8			606	35140	8	each	BRIDGE TERMINAL ASSEMBLY, TYPE A	
							2		SPECIAL	60640000	2	each	915 mm CONCRETE ANCHOR	18
							987		SPECIAL	60650000	987	meter	RESHAPING BERM	
			19						SPECIAL	69050100	19	each	MAILBOX SUPPORT SYSTEM, SINGLE	
			9						SPECIAL	69050200	9	each	MAILBOX SUPPORT SYSTEM, DOUBLE	
													DRAINAGE	
						450			601	32104	450	cubic meter	ROCK CHANNEL PROTECTION, TYPE B WITH FABRIC FILTER	
4									604	09000	4	each	CATCH BASIN ADJUSTED TO GRADE	
6									604	34500	6	each	MANHOLE ADJUSTED TO GRADE	
													PAVEMENT	
				500					253	02000	500	cubic meter	PAVEMENT REPAIR	
990	787				440				254	01000	2217	square meter	PAVEMENT PLANING, BITUMINOUS	

GENERAL SUMMARY

HUR-60-20.809
ERI-60-0.000
HUR-303-0.000

GENERAL SUMMARY

metric units

SHEET NUMBER 5	6	7	8	9	10	11	25	39	ITEM	ITEM EXT.	TOTAL	UNIT	DESCRIPTION	REF. SHEET
													PAVEMENT *(CONTINUED)*	
			1053						301	10002	1053	cubic meter	BITUMINOUS AGGREGATE BASE	
1370	885								403	20000	2255	cubic meter	ASPHALT CONCRETE, AC-20	
1800	1167								404	20000	2967	cubic meter	ASPHALT CONCRETE, AC-20	
36024	23321								407	10000	59345	liter	TACK COAT	
		9926	6859						408	10000	16785	liter	BITUMINOUS PRIME COAT	
							79		611	10000	79	square meter	REINFORCED CONCRETE APPROACH SLAB (T=305 mm)	
		6660	4052						617	20000	10712	square meter	SHOULDER PREPARATION	
		598	360	159					617	98300	1117	metric ton	SHOULDER RECONDITIONING, MISC., COMPACTED AGGREGATE	
													MAINTENANCE OF TRAFFIC	
					30				404	35000	30	cubic meter	BITUMINOUS CONCRETE FOR MAINTAINING TRAFFIC	
						48			614	12460	48	each	WORK ZONE MARKING SIGN	
								33.10	614	20500	33.10	kilometer	TEMPORARY CENTER LINE, CLASS II, 642 PAINT	
													TRAFFIC CONTROL	
								882	621	00200	882	each	RAISED PAVEMENT MARKER, INSTALLATION ONLY	
								64	621	00300	64	each	PRISMATIC RETRO REFLECTOR	
								64	621	00600	64	each	RAISED PAVEMENT MARKER CASTING, INSTALLATION ONLY	
								33.10	642	00102	33.10	kilometer	EDGE LINE, TYPE 2	
								16.55	642	00302	16.55	kilometer	CENTER LINE, TYPE 2	
								79	644	00500	79	meter	STOP LINE	
								2	644	01100	2	each	SCHOOL SYMBOL, 1800 MM	
							50		802	00100	50	each	BARRIER REFLECTOR, TYPE A	

CALC BY TEM
CHK'D By JLB

GENERAL SUMMARY

HUR-60-20.809
ERI-60-0.000
HUR-303-0.000

metric units

CALC BY TEW
CHK'D BY JLB

SHEET NUMBER																	ITEM	ITEM EXT.	TOTAL	UNIT	DESCRIPTION	REF. SHEET
23		26		29																		
																					HUR-303-01529 S.L.K. (HUR-303-0095 S.L.M.) SFN 3904059	
22.86																	517	72201	22.86	meter	RAILING (DEEP BEAMRAIL WITH STEEL TUBULAR BACKUP AND TYPE 1 STEEL POST AND ANCHOR BOLTS), AS PER PLAN	
																					HUR-303-03009 S.L.K. (HUR-303-0187 S.L.M.) SFN 3904083	
				22													202	11300	22	cubic meter	PORTIONS OF STRUCTURE REMOVED, ABUTMENTS	13
				14													202	11304	14	square meter	PORTIONS OF STRUCTURE REMOVED, DECK	14
				10													202	98100	10	each	REMOVAL, MISC.: ROCKERS	
				23													202	98200	23	meter	REMOVAL, MISC.: EXPANSION JOINTS	
				663													509	15820	663	kilogram	EPOXY COATED REINFORCING STEEL, GRADE 400	
				4													511	31501	4	cubic meter	CLASS S CONCRETE, SUPERSTRUCTURE, AS PER PLAN	16
				22													511	44101	22	cubic meter	CLASS C CONCRETE, ABUTMENT NOT INCLUDING FOOTING, AS PER PLAN	16
				23													516	11210	23	meter	STRUCTURAL EXPANSION JOINT, INCLUDING ELASTOMERIC STRIP SEAL	
				10													516	46900	10	each	BEARING DEVICE, MISC.: ROCKER	16
		LUMP															516	47000	LUMP		JACKING AND TEMPORARY SUPPORT OF SUPERSTRUCTURE	16,17
				20													518	21201	20	cubic meter	POROUS BACKFILL WITH FILTER FABRIC, AS PER PLAN	17
				31													518	40000	31	meter	150 mm PERFORATED CORRUGATED PLASTIC PIPE, 707.16	
				23													SPECIAL	53001300	23	meter	STRUCTURE, MISC.: JOINT SEALING	19,20
																	614	11000	LUMP		MAINTAINING TRAFFIC	
																	619	15000	LUMP		FIELD OFFICE, TYPE A	
																	SPECIAL	61925000	LUMP		COMPUTER EQUIPMENT FOR TYPE A FIELD OFFICE	
																	624	10000	LUMP		MOBILIZATION	

GENERAL SUMMARY

HUR-60-20.809
ERI-60-0.000
HUR-303-0.000

Straight Line Kilometers have been converted from mileage - (references in the field are in miles)

metric units

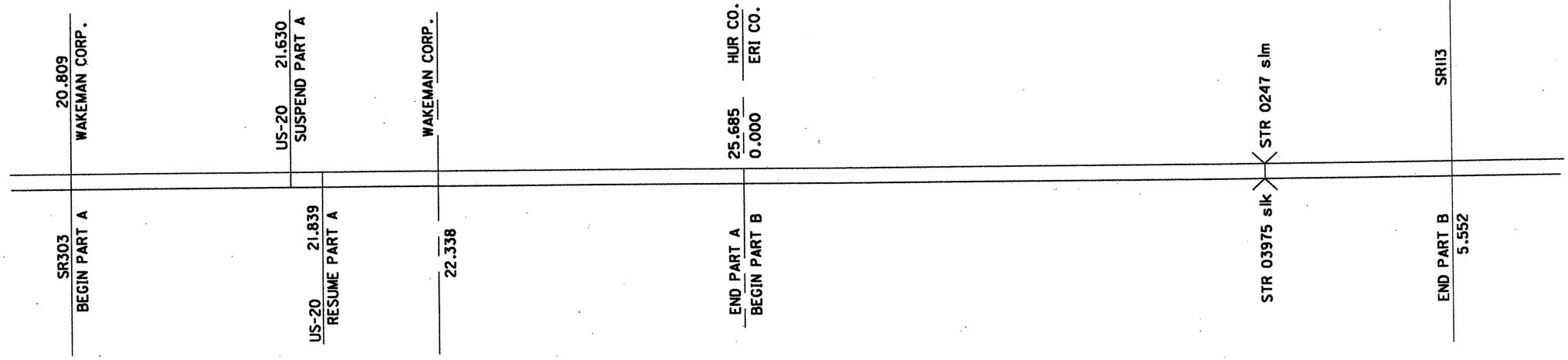

* STOP LEVELING COURSE 0.3 m SHORT OF CURB AND
* TAPER SURFACE COURSE TO 0 mm @ CURB

* SEE TYPICALS ON "SHOULDER DATA" SHEET

USE BUTT JOINTS THROUGHOUT PROJECT

PAVEMENT DATA

PART	ROUTE	LOG POINT TO LOG POINT Straight Line kilometer	LENGTH kilometer	LENGTH meter	WIDTH METER AVG.	* TYPICAL	EXISTING TYPE PAVEMENT	PAVEMENT AREA square meter	407 TACK COAT @ 0.36 L/m² liter	403 ASPHALT CONCRETE, AC-20 THICK AVG. mm	403 ASPHALT CONCRETE, AC-20 m³	407 TACK COAT @ 0.14 L/m² liter	404 ASPHALT CONCRETE, AC-20 THICK AVG. mm	404 ASPHALT CONCRETE, AC-20 m³	254 PAVEMENT PLANING, BITUMINOUS m²	604 CATCH BASIN ADJUSTED TO GRADE each	604 MANHOLE ADJUSTED TO GRADE each
A	HUR-SR60	20.809 - 21.374	0.565	565	6.86	1	404	3876	1395	19	74	543	25	97			
		21.374 - 21.398	0.024	24	8.23	2	404	198 * 190	71	19	4	28	25	5			
		21.398 - 21.445	0.047	47	7.92	2	404	372 * 358	134	19	7	52	25	9			
		21.445 - 21.630	0.185	185	6.71	1	404	1241	447	19	24	174	25	31			
		21.839 - 25.685	3.846	3846	6.71	1	404	25807	9291	19	490	3613	25	645			
							EXTRA AREA FOR INTERS., DRIVES & MB	1205	434	19	23	169	25	30	585		
		TOTAL PART A	4.667	4667				32699	11772		622	4579		817	585	4	6
B	ERI-SR60	0.000-3.685	3.685	3685	6.71	1	404	24726	8901	19	470	3462	25	618			
		3.685-4.104	0.419	419	7.92	3	404	3318	1194	19	63	465	25	83			
		4.104-4.635	0.531	531	6.71	1	404	3563	1283	19	68	499	25	89			
		4.635-4.828	0.193	193	7.92	1	404	1529	550	19	29	214	25	38			
		4.828-5.021	0.193	193	7.32	1	404	1413	509	19	27	198	25	35			
		5.021-5.440	0.419	419	6.71	1	404	2811	1012	19	53	394	25	70			
		5.440-5.552	0.112	112	7.32	1	404	820	295	19	16	115	25	21			
							EXTRA AREA FOR INTERS., DRIVES & MB	1165	419	19	22	163	25	29	405		
		TOTAL PART B	5.552	5552				39345	14163		748	5510		983	405		

PLAN NO.

PAVEMENT DATA

HUR-SR60-20.809
ERI-SR60-0.000
HUR-SR303-0.000

5
39

DESIGN FILE: I:\dgn\ops\1997\he60h303.dgn
WORKSTATION: twatkins DATE: 27 DEC 96

Straight Line Kilometers have been converted from mileage - (references in the field are in miles)

metric units

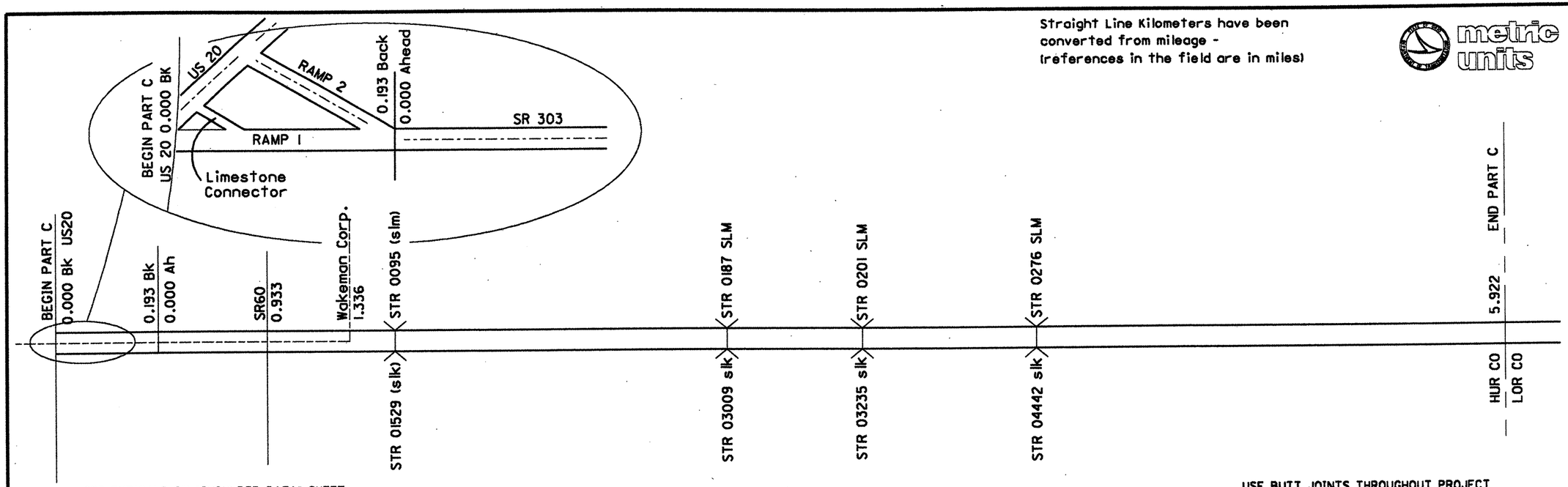

* SEE TYPICALS ON "SHOULDER DATA" SHEET

USE BUTT JOINTS THROUGHOUT PROJECT

PAVEMENT DATA

PART	ROUTE	LOG POINT TO LOG POINT Straight Line kilometer	LENGTH kilometer	LENGTH meter	WIDTH METER AVG.	* TYPICAL	EXISTING TYPE PAVEMENT	PAVEMENT AREA square meter	407 TACK COAT @ 0.36 L/m² liter	403 ASPHALT CONCRETE, AC-20 THICK AVG. mm	403 ASPHALT CONCRETE, AC-20 m³	407 TACK COAT @ 0.14 L/m² liter	404 ASPHALT CONCRETE, AC-20 THICK AVG. mm	404 ASPHALT CONCRETE, AC-20 m³	254 PAVEMENT PLANING, BITUMINOUS m²
C	HUR-303	RAMP 2		43	6.10	1	404	262	94	19	5	37	25	7	262
		RAMP I		90	4.27	2	404	384	138	19	7	54	25	10	30
		0.000 - 0.064	0.064	64	7.32	2	404	468	168	19	9	66	25	12	
		0.064 - 0.145	0.081	81	7.32	3	404	593	213	19	11	83	25	15	
		0.145 - 0.193 Bk	0.048	48	7.32	3	404	351	126	19	7	49	25	9	
		Ah 0.000 - 1.432	1.432	1432	7.32	3	404	10482	3774	19	199	1467	25	262	
		1.432 - 1.722	0.290	290	7.32	3	404	2123	764	19	40	297	25	53	
		1.722 - 2.768	1.046	1046	7.32	3	404	7657	2757	19	145	1072	25	191	
		2.768 - 3.557	0.789	789	7.32	3	404	5775	2079	19	110	809	25	144	
		3.557 - 5.922	2.365	2365	7.32	3	404	17312	6232	19	329	2424	25	433	
							EXTRA AREA FOR INTERS., DRIVES & MB	1235	445	19	23	173	25	31	495
		TOTAL PART C	6.115	6248				46642	16790		885	6531		1167	787

PLAN NO.

PAVEMENT DATA

HUR-60-20.809
ERI-60-0.000
HUR-303-0.000

calculated TEW checked JLB

WORKSTATION: twatkins DATE: 31 DEC 96

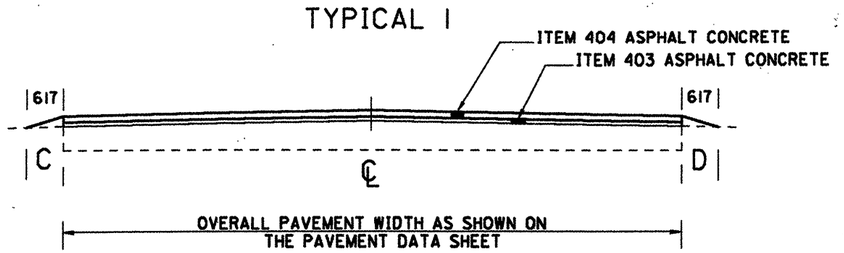

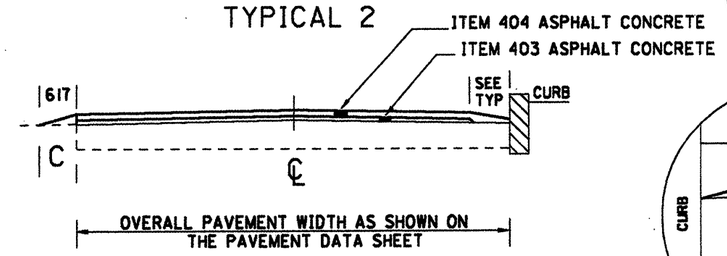

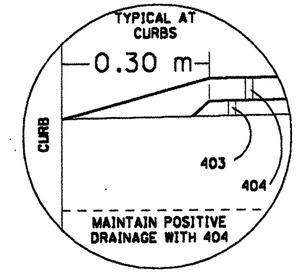

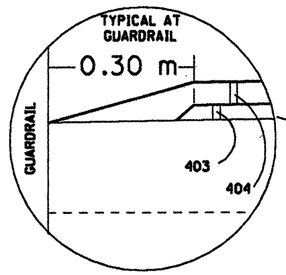

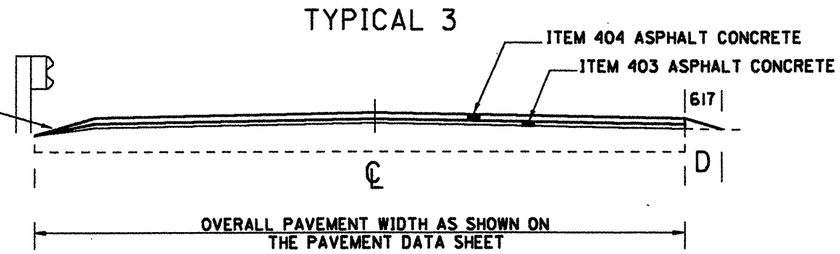

Straight Line Kilometers have been converted from mileage - (references in the field are in miles)

SHOULDER DATA

PART	ROUTE	LOG POINT TO LOG POINT (straight line kilometer)	LENGTH km	LENGTH m	TYPICAL	PAVED SHOULDER PROPOSED WIDTH m (avg.) A	PAVED SHOULDER PROPOSED WIDTH m (avg.) B	PAVED SHOULDER AREA m²	203 LINEAR GRADING DEPTH mm (avg.)	203 LINEAR GRADING m	402 ASPHALT CONCRETE AVG. THICK mm	402 ASPHALT CONCRETE m³	301 BITUMINOUS AGGREGATE BASE AVG. THICK mm	301 BITUMINOUS AGGREGATE BASE m³	AGGREGATE SHOULDER PROPOSED WIDTH m (avg.) C	AGGREGATE SHOULDER PROPOSED WIDTH m (avg.) D	AGGR. SHOULDER AREA m²	617 SHOULDER PREPARATION m²	617 SHOULDER RECONDITIONING, MISC., COMPACTED AGGREGATE 1780 kg / m³ 50 mm AVG. THICKNESS metric ton	408 PRIME Bit. Matl. @ 1.8 L / m² liter
A	HUR-SR60	20.809 - 21.374	0.565	565	1										0.30	0.30	339	339	30	
		21.374 - 21.398	0.024	24	2										0.30		7	7	2	
		21.398 - 21.445	0.047	47	2										0.30		14	14	2	
		21.445 - 21.630	0.185	185	1										0.30	0.30	111	111	11	
		21.839 - 25.685	3.846	3846	1										0.30	0.30	2308	2308	205	4154
															UNPAVED DRIVES			295	27	
		TOTAL PART A	4.667	4667														3074	277	4154
B	ERI-SR60	0.000-3.685	3.685	3685	1										0.30	0.30	2211	2211	198	3980
		3.685-4.104	0.419	419	3											0.30	126	126	11	227
		4.104-4.635	0.531	531	1										0.30	0.30	319	319	28	574
		4.635-4.828	0.193	193	1										0.30	0.30	116	116	11	209
		4.828-5.021	0.193	193	1										0.30	0.30	116	116	11	209
		5.021-5.440	0.419	419	1										0.30	0.30	251	251	23	452
		5.440-5.552	0.112	112	1										0.30	0.30	67	67	5	121
															UNPAVED DRIVES			380	34	
		TOTAL PART B	5.552	5552														3586	321	5772

calculated TEW checked JLB

PLAN NO.

SHOULDER DATA

HUR-SR60-20.809
ERI-SR60-0.000
HUR-SR303-0.000

DESIGN FILE: i:\dgn\ops\1997\he60h303.dgn
WORKSTATION: twatkins DATE: 27 DEC 96

TYPICAL 1

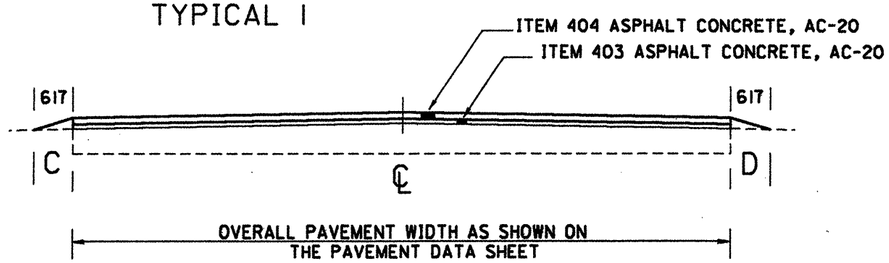

TYPICAL 3

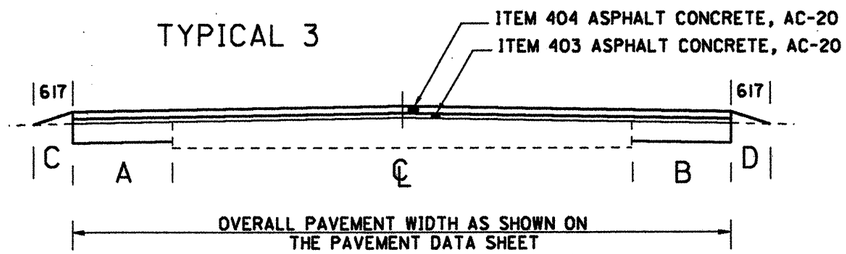

TYPICAL 2

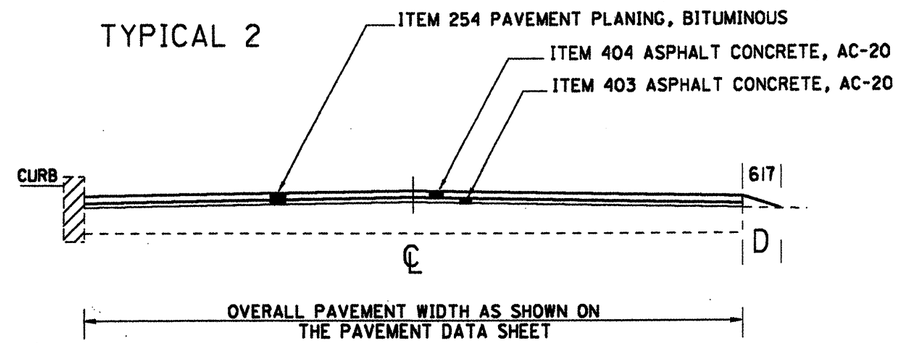

Straight Line Kilometers have been converted from mileage - (references in the field are in miles)

SHOULDER DATA

PART	ROUTE	LOG POINT TO LOG POINT (straight line kilometer)	LENGTH km	LENGTH m	TYPICAL	PAVED SHOULDER PROPOSED WIDTH m (avg.) A	PAVED SHOULDER PROPOSED WIDTH m (avg.) B	PAVED SHOULDER AREA m²	203 LINEAR GRADING DEPTH mm (avg.)	203 LINEAR GRADING m	402 ASPHALT CONCRETE AVG. THICK mm	402 ASPHALT CONCRETE m³	301 BITUMINOUS AGGREGATE BASE AVG. THICK mm	301 BITUMINOUS AGGREGATE BASE m³	AGGREGATE SHOULDER PROPOSED WIDTH m (avg.) C	AGGREGATE SHOULDER PROPOSED WIDTH m (avg.) D	AGGR. SHOULDER AREA m²	617 SHOULDER PREPARATION m²	617 SHOULDER RECONDITIONING, MISC., COMPACTED AGGREGATE 1780 kg / m³ 50 mm AVG. THICKNESS metric ton	408 PRIME Bit. Matl. @ 1.8 L / m² liter
C	SR303	RAMP 2		43	1	0	0	0	127	0			152	0		0.46	20	20	2	36
		RAMP 1		90	2	0	0	0	127	0			152	0	0.46	0.46	83	83	7	149
		0.000 - 0.064	0.064	64	2	0	0	0	127	0			152	0	0.61	0.61	78	78	7	140
		0.064 - 0.145	0.081	81	3	0.30	0.30	49	127	162			152	7	0.30	0.30	49	49	4	88
		0.145 - 0.193 Bk	0.048	48	3	0.76	0.76	73	127	96			152	11	0.30	0.30	29	29	2	52
		Ah 0.000 - 1.432	1.432	1432	3	0.61	0.61	1747	127	2864			152	266	0.30	0.30	859	859	77	1546
		1.432 - 1.722	0.290	290	3	0.30	0.30	174	127	580			152	26	0.30	0.30	174	174	16	313
		1.722 - 2.768	1.046	1046	3	0.61	0.61	1276	127	2092			152	194	0.30	0.30	628	628	55	1130
		2.768 - 3.557	0.789	789	3	0.46	0.46	726	127	1578			152	110	0.30	0.30	473	473	43	851
		3.557 - 5.922	2.365	2365	3	0.61	0.61	2885	127	4730			152	439	0.30	0.30	1419	1419	126	2554
															UNPAVED DRIVES			240	21	-
		TOTAL PART C	6.115	6248				6930		12102				1053				4052	360	6859

metric units

CALCULATED T&W checked JLB

PLAN NO.

SHOULDER DATA

HUR-60-20.808
ERI-60-0.000
HUR-303-0.000

DESIGN FILE: h:\dgn\ops\1997\ha60h303.dgn
WORKSTATION: /watkins DATE: 27 DEC 96

ITEM SPECIAL, MAILBOX SUPPORT

THIS ITEM OF WORK SHALL CONSIST OF THE REMOVAL OF EXISTING NON-STANDARD MAILBOX SUPPORTS AND FURNISHING AND ERECTING MAILBOX SUPPORTS AND ANY ASSOCIATED HARDWARE IN ACCORDANCE WITH THE DETAILS SHOWN, AND ATTACHING AN OWNER SUPPLIED MAILBOX, AT LOCATIONS DETERMINED BY THE ENGINEER.

IN ABSENCE OF A NEW BOX SUPPLIED BY THE OWNER THE CONTRACTOR SHALL SALVAGE THE EXISTING BOX AND PLACE IT ON THE NEW SUPPORT. DUE CARE SHALL BE EXERCISED IN SUCH AN OPERATION, THE CONTRACTOR SHALL BE RESPONSIBLE FOR REPAIRING OR REPLACING ANY BOX DAMAGED BY IMPROPER HANDLING, AS JUDGED AND DIRECTED BY THE ENGINEER.

THE BOX SHALL BE SECURELY AND NEATLY ATTACHED BY THE CONTRACTOR TO THE NEW SUPPORT. THE CONTRACTOR SHALL SUPPLY ALL NECESSARY ATTACHMENT HARDWARE (NUTS, BOLTS, PLATES, SPACERS AND WASHERS) AS NECESSARY TO ACCOMMODATE THE COMPLETE INSTALLATION. SUPPORT HARDWARE SHALL ACCOMMODATE EITHER A SINGLE OR A DOUBLE MAILBOX INSTALLATION, AND NO MORE THAN TWO MAILBOXES MAY BE MOUNTED ON A SINGLE POST. [HARDWARE SHALL BE COMMERCIAL GRADE GALVANIZED STEEL]

SATISFACTORY SUPPORTS ARE AS FOLLOWS: [MAXIMUM 100mm x 100mm SQUARE or 115mm DIA. ROUND TIMBER], [MAXIMUM 50mm I.D. STANDARD STRENGTH STEEL PIPE]

POSTS SHALL BE SET AS PER THE FIRST PARAGRAPH OF 606.03, AND SHALL IN NO INSTANCE BE ENCASED IN CONCRETE.

THE CONTRACTOR SHALL BE RESPONSIBLE FOR COORDINATING WORK WITH THE LOCAL POST MASTER AND THE PROPERTY OWNERS.

GROUP MAILBOX SUPPORTS SHALL BE PLACED ON 1.0m CENTERS AND THE TURNOUT LENGTHENED TO ACCOMMODATE THE GROUPING.

WHERE GUARDRAIL EXISTS, MAILBOXES AND THEIR SUPPORTS SHALL BE PLACED BEHIND THE GUARDRAIL. SUPPORTS MUST STILL MEET THE BREAKAWAY REQUIREMENTS LISTED ABOVE.

THE FOLLOWING ESTIMATED QUANTITIES HAVE BEEN CARRIED TO THE GENERAL SUMMARY TO BE USED AS DESCRIBED ABOVE.

ITEM SPECIAL-MAILBOX SUPPORT SYSTEM, SINGLE
PART A = 7 each - PART B = 10 each - PART C =2 each

ITEM SPECIAL-MAILBOX SUPPORT SYSTEM, DOUBLE
PART A = 3 each - PART B = 4 each - PART C = 2 each

MAILBOXES

EXISTING AGGREGATE MAILBOX APPROACHES SHALL BE PAVED WITH 19 mm OF ITEM 403 AND 25 mm OF ITEM 404. THEY SHALL CONFORM AS MUCH AS PRACTICAL TO STANDARD DRAWING BP-4.1 OR AS DIRECTED BY THE ENGINEER.

GRADING SHALL BE PERFORMED IN THESE AREAS TO OBTAIN A BASE WHICH WILL ALLOW THE FINISHED GRADE TO BE FLUSH WITH ADJACENT PAVEMENT. A QUANTITY OF 617 AGGREGATE HAS BEEN PROVIDED FOR AREAS WHERE THE SHOULDER IS LOW PRIOR TO GRADING AND/OR LOW AREAS CAUSED BY THE REMOVAL OF UNSUITABLE MATERIAL. QUANTITIES TO PERFORM THIS WORK HAVE BEEN INCLUDED IN THE GENERAL SUMMARY AND ARE ESTIMATED AS FOLLOWS.

ITEM 203, GRADING MAILBOX APPROACHES:
PART A = 26 each - PART B= 32 each - PART C = 41 each

ITEM 617, SHOULDER RECONDITIONING, MISC., COMPACTED AGGREGATE
PART A = 41 metric ton PART B = 52 metric ton - PART C = 66 metric ton

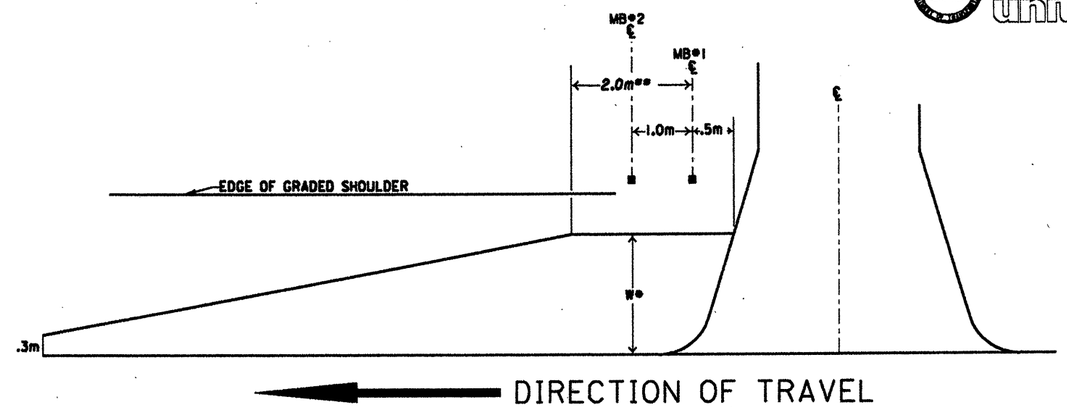

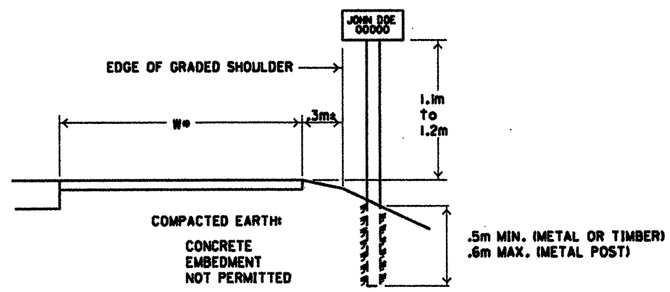

* WHERE POSTS ARE BEHIND GUARDRAIL, TURNOUT SHALL EXTEND TO FACE OF GUARDRAIL. WHERE NO GUARDRAIL IS REQUIRED, TURNOUT WIDTH SHALL BE 1.8m MINIMUM, EXCEPT WHERE FIELD CONDITIONS WILL NOT PERMIT.

** ADD 1.0m FOR EACH ADDITIONAL MAILBOX

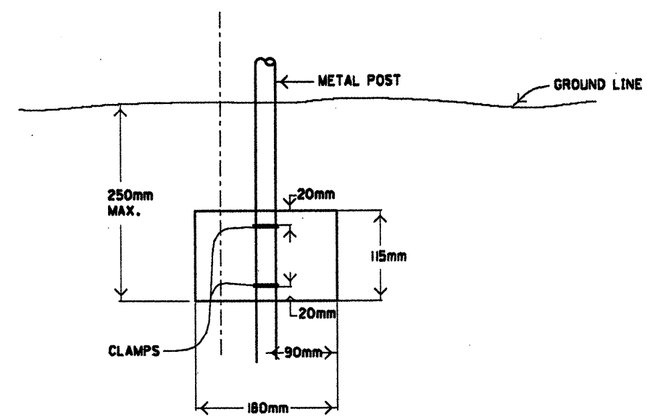

ANTI-TWIST PLATE

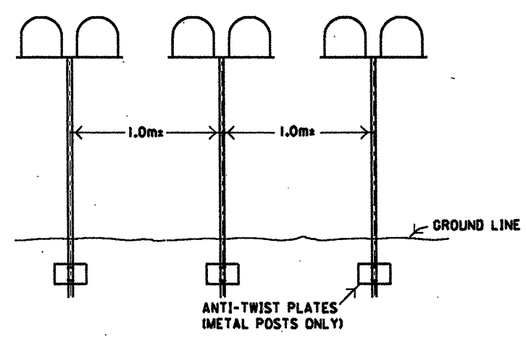

GROUP MAILBOX INSTALLATION

metric units

calculated T&W checked JLB

PLAN NO.

MAILBOX FACILITIES

HUR-SR60-20.809
ERI-SR60-0.000
HUR-SR303-0.000

9
39

DESIGN FILE: i:\dgn\ops\1997\he60h303.dgn
WORKSTATION: *watkins* DATE: *27 DEC 96*

metric units

ITEM 404, ASPHALT CONCRETE

IN ADDITION TO ITEM 401.12, THE FEATHERED OR BUTT JOINT SHALL BE UNIFORMLY COATED WITH A 150mm WIDE BAND OF A.C..THE COST OF THIS WORK SHALL BE INCLUDED IN THE UNIT PRICE BID FOR ITEM 404 ASPHALT CONCRETE.

ITEM 404, BITUMINOUS CONCRETE FOR MAINTAINING TRAFFIC

THE FOLLOWING ESTIMATED QUANTITY HAS BEEN CARRIED TO THE GENERAL SUMMARY TO CONSTRUCT A TEMPORARY ASPHALT WEDGE FROM THE EXISTING PAVEMENT TO THE PLANED SURFACE AT BUTT JOINTS AND OTHER LOCATIONS THAT RESULT IN A DROP-OFF IN EXCESS OF 38mm, AS DIRECTED BY THE ENGINEER. THIS QUANTITY SHALL ALSO BE USED AT PLANED SURFACES WHERE A TEMPORARY ASPHALT WEDGE IS NEEDED AROUND CASTINGS, AS DIRECTED BY THE ENGINEER.

PART A = 10 m^3 ITEM 404, BITUMINOUS CONCRETE FOR MAINTAINING TRAFFIC

PART B = 10 m^3 ITEM 404, BITUMINOUS CONCRETE FOR MAINTAINING TRAFFIC

PART C = 10 m^3 ITEM 404, BITUMINOUS CONCRETE FOR MAINTAINING TRAFFIC

ITEM 604, CASTINGS ADJUSTED TO GRADE

ANY UNIT OF THIS ITEM MAY BE NON-PERFORMED IF SO DIRECTED BY THE ENGINEER AND THE SURFACE SHALL BE FEATHERED TO MEET THE EXISTING CASTING OR INLET IN A MANNER ACCEPTABLE TO THE ENGINEER. ALL ADJUSTING RINGS SHALL HAVE THE ENGINEERS APPROVAL BEFORE USING.

UNDER ITEM 604.03, ADJUSTING TO GRADE, PARAGRAPH (A), THE CASTING TO BE ADJUSTED MAY OR MAY NOT HAVE AN EXISTING FRAME. THE WORK SHALL CONSIST OF ADJUSTING THE EXISTING CASTING OR GRATE TO THE SATISFACTION OF THE ENGINEER. THE CONTRACTOR IS REMINDED TO FIELD CHECK ALL ADJUSTMENT TO GRADE ITEMS PRIOR TO BIDDING, AS NO ADDITIONAL COMPENSATION WILL BE GRANTED FOR LABOR AND MATERIAL REQUIRED TO SATISFACTORILY ADJUST CASTINGS WITHOUT FRAMES.

ROUTINE MAINTENANCE

BETWEEN THE TIME THAT BIDS ARE TAKEN AND THE START OF CONSTRUCTION, THE MAINTAINING AGENCY MAY ENTER UPON THE PROJECT AND PERFORM ROUTINE MAINTENANCE SUCH AS CRACK SEALING, PATCHING, AND BERM AND SHOULDER REPAIR. THE EFFECTS, IF ANY, OF THE PERFORMANCE OF ROUTINE MAINTENANCE SHALL BE CONSIDERED AS INHERENT IN WORK OF THE CHARACTER PROVIDED FOR IN THE PLAN AND THE RESULTING CONDITIONS SHALL NOT BE CONSIDERED AS DIFFERING MATERIALLY FROM THOSE EXISTING AT THE TIME BIDS WERE TAKEN.

INTERSECTIONS AND DRIVES

RURAL-INTERSECTIONS SHALL BE PAVED TO THE END OF THE RADII OR AS DIRECTED BY THE ENGINEER. (TO PROVIDE A SMOOTH TRANSITION BETWEEN THE TWO HIGHWAYS, AND TO ELIMINATE WATER POCKETS)

URBAN-INTERSECTIONS SHALL BE PAVED TO THE BACK OF CROSSWALKS OR AS DIRECTED BY THE ENGINEER. (TO PROVIDE A SMOOTH TRANSITION BETWEEN THE TWO HIGHWAYS, AND TO ELIMINATE WATER POCKETS)

EXISTING PAVED DRIVES SHALL BE PAVED SO AS TO PROVIDE A SMOOTH TRANSITION BETWEEN THE HIGHWAY AND THE DRIVE, (DISTANCE FROM EDGE OF ROADWAY MAY VARY - AT EACH DRIVE) AS DIRECTED BY THE ENGINEER.

EXISTING AGGREGATE DRIVES SHALL BE PAVED WITH AN APRON THE WIDTH OF THE 617 BERM OR .6 m MINIMUM. THE SLOPE OF THIS APRON SHALL BE THE SAME AS THE ADJACENT PAVEMENT SLOPE OR AS DIRECTED BY THE ENGINEER. ITEM 617 AGGREGATE SHALL BE PLACED ADJACENT TO THIS APRON TO PROVIDE A SMOOTH TRANSITION FROM THE APRON TO THE EXISTING DRIVE, (WIDTH OF THIS 617 APPLICATION MAY VARY.) AS DIRECTED BY THE ENGINEER. AN ADDITIONAL QUANTITY HAS BEEN ESTIMATED TO COMPLETE THIS WORK AND IS SHOWN ON THE "SHOULDER DATA" SHEET.

ANY HAZARD OR UNSAFE CONDITION RESULTING FROM THE ABOVE WORK MUST BE CORRECTED IMMEDIATELY, AS DIRECTED BY THE ENGINEER. THE CONTRACTOR IS REMINDED OF SECTIONS 104.04, 107.07 & 614.02 (a): PUBLIC CONVENIENCE AND SAFETY.

PAVEMENT CONTROL

AN AUTOMATIC SCREED CONTROL, HAVING A 9.1m MINIMUM SKI-ARM, SHALL BE USED FOR PLACING THE 403 PRE-LEVEL AND 404 SURFACE COURSE ON EXISTING PAVEMENT WIDTHS OF 6.1 m AND OVER.

SPECIAL ATTENTION SHALL BE GIVEN TO SUPER-ELEVATED CURVES. THE SUPER-ELEVATION SHALL BE MAINTAINED AND/OR RESTORED, IF NECESSARY, AS DIRECTED BY THE ENGINEER.

BUTT JOINTS

BUTT JOINTS SHALL NOT BE CUT AND LEFT OPEN TO TRAFFIC FOR A TIME PERIOD LONGER THAN THREE (3) DAYS. IF CUT IS NOT PAVED WITHIN THREE (3) DAYS, IT SHALL BE FILLED IN WITH A TEMPORARY ASPHALT CONCRETE WEDGE, OF SUFFICIENT LENGTH, AS DIRECTED BY THE ENGINEER.

CONSTRUCTION "BUMP" (OW-62) AND "ADVISORY SPEED" (OW-143) SIGNS SHALL BE ERECTED AND MAINTAINED DURING THE PERIOD THAT THE CUT FOR THE BUTT JOINT IS LEFT OPEN.

ITEM 253, PAVEMENT REPAIR

THIS ITEM OF WORK SHALL CONSIST OF THE REMOVAL OF THE EXISTING PAVEMENT OR PAVED BERM WHICH MAY BE ASPHALT, BRICK, CONCRETE, OR A COMBINATION OF EACH, IN AREAS OF EXISTING PAVEMENT FAILURE.

THE ENGINEER SHALL DESIGNATE THE LOCATIONS AND LIMITS OF THE AREAS TO BE REPAIRED. THE REPAIR AREAS SHALL BE ROUGHLY RECTANGULAR IN SHAPE AND CUT OR SAWED TO A NEAT LINE. THE PAVEMENT SHALL BE REMOVED WITHIN THE DESIGNATED AREAS BY METHODS WHICH WILL NOT DAMAGE THE ADJACENT PAVEMENT. THE DEPTH OF REMOVAL, AS DIRECTED BY THE ENGINEER, SHALL BE SUFFICIENT TO REMOVE ALL DETERIORATED PAVEMENT (ESTIMATED DEPTH MAY VARY FROM 50mm to 305mm). THE MATERIALS SO REMOVED SHALL BE DISPOSED OF IN ACCORDANCE WITH 203.05.

REPLACEMENT MATERIAL SHALL BE 402 OR 301 MATERIAL AND SHALL BE PLACED AND COMPACTED TO FINISH FLUSH WITH THE ADJACENT PAVEMENT SURFACE. THE REPAIR AREAS SHALL BE PAINTED WITH BITUMINOUS MATERIAL (SIDES AND BOTTOM). ALL COMPACTION SHALL BE ACHIEVED BY MECHANICAL METHODS TO THE SATISFACTION OF THE ENGINEER, MAXIMUM LIFT THICKNESS SHALL BE 76mm.

PAYMENT SHALL INCLUDE ALL LABOR, EQUIPMENT AND MATERIALS NECESSARY TO COMPLETE THE PAVEMENT REPAIR. THE FOLLOWING ESTIMATED QUANTITY IS PROVIDED IN THE SUMMARY TO BE USED AS DIRECTED BY THE ENGINEER. PAYMENT WILL BE MADE AT THE UNIT PRICE BID PER cubic meter,(BY TICKET WEIGHT CONVERSION), OF ITEM 253, PAVEMENT REPAIR.

PART A = 100 m^3 ITEM 253 PAVEMENT REPAIR

PART B = 300 m^3 ITEM 253 PAVEMENT REPAIR

PART C = 100 m^3 ITEM 253 PAVEMENT REPAIR

PROGRESSION OF WORK

WIDENING SHALL BE DONE PRIOR TO RESURFACING. GUARDRAIL WORK SHALL BE DONE AFTER WIDENING, RESURFACING, EMBANKMENT AND BERM WORK SO AS TO ESTABLISH PROPER GRADES FROM WHICH TO CONSTRUCT THE RAIL.

ITEM 407, TACK COAT

AS PER 407.05 THE APPLICATION RATE SHALL BE 0.36 l/m^2 PRIOR TO THE LEVELING COURSE AND 0.14 l/m^2 PRIOR TO THE SURFACE COURSE. A COMPLETE PAVEMENT SURFACE COVERAGE SHALL BE REQUIRED. AREAS OF TACK STRIPPED BY CONSTRUCTION EQUIPMENT OR TRAFFIC SHALL BE RECOATED PRIOR TO PLACING ASPHALT CONCRETE. COVER AGGREGATE AS REQUIRED PER 407.06, SHALL BE CONSIDERED INCIDENTAL AND ALL COST SHALL BE INCLUDED IN THE UNIT PRICE BID FOR ITEM 407, TACK COAT.

metric units

ITEM 254, PAVEMENT PLANING, BITUMINOUS

THE INTENT OF THE PLANING IS TO MILL 44mm MINIMUM DEPTH AT THE CENTERLINE AND/OR EDGE OF PAVEMENT AND 6mm MINIMUM DEPTH IN BOTTOM OF WHEEL RUTS. THE PAVEMENT SLOPE MAY VARY BETWEEN 16mm AND 33mm per meter, CONTINUOUS FOR PAVEMENT WIDTH. THE MILLING DEPTH SHALL BE CONTROLLED FROM THE CENTER LINE OR EDGE OF PAVEMENT, TO PRODUCE THE LEAST AMOUNT OF MILLING IN CONFORMANCE WITH ABOVE LIMITS. FIELD WORK NECESSARY FOR PROPER CONTROL WITHIN PLAN INTENT SHALL BE THE RESPONSIBILITY OF THE CONTRACTOR.

AN AUTOMATIC MILLING HEAD PROFILE CONTROL HAVING A MINIMUM 9m SKI-ARM SHALL BE USED DURING PLANING OPERATION.

ABOVE CONDITIONS DO NOT APPLY TO PLANING PERFORMED IN AREAS AS DIRECTED BY THE ENGINEER TO ELIMINATE ADVERSE SURFACE DISTORTION, OR TO PROVIDE A SATISFACTORY GRADE AT CASTINGS. THESE AREAS INCLUDE MATERIAL DISPLACED BY RUTTING OR SHOVING ASPHALT, SURFACE PATCHES, CONCRETE PATCHING, TRANSVERSE BUMPS, PAVEMENT AT RAILROADS, CASTINGS, ETC. PLANING OF THESE AREAS SHALL BE PERFORMED THROUGHOUT THE PROJECT PRIOR TO PAVING. AREAS TO BE PLANED WILL BE DESIGNATED BY THE ENGINEER.

THE PROGRESSION OF THE PLANING SHALL PROCEED IN SUCH A MANNER THAT NORMAL TRAFFIC WILL NOT BE REQUIRED TO RUN OVER THE PLANED ROADWAY SURFACE MORE THAN TWENTY-ONE (21) CALENDAR DAYS. THE 21 CALENDAR DAYS SHALL BE CONSIDERED AN INTERIM COMPLETION DATE (SECTION 108) AND FOR EACH CALENDAR DAY BEYOND THE 21 DAYS THAT THE ROADWAY REMAINS EXPOSED TO THE PLANED SURFACE, THE CONTRACTOR WILL BE ASSESSED LIQUIDATED DAMAGES AS PER 108.07. PLANED AREAS THAT CREATE A LONGITUDINAL JOINT THAT IS BETWEEN TRAVELED LANES SHALL BE COMPLETED IN SUCH A MANNER SO AS TO REMOVE THE JOINT BEFORE THE END OF EACH DAYS WORK AND BEFORE THIS JOINT IS EXPOSED TO TRAFFIC THE CONTRACTOR SHALL ERECT OW-171 (UNEVEN PAVEMENT), THIS SIGN SHALL REMAIN ONLY WHEN THE CONDTION EXISTS.

ITEM 614, WORK ZONE MARKING SIGN

THE FOLLOWING ESTIMATED QUANTITY HAS BEEN CARRIED TO THE GENERAL SUMMARY FOR USE AS DIRECTED BY THE ENGINEER FOR TEMPORARY WORK ZONE MARKING SIGNS PER THE REQUIREMENTS OF THE CONSTRUCTION DRAWINGS:

ITEM 614, WORK ZONE MARKING SIGN:

PART A = 12 each

PART B = 20 each

PART C = 16 each

TOTAL = 48 each

ITEM 617, SHOULDER RECONDITIONING, MISC.: COMPACTED AGGREGATE

THIS ITEM OF WORK SHALL CONFORM TO ITEM 617 IN THE CONSTRUCTION AND MATERIALS SPECIFICATIONS BOOK WITH EXCEPTION OF 617.03 (MATERIALS) AND 617.06 (METHOD OF MEASUREMENT).

THE MATERIAL ON THIS PROJECT SHALL BE THE BITUMINOUS ASPHALT GRINDINGS RESULTING FROM ITEM 254. THE GRINDINGS USED FOR THIS ITEM SHALL BE PLACED AND COMPACTED AS DESCRIBED IN 617.05 WITH SPECIAL CARE TO CREATE PROPER COMPACTION. 100% OF THIS MATERIAL SHALL PASS A 32mm SIEVE AS JUDGED BY THE ENGINEER. THE CONTRACTOR SHALL TAKE SPECIAL CARE TO MEET THE TYPICAL SECTIONS SHOWN IN THE PLANS AND AS DIRECTED BY THE ENGINEER.

SINCE THE BITUMINOUS ASPHALT GRINDINGS FROM THIS JOB WILL NOT BE A LARGE ENOUGH QUANTITY TO RECONDITION THE AGGREGATE SHOULDERS, THE CONTRACTOR WILL NEED TO SUPPLY THE ADDITIONAL QUANTITY FROM AN APPROVED RAP (RECYCLED ASPHALT PAVEMENT) PILE OR SUPPLY ITEM 617 COMPACTED AGGREGATE, TYPE A AS SPECIFIED IN THE SPECIFICATIONS BOOK.

THE MATERIAL ON THIS PROJECT WILL BE PAID FOR BY THE metric ton. THE CONTRACTOR SHALL BE RESPONSIBLE FOR RECORDING THE GROSS, TARE, AND NET WEIGHT OF EACH TRUCK LOAD OF MATERIAL TO THE NEAREST 45 kg IN TRIPLICATE ON PLANT TICKET FORMS APPROVED BY THE DIRECTOR. THE CONTRACTOR SHALL PROVIDE A TARE WEIGHT FOR EACH TRUCK AT THE BEGINNING OF EACH DAY'S OPERATION. ONE COPY OF THE WEIGHT TICKET SHALL ACCOMPANY EACH LOAD DELIVERED TO THE PROJECT AND SHALL BE PRESENTED TO THE ENGINEER.

PAYMENT FOR ALL THE ABOVE SHALL BE INCLUDED IN THE PRICE BID PER metric ton OF 617 SHOULDER RECONDITIONING, MISC.:COMPACTED AGGREGATE.

ITEM 203 LINEAR GRADING

THIS WORK SHALL CONSIST OF PREPARING A SUBGRADE FOR THE SHOULDER PAVING BY EXCAVATING THE EXISTING SHOULDER MATERIAL, AS DESCRIBED IN THE "TRENCH FOR WIDENING" NOTE, TO THE DEPTH SHOWN IN THE PLANS OR AS DIRECTED BY THE ENGINEER. THIS OPERATION SHALL INCORPORATE TRIMMING THE EDGE OF THE EXISTING PAVEMENT TO A LINE ESTABLISHED BY THE ENGINEER TO FACILITATE THE WIDENING WITHIN THE OVERALL PAVEMENT WIDTHS SHOWN. COMPACTION SHALL BE CARRIED OUT BY MEANS OF A TRENCH ROLLER, 401.11. AREAS GRADED IN EXCESS OF THE DEPTHS REQUIRED SHALL BE BACKFILLED TO THE DESIRED GRADE USING 617 AGGREGATE AT THE CONTRACTORS EXPENSE. THE EXCAVATED MATERIAL SHALL BE USED TO BACKUP THE SHOULDER WHERE NECESSARY AS DIRECTED BY THE ENGINEER (THIS MATERIAL SHALL BE GRADED AND COMPACTED). THE EXCAVATED MATERIAL NOT REQUIRED FOR BACKUP SHALL BE DISPOSED OF, AS DIRECTED BY THE ENGINEER.

TRENCH FOR WIDENING

TRENCH EXCAVATION FOR BASE AND BERM WIDENING SHALL BE PREFORMED ONLY ON ONE SIDE OF THE PAVEMENT AT A TIME. THE OPEN TRENCH SHALL BE ADEQUATELY MAINTAINED AND PROTECTED AT ALL TIMES WITH DRUMS OR BARRICADES.

PLACEMENT OF THE PROPOSED BASE MATERIAL SHALL FOLLOW AS CLOSELY AS POSSIBLE BEHIND THE EXCAVATION. THE LENGTH OF WIDENING TRENCH WHICH IS OPEN AT ANY ONE TIME SHALL BE HELD TO A MINIMUM AND SHALL AT ALL TIMES BE SUBJECT TO APPROVAL BY THE ENGINEER.

PAVED BERM AND/OR BASE WIDENING

PAVEMENT AND BERM QUANTITIES ARE CALCULATED THROUGH ALL INTERSECTIONS AND DRIVES. ANY PORTION MAY BE NON-PERFORMED IF SO DIRECTED BY THE ENGINEER.

AIRWAY-HIGHWAY CLEARANCE

THIS PROJECT HAS BEEN IDENTIFIED AS BEING WITHIN THE INFLUENCE AREA OF A PUBLIC AIRPORT. THE CONTRACTOR IS REQUIRED TO COORDINATE WITH THE FEDERAL AVIATION ADMINISTRATION (FAA) AND TO FILE FAA FORM 7460-1 IF ANY TEMPORARY STRUCTURES OR CONSTRUCTION EQUIPMENT OPERATING AT MAXIMUM HEIGHT PENETRATES THE NOTIFICATION SURFACE OF THE AIRPORT AS DEFINED IN PART 77 OF THE FEDERAL AVIATION REGULATIONS. IF FORM 7460-1 IS REQUIRED AS PER REGULATIONS, A COPY OF THE SUBMISSION AND FORM 7460-1 SHALL BE FORWARDED TO THE ODOT DIVISION OF AVIATION. NO EQUIPMENT SHALL BE MOVED TO THE JOB SITE NOR WORK COMMENCED UNTIL THE CONTRACTOR HAS: (1) ADVISED THE PROJECT ENGINEER IN WRITING THAT THROUGH COORDINATION WITH FAA IT HAS BEEN DETERMINED THAT IT WILL NOT BE NECESSARY TO FILE FORM 7460-1, OR (2) FURNISHED A COPY OF FAA'S APPROVAL AND ODOT'S DIVISION OF AVIATION PERMIT TO THE PROJECT ENGINEER.

THE CONTRACTOR IS ADVISED THAT FAA APPROVAL TYPICALLY TAKES 30 TO 90 DAYS. ALL SUBMISSIONS SHOULD BE DIRECTED TO THESE OFFICES:

The Federal Aviation Administration
Great Lakes Regional Office
Air Traffic Division AGL-530
2300 East Devon Avenue
Des Plaines, Illinois 60018
(708) 294-7458

Ohio Department of Transportation
Division of Aviation
2829 West Dublin-Granville Road
Columbus, Ohio 43235
(614) 793-5046

* This note may be disregarded by the contractor if their temporary structures or construction equipment at maximum operating height does not exceed 25 feet.

RAISED PAVEMENT MARKER CASTINGS SUPPLIED BY THE DEPARTMENT

THE DEPARTMENT SHALL SUPPLY TO THE CONTRACTOR RPM CASTINGS OR LOW PROFILE RPM CASTINGS WITH TWO WAY YELLOW/YELLOW REFLECTORS IN THE QUANTITIES SHOWN HEREIN. PAY ITEMS FOR THE DEPARTMENT SUPPLIED MATERIALS SHALL BE INDICATED AS "INSTALLATION ONLY." ALL OTHER MATERIALS ARE TO BE CONTRACTOR FURNISHED. THE QUANTITY AND TYPE OF DEPARTMENT SUPPLIED MATERIALS ARE SHOWN ELSEWHERE IN THE PLAN.

THE CONTRACTOR WILL BE INFORMED AT THE PRE-CONSTRUCTION CONFERENCE FOR THE LOCATION OF THE DEPARTMENT SUPPLIED MATERIAL. THE CONTRACTOR SHALL PICK UP DEPARTMENT SUPPLIED RPM MATERIALS AT THE SPECIFIED LOCATION(S) FOR TRANSPORT TO THE WORK SITE OR TO THE CONTRACTOR'S STORAGE FACILITY. AN AUTHORIZATION FOR PICK UP FORM WILL BE FURNISHED BY THE DISTRICT CONSTRUCTION ADMINISTRATOR* TO THE CONTRACTOR AT THE PRE-CONSTRUCTION CONFERENCE. THE CONTRACTOR SHALL NOTIFY THE DISTRICT AND/OR THE PARTIES LISTED ON THE AUTHORIZATION FORM (DEPENDENT ON THE STORAGE LOCATIONS OF THE MATERIALS) IN WRITING AT LEAST FIVE (5) CALENDAR DAYS PRIOR TO PICK UP OF DEPARTMENT SUPPLIED MATERIALS. THE CONTRACTOR SHALL STORE THEM WITHOUT DAMAGE OR CONTAMINATION WITH FOREIGN MATTER. A DEDUCTION IN THE AMOUNT OF THE ACTUAL COST TO THE DEPARTMENT SHALL BE MADE

PROFILE CASTINGS RECEIVED BY THE CONTRACTOR WHICH WERE NOT INSTALLED AND WERE NOT RETURNED TO THE FOR MATERIALS DAMAGED BY THE CONTRACTOR OR FOR LOW DEPARTMENT.

RETURN OF NON PERFORMED RAISED PAVEMENT MARKER MATERIALS

RAISED PAVEMENT MARKERS THAT ARE NON PERFORMED SHALL BE SORTED BY PRISMATIC RETRO REFLECTOR COLOR AND CAREFULLY PACKED INTO APPROVED CONTAINERS FOR SHIPMENT BY THE CONTRACTOR TO A LOCATION(S) (IN COLUMBUS AND/OR WITHIN THE DISTRICT) AS SPECIFIED AT THE PRE-CONSTRUCTION CONFERENCE. PRISMATIC RETRO REFLECTOR COLORS OR LOW PROFILE CASTINGS SHALL NOT BE MIXED WITHIN ANY ONE CONTAINER. THE CONTRACTOR SHALL CLEARLY MARK, ON THE OUTSIDE OF EACH CONTAINER, THE COLOR OF THE PRISMATIC RETRO REFLECTOR,

FINAL ACCEPTANCE

RAISED PAVEMENT MARKER MATERIALS WHICH ARE UNACCEPTABLE, OR BECOME UNACCEPTABLE PRIOR TO FINAL ACCEPTANCE AS DETERMINED BY THE ENGINEER, FOR CAUSES SUCH AS, BUT NOT LIMITED TO, IMPROPER INSTALLATION, EPOXY NOT HARDENING OR LOSS OF ADHESION TO THE PAVEMENT OR BETWEEN THE LOW PROFILE CASTING AND THE PRISMATIC RETRO-REFLECTOR, LOSS OR IMPROPER REFLECTING PRISMATIC RETRO-REFLECTORS SHALL BE REPLACED BY THE CONTRACTOR WITH RPM MATERIALS CONFORMING TO THESE SPECIFICATIONS AND REQUIREMENTS AT HIS EXPENSE WITHOUT DELAY. THE CONTRACTOR WILL NOT RECEIVE PAYMENT FOR UNACCEPTABLE WORK WHICH IS NON PERFORMED

UNDERGROUND UTILITIES:

EXTREME CAUTION SHOULD BE EXERCISED IN AREAS WITH UNDERGROUND WATER LINES, DRAINS, CABLES, SEWERS OR OTHER UTILITIES.

THE CONTRACTOR IS FULLY RESPONSIBLE FOR ALL DAMAGE INFLICTED ON UNDERGROUND UTILITIES IN THE EXECUTION OF THIS CONTRACT.

THE FOLLOWING IS A LIST OF UTLITIES WHICH MAY BE INVOLVED. THE OHIO DEPT. OF TRANSPORTATION DOES NOT GUARANTEE THE COMPLETENESS OF THIS LIST.

Mr. Mark Wojnar
Engineering Supervisor
GTE Telephone Operations-North Area
117 North Sandusky Street
Bellevue, Ohio 44811
Phone: (419) 483-8158

Mr. Edward J. Haas, Liaison Operations
Columbia Gas Transmission Corp.
3151 Lincoln Way West
Wooster, Ohio 44691
Phone (330) 264-2201

Mr. Anthony Duebodeaux
General Manager
Erie Huron County Rural Water Authority
P. O. Box 96
Collins, Ohio 44826
Phone: (419) 668-7213

Mr. Larry Gullet
Lorain-Medina Rural Electric Co-op
22898 West Road
P.O. Box 158 R.D.
Wellington, Ohio 44090
Phone: (216) 647-2133

Ms. Laura Frank, Manager
Highway Department
Ameritech
13630 Lorain Avenue, Room 400
Cleveland, Ohio 44111
Phone: (216) 476-6136

Mr. Eldon Anderson
General Manager
Rural Lorain County Water Authority
P.O. Box 567
LaGrange, Ohio 44050
Phone: (216) 355-6060

Mr. Don Klier, Field Engineer
Century Telephone Company
1730 West 19th Street
Lorain, Ohio 44052
Phone: (216) 244-8227

metric units

calculated TEW checked JLB

PLAN NO.

GENERAL NOTES

HUR-60-20.809
ERI-60-0.000
HUR-303-0.000

DESIGN FILE: i:\dgn\ops\1997\he60h303.dgn
WORKSTATION: lwatkins DATE: 07 JAN 97

EXISTING STRUCTURE VERIFICATION:

DETAILS AND DIMENSIONS SHOWN ON THESE PLANS PERTAINING TO THE EXISTING STRUCTURE HAVE BEEN OBTAINED FROM PLANS OF THE EXISTING STRUCTURE AND FROM FIELD OBSERVATIONS AND MEASUREMENTS. CONSEQUENTLY, THEY ARE INDICATIVE OF THE EXISTING STRUCTURE AND THE PROPOSED WORK BUT THEY SHALL BE CONSIDERED TENTATIVE AND APPROXIMATE. THE CONTRACTOR IS REFERRED TO C.M.S. SECTIONS 102.05, 105.02 AND 513.02. THE ORIGINAL CONSTRUCTION PLANS OF THE EXISTING BRIDGE ARE AVAILABLE UPON REQUEST AT THE DISTRICT 3 OFFICE OF THE OHIO DEPARTMENT OF TRANSPORTATION, ASHLAND, OHIO.

CONTRACT BID PRICES SHALL BE BASED UPON A RECOGNITION OF THE UNCERTAINTIES DESCRIBED ABOVE AND UPON A PRE-BID EXAMINATION OF THE EXISTING STRUCTURE BY THE CONTRACTOR. HOWEVER, ALL PROJECT WORK SHALL BE BASED ON ACTUAL DETAILS AND DIMENSIONS WHICH HAVE BEEN VERIFIED BY THE CONTRACTOR IN THE FIELD.

DESIGN SPECIFICATIONS:

THIS STRUCTURE CONFORMS TO "STANDARD SPECIFICATIONS FOR HIGHWAY BRIDGES" ADOPTED BY THE AMERICAN ASSOCIATION OF STATE HIGHWAY AND TRANSPORTATION OFFICIALS, 1992, INCLUDING THE 1993, 1994, AND 1995 INTERIM SPECIFICATIONS, AND THE ODOT BRIDGE DESIGN MANUAL.

DESIGN DATA:

CONCRETE CLASS C - COMPRESSIVE STRENGTH 27.5 MPa

CONCRETE CLASS S - COMPRESSIVE STRENGTH 31.0 MPa

REINFORCING STEEL - ASTM A615M, A616M, A617M - GRADE 400 MINIMUM
YIELD STRENGTH 400 MPa

PLACING ASPHALT CONCRETE FEATHERING ON APPROACHES TO BRIDGES:

SPECIAL CARE SHALL BE TAKEN, WHEN PLACING THE ASPHALT CONCRETE FEATHERING TO EFFECT A SMOOTH TRANSITION FROM THE EXISTING APPROACH PAVEMENT TO THE BRIDGE DECK OR APPROACH SLAB. THE CONTRACTOR'S ATTENTION IS CALLED TO SECTION 404.16 OF THE C.M.S. AND TO STANDARD DRAWING BP-3.1M FOR THE REQUIRED TOLERANCES.

LOCATIONS OF GUARDRAIL:

THE GUARDRAIL PROTECTION PROVIDED IN THIS PLAN SHALL BE LOCATED IN THE FIELD TO ASSURE THAT THE INSTALLATION WILL AFFORD THE MAXIMUM PROTECTION FOR TRAFFIC. THIS LOCATION SHALL BE POSITIONED AS FAR AS POSSIBLE FROM THE EDGE OF PAVEMENT WHILE MAINTAINING PROPER GRADE IN FRONT OF GUARDRAIL AS PER STANDARDS.

GUARDRAIL POSTS OVER CULVERTS SHALL BE POSITIONED SO THAT INTERFERENCE OR DAMAGE TO THE CULVERT IS AVOIDED.

GUARDRAIL REPLACEMENT:

NO HAZARD SHALL BE LEFT UNPROTECTED EXCEPT FOR THE ACTUAL TIME NECESSARY TO REMOVE, GRADE, AND REINSTALL GUARDRAIL IN A CONTINUOUS OPERATION. THE REMOVAL OF ALL GUARDRAIL SHALL AT ALL TIMES BE AS DIRECTED BY THE ENGINEER. NO GUARDRAIL SHALL BE REMOVED UNTIL THE REPLACEMENT MATERIAL IS ON THE SITE, READY FOR INSTALLATION. FAILURE TO COMPLY WITH THIS REQUIREMENT SHALL BE DEEMED SUFFICIENT CAUSE TO ORDER WORK SUSPENDED ON THIS PROJECT UNTIL SUCH TIME THAT THE ENGINEER IS ASSURED OF SAID COMPLIANCE.

ITEM 202 - PORTIONS OF STRUCTURE REMOVED, ABUTMENTS:

THIS ITEM OF WORK SHALL BE USED TO REMOVE PORTIONS OF THE EXISTING ABUTMENTS AS SHOWN IN THE PLANS ON STRUCTURE HUR-303-03009 S.L.K. (HUR-303-0187 S.L.M.).

THE CONCRETE SHALL BE REMOVED BY A HYDRAULIC SPLITTING METHOD. A LINE OF HOLES SHALL BE DRILLED ALONG THE REMOVAL LINE AND A HYDRAULIC SPLITTER USED AS PER MANUFACTURER'S RECOMMENDATIONS. SIXTEEN (16) kg AND SEVEN (7) kg JACKHAMMERS SHALL BE USED FOR THE FINAL FINISH WORK. A HOE RAM, CONCRETE CRUSHER, OR OTHER SIMILAR DEVICES SHALL NOT BE PERMITTED TO DO ANY OF THE WORK. CONCRETE SHALL BE REMOVED IN A MANNER THAT PREVENTS CUTTING, ELONGATING, OR DAMAGING OF THE EXISTING REINFORCING STEEL TO BE PRESERVED. IF THE EXISTING REINFORCING STEEL DESIGNATED FOR PRESERVATION IS DAMAGED DURING REMOVAL OPERATIONS, DOWELED REINFORCING STEEL SHALL BE ADDED AT THE CONTRACTOR'S EXPENSE.

PAYMENT FOR ALL OF THE ABOVE SHALL BE AT THE UNIT PRICE BID PER CUBIC METER FOR ITEM 202 - PORTIONS OF STRUCTURE REMOVED, ABUTMENTS WHICH SHALL INCLUDE ALL LABOR, EQUIPMENT, MATERIALS, AND INCIDENTALS NECESSARY TO COMPLETE THE ABOVE WORK.

metric units

DESIGN AGENCY: DISTRICT THREE

DESIGNED NRC | DRAWN NRC | REVIEWED RDN | DATE 12-96
CHECKED | REVISED | STRUCTURAL FILE NUMBER

GENERAL NOTES

HUR-60-20.809
ERI-60-0.000
HUR-303-0.000

DESIGN FILE: d:\users\nconley\dgn\bridge\1996\hur060\gnote.dgn
WORKSTATION: nconley DATE: 31 DEC 96

ITEM 202 - PORTIONS OF STRUCTURE REMOVED, DECK:

THIS ITEM OF WORK SHALL BE USED TO REMOVE PORTIONS OF THE EXISTING CONCRETE DECK FROM THE STEEL BEAMS AS SHOWN IN THE PLANS FOR STRUCTURE HUR-303-03009 S.L.K. (HUR-303-0187 S.L.M.). CARE SHALL BE TAKEN NOT TO DAMAGE THE STEEL BEAMS DURING THE DECK REMOVAL. THE USE OF EXPLOSIVES, HEADACHES BALLS, HOE RAMS, CONCRETE CRUSHERS AND OTHER SIMILAR TYPE IMPACT DEVICES IS NOT PERMITTED.

THE CONCRETE DECK MAY BE REMOVED BY SAWING WITH THE FOLLOWING RESTRICTIONS.

1. BEFORE ANY SAWING IS PERMITTED, THE OUTLINES OF THE TOP FLANGES OF ALL STRINGERS ARE TO BE DRAWN ON THE BRIDGE DECK AND TWENTY-FIVE (25) mm ± DIAMETER PILOT HOLES SHALL BE DRILLED OUTSIDE THESE LINES TO CONFIRM THE WIDTH OF THE FLANGES. PILOT HOLES SHALL NOT BE DRILLED OVER THE BEAM FLANGES.

2. ALL SAWING SHALL BE CONFINED TO THE AREAS BETWEEN THE FLANGE EDGES MINUS 100 mm. (FIFTY (50) mm ± EACH SIDE)

3. THE DRILLING OF PILOT HOLES AND THE GENERAL SAWING PATTERN SHALL BE APPROVED BY THE ENGINEER.

4. HAND SAWS MAY BE USED IN THE FLANGE AREAS IF THE OPERATION IS OBSERVED AND APPROVED BY THE ENGINEER; AND THEN ONLY TO A DEPTH NOT PENETRATING THE LOWER REINFORCING STEEL MAT. THE ENGINEER MAY TERMINATE THE HAND SAWING OPERATION OVER THE FLANGES IF HE FEELS THE BRIDGE INTEGRITY IS IN JEOPARDY.

5. AS AN ALTERNATIVE TO USING HAND SAWS, THE LARGE CUTTING SAWS MAY BE USED FOR THE TRANSVERSE CUTS ACROSS THE FLANGES WITH THE CUT RESTRICTED TO A MAXIMUM DEPTH OF 100 mm OVER THE FLANGES. THIS SHALL BE ACCOMPLISHED BY MAKING AN INITIAL TRANSVERSE PRECUT TO A MAXIMUM DEPTH OF 100 mm CONTINUOUSLY ACROSS THE ENTIRE DECK. THE SECOND CUT SHALL BE RESTRICTED TO THE AREAS BETWEEN THE BEAMS IN ACCORDANCE WITH NUMBER 2 ABOVE.

CONCRETE MAY BE REMOVED BY MEANS OF PNEUMATIC HAMMERS EMPLOYING POINTED AND BLUNT CHISEL EDGED TOOLS. THE WEIGHT OF THE HAMMERS SHALL NOT EXCEED SIXTEEN (16) kg WITHIN 460 mm OF THE STEEL BEAMS. OUTSIDE THE 460 mm LIMIT THE WEIGHT OF THE HAMMERS SHALL NOT EXCEED FORTY-ONE (41) kg. CARE SHALL BE TAKEN NOT TO NICK OR GOUGE THE STEEL BEAMS WITH THE PNEUMATIC HAMMERS.

ALL IMPERFECTIONS AND EXISTING TACK WELDS ON THE BEAMS DISCOVERED AFTER THE DECK HAS BEEN REMOVED SHALL BE GROUND SMOOTH. ANY BOLTS OR PROJECTIONS WELDED TO THE STRUCTURAL STEEL SHALL BE CUT THIRTY-EIGHT (38) mm ABOVE THE EXISTING WELDS.

ANY DAMAGE TO THE STEEL BEAMS, DONE BY THE CONTRACTOR, SHALL BE REPAIRED BY THE CONTRACTOR AT HIS EXPENSE. THE CONTRACTOR'S PROPOSED METHOD OF REPAIR SHALL BE SUBMITTED IN WRITING FOR APPROVAL BY THE DIRECTOR. THE CONTRACTOR SHALL RECEIVE APPROVAL FROM THE DIRECTOR BEFORE COMMENCEMENT OF SAID REPAIRS.

NO PART OF THE STRUCTURE SHALL BE SUBJECTED TO UNIT STRESSES THAT EXCEED BY MORE THAN ONE-THIRD THE ALLOWABLE UNIT STRESSES, AS GIVEN IN AASHTO "STANDARD SPECIFICATIONS FOR HIGHWAY BRIDGES" DUE TO ERECTION, REMOVAL AND CONSTRUCTION METHODS, OR TO THE USE OR MOVEMENT OF CONSTRUCTION EQUIPMENT ONTO OR ACROSS THE STRUCTURE. WHEN EQUIPMENT HAVING A GROSS WEIGHT OF IN EXCESS OF 18 000 kg IS TO BE PLACED ON THE STRUCTURE AND USED FOR REMOVAL AND CONSTRUCTION PURPOSES, STRUCTURAL ANALYSIS CALCULATIONS BY A REGISTERED STRUCTURAL ENGINEER SHOWING THE STRESSES PRODUCED BY THE EQUIPMENT AND ASSOCIATED LOADS SHALL BE SUBMITTED TO THE ENGINEER FOR REVIEW AND APPROVAL.

PAYMENT FOR ALL OF THE ABOVE SHALL BE AT THE UNIT PRICE BID PER SQUARE METER FOR ITEM 202 - PORTIONS OF STRUCTURE REMOVED, DECK WHICH SHALL INCLUDE ALL LABOR, EQUIPMENT, MATERIALS, AND INCIDENTALS NECESSARY TO COMPLETE THE ABOVE WORK.

ITEM 202 - APPROACH SLAB REMOVED, AS PER PLAN:

THIS ITEM SHALL BE USED TO REMOVE THE EXISTING APPROACH SLABS AT STRUCTURE HUR-303-03009 S.L.K. (HUR-303-0187 S.L.M.) AND TO REMOVE ANY ADDITIONAL MATERIAL BOTH BELOW AND NEXT TO THE EXISTING APPROACH SLAB NECESSARY FOR THE INSTALLATION OF THE PROPOSED APPROACH SLAB. THE REMOVAL OF ADDITIONAL MATERIAL IS INCIDENTAL TO THIS ITEM AND WILL NOT BE PAID FOR SEPARATELY.

PAYMENT FOR ALL OF THE ABOVE SHALL BE AT THE UNIT PRICE BID PER SQUARE METER FOR ITEM 202 - APPROACH SLAB REMOVED, AS PER PLAN WHICH SHALL INCLUDE ALL LABOR, EQUIPMENT, MATERIALS, AND INCIDENTALS NECESSARY TO COMPLETE THE ABOVE WORK.

ITEM 202 - BRIDGE RAILING REMOVED, AS PER PLAN:

THIS ITEM SHALL BE USED AT LOCATIONS INDICATED IN THE PLAN.

THIS ITEM SHALL BE USED TO REMOVE THE EXISTING TYPE I STEEL POSTS, POST CONNECTIONS, AND DEEP BEAM RAIL AS SHOWN IN THE PLAN. THESE ITEMS SHALL BECOME PROPERTY OF THE CONTRACTOR.

CARE SHALL BE TAKEN NOT TO DAMAGE THE EXISTING STRUCTURE DURING REMOVAL OPERATIONS.

PAYMENT FOR ALL OF THE ABOVE SHALL BE AT THE UNIT PRICE BID PER METER FOR ITEM 202 - BRIDGE RAILING REMOVED, AS PER PLAN WHICH SHALL INCLUDE ALL LABOR, EQUIPMENT, MATERIALS AND INCIDENTALS NECESSARY TO COMPLETE THE ABOVE WORK.

ITEM 202 - ANCHOR ASSEMBLY REMOVED, TYPE A:

THIS ITEM SHALL BE USED AT LOCATIONS INDICATED IN THE PLAN.

THIS ITEM SHALL INCLUDE THE REMOVAL OF THE EXISTING TYPE A ANCHOR ASSEMBLY INCLUDING ALL POSTS, HARDWARE, RAIL ELEMENT, AND CONCRETE ANCHORS. ALL ITEMS REMOVED BECOME PROPERTY OF THE CONTRACTOR AND SHALL BE PROPERLY DISPOSED OF.

THE EXISTING CONCRETE ANCHOR AND CONCRETE POSTS SHALL BE REMOVED ENTIRELY. ALL HOLES REMAINING SHALL BE FILLED WITH GRANULAR MATERIAL OR EXCESS MATERIAL RESULTING FROM GUARDRAIL CONSTRUCTION. ALL FILL MATERIAL SHALL BE THOROUGHLY COMPACTED AND LEVELED AS DIRECTED BY THE ENGINEER.

PAYMENT FOR ALL OF THE ABOVE SHALL BE AT THE UNIT PRICE BID PER EACH FOR ITEM 202 - ANCHOR ASSEMBLY REMOVED, TYPE A WHICH SHALL INCLUDE ALL LABOR, EQUIPMENT, MATERIALS, AND INCIDENTALS NECESSARY TO COMPLETE THE ABOVE WORK.

ITEM 202 - REMOVAL, MISC.: ROCKERS:

THIS ITEM SHALL CONSIST OF FURNISHING THE NECESSARY MATERIALS AND LABOR TO REMOVE THE EXISTING R-340 ROCKER ASSEMBLIES, EXCEPT FOR THE TOP PLATES, AT THE REAR AND FORWARD ABUTMENTS.

THE CONTRACTOR SHALL FIELD MEASURE ALL NECESSARY DIMENSIONS BEFORE THE EXISTING ROCKERS ARE REMOVED.

PAYMENT FOR ALL OF THE ABOVE SHALL BE AT THE UNIT PRICE BID PER EACH FOR ITEM 202 - REMOVAL, MISC.: ROCKERS WHICH SHALL INCLUDE ALL LABOR, EQUIPMENT, MATERIALS AND INCIDENTALS NECESSARY TO COMPLETE THE ABOVE WORK.

ITEM 202 - REMOVAL, MISC.: EXPANSION JOINTS:

THIS ITEM OF WORK SHALL BE USED TO REMOVE THE EXISTING EXPANSION JOINTS ON STRUCTURE HUR-303-03009 S.L.K. (HUR-303-0187 S.L.M.).

GRIND WELDS SMOOTH ON FLANGE. DO NOT GRIND PERPENDICULAR TO THE FLANGE.

PAYMENT FOR ALL OF THE ABOVE SHALL BE AT THE UNIT PRICE BID PER METER FOR ITEM 202 - REMOVAL, MISC.: EXPANSION JOINTS WHICH SHALL INCLUDE ALL LABOR, EQUIPMENT, MATERIALS AND INCIDENTALS NECESSARY TO COMPLETE THE ABOVE WORK.

ITEM 203 - EMBANKMENT, AS PER PLAN:

AT SPECIFIED LOCATIONS AND LOCATIONS AS DIRECTED BY THE ENGINEER, EMBANKMENT SHALL BE PLACED AS TO PROVIDE A SUITABLE AREA TO CONSTRUCT THE GUARDRAIL.

AREAS WHERE EMBANKMENT MATERIALS ARE TO BE PLACED SHALL BE SCALPED. THE REQUIREMENTS FOR MOISTURE, DENSITY CONTROL AND BENCHING SHALL BE WAIVED. THE DEPTH OF LAYERS IN WHICH THE EMBANKMENTS ARE PLACED AND THE METHOD OF COMPACTION SHALL BE DETERMINED BY THE ENGINEER. AFTER THE EMBANKMENT HAS BEEN PLACED, THE AREAS SHALL BE FERTILIZED, SEEDED, MULCHED, AND WATERED AS PER ITEM 659. THE COST SHALL BE INCLUDED IN THIS ITEM FOR PAYMENT. THE METHOD OF MEASUREMENT FOR EMBANKMENT MATERIAL SHALL BE THE NUMBER OF CUBIC METERS MEASURED BY LOOSE VOLUME IN THE CARRIER AT THE WORK SITE, IN LIEU OF THE REQUIREMENTS OF 203.15, AND PAYMENT FOR ACCEPTED QUANTITIES WILL BE MADE AT THE CONTRACT UNIT BID PRICE PER CUBIC METER FOR ITEM 203 - EMBANKMENT, AS PER PLAN AND SHALL INCLUDE ALL WORK DESCRIBED ABOVE AND AT ALL TIMES BE AS DIRECTED BY THE ENGINEER.

ITEM 511 - CLASS S CONCRETE, SUPERSTRUCTURE, AS PER PLAN:
ITEM 511 - CLASS C CONCRETE, ABUTMENT, NOT INCLUDING FOOTING, AS PER PLAN:

THIS ITEM SHALL BE USED AT LOCATIONS INDICATED IN THE PLAN.

THE COARSE AGGREGATE SHALL BE #8 LIMESTONE.

CURING SHALL BE IN ACCORDANCE WITH 511.14 TYPE A WATER CURING.

NOT MORE THAN 48 HOURS PRIOR TO PLACING THE CONCRETE, ALL EXISTING SURFACES TO WHICH THE CONCRETE IS TO BOND, INCLUDING EXPOSED REINFORCING AND STRUCTURAL STEEL SHALL BE CLEANED BY ABRASIVE BLASTING. THESE SURFACES SHALL BE MADE FREE OF SPALLS, LAITANCE, AND OTHER CONTAMINANTS DETRIMENTAL TO ACHIEVING AN ADEQUATE BOND.

IMMEDIATELY BEFORE THE CONCRETE IS PLACED ALL ADJACENT CONCRETE SURFACES SHALL BE COVERED WITH A THIN LAYER OF BONDING GROUT. THE BONDING GROUT SHALL CONSIST OF EQUAL PARTS BY VOLUME OF PORTLAND CEMENT AND SAND, MIXED WITH ENOUGH WATER TO FORM A SLURRY OF PAINT-LIKE CONSISTANCY WHICH SHALL BE SUCH AS TO ALLOW IT TO BE APPLIED WITH A STIFF BRUSH OR BROOM TO EXISTING CONCRETE SURFACES IN A THIN EVEN COATING THAT WILL NOT RUN OR PUDDLE. THE GROUT SHALL BE APPLIED FOR A SHORT DISTANCE IN ADVANCE OF THE PLACEMENT OF THE CONCRETE AND SHALL NOT BE DRY.

PAYMENT FOR ALL OF THE ABOVE SHALL BE AT THE UNIT PRICE BID PER CUBIC METER FOR ITEM 511 WHICH SHALL INCLUDE ALL LABOR, EQUIPMENT, MATERIALS, AND INCIDENTALS NECESSARY TO COMPLETE THE ABOVE WORK.

ITEM 516 - BEARING DEVICE, MISC.: ROCKER:

THIS ITEM SHALL CONSIST OF FURNISHING THE NECESSARY MATERIALS AND LABOR TO INSTALL NEW R-340 ROCKER ASSEMBLIES AT THE REAR AND FORWARD ABUTMENTS AS PER STANDARD DRAWING RB-1-55M. THE NEW ASSEMBLIES SHALL INCLUDE THE ROCKER, BOTTOM PLATE, SHEET LEAD OR PREFORMED BEARING PADS AND ANY NECESSARY SHIMS.

PAYMENT FOR ALL OF THE ABOVE SHALL BE AT THE UNIT PRICE BID PER EACH FOR ITEM 516 - BEARING DEVICE, MISC.: ROCKER WHICH SHALL INCLUDE ALL LABOR, EQUIPMENT, MATERIALS AND INCIDENTALS NECESSARY TO COMPLETE THE ABOVE WORK.

ITEM 516 - JACKING AND TEMPORARY SUPPORT OF SUPERSTRUCTURE, AS PER PLAN:

THIS ITEM SHALL CONSIST OF FURNISHING ALL NECESSARY LABOR, MATERIALS, AND EQUIPMENT TO RAISE OR REPOSITION ANY EXISTING STRUCTURES TO THE DIMENSIONS AND REQUIREMENTS DEFINED IN THE PROJECT PLANS.

THE CONTRACTOR SHALL BE RESPONSIBLE FOR THE DESIGN, INSTALLATION AND OPERATION OF AN ADEQUATE JACKING SYSTEM, INCLUDING ANY TEMPORARY OR PERMANENT SUPPORTS NECESSARY TO PERFORM THE WORK DESCRIBED IN THE PROJECT PLANS. THREE (3) SETS OF JACKING PLANS, WHICH INCLUDE THE INFORMATION DESCRIBED IN THIS NOTE, SHALL BE SUBMITTED TO THE DIRECTOR FOR APPROVAL AT LEAST THIRTY (30) DAYS BEFORE ACTUAL WORK IS TO BEGIN. THE PLANS SHALL BE PREPARED AND STAMPED BY A REGISTERED PROFESSIONAL ENGINEER.

JACKING SUBMITTALS SHALL INCLUDE AT LEAST THE FOLLOWING:

1. THE SIGNATURE AND NUMBER, OR PROFESSIONAL SEAL, OF THE REGISTERED PROFESSIONAL ENGINEER WHO PREPARED THE SUBMITTAL.
2. CALCULATIONS AND ANALYSIS OF THE STRUCTURE TO DETERMINE AND DEFINE THE ACTUAL LOADING APPLIED AT THE CONTRACTOR'S SELECTION JACKING POINTS.
3. A DRAWING SHOWING THE PHYSICAL AND DIMENSIONAL POSITION OF THE JACKS WITH RESPECT TO THE STRUCTURE INCLUDING CLEARANCES AND CENTER OF LIFT.
4. A SCHEMATIC LAYOUT OF JACKS, CHECK VALVES, PUMPS WITH 3 WAY RETRACTOR VALVE, PRESSURE GAGES, FLOW CONTROL VALVES, ETC. IN ACCORDANCE WITH MANUFACTURER'S RECOMMENDATIONS. ALL JACKS FOR EACH ABUTMENT OR PIER SHALL BE CONNECTED TOGETHER. ALL JACKS AT EACH ABUTMENT OR PIER SHALL BE THE SAME SIZE.
5. ANALYSIS AND CALCULATIONS OF THE STRESSES INDUCED OR CREATED IN THE STRUCTURE AND ANY TEMPORARY OR PERMANENT SUPPORTS. DESIGN CALCULATIONS FOR ANY TEMPORARY OR PERMANENT SUPPORTS.
6. PHYSICAL DIMENSIONS, MATERIALS, AND FABRICATION DETAILS OF ANY TEMPORARY OR PERMANENT SUPPORTS. HORIZONTAL AND VERTICAL MOVEMENT RESTRAINT SHALL BE PROVIDED.
7. A STEP BY STEP PROCEDURE DETAILING ALL STEPS IN THE JACKING OPERATION.
8. METHOD OF ATTACHMENT TO STRUCTURAL MEMBERS. WELDING TO TENSION AREAS WILL NOT BE PERMITTED.

THE ENTIRE SYSTEM INCLUDING JACKS SHALL HAVE 20% MORE CAPACITY THAN REQUIRED BASED ON CALCULATED LOADS.

(NOTE CONTINUED)

ITEM 516 - JACKING AND TEMPORARY SUPPORT OF SUPERSTRUCTURE, AS PER PLAN (CONTINUED):

FOR LIFTS GREATER THAN 25 mm, JACKS SHALL HAVE LOCKING NUTS TO POSITIVELY LOCK AND SUPPORT THE STRUCTURE DURING THE LIFT.

JACKS SHALL HAVE A SWIVEL LOAD CAP, A DOMED PISTON HEAD OR SOME OTHER DEVICE TO PROTECT AGAINST THE EFFECTS OF SIDE LOAD ON THE JACK.

JACKS ALONE SHALL NOT BE USED TO SUPPORT LOADS EXCEPT DURING THE ACTUAL JACKING OPERATION. TEMPORARY SUPPORTS, BLOCKING OR OTHER METHODS APPROVED BY THE DIRECTOR SHALL BE USED.

SINGLE ACTING RAMS WITH NO OVER-TRAVEL PROTECTION SYSTEM SHALL NOT BE USED.

SPARE EQUIPMENT SHALL BE AVAILABLE ON SITE FOR THE REQUIRED STRUCTURE RAISING TO PROCEED IN THE EVENT OF A BREAKDOWN. A LIST OF SPARE EQUIPMENT SHALL BE PROVIDED TO THE ENGINEER.

AT A MINIMUM, A JACKING OPERATION SHALL LIFT ALL BEAMS AT ANY ONE ABUTMENT OR PIER SIMULTANEOUSLY. THE ONLY EXCEPTION IS THE SITUATION WHERE THE WORK INVOLVES REPLACING OR REHABILITATING INDIVIDUAL BEARINGS; NO PERMANENT SHIMMING IS REQUIRED AND THE HEIGHT OF THE LIFT SHALL NOT EXCEED 6 mm.

MAXIMUM DIFFERENTIAL JACKING HEIGHT BETWEEN ANY ADJACENT ABUTMENTS OR PIERS SHALL BE 25 mm OR LESS.

IF, DURING THE JACKING OPERATIONS, CRACKING OF THE CONCRETE SUPERSTRUCTURE, SEPARATION OF THE CONCRETE DECK FROM THE STEEL STRINGERS, OR OTHER DAMAGE TO THE STRUCTURE IS VISUALLY OBSERVED, THE JACKING OPERATION SHALL IMMEDIATELY CEASE AND APPROVED SUPPORTS SHALL BE INSTALLED. THE CONTRACTOR SHALL THEN ANALYZE THE DAMAGE AND SUBMIT A METHOD OF CORRECTION TO THE ENGINEER FOR APPROVAL. ANY BEAMS THAT SEPARATE FROM THE DECK SHALL BE EPOXY INJECTED FOR THE DISTANCE OF THE SEPARATION IN ACCORDANCE WITH THE PROPOSAL NOTE "CONCRETE REPAIR BY EPOXY INJECTION". COST OF THIS EPOXY INJECTION OR OTHER REQUIRED REPAIRS SHALL BE BORNE BY THE CONTRACTOR.

THE CONTRACTOR SHALL DEMONSTRATE TO THE ENGINEER THAT THE BRIDGE BEARINGS ARE FULLY SEATED BETWEEN ALL CONTACT AREAS. IF FULL SEATING IS NOT ATTAINED, SUITABLE MEANS OF REPAIR, SUBJECT TO THE APPROVAL OF THE ENGINEER, WILL BE REQUIRED AT THE CONTRACTOR'S EXPENSE.

THE JACKING OPERATION SHALL BE DIRECTED BY A PROFESSIONAL ENGINEER EMPLOYED BY THE CONTRACTOR. FAILURE TO HAVE A PROFESSIONAL ENGINEER PRESENT SHALL BE CAUSE FOR CEASING JACKING OPERATIONS.

PAYMENT SHALL BE MADE AT THE LUMP SUM PRICE BID FOR ITEM 516 - JACKING AND TEMPORARY SUPPORT OF SUPERSTRUCTURE, AS PER PLAN AND SHALL INCLUDE ALL NECESSARY TOOLS, LABOR, EQUIPMENT AND MATERIALS NECESSARY TO COMPLETE THIS ITEM OF WORK.

ITEM 517 - RAILING (DEEP BEAM RAIL WITH STEEL TUBULAR BACKUP AND TYPE 1 STEEL POSTS AND ACHORS BOLTS), AS PER PLAN:

THIS ITEM SHALL BE USED AT LOCATIONS INDICATED IN THE PLAN.

ALL ITEMS REQUIRED TO CONSTRUCT THE PROPOSED BRIDGE RAIL AS SHOWN IN THE PLAN ARE INCIDENTAL TO ITEM 517 - RAILING (DEEP BEAM RAIL WITH STEEL TUBULAR BACKUP AND TYPE I STEEL POSTS AND ANCHOR BOLTS), AS PER PLAN.

PAYMENT FOR ALL OF THE ABOVE SHALL BE AT THE UNIT PRICE BID PER METER FOR ITEM 517 - RAILING (DEEP BEAM RAIL WITH STEEL TUBULAR BACKUP AND TYPE I STEEL POSTS AND ANCHOR BOLTS), AS PER PLAN WHICH SHALL INCLUDE ALL LABOR, EQUIPMENT, MATERIALS, AND INCIDENTALS NECESSARY TO COMPLETE THE ABOVE WORK.

ITEM 518 - POROUS BACKFILL WITH FABRIC FILTER, AS PER PLAN:

THE POROUS BACKFILL MATERIAL SHALL BE #57 GRAVEL.

EXCAVATION AND BACKFILL REQUIRED FOR THIS ITEM SHALL BE INCIDENTAL TO THIS ITEM.

PAYMENT FOR THE ABOVE SHALL BE AT THE UNIT PRICE BID PER CUBIC METER FOR ITEM 518 - POROUS BACKFILL WITH FABRIC FILTER, AS PER PLAN WHICH SHALL INCLUDE ALL LABOR, EQUIPMENT, MATERIALS, AND INCIDENTALS NECESSARY TO COMPLETE THE ABOVE WORK.

ITEM 606 - RAISING TYPE 5 GUARDRAIL:

WHERE DESIGNATED IN THE PLAN, THE EXISTING TYPE 5 GUARDRAIL SHALL BE RAISED ON THE EXISTING WOOD POSTS AS PER STANDARD DRAWING GR-2. IM SO AS TO OBTAIN THE STANDARD 685 mm HEIGHT. THE RAIL SHALL BE REATTACHED TO THE POSTS USING NEW POST BOLTS.

THE RAIL SHALL BE DISMANTLED ONLY TO THE EXTENT NECESSARY TO FIELD BORE NEW BOLT HOLES IN THE WOOD POSTS, AND TO RECONNECT THE RAIL AND BLOCK TO EXISTING POSTS.

THE EXISTING TYPE "A" ANCHOR ASSEMBLIES THAT ARE TO REMAIN SHALL NOT BE ADJUSTED. THE LAST RAIL ELEMENT SHALL BE TRANSITIONED TO MEET THESE ASSEMBLIES.

PAYMENT FOR ALL OF THE ABOVE SHALL BE AT THE UNIT PRICE BID PER METER FOR ITEM 606 - RAISING TYPE 5 GUARDRAIL WHICH SHALL INCLUDE ALL LABOR, EQUIPMENT, MATERIALS, AND INCIDENTALS NECESSARY TO COMPLETE THE ABOVE WORK.

ITEM 606 - GUARDRAIL POST, 2.75 METER:

PAYMENT FOR ITEM 606 - GUARDRAIL POST, 2.75 METER SHALL INCLUDE COSTS OVER AND ABOVE THE PRICE BID FOR ITEM 606 - GUARDRAIL, TYPE 5 FOR UTILIZING 2.75 METER GUARDRAIL POSTS IN PLACE OF NORMAL LENGTH (1.83 METER) POSTS AT LOCATIONS SPECIFIED IN THE PLAN OR AS DIRECTED BY THE ENGINEER. 2.75 METER GUARDRAIL POSTS SHALL BE INSTALLED WITH A MINIMUM EMBEDMENT DEPTH OF 1.95 METERS.

A QUANTITIY OF POSTS IS INCLUDED IN THE TOTAL ON THE ESTIMATED QUANTITY SHEET AS A CONTINGENCY. THESE POSTS ARE TO BE USED AS DIRECTED BY THE ENGINEER.

ITEM 606 - ANCHOR ASSEMBLY REBUILT, TYPE A, AS PER PLAN:

THIS ITEM SHALL CONSIST OF REMOVING ALL ELEMENTS OF THE EXISTING ANCHOR ASSEMBLY, EXCEPT THE 0.9 METER DIAMETER CONCRETE ANCHOR. THE CONCRETE ENCASED POSTS SHALL BE COMPLETELY REMOVED INCLUDING ALL CONCRETE. THE RESULTING HOLES SHALL BE BACKFILLED AND COMPACTED. THE NEW ACHOR ASSEMBLY SHALL BE CONSTRUCTED AS PER STANDARD DRAWING GR-4. IM.

PAYMENT FOR ALL OF THE ABOVE SHALL BE AT THE UNIT PRICE BID PER EACH FOR ITEM 606 - ANCHOR ASSEMBLY REBUILT, TYPE A, AS PER PLAN WHICH SHALL INCLUDE ALL LABOR, EQUIPMENT, MATERIALS, AND INCIDENTALS NECESSARY TO COMPLETE THE ABOVE WORK.

ITEM SPECIAL - 915 mm CONCRETE ANCHOR:

THIS ITEM SHALL BE USED TO CONSTRUCT A VERTICAL EXTENSION TO AN EXISTING 915 mm CONCRETE ANCHOR.

THE EXTENSION SHALL CONSIST OF BOLTING 22 mm X 51 mm MIN. COUPLING NUTS ON THE EXISTING BOLTS AND 22 mm STUDS FROM THESE NUTS. CLASS C CONCRETE SHALL THEN BE PLACED AT A THICKNESS OF 200 mm. THIS CONCRETE SHALL BE FORMED TO MATCH THE EXISTING ANCHOR AS CLOSELY AS POSSIBLE (SEE DETAILS BELOW). ALL HARDWARE SHALL BE STANDARD GALVANIZED STEEL.

PAYMENT FOR ALL OF THE ABOVE SHALL BE AT THE UNIT PRICE BID PER EACH FOR ITEM SPECIAL - 915 mm CONCRTE ANCHOR WHICH SHALL INCLUDE ALL LABOR, EQUIPMENT, MATERIALS, AND INCIDENTALS NECESSARY TO COMPLETE THE ABOVE WORK.

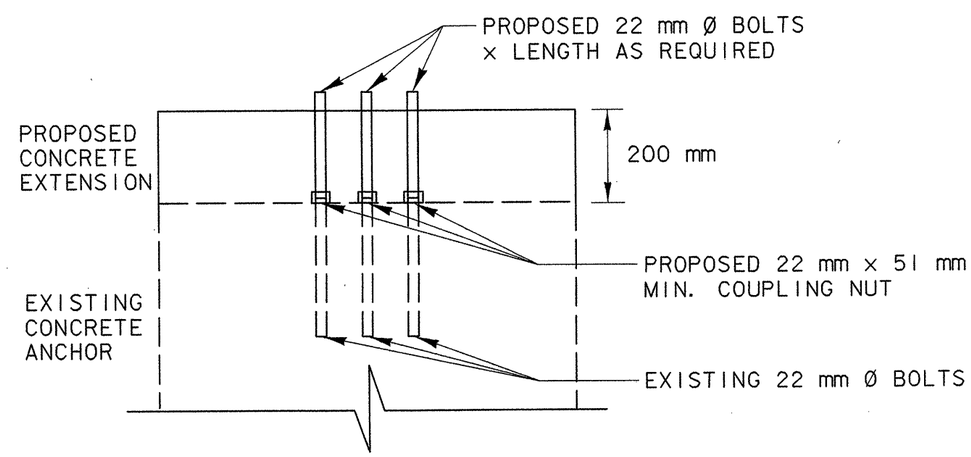

DESIGN FILE: d:\users\nconley\dgn\bridge\1996\hur060\gnote.dgn
WORKSTATION: nconley DATE: 31 DEC 96

metric units

DESIGN AGENCY: DISTRICT THREE

DESIGNED NRC | DRAWN NRC | REVIEWED RDN | DATE 12-96
CHECKED | REVISED | STRUCTURAL FILE NUMBER

GENERAL NOTES

HUR-60-20.809
ERI-60-0.000
HUR-303-0.000

ITEM SPECIAL - STRUCTURE, MISC.: JOINT SEALING:

I. DESCRIPTION

THIS ITEM SHALL CONSIST OF FURNISHING THE NECESSARY LABOR, MATERIALS, AND EQUIPMENT NEEDED FOR SURFACE PREPARATION, MIXING AND PLACING THE SEAL ON TO THE CONSTRUCTION JOINT FORMED ALONG NEW PATCHES AND EXISTING UNSEALED OVERLAY JOINTS.

II. MATERIAL

THE JOINT SEAL SHALL BE FURNISHED BY ONE OF THE FOLLOWING:

MANUFACTURER	SEALER DESIGNATION
FORSROC INC. 2 SUMMIT PARK DRIVE SUITE 300 INDEPENDENCE, OH 44131 (216) 642-9342	NITOBOND ULV
SIKA CORPORATION 1300 GRANGER ROAD BROOKLYN HEIGHTS, OH 44131 (216) 749-7225	SIKADUR 35 HI-MOD LV
POLY-CARB 33095 BAINBRIDGE ROAD SOLON, OH 44139 (216) 248-1223	MARK - 135 SAFE-T-SEAL

THE MATERIAL MANUFACTURER SHALL PROVIDE BEFORE APPLICATION A CHART SHOWING AMBIENT TEMPERATURE VERSES OPEN TIME (LIQUID STATE), INITIAL STATE (GEL) AND FINAL CURE (SOLID STATE).

THE SAND USED TO COVER THE EPOXY SHALL BE BEST 620 SILICA SAND AVAILABLE FROM:

WALTER C. BEST
P.O. BOX 87
CHARDON, OH 44024
(216) 285-3132

OR AN APPROVED ALTERNATE.

III. PLACEMENT

A) APPLICATION

THE JOINT SEAL SHALL BE POURED INTO THE JOINT WITH A NARROW NOZZLE CONTAINER. AS THE JOINT SEAL PENETRATES INTO THE JOINT, THE SEAL SHALL BE REAPPLIED. TO ENHANCE THE PENETRATION OF THE JOINT SEAL, A SQUEEGEE SHALL BE WORKED BACK AND FORTH ACROSS THE JOINT. ALL SEALING MATERIAL SHALL BE WITHIN A 100 mm WIDE AREA, 50 mm ON EITHER SIDE OF THE JOINT. ANY MATERIAL OUTSIDE OF THE AREA SHALL BE REMOVED TO THE ENGINEERS SATISFACTION AT NO COST TO THE STATE.

THE SEALED AREAS OF THE BRIDGE DECK SHALL HAVE SAND BROADCAST AFTER 45 MINUTES, BUT BEFORE THE EPOXY HAS PASSED FROM THE OPEN TIME (LIQUID STATE) TO THE GEL STATE. THE SAND SHALL SATURATE THE SEAL AT A RATE OF 0.5 kg OF SAND TO 0.25 SQUARE METERS. THE SAND SHALL HAVE A MAXIMUM MOISTURE CONTENT OF 0.5 OF THE PERCENT ABSORPTION WHEN TESTED IN ACCORDANCE TO A CALIFORNIA TEST 226.

B) PLACEMENT LIMITATIONS

1) THE EPOXY SHALL BE PLACED AT AN AMBIENT TEMPERATURE DEFINED AS DECK SURFACE TEMPERATURE SUCH THAT THE OPEN TIME (LIQUID STATE) IS GREATER THAN ONE HOUR AND FINAL CURE IS LESS THAN SIX HOURS.

2) JOINT SEAL SHALL NOT BE PLACED WITHIN 48 HOURS AFTER A RAIN OR WHEN RAIN IS FORECAST WITHIN 12 HOURS. JOINT SEAL SHALL NOT BE APPLIED WHEN THE DECK SURFACE TEMPERATURE IS LESS THAN 3°C ABOVE THE DEW POINT OR WHEN THE RELATIVE HUMIDITY IS GREATER THAN 85%. JOINT SEAL SHALL NOT BE APPLIED TO WET OR DAMP SURFACES.

3) PLACEMENT SHALL NOT START UNTIL ATMOSPHERIC TEMPERATURE IS WITHIN 8°C OF THE PROJECTED MAXIMUM ATMOSPHERIC TEMPERATURE FOR THE DAY.

4) THE EPOXY SHALL BE PLACED WHEN THE DECK SURFACE TEMPERATURE IS BELOW 41°C.

C) CURE

THE CONTRACTOR MAY CONTROL CURE TIME BY VARYING THE SIZE AND SHAPE OF MIXING CONTAINER, AMOUNT MIXED AT ONE TIME, THE TEMPERATURE OF RESIN AND HARDENER AND THE TYPE OF HARDENER USED.

(NOTE CONTINUED)

ITEM SPECIAL - STRUCTURE, MISC.: JOINT SEALING (CONTINUED):

D) CURE TIME TEST

THE CONTRACTOR SHALL MAKE 100 GRAM SAMPLES FOR CURE TIME TESTS FOR EACH BATCH OF EPOXY MIX. THE TIME TO INITIAL CURE (GEL STATE) AND FINAL CURE (SOLID STATE) SHALL BE RECORDED FOR EACH CURE TIME TEST. THESE TESTS SHALL BE USED TO VERIFY THE MANUFACTURER'S CHART AND TO ADJUST EACH EPOXY APPLICATION FOR FIELD CONDITIONS.

TRAFFIC AND EQUIPMENT SHALL NOT BE PERMITTED ON THE TREATED DECK UNTIL IT IS TACK FREE, A MINIMUM OF SIX HOURS HAVE ELAPSED SINCE TREATMENT AND SAND COVER ADHERES SUFFICIENTLY TO RESIST BRUSHING BY HAND OR ONE HOUR BEYOND THE TIME THE EPOXY HAS PASSED FROM INITIAL STATE (GEL) TO FINAL CURE (SOLID STATE).

IV. EQUIPMENT

THE CONTRACTOR SHALL PROVIDE THE ENGINEER THE FOLLOWING TEST EQUIPMENT IN GOOD WORKING CONDITION FOR THE DURATION OF THE PROJECT. IF NO TEST EQUIPMENT IS AVAILABLE NO WORK SHALL BE PERFORMED.

1) ONE (1) SLING PSYCHROMETER INCLUDING PSYCHROMETRIC TABLES USED TO CALCULATE RELATIVE HUMIDITY AND DEW POINT TEMPERATURES.

2) ONE (1) PORTABLE INFRARED THERMOMETER AVAILABLE FROM:

MODEL: RAYNGER ST SERIES (-18° TO 400°C)

MANUFACTURER: RAYTEK INC.
1201 SHAFFFER ROAD
P.O. BOX 1820
SANTA CRUZ, CA 95061-1820
(800) 227-8074

OR AN APPROVED ALTERNATE.

V. METHOD OF MEASUREMENT

THE QUANTITY SHALL BE THE ACTUAL LENGTH IN METER OF JOINT SEALING, COMPLETE, IN PLACE AND ACCEPTED.

VI. BASIS OF PAYMENT

PAYMENT FOR ALL OF THE ABOVE SHALL BE AT THE UNIT CONTRACT PRICE BID PER METER FOR ITEM SPECIAL - STRUCTURE MISC.: JOINT SEALING WHICH SHALL INCLUDE ALL LABOR, EQUIPMENT, MATERIALS, AND INCIDENTALS NECESSARY TO COMPLETE THE ABOVE WORK.

ITEM SPECIAL - RESHAPING BERM:

BERMS AND SHOULDERS AT LOCATIONS WHERE EXISTING GUARDRAIL IS REMOVED OR WHERE GUARDRAIL IS TO BE BUILT, SHALL BE RESHAPED AS DIRECTED BY THE ENGINEER TO INSURE A SMOOTH SURFACE FREE OF IRREGULARITIES. EXCESS MATERIAL RESULTING SHALL BE USED ELSEWHERE FOR THIS ITEM IF SO DIRECTED OR DISPOSED OF. IF EXTRA MATERIAL IS REQUIRED IT SHALL BE PAID FOR WITH ITEM 203 - EMBANKMENT, AS PER PLAN. THIS WORK SHALL NOT BE STARTED UNTIL AFTER THE RESURFACING AND BERM WORK HAS BEEN COMPLETED.

THE AREA IN FRONT OF THE GUARDRAIL SHALL BE GRADED AND RESHAPED TO PROVIDE AN AREA THAT HAS A SLOPE OF 10:1 MAX.

THE ABOVE WORK SHALL BE PAID FOR WITH ITEM SPECIAL - RESHAPING BERM WITH THE EXCEPTION OF ANY EXTRA MATERIAL REQUIRED TO MEET THE SLOPE REQUIREMENTS WHICH SHALL BE PAID BY ITEM 203 - EMBANKMENT, AS PER PLAN.

ITEM 614 - MAINTAINING TRAFFIC:

TWO-WAY TRAFFIC SHALL BE MAINTAINED AT ALL TIMES EXCEPT THAT THROUGH TRAFFIC ON STRUCTURE HUR-303-03009 S.L.K (HUR-303-0187 S.L.M) SHALL BE DETOURED AS SHOWN ON SHEET NO. 21 FOR A MAXIMUM OF 45 CONSECUTIVE CALENDAR DAYS. THE 45 CONSECUTIVE DAYS SHALL BE CONSIDERED AS AN INTERIM COMPLETION DATE (SECTION 108) AND FOR EACH CALENDAR DAY BEYOND THE 45 CALENDAR DAYS THAT THE HIGHWAY REMAINS CLOSED TO TRAFFIC, THE CONTRACTOR WILL BE ASSESSED LIQUIDATED DAMAGES AS PER 108.07.

DETOUR SIGNING WILL BE PROVIDED BY THE STATE OF OHIO. THE CONTRACTOR WILL NOTIFY THE DISTRICT THREE TRAFFIC ENGINEER IN WRITING A MINIMUM OF FORTEEN (14) DAYS IN ADVANCE OF WHEN THE DETOUR IS PLACED.

THE CONTRACTOR SHALL BE RESPONSIBLE FOR THE GATES AND BARRICADES AT THE END OF THE WORK AREA OF THE PROJECT. SEE STANDARD DRAWING MT-101.60M FOR DETAILS.

TWO WAY TRAFFIC SHALL BE MAINTAINED AT ALL OTHER LOCATIONS AT ALL TIMES EXCEPT DURING WORKING HOURS, WHEN ONE LANE MAY BE CLOSED USING FLAGGERS AS PER STANDARD DRAWINGS MT-97.10M AND MT-97.11M. AT STRUCTURE HUR-303-01529 S.L.K. (HUR-303-0095 S.L.M.) FLAGGERS SHALL BE USED CONTINUOUSLY UNTIL NEW BRIDGE RAIL IS COMPLETELY CONSTRUCTED.

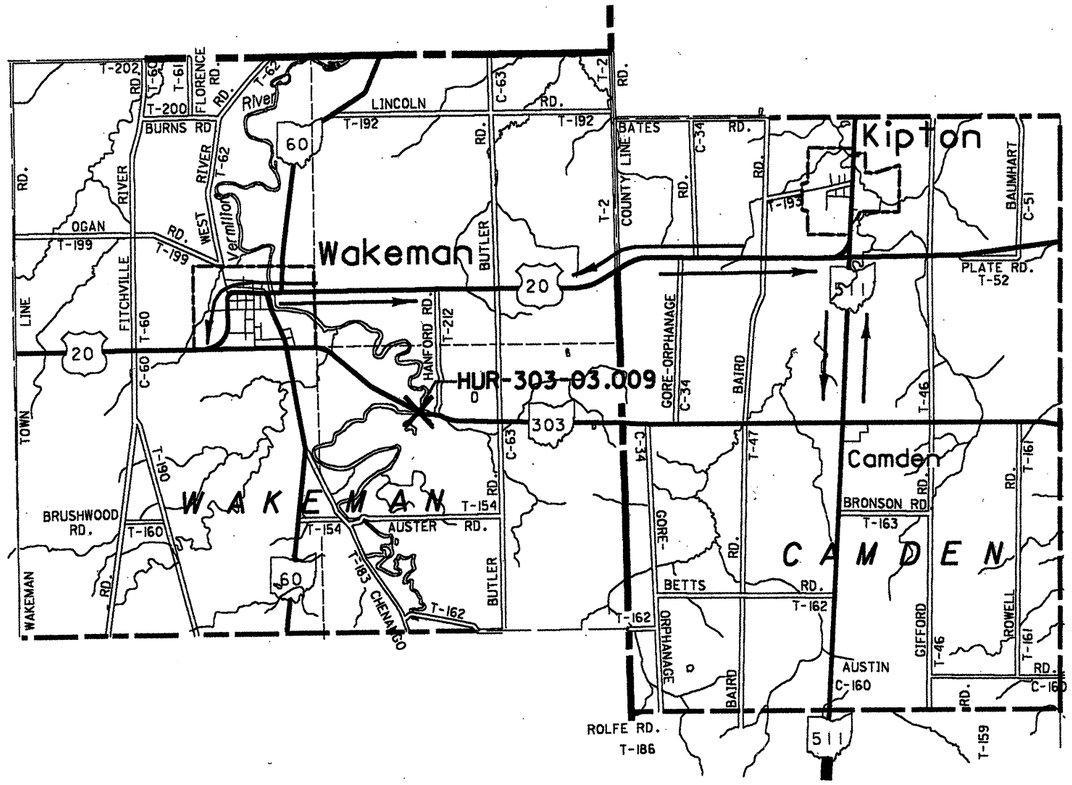

DETOUR S.R.303

TRAFFIC WILL BE DETOURED TO SR 511 AND USR 20 FOR A MAXIMUM OF 45 DAYS AS DETAILED ON ABOVE MAP FOR BRIDGE REHABILITATION OF STRUCTURE HUR-303-03009.

metric units

CALCULATED MER
CHECKED JLB

PLAN NO.

DETOUR DETAILS

HUR-SR60-20.809
ERI-SR60-0.000
HUR-303-0.000

21
39

DESIGN FILE: I:\dgn\ops\1997\hs60\303.dgn
WORKSTATION: hwatkins DATE: 30 DEC 96

metric units

BRIDGE TREATMENT

BRIDGE DECK DATA								ROADWAY DATA		
PART	COUNTY, ROUTE, BRIDGE NO.	STRUCTURE TYPE	LENGTH (BRIDGE LIMITS)	WIDTH	BRIDGE DECK AREA	SKEW	EXISTING WEARING SURFACE	EXISTING PAVEMENT WIDTH	EXISTING APPROACH SLAB WIDTH	EXISTING APPROACH SLAB LENGTH
			mm	mm	square meter			mm	mm	mm
B	● ERI-60-03975 S. L. K. ERI-60-0247 S. L. M.	3 SPAN STEEL BEAM WITH TIMBER DECK	45 720	9449	432	0°	ASPHALT	7920		
C	●● HUR-303-01529 S. L. K. HUR-303-0095 S. L. M.	STEEL BEAM WITH TIMBER DECK	8839	9144	76	0°	ASPHALT	7320		
C	●●● HUR-303-03009 S. L. K. HUR-303-0187 S. L. M.	CONTINUOUS STEEL BEAM	64 618	8534	532	40° L. F.	CONCRETE	7320	7775	4572
C	●●●● HUR-303-03235 S. L. K. HUR-303-0201 S. L. M.	CONCRETE BOX	3048			32° L. F.	ASPHALT	7320		
C	●●●● HUR-303-04442 S. L. K. HUR-303-0276 S. L. M.	CONCRETE BOX	3048			37° L. F.	ASPHALT	7320		

● PAVE OVER.

●● FEATHER INTERMEDIATE COURSE AT BRIDGE. PAVE OVER (FULL WIDTH) WITH SURFACE COURSE ONLY. (SEE DETAILS IN THE PLAN FOR ADDITIONAL WORK)

●●● PLANE 30 m EACH WAY, BUTT JOINT AT APPROACH SLAB. (SEE DETAILS IN THE PLAN FOR ADDITIONAL WORK)

●●●● PAVE OVER. (SEE DETAILS IN THE PLAN FOR ADDITIONAL WORK)

DESIGN FILE: d:\users\nconley\dgn\bridge\1996\hur060\equan.dgn
WORKSTATION: nconley DATE: 31 DEC 96

DESIGN AGENCY: DISTRICT THREE
DESIGNED NRC | DRAWN NRC | REVIEWED RDN | DATE 12-96
CHECKED | REVISED | STRUCTURAL FILE NUMBER

BRIDGE TREATMENT

HUR-60-20.809
ERI-60-0.000
HUR-303-0.000

metric units

PART	LOCATION	202 APPROACH SLAB REMOVED, AS PER PLAN	202 GUARDRAIL REMOVED	202 BRIDGE RAILING REMOVED, AS PER PLAN	202 ANCHOR ASSEMBLY REMOVED, TYPE A		203 EMBANKMENT, AS PER PLAN	203 SUBGRADE COMPACTION	254 PAVEMENT PLANING, BITUMINOUS		517 RAILING (DEEP BEAM RAIL WITH STEEL TUBULAR BACKUP AND TYPE I STEEL POSTS AND ANCHOR BOLTS), AS PER PLAN
		square meter	meter	meter	each		cubic meter	square meter	square meter		meter
C	HUR-303-01529 S. L. K. HUR-303-0095 S. L. M.		179.07	26.67	6		4				22.86
C	HUR-303-2.446 S. L. K. HUR-303-1.52 S. L. M.		38.1		4						
C	HUR-303-03009 S. L. K. HUR-303-0187 S. L. M.	63	73.3425		4			79	440		
C	HUR-303-03235 S. L. K. HUR-303-0201 S. L. M.										
C	HUR-303-3.991 S. L. K. HUR-303-2.48 S. L. M.		91.44		1		8				
C	HUR-303-04442 S. L. K. HUR-303-0276 S. L. M.										
	TOTAL	63	381.95	26.67	15		12	79	440		22.86

DESIGN FILE: d:\users\nconley\dgn\bridge\1996\hur060\equan.dgn
WORKSTATION: nconley DATE: 31 DEC 96

DESIGN AGENCY: DISTRICT THREE

DESIGNED NRC | DRAWN NRC | REVIEWED RDN 12-96 | DATE
CHECKED EJH | REVISED | STRUCTURAL FILE NUMBER

ESTIMATED QUANTITIES

HUR-60-20.809
ERI-60-0.000
HUR-303-0.000

metric units

PART	LOCATION	601		606	606	606	606	606	606	606	
		ROCK CHANNEL PROTECTION, TYPE B WITH FABRIC FILTER		GUARDRAIL, TYPE 5	RAISING TYPE 5 GUARDRAIL	GUARDRAIL POST, 2.75 METER	ANCHOR ASSEMBLY, TYPE A	ANCHOR ASSEMBLY, TYPE T	ANCHOR ASSEMBLY REBUILT, TYPE A, AS PER PLAN	BRIDGE TERMINAL ASSEMBLY, TYPE 4	
		cubic meter		meter	meter	each	each	each	each	each	
C	HUR-303-01529 S. L. K. HUR-303-0095 S. L. M.			253.365		122	2	4		4	
C	HUR-303-2.446 S. L. K. HUR-303-1.52 S. L. M.			72.39		24	3	1			
C	HUR-303-03009 S. L. K. HUR-303-0187 S. L. M.	450		106.68			3	1		4	
C	HUR-303-03235 S. L. K. HUR-303-0201 S. L. M.				209.55						
C	HUR-303-3.991 S. L. K. HUR-303-2.48 S. L. M.			106.68		54		1	3		
C	HUR-303-04442 S. L. K. HUR-303-0276 S. L. M.				114.3						
	TOTAL	450		539.12	323.85	200	8	7	3	8	

DESIGN FILE: d:\users\nconley\dgn\bridge\1996\hur060\equan.dgn
WORKSTATION: nconley DATE: 31 DEC 96

DESIGN AGENCY: DISTRICT THREE
DESIGNED NRC | DRAWN NRC | REVIEWED RDN 12-96 | DATE
CHECKED EAK | REVISED | STRUCTURAL FILE NUMBER

ESTIMATED QUANTITIES

HUR-60-20.809
ERI-60-0.000
HUR-303-0.000

metric units

PART	LOCATION	SPECIAL		611		802		SPECIAL			
		915 mm CONCRETE ANCHOR		REINFORCED CONCRETE APPROACH SLAB (T = 305 mm)		BARRIER REFLECTOR, TYPE A		RESHAPING BERM			
		each		square meter		each		meter			
C	HUR-303-01529 S. L. K. HUR-303-0095 S. L. M.					13		287			
C	HUR-303-2. 446 S. L. K. HUR-303-1. 52 S. L. M.					6		103			
C	HUR-303-03009 S. L. K. HUR-303-0187 S. L. M.			79		7		133			
C	HUR-303-03235 S. L. K. HUR-303-0201 S. L. M.					10		211			
C	HUR-303-3. 991 S. L. K. HUR-303-2. 48 S. L. M.	2				7		138			
C	HUR-303-04442 S. L. K. HUR-303-0276 S. L. M.					7		115			
	TOTAL	2		79		50		987			

DESIGN FILE: d:\users\noonley\dgn\bridge\1996\hur060\equan.dgn
WORKSTATION: noonley DATE: 31 DEC 96

DESIGN AGENCY: DISTRICT THREE

DESIGNED NRC | DRAWN NRC | REVIEWED RDW 12-96 | DATE
CHECKED ERJ | REVISED | STRUCTURAL FILE NUMBER

ESTIMATED QUANTITIES

HUR-60-20.809
ERI-60-0.000
HUR-303-0.000

NOTE: EXISTING BRIDGE RAIL AND GUARDRAIL IS NOT SHOWN. BRIDGE RAIL TO REMAIN. SEE SHEET FOR ADDITIONAL WORK 34 .

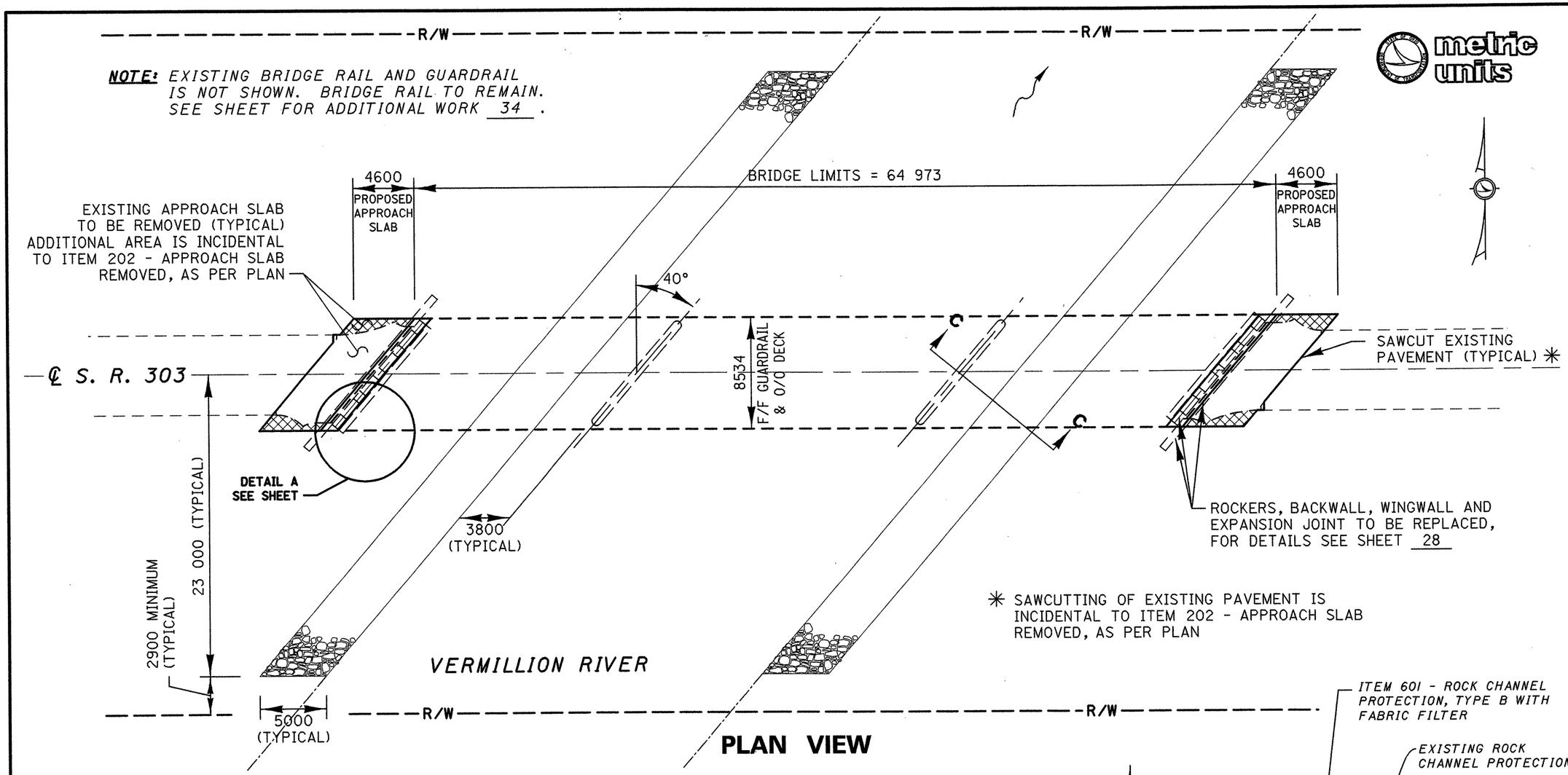

PLAN VIEW

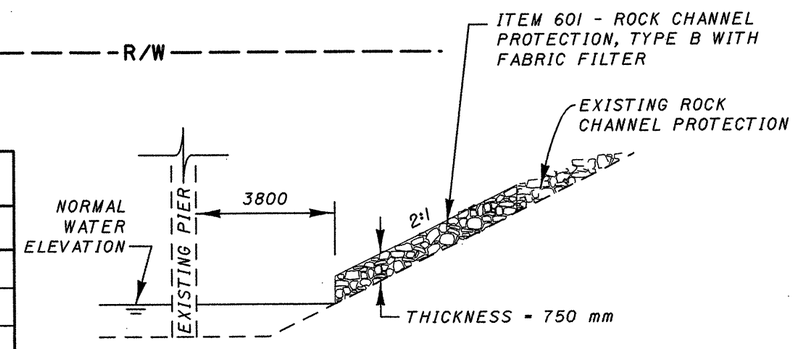

SECTION C-C

ALL DIMENSIONS ARE IN MILLIMETERS, UNLESS NOTED OTHERWISE

ESTIMATED QUANTITIES

ITEM	QUANTITY	UNIT	DESCRIPTION
202	63 ★	square meter	APPROACH SLAB REMOVED, AS PER PLAN
203	79 ★	square meter	SUBGRADE COMPACTION
516	lump	lump	JACKING AND TEMPORARY SUPPORT OF SUPERSTRUCTURE
601	450 ★	cubic meter	ROCK CHANNEL PROTECTION, TYPE B WITH FABRIC FILTER
611	79 ★	square meter	REINFORCED CONCRETE APPROACH SLAB (T=305 mm)

THE REMAINING QUANTITY IS CARRIED TO SHEET 4

★ QUANTITY IS CARRIED TO ESTIMATED QUANTITIES SHEETS 23, 24, & 25

DESIGN FILE: d:\users\nconley\dgn\bridge\1996\hur060\misc.dgn
WORKSTATION: nconley DATE: 02 JAN 97

DESIGN AGENCY: DISTRICT THREE
DESIGNED NRC | DRAWN NRC | REVIEWED RDW | DATE 12-96
CHECKED | REVISED | STRUCTURAL FILE NUMBER 3904083

GENERAL PLAN
HUR-303-03009 S.L.K. HUR-303-0187 S.L.M.

HUR-60-20.809
ERI-60-0.000
HUR-303-0.000

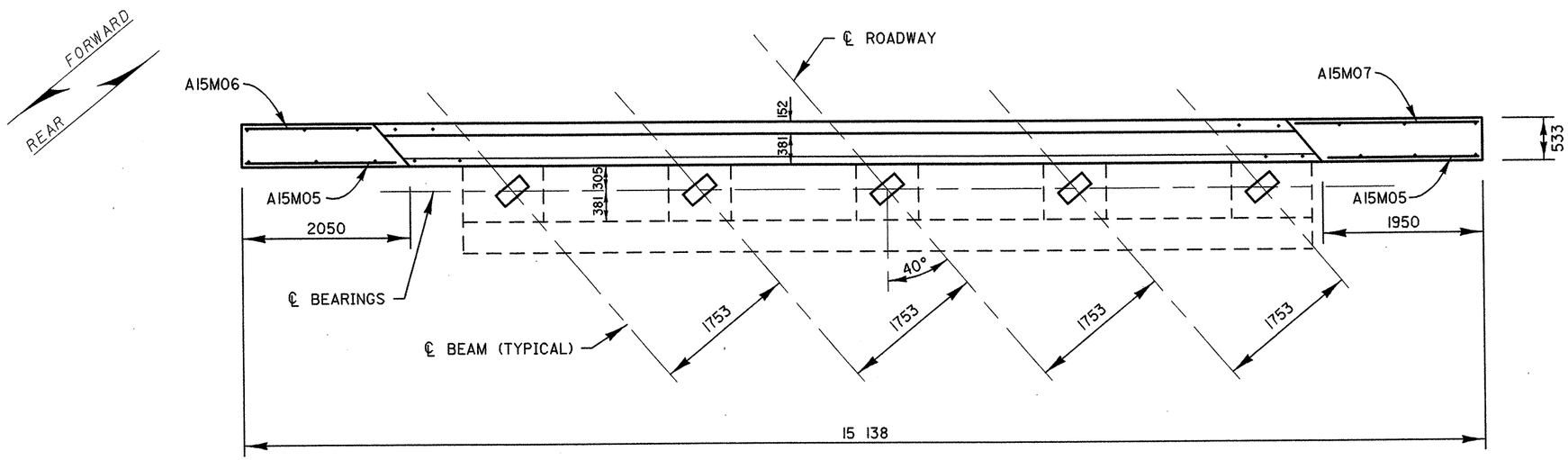

PLAN VIEW

NOTES:

1. FOR SECTION VIEWS A-A AND B-B, SEE SHEET 28 .
2. MINIMUM REINFORCING STEEL SPLICE LENGTH SHALL BE 1050 mm.

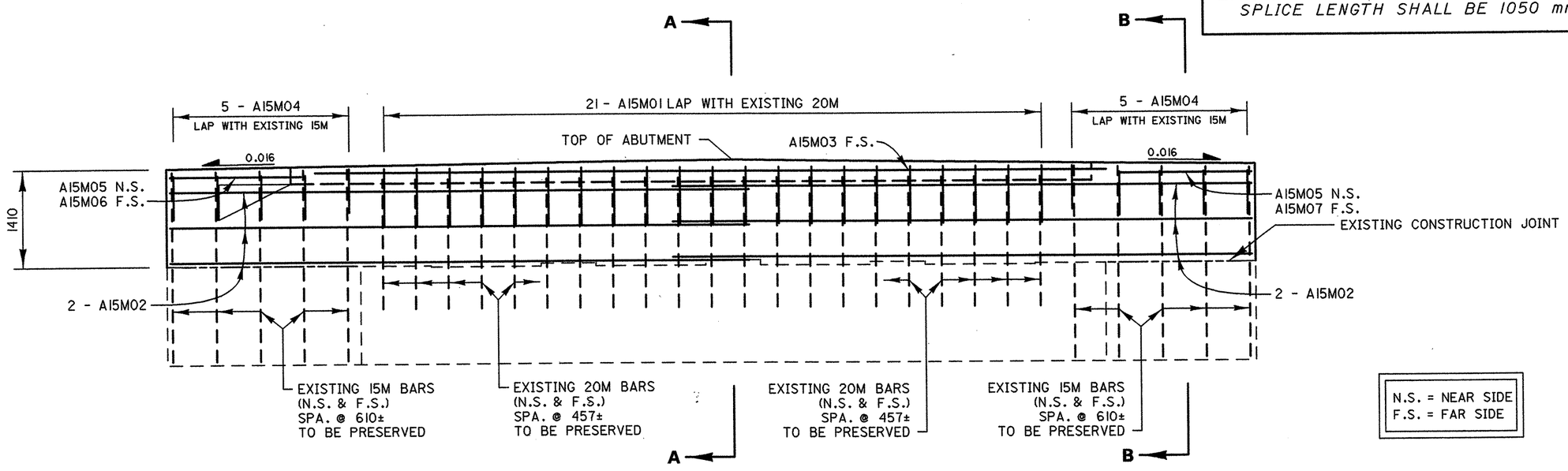

N.S. = NEAR SIDE
F.S. = FAR SIDE

ELEVATION VIEW

ALL DIMENSIONS ARE IN MILLIMETERS, UNLESS NOTED OTHERWISE

DESIGN FILE: d:\users\nconley\dgn\bridge\1996\hur060\misc.dgn
WORKSTATION: nconley DATE: 02 JAN 97

metric units

DESIGN AGENCY: DISTRICT THREE

DESIGNED NRC | DRAWN NRC | REVIEWED RDN | DATE 12-96
CHECKED | REVISED | STRUCTURAL FILE NUMBER 3904083

ABUTMENT DETAILS

HUR-303-03009 S.L.K. HUR-303-0187 S.L.M.

HUR-60-20.809
ERI-60-0.000
HUR-303-0.000

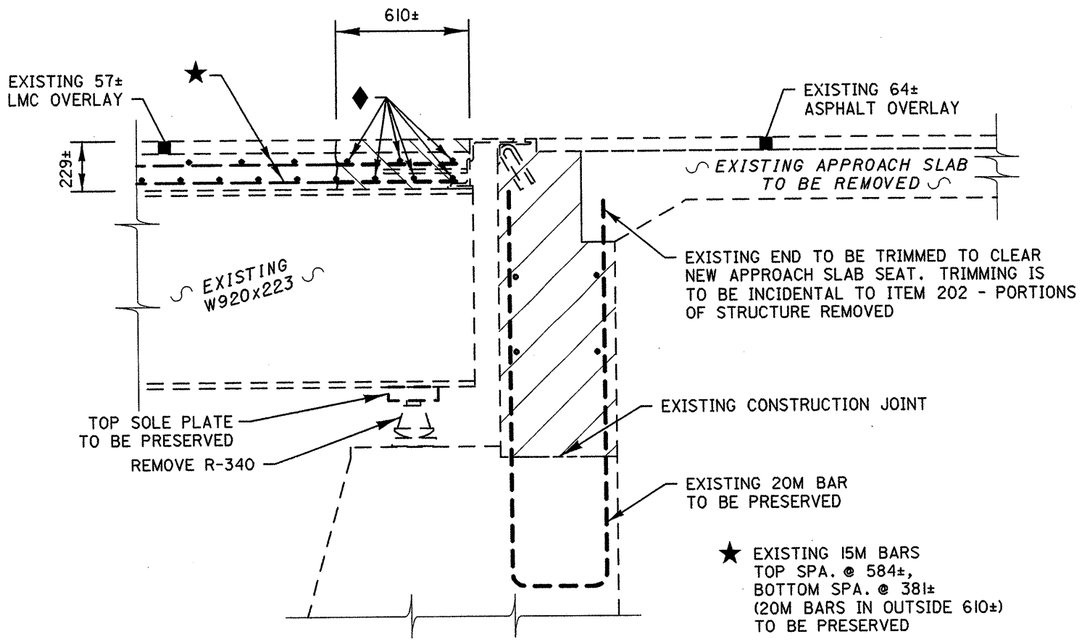

★ EXISTING 15M BARS TOP SPA. @ 584±, BOTTOM SPA. @ 381± (20M BARS IN OUTSIDE 610±) TO BE PRESERVED

♦ PRESERVE ALL EXISTING STEEL FOR TRANSVERSE STEEL LAYOUT, SEE DETAIL A ON SHEET 29

EXISTING SECTION A-A

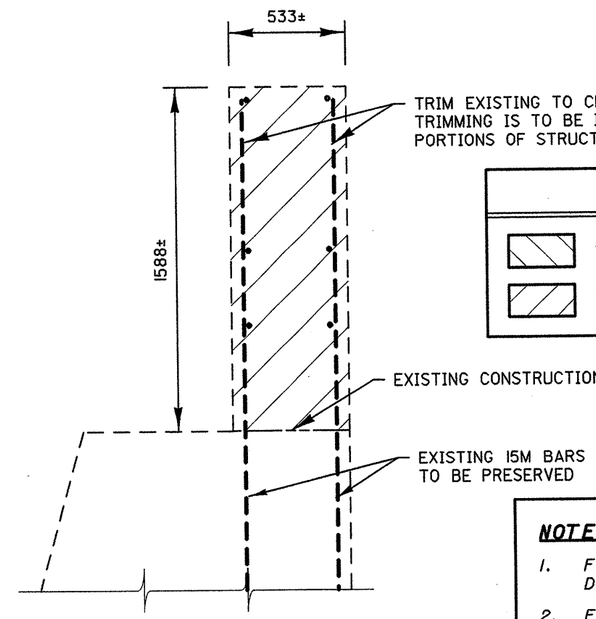

EXISTING SECTION B-B

LEGEND

- ITEM 202 - PORTIONS OF STRUCTURE REMOVED, DECK (square meter)
- ITEM 202 - PORTIONS OF STRUCTURE REMOVED, ABUTMENTS (cubic meter)

NOTES:

1. FOR REINFORCING STEEL QUANTITIES AND DIAGRAMS, SEE SHEET 29 .
2. FOR ESTIMATED QUANTITES SEE SHEET 29 .
3. ANIMAL GUARDS SHALL BE PROVIDED AT THE OUTLETS OF DRAINAGE PIPES. SEE STANDARD DRAWING DM-1.1M FOR DETAILS. THIS ITEM IS INCIDENTAL TO ITEM 518 - 150 mm PERFORATED CORRUGATED PLASTIC PIPE, 707.16.
4. FOR APPROACH SLAB DETAILS REFER TO STANDARD DRAWING AS-1-81M.
5. FOR ROCKER DETAILS REFER TO STANDARD DRAWING RB-1-55M.
6. FOR EXPANSION JOINT DETAILS REFER TO STANDARD DRAWING EXJ-4-87M.
7. POROUS BACKFILL SHALL EXTEND UPWARD TO THE PLANE OF THE SUBGRDE AND LATERALLY TO THE ENDS OF THE WINGWALLS.

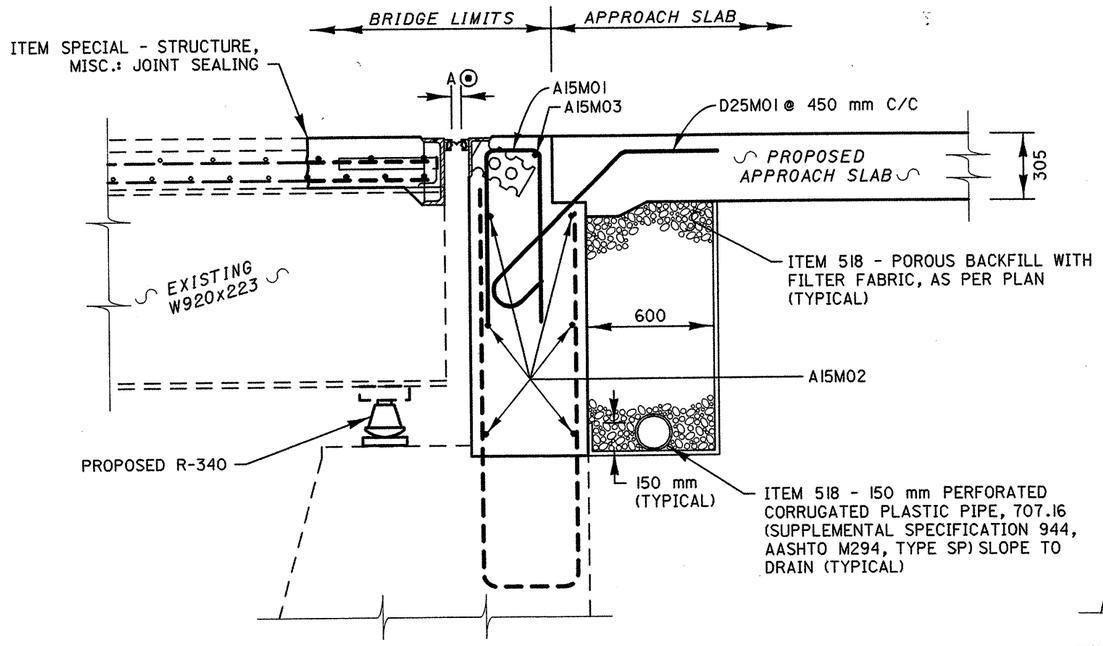

PROPOSED SECTION A-A

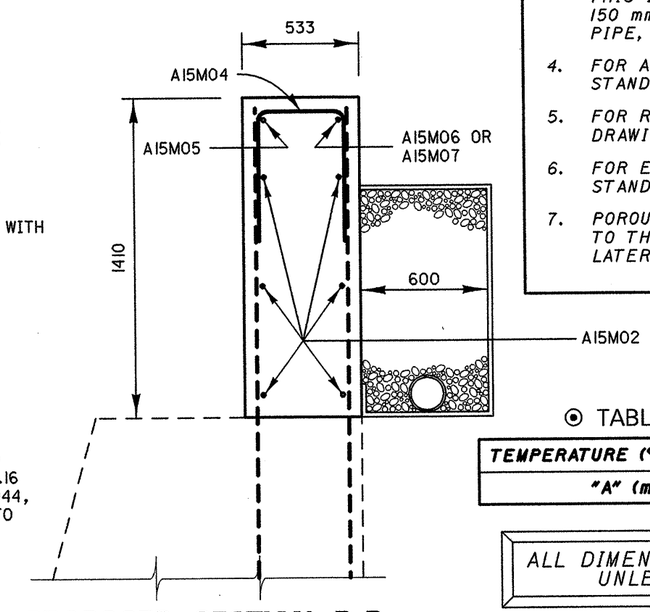

PROPOSED SECTION B-B

⊙ TABLE FOR DIMENSION "A"

TEMPERATURE (°C)	0	5	10	15	20	25	30	35
"A" (mm)	45	44	43	42	41	40	39	38

ALL DIMENSIONS ARE IN MILLIMETERS, UNLESS NOTED OTHERWISE

metric units

DESIGN AGENCY: DISTRICT THREE

DESIGNED NRC | DRAWN NRC | REVIEWED RDN 12-96 | DATE | CHECKED | REVISED | STRUCTURAL FILE NUMBER 3904083

ABUTMENT DETAILS

HUR-303-03009 S.L.K. HUR-303-0187 S.L.M.

HUR-60-20.809
ERI-60-0.000
HUR-303-0.000

28/39

DESIGN FILE: d:\users\nconley\dgn\bridge\1996\hur060\misc.dgn
WORKSTATION: nconley DATE: 02 JAN 97

ITEM 509 - EPOXY COATED REINFORCING STEEL, GRADE 400

MARK	SHAPE	LENGTH (mm)	QUANTITY	WEIGHT (kg)
A15M01	BENT	1795	42	118.4
A15M02	STRAIGHT	8050	24	303.4
A15M03	STRAIGHT	11 000	2	34.5
A15M04	BENT	1565	20	49.2
A15M05	STRAIGHT	1825	4	11.5
A15M06	STRAIGHT	1525	2	4.8
A15M07	STRAIGHT	2225	2	7.0
S15M01	BENT	1270	8	15.9
S15M02	STRAIGHT	1100	8	13.8
D25M01	BENT	1345	40	103.7
			TOTAL	663

BAR DIAGRAMS

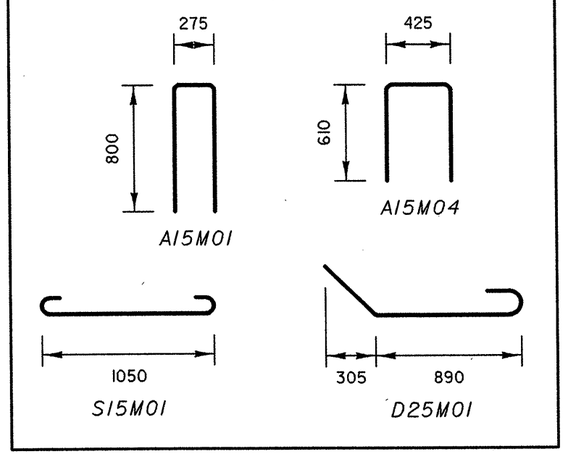

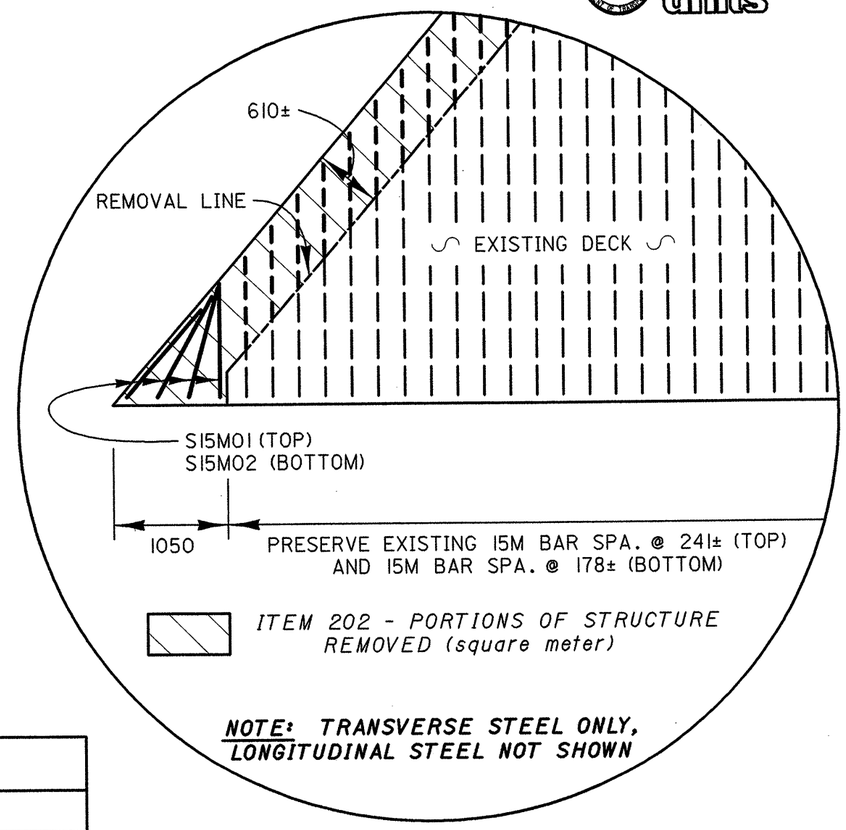

DETAIL A

ESTIMATED QUANTITIES

ITEM	QUANTITY	UNIT	DESCRIPTION
202	22	cubic meter	PORTIONS OF STRUCTURE REMOVED, ABUTMENTS
202	14	square meter	PORTIONS OF STRUCTURE REMOVED, DECK
202	10	each	REMOVAL, MISC.: ROCKERS
202	23	meter	REMOVAL, MISC.: EXPANSION JOINTS
509	663	kilogram	EPOXY COATED REINFORCING STEEL, GRADE 400
511	4	cubic meter	CLASS S CONCRETE, SUPERSTRUCTURE, AS PER PLAN
511	22	cubic meter	CLASS C CONCRETE, ABUTMENT NOT INCLUDING FOOTING, AS PER PLAN
516	23	meter	STRUCTURAL EXPANSION JOINT, INCLUDING ELASTOMERIC STRIP SEAL
516	10	each	BEARING DEVICE, MISC.: ROCKER
518	20	cubic meter	POROUS BACKFILL WITH FILTER FABRIC, AS PER PLAN
518	31	meter	150 mm PERFORATED CORRUGATED PLASTIC PIPE, 707.16
SPECIAL	23	meter	STRUCTURE, MISC.: JOINT SEALING

ALL QUANTITIES ARE CARRIED TO SHEET 4

ALL DIMENSIONS ARE IN MILLIMETERS, UNLESS NOTED OTHERWISE

metric units

DESIGN AGENCY: DISTRICT THREE
DESIGNED NRC | DRAWN NRC | REVIEWED RDN | DATE 12-96
CHECKED EAA | REVISED | STRUCTURAL FILE NUMBER 3904083

ABUTMENT DETAILS
HUR-303-03009 S.L.K. HUR-303-0187 S.L.M.

HUR-60-20.809
ERI-60-0.000
HUR-303-0.000

DESIGN FILE: d:\users\nconley\dgn\bridge\1996\hur060\misc.dgn
WORKSTATION: nconley DATE: 02 JAN 97

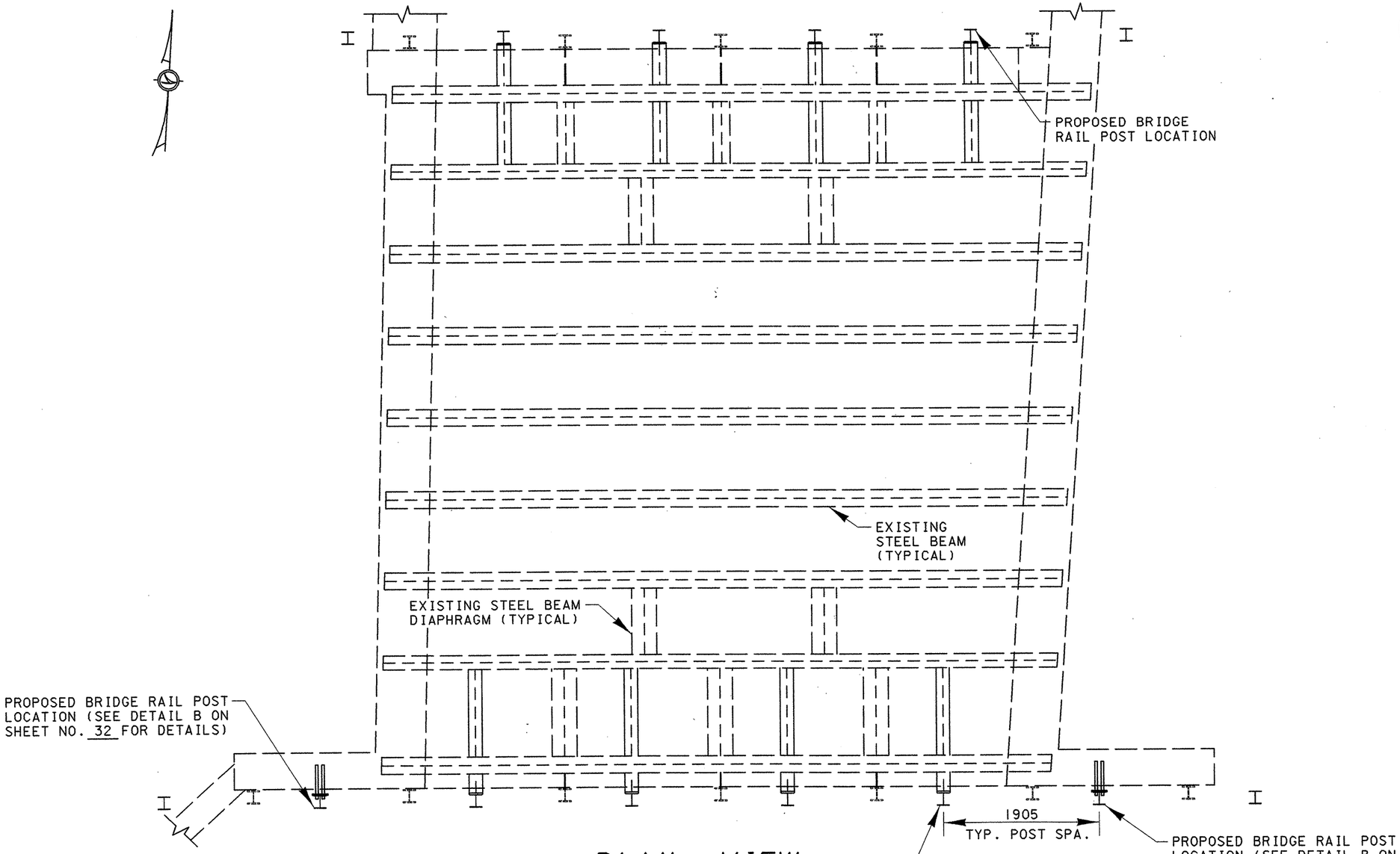

PLAN VIEW

NOTES:

1) THE EXISTING BRIDGE RAIL SHALL BE REMOVED AND NEW BRIDGE RAIL SHALL BE CONSTRUCTED ON BOTH SIDES OF THE BRIDGE
2) THE CONTRACTOR SHALL FIELD CHECK THE PROPOSED POST LAYOUT
3) SEE GUARDRAIL DETAIL SHEET, SHEET NO. 33 , FOR QUANTITIES
4) SEE TYPICAL SECTIONS ON SHEET NO. 31
5) THE TIMBER BRIDGE DECK IS NOT SHOWN IN THIS VIEW

ALL DIMENSIONS ARE IN MILLIMETERS, UNLESS NOTED OTHERWISE

metric units

DESIGN AGENCY: DISTRICT THREE

DESIGNED EJG 04-96 | DRAWN EJG | REVIEWED RDW 12-96 | DATE | STRUCTURAL FILE NUMBER 3904059

CHECKED NRC | REVISED

BRIDGE RAIL DETAIL

HUR-303-01529 S.L.K. HUR-303-0095 S.L.M.

HUR-60-20.809
ERI-60-0.000
HUR-303-0.000

30/39

DESIGN FILE:1996\HUR303\MISC.DGN

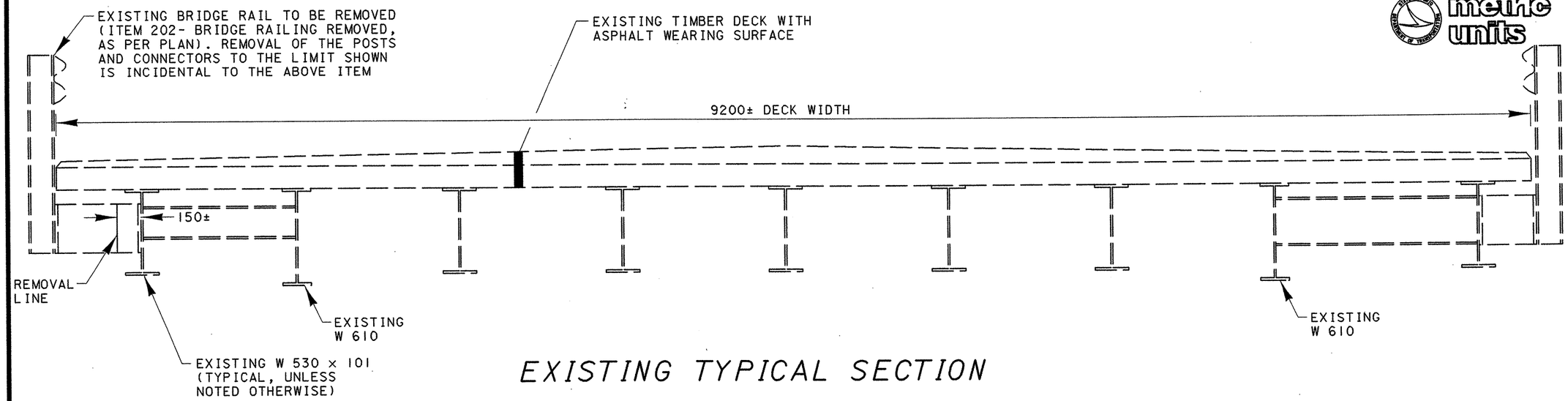

EXISTING TYPICAL SECTION

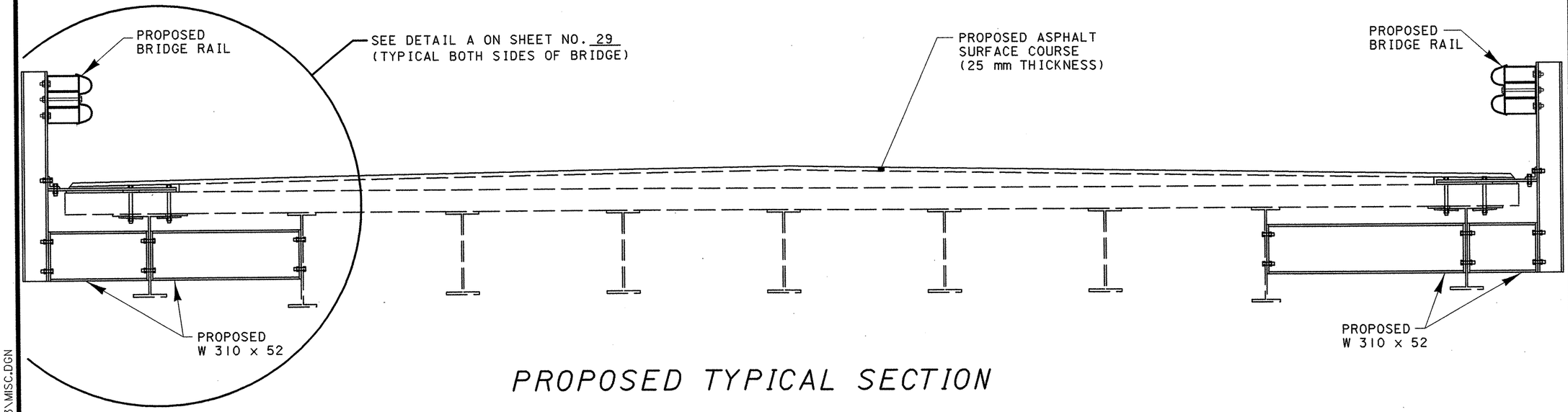

PROPOSED TYPICAL SECTION

ALL DIMENSIONS ARE IN MILLIMETERS, UNLESS NOTED OTHERWISE

DESIGN FILE:1996\HUR303\MISC.DGN

DESIGN AGENCY: DISTRICT THREE

DESIGNED E.J.G. 12-96 | DRAWN E.J.G. | REVIEWED RDN 12-96 | DATE

CHECKED NRC | REVISED | STRUCTURAL FILE NUMBER 3904059

BRIDGE RAIL DETAIL

HUR-303-01529 S.L.K. HUR-303-0095 S.L.M.

HUR-60-20.809
ERI-60-0.000
HUR-303-0.000

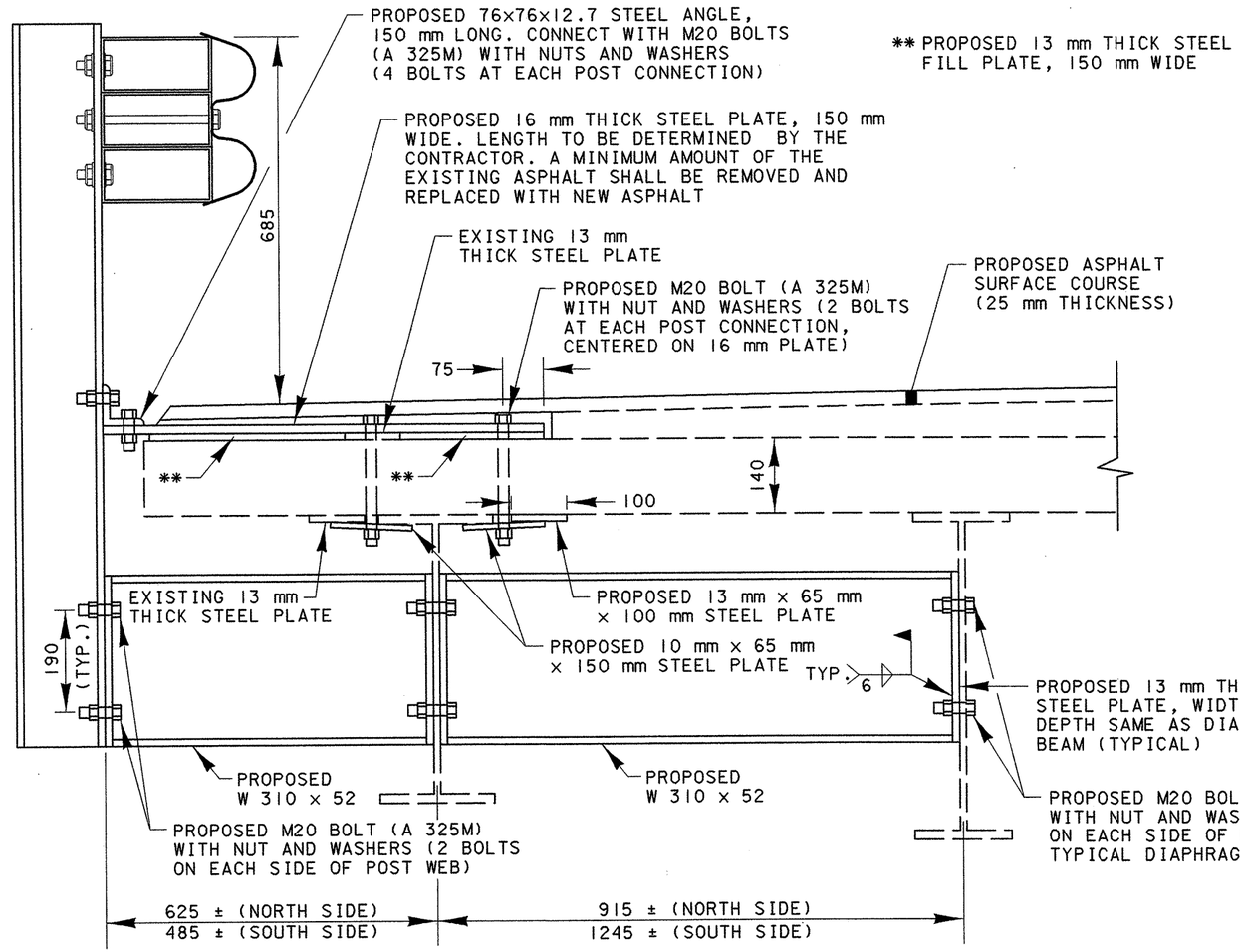

DETAIL A

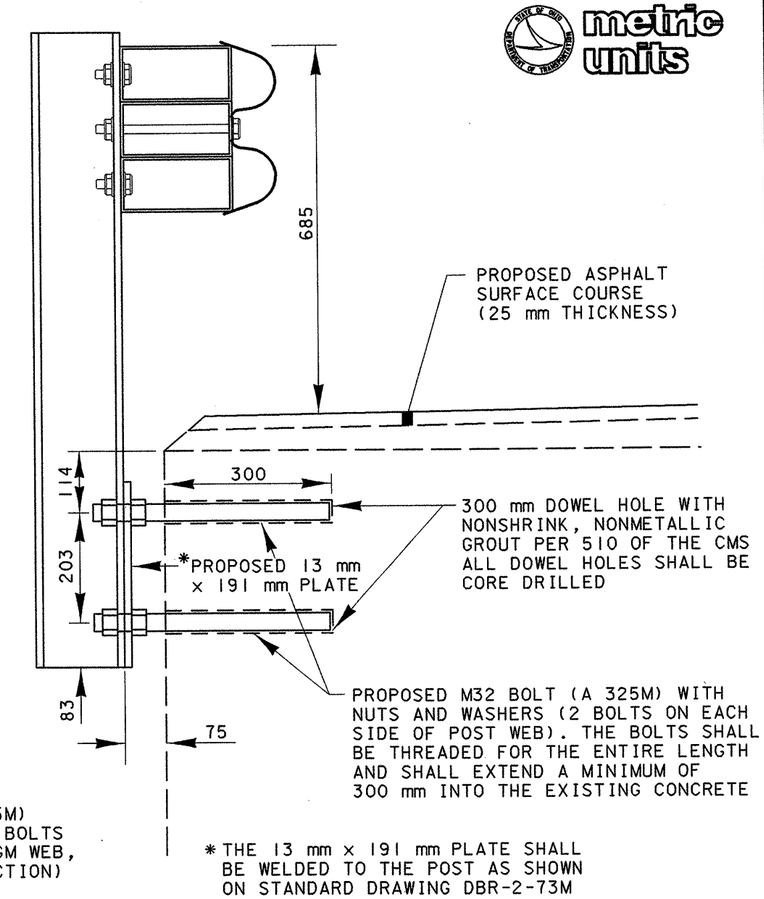

DETAIL B

NOTES:

1) ALL ITEMS REQUIRED TO CONSTRUCT THE PROPOSED BRIDGE RAIL AS SHOWN ARE INCIDENTAL TO ITEM 517- RAILING (DEEP BEAM RAIL WITH STEEL TUBULAR BACKUP AND TYPE 1 STEEL POSTS AND ANCHOR BOLTS), AS PER PLAN

2) THE CONTRACTOR SHALL FIELD VERIFY ALL DIMENSIONS PRIOR TO BEGINNING ANY WORK

3) SEE STANDARD DRAWING DBR-2-73M FOR DETAILS NOT SHOWN

4) BOLTS SHALL BE ASTM A 325M PER 711.09 OF THE CMS AND GALVANIZED PER 711.02 OF THE CMS

5) ALL STEEL BEAMS, PLATES, AND ANGLES SHALL BE ASTM A 36M AND GALVANIZED PER 711.02 OF THE CMS

6) DAMAGE TO GALVANIZED AREAS SHALL BE REPAIRED IN A MANNER SATISFACTORY TO THE ENGINEER

ALL DIMENSIONS ARE IN MILLIMETERS, UNLESS NOTED OTHERWISE

metric units

DESIGN AGENCY: DISTRICT THREE

DESIGNED	DRAWN	REVISED	STRUCTURAL FILE NUMBER
EJG 12-96	EJG	RDN 12-96	3904059
CHECKED	REVISED		
NRC			

BRIDGE RAIL DETAIL

HUR-303-01529 S.L.K. HUR-303-0095 S.L.M.

HUR-60-20.809
ERI-60-0.000
HUR-303-0.000

32/39

DESIGN FILE:1996\HUR303\MISC.DGN

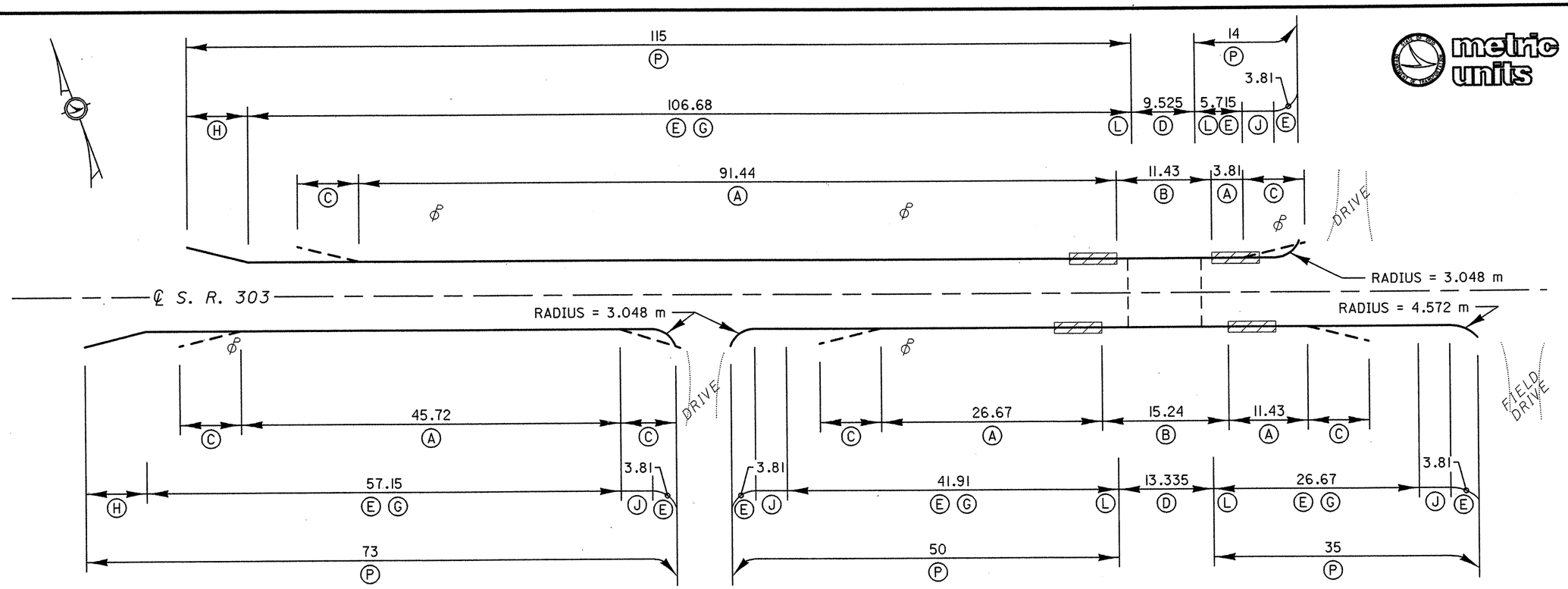

LOCATION	ITEM	DESCRIPTION	UNIT	QUANTITY		TOTAL QUANTITY
				LEFT	RIGHT	
A	202	GUARDRAIL REMOVED	meter	95.25	83.82	179.07
B	202	BRIDGE RAILING REMOVED, AS PER PLAN	meter	11.43	15.24	26.67
C	202	ANCHOR ASSEMBLY REMOVED, TYPE A	each	2	4	6
	203	EMBANKMENT, AS PER PLAN	cubic meter	2	2	4
D	517	RAILING (DEEP BEAM RAIL WITH STEEL TUBULAR BACKUP AND TYPE I STEEL POSTS AND ANCHOR BOLTS), AS PER PLAN	meter	9.525	13.335	22.86
E	606	GUARDRAIL, TYPE 5	meter	116.205	137.16	253.365
G	606	GUARDRAIL POST, 2.75 METER	each	56	66	122
H	606	ANCHOR ASSEMBLY, TYPE A	each	1	1	2
J	606	ANCHOR ASSEMBLY, TYPE T	each	1	3	4
L	606	BRIDGE TERMINAL ASSEMBLY, TYPE 4	each	2	2	4
N	802	BARRIER REFLECTOR, TYPE A	each	6	7	13
P	SPECIAL	RESHAPING BERM	meter	129	158	287

ALL QUANTITIES ARE CARRIED TO ESTIMATED QUANTITIES SHEET, SHEET NOS. 23, 24 & 25 .

NOTE:
SEE SHEET NOS. 30, 31 & 32 FOR BRIDGE RAIL DETAILS

ITEM 203 - EMBANKMENT, AS PER PLAN

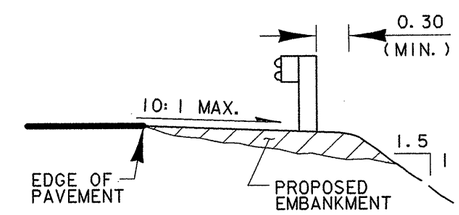

TYPICAL SECTION

ALL DIMENSIONS ARE IN METERS, UNLESS NOTED OTHERWISE

DESIGN FILE: d:\users\nconley\dgn\bridge\1996\hur060\grail.dgn
WORKSTATION: nconley DATE: 31 DEC 96

metric units

DESIGN AGENCY: DISTRICT THREE

DESIGNED MB | DRAWN NRC | REVIEWED RDN 12-96 | DATE | STRUCTURAL FILE NUMBER 3904059
CHECKED EAL | REVISED

GUARDRAIL DETAIL

HUR-303-01529 S.L.K. HUR-303-0095 S.L.M.

HUR-60-20.809
ERI-60-0.000
HUR-303-0.000

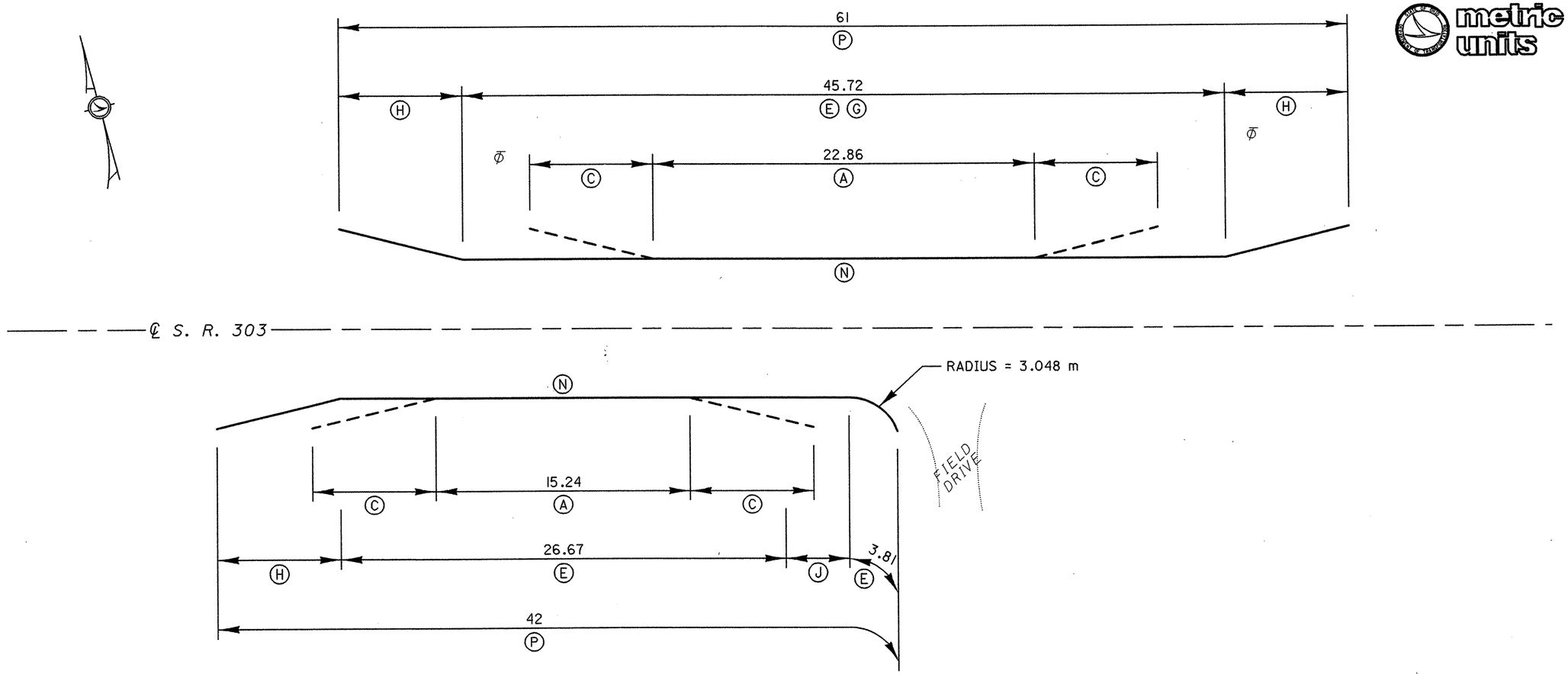

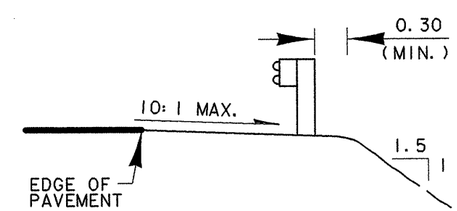

TYPICAL SECTION

LOCATION	ITEM	DESCRIPTION	UNIT	QUANTITY		TOTAL QUANTITY
				LEFT	RIGHT	
A	202	GUARDRAIL REMOVED	meter	22.86	15.24	38.1
C	202	ANCHOR ASSEMBLY REMOVED, TYPE A	each	2	2	4
E	606	GUARDRAIL, TYPE 5	meter	45.72	26.67	72.39
G	606	GUARDRAIL POST, 2.75 METER	each	24		24
H	606	ANCHOR ASSEMBLY, TYPE A	each	2	1	3
J	606	ANCHOR ASSEMBLY, TYPE T	each		1	1
N	802	BARRIER REFLECTOR, TYPE A	each	3	3	6
P	SPECIAL	RESHAPING BERM	meter	61	42	103

ALL QUANTITIES ARE CARRIED TO ESTIMATED QUANTITIES SHEET, SHEET NOS. 23, 24 & 25 .

ALL DIMENSIONS ARE IN METERS, UNLESS NOTED OTHERWISE

DESIGN FILE: d:\users\nconley\dgn\bridge\1996\hur060\grail.dgn
WORKSTATION: nconley DATE: 31 DEC 96

DESIGN AGENCY: DISTRICT THREE
DESIGNED MB | DRAWN NRC | REVIEWED RDN | DATE 12-96
CHECKED EJK | REVISED | STRUCTURAL FILE NUMBER

GUARDRAIL DETAIL

HUR-303-2.446 S.L.K. HUR-303-1.52 S.L.M.

HUR-60-20.809
ERI-60-0.000
HUR-303-0.000

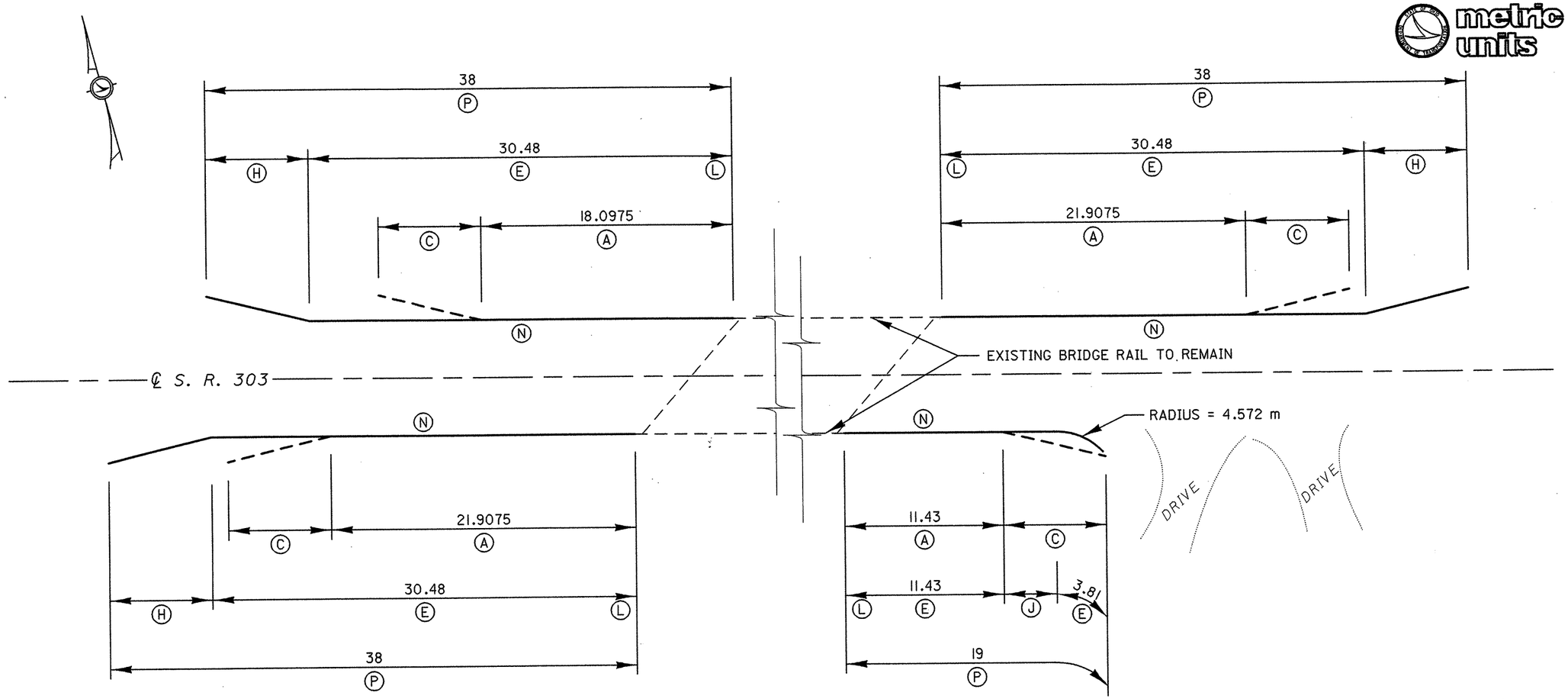

SEE SHEET 26 FOR ADDITIONAL WORK.

LOCATION	ITEM	DESCRIPTION	UNIT	QUANTITY		TOTAL QUANTITY
				LEFT	RIGHT	
A	202	GUARDRAIL REMOVED	meter	40.005	33.3375	73.3425
C	202	ANCHOR ASSEMBLY REMOVED, TYPE A	each	2	2	4
E	606	GUARDRAIL, TYPE 5	meter	60.96	45.72	106.68
H	606	ANCHOR ASSEMBLY, TYPE A	each	2	1	3
J	606	ANCHOR ASSEMBLY, TYPE T	each		1	1
L	606	BRIDGE TERMINAL ASSEMBLY, TYPE 4	each	2	2	4
N	802	BARRIER REFLECTOR, TYPE A	each	4	3	7
P	SPECIAL	RESHAPING BERM	meter	76	57	133

ALL QUANTITIES ARE CARRIED TO ESTIMATED QUANTITIES SHEET, SHEET NOS. 23, 24 & 25 .

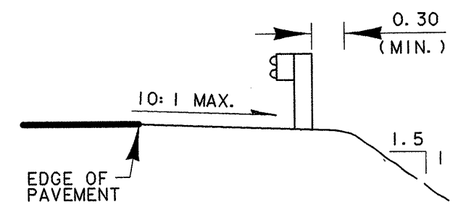

TYPICAL SECTION

ALL DIMENSIONS ARE IN METERS, UNLESS NOTED OTHERWISE

DESIGN FILE: d:\users\nconley\dgn\bridge\1996\hur060\grail.dgn
WORKSTATION: nconley DATE: 31 DEC 96

DESIGN AGENCY: DISTRICT THREE
DESIGNED: MB
CHECKED: SKH
DRAWN: NRC
REVISED:
REVIEWED: RDW
DATE: 12-96
STRUCTURAL FILE NUMBER: 3904083

GUARDRAIL DETAIL
HUR-303-03009 S.L.K. HUR-303-0187 S.L.M.

HUR-60-20.809
ERI-60-0.000
HUR-303-0.000

35
39

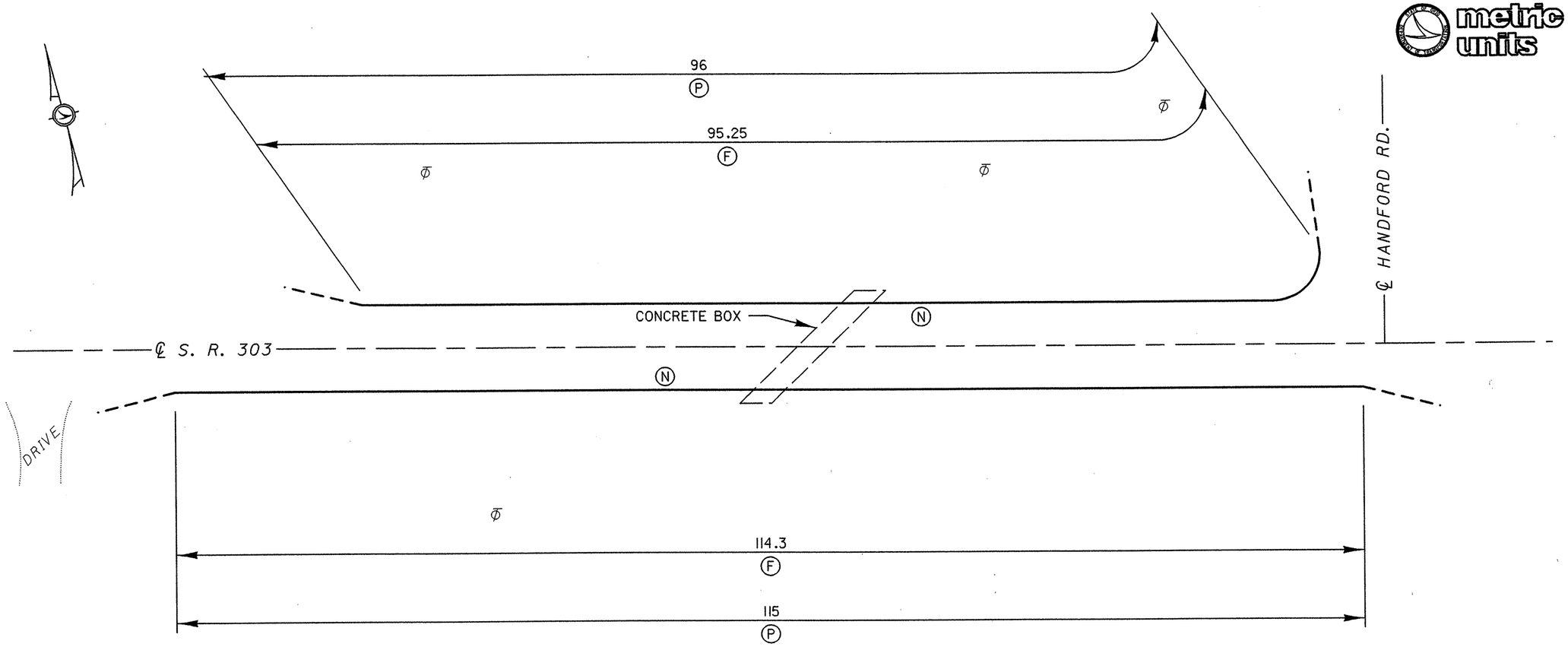

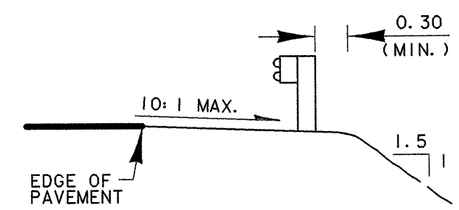

TYPICAL SECTION

LOCATION	ITEM	DESCRIPTION	UNIT	QUANTITY		TOTAL QUANTITY
				LEFT	RIGHT	
(F)	606	RAISING TYPE 5 GUARDRAIL	meter	95.25	114.3	209.55
(N)	802	BARRIER REFLECTOR, TYPE A	each	5	5	10
(P)	SPECIAL	RESHAPING BERM	meter	96	115	211

ALL QUANTITIES ARE CARRIED TO ESTIMATED QUANTITIES SHEET, SHEET NOS. 24 & 25 .

ALL DIMENSIONS ARE IN METERS, UNLESS NOTED OTHERWISE

metric units

DESIGN AGENCY: DISTRICT THREE

DESIGNED MB | DRAWN NRC | REVIEWED RDN DATE 12-96 | STRUCTURAL FILE NUMBER 3904105

CHECKED EJH | REVISED

GUARDRAIL DETAIL

HUR-303-03235 S.L.K. HUR-303-0201 S.L.M.

HUR-60-20.809
ERI-60-0.000
HUR-303-0.000

36/39

DESIGN FILE: d:\users\nconley\dgn\bridge\1996\hur060\grdtl.dgn
WORKSTATION: nconley DATE: 31 DEC 96

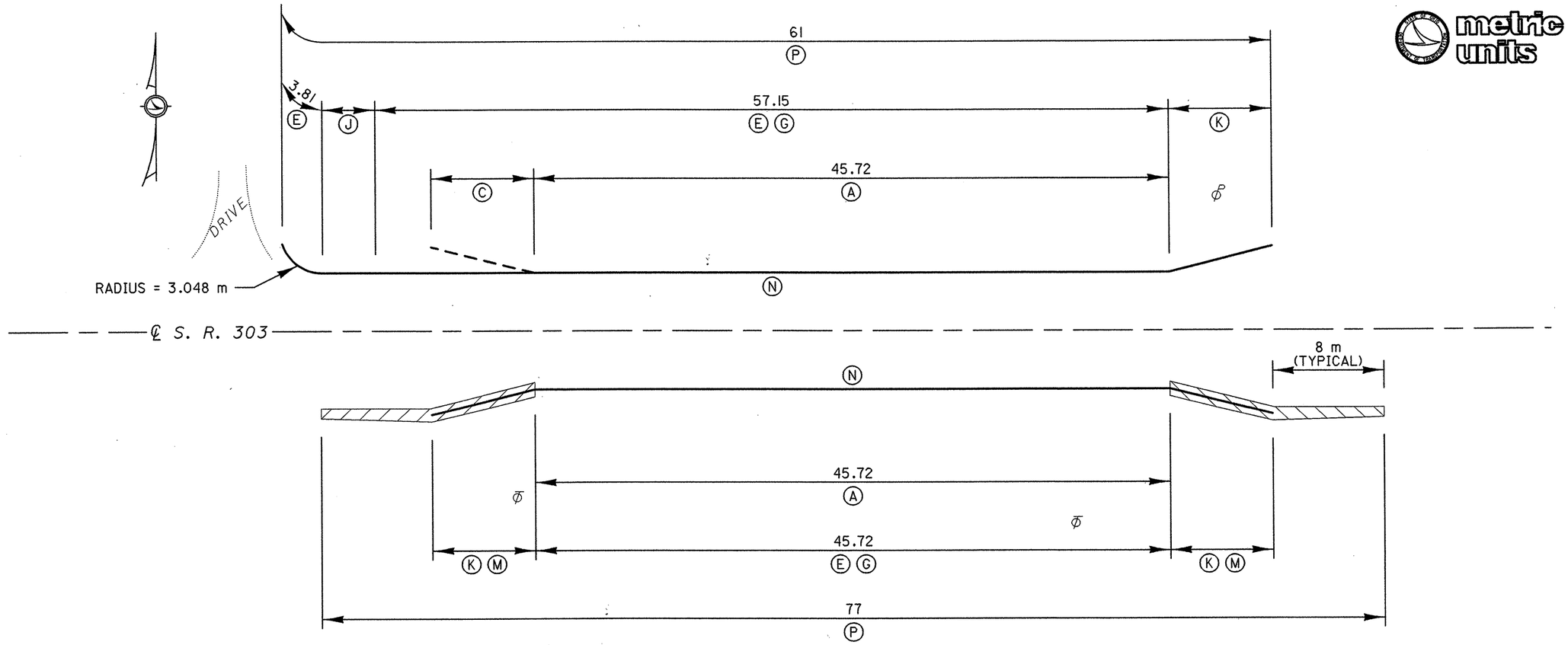

metric units

LOCATION	ITEM	DESCRIPTION	UNIT	QUANTITY		TOTAL QUANTITY
				LEFT	RIGHT	
(A)	202	GUARDRAIL REMOVED	meter	45.72	45.72	91.44
(C)	202	ANCHOR ASSEMBLY REMOVED, TYPE A	each	1		1
	203	EMBANKMENT, AS PER PLAN	cubic meter	4	4	8
(E)	606	GUARDRAIL, TYPE 5	meter	60.96	45.72	106.68
(G)	606	GUARDRAIL POST, 2.75 METER	each	30	24	54
(J)	606	ANCHOR ASSEMBLY, TYPE T	each	1		1
(K)	606	ANCHOR ASSEMBLY REBUILT, TYPE A, AS PER PLAN	each	1	2	3
(M)	SPECIAL	915 mm CONCRETE ANCHOR	each		2	2
(N)	802	BARRIER REFLECTOR, TYPE A	each	3	4	7
(P)	SPECIAL	RESHAPING BERM	meter	61	77	138

ALL QUANTITIES ARE CARRIED TO ESTIMATED QUANTITIES SHEET, SHEET NOS. 23, 24 & 25 .

ITEM 203 - EMBANKMENT, AS PER PLAN

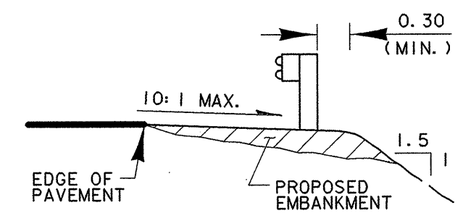

TYPICAL SECTION

ALL DIMENSIONS ARE IN METERS, UNLESS NOTED OTHERWISE

DESIGN FILE: d:\users\nconley\dgn\bridge\1996\hur060\grdl.dgn
WORKSTATION: nconley DATE: 31 DEC 96

DESIGN AGENCY: DISTRICT THREE

DESIGNED MB | DRAWN NRC | REVIEWED RDN 12-96 | DATE
CHECKED | REVISED | STRUCTURAL FILE NUMBER

GUARDRAIL DETAIL

HUR-303-3.991 S.L.K. HUR-303-2.48 S.L.M.

HUR-60-20.809
ERI-60-0.000
HUR-303-0.000

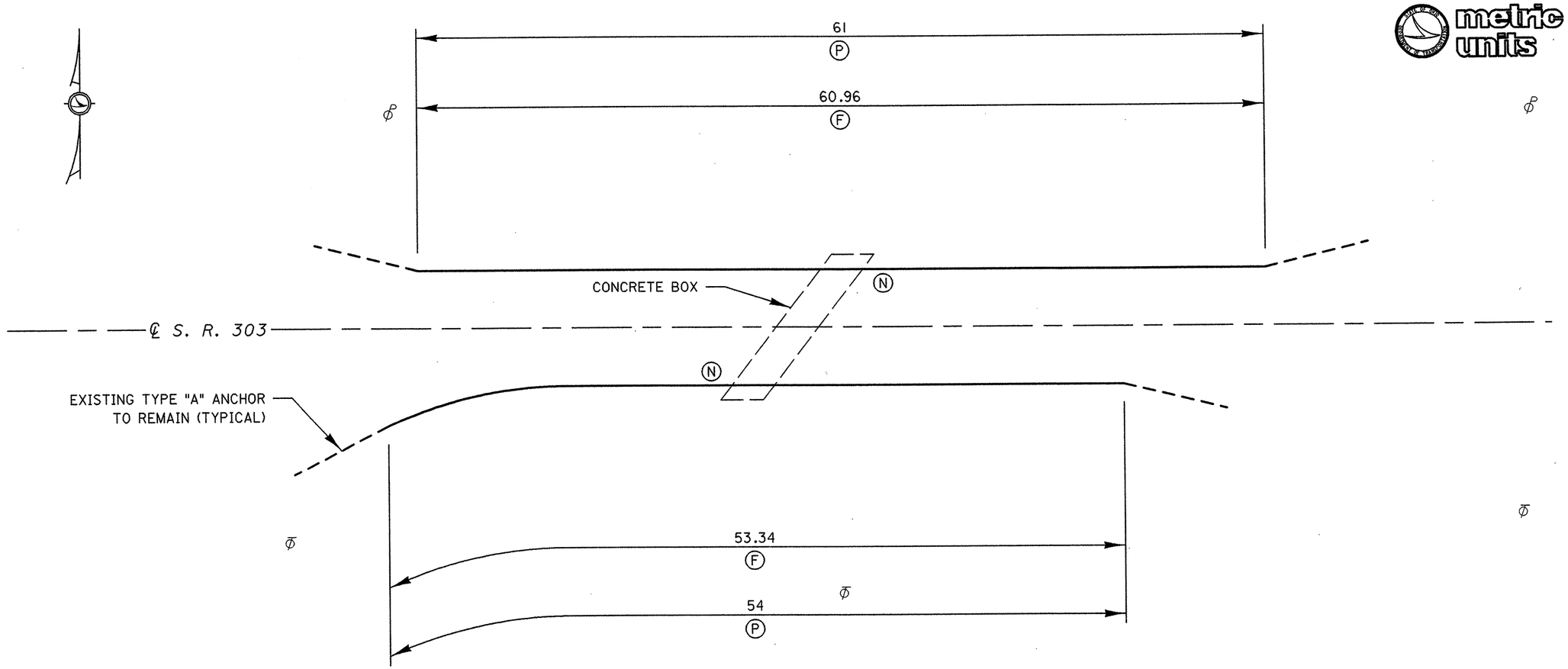

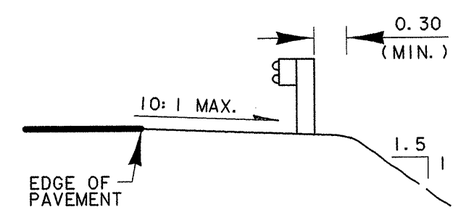

TYPICAL SECTION

LOCATION	ITEM	DESCRIPTION	UNIT	QUANTITY		TOTAL QUANTITY
				LEFT	RIGHT	
F	606	RAISING TYPE 5 GUARDRAIL	meter	60.96	53.34	114.3
N	802	BARRIER REFLECTOR, TYPE A	each	4	3	7
P	SPECIAL	RESHAPING BERM	meter	61	54	115

ALL QUANTITIES ARE CARRIED TO ESTIMATED QUANTITIES SHEET, SHEET NOS. 24 & 25 .

ALL DIMENSIONS ARE IN METERS, UNLESS NOTED OTHERWISE

DESIGN FILE: d:\users\nconley\dgn\bridge\1996\hur060\grail.dgn
WORKSTATION: nconley DATE: 31 DEC 96

metric units

DESIGN AGENCY: DISTRICT THREE

DESIGNED MB | DRAWN NRC | REVIEWED RDW | DATE 12-96
CHECKED | REVISED | STRUCTURAL FILE NUMBER 3904156

GUARDRAIL DETAIL

HUR-303-04442 S.L.K. HUR-303-0276 S.L.M.

HUR-60-20.809
ERI-60-0.000
HUR-303-0.000

38
39

AUXILIARY & LONG LINE MARKINGS

metric units

PART	ROUTE	FROM S.L.K.	FROM	TO S.L.K.	TO	202 RAISED PAVEMENT MARKER REMOVED FOR STORAGE each	LANE WIDTH m	642, TYPE 2 EDGE LINE HIGHWAY kilometers km	EDGE LINE TOTAL (PAY QUANT.) km	LANE LINE km	CENTER LINE SOLID LINE EQUIVALENT km	CENTER LINE TOTAL (PAY QUANT.) km	644 AUXILIARY MARKINGS (740.04) CHANNELIZING LINE 200mm m	STOP LINE 600mm m	CROSSWALK LINE 300mm m	TRANSVERSE LINE 600mm m	RAILROAD SYMBOL MARKING each	SCHOOL SYMBOL MARKING 1800mm each	SCHOOL SYMBOL MARKING 2500mm each	PARKING LOT STALL MARKING m	LANE ARROW TURN LEFT each	LANE ARROW TURN RIGHT each	LANE ARROW THRU each	LANE ARROW COMBINATION each	WORD ON PAVEMENT "ONLY" 1800mm each	WORD ON PAVEMENT "ONLY" 2500mm each	HANDICAP SYMBOL MARKING each	SPECIAL AIR SPEED ZONE MARKING each	614 TEMPORARY CENTER LINE, CLASS II, 642 PAINT km	TEMPORARY LANE LINE, CLASS II, 642 PAINT km
A	HUR-60	20.809	SR-303 Wakeman S. Corp. Line	25.685	Erie County Line	191	3.3	4.88	9.76		16.89	4.88		13				2											9.76	
B	ERI-60	0.000	Huron County Line	5.552	SR113	408	3.3	5.55	11.10		7.32	5.55		30															11.10	
C	HUR-303	0.000	US-20	5.922	Lorain County Line	441	3.3	6.12	12.24		7.39	6.12		36															12.24	
	TOTAL PROJECT					1040		16.55	33.10		31.60	16.55		79				2											33.10	

RAISED PAVEMENT MARKERS

LOCATION PART	ROUTE	s.l.k. SECTION FROM	TO	DETAIL	RPM	621 RAISED PAVEMENT MARKER, INSTALLATION ONLY each	PRISMATIC RETRO REFLECTOR each	RAISED PAVEMENT MARKER CASTING, INSTALLATION ONLY each	PRISMATIC RETRO-REFLECTOR TYPES ONE - WAY WHITE	ONE - WAY YELLOW	TWO - WAY YELLOW/ YELLOW	TWO - WAY WHITE/ RED	TWO - WAY YELLOW/ RED	REMARKS
A	HUR-60	22.338	23.947	GAP	66	66					66			Continuous Route Treatment
		23.947	24.076	16	41	41					41			Curve @ 6 meter Spacings
		24.076	25.041	GAP	28	28					28			Continuous Route Treatment
		25.041	25.460	16	42	42					42			Curve @ 6 meter Spacings
		25.460	25.685	GAP	14	14					14			Continous Route Treatment
		TOTAL PART A			191	191					191			
B	ERI-60	0.000	3.122	GAP	128	128					128			Continous Route Treatment
		3.122	4.233	16	121	121					121			2 Reverse Curves @ 6 meter Spacings
		4.233	4.410	GAP	7	7					7			Continous Route Treatment
		4.410	5.230	16	84	84					84			3 Curves @ 6 meter Spacings
		5.230	5.552	6	27	11	16	16	16		11			Stop Approach @ SR 113 (South Approach)
		TOTAL PART B			367	351	16	16	16		351			
C	HUR-303	0.000	0.322	6	27	11	16	16	16		11			Stop Approach @ US 20
		0.322	0.612	GAP	12	12					12			Continuous Route Treatment
		0.612	1.255	6	54	22	32	32	32		22			Stop Approaches @ SR 60
		1.255	1.706	15	37	37					37			Two Curves Plus Fill-Ins
		1.706	3.203	GAP	61	61					61			Continous Route Treatment
		3.203	3.718	15	43	43					43			4 Curves Plus Fill-Ins
		3.718	5.922	GAP	90	90					90			Continous Route Treatment
		TOTAL PART C			324	276	48	48	48		276			
		TOTAL PROJECT			882	818	64	64	64		818			

DETAIL	
1	MULTILANE DIVIDED
1	TYPICAL SPACING
2	TAPERED ACCEL LANE
3	DECELERATION LANE
4	PARALLEL ACEL LANE
5	MULTILANE DIVIDED/ EXPRESSWAY
6	STOP APPROACH
7	1 LANE APPR. W/LT. TURN LANE
8	THRU APPROACH
9	2 LANE APPR. W/LT TURN LANE
10	4 LANE DIVIDED TO 2 LANE TRANSITION
11	4 LANE UNDIVIDED TO 2 LANE TRANSITION
12	TWO LANE NARROW BRIDGE
13	TWO WAY LEFT TURN LANE
14	ONE LANE BRIDGE
15	HORIZONTAL CURVE
16	HORIZONTAL CURVE ALT.
17	STOP APPROACH ALT.
GAP	CENTERLINE AT 24m TYP.

calculated T&W checked JLB

PLAN NO.

PAVEMENT MARKING INFORMATION

HUR-60-10.809
ERI-60-0.000
HUR-303-0.000

39
39

DESIGN FILE: h:\dgn\ops\1997\hs60h303.dgn
WORKSTATION: rwatkins DATE: 27 DEC 96