STATE OF OHIO DEPARTMENT OF TRANSPORTATION

LOCATION MAP

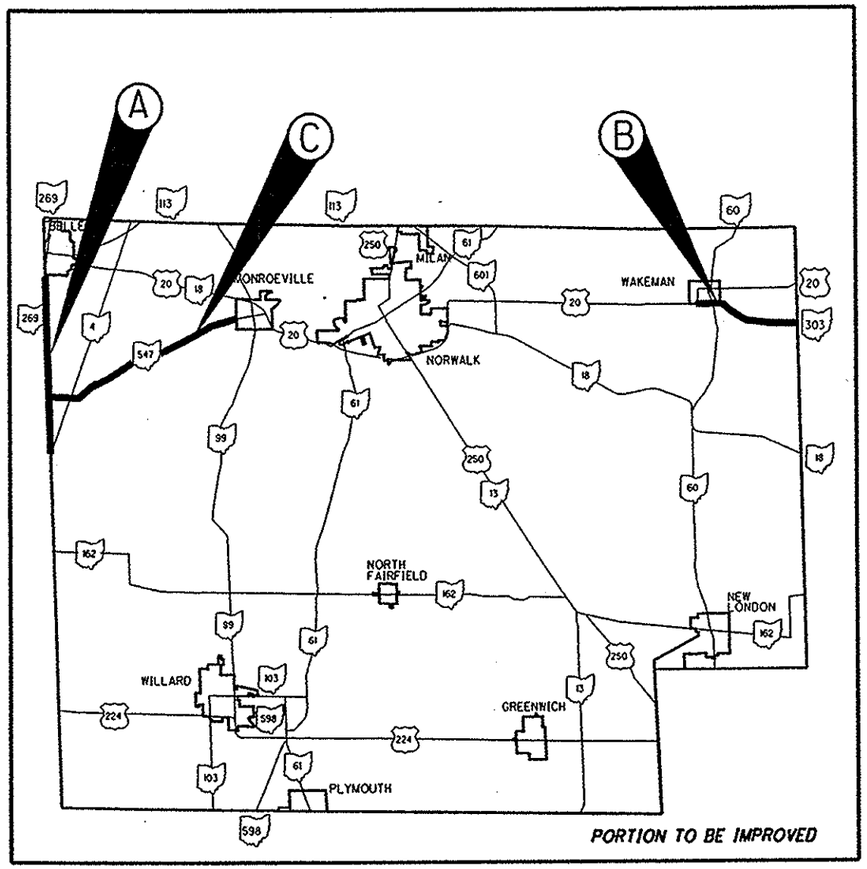

LATITUDE: N 41° 14' 11" LONGITUDE: W 82° 41' 23"

HUR-269/VAR-0.00/VAR

VILLAGE OF WAKEMAN
LYME TOWNSHIP
RIDGEFIELD TOWNSHIP
SHERMAN TOWNSHIP
WAKEMAN TOWNSHIP
HURON COUNTY

INDEX OF SHEETS

1	-	TITLE SHEET
2	-	TYPICAL SECTIONS
2	-	STRAIGHT LINE DIAGRAM
3-4	-	GENERAL NOTES
5	-	TRAFFIC CONTROL FOR POST CHIP SEAL OPERATIONS
6	-	GENERAL SUMMARY
7	-	PAVEMENT DATA
8	-	PAVEMENT MARKING DATA

PROJECT DESCRIPTION

THIS PROJECT WILL INCLUDE PAVEMENT REPAIR, CHIP SEALING, AND PAVEMENT MARKINGS.

PROJECT EARTH DISTURBED AREA = N/A (MAINTENANCE PROJECT)
ESTIMATED CONCTRACTOR EARTH DISTURBED AREA = N/A (MAINTENANCE PROJECT)
NOTICE OF INTENT EARTH DISTURBED AREA = N/A (MAINTENANCE PROJECT)

2008 SPECIFICATIONS

THE STANDARD 2008 SPECIFICATIONS OF THE STATE OF OHIO DEPARTMENT OF TRANSPORTATION, INCLUDING CHANGES AND SUPPLEMENTAL SPECIFICATIONS LISTED IN THE PLANS AND THE PROPOSAL SHALL GOVERN THESE IMPROVEMENTS.

I HEREBY APPROVE THESE PLANS AND DECLARE THAT THE MAKING OF THESE IMPROVEMENTS WILL NOT REQUIRE THE CLOSING OF THE HIGHWAY AND PROVISIONS FOR THE MAINTENANCE AND SAFETY OF TRAFFIC WILL BE AS INDICATED IN THE PLAN AND PROPOSAL.

UNDERGROUND UTILITIES
CONTACT BOTH SERVICES
CALL TWO WORKING DAYS
BEFORE YOU DIG
CALL
1-800-362-2764
(TOLL FREE)
OHIO UTILITIES PROTECTION SERVICE
NON-MEMBERS
MUST BE CALLED DIRECTLY
OIL & GAS PRODUCERS PROTECTIVE SERVICE CALL: 1-800-929-0988

PLAN PREPARED BY:
DISTRICT THREE
PRODUCTION DEPARTMENT

ENGINEERS SEAL:
STATE OF OHIO
BRUCE A. DALTON
E-53790
REGISTERED
PROFESSIONAL ENGINEER
SIGNED: Bruce Dalton
DATE: 5/19/09

STANDARD CONSTRUCTION DRAWINGS				SUPPLEMENTAL SPECIFICATIONS	
MT-97.10	04-17-09	TC-41.20	01-19-01	800	04-17-09
MT-97.11	04-17-09	TC-42.20	07-16-04	832	05-05-09
MT-99.20	01-16-09	TC-65.10	01-21-05	882	01-16-09
MT-101.90	01-16-09	TC-65.11	01-21-05		
MT-105.10	01-16-09	TC-71.10	01-16-09		
		TC-73.10	01-19-01		
DM-4.3	04-17-09				
DM-4.4	04-17-09				
				SPECIAL PROVISIONS	

APPROVED John Hart
DATE 5/19/09 DISTRICT DEPUTY DIRECTOR

APPROVED Jolene M. Molitoris Jr
DATE 5-26-09 DIRECTOR, DEPARTMENT OF TRANSPORTATION

FEDERAL PROJECT NO. E090(749)
PID NO. 80055
CONSTRUCTION PROJECT NO.
RAILROAD INVOLVEMENT NONE
HUR-269/VAR-0.00/VAR
1/8

HUR - SR-269/VAR-0.00/VAR
090410 PID - 80055
Dist 3 8/12/2009

DESIGN FILE: $$$$$.DGNFILESPECIFICAT
WORKSTATION: $TERMINAL$ DATE: $$$$

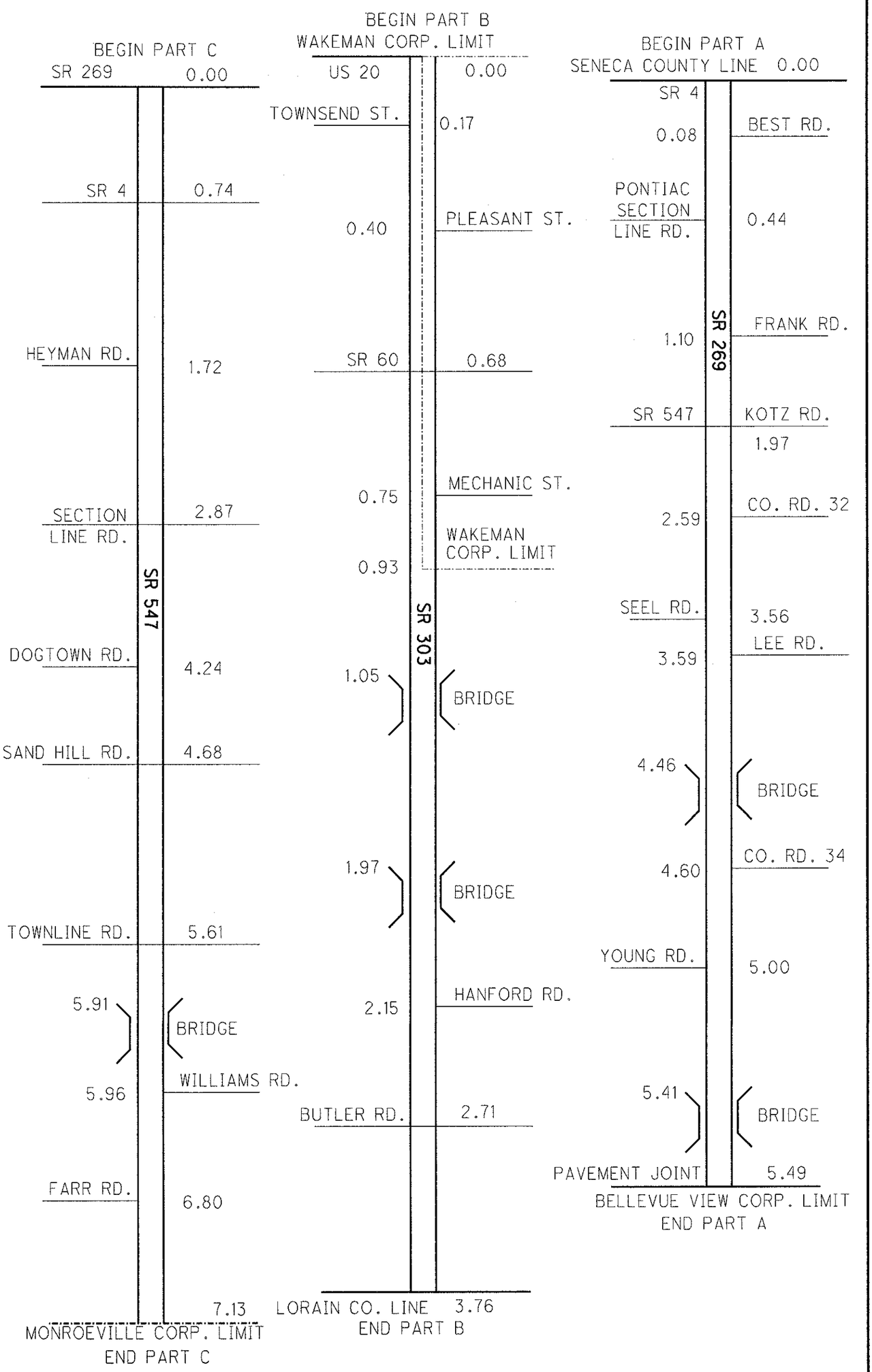

TYPICAL 1

OVERALL PAVEMENT WIDTH AS SHOWN ON THE PAVEMENT DATA SHEET

ITEM 882 SINGLE CHIP SEAL WITH TWO YEAR WARRANTY

TYPICAL & STRAIGHT LINE DIAGRAMS

CALCULATED CVH
CHECKED BAD

ROUTINE MAINTENANCE

BETWEEN THE TIME THAT BIDS ARE TAKEN AND THE START OF CONSTRUCTION, THE MAINTAINING AGENCY MAY ENTER UPON THE PROJECT AND PERFORM ROUTINE MAINTENANCE SUCH AS CRACK SEALING, PATCHING, AND BERM AND SHOULDER REPAIR. THE EFFECTS, IF ANY, OF THE PERFORMANCE OF ROUTINE MAINTENANCE SHALL BE CONSIDERED AS INHERENT IN WORK OF THE CHARACTER PROVIDED FOR IN THE PLAN AND THE RESULTING CONDITIONS SHALL NOT BE CONSIDERED AS DIFFERING MATERIALLY FROM THOSE EXISTING AT THE TIME BIDS WERE TAKEN.

CONTRACTOR REQUIREMENTS

TWO WAY TRAFFIC SHALL BE MAINTAINED AT ALL TIMES EXCEPT THAT ONE-WAY TRAFFIC WILL BE PERMITTED FOR MINIMUM PERIODS OF TIME CONSISTENT WITH THE REQUIREMENTS OF THE SPECIFICATIONS FOR PROTECTION OF COMPLETED CHIP SEAL COURSE

THE CONTRACTOR SHALL AVOID PLACING CHIP SEAL ON ANY MONUMENT BOXES, VALVE BOXES, MANHOLES, ETC. THAT EXIST IN THE PAVEMENT SURFACE.

THE CONTRACTOR IS INSTRUCTED TO OMIT CHIP SEALING ON STRUCTURES WHICH HAVE CONCRETE DECKS OR CONCRETE OVERLAYS.

ITEM 253, PAVEMENT REPAIR, AS PER PLAN
ITEM 253, PAVEMENT REPAIR, MISC.: PARTIAL DEPTH

THESE ITEMS OF WORK SHALL CONSIST OF THE REMOVAL OF THE EXISTING PAVEMENT OR PAVED BERM WHICH MAY BE ASPHALT, BRICK, CONCRETE, OR A COMBINATION OF EACH, IN AREAS OF EXISTING PAVEMENT FAILURE.

THE ENGINEER SHALL DESIGNATE THE LOCATIONS AND LIMITS OF THE AREAS TO BE REPAIRED. PAVEMENT REPAIR SHALL BE PERFORMED BEFORE PLACEMENT OF THE CHIP SEAL. THE REPAIR AREAS SHALL BE SAW CUT AND EXCAVATED TO PROVIDE STRAIGHT AND VERTICAL SURFACES AROUND THE PERIMETER OF THE REPAIR AREA. PAVEMENT PLANING MAY BE USED AS AN ALTERNATIVE TO SAW CUTTING AND EXCAVATING. THE PAVEMENT SHALL BE REMOVED WITHIN THE DESIGNATED AREAS BY METHODS WHICH WILL NOT DAMAGE ADJACENT PAVEMENT. THE DEPTH OF REMOVAL SHALL BE SUFFICIENT TO REMOVE ALL DETERIORATED PAVEMENT WITH A MAXIMUM DEPTH OF 8", BASED ON THE PAVEMENT DESIGN AND A DEPTH OF 4" AND AN AVERAGE WIDTH OF 4 FT FOR ESTIMATING PURPOSES. THE MATERIALS REMOVED SHALL BE DISPOSED OF IN ACCORDANCE WITH 105.16 AND 105.17.

THE CONTRACTOR SHALL BE CAPABLE OF PERFORMING PAVEMENT REPAIRS 2 FEET WIDE.

REPLACEMENT MATERIAL SHALL BE ITEM 301 OR ITEM 448 TYPE 2, PG64-22 MATERIAL AND SHALL BE PLACED AND COMPACTED TO FINISH FLUSH WITH THE ADJACENT PAVEMENT SURFACE. ITEM 301 CAN BE USED WHEN THE DEPTH OF THE REPAIR IS BETWEEN 3" AND 12" WITH A MAXIMUM PAVEMENT LIFT OF 6". ITEM 448 TYPE 2 CAN BE USED WHEN THE DEPTH OF THE REPAIR IS BETWEEN 0" AND 5" WITH A MAXIMUM PAVEMENT LIFT OF 3". ALL EXISTING PAVEMENT AREAS WHICH WILL BE IN CONTACT WITH THE PAVEMENT REPAIR SHALL BE CLEANED AND COATED PER CMS 401.14, USING AN ASPHALT MATERIAL COMPLYING WITH 407.02. ALL COMPACTION SHALL BE ACHIEVED BY MECHANICAL METHODS TO THE SATISFACTION OF THE ENGINEER.

PAYMENT SHALL INCLUDE ALL LABOR, EQUIPMENT, AND MATERIALS NECESSARY TO COMPLETE THE PAVEMENT REPAIR. FOR PAYMENT PURPOSES ITEM 253 PAVEMENT REPAIR, MISC.: PARTIAL DEPTH IS TO BE A MAXIMUM OF 4" DEEP AND ITEM 253 PAVEMENT REPAIR, AS PER PLAN IS FOR DEPTHS GREATER THAN 4". PAYMENT WILL BE MADE AT THE UNIT BID PRICE PER CUBIC YARD, (BY TICKET WEIGHT CONVERSION), OF ITEM 253, PAVEMENT REPAIR, AS PER PLAN OR ITEM 253 PAVEMENT REPAIR, MISC.: PARTIAL DEPTH. THE FOLLOWING ESTIMATED QUANTITIES ARE PROVIDED IN THE GENERAL SUMMARY TO BE USED AS DIRECTED BY THE ENGINEER:

SR 269 ITEM 253 PAVEMENT REPAIR, MISC.: PARTIAL DEPTH	100 CU. YD.
SR 303 ITEM 253 PAVEMENT REPAIR, MISC.: PARTIAL DEPTH	100 CU. YD.
SR 547 ITEM 253 PAVEMENT REPAIR, MISC.: PARTIAL DEPTH	20 CU. YD.

NOTE: WE DO NOT EXPECT ANY REPAIRS DEEPER THAN 4"

The list below contains ONE SPECIFIC intersection and the corresponding pavement repair treatments. The quantities LISTED ABOVE include thIS work which is to be included in Item 253 Pavement Repair, misc.: partial depth:
On HUR- SR 303 in the EASTbound lane beginning at approximately the stop bar at SR 60 (slm 0.68 WEST LEG), there is severe rutting that is measured approximately 375 feet long from the stop bar to the west and 11 feet wide. Remove 3" of asphalt, tack and replace with CMS 448 Type 2 material.

On HUR- SR 303 in the WESTbound lane beginning at approximately the stop bar at SR 60 (slm 0.68 EAST LEG), there is severe rutting that is measured approximately 270 feet long from the stop bar to the east and 11 feet wide. Remove 3" of asphalt, tack and replace with CMS 448 Type 2 material.

ITEM 614, MAINTAINING TRAFFIC
(LANES OPEN DURING HOLIDAYS OR SPECIAL EVENTS)

NO WORK SHALL BE PERFORMED AND ALL EXISTING LANES SHALL BE OPEN TO TRAFFIC DURING THE FOLLOWING DESIGNATED HOLIDAYS OR EVENTS:

CHRISTMAS	FOURTH OF JULY
NEW YEARS	LABOR DAY
MEMORIAL DAY	THANKSGIVING

THE PERIOD OF TIME THAT THE LANES ARE TO BE OPEN DEPENDS ON THE DAY OF THE WEEK ON WHICH THE HOLIDAY OR EVENT FALLS. THE FOLLOWING SCHEDULE SHALL BE USED TO DETERMINE THIS PERIOD:

DAY OF THE WEEK	TIME ALL LANES MUST BE OPEN TO TRAFFIC
SUNDAY	12:00N FRIDAY THROUGH 6:00 AM MONDAY
MONDAY	12:00N FRIDAY THROUGH 6:00 AM TUESDAY
TUESDAY	12:00N MONDAY THROUGH 6:00 AM WEDNESDAY
WEDNESDAY	12:00N TUESDAY THROUGH 6:00 AM THURSDAY
THURSDAY	12:00N WEDNESDAY THROUGH 6:00 AM MONDAY
FRIDAY	12:00N THURSDAY THROUGH 6:00 AM MONDAY
SATURDAY	12:00N FRIDAY THROUGH 6:00 AM MONDAY

SHOULD THE CONTRACTOR FAIL TO MEET ANY OF THESE REQUIREMENTS, THE CONTRACTOR SHALL BE ASSESSED LIQUIDATED DAMAGES IN ACCORDANCE WITH CMS 108.07.

ITEM 642, FINAL PAVEMENT MARKINGS

In addition to the pavement markings placed on the chip seal immediately after completing the chip seal work, an additional application of the final pavement markings has been provided and shall be placed no sooner than 30 calendar days and no more than 45 calendar days after the chip seal work has been completed.

ITEM 614, MAINTAINING TRAFFIC

A MINIMUM OF ONE (1) LANE OF TRAFFIC SHALL BE MAINTAINED AT ALL TIMES USING FLAGGERS.

ALL WORK AND TRAFFIC CONTROL DEVICES SHALL BE IN ACCORDANCE WITH CMS 614 AND OTHER APPLICABLE PORTIONS OF THE SPECIFICATIONS, AS WELL AS THE OHIO MANUAL OF UNIFORM TRAFFIC CONTROL DEVICES. PAYMENT FOR ALL LABOR, EQUIPMENT, AND MATERIALS SHALL BE INCLUDED IN THE LUMP SUM CONTRACT PRICE FOR ITEM 614, MAINTAINING TRAFFIC, UNLESS SEPARATELY ITEMIZED IN THE PLAN.

ITEM 614- WORK ZONE MARKING SIGN, AS PER PLAN, ADVANCE NOTICE

THE CHIP SEAL BEGINS SIGNS, AS DETAILED IN THESE PLANS, SHALL BE ERECTED BY THE CONTRACTOR AT LEAST ONE WEEK IN ADVANCE OF THE SCHEDULED START OF THE WORK. THE SIGNS SHALL BE ERECTED ON THE RIGHT HAND SIDE AT THE PROJECT LIMITS OF EACH ROADWAY BEING CHIP SEALED. THEY SHALL BE PLACED SO AS NOT TO INTERFERE WITH THE VISIBILITY OF ANY OTHER TRAFFIC CONTROL SIGNS. THE SIGN DETAILS FOR THIS BLACK ON ORANGE SIGN WILL BE PROVIDED AT THE PRECONSTRUCTION MEETING.

THE FOLLOWING ESTIMATED QUANTITIES HAVE BEEN INCLUDED IN THE GENERAL SUMMARY FOR THIS ADVANCE NOTIFICATION:

ITEM 614, WORK ZONE MARKING SIGN, AS PER PLAN, ADVANCE NOTICE 9 EACH

SR 269
2 EACH - 1 AT EACH END
1 EACH AT SR 547

SR 303
2 EACH - 1 AT EACH END
2 EACH AT SR 60

SR 547
2 EACH - 1 AT EACH END

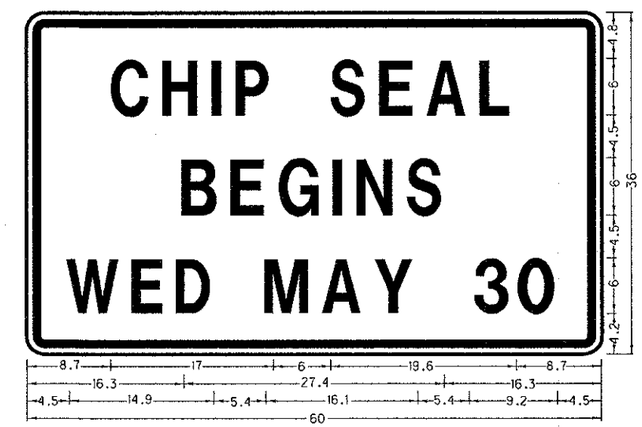

2.3" Radius, 0.9" Border, 0.6" Indent, Black and Orange "CHIP SEAL" D; "BEGINS" D, "WED MAY 30" D 90% spacing;

CALCULATED CVH CHECKED BAD

GENERAL NOTES

HUR-269/VAR-0.00/VAR

3/8

DESIGN FILE: $$$$.DGNFILESPECIFICATIONS$$$$
WORKSTATION: $TERMINAL$ DATE: $$DATE$$$$

ITEM SPECIAL: FOG SEAL

Description
This work consists of preparing and treating a newly seal coated (chip sealed) surface with a specialized anionic asphalt emulsion.

Material
Material shall conform to the following typical physical properties:

Parameter	Test Method	MIN.	MAX.
Saybolt Furol Viscosity, SFS @ 25°C	ASTM D88	15	100
Storage Stability, 24 hrs, %	ASTM D244	--	1
Storage Stability, 5 days, %	ASTM D244	--	5
Residue by Distillation, %	ASTM D244	50	--
Oil Distillate, %	ASTM D244	--	1
Sieve Test, %	ASTM D244	--	0.3
Test on Residue:			
Penetration, @ 25°C,	ASTM D5	--	20
Softening Point Range Deg C	ASTM D36	65	--
Solubility,%	ASTM D2042	97.5	--
Original Binder DSR@82°C			
G*/SIN 8,10 rad/sec	AASHTO T111	1	--

Note: Product should not contain filler such as clay, etc. The manufacturer shall supply the specific gravity of the diluted material at 160° F.

Equipment
Contractor shall provide adequate cleaning equipment and distributor. Use distributors designed, equipped, maintained, and operated to apply asphalt material at the specified rate per square yard (square meter) with uniform pressure over the required width of application. Ensure that the distributor includes tachometer, pressure gauges, accurate volume measuring devices, or a calibrated tank. Mount an accurate thermometer with a range covering the specified application temperature for asphalt material at approximately center height of the tank with the stem extending into the asphalt material. Ensure that the distributor has a full-circulating system with a spray bar that is adjustable laterally and vertically. Ensure that the spray bar will maintain a constant height above the pavement under variable load conditions. Supply each distributor with suitable charts showing truck and pump speeds and other pertinent application data necessary to obtain the required results. See manufacturer*s representative for correct distributor settings.

Weather Limitations
Do not apply the material if the surface temperature is below 40° F.
Note: Do not allow the product to freeze prior to application.

Preparation of Surface
Ensure that the surface has been swept just before application and is thoroughly clean, dry and free of loose stone chips. Remove dirt, dust and loose chips cleaned from the surface and dispose of it. Material should not be applied to a new seal coated (chip seal) surface for a period of two weeks after seal coat installation.

Application of Asphalt Material
Uniformly apply the asphalt material with a distributor. Surface to be clean, dry and free of loose stone chips.

Note: This material is not compatible with Cationic emulsions (CRS, CQS, CMS, CSS etc.) All equipment should be thoroughly cleaned if cationic emulsion was previously present. If product is to be stored for an extended period of time the material should be agitated or gently circulated prior to use. Nozzle spray pattern should be identical to one another along the distributor spray bar. The angle of the nozzle should a 15 to 30 degree angle to the spray bar axis to maximize overlap.

The polymer fog seal should be applied at a rate of 0.1 to 0.2 gallons per square yard. Recommended application temperature is 140° F to 180° F. Do not exceed 180° F.

The Engineer and Manufacturer's Representative will approve the quantity, rate of application, temperature, distributor settings and areas to be treated before application of the polymer fog seal. Contractor must contact the manufacturer's representative for distributor settings and spray nozzle type. The engineer will determine the actual application rate in gallons per square yard (Liters per square meter) by a check on the project. The application is considered satisfactory when the actual rate is within ±10 percent of the required rate and the material is applied uniformly with no visible evidence of streaking, ridging or excess material bleeding or puddling.

The material shall be overlapped by 2" to 6" at all adjacent spray passes.

Traffic shall be allowed on the material after one hour or longer as directed by the project engineer's on-site representative after the material has been determined to be tack free and set reasonably firmly.

Apply work zone markings after cure. Permanent pavement markings may be applied on the material after 24 hours. Thermoplastic or non-water based final pavement markings shall be applied not sooner than two weeks after material application.

Method of Measurement
The Department will measure Fog Seal by the number of gallons (liters) of diluted asphalt material applied for each according to Item 109.

Basis of Payment
The Department will pay for accepted quantities at the contract prices as follows:

Item	Unit	Description
Special	Gallon	Misc.: Fog Seal

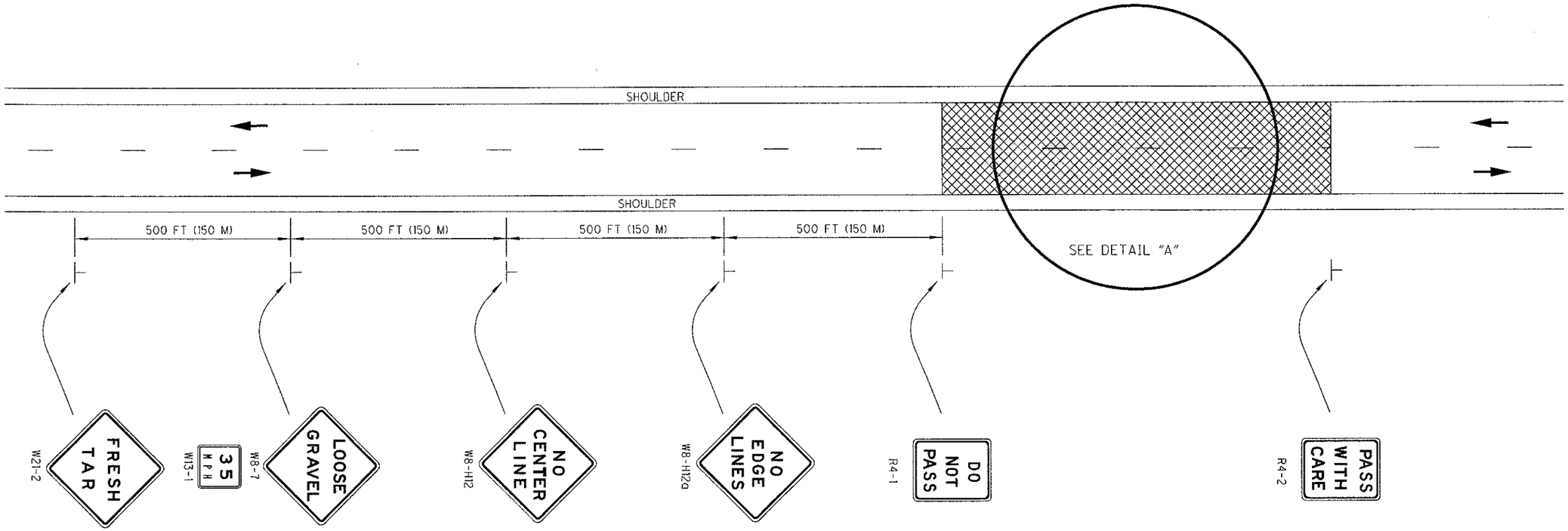

GENERAL NOTES:

1. The suggested minimum sign spacing is 200 feet (60 m), with 500 feet (150 m) spacing desirable.
2. The NO CENTER LINE (W8-H12), NO EDGE LINE (W8-H12a), and DO NOT PASS (R4-1) signs should be repeated every 2 miles per CMS 614.04.
3. The PASS WITH CARE (R4-2) sign, shown at the termination point of the chip seal activitiy, shall not be installed if this point is located in a No Passing zone or within 500 feet (150 m) of the next No Passing zone.
4. Repeat the LOOSE GRAVEL (W8-7) with an Advisory Speed Plaque (W13-1) every 1/2 mile per CMS 422.09.
5. Remove the NO CENTER LINE (W8-H12) and NO EDGE LINES (W8-H12a) signs after placing final markings.
6. Repeat sign layout in opposite direction.
7. Temporary traffic control for chip seal operations is not shown.
8. For signing of side roads intersecting the work area, see Detail "A".
9. All signs to be installed in Item 614, Lump, Maintaining Traffic for payment

LEGEND

AREA OF CHIP SEAL OPERATION

DIRECTION OF TRAVEL

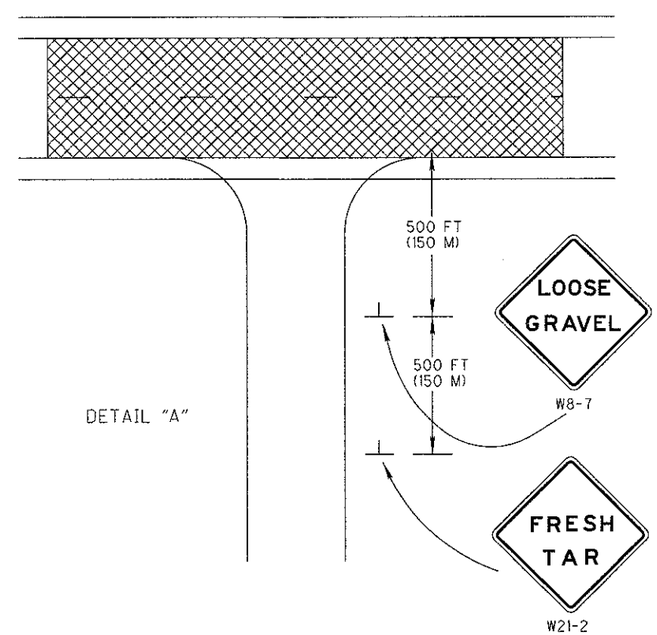

OFFICE OF TRAFFIC ENGINEERING

DESIGNED SHB
REVIEWED LAM

REVISION DATE 7/18/08
CHECKED

PIS NUMBER 209940

PLAN INSERT SHEET

TRAFFIC CONTROL FOR POST CHIP SEAL OPERATIONS

HUR-269/VAR-0.00/VAR

1/1

5/8

SHEET NUMBER 3		7		8					ITEM	ITEM EXT.	TOTAL	UNIT	DESCRIPTION	REF. SHEET
220									253	90000	220	CU YD	PAVEMENT REPAIR, MISC.: PARTIAL DEPTH	3
9									614	12461	9	EACH	WORK ZONE MARKING SIGN, AS PER PLAN, ADVANCE NOTICE	
				32.76					614	21500	32.76	MILE	WORK ZONE CENTER LINE, CLASS II, 642 PAINT	
				136					614	26200	136	FT	WORK ZONE STOP LINE, CLASS I, 642 PAINT	
				1330					621	00100	1330	EACH	RPM	
				1330					621	54000	1330	EACH	RAISED PAVEMENT MARKER REMOVED	
				65.76					642	00100	65.76	MILE	EDGE LINE, TYPE 1	
				32.76					642	00300	32.76	MILE	CENTER LINE, TYPE 1	
				272					642	00500	272	FT	STOP LINE, TYPE 1	
		8015							SPECIAL	69098900	8015	GAL	MISC.: FOG SEAL	4
		243672							882	10000	243672	SQ YD	SINGLE CHIP SEAL WITH TWO YEAR WARRANTY	
									614	11000	LUMP		MAINTAINING TRAFFIC	
									624	10000	LUMP		MOBILIZATION	

CALCULATED CVH
CHECKED BAD

GENERAL SUMMARY

HUR-269/VAR-0.00/VAR

6/8

PART	COUNTY	ROUTE	LOG POINT TO LOG POINT (STRAIGHT LINE MILEAGE)		LENGTH MILE	LENGTH FEET	WIDTH FEET AVG.	TYPICAL	882 SINGLE CHIP SEAL WITH TWO YEAR WARRANTY (SQ YD)	SPECIAL MISC.: FOG COAT @ 0.15 GAL/SY (GALLON)	REMARKS
A	HURON	SR 269	0.00	5.49	5.49	28987	24.0	1	77,299		TRAVELED LANES AND SHOULDERS
B	HURON	SR 303 RAMP	0.00	0.06	0.06	317	14.0	1	493	74	TRAVELED LANES AND SHOULDERS
		SR 303	0.00	3.76	3.76	19853	24.0	1	52,941	7,941	TRAVELED LANES AND SHOULDERS
C	HURON	SR 547	0.00	7.13	7.13	37646	27.0	1	112,939		TRAVELED LANES AND SHOULDERS
		TOTALS			16.44				243,672	8,015	

CALCULATED CVH
CHECKED BAD

PAVEMENT DATA

HUR-269/VAR-0.00/VAR

AUXILIARY & LONG LINE MARKINGS

ROUTE	COUNTY	STATION / SLM FROM	STATION / SLM TO	HIGHWAY MILES MILE	614 WORK ZONE LANE LINE, CLASS I, 642 PAINT MILE	614 WORK ZONE CENTER LINE, CLASS II, 642 PAINT MILE	614 WORK ZONE CHANNELIZING LINE, CLASS I, 642 PAINT FT	614 WORK ZONE STOP LINE, CLASS I, 642 PAINT FT	EDGE LINE TOTAL (PAY QUANTITY) (WHITE) MILE	EDGE LINE TOTAL (PAY QUANTITY) (YELLOW) MILE	LANE LINE MILE	CENTER LINE SOLID LINE EQUIVALENT MILE	CENTER LINE TOTAL (PAY QUANTITY) MILE	642, TYPE 1 AUXILIARY MARKINGS (740.04) CHANNELIZING LINE 8" FT	STOP LINE 24" FT	CROSSWALK LINE 12" FT	TRANSVERSE/ DIAGONAL LINE (WHITE) 24" FT	TRANSVERSE/ DIAGONAL LINE (YELLOW) 24" FT	ISLAND MARKING SQ FT	RAILROAD SYMBOL MARKING EACH	SCHOOL SYMBOL MARKING 72 INCH EACH	SCHOOL SYMBOL MARKING 96 INCH EACH	PARKING LOT STALL MARKING FT	LANE ARROW LEFT EACH	LANE ARROW RIGHT EACH	LANE ARROW THROUGH EACH	LANE ARROW COMBINATION EACH	WORD ON PAVEMENT "ONLY" 72 INCH EACH	WORD ON PAVEMENT "ONLY" 96 INCH EACH	DOTTED LINE, 4" FT	HANDICAP SYMBOL MARKING EACH	SPECIAL AIR SPEED ZONE MARKING EACH
SR 269	HURON	0.00	5.49	5.49		10.98		56	21.96			12.60	10.98		112																	
SR 303	HURON	0.00	3.76	3.76		7.52		32	15.16	0.12		19.88	7.52		64																	
SR 547	HURON	0.00	7.13	7.13		14.26		48	28.52			25.92	14.26		96																	
			TOTAL	**16.38**		**32.76**		**136**	**65.64**	**0.12**		**58.40**	**32.76**		**272**																	

RAISED PAVEMENT MARKERS

ROUTE	COUNTY	STATION/SLM FROM	STATION/SLM TO	DETAIL	621 RAISED PAVEMENT MARKER REMOVED EACH	621 RPM EACH	PRISMATIC RETRO-REFLECTOR TYPES ONE-WAY WHITE EACH	TWO-WAY YELLOW / YELLOW	TWO-WAY WHITE / RED	TWO-WAY YELLOW / RED	TWO-WAY BLUE / BLUE	REMARKS
SR 269	HURON	0.00	0.20	6	27	27	16	11				STOP APPROACH @ SR 4
		0.20	1.80	GAP	211	211		211				CONTINUOUS ROUTE TREATMENT
		1.80	2.14	8	22	22		22				THRU APPROACH @ SR 547
		2.14	5.62	GAP	230	230		230				CONTINUOUS ROUTE TREATMENT
SR 303	HURON	0.00	0.20	6	27	27	16	11				STOP APPROACH @US 20
		0.20	0.38	GAP	20	20		20				CONTINUOUS ROUTE TREATMENT
		0.38	0.78	6	27	27	16	11				STOP APPROACHES @ SR 60
		0.78	1.06	15	21	21		21				TWO CURVES PLUS FILL-INS
		1.06	1.99	GAP	61	61		61				CONTINUOUS ROUTE TREATMENT
		1.99	2.31	15	35	35		35				4 CURVES PLUS FILL INS
		2.31	3.76	GAP	98	98		98				CONTINUOUS ROUTE TREATMENT
SR 547	HURON	0.00	0.20	6	27	27	16	11				STOP APPROACH @ SR 269
		0.20	0.54	GAP	22	22		22				CONTINUOUS ROUTE TREATMENT
		0.54	0.92	6	54	54	32	22				STOP APPROACH @ SR 4
		0.92	1.50	GAP	45	45		45				CONTINUOUS ROUTE TREATMENT
		1.50	1.74	15	32	32		32				CURVE
		1.74	4.11	GAP	156	156		156				CONTINUOUS ROUTE TREATMENT
		4.11	4.35	15	32	32		32				CURVE
		4.35	7.13	GAP	183	183		183				CONTINUOUS ROUTE TREATMENT
			TOTAL		**1,330**	**1,330**	**96**	**1,234**				

DETAIL	DESCRIPTION
1	MULTILANE UNDIVIDED TYPICAL SPACING
2	TAPERED ACCEL. LANE
3	DECELERATION LANE
4	PARALLEL ACCEL LANE
5	MULTILANE DIVIDED/EXPRESSWAY
6	STOP APPROACH
7	2 LANE APPR. WITH TURN LANE
8	THROUGH APPROACH
9	3 LANE APPR. WITH TURN LANE
10	3 LANE DIVIDED TO 2 LANE TRANSITION
11	3 LANE UNDIVIDED TO 2 LANE TRANSITION
12	TWO LNAE NARROW BRIDGE
13	TWO WAY LEFT TURN LANE
14	ONE LANE BRIDGE
15	HORIZONTAL CURVE
16	HORIZONTAL CURVE ALT.
17	STOP APPROACH ALT.
18	FIRE HYDRANT
GAP	CENTER LINE AT 80 FT. TYP.

NOTES

1) Thru lanes shall be striped at 11' widths

2) In addition to the pavement markings placed on the chip seal immediately after completing the chip seal work, an additional application of the final pavement markings has been provided and shall be placed no sooner than 30 calendar days and no more than 45 calendar days after the chip seal work has been completed.

CALCULATED CVH
CHECKED BAD

PAVEMENT MARKING DATA

HUR-269/VAR-0.00/VAR

8/8