HUR - US 20-17.82
210389 PID - 110357
Dist 3 7/1/2021

Contract Proposal available @
www.contracts.dot.state.oh.us

...\Sheets\110357_GT001.dgn 3/23/2021 8:40:36 AM mswhitt

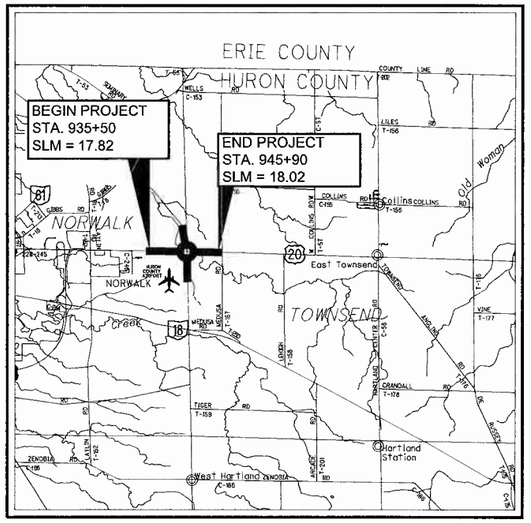

LOCATION MAP

LATITUDE: 41 °14'57" LONGITUDE: 82 °32'29"

SCALE IN MILES

0 1 2 3 4

N

PORTION TO BE IMPROVED
INTERSTATE HIGHWAY
FEDERAL ROUTES
STATE ROUTES
COUNTY & TOWNSHIP ROADS
OTHER ROADS

DESIGN DESIGNATION

	US 20 (WEST LEG)	US 20 (EAST LEG)	SR 601 (NORTH LEG)	SR 601 (SOUTH LEG)
CURRENT ADT (2021)	6,250	6,800	3,200	3,100
DESIGN YEAR ADT (2041)	6,250	6,800	3,700	4,700
DESIGN HOURLY VOLUME (2041)	500	540	330	470
DIRECTIONAL DISTRIBUTION	0.52	0.54	0.59	0.55
TRUCKS (24 HOUR B&C)	0.14	0.15	0.15	0.18
DESIGN SPEED	60	60	60	60
LEGAL SPEED	55	55	55	55

DESIGN FUNCTIONAL CLASSIFICATION:
RURAL PRINCIPAL ARTERIAL (US20), RURAL MAJOR COLLECTOR (SR 601)

NHS PROJECT	YES	NO

DESIGN EXCEPTIONS

NONE

UNDERGROUND UTILITIES
Contact Two Working Days Before You Dig
OHIO811.org Before You Dig
OHIO811, 8-1-1, or 1-800-362-2764
(Non-members must be called directly)

PLAN PREPARED BY:
TranSystems
400 WEST NATIONWIDE BLVD., SUITE 225
COLUMBUS, OH 43215

STATE OF OHIO
DEPARTMENT OF TRANSPORTATION

HUR-20-17.82

NORWALK TOWNSHIP
TOWNSEND TOWNSHIP
HURON COUNTY

INDEX OF SHEETS:

TITLE SHEET	1
SCHEMATIC PLAN	2 - 4
TYPICAL SECTIONS	5 - 12
GENERAL NOTES	13 - 16
MAINTENANCE OF TRAFFIC	17 - 20
GENERAL SUMMARY	21 - 23
ESTIMATED QUANTITIES	24 - 29
PROJECT SITE PLAN	30 - 31
PLAN & PROFILES	32 - 42
ROUNDABOUT PROFILES	43 - 44
CROSS SECTIONS	45 - 66
INTERSECTION DETAILS	67 - 69
SPLITTER ISLAND DETAILS	70 - 71
PLAN INSERT SHEETS	72 - 79
SUE LEVEL A TEST HOLES	80 - 82
TRAFFIC CONTROL	83 - 94
LIGHTING	95 - 98
STRUCTURES OVER 20' HUR-20-1774	99 - 101
LANDSCAPE PLAN	102
RIGHT OF WAY	103 - 122
SOIL PROFILE SHEETS	123 - 128

PROJECT DESCRIPTION

THIS PROJECT CONSISTS OF THE CONSTRUCTION OF A SINGLE LANE ROUNDABOUT AT THE INTERSECTION OF US 20 AND SR 601. IMPROVEMENTS WILL BE LIMITED TO THE IMMEDIATE AREA OF THE INTERSECTION REQUIRED TO CONSTRUCT THE ROUNDABOUT APPROACHES.

EARTH DISTURBED AREAS

PROJECT EARTH DISTURBED AREA:	3.91 ACRES
ESTIMATED CONTRACTOR EARTH DISTURBED AREA:	0.35 ACRES
NOTICE OF INTENT EARTH DISTURBED AREA:	4.26 ACRES

2019 SPECIFICATIONS

THE STANDARD SPECIFICATIONS OF THE STATE OF OHIO, DEPARTMENT OF TRANSPORTATION, INCLUDING SUPPLEMENTAL SPECIFICATIONS LISTED IN THE PLANS AND CHANGES LISTED IN THE PROPOSAL SHALL GOVERN THIS IMPROVEMENT.

MAINTENANCE OF TRAFFIC ENDORSEMENT

I HEREBY APPROVE THESE PLANS AND DECLARE THAT THE MAKING OF THIS IMPROVEMENT WILL REQUIRE THE CLOSING OF TRAFFIC TO THE HIGHWAY AND THAT THE DETOURS WILL BE PROVIDED AS INDICATED ON SHEET 19 .

ENGINEERS SEAL: FOR ROADWAY & LIGHTING	ENGINEERS SEAL: FOR STRUCTURES
SIGNED: Saul Hastings	SIGNED: Richard S. Block
DATE: 3/1/21	DATE: 3/1/21

STANDARD CONSTRUCTION DRAWINGS								SUPPLEMENTAL SPECIFICATIONS		SPECIAL PROVISIONS
BP-3.1	01/17/20	MGS-1.1	1/19/18	HL-30.22	1/15/21	TC-52.20	1/15/21	800-2019	4/16/21	NONE
		MGS-2.1	1/19/18	HL-40.20	7/17/20	TC-71.10	1/19/18	813	10/19/18	
CB-1.1	7/19/19	MGS-2.3	7/18/14	HL-50.11	1/16/15			832	10/19/18	
CB-2.1	1/15/21	MGS-4.1	1/20/17	HL-60.11	7/21/17			846	4/17/15	
CB-2.2	1/15/21	MGS-4.2	7/19/13	HL-60.12	1/15/21			913	4/21/17	
CB-4.2	1/18/13			HL-60.31	1/17/20					
		DBR-2-73	7/19/02							
MH-1.2	1/15/16	DBR-3-11	7/15/11	MT-97.10	4/19/19					
		HW-2.1	7/20/18	MT-101.60	1/17/20					
DM-1.1	7/17/20	HW-2.2	7/20/18	MT-101.90	7/17/20					
DM-1.2	1/18/13			MT-105.10	1/17/20					
DM-4.3	1/15/16	HL-10.11	1/15/21							
DM-4.4	1/15/16	HL-10.12	1/20/17	TC-41.20	10/18/13					
		HL-10.13	4/17/20	TC-41.30	10/18/13					
BP-4.1	7/19/13	HL-20.11	1/15/21	TC-42.20	10/18/13					
BP-5.1	1/18/19	HL-30.11	1/15/21	TC-52.10	10/18/13					

APPROVED Paul R. Wamsley 03/30/21
DATE _____ DISTRICT DEPUTY DIRECTOR

APPROVED Jack Marchbanks DLS
DATE 5/10/21 DIRECTOR, DEPARTMENT OF TRANSPORTATION

FEDERAL PROJECT NO. E190640
PID NO. 110357
CONSTRUCTION PROJECT NO.
RAILROAD INVOLVEMENT NONE
HUR-20-17.82

US 20

CURVE DATA NO. 1	CURVE DATA NO. 2	CURVE DATA NO. 3
P.I. Sta. 938+84.72	P.I. Sta. 941+26.99	P.I. Sta. 942+21.62
Δ = 9° 49′ 24″ (RT)	Δ = 35° 15′ 40″ (LT)	Δ = 25° 30′ 57″ (RT)
Dc = 3° 49′ 11″	Dc = 57° 17′ 45″	Dc = 20° 00′ 00″
R = 1,500.00′	R = 100.00′	R = 286.48′
T = 128.90′	T = 31.78′	T = 64.86′
L = 257.17′	L = 61.54′	L = 127.58′
E = 5.53′	E = 4.93′	E = 7.25′
PC Sta. 937+55.81	PC Sta. 940+95.21	PRC Sta. 941+56.75
PT Sta. 940+12.98	PRC Sta. 941+56.75	PT Sta. 942+84.33

SR 601

CURVE DATA NO. 4	CURVE DATA NO. 5	CURVE DATA NO. 6	CURVE DATA NO. 7
P.I. Sta. 55+39.95	P.I. Sta. 56+54.18	P.I. Sta. 56+99.79	P.I. Sta. 58+61.20
Δ = 22° 24′ 48″ (LT)	Δ = 39° 15′ 35″ (RT)	Δ = 14° 31′ 41″ (LT)	Δ = 8° 30′ 31″ (LT)
Dc = 14° 04′ 27″	Dc = 57° 20′ 19″	Dc = 57° 10′ 33″	Dc = 2° 51′ 53″
R = 407.10′	R = 99.93′	R = 100.21′	R = 2,000.00′
T = 80.66′	T = 35.64′	T = 12.77′	T = 148.78′
L = 159.25′	L = 68.47′	L = 25.41′	L = 297.00′
E = 7.91′	E = 6.17′	E = 0.81′	E = 5.53′
PC Sta. 54+59.29	PRC Sta. 56+18.54	PRC Sta. 56+87.01	PCC Sta. 57+12.42
PRC Sta. 56+18.54	PRC Sta. 56+87.01	PCC Sta. 57+12.42	PT Sta. 60+09.43

ACCESS ROAD

CURVE DATA NO. 8
P.I. Sta. 0+52.65
Δ = 90° 00′ 00″ (LT)
Dc = 229° 10′ 59″
R = 25.00′
T = 25.00′
L = 39.27′
E = 10.36′
PC Sta. 0+27.65
PT Sta. 0+66.92

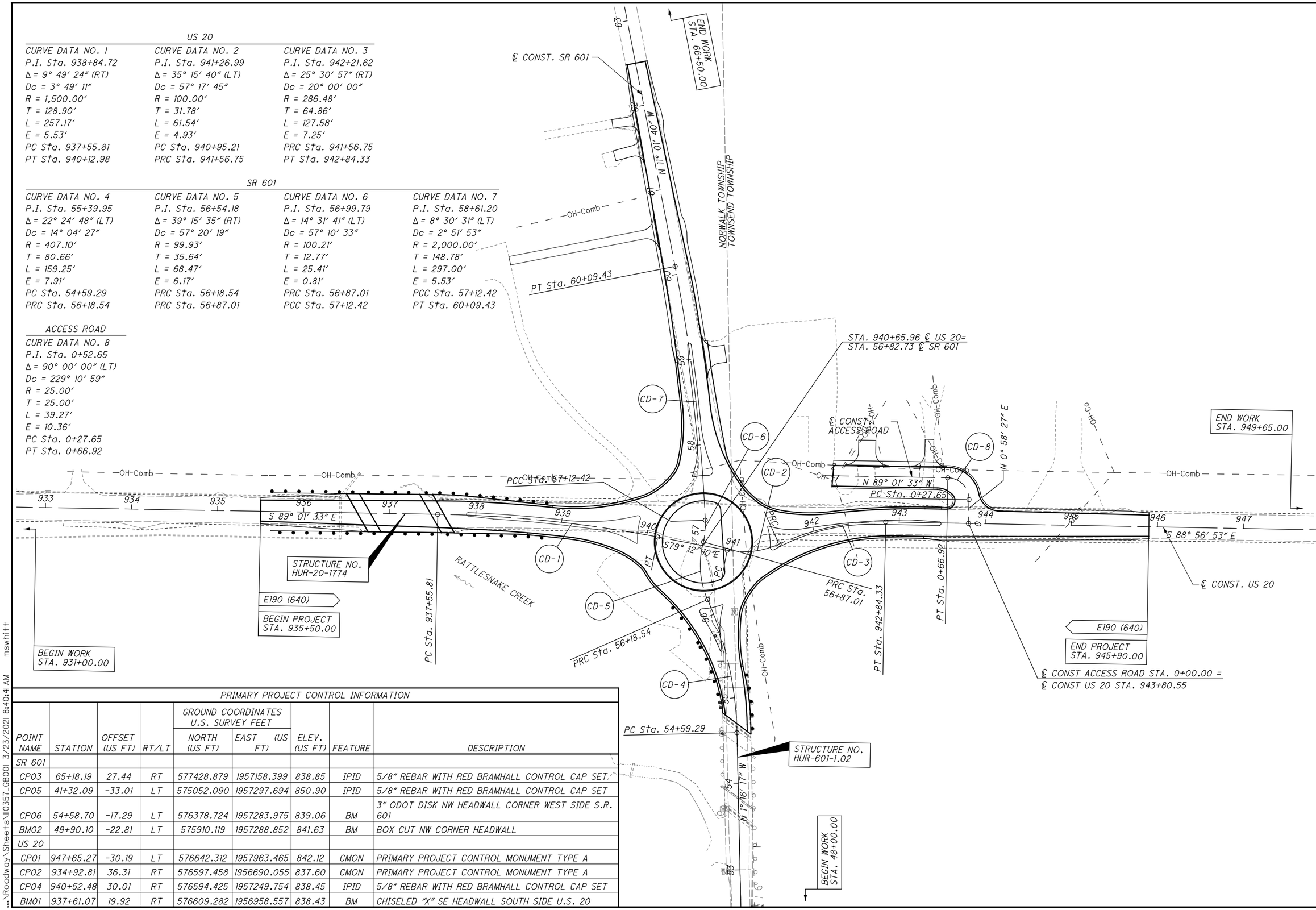

PRIMARY PROJECT CONTROL INFORMATION

POINT NAME	STATION	OFFSET (US FT)	RT/LT	GROUND COORDINATES U.S. SURVEY FEET NORTH (US FT)	EAST (US FT)	ELEV. (US FT)	FEATURE	DESCRIPTION
SR 601								
CP03	65+18.19	27.44	RT	577428.879	1957158.399	838.85	IPID	5/8″ REBAR WITH RED BRAMHALL CONTROL CAP SET
CP05	41+32.09	-33.01	LT	575052.090	1957297.694	850.90	IPID	5/8″ REBAR WITH RED BRAMHALL CONTROL CAP SET
CP06	54+58.70	-17.29	LT	576378.724	1957283.975	839.06	BM	3″ ODOT DISK NW HEADWALL CORNER WEST SIDE S.R. 601
BM02	49+90.10	-22.81	LT	575910.119	1957288.852	841.63	BM	BOX CUT NW CORNER HEADWALL
US 20								
CP01	947+65.27	-30.19	LT	576642.312	1957963.465	842.12	CMON	PRIMARY PROJECT CONTROL MONUMENT TYPE A
CP02	934+92.81	36.31	RT	576597.458	1956690.055	837.60	CMON	PRIMARY PROJECT CONTROL MONUMENT TYPE A
CP04	940+52.48	30.01	RT	576594.425	1957249.754	838.45	IPID	5/8″ REBAR WITH RED BRAMHALL CONTROL CAP SET
BM01	937+61.07	19.92	RT	576609.282	1956958.557	838.43	BM	CHISELED "X" SE HEADWALL SOUTH SIDE U.S. 20

HORIZONTAL SCALE IN FEET 0 25 50 100

CALCULATED HB
CHECKED GAH

SCHEMATIC PLAN

HUR-20-17.82

...\Roadway\Sheets\10357_GB001 3/23/2021 8:40:41 AM mswhitt

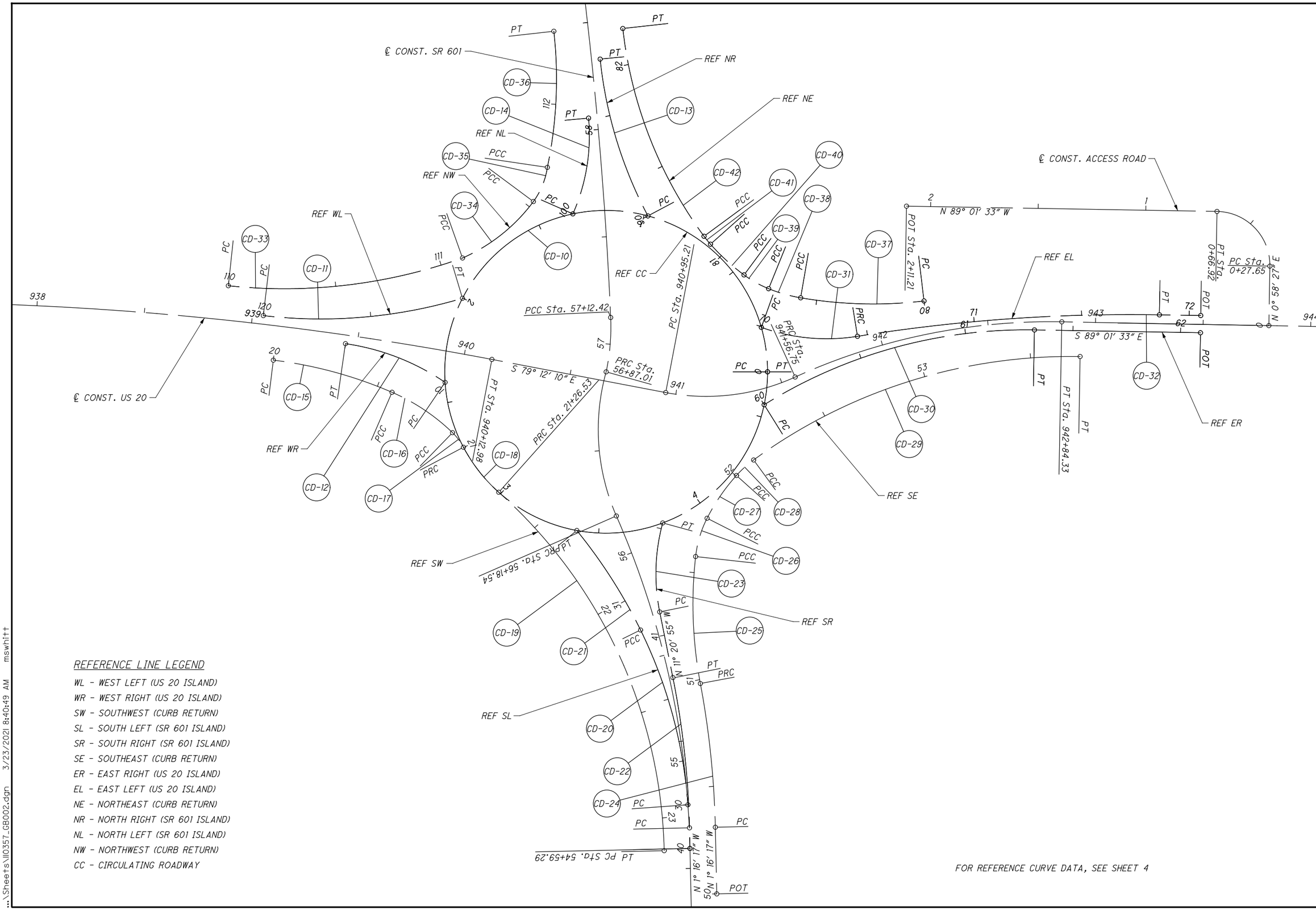

REFERENCE LINE LEGEND

WL - WEST LEFT (US 20 ISLAND)
WR - WEST RIGHT (US 20 ISLAND)
SW - SOUTHWEST (CURB RETURN)
SL - SOUTH LEFT (SR 601 ISLAND)
SR - SOUTH RIGHT (SR 601 ISLAND)
SE - SOUTHEAST (CURB RETURN)
ER - EAST RIGHT (US 20 ISLAND)
EL - EAST LEFT (US 20 ISLAND)
NE - NORTHEAST (CURB RETURN)
NR - NORTH RIGHT (SR 601 ISLAND)
NL - NORTH LEFT (SR 601 ISLAND)
NW - NORTHWEST (CURB RETURN)
CC - CIRCULATING ROADWAY

FOR REFERENCE CURVE DATA, SEE SHEET 4

HORIZONTAL SCALE IN FEET 0 10 20 40

CALCULATED TK
CHECKED GAH

GEOMETRIC LAYOUT

HUR-20-17.82

...\Sheets\110357_GB002.dgn 3/23/2021 8:40:49 AM mswhitt

REF CC
CURVE DATA NO. 10
P.I. Sta. 0+00.00
Δ = 360° 00′ 00″ (LT)
Dc = 76° 23′ 40″
R = 75.00′
T = 0.00′
L = 471.24′
E = 150.00′
PC Sta. 0+00.00
PT Sta. 4+71.24

REF WL
CURVE DATA NO. 11
P.I. Sta. 120+47.41
Δ = 23° 17′ 41″ (LT)
Dc = 24° 54′ 40″
R = 230.00′
T = 47.41′
L = 93.51′
E = 4.84′
PC Sta. 120+00.00
PT Sta. 120+93.51

REF WR
CURVE DATA NO. 12
P.I. Sta. 10+25.49
Δ = 26° 05′ 19″ (LT)
Dc = 52° 05′ 13″
R = 110.00′
T = 25.49′
L = 50.09′
E = 2.91′
PC Sta. 10+00.00
PT Sta. 10+50.09

REF NR
CURVE DATA NO. 13
P.I. Sta. 90+38.80
Δ = 21° 57′ 29″ (RT)
Dc = 28° 38′ 52″
R = 200.00′
T = 38.80′
L = 76.65′
E = 3.73′
PC Sta. 90+00.00
PT Sta. 90+76.65

REF NL
CURVE DATA NO. 14
P.I. Sta. 100+23.30
Δ = 29° 01′ 33″ (LT)
Dc = 63° 39′ 43″
R = 90.00′
T = 23.30′
L = 45.59′
E = 2.97′
PC Sta. 100+00.00
PT Sta. 100+45.59

REF SW

CURVE DATA NO. 15	CURVE DATA NO. 16	CURVE DATA NO. 17	CURVE DATA NO. 18	CURVE DATA NO. 19
P.I. Sta. 20+28.86	P.I. Sta. 20+74.51	P.I. Sta. 20+95.60	P.I. Sta. 21+13.32	P.I. Sta. 22+26.55
Δ = 16° 25′ 18″ (RT)	Δ = 20° 43′ 15″ (RT)	Δ = 18° 02′ 28″ (RT)	Δ = 20° 24′ 25″ (LT)	Δ = 47° 00′ 22″ (RT)
Dc = 28° 38′ 52″	Dc = 60° 57′ 11″	Dc = 212° 12′ 24″	Dc = 76° 23′ 40″	Dc = 24° 54′ 40″
R = 200.00′	R = 94.00′	R = 27.00′	R = 75.00′	R = 230.00′
T = 28.86′	T = 17.19′	T = 4.29′	T = 13.50′	T = 100.02′
L = 57.32′	L = 33.99′	L = 8.50′	L = 26.71′	L = 188.69′
E = 2.07′	E = 1.56′	E = 0.34′	E = 1.21′	E = 20.81′
PC Sta. 20+00.00	PCC Sta. 20+57.32	PCC Sta. 20+91.32	PRC Sta. 20+99.82	PRC Sta. 21+26.53
PCC Sta. 20+57.32	PCC Sta. 20+91.32	PRC Sta. 20+99.82	PRC Sta. 21+26.53	PT Sta. 23+15.23

REF SL

CURVE DATA NO. 20	CURVE DATA NO. 21
P.I. Sta. 30+42.87	P.I. Sta. 31+12.31
Δ = 22° 03′ 08″ (LT)	Δ = 12° 55′ 19″ (LT)
Dc = 26° 02′ 37″	Dc = 23° 28′ 55″
R = 220.00′	R = 244.00′
T = 42.87′	T = 27.63′
L = 84.67′	L = 55.03′
E = 4.14′	E = 1.56′
PC Sta. 30+00.00	PCC Sta. 30+84.67
PCC Sta. 30+84.67	PT Sta. 31+39.70

REF SR

CURVE DATA NO. 22	CURVE DATA NO. 23
P.I. Sta. 40+44.84	P.I. Sta. 41+32.29
Δ = 10° 04′ 37″ (LT)	Δ = 26° 34′ 12″ (RT)
Dc = 14° 19′ 26″	Dc = 63° 39′ 43″
R = 400.00′	R = 90.00′
T = 35.27′	T = 21.25′
L = 70.35′	L = 41.74′
E = 1.55′	E = 2.47′
PC Sta. 40+09.57	PC Sta. 41+11.04
PT Sta. 40+79.92	PT Sta. 41+52.77

REF SE

CURVE DATA NO. 24	CURVE DATA NO. 25	CURVE DATA NO. 26	CURVE DATA NO. 27	CURVE DATA NO. 28	CURVE DATA NO. 29
P.I. Sta. 50+64.66	P.I. Sta. 51+28.05	P.I. Sta. 51+66.91	P.I. Sta. 51+88.31	P.I. Sta. 52+05.73	P.I. Sta. 52+95.02
Δ = 9° 20′ 59″ (LT)	Δ = 16° 58′ 42″ (RT)	Δ = 20° 35′ 03″ (RT)	Δ = 15° 03′ 28″ (RT)	Δ = 11° 51′ 23″ (RT)	Δ = 37° 07′ 07″ (RT)
Dc = 13° 54′ 24″	Dc = 28° 38′ 52″	Dc = 110° 11′ 03″	Dc = 62° 16′ 41″	Dc = 110° 11′ 03″	Dc = 22° 55′ 06″
R = 412.00′	R = 200.00′	R = 52.00′	R = 92.00′	R = 52.00′	R = 250.00′
T = 33.69′	T = 29.85′	T = 9.44′	T = 12.16′	T = 5.40′	T = 83.94′
L = 67.23′	L = 59.27′	L = 18.68′	L = 24.18′	L = 10.76′	L = 161.96′
E = 1.38′	E = 2.22′	E = 0.85′	E = 0.80′	E = 0.28′	E = 13.71′
PC Sta. 50+30.97	PRC Sta. 50+98.20	PCC Sta. 51+57.47	PCC Sta. 51+76.15	PCC Sta. 52+00.33	PCC Sta. 52+11.09
PRC Sta. 50+98.20	PCC Sta. 51+57.47	PCC Sta. 51+76.15	PCC Sta. 52+00.33	PCC Sta. 52+11.09	PT Sta. 53+73.05

REF ER
CURVE DATA NO. 30
P.I. Sta. 60+67.93
Δ = 32° 54′ 35″ (RT)
Dc = 24° 54′ 40″
R = 230.00′
T = 67.93′
L = 132.11′
E = 9.82′
PC Sta. 60+00.00
PT Sta. 61+32.11

REF EL

CURVE DATA NO. 31	CURVE DATA NO. 32
P.I. Sta. 70+23.16	P.I. Sta. 71+15.93
Δ = 28° 51′ 40″ (LT)	Δ = 10° 05′ 12″ (RT)
Dc = 63° 39′ 43″	Dc = 7° 09′ 43″
R = 90.00′	R = 800.00′
T = 23.16′	T = 70.60′
L = 45.33′	L = 140.84′
E = 2.93′	E = 3.11′
PC Sta. 70+00.00	PRC Sta. 70+45.33
PRC Sta. 70+45.33	PT Sta. 71+86.17

REF NW

CURVE DATA NO. 33	CURVE DATA NO. 34	CURVE DATA NO. 35	CURVE DATA NO. 36
P.I. Sta. 110+56.20	P.I. Sta. 111+32.29	P.I. Sta. 111+61.92	P.I. Sta. 112+02.48
Δ = 25° 42′ 58″ (LT)	Δ = 29° 45′ 28″ (LT)	Δ = 27° 38′ 13″ (LT)	Δ = 18° 13′ 27″ (LT)
Dc = 23° 16′ 21″	Dc = 69° 52′ 22″	Dc = 159° 39′ 50″	Dc = 28° 38′ 52″
R = 246.20′	R = 82.00′	R = 35.89′	R = 200.00′
T = 56.20′	T = 21.79′	T = 8.83′	T = 32.08′
L = 110.50′	L = 42.59′	L = 17.31′	L = 63.61′
E = 6.33′	E = 2.84′	E = 1.07′	E = 2.56′
PC Sta. 110+00.00	PCC Sta. 111+10.50	PCC Sta. 111+53.09	PCC Sta. 111+70.40
PCC Sta. 111+10.50	PCC Sta. 111+53.09	PCC Sta. 111+70.40	PT Sta. 112+34.01

REF NE

CURVE DATA NO. 37	CURVE DATA NO. 38	CURVE DATA NO. 39	CURVE DATA NO. 40	CURVE DATA NO. 41	CURVE DATA NO. 42
P.I. Sta. 80+28.96	P.I. Sta. 80+65.32	P.I. Sta. 80+79.65	P.I. Sta. 80+96.80	P.I. Sta. 81+09.73	P.I. Sta. 81+65.75
Δ = 16° 28′ 51″ (RT)	Δ = 12° 21′ 00″ (RT)	Δ = 14° 27′ 39″ (RT)	Δ = 11° 54′ 06″ (RT)	Δ = 5° 12′ 50″ (RT)	Δ = 30° 02′ 19″ (RT)
Dc = 28° 38′ 52″	Dc = 79° 34′ 39″	Dc = 110° 11′ 03″	Dc = 56° 10′ 20″	Dc = 110° 11′ 03″	Dc = 28° 38′ 52″
R = 200.00′	R = 72.00′	R = 52.00′	R = 102.00′	R = 52.00′	R = 200.00′
T = 28.96′	T = 7.79′	T = 6.60′	T = 10.63′	T = 2.37′	T = 53.66′
L = 57.53′	L = 15.52′	L = 13.12′	L = 21.19′	L = 4.73′	L = 104.85′
E = 2.09′	E = 0.42′	E = 0.42′	E = 0.55′	E = 0.05′	E = 7.07′
PC Sta. 80+00.00	PCC Sta. 80+57.53	PCC Sta. 80+73.05	PCC Sta. 80+86.17	PCC Sta. 81+07.36	PCC Sta. 81+12.09
PCC Sta. 80+57.53	PCC Sta. 80+73.05	PCC Sta. 80+86.17	PCC Sta. 81+07.36	PCC Sta. 81+12.09	PT Sta. 82+16.95

CALCULATED TK
CHECKED GAH

ROUNDABOUT CURVE DATA

HUR-20-17.82

...\Sheets\110357_GB002.dgn 3/23/2021 8:40:49 AM mswhitt

EXISTING LEGEND:

- (A) EXISTING PAVEMENT (ASPHALT, 10")
- (B) EXISTING PAVEMENT (ASPHALT, 13")
- (C) CONCRETE (7")
- (D) EXISTING BRICK (3")

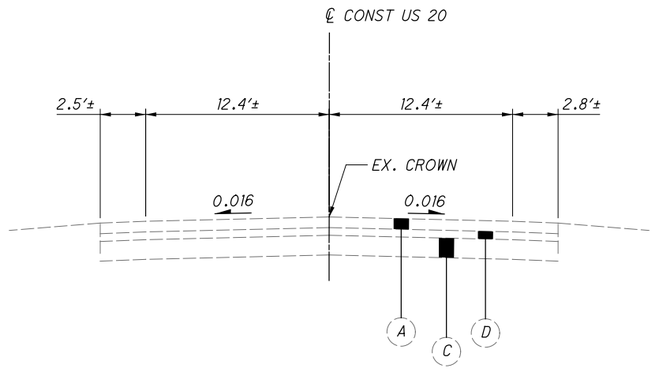

NORMAL SECTION A-A
STA 935+50.00

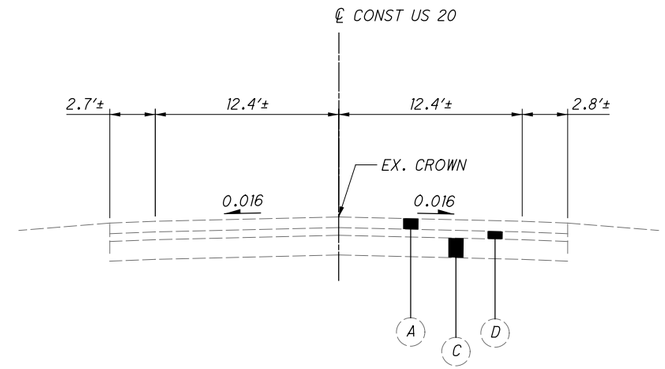

NORMAL SECTION C-C
STA 945+90.00

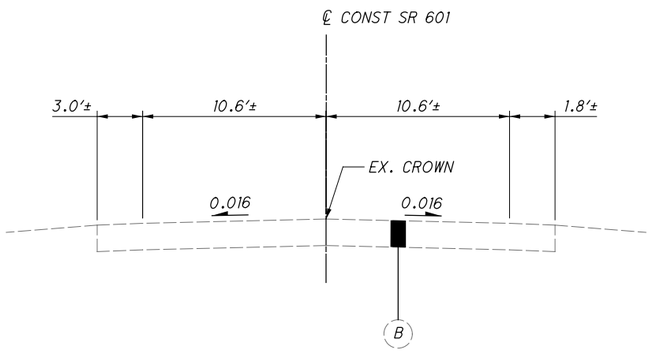

NORMAL SECTION B-B
STA 53+34.00

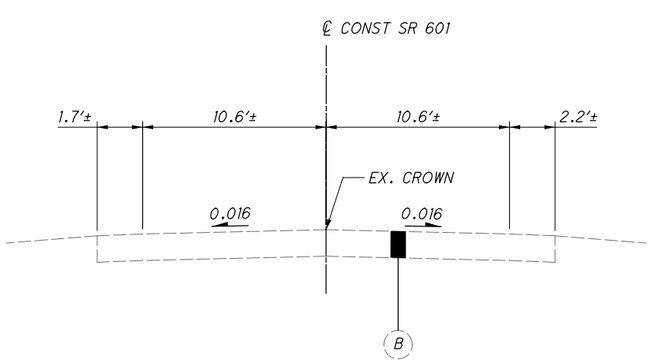

NORMAL SECTION D-D
STA 62+49.95

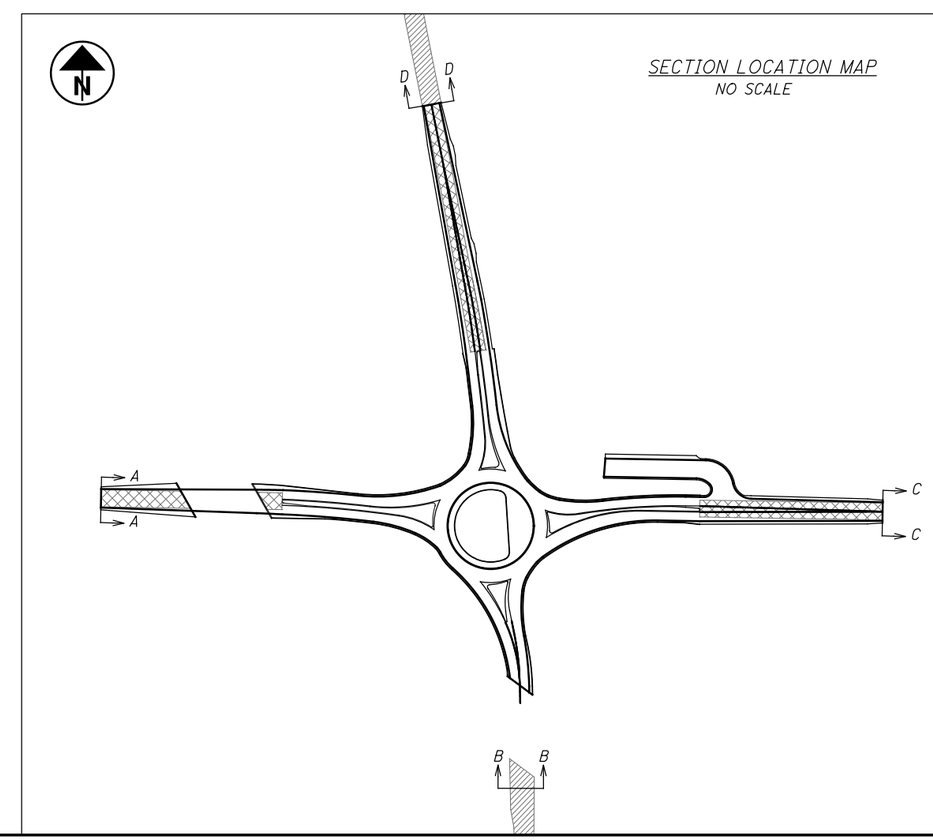

SECTION LOCATION MAP
NO SCALE

EXISTING TYPICAL SECTIONS

HUR-20-17.82

...\Sheets\110357_GY004.dgn 3/23/2021 8:40:52 AM mswhitt

LEGEND:

1. ITEM 441 - 1¼" ASPHALT CONCRETE SURFACE COURSE, TYPE 1, (448), PG64-22
2. ITEM 441 - 1¾" ASPHALT CONCRETE INTERMEDIATE COURSE, TYPE 2, (448)
3. ITEM 407 - TACK COAT
4. ITEM 301 - 6" ASPHALT CONCRETE BASE, PG64-22
5. ITEM 254 - PAVEMENT PLANING (1.25" DEPTH)
6. ITEM 254 - PAVEMENT PLANING (DEPTH VARIES 3.0" TO 6.0" AS SHOWN)
7. ITEM 609 - COMBINATION CURB AND GUTTER, TYPE 2
8. ITEM 605 - 4" BASE PIPE UNDERDRAIN
9. ITEM 304 - 6" AGGREGATE BASE
10. ITEM 452 - 8" NON-REINFORCED CONCRETE PAVEMENT, CLASS QC 1P
11. ITEM 609 - CURB, TYPE 2-A
12. ITEM 659 - SEEDING AND MULCHING
13. ITEM 441 - 2" ASPHALT CONCRETE SURFACE COURSE, TYPE 1, (448), PG64-22
14. ITEM 606 - GUARDRAIL, TYPE 5 OR TYPE MGS
15. ITEM 609 - COMBINATION CURB AND GUTTER, TYPE 3, AS PER PLAN
16. ITEM 451 - 9" REINFORCED CONCRETE PAVEMENT, CLASS QC 1P, AS PER PLAN
17. ITEM 609 - 9" CONCRETE TRAFFIC ISLAND
18. ITEM 609 - CURB, TYPE 6
19. ITEM 206 - CEMENT STABILIZED SUBGRADE, 12" DEEP
20. ITEM 204 - SUBGRADE COMPACTION
21. ITEM 204 - EXCAVATION OF SUBGRADE, 12" DEEP
22. ITEM 204 - GRANULAR MATERIAL, TYPE B W/GEOTEXTILE FABRIC
23. ITEM 204 - PROOF ROLLING
24. ITEM SPECIAL - PAVEMENT OVERLAY FABRIC COMPOSITE (30" WIDE, CENTERED OVER JOINT)
25. ITEM 301 - 3" ASPHALT CONCRETE BASE, PG64-22

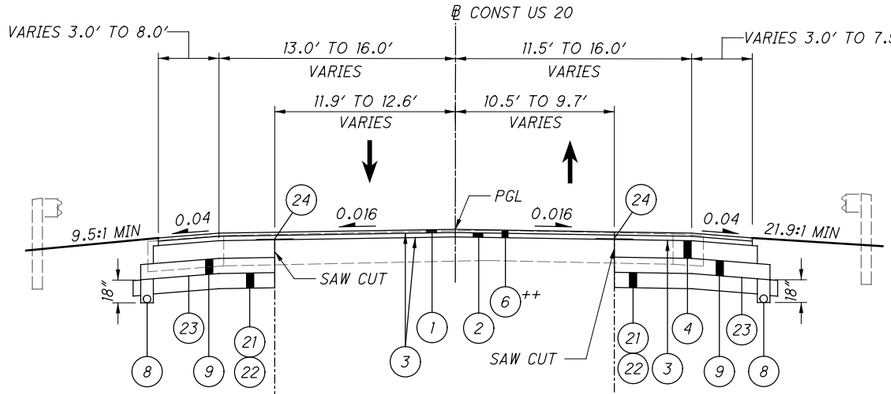

++ (6) PLANING DEPTH = 3.00"±

NORMAL SECTION (E-E)
STA 935+50.00 TO STA 936+62.33
STA 937+62.90 TO STA 937+89.11

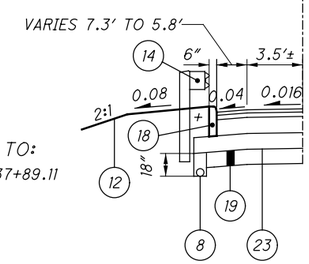

SECTION APPLIES TO:
STA 937+49.46 TO STA 937+89.11

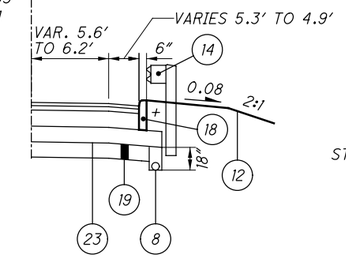

SECTION APPLIES TO:
STA 937+75.66 TO STA 937+89.11

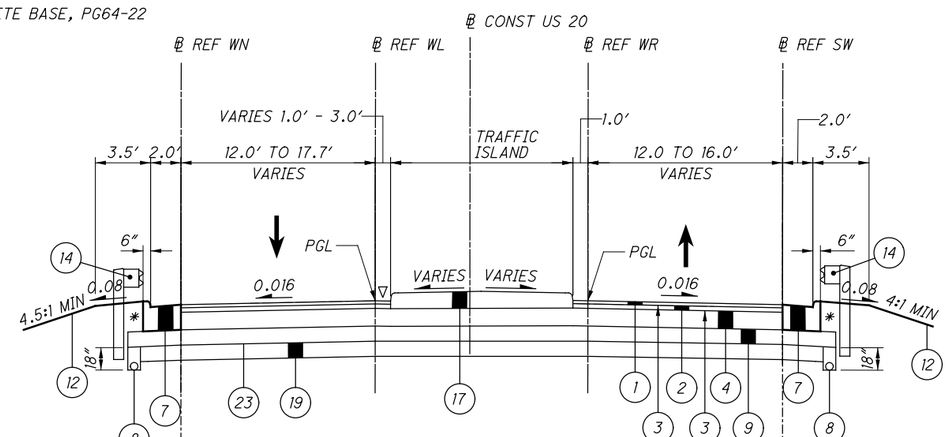

NORMAL SECTION (F-F)
STA 937+89.11 TO STA 939+91.35

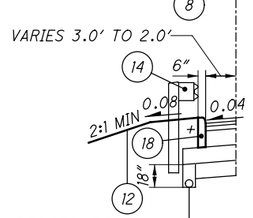

SECTION APPLIES TO:
STA 937+89.11 TO STA 938+87.48

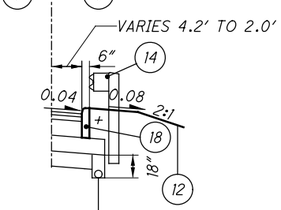

SECTION APPLIES TO:
STA 937+89.11 TO STA 938+61.65

SEE SPLITTER ISLAND SHEETS FOR ADDITIONAL INFORMATION
SEE ROADWAY PLAN SHEETS FOR LOCATIONS OF VARIABLE DIMENSIONS

* FOR TYPICAL CURB & GUTTER EDGE COURSE DETAIL, SEE SHEET 12

+ FOR TYPICAL CURB EDGE COURSE DETAIL, SEE SHEET 12

∇ FOR TYPICAL TRAFFIC ISLAND DETAIL, SEE SHEET 12

SECTION LOCATION MAP
NO SCALE

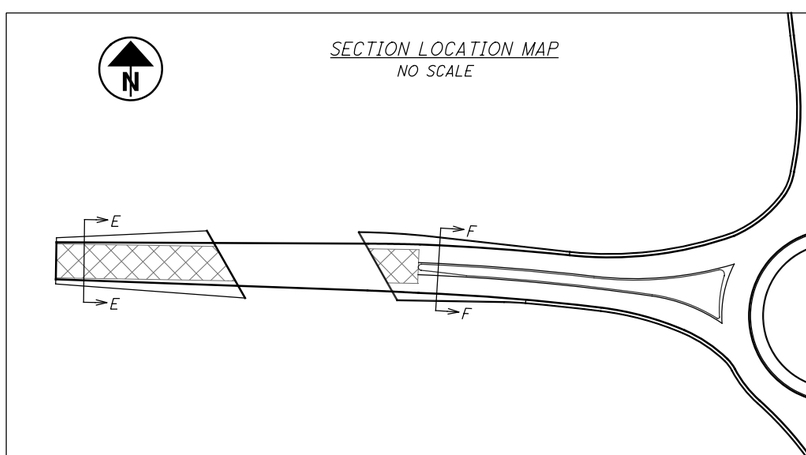

TYPICAL SECTIONS - US 20

HUR-20-17.82

...\Sheets\110357_GY001.dgn 3/23/2021 8:40:56 AM mswhitt

LEGEND:

1. ITEM 441 - 1¼" ASPHALT CONCRETE SURFACE COURSE, TYPE 1, (448), PG64-22
2. ITEM 441 - 1¾" ASPHALT CONCRETE INTERMEDIATE COURSE, TYPE 2, (448)
3. ITEM 407 - TACK COAT
4. ITEM 301 - 6" ASPHALT CONCRETE BASE, PG64-22
5. ITEM 254 - PAVEMENT PLANING (1.25" DEPTH)
6. ITEM 254 - PAVEMENT PLANING (DEPTH VARIES 3.0" TO 6.0" AS SHOWN)
7. ITEM 609 - COMBINATION CURB AND GUTTER, TYPE 2
8. ITEM 605 - 4" BASE PIPE UNDERDRAIN
9. ITEM 304 - 6" AGGREGATE BASE
10. ITEM 452 - 8" NON-REINFORCED CONCRETE PAVEMENT, CLASS QC 1P
11. ITEM 609 - CURB, TYPE 2-A
12. ITEM 659 - SEEDING AND MULCHING
13. ITEM 441 - 2" ASPHALT CONCRETE SURFACE COURSE, TYPE 1, (448), PG64-22
14. ITEM 606 - GUARDRAIL, TYPE 5 OR TYPE MGS
15. ITEM 609 - COMBINATION CURB AND GUTTER, TYPE 3, AS PER PLAN
16. ITEM 451 - 9" REINFORCED CONCRETE PAVEMENT, CLASS QC 1P, AS PER PLAN
17. ITEM 609 - 9" CONCRETE TRAFFIC ISLAND
18. ITEM 609 - CURB, TYPE 6
19. ITEM 206 - CEMENT STABILIZED SUBGRADE, 12" DEEP
20. ITEM 204 - SUBGRADE COMPACTION
21. ITEM 204 - EXCAVATION OF SUBGRADE, 12" DEEP
22. ITEM 204 - GRANULAR MATERIAL, TYPE B W/GEOTEXTILE FABRIC
23. ITEM 204 - PROOF ROLLING
24. ITEM SPECIAL - PAVEMENT OVERLAY FABRIC COMPOSITE (30" WIDE, CENTERED OVER JOINT)
25. ITEM 301 - 3" ASPHALT CONCRETE BASE, PG64-22

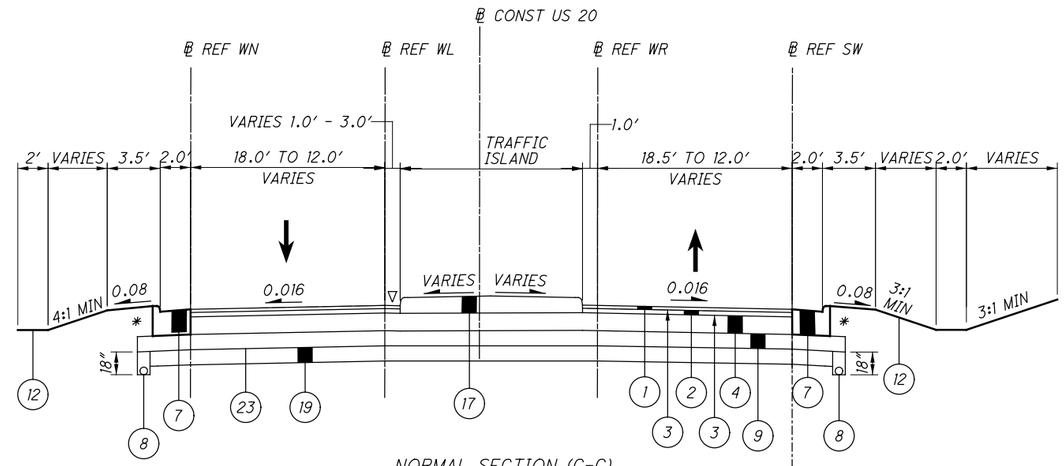

NORMAL SECTION (G-G)
STA 941+45.85 TO STA 943+48.64

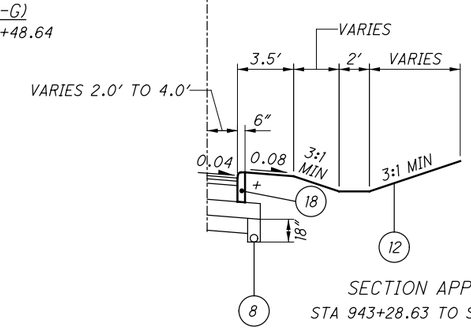

SECTION APPLIES TO:
STA 943+28.63 TO STA 943+48.64

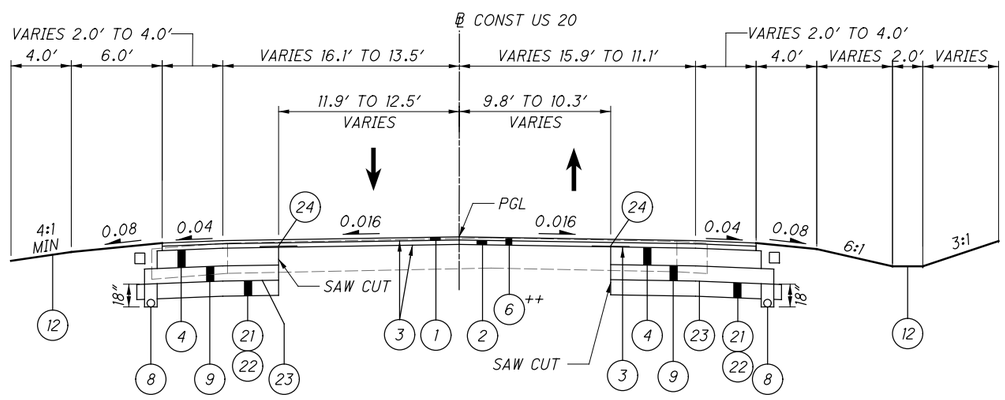

NORMAL SECTION (H-H)

STA 943+48.64 TO STA 945+90.00

++ (6) PLANING DEPTH = 3.00"±

SEE SPLITTER ISLAND SHEETS FOR ADDITIONAL INFORMATION
SEE ROADWAY PLAN SHEETS FOR LOCATIONS OF VARIABLE DIMENSIONS

☐ FOR TYPICAL ASPHALT EDGE COURSE DETAIL, SEE SHEET 12

✱ FOR TYPICAL CURB & GUTTER EDGE COURSE DETAIL, SEE SHEET 12

+ FOR TYPICAL CURB EDGE COURSE DETAIL, SEE SHEET 12

▽ FOR TYPICAL TRAFFIC ISLAND DETAIL, SEE SHEET 12

SECTION LOCATION MAP
NO SCALE

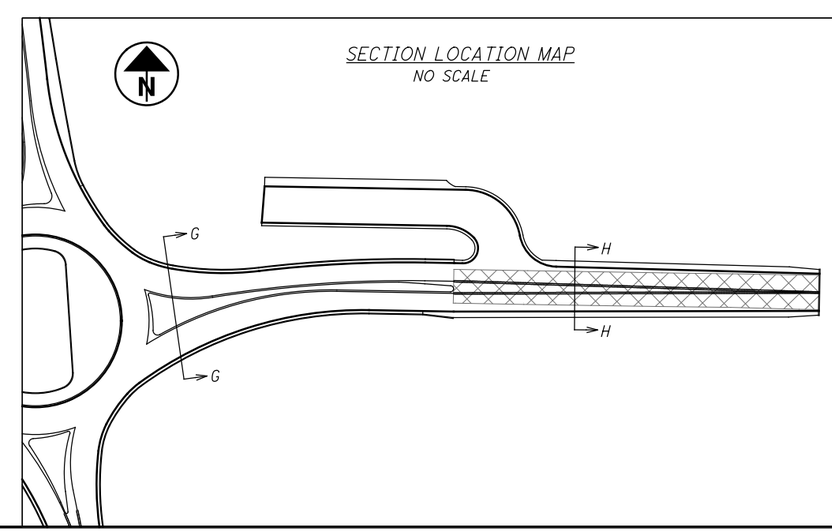

TYPICAL SECTIONS - US 20

HUR-20-17.82

...\Sheets\110357_GY001.dgn 3/23/2021 8:40:56 AM mswhitt

LEGEND:

1. ITEM 441 - 1¼" ASPHALT CONCRETE SURFACE COURSE, TYPE 1, (448), PG64-22
2. ITEM 441 - 1¾" ASPHALT CONCRETE INTERMEDIATE COURSE, TYPE 2, (448)
3. ITEM 407 - TACK COAT
4. ITEM 301 - 6" ASPHALT CONCRETE BASE, PG64-22
5. ITEM 254 - PAVEMENT PLANING (1.25" DEPTH)
6. ITEM 254 - PAVEMENT PLANING (DEPTH VARIES 3.0" TO 6.0" AS SHOWN)
7. ITEM 609 - COMBINATION CURB AND GUTTER, TYPE 2
8. ITEM 605 - 4" BASE PIPE UNDERDRAIN
9. ITEM 304 - 6" AGGREGATE BASE
10. ITEM 452 - 8" NON-REINFORCED CONCRETE PAVEMENT, CLASS QC 1P
11. ITEM 609 - CURB, TYPE 2-A
12. ITEM 659 - SEEDING AND MULCHING
13. ITEM 441 - 2" ASPHALT CONCRETE SURFACE COURSE, TYPE 1, (448), PG64-22
14. ITEM 606 - GUARDRAIL, TYPE 5 OR TYPE MGS
15. ITEM 609 - COMBINATION CURB AND GUTTER, TYPE 3, AS PER PLAN
16. ITEM 451 - 9" REINFORCED CONCRETE PAVEMENT, CLASS QC 1P, AS PER PLAN
17. ITEM 609 - 9" CONCRETE TRAFFIC ISLAND
18. ITEM 609 - CURB, TYPE 6
19. ITEM 206 - CEMENT STABILIZED SUBGRADE, 12" DEEP
20. ITEM 204 - SUBGRADE COMPACTION
21. ITEM 204 - EXCAVATION OF SUBGRADE, 12" DEEP
22. ITEM 204 - GRANULAR MATERIAL, TYPE B W/GEOTEXTILE FABRIC
23. ITEM 204 - PROOF ROLLING
24. ITEM SPECIAL - PAVEMENT OVERLAY FABRIC COMPOSITE (30" WIDE, CENTERED OVER JOINT)
25. ITEM 301 - 3" ASPHALT CONCRETE BASE, PG64-22

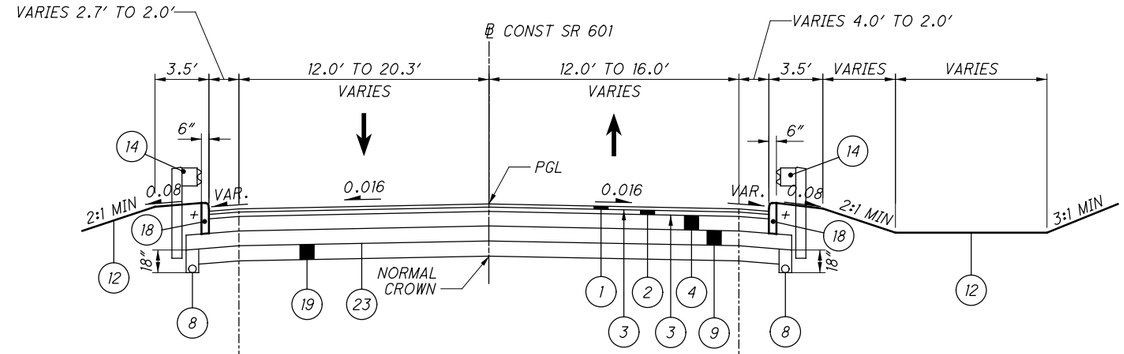

NORMAL SECTION (I-I)
STA 54+70.07 TO STA 55+56.13

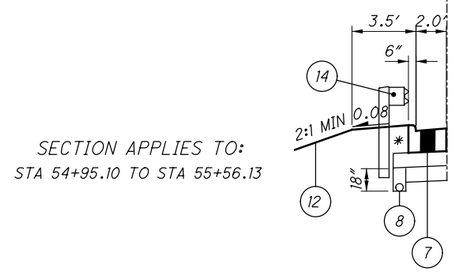

SECTION APPLIES TO:
STA 54+95.10 TO STA 55+56.13

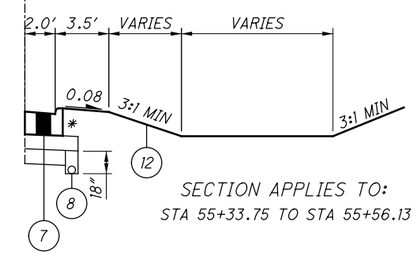

SECTION APPLIES TO:
STA 55+33.75 TO STA 55+56.13

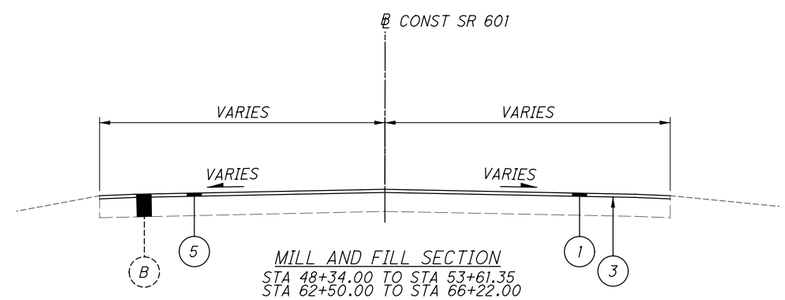

MILL AND FILL SECTION
STA 48+34.00 TO STA 53+61.35
STA 62+50.00 TO STA 66+22.00

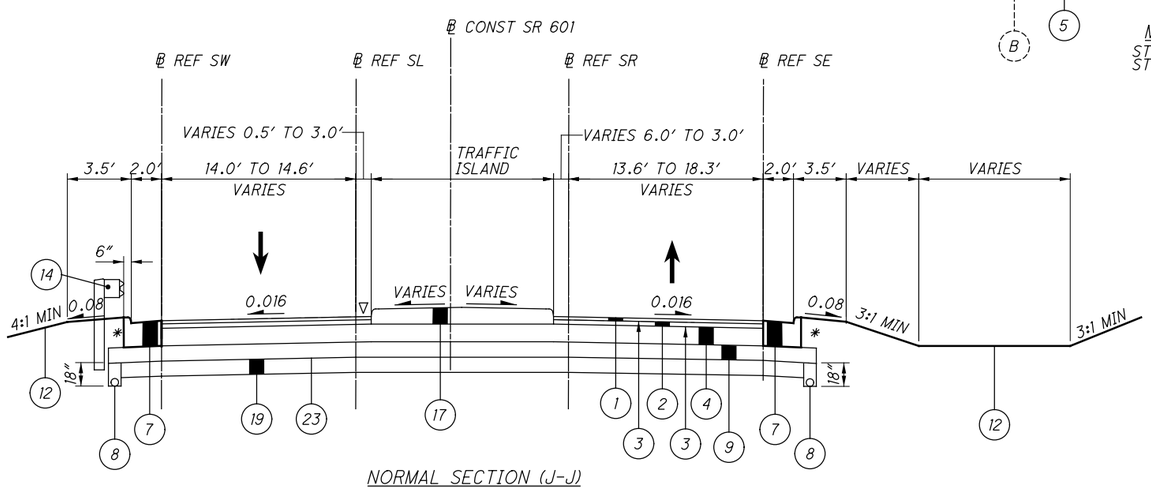

NORMAL SECTION (J-J)
STA 55+56.13 TO 56+10.30

SEE SPLITTER ISLAND SHEETS FOR ADDITIONAL INFORMATION
SEE ROADWAY PLAN SHEETS FOR LOCATIONS OF VARIABLE DIMENSIONS

* FOR TYPICAL CURB & GUTTER EDGE COURSE DETAIL, SEE SHEET 12

+ FOR TYPICAL CURB EDGE COURSE DETAIL, SEE SHEET 12

∇ FOR TYPICAL TRAFFIC ISLAND DETAIL, SEE SHEET 12

SECTION LOCATION MAP
NO SCALE

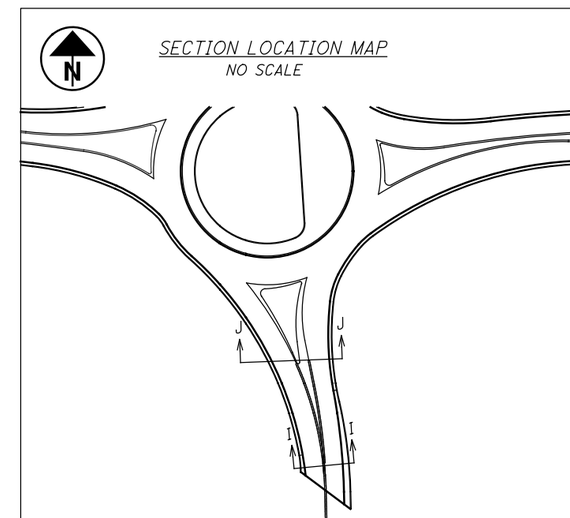

TYPICAL SECTIONS - SR 601

HUR-20-17.82

...\Sheets\110357_GY002.dgn 3/23/2021 8:40:59 AM mswhitt

LEGEND:

1. ITEM 441 - 1¼" ASPHALT CONCRETE SURFACE COURSE, TYPE 1, (448), PG64-22
2. ITEM 441 - 1¾" ASPHALT CONCRETE INTERMEDIATE COURSE, TYPE 2, (448)
3. ITEM 407 - TACK COAT
4. ITEM 301 - 6" ASPHALT CONCRETE BASE, PG64-22
5. ITEM 254 - PAVEMENT PLANING (1.25" DEPTH)
6. ITEM 254 - PAVEMENT PLANING (DEPTH VARIES 3.0" TO 6.0" AS SHOWN)
7. ITEM 609 - COMBINATION CURB AND GUTTER, TYPE 2
8. ITEM 605 - 4" BASE PIPE UNDERDRAIN
9. ITEM 304 - 6" AGGREGATE BASE
10. ITEM 452 - 8" NON-REINFORCED CONCRETE PAVEMENT, CLASS QC 1P
11. ITEM 609 - CURB, TYPE 2-A
12. ITEM 659 - SEEDING AND MULCHING
13. ITEM 441 - 2" ASPHALT CONCRETE SURFACE COURSE, TYPE 1, (448), PG64-22
14. ITEM 606 - GUARDRAIL, TYPE 5 OR TYPE MGS
15. ITEM 609 - COMBINATION CURB AND GUTTER, TYPE 3, AS PER PLAN
16. ITEM 451 - 9" REINFORCED CONCRETE PAVEMENT, CLASS QC 1P, AS PER PLAN
17. ITEM 609 - 9" CONCRETE TRAFFIC ISLAND
18. ITEM 609 - CURB, TYPE 6
19. ITEM 206 - CEMENT STABILIZED SUBGRADE, 12" DEEP
20. ITEM 204 - SUBGRADE COMPACTION
21. ITEM 204 - EXCAVATION OF SUBGRADE, 12" DEEP
22. ITEM 204 - GRANULAR MATERIAL, TYPE B W/GEOTEXTILE FABRIC
23. ITEM 204 - PROOF ROLLING
24. ITEM SPECIAL - PAVEMENT OVERLAY FABRIC COMPOSITE (30" WIDE, CENTERED OVER JOINT)
25. ITEM 301 - 3" ASPHALT CONCRETE BASE, PG64-22

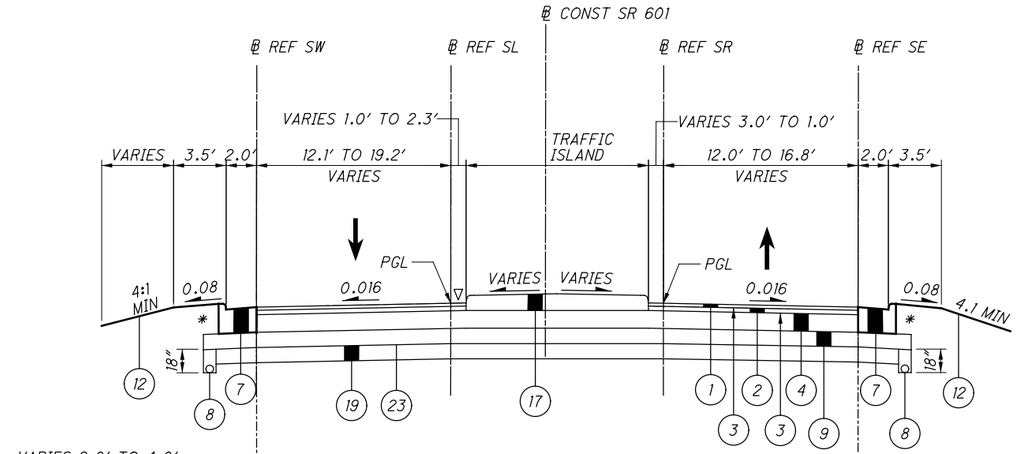

NORMAL SECTION (K-K)
STA 57+62.27 TO 59+18.80

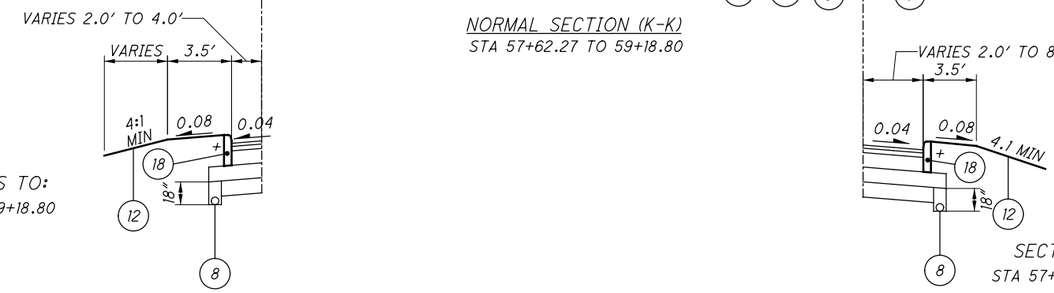

SECTION APPLIES TO:
STA 58+98.65 TO STA 59+18.80

SECTION APPLIES TO:
STA 57+73.69 TO STA 59+18.80

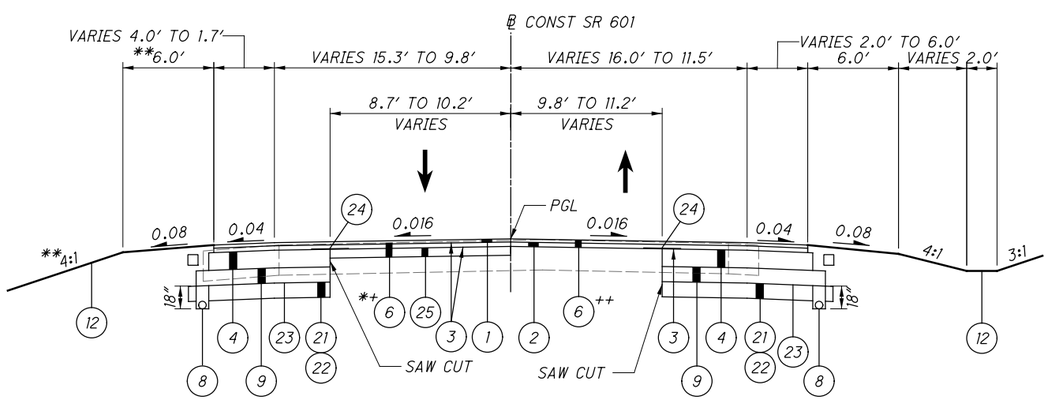

NORMAL SECTION (L-L)
STA 59+18.80 TO STA 62+50.00

** FORESLOPE VARIES
4:1 TO 2:1
STA 60+85 TO STA 61+00
2:1
STA 61+00 TO STA 61+20
2:1 TO 4:1
STA 61+20 TO 61+35

GRADED SHOULDER WIDTH VARIES
6.0' TO 4.0'
STA 60+85 TO STA 61+00
4.0'
STA 61+00 TO STA 61+20
4.0' TO 6.0'
STA 61+20 TO 61+35

SEE SPLITTER ISLAND SHEETS FOR ADDITIONAL INFORMATION
SEE ROADWAY PLAN SHEETS FOR LOCATIONS OF VARIABLE DIMENSIONS

☐ FOR TYPICAL ASPHALT EDGE COURSE DETAIL, SEE SHEET 12

* FOR TYPICAL CURB & GUTTER EDGE COURSE DETAIL, SEE SHEET 12

+ FOR TYPICAL CURB EDGE COURSE DETAIL, SEE SHEET 12

∇ FOR TYPICAL TRAFFIC ISLAND DETAIL, SEE SHEET 12

++ (6) PLANING DEPTH = 3.00"±

*+ (6) PLANING DEPTH = 3.00"± AT SAW CUT AND VARIES TO 6.00"± AT PAV'T CROWN

SECTION LOCATION MAP
NO SCALE

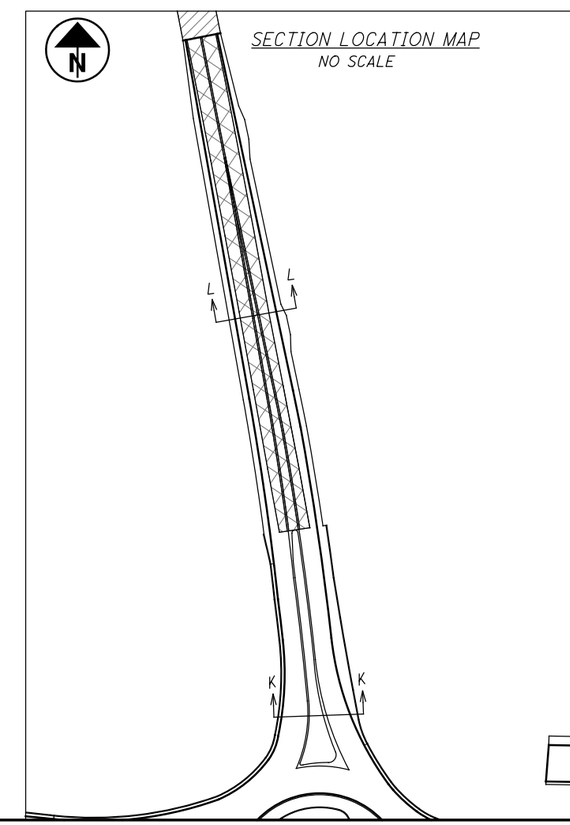

TYPICAL SECTIONS - SR 601

HUR-20-17.82

...\Sheets\110357_GY002.dgn 3/23/2021 8:41:00 AM mswhitt

LEGEND:

1. ITEM 441 - 1¼" ASPHALT CONCRETE SURFACE COURSE, TYPE 1, (448), PG64-22
2. ITEM 441 - 1¾" ASPHALT CONCRETE INTERMEDIATE COURSE, TYPE 2, (448)
3. ITEM 407 - TACK COAT
4. ITEM 301 - 6" ASPHALT CONCRETE BASE, PG64-22
5. ITEM 254 - PAVEMENT PLANING (1.25" DEPTH)
6. ITEM 254 - PAVEMENT PLANING (DEPTH VARIES 3.0" TO 6.0" AS SHOWN)
7. ITEM 609 - COMBINATION CURB AND GUTTER, TYPE 2
8. ITEM 605 - 4" BASE PIPE UNDERDRAIN
9. ITEM 304 - 6" AGGREGATE BASE
10. ITEM 452 - 8" NON-REINFORCED CONCRETE PAVEMENT, CLASS QC 1P
11. ITEM 609 - CURB, TYPE 2-A
12. ITEM 659 - SEEDING AND MULCHING
13. ITEM 441 - 2" ASPHALT CONCRETE SURFACE COURSE, TYPE 1, (448), PG64-22
14. ITEM 606 - GUARDRAIL, TYPE 5 OR TYPE MGS
15. ITEM 609 - COMBINATION CURB AND GUTTER, TYPE 3, AS PER PLAN
16. ITEM 451 - 9" REINFORCED CONCRETE PAVEMENT, CLASS QC 1P, AS PER PLAN
17. ITEM 609 - 9" CONCRETE TRAFFIC ISLAND
18. ITEM 609 - CURB, TYPE 6
19. ITEM 206 - CEMENT STABILIZED SUBGRADE, 12" DEEP
20. ITEM 204 - SUBGRADE COMPACTION
21. ITEM 204 - EXCAVATION OF SUBGRADE, 12" DEEP
22. ITEM 204 - GRANULAR MATERIAL, TYPE B W/GEOTEXTILE FABRIC
23. ITEM 204 - PROOF ROLLING
24. ITEM SPECIAL - PAVEMENT OVERLAY FABRIC COMPOSITE (30" WIDE, CENTERED OVER JOINT)
25. ITEM 301 - 3" ASPHALT CONCRETE BASE, PG64-22

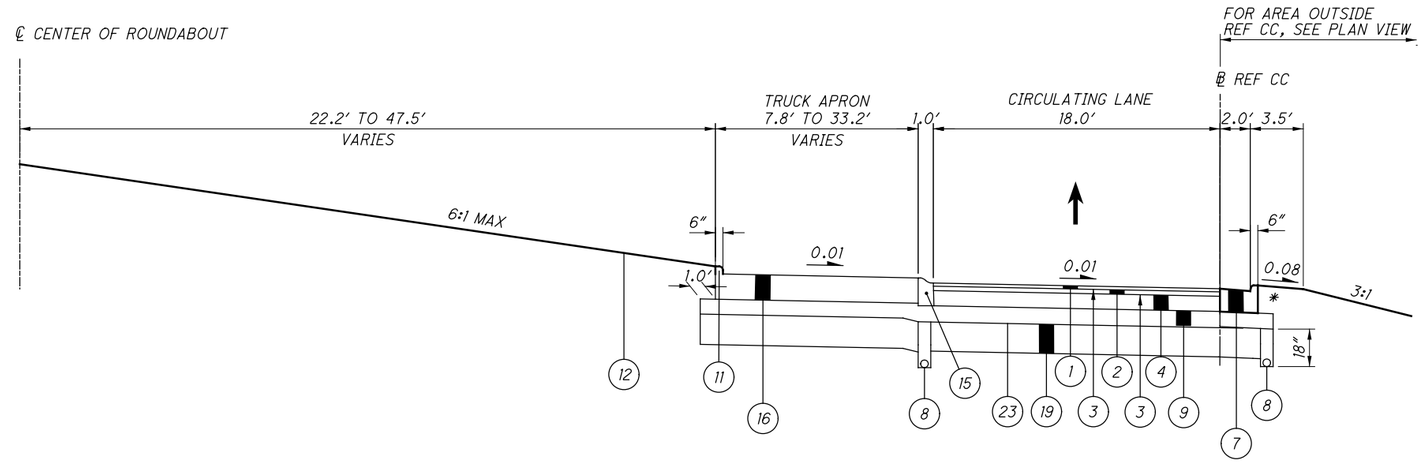

NORMAL SECTION (M-M)
STA 0+00.00 TO STA 4+71.24

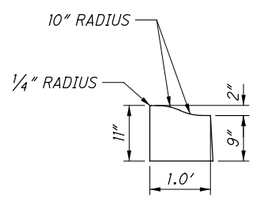

ITEM 609 - COMBINATION CURB AND GUTTER, TYPE 3, AS PER PLAN

THIS ITEM SHALL FOLLOW ALL DETAILS AND MEASUREMENTS SHOWN IN SCD BP-5.1 EXCEPT THAT THE HEIGHT OF THE CURB SHALL BE 2".

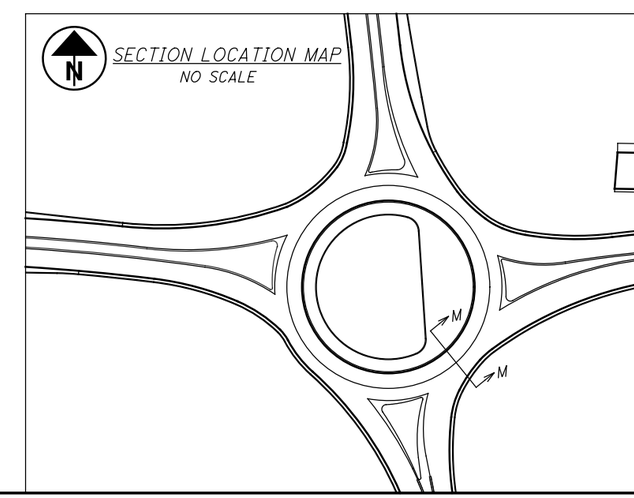

SECTION LOCATION MAP
NO SCALE

SEE SPLITTER ISLAND SHEETS FOR ADDITIONAL INFORMATION
SEE ROADWAY PLAN SHEETS FOR LOCATIONS OF VARIABLE DIMENSIONS

* FOR TYPICAL CURB & GUTTER EDGE COURSE DETAIL, SEE SHEET 12

ROUNDABOUT TYPICAL SECTIONS

HUR-20-17.82

...\Sheets\110357_GY003.dgn 3/23/2021 8:41:03 AM mswhitt

LEGEND:

1. ITEM 441 - 1¼" ASPHALT CONCRETE SURFACE COURSE, TYPE 1, (448), PG64-22
2. ITEM 441 - 1¾" ASPHALT CONCRETE INTERMEDIATE COURSE, TYPE 2, (448)
3. ITEM 407 - TACK COAT
4. ITEM 301 - 6" ASPHALT CONCRETE BASE, PG64-22
5. ITEM 254 - PAVEMENT PLANING (1.25" DEPTH)
6. ITEM 254 - PAVEMENT PLANING (DEPTH VARIES 3.0" TO 6.0" AS SHOWN)
7. ITEM 609 - COMBINATION CURB AND GUTTER, TYPE 2
8. ITEM 605 - 4" BASE PIPE UNDERDRAIN
9. ITEM 304 - 6" AGGREGATE BASE
10. ITEM 452 - 8" NON-REINFORCED CONCRETE PAVEMENT, CLASS QC 1P
11. ITEM 609 - CURB, TYPE 2-A
12. ITEM 659 - SEEDING AND MULCHING
13. ITEM 441 - 2" ASPHALT CONCRETE SURFACE COURSE, TYPE 1, (448), PG64-22
14. ITEM 606 - GUARDRAIL, TYPE 5 OR TYPE MGS
15. ITEM 609 - COMBINATION CURB AND GUTTER, TYPE 3, AS PER PLAN
16. ITEM 451 - 9" REINFORCED CONCRETE PAVEMENT, CLASS QC 1P, AS PER PLAN
17. ITEM 609 - 9" CONCRETE TRAFFIC ISLAND
18. ITEM 609 - CURB, TYPE 6
19. ITEM 206 - CEMENT STABILIZED SUBGRADE, 12" DEEP
20. ITEM 204 - SUBGRADE COMPACTION
21. ITEM 204 - EXCAVATION OF SUBGRADE, 12" DEEP
22. ITEM 204 - GRANULAR MATERIAL, TYPE B W/GEOTEXTILE FABRIC
23. ITEM 204 - PROOF ROLLING
24. ITEM SPECIAL - PAVEMENT OVERLAY FABRIC COMPOSITE (30" WIDE, CENTERED OVER JOINT)
25. ITEM 301 - 3" ASPHALT CONCRETE BASE, PG64-22

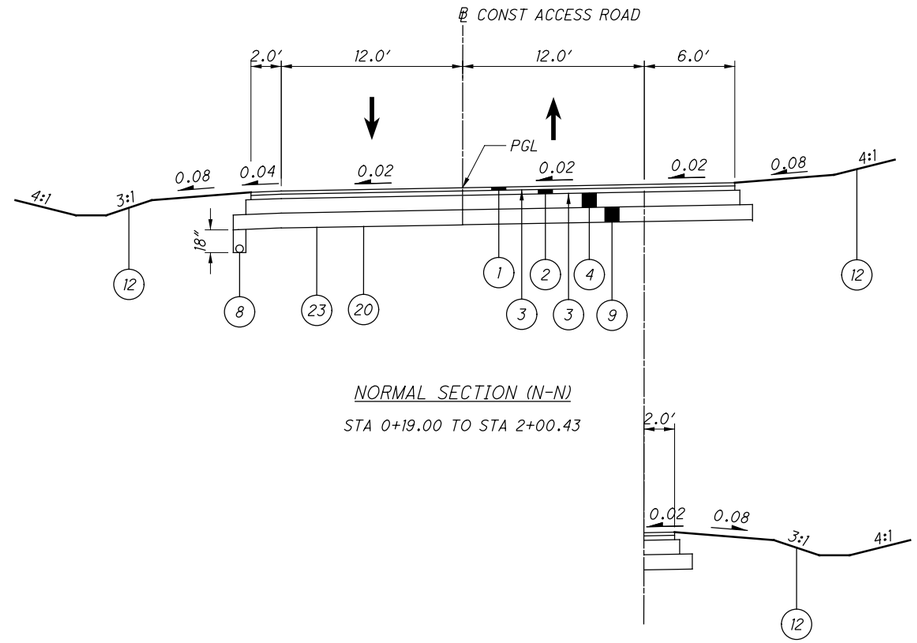

NORMAL SECTION (N-N)

STA 0+19.00 TO STA 2+00.43

SECTION APPLIES TO:

STA 0+19.00 TO STA 0+84.88

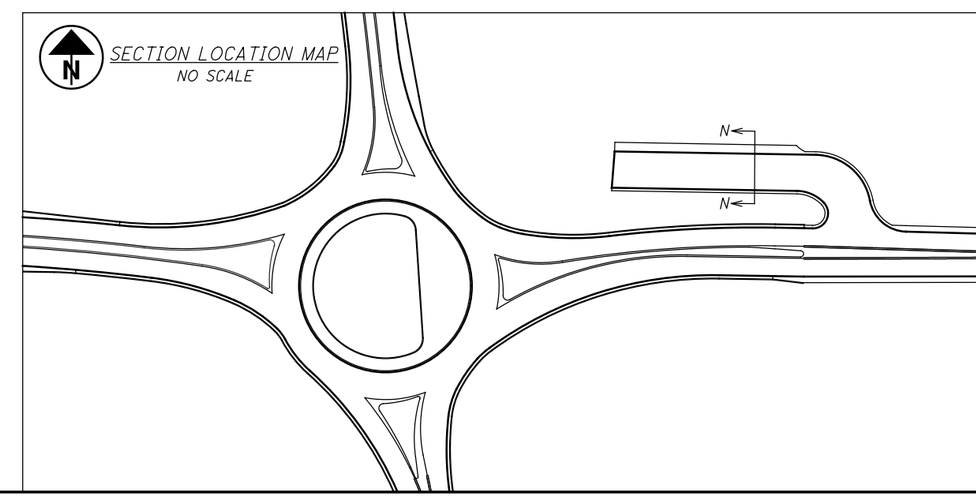

* FOR TYPICAL ASPHALT EDGE COURSE DETAIL, SEE SHEET 12

TYPICAL SECTIONS - ACCESS ROAD

HUR-20-17.82

...\Sheets\110357_GY003.dgn 3/23/2021 8:41:03 AM mswhitt

LEGEND:

1. ITEM 441 - 1¼" ASPHALT CONCRETE SURFACE COURSE, TYPE 1, (448), PG64-22
2. ITEM 441 - 1¾" ASPHALT CONCRETE INTERMEDIATE COURSE, TYPE 2, (448)
3. ITEM 407 - TACK COAT
4. ITEM 301 - 6" ASPHALT CONCRETE BASE, PG64-22
5. ITEM 254 - PAVEMENT PLANING (1.25" DEPTH)
6. ITEM 254 - PAVEMENT PLANING (DEPTH VARIES 3.0" TO 6.0" AS SHOWN)
7. ITEM 609 - COMBINATION CURB AND GUTTER, TYPE 2
8. ITEM 605 - 4" BASE PIPE UNDERDRAIN
9. ITEM 304 - 6" AGGREGATE BASE
10. ITEM 452 - 8" NON-REINFORCED CONCRETE PAVEMENT, CLASS QC 1P
11. ITEM 609 - CURB, TYPE 2-A
12. ITEM 659 - SEEDING AND MULCHING
13. ITEM 441 - 2" ASPHALT CONCRETE SURFACE COURSE, TYPE 1, (448), PG64-22
14. ITEM 606 - GUARDRAIL, TYPE 5 OR TYPE MGS
15. ITEM 609 - COMBINATION CURB AND GUTTER, TYPE 3, AS PER PLAN
16. ITEM 451 - 9" REINFORCED CONCRETE PAVEMENT, CLASS QC 1P, AS PER PLAN
17. ITEM 609 - 9" CONCRETE TRAFFIC ISLAND
18. ITEM 609 - CURB, TYPE 6
19. ITEM 206 - CEMENT STABILIZED SUBGRADE, 12" DEEP
20. ITEM 204 - SUBGRADE COMPACTION
21. ITEM 204 - EXCAVATION OF SUBGRADE, 12" DEEP
22. ITEM 204 - GRANULAR MATERIAL, TYPE B W/GEOTEXTILE FABRIC
23. ITEM 204 - PROOF ROLLING
24. ITEM SPECIAL - PAVEMENT OVERLAY FABRIC COMPOSITE (30" WIDE, CENTERED OVER JOINT)
25. ITEM 301 - 3" ASPHALT CONCRETE BASE, PG64-22

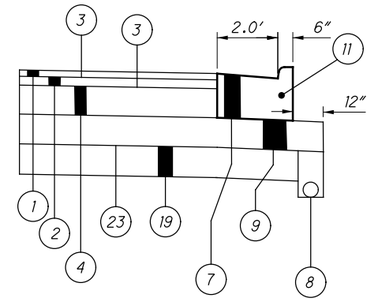

✳ TYPICAL CURB & GUTTER EDGE COURSE DETAIL

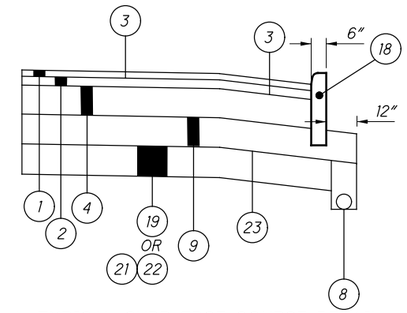

+ TYPICAL CURB EDGE COURSE DETAIL

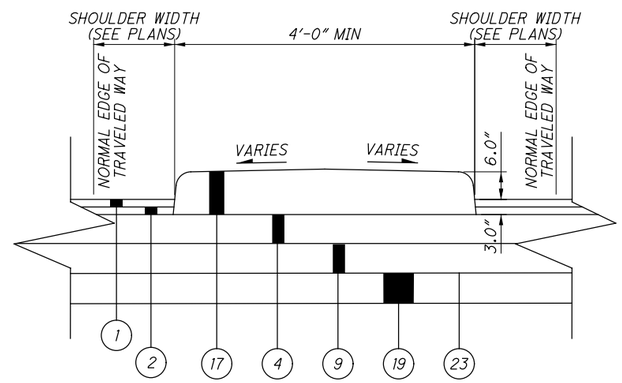

▽ TYPICAL TRAFFIC ISLAND DETAIL

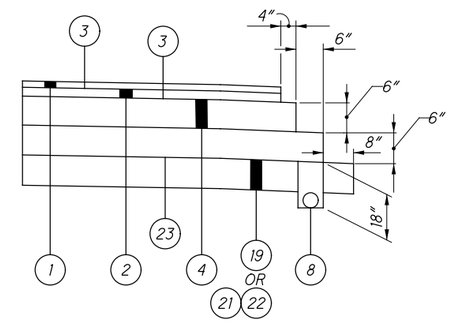

□ TYPICAL ASPHALT EDGE COURSE DETAIL

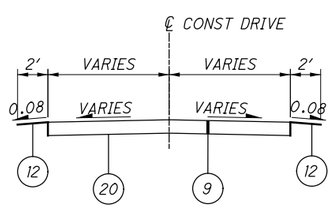

TYPICAL FIELD DRIVEWAY

US 20 STA. 944+93.87

SR 601 STA. 61+52.14

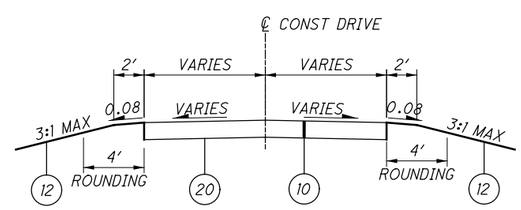

TYPICAL CONCRETE COMMERCIAL DRIVEWAY

SR 601 STA. 59+00.95

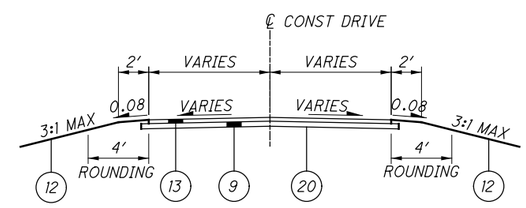

TYPICAL RESIDENTIAL ASPHALT DRIVEWAY

SR 601 STA. 60+52.69

SR 601 STA. 61+83.42

ACCESS ROAD STA 0+89.07

ACCESS ROAD STA 1+61.14

DRIVEWAY TYPICAL SECTIONS & DETAILS

HUR-20-17.82

...\Sheets\110357_GY003.dgn 3/23/2021 8:41:03 AM mswhitt

UTILITIES

LISTED BELOW ARE ALL UTILITIES LOCATED WITHIN THE PROJECT CONSTRUCTION LIMITS TOGETHER WITH THEIR RESPECTIVE OWNERS:

NORTHERN OHIO RURAL WATER
P.O. BOX 96
COLLINS, OHIO 44826
ATTN: JOSH SUTHERLAND
PHONE: (419) 668-7213
EMAIL: jsutherland@norw.org

FRONTIER COMMUNICATIONS
3126 NORTH MCCORD ROAD
TOLEDO, OHIO 43617
ATTN: AMY ROTH
PHONE: (419) 841-7281
EMAIL: amy.l.roth@ftr.com

CHARTER
1575 LEXINGTON AVENUE
MANSFIELD, OHIO 44907
ATTN: RON FERDINAND
EMAIL: ronald.ferdinand@charter.com

OHIO EDISON COMPANY
2508 WEST PERKINS AVENUE
SANDUSKY, OH 44870
ATTN: JIM ROHRBACHER
PHONE: (419_ 627-6881
EMAIL: jorohrbacher@firstenergeycorp.com

THE LOCATION OF THE UNDERGROUND UTILITIES SHOWN ON THE PLANS ARE AS OBTAINED FROM THE OWNERS AS REQUIRED BY SECTION 153.64 O.R.C.

CONSTRUCTION NOISE

ACTIVITIES AND LAND USE ADJACENT TO THIS PROJECT MAY BE AFFECTED BY CONSTRUCTION NOISE. IN ORDER TO MINIMIZE ANY ADVERSE CONSTRUCTION NOISE IMPACTS, DO NOT OPERATE POWER-OPERATED CONSTRUCTION-TYPE DEVICES BETWEEN THE HOURS OF 7 PM AND 7 AM. IN ADDITION, DO NOT OPERATE AT ANY TIME ANY DEVICE IN SUCH A MANNER THAT THE NOISE CREATED SUBSTANTIALLY EXCEEDS THE NOISE CUSTOMARILY AND NECESSARILY ATTENDANT TO THE REASONABLE AND EFFICIENT PERFORMANCE OF SUCH EQUIPMENT.

ROUTINE MAINTENANCE

BETWEEN THE TIME THAT BIDS ARE TAKEN AND THE START OF CONSTRUCTION, THE MAINTAINING AGENCY MAY ENTER UPON THE PROJECT AND PERFORM ROUTINE MAINTENANCE SUCH AS CRACK SEALING, PATCHING, AND BERM AND SHOULDER REPAIR. THE EFFECTS, IF ANY, OF THE PERFORMANCE OF ROUTINE MAINTENANCE SHALL BE CONSIDERED AS INHERENT IN WORK OF THE CHARACTER PROVIDED FOR IN THE PLAN AND THE RESULTING CONDITIONS SHALL NOT BE CONSIDERED AS DIFFERING MATERIALLY FROM THOSE EXISTING AT THE TIME BIDS WERE TAKEN.

SURVEYING PARAMETERS

PRIMARY PROJECT CONTROL MONUMENTS GOVERN ALL POSITIONING ON ODOT PROJECTS. SEE SHEET 2 OF THE PLANS FOR A TABLE CONTAINING PROJECT CONTROL INFORMATION.

USE THE FOLLOWING PROJECT CONTROL, VERTICAL POSITIONING, AND HORIZONTAL POSITIONING PARAMETERS FOR ALL SURVEYING:

PROJECT CONTROL

POSITIONING METHOD: STATIC GNSS
MONUMENT TYPE: (B)

VERTICAL POSITIONING

ORTHOMETRIC HEIGHT DATUM: NAVD88
GEOID: GEOID12A

HORIZONTAL POSITIONING

REFERENCE FRAME: NAD83(2011)(EPOCH:2010.0000)
ELLIPSOID: GRS80
MAP PROJECTION: LAMBERT CONFORMAL CONIC
COORDINATE SYSTEM: OHIO STATE PLANE (NORTH) ZONE
COMBINED SCALE FACTOR: 1.00009000
ORIGIN OF COORDINATE SYSTEM: 0,0

USE THE POSITIONING METHODS AND MONUMENT TYPE USED IN THE ORIGINAL SURVEY TO RESTORE ALL MONUMENTS RELATED TO PRIMARY PROJECT CONTROL THAT ARE DAMAGED OR DESTROYED BY CONSTRUCTION ACTIVITIES. RESTORE THE DAMAGED OR DESTROYED MONUMENTS IN ACCORDANCE WITH CMS 623.

UNITS ARE IN U.S. SURVEY FEET.

ROUNDING

THE ROUNDING AT SLOPE BREAKPOINTS SHOWN ON THE TYPICAL SECTIONS APPLIES TO ALL CROSS-SECTIONS EVEN THOUGH OTHERWISE SHOWN.

WORK LIMITS

THE WORK LIMITS SHOWN ON THESE PLANS ARE FOR PHYSICAL CONSTRUCTION ONLY. PROVIDE THE INSTALLATION AND OPERATION OF ALL WORK ZONE TRAFFIC CONTROL AND WORK ZONE TRAFFIC CONTROL DEVICES REQUIRED BY THESE PLANS WHETHER INSIDE OR OUTSIDE THESE WORK LIMITS.

CLEARING AND GRUBBING

THE FOLLOWING IS AN APPROXIMATE ESTIMATE OF THE NUMBER OF TREES AND STUMPS TO BE REMOVED WITHIN THE CONSTRUCTION LIMITS AS SPECIFICALLY MARKED IN THE PLANS. HOWEVER, ALL TREE REMOVAL WORK WILL BE PERFORMED BY OTHERS PRIOR TO CONSTRUCTION.

SIZES	NO. TREES	NO. STUMPS	TOTAL
18"	8	0	8
30"	1	0	1
48"	0	0	0
60"	0	0	0

SEEDING AND MULCHING

THE FOLLOWING QUANTITIES ARE PROVIDED TO PROMOTE GROWTH AND CARE OF PERMANENT SEEDED AREAS:

659, SOIL ANALYSIS TEST
2 EACH

659, TOPSOIL
855 CU. YD.

659, SEEDING AND MULCHING
7707 SQ. YD.

659, REPAIR SEEDING AND MULCHING
385 SQ. YD.

659, INTER-SEEDING
385 SQ. YD.

659, COMMERCIAL FERTILIZER
1.08 TON

659, LIME
1.59 ACRES

659, WATER
43 M. GAL.

659, MOWING
17 M. SQ.FT.

SEEDING AND MULCHING SHALL BE APPLIED TO ALL AREAS OF EXPOSED SOIL BETWEEN THE RIGHT-OF-WAY LINES, AND WITHIN THE CONSTRUCTION LIMITS FOR AREAS OUTSIDE THE RIGHT-OF-WAY LINES COVERED BY WORK AGREEMENT OR SLOPE EASEMENT. QUANTITY CALCULATIONS FOR SEEDING AND MULCHING ARE BASED ON THESE LIMITS.

PROTECTION OF RIGHT-OF-WAY LANDSCAPING

PRIOR TO BEGINNING WORK, THE CONTRACTOR, THE PROJECT ENGINEER, AND A REPRESENTATIVE OF THE MAINTAINING AGENCY WILL REVIEW AND RECORD ALL LANDSCAPING ITEMS WITHIN THE RIGHT-OF-WAY (BOTH WITHIN AND OUTSIDE THE CONSTRUCTION LIMITS) A RECORD OF THIS REVIEW WILL BE KEPT IN THE PROJECT.

ENVIRONMENTAL COMMITMENTS

ENDANGERED BAT HABITAT REMOVAL

THIS PROJECT IS LOCATED WITHIN THE KNOWN HABITAT RANGES OF THE FEDERALLY LISTED AND PROTECTED INDIANA BAT AND NORTHERN LONG-EARED BAT. THE CONTRACTOR SHALL NOT REMOVE TREES UNDER THIS PROJECT FROM APRIL 1 THROUGH SEPTEMBER 30. ALL NECESSARY TREE REMOVAL SHALL OCCUR FROM OCTOBER 1 THROUGH MARCH 31. THIS REQUIREMENT IS NECESSARY TO AVOID AND MINIMIZE IMPACTS TO THESE SPECIES AS REQUIRED BY THE ENDANGERED SPECIES ACT. FOR THE PURPOSES OF THIS NOTE, A TREE IS DEFINED AS A LIVE, DYING, OR DEAD WOODY PLANT, WITH A TRUNK THREE INCHES OR GREATER IN DIAMETER AT A HEIGHT OF 4.5 FEET ABOVE THE GROUND SURFACE, AND WITH A MINIMUM HEIGHT OF 13 FEET.

EARTHWORK SUMMARY

SHEET NO.	STATION		203 EXCAVATION	203 EMBANKMENT	659 SEEDING AND MULCHING
	FROM	TO	CY	CY	SY
	SR 601				
53	54+70.07	55+00.00	63	110	134
54	55+50.00	56+00.00	452	200	750
55	57+75.00	58+50.00	349	65	1,176
56	59+00.95	59+50.00	183	134	262
57	60+00.00	61+00.00	169	311	368
58	61+20.00	61+83.42	63	119	147
59	62+00.00	62+72.00	50	148	232
	SUBTOTAL		1,329	1,087	3,069
	US 20				
45	935+00.00	936+00.00	44	30	157
46	936+50.00	936+62.33	58	73	130
47	937+90.00	938+00.00	154	216	383
48	938+50.00	939+50.00	201	337	501
49	939+75.00	942+00.00	278	201	978
50	942+50.00	943+50.00	299	95	554
51	944+00.00	944+93.87	257	142	766
52	945+50.00	946+00.00	65	100	306
	SUBTOTAL		1,356	1,194	3,775
	CIRCULATORY ROADWAY				
60	0+00.00	0+50.00	116	33	12
61	1+15.00	1+75.00	145	304	37
62	2+20.00	2+75.00	83	525	85
63	3+60.00	4+20.00	404	782	470
	SUBTOTAL		748	1,644	604
	ACCESS ROAD				
64	0+37.00	0+75.00	127	0	79
65	0+89.07	1+61.14	332	1	123
66	2+00.42	2+10.00	137	2	57
	SUBTOTAL		596	3	259
	GRAND TOTAL CARRIED TO GENERAL SUMMARY		4,029	3,928	7,707

CALCULATED TK
CHECKED MSW

GENERAL NOTES

HUR-20-17.82

...\Sheets\110357_GN001.dgn 3/23/2021 8:41:06 AM mswhitt

ITEM SPECIAL - MAILBOX SUPPORT SYSTEM, (SINGLE)

THIS WORK SHALL CONSIST OF FURNISHING AND ERECTING MAILBOX SUPPORTS AND ANY ASSOCIATED MOUNTING HARDWARE IN ACCORDANCE WITH PLAN DETAILS, AND ATTACHING AN OWNER-SUPPLIED MAILBOX AT LOCATIONS SPECIFIED IN THE PLAN, OR OTHERWISE ESTABLISHED BY THE ENGINEER.

WOOD POSTS SHALL BE NOMINAL 4 INCHES BY 4 INCHES SQUARE OR 4.5 INCHES DIAMETER ROUND, AND CONFORM TO 710.14.

STEEL POSTS SHALL BE NOMINAL PIPE SIZE 2 INCHES I.D., AND CONFORM TO AASHTO M 181.

ALL HARDWARE INCLUDING BUT NOT LIMITED TO PLATES, SCREWS, BOLTS, AND ETC. SHALL BE COMMERCIAL-GRADE GALVANIZED STEEL.

POSTS SHALL BE SET PER THE FIRST PARAGRAPH OF 606.03, AND SHALL IN NO INSTANCE BE ENCASED IN CONCRETE.

SUPPORT HARDWARE SHALL ACCOMMODATE EITHER A SINGLE OR A DOUBLE MAILBOX INSTALLATION, AND NO MORE THAN TWO BOXES MAY BE MOUNTED ON A SINGLE POST.

THE MAILBOX SHALL BE SECURELY AND NEATLY ATTACHED BY THE CONTRACTOR TO THE NEW SUPPORT. THE CONTRACTOR SHALL FURNISH ALL NECESSARY ATTACHMENT HARDWARE (NUTS, BOLTS, PLATES, SPACERS, AND WASHERS) AS NECESSARY TO ACCOMMODATE THE COMPLETE INSTALLATION.

IN THE ABSENCE OF A NEW BOX SUPPLIED BY THE OWNER, THE CONTRACTOR SHALL SALVAGE THE EXISTING BOX AND PLACE IT ON THE NEW SUPPORT. DUE CARE SHALL BE EXERCISED IN SUCH AN OPERATION, AND THE CONTRACTOR SHALL BE RESPONSIBLE FOR REPAIRING OR REPLACING ANY BOX DAMAGED BY IMPROPER HANDLING ON HIS PART, AS JUDGED AND DIRECTED BY THE ENGINEER.

THE CONTRACTOR SHALL BE RESPONSIBLE FOR COORDINATING WITH THE LOCAL POST MASTER REGARDING THE TIMING OF THE MOVEMENT OF ANY MAILBOX TO A NEW LOCATION.

PAYMENT UNDER THIS ITEM SHALL BE LIMITED TO FINAL PERMANENT INSTALLATIONS. TEMPORARY INSTALLATIONS SHALL BE IN ACCORDANCE WITH 107.10. HOWEVER, THE SAME MATERIAL AND SIZE LIMITATIONS AS FOR PERMANENT INSTALLATIONS SHALL APPLY.

MAILBOX SUPPORTS, COMPLETE IN PLACE, WILL BE PAID FOR AT THE CONTRACT UNIT PRICE PER EACH, FOR ITEM SPECIAL MAILBOX SUPPORT SYSTEM, (SINGLE).

ITEM 254 - PATCHING PLANED SURFACE

THE FOLLOWING QUANTITY IS PROVIDED IN THE GENERAL SUMMARY TO ACCOUNT FOR PATCHING AREAS OF THE PLANED SURFACE THAT THE ENGINEER DESIGNATES AS HAVING SPALLING OR DISLODGED UNSOUND PAVEMENT.

ITEM 254 - PATCHING PLANED SURFACE 167 SY

ITEM 204 - SUBGRADE COMPACTION AND PROOF ROLLING

CONSTRUCT THE SUBGRADE AS FOLLOWS AND IN THE FOLLOWING SEQUENCE:

1. SHAPE THE SUBGRADE TO WITHIN 0.2 FEET OF THE PLAN SUBGRADE ELEVATION.

2. EXCAVATE AND REPLACE UNSUITABLE SUBGRADE BEFORE PROOF ROLLING. THE EXCAVATION LIMITS ARE SHOWN AND LABELED ON THE CROSS SECTIONS AS UNSUITABLE SUBGRADE. UNSUITABLE SUBGRADE INCLUDES UNSUITABLE SOIL (A-4B, A-2-5, A-5, A-7-5, AND SOIL WITH A LIQUID LIMIT GREATER THAN 65) AND ANY COAL, SHALE, OR ROCK WHICH NEEDS TO BE REMOVED ACCORDING TO 204.05.

   IF THERE IS UNSUITABLE SUBGRADE IN A SHALLOW FILL LOCATION, EXCAVATE AND REPLACE THE UNSUITABLE SUBGRADE BEFORE CONSTRUCTING THE SHALLOW FILL AND SHAPING THE SUBGRADE.

3. COMPACT THE SUBGRADE ACCORDING TO 204.03.

4. APPROXIMATE LIMITS FOR EXCAVATION OF UNSTABLE SUBGRADE ARE SHOWN AND LABELED ON THE CROSS SECTIONS AS UNSTABLE SUBGRADE. THE ENGINEER WILL IDENTIFY THE ACTUAL LIMITS OF EXCAVATION FOR UNSTABLE SUBGRADE BASED ON THE PROOF ROLLING RESULTS AND VISUAL OBSERVATIONS.

   PROOF ROLL THE COMPACTED SUBGRADE ACCORDING TO 204.06.

5. EXCAVATE UNSTABLE SUBGRADE AS DIRECTED BY THE ENGINEER AND STABILIZE BY REPLACING WITH THE SPECIFIED MATERIALS ACCORDING TO 204.07. EXCAVATIONS WILL EXTEND 18 INCHES BEYOND THE EDGE OF THE SURFACE OF THE PAVEMENT, PAVED SHOULDERS, OR PAVED MEDIANS.

6. PROOF ROLL THE STABILIZED AREAS ACCORDING TO 204.06 TO VERIFY STABILITY.

7. FINE GRADE THE SUBGRADE TO THE SPECIFIED GRADE.

THE QUANTITIES FOR EXCAVATING THE UNSUITABLE SUBGRADE AND UNSTABLE SUBGRADE ARE BOTH PAID UNDER ITEM 204 EXCAVATION OF SUBGRADE.

ITEM 204 - PROOF ROLLING

THE FOLLOWING QUANTITY IS PROVIDED IN THE GENERAL SUMMARY TO ADDRESS LOCATIONS REQUIRING PROOF ROLLING. SEE PLAN SHEET NO. 29 FOR ADDITIONAL INFORMATION.

ITEM 204 - PROOF ROLLING 4 HOUR.

CONNECTION BETWEEN EXISTING AND PROPOSED GUARDRAIL

WHEN IT IS NECESSARY TO SPLICE PROPOSED GUARDRAIL TO EXISTING GUARDRAIL, ONLY THE EXISTING GUARDRAIL SHALL BE CUT, DRILLED, OR PUNCHED. THE CONNECTION SHALL BE MADE USING A W-BEAM, BEAM SPLICE AS SHOWN IN AASHTO M 180-12, EXCEPT THE BEAM WASHERS ARE NOT TO BE USED. PAYMENT SHALL BE INCLUDED IN THE CONTRACT PRICE FOR THE RESPECTIVE GUARDRAIL ITEMS.

ITEM 606 - ANCHOR ASSEMBLY, MGS TYPE E

THIS ITEM SHALL CONSIST OF FURNISHING AND INSTALLING ANY OF THE GUARDRAIL END TERMINALS FOR TYPE MGS GUARDRAIL AS LISTED ON ROADWAY ENGINEERING'S WEB PAGE UNDER ROADSIDE SAFETY DEVICES FOR APPROVED GUARDRAIL END TREATMENTS. INSTALLATION SHALL BE AT THE LOCATIONS SPECIFIED IN THE PLANS, IN ACCORDANCE WITH THE MANUFACTURER'S SPECIFICATIONS.

THE FACE OF THE TYPE E IMPACT HEAD SHALL BE COVERED WITH A SHEET OF TYPE G REFLECTIVE SHEETING, PER CMS 730.19.

REFER TO THE MANUFACTURER'S INSTRUCTIONS REGARDING THE INSTALLATION OF, AND THE GRADING AROUND THE FOUNDATION TUBES AND GROUND STRUT. THE TOP OF ANY FOUNDATION TUBE SHOULD BE LESS THAN 4 INCHES ABOVE THE GROUND. THE PLACEMENT OF THE FOUNDATION TUBES SHOULD BE AN APPROPRIATE DEPTH BELOW THE LEVEL LINE IN ORDER TO MAINTAIN THE FINISHED GUARDRAIL HEIGHT OF 31 INCHES FROM THE EDGE OF THE SHOULDER.

ON-SITE GRADING IS REQUIRED IF THE TOP OF THE FOUNDATION TUBES OR TOP OF THE GROUND STRUT DOES PROJECT MORE THAN 4 INCHES ABOVE THE GROUND LINE.

PAYMENT FOR THE ABOVE WORK SHALL BE MADE AT THE UNIT PRICE BID FOR ITEM 606, ANCHOR ASSEMBLY, MGS TYPE E, EACH, AND SHALL INCLUDE ALL LABOR, TOOLS, EQUIPMENT AND MATERIALS NECESSARY TO CONSTRUCT A COMPLETE AND FUNCTIONAL ANCHOR ASSEMBLY SYSTEM, INCLUDING ALL RELATED TRANSITIONS, REFLECTIVE SHEETING, HARDWARE, GRADING, EMBANKMENT AND EXCAVATION NOT SEPARATELY SPECIFIED, AS REQUIRED BY THE MANUFACTURER.

ITEM 202 - GUARDRAIL REMOVED, AS PER PLAN

THIS WORK INVOLVES THE REMOVAL OF A SINGLE 12.5' PANEL OF EXISTING GUARDRAIL AND ONE STEEL POST LOCATED ALONG THE EASTERN EDGE OF THE GULF INN PARKING LOT, NEAR THE END OF THE PROPOSED ACCESS ROAD. THE EXISTING CURVED BUFFER END GUARD SHOULD BE RELOCATED TO THE END OF THE LAST GUARDRAIL PANEL TO REMAIN.

ITEM 451 - 9" REINFORCED CONCRETE PAVEMENT, CLASS QC1P, AS PER PLAN

ALL WORK SHALL BE IN CONFORMANCE WITH ITEM 451 - REINFORCED CONCRETE PAVEMENT, CLASS QC1P FOR THE INSTALLATION OF THE TRUCK APRON EXCEPT THAT THE CONCRETE SHALL BE DIED A BRICK RED COLOR. THE ACTUAL COLOR VARIATION SHALL BE APPROVED BY THE ENGINEER PRIOR TO APPLICATION. PAYMENT FOR THE WORK DESCRIBED SHALL INCLUDE ALL LABOR, MATERIALS, AND EQUIPMENT NECESSARY TO INSTALL THE TRUCK APRON AND SHALL BE MADE AT THE UNIT PRICE BID FOR ITEM 451 - 9" REINFORCED CONCRETE PAVEMENT, CLASS QC1P, AS PER PLAN.

ITEM 609 - 9" CONCRETE TRAFFIC ISLAND, AS PER PLAN

ALL WORK SHALL BE IN CONFORMANCE WITH ITEM 609 - 9" CONCRETE TRAFFIC ISLAND FOR THE INSTALLATION OF THE SPLITTER ISLANDS EXCEPT THAT THE INTERIOR SURFACE OF THE CONCRETE SHALL BE STAMPED WITH A STANDARD RUNNING BOND BRICK TEXTURE AND DIED A BRICK RED COLOR (WHICH MATCHES THE COLOR USED IN THE TRUCK APRON). THE "INTERIOR SURFACE" SHALL BE LIMITED TO A DISTINCT BOUNDARY 6" INSIDE THE TOE AROUND THE OUTSIDE OF THE ISLAND. FOR DETAILED ILLUSTRATION OF THE "INTERIOR SURFACE" LIMITS, SEE SHEET 71 . PAYMENT FOR THE WORK DESCRIBED SHALL INCLUDE ALL LABOR, MATERIALS, AND EQUIPMENT NECESSARY TO INSTALL THE SPLITTER ISLANDS AND SHALL BE MADE AT THE UNIT PRICE BID FOR ITEM 609 - 9" CONCRETE TRAFFIC ISLAND, AS PER PLAN.

...\Sheets\110357_GN001.dgn 3/23/2021 8:41:06 AM mswhitt

ITEM 611 - RESIDENTIAL AND COMMERCIAL DRAINAGE CONNECTIONS

EXISTING ROOF DRAINS, FOOTER DRAINS, OR YARD DRAINS, DISTURBED BY THE WORK, SHALL BE PROVIDED WITH UNOBSTRUCTED OUTLETS BY CONNECTING A CONDUIT THROUGH THE CURB OR INTO A DRAINAGE STRUCTURE. THE LOCATION, TYPE, SIZE AND GRADE OF THE NEW CONDUIT REQUIRED TO REPLACE OR EXTEND THE EXISTING DRAIN WILL BE DETERMINED BY THE ENGINEER.

THE FOLLOWING CONDUIT TYPES MAY BE USED: 707.33, 707.41 NON-PERFORATED, 707.42, 707.43, 707.45, 707.46, 707.47, 707.51, 707.52 SDR35.

PAYMENT FOR ALL LABOR AND MATERIALS WILL BE PERFORMED BY CHANGE ORDER.

FARM DRAINS

ALL FARM DRAINS, WHICH ARE ENCOUNTERED DURING CONSTRUCTION, SHALL BE PROVIDED WITH UNOBSTRUCTED OUTLETS. EXISTING COLLECTORS WHICH ARE LOCATED BELOW THE ROADWAY DITCH ELEVATIONS, AND WHICH CROSS THE ROADWAY, SHALL BE REPLACED WITHIN THE (RIGHT OF WAY) (CONSTRUCTION) LIMITS BY ITEM 611 CONDUIT, TYPE B, ONE COMMERCIAL SIZE LARGER THAN THE EXISTING CONDUIT.

EXISTING COLLECTORS AND ISOLATED FARM DRAINS, WHICH ARE ENCOUNTERED ABOVE THE ELEVATION OF ROADWAY DITCHES, SHALL BE OUTLETTED INTO THE ROADWAY DITCH BY 611 TYPE F CONDUIT. THE OPTIMUM OUTLET ELEVATION SHALL BE ONE FOOT ABOVE THE FLOWLINE ELEVATION OF THE DITCH. LATERAL FIELD TILES WHICH CROSS THE ROADWAY SHALL BE INTERCEPTED BY 611, TYPE E CONDUIT, AND CARRIED IN A LONGITUDINAL DIRECTION TO AN ADEQUATE OUTLET OR ROADWAY CROSSING.

THE LOCATION, TYPE, SIZE AND GRADE OF REPLACEMENTS SHALL BE DETERMINED BY THE ENGINEER AND PAYMENT SHALL BE MADE ON FINAL MEASUREMENTS.

EROSION CONTROL PADS SHALL BE PROVIDED AT THE OUTLET END OF ALL FARM DRAINS AS PER STANDARD CONSTRUCTION DRAWING DM-1.1, EXCEPT WHEN THEY OUTLET INTO A DRAINAGE STRUCTURE. PAYMENT FOR THE EROSION CONTROL PADS AND ANY NECESSARY BENDS OR BRANCHES SHALL BE INCLUDED FOR PAYMENT IN THE PERTINENT CONDUIT ITEMS.

PAYMENT FOR ALL LABOR AND MATERIALS WILL BE PERFORMED BY CHANGE ORDER.

POST CONSTRUCTION STORM WATER TREATMENT

THIS PLAN UTILIZES STRUCTURAL BEST MANAGEMENT PRACTICES (BMP'S) FOR POST CONSTRUCTION STORM WATER TREATMENT.

CROSSINGS AND CONNECTIONS TO EXISTING PIPES AND UTILITIES

WHERE PLANS PROVIDE FOR A PROPOSED CONDUIT TO BE CONNECTED TO, OR CROSS OVER OR UNDER AN EXISTING SEWER OR UNDERGROUND UTILITY, THE CONTRACTOR SHALL LOCATE THE EXISTING PIPES OR UTILITIES BOTH AS TO LINE AND GRADE BEFORE STARTING TO LAY THE PROPOSED CONDUIT.

IF IT IS DETERMINED THAT THE ELEVATION OF THE EXISTING CONDUIT, OR EXISTING APPURTENANCE TO BE CONNECTED, DIFFERS FROM THE PLAN ELEVATION OR RESULTS IN A CHANGE IN THE PLAN CONDUIT SLOPE, THE ENGINEER SHALL BE NOTIFIED BEFORE STARTING CONSTRUCTION OF ANY PORTION OF THE PROPOSED CONDUIT WHICH WILL BE AFFECTED BY THE VARIANCE IN THE EXISTING ELEVATIONS.

IF IT IS DETERMINED THAT THE PROPOSED CONDUIT WILL INTERSECT AN EXISTING SEWER OR UNDERGROUND UTILITY IF CONSTRUCTED AS SHOWN ON THE PLAN, THE ENGINEER SHALL BE NOTIFIED BEFORE STARTING CONSTRUCTION OF ANY PORTION OF THE PROPOSED CONDUIT WHICH WOULD BE AFFECTED BY THE INTERFERENCE WITH AN EXISTING FACILITY.

PAYMENT FOR ALL THE OPERATIONS DESCRIBED ABOVE SHALL BE INCLUDED IN THE CONTRACT PRICE FOR THE PERTINENT 611 CONDUIT ITEM.

REVIEW OF DRAINAGE FACILITIES

BEFORE ANY WORK IS STARTED ON THE PROJECT AND AGAIN BEFORE FINAL ACCEPTANCE BY THE STATE, REPRESENTATIVES OF THE STATE AND THE CONTRACTOR, ALONG WITH LOCAL REPRESENTATIVES, SHALL MAKE AN INSPECTION OF ALL EXISTING SEWERS WHICH ARE TO REMAIN IN SERVICE AND WHICH MAY BE AFFECTED BY THE WORK. THE CONDITION OF THE EXISTING CONDUITS AND THEIR APPURTENANCE SHALL BE DETERMINED FROM FIELD OBSERVATIONS. RECORDS OF THE INSPECTION SHALL BE KEPT IN WRITING BY THE STATE.

ALL NEW CONDUITS, INLETS, CATCH BASINS, AND MANHOLES CONSTRUCTED AS A PART OF THE PROJECT SHALL BE FREE OF ALL FOREIGN MATTER AND IN A CLEAN CONDITION BEFORE THE PROJECT WILL BE ACCEPTED BY THE STATE.

ALL EXISTING SEWERS INSPECTED INITIALLY BY THE ABOVE MENTIONED PARTIES SHALL BE MAINTAINED AND LEFT IN A CONDITION REASONABLY COMPARABLE TO THAT DETERMINED BY THE ORIGINAL INSPECTION. ANY CHANGE *IN THE CONDITION RESULTING FROM THE CONTRACTOR'S OPERATIONS SHALL BE CORRECTED BY THE CONTRACTOR TO THE SATISFACTION OF THE ENGINEER.

PAYMENT FOR ALL OPERATIONS DESCRIBED ABOVE SHALL BE INCLUDED IN THE CONTRACT PRICE FOR THE PERTINENT 611 CONDUIT ITEMS.

VEGETATED FILTER STRIP

THIS PLAN UTILIZES VEGETATED FILTER STRIP(S) FOR POST CONSTRUCTION STORM WATER TREATMENT. PLACE EITHER ITEM 660 SODDING OR ITEM 659 SEEDING AND MULCHING WITH A 4-INCH LIFT OF TOPSOIL AND ITEM 670, SLOPE EROSION PROTECTION TO ALL DISTURBED AREAS DESIGNATED AS VEGETATED FILTER STRIPS, THE EDGE OF SHOULDER, AND THE FORESLOPE AS SPECIFIED IN THE PLANS.

BIORETENTION CELL(S)

CONSTRUCT THE BIORETENTION CELL(S) AFTER ALL CONTRIBUTING DRAINAGE AREAS ARE STABILIZED AS SHOWN ON THE CONTRACT PLANS. DO NOT OPERATE HEAVY EQUIPMENT WITHIN THE PERIMETER OF A BIORETENTION CELL. USE ALL SUITABLE EXCAVATED MATERIAL IN THE WORK. ALTERNATIVELY, LEGALLY USE, RECYCLE, OR DISPOSE OF ALL EXCAVATED MATERIALS ACCORDING TO 105.16 AND 105.17.

EXCAVATE THE BIORETENTION CELL TO THE DIMENSIONS, WITH VERTICAL SIDES, TO THE ELEVATIONS SPECIFITIED. MINIMIZE THE COMPACTION OF THE BOTTOM OF THE BIORETENTION CELL. EXCAVATION WILL BE MEASURED AND PAID AS ITEM 203, EXCAVATION, AS PER PLAN.

THE BIORETENTION CELL CONSISTS OF FOUR DISCRETE LAYERS: BIORETENTION PLANTING SOIL LAYER, FINE AGGREGATE LAYER, COARSE AGGREAGE NO. 78 LAYER, AND COARSE AGGREGATE NO. 57 LAYER AND AN UNDERDRAIN SYSTEM. THE MATERIALS AND VOLUMES FOR EACH LAYER ARE AS SHOWN:

ITEM 601 - BIORETENTION CELL		
BIORETENTION PLANTING SOIL LAYER PLUS 3 INCH COVER		132 CY
	COMPOSITION BY VOLUME	
5	PARTS SAND-CMS FINE AGGREGATE AS PER 703.20	
1	PART TOPSOIL-CMS 659.05	
2	PARTS COMPOST-CMS 659.06	
FINE AGGREGATE AS PER CMS 703.20		12 CY
COARSE AGGREGATE SIZE NO. 78 PER 703.20		12 CY
COARSE AGGREGATE SIZE NO. 57 PER 703.20		48 CY
TOTAL CUBIC YARDS CARRIED TO G. S.		204 CY*

*QUANTITY CARRIED TO THE GENERAL SUMMARY

CONSTRUCT THE UNDERDRAIN SYSTEM AS SPECIFIED.

PLACE THE BIORETENTION PLANTING SOIL IN 12 INCH LIFTS. THE BIORETENTION PLANTING SOIL LAYER PLUS 3 INCH COVER IS 3 INCHES GREATER THAN THE DEPTH SPECIFIED TO ACCOUNT FOR EXPECTED SETTLING OF THE UNCOMPACTED SOIL.

THE BIORETENTION PLANTING SOIL SHALL BE A UNIFORM MIX THAT IS FREE OF STONES, STUMPS, ROOTS, OR ANY OTHER OBJECT LARGER THAN TWO INCHES. THE SOIL MAY CONSIST OF EXISTING SOIL, FURNISHED SOIL, OR A COMBINATION OF BOTH PROVIDED THAT THE PH IS BETWEEN 5.2-8.0 AND MEETS THE COMPOSITION REQUIREMENTS LISTED ABOVE. PHOSPHORUS CONCENTRATIONS OF THE PLANTING SOIL SHALL FALL BETWEEN 15 AND 60 MG/KG (PPM) AND DETERMINED BY THE MEHLICH III TEST.

THOROUGHLY MIX THE BIORETENTION PLANTING SOIL PRIOR TO PLACEMENT. PLACE OBSERVATION WELL AND CLEANOUT WHERE SPECIFIED. CONNECT THE OBSERVATION WELL AND CLEANOUT TO THE PERFORATED UNDERDRAIN WITH THE APPROPRIATE MANUFACTURED CONNECTIONS. EXTEND THE OBSERVATION WELL AND CLEANOUT 4 INCHES ABOVE THE SURFACE ELEVATION. CAP THE OBSERVATION WELL AND CLEANOUT WITH A THREADED SCREW CAP. CAP THE ENDS OF PERFORATED UNDERDRAIN PIPES NOT TERMINATING IN AN OBSERVATION WELL AND CLEANOUT OR CONNECTED TO OTHER CONDUITS. PLACE SEED, TURF, TREES, SHRUBS, OR OTHER PLANT MATERIALS FOR BIORETENTION FACILITIES AS SPECIFIED. PLANT MATERIALS WILL BE MEASURED AND PAID FOR PER CMS ITEM(S) 659, 660, OR 661 DEPENDING ON THE PLANT MATERIALS SPECIFIED. APPLY NO PESTICIDES, HERBICIDES, LIME, AND FERTILIZERS. INSTALL ITEM 611 AS SPECIFIED. INSTALL TEMPORARY EROSION CONTROL MAT TYPE A, B, C, OR E PER CMS 671 WITH EITHER STRAW MULCH OR COMPOST OR AS SPECIFIED IN THE PLANS.

BIORETENTION CELLS WILL BE PAID FOR AS ITEM 601, BIORETENTION CELL CU YD. AND ITEM 601, TIED CONCRETE MAT SQ YD. EXCAVATION FOR BIORETENTION CELLS SHALL BE FOR VERTICAL SIDES ONLY AS SPECIFIED AND PAID FOR AS ITEM 203, EXCAVATION, AS PER PLAN CU YD. PERFORATED UNDERDRAINS, OBSERVATION WELLS, AND ASSOCIATED FITTINGS AND COUPLERS WILL BE PAID FOR AS ITEM 605, UNDERDRAIN, AS PER PLAN. NON PERFORATED OUTLET PIPES FOR BIORETENTION CELLS SHALL BE PAID FOR AS ITEM 611. SEEDING AND MULCHING FOR THE BIORETENTION CELL SHALL BE PAID FOR AS ITEM 659 SEEDING AND MULCHING SQ YD. EROSION CONTROL MATS SHALL BE PAID FOR AS ITEM 671, EROSION CONTROL MATS SQ YD.

...\Sheets\110357_GN001.dgn 3/23/2021 8:41:07 AM mswhitt

ITEM SPECIAL - PAVEMENT OVERLAY FABRIC COMPOSITE

DESCRIPTION: THIS WORK SHALL CONSIST OF FURNISHING AND INSTALLING PAVEMENT OVERLAY FABRIC AS SHOWN ON THE PLANS AND AT LOCATIONS DESIGNATED BY THE ENGINEER THIS FABRIC COMPOSITE MAY BE PLACED ON A MILLED SURFACE.

MATERIALS: PAVEMENT OVERLAY FABRIC COMPOSITE SHALL BE CONSTRUCTED OF LONG CHAIN SYNTHETIC POLYMERS COMPOSED OF AT LEAST 85 PERCENT OF POLYOLEPHINES, POLYESTERS, AND POLYAMIDES BY WEIGHT, SHALL BE RESISTANT TO CHEMICAL ATTACK, MILDEW, ROT, AND ATTACHED TO A FIBERGLASS GRID. COMPOSITE SHALL MEET THE FOLLOWING PHYSICAL REQUIREMENTS:

PROPERTY	SPECIFICATION	TEST METHOD
PAVING FABRIC: GLAS GRID CG200 OR APPROVED EQUAL		
GRAB TENSILE STRENGTH, LBS.	90 MIN.	ASTM D1682
GRAB ELONGATION PERCENT	50 MIN.	ASTM D1682
ASPHALT RETENTION, GAL/SY	0.20 MIN.	AASHTO M-288
COMPOSITE: ULTIMATE TENSILE STRENGTH (LBS/FT)	MD 6720 MIN. XD 13440 MIN.	ASTM D6637
MAXIMUM ELONGATION	LESS THAN 3%	ASTM D6637
PERCENT OPEN AREA	> 50	TEX-621-J "TESTING GEOGRIDS"
MELTING POINT (MIN. DEGREES F)	1000	ASTM C338
LOSS ON IGNITION %	> 15	TEX-621-J "TESTING GEOGRIDS"
MASS/UNIT AREA	16.0 OZ./ SY. MIN.	ASTM C5261-92

THE COMPOSITE FABRIC SHALL NOT BE EXPOSED TO ULTRAVIOLET RADIATION FOR MORE THAN 7 DAYS. THE FABRIC SHALL BE AT LEAST 60 INCHES BUT NO MORE THAN 150 INCHES IN WIDTH AND FURNISHED IN ROLLS OF APPROXIMATELY 104 YARDS IN LENGTH. THE FABRIC CAN BE CUT TO A 30 INCH WIDTH IF A 30 INCH WIDTH IS SPECIFIED IN THE PLAN.

THE ASPHALT SEALANT SHALL BE PG64-22 MEETING THE REQUIREMENTS OF 702.01.

CERTIFICATION SHALL BE FURNISHED IN ACCORDANCE WITH 101.061 BEFORE THE FABRIC IS PLACED. THE ENGINEER MAY REQUIRE SAMPLING FOR TESTING PURPOSES AS DIRECTED BY THE LABORATORY.

EQUIPMENT: THE CONTRACTOR SHALL PROVIDE EQUIPMENT FOR HEATING AND APPLYING BITUMINOUS MATERIALS. HEATING EQUIPMENT AND DISTRIBUTORS SHALL MEET THE REQUIREMENTS OF 407.

THE MECHANICAL LAYDOWN EQUIPMENT SHALL BE MOUNTED ON A FOUR-WHEELED VEHICLE THAT IS CAPABLE OF DRIVING OVER THE FABRIC WHILE IT IS BEING INSTALLED TO CONTROL THE TENSION ON THE MATERIAL. THE LAYDOWN MACHINE SHALL BE EQUIPPED WITH CLUTCHES TO ADJUST THE ROLL TENSION AND BROOMS TO SMOOTH OUT WRINKLES DURING INSTALLATION. MANUAL LAYDOWN MAY ONLY BE USED IN AREAS INACCESSIBLE TO THE LAYDOWN MACHINE.

CONSTRUCTION DETAILS

1. SURFACE PREPARATION: THE CRACKS AND ENTIRE ROAD SURFACE TO BE TREATED, AND AT LEAST ONE ADDITIONAL FOOT ON EACH SIDE, SHALL BE CLEANED BY SWEEPING, BLOWING, OR OTHER METHODS UNTIL ALL DUST, MUD, CLAY LUMPS, VEGETATION, AND FOREIGN MATERIAL ARE REMOVED ENTIRELY FROM THE PAVEMENT BEFORE THE BITUMINOUS MATERIAL IS APPLIED. CARE SHALL BE EXERCISED TO PREVENT MATERIAL SO REMOVED FROM BECOMING MIXED WITH THE NEW SURFACE. LARGE CRACKS AND POTHOLES SHOULD BE FILLED.

2. APPLICATION OF ASPHALT SEALANT: THE APPLICATION OF THE ASPHALT SEALANT SHALL CONFORM TO THE APPLICABLE PORTIONS OF 407. THE ASPHALT SEALANT SHALL BE UNIFORMLY SPRAYED OVER THE AREA TO BE COVERED BY FABRIC AT A RATE OF 0.25 TO 0.30 GALLON PER SQUARE YARD.

THE QUANTITY APPLIED WILL VARY WITH THE SURFACE CONDITION OF THE EXISTING PAVEMENT (DEGREE OF POROSITY, FOR EXAMPLE). THE FABRIC ALONE, UNDER HEAT OF THE OVERLAY, WILL ABSORB AT LEAST 0.20 GALLON PER SQUARE YARD. WITHIN INTERSECTIONS OR OTHER ZONES WHERE VEHICLE BRAKING IS COMMON PLACE, THE APPLICATION SHALL BE REDUCED 20 PERCENT. THE SEALANT SHALL BE APPLIED TO AN AREA TWO TO SIX INCHES WIDER THAN THE WIDTHS OF THE FABRIC BEING PLACED, BUT RESTRICTED TO THE AREA OF IMMEDIATE FABRIC LAYDOWN. APPLICATION SHALL BE BY DISTRIBUTOR WITH HAND SPRAYING ALLOWED ONLY WHERE THE DISTRIBUTOR CANNOT BE USED. ASPHALT SPILLS SHALL BE CLEANED FROM THE ROAD SURFACE TO AVOID FLUSHING AND POSSIBLE MOVEMENT AT THESE ASPHALT RICH AREAS.

THE ASPHALT CEMENT USED AS A SEALANT SHALL HAVE DISTRIBUTOR TANK TEMPERATURE BETWEEN 300 DEGREES AND 350 DEGREES F. APPLICATION TEMPERATURE IS NOT CRITICAL AFTER THE ASPHALT IS SPRAYED ON THE PAVEMENT. IF THE FABRIC IS TO BE OVER-SPRAYED, DISTRIBUTOR TANK TEMPERATURES SHOULD NOT EXCEED 350 DEGREES F TO AVOID DAMAGE TO THE FABRIC.

3. COMPOSITE FABRIC PLACEMENT: THE COMPOSITE FABRIC SHALL BE PLACED ON THE ASPHALT SEALANT AS SOON AS PRACTICAL AND BEFORE THE TACKINESS OF THE SEALANT IS LOST. THE COMPOSITE SHALL BE PLACED AS SMOOTHLY AS POSSIBLE TO AVOID WRINKLES. IT SHALL BE UNROLLED SO THAT THE SOFT SIDE IS UNWOUND INTO THE SEALANT AND THE GRID SIDE UP, THUS PROVIDING OPTIMUM BOND BETWEEN FABRIC AND PAVEMENT DURING THE CONSTRUCTION PROCESS. WRINKLES SEVERE ENOUGH TO CAUSE "FOLDS" SHALL BE SLIT AND LAID FLAT. SMALL WRINKLES, WHICH FLATTEN UNDER COMPACTION, ARE NOT DETRIMENTAL TO PERFORMANCE. THE COMPOSITE SHALL BE BROOMED OR SQUEEGEED TO REMOVE AIR BUBBLES AND MAKE COMPLETE CONTACT WITH THE ROAD SURFACE AS RECOMMENDED BY THE FABRIC MANUFACTURER. THE FABRIC SHALL BE LAID STRAIGHT, WITHIN THE SEALANT AREA. MODERATE CURVES CAN BE NEGOTIATED BY STRETCHING THE FABRIC ON THE OUTSIDE OF THE CURVE BY ADJUSTING THE DRAG ON THE BRAKES OF THE LAYDOWN EQUIPMENT. TRANSVERSE JOINTS SHALL BE "SHINGLED" IN THE DIRECTION OF PAVING.

LONGITUDINAL JOINTS SHALL BE MADE BY OVERLAPPING THE FABRIC ONE TO TWO INCHES. TRANSVERSE JOINTS SHALL BE MADE BY OVERLAPPING THE FABRIC MINIMUM OF FOUR INCHES. ADDITIONAL SEALANT (ABOUT 0.20 GAL. PER SQ. YD.) SHALL BE ADDED TO THE JOINTS AS REQUIRED. THE ADDITIONAL SEALANT FOR TRANSVERSE JOINTS MAY BE APPLIED BY HAND SPRAYING OR WITH MOP AND BUCKET IF EXTREME CARE IS TAKEN TO NOT EXCEED THE SPECIFIED RATE.

TO ENHANCE THE BOND OF THE FABRIC WITH THE EXISTING PAVEMENT AND TO SMOOTH OUT ANY WRINKLES OR FOLDS IN THE FABRIC, THE CONTRACTOR MAY BE REQUIRED TO PNEUMATICALLY ROLL THE FABRIC AFTER IT IS PLACED.

4. TREATMENT OF THE APPLIED COMPOSITE PRIOR TO THE ASPHALT CONCRETE: IT IS UNNECESSARY TO TACK COAT THE FABRIC PRIOR TO PLACEMENT OF THE OVERLAY UNLESS THERE ARE CIRCUMSTANCES SUCH AS DELAY OF OVERLAY, DUST ACCUMULATION OR UNDER APPLICATION OF SEALANT WHICH WOULD MAKE TACK COATING DESIRABLE. IF A TACK COAT IS REQUIRED, EMULSIFIED ASPHALT SHALL BE APPLIED AT A RATE OF 0.02 TO 0.05 GALLON PER SQUARE YARD RESIDUAL ASPHALT. PLACEMENT OF THE ASPHALT CONCRETE OVERLAY SHALL CLOSELY FOLLOW FABRIC LAYDOWN. IN THE EVENT THAT THE SEALANT BLEEDS THROUGH THE FABRIC BEFORE THE ASPHALT CONCRETE IS PLACED, IT MAY BE NECESSARY TO BLOT THE SEALANT BY SPREADING SAND OR ASPHALT CONCRETE OVER THE AFFECTED AREAS. THIS WILL PREVENT ANY TENDENCY FOR CONSTRUCTION EQUIPMENT TO PICK UP THE FABRIC WHEN DRIVING OVER IT.

TURNING OF THE PAVER AND OTHER VEHICLES SHALL BE GRADUAL TO AVOID MOVEMENT OR DAMAGE TO THE COMPOSITE. UNESSENTIAL TRAFFIC ON COMPOSITE SHOULD BE ELIMINATED. IF IT IS NECESSARY TO OPEN THE ROAD TO TRAFFIC AFTER FABRIC PLACEMENT, BUT PRIOR TO PAVING, IT IS ADVISABLE TO SPREAD A SMALL AMOUNT OF SAND OVER THE MEMBRANE TO PREVENT TIRES FROM STICKING TO THE SEALANT OR PULLING UP THE COMPOSITE. THIS PRACTICE IS TO BE AVOIDED IF POSSIBLE TO PREVENT DAMAGE TO THE MEMBRANE. QUICK STOPS AND SHARP TURNS MAY DAMAGE THE MATERIALS. IF RAIN PRIOR TO THE OVERLAY SHOULD CAUSE A BLISTERED APPEARANCE AND SOME BOND LOSS THROUGHOUT THE MEMBRANE, IT SHOULD BE CORRECTED BY PNEUMATIC ROLLING UNTIL ADHESION IS RESTORED.

5. ASPHALT CONCRETE: THE ASPHALT CONCRETE OVERLAY SHALL CONFORM TO 401 SPECIFICATION WITH A MINIMUM THICKNESS OF 1.5".

METHOD OF MEASUREMENT: THE ACCEPTED FABRIC COMPOSITE PLACED IN ACCORDANCE WITH THESE SPECIFICATIONS AS DIRECTED WILL BE MEASURED BY THE SQUARE YARD OF ROADWAY, RAMPS, AND TURNOUTS COVERED BY THE COMPOSITE FABRIC. LAPS IN COMPOSITE FABRIC WILL NOT BE MEASURED.

BLOTTING THE SEALANT, SPREADING SAND OR ASPHALT CONCRETE OVER THE MEMBRANE TO PREVENT TIRES FROM STICKING TO THE SEALANT OR PULLING UP THE FABRIC, ROLLING TO RESTORE BOND, OR APPLICATION OF A TACK COAT WILL NOT BE MEASURED FOR DIRECT PAYMENT BUT SHALL BE CONSIDERED A NECESSARY PART OF THE CONSTRUCTION INVOLVED AND THE COST THEREFORE SHALL BE INCLUDED IN OTHER APPROPRIATE CONTRACT UNIT PRICES.

BASIS OF PAYMENT: THE ACCEPTED QUANTITIES OF PAVEMENT OVERLAY FABRIC COMPOSITE WILL BE PAID FOR AT THE CONTRACT UNIT PRICE PER SQUARE YARD, WHICH PRICE AND PAYMENT SHALL BE FULL COMPENSATION FOR FURNISHING ALL LABOR, MATERIALS (INCLUDING ASPHALT SEALANT AND OVERLAP), TOOLS, EQUIPMENT AND INCIDENTALS FOR DOING ALL THE WORK INVOLVED IN FURNISHING AND PLACING THE COMPOSITE COMPLETE IN PLACE AS SHOWN ON THE PLANS OR AS DIRECTED BY THE ENGINEER.

ITEM	UNIT	DESCRIPTION
SPECIAL 690E12060	SY	PAVEMENT OVERLAY FABRIC COMPOSITE

ITEM 614, MAINTAINING TRAFFIC

IN ADDITION TO THE REQUIREMENTS FOR MAINTAINING TRAFFIC AS INDICATED IN THE OHIO MANUAL OF UNIFORM TRAFFIC CONTROL DEVICES FOR STREETS AND HIGHWAYS, CURRENT EDITION AND ITEM 614, COMPLY WITH THE FOLLOWING REQUIREMENTS:

BEFORE WORK BEGINS, DESIGNATE A PERSON UNDER THE CONTRACTOR'S EMPLOYMENT TO BE RESPONSIBLE FOR MAINTAINING TRAFFIC CONTROL DEVICES ASSOCIATED WITH THIS PROJECT. THIS PERSON MUST BE AVAILABLE TO BE CONTACTED 24 HOURS A DAY BY THE HURON COUNTY ENGINEER AND ALL INTERESTED LAW ENFORCEMENT AGENCIES IN THE EVENT THAT ANY PROBLEMS ARISE DURING NON-WORKING HOURS. THIS PERSON SHALL CORRECT ANY DEFICIENCIES WITHIN 4 HOURS OF NOTIFICATION BY THE ENGINEER OR LAW ENFORCEMENT AGENCIES. SUBMIT TO THE ENGINEER, IN WRITING, THE NAME AND TELEPHONE NUMBER OF THIS PERSON NO LESS THAN THREE (3) WORKING DAYS BEFORE INSTALLATION OF TRAFFIC CONTROL DEVICES. HURON COUNTY ENGINEER, 150 JEFFERSON STREET, NORWALK, OH 44857, PHONE: (419) 668-1997. FAX: (419) 668-8308

FURNISH, ERECT, AND MAINTAIN SIGNS, SIGN SUPPORTS, AND BARRICADES OF THE TYPE AND LOCATION SHOWN IN THESE PLANS. PAYMENT FOR ALL DETOUR SIGNING SHALL BE INCLUDED IN THE CONTRACT PRICE FOR ITEM 614, DETOUR SIGNING.

THE CONTRACTOR MAY SUBMIT ALTERNATIVE METHODS FOR THE MAINTENANCE OF TRAFFIC, PROVIDED THE INTENT OF THE ABOVE PROVISIONS IS FOLLOWED AND NO ADDITIONAL INCONVENIENCE TO THE TRAVELING PUBLIC RESULTS THERE FROM. DO NOT PLACE AN ALTERNATE PLAN INTO EFFECT UNTIL APPROVAL HAS BEEN GRANTED BY THE ENGINEER.

THE FOLLOWING QUANTITIES HAVE BEEN INCLUDED IN THE GENERAL SUMMARY FOR MAINTENANCE OF TRAFFIC:

ITEM 614, MAINTAINING TRAFFIC	LUMP SUM
ITEM 614, DETOUR SIGNING	LUMP SUM

ALL WORK AND TRAFFIC CONTROL DEVICES SHALL BE IN ACCORDANCE WITH C&MS 614 AND OTHER APPLICABLE PORTIONS OF THE SPECIFICATIONS, AS WELL AS THE OHIO MANUAL OF UNIFORM TRAFFIC CONTROL DEVICES. PAYMENT FOR ALL LABOR EQUIPMENT AND MATERIALS SHALL BE INCLUDED IN THE LUMP SUM CONTRACT PRICE FOR ITEM 614, MAINTAINING TRAFFIC, UNLESS SEPARATELY ITEMIZED IN THE PLAN.

LOCAL ACCESS

THE CONTRACTOR SHALL MAINTAIN INGRESS AND EGRESS TO ALL PROPERTIES AFFECTED BY THIS IMPROVEMENT AT ALL TIMES. ANY COSTS ASSOCIATED WITH THIS WORK SHALL BE INCLUDED IN THE CONTRACT PRICE FOR ITEM 614, MAINTAINING TRAFFIC, AND SHALL INCLUDE ALL LABOR, EQUIPMENT AND MATERIALS NECESSARY TO MAINTAIN LOCAL ACCESS TO PROPERTIES.

NOTIFICATION OF TRAFFIC RESTRICTIONS

THROUGHOUT THE DURATION OF THE PROJECT, THE CONTRACTOR SHALL NOTIFY THE PROJECT ENGINEER IN WRITING OF ALL TRAFFIC RESTRICTIONS AND UPCOMING MAINTENANCE OF TRAFFIC CHANGES. THE CONTRACTOR SHALL ENSURE THE WRITTEN NOTIFICATION IS SUBMITTED IN A TIMELY MANNER TO ALLOW THE PROJECT ENGINEER TO MEET THE REQUIRED TIME FRAMES SET FORTH IN THE TABLE BELOW TO INFORM THE SPECIAL HAULING PERMITS SECTION (HAULING.PERMITS@DOT.OHIO.GOV) AND THE DISTRICT PUBLIC INFORMATION OFFICE (PIO). THIS NOTIFICATION SHALL BE RECEIVED BY THE PROJECT ENGINEER PRIOR TO THE PHYSICAL SETUP OF ANY APPLICABLE SIGNS OR MESSAGE BOARDS.

INFORMATION SHOULD INCLUDE, BUT IS NOT LIMITED TO, ALL CONSTRUCTION ACTIVITIES THAT IMPACT OR INTERFERE WITH TRAFFIC AND SHALL LIST THE SPECIFIC LOCATION, TYPE OF WORK, ROAD STATUS, DATE AND TIME OF RESTRICTION, DURATION OF RESTRICTION, NUMBER OF LANES MAINTAINED, NUMBER OF LANES CLOSED, MINIMUM VERTICAL CLEARANCE, MINIMUM WIDTH OF DRIVABLE PAVEMENT, DETOUR ROUTES, IF APPLICABLE, AND ANY OTHER INFORMATION REQUESTED BY THE PROJECT ENGINEER.

NOTIFICATION OF TRAFFIC RESTRICTIONS TIME TABLE

ITEM	DURATION OF CLOSURE	NOTICE DUE TO PERMITS & PIO
RAMP & ROAD CLOSURES	>= 2 WEEKS	21 CALENDAR DAYS PRIOR TO CLOSURE
	> 12 HOURS & < 2 WEEKS	14 CALENDAR DAYS PRIOR TO CLOSURE
	<= 12 HOURS	4 CALENDAR DAYS PRIOR TO CLOSURE
LANE CLOSURES & RESTRICTIONS	>= 2 WEEKS	14 CALENDAR DAYS PRIOR TO CLOSURE
	< 2 WEEKS	5 BUSINESS DAYS PRIOR TO CLOSURE
START OF CONSTRUCTION & TRAFFIC PATTERN CHANGES	N/A	14 CALENDAR DAYS PRIOR TO IMPLEMENTATION

ANY UNFORESEEN CONDITIONS NOT SPECIFIED IN THE PLANS REQUIRING TRAFFIC RESTRICTIONS SHALL ALSO BE REPORTED TO THE PROJECT ENGINEER USING THE NOTIFICATION TIME TABLE.

ITEM 614, MAINTAINING TRAFFIC (SIGNS AND BARRICADES)

THE CONTRACTOR SHALL PROVIDE, ERECT AND MAINTAIN SIGNS AND SIGN SUPPORTS, AS DETAILED IN THE OHIO MANUAL OF UNIFORM TRAFFIC CONTROL DEVICES, AND TYPE III BARRICADES OF THE TYPE AND LOCATION AS SHOWN IN THE DETOUR PLAN MAP.

ITEM 614, MAINTAINING TRAFFIC (NOTICE OF CLOSURE SIGN)

NOTICE OF CLOSURE SIGNS (W20-H13) SHALL BE ERECTED BY THE CONTRACTOR PRIOR TO THE SCHEDULED ROAD OR RAMP CLOSURE IN ACCORDANCE WITH THE NOTICE OF CLOSURE TIME TABLE BELOW. [AT THE APPROVAL OF THE ENGINEER, PORTABLE CHANGEABLE MESSAGE SIGNS MAY BE USED IN LIEU OF THE STANDARD FLATSHEET SIGN FOR CLOSURE DURATIONS OF LESS THAN 1 WEEK.]

THE SIGNS SHALL BE ERECTED ON THE RIGHT-HAND SIDE OF THE ROAD/RAMP FACING TRAFFIC. THEY SHALL BE PLACED SO AS NOT TO INTERFERE WITH THE VISIBILITY OF ANY OTHER TRAFFIC CONTROL SIGNS. ON ROADWAYS, THEY SHOULD BE ERECTED AT OR NEAR THE POINT OF CLOSURE. THE SIGNS MAY BE ERECTED ANYWHERE ON RAMPS AS LONG AS THEY ARE VISIBLE TO THE MOTORISTS USING THE RAMP. ON ENTRANCE RAMPS, THE SIGN SHALL BE ERECTED WELL IN ADVANCE OF THE MERGE AREA TO AVOID DISTRACTING MOTORISTS.

NOTICE OF CLOSURE SIGN TIME TABLE

ITEM	DURATION OF CLOSURE	SIGN DISPLAYED TO PUBLIC
RAMP &	>=2 WEEKS	14 CALENDAR DAYS PRIOR TO CLOSURE
ROAD	> 12 HOURS & < 2 WEEKS	7 CALENDAR DAYS PRIOR TO CLOSURE
CLOSURES	<= 12 HOURS	2 BUSINESS DAYS PRIOR TO CLOSURE

THE SIGN SHALL DISPLAY THE DATE OF THE CLOSURE IN MMM-DD FORMAT AND THE NUMBER OF DAYS OF THE CLOSURE. THE LAST LINE OF THE W20-H13 SIGN LISTS A PHONE NUMBER WHICH A MOTORIST MAY CALL FOR ADDITIONAL INFORMATION. THIS IS TO BE A SPECIFIC OFFICE WITHIN THE DISTRICT RATHER THAN THE GENERAL SWITCHBOARD NUMBER.

ITEM 614, MAINTAINING TRAFFIC (ROAD CLOSED SIGN)

THE CONTRACTOR SHALL PROVIDE, ERECT AND MAINTAIN STANDARD 48 X 30 INCH ROAD CLOSED SIGNS, SIGN SUPPORTS, BARRICADES AND LIGHTS, AS DETAILED IN SCD MT-101.60 AT THE FOLLOWING LOCATIONS DURING PERIODS IN WHICH THE AFFECTED ROADS ARE CLOSED TO TRAFFIC.

- US 20 WB AT SR 60.
- US 20 WB AT HARTLAND CENTER ROAD.
- US 20 EB AT LAYLIN ROAD.
- SR 601 SB AT SR 61 (E. MAIN STREET).
- US 250 WB AT N. GREENWICH TOWN LINE ROAD.

DUST CONTROL

THE CONTRACTOR SHALL FURNISH AND APPLY WATER FOR DUST CONTROL AS DIRECTED BY THE ENGINEER. THE FOLLOWING ESTIMATED QUANTITIES HAVE BEEN INCLUDED FOR DUST CONTROL PURPOSES:

ITEM 616, WATER	32 M. GAL.

LANES OPEN DURING HOLIDAYS OR SPECIAL EVENTS

NO WORK SHALL BE PERFORMED AND ALL EXISTING LANES SHALL BE OPEN TO TRAFFIC DURING THE FOLLOWING DESIGNATED HOLIDAYS OR EVENTS:

CHRISTMAS	FOURTH OF JULY
NEW YEARS	LABOR DAY
MEMORIAL DAY	THANKSGIVING
HURON COUNTY FAIR	NORWALK STRAWBERRY FESTIVAL

SUMMIT MOTORSPORTS PARK EVENTS (EXCEPT DURING DESIGNATED 60 DAY CLOSURE PERIOD)

THE PERIOD OF TIME THAT THE LANES ARE TO BE OPEN DEPENDS ON THE DAY OF THE WEEK ON WHICH THE HOLIDAY OR EVENT FALLS. THE FOLLOWING SCHEDULE SHALL BE USED TO DETERMINE THIS PERIOD:

DAY OF HOLIDAY OR EVENT	TIME ALL LANES MUST BE OPEN TO TRAFFIC
SUNDAY	12:00N FRIDAY THROUGH 6:00 AM MONDAY
MONDAY	12:00N FRIDAY THROUGH 6:00 AM TUESDAY
TUESDAY	12:00N MONDAY THROUGH 6:00 AM WEDNESDAY
WEDNESDAY	12:00N TUESDAY THROUGH 6:00 AM THURSDAY
THURSDAY	12:00N WEDNESDAY THROUGH 6:00 AM FRIDAY
THURSDAY (THANKSGIVING ONLY)	6:00 AM WEDNESDAY THROUGH 6:00 AM MONDAY
FRIDAY	12:00N THURSDAY THROUGH 6:00 AM MONDAY
SATURDAY	12:00N FRIDAY THROUGH 6:00 AM MONDAY

SHOULD THE CONTRACTOR FAIL TO MEET ANY OF THESE REQUIREMENTS, THE CONTRACTOR SHALL BE ASSESSED A DISINCENTIVE IN ACCORDANCE WITH THE UNAUTHORIZED LANE USE TABLE.

ITEM 614, MAINTAINING TRAFFIC (LANE CLOSURE/REDUCTION REQUIRED)

LENGTH AND DURATION OF LANE CLOSURES AND RESTRICTIONS SHALL BE AT THE APPROVAL OF THE ENGINEER. IT IS THE INTENT TO MINIMIZE THE IMPACT TO THE TRAVELING PUBLIC. LANE CLOSURES OR RESTRICTIONS OVER SEGMENTS OF THE PROJECT IN WHICH NO WORK IS ANTICIPATED WITHIN A REASONABLE TIME FRAME, AS DETERMINED BY THE ENGINEER, SHALL NOT BE PERMITTED. THE LEVEL OF UTILIZATION OF MAINTENANCE OF TRAFFIC DEVICES SHALL BE COMMENSURATE WITH THE WORK IN PROGRESS.

ITEM 614, MAINTAINING TRAFFIC (TIME LIMITATION ON A DETOUR)

A MINIMUM OF ONE LANE OF TRAFFIC IN EACH DIRECTION SHALL BE MAINTAINED AT ALL TIMES, EXCEPT FOR A PERIOD NOT TO EXCEED 60 CONSECUTIVE CALENDAR DAYS, WHEN THROUGH TRAFFIC MAY BE DETOURED AS SHOWN ON SHEET 19 . THIS 60 DAY PERIOD SHALL OCCUR BETWEEN LABOR DAY AND THANKSGIVING DAY OF 2021. A DISINCENTIVE SHALL BE ASSESSED IN THE MAXIMUM AMOUNT OF $10,000 PER DAY FOR EACH CALENDAR DAY THE ROADWAY REMAINS CLOSED TO TRAFFIC BEYOND THE SPECIFIED LIMIT.

...\MOT\Sheets\110357_MN001.dgn 3/23/2021 8:41:10 AM mswhitt

ITEM 614, PORTABLE CHANGEABLE MESSAGE SIGNS, AS PER PLAN

THE CONTRACTOR SHALL FURNISH, INSTALL, MAINTAIN AND REMOVE, WHEN NO LONGER NEEDED, A CHANGEABLE MESSAGE SIGN. THE SIGN SHALL BE OF A TYPE SHOWN ON A LIST OF APPROVED PCMS UNITS AVAILABLE ON THE OFFICE OF MATERIALS MANAGEMENT WEB PAGE. THE LIST CONTAINS CLASS A AND B UNITS WITH MINIMUM LEGIBILITY DISTANCES OF 800 FEET AND 650 FEET, RESPECTIVELY.

EACH SIGN SHALL BE TRAILER-MOUNTED AND EQUIPPED WITH A FUNCTIONAL DIMMING MECHANISM, TO DIM THE SIGN DURING DARKNESS, AND A TAMPER AND VANDAL PROOF ENCLOSURE. EACH SIGN SHALL BE PROVIDED WITH APPROPRIATE TRAINING AND OPERATION INSTRUCTIONS TO ENABLE ON-SITE PERSONNEL TO OPERATE AND TROUBLESHOOT THE UNIT. THE SIGN SHALL ALSO BE CAPABLE OF BEING POWERED BY AN ELECTRICAL SERVICE DROP FROM A LOCAL UTILITY COMPANY. THE PCMS SHALL BE DELINEATED IN ACCORDANCE WITH C&MS 614.03.

THE PROBABLE PCMS LOCATIONS AND WORK LIMITS FOR THOSE LOCATIONS ARE SHOWN ON SHEET(S) 19 OF THE PLAN. PLACEMENT, OPERATION, MAINTENANCE AND ALL ACTIVATION OF THE SIGNS BY THE CONTRACTOR SHALL BE AS DIRECTED BY THE ENGINEER. THE PCMS SHALL BE LOCATED IN A HIGHLY VISIBLE POSITION YET PROTECTED FROM TRAFFIC. THE CONTRACTOR SHALL, AT THE DIRECTION OF THE ENGINEER, RELOCATE THE PCMS TO IMPROVE VISIBILITY OR ACCOMMODATE CHANGED CONDITIONS. WHEN NOT IN USE, THE PCMS SHALL BE TURNED OFF. ADDITIONALLY, WHEN NOT IN USE FOR EXTENDED PERIODS OF TIME, THE PCMS SHALL BE TURNED AWAY FROM ALL TRAFFIC.

THE ENGINEER SHALL BE PROVIDED ACCESS TO EACH SIGN UNIT AND SHALL BE PROVIDED WITH APPROPRIATE TRAINING AND OPERATION INSTRUCTIONS TO ENABLE ODOT PERSONNEL TO OPERATE AND TROUBLESHOOT THE UNIT, AND TO REVISE SIGN MESSAGES, IF NECESSARY.

(THE CONTRACTOR SHALL IMPLEMENT A SYSTEM WHEREBY CHANGEABLE MESSAGES WILL BE IMPLEMENTED WITHIN 2 HOURS FOLLOWING TELEPHONE NOTIFICATION FROM THE PROJECT ENGINEER TO A DESIGNATED PHONE.)

ALL MESSAGES TO BE DISPLAYED ON THE SIGN WILL BE PROVIDED BY THE ENGINEER. A LIST OF ALL REQUIRED PRE-PROGRAMMED MESSAGES WILL BE GIVEN TO THE CONTRACTOR AT THE PROJECT PRECONSTRUCTION CONFERENCE. THE SIGN SHALL HAVE THE CAPABILITY TO STORE UP TO 99 MESSAGES. MESSAGE MEMORY OR PRE-PROGRAMMED DISPLAYS SHALL NOT BE LOST AS A RESULT OF POWER FAILURES TO THE ON-BOARD COMPUTER. THE SIGN LEGEND SHALL BE CAPABLE OF BEING CHANGED IN THE FIELD. THREE-LINE PRESENTATION FORMATS WITH UP TO SIX MESSAGE PHASES SHALL BE SUPPORTED. PCMS FORMAT SHALL PERMIT THE COMPLETE MESSAGE FOR EACH PHASE TO BE READ AT LEAST TWICE.

THE PCMS SHALL CONTAIN AN ACCURATE CLOCK AND PROGRAMMING LOGIC WHICH WILL ALLOW THE SIGN TO BE ACTIVATED, DEACTIVATED OR MESSAGES CHANGED AUTOMATICALLY AT DIFFERENT TIMES OF THE DAY FOR DIFFERENT DAYS OF THE WEEK.

ITEM 614, PORTABLE CHANGEABLE MESSAGE SIGNS, AS PER PLAN (CONT.)

(THE PCMS SHALL CONTAIN A CELLULAR TELEPHONE DATA LINK WHICH WILL (IN ACTIVE CELLULAR PHONE AREAS) ALLOW REMOTE SIGN ACTIVATION, MESSAGE CHANGES, MESSAGE ADDITIONS AND REVISIONS TO TIME OF DAY PROGRAMS. THE SYSTEM SHALL ALSO PERMIT VERIFICATION OF CURRENT AND PROGRAMMED MESSAGES. ONE REMOTE DATA INPUT DEVICE (LAPTOP COMPUTER PLUS MODEM OR EQUIVALENT) SHALL BE FURNISHED FOR USE BY THE DISTRICT TRAFFIC ENGINEER, OR EQUIVALENT, AND SHALL BE INSURED AGAINST THEFT.) THE PCMS UNIT SHALL BE MAINTAINED IN GOOD WORKING ORDER BY THE CONTRACTOR IN ACCORDANCE WITH THE PROVISIONS OF C&MS 614.07. THE CONTRACTOR SHALL, PRIOR TO ACTIVATING THE UNIT, MAKE ARRANGEMENTS, WITH AN AUTHORIZED SERVICE AGENT FOR THE PCMS, TO ASSURE PROMPT SERVICE IN THE EVENT OF FAILURE. ANY FAILURE SHALL NOT RESULT IN THE SIGN BEING OUT OF SERVICE FOR MORE THAN 12 HOURS, INCLUDING WEEKENDS. FAILURE TO COMPLY MAY RESULT IN AN ORDER TO STOP WORK AND OPEN ALL TRAFFIC LANES AND/OR IN THE DEPARTMENT TAKING APPROPRIATE ACTION TO SAFELY CONTROL TRAFFIC. THE ENTIRE COST TO CONTROL TRAFFIC, ACCRUED BY THE DEPARTMENT DUE TO THE CONTRACTOR'S NONCOMPLIANCE, WILL BE DEDUCTED FROM MONEYS DUE, OR TO BECOME DUE THE CONTRACTOR ON HIS CONTRACT.

THE CONTRACTOR SHALL BE RESPONSIBLE FOR 24-HOUR-PER-DAY OPERATION AND MAINTENANCE OF THESE SIGNS ON THE PROJECT FOR THE DURATION OF THE PHASES WHEN THE PLAN REQUIRES THEIR USE.

PAYMENT FOR THE ABOVE DESCRIBED ITEM SHALL BE AT THE CONTRACT UNIT PRICE. PAYMENT SHALL INCLUDE ALL LABOR, MATERIALS, EQUIPMENT, FUELS, LUBRICATING OILS, SOFTWARE, HARDWARE, AND INCIDENTALS TO PERFORM THE ABOVE DESCRIBED WORK.

ITEM 614, PORTABLE CHANGEABLE MESSAGE SIGN, AS PER PLAN 12 SIGN MONTH ASSUMING 4 PCMS SIGN(S) FOR 3 MONTH(S)

ROUNDABOUT LIGHTING

THE ROUNDABOUT LIGHTING SHALL BE COMPLETED PRIOR TO OPENING THE NEW ROUNDABOUT TO TRAFFIC. IF PERMANENT LIGHTING MATERIALS ARE NOT ANTICIPATED TO BE AVAILABLE PRIOR TO OPENING THE ROUNDABOUT TO TRAFFIC, THE CONTRACTOR SHALL PROVIDE ACCOMMODATIONS FOR TEMPORARY LIGHTING TO BE APPROVED BY THE ENGINEER. ANY TEMPORARY LIGHTING, IF REQUIRED, SHALL BE INCIDENTAL TO ITEM 614 MAINTAINING TRAFFIC, LUMP SUM.

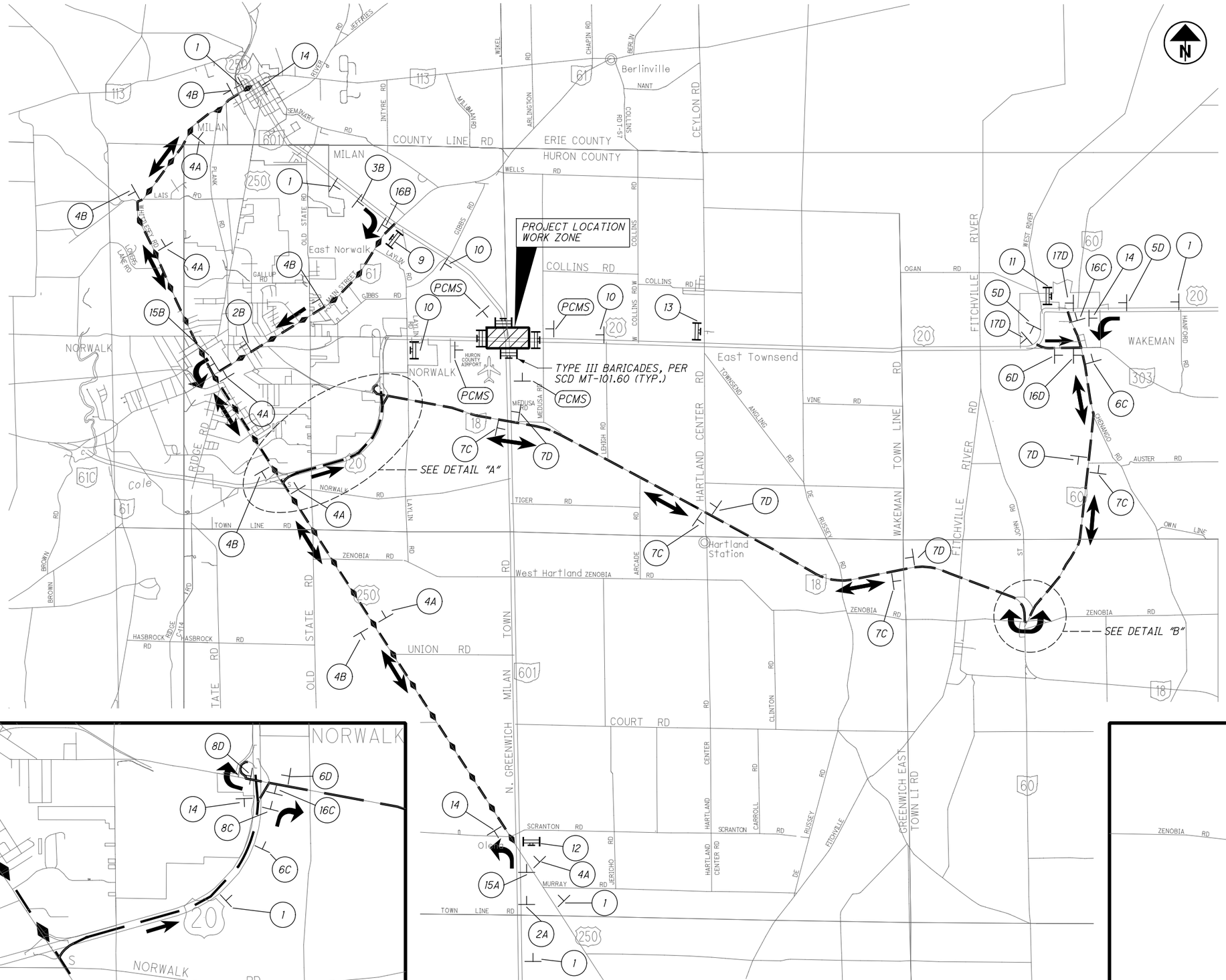

DETOUR MAP
N.T.S.

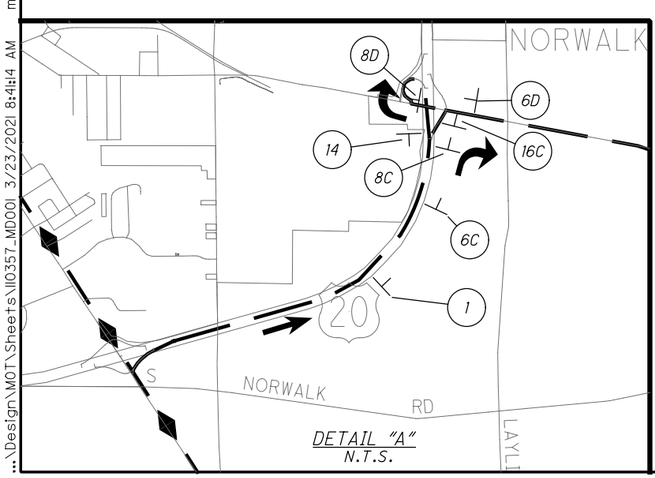

DETAIL "A"
N.T.S.

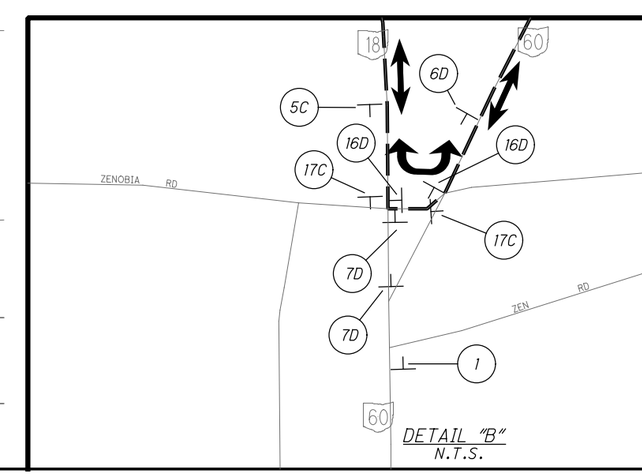

DETAIL "B"
N.T.S.

CALCULATED HB
CHECKED GAH

MAINTENANCE OF TRAFFIC DETOUR MAP

HUR-20-17.82

...\Design\MOT\Sheets\110357_MD001 3/23/2021 8:41:14 AM mswhitt

PCMS

PORTABLE CHANGEABLE MESSAGE SIGN (PCMS) SHALL BE IN PLACE ONE WEEK PRIOR TO CLOSURE

MESSAGE 1

US 20
SR 601
INTERSECTION

3 SEC

MESSAGE 2

CLOSES
XX/XX/21
FOR XX DAYS

3 SEC

1

DETOUR AHEAD

W20-2-36

2

DETOUR

M4-8-24

601

M1-5-30-3

M5-1-21

3

DETOUR

M4-8-24

601

M1-5-30-3

M5-1-21

4

DETOUR

M4-8-24

601

M1-5-30-3

M6-3-21

5

DETOUR

M4-8-24

20

M1-4-30-2

M5-1-21

6

DETOUR

M4-8-24

20

M1-4-30-2

M5-1-21

7

DETOUR

M4-8-24

20

M1-4-30-2

M6-3-21

8

DETOUR

M4-8-24

20

M1-4-30-2

M6-2-21

9

ROAD CLOSED
2¼ MILES AHEAD
LOCAL TRAFFIC ONLY

R11-3a-60

DETOUR

M4-10R-48

10

ROAD CLOSED
1¼ MILES AHEAD
LOCAL TRAFFIC ONLY

R11-3a-60

11

ROAD CLOSED
7¾ MILES AHEAD
LOCAL TRAFFIC ONLY

R11-3a-60

DETOUR

M4-10L-48

12

ROAD CLOSED
6¾ MILES AHEAD
LOCAL TRAFFIC ONLY

R11-3a-60

DETOUR

M4-10L-48

13

ROAD CLOSED
2½ MILES AHEAD
LOCAL TRAFFIC ONLY

R11-3a-60

14

END DETOUR

M4-8a-24

15

DETOUR

M4-8-24

601

M1-5-30-3

M6-1-21

16

DETOUR

M4-8-24

20

M1-4-30-2

M6-1-21

17

DETOUR

M4-8-24

20

M1-4-30-2

M6-1-21

A

NORTH

M3-1-24

B

SOUTH

M3-3-24

C

EAST

M3-2-24

D

WEST

M3-4-24

CALCULATED HB
CHECKED GAH

MAINTENANCE OF TRAFFIC DETOUR MAP

HUR-20-17.82

...\Design\MOT\Sheets\110357_MD001 3/23/2021 8:41:14 AM mswhitt

SHEET NUM. 13	14	15	24	25	26	29	30	106				PART. 01/SAF/OT	02/NHS/BR	ITEM	ITEM EXT	GRAND TOTAL	UNIT	DESCRIPTION	SEE SHEET NO.
																		ROADWAY	
LS												LS		201	11000	LS		CLEARING AND GRUBBING	
			5,642									5,642		202	23000	5,642	SY	PAVEMENT REMOVED	
			92									92		202	30000	92	SF	WALK REMOVED	
			1,287									1,287		202	35100	1,287	FT	PIPE REMOVED, 24" AND UNDER	
			774.5									774.5		202	38000	774.5	FT	GUARDRAIL REMOVED	
			12.5									12.5		202	38001	12.5	FT	GUARDRAIL REMOVED, AS PER PLAN	14
			1									1		202	42010	1	EACH	ANCHOR ASSEMBLY REMOVED, TYPE E	
			5									5		202	53100	5	EACH	MAILBOX REMOVED	
			7									7		202	58100	7	EACH	CATCH BASIN REMOVED	
4,029												4,029		203	10000	4,029	CY	EXCAVATION	
					189							189		203	10001	189	CY	EXCAVATION, AS PER PLAN	15
3,928												3,928		203	20000	3,928	CY	EMBANKMENT	
						975						975		204	10000	975	SY	SUBGRADE COMPACTION	
						458						458		204	13000	458	CY	EXCAVATION OF SUBGRADE	
						458						458		204	30010	458	CY	GRANULAR MATERIAL, TYPE B	
	4											4		204	45000	4	HOUR	PROOF ROLLING	
						1,374						1,374		204	50000	1,374	SY	GEOTEXTILE FABRIC	
						144						144		206	10500	144	TON	CEMENT	
						5,565						5,565		206	11000	5,565	SY	CURING COAT	
						5,565						5,565		206	15010	5,565	SY	CEMENT STABILIZED SUBGRADE, 12 INCHES DEEP	
				237.5								237.5		606	13000	237.5	FT	GUARDRAIL, TYPE 5	
				125								125		606	15050	125	FT	GUARDRAIL, TYPE MGS	
				37.5								37.5		606	17360	37.5	FT	GUARDRAIL, TYPE MGS, LONG-SPAN	
				3								3		606	26100	3	EACH	ANCHOR ASSEMBLY, TYPE E	
				1								1		606	26150	1	EACH	ANCHOR ASSEMBLY, MGS TYPE E [MASH 2016]	
				1								1		606	26500	1	EACH	ANCHOR ASSEMBLY, TYPE T	
				1								1		606	26550	1	EACH	ANCHOR ASSEMBLY, MGS TYPE T	
				4								4		606	35140	4	EACH	BRIDGE TERMINAL ASSEMBLY, TYPE 4	
								5				5		623	38500	5	EACH	MONUMENT ASSEMBLY	
								1				1		623	40520	1	EACH	RIGHT-OF-WAY MONUMENT	
				5								5		SPECIAL	69050100	5	EACH	MAILBOX SUPPORT SYSTEM, SINGLE	14
																		EROSION CONTROL	
					2							2		601	21050	2	SY	TIED CONCRETE BLOCK MAT WITH TYPE 1 UNDERLAYMENT	
					21							21		601	21060	21	SY	TIED CONCRETE BLOCK MAT WITH TYPE 2 UNDERLAYMENT	
					2							2		601	32204	2	CY	ROCK CHANNEL PROTECTION, TYPE C WITH GEOTEXTILE FABRIC	
		204										204		601	45050	204	CY	BIORETENTION CELL	
					0.75							0.75		602	20000	0.75	CY	CONCRETE MASONRY	
2												2		659	00100	2	EACH	SOIL ANALYSIS TEST	
855												855		659	00300	855	CY	TOPSOIL	
7,707												7,707		659	10000	7,707	SY	SEEDING AND MULCHING	
385												385		659	14000	385	SY	REPAIR SEEDING AND MULCHING	
385												385		659	15000	385	SY	INTER-SEEDING	
1.08												1.08		659	20000	1.08	TON	COMMERCIAL FERTILIZER	
1.59												1.59		659	31000	1.59	ACRE	LIME	
43												43		659	35000	43	MGAL	WATER	
17												17		659	40000	17	MSF	MOWING	
					593							593		670	00500	593	SY	SLOPE EROSION PROTECTION	
					145							145		671	15000	145	SY	EROSION CONTROL MAT, TYPE A	
							LS					LS		832	15000	LS		STORM WATER POLLUTION PREVENTION PLAN	
							LS					LS		832	15002	LS		STORM WATER POLLUTION PREVENTION INSPECTIONS	
							LS					LS		832	15010	LS		STORM WATER POLLUTION PREVENTION INSPECTION SOFTWARE	
							37,011					37,011		832	30000	37,011	EACH	EROSION CONTROL	

CALCULATED MSW
CHECKED GAH

GENERAL SUMMARY

HUR-20-17.82

...\Sheets\110357_GG101.dgn 3/23/2021 8:41:17 AM mswhitt

SHEET NUM.										PART.		ITEM	ITEM EXT	GRAND TOTAL	UNIT	DESCRIPTION	SEE SHEET NO.
14	25	26	27	29	96					01/SAF/OT	02/NHS/BR						
																DRAINAGE	
			3,138							3,138		605	06000	3,138	FT	4" BASE PIPE UNDERDRAINS	
		100								100		605	13301	100	FT	6" UNCLASSIFIED PIPE UNDERDRAINS, AS PER PLAN	31
			230							230		611	00410	230	FT	4" CONDUIT, TYPE F FOR UNDERDRAIN OUTLET	
		86								86		611	00510	86	FT	6" CONDUIT, TYPE F FOR UNDERDRAIN OUTLETS	
		379								379		611	04400	379	FT	12" CONDUIT, TYPE B	
		473								473		611	04600	473	FT	12" CONDUIT, TYPE C	
		71								71		611	06100	71	FT	15" CONDUIT, TYPE C	
		71								71		611	07400	71	FT	18" CONDUIT, TYPE B	
		324								324		611	07600	324	FT	18" CONDUIT, TYPE C	
		6								6		611	98150	6	EACH	CATCH BASIN, NO. 3	
		3								3		611	98180	3	EACH	CATCH BASIN, NO. 3A	
		4								4		611	98470	4	EACH	CATCH BASIN, NO. 2-2B	
		2								2		611	98630	2	EACH	CATCH BASIN ADJUSTED TO GRADE	
		2								2		611	99574	2	EACH	MANHOLE, NO. 3	
		1								1		611	99574	1	EACH	MANHOLE, NO. 3 W/ECCENTRIC CONE TOP	
		1								1		611	99710	1	EACH	PRECAST REINFORCED CONCRETE OUTLET	
																PAVEMENT	
				2,487						2,487		254	01000	2,487	SY	PAVEMENT PLANING, ASPHALT CONCRETE (1.25" DEPTH)	
				1,667						1,667		254	01000	1,667	SY	PAVEMENT PLANING, ASPHALT CONCRETE (DEPTH VARIES 3.0" TO 6.0")	
167										167		254	01600	167	SY	PATCHING PLANED SURFACE	
				1,036						1,036		301	46000	1,036	CY	ASPHALT CONCRETE BASE, PG64-22	
				1,474						1,474		304	20000	1,474	CY	AGGREGATE BASE	
				1,158						1,158		407	10000	1,158	GAL	TACK COAT	
				350						350		441	50000	350	CY	ASPHALT CONCRETE SURFACE COURSE, TYPE 1, (448), PG64-22	
				344						344		441	50300	344	CY	ASPHALT CONCRETE INTERMEDIATE COURSE, TYPE 2, (448)	
				462						462		451	14011	462	SY	9" REINFORCED CONCRETE PAVEMENT, CLASS QC 1P, AS PER PLAN	14
				2						2		452	12010	2	SY	8" NON-REINFORCED CONCRETE PAVEMENT, CLASS QC 1P	
	1,196									1,196		609	12000	1,196	FT	COMBINATION CURB AND GUTTER, TYPE 2	
	280									280		609	14000	280	FT	CURB, TYPE 2-A	
	358									358		609	18001	358	FT	COMBINATION CURB AND GUTTER, TYPE 3, AS PER PLAN	10
	502									502		609	26000	502	FT	CURB, TYPE 6	
	570									570		609	58001	570	SY	9" CONCRETE TRAFFIC ISLAND, AS PER PLAN	14
				395						395		SPECIAL	69012060	395	SY	PAVEMENT OVERLAY FABRIC COMPOSITE	16
																LIGHTING	
					18					18		625	00450	18	EACH	CONNECTION, FUSED PULL APART	
					39					39		625	00480	39	EACH	CONNECTION, UNFUSED PERMANENT	
					9					9		625	10490	9	EACH	LIGHT POLE, CONVENTIONAL, AT10B32.5	
					9					9		625	14000	9	EACH	LIGHT POLE FOUNDATION, 24" X 6' DEEP	
					525					525		625	23302	525	FT	NO. 6 AWG 2400 VOLT DISTRIBUTION CABLE	
					765					765		625	23400	765	FT	NO. 10 AWG POLE AND BRACKET CABLE	
					1,384					1,384		625	24324	1,384	FT	1-1/2" DUCT CABLE WITH THREE NO. 6 AWG 2400 VOLT CABLES	
					232					232		625	25902	232	FT	CONDUIT, JACKED OR DRILLED, 725.04, 3"	
					9					9		625	26253	9	EACH	LUMINAIRE, CONVENTIONAL, SOLID STATE (LED), AS PER PLAN, TYPE III ASYMMETRIC DISTRIBUTION, 120V	95
					1,190					1,190		625	29002	1,190	FT	TRENCH, 24" DEEP	
					8					8		625	30700	8	EACH	PULL BOX, 725.08, 18"	
					4					4		625	30706	4	EACH	PULL BOX, 725.08, 24"	
					10					10		625	32000	10	EACH	GROUND ROD	
					1					1		625	34001	1	EACH	POWER SERVICE, AS PER PLAN	95
					1,422					1,422		625	36010	1,422	FT	UNDERGROUND WARNING/MARKING TAPE	

CALCULATED MSW
CHECKED GAH

GENERAL SUMMARY

HUR-20-17.82

...\Sheets\110357_GG101.dgn 3/23/2021 8:41:18 AM mswhitt

SHEET NUM.												PART.		ITEM	ITEM EXT	GRAND TOTAL	UNIT	DESCRIPTION	SEE SHEET NO.
17	18	84	86	100	102							01/SAF/OT	02/NHS/BR						
																		TRAFFIC CONTROL	
			34									34		620	60000	34	EACH	DELINEATOR, POST SURFACE MOUNTED	
		442										442		630	03100	442	FT	GROUND MOUNTED SUPPORT, NO. 3 POST	
		25										25		630	08600	25	EACH	SIGN POST REFLECTOR	
		327										327		630	80100	327	SF	SIGN, FLAT SHEET	
		38										38		630	84900	38	EACH	REMOVAL OF GROUND MOUNTED SIGN AND DISPOSAL	
		9										9		630	85100	9	EACH	REMOVAL OF GROUND MOUNTED SIGN AND REERECTION	
		32										32		630	86002	32	EACH	REMOVAL OF GROUND MOUNTED POST SUPPORT AND DISPOSAL	
			1.07									1.07		644	00104	1.07	MILE	EDGE LINE, 6"	
			0.56									0.56		644	00300	0.56	MILE	CENTER LINE 4"	
			16									16		644	00500	16	FT	STOP LINE 24"	
			422									422		644	00700	422	FT	TRANSVERSE/DIAGONAL LINE 24" (YELLOW)	
			4									4		644	01300	4	EACH	LANE ARROW	
			109									109		644	01510	109	FT	DOTTED LINE, 6" (WHITE)	
			70									70		644	20800	70	FT	YIELD LINE	
			21									21		646	50100	21	FT	REMOVAL OF PAVEMENT MARKING	
																		LANDSCAPING	
					618							618		659	98000	618	SY	SEEDING, MISC.: NO-MOW FINE FESCUE SEED MIX	102
					3							3		661	40120	3	EACH	DECIDUOUS TREE, 3" CALIPER, TILIA CORDATA 'GREENSPIRE	
					3							3		661	50170	3	EACH	EVERGREEN TREE, 10' HEIGHT, PICEA OMORIKA 'BRUNS'	
					150							150		662	31000	150	GAL	LANDSCAPE WATERING	
																		STRUCTURE OVER 20 FOOT SPAN (HUR-20-1774)	
				491									491	202	23500	491	SY	WEARING COURSE REMOVED	
				153									153	202	38602	153	FT	BRIDGE RAILING REMOVED FOR REUSE	
				102									102	202	98200	102	FT	REMOVAL MISC.: POLYMER MODIFIED ASPHALT EXPANSION JOINT SYSTEM	100
				69									69	407	10000	69	GAL	TACK COAT	
				41									41	441	10100	41	CY	ASPHALT CONCRETE SURFACE COURSE, TYPE 1, (446), PG70-22M	
				27									27	441	10200	27	CY	ASPHALT CONCRETE INTERMEDIATE COURSE, TYPE 2, (446)	
				364									364	512	33010	364	SY	TYPE 3 WATERPROOFING	
				364									364	512	74001	364	SY	REMOVAL OF EXISTING COATINGS FROM CONCRETE SURFACES, AS PER PLAN	100
				153									153	517	75501	153	FT	BRIDGE RAILING REBUILT, AS PER PLAN	100
				49									49	846	00110	49	CF	POLYMER MODIFIED ASPHALT EXPANSION JOINT SYSTEM	
																		MAINTENANCE OF TRAFFIC	
LS												LS		614	12420	LS		DETOUR SIGNING	
	12											12		614	18601	12	SNMT	PORTABLE CHANGEABLE MESSAGE SIGN, AS PER PLAN	18
32												32		616	10000	32	MGAL	WATER	
																		INCIDENTALS	
LS												LS	LS	614	11000	LS		MAINTAINING TRAFFIC	
												11		619	16010	11	MNTH	FIELD OFFICE, TYPE B	
												LS		623	10000	LS		CONSTRUCTION LAYOUT STAKES AND SURVEYING	
												LS	LS	624	10000	LS		MOBILIZATION	

CALCULATED MSW
CHECKED GAH

GENERAL SUMMARY

HUR-20-17.82

...\Sheets\110357_GG101.dgn 3/23/2021 8:41:18 AM mswhitt

REFERENCE NO.	SHEET NO.	LOCATION	STATION FROM	STATION TO	SIDE	PLANIMETERED AREAS	202 PAVEMENT REMOVED (ASPHALT) SY	202 PAVEMENT REMOVED (CONCRETE) SY	202 WALK REMOVED SF		202 PIPE REMOVED, 24" AND UNDER FT	202 GUARDRAIL REMOVED FT	202 GUARDRAIL REMOVED, AS PER PLAN FT	202 ANCHOR ASSEMBLY REMOVED, TYPE E EACH		202 MAILBOX REMOVED EACH	202 CATCH BASIN REMOVED EACH					
R-1	33	US-20	935+50.00	936+55.21	LT	374.75	41.6															
R-2	33	US-20	935+50.00	936+75.13	RT	473.50	52.6															
R-3	33	US-20	935+60.81	936+60.12	LT							100.0										
R-4	33	US-20	935+60.81	936+87.67	RT							100.0										
R-5	33	US-20	937+50.03	938+00.00	LT/RT	585.60	65.1															
R-6	33	US-20	937+11.86	940+25.58	LT						336.1						1					
R-7	33	US-20	937+62.85	940+13.69	RT							250.0										
R-8	33	US-20	937+36.22	939+67.27	LT							237.0										
R-14	34	US-20	938+00.00	943+00.00	LT/RT	16,165.30	1,796.1															
R-15	34	SR-601 (EX DRIVEWAY)	57+36.69	60+35.65	LT	3,530.43	392.3															
R-16	34	SR-601	56+00.00	57+00.81	LT/RT	3,617.00	401.9															
R-17	34	SR-601	57+24.89	59+18.80	LT/RT	6,707.95	745.3															
R-18	34	US-20 (EXISTING PARKING LOT)	939+48.65	940+99.52	RT	9,759.32	1,084.4															
		SR-601 (EXISTING PARKING LOT)	55+25.43	56+83.58	LT																	
R-19	34	US-20	940+25.58	941+53.98	LT						98.7						1					
R-20	34	SR-601	57+48.12	57+68.14	LT						37.2						1					
R-21	34	SR-601	56+44.48	56+90.96	RT						28.5						1					
R-22	34	US-20	940+57.60	940+61.99	RT				14.8													
R-23	34	US-20	939+64.77		LT											1						
R-24	34	SR-601	57+94.98		RT											1						
R-25	34	US-20	941+53.98	942+62.43	LT						126.1						1					
R-26	34	US-20	942+62.43	945+60.32	LT						299.4						1					
R-31	35	US-20	943+00.00	945+90.00	LT/RT	3,358.69	373.2															
R-32	35	US-20	943+08.45	943+12.03	LT											2						
R-33	35	US-20	941+29.44	944+11.11	RT						277.0						1					
R-39	38	SR-601	54+57.46	56+00.00	LT/RT	3,833.63	426.0															
R-40	38	SR-601	54+85.31	55+73.36	LT							87.5										
R-41	38	SR-601	54+59.32	55+10.17	RT									1								
R-42	38	SR-601	55+18.42	55+48.76	LT	234.49		26.1														
R-48	39	SR-601	59+18.80	62+50.00	LT	1,086.58	120.7															
R-49	39	SR-601	59+18.80	62+50.00	RT	1,055.06	117.2															
R-50	39	SR-601	61+87.38		RT											1						
R-51	39	SR-601	61+19.64	62+03.58	LT						84.0											
R-57	41	ACCESS ROAD	1+24.56	127+25.00	RT				20.1													
R-58	41	ACCESS ROAD	1+63.48	1+67.53	RT				56.9													
R-59	41	ACCESS ROAD	1+89.51		RT								12.5									
SUBTOTAL THIS SHEET							5,616.4	26.1														
TOTALS CARRIED TO GENERAL SUMMARY							5,642		92		1287	774.5	12.5	1		5	7					

CALCULATED MSW
CHECKED GAH

REMOVAL QUANTITIES

HUR-20-17.82

...\Sheets\110357_GS101.dgn 3/23/2021 8:41:20 AM mswhitt

SHEET NO.	REFERENCE NO.	ALIGNMENT	STATION FROM	STATION TO	SIDE		606 GUARDRAIL, TYPE 5	606 GUARDRAIL, TYPE MGS	606 GUARDRAIL, TYPE MGS, LONG-SPAN	606 ANCHOR ASSEMBLY, TYPE E	606 ANCHOR ASSEMBLY, MGS TYPE E [MASH 2016]	606 ANCHOR ASSEMBLY, TYPE T	606 ANCHOR ASSEMBLY, MGS TYPE T	606 BRIDGE TERMINAL ASSEMBLY, TYPE 4		609 COMBINATION CURB AND GUTTER, TYPE 2	609 CURB, TYPE 2-A	609 COMBINATION CURB AND GUTTER, TYPE 3, AS PER PLAN	609 CURB, TYPE 6	609 9" CONCRETE TRAFFIC ISLAND, AS PER PLAN		690 SPECIAL-MAILBOX SUPPORT SYSTEM, SINGLE	
							FT	FT	FT	EACH	EACH	EACH	EACH	EACH		FT	FT	FT	FT	SY		EA	
33	C-1	US-20	937+49.46	938+87.48	LT														139.89				
33	C-2	US-20	937+75.66	938+61.65	RT														84.93				
33	GR-1	US-20	935+61.12	936+61.12	LT		25.0			1				1									
33	GR-2	US-20	935+61.66	936+86.65	RT		50.0			1				1									
33	GR-3	US-20	937+37.62	938+85.73	LT		75.0			1				1									
33	GR-4	US-20	937+63.26	938+89.88	RT		87.5					1		1									
34	C-3	US-20 W TO SR-601 N	938+87.48	58+98.70	LT											284.48							
34	C-4	US-20 W TO SR-601 S	938+61.65	54+95.10	RT/LT											329.66							
34	C-5	REF CC	0+00.00	4+71.24	LT													358.14					
34	C-6	REF CC	0+00.00	4+71.24	LT												279.68						
34	C-7	REF NE TO US-20 E	81+42.44	943+48.64	LT											271.29							
34	C-8	SR-601 S TO US-20 E	55+33.74	943+28.63	RT											310.35							
34	TI-1	US-20	937+89.11	939+89.26	LT/RT															201.42			
34	TI-2	US-20	941+45.88	943+48.64	LT/RT															158.23			
35	C-9	US-20	943+28.63	943+48.64	RT														20.11				
38	C-10	SR-601	54+83.38	54+94.97	LT														11.16				
38	C-11	SR-601	54+57.46	55+33.71	RT														79.21				
38	GR-5	SR-601	54+84.35	56+33.17	LT			62.5	37.5		1												
38	GR-6	SR-601	54+59.32	55+31.38	RT			62.5					1										
38	TI-3	SR-601	55+56.13	56+08.26	LT/RT															72.12			
39	C-12	SR-601	57+74.52	59+18.80	RT														147.00				
39	C-13	SR-601	58+98.65	59+18.80	LT														20.07				
39	MB-1	SR-601	58+33.25		RT																	1	
39	MB-2	SR-601	60+52.90		RT																	1	
39	MB-3	SR-601	61+85.00		RT																	1	
39	TI-4	SR-601	57+64.45	59+18.80	LT/RT															138.17			
41	MB-4	ACCESS ROAD	1+17.00		RT																	1	
41	MB-5	ACCESS ROAD	1+20.00		RT																	1	
TOTALS CARRIED TO GENERAL SUMMARY							237.5	125.0	37.5	3	1	1	1	4		1,196	280	358	502	570		5	

CALCULATED MSW
CHECKED GAH

ROADWAY QUANTITIES

HUR-20-17.82

...\Sheets\110357_GS101.dgn 3/23/2021 8:41:20 AM mswhitt

SHEET NO.	REFERENCE NO.	LOCATION	STATION FROM	STATION TO	SIDE	601 ROCK CHANNEL PROTECTION, TYPE C WITH GEOTEXTILE FABRIC	602 CONCRETE MASONRY	611 12" CONDUIT, TYPE B	611 12" CONDUIT, TYPE C	611 15" CONDUIT, TYPE C	611 18" CONDUIT, TYPE B	611 18" CONDUIT, TYPE C	611 CATCH BASIN, NO. 3	611 CATCH BASIN, NO. 3A	611 CATCH BASIN, NO. 2-2B	611 CATCH BASIN ADJUSTED TO GRADE	611 MANHOLE, NO. 3	611 MANHOLE, NO. 3 W/ ECCENTRIC CONE TOP				
						CY	CY	FT	FT	FT	FT	FT	EACH	EACH	EACH	EACH	EACH	EACH				
D-1	33	US 20	936+42.01		LT											1						
D-2	33	US 20	937+18.00	937+75.00	LT	2	0.33					58						1				
D-3	33	US 20	937+75.00	937+75.00	LT				6					1								
D-4	33	US 20	937+75.00	937+86.00	LT&RT			44						1								
D-5	34	US 20	937+75.00	939+56.00	LT							185					1					
D-6	34	US 20	939+56.00	940+18.00	LT							81	1									
D-7	34	US 20	940+18.00	940+89.00	LT						71		1									
D-8	34	US 20	940+89.00	941+71.00	LT					64			1									
D-9	34	US 20	941+49.00	941+51.00	RT		0.21		16				1									
D-10	34	US 20	941+71.00	941+75.00	LT					7					1							
D-11	34	US 20/ACCESS	941+75.00	1+50.00	LT				111						1							
D-12	35	ACCESS/US 20	1+50	944+00.00	LT			129							1							
D-13	35	US 20	944+00.00	945+60.00	LT				163							1						
D-14	38	SR 601	54+72.00	55+68.88	LT		0.21		90					1								
D-15	34	SR 601	55+68.88	56+09.00	LT			45					1									
D-16	38	SR 601	55+75.00	55+96.00	RT				29				1									
D-17	38	SR 601	55+96.00	56+21.00	RT				58								1					
D-18	39	SR 601	57+62.00	59+20.00	RT			161							1							
TOTALS CARRIED TO GENERAL SUMMARY						2	0.75	379	473	71	71	324	6	3	4	2	2	1				

STATION FROM	STATION TO	SIDE	BEGIN LATITUDE	BEGIN LONGITUDE	END LATITUDE	END LONGITUDE	BMP WIDTH (FT)	EDA TREATMENT CREDIT (ACRES)	203 EXCAVATION, AS PER PLAN, VERTICAL SIDES ONLY, (BIORETENTION CELL)	601 TIED CONCRETE BLOCK MAT WITH TYPE 1 UNDERLAYMENT	601 TIED CONCRETE BLOCK MAT WITH TYPE 2 UNDERLAYMENT	605 6" UNCLASSIFIED PIPE UNDERDRAINS, AS PER PLAN	6" CLEANOUT (FOR INFORMATION ONLY)	611 6" CONDUIT, TYPE F FOR UNDERDRAIN OUTLETS	611 PRECAST REINFORCED CONCRETE OUTLET	670 SLOPE EROSION PROTECTION	671 EROSION CONTROL MAT, TYPE A	
									CY	SY	SY	FT	EACH	FT	EACH	SY	SY	
944+00.00	944+50.00	LT	41.249495	82.539675	41.249496	82.539447	25	0.07								153		
945.50.00	946+00.00	LT	41.249475	82.539207	41.249508	82.538984	30	0.07								174		
944+50.00	946+00.00	RT	41.249293	82.539530	41.249271	82.538989	15	0.11								266		
54+18.00	55+91.00	RT			41.248829	82.540595		0.72	189	2	21	100	1	86	1		145	
FOR TOPSOIL AND SEEDING AND MULCHING QUANTITIES, SEE ROADWAY SUBSUMMARY					SUBTOTALS			0.97	189	2	21	100	1	86	1	593	145	
TOTALS CARRIED TO GENERAL SUMMARY									189	2	21	100		86	1	593	145	

CALCULATED HB
CHECKED MHT

DRAINAGE SUBSUMMARY

HUR-20-17.82

...\Sheets\110357_DS002.dgn 3/23/2021 8:41:23 AM mswhitt

SHEET NO.	REF NO.	STATION FROM	STATION TO	CHAIN	SIDE	OUTLET ELEVATION		4" BASE PIPE UNDERDRAINS (605)	4" CONDUIT, TYPE F FOR UNDERDRAIN OUTLET (611)			FOR INFORMATION ONLY — BENDS AND BRANCHES — * DENOTES TO CONNECT TO EXISTING UD: 4" X 11.25* BEND	4" X 22.50* BEND	4" X 45* BEND	4" X 90* BEND	4" X 4" TEE	
								FT	FT				EACH	EACH	EACH	EACH	EACH
33	UD-1	935+50.00	936+43.64	US 20	RT	835.41		91	10						2		
33	UD-2	935+50.00	936+42.00	US 20	LT	835.65		81	10								
33	UD-3	937+75.00	939+52.00	US 20	LT	836.00		171	10						1		
33	UD-4	937+86.00	939+92.00	US 20	RT	836.00		191	10						1		
34	UD-5	939+56.00	940+15.00	US 20	LT	836.76		66	10					1			
34	UD-6	940+48.00	941+49.00	US 20	LT&RT	836.42		340	20							1	
34	UD-7	941+18.00	941+71.00	US 20	LT	836.91		39	10						1		
34	UD-8	941+49.00	945+90.00	US 20	RT	836.42		422	10						1		
34	UD-9	941.71.00	0+63.50	US 20 / ACCESS RD	LT	836.91		205	10						1		
35	UD-10	944+00.00	945+55.00	ACCESS RD / US 20	LT	836.92		171	10							1	
35	UD-11	945.60.00	945+90.00	US 20	LT	838.93		20	10							1	
38	UD-12	54+57.00	55+75.00	SR 601	RT	835.91		111	10						1		
38	UD-13	54+83.00	55+68.88	SR 601	LT	835.54		71	10						1		
38	UD-14	55+68.88	56+56.00	SR 601	LT	835.54		102	10						1		
38	UD-15	55+83.00	55+97.00	SR 601	RT	835.78		8	10						1		
38	UD-16	55+97.00	56+16.00	SR 601	RT	835.95		35	10						1		
34	UD-17	57+62.00	60+48.00	SR 601	RT	837.50		279	10						1		
34	UD-18	57+78.00	60+48.00	SR 601	LT	837.53		260	10						1		
39	UD-19	60+58.00	62+50.00	SR 601	RT	EX UD		183	10				4				
39	UD-20	60+58.00	62+50.00	SR 601	LT	EX UD		182	10								
41	UD-21	0+84.00	1+50.00	ACCESS RD	LT	838.25		59	10						1		
41	UD-22	1+50.00	2+01.00	ACCESS RD	LT	838.25		51	10							1	
													4	1	15	3	1
TOTALS CARRIED TO GENERAL SUBSUMMARY								3138	230								

CALCULATED HB
CHECKED MHT

UNDERDRAIN QUANTITIES

HUR-20-17.82

...\Sheets\110357_DS001.dgn 3/23/2021 8:41:25 AM mswhitt

PAV'T AREA	STATION FROM	STATION TO	SIDE	LENGTH (ALONG CURB OR EDGE)	AVERAGE WIDTH OF PAVED AREA	AREA (FROM CADD)	204 SUBGRADE COMPACTION	204 EXCAVATION OF SUBRADE (12" DEEP)	204 12" GRANULAR MATERIAL, TYPE B	204 PROOF ROLLING	204 GEOTEXTILE FABRIC	206 CEMENT	206 CURING COAT	206 CEMENT STABILIZED SUBGRADE, 12" DEEP	254 PAVEMENT PLANING, ASPHALT CONCRETE (1.25" DEPTH)	254 PAVEMENT PLANING, ASPHALT CONCRETE (DEPTH VARIES 3.0" TO 6.0")	301 6" ASPHALT CONCRETE BASE, PG64-22	304 6" AGGREGATE BASE	407 TACK COAT (@0.06 GAL/SY)	407 TACK COAT (@0.09 GAL/SY)	441 1 1/4" AC SURFACE COURSE, TYPE 1, (448), PG64-22	441 2" AC SURFACE COURSE, TYPE 1, (448), PG64-22	441 1 3/4" AC INTERMEDIATE COURSE, TYPE 2, (448)	451 9" REINFORCED CONCRETE PAVEMENT, CLASS QC 1P, AS PER PLAN	452 8" NON-REINFORCED CONCRETE PAVEMENT, CLASS QC 1P	SPECIAL PAVEMENT OVERLAY FABRIC COMPOSITE (30" WIDE)
				LF	LF	SQ FT	SY	CY	CY	HR	SY	TON	SY	SY	SY	SY	CY	CY	GAL	GAL	CY	CY	CY	SY	SY	SY
	US-20																										
FULL DEPTH ASPH., EXC. SUB.	935+50.00	936+55.21	LT	99.45	7.4	739		27.4	27.4	0.04	82.1						13.7	13.7	9.8		2.9		4.0			
+ASPH. EDGE COURSE	935+50.00	936+49.22	LT	99.45				5.5	5.5	0.01	16.6						0.6	1.5								
ASPHALT RESURFACING	935+50.00	936+68.57	LT/RT	223.9		2,515										279.49			16.8	25.2	9.7		13.6			62.2
FULL DEPTH ASPH., EXC. SUB.	935+50.00	936+75.13	RT	125.39	7.3	916		33.9	33.9	0.05	101.7						17.0	17.0	12.2		3.5		4.9			
+ASPH. EDGE COURSE	935+50.00	936+75.13	RT	125.39				7.0	7.0	0.01	20.9						0.8	1.9								
ASPHALT RESURFACING	937+55.71	937+89.11	LT/RT	53.7		599										66.53			4.0	6.0	2.3		3.2			14.9
FULL DEPTH ASPHALT CSS	937+49.46	939+94.73	LT	245.27	15.5	3,806				0.21		10.94	422.87	422.9			70.5	70.5	50.7		14.7		20.6			
+TYPE D EDGE COURSE	937+49.46	938+87.48	LT	139.9						0.03		1.61	62.18	62.2				7.8								
+C&G EDGE COURSE	938+87.48	939+86.80	LT	105.1						0.02		1.21	46.71	46.7				5.8								
TRAFFIC ISLAND	937+89.11	939+91.08	LT/RT	199.9	9.1	1,813				0.07		5.21	201.42	201.4			33.6	33.6	12.1							
FULL DEPTH ASPHALT CSS	937+68.93	939+93.44	RT	224.51	14.7	3,303				0.18		9.50	367.02	367.0			61.2	61.2	44.0		12.7		17.8			
+TYPE D EDGE COURSE	937+75.66	938+61.65	RT	84.9						0.02		0.98	37.75	37.7				4.7								
+C&G EDGE COURSE	938+61.65	939+86.74	RT	125.2						0.03		1.44	55.63	55.6				7.0								
FULL DEPTH ASPHALT CSS	941+39.49	943+48.64	LT	209.15	14.3	2,985				0.17		8.58	331.70	331.7			55.3	55.3	39.8		11.5		16.1			
+C&G EDGE COURSE	941+63.59	943+48.64	LT	199.0						0.04		2.29	88.44	88.4				11.1								
TRAFFIC ISLAND	941+45.73	943+48.64	LT/RT	202.9	7.0	1,424				0.05		4.09	158.23	158.2			26.4	26.4	9.5							
FULL DEPTH ASPHALT CSS	941+39.49	943+48.64	RT	209.15	16.0	3,337				0.19		9.59	370.77	370.8			61.8	61.8	44.5		12.9		18.0			
+C&G EDGE COURSE	941+43.80	943+28.63	RT	179.7						0.04		2.07	79.87	79.9				10.0								
+TYPE D EDGE COURSE	943+28.63	943+48.64	RT	20.1						0.004		0.23	8.94	8.9				1.1								
FULL DEPTH ASPH., EXC. SUB.	943+48.64	945+90.00	LT	241.37	6.2	1,508		55.9	55.9	0.08	167.6						27.9	27.9	20.1		5.8		8.1			
+ASPH. EDGE COURSE	943+48.64	945+90.00	LT	193.55				10.8	10.8	0.02	32.3						1.2	3.0								
ASPHALT RESURFACING	943+48.64	945+90.00	LT/RT	482.7		5,394										599.33			36.0	53.9	20.8		29.1			134.1
FULL DEPTH ASPH., EXC. SUB.	943+48.64	945+90.00	RT	241.36	7.3	1,762		65.2	65.2	0.10	195.7						32.6	32.6	23.5		6.8		9.5			
+ASPH. EDGE COURSE	943+48.64	945+90.00	RT	241.51				13.4	13.4	0.02	40.3						1.5	3.7								
GRAVEL DRIVE	944+47.51	945+40.75	LT	93.24		1,863												207.0								
	ACCESS ROAD																									
FULL DEPTH ASPH., SUB. COMP.	0+19.05	2+01.18	LT/RT	182.13	31.5	5,738	637.6			0.32							106.3	106.3	76.5		22.1		31.0			
+ASPH. EDGE COURSE	0+19.05	2+01.18	LT	154.44				8.6	8.6	0.01	25.7						1.0	2.4								
+ASPH. EDGE COURSE	0+19.05	2+01.18	RT	209.51				11.6	11.6	0.02	34.9						1.3	3.2								
RES. ASPHALT DRIVE	0+79.74	0+97.85	RT	26.19	11.3	295	29.8			0.01								5.5				1.8				
RES. ASPHALT DRIVE	1+47.32	1+74.96	RT	24.0	21.0	504	51.4			0.03								9.3				3.1				
SUBTOTAL CARRIED TO SHEET 29							718.8	239.3	239.3	1.8	717.8	57.7	2,231.5	2,231.5		945.3	512.4	791.2	399.5	85.1	125.8	4.9	176.1			211.2

CALCULATED MSW
CHECKED GAH

PAVEMENT QUANTITIES

HUR-20-17.82

...\Sheets\110357_GS101.dgn 3/23/2021 8:41:27 AM mswhitt

PAV'T AREA	STATION FROM	STATION TO	SIDE	LENGTH (ALONG CURB OR EDGE)	AVERAGE WIDTH OF PAVED AREA	AREA (FROM CADD)	204 SUBGRADE COMPACTION	204 EXCAVATION OF SUBRADE (12" DEEP)	204 12" GRANULAR MATERIAL, TYPE B	204 PROOF ROLLING	204 GEOTEXTILE FABRIC	206 CEMENT	206 CURING COAT	206 CEMENT STABILIZED SUBGRADE, 12" DEEP	254 PAVEMENT PLANING, ASPHALT CONCRETE (1.25" DEPTH)	254 PAVEMENT PLANING, ASPHALT CONCRETE (DEPTH VARIES 3.0" TO 6.0")	301 6" ASPHALT CONCRETE BASE, PG64-22	304 6" AGGREGATE BASE	407 TACK COAT (@0.06 GAL/SY)	407 TACK COAT (@0.09 GAL/SY)	441 1 1/4" AC SURFACE COURSE, TYPE 1, (448), PG64-22	441 2" AC SURFACE COURSE, TYPE 1, (448), PG64-22	441 1 3/4" AC INTERMEDIATE COURSE, TYPE 2, (448)	451 9" REINFORCED CONCRETE PAVEMENT, CLASS QC 1P, AS PER PLAN	452 8" NON-REINFORCED CONCRETE PAVEMENT, CLASS QC 1P	SPECIAL PAVEMENT OVERLAY FABRIC COMPOSITE (30" WIDE)
				LF	LF	SQ FT	SY	CY	CY	HR	SY	TON	SY	SY	SY	SY	CY	CY	GAL	GAL	CY	CY	CY	SY	SY	SY
	SR 601																									
MILL AND FILL	48+34.00	53+73.85	LT/RT	527.35	24.5	12,921									1,435.63					129.2	49.8					
FULL DEPTH ASPHALT CSS	54+70.07	56+19.55	LT	149.48	15.3	2,294				0.13		6.59	254.85	254.9			42.5	42.5	30.6		8.8		12.4			
+TYPE D EDGE COURSE	54+83.38	54+94.97	LT	11.2						0.002		0.13	4.96	5.0				0.6								
+C&G EDGE COURSE	54+94.97	56+15.80	LT	116.3						0.03		1.34	51.71	51.7				6.5								
TRAFFIC ISLAND	55+56.13	56+11.26	LT/RT	55.1	11.8	649				0.02		1.87	72.12	72.1			12.0	12.0	4.3							
FULL DEPTH ASPHALT CSS	54+57.46	56+10.30	RT	152.84	16.7	2,547				0.14		7.32	283.00	283.0			47.2	47.2	34.0		9.8		13.8			
+TYPE D EDGE COURSE	54+57.46	55+33.75	RT	79.2						0.02		0.91	35.20	35.2				4.4								
+C&G EDGE COURSE	55+33.75	55+97.15	RT	70.3						0.02		0.81	31.27	31.3				3.9								
FULL DEPTH ASPHALT CSS	57+61.68	59+18.80	LT	157.12	15.2	2,383				0.13		6.85	264.78	264.8			44.1	44.1	31.8		9.2		12.9			
+C&G EDGE COURSE	57+70.52	58+98.65	LT	129.3						0.03		1.49	57.46	57.5				7.2								
+TYPE D EDGE COURSE	58+98.65	59+18.80	LT	20.0						0.004		0.23	8.90	8.9				1.1								
TRAFFIC ISLAND	57+63.57	59+18.80	LT/RT	155.2	8.0	1,244				0.05		3.58	138.17	138.2			23.0	23.0	8.3							
FULL DEPTH ASPHALT CSS	57+58.38	59+18.80	RT	160.42	20.8	3,345				0.19		9.62	371.63	371.6			61.9	61.9	44.6		12.9		18.1			
+C&G EDGE COURSE	57+65.05	57+73.69	RT	9.7						0.002		0.11	4.30	4.3				0.5								
+TYPE D EDGE COURSE	57+73.69	59+18.80	RT	147.0						0.03		1.69	65.33	65.3				8.2								
CONC. COMM. DRIVE	58+87.80	59+14.10	RT	18.5	21.1	390	38.9			0.02															2.3	
FULL DEPTH ASPH., EXC. SUB.	59+18.80	62+49.95	LT	330.72	7.0	2,327		86.2	86.2	0.13	258.6						43.1	43.1	31.0		9.0		12.6			
+ASPH. EDGE COURSE	59+18.80	62+49.95	LT	274.65				15.3	15.3	0.02	45.8						1.7	4.2								
ASPHALT RESURFACING	59+18.80	62+49.95	LT/RT	662.3		6,494										721.53	28.5		43.3	64.9	25.1		35.1			184.0
FULL DEPTH ASPH., EXC. SUB.	59+18.80	62+49.95	RT	331.63	8.0	2,668		98.8	98.8	0.15	296.5						49.4	49.4	35.6		10.3		14.4			
+ASPH. EDGE COURSE	59+18.80	62+49.95	RT	332.94				18.5	18.5	0.03	55.5						2.1	5.1								
RES. ASPHALT DRIVE	60+41.48	60+63.49	RT	26.19	66.6	1,746	190.3			0.10								32.3				10.8				
GRAVEL DRIVE	61+41.54	61+59.33	RT	26.19	13.8	362												6.7								
RES. ASPHALT DRIVE	61+76.81	61+92.74	RT	26.19	10.2	267	27.1			0.01								5.0				1.7				
MILL AND FILL	62+49.95	66+22.00	LT/RT	372.05	25.4	9,462									1,051.34					94.6	36.5					
	REF CC (CIRCULATING LANE)																									
FULL DEPTH ASPHALT CSS	0+00.00	4+71.24	RT	471.24	19.3	9,089				0.50		26.13	1,009.94	1,009.9			168.3	168.3	121.2		35.1		49.1			
+NE C&G EDGE COURSE	80+70.15	81+32.76	RT	62.6						0.01		0.72	27.83	27.8				3.5								
+NW C&G EDGE COURSE	111+05.11	111+55.29	RT	50.2						0.01		0.58	22.30	22.3				2.8								
+SW C&G EDGE COURSE	20+75.21	21+63.36	RT	88.1						0.02		1.01	39.18	39.2				4.9								
+SE C&G EDGE COURSE	51+68.55	52+28.85	RT	60.3						0.01		0.69	26.80	26.8				3.3								
+CURB 3-B, APP	0+00.00	4+71.24	RT			355				0.02		1.02	39.44	39.4				6.6								
+TRUCK APRON	0+00.00	4+71.24	RT			4,157				0.23		11.95	461.91	461.9				77.0						461.9		
+CURB 2-A	0+00.00	4+71.24	RT	279.7						0.03		1.61	62.15	62.2				7.8								
SUBTOTAL THIS SHEET							256.2	218.8	218.8	2.1	656.4	86.2	3,333.2	3,333.2	2,487.0	721.5	523.8	683.2	384.6	288.8	206.5	12.4	168.2	461.9	2.3	184.0
SUBTOTAL FROM SHEET 28							718.8	239.3	239.3	1.8	717.8	57.7	2,231.5	2,231.5		945.3	512.4	791.2	399.5	85.1	125.8	4.9	176.1			211.2
TOTAL CARRIED TO GENERAL NOTES										4																
TOTAL CARRIED TO GENERAL SUMMARY							975	458	458		1,374	144	5,565	5,565	2,487	1,667	1,036	1,474	1,158		350		344	462	2	395

CALCULATED MSW
CHECKED GAH

PAVEMENT QUANTITIES

HUR-20-17.82

...\Sheets\110357_GS101.dgn 3/23/2021 11:21:15 AM mswhitt

PROJECT DATA	
TOTAL AREA (RIGHT-OF-WAY)..... 6.13 ACRES	RUNOFF COEFFICIENT FOR PRE-CONSTRUCTION SITE.....0.53
PROJECT EARTH DISTURBED AREA.. 3.91 ACRES	RUNOFF COEFFICIENT FOR POST-CONSTRUCTION SITE.....0.63
ESTIMATED CONTRACTOR EARTH DISTURBED AREA..... 0.35 ACRES	POST CONSTRUCTION BMP: VEGETATED FILTER STRIPS AND BIORETENTION CELL
NOTICE OF INTENT EARTH DISTURBED AREA..... 4.90 ACRES	
IMPERVIOUS (PAVED) AREA FOR PRE-CONSTRUCTION SITE.....5.28 ACRES	IMMEDIATE RECEIVING WATERS: RATTLESNAKE CREEK
IMPERVIOUS (PAVED) AREA FOR POST-CONSTRUCTION SITE.....5.89 ACRES	SUBSEQUENT RECEIVING WATERS: HURON RIVER

USGS MAP: NORWALK, OH

LONGITUDE: 82° 32′ 29″
LATITUDE: 41° 14′ 57″

*LONGITUDE AND LATITUDE TO APPROX. CENTER OF PROJECT.

PROJECT DESCRIPTION:

THIS PROJECT CONSISTS OF THE CONSTRUCTION OF A SINGLE LANE ROUNDABOUT AT THE INTERSECTION OF US 20 AND SR 601. IMPROVEMENTS WILL BE LIMITED TO THE IMMEDIATE AREA OF THE INTERSECTION REQUIRED TO CONSTRUCT THE ROUNDABOUT APPROACHES.

LEGEND
CATCH BASIN, CB-3A
CATCH BASIN, CB-3
CATCH BASIN, CB2-2B
MANHOLE, MH-3

BMP TYPE	EDA TREATMENT CREDIT (ACRES)
VEGETATED FILTER STRIP	0.25 AC
BIORETENTION CELL	0.72 AC
TREATMENT PROVIDED	0.97 AC
TREATMENT REQUIRED	0.89 AC

FOR INDIVIDUAL BMP LOCATIONS AND QUANTITIES SEE BMP SUBSUMMARY SHEET: 26

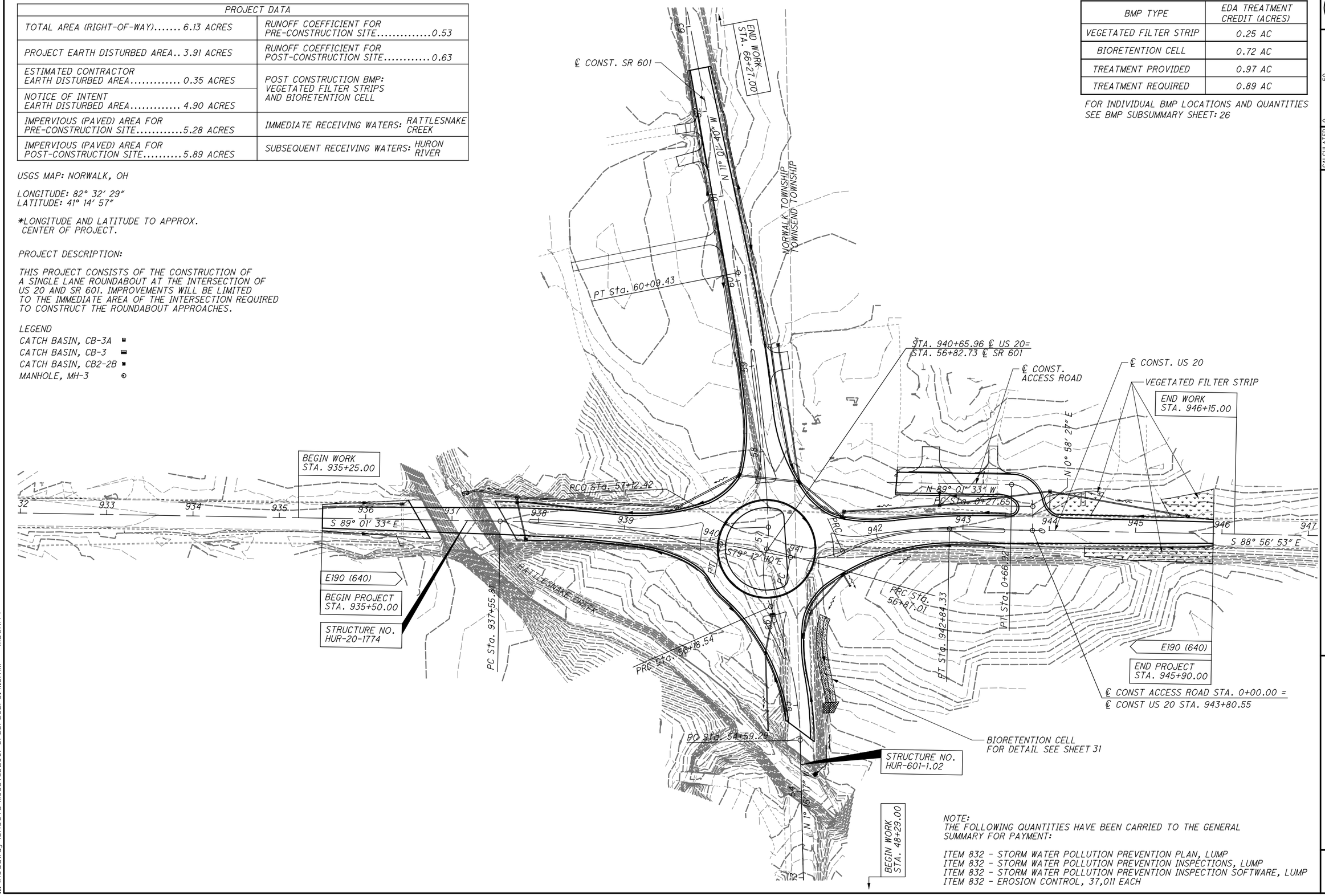

NOTE:
THE FOLLOWING QUANTITIES HAVE BEEN CARRIED TO THE GENERAL SUMMARY FOR PAYMENT:

ITEM 832 - STORM WATER POLLUTION PREVENTION PLAN, LUMP
ITEM 832 - STORM WATER POLLUTION PREVENTION INSPECTIONS, LUMP
ITEM 832 - STORM WATER POLLUTION PREVENTION INSPECTION SOFTWARE, LUMP
ITEM 832 - EROSION CONTROL, 37,011 EACH

HORIZONTAL SCALE IN FEET 0 25 50 100

CALCULATED HB
CHECKED MHT

PROJECT SITE PLAN
STA. 935+50.00 TO STA. 945+90.00

HUR-20-17.82

...\Roadway\Sheets\110357_DE001 3/23/2021 8:41:31 AM mswhitt

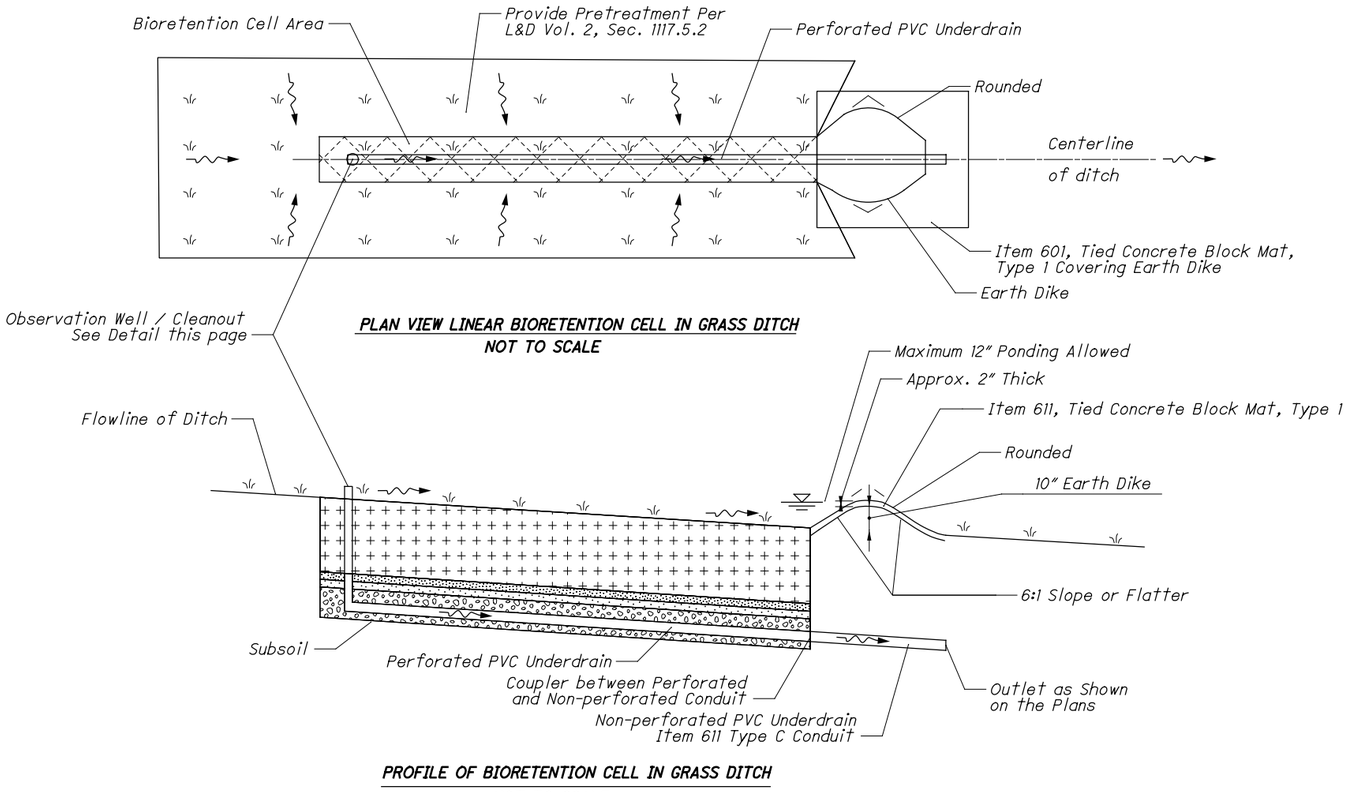

NOTES

EROSION CONTROL: For grassed bioretention, include temporary erosion control mat Type A per CMS 671 over the surface of all bioretention planting soil.

BIORETENTION PLANTING SOIL: See Plan Note Bioretention Cells on sheet 15 for approved bioretention planting soil characteristics.

PLANTINGS: Seed the bioretention cell area per CMS 659. Do not apply fertilizer or lime to the bioretention cell area.

SUBSOIL: Scarify the subsoil 3" minimum before installation of aggregate into bioretention cell.

BIORETENTION SIDES: Construct bioretention cells with vertical sides unless otherwise specified.

PAYMENT: Bioretention cell will be paid for as Iem 601, Bioretention Cell cu yd and Item 601 Tied Concrete Mat sq yd. Excavation will be paid for as Item 203, Excavation cu yd. Perforated underdrains, observation wells, and associated fittings and couplers will be paid for as Item 605, Underdrain APP. Non perforated underdrains will be paid for as Item 611, Outlet Pipe. Seeding and mulching for the bioretention cell will be paid for as Item 659, Seeding and Mulching sq yd. Erosion control mats will be paid for as item 617, Erosion Control Mats sq yd.

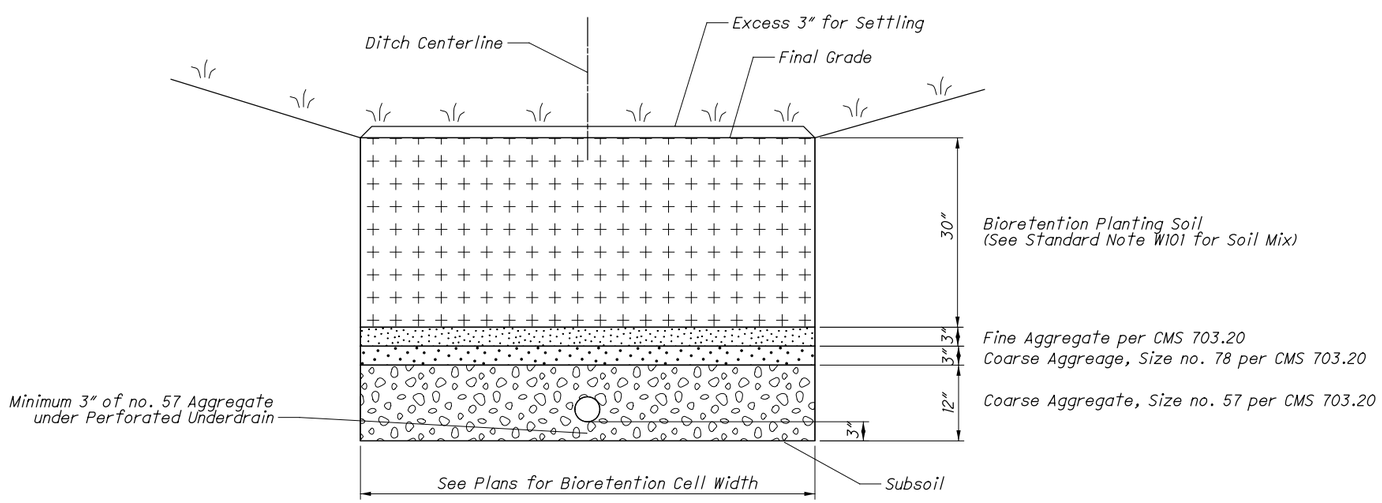

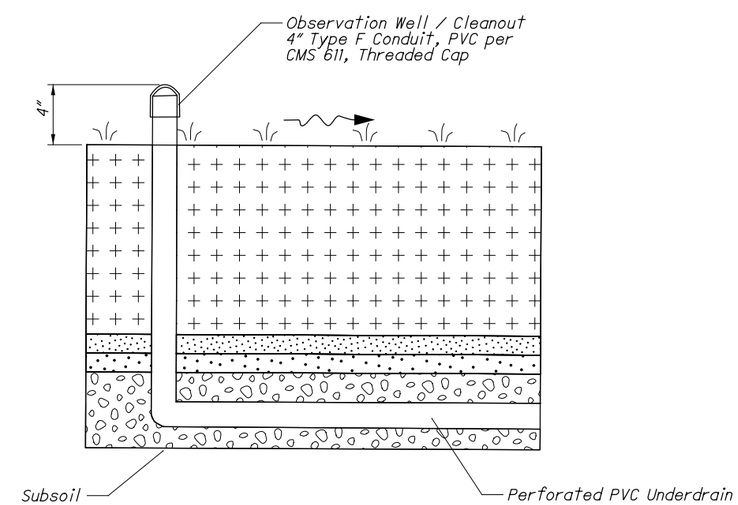

LINEAR BIORETENTION CELL

HUR-20-17.82

...\Sheets\II0357_DD001.dgn 3/23/2021 8:41:36 AM mswhitt

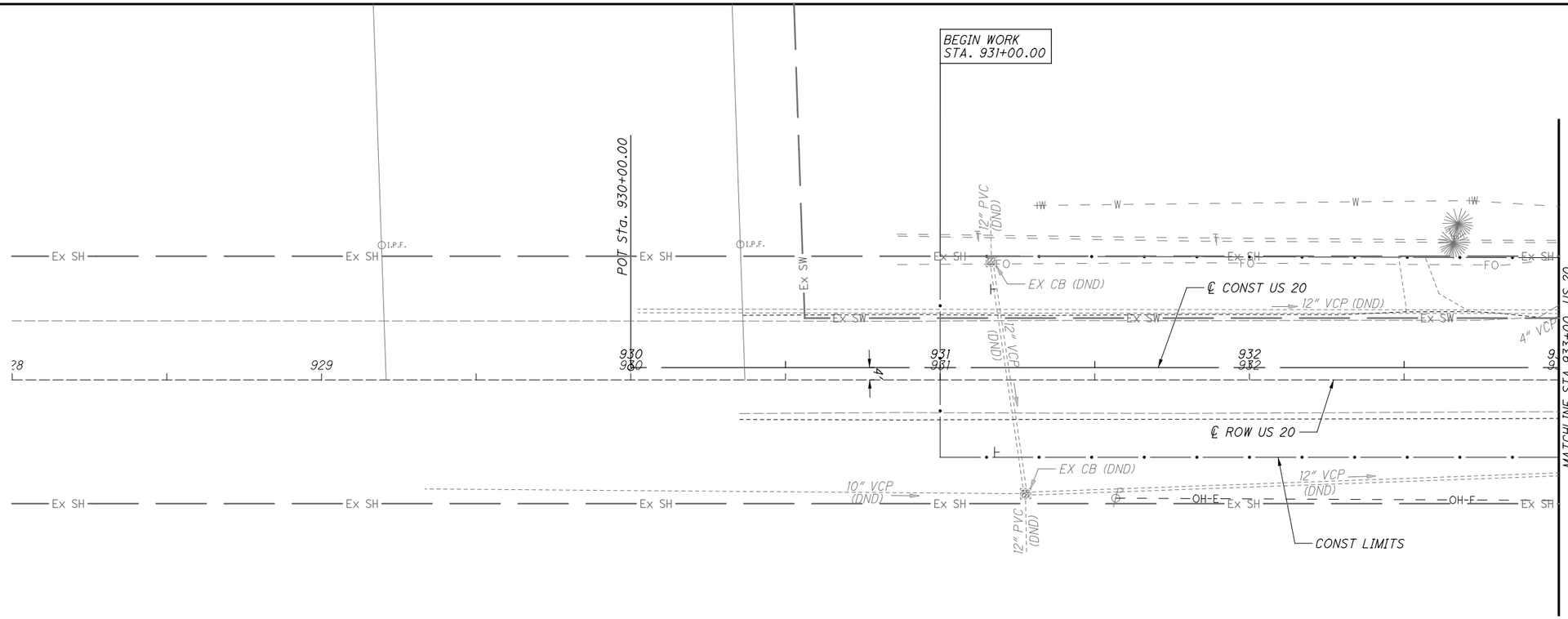

HORIZONTAL SCALE IN FEET
0 10 20 40

CALCULATED TK
CHECKED GAH

PLAN AND PROFILE - US 20
STA 928+00 TO STA 933+00

HUR-20-17.82

...\Roadway\Sheets\I0357GP001.dgn 3/23/2021 8:41:41 AM mswhitt

US 20
CURVE DATA NO. 1
P.I. Sta. 938+84.72
Δ = 9° 49′ 24″ (RT)
Dc = 3° 49′ 11″
R = 1,500.00′
T = 128.90′
L = 257.17′
E = 5.53′
PC Sta. 937+55.81
PT Sta. 940+12.98

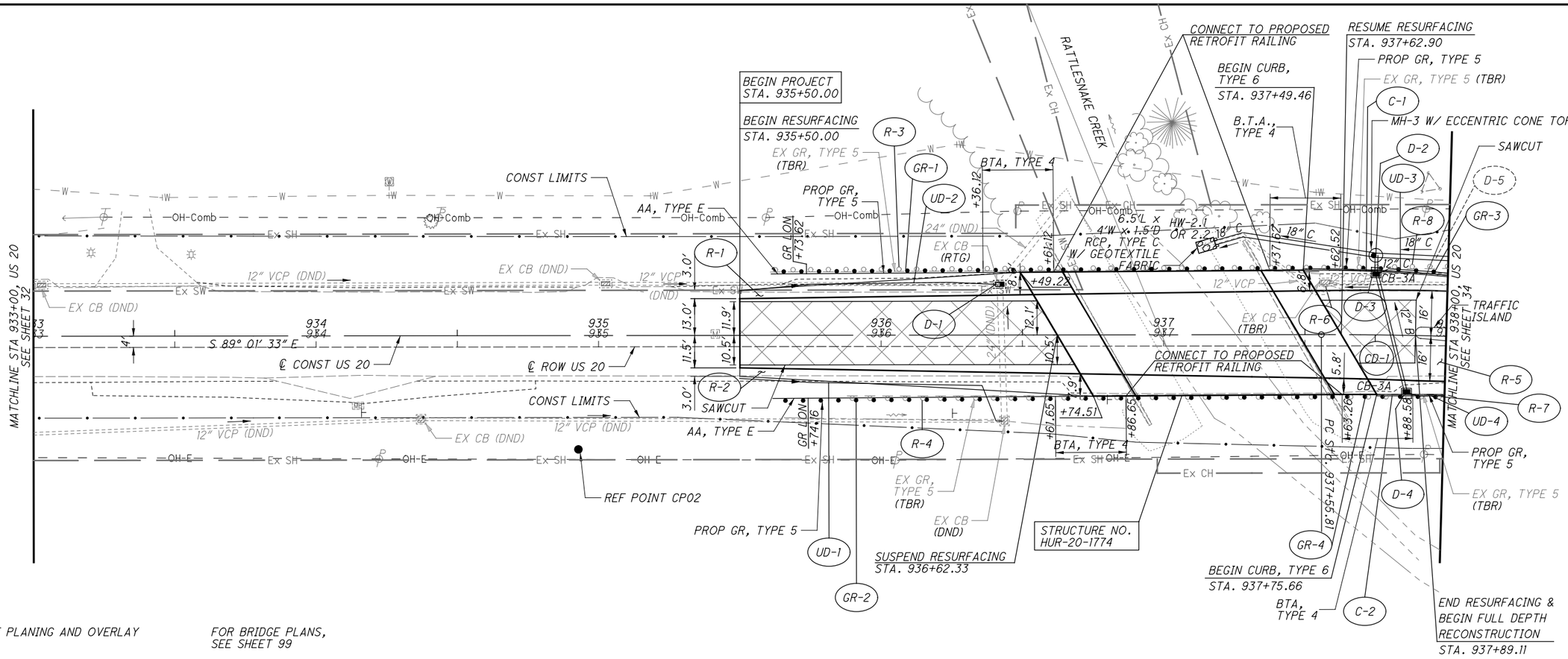

LEGEND

PAVEMENT PLANING AND OVERLAY

FOR BRIDGE PLANS, SEE SHEET 99

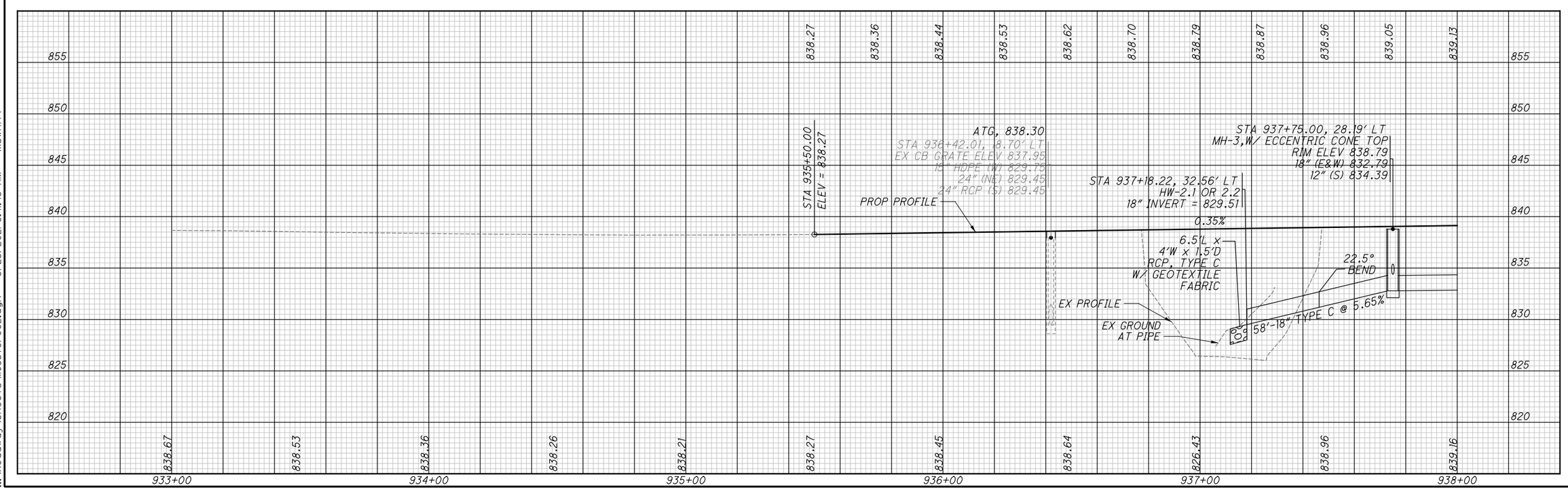

HORIZONTAL SCALE IN FEET 0 10 20 40

CALCULATED TK
CHECKED GAH

PLAN AND PROFILE - US 20
STA 933+00 TO STA 938+00

HUR-20-17.82

...\Roadway\Sheets\110357GP002.dgn 3/23/2021 8:41:45 AM mswhitt

US 20
CURVE DATA NO. 1
P.I. Sta. 938+84.72
Δ = 9° 49′ 24″ (RT)
Dc = 3° 49′ 11″
R = 1,500.00′
T = 128.90′
L = 257.17′
E = 5.53′
PC Sta. 937+55.81
PT Sta. 940+12.98

US 20
CURVE DATA NO. 2
P.I. Sta. 941+26.99
Δ = 35° 15′ 40″ (LT)
Dc = 57° 17′ 45″
R = 100.00′
T = 31.78′
L = 61.54′
E = 4.93′
PC Sta. 940+95.21
PRC Sta. 941+56.75

US 20
CURVE DATA NO. 3
P.I. Sta. 942+21.62
Δ = 25° 30′ 57″ (RT)
Dc = 20° 00′ 00″
R = 286.48′
T = 64.86′
L = 127.58′
E = 7.25′
PRC Sta. 941+56.75
PT Sta. 942+84.33

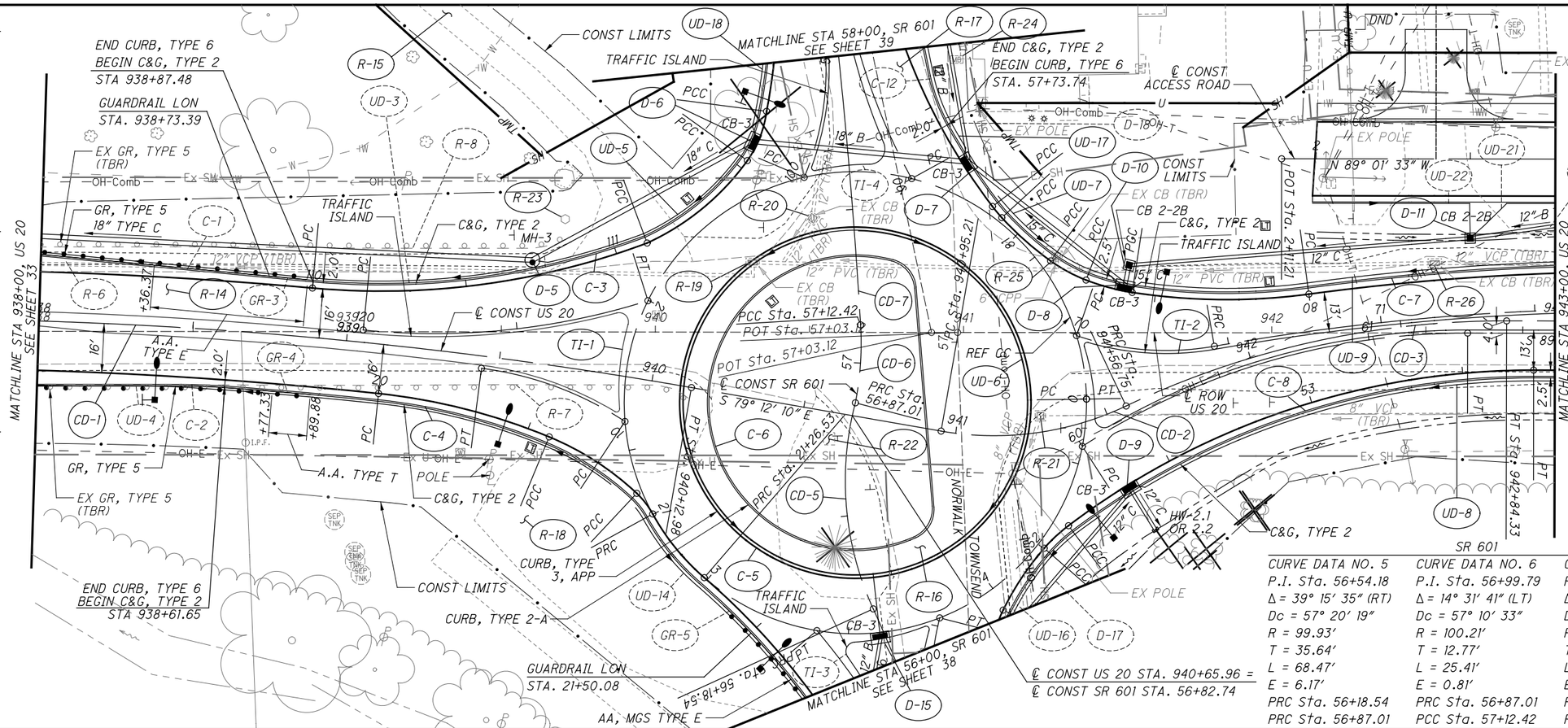

CURVE DATA NO. 5	CURVE DATA NO. 6	CURVE DATA NO. 7
P.I. Sta. 56+54.18	P.I. Sta. 56+99.79	P.I. Sta. 58+61.20
Δ = 39° 15′ 35″ (RT)	Δ = 14° 31′ 41″ (LT)	Δ = 8° 30′ 31″ (LT)
Dc = 57° 20′ 19″	Dc = 57° 10′ 33″	Dc = 2° 51′ 53″
R = 99.93′	R = 100.21′	R = 2,000.00′
T = 35.64′	T = 12.77′	T = 148.78′
L = 68.47′	L = 25.41′	L = 297.00′
E = 6.17′	E = 0.81′	E = 5.53′
PRC Sta. 56+18.54	PRC Sta. 56+87.01	PCC Sta. 57+12.42
PRC Sta. 56+87.01	PCC Sta. 57+12.42	PT Sta. 60+09.43

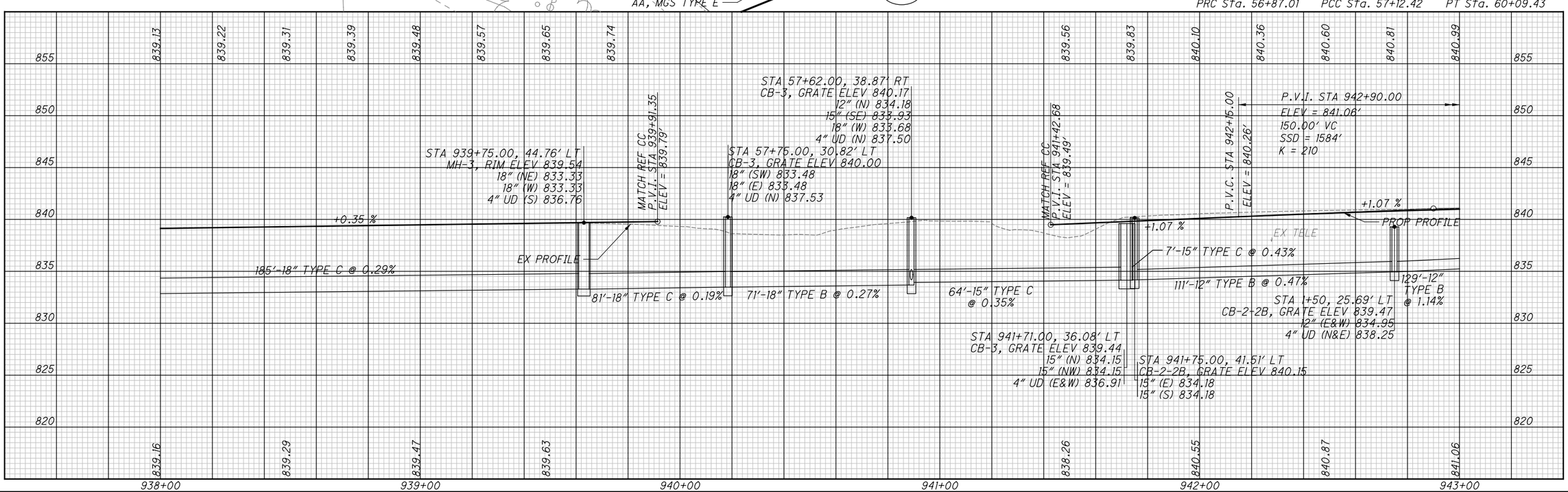

HORIZONTAL SCALE IN FEET 0 10 20 40

CALCULATED TK
CHECKED GAH

PLAN AND PROFILE - US 20
STA 938+00 TO STA 943+00

HUR-20-17.82

...\Roadway\Sheets\I0357GP003.dgn 3/23/2021 8:41:50 AM mswhitt

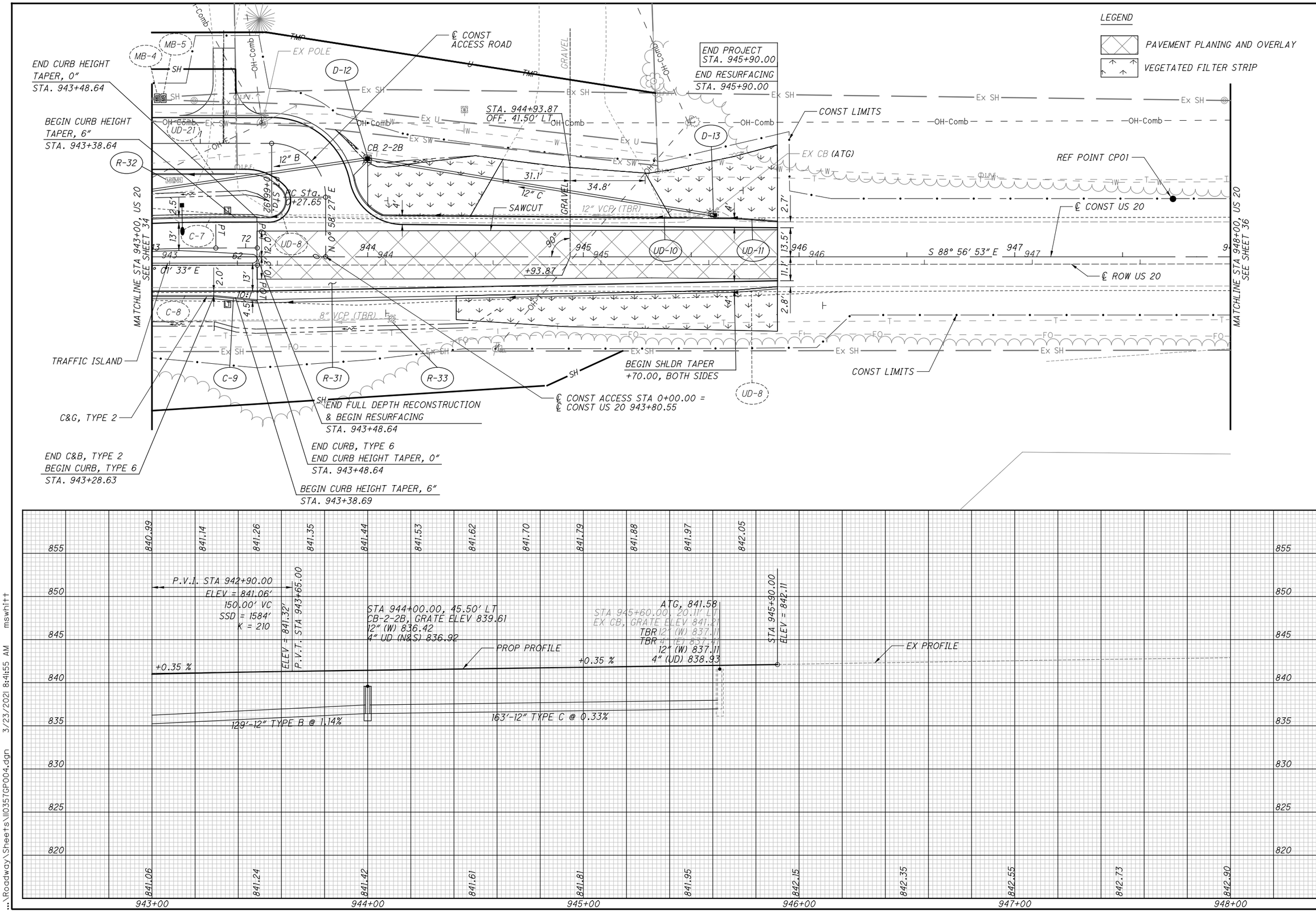
LEGEND
PAVEMENT PLANING AND OVERLAY
VEGETATED FILTER STRIP
END CURB HEIGHT TAPER, 0" STA. 943+48.64
BEGIN CURB HEIGHT TAPER, 6" STA. 943+38.64
℄ CONST ACCESS ROAD
EX POLE
END PROJECT STA. 945+90.00
END RESURFACING STA. 945+90.00
STA. 944+93.87 OFF. 41.50' LT
CONST LIMITS
EX CB (ATG)
REF POINT CP01
℄ CONST US 20
℄ ROW US 20
SAWCUT
12" VCP (TBR)
8" VCP (TBR)
MATCHLINE STA 943+00, US 20 SEE SHEET 34
MATCHLINE STA 948+00, US 20 SEE SHEET 36
S 88° 56' 53" E
N 0° 58' 27" E
TRAFFIC ISLAND
C&G, TYPE 2
END C&B, TYPE 2
BEGIN CURB, TYPE 6
STA. 943+28.63
END FULL DEPTH RECONSTRUCTION & BEGIN RESURFACING STA. 943+48.64
END CURB, TYPE 6
END CURB HEIGHT TAPER, 0" STA. 943+48.64
BEGIN CURB HEIGHT TAPER, 6" STA. 943+38.69
℄ CONST ACCESS STA 0+00.00 = ℄ CONST US 20 943+80.55
BEGIN SHLDR TAPER +70.00, BOTH SIDES
CONST LIMITS
P.V.I. STA 942+90.00
ELEV = 841.06'
150.00' VC
SSD = 1584'
K = 210
ELEV = 841.32'
P.V.T. STA 943+65.00
STA 944+00.00, 45.50' LT
CB-2-2B, GRATE ELEV 839.61
12" (W) 836.42
4" UD (N&S) 836.92
ATG, 841.58
STA 945+60.00, 20.11' LT
EX CB, GRATE ELEV 841.21
TBR 12" (W) 837.11
TBR 4" (E) 837.41
12" (W) 837.11
4" (UD) 838.93
STA 945+90.00
ELEV = 842.11
PROP PROFILE
EX PROFILE
+0.35 %
+0.35 %
129'-12" TYPE B @ 1.14%
163'-12" TYPE C @ 0.33%
HORIZONTAL SCALE IN FEET
CALCULATED TK
CHECKED GAH
PLAN AND PROFILE - US 20
STA 943+00 TO STA 948+00
HUR-20-17.82
35
128
...\Roadway\Sheets\II0357GP004.dgn 3/23/2021 8:41:55 AM mswhitt

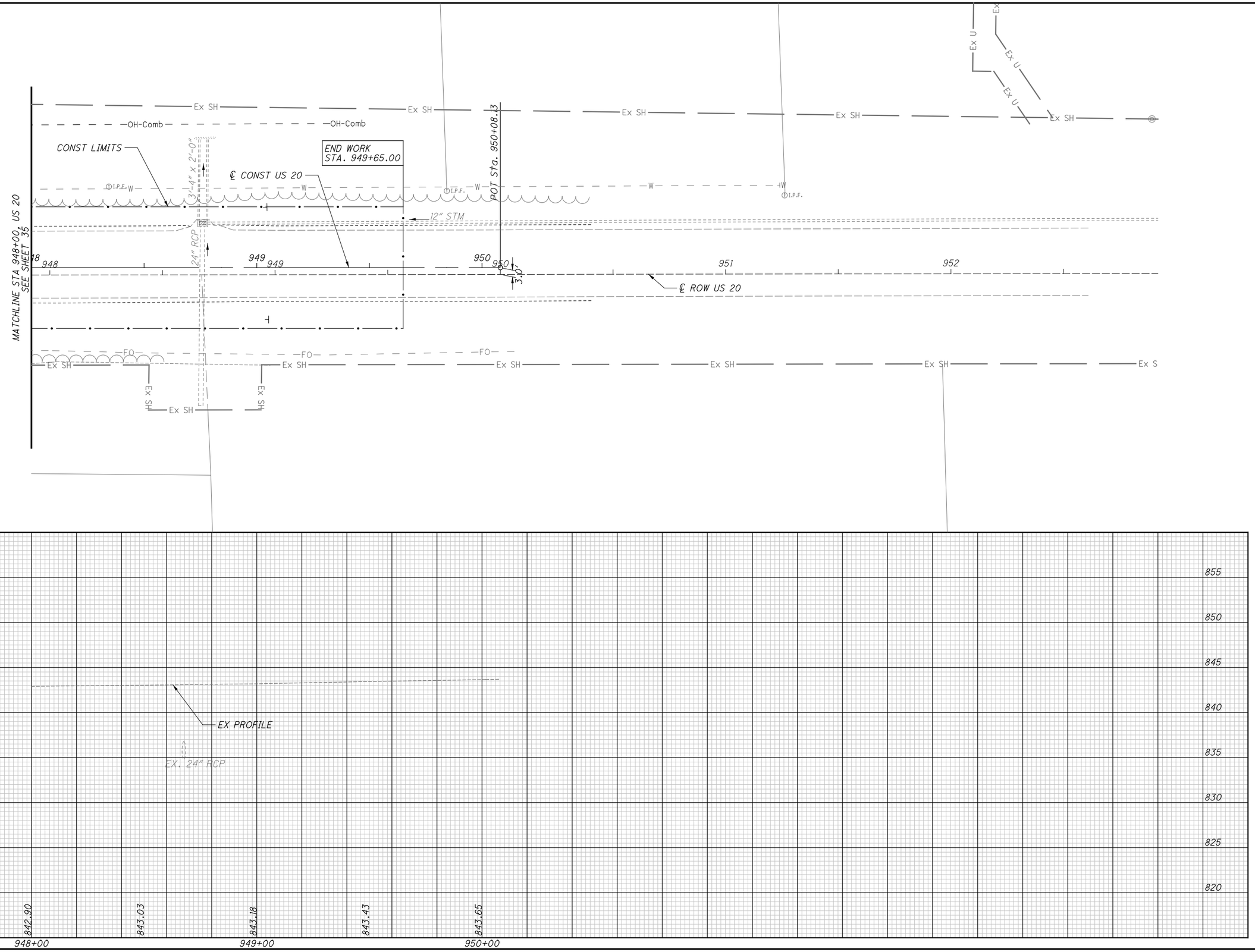

HORIZONTAL SCALE IN FEET
0 10 20 40

CALCULATED TK
CHECKED GAH

PLAN AND PROFILE - US 20
STA 948+00 TO STE 950+08

HUR-20-17.82

...\Roadway\Sheets\110357GP005.dgn 3/23/2021 8:41:59 AM mswhitt

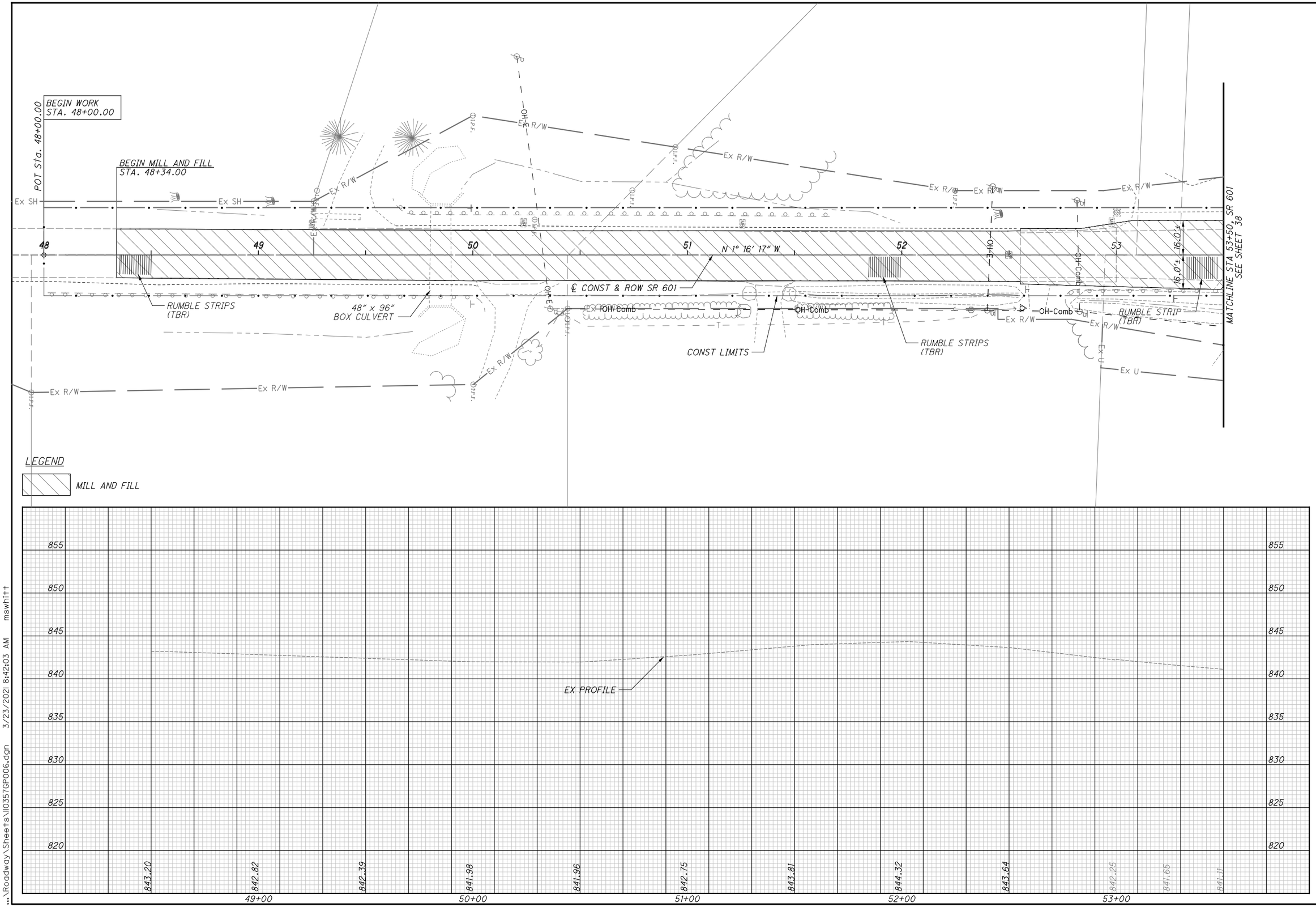

...\Roadway\Sheets\10357GP006.dgn 3/23/2021 8:42:03 AM mswhitt

HORIZONTAL SCALE IN FEET
0 10 20 40

CALCULATED TK
CHECKED GAH

PLAN AND PROFILE - SR 601
STA 48+34 TO STA 53+50

HUR-20-17.82

SR 601
CURVE DATA NO. 4
P.I. Sta. 55+39.95
Δ = 22° 24′ 48″ (LT)
Dc = 14° 04′ 27″
R = 407.10′
T = 80.66′
L = 159.25′
E = 7.91′
PC Sta. 54+59.29
PRC Sta. 56+18.54

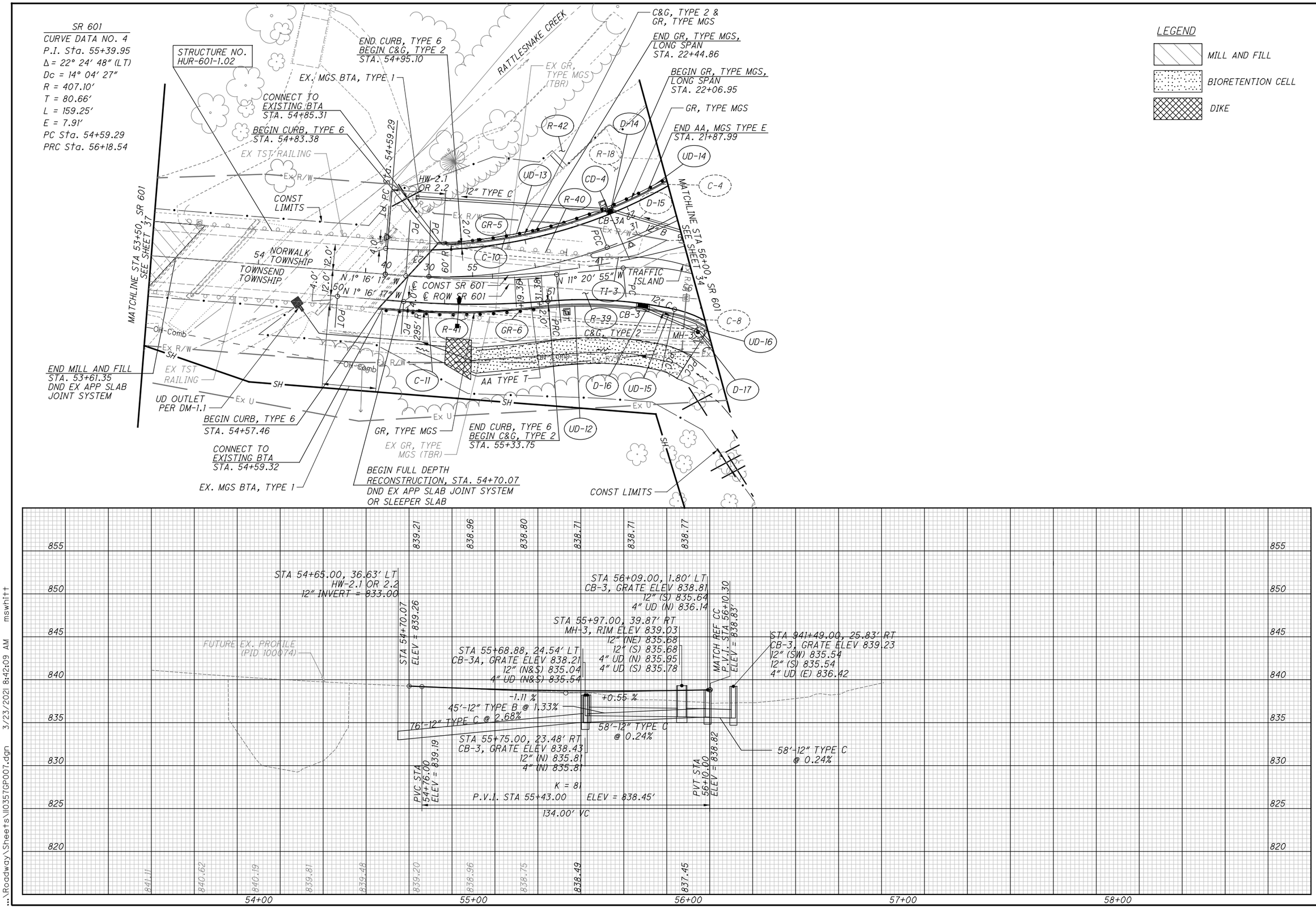

PLAN AND PROFILE - SR 601
STA 53+50 TO STA 56+00

HUR-20-17.82

38
128

...\Roadway\Sheets\110357GP007.dgn 3/23/2021 8:42:09 AM mswhitt

SR 601
CURVE DATA NO. 7
P.I. Sta. 58+61.20
Δ = 8° 30′ 31″ (LT)
Dc = 2° 51′ 53″
R = 2,000.00′
T = 148.78′
L = 297.00′
E = 5.53′
PCC Sta. 57+12.42
PT Sta. 60+09.43

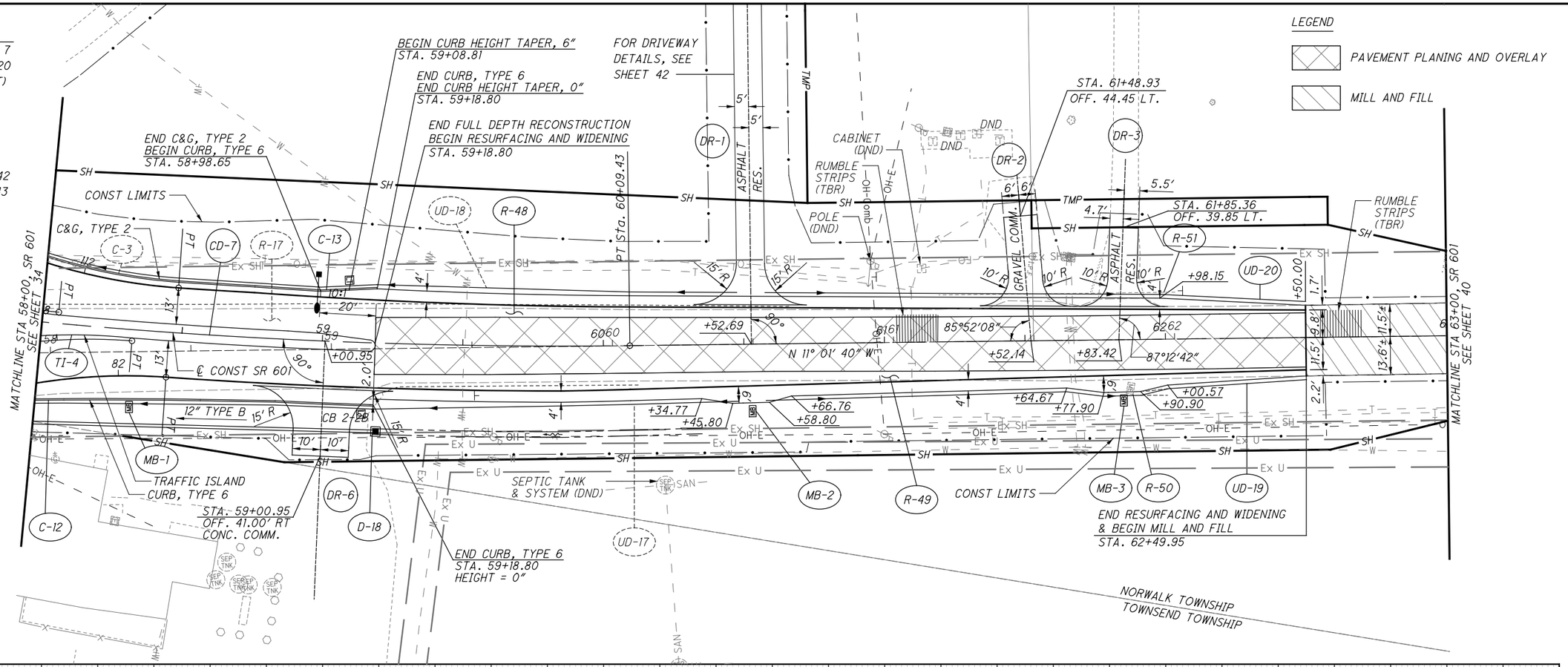

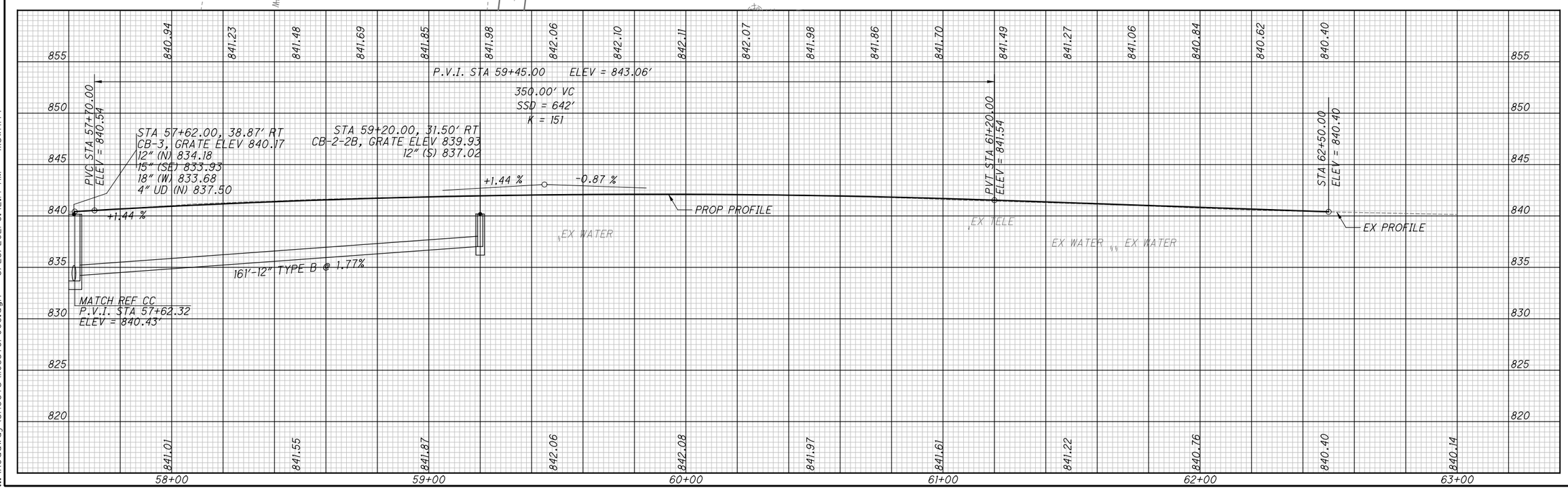

HORIZONTAL SCALE IN FEET 0 10 20 40

CALCULATED TK
CHECKED GAH

PLAN AND PROFILE - SR 601
STA 58+00 TO STA 63+00

HUR-20-17.82

...\Roadway\Sheets\II035TGP008.dgn 3/23/2021 8:42:14 AM mswhitt

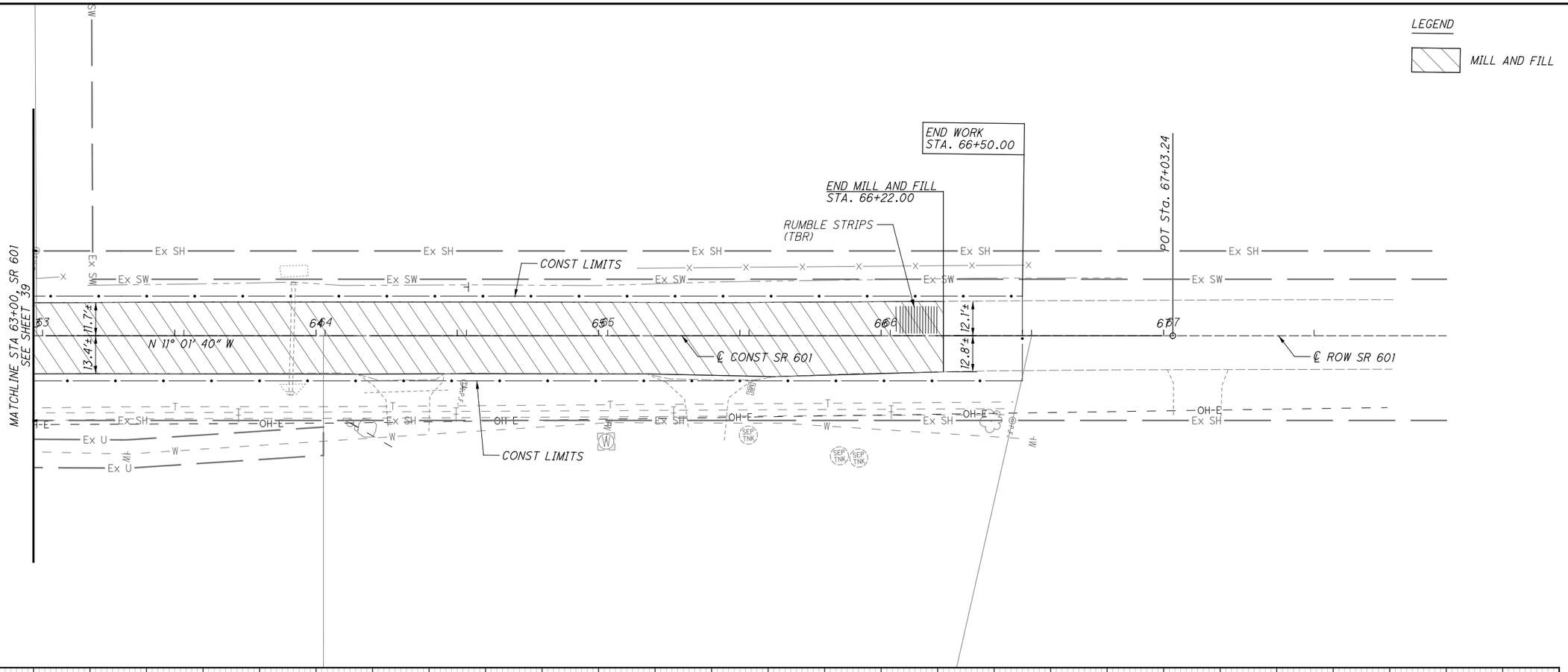

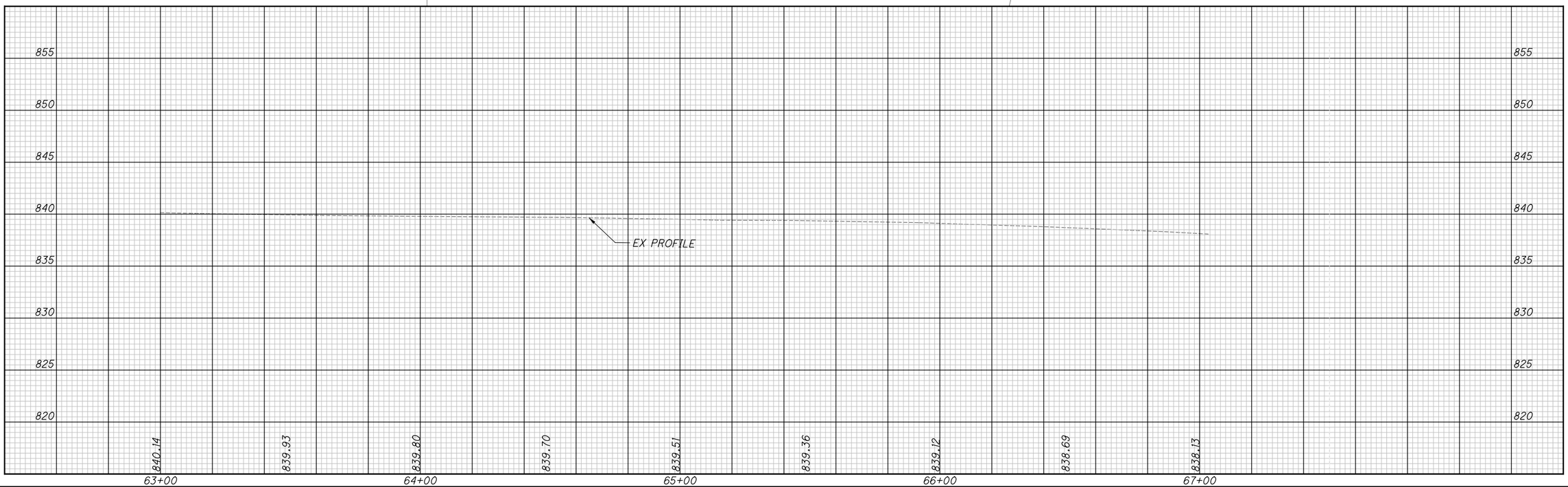

HORIZONTAL SCALE IN FEET
0 10 20 40

CALCULATED TK
CHECKED GAH

PLAN AND PROFILE - SR 601
STA 63+00 TO STA 67+03

HUR-20-17.82

...\Roadway\Sheets\II0357GP009.dgn 3/23/2021 8:42:19 AM mswhitt

ACCESS ROAD
CURVE DATA NO. 8
P.I. Sta. 0+52.65
Δ = 90° 00′ 00″ (LT)
Dc = 229° 10′ 59″
R = 25.00′
T = 25.00′
L = 39.27′
E = 10.36′
PC Sta. 0+27.65
PT Sta. 0+66.92

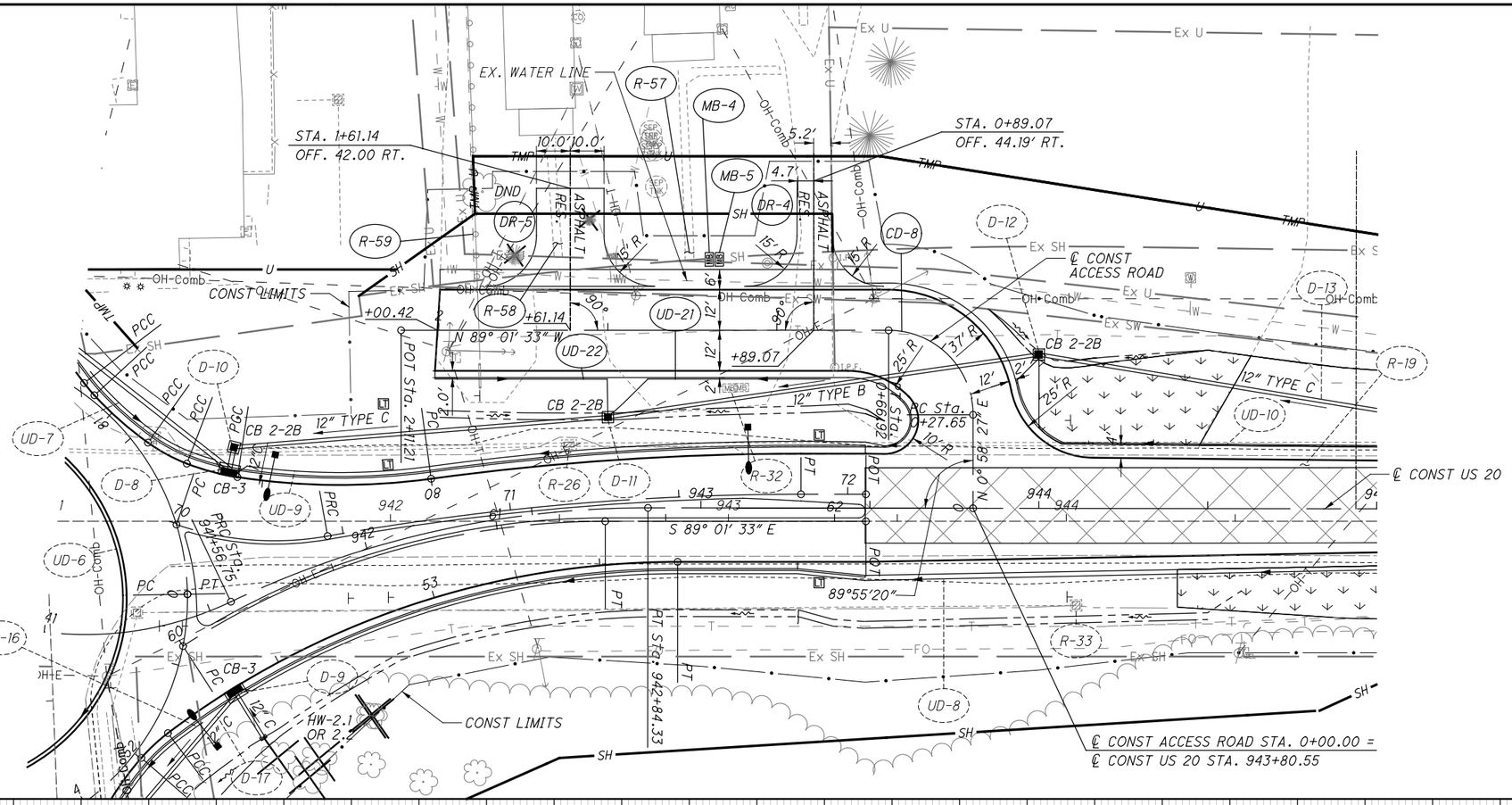

LEGEND

PAVEMENT PLANING AND OVERLAY

VEGETATED FILTER STRIP

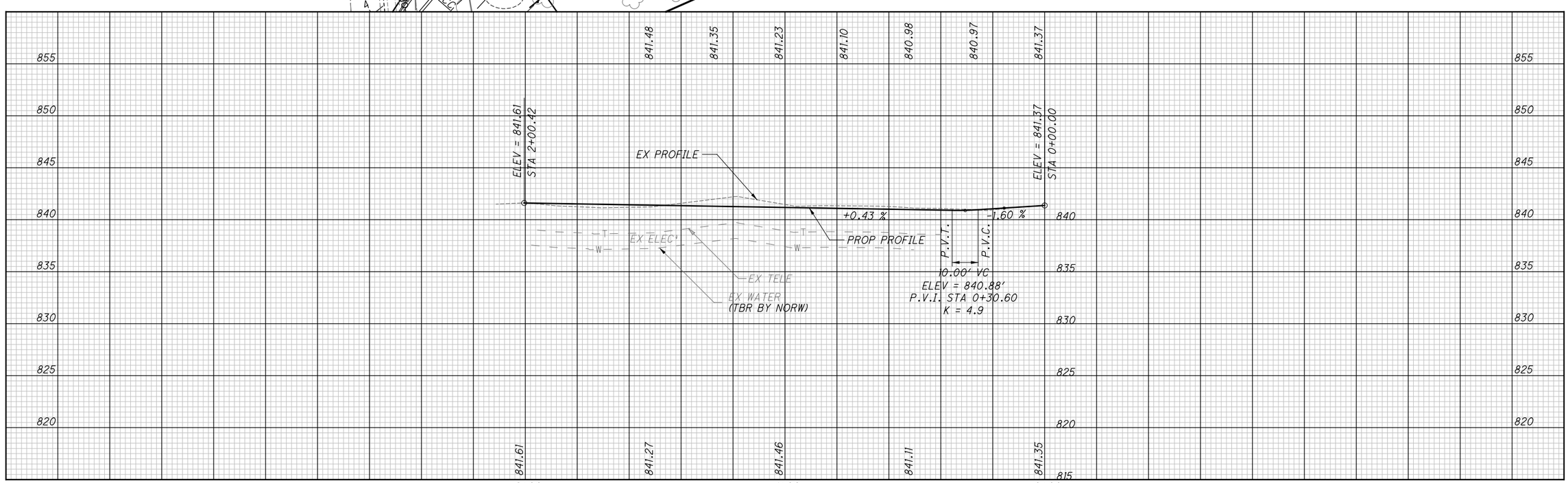

HORIZONTAL SCALE IN FEET 0 10 20 40

CALCULATED TK
CHECKED GAH

PLAN AND PROFILE
ACCESS ROAD

HUR-20-17.82

...\Roadway\Sheets\II0357GP010.dgn 3/23/2021 8:42:23 AM mswhitt

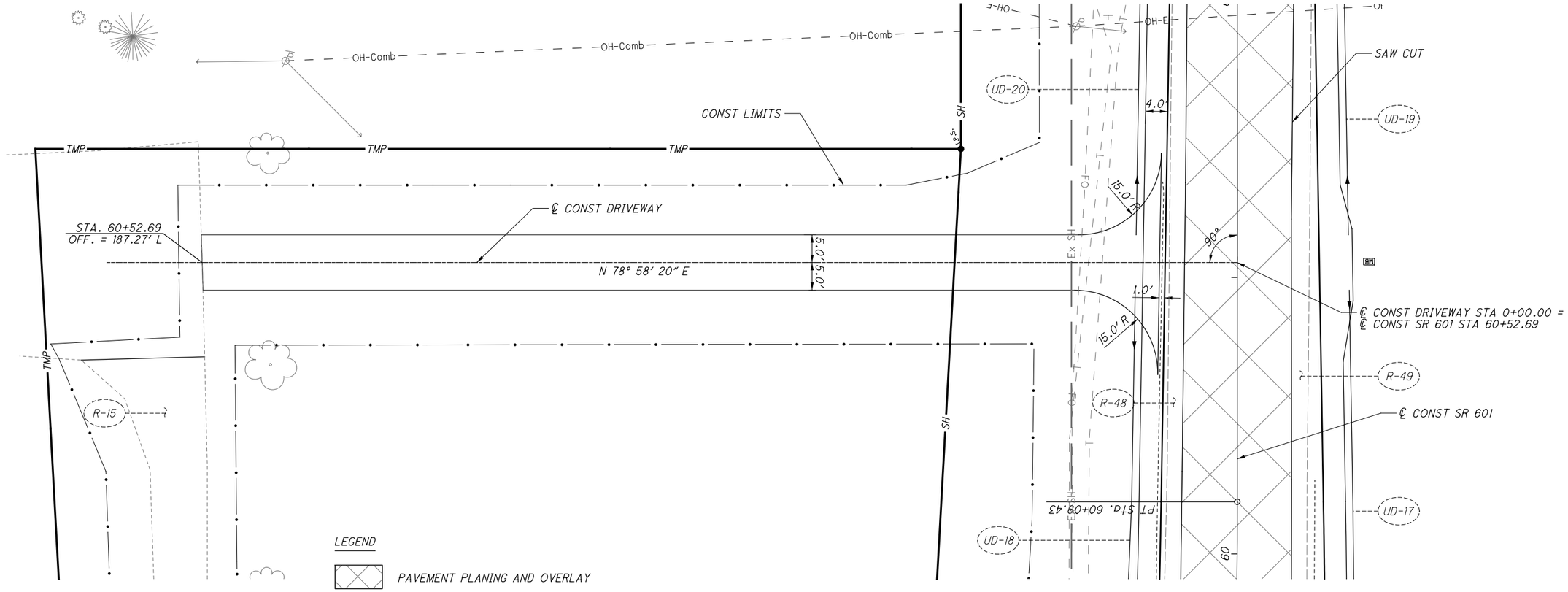

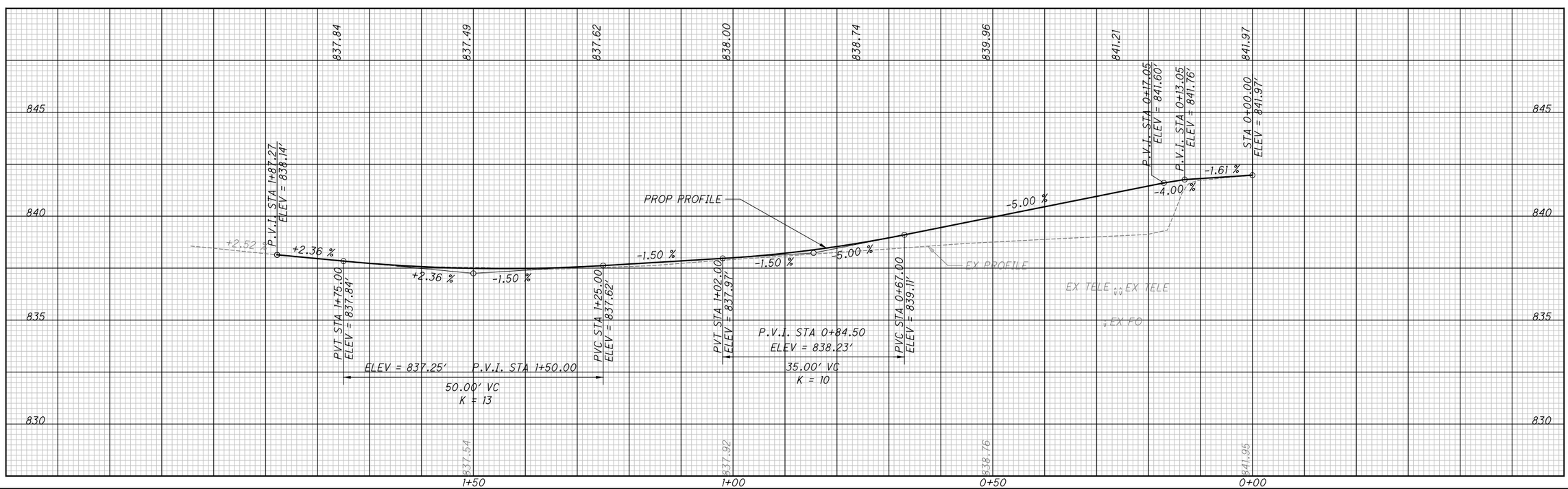

HORIZONTAL SCALE IN FEET 0 5 10 20

CALCULATED MSW
CHECKED GAH

DRIVEWAY PLAN AND PROFILE
SR 601 STA. 60+52.69 (LEFT)

HUR-20-17.82

...\Roadway\Sheets\I0357GP012.dgn 3/23/2021 8:42:29 AM mswhitt

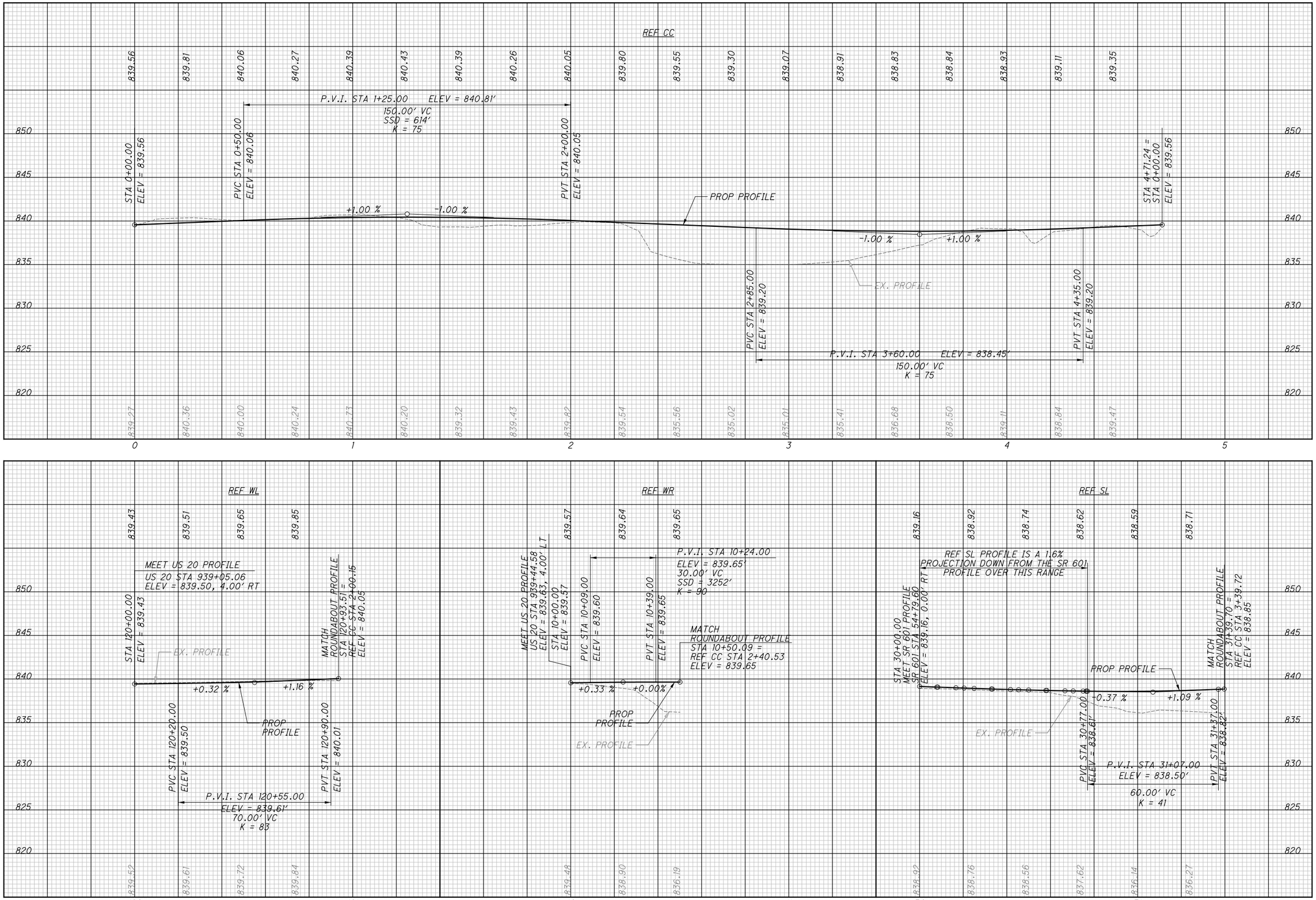

CALCULATED TK
CHECKED GAH

PROFILE - REF CC AND SPLITTER ISLANDS

HUR-20-17.82

...\Sheets\110357_GF001.dgn 3/23/2021 8:42:32 AM mswhitt

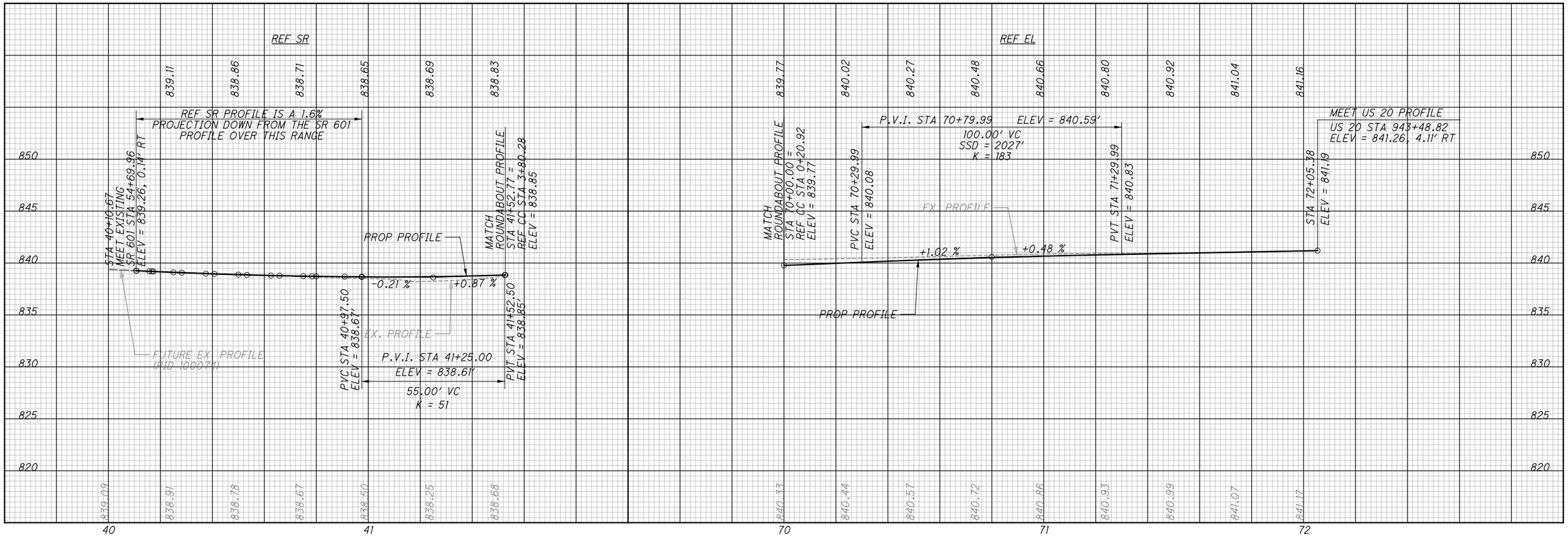

CALCULATED TK
CHECKED GAH

PROFILE - SPLITTER ISLANDS

HUR-20-17.82

...\Sheets\110357_GF002.dgn 3/23/2021 8:42:35 AM mswhitt

SEEDING END WIDTH	SEEDING SQ. YDS.	END AREA CUT	END AREA FILL	VOLUME CUT	VOLUME FILL
19	104	24	28	33	28
19	53	11	2	11	2
0	157	0	0	44	30

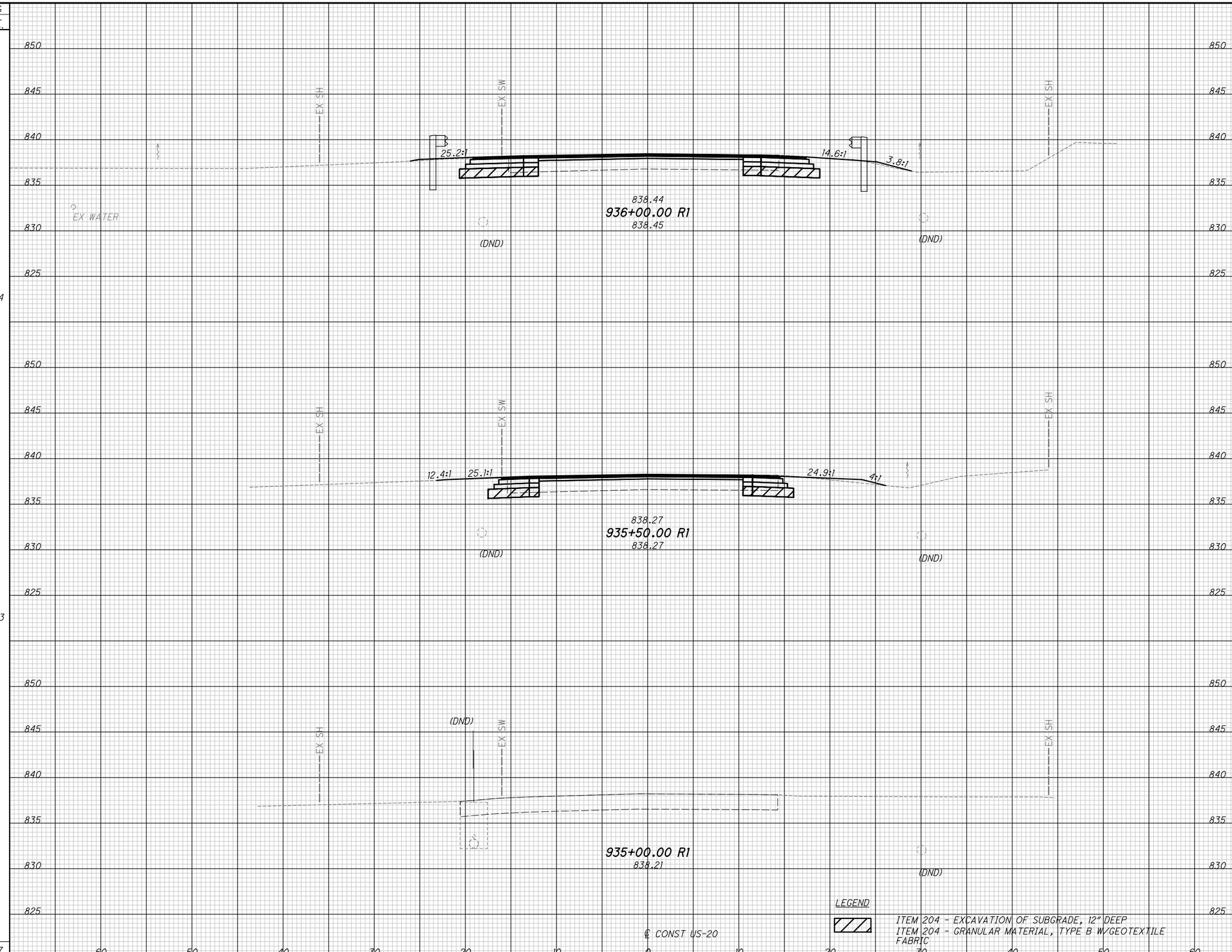

CALCULATED MSW
CHECKED GAH

CROSS SECTIONS US-20
STA. 935+00.00 TO STA. 936+00.00

HUR-20-17.82

...\Sheets\110357_XS102.dgn 3/23/2021 8:42:39 AM mswhitt

SEEDING END WIDTH	SEEDING SQ. YDS.	END AREA CUT	END AREA FILL	VOLUME CUT	VOLUME FILL
23		22	35		
	28			11	16
18		26	33		
	102			47	57
130				58	73

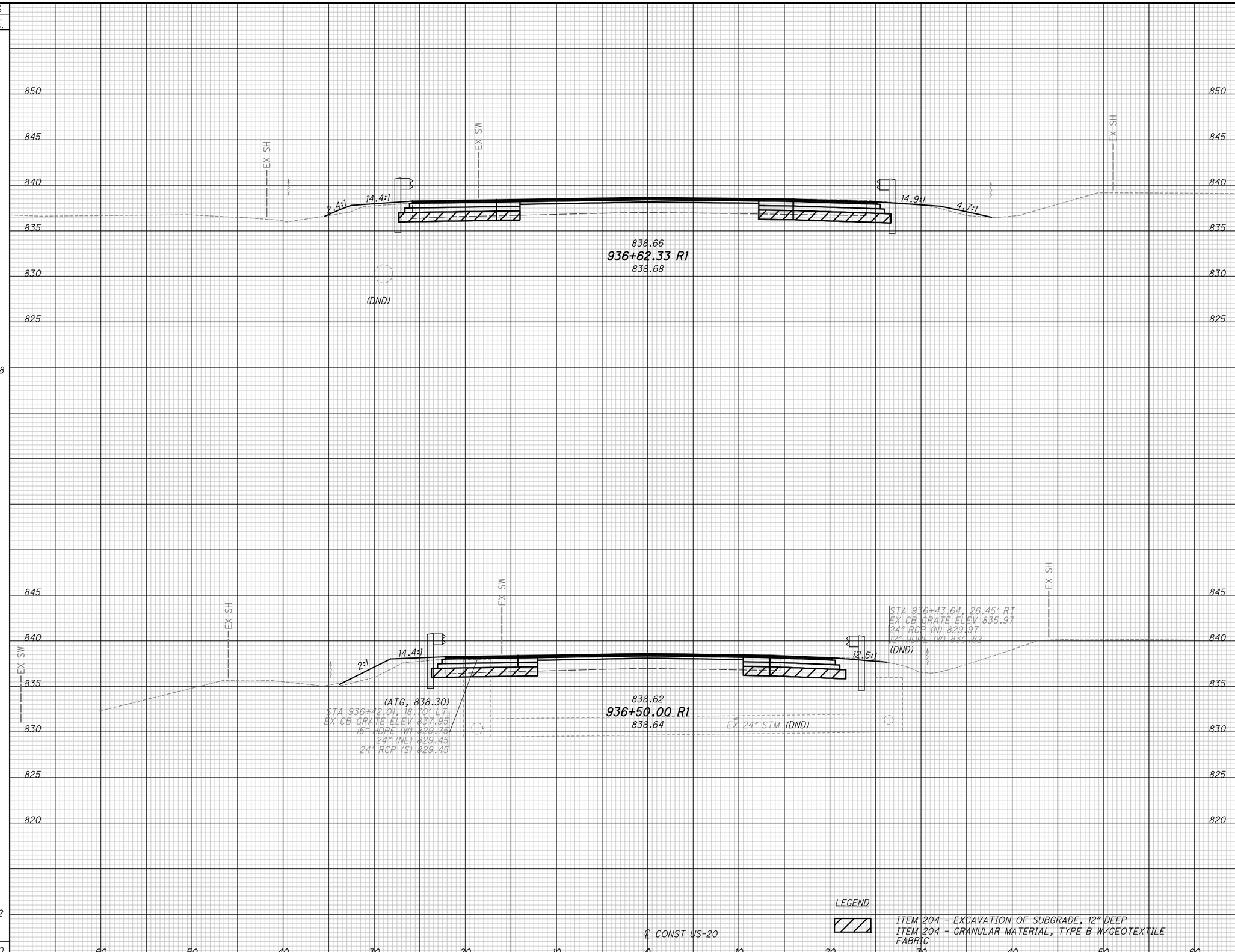

CALCULATED MSW
CHECKED GAH

CROSS SECTIONS US-20
STA. 936+50.00 TO STA. 936+62.33

HUR-20-17.82

...\Sheets\110357_XS102.dgn 3/23/2021 8:42:39 AM mswhitt

SEEDING END WIDTH	SEEDING SQ. YDS.	END AREA CUT	END AREA FILL	VOLUME CUT	VOLUME FILL
38	38	45	35	14	17
26	75	23	48	29	46
26	270	37	47	111	153
	383			154	216

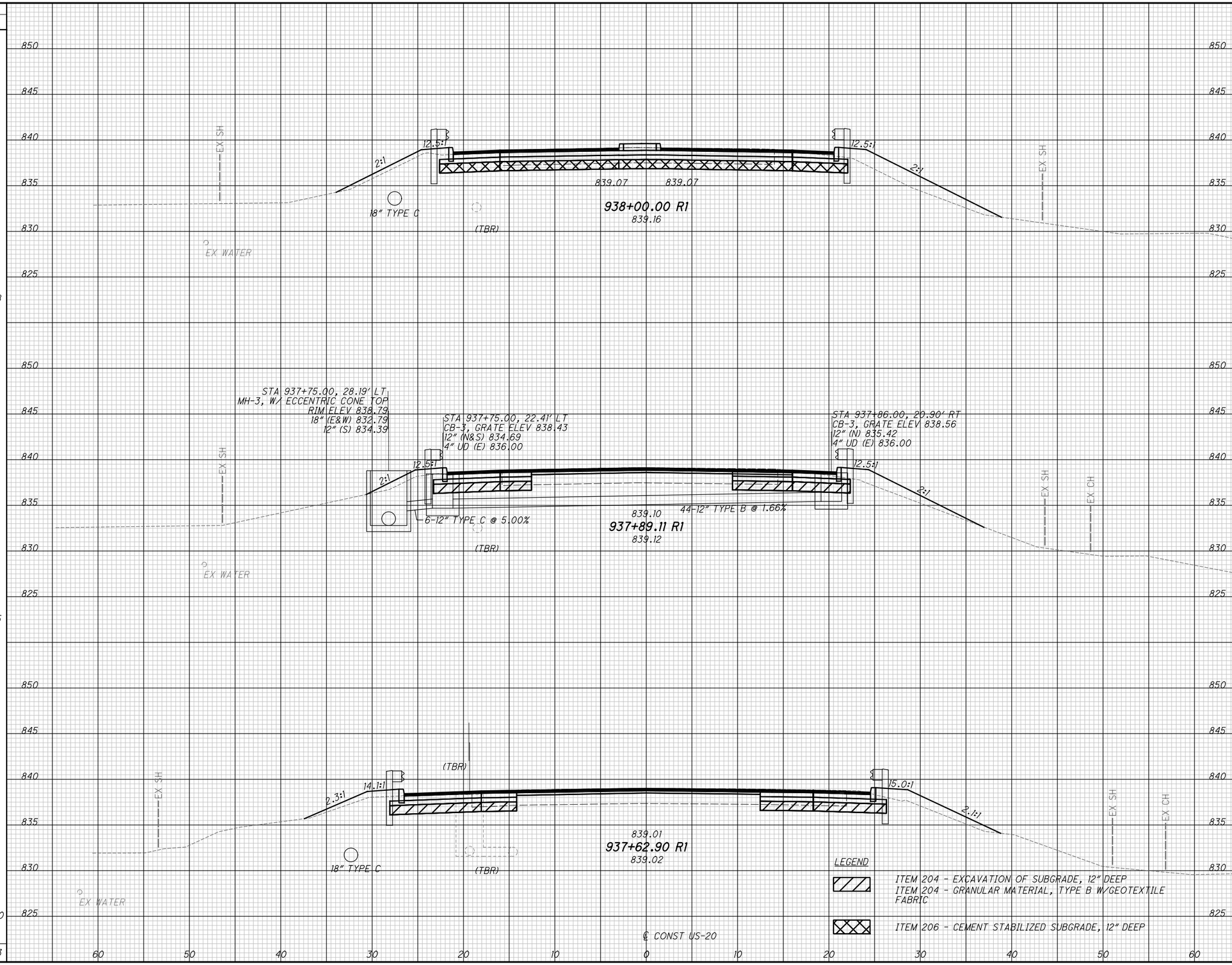

CALCULATED MSW
CHECKED GAH

CROSS SECTIONS US-20
STA. 937+62.90 TO STA. 938+00.00

HUR-20-17.82

...\Sheets\110357_XS102.dgn 3/23/2021 8:42:40 AM mswhitt

SEEDING END WIDTH	SEEDING SQ. YDS.	END AREA CUT	END AREA FILL	VOLUME CUT	VOLUME FILL
31		32	100		
	179			62	166
34		35	79		
	156			65	106
22		35	36		
	166			74	65
	501			201	337

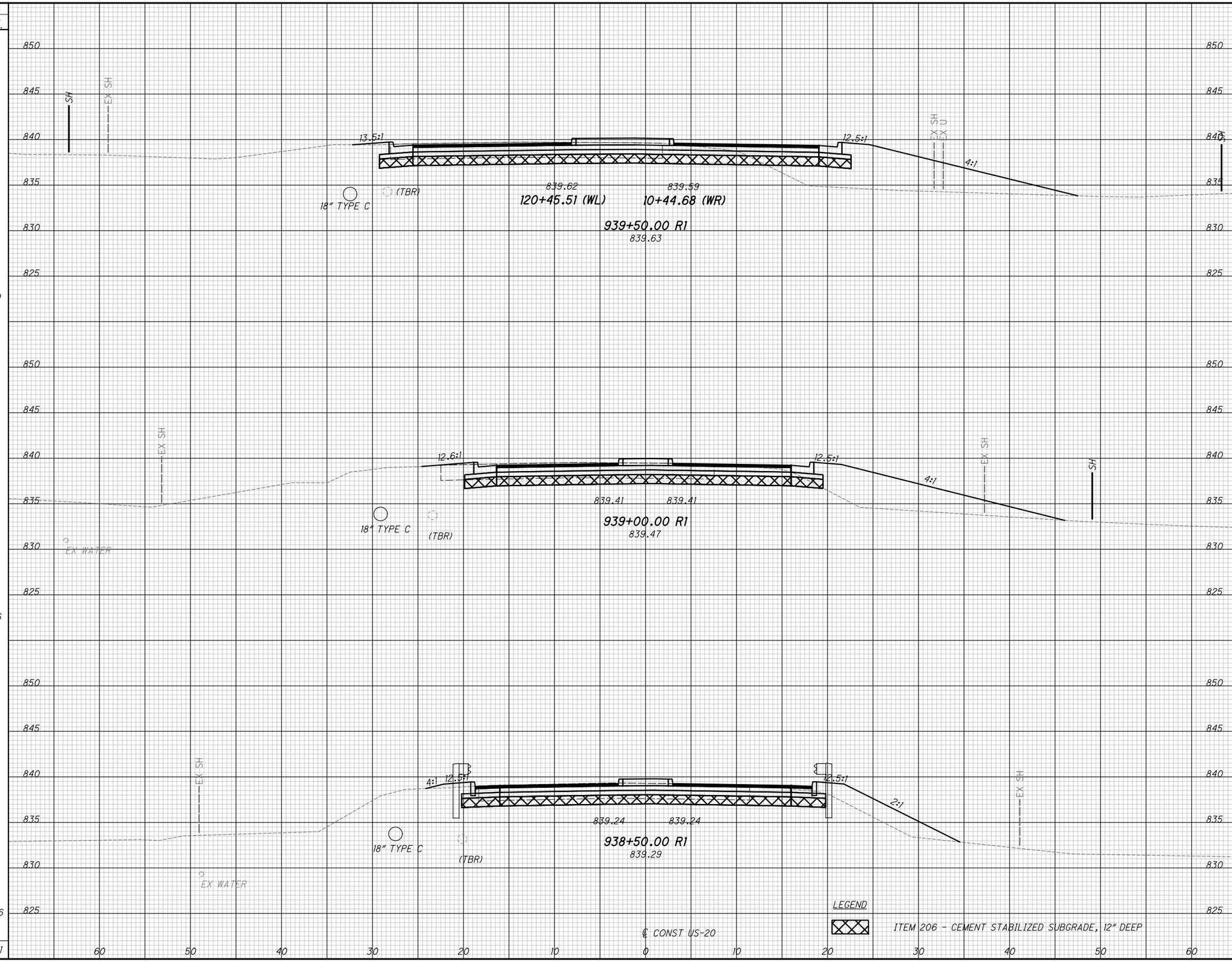

CALCULATED MSW
CHECKED GAH

CROSS SECTIONS US-20
STA. 938+50.00 TO STA. 939+50.00

HUR-20-17.82

...\Sheets\110357_XS102.dgn 3/23/2021 8:42:40 AM mswhitt

SEEDING END WIDTH	SEEDING SQ. YDS.	END AREA CUT	END AREA FILL	VOLUME CUT	VOLUME FILL
23		78	21		
	141			170	28
41		152	16		
	750			82	67
32		25	129		
87				26	106
978				278	201

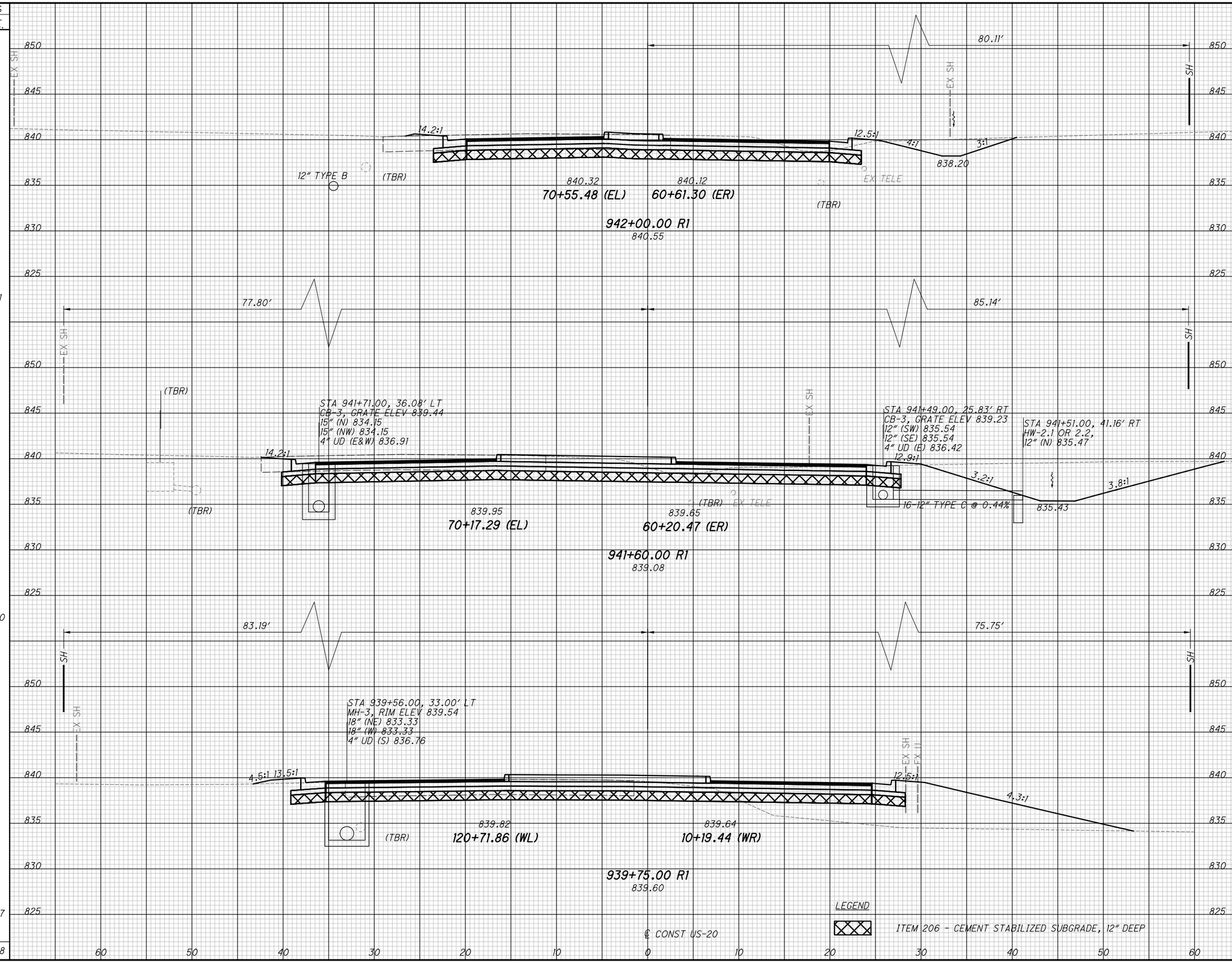

CALCULATED MSW
CHECKED GAH

CROSS SECTIONS US-20
STA. 939+75.00 TO STA. 942+00.00

HUR-20-17.82

...\Sheets\110357_XS102.dgn 3/23/2021 8:42:40 AM mswhitt

SEEDING END WIDTH	SEEDING SQ. YDS.	END AREA CUT	END AREA FILL	VOLUME CUT	VOLUME FILL
39	207	59	28	91	37
35	191	40	13	86	25
34	156	54	14	122	33
	554			299	95

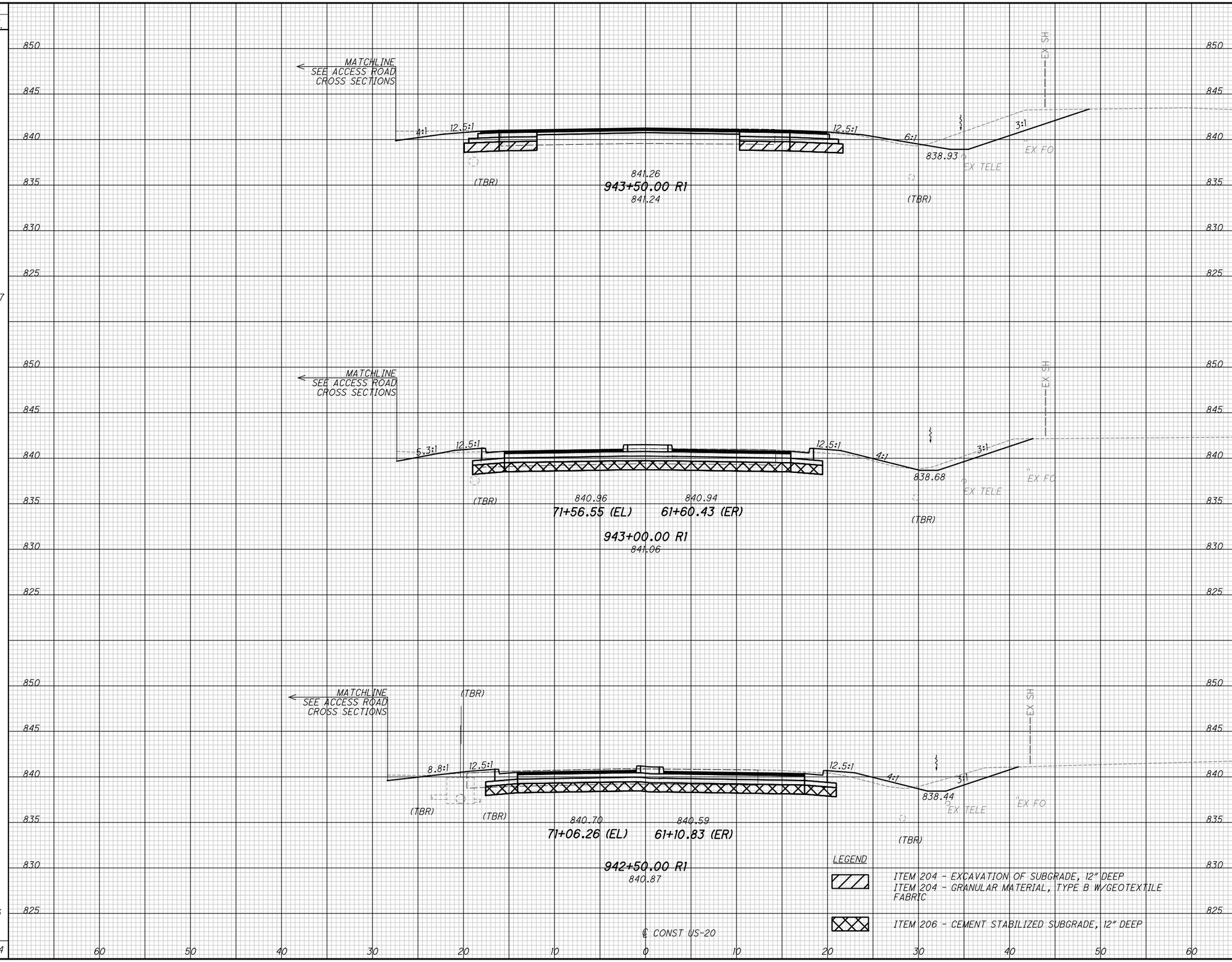

CALCULATED MSW
CHECKED GAH

CROSS SECTIONS US-20
STA. 942+50.00 TO STA. 943+50.00

HUR-20-17.82

...\Sheets\110357_XS102.dgn 3/23/2021 8:42:41 AM mswhitt

SEEDING END WIDTH	SEEDING SQ. YDS.	END AREA CUT	END AREA FILL	VOLUME CUT	VOLUME FILL
18		25	25		
	169			49	41
51		35	26		
	315			93	50
62		65	28		
	282			115	51
766				257	142

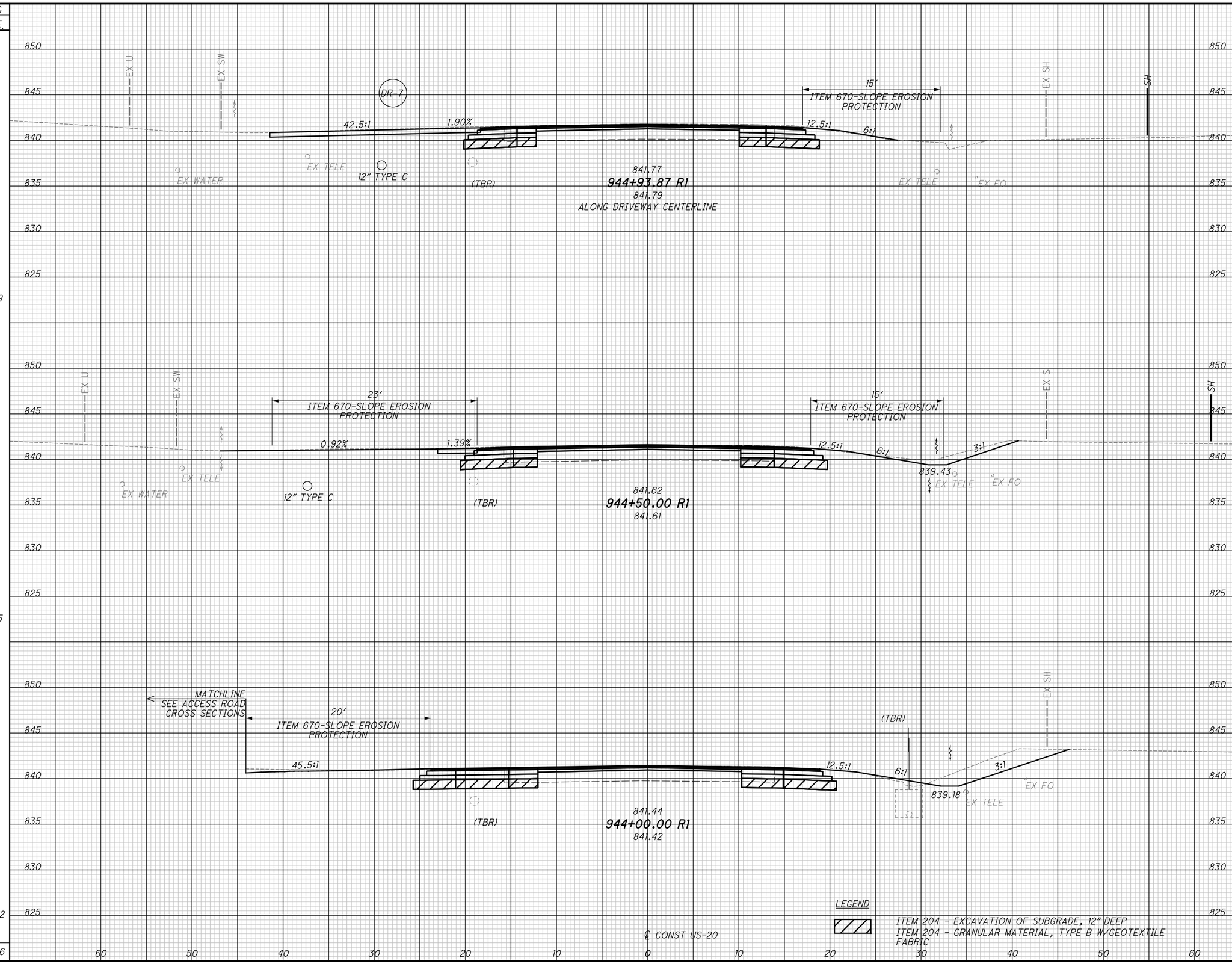

CALCULATED MSW
CHECKED GAH

CROSS SECTIONS US-20
STA. 944+00.00 TO STA. 944+93.87

HUR-20-17.82

...\Sheets\110357_XS102.dgn 3/23/2021 8:42:41 AM mswhitt

SEEDING END WIDTH	SEEDING SQ. YDS.	END AREA CUT	END AREA FILL	VOLUME CUT	VOLUME FILL
0		0	0		
	14			2	5
24		11	26		
	128			20	40
34		16	28		
	164			43	55
	306			65	100

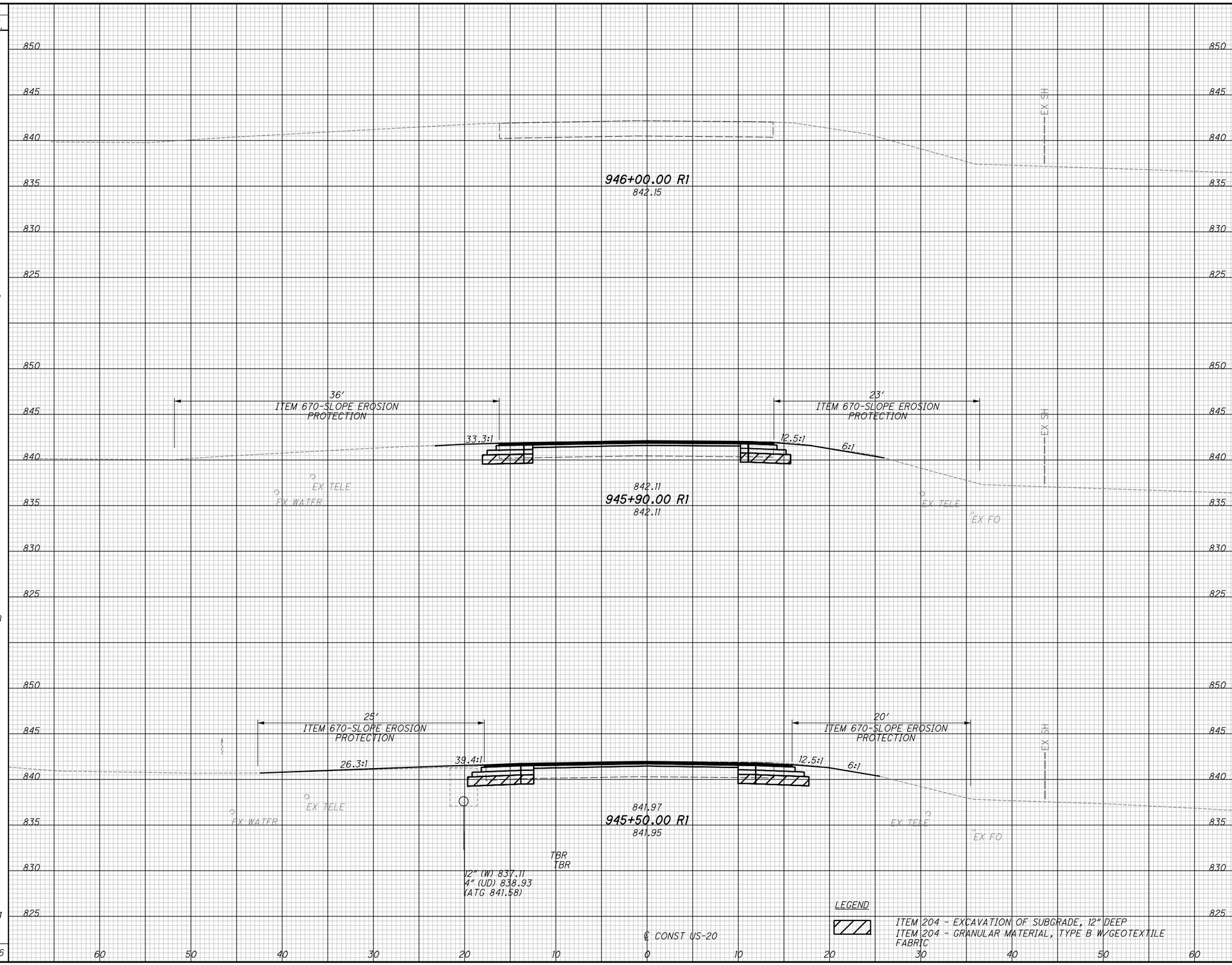

CALCULATED MSW
CHECKED GAH

CROSS SECTIONS US-20
STA. 945+50.00 TO STA. 946+00.00

HUR-20-17.82

...\Sheets\110357_XS102.dgn 3/23/2021 8:42:41 AM mswhitt

SEEDING END WIDTH	SEEDING SQ. YDS.	END AREA CUT	END AREA FILL	VOLUME CUT	VOLUME FILL
68		63	81		
	116			54	94
16		55	123		
	18			9	16
47		42	58		
134				63	110

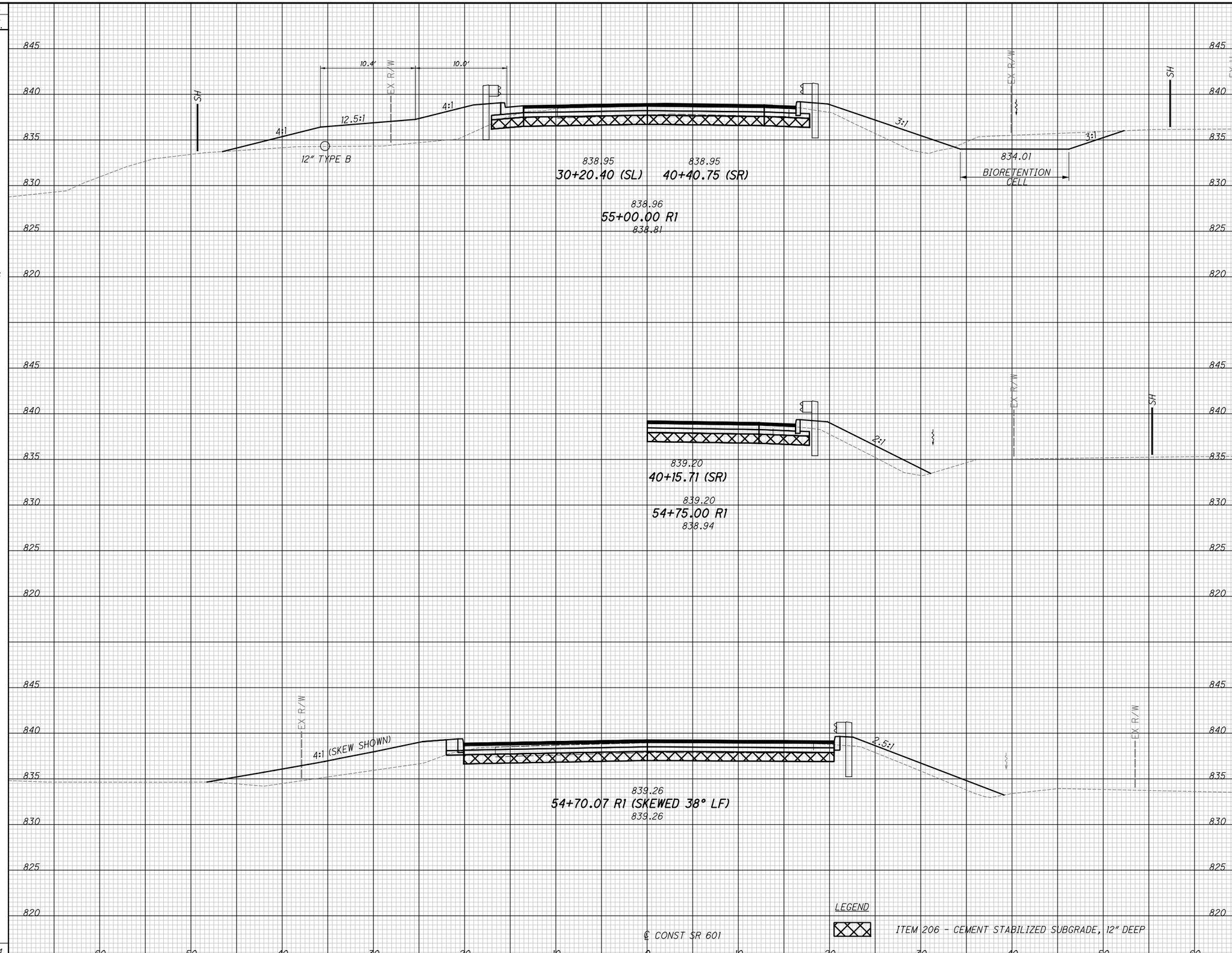

CALCULATED TK
CHECKED GAH

CROSS SECTIONS SR 601
STA. 54+70.07 TO STA. 55+00.00

HUR-20-17.82

...\Sheets\110357_XS101.dgn 3/23/2021 8:42:45 AM mswhitt

SEEDING END WIDTH	SEEDING SQ. YDS.	END AREA CUT	END AREA FILL	VOLUME CUT	VOLUME FILL
100	226	239	59	172	47
63	171	133	43	115	39
60	353	116	42	165	114
750				452	200

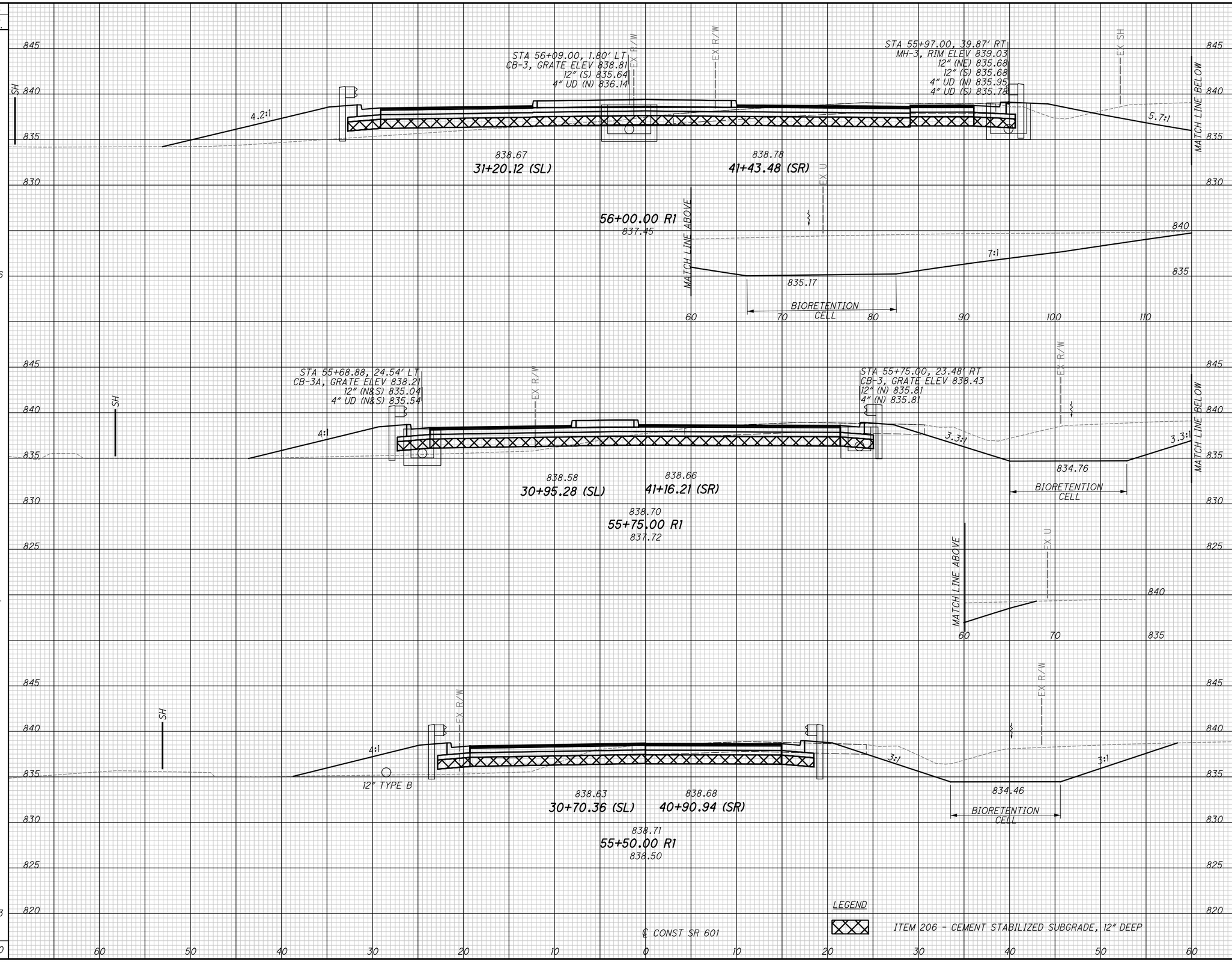

CALCULATED TK
CHECKED GAH

CROSS SECTIONS SR 601
STA. 55+50.00 TO STA. 56+00.00

HUR-20-17.82

...\Sheets\110357_XS101.dgn 3/23/2021 8:42:45 AM mswhitt

SEEDING END WIDTH	SEEDING SQ. YDS.
19	88
14	31
9	1057
	1176

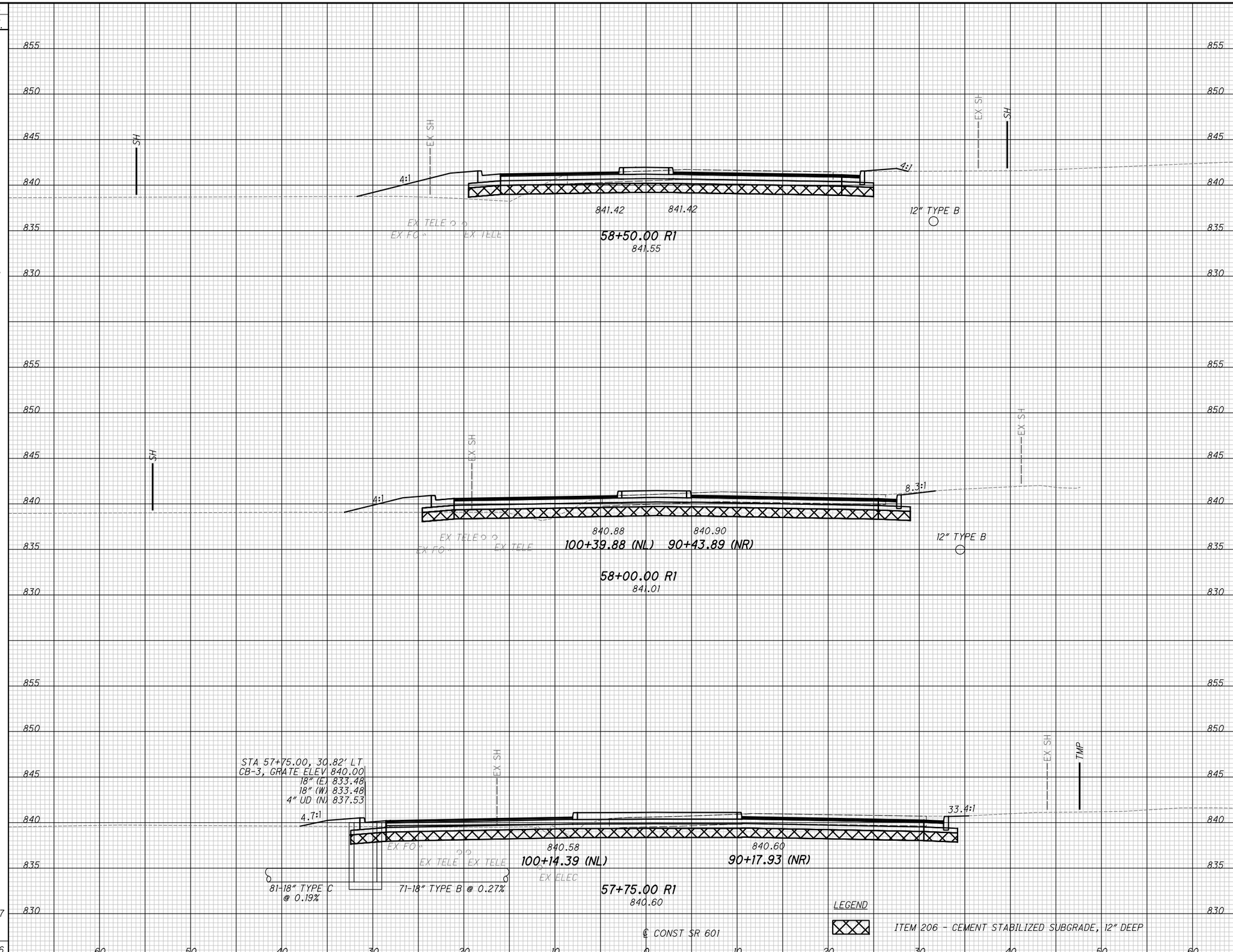

END AREA CUT	END AREA FILL	VOLUME CUT	VOLUME FILL
56	23		
		116	30
69	9		
		77	6
99	3		
		156	29
		349	65

CALCULATED TK
CHECKED GAH

CROSS SECTIONS SR 601
STA. 57+75.00 TO STA. 58+50.00

HUR-20-17.82

...\Sheets\110357_XS101.dgn 3/23/2021 8:42:46 AM mswhitt

SEEDING END WIDTH	SEEDING SQ. YDS.
34	113
33	49
17	100
	262

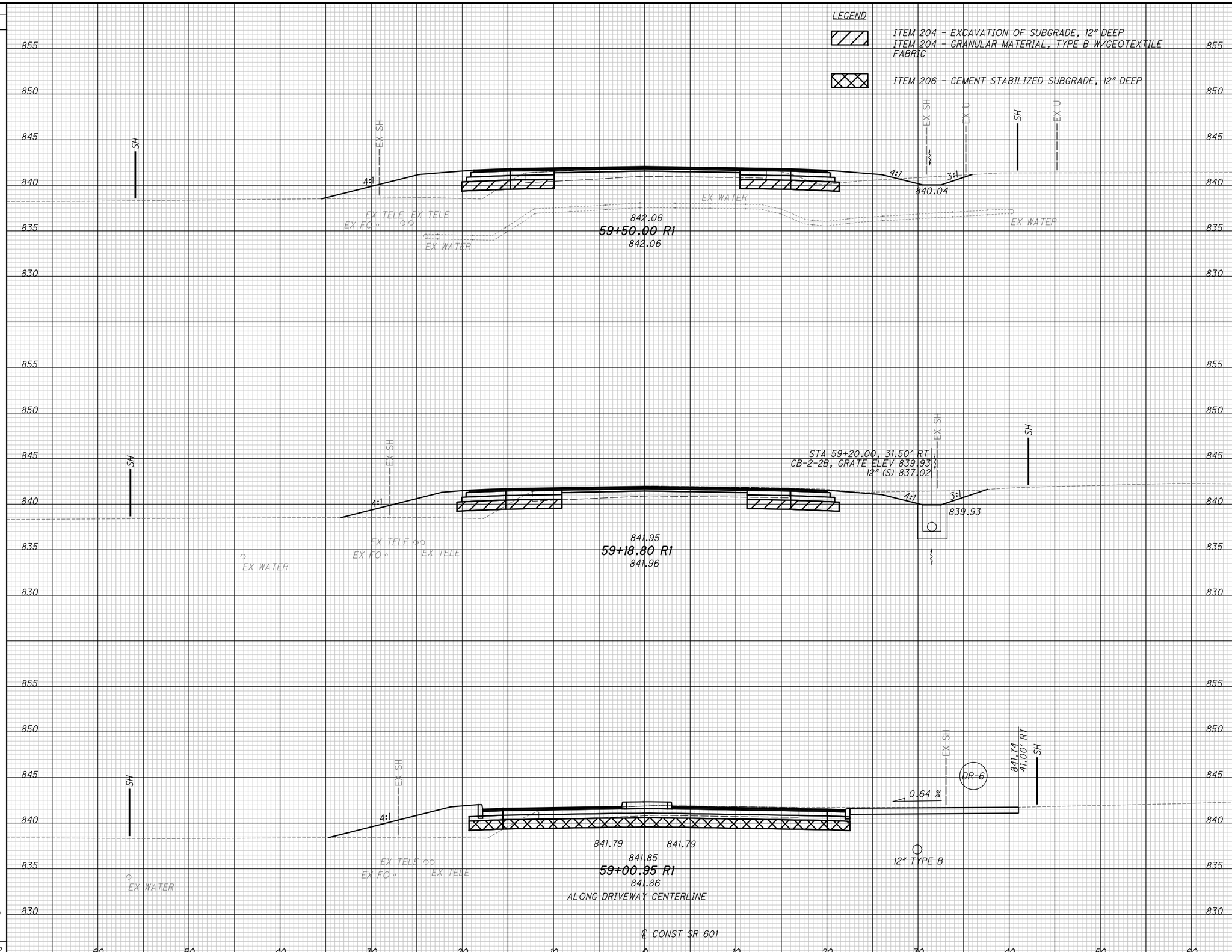

END AREA CUT	END AREA FILL	VOLUME CUT	VOLUME FILL
24	55	35	57
37	44	34	25
64	32	114	52
		183	134

CALCULATED TK
CHECKED GAH

CROSS SECTIONS SR 601
STA. 59+00.95 TO STA. 59+50.00

HUR-20-17.82

...\Sheets\110357_XS101.dgn 3/23/2021 8:42:46 AM mswhitt

SEEDING END WIDTH	SEEDING SQ. YDS.	END AREA CUT	END AREA FILL	VOLUME CUT	VOLUME FILL
20	76	19	40	57	98
9	115	47	71	68	117
31	177	24	49	44	96
	368			169	311

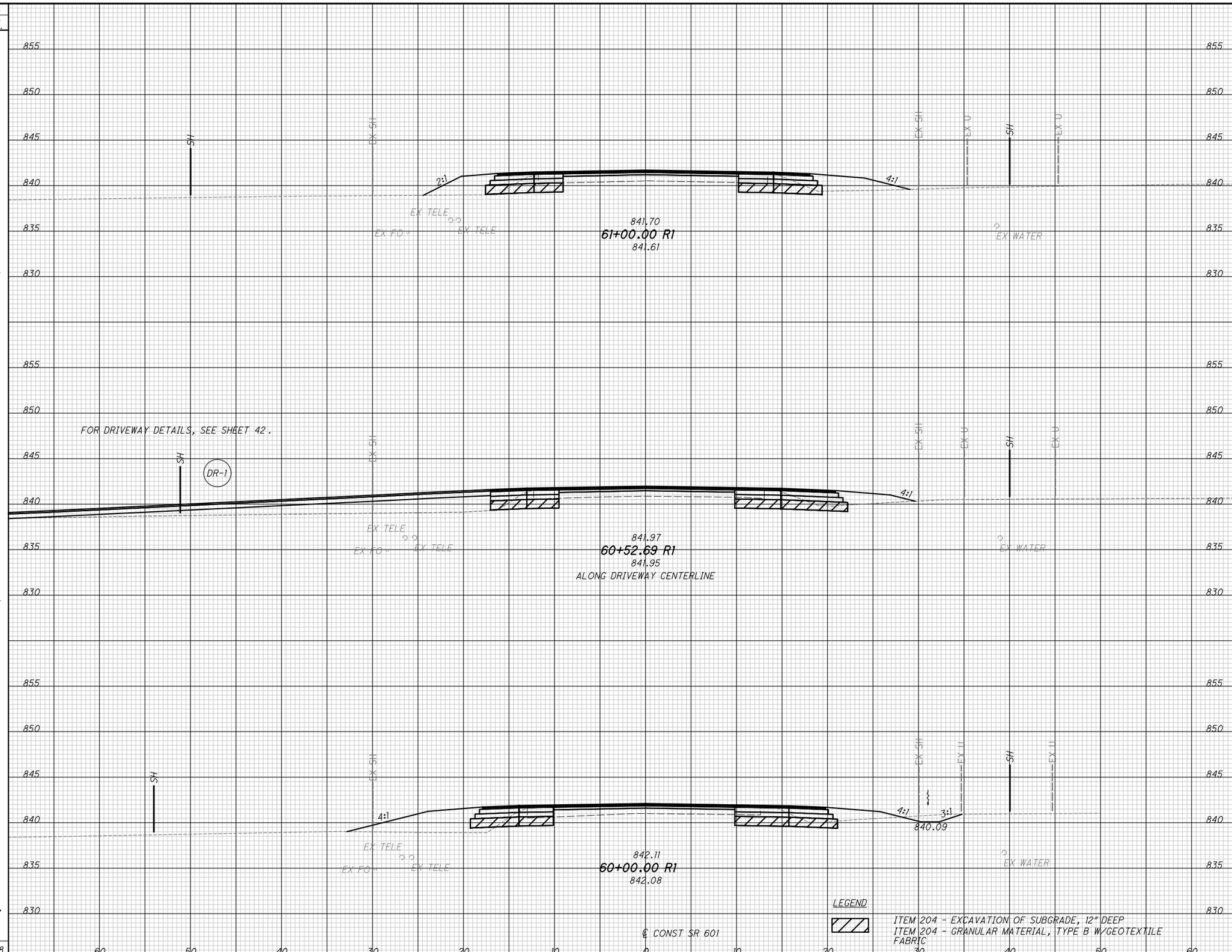

CALCULATED TK
CHECKED GAH

CROSS SECTIONS SR 601
STA. 60+00.00 TO STA. 61+00.00

HUR-20-17.82

...\Sheets\110357_XS101.dgn 3/23/2021 8:42:46 AM mswhitt

SEEDING END WIDTH	SEEDING SQ. YDS.	END AREA CUT	END AREA FILL	VOLUME CUT	VOLUME FILL
13	43	23	34	25	42
13	59	20	39	24	47
21	45	20	41	14	30
147				63	119

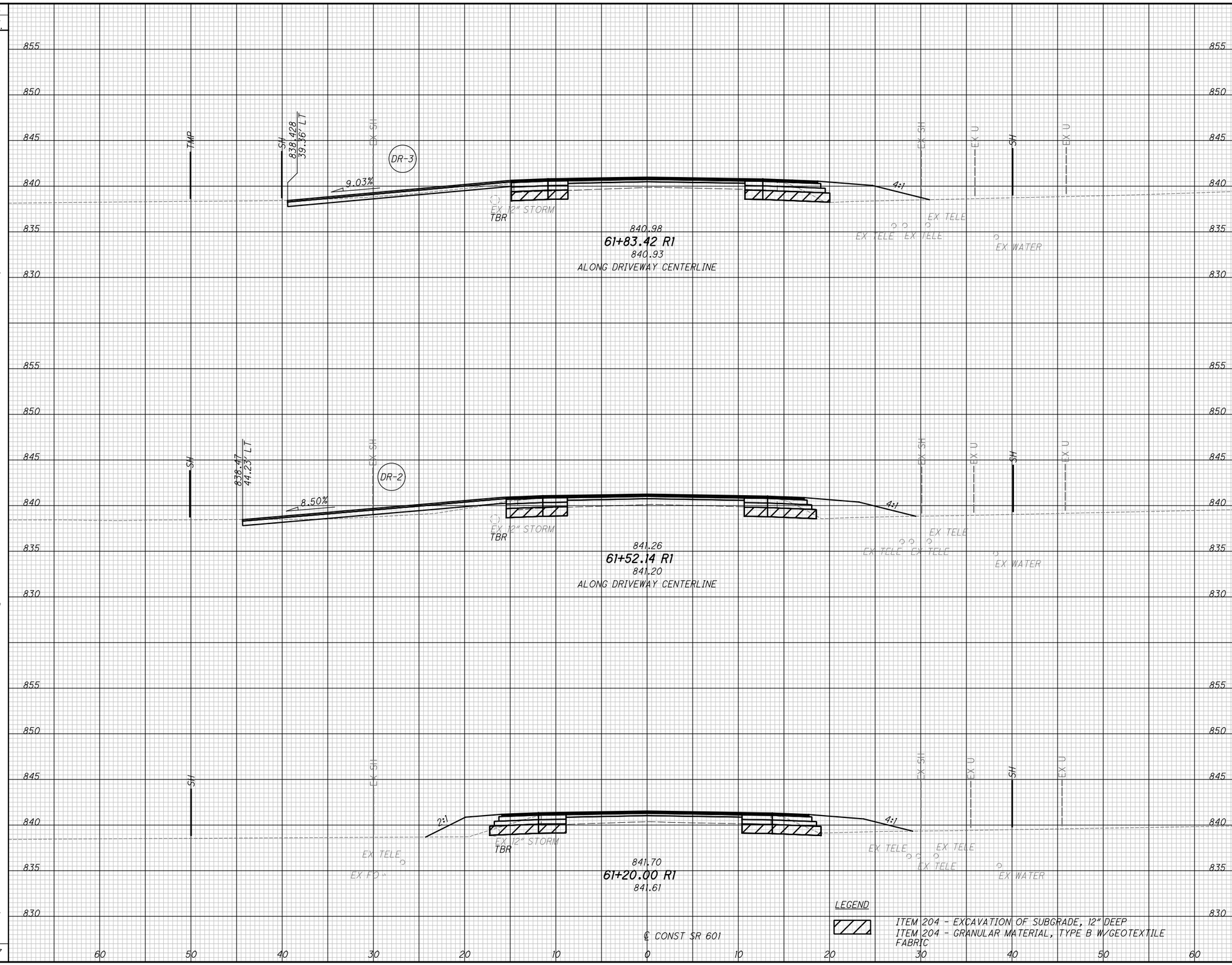

CALCULATED TK
CHECKED GAH

CROSS SECTIONS SR 601
STA. 61+20.00 TO STA. 61+83.42

HUR-20-17.82

...\Sheets\110357_XS101.dgn 3/23/2021 8:42:46 AM mswhitt

SEEDING END WIDTH	SEEDING SQ. YDS.	END AREA CUT	END AREA FILL	VOLUME CUT	VOLUME FILL
0		0	0		
	37			6	22
30		14	53		
	158			31	99
28		19	53		
	37			13	27
	232			50	148

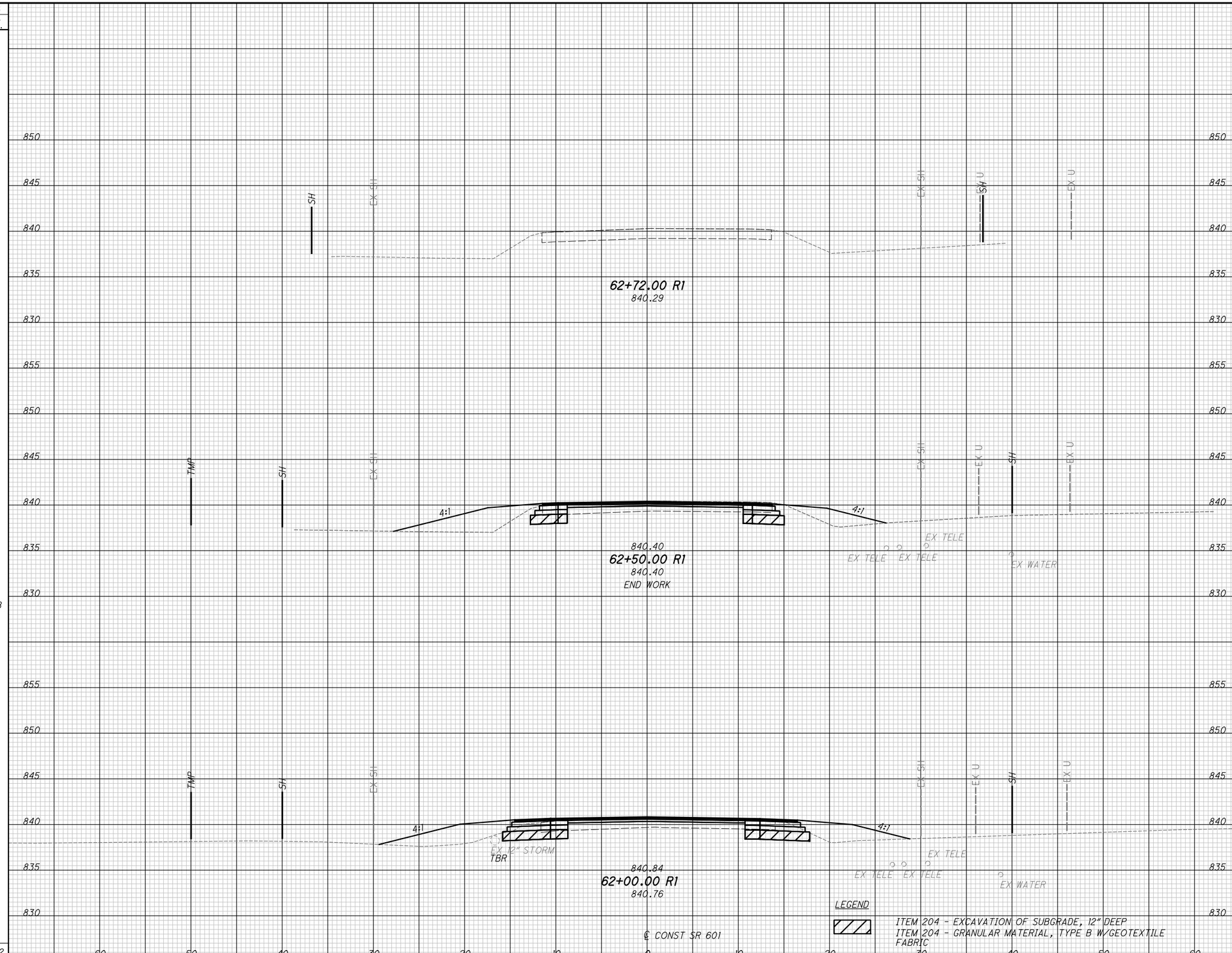

CALCULATED TK
CHECKED GAH

CROSS SECTIONS SR 601
STA. 62+00.00 TO STA. 62+72.00

HUR-20-17.82

...\Sheets\110357_XS101.dgn 3/23/2021 8:42:47 AM mswhitt

SEEDING END WIDTH	SEEDING SQ. YDS.	END AREA CUT	END AREA FILL	VOLUME CUT	VOLUME FILL
5	12	50	26	103	31
0	0	73	12	13	2
0		72	12		
12				116	33

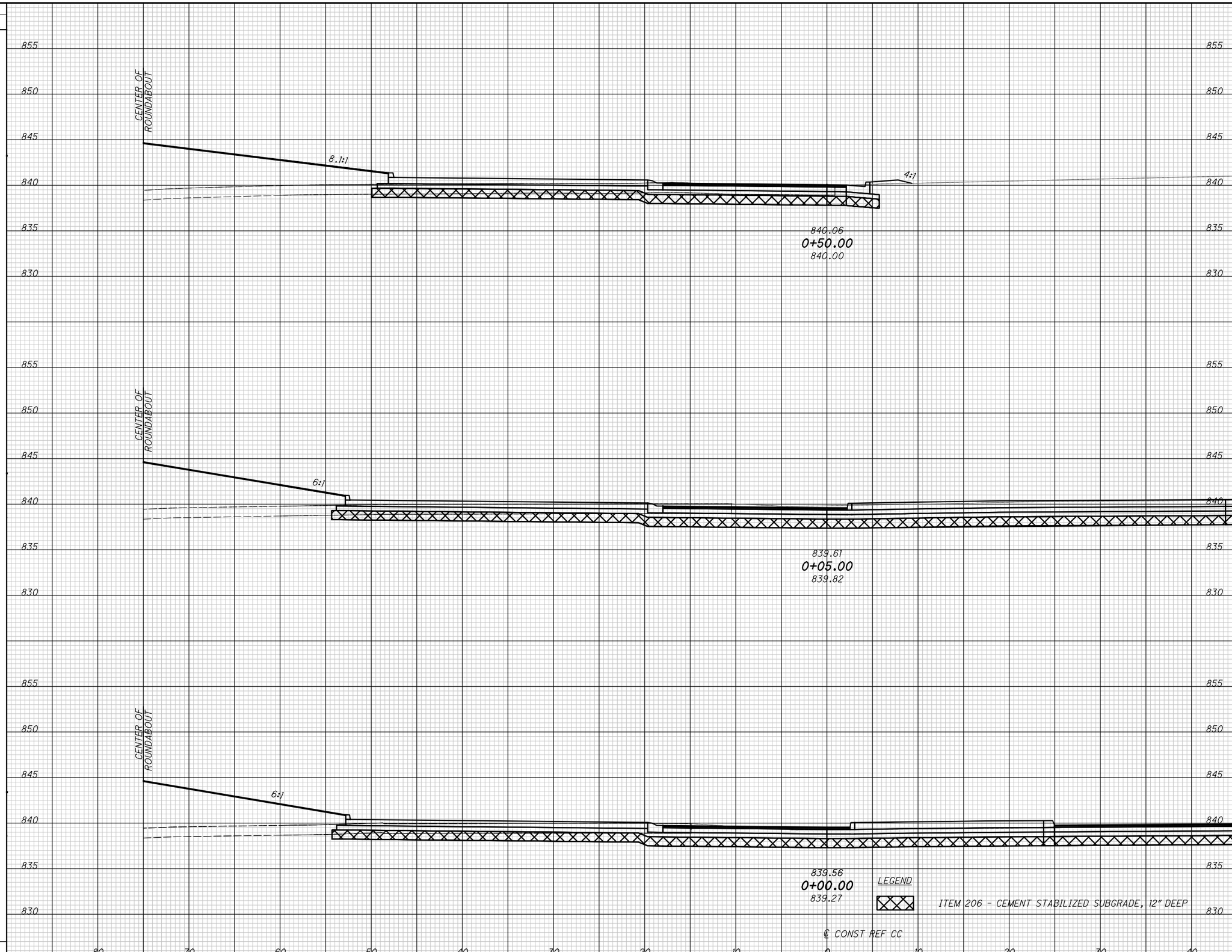

CALCULATED TK
CHECKED GAH

CROSS SECTIONS REF CC
STA. 0+00.00 TO STA. 0+50.00

HUR-20-17.82

...\Sheets\110357_XS103.dgn 3/23/2021 8:42:51 AM mswhitt

SEEDING END WIDTH	SEEDING SQ. YDS.	END AREA CUT	END AREA FILL	VOLUME CUT	VOLUME FILL
7	20	29	88	51	170
0	0	21	78	4	14
0	17	25	75	90	120
	37			145	304

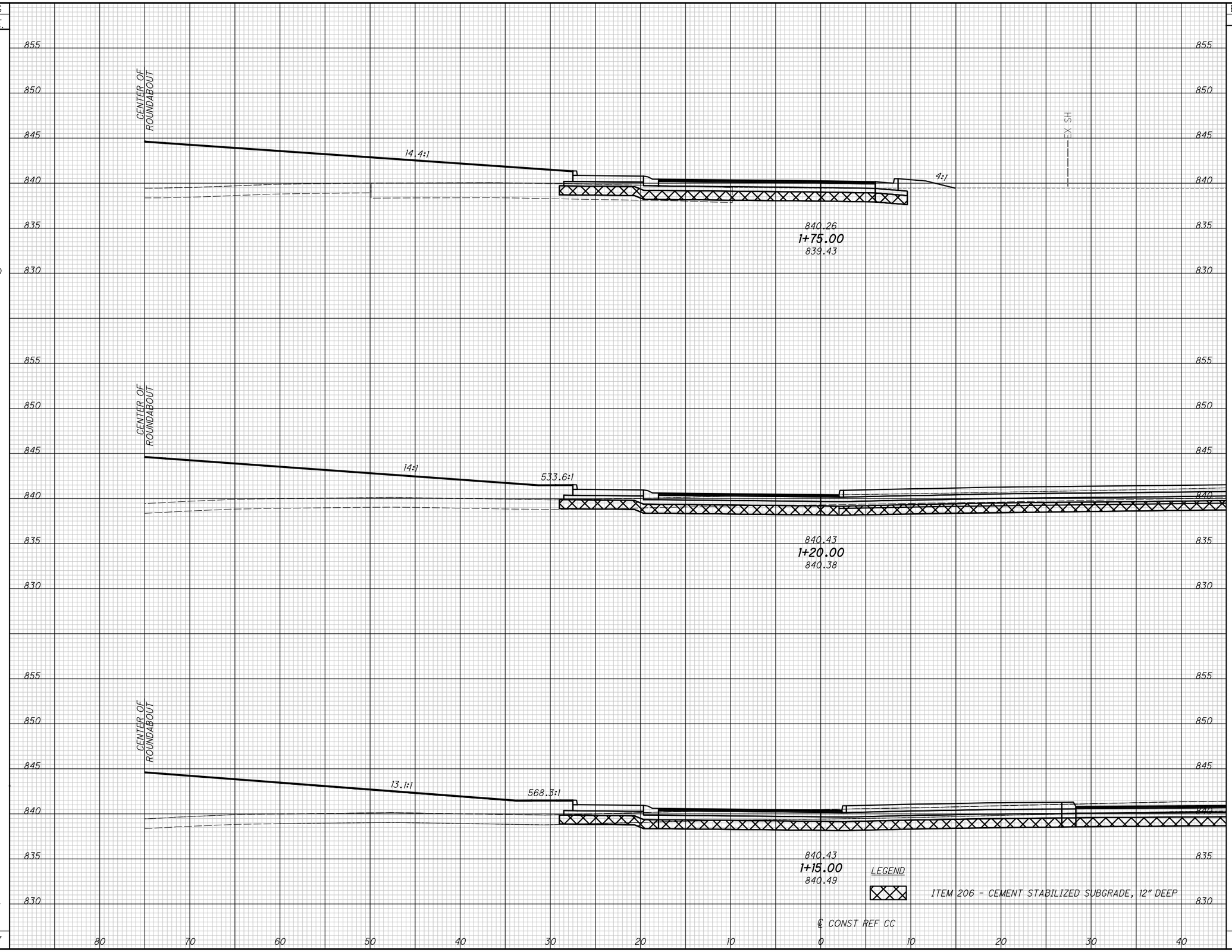

CALCULATED TK
CHECKED GAH

CROSS SECTIONS REF CC
STA. 1+15.00 TO STA. 1+75.00

HUR-20-17.82

...\Sheets\110357_XS103.dgn 3/23/2021 8:42:51 AM mswhitt

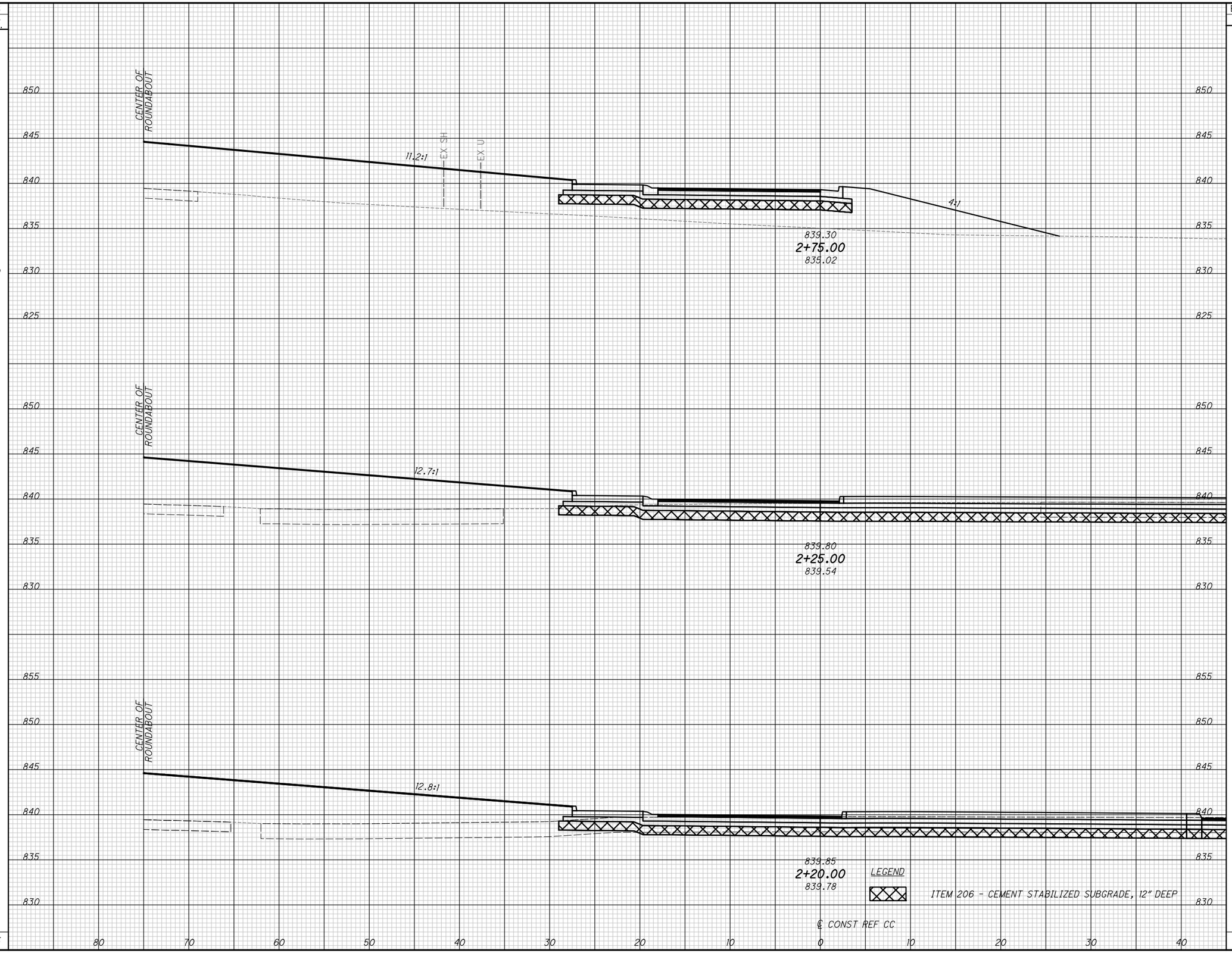

SEEDING END WIDTH	SEEDING SQ. YDS.	END AREA CUT	END AREA FILL	VOLUME CUT	VOLUME FILL
25	69	0	270	46	348
0	0	50	106	5	19
0	0	9	101		
	16			32	170
	85			83	525

CALCULATED TK
CHECKED GAH

CROSS SECTIONS REF CC
STA. 2+20.00 TO STA. 2+75.00

HUR-20-17.82

...\Sheets\110357_XS103.dgn 3/23/2021 8:42:51 AM mswhitt

SEEDING END WIDTH	SEEDING SQ. YDS.
0	
	85
30	
	92
0	
	10
36	
	283
	470

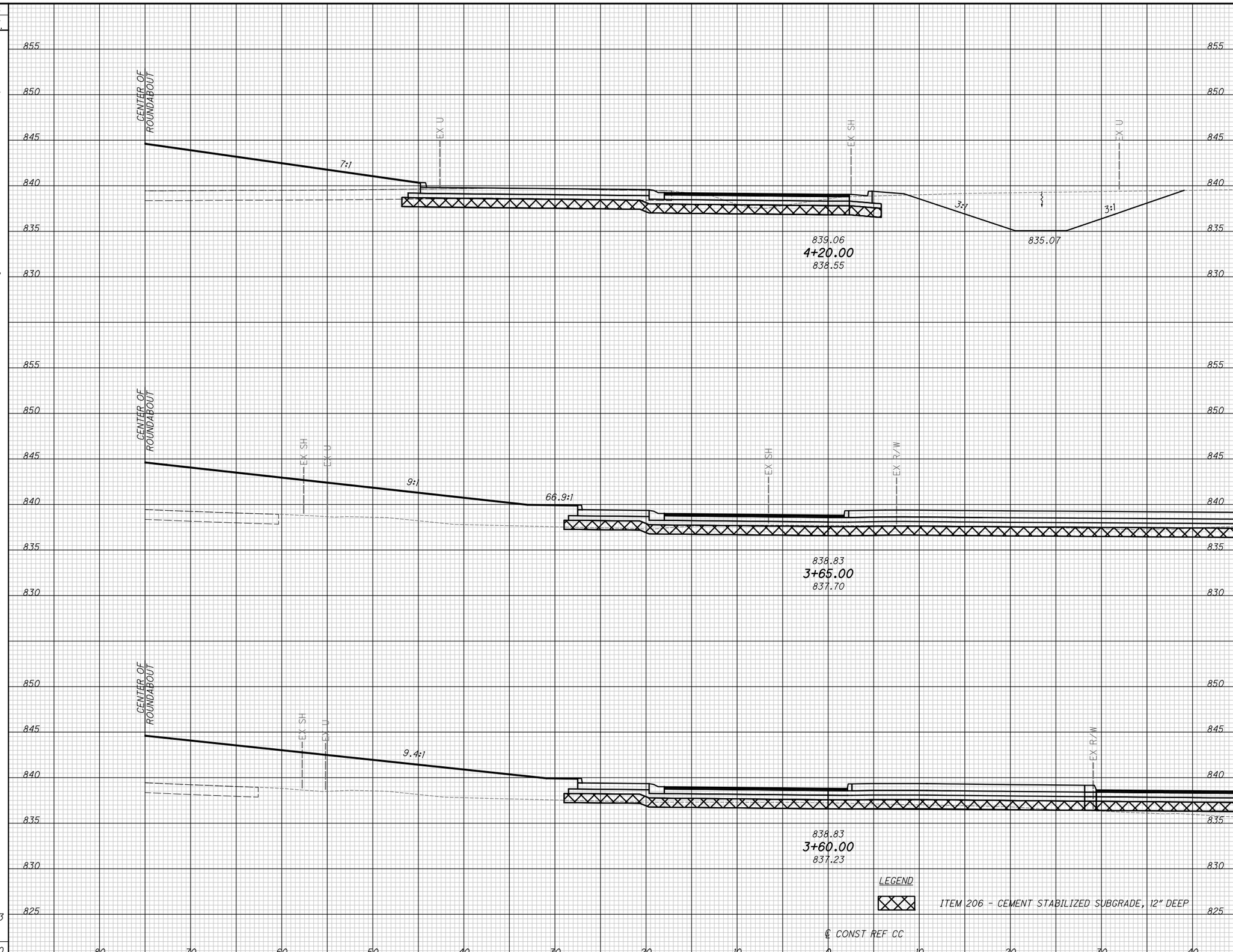

END AREA CUT	END AREA FILL	VOLUME CUT	VOLUME FILL
72	12		
		205	41
144	31		
		170	133
24	99		
		4	19
16	104		
		25	589
		404	782

CALCULATED TK
CHECKED GAH

CROSS SECTIONS REF CC
STA. 3+60.00 TO STA. 4+20.00

HUR-20-17.82

...\Sheets\110357_XS103.dgn 3/23/2021 8:42:51 AM mswhitt

SEEDING END WIDTH	SEEDING SQ. YDS.
17	43
14	36
35	79

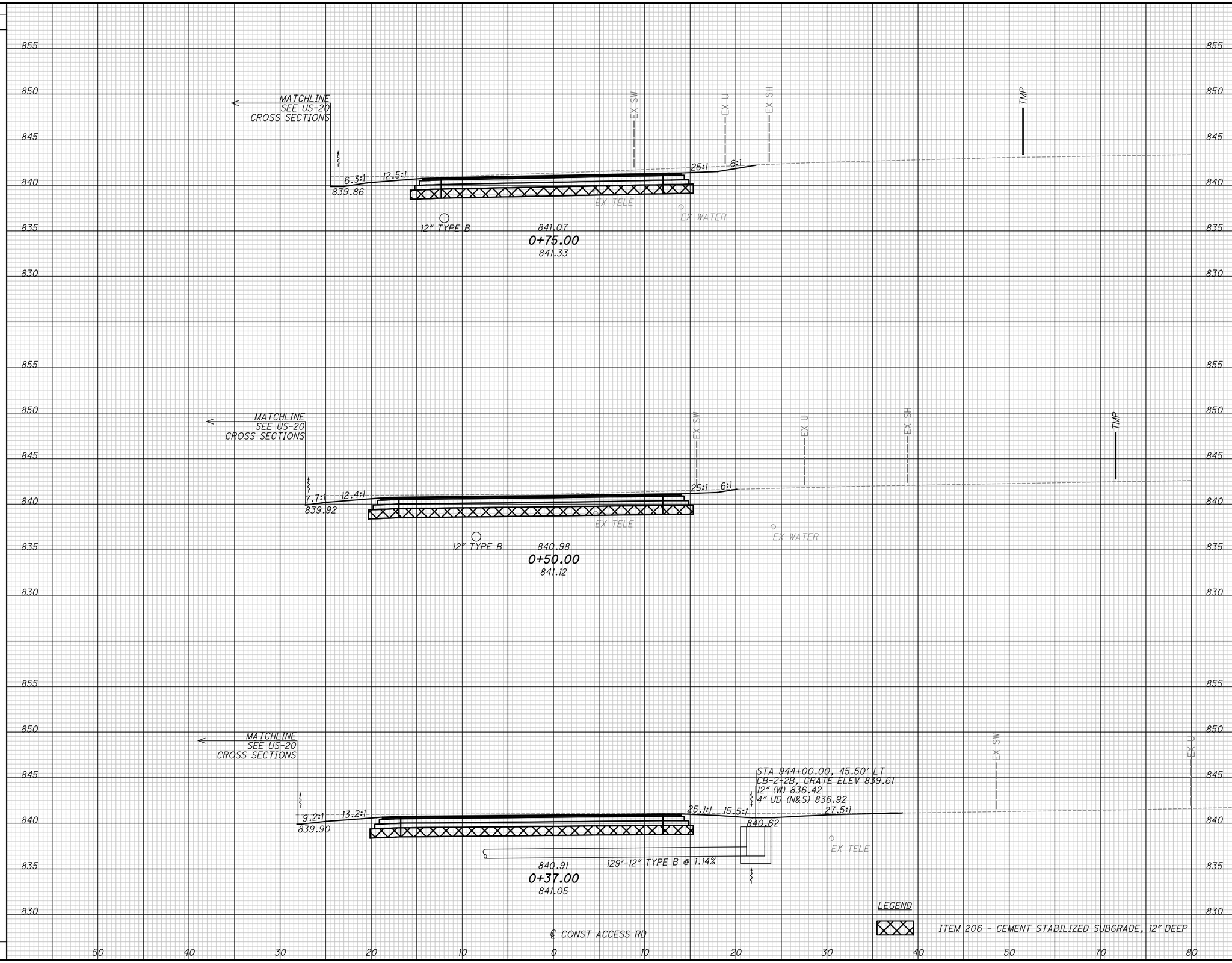

END AREA CUT	END AREA FILL	VOLUME CUT	VOLUME FILL
86	0		
92	0		
94	0	82	0
		45	0
		127	0

CALCULATED TK
CHECKED GAH

CROSS SECTIONS ACCESS ROAD
STA. 0+37.00 TO STA. 0+75.00

HUR-20-17.82

...\Sheets\110357_XS104.dgn 3/23/2021 8:42:54 AM mswhitt

SEEDING END WIDTH	SEEDING SQ. YDS.	END AREA CUT	END AREA FILL	VOLUME CUT	VOLUME FILL
11		89	2		
	55			134	1
16		111	0		
	48			147	0
8		110	0		
	20			51	0
	123			332	1

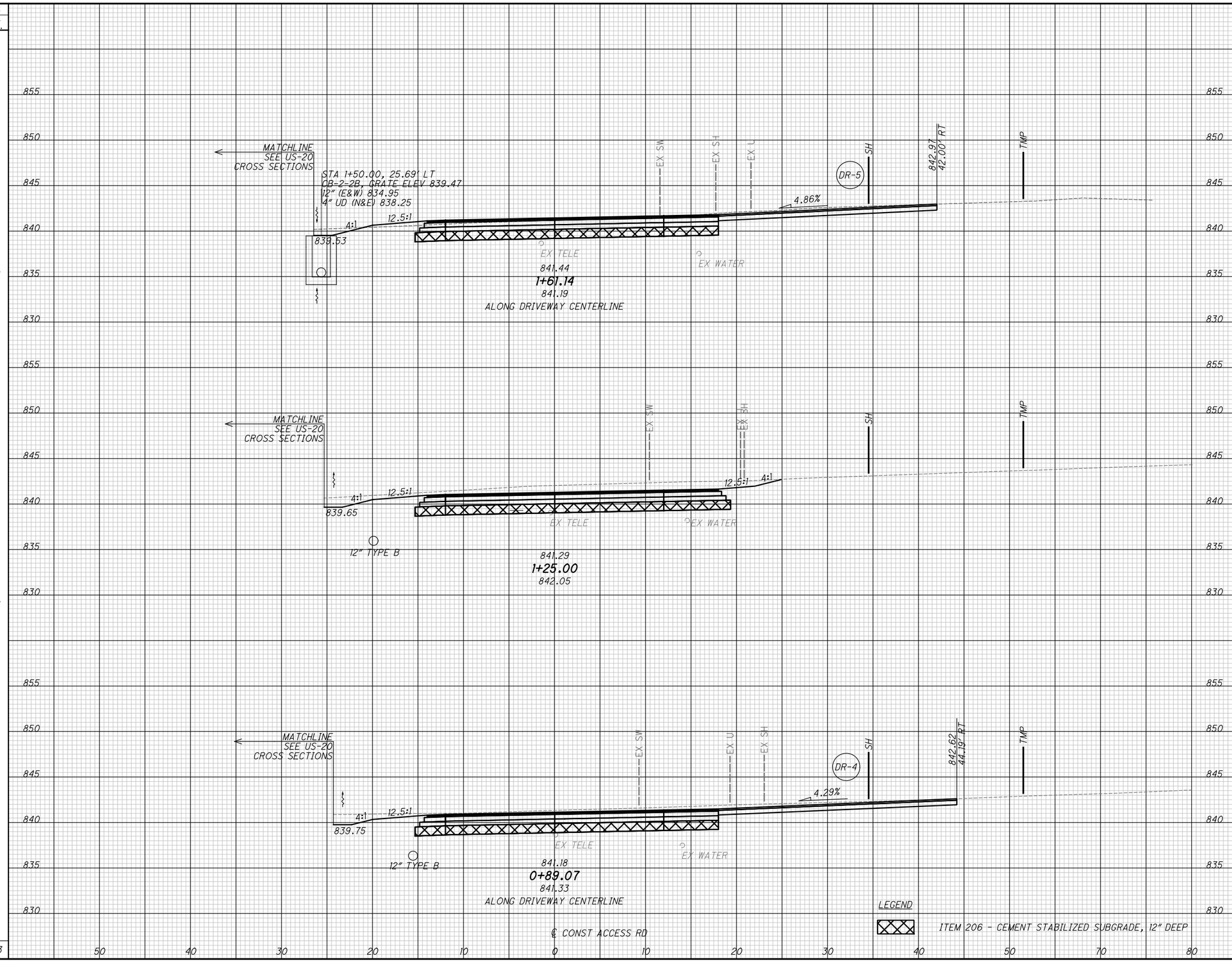

CALCULATED TK
CHECKED GAH

CROSS SECTIONS ACCESS ROAD
STA. 0+89.07 TO STA. 1+61.14

HUR-20-17.82

...\Sheets\110357_XS104.dgn 3/23/2021 8:42:55 AM mswhitt

SEEDING		END AREA		VOLUME	
END WIDTH	SQ. YDS.	CUT	FILL	CUT	FILL
		0	0		
				0	0
0		0	0		
	7			15	0
12		81	0		
	50			122	2
57				137	2

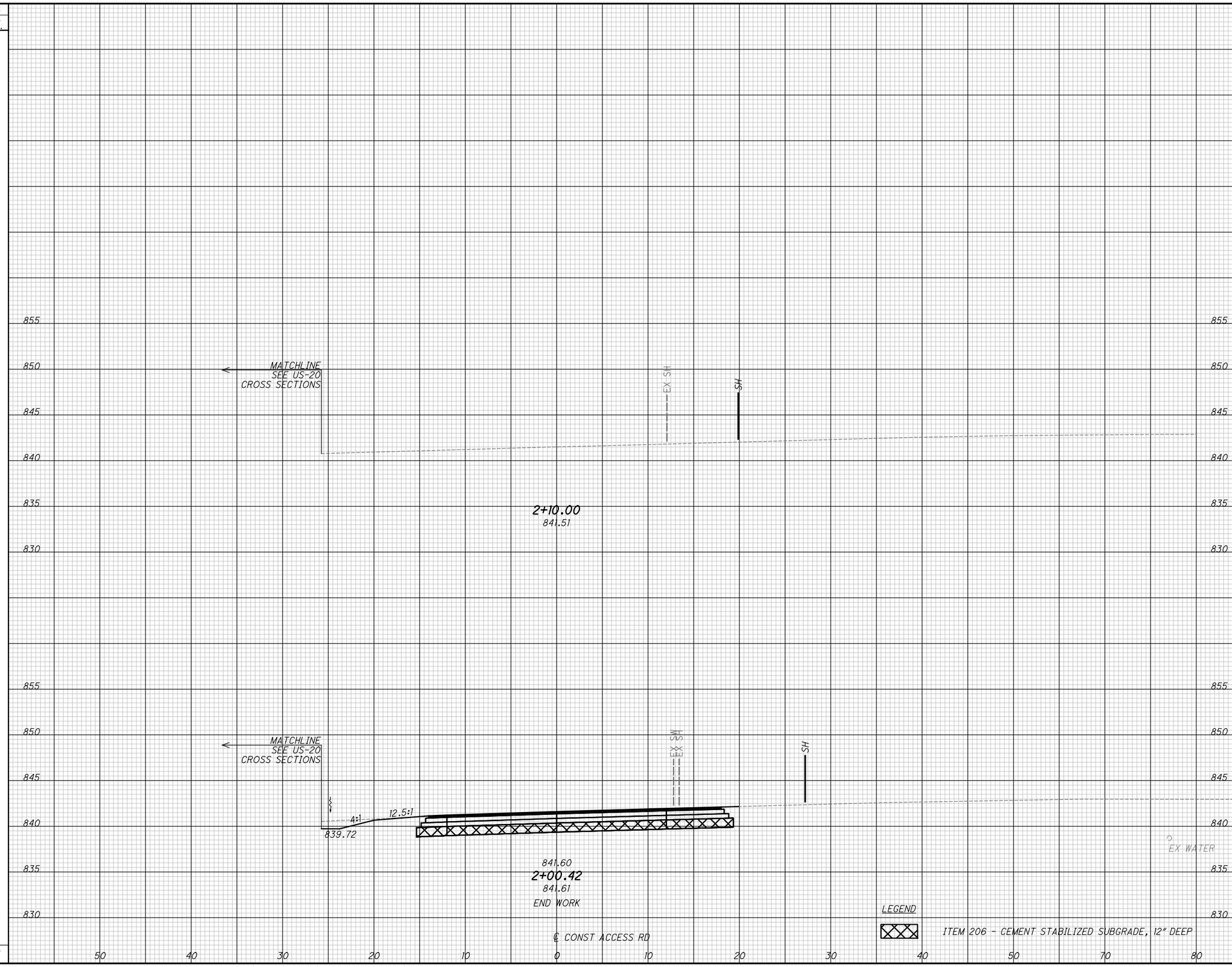

CALCULATED TK
CHECKED GAH

CROSS SECTIONS ACCESS ROAD
STA. 2+00.42 TO STA. 2+10.00

HUR-20-17.82

...\Sheets\110357_XS104.dgn 3/23/2021 8:42:55 AM mswhitt

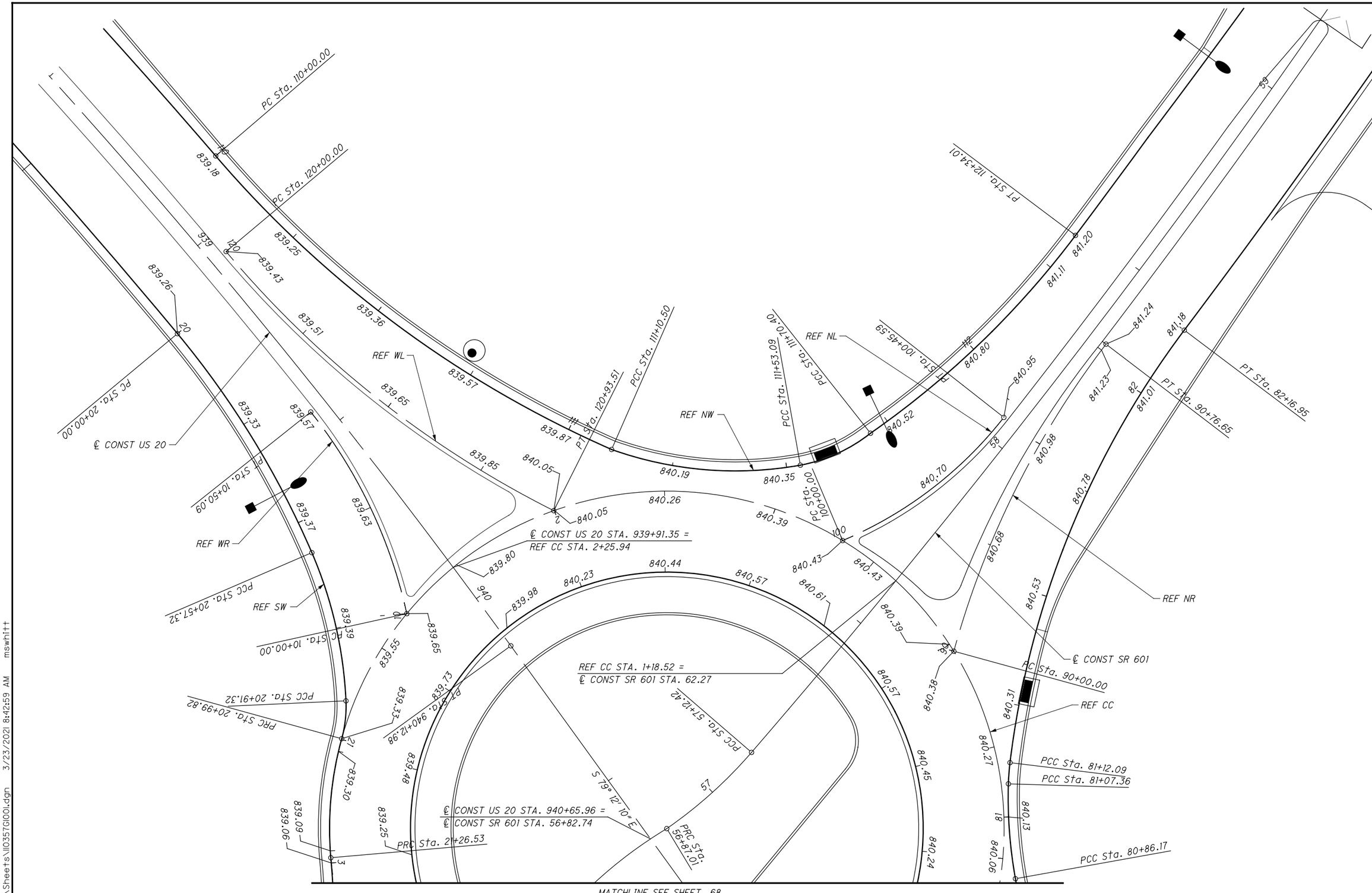

HORIZONTAL SCALE IN FEET 0 5 10 20

CALCULATED TK
CHECKED GAH

ROUNDABOUT INTERSECTION DETAILS

HUR-20-17.82

...\Roadway\Sheets\II0357GI001.dgn 3/23/2021 8:42:59 AM mswhitt

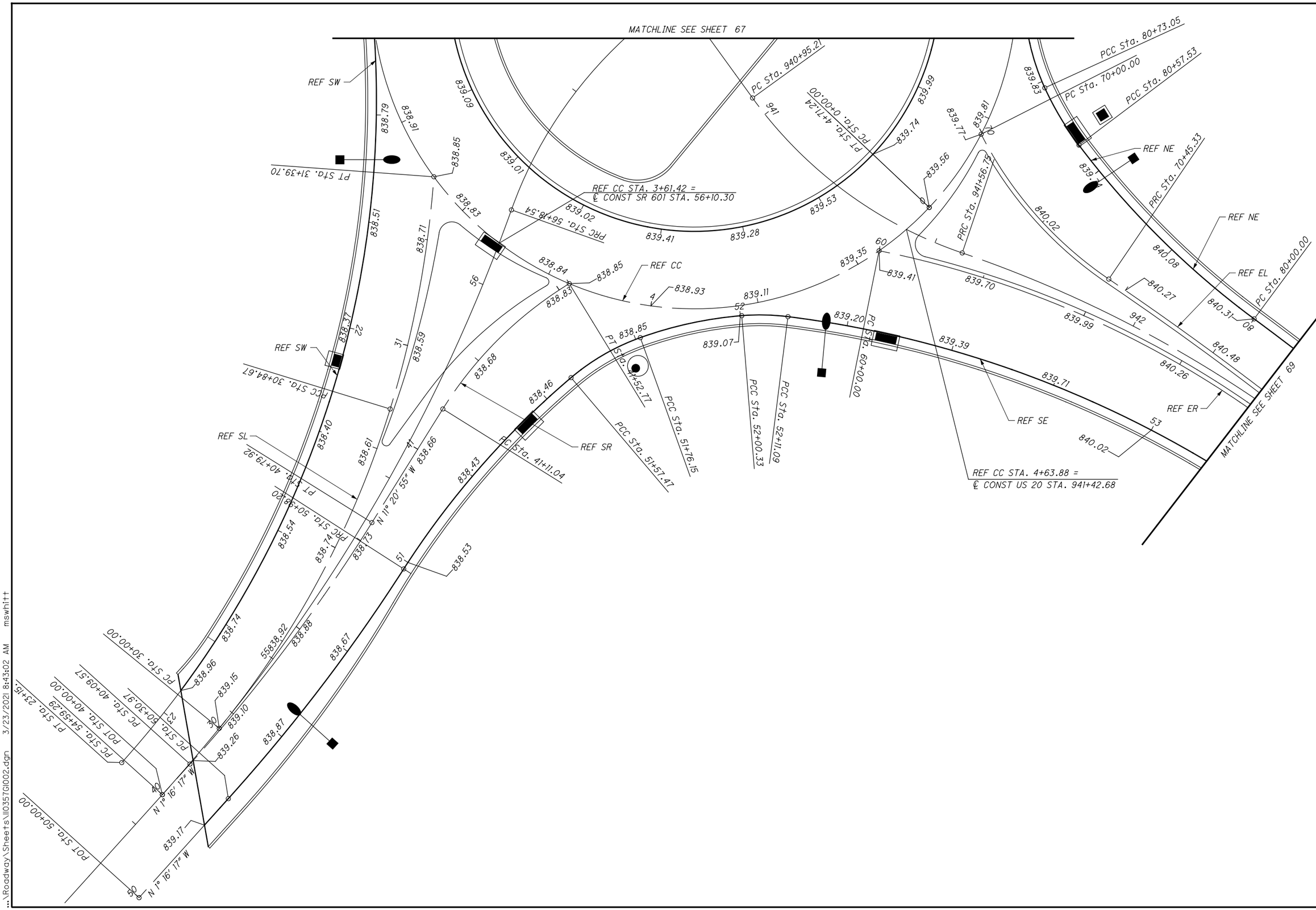

HORIZONTAL SCALE IN FEET
0 5 10 20

CALCULATED TK
CHECKED GAH

ROUNDABOUT INTERSECTION DETAILS

HUR-20-17.82

...\Roadway\Sheets\II0357GI002.dgn 3/23/2021 8:43:02 AM mswhitt

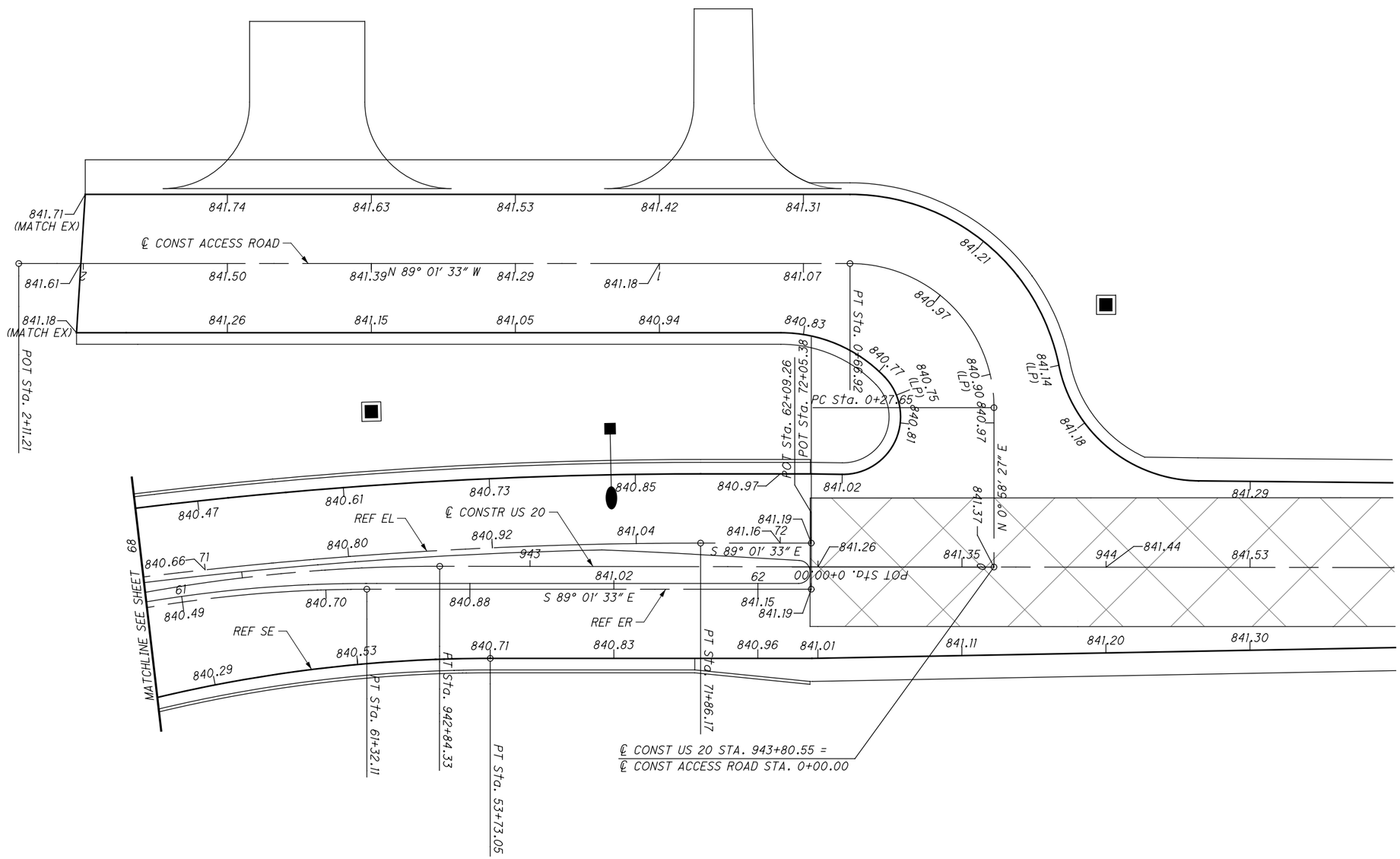

HORIZONTAL SCALE IN FEET
0 5 10 20

CALCULATED TK
CHECKED GAH

INTERSECTION DETAILS

HUR-20-17.82

...\Roadway\Sheets\II0357GI004.dgn 3/23/2021 8:43:06 AM mswhitt

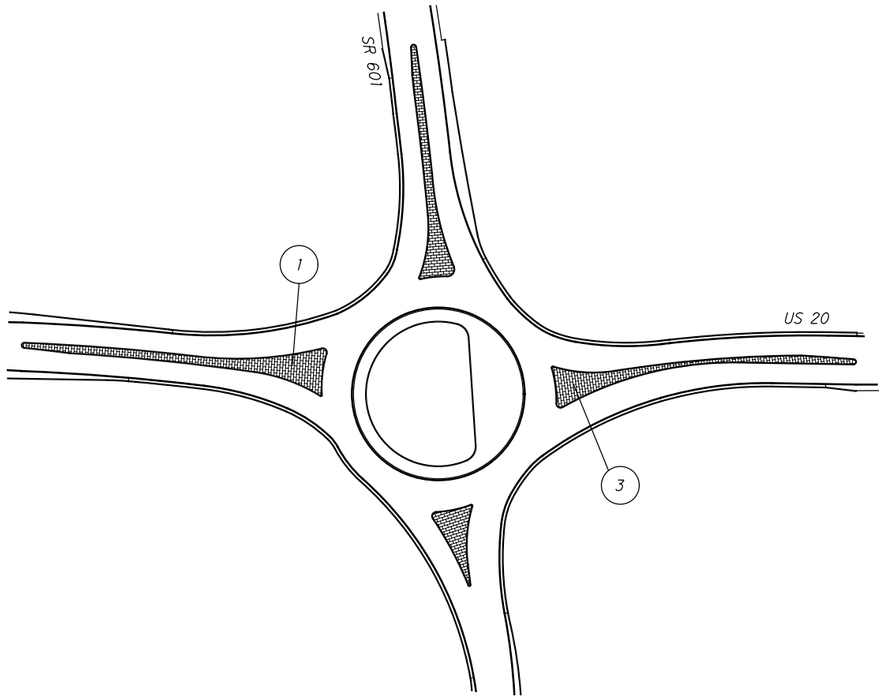

FOR SECTIONS A-A AND B-B, SEE SHEET 71 .

* ALL ELEVATIONS SHOWN AT THE FACE OF CURB REPRESENT THE PAVEMENT LEVEL.

CONTROL POINT	STATION	OFFSET (FT)	BASELINE CONSTRUCTION	*ELEV. (FT)	NORTHING	EASTING
IW1	937+91.11	-3.00	US 20	839.05	576635.2717	1956989.1085
IW2	120+00.00	1.00	REF WL	839.45	576626.3187	1957102.9055
IW3	120+82.73	1.00	REF WL	839.93	576631.5496	1957185.3773
IW4	2+09.53	3.00	REF CC	839.92	576627.7843	1957188.9757
IW5	2+36.33	1.50	REF CC	839.68	576600.4697	1957185.8075
IW6	10+45.65	-1.00	REF WR	839.67	576599.5617	1957184.2800
IW7	10+00.00	-1.00	REF WR	839.59	576615.2586	1957141.3238
IW8	938+21.09	3.00	US 20	839.16	576627.7654	1957018.7502
IW9	937+90.97	1.00	US 20	839.09	576631.2848	1956988.8133
IE1	62+07.07	-1.00	REF ER	841.20	576620.3840	1957536.2642
IE2	61+32.11	-1.00	REF ER	840.77	576621.6583	1957461.3149
IE3	60+10.69	-1.00	REF ER	839.55	576592.1945	1957344.4384
IE4	4+65.15	2.92	REF CC	839.53	576594.8794	1957339.9723
IE5	0+16.94	1.50	REF CC	839.72	576618.3248	1957336.8581
IE6	70+04.22	1.00	REF EL	839.81	576619.5618	1957338.1124
IE7	70+45.33	1.00	REF EL	840.24	576616.7038	1957379.2290
IE8	71+69.00	1.00	REF EL	841.04	576626.7799	1957502.2007
IE9	71+86.17	2.00	REF EL	841.13	576625.6696	1957519.3357
IE10	72+03.30	3.00	REF EL	841.21	576624.3780	1957536.4487

LEGEND

R = RADIUS

L = LENGTH

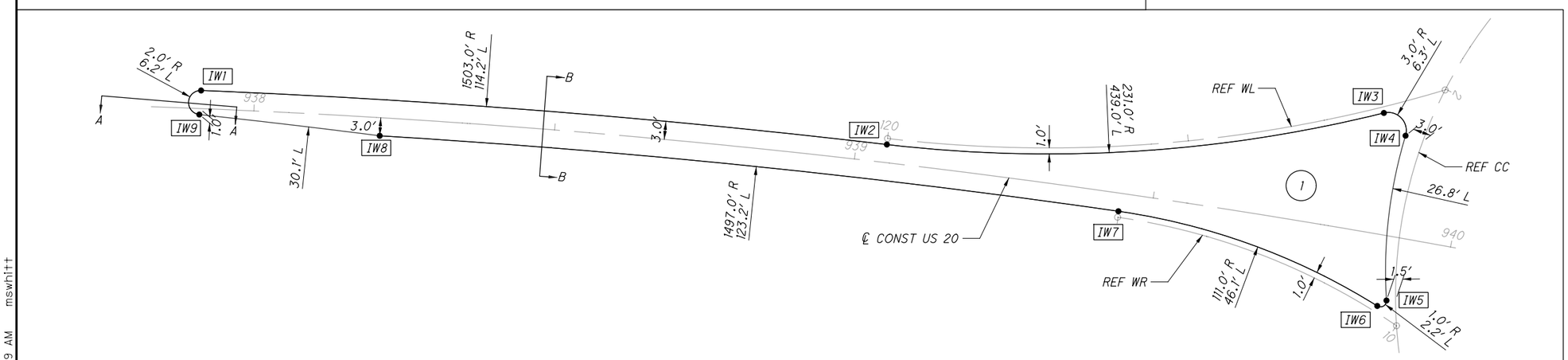

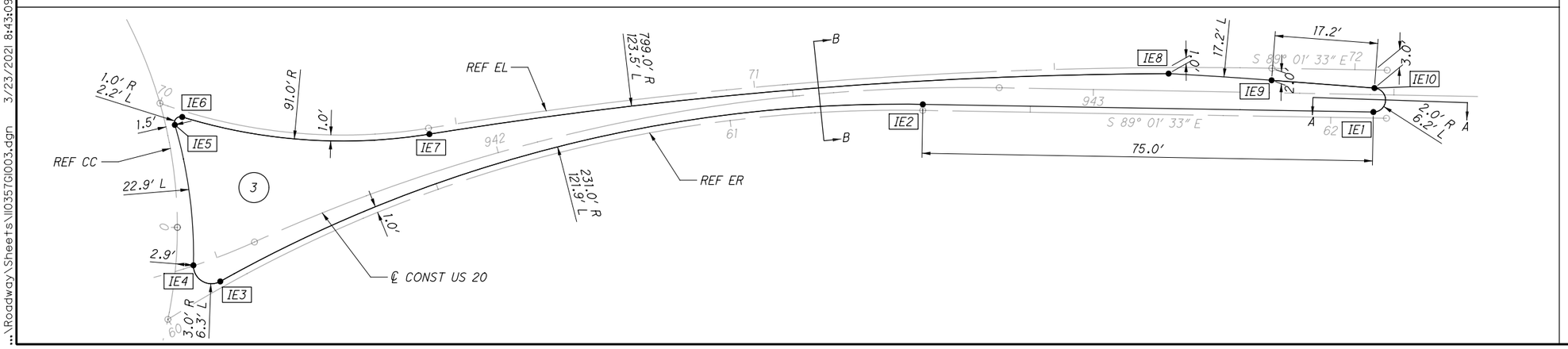

SPLITTER ISLAND DETAILS

HUR-20-17.82

HORIZONTAL SCALE IN FEET 0 5 10 20

CALCULATED TK CHECKED GAH

...\Roadway\Sheets\110357G003.dgn 3/23/2021 8:43:09 AM mswhitt

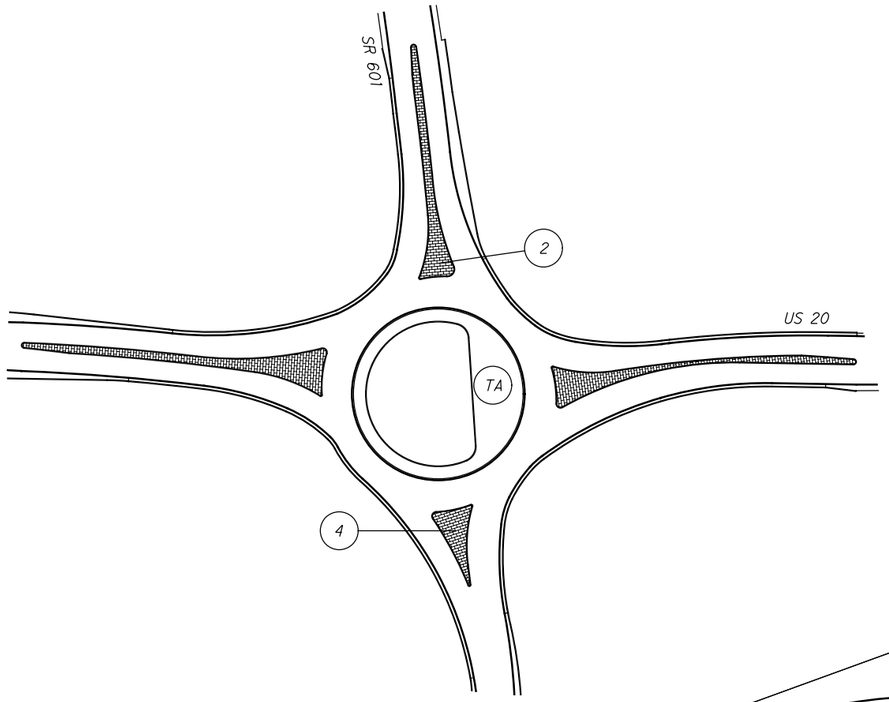

* ALL ELEVATIONS SHOWN AT THE FACE OF CURB REPRESENT THE PAVEMENT LEVEL.

CONTROL POINT	STATION	OFFSET (FT)	BASELINE CONSTRUCTION	*ELEV. (FT)	NORTHING	EASTING
IS1	30+77.27	0.52	REF SL	838.60	576474.7251	1957281.9148
IS2	30+84.67	0.82	REF SL	838.61	576481.5676	1957279.0211
IS3	31+26.98	2.52	REF SL	838.79	576518.8556	1957258.4650
IS4	3+51.98	2.70	REF CC	838.80	576523.5116	1957260.8099
IS5	3+74.90	1.02	REF CC	838.83	576528.2733	1957283.7729
IS6	41+48.23	-2.48	REF SR	838.83	576527.0645	1957285.0840
IS7	41+11.04	-5.15	REF SR	838.69	576488.5980	1957282.1377
IS8	40+97.59	-6.12	REF SR	838.67	576475.2249	1957283.8343
IN1	59+16.81	3.00	SR 601	841.89	576830.2364	1957247.9791
IN2	90+76.65	-1.00	REF NR	841.26	576746.4161	1957258.5179
IN3	90+14.35	-2.87	REF NR	840.56	576685.3945	1957272.8197
IN4	1+12.18	2.53	REF CC	840.39	576678.5120	1957268.1195
IN5	1+29.44	1.45	REF CC	840.46	576676.7282	1957250.5014
IN6	100+04.16	1.00	REF NL	840.47	576678.0697	1957249.3706
IN7	100+45.59	1.00	REF NL	840.96	576719.1876	1957255.1470
IN8	58+87.62	-3.00	SR 601	841.72	576800.5036	1957246.0764
IN9	58+98.92	-2.72	SR 601	841.80	576811.7176	1957244.8465
IN10	59+17.00	-0.99	SR 601	841.89	576829.8431	1957244.0031
TA1	0+97.22	-27.00	REF CC	840.97	576647.3983	1957275.3202
TA2	0+80.39	-32.61	REF CC	840.95	576638.4214	1957282.5910
TA3	4+00.60	-32.61	REF CC	839.59	576566.9134	1957287.2449
TA4	3+83.77	-27.00	REF CC	839.46	576557.0710	1957281.2019

SECTION A-A
ISLAND NOSE DETAIL
PER RM-3.1

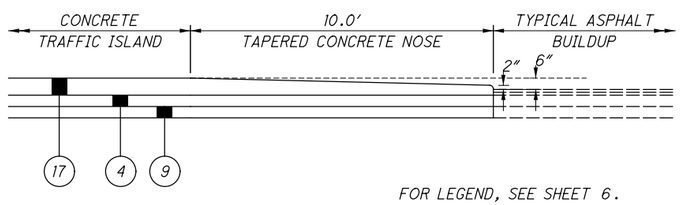

FOR LEGEND, SEE SHEET 6.

SECTION B-B
STAMPED AND COLORED CONCRETE DETAIL

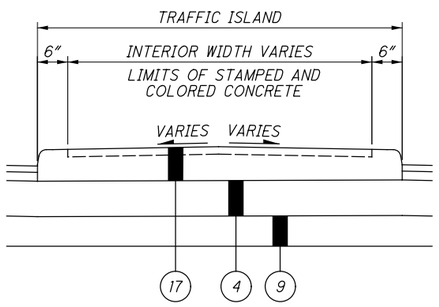

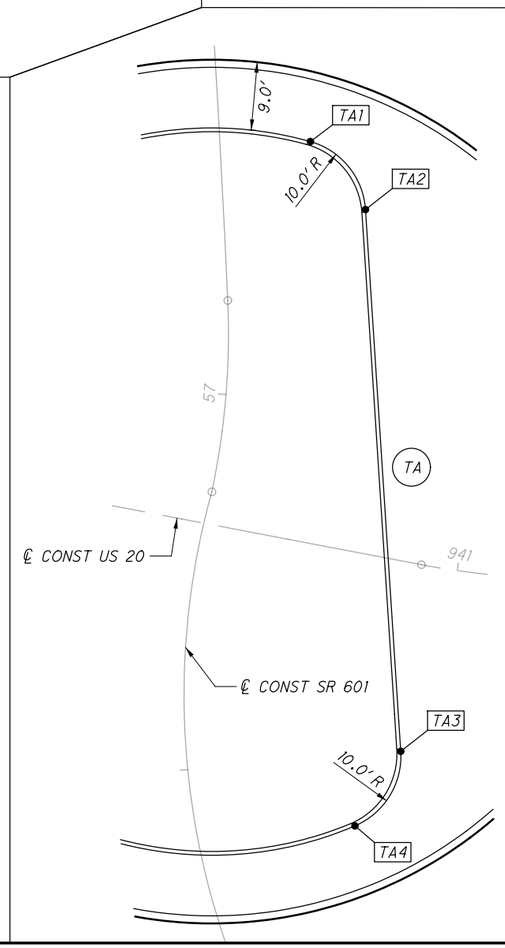

LEGEND

R = RADIUS

L = LENGTH

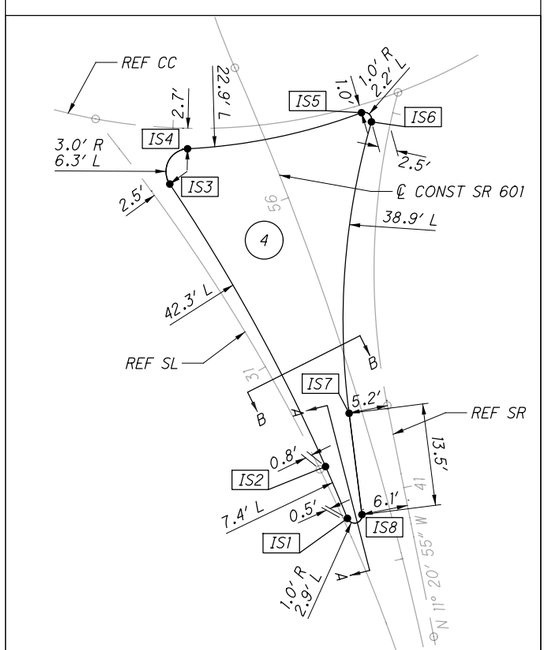

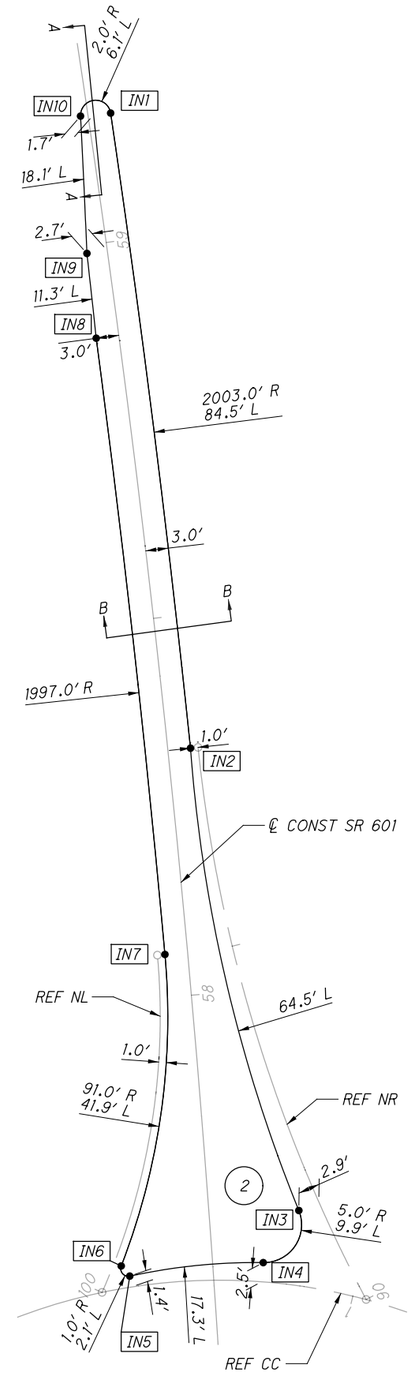

HORIZONTAL SCALE IN FEET
0 5 10 20

CALCULATED TK
CHECKED GAH

SPLITTER ISLAND DETAILS

HUR-20-17.82

...\Roadway\Sheets\II0357GI003.dgn 3/23/2021 8:43:10 AM mswhitt

NOTES

GENERAL: COMPONENTS SHOWN ON THIS DRAWING ARE USED IN A VARIETY OF GUARDRAIL SYSTEMS. SEE INDIVIDUAL GUARDRAIL DRAWING FOR SPECIFIC APPLICATIONS.

SEE CMS 606 FOR GUARDRAIL SPECIFICATIONS NOT COVERED ON THESE DRAWINGS.

REFER TO AASHTO M 180 FOR DIMENSIONAL DETAILS OF W-BEAM AND THRIE-BEAM RAIL ELEMENTS, RELATED BUFFER AND END SECTIONS, BEAM SPLICES, POST AND SPLICE BOLTS, NUTS, AND TYPE 1 W-BEAM TO THRIE-BEAM TRANSITION SECTIONS.

RAIL ELEMENTS: W-BEAM RAIL HAS AN EFFECTIVE LENGTH OF 12'-6" UNLESS OTHERWISE SPECIFIED, WITH 3#4" X 21#2" POST BOLT SLOTS ON 6'-3" CENTERS REGARDLESS OF POST SPACING. FIELD PUNCH OR DRILL BOLT HOLES OR SLOTS FOR IRREGULARLY SPACED POSTS AS SPECIFIED IN CMS 606.04.

RAIL SPLICES: LAP SPLICES BETWEEN TWO RAIL ELEMENTS OR BETWEEN A RAIL AND TERMINAL CONNECTOR IN THE DIRECTION OF TRAFFIC. LAP THE BUFFER OR FLARED END SECTIONS IN THE DIRECTION OF TRAFFIC.

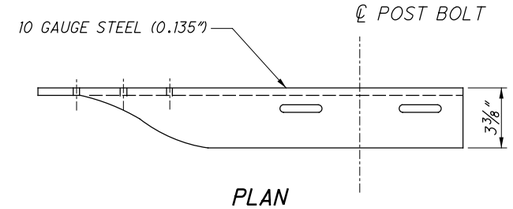

PLAN

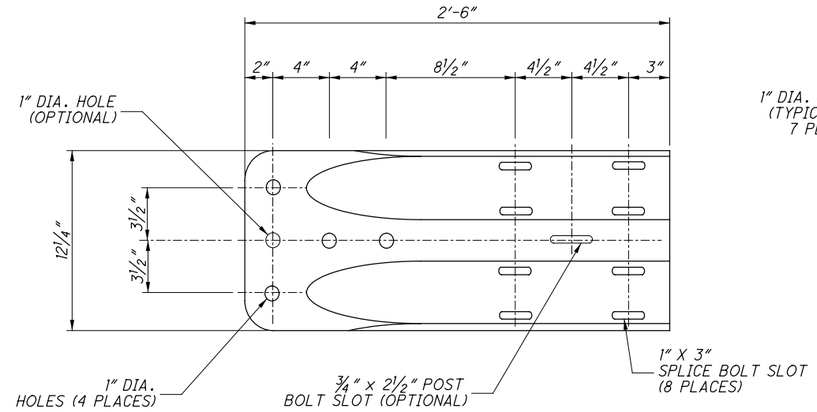

ELEVATION

W-BEAM TERMINAL CONNECTOR

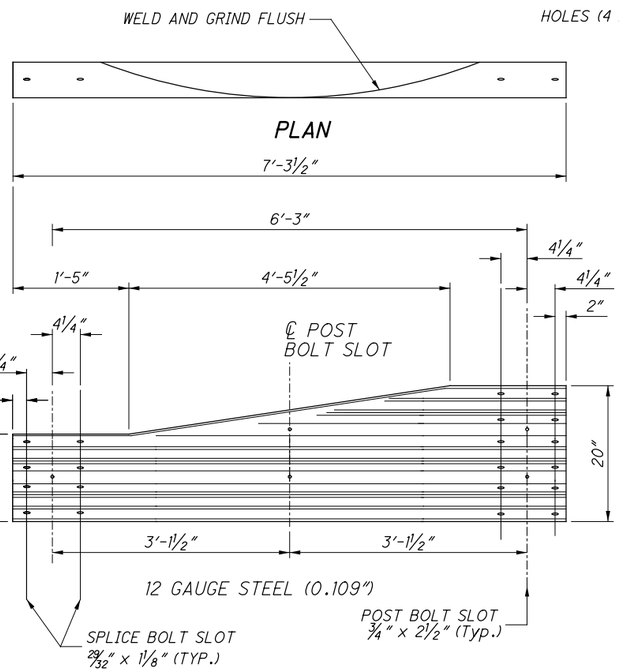

ELEVATION

TYPE 2 TRANSITION SECTION

(ASYMMETRIC W TO THRIE-BEAM)

FOR DETAILS OF TYPE 1 TRANSITION SECTION (SYMMETRIC), REFER TO AASHTO M 180, FIGURE 4.

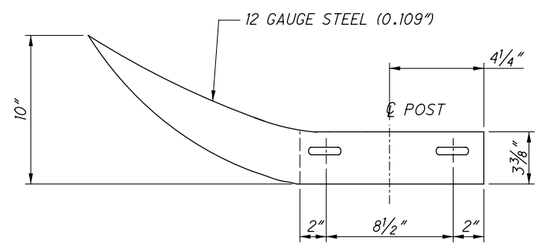

PLAN

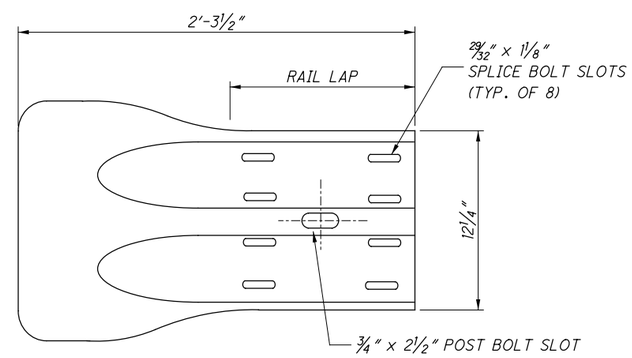

ELEVATION

W-BEAM FLARED END SECTION

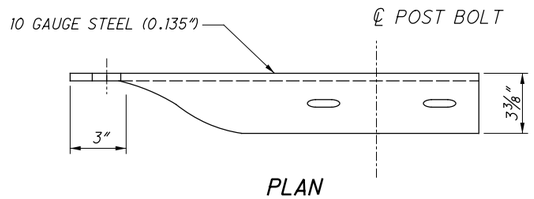

PLAN

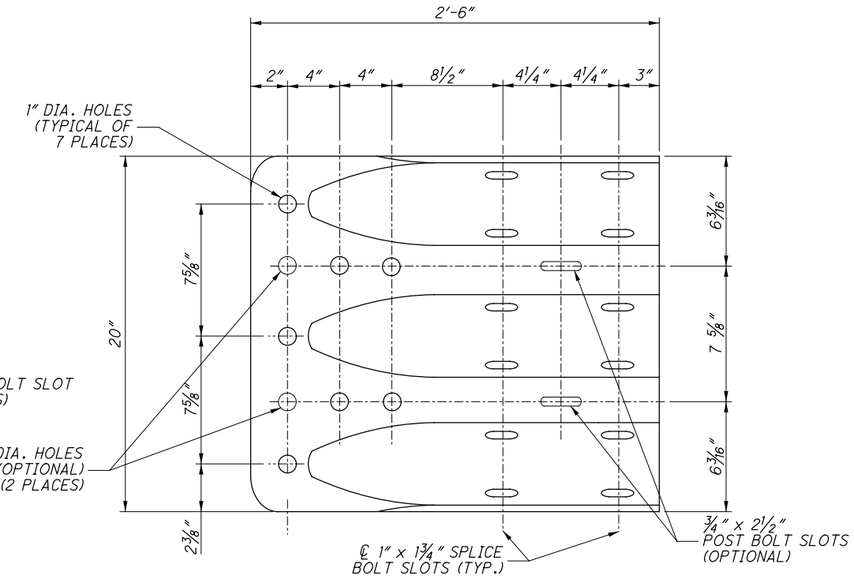

ELEVATION

THRIE-BEAM TERMINAL CONNECTOR

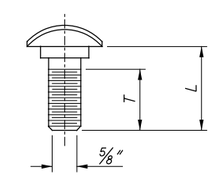

GUARDRAIL BOLT
(FOR POST AND SPLICE BOLTS)

L	T MIN.	BOLT USE
18" (STANDARD RAIL)	4"	TYPE 5: SP/WB, PB
26" (BARRIER RAIL)		
10"	4"	TYPE 5: SP/WB, PB
1 1/4"	1 1/8"	SPLICE BOLT

WP = WOOD POST WB = WOOD BLOCKOUT
SP = STEEL POST PB = PLASTIC BLOCKOUT

LONGER BOLT MAY BE NEEDED FOR ROUND WOOD POST LARGER THAN 8" DIA.

OFFICE OF ROADWAY ENGINEERING

DESIGNED . REVIEWED .
REVISION DATE . CHECKED .

PLAN INSERT SHEET
GUARDRAIL DETAILS (Rail Components)

HUR-20-17.82

1/9
1/3
72/128

...\Sheets\10357_GR101.dgn 3/23/2021 8:43:13 AM mswhitt

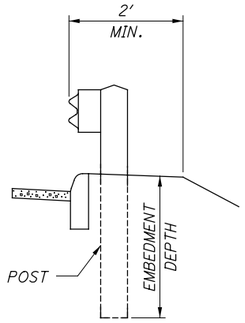

DETAIL A

SEE POST EMBEDMENT DEPTH NOTE

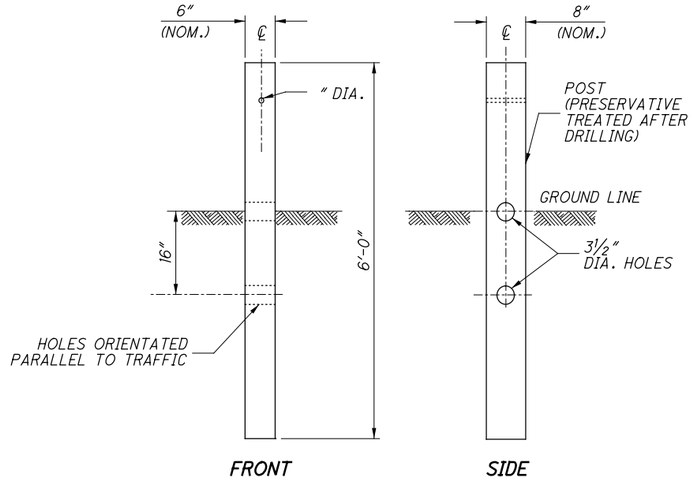

TYPE 1 BREAKAWAY CRT POST

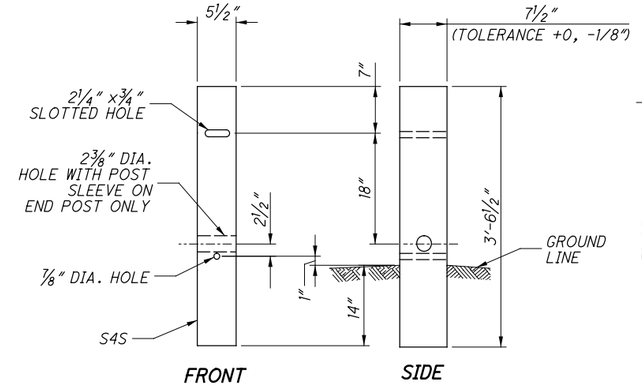

TYPE 2 BREAKAWAY CRT POST

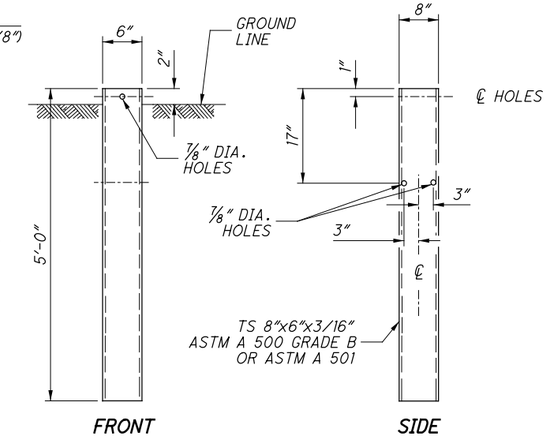

STEEL GROUND TUBE

NOTES

GUARDRAIL HEIGHT: FOR INITIAL INSTALLATION, CONSTRUCT THE GUARDRAIL WITHIN ± 1″ OF THE STANDARD HEIGHT, H, OR 29″ TO THE TOP OF W-BEAM RAIL. (SEE MEASURING GUARDRAIL HEIGHT DETAIL.) WHEN SUBSEQUENT PROJECTS, SUCH AS RESURFACINGS, AFFECT THE HEIGHT OF EXISTING GUARDRAIL, THE FINISHED HEIGHT IS TO BE WITHIN ±2.5″ OF THE STANDARD HEIGHT.

POST EMBEDMENT DEPTH: STANDARD EMBEDMENT IS 3′-5″ MIN. WHERE LESS THAN 2′ OF GRADED SHOULDER WIDTH (10:1 OR FLATTER) EXISTS, MEASURED FROM THE FACE OF THE GUARDRAIL (SEE DETAIL "A"), USE LONGER POSTS SO THAT A MINIMUM OF 5′-5″ EMBEDMENT DEPTH IS PROVIDED. PAYMENT FOR THE LONGER POSTS WILL BE MADE AT THE UNIT PRICE BID FOR **ITEM 606 - GUARDRAIL POST, 9′, EACH.**

SPECIAL POST MOUNTINGS: INSTALL POSTS LOCATED OVER A DRAINAGE INLET OR STRUCTURE AS SHOWN IN THE FOOTING ANCHOR DETAIL, OR ANCHOR PER THE DETAILS SHOWN ON**SCD GR-2.2.**

INSTALL POSTS LOCATED OVER A FOOTING WITH A COVER OF LESS THAN 2′-6″ WITH A FOOTING ANCHOR AS DETAILED HERE. (A PLATE, AS DETAILED ON SECTION B-B OF **SCD GR-2.2**, MAY BE USED AS AN ALTERNATIVE ATTACHMENT METHOD.) WHERE THE COVER IS BETWEEN 2′-6″ AND 3′-5″,THE FOOTING ANCHOR MAY BE OMITTED AND THE POST ENCASED INSTEAD WITH 4″ (MIN.) OF CONCRETE.

DO NOT DRIVE POSTS LOCATED OVER A CULVERT WITH LESS THAN 4′-3″ OF COVER; INSTEAD SET IN DRILLED OR DUG HOLES. WHERE THE AVAILABLE POST EMBEDMENT DEPTH IS LESS THAN 3′-5″, ENCASE THE POST WITH A MINIMUM OF 4″ CONCRETE.

ALL COSTS ASSOCIATED WITH SPECIAL POST MOUNTINGS ARE INCLUDED IN THE UNIT PRICE BID OF ITEM 606 GUARDRAIL OF THE TYPE SPECIFIED IN THE PLANS.

ANCHORS: HOLES AND GROUTING SHALL COMPLY WITH CMS 510. USE EITHER CEMENT OR NON-SHRINK, NONMETALLIC GROUT.

EXPANSION SHIELD ANCHORS AS SPECIFIED IN CMS 712.01 MAY BE SUBSTITUTED EXCEPT WHERE CONCRETE DETERIORATION HAS OCCURRED, AS DETERMINED BY THE ENGINEER. WHERE SELF-DRILLING ANCHORS ARE USED, DRILL THE HOLES WITH THE EXPANSION SHIELD (NOT BY A DRILL BIT) AND INSTALL THE SHIELD FLUSH WITH THE CONCRETE SURFACE.

PROTECTIVE COATING: IN LIEU OF THE COMPLYING WITH CMS 710.06, COAT EXPANSION SHIELDS, ANCHORS AND CONCRETE INSERT ANCHOR ASSEMBLIES EMBEDDED IN CONCRETE IN ACCORDANCE WITH ASTM A 153 OR BE OF STAINLESS STEEL. ANY BOLTS SCREWED INTO THESE DEVICES SHALL MEET CMS 710.06. (SEE SHEET 3 FOR CONCRETE INSERT ANCHOR ASSEMBLY DETAIL.)

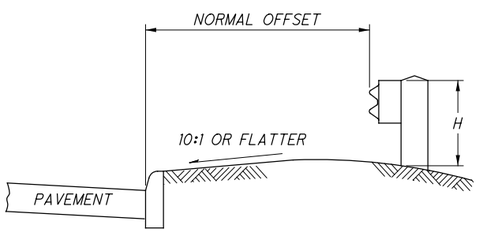

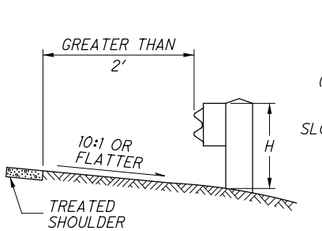

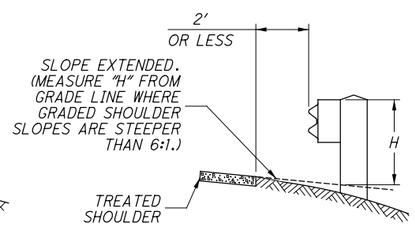

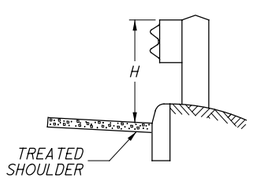

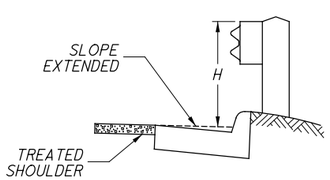

H = STANDARD HEIGHT (SEE GUARDRAIL HEIGHT NOTE)

MEASURING GUARDRAIL HEIGHT

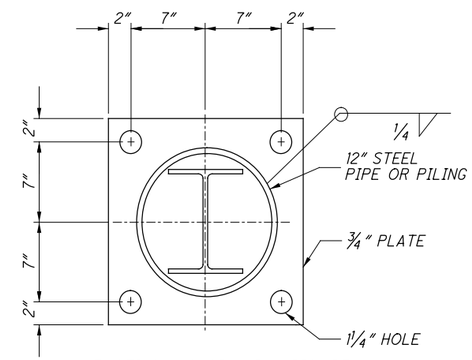

FOOTING ANCHOR AND HARDWARE NEED NOT BE GALVANIZED

SECTION A-A

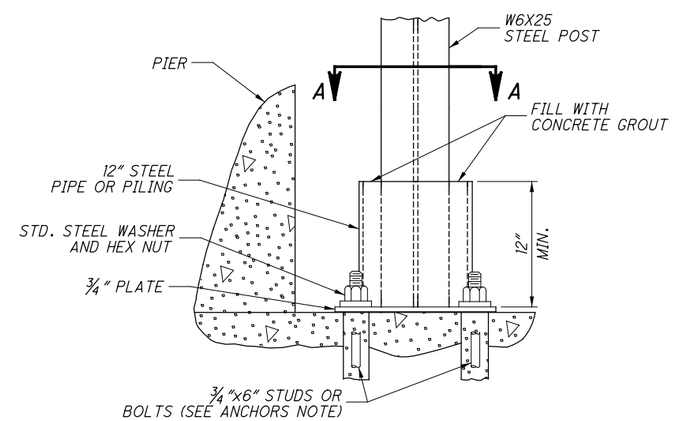

ELEVATION
FOOTING ANCHOR

SEE SPECIAL POST MOUNTINGS NOTE.

OFFICE OF ROADWAY ENGINEERING

DESIGNED . REVIEWED .

REVISION DATE . CHECKED .

PLAN INSERT SHEET

GUARDRAIL DETAILS (Rail Components)

HUR-20-17.82

2/9

2/3

73/128

...\Sheets\110357_GR101.dgn 3/23/2021 8:43:13 AM mswhitt

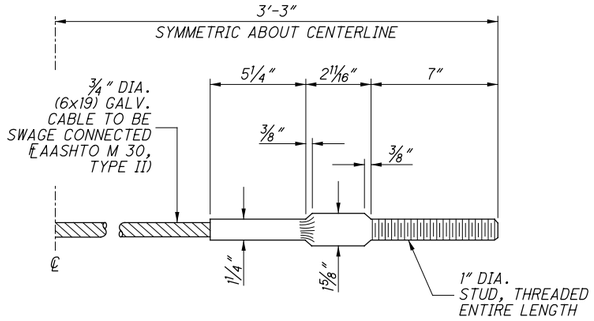

STANDARD SWAGED FITTING AND STUD

CABLE ANCHOR

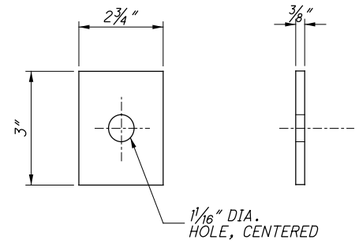

END PLATE

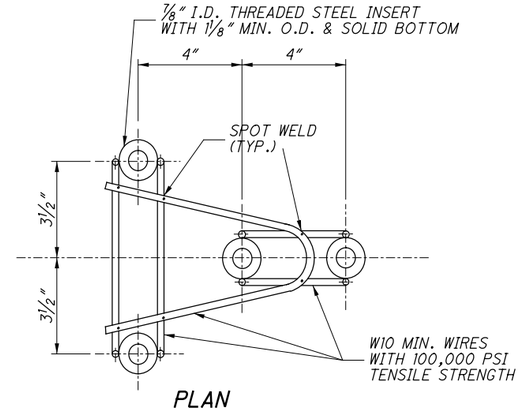

PLAN

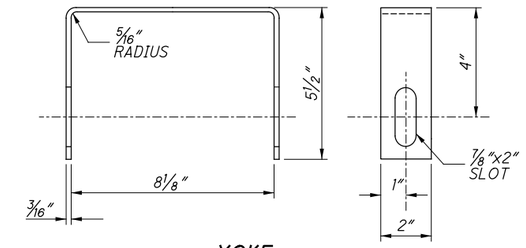

YOKE

TWO REQUIRED IN ASSEMBLY

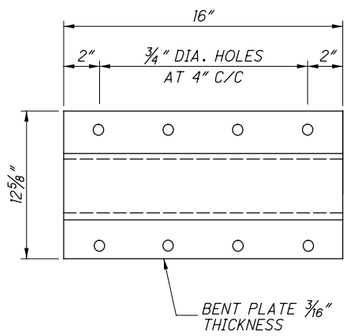

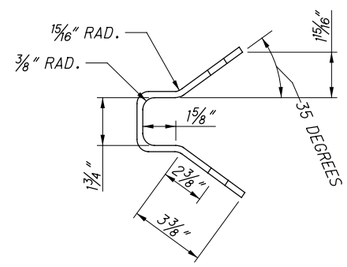

ANCHOR BRACKET

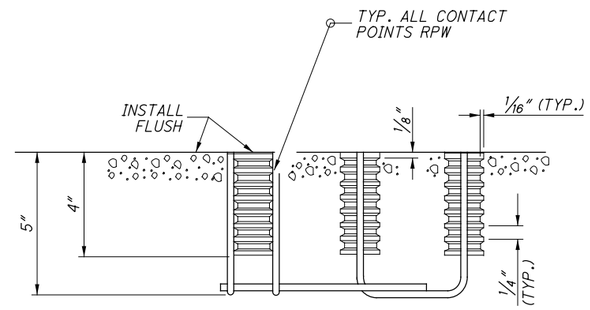

FOUR ⅞" BOLTS REQUIRED

ELEVATION

CONCRETE INSERT ANCHOR ASSEMBLY (W-BEAM ONLY)

SEE ANCHORS AND PROTECTIVE COATINGS NOTES ON SHEET 2

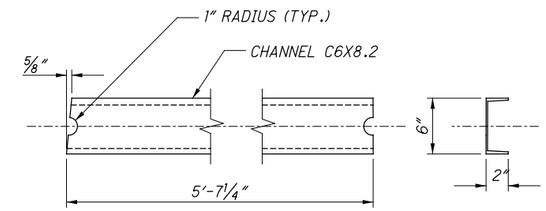

STRUT

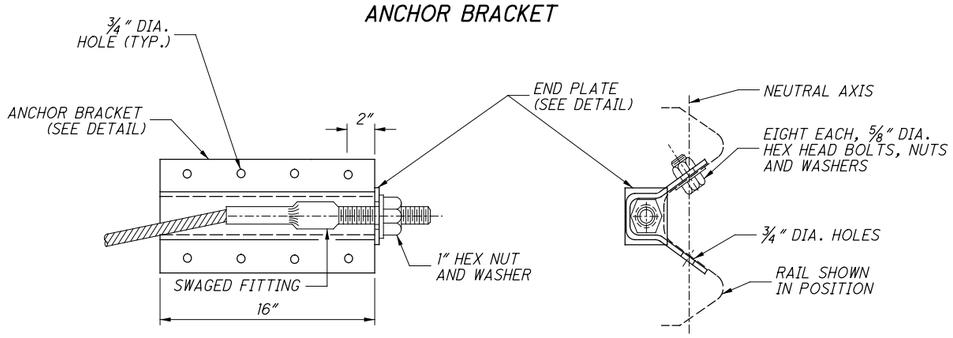

ANCHOR BRACKET ASSEMBLY DETAILS

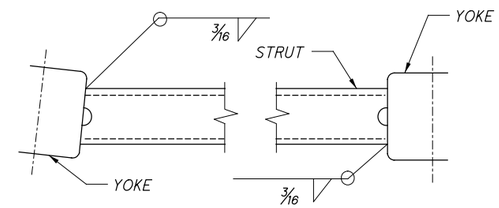

CHANNEL LEGS SHOWN DOWN. FOR OPPOSITE HAND, INSTALL CHANNEL LEGS UP.

STRUT AND YOKE ASSEMBLY

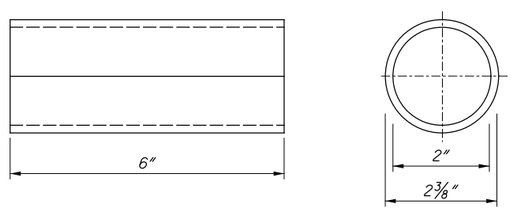

POST SLEEVE

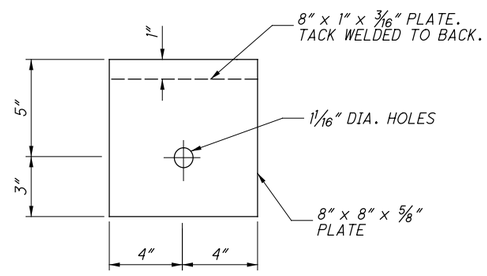

BEARING PLATE

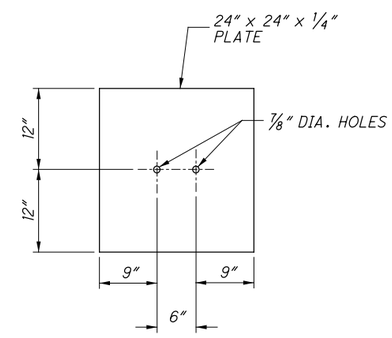

SOIL PLATE

OFFICE OF ROADWAY ENGINEERING

DESIGNED	REVIEWED
.	.
REVISION DATE	CHECKED
.	.

PLAN INSERT SHEET

GUARDRAIL DETAILS (Rail Components)

HUR-20-17.82

3/9

3/3

74/128

...\Sheets\110357_GR101.dgn 3/23/2021 8:43:13 AM mswhitt

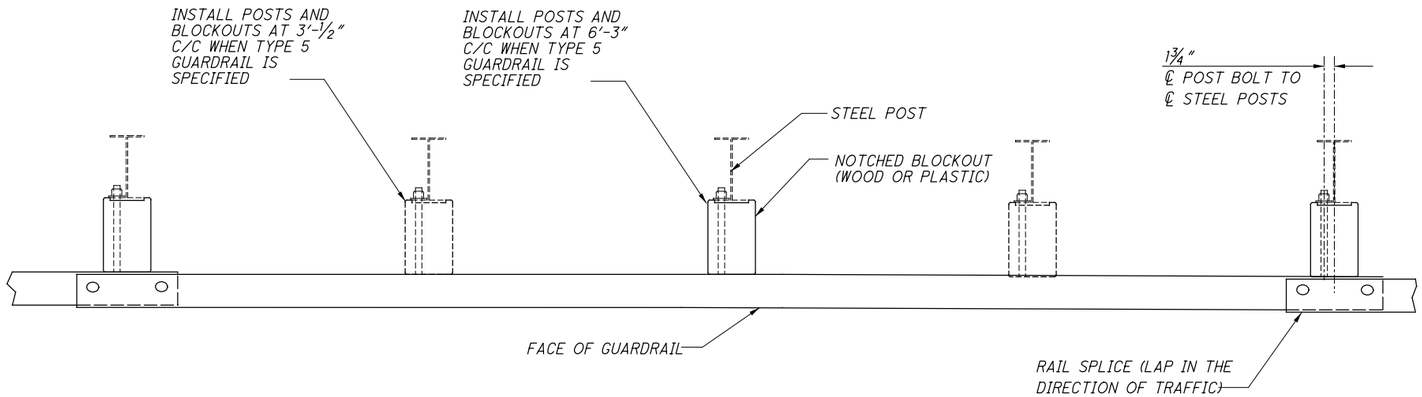

(STEEL POSTS SHOWN)

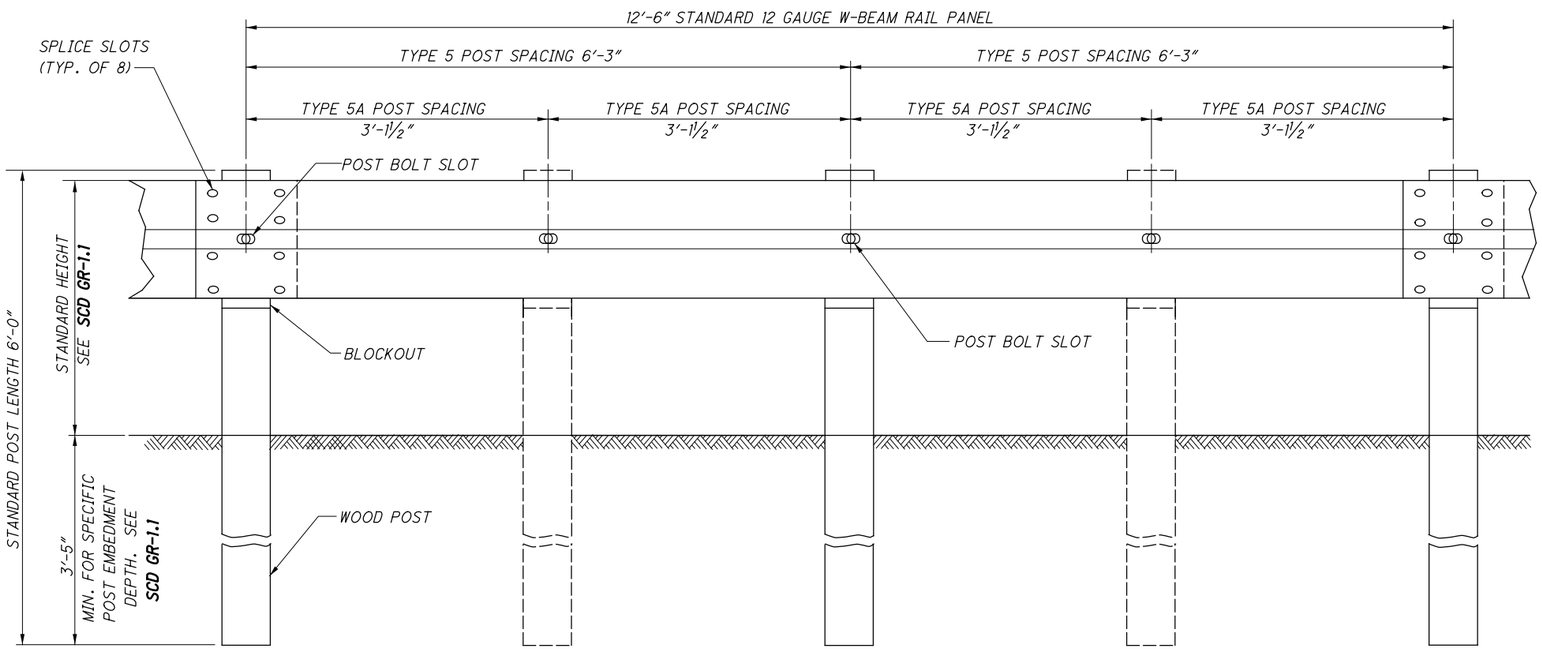

ELEVATION
(WOOD POSTS SHOWN)

NOTES

RAIL: USE W-BEAM RAIL MEETING AASHTO M 180 TYPE II CLASS A, AS SPECIFIED IN CMS 606.

POSTS: POSTS MAY BE CONSTRUCTED OF WOOD OR STEEL. WOOD POSTS MAY BE ROUND OR 6"X8" SQUARE-SAWED.

USE ROUND WOOD POSTS ON RUNS OF SINGLE-SIDED RAIL. THE ROUND POSTS SHALL BE 8"±1 IN DIAMETER AT THE TOP AND NOT MORE THAN 3" LARGER AT THE BUTT WITH A UNIFORM TAPER.

FABRICATED WOOD POSTS WITH SQUARE ENDS. POSTS SHALL BE PRESSURE-TREATED AS PER CMS 710.14. BORE BOLT HOLES AND, IF REQUIRED, TRIM THE TOPS OF POSTS AFTER THE POSTS ARE SET.

STEEL POSTS ARE TO BE W6X9 OR W6X8.5 GALVANIZED STEEL. USE THE SAME TYPE OF POST THROUGHOUT THE LENGTH OF THE PROJECT UNLESS OTHERWISE SPECIFIED IN THE PLANS OR PERMITTED BY THE ENGINEER.

ALL POSTS ARE 6'-0" LONG UNLESS SPECIFIED OTHERWISE IN THE CONTRACT DOCUMENT. POSTS MAY BE SET IN DRILLED HOLES OR MAY BE DRIVEN TO GRADE.

WELDED BEAM POSTS: WELDED BEAM GUARDRAIL POSTS MAY BE USED FOR ITEM 606, GUARDRAIL, PROVIDED THE WEB AND FLANGE SIZES ARE AS SHOWN HERE. WELDING OF THE WEB TO THE FLANGES MUST COMPLY WITH ASTM A 769, CLASS 1, USING GRADE 36 STEEL [250 MPA YIELD POINT] WITH THE FOLLOWING EXCEPTIONS:

SEC. 7.2 TEST REPORTS OF TENSILE PROPERTIES FOR EACH LOT SHALL ACCOMPANY EACH SHIPMENT.

SEC. 12 BEAMS THAT HAVE IMPERFECTIONS REPAIRED BY WELDING SHALL NOT BE ACCEPTED FOR USE IN ITEM 606.

SEC. 13 RANDOM SAMPLES SHALL BE TESTED BY THE DEPARTMENT FROM MATERIALS DELIVERED TO THE PROJECT SITE, OR OTHER LOCATIONS DESIGNATED BY THE LABORATORY.

ALTERNATE POSTS: ENGINEERED GUARDRAIL POSTS HAVING MET NCHRP 350 CRITERIA, AND LISTED ON THEOFFICE OF MATERIALS **MANAGEMENT'S** APPROVED LIST ARE PERMITTED AS AN EQUAL ALTERNATE WHEN INSTALLED ACCORDING TO THE MANUFACTURER'S INSTRUCTIONS AND WITHIN THE LIMITATIONS SHOWN ON THE APPROVED LIST.

BLOCKOUTS: BLOCKOUT DIMENSIONS ARE DEPENDENT ON POST USED. WOOD BLOCKOUTS ARE TO BE PRESSURE TREATED AS SPECIFIED IN CMS 710.14. BORE BOLT HOLES. APPROVED ALTERNATE BLOCKOUTS MAY BE USED IN LIEU OF THE WOOD BLOCKOUTS SHOWN. THE APPROVED LIST IS MAINTAINED BY THEOFFICE OF ROADWAY ENGINEERING.

WASHERS: INSTALL APPROPRIATE SIZED STANDARD GALVANIZED STEEL WASHERS ON THE NUT SIDE OF BOLTS INSTALLED ON WOOD POSTS.

DELINEATION: FOR BARRIER REFLECTORS, SEE CMS 626.

MISCELLANEOUS: FOR OTHER GUARDRAIL DETAILS, SEESCD GR-1.1.

STEEL BEAM POSTS (ENGLISH)				
SIZE	BEAM DEPTH	FLANGE WIDTH	FLANGE THICKNESS	WEB THICKNESS
ROLLED W6X8.5	5.8"	3.94"	0.193"	0.170"
ROLLED W6X9	5.9"	3.94"	0.215"	0.170"
WELDED 6X8.5	6.0"	3.94"	0.193"	0.170"
WELDED 6X9	6.0"	3.94"	0.215"	0.170"

OFFICE OF ROADWAY ENGINEERING

DESIGNED . REVIEWED .
REVISION DATE . CHECKED .

PLAN INSERT SHEET

GUARDRAIL TYPE 5 & 5A

HUR-20-17.82

4/9
1/2
75/128

...\Sheets\110357_GR102.dgn 3/23/2021 8:43:16 AM mswhitt

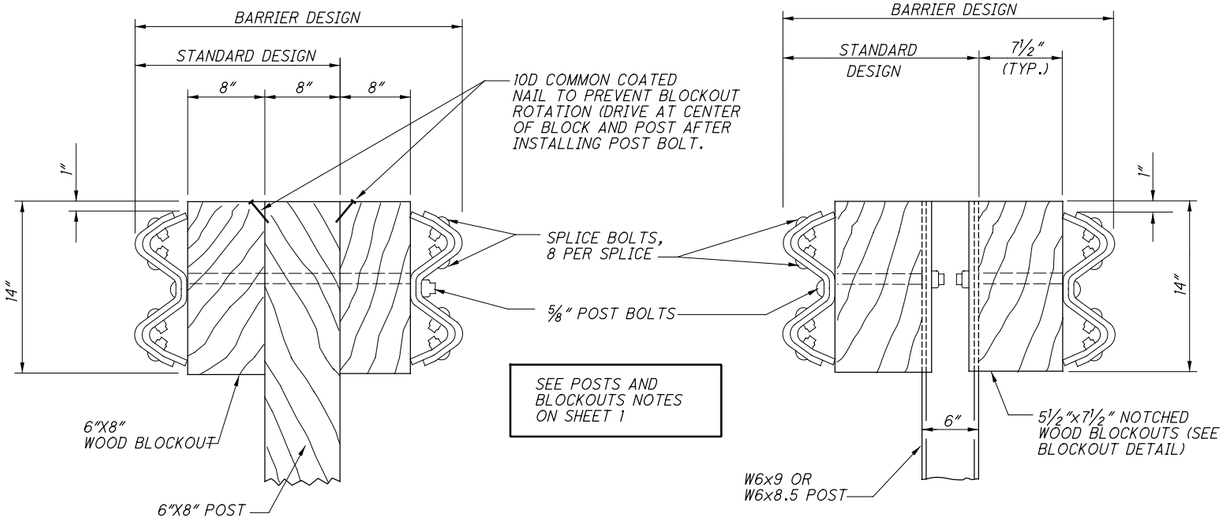

SEE POSTS AND BLOCKOUTS NOTES ON SHEET 1

SQUARE WOOD POST

STEEL POST

SEE POSTS NOTE, SHEET 1

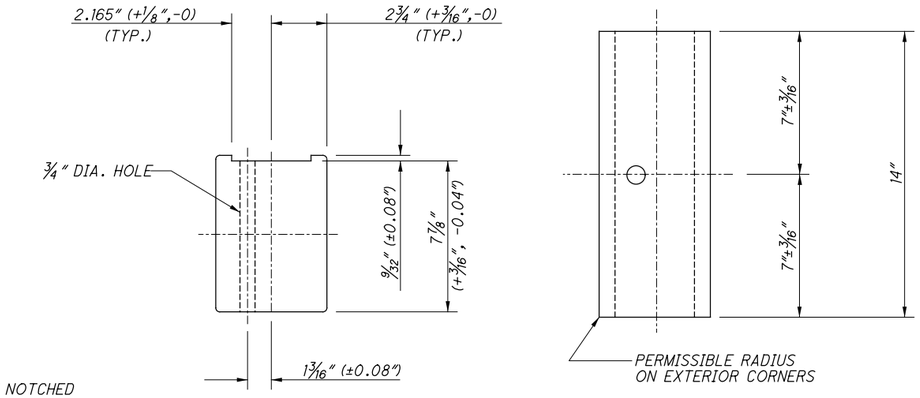

PLAN

ELEVATION

NOTCHED BLOCKOUTS FOR STEEL POSTS

SEE BLOCKOUTS NOTE ON SHEET 1

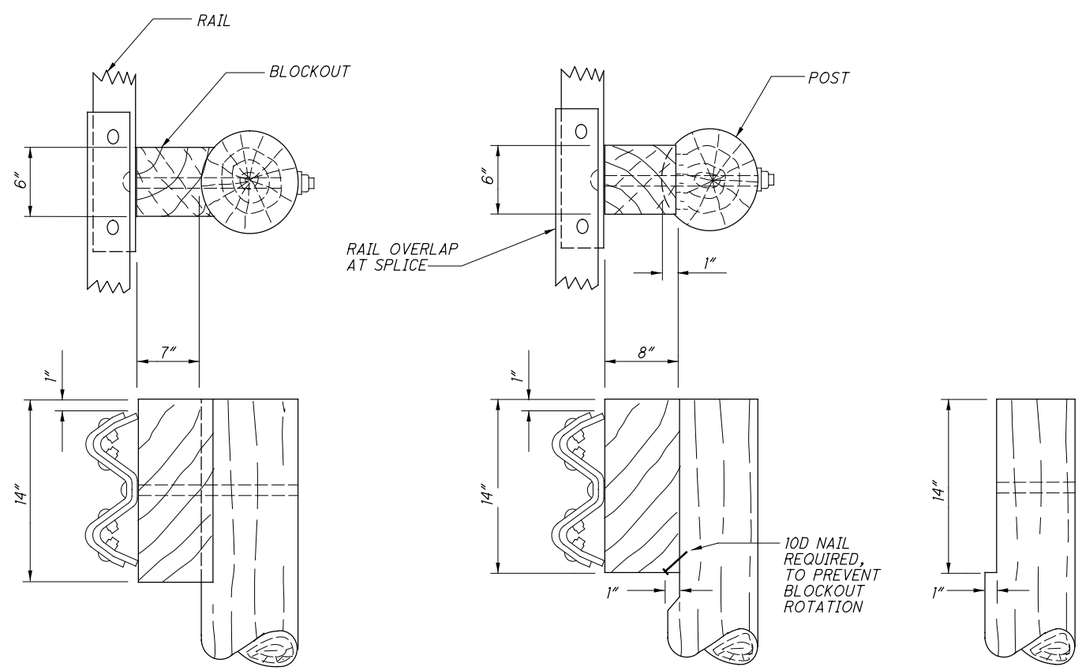

METHOD 1
ROUTED BLOCKOUT

METHOD 2
NOTCHED POST

TOENAIL NOT REQUIRED IF POST IS CUT AS SHOWN

ALTERNATE METHODS OF PLACING THE BLOCKOUTS ON ROUND POSTS MAY BE SUBMITTED FOR CONSIDERATION AND APPROVED BY THE ENGINEER.

ROUND WOOD POSTS

SINGLE SIDED RUNS ONLY (STANDARD DESIGN)

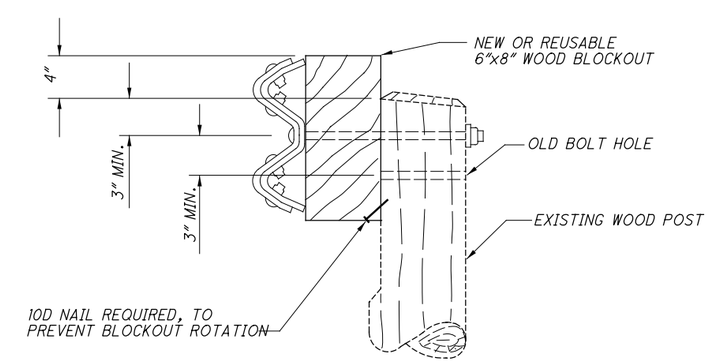

WOOD POSTS WITH WOOD BLOCK RAISING EXISTING GUARDRAIL HEIGHT

OFFICE OF ROADWAY ENGINEERING

DESIGNED . REVIEWED .

REVISION DATE . CHECKED .

PLAN INSERT SHEET

GUARDRAIL TYPE 5 & 5A

HUR-20-17.82

5/9

2/2

76/128

...\Sheets\110357_GR102.dgn 3/23/2021 8:43:16 AM mswhitt

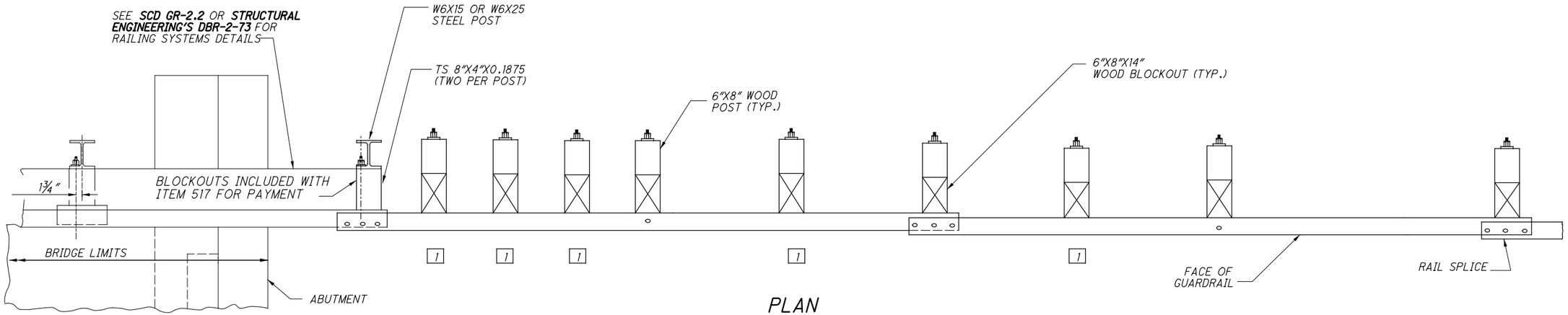

PLAN

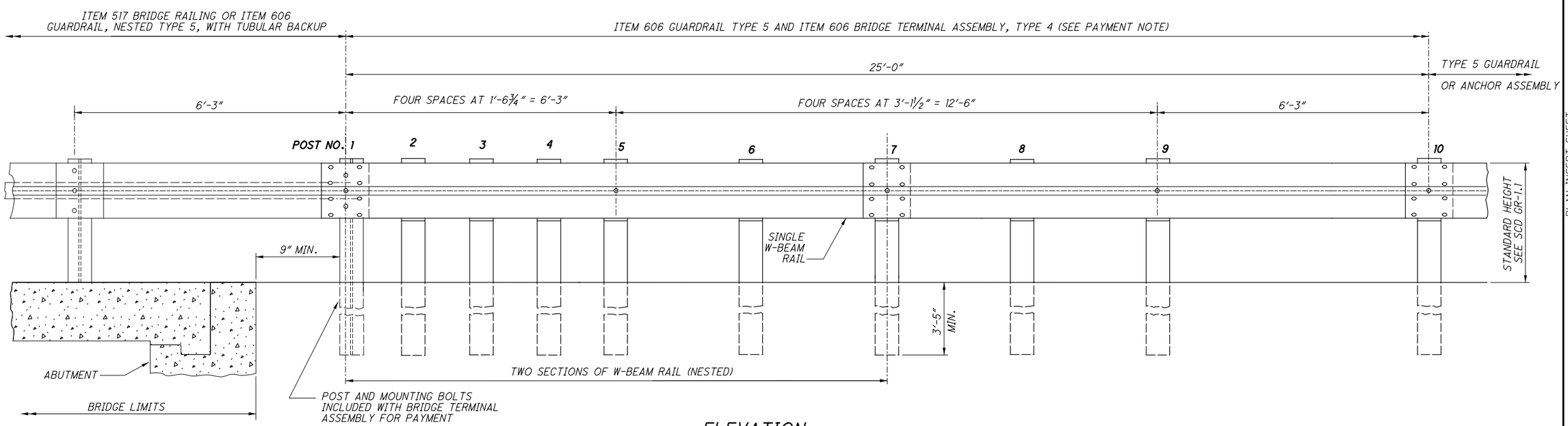

ELEVATION

NOTES

GENERAL: FOR ADDITIONAL DETAILS, SEE **SCD GR-1.1.**

APPLICATION: THE TYPE 4 BRIDGE TERMINAL ASSEMBLY SHALL CONNECT TYPE 5 GUARDRAIL RUNS TO TYPE 5 GUARDRAIL WITH TUBULAR BACKUP OR TO DEEP BEAM BRIDGE GUARDRAIL (AS SHOWN ON **STRUCTURAL ENGINEERING SCD DBR-2-73**).

DETAIL INFORMATION: THE FIRST POST OFF THE BRIDGE SHALL BE STEEL (W6X15 OR W6X25). ALL HOLES IN THE OFF-STRUCTURE END OF THE APPROACH PANEL RAIL SECTION SPANNING THE ABUTMENT ARE SLOTTED "X2 ". TIGHTEN THE BOLTS AS SPECIFIED FOR EXPANSION JOINTS IN ITEM 606.05.

POSTS: POSTS MAY BE SET IN DRILLED HOLES OR DRIVEN TO GRADE. SEE **SCD GR-1.1** FOR ADDITIONAL POST EMBEDMENT DETAILS. GUARDRAIL IS NOT ATTACHED TO CERTIAN POSTS (SEE LEGEND).

WOOD POSTS - USE SQUARE SAWED PRESSURE TREATED WOOD AS SPECIFIED IN CMS 710.14 AND FABRICATED WITH SQUARE ENDS. BORE BOLT HOLES AND TRIM THE TOPS OF POSTS, IF REQUIRED AFTER THE POSTS ARE SET.

STEEL POSTS - ARE ALLOWED AS AN ALTERNATE. USE W6X9 OR W6X8.5 IN LIEU OF THE 6"X8" WOOD POST. USE SAME POST MATERIAL THROUGH-OUT ASSEMBLY.

BLOCKOUTS: APPROVED ALTERNATE BLOCKOUTS CAN BE FOUND ON THE OFFICE OF ROADWAY ENGINEERING WEBSITE. STEEL BLOCKOUTS ARE NOT PERMITTED.

FLARED GUARDRAIL: START STANDARD GUARDRAIL FLARES AS SHOWN ON **SCD GR-5.1** AT OR BEYOND POST NO. 10; HOWEVER, THE FLARE MAY BEGIN AT POST NO. 7.

PAYMENT: ITEM 606 - BRIDGE TERMINAL ASSEMBLY, TYPE 4, EACH, INCLUDES THE COST OF EXTRA COMPONENTS IN EXCESS OF NORMAL GUARDRAIL, SUCH AS ADDITIONAL POSTS AND OTHER HARDWARE. THE TS 8"X4" SPACERS AND TUBULAR BACKUP RAIL EXTENDING TO THE FIRST POST OFF THE BRIDGE IS INCLUDED WITH **ITEM 517 - RAILING,** OR **ITEM 606 - GUARDRAIL, NESTED TYPE 5 WITH TUBULAR BACKUP,** FOR PAYMENT.

LEGEND

1 GUARDRAIL IS NOT ATTACHED TO POSTS AT POSTS 2, 3, 4, 6, AND 8. BLOCKOUT IS FASTENED TO POST WITH STANDARD POST BOLT.

OFFICE OF ROADWAY ENGINEERING

DESIGNED . REVIEWED .

REVISION DATE . CHECKED .

PLAN INSERT SHEET

BRIDGE TERMINAL ASSEMBLY, TYPE 4

HUR-20-17.82

7/9

1/1

77/128

...\Sheets\110357_GR104.dgn 3/23/2021 8:43:19 AM mswhitt

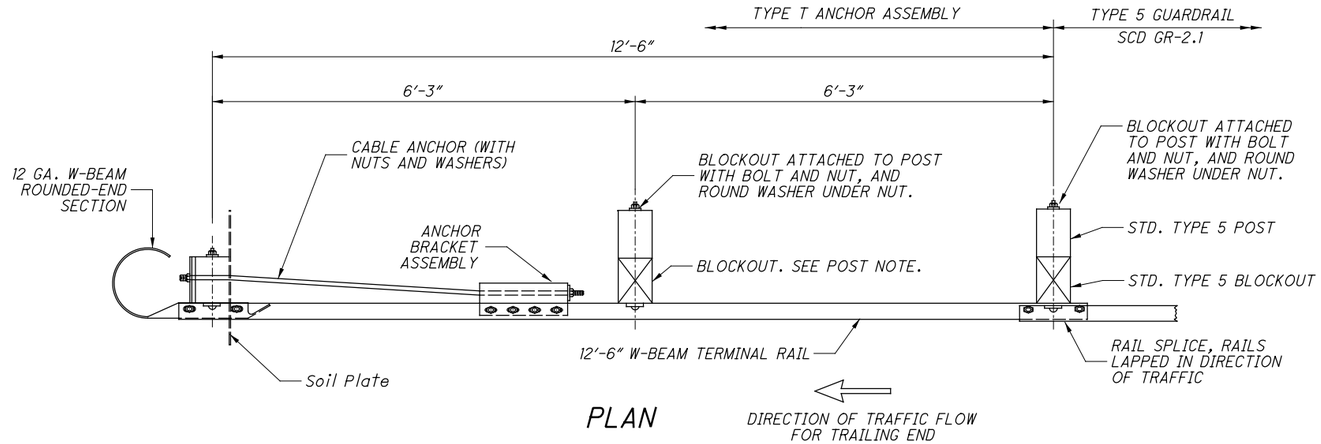

PLAN

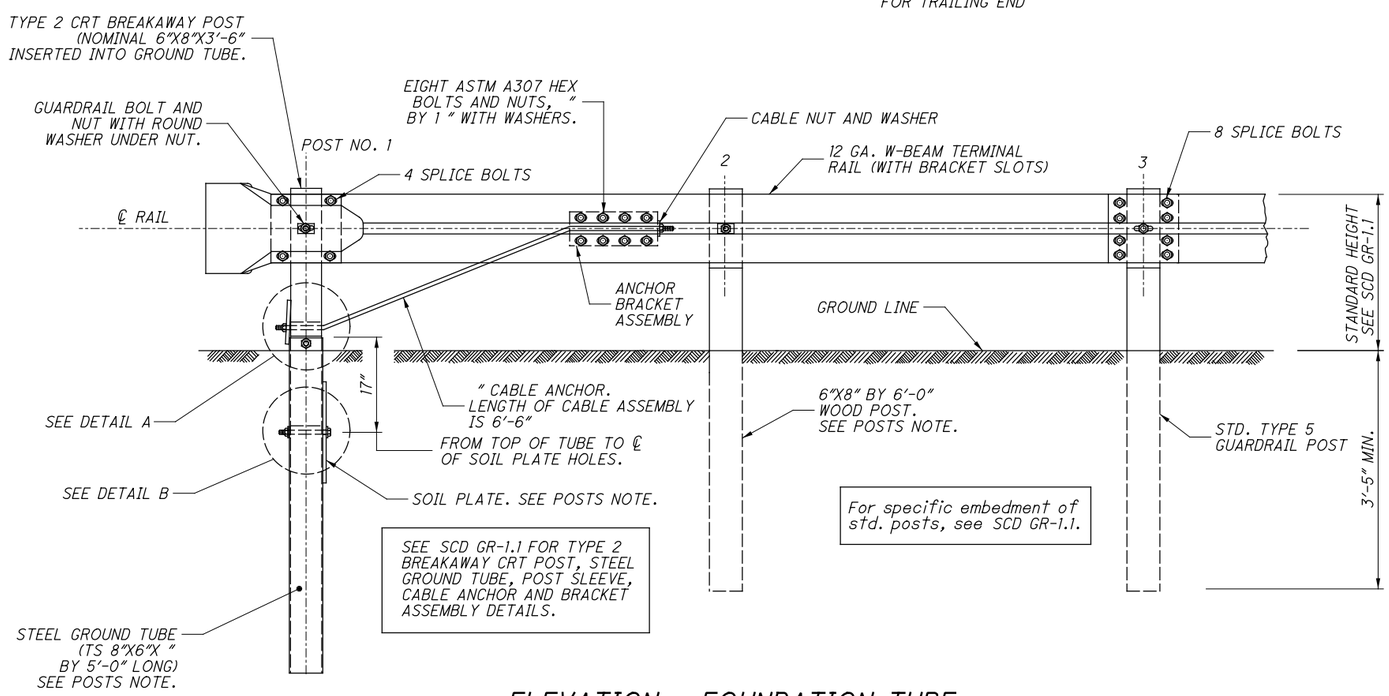

ELEVATION - FOUNDATION TUBE

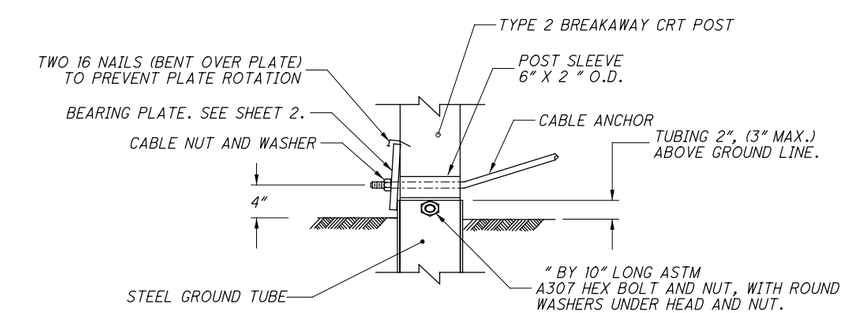

DETAIL A

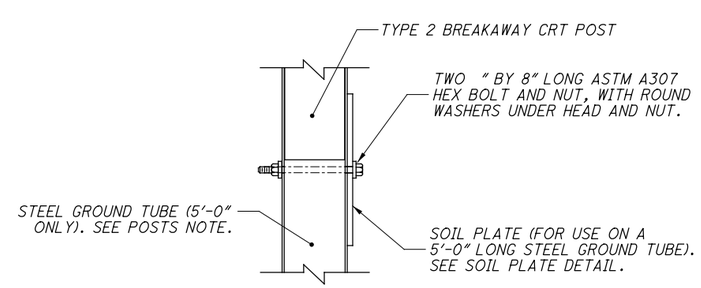

DETAIL B

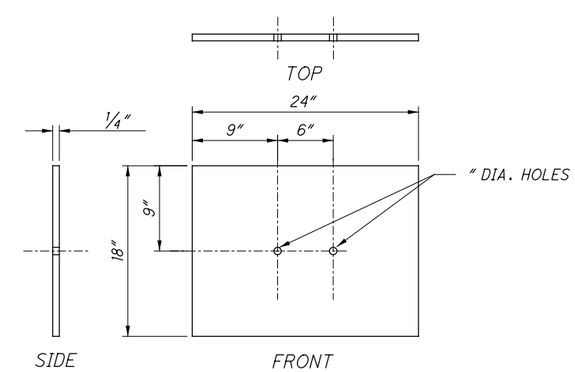

SOIL PLATE DETAIL

NOTES

APPLICATION: USE TYPE T ANCHOR ASSEMBLIES ON THE TRAILING END OF GUARDRAIL RUNS, LOCATED OUTSIDE OF THE CLEAR ZONE OF OPPOSING TRAFFIC. THE ASSEMBLY IS 12'-6" LONG, NONE OF WHICH CAN BE CONSIDERED THE LENGTH OF NEED FOR THE GUARDRAIL RUN.

FOR TERMINATION REQUIREMENTS AT DRIVEWAYS, SEE DRIVEWAY OPENING DETAIL ON SHEET 2. FOR SIDE ROAD APPROACHES AND TERMINALS AT STRUCTURES, SEE LOCATION & DESIGN MANUAL, VOLUME 1, FIGURE 603-3.

ANCHORING OPTIONS: CONTRACTOR MAY CHOOSE EITHER THE FOUNDATION TUBE (SHOWN ON THIS SHEET) OR THE CONCRETE FOOTING OPTION (SHEET 2) TO CONSTRUCT THIS ANCHOR ASSEMBLY.

IF THE FOUNDATION TUBE OPTION IS CHOSEN, THE CONTRACTOR WILL TAKE PROPER CARE TO INSURE THAT THE SOIL PLATE FASTENERS ARE NOT BROKEN DURING THE DRIVING PROCESS.

CONCRETE FOOTINGS MAY BE CAST-IN-PLACE OR PRECAST. COMPACT FILL AFTER PLACING PRECAST UNIT.

MATERIALS: SEE **SCD GR-1.1** FOR PARTS USED ON THIS ANCHOR, INCLUDING THE CRT BREAKAWAY POSTS, STEEL GROUND TUBE, POST SLEEVE, CABLE ANCHOR AND BRACKET ASSEMBLY.

BEARING PLATE AND SOIL PLATE IS ASTM A709 GRADE 36. STEEL GROUND TUBE SHALL BE ASTM A500, GRADE B, AND MEET CMS 707.10. ALL ANGLES, CHANNELS AND PLATES SHALL MEET CMS 711.01. ALL STRUCTURAL STEEL SHALL BE GALVANIZED AS SPECIFIED IN CMS 711.02. ALL BOLT WASHERS INDICATED ARE STANDARD GALVANIZED STEEL OF THE APPROPRIATE SIZE.

CONCRETE SHALL BE CLASS C.

COMPONENTS ON THIS ANCHOR THAT ARE NOT DETAILED ON SCD GR-1.1 INCLUDE: 1) 12'-6" W-BEAM TERMINAL RAIL (STANDARD PART RWM14A), AND 2) W-BEAM ROUNDED END SECTION (RWE03A). FOR COMPLETE DETAILS AND SPECIFICATIONS, SEE PART DESCRIPTIONS IN THE **AASHTO/AGC/ARTBA STANDARDIZED HARDWARE GUIDE.**

POSTS: POST NO. 1 MAY BE AN 8'-0" LONG STEEL GROUND TUBE WITHOUT A SOIL PLATE IN LIEU OF THE 5'-0" TUBE WITH SOIL PLATE.

POST NO. 2 CAN BE W6X9 (OR W6X8.5) WITH NOTCHED WOOD BLOCKOUTS OR A STANDARD TYPE 5 POST AND BLOCKOUT. RECYCLED PLASTIC BLOCKOUTS ARE PERMITTED.

PAYMENT: ALL LABOR AND MATERIALS, INCLUDING THE W-BEAM ROUNDED END SECTION AND THE W-BEAM TERMINAL RAIL FOR THE 12'-6" ANCHOR ASSEMBLY SHALL BE INCLUDED IN THE UNIT PRICE BID FOR ITEM 606 - ANCHOR ASSEMBLY, TYPE T, EACH.

OFFICE OF ROADWAY ENGINEERING

DESIGNED . REVIEWED .
REVISION DATE . CHECKED .

PLAN INSERT SHEET

TYPE T ANCHOR ASSEMBLY
(Foundation Tube Option)

HUR-20-17.82

8/9
1/2

78/128

...\Sheets\10357_GR06.dgn 3/23/2020 8:41:52 AM mswhistwhitt

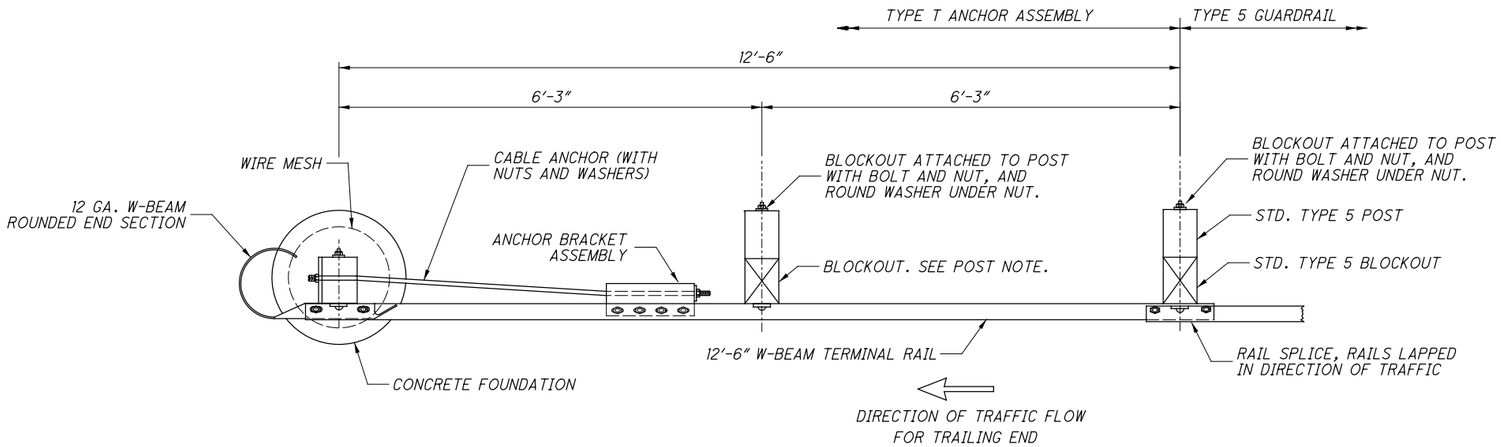

PLAN

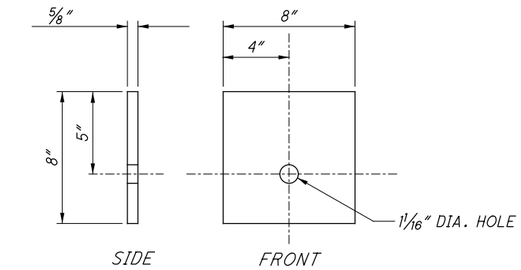

BEARING PLATE DETAIL

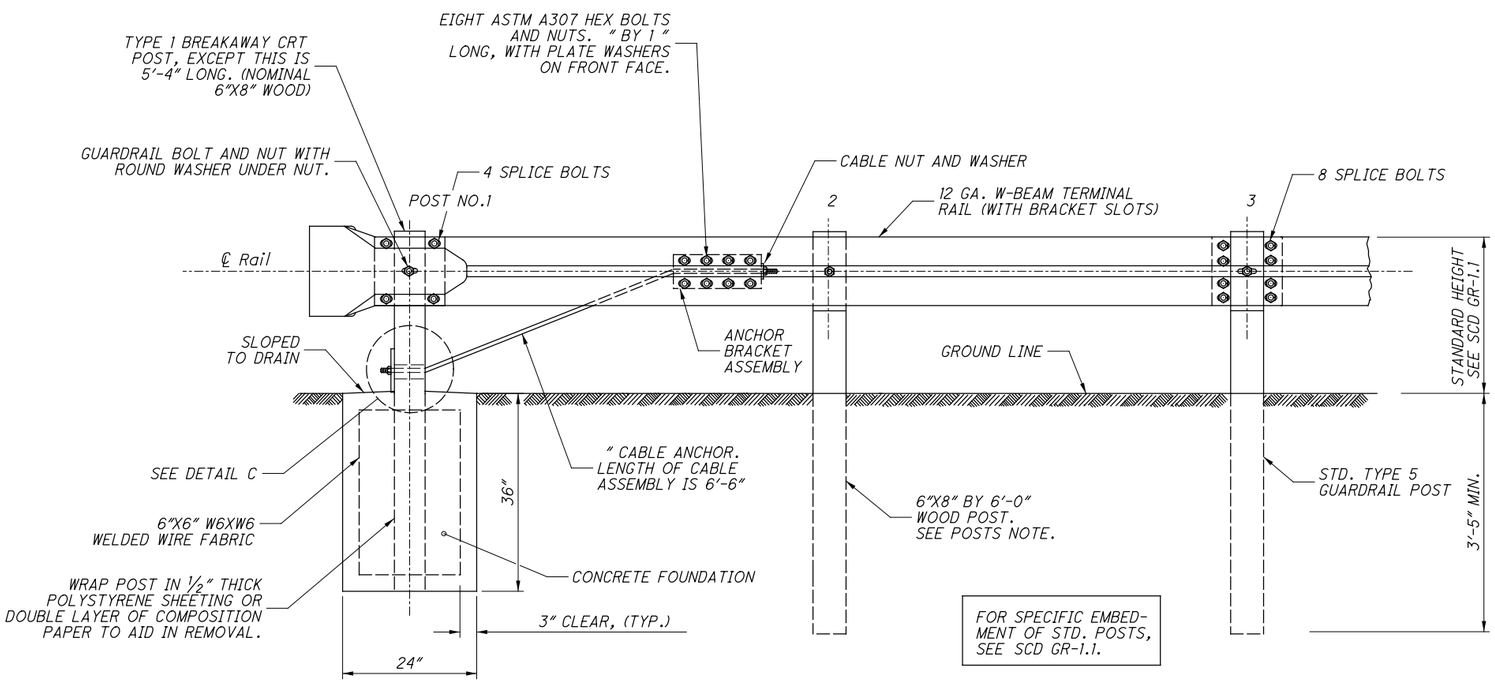

SEE SCD GR-1.1 FOR TYPE 1 BREAKAWAY CRT POST, STEEL GROUND TUBE, POST SLEEVE, CABLE ANCHOR AND BRACKET ASSEMBLY DETAILS.

ELEVATION - CONCRETE FOOTER

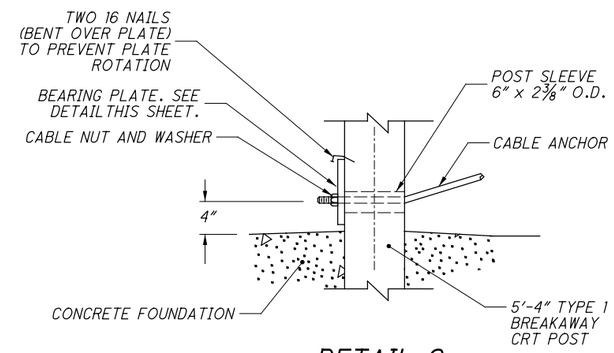

DETAIL C

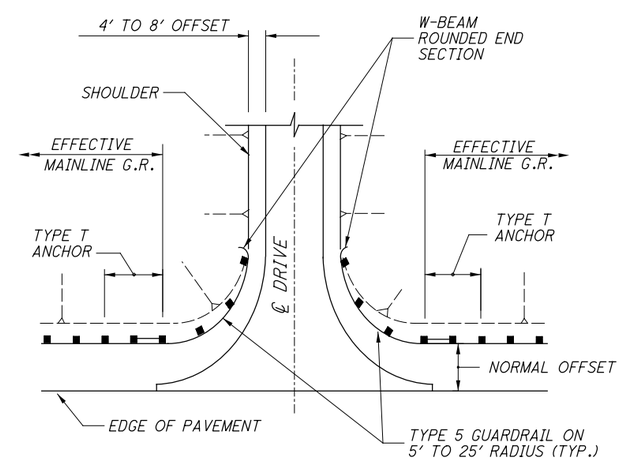

DRIVEWAY OPENING

OFFICE OF ROADWAY ENGINEERING

DESIGNED . REVIEWED .

REVISION DATE . CHECKED .

PLAN INSERT SHEET

TYPE T ANCHOR ASSEMBLY (Foundation Tube Option)

HUR-20-17.82

9/9

2/2

79/128

...\Sheets\110357_GR105.dgn 3/23/2021 8:43:22 AM mswhitt

National Engineering & Architectural Services Inc.

National Engineering &
Architectural Services, INC. (NEAS)
2800 Corporate Exchange Dr.
Suite 240
Columbus, Ohio 43231
Office: (614) 714-0299
Fax: (614) 714-0251

LEVEL A TEST HOLE CERTIFICATION FORM

PROJECT NAME: HUR-20-17.82 , PID#: 110357
NEAS PROJECT #: 20-0030
PROJECT LOCATION (CTY., CITY, ST.): HUR., NORWALK, US-20
FOREMAN/TRUCK: N. MILLER, B. MOULTON, A. FERRIS
DATE OF EXCAVATION: 07-07-20
WEATHER CONDITIONS: 92° SUNNY

TEST HOLE #: 01
UTILITY TO BE LOCATED: WATER LINE (FOUND)

CONTROL POINT: CP04 (GROUND)
NORTHING: 576594.425
EASTING: 1957249.754
ELEVATION: 838.450

TEST HOLE LOCATION (PAV., BERM, ETC): GRASS LAWN
EXISTING SURFACE GRADE ELEVATION: 842.167
PAVING CONDITION PRIOR TO WORK: N/A
PAVING THICKNESS AND TYPE: N/A
SOIL TYPE: DIRT AND GRAVEL FIELD CONDITIONS: DRY
COLOR OF RIBBON INSTALLED IN TEST HOLE: N/A

FIELD REMARKS: N/A

SIZE OF UTILITY: 6"
MATERIAL OF FOUND UTILITY: SPP
THE UTILITY WAS IN GOOD CONDITION
THERE WERE NOT ADDITIONAL UTILITIES IN THE TEST HOLE
SURVEYED ELEVATION TOP OF UTILITY: 837.984
SURVEYED ELEVATION BOTTOM OF UTIL (IF REQ.): N/A
SURVEYED NORTHING TOP OF UTILITY: 576691.7840 (GROUND)
SURVEYED EASTING TOP OF UTILITY: 1957476.3980 (GROUND)
DEPTH OF TOP OF UTILITY FROM SURFACE: 4.18' DEPTH
DIRECTION OF UTILITY LINE: EAST AND WEST
PHOTO IMAGE NUMBERS: 717-718

UTILITY REMARKS: N/A

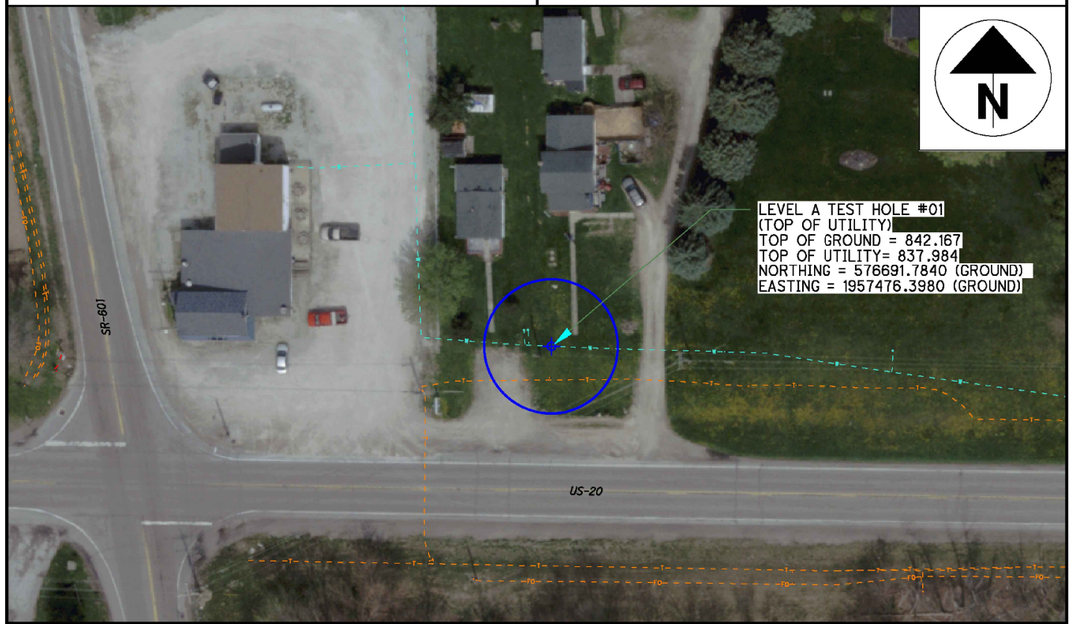

UTILITY LEGEND

GAS	G	TEST HOLE		ELEC. P.B.	
WATER	W	FIRE HYDRANT		POWER POLE	
TELEPHONE	T	WATER VALVE		POWER/LIGHT	
ELECTRIC	E	GAS MARKER		LIGHT POLE	
SANITARY SEWER	SAN	GAS VALVE		SAN M.H.	
STORM SEWER		F.O. MARKER		TRAFFIC P.B.	
FIBER OPTIC	FO	UNKNOWN P.B.		GROUND SHOT	
CABLE TV	CTV				
TRAFFIC	TR				

I, Charles W. Price, JR. do hereby certify that the positioning of the utility facilities provided utilizing the Quality Levels was performed in accordance with ODOT's SULS specifications.

Charles W. Price, JR., P.S.
DATE 07-13-20

STATE OF OHIO
CHARLES W. PRICE, JR.
S-7825
REGISTERED
PROFESSIONAL SURVEYOR

National Engineering & Architectural Services Inc.

National Engineering &
Architectural Services, INC. (NEAS)
2800 Corporate Exchange Dr.
Suite 240
Columbus, Ohio 43231
Office: (614) 714-0299
Fax: (614) 714-0251

LEVEL A TEST HOLE CERTIFICATION FORM

PROJECT NAME: HUR-20-17.82 , PID#: 110357
NEAS PROJECT #: 20-0030
PROJECT LOCATION (CTY., CITY, ST.): HUR., NORWALK, US-20
FOREMAN/TRUCK: N. MILLER, B. MOULTON, A. FERRIS
DATE OF EXCAVATION: 07-07-20
WEATHER CONDITIONS: 92° SUNNY

TEST HOLE #: 02
UTILITY TO BE LOCATED: TELECOM (FOUND)

CONTROL POINT: CP04 (GROUND)
NORTHING: 576594.425
EASTING: 1957249.754
ELEVATION: 838.450

TEST HOLE LOCATION (PAV., BERM, ETC): GRASS LAWN
EXISTING SURFACE GRADE ELEVATION: 841.828
PAVING CONDITION PRIOR TO WORK: N/A
PAVING THICKNESS AND TYPE: N/A
SOIL TYPE: DIRT AND GRAVEL FIELD CONDITIONS: DRY
COLOR OF RIBBON INSTALLED IN TEST HOLE: N/A

FIELD REMARKS: N/A

SIZE OF UTILITY: 1"
MATERIAL OF FOUND UTILITY: PLASTIC
THE UTILITY WAS IN GOOD CONDITION
THERE WERE NOT ADDITIONAL UTILITIES IN THE TEST HOLE
SURVEYED ELEVATION TOP OF UTILITY: 839.602
SURVEYED ELEVATION BOTTOM OF UTIL (IF REQ.): N/A
SURVEYED NORTHING TOP OF UTILITY: 576677.1410 (GROUND)
SURVEYED EASTING TOP OF UTILITY: 1957475.4220 (GROUND)
DEPTH OF TOP OF UTILITY FROM SURFACE: 2.23' DEPTH
DIRECTION OF UTILITY LINE: EAST AND WEST
PHOTO IMAGE NUMBERS: 715-716

UTILITY REMARKS: N/A

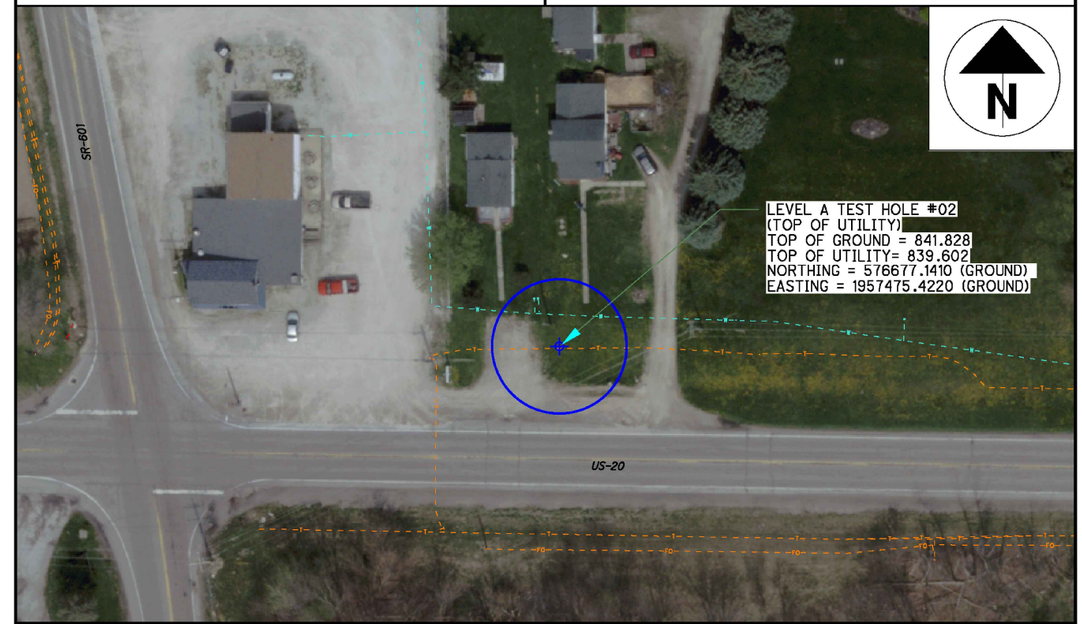

UTILITY LEGEND

GAS	G	TEST HOLE		ELEC. P.B.	
WATER	W	FIRE HYDRANT		POWER POLE	
TELEPHONE	T	WATER VALVE		POWER/LIGHT	
ELECTRIC	E	GAS MARKER		LIGHT POLE	
SANITARY SEWER	SAN	GAS VALVE		SAN M.H.	
STORM SEWER		F.O. MARKER		TRAFFIC P.B.	
FIBER OPTIC	FO	UNKNOWN P.B.		GROUND SHOT	
CABLE TV	CTV				
TRAFFIC	TR				

I, Charles W. Price, JR. do hereby certify that the positioning of the utility facilities provided utilizing the Quality Levels was performed in accordance with ODOT's SULS specifications.

Charles W. Price, JR., P.S.
DATE 07-13-20

STATE OF OHIO
CHARLES W. PRICE, JR.
S-7825
REGISTERED
PROFESSIONAL SURVEYOR

CALCULATED CWP
CHECKED GAH

SUE LEVEL A TEST HOLE CERTIFICATIONS

HUR-20-17.82

...\Sheets\110357_UD001.dgn 3/23/2021 8:43:25 AM mswhitt

National Engineering & Architectural Services, INC. (NEAS)
2800 Corporate Exchange Dr.
Suite 240
Columbus, Ohio 43231
Office: (614) 714-0299
Fax: (614) 714-0251

LEVEL A TEST HOLE CERTIFICATION FORM

PROJECT NAME: HUR-20-17.82 , PID#: 110357
NEAS PROJECT #: 20-0030
PROJECT LOCATION (CTY., CITY, ST.): HUR., NORWALK, US-20
FOREMAN/TRUCK: N. MILLER, B. MOULTON, A. FERRIS
DATE OF EXCAVATION: 07-07-20
WEATHER CONDITIONS: 92° SUNNY

TEST HOLE #: 03
UTILITY TO BE LOCATED: WATER LINE (FOUND)

CONTROL POINT: CP01 (GROUND)
NORTHING: 576642.3120
EASTING: 1957963.4650
ELEVATION: 842.120

TEST HOLE LOCATION (PAV., BERM, ETC): GRASS LAWN
EXISTING SURFACE GRADE ELEVATION: 841.687
PAVING CONDITION PRIOR TO WORK: N/A
PAVING THICKNESS AND TYPE: N/A
SOIL TYPE: DIRT AND ROCK FIELD CONDITIONS: DRY
COLOR OF RIBBON INSTALLED IN TEST HOLE: N/A

FIELD REMARKS: N/A

SIZE OF UTILITY: 6"
MATERIAL OF FOUND UTILITY: SPP
THE UTILITY WAS IN GOOD CONDITION
THERE WERE NOT ADDITIONAL UTILITIES IN THE TEST HOLE
SURVEYED ELEVATION TOP OF UTILITY: 837.797
SURVEYED ELEVATION BOTTOM OF UTIL (IF REQ.): N/A
SURVEYED NORTHING TOP OF UTILITY: 576689.2380 (GROUND)
SURVEYED EASTING TOP OF UTILITY: 1957557.1100 (GROUND)
DEPTH OF TOP OF UTILITY FROM SURFACE: 3.89' DEPTH
DIRECTION OF UTILITY LINE: EAST AND WEST
PHOTO IMAGE NUMBERS: 713-714

UTILITY REMARKS: N/A

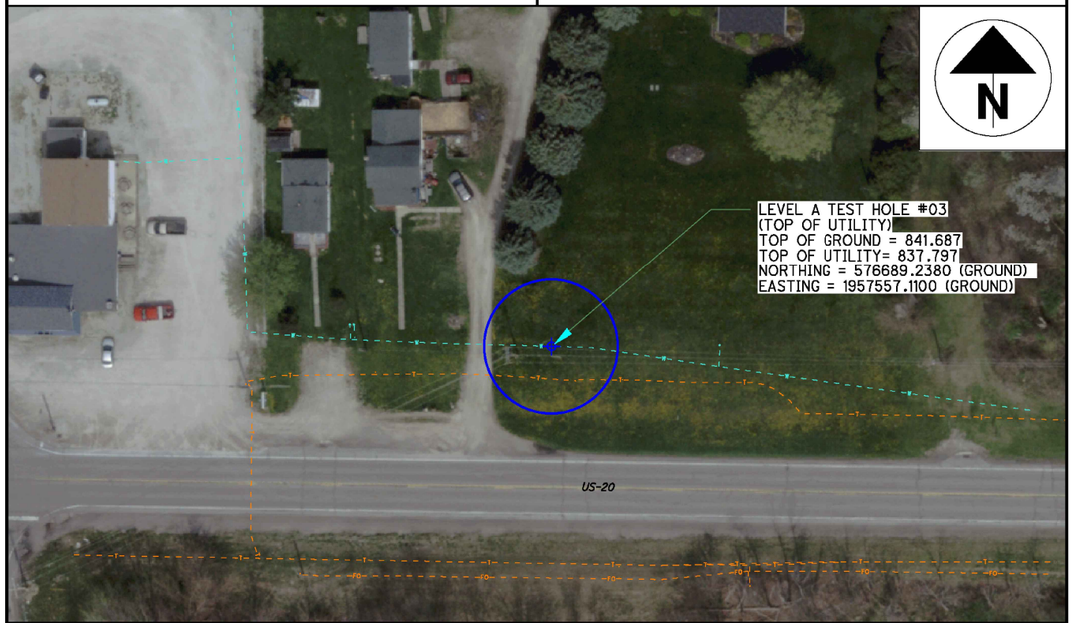

UTILITY LEGEND

GAS	TEST HOLE	ELEC. P.B.	
WATER	FIRE HYDRANT	POWER POLE	
TELEPHONE	WATER VALVE	POWER/LIGHT	
ELECTRIC	GAS MARKER	LIGHT POLE	
SANITARY SEWER	GAS VALVE	SAN M.H.	
STORM SEWER	F.O. MARKER	TRAFFIC P.B.	
FIBER OPTIC	UNKNOWN P.B.	GROUND SHOT	
CABLE TV			
TRAFFIC			

I, Charles W. Price, JR. do hereby certify that the positioning of the utility facilities provided utilizing the Quality Levels was performed in accordance with ODOT's SULS specifications.

Charles W. Price, JR., P.S.
DATE 07-13-20

STATE OF OHIO CHARLES W. PRICE, JR. S-7626 REGISTERED PROFESSIONAL SURVEYOR

National Engineering & Architectural Services, INC. (NEAS)
2800 Corporate Exchange Dr.
Suite 240
Columbus, Ohio 43231
Office: (614) 714-0299
Fax: (614) 714-0251

LEVEL A TEST HOLE CERTIFICATION FORM

PROJECT NAME: HUR-20-17.82 , PID#: 110357
NEAS PROJECT #: 20-0030
PROJECT LOCATION (CTY., CITY, ST.): HUR., NORWALK, US-20
FOREMAN/TRUCK: N. MILLER, B. MOULTON, A. FERRIS
DATE OF EXCAVATION: 07-07-20
WEATHER CONDITIONS: 92° SUNNY

TEST HOLE #: 04
UTILITY TO BE LOCATED: TELECOM (FOUND)

CONTROL POINT: CP01 (GROUND)
NORTHING: 576642.3120
EASTING: 1957963.4650
ELEVATION: 842.120

TEST HOLE LOCATION (PAV., BERM, ETC): GRASS LAWN
EXISTING SURFACE GRADE ELEVATION: 841.185
PAVING CONDITION PRIOR TO WORK: N/A
PAVING THICKNESS AND TYPE: N/A
SOIL TYPE: DIRT AND ROCK FIELD CONDITIONS: DRY
COLOR OF RIBBON INSTALLED IN TEST HOLE: N/A

FIELD REMARKS: N/A

SIZE OF UTILITY: 1"
MATERIAL OF FOUND UTILITY: PLASTIC
THE UTILITY WAS IN GOOD CONDITION
THERE WERE NOT ADDITIONAL UTILITIES IN THE TEST HOLE
SURVEYED ELEVATION TOP OF UTILITY: 839.388
SURVEYED ELEVATION BOTTOM OF UTIL (IF REQ.): N/A
SURVEYED NORTHING TOP OF UTILITY: 576673.6930 (GROUND)
SURVEYED EASTING TOP OF UTILITY: 1957590.7430 (GROUND)
DEPTH OF TOP OF UTILITY FROM SURFACE: 1.80' DEPTH
DIRECTION OF UTILITY LINE: EAST AND WEST
PHOTO IMAGE NUMBERS: 711-712

UTILITY REMARKS: N/A

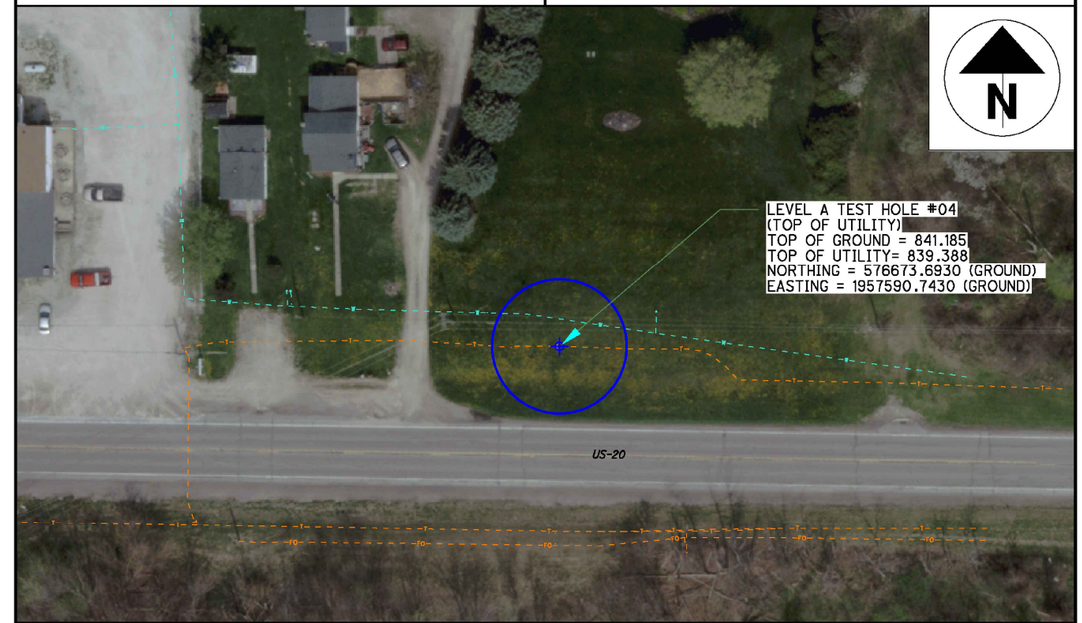

UTILITY LEGEND

GAS	TEST HOLE	ELEC. P.B.	
WATER	FIRE HYDRANT	POWER POLE	
TELEPHONE	WATER VALVE	POWER/LIGHT	
ELECTRIC	GAS MARKER	LIGHT POLE	
SANITARY SEWER	GAS VALVE	SAN M.H.	
STORM SEWER	F.O. MARKER	TRAFFIC P.B.	
FIBER OPTIC	UNKNOWN P.B.	GROUND SHOT	
CABLE TV			
TRAFFIC			

I, Charles W. Price, JR. do hereby certify that the positioning of the utility facilities provided utilizing the Quality Levels was performed in accordance with ODOT's SULS specifications.

Charles W. Price, JR., P.S.
DATE 07-13-20

STATE OF OHIO CHARLES W. PRICE, JR. S-7626 REGISTERED PROFESSIONAL SURVEYOR

CALCULATED CWP
CHECKED GAH

SUE LEVEL A TEST HOLE CERTIFICATIONS

HUR-20-17.82

...\Sheets\110357_UD001.dgn 3/23/2021 8:43:28 AM mswhitt

National Engineering & Architectural Services, INC. (NEAS)
2800 Corporate Exchange Dr.
Suite 240
Columbus, Ohio 43231
Office: (614) 714-0299
Fax: (614) 714-0251

LEVEL A TEST HOLE CERTIFICATION FORM

PROJECT NAME: HUR-20-17.82 , PID#: 110357
NEAS PROJECT #: 20-0030
PROJECT LOCATION (CTY., CITY, ST.): HUR., NORWALK, US-20
FOREMAN/TRUCK: N. MILLER, B. MOULTON, A. FERRIS
DATE OF EXCAVATION: 07-07-20
WEATHER CONDITIONS: 92° SUNNY

TEST HOLE #: 05
UTILITY TO BE LOCATED: TELECOM (FOUND)

CONTROL POINT: CP01 (GROUND)
NORTHING: 576642.3120
EASTING: 1957963.4650
ELEVATION: 842.120

TEST HOLE LOCATION (PAV., BERM, ETC): GRASS LAWN
EXISTING SURFACE GRADE ELEVATION: 841.299
PAVING CONDITION PRIOR TO WORK: N/A
PAVING THICKNESS AND TYPE: N/A
SOIL TYPE: DIRT FIELD CONDITIONS: DRY
COLOR OF RIBBON INSTALLED IN TEST HOLE: N/A

FIELD REMARKS: N/A

SIZE OF UTILITY: 1"
MATERIAL OF FOUND UTILITY: PLASTIC
THE UTILITY WAS IN GOOD CONDITION
THERE WERE NOT ADDITIONAL UTILITIES IN THE TEST HOLE
SURVEYED ELEVATION TOP OF UTILITY: 838.781
SURVEYED ELEVATION BOTTOM OF UTIL (IF REQ.): N/A
SURVEYED NORTHING TOP OF UTILITY: 576586.4530 (GROUND)
SURVEYED EASTING TOP OF UTILITY: 1957588.7900 (GROUND)
DEPTH OF TOP OF UTILITY FROM SURFACE: 2.52' DEPTH
DIRECTION OF UTILITY LINE: EAST AND WEST
PHOTO IMAGE NUMBERS: 707-708

UTILITY REMARKS: N/A

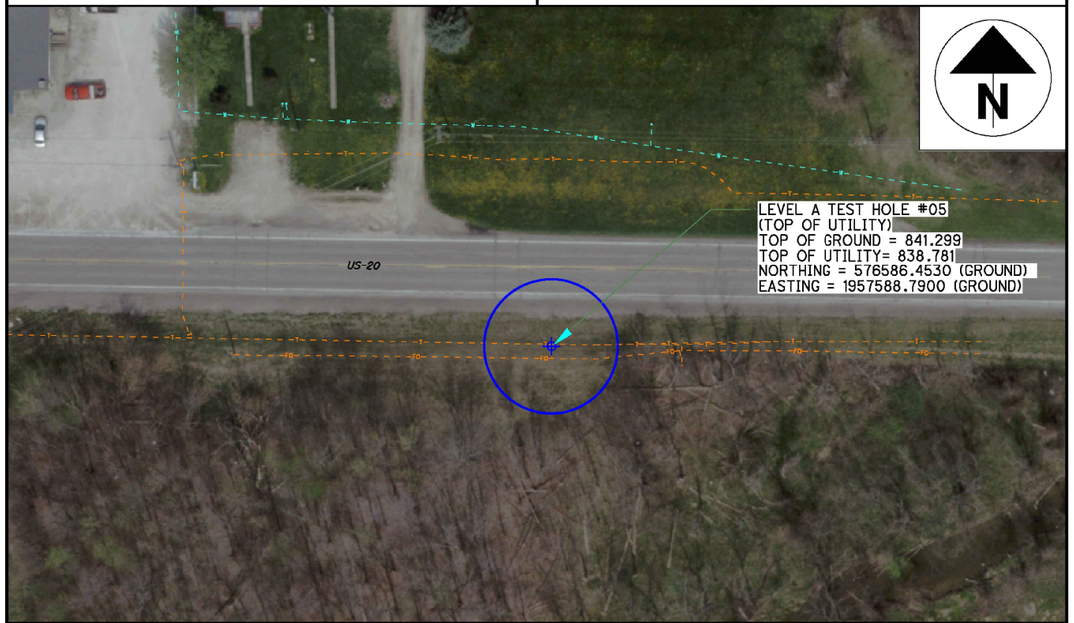

UTILITY LEGEND

GAS	TEST HOLE	ELEC. P.B.	
WATER	FIRE HYDRANT	POWER POLE	
TELEPHONE	WATER VALVE	POWER/LIGHT	
ELECTRIC	GAS MARKER	LIGHT POLE	
SANITARY SEWER	GAS VALVE	SAN M.H.	
STORM SEWER	F.O. MARKER	TRAFFIC P.B.	
FIBER OPTIC	UNKNOWN P.B.	GROUND SHOT	
CABLE TV			
TRAFFIC			

I, Charles W. Price, JR. do hereby certify that the positioning of the utility facilities provided utilizing the Quality Levels was performed in accordance with ODOT's SULS specifications.

Charles W. Price, JR., P.S.
DATE 07-13-20

STATE OF OHIO CHARLES W. PRICE, JR. S-7825 REGISTERED PROFESSIONAL SURVEYOR

National Engineering & Architectural Services, INC. (NEAS)
2800 Corporate Exchange Dr.
Suite 240
Columbus, Ohio 43231
Office: (614) 714-0299
Fax: (614) 714-0251

LEVEL A TEST HOLE CERTIFICATION FORM

PROJECT NAME: HUR-20-17.82 , PID#: 110357
NEAS PROJECT #: 20-0030
PROJECT LOCATION (CTY., CITY, ST.): HUR., NORWALK, US-20
FOREMAN/TRUCK: N. MILLER, B. MOULTON, A. FERRIS
DATE OF EXCAVATION: 07-07-20
WEATHER CONDITIONS: 92° SUNNY

TEST HOLE #: 06
UTILITY TO BE LOCATED: FIBER OPTIC (FOUND)

CONTROL POINT: CP01 (GROUND)
NORTHING: 576642.3120
EASTING: 1957963.4650
ELEVATION: 842.120

TEST HOLE LOCATION (PAV., BERM, ETC): GRASS LAWN
EXISTING SURFACE GRADE ELEVATION: 843.229
PAVING CONDITION PRIOR TO WORK: N/A
PAVING THICKNESS AND TYPE: N/A
SOIL TYPE: DIRT FIELD CONDITIONS: DRY
COLOR OF RIBBON INSTALLED IN TEST HOLE: N/A

FIELD REMARKS: FIBER OPTIC PLASTIC COATED.

SIZE OF UTILITY: 0.5"
MATERIAL OF FOUND UTILITY: PLASTIC COATED
THE UTILITY WAS IN GOOD CONDITION
THERE WERE NOT ADDITIONAL UTILITIES IN THE TEST HOLE
SURVEYED ELEVATION TOP OF UTILITY: 840.067
SURVEYED ELEVATION BOTTOM OF UTIL (IF REQ.): N/A
SURVEYED NORTHING TOP OF UTILITY: 576581.5640 (GRID)
SURVEYED EASTING TOP OF UTILITY: 1957589.0890 (GRID)
DEPTH OF TOP OF UTILITY FROM SURFACE: 3.16' DEPTH
DIRECTION OF UTILITY LINE: EAST AND WEST
PHOTO IMAGE NUMBERS: 709-710

UTILITY REMARKS: N/A

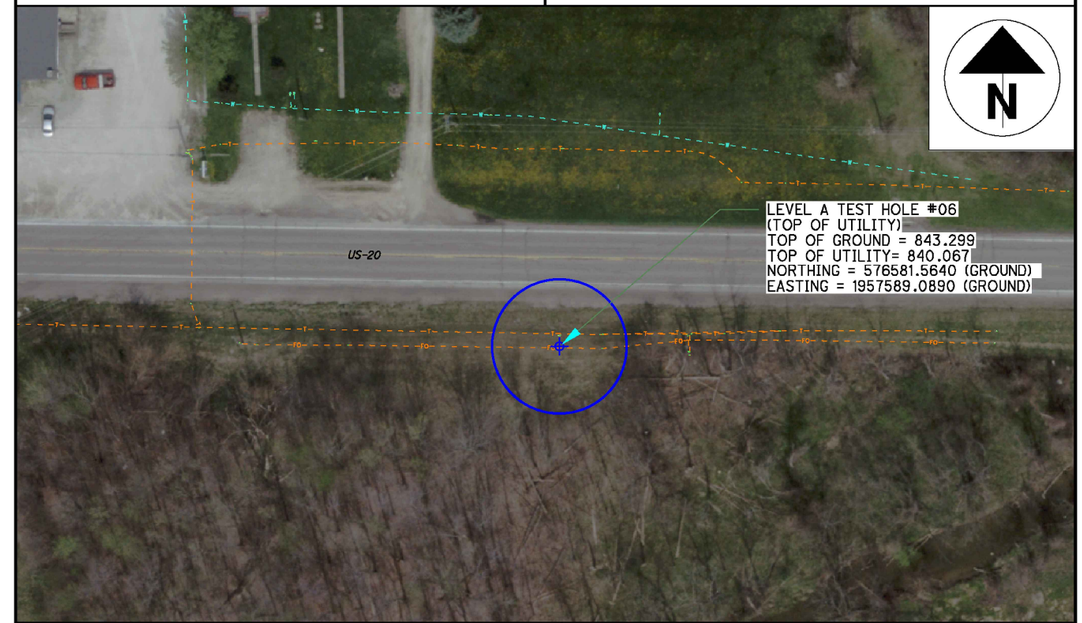

UTILITY LEGEND

GAS	TEST HOLE	ELEC. P.B.	
WATER	FIRE HYDRANT	POWER POLE	
TELEPHONE	WATER VALVE	POWER/LIGHT	
ELECTRIC	GAS MARKER	LIGHT POLE	
SANITARY SEWER	GAS VALVE	SAN M.H.	
STORM SEWER	F.O. MARKER	TRAFFIC P.B.	
FIBER OPTIC	UNKNOWN P.B.	GROUND SHOT	
CABLE TV			
TRAFFIC			

I, Charles W. Price, JR. do hereby certify that the positioning of the utility facilities provided utilizing the Quality Levels was performed in accordance with ODOT's SULS specifications.

Charles W. Price, JR., P.S.
DATE 07-13-20

STATE OF OHIO CHARLES W. PRICE, JR. S-7825 REGISTERED PROFESSIONAL SURVEYOR

CALCULATED CWP
CHECKED GAH

SUE LEVEL A TEST HOLE CERTIFICATIONS

HUR-20-17.82

...\Sheets\110357_UD001.dgn 3/23/2021 8:43:31 AM mswhitt

SHEET NO.	REFERENCE NO.	LOCATION	STATION FROM	STATION TO	SIDE	CODE	SIZE (INCHES)	630 GROUND MOUNTED SUPPORT, NO 3 POST FT	SIGN POST REFLECTOR EACH	SIGN, FLAT SHEET SF	REMOVAL OF GROUND MOUNTED SIGN AND DISPOSAL EACH	REMOVAL OF GROUND MOUNTED POST SUPPORT AND DISPOSAL EACH	REMOVAL OF GROUND MOUNTED SIGN AND REERECTION EACH
87	S-1	US 20	931+18		RT						2	1	
87	S-2	US 20	931+16		LT						2	1	
87	S-3	US 20	932+00		LT	W2-6-36	36" x 36"	12.5	1	9.00			
87	S-3	US 20	932+00		LT	W13-1P-24	24" x 24"			4.00			
87	S-3	US 20	932+00		RT	W2-6-36	36" x 36"	12.5	1	9.00			
87	S-3	US 20	932+00		RT	W13-1P-24	24" x 24"			4.00			
88	S-4	US 20	933+50	934+16	RT			10.75				1	2
88	S-5	US 20	935+00		RT	W3-2-36	36" x 36"	11.5	1	9.00			
88	S-6	US 20	935+00		LT	W3-2-36	36" x 36"	11.5	1	9.00			
88	S-7	US 20	938+89		RT	R4-7-24	24" x 30"	11.5		5.00			
88	S-7	US 20	938+89		RT	OM1-1-18	18" x 18"			2.25			
89	S-8	US 20	939+41		LT						1	1	
89	S-9	US 20	939+87		LT	M3-4-24	24" x 12"			2.00			
89	S-9	US 20	939+87		LT	M1-4-24-2	24" x 24"	11.75		4.00			
89	S-9	US 20	939+87		LT	M6-2-21	21" x 15"			2.19			
89	S-10	US 20	939+86		RT	R1-2-36	36" x 36"	10.25	1	3.90			
89	S-10	US 20	939+89		RT	R1-2-36	36" x 36"	10.25	1	3.90			
89	S-11	US 20	941+34		LT						2	1	
89	S-12	US 20	941+40	941+41	RT						2	2	
89	S-13	US 20	941+44		LT	R1-2-36	36" x 36"	10.25	1	3.90			
89	S-13	US 20	941+45		LT	R1-2-36	36" x 36"	10.25	1	3.90			
89	S-14	US 20	941+48		RT	M3-4-24	24" x 12"			2.00			
89	S-14	US 20	941+48		RT	M1-4-24-2	24" x 24"	11.75		4.00			
89	S-14	US 20	941+48		RT	M6-2-21	21" x 15"			1.25			
89	S-15	US 20	941+90		RT						2	1	
89	S-16	US 20	942+02		RT						1	1	
89	S-17	US 20	942+40		LT						1	1	
89	S-35	SR 601	55+45		LT						2	1	
89	S-36	SR 601	55+62		LT	R4-7-24	24" x 30"	11.5		5.00			
89	S-36	SR 601	55+62		LT	OM-1-18	18" x 18"			2.25			
89	S-37	SR 601	55+95		RT	R1-2-36	36" x 36"	10.25	1	3.90			
89	S-37	SR 601	56+06		RT	R1-2-36	36" x 36"	10.25	1	3.90			
89	S-38	SR 601	56+08		LT	M3-4-24	24" x 12"			2.00			
89	S-38	SR 601	56+08		LT	M1-4-24-2	24" x 24"	11.75		4.00			
89	S-38	SR 601	56+08		LT	M6-2-21	21" x 15"			1.25			
89	S-39	SR 601	56+58		RT						1	1	
89	S-40	SR 601	56+59		RT						2	1	
89	S-41	SR 601	56+75		LT						2	1	
89	S-42	US 601	57+46		LT						2	1	
89	S-43	US 601	57+66		LT	R1-2-36	36" x 36"	10.25	1	3.90			
89	S-43	US 601	57+73		LT	R1-2-36	36" x 36"	10.25	1	3.90			
89	S-44	US 601	57+67		RT	M3-4-24	24" x 12"			2.00			
89	S-44	US 601	57+67		RT	M1-4-24-2	24" x 24"	11.75		4.00			
89	S-44	US 601	57+67		RT	M6-2-21	21" x 15"			1.25			
89	S-45	US 601	57+78		RT						2	1	
89	S-46	US 601	57+80		RT						1	1	
TOTALS THIS SHEET								211	12	120	25	17	2

CALCULATED HB
CHECKED GAH

SIGNING SUBSUMMARY

HUR-20-17.82

...\Traffic\Sheets\II0357TS002.dgn 3/23/2021 8:43:36 AM mswhitt

SHEET NO.	REFERENCE NO.	LOCATION	STATION FROM	STATION TO	SIDE	CODE	SIZE (INCHES)	630 GROUND MOUNTED SUPPORT, NO 3 POST FT	SIGN POST REFLECTOR EACH	SIGN, FLAT SHEET SF	REMOVAL OF GROUND MOUNTED SIGN AND DISPOSAL EACH	REMOVAL OF GROUND MOUNTED POST SUPPORT AND DISPOSAL EACH	REMOVAL OF GROUND MOUNTED SIGN AND REERECTION EACH
89	S-47	US 601	57+96		LT						2	1	
89	S-57	REF CC	0+67		LT	R6-1R-36	36" x 12"	11.5/11.5		3.00			
89	S-57	REF CC	0+67		LT	R6-4a-48	48" x 24"			8.00			
89	S-58	REF CC	1+36		LT	R6-1R-36	36" x 12"	11.5/11.5		3.00			
89	S-58	REF CC	1+36		LT	R6-4a-48	48" x 24"			8.00			
89	S-59	REF CC	2+37		LT	R6-1R-36	36" x 12"	11.5/11.5		3.00			
89	S-59	REF CC	2+37		LT	R6-4a-48	48" x 24"			8.00			
89	S-60	REF CC	3+93		LT	R6-1R-36	36" x 12"	11.5/11.5		3.00			
89	S-60	REF CC	3+93		LT	R6-4a-48	48" x 24"			8.00			
90	S-18	US 20	943+35		RT						1	1	
90	S-19	US 20	943+46		LT	R4-7-24	24" x 30"	11.5		5.00			
90	S-19	US 20	943+46		LT	OM1-1-18	18" x 18"			2.25			
90	S-20	US 20	945+00	945+74	LT			9.5/95				2	1
90	S-21	US 20	946+50		RT	W3-2-36	36" X 36"	11.5	1	9.00			
90	S-22	US 20	946+50		LT	W3-2-36	36" X 36"	11.5	1	9.00			
90	S-23	US 20	947+61	948+00	LT			10.75				1	2
90	S-24	ACCESS RD	0+26		LT	R1-1-24	24" x 24"	10.5		4.00			
90	S-25	ACCESS RD	0+31		RT	W14-2-30	30" x 30"	10.5	1	6.25			
91	S-26	US 20	949+05		LT						2	1	
91	S-27	US 20	949+05		RT						2	2	
91	S-28	US 20	949+50		LT	W2-6-36	36" x 36"	12.5	1	9.00			
91	S-28	US 20	949+50		LT	W13-1p-24	24" x 24"			4.00			
91	S-28	US 20	949+50		RT	W2-6-36	36" x 36"	12.5	1	9.00			
91	S-28	US 20	949+50		RT	W13-1p-24	24" x 24"			4.00			
92	S-29	SR 601	48+00		LT	W2-6-36	36" x 36"	12.5	1	9.00			
92	S-29	SR 601	48+00		LT	W13-1P-24	24" x 24"			4.00			
92	S-29	SR 601	48+00		RT	W2-6-36	36" x 36"	12.5	1	9.00			
92	S-29	SR 601	48+00		RT	W13-1P-24	24" x 24"			4.00			
92	S-30	SR 601	50+00		RT						1	1	
92	S-31	SR 601	50+00		LT						1	1	
92	S-32	SR 601	50+00	52+58	RT			11				1	2
92	S-33	SR 601	52+00		RT	W3-2-36	36" x 36"	11.5	1	9.00			
92	S-34	SR 601	52+00		LT	W3-2-36	36" x 36"	11.5	1	9.00			
93	S-48	SR 601	59+17		LT	R4-7-24	24" x 30"	11.5		5.00			
93	S-48	SR 601	59+17		LT	OM1-1-18	18" x 18"			2.25			
93	S-49	SR 601	59+54		LT	M3-1-24	24" x 12"	10.5		2.00			
93	S-49	SR 601	59+54		LT	M1-5-24-3	30" x 24"			5.00			
93	S-50	SR 601	59+54		LT						2	1	
93	S-51	SR 601	62+00		RT	W3-2-36	36" X 36"	11.5	1	9.00			
93	S-52	SR 601	62+00		LT	W3-2-36	36" X 36"	11.5	1	9.00			
93	S-53	SR 601	62+06	63+50	LT			11				1	2
94	S-54	SR 601	64+52		RT						1	1	
94	S-55	SR 601	64+54		LT						1	1	
94	S-56	SR 601	65+50		LT	W2-6-36	36" X 36"	12.5	1	9.00			
94	S-56	SR 601	65+50		LT	W13-1P-24	24" x 24"			4.00			
94	S-56	SR 601	65+50		RT	W2-6-36	36" X 36"	12.5	1	9.00			
94	S-56	SR 601	65+50		RT	W13-1P-24	24" x 24"			4.00			
TOTALS THIS SHEET								231	13	208	13	15	7
TOTALS FROM SHEET 83								211	12	120	25	17	2
TOTALS CARRIED TO GENERAL SUMMARY								442	25	327	38	32	9

CALCULATED HB
CHECKED GAH

SIGNING SUBSUMMARY

HUR-20-17.82

...\Traffic\Sheets\10357TS002.dgn 3/23/2021 8:43:37 AM mswhitt

SHEET NO.	REFERENCE NO.	LOCATION	STATION FROM	STATION TO	SIDE	620 DELINEATOR, POST SURFACE MOUNTED	644 EDGE LINE, 6" (WHITE)	644 EDGE LINE 6" (YELLOW)	644 CENTER LINE 4"	644 STOP LINE, 24"	644 TRANSVERSE / DIAGONAL LINE 24" (YELLOW)	644 LANE ARROW	644 DOTTED LINE, 6" (WHITE)	644 YIELD LINE	646 REMOVAL OF PAVEMENT MARKING
						EACH	MILE	MILE	MILE	FT	FT	EACH	FT	FT	FT
88	ELW-1	US 20	935+50.00	938+87.48	LT		0.06								
88	ELW-2	US 20	935+50.00	938+61.65	RT		0.06								
88	CDS-1	US 20	935+50.00	937+89.11	LT				0.05						
88	CDS-2	US 20	935+50.00	937+89.11	RT				0.05						
88	TLY-1	US 20	936+00.00	937+89.11	LT&RT						95				
88	ELY-1	US 20	937+89.11	939+94.55	LT			0.04							
88	ELY-2	US 20	937+89.11	939+93.44	RT			0.04							
89	YL-1	US 20	939+84.95	939+92.75	RT									16	
89	ELW-3	US 20	939+93.44	939+94.55	LT&RT		0.01								
89	DLW-1	US 20	939+93.44	940+01.11	RT								24		
89	DLW-2	US 20	941+50.22	941+52.56	RT								26		
89	YL-2	US 20	941+50.22	941+63.70	RT									18	
89	ELW-4	US 20	941+39.49	941+50.22	LT&RT		0.01								
89	ELY-3	US 20	941+50.22	943+48.82	LT			0.04							
89	ELY-4	US 20	941+39.49	943+48.83	RT			0.04							
89	TLY-2	SR 601	54+59.29	55+56.44	LT/RT						53				
89	ELY-5	SR 601	55+56.44	56+19.55	LT			0.01							
89	ELY-6	SR 601	55+56.23	56+07.42	RT			0.01							
89	YL-3	SR 601	55+97.13	56+07.42	RT									18	
89	ELW-5	SR 601	56+07.42	56+19.55	LT&RT		0.01								
89	DLW-3	SR 601	56+07.42	56+08.61	RT								29		
89	DLW-4	SR 601	57+57.49	57+61.68	LT								30		
89	ELW-6	SR 601	57+58.38	57+61.68	LT&RT		0.01								
89	YL-4	SR 601	57+61.68	57+70.51	LT									18	
89	ELY-7	SR 601	57+61.68	59+18.80	LT			0.03							
89	ELY-8	SR 601	57+58.38	59+18.86	RT			0.03							
89	ELW-7	SR 601	57+73.69	66+22.00	RT		0.16								
89	LA-1	REF CC	1+12.77		LT							1			
89	LA-2	REF CC	2+14.73		LT							1			
89	LA-3	REF CC	3+54.30		LT							1			
89	LA-4	REC CC	4+70.40		LT							1			
90	ELW-8	ACCESS ROAD	0+16.15	2+01.18	LT		0.03								
90	CDS-3	ACCESS ROAD	0+26.40	2+00.42	LT&RT				0.03						
90	ELW-9	ACCESS ROAD / US 20	1+99.67	945+89.04	LT&RT		0.07								
90	SL-1	ACCESS ROAD	0+26.40		LT					16					
90	ELW-10	US 20	943+28.63	945+89.14	RT		0.05								
90	CDS-4	US 20	943+48.82	945+90.00	LT				0.05						
90	CDS-5	US 20	943+48.83	945+90.00	RT				0.05						
90	TLY-3	US 20	943+48.82	945+90.00	LT&RT						131				
92	ELW-11	SR 601	48+34.00	53+70.73	LT		0.10								
92	CDS-6	SR 601	48+34.00	53+61.35	LT&RT				0.10						
92	ELW-12	SR 601	48+34.00	53+51.98	LT		0.10								
92	ELW-13	SR 601	54+60.55	55+33.75	RT		0.01								
92	CDS-7	SR 601	54+69.96	55+56.44	LT&RT				0.02						
92	ELW-14	SR 601	54+58.51	54+95.10	LT		0.01								
TOTALS THIS SHEET						0	0.69	0.24	0.35	16	279	4	109	70	0

CALCULATED SS
CHECKED GAH

PAVEMENT MARKING SUBSUMMARY

HUR-20-17.82

...\Traffic\Sheets\10357TS001.dgn 3/23/2021 8:43:39 AM mswhitt

SHEET NO.	REFERENCE NO.	LOCATION	STATION FROM	STATION TO	SIDE	620 DELINEATOR, POST SURFACE MOUNTED	644 EDGE LINE, 6" (WHITE)	644 EDGE LINE 6" (YELLOW)	644 CENTER LINE 4"	644 STOP LINE, 24"	644 TRANSVERSE / DIAGONAL LINE 24" (YELLOW)	644 LANE ARROW	644 DOTTED LINE, 6" (WHITE)	644 YIELD LINE	646 REMOVAL OF PAVEMENT MARKING
						EACH	MILE	MILE	MILE	FT	FT	EACH	FT	FT	FT
92	R-1	SR 601	54+58.51	54+79.87	LT										21
92	CDS-8	SR 601	54+69.96	55+56.23	RT				0.02						
93	ELW-15	SR 601	58+98.65	66+22.00	LT		0.14								
93	CDS-9	SR 601	59+19.04	61+68.94	LT				0.05						
93	DP-1	SR 601	59+19.71	59+18.97	RT	34									
93	CDS-10	SR 601	59+18.80	61+68.94	RT				0.05						
93	TLY-4	SR 601	59+19.04	61+10.86	LT&RT						143				
93	CDS-11	SR 601	61+68.94	66+22.00	LT&RT				0.09						
TOTALS THIS SHEET 85						34	0.14		0.21		143				21
TOTALS FROM SHEET							0.69	0.24	0.35	16	279	4	109	70	
TOTALS CARRIED TO GENERAL SUMMARY						34	1.07		0.56	16	422	4	109	70	21

CALCULATED SS
CHECKED GAH

PAVEMENT MARKING SUBSUMMARY

HUR-20-17.82

...\Traffic\Sheets\10357TS001.dgn 3/23/2021 8:43:40 AM mswhitt

TRAFFIC CONTROL LEGEND

CDS	ITEM 644 - CENTER LINE, DOUBLE YELLOW, 4"
DLW	ITEM 644 - DOTTED LINE, WHITE, 6"
ELW	ITEM 644 - EDGE LINE, WHITE, 6"
ELY	ITEM 644 - EDGE LINE, YELLOW, 6"
TLY	ITEM 644 - TRANSVERSE/DIAGONAL LINE, YELLOW, 24"
YL	ITEM 644 - YIELD LINE
LA	ITEM 644 - LANE ARROW
SL	ITEM 644 - STOP LINE, 24"
DP	ITEM 620 - DELINEATOR, POST SURFACE MOUNTED
S	SIGN
R-1	REMOVAL ITEM REFERENCE NO.

(DND) - DO NOT DISTURB
(TBR) - TO BE REMOVED

EXITING RUMBLE STRIPS

EXISTING SIGN

PROPOSED SIGN

EXISTING SIGN TO BE REMOVED

EXISTING SIGN TO BE REMOVED AND REERECTED

DIRECTION OF TRAVEL

EXISTING SIGN POST

PROPOSED SIGN POST

REMOVED PAVEMENT MARKING

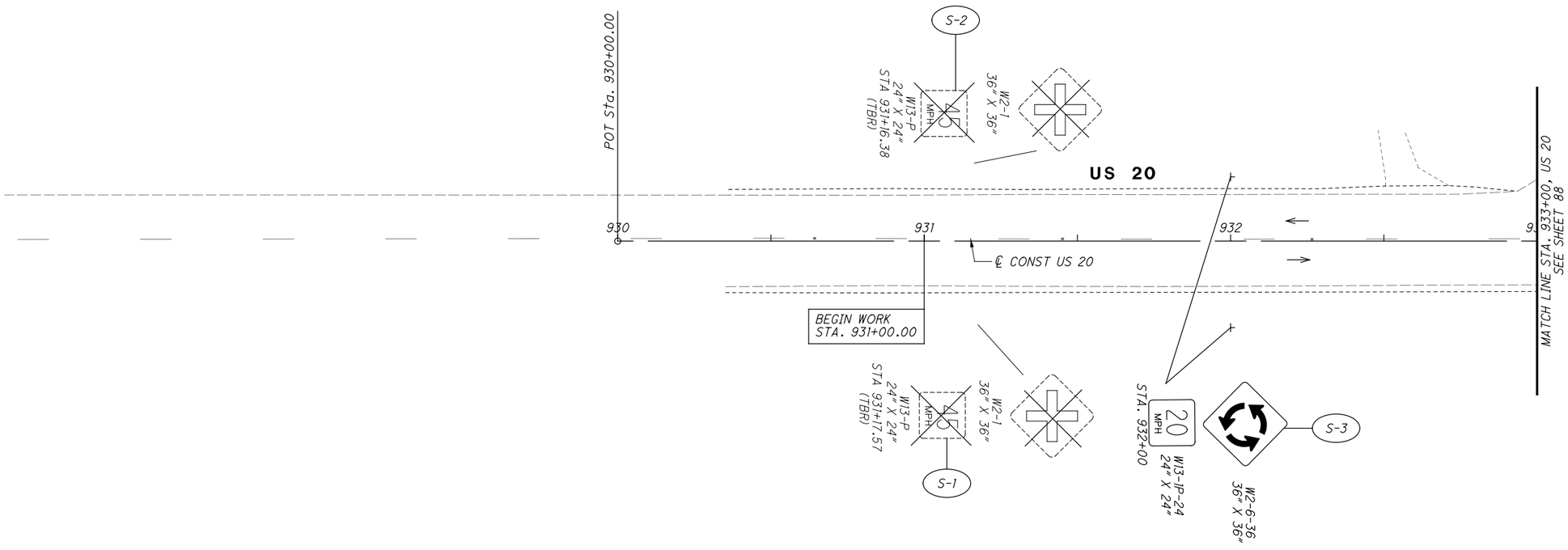

HORIZONTAL SCALE IN FEET
0 10 20 40

CALCULATED HB
CHECKED SS

TRAFFIC CONTROL PLAN - US 20
930+35.50 TO STA. 933+00

HUR-20-17.82

...\Traffic\Sheets\1103577TP001.dgn 3/23/2021 8:43:45 AM mswhitt

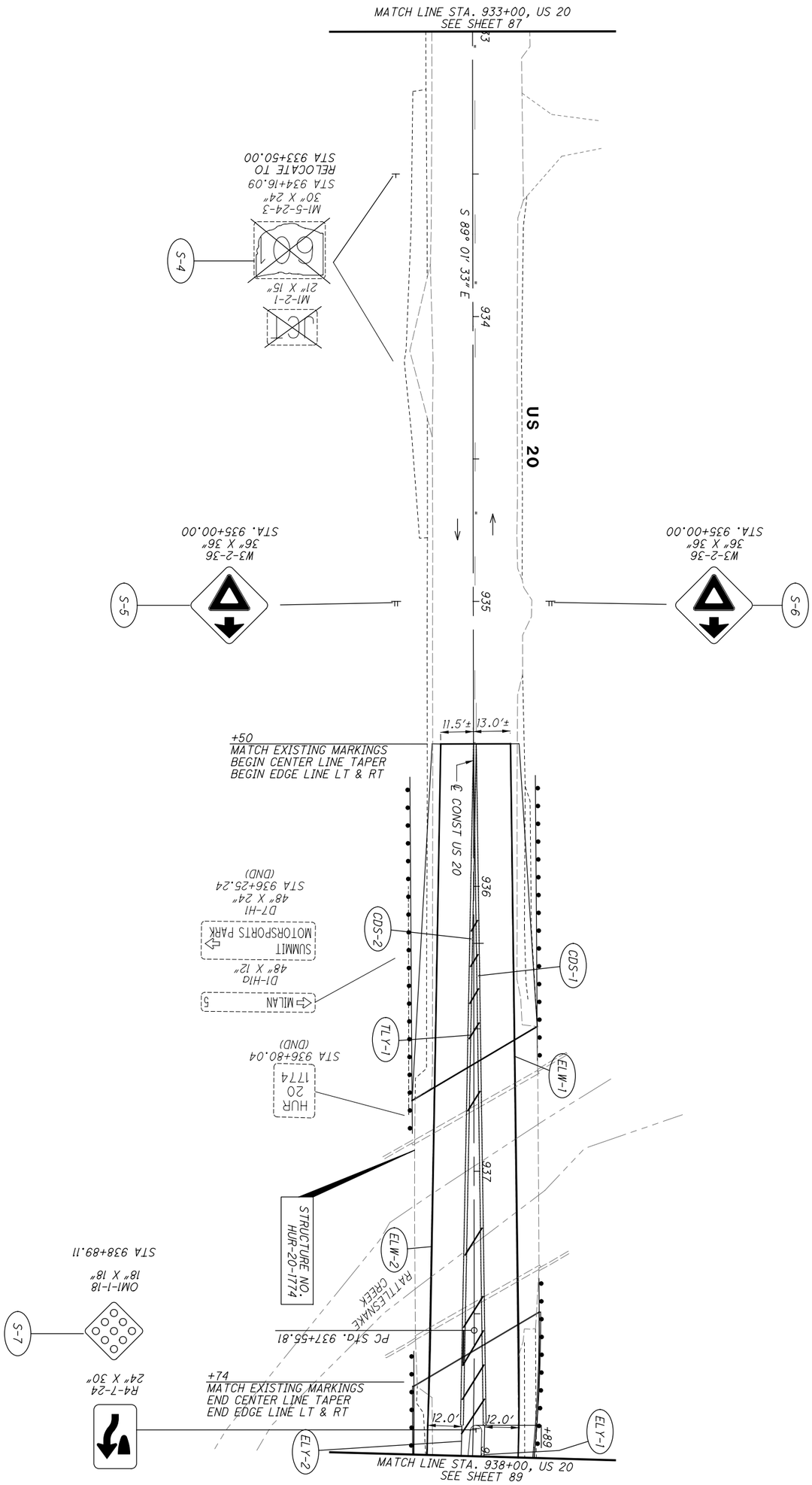

FOR TRAFFIC CONTROL LEGEND, SEE SHEET 87.

88 / 128	HUR-20-17.82	TRAFFIC CONTROL PLAN - US 20 STA. 933+00 TO STA. 938+00	CALCULATED HB CHECKED SS	0 10 20 40 HORIZONTAL SCALE IN FEET

NOTES

1. FOR TRAFFIC CONTROL LEGEND SEE SHEET 87.

CENTRAL ISLAND SIGNS

(STATION AND OFFSET REFERENCED FROM ℄ REF CC)

ONE WAY	R6-1R-36 36" X 12"
	R6-4a-48 48" X 24"

1. STA. 0+67, 44' LT
2. STA. 1+36, 29' LT
3. STA. 2+37, 29' LT
4. STA. 3+93, 31' LT

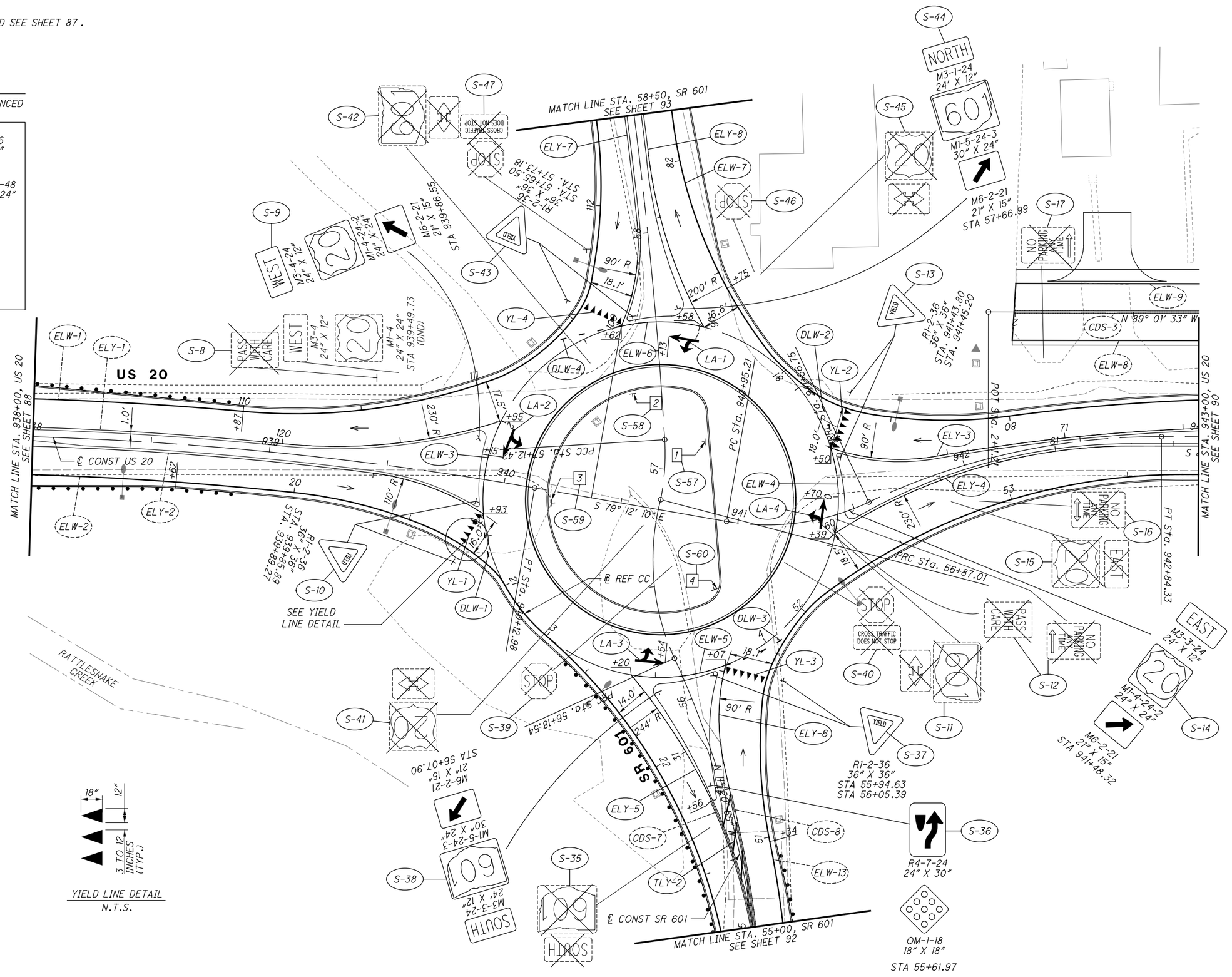

YIELD LINE DETAIL

N.T.S.

HORIZONTAL SCALE IN FEET 0 10 20 40

CALCULATED HB

CHECKED SS

TRAFFIC CONTROL PLAN - US 20
STA. 938+00 TO STA. 943+00

HUR-20-17.32

...\Traffic\Sheets\H0357TP003.dgn 3/23/2021 8:43:54 AM mswhitt

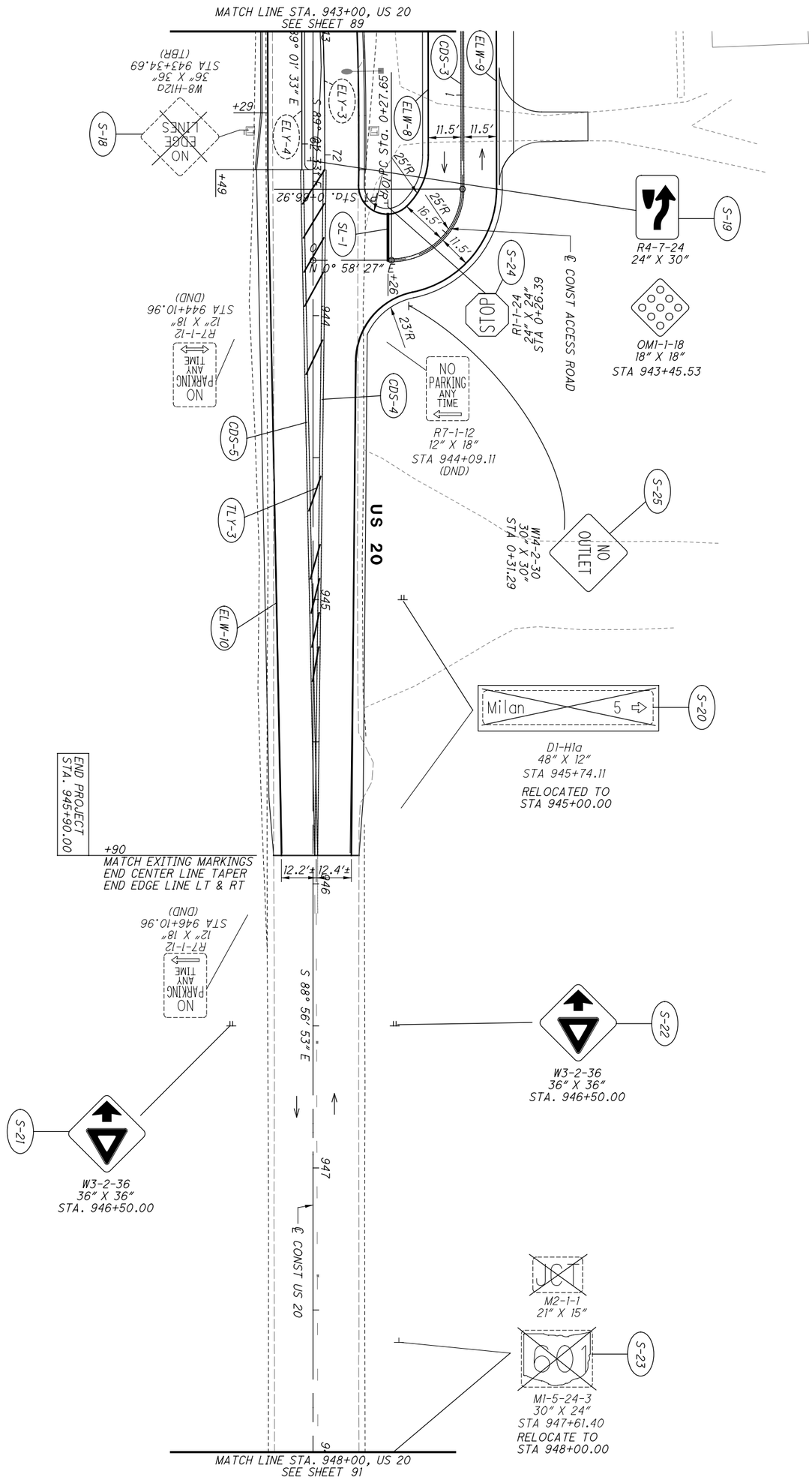

FOR TRAFFIC CONTROL LEGEND, SEE SHEET 87.

90 / 128	HUR-20-17.82	TRAFFIC CONTROL PLAN - US 20 STA. 943+00 TO STA. 948+00	CALCULATED HB CHECKED SS	0 10 20 40 HORIZONTAL SCALE IN FEET

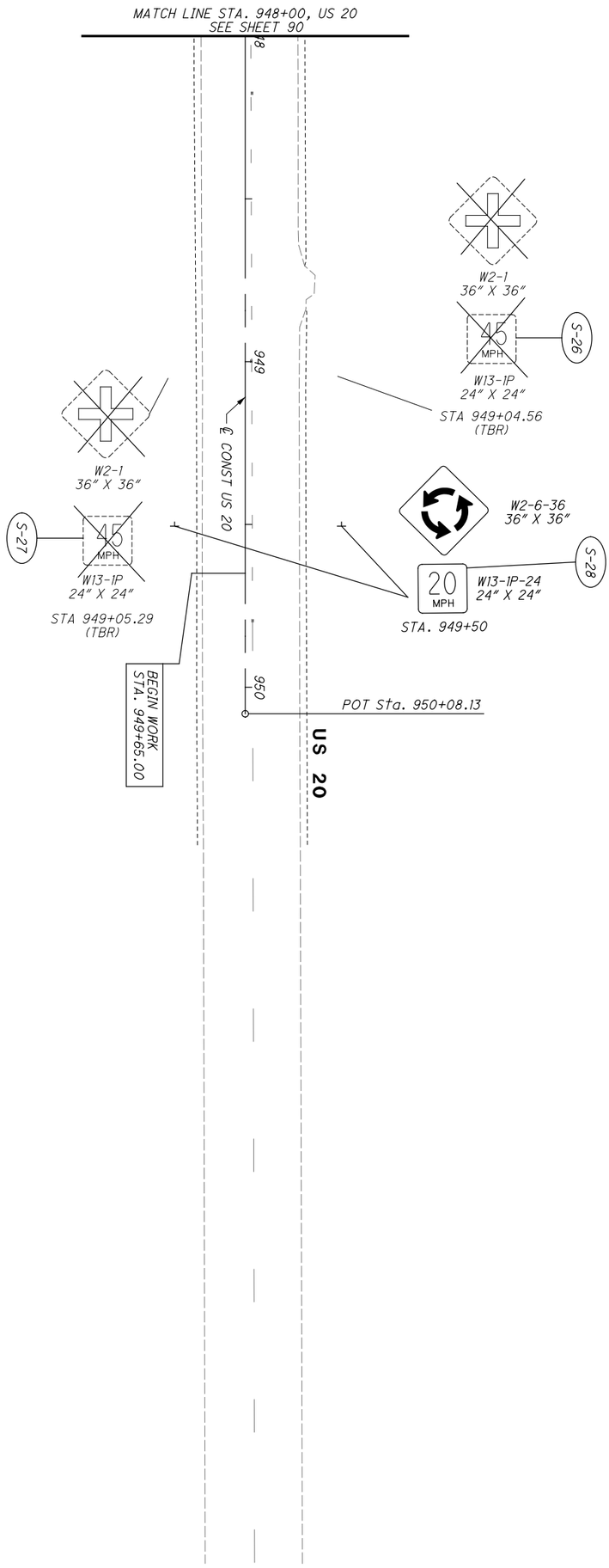

FOR TRAFFIC CONTROL LEGEND, SEE SHEET 87.

91 / 128	HUR-20-17.82	TRAFFIC CONTROL PLAN - US 20 STA. 948+00 TO 950+00	CALCULATED HB CHECKED SS	0 10 20 40 HORIZONTAL SCALE IN FEET

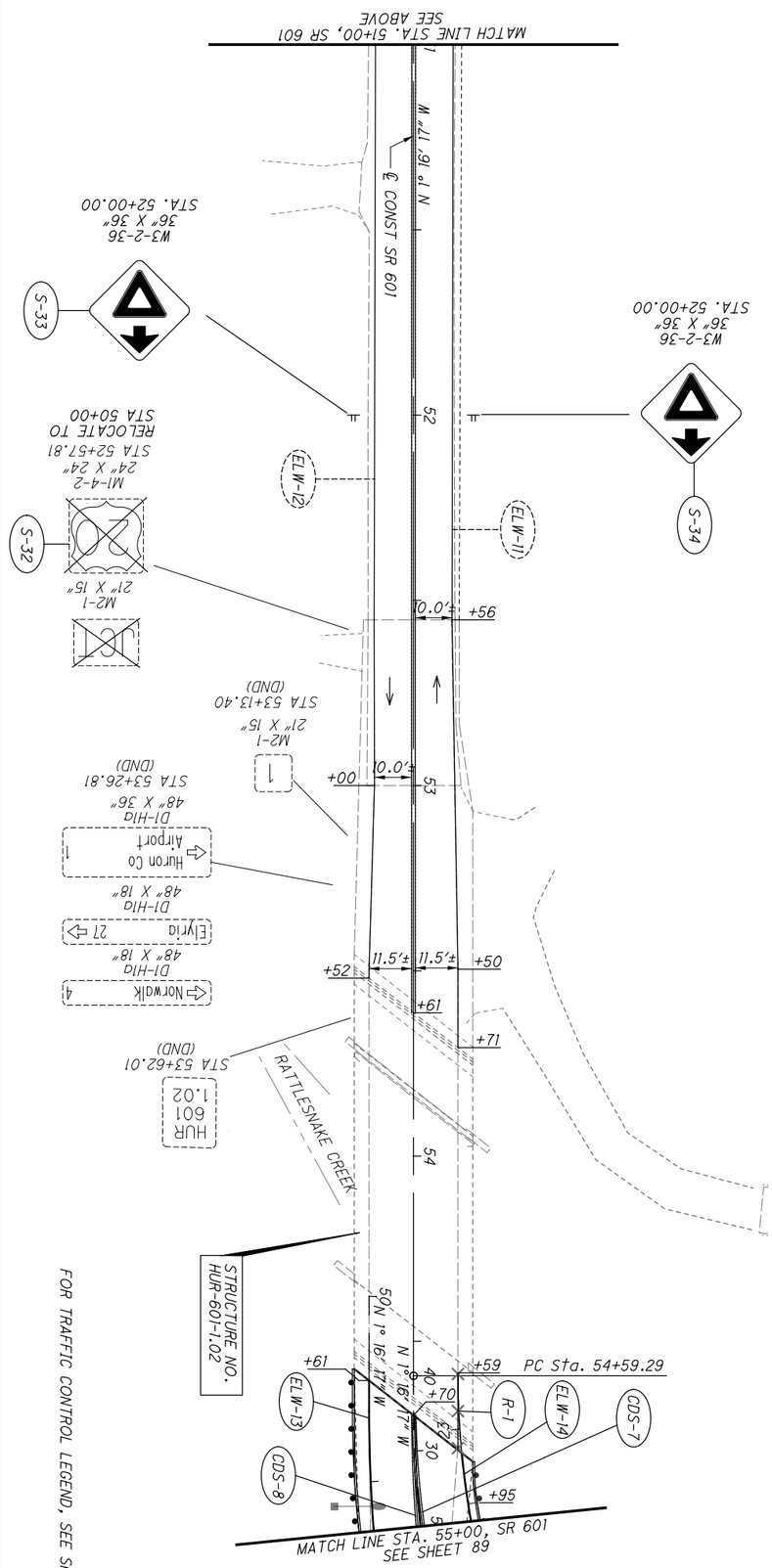

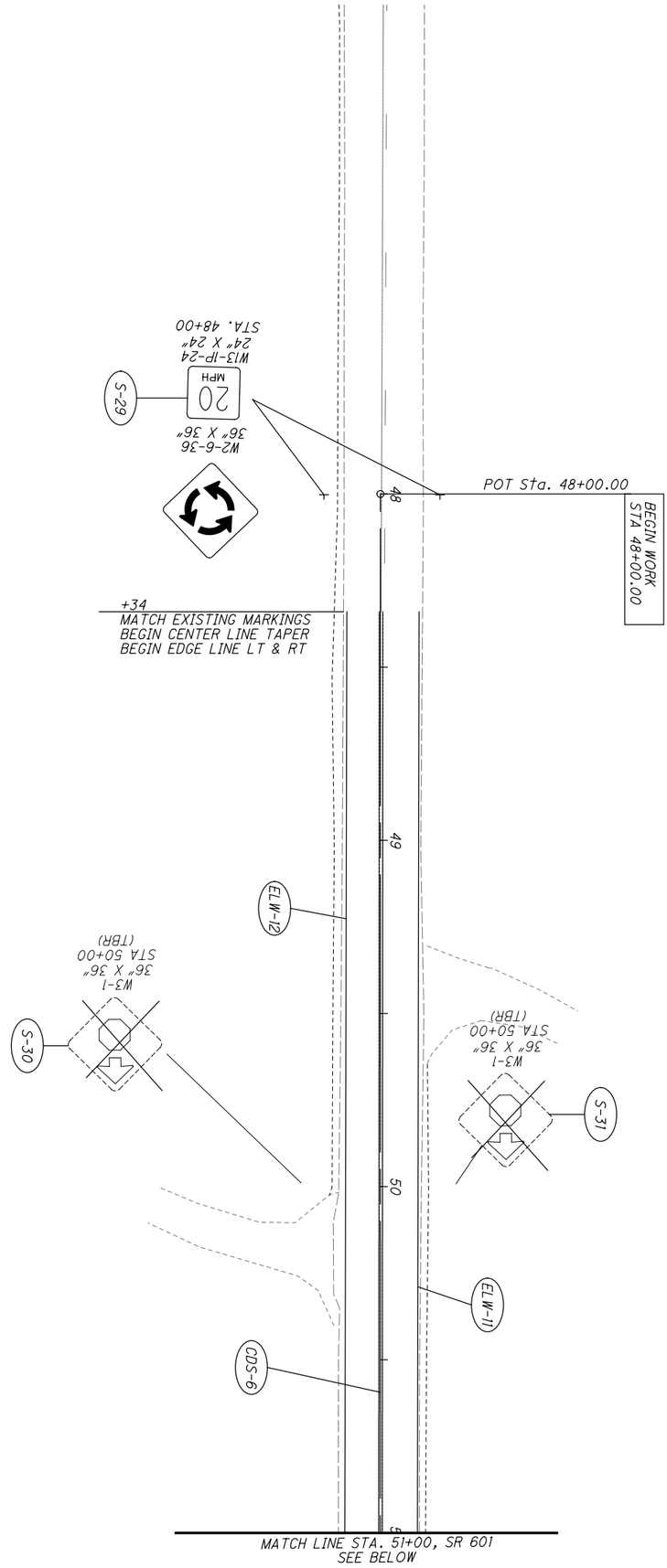

FOR TRAFFIC CONTROL LEGEND, SEE SHEET 87.

92 / 128	HUR-20-17.82	TRAFFIC CONTROL PLAN - SR 601 STA 48+00 TO STA 55+00	CALCULATED HB CHECKED SS	0 10 20 40 HORIZONTAL SCALE IN FEET

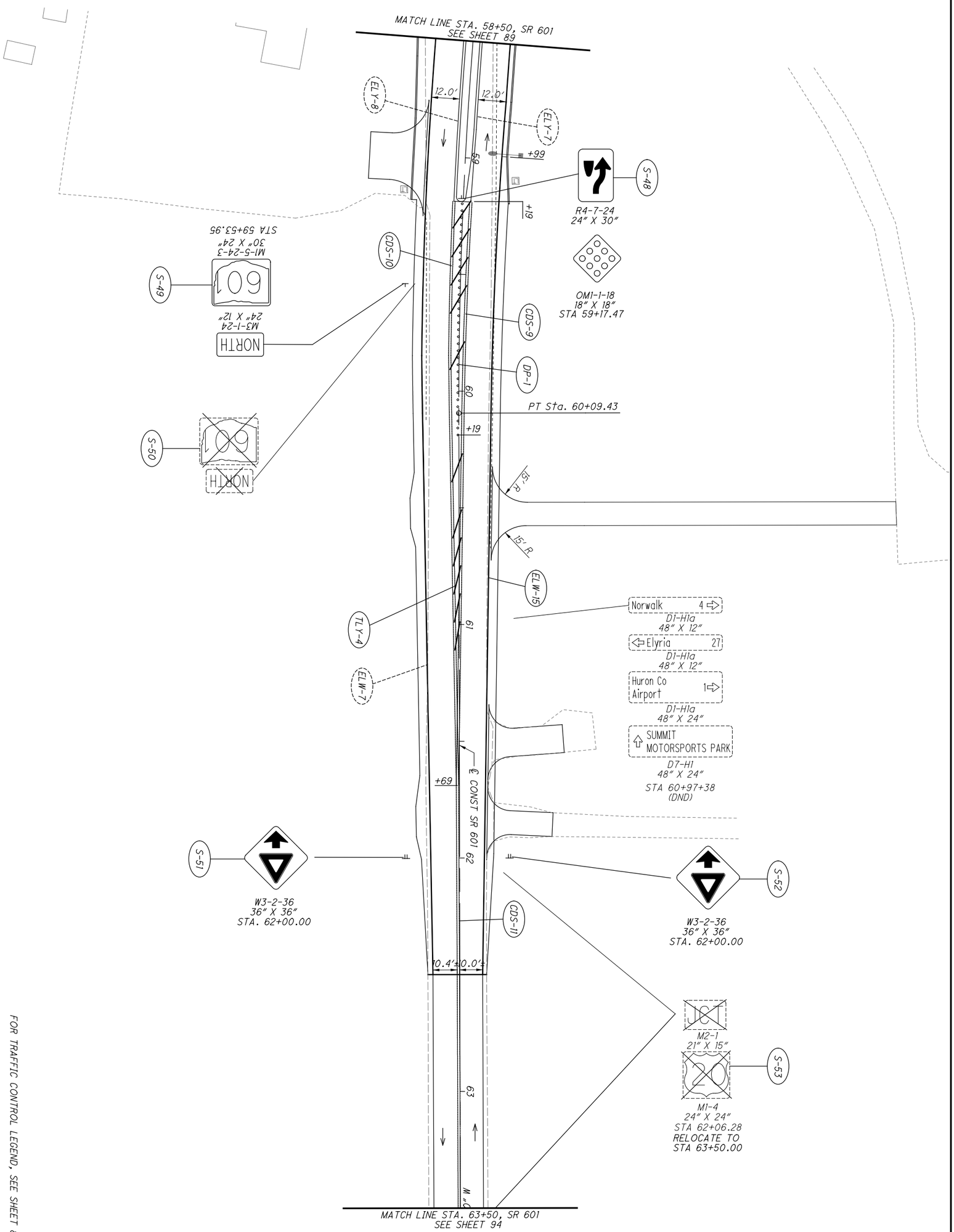

FOR TRAFFIC CONTROL LEGEND, SEE SHEET 87.

93 / 128	HUR-20-17.82	TRAFFIC CONTROL PLAN - SR 601 STA. 58+50 TO STA. 63+50	CALCULATED HB CHECKED SS	0 10 20 40 HORIZONTAL SCALE IN FEET

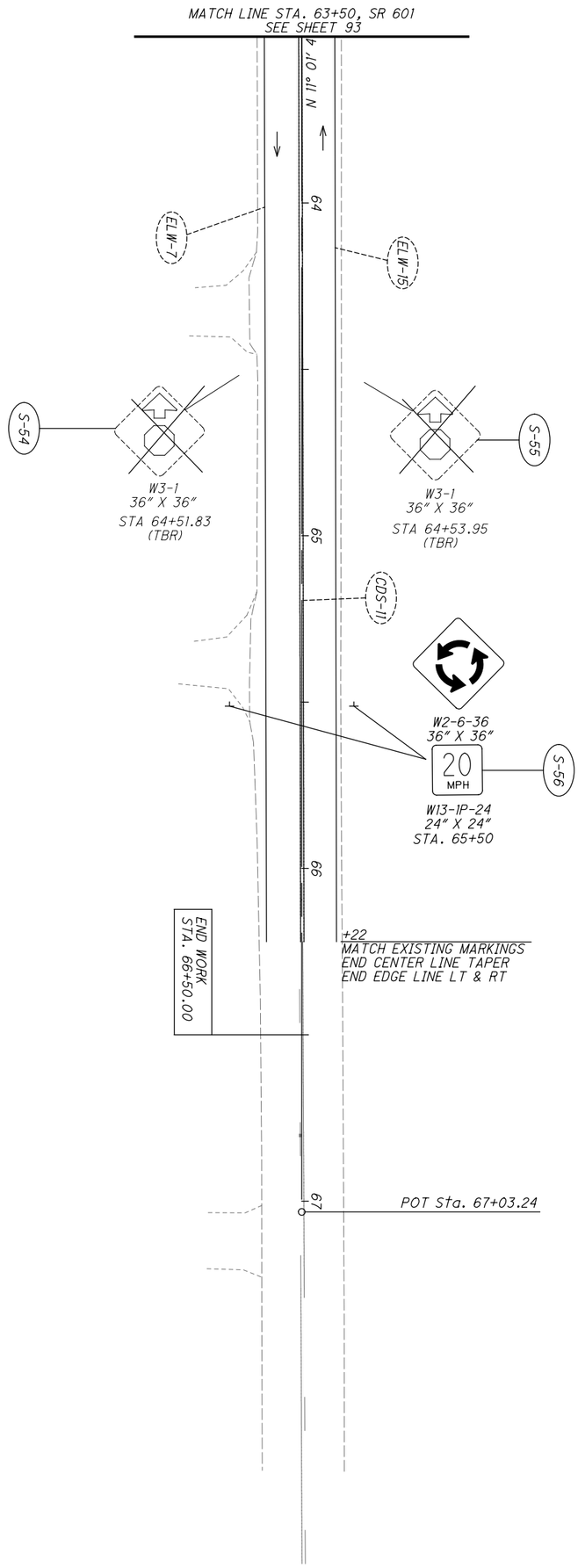

FOR TRAFFIC CONTROL LEGEND, SEE SHEET 87.

94 / 128	HUR-20-17.82	TRAFFIC CONTROL PLAN - SR 601 STA. 63+50 TO 66+22	CALCULATED HB CHECKED SS	0 10 20 40 HORIZONTAL SCALE IN FEET

PADLOCKS AND KEYS

PADLOCKS FURNISHED SHALL BE EITHER BRASS OR BRONZE, EQUAL TO MASTER NO. 4BKA OR WILSON BOHANNAN 660A, AND SHALL BE KEYED IN ACCORDANCE WITH C&MS 631.06. PAYMENT SHALL BE INCLUDED IN THE BID FOR THE ITEM(S) BEING LOCKED.

ITEM 625, LUMINAIRE, CONVENTIONAL, SOLID STATE (LED), AS PER PLAN, TYPE III ASYMMETRIC DISTRIBUTION, 120V

IN ADDITION TO THE REQUIREMENTS OF ODOT'S CONSTRUCTION AND MATERIAL SPECIFICATIONS, LUMINAIRES FOR CONVENTIONAL LIGHTING UNITS SHALL BE AS FOLLOWS:

THIS ITEM CONSISTS OF INSTALLING A LUMINAIRE ON A LIGHT AT THE POSITION INDICATED ON THE PLANS. FURNISH NEW MATERIALS AND EQUIPMENT OF FIRST QUALITY, OF CURRENT DESIGN, AND FREE FROM DEFECTS. ENSURE THE LUMINAIRE IS LEVEL AND ALIGNED VERTICALLY AND HORIZONTALLY TO THE ROADWAY AS SPECIFIED.

LUMINAIRES FOR CONVENTIONAL LED LIGHTING UNITS AND ASSOCIATED IES TYPE III DISTRIBUTION SHALL BE:
- COOPER/EATON VERDEON LED, VERD-A02-E-U-T3-7030-AP.ies;
- GE EVOLVE LED, ERLH_10C330XXXXX.IES;
- OR APPROVED EQUAL.

IN ADDITION, CONTRACTOR MAY HAVE THE OPTION TO USE:
- AMERICAN ELECTRIC LIGHTING ATBM LED, ATBM_P10_XXXXX_R3_3K.ies;

EXCEPT FOR LUMINAIRES ON POLES A-1 AND B-2 ONLY WHERE ONE OF THE OPTIONS ARE REQUIRED:
A) SELECT A LOWER LUMEN PACKAGE PRODUCT
B) USE AN ADDITIONAL AO MODULE WITH DIMMING FEATURES FOR FIELD ADJUSTMENT

FOR BOTH OPTIONS, CONTRACTOR SHALL PERFORM A PHOTOMETRIC ANALYSIS USING VISUAL LIGHTING DESIGN SOFTWARE TO ENSURE LUMEN OUTPUT MEETS DESIGN CRITERIA. THE ANALYSIS SHALL BE SUBMITTED TO ODOT FOR REVIEW AND APPROVAL.

PAYMENT WILL BE MADE AT THE UNIT BID PRICE FOR EACH CMS ITEM 625, "625, LUMINAIRE, CONVENTIONAL, SOLID STATE (LED), AS PER PLAN, TYPE III ASYMMETRIC DISTRIBUTION, 120V", FOR EACH LUMINAIRE WHICH SHALL BE FULL COMPENSATION FOR ALL LABOR, MATERIALS AND INCIDENTALS REQUIRED TO COMPLETE THIS ITEM IN A SATISFACTORY AND WORKMANLIKE MANNER.

625, POWER SERVICE, AS PER PLAN

IN ADDITION TO THE REQUIREMENTS OF THE SPECIFICATIONS, THE FOLLOWING IS ADDED.

THE POWER SUPPLYING AGENCY FOR THIS PROJECT IS:

OHIO EDISON COMPANY
2508 WEST PERKINS AVENUE
SANDUSKY, OH 44870
ATTN: JIM ROHRBACHER
PHONE: (419)-627-6881
EMAIL: jorohrbacher@firstenergeycorp.com

POWER FOR LIGHTING CIRCUIT SHALL BE NOMINAL 120/240 VOLTS.

THE ENGINEER SHALL ENSURE THAT EACH POWER SERVICE ELECTRICAL ENERGY ACCOUNT IS IN THE NAME OF AND THAT THE BILLING ADDRESS IS TO THE MAINTAINING AGENCY NOTED IN THE PLANS. THIS SHALL BE DONE NOT ONLY FOR EACH NEW POWER SERVICE ESTABLISHED BY THIS PROJECT BUT ALSO FOR EACH EXISTING POWER SERVICE, SINCE THERE MAY BE A REASSIGNMENT OF THE RESPONSIBILITY FOR AN EXISTING SERVICE AS A RESULT OF THE WORK PERFORMED BY THIS PROJECT.

PAYMENT WILL BE MADE AT THE UNIT BID PRICE FOR EACH C&MS ITEM 625, "POWER SERVICE, AS PER PLAN" WHICH SHALL BE FULL COMPENSATION FOR ALL LABOR, MATERIALS AND INCIDENTALS REQUIRED TO COMPLETE THIS ITEM IN A SATISFACTORY AND WORKMANLIKE MANNER.

REFERENCE NO.	SHEET NO.	SIDE	ROADWAY	STATION TO STATION	625 CONNECTION, FUSED PULL APART EACH	625 CONNECTION, UNFUSED PERMANENT EACH		625 LIGHT POLE, CONVENTIONAL, A710B32.5 EACH	625 LIGHT POLE FOUNDATION, 24" X 6' DEEP EACH	625 NO. 6 AWG 2400 VOLT DISTRIBUTION CABLE FT	625 NO. 10 AWG POLE AND BRACKET CABLE FT	625 1-1/2" DUCT CABLE WITH THREE NO. 6 AWG 2400 VOLT CABLES FT	625 CONDUIT, JACKED OR DRILLED, 725.04, 3" FT	625 LUMINAIRE, CONVENTIONAL, SOLID STATE (LED), AS PER PLAN, TYPE III ASYMMETRIC DISTRIBUTION, 120V EACH	625 TRENCH, 24" DEEP FT	625 PULL BOX, 725.08, 18" EACH	625 PULL BOX, 725.08, 24" EACH	625 GROUND ROD EACH	625 POWER SERVICE, AS PER PLAN EACH	625 UNDERGROUND WARNING/MARKING TAPE 625	
A-1	97	RT	℄ REF NE	80+47	2			1	1		85	44		1	34			1		34
PB-3	97	RT	S.R. 601	59+15		3						243			233	1				233
PB-4	97	LT	S.R. 601	59+09		3				174			48			1				48
PB-5	97	RT	℄ REF NE	81+60		3										1				
A-2	97	LT	S.R. 601	58+98	2			1	1		85	22		1	12			1		12
A-3	97	LT	℄ REF NW	111+76	2			1	1		85	118		1	108			1		108
PB-11	97	LT	℄ REF NW	111+30		3							43				1			43
PB-12	97	LT	℄ REF CC	1+68		3							44				1			44
B-1	97	LT	U.S. 20	943+14	2			1	1		85	118		1	108			1		108
PB-10	97	LT	U.S. 20	943+35		3						32			22	1				22
PB-9	97	RT	U.S. 20	943+35		3				162		54	44			1				44
B-2	97	RT	℄ REF SE	52+18	2			1	1		85	202		1	192			1		192
B-3	97	RT	℄ REF SE	50+57	2			1	1		85	164		1	154			1		154
PB-8	97	RT	℄ REF SE	51+07		3						31			21	1				21
PB-7	97	RT	S.R. 601	22+10		3				189			53			1				53
B-4	97	RT	℄ REF SW	21+61	2			1	1		85	59		1	49			1		49
PB-6	97	RT	℄ REF SW	20+53		3										1				
B-5	97	RT	℄ REF SW	20+42	2			1	1		85	128		1	118			1		118
B-6	97	RT	U.S. 20	938+39	2			1	1		85	125		1	115			1		115
PB-1	97	LT	U.S. 20	942+15		3						28			18		1			18
PB-2	97	LT	U.S. 20	942+12		3						16			6		1			6
CC1	97	LT	U.S. 20	942+16		3												1	1	
TOTALS CARRIED TO GENERAL SUMMARY					18	39		9	9	525	765	1384	232	9	1190	8	4	10	1	1422

CALCULATED SS
CHECKED GAH

LIGHTING SUBSUMMARY

HUR-20-17.82

...\Sheets\110357_LS001.dgn 3/23/2021 8:44:22 AM mswhitt

LIGHTING LEGEND	
PROPOSED	DESCRIPTION
	CONVENTIONAL LIGHT POLE WITH LED LUMINAIRE, AT10B32.5, LED, TYPE III, 120V
	PROP. LIGHTING CONDUIT STUB
	CONTROL CENTER, POLE MOUNTED, 120/240V, 60 AMP
	1-1/2" DUCT CABLE (WITH THREE WIRE NO.6 AWG 2400 VOLT CABLES, 2 CONDUCTORS, 120/240V, WITH GROUND)
	CONDUIT, 3", 725.04 (JACKED OR DRILLED)
	LIGHTING PULL BOX, 725.08, (BY SIZE)

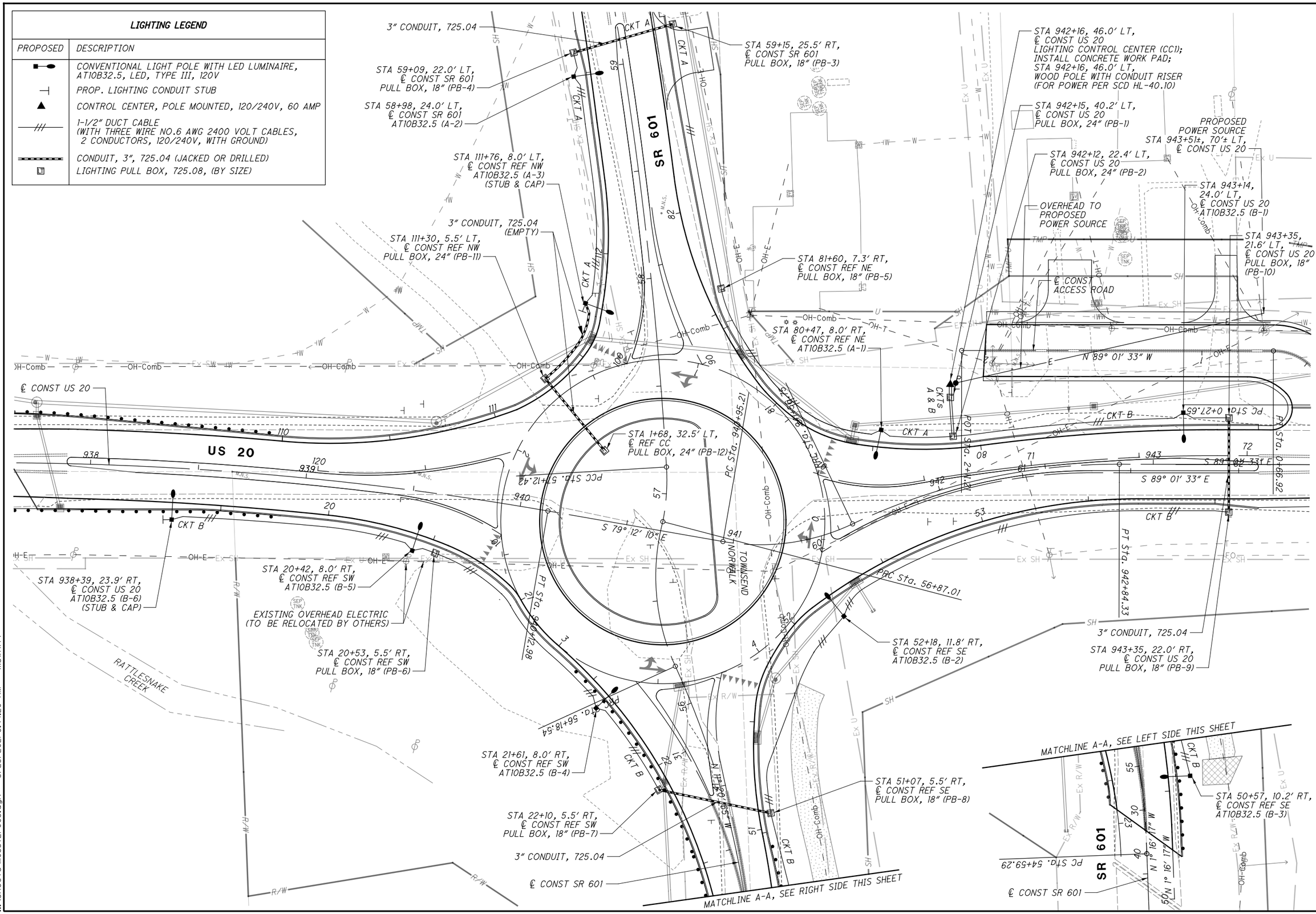

N

HORIZONTAL SCALE IN FEET 0 10 20 40

CALCULATED SS
CHECKED GAH

LIGHTING PLAN
US 20 AND SR 601 ROUNDABOUT

HUR-20-17.32

...\Sheets\10357LP003.dgn 3/23/2021 8:44:26 AM mswhitt

VOLTAGE DROP CALCULATIONS

HUR-20-17.82 (US 20 AND SR 601 ROUNDABOUT)

CO. **HUR** RTE. **US20** SEC. **17.82** SUPPLY POINT: **CC** CIRCUIT: **AB**

VOLTAGE: **120** WATTAGE: **92** LED AMPS: 1.00

0 HPS #N/A

0 HPS #N/A

WIRE FACTORS USED (per wire):

NO. 4 AWG 0.31 Ohms/MFT/1000

NO. 6 AWG 0.49 Ohms/MFT/1000

NO. 8 AWG 0.78 Ohms/MFT/1000

NO. 10 AWG 1.20 Ohms/MFT/1000

NO. OF WIRES FOR CALCULATION: 2

SECTION			AMPERES		AMP-FT	AWG	VOLTAGE DROP		% DROP	AT PT.
FROM	TO	FEET	AT PT.	ACCUM.			IN SECT.	ACCUM.		
										Circuit A
A3	A2	118	1.00	1.00	118	6	0.12	1.55	**1.29%**	**A3**
A2	A1	333	1.00	2.00	666	6	0.65	1.43	1.20%	A2
A1	PB0	44	1.00	3.00	132	6	0.13	0.78	0.65%	A1
										Circuit B
B6	B5	125	1.00	1.00	125	6	0.12	3.51	**2.92%**	**B6**
B5	B4	138	1.00	2.00	276	6	0.27	3.39	2.82%	B5
B4	PB	122	1.00	3.00	366	6	0.36	3.12	2.60%	B4
B3	PB	62	1.00	1.00	62	6	0.06	2.82	**2.35%**	**B3**
PB	B2	112	0.00	4.00	448	6	0.44	3.20		
B2	B1	288	1.00	5.00	1440	6	1.41	2.76	2.30%	B2
B1	PB0	118	1.00	6.00	708	6	0.69	1.35	1.12%	B1
PB0	CC-1	74	0.00	9.00	666	6	0.65	0.65		
		SUM	9.00	AMPS PROPOSED LOAD						
			1.1	kVA						

CIRCUIT CC-AB:

1. TEN (10) FEET OF SLACK IS INCLUDED IN EACH CABLE RUN BETWEEN POLES/PULL BOXES.

LIGHTING CONTROL CENTER DATA

CONTROL CENTER	LINE VOLTAGE (VOLTS)	CONNECTED LOAD (kVA)	SERVICE ENTRANCE CABLE (AWG)	ENCLOSURE RATING (AMPS)	CIRCUIT NO.	CIRCUIT LOAD (AMPS)	PROP. CIRCUIT FUSE SIZE (AMPS)	PROP. CIRCUIT CABLE SIZE (AWG)	MAINTAINING AGENCY
CC-1 ROUNDABOUT	120/240V	1.1	OHIO EDISON	60	A	3.0	30	6	ODOT DISTRICT 3
					B	6.0	30	6	

NOTES:

1. FOR ADDITIONAL CONTROL CENTER DETAILS, SEE STANDARD DRAWINGS.
2. SERVICE FOR LIGHTING CONTROL CENTER IS SINGLE PHASE, 3-WIRE.

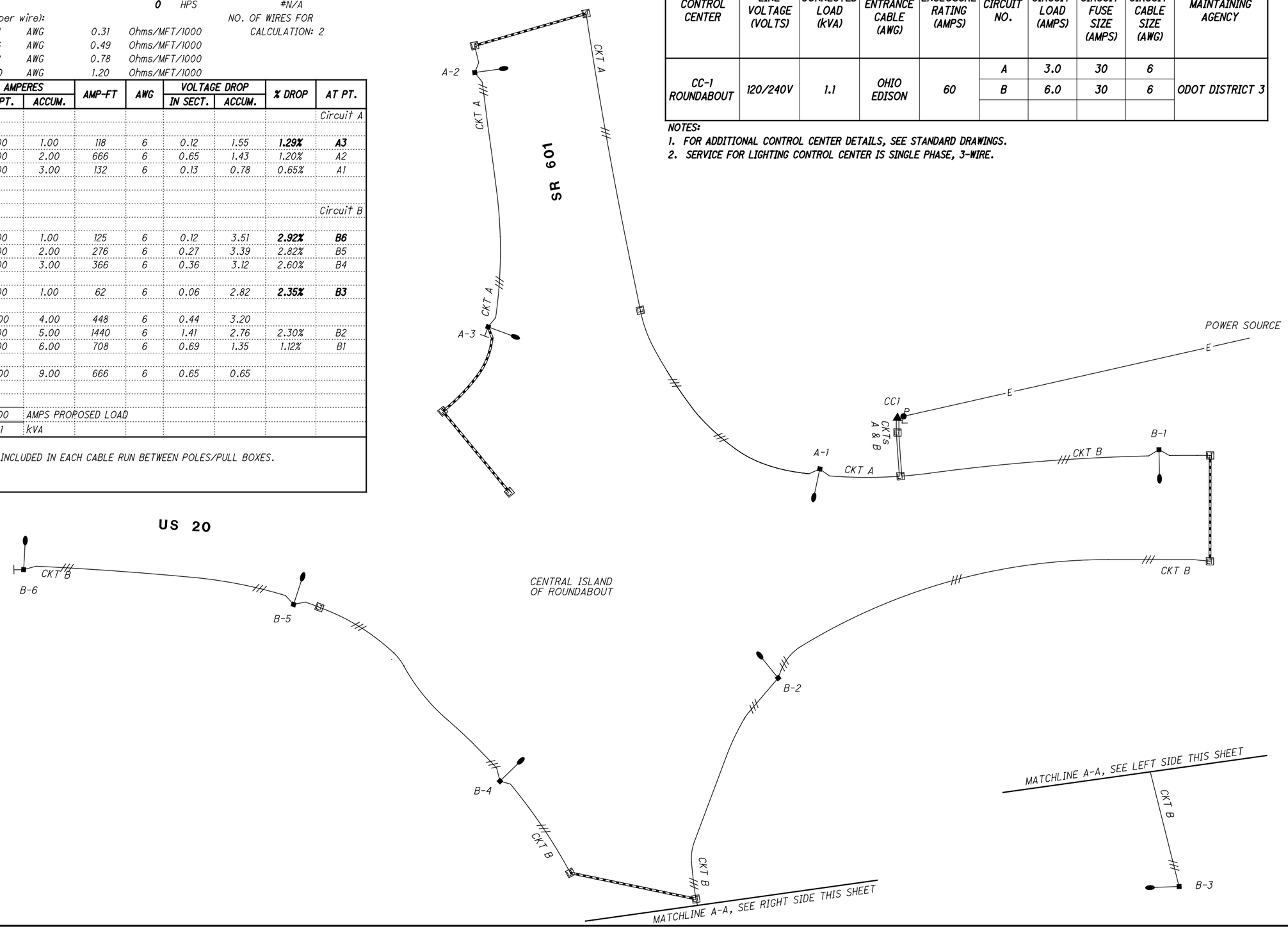

HORIZONTAL SCALE IN FEET 0 10 20 40

CALCULATED SS CHECKED GAH

LIGHTING CIRCUIT SCHEMATIC
US 20 AND SR 601 ROUNDABOUT

HUR-20-17.32

...\Sheets\110357LC001.dgn 3/23/2021 8:44:31 AM mswhitt

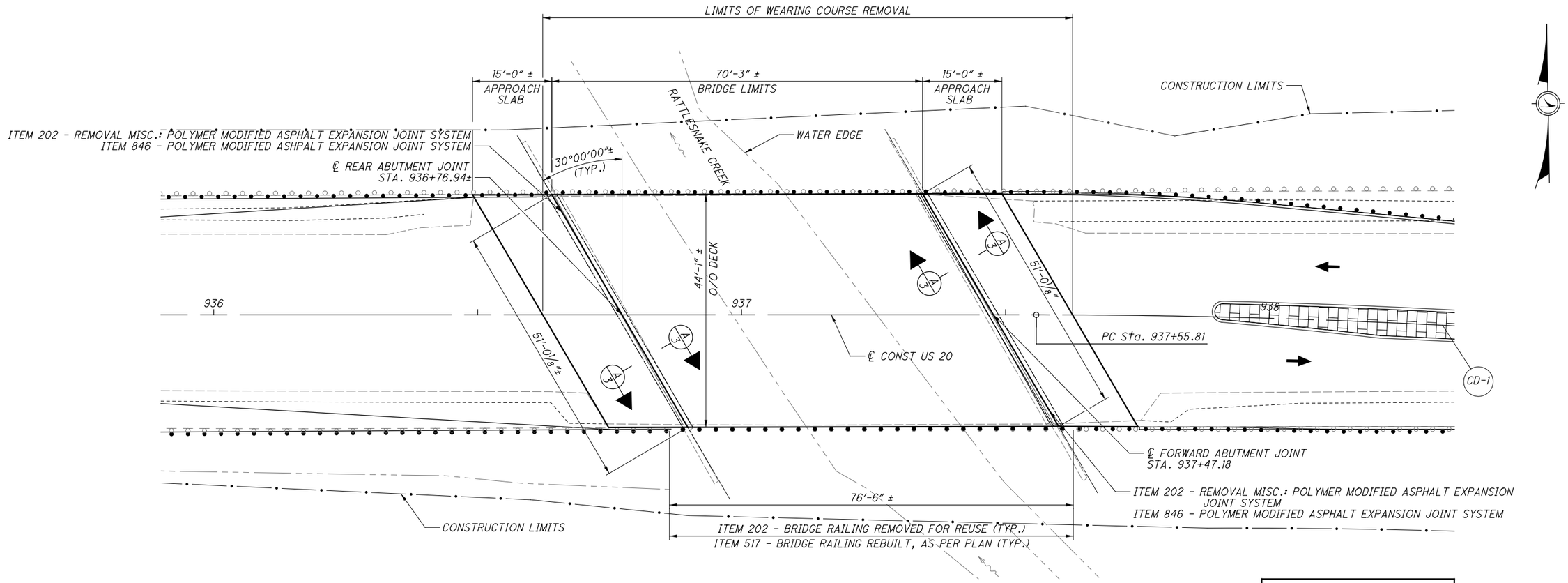

PLAN

BENCHMARK DATA
BM #1 STA. 934+92.80, EL. 837.60, OFFSET 36.31', RT.
BM #2 STA. 937+61.07, EL. 838.43, OFFSET 19.92', RT.

CURVE DATA NO. 1
P.I. STA. 938+84.72
Δ = 9°49'24" (RT)
DC = 3°49'11"
R = 1,500.00'
T = 128.90'
L = 257.17'
E = 5.53'
PC STA. 937+55.81
PT STA. 940+12.98

NOTES:

1. DESIGN TRAFFIC:
   2023 ADT = 6,525 2023 ADTT = 914
   2043 ADT = 6,525 2043 ADTT = 914
2. FOR ADDITIONAL BENCHMARK INFORMATION, SEE ROADWAY PLAN SHEET 2/128.
3. FOR MAINTENANCE OF TRAFFIC NOTES, PERMITTED LANE CLOSURES AND DETAILS, REFER TO ROADWAY PLANS.

DESIGN AGENCY
TranSystems
1100 SUPERIOR AVENUE, SUITE 1200
CLEVELAND, OHIO 44114

DESIGNED	DRAWN	REVIEWED	DATE
RSB	JML	DSS	3/1/21
CHECKED	REVISED	STRUCTURE FILE NUMBER	
ZTW		3901394	

GENERAL PLAN
BRIDGE NO. HUR-20-1774
US 20 OVER RATTLESNAKE CREEK

HUR-20-17.82
PID No. 110357

...\Sheets\020_1782C_SG001.dgn 3/23/2021 8:44:36 AM mswhitt

STRUCTURE GENERAL NOTES

REFER TO THE FOLLOWING SUPPLEMENTAL SPECIFICATIONS:
800 DATED XX/XX/2021
846 DATED 4/17/2015

DESIGN SPECIFICATIONS:
THIS STRUCTURE CONFORMS TO THE 8TH EDITION OF THE "LRFD BRIDGE DESIGN SPECIFICATIONS" ADOPTED BY THE AMERICAN ASSOCIATION OF STATE HIGHWAY AND TRANSPORTATION OFFICIALS, 2017 AND THE ODOT BRIDGE DESIGN MANUAL, 2020.

DECK PROTECTION METHOD:
ASPHALT CONCRETE DECK OVERLAY AND TYPE 3 WATERPROOFING MEMBRANE.

EXISTING STRUCTURE VERIFICATION:
DETAILS AND DIMENSIONS SHOWN ON THESE PLANS PERTAINING TO THE EXISTING STRUCTURE HAVE BEEN OBTAINED FROM PLANS OF THE EXISTING STRUCTURE AND FROM FIELD OBSERVATIONS AND MEASUREMENTS. CONSEQUENTLY, THEY ARE INDICATIVE OF THE EXISTING STRUCTURE AND THE PROPOSED WORK BUT THEY SHALL BE CONSIDERED TENTATIVE AND APPROXIMATE. THE CONTRACTOR IS REFERRED TO CMS SECTIONS 102.05 AND 105.02.

BASE CONTRACT BID PRICES UPON A RECOGNITION OF THE UNCERTAINTIES DESCRIBED ABOVE AND UPON A PREBID EXAMINATION OF THE EXISTING STRUCTURE. HOWEVER, THE DEPARTMENT WILL PAY FOR ALL PROJECT WORK BASED UPON ACTUAL DETAILS AND DIMENSIONS THAT HAVE BEEN VERIFIED IN THE FIELD.

EXISTING STRUCTURE PLANS:
CONSTRUCTION PLANS FOR THE EXISTING BRIDGE ARE ON FILE AT THE DEPARTMENT OF TRANSPORTATION, DISTRICT 3 OFFICE, 906 CLARK AVENUE, ASHLAND, OHIO AND ARE AVAILABLE FOR REFERENCE.

UTILITIES:
THERE ARE NO UNDERGROUND UTILITIES SHOWN ON THIS PLAN. THE NATURE OF THE WORK REQUIRED BY THIS PROJECT WILL NOT AFFECT ANY KNOWN UNDERGROUND UTILITIES THAT EXIST UNDER OR ADJACENT TO THE WORK AREA.

IN-STREAM WORK RESTRICTION:
THE CONTRACTOR SHALL TAKE ALL PRECAUTIONS TO AVOID CONSTRUCTION IN AND/OR LIMIT DEMOLITION DEBRIS FROM ENTERING STREAMS OR WETLANDS. ANY MATERIAL THAT DOES FALL INTO STREAMS OR WETLANDS SHALL BE REMOVED AS SOON AS POSSIBLE.

ALL PROJECTS INVOLVING JURISDICTIONAL WATERS OF THE UNITED STATES STREAMS, RIVERS, NON-ISOLATED WETLANDS, AND/OR ISOLATED WETLANDS ARE SUBJECT TO REGULATION UNDER SECTIONS 404 AND 401 OF THE CLEAN WATER ACT, AND POSSIBLY OHIO EPA ISOLATED WETLAND LAW. IT IS ANTICIPATED THAT NO IN-STREAM WORK, OR WORK UNDER THE STREAM'S ORDINARY HIGH WATER MARK (OHWM) WILL BE NEEDED. THEREFORE NO WATERWAY PERMITS HAVE BEEN GRANTED AND NO IN-STREAM WORK IS ALLOWED.

SHOULD WORK (EITHER TEMPORORARY OR PERMANENT) IN THE STREAM BE NEEDED; IT WILL REQUIRE A PERMIT AND AUTHORIZATION OF THE UNITED STATES ARMY CORPS OF ENGINEERS (USACE). THE CONTRACTOR SHALL NOT UTILIZE FILLS BELOW OHWM UNTIL SUCH ACTIVITY IS AUTHORIZED BY THE USACE. DETAILS OF THE REQUIREMENT ARE DESCRIBED IN ODOT'S SUPPLEMENTAL SPECIFICATION 832.

USACE DEFINITION OF OHWM - THE ORDINARY HIGH WATER MARK IS THE LINE ON THE SHORE ESTABLISHED BY THE FLUCTUATIONS OF WATER AND INDICATED BY PHYSICAL CHARACTERISTICS SUCH AS A CLEAR, NATURAL LINE IMPRESSED ON THE BANK; SHELVING; CHANGES IN THE CHARACTER OF THE SOIL; DESTRUCTION OF TERRESTRIAL VEGETATION; THE PRESENCE OF LITTER AND DEBRIS; OR OTHER APPROPRIATE MEANS THAT CONSIDER THE CHARACTERISTICS OF THE SURROUNDING AREAS.

ITEM 202 - REMOVAL MISC.: POLYMER MODIFIED ASPHALT EXPANSION JOINT SYSTEM:
THIS ITEM SHALL BE USED TO REMOVE THE EXISTING POLYMER MODIFIED ASPHALT EXPANSION JOINT SYSTEM LOCATED BETWEEN THE APPROACH SLAB AND THE CONCRETE BOX BEAM.

PAYMENT FOR ALL OF THE ABOVE SHALL BE AT THE UNIT PRICE BID PER FOOT WHICH SHALL INCLUDE ALL LABOR, EQUIPMENT, MATERIALS, AND INCIDENTALS NECESSARY TO COMPLETE THE WORK.

ITEM 202 - BRIDGE RAILING REMOVED FOR REUSE:
THIS WORK IS TO FACILITATE FULL WIDTH PLANING AND PAVING OVER THE STRUCTURE. THE INTENT IS TO REMOVE THE RAIL ELEMENTS ONLY DURING THE WEARING COURSE REMOVAL AND PAVING OPERATIONS. BRIDGE RAILING POSTS ARE TO REMAIN IN PLACE.

PERFORM WORK CAREFULLY DURING DECK REMOVALTO PROTECT PORTIONS OF SUCH SYSTEMS THAT ARE TO BE SALVAGED.

PAYMENT FOR ALL OF THE ABOVE SHALL BE AT THE UNIT PRICE BID PER FOOT, WHICH SHALL INCLUDE ALL LABOR, EQUIPMENT, MATERIALS, AND INCIDENTALS NECESSARY TO COMPLETE THE WORK.

ITEM 512 - REMOVAL OF EXISTING COATINGS FROM CONCRETE SURFACES, AS PER PLAN
THIS WORK IS TO REMOVE THE EXISTING TYPE 3 WATERPROOFING.

PAYMENT FOR ALL OF THE ABOVE SHALL BE AT THE UNIT PRICE BID PER SQUARE YARD, WHICH SHALL INCLUDE ALL LABOR, EQUIPMENT, MATERIALS, AND INCIDENTALS NECESSARY TO COMPLETE THE WORK.

ITEM 517 - BRIDGE RAILING REBUILT, AS PER PLAN
THIS WORK IS TO REPLACE THE REMOVED EXISTING BRIDGE RAILING AFTER THE FULL WIDTH PLANING AND PAVING OVER THE STRUCTURE IS COMPLETE.

PAYMENT FOR ALL OF THE ABOVE SHALL BE AT THE UNIT PRICE BID PER FOOT, WHICH SHALL INCLUDE ALL LABOR, EQUIPMENT, MATERIALS, AND INCIDENTALS NECESSARY TO COMPLETE THE WORK.

ITEM 846 - POLYMER MODIFIED ASPHALT EXPANSION JOINT SYSTEM:
THIS ITEM WILL BE USED TO FURNISH AND INSTALL THE EXPANSION JOINTS AS PER SUPPLEMENTAL SPECIFICATION 846 AND THE MANUFACTURER'S REQUIREMENTS USING A POLYMER MODIFIED ASPHALT SYSTEM. THE CONTRACTOR SHALL OBTAIN THE SERVICES OF ONE OF THE DEPARTMENT'S QUALIFIED PRODUCTS LIST (QPL) APPROVED APPLICATORS WHO SHALL FURNISH AND INSTALL THE NEW BRIDGE EXPANSION JOINT SYSTEM AFTER ALL PAVING ON THE STRUCTURE HAS BEEN COMPLETED.

PAYMENT FOR ALL OF THE ABOVE SHALL BE AT THE UNIT PRICE BID PER CUBIC FOOT, WHICH SHALL INCLUDE ALL LABOR, EQUIPMENT, MATERIALS, AND INCIDENTALS NECESSARY TO COMPLETE THE WORK.

MADE BY: JML DATE: 12/07/2020
CHECKED BY: RSB DATE: 12/07/2020

ESTIMATED QUANTITIES

STRUCTURE FILE NUMBER: 3901394

ITEM	ITEM EXTENSION	TOTAL	UNIT	DESCRIPTION	ABUTMENTS	SUPER STRUCTURE	GENERAL	REFERENCE SHEET NUMBER
202	23500	491	SY	WEARING COURSE REMOVED		491		
202	38602	153	FT	BRIDGE RAILING REMOVED FOR REUSE		153		
202	98200	102	FT	REMOVAL MISC.: POLYMER MODIFIED ASPHALT EXPANSION JOINT SYSTEM		102		100 / 128
407	10000	69	GAL	TACK COAT		69		
441	10100	41	CY	ASPHALT CONCRETE SURFACE COURSE, TYPE 1, (446), PG70-22M		41		
441	10200	27	CY	ASPHALT CONCRETE INTERMEDIATE COURSE, TYPE 2, (446)		27		
512	33010	364	SY	TYPE 3 WATERPROOFING		364		
512	74001	364	SY	REMOVAL OF EXISTING COATINGS FROM CONCRETE SURFACES, AS PER PLAN		364		100 / 128
517	75501	153	FT	BRIDGE RAILING REBUILT, AS PER PLAN		153		100 / 128
846	00110	49	CF	POLYMER MODIFIED ASPHALT EXPANSION JOINT SYSTEM		49		

DESIGN AGENCY
TranSystems
1100 SUPERIOR AVENUE, SUITE 1200
CLEVELAND, OHIO 44114

DESIGNED	DRAWN	REVIEWED	DATE
RSB	JML	DSS	3/1/21
CHECKED	REVISED	STRUCTURE FILE NUMBER	
ZTW		3901394	

GENERAL NOTES AND ESTIMATED QUANTITIES
BRIDGE NO. HUR-20-1774
US 20 OVER RATTLESNAKE CREEK

HUR-20-17.82
PID No. 110357

...\Sheets\020_1782C_SN001.dgn 3/23/2021 8:44:40 AM mswhitt

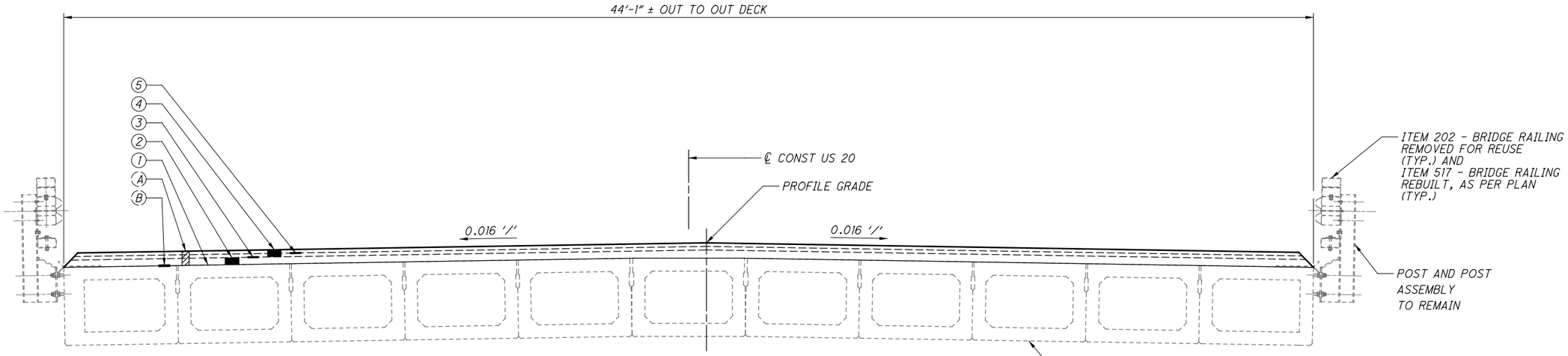

TRANSVERSE SECTION

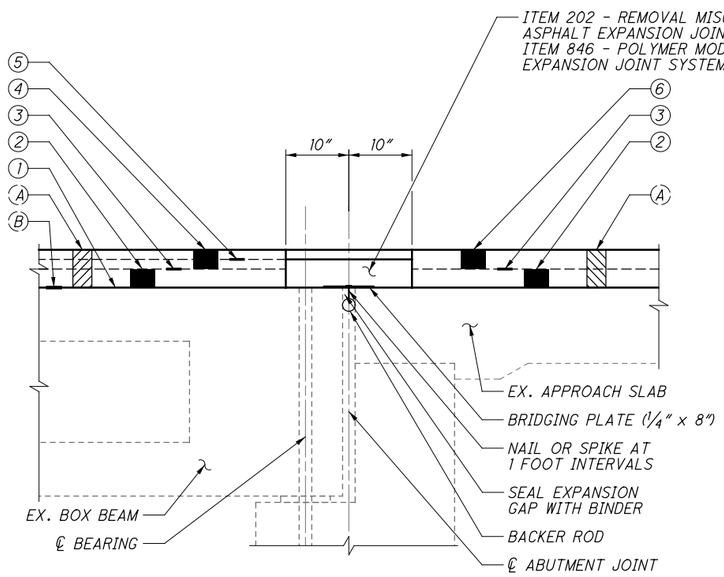

A/1 SECTION

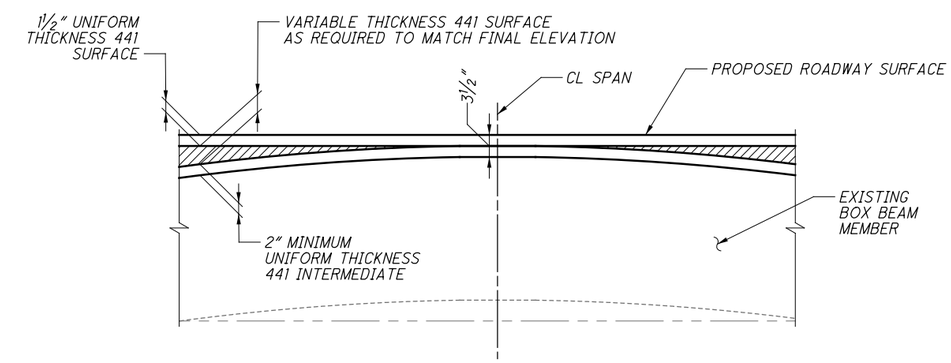

ASPHALT THICKNESS DIAGRAM

(SEE NOTE 1)

LEGEND:

EXISTING

(A) ITEM 202 - WEARING COURSE REMOVED (EXISTING ASPHALT CONCRETE OVERLAY, 3 1/2" ±)

(B) ITEM 512 - REMOVAL OF EXISTING COATINGS FROM CONCRETE SURFACES, AS PER PLAN

PROPOSED

(1) ITEM 512 - TYPE 3 WATERPROOFING

(2) ITEM 441 - ASPHALT CONCRETE INTERMEDIATE COURSE, TYPE 2, (446) (2")

(3) ITEM 407 - TACK COAT

(4) ITEM 441 - ASPHALT CONCRETE SURFACE COURSE, TYPE 1, (446), PG70-22M (2 LIFTS; VARIABLE AND 1.5" UNIFORM)

(5) ITEM 407 - TACK COAT

(6) ITEM 441 - ASPHALT CONCRETE SURFACE COURSE, TYPE 1, (446) (3")

NOTES:

1. ASPHALT CONCRETE WEARING COURSE SHALL CONSIST OF A VARIABLE THICKNESS OF 441 ASPHALT CONCRETE SURFACE COURSE, TYPE 1, PG70-22M AND A SECOND 1 1/2" THICKNESS OF 441 ASPHALT CONCRETE SURFACE COURSE, TYPE 1, PG70-22M. PLACE THE FIRST 441 SURFACE COURSE IN TWO OPERATOINS. THE FIRST PORTION OF THE COURSE SHALL BE OF 2" UNIFORM THICKNESS. FEATHER THE SECOND PORTION OF THE COURSE TO PLACE THE SURFACE PARALLEL TO AND 1 1/2" BELOW THE FINAL PAVEMENT SURFACE ELEVATION.

DESIGN AGENCY
TranSystems
1100 SUPERIOR AVENUE, SUITE 1000
CLEVELAND, OHIO 44114

DESIGNED	DRAWN	REVIEWED	DATE
RSB	JML	DSS	3/1/21
CHECKED	REVISED	STRUCTURE FILE NUMBER	
ZTW		3901394	

TRANSVERSE SECTION AND STRUCTURE DETAILS
BRIDGE NO. HUR-20-1774
US 20 OVER RATTLESNAKE CREEK

HUR-20-17.82
PID No. 110357

...\Sheets\020_1782C_ST001.dgn 3/23/2021 8:44:54 AM mswhitt

ITEM 659 - SEEDING, MISC.: NO-MOW FINE FESCUE MIX

THIS ITEM SHALL BE AS PER ITEM 659 - SEEDING AND MULCHING EXCEPT THAT THE MIX TYPE SHALL BE:

40% GOTHAM HARD FESCUE
30% FOXFIRE CREEPING RED FESCUE
20% LACROSSE CHEWINGS FESCUE
10% AZURE SHEEP FESCUE

GERMINATION RATE OF 85% MIN.
NOXIOUS WEED CONTENT 0% MAX.
WEED SEED CONTENT 0.05% MAX.

APPLY AT A RATE OF 80#/ACRE. WATER PER ODOT ITEM 659.17.

THIS ITEM SHALL ALSO INCLUDE ITEMS 659 - TOPSOIL, REPAIR SEEDING AND MULCHING, COMMERCIAL FERTILIZER, LIME, AND WATER FOR THE SEEDED AREA.

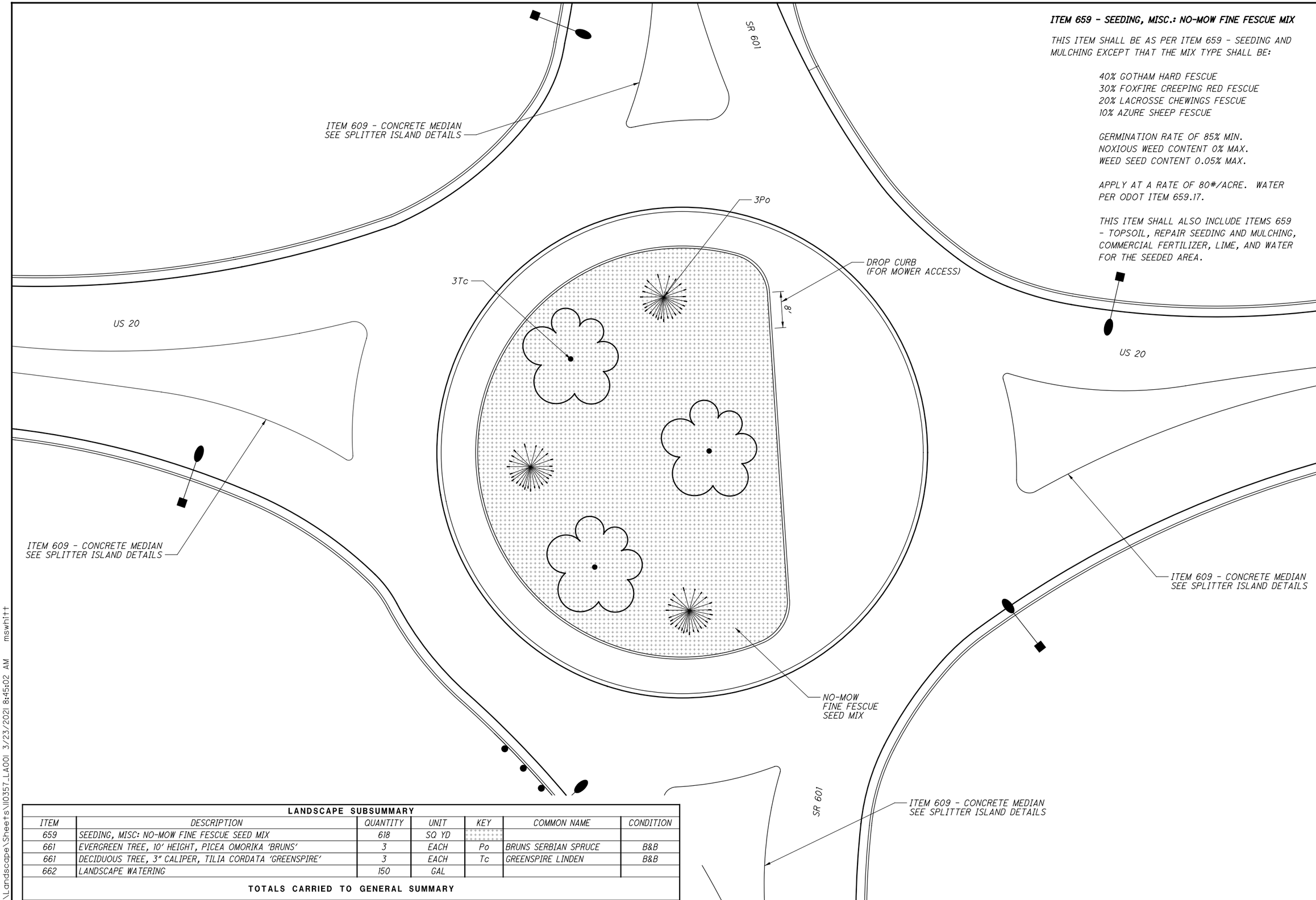

LANDSCAPE SUBSUMMARY

ITEM	DESCRIPTION	QUANTITY	UNIT	KEY	COMMON NAME	CONDITION
659	SEEDING, MISC: NO-MOW FINE FESCUE SEED MIX	618	SQ YD			
661	EVERGREEN TREE, 10' HEIGHT, PICEA OMORIKA 'BRUNS'	3	EACH	Po	BRUNS SERBIAN SPRUCE	B&B
661	DECIDUOUS TREE, 3" CALIPER, TILIA CORDATA 'GREENSPIRE'	3	EACH	Tc	GREENSPIRE LINDEN	B&B
662	LANDSCAPE WATERING	150	GAL			

TOTALS CARRIED TO GENERAL SUMMARY

N

HORIZONTAL SCALE IN FEET 0 5 10 20

CALCULATED TK
CHECKED GAH

LANDSCAPE PLAN

HUR-20-17.82

...\Landscape\Sheets\10357_LA001 3/23/2021 8:45:02 AM mswhitt

RIGHT OF WAY LEGEND SHEET
HUR-20-17.82

HURON COUNTY, OHIO
NORWALK TOWNSHIP
SECTION 2, G.L. 9 & SECTION 1, G.L. 35
T-4N, R-22W
TOWNSEND TOWNSHIP
SECTION 3, LOT 73 & SECTION 4, LOT 96
T-4N, R-21W
FIRE LANDS, CONNECTICUT WESTERN RESERVE

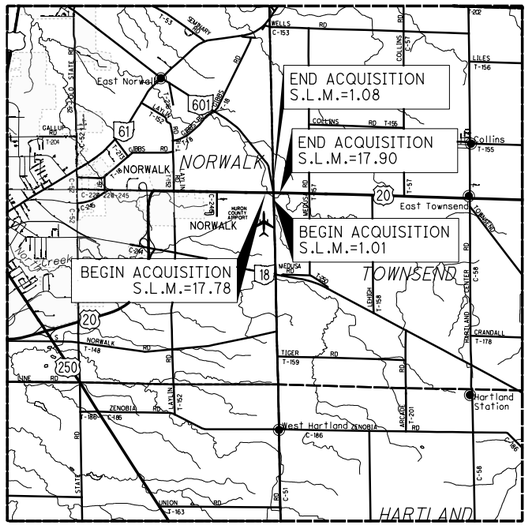

LOCATION MAP
LATITUDE: 41°14′57″ LONGITUDE: 82°32′29″

PROJECT DESCRIPTION

THIS PROJECT CONSISTS OF THE CONSTRUCTION OF A SINGLE LANE ROUNDABOUT AT THE INTERSECTION OF US 20 AND SR 601. IMPROVEMENTS WILL BE LIMITED TO THE IMMEDIATE AREA OF THE INTERSECTION REQUIRED TO CONSTRUCT THE ROUNDABOUT APPROACHES.

NOTE

THE EXISTING AND PROPOSED RIGHT OF WAY SHALL BE REFERENCED FROM THE EXISTING CENTERLINE OF RIGHT OF WAY OF U.S. 20 AND S.R. 601

STRUCTURE KEY

- RESIDENTIAL
- COMMERCIAL
- OUT-BUILDING

TYPES OF TITLE LEGEND:
WD = WARRANTY DEED
SH = STANDARD HIGHWAY EASEMENT
T = TEMPORARY EASEMENT
CH = CHANNEL EASEMENT
U = UTILITY EASEMENT

PLANS PREPARED BY:

FIRM NAME: BRAMHALL ENGINEERING & SURVEYING COMPANY
R/W DESIGNER: JAMES T. SCOTT JR., P.E.
R/W REVIEWER: AMY M. KELLY, P.S.
FIELD REVIEWER: ERIC SZUNYOGH
PRELIMINARY FIELD REVIEW DATE: FEBRUARY 25, 2020
TRACINGS FIELD REVIEW DATE: SEPTEMBER 2, 2020
OWNERSHIP UPDATED BY: AMY M. KELLY, P.S.
DATE COMPLETED: SEPTEMBER 3, 2020
PLAN COMPLETION DATE: SEPTEMBER 14, 2020

INDEX OF SHEETS:

LEGEND SHEET	1
CENTERLINE PLAT & MONUMENTATION	2 - 8
PROPERTY MAP	9
SUMMARY OF ADDITIONAL R/W	10
RIGHT OF WAY TOPO SHEETS	11 - 19 (ODD)
RIGHT OF WAY BOUNDARY SHEETS	12 - 20 (EVEN)

PROJECT CONTROL

COORDINATE SYSTEM: OHIO STATE PLANE, NORTH ZONE (3401)
HORIZONTAL DATUM: NAD83 (2011)
GRID TO GROUND MULTIPLIER: 1.00009000
COMBINED SCALE FACTOR: 0.999910008
PROJECT ADJUSTMENT FACTOR (STATE PLANE GRID (METERS) TO PROJECT GROUND (US SURVEY FEET): 3.281128608
ENGLISH TO METRIC CONVERSION: 3.28083333

UTILITY OWNERS	
NORTHERN OHIO RURAL WATER *ATTN: JOSH SOUTHERLAND* *2205 US 20 E* *NORWALK, OH 44857* *PHONE: 419-668-7213* *EMAIL: JSOUTHERLAND@NORW.ORG*	*FIRST ENERGY* *6326 LAKE AVENUE* *ELYRIA, OH 44035* *ATTN: DOUG LINN* *PHONE: 440-326-3268* *EMAIL: LINNDM@FIRSTENERGYCORP.COM*
COLUMBIA GAS OF OHIO *1800 BROAD AVENUE* *FINDLAY, OH 45840* *ATTN: NATHAN HOY* *PHONE: (419) 427-3242* *EMAIL: NHOY@NISOURCE.COM*	*FRONTIER COMMUNICATIONS* *6223 NORWALK ROAD* *MEDINA, OHIO 44256* *ATTN: RANDY HOWARD* *PHONE: (330) 722-9586* *EMAIL: J.HOWARD@FTR.COM*
WINDSTREAM *560 TERNES AVE.* *ELYRIA, OHIO 44035* *ATTN: GEOFF HAMM* *PHONE:440-329-4245* *EMAIL: GEOFFREY.P.HAMM@WINDSTREAM.COM*	*CHARTER/SPECTRUM ENTERPRISE* *1575 LEXINGTON AVE.* *MANSFIELD, OH 44907* *ATTN: RON FERDINAND* *EMAIL: RONALD.FERDINAND@CHARTER.COM*
NOTES: THE LOCATION OF THE UNDERGROUND UTILITIES SHOWN ON THE PLANS ARE OBTAINED FROM THE OWNER OF THE UTILITIES AS REQUIRED BY SECTION 153.64 O.R.C.	

CONVENTIONAL SYMBOLS

County Line
Township Line
Section Line
Corporation Line or
Fence Line (Ex)
Fence Line (Pr)
Center Line
Right of Way (Ex)
Right of Way (Pr)
Ex R/W
R/W
Standard Highway Ease.(Ex)
Ex SH
Standard Highway Ease.(Pr)
SH
Temporary Right of Way
TMP
Channel Ease. (Pr)
CH
Utility Ease. (Ex)
Ex U
Railroad or
Guardrail (Ex)
Guardrail (Pr)
Construction Limits
Edge of Pavement (Ex)
Edge of Pavement (Pr)
Edge of Shoulder (Ex)
Edge of Shoulder (Pr)
Ditch / Creek (Ex)
Ditch / Creek (Pr)
Overhead Electric (Ex) —OH-E—
Overhead Telephone (Ex) —OH-T—
Overhead Combined (Ex) —OH-Comb—
Waterline (Ex) —W—
Tree Line (Ex)
Ownership Hook Symbol , Example
Property Line Symbol , Example
Break Line Symbol , Example
Tree (Pr) , Tree (Ex) , Shrub (Ex)
Tree (Remove) , Shrub (Remove)
Evergreen (Ex) , Stump
Evergreen (Remove) , Stump (Remove)
Wetland (Pr) , Grass (Pr) , Aerial Target
Post (Ex) , Mailbox (Ex) , Mailbox (Pr)
Light (Ex) , Telephone Marker (Ex)
Fire Hydrant (Ex) , Water Meter (Ex)
Water Valve (Ex) , Utility Valve Unknown (Ex.)
Telephone Pole (Ex) , Power Pole (Ex)
Light Pole (Ex) Light and Power Poe (Ex)

I, AMY M. KELLY , P. S. HAVE CONDUCTED A SURVEY OF THE EXISTING CONDITIONS FOR THE OHIO DEPARTMENT OF TRANSPORTATION IN NOVEMBER & DECEMBER OF 2019. THE RESULTS OF THAT SURVEY ARE CONTAINED HEREIN. THE HORIZONTAL COORDINATES EXPRESSED HEREIN ARE BASED ON THE OHIO STATE PLANE COORDINATES SYSTEM NORTH ZONE ON NAD 83 (2011) DATUM. THE PROJECT COORDINATES (US SURVEY FEET) ARE RELATIVE TO STATE PLANE GRID COORDINATES (METERS OR US SURVEY FEET) BY A PROJECT ADJUSTMENT FACTOR OF 1.00009000. ELEVATIONS OF PROJECT CONTROL POINTS AND BENCHMARKS ARE BASED ON GEOID 12-A OF THE NAVD88 DATUM AND WERE ESTABLISHED BY CONVENTIONAL DIFFERENTIAL LEVELING FROM CP02. THE ELEVATION OF CP01 WAS DETERMINED BY AVERAGING 16 ODOT VRS-DERIVED GNSS OBSERVATIONS OBTAINED ON 10-22-2019. AS A PART OF THIS PROJECT I HAVE REESTABLISHED THE LOCATIONS OF THE EXISTING PROPERTY LINES AND THE EXISTING CENTERLINE OF RIGHT OF WAY FOR PROPERTY TAKES CONTAINED HEREIN. AS A PART OF THIS PROJECT I HAVE ESTABLISHED THE PROPOSED PROPERTY LINES, CALCULATED THE GROSS TAKE, PRESENT ROADWAY OCCUPIED (PRO), NET TAKE AND NET RESIDUE; AS WELL AS PREPARED THE LEGAL DESCRIPTIONS NECESSARY TO ACQUIRE THE PARCELS AS SHOWN HEREIN. AS A PART OF THIS WORK I HAVE SET RIGHT OF WAY MONUMENTS AT THE PROPERTY CORNERS, PROPERTY LINE INTERSECTION, POINTS ALONG THE RIGHT OF WAY AND/OR ANGLE POINTS ON THE RIGHT OF WAY, SECTION CORNERS AND OTHER POINTS AS SHOWN HEREIN. ALL OF MY WORK CONTAINED HEREIN WAS CONDUCTED IN ACCORDANCE WITH OHIO ADMINISTRATIVE CODE 4733-37 COMMONLY KNOWN AS "MINIMUM STANDARDS FOR BOUNDARY SURVEYS IN THE STATE OF OHIO" UNLESS NOTED. THE WORDS I AND MY AS USED HEREIN ARE TO MEAN EITHER MYSELF OR SOMEONE WORKING UNDER MY DIRECT SUPERVISION.

AMY M. KELLY, PROFESSIONAL LAND SURVEYOR NO. 8469

DATE: 10/13/2020

SURVEYORS SEAL

STATE OF OHIO
AMY M. KELLY
S-8469
REGISTERED
PROFESSIONAL SURVEYOR

FEDERAL PROJECT NO. E 190(640)
PID NO. 110357
CALCULATED JTS
CHECKED AMK

RIGHT OF WAY LEGEND SHEET

HUR-20-17.82

I:\ProjectData\HUR\110357\Design\RW\Sheets\110357_RL001.dgn Sheet 9/17/2020 3:57:25 PM jtscott

HUR-20-17.82

HURON COUNTY, OHIO
NORWALK TOWNSHIP
SECTION 2, G.L. 9 & SECTION 1, G.L. 35
T-4N, R-22W
TOWNSEND TOWNSHIP
SECTION 3, LOT 73 & SECTION 4, LOT 96
T-4N, R-21W
FIRE LANDS, CONNECTICUT WESTERN RESERVE

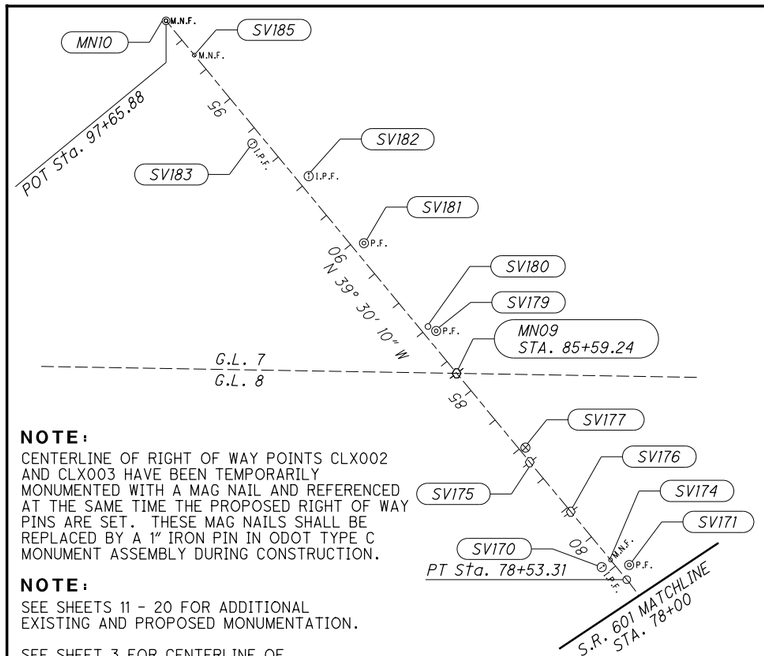

C1
S.R. 601
P.I. Sta. 77+26.61
Δ = 28° 28' 30" (LT)
Dc = 11° 00' 00"
R = 520.87'
T = 132.16'
L = 258.86'
E = 16.51'
C = 256.21'
C.B. = N 25° 15' 55" W

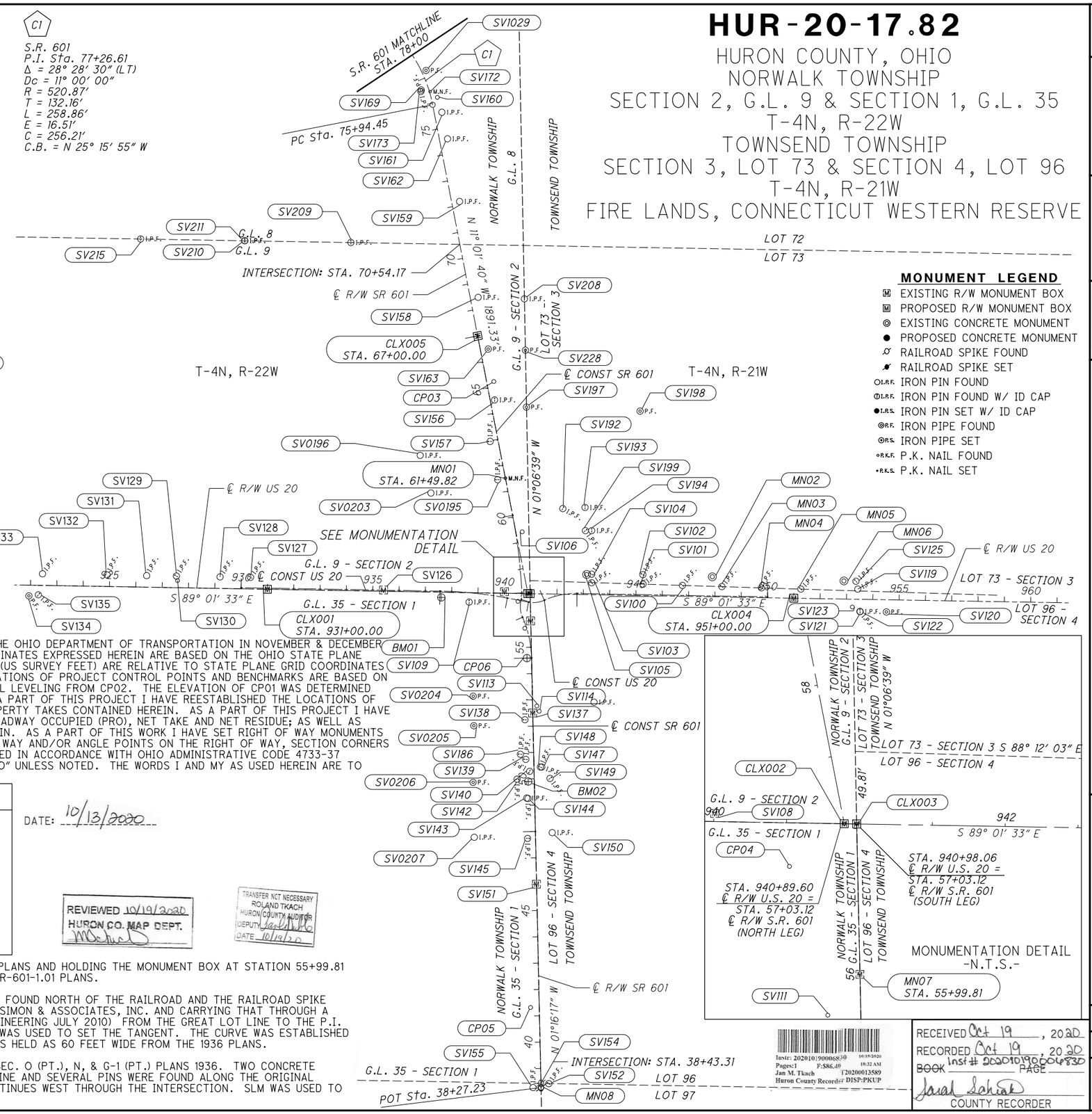

MONUMENT LEGEND

- EXISTING R/W MONUMENT BOX
- PROPOSED R/W MONUMENT BOX
- EXISTING CONCRETE MONUMENT
- PROPOSED CONCRETE MONUMENT
- RAILROAD SPIKE FOUND
- RAILROAD SPIKE SET
- I.R.F. IRON PIN FOUND
- I.R.F. IRON PIN FOUND W/ ID CAP
- I.R.S. IRON PIN SET W/ ID CAP
- R.F. IRON PIPE FOUND
- R.S. IRON PIPE SET
- P.K.F. P.K. NAIL FOUND
- P.K.S. P.K. NAIL SET

NOTE:
CENTERLINE OF RIGHT OF WAY POINTS CLX002 AND CLX003 HAVE BEEN TEMPORARILY MONUMENTED WITH A MAG NAIL AND REFERENCED AT THE SAME TIME THE PROPOSED RIGHT OF WAY PINS ARE SET. THESE MAG NAILS SHALL BE REPLACED BY A 1" IRON PIN IN ODOT TYPE C MONUMENT ASSEMBLY DURING CONSTRUCTION.

NOTE:
SEE SHEETS 11 - 20 FOR ADDITIONAL EXISTING AND PROPOSED MONUMENTATION.

SEE SHEET 3 FOR CENTERLINE OF CONSTRUCTION INFORMATION.

NOTE:
SETTING OF ALL MONUMENTS SHALL BE PERFORMED BY A SURVEYOR REGISTERED IN THE STATE OF OHIO. THE MONUMENT ASSEMBLIES AND REFERENCE MONUMENTS WILL BE INSTALLED BY THE CONTRACTOR AT THE TIME OF CONSTRUCTION. THE IRON PIN AND CAP (WHEN REQUIRED) ARE TO BE INSTALLED BY THE CONTRACTOR'S SURVEYOR.

CHANGES OR ALTERATIONS TO THE LOCATION OF ANY MONUMENTS SHOWN IN THIS TABLE, REQUIRE PRIOR APPROVAL FROM THE DISTRICT REAL ESTATE ADMINISTRATOR OF THE OHIO DEPARTMENT OF TRANSPORTATION. IN THE EVENT THAT CHANGES OR ALTERATIONS ARE APPROVED, A REVISED CENTERLINE PLAT WITH THE NEW LOCATIONS SHALL BE RECORDED IN THE APPLICABLE COUNTY RECORDS AND THE OHIO DEPARTMENT OF TRANSPORTATION. SPECIFICATIONS FOR MONUMENT ASSEMBLIES, REFERENCE MONUMENTS AND RIGHT OF WAY MONUMENTS ARE SHOWN ON STANDARD CONSTRUCTION DRAWING RM-1.1.

I, AMY M. KELLY , P. S. HAVE CONDUCTED A SURVEY OF THE EXISTING CONDITIONS FOR THE OHIO DEPARTMENT OF TRANSPORTATION IN NOVEMBER & DECEMBER OF 2019. THE RESULTS OF THAT SURVEY ARE CONTAINED HEREIN. THE HORIZONTAL COORDINATES EXPRESSED HEREIN ARE BASED ON THE OHIO STATE PLANE COORDINATES SYSTEM NORTH ZONE ON NAD 83 (2011) DATUM. THE PROJECT COORDINATES (US SURVEY FEET) ARE RELATIVE TO STATE PLANE GRID COORDINATES (METERS OR US SURVEY FEET) BY A PROJECT ADJUSTMENT FACTOR OF 1.00009000. ELEVATIONS OF PROJECT CONTROL POINTS AND BENCHMARKS ARE BASED ON GEOID 12-A OF THE NAVD88 DATUM AND WERE ESTABLISHED BY CONVENTIONAL DIFFERENTIAL LEVELING FROM CP02. THE ELEVATION OF CP01 WAS DETERMINED BY AVERAGING 16 ODOT VRS-DERIVED GNSS OBSERVATIONS OBTAINED ON 10-22-2019. AS A PART OF THIS PROJECT I HAVE REESTABLISHED THE LOCATIONS OF THE EXISTING PROPERTY LINES AND THE EXISTING CENTERLINE OF RIGHT OF WAY FOR PROPERTY TAKES CONTAINED HEREIN. AS A PART OF THIS PROJECT I HAVE ESTABLISHED THE PROPOSED PROPERTY LINES, CALCULATED THE GROSS TAKE, PRESENT ROADWAY OCCUPIED (PRO), NET TAKE AND NET RESIDUE; AS WELL AS PREPARED THE LEGAL DESCRIPTIONS NECESSARY TO ACQUIRE THE PARCELS AS SHOWN HEREIN. AS A PART OF THIS WORK I HAVE SET RIGHT OF WAY MONUMENTS AT THE PROPERTY CORNERS, PROPERTY LINE INTERSECTION, POINTS ALONG THE RIGHT OF WAY AND/OR ANGLE POINTS ON THE RIGHT OF WAY, SECTION CORNERS AND OTHER POINTS AS SHOWN HEREIN. ALL OF MY WORK CONTAINED HEREIN WAS CONDUCTED IN ACCORDANCE WITH OHIO ADMINISTRATIVE CODE 4733-37 COMMONLY KNOWN AS "MINIMUM STANDARDS FOR BOUNDARY SURVEYS IN THE STATE OF OHIO" UNLESS NOTED. THE WORDS I AND MY AS USED HEREIN ARE TO MEAN EITHER MYSELF OR SOMEONE WORKING UNDER MY DIRECT SUPERVISION.

AMY M. KELLY, PROFESSIONAL LAND SURVEYOR NO. 8469

SURVEYORS SEAL

STATE OF OHIO
AMY M. KELLY
S-8469
REGISTERED
PROFESSIONAL SURVEYOR

DATE: 10/13/2020

REVIEWED 10/19/2020
HURON CO. MAP DEPT.

TRANSFER NOT NECESSARY
ROLAND TKACH
HURON COUNTY AUDITOR
DEPUTY
DATE 10/19/20

BASIS OF BEARINGS:
BASIS OF BEARINGS ESTABLISHED ON BASIS OF GRID NORTH OF THE OHIO STATE PLANE NORTH (3401) COORDINATE SYSTEM NAD83 (2011).

BASIS FOR EXISTING R/W:
THE SOUTH LEG OF THE CENTERLINE OF SR 601 WAS DETERMINED UTILIZING HUR-601-0.94 PLANS AND HOLDING THE MONUMENT BOX AT STATION 55+99.81 FOR STATIONING. THE RIGHT-OF-WAY WAS DETERMINED USING BOTH HUR-601-0.94 AND HUR-601-1.01 PLANS.

THE NORTH LEG OF THE CENTERLINE OF SR 601 WAS DETERMINED BY HOLDING THE MAGNAIL FOUND NORTH OF THE RAILROAD AND THE RAILROAD SPIKE FOUND 54.50 FEET SOUTH OF GREAT LOT 7, SECTION 2 FROM A 2010 SURVEY BY THOMAS SIMON & ASSOCIATES, INC. AND CARRYING THAT THROUGH A DISTANCE OF 892.59 FEET (RECORD DISTANCE FROM SURVEY BY CONTRACTORS DESIGN ENGINEERING JULY 2010) FROM THE GREAT LOT LINE TO THE P.I. FROM THE P.I., A MAGNAIL, APPROXIMATELY 447 FEET NORTHERLY OF THE INTERSECTION WAS USED TO SET THE TANGENT. THE CURVE WAS ESTABLISHED PER THE GREENWICH-MILAN ROAD (WPSO 950-A) PLANS FROM 1936. THE RIGHT-OF-WAY WAS HELD AS 60 FEET WIDE FROM THE 1936 PLANS.

THE CENTERLINE OF RIGHT-OF-WAY OF U.S. ROUTE 20 WERE DETERMINED FROM S.H. 290 SEC. O (PT.), N, & G-1 (PT.) PLANS 1936. TWO CONCRETE MONUMENTS EAST OF THE INTERSECTION WERE HELD FOR THE NORTHERLY RIGHT-OF-WAY LINE AND SEVERAL PINS WERE FOUND ALONG THE ORIGINAL CENTERLINE OF U.S. ROUTE 20. THE PRESENT CENTERLINE IS A STRAIGHT LINE THAT CONTINUES WEST THROUGH THE INTERSECTION. SLM WAS USED TO DETERMINE THE STATIONING OF U.S. ROUTE 20.

Instr: 202010190006830 10/19/2020 10:32 AM
Pages:1 F:$86.40
Jan M. Tkach T20200013589
Huron County Recorder DISP:PKUP

RECEIVED Oct 19, 2020
RECORDED Oct 19, 2020
BOOK Inst# 202010190006830 PAGE
COUNTY RECORDER

HORIZONTAL SCALE IN FEET 0 100 200 400

PID NO. 110357

R/W DESIGNER JTS
R/W REVIEWER AMK

CENTERLINE PLAT

HUR-20-17.82

1/7
2/20
104/128

I:\Project\Data\HUR\110357\Design\RW\Sheets\110357_RC001.dgn Sheet 9/17/2020 3:57:31 PM ltscott

HUR-20-17.82

HURON COUNTY, OHIO
NORWALK TOWNSHIP
SECTION 2, G.L. 9 & SECTION 1, G.L. 35
T-4N, R-22W
TOWNSEND TOWNSHIP
SECTION 3, LOT 73 & SECTION 4, LOT 96
T-4N, R-21W
FIRE LANDS, CONNECTICUT WESTERN RESERVE

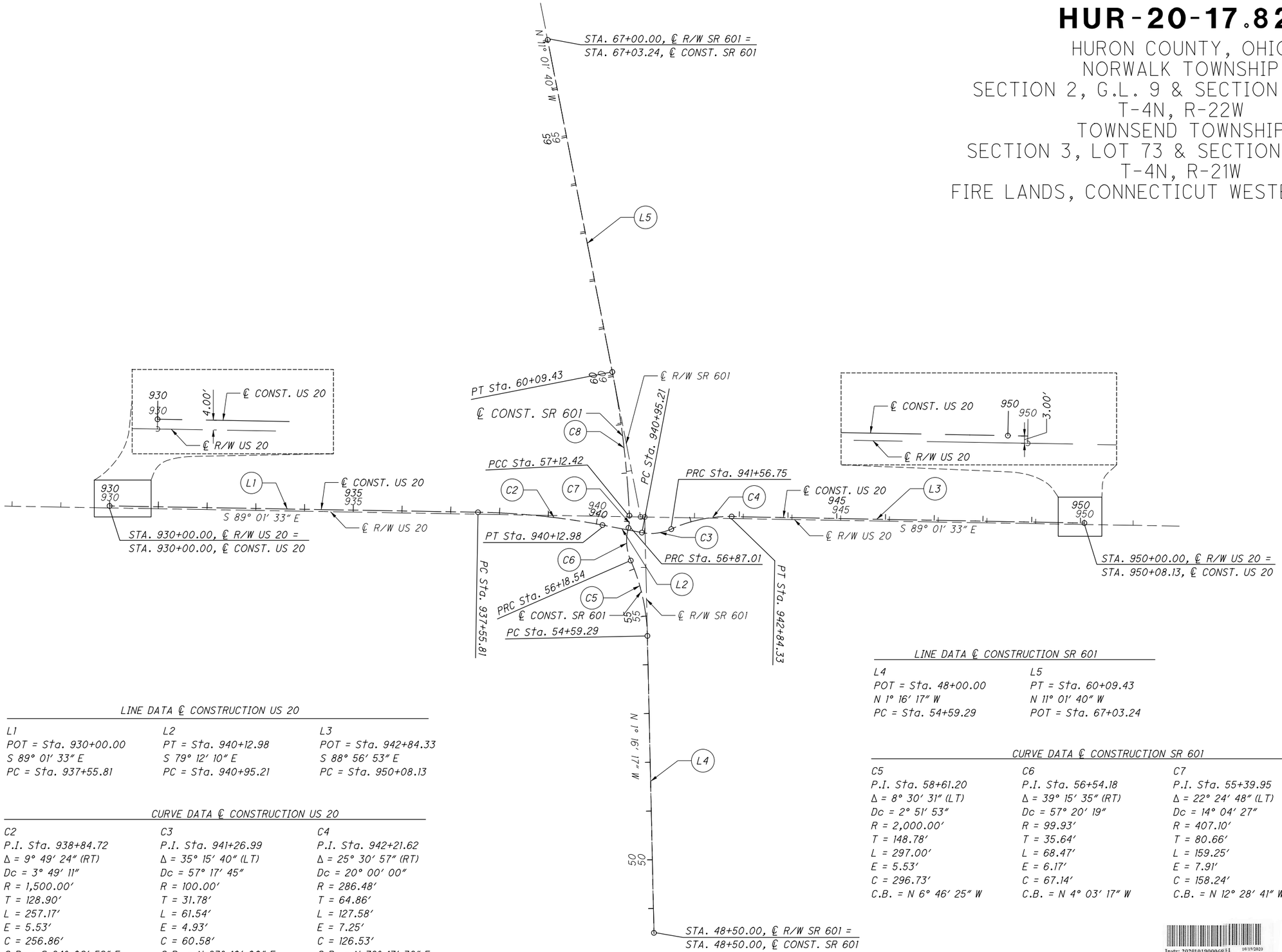

LINE DATA ℄ CONSTRUCTION US 20

L1	L2	L3
POT = Sta. 930+00.00	PT = Sta. 940+12.98	POT = Sta. 942+84.33
S 89° 01' 33" E	S 79° 12' 10" E	S 88° 56' 53" E
PC = Sta. 937+55.81	PC = Sta. 940+95.21	PC = Sta. 950+08.13

CURVE DATA ℄ CONSTRUCTION US 20

C2	C3	C4
P.I. Sta. 938+84.72	P.I. Sta. 941+26.99	P.I. Sta. 942+21.62
Δ = 9° 49' 24" (RT)	Δ = 35° 15' 40" (LT)	Δ = 25° 30' 57" (RT)
Dc = 3° 49' 11"	Dc = 57° 17' 45"	Dc = 20° 00' 00"
R = 1,500.00'	R = 100.00'	R = 286.48'
T = 128.90'	T = 31.78'	T = 64.86'
L = 257.17'	L = 61.54'	L = 127.58'
E = 5.53'	E = 4.93'	E = 7.25'
C = 256.86'	C = 60.58'	C = 126.53'
C.B. = S 84° 06' 52" E	C.B. = N 83° 10' 00" E	C.B. = N 78° 17' 38" E

LINE DATA ℄ CONSTRUCTION SR 601

L4	L5
POT = Sta. 48+00.00	PT = Sta. 60+09.43
N 1° 16' 17" W	N 11° 01' 40" W
PC = Sta. 54+59.29	POT = Sta. 67+03.24

CURVE DATA ℄ CONSTRUCTION SR 601

C5	C6	C7	C8
P.I. Sta. 58+61.20	P.I. Sta. 56+54.18	P.I. Sta. 55+39.95	P.I. Sta. 56+99.79
Δ = 8° 30' 31" (LT)	Δ = 39° 15' 35" (RT)	Δ = 22° 24' 48" (LT)	Δ = 14° 31' 41" (LT)
Dc = 2° 51' 53"	Dc = 57° 20' 19"	Dc = 14° 04' 27"	Dc = 57° 10' 33"
R = 2,000.00'	R = 99.93'	R = 407.10'	R = 100.21'
T = 148.78'	T = 35.64'	T = 80.66'	T = 12.77'
L = 297.00'	L = 68.47'	L = 159.25'	L = 25.41'
E = 5.53'	E = 6.17'	E = 7.91'	E = 0.81'
C = 296.73'	C = 67.14'	C = 158.24'	C = 25.34'
C.B. = N 6° 46' 25" W	C.B. = N 4° 03' 17" W	C.B. = N 12° 28' 41" W	C.B. = N 4° 44' 41" E

Instr: 202010190006831 10/19/2020
Pages:1 F:$86.40 10:32 AM
Jan M. Tkach T20200013589
Huron County Recorder DISP:PKUP

RECEIVED Oct 19, 2020
RECORDED Oct 19, 2020
BOOK ____ PAGE ____
Inst # 202010190006831
Sarah Schrad
COUNTY RECORDER

N
0 50 100 200
HORIZONTAL SCALE IN FEET

PID NO. 110357

R/W DESIGNER JTS
R/W REVIEWER AMK

CENTERLINE PLAT

HUR-20-17.82

2/7
3/20
105/128

I:\ProjectData\HUR\110357\Design\RW\Sheets\110357_RC007.dgn Sheet 9/17/2020 3:57:32 PM jtscott

HUR-20-17.82

PID: 110357

PROJECT GROUND COORDINATES - US SURVEY FEET

Project coordinates (U.S. Survey Feet) are relative to State Plane Grid coordinates (meters) by a Project Adjustment Factor of: 3.28112861

	C/L of Right of Way		HUR-601.094, Oberlin Norwalk S.H. 290 (1936) used for alignment				
NAME	STATION	OFFSET (US FT)	RT/LT	NORTH (US FT)	EAST (US FT)	ELEVATION (US FT)	FEATURE
SR 601							
CP03	65+18.19*	27.44	RT	577428.879	1957158.399	838.85	IPID
CP05	41+32.09*	-33.01	LT	575052.090	1957297.694	850.90	IPID
CP06	54+58.70*	-17.29	LT	576378.724	1957283.975	839.06	BM
BM02	49+90.10*	-22.81	LT	575910.119	1957288.852	841.63	BM
US 20							
CP01	947+65.27	-30.19	LT	576642.312	1957963.465	842.12	CMON
CP02	934+92.81	36.31	RT	576597.458	1956690.055	837.60	CMON
CP04	940+52.48	30.01	RT	576594.425	1957249.754	838.45	IPID
BM01	937+61.07	19.92	RT	576609.282	1956958.557	838.43	BM

EXISTING MONUMENTATION CENTERLINE OF RIGHT OF WAY US ROUTE 20 & SR 601

NAME	STATION	OFFSET (US FT)	RT/LT	NORTH (US FT)	EAST (US FT)	ELEVATION (US FT)	FEATURE
SR 601							
MN01	61+49.82*	0.00	-	577062.072	1957201.929	841.13	MAG
MN07	55+99.81*	0.00	-	576520.184	1957298.127	838.41	MONBOX
MN08	38+27.23*	0.00	-	574748.042	1957337.460	854.34	RSPK
MN09	85+59.24*	0.00	-	579256.407	1956367.19	824.23	RSPK
MN10	97+65.88*	0.00	-	580187.447	1955599.622	815.35	MAG
US 20							
MN02	947+89.18	-75.80	LT	576687.511	1957988.145	837.21	CMON
MN03	948+26.31	-39.20	LT	576650.281	1958024.644	841.46	IPID
MN04	949+76.31	-37.11	LT	576645.649	1958174.586	842.29	IPID
MN05	951+26.23	-34.94	LT	576640.931	1958324.450	843.48	IPID
MN06	952+89.32	-68.60	LT	576671.806	1958488.092	848.04	CMON

CENTERLINE OF RIGHT OF WAY

NAME	STATION	OFFSET (US FT)	RT/LT	NORTH (US FT)	EAST (US FT)	ELEVATION (US FT)	FEATURE
CLX001	931+00.00	0.00	-	576640.439	1956297.921	0.00	CALPT
CLX002	940+89.60	0.00	-	576623.615	1957287.378	0.00	CALPT
CLX003	940+98.06	0.00	-	576623.472	1957295.835	0.00	CALPT
CLX004	951+00.00	0.00	-	576606.439	1958297.632	0.00	CALPT
MN08	38+27.23*	0.00	-	574748.042	1957337.460	0.00	RSPK
MN07	55+99.81*	0.00	-	576520.184	1957298.127	0.00	MONBOX
CLX005	67+00.00*	0.00	-	577602.087	1957096.688	0.00	CALPT
CLX006	75+94.45*	0.00	-	578480.020	1956925.591	0.00	CALPT
CLX007	78+53.31*	0.00	-	578711.718	1956816.239	0.00	CALPT
MN10	97+65.88*	0.00	-	580187.447	1955599.622	0.00	MAG

PROJECT ADJUSTMENT FACTOR BASED ON:

UNITLESS FACTOR = 1.00009000 State Plane Grid to Project Ground (same units)
PROJ. ADJ. FACTOR = 3.28112861 State Plane Grid (meters) to Project Ground (US Survey Feet)
ENG./METRIC CONV. = 3.28083333 US Survey foot to meters conversion factor

PROJECT coordinates are scaled from GRID coordinates about the Ohio North Zone grid point N=0, E=0.

PROJECT CONTROL POINTS

DESCRIPTION	NAME	NORTH (m)	EAST (m)	ORTHO HT (m)	NORTH (US FT)	EAST (US FT)
5/8" REBAR WITH RED BRAMHALL CONTROL CAP SET	CP03	175984.8357	596489.3891	255.682	577376.9151	1956982.2706
5/8" REBAR WITH RED BRAMHALL CONTROL CAP SET	CP05	175260.4541	596531.8424	259.355	575000.3400	1957121.5531
3" ODOT DISK NW HEADWALL CORNER WEST SIDE SR 601	CP06	175664.7766	596527.6613	255.746	576326.8546	1957107.8353
BOX CUT NW CORNER HEADWALL	BM02	175521.9584	596529.1476	256.529	575858.2918	1957112.7119
PRIMARY PROJECT CONTROL MONUMENT TYPE A	CP01	175745.1112	596734.7516	256.679	576590.4189	1957787.2641
PRIMARY PROJECT CONTROL MONUMENT TYPE A	CP02	175731.4409	596346.6504	255.301	576545.5689	1956513.9687
5/8" REBAR WITH RED BRAMHALL CONTROL CAP SET	CP04	175730.5165	596517.2316	255.560	576542.5362	1957073.6174
CHISELED "X" SE HEADWALL SOUTH SIDE US 20	BM01	175735.0445	596428.4826	255.554	576557.3918	1956782.4466

EXISTING CENTERLINE CONTROL POINTS

Horiz. Datum: NAD83 (2011)
Ohio State Plane, North Zone (3401)

DESCRIPTION	NAME	NORTH (m)	EAST (m)	ORTHO HT (m)	NORTH (US FT)	EAST (US FT)
MAGNAIL 1" BELOW GRADE	MN01	175873.0427	596502.6558	256.377	577010.141	1957025.797
1" PIN IN MONUMENT BOX	MN07	175707.8898	596531.9744	255.547	576468.302	1957121.986
RAILROAD SPIKE 4" BELOW GRADE	MN08	175167.7885	596543.9620	260.404	574696.319	1957161.315
RAILROAD SPIKE 5" BELOW GRADE	MN09	176541.8172	596248.2492	251.226	579204.279	1956191.131
MAGNAIL 1" BELOW GRADE	MN10	176825.5732	596014.3156	248.519	580135.235	1955423.634
CONCRETE MONUMENT 4" ABOVE GRADE	MN02	175758.8866	596742.2734	255.181	576635.614	1957811.942
5/8" PIN CAPPED RILEY 6926	MN03	175747.5399	596753.3973	256.476	576598.387	1957848.438
5/8" PIN CAPPED RILEY 6926	MN04	175746.1282	596799.0956	256.730	576593.756	1957998.366
5/8" PIN CAPPED RILEY 6926	MN05	175744.6903	596844.7701	257.094	576589.038	1958148.217
CONCRETE MONUMENT 4" ABOVE GRADE	MN06	175754.1001	596894.6438	258.482	576619.910	1958311.844

CENTERLINE ALIGNMENT

Horiz. Datum: NAD83 (2011)
Ohio State Plane, North Zone (3401)

DESCRIPTION	NAME	NORTH (m)	EAST (m)	ORTHO HT (m)	NORTH (US FT)	EAST (US FT)
POT (US 20) - MONUMENT BOX SET	CLX001	175744.5403	596227.1384	0.000	576588.546	1956121.870
POT (US 20) & PI (SR 601) - MONUMENT BOX SET	CLX002	175739.4128	596528.6984	0.000	576571.724	1957111.238
POT (US 20) & PI (SR 601) - MONUMENT BOX SET	CLX003	175739.3692	596531.2759	0.000	576571.581	1957119.694
POT (US 20) - MONUMENT BOX SET	CLX004	175734.1780	596836.5967	0.000	576554.549	1958121.401
RAILROAD SPIKE 4" BELOW GRADE	MN08	175167.7885	596543.9620	0.000	574696.319	1957161.315
1" PIN IN MONUMENT BOX	MN07	175707.8898	596531.9744	0.000	576468.302	1957121.986
POT (SR 601) - MONUMENT BOX SET	CLX005	176037.6248	596470.5812	0.000	577550.107	1956920.565
PC (SR 601)	CLX006	176305.1953	596418.4354	0.000	578427.961	1956749.484
PT (SR 601)	CLX007	176375.8106	596385.1079	0.000	578659.639	1956640.141
MAGNAIL 1" BELOW GRADE	MN10	176825.5732	596014.3156	0.000	580135.235	1955423.634

Unitless Factor:
The Grid to Ground Multiplier for the project was computed by taking the inverse of the combined scale factor for: CP04

Primary Project Control:
Horizontal control was positioned with a minimum of 5 VRS-derived GNSS observations. Vertical control was established by differential leveling. All positions are in conformance to the ODOT Surveying and Mapping Specifications.

STATE PLANE GRID COORDINATES

Horiz. Datum: NAD83 (2011) Ohio State Plane, North Zone (3401)
Vert. Datum: NAVD88 CP01 defined by GPS from CORS using Geoid 12A.
All other elevations are established by leveling from CP01.

MONUMENTS TO BE SET OR RESET DURING CONSTRUCTION

	ITEM 623E40520 RIGHT-OF-WAY MONUMENT	ITEM 623E38500 MONUMENT ASSEMBLY
MN01	1+	
TOTAL MONUMENTS - QUANTITY CARRIED TO GENERAL SUMMARY ITEM 623	1	5

STATION AND OFFSET VALUES ARE REFERENCED TO THE CENTERLINE OF RIGHT-OF-WAY AND CONSTRUCTION FOR US 20, UNLESS DESIGNATED BELOW:
** - STATION AND OFFSET VALUES ARE REFERENCED TO THE CENTERLINE OF RIGHT-OF-WAY AND CONSTRUCTION OF SR 601*
+ - MONUMENTS TO BE RESET

Instr: 202010190006832 10/19/2020 10:32 AM
Pages:1 F:$86.40
Jan M. Tkach T20200013589
Huron County Recorder DISP:PKUP

RECEIVED Oct 19, 2020
RECORDED Oct 19, 2020
BOOK Inst # 202010190006832 PAGE
COUNTY RECORDER

PID NO. 110357

R/W DESIGNER JTS
R/W REVIEWER AMK

CENTERLINE PLAT

HUR-20-17.82

3/7
4/20
106/128

I:\ProjectData\HUR\110357\Design\RW\Sheets\110357_RC002.dgn Sheet 9/17/2020 3:57:33 PM jtscott

PROJECT GROUND COORDINATES - US SURVEY FEET

Project coordinates (U.S. Survey Feet) are relative to State Plane Grid coordinates (meters) by a Project Adjustment Factor of: 3.28112861

C/L of Right of Way — **HUR-601.094, Oberlin Norwalk S.H. 290 (1936) used for alignment**

EXISTING RIGHT OF WAY POINTS

STATE PLANE GRID COORDINATES

Horiz. Datum: NAD83 (2011) *Ohio State Plane, North Zone (3401)*
Vert. Datum: NAVD88 *CP01 defined by GPS from CORS using Geoid 12A.*
All other elevations are established by leveling from CP01.

NAME	STATION	OFFSET (US FT)	RT/LT	NORTH (US FT)	EAST (US FT)	ELEVATION (US FT)	FEATURE	DESCRIPTION	NAME	NORTH (m)	EAST (m)	ORTHO HT (m)	NORTH (US FT)	EAST (US FT)
SR 601									**SR 601**					
RE01	38+27.23*	-25.00	LT	574747.487	1957312.466	0.00	CALPT	CALCULATED RIGHT OF WAY POINT	RE01	175167.6193	596536.3445	0.000	574695.764	1957136.324
RE02	38+27.23*	25.00	RT	574748.597	1957362.454	0.00	CALPT	CALCULATED RIGHT OF WAY POINT	RE02	175167.9576	596551.5795	0.000	574696.874	1957186.307
RE03	47+00.01*	25.00	RT	575621.161	1957343.087	0.00	CALPT	CALCULATED RIGHT OF WAY POINT	RE03	175433.8917	596545.6770	0.000	575569.360	1957166.942
SV144	47+94.15*	64.04	RT	575845.757	1957288.052	840.92	IPIN	3/4" BENT	SV144	175502.3426	596528.9038	256.313	575793.936	1957111.912
SV150	49+25.77*	-25.04	LT	575716.144	1957380.032	844.85	IPIN	3/4"	SV150	175462.8400	596556.9369	257.510	575664.334	1957203.884
SV142	49+99.99*	-64.97	LT	575919.074	1957246.487	841.74	IPID	3/4" ODOT ENGINEERING ASSOCIATES 7287	SV142	175524.6876	596516.2359	256.564	575867.246	1957070.351
SV149	50+00.22*	60.33	RT	575922.080	1957371.744	842.88	IPID	3/4" ODOT ENGINEERING ASSOCIATES 7287	SV149	175525.6038	596554.4109	256.909	575870.252	1957195.596
SV148	50+44.15*	24.96	RT	575965.216	1957335.414	840.40	IPID	3/4" ODOT ENGINEERING ASSOCIATES 7287	SV148	175538.7505	596543.3385	256.154	575913.384	1957159.270
SV186	50+94.42*	-50.28	LT	576013.805	1957259.075	836.41	IPID	3/4" ODOT ENGINEERING ASSOCIATES 7287	SV186	175553.5591	596520.0724	254.937	575961.968	1957082.938
SV138	52+24.88*	-29.92	LT	576144.680	1957276.539	844.39	IPID	3/4" ODOT ENGINEERING ASSOCIATES 7287	SV138	175593.4463	596525.3950	257.372	576092.832	1957100.400
RE04	52+44.81*	25.00	RT	576165.826	1957330.998	0.00	CALPT	CALCULATED RIGHT OF WAY POINT	RE04	175599.8910	596541.9926	0.000	576113.976	1957154.854
RE05	52+44.81*	30.00	RT	576165.937	1957335.997	0.00	CALPT	CALCULATED RIGHT OF WAY POINT	RE05	175599.9248	596543.5162	0.000	576114.087	1957159.853
RE06	52+79.22*	30.00	RT	576200.339	1957335.233	0.00	CALPT	CALCULATED RIGHT OF WAY POINT	RE06	175610.4096	596543.2833	0.000	576148.486	1957159.089
RE07	52+93.93*	-30.00	LT	576213.714	1957274.922	0.00	CALPT	CALCULATED RIGHT OF WAY POINT	RE07	175614.4860	596524.9021	0.000	576161.859	1957098.783
RE08	53+49.81*	42.00	RT	576271.178	1957345.664	0.00	CALPT	CALCULATED RIGHT OF WAY POINT	RE08	175631.9995	596546.4624	0.000	576219.318	1957169.519
RE09	53+99.81*	-42.00	LT	576319.301	1957260.575	0.00	CALPT	CALCULATED RIGHT OF WAY POINT	RE09	175646.6661	596520.5296	0.000	576267.437	1957084.437
RE10	54+49.81*	42.00	RT	576371.153	1957343.445	0.00	CALPT	CALCULATED RIGHT OF WAY POINT	RE10	175662.4692	596545.7861	0.000	576319.284	1957167.300
RE11	54+59.15*	-42.00	LT	576378.627	1957259.259	0.00	CALPT	CALCULATED RIGHT OF WAY POINT	RE11	175664.7470	596520.1285	0.000	576326.758	1957083.122
RE12	54+79.81*	-30.00	LT	576399.548	1957270.797	0.00	CALPT	CALCULATED RIGHT OF WAY POINT	RE12	175671.1232	596523.6450	0.000	576347.677	1957094.658
RE13	55+49.81*	34.00	RT	576470.951	1957333.228	0.00	CALPT	CALCULATED RIGHT OF WAY POINT	RE13	175692.8849	596542.6722	0.000	576419.073	1957157.084
RE14	55+49.81*	-30.00	LT	576469.531	1957269.244	0.00	CALPT	CALCULATED RIGHT OF WAY POINT	RE14	175692.4521	596523.1716	0.000	576417.653	1957093.106
RE15	55+99.81*	-25.00	LT	576519.629	1957273.133	0.00	CALPT	CALCULATED RIGHT OF WAY POINT	RE15	175707.7207	596524.3569	0.000	576467.747	1957096.994
RE16	55+99.81*	25.00	RT	576520.739	1957323.121	0.00	CALPT	CALCULATED RIGHT OF WAY POINT	RE16	175708.0590	596539.5919	0.000	576468.857	1957146.978
RE17	56+64.07*	-25.00	LT	576583.876	1957271.707	0.00	CALPT	CALCULATED RIGHT OF WAY POINT	RE17	175727.3014	596523.9223	0.000	576531.988	1957095.568
RE18	56+62.11*	25.00	RT	576583.026	1957321.738	0.00	CALPT	CALCULATED RIGHT OF WAY POINT	RE18	175727.0424	596539.1704	0.000	576531.138	1957145.595
RE19	57+60.62*	-30.00	LT	576674.310	1957246.934	0.00	CALPT	CALCULATED RIGHT OF WAY POINT	RE19	175754.8633	596516.3721	0.000	576622.414	1957070.798
RE20	57+47.86*	30.00	RT	576673.268	1957308.266	0.00	CALPT	CALCULATED RIGHT OF WAY POINT	RE20	175754.5457	596535.0645	0.000	576621.372	1957132.124
RE21	75+94.45*	-30.00	LT	578474.281	1956896.145	0.00	CALPT	CALCULATED RIGHT OF WAY POINT	RE21	176303.4462	596409.4611	0.000	578422.223	1956720.040
RE22	75+94.45*	30.00	RT	578485.759	1956955.037	0.00	CALPT	CALCULATED RIGHT OF WAY POINT	RE22	176306.9444	596427.4098	0.000	578433.700	1956778.927
RE23	78+53.31*	-30.00	LT	578692.634	1956793.092	0.00	CALPT	CALCULATED RIGHT OF WAY POINT	RE23	176369.9943	596378.0533	0.000	578640.556	1956616.996
RE24	78+53.31*	30.00	RT	578730.801	1956839.387	0.00	CALPT	CALCULATED RIGHT OF WAY POINT	RE24	176381.6266	596392.1628	0.000	578678.720	1956663.287
RE25	97+65.88*	-30.00	LT	580168.364	1955576.474	0.00	CALPT	CALCULATED RIGHT OF WAY POINT	RE25	176819.7572	596007.2607	0.000	580116.154	1955400.488
RE26	97+65.88*	30.00	RT	580206.530	1955622.770	0.00	CALPT	CALCULATED RIGHT OF WAY POINT	RE26	176831.3892	596021.3705	0.000	580154.316	1955446.780
US 20									**US 20**					
RE27	921+38.65	-40.00	LT	576696.776	1955337.390	0.00	CALPT	CALCULATED RIGHT OF WAY POINT	RE27	175761.7103	595934.3944	0.000	576644.878	1955161.425
RE28	921+38.65	40.00	RT	576616.787	1955336.030	0.00	CALPT	CALCULATED RIGHT OF WAY POINT	RE28	175737.3318	595933.9799	0.000	576564.896	1955160.066
RE29	936+47.70	-40.00	LT	576671.122	1956846.226	0.00	CALPT	CALCULATED RIGHT OF WAY POINT	RE29	175753.8917	596394.2471	0.000	576619.226	1956670.126
RE30	936+47.70	-50.00	LT	576681.120	1956846.396	0.00	CALPT	CALCULATED RIGHT OF WAY POINT	RE30	175756.9388	596394.2989	0.000	576629.223	1956670.296
RE17	940+74.61	40.00	RT	576583.876	1957271.707	0.00	CALPT	CALCULATED RIGHT OF WAY POINT	RE17	175727.3014	596523.9223	0.000	576531.988	1957095.568
RE18	941+24.65	40.00	RT	576583.026	1957321.738	0.00	CALPT	CALCULATED RIGHT OF WAY POINT	RE18	175727.0424	596539.1704	0.000	576531.138	1957145.595
RE19	940+48.30	-50.00	LT	576674.310	1957246.934	0.00	CALPT	CALCULATED RIGHT OF WAY POINT	RE19	175754.8633	596516.3721	0.000	576622.414	1957070.798
RE20	941+09.64	-50.00	LT	576673.268	1957308.266	0.00	CALPT	CALCULATED RIGHT OF WAY POINT	RE20	175754.5457	596535.0645	0.000	576621.372	1957132.124
RE31	941+15.81	-50.00	LT	576673.163	1957314.430	0.00	CALPT	CALCULATED RIGHT OF WAY POINT	RE31	175754.5137	596536.9431	0.000	576621.267	1957138.288
RE32	941+91.55	-60.76	LT	576682.634	1957390.349	0.00	CALPT	CALCULATED RIGHT OF WAY POINT	RE32	175757.4002	596560.0812	0.000	576630.737	1957214.200
RE33	941+90.71	-66.70	LT	576688.588	1957389.609	0.00	CALPT	CALCULATED RIGHT OF WAY POINT	RE33	175759.2148	596559.8557	0.000	576636.691	1957213.460
RE34	944+18.32	-81.14	LT	576699.156	1957617.433	0.00	CALPT	CALCULATED RIGHT OF WAY POINT	RE34	175762.4357	596629.2903	0.000	576647.258	1957441.263
MN02	947+89.18	-75.80	LT	576687.511	1957988.145	837.21	CMON	CONCRETE MONUMENT 4" ABOVE GRADE	MN02	175758.8866	596742.2734	255.182	576635.614	1957811.942
RE35	948+44.01	40.00	RT	576570.796	1958041.000	0.00	CALPT	CALCULATED RIGHT OF WAY POINT	RE35	175723.3150	596758.3822	0.000	576518.909	1957864.792
RE36	948+43.72	60.00	RT	576550.804	1958040.371	0.00	CALPT	CALCULATED RIGHT OF WAY POINT	RE36	175717.2220	596758.1905	0.000	576498.919	1957864.163
RE37	948+93.72	60.00	RT	576549.954	1958090.358	0.00	CALPT	CALCULATED RIGHT OF WAY POINT	RE37	175716.9629	596773.4252	0.000	576498.069	1957914.146
RE38	948+94.00	40.00	RT	576569.947	1958090.986	0.00	CALPT	CALCULATED RIGHT OF WAY POINT	RE38	175723.0562	596773.6166	0.000	576518.060	1957914.774
MN06	952+89.32	-68.60	LT	576671.806	1958488.092	848.04	CMON	CONCRETE MONUMENT 4" ABOVE GRADE	MN06	175754.1001	596894.6438	258.483	576619.910	1958311.844
RE39	965+68.82	40.00	RT	576541.475	1959765.560	0.00	CALPT	CALCULATED RIGHT OF WAY POINT	RE39	175714.3787	597283.9818	0.000	576489.591	1959589.197
RE40	965+68.82	50.00	RT	576531.476	1959765.390	0.00	CALPT	CALCULATED RIGHT OF WAY POINT	RE40	175711.3313	597283.9300	0.000	576479.593	1959589.027
RE41	972+62.88	50.00	RT	576519.677	1960459.349	0.00	CALPT	CALCULATED RIGHT OF WAY POINT	RE41	175707.7353	597495.4301	0.000	576467.795	1960282.924
RE42	972+62.88	-40.17	LT	576609.834	1960460.882	0.00	CALPT	CALCULATED RIGHT OF WAY POINT	RE42	175735.2127	597495.8973	0.000	576557.944	1960284.456

STATION AND OFFSET VALUES ARE REFERENCED TO THE CENTERLINE OF RIGHT-OF-WAY AND CONSTRUCTION FOR US 20, UNLESS DESIGNATED BELOW:
** - STATION AND OFFSET VALUES ARE REFERENCED TO THE CENTERLINE OF RIGHT-OF-WAY AND CONSTRUCTION OF SR 601*

Instr: 202010190006833 10/19/2020 10:32 AM
Pages:1 F:$86.40
Jan M. Tkach T20200013589
Huron County Recorder DISP:PKUP

RECEIVED Oct 19, 2020
RECORDED Oct 19, 2020
BOOK Inst # 202010190006833 PAGE
Sarah Schrock
COUNTY RECORDER

PID NO. 110357

R/W DESIGNER JTS
R/W REVIEWER AMK

CENTERLINE PLAT

HUR-20-17.82

4 / 7
5 / 20
107 / 128

i:\ProjectData\HUR\110357\Design\RW\Sheets\110357_RC003.dgn Sheet 9/17/2020 3:57:34 PM jtscott

PROJECT GROUND COORDINATES - US SURVEY FEET								EXISTING RIGHT OF WAY AND BOUNDARY MONUMENTS	STATE PLANE GRID COORDINATES						MONUMENTS TO BE RESET DURING CONSTRUCTION	
Project coordinates (U.S. Survey Feet) are relative to State Plane Grid coordinates (meters) by a Project Adjustment Factor of: 3.28112861									Horiz. Datum: NAD83 (2011) Vert. Datum: NAVD88		Ohio State Plane, North Zone (3401) CP01 defined by GPS from CORS using Geoid 12A. All other elevations are established by leveling from CP01.				ITEM 623E40520	ITEM 623E38500
	C/L of Right of Way		HUR-601.094, Oberlin Norwalk S.H. 290 (1936) used for alignment												RIGHT-OF-WAY MONUMENT	MONUMENT ASSEMBLY
NAME	STATION	OFFSET (US FT)	RT/LT	NORTH (US FT)	EAST (US FT)	ELEVATION (US FT)	FEATURE	DESCRIPTION	NAME	NORTH (m)	EAST (m)	ORTHO HT (m)	NORTH (US FT)	EAST (US FT)		
SR 601																
SV155	38+28.04*	-30.24	LT	574748.181	1957307.210	853.15	IPIN	5/8" PIN	SV155	175167.8308	596534.7427	260.041	574696.458	1957131.068		
SV152	38+41.58*	30.02	RT	574763.053	1957367.159	852.51	IPID	5/8" PIN HURON COUNTY ENGINEER	SV152	175172.3634	596553.0135	259.846	574711.329	1957191.012		
SV154	38+43.31*	-0.01	LT	574764.118	1957337.093	854.09	RSPK	RAILROAD SPIKE 4" BELOW GRADE	SV154	175172.6880	596543.8502	260.327	574712.394	1957160.949		
SV151	46+00.02*	0.08	RT	575520.637	1957320.392	847.11	MONBOX	1" PIN	SV151	175403.2547	596538.7602	258.200	575468.845	1957144.249		
SV145	47+74.43*	-29.88	LT	575694.340	1957286.573	843.89	IPID	5/8" PIN CD ENG	SV145	175456.1947	596528.4531	257.218	575642.532	1957110.433		
SV144	49+25.77*	-25.04	LT	575845.757	1957288.052	840.92	IPIN	3/4" PIN	SV144	175502.3426	596528.9038	256.313	575793.936	1957111.912		
SV143	49+27.34*	-29.97	LT	575847.213	1957283.084	842.10	IPIN	5/8" PIN	SV143	175502.7863	596527.3897	256.673	575795.391	1957106.944		
SV140	50+28.81*	-16.51	LT	575948.961	1957294.289	841.26	IPID	3/4" PIN ODOT	SV140	175533.7964	596530.8047	256.417	575897.130	1957118.148	1	
SV147	50+44.13*	29.99	RT	575965.310	1957340.437	841.56	IPIN	1" PIN	SV147	175538.7791	596544.8694	256.508	575913.478	1957164.292		
SV139	50+74.37*	-30.14	LT	575994.209	1957279.656	838.29	IPID	5/8" PIN AZTECH	SV139	175547.5867	596526.3449	255.511	575942.374	1957103.517		
SV0205	52+06.62*	-224.65	LT	576122.101	1957082.257	842.98	IPIPE	1" PIPE 1" BELOW GRADE	SV0205	175586.5648	596466.1830	256.941	576070.255	1956906.135		
SV137	52+49.84*	0.01	RT	576170.296	1957305.901	842.91	MONBOX	1" PIN	SV137	175601.2533	596534.3437	256.919	576118.445	1957129.759		
SV0227	52+85.95*	233.89	RT	576211.588	1957538.919	839.51	IPIN	1/2" PIN 8" BELOW GRADE	SV0227	175613.8380	596605.3613	255.883	576159.734	1957362.756		
SV0203	61+48.52*	-288.12	LT	577005.682	1956919.378	838.61	IPIN	1/2" PIN	SV0203	175855.8566	596416.5419	255.609	576953.756	1956743.271		
SV0195	61+49.77*	-30.04	LT	577056.272	1957172.450	838.69	IPID	5/8" PIN CD ENG	SV0195	175871.2751	596493.6714	255.633	577004.342	1956996.320		
SV0196	62+96.57*	-300.91	LT	577148.551	1956878.502	838.57	IPIN	5/8" PIN 2" BELOW GRADE	SV0196	175899.3992	596404.0840	255.597	577096.612	1956702.399		
SV157	62+97.70*	-30.10	LT	577201.456	1957144.103	837.53	IPID	5/8" PIN CD ENG	SV157	175915.5233	596485.0320	255.280	577149.513	1956967.976		
SV0197	63+99.15*	130.26	RT	577331.714	1957282.090	837.73	IPIPE	3/4" PIPE 2" BELOW GRADE	SV0197	175955.2224	596527.0868	255.341	577279.759	1957105.950		
SV156	64+49.06*	16.78	RT	577358.991	1957161.156	839.11	IPID	5/8" PIN	SV156	175963.5357	596490.2293	255.761	577307.033	1956985.027	1	
SV0228	66+12.11*	167.75	RT	577547.913	1957278.152	836.91	IPIPE	1" PIPE 6" BELOW GRADE	SV0228	176021.1141	596525.8866	255.091	577495.938	1957102.013		
SV163	66+43.24*	30.00	RT	577552.113	1957136.991	837.73	IPIPE	PIPE	SV163	176022.3941	596482.8645	255.341	577500.138	1956960.865		
SV0208	68+04.30*	201.10	RT	577742.927	1957274.128	835.67	IPID	5/8" PIN 4" ABOVE GRADE	SV0208	176080.5491	596524.6602	254.713	577690.935	1957097.989		
SV158	68+43.28*	30.01	RT	577748.458	1957098.740	834.33	IPIN	5/8" PIN	SV158	176082.2348	596471.2066	254.304	577696.465	1956922.617		
SV159	72+13.97*	30.26	RT	578112.356	1957028.077	830.09	IPIN	5/8" PIN	SV159	176193.1411	596449.6704	253.012	578060.331	1956851.960		
SV162	74+56.53*	30.94	RT	578350.568	1956982.341	827.35	IPIN	5/8" PIN	SV162	176265.7418	596435.7313	252.177	578298.521	1956806.228		
SV161	75+59.44*	29.29	RT	578451.264	1956961.038	827.39	IPIN	5/8" PIN 3" ABOVE GRADE	SV161	176296.4312	596429.2387	252.189	578399.208	1956784.927		
SV172	76+44.78*	2.88	RT	578529.704	1956916.353	828.84	MAG	MAG NAIL 2" BELOW GRADE	SV172	176320.3376	596415.6199	252.631	578477.641	1956740.246		
SV173	76+55.98*	-30.41	LT	578530.283	1956881.327	825.34	IPID	1/2" PIN HETRICK	SV173	176320.5141	596404.9449	251.564	578478.220	1956705.224		
SV169	76+61.06*	-27.46	LT	578535.765	1956882.645	825.23	IPIPE	PIPE	SV169	176322.1849	596405.3466	251.531	578483.701	1956706.541		
SV1029	77+23.98*	16.96	RT	578610.028	1956900.674	828.63	IPIPE	1-1/2" PIPE 8" BELOW GRADE	SV1029	176344.8182	596410.8414	252.567	578557.958	1956724.569		
SV171	78+78.72*	30.20	RT	578750.533	1956823.381	827.24	IPIPE	PIPE	SV171	176387.6404	596387.2846	252.143	578698.450	1956647.283		
SV170	79+20.40*	-29.64	LT	578744.630	1956750.694	821.01	IPID	1/2" PIN HETRICK	SV170	176385.8413	596365.1315	250.244	578692.548	1956574.602		
SV174	79+20.42*	0.39	RT	578763.748	1956773.854	826.57	MAG	MAG NAIL 2" BELOW GRADE	SV174	176391.6680	596372.1901	251.939	578711.664	1956597.760		
SV176	80+85.21*	0.26	RT	578890.813	1956668.924	826.01	RSPK	RAILROAD SPIKE 5" BELOW GRADE	SV176	176430.3940	596340.2102	251.768	578838.718	1956492.840		
SV175	82+55.13*	0.15	RT	579021.856	1956560.748	826.26	RSPK	RAILROAD SPIKE 5" BELOW GRADE	SV175	176470.3324	596307.2411	251.845	578969.749	1956384.673		
SV179	86+79.79*	29.85	RT	579368.408	1956313.537	820.83	IPIPE	PIPE	SV179	176575.9521	596231.8978	250.189	579316.270	1956137.485		
SV181	89+79.90*	29.98	RT	579600.053	1956122.731	818.96	IPIPE	1" PIPE 2" BELOW GRADE	SV181	176646.5513	596173.7452	249.620	579547.894	1955946.696		
SV182	92+09.22*	29.92	RT	579776.957	1955976.808	815.93	IPID	5/8" PIN T SIMON	SV182	176700.4669	596129.2718	248.696	579724.782	1955800.786		
SV183	93+70.05*	-30.08	LT	579862.888	1955828.210	815.76	IPID	5/8" PIN CD ENG 7072 8456 5" ABOVE GRADE	SV183	176726.6563	596083.9831	248.644	579810.705	1955652.201		
SV185	96+47.69*	0.04	RT	580096.273	1955674.840	816.24	MAG	MAG NAIL 1" BELOW GRADE	SV185	176797.7858	596037.2401	248.790	580044.069	1955498.845		
									TOTAL MONUMENTS - QUANTITY CARRIED TO GENERAL SUMMARY ITEM 623						2	0

STATION AND OFFSET VALUES ARE REFERENCED TO THE CENTERLINE OF RIGHT-OF-WAY AND CONSTRUCTION FOR US 20, UNLESS DESIGNATED BELOW:

* - STATION AND OFFSET VALUES ARE REFERENCED TO THE CENTERLINE OF RIGHT-OF-WAY AND CONSTRUCTION OF SR 601

Instr: 202010190006834 10/19/2020 10:32 AM
Pages:1 F:$86.40
Jan M. Tkach T20200013589
Huron County Recorder DISP:PKUP

RECEIVED Oct 19, 2020
RECORDED Oct 19, 2020
BOOK Inst # 202010190006834 PAGE
Sarah Schad
COUNTY RECORDER

PID NO. 110357

R/W DESIGNER JTS
R/W REVIEWER AMK

CENTERLINE PLAT DATA

HUR-20-17.82

5/7

6/20

108/128

I:\ProjectData\HUR\110357\Design\RW\Sheets\110357_RC004.dgn Sheet 9/17/2020 3:57:36 PM jtscott

PROJECT GROUND COORDINATES - US SURVEY FEET

Project coordinates (U.S. Survey Feet) are relative to State Plane Grid coordinates (meters) by a Project Adjustment Factor of: 3.28112861

	C/L of Right of Way		HUR-601.094, Oberlin Norwalk S.H. 290 (1936) used for alignment					
NAME	STATION	OFFSET (US FT)	RT/LT	NORTH (US FT)	EAST (US FT)	ELEVATION (US FT)	FEATURE	DESCRIPTION
US 20								
SV134	921+94.59	40.60	RT	576615.236	1955391.950	839.02	IPIPE	PIPE
SV135	922+30.45	36.23	RT	576619.001	1955427.880	840.07	IPID	5/8" PIN CD ENG
SV133	922+44.95	-43.79	LT	576698.758	1955443.742	839.09	IPIN	5/8" PIN
SV132	924+90.55	-43.82	LT	576694.613	1955689.303	837.97	IPIN	PIN
SV131	926+40.77	-43.84	LT	576692.075	1955839.505	837.19	IPIN	PIN
SV129	927+53.68	-43.92	LT	576690.243	1955952.396	837.83	IPID	5/8" PIN RILEY
SV128	929+19.48	-43.57	LT	576687.068	1956118.166	837.96	IPIN	PIN
SV127	930+35.39	-43.84	LT	576685.368	1956234.070	834.73	IPID	1/2" PIN RPH
SV0209	933+94.88	-1321.49	LT	577956.723	1956615.220	822.82	IPID	5/8" PIN CD ENG 7072 8456
SV109	938+67.11	36.02	RT	576591.380	1957064.309	832.69	IPID	5/8" PIN CD ENG
SV0192	942+16.89	-325.09	LT	576946.492	1957420.173	842.75	IPID	1/2" PIN RPH 6510 8" ABOVE GRADE
SV0193	943+01.28	-330.79	LT	576950.761	1957504.647	843.40	IPID	1/2" PIN RPH DJC 6510 6652
SV0199	943+04.35	-242.64	LT	576862.568	1957506.220	844.50	IPID	1/2" PIN RPH DJC 6510 6652 1" BELOW GRADE
SV105	943+11.52	-76.38	LT	576696.207	1957510.565	842.78	CMON	R/W MONUMENT 4" ABOVE GRADE
SV0194	943+28.10	-243.41	LT	576862.931	1957529.983	845.06	IPID	1/2" PIN RPH DJC 6510 6652
SV104	943+30.97	-77.96	LT	576697.459	1957530.035	842.23	IPID	5/8" PIN RPH DJC
SV103	943+31.47	-45.60	LT	576665.101	1957529.992	841.04	IPID	5/8" PIN RPH DJC
SV102	945+25.30	-79.32	LT	576695.517	1957724.359	842.64	IPID	5/8" PIN
SV101	945+26.37	-43.37	LT	576659.552	1957724.825	840.80	IPIN	PIN
SV100	946+76.25	-41.29	LT	576654.931	1957874.648	840.88	IPID	5/8" PIN RILEY
SV125	953+35.13	-68.15	LT	576670.578	1958533.891	848.77	IPID	5/8" PIN RILEY
SV119	953+42.46	-38.39	LT	576640.700	1958540.714	846.29	IPIN	PIN
SV121	953+52.40	46.43	RT	576555.723	1958549.202	845.61	IPID	5/8" PIN HANK & ASSOC.
SV120	954+52.73	46.34	RT	576554.112	1958649.522	847.89	IPIPE	PIPE

EXISTING RIGHT OF WAY AND BOUNDARY MONUMENTS

STATE PLANE GRID COORDINATES

Horiz. Datum: NAD83 (2011) Ohio State Plane, North Zone (3401)
Vert. Datum: NAVD88 CP01 defined by GPS from CORS using Geoid 12A.
All other elevations are established by leveling from CP01.

MONUMENTS TO BE RESET DURING CONSTRUCTION

NAME	NORTH (m)	EAST (m)	ORTHO HT (m)	NORTH (US FT)	EAST (US FT)	ITEM 623E40520 RIGHT-OF-WAY MONUMENT	ITEM 623E38500 MONUMENT ASSEMBLY
SV134	175736.8591	595951.0228	255.734	576563.345	1955215.981		
SV135	175738.0066	595961.9733	256.054	576567.110	1955251.907		
SV133	175762.3144	595966.8076	255.755	576646.860	1955267.768		
SV132	175761.0511	596041.6480	255.414	576642.715	1955513.307		
SV131	175760.2776	596087.4255	255.176	576640.177	1955663.495		
SV129	175759.7192	596121.8317	255.371	576638.346	1955776.376		
SV128	175758.7516	596172.3539	255.411	576635.171	1955942.131		
SV127	175758.2335	596207.6784	254.426	576633.471	1956058.025		
SV0209	176145.7084	596323.8427	250.796	577904.712	1956439.140		
SV109	175729.5885	596460.7129	253.804	576539.491	1956888.189		
SV0192	175837.8171	596569.1708	256.871	576894.571	1957244.021		
SV0193	175839.1181	596594.9162	257.069	576898.840	1957328.487		
SV0199	175812.2393	596595.3956	257.404	576810.655	1957330.060		
SV105	175761.5369	596596.7198	256.880	576644.309	1957334.405		
SV0194	175812.3499	596602.6379	257.575	576811.018	1957353.821		
SV104	175761.9185	596602.6537	256.712	576645.561	1957353.873	1	
SV103	175752.0566	596602.6406	256.350	576613.206	1957353.830	1	
SV102	175761.3266	596661.8785	256.837	576643.619	1957548.180		
SV101	175750.3654	596662.0205	256.276	576607.657	1957548.646		
SV100	175748.9571	596707.6825	256.301	576603.037	1957698.455		
SV125	175753.7259	596908.6021	258.706	576618.682	1958357.639		
SV119	175744.6199	596910.6816	257.950	576588.807	1958364.461		
SV121	175718.7212	596913.2685	257.742	576503.838	1958372.948		
SV120	175718.2302	596943.8434	258.437	576502.227	1958473.259		
TOTAL MONUMENTS - QUANTITY CARRIED TO GENERAL SUMMARY ITEM 623						2	0

Instr: 202010190006835 10/19/2020 19:32 AM
Pages:1 F:$86.40
Jan M. Tkach #202000013589
Huron County Recorder DISP:PKUP

RECEIVED Oct 19, 2020
RECORDED Oct 19, 2020
BOOK Inst # 202010190006835 PAGE
Sarah Schrock
COUNTY RECORDER

PID NO. 110357

R/W DESIGNER JTS
R/W REVIEWER AMK

CENTERLINE PLAT DATA

HUR-20-17.82

6/7
7/20
109/128

I:\ProjectData\HUR\110357\Design\RW\Sheets\110357_RC006.dgn Sheet 9/17/2020 3:57:37 PM jtscott

PROJECT GROUND COORDINATES - US SURVEY FEET								PROPOSED RIGHT OF WAY MONUMENTS	STATE PLANE GRID COORDINATES						MONUMENTS TO BE RESET AFTER CONSTRUCTION	
Project coordinates (U.S. Survey Feet) are relative to State Plane Grid coordinates (meters) by a Project Adjustment Factor of: 3.28112861									Horiz. Datum: NAD83 (2011) Ohio State Plane, North Zone (3401) Vert. Datum: NAVD88 CP01 defined by GPS from CORS using Geoid 12A. All other elevations are established by leveling from CP01.						ITEM 623E40520 RIGHT OF WAY PIN (TYPE "B")	ITEM 623E40520 RIGHT OF WAY MONUMENT
	C/L of Right of Way		HUR-601.094, Oberlin Norwalk S.H. 290 (1936) used for alignment													
NAME	STATION	OFF. (US FT)	RT/LT	NORTH (US FT)	EAST (US FT)	ELEV. (US FT)	FEATURE	DESCRIPTION	NAME	NORTH (m)	EAST (m)	ORTHO HT (m)	NORTH (US FT)	EAST (US FT)		
SR 601																
RW011	53+49.81*	42.00	RT	576271.178	1957345.664	0.00	IPINS	3/4" X 30" REBAR WITH A 2" DIA. ALUM. CAP STAMPED "ODOT RW - PS 8469"	RW011	175631.9995	596546.4624	0.000	576219.318	1957169.519		
RW012	54+00.00*	55.00	RT	576321.644	1957357.547	0.00	IPINS	3/4" X 30" REBAR WITH A 2" DIA. ALUM. CAP STAMPED "ODOT RW - PS 8469"	RW012	175647.3802	596550.0840	0.000	576269.780	1957181.401		
RW014	54+59.15*	-42.00	LT	576378.627	1957259.259	0.00	IPINS	3/4" X 30" REBAR WITH A 2" DIA. ALUM. CAP STAMPED "ODOT RW - PS 8469"	RW014	175664.7470	596520.1285	0.000	576326.758	1957083.122		
RW015	55+27.55*	-137.21	LT	576444.900	1957162.560	0.00	IPINS	3/4" X 30" REBAR WITH A 2" DIA. ALUM. CAP STAMPED "ODOT RW - PS 8469"	RW015	175684.9453	596490.6572	0.000	576393.025	1956986.431		
RW016	55+90.00*	55.00	RT	576511.597	1957353.331	0.00	IPINS	3/4" X 30" REBAR WITH A 2" DIA. ALUM. CAP STAMPED "ODOT RW - PS 8469"	RW016	175705.2727	596548.7991	0.000	576459.716	1957177.185		
RW017	58+00.00*	-65.00	LT	576706.273	1957205.046	0.00	IPINS	3/4" X 30" REBAR WITH A 2" DIA. ALUM. CAP STAMPED "ODOT RW - PS 8469"	RW017	175764.6048	596503.6058	0.000	576654.374	1957028.913		
RW018	58+25.63*	0.00	-	576743.866	1957263.943	0.00	MAGS	MAG NAIL SET	RW018	175776.0621	596521.5560	0.000	576691.964	1957087.805		
RW019	58+25.63*	30.00	RT	576749.605	1957293.389	0.00	IPINS	3/4" X 30" REBAR WITH A 2" DIA. ALUM. CAP STAMPED "ODOT RW - PS 8469"	RW019	175777.8112	596530.5304	0.000	576697.702	1957117.248		
RW020	58+82.83*	40.00	RT	576807.659	1957292.263	0.00	IPINS	3/4" X 30" REBAR WITH A 2" DIA. ALUM. CAP STAMPED "ODOT RW - PS 8469"	RW020	175795.5045	596530.1872	0.000	576755.751	1957116.123		
RW021	60+70.00*	-50.00	LT	576974.156	1957168.122	0.00	IPINS	3/4" X 30" REBAR WITH A 2" DIA. ALUM. CAP STAMPED "ODOT RW - PS 8469"	RW021	175846.2483	596492.3524	0.000	576922.233	1956991.993		
RW010	61+49.61*	-50.00	LT	577052.301	1957152.893	0.00	MAGS	MAG NAIL SET	RW010	175870.0648	596487.7110	0.000	577000.371	1956976.765		1
RW023	61+49.66*	-40.00	LT	577054.254	1957162.700	0.00	MAGS	MAG NAIL SET	RW023	175870.6600	596490.6999	0.000	577002.324	1956986.571		1
RW022	61+49.83*	0.00	-	577062.072	1957201.929	0.00	MAG	MAG NAIL FOUND	RW022	175873.0427	596502.6558	0.000	577010.141	1957025.797		1
RW026	62+55.00*	-40.00	LT	577157.653	1957142.549	0.00	IPINS	3/4" X 30" REBAR WITH A 2" DIA. ALUM. CAP STAMPED "ODOT RW - PS 8469"	RW026	175902.1733	596484.5584	0.000	577105.713	1956966.422		
RW028	62+55.00*	40.00	RT	577172.956	1957221.072	0.00	IPINS	3/4" X 30" REBAR WITH A 2" DIA. ALUM. CAP STAMPED "ODOT RW - PS 8469"	RW028	175906.8372	596508.4901	0.000	577121.015	1957044.938		
RW024	62+97.82*	0.00	-	577207.335	1957173.619	0.00	MAGS	MAG NAIL SET	RW024	175917.3150	596494.0277	0.000	577155.391	1956997.489		
RW025	62+97.70*	-30.00	LT	577201.475	1957144.197	0.00	IPINS	3/4" X 30" REBAR WITH A 2" DIA. ALUM. CAP STAMPED "ODOT RW - PS 8469"	RW025	175915.5290	596485.0607	0.000	577149.532	1956968.070		
RW027	62+97.82*	30.00	RT	577213.074	1957203.065	0.00	IPINS	3/4" X 30" REBAR WITH A 2" DIA. ALUM. CAP STAMPED "ODOT RW - PS 8469"	RW027	175919.0641	596503.0021	0.000	577161.129	1957026.933		
RW033	55+15.69*	-232.29	LT	576430.930	1957067.760	0.00	IPINS	3/4" X 30" REBAR WITH A 2" DIA. ALUM. CAP STAMPED "ODOT RW - PS 8469"	RW033	175680.6876	596461.7647	0.000	576379.056	1956891.640		
US 20																
RW029	938+65.59	-	RT	576627.424	1957063.399	0.00	MAGS	MAG NAIL SET	RW029	175740.5737	596460.4356	0.000	576575.532	1956887.279		
RW030	938+67.16	40.00	RT	576587.403	1957064.288	0.00	IPINS	3/4" X 30" REBAR WITH A 2" DIA. ALUM. CAP STAMPED "ODOT RW - PS 8469"	RW030	175728.3764	596460.7065	0.000	576535.515	1956888.168		
RW031	939+50.00	-	RT	576625.989	1957147.798	0.00	MAGS	MAG NAIL SET	RW031	175740.1363	596486.1582	0.000	576574.097	1956971.671		
RW032	939+50.00	-50.00	LT	576675.981	1957148.648	0.00	IPINS	3/4" X 30" REBAR WITH A 2" DIA. ALUM. CAP STAMPED "ODOT RW - PS 8469"	RW032	175755.3726	596486.4172	0.000	576624.085	1956972.520		
RW034	942+50.00	70.00	RT	576550.899	1957446.565	0.00	IPINS	3/4" X 30" REBAR WITH A 2" DIA. ALUM. CAP STAMPED "ODOT RW - PS 8469"	RW034	175717.2509	596577.2143	0.000	576499.014	1957270.411		
RW037	944+75.00	56.00	RT	576561.072	1957671.770	0.00	IPINS	3/4" X 30" REBAR WITH A 2" DIA. ALUM. CAP STAMPED "ODOT RW - PS 8469"	RW037	175720.3514	596645.8508	0.000	576509.186	1957495.595		
RW035	945+10.00	-	RT	576616.469	1957707.717	0.00	MAGS	MAG NAIL SET	RW035	175737.2349	596656.8065	0.000	576564.578	1957531.539		
RW036	945+10.00	40.00	RT	576576.475	1957707.037	0.00	IPINS	3/4" X 30" REBAR WITH A 2" DIA. ALUM. CAP STAMPED "ODOT RW - PS 8469"	RW036	175725.0458	596656.5992	0.000	576524.588	1957530.859		
RW039	942+26.48	-47.90	LT	576669.182	1957425.053	0.00	MAGS	MAG NAIL SET	RW039	175753.3004	596570.6580	0.000	576617.286	1957248.901		
RW040	941+90.66	-66.69	LT	576688.582	1957389.557	0.00	IPINS	3/4" X 30" REBAR WITH A 2" DIA. ALUM. CAP STAMPED "ODOT RW - PS 8469"	RW040	175759.2130	596559.8398	0.000	576636.685	1957213.408		
RW041	942+24.99	-91.00	LT	576712.301	1957424.294	0.00	IPINS	3/4" X 30" REBAR WITH A 2" DIA. ALUM. CAP STAMPED "ODOT RW - PS 8469"	RW041	175766.4419	596570.4267	0.000	576660.402	1957248.142		
RW042	943+30.70	-91.00	LT	576710.504	1957529.990	0.00	IPINS	3/4" X 30" REBAR WITH A 2" DIA. ALUM. CAP STAMPED "ODOT RW - PS 8469"	RW042	175765.8943	596602.6400	0.000	576658.605	1957353.828		1
RW043	943+30.89	-79.79	LT	576699.296	1957529.990	0.00	IPINS	3/4" X 30" REBAR WITH A 2" DIA. ALUM. CAP STAMPED "ODOT RW - PS 8469"	RW043	175762.4784	596602.6400	0.000	576647.398	1957353.828		1
									SUBTOTAL MONUMENTS - QUANTITY CARRIED TO GENERAL SUMMARY ITEM 623						0	5

STATION AND OFFSET VALUES ARE REFERENCED TO THE CENTERLINE OF RIGHT-OF-WAY AND CONSTRUCTION FOR US 20, UNLESS DESIGNATED BELOW:

* - STATION AND OFFSET VALUES ARE REFERENCED TO THE CENTERLINE OF RIGHT-OF-WAY AND CONSTRUCTION OF SR 601

Instr: 202010190006836 10/19/2020 10:32 AM
Pages:1 F:$86.40
Jan M. Tkach T2020013589
Huron County Recorder DISP:MAIL

RECEIVED Oct 19, 2020
RECORDED Oct 19, 2020
BOOK Inst # 202010190006836 PAGE
Sarah Schiak
COUNTY RECORDER

PID NO. 110357

R/W DESIGNER JTS
R/W REVIEWER AMK

CENTERLINE PLAT DATA

HUR-20-17.82

I:\ProjectData\HUR\110357\Design\RW\Sheets\110357_RC005.dgn Sheet 9/17/2020 3:57:38 PM jtscott

HUR-20-17.82

HURON COUNTY, OHIO
NORWALK TOWNSHIP
SECTION 2, G.L. 9 & SECTION 1, G.L. 35
T-4N, R-22W
TOWNSEND TOWNSHIP
SECTION 3, LOT 73 & SECTION 4, LOT 96
T-4N, R-21W
FIRE LANDS, CONNECTICUT WESTERN RESERVE

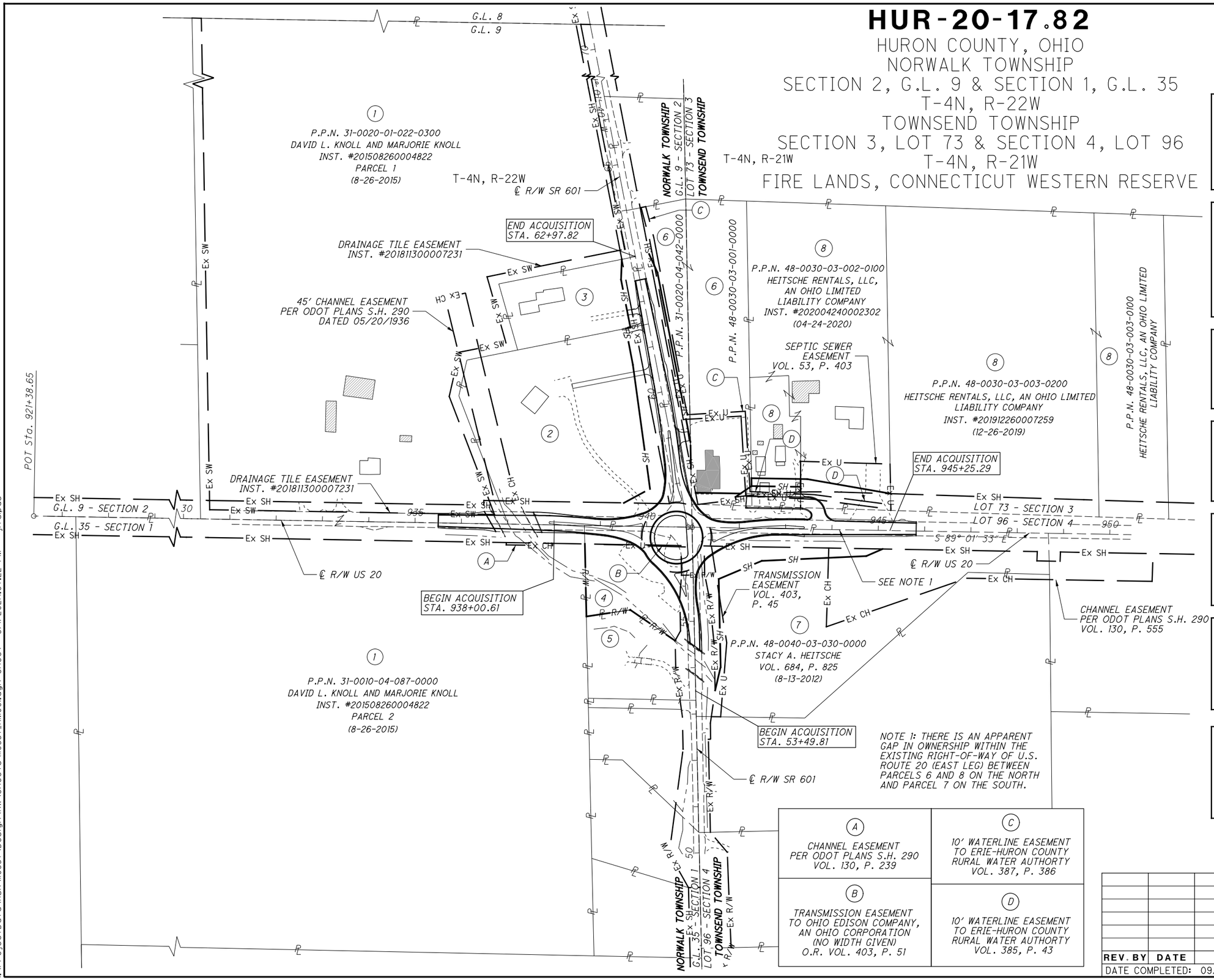

(2) P.P.N. 31-0020-01-022-0000
DAVID L. KNOLL AND MARJORIE KNOLL
O.R. VOL. 591, P. 418 (1-14-2010)
O.R. VOL. 430, P. 573 (3/17/1998)

(3) P.P.N. 31-0020-01-022-0200
JENIFER L. MUELLER, AS TRUSTEE OF A DECLARATION OF TRUST (THE KNOLL FAMILY IRREVOCABLE TRUST DATED JUNE 7, 2019)
INST. #201907030003457 (7-3-2019)

(4) P.P.N. 31-0010-04-086-0000
SPECULATIVE PROPERTIES, LLC
O.R. VOL. 506, P. 815 (8-22-2007)

(5) P.P.N. 31-0010-04-085-0000
BRUCE R. GRIFFITH
INST. #201806270003909 (6-27-2018)

(6) P.P.N. 48-0030-03-001-0000
OLD GULF INN, LTD., AN OHIO LIMITED LIABILITY COMPANY
O.R. VOL. 406, P. 102 (9-23-2005)

(6) P.P.N. 31-0020-04-042-0000
OLD GULF INN, LTD., AN OHIO LIMITED LIABILITY COMPANY
O.R. VOL. 406, P. 102 (9-23-2005)

(8) P.P.N. 48-0030-03-002-0000
HEITSCHE RENTALS, LLC, AN OHIO LIMITED LIABILITY COMPANY
INST. #201905200002515 (5-20-2019)

(A) CHANNEL EASEMENT PER ODOT PLANS S.H. 290 VOL. 130, P. 239	(C) 10' WATERLINE EASEMENT TO ERIE-HURON COUNTY RURAL WATER AUTHORTY VOL. 387, P. 386
(B) TRANSMISSION EASEMENT TO OHIO EDISON COMPANY, AN OHIO CORPORATION (NO WIDTH GIVEN) O.R. VOL. 403, P. 51	(D) 10' WATERLINE EASEMENT TO ERIE-HURON COUNTY RURAL WATER AUTHORTY VOL. 385, P. 43

REV. BY	DATE	DESCRIPTION

DATE COMPLETED: 09/14/2020

HORIZONTAL SCALE IN FEET 0 50 100 200

PID NO. 110357

R/W DESIGNER JTS
R/W REVIEWER AMK

PROPERTY MAP

HUR-20-17.82

I:\Project Data\HUR\110357\Design\RW\Sheets\110357_RW001.dgn Sheet 3/1/2021 1:07:22 PM jitalpas

TOTAL NUMBER OF :

6 OWNERSHIPS — 1 TOTAL TAKES

15 PARCELS — 0 OWNERSHIPS W/ STRUCTURES INVOLVED

ALL AREAS IN ACRES

PARCEL NO.	OWNER	SHEET NOS.	OWNERS RECORD VOLUME / INSTRUMENT #	OWNERS RECORD PAGE	AUDITOR'S PARCEL NUMBER	AUDITOR'S RECORD AREA	TOTAL P.R.O.	GROSS TAKE	P.R.O. IN TAKE	NET TAKE	STRUCTURE	NET RESIDUE LEFT	NET RESIDUE RIGHT	TYPE FUND	REMARKS	AS ACQUIRED BOOK	AS ACQUIRED PAGE
1	DAVID L. KNOLL AND MARJORIE KNOLL	9, 11, 12, 19, 20	201508260004822		31-0020-01-022-0300	23.53								STATE	**NO ADDITIONAL R/W REQUIRED**		
			8/26/2015														
			O.R. 591	418	31-0010-04-087-0000	35.56											
			O.R. 430	573													
2-SH	DAVID L. KNOLL AND MARJORIE KNOLL	9, 11, 12, 13, 14, 19, 20	O.R. 591	418	31-0020-01-022-0000	3.732	0.7218	0.6824	0.4243	0.2581	NO	2.7521			NET RESIDUE LEFT OF S.R. 601		
			1/14/2010												*POST, *ROCK, +TREE, *3 TREES		
2-T			O.R. 430	573				0.8287	0.0000	0.8287					PERFORM GRADING, DRIVE REPLACEMENT		
3-SH	JENIFER L. MUELLER, AS TRUSTEE OF A DECLARATION OF TRUST (THE KNOLL FAMILY IRREVOCABLE TRUST DATED JUNE 7, 2019)	9, 19, 20	201907030003457		31-0020-01-022-0200	1.00	0.1019	0.1310	0.1019	0.0291	NO	0.8690			NET RESIDUE LEFT OF S.R. 601		
			7/3/2019												DEED ACREAGE = 1.0003 ACRES		
3-T								0.0242	0.0000	0.0242	NO				PERFORM GRADING, DRIVE REPLACEMENT		
4-WD	SPECULATIVE PROPERTIES, LLC	9, 13, 14, 17, 18	O.R. 506	815	31-0010-04-086-0000	1.027	0.2501	1.0173	0.2501	0.7672	NO				*TREE		
			8/22/2007												+2 TREES,+ LIGHT POLE, +ASPHALT PARKING		
															AND +DRIVE, +SEPTIC, AND +CONC. PAD		
															NO WIDTH GIVEN FOR UTILITY EASEMENT OVERLAP		
															1.0173 AC. CALCULATED FROM SURVEY		
5	BRUCE R. GRIFFITH	9, 17, 18	201806270003909		31-0010-04-085-0000	0.756									**NO ADDITIONAL R/W REQUIRED**		
			6-27-18												DEED ACREAGE = 0.758		
6-SH1	OLD GULF INN, LTD., AN OHIO LIMITED LIABILITY COMPANY	9, 13, 14, 19, 20	O.R. 406	102	31-0020-04-042-0000	0.88	0.4350	0.4221	0.3252	0.0969	NO		0.7831		NET RESIDUE RIGHT OF S.R. 601		
			9/23/2005												NOTE RECORD AREA APPEARS TO EXCLUDE PRO		
6-SH2					48-0030-03-001-0000	1.97	0.0397	0.0358	0.0279	0.0079	NO		1.9224		RECORD AREA OF 0.88 AC. APPEARS TO BE IN ERROR		
															WATERLINE EASEMENT OVERLAP - 0.0353 ACRES		
	PARCEL 6 TOTAL					**2.85**	**0.4747**	**0.4579**	**0.3531**	**0.1048**			2.7055		*PRIVATE SIGN		
															DEED ACREAGE = 1.972 ACRES		
6-U					48-0030-03-001-0000			0.0390	0.0000	0.0390							
6-T					48-0030-03-001-0000			0.0045	0.0000	0.0045	NO				PERFORM GRADING, DRAINAGE INSTALLATION		
7-SH	STACY A. HEITSCHE	9, 13, 14, 15, 16, 17, 18	684	825	48-0040-03-030-0000	4.365	0.7545	0.7814	0.4136	0.3678	NO		3.2427		NET RESIDUE RIGHT OF U.S. RT. 20		
			8/13/2012												+TREES(12)/BRUSH		
															TRANSMISSION EASEMENT OVERLAP - 0.1160 ACRES		
															CHANNEL EASEMENT OVERLAP - 0.0409 ACRES		
8-SH	HEITSCHE RENTALS, LLC, AN OHIO LIMITED LIABILITY COMPANY	9, 13, 14, 13, 14	201905200002515		48-0030-03-002-0000	0.647	0.0700	0.1060	0.0700	0.0360		0.5410			DEED ACREAGE = 0.6468 ACRES		
			5/20/2019														
8-T1								0.0413	0.0000	0.0413	NO				PERFORM GRADING, DRIVE REPLACEMENT		
															DRAINAGE INSTALLATION; +TREES(2)		
															WATERLINE EASEMENT OVERLAP - 0.0050 ACRES		
8-U1								0.0413	0.0000	0.0413	NO				8-U1 AND 8-T1 ARE 100% OVERLAP		
8-T2	HEITSCHE RENTALS, LLC, AN OHIO LIMITED LIABILITY COMPANY	9, 15, 16	202004240002302		48-0030-03-002-0100	3.863		0.0636	0.0000	0.0636	NO				PERFORM GRADING, DRIVE REPLACEMENT		
			4/24/2020												SEPTIC SEWER EASEMENT OVERLAP - 0.0636 ACRES		
															8-U2 AND 8-T2 ARE 100% OVERLAP		
8-U2								0.0636	0.0000	0.0636	NO				DEED ACREAGE = 3.8632 ACRES		
8	HEITSCHE RENTALS, LLC, AN OHIO LIMITED LIABILITY COMPANY	9, 15, 16	201912260007259		48-0030-03-003-0200	6.780									**NO ADDITIONAL R/W REQUIRED**		
			12/26/2019														
					48-0030-03-003-0100	2.255									**NO ADDITIONAL R/W REQUIRED**		
	PARCEL 8 TOTAL					**13.5450**						**13.5090**					
														STATE			

NOTE: ALL TEMPORARY PARCELS TO BE OF 12 MONTH DURATION.

GRANTEE:

ALL RIGHT OF WAY ACQUIRED IN THE NAME OF THE STATE OF OHIO DEPARTMENT OF TRANSPORTATION UNLESS OTHERWISE SHOWN.

NOTE: UNDER NO CIRCUMSTANCES ARE TEMPORARY EASEMENTS TO BE USED FOR STORAGE OF MATERIAL OR EQUIPMENT BY THE CONTRACTOR UNLESS NOTED OTHERWISE.

NET TAKE = GROSS TAKE - PRO IN TAKE

NET RESIDUE = RECORD AREA - TOTAL PRO - NET TAKE

TYPES OF TITLE LEGEND:
WD = WARRANTY DEED
SH = STANDARD HIGHWAY EASEMENT
T = TEMPORARY EASEMENT
CH = CHANNEL EASEMENT
U = UTILITY EASEMENT

* DENOTES RIGHT OF WAY ENCROACHMENT

+ DENOTES REMOVAL ITEMS SEE CORRESPONDING RIGHT OF WAY PLAN SHEET FOR DESCRIPTION

REV. BY	DATE	DESCRIPTION

FIELD REVIEW BY: ERIC SZUNYOGH DATE: 09/02/2020

OWNERSHIP VERIFIED BY: AMY M. KELLY DATE: 09/03/2020

DATE COMPLETED: 09/14/2020

FEDERAL PROJECT NO. E 190(640)

PID NO. 110357

STATE JOB NO. 439585

R/W DESIGNER JTS

R/W REVIEWER AMK

SUMMARY OF ADDITIONAL RIGHT OF WAY

HUR-20-17.82

I:\Project Data\HUR\110357\Design\RW\Sheets\110357_RS001.dgn Sheet 3/1/2021 1:07:23 PM jitrdpos

HUR-20-17.82

HURON COUNTY, OHIO
NORWALK TOWNSHIP
SECTION 2, G.L. 9 & SECTION 1, G.L. 35
T-4N, R-22W
TOWNSEND TOWNSHIP
SECTION 3, LOT 73 & SECTION 4, LOT 96
T-4N, R-21W
FIRE LANDS, CONNECTICUT WESTERN RESERVE

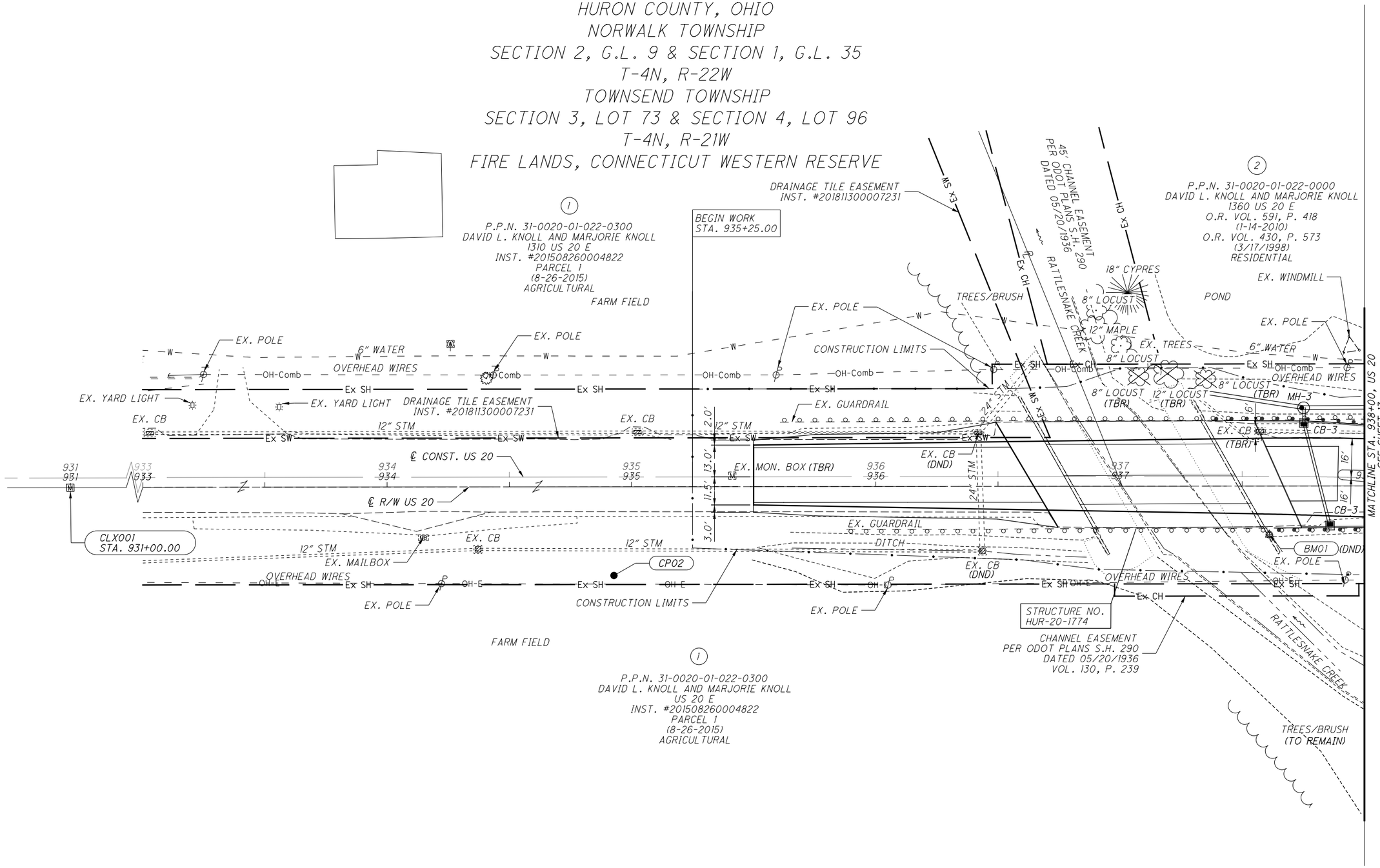

REV. BY	DATE	DESCRIPTION

DATE COMPLETED: 09/14/2020

HORIZONTAL SCALE IN FEET 0 10 20 40

PID NO. 110357

R/W DESIGNER JTS
R/W REVIEWER AMK

RIGHT OF WAY TOPO SHEET
US 20 STA 933+00 TO STA 938+00

HUR-20-17.82

I:\ProjectData\HUR\110357\Design\RW\Sheets\110357_RT001.dgn Sheet 3/1/2021 4:07:26 PM jitalpas

HUR-20-17.82

HURON COUNTY, OHIO
NORWALK TOWNSHIP
SECTION 2, G.L. 9 & SECTION 1, G.L. 35
T-4N, R-22W
TOWNSEND TOWNSHIP
SECTION 3, LOT 73 & SECTION 4, LOT 96
T-4N, R-21W
FIRE LANDS, CONNECTICUT WESTERN RESERVE

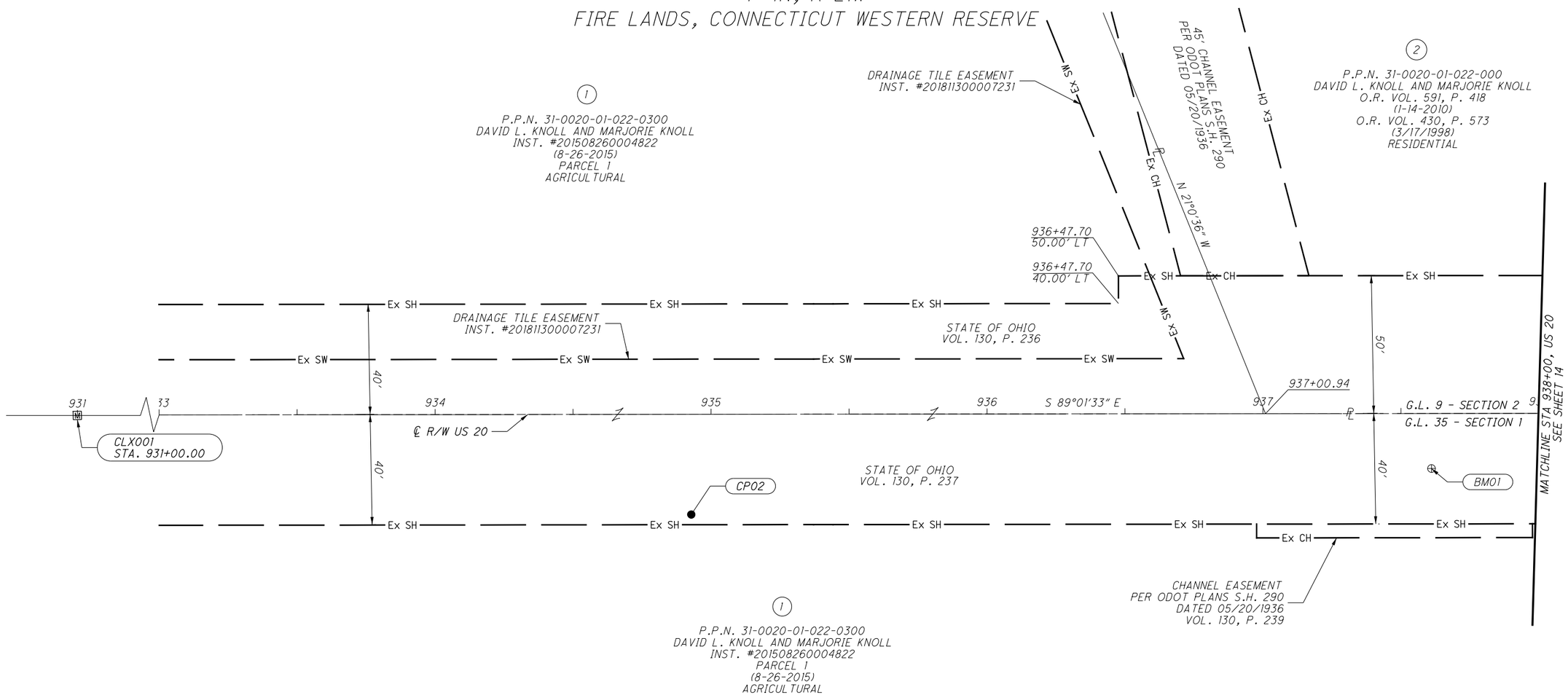

XXXX INDICATES MONUMENT IDENTIFIER, SEE SHEETS 3-6 FOR STATION/OFFEST, COORDINATES AND DESCRIPTIONS.

REV. BY	DATE	DESCRIPTION

DATE COMPLETED: 09/14/2020

HORIZONTAL SCALE IN FEET 0 10 20 40

PID NO. 110357

R/W DESIGNER JTS
R/W REVIEWER AMK

RIGHT OF WAY BOUNDARY SHEET
US 20 STA 933+00 TO STA 938+00

HUR-20-17.82

I:\ProjectData\HUR\110357\Design\RW\Sheets\110357_RB001.dgn Sheet 3/1/2021 1:07:28 PM jitdlpas

HUR-20-17.82

HURON COUNTY, OHIO
NORWALK TOWNSHIP
SECTION 2, G.L. 9 & SECTION 1, G.L. 35
T-4N, R-22W
TOWNSEND TOWNSHIP
SECTION 3, LOT 73 & SECTION 4, LOT 96
T-4N, R-21W
FIRE LANDS, CONNECTICUT WESTERN RESERVE

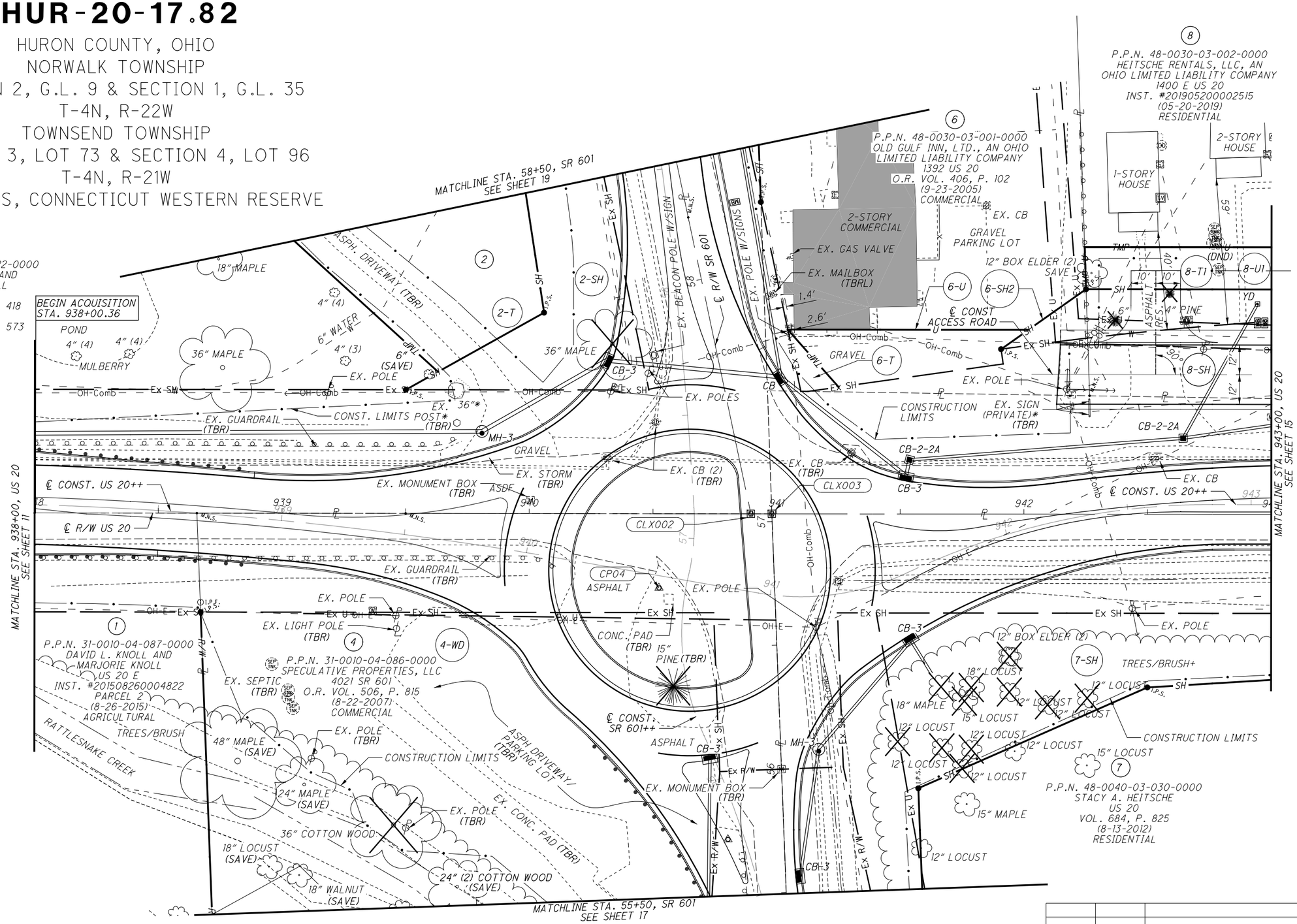

++ SEE SHEET 3 FOR CENTERLINE OF CONSTRUCTION GEOMETRY
+ TREES/BRUSH TO BE REMOVED WITHIN CONSTRUCTION LIMITS
* DENOTES RIGHT OF WAY ENCROACHMENT

REV. BY	DATE	DESCRIPTION

DATE COMPLETED: 09/14/2020

HORIZONTAL SCALE IN FEET 0 10 20 40

PID NO. 110357

R/W DESIGNER JTS
R/W REVIEWER AMK

RIGHT OF WAY TOPO SHEET
US 20 STA 938+00 TO STA 943+00

HUR-20-17.82

I:\ProjectData\HUR\110357\Design\RW\Sheets\110357_RT002.dgn Sheet 3/1/2021 4:07:30 PM jltalpas

HUR-20-17.82

HURON COUNTY, OHIO
NORWALK TOWNSHIP
SECTION 2, G.L. 9 & SECTION 1, G.L. 35
T-4N, R-22W
TOWNSEND TOWNSHIP
SECTION 3, LOT 73 & SECTION 4, LOT 96
T-4N, R-21W
FIRE LANDS, CONNECTICUT WESTERN RESERVE

XXXX — INDICATES MONUMENT IDENTIFIER, SEE SHEETS 3-6 FOR STATION/OFFEST, COORDINATES AND DESCRIPTIONS.

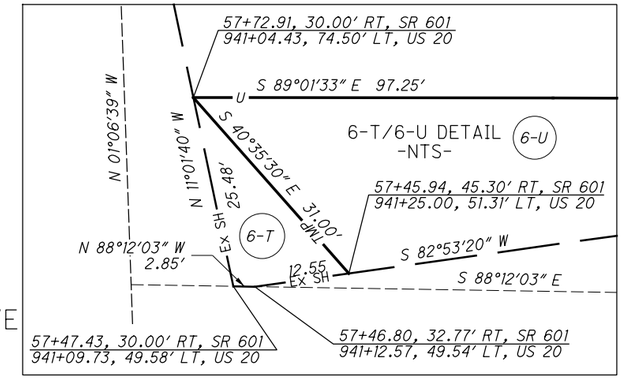

NOTE:

CENTERLINE OF RIGHT OF WAY POINTS CLX002 AND CLX003 HAVE BEEN TEMPORARILY MONUMENTED WITH A MAG NAIL AND REFERENCED AT THE SAME TIME THE PROPOSED RIGHT OF WAY PINS ARE SET. THESE MAG NAILS SHALL BE REPLACED BY A 1" IRON PIN IN ODOT TYPE C MONUMENT ASSEMBLY DURING CONSTRUCTION.

PARCEL NO.	GROSS TAKE	AREA OF DUAL USE
8-T1	0.0413 ACRES	0.0413 ACRES
8-U1	0.0413 ACRES	0.0413 ACRES

C1
R=1468.69'
A=105.59'
T=52.82'
C=105.57'
Δ=04°07'9"
N 86°19'33" E

C3
R=1468.69'
A=35.31'
T=17.66'
C=35.31'
Δ=01°22'39"
N 83°34'39" E

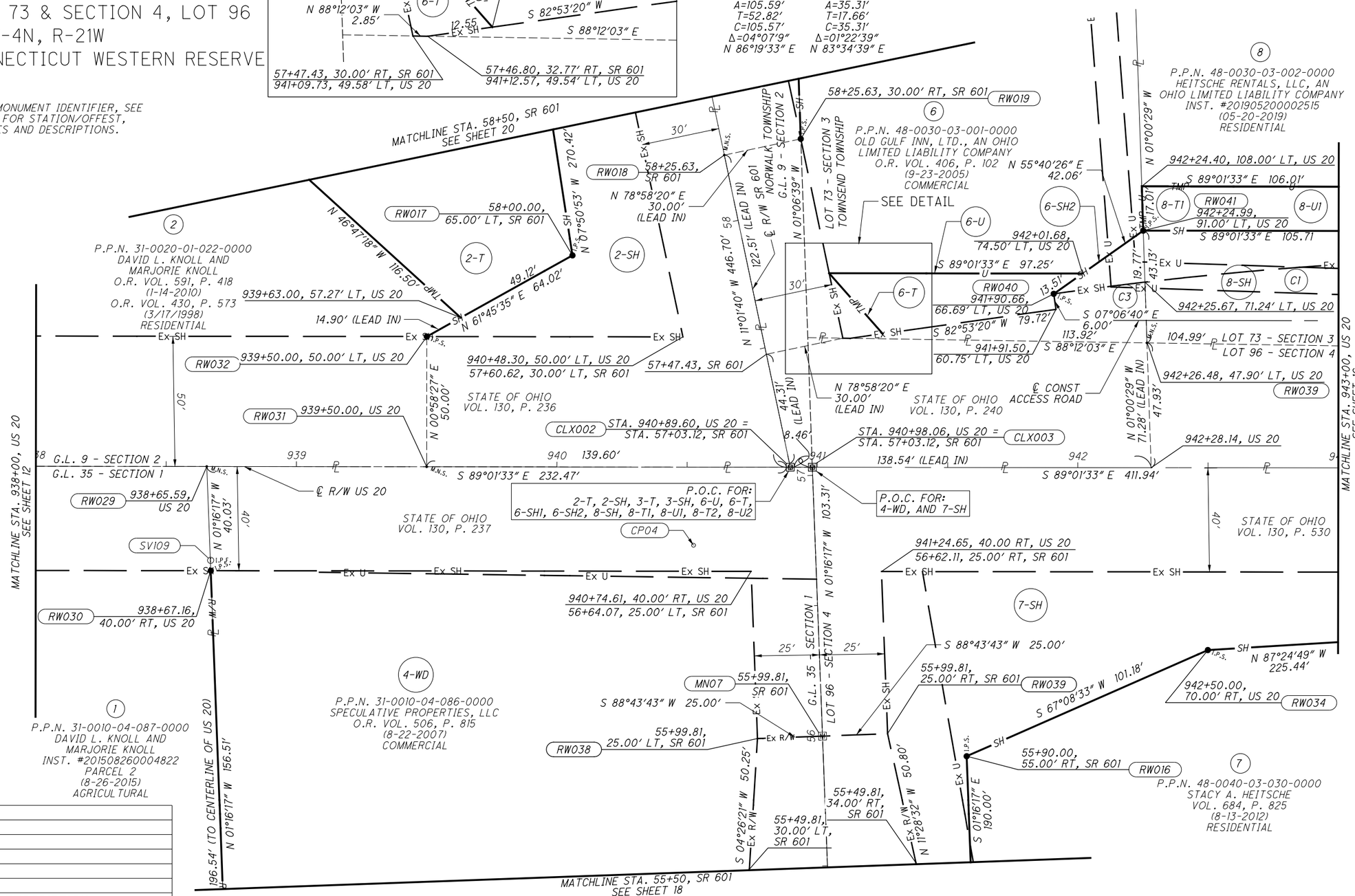

REV. BY	DATE	DESCRIPTION

DATE COMPLETED: 09/14/2020

HORIZONTAL SCALE IN FEET 0 10 20 40

PID NO. 110357

R/W DESIGNER JTS
R/W REVIEWER AMK

RIGHT OF WAY BOUNDARY SHEET
US 20 STA 938+00 TO STA 943+00

HUR-20-17.82

I:\ProjectData\HUR\110357\Design\RW\Sheets\110357_RB002.dgn Sheet 3/1/2021 1:07:32 PM jltalpas

HUR-20-17.82

HURON COUNTY, OHIO
NORWALK TOWNSHIP
SECTION 2, G.L. 9 & SECTION 1, G.L. 35
T-4N, R-22W
TOWNSEND TOWNSHIP
SECTION 3, LOT 73 & SECTION 4, LOT 96
T-4N, R-21W
FIRE LANDS, CONNECTICUT WESTERN RESERVE

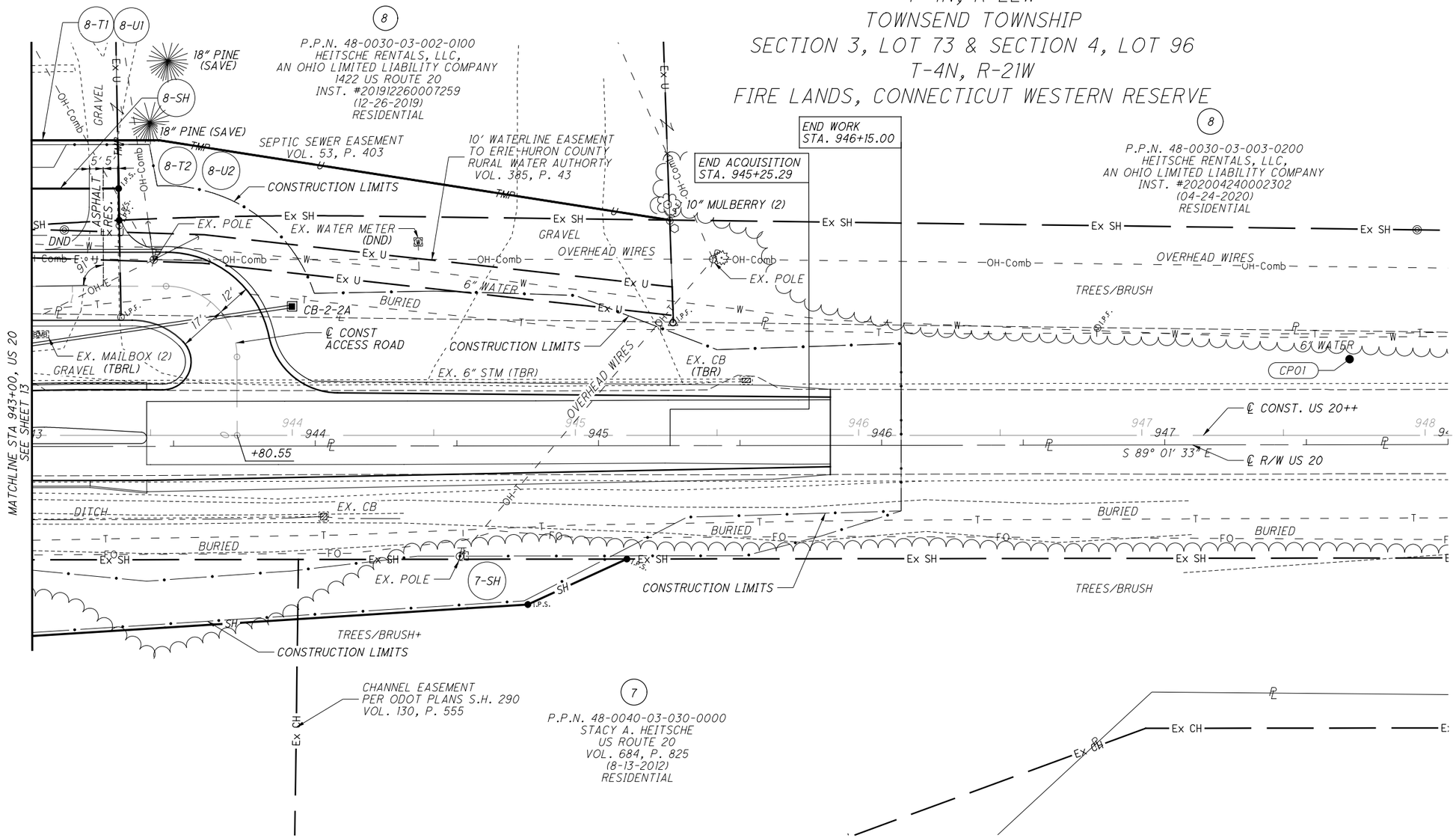

+ TREES/BRUSH TO BE REMOVED WITHIN CONSTRUCTION LIMITS
++ SEE SHEET 3 FOR CENTERLINE OF CONSTRUCTION GEOMETRY

REV. BY	DATE	DESCRIPTION

DATE COMPLETED: 09/14/2020

HORIZONTAL SCALE IN FEET 0 10 20 40

PID NO. 110357

R/W DESIGNER JTS
R/W REVIEWER AMK

RIGHT OF WAY TOPO SHEET
US 20 STA 943+00 TO STA 948+00

HUR-20-17.82

I:\Project Data\HUR\110357\Design\RW\Sheets\110357_RT003.dgn Sheet 3/1/2021 1:07:34 PM jitalpas

HUR-20-17.82

HURON COUNTY, OHIO
NORWALK TOWNSHIP
SECTION 2, G.L. 9 & SECTION 1, G.L. 35
T-4N, R-22W
TOWNSEND TOWNSHIP
SECTION 3, LOT 73 & SECTION 4, LOT 96
T-4N, R-21W
FIRE LANDS, CONNECTICUT WESTERN RESERVE

PARCEL NO.	GROSS TAKE	AREA OF DUAL USE
8-T1	0.0413 ACRES	0.0413 ACRES
8-U1	0.0413 ACRES	0.0413 ACRES
8-T2	0.0636 ACRES	0.0636 ACRES
8-U2	0.0636 ACRES	0.0636 ACRES

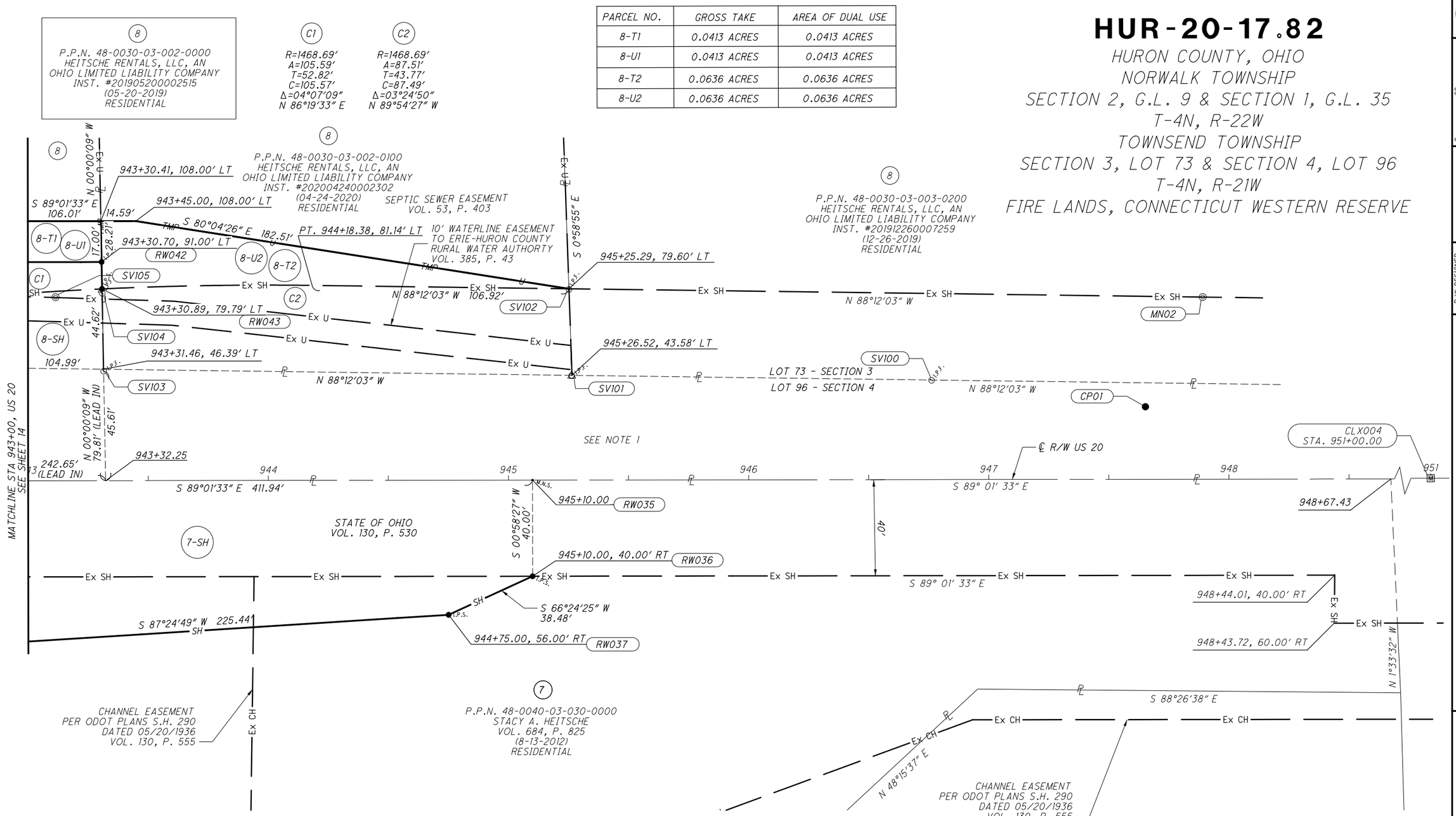

NOTE 1: THERE IS AN APPARENT GAP IN OWNERSHIP WITHIN THE EXISTING RIGHT-OF-WAY OF U.S. ROUTE 20 (EAST LEG) BETWEEN PARCELS 6 AND 8 ON THE NORTH AND PARCEL 7 ON THE SOUTH.

XXXX — INDICATES MONUMENT IDENTIFIER, SEE SHEETS 3-6 FOR STATION/OFFEST, COORDINATES AND DESCRIPTIONS.

REV. BY	DATE	DESCRIPTION

DATE COMPLETED: 09/14/2020

HORIZONTAL SCALE IN FEET 0 10 20 40

PID NO. 110357

R/W DESIGNER JTS
R/W REVIEWER AMK

RIGHT OF WAY BOUNDARY SHEET
US 20 STA 943+00 TO STA 948+00

HUR-20-17.82

I:\ProjectData\HUR\110357\Design\RW\Sheets\110357_RB003.dgn Sheet 3/1/2021 1:07:36 PM jltalpas

HURON COUNTY, OHIO
NORWALK TOWNSHIP
SECTION 2, G.L. 9 & SECTION 1, G.L. 35
T-4N, R-22W
TOWNSEND TOWNSHIP
SECTION 3, LOT 73 & SECTION 4, LOT 96
T-4N, R-21W
FIRE LANDS, CONNECTICUT WESTERN RESERVE

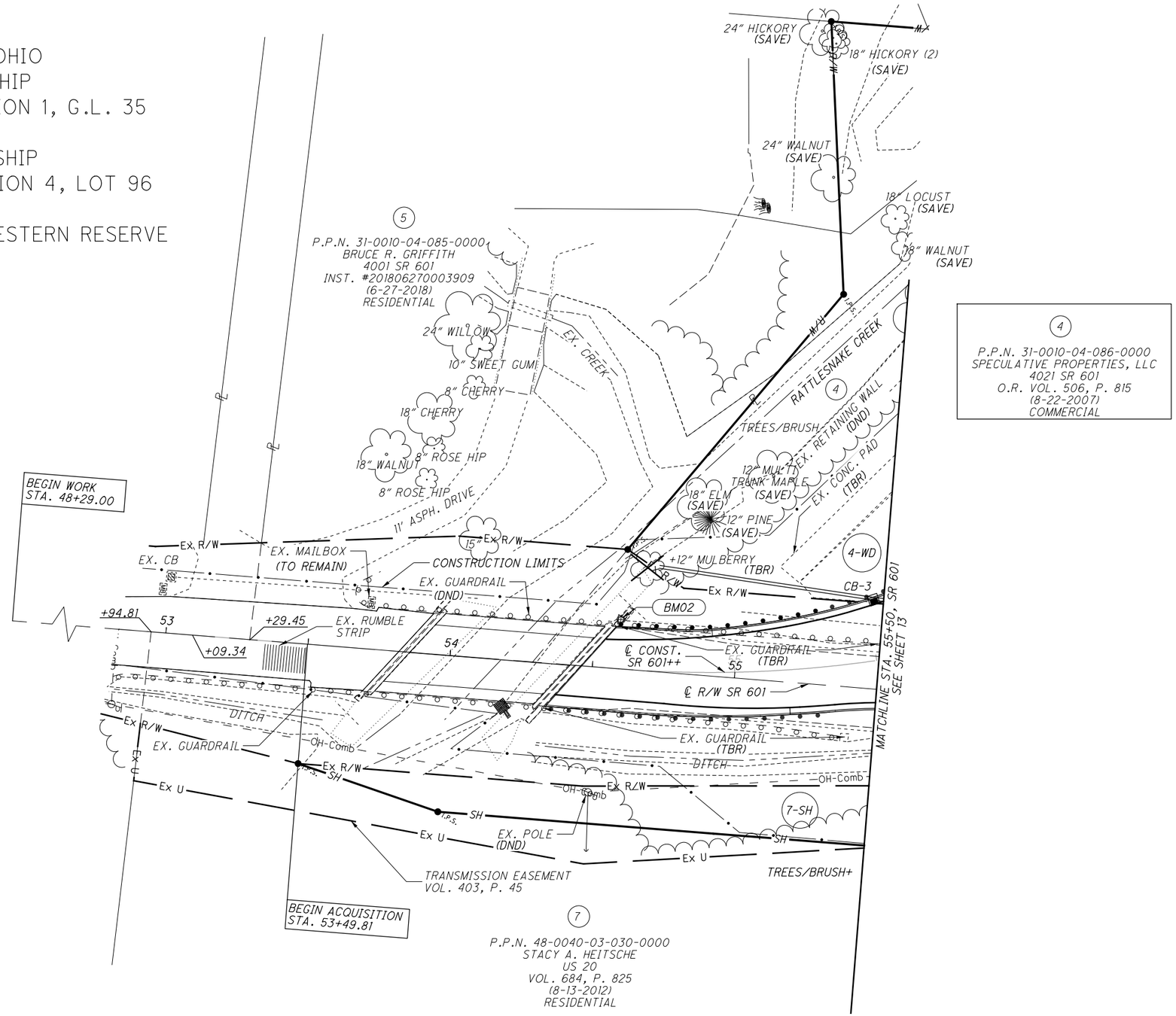

+ TREES/BRUSH TO BE REMOVED WITHIN CONSTRUCTION LIMITS
++ SEE SHEET 3 FOR CENTERLINE OF CONSTRUCTION GEOMETRY

REV. BY	DATE	DESCRIPTION

DATE COMPLETED: 09/14/2020

HORIZONTAL SCALE IN FEET 0 10 20 40

PID NO. 110357

R/W DESIGNER JTS
R/W REVIEWER AMK

RIGHT OF WAY TOPO SHEET
SR 601 STA 53+00 TO STA 55+50

HUR-20-17.82

i:\ProjectData\HUR\110357\Design\RW\Sheets\110357_RT004.dgn Sheet 3/1/2021 1:07:38 PM jltalpas

HURON COUNTY, OHIO
NORWALK TOWNSHIP
SECTION 2, G.L. 9 & SECTION 1, G.L. 35
T-4N, R-22W
TOWNSEND TOWNSHIP
SECTION 3, LOT 73 & SECTION 4, LOT 96
T-4N, R-21W
FIRE LANDS, CONNECTICUT WESTERN RESERVE

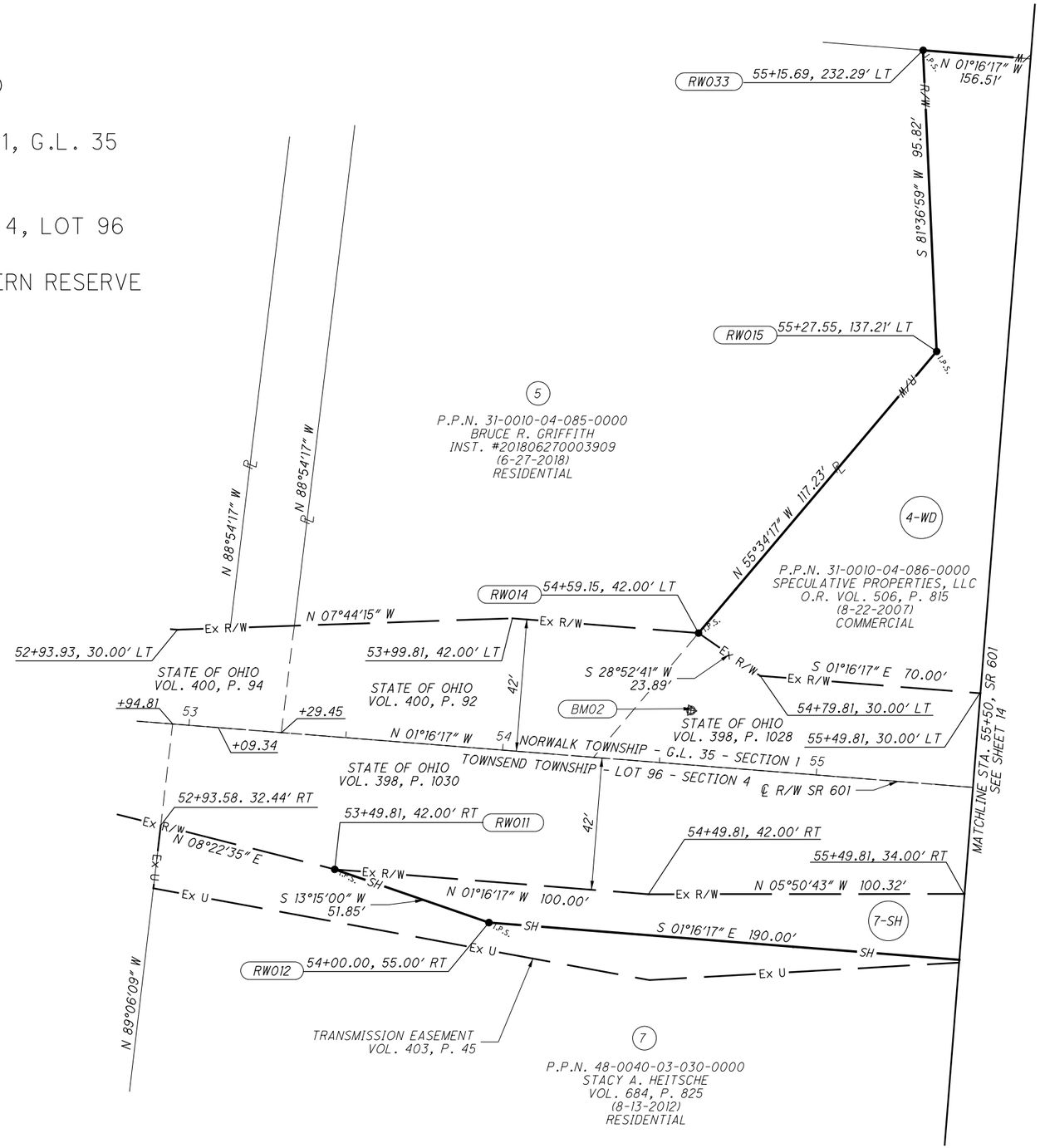

XXXX INDICATES MONUMENT IDENTIFIER, SEE SHEETS 3-6 FOR STATION/OFFEST, COORDINATES AND DESCRIPTIONS.

REV. BY	DATE	DESCRIPTION

DATE COMPLETED: 09/14/2020

HORIZONTAL SCALE IN FEET 0 10 20 40

PID NO. 110357

R/W DESIGNER JTS
R/W REVIEWER AMK

RIGHT OF WAY BOUNDARY SHEET
SR 601 STA 53+00 TO STA 55+50

HUR-20-17.82

i:\ProjectData\HUR\110357\Design\RW\Sheets\110357_RB004.dgn Sheet 3/1/2021 1:07:40 PM jltalpos

HUR-20-17.82

HURON COUNTY, OHIO
NORWALK TOWNSHIP
SECTION 2, G.L. 9 & SECTION 1, G.L. 35
T-4N, R-22W
TOWNSEND TOWNSHIP
SECTION 3, LOT 73 & SECTION 4, LOT 96
T-4N, R-21W
FIRE LANDS, CONNECTICUT WESTERN RESERVE

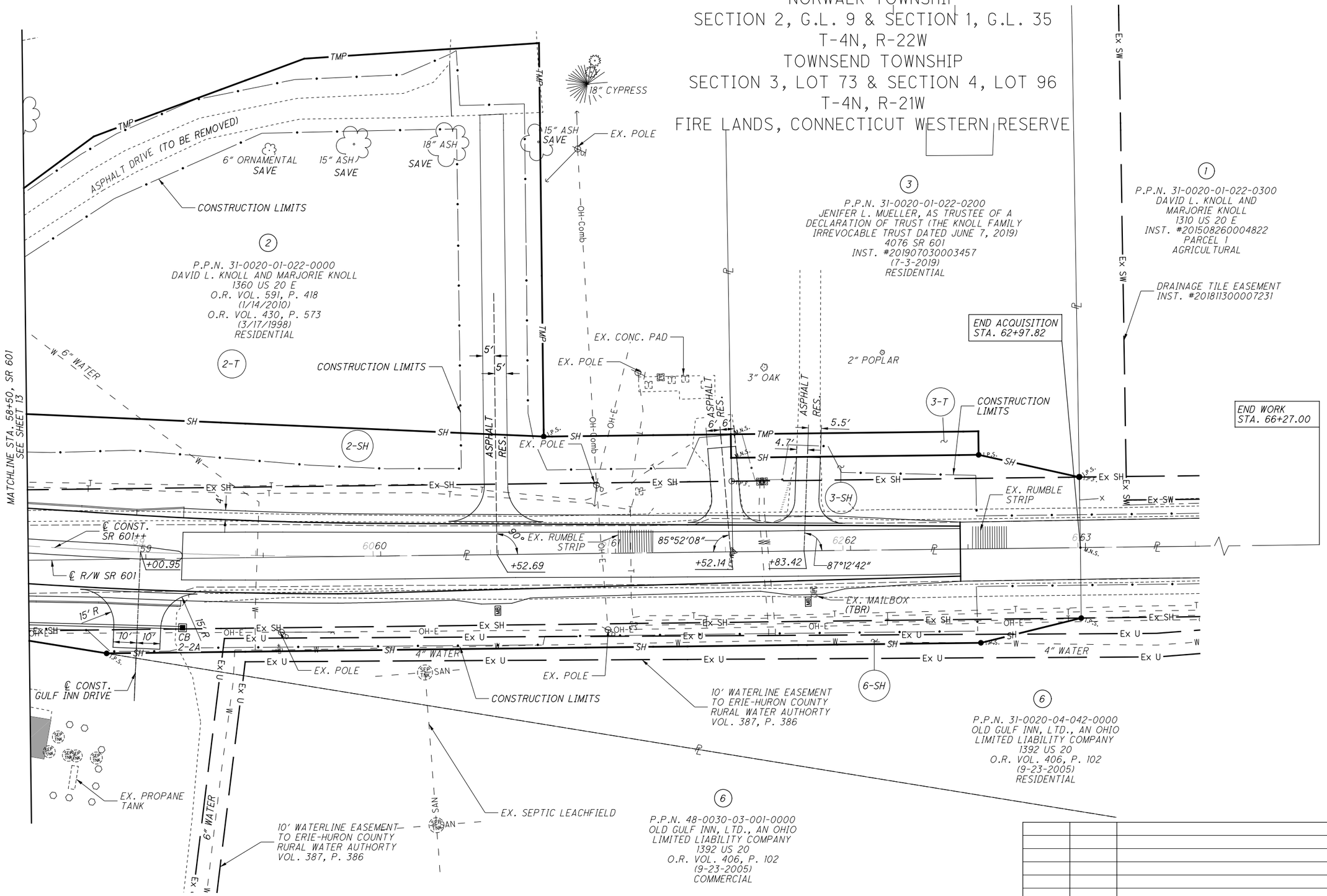

++ SEE SHEET 3 FOR CENTERLINE OF CONSTRUCTION GEOMETRY

REV. BY	DATE	DESCRIPTION

DATE COMPLETED: 09/14/2020

HORIZONTAL SCALE IN FEET 0 10 20 40

PID NO. 110357

R/W DESIGNER JTS
R/W REVIEWER AMK

RIGHT OF WAY TOPO SHEET
SR 601 STA 58+50 TO STA 63+50

HUR-20-17.82

I:\ProjectData\HUR\110357\Design\RW\Sheets\110357_RT005.dgn Sheet 3/1/2021 1:07:42 PM jltalpas

HUR-20-17.82

HURON COUNTY, OHIO
NORWALK TOWNSHIP
SECTION 2, G.L. 9 & SECTION 1, G.L. 35
T-4N, R-22W
TOWNSEND TOWNSHIP
SECTION 3, LOT 73 & SECTION 4, LOT 96
T-4N, R-21W
FIRE LANDS, CONNECTICUT WESTERN RESERVE

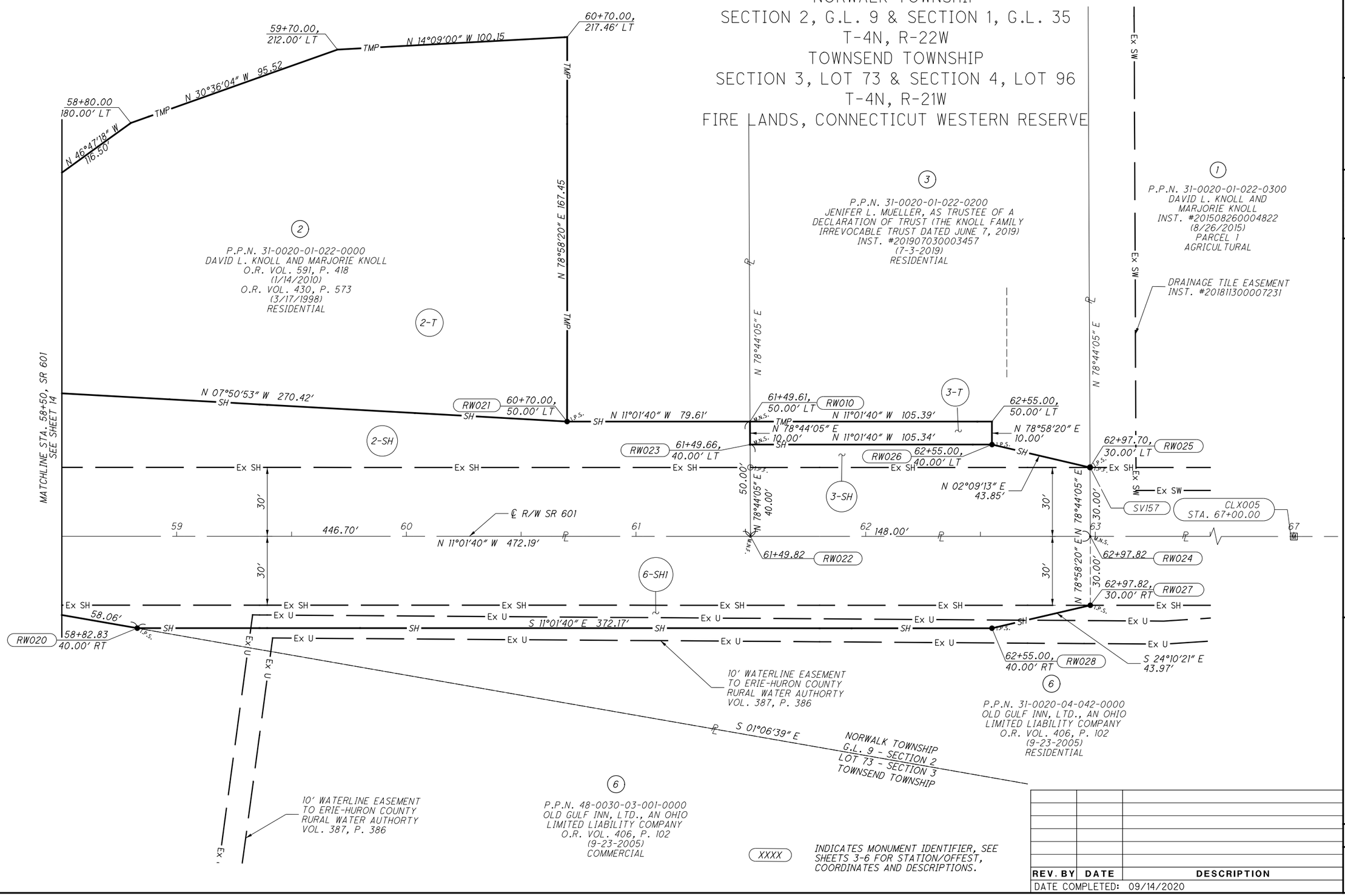

REV. BY	DATE	DESCRIPTION

DATE COMPLETED: 09/14/2020

HORIZONTAL SCALE IN FEET 0 10 20 40

PID NO. 110357

R/W DESIGNER JTS
R/W REVIEWER AMK

RIGHT OF WAY BOUNDARY SHEET
SR 601 STA 58+50 TO STA 63+50

HUR-20-17.82

20/20

122/128

I:\ProjectData\HUR\110357\Design\RW\Sheets\110357_RB005.dgn Sheet 3/1/2021 1:07:44 PM jltalpas

PROJECT DESCRIPTION

THIS PROJECT INVOLVES THE CONSTRUCTION OF A SINGLE LANE ROUNDABOUT AT THE INTERSECTION OF US 20 AND SR 601 IN HURON COUNTY, OHIO.

HISTORIC RECORDS

A HISTORIC REPORT/PLAN, HUR-601-1.02, WAS REVIEWED FOR THIS PROJECT. THIS DID NOT PROVIDE RELEVANT INFORMATION FOR USE ON THE DESIGN OF THIS PROJECT. THEREFORE, NO HISTORIC DATA FROM THIS PROJECT HAS BEEN PRESENTED ON THIS SOIL PROFILE.

GEOLOGY

THE PROJECT SITE IS LOCATED WITHIN THE BEREA HEADLANDS OF THE TILL PLAIN. THIS AREA IS CHARACTERIZED BY GENTLY ROLLING TO FLAT TERRAIN OF THIN DRIFT DESCENDING TO LAKE ERIE OF LOW RELIEF (20 FT) PUNCTUATED BY MORE THAN 20 STREAMLINED "WHALEBACKS" OF BEREA SANDSTONE OF 0.5 TO 2.5 MILES LONG AND 30 FT TO 60 FT HIGH. THIS AREA IS SOMEWHAT POORLY DRAINED AND AT THE ELEVATION OF 800 FT 1000 FT. THE TILL IN THIS AREA IS THIN, CLAYEY AND MEDIUM-LIME WISCONSINAN-AGE TILL OVER RESISTANT MISSISSIPPIAN-AGE BEREA SANDSTONE.

RECONNAISSANCE

FIELD RECONNAISSANCE WAS COMPLETED BY NEAS STAFF ON MARCH 30, 2020. THE PAVEMENT ALONG US 20 WAS OBSERVED TO BE IN VERY GOOD CONDITION, WITH NO SIGNS OF DISTRESS, CRACKING, OR DRAINAGE ISSUES NOTED. THE PAVEMENT ALONG SR 601 AT THE NORTH OF THE US-20 INTERSECTION WAS OBSERVED TO BE IN SOME DISTRESS, WITH CRACKING, PATCHING AND WHEEL TRACKING NOTED. THE PAVEMENT ALONG SR-601 AT THE SOUTH OF THE US-20 INTERSECTION WAS OBSERVED TO BE IN VERY GOOD CONDITION, WITH NO SIGNS OF DISTRESS, CRACKING, OR DRAINAGE ISSUES NOTED.

SUBSURFACE EXPLORATION

SEVEN (7) BORINGS WERE COMPLETED BETWEEN APRIL 8, 2020 AND APRIL 9, 2020, USING A CME 55T TRUCK MOUNTED DRILLING RIG UTILIZING A 3.25-I.D. HOLLOW STEM AUGER TO ADVANCE THE BORINGS THROUGH THE SOIL. THESE BORINGS WERE DRILLED TO DEPTHS BETWEEN 7.5 FT AND 19.8 FT BELOW GROUND SURFACE (BGS). DISTURBED SAMPLES WERE COLLECTED IN ACCORDANCE WITH THE STANDARD PENETRATION TEST (AASHTO T206) CONTINUOUSLY AND AT 2.5 FT INTERVALS. THE HAMMER SYSTEM USED WAS LAST CALIBRATED ON DECEMBER 5, 2019, AND THE AVERAGE DRILL ROD ENERGY RATIO (ER) WAS 68.4%. ROCK CORING WAS PERFORMED WITHIN B-001-0-19 BELOW A DEPTH OF 9.8 FT BGS. CORING WAS PERFORMED USING NQ2 TRIPLE TUBE CORE BARREL WITH WATER AS THE CIRCULATING FLUID.

EXPLORATION FINDINGS

SUBGRADE CONDITIONS WITHIN THE PROJECT AREA ARE RELATIVELY CONSISTENT AND ARE COMPRISED OF VARIOUS GRANULAR AND COHESIVE MATERIALS.

SUBGRADE SOILS ENCOUNTERED ALONG THE PROPOSED US 20 CONSISTED OF 44% COHESIVE MATERIALS, 25% GRANULAR MATERIALS, AND 31% ROCK. COHESIVE MATERIALS WERE OF STIFF TO HARD CONSISTENCY, DAMP, AND WERE COMPRISED OF SILT AND CLAY (A-6a) AND SILTY CLAY (A-6b). GRANULAR MATERIALS WERE OF LOOSE TO DENSE COMPACTNESS, DAMP TO MOIST, AND WERE COMPRISED OF SANDY SILT (A-4a). ROCK ENCOUNTERED CONSISTED OF SANDSTONE. ALL BORINGS ENCOUNTERED ASPHALT, BASE, AND/OR GRAVEL AT THE TOP OF THE BORING.

SUBGRADE SOILS ALONG THE PROPOSED SR 601 CONSISTED OF 12% COHESIVE MATERIALS, 69% GRANULAR MATERIALS, AND 19% ROCK. COHESIVE MATERIALS WERE OF VERY STIFF TO HARD CONSISTENCY, DAMP TO MOIST, AND WERE COMPRISED OF SILTY CLAY (A-6b) AND CLAY (A-7-6). GRANULAR MATERIALS WERE OF LOOSE TO VERY DENSE COMPACTNESS, DAMP TO MOIST, AND WERE COMPRISED OF GRAVEL AND STONE FRAGMENTS WITH SAND (A-1-b) AND SANDY SILT (A-4a). ROCK ENCOUNTERED CONSISTED OF INTERBEDDED SILTSTONE AND SANDSTONE OR SANDSTONE.

ALL SAMPLES TESTED FOR SULFATE CONTENT WERE FOUND TO HAVE A SULFATE CONTENT OF LESS THAN 3,000 PPM.

GROUNDWATER WAS NOT ENCOUNTERED IN ANY OF THE BORINGS.

SPECIFICATIONS

THIS GEOTECHNICAL EXPLORATION WAS PERFORMED IN ACCORDANCE WITH THE STATE OF OHIO, DEPARTMENT OF TRANSPORTATION, OFFICE OF GEOTECHNICAL ENGINEERING, SPECIFICATIONS FOR GEOTECHNICAL EXPLORATIONS, DATED JANUARY 2020.

AVAILABLE INFORMATION

ALL AVAILABLE SOIL AND BEDROCK INFORMATION THAT CAN BE CONVENIENTLY SHOWN ON THE GEOTECHNICAL EXPLORATION SHEETS HAS BEEN SO REPORTED. ADDITIONAL EXPLORATIONS MAY HAVE BEEN MADE TO STUDY SOME SPECIAL ASPECT OF THE PROJECT. COPIES OF THIS DATA, IF ANY, MAY BE INSPECTED IN THE DISTRICT DEPUTY DIRECTOR'S OFFICE OR THE OFFICE OF GEOTECHNICAL ENGINEERING AT 1980 WEST BROAD STREET.

LEGEND

DESCRIPTION	ODOT CLASS	CLASSIFIED MECH.	CLASSIFIED VISUAL
GRAVEL AND STONE FRAGMENTS WITH SAND	A-1-b	1	0
SANDY SILT	A-4a	6	9
SILT AND CLAY	A-6a	2	0
SILTY CLAY	A-6b	4	2
CLAY	A-7-6	1	0
	TOTAL	14	11

SANDSTONE

SILTSTONE

PAVEMENT OR BASE = X = APPROXIMATE THICKNESS — *VISUAL*

SOD AND TOPSOIL = X = APPROXIMATE THICKNESS — *VISUAL*

BORING LOCATION - PLAN VIEW.

DRIVE SAMPLE AND/OR ROCK CORE BORING PLOTTED TO VERTICAL SCALE ONLY. HORIZONTAL BAR INDICATES A CHANGE IN STRATIGRAPHY.

WC INDICATES WATER CONTENT IN PERCENT.

N_{60} INDICATES STANDARD PENETRATION RESISTANCE NORMALIZED TO 60% DRILL ROD ENERGY RATIO.

X/Y/Z NUMBER OF BLOWS FOR STANDARD PENETRATION TEST (SPT):
X= NUMBER OF BLOWS FOR FIRST 6 INCHES.
Y= NUMBER OF BLOWS FOR SECOND 6 INCHES.
Z= NUMBER OF BLOWS FOR THIRD 6 INCHES.

SS INDICATES A SPLIT SPOON SAMPLE.

NP INDICATES A NON-PLASTIC SAMPLE.

INDEX OF SHEETS

LOCATION FROM STA.	TO STA.	PLAN VIEW SHEET	PROFILE SHEET	CROSS-SECTION SHEET	CUT MAX.	FILL EMB. MAX.
US-20						
BEGIN	940+80	3	3	-	<1 FT	1 FT
940+80	END	4	4	-	<1 FT	1 FT
SR-601						
BEGIN	58+00	5	5	-	<1 FT	2 FT
58+00	END	6	6	-	<1 FT	<1 FT

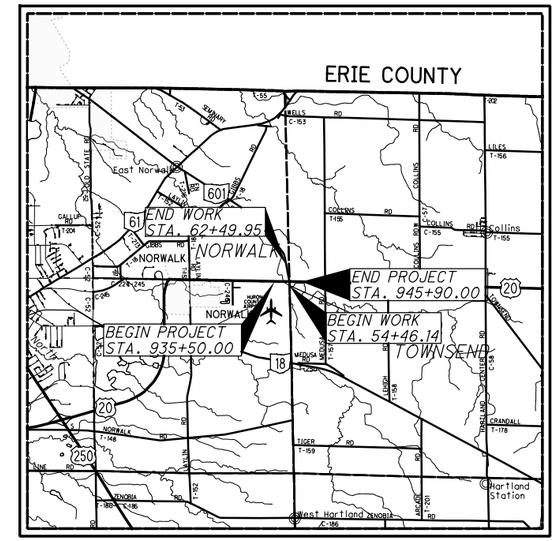

LOCATION MAP

SCALE IN MILES

0 1 2 3 4

N

PARTICLE SIZE DEFINITIONS

12"	3"	2.0 mm	0.42 mm	0.074 mm	0.005 mm
BOULDERS	COBBLES	GRAVEL	COARSE SAND	FINE SAND	SILT / CLAY
		No. 10 SIEVE	No. 40 SIEVE	No. 200 SIEVE	

RECON. - 03/30/20
DRILLING - CA 04/08/20 - 04/09/20
DRAWN - MJ 07/07/20 - 08/04/20
REVIEWED - CH 08/05/20

DESIGN AGENCY
NATIONAL ENGINEERING & ARCHITECTURAL SERVICES INC.
2800 CORPORATE EXCHANGE DR, STE 240
COLUMBUS, OH 43231 (614) 714-0299

PID NO. **110357**

SOIL PROFILE

HUR-20-17.82

P:\20-0030 (110357 HUR-20-17.82)\110357\geotechnical\sheets\110357ICO01.dgn Sheet 3/1/2021 12:44:21 PM mjasiewicz

SUMMARY OF SOIL TEST DATA
US-20

EXPLORATION NO., STATION & OFFSET	FROM		TO	SAMPLE ID	N60	% REC	HP †sf	% GR	% CS	% FS	% SILT	% CLAY	LL	PL	PI	% WC	ODOT CLASS (GI)	ppm SO4
B-001-0-19	01.50	-	03.00	SS-1	8	28	3.50	5	10	15	35	35	30	18	12	18	A-6a (8)	210
STA. 937+90, 12′ RT	03.00	-	04.50	SS-2	34	56	2.75	9	19	24	29	19	27	17	10	14	A-4a (3)	
LATITUDE = 41.249226	04.50	-	06.00	SS-3	17	67	2.50				SAME AS SS-2					16	A-4a (VISUAL)	
LONGITUDE = -82.542509	06.00	-	07.50	SS-4	7	83	2.25				SAME AS SS-2					18	A-6a (VISUAL)	
	07.50		09.00	SS-5	8	89	1.75				SAME AS SS-2					17	A-6a (VISUAL)	
	09.00		09.50	SS-6A	12/50/3″	44	2.00				SAME AS SS-2					17	A-6a (VISUAL)	
	09.50		09.80	SS-6B	-	44	-	SANDSTONE, GRAY, HIGHLY WEATHERED, MODERATELY STRONG								10	ROCK (VISUAL)	
B-006-0-19	01.00	-	02.50	SS-1	14	67	4.50	2	9	19	32	38	34	17	17	13	A-6b (10)	130
STA. 941+74, 39′ LT	03.50	-	05.00	SS-2	19	56	2.50	25	9	19	28	19	27	16	11	15	A-6a (3)	
LATITUDE = 41.249286	06.00	-	07.50	SS-3	32	78	-	SANDSTONE, BROWN, HIGHLY WEATHERED, SLIGHTLY STRONG								11	ROCK (VISUAL)	
LONGITUDE = -82.541184	08.50	-	09.42	SS-4	26/50/5″	73	-				SAME AS SS-3					11	ROCK (VISUAL)	
B-007-0-19	01.50	-	03.00	SS-1	9	44	4.25	5	8	13	32	42	39	20	19	18	A-6b (11)	<100
STA. 945+25, 7′ RT	03.00	-	04.50	SS-2	17	56	4.50	2	7	14	34	43	35	19	16	17	A-6b (10)	
LATITUDE = 41.249207	04.50	-	06.00	SS-3	14	56	4.50				SAME AS SS-2					18	A-6b (VISUAL)	
LONGITUDE = -82.539865	06.00	-	07.50	SS-4	15	67	4.50				SAME AS SS-2					19	A-6b (VISUAL)	

SUMMARY OF SOIL TEST DATA
SR-601

EXPLORATION NO., STATION & OFFSET	FROM		TO	SAMPLE ID	N60	% REC	HP †sf	% GR	% CS	% FS	% SILT	% CLAY	LL	PL	PI	% WC	ODOT CLASS (GI)	ppm SO4
B-002-0-19	01.50	-	03.00	SS-1	10	22	-	31	44	5	18	2	NP	NP	NP	9	A-1-b (0)	2000
STA. 61+95, 6′ RT	03.00	-	04.50	SS-2	9	50	3.00	2	4	13	31	50	46	23	23	28	A-7-6 (14)	
LATITUDE = 41.250553	04.50	-	06.00	SS-3	13	78	4.50	HARD, DARK GRAY + GRAY, SANDY SILT, LITTLE CLAY, TRACE GRAVEL								19	A-4a (VISUAL)	
LONGITUDE = -82.541737	06.00	-	07.50	SS-4	10	89	4.50	4	8	15	36	37	33	17	16	14	A-6b (10)	
B-003-0-19	01.50	-	03.00	SS-1	8	56	2.50	4	10	22	42	22	24	17	7	16	A-4a (6)	<100
STA. 57+46, 39′ LT	03.00	-	04.50	SS-2	10	39	2.00	1	8	22	45	24	26	20	6	20	A-4a (7)	
LATITUDE = 41.249328	04.50	-	06.00	SS-3	7	33	-				SAME AS SS-2					11	A-4a (VISUAL)	
LONGITUDE = -82.541650	06.00	-	07.50	SS-4	11	56	2.00				SAME AS SS-2					21	A-4a (VISUAL)	
B-004-0-19	01.00	-	02.50	SS-1	44	61	1.50	16	6	30	30	18	25	19	6	18	A-4a (3)	<100
STA. 56+48, 20′ LT	03.50	-	05.00	SS-2	38	56	-	SANDSTONE, ORANGE-BROWN, HIGHLY WEATHERED, SLIGHTLY STRONG								11	ROCK (VISUAL)	
LATITUDE = 41.249060	06.00	-	06.33	SS-3	50/4″	75	-				SAME AS SS-2					12	ROCK (VISUAL)	
LONGITUDE = -82.541592	08.50	-	08.67	SS-4	50/2″	0	-				SAME AS SS-2					-	ROCK (VISUAL)	
B-005-0-19	01.00	-	02.50	SS-1	8	61	2.75	15	11	25	30	19	26	17	9	15	A-4a (3)	170
STA. 55+07, 9′ LT	03.50	-	05.00	SS-2	24	67	2.25	35	7	19	25	14	24	17	7	14	A-4a (1)	
LATITUDE = 41.248699	06.00	-	07.50	SS-3	27	61	2.50				SAME AS SS-1					14	A-4a (VISUAL)	
LONGITUDE = -82.541348	08.50	-	09.17	SS-4	31/50/2″	63	1.75				SAME AS SS-1					15	A-4a (VISUAL)	

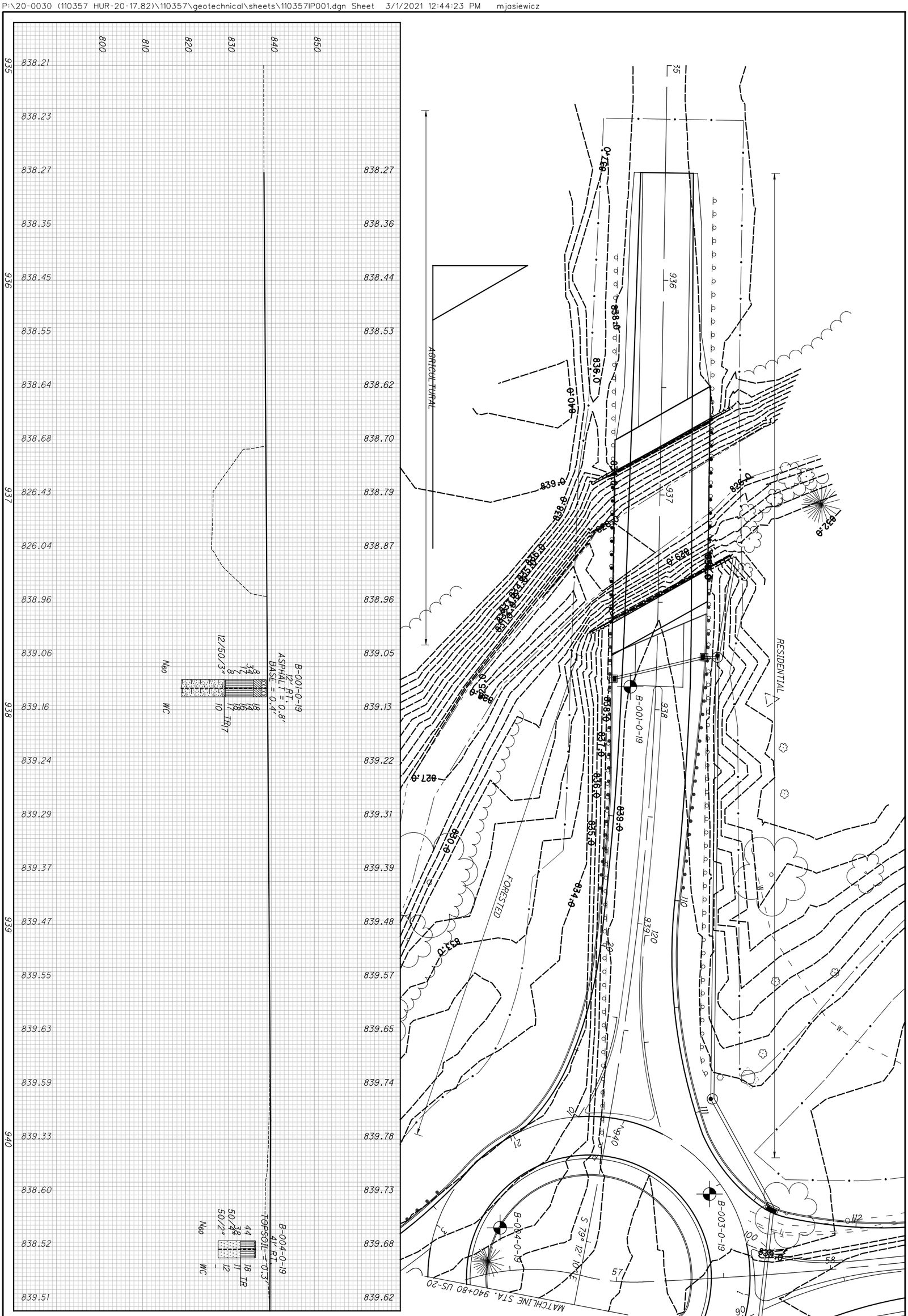

125 / 128	3 / 6	HUR-20-17.82	SOIL PROFILE BEGIN TO STA. 940+80 US-20	DRAWN MJ CHECKED CH	0 10 20 40 HORIZONTAL SCALE IN FEET

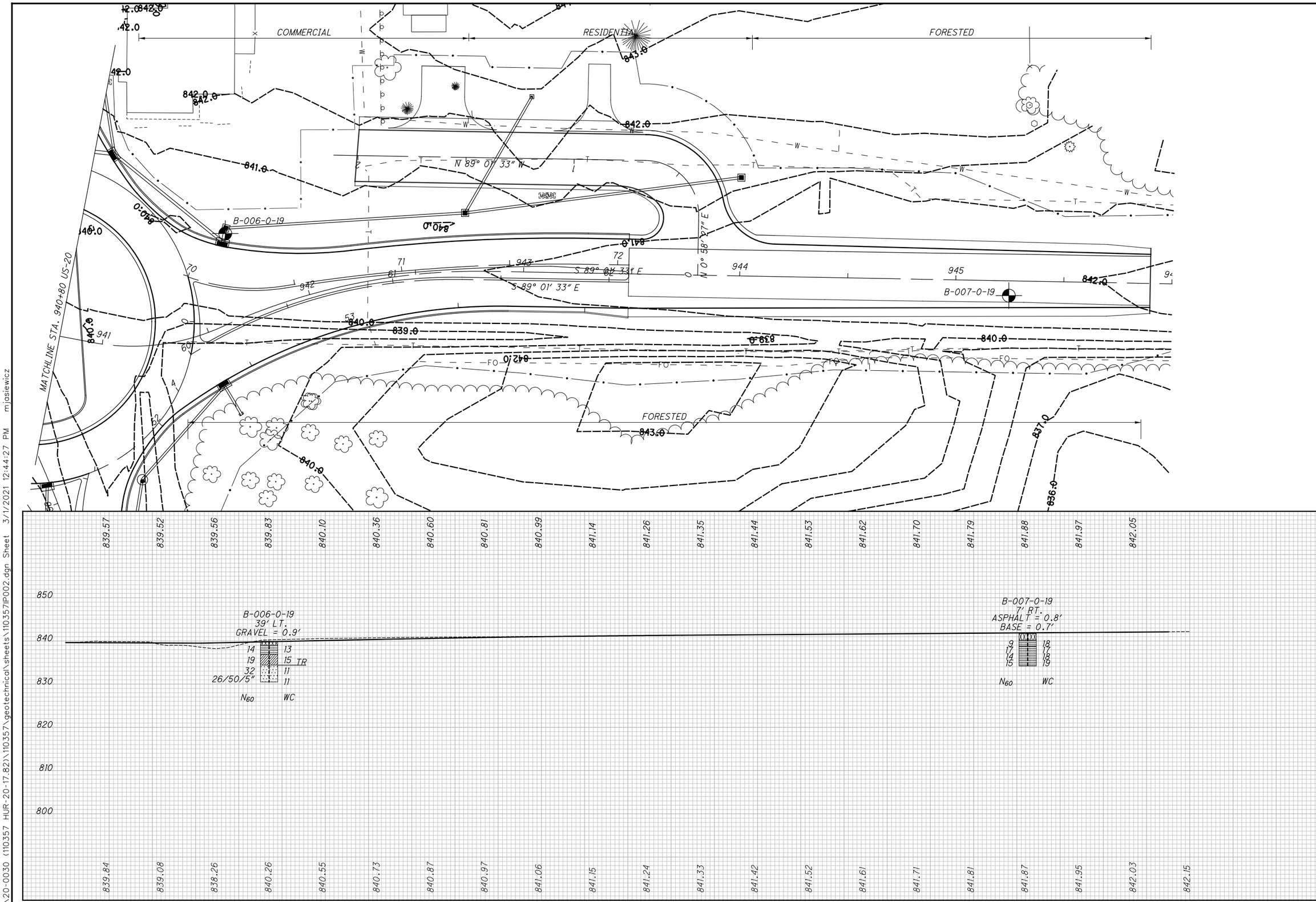

HORIZONTAL SCALE IN FEET
0 10 20 40

DRAWN MJ
CHECKED CH

SOIL PROFILE
STA. 940+80 TO END US-20

HUR-20-17.82

4 / 6

126 / 128

P:\20-0030 (110357 HUR-20-17.82)\110357\geotechnical\sheets\110357IP002.dgn Sheet 3/1/2021 12:44:27 PM mjasiewicz

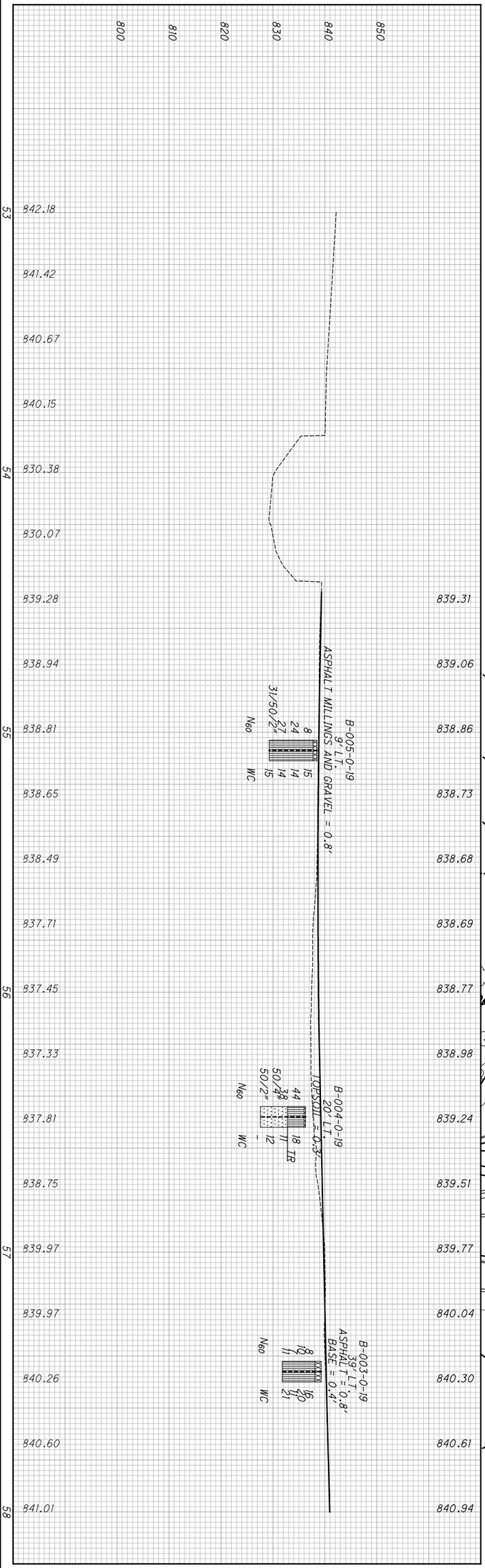

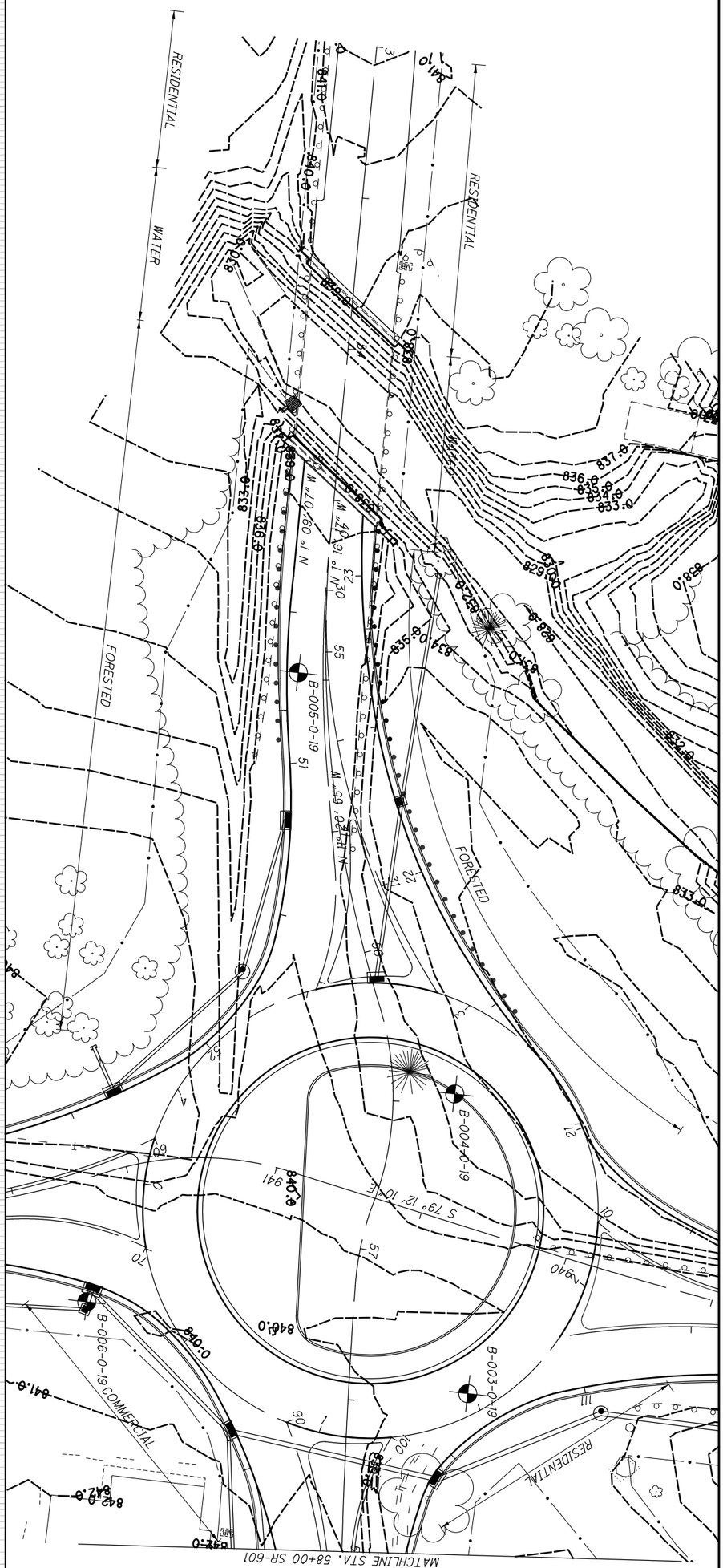

127 / 128	5 / 6	HUR-20-17.82	SOIL PROFILE BEGIN TO STA. 58+00 SR-601	DRAWN MJ CHECKED CH	0 10 20 40 HORIZONTAL SCALE IN FEET

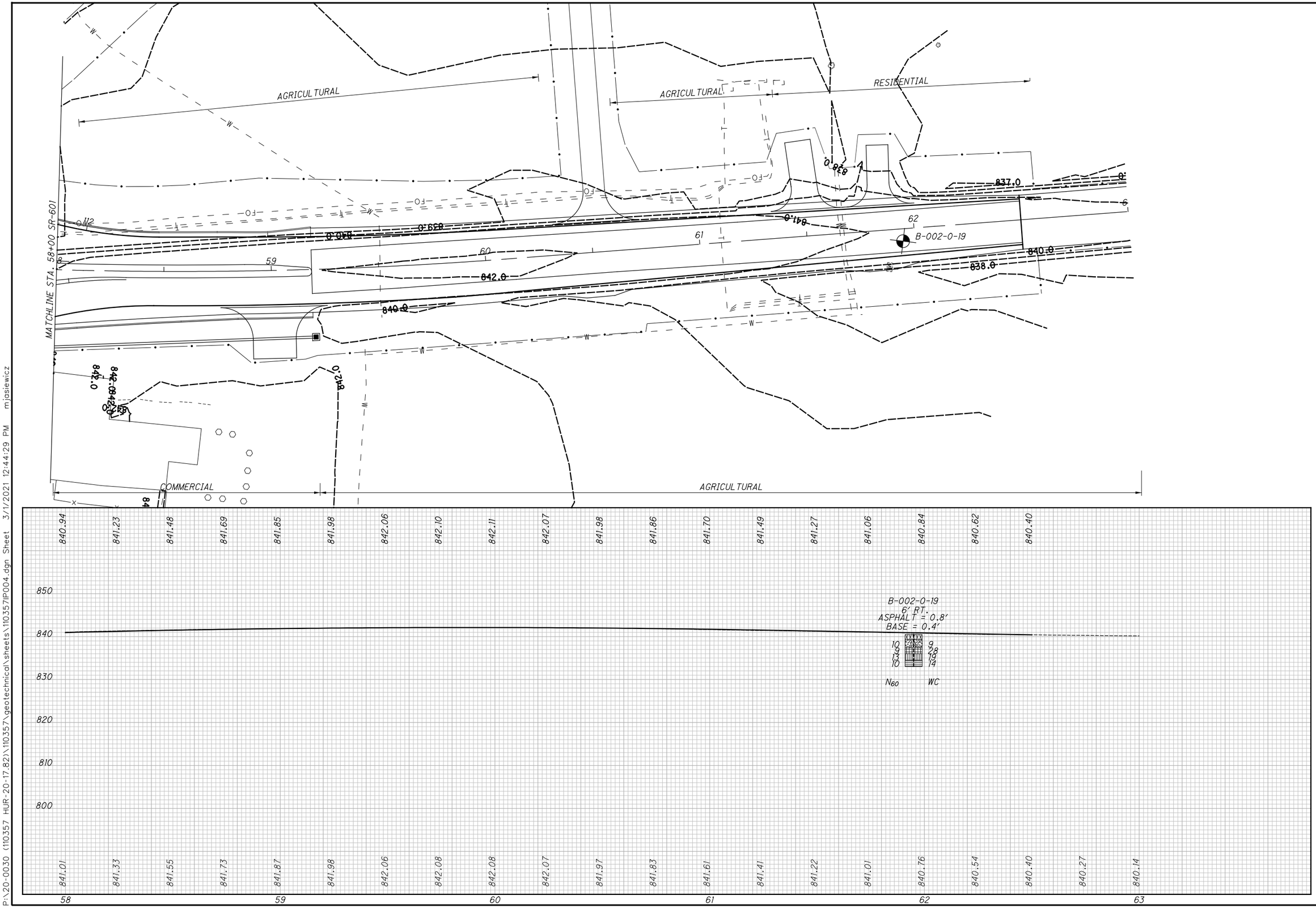

SOIL PROFILE
STA. 58+00 TO END SR-601

HUR-20-17.82

6/6

128/128

P:\20-0030 (110357 HUR-20-17.82)\110357\geotechnical\sheets\110357IP004.dgn Sheet 3/1/2021 12:44:29 PM mjasiewicz