FHWA REGION	STATE	PROJECT	
5	OHIO	U-F-1 (30)	

1/179

JEF-7-11.80

U-F-1 (30)

STATE OF OHIO
DEPARTMENT OF TRANSPORTION

JEF-7-11.80

CITY OF MINGO JUNCTION
CITY OF STEUBENVILLE
JEFFERSON COUNTY
STEUBENVILLE TOWNSHIP
WELLS TOWNSHIP

CONVENTIONAL SIGNS

CENTERLINE
TOWNSHIP LINE
CORPORATION LINE
FENCE LINE
UTILITY POLES — POWER — TELEPHONE — POWER & TELE.
GUARD RAIL — PROPOSED — EXISTING
CULVERTS AND SEWERS — PROPOSED — EXISTING
MANHOLES — PROPOSED — EXISTING
CATCH BASINS — PROPOSED — EXISTING
HYDRANT — PROPOSED — EXISTING
PROPOSED CONCRETE BARRIER

INDEX OF SHEETS

TITLE SHEET ____ 1
SCHEMATIC PLAN ____ 2
TYPICAL SECTIONS ____ 3-10
ROADWAY QUANTITY CALCULATIONS ____ 11-23
PAVEMENT QUANTITY CALCULATIONS ____ 24-29
GENERAL NOTES ____ 30-30A & 30B
GENERAL SUMMARY ____ 31-32
MISCELLANEOUS DETAILS ____ 33-34
BARRIER TRANSITION AT APPROACH SLABS ____ 35
LEFT TURN LANE BARRIER DETAILS ____ 36-37
LEFT TURN LANE PAVEMENT DETAILS ____ 38
BARRIER TRANSITION DETAILS ____ 39-42
PLAN SHEETS ____ 43-75
DRAINAGE DETAILS ____ 76-82
REINFORCING DETAILS ____ 83-84, 84A-84C
SIGNING PLANS ____ 85-144, 127A

PAVEMENT MARKING ____ 145-163
STRUCTURES OVER 20' SPAN ____ 164-179

LINE DATA

BEGIN WORK S.R. 7 STA. 622+85.00
TO STA. 669+53.15B = STA. 657+38.94A — 4668.15 LIN. FT.
STA. 669+53.15B = STA. 657+38.94A
TO STA. 691+08.27B = STA. 691+07.89A — 3369.33 LIN. FT.
STA. 691+08.27B = STA. 691+07.89A
TO STA. 703+67.75B = STA. 703+69.83A — 1259.86 LIN. FT.
STA. 703+67.75B = STA. 703+69.83A
TO STA. 770+80.24 = STA. 770+80.96A — 6710.41 LIN. FT.
STA. 770+80.24B = STA. 770+80.96A
TO STA. 790+31.78B = STA. 790+31.53A — 1950.82 LIN. FT.
STA. 790+31.78B = STA. 790+31.53A
TO STA. 818+53.26 N.B.B = STA. 818+57.02 N.B.A — 2821.73 LIN. FT.
STA. 818+53.26 N.B.B = STA. 818+57.02 N.B.A
TO STA. 903+03.68B = STA. 903+10.94A — 8446.66 LIN. FT.
STA. 903+03.68B = STA. 903+10.94A
TO END WORK S.R. 7 STA. 916+89.00 — 1378.06 LIN. FT.
BEGIN WORK S.R. 151 STA. 12+80.00 TO END WORK STA. 21+00.00 — 820.00 LIN. FT.
11 SIGNS AT 25' EACH (FOR LOCATIONS SEE SHEET NO. 90-92) — 275.00 LIN. FT.
NET LENGTH OF WORK — 31,700.02 LIN. FT. = 6.003 MILES
NET LENGTH OF PROJECT — 0.00 LIN. FT. = 0.000 MILES

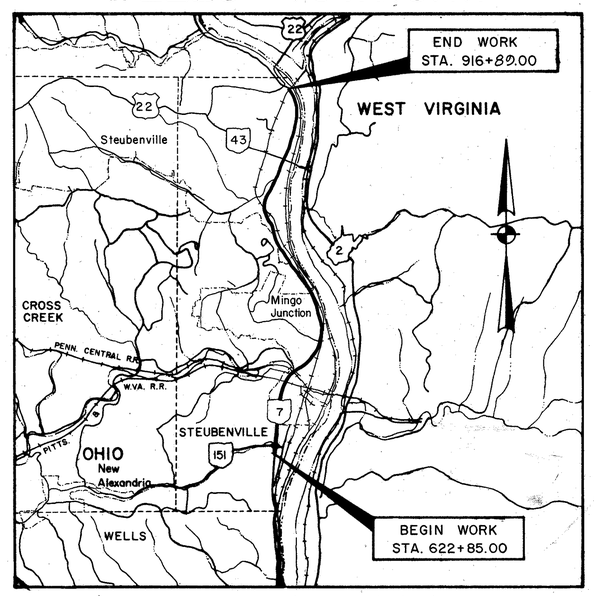

LOCATION

0 1 2
SCALE IN MILES

PORTION TO BE IMPROVED
FEDERAL ROADS
STATE ROADS
OTHER ROADS

PLAN — SCALE 0 50 100
PLAN — 0 20 40

1979 SPECIFICATIONS

THE STANDARD SPECIFICATIONS OF THE STATE OF OHIO, DEPARTMENT OF TRANSPORTATION, INCLUDING CHANGES AND SUPPLEMENTAL SPECIFICATIONS LISTED IN THE PROPOSAL SHALL GOVERN THIS IMPROVEMENT.

I HEREBY APPROVE THESE PLANS AND DECLARE THAT THE MAKING OF THIS IMPROVEMENT WILL NOT REQUIRE THE CLOSING TO TRAFFIC OF THE HIGHWAY AND THAT PROVISIONS FOR THE MAINTENANCE AND SAFETY OF THE TRAFFIC WILL BE AS SET FORTH IN THE PLANS AND ESTIMATE.

APPROVED George A. Nelms
DATE 4-19-79 DISTRICT DEPUTY DIRECTOR OF TRANSPORTATION

APPROVED Robert B. Pfeifer
DATE 5-22-79 ENGINEER, BUREAU OF BRIDGES AND STRUCTURAL DESIGN

APPROVED R. E. Gallin
DATE 6-19-79 CHIEF ENGINEER, PLANNING AND DESIGN

APPROVED David F. Wein
DATE 6-19-79 DIRECTOR, DEPARTMENT OF TRANSPORTATION

STANDARD DRAWINGS					
GR-3B	12-6-76	TC-35.10	10-5-77	TC-41.108	19-77
BP-5	8-11-75	F-1	5-1-76	TC-41.20	4-1-77
BP-7	12-6-76	MC-3	6-1-73	TC-41.50	4-1-77
BP-11*	1-3-75	I-2	6-6-69	TC-42.108	19-77
CB-3A	1-1-76	I-3	11-1-77	TC-42.20	4-1-77
GR-1	12-6-76	MC-1	6-13-69	TC-51.10	6-2-75
GR-2B	12-6-76	MC-4	7-26-76	TC-51.11	6-2-75
GR-2C	12-6-76	MC-6	6-1-65	TC-52.10	4-1-77
GR-3A	12-6-76	MC-9	11-1-77	TC-52.20	4-1-77
GR-4	12-6-76	MH-1,2,3	15 6-12-75	TC-61.10	8-19-77
GR-4A	7-26-76	TC-12.30	10-1-74	TC-71.10	12-1-75
GR-5	1-1-71	TC-21.10	10-1-74	TC-72.20	8-29-77
GR-6	1-1-71	TC-22.10	10-1-74	BR-1-67	10-15-71
MC-10	5-1-76	TC-22.20	8-19-77	HL-10	1-21-76

SUPPLEMENTAL SPECIFICATIONS	
844	11-8-74
845	6-27-77
850	6-27-77
921	12-4-72
1001	1-3-77
953	3-8-79
836	3-12-75
853	6-26-78
933	7-6-73
956	6-26-78

PREPARED AND RECOMMENDED BY
W.E. QUICKSALL AND ASSOCIATES, INC.
CONSULTING ENGINEERS
NEW PHILADELPHIA, OHIO

FILE NO. JEF-7-11.80
DATE OF LETTING ____ 19 ____
CONTRACT NO. ____

DEPARTMENT OF TRANSPORTATION
FEDERAL HIGHWAY ADMINISTRATION
APPROVED:
DIVISION ADMINISTRATOR ____ DATE ____

Rev. 6-21-79

SCHEMATIC PLAN

Calc. By - P.H. 11-2-78
Ck'd By - W.C.R. 11-3-78

FHWA REGION	STATE	PROJECT	
5	OHIO	F-1 (30)	

JEF-7-11.80

2

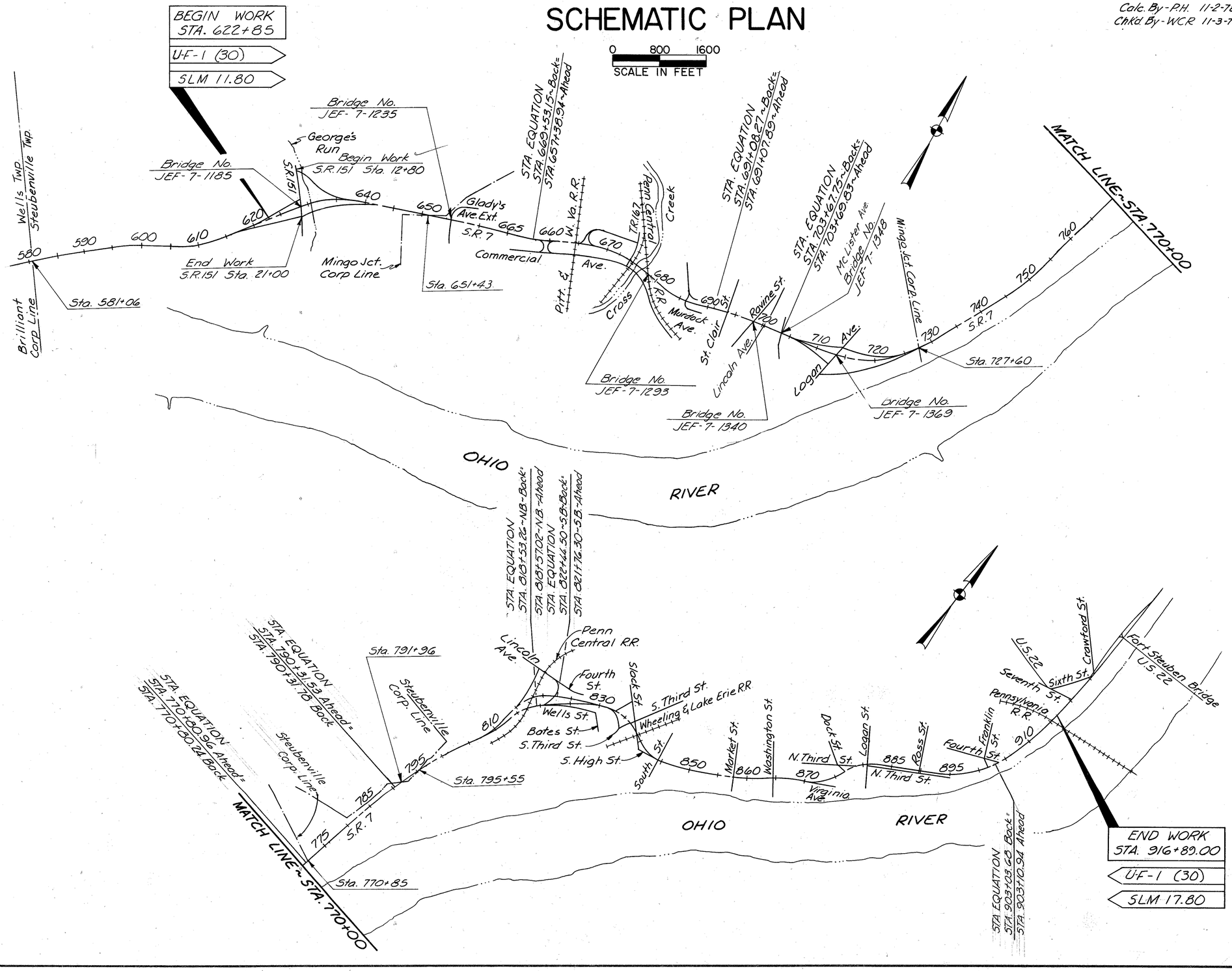

Dwn.	Chkd.	Corr.	Rev.	Rev.	Rev.
G.W. 2-28-78	W.C.R. 2-15-78	G.W. 2-26-78	W.C.R. 2-27-78	P.H.J. 2-28-78	P.H.J. 2-27-79

FHWA REGION	STATE	PROJECT	
5	OHIO		

3

JEF-7-11.80

TYPICAL SECTION

0 4' 8'
SCALE IN FEET

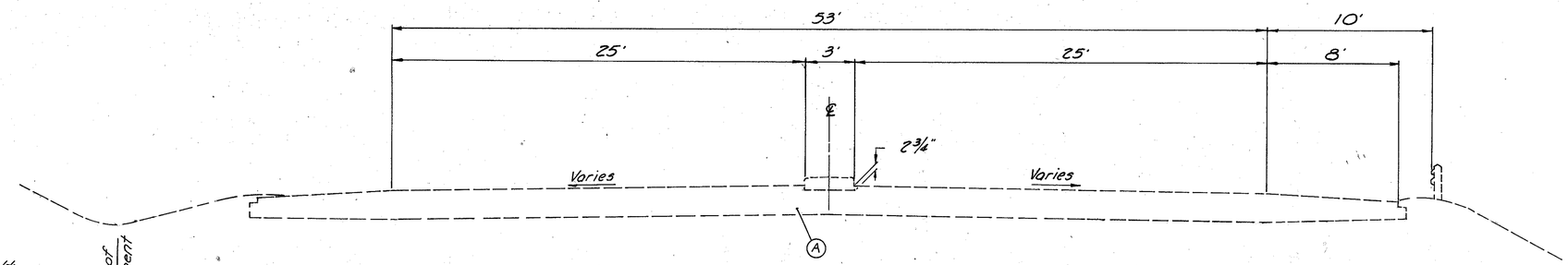

EXISTING TYPICAL SECTION
(See Stationing Below)

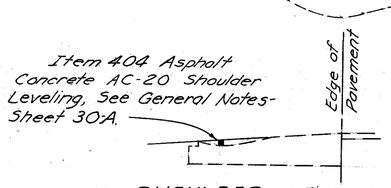

SHOULDER LEVELING DETAIL

Sta. 622+85 to Sta. 816+37.15 S.B.
Sta. 622+85 to Sta. 814+59.23 N.B.
Ramps within these Mainline Stations are to be included for leveling work except Commerical Avenue, Ramps A & B, and Logan Avenue. Ramp D will terminate at guardrail construction limits.

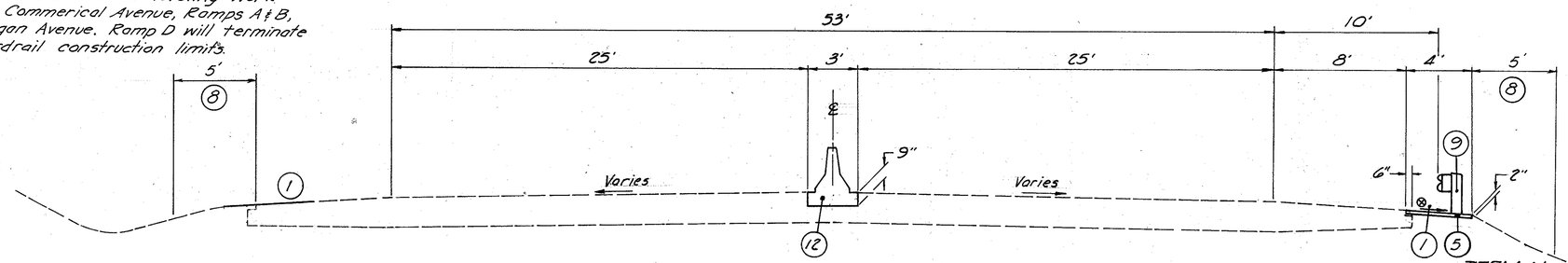

PROPOSED TYPICAL SECTION

NOTE: Use Concrete Barrier, Standard Type A-1', Modified as per plan, at all locations on this typical up to Sta. 770+25.00; Use Concrete Barrier, Standard Type 'A' from Sta. 770+65.00 to Sta 804+16.97.

⊗ Slope ½" per foot or pavement slope when greater.

* See General Notes, Sheet No. 30
** See General Notes, Sheet No. 30-A

Sta. 622+85 to Sta. 627+88.23
Sta. 627+88.23 to Sta. 628+13.23 Approach Slab, See Sheet No. 35
Sta. 629+92.91 to Sta. 630+17.91 Approach Slab, See Sheet No. 35
Sta. 630+17.91 to Sta. 654+07.75
Sta. 654+07.75 to Sta. 654+32.75 Approach Slab, See Sheet No. 35
Sta. 655+67.25 to Sta. 655+92.25 Approach Slab, See Sheet No. 35
Sta. 655+92.25 to Sta. 669+53.15 BACK = Sta. 657+38.94 AHEAD
Sta. 657+38.94 AHEAD to Sta. 657+50.84

Sta. 670+07.79 to Sta. 672+96.71
Sta. 672+96.71 to Sta. 673+21.71 Approach Slab; See Sheet No. 35

Sta. 691+07.89 to Sta. 697+35.40
Sta. 697+35.40 to Sta. 697+60.40 Approach Slab, See Sheet No. 35
Sta. 698+82.22 to Sta. 699+07.22 Approach Slab, See Sheet No. 35
Sta. 699+07.22 to Sta. 701+75.00
Sta. 701+75.00 to Sta. 702+00.00 Approach Slab, See Sheet No. 35
Sta. 704+92.60 to Sta. 705+17.60 Approach Slab, See Sheet No. 35
Sta. 705+17.60 to Sta. 712+75.97
Sta. 712+75.97 to Sta. 713+00.97 Approach Slab, See Sheet No. 35
Sta. 714+49.03 to Sta. 714+74.03 Approach Slab, See Sheet No. 35
Sta. 714+74.03 to Sta. 770+80.26 BACK = Sta. 770+80.96 AHEAD
Sta. 770+80.96 AHEAD to Sta. 804+16.97

ITEM No.	LEGEND
1	203 - Linear Grading *
2	301 - Bituminous Aggregate Base; AC-20, RT-11 or RT-12
3	304 - Aggregate Base
4	310 - Subbase, Type I
5	404 - Asphalt Concrete, AC-20
6	409 - Seal Coat Bituminous Material; MC-800, MC-3000, CBAE-800, RS-1, RS-2, CRS-1, CRS-2, RT-9 or RT-10 applied at the rate of 0.3 Gallons per Square Yard.
7	409 - Seal Coat Cover Aggregate No. 8 applied at rate of 0.008 Cubic Yard per square yard.
8	659 - Seeding and Mulching
9	606 - Guardrail, Type 5
10	606 - Guardrail, Rebuilt, Type 5, as per plan **
11	612 - 4" Concrete Median *
12	622 - Concrete Barrier, Far Type See Plan
A	Existing Flexible Pavement
B	Existing Rigid Pavement

Drawn RJS 5-1-78	Ck'd. FM 5-2-78	Revised RJS 5-3-78	Ck'd MKR 5-4-78

FHWA REGION	STATE	PROJECT	
5	OHIO		

4

JEF-7-11.80

TYPICAL SECTION

0 4' 8'
SCALE IN FEET

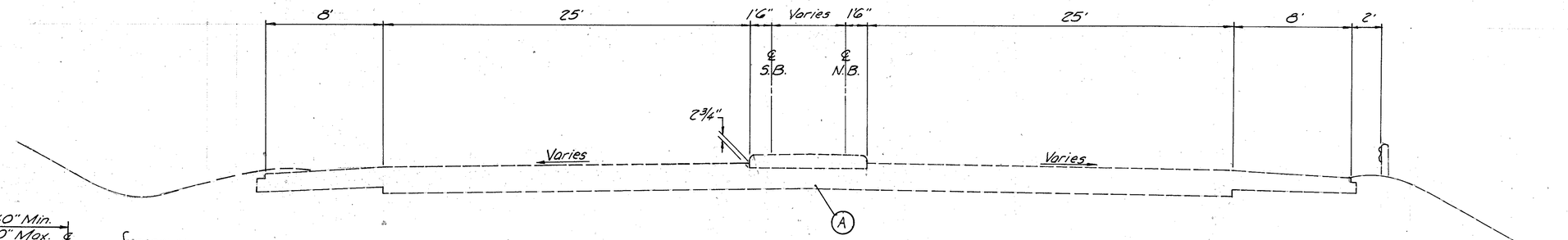

EXISTING TYPICAL SECTION

(See Stationing Below)

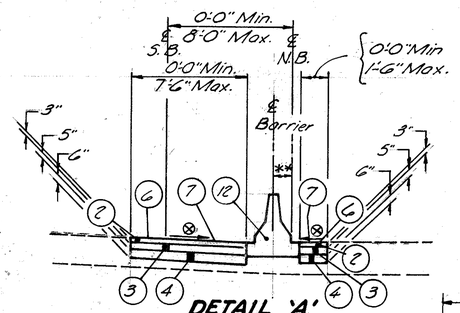

DETAIL 'A'

Sta. 804+16.97 to Sta. 809+00

**For Concrete Barrier Alignment Transition See Sheet No. 34

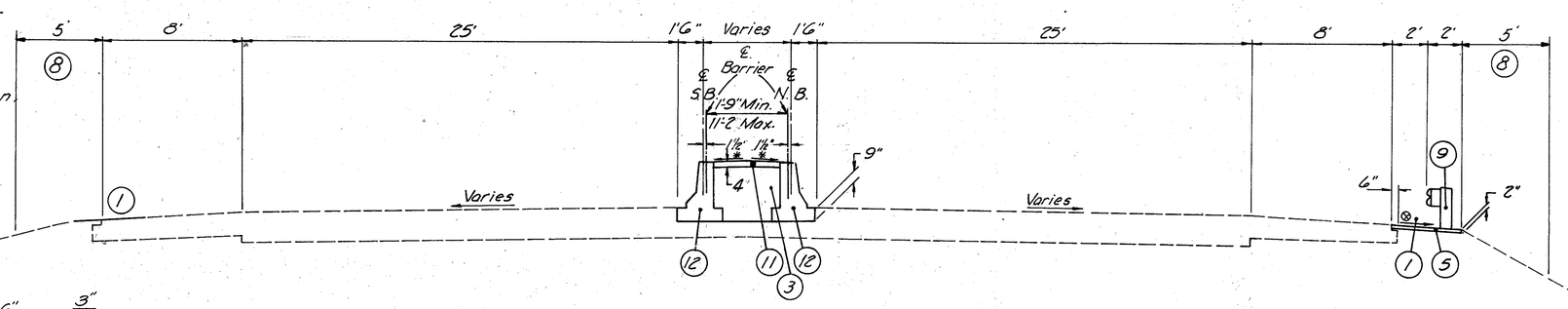

PROPOSED TYPICAL SECTION

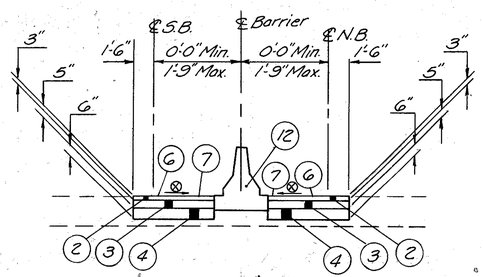

DETAIL 'G'

Sta. 681+80.42 to Sta. 691+07.89

Sta. 657+50.84 to Sta. 659+36.2 Barrier Transition, See Sheet No. 39
Sta. 659+36.2 to Sta. 667+87.4 N.B. & Sta. 667+86.7 S.B.
Sta. 667+87.4 N.B. & Sta. 667+86.7 S.B. to Sta 670+07.79 N.B. & Sta. 670+07.05 S.B.=
(Sta. 670+07.79 one & AHEAD) Barrier Transition, See Sheet No. 39

Sta. 681+55.42 to Sta. 681+80.42 Approach Slab, See Sheet No. 35
Sta 681+80.42 to Sta. 691+08.27 N.B. BACK & Sta. 691+07.23 S.B. BACK = (Sta. 691+07.89 one & AHEAD)
(See Detail 'G' This Sheet)
Sta. 804+16.97 to Sta. 809+00.00 (See Detail 'A' This Sheet) Barrier Alignment Transition, See Sheet No. 34

FOR LEGEND, See Sheet No. 3

⊗ Slope ½" per foot or pavement slope when greater.
* Slope ⅜" per foot.

Drawn	CKD	REVISED	BK CKD
RJS 5-1-78	P.H. 5-2-78	RJS 5-3-78	WCR 5-4-78

TYPICAL SECTION

FHWA REGION	STATE	PROJECT	
5	OHIO		

5

JEF-7-11.80

0' 4' 8'
SCALE IN FEET

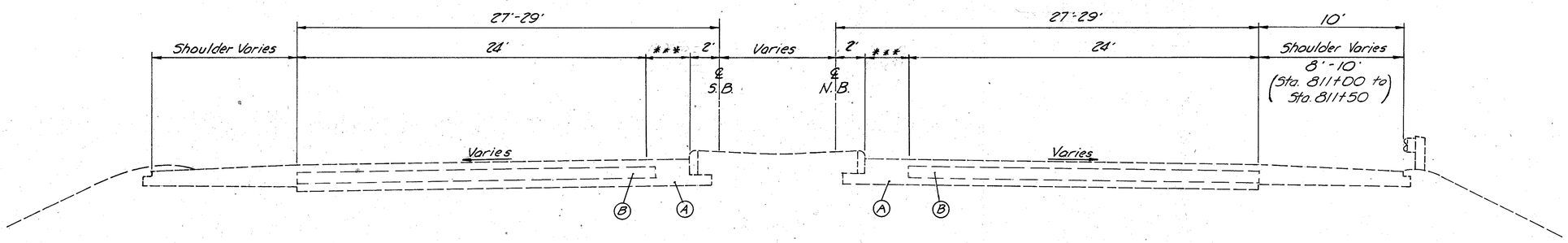

EXISTING TYPICAL SECTION
(See Stationing Below)

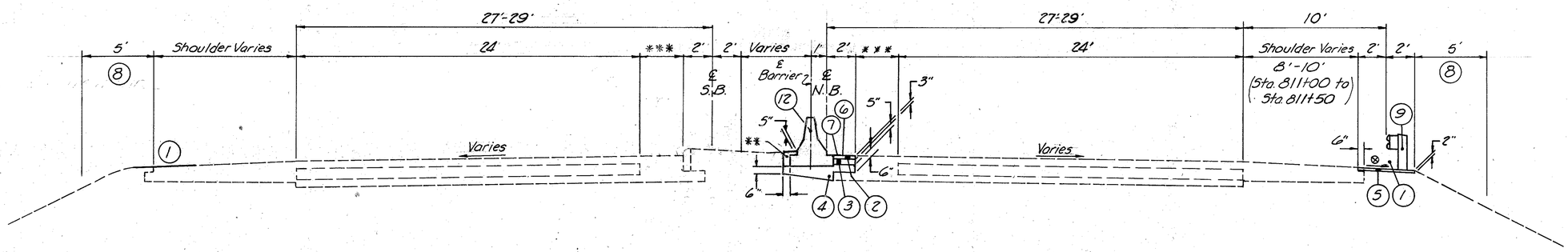

PROPOSED TYPICAL SECTION

Sta. 809+00 to Sta. 814+59.23
Sta. 814+59.23 to Sta. 816+37.15 S.B.

FOR LEGEND,
See Sheet No. 3

⊗ Slope 1/2" per foot or pavement slope when greater.
** Backfill in accordance with Item 622
*** Shoulder Varies from 1'-0" @ Sta. 809+00 to 3'-0" @ Sta. 811+00

Drawn	CKD	Revised	Revised	Accepted
RJS 5-1-78	RH 5-2-78	RJS 5-3-78	WCR 5-4-78	

FHWA REGION	STATE	PROJECT	
5	OHIO		

6

JEF-7-11.80

TYPICAL SECTION

0' 4' 8'
SCALE IN FEET

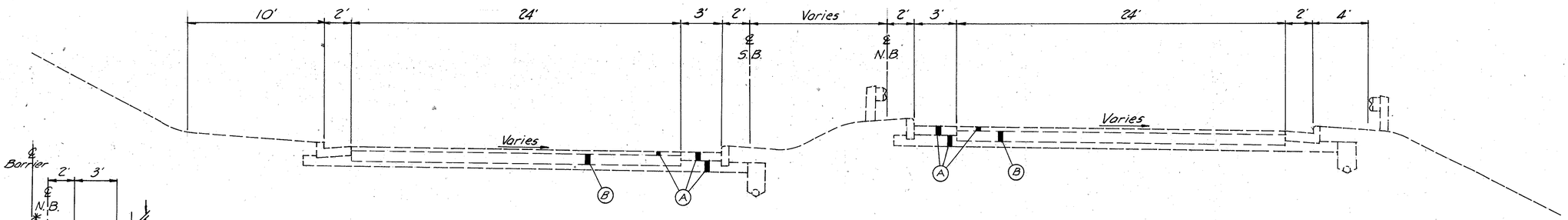

EXISTING TYPICAL SECTION

(See Stationing Below)

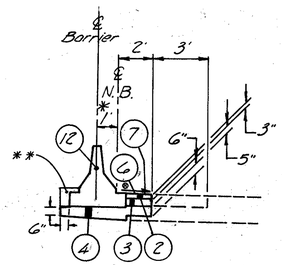

DETAIL 'C'

Sta. 814+59.23 to Sta. 816+37.15 N.B.
Sta. 827+00 to Sta. 830+25.51 N.B.

* For Concrete Barrier Alignment Transition, See Sheet No. 40

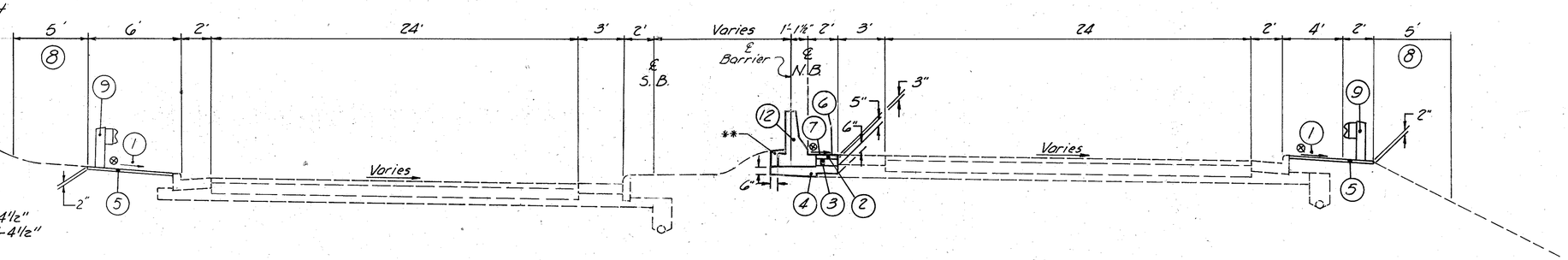

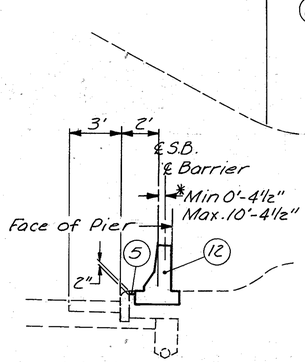

DETAIL 'E'

Sta. 821+40 to Sta. 822+44.50 Back =
Sta. 821+76.30 Ahead to Sta 822+00

* For Concrete Barrier Alignment See Plan, Sheet No. 60

⊗ Slope ½" per foot or pavement slope when greater.
** Backfill in accordance with Item 622

PROPOSED TYPICAL SECTION

Sta. 814+59.23 N.B. to Sta. 816+37.15 N.B. (See Detail C, This Sheet)
Sta. 816+37.15 to Sta. 827+00 (See Plan, Sheet Nos. 59-61, See Detail E, This Sheet)
Sta. 827+00 to Sta. 829+75.51 (See Detail C This Sheet)
Sta. 829+75.51 to Sta. 830+25.51 (See Detail C This Sheet) Barrier Alignment Transition, See Sheet No. 40

FOR LEGEND,
See Sheet No. 3

Drawn RJS 5-1-78	CKD AH 5-2-78	Revised RJS 5-3-78	Checked WER 5-4-78

FHWA REGION	STATE	PROJECT	
5	OHIO		

7

JEF-7-11.80

TYPICAL SECTION

0 4' 8'
SCALE IN FEET

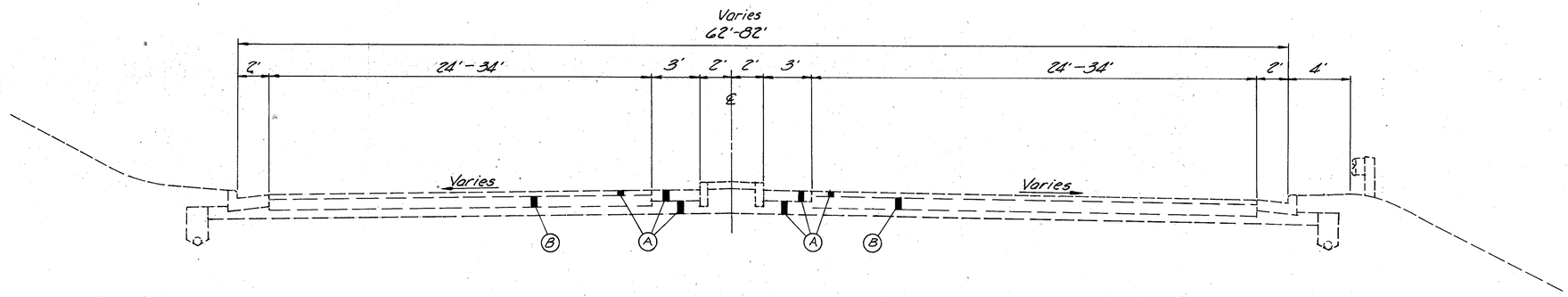

EXISTING TYPICAL SECTION

(See Stationing Below)

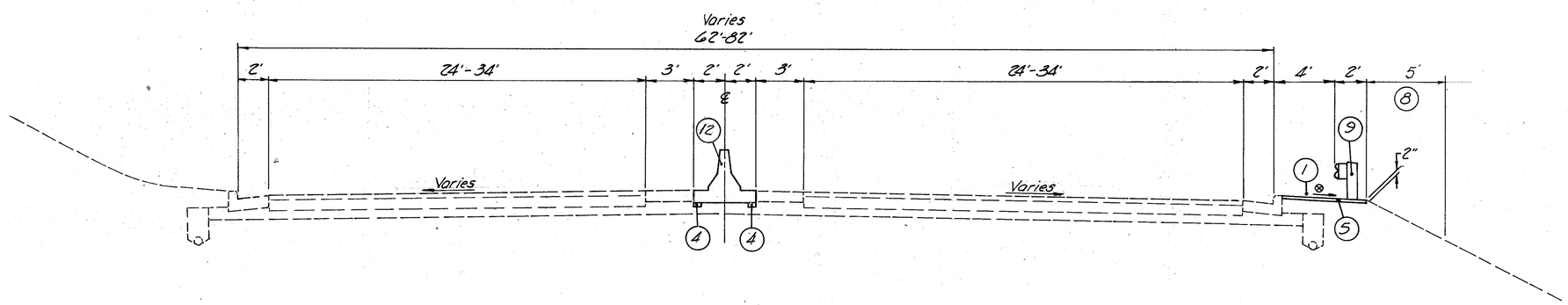

PROPOSED TYPICAL SECTION

Sta. 830+25.51 to Sta. 853+92.86
Sta. 860+59.77 to Sta. 877+27.13

For Left Turn Pavement Details, See Sheet No. 38

FOR LEGEND,
See Sheet No. 3

⊗ Slope ½" per foot or pavement slope when greater.

Drawn RJS 5-1-78	CKd PH 5-2-78	REVISED RJS 5-3-78	BK'CKD WCR 5-4-78

FHWA REGION	STATE	PROJECT	
5	OHIO		

8

JEF-7-11.80

TYPICAL SECTION

0 4' 8'
SCALE IN FEET

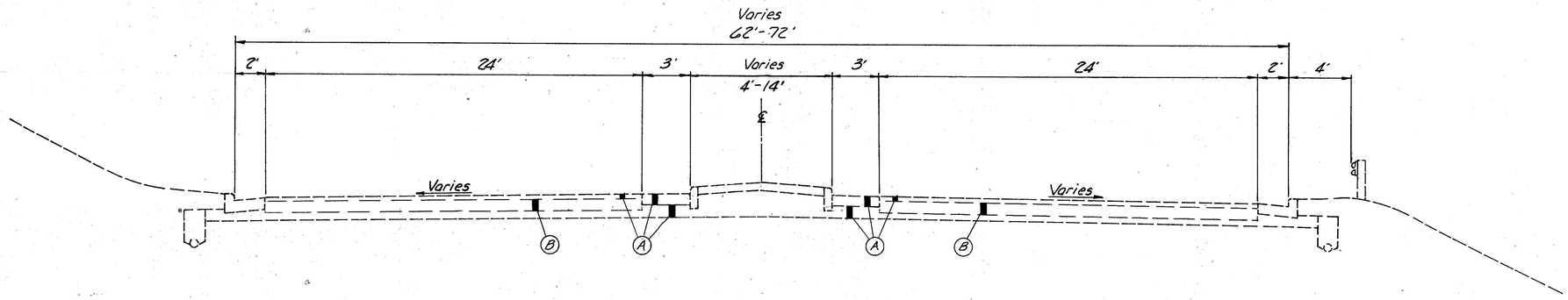

EXISTING TYPICAL SECTION

(See Stationing Below)

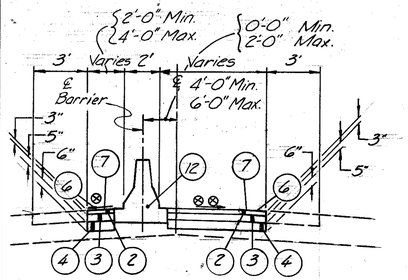

DETAIL 'D'

Sta. 907+10.7 to Sta. 908+75
See Detail Sheet No. 41

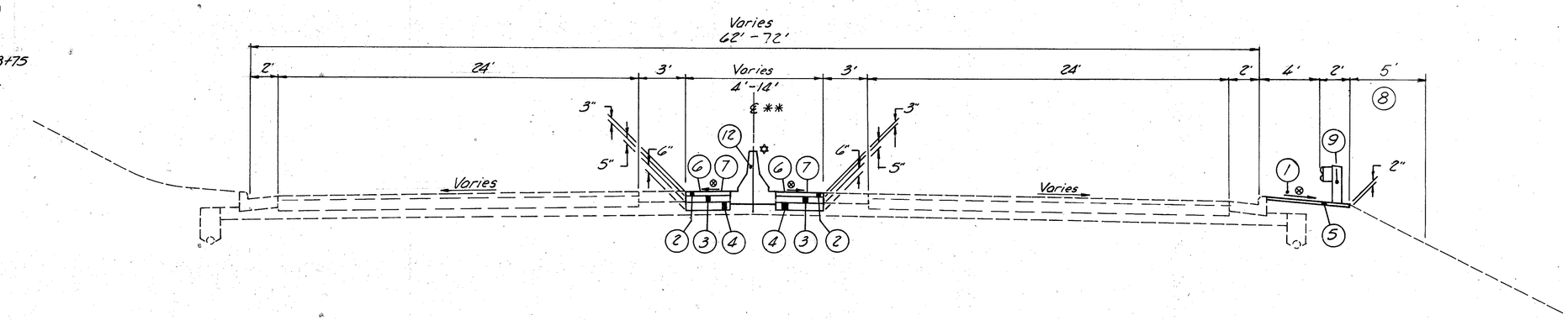

PROPOSED TYPICAL SECTION

Sta. 853+92.86 to Sta. 860+59.77
Sta. 877+27.13 to Sta. 907+10.7
Sta. 907+10.7 to Sta. 908+75 (See Detail D This Sheet)

✡ FOR CONCRETE BARRIER ALIGNMENT,
See Plan Sheets

FOR LEGEND,
See Sheet No. 3

⊗ Slope ½" per foot or pavement slope when greater.
⊗⊗ Variable slope

For Left Turn Pavement Details, See Sheet No. 38

* * For Centerline Alignment, See Plan, Sta. 853+92.86 to Sta. 857+31.34, Sheet No. 66 & 67

Drawn RJS 5-1-78	CKD PH 5-2-78	Revised RJS 5-3-78 / BK.CKD. WCR 5-4-78

FHWA REGION	STATE	PROJECT	
5	OHIO		

9

JEF-7-11.80

TYPICAL SECTION

0 4' 8'
SCALE IN FEET

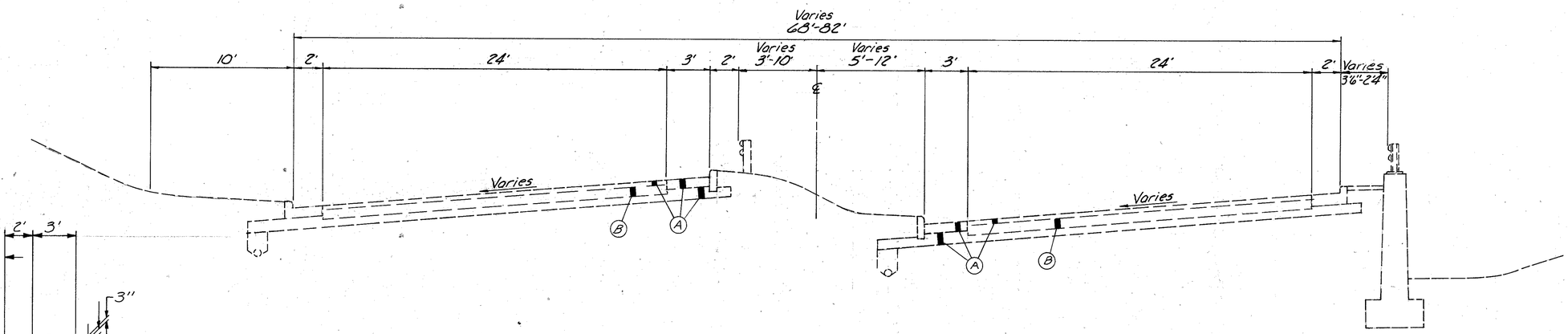

EXISTING TYPICAL SECTION

(See Stationing Below)

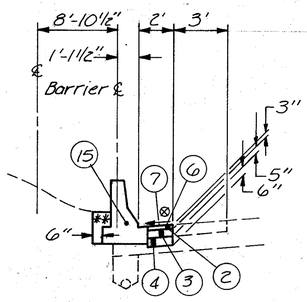

DETAIL 'F'

Sta. 914+25 TO Sta. 914+80 N.B.
See Detail, Sheet No. 42

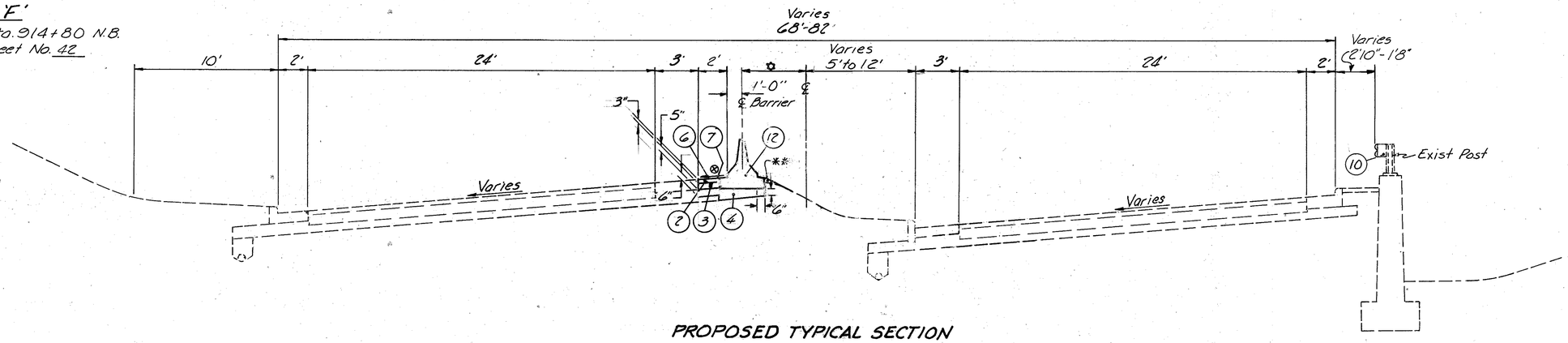

PROPOSED TYPICAL SECTION

Sta. 908+75 to Sta. 914+25
Sta. 914+25 to Sta. 915+32 (Barrier Transition, See Sheet No. 42 & Detail F, This Sheet)
Sta. 915+32 to Sta. 915+62

** Backfill in accordance with Item 622.
⊗ Slope ½" per foot or pavement slope when greater

✿ Varies from 2'-0" @ 908+75 to 9'-0" @ 914+50
9'-0" from 914+50 to 915+50
Varies from 9'-0" @ 915+50 to 8'-10" @ 915+62

FOR LEGEND,
See Sheet No. 3

Drawn	CKD	Revised	Revised	BK.CKD
RJS	RJS	RJS	RJS	WLCR
5-3-78	5-4-78	5-5-78	5-5-78	5-5-78

FHWA REGION	STATE	PROJECT	
5	OHIO		

10

JEF-7-11.80

TYPICAL SECTION

0' 4' 8'
SCALE IN FEET

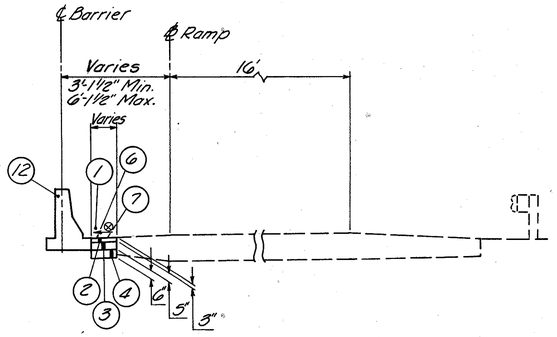

RAMP WITH CONCRETE BARRIER
Lincoln Avenue Interchange ~ Ramp B

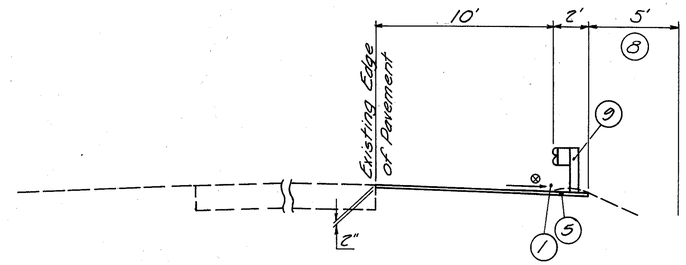

MURDOCK AVENUE

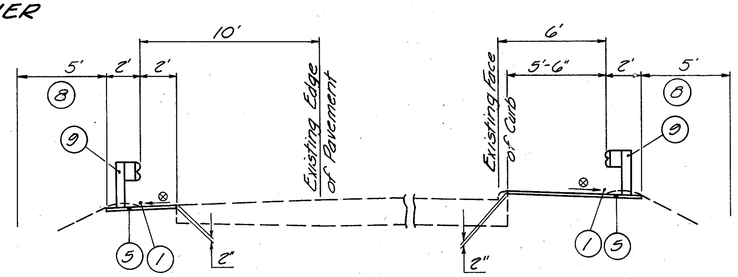

S.R. 151

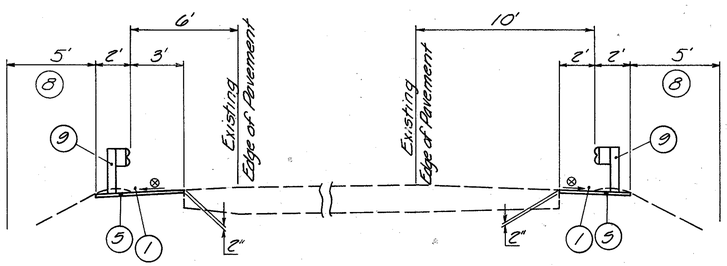

RAMP WITH GUARDRAIL
S.R. 151 Interchange ~ Ramps B & C
Commercial Avenue Interchange ~ Ramps A & B
Logan Avenue Interchange ~ Ramps C & D
Lincoln Avenue Interchange ~ Ramp B

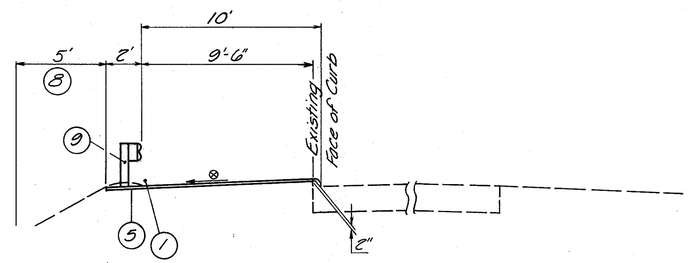

COMMERCIAL AVENUE

⊗ Slope ½" per foot or pavement slope when greater.

FOR LEGEND,
See Sheet No. 3

DRAWN	CHKD
DDD	MLE
10/2/78	9/13/78

ROADWAY QUANTITY CALCULATIONS

Calc. By G.W. 11-2-78
Chkd. By P.H. - 11-2-78

FHWA REGION	STATE	PROJECT	
5	OHIO		

11

JEF-7-11.80

STA 622+85 TO STA. 640+00

(B-1) Sta. 622+85 to Sta. 627+88.23 (℄)

Item 202 ~ 9" Concrete Median Removed

[(503.23)(3) ÷ (9) = 167.74 Sq.Yd.

Item 622 ~ Concrete Barrier, Standard Type A-1, Modified, as per plan 503.23 Lin.Ft.

(B-2) Sta. 627+88.23 to Sta. 628+13.23 (℄)

Item 622 ~ Concrete Barrier, Standard Type A-1, Modified, as per plan 25.0 Lin.Ft.

(B-3) Sta. 629+92.91 to Sta. 630+17.91 (℄)

Item 622 ~ Concrete Barrier, Standard Type A-1, Modified, as per plan 25.0 Lin.Ft.

(B-4) Sta. 630+17.91 to Sta. 640+00 (℄)

Item 202 ~ 9" Concrete Median Removed

[(982.09 - *15.33 - *1.33)](3) ÷ 9 318.48 Sq.Yd.

Item 622 ~ Concrete Barrier, Standard Type A-1, Modified, as per plan
982.09 - 20* - 20* = 942.09 Lin.Ft.

(D-1) Sta. 630+25 ℄

Item 604 ~ Inlet, Standard No. I-3A-14, Modified, as per plan

1 Each

(D-2) Sta. 636+00 (℄)

Item 604 ~ Inlet, Standard No. I-3A-10, Modified as per plan

1 Each

(R-1) Sta. 631+00 to Sta. 633+06.5 (Lt)

Item 202 ~ Guardrail Removed for Storage

306.5 Lin.Ft.

* Subtract For Inlet

(GR-1) Sta. 622+84 to Sta. 627+84 (Rt.)

Item 202 ~ Guard Rail Removed for Storage

500.0 Lin.Ft.

Item 606 ~ Guardrail, Type 5

500.00 - 25.00 = 475.00 Lin.Ft

Item 606 ~ Anchor Assembly, Standard Type A

1 Each

Item 606 ~ Bridge Terminal Assembly, Standard Type D

1 Each

(GR-2) Sta. 625+04 to Sta. 628+04 (Lt.)

Item 202 ~ Guardrail Removed for Storage

300.0 Lin.Ft.

Item 606 ~ Guardrail, Type 5
300.00 - 12.50 = 287.50 Lin.Ft.

Item 606 ~ Anchor Assembly Standard Type T

1 Each

Item 606 ~ Bridge Terminal Assembly Standard Type J

1 Each

(GR-3) Sta. 19+33 to 19+65.5 (Rt.) S.R. 151

Item 606 ~ Guardrail, Type 5
32.50 - 25.00 = 7.50 Lin.Ft.

Item 606 ~ Anchor Assembly Standard Type A

1 Each

(GR-4) Sta. 19+65.5 to Sta. 20+51 (Rt) S.R. 151

Item 202 ~ Guardrail Removed for Storage

85.5 Lin.Ft.

Item 606 ~ Guardrail, Type 5

85.50 Lin.Ft.

(GR-5) Sta. 20+51 to Sta. 20+83 (Rt.) S.R. 151

Item 606 ~ Guardrail, Type 5
32.00 - 25.00 7.00 Lin.Ft.

Item 606 ~ Anchor Assembly, Standard Type A

1 Each

(GR-6) Sta. 18+00 to Sta. 18+75 (Lt) S.R. 151

Item 202 ~ Guardrail Removed for Storage

75.0 Lin.Ft.

Item 606 ~ Guardrail Type 5
75.00 - 25.00 = 50.00 Lin.Ft.

Item 606 ~ Anchor Assembly, Standard Type A

1 Each

(GR-7) Sta. 19+00 to Sta. 19+53 (Lt.) S.R. 151

Item 606 ~ Guardrail, Type 5
53.00 - 25.00 28.00 Lin.Ft.

Item 606 ~ Anchor Assembly, Standard Type A

1 Each

(GR-8) Sta. 19+53 to Sta. 21+00 (Lt.) S.R. 151

Item 202 ~ Guardrail Removed for Storage

147.0 Lin.Ft.

Item 606 ~ Guardrail, Type 5

147.00 Lin.Ft.

(GR-9) Sta. 21+00 (Lt.) S.R. 151 to Sta. 629+91 Ramp B (Lt.)

Item 606 ~ Guardrail, Type 5
50.00 - 25.00 25.00 Lin.Ft.

Item 606 ~ Anchor Assembly, Standard Type T

1 Each

(GR-10) Sta. 629+97 to Sta. 632+97 (Ramp B) (Rt)

Item 202 ~ Guard Rail Removed for Storage

300.0 Lin.Ft.

Item 606 ~ Guardrail, Type 5
300.00 - 25.00 - 12.5 = 262.50 Lin.Ft.

Item 606 ~ Anchor Assembly, Standard Type A

1 Each

Item 606 ~ Anchor Assembly, Standard Type T

1 Each

(GR-11) Sta. 630+19 to Sta. 631+00 (Lt.)

Item 202 ~ Guardrail Removed for Storage

81.0 Lin.Ft.

Item 606 ~ Guardrail, Type 5

81.00 Lin.Ft.

Item 606 ~ Bridge Terminal Assembly Standard Type D

1 Each

(GR-12) Sta. 630+01 to Sta. 638+13.5 (Rt.) S.R. 7

Item 202 ~ Guardrail Removed for Storage

812.5 Lin.Ft.

Item 606 ~ Guardrail, Type 5
812.50 - 12.50 = 800.00 Lin.Ft.

Item 606 ~ Anchor Assembly, Standard Type T

1 Each

Item 606 ~ Bridge Terminal Assembly Standard Type J

1 Each

(J-1) Sta. 626+99 ℄

Item Special ~ Pressure Relief Joint, Standard Type C

53.2 Lin.Ft.

Item 605 ~ 6" Unclassified Pipe Underdrain 707.01 Type III or 707.12 Type III

28 Lin.Ft.

(J-2) Sta. 631+05 ℄

Item Special ~ Pressure Relief Joint, Standard Type C

53.2 Lin.Ft.

Item 605 ~ Unclassified Pipe Underdrain 707.01 Type III or 707.12 Type III

15 Lin.Ft.

S.R. 151 STA. 12+00 TO STA. 18+00

(GR-1) Sta. 18+00 S.R. 151 to Sta. 30+75 Ramp C

Item 202 ~ Guardrail Removed for Storage

790.0 Lin.Ft.

Item 606 ~ Guardrail, Type 5

790.00 Lin.Ft.

(GR-2) Sta. 30+75 Ramp C to Sta. 631+00 S.R. 7

Item 606 ~ Guardrail, Type 5 404.50 Lin.Ft.

(GR-3) Sta. 12+80 S.R. 151 to Sta. 27+75 Ramp C

Item 202 ~ Guardrail Removed for Storage

187.50 Lin.Ft.

Item 606 ~ Guardrail, Type 5
187.50 - 25.00 = 162.50 Lin.Ft.

Item 606 ~ Anchor Assembly Standard Type A

1 Each

(R-1) Sta. 30+75 to Sta. 33+36 Ramp C (Rt)

Item 202 ~ Guardrail Removed for Storage

261.0 Lin.Ft.

ROADWAY QUANTITY CALCULATIONS

Calc. By LDB 11-2-78
Chkd. By WCR 11-3-78

FHWA REGION	STATE	PROJECT	
5	OHIO		

12

JEF-7-11.80

STA. 640+00 TO STA. 660+00

(B-1) Sta. 640+00 to Sta. 651+43 (℄)

Item 202 ~ 9" Concrete Median Removed

[(1143.00)(3)] ÷ 9 = 381.0 Sq.Yd.

Item 622 ~ Concrete Barrier, Standard Type A-1, Modified, as per plan 1143.0 Lin.Ft.

(GR-1) Sta. 644+50 to Sta. 645+63 (Lt)

Item 202 ~ Guardrail Removed for Storage 113.0 Lin.Ft.

Item 606 ~ Guardrail, Type 5 113.00 - 12.50 100.50 Lin.Ft.

Item 606 ~ Anchor Assembly, Standard Type T 1 Each

(GR-2) Sta. 645+63 to Sta. 646+00 (Lt)

Item 606 ~ Guardrail, Type 5 37.00 - 25.00 = 12.00 Lin.Ft.

Item 606 ~ Anchor Assembly, Standard Type A 1 Each

(GR-3) Sta. 647+56 to Sta. 647+81 (85' Lt.)

Item 606 ~ Guardrail, Type 4 25.00 Lin.Ft.

(B-2) Sta. 651+43 to Sta. 654+07.75 (℄)

Item 202 ~ 9" Concrete Median Removed

[(264.75)(3)] ÷ 9 = 88.25 Sq.Yd.

Item 622 ~ Concrete Barrier, Standard Type A-1, Modified as per plan 264.75 Lin.Ft.

(B-3) Sta. 654+07.75 to Sta. 654+32.75 (℄)

Item 622 ~ Concrete Barrier Standard Type A-1, Modified as per plan 25.00 Lin.Ft.

(B-4) Sta. 655+67.25 to Sta. 655+92.25 (℄)

Item 622 ~ Concrete Barrier, Standard Type A-1, Modified as per plan 25.00 Lin.Ft.

(B-5) Sta. 655+92.25 to Sta. 660+00 (℄)

Item 202 ~ 9" Concrete Median Removed

[(407.75)(3)] ÷ 9 = 135.92 Sq.Yd.

Item 622 ~ Concrete Barrier, Standard Type A-1, Modified as Per plan 407.75 Lin.Ft.

(GR-4) Sta. 641+95 Ramp B to Sta. 648+13. S.R. 7 (Rt)

Item 202 ~ Guardrail Removed for Storage 618.00 Lin.Ft.

Item 606 ~ Guardrail, Type 5 618.00 - 25.00 = 593.00 Lin.Ft.

Item 606 ~ Anchor Assembly, Standard Type A 1 Each

(GR-5) Sta. 653+34.5 to Sta. 653+86 (Lt)

Item 202 ~ Guardrail Removed for Storage 51.50 Lin.Ft.

Item 606 ~ Guardrail, Type 5 51.50 - 12.50 = 39.00 Lin.Ft.

Item 606 ~ Anchor Assembly, Standard Type T 1 Each

(GR-6) Sta. 653+86 to Sta. 654+22 (Lt)

Item 202 ~ Guardrail Removed for Storage 36.00 Lin.Ft.

Item 606 ~ Guardrail, Type 5 36.00 Lin.Ft.

Item 606 ~ Bridge Terminal Assembly, Standard Type J 1 Each

(GR-7) Sta. 648+13 to Sta. 648+97 (Rt)

Item 202 ~ Guardrail Removed for Storage 84.00 Lin.Ft.

Item 606 ~ Guardrail, Type 5 84.00 Lin.Ft.

(GR-8) Sta. 648+97 to Sta. 650+79 Rt.

Item 606 ~ Guardrail, Type 5 182.00 Lin.Ft.

(GR-9) Sta. 650+79 to Sta. 654+20 (Rt)

Item 202 ~ Guardrail Removed for Storage 341.00 Lin.Ft.

Item 606 ~ Guardrail, Type 5 341.00 Lin.Ft.

Item 606 ~ Bridge Terminal Assembly, Standard Type D 1 Each

(GR-10) Sta. 655+77.5 to Sta. 656+52.5 (Rt.)

Item 202 ~ Guardrail Removed for Storage 75.00 Lin.Ft.

Item 606 ~ Guardrail, Type 5 75.00 - 12.50 = 62.50 Lin.Ft.

Item 606 ~ Bridge Terminal Assembly, Standard Type J 1 Each

Item 606 ~ Anchor Assembly Standard Type T 1 Each

(GR-11) Sta. 655+77.5 to Sta. 657+27.5 (Lt)

Item 202 ~ Guardrail Removed for Storage 100.00 Lin.Ft.

Item 606 ~ Guardrail, Type 5 150.00 - 25.00 125.00 Lin.Ft.

Item 606 ~ Anchor Assembly, Standard Type A 1 Each

Item 606 ~ Bridge Terminal Assembly, Standard Type D 1 Each

(R-1) Sta. 647+27 to Sta. 647+47 (Lt.)

Item 202 ~ Guardrail Removed for Storage 20.0 Lin.Ft.

(J-1) Sta. 653+24 (℄)

Item Special ~ Pressure Relief Joint, Standard Type C 53.2 Lin.Ft.

Item 605 ~ 6" Unclassified Pipe Underdrain 707.01 Type III or 707.12 Type III. 32 Lin.Ft.

(J-2) Sta. 656+77 (℄)

Item Special ~ Pressure Relief Joint, Standard Type C 53.2 Lin.Ft.

Item 605 ~ 6" Unclassified Pipe Underdrain 707.01 Type III or 707.12 Type III 28 Lin.Ft.

* Subtract For Inlet

STA. 660+00 TO STA. 665+00

(B-1) Sta. 660+00 to Sta. 659+36.2

Item 202 ~ 9" Concrete Median Removed

[((669+53.15 - 660+00.00) + (657+50.84 - 657+38.94)] (3)) ÷ 9 + [(659+36.20 - 657+50.84)($\frac{3+5}{2}$) ÷ 9 = 404.06 Sq.Yd.

Item 622 ~ Concrete Barrier, Standard Type A-1, Modified as per plan (669+53.15 - 660+00.00) + (657+50.84 - 657+38.94) + (659+36.20 - 657+50.84) = 1150.41 Lin.Ft.

(B-2) Sta. 659+36.2 to Sta. 665+00

Item 202 ~ 9" Concrete Median Removed

[(662+50.00 - 659+36.2) - (7.33*)] ($\frac{5.0+14.5}{2}$) + [(664+30 - 662+50)(14.5)] + [(665+00.0 - 664+30.0)($\frac{14.5+12.64}{2}$)] ÷ 9 = 727.55

727.55 - 7.5 (Deduct for Bridge Piers) = 720.05 Sq.Yd.

Item 622 ~ Concrete Barrier, Standard Type D-1, Modified as per plan. 2(665+00 - 659+36.2) - 40* = 1087.6 Lin.Ft.

Item 304 ~ Aggregate Base

[[(Sta. 662+50 - 659+36.2)($\frac{10.5+1}{2}$)(3.08) + (664+30 - 662+50)(10.5)(3.08) + (665+00 - 664+30)($\frac{10.5+8.64}{2}$)(3.08) - (665+00 - 659+36.2)(0.5 x 2)(.75)] ÷ 27 = 482.19 Cu.Yd.

Item 612 ~ Concrete Median, Standard Type

[(662+50 - 659+36.2)($\frac{1.0+10.5}{2}$) + (664+30 - 662+50)(10.5) + (665+00 - 664+30)($\frac{10.5+8.64}{2}$)] ÷ 9 = 484.92 Sq.Yd.

(D-38) Sta. 662+52 ℄ S.B.

Item 604 ~ Inlet, Standard No. I-3A-14, Modified as per plan 1 Each

ROADWAY QUANTITY CALCULATIONS

Calc. By G.W. - 11-3-78
Chk'd. By RaM - 11-4-78

FHWA REGION	STATE	PROJECT	
5	OHIO		

13

JEF-7-11.80

STA. 660+00 TO STA. 665+00

(D-3) Sta. 662+52 ℄ N.B.

Item 604 ~ Inlet, Standard No. I-3A-14, Modified as per plan — 1 Each

(GR-1) Sta. 658+79 to Sta. 664+43 (Lt.)

Item 202 ~ Guardrail Removed for Storage — 562.5 Lin. Ft.

Item 606 ~ Guardrail, Type 5

562.50 - 12.50 = 550.00 Lin. Ft.

Item 606 ~ Anchor Assembly, Standard Type T — 1 Each

Item 606 ~ Bridge Terminal Assembly, Standard Type J — 1 Each

(GR-2) Sta. 663+39.8 to Sta. 664+20 (Rt.)

Item 606 ~ Guard Rail, Type 5 — 10.50 Lin. Ft.

Item 606 ~ Guard Rail, Barrier Design, Type 5 — 50.00 Lin. Ft.

Item 606 ~ Anchor Assembly Barrier Design, Standard Type A — 1 Each

(GR-3) Sta. 664+20 to Sta. 665+00 (Rt.)

Item 202 ~ Guardrail Removed for Storage — 80.0 Lin. Ft.

Item 606 ~ Guard Rail, Type 5 — 160.00 Lin. Ft.

(R-1) Sta. 664+72.5 to Sta. 665+00 ℄

Item 202 ~ Guardrail Removed for Storage — 27.50 Lin. Ft.

(R-2) Sta. 664+20 to Sta. 665+00 ℄

Item 202 ~ Guardrail Removed for Storage — 80.0 Lin. Ft.

(R-3) Sta. 664+68 to Sta. 665+00 (Rt.)

Item 202 ~ Guardrail Removed for Storage, — 32.00 Lin. Ft.

(GR-4) Sta. 668+39.3 to Sta. 657+75 Rt.

Item 606 - Guard Rail, Type 5 — 112.50 Lin. Ft.

Item 606 - Anchor Assembly, Standard Type A — 1 Each

Item 606 - Anchor Assembly, Standard Type T — 1 Each

STA. 665+00 TO STA. 675+00

(B-1) Sta. 665+00 to Sta. 667+87.7 ℄

Item 202 ~ 9" Concrete Median Removed

$(667+87.7 - 665+00 - 15.33^{*})\left(\frac{12.64+5.0}{2}\right) \div 9 = 266.92$ Sq. Yd.

Item 622 ~ Concrete Barrier, Standard Type D-1, Modified as per plan

$2(667+87.7 - 665+00 - 20^{*}) =$ 535.4 Lin. Ft.

Item 304 ~ Aggregate Base

$\left[(667+87.7 - 665+00)\left(\frac{8.64+1}{2}\right)(3.08) - (667+87.7 - 665+00)(0.5 \times 2)(.75)\right] \div 27 =$ 150.20 Cu. Yd.

Item 612 ~ Concrete Median, Standard Type

$(667+87.7 - 665+00)\left(\frac{8.64+1.0}{2}\right) \div 9 =$ 154.08 Sq. Yd.

(B-2) Sta. 667+87.7 to Sta. 672+96.71 ℄

Item 202 ~ 9" Concrete Median Removed

$\left[(670+07.79 - 667+87.7)\left(\frac{5+3}{2}\right) + (672+96.71 - 670+07.79)(3)\right] \div 9 =$ 194.12 Sq. Yd.

Item 622 ~ Concrete Barrier, Standard Type A-1, Modified, as per plan — 509.01 Lin. Ft.

(B-3) Sta. 672+96.71 to Sta. 673+21.71 ℄

Item 622 ~ Concrete Barrier, Standard Type A-1, Modified as per plan — 25.0 Lin. Ft.

* Subtract For Inlet

(D-4) Sta. 667+18.5 ℄

Item 604 ~ Inlet, Standard No. I-3A-14, Modified as per plan — 1 Each

(GR-1) Sta. 665+28 (Lt.) S.R. 7 to Sta. 62+20 (Rt.) Ramp A B

Item 202 ~ Guardrail Removed for Storage — 375.00 Lin. Ft.

Item 606 ~ Guardrail, Type 5

375.00 - 25.00 = 350.00 Lin. Ft.

Item 606 ~ Anchor Assembly, Standard Type A — 1 Each

Item 606 ~ Bridge Terminal Assembly, Standard Type D — 1 Each

(GR-2) Sta. 665+00 to Sta. 667+22 (Rt.)

Item 202 ~ Guardrail Removed for Storage — 222.00 Lin. Ft.

Item 606 ~ Guardrail, Barrier Design, Type 5 — 100.00 Lin. Ft.

Item 606 ~ Guardrail, Type 5 — 251.00 Lin. Ft.

(GR-3) Sta. 667+22 to Sta. 673+03 (Rt.)

Item 202 ~ Guardrail Removed for Storage — 566.00 Lin. Ft.

Item 606 ~ Guardrail, Type 5 — 566.00 Lin. Ft.

Item 606 ~ Bridge Terminal Assembly, Standard Type D — 1 Each

(GR-4) Sta. 62+25.35 (Lt.) Ramp 'A-B' to Sta. 673+10 (Lt.) S.R. 7

Item 202 ~ Guardrail Removed for Storage — 750.0 Lin. Ft.

Item 606 ~ Guardrail, Type 5

750.00 - 25.00 = 737.50 Lin. Ft.

Item 606 ~ Anchor Assembly Standard Type T — 1 Each

Item 606 ~ Bridge Terminal Assembly, Standard Type J — 1 Each

(R-1) Sta. 665+00 to Sta. 665+60 (℄)

Item 202 ~ Guardrail Removed for Storage — 60.0 Lin. Ft.

(R-2) Sta. 665+00 to Sta. 665+07.5 (℄)

Item 202 ~ Guardrail Removed for Storage — 7.5 Lin. Ft.

(R-3) Sta. 665+00 to Sta. 665+30.5 (Rt.)

Item 202 ~ Guardrail Removed for Storage — 30.5 Lin. Ft.

(J-1) Sta. 672+07 ℄

Item Special ~ Pressure Relief Joint, Standard Type C — 651 Lin. Ft.

Item 605 ~ 6" Unclassified Pipe Underdrain 707.01 Type III or 707.12 Type III — 14 Lin. Ft.

STA. 675+00 TO STA. 695+00

(B-1) Sta. 681+55.42 to Sta. 681+80.42 ℄

Item 622 ~ Concrete Barrier, Standard Type A-1, Modified, as per plan — 25.0 Lin. Ft.

(B-2) Sta. 681+80.42 to Sta. 695+00 ℄

Item 202 ~ 9" Concrete Median Removed

$(684+18.70 - 681+80.42 - 15.33^{*}) \times \left(\frac{3.19+5}{2}\right) \div 9 = 101.44$

$(687+92.10 - 684+81.70 - 15.33^{*}) \times \left(\frac{5+6.51}{2}\right) \div 9 = 188.68$

$(687+92.10 - 684+81.70) \times \left(\frac{1+2.51}{2}\right) \div 9 = 60.53$

$\left[(691+08.27 - 687+92.10) \times \left(\frac{5+3}{2}\right)\right] + (695+00 - 691+07.89 - 6.0^{*} - 7.33^{*})(3)\right] \div 9 = 266.78$

Total Item 202 — 617.43 Sq. Yd.

Item 622 ~ Concrete Barrier, Standard Type A-1, Modified as per plan

1319.58 - 70 = 1249.58 Lin. Ft.

ROADWAY QUANTITY CALCULATIONS

Calc. By G.W. 11-6-78
Chkd. By WCR 11-7-78

FHWA REGION	STATE	PROJECT	
5	OHIO		

14

JEF-7-11.80

STA. 675+00 TO STA. 695+00 CON'T.

(D-5) Sta. 682+05 ℄

Item 604 ~ Inlet, Standard No. I-3A-14, Modified as per plan — 1 Each

(D-6) Sta. 685+00 ℄ N.B.

Item 604 ~ Inlet, Standard No. I-3A-14, Modified as per plan — 1 Each

(D-7) Sta. 692+10 ℄

Item 604 ~ Manhole, Type 1 — 1 Each

(D-8) Sta. 694+51.5 ℄

Item 604 ~ Inlet, Standard No. I-3A-10, Modified as per plan — 1 Each

(GR-1) Sta. 681+75 to Sta. 683+25 (Lt.)

Item 202 ~ Guardrail Removed for Storage — 150.0 Lin.Ft.

Item 606 ~ Guardrail, Type 5

150.00 - 25.00 = 125.00 Lin.Ft.

Item 606 ~ Anchor Assembly, Standard Type A — 1 Each

Item 606 ~ Bridge Terminal Assembly, Standard Type D — 1 Each

(GR-2) Sta. 681+65 to Sta. 687+75 (Rt.)

Item 202 ~ Guardrail Removed for Storage — 700.0 Lin.Ft.

Item 606 ~ Guardrail, Type 5

700.0 - 25.00 = 675.00 Lin.Ft.

Item 606 ~ Anchor Assembly, Standard Type A — 1 Each

Item 606 ~ Bridge Terminal Assembly Standard Type J — 1 Each

(GR-3) Sta. 687+30 to Sta. 688+80 Lt.

Item 606 - Guard Rail, Type 5 — 112.50 Lin.Ft.

Item 606 - Anchor Assembly, Standard Type A — 1 Each

Item 606 - Anchor Assembly, Standard Type T — 1 Each

(R-1) Sta. 684+02 to Sta. 686+28 ℄

Item 202 ~ Guardrail, Barrie Design, Removed for Storage — 225.0 Lin.Ft.

(J-1) Sta. 682+63 N.B. ℄

Item Special ~ Pressure Relief Joint, Standard Type C — 59.0 Lin.Ft.

Item 605 ~ 6" Unclassified Pipe Underdrain 707.01 Type III or 707.12 Type III — 16 Lin.Ft.

STA. 695+00 TO STA. 715+00

(B-1) Sta. 695+00 to Sta. 697+35.40 ℄

Item 202 ~ 9" Concrete Median Removed

(697+35.40 - 695+00 - 9.33*)(3) ÷ 9 = 75.36 Sq.Yd.

Item 622 ~ Concrete Barrier, Standard Type A-1 Modified, as per plan

235.40 - 20 = 215.40 Lin.Ft.

(B-2) Sta. 697+35.40 to Sta. 697+60.40 ℄

Item 622 ~ Concrete Barrier, Standard Type A-1 Modified, as per plan — 25.00 Lin.Ft.

(B-3) Sta. 698+82.22 to Sta. 699+07.22

Item 622 ~ Concrete Barrier, Standard Type A-1 Modified, as per plan — 25.00 Lin.Ft.

* Subtract For Inlet

(B-4) Sta. 699+07.22 to Sta. 701+75 ℄

Item 202 ~ 9" Concrete Median Removed

(701+75 - 699+07.22 - 11.33*)(3) ÷ 9 = 85.48 Sq.Yd.

Item 622 ~ Concrete Barrier, Standard Type A-1 Modified as per plan

267.78 - 20 = 247.78 Lin.Ft.

(B-5) Sta. 701+75 to Sta. 702+00 ℄

Item 622 ~ Concrete Barrier, Standard Type A-1 Modified, as per plan — 25.00 Lin.Ft.

(B-6) Sta. 704+92.60 to Sta. 705+17.60 ℄

Item 622 ~ Concrete Barrier, Standard Type A-1 Modified, as per plan — 25.00 Lin.Ft.

(B-7) Sta. 705+17.60 to Sta. 712+75.97 ℄

Item 202 ~ 9" Concrete Median Removed

(712+75.97 - 705+17.60 - 21.33* - 15.33*)(3) ÷ 9 = 240.57 Sq.Yd.

Item 622 ~ Concrete Barrier, Standard Type A-1, Modified as per plan

758.37 - 20 - 20 - 20 = 698.37 Lin.Ft.

(B-8) Sta. 712+75.97 to Sta. 713+00.97 ℄

Item 622 ~ Concrete Barrier, Standard Type A-1 Modified as per plan — 25.00 Lin.Ft.

(B-9) Sta. 714+49.03 to Sta. 714+74.03 ℄

Item 622 ~ Concrete Barrier, Standard Type A-1 Modified, as per plan — 25.00 Lin.Ft.

(B-10) Sta. 714+74.03 to Sta. 715+00 ℄

Item 202 ~ 9" Concrete Median Removed

(715+00 - 714+74.03)(3) ÷ 9 = 8.66 Sq.Yd.

Item 622 ~ Concrete Barrier Standard Type A-1 Modified as per plan — 25.97 Lin.Ft.

(D-9) Sta. 695+99.5 ℄

Item 604 ~ Inlet, Standard No. I-3A-10, Modified as per plan — 1 Each

(D-10) Sta. 699+10 ℄

Item 604 ~ Inlet, Standard No. I-3A-10, Modified as per plan — 1 Each

(D-11) Sta. 705+18 ℄

Item 604 ~ Inlet, Standard No. I-3A-10, Modified as per plan — 1 Each

(D-12) Sta. 705+38 ℄

Item 604 ~ Inlet, Standard No. I-3A-10, Modified as per plan — 1 Each

Item 603 ~ 12" Conduit, Type B — 20.0 Lin.Ft.

(D-13) Sta. 709+60.7 ℄

Item 604 ~ Inlet, Standard No. I-3A-14, Modified as per plan — 1 Each

(GR-1) Sta. 697+24 to Sta. 697+61.5 (Lt)

Item 202 ~ Guardrail Removed for Storage — 37.50 Lin.Ft.

Item 606 ~ Guardrail, Type 5

37.50 - 12.50 = 25.00 Lin.Ft.

Item 606 ~ Anchor Assembly, Standard Type T — 1 Each

Item 606 ~ Bridge Terminal Assembly, Standard Type J — 1 Each

(GR-2) Sta. 699+04 to Sta. 699+41.5 (Lt.)

Item 202 ~ Guardrail Removed for Storage — 37.50 Lin.Ft.

Item 606 ~ Guardrail, Type 5 — 37.50 Lin.Ft.

Item 606 ~ Bridge Terminal Assembly, Standard Type D — 1 Each

(GR-3) Sta. 699+41.5 to Sta. 700+07.9 Lt.

Item 606 ~ Guardrail, Type 5 — 66.40 Lin.Ft.

Item 606 ~ Bridge Terminal Assembly, Standard Type J — 1 Each

ROADWAY QUANTITY CALCULATIONS

Calc. By LDB 11-6-78
Chk'd. By WH 11-7-78

FHWA REGION	STATE	PROJECT	
5	OHIO		

15

JEF-7-11.80

STA. 695+00 TO STA. 715+00

GR-4 Sta. 698+85 to Sta. 699+60 (Rt.)

Item 202 ~ Guardrail Removed for Storage — 75.00 Lin.Ft.

Item 606 ~ Guardrail, Type 5 — 75.00 Lin.Ft.

Item 606 ~ Bridge Terminal Assembly, Standard Type J — 1 Each

GR-5 Sta. 700+51.80 to Sta. 700+92.50 (Rt.)

Item 606 ~ Guardrail, Type 5 — 40.70 Lin.Ft.

Item 606 ~ Bridge Terminal Assembly, Standard Type J — 1 Each

GR-6 Sta. 700+92.50 to Sta. 701+80.00 (Rt.)

Item 202 ~ Guardrail Removed for Storage — 87.50 Lin.Ft.

Item 606 ~ Guardrail, Type 5 — 87.50 Lin.Ft.

Item 606 ~ Bridge Terminal Assembly, Standard Type D — 1 Each

GR-7 Sta. 701+57 to Sta. 701+82 (Lt.)

Item 202 ~ Guardrail Removed for Storage — 25.00 Lin.Ft.

Item 606 ~ Guardrail, Type 5 — 25.00 Lin.Ft.

Item 606 ~ Bridge Terminal Assembly, Standard Type J — 1 Each

GR-8 Sta. 705+27 to Sta. 709+70 (Rt.)

Item 202 ~ Guardrail Removed for Storage — 462.50 Lin.Ft.

Item 606 ~ Guardrail, Type 5 — 462.50 Lin.Ft.

Item 606 ~ Bridge Terminal Assembly, Standard Type J — 1 Each

GR-9 Sta. 709+70 to Sta. 709+95 (Rt.)

Item 606 ~ Guardrail, Type 5

22.50 − 12.50 = — 25.00 Lin.Ft.

Item 606 ~ Bridge Terminal Assembly, Standard Type D — 1 Each

GR-10 Sta. 707+60 to Sta. 712+72.5 (Rt.)

Item 202 ~ Guardrail Removed for Storage — 512.50 Lin.Ft.

Item 606 ~ Guardrail, Type 5

512.50 − 25.00 = — 487.50 Lin.Ft.

Item 606 ~ Anchor Assembly, Standard Type A — 1 Each

Item 606 ~ Bridge Terminal Assembly, Standard Type D — 1 Each

GR-11 Sta. 709+21.5 to Sta. 709+59 (Rt.)

Item 606 ~ Anchor Assembly, Standard Type A — 1 Each

Item 606 ~ Bridge Terminal Assembly, Standard Type D — 1 Each

Item 606 ~ Guardrail Type 5 — 12.50 Lin.Ft.

GR-12 Sta. 712+06 to Sta. 713+06 (Lt.)

Item 202 ~ Guardrail Removed for Storage — 100.00 Lin.Ft.

Item 606 ~ Guardrail, Type 5

100.00 − 12.50 = — 87.50 Lin.Ft.

Item 606 ~ Anchor Assembly, Standard Type T — 1 Each

Item 606 ~ Bridge Terminal Assembly, Standard Type J — 1 Each

GR-13 Sta. 714+77 to Sta. 715+00 (Lt.)

Item 202 ~ Guardrail Removed for Storage — 23.00 Lin.Ft.

Item 606 ~ Guardrail, Type 5 — 23.00 Lin.Ft.

Item 606 ~ Bridge Terminal Assembly, Standard Type D — 1 Each

* Subtract For Inlet

GR-14 Sta. 714+43 to Sta. 715+00 (Rt.)

Item 202 ~ Guardrail Removed for Storage — 57.00 Lin.Ft.

Item 606 ~ Guardrail, Type 5 — 57.00 Lin.Ft.

Item 606 ~ Bridge Terminal Assembly, Standard Type J — 1 Each

J-1 Sta. 696+43 &

Item Special ~ Pressure Relief Joint, Standard Type C — 53.2 Lin.Ft.

Item 605 ~ 6" Unclassified Pipe Underdrain 707.01 Type III or 707.12 Type III — 16 Lin.Ft.

J-2 Sta. 699+96 &

Item Special ~ Pressure Relief Joint, Standard Type C — 53.2 Lin.Ft.

Item 605 ~ 6" Unclassified Pipe Underdrain 707.01 Type III or 707.12 Type III — 16 Lin.Ft.

J-3 Sta. 700+93 &

Item Special ~ Pressure Relief Joint, Standard Type C — 53.2 Lin.Ft.

Item 605 ~ 6" Unclassified Pipe Underdrain 707.01 Type III or 707.12 Type III — 16 Lin.Ft.

J-4 Sta. 705+97 &

Item Special ~ Pressure Relief Joint, Standard Type C — 76.0 Lin.Ft.

Item 605 ~ 6" Unclassified Pipe Underdrain 707.01 Type III or 707.12 Type III — 16 Lin.Ft.

J-5 Sta. 711+82 &

Item Special ~ Pressure Relief Joint, Standard Type C — 53.2 Lin.Ft.

Item 605 ~ 6" Unclassified Pipe Underdrain 707.01 Type III or 707.12 Type III — 16 Lin.Ft.

GR-15 Sta. 699+60 to Sta. 700+46.8 (Rt.)

Item 606 ~ Guardrail Type 5 — 56.80 Lin.Ft.

Item 606 ~ Bridge Terminal Assembly, Standard Type D — 1 Each

GR-16 Sta. 700+47.9 to Sta. 701+57 Lt.

Item 606 ~ Guardrail, Type 5 — 109.10 Lin.Ft.

Item 606 ~ Bridge Terminal Assembly, Standard Type D — 1 Each

STA. 715+00 TO STA. 735+00

B-1 Sta. 715+00 to Sta. 727+60 &

Item 202 ~ 9" Concrete Median Removed

727+60 − 715+00 − (9.33*)(3) ÷ 9 = — 413.36 Sq.Yd.

Item 622 ~ Concrete Barrier, Standard Type A-1, Modified as per plan

1260 − 20 = — 1240 Lin.Ft.

B-2 Sta. 727+60 to Sta. 735+00 &

Item 202 ~ 9" Concrete Median Removed

(735+00 − 727+60 − 7.33* − 15.33* − 17.33*)

(3) ÷ 9 = — 233.34 Sq.Yd.

Item 622 ~ Concrete Barrier, Standard Type A-1, Modified as per plan — 680 Lin.Ft.

D-14 Sta. 725+78 &

Item 604 ~ Inlet, Standard No. I-3A-10, Modified as per plan — 1 Each

Item 603 ~ 12" Conduit, Type B — 20.00 Lin.Ft.

D-15 Sta. 725+98 &

Item 604 ~ Inlet, Standard No. I-3A-10, Modified as per plan — 1 Each

D-16 Sta. 728+00 &

Item 604 ~ Inlet, Standard No. I-3A-10, Modified as per plan — 1 Each

D-17 Sta. 729+52 &

Item 604 ~ Inlet, Standard No. I-3A-14, Modified as per plan — 1 Each

ROADWAY QUANTITY CALCULATIONS

Calc. By G.W 11-6-78
Chkd By WCR 11-7-78

FHWA REGION	STATE	PROJECT	
5	OHIO		

16

JEF-7-11.80

STA. 715+00 TO STA. 735+00 CON'T.

(D-18) Sta. 733+00 ℄

Item 604 ~ Inlet, Standard No. I-3A-16, Modified as per plan — 1 Each

(GR-1) Sta. 715+00 to Sta. 716+80 (Lt.)

Item 202 ~ Guardrail Removed for Storage — 177.00 Lin.Ft.

Item 606 ~ Guardrail, Type 5

177.00 - 25.00 = 152.00 Lin.Ft.

Item 606 ~ Anchor Assembly Standard, Type A — 1 Each

(GR-2) Sta. 715+00 to Sta. 723+48 (Lt.)

Item 202 ~ Guardrail Removed for Storage — 868.00 Lin.Ft.

Item 606 ~ Guardrail, Type 5 — 868.00 Lin.Ft.

Item 606 ~ Bridge Terminal Assembly, Standard Type D — 1 Each

(GR-3) Sta. 726+35 to Sta. 727+60 (Rt.)

Item 202 ~ Guardrail Removed for Storage — 125.00 Lin.Ft.

Item 606 ~ Guardrail, Type 5 — 125.00 Lin.Ft.

(GR-4) Sta. 727+60 to Sta. 735+00 (Rt.)

Item 202 ~ Guardrail Removed for Storage — 753.00 Lin.Ft.

Item 606 ~ Guardrail, Type 5 — 753.00 Lin.Ft.

(J-1) Sta. 715+70 ℄

Item Special ~ Pressure Relief Joint, Standard Type C — 53.2 Lin.Ft.

Item 605 ~ 6" Unclassified Pipe Underdrain 707.01 Type III or 707.12 Type III — 18 Lin.Ft.

STA. 735+00 TO STA. 755+00

(B-1) Sta. 735+00 to Sta. 755+00 ℄

Item 202 ~ 9" Concrete Median Removed

755+00 - 735+00 - 17.33* - 17.33* - 17.33*) (3) ÷ 9 = 649.34 Sq.Yd.

Item 622 ~ Concrete Barrier, Standard Type A-1, Modified as per plan

2000 - 20 - 20 - 20 = 1940.0 Lin.Ft.

(D-19) Sta. 736+00 ℄

Item 604 ~ Inlet, Standard No. I-3A-16, Modified as per plan — 1 Each

(D-20) Sta. 740+00 ℄

Item 604 ~ Inlet, Standard No. I-3A-16, Modified as per plan — 1 Each

(D-21) Sta. 749+00 ℄

Item 604 ~ Inlet, Standard No. I-3A-16, Modified as per plan — 1 Each

(GR-1) Sta. 735+00 to Sta. 755+00 (Rt.)

Item 202 ~ Guardrail Removed for Storage — 2035.0 Lin.Ft.

Item 606 ~ Guardrail, Type 5 — 2035.00 Lin.Ft.

STA. 755+00 to STA. 770+00

(B-1) Sta. 755+00 to Sta. 770+00 ℄

Item 202 ~ 9" Concrete Median Removed

(770+00 - 755.00 - 7.33 - 7.33 - 13.33) (3) ÷ 9 = 490.67 Sq.Yd.

Item 622 ~ Concrete Barrier, Standard Type A-1, Modified as per plan

770+00 - 755.00 - 20 - 20 - 20 = 1440.00 Lin.Ft.

(D-22) Sta. 756+50 ℄

Item 604 ~ Inlet, Standard No. I-3A-10, Modified as per plan — 1 Each

(D-23) Sta. 759+33 ℄

Item 604 ~ Inlet, Standard No. I-3A-10, Modified as per plan — 1 Each

(D-24) Sta. 769+77 ℄

Item 604 ~ Inlet, Standard No. I-3A-12, Modified as per plan — 1 Each

(D-35) Sta. 756+30 ℄

Item 604 ~ Inlet, Standard No. I-3A-10, Modified as per plan — 1 Each

Item 603 ~ 15" Conduit, Type B — 20.0 Lin.Ft.

(GR-1) Sta. 755+00 to Sta. 770+00 (Rt.)

Item 202 ~ Guardrail Removed for Storage — 1521.00 Lin.Ft.

Item 606 ~ Guardrail, Type 5 — 1521.00 Lin.Ft.

STA. 770+00 to STA. 780+00

(B-1) Sta. 770+00 to Sta. 770+25 ℄

Item 202 ~ 9" Concrete Median Removed

(770+25 - 770+00) (3) ÷ 9 = 8.33 Sq.Yd.

Item 622 ~ Concrete Barrier, Standard Type A-1, Modified as per plan — 25.00 Lin.Ft.

(B-2) Sta. 770+65 to Sta. 770+85 ℄

Item 202 ~ 9" Concrete Median Removed

[(770+80.24 - 770+65) + (770+85 - 770+80.96)] (3) ÷ 9 = 6.43 Sq.Yd.

Item 622 ~ Concrete Barrier, Standard Type A

(770+80.24 - 770+65) + 770+85 - 770+80.96 = 19.28 Lin.Ft.

(B-3) Sta. 770+85 to Sta. 780+00 ℄

Item 202 ~ 9" Concrete Median Removed

(780+00 - 770+85 - 9.33* - 9.33*) (3) ÷ 9 = 298.78 Sq.Yd.

Item 622 ~ Concrete Barrier, Standard Type A

780+00 - 770+85 - 20* - 20* = 875.00 Lin.Ft.

(D-25) Sta. 771+99 ℄

Item 604 ~ Inlet, Standard No. I-3A-10, Modified as per plan — 1 Each

(D-26) Sta. 774+49 ℄

Item 604 ~ Inlet, Standard No. I-3A-10, Modified as per plan — 1 Each

(GR-1) Sta. 770+00 to Sta. 770+76 (Rt.)

Item 202 ~ Guardrail Removed for Storage — 76.00 Lin.Ft.

Item 606 ~ Guardrail, Type 5 — 76.00 Lin.Ft.

(GR-2) Sta. 770+76 to Sta. 780+00 (Rt.)

Item 202 ~ Guardrail Removed for Storage — 926.50 Lin.Ft.

Item 606 ~ Guardrail, Type 5 — 926.50 Lin.Ft.

* Subtract For Inlet

ROADWAY QUANTITY CALCULATIONS

Calc. By WCR - 11-7-78
Chk'd. By RaM - 11-8-78

FHWA REGION	STATE	PROJECT	
5	OHIO		

17

JEF-7-11.80

STA. 780+00 TO STA. 790+00

(B-1) Sta. 780+00 to Sta. 790+00 ℄

Item 202 ~ 9" Concrete Median Removed

(790+00 - 780+00 - 7.33* - 9.33*)(3) ÷ 9 = 327.78 Sq. Yd.

Item 622 ~ Concrete Barrier, Standard Type A

790+00 - 780+00 - 20* - 20* = 960.00 Lin. Ft.

(D-27) Sta. 784+74 ℄

Item 604 ~ Inlet, Standard No. I-3A-10, Modified as per plan — 1 Each

(D-28) Sta. 787+00 ℄

Item 604 ~ Inlet, Standard No. I-3A-10, Modified as per plan — 1 Each

(GR-1) Sta. 780+00 to Sta. 790+00 (Rt.)

Item 202 ~ Guardrail Removed for Storage — 1000.00 Lin. Ft.

Item 606 ~ Guardrail, Type 5 — 1000.00 Lin. Ft.

STA. 790+00 TO STA. 800+00

(B-1) Sta. 790+00 to Sta. 791+96 ℄

Item 202 ~ 9" Concrete Median Removed

[(790+31.78 - 790+00) + (791+96 - 790+31.53 - 7.33*)(3)] ÷ 9 = 62.97 Sq. Yd.

Item 622 ~ Concrete Barrier, Standard Type A

(790+31.78 - 790+00) + (791+96 - 790+31.53 - 20*) = 176.25 Lin. Ft.

(B-2) Sta. 791+96 to Sta. 795+55 ℄

Item 202 ~ 9" Concrete Median Removed

(795+55 - 791+96)(3) ÷ 9 = 119.67 Sq. Yd.

Item 622 ~ Concrete Barrier, Standard Type A

795+55 - 791+96 = 359.0 Lin. Ft.

(B-3) Sta. 795+55 to Sta. 800+00 ℄

Item 202 ~ 9" Concrete Median Removed

(800+00 - 795+55)(3) ÷ 9 = 148.33 Sq. Yd.

Item 622 ~ Concrete Barrier, Standard Type A

800+00 - 795+55 = 445.0 Lin. Ft.

(D-29) Sta. 790+80 ℄

Item 604 ~ Inlet, Standard No. I-3A-10, Modified as per plan — 1 Each

(GR-1) Sta. 790+00 to Sta. 792+66.5 Rt.

Item 202 ~ Guardrail Removed for Storage — 266.5 Lin. Ft.

Item 606 ~ Guardrail, Type 5 — 266.50 Lin. Ft.

(GR-2) Sta. 792+66.5 to Sta. 793+34.5 Rt.

Item 202 ~ Guardrail Removed for Storage — 68.0 Lin. Ft.

Item 606 ~ Guardrail, Type 5 — 68.0 Lin. Ft.

(GR-3) Sta. 793+34.5 to Sta. 800+00 Rt.

Item 202 ~ Guardrail Removed for Storage — 665.5 Lin. Ft.

Item 606 ~ Guardrail, Type 5 — 665.50 Lin. Ft.

* Subtract For Inlet

STA. 800+00 TO STA. 809+50

(B-1) Sta. 800+00 to Sta. 809+00 ~ N.B.

Item 202 ~ 9" Concrete Median Removed

[(804+16.97 - 800+00 - 19.33* - 15.33*)(3) ÷ 9] +

[(809+00 - 804+16.97)(3+12/2) ÷ 9] = 529.96 Sq. Yd.

Item 622 ~ Concrete Barrier, Standard Type A

809+00 - 800+00.00 - 20* - 20* - 20* = 840.0 Lin. Ft.

(B-2) Sta. 809+00 to Sta. 809+50 ~ N.B.

Item 202 ~ Curb Removed

809+50 - 809+00 - 11.33* = 38.67 Lin. Ft.

Item 622 ~ Concrete Barrier, Standard Type A

809+50 - 809+00 - 20* = 30.0 Lin. Ft.

(D-30) Sta. 801+31 ℄

Item 604 ~ Inlet, Standard No. I-3A-10, Modified as per plan — 1 Each

Item 603 ~ 12" Conduit, Type B — 20.0 Lin. Ft.

(D-31) Sta. 801+51 ℄

Item 604 ~ Inlet, Standard No. I-3A-10, Modified as per plan — 1 Each

(D-32) Sta. 803+51 ℄

Item 604 ~ Inlet, Standard No. I-3A-14, Modified as per plan — 1 Each

(D-33) Sta. 809+24 N.B.

Item 604 ~ Inlet, Standard No. I-3A — 1 Each

(GR-1) Sta. 800+00 to Sta. 809+50 (Rt.)

Item 202 ~ Guardrail Removed for Storage — 961.00 Lin. Ft.

Item 606 ~ Guardrail, Type 5 — 961.00 Lin. Ft.

STA. 809+50 to STA. 814+00

(GR-2) Sta. 810+68 to Sta. 811+23 (S.B.)

Item 202 ~ Guardrail Removed for Storage — 55.0 Lin. Ft.

Item 606 ~ Guardrail, Type 5

55.00 - 12.5 = 42.50 Lin. Ft.

Item 606 ~ Anchor Assembly, Standard Type T — 1 Each

(GR-3) Sta. 811+23 to Sta. 811+55.5 (S.B.)

Item 606 ~ Guardrail, Type 5

32.50 - 25.00 = 7.50 Lin. Ft.

Item 606 ~ Anchor Assembly, Standard Type A — 1 Each

(B-1) Sta. 809+50 to Sta. 814+00 (N.B.)

Item 202 ~ Curb Removed

814+00 - 809+50 - 15.33* = 434.67 Lin. Ft.

Item 622 ~ Concrete Barrier, Standard Type A

814+00 - 809+50 - 20* = 430.00 Lin. Ft.

(D-34) Sta. 811+50 N.B.

Item 604 ~ Inlet, Standard No. I-3A-14, Modified as per plan — 1 Each

(GR-1) Sta. 809+50 to Sta. 809+65 (Rt.)

Item 202 ~ Guardrail Removed for Storage — 15.0 Lin. Ft.

Item 606 ~ Guardrail, Type 5

15.0 - 12.5 = 2.50 Lin. Ft.

Item 606 ~ Anchor Assembly, Standard Type T — 1 Each

ROADWAY QUANTITY CALCULATIONS

Calc. By G.W. - 11-8-78
Ch.Kd. By P.H. - 11-9-78

FHWA REGION	STATE	PROJECT	
5	OHIO		

18

JEF-7-11.80

STA. 814+00 TO STA. 818+00

(B-1) Sta. 814+00 to Sta. 816+37.15 (N.B.)

Item 202 ~ Curb Removed — 237.15 Lin.Ft.

Item 622 ~ Concrete Barrier, Standard, Type A — 237.15 Lin.Ft.

(B-2) Sta. 816+37.15 to Sta. 818+00. N.B.

Item 202 ~ Curb Removed — 162.85 Lin.Ft.

Item 622 ~ Concrete Barrier, Standard Type D — 162.85 Lin.Ft.

Item 202 ~ Guardrail Removed for Storage — 162.9 Lin.Ft.

Item 304 ~ Aggregate Base

Backfill Area $\left\{ \begin{array}{l} 8/12 \times 102.85' \times 3/12 \div 27 = 5.1 \text{ C.Y.} \\ 9/12 \times 102.85' \times 4/12 \div 27 = 9.8 \text{ C.Y.} \end{array} \right.$ (Sta. 816+37.15 to 817+40)

2:1 From End of Wall $\left\{ \begin{array}{l} (8/12 \times 6' \times 4/12 \div 2) \div 27 = 0.2 \text{ C.Y.} \\ (2' \times 6' \times 4/12 \div 2) \div 27 = 0.8 \text{ C.Y.} \end{array} \right.$

Total Aggregate Base — 15.8 Cu. Yd.

(GR-1) Sta. 817+02.5 to Sta. 818+00 N.B.

Item 606 ~ Guardrail Rebuilt, Type 5, as per plan — 81.00 Lin.Ft.

Item 606 ~ Guardrail Type 5 — 12.50 Lin.Ft.

Item 606 ~ Bridge Terminal Assembly, Standard Type J — 1 Each

(R-1) Sta. 815+45 to Sta. 816+37.15 Lt. (N.B.)

Item 202 ~ Guardrail Removed for Storage — 92.2 Lin.Ft.

STA. 818+00 TO STA. 822+50

(B-1) Sta. 818+00 (N.B.) to Sta. 2+39.5 (Ramp B) Lt.

Item 202 Curb Removed — 177.5 Lin.Ft.

Item 622 ~ Concrete Barrier, Standard Type D — 177.50 Lin.Ft.

Item 202 - Guardrail Removed for Storage — 177.5 Lin.Ft.

(B-2) Sta. 2+39.5 to Sta. 3+34 (Ramp B) Lt.

Item 622 ~ Concrete Barrier, Standard Type D — 93.50 Lin.Ft.

Item 202 - Guardrail Removed for Storage — 93.5 Lin.Ft.

(B-3) Sta. 821+40 to Sta. 822+00 (S.B.) Rt.

Item 622 ~ Concrete Barrier, Standard Type D — 130.00 Lin.Ft.

(GR-1) Sta. 818+00 to Sta. 820+16 (N.B.) Rt.

Item 606 ~ Guardrail Rebuilt, Type 5 as per plan — 215.00 Lin.Ft.

(GR-2) Sta. 820+16 to Sta. 822+50 (N.B.) Rt.

Item 202 ~ Guardrail Removed for Storage — 230.00 Lin.Ft.

Item 606 ~ Guardrail, Type 5 — 230.00 Lin.Ft.

(GR-3) Sta. 822+35 to Sta. 822+50 (N.B.) Lt.

Item 202 ~ Guardrail Removed for Storage — 15.0 Lin.Ft.

Item 606 ~ Guardrail, Type 5 — 15.00 Lin.Ft.

(GR-4) Sta. 821+01.0 to Sta. 821+18 (S.B.) Lt.

Item 606 ~ Guardrail, Type 5

17.00 - 12.50 = — 4.50 Lin.Ft.

Item 606 ~ Anchor Assembly, Standard Type T — 1 Each

(GR-5) Sta. 821+18 to Sta. 822+20.3 (S.B.) Lt.

Item 202 ~ Guardrail Removed for Storage

(822+44.50 - 821+18) + (822+20.3 - 821+76.30) = 170.50 Lin.Ft.

Item 606 ~ Guardrail, Type 5 — 170.50 Lin.Ft.

(GR-6) Sta. 822+20.3 to Sta. 822+45.3 (S.B.) Lt.

Item 606 ~ Anchor Assembly, Standard Type A — 1 Each

(GR-7) Sta. 4+90 to Sta. 6+15 (Lt.) Ramp B

Item 202 ~ Guardrail Removed for Storage — 125.0 Lin.Ft.

Item 606 ~ Guardrail, Type 5

125.00 - 12.5 = — 112.50 Lin.Ft.

Item 606 ~ Anchor Assembly, Standard Type T — 1 Each

Item 606 ~ Bridge Terminal Assembly, Standard Type D — 1 Each

(R-1) Sta. 820+95 to Sta. 822+01 (S.B.)

Item 202 ~ Guardrail Removed for Storage — 175.0 Lin.Ft.

STA. 822+50 TO STA. 827+50

(B-1) Sta. 827+00 to Sta. 827+50 (N.B.) Lt.

Item 202 ~ Curb Removed — 50.0 Lin.Ft.

Item 622 ~ Concrete Barrier, Standard Type A — 50.0 Lin.Ft.

Item 202 ~ Guardrail Removed for Storage — 50.00 Lin.Ft.

(GR-1) Sta. 822+50 to Sta. 827+00 (N.B.) Lt.

Item 202 ~ Guardrail Removed for Storage — 450.00 Lin.Ft.

Item 606 ~ Guardrail, Type 5 — 450.00 Lin.Ft.

(GR-2) Sta. 822+50 to Sta. 827+36.5 (N.B.) Rt.

Item 202 ~ Guardrail Removed for Storage — 486.5 Lin.Ft.

Item 606 ~ Guardrail, Type 5

486.50 - 12.50 = — 474.00 Lin.Ft.

Item 606 ~ Anchor Assembly, Standard Type T — 1 Each

STA. 827+50 TO STA. 832+00

(B-1) Sta. 827+50 to Sta. 829+60.5 N.B.

Item 202 ~ Curb Removed — 210.5 Lin.Ft.

Item 202 ~ Guardrail Removed for Storage — 204.0 Lin.Ft.

Item 622 ~ Concrete Barrier, Standard Type A — 210.5 Lin.Ft.

(B-2) Sta. 829+60.5 to 829+75.51 ~ N.B.

Item 202 ~ Curb Removed — 15.0 Lin.Ft.

Item 202 ~ 4" Median Pavement Removed

$\left[\left(\frac{6.15+8}{2}\right) - 1\right](15) \div 9 =$ — 10.1 Sq. Yd.

Item 622 ~ Concrete Barrier, Standard Type A — 15.0 Lin.Ft.

(B-3) Sta. 829+75.51 to 830+25.51 ~ N.B.

Item 202 ~ Curb Removed — 100.0 Lin.Ft.

Item 202 ~ 4" Median Pavement Removed

$\left[\left(\frac{6.15}{2}\right) - 1\right](50) \div 9 =$ — 11.5 Sq. Yd.

Item 622 ~ Concrete Barrier, Standard Type A — 50.0 Lin.Ft.

ROADWAY QUANTITY CALCULATIONS

Calc. By WCR-11-9-78
Chk'd. By G.V.V.-11-10-78

FHWA REGION	STATE	PROJECT	
5	OHIO		

19

JEF-7-11.80

STA. 827+50 TO STA. 832+00 CON'T.

(B-4) Sta. 830+25.51 to Sta. 832+00 ℄

Item 202 ~ Curb Removed — 349.0 Lin.Ft.

Item 202 ~ 4" Median Pavement Removed
3 x 174.5 ÷ 9 = — 58.2 Sq. Yd.

Item 622 ~ Concrete Barrier, Standard Type A-2, Modified as per plan
174.5 - 20 = — 154.5 Lin.Ft.

(D-36) Sta. 830+50 ℄

Item 604 ~ Inlet, Standard No. I-3A — 1 Each

STA. 832+00 TO STA. 836+50

(B-1) Sta. 832+00 to Sta. 833+44 ~ ℄

Item 202 ~ 4" Median Pavement Removed
(833+44 - 832+00)(3) ÷ 9 = — 48.0 Sq. Yd.

Item 202 ~ Curb Removed
2(833+44 - 832+00) = — 288.0 Lin.Ft.

Item 622 ~ Concrete Barrier, Standard Type A-2, Modified as per plan — 144.0 Lin.Ft.

STA. 836+50 TO STA. 841+00

(R-1) Sta. 838+93 to Sta. 839+13 ~ ℄

Item 202 ~ 4" Median Pavement Removed
(839+13 - 838+93)(3) ÷ 9 = — 6.67 Sq. Yd.

Item 202 ~ Curb Removed
(839+13 - 838+93)(2) = — 40.0 Lin.Ft.

STA. 841+00 TO STA. 845+50

(B-1) Sta. 844+85 to Sta. 845+50 Rt.

Item 622 ~ Concrete Barrier, Standard Type A-5 Modified as per plan — 65.00 Lin.Ft.

(C-1) Sta. 841+59.5 to Sta. 842+17 Rt.

Item 609 ~ Curb, Standard Type 6 — 63.0 Lin.Ft.

(R-1) Sta. 841+13 to Sta. 841+29 ~ ℄

Item 202 ~ 4" Median Pavement Removed
(841+29 - 841+13)(3) ÷ 9 = — 5.33 Sq. Yd.

Item 202 ~ Curb Removed
2(841+29 - 841+13) — 32.0 Lin.Ft.

(R-2) Sta. 841+59.5 to Sta. 842+30.5 Rt.

Item 202 ~ Curb Removed — 95.0 Lin.Ft.

(R-3) Sta. 841+49 to Sta. 841+53 ℄

Item 202 ~ 4" Median Pavement Removed
(841+53 - 841+49)(3) ÷ 9 = — 1.33 Sq. Yd.

Item 202 ~ Curb Removed
2(841+53 - 841+49) = — 8.0 Lin.Ft.

(R-4) Sta. 844+85 to Sta. 845+50 ℄

Item 202 ~ Curb Removed
2(845+50 - 844+85) = — 130.0 Lin.Ft.

Item 202 ~ 4" Median Pavement Removed
(845+50 - 844+85)(3) ÷ 9 = — 21.7 Sq. Yd.

(R-5) Sta. 841+25 ℄

Item 202 ~ Catch Basin Abandoned — 1 Each

(GR-1) Sta. 845+10 to Sta. 845+50 Rt.

Item 202 ~ Guardrail Removed for Storage — 40.0 Lin.Ft.

Item 606 ~ Guardrail, Type 5
40.0 - 25.0 = — 15.00 Lin.Ft.

Item 606 ~ Anchor Assembly, Standard Type A — 1 Each

(D-37) Sta. 841+09 ℄

Item 604 ~ Catch Basin, Standard No. 3-A — 1 Each

Item 603 ~ 12" Conduit, Type B — 16.0 Lin.Ft.

STA. 845+50 TO STA. 855+50

(B-1) Sta. 845+50 to Sta. 845+94 ~ Rt.

Item 202 ~ Curb Removed
2(845+94 - 845+50) = — 88.0 Lin.Ft.

Item 202 ~ 4" Median Pavement Removed
(845+94 - 845+50)(3) ÷ 9 = — 14.7 Sq. Yd.

Item 622 ~ Concrete Barrier, Standard Type A-5, Modified as per plan — 44.0 Lin.Ft.

(B-2) Sta. 848+05.3 to Sta. 853+92.86 ℄

Item 202 ~ Curb Removed
2(853+92.86 - 848+05.3) = 1175.12 Lin.Ft.

Item 202 ~ 4" Median Pavement Removed
(853+92.86 - 848+05.3 (3) ÷ 9 = — 195.85 Sq. Yd.

Item 622 ~ Concrete Barrier, Standard Type A-2, Modified as per plan — 587.60 Lin.Ft.

(B-3) Sta. 853+92.86 to Sta. 855+50 ℄

Item 202 ~ Curb Removed
2(855+50 - 853+92.86) = — 314.28 Lin.Ft.

Item 202 ~ 4" Median Pavement Removed
(855+50 - 853+92.86)$\left(\frac{3.0+7.64}{2}\right)$ ÷ 9 = 92.89 Sq. Yd.

Item 622 ~ Concrete Barrier, Standard Type A — 157.14 Lin.Ft.

(B-4) Sta. 845+94 to Sta. 848+05.3 ℄

Item 202 ~ Curb Removed
2(848+05.3 - 845+94) = — 422.60 Lin.Ft.

Item 202 ~ 4" Median Pavement Removed
3(848+05.3 - 845+94) ÷ 9 = — 70.43 Sq. Yd.

Item 622 ~ Concrete Barrier, Standard Type A-6, Modified as per plan — 211.30 Lin.Ft.

(GR-1) Sta. 845+50 to Sta. 848+23 (Rt.)

Item 202 ~ Guardrail Removed for Storage — 273.0 Lin.Ft.

Item 606 ~ Guardrail, Type 5 — 273.00 Lin.Ft.

(GR-2) Sta. 848+23 to Sta. 850+24 (Rt.)

Item 606 ~ Guardrail, Type 5 — 201.00 Lin.Ft.

(GR-3) Sta. 850+24 to Sta. 855+50 (Rt.)

Item 202 ~ Guardrail Removed for Storage — 526.0 Lin.Ft.

Item 606 ~ Guardrail, Type 5 — 526.00 Lin.Ft.

* Subtract For Inlet

ROADWAY QUANTITY CALCULATIONS

Calc. By GW 11-10-78
Chkd. By WCR 11-11-78

FHWA REGION	STATE	PROJECT	
5	OHIO		

20

JEF 7-11.80

STA. 855+50 TO STA. 865+00

(B-1) Sta. 855+50 to Sta. 860+59.77 ℄

Item 202 ~ Curb Removed

2(860+59.77-855+50) = 1019.54 Lin.Ft.

Item 202 ~ 4" Median Pavement Removed

[(855+62.10-855+50)($\frac{7.64+8}{2}$)+(857+31.34-855+62.10)($\frac{8+13}{2}$)+(858+00-857+31.34)(13)+(860+50-858+00)($\frac{13+3}{2}$)+(860+59.77-860+50)(3)]÷9 532.61 Sq.Yd.

Item 622 ~ Concrete Barrier, Standard Type A
(860+59.77-855+50) = 509.77 Lin.Ft.

(B-2) Sta. 860+59.77 to Sta. 862+85 ~ Lt.

Item 622 ~ Concrete Barrier, Standard Type A-6, Modified as per plan

862+85-860+59.77*-20*-20 = 185.2 Lin.Ft.

(B-3) Sta. 862+85 to Sta. 863+85 ~ Lt.

Item 622 ~ Concrete Barrier, Standard Type A-5, Modified as per plan

863+85-862+85 = 100.0 Lin.Ft.

(D-39) Sta. 861+30 Lt.

Item 202 ~ Catch Basin Abandoned 1 Each

Item 604 ~ Inlet, Standard No. I-3A-10, Modified as per plan 1 Each

Item 603 ~ 12" Conduit, Type B 98.0 Lin.Ft.

(D-40) Sta. 862+23 Lt.

Item 603 ~ 12" Conduit, Type B 8.0 Lin.Ft.

Item 604 ~ Inlet, Standard No. I-3A-10, Modified as per plan 1 Each

(GR-1) Sta. 855+50 to Sta. 860+31 (Rt.)

Item 202 ~ Guardrail Removed for Storage 485.0 Lin.Ft.

Item 606 ~ Guardrail, Type 5

485.00-12.50 472.50 Lin.Ft.

Item 606 ~ Anchor Assembly, Standard Type T 1 Each

(R-1) Sta. 857+06 to Sta. 858+07 (Rt.)

Item 202 ~ Guardrail Removed for Storage 100.0 Lin.Ft.

(R-2) Sta. 857+35 to Sta. 858+37 (Lt)

Item 202 ~ Guardrail Removed for Storage 100.0 Lin.Ft.

(R-3) Sta. 860+59.77 to Sta. 864+02 ~ ℄

Item 202 ~ Curb Removed

2(864+02-860+59.77) = 684.46 Lin.Ft.

Item 202 ~ 4" Median Pavement Removed

(864+02-860+59.77)(3)÷9 = 114.08 Sq.Yd.

(R-4) Sta. 864+87 to Sta. 865+00 ~ ℄

Item 202 ~ Curb Removed 13.0 Lin.Ft.

Item 202 ~ 4" Median Pavement Removed

(865+00-864+87)(3)÷9 = 4.33 Sq.Yd.

(R-5) Sta. 861+13 to Sta. 862+46 ℄

Item 202 ~ Pavement Removed

(862+46-861+13)(3)÷9 = 44.3 Sq.Yd.

STA. 865+00 TO STA. 874+50

(D-41) Sta. 865+03 Rt.

Item 603 ~ 12" Conduit, Type B 8.0 Lin.Ft.

Item 604 ~ Catch Basin, Standard No. 3-A 1 Each

Item 202 ~ Catch Basin Abandoned 1 Each

(B-1) Sta. 865+00 to Sta. 865+87 ~ Rt.

Item 622 ~ Concrete Barrier, Standard Type A-5, Modified as per plan

865+87-865+00 87.0 Lin.Ft.

(B-2) Sta. 865+87 to Sta. 867+21 ~ Rt.

Item 622 ~ Concrete Barrier, Standard Type A-6, Modified as per plan

867+21-865+87-20* = 114.0 Lin.Ft.

(B-3) Sta. 867+21 to Sta. 874+50 ~ ℄

Item 202 ~ Curb Removed

2(874+50-867+21) = 1458.0 Lin.Ft.

Item 202 ~ 4" Median Pavement Removed

(874+50-867+21)(3)÷9 = 243.0 Sq.Yd.

Item 622 ~ Concrete Barrier, Standard Type A-2, Modified as per plan
874+50-867+21-20*-20* = 689.0 Lin.Ft.

(D-42) Sta. 866+28 ℄

Item 604 ~ Inlet, Standard No. I-3A-10, Modified as per plan 1 Each

Item 603 ~ 12" Conduit, Type B 10.0 Lin.Ft.

(D-43) Sta. 868+02 ℄

Item 604 ~ Inlet, Standard No. I-3A 1 Each

(D-44) Sta. 873+10 ℄

Item 604 ~ Inlet, Standard No. I-3A 1 Each

(GR-1) Sta. 869+75 to Sta. 871+40 (Rt.)

Item 202 ~ Guardrail Removed for Storage 175.0 Lin.Ft.

Item 606 ~ Guardrail, Type 5

175.00-25.00-12.50 = 137.50 Lin.Ft.

Item 606 ~ Anchor Assembly, Standard Type A 1 Each

Item 606 ~ Anchor Assembly, Standard Type T 1 Each

(R-1) Sta. 865+00 to Sta. 867+21 ℄

Item 202 ~ Curb Removed

2(867+21-865+00) = 442.0 Lin.Ft.

Item 202 ~ 4" Median Pavement Removed

(867+21-865+00)(3)÷9 = 73.67 Sq.Yd.

STA. 874+50 TO STA. 879+00

(B-1) Sta. 874+50 to Sta. 876+55 ℄

Item 622 ~ Concrete Barrier, Standard Type A-2, Modified as per plan
876+55-874+50-20* 185.0 Lin.Ft.

(B-2) Sta. 876+55 to Sta. 877+20

Item 622 ~ Concrete Barrier, Standard Type A-6, Modified as per plan
877+20-876+55 65.0 Lin.Ft.

(B-3) Sta. 877+20 to Sta. 877+27.13 Lt.

Item 622 ~ Concrete Barrier, Standard Type A-2, Modified as per plan
877+27.13-877+20 7.1 Lin.Ft.

(B-4) Sta. 877+27.13 to Sta. 879+00 Lt.

Item 622 ~ Concrete Barrier, Standard Type A
879+00-877+27.13-20* 152.9 Lin.Ft.

(D-45) Sta. 875+65 ℄

Item 604 ~ Inlet, Standard No. I-3A 1 Each

* Subtract For Inlet

ROADWAY QUANTITY CALCULATIONS

Calc. By GW 11-10-78
Chkd By WCR 11-11-78

FHWA REGION	STATE	PROJECT	
5	OHIO		

JEF-7-11.80

STA. 874+50 TO STA. 879+00 CON'T.

(D-46) Sta. 877+39 ℄

Item 604 ~ Inlet, Standard No. I-3A — 1 Each

Item 603 ~ 12" Conduit, Type B — 14.0 Lin. Ft.

(R-1) Sta. 877+27.13 to Sta. 879+00 ℄

Item 202 ~ Curb Removed

2(879+00 - 877+27.13) = 345.74 Lin. Ft.

Item 202 ~ 4" Median Pavement Removed

$(879+00-877+27.13)\left(\frac{3+6.46}{2}\right) \div 9 =$ 90.85 Sq. Yd.

(R-2) Sta. 876+92 to Sta. 877+18 Rt.

Item 202 ~ Walk Removed

5 x 30 = 150.0 Sq. Ft.

(R-3) Sta. 874+50 to Sta. 876+55 ℄

Item 202 ~ Curb Removed

2(876+55 - 874+50) = 410.0 Lin. Ft.

Item 202 ~ 4" Median Pavement Removed

(876+55 - 874+5)(3) ÷ 9 — 68.3 Sq. Yd.

(GR-1) Sta. 874+67 to Sta. 876+08 (Rt.)

Item 202 ~ Guardrail Removed for Storage — 141.0 Lin. Ft.

Item 606 ~ Guardrail, Type 5

141.00 - 25.00 = 116.00 Lin. Ft.

Item 606 ~ Anchor Assembly, Standard Type A — 1 Each

(GR-2) Sta. 876+08 to Sta. 876+29.5 (Rt.)

Item 606 ~ Guardrail, Type 5

21.5 - 12.5 — 9.00 Lin. Ft.

Item 606 ~ Anchor Anchor, Standard Type T — 1 Each

(TD-1) Sta. 876+78 to Sta. 876+85 (Lt.)

Item 613 ~ Traffic Dividers — 2 Each

(E-1) Sta. 876+91 to Sta. 877+00 Rt.

Item 607 ~ Fence, Type CL — 10 Lin. Ft.

(R-4) Sta. 877+26 ℄

Item 202 ~ Catch Basin Abandoned — 1 Each

STA. 879+00 TO STA. 883+50

(B-1) Sta. 879+00 to Sta. 879+24 (Lt.)

Item 622 ~ Concrete Barrier, Standard Type A — 24.0 Lin. Ft.

(B-2) Sta. 879+24 to Sta. 880+24 (Lt.)

Item 622 ~ Concrete Barrier, Standard Type A-3, Modified as per plan — 100.0 Lin. Ft.

(B-3) Sta. 881+13 to Sta. 882+13 (Rt.)

Item 622 ~ Concrete Barrier, Standard Type A-3, Modified as per plan — 100.0 Lin. Ft.

(B-4) Sta. 882+13 to Sta. 883+50

Item 622 ~ Concrete Barrier, Standard Type A — 137.0 Lin. Ft.

(R-1) Sta. 879+00 to Sta. 880+24 ℄

Item 202 ~ Curb Removed

2(880+24 - 879+00) = 248.0 Lin. Ft.

Item 202 ~ 4" Median Pavement Removed

$\left[(880+09-879+00)\left(\frac{6.46+9}{2}\right) + (880+24-880+09)\left(\frac{9+3}{2}\right)\right] \div 9 =$ 103.62 Sq. Yd.

(R-2) Sta. 881+13 to Sta. 883+50 ℄

Item 202 ~ Curb Removed

2(883+50 - 881+13) = 474.0 Lin. Ft.

Item 202 ~ 4" Median Pavement Removed

$\left[(881+27-881+13)\left(\frac{9+3}{2}\right) + (883+50-881+27)(9)\right] \div 9 =$ 232.3 Sq. Yd.

STA. 883+50 TO STA. 893+50

(B-1) Sta. 883+50 to Sta. 888+45 Lt. & Rt.

Item 622 ~ Concrete Barrier, Standard Type A

888+45 - 883+50 - *20 = 475.0 Lin. Ft.

(B-2) Sta. 888+45 to Sta. 889+45 Lt.

Item 622 ~ Concrete Barrier, Standard Type A-3, Modified as per plan — 100.0 Lin. Ft.

(B-3) Sta. 890+36 to Sta. 891+36 Rt.

Item 622 ~ Concrete Barrier, Standard Type A-3, Modified as per plan — 100.0 Lin. Ft.

(B-4) Sta. 891+36 to Sta. 893+50 Rt.

Item 622 ~ Concrete Barrier Standard Type A — 214.0 Lin. Ft.

(D-47) Sta. 885+35 Lt.

Item 604 ~ Inlet, Standard No. I-3A-12, Modified as per plan — 1 Each

(GR-1) Sta. 893+19 to Sta. 893+50 (Rt.)

Item 202 ~ Guardrail Removed for Storage — 31.0 Lin. Ft.

Item 606 ~ Guardrail, Type 5

31.0 - 25.00 = 6.00 Lin. Ft.

Item 606 ~ Anchor Assembly, Standard Type A — 1 Each

(R-1) Sta. 883+50 to Sta. 889+56 ℄

Item 202 ~ Curb Removed

2(889+56 - 883+50) - *13.33 = 1198.7 Lin. Ft.

Item 202 ~ 4" Median Pavement Removed

$\left[(889+37-883+50)(9) + (889+56-889+37)\left(\frac{9+3}{2}\right)\right] \div 9 =$ 599.7 Sq. Yd.

(R-2) Sta. 890+36 to Sta. 893+50 Rt.

Item 202 ~ Curb Removed

2(893+50 - 890+36) = 628.0 Lin. Ft.

Item 202 ~ 4" Median Pavement Removed

$\left[(892+71.23-890+36)(2) + (893+50-892+71.23)\left(\frac{2+5.61}{2}\right)\right] \div 9 =$ 85.6 Sq. Yd.

STA. 893+50 TO STA. 898+00

(B-1) Sta. 893+50 to Sta. 898+00 Lt. & Rt.

Item 622 ~ Concrete Barrier, Standard Type A

453.0 - 20.0* = 430.0 Lin. Ft.

(D-48) Sta. 896+50 Rt.

Item 604 ~ Inlet, Standard No. I-3A-10, Modified as per plan — 1 Each

(GR-1) Sta. 893+50 to Sta. 898+00

Item 202 ~ Guardrail Removed for Storage — 460.0 Lin. Ft.

Item 606 ~ Guardrail, Type 5 — 460.00 Lin. Ft.

(R-1) Sta. 893+50 to Sta. 898+00 ℄

Item 202 ~ Curb Removed

2(898+00 - 893+50) - *7.33 = 892.7 Lin. Ft.

Item 202 ~ 4" Median Pavement Removed

$\left[(894+24-893+50)\left(\frac{5.61+9}{2}\right) + (896+71.23-894+24)(9) + (898+00-896+71.23)\left(\frac{9+3}{2}\right)\right] \div 9 =$ 393.1 Sq. Yd.

ROADWAY QUANTITY CALCULATIONS

Calc. By G.W. - 11-9-78
Chk'd. By P.H. - 11-10-78

FHWA REGION	STATE	PROJECT	
5	OHIO		

22

JEF-7-11.80

STA. 898+00 TO STA. 902+50

(B-1) Sta. 898+00 to Sta. 899+94 Lt.

Item 622 ~ Concrete Barrier, Standard Type A — 194.0 Lin.Ft.

(B-2) Sta. 899+94 to Sta. 900+94 Lt.

Item 622 ~ Concrete Barrier, Standard Type A-3, Modified as per plan

(900+94 - 899+94) - 9.33* = 90.7 Lin.Ft.

(B-3) Sta. 901+75 to Sta. 902+50 Lt.

Item 622 ~ Concrete Barrier, Standard Type A-3, Modified as per plan

902+50 - 901+75 - 3.67 = 71.3 Lin.Ft.

(D-49) Sta. 900+90 Lt.

Item 604 ~ Inlet, Standard No. 2-8 — 1 Each

(D-50) Sta. 902+50 Lt.

Item 604 ~ Inlet, Standard No. 2-6 — 1 Each

(GR-1) Sta. 898+00 to Sta. 901+94 Rt.

Item 202 ~ Guardrail Removed for Storage — 409.0 Lin.Ft.

Item 606 ~ Guardrail, Type 5

409.0 - 12.5 = 396.50 Lin.Ft.

Item 606 ~ Anchor Assembly, Standard Type T — 1 Each

(GR-2) Sta. 902+06 to Sta. 902+50 Rt.

Item 202 ~ Guardrail Removed for Storage — 44.0 Lin.Ft.

Item 606 ~ Guardrail, Type 5

44.0 - 25.0 = 19.00 Lin.Ft.

Item 606 ~ Anchor Assembly, Standard Type A — 1 Each

(R-1) Sta. 898+00 to Sta. 900+94 Lt.

Item 202 ~ Curb Removed

2(900+94 - 898+00) - 9.33 ÷ 9 = 578.7 Lin.Ft.

Item 202 ~ 4" Median Pavement Removed

(900+94 - 898+00)(2) ÷ 9 = 65.3 Sq.Yd.

(R-2) Sta. 901+68 to Sta. 902+50 ℄

Item 202 ~ Curb Removed

2(902+50 - 901+68) + 6.3 = 170.3 Lin.Ft.

Item 202 ~ 4" Median Pavement Removed

$\left[(901+92 - 901+68)\left(\frac{4+9}{2}\right) + (902+50 - 901+92)(9)\right] \div 9 =$ 75.3 Lin.Ft.

STA. 902+50 TO STA. 912+00

(B-1) Sta. 902+50 to Sta. 902+69 Lt.

Item 622 ~ Concrete Barrier, Standard Type A-3, Modified as per plan — 19.0 Lin.Ft.

(B-2) Sta. 902+69 to Sta. 911+02 ℄

Item 622 ~ Concrete Barrier, Standard Type A

911+02 - 902+69 - 10.0* - 10.0* = 813.0 Lin.Ft.

(B-3) Sta. 911+02 to Sta. 912+00 Lt.

Item 622 ~ Concrete Barrier, Standard Type A — 88 Lin.Ft.

Item 202 ~ Guardrail Removed for Storage — 98 Lin.Ft.

(C-1) Sta. 907+57.4 to Sta. 909+02.3 Rt.

Item 609 ~ Curb, Standard Type 6 — 144.9 Lin.Ft.

(D-51) Sta. 902+90 ℄

Item 604 ~ Manhole Reconstructed to Grade — 1 Each

(D-52) Sta. 905+00 ℄

Item 604 ~ Manhole, Type 1 — 1 Each

(D-53) Sta. 907+50 ℄

Item 604 ~ Manhole, Type 2 — 1 Each

(D-54) Sta. 908+06 (Rt.)

Item 604 ~ Inlet, Standard No. 2-10 — 1 Each

(D-55) Sta. 911+12 Lt.

Item 604 ~ Manhole, Type 1 — 1 Each

(GR-1) Sta. 902+50 to Sta. 912+00 Rt.

Item 202 ~ Guardrail Removed for Storage — 955.0 Lin.Ft.

Item 606 ~ Guardrail, Type 5 — 955.00 Lin.Ft.

(R-1) Sta. 902+63 (Rt.)

Item 202 ~ Inlet Abandoned — 1 Each

(R-2) Sta. 908+00 (Rt.)

Item 202 ~ Inlet Abandoned — 1 Each

(R-3) Sta. 902+50 to Sta. 908+75

Item 202 ~ Curb Removed

2(908.75 - 902+50) - 7.33 - 11.33 = 1231.3 Lin.Ft.

Item 202 ~ 4" Median Pavement Removed

(908+75 - 902+50 - 16.0*)(9) ÷ 9 = 607.0 Sq.Yd.

(R-4) Sta. 908+75 to Sta. 909+02.3 Rt.

Item 202 ~ Curb Removed — 27.3 Lin.Ft.

(R-5) Sta. 908+75 to Sta. 912+00 Lt.

Item 202 ~ Curb Removed — 325.0 Lin.Ft.

ROADWAY QUANTITY CALCULATIONS

Calc. By GW - 11-13-78
Chkd. By WCR - 11-14-78

FHWA REGION	STATE	PROJECT	
5	OHIO		

23

JEF-7-11.80

STA. 912+00 TO STA. 916+68

(B-1) Sta. 912+00 to. Sta. 915+62 Lt.

Item 622 ~ Concrete Barrier, Standard Type A

362.0 Lin. Ft.

(B-2) Sta. 914+25 to Sta. 914+76 Rt.

Item 622 ~ Concrete Barrier, Standard Type D

914+76 - 914+25 - 10.0* = 41.0 Lin. Ft.

(D-54) Sta. 914+53 Rt.

Item 604 ~ Manhole, Type 3 1 Each

(GR-1) Sta. 912+00 to Sta. 912+76 (Rt.)

Item 202 ~ Guardrail Removed for Storage

77.0 Lin. Ft.

Item 606 ~ Guardrail, Type 5

77.00 Lin. Ft.

(GR-2) Sta. 912+76 to Sta. 916+49 (Rt.)

Item 606 ~ Guardrail Rebuilt, Type 5, as per plan

380.00 Lin. Ft.

(GR-3) Sta. 916+49 to Sta. 916+68 (Rt.)

Item 202 ~ Guardrail Removed for Storage

19.0 Lin. Ft.

Item 606 ~ Guardrail, Type 5

19.0 - 12.5 = 6.50 Lin. Ft.

Item 606 ~ Anchor Assembly, Standard Type T

1 Each

(R-1) Sta. 912+00 to Sta. 915+62 (Lt)

Item 202 ~ Curb Removed

362.0 Lin. Ft.

(R-2) Sta. 912+00 to Sta. 914+89.5 (Lt)

Item 202 ~ Guardrail Removed for Storage

289.5 Lin. Ft.

(R-3) Sta. 915+12 to Sta. 915+62 (Lt)

Item 202 ~ Guardrail Removed for Storage

49.0 Lin. Ft.

(R-4) Sta. 914+25 to Sta. 914+77 (Rt)

Item 202 ~ Curb Removed

52.0 Lin. Ft.

(R-5) Sta. 915+62 to Sta. 916+53 Lt.

Item 202 ~ Guardrail Removed for Storage 101.0 Lin. Ft.

PAVEMENT QUANTITY CALCULATIONS

Calc. By GW - 11-14-78
Chkd. By LDB - 11-14-78

FHWA REGION	STATE	PROJECT	
5	OHIO		

JEF-7-11.80

Sta. 681+80.42 to Sta 691+07.89

Item 301 Bituminous Aggregate Base: 702.01, AC-20 or 702.09 RT-11 or RT-12

$[(927.47 \times \frac{6.5+3.0}{2}) - (927.47 \times 3.0)][\frac{3}{12}] \div 27 =$ 15.0 Cu.Yd.

Item 304 Aggregate Base

$[(927.47 \times \frac{6.5+3.0}{2}) - (927.47 \times 3.0)][\frac{5}{12}] \div 27 =$ 25.0 Cu.Yd.

Item 310 Subbase Type I

$[(927.47 \times \frac{6.5+3.0}{2}) - (927.47 \times 3.0)][\frac{6}{12}] \div 27 =$ 30.0 Cu.Yd.

Item 409 Seal Coat Bituminous Material; applied at the rate of 0.3 Gal. per Sq. Yd.

$[(927.47 \times \frac{6.5+3.0}{2}) - (927.47 \times 3.0)] \div 9 \times 0.3 =$ 54.1 Gal.

Item 409 Seal Coat Cover Aggregate No. 8, applied at the rate of 0.008 Cu. Yd per Sq. Yd.

$[(927.47 \times \frac{6.5+3.0}{2}) - (927.47 \times 3.0)] \div 9 \times 0.008 =$ 1.4 Cu. Yd.

Sta. 804+16.97 to Sta. 809+00.00

Item 301 ~ Bituminous Aggregate Base; 702.01, AC-20 or 702.09 RT-11 or RT-12

Lt. Side: $[\frac{1}{2}(809+00 - 804+16.97)(7.5)(\frac{3}{12})] \div 27 =$ 16.8 Cu.Yd.

Rt. Side: $[\frac{1}{2}(809+00 - 804+16.97)(1.5)(\frac{3}{12})] \div 27 =$ 3.4 Cu.Yd.

Total: 20.2 Cu.Yd.

Item 304 ~ Aggregate Base

Lt. Side: $[\frac{1}{2}(809+00 - 804+16.97)(7.5)(\frac{5}{12})] \div 27 =$ 28.0 Cu.Yd.

Rt. Side: $[\frac{1}{2}(809+00 - 804+16.97)(1.5)(\frac{5}{12})] \div 27 =$ 5.6 Cu.Yd.

Total: 33.6 Cu.Yd.

Item 310 ~ Subbase Type I

Lt. Side $[\frac{1}{2}(809+00 - 804+16.97)(7.5)(\frac{6}{12})] \div 27 =$ 33.5 Cu.Yd.

Rt. Side $[\frac{1}{2}(809+00 - 804+16.97)(1.5)(\frac{6}{12})] \div 27 =$ 6.7 Cu.Yd

Total: 40.2 Cu.Yd.

Item 409 ~ Seal Coat Bituminous Material; applied at the rate of 0.3 Gal per Square Yard

Lt. Side: $[\frac{1}{2}(809+00 - 804+16.97)(7.5) \div 9](0.3) =$ 60.4 Gal.

Rt. Side: $[\frac{1}{2}(809+00 - 804+16.97)(1.5) \div 9](0.3) =$ 12.1 Gal.

Total: 72.5 Gal.

Item 409 ~ Seal Coat Cover Aggregate No. 8, applied at the rate of 0.008 Cubic Yard per Sq. Yd.

Lt. Side: $[\frac{1}{2}(809+00 - 804+16.97)(7.5) \div 9](0.008) =$ 1.6 Cu.Yd.

Rt. Side: $[\frac{1}{2}(809+00 - 804+16.97)(1.5) \div 9](0.008) =$ 0.3 Cu.Yd

Total: 1.9 Cu.Yd.

Sta. 809+00 (N.B.) to Sta. 3+34 (Ramp B)

Item 301 ~ Bituminous Aggregate Base

Rt. Side: $[(817+38.22 - 809+00+180)(1.5)] + [(3+34 - 1+80)(\frac{1.5+4.625}{2})](\frac{3}{12}) \div 27 =$ 18.5 Cu.Yd.

Item 304 ~ Aggregate Base

Rt. Side: $[(817+38.22 - 809+00+180)(1.5)] + [(3+34 - 1+80)(\frac{1.5+4.625}{2})](\frac{5}{12}) \div 27 =$ 30.8 Cu.Yd.

Item 310 ~ Subbase Type I

Rt. Side: $[(817+38.22 - 809+00+180)(1.5)(\frac{6}{12})] + [(817+38.22 - 809+00+180)(3.0)(\frac{6}{12})] + [(817+38.22 - 809+00+180)(3.0)(\frac{.33}{2})] + [(3+34 - 1+80)(\frac{1.5+4.625}{2})(\frac{6}{12})] + [(3+34 - 1+80)(3)(\frac{6}{12})] + [(3+34 - 1+80)(3.0)(\frac{.33}{2})] \div 27 =$ 123.6 Cu.Yd.

Item 409 ~ Seal Coat Bituminous Material applied at the rate of 0.3 Gal. per Square Yard

Rt. Side: $[(817+38.22 - 809+00+180)(1.5) + (3+34 - 1+80)(\frac{1.5+4.625}{2})] \div 9](0.3) =$ 66.6 Gal.

Item 409 ~ Seal Coat Cover Aggregate No. 8 applied at the rate of 0.008 Cubic Yard per Square Yard.

222.0 Sq.Yd. x .008 = 1.8 Cu.Yd.

Sta. 821+40 to Sta. 822+00 S.B.

Item 404 ~ Asphalt Concrete, AC-20

$[(822+44.50 - 821+40) + (822+00 - 821+76.30)](\frac{.25+10.63}{2})(\frac{2}{12}) \div 27 =$ 4.3 Cu.Yd.

Sta. 827+00 to Sta. 830+25.51

Item 301 ~ Bituminous Aggregate Base

$[(829+75.51 - 827+00)(1.5)(3/12)] + [(830+25.51 - 829+75.51)(\frac{1.5}{2})(3/12)] \div 27 =$ 4.2 Cu.Yd.

Item 304 ~ Aggregate Base

$[(829+75.51 - 827+00)(1.5)(5/12)] + [(830+25.75 - 829+75.51)(\frac{1.5}{2})(5/12)] \div 27 =$ 7.0 Cu.Yd.

Item 310 ~ Subbase Type I

$[(829+75.51 - 827+00)(1.5)(6/12)] + [(829+75.51 - 827+00)(3.0)(6/12)] + [(829+75.51 - 827+00)(3.0)(\frac{.33}{2})] + [(830+25.51 - 829+75.51)(\frac{1.5}{2})(6/12)] + [(830+25.51 - 829+75.51)(\frac{4.42}{2})(6/12)] + [(830+25.51 - 829+75.51)(\frac{4.42}{2})(\frac{.33}{2})] \div 27 =$ 31.4 Cu.Yd.

Item 409 ~ Seal Coat Bituminous Material applied at the rate of 0.3 Gal. per Square Yard

$[(829+75.51 - 827+00)(1.5) + [830+25.51 - 829+75.51)(\frac{1.5}{2})] \div 9](0.3) =$ 15.0 Gal.

Item 409 ~ Seal Coat Cover Aggregate No. 8 applied at the rate of 0.008 Cubic Yards per Square Yard

(50.085 Sq.Yd., from preceding calc.)(0.008 Cu.Yd.) = 0.4 Cu.Yd.

STA 830+25.51 to STA 833+44

Item 310 Subbase Type I

$2[(833+44 - 830+25.51)(6/12)(3/12) \div 27] =$ 3.0 Cu.Yd.

Sta. 838+93 to Sta. 839+13

Item 402 ~ Asphalt Concrete, AC-20

$(839+13 - 838+93)(10)(\frac{1\frac{1}{2}}{12}) \div 27 =$ 0.9 Cu.Yd.

Item 404 ~ Asphalt Concrete, AC-20

$(839+13 - 838+93)(10)(\frac{1\frac{1}{2}}{12}) \div 27$ 0.9 Cu.Yd.

Item 305 ~ 9" Portland Cement Concrete Base

$(839+13 - 838+93)(10) \div 9 =$ 22.2 Sq.Yd.

Item 310 ~ Subbase Type I

$(839+13 - 838+93)(10)(\frac{6}{12}) \div 27 =$ 3.7 Cu.Yd.

Item 407 ~ Tack Coat: 702.04, SS-1, SS-1H, MS-2 or RS-1; or 702.02, RC-250, applied at a rate of 0.10 Gal per Sq.Yd.

22.2 x 0.10 = 2.2 Gal.

Item 407 ~ Cover Aggregate; applied at a rate of 7 lbs per sq.Yd.

22.2 x 7 ÷ 2000 = .08 Tons

Sta. 841+13 to Sta. 841+29

Item 402 ~ Asphalt Concrete, AC-20

$[(841+29 - 841+13)(10)](\frac{1\frac{1}{2}}{12}) \div 27 =$ 0.7 Cu.Yd.

Item 404 ~ Asphalt Concrete AC-20

$[(841+29 - 841+13)(10)(\frac{1\frac{1}{2}}{12}) \div 27 =$ 0.7 Cu.Yd.

Item 305 ~ 9" Portland Cement Concrete Base

$[(841+29 - 841+13)(10) \div 9 =$ 178 Sq.Yd.

Item 310 ~ Subbase Type I

$[(841+29 - 841+13)(10)(6/12) \div 27 =$ 3.0 Cu.Yd.

Item 407 ~ Tack Coat: 702.04, SS-1, SS-1H, MS-2 or RS-1; or 702.02, RC-250, applied at the rate of 0.10 Gal. per sq.Yd.

(17.8)(0.10) = 1.8 Gal.

Item 407 ~ Cover Aggregate applied at the rate of 7 lbs per sq.Yd.

(17.8)(7) ÷ 2000 = 0.06 Ton

STA. 841+49 TO STA. 841+53

Item 402 ~ Asphalt Concrete, AC-20

$[(841+53 - 841+49)(10)(1.5/12)] \div 27 =$ 0.2 Cu.Yd.

Item 404 ~ Asphalt Concrete, AC-20

$[(841+53 - 841+49)(10)(1.5/12)] \div 27 =$ 0.2 Cu.Yd.

Item 305 ~ 9" Portland Cement Concrete Base

$[(841+53 - 841+49)(10)] \div 9 =$ *4.4 Sq.Yd.

Item 310 ~ Subbase Type I

$[(841+53 - 841+49)(10)(6/12)] \div 27 =$ 0.7 Cu.Yd.

Item 407 ~ Tack Coat, applied at the rate of 0.1 Gal. per Square Yard

(*4.4 Sq.Yd.)(0.1 Gal) = 0.4 Gal.

Item 407 ~ Cover Aggregate, applied at the rate of 7 lbs per Square Yard

(*4.4 Sq.Yd.)(7 lbs) ÷ 2000 = 0.02 Tons

PAVEMENT QUANTITY CALCULATIONS

Calc. By LDB 11-13-78
Ch'kd. By P.H. 11-14-78

FHWA REGION	STATE	PROJECT	
5	OHIO		

25

JEF-7-11.80

STA. 844+86.0 TO STA. 848+68.7
(Left Turn Lane)

Item 402 ~ Asphalt Concrete, AC-20

$\left(\left[(846+73.2-844+86)(10)\right]+\left[(848+05.3-846+73.2)\left(\frac{10+3}{2}\right)\right]+\left[(848+68.7-848+05.3)(3)\right]\right)\left(\frac{1.5}{12}\right)\div 27=$ **13.5 Cu.Yd.**

Item 404 ~ Asphalt Concrete, AC-20

$\left(\left[(846+73.2-844+86)(10)\right]+\left[(848+05.3-846+73.2)\left(\frac{10+3}{2}\right)\right]+\left[(848+68.7-848+05.3)(3.0)\right]\right)\left(\frac{1.5}{12}\right)\div 27=$ **13.5 Cu.Yd.**

Item 305 ~ 9" Portland Cement Concrete Base

$\left(\left[(846+73.2-844+86)(10)\right]+\left[(848+05.3-846+73.2)\left(\frac{10+3}{2}\right)\right]+\left[(848+68.7-848+05.3)(3.0)\right]\right)\div 9=$ ***324.5 Sq.Yd.**

Item 310 ~ Subbase Type I

$\left(\left[(846+73.2-844+86)(10)\right]+\left[(848+05.3-846+73.2)\left(\frac{10+3}{2}\right)\right]+\left[(848+68.7-848+05.3)(3)\right]\right)\left(\frac{6}{12}\right)\div 27=$ **54.1 Cu.Yd.**

Item 407 ~ Tack Coat, applied at the rate of 0.10 gal. per square Yard.

(***324.5 Sq.Yd)(0.10 Gal) = **32.5 Gal.**

Item 407 ~ Cover Aggregate, applied at the rate of 7 lbs per Square Yard.

(***324.5 Sq.Yd)(7 lbs) ÷ 2000 = **1.14 Ton.**

STA 848+05.2 to STA 853+92.86

Item 310 ~ Subbase Type I

$2\left[(853+92.86-848+05.3)(5/12)(3/12)\div 27\right]=$ **5.4 Cu.Yd.**

STA. 853+92.86 TO STA. 860+05.2

Total Area: $\left[(857+31.34-853+92.86)\left(\frac{4+14}{2}\right)\right]+\left[(858+00-857+31.34)(14)\right]+\left[(860+05.2-858+00)\left(\frac{14+6.1}{2}\right)\right]=6069.8$ Sq.Ft.

Barrier Area $\left[(856+78-853+92.86)(3)\right]+\left[(857+48-856+78)\left(\frac{3.0+6.6}{2}\right)\right]+\left[(857+94-857+48)(6.6)\right]+\left[(858+64-857+94)\left(\frac{6.6+3.0}{2}\right)\right]+\left[(860+05.2-858+64)(3.0)\right]=$ 2254.6 Sq.Ft.

Area for Pavement Calculations

6069.8 − 2254.6 = **(3815.2 Sq.Ft.**

Item 301 ~ Bituminous Aggregate Base

(3815.2)(3/12) ÷ 27 = **35.3 Cu.Yd.**

Item 304 ~ Aggregate Base

(3815.2)(5/12) ÷ 27 = **58.9 Cu.Yd.**

Item 310 ~ Subbase Type I

(3815.2)(6/12) ÷ 27 = **70.7 Cu.Yd.**

Item 409 ~ Seal Coat Bituminous Material, applied at the rate of 0.3 Gal. per Square Yard

(3815.2 ÷ 9)(0.3) = **127.2 Gal.**

Item 409 ~ Seal Coat Cover Aggregate No.8, applied at the rate of 0.008 Cubic Yard per Square Yard

(3815.2 ÷ 9)(0.008) **3.4 Cu.Yd.**

STA. 860+05.2 TO STA. 860+59.77 (Lt.)

Item 301 ~ Bituminous Aggregate Base

$(860+59.77-860+05.2)\left(\frac{1.55+0.5}{2}\right)(3/12)\div 27=$ **0.5 Cu.Yd.**

Item 304 ~ Aggregate Base

$(860+59.77-860+05.2)\left(\frac{1.55+0.5}{2}\right)\left(\frac{5}{12}\right)\div 27=$ **0.9 Cu.Yd.**

Item 310 ~ Subbase Type I

$(860+59.77-860+05.2)\left(\frac{1.55+0.5}{2}\right)(6/12)\div 27=$ **1.0 Cu.Yd.**

Item 409 ~ Seal Coat Bituminous Material, applied at the rate of 0.3 Gal. per Square Yard.

$\left[(860+59.77-860+05.2)\left(\frac{1.55+0.5}{2}\right)\div 9\right](0.3)=$ **1.9 Gal.**

Item 409 ~ Seal Coat Cover Aggregate No.8, applied at the rate of 0.008 Cubic Yard per Square Yard.

$\left[(860+59.77-860+05.2)\left(\frac{1.55+0.5}{2}\right)\div 9\right](0.008)=$ **0.1 Cu.Yd.**

STA. 860+05.2 TO STA. 864+02 (Rt.)
(Left Turn Lane)

Item 402 ~ Asphalt Concrete, AC-20

$\left(\left[(860+59.77-860+05.2)\left(\frac{4.55+3.5}{2}\right)\left(\frac{1.5}{12}\right)\right]+\left[(861+59.77-860+59.77)\left(\frac{9.5+6}{2}\right)\left(\frac{1.5}{12}\right)\right]+\left[(864+02-861+59.77)(9.5)\left(\frac{1.5}{12}\right)\right]\right)\div 27=$ **15.3 Cu.Yd.**

Item 404 ~ Asphalt Concrete, AC-20

$\left(\left[(860+59.77-860+05.2)\left(\frac{4.55+3.5}{2}\right)\left(\frac{1.5}{12}\right)\right]+\left[(861+59.77-860+59.77)\left(\frac{9.5+6}{2}\right)\left(\frac{1.5}{12}\right)\right]+\left[(864+02-861+59.77)(9.5)\left(\frac{1.5}{12}\right)\right]\right)\div 27=$ **15.3 Cu.Yd.**

Item 305 ~ 9" Portland Cement Concrete Base

$\left[(860+59.77-860+05.2)\left(\frac{4.55+3.5}{2}\right)\right]+\left[(861+13.00-860+59.77)\left(\frac{8.9+6}{2}\right)\right]+\left[(862+46.0-861+13.0)(12.5)\right]+\left[(864+02-862+46)(10)\right]\div 9=$ **426.5 Sq.Yd.**

Item 310 ~ Subbase Type I

$\left\{\left[(860+59.77-860+05.2)\left(\frac{4.55+3.5}{2}\right)\right]+\left[(861+13.00-860+59.77)\left(\frac{8.9+6}{2}\right)\right]+\left[(862+46-861+13.00)(12.5)\right]+\left[(864+02-862+46)(10)\right]\right\}(6/12)\div 27=$ **71.1 Cu.Yd.**

Item 407 ~ Tack Coat, applied at the rate of 0.10 Gal. per Square Yard.

(**366.2 Sq.Yd)(0.10 Gal) = **36.6 Gal.**

Item 407 ~ Cover Aggregate, applied at the rate of 7 lbs. per Square Yard.

(**366.2 Sq.Yd.)(7 lbs) ÷ 2000 = **1.28 Ton.**

STA. 864+87.0 TO STA. 867+94.1
(Left Turn Lane)

Item 402 ~ Asphalt Concrete AC-20

$\left(\left[(865+87.0-864+87.0)(9.5)\left(\frac{1.5}{12}\right)\right]+\left[(867+21-865+87)\left(\frac{9.5+6}{2}\right)\left(\frac{1.5}{12}\right)\right]+\left[(867+94.1-867+21)(3.0)\left(\frac{1.5}{12}\right)\right]\right)\div 27=$ **10.2 Cu.Yd.**

Item 404 ~ Asphalt Concrete, AC-20

$\left(\left[(865+87-864+87)(9.5)\left(\frac{1.5}{12}\right)\right]+\left[(867+21-865+87)\left(\frac{9.5+6}{2}\right)\left(\frac{1.5}{12}\right)\right]+\left[(867+94.1-867+21)(3.0)\left(\frac{1.5}{12}\right)\right]\right)\div 27=$ **10.2 Cu.Yd.**

Item 305 ~ 9" Portland Cement Concrete Base

$\left(\left[(865+87-864+87)(10)\right]+\left[(867+21-865+87)\left(\frac{10+6}{2}\right)\right]+\left[(867+94.1-867+21)(3.0)\right]\right)\div 9=$ ***234.6 Sq.Yd.**

Item 310 ~ Subbase, Type I

$\left(\left[(865+87-864+87)(10)(6/12)\right]+\left[(867+21-865+87)\left(\frac{10.0+6.0}{2}\right)\left(\frac{6}{12}\right)\right]+\left[(867+94.1-867+21)(3.0)\left(\frac{6}{12}\right)\right]\right)\div 27=$ **42.4 Cu.Yd.**

Item 407 ~ Tack Coat, applied at the rate of 0.10 gal. per Square Yard

(***245.3 Sq Yd)(0.10 Gal) = **24.5 Gal.**

Item 407 ~ Cover Aggregate, applied at the rate of 7 lbs per Square Yard.

(***245.3 Sq Yd.)(7 lbs) ÷ 2000 = **0.86 Ton.**

STA. 867+94.1 TO STA. 876+55

Item 310 ~ Subbase Type I

$2\left[(876+55-867+94.1)\left(\frac{3}{12}\right)\left(\frac{6}{12}\right)\div 27\right]=$ **8.0 Cu.Yd.**

STA. 877+20 TO STA. 877+27.13

Item 310 ~ Subbase Type I

$2\left[(877+27.13-877+20)\left(\frac{3}{12}\right)\left(\frac{6}{12}\right)\div 27\right]=$ **0.1 Cu.Yd.**

STA. 877+27.13 TO STA. 880+12

Item 310 ~ Subbase Type I

$\left[(880+12-877+27.13)\left(\frac{3}{12}\right)\left(\frac{6}{12}\right)\div 27\right]=$ **1.3 Cu.Yd.**

PAVEMENT QUANTITY CALCULATIONS

Calc. By G.W. - 11-14-78
Chkd. By RaM - 11-15-78

FHWA REGION	STATE	PROJECT	
5	OHIO		

26

JEF-7-11.80

STA. 875+65.2 TO STA. 880+24.0
Left Turn Lane

Item 402 ~ Asphalt Concrete, AC-20

$\left(\left[(877+27.13 - 875+65.2 - 65.0')(3.0)\left(\frac{1.5}{12}\right)\right] + \left[(880+24 - 877+27.13)\left(\frac{3.0+12.0}{2}\right)\left(\frac{1.5}{12}\right)\right]\right) \div 27 =$ 11.7 Cu.Yd.

Item 404 ~ Asphalt Concrete, AC-20

$\left(\left[(877+27.13 - 875+65.2 - 65.0)(3.0)\left(\frac{1.5}{12}\right)\right] + \left[(880+24 - 877+27.13)\left(\frac{3.0+12.0}{2}\right)\left(\frac{1.5}{12}\right)\right]\right) \div 27 =$ 11.7 Cu.Yd.

Item 305 ~ 9" Portland Cement Concrete Base

$\left(\left[(877+27.13 - 875+65.2 - 65.0)(3.0)\right] + \left[(880+24 - 877+27.13)\left(\frac{3.0+12.0}{2}\right)\right]\right) \div 9 =$ $^{+}$279.7 Sq.Yd.

Item 310 ~ Subbase Type I

$\left(\left[(877+27.13 - 875+65.2 - 65.0)(3.0)\left(\frac{6}{12}\right)\right] + \left[(880+24 - 877+27.13)\left(\frac{3.0+12.0}{2}\right)\left(\frac{6}{12}\right)\right]\right) \div 27 =$ 46.6 Cu.Yd.

Item 407 ~ Tack Coat, applied at the rate of 0.10 Gal. per Square Yard

($^{+}$279.7 Sq Yd.) (0.10 Gal) = 28.0 Gal.

Item 407 ~ Cover Aggregate, applied at the rate of 7 lbs. per Square Yard.

($^{+}$279.7 Sq Yd.)(7 lbs) ÷ 2000 = 0.98 Ton.

STA. 881+13.0 TO STA. 885+29.1

Item 402 ~ Asphalt Concrete, AC-20

$\left((884+20 - 881+13)(12.0)\left(\frac{1.5}{12}\right)\right] + \left[(885+20 - 884+20)\left(\frac{12.0+1.0}{2}\right)\left(\frac{1.5}{12}\right)\right] + \left[(885+29.1 - 885+20)(1.0)\left(\frac{1.5}{12}\right)\right]\right) \div 27 =$ 20.1 Cu.Yd.

Item 404 ~ Asphalt Concrete, AC-20

$\left(\left[(884+20 - 881+13)(12.0)\left(\frac{1.5}{12}\right)\right] + \left[(885+20 - 884+20)\left(\frac{12.0+1.0}{2}\right)\left(\frac{1.5}{12}\right)\right] + \left[(885+29.1 - 885+20)(1.0)\left(\frac{1.5}{12}\right)\right]\right) \div 27 =$ 20.1 Cu.Yd.

Item 305 ~ 9" Portland Cement Concrete Base

$\left(\left[(884+20 - 881+13)(12.0)\right] + \left[(885+20 - 884+20)\left(\frac{12.0+1.0}{2}\right)\right] + \left[(885+29.1 - 885+20)(1.0)\right]\right) \div 9 =$ $^{\#}$482.6 Sq. Yd.

Item 310 ~ Subbase Type I

$\left(\left[(884+20 - 881+13)(12.0)\left(\frac{6}{12}\right)\right] + \left[(885+20 - 884+20)\left(\frac{12.0+1.0}{2}\right)\left(\frac{6}{12}\right)\right] + \left[(885+29.1 - 885+20)(1.0)\left(\frac{6}{12}\right)\right]\right) \div 27 =$ 80.4 Cu.Yd.

Item 407 ~ Tack Coat, applied at the rate of 0.10 Gal per Square Yard.

($^{\#}$482.6 Sq Yd)(0.10 Gal) = 48.3 Gal.

Item 407 ~ Cover Aggregate, applied at the rate of 7 lbs. per Square Yard.

($^{\#}$482.6 Sq.Yd.)(7 lbs) ÷ 2000 = 1.69 Ton.

STA. 881+21 TO STA. 884+42 (Rt.)

Item 310 ~ Subbase Type I

$(884+42 - 881+21)\left(\frac{3}{12}\right)\left(\frac{6}{12}\right) \div 27 =$ 1.5 Cu.Yd.

STA. 885+05 TO STA. 889+45

Item 310 ~ Subbase Type I

$(889+45 - 885+05)\left(\frac{3}{12}\right)\left(\frac{6}{12}\right) \div 27 =$ 2.0 Cu.Yd.

STA. 884+10.9 TO STA. 889+56 (Lt.)
Left Turn Lane

Item 402 ~ Asphalt Concrete, AC-20

$\left(\left[(884+20 - 884+10.9)(1.0)\left(\frac{1.5}{12}\right)\right] + \left[(885+20 - 884+20)\left(\frac{1.0+12.0}{2}\right)\left(\frac{1.5}{12}\right)\right] + \left[(889+56 - 885+20)(12.0)\left(\frac{1.5}{12}\right)\right]\right) \div 27 =$ 27.3 Cu.Yd.

Item 404 ~ Asphalt Concrete, AC-20

$\left(\left[(884+20 - 884+10.9)(1.0)\left(\frac{1.5}{12}\right)\right] + \left[(885+20 - 884+20)\left(\frac{1.0+12.0}{2}\right)\left(\frac{1.5}{12}\right)\right] + \left[(889+56 - 885+20)(12.0)\left(\frac{1.5}{12}\right)\right]\right) \div 27 =$ 27.3 Cu.Yd.

Item 305 ~ 9" Portland Cement Concrete Base

$\left(\left[(884+20 - 884+10.9)(1.0)\right] + \left[(885+20 - 884+20)\left(\frac{1.0+12.0}{2}\right)\right] + \left[(889+56 - 885+20)(12.0)\right]\right) \div 9 =$ $^{\#\#}$654.6 Sq. Yd.

Item 310 ~ Subbase Type I

$\left(\left[(884+20 - 884+10.9)(1.0)\left(\frac{6}{12}\right)\right] + \left[(885+20 - 884+20)\left(\frac{1.0+12.0}{2}\right)\left(\frac{6}{12}\right)\right] + \left[(889+56 - 885+20)(12.0)\left(\frac{6}{12}\right)\right]\right) \div 27 =$ 109.1 Cu.Yd.

Item 407 ~ Tack Coat, applied at the rate of 0.10 Gal per Square Yard.

($^{\#\#}$654.6 Sq.Yd.)(0.10 Gal) = 65.5 Gal.

Item 407 ~ Cover Aggregate, applied at the rate of 7 lbs per Square Yard.

($^{\#\#}$654.6 Sq.Yd)(7 lbs) ÷ 2000 = 2.29 Ton.

STA. 890+36 TO STA. 897+34.1

Item 402 ~ Asphalt Concrete, AC-20

$\left(\left[(892+71.23 - 890+36)(2.0)(1.5/12)\right] + \left[(894+42 - 892+71.23)\left(\frac{2.0+9.0}{2}\right)(1.5/12)\right] + \left[(896+25 - 894+42)(9.0)(1.5/12)\right] + \left[(897+25 - 896+25)\left(\frac{12+1}{2}\right)(1.5/12)\right] + \left[(897+34.1 - 897+25)(1.0)(1.5/12)\right] + \left[(896+25 - 894+52)(3.0)(1.5/12)\right]\right) \div 27 =$ 19.6 Cu.Yd

Item 404 ~ Asphalt Concrete, AC-20

$\left(\left[(892+71.23 - 890+36)(2.0)(1.5/12)\right] + \left[(894+42 - 892+71.23)\left(\frac{2.0+9.0}{2}\right)(1.5/12)\right] + \left[(896+25 - 894+42)(9.0)(1.5/12)\right] + \left[(897+25 - 896+25)\left(\frac{12+1}{2}\right)(1.5/12)\right] + \left[(897+34.1 - 897+25)(1.0)(1.5/12)\right] + \left[(896+25 - 894+52)(3.0)(1.5/12)\right]\right) \div 27 =$ 19.6 Cu.Yd

Item 305 ~ 9" Portland Cement Concrete Base

$\left(\left[(892+71.23 - 890+36)(2.0)\right] + \left[(894+42 - 892+71.23)\left(\frac{2.0+9.0}{2}\right)\right] + \left[(896+25 - 894+42)(9.0)\right] + \left[(897+25 - 896+25)\left(\frac{12.0+1.0}{2}\right)\right] + \left[(897+34.1 - 897+25)(1.0)\right] + \left[(896+25 - 894+52)(3.0)\right]\right) \div 9 =$ $^{\times}$470.5 Sq.Yd.

Item 310 ~ Subbase Type I

$\left(\left[(892+71.23 - 890+36)(2.0)(6/12)\right] + \left[(894+42 - 892+71.23)\left(\frac{2.0+9.0}{2}\right)(6/12)\right] + \left[(896+25 - 894+42)(9.0)(6/12)\right] + \left[(897+25 - 896+25)\left(\frac{12.0+1.0}{2}\right)(6/12)\right] + \left[(897+34.1 - 897+25)(1.0)(6/12)\right] + \left[(896+25 - 894+52)(3.0)(6/12)\right]\right) \div 27 =$ 78.4 Cu.Yd.

Item 407 ~ Tack Coat, applied at the rate of 0.10 Gal. per Square Yard.

($^{\times}$470.5 Sq.Yd) (0.10 Gal) 47.1 Gal.

Item 407 ~ Cover Aggregate, applied at the rate of 7 lbs. per Square Yard.

($^{\times}$470.5 Sq.Yd)(7 lbs) ÷ 2000 = 1.65 Ton.

STA. 890+36 TO 896+37 (Rt.)

Item 310 ~ Subbase Type I

$(896+37 - 890+36)\left(\frac{3}{12}\right)\left(\frac{6}{12}\right) \div 27 =$ 2.8 Cu.Yd.

STA. 896+15.9 TO STA. 900+94

Item 402 ~ Asphalt Concrete, AC-20

$\left[(896+25.00 - 896+15.9)(1)\left(\frac{1.5}{12}\right) + (896+61.23 - 896+25.00)\right] + \left[(1084.0\ ^{\blacksquare})\left(\frac{1.5}{12}\right) + (900+94 - 898+00)(2.0)\left(\frac{1.5}{12}\right)\right] \div 27 =$ 8.5 Cu.Yd.

Item 404 ~ Asphalt Concrete, AC-20

$\left[(896+25.00 - 896+15.9)(1)\left(\frac{1.5}{12}\right) + (896+61.23 - 896+25.00)\left(\frac{1.0+1}{2}\right)\left(\frac{1.5}{12}\right)\right] + \left[(1084.0\ ^{\blacksquare})\left(\frac{1.5}{12}\right) + (900+94 - 898+00)(2.0)\left(\frac{1.5}{12}\right)\right] \div 27 =$ 8.5 Cu.Yd.

Item 305 ~ 9" Portland Cement Concrete Base

$\left[(896+25.00 - 896+15.9)(1) + (896+61.23 - 896+25.00)\left(\frac{1.0+1}{2}\right)\right] + (1084.0\ ^{\blacksquare}) + \left[(900+94 - 898+00)(2)\right] \div 9 =$ 202.9 Sq. Yd.

Item 310 ~ Subbase Type I

$\left[(896+25.00 - 896+15.9)(1)\left(\frac{6}{12}\right) + (896+61.23 - 896+25.00)\left(\frac{1.0+1}{2}\right)\left(\frac{6}{12}\right)\right] + (1084.0\ ^{\blacksquare})\left(\frac{6}{12}\right) + \left[(900+94 - 898+00)(2)\left(\frac{6}{12}\right)\right] \div 27 =$ 33.8 Cu.Yd.

Item 407 ~ Tack Coat, applied at the rate of 0.10 Gal. per Sqare Yard.

(202.9 Sq. Yd.) (0.10 Gal.) = 20.3 Gal

Item 407 ~ Cover Aggregate, applied at the rate of 7 lbs per Sqare Yard

(202.9 Sq. Yd.)(7 lbs.) ÷ 2000 = 0.71 Tons

$^{\blacksquare}$ Planimeter Area from Sta. 896+61.23 to Sta. 898+00.

STA. 896+95 TO STA. 900+94

Item 310 ~ Subbase Type I

$(900+94 - 896+95)\left(\frac{6}{12}\right)\left(\frac{3}{12}\right) \div 27 =$ 1.8 Cu.Yd.

PAVEMENT QUANTITY CALCULATIONS

Calc. By GW 11-14-78
Chk'd. By LDB 11-15-78

FHWA REGION	STATE	PROJECT	
5	OHIO		

27

JEF-7-11.80

STA. 901+68 TO STA. 906+25 (Rt.)

Item 402 ~ Asphalt Concrete AC-20

$\left(\left[(268.0\,\boxtimes)\left(\frac{1.5}{12}\right)\right]+\left[(904+50-902+04)\left(\frac{10.4+6.5}{2}\right)\left(\frac{1.5}{12}\right)\right]+\left[(906+25-904+50)(6.5)\left(\frac{1.5}{12}\right)\right]\right)\div 27=$ 16.1 Cu.Yd.

Item 404 ~ Asphalt Concrete, AC-20

$\left(\left[(268.0\,\boxtimes)\left(\frac{1.5}{12}\right)\right]+\left[(904+50-902+04)\left(\frac{10.4+6.5}{2}\right)\left(\frac{1.5}{12}\right)\right]+\left[(906+25-904+50)(6.5)\left(\frac{1.5}{12}\right)\right]\right)\div 27=$ 16.1 Cu.Yd.

Item 305 ~ 9" Portland Cement Concrete Base

$\left[(268.0\,\boxtimes)\right]+\left[(904+50-902+04)\left(\frac{10.4+6.5}{2}\right)\right]+\left[(906+25-904+50)(6.5)\right]\right)\div 9=$ 387.1 Sq.Yd.

Item 310 ~ Subbase Type I

$\left(\left[(268.0\,\boxtimes)\left(\frac{6}{12}\right)\right]+\left[(904+50-902+04)\left(\frac{10.4+6.5}{2}\right)\left(\frac{6}{12}\right)\right]+\left[(906+25-904+50)(6.5)\left(\frac{6}{12}\right)\right]\right)\div 27=$ 64.5 Cu.Yd.

Item 407 ~ Tack Coat, applied at the rate of 0.10 Gal. per Square Yard

(387.1 Sq.Yd.)(0.10 Gal) = 38.7 Gal.

Item 407 ~ Cover Aggregate, applied at the rate of 7 lbs per Square Yard.

(387.1 Sq.Yd.)(7 lbs) ÷ 2000 = 1.35 Ton.

STA 901+75 TO STA. 902+75

Item 310 ~ Subbase Type I

$(902+75-901+75)\left(\frac{3}{12}\right)\left(\frac{6}{12}\right)\div 27$ 0.5 Cu.Yd.

⊠ Planimeter Area from Sta. 901+68 to Sta. 902+04

STA. 902+75 TO STA. 907+10.7 (Lt.)

Item 301 ~ Bituminous Aggregate Base

$\left(\left[(904+50-902+75)\left(\frac{3.5}{2}\right)\left(\frac{3}{12}\right)\right]+\left[(907+10.7-904+50)(3.5)\left(\frac{3}{12}\right)\right]\right)\div 27=$ 11.3 Cu.Yd.

Item 304 ~ Aggregate Base

$\left(\left[(904+50-902+75)\left(\frac{3.5}{2}\right)\left(\frac{5}{12}\right)\right]+\left[(907+10.7-904+50)(3.5)\left(\frac{5}{12}\right)\right]\right)\div 27=$ 18.8 Cu.Yd.

Item 310 ~ Subbase Type I

$\left(\left[(904+50-902+75)\left(\frac{3.5}{2}\right)\left(\frac{6}{12}\right)\right]+\left[(907+10.7-904+50)(3.5)\left(\frac{6}{12}\right)\right]\right)\div 27=$ 22.6 Cu.Yd.

Item 409 ~ Seal Coat Bituminous Material, applied at the rate of 0.3 Gal. per Square Yard.

$\left(\left[(904+50-902+75)\left(\frac{3.5}{2}\right)\right]+\left[(907+10.7-904+50)(3.5)\right]\right)\div 9=$ 135.41 Sq.Yd.

(135.41 Sq.Yd)(0.3 Gal) = 40.6 Gal.

Item 409 ~ Seal Coat Cover Aggregate No.8, applied at the rate of 0.008 Cubic Yard per Square Yard

(135.41 Sq.Yd)(0.008 Cu.Yd.) = 1.1 Cu.Yd.

STA. 906+25 TO STA. 907+10.7 Rt.

Item 301 ~ Bituminous Aggregate Base

$\left[(907+10.7-906+25)(3.5)\left(\frac{3}{12}\right)\right]\div 27=$ 2.8 Cu.Yd.

Item 304 ~ Aggregate Base

$\left[(907+10.7-906+25)(3.5)\left(\frac{5}{12}\right)\right]\div 27=$ 4.6 Cu.Yd.

Item 310 ~ Subbase Type I

$\left[(907+10.7-906+25)(3.5)\left(\frac{6}{12}\right)\right]\div 27=$ 5.6 Cu.Yd.

Item 409 ~ Seal Coat Bituminous Material, applied at the rate of 0.3 Gal. per Square Yard.

$\left[(907+10.7-906+25)(3.5)\right]\div 9=$ 33.33 Sq.Yd.

(33.33 Sq.Yd.)(0.3 Gal.) = 10.0 Gal.

Item 409 ~ Seal Coat Cover Aggregate No.8 applied at the rate of 0.008 Cubic Yard per Square Yard.

(33.33 Sq.Yd.)(0.008 Cu.Yd) = 0.3 Cu.Yd.

STA. 907+10.7 TO STA. 909+02.3 (Rt.)

Item 301 ~ Bituminous Aggregate Base

$\left(\left[(907+57.4-907+10.7)\left(\frac{3.5+2.57}{2}\right)\left(\frac{3}{12}\right)\right]+\left[(909+02.3-907+57.4)\left(\frac{2.57}{2}\right)(3/12)\right]\right)\div 27=$ 3.0 Cu.Yd.

Item 304 ~ Aggregate Base

$\left(\left[(907+57.4-907+10.7)\left(\frac{3.5+2.57}{2}\right)(5/12)\right]+\left[(909+02.3-907+57.4)\left(\frac{2.57}{2}\right)(5/12)\right]\right)\div 27=$ 5.1 Cu.Yd.

Item 310 ~ Subbase Type I

$\left(\left[(907+57.4-907+10.7)\left(\frac{3.5+2.57}{2}\right)(6/12)\right]+\left[(909+02.3-907+57.4)\left(\frac{2.57}{2}\right)(6/12)\right]\right)\div 27=$ 6.1 Cu.Yd.

Item 409 ~ Seal Coat Bituminous Material, applied at the rate of 0.3 Gal. per Square Yard.

$\left(\left[(907+57.4-907+10.7)\left(\frac{3.5+2.57}{2}\right)\right]+\left[(909+02.3-907+57.4)\left(\frac{2.57}{2}\right)\right]\right)\div 9=$ 36.44 Sq.Yd.

(36.44 Sq.Yd.)(0.3 Gal) = 10.9 Gal.

Item 409 ~ Seal Coat Cover Aggregate No.8, applied at the rate of 0.008 Cubic Yard per Square Yard.

(36.44 Sq.Yd.)(0.008 Cu.Yd) = 0.3 Cu.Yd.

STA. 907+10.7 TO STA. 915+62 (Lt.)

Item 301 ~ Bituminous Aggregate Base

$\left(\left[(908+75-907+10.7)\left(\frac{3.5+1.5}{2}\right)(3/12)\right]+\left[(915+62-908+75)(1.5)(3/12)\right]\right)\div 27=$ 13.3 Cu.Yd.

Item 304 ~ Aggregate Base

$\left(\left[(908+75-907+10.7)\left(\frac{3.5+1.5}{2}\right)(5/12)\right]+\left[(915+62-908+75)(1.5)(5/12)\right]\right)\div 27=$ 22.2 Cu.Yd.

Item 310 ~ Subbase Type I

$\left(\left[(908+75-907+10.7)\left(\frac{3.5+1.5}{2}\right)(6/12)\right]+\left[(915+62-908+75)(1.5)(6/12)\right]\right)\div 27=$ 26.7 Cu.Yd.

Item 409 ~ Seal Coat Bituminous Material, applied at the rate of 0.3 Gal. per Square Yard.

$\left(\left[(908+75-907+10.7)\left(\frac{3.5+1.5}{2}\right)\right]+\left[(915+62-908+75)(1.5)\right]\right)\div 9=$ 160.14 Sq.Yd.

(160.14 Sq.Yd)(0.3 Gal) = 48.0 Gal.

Item 409 ~ Seal Coat Cover Aggregate No.8, applied at the rate of 0.008 Cubic Yard per Square Yard.

(160.14 Sq.Yd.)(0.008) = 1.3 Cu.Yd.

STA. 914+25 TO STA. 914+77.5 Rt.

Item 301 ~ Bituminous Aggregate Base

$\left[(914+77.5-914+25)(1.5)(3/12)\right]\div 27=$ 0.7 Cu.Yd.

Item 304 ~ Aggregate Base

$\left[(914+77.5-914+25)(1.5)(5/12)\right]\div 27=$ 1.2 Cu.Yd.

Item 310 ~ Subbase Type I

$\left[(914+77.5-914+25)(1.5)(6/12)\right]\div 27=$ 1.5 Cu.Yd.

Item 409 ~ Seal Coat Bituminous Material, applied at the rate of 0.3 Gal. per Square Yard.

$\left[(914+77.5-914+25)(1.5)\right]\div 9=$ 8.75 Sq.Yd.

(8.75 Sq.Yd.)(0.3 Gal) = 2.6 Gal.

Item 409 ~ Seal Coat Cover Aggregate No.8, applied at the rate of 0.008 Cubic Yard per Square Yard.

(8.75 Sq.Yd)(0.008 Cu.Yd) = 0.1 Cu.Yd.

PAVEMENT QUANTITY CALCULATIONS

Calc. By G.W. 11-15-78
Chk'd By P.H. 11-16-78

FHWA REGION	STATE	PROJECT	
5	OHIO		

28

JEF-7-11.80

Item 203 Linear Grading Method 1

	Lin. Ft.	Mi
S.R.-7, rt		
Sta 841+59.5 to Sta 842+30	70.5	0.013
S.R.-7, ℄		
Sta 844+86 to Sta 848+05.3	319.3	0.060
S.R.-7, ℄		
Sta 853+92.86 to Sta 864+02	1009.14	0.191
S.R.-7, ℄		
Sta 864+87 to Sta 867+21	234	0.044
Sta 877+27.13 to Sta 880+24	296.87	0.056
Sta 881+13 to Sta 889+56	843	0.160
Sta 890+36 to Sta 900+94	1058	0.200
Sta 901+75 to Sta 916+68	1493	0.283
Total Method 1		
City of Steubenville	Total	1.007

Item 203 Linear Grading Method 2

	Lin. Ft.	Mi
Ramp A, lt.		
Sta 65+28 to Sta 67+88.96	260.96	0.049
Sta 63+29.63 to Sta 62+20	109.63	0.021
Ramp B, rt.		
Sta 62+25.35 to Sta 67+00	474.65	0.090
S.R. 7, lt.		
Sta 670+00 to Sta 673+10	310	0.059
Sta 681+75 to Sta 683+25	150	0.028
S.R. 7, rt.		
Sta 681+65 to Sta 685+00	335	0.063
Sta 698+85 to Sta 699+60	75	0.014
Sta 700+67.5 to Sta 701+80	112.5	0.021
S.R. 7, lt.		
Sta 687+30 to Sta 688+80	150	0.028
Sta 697+24 to Sta 697+61.5	37.5	0.007
Sta 699+04 to Sta 699+41.5	37.5	0.007
Sta 701+57 to Sta 701+82	25.0	0.005
Sta 712+06 to Sta 713+06	100.0	0.019
Sta 714+77 to Sta 716+80	203	0.038
S.R. 7, rt.		
Sta 705+27 to Sta 706+76	149	0.028
Sta 707+60 to Sta 712+72.5	512.5	0.097
Sta 714+43 to Sta 723+48	905	0.171
Ramp C, rt.		
Sta 6+78.33 to Sta 10+10	331.67	0.063
Ramp D, rt.		
Sta 726+35 to Sta 732+08	573	0.109
S.R. 7, rt.		
Sta 732+08 to Sta 770+76	3868	0.733
Subtotal State	11,216.91	2.124
S.R. 7, rt		
Sta 770+76 to Sta 792+66.5	2190.5	0.415
Sta 793+34 to Sta 809+65	1631	0.309
Sta 820+16 to Sta 827+36.5	720.5	0.136
S.R. 7, lt		
Sta 810+68 to Sta 811+55.5	87.5	0.017
Sta 821+01 to Sta 822+45.35	144.35	0.027
Sta 822+25 to Sta 827+00	475	0.090
S.R. 7, rt.		
Sta 845+10 to Sta 860+31	1521	0.288
Sta 869+75 to Sta 871+40	175	0.033
Sta 874+67 to Sta 876+29.5	162.5	0.031
Sta 893+19 to Sta 901+94	875	0.166
Sta 902+06 to Sta 912+76	1070	0.203
Sta 916+49 to Sta 916+68	19	0.004
Subtotal City of Steubenville	9071.3	1.718
S.R. 7, rt		
Sta 792+66.5 to Sta 793+34.5	68	0.013
Subtotal State	68	0.013
Total Method 2		
Mingo Junction	3754.5	0.711
State	11,284.9	2.137
Steubenville	9,071.3	1.718

Item 203 Linear Grading Method 2

	Lin. Ft.	Mi
S.R. 7, rt.		
Sta 622+84 to Sta 627+84	500	0.095
S.R.-7, lt.		
Sta 625+04 to Sta 628+04	300	0.057
Sta 630+19 to Sta 633+06.5	287.5	0.054
S.R.-7, rt.		
Sta 630+01 to Sta 638+13.5	812.5	0.154
Ramp B, rt.		
Sta 629+97 to Sta 632+97	300	0.057
Ramp C, lt.		
Sta 26+60 to Sta 27+75	115	0.022
Ramp C, rt.		
Sta 26+80 to Sta 33+00	620	0.117
S.R.-7, rt.		
Sta 641+95 to Sta 648+13	618	0.117
S.R.-7, lt.		
Sta 644+50 to Sta 646+00	150	0.028
Sta 653+34.5 to Sta 653+86	51.5	0.010
Subtotal Mingo Junction	3754.5	0.711
S.R.-7, rt.		
Sta 648+13 to Sta 654+20	607	0.115
Sta 655+77.5 to Sta 656+52.5	75	0.014
S.R.-7, lt.		
Sta 653+86 to Sta 654+22	36	0.007
Sta 655+77.5 to Sta 656+77.5	100	0.019
S.R.-7, rt.		
Sta 668+39.3 to Sta 669+53.2	113.9	0.022
Sta 657+38.9 to Sta 657+75	36.1	0.007
S.R.-7, lt.		
Sta 658+79 to Sta 664+43	564	0.107
S.R.-7, rt.		
Sta 663+38 to Sta 673+03	965	0.183

Item 203 Linear grading Method 3

	Lin. ft.	Mi
Ramp A, lt.		
Sta 620+00 to Sta 628+77	877	0.166
Ramp A, rt.		
Sta 620+00 to Sta 628+83	883	0.167
Ramp D, lt.		
Sta 622+80 to Sta 628+30	550	0.104
Ramp D, rt.		
Sta 622+80 to Sta 628+10	530	0.100
Ramp C, lt.		
Sta 27+75 to Sta 36+00	825	0.156
S.R.-7, lt.		
Sta 636+00 to Sta 644+50	850	0.161
Ramp B, lt.		
Sta 629+80 to Sta 645+25	1545	0.293
Ramp B, rt.		
Sta 632+97 to Sta 641+95	898	0.170
S.R 7, rt		
Sta 638+13.5 to Sta 644+00	586.5	0.111
S.R. 7, lt.		
Sta 646+00 to Sta 653+34.5	734.5	0.139
Subtotal Mingo Junction	8279	1.568
S.R.-7, rt.		
Sta 656+52.5 to Sta 668+39.3	1186.8	0.225
S.R.-7, lt.		
Sta 656+77.5 to Sta 669+53.2	1275.7	0.242
Sta 657+38.9 to Sta 658+79	140.1	0.027
Ramp C,		
Sta 669+75 to Sta 672+40	256	0.048
Ramp D		
Sta 658+76.54 to Sta 663+38	461.46	0.087
Ramp A-B, rt.		
Sta 62+20 to Sta 55+77.93 +97.2	739.27	0.140
Ramp A-B, lt.		
Sta 62+25.35 to Sta 55+41 +60.52'	744.87	0.141
S.R. 7, lt.		
Sta 683+25 to Sta 685+00	175	0.033
Sta 685+00 to Sta 687+30	230	0.044
Sta 688+80 to Sta 697+24	844	0.160
S.R. 7, rt		
Sta 691+85 to Sta 696+50	465	0.088
Sta 699+60 to Sta 700+67.5	107.5	0.020
S.R. 7, lt.		
Sta 699+66.5 to Sta 701+57	190.5	0.036
Sta 706+84 to Sta 709+60	276	0.052
Sta 709+60 to Sta 712+06	246	0.047
Ramp A, lt.		
Sta 9+60 to Sta 13+95	435	0.082
Ramp A, rt.		
Sta 9+60 to Sta 13+95	435	0.082
Ramp C, rt.		
Sta 10+10 to Sta 12+60	250	0.047
Ramp C, lt.		
Sta 7+60 to Sta 13+20	560	0.107
Ramp B, lt.		
Sta 15+00 to Sta 17+73	285	0.054
Ramp B, rt.		
Sta 15+00 to Sta 17+70	245	0.046
S.R. 7, lt.		
Sta 717+55 to 770+92	5337	1.011
Subtotal State	14,885.2	2.819
S.R. 7, lt.		
Sta 770+92 to Sta 791+42	2050	0.388
Subtotal City of Steubenville	2,050	0.388

Item 203 Linear Grading Method 3

	Lin. ft.	Mi
S.R. 7, lt.		
Sta 791+42 to Sta 796+33	491	0.093
Subtotal State	491	0.093
S.R. 7, lt.		
Sta 796+33 to Sta 810+68	1435	0.272
Sta 811+55.5 to Sta 811+81	25.5	0.005
S.R. 7, rt		
Sta 809+65 to Sta 820+16	1051	0.199
Sta 912+76 to Sta 916+49	373	0.071
Subtotal City of Steubenville	2884.5	0.546
Total Method 3		
Mingo Junction	8279	1.568
State	15,376.2	2.912
Steubenville	4,934.5	0.934

Item 203 Linear Grading Method 4

	Lin. ft.	Mi
S.R. 151, lt.		
Sta 12+80 to Sta 13+50	70	0.013
Sta 14+00 to Sta 21+00	700	0.133
Subtotal Mingo Junction	770	0.146
Murdock Ave		
Sta 685+00 to Sta 687+75	275	0.052
Subtotal State	275	0.052
Total Method 4		
Mingo Junction	770	0.146
State	275	0.052
Steubenville	0	0

Item 659 ~ Seeding & Mulching

Note: See Linear Grading Calculations for Lengths.

	Mingo Junction	State of Ohio	City of Steubenville
Method 2	3754.5	11,284.9	9071.3
Method 3	8279.0	15,376.2	4934.5
Method 4	770.0	275.0	—
Total	12,803.5 L.F.	26,936.1 L.F.	14,005.8 L.F.
x 5 ÷ 9 =	7113.1 S.Y.	14,964.5 S.Y.	7781 S.Y.

Item 659 ~ Commercial Fertilizer

S.Y. x 9 x 20 / 1000 x 2000 =	0.64 Tons	1.35 Tons	0.70 Tons

Item 659 ~ Agricultural Liming

S.Y. x 9 x 100 / 1000 x 2000 =	3.20 Tons	6.73 Tons	3.50 Tons

PAVEMENT QUANTITY CALCULATIONS

Calc. By PH 12-27-78
Chkd. By WCR 12-28-78

FHWA REGION	STATE	PROJECT	
5	OHIO		

JEF-7-11.80

29

Item 404 Asphalt Concrete AC-20

X' × 4' × 2" × 1/12" × 1 CY/27 C.F = X × 0.0247 Sta 620+00 to Sta 814+59.23

X' × 5¼' × 2" × 1/12" × 1 CY/27 C.F = X × 0.034 Sta 814+59.23 to Sta 916+77

	Lin. ft.	factor	C.Y.
S.R.-7, rt.			
Sta 622+84 to Sta 627+84	500	0.0247	12.35
S.R.-7, lt.			
Sta 625+04 to Sta 628+04	300	0.0247	7.41
Sta 630+19 to Sta 633+06.5	287.5	0.0247	7.10
S.R.-7, rt.			
Sta 630+01 to Sta 638+13.5	812.5	0.0247	20.07
Ramp B, rt.			
Sta 629+97 to Sta 632+97	300	0.0247	7.41
Ramp C, lt.			
Sta 26+60 to Sta 27+75	115	0.0247	2.84
Ramp C, rt.			
Sta 26+80 to Sta 33+00	620	0.0247	15.31
S.R. 7, rt			
Sta 641+95 to Sta 648+13	618	0.0247	15.26
S.R.7, lt.			
Sta 644+50 to Sta 646+00	150	0.0247	3.71
Sta 653+34.5 to Sta 653+86	51.5	0.0247	1.27
Subtotal Mingo Junction	3754.5	0.0247	92.73
S.R. 7, rt.			
Sta 648+13 to Sta 654+20	607	0.0247	14.99
Sta 655+77.5 to Sta 656+52.5	75	0.0247	1.85
S.R. 7, lt.			
Sta 653+86 to Sta 654+22	36	0.0247	0.89
Sta 655+77.5 to Sta 656+77.5	100	0.0247	2.47
Sta 658+79 to Sta 664+43	564	0.0247	13.93
S.R.-7, rt.			
Sta 668+39.3 to Sta 669+53.2	113.9	0.0247	2.81
Sta 657+38.9 to Sta 657+75	36.1	0.0247	0.89
Sta 663+28 to Sta 673+03	965	0.0247	23.84
Ramp A, lt.			
Sta 65+28 to Sta 67+89	261	0.0247	6.45
Sta 63+29.6 to Sta 62+20	109.6	0.0247	2.71
Ramp B, rt.			
Sta 62+25.4 to Sta 67+00	474.6	0.0247	11.72
S.R.-7, lt.			
Sta 670+00 to Sta 673+10	310	0.0247	7.66
Sta 681+75 to Sta 683+25	150	0.0247	3.71
S.R.-7, rt.			
Sta 681+65 to Sta 685+00	335	0.0247	8.27
Sta 698+85 to Sta 699+60	75	0.0247	1.85
Sta 700+67.5 to Sta 701.80	112.5	0.0247	2.78
S.R.-7, lt.			
Sta 687+30 to Sta 688+80	150	0.0247	3.71
Sta 697+24 to Sta 697+61.5	37.5	0.0247	0.93
Sta 699+04 to Sta 699+41.5	37.5	0.0247	0.93
Sta 701+57 to Sta 701+82	25.0	0.0247	0.62
Sta 712+06 to Sta 713+06	100	0.0247	2.47
Sta 714+77 to Sta 716+89	203	0.0247	5.01
S.R.-7, rt.			
Sta 705+27 to Sta 706+76	149	0.0247	3.68
Sta 707+60 to Sta 712+72.5	512.5	0.0247	12.66
Sta 714+43 to Sta 723+48	905	0.0247	22.35
Ramp C, rt.			
Sta 6+78.3 to Sta 10+19	331.7	0.0247	8.19
Ramp D, rt			
Sta 726+25 to Sta 732+08	573	0.0247	14.15
S.R.-7, rt			
Sta 732+08 to Sta 770+76	3868	0.0247	95.54
Subtotal State	11,216.9		277.06

	Lin. ft.	factor	C.Y.
S.R. 7, rt.			
Sta. 770+76 to Sta. 792+66.5	2190.5	0.0247	54.12
Sta. 793+34 to Sta. 809+65	1631	0.0247	40.29
Sta. 820+16 to Sta. 827+36.5	720.5	0.034	24.50
S.R. 7, lt.			
Sta. 810+68 to Sta. 811+55.5	87.5	0.034	2.98
Sta. 821+01 to Sta. 822+45.4	144.4	0.034	4.91
Sta. 822+25 to Sta. 827+00	475	0.034	16.15
S.R. 7, rt.			
Sta. 845+10 to Sta. 860+31	1521	0.034	51.71
Sta. 869+75 to Sta. 871+40	175	0.034	5.95
Sta. 874+67 to Sta. 876+08	162.5	0.034	5.53
Sta. 893+19 to Sta. 901+94	875	0.034	29.75
Sta. 902+06 to Sta. 912+76	1070	0.034	36.38
Sta. 916+49 to Sta. 916+68	19	0.034	0.65
Subtotal-City of Steubenville	—	—	272.92
S.R. 7, rt.			
Sta. 792+66.5 to Sta. 793+34.5	68	0.034	2.31
Subtotal State	—	—	2.31
Totals Item 404			
Mingo Junction (A)	3754.5		92.73
State (C)	11,284.9		279.37
City of Steubenville (B)	9,071.4		272.92

LOCATION Sta. to Sta.	Cu. Yd. ITEM 301 Bituminous Aggregate Base	Cu. Yd. ITEM 304 Aggregate Base	Sq. Yd. ITEM 305 9" Portland Cement Conc. Base	Cu. Yd. ITEM 310 Subbase Type I	Cu. Yd. ITEM 402 Asphalt Concrete AC-20	Cu. Yd. ITEM 404 Asphalt Concrete AC-20	Gal. ITEM 407 Tack Coat RC-250, MS-2, RS-1, SS-1 or SS-1h	Ton ITEM 407 Cover Aggregate	Gal. ITEM 409 Seal Coat Bituminous Material	Cu. Yd. ITEM 409 Seal Coat Cover Agg. No. 8
* 681+80.42 to 691+07.89	15.0	25.0		30.0					54.1	1.4
804+16.97 to 809+00	20.2	33.6		40.2					72.5	1.9
809+00 to 3+34 Ramp B	18.5	30.8		123.6					66.6	1.8
821+40 to 822+00 5.8						4.3				
827+00 to 830+25.51	4.2	7.0		31.4					15.0	0.4
830+25.51 to 833+44				3.0						
838+33 to 839+13			22.2	3.7	0.9	0.9	2.2	0.08		
841+13 to 841+29			17.8	3.0	0.7	0.7	1.8	0.06		
841+49 to 841+53			4.4	0.7	0.2	0.2	0.4	0.02		
844+86 to 848+68.7			324.5	54.1	13.5	13.5	32.5	1.14		
848+05.2 to 853+92.9				5.4						
853+92.9 to 860+05.2	35.3	58.9		70.7					127.2	3.4
860+05.3 to 860+38 LT.	0.5	0.9		1.0					1.9	0.1
860+05.2 to 864+02 RT.			426.5	71.1	15.3	15.3	36.6	1.28		
864+57 to 867+94.1			254.6	42.4	10.2	10.2	24.5	0.86		
867+94.1 to 876+55				8.0						
877+20 to 877+27.1				0.1						
877+27.1 to 880+12.1				1.3						
875+65.2 to 880+24			279.7	46.6	11.7	11.7	28.0	0.98		
881+13.0 to 885+29.1			482.6	80.4	20.1	20.1	48.3	1.69		
881+21 to 884+42 RT.				1.5						
885+05 to 889+45				2.0						
884+10.3 to 889+56 LT.			654.6	108.1	27.3	27.3	65.5	2.29		
890+36 to 897+34.1			470.5	78.4	19.6	19.6	47.1	1.65		
890+36 to 896+57 RT.				2.8						
896+15.9 to 900+94			202.9	33.8	8.5	8.5	20.3	0.71		
896+95 to 900+94				1.8						
901+68 to 906+25 RT.			387.1	64.5	16.1	16.1	38.7	1.35		
901+75 to 902+75				0.5						
902+75 to 907+10.7 LT.	11.3	18.8		22.6					40.6	1.1
906+25 to 907+10.7 RT.	2.8	4.6		5.6					10.0	0.3
907+10.7 to 909+02.3 RT.	3.0	5.1		6.1					10.9	0.3
907+10.7 to 913+62 LT.	13.3	22.2		26.7					48.0	1.3
914+25 to 914+77.5 RT.	0.7	1.2		1.5					2.6	0.1
STEUBENVILLE TOTAL	110	183	3527	944	144	148	346	12.11	395	11

* Mingo Junction

SUB SUMMARY

FROM SHEET NO. 30-B A	30-B B	30-B C	28 A	28 B	28 C	29 A	29 B	29 C	30 A	30 B	30 C	30A A	30A B	30A C	SUB-TOTAL A	SUB-TOTAL B	SUB-TOTAL C	UNIT	ITEM	DESCRIPTION
				1.007												1.007		Mile	203	Linear Grading, Method 1
			0.711	1.718	2.137										0.711	1.718	2.137	Mile	203	Linear Grading, Method 2
			1.568	0.934	2.912										1.568	0.934	2.912	Mile	203	Linear Grading, Method 3
			0.146		0.052										0.146		0.052	Mile	203	Linear Grading, Method 4
	Lump															Lump		Lump	Special	Removal of Light Pole
						15	110								15	110		Cu. Yd.	301	Bituminous Aggregate Base, AC-20 or RT-11 or RT-12
						25	183								25	183		Cu. Yd.	304	Aggregate Base
							3527									3527		Sq. Yd.	305	9" Portland Cement Concrete Base
						30	944								30	944		Cu. Yd.	310	Subbase, Type I
							144									144		Cu. Yd.	402	Asphalt Concrete AC-20
						93	420	279				350	200	500	443	620	779	Cu. Yd.	404	Asphalt Concrete AC-20
							346									346		Gal.	407	Tack Coat: RC-250, MS-2, RS-1, SS-1 or SS-1h
							12									12		Ton	407	Cover Aggregate
						54	395								54	395		Gal.	409	Seal Coat Bituminous Material; MC-800, MC-3000; CBAE 800, RS-1, RS-2, CRS-1, CRS-2, RT-9, RT-10
						1	11								1	11		Cu. Yd.	409	Seal Coat Cover Aggregate No. 8
44	46	34													44	46	34	Each	604	Reference Monument Standard
												30	60	30	30	60	30	Ton	616	Calcium Chloride
												750	1500	750	750	1500	750	M.Gal.	616	Water
			0.64	0.70	1.35							0.16	0.26	0.16	0.80	0.96	1.51	Ton	659	Commercial Fertilizer
			7113.1	7781.0	14,964.5										7113.1	7781.0	14,964.5	Sq. Yd.	659	Seeding & Mulching
												28.12	56.25	28.12	28.12	56.25	28.12	M. Gal.	659	Water
			3.20	3.50	6.73										3.20	3.50	6.73	Ton	659	Agricultural Liming
												Lump	Lump	Lump	Lump	Lump	Lump	Lump	619	Field Office
									Lump	Lump	Lump				Lump	Lump	Lump	Lump	614	Maintaining Traffic
												Lump			Lump			Lump	Special	Ditch Realignment

GENERAL NOTES

MAINTENANCE OF TRAFFIC

THROUGH TRAFFIC SHALL BE MAINTAINED AT ALL TIMES ON STATE ROUTE 7 RAMPS WITHIN THE WORK LIMITS. FOUR LANE, TWO WAY TRAFFIC SHALL BE MAINTAINED ON STATE ROUTE 7 AT ALL TIMES, EXCEPT UNDER THE FOLLOWING CONDITIONS:

CONSTRUCTION WORK WHICH REQUIRES MEN AND/OR EQUIPMENT TO OCCUPY A THROUGH LANE: WHEN POSSIBLE, THE CONTRACTOR SHALL ACCOMMODATE THE TRAVELING PUBLIC BY OCCUPYING A SOUTH BOUND LANE DURING PERIODS OF HEAVY NORTH BOUND TRAFFIC AND VICE VERSA. AT NO TIME SHALL BOTH LANES OF A DIRECTIONAL MOVEMENT BE CLOSED TO TRAFFIC.

ERECTION AND REMOVAL OF OVERHEAD SIGN SUPPORT SPANS AND/OR WORK ON OVERHEAD SIGNS THAT ARE IN PLACE OVER THE PAVEMENT. THROUGH TRAFFIC FLOW MAY BE INTERRUPTED FOR SHORT PERIODS (UP TO TEN MINUTES) FOR THIS WORK. THE CONJESTION OF TRAFFIC CAUSED BY AN INTERRUPTION OF FLOW SHALL SUBSIDE BEFORE THE NEXT CLOSURE IS PERMITTED. WORK SHALL BE SCHEDULED IN A MANNER THAT CLOSURES WILL OCCUR AT PERIODS OF LOW TRAFFIC VOLUME.

THE CONTRACTOR IS ENCOURAGED TO SCHEDULE THE VARIOUS WORK ITEMS WHICH INVOLVE LANE RESTRICTIONS OR CLOSURES IN A PRACTICAL MANNER WHICH WILL ADD TO THE EFFICIENCY, ECONOMY, AND SAFETY OF OPERATIONS AND THE LEAST POSSIBLE DISRUPTION TO THROUGH TRAFFIC.

THE BASE WIDENING ON THIS PROJECT WILL BE COMPLETED TO A DEPTH 3 INCHES BELOW THE EXISTING PAVEMENT BY THE END OF THE WORK DAY. EXCEPT FOR A SHORT LENGTH OF A WORK SECTION (25 FEET OR LESS) AT THE END OF THE TRENCH, NO TRENCH WILL BE LEFT OPEN OVERNIGHT. IN CASE WORK MUST BE SUSPENDED BECAUSE OF INCLEMENT WEATHER OR OTHER REASONS, THE TRENCH FOR THE UNCOMPLETED BASE WIDENING WILL BE BACKFILLED AT THE DIRECTION OF THE ENGINEER.

A FLASHING ARROW BARRICADE SHALL BE USED FOR TRAFFIC CONTROL WHERE THERE IS A LANE RESTRICTION.

THE CONTRACTOR SHALL FURNISH AND MAINTAIN ALL FLAGS, BARRICADES, SIGN SUPPORTS, FLAGMEN, WATCHMEN, AND INCIDENTALS RELATED THERETO AND SHALL UTILIZE THEM IN CONFORMANCE WITH THE OHIO MANUAL OF UNIFORM TRAFFIC CONTROL DEVICES, CURRENT EDITION, LATEST REVISION.

TEMPORARY SIGNS SHALL BE MOUNTED ON SUPPORT POSTS AFFIXED TO EXISTING GUARD RAIL POSTS WHEREVER POSSIBLE. EASELS OR BARRELS FILLED TO ONE HALF CAPACITY WITH AGGREGATE, ACCOMPANIED WITH ATTACHED SUPPORT POSTS MAY BE USED WHERE GUARD RAIL POSTS ARE NOT AVAILABLE. BARRELS SHALL HAVE REFLECTIVE SHEETING IN ACCORDANCE WITH 614.03(a).

PAYMENT FOR ALL THE WORK DESCRIBED ABOVE SHALL BE INCLUDED IN THE UNIT PRICE BID FOR ITEM 614 MAINTAINING TRAFFIC.

ORIGINAL CONSTRUCTION PLANS

THIS PROJECT INCLUDES ALL OR PART OF CONSTRUCTION PROJECTS: JEF 7-11.35, JEF-7-13.36, JEF-7-13.53, JEF-7-15.30, JEF - 7-16.10, AND JEF-7-17.33. COPIES OF THESE PLANS ARE ON FILE IN THE DISTRICT 11 OFFICE, WEST HIGH AVENUE EXTENSION, NEW PHILADELPHIA, OHIO.

PUBLIC SAFETY

NO HAZARD SHALL BE LEFT UNPROTECTED EXCEPT FOR THE ACTUAL TIME NECESSARY TO REMOVE, GRADE AND REINSTALL GUARD RAIL IN A CONTINUOUS OPERATION. THE REMOVAL OF ALL GUARD RAIL SHALL AT ALL TIMES BE AS DIRECTED BY THE ENGINEER. NO GUARD RAIL SHALL BE REMOVED UNTIL THE REPLACEMENT MATERIAL IS ON THE SITE, READY FOR INSTALLATION. FAILURE TO COMPLY WITH THIS REQUIREMENT SHALL BE DEEMED SUFFICIENT CAUSE TO ORDER WORK SUSPENDED ON THIS PROJECT UNTIL SUCH TIME THAT THE ENGINEER IS ASSURED OF SAID COMPLIANCE.

PROPOSED CONCRETE BARRIER CONSTRUCTION

THE EXISTING CONCRETE MEDIAN SHALL BE REMOVED AND DISPOSED OF.

THE EXISTING CONCRETE CURB (WHERE APPLICABLE) SHALL BE CAREFULLY REMOVED AND DISPOSED OF. THE CONTRACTOR SHALL BE RESPONSIBLE FOR ANY SHOULDER DAMAGE DURING THIS OPERATION AS NOTED ELSEWHERE IN THE PLANS.

THE CONTRACTOR SHALL CAREFULLY EXCAVATE THE EXISTING MATERIAL TO THE EDGE OF THE EXISTING PAVED SHOULDERS. THE CONTRACTOR SHALL BE RESPONSIBLE FOR ANY SHOULDER DAMAGE DURING THIS OPERATION AS NOTED IN THE PLANS. THE COST OF EXCAVATION AND DISPOSAL OF THE EXCAVATED MATERIAL SHALL BE IN ACCORDANCE WITH ITEM 203.

SUBGRADE UNDER THE PROPOSED MEDIAN SHALL BE COMPACTED IN ACCORDANCE WITH SECTION 203.13 OF THE SPECIFICATIONS.

THE PROPOSED CONCRETE BARRIER SHALL BE PLACED AND PAID FOR AS DESCRIBED IN ITEM 622, CONCRETE BARRIER.

ITEM 612 CONCRETE MEDIAN

PLACEMENT OF CONCRETE MEDIAN SHALL BE MADE BETWEEN CONCRETE BARRIERS IN ACCORDANCE WITH TYPICAL SECTIONS AND WITH LINES AND GRADES ESTABLISHED BY BARRIER CONSTRUCTION. WHERE ELEVATIONS ON A BARRIER TOP ARE EQUAL TO (OR NEARLY SO) THOSE ON THE ADJACENT BARRIER, THE CONCRETE MEDIAN SHALL BE CROWNED ALONG ITS CENTERLINE WITH SLOPES OF 3/8 INCH PER FOOT. WHERE ELEVATIONS ON BARRIER TOPS ARE UNEQUAL, THE CONCRETE MEDIAN SHALL BE CONSTRUCTED WITH ONE SLOPE CONTINUOUS FROM BARRIER TOP TO BARRIER TOP. TRANSITIONS BETWEEN CROWNED AND CONTINUOUSLY SLOPED SECTIONS SHALL BE MADE SIMILAR TO THE DEVELOPMENT OF SUPERELEVATION AS FOLLOWS:

1. AS THE BARRIER PROFILE ALONG ONE SIDE BEGINS TO TRANSITION UPWARD, THE SLOPE BETWEEN THE CROWN POINT AND BARRIER SHALL TRANSITION FROM NORMAL (3/8 INCH PER FOOT DOWNWARD) TO REVERSE SECTION (3/8 INCH PER FOOT UPWARD). THE LENGTH OF TRANSITION SHALL BE DETERMINED DURING CONSTRUCTION BY USE OF THE UPPER BARRIER PROFILE AND THE CROWN LINE PROFILE. (THE CROWN LINE PROFILE SHALL BE ESTABLISHED FROM THE LOWER BARRIER PROFILE.)

2. AFTER THE REVERSE SECTION IS ACHIEVED, THE SLOPE SHALL CONTINUE TO TRANSITION BY FOLLOWING BARRIER PROFILES.

3. TRANSITIONS OF OPPOSITE DIRECTION SHALL BE OF REVERSE ORDER:

PROFILE

THE PROFILE ALONG THE TOP OF ITEM 622 CONCRETE BARRIER TYPE D SHALL BE SET THIRTY-TWO INCHES (THIRTY-FOUR INCHES OUTSIDE THE CORPORATION OF STEUBENVILLE) ABOVE THE PAVED BERM ELEVATION ADJACENT TO THE CONCRETE BARRIER.

THE PROFILE ALONG THE TOP OF ITEM 622 CONCRETE BARRIER TYPE A OR ITEM 622 CONCRETE BARRIER TYPE A-1 (OR A-2), AS PER PLAN, SHALL BE SET IN THE SAME MANNER AS CONCRETE BARRIER TYPE D WITH THIS ADJUSTMENT: SINCE THE ELEVATION OF THE SOUTH BOUND PAVED BERM MAY VARY FROM THAT OF THE NORTH BOUND, DUE TO VARIANCES IN RESURFACING, CONSTRUCTION, ETC., OR BY PROJECTION OF EXISTING

PAVEMENT CROSS SLOPES ACROSS PROPOSED PAVEMENTS, THE PROFILE SHALL BE SET USING THE HIGHER ELEVATION. THE SIDE WITH LOWER ELEVATION SHALL HAVE A VARIABLE DIMENSION IN PLACE OF THE THREE INCH VERTICAL DIMINSION (FIVE INCH OUTSIDE THE CORPORATION OF STEUBENVILLE LOCATED IMMEDIATELY ABOVE THE NINE INCH BASE AND BELOW THE SAFETY SHAPE (SEE STANDARD DRAWING MC-9). THIS DIMENSION MAY BE INCREASED BY AS MUCH AS TWO INCHES TO ACCOMODATE THESE VARIATIONS. IF THE VARIANCE EXCEEDS TWO INCHES, THE VERTICAL DIMENSIONS SHALL BE AS PER CONCRETE BARRIER TYPE C(SEE STANDARD DRAWING MC-9) WHILE RETAINING THE HORIZONTAL DIMENSIONS OF THE TYPE LISTED IN THE QUANTITY DESCRIPTIONS. PAYMENT FOR THESE ADJUSTMENTS SHALL BE INCLUDED IN THE UNIT PRICE BID FOR ITEM 622 CONCRETE BARRIER.

EXCAVATION FOR ITEM 622 CONCRETE BARRIER

EXCAVATION INCLUDED WITH PAYMENT FOR ITEM 622 SHALL CONSIST OF EARTH AND ALL FLEXIBLE PAVEMENT MATERIALS. SHOULD REMOVAL OF CONCRETE BASE COURSES BE REQUIRED FOR PLACEMENT OF ITEM 622, PAYMENT SHALL BE MADE AT THE UNIT PRICE BID FOR ITEM 202 PAVEMENT REMOVED. BACKFILLING OF VOIDS LEFT BY THIS REMOVAL SHALL BE MADE WITH ITEM 310 SUBBASE. WORK REQUIRING EXTRA PAYMENT UNDER ITEM 202 AND ITEM 310 SHALL REQUIRE THE ENGINEER'S APPROVAL PRIOR TO COMMENCEMENT.

ITEM 203 LINEAR GRADING

THIS WORK SHALL CONSIST OF ALL EXCAVATION AND EMBANKMENT REQUIRED TO CONSTRUCT PAVED BERMS, ASPHALT CONCRETE SHOULDER TREATMENT, AND SHOULDER GRADING OUTSIDE THE LIMITS OF PAVED BERM. AREAS WHICH REQUIRE LINEAR GRADING ARE LISTED IN THE PAVEMENT CALCULATIONS AND ARE IN ACCORDANCE WITH DETAILS SHOWN ON THE TYPICAL SECTIONS AND PLANS.

THE EXCESS OF MATERIALS RESULTING FROM THIS WORK SHALL BE REMOVED AND DISPOSED OF BY THE CONTRACTOR AT THE DIRECTION OF THE ENGINEER.

MEASUREMENT WILL BE MADE PER MILE ALONG EACH EDGE OF PAVEMENT WHICH REQUIRES LINEAR GRADING.

PAVEMENT WILL BE MADE SEPARATELY FOR EACH OF THE FOLLOWING ITEMS:

ITEM 203 LINEAR GRADING METHOD 1. THIS ITEM APPLIES TO EXCAVATION REQUIRED FOR CONSTRUCTION OF PAVED BERMS ADJACENT TO ITEM 622 CONCRETE BARRIER.

ITEM 203 LINEAR GRADING METHOD 2. THIS ITEM APPLIES TO EXCAVATION AND/OR EMBANKMENT REQUIRED FOR CONSTRUCTION OF ASPHALT CONCRETE SHOULDER TREATMENT UNDER GUARDRAIL.

ITEM 203 LINEAR GRADING METHOD 3. THIS ITEM APPLIES TO EXCAVATION REQUIRED FOR REMOVAL OF ACCUMULATED SOD, EARTH, AND DEBRIS ALONG EXISTING PAVED BERMS OUTSIDE THE LIMITS OF GUARDRAIL.

ITEM 203 LINEAR GRADING METHOD 4. THIS ITEM APPLIES TO EXCAVATION ALONG CROSS ROADS WITH GUARDRAIL REPLACEMENT. THE UNPAVED PORTION OF SHOULDER SHALL BE GRADED TO REMOVE SOD, EARTH, AND DEBRIS. THE FINISHED GRADE SHALL SLOPE AWAY FROM PAVEMENT AT THE RATE OF ONE INCH PER FOOT.

PAYMENT FOR ALL THE WORK DESCRIBED ABOVE SHALL BE INCLUDED IN THE UNIT PRICE BID PER MILE FOR THE APPROPRIATE METHOD OF ITEM 203 LINEAR GRADING.

EXCAVATION FOR PAVEMENT TRENCHES ADJACENT TO CURB SHALL BE INCLUDED WITH THE UNIT PRICE BID FOR ITEM 609.

MANHOLES, CATCH BASINS, AND INLETS REMOVED OR ABANDONED

THE CASTINGS SHALL BE CAREFULLY REMOVED AND STORED WITHIN THE RIGHT-OF-WAY FOR SALVAGE BY MUNICIPAL OR STATE FORCES.

GENERAL NOTES

ITEM 404 ASPHALT CONCRETE AC-20-(SHOULDER LEVELING)

THE FOLLOWING QUANTITY HAS BEEN INCLUDED IN THE PLANS FOR USE IN RE-ESTABLISHING SHOULDER SLOPES. REPAIR WORK SHALL BE MADE TO FACILITATE SURFACE DRAINAGE OF PAVEMENT, THE PROPOSED CONSTRUCTION, AND ANY REPAIR WORK OF SERIOUS NATURE THAT IS REQUIRED. ALL AREA SCHEDULED FOR THIS WORK SHALL BE APPROVED BY THE ENGINEER. QUANTITIES SHALL BE DETERMINED PRIOR TO CONSTRUCTION AND PAYMENT MADE ON THE BASIS THEREOF.

	A	B	C	
ITEM 404 ASPHALT CONCRETE AC-20	350	200	500	C.Y.

REPLACEMENT OF DAMAGED SHOULDERS

ANY PORTION OF THE EXISTING PAVED BERM THAT MAY BE DAMAGED BY THE CONTRACTOR DURING CONSTRUCTION SHALL BE REPAIRED BY THE CONTRACTOR AT HIS EXPENSE. MATERIAL FOR SUCH REPAIRS SHALL MEET THE REQUIREMENTS OF ITEM 301 BITUMINOUS AGGREGATE BASE, ITEM 409 SEAL COAT BITUMINOUS MATERIAL, AND ITEM 409 SEAL COAT COVER AGGREGATE NO. 8.

LOCATIONS OF GUARDRAIL

THE LOCATIONS OF GUARDRAIL RUNS AS SHOWN IN THESE PLANS ARE SUBJECT TO ADJUSTMENT TO ASSURE THAT THE PLANNED INSTALLATIONS WILL AFFORD MAXIMUM PROTECTION FOR TRAFFIC.

GUARD RAIL OVER CULVERTS

WHEN SUFFICIENT POST DEPTH IS NOT AVAILABLE DUE TO A CULVERT, THE GUARD RAIL POSTS DIRECTLY OVER THE CULVERT SHALL NOT BE DRIVEN BUT SET IN HOLES. IF THE DISTANCE BETWEEN THE GROUND LINE AND THE TOP OF THE CULVERT IS LESS THAN 3 FEET, THE POST SHALL BE ENCASED IN A MINIMUM OF 4" THICKNESS OF CLASS C CONCRETE FOR THE FULL DEPTH OF THE POST. PAYMENT FOR THE ABOVE ITEM SHALL BE INCLUDED IN THE UNIT PRICE BID FOR ITEM 606, GUARD RAIL TYPE 5.

ITEM 202 GUARDRAIL OR BARRIER GUARD RAIL REMOVED FOR STORAGE

THE REMOVAL OF EXISTING ANCHOR ASSEMBLIES AND REMOVAL OF THE FOUNDATIONS FOR ANCHOR ASSEMBLIES TO A DEPTH OF ONE FOOT BELOW GRADE SHALL BE INCLUDED FOR PAYMENT WITH THIS ITEM.

THE QUANTITY MEASUREMENT LISTED IN THESE PLANS INCLUDES THE LENGTH OF THE ATTACHED ANCHOR ASSEMBLY. THE SALVAGED RAIL ELEMENTS SHALL BE STOCK PILED IN A NEAT MANNER AT A LOCATION ON THE PROJECT APPROVED BY THE ENGINEER WHICH PRESENTS NO SAFETY HAZARD TO THE TRAVELING PUBLIC. THE RAIL ELEMENTS SHALL BE REMOVED FROM THE PROJECT SITE BY ODOT PERSONNEL (OUTSIDE THE CORPORATE LIMITS OF THE CITY OF STEUBENVILLE) AND BY CITY OF STEUBENVILLE PERSONNEL (WITHIN THE CORPORATE LIMITS OF THE CITY OF STEUBENVILLE). GUARDRAIL SALVAGED WITHIN THE CORPORATE LIMITS OF STEUBENVILLE SHALL BE STOCK PILED SEPARATELY AND SHALL BE CLEARLY MARKED IN A MANNER SATISFACTORY TO THE ENGINEER.

ALL POSTS, BOLTS AND INCIDENTAL HARDWARE SHALL BECOME THE PROPERTY OF THE CONTRACTOR.

GUARDRAIL POST LOCATIONS

THE LOCATION OF NEW GUARDRAIL POSTS SHALL NOT COINCIDE WITH THE LOCATION OF EXISTING GUARDRAIL POSTS. THE LOCATIONS OF ANCHOR ASSEMBLIES SHALL BE ADJUSTED TO ACCOMPLISH THIS. GUARDRAIL WHICH TERMINATES AT BRIDGES OR RETAINING WALLS SHALL INCORPORATE REDUCED POST SPACING IN ONE PANEL NEAR THE OBSTRUCTION TO FACILITATE THE CONNECTION.

ITEM 606 GUARDRAIL REBUILT TYPE 5 , AS PER PLAN

THIS WORK SHALL INCLUDE THE REMOVAL OF EXISTING RAIL ELEMENTS FROM THEIR RESPECTIVE POSTS. THE POSTS SHALL BE PRIMED AND GIVEN TWO COATS OF WHITE PAINT IN ACCORDANCE WITH 618.02 THROUGH 618.05. THE RAIL ELEMENTS SHALL BE REPLACED WITH NEW GUARDRAIL AND SPACER BLOCKS AS PER STANDARD DRAWING GR 2-B.

REVIEW OF DRAINAGE FACILITIES

BEFORE ANY WORK IS STARTED ON THE PROJECT, AND AGAIN BEFORE FINAL ACCEPTANCE BY THE STATE, REPRESENTATIVES OF THE STATE AND THE CONTRACTOR ALONG WITH LOCAL REPRESENTATIVES SHALL MAKE AN INSPECTION OF THE EXISTING SEWERS WITHIN THE WORK LIMITS WHICH ARE TO REMAIN IN SERVICE AND WHICH MAY BE AFFECTED BY THE WORK. THE CONDITION OF THE EXISTING CONDUITS AND THEIR APPURTENANCES SHALL BE DETERMINED FROM FIELD OBSERVATIONS. RECORDS OF THE INSPECTION SHALL BE KEPT IN WRITING BY THE STATE.

ALL NEW CONDUITS, INLETS, CATCH BASINS, AND MANHOLES CONSTRUCTED AS A PART OF THE PROJECT SHALL BE FREE OF ALL FOREIGN MATTER AND A CLEAN CONDITION BEFORE THE PROJECT WILL BE ACCEPTED BY THE STATE.

* Continued below

CONNECTIONS TO EXISTING PIPE

WHERE THE PLANS PROVIDE FOR PROPOSED CONDUIT TO BE CONNECTED TO, OR TO CROSS EITHER OVER OR UNDER AN EXISTING SEWER, IT SHALL BE THE RESPONSIBILITY OF THE CONTRACTOR TO LOCATE THE EXISTING PIPE BOTH AS TO LINE AND GRADE BEFORE HE STARTS TO LAY THE PROPOSED CONDUIT

Payment for all operations described above shall be included in the unit price bid for the pertinent 603 conduit items.

** REVIEW OF DRAINAGE FACILITIES CONTINUED*

All existing sewers inspected initially by the above-mentioned parties shall be maintained and left in a condition reasonably comparable to that determined by the original inspection. Any change in the condition resulting from the Contractor's operations shall be corrected by the Contractor to the satisfaction of the Engineer.

Payment for all operations described above shall be included in the unit prices bid for the pertinent 603 conduit items of the contract.

MAINTENANCE OF EXISTING SUBBASE DRAINAGE

FLOW FROM EXISTING PIPE UNDERDRAINS WHICH CONNECT WITH CATCH BASINS SCHEDULED FOR REPLACEMENT, SHALL BE MAINTAINED. REPLACEMENT CONDUIT FOR THIS WORK HAS BEEN INCLUDED IN THE PLANS.

DRAINAGE TO OTHER PIPE UNDERDRAINS OR AGGREGATE DRAINS SHALL BE REPAIRED IN ACCORDANCE WITH ITEM 605 AND TO THE SATISFACTION OF THE ENGINEER AT THE CONTRACTOR'S EXPENSE.

PAVEMENT REPLACEMENT

EXISTING PAVEMENT REMOVED DURING CONSTRUCTION OF INLETS AND STORM SEWERS SHALL BE INCLUDED IN THE UNIT PRICE BID FOR ITEM 604 AND SHALL BE REPLACED IN ACCORDANCE WITH THE PAVEMENT REPLACEMENT DETAIL SHOWN ON THE MISCELLANEOUS DETAILS. PAVEMENT WITHIN AREAS OF PAVED BERMS SHALL BE OF THE COMPOSITION SHOWN ON THE TYPICAL SECTIONS. PAYMENT FOR REPLACEMENT OF DAMAGED PAVEMENTS SHALL BE INCLUDED WITH THE UNIT PRICES BID UNDER ITEM 604. SEE SHEET No. 33.

REMOVAL OF EXISTING PIPE

THE REMOVAL OF ALL EXISTING PIPE DRAINS WHICH WOULD NORMALLY BE REMOVED IN VARIOUS EXCAVATION ITEMS, SHALL BE INCLUDED FOR PAYMENT IN THE UNIT PRICES BID FOR THE RESPECTIVE EXCAVATION ITEMS, UNLESS OTHERWISE ITEMIZED IN THE PLANS.

ESTIMATED QUANTITIES

SPECIFIC LOCATIONS AND USAGE OF ESTIMATED QUANTITIES SET UP ON THIS PLAN TO BE USED AS DIRECTED BY THE ENGINEER SHALL BE MADE A MATTER OF RECORD BY INCORPORATION INTO THE FINAL CHANGE ORDER GOVERNING COMPLETION OF THIS PROJECT. ESTIMATED QUANTITIES OF MATERIALS SHALL NOT BE ORDERED FOR DELIVERY TO THE PROJECT UNLESS AUTHORIZED BY THE ENGINEER.

DUST CONTROL

THE FOLLOWING QUANTITIES HAVE BEEN CARRIED TO THE GENERAL SUMMARY TO BE USED AS REQUIRED FOR THE PURPOSES OF DUST CONTROL IN ACCORDANCE WITH ITEM 616.

	A	B	C	
ITEM 616 CALCIUM CHLORIDE	30	60	30	Tons
ITEM 616 WATER	750	1500	750	M. GAL.

WATERING PERMANENT SEEDED AREAS

THE FOLLOWING ESTIMATED QUANTITY IS TO BE USED AS DIRECTED BY THE ENGINEER TO PROMOTE GROWTH AND TO CARE FOR PERMANENT SEEDED AREAS WITHIN THE PROJECT LIMITS IN ACCORDANCE WITH 659.09:

	A	B	C	
ITEM 659 WATER	25	50	25	M.GAL.

WATER POLLUTION, SOIL EROSION, AND SILTATION CONTROL

THE FOLLOWING ESTIMATED QUANTITIES ARE TO BE USED AS DIRECTED BY THE ENGINEER FOR EROSION AND SILTATION CONTROL MEASURES:

	A	B	C	
659 COMMERCIAL FERTILIZER	0.16	0.26	0.16	TON
659 WATER	3.12	6.25	3.12	M. GAL.

FIELD OFFICE

THE CONTRACTOR SHALL PROVIDE A SUITABLE FIELD OFFICE HAVING A MINIMUM OF 400 SQ. FT. OF FLOOR SPACE.

STATION OVERLAP

TWO STATION OVERLAPS OCCUR WITHIN THE WORK LIMITS OF THIS PROJECT. USE OF DETAIL SHEETS SHOULD BE CO-ORDINATED WITH PLAN SHEETS TO INSURE CORRECT PLAN INTERPRETATION. STATION EQUATIONS HAVE CREATED THESE OVERLAPS AT THE FOLLOWING LOCATIONS:

STA 657 + 38.94 TO STA 669 + 53.15

STA 821 + 76.30 S.B. TO STA 822 + 44.50 S.B.

ITEM SPECIAL DITCH REALIGNMENT

THIS WORK CONSISTS OF REALIGNMENT OF THE ROADSIDE DITCH TO ALLOW PLACEMENT OF THE SIGN SUPPORT AT STATION 687 + 55 AS SHOWN ON THE DETAIL ON SHEET 142. THE DITCH FLOW LINE SHALL BE RECONSTRUCTED AS INDICATED ON SHEET 142 OR AS DIRECTED BY THE ENGINEER.

THE DITCH BOTTOM SHALL BE PROTECTED WITH ITEM 667 SEEDING AND JUTE MATTING 7 1/2 FEET WIDE, THE FULL LENGTH OF THE REALIGNED DITCH AND IN ACCORDANCE WITH STANDARD CONSTRUCTION DRAWING MC-10.

DISTURBED AREA NOT COVERED BY THE SEEDING AND JUTE MATTING SHALL BE TREATED WITH ITEM 659 SEEDING AND MULCHING.

PAYMENT FOR ALL THE ABOVE WORK WILL BE INCLUDED IN THE UNIT PRICE BID FOR THE FOLLOWING ITEM, WHICH HAS BEEN INCLUDED IN THE GENERAL SUMMARY FOR PAYMENT:

ITEM SPECIAL DITCH REALIGNMENT--- LUMP SUM

FASTENING OF BRIDGE TERMINAL ASSEMBLIES

Bridge terminal assemblies which are to be fastened to existing concrete parapets by steel box blockouts shall be attached by means of through bolts. Expansion anchor bolts will not be permitted. Where self-drilling anchors are permitted and are used, the holes shall be drilled with the tubular expansion shell, rather than with a bit, to insure a proper fit. The anchors shall be installed flush with the surface of concrete.

Where anchorage by expansion bolts to a deteriorated concrete surface would result in a questionable attachment, through bolts shall be used instead, at the discretion of the Engineer.

SEALING JOINTS IN CONCRETE BASE

The joints shall be sealed with material meeting the requirements of 705.01 or 705.02.

Payment for construction in sealing of these joints shall be included in the unit price bid for concrete base.

FHWA REGION	STATE	PROJECT	
5	OHIO		

30-B

JEF-7-11.80

GENERAL NOTES

ITEM SPECIAL - REMOVAL OF LIGHT POLE

THIS WORK SHALL CONSIST OF REMOVAL OF THE LIGHT POLE (POLE C-15 RIGHT OF STATION 842 + 20) AND RESTORATION OF THE LIGHTING POWER CIRCUIT IN ACCORDANCE WITH THE FOLLOWING.

THE CONTRACTOR SHALL NOTIFY THE CITY ENGINEER OF THE CITY OF STEUBENVILLE 30 DAYS BEFORE BEGINNING THIS WORK SO THAT THE CITY CAN ARRANGE TO HAVE A TEMPORARY LIGHTING UNIT INSTALLED (ON OHIO POWER POLE 166-B-4) BEFORE THE EXISTING LIGHT IS REMOVED. THE TEMPORARY UNIT IS TO REMAIN IN OPERATION UNTIL SUCH TIME AS THE ANTICIPATED REPLACEMENT OF THE ENTIRE LIGHTING SYSTEM IN THE AREA IS UNDERTAKEN.

THE EXISTING LUMINAIRE AND POLE SHALL BE CAREFULLY REMOVED, SO AS TO AVOID DAMAGE, AND STORED ON THE PROJECT FOR SALVAGE BY THE CITY OF STEUBENVILLE.

THE EXISTING POLE FOUNDATION SHALL BE REMOVED TO A MINIMUM OF 1 FOOT BELOW SUBGRADE OF THE PROPOSED PAVEMENT.

A 24 INCH METAL PULL BOX, PER STANDARD DRAWING HL-10 AND SPECIFICATION 625 SHALL BE PROVIDED AT STATION 841 + 97, 43 FEET RIGHT . THE EXISTING UNDERGROUND CABLE TO POLE C-15 SHALL BE UNEARTHED AND RELOCATED TO THIS PULL BOX. EXCESS CABLE SHALL BE CUT OFF. THE LIGHTING CIRCUIT SHALL BE RESTORED BY SPLICING THE CABLE ENDS USING PERMANENT EPOXY ENCAPSULATED SPLICES IN ACCORDANCE WITH SPECIFICATION 625 AND APPROPRIATE FOR 10,500 VOLT NORMAL LINE VOLTAGE. THE CONTRACTOR SHALL CONSULT THE CITY ENGINEER AND THE OHIO POWER COMPANY FOR ADVICE CONCERNING CIRCUIT WIRING CHARACTERISTICS AND PARTICULARS OF WHAT MUST BE DONE TO RETAIN PROPER FUNCTION OF THE CIRCUIT.

PAYMENT WILL BE AT THE CONTRACT LUMP SUM PRICE BID FOR THE ITEM LISTED BELOW, WHICH PRICE WILL INCLUDE ALL LABOR, MATERIALS, EQUIPMENT AND INCIDENTALS NECESSARY TO PERFORM THE REQUIRED WORK. THE FOLLOWING ITEM HAS BEEN INCLUDED IN THE GENERAL SUMMARY FOR PAYMENT:

ITEM SPECIAL, REMOVAL OF LIGHT POLE.....LUMP SUM

RE-ESTABLISHMENT OF EXISTING CONTROL MONUMENTS

THE RIGHT OF WAY CONTROL MONUMENTS, LOCATED ON OR NEAR THE CENTERLINE OF S.R.7 AND IDENTIFIED ON THE FOLLOWING CENTERLINE SURVEY PLATS AS RECORDED IN THE PLAT BOOK RECORDS OF JEFFERSON COUNTY:

JEF - 7 - 11.35	VOL. 9	PAGE 13
JEF - 7 - 13.53	VOL. 9	PAGE 19
JEF - 7 - 15.30	VOL. 9	PAGE 16
JEF - 7 - 16.06	VOL. 9	PAGE 12
JEF - 7 - 17.33	VOL. 9	PAGE 26

RIGHT OF WAY CONTROL MONUMENT

AT THE STATIONS SHOWN ON THIS TABLE, SHALL BE PRESERVED IN THE FOLLOWING MANNER:

THE CONTRACTOR SHALL ESTABLISH APPROPRIATE SURVEY CONTROL AT LOCATIONS THAT WILL REMAIN UNDISTURBED DURING CONSTRUCTION OF THIS PROJECT. SURVEY CONTROL SHALL BE SET PRIOR TO ANY WORK ON THE EXISTING MEDIAN. UPON COMPLETION OF ALL OTHER PLAN WORK, THE SURVEY CONTROL SHALL BE USED TO SET THE REFERENCE MONUMENTS. THE SETTING OF MONUMENTS SHALL BE PERFORMED UNDER THE DIRECT SUPERVISION OF A REGISTERED PROFESSIONAL SURVEYOR. ALL MONUMENTS WHICH ARE SET, WHICH DIFFER FROM THOSE LISTED ON THE TABLE , SHALL BE RECORDED BY FILING AN AFFIDAVIT WITH THE DISTRICT DEPUTY DIRECTOR, ODOT, DISTRICT 11, NEW PHILA-
* DELPHIA, OHIO, LISTING THE CHANGES. ALL MONUMENTS SHALL BE SET AT THE OFFSETS SHOWN ON THIS TABLE PERPENDICULAR TO THE LINES SHOWN ON THE CENTERLINE SURVEY PLATS OF THE ORIGINAL CONSTRUCTION PLANS, COPIES OF THE CENTERLINE SURVEY PLATS LISTED ABOVE MAY BE OBTAINED FROM THE JEFFERSON COUNTY COURTHOUSE, STEUBENVILLE, OHIO OR OHIO DEPARTMENT OF TRANSPORTATION, DISTRICT 11, NEW PHILADELPHIA, OHIO.

THE FOLLOWING QUANTITIES HAVE BEEN CARRIED TO THE GENERAL SUMMARY FOR THE WORK DESCRIBED ABOVE:

	A	B	C	
ITEM 604 REFERENCE MONUMENT, STANDARD	44	46	34	EACH

REPLACEMENT CENTERLINE REFERENCE MONUMENTS

	Station	Each	Offset Left	Offset Right
State Funding	627+75.00	2	38.50'	38.50'
	633+00.18	2	38.50'	38.50'
	635+34.53	2	60.00'	38.50'
	* 638+01.16	2	50.00'	38.50'
	646+00.00	2	38.50'	62.00'
Mingo Junction Funding	654+00.00	2	38.50'	38.50'
	662+00.00	2	38.50'	38.50'
	* 660+60.16 N.B.	2	56.00'	38.50'
	661+60.16 N.B.	2	61.00'	61.00'
	664+39.05 N.B.	2	66.00'	55.00'
	* 665+39.05 N.B.	2	75.00'	60.00'
	* 667+65.07 N.B.	2	50.00'	50.00'
	669+65.06 N.B.	2	56.00'	45.00'
	* 682+02.51 S.B.	2	38.50'	38.50'
	684+02.50 S.B.	2	56.00	56.00'
	688+07.23 S.B.	2	38.50'	38.50'
	* 690+07.25	2	38.50'	38.50'
	* 694+67.75	2	38.50'	38.50'
	695+67.75	2	38.50'	38.50'
	* 705+64.88	2	50.00'	50.00'
	707+31.54	2	50.00'	38.50'
	708+08.16	2	50.00'	38.50'
	* 709+74.84	2	30.00'	38.50'
	* 715+28.03	2	38.50'	38.50'
	717+28.02	2	45.00'	38.50'
	725+03.02	2	38.50'	28.50'
State Funding	* 727+03.01	2	38.50'	28.50'
	731+52.66	2	38.50'	28.50'
	739+00.00	2	38.50'	38.50'
	746+52.66	2	38.50'	38.50'
	* 749+06.63	2	38.50'	38.50'
	750+39.96	2	38.50'	38.50'
	755+80.07	2	38.50'	38.50'
	* 757+13.40	2	38.50'	38.50'
	* 758+91.32	2	38.50'	38.50'
	760+91.31	2	38.50'	38.50'
	761+16.31	2	38.50'	38.50'
	* 763+16.33	2	38.50'	38.50'
	* 769+80.24	2	38.50'	38.50'
Steubenville Funding	771+39.64	2	38.50'	38.50'
	776+14.64	2	38.50'	38.50'
	778+14.64	2	38.50'	38.50'
	784+84.33	2	38.50'	38.50'
	790+31.78 Back= 790+31.53 Ahead	2	38.50'	38.50'
	795+90.22	2	38.50'	38.50'
	802+45.78	2	38.50'	38.50'
	804+16.97 N.B.&S.B.	2	38.50'	38.50'
	812+16.97 N.B.	2	10.00'	41.00'
	814+59.23 N.B.	2	10.00'	41.00'
	829+20.26 N.B.	2	5.00'	37.00'
	851+05.84	2	37.00'	37.00'
	857+31.34	2	42.00'	42.00'
	860+59.77	2	37.00'	37.00'
	863+18.91	2	37.00'	37.00'
	866+02.24	2	37.00'	37.00'
	869+73.08	2	37.00'	37.00'
	873+71.99	2	37.00'	37.00'
	877+27.13	2	37.00'	37.00'
	883+10.46	2	37.00	40.00'
	892+71.23	2	40.00'	40.00'
	903+03.68 Back= 903+10.94 Ahead	2	40.00'	40.00'
	905+33.03	2	50.00'	40.00'
	TOTAL ITEM 604	124		

* Monument on curve elimination point, set monuments perpendicular to main tangent. For details see original centerline survey plat.

DWN	CKD	CKD	CKD
LOB	JHL	JHL	JHL
5-5-80			

GENERAL SUMMARY TABLE

Calc. By WCR 12-28-78
Chkd By PH 12-29-78

FED. RD DIVISION	STATE	PROJECT	
2	OHIO	-	

31

JEF-7-11.80

FROM SHEET NO.

29 A	29 B	29 C	43 C	44 C	45 A	45 C	46 A	47 A	48 A	50 A	51 A	51 C	52 C	53 C	54 B	54 C	55 B	56 B	56 C	57 B	58 B	59 B	60 B	61 B	62 B	63 B	64 B	65 B	66 B	67 B	68 B	69 B	70 B	71 B	72 B	73 B	74 B	75 B	(A) FEDERAL STATE & MINGO JUNCTION	(B) FEDERAL STATE & STEUBENVILLE	SUB-TOTAL	(C) STATE FEDERAL	GRAND TOTAL	UNIT	ITEM	DESCRIPTION	TYPE CODE Y101 Unless Noted Otherwise
																																															ROADWAY
			486		224	381	1124	461	617	410	414	233	649	491	299	15	328	211	120	530																			3250	1368	4618	2375	6993	Sq. Yd.	202	9" Concrete Median Removed	
																									80	48	7	28	374	651	317	159	336	685	393	141	607			3826	3826		3826	Sq. Yd.	202	4" Median Pavement Removed	
			2608	239	636	803	782	2011	850	1418	1170	753	2035	1521	927	76	1000	932	68	961	70	255	987	987	204			40	799	685	175	141		31	460	453	1053	536	6867	10696	17563	9103	26666	Lin. Ft.	202	Guardrail Removed For Storage	
									225																														225		225		225	Lin. Ft.	202	Guardrail Barrier Design, Removed For Storage	
																				39	435	400	178	50	675	288	40	265	2000	1717	1900	756	722	1827	893	749	1584	414		14932	14932		14932	Lin. Ft.	202	Curb Removed	
																																150								150	150		150	Sq. Ft.	202	Walk Removed	
																																					2			2	2		2	Each	202	Inlet Abandoned	
																												1		1	1	1								4	4		4	Each	202	Catch Basin Abandoned	
																														44										44	44		44	Sq. Yd.	202	Pavement Removed	
	1.007																																							1.007	1.007		1.007	Mile	203	Linear Grading, Method 1	
0.711	1.718	2.137																																					0.711	1.718	2.429	2.137	4.566	Mile	203	Linear Grading, Method 2	
1.568	0.934	2.912																																					1.568	0.934	2.502	2.912	5.414	Mile	203	Linear Grading, Method 3	
0.146		0.052																																					0.146		0.146	0.052	0.198	Mile	203	Linear Grading, Method 4	
44	46	34																																					44	46	90	34	124	Each	604	Reference Monument, Standard	
						25.0																																				25.00	25.00	Lin. Ft.	606	Guard Rail, Type 4	
			2256.0	1357.0	830.5	744.5	833.0	1904.5	912.5	1678.0	1145.0	753.0	2035.0	1521.0	926.5	76.0	1000.0	932.0	68.0	961.0	52.5	12.5	532.5	924.0				15.0	1000.0	472.5	137.5	125.0		6.0	460.0	415.5	955.0	83.5	7303.50	9011.00	16314.50	8810.50	25125.00	Lin. Ft.	606	Guard Rail, Type 5	
			6	1	1	2	1	1	3	2	1										1		1					1			1	1		1		1			9	7	16	9	25	Each	606	Anchor Assembly, Standard Type A	
			4		1	2	2	1	1	2											2		2	1						1	1	1				1		1	7	10	17	6	23	Each	606	Anchor Assembly, Standard Type T	
			2		2			2	1	8	1												1																14	1	15	2	17	Each	606	Bridge Terminal Assembly, Standard Type D	
							1																																1		1		1	Each	606	Anchor Assembly, Barrier Design, Standard Type A	
							50.0	100.0																															150.00		150.00		150.00	Lin. Ft.	606	Guard Rail, Barrier Design, Type 5	
																						81.0	215.0															380.0		676.00	676.00		676.00	Lin. Ft.	606	Guard Rail Rebuilt, Type 5, as per plan	
			2		2		1	1	1	8												1																	13	1	14	2	16	Each	606	Bridge Terminal Assembly, Standard Type J	
																																10								10	10		10	Lin. Ft.	607	Fence, Type CL	
30	60	30																																					30	60	90	30	120	Ton	616	Calcium Chloride	
750	1500	750																																					750	1500	2250	750	3000	M. Gal.	616	Water	
	Lump																																							Lump	Lump		Lump	Lump	Special	Removal of Light Pole	
																																														PAVEMENT
15	110																																						15	110	125		125	Cu. Yd.	301	Bituminous Aggregate Base; AC-20, RT-11 or RT-12	
25	183						482	150														16																	657	199	856		856	Cu. Yd.	304	Aggregate Base	
	3527																																							3527	3527		3527	Sq. Yd.	305	9" Portland Cement Concrete Base, modified as per plan	
30	944																																						30	944	974		974	Cu. Yd.	310	Subbase Type I	
	144																																							144	144		144	Cu. Yd.	402	Asphalt Concrete, AC-20	
443	620	779																																					443	620	1063	779	1842	Cu. Yd.	404	Asphalt Concrete, AC-20	
	346																																							346	346		346	Gal.	407	Tack Coat: RC-250, MS-2, RS-1, SS-1 or SS-1h	
	12																																							12	12		12	Ton	407	Cover Aggregate	
54	395																																						54	395	449		449	Gal.	409	Seal Coat Bituminous Material; MC-800, MC-3000, CBAE 800, RS-1, RS-2, CRS-1, CRS-2, RT-9, RT-10	
1	11																																						1	11	12		12	Cu. Yd.	409	Seal Coat Cover Aggregate No. 8	
																												63									145			208	208		208	Lin. Ft.	609	Curb, Standard Type 6	
							485	154																															639		639		639	Sq. Yd.	612	Concrete Median, Standard Type	
																																2								2	2		2	Each	613	Traffic Dividers	
			106		106			65	59	289	53																												572		572	106	678	Lin. Ft.	Special	Pressure Relief Joint, Standard Type C	

GENERAL SUMMARY TABLE

Calc. By W.C.R. 12-28-78
Chkd. By P.H. 12-29-78

FED. RD. DIVISION	STATE	PROJECT	
2	OHIO		

JEF-7-11.80

FROM SHEET NO.

29 A	29 B	29 C	43 C	45 A	45 C	46 A	47 A	48 A	50 A	51 A	51 C	52 C	53 C	54 B	54 C	55 B	56 B	56 C	57 B	58 B	59 B	60 B	61 B	62 B	63 B	64 B	65 B	66 B	67 B	68 B	69 B	70 B	71 B	72 B	73 B	74 B	75 B	(A) FEDERAL STATE & MINGO JUNCTION	(B) FEDERAL STATE & STEUBENVILLE	SUB-TOTAL	(C) FEDERAL & state	GRAND TOTAL	UNIT	ITEM	DESCRIPTION (TYPE CODE Y101 Unless Noted Otherwise)
																																													PAVEMENT
														575	19	960	621	359	870	430	237		50	276				157	510		153	161	689	430	194	901	362		7876	7876	359	8235	Lin. Ft.	622	Concrete Barrier, Standard Type A
			1495	723	1143	1150	534	1275	1338	1240	680	1940	1440		25																							6260		6260	6723	12,983	Lin. Ft.	622	Concrete Barrier, Standard Type A-1, Modified as per plan
																								155	144			588		689	192								1768	1768		1768	Lin. Ft.	622	Concrete Barrier, Standard Type A-2, Modified as per plan
																																200	200		162	19			581	581		581	Lin. Ft.	622	Concrete Barrier, Standard Type A-3, Modified as per plan
																											65	44	100	87									296	296		296	Lin. Ft.	622	Concrete Barrier, Standard Type A-5, Modified as per plan
																												211	185	114	65								575	575		575	Lin. Ft.	622	Concrete Barrier, Standard Type A-6, Modified as per plan
																					163	401															41		605	605		605	Lin. Ft.	622	Concrete Barrier, Standard Type D
						1088	535																															1623		1623		1623	Lin. Ft.	622	Concrete Barrier, Standard Type D-1, Modified as per plan
																																													DRAINAGE
									20	20									20								16		106	18	14							40	174	214		214	Lin. Ft.	603	12" Conduit, Type B
													20																												20	20	Lin. Ft.	603	15" Conduit, Type B
			1					1	4	2	1		3	2		2	1		2										2	1				1				7	11	18	5	23	Each	604	Inlet, Standard No. I-3A-10, Modified as per plan
													1																				1						1	1	1	2	Each	604	Inlet, Standard No. I-3A-12, Modified as per plan
			1			2	1	2	1		1								1	1																		6	2	8	2	10	Each	604	Inlet, Standard No. I-3A-14, Modified as per plan
											1	3																													4	4	Each	604	Inlet, Standard No. I-3A-16, Modified as per plan
																			1					1						2	2								6	6		6	Each	604	Inlet, Standard No. I-3A
																																			1					1	1		1	Each	604	Inlet, Standard No. 2-6
																																			1					1	1		1	Each	604	Inlet, Standard No. 2-8
																																				1				1	1		1	Each	604	Inlet, Standard No. 2-10
																											1			1										2	2		2	Each	604	Catch Basin, Standard No. 3-A
								1																												2		1	2	3		3	Each	604	Manhole, Type 1
																																				1				1	1		1	Each	604	Manhole, Type 2
																																					1			1	1		1	Each	604	Manhole, Type 3
																																				1				1	1		1	Each	604	Manhole Reconstructed To Grade
			43	60			14	16	80	18																												188		188	43	231	Lin. Ft.	605	6" Unclassified Pipe Underdrain, 707.01 Type III or 707.12 Type III
																																													EROSION CONTROL Y005
0.80	0.96	1.51																																				0.80	0.96	1.76	1.51	3.27	Ton	659	Commercial Fertilizer
28.12	56.25	28.12																																				28	56	84	28	112	M.Gal.	659	Water
3.20	3.50	6.73																																				3.20	3.50	6.70	6.73	13.43	Ton	659	Agricultural Liming
7113	7781	14968																																				7113	7781	14894	14965	29,859	Sq. Yd.	659	Seeding and Mulching
Lump																																						Lump		Lump		Lump	Lump	Special	Ditch Realignment
																																													TRAFFIC CONTROL For Quantities, See Sheet No. 87
																																													STRUCTURES OVER 20' SPAN For Quantities, See Sheet No. 166
Lump	Lump	Lump																																				Lump	Lump	Lump	Lump	Lump	Lump	619	Field Office
																																						Lump	Lump	Lump	Lump	Lump	Lump	623	Construction Layout Stakes
Lump	Lump	Lump																																				Lump	Lump	Lump	Lump	Lump	Lump	614	Maintaining Traffic
																																											Lump	624	Mobilization

FHWA REGION	STATE	PROJECT	
5	OHIO		

JEF-7-11.80

33

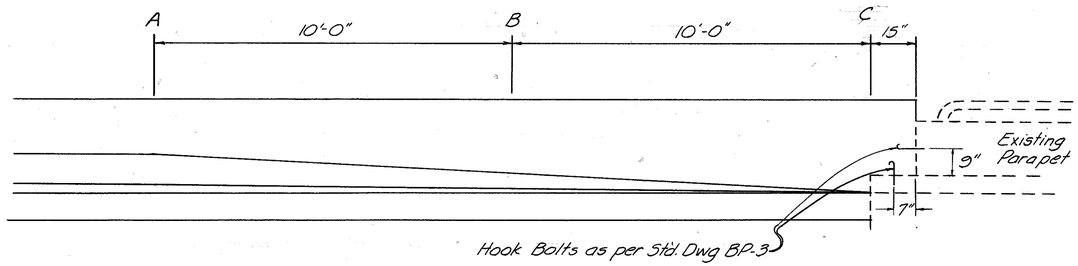

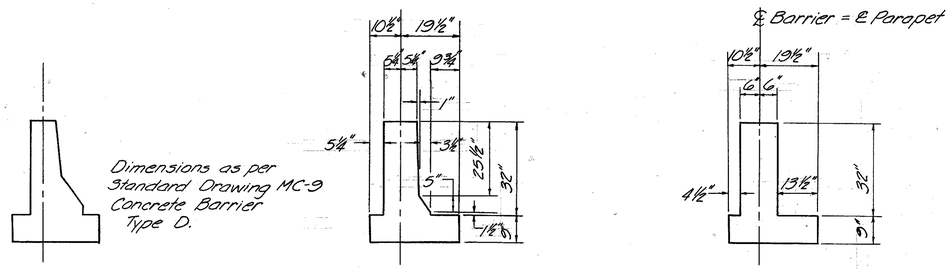

SECTION A-A SECTION B-B SECTION C-C

CONCRETE BARRIER CONNECTION TO EXISTING PARAPET WALL

If permissible construction joint is used, dowels shall be inserted as per Standard Drawing MC-9, except that dowels shall project only 3" above the permissible construction joint.

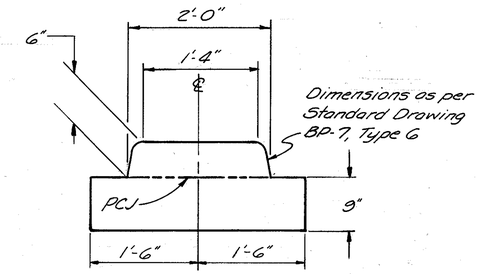

CONCRETE BARRIER
TYPE A-3
Modified, as per plan

Sta. 879+24 to Sta. 880+24 Sta. 881+13 to Sta. 882+13
Sta. 888+45 to Sta. 889+45 Sta. 890+36 to Sta. 891+36
Sta. 899+94 to Sta. 900+94 Sta. 901+75 to Sta. 902+69

Not to Scale

If permissible construction joint is used, dowels shall be inserted as per Standard Drawing MC-9.

NOTE: Dimensions not shown are as per Standard Drawing MC-9.

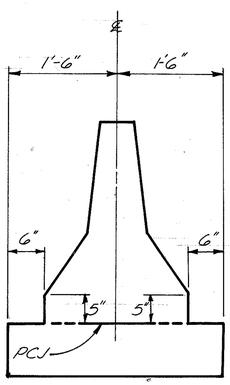

CONCRETE BARRIER
TYPE A-1
Modified, as per plan

Sta. 622+85 to Sta. 770+25

Not to Scale

NOTE: For Dimensions in the transition area, See Barrier Transition Detail Sheet No. 39

If permissible construction joint is used, dowels shall be inserted as per Standard Drawing MC-9.

NOTE: Dimensions not shown are as per Standard Drawing MC-9.

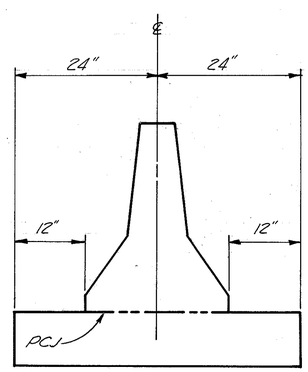

CONCRETE BARRIER
TYPE A-2
Modified, as per plan

Sta. 830+25.51 to Sta. 833+44 Sta. 841+53 to Sta. 842+98
Sta. 834+10 to Sta. 835+62 Sta. 845+94 to Sta. 853+92.86
Sta. 836+64 to Sta. 838+78 Sta. 860+59.77 to Sta. 862+85
Sta. 839+49 to Sta. 841+13 Sta. 865+87 to Sta. 877+27.13

Not to Scale

If permissible construction joint is used, dowels shall be inserted as per Standard Drawing MC-9.

NOTE: Dimensions not shown are as per Standard Drawing MC-9.

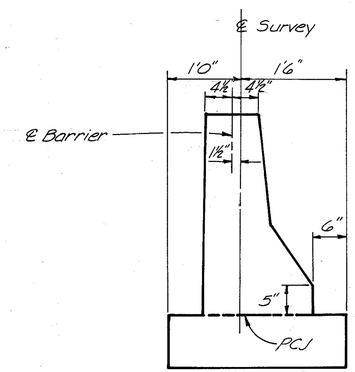

CONCRETE BARRIER
TYPE D-1
Modified, as per plan

Sta. 659+36.2 to Sta. 667+87.4
Sta. 684+18.7 to Sta. 687+92.1

Not to Scale

To be used in conjunction with Catch Basin and conduit installation

NOTE: See General Notes, Sheet No. 30-A

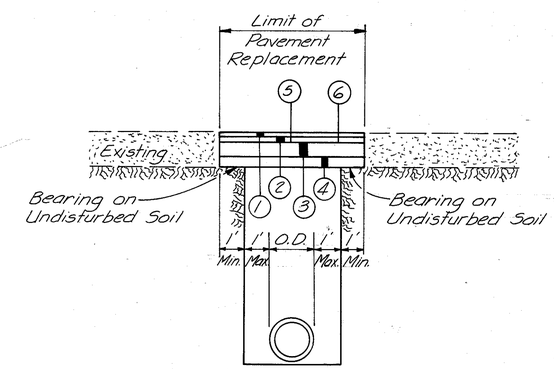

PAVEMENT COMPOSITION

Sta. 622+85 to Sta. 809+00
1 — 2" Item 404
2 — 1½" Item 402
3 — 10" Item 301
4 — 9" Item 310

Sta. 809+00 to Sta. 916+68
1 — 1½" Item 404
2 — 1½" Item 402
3 — 9" Item 305
4 — 6" Item 310
5 — Item 407
6 — Item 407

PAVEMENT REPLACEMENT
For Storm Drains
Not to Scale

FHWA REGION	STATE	PROJECT	
5	OHIO		

34

JEF-7-11.80

NOTE:
Remove existing asphalt down to the concrete base to provide for concrete barrier construction.
Payment for this removal and proposed dowels shall be included in the unit price for Item 622 Concrete Barrier Type A-6.
See Standard Drawing MC-9, Concrete Barrier Type A for dimensions not shown.
Use of the self drilling type of anchor shall not be permitted with proposed concrete base. Dowels shall be as per Standard Drawing MC-9.

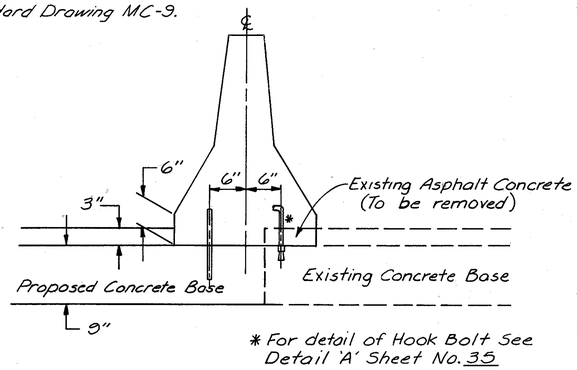

CONCRETE BARRIER TYPE A-6 MODIFIED, AS PER PLAN

Not to Scale

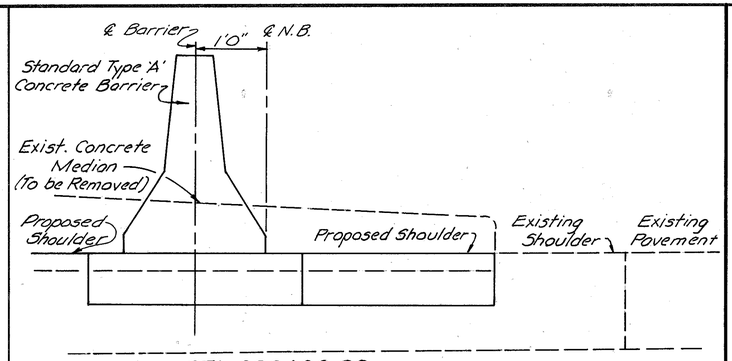

STA. 809+00.00

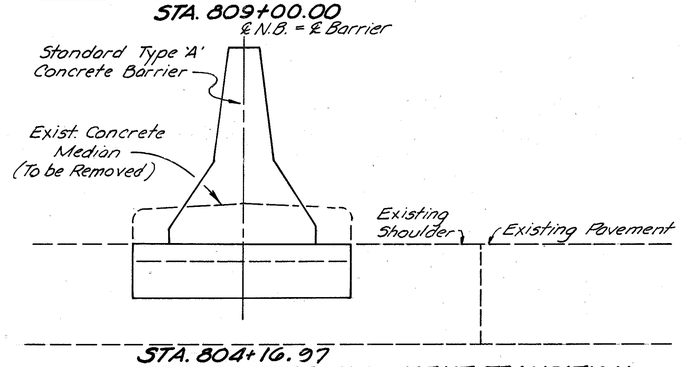

STA. 804+16.97

CONCRETE BARRIER ALIGNMENT TRANSITION

Not To Scale

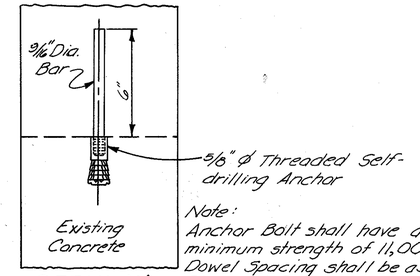

DETAIL 'A'

Note:
Anchor Bolt shall have a minimum strength of 11,000 pounds. Dowel Spacing shall be as per Standard Drawing MC-9.

Note:
Remove existing asphalt down to concrete base to provide for concrete barrier construction.
Payment for this removal and proposed dowels shall be included in the unit price for Item 622 Concrete Barrier Type A.
For dimensions of Concrete Barrier, Type A, See Standard Drawing, MC-9.
Use of the self drilling type of anchor shall not be permitted with proposed concrete base. Dowels shall be as per Standard Drawing, MC-9.

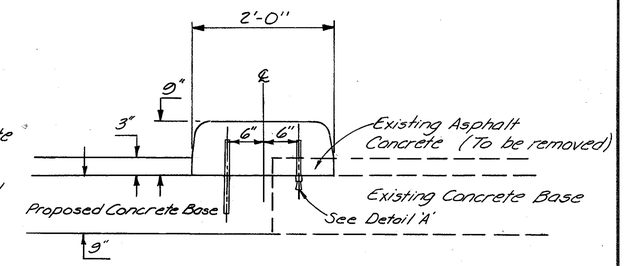

CONCRETE BARRIER TYPE A-5 MODIFIED, AS PER PLAN

Not to Scale

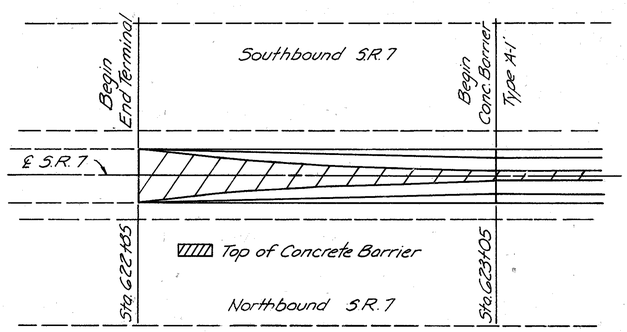

PLAN

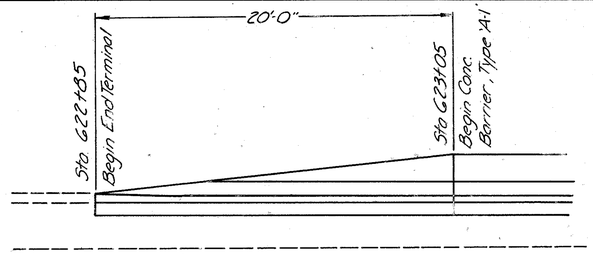

PROFILE

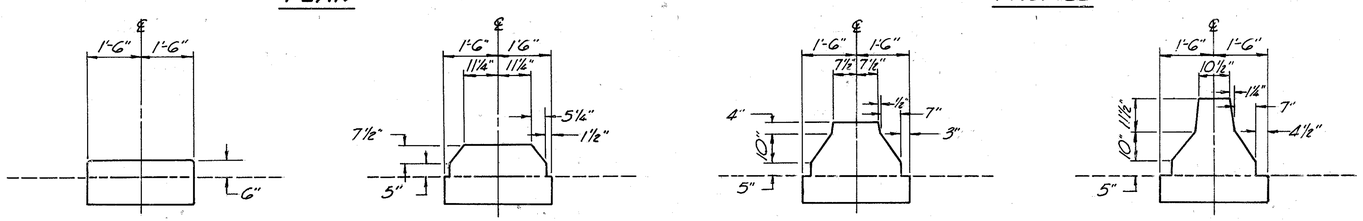

622+85 (Match Existing) | 622+90 | 622+95 | 623+00

ELEVATION

CONCRETE BARRIER END TERMINAL, MODIFIED AS PER PLAN

Sta. 622+85 to Sta. 623+05

NOT TO SCALE

Note: Three new posts with spacer blocks shall be set in concrete as shown. A terminal connector shall be installed on the concrete barrier as detailed. The use of self drilling anchors will not be permitted for this connection. An insert anchor assembly is to be placed during barrier construction. Payment for all materials and labor required to make this connection shall be included with the unit price bid for Item 622 Concrete Barrier, Standard Type 'A'.

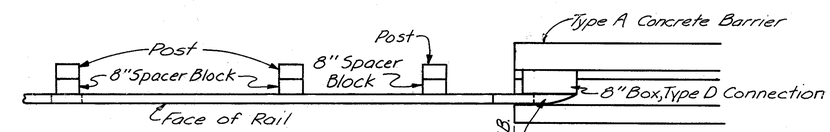

PLAN

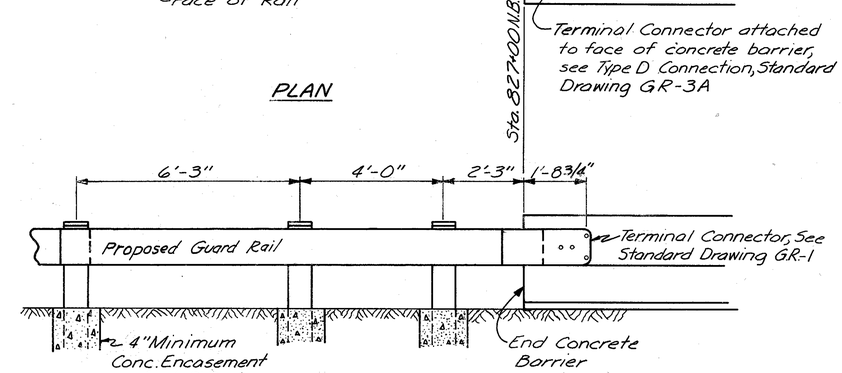

ELEVATION

GUARD RAIL TERMINAL CONNECTION TO CONCRETE BARRIER

NOT TO SCALE

See Sheet No. 61

Drawn GW	CKD WCR	REVISED S.WATT	RK CHKD WCR
5-5-78	5-6-78	5-10-78	5-22-78

FHWA REGION	STATE	PROJECT	
5	OHIO		

35

JEF-7-11.80

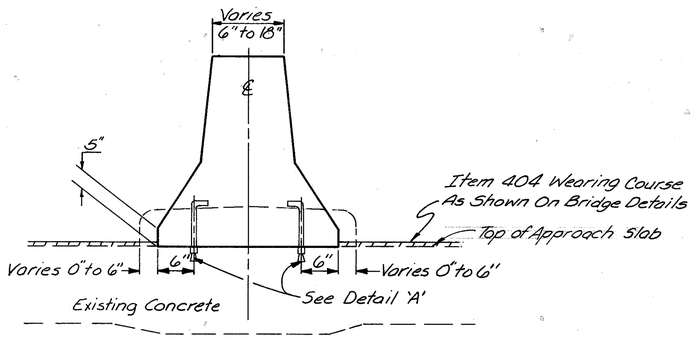

SECTION B-B

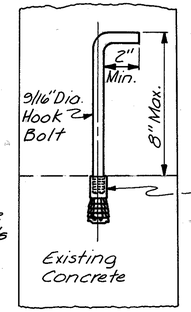

Note:
Hook bolt shall have a minimum strength of 11,000 pounds.

DETAIL 'A'

APPROACH SLAB LIMITS	
From	To
627+88.23	628+13.23
629+92.91	630+17.91
654+07.75	654+32.75
655+67.25	655+92.25
672+96.71	673+21.71
681+55.42	681+80.42

NOTE:
The existing concrete median shall be removed to the top of the approach slab thru the transition. Payment for median removal and hook bolt assemblies shall be included in the unit price bid for Item 622-Concrete Barrier Type 'A-1', Modified as per plan.
FOR DETAIL, CONCRETE BARRIER TYPE 'A-1', Modified as per plan, See Sheet No 33

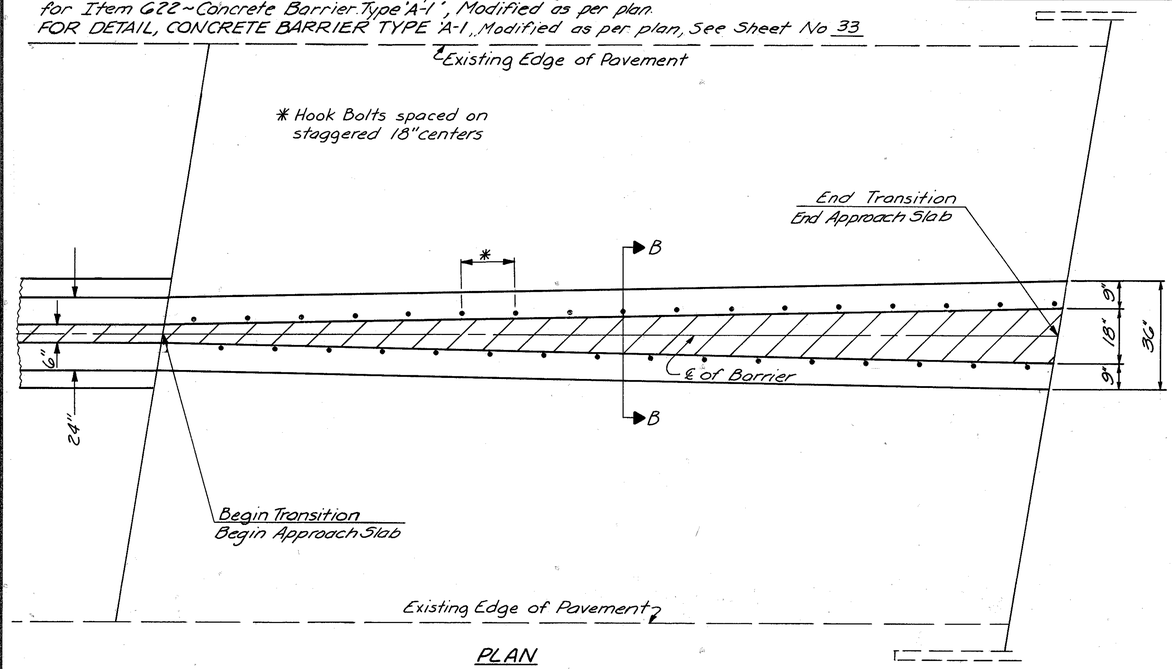

PLAN

CONCRETE BARRIER TRANSITION THRU APPROACH SLABS
TYPE I

Not to Scale

Top of Concrete Barrier

Note:
The other end of bridge will be the reverse of the transition shown.

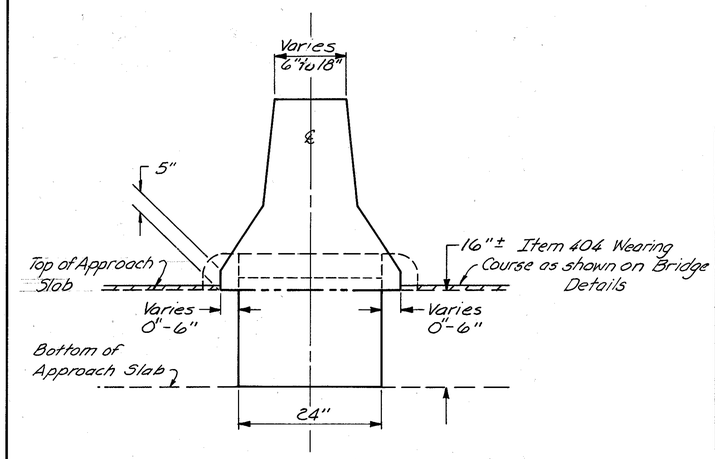

SECTION A-A

APPROACH SLAB LIMITS	
From	To
697+35.40	697+60.40
698+82.22	699+07.22
701+75.00	702+00.00
704+92.60	705+17.60
712+75.97	713+00.97
714+49.03	714+74.03

NOTE:
The existing curb and concrete median shall be removed to the top of the approach slabs and the earth between the approach slabs shall be excavated for a depth of approximately 16". Payment for curb and concrete median removal and excavation, thru the transition, shall be included in the unit price bid for Item 622-Concrete Barrier Type 'A-1', Modified as per plan
FOR DETAIL, CONCRETE BARRIER TYPE 'A-1', Modified as per plan, See Sheet No. 33

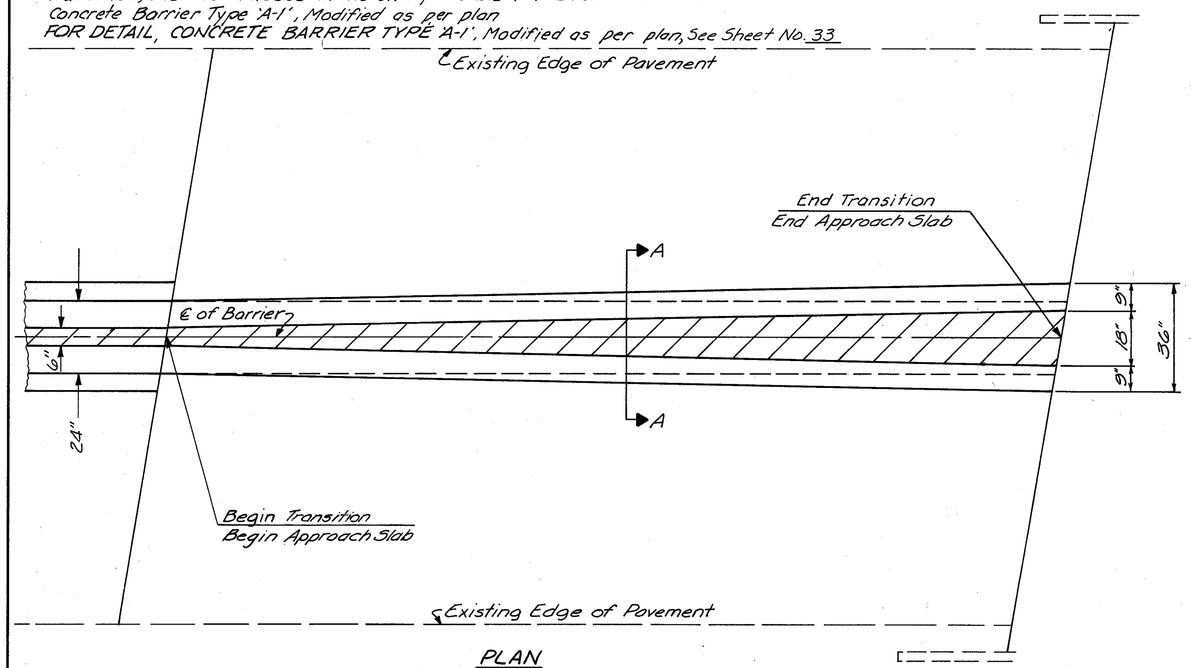

PLAN

CONCRETE BARRIER TRANSITION THRU APPROACH SLABS
TYPE II

Not to Scale

Top of Concrete Barrier

Note:
The other end of bridge will be the reverse of the transition shown.

Drawn	Chkd	Revised	Rev. Chkd
GW 5-5-78	WLR 5-10-78	GW 5-22-78	WLR 5-22-78

W.E. QUICKSALL & ASSOCIATES INC. Consulting Engineers

BARRIER TRANSITIONS AT APPROACH SLABS

FHWA REGION	STATE	PROJECT	
5	OHIO		

36

JEF-7-11.80

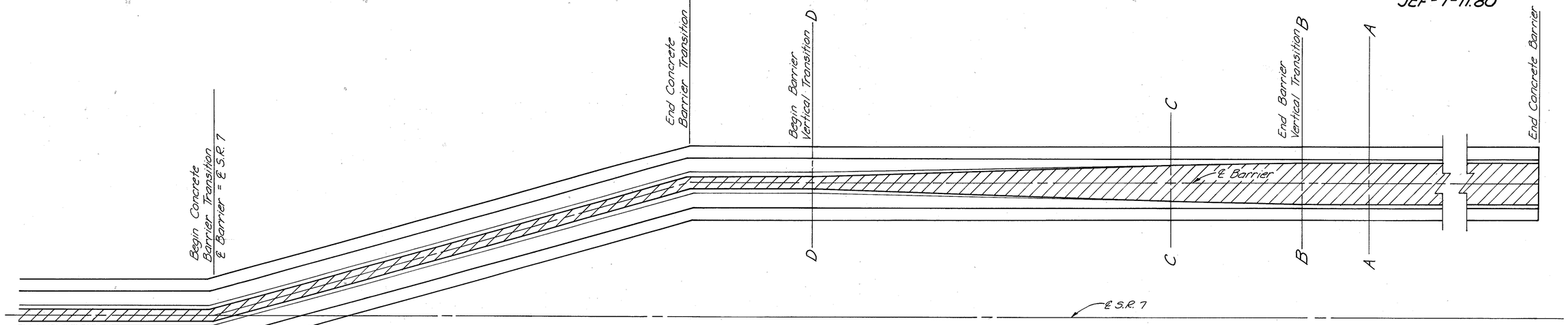

BARRIER VERTICAL TRANSITION
BEYOND
BARRIER HORIZONTAL TRANSITION

Not to Scale

Top of Concrete Barrier

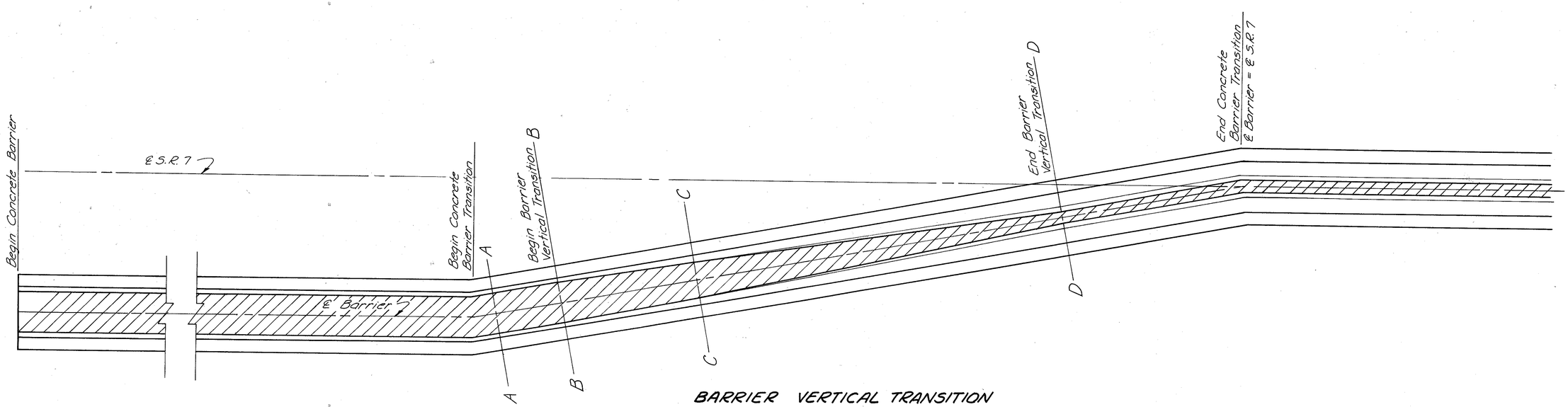

BARRIER VERTICAL TRANSITION
WITHIN
BARRIER HORIZONTAL TRANSITION

Not to Scale

Top of Concrete Barrier

For Additional Left Turn Lane Barrier Details, See Sheet No. 37

Dwn.	Chkd.
L.D.B.	G.W.
6-3-78	10-4-78

W.E. QUICKSALL & ASSOCIATES INC. Consulting Engineers

LEFT TURN LANE BARRIER DETAILS

FHWA REGION	STATE	PROJECT	
5	OHIO		

37

JEF-7-11.80

INTERSECTION	BARRIER HORIZONTAL TRANSITION				BARRIER VERTICAL TRANSITION		END BARRIER		BEGIN BARRIER	
	Begin Station	℄ Offset	End Station	℄ Offset	Begin Station	End Station	Station	Offset	Station	Offset
South Street	845+94	10' Rt.	848+05.3	0'	845+94	846+14			844+86	10' Rt.
Washington Street	860+59.77	0'	861+59.77	5.5' Lt.	862+65	862+85	863+85	5.5' Lt.		
Washington Street	865+87	5.5' Rt.	867+21	0'	865+87	866+07			865+00	5.5' Rt.
Logan Street	877+27.13	0'	880+24	5.5' Lt.	879+04	879+24	880+24	5.5' Lt.		
Logan Street	884+20	5.5' Rt.	884+70	0'	882+13	882+33			881+13	5.5' Rt.
Ross Street	884+70	0'	885+20	5.5' Lt.	888+25	888+45	889+45	5.5' Lt.		
Ross Street	896+25	5.5' Rt.	896+63	0'	891+36	891+56			890+36	5.5' Rt.
Franklin St. Conn.	896+63	0'	897+25	5.5' Lt.	899+74	899+94	900+94	5.5' Lt.		
Franklin St. Conn.	901+75	5.5' Lt.	904+50	0'	902+69	902+89			901+75	5.5' Lt.

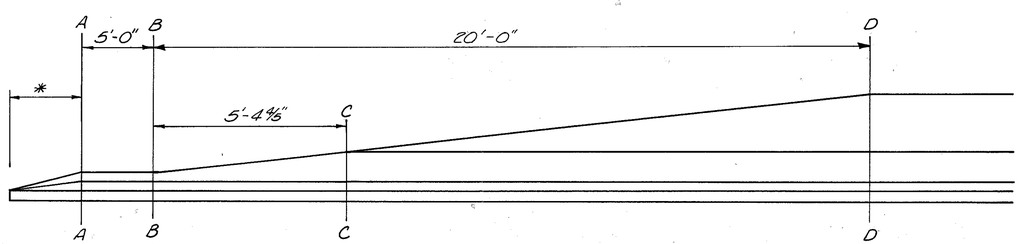

PROFILE

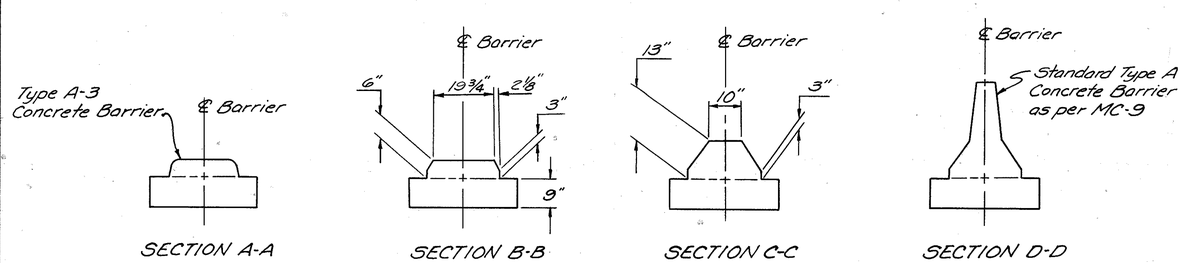

ELEVATION

* Transition from 0" to 6" in 10' except at Sta. 865+00 and Sta. 900+94

Designed by W.E. 12-21-77
Checked
Dwn. L.D.B. 10-4-78

LEFT TURN LANE BARRIER DETAILS

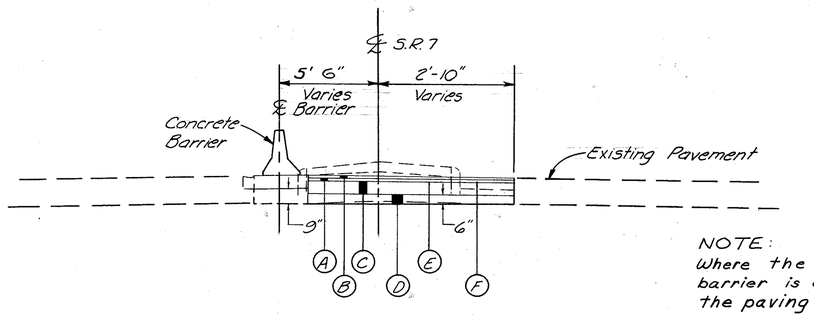

Sta. 875+65.2 to Sta. 880+24.0 Lt.
Sta. 881+13.0 to Sta. 885+29.1 Rt.
Sta. 884+10.9 to Sta. 889+56.0 Lt.
Sta. 890+36.0 to Sta. 897+34.1 Rt.
Sta. 896+15.9 to Sta. 900+94.0 Lt.
Sta. 901+68.0 to Sta. 906+25.0 Rt.

NOTE:
Where the proposed concrete barrier is constructed within the paving limits shown on this detail, the existing subbase material shall be utilized as base material for the proposed concrete barrier.

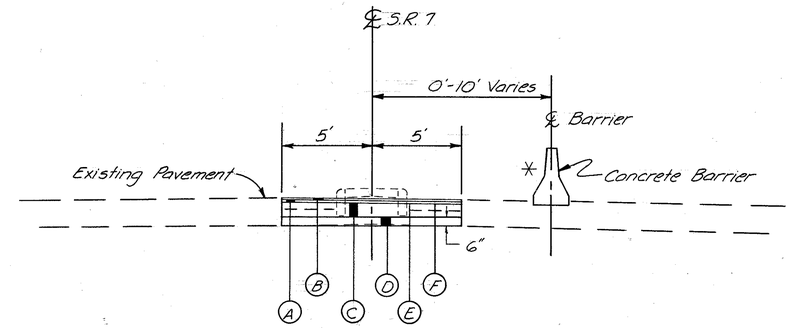

Sta. 844+86.0 to Sta. 848+68.7

* For Concrete Barrier Treatment in Existing Pavement, See Miscellaneous Detail, Sheet No. 34

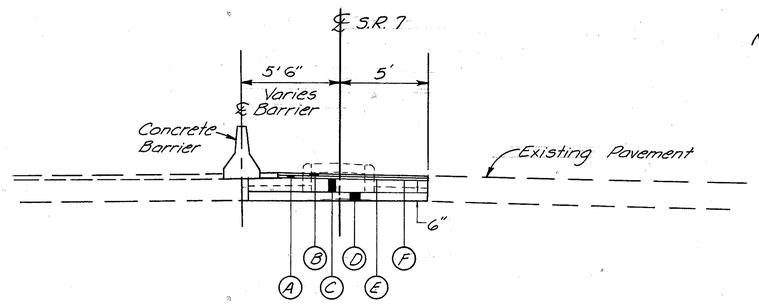

Sta. 860+05.2 to Sta. 864+02.0 Lt.
Sta. 864+87.0 to Sta. 867+94.1 Rt.

NOTE:
Tie the proposed concrete base to the existing concrete base by use of Hook Bolts, as per Standard Drawing BP-3.

LEGEND

- (A) — Item 402 1½" Asphalt Concrete AC-20
- (B) — Item 404 1½" Asphalt Concrete AC-20
- (C) — Item 305 9" Portland Cement Concrete Base
- (D) — Item 310 Subbase Type I (Thickness as shown)
- (E) — Item 407 Tack Coat: RC-250, MS-2, RS-1, SS-1, or SS 1h, applied at the rate of 0.10 gal. per sq. yd.
- (F) — Item 407 Cover Aggregate

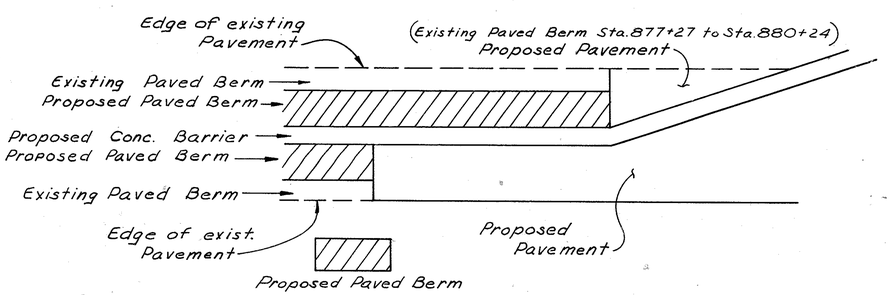

PLAN

LEFT TURN LANE PAVEMENT DETAILS

FHWA REGION	STATE	PROJECT	
5	OHIO		

39

JEF-7-11.80

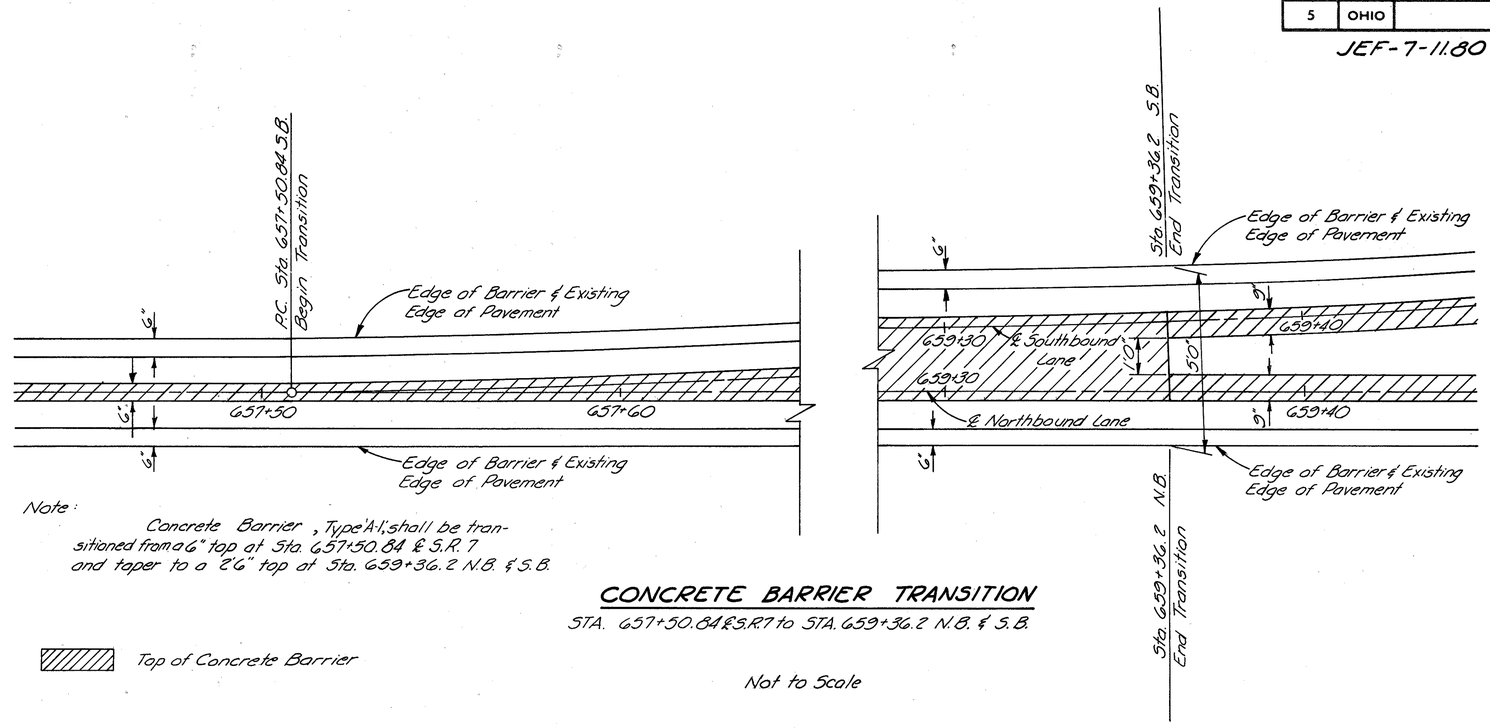

Note:

Concrete Barrier, Type 'A-1', shall be transitioned from a 6" top at Sta. 657+50.84 & S.R. 7 and taper to a 2'6" top at Sta. 659+36.2 N.B. & S.B.

CONCRETE BARRIER TRANSITION

STA. 657+50.84 & S.R. 7 to STA. 659+36.2 N.B. & S.B.

Top of Concrete Barrier

Not to Scale

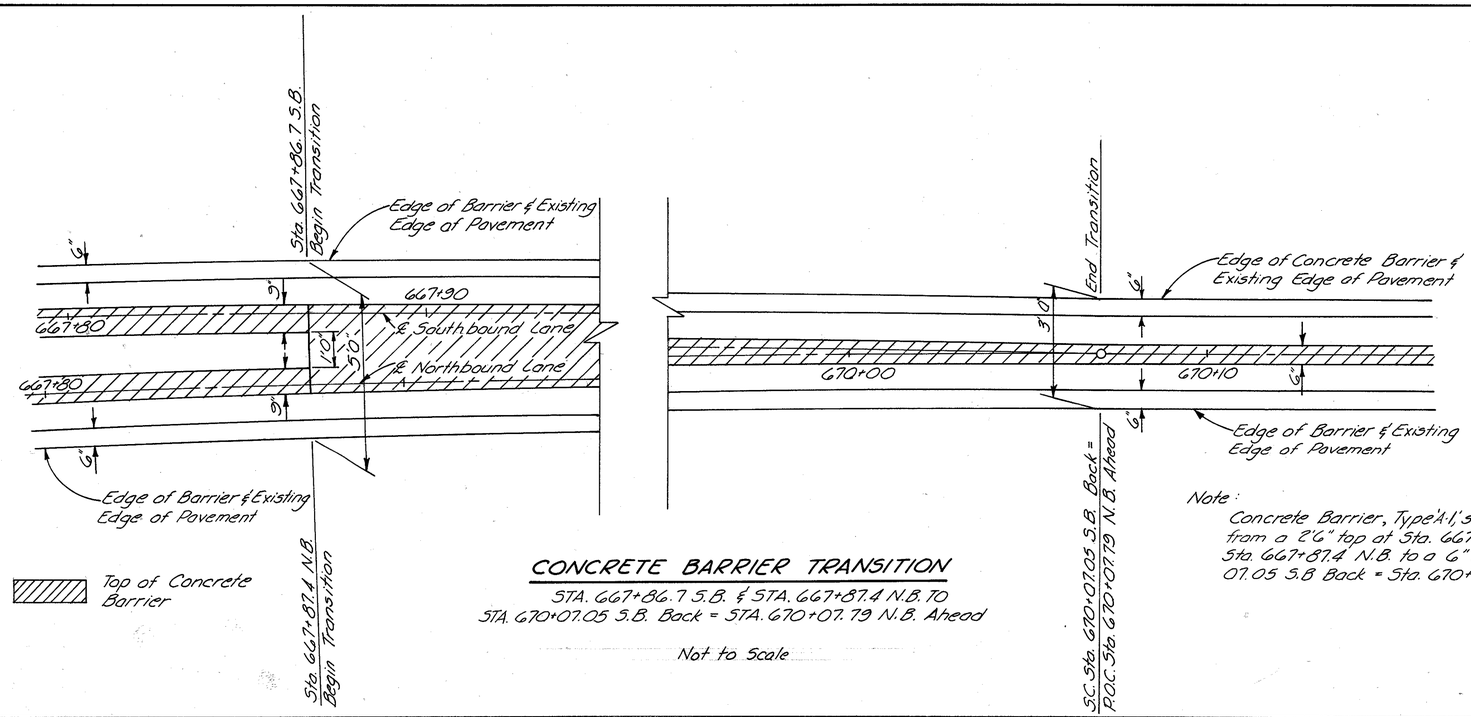

Top of Concrete Barrier

CONCRETE BARRIER TRANSITION

STA. 667+86.7 S.B. & STA. 667+87.4 N.B. TO
STA. 670+07.05 S.B. Back = STA. 670+07.79 N.B. Ahead

Not to Scale

Note:

Concrete Barrier, Type 'A-1', shall be transitioned from a 2'6" top at Sta. 667+86.7 S.B. and Sta. 667+87.4 N.B. to a 6" top at Sta. 670+07.05 S.B. Back = Sta. 670+07.79 N.B. Ahead.

Dwn.	Chkd.	Revised	Ck. Chief
LOS 4-28-78	WCR 5-5-78	LOS 5-2-78	WCR 5-10-78

W.E. QUICKSALL & ASSOCIATES INC. Consulting Engineers

BARRIER TRANSITION DETAILS

FHWA REGION	STATE	PROJECT	
5	OHIO		

40

JEF-7-11.80

CONCRETE BARRIER TRANSITION

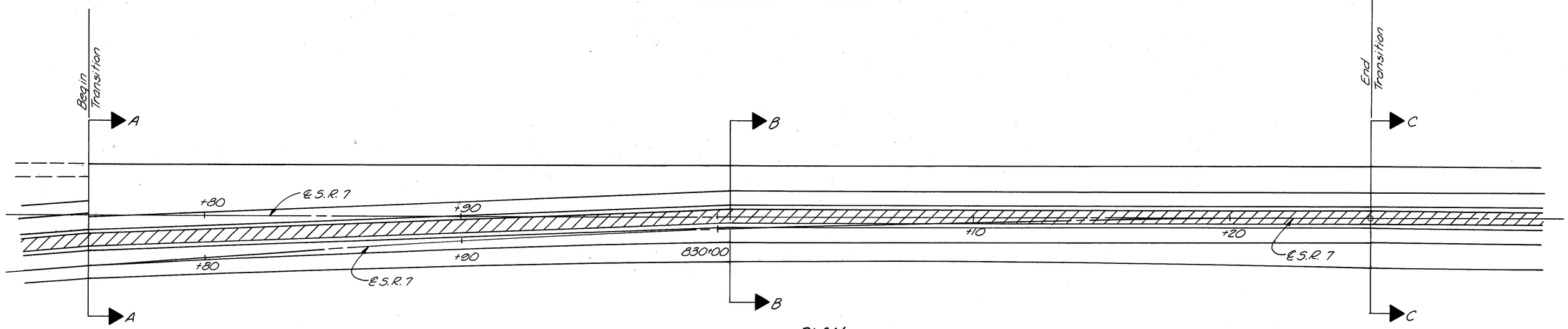

PLAN

Sta. 829+75.51 to Sta. 830+25.51

Not to Scale

Top of Concrete Barrier

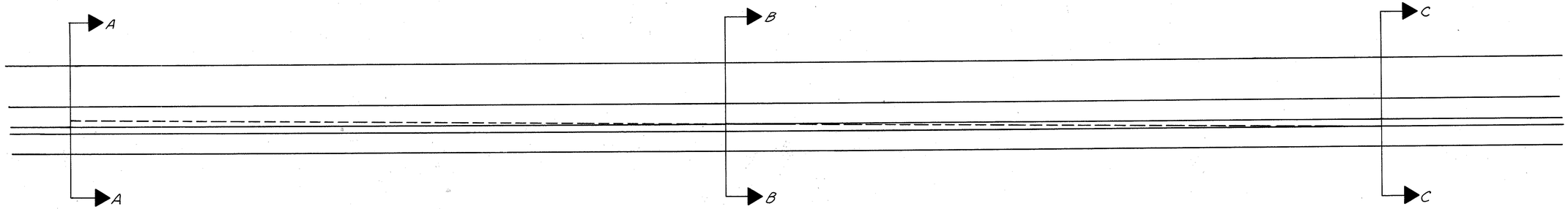

PROFILE

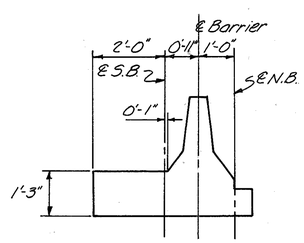

SECTION A-A

Sta. 829+75.51 S.B.

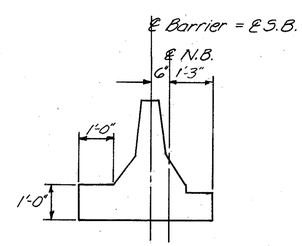

SECTION B-B

Sta. 830+00.51 S.B.

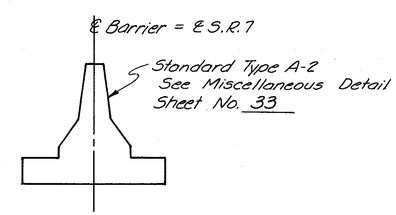

SECTION C-C

Sta. 830+25.51 S.B. = N.B

NOTE: For Dimensions not shown, See Standard Drawing MC-9.

Dwn. LDB 10-6-98

W.E. QUICKSALL & ASSOCIATES INC. Consulting Engineers

BARRIER TRANSITION DETAILS

FHWA REGION	STATE	PROJECT	
5	OHIO		

41

JEF-7-11.80

CONCRETE BARRIER TRANSITION

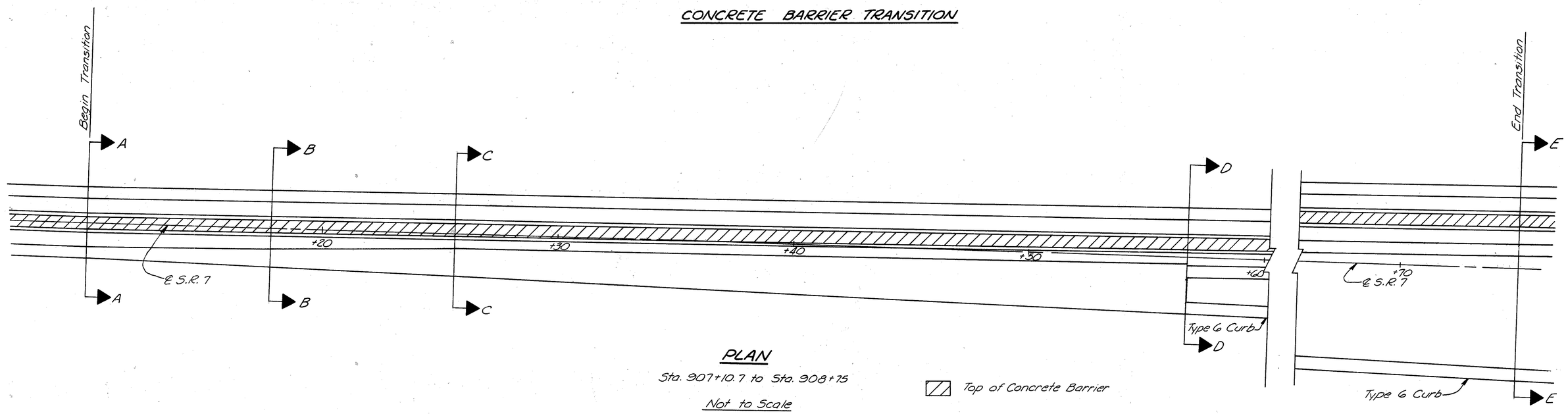

PLAN

Sta. 907+10.7 to Sta. 908+75

Not to Scale

Top of Concrete Barrier

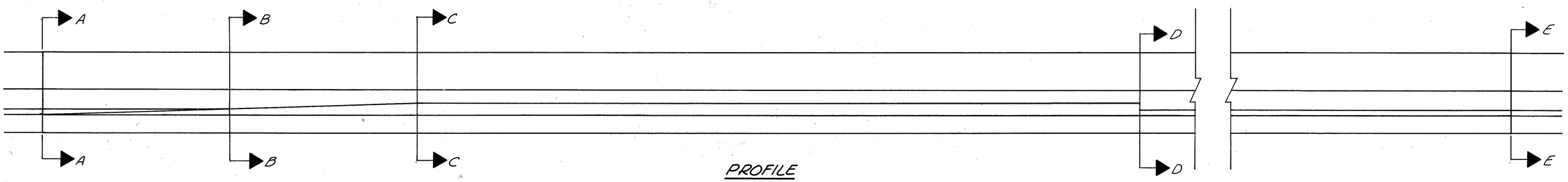

PROFILE

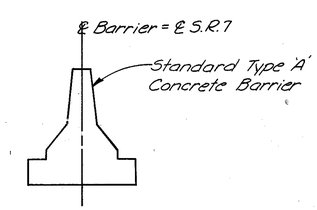

SECTION A-A
Sta. 907+10.7

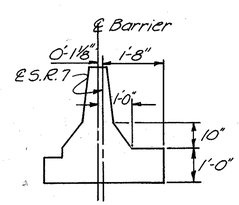

SECTION B-B
Sta. 907+18.5

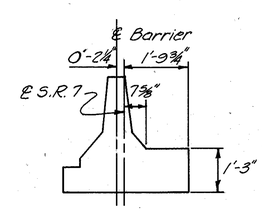

SECTION C-C
Sta. 907+26.3

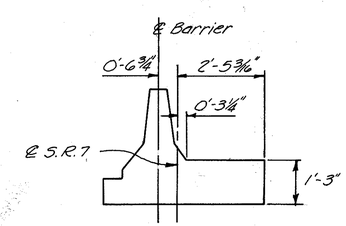

SECTION D-D
Sta. 907+57.4

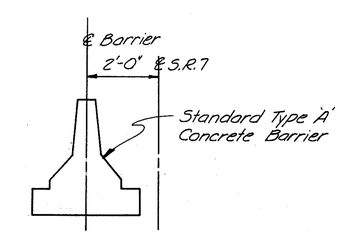

SECTION E-E
Sta. 908+75

NOTE: Excavation for pavement trench, Sta. 907+57.4 to Sta. 909+02.3, Shall be included in the unit price bid for Item 609.

NOTE: For Dimensions not shown, See Standard Drawing MC-9.

Chkd.

Dwn. LDS 02-20-98

W.E. QUICKSALL & ASSOCIATES INC. Consulting Engineers

BARRIER TRANSITION DETAILS

FHWA REGION	STATE	PROJECT	
5	OHIO		

JEF-7-11.80

42

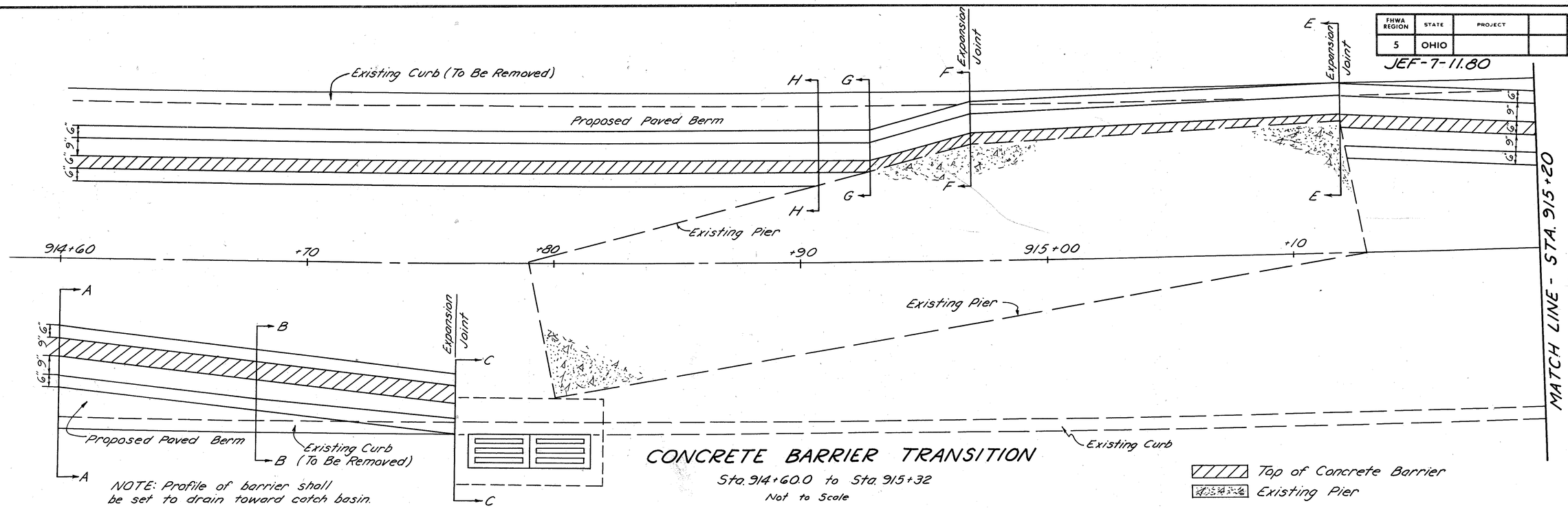

CONCRETE BARRIER TRANSITION

Sta. 914+60.0 to Sta. 915+32

Not to Scale

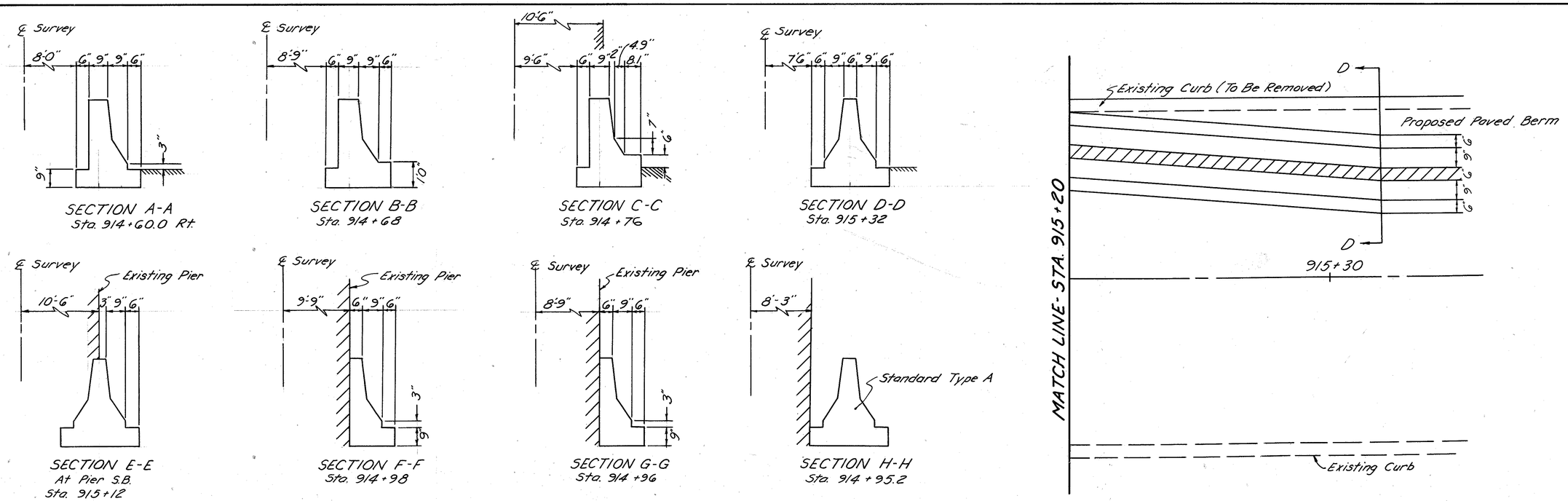

BARRIER TRANSITION DETAILS

Calc. By WCR 11-27-78
Checked By P.H. 11-28-78

FHWA REGION	STATE	PROJECT	
5	OHIO		

JEF-7-11.80

43

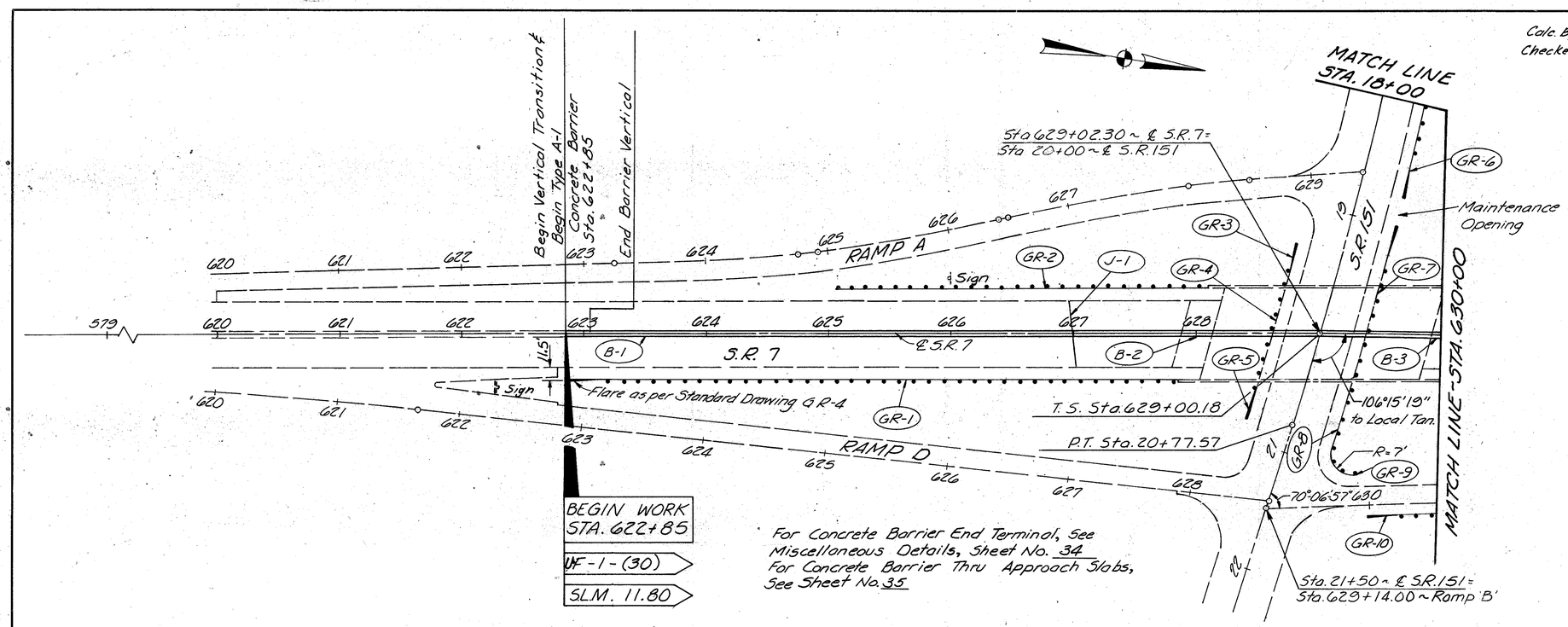

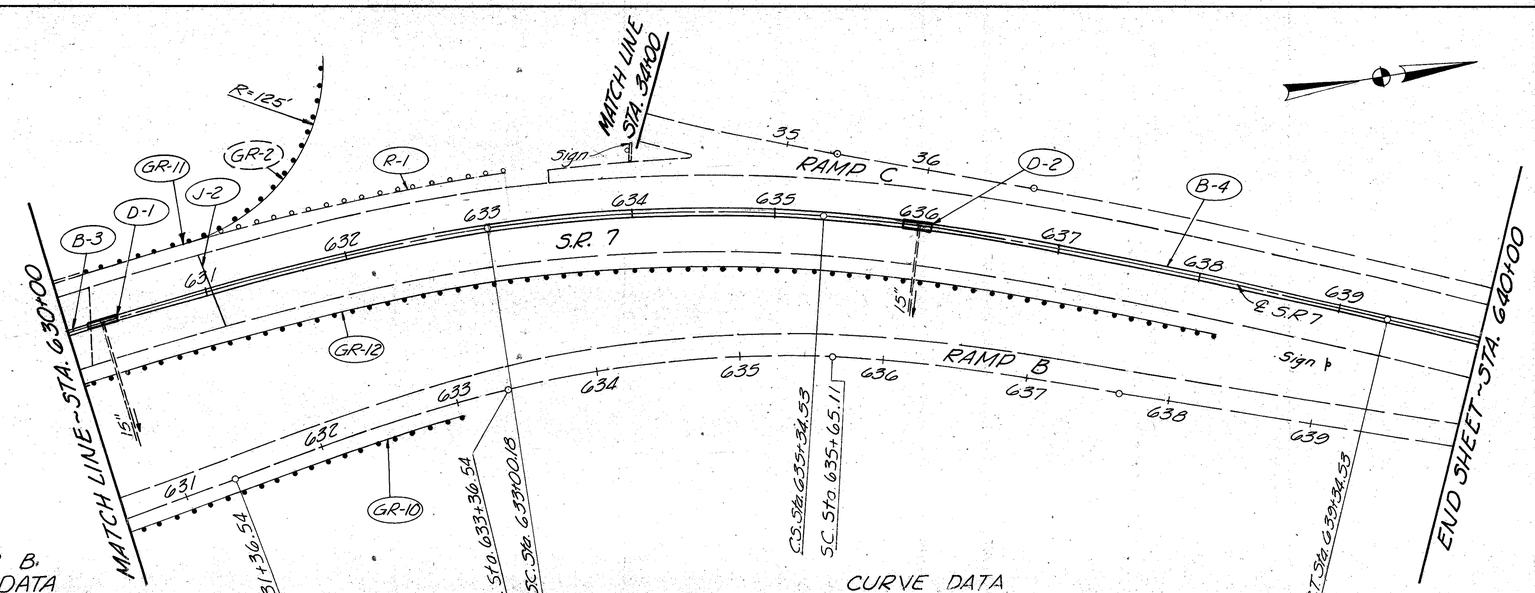

RAMP B CURVE DATA

P.I. = 634+56.36	θ_s = 7°00'00"
Δ_T = 30°00'00" Rt.	L.T. = 133.44'
Dc = 7°00'00"	S.T. = 66.76'
Ls = 200.00'	Xs = 199.70'
Rc = 818.51'	Ys = 8.14'
Δ_c = 16°00'00"	Ts = 319.82'
Lc = 228.57'	Es = 31.00'
L.C. = 199.87'	

CURVE DATA

P.I. = 634+27.16	θ_s = 10°00'00"
Δ_T = 31°43'02" Rt.	L.T. = 267.09'
Dc = 5°00'00"	S.T. = 133.72'
Ls = 400.00'	Xs = 398.78'
Rc = 1145.92'	Ys = 23.22'
Δ_c = 11°43'02"	Ts = 526.98'
Lc = 234.35'	Es = 51.42'
L.C. = 399.46'	

ESTIMATED QUANTITIES — STATE FUNDING

REF. NO.	STATION TO STATION	SIDE	202 Sq. Yd.	202 9" Concrete Median Removed	202 Lin. Ft. Guardrail Removed for Storage	606 Lin. Ft. Guard Rail Type 5	606 Each Anchor Assembly Std. Type A	606 Each Bridge Terminal Assembly Std. Type D	606 Each Anchor Assembly Std. Type T	606 Each Bridge Terminal Assembly Std. Type J	Special Lin. Ft. Pressure Relief Joint Std. Type C	622 Lin. Ft. Concrete Barrier Std. Type A-1 Mod. as per plan	604 Each Inlet Std. No. I-3A-14 Mod., as per plan	604 Each Inlet Std. No. I-3A-10 Mod., as per plan	605 Lin. Ft. 6" Uncl. Pipe Underdrain 707.01 Type III or 707.12 Type III	SEE SHEET NO.
R-1	622+85 to 627+88.23	℄		167.7												
R-2	631+88.24 to 628+13.76	℄														
R-3	629+86.91 to 630+17.91	℄														
R-4	630+17.91 to 640+00	℄		318.5												
D-1	630+25	℄														
D-2	636+00	℄														
R-1	631+00 to 633+06.5	L.T.			326.5			1								34
GR-1	622+84 to 627+84	R.T.			500.0	475.00	1						1			35
GR-2	625+04 to 628+04	L.T.			300.0	281.50	1		1							35
GR-3	629+33 to 629+53.5	R.T.				7.50	1									35
GR-4	629+55 to 630+51	R.T.			85.5	85.50										
GR-5	630+51 to 630+83	R.T.				7.00	1									
GR-6	630+18 to 630+75	R.T.			75.0	50.00	1									
GR-7	630+00 to 630+53	R.T.				28.00	1									
GR-8	630+53 to 630+00	L.T.			147.0	147.00										
GR-9	630+00 to 630+51	L.T.				25.00			1							
GR-10	629+91 Ramp B to 633+97	R.T.			300.0	262.50	1		1							
GR-11	633+97 to 633+97 Ramp B															
GR-12	630+19 to 631+00	L.T.			81.0	81.00			1							
GR-13	630+01 to 638+13.5	R.T.			812.5	800.00										
J-1	626+99	℄							1	1	53.2				28	
J-2	631+05	℄									53.2				15	
TOTALS			486	2608		2256.00	6	2	4	2	106	1495	1	1	43	

STA. 622+85 TO STA. 640+00

Calc By P.H. 11-27-78
Chkd By RoM 11-28-78

FHWA REGION	STATE	PROJECT	
5	OHIO		

JEF-7-11.80

44

RAMP C
CURVE DATA
P.I. = 27+70.91
Δ = 40°40'20" Rt.
D = 30°09'20"
T = 70.42'
L = 134.87'
E = 12.63'
R = 190.00'

RAMP C
SPIRAL
CURVE DATA
P.I = 28+68.92
θ_s = 15°04'40"
Ls = 100.00'
L.T. = 66.91'
S.T. = 33.56'
Xs = 99.32'
Ys = 8.73'

RAMP C
SPIRAL
CURVE DATA
P.I. = 30+40.54
θ_s = 10°30'00"
Ls = 150.00'
L.T. = 100.18'
S.T. = 50.16'
Xs = 149.50'
Ys = 9.14'

RAMP C
CURVE DATA
PI = 31+89.56
Δ = 27°15'00" Lt
D = 14°00'00"
T = 99.20'
L = 194.64'
E = 11.85'
R = 409.26'

RAMP C
SPIRAL
CURVE DATA
P.I. = 33+69.08
θ_s = 17°30'00"
Ls = 250.00'
L.T. = 167.49'
S.T. = 84.08'
Xs = 247.68'
Ys = 25.28'

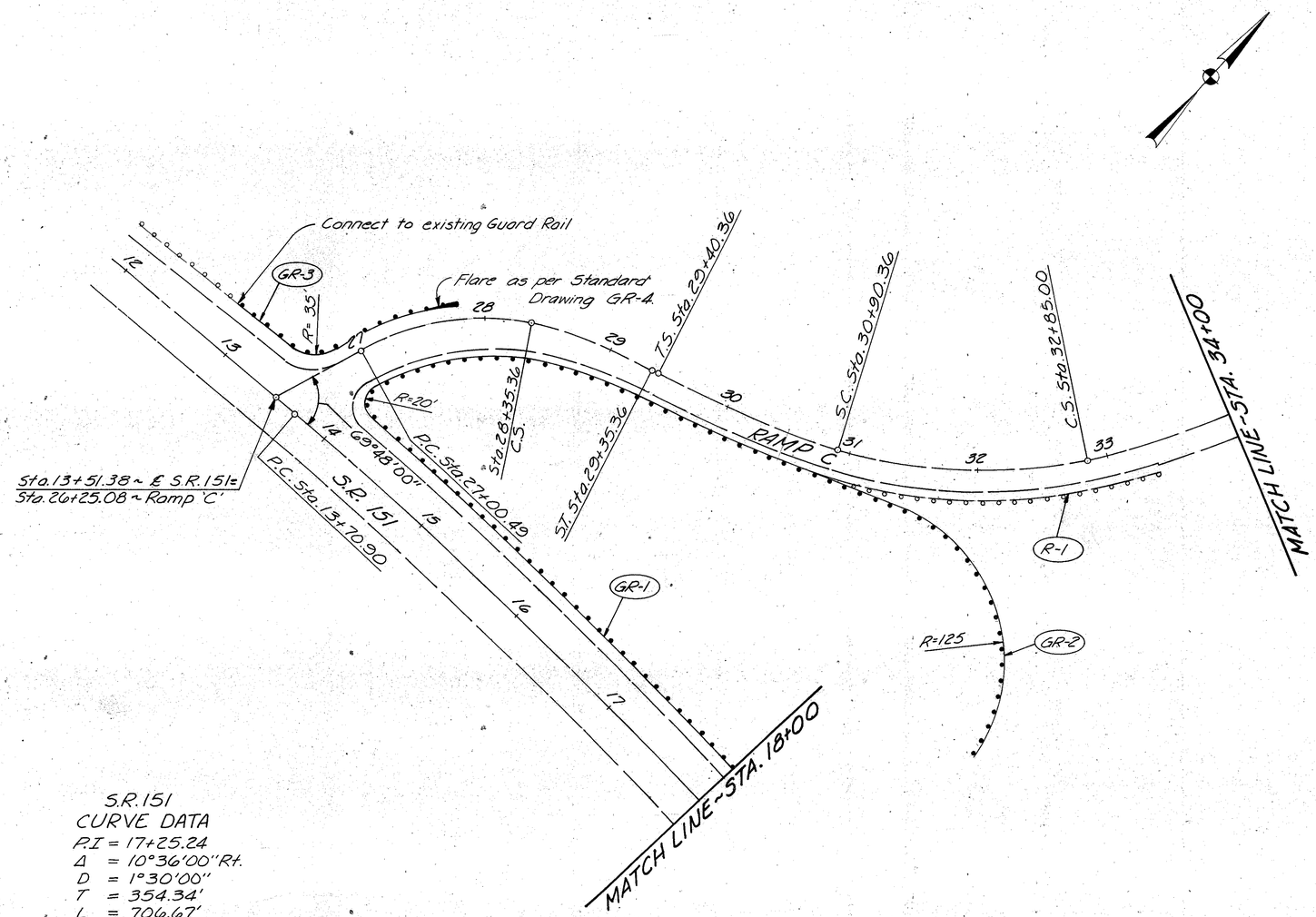

S.R. 151
CURVE DATA
P.I = 17+25.24
Δ = 10°36'00" Rt.
D = 1°30'00"
T = 354.34'
L = 706.67'
E = 16.40'
R = 3819.72'

ESTIMATED QUANTITIES

REF. NO.	STATION TO STATION	SIDE	202 Guardrail Removed for Storage Lin. Ft.	606 Guard Rail Type 5 Lin. Ft.	606 Anchor Assembly Std. Type A Each
GR-1	18+00 S.R. 151 to 30+75 Ramp C	Lt.	790.0	790.00	
GR-2	30+75 Ramp C to 30+75 Ramp C	Rt.		404.50	
GR-3	12+90 S.R. 151 to 27+75 Ramp C	Rt.	187.5	162.50	1
R-1	30+75 to 33+36 Ramp C	Rt.	261.0		
TOTALS			1239	1357.00	1

STATE FUNDING

SEE SHEET NO.

Chkd.	C.H.L.	11-28-78
Drawn	C.D.D.	11-27-78

W. E. QUICKSALL & ASSOCIATES INC. Consulting Engineers

S.R. 151 ~ STA. 12+00 TO STA. 18+00

Calc. By WCR 11-28-78
Chk'd. By G.W. 11-29-78

FHWA REGION	STATE	PROJECT	
5	OHIO		

45

JEF-7-11.80

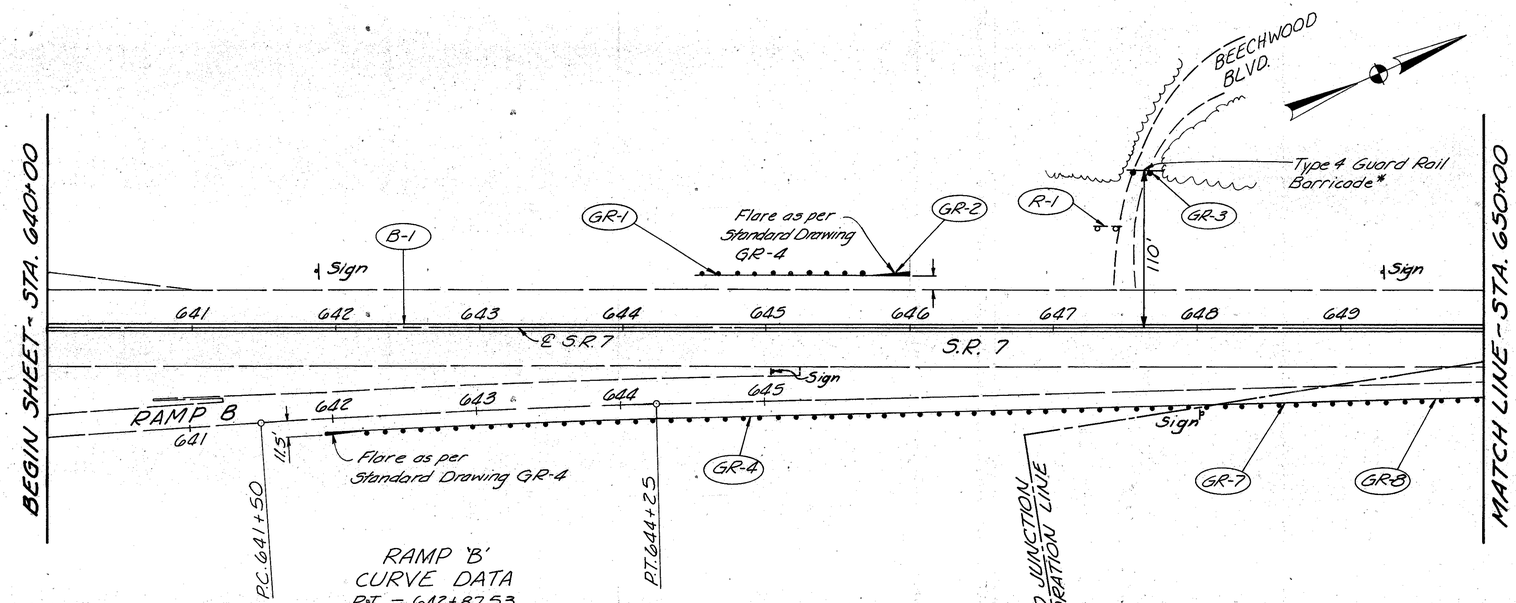

RAMP 'B'
CURVE DATA
P.I. = 642+87.53
Δ = 2°45'00" Rt.
D = 1°00'00"
T = 137.53'
L = 275.00'
E = 1.65'
R = 5,729.58

*Barricade has flared end section as per 606.03 of the specifications.

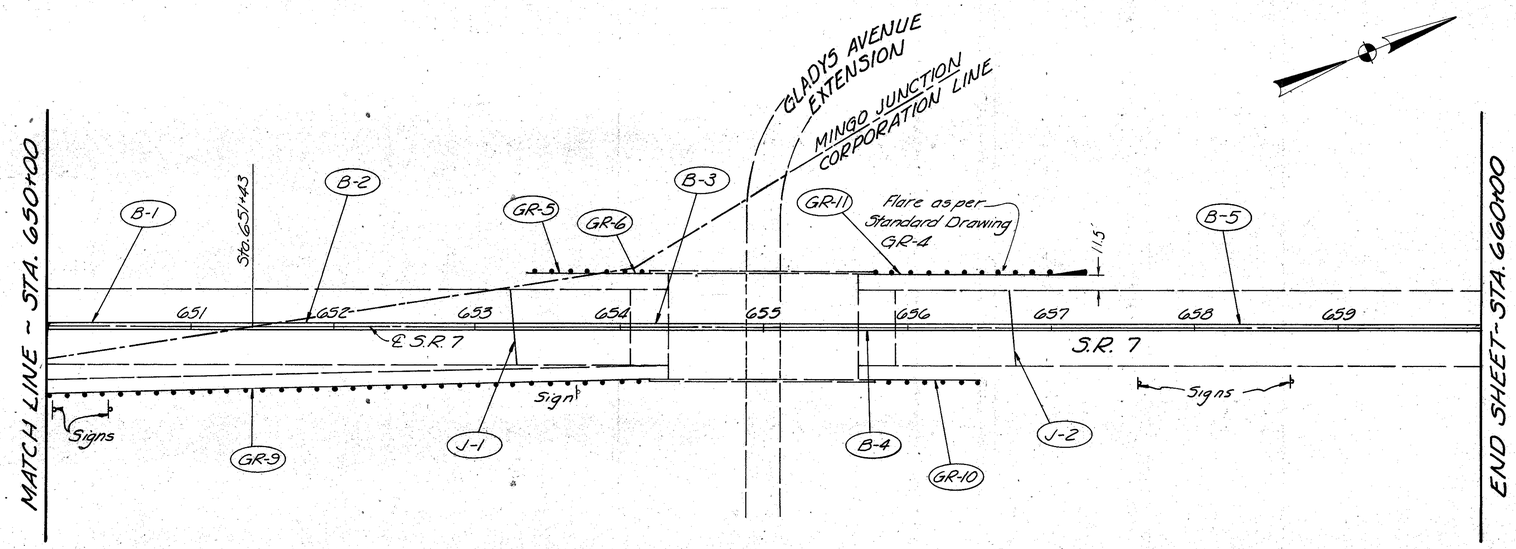

For Concrete Barrier Thru Approach Slabs, See Sheet No. 35

ESTIMATED QUANTITIES

REF. NO.	STATION TO STATION	SIDE	622 Concrete Barrier Std. Type A-1 Mod. as per plan (Lin. Ft.)	606 Anchor Assembly Std. Type T (Each)	606 Anchor Assembly Std. Type A (Each)	606 Guard Rail Type 4 (Lin. Ft.)	606 Guard Rail Type 5 (Lin. Ft.)	202 Guardrail Removed for Storage (Lin. Ft.)	202 9" Concrete Median Removed (Sq. Yd.)	605 6" Uncl. Pipe Underdrain 707.01 Type III or 707.12 Type III (Lin. Ft.)	622 Concrete Barrier Std. Type A-1 Mod. as per plan (Lin. Ft.)	606 Bridge Terminal Assembly Std. Type D (Each)	606 Bridge Terminal Assembly Std. Type J (Each)	606 Anchor Assembly Std. Type T (Each)	606 Anchor Assembly Std. Type A (Each)	606 Guard Rail Type 5 (Lin. Ft.)	Special Pressure Relief Joint Std. Type C (Lin. Ft.)	202 Guardrail Removed for Storage (Lin. Ft.)	202 9" Concrete Median Removed (Sq. Yd.)	SEE SHEET NO.
B-1	640+00 to 651+43	℄	1143.0						381.0											
B-2	651+63 to 654+07.75	℄																		
B-3	654+07.75 to 654+37.75	℄																		
B-4	655+47.75 to 655+91.25	℄																		
B-5	656+91.25 to 660+00	℄							135.9											
GR-1	644+50 to 645+63	Lt.		1				113.0												
GR-2	645+63 to 646+00	Lt.			1	25.00	100.50	12.00												
GR-3	647+56 to 647+81	Lt.		1			39.00													
GR-4	647+81 to 648+25	Rt.				25.00	598.00	61.0												
GR-5	653+34.5 to 653+66	Lt.					36.00													
GR-6	653+66 to 654+22	Lt.						51.5												
GR-7	648+13 to 648+91	Rt.					84.00													
GR-8	648+97 to 650+79	Rt.					182.00													
GR-9	650+79 to 654+20	Rt.					341.00													
GR-10	655+77.5 to 656+52.5	Rt.					75.0													
GR-11	655+77.5 to 657+27.5	Lt.					150.0													
J-1	653+24	℄								32										
J-2	656+77	℄								28										
R-1	647+27 to 647+47	Lt.																		
TOTALS			1143	2	2	25.00	744.50	80.3	381	60	723	2	2	1	1	830.00	106	6.36	224		

STATE FUNDING

MINGO JUNCTION FUNDING

Date	Chkd.	Dwn.
5/8/78	WCR	GW

W. E. QUICKSALL & ASSOCIATES INC. Consulting Engineers

STA. 640+00 TO STA. 660+00

Calc. By WCR 12-1-78
Chkd. By LDB 12-1-78

FHWA REGION	STATE	PROJECT	
5	OHIO		

46

JEF-7-11.80

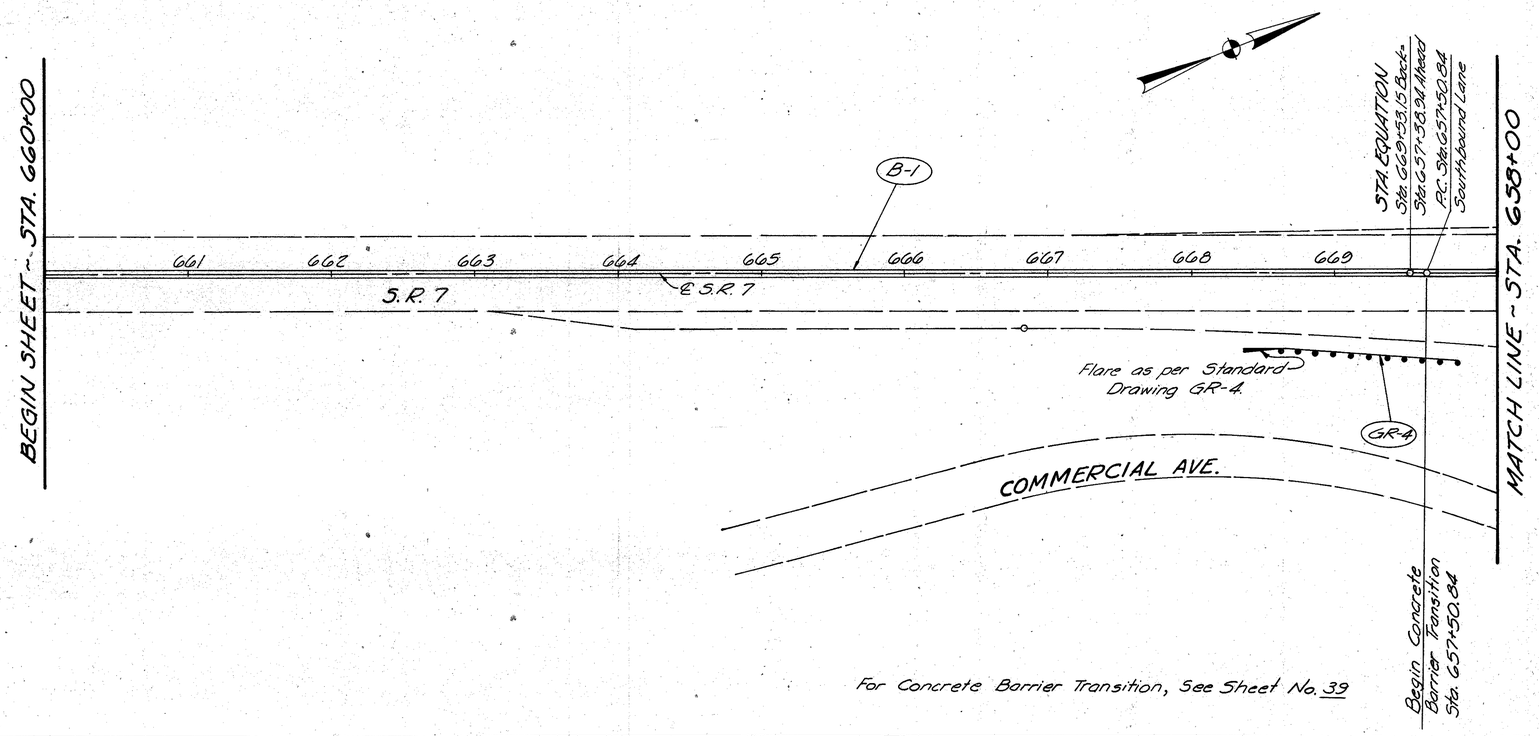

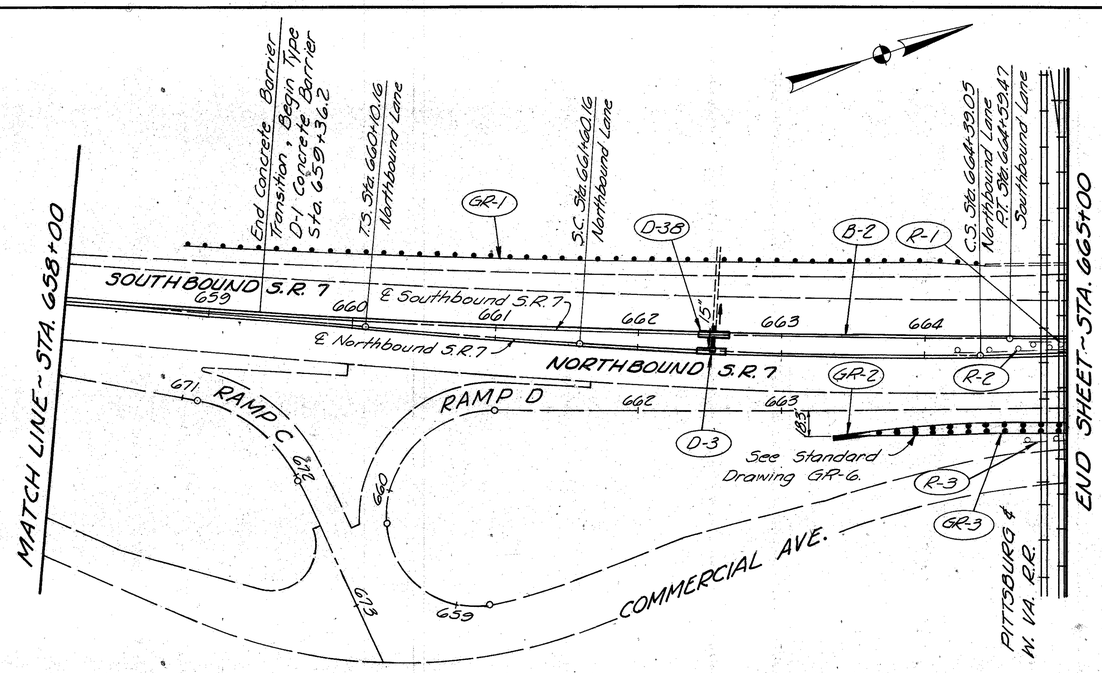

NORTHBOUND LANE CURVE DATA

P.I. = 662+39.84
Δr = 6°26'00" Lt.
Dc = 1°30'00"
Ls = 150.00'
Rc = 3819.72'
Δc = 4°11'00"
Lc = 278.89'
L.C. = 150.00'
θs = 1°07'30"
L.T. = 100.00'
S.T. = 50.00'
Xs = 149.99'
Ys = 0.98'
Ts = 289.62'
Es = 6.27'

SOUTHBOUND LANE CURVE DATA

P.I. = 661+05.35
Δ = 4°43'27" Lt.
D = 0°40'00"
T = 354.51'
L = 708.63'
E = 7.31'
R = 8594.31'

For Concrete Barrier Transition, See Sheet No. 39

ESTIMATED QUANTITIES — MINGO JUNCTION FUNDING

REF. NO.	STATION TO STATION	SIDE	202 9" Concrete Median Removed (Sq. Yd.)	202 Guardrail Removed for Storage (Lin. Ft.)	202 Anchor Assembly Std. Type A (Each)	606 Guard Rail, Type 5 (Lin. Ft.)	606 Guard Rail Barrier Design Type 5 (Lin. Ft.)	606 Anchor Assembly Std. Type T (Each)	606 Bridge Terminal Assembly Std. Type J (Each)	606 Anchor Assembly Barrier Design Std. Type A (Each)	612 Concrete Median Std. Type (Sq. Yd.)	622 Concrete Barrier Std. Type D-1 Mod. as per plan (Lin. Ft.)	622 Concrete Barrier Std. Type A-1 Mod. as per plan (Lin. Ft.)	304 Aggregate Base (Cu. Yd.)	604 Inlet Std. No. I-3A-14 Mod., as per plan (Each)	SEE SHEET NO.
B-1	660+00 to 659+36.2	℄	404.1													39
B-2	663+39.8 to 664+20	℄	720.1													
D-3	662+52	℄ N.B.														
D-3B	662+52	℄ S.B.														
GR-1	659+79 to 664+43	Lt.		562.5		550.00										
GR-2	663+39.8 to 664+20	Rt.				10.50	50.00		1							
GR-3	664+20 to 665+00	Rt.		80.0		160.00										
GR-4	663+39.3 to 657+75	Rt.			1	112.50		1								
R-1	664+72.5 to 665+00	℄ S.B.		27.5												
R-2	664+20 to 665+00	℄ N.B.		80.0												
R-3	664+68 to 665+00	Rt.		32.0												
TOTALS			1124	782	1	833.00	50.00	2	1	1	485	1088	1150	482	2	

Date	Chkd.	Revisions
2-20-80	WCR	Sheet No.

W. E. QUICKSALL & ASSOCIATES INC. Consulting Engineers

STA. 660+00 TO STA. 665+00

Calc. By WCR 12-1-78
Checked By WH 12-4-78

FHWA REGION	STATE	PROJECT	
5	OHIO		

JEF-7-11.80

47

SOUTHBOUND LANE CURVE DATA

P.I. = 669+07.17
Δ_T = 35°09'08"
Dc = 4°00'00"
Ls = 300.00'
Rc = 1432.39'
Δ_c = 23°09'08"
Lc = 578.81'
L.C. = 299.85'

θ_s = 6°00'00"
L.T. = 200.12'
S.T. = 100.10'
Xs = 299.67'
Ys = 10.46'
Ts = 604.50'
Es = 72.89'

RAMP A CURVE DATA

P.I. = 65+50.05
Δ = 6°00'00" Lt.
D = 6°00'00"
T = 50.05'
L = 100.00'
E = 1.31'
R = 954.93'

RAMP A CURVE DATA

P.I. = 66+49.84
Δ = 67°12'35" Lt.
D = 76°23'40"
T = 49.84'
L = 87.98'
E = 15.05'
R = 75.00'

RAMP B CURVE DATA

P.I. = 65+06.31
Δ = 36°00'00" Lt.
D = 28°38'52"
T = 64.98'
L = 125.66'
E = 10.29'
R = 200.00'

RAMP A-B CURVE DATA

P.I. = 62+81.07
Δ = 50°00'00" Lt.
D = 47°56'47"
T = 55.72'
L = 104.28'
E = 12.35'
R = 119.50'

NORTHBOUND LANE CURVE DATA

P.I. = 672+92.81
Δ_T = 36°49'55" Rt.
Dc = 4°00'00"
Ls = 300.00'
Rc = 1432.39'
Δ_c = 24°49'55"
Lc = 620.80'
L.C. = 299.85'

θ_s = 6°00'00"
L.T. = 200.12'
S.T. = 100.10'
Xs = 299.67'
Ys = 10.46'
Ts = 627.75'
Es = 80.07'

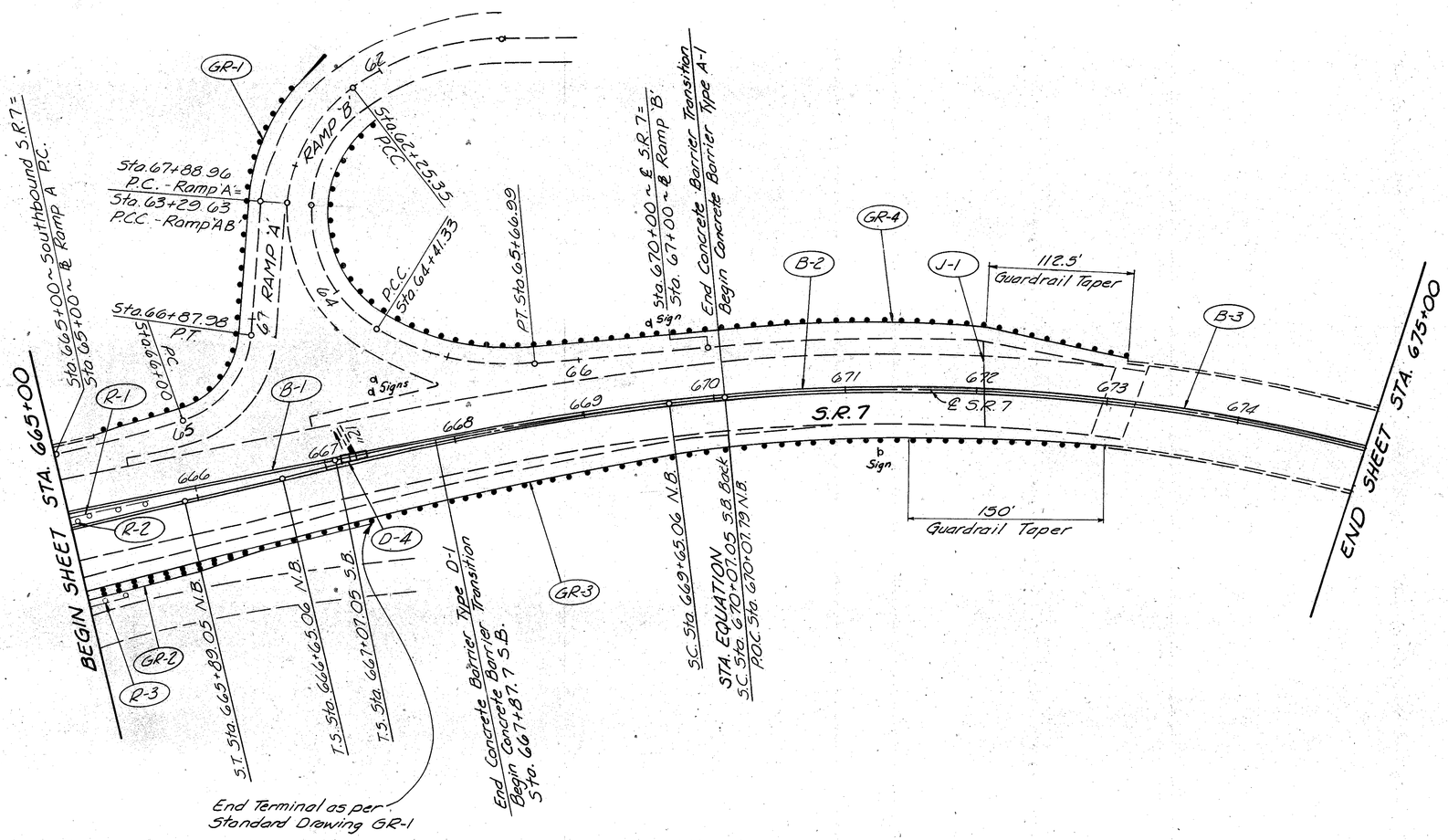

For Concrete Barrier Thru Approach Slabs, See Sheet No. 35
For Concrete Barrier Transition, See Sheet No. 39

ESTIMATED QUANTITIES

REF. NO.	STATION TO STATION	SIDE	202 Guardrail Removed for Storage (Lin. Ft.)	202 9" Concrete Median Removed (Sq. Yd.)	605 6" Uncl. Pipe Underdrain 707.01 Type III or 707.12 Type III (Lin. Ft.)	604 Inlet Std. No. I-3A-14 Mod., as per plan (Each)	304 Aggregate Base (Cu. Yd.)	606 Bridge Terminal Assembly Std. Type J (Each)	622 Concrete Barrier Std. Type D-1 Mod. as per plan (Lin. Ft.)	622 Concrete Barrier Std. Type A-1 Mod. as per plan (Lin. Ft.)	612 Concrete Median Std. Type (Sq. Yd.)	Special Pressure Relief Joint Std. Type C (Lin. Ft.)	606 Anchor Assembly Std. Type T (Each)	606 Guard Rail Barrier Design Type S (Lin. Ft.)	606 Bridge Terminal Assembly Std. Type D (Each)	606 Anchor Assembly Std. Type A (Each)	606 Guard Rail, Type S (Lin. Ft.)
					SEE SHEET NO.												
B-1	665+00 to 667+87.7	℄		266.9													
B-2	667+87.7 to 672+96.71	℄		134.7													
B-3	672+96.71 to 673+21.71	℄															
D-4	667+18.5	℄															
GR-1	665+28 to 67+20	Lt.	375.0				350.00	1							1		
	AB to 673+10 S.R.7	Rt.												100.00			
GR-2	665+00 to 667+22	Rt.	222.0				251.00										
GR-3	667+22 to 673+03	Rt.	566.0				566.00								1		
GR-4	67+25.35 Ramp AB	Lt.	750.0				737.50						1				
R-1	665+00 to 665+60	℄	60.0														
R-2	665+00 to 665+07.5	℄	7.5														
R-3	665+00 to 665+30.5	Rt.	30.5														
J-1	672+07	℄										65.1					
TOTALS			2011	461	14	1	1904.50	1	535	534	154	65	1	100.00	2	1	150

MINGO JUNCTION FUNDING

DWN	CHKD	CHKD
WCR 12-1-78	WH 12-4-78	

W. E. QUICKSALL & ASSOCIATES INC. Consulting Engineers

STA. 665+00 TO STA. 675+00

Calc. By WCR 12-4-78
Chkd. By P.H. 12-4-78

FHWA REGION	STATE	PROJECT	
5	OHIO		

48

JEF-7-11.80

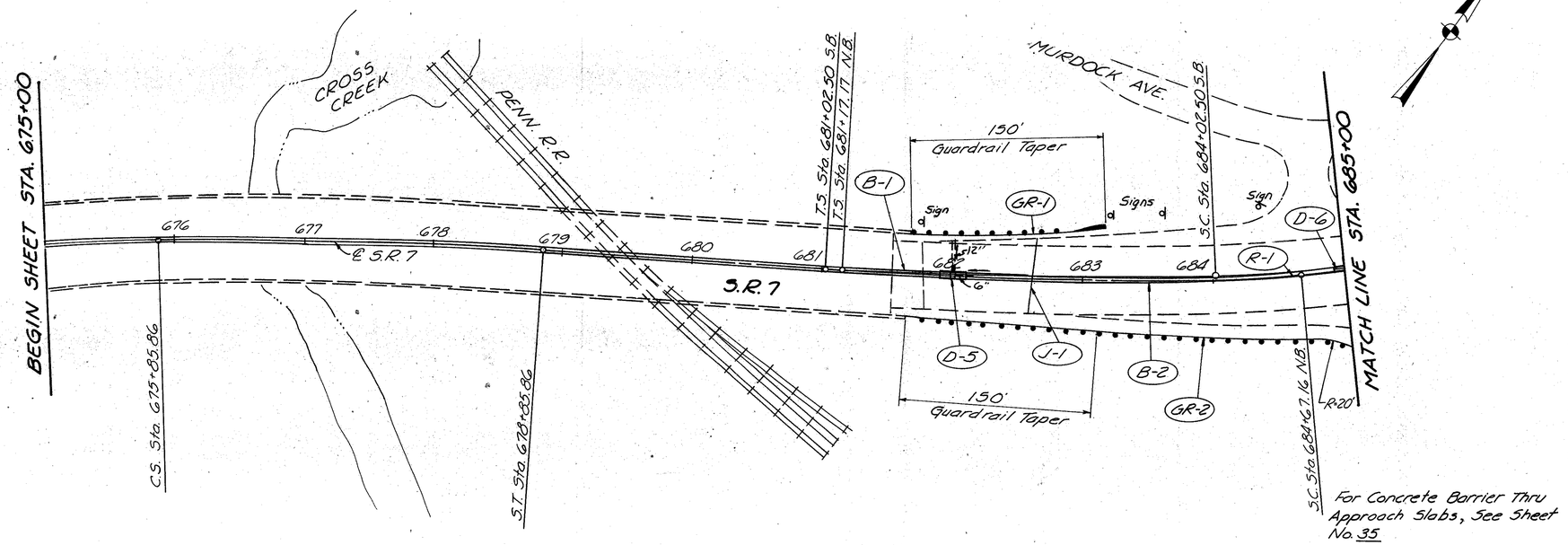

For Concrete Barrier Thru Approach Slabs, See Sheet No. 35

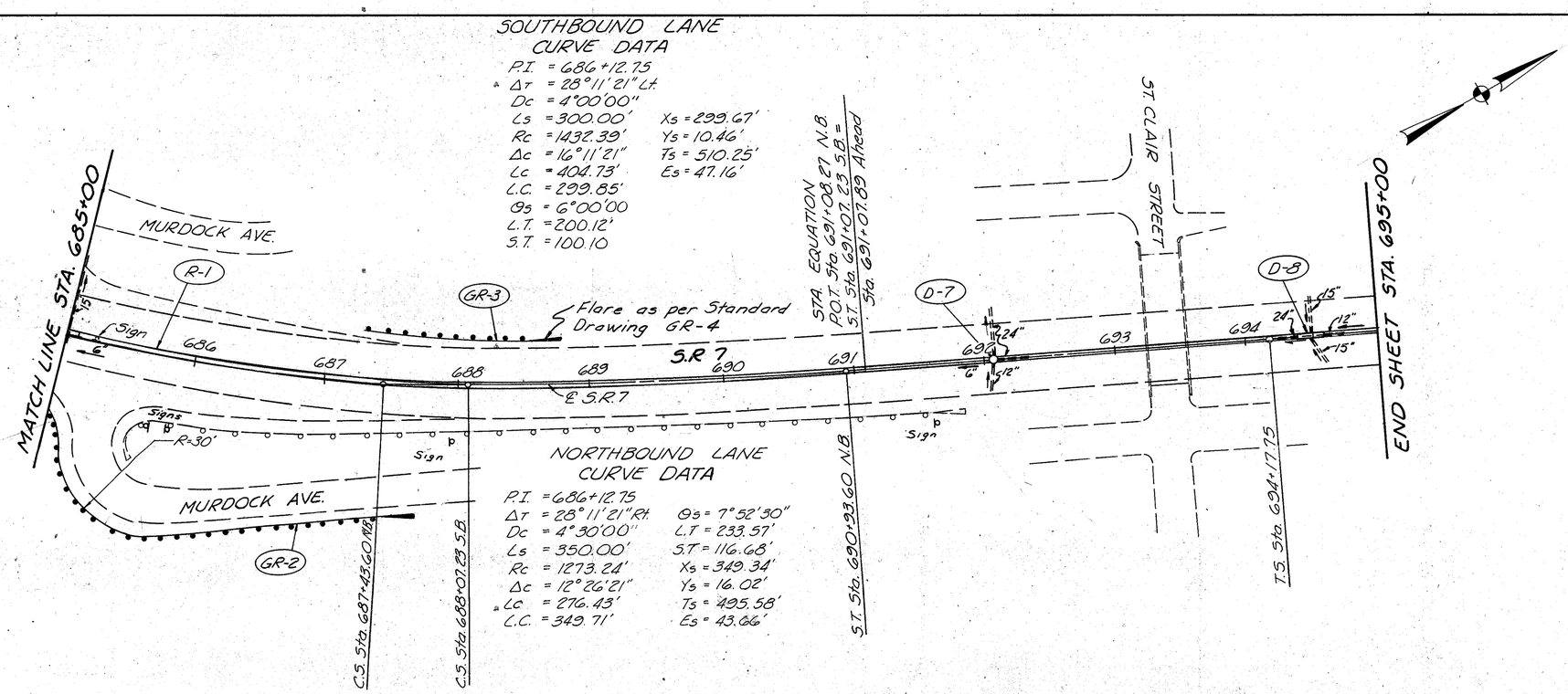

SOUTHBOUND LANE
CURVE DATA

P.I. = 686+12.75
Δ_T = 28°11'21" Lt.
Dc = 4°00'00"
Ls = 300.00' Xs = 299.67'
Rc = 1432.39' Ys = 10.46'
Δ_c = 16°11'21" Ts = 510.25'
Lc = 404.73' Es = 47.16'
L.C. = 299.85'
Θ_s = 6°00'00
L.T. = 200.12'
S.T. = 100.10

NORTHBOUND LANE
CURVE DATA

P.I. = 686+12.75
Δ_T = 28°11'21" Rt.
Dc = 4°30'00"
Ls = 350.00'
Rc = 1273.24'
Δ_c = 12°26'21"
Lc = 276.43'
L.C. = 349.71'
Θ_s = 7°52'30"
L.T. = 233.57'
S.T. = 116.68'
Xs = 349.34'
Ys = 16.02'
Ts = 495.58'
Es = 43.66'

ESTIMATED QUANTITIES — MINGO JUNCTION FUNDING

REF. NO.	STATION TO STATION	SIDE	605 6" Uncl. Pipe Underdrain 707.01 Type III or 707.12 Type III Lin. Ft.	604 Inlet Std. No. I-3A-10 Mod., as per plan Each	604 Inlet Std. No. I-3A-14 Mod. as per plan Each	604 Manhole Type 1 Each	606 Bridge Terminal Assembly Std. Type J Each	622 Concrete Barrier Std. Type A-1 Mod. as per plan Lin. Ft.	Special Pressure Relief Joint Std. Type C Lin. Ft.	606 Bridge Terminal Assembly Std. Type D Each	606 Anchor Assembly Std. Type T Each	606 Anchor Assembly Std. Type A Each	606 Guard Rail, Type S Lin. Ft.	606 Guardrail Barrier Design Removed for Storage Lin. Ft.	202 Guardrail Removed for Storage Lin. Ft.	202 9" Concrete Median Removed Sq. Yd.
			35													
B-1	681+55.48 to 681+80.42	℄			1											
B-2	681+80.42 to 695+00	℄			1											
				1		1										
				1		1										
						1										
							1									
								250								
								1249.6								
D-5	682+05	℄														
D-6	683+00	℄ NB														
D-7	692+10	℄														
D-8	694+51.5	℄														
GR-1	681+75 to 683+25	L.H.								1						
GR-2	681+65 to 687+75	R.H.											125.00		1500	
GR-3	687+30 to 688+80	L.H.											675.00		1000	
											1	1	112.50			
											1	1				
R-1	684+02 to 686+28	℄						225.0						225		
J-1	682+63 NB	℄							590							
TOTALS			16	1	2	1	1	1275	59	1	1	3	912.50	225	850	617

Dwn.	Chkd.	Date
L.D.B.	W.E.Q.	5-22-78

W. E. QUICKSALL & ASSOCIATES INC. Consulting Engineers

STA. 675+00 TO STA. 695+00

Calc. By LDB 12-4-78
Chk'd. By RaM 12-5-78

FHWA REGION	STATE	PROJECT	
5	OHIO		

JEF-7-11.80

49

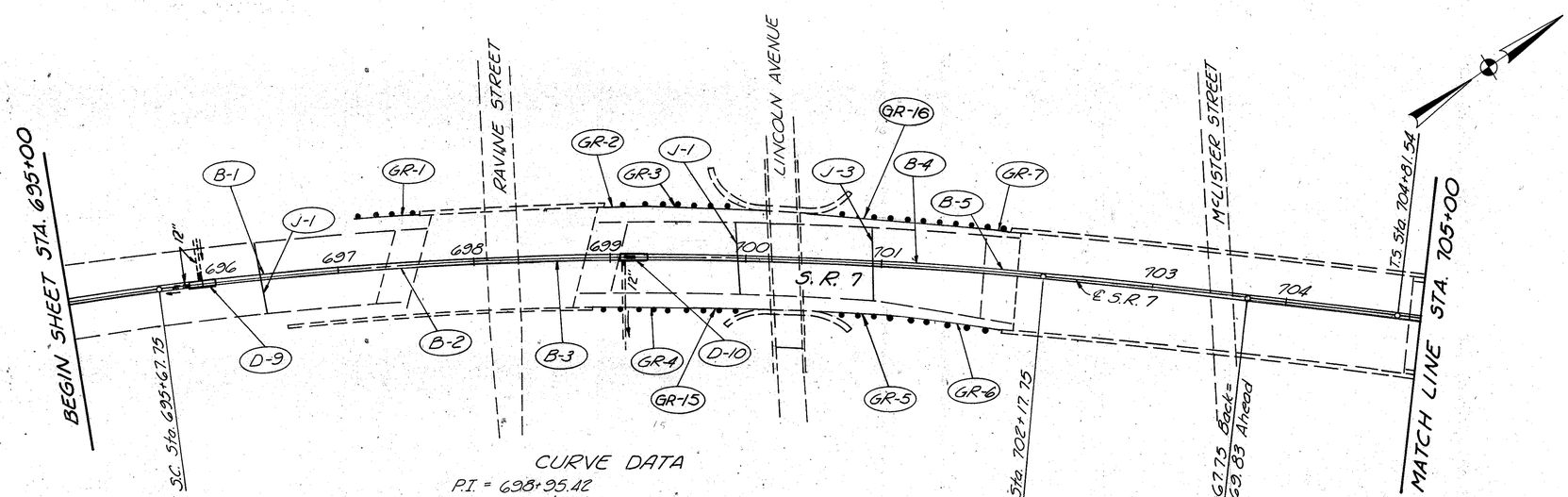

CURVE DATA

P.I. = 698+95.42	
Δ_T = 16°00'00" Rt.	Θ_s = 1°30'00"
Dc = 2°00'00"	L.T. = 100.00'
Ls = 150.00'	S.T. = 50.00'
Rc = 2864.79'	Xs = 149.99'
Δ_c = 13°00'00"	Ys = 1.31'
Lc = 650.00'	Ts = 477.67'
L.C. = 149.99'	Es = 28.49'

For Concrete Barrier Thru Approach Slabs, See Sheet No. 35

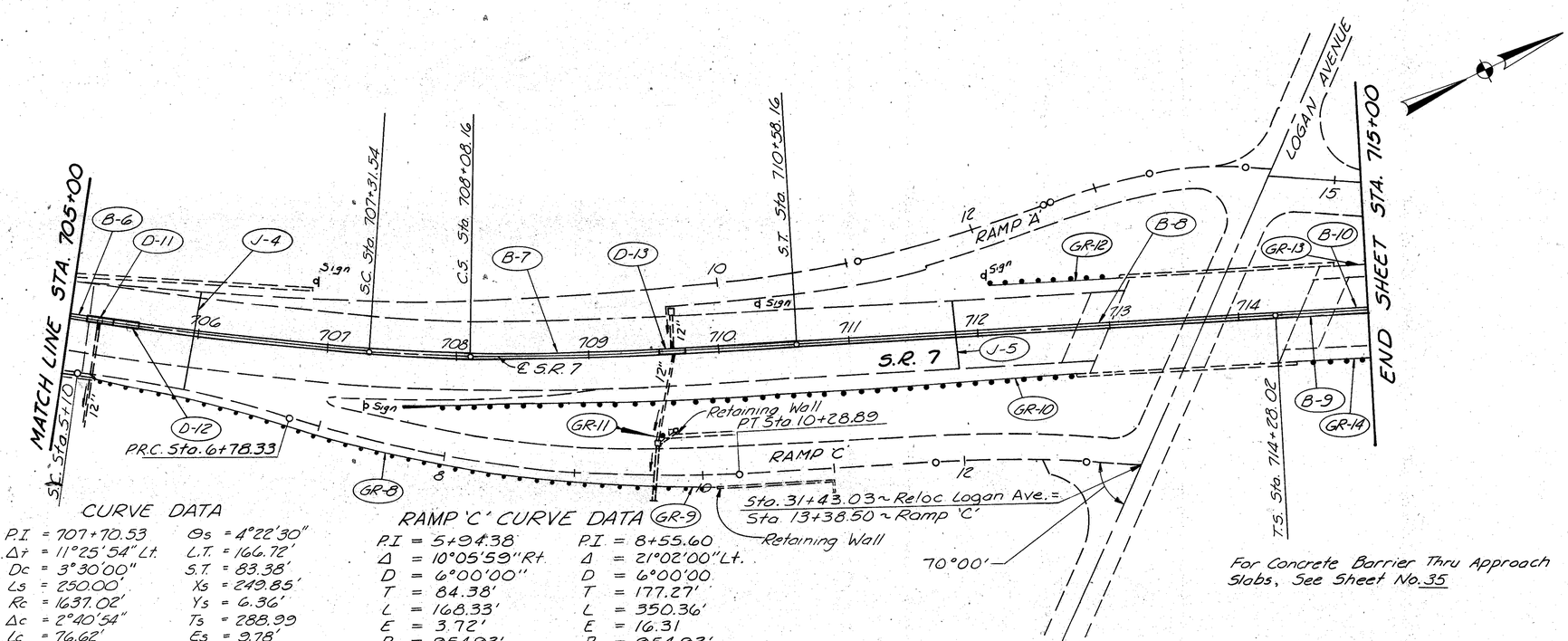

CURVE DATA

P.I. = 707+70.53	Θ_s = 4°22'30"
Δ_T = 11°25'54" Lt.	L.T. = 166.72'
Dc = 3°30'00"	S.T. = 83.38'
Ls = 250.00'	Xs = 249.85'
Rc = 1637.02'	Ys = 6.36'
Δ_c = 2°40'54"	Ts = 288.99
Lc = 76.62'	Es = 9.78'
L.C. = 249.93'	

RAMP 'C' CURVE DATA

P.I. = 5+94.38	P.I. = 8+55.60
Δ = 10°05'59" Rt.	Δ = 21°02'00" Lt.
D = 6°00'00"	D = 6°00'00
T = 84.38'	T = 177.27'
L = 168.33'	L = 350.36'
E = 3.72'	E = 16.31
R = 954.93'	R = 954.93'

For Concrete Barrier Thru Approach Slabs, See Sheet No. 35

SEE SHEET NO.
FOR QUANTITIES, SEE SHEET NO. 50

ESTIMATED QUANTITIES

REF. NO.	STATION TO STATION	SIDE
TOTALS		

Dwn.	Chkd.
LDB 5-22-78	WEB 5-25-78

W. E. QUICKSALL & ASSOCIATES INC. Consulting Engineers

STA. 695+00 TO STA. 715+00

Calc. By RaM 12-6-78
Chk'd. By P.H. 12-9-78

FHWA REGION	STATE	PROJECT	
5	OHIO		

50

JEF-7-11.80

ESTIMATED QUANTITIES

MINGO JUNCTION FUNDING

REF. NO.	STATION TO STATION	SIDE	202 Concrete Median Removed	202 Guardrail Removed for Storage	603 12" Conduit Type B	604 Inlet Std. No. T-34-10 Mod. as per plan	604 Inlet Std. No. T-34-14 Mod. as per plan			606 Guard Rail Type 5	606 Anchor Assembly Std. Type	606 Bridge Terminal Assembly Std. Type D	606 Anchor Assembly Std. Type A	606 Bridge Terminal Assembly Std. Type C	622 Concrete Barrier Std. Type A1 Mod. as per plan	605 6" Unclassified Pipe Underdrain 707.01 Type III or 707.12 Type III	Special Pressure Relief Joint Std. Type C	SEE SHEET NO.
			Sq. Yd.	Lin. Ft.	Lin. Ft.	Each	Each			Lin. Ft.	Each	Each	Each	Each	Lin. Ft.	Lin. Ft.	Lin. Ft.	
B-1	695+00 to 697+35.40	℄	75.4												215.4			
B-2	697+35.40 to 697+60.40	℄													25.0			35
B-3	698+82.22 to 699+07.22	℄													25.0			35
B-4	699+07.22 to 701+75	℄	85.5												247.8			
B-5	701+75 to 702+00	℄													25.0			
B-6	704+92.60 to 705+17.60	℄													25.0			
B-7	705+17.60 to 712+75.97	℄	240.6												698.4			
B-8	712+75.97 to 713+00.97	℄													25.0			35
B-9	714+49.03 to 714+74.03	℄													25.0			35
B-10	714+74.03 to 715+00	℄	8.7												26.0			
D-9	695+99.50	℄				1												80
D-10	699+10	℄				1												80
D-11	705+18	℄				1												80
D-12	705+38	℄			20	1												80
D-13	709+60.7	℄					1											80
GR1	697+24 to 697+61.5	Lt.		37.5						25.00	1			1				
GR2	699+04 to 699+41.5	Lt.		37.5						37.50		1						
GR3	699+41.5 to 700+07.9	Lt.								66.40				1				
GR4	698+85 to 699+60	Rt.		75.0						75.00				1				
GR5	700+51.8 to 700+92.50	Rt.								40.70				1				
GR6	700+92.50 to 701+80	Rt.		87.5						87.50		1						
GR7	701+57 to 701+82	Lt.		25.0						25.00				1				
GR8	705+27 to 709+70	Rt.		462.5						462.50				1				
GR9	709+70 to 709+95	Rt.								25.00		1						
GR10	707+60 to 712+72.5	Rt.		512.5						487.50		1	1					
GR11	709+21.5 to 709+59	Rt.								12.50		1	1					
GR12	712+06 to 713+06	Lt.		100.0						87.50	1			1				
GR13	714+77 to 715+00	Lt.		23.0						23.00		1						
GR14	714+43 to 715+00	Rt.		57.0						57.00				1				
J-1	696+43	℄														16	53.2	
J-2	699+96	℄														16	53.2	
J-3	700+93	℄														16	53.2	
J-4	705+97	℄														16	76.0	
J-5	711+82	℄														16	53.2	
GR15	699+60 to 700+16.8	Rt.								56.80		1						
GR16	700+47.3 to 701+57	Lt.								109.10		1						
	TOTAL		410	1418	20	4	1			1628.00	2	8	2	8	1338	80	289	

STA. 695+00 TO STA. 715+00 ESTIMATED QUANTITIES

W.E. QUICKSALL & ASSOCIATES INC. Consulting Engineers

Calc. By WCR 12-11-78
Chkd. By RaM 12-11-78

FHWA REGION	STATE	PROJECT	
5	OHIO		

JEF-7-11.80

51

CURVE DATA

P.I. = 721+43.24
Δ_T = 43°00'00" Lt.
Dc = 4°00'00"
Ls = 300.00'
Rc = 1432.39'
Δ_c = 31°00'00"
Lc = 775.00'
L.C. = 299.85'

θ_s = 6°00'00"
L.T. = 200.11'
S.T. = 100.10'
Xs = 299.67'
Ys = 10.46'
Ts = 715.22'
Es = 109.94'

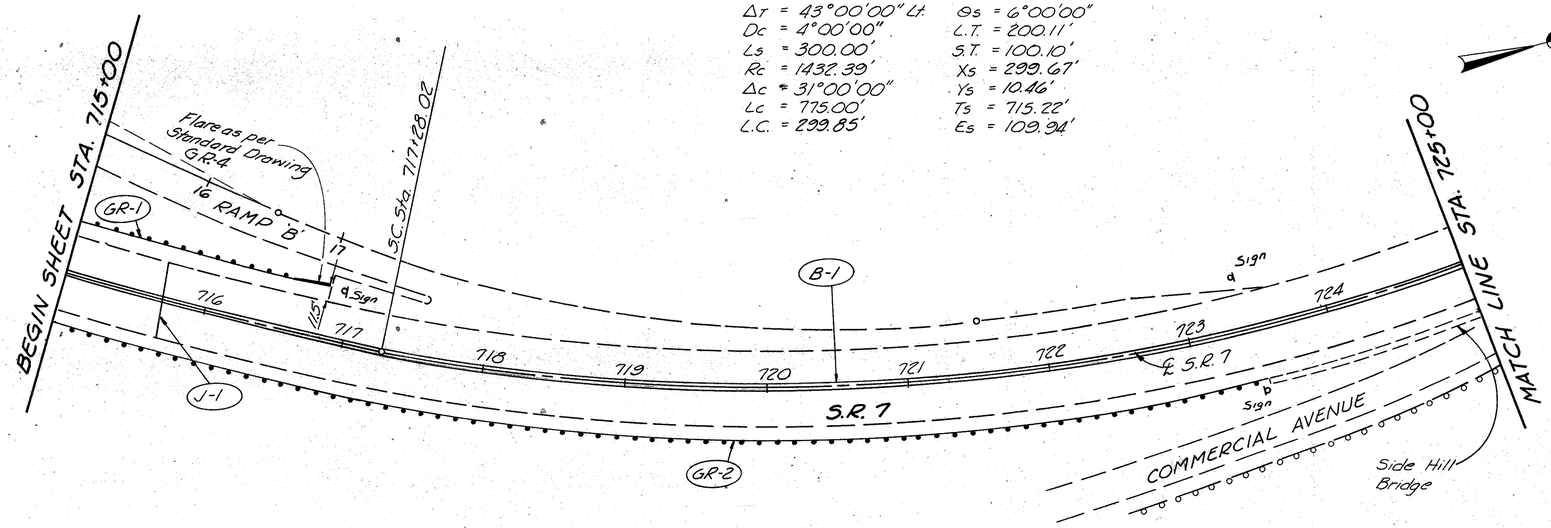

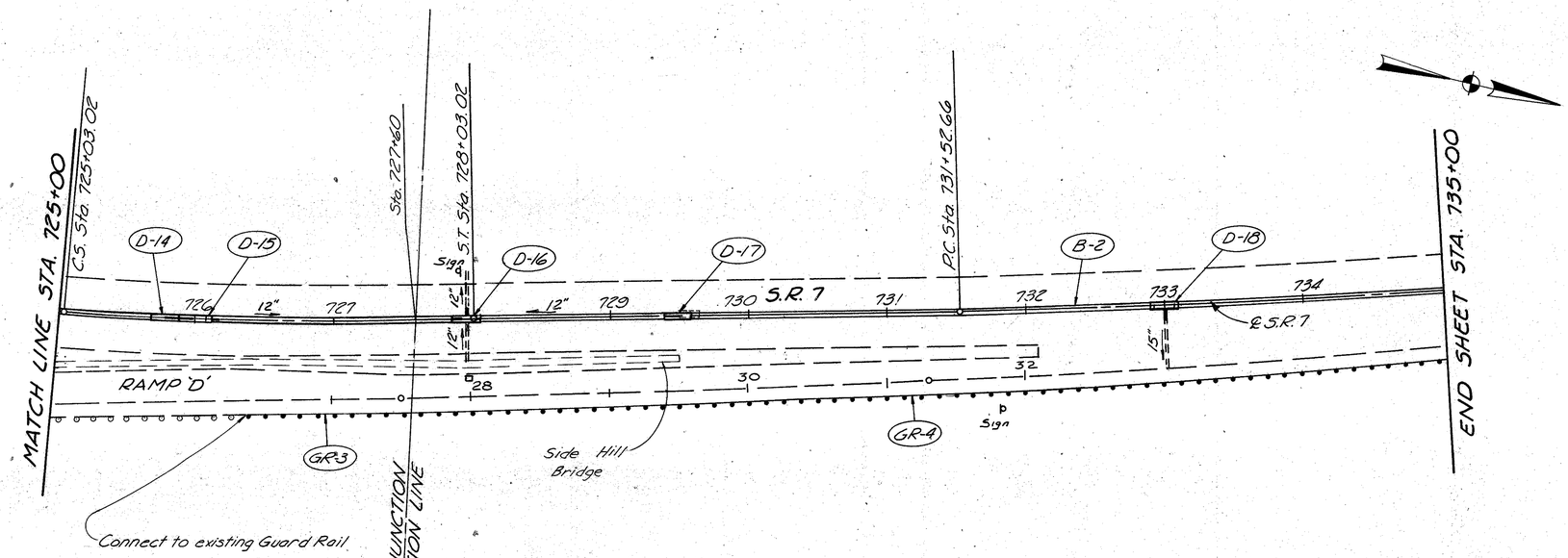

CURVE DATA

P.I. = 739+04.57
Δ = 10°00'00" Lt.
D = 0°40'00"
T = 751.91'
L = 1500.00'
E = 32.83'
R = 8594.37'

ESTIMATED QUANTITIES

REF. NO.	STATION TO STATION	SIDE	202 Sq. Yd. Lin. Ft. 9" Concrete Median Removed	202 Lin. Ft. Guardrail Removed For Storage	606 Lin. Ft. Guard Rail, Type 5	606 Each Anchor Assembly Std. Type A	606 Each Bridge Terminal Assembly Std. Type D	622 Lin. Ft. Concrete Barrier Std. Type A-1, Mod. as per plan	Special Lin. Ft. Pressure Relief Joint Std. Type C	603 Lin. Ft. 12" Conduit Type B	604 Each Inlet Std. No. I-34-10, Mod. as per plan	605 Lin. Ft. 6" Uncl. Pipe Underdrain 707.01 Type III or 707.12 Type III	622 Lin. Ft. Concrete Barrier Std. Type A-1 Mod. as per plan	606 Lin. Ft. Guard Rail, Type 5	202 Lin. Ft. Guardrail Removed For Storage	202 Sq. Yd. 9" Concrete Median Removed	604 Each Inlet Std. No. I-34-10 Mod. as per plan	604 Each Inlet Std. No. I-34-14 Mod. as per plan	604 Each Inlet Std. No. I-34-16 Mod. as per plan	TOTALS
B-1	715+00 to 727+60	℄																		
B-2	727+60 to 735+00	℄																		
D-14	725+78	℄								20	1									
D-15	726+98	℄									1									
D-16	728+20	℄																		
D-17	729+52	℄																		
D-18	733+00	℄																		
GR-1	715+00 to 716+80	Lt.				1														
GR-2	715+00 to 723+48	Rt.					1													
GR-3	726+35 to 727+60	Rt.																		
GR-4	727+60 to 735+00	Rt.																		
J-1	715+70	℄							53.2											
TOTALS			41.4	1170	1145.00	1	1	1240	53	20	2	18	680	753.00	753	233	1	1	1	

MINGO JUNCTION FUNDING

	202 Sq. Yd. Lin. Ft. 9" Concrete Median Removed	202 Lin. Ft. Guardrail Removed For Storage	606 Lin. Ft. Guard Rail, Type 5	606 Each Anchor Assembly Std. Type A	606 Each Bridge Terminal Assembly Std. Type D	622 Lin. Ft. Concrete Barrier Std. Type A-1, Mod. as per plan	Special Lin. Ft. Pressure Relief Joint Std. Type C	603 Lin. Ft. 12" Conduit Type B	604 Each Inlet Std. No. I-34-10, Mod. as per plan	605 Lin. Ft. 6" Uncl. Pipe Underdrain 707.01 Type III or 707.12 Type III	622 Lin. Ft. Concrete Barrier Std. Type A-1 Mod. as per plan	606 Lin. Ft. Guard Rail, Type 5	202 Lin. Ft. Guardrail Removed For Storage	202 Sq. Yd. 9" Concrete Median Removed	604 Each Inlet Std. No. I-34-10 Mod. as per plan	604 Each Inlet Std. No. I-34-14 Mod. as per plan	604 Each Inlet Std. No. I-34-16 Mod. as per plan	TOTALS
STATE FUNDING						680.0								233.3				
MINGO JUNCTION FUNDING	41.3.6	1170	1145.00	1	1	1240.0	53.2	20	2	18								

Calc. By P.H. 12-3-78
Chkd. By W.C.R. 12-4-78

FHWA REGION	STATE	PROJECT	
5	OHIO		

52

JEF-7-11.80

CURVE DATA

P.I. = 739+04.57
Δ = 10°00'00" Lt.
D = 0°40'00"
T = 751.91'
L = 1500.00'
E = 32.83'
R = 8594.37'

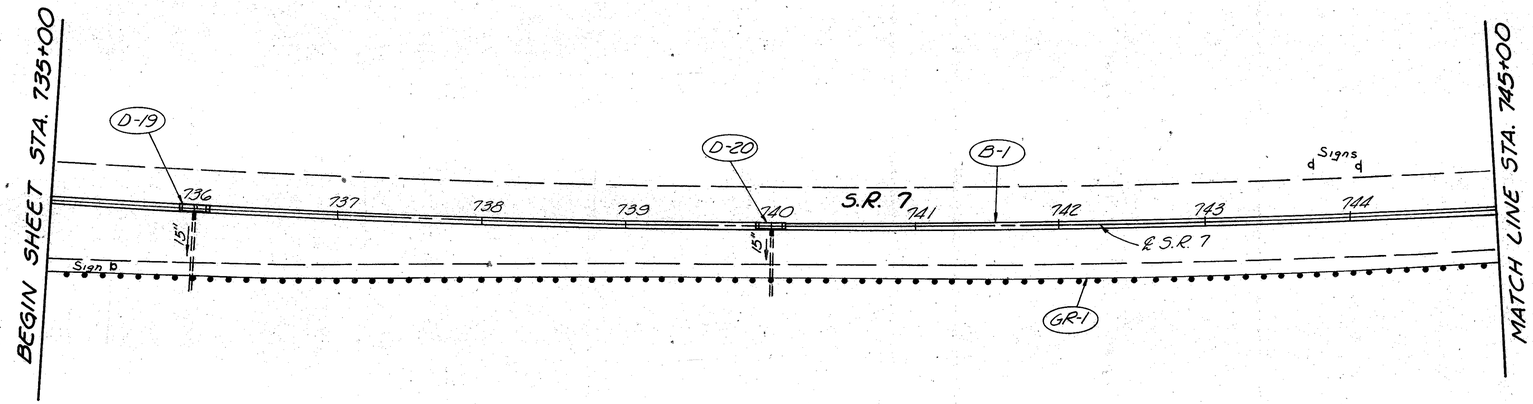

CURVE DATA

P.I. = 753+12.16
Δ_T = 14°48'08" Lt.
Dc = 2°00'00"
Ls = 200.00'
Rc = 2864.79'
Δc = 10°48'08"
Lc = 540.11'
L.C. = 198.92'
Θs = 20°00'00"
L.T. = 133.34'
S.T. = 66.67'
Xs = 197.58'
Ys = 23.07'
Ts = 472.20'
Es = 24.65'

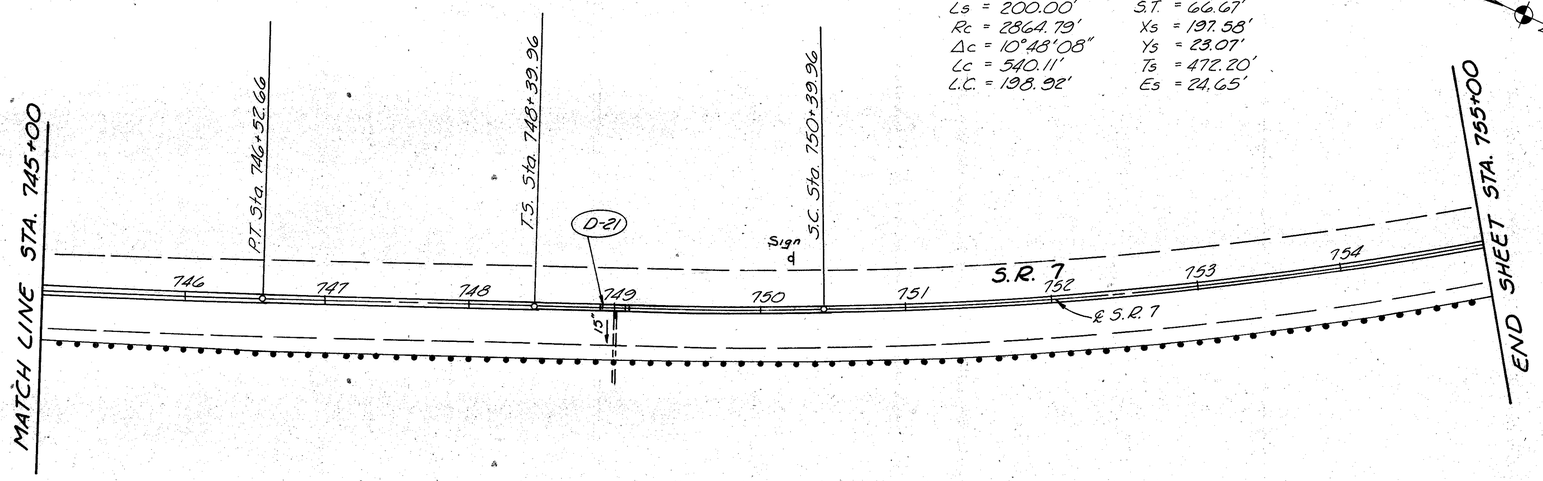

ESTIMATED QUANTITIES

REF. NO.	STATION TO STATION	SIDE	202 Guardrail Removed for Storage (Lin. Ft.)	202 Concrete Median Removed (Sq. Yd.)	606 Guard Rail Type 5 (Lin. Ft.)	604 Inlet Std. No. I-34-16 Mod. as per plan (Each)	622 Concrete Barrier Std. Type A-1 Mod. as per plan (Lin. Ft.)
B-1	735+00 to 755+00	℄		649.3			1940.0
D-19	736+00	℄				1	
D-20	740+00	℄				1	
D-21	749+00	℄				1	
GR-1	735+00 to 755+00	Rt.	2035.0		2035.00		
TOTALS			2035	649	2035.00	3	1940

STATE FUNDING

SEE SHEET NO.

Dwn	Chkd	
LDB 5-23-78	WCR 5-23-78	

W. E. QUICKSALL & ASSOCIATES INC. Consulting Engineers

STA. 735+00 TO STA. 755+00

Calc. By GW 12-11-78
Chkd. By WCR 12-12-78

FHWA REGION	STATE	PROJECT	
5	OHIO		

53

JEF-7-11.80

CURVE DATA

P.I. = 761+04.76
Δ_T = 13°00'00" Rt. θ_s = 6°00'00"
D_c = 4°00'00" L.T. = 200.11'
L_s = 300.00' S.T. = 100.10'
R_c = 1432.39' X_s = 299.67'
Δ_c = 1°00'00" Y_s = 10.46'
L_c = 25.00' T_s = 313.45'
L.C. = 299.85' E_s = 11.90'

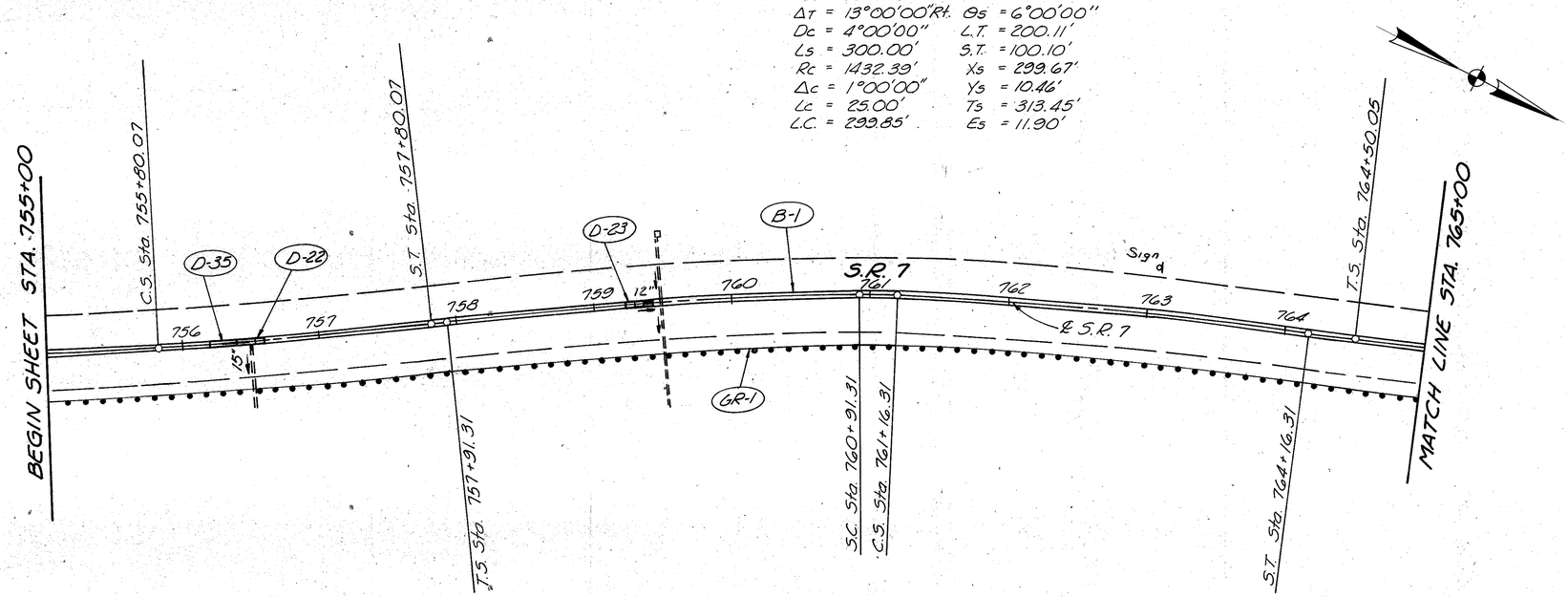

CURVE DATA

P.I. = 767+65.69
Δ_T = 09°54'20" Lt.
D_c = 3°00'00"
L_s = 300.00'
R_c = 1909.86'
Δ_c = 0°54'20"
L_c = 30.19'
L.C. = 299.92'
θ_s = 4°30'00"
L.T. = 200.06'
S.T. = 100.06'
X_s = 299.81'
Y_s = 7.85'
T_s = 315.64'
E_s = 9.13'

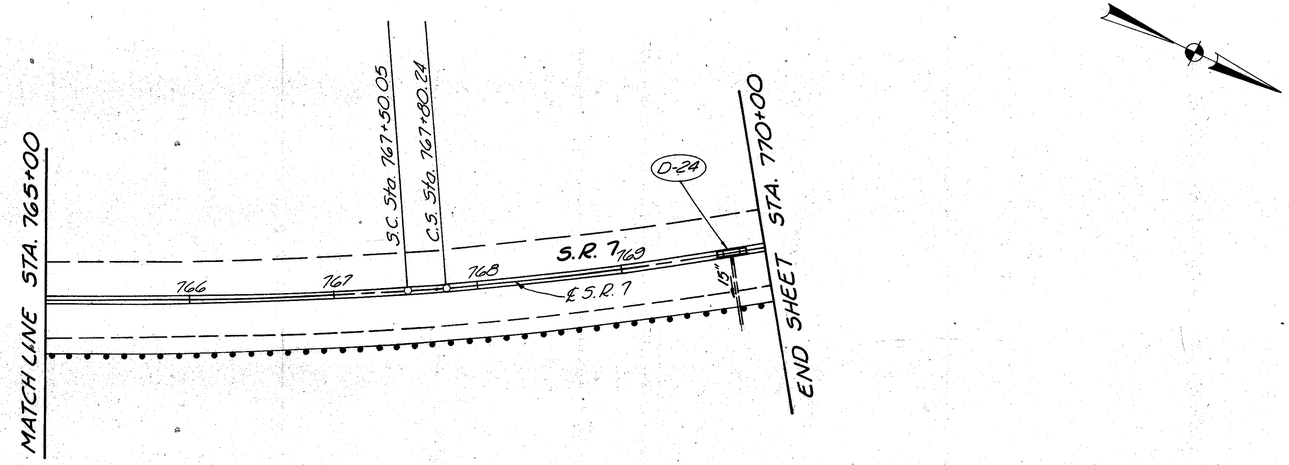

ESTIMATED QUANTITIES

REF. NO.	STATION TO STATION	SIDE	202 Sq. Yd. 9" Concrete Median Removed	202 Lin. Ft. Guardrail Removed for Storage	606 Lin. Ft. Guard Rail Type 5	603 Lin. Ft. 15" Conduit Type B	604 Each Inlet Std. No. I-3A-10 Mod. as per plan	604 Each Inlet Std. No. I-3A-12 Mod. as per plan	622 Lin. Ft. Concrete Barrier Std. Type A-1 Mod. as per plan
B-1	755+00 to 770+00	℄	492.7						1440.0
D-22	756+50	℄					1		
D-23	759+33	℄					1		
D-24	769+77	℄						1	
D-35	756+30	℄				20	1		
GR-1	755+00 to 770+00	RT.		152.10	152.00				
TOTALS			492	152.1	152.00	20	3	1	1440

STATE FUNDING

SEE SHEET NO.

Date	Chkd.	Chkd.
5-23-80	LDB	6-5-78

W. E. QUICKSALL & ASSOCIATES INC. Consulting Engineers

STA. 755+00 TO STA. 770+00

Calc. By WCR 12-12-78
Checked By RaM 12-13-78

FHWA REGION	STATE	PROJECT	
5	OHIO		

54

JEF-7-11.80

CURVE DATA

P.I. = 774+77.73	
Δr = 9°30'00" Rt.	θs = 2°00'00"
Dc = 2°00'00"	L.T. = 133.34'
Ls = 200.00'	S.T. = 66.67'
Rc = 2864.79'	Xs = 199.98'
Δc = 5°30'00"	Ys = 2.33'
Lc = 275.00'	Ts = 338.09'
L.C. = 199.99'	Es = 10.45'

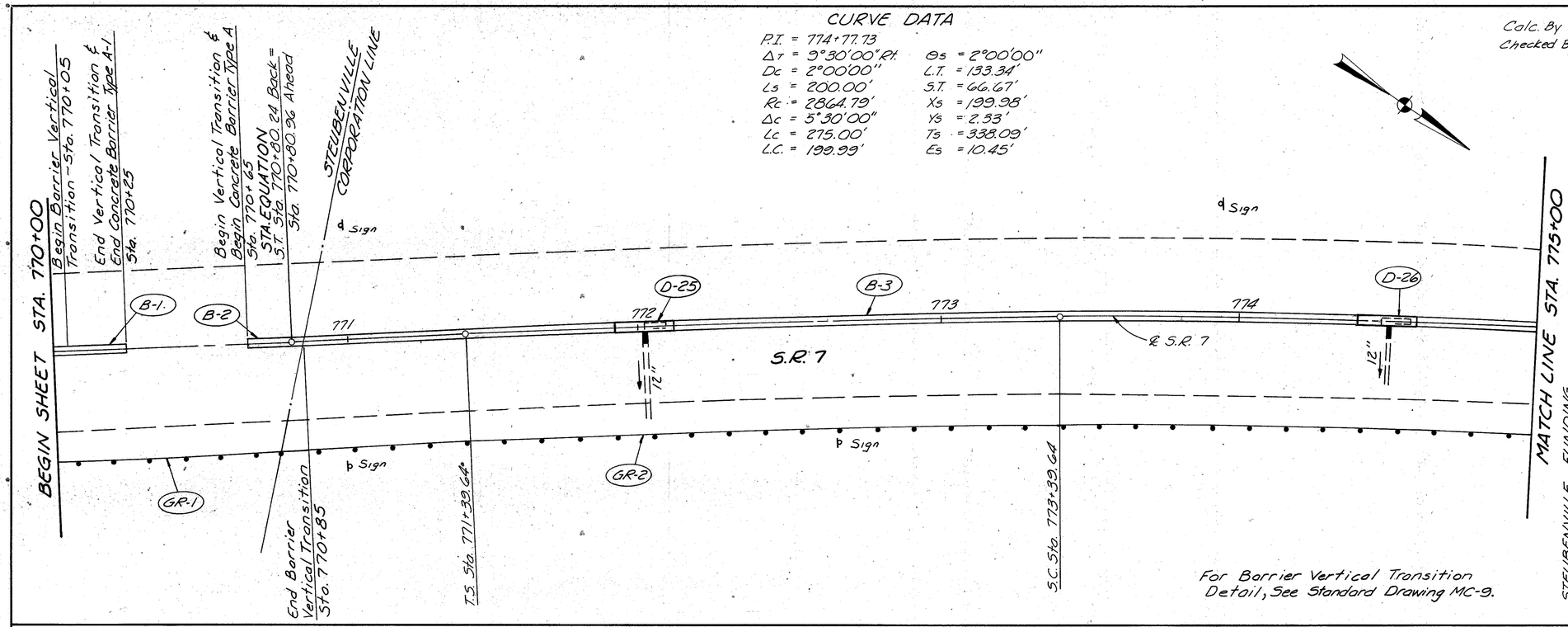

For Barrier Vertical Transition Detail, See Standard Drawing MC-9.

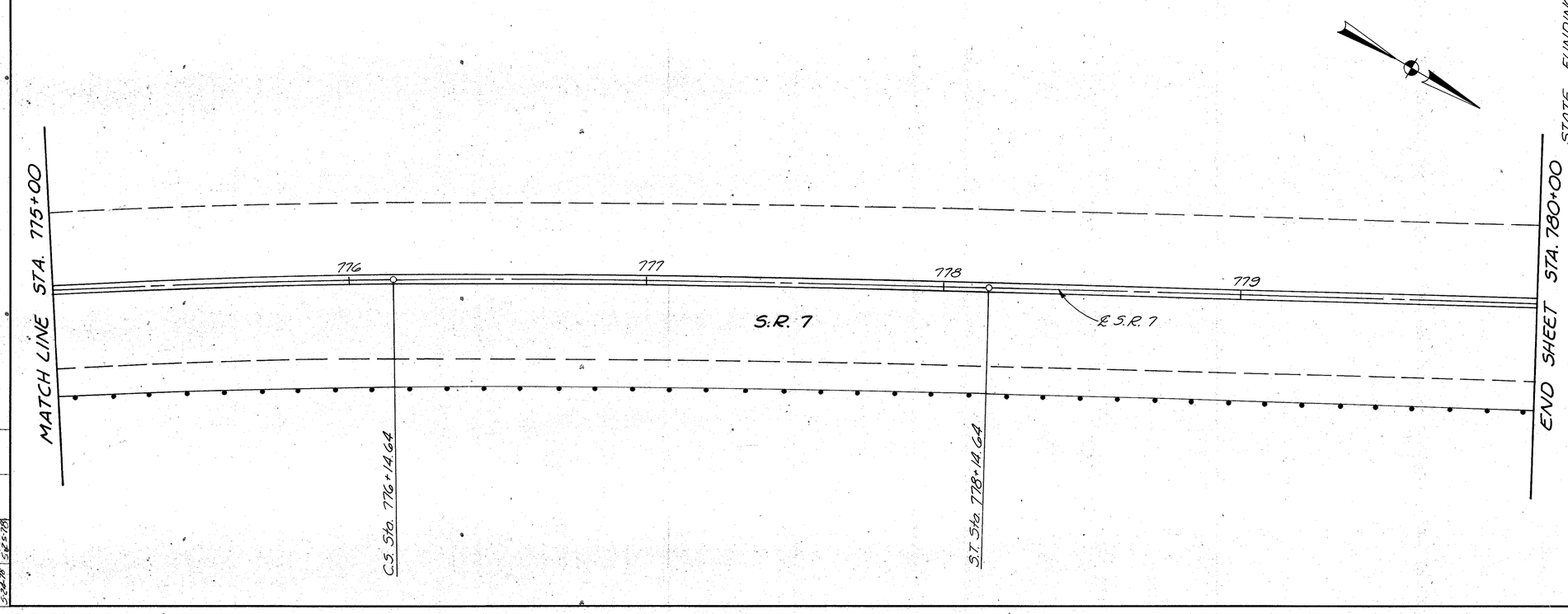

ESTIMATED QUANTITIES

REF. NO.	STATION TO STATION	SIDE	202 Sq. Yd.	202 Lin. Ft.	622 Lin. Ft.	606 Lin. Ft.	604 Inlet. Std. No. T-3A-10 Mod. as per plan Each	202 Guardrail Removed For Storage Lin. Ft.	202 9" Concrete Median Removed Sq. Yd.	622 Concrete Barrier Std. Type A Lin. Ft.	622 Concrete Barrier Std. Type A-1 Mod. as per plan Lin. Ft.	606 Guard Rail Type 5 Lin. Ft.	202 Guardrail Removed For Storage Lin. Ft.	202 9" Concrete Median Removed Sq. Yd.	SEE SHEET NO.
B-1	770+00 to 770+25	℄	8.3								25.0				
B-2	770+65 to 770+85	℄	6.4												
B-3	770+85 to 780+00	℄													
D-25	771+99	℄					1								80
D-26	774+49	℄					1								80
GR-1	770+00 to 770+76	RT.				76.00									
GR-2	770+76 to 780+00	RT.													
TOTALS			15	76		76.00	2			19	25	926.50	926.5	299	
					875				927						

STEUBENVILLE FUNDING

STATE FUNDING

Date	Chkd.
5-26-78	WCR
5-26-78	SPE

W. E. QUICKSALL & ASSOCIATES INC. Consulting Engineers

STA. 770+00 TO STA. 780+00

Calc. By GW 12-12-78
Chkd. By LOB 12-12-78

FHWA REGION	STATE	PROJECT	
5	OHIO		

55

JEF-7-11.80

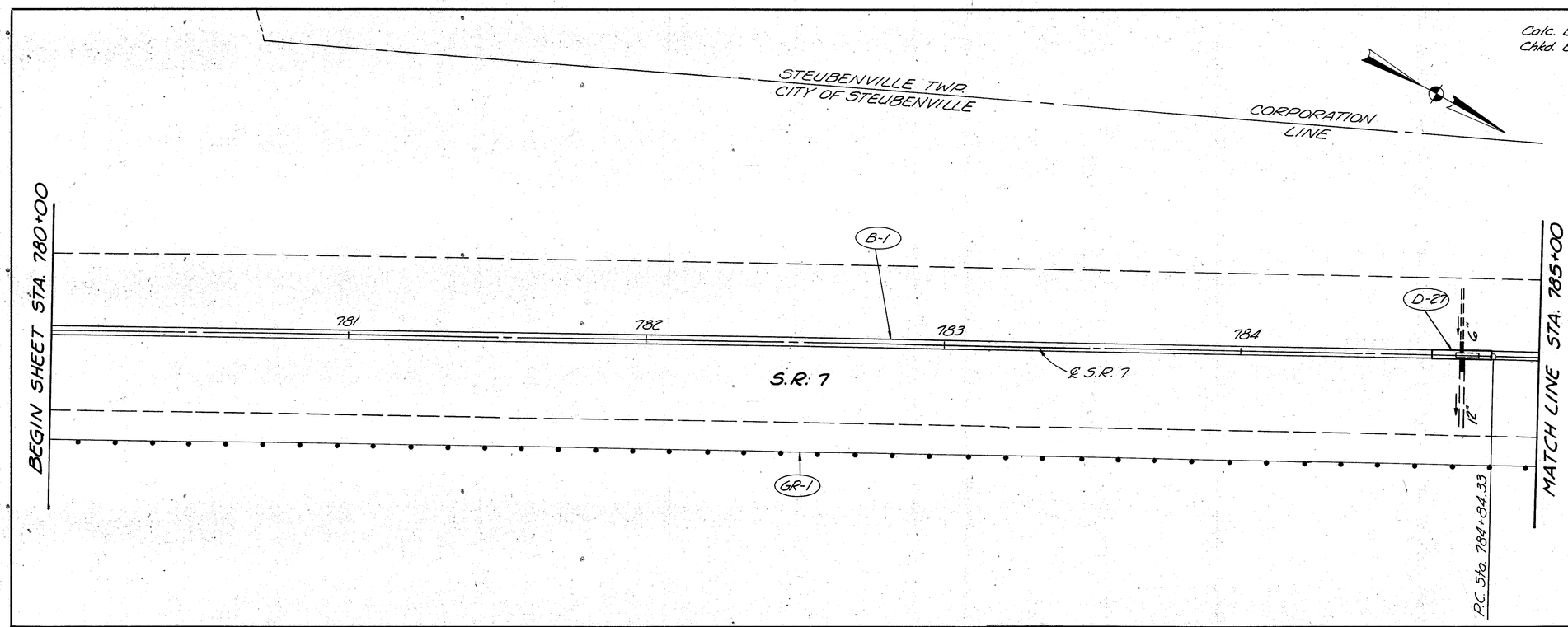

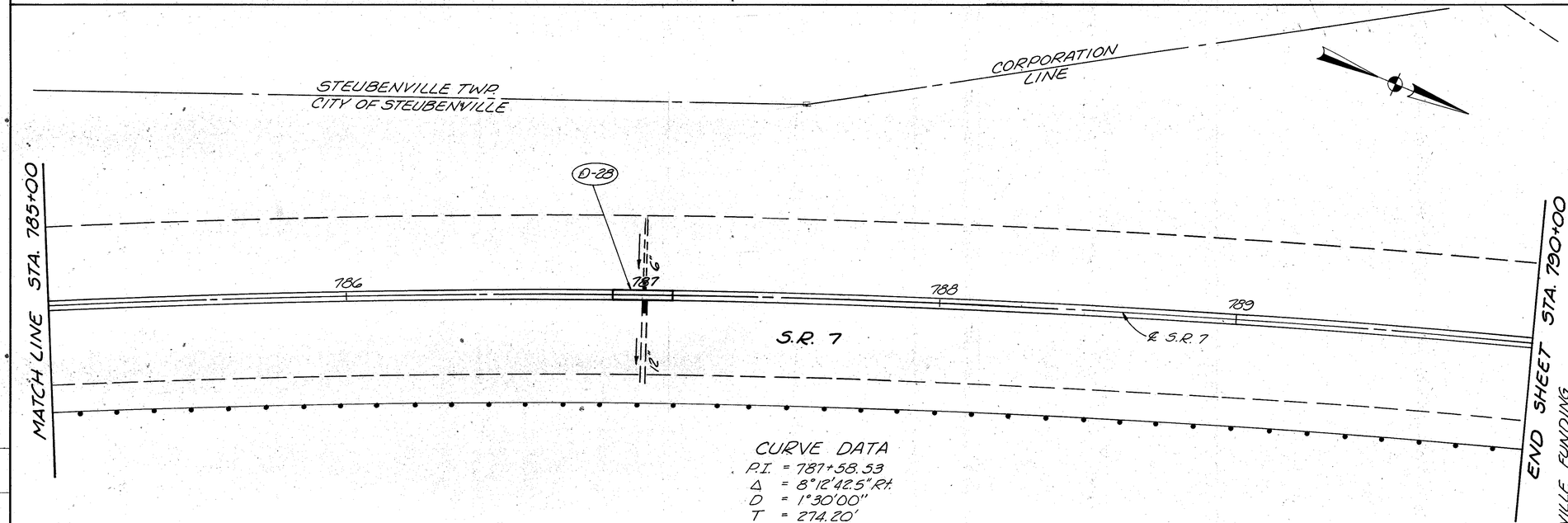

CURVE DATA

P.I. = 787+58.53
Δ = 8°12'42.5" Rt.
D = 1°30'00"
T = 274.20'
L = 547.45'
E = 9.83'
R = 3819.72'

STEUBENVILLE FUNDING

ESTIMATED QUANTITIES

REF. NO.	STATION TO STATION	SIDE	202 Sq. Yd. Guardrail Removed For Storage 9" Concrete Median Removed	202 Lin. Ft. Guardrail Removed For Storage 9" Concrete Median Removed	606 Guard Rail Type 5 Lin. Ft.	604 Inlet Std. No. I-34-10 Mod. as per plan Each	622 Concrete Barrier Std. Type A Lin. Ft.	SEE SHEET NO. 80 80
B-1	780+00 to 790+00	℄	327.8				960.0	
D-27	784+74	℄				1		
D-28	787+00	℄				1		
GR-1	780+00 to 790+00	Rt.		1000.0	1000.00			
TOTALS			327.8	1000	1000.00	2	960	

Dwg. Chkd. 5-22-78
Dwg. Chkd. 5-22-78

W. E. QUICKSALL & ASSOCIATES INC. Consulting Engineers

STA. 780+00 TO STA. 790+00

Calc. By G.W. 12-13-78
Chkd. By RaM 12-14-78

FHWA REGION	STATE	PROJECT	
5	OHIO		

56

JEF-7-11.80

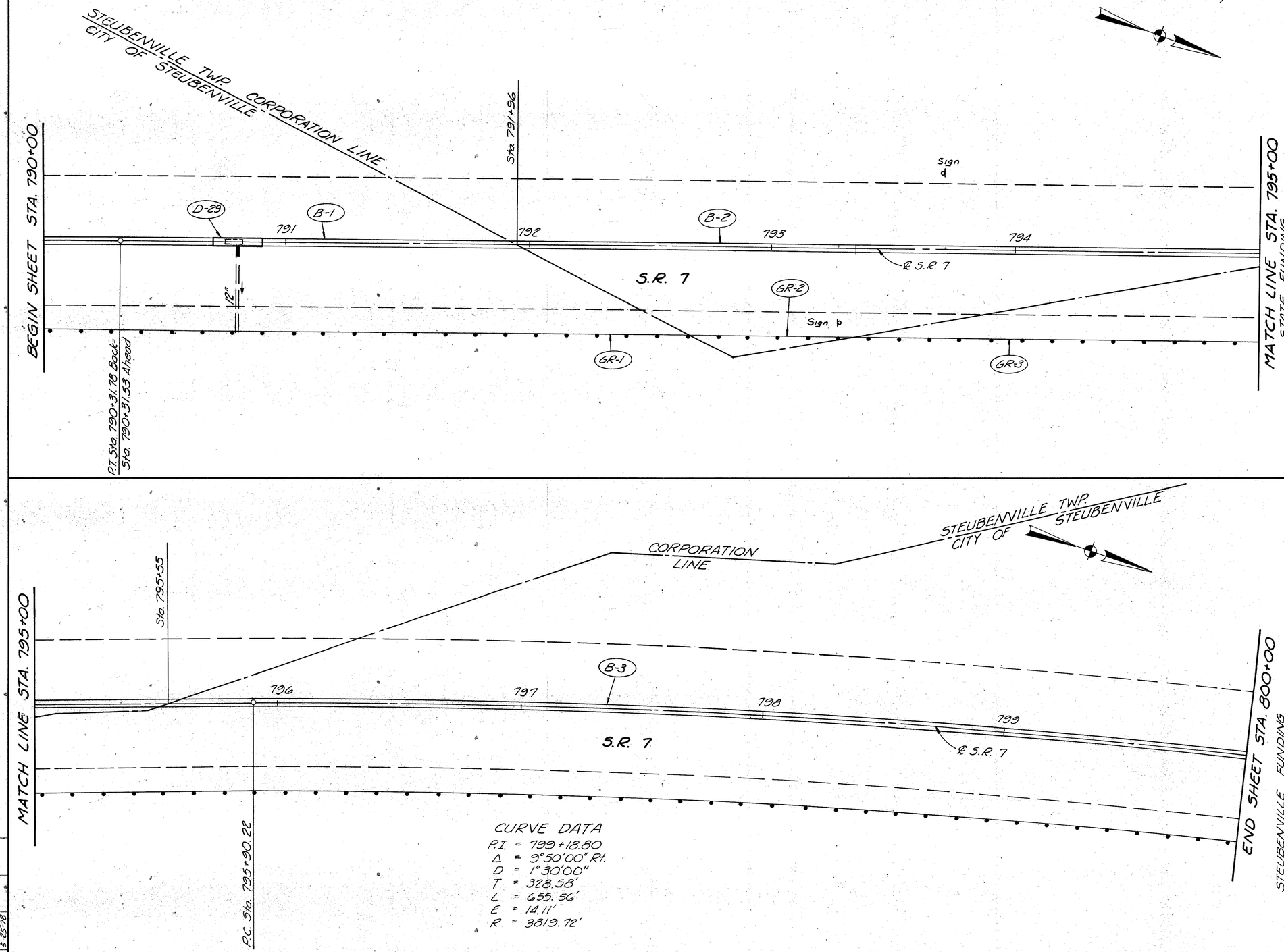

CURVE DATA
P.I. = 799+18.80
Δ = 9°50'00" Rt.
D = 1°30'00"
T = 328.58'
L = 655.56'
E = 14.11'
R = 3819.72'

ESTIMATED QUANTITIES

REF. NO.	STATION TO STATION	SIDE	202 Guardrail Removed For Storage 9" Concrete Median Removed Sq. Yd.	202 Guardrail Removed For Storage Lin. Ft.	606 Guard Rail Type 5 Lin. Ft.	622 Concrete Barrier Std. Type A Lin. Ft.	604 Inlet Std. No. I-3A-10 Mod. as per plan Each	622 Concrete Barrier Std. Type A Lin. Ft.	606 Guard Rail Type 5 Lin. Ft.	202 Guardrail Removed For Storage Lin. Ft.	202 9" Concrete Median Removed Sq. Yd.	SEE SHEET NO.
B-1	790+00 to 791+96	℄				359.0						
B-2	791+96 to 795+55	℄						116.3				
B-3	795+55 to 800+00	℄						445.0				
D-29	790+80	℄					1					
GR-1	790+00 to 792+66.5	Rt.		266.5	266.50						63.0	
GR-2	792+66.5 to 793+34.5	Rt.										
GR-3	793+34.5 to 800+00	Rt.		665.5	665.50						148.3	
TOTALS			120	68	6800	359	1	621	932.00	932	211	

Date	Chkd.
12-28-78	RaM 12-28-78

W. E. QUICKSALL & ASSOCIATES INC. Consulting Engineers

STA. 790+00 TO STA. 800+00

Calc. By GW 12-12-78
Chkd. By LDB 12-12-78

FHWA REGION	STATE	PROJECT	
5	OHIO		

57

JEF-7-11.80

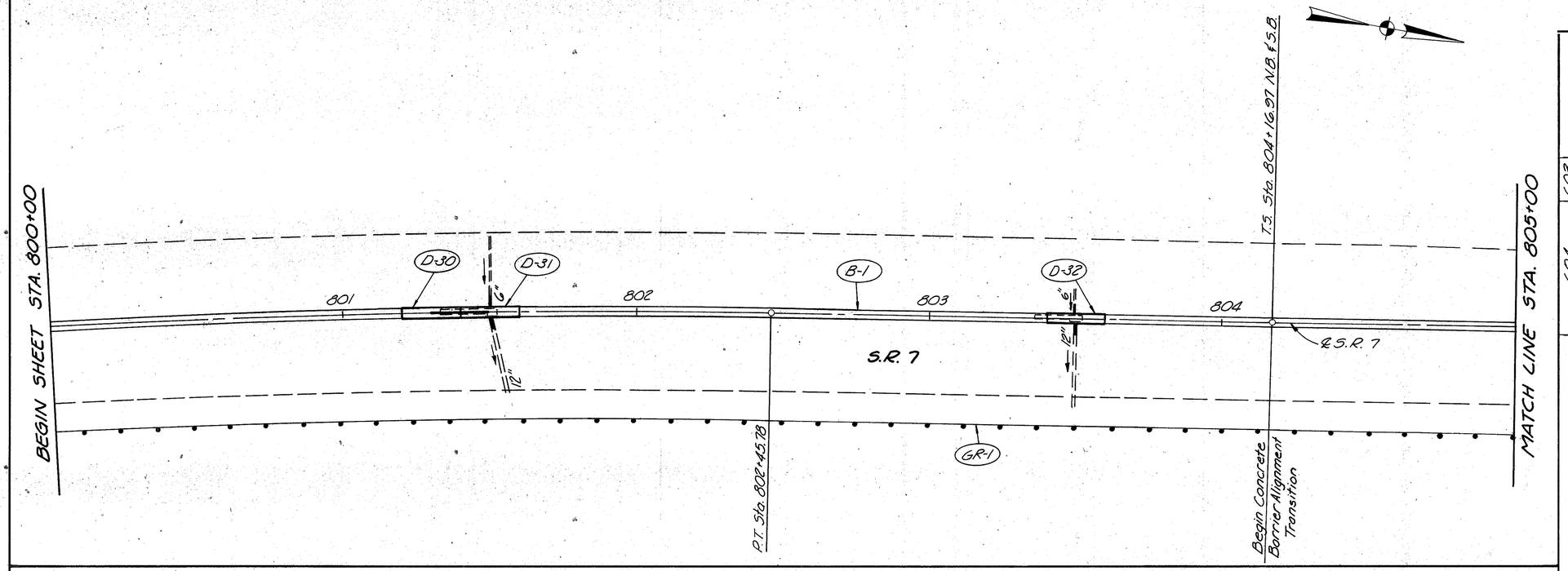

NORTHBOUND LANE CURVE DATA

P.I. = 808+18.80
ΔT = 16°00'00" Lt.
Dc = 4°00'00"
Ls = 400.00'
Rc = 1432.39'
Δc = 0°00'00"
Lc = 0.00'
L.C. = 399.65

θs = 8°00'00"
L.T. = 266.94'
S.T. = 133.58'
Xs = 399.22'
Ys = 18.59'
Ts = 401.83'
Es = 18.77'

SOUTHBOUND LANE CURVE DATA

P.I. = 808+19.85
ΔT = 20°00'00" Lt.
Dc = 5°00'00"
Ls = 400.00'
Rc = 1145.92'
Δc = 0°00'00"
Lc = 0.00'
L.C. = 399.46

θs = 10°00'00"
L.T. = 267.09'
S.T. = 133.72'
Xs = 398.78'
Ys = 23.22'
Ts = 402.88'
Es = 23.58'

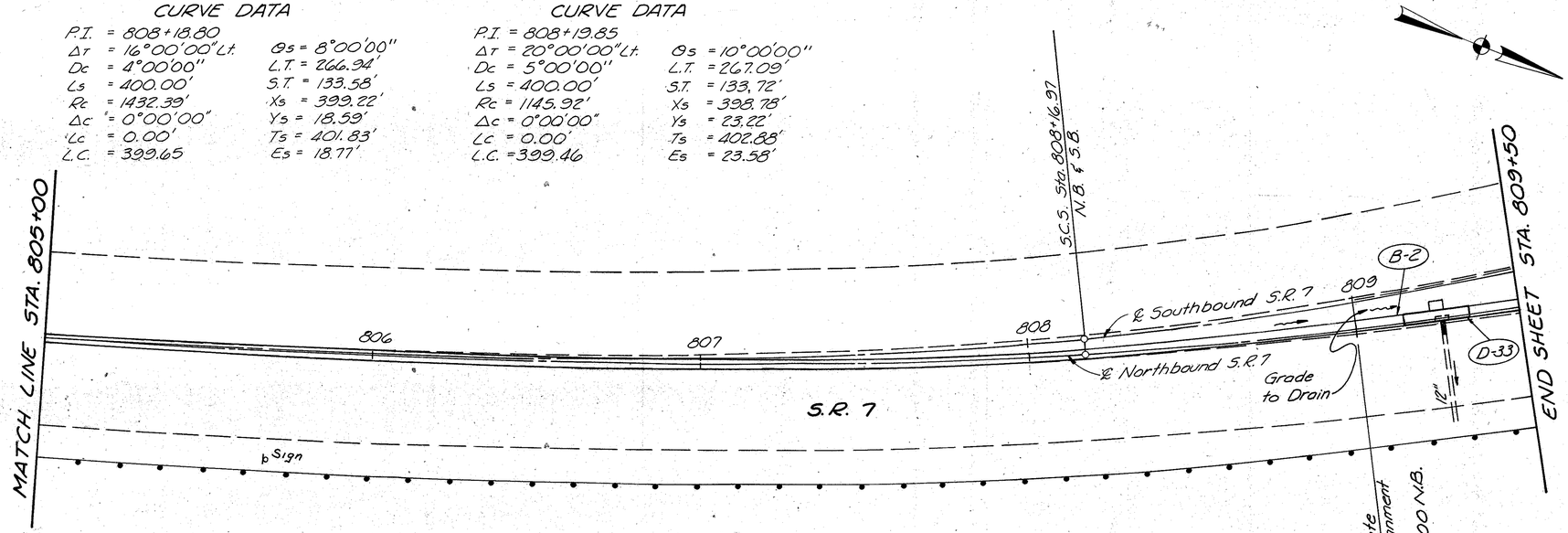

For Concrete Barrier Transition, See Sheet No. 34

STEUBENVILLE FUNDING

ESTIMATED QUANTITIES

REF. NO.	STATION TO STATION	SIDE	202 Curb Removed Lin. Ft.	202 9" Concrete Median Removed Sq. Yd.	606 Guard Rail Type 5 Lin. Ft.	606 Guardrail Removed for Storage Lin. Ft.	622 Concrete Barrier Std. Type A Lin. Ft.	603 12" Conduit Type B Lin. Ft.	604 Inlet Std. No. I-34-10 Mod. as per plan Each	604 Inlet Std. No. I-34-14 Mod. as per plan Each	604 Inlet Std. No. I-34 Each	SEE SHEET NO.
B-1	802+00 to 802+00	N.B.					840.0					34
B-2	809+00 to 809+50	N.B.	38.7	53.0			30.0					
D-30	801+31	℄										80
D-31	801+51	℄										80
D-32	803+45	℄										80
D-33	809+24	N.B.				96.10						
GR-1	800+00 to 809+50	R.R.			96.00							
TOTALS			39	530	96.00	96.1	870	20	2	1	1	

CHKD. 5-25-78	
CHKD. 5-24-78	

W. E. QUICKSALL & ASSOCIATES INC. Consulting Engineers

STA. 800+00 TO STA. 809+50

Calc. By WCR 12-14-78
Chk'd. By P.H. 12-15-78

FHWA REGION	STATE	PROJECT	
5	OHIO		

58

JEF-7-11.80

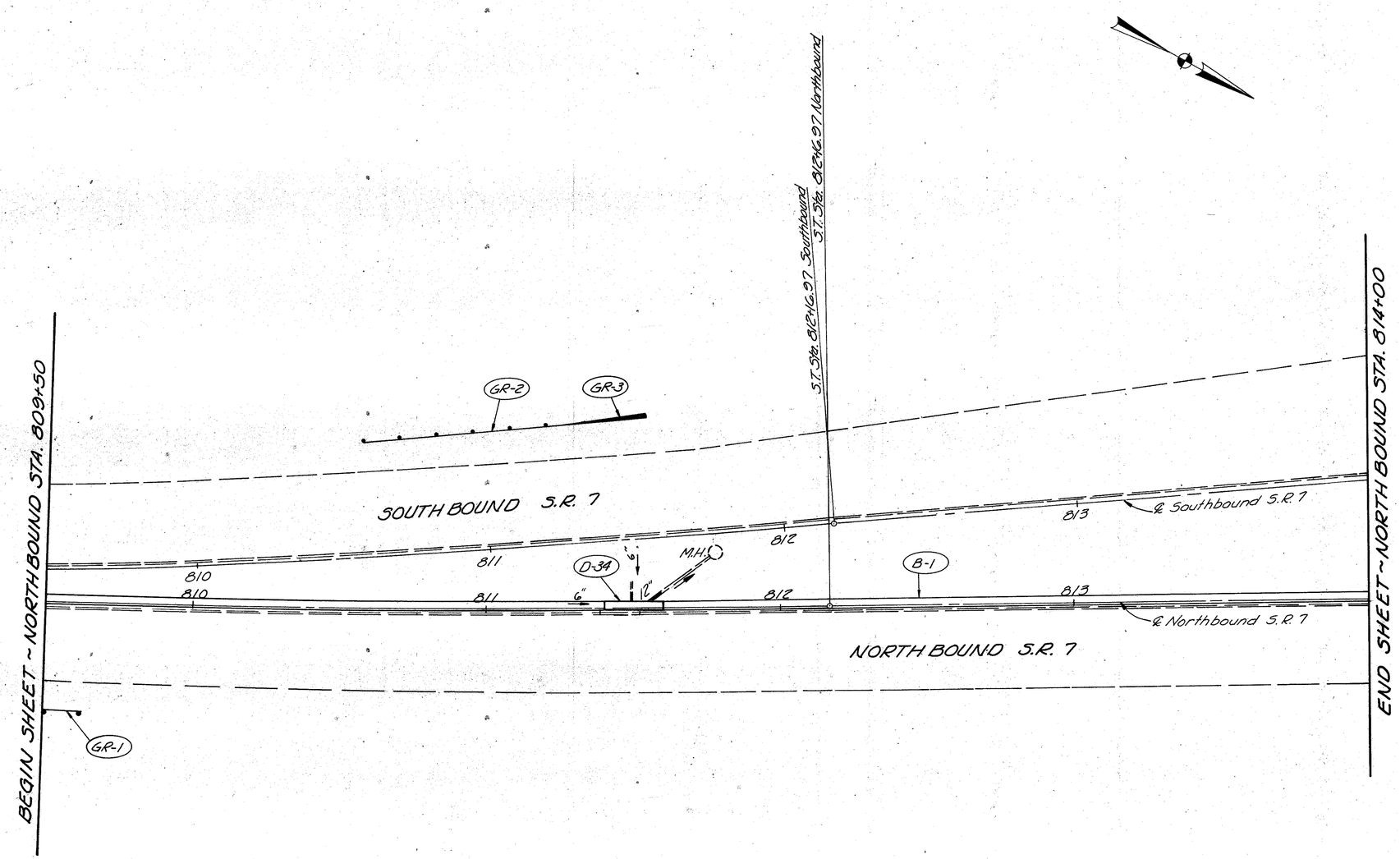

STEUBENVILLE FUNDING

ESTIMATED QUANTITIES

REF. NO.	STATION TO STATION	SIDE	202 Curb Removed Lin. Ft.	202 Guardrail Removed For Storage Lin. Ft.	606 Guard Rail Type 5 Lin. Ft.	606 Anchor Assembly Std. Type T Each	606 Anchor Assembly Std. Type A Each	622 Concrete Barrier Std. Type A Lin. Ft.	604 Inlet Std. No. I-34-14 Mod. as per plan Each	SEE SHEET NO.
B-1	809+50 to 814+00	N.B.	434.7							
D-34	811+50	N.B.						430.0	1	80
GR-1	809+50 to 809+65	Rt.		15.0	2.50	1				
GR-2	810+65 to 811+23	S.B.		55.0	42.50	1				
GR-3	811+23 to 811+55.5	S.B.			7.50		1			
TOTALS			434	70	52.50	2	1	430	1	

Drawn DDN 5-28-78
Chk'd. DCZ 5-29-78

W. E. QUICKSALL & ASSOCIATES INC. Consulting Engineers

STA. 809+50 TO STA. 814+00

FHWA REGION	STATE	PROJECT	
5	OHIO		

59

JEF-7-11.80

Calc. By LDB 12-13-78
Chkd. By WCR 12-13-78

NORTHBOUND LANE CURVE DATA

P.I. = 816+66.21
Δ = 43°20'34" Rt.
D = 11°00'00"
T = 206.98'
L = 394.03'
E = 39.61'
R = 520.87'

SOUTHBOUND LANE CURVE DATA

P.I. = 818+76.89
Δ = 56°33'08" Rt.
D = 7°00'00"
T = 440.28'
L = 807.89'
E = 110.89'
R = 818.51'

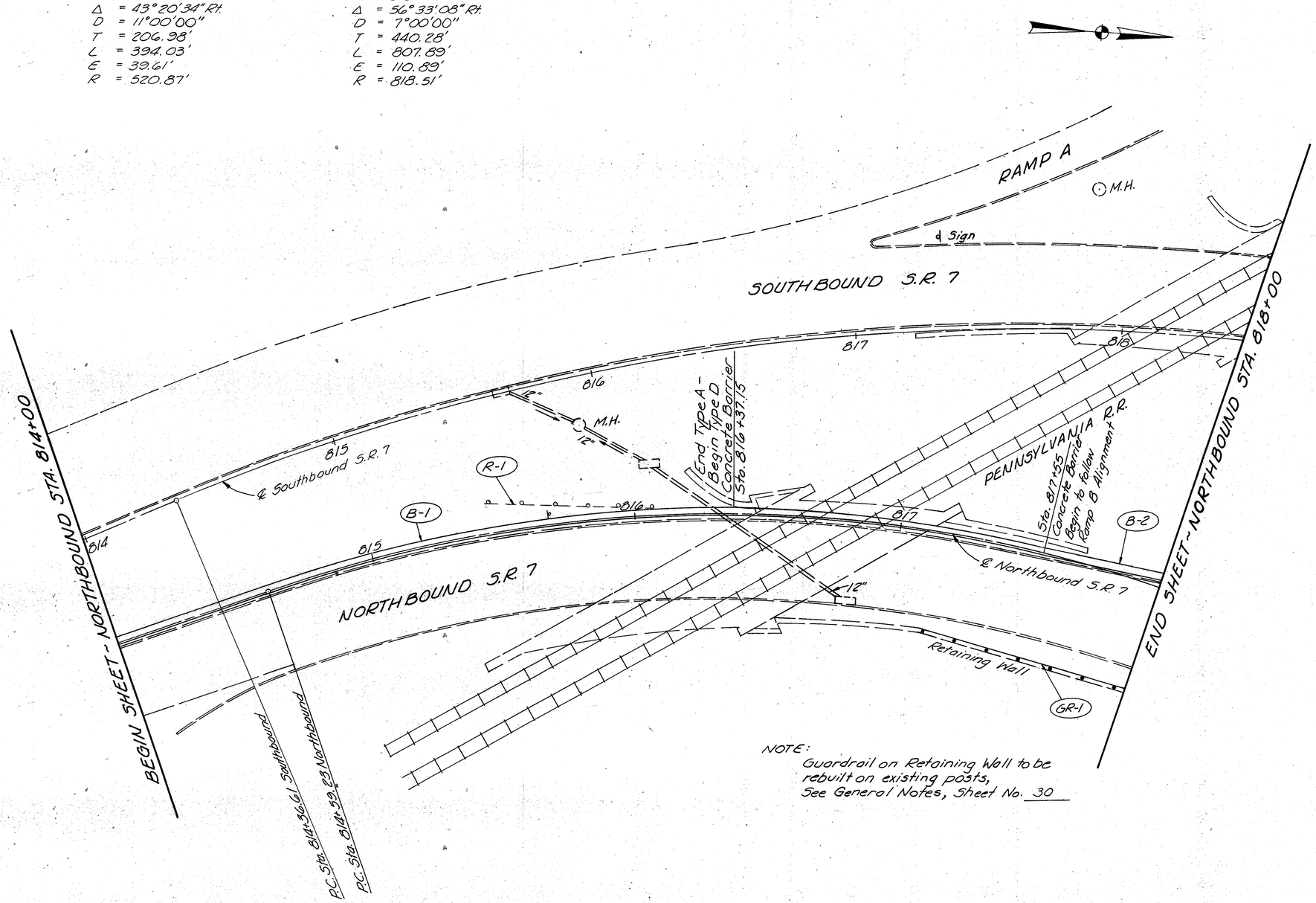

NOTE:
Guardrail on Retaining Wall to be rebuilt on existing posts,
See General Notes, Sheet No. 30

STEUBENVILLE FUNDING

ESTIMATED QUANTITIES

REF. NO.	STATION TO STATION	SIDE	202 Curb Removed (Lin. Ft.)	202 Guardrail Removed For Storage (Lin. Ft.)	606 Guardrail Rebuilt Type 5 as per plan (Lin. Ft.)	606 Guard Rail Type 5 (Lin. Ft.)	606 Bridge Terminal Assembly Std. Type J (Each)	622 Concrete Barrier Std. Type A (Lin. Ft.)	622 Concrete Barrier Std. Type D (Lin. Ft.)	304 Aggregate Base (Cu. Yd.)	SEE SHEET NO.
B-1	814+00 to 816+37.15	N.B.	237.2					237.2			
B-2	816+37.15 to 818+00	N.B.	162.9	162.9					162.9		
GR-1	817+02.5 to 818+00	N.B.			81.00	12.50	1			15.8	
R-1	815+45 to 816+37.15	N.B.		92.2							
TOTALS			400	255	81.00	12.50	1	237	163		16

Computed	Checked	Date
LDB	WCR	12-13-78

W. E. QUICKSALL & ASSOCIATES INC. Consulting Engineers

STA. 814+00 TO STA. 818+00

Calc. By P.H. 12-14-78
Chk'd. By RaM 12-16-78

FHWA REGION	STATE	PROJECT	
5	OHIO		

60

JEF-7-11.80

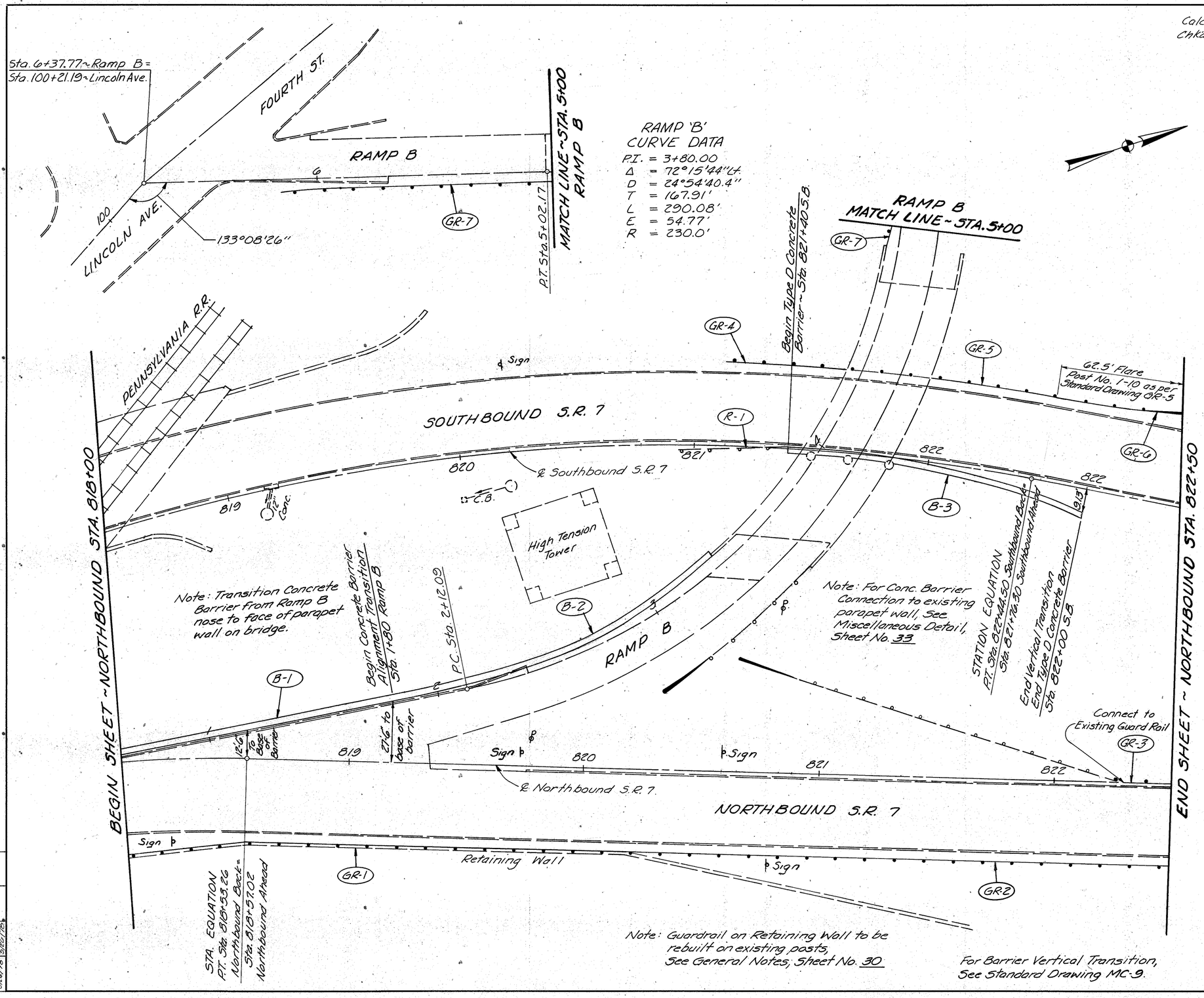

ESTIMATED QUANTITIES

STEUBENVILLE FUNDING

REF. NO.	STATION TO STATION	SIDE	202 Curb Removed (Lin. Ft.)	202 Guardrail Removed for Storage (Lin. Ft.)	606 Guardrail Rebuilt Type 5, as per plan (Lin. Ft.)	606 Guard Rail, Type 5 (Lin. Ft.)	606 Anchor Assembly Std. Type T (Each)	606 Anchor Assembly Std. Type A (Each)	606 Bridge Terminal Assembly Std. Type D (Each)	622 Concrete Barrier Std. Type D (Lin. Ft.)	SEE SHEET NO.
B-1	818+00 NB to 2+39.5 Ramp B	Lt.	177.5	177.5						177.5	
B-2	2+39.5 to 5+34 Ramp B	Lt.		93.5						93.5	
B-3	821+40 to 822+00 SB	Rt.								130.0	
GR-1	818+00 to 820+16 NB	Rt.			215.00						
GR-2	820+16 to 822+50 NB	Rt.		230.0		230.00					
GR-3	822+35 to 822+50 NB	Lt.		15.0		15.00					
GR-4	821+01 to 821+18 SB	Lt.				4.50	1				
GR-5	821+18 to 822+20.3 SB	Lt.		170.5		170.50					
GR-6	822+20.3 to 822+45.3 SB	Lt.					1				
GR-7	4+90 to 6+37.77 Ramp B	Lt.		125.0		112.50	1		1		
R-1	820+95 to 822+01 SB	Rt.		175.0							
TOTALS			178	987	215.00	532.50	2	1	1	401	

Drawn GJD 6/26/78 Chkd. WCR 5/30/79

W. E. QUICKSALL & ASSOCIATES INC. Consulting Engineers

STA. 818+00 TO STA. 822+50

Calc. By GW 12-13-78
Chkd. By WCR 12-13-78

FHWA REGION	STATE	PROJECT	
5	OHIO		

61

JEF-7-11.80

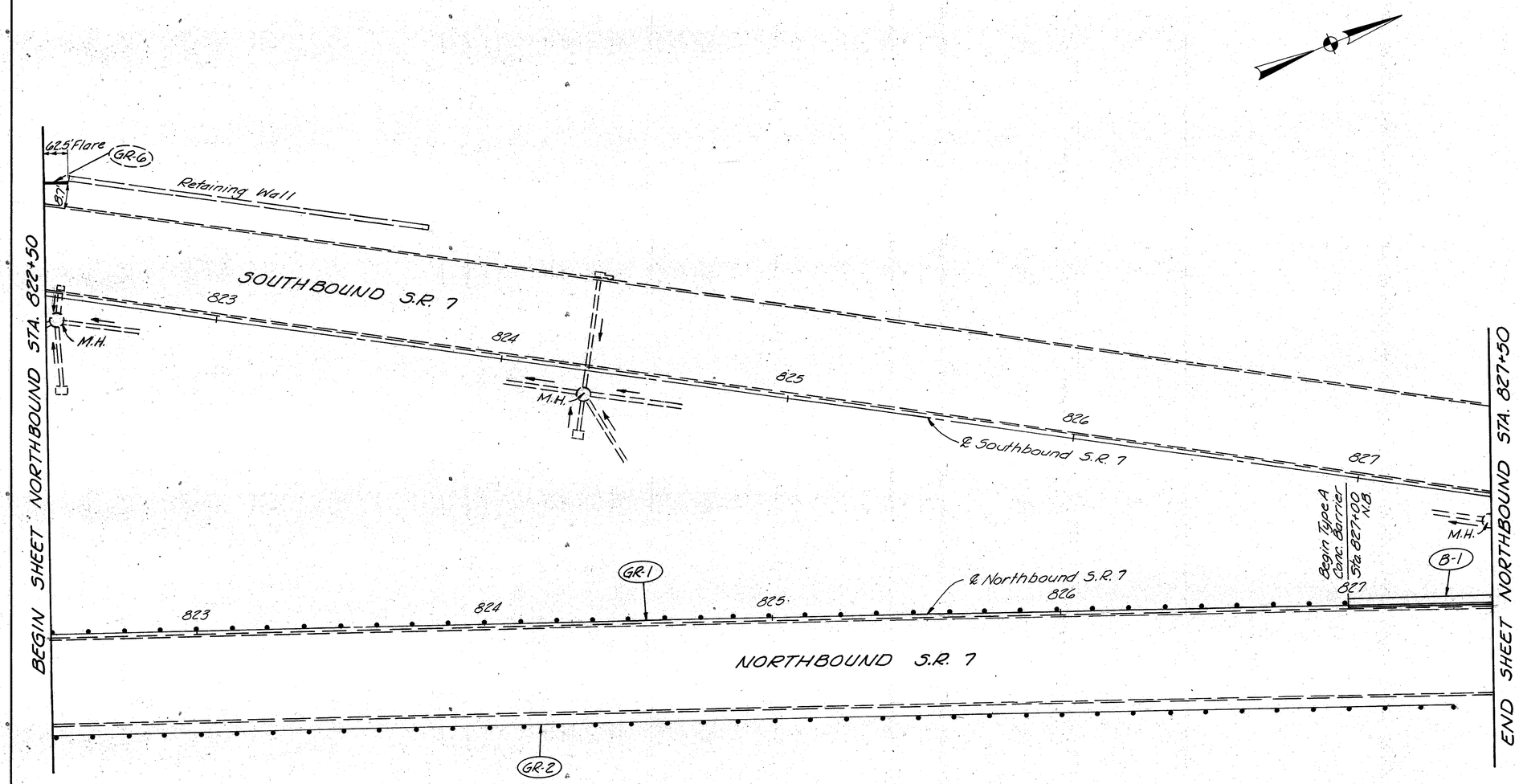

For Guard Rail Terminal Connection To Concrete Barrier, See Miscellaneous Detail, Sheet No. 34.

STEUBENVILLE FUNDING

ESTIMATED QUANTITIES

REF. NO.	STATION TO STATION	SIDE	202 Curb Removed Lin. Ft.	202 Guardrail Removed For Storage Lin. Ft.	606 Guard Rail, Type 5 Lin. Ft.	606 Anchor Assembly Std. Type 7 Each	622 Concrete Barrier Std. Type A Lin. Ft.
B-1	827+00 to 827+50 NB	Lt.	50.0	50.0			50.0
GR-1	822+50 to 827+00 NB	Lt.			450.00		
GR-2	822+50 to 827+38 NB	Rt.			474.00	1	
TOTALS			50	987	924.00	1	50

SEE SHEET NO.

CHKD. WCR 5-26-78	CHKD. WCR 5-26-78

W. E. QUICKSALL & ASSOCIATES INC. Consulting Engineers

STA. 822+50 TO STA. 827+50

Calc. By P.H. 12-18-78
Chkd. By RaM 12-18-78

FHWA REGION	STATE	PROJECT	
5	OHIO		

62

JEF-7-11.80

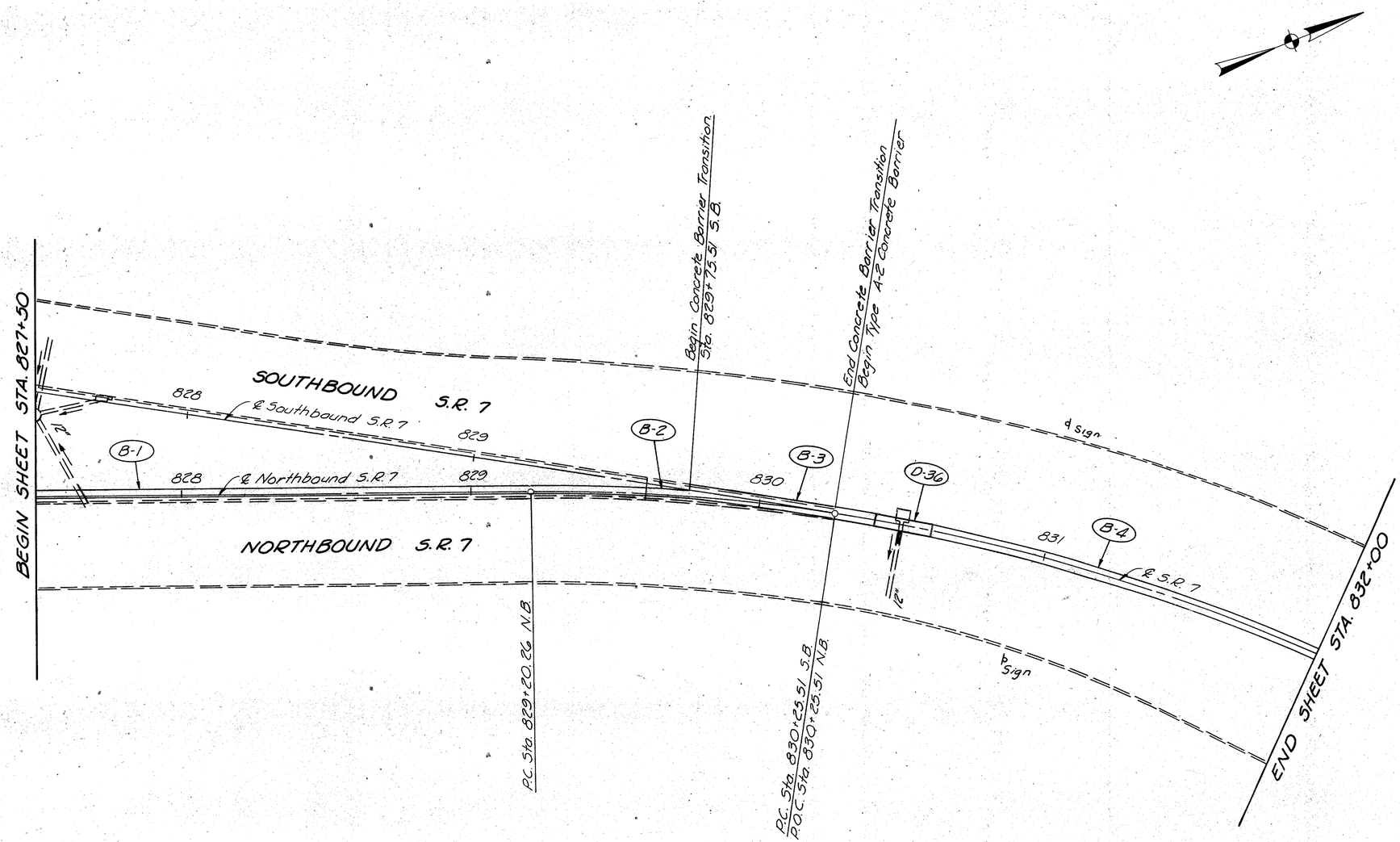

For Concrete Barrier Transition, See Sheet No. 40

ESTIMATED QUANTITIES — STEUBENVILLE FUNDING

REF. NO.	STATION TO STATION	SIDE	202 Curb Removed Lin. Ft.	202 4" Median Pavement Removed Sq. Yd.	202 Guardrail Removed For Storage Lin. Ft.	622 Concrete Barrier Std. Type A-2 Mod. as per plan Lin. Ft.	622 Concrete Barrier Std. Type A Lin. Ft.	604 Inlet Std. No. I-3A Each	SEE SHEET NO. 40	SEE SHEET NO. 80
B-1	827+50 to 829+60.5	NB	210.5		204.0		210.5			
B-2	829+60.5 to 829+75.51	NB	15.0	10.1			15.0			
B-3	829+75.51 to 830+25.51	NB	100.0	11.5			50.0	1		1
B-4	830+25.51 to 832+00	℄	349.0	58.2		154.5				
D-36	830+50	℄								
TOTALS			675	80	204	155	276	1		

CHKD.	WEC	5-26-78
CKD.	LOB	5-26-78
DWN.		

W. E. QUICKSALL & ASSOCIATES INC. Consulting Engineers

STA. 827+50 TO STA. 832+00

Calc. By GW 12-13-78
Chkd. By PH 12-14-78

FHWA REGION	STATE	PROJECT	
5	OHIO		

63

JEF-7-11.80

NORTHBOUND LANE CURVE DATA

P.I. = 833+18.32
Δ = 62° 35' 27"
D = 8° 45' 00"
T = 398.06'
L = 715.32'
E = 111.49'
R = 654.81'

SOUTHBOUND LANE CURVE DATA

P.I. = 833+54.71
Δ = 53° 22' 53"
D = 8° 45' 00"
T = 329.20'
L = 610.07'
E = 78.10'
R = 654.81'

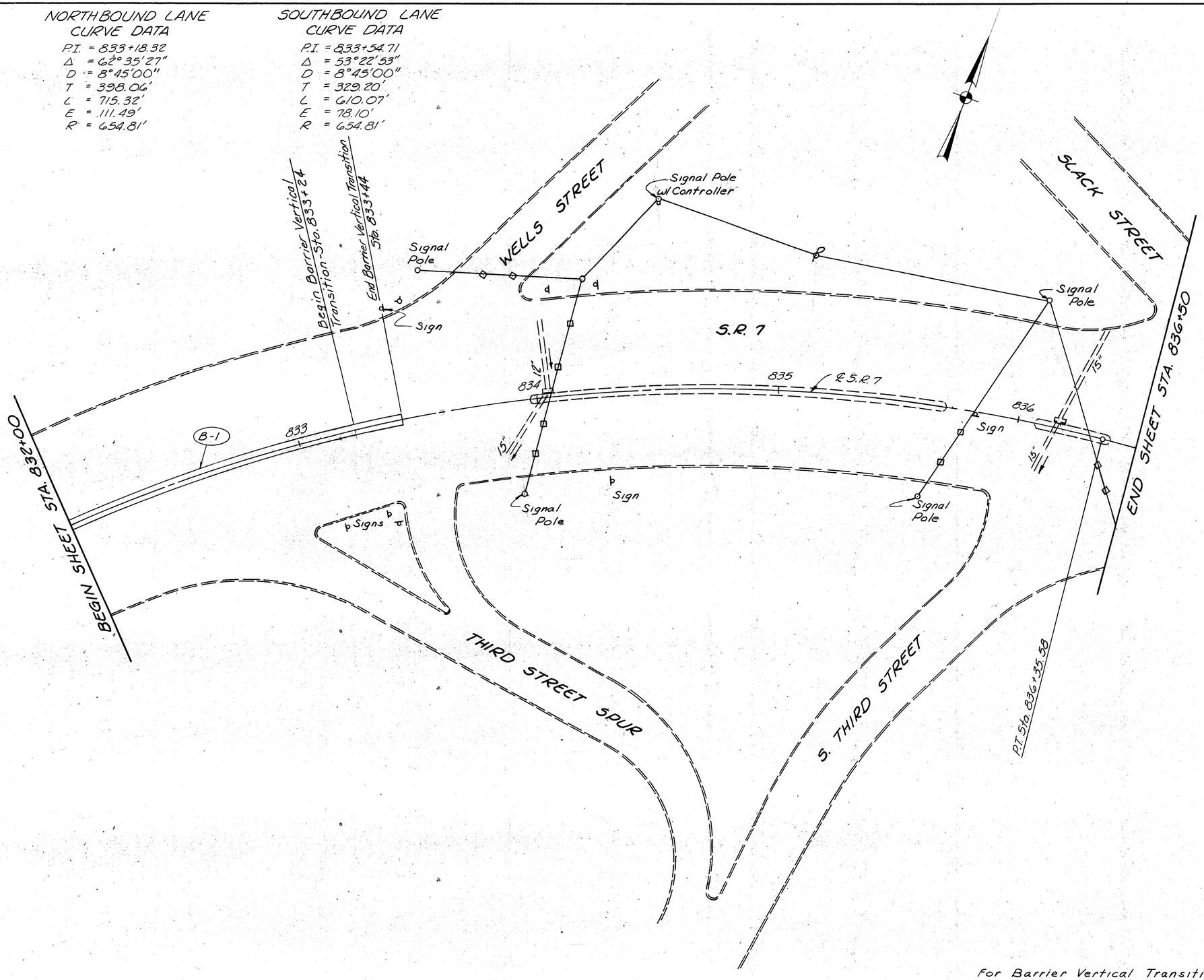

For Barrier Vertical Transition Detail, See Standard Drawing MC-9.

STEUBENVILLE FUNDING

ESTIMATED QUANTITIES

REF. NO.	STATION TO STATION	SIDE	202 Curb Removed Lin. Ft.	202 4" Median Pavement Removed Sq. Yd.	622 Concrete Barrier Std. Type A-2 Mod. as per plan Lin. Ft.	SEE SHEET NO.
B-1	832+00 to 833+44	℄	288.0	48.0	144.0	
TOTALS			288	48	144	

STA. 832+00 TO STA. 836+50

W. E. QUICKSALL & ASSOCIATES INC. Consulting Engineers

Calc. By RoM 12-18-78
Chk'd By P.H. 12-19-78

FHWA REGION	STATE	PROJECT	
5	OHIO		

64

JEF-7-11.80

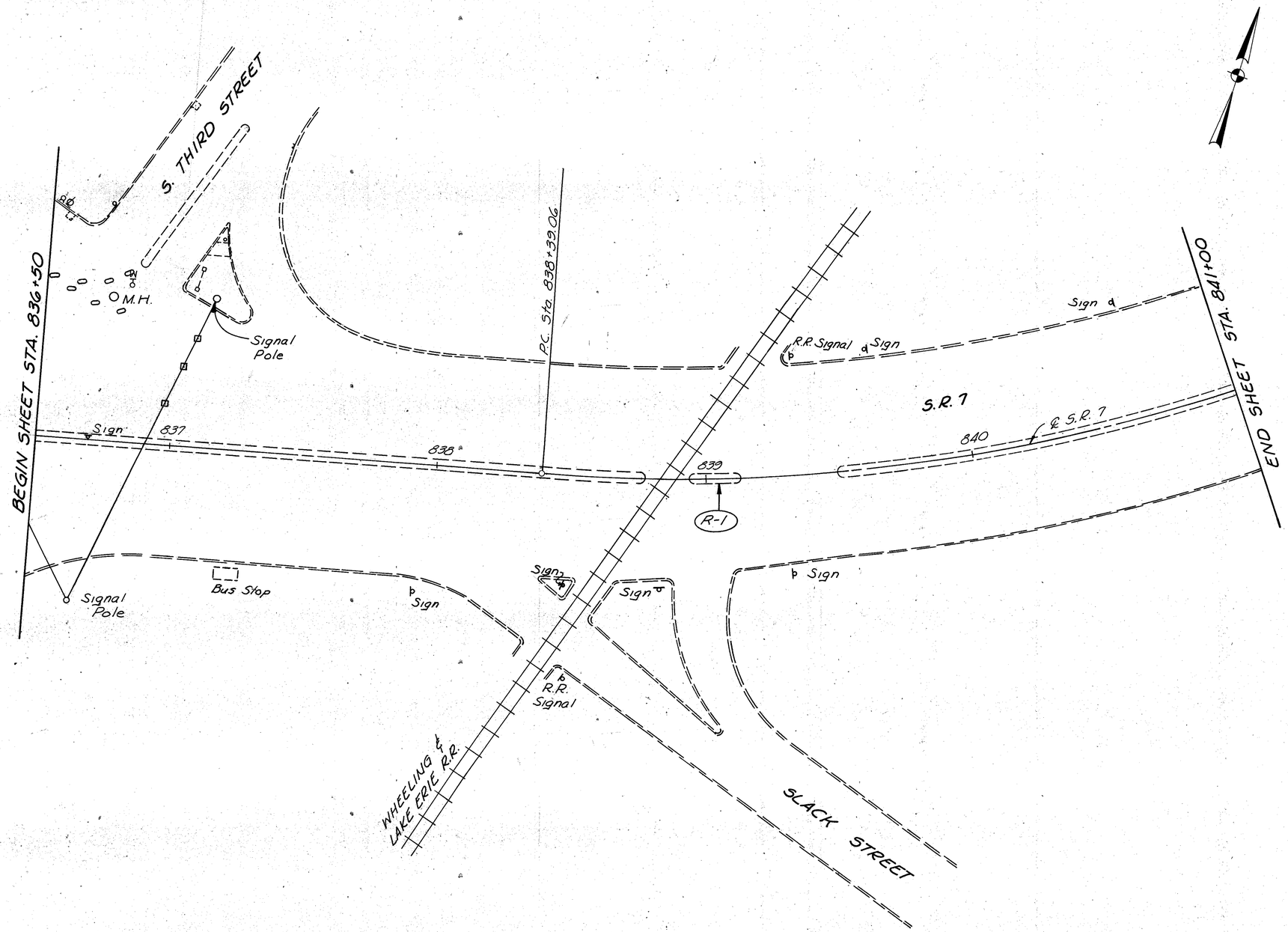

STEUBENVILLE FUNDING

SEE SHEET NO.	

ESTIMATED QUANTITIES

REF. NO.	STATION TO STATION	SIDE	202 4" Median Pavement Removed Sq. Yd.	202 Curb Removed Lin. Ft.
R-1	838+93 to 839+13	℄	6.7	40.0
TOTALS			7	40

Dwn. CMH 12-18-78
Chk'd. MCF 12-18-78

W. E. QUICKSALL & ASSOCIATES INC. Consulting Engineers

STA. 836+50 TO STA. 841+00

Calc. By GW 12-15-78
Chkd. By WCR 12-18-78

FHWA REGION	STATE	PROJECT	
5	OHIO		

JEF-7-11.80

65

CURVE DATA

P.I. = 841+89.26
Δ = 56°16'38" Lt.
D = 8°45'00"
T = 350.20'
L = 643.17'
E = 87.96'
R = 654.81'

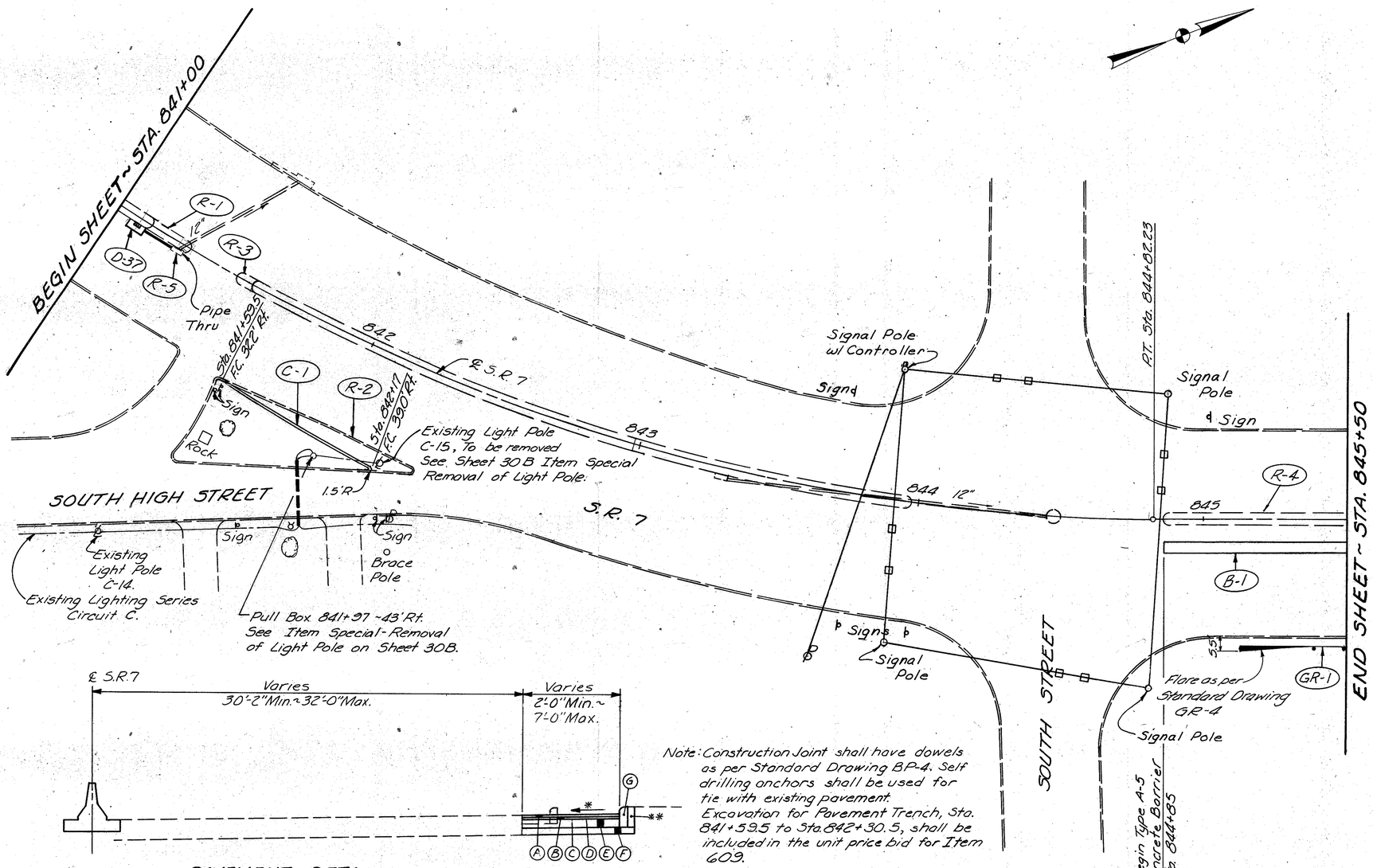

PAVEMENT DETAIL

STA. 841+59.5 TO STA. 842+30.5 Rt.

Note: Construction Joint shall have dowels as per Standard Drawing BP-4. Self drilling anchors shall be used for tie with existing pavement. Excavation for Pavement Trench, Sta. 841+59.5 to Sta. 842+30.5, shall be included in the unit price bid for Item 609.

LEGEND

(A) — Item 404 — 1 1/2" Asphalt Concrete, AC-20
(B) — Item 402 — 1 1/2" Asphalt Concrete, AC-20
(C) — Item 407 — Tack Coat: 702.04, SS-1, SS-1H, MS-2, or RS-1, or 702.02, RC-250, Applied at a Rate of 0.1 gal per square yard.
(D) — Item 407 — Cover Aggregate, Applied at a Rate of 7 lbs per Square Yard
(E) — Item 305 — 9" Portland Cement Concrete Base
(F) — Item 310 — 6" Subbase, Type I
(G) — Item 609 — Curb, Standard Type 6

* Match Existing Cross Slope
** Backfill in accordance with Item 609

For Left Turn Lane Barrier Details, See Sheet Nos. 36 & 37

Drawn: CDO 9/28/78
Chkd: WCR 9/28/78

ESTIMATED QUANTITIES

REF. NO.	STATION TO STATION	SIDE	202 Sq. Yd.	202 Lin. Ft.	202 Each	402 Lin. Ft.	404 Lin. Ft.	606 Lin. Ft.	606 Each	609 Lin. Ft.	622 Lin. Ft.	603 Lin. Ft.	604 Each	SEE SHEET NO.
B-1	844+85 to 845+50	Rt.									65.0			
C-1	841+59.5 to 842+17	Rt.								63.0				
D-37	841+09	℄												
GR-1	845+10 to 845+50	Rt.					40.0	15.00	1					
R-1	841+13 to 841+29	℄	32.0	5.3										
R-2	841+59.5 to 842+30.5	Rt.	95.0	1.3										
R-3	841+49 to 841+53	℄	8.0											
R-4	844+85 to 845+50	℄	130.0	21.7										
R-5	841+25	℄			1									
TOTALS			265	28	1	40		15.00	1	63	65	16	1	

STEUBENVILLE FUNDING

W. E. QUICKSALL & ASSOCIATES INC. Consulting Engineers

STA. 841+00 TO STA. 845+50

Calc. By LDB 12-18-78
Chkd. By WCR 12-18-78

FHWA REGION	STATE	PROJECT	
5	OHIO		

JEF-7-11.80

66

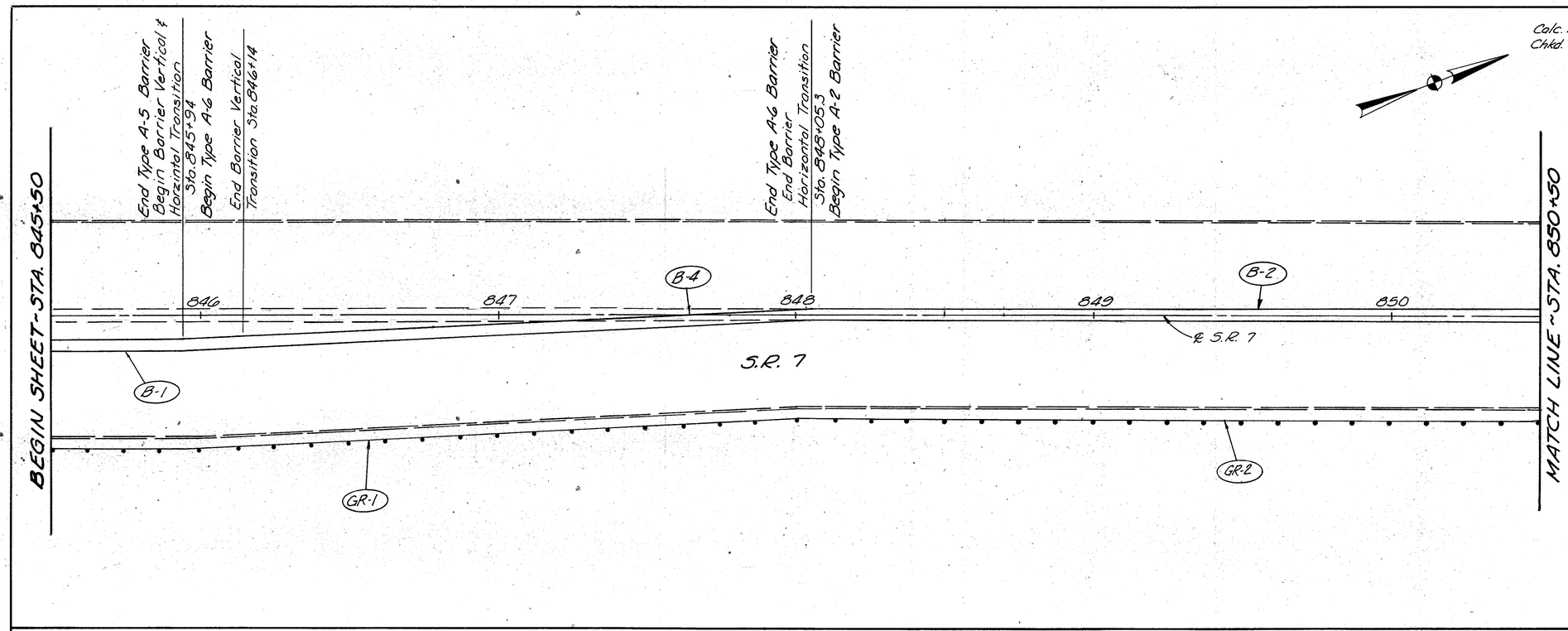

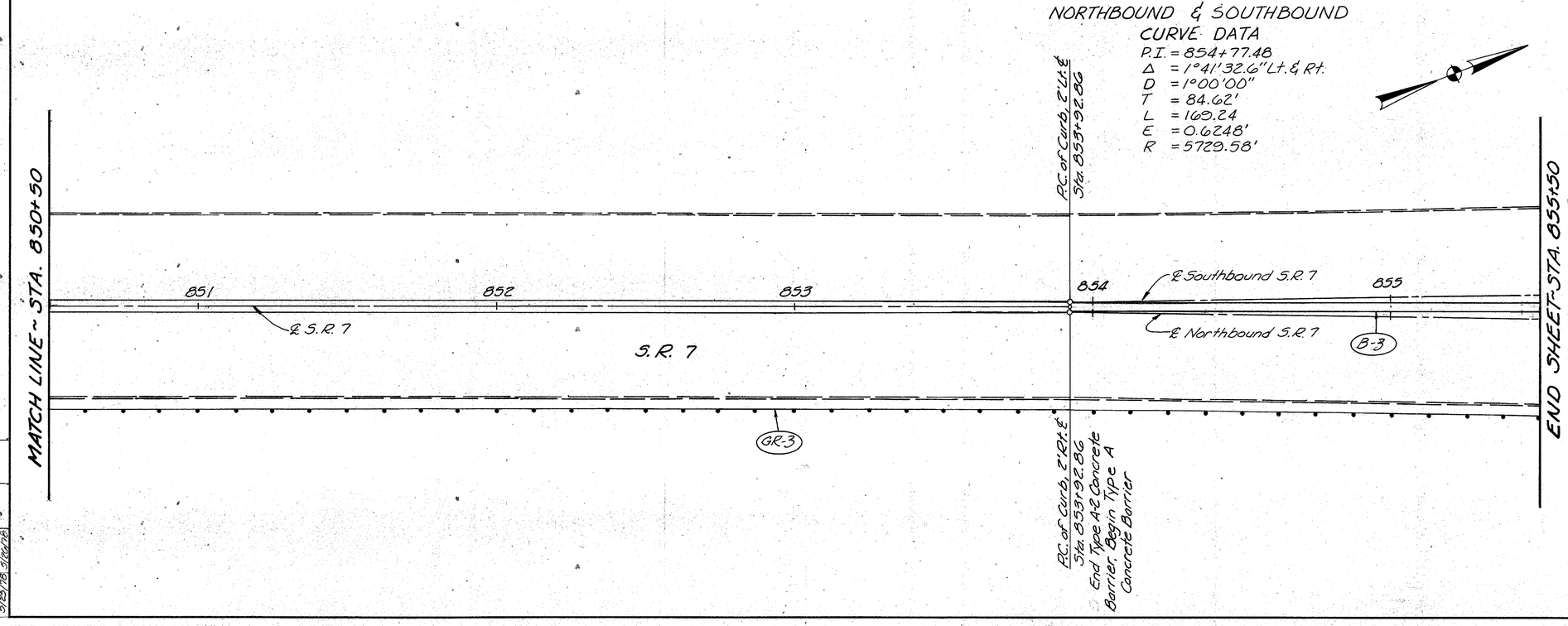

ESTIMATED QUANTITIES

REF. NO.	STATION TO STATION	SIDE		Concrete Barrier Std. Type A-6 Mod. as per plan (Lin. Ft.)	Concrete Barrier Std. Type A-5 Mod. as per plan (Lin. Ft.)	Concrete Barrier Std. Type A-2 Mod. as per plan (Lin. Ft.)	Concrete Barrier Std. Type A (Lin. Ft.)	Guard Rail Type 5 (Lin. Ft.)	Guardrail Removed For Storage (Lin. Ft.)	4" Median Pavement Removed (Sq. Yd.)	Curb Removed (Lin. Ft.)
			SEE SHEET NO.	622				606		202	
B-1	845+50 to 845+94	Rt.								14.7	88.0
B-2	848+05.3 to 853+92.86	℄				587.6				195.9	1175.1
B-3	853+92.86 to 855+50	℄								92.9	314.3
B-4	845+94 to 848+05.3	Rt.		211.3			157.1			70.4	422.6
GR-1	845+50 to 848+23	Rt.						273.00	273.0		
GR-2	848+23 to 850+24	Rt.						101.00			
GR-3	850+24 to 855+50	Rt.						526.00	526.0		
TOTALS				211	44	588	157	1000.00	799	374	2000

STEUBENVILLE FUNDING

Dsgn. DOD 9/25/78 | Chkd. RKC.R. 9/26/78

W. E. QUICKSALL & ASSOCIATES INC. Consulting Engineers

STA. 845+50 TO STA. 855+50

FHWA REGION	STATE	PROJECT	
5	OHIO		

67

JEF-7-11.80

Calc. By P.H. 12-19-78
Chk'd. By WCR 12-20-78

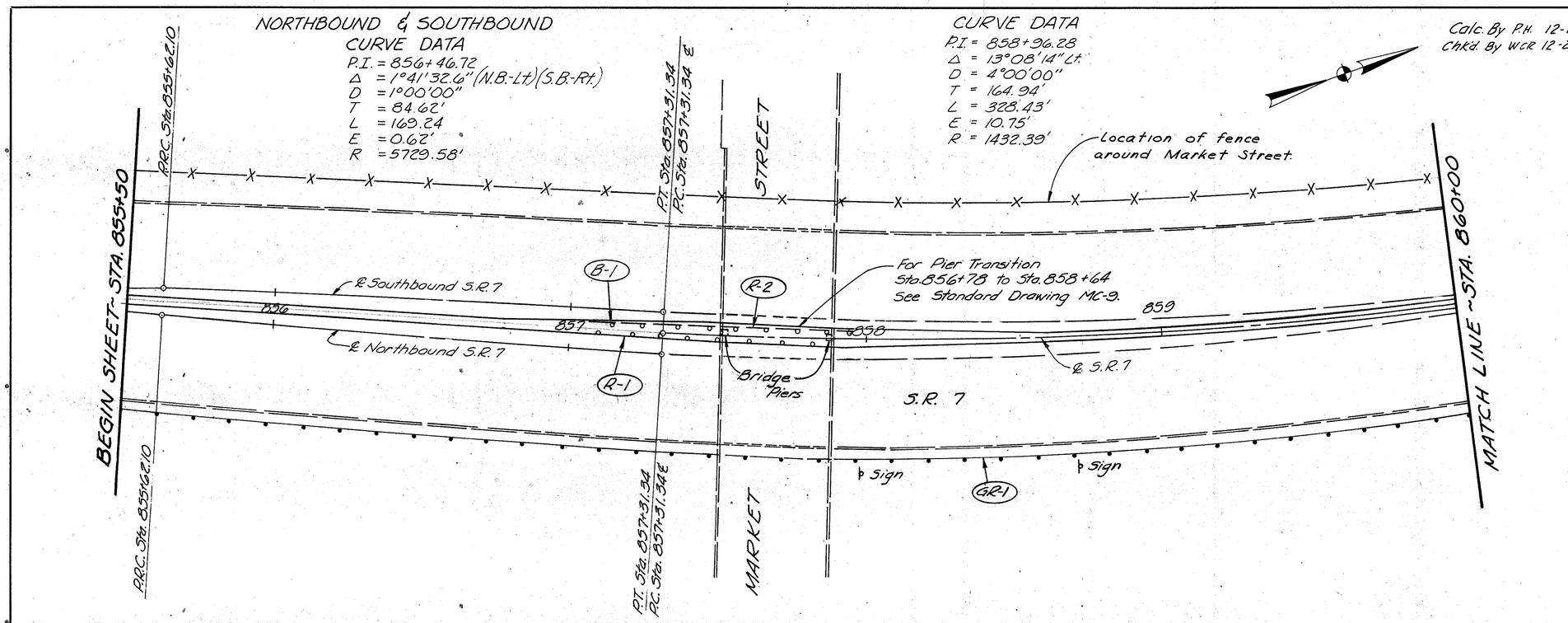

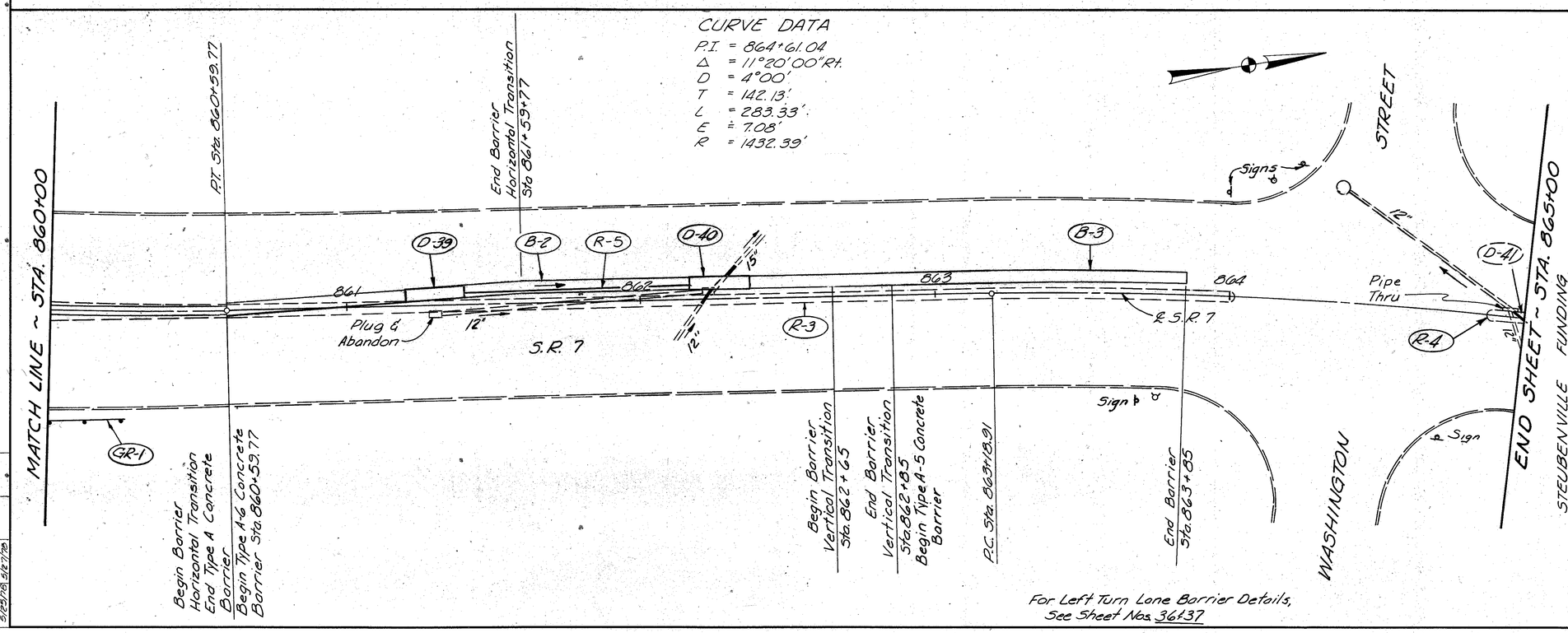

ESTIMATED QUANTITIES

REF. NO.	STATION TO STATION	SIDE	202 4" Median Pavement Removed Sq. Yd.	202 Catch Basin Abandoned Each	202 Curb Removed Lin. Ft.	202 Pavement Removed Sq. Yd.	606 Guardrail Removed For Storage Lin. Ft.	606 Guard Rail, Type 5 Lin. Ft.	606 Anchor Assembly Std., Type Each	622 Concrete Barrier Std. Type A-5 Mod. as per plan Lin. Ft.	622 Concrete Barrier Std. Type A Lin. Ft.	622 Concrete Barrier Std. Type A-6 Mod. as per plan Lin. Ft.	603 12" Conduit Type B Lin. Ft.	604 Inlet Std. No. I-34-10 Mod as per plan Each	SEE SHEET NO.
B-1	855+50 to 860+59.77	℄			1019.5						509.8				
B-2	860+59.77 to 862+21.95	Lt.	532.6							100.0					
B-3	862+85 to 863+85	Lt.										185.2			
D-39	861+30	Lt.		1									28	1	80
D-40	862+23	Lt.											8	1	80
GR-1	855+50 to 860+31	Rt.					485.0	472.50	1						80
R-1	857+06 to 858+07	Rt.													
R-2	857+35 to 858+37	Lt.					100.0								
R-3	860+59.77 to 862+02	℄	114.1				100.0								
R-4	862+87 to 863+00	℄	4.3												
R-5	861+13 to 862+46	℄				44.3									
TOTALS			651	1	1717	44	685	472.50	1	100	510	185	106	2	

STA. 855+50 TO STA. 865+00

W. E. QUICKSALL & ASSOCIATES INC. Consulting Engineers

Calc. By LDB 12-18-78
Chkd. By WCR 12-19-78

FHWA REGION	STATE	PROJECT	
5	OHIO		

GB

JEF-7-11.80

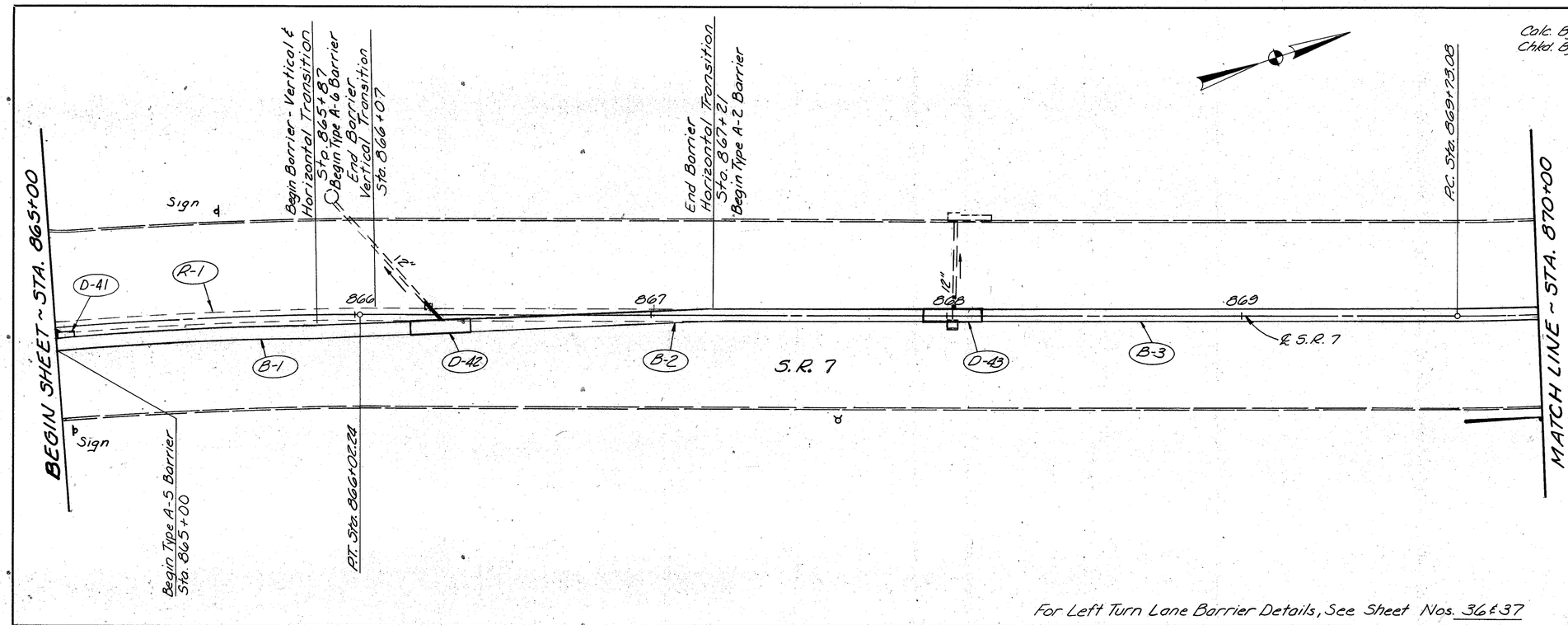

For Left Turn Lane Barrier Details, See Sheet Nos. 36 & 37

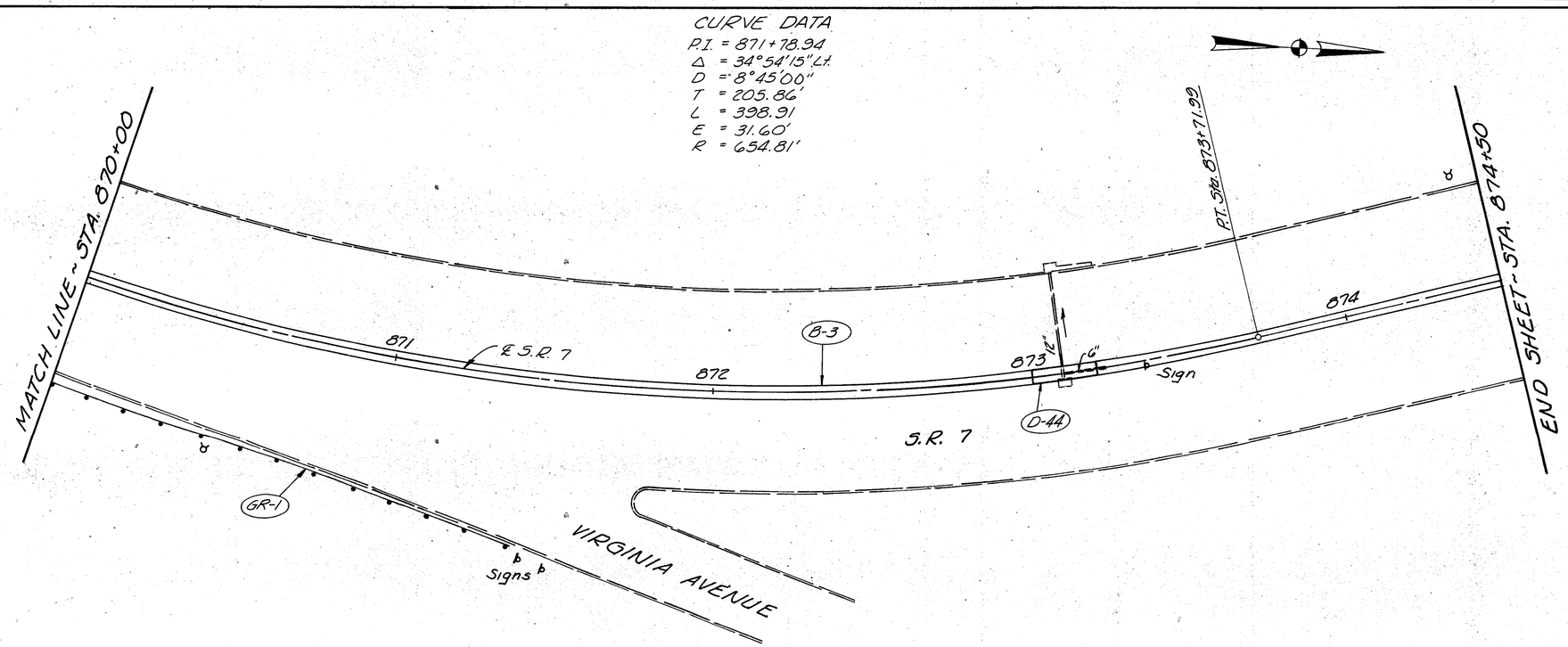

ESTIMATED QUANTITIES

STEUBENVILLE FUNDING

REF. NO.	STATION TO STATION	SIDE	202 4" Median Pavement Removed (Sq. Yd.)	202 Curb Removed (Lin. Ft.)	202 Guardrail Removed for Storage (Lin. Ft.)	202 Catch Basin Abandoned (Each)	606 Anchor Assembly Std. Type A (Each)	606 Anchor Assembly Std. Type T (Each)	606 Guard Rail, Type 5 (Lin. Ft.)	622 Concrete Barrier Std. Type A-2 Mod. as per plan (Lin. Ft.)	622 Concrete Barrier Std. Type A-5 Mod. as per plan (Lin. Ft.)	622 Concrete Barrier Std. Type A-6 Mod. as per plan (Lin. Ft.)	603 12" Conduit Type B (Lin. Ft.)	604 Inlet Std. No. I-3A (Each)	604 Inlet Std. No. I-3A-10 Mod. as per plan (Each)	604 Catch Basin Std. No. 3-A (Each)	SEE SHEET NO.
B-1	865+00 to 865+87	Rt.									87.0	114.0					
B-2	865+87 to 867+21	Rt.													1	1	80
B-3	867+21 to 874+50	℄		1458.0	243.0					689.0							80
D-41	865+02.24	Rt.				1											80
D-42	866+03	Rt.															
D-43	868+02	Rt.															
D-44	873+10	℄															
GR-1	869+75 to 871+40	Rt.			175.0		1	1	137.50								
R-1	865+00 to 867+21	℄	317	73.7			1						18	2	1	1	
TOTALS			317	1900	175	1	1	1	137.50	689	87	114	18	2	1	1	

STA. 865+00 TO STA. 874+50

Drawn CDD 9/25/78 | Chkd. WCR 9/29/78

W. E. QUICKSALL & ASSOCIATES INC. Consulting Engineers

Calc. By GW 12-20-78
Chkd. By PH 12-20-78

FHWA REGION	STATE	PROJECT	
5	OHIO		

JEF-7-11.80

69

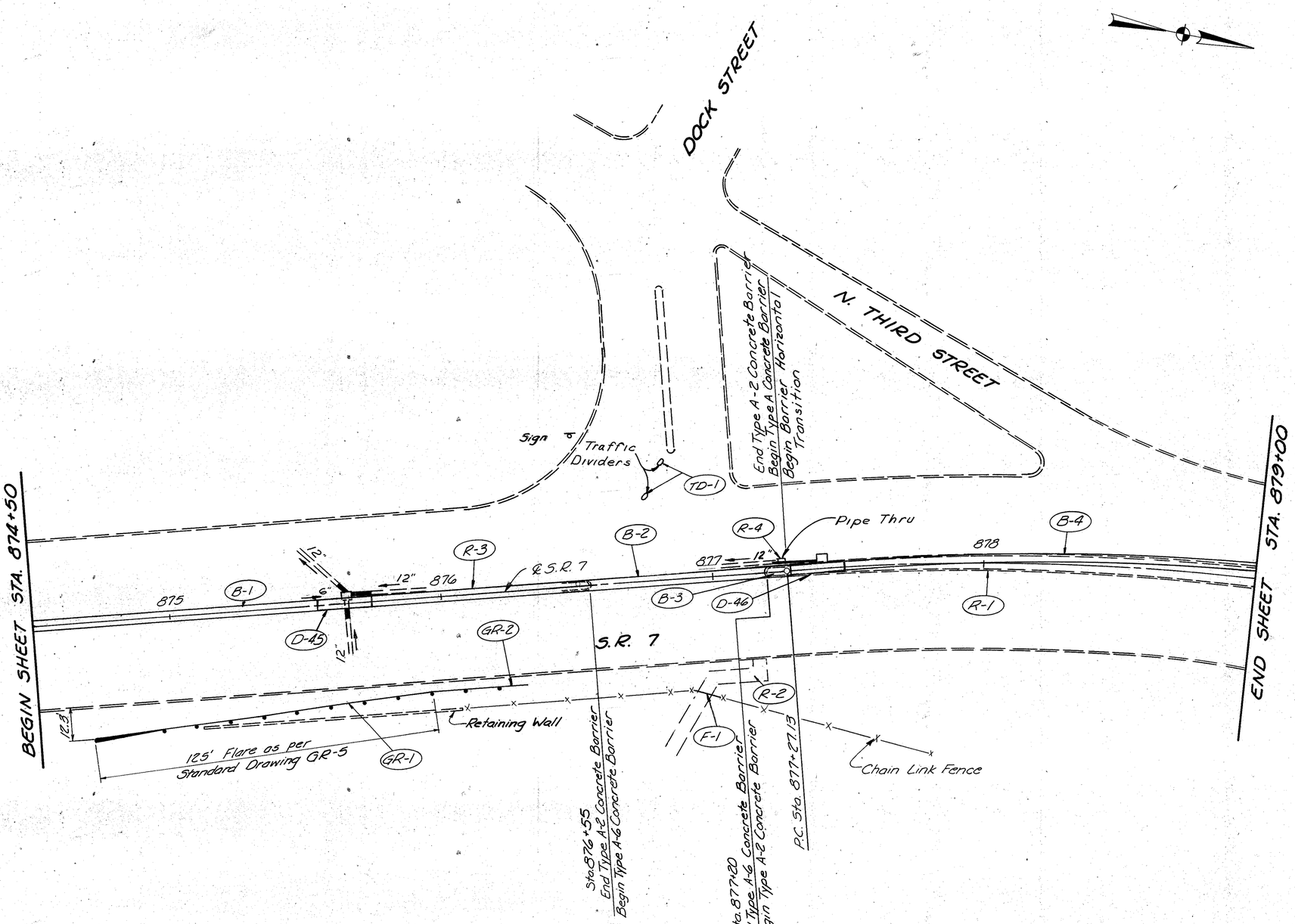

For Traffic Dividers, See Standard Drawing MC-6

STEUBENVILLE FUNDING

ESTIMATED QUANTITIES

REF. NO.	STATION TO STATION	SIDE	202 Curb Removed (Lin.Ft.)	202 4" Median Pavement Removed (Sq.Yd.)	202 Guardrail Removed for Storage (Lin.Ft.)	202 Catch Basin Abandoned (Each)	202 Walk Removed (Sq.Ft.)	607 Fence Type CL (Lin.Ft.)	613 Traffic Dividers (Each)	622 Concrete Barrier Std. Type A-2 Mod. as per plan (Lin.Ft.)	622 Concrete Barrier Std. Type A (Lin.Ft.)	622 Concrete Barrier Std. Type A-6 Mod. as per plan (Lin.Ft.)	603 12" Conduit Type B (Lin.Ft.)	604 Inlet, Std. No. I-34 (Each)	606 Guard Rail, Type 5 (Lin.Ft.)	606 Anchor Assembly Std. Type A (Each)	606 Anchor Assembly Std. Type 1 (Each)	SEE SHEET NO.
B-1	874+50 to 876+55	℄								185.0		65.0						
B-2	876+55 to 877+20	Lt.									7.1							
B-3	877+20 to 877+27.13	Lt.																
B-4	877+27.13 to 879+00	Lt.									152.9							
D-45	875+65	℄																
D-46	877+99	℄																
GR-1	874+67 to 876+08	Rt.			141.0													
GR-2	876+08 to 876+89.5	Rt.																
R-1	877+27.13 to 879+00	℄	345.7	90.9														
R-2	876+92 to 877+18	Rt.					150.0											
R-3	874+50 to 876+55	℄	410.0	68.3														
R-4	877+26	℄				1												
TD-1	876+78 to 876+85	Lt.							2									
F-1	876+91 to 877+00	Rt.						10										
TOTALS			756	159	141	1	150	10	2	192	153	65	14	2	125.00	1	1	

Dwg.	Chkd.
5-25-80	5-27-80

W. E. QUICKSALL & ASSOCIATES INC. Consulting Engineers

STA. 874+50 TO STA. 879+00

CURVE DATA
P.I. = 880+28.22
Δ = 35°00'00" Rt.
D = 6°00'00"
T = 301.09'
L = 583.33'
E = 46.34'
R = 954.93'

Calc. By G.W. - 12-21-78
Chkd. By P.H. - 12-22-78

FHWA REGION	STATE	PROJECT	
5	OHIO		

JEF-7-11.80

7.0

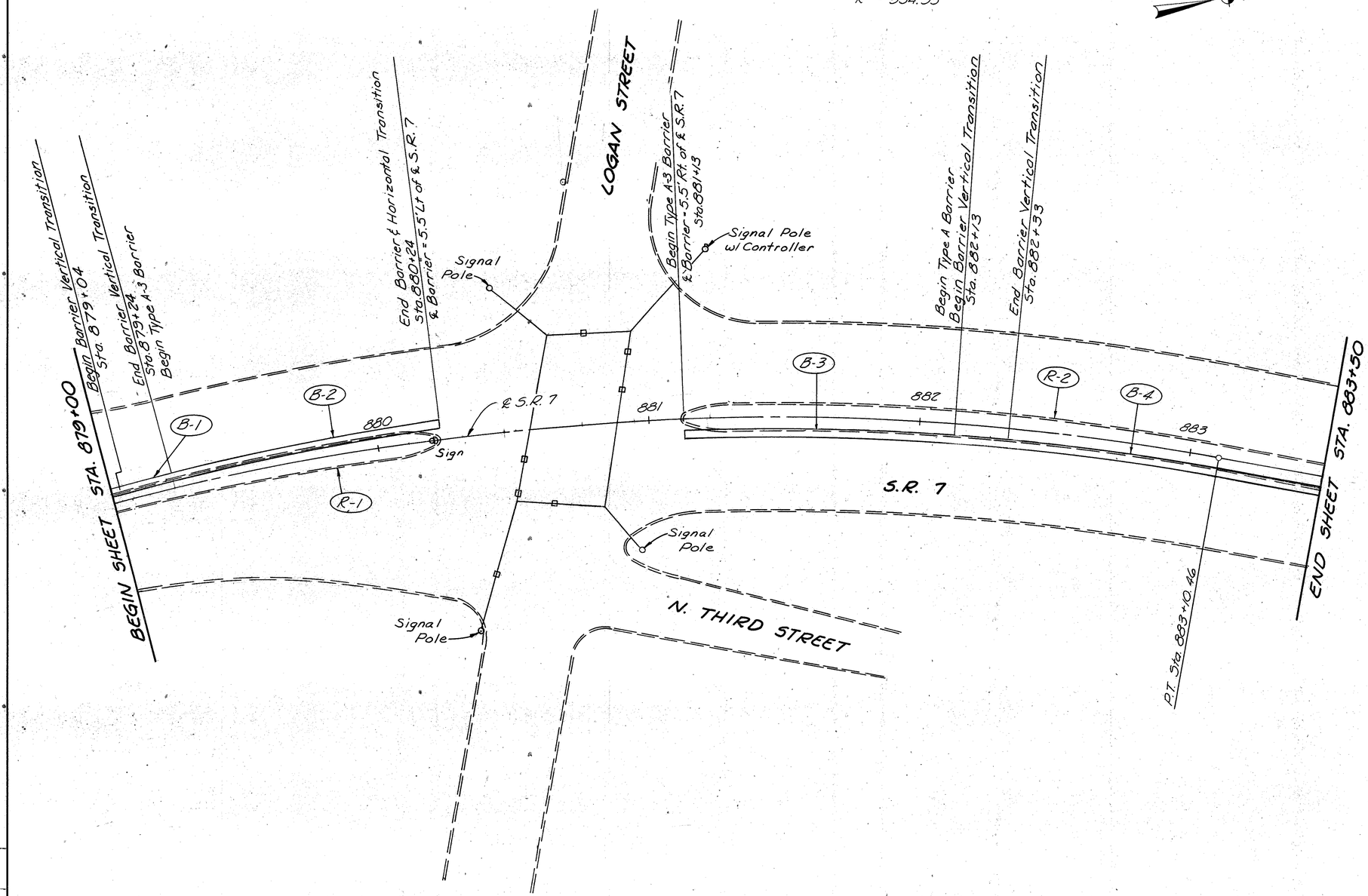

For Left Turn Lane Barrier Details, See Sheets No. 36 & 37

STEUBENVILLE FUNDING

ESTIMATED QUANTITIES

REF. NO.	STATION TO STATION	SIDE	202 Curb Removed Lin. Ft.	202 4" Median Pavement Removed Sq. Yd.	622 Concrete Barrier Std. Type A Lin. Ft.	622 Concrete Barrier Std. Type A-3 Mod. as per plan Lin. Ft.	SEE SHEET NO.
B-1	879+00 to 879+24	Lt.			24.0		
B-2	879+24 to 880+24	Lt.				100.0	
B-3	881+13 to 882+13	Rt.				100.0	
B-4	882+13 to 883+50	Rt.			137.0		
R-1	879+00 to 880+24	Lt.	249.0	102.6			
R-2	881+13 to 883+50	Lt.	474.0	232.3			
TOTALS			722	336	161	200	

DWN.	CHKD.
G.W. 12-21-78	P.H. 12-22-78

W. E. QUICKSALL & ASSOCIATES INC. Consulting Engineers

STA. 879+00 TO STA. 883+50

Calc. By GW 12-20-78
Chkd. By WCR 12-21-78

FHWA REGION	STATE	PROJECT	
5	OHIO		

JEF-7-11.80

71

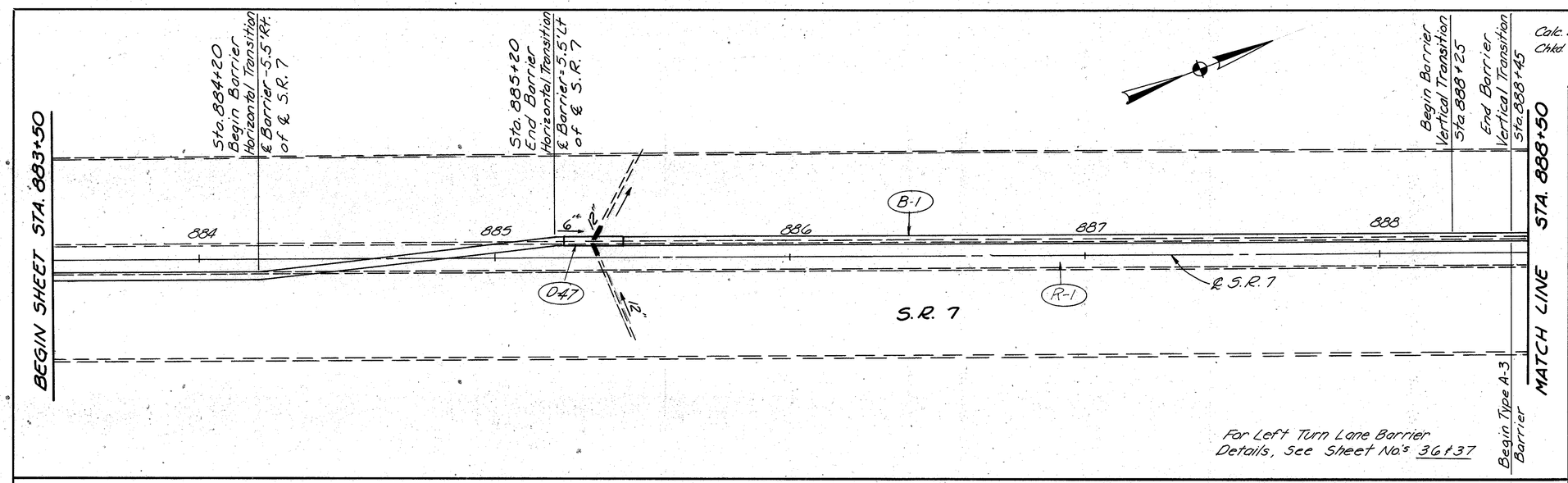

For Left Turn Lane Barrier
Details, See Sheet No's 36 & 37

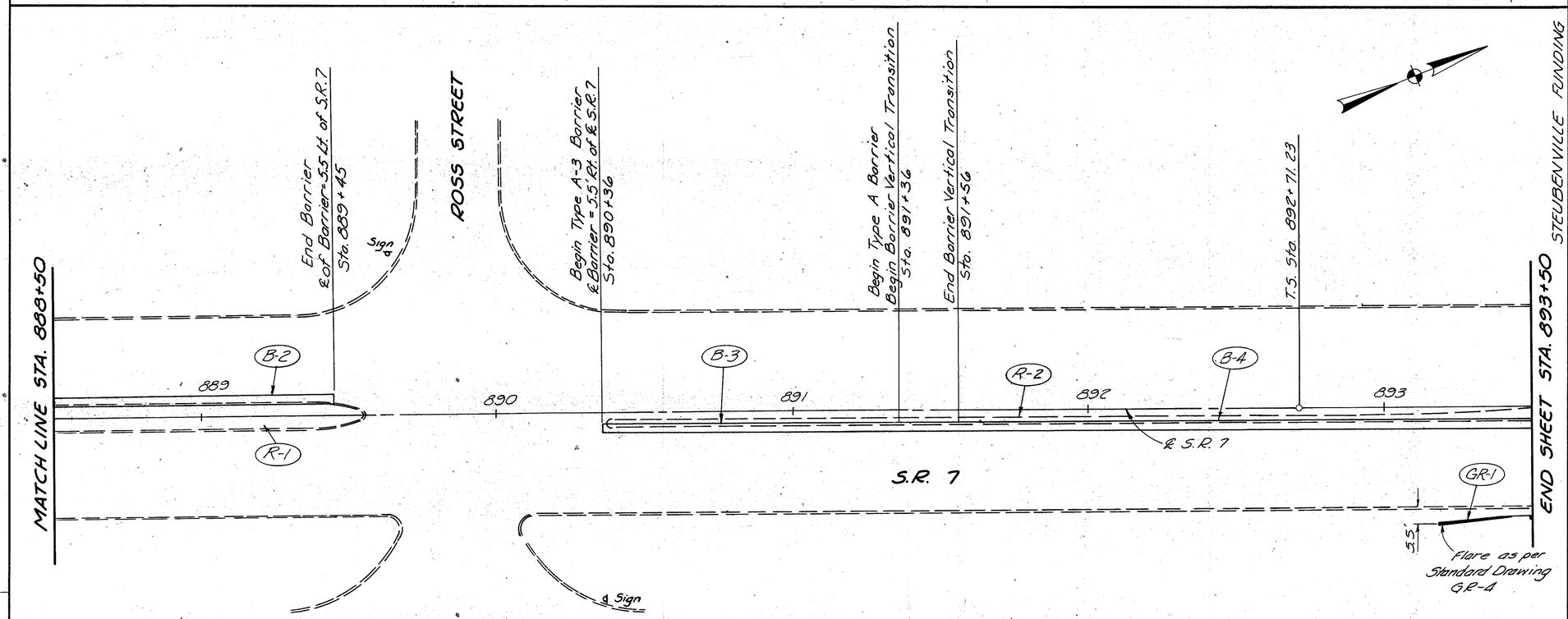

For Left Turn Lane Barrier
Details, See Sheet No's 36 & 37

STEUBENVILLE FUNDING

ESTIMATED QUANTITIES

REF. NO.	STATION TO STATION	SIDE	202 Curb Removed Lin. Ft.	202 4" Median Pavement Removed Sq. Yd.	202 Guardrail Removed for Storage Lin. Ft.	606 Guard Rail, Type 5 Lin. Ft.	606 Anchor Assembly Std. Type A Each	622 Concrete Barrier Std. Type A Lin. Ft.	622 Concrete Barrier Std. Type A-3 Mod. as per plan Lin. Ft.	604 Inlet, Std. No. I-34-12 Mod. as per plan Each	SEE SHEET NO.
B-1	883+50 to 888+45	L & R						475.0			
B-2	888+45 to 889+45	Lt.							100.0		
B-3	890+36 to 891+36	Rt.							100.0		
B-4	891+36 to 893+50	Rt.						214.0			
D-47	885+35	Lt.									
GR-1	893+19 to 893+50	Rt.			31.0	6.00	1				
R-1	883+50 to 889+56	℄	1198.7	599.7						1	80
R-2	890+36 to 893+50	Rt.	628.0	85.6							
TOTALS			1827	685	31	6.00	1	689	200	1	

DWG. CHKD. 5-29-78 WCR 5-29-78

W. E. QUICKSALL & ASSOCIATES INC. Consulting Engineers

STA. 883+50 TO STA. 893+50

Calc. By GW 12-21-78
Chkd. By WCR 12-21-78

FHWA REGION	STATE	PROJECT	
5	OHIO		

JEF-7-11.80

72

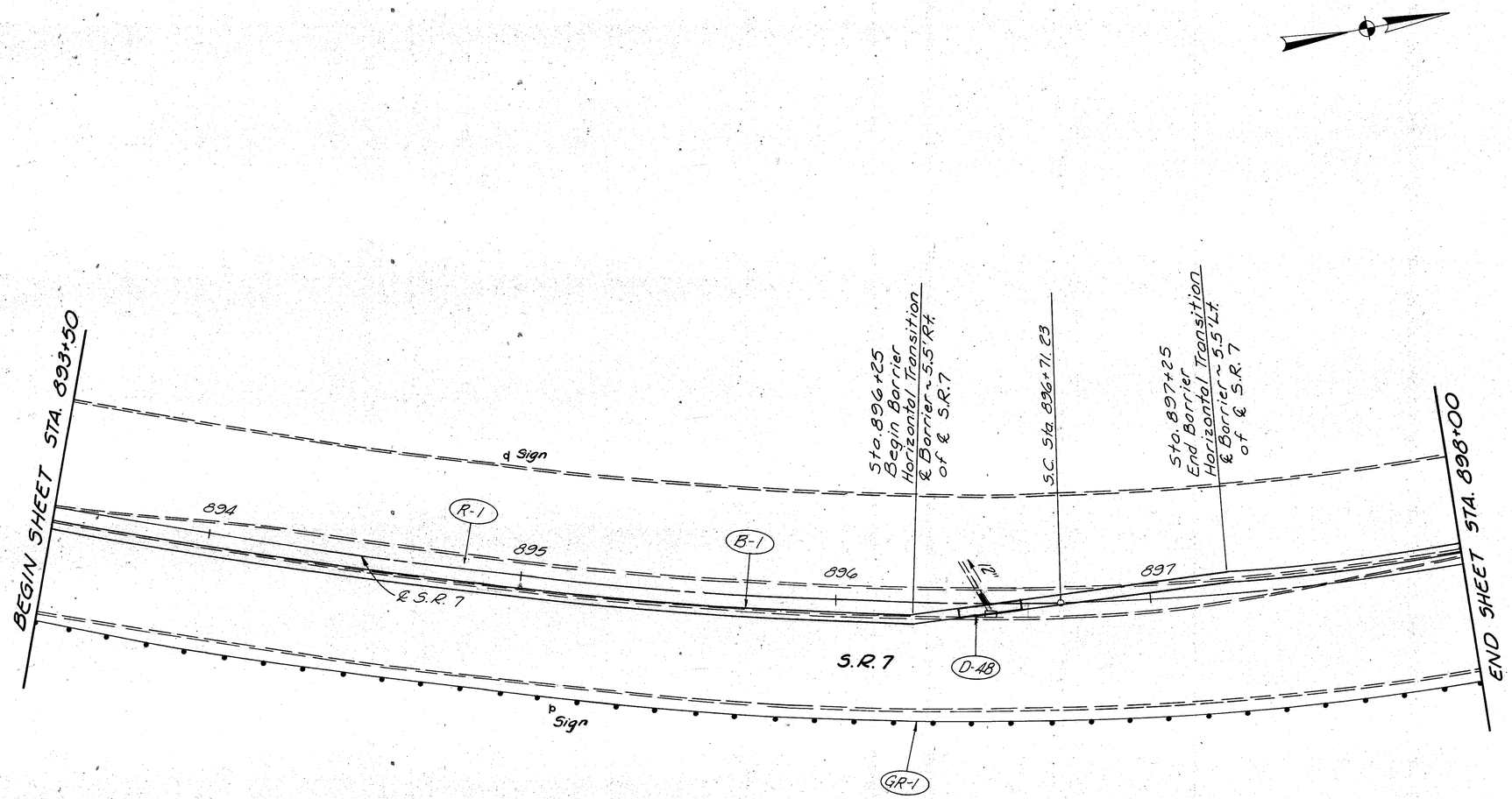

For Left Turn Lane Barrier Details, See Sheet Nos. 36 & 37

ESTIMATED QUANTITIES — STEUBENVILLE FUNDING

REF. NO.	STATION TO STATION	SIDE	202 Curb Removed Lin. Ft.	202 4" Median Pavement Removed Sq. Yd.	202 Guardrail Removed for Storage Lin. Ft.	606 Guard Rail, Type 5 Lin. Ft.	622 Concrete Barrier Std. Type A Lin. Ft.	604 Inlet Std. No. I-34-10 Mod. as per plan Each	SEE SHEET NO.
B-1	893+50 to 898+00	Lt. & Rt.					430.0		
D-4B	896+50	Rt.						1	80
GR-1	893+50 to 898+00	Rt.			460.00	460.00			
R-1	893+50 to 898+00	℄	892.7	393.1					
TOTALS			893	393	460	460.00	430	1	

Chkd. WCR 5-22-79
Dwn. GW 5-23-78

W. E. QUICKSALL & ASSOCIATES INC. Consulting Engineers

STA. 893+50 TO STA. 898+00

Cd'c. By P.H. 12-22-78
Ch'k'd. By RoM 12-26-78

FHWA REGION	STATE	PROJECT	
5	OHIO		

JEF-7-11.80

73

CURVE DATA

P.I. = 898+01.65
Δ_T = 37°56'50" Lt.
Dc = 6°00'00"
Ls = 400.00'
Rc = 954.93'
Δ_c = 61°57'00"
Lc = 1032.45'
L.C. = 399.22'
Θ_s = 12°00'00"
L.T. = 267.28'
S.T. = 133.89'
Xs = 398.25'
Ys = 27.84'
Ts = 530.42'
Es = 62.23'

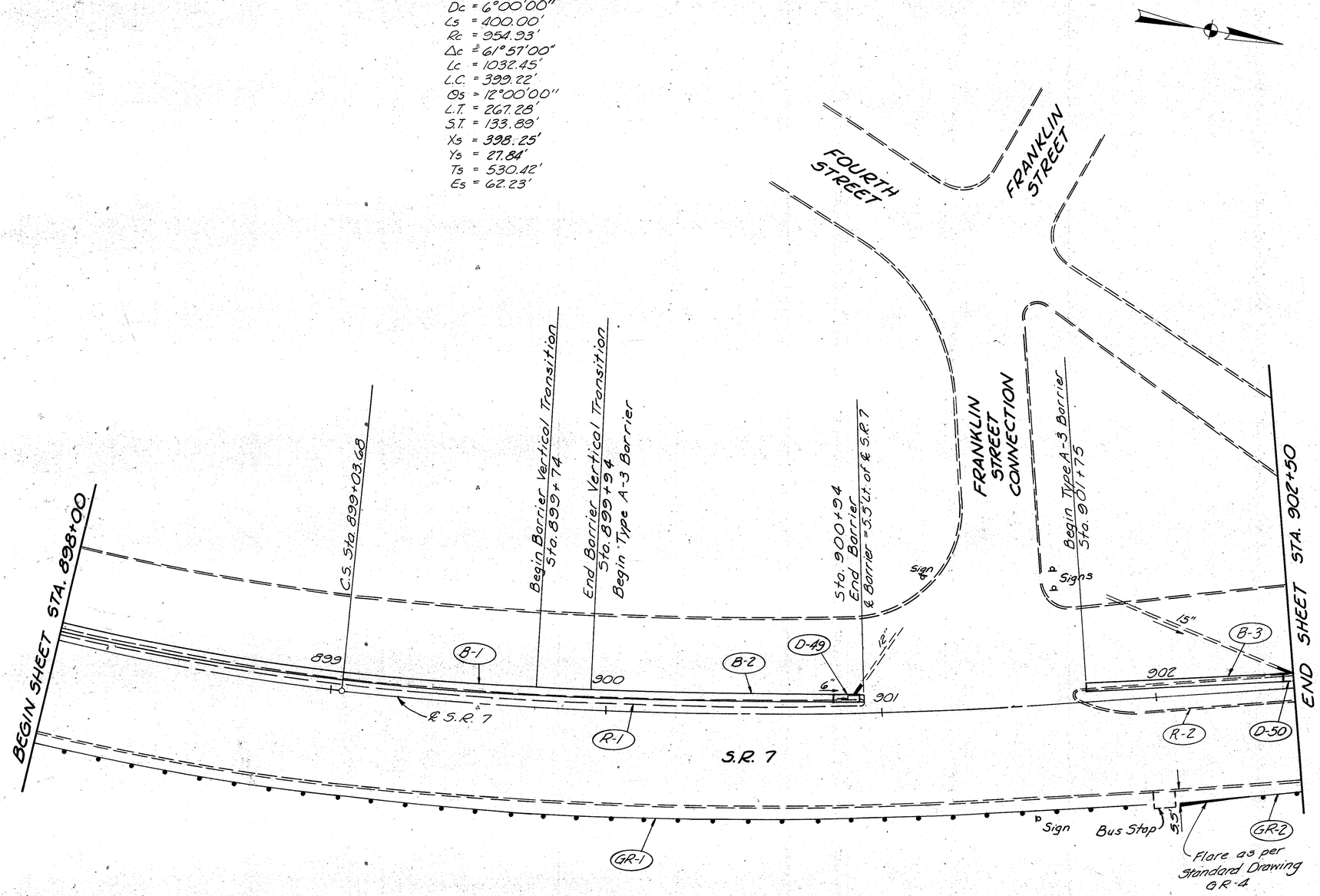

Note:
Transition the portion of barrier above pavement level from 2' of Sta. 900+79 to 3' of Sta. 900+84 and from 2' of Sta. 902+43 to 3' at 902+48 providing for the 3' wide I-2 Median Inlets.

For Left Turn Lane Barrier Details, See Sheet Nos. 36 & 37

ESTIMATED QUANTITIES

REF. NO.	STATION TO STATION	SIDE	202 Curb Removed Lin. Ft.	202 Median Pavement Removed Sq. Yd.	202 Guardrail Removed for Storage 4" Lin. Ft.	606 Guard Rail, Type 5 Lin. Ft.	606 Anchor Assembly Std. Type A Each	606 Anchor Assembly Std. Type T Each	622 Concrete Barrier Std. Type A Lin. Ft.	622 Concrete Barrier Std. Type A-3 Mod. as per plan Lin. Ft.	604 Inlet Std. No. 2-8 Each	604 Inlet Std. No. 2-6 Each	SEE SHEET NO.
B-1	898+00 to 899+94	Lt.							194.0				
B-2	899+94 to 901+94	Lt.								92.7			
B-3	901+75 to 902+50	Lt.								71.3			
D-49	900+90	Lt.											
D-50	902+50	Lt.											
R-1	898+00 to 901+94	Rt.			409.0	396.50		1				1	80
R-2	902+06 to 902+50	Rt.			44.0	19.00	1				1		80
GR-1	898+20 to 900+94	Lt.	578.7	65.3									
GR-2	901+63 to 902+50	℄	170.3	75.3									
TOTALS			749	141	453	415.50	1	1	194	162	1	1	

STEUBENVILLE FUNDING

Date	Cd'd By	Ch'k'd By
5-25-78		

W. E. QUICKSALL & ASSOCIATES INC. Consulting Engineers

STA. 898+00 TO STA. 902+50

Calc. By GW 12-22-78
Chkd. By WCR 12-22-78

FHWA REGION	STATE	PROJECT	
5	OHIO		

74

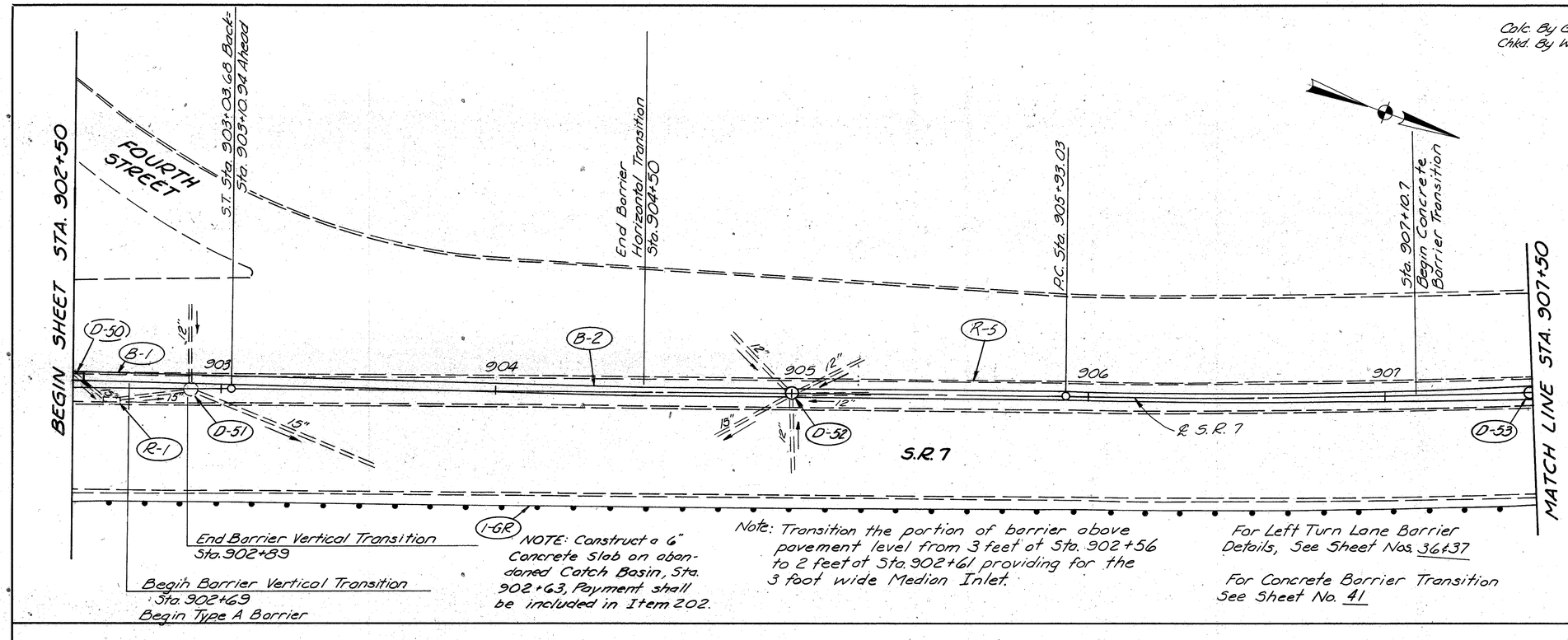

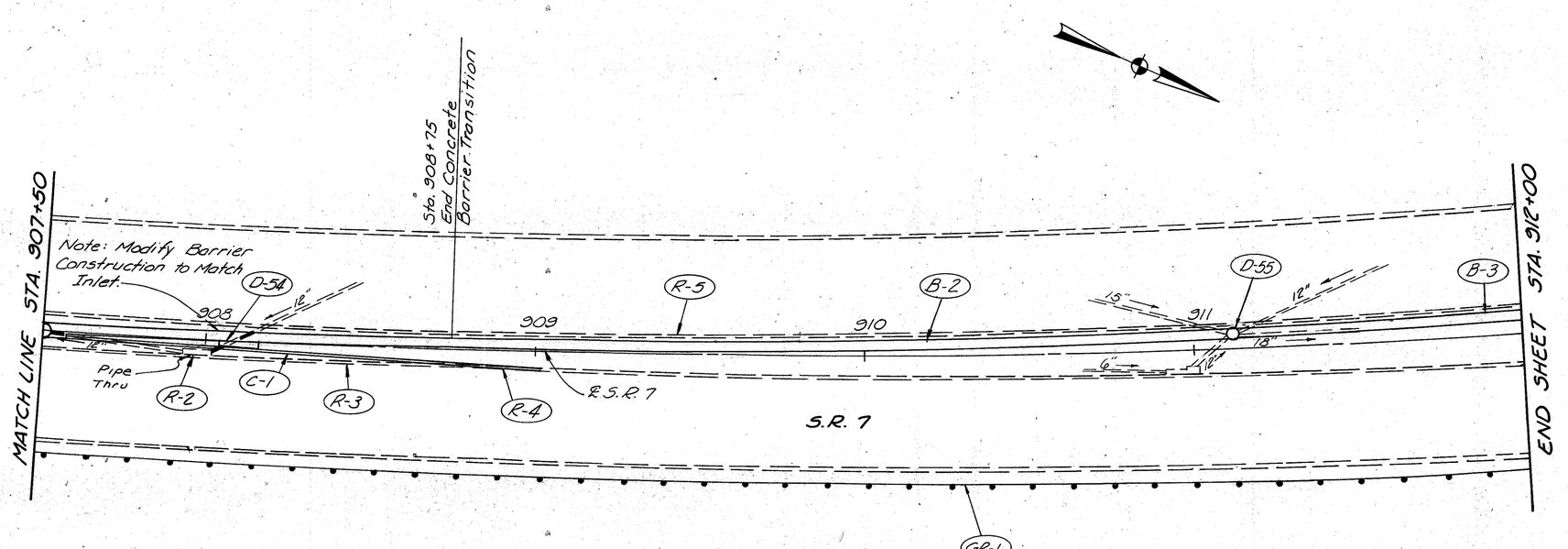

ESTIMATED QUANTITIES

REF. NO.	STATION TO STATION	SIDE	604 Manhole Type 2 Each	604 Manhole Type 1 Each	604 Inlet Std. No. 2-10 Each	604 Manhole Reconstructed to Grade Each	622 Concrete Barrier Std. Type A-3 Mod. as per plan Lin. Ft.	622 Concrete Barrier Std. Type A Lin. Ft.	609 Curb Standard Type 6 Lin. Ft.	606 Guard Rail, Type 5 Lin. Ft.	202 Guardrail Removed for Storage Lin. Ft.	202 Inlet Abandoned Each	202 4" Median Pavement Removed Sq. Yd.	202 Curb Removed Lin. Ft.	SEE SHEET NO.
B-1	902+50 to 902+69	Lt.					19.0								
B-2	902+69 to 911+02	℄						813.0							
B-3	911+02 to 912+00	Lt.						98.0							
C-1	907+51.4 to 909+02.3	Rt.							144.9						
GR-1	902+50 to 912+00	Rt.									955.0	955.0			
R-1	902+63	Rt.													
R-2	908+00	Rt.													
R-3	902+50 to 908+75	℄										1			
R-4	908+75 to 909+02.3	Rt.										1			
R-5	908+75 to 912+00	Lt.													
D-51	902+30	℄													
D-52	905+00	℄													
D-53	907+30	℄													
D-54	908+26	℄													
D-55	911+12	Lt.													
TOTALS			1	2	1	1	19	901	145	955.0	1053	2	607	1584	

STEUBENVILLE FUNDING

Date	Chkd.
12-13-78	GW
5-20-80	WCR

W. E. QUICKSALL & ASSOCIATES INC. Consulting Engineers

STA. 902+50 TO STA. 912+00

CURVE DATA
P.I. = 913+85.31
Δ = 26°27'26" Lt.
D = 1°42'00"
T = 792.28'
L = 1556.31'
E = 91.87'
R = 3370.34'

Calc. By LDB 12-22-78
Chkd. By G.W. 12-26-78

FHWA REGION	STATE	PROJECT	
5	OHIO		

JEF-7-11.80

75

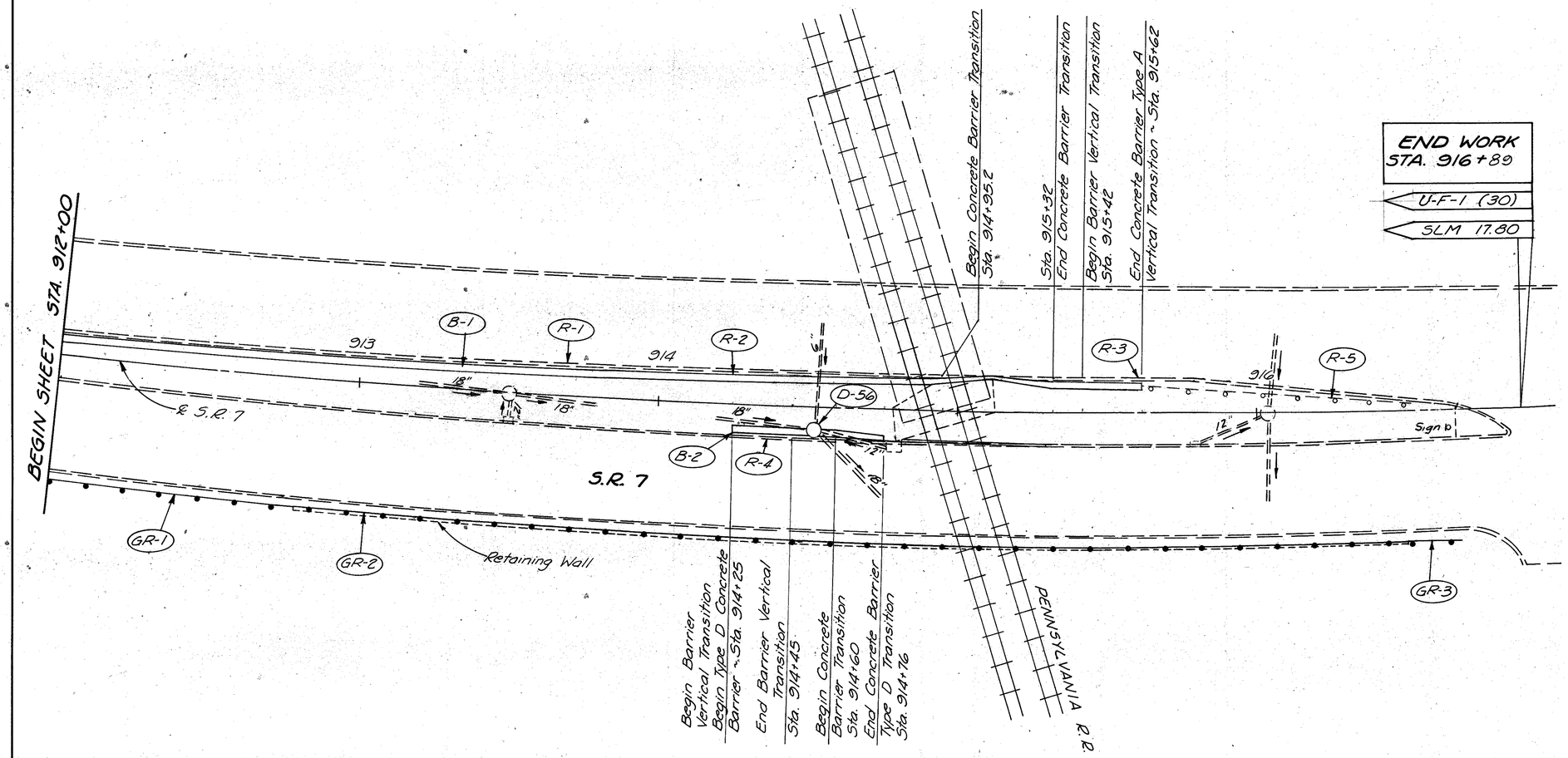

Note: Guardrail on Retaining Wall to be Rebuilt on Existing Posts, See General Notes, Sheet No. 30-A

For Barrier Vertical Transition Detail, See Standard Drawing MC-9.

For Concrete Barrier Transition, See Sheet No. 42

ESTIMATED QUANTITIES

STEUBENVILLE FUNDING

REF. NO.	STATION TO STATION	SIDE	202 Curb Removed (Lin.Ft.)	202 Guardrail Removed for Storage (Lin.Ft.)	606 Guard Rail, Type 5 (Lin.Ft.)	606 Anchor Assembly Std. Type 1 (Each)	606 Guardrail Rebuilt Type 5, as per plan (Lin.Ft.)	622 Concrete Barrier Std. Type D (Lin.Ft.)	622 Concrete Barrier Std. Type A (Lin.Ft.)	604 Manhole Type 3 (Each)	SEE SHEET NO.
B-1	912+00 to 915+62	Lt.							362.0		
B-2	914+25 to 914+76	Rt.						41.0			
D-56	914+53	Rt.									
GR-1	912+00 to 912+76	Rt.		77.0	77.00						
GR-2	912+76 to 916+49	Rt.					380.00				
GR-3	916+49 to 916+68	Rt.		19.0	6.50	1					
R-1	912+00 to 915+62	Lt.	362.0								
R-2	912+00 to 914+89.5	Lt.		289.5							
R-3	915+12 to 915+62	Lt.		49.0							
R-4	914+25 to 914+77	Rt.	52.0								
R-5	915+62 to 916+53	Lt.		101.0							
TOTALS			414	536	83.50	1	380	41	362	1	

Dwn. LDB 5-19-78 Chkd. W.E.Q. 5-19-78

FHWA REGION	STATE	PROJECT	
5	OHIO		

76

JEF-7-11.80

INLET, STANDARD NO. I-3A, MODIFIED, AS PER PLAN

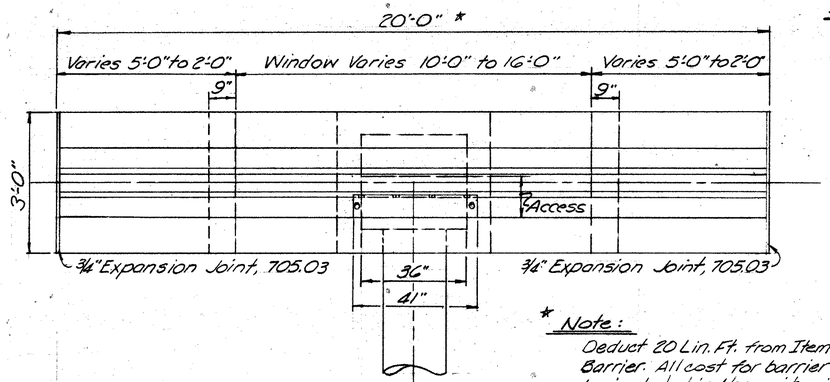

PLAN

* Note:
Deduct 20 Lin. Ft. from Item 622 Concrete Barrier. All cost for barrier and inlet shall be included in the unit price bid for Item 604 - Inlet, Standard No. I-3A, Modified, As Per Plan.

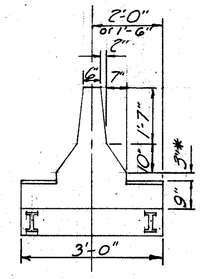

SECTION
A-A

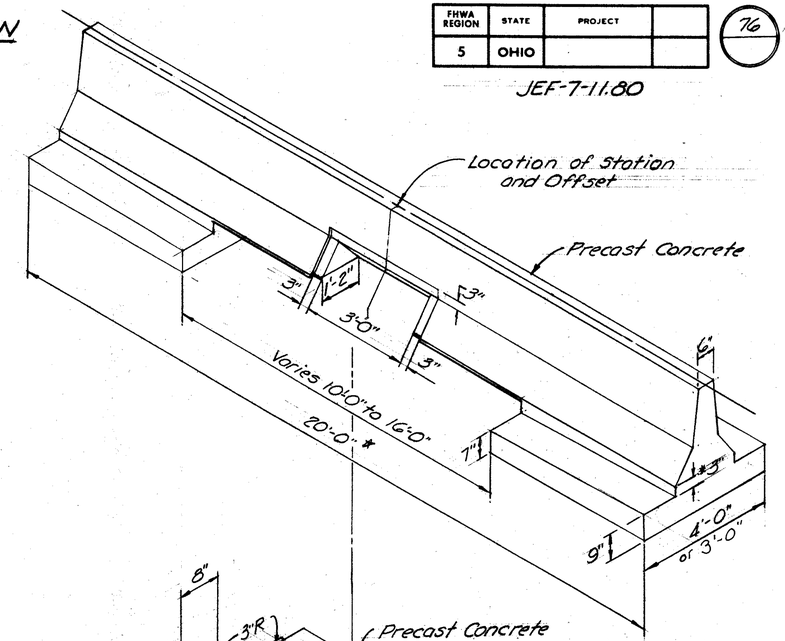

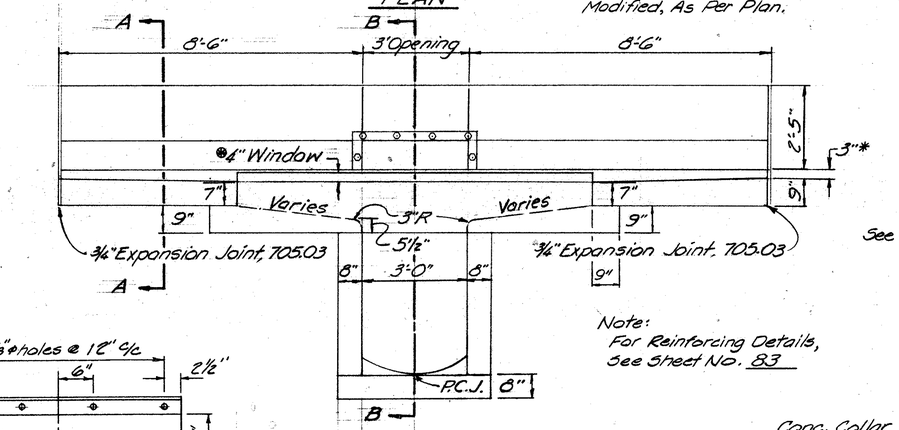

ELEVATION

Note:
For Reinforcing Details, See Sheet No. 83

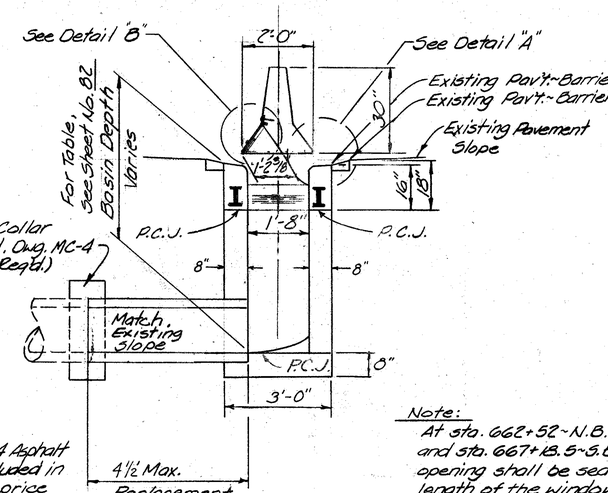

Replacement Conduit to be included for Payment with Item 604 - Inlet, Standard No. I-3A, Modified, As Per Plan. The Conduit shall be constructed in accordance with Item 603.

SECTION
A-A

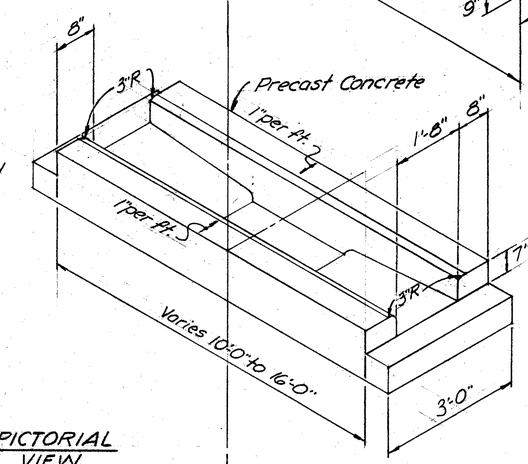

PICTORIAL VIEW

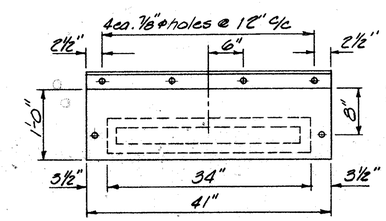

ACCESS DOOR DETAIL

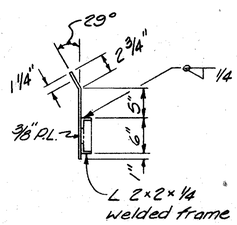

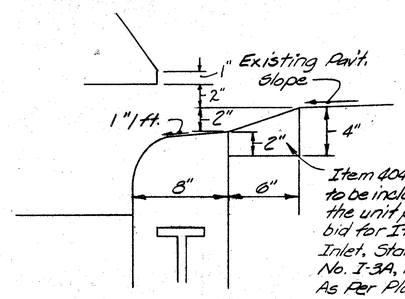

Item 404 Asphalt to be included in the unit price bid for Item 604 Inlet, Standard No. I-3A, Modified, As Per Plan.

DETAIL "A"
No Scale

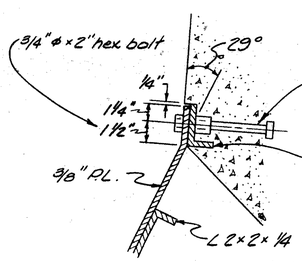

3/4" x 4" end-welded stud and double nut or 3/4" fabricated masonry insert (6 req'd.)

L 3 x 2 x 3/8 welded frame around 36" x 12" opening

DETAIL "B"

Note:
The steel door, frame and all bolts, nuts and inserts shall be galvanized.

Note:
At sta. 662+52 - N.B., sta. 662+52 - S.B., and sta. 667+13.5 - S.B. the inside window opening shall be sealed for the full length of the window by using a 3/8" steel plate firmly anchored to the barrier and to the top slab of the inlet.

Note:
For Pavement Replacement, See General Notes, Sheet No. 30-A

NOTE: Dimensions not shown are as per Standard Drawings MC-9 & I-3.

0 2 4
SCALE IN FEET

* 5" when adjacent to Concrete Barrier Type "A-1"
❋ 6" when adjacent to Concrete Barrier Type "A-1"

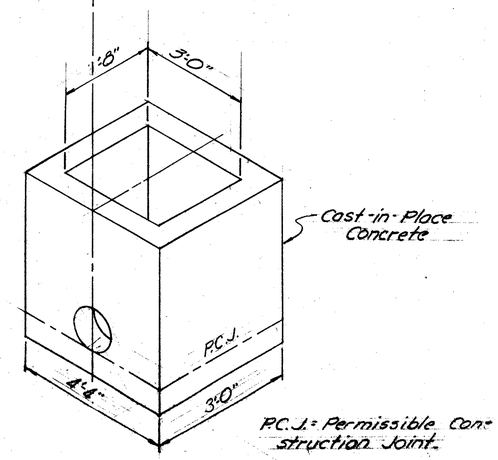

P.C.J. = Permissible Construction Joint.

DRAWN	CK'D.	CORR.	CK'D.	BK. CK'D.
SMW 3/31/78	P.H. 6-2-78	JWM 6/9/78	P.H. 2-28-79	

W.E. QUICKSALL & ASSOCIATES INC. Consulting Engineers

DRAINAGE DETAILS

FHWA REGION	STATE	PROJECT	
5	OHIO		

77

JEF-7-11.80

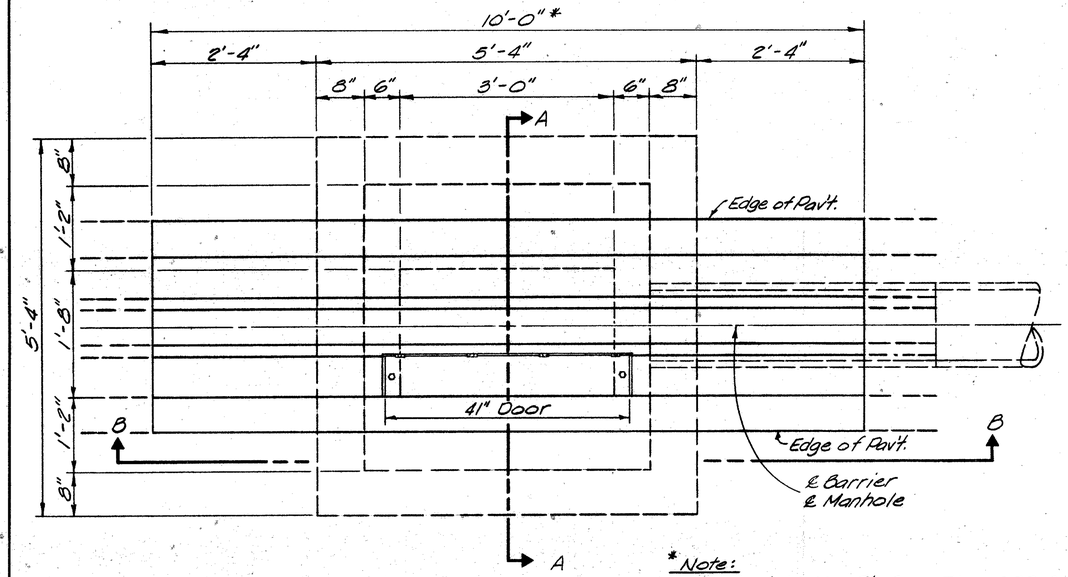

*Note:
Deduct 10 Lin. Ft. from Item 622 Concrete Barrier. All cost for barrier and manhole shall be included in the unit price bid for Item 604 - Manhole, Type 1.

PLAN
No Scale

Note:
Pavement replacement quantities shall be included in the unit price bid for Item 604 - Manhole, Type 1.

** Dimensions "A" & "B" To Be Determined At Time Of Construction

Note:
Manhole steps shall be as per Std. Dwg. MH-1

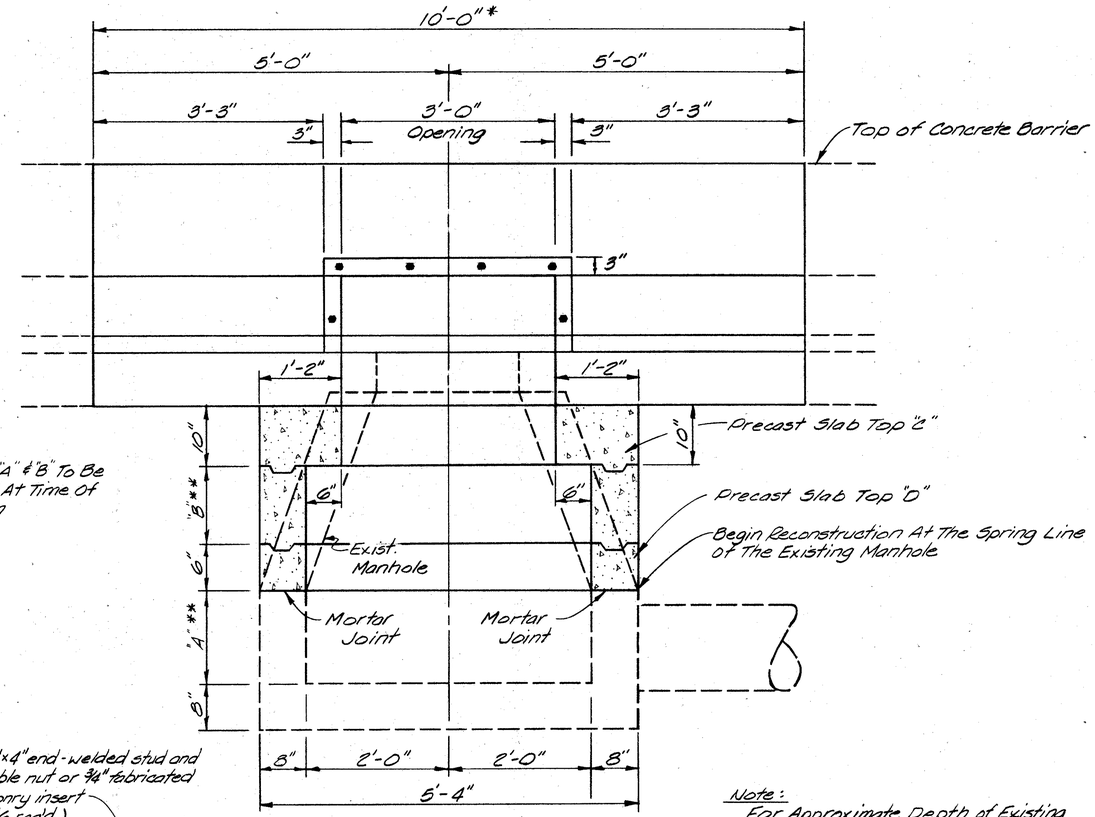

Note:
For Approximate Depth of Existing Manholes, See Sheet No. 82

ELEVATION B-B
No Scale

Note:
For Reinforcing Details, See Sheet No. 84

Note:
Type A-1 Barrier @ Sta. 692+10.

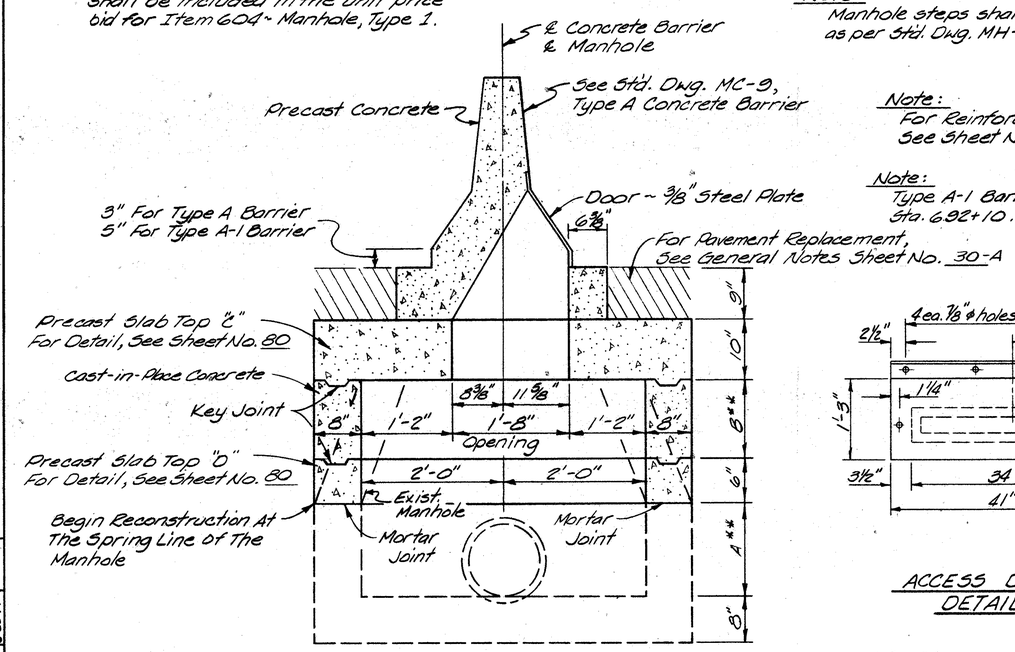

SECTION A-A
No Scale

** Dimensions "A" & "B" To Be Determined At Time of Construction.

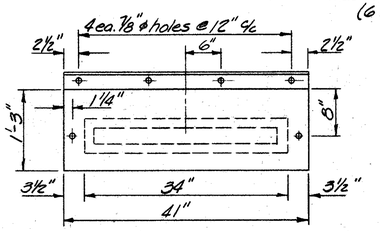

ACCESS DOOR DETAIL

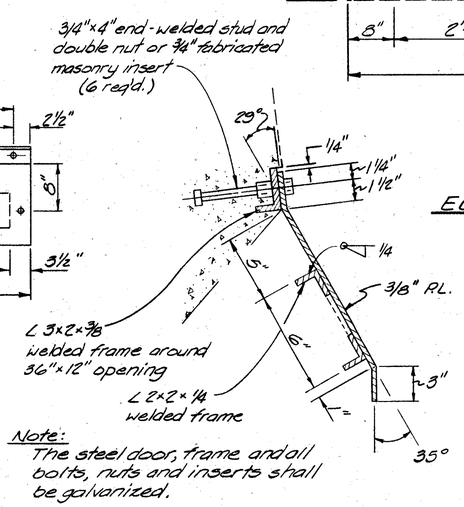

Note:
The steel door, frame and all bolts, nuts and inserts shall be galvanized.

MANHOLE, TYPE 1

D-7	STA. 692+10
D-52	STA. 905+00
D-55	STA. 911+12

DWN.	CKD.	CKD.	CKD.
B.L. 11-14-83	P.D.H. 12-20-83	J.C. 12-22-83	BCD

W. E. QUICKSALL & ASSOCIATES INC. Consulting Engineers

D-7 D-52 D-55 DRAINAGE DETAILS

FHWA REGION	STATE	PROJECT	
5	OHIO		

78

JEF-7-11.80

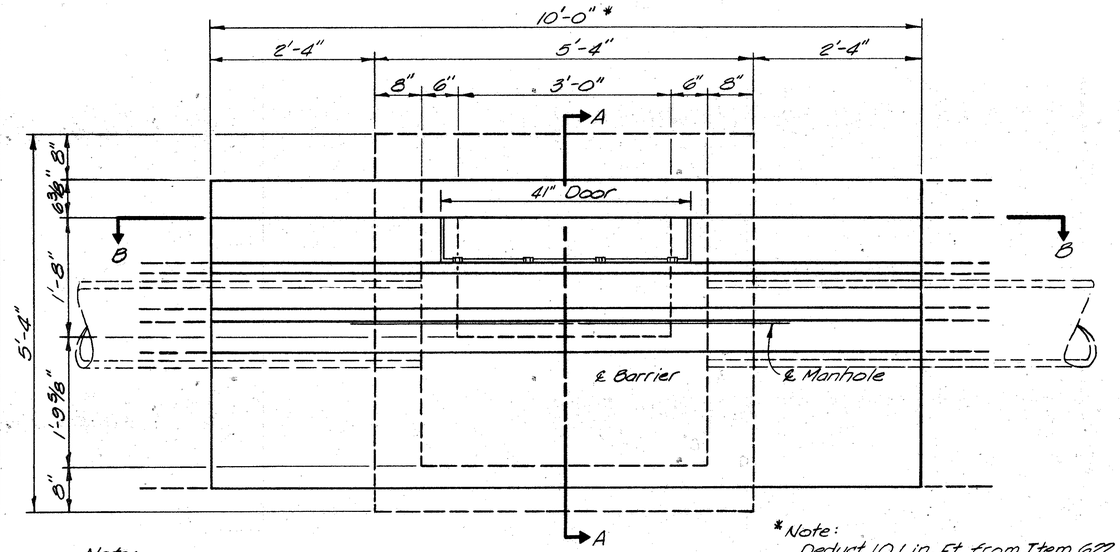

Note:
Pavement replacement quantities shall be included in the unit price bid for Item 604~Manhole, Type 2

PLAN
No Scale

*Note:
Deduct 10 Lin. Ft. from Item 622 Concrete Barrier. All cost for barrier and manhole shall be included in the unit price bid for Item 604~Manhole, Type 2.

Note:
For Reinforcing Details, See Sheet No. 84

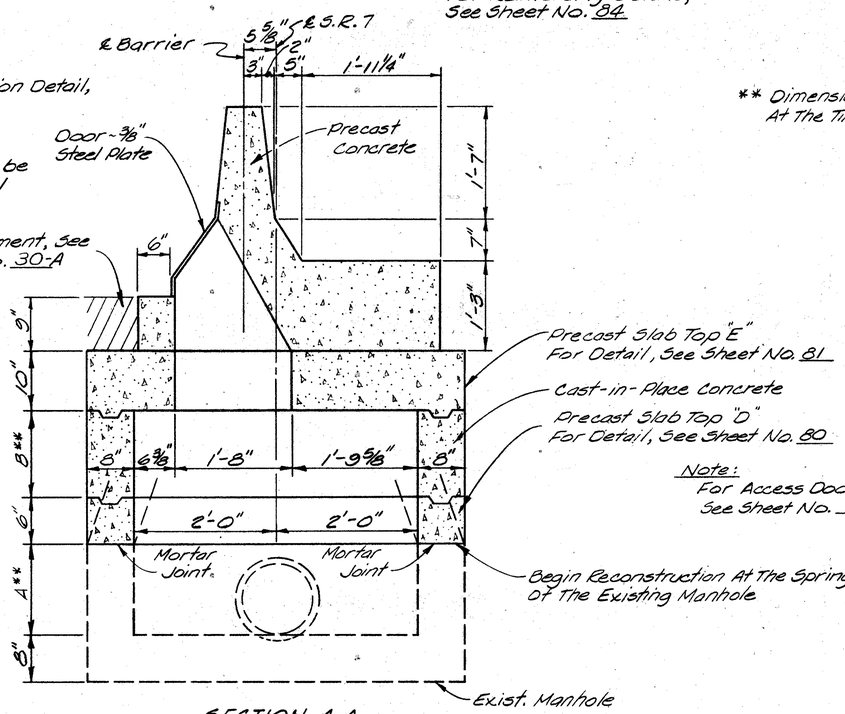

Note:
For Barrier Transition Detail, See Sheet No. 41

Note:
Manhole steps shall be as per Std. Dwg. MH-1

For Pavement Replacement, See General Notes Sheet No. 30-A

** Dimensions "A" & "B" To Be Determined At The Time of Construction.

SECTION A-A
No Scale

Note:
For Access Door Detail, See Sheet No. 77

** Dimensions "A" & "B" To Be Determined At The Time of Construction.

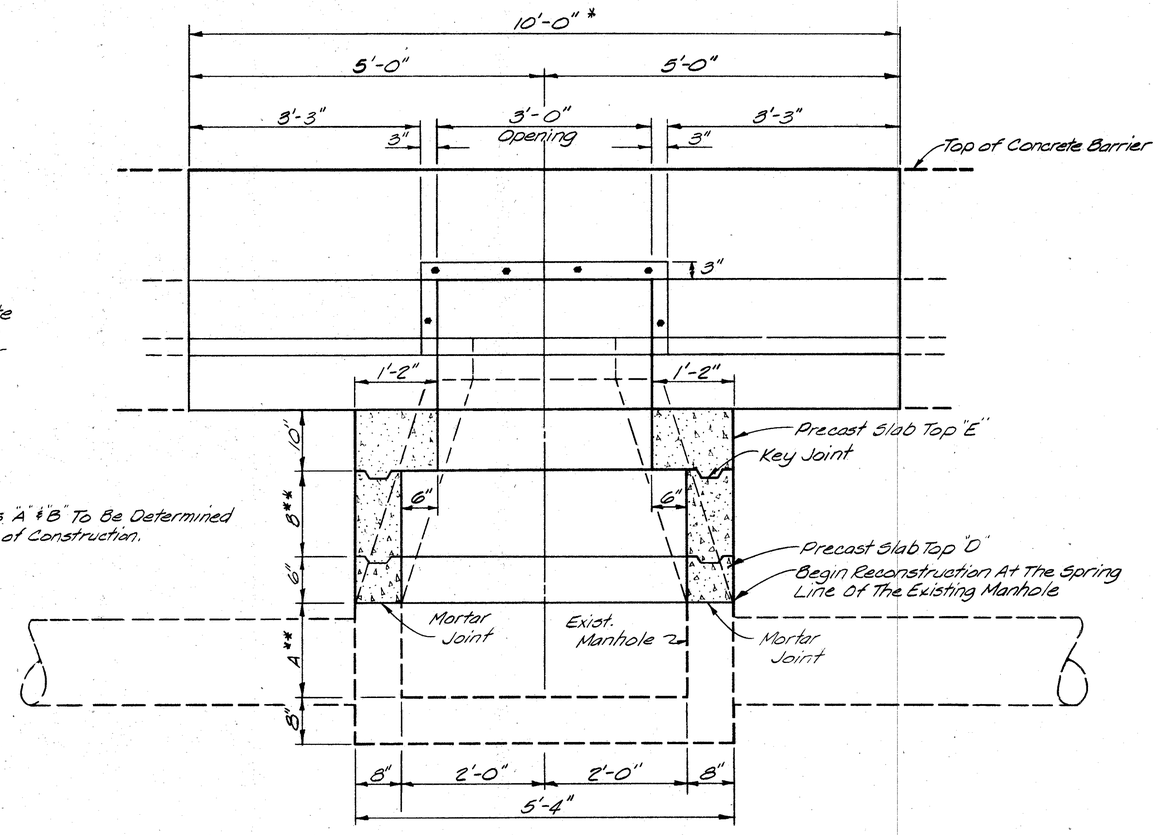

ELEVATION B-B
No Scale

Note: For Approx. Depth of Existing Manhole, See Sheet No. 82

MANHOLE, TYPE 2
STA. 307+50

DWN.	CKD.	CHKD.	ACCD.
B.L. 12-14-79	R.D.H. 2-21-79	B.L. 2-22-79	

W. E. QUICKSALL & ASSOCIATES INC. Consulting Engineers

FHWA REGION	STATE	PROJECT	
5	OHIO		

79

JEF-7-11.80

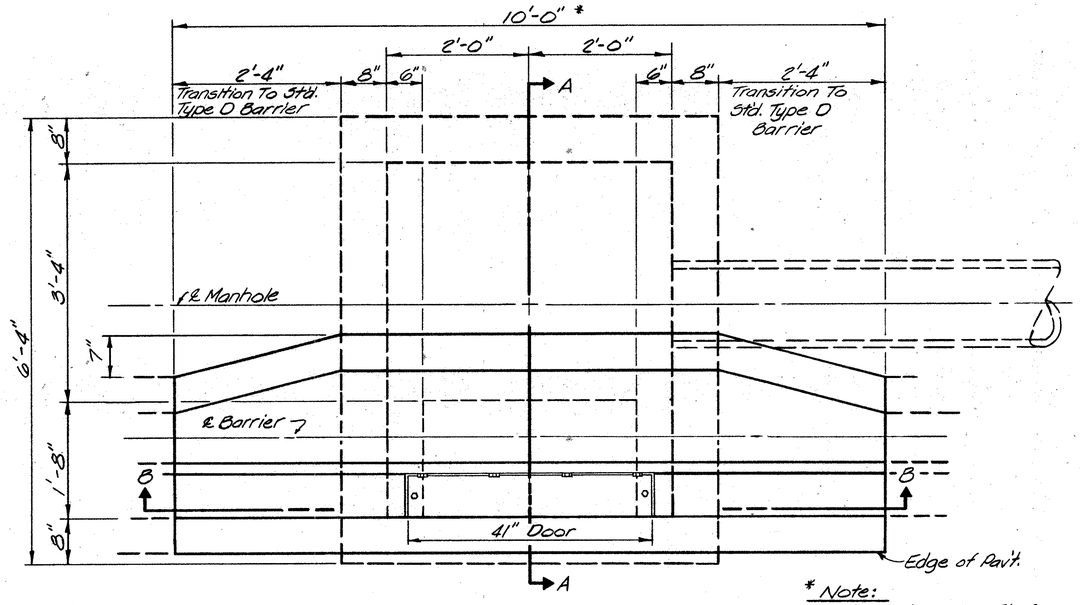

Note:
For Reinforcing Details, See Sheet No. 84-A

PLAN
No Scale

* Note:
Deduct 10 Lin. Ft. from Item 622 Concrete Barrier. All cost for barrier and manhole shall be included in the unit price bid for Item 604 - Manhole, Type 3.

Note:
Manhole steps shall be as per Std. Dwg. MH-1

Note:
For Access Door Detail, See Sheet No. 77

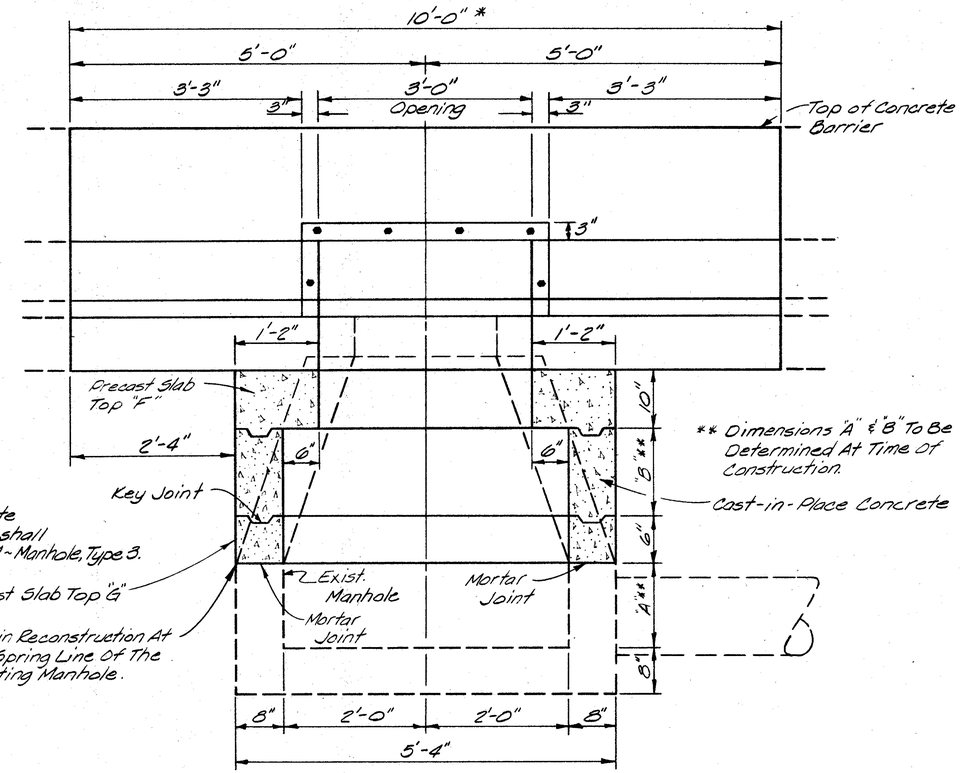

** Dimensions "A" & "B" To Be Determined At Time Of Construction.

ELEVATION B-B
No Scale

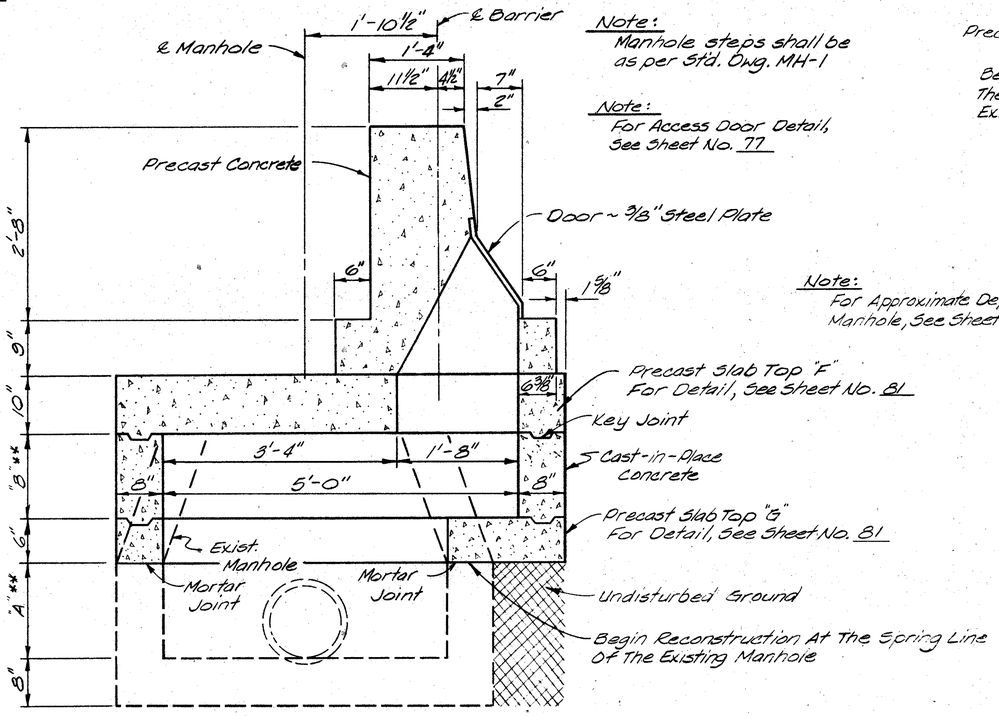

Note:
For Approximate Depth of Existing Manhole, See Sheet No. 82

** Dimensions "A" & "B" To Be Determined At Time of Construction.

SECTION A-A
No Scale

MANHOLE, TYPE 3
STA. 914+53

DWN.	CHK.	CKD.	CORR.	BWD.
K.L.		R.D.K. 2-21-79	2-22-79	

W. E. QUICKSALL & ASSOCIATES INC. Consulting Engineers

D-56 DRAINAGE DETAILS

FHWA REGION	STATE	PROJECT	
5	OHIO		

80

JEF-7-11.80

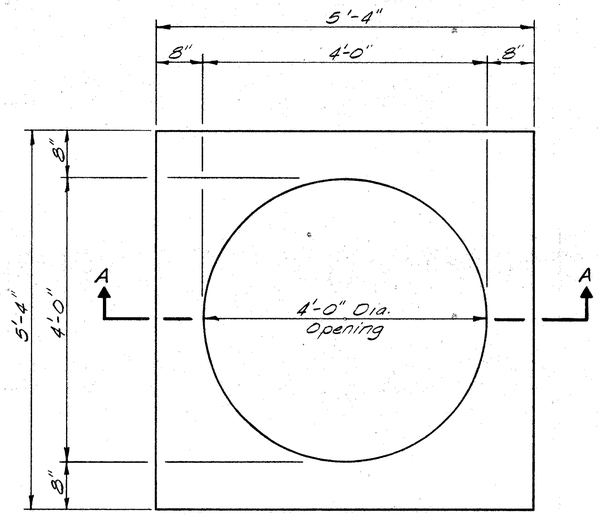

PLAN
TOP SLAB "D"
No Scale

Note:
For Manhole Details, See Sheet No.'s 77 & 78
For Reinforcing Details, See Sheet No. 84

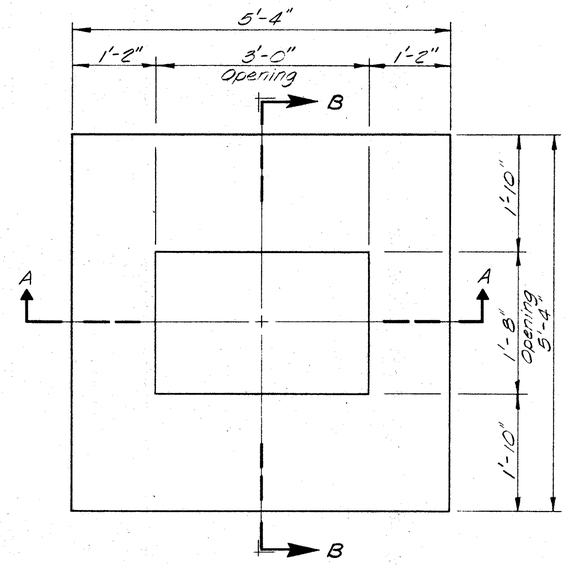

PLAN
TOP SLAB "C"
No Scale

Note:
For Manhole Detail, See Sheet No. 77
For Reinforcing Details, See Sheet No. 84

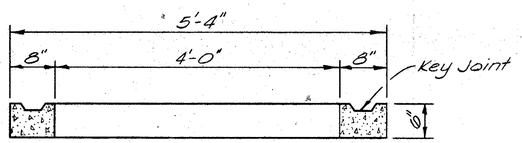

SECTION A-A
No Scale

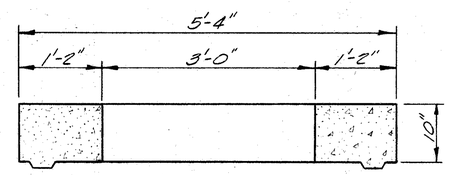

SECTION A-A
No Scale

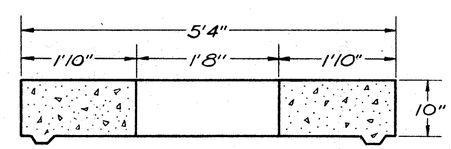

SECTION B-B
No Scale

TOP SLAB DETAILS
MANHOLE, TYPE 1
D-7 STA. 692+10
D-52 STA. 905+00
D-55 STA. 911+12
MANHOLE, TYPE 2
D-55 STA. 907+50

TOP SLAB DETAILS
MANHOLE, TYPE 1
D-7 STA. 692+10
D-52 STA. 905+00
D-55 STA. 911+12

DWN. B.L. 2-25-19	CKD. D.D.K. 2-21-19
CODE.	BLD.

W. E. QUICKSALL & ASSOCIATES INC. Consulting Engineers

DRAINAGE DETAILS

FHWA REGION	STATE	PROJECT	
5	OHIO		

81

JEF-7-11.80

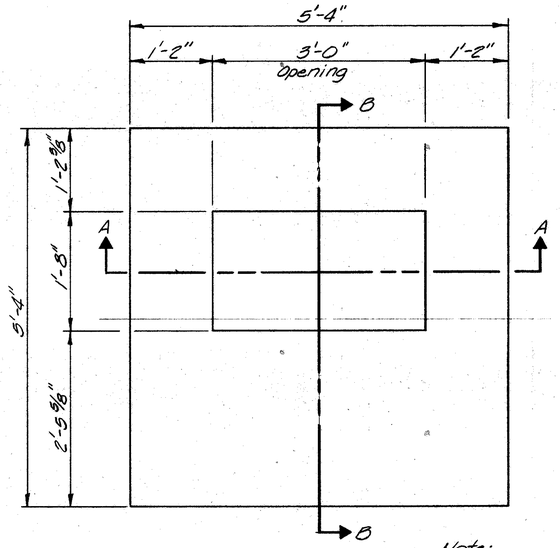

Note:
For Manhole Detail, See Sheet No. 78
For Reinforcing Details, See Sheet No. 84

PLAN
TOP SLAB "E"
No Scale

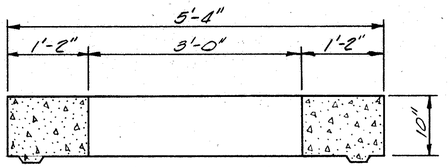

SECTION A-A
No Scale

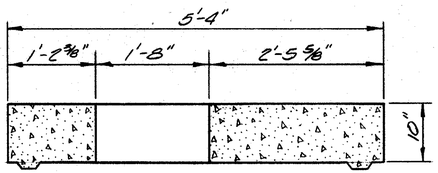

SECTION B-B
No Scale

(D-53) MANHOLE, TYPE 2
STA. 907+50

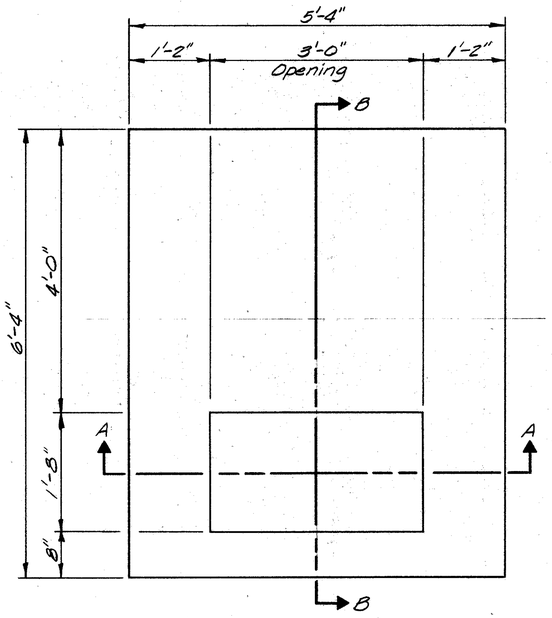

PLAN
TOP SLAB "F"
No Scale

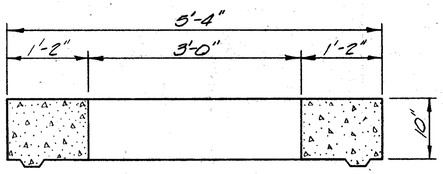

SECTION A-A
No Scale

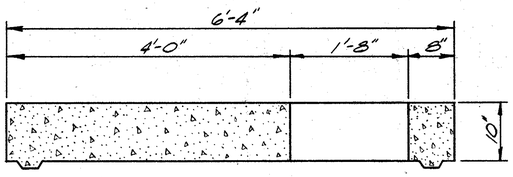

SECTION B-B
No Scale

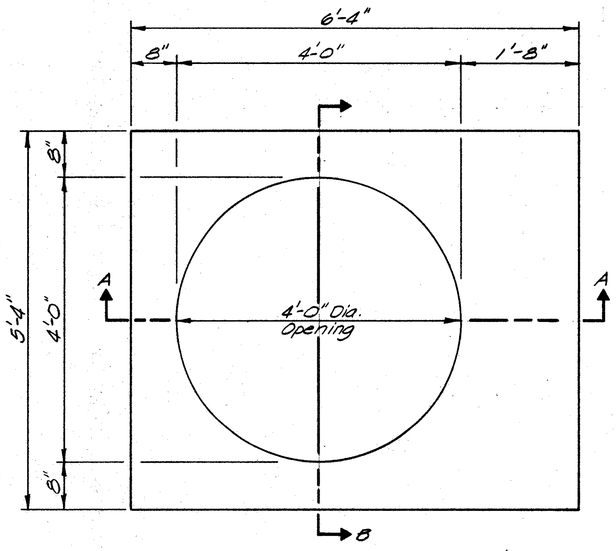

Note:
For Manhole Detail, See Sheet No. 79
For Reinforcing Details, See Sheet No. 84-A

PLAN
TOP SLAB "G"
No Scale

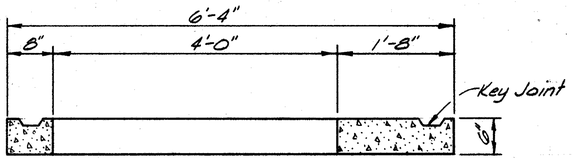

SECTION A-A
No Scale

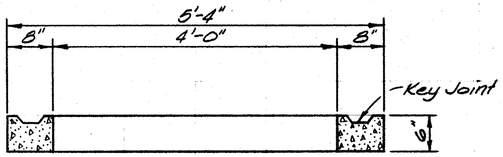

SECTION B-B
No Scale

(D-56) MANHOLE, TYPE 3
STA. 914+53

DWN. B.L. 8-23-79	CHD. P.D.H. 8-23-79
CORR.	REVD.

W. E. QUICKSALL & ASSOCIATES INC. Consulting Engineers

DRAINAGE DETAILS

FHWA REGION	STATE	PROJECT	
5	OHIO		

82

JEF-7-11.80

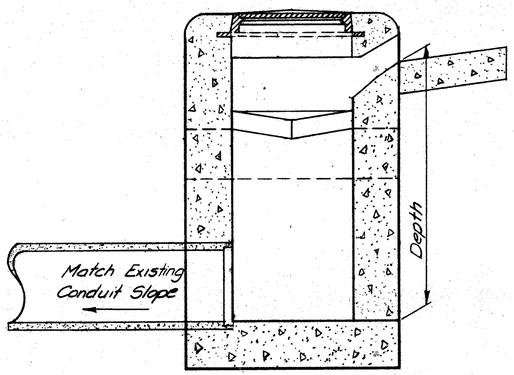

Note: For Dimensions, See Standard Drawing I-2.

INLET, STANDARD NO. 2

Ref. No.	Station and Side	Inlet Description	Outlet Conduit Size	Inlet Conduit Size	Depth*	See Sheet Number
D-49	900+90 5.5'Lt.	I-2-8	12"✿	6"	3.8	73
D-50	902+50 4'Lt.	I-2-6	15"	15"	8.3	73
D-54	908+06 ℄	I-2-10	12"	6",12"	4.0	74

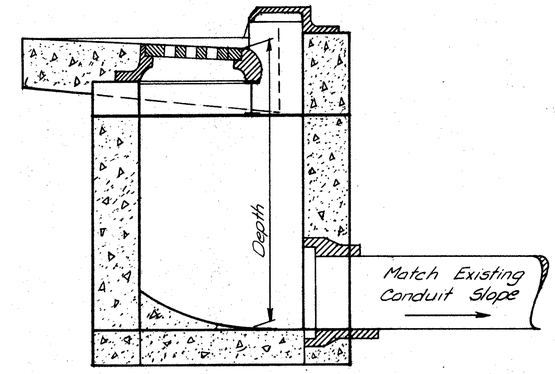

Note: For Dimensions, See Standard Drawing CB-3A.

CATCH BASIN, STANDARD NO. 3-A

Ref. No.	Station and Side	Catch Basin	Outlet Conduit Size	Inlet Conduit Size	Depth*	See Sheet Number
D-41	865+00 3'Rt.	3A	12"✿	12"	6.9	67
D-37	841+09 2'Rt.	3A	12"✿	—	3.5	65

INLET, STANDARD NO. I-3A, MODIFIED, AS PER PLAN

(For Typical Detail, See Sheet No. 76)

Ref. No.	Station and Side	Inlet Description	Outlet Conduit Size	Inlet Conduit Size	Depth*	See Sheet Number
D-1	630+25 ℄	I-3A-14 as per plan	15"	—	4.6	43
D-2	636+00 ℄	I-3A-10 as per plan	15"	—	4.0	43
D-8	694+51.5 ℄	I-3A-10 as per plan	24"	1@12",2@15	5.7	48
D-9	695+99.5 ℄	I-3A-10 as per plan	12"	12"	4.4	49
D-10	699+10 ℄	I-3A-10 as per plan	12"	—	4.7	49
D-11	705+18 ℄	I-3A-10 as per plan	12"	—	5.9	49
D-12	705+38 ℄	I-3A-10 as per plan	12"✿	—	5.9	49
D-13	709+60.7 ℄	I-3A-14 as per plan	15"	12"	5.1	49
D-14	725+78 ℄	I-3A-10 as per plan	12"✿	—	5.1	51
D-15	725+98 ℄	I-3A-10 as per plan	12"	—	5.2	51
D-16	728+00 ℄	I-3A-10 as per plan	12"	3@12"	5.1	51
D-17	729+52 ℄	I-3A-14 as per plan	12"	—	4.3	51
D-18	733+00 ℄	I-3A-16 as per plan	15"	—	3.6	51
D-19	736+00 ℄	I-3A-16 as per plan	15"	—	4.1	52
D-20	740+00 ℄	I-3A-16 as per plan	15"	—	4.1	52
D-21	748+00 ℄	I-3A-16 as per plan	15"	—	3.0	52
D-35	756+30 ℄	I-3A-10 as per plan	15"✿	—	3.5	53
D-22	756+50 ℄	I-3A-10 as per plan	15"	—	3.6	53
D-23	759+33 ℄	I-3A-10 as per plan	12"	—	4.1	53
D-24	769+77 ℄	I-3A-12 as per plan	15"×15"	—	3.9	53
D-25	771+99 ℄	I-3A-10 as per plan	12"	—	4.1	54
D-26	774+49 ℄	I-3A-10 as per plan	12"	—	4.1	54
D-27	784+74 ℄	I-3A-10 as per plan	12"	6"	3.8	55
D-28	787+00 ℄	I-3A-10 as per plan	12"	6"	4.4	55
D-29	790+80 ℄	I-3A-10 as per plan	12"	—	4.5	56
D-30	801+31 ℄	I-3A-10 as per plan	12"	—	3.4	57
D-31	801+51 ℄	I-3A-10 as per plan	12"	6"	3.5	57
D-32	803+51 ℄	I-3A-14 as per plan	12"	6"	4.4	57

* Depth measured from Outlet flowline to window elevation of Inlet or grate elevation of catch basin.

✿ Pipe included for payment with Item 603. All others included for payment with Item 604.

INLET, STANDARD NO. I-3A, MODIFIED, AS PER PLAN

(For Typical Detail, See Sheet No. 76)

Ref. No.	Station and Side	Inlet Description	Outlet Conduit Size	Inlet Conduit Size	Depth*	See Sheet Number
D-5	682+05 ℄	I-3A-14 as per plan	12"	6"	4.1	48
D-6	685+00 N.B.	I-3A-14 as per plan	15"	6"	4.0	48
D-34	811+50 N.B.	I-3A-14 as per plan	12"	2@6"	3.6	58
D-39	861+30 3.5'Lt.	I-3A-10 as per plan	12"✿	—	3.5	67
D-40	862+23 5.5'Lt.	I-3A-10 as per plan	15"	12"✿&12"	4.7	67
D-42	866+28 3.5'Rt.	I-3A-10 as per plan	12"✿	-	2.9	68
D-47	885+35 5.5'Lt.	I-3A-12 as per plan	12"	6"&12"	5.0	71
D-48	896+50	I-3A-10 as per plan	12"	—	4.1	72
D-3	662+52 N.B.	I-3A-14 as per plan	15"	8"	4.9	46
D-38	662+52 S.B.	I-3A-14 as per plan	15"	-	6.4	46
D-4	667+18.5 S.B.	I-3A-14 as per plan	12"	-	5.5	47

MANHOLES

Ref. No.	Station and Side	Manhole Description			Depth	See Sheet Number
D-7	692+10 ℄	Type 1			5'-2"±	48
D-52	905+00 ℄	Type 1			8'-8"±	74
D-53	907+50 ℄	Type 2			3'-11"±	74
D-55	911+12 ℄	Type 1			5'-11"±	74
D-56	914+53 Rt.	Type 3			4'-5"±	75

INLET, STANDARD NO. I-3A

Ref. No.	Station and Side	Inlet Description	Outlet Conduit Size	Inlet Conduit Size	Depth*	See Sheet Number
D-33	809+24 N.B.	I-3A	12"	-	4.5	57
D-36	830+50 ℄	I-3A	12"	-	3.5	62
D-43	868+02 ℄	I-3A	12"	-	3.0	68
D-44	873+10 ℄	I-3A	12"	6"	3.2	68
D-45	875+65 ℄	I-3A	12"	1-6" 2-12"	4.5	69
D-46	877+26 0.4'Lt.	I-3A	12"✿	-	2.7	69

DRAINAGE DETAILS

FHWA REGION	STATE	PROJECT	
5	OHIO		

83

JEF-7-11.80

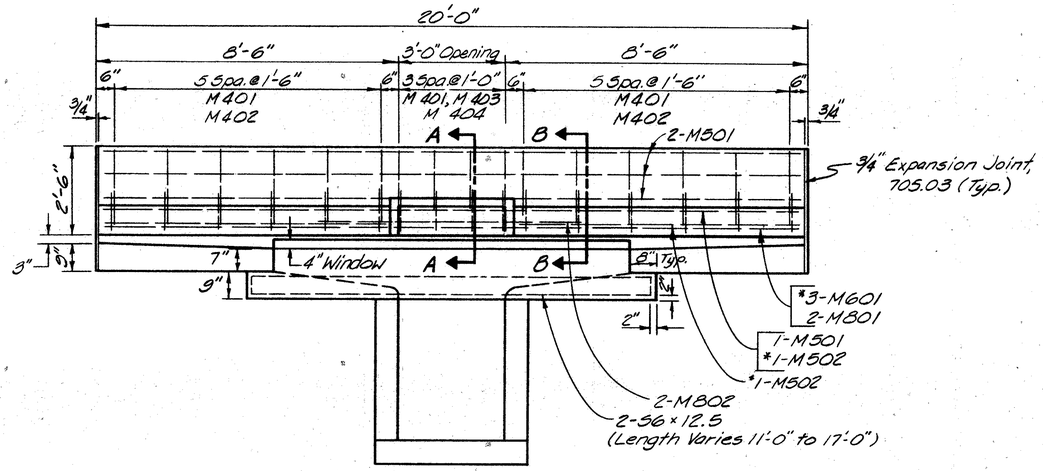

ELEVATION
No Scale

* Typical, each side of 3' opening.

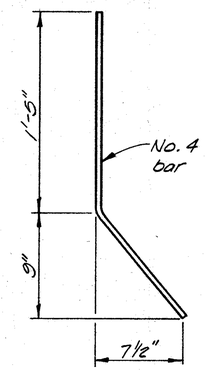

M403

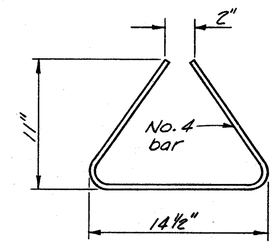

M402

BENDING DIAGRAM

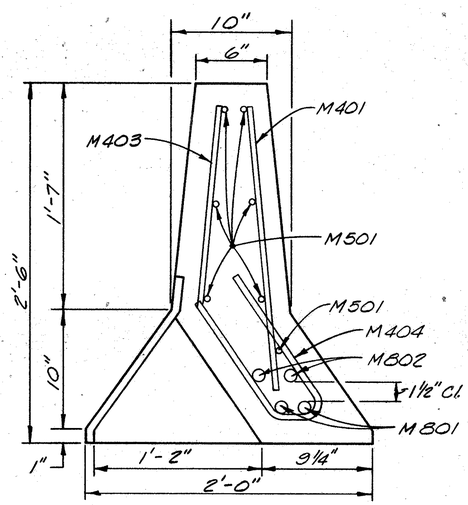

SECTION A-A
No Scale

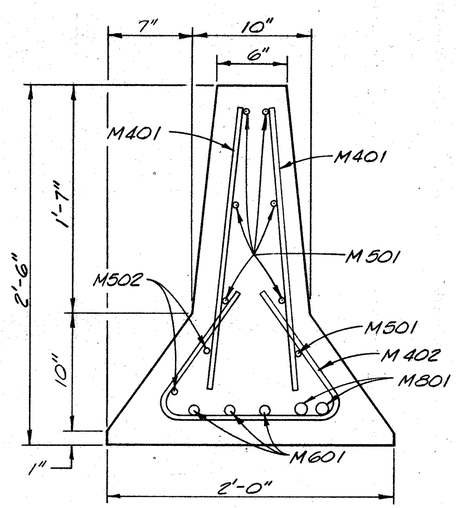

SECTION B-B
No Scale

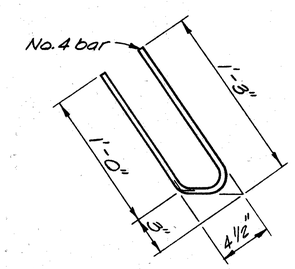

M404

STEEL LIST		
BAR NO.	NO.	LIN. FT.
M401	28	2'-0"
M402	12	3'-1"
M403	4	2'-4"
M404	4	2'-7"
M501	7	19'-6"
M502	4	8'-1"
M601	6	8'-1"
M801	2	19'-6"
M802	2	7'-6"
56x12.5	2	Varies

Note:
Length of steel beam varies with the length of window opening of the median inlet.

REINFORCING DETAIL FOR INLET, STANDARD NO. I-3A MODIFIED AS PER PLAN

DWN.	CKD.	CORR.	RECD.
D.W.L. 12-7-78			

W. E. QUICKSALL & ASSOCIATES INC. Consulting Engineers

FHWA REGION	STATE	PROJECT	
5	OHIO		

84

JEF-7-11.80

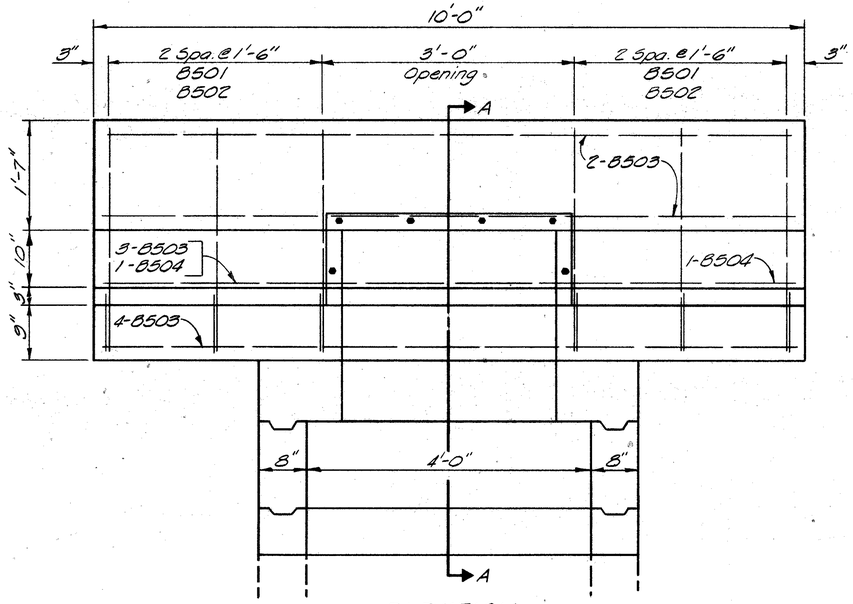

ELEVATION
No Scale

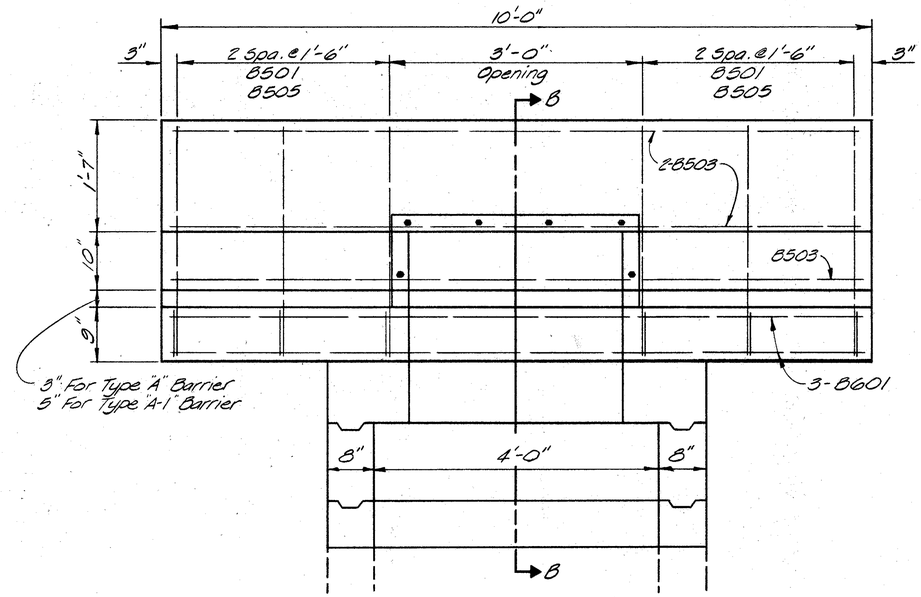

ELEVATION
No Scale

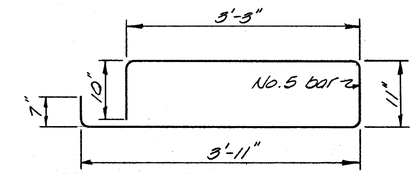

8502

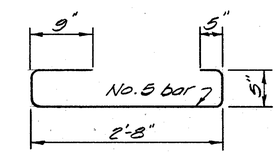

8505

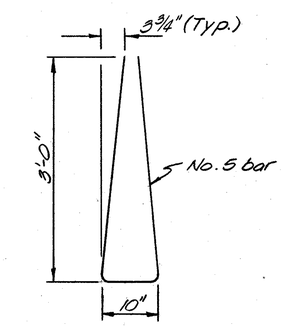

8501

BENDING DIAGRAM

Note:
For Steel List,
See Sheet No. 84-A

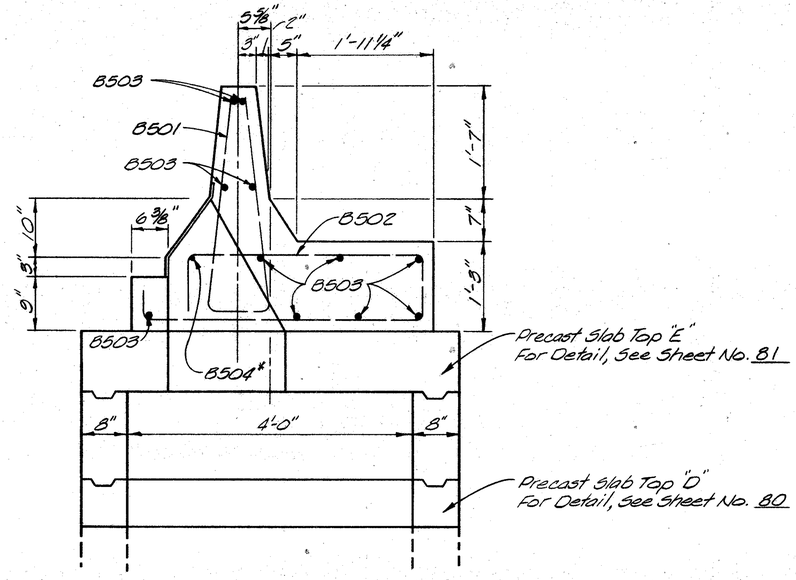

* Typical, each side of opening.

SECTION A-A
No Scale

Note:
For Manhole Detail,
See Sheet No. 78

MANHOLE, TYPE 2

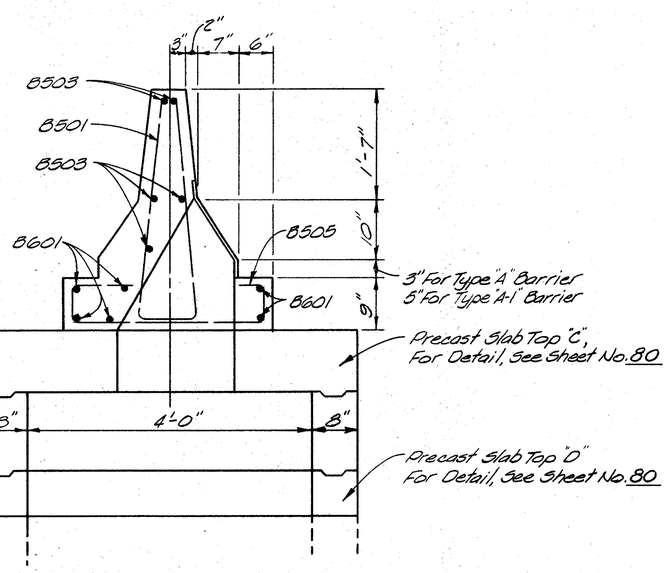

SECTION B-B
No Scale

Note:
For Manhole Detail,
See Sheet No. 77

MANHOLE, TYPE 1

REINFORCING DETAILS
MANHOLE TYPE 1 & 2

DWN.	CKD.	CKD.	REV'D
8-5-79	W.D.O.	3-3-80	

FHWA REGION	STATE	PROJECT	
5	OHIO		

84-A

JEF-7-11.80

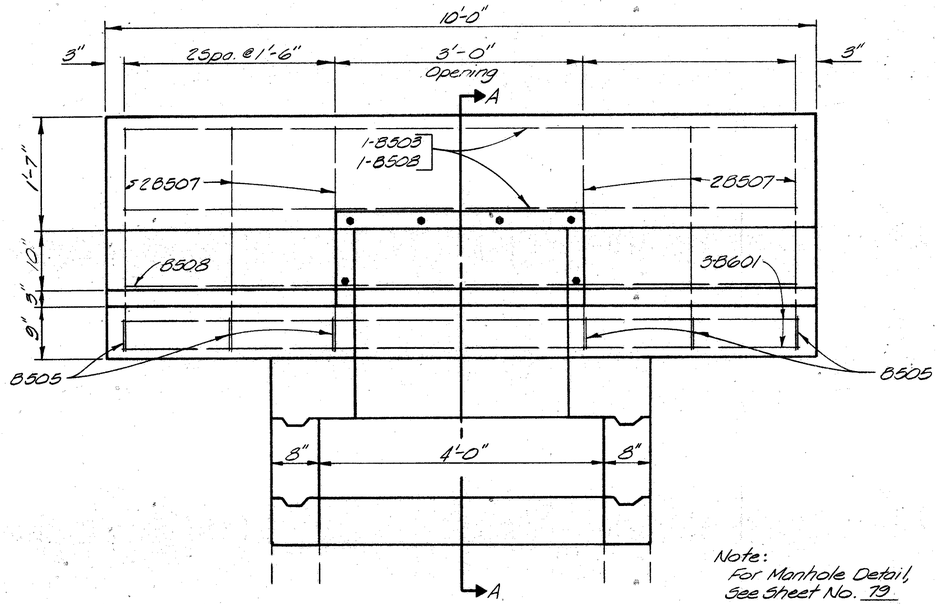

Note:
For Manhole Detail,
See Sheet No. 79

ELEVATION
No Scale

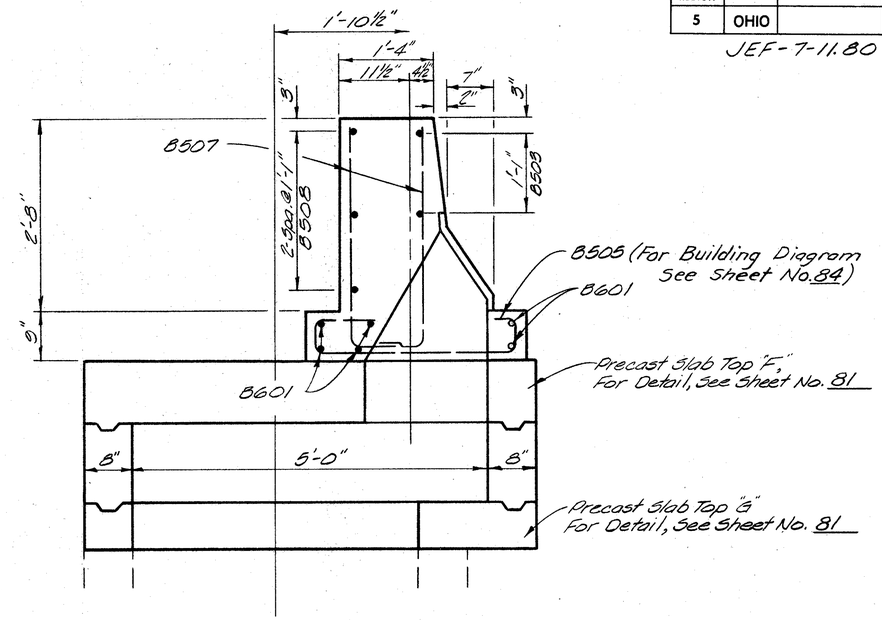

SECTION A-A
No Scale

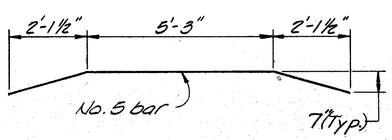

8508

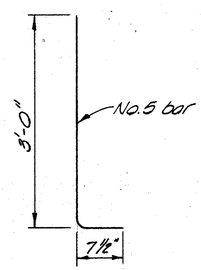

8507

BENDING DIAGRAM

STEEL LIST			
	BAR NO.	NO.	LIN. FT.
MANHOLE, TYPE 1	8501	6	6'-10"
	8503	5	9'-6"
	8505	6	4'-0"
	8601	6	9'-6"
	8602	8	5'-0"
	8701	10	5'-0"
MANHOLE, TYPE 2	8501	6	6'-10"
	8502	6	9'-0"
	8503	11	9'-6"
	8504	2	3'-0"
	8506	3	2'-1"
	8602	8	5'-0"
	8701	10	5'-0"
MANHOLE, TYPE 3	8503	2	9'-6"
	8505	6	4'-0"
	8507	12	3'-6"
	8508	3	9'-7"
	8509	3	3'-8"
	8601	6	9'-6"
	8602	5	5'-0"
	8701	5	5'-0"
	8702	8	6'-0"

REINFORCING DETAILS
MANHOLE TYPE 3

DWN.	CKD.	CKD.	BKCD.
B.L. 8-2-79	CLD. W.R.G. 5-10-79		

FHWA REGION	STATE	PROJECT	
5	OHIO		

84-B

JEF-7-11.80

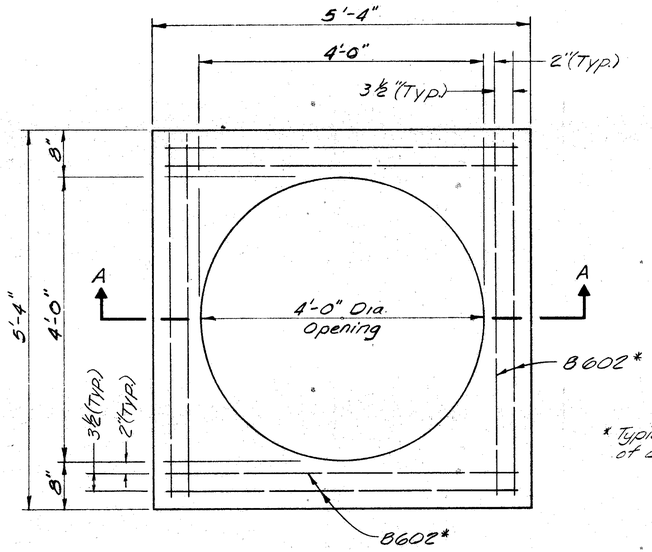

* Typical, each side of opening

PLAN
TOP SLAB D
No Scale

Note:
For Manhole Details, See Sheet No's 77 & 78

Note:
For Steel List, See Sheet No. 84-A

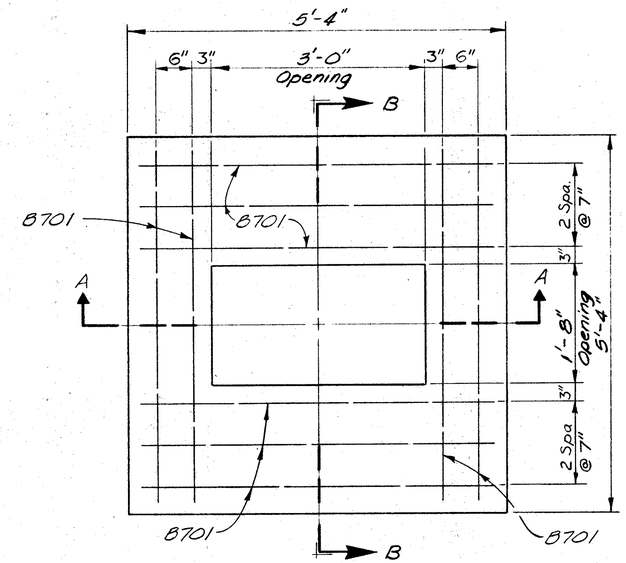

PLAN
TOP SLAB "C"
No Scale

Note:
For Manhole Detail, See Sheet No. 77

Note:
For Steel List, See Sheet No. 84-A

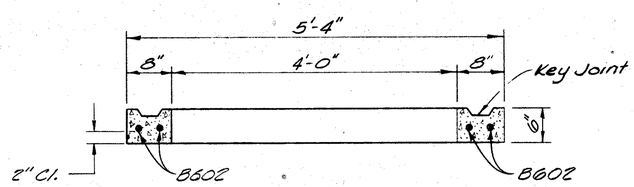

SECTION A-A
No Scale

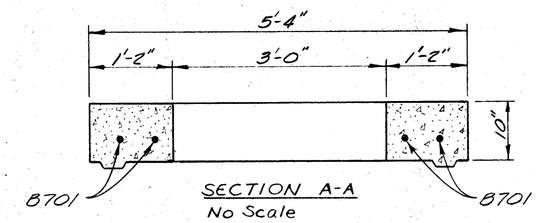

SECTION A-A
No Scale

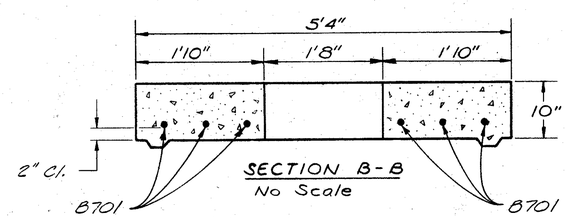

SECTION B-B
No Scale

MANHOLE, TYPE 1
D-7 STA. 692+10
D-52 STA. 905+00
D-55 STA. 911+12
MANHOLE, TYPE 2
D-53 STA. 907+50

MANHOLE, TYPE 1
D-7 STA. 692+10
D-52 STA. 905+00
D-55 STA. 911+12

REINFORCING DETAILS
TOP SLAB, "C" & "D"

DWN.	CKD.	CKD.	REV.
G.L. 2-2-79	G.L. 3-10-79		

FHWA REGION	STATE	PROJECT	
5	OHIO		

84C

JEF-7-11.80

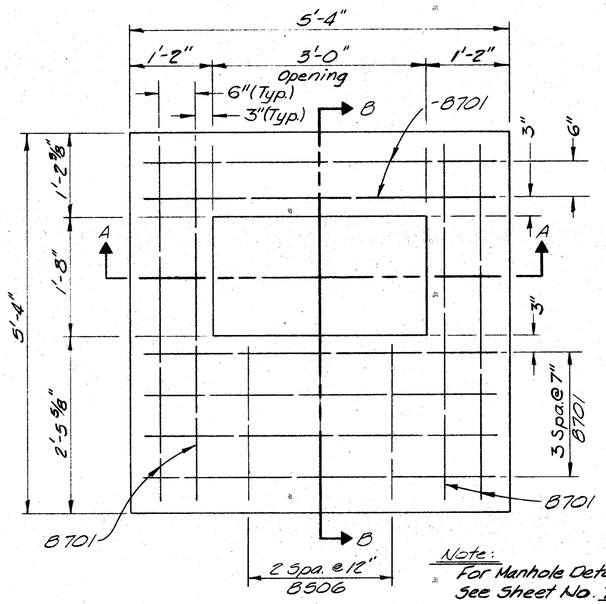

Note:
For Manhole Detail,
See Sheet No. 78

Note:
For Steel List,
See Sheet No. 84-A

PLAN
TOP SLAB "E"
No Scale

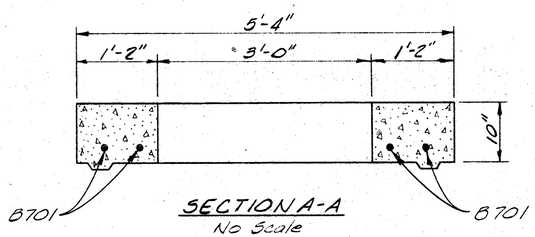

SECTION A-A
No Scale

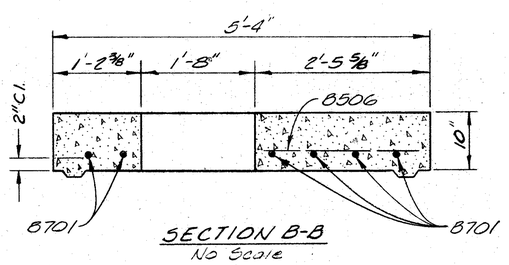

SECTION B-B
No Scale

(D-53) MANHOLE, TYPE 2
STA. 907+50

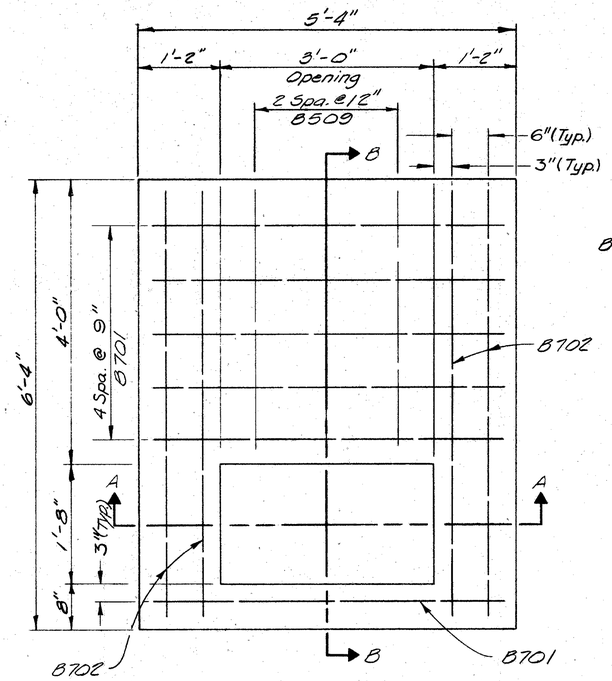

PLAN
TOP SLAB "F"
No Scale

Note:
For Steel List,
See Sheet No. 84-A

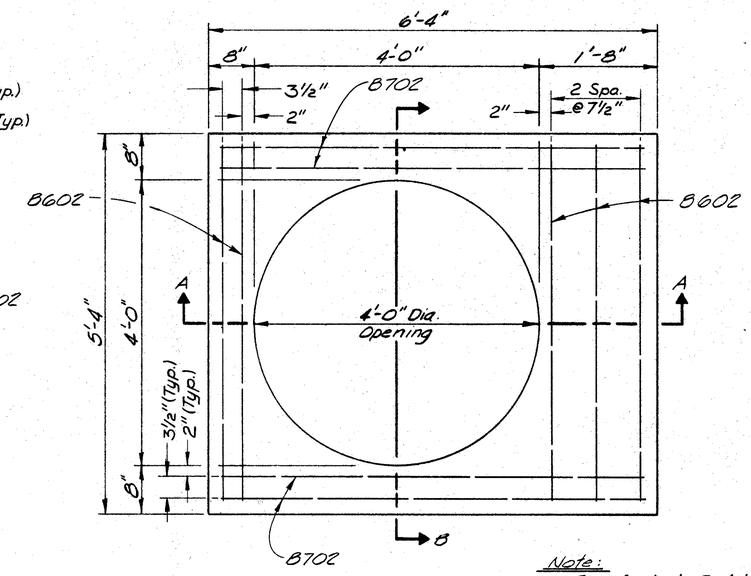

Note:
For Manhole Detail,
See Sheet No. 79

PLAN
TOP SLAB "G"
No Scale

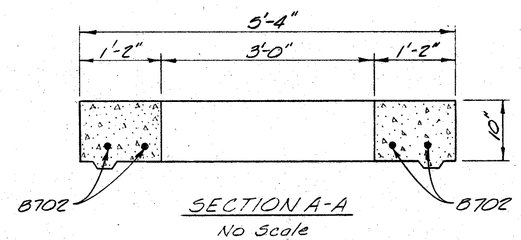

SECTION A-A
No Scale

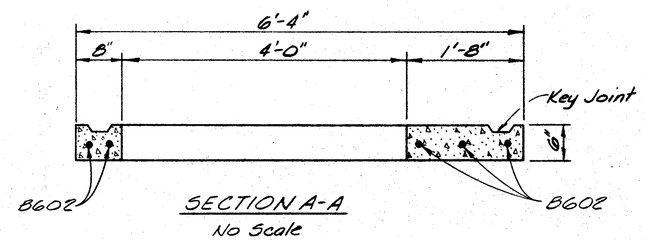

SECTION A-A
No Scale

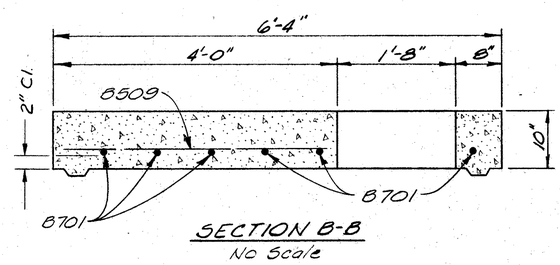

SECTION B-B
No Scale

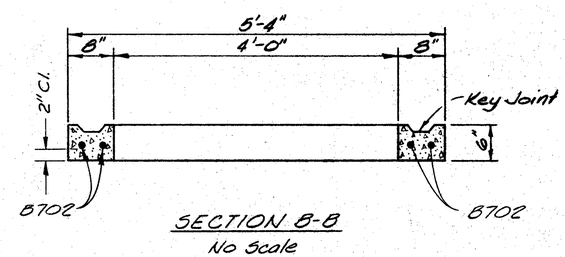

SECTION B-B
No Scale

(D-56) MANHOLE, TYPE 3
STA. 914+53

REINFORCING DETAILS
TOP SLABS "E", "F" & "G"

CHKD.	BLD		
DRN.	CDE		
CHK.	ZD	3-10-79	
SC-79			

TRAFFIC CONTROL GENERAL NOTES

FHWA REGION	STATE	PROJECT	
5	OHIO		

85

JEF-7-11.80

625 PLAN SPECIFICATION REFERENCES

REFERENCES WITHIN THE PLANS TO ITEMS 625 AND 713 SHALL BE CONSIDERED AS REFERRING TO ITEMS S625 AND S713.

844 REMOVAL OF GROUND MOUNTED SIGNS

GROUND MOUNTED SIGNS SHALL BE CAREFULLY REMOVED WHERE INDICATED ON THE PLANS. THE SIGNS SHALL BE RE-ERECTED ELSEWHERE ON THE PROJECT OR STORED ON THE PROJECT FOR SALVAGE BY FORCES OF THE CITY OF STEUBENVILLE (SIGNS WITHIN STEUBENVILLE CORP. LIMITS) OR FORCES OF THE COUNTY ENGINEER. TO ASSURE MAINTENANCE OF ADEQUATE TRAFFIC CONTROL AT ALL TIMES, NO SIGNS SHALL BE REMOVED WITHOUT THE APPROVAL OF THE ENGINEER.

RE-ERECTION MAY REQUIRE FIELD DRILLING AND ANY NECESSARY HARDWARE SHALL BE FURNISHED.

PAYMENT WILL BE AT THE CONTRACT UNIT PRICE FOR EACH SIGN REMOVED AND STORED OR RE-ERECTED, CATEGORIZED AS MAJOR SIGNS (40 SQUARE FEET OR LARGER) OR OTHER SIGNS.

844 EACH REMOVAL OR GROUND MOUNTED MAJOR SIGN AND STORAGE.

844 EACH REMOVAL OF GROUND MOUNTED SIGN AND STORAGE.

844 EACH REMOVAL OF GROUND MOUNTED SIGN AND RE-ERECTION.

844 REMOVAL OF GROUND MOUNTED SIGN SUPPORTS

GROUND MOUNTED SIGN SUPPORTS SHALL BE CAREFULLY REMOVED WHERE INDICATED ON THE PLANS AND STORED ON THE PROJECT FOR SALVAGE BY FORCES OF THE CITY OF STEUBENVILLE (SUPPORTS WITHIN STEUBENVILLE CORP. LIMITS) OR FORCES OF THE COUNTY ENGINEER. SUPPORTS SHALL BE REMOVED WITH CARE TO AVOID DAMAGING. FOUNDATIONS FOR SUPPORTS SHALL BE REMOVED TO AT LEAST ONE FOOT BELOW GROUNDLINE WITH BACKFILLING, RESTORATION OF SURFACES AND DISPOSAL OF SURPLUS MATERIAL IN ACCORDANCE WITH 603.09.

PAYMENT WILL BE AT THE CONTRACT UNIT PRICE FOR EACH SUPPORT REMOVED AND STORED, CATEGORIZED AS BEAM OR POST (NO. 8 AND SMALLER).

844 EACH REMOVAL OF GROUND MOUNTED BEAM SUPPORT

844 EACH REMOVAL OF GROUND MOUNTED POST SUPPORT

AN ESTIMATED QUANTITY OF 27 EACH HAS BEEN INCLUDED IN THE GENERAL SUMMARY WITH THIS ITEM FOR THE REMOVAL OF EXISTING DELINEATOR POSTS.

844 REMOVAL OF SEMI-OVERHEAD MOUNTED SIGNS

SEMI-OVERHEAD MOUNTED SIGNS SHALL BE CAREFULLY REMOVED WHERE INDICATED ON THE PLANS. THE SIGN SHALL BE STORED ON THE PROJECT FOR SALVAGE BY FORCES OF THE COUNTY ENGINEER.

TO ASSURE MAINTENANCE OF ADEQUATE TRAFFIC CONTROL AT ALL TIMES, NO SIGNS SHALL BE REMOVED WITHOUT THE APPROVAL OF THE ENGINEER.

PAYMENT WILL BE AT THE CONTRACT UNIT PRICE FOR EACH SIGN REMOVED AND STORED.

844 EACH REMOVAL OF SEMI-OVERHEAD MOUNTED SIGN AND STORAGE.

844 REMOVAL OF SEMI-OVERHEAD SIGN SUPPORTS, BY TYPE

SEMI-OVERHEAD SIGN SUPPORTS SHALL BE REMOVED WHERE INDICATED ON THE PLANS. SUPPORTS SHALL BE CAREFULLY DISMANTLED, REMOVED, AND STORED ON THE PROJECT FOR SALVAGE BY FORCES OF THE COUNTY ENGINEER. SUPPORT FOUNDATIONS SHALL BE REMOVED TO AT LEAST ONE FOOT BELOW GROUNDLINE WITH BACKFILLING, RESTORATION OF SURFACES AND DISPOSAL OF SURPLUS MATERIAL IN ACCORDANCE WITH 603.09.

PAYMENT WILL BE AT THE CONTRACT UNIT PRICE FOR EACH SUPPORT REMOVED AND STORED BY TYPE.

844 EACH REMOVAL OF SEMI-OVERHEAD SIGN SUPPORT AND STORAGE TYPE 816-9.24.

844 REMOVAL OF OVERHEAD MOUNTED SIGNS

OVERHEAD MOUNTED SIGNS SHALL BE CAREFULLY REMOVED WHERE INDICATED ON THE PLANS. THE SIGNS SHALL BE STORED ON THE PROJECT FOR SALVAGE BY FORCES OF THE CITY OF STEUBENVILLE.

TO ASSURE MAINTENANCE OF ADEQUATE TRAFFIC CONTROL AT ALL TIMES, NO SIGNS SHALL BE REMOVED WITHOUT THE APPROVAL OF THE ENGINEER.

PAYMENT WILL BE AT THE CONTRACT UNIT PRICE FOR EACH SIGN REMOVED AND STORED.

844 EACH REMOVAL OF OVERHEAD MOUNTED SIGN AND STORAGE

844 SIGNS, BY TYPE

REFLECTIVE SHEETING FOR SIGN FACES SHALL BE TYPE F IN ACCORDANCE WITH 844.03.

844 SIGNS, FLAT SHEET, MOUNTED ON SPAN WIRE

IN ADDITION TO THE PROVISIONS OF SUPPLEMENTAL SPECIFICATION 844, FLAT SHEET SIGNS MOUNTED ON SPAN WIRE SHALL BE FIELD DRILLED TO MATCH MOUNTING HOLES IN BRACKETS IN LIEU OF SHOP PUNCHING.

844 SIGN HANGER ASSEMBLY

SIGNS MOUNTED ON SPAN WIRE SHALL BE ATTACHED BY AN ASSEMBLY CONSISTING OF ALL PARTS NECESSARY TO ATTACH AN INDIVIDUAL SIGN TO THE SPAN WIRE AS SHOWN ON SHEET 143.

PAYMENT WILL BE AT THE CONTRACT UNIT PRICE FOR EACH SIGN HANGER ASSEMBLY FURNISHED AND IN PLACE.

844 EACH SPAN WIRE SIGN HANGER ASSEMBLY

844 POLE MOUNTED SIGN ATTACHMENT ASSEMBLY

SIGNS MOUNTED ON POLES SHALL BE ATTACHED BY AN ASSEMBLY AS SHOWN ON SHEET 143, CONSISTING OF ALL PARTS NECESSARY TO ATTACH AN INDIVIDUAL SIGN TO A POLE.

PAYMENT WILL BE AT THE CONTRACT UNIT PRICE FOR EACH SIGN ATTACHMENT ASSEMBLY FURNISHED AND IN PLACE.

844 EACH POLE MOUNTED SIGN ATTACHMENT ASSEMBLY

844 CONCRETE BARRIER MOUNTED SIGN SUPPORTS

SIGNS MOUNTED ON THE CONCRETE BARRIER SHALL BE MOUNTED ON A POST SUPPORT EMBEDDED IN THE BARRIER AS SHOWN ON SHEET 143, INCLUDING ALL PARTS NECESSARY TO ATTACH THE SIGN. THE BARRIER INSERT (BY TYPE) INCLUDES SAND FILL AND BITUMINOUS TOP SEAL.

PAYMENT WILL BE AT THE CONTRACT UNIT PRICE OF THE FOLLOWING ITEMS FOR EACH SUPPORT FURNISHED AND IN PLACE:

844 LINEAR FEET GROUND MOUNTED SUPPORTS, NO. 2 POST

844 EACH CONCRETE BARRIER INSERT, 3 1/2 INCH PIPE.

844 DOUBLE FACED SIGNS, BY TYPE

DOUBLE FACED SIGNS (STREET NAME SIGNS) SHALL BE IN ACCORDANCE WITH APPLICABLE SECTIONS OF SUPPLEMENTAL SPECIFICATION 844 AND SHALL BE REFLECTORIZED WITH TYPE F SHEETING CONFORMING TO 844.03, SIGNS SHALL INCLUDE MOUNTING HARDWARE AS SHOWN ON SHEET 143.

PAYMENT WILL BE AT THE CONTRACT UNIT PRICE FOR EACH DOUBLE FACED SIGN, FURNISHED AND IN PLACE.

844 EACH DOUBLE FACED SIGN, STREET NAME

844 STREET NAME SIGN SUPPORTS

SUPPORTS FOR DOUBLE FACED STREET NAME SIGNS SHALL BE FURNISHED AND INSTALLED WHERE INDICATED ON THE PLANS. THE SUPPORTS SHALL BE 2 INCH SCHEDULE 40 GALVANIZED STEEL PIPE 12 FOOT LONG. SUPPORTS SHALL BE EMBEDDED IN CONCRETE IN ACCORDANCE WITH SHEET 143 AND SHALL BE PLUMB.

PAYMENT WILL BE AT THE CONTRACT UNIT PRICE FOR EACH SUPPORT, FURNISHED AND IN PLACE, INCLUDING EXCAVATING AND CONCRETE FOR EMBEDMENT.

844 EACH STREET NAME SIGN SUPPORT

844 GROUND MOUNTED SUPPORT, NO. 4 POST, AS PER PLAN

SPECIAL POSTS INCORPORATING A SQUARE TUBULAR TOP EXTENSION FOR MOUNTING SIGNS AT RIGHT ANGLES TO OTHER SIGNS ON THE POST SHALL BE FURNISHED, ASSEMBLED AND ERECTED IN ACCORDANCE WITH TC-41.50 AND THE PLANS.

PAYMENT WILL BE AT THE CONTRACT UNIT PRICE PER LINEAR FOOT OF SUPPORT OVERALL LENGTH, FURNISHED AND IN PLACE.

844 LINEAR FOOT GROUND MOUNTED SUPPORT, NO. 4 POST, AS PER PLAN

844 SIGN SUPPORT ALTERNATE DESIGN

ALTERNATE DESIGNS FOR SIGN SUPPORTS SUCH AS DIFFERING ENGINEERING DESIGNS OR DIFFERENT STRUCTURAL MATERIALS MAY BE SUBMITTED BY A BIDDING CONTRACTOR TO THE DEPARTMENT FOR ACCEPTANCE. ALTERNATIVE DESIGNS SHALL BE SUBMITTED TO THE DEPARTMENT AT LEAST 21 DAYS IN ADVANCE OF THE BID OPENING DATE AND SUBMISSION SHALL BE TO THE FOLLOWING ADRESS:

OHIO DEPARTMENT OF TRANSPORATION, BUREAU OF DESIGN SERVICES, 25 SOUTH FRONT STREET, COLUMBUS, OHIO 43215

NOTIFICATION OF THE ACCEPTANCE OR REJECTION OF THE ALTERNATE DESIGN WILL BE GIVEN BY THE DEPARTMENT TO THE BIDDING CONTRACTOR AT LEAST 7 DAYS IN ADVANCE OF THE BID OPENING DATE.

844 DETERMINATION OF SIGN SUPPORT, LENGTH

THE ATTENTION OF THE CONTRACTOR IS CALLED ESPECIALLY TO SECTION 844.04 (WORKING PLANS) AND 844.08 - 1 (GROUND MOUNTED SUPPORTS). THE EXISTING GROUND LINE MAY DIFFER FROM THAT WHICH WAS ASSUMED WHEN COMPUTING THE APPROXIMATE SUPPORT LENGTH WHICH APPEARS IN THESE PLANS.

USE OF EXISTING SIGN SUPPORTS

WHERE THE PLANS INDICATE UPGRADING OF SIGN(S) BY MOUNTING ONTO EXISTING POST(S) (DESIGNATED BY ** IN THE PLANS) THE ENGINEER SHALL ASCERTAIN THE CONDITION OF THE EXISTING SUPPORT(S). WHERE AN EXISTING POST IS FOUND TO BE BENT OR DETERIORATED IT SHALL BE REMOVED AND A NEW POST INSTALLED. WHERE A SUPPORT IS TOO SHORT IT SHALL BE EITHER:

1. LENGTHENED BY SHIFTING THE EXTENSION, IF THERE IS ONE, OR BY ADDITION OF AN EXTENSION OF NO. 2 POST; OR, 2. REMOVED, AND A NEW POST INSTALLED; WHICHEVER IS ORDERED BY THE ENGINEER.

THE FOLLOWING ESTIMATED QUANTITIES HAVE BEEN CARRIED TO THE GENERAL SUMMARY FOR THIS WORK.

844	20 LIN. FT.	GROUND MOUNTED SUPPORTS, NO. 2 POST
844	15 LIN. FT.	GROUND MOUNTED SUPPORTS, NO. 3 POST, DRIVEN
844	45 LIN. FT.	GROUND MOUNTED SUPPORTS, NO. 4 POSTS, DRIVEN
844	4 EACH	REMOVAL OF GROUND MOUNTED SIGN AND RE-ERECTION

SUB SUMMARY TABLE

Calc. By: G.W. Date: 1-18-79
Chkd. By: A.E.H. Date: 1-22-79

FED. RD DIVISION	STATE	PROJECT	
2	OHIO		

86

JEF-7-11.80

FROM SHEET NO.

30	85	88			89		90	91	92	94	95		97	100	102	104	105	107	108		109	110	111		112	113		114	115	116	117	119	120	121	123	125	126	(A) FEDERAL STATE & MINGO JUNCTION	(B) FEDERAL STATE STEUBENVILLE	SUB-TOTAL	(C) STATE & FEDERAL		UNIT	ITEM	DESCRIPTION
C	C	A	B	C	A	B	C	C	C	C	A	C	A	A	A	A	A	A	A	C	C	C	B	C	B	B	C	B	B	B	B	B	B	B	B	B	B	B										
																																															— TRAFFIC CONTROL —
																																																SIGNING
						12	16	21	32	286	12	12	142	262	96	108	38	197	16	7	53	28	33	23		12		9		27	32	171	32	24	157	11.7	57	871	683	1554	478		Sq. Ft.	844	Signs, Flat Sheet
					363		242	170	145	180	290	170	30	105	215		165		60	30	156	75	24		48			65		65	30			18	36		46	1228	332	1560	1168		Sq. Ft.	844	Signs, Extru-Sheet
							10																			13												—	13	13	10		Each	844	Revised Demountable Copy Units on Existing Panels
	20													4	21			18					9	9														43	9	52	29		Lin. Ft.	844	Ground Mounted Supports, No. 2 Post
										18								23																				23	—	23	18		Lin. Ft.	844	Ground Mounted Supports, No. 2 Post Driven
	15							32		27			28	64	58	14	43	40		31						32						84		30	148	14	14	247	322	569	105		Lin. Ft.	844	Ground Mounted Supports, No. 3 Post Driven
	45						30	16	70	396	36	34	196	230	59	163	51	125	30		121	66	69	29				16		31	65	196	72	29	131	163	44	890	816	1706	807		Lin. Ft.	844	Ground Mounted Supports, No. 4 Post Driven
										53								49																	16	17		49	33	82	53		Lin. Ft.	844	Ground Mounted Supports, No. 4 Post Driven, as per plan
							32		69	61	33		35	71	69		36		35	34											32			38	61		62	279	193	472	196		Lin. Ft.	844	Ground Mounted Supports, S4 x 7.7
																							40							35								—	75	75	—		Lin. Ft.	844	Ground Mounted Supports, W6 x 8.5
							41			78					44		87		44		79				34			39										175	73	248	198		Lin. Ft.	844	Ground Mounted Supports, W10 x 11.5
									51					49								49																49	—	49	100		Lin. Ft.	844	Ground Mounted Supports, W8 x 17
											52				51																							103	—	103	—		Lin. Ft.	844	Ground Mounted Supports, W10 x 21
							59	59			64	59																										64	—	64	177		Lin. Ft.	844	Ground Mounted Supports, W12 x 31
							5.74	3.00	3.28	4.94	6.00	3.00	0.54	3.28	5.74		4.94		2.74	0.54	4.40	2.20	0.66		0.66			2.20		0.66	0.54			0.54	1.08		1.08	23.24	7.42	30.66	27.10		Cu. Yd.	844	Concrete for Embedded Foundations
							6	2	4	6	2	2	2	2	2		2		4	2	4				2						2			2	4		4	14	14	28	26		Each	844	Breakaway Beam Connection
																																			1		1	—	2	2	—		Each	844	Double Faced Sign, Street Name
																																			1		1	—	2	2	—		Each	844	Street Name Sign Support
																																			1		1	—	2	2	—		Each	844	Pole Mounted Sign Attachment Assembly
															2								1	1														2	1	3	1		Each	844	Concrete Barrier Insert, 3 1/2 Inch Pipe
							3	3	5	46	6	3	15	44	12	5	4	14	3	2	4	1	4		1		1	1	3	3	5	12		6		11	103	46	149	68		Each	844	Removal of Ground Mounted Sign and Storage
	4												1					2	1																15	4		4	19	23	4		Each	844	Removal of Ground Mounted Sign and Re-erection
							1	1			1	1	1		2		1		1	1	1		1							1							1	6	3	9	5		Each	844	Removal of Ground Mounted Major Sign and Storage
	27						6	2	7	28	8	3	7	14	9	6	3	4	3	1	3	1	3		1		1	1		2	7	7		5	17	3	12	54	58	112	79		Each	844	Removal of Ground Mounted Post Support
							2	2			2	2	2		4		2		2	2	2		2							2							2	12	6	18	10		Each	844	Removal of Ground Mounted Beam Support
					2																																	2	—	2	—		Each	844	Overhead Sign Support, Type TC-12.30 Design No. 4, 20'-0" Arm
					1																																	1	—	1	—		Each	844	Overhead Sign Support, Type TC-12.30 Design No. 6, 26'-0" Arm
					1																																	1	—	1	—		Each	844	Overhead Sign Support, Type TC-12.30 Design No. 8, 32'-0" Arm
						3																																—	3	3	—		Each	844	Span Wire Sign Hanger Assembly
					14.25																																	14.25	—	14.25	—		Cu. Yd.	844	Concrete for Anchor Base Foundation
					5																																	5	—	5	—		Each	844	Removal of Semi-Overhead Mounted Sign and Storage
					5																																	5	—	5	—		Each	844	Removal of Semi-Overhead Sign Support and Storage, Type 816-9.24
					4	2																																—	2	2	—		Each	844	Removal of Overhead Sign and Storage
																																						4	—	4	—		Each	625	Ground Rods
		37	39	95																																		37	39	76	95		Each	620	Delineators, Type A, Post Mounted
		12		2																																		16	—	16	2		Each	620	Delineators, Type A, Bracket Mounted
		157	7	61																																		157	7	164	61		Each	620	Delineators, Type C, Post Mounted
		5	—	—																																		5	—	5	—		Each	620	Delineators, Type C, Bracket Mounted
		25	10	30																																		25	10	35	30		Each	620	Delineators, Type D, Post Mounted
		—	5	2																																		—	5	5	2		Each	620	Delineators, Type D, Bracket Mounted

GENERAL SUMMARY TABLE

Calc By: G.W. Date: 1-18-79
Chkd. By: AEH. Date: 1-22-79

FED RD DIVISION	STATE	PROJECT	
2	OHIO		

87

JEF-7-11.80

FROM SHEET NO. 86 A	86 B	86 C	127A B	128 B	130 B	131 B	133 B	134 B	135 B	136 B	137 B	139 B	140 B	141 B	145 B	145 C	(A) FEDERAL STATE & WINGO JUNCTION	(B) FEDERAL STATE & STEUBENVILLE	SUB-TOTAL	(C) STATE & FEDERAL	GRAND TOTAL	UNIT	ITEM	DESCRIPTION
																								— TRAFFIC CONTROL —
																								SIGNING
871	683	478	76	33	72	49	120	87	68	87	12	77	21	12			871	1397	2268	478	2746	Sq. Ft.	844	Signs, Flat Sheet
1228	332	1168	18	77	176	59	95			36	42		64				1228	899	2127	1168	3295	Sq. Ft.	844	Signs, Extru-Sheet
–	13	10															–	13	13	10	23	Each	844	Revised Demountable Copy Units on Existing Panels
43	9	29					17										43	26	69	29	98	Lin. Ft.	844	Ground Mounted Supports, No. 2 Post
23	–	18															23	–	23	18	41	Lin. Ft.	844	Ground Mounted Supports, No. 2 Post Driven
247	322	105	44	60		59	85		15	29	30			29			247	673	920	105	1025	Lin. Ft.	844	Ground Mounted Supports, No. 3 Post Driven
890	816	807	93	15	125	46	91	108	95	120		120	46				890	1675	2565	807	3372	Lin. Ft.	844	Ground Mounted Supports, No. 4 Post Driven
49	33	53															49	33	82	53	135	Lin. Ft.	844	Ground Mounted Supports, No. 4 Post Driven, as per plan
279	193	196	30	30			60			70	64		68				279	515	794	196	990	Lin. Ft.	844	Ground Mounted Supports, S4 x 7.7
–	75	–															–	75	75	–	75	Lin. Ft.	844	Ground Mounted Supports, W6 x 8.5
175	73	198		52	129	42	39										175	335	510	198	708	Lin. Ft.	844	Ground Mounted Supports, W10 x 11.5
49	–	100															49	–	49	100	149	Lin. Ft.	844	Ground Mounted Supports, W8 x 17
103	–	–															103	–	103	–	103	Lin. Ft.	844	Ground Mounted Supports, W10 x 21
64	–	177															64	–	64	177	241	Lin. Ft.	844	Ground Mounted Supports, W12 x 31
23.24	7.42	27.10	0.54	2.76	6.60	2.20	3.28			1.08	1.08		1.08				23.3	26.0	49.3	27.1	76.4	Cu. Yd.	844	Concrete for Embedded Foundations
14	14	26	2	2	4	2	6			4	2		4				14	40	54	26	80	Each	844	Breakaway Beam Connection
–	2	–	2			1		2		2		2	1				–	12	12	–	12	Each	844	Double Faced Sign, Street Name
–	2	–	2			1		2		2		2	1				–	12	12	–	12	Each	844	Street Name Sign Support
–	2	–	2					2									–	6	6	–	6	Each	844	Pole Mounted Sign Attachment Assembly
2	1	1					2										2	3	5	1	6	Each	844	Concrete Barrier Insert, 3 1/2 Inch Pipe
103	46	68	16	1	11	15	8	5		4	2	10	3	2			103	123	226	68	294	Each	844	Removal of Ground Mounted Sign and Storage
4	19	4															4	19	23	4	27	Each	844	Removal of Ground Mounted Sign and Re-erection
6	3	5			3												6	6	12	5	17	Each	844	Removal of Ground Mounted Major Sign and Storage
54	58	79	8	1	4	6	5	1		2	2	7	1	1			54	96	150	79	229	Each	844	Removal of Ground Mounted Post Support
12	6	10			4												12	10	22	10	32	Each	844	Removal of Ground Mounted Beam Support
2	–	–															2	–	2	–	2	Each	844	Overhead Sign Support, Type TC-12.30 Design No. 4, 20'-0" Arm
1	–	–															1	–	1	–	1	Each	844	Overhead Sign Support, Type TC-12.30 Design No. 6, 26'-0" Arm
1	–	–															1	–	1	–	1	Each	844	Overhead Sign Support, Type TC-12.30 Design No. 8, 32'-0" Arm
–	3	–																3	3	–	3	Each	844	Span Wire Sign Hanger Assembly
14.25	–	–															14.3	–	14.3	–	14.3	Cu. Yd.	844	Concrete for Anchor Base Foundation
5	–	–															5	–	5	–	5	Each	844	Removal of Semi-Overhead Mounted Sign and Storage
5	–	–															5	–	5	–	5	Each	844	Removal of Semi-Overhead Sign Support and Storage, Type B16-9.24
–	2	–															–	2	2	–	2	Each	844	Removal of Overhead Sign and Storage
4	–	–															4	–	4	–	4	Each	625	Ground Rods
37	39	95															37	39	76	95	171	Each	620	Delineators, Type A, Post Mounted
12	–	2															16	–	16	2	18	Each	620	Delineators, Type A, Bracket Mounted
157	7	61															157	7	164	61	225	Each	620	Delineators, Type C, Post Mounted
5	–	–															5	–	5	–	5	Each	620	Delineators, Type C, Bracket Mounted
25	10	30															25	10	35	30	65	Each	620	Delineators, Type D, Post Mounted
–	5	2															–	5	5	2	7	Each	620	Delineators, Type D, Bracket Mounted
																								PAVEMENT MARKING
															0.47	1.24		0.47	0.47	1.24	1.71	Mi.	621	Edge Line, White
															0.47	4.80		0.47	0.47	4.80	5.27	Mi.	621	Edge Line, Yellow
															0.47	4.81		0.47	0.47	4.81	5.28	Mi.	621	4" Lane Line
																0.01				0.01	0.01	Mi.	621	Center Line
																2414				2414	2414	Lin. Ft.	621	8" Channelizing Line, White
																57				57	57	Lin. Ft.	621	8" Channelizing Line, Yellow
																701				701	701	Lin. Ft.	621	24" Stop Line
																60				60	60	Lin. Ft.	621	24" Broad Transverse Lines, White
																1879				1879	1879	Lin. Ft.	621	24" Broad Transverse Lines, Yellow
																18				18	18	Each	621	Lane Arrow
																9				9	9	Each	621	Word "ONLY" on Pavement
																2				2	2	Each	621	Word "SCHOOL" on Pavement
																145				145	145	Lin. Ft.	621	4" Dotted Line
																237				237	237	Lin. Ft.	621	12" Crosswalk Line, White

Calc. By : G.W. Date : 1-2-79
Chkd. By : AEH. Date : 1-8-79

FHWA REGION	STATE	PROJECT	
5	OHIO		

88

JEF-7-11.80

ITEM 620-DELINEATORS

LOCATION	SIDE	STATION FROM	STATION TO	INTERVAL (FT.)	POST MOUNTED TYPE A Each	POST MOUNTED TYPE B Each	POST MOUNTED TYPE C Each	POST MOUNTED TYPE D Each				BRACKET MOUNTED TYPE A Each	BRACKET MOUNTED TYPE B Each	BRACKET MOUNTED TYPE C Each	BRACKET MOUNTED TYPE D Each
		STATE FUNDING													
S.R. 7	Lt.	579+00	609+00	200	16										
	Rt.	579+00	615+00	200	19										
	Lt.	623+00	633+00	200	5							1			
	Rt.	623+00	643+00	200	10							1			
	Lt.	643+00	653+00	200	6										
	Lt.	729+00	769+00	200	21										
	Rt.	741+00	769+00	200	15										
	℄	770+15													1
	℄	770+75													1
	Lt.	793+00	795+00	200	2										
	Rt.	793+00			1										
S.R. 151 INTERCHANGE															
Ramp A	Lt.	611+00	626+00	100			16								
	Lt.	626+60	628+40	60				4							
	Rt.	623+60	626+60	60				6							
Ramp B	Rt.	630+00	633+00	100			4								
	Lt.	632+00	636+80	60				9							
	Rt.	636+80	647+80	100			12								
Ramp C	Lt.	26+85	28+35	30			6								
	Lt.	28+95	29+95	100			2								
	Rt.	28+95	29+95	100				2							
	Rt.	30+65	33+85	40				9							
	Lt.	33+85	641+00	100			8								
Ramp D	Rt.	615+50	627+50	100			13								
TOTAL		STATE FUNDING			95		61	30				2			2
		MINGO JUNCTION FUNDING													
Ramp B-SR151	Rt.	649+20	654+20	100			6								
S.R. 7	Lt.	655+00	667+00	200	6							1			
	Rt.	656+00	662+00	200	4										
	Lt.	673+00	681+00	200	1							4			
	Rt.	672+00	682+00	200	2							4			
	Lt.	689+00	703+00	200	7							1			
	Rt.	690+00	700+00	200	5							1			
	Rt.	707+65	727+65	200	7							4			
	Lt.	710+50	716+50	200	3							1			
	Lt.	725+00	727+00	200	2										
COMMERCIAL AVE. INTERCHANGE															
Ramp A	Lt.	667+40 B.K.	665+25 Ah.	100			11							1	
	Lt.	65+85					1								
	Rt.	66+25	66+95	30				4							
	Rt.	67+50						1							
Ramp B	Rt.	63+65	64+65	30				5							
	Lt.	61+00	65+25	30			13								
	Lt.	669+00	673+00	80			6								
Ramp A-B	Lt.	55+40	60+40	100			6								
	Rt.	56+50	60+50	100			5								
	Rt.	61+10	63+10	30			9								
	Rt.	63+70					1								
SUB-TOTAL A					37		58	10				16		1	

LOCATION	SIDE	STATION FROM	STATION TO	INTERVAL (FT.)	POST MOUNTED TYPE A Each	POST MOUNTED TYPE B Each	POST MOUNTED TYPE C Each	POST MOUNTED TYPE D Each				BRACKET MOUNTED TYPE A Each	BRACKET MOUNTED TYPE B Each	BRACKET MOUNTED TYPE C Each	BRACKET MOUNTED TYPE D Each
		MINGO JUNCTION FUNDING (Continued)													
Ramp C	Rt.	663+10	671+00	100			9								
	Lt.	671+45	671+85	30				3							
	Lt.	672+45						1							
Ramp D	Rt.	656+30	658+30	100			3								
	Rt.	658+90	659+75	30			4								
	Lt.	659+75	660+70	30				5							
	Rt.	660+00	671+00	100			11								
MURDOCK AVENUE INTERCHANGE															
S.R. 7	Lt.	682+00	684+00	100			3								
	Rt.	683+00	685+00	100			3								
	Lt.	685+62	687+62	100			3								
	Rt.	686+00	688+00	100			3								
LOGAN AVENUE INTERCHANGE															
Ramp A	Lt.	705+00	12+00	100			8								
	Lt.	12+70					1								
	Lt.	13+30	13+90	30			3								
	Rt.	11+00	12+00	50				3							
Ramp B	Rt.	15+20						1							
	Rt.	16+20	16+80	60				2							
	Lt.	16+80					1								
	Lt.	17+52	723+60	100			7								
Ramp C	Rt.	701+00	7+00	100			3							4	
	Rt.	7+60	10+60	60			6								
	Rt.	11+60	12+60	100			2								
Ramp D	Rt		739+00	100			29								
SUB-TOTAL B							99	15						4	
SUB-TOTAL A					37		58	10				16		1	
TOTAL MINGO JCT. FUNDING					37		157	25				16		5	
		STEUBENVILLE FUNDING													
S.R. 7	Lt.	771+00	791+00	200	11										
	Rt.	771+00	791+00	200	11										
	Lt.	797+00	811+00	200	8										
	Rt.	795+00	811+00	200	9										
LINCOLN AVENUE															
Ramp A	Lt.	812+00	817+00	100			6								
	Lt.	1+50					1								
	Rt.	1+00	2+00					3							
Ramp B	Rt.	2+20	5+20	30				6							5
	Rt.	5+80						1							
TOTAL STEUBENVILLE FUNDING					39		7	10							5
TOTALS					171	—	225	65				18	-	5	7

DELINEATOR SUB-SUMMARY

DRAWN	Ck'd.	CORR.	Bk. Ck'd.

W.E. QUICKSALL & ASSOCIATES INC. Consulting Engineers

TRAFFIC CONTROL QUANTITIES

Calc. By: G.W. Date: 1-2-79
Chkd. By: A.E.H. Date: 1-8-79

FED RD DIVISION	STATE	PROJECT	
	OHIO		

JEF-7-11.80

OVERHEAD SIGN SUPPORTS

REF NO.	ROADWAY	SIDE	CODE	SIZE	844~SIGNS Flat Sheet Sq. Ft.	844~SIGNS Extra Sheet Sq. Ft.		844~OVERHEAD SIGN SUPPORTS Type TC-12.30 Design No. 4, 20'-0" Arm Each	Type TC-12.30 Design No. 6, 26'-0" Arm Each	Type TC-12.30 Design No. 8, 32'-0" Arm Each	Span Wire Sign Hanger Assembly Each	Conc. for Anchor Base Foundation Cu.Yd	Ground Rods Each	844~REMOVAL OF Semi-Overhead M'Y'd Sign and Storage Each	Semi-Overhead Sign Support and Storage Type 816-9.24 Each	Overhead Mounted Sign and Storage Each
	MINGO JCT. FUNDING															
97	S.R. 7~657+50	Rt.	GE	18'x5.5'		99.0				1		4.17	1			
99	S.R. 7~659+22	Rt.	Existing											1	1	
119	S.R. 7~667+47	Lt.	Existing											1	1	
120	S.R. 7~669+00	Lt.	GE	18'x5.5'		99.0			1			3.48	1			
168	S.R. 7~683+00	Rt.	GE	15'x5.5'		82.5		1				3.48	1			
169	S.R. 7~684+23	Lt.	Existing											1	1	
170	S.R. 7~685+86	Rt.	Existing											1	1	
171	S.R. 7~687+55	Lt.	GE	15'x5.5'		82.5		1				3.12	1			
195	S.R. 7~707+30	Rt.	Existing											1	1	
	TOTAL					363.0		2	1	1		14.25	4	5	5	
	STEUBENVILLE FUNDING															
335	SR-7~834+03	Rt.	Existing													1
336	S.R. 7~834+03	Rt.	R-121-24	24"x24"	4.0						1					
337	S.R. 7~836+33	Rt.	R-121-24	24"x24"	4.0						1					
373	S.R. 7~836+95	Lt.	Existing													1
374	SR-7-836+95	Lt.	R-121-24	24"x24"	4.0						1					
	TOTALS				12.0						3					2

OVERHEAD SIGN SUPPORTS SUB-SUMMARY

Calc. By: R.S. Date: 12-19-78
Chkd. By: G.W. Date: 1-11-79

FHWA REGION	STATE	PROJECT	
5	OHIO		

JEF-7-11.80

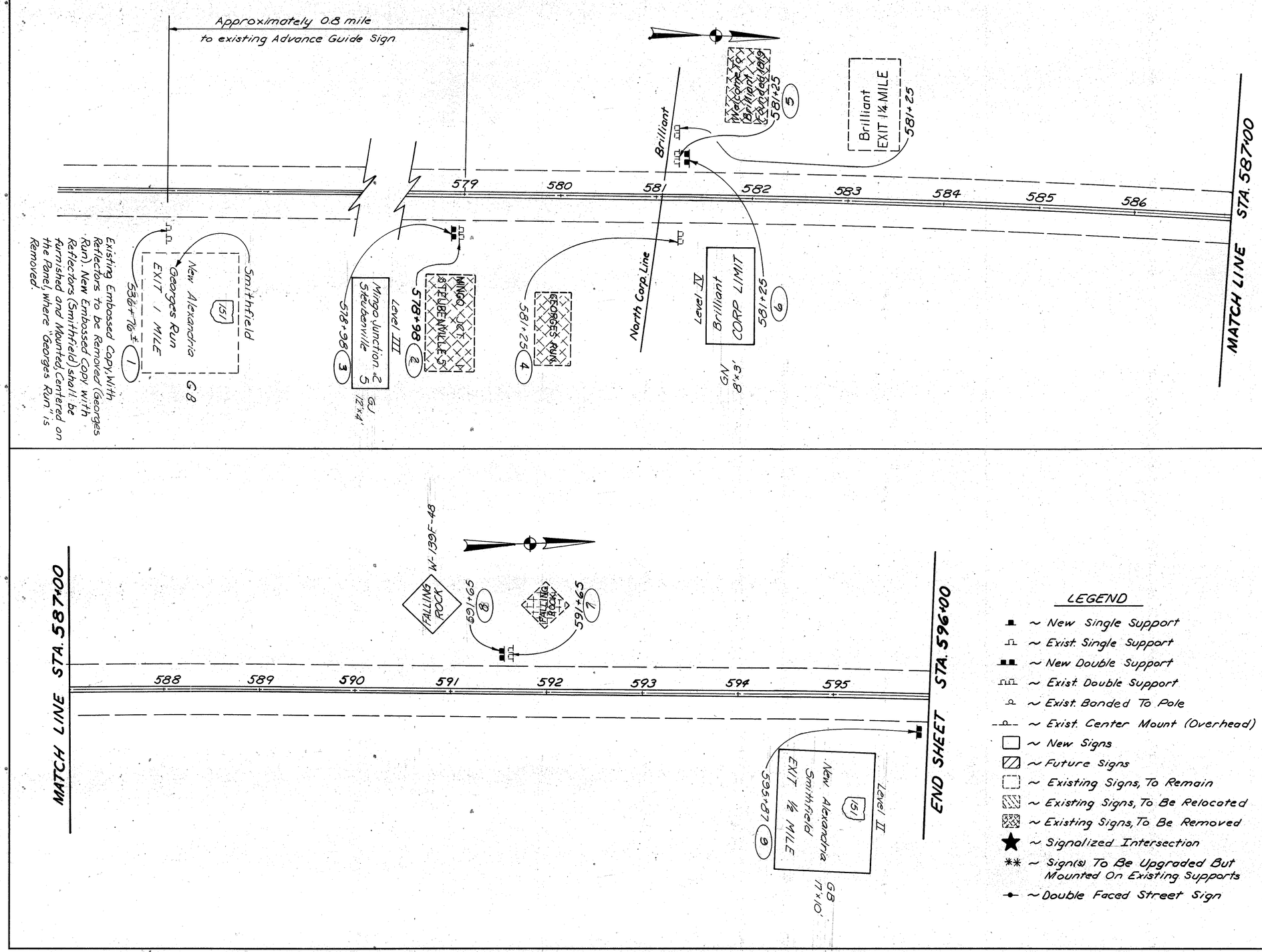

STATE FUNDING

ESTIMATED QUANTITIES

REF. NO.	STATION	SIDE	CODE	SIZE	844-SIGNS Flat Sheet Sq. Ft.	Extru Sheet Sq. Ft.	Revised Demountable Copy Units on Existing Panels Each	844-GRD. MTD. SUPPORTS No. 4 Post Driven Lin. Ft.	54x77 Lin. Ft.	W10x115 Lin. Ft.	W12x31 Lin. Ft.	Concrete for Embedded Foundation Cu. Yd.	Breakaway Beam Connection Each	844-REMOVAL OF Ground Mounted Sign & Storage Each	Ground Mounted Beam Support Each	Ground Mounted Post Support Each	Ground Mounted Major Sign & Storage Each	SEE SHEET NO.
1	536+76 ±	Lt.	Existing											1				
2	578+98	Rt.	GU	12'x4'		48.0									2			
3	578+98	Rt.	Existing													2		
4	581+25	Lt.	Existing											1		2	1	
5	581+25	Rt.	Existing											1		2		
6	581+25	Lt.	GN	8'x3'		24.0								1		2		
7	591+65	Lt.	Existing						31.5			0.54	2					
8	591+65	Lt.	W-139F-48	48"x48"	16.0			30.2										
9	595+87	Rt.	GB	17'x10'		170.0				40.7	59.1	3.00	2					
TOTALS					16	242	10	30	32	41	59	5.74	6	3	6	2	1	

W. E. QUICKSALL & ASSOCIATES INC. Consulting Engineers

SIGNING PLAN ~ STA. 578+98 TO STA 596+00

Calc. By: R.S. Date: 12-19-78
Chkd. By: G.W. Date: 1-11-79

FHWA REGION	STATE	PROJECT	
5	OHIO		

JEF-7-1180

91

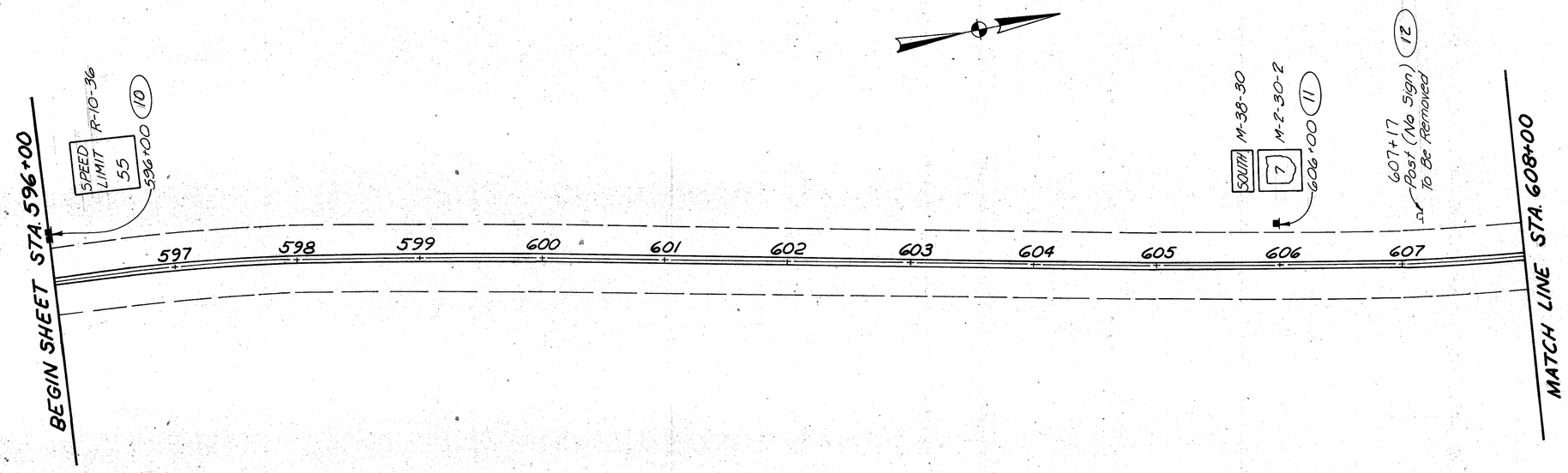

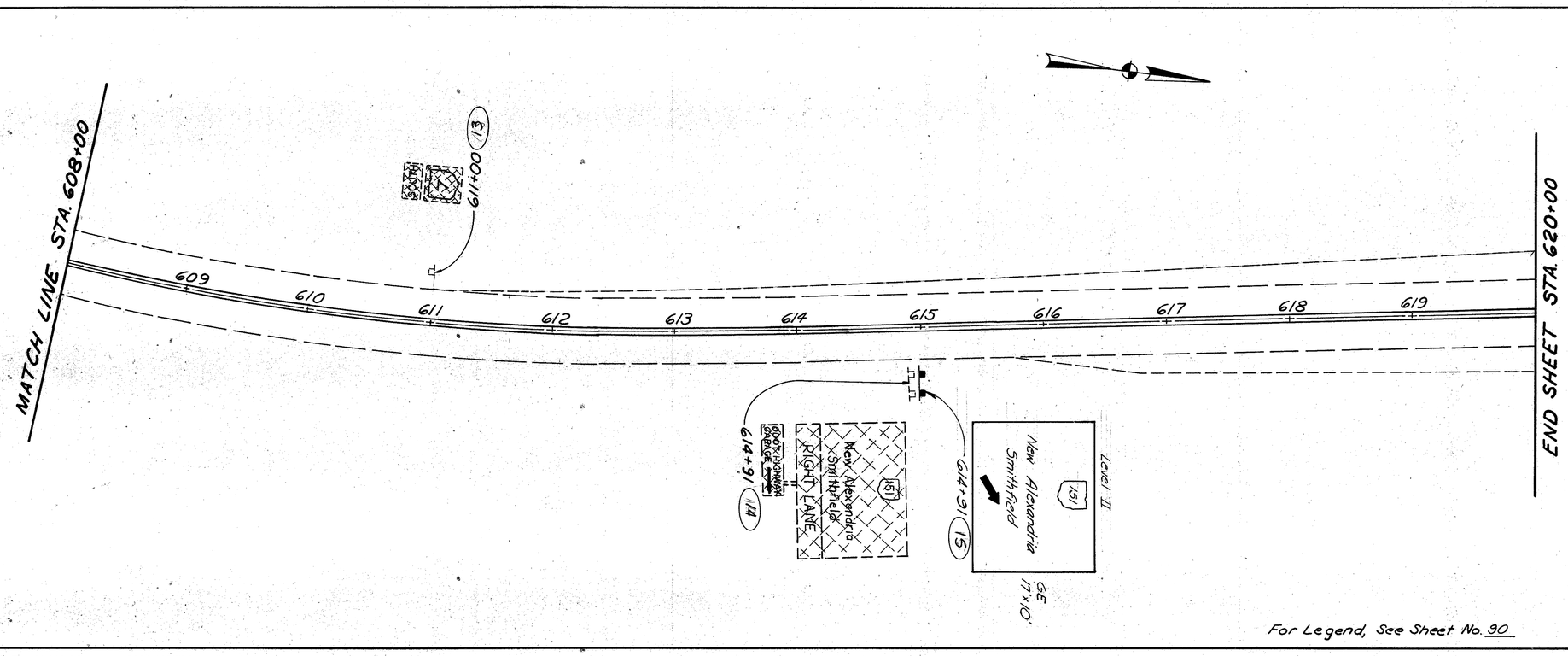

For Legend, See Sheet No. 90

ESTIMATED QUANTITIES — STATE FUNDING

REF. NO.	STATION	SIDE	CODE	SIZE	844- SIGNS Flat Sheet Sq. Ft.	844- SIGNS Extra Sheet Sq. Ft.	844- GRD. MTD SUPPORTS No. 3 Post Driven Lin. Ft.	No. 4 Post Driven Lin. Ft.	W12-3 Lin. Ft.	Concrete For Embedded Foundation Cu. Yd.	Breakaway Beam Connection Each	844- REMOVAL OF Ground Mounted Beam Support Each	Ground Mounted Post Support Each	Ground Mounted Major Sign & Storage Each	Ground Mounted Sign & Storage Each	SEE SHEET NO.
10	596+00	Lt.	R-10-36	36"x48"	12.0											
11	606+00	Lt.	M-38-30	30"x45"	3.1											
			M-2-30-2	30"x30"	6.3		32.1	15.6								
12	607+17	Lt.	Existing										1		2	
13	611+00	Lt.	Existing										1		1	
14	614+91	Rt.	Existing									2				
15	614+91	Rt.	GE	17'x10'		170.0			39.1	3.00	2	2	2	1	3	
TOTALS					21	170	32	16	39	3.00	2					

DWN. FOX 11-27-78

W. E. QUICKSALL & ASSOCIATES INC. Consulting Engineers

SIGNING PLAN STA. 596+00 TO STA 620+00

Calc. By: R. S. Date: 12-19-78
Chkd. By: G.W. Date: 1-11-79

FHWA REGION	STATE	PROJECT	
5	OHIO		

92

JEF-7-11.80

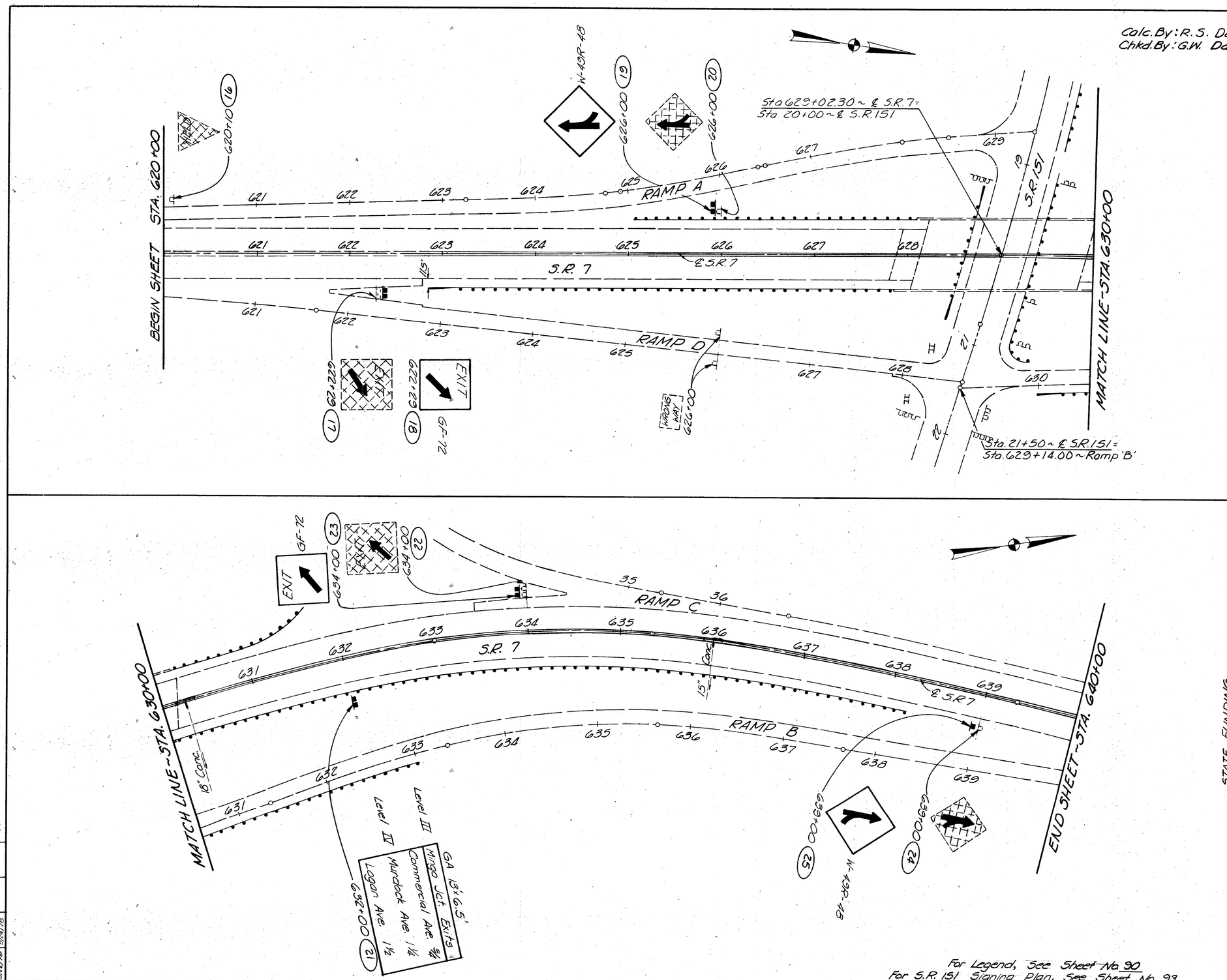

For Legend, See Sheet No. 90
For S.R. 151 Signing Plan, See Sheet No. 93

STATE FUNDING

ESTIMATED QUANTITIES

REF. NO.	STATION	SIDE	CODE	SIZE	844~SIGNS Flat Sheet Sq. Ft.	844~SIGNS Extra Sheet Sq. Ft.	844~GRD. MTD. SUPPORTS No. 9 Post Driven Lin. Ft.	844~GRD. MTD. SUPPORTS 5x7.7 Lin. Ft.	844~GRD. MTD. SUPPORTS W8x17 Lin. Ft.	844~GRD. MTD. SUPPORTS Concrete for Embedded Foundation Cu. Yds.	844~GRD. MTD. SUPPORTS Breakaway Beam Connection Each	844~REMOVAL OF Ground Mounted Post Support Each	844~REMOVAL OF Ground Mounted Sign & Storage Each	SEE SHEET NO.
16	620+10	Lt.	Existing									1	1	
17	622+29	Rt.	Existing									2	1	
18	622+29	Rt.	GF-72	6'x5'		30.0		34.5		0.54	2			
19	626+00	Lt.	Existing	48"x48"								1	1	
20	626+00	Lt.	W-13R-46	48"x48"	16.0									
21	632+00	Rt.	GA	13'x6.5'		84.5								
22	634+00	Lt.	Existing				35.5		50.7	2.70		2	1	
23	634+00	Lt.	GF-72	6'x5'		30.0		34.5		0.54	2			
24	639+00	Rt.	Existing											
25	639+00	Rt.	W-13R-46	48"x48"	16.0		34.6							
TOTALS					32	145	70	69	51	3.28	4	7	5	

STA. 620+00 TO STA. 640+00

Drawn CDD Chk. GM Sheet 32 Date 9/78

W. E. QUICKSALL & ASSOCIATES INC. Consulting Engineers

FHWA REGION	STATE	PROJECT	
5	OHIO		

JEF-7-11.80

93

Calc. By: R.S. Date: 12-20-78
Chkd. By: G.W. Date: 1-11-79

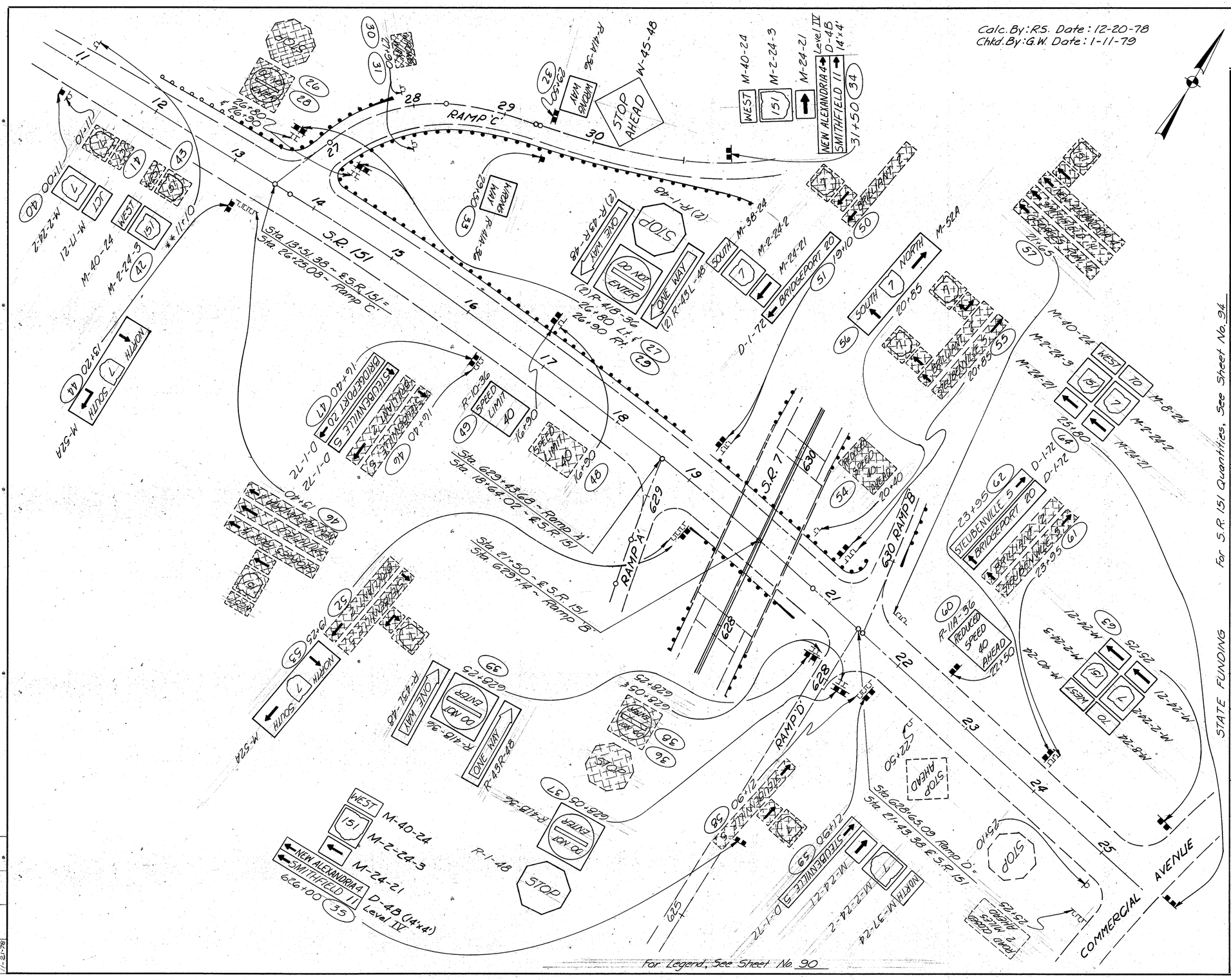

For Legend, See Sheet No. 90

REF. NO.	STATION	SIDE	CODE	SIZE	844-SIGNS Flat Sheet Sq. Ft.	844-SIGNS Extra Sheet	844-GRD. MTD SUPPORTS No. 2 Post Lin. Ft.	No. 4 Post Lin. Ft.	No. 4 Post Driven, Driven as per plan Lin. Ft.	W10x15 Lin. Ft.	Concrete For Embedded Foundation Cu. Yd.	Breakaway Beam Connection Each	844-REMOVAL OF Ground Mounted Post Support Each	Ground Mounted Sign & Storage Each	SEE SHEET NO.
			RAMP 'C'												
26	26+80	Lt.	Existing	48"x48"	16.0										
27	26+80	Lt.	R-1-48	48"x48"	9.0			18.0	18.6						
			R-41A-36	36"x36"	6.0										
			R-43R-48	48"x18"	6.0										
			R-43L-48	48"x18"	6.0										
28	26+90	Rt.	Existing	48"x48"	16.0										
29	26+90	Rt.	R-1-48	48"x48"	9.0			17.7	18.3						
			R-41B-36	36"x36"	9.0										
			R-43R-48	48"x18"	6.0										
			R-43L-48	48"x18"	6.0										
30	27+90	Lt.	Existing												
31	27+90	Rt.	Existing												
32	29+50	Lt.	R-41A-36	36"x24"	6.0			35.0							
			R-45-48	48"x48"	16.0										
33	29+50	Rt.	R-41A-36	36"x24"	6.0										
34	31+50	Lt.	M-40-24	24"x12"	2.0			15.8							
			M-2-24-3	24"x24"	4.0					39.3	2.20	2			
			M-24-21	21"x15"	2.2		8.6								
			D-4B	14"x4"		.56.0									
SUB-TOTAL A					110	56	9	87	37	39	2.20	2	4	6	

STATE FUNDING For S.R. 151 Quantities, See Sheet No. 94

DWN. RDS 1-11-79

W. E. QUICKSALL & ASSOCIATES INC. Consulting Engineers

SIGNING PLAN S.R. 151 STA. 11+00 TO STA 25+80

TRAFFIC CONTROL QUANTITIES

Calc. By: R.S. Date: 12-20-78
Chkd. By: G.W. Date: 1-11-79

FED. RD DIVISION	STATE	PROJECT	
	OHIO		

JEF-7-11.80

STATE FUNDING

GROUND MOUNTED SIGNS

REF NO.	STATION	SIDE	CODE	SIZE	844~SIGNS Flat Sheet Sq. Ft.	844~SIGNS Extru Sheet Sq. Ft.	844~GROUND MOUNTED SUPPORTS No. 2 Post Lin. Ft.	No. 3 Post Driven Lin. Ft.	No. 4 Post Driven Lin. Ft.	No. 4 Post Driven, as per plan Lin. Ft.	5 4 x 7.7 Lin. Ft.	W10 x 11.5 Lin. Ft.	Concrete for Embedded Foundation Cu. Yd.	Breakaway Beam Connection Each	844~REMOVAL OF Ground Mounted Sign and Storage Each	Ground Mounted Post Support Each
	RAMP 'D'															
35	626+00	Rt.	D-4B	14'x4'		56.0	8.6					39.3	2.20	2		
			M-40-24	24"x12"	2.0											
			M-2-24-3	24"x24"	4.0											
			M-24-21	21"x15"	2.2											
36	628+05	Rt.	Existing												2	1
37	628+05	Rt.	R-1-48	48"x48"	16.0				31.8							
			R-41B-36	36"x36"	9.0											
38	628+25	Lt.	Existing												2	1
39	628+25	Lt.	R-41B-36	36"x36"	9.0				16.0	16.3						
			R-43R-48	48"x18"	6.0											
			R-43L-48	48"x18"	6.0											
	S.R. 151															
40	11+00	Rt.	M-17-21	21"x15"	2.2				14.4							
			M-2-24-2	24"x24"	4.0											
41	11+10	Lt.	Existing												2	
42	11+10	Lt.	M-40-24	24"x12"	2.0											
			M-2-24-3	24"x24"	4.0											
43	11+10	Rt.	Existing												2	1
44	13+20	Rt.	M-52A	108"x30"		22.5			27.2							
45	13+40	Rt.	Existing												6	3
46	16+40	Rt.	Existing												1	2
47	16+40	Rt.	D-1-72	72"x12"	6.0				26.6							
			D-1-72	72"x12"	6.0											
48	16+90	Lt.	Existing												1	1
49	16+90	Lt.	R-10-36	36"x48"	12.0				31.6							
50	19+10	Lt.	Existing												3	2
51	19+10	Lt.	M-38-24	24"x12"	2.0				30.3							
			M-2-24-2	24"x24"	4.0											
			M-24-21	21"x15"	2.2											
			D-1-72	72"x12"	6.0											
52	19+25	Rt.	Existing												4	3
53	19+25	Rt.	M-52A	108"x30"		22.5					30.7		0.54	2		
54	20+40	Lt.	Existing												1	1
55	20+85	Lt.	Existing												6	2
56	20+85	Lt.	M-52A	108"x30"		22.5					30.3					
57	21+65	Lt.	Existing												5	2
58	21+90	Rt.	Existing												3	3
59	21+90	Rt.	M-37-24	24"x12"	2.0				33.7							
			M-2-24-2	24"x24"	4.0											
			M-24-21	21"x15"	2.2											
			D-1-72	72"x12"	6.0											
60	22+50	Lt.	R-11A-36	36"x48"	12.0				34.9							
61	23+95	Lt.	Existing												2	2
62	23+95	Lt.	D-1-72	72"x12"	6.0			26.9								
			D-1-72	72"x12"	6.0											
63	25+25	Lt.	M-8-24	24"x12"	2.0				31.3							
			M-40-24	24"x12"	2.0											
			M-2-24-3	24"x24"	4.0											
			M-2-24-2	24"x24"	4.0											
			M-24-21	21"x15"	2.2											
			M-24-21	21"x15"	2.2											
64	25+80	Lt.	M-8-24	24"x12"	2.0				31.3							
			M-40-24	24"x12"	2.0											
			M-2-24-3	24"x24"	4.0											
			M-2-24-2	24"x24"	4.0											
			M-24-21	21"x15"	2.2											
			M-24-21	21"x15"	2.2											
	SUB-TOTAL A (From Sheet No. 93)				110	56	9		87	37		39	2.20	2	6	4
	SUB-TOTAL B (From This Sheet)				176	124	9	27	309	16	61	39	2.74	4	40	24
	GRAND TOTALS				286	180	18	27	396	53	61	78	4.94	6	46	28

S.R. 151 ~ ESTIMATED QUANTITIES

Calc. By: R.S. Date: 12-20-78
Chkd By: G.N. Date: 1-11-79

FHWA REGION	STATE	PROJECT	
5	OHIO		

JEF-7-11.80

95

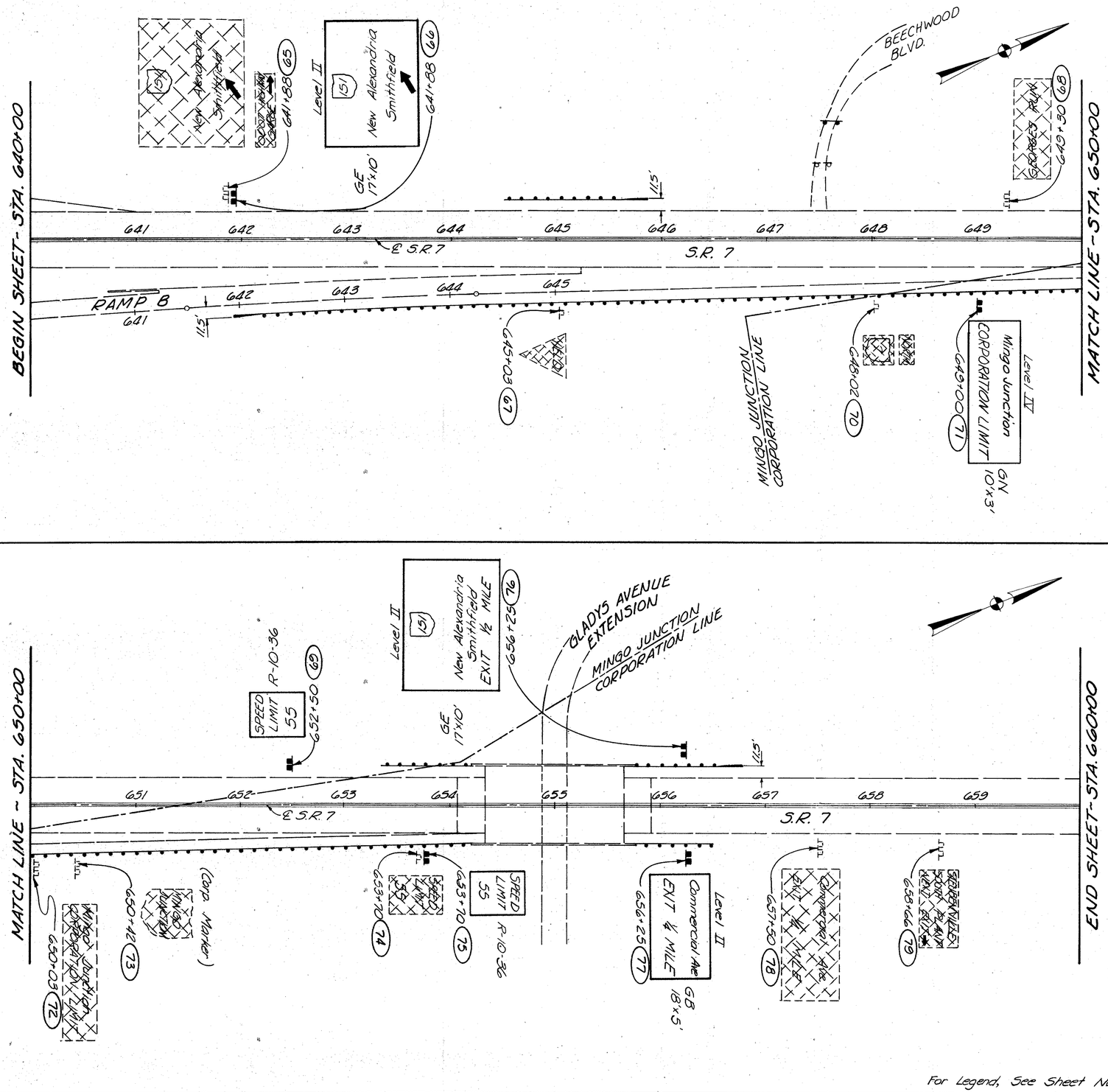

For Legend, See Sheet No. 90

ESTIMATED QUANTITIES

REF. NO.	STATION	SIDE	CODE	SIZE	844 ~ SIGNS Flat Sheet Sq. Ft.	844 ~ SIGNS Extru Sheet Sq. Ft.	844 ~ GRD. MTD. SUPPORTS No. 4 Post Driven Lin. Ft.	844 ~ GRD. MTD. SUPPORTS 54x17.7 W10x21 Lin. Ft.	844 ~ GRD. MTD. SUPPORTS W10x21 W12x31 Lin. Ft.	844 ~ GRD. MTD. SUPPORTS Concrete For Embedded Foundation Cu. Yd.	844 ~ GRD. MTD. SUPPORTS Breakaway Beam Connection Each	844 ~ REMOVAL OF Ground Mounted Beam Support Each	844 ~ REMOVAL OF Ground Mounted Post Support Each	844 ~ REMOVAL OF Ground Mounted Major Sign & Storage Each	844 ~ REMOVAL OF Ground Mounted Sign & Storage Each	SEE SHEET NO.
			STATE FUNDING													
65	641+33	Lt.	Existing									2				
66	641+88	Lt.	GE	17'x10'		170.0										
67	645+03	Rt.	Existing						58.6	3.00	2		1			
68	649+30	Lt.	Existing										2			
69	652+50	Lt.	R-10-36										1			
	TOTALS				12	290	36	33	52	6.4	2	2	8	1	6	
			MINGO JUNCTION FUNDING													
70	648+02	Rt.	Existing			30.0		33.0		0.54			2		2	
71	649+00	Rt.	GN	10'x3'												
72	650+03	Rt.	Existing										2		1	
73	650+42	Rt.	Existing												1	
74	653+70	Rt.	Existing	36"x48"	12.0		35.5		64.1	3.00	2			1		
75	653+70	Rt.	R-10-36	17"x10"		170.0				2.46						
76	656+25	Lt.	GE	18'x5'		90.0			51.6				2			
77	656+25	Rt.	GB													
78	657+50	Rt.	Existing													
79	658+66	Rt.	Existing													
TOTALS					12	290	36	33	52	6.4	2	2	8	1	6	

STA. 640+00 TO STA. 660+00

FHWA REGION	STATE	PROJECT	
5	OHIO		

96

JEF-7-11.80

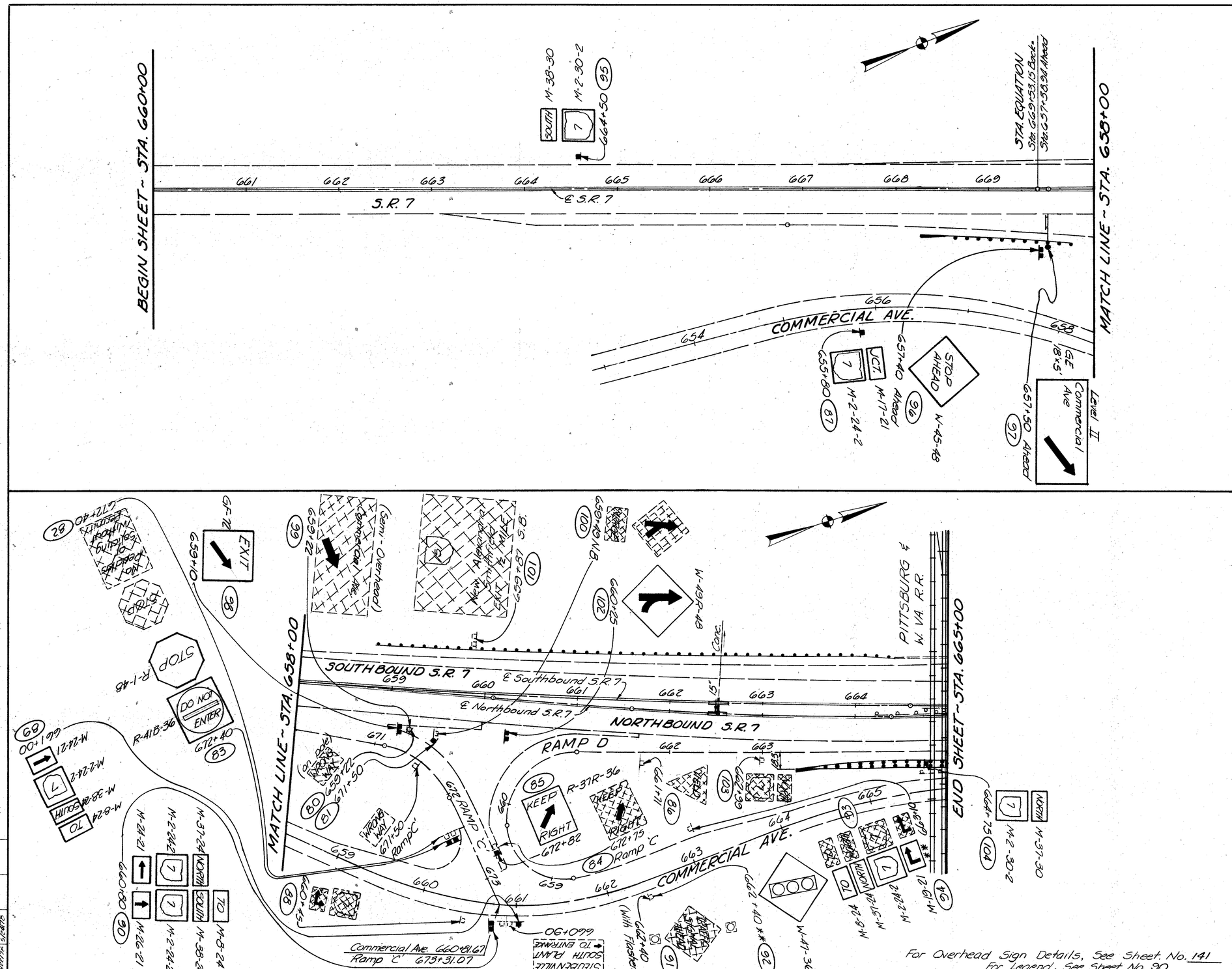

SEE SHEET NO.
FOR QUANTITIES, SEE SHEET NO. 97

ESTIMATED QUANTITIES

REF. NO.	STATION TO STATION	SIDE

TRAFFIC CONTROL QUANTITIES

Calc. By: R.S. Date: 12-20-78
Chkd. By: G.N. Date: 1-11-79

FED. RD DIVISION	STATE	PROJECT	
	OHIO		

97

JEF-7-11.80

MINGO JUNCTION FUNDING

GROUND MOUNTED SIGNS

REF NO.	STATION	SIDE	CODE	SIZE	844 ~ SIGNS Flat Sheet Sq. Ft.	844 ~ SIGNS Extru Sheet Sq. Ft.	844 ~ GROUND MOUNTED SUPPORTS No. 3 Post Driven Lin. Ft.	844 ~ GROUND MOUNTED SUPPORTS No. 4 Post Driven Lin. Ft.	844 ~ GROUND MOUNTED SUPPORTS 54x7.7 Lin. Ft.	844 ~ GROUND MOUNTED SUPPORTS Concrete For Embedded Foundation Cu. Yds.	844 ~ GROUND MOUNTED SUPPORTS Breakaway Beam Connection Each	844 ~ REMOVAL OF Ground Mounted Sign & Storage Each	844 ~ REMOVAL OF Ground Mounted Major Sign & Storage Each	844 ~ REMOVAL OF Ground Mounted Post Support Each	844 ~ REMOVAL OF Ground Mounted Beam Support Each	844 ~ REMOVAL OF Ground Mounted Sign & Re-erection Each
	RAMP 'C'															
80	659+22	Lt.	Existing													1
81	671+50	Lt.	Re-erected				13.5									
82	672+40	Rt.	Existing									2		2		
83	672+40	Rt.	R-41B-36	36" x 36"	9.0			31.9								
			R-1-48	48" x 48"	16.0											
84	672+75	Lt.	Existing									1		1		
85	672+82	Lt.	R-37R-36	36" x 48"	12.0			14.5								
	RAMP 'D'															
86	661+71	Rt.	Existing									1		1		
	COMMERICAL AVE.															
87	655+80	Rt.	M-17-21	21"x15"	2.2		14.5									
			M-2-24-2	24" x 24"	4.0											
88	660+45	Rt.	Existing									2		1		
89	661+00	Rt.	M-8-24	24"x12"	2.0			16.1								
			M-38-24	24"x12"	2.0											
			M-2-24-2	24"x24"	4.0											
			M-24-21	21"x15"	2.2											
90	660+80	Rt.	M-8-24	24"x12"	2.0			32.0								
			M-37-24	24"x12"	2.0											
			M-38-24	24"x12"	2.0											
			M-2-24-2	24"x24"	4.0											
			M-2-24-2	24"x24"	4.0											
			M-24-21	21"x15"	2.2											
			M-26-21	21"x15"	2.2											
91	662+40	Rt.	Existing									1				
92	662+40	Rt.	W-47-36	36"x36"	9.0											
93	663+10	Lt.	Existing									4				
94	663+10	Lt.	M-8-24	24"x12"	2.0											
			M-37-24	24"x12"	2.0											
			M-2-24-2	24"x24"	4.0											
			M-19-21	21"x15"	2.2											
	S.R. 7															
95	664+50 Back	Lt.	M-38-30	30"x15"	3.1			16.7								
			M-2-30-2	30"x30"	6.3											
96	657+40 Ahead	Rt.	W-45-48	48"x48"	16.0			34.6								
97	657+50	Rt.	For Overhead Sign Quantities, See Sheet No. 89													
98	659+10	Rt.	GF-72	6'x5'		30.0			34.5	0.54	2					
99	659+22	Rt.	For Overhead Sign Quantities, See Sheet No. 89													
100	659+49 N.B.	Rt.	Existing									2		1		
101	659+87 S.B.	Lt.	Existing										1		2	
102	660+25 N.B.	Rt.	W-49R-48	48"x48"	16.0			34.6								
103	662+99 N.B.	Rt.	Existing									2		1		
104	664+75 N.B.	Rt.	M-37-30	30"x15"	3.1			15.6								
			M-2-30-2	30"x30"	6.3											
	GRAND TOTALS				142	30	28	196	35	0.54	2	15	1	7	2	1

ESTIMATED QUANTITIES

Calc. By: R.S. Date: 12-20-78
Chkd. By: G.W. Date: 1-11-79

FHWA REGION	STATE	PROJECT	
5	OHIO		

JEF-7-11.80

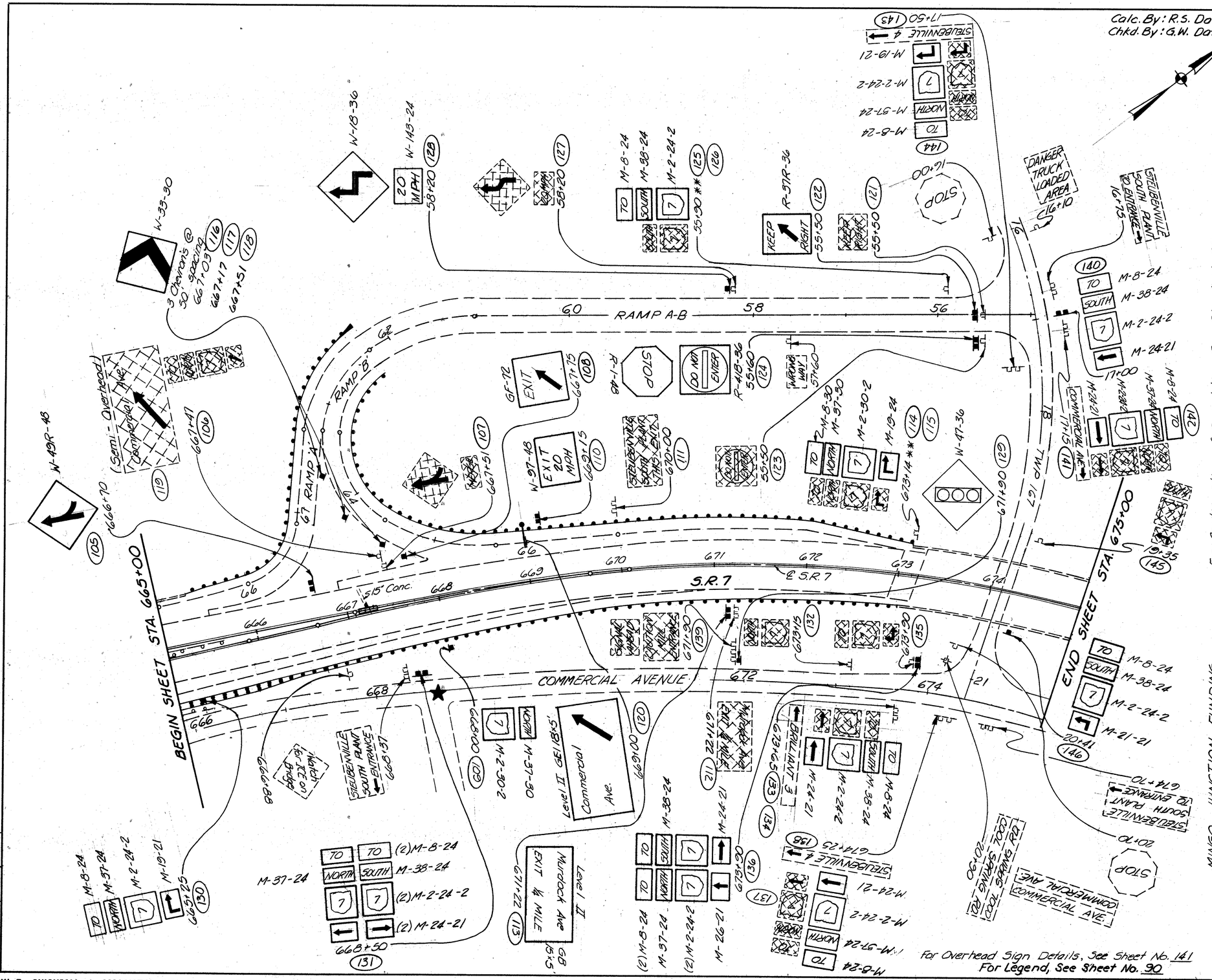

MINGO JUNCTION FUNDING

For Continuation of Quantities, See Sheet No. 39

ESTIMATED QUANTITIES

REF. NO.	STATION	SIDE	CODE	SIZE	844-SIGNS Extra Sheet Sq. Ft.	844-SIGNS Flat Sheet Sq. Ft.	844-GRD. MTD. SUPPORTS No. 3 Post Driven Lin. Ft.	No. 4 Post Driven Lin. Ft.	54x7.7 W8x17 Lin. Ft.	Concrete For Embedded Foundation Cu. Yd.	Breakaway Beam Connection Each	844 - REMOVAL OF Ground Mounted Post Support Each	Ground Mounted Sign & Storage Each	SEE SHEET NO.
	S.R. 7													
105	666+70	Lt.	W-49R-48	48"x48"		16.0								
106	667+41	Lt.	Existing				34.6							
107	667+51	Lt.	Existing											
108	667+75	Lt.	GF-72	6'x5'										
109	668+00	Rt.	M-37-30	30"x15"	30.0	3.1			34.1					
110	669+15	Lt.	W-97-48	30"x30"		3.1								
111	670+00	Lt.	W-97-48	30"x30"		6.3								
112	671+22	Rt.	Existing			20.0			36.7					
113	671+22	Rt.	Existing											
114	673+14	Lt.	W-8-30	30"x15"		3.1								
115	673+14	Lt.	M-37-30	30"x15"	75.0									
			M-2-30-2	30"x30"		6.3								
			M-19-24	24"x18"		3.0								
	RAMP B													
116	667+03	Lt.	W-33-30	30"x36"		7.5			11.7					
117	667+17	Lt.	W-33-30	30"x36"		7.5			11.7					
118	667+51	Lt.	W-33-30	30"x36"		7.5			11.7					
119	666+70	Lt.	W-49R-48	48"x48"		16.0								
120	669+00		For Overhead Sign Quantities, See Sheet No. 89											
			For Overhead Sign Quantities, See Sheet No. 89											
SUB-TOTAL A					105	83	35	50	71	3.28	2	49	5	12

STA. 665+00 TO STA. 675+00

W. E. QUICKSALL & ASSOCIATES INC. Consulting Engineers

TRAFFIC CONTROL QUANTITIES

Calc. By: R.S. Date: 12-20-78
Chkd. By: G.W. Date: 1-11-79

FED. RD. DIVISION	STATE	PROJECT	
	OHIO		

MINGO JUNCTION FUNDING

JEF-7-11.80

GROUND MOUNTED SIGNS

REF NO.	STATION	SIDE	CODE	SIZE	844 - SIGNS Flat Sheet Sq. Ft.	844 - GROUND MOUNTED SUPPORTS No. 2 Post Lin. Ft.	No. 3 Post Driven Lin. Ft.	No. 4 Post Driven Lin. Ft.	844 - REMOVAL OF Ground Mounted Sign & Storage Each	Ground Mounted Post Support Each
	RAMP 'A-B'									
121	55+50	℄	Existing						1	1
122	55+50	℄	R-37R-36	36"x48"	12.0		29.0			
123	55+50	Lt.	Existing						1	1
124	55+60	Lt.	R-1-48	48"x48"	16.0			32.4		
			R-41B-36	36"x36"	9.0					
125	55+90	Rt.	Existing						2	
126	55+90	Rt.	M-8-24	24"x12"	2.0	2.0				
			M-38-24	24"x12"	2.0					
			M-2-24-2	24"x24"	4.0					
127	58+20	Rt.	Existing						2	1
128	58+20	Rt.	W-18-36	36"x36"	9.0			16.0		
			W-143-24	24"x24"	4.0					
	COMMERCIAL	AVENUE								
129	671+90	Lt	W-47-36	36"x36"	9.0			15.4		
130	665+25 S.R.T.	Rt	M-8-24	24"x12"	2.0			16.6		
			M-37-24	24"x12"	2.0					
			M-2-24-2	24"x24"	4.0					
			M-19-21	21"x15"	2.2					
131	668+50	Lt.	M-8-24	24"x12"	2.0			32.6		
			M-8-24	24"x12"	2.0					
			M-37-24	24"x12"	2.0					
			M-38-24	24"x12"	2.0					
			M-2-24-2	24"x24"	4.0					
			M-2-24-2	24"x24"	4.0					
			M-24-21	21"x15"	2.2					
			M-24-21	21"x15"	2.2					
132	673+15	Lt.	Existing						2	1
133	673+65	Rt.	Existing						3	
134	673+65	Rt.	M-8-24	24"x12"	2.0	2.0				
			M-38-24	24"x12"	2.0					
			M-2-24-2	24"x24"	4.0					
			M-24-21	21"x15"	2.2					
135	673+90	Lt.	Existing						3	1
136	673+90	Lt.	M-8-24	24"x12"	2.0			33.1		
			M-8-24	24"x12"	2.0					
			M-37-24	24"x12"	2.0					
			M-38-24	24"x12"	2.0					
			M-2-24-2	24"x24"	4.0					
			M-2-24-2	24"x24"	4.0					
			M-26-21	21"x15"	2.2					
			M-24-21	21"x15"	2.2					
137	674+25	Rt.	Existing						4	
138	674+25	Rt.	M-8-24	24"x12"	2.0					
			M-37-24	24"x12"	2.0					
			M-2-24-2	24"x24"	4.0					
			M-24-21	21"x15"	2.2					
139	671+90	Lt	Existing						2	3
	T.R. 167							17.2		
140	17+00	Lt.	M-8-24	24"x12"	2.0					
			M-38-24	24"x12"	2.0					
			M-2-24-2	24"x24"	4.0					
			M-24-21	21"x15"	2.2					
141	17+15	Lt.	Existing						4	
142	17+15	Lt.	M-8-24	24"x12"	2.0					
			M-37-24	24"x12"	2.0					
			M-2-24-2	24"x24"	4.0					
			M-24-21	21"x15"	2.2					
143	17+50	Rt.	Existing						4	
144	17+50	Rt.	M-8-24	24"x12"	2.0					
			M-37-24	24"x12"	2.0					
			M-2-24-2	24"x24"	4.0					
			M-19-21	21"x15"	2.2					
	SUB-TOTAL B				169	4	29	163	28	8

For Continuation of Quantities, See Sheet No. 100

TRAFFIC CONTROL QUANTITIES

Calc. By: R.S. Date: 12-20-78
Chkd By: G.W. Date: 1-11-79

FED RD DIVISION	STATE	PROJECT	
	OHIO		

100

JEF-7-11.80

MINGO JUNCTION FUNDING

GROUND MOUNTED SIGNS

REF NO.	STATION	SIDE	CODE	SIZE	844~ SIGNS Flat Sheet Sq. Ft.	844~ SIGNS Extru Sheet Sq. Ft.		844~ GROUND MOUNTED SUPPORTS No. 2 Post Lin. Ft.	No. 3 Post Driven Lin. Ft.	No. 4 Post Driven Lin. Ft.		54×7.7 Lin. Ft.	W8×17 Lin. Ft.	Concrete For Embedded Foundation Cu. Yds.	Breakaway Beam Connection Each					844~ REMOVAL OF Ground Mounted Sign & Storage Each	Ground Mounted Post Support Each			
	T.R. 167																							
																				3	1			
145	19+35	Lt.	Existing																					
146	20+41	Lt.	M-8-24	24"×12"	2.0					17.2														
			M-3B-24	24"×12"	2.0																			
			M-2-24-2	24"×24"	4.0																			
			M-21-21	21"×15"	2.2																			
	SUB-TOTAL A		(From Sheet No. 98)		83	105			35	50		71	49	3.28	2					12	5			
	SUB-TOTAL B		(From Sheet No. 99)		169			4	29	163										28	8			
	SUB-TOTAL C				10					17										3	1			
	GRAND TOTALS				262	105		4	64	230		71	49	3.28	2					44	14			

ESTIMATED QUANTITIES

FHWA REGION	STATE	PROJECT	
5	OHIO		

JEF-7-11.80

101

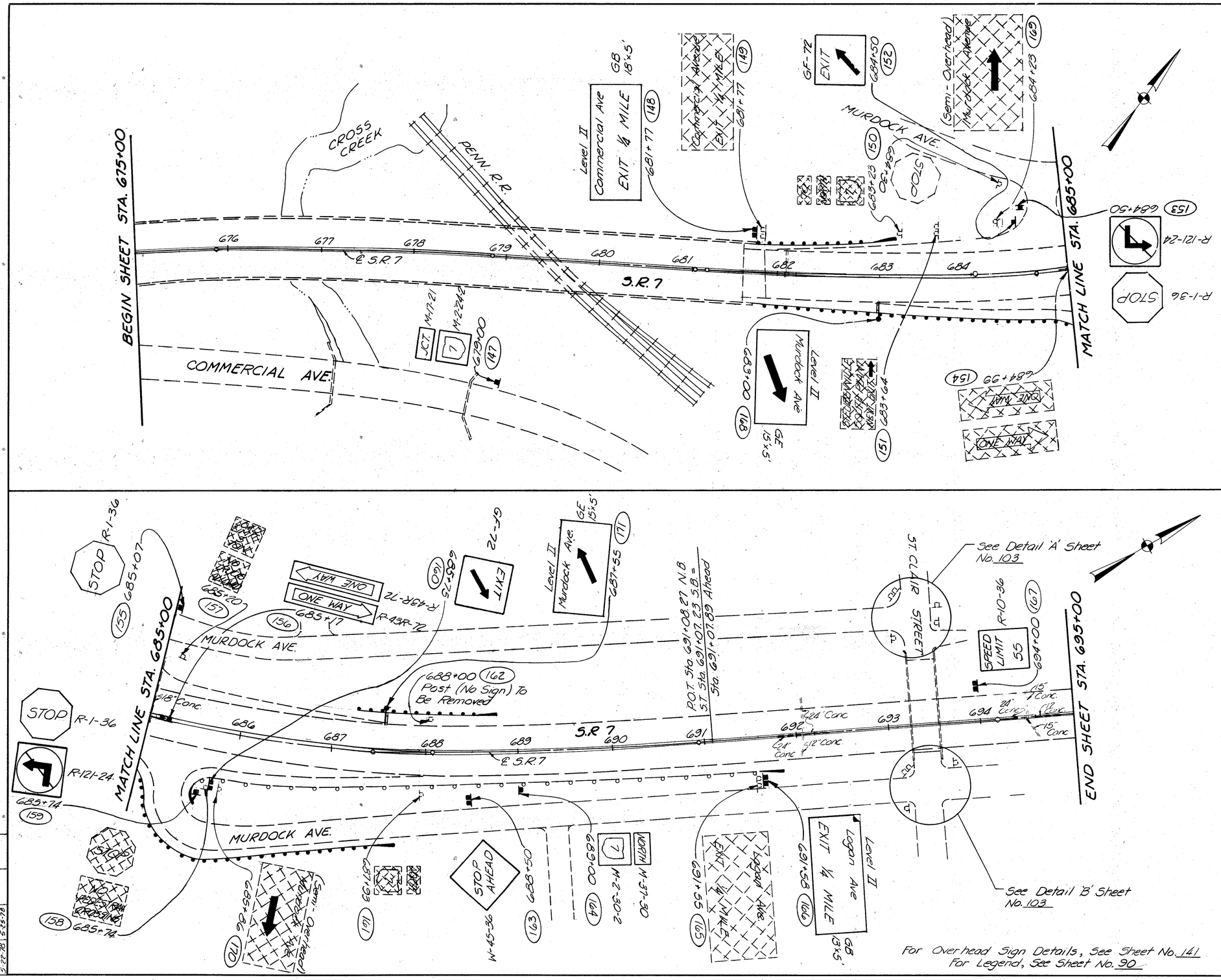

For Overhead Sign Details, See Sheet No. 141
For Legend, See Sheet No. 90

SEE SHEET NO.	

TRAFFIC CONTROL QUANTITIES

MINGO JUNCTION FUNDING

Calc. By: R.S. Date: 12-21-78
Chkd. By: G.W. Date: 1-11-79

FED. RD. DIVISION	STATE	PROJECT	
	OHIO		

JEF-7-11.80

GROUND MOUNTED SIGNS

REF NO.	STATION	SIDE	CODE	SIZE	844 ~ SIGNS: Flat Sheet (Sq. Ft.)	844 ~ SIGNS: Extru Sheet (Sq. Ft.)		844 ~ GROUND MOUNTED SUPPORTS: No. 2 Post (Lin. Ft.)	No 3 Post Driven (Lin. Ft.)	No. 4 Post Driven (Lin. Ft.)	5 4x7.7 (Lin. Ft.)	W10x11.5 (Lin. Ft.)	W10x21 (Lin. Ft.)	Concrete For Embedded Foundation (Cu. Yds.)	Breakaway Beam Connection (Each)	Concrete Barrier Insert, 3½ Inch pipe (Each)			844 ~ REMOVAL OF: Ground Mounted Sign & Storage (Each)	Ground Mounted Major Sign & Storage (Each)	Ground Mounted Post Support (Each)	Ground Mounted Beam Support (Each)		
147	679+00	Rt.	M-2-24-2	24"x 24"	4.0				15.0															
			M-17-21	21"x 15"	2.2																			
148	681+77	Lt.	GB	18'x5'		90.0							50.6	2.46										
149	681+77	Lt.	Existing																	1		2		
150	683+23	Lt.	Existing																3		1			
151	683+64	Lt.	Existing																1		2			
152	684+50	Lt.	GF-72	72"x 60"		30.0					33.6			0.54	2									
153	684+50	Lt.	R-1-36	36"x36"	9.0					14.2														
			R-121-24	24"x 24"	4.0																			
154	684+99	℄	Existing																2		2			
155	685+07	Lt.	R-1-36	36"x36"	9.0					14.3														
156	685+17	℄	R-43,R-72	72"x 24"	12.0			21.0								2								
			R-43,R-72	72"x 24"	12.0																			
157	685+20	Lt.	Existing																2		1			
158	685+74	Rt.	Existing																2		1			
159	685+74	Rt.	R-1-36	36"x 36"	9.0					14.7														
			R-121-24	24"x 24"	4.0																			
160	685+75	Rt.	GF-72	72"x 60"		30.0					35.0			0.54										
161	687+93	Rt.	Existing																2		1			
162	688+00	Lt.	Existing																		1			
163	688+50	Rt.	W-45-36	36"x 36"	9.0				11.7															
164	689+00	Rt.	M-2-30-2	30"x 30"	6.3					15.3														
			M-37-30	30"x 15"	3.1																			
165	691+55	Rt.	Existing																	1		2		
166	691+58	Rt.	GB	13'x5'		65.0						43.6		2.20										
167	694+00	Lt.	R-10-36	36"x 48"	12.0				31.7															
168	683+00	Rt.	For Overhead Sign Quantities, See Sheet No. 89																					
169	683+23	Lt.																						
170	685+86	Rt.																						
171	687+55	Lt.																						
	TOTALS				96	215		21	58	59	69	44	51	5.74	2	2			12	2	9	4		

FHWA REGION	STATE	PROJECT	
5	OHIO		

103

JEF-7-11.80

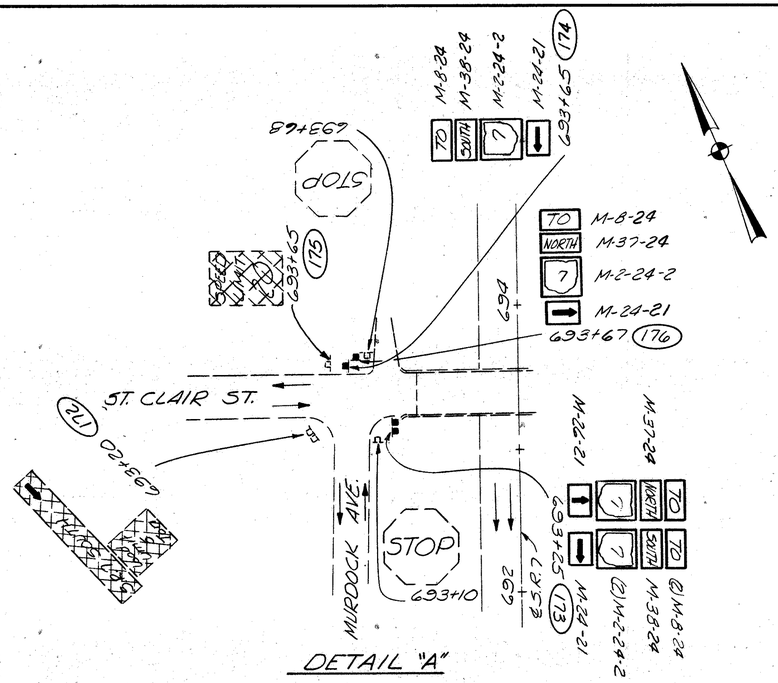

DETAIL "A"

0 50 100
Scale In Feet

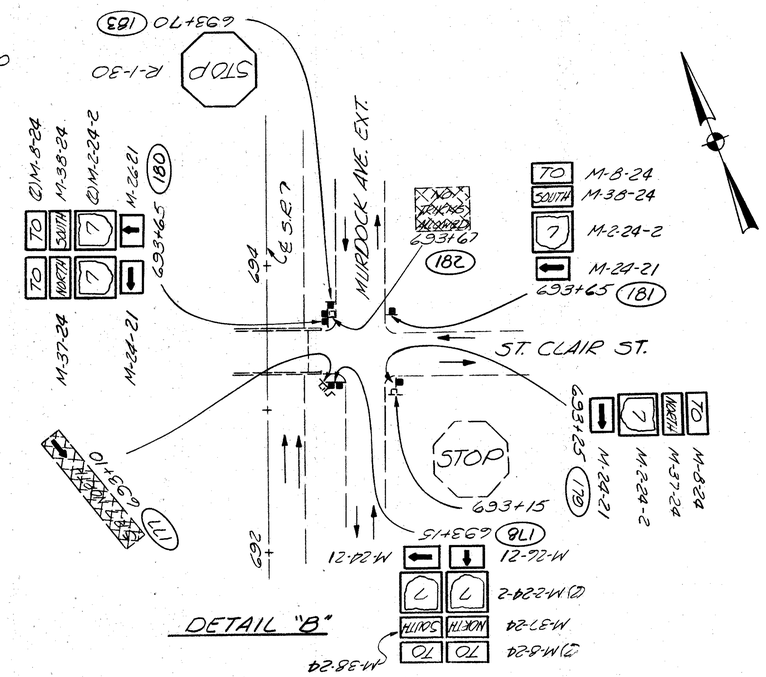

DETAIL "B"

For Quantities, See Sheet No. 104

For Legend, See Sheet No. 90

DRAWN	CK'D.	CORR.	BK. CK'D.

W.E. QUICKSALL & ASSOCIATES INC. Consulting Engineers

SIGNING PLAN ~ DETAIL A & B

TRAFFIC CONTROL QUANTITIES

Calc. By: R.S. Date: 12-21-78
Chkd. By: GW. Date: 1-12-79

FED. RD. DIVISION	STATE	PROJECT	
	OHIO		

JEF-7-11.80

MINGO JUNCTION FUNDING

GROUND MOUNTED SIGNS

REF NO.	STATION	SIDE	CODE	SIZE	844 ~ SIGNS Flat Sheet Sq. Ft.	844 ~ GROUND MOUNTED SUPPORTS No. 3 Post Driven Lin. Ft.	844 ~ GROUND MOUNTED SUPPORTS No. 4 Post Driven Lin. Ft.	844 ~ REMOVAL OF Ground Mounted Sign & Storage Each	844 ~ REMOVAL OF Ground Mounted Post Support Each
	ST. CLAIR	STREET							
172	693+20	Lt.	Existing					2	2
173	693+25	Lt.	M-8-24	24"x12"	2.0		32.7		
			M-37-24	24"x12"	2.0				
			M-2-24-2	24"x24"	4.0				
			M-26-21	21"x15"	2.2				
			M-8-24	24"x12"	2.0				
			M-38-24	24"x12"	2.0				
			M-2-24-2	24"x24"	4.0				
			M-24-21	21"x15"	2.2				
174	693+65	Lt.	M-8-24	24"x12"	2.0		16.1		
			M-38-24	24"x12"	2.0				
			M-2-24-2	24"x24"	4.0				
			M-24-21	21"x15"	2.2				
175	693+65	Lt.	Existing					1	1
176	693+67	Lt.	M-8-24	24"x12"	2.0		16.1		
			M-37-24	24"x12"	2.0				
			M-2-24-2	24"x24"	4.0				
			M-24-21	21"x15"	2.2				
177	693+10	Rt.	Existing					1	2
178	693+15	Rt.	M-8-24	24"x12"	2.0		32.7		
			M-37-24	24"x12"	2.0				
			M-2-24-2	24"x24"	4.0				
			M-26-21	21"x15"	2.2				
			M-8-24	24"x12"	2.0				
			M-38-24	24"x12"	2.0				
			M-2-24-2	24"x24"	4.0				
			M-24-21	21"x15"	2.2				
179	693+25	Rt.	M-8-24	24"x12"	2.0		16.1		
			M-37-24	24"x12"	2.0				
			M-2-24-2	24"x24"	4.0				
			M-24-21	21"x15"	2.2				
180	693+65	Rt.	M-8-24	24"x12"	2.0		32.7		
			M-37-24	24"x12"	2.0				
			M-2-24-2	24"x24"	4.0				
			M-24-21	21"x15"	2.2				
			M-8-24	24"x12"	2.0				
			M-38-24	24"x12"	2.0				
			M-2-24-2	24"x24"	4.0				
			M-26-21	21"x15"	2.2				
181	693+65	Rt.	M-8-24	24"x12"	2.0		16.1		
			M-38-24	24"x12"	2.0				
			M-2-24-2	24"x24"	4.0				
			M-24-21	21"x15"	2.2				
182	693+67	Rt.	Existing					1	1
183	693+70	Rt.	R-1-30	30"x30"	6.3	14.1			
	TOTALS				108	14	163	5	6

FHWA REGION	STATE	PROJECT	
5	OHIO		

JEF-7-11.80

105

Calc. By: R.S. Date: 12-21-78
Chkd. By: G.W. Date: 1-12-79

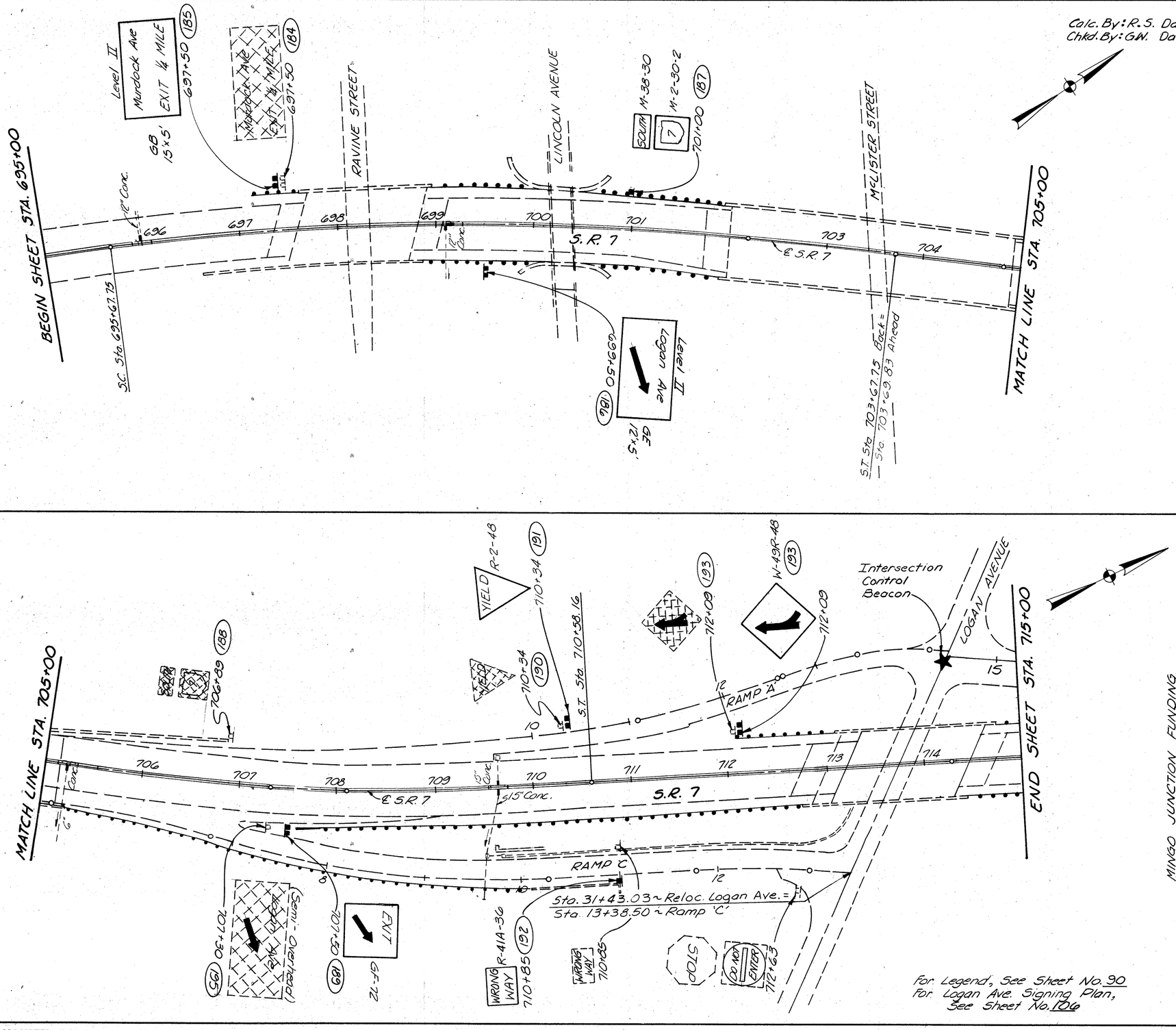

MINGO JUNCTION FUNDING

ESTIMATED QUANTITIES

REF. NO.	STATION	SIDE	CODE	SIZE	844~SIGNS Flat Sheet	844~SIGNS Extru Sheet	844~GRD. MTD. SUPPORTS No. 3 Post Driven	No. 4 Post Driven	54×7.7	W10×15	Concrete For Embedded Foundation	Breakaway Beam Connection	844~REMOVAL OF Ground Mounted Beam Support	Ground Mounted Post Support	Ground Mounted Major Sign & Storage	Ground Mounted Sign & Storage	SEE SHEET NO.
					Sq. Ft.	Sq. Ft.	Lin. Ft.	Lin. Ft.	Lin. Ft.	Lin. Ft.	Cu. Yd.	Each	Each	Each	Each	Each	
184	697+50	Lt.	Existing										2				
185	697+50	Lt.	GB	15'x5'		75.0				45.9	2.20						
186	699+50	Rt.	GF	12'x5'		60.0				41.4	2.20						
187	701+00	Lt.	M-38-30	30"x15"	3.1												
			M-2-30-2	30"x30"	6.3			15.3									
188	706+89	Lt.	Existing														
189	707+50	Rt.	GF-12	12"x60"		30.0			36.0		0.54	2					
190	710+34	Lt.	Existing														
191	710+34	Lt.	R-2-48	48"x48"x48"	6.9			28.8									
192	710+85	Rt.	R-41A-36	36"x24"	6.0			13.8									
193	712+09	Lt.	Existing														
194	712+09	Lt.	W-49R-48	48"x48"	16.0				35.8								
195	707+30	Rt.	For Overhead Sign Quantities, See Sheet No. 89														
TOTALS					38	165	43	51	36	87	4.94	2	2	3	1	4	

Dwn. L.D.B. 5-22-78 Chkd. G.W. 5-25-78

W. E. QUICKSALL & ASSOCIATES INC. Consulting Engineers

STA. 695+00 TO STA. 715+00

FHWA REGION	STATE	PROJECT	
5	OHIO		

106

JEF-7-11.80

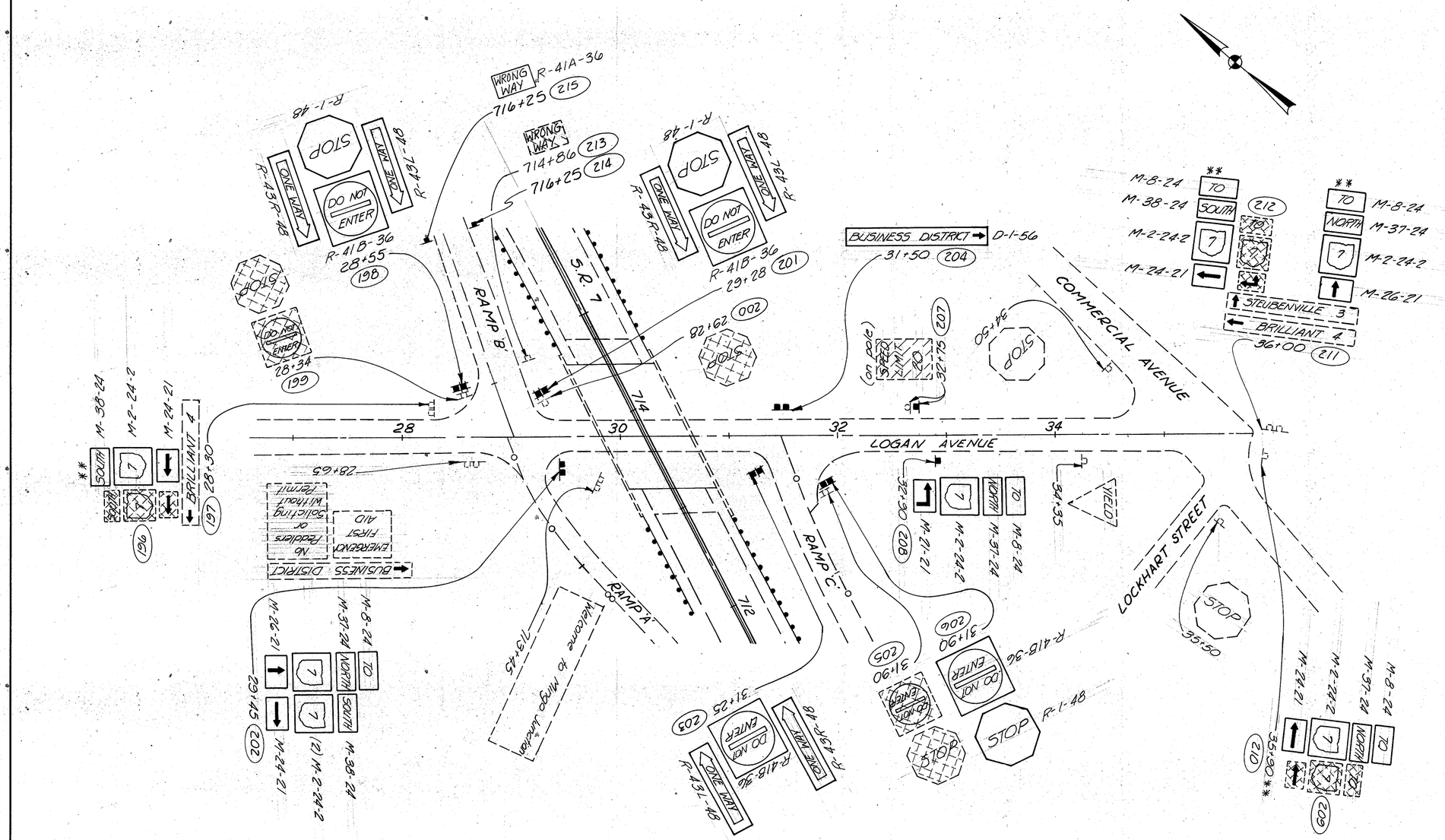

For Legend, See Sheet No. 90

ESTIMATED QUANTITIES			
REF. NO.	STATION TO STATION	SIDE	SEE SHEET NO.
TOTALS			

FOR QUANTITIES, SEE SHEET NO. 107

DWN FDH 11-20-78

W. E. QUICKSALL & ASSOCIATES INC. Consulting Engineers

SIGNING PLAN LOGAN AVE. STA. 28+30 TO STA. 36+15

TRAFFIC CONTROL QUANTITIES

MINGO JUNCTION FUNDING

Calc. By: GN. Date: 12-21-78
Chkd. By: AEH Date: 1-12-79

FED. RD. DIVISION	STATE	PROJECT	
	OHIO		

JEF-7-11.80

GROUND MOUNTED SIGNS

REF NO.	STATION	SIDE	CODE	SIZE	844~ SIGNS Flat Sheet Sq. Ft.	844~ GROUND MOUNTED SUPPORTS No. 2 Post Lin. Ft.	No. 2 Post Driven Lin. Ft.	No. 3 Post Driven Lin. Ft.	No. 4 Post Driven Lin. Ft.	No. 4 Post Driven As Per Plan Lin. Ft.	844~ REMOVAL OF Ground Mounted Sign & Storage Each	Ground Mounted Post Support Each	Ground Mounted Sign & Re-erection Each
	LOGAN AVENUE												
196	28+30	Lt.	Existing								3		
197	28+30	Lt.	M-38-24	24"x12"	2.0								
			M-2-24-2	24"x24"	4.0								
			M-24-21	21"x15"	2.2								
198	28+55	Lt.	R-1-48	48"x48"	16.0				15.5	16.5			
			R-41B-36	36"x36"	9.0								
			R-43R-48	48"x18"	6.0								
			R-43L-48	48"x18"	6.0								
199	28+34	Lt.	Existing								2	1	
200	29+28	Lt.	Existing								1	1	
201	29+28	Lt.	R-1-48	48"x48"	16.0				15.5	16.5			
			R-41B-36	36"x36"	9.0								
			R-43R-48	48"x18"	6.0								
			R-43L-48	48"x18"	6.0								
202	29+45	Rt.	M-8-24	24"x12"	2.0				32.3				
			M-37-24	24"x12"	2.0								
			M-2-24-2	24"x24"	4.0								
			M-26-21	21"x15"	2.2								
			M-38-24	24"x12"	2.0								
			M-2-24-2	24"x24"	4.0								
			M-24-21	21"x15"	2.2								
203	31+25	Rt.	R-41B-36	36"x36"	9.0				14.5	15.5			
			R-43R-48	48"x18"	6.0								
			R-43L-48	48"x18"	6.0								
204	31+50	Lt.	O-1-56	56"x8"	3.1		23.2						
205	31+90	Rt.	Existing								2	1	
206	31+90	Rt.	R-1-48	48"x48"	16.0				30.5				
			R-41B-36	36"x36"	9.0								
207	32+75	Rt.	Existing					13.6					1
208	32+90	Rt.	M-8-24	24"x12"	2.0				16.6				
			M-37-24	24"x12"	2.0								
			M-2-24-2	24"x24"	4.0								
			M-21-21	21"x15"	2.2								
209	35+90	Rt.	Existing								3		
210	35+90	Rt.	M-8-24	24"x12"	2.0	3.0							
			M-37-24	24"x12"	2.0								
			M-2-24-2	24"x24"	4.0								
			M-24-21	21"x15"	2.2								
211	36+00	Lt.	M-8-24	24"x12"	2.0	15.0							
			M-38-24	24"x12"	2.0								
			M-2-24-2	24"x24"	4.0								
			M-24-21	21"x15"	2.2								
			M-8-24	24"x12"	2.0								
			M-37-24	24"x12"	2.0								
			M-2-24-2	24"x24"	4.0								
			M-26-21	21"x15"	2.2								
212	36+00	Lt.	Existing								3		
213	714+86	Lt.	Existing									1	1
214	716+25	Lt.	Re-erection					13.0					
215	716+25	Lt.	R-41A-36	36"x24"	6.0			13.5					
	TOTALS				197	18	23	40	125	49	14	4	2

Calc. By: L.D.B. Date: 12-19-78
Chkd. By: G.W. Date: 1-12-79

FHWA REGION	STATE	PROJECT	
5	OHIO		

JEF-7-11.80

108

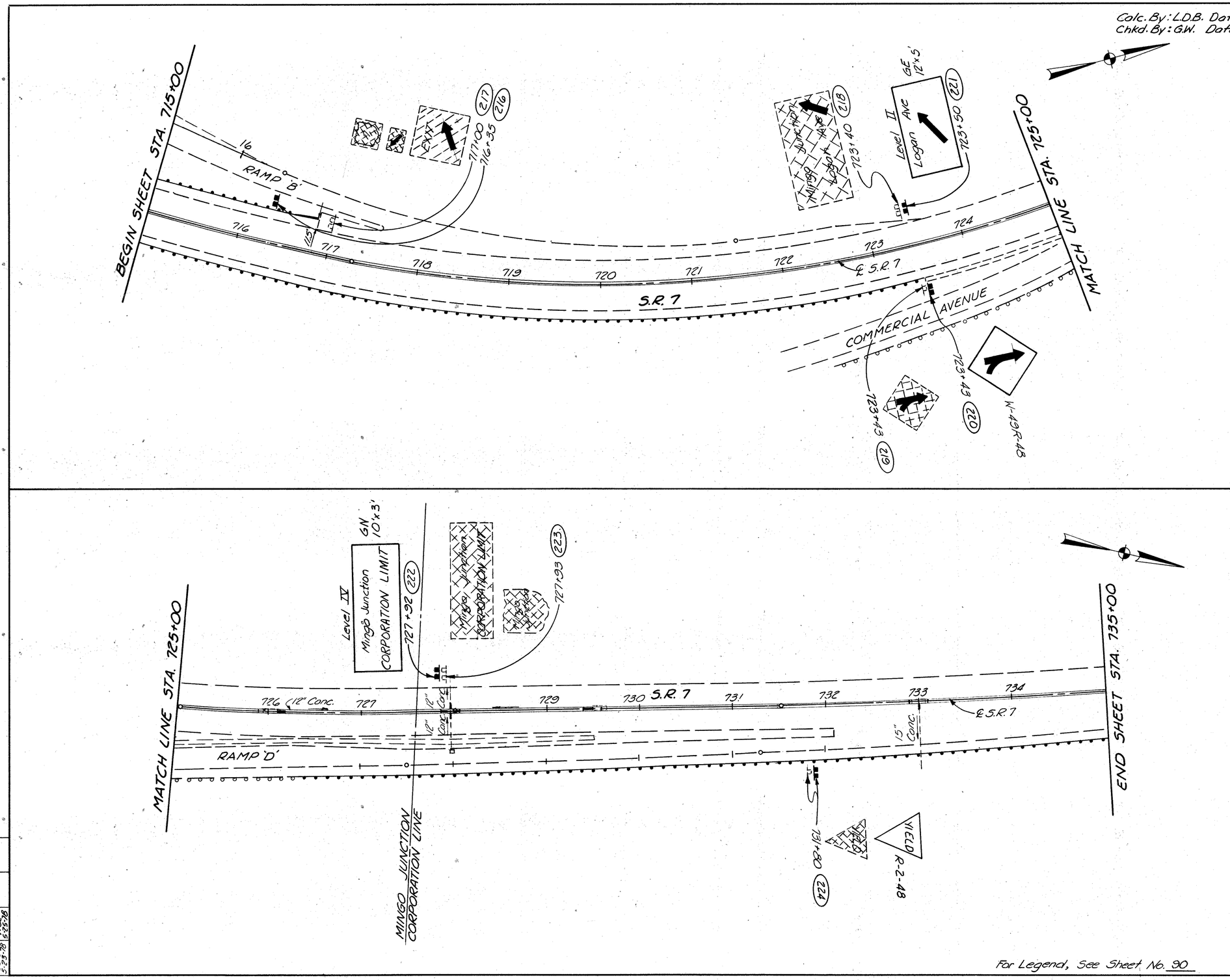

For Legend, See Sheet No. 90

| ESTIMATED QUANTITIES | | |

Calc. By: L.D.B. Date: 12-19-78
Chkd. By: G.W. Date: 1-12-79

FHWA REGION	STATE	PROJECT	
5	OHIO		

JEF-7-11.80

109

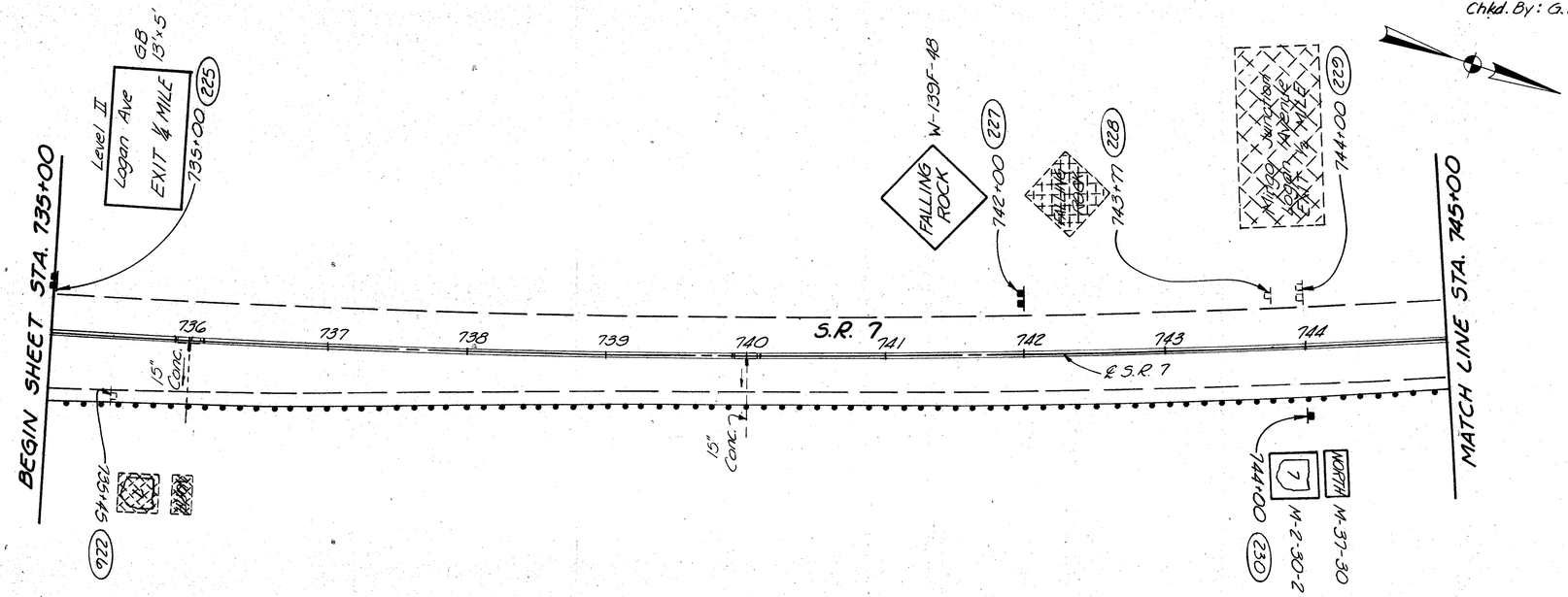

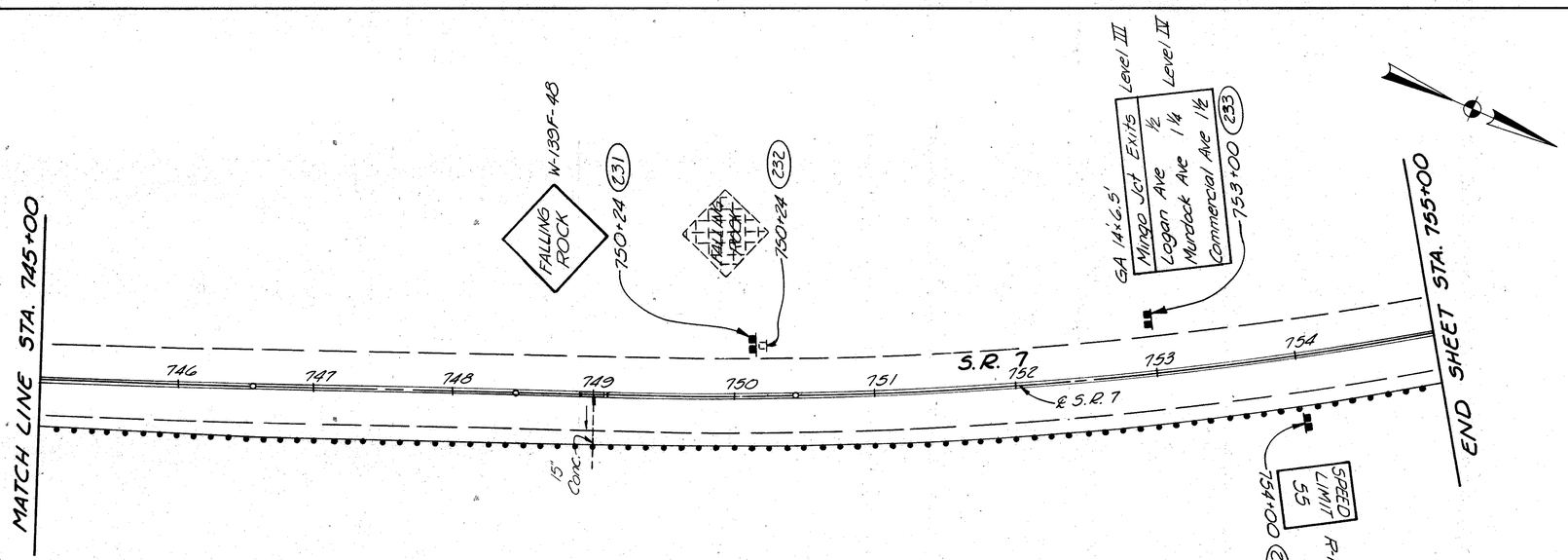

For Legend, See Sheet No. 90

ESTIMATED QUANTITIES — STATE FUNDING

REF. NO.	STATION	SIDE	CODE	SIZE	844-SIGNS Sq. Ft. Flat Sheet	844-SIGNS Sq. Ft. Extru Sheet	844-GRD. MTD. SUPPORTS No. 4 Post Driven Lin. Ft.	844-GRD. MTD. SUPPORTS W10x11.5 Lin. Ft.	844-GRD. MTD. SUPPORTS Concrete for Embedded Foundation Cu. Yd.	844-GRD. MTD. SUPPORTS Breakaway Beam Connection Each	844-REMOVAL OF Ground Mounted Beam Support Each	844-REMOVAL OF Ground Mounted Post Support Each	844-REMOVAL OF Ground Mounted Major Sign & Storage Each	844-REMOVAL OF Ground Mounted Sign & Storage Each	SEE SHEET NO.
225	735+00	Lt.	GB	13'x5'		65.0									
226	735+45	Rt.	Existing												
227	742+00	Lt.	W-139F-48	48"x48"	16.0		34.6								
228	743+77	Lt.	Existing												
229	744+00	Lt.	Existing												
230	744+00	Rt.	M-37-30	30"x15"	3.1										
			M-2-30-2	30"x30"	6.3										
231	750+24	Lt.	W-139F-48	48"x48"	16.0		34.6								
232	750+24	Lt.	Existing												
233	753+00	Lt.	GA	14'x6.5		91.0		40.9	2.20	2					
234	754+00	Rt.	R-10-36	36"x48"	12.0		35.6								
TOTALS					53	156	121	79	4.40	4	2	3	1	4	

Dwn. LDB 5-25-78 Chkd. WCC 5-25-78

W. E. QUICKSALL & ASSOCIATES INC. Consulting Engineers

STA. 735+00 TO STA. 755+00

Calc. By: L.D.B. Date: 12-19-78
Chkd By: G.W. Date: 1-12-79

FHWA REGION	STATE	PROJECT	
5	OHIO		

110

JEF-7-11.80

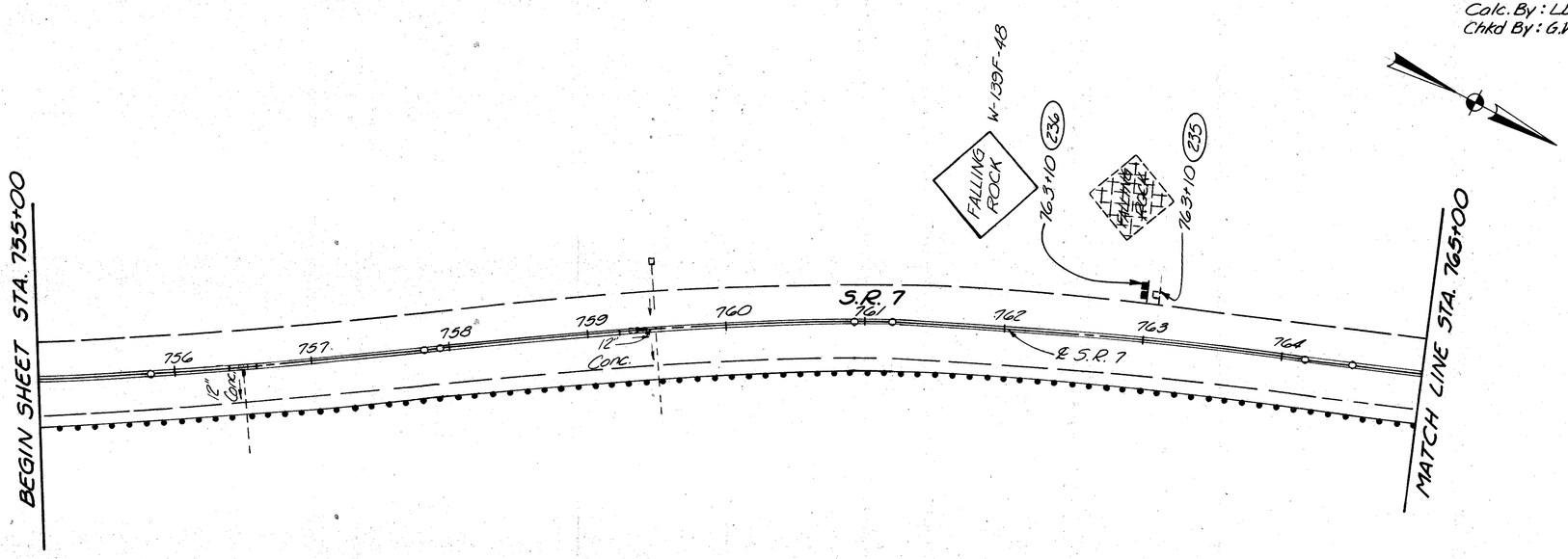

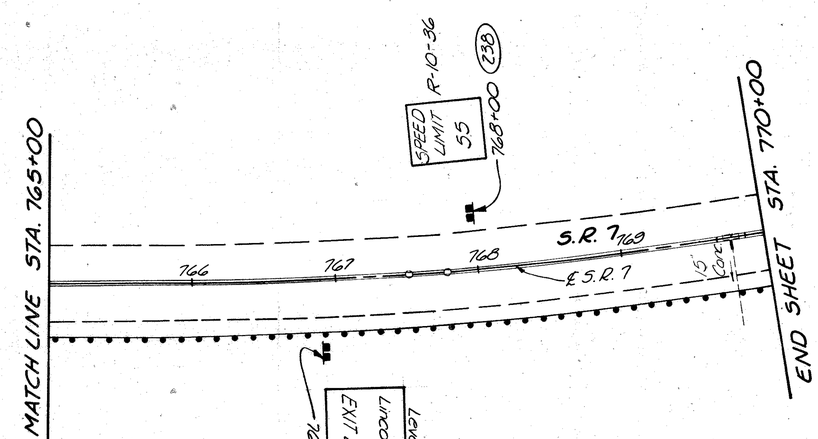

For Legend, See Sheet No. 90

STATE FUNDING

ESTIMATED QUANTITIES

REF. NO.	STATION	SIDE	CODE	SIZE	844-SIGNS Flat Sheet Sq. Ft.	844-SIGNS Extru Sheet Sq. Ft.	844-GRD. MTD SUPPORTS No. 4 Post Driven Lin. Ft.	844-GRD. MTD SUPPORTS W8x17 Lin. Ft.	844-GRD. MTD SUPPORTS Concrete For Embedded Foundation Cu. Yd.	844 ~ REMOVAL OF Ground Mounted Post Support Each	844 ~ REMOVAL OF Ground Mounted Sign & Storage Each	SEE SHEET NO.
235	763+10	Lt.	Existing								1	
236	763+10	Lt.	W-139-48	48"x48"	16.0		34.6					
237	766+89	Rt.	GB	15'x5'		75.0		48.5	2.20			
238	768+00	Lt.	R-10-36	36"x48"	12.0		31.7					
TOTALS					28	75	66	49	2.20		1	1

W. E. QUICKSALL & ASSOCIATES INC. Consulting Engineers

STA. 755+00 TO STA. 770+00

Calc. By: L.D.B. Date: 12-20-78
Chkd By: G.W. Date: 1-12-79

FHWA REGION	STATE	PROJECT	
5	OHIO		

JEF-7-11.80

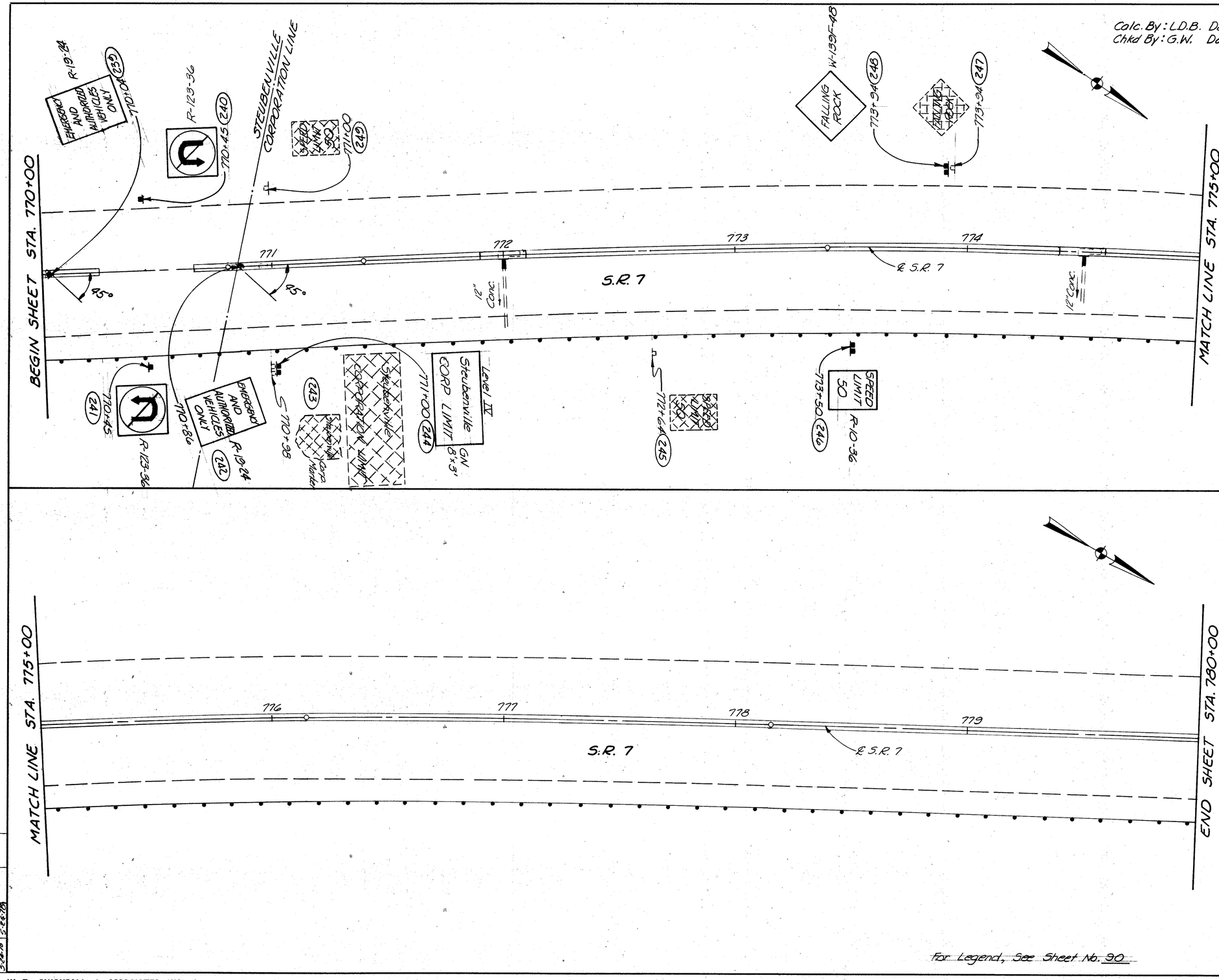

For Legend, See Sheet No. 90

ESTIMATED QUANTITIES						844-SIGNS		844-GRD MTD SUPPORTS								SEE SHEET NO.
REF. NO.	STATION	SIDE	CODE	SIZE	Flat Sheet	Extra Sheet	No. 2 Post	No. 4 Post Driven	No. 4 Post W6x8.5	Concrete For Embedded Foundation	Concrete Barrier Insert, 36 inch pipe	Ground Mounted Beam Support	Ground Mounted Post Support	Ground Mounted Major Sign & Storage	Ground Mounted Sign & Storage	
					Sq. Ft.	Sq. Ft.	Lin. Ft.	Lin. Ft.	Lin. Ft.	Cu. Yd.	Each	Each	Each	Each	Each	
	STATE RUNDING															
239	770+04	℄	R-19-24	24"x30"	5.0											
240	770+45	Lt.	R-123-36	36"x36"	9.0		8.5	14.7								
241	770+45	Rt.	R-123-36	36"x36"	9.0			14.7								
	TOTALS				23		8.5	29								
	STEUBENVILLE RUNDING															
242	770+86	℄	R-19-24	24"x30"	5.0		8.5					2	1	1	1	
243	770+98	Rt.	Existing								1					
244	771+00	Rt.	GN	8'x3'		24.0			40.2	0.66						
245	771+64	Rt.	Existing													
246	773+50	Rt.	R-10-36	36"x48"	12.0			35.6								
247	773+34	Lt.	Existing													
248	773+34	Lt.	W-139F-48	48"x48"	16.0			33.2								
249	771+00	Lt.	Existing													
TOTALS					33	24	9	80	40	0.66	1	2	3	1	4	

W. E. QUICKSALL & ASSOCIATES INC. Consulting Engineers

STA. 770+00 TO STA. 780+00

Calc. By: L.D.B. Date: 12-20-78
Chkd. By: G.W. Date: 1-12-79

FHWA REGION	STATE	PROJECT	
5	OHIO		

112

JEF-7-11.80

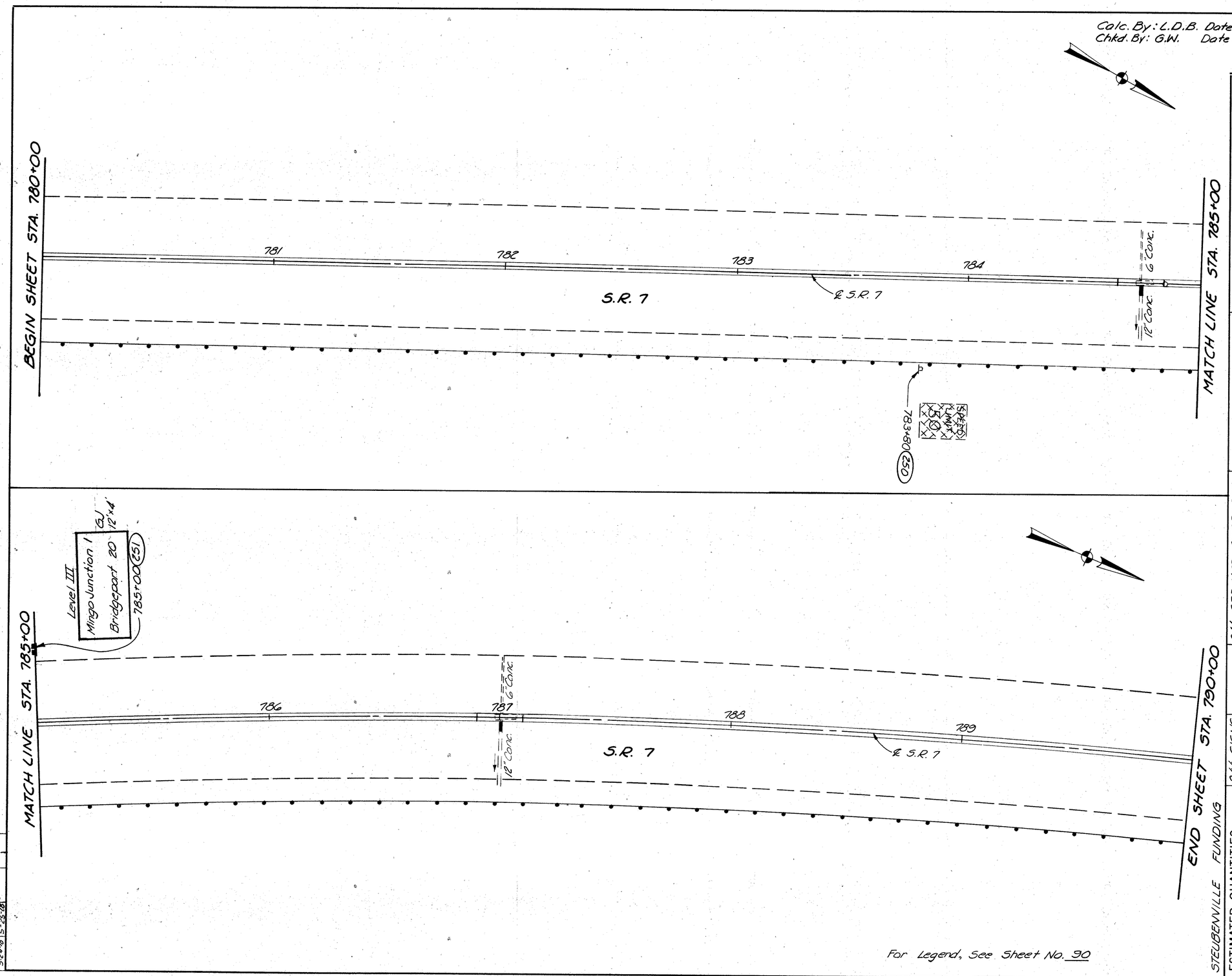

For Legend, See Sheet No. 90

STEUBENVILLE FUNDING

ESTIMATED QUANTITIES

REF. NO.	STATION	SIDE	CODE	SIDE	844-SIGNS Extru Sheet	844-GRD. MTD. SUPPORTS W6x85 Breakaway Beam Connection	Concrete For Embedded Foundation	844-REMOVAL OF Ground Mounted Post Support	Ground Mounted Sign & Storage	SEE SHEET NO.
					Sq. Ft.	Each	Cu. Yd.	Each	Each	
250	783+80	Rt.	Existing			2		1	1	
251	785+00	Lt.	GJ	12"x4'	48.0		0.66			
TOTALS					48	2	0.66	1	1	

Own. 409 5-22-78
Chkd. WCE 5-23-78

W. E. QUICKSALL & ASSOCIATES INC. Consulting Engineers

STA. 780+00 TO STA. 790+00

Calc. By: L.D.B. Date: 12-20-78
Chkd. By: G.W. Date: 1-12-79

FHWA REGION	STATE	PROJECT	
5	OHIO		

JEF-7-11.80

113

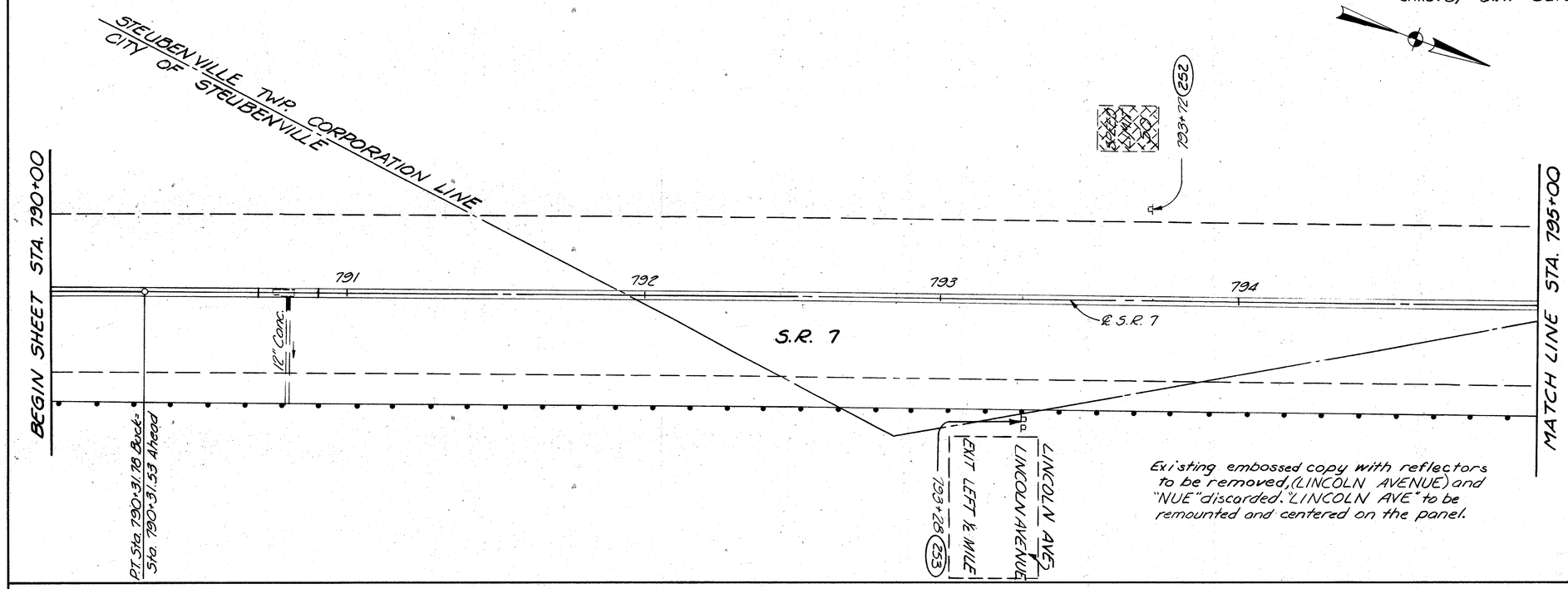

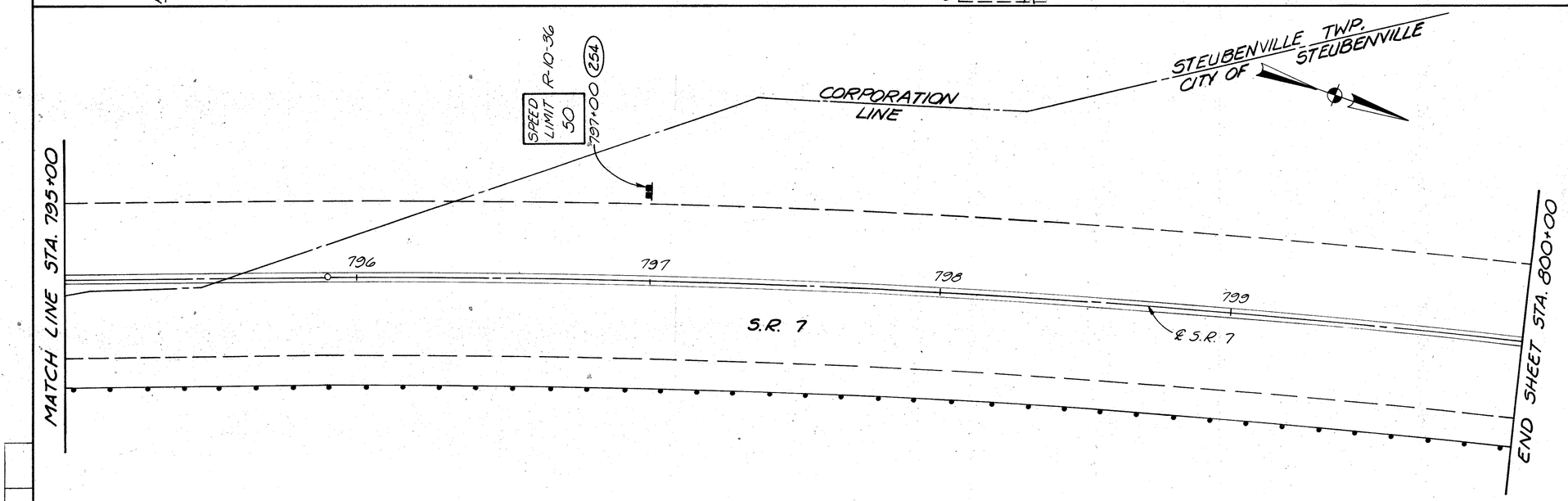

For Legend, See Sheet No. 90

ESTIMATED QUANTITIES

REF. NO.	STATION	SIDE	CODE	SIZE	844-SIGNS Revised Demountable Copy Units on Existing Panels Each	844-SIGNS Flat Sheet Sq. Ft.	844-GRD. MTD. SUPPORTS No. 3 Post Driven Lin. Ft.	844-REMOVAL OF Ground Mounted Post Support Each	844-REMOVAL OF Ground Mounted Sign & Storage Each	SEE SHEET NO.
	STATE FUNDING									
252	793+72	Lt.	Existing					1	1	
	TOTALS							1	1	
	STEUBENVILLE FUNDING									
253	793+28	Rt.	Existing		13					
254	797+00	Lt.	R-10-36	36"x48"		12.0	31.5			
TOTALS					13	12	32			

Dwn. LDB Chkd. GW
Scale 1"=5' Date 1-12-79

Calc. By: L.D.B. Date: 12-21-79
Chkd By: G.W. Date: 1-12-79

FHWA REGION	STATE	PROJECT	
5	OHIO		

114

JEF-7-11.80

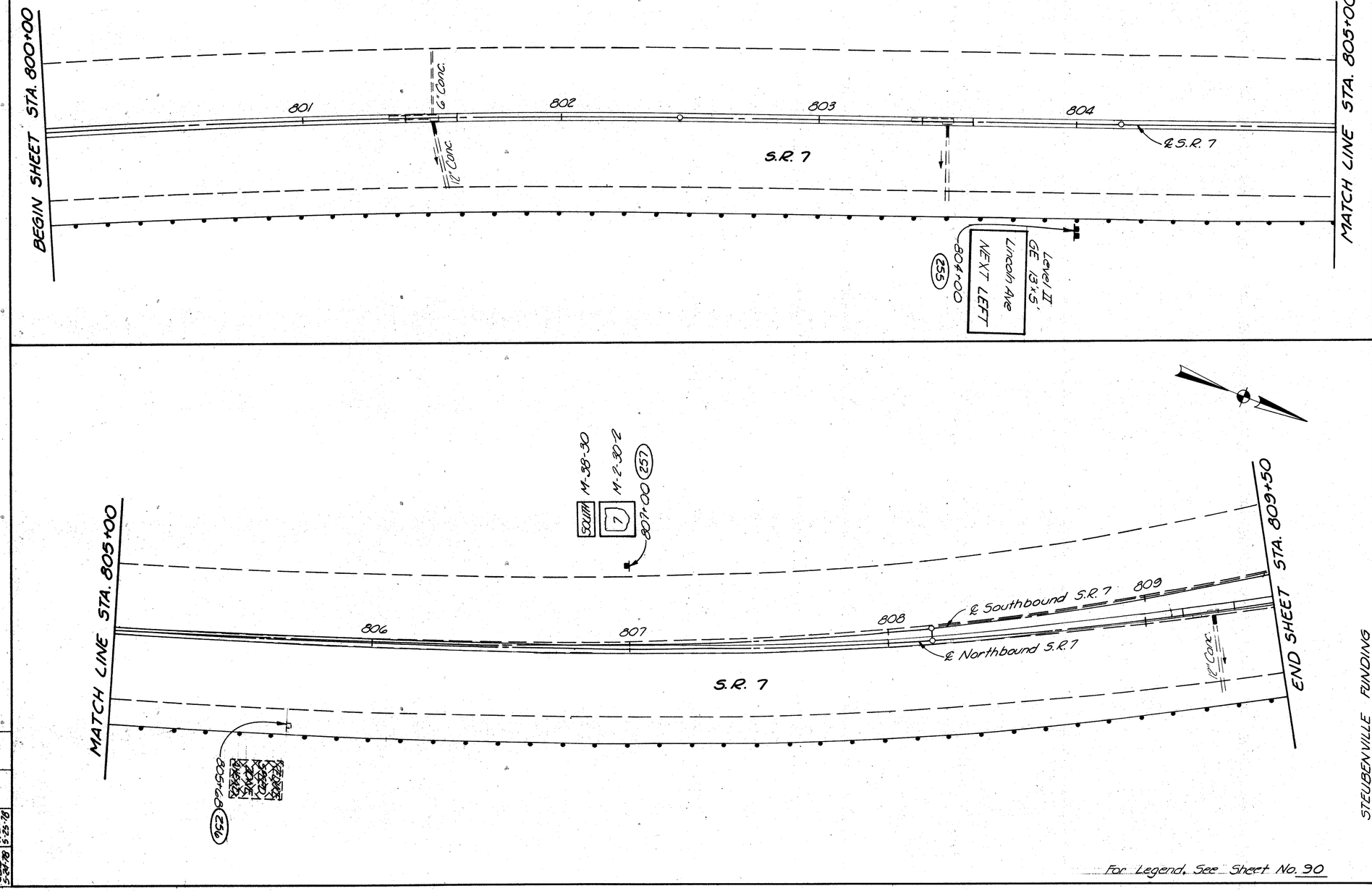

For Legend, See Sheet No. 90

STEUBENVILLE FUNDING

ESTIMATED QUANTITIES

REF. NO.	STATION	SIDE	CODE	SIZE	844-SIGNS Flat Sheet Sq. Ft.	844-SIGNS Extra Sheet Sq. Ft.	844-GRD. MTD. SUPPORTS No. 4 Post Driven Lin. Ft.	844-GRD. MTD. SUPPORTS W10x115 Lin. Ft.	844-GRD. MTD. SUPPORTS Concrete for Embedded Foundation Cu. Yd.	844-REMOVAL OF Ground Mounted Post Support Each	844-REMOVAL OF Ground Mounted Sign & Storage Each	SEE SHEET NO.
255	804+00	Rt.	GE	13'x5'		65.0				1	1	
256	805+65	Rt.	Existing									
257	807+00	Lt.	M-38-30	30"x15"	9.1		15.5					
			M-2-30-2	30"x30"	6.3							
TOTALS					9	65	16	39	2.20			

DWG. L.D.B. 5-24-80 CHKD. W.E.Q. 5-25-80

W. E. QUICKSALL & ASSOCIATES INC. Consulting Engineers

STA. 800+00 TO STA. 809+50

Calc. By: L.D.B. Date: 12-21-78
Chkd. By: G.W. Date: 1-12-79

FHWA REGION	STATE	PROJECT	
5	OHIO		

115

JEF-7-11.80

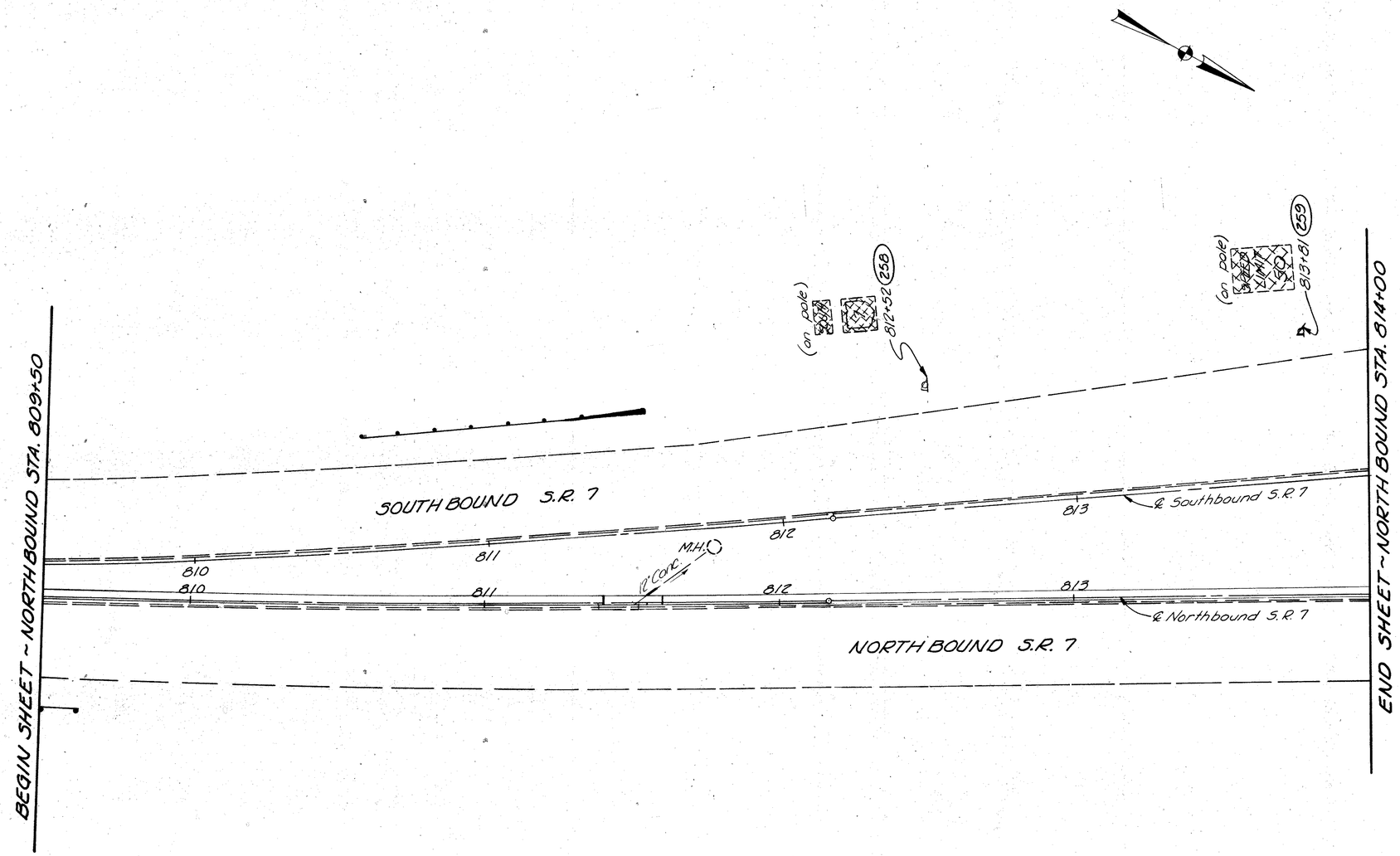

STEUBENVILLE FUNDING

ESTIMATED QUANTITIES

REF. NO.	STATION	SIDE	CODE	SIZE	844 - REMOVAL OF Ground Mounted Sign & Storage Each	SEE SHEET NO.
258	812+52	58 LT.	Existing		2	
259	813+61	58 LT.	Existing		1	
TOTALS					3	

For Legend, See Sheet No. 90

DRAWN D.D.D. CHKD. L.D.B. ENG. G.W. DATE 12-21-78

W. E. QUICKSALL & ASSOCIATES, INC. Consulting Engineers

STA. 809+50 TO STA. 814+00

Calc. By: L.D.B. Date: 12-21-78
Chkd. By: G.W. Date: 1-15-79

FHWA REGION	STATE	PROJECT	
5	OHIO		

116

JEF-7-11.80

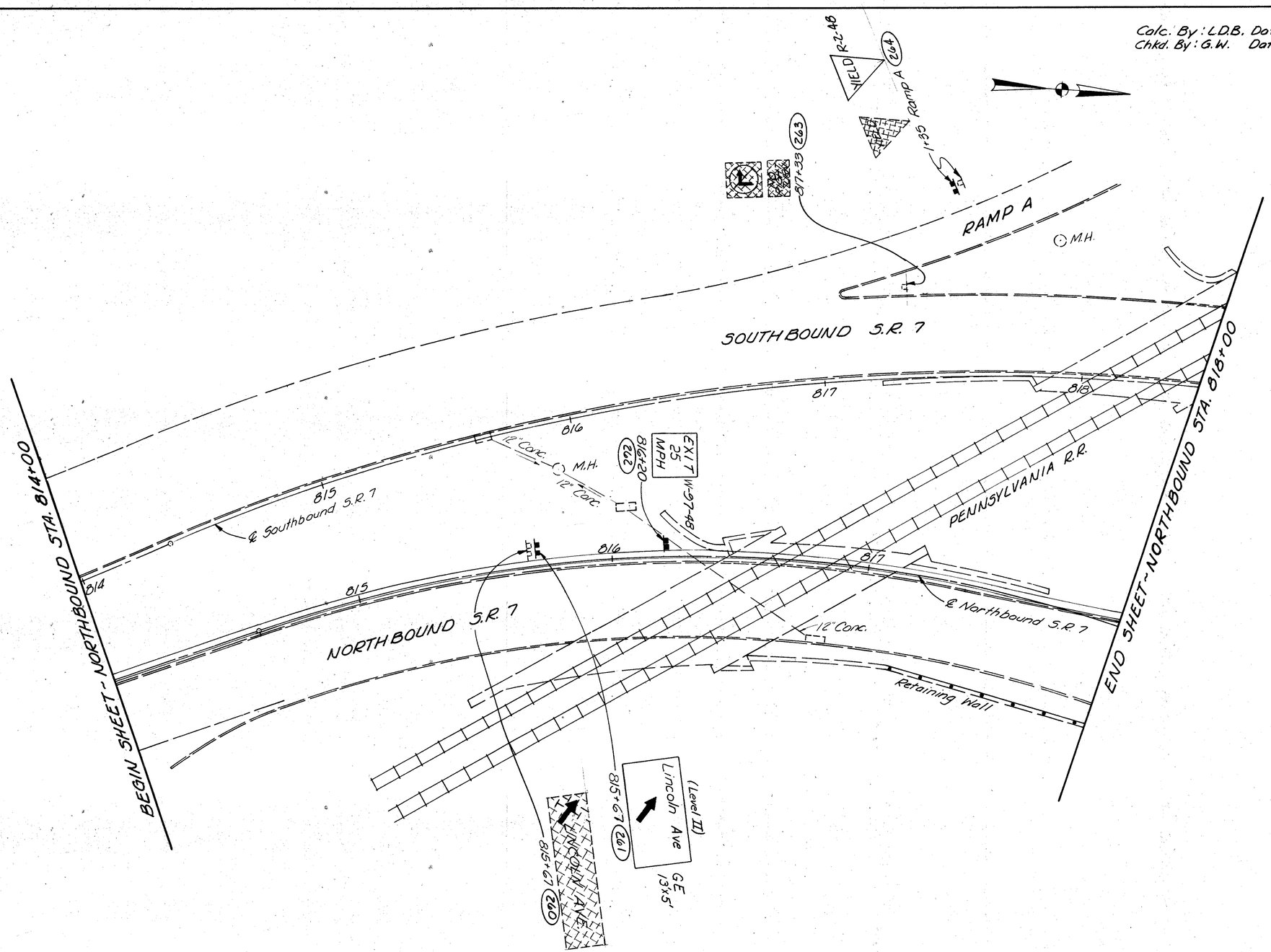

For Legend, See Sheet No. 90

STEUBENVILLE FUNDING

ESTIMATED QUANTITIES					844-SIGNS		844-REMOVAL OF						
REF. NO.	STATION	SIDE	CODE	SIZE	Flat Sheet	Extra Sheet	No. 3 Post Driven	No. 4 Post Driven	Concrete For Embedded Foundation	Ground Mounted Beam Support	Ground Mounted Major Sign & Storage	Ground Mounted Post Support	Ground Mounted Sign & Storage	SEE SHEET NO.
					Sq. Ft.	Sq. Ft.	Lin. Ft.	Lin. Ft.	Cu. Yd.	Each	Each	Each	Each	
260	815+67	N.B.	Lt. Existing	13'x5'										
261	815+67	N.B.	Lt. GE	48"x60"	20.0	65.0								
262	816+20	N.B.	Lt. W-9T-48	48"x48"				32.3						
263	817+33	S.B.	Lt. Existing											
264	RAMP A		Lt. Existing											
	I-35		R-2-48	48"x48"	6.9		30.9							
TOTALS					27	65	31	32	35	0.66	2	1	2	3

844-GRD. MTD. SUPPORTS	

Date	Chkd.	Chkd.	Chkd.
12-21-78	1-15-79	2-6-79	8-23-79

W. E. QUICKSALL & ASSOCIATES INC. Consulting Engineers

STA. 814+00 TO STA. 818+00

Calc. By: L.D.B. Date: 12-21-78
Chkd. By: G.W. Date: 1-15-79

FHWA REGION	STATE	PROJECT	
5	OHIO		

JEF-7-11.80

117

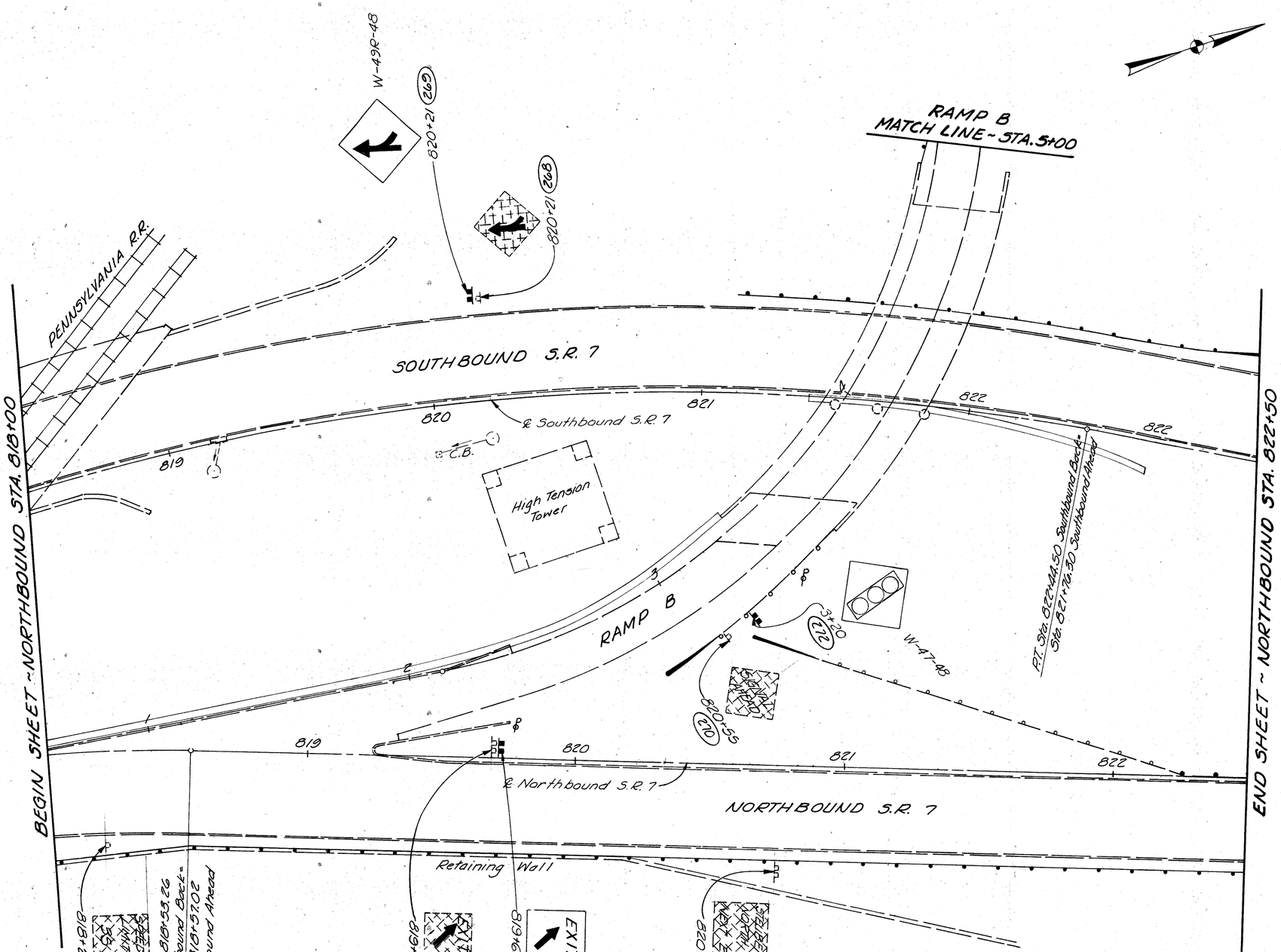

For Legend, See Sheet No. 90

STEUBENVILLE FUNDING

ESTIMATED QUANTITIES

REF. NO.	STATION	SIDE	CODE	SIZE	844-SIGNS Flat Sheet Sq. Ft.	844-SIGNS Extru Sheet Sq. Ft.	844-GRD. MTD. SUPPORTS No. 4 Post Driven Lin. Ft.	844-GRD. MTD. SUPPORTS 5x4x7.7 Lin. Ft.	844-GRD. MTD. SUPPORTS Concrete For Embedded Foundation Cu. Yd.	844-GRD. MTD. SUPPORTS Breakaway Beam Connection Each	844-REMOVAL OF Ground Mounted Post Support Each	844-REMOVAL OF Ground Mounted Sign & Storage Each	SEE SHEET NO.
265	818+20	Rt.	Existing								1	1	
266	819+69	Rt.	Ex-5F-72								2	1	
267	819+69	Rt.	Ex-5F-72	72"x60"		30.0		32.3	0.54	2	1	1	
268	820+21	Lt.	Ex-5Ftng										
269	820+21	Lt.	W-49R-48	48"x48"	16.0								
270	820+55	Lt.	Existing				30.6				1	1	
271	820+75	Rt.	Existing										
272	RAMP B 3+20	Rt.	W-47-48	48"x48"	16.0		34.0				2		
TOTALS					32	30	65	32	0.54	2	7	5	

W. E. QUICKSALL & ASSOCIATES INC. Consulting Engineers

STA. 818+00 TO STA. 822+50

FHWA REGION	STATE	PROJECT	
5	OHIO		

118

JEF-7-11.80

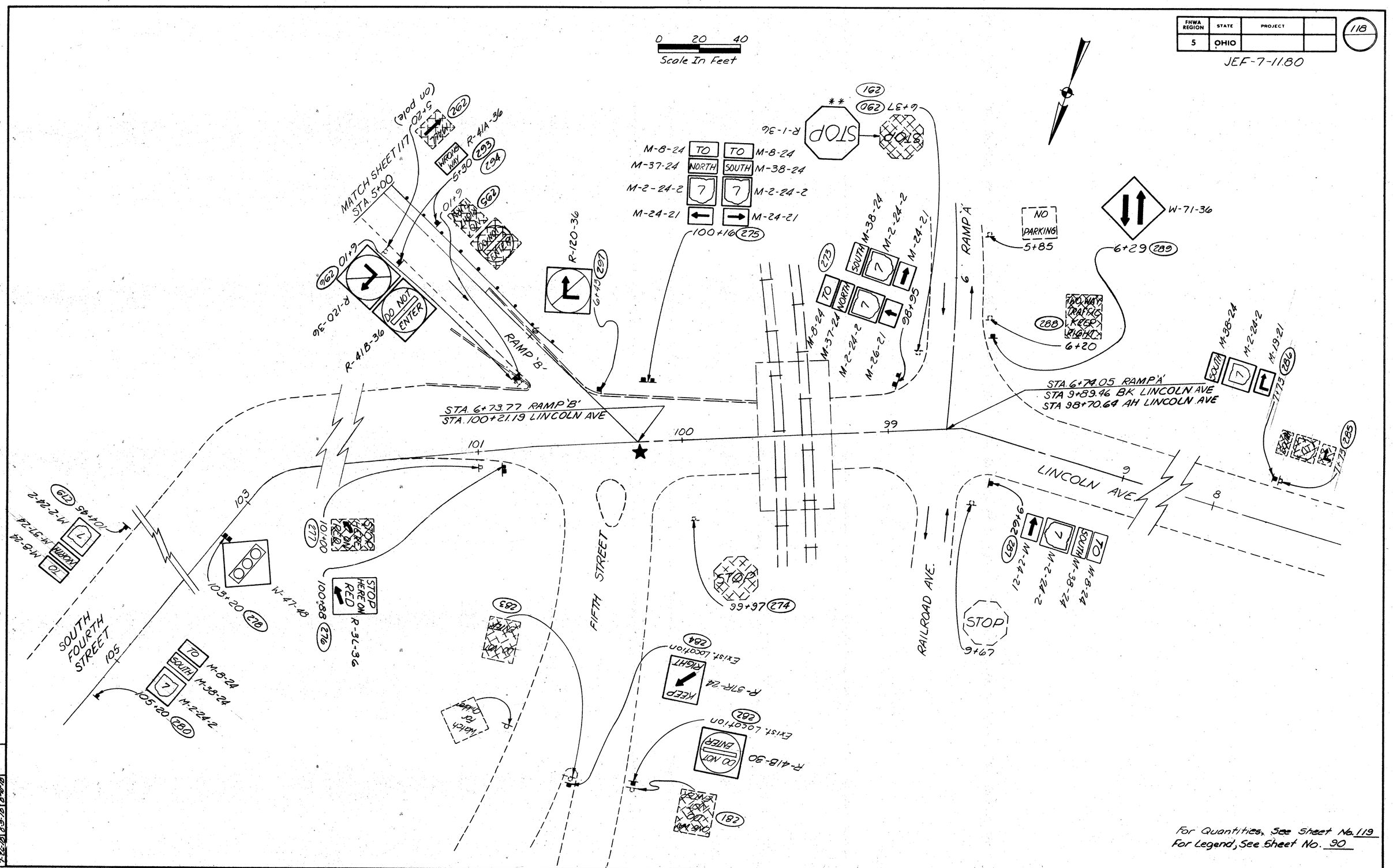

For Quantities, See Sheet No. 119
For Legend, See Sheet No. 90

DRAWN	CK'D.	CORR.	BK. CK'D.
GW 7-22-81	AEH 8-9-81	DAV 8-10-81	

W.E. QUICKSALL & ASSOCIATES INC. Consulting Engineers

LINCOLN AVE. DETAIL "A"

TRAFFIC CONTROL QUANTITIES

Calc. By: L.DB. Date: 12-21-78
Chkd. By: G.W. Date: 1-15-79

FED. RD. DIVISION	STATE	PROJECT	
	OHIO		

119

JEF-7-11.80

STEUBENVILLE FUNDING

GROUND MOUNTED SIGNS

REF NO.	STATION	SIDE	CODE	SIZE	844 - SIGNS Flat Sheet Sq. Ft.	844 - GROUND MOUNTED SUPPORTS No. 3 Post Driven Lin. Ft.	No. 4 Post Driven Lin. Ft.	844 - REMOVAL OF Ground Mounted Sign & Storage Each	Ground Mounted Post Support Each
	SOUTH 4TH STREET								
273	98+95	Lt.	M-8-24	24"x12"	2.0		32.3		
			M-37-24	24"x12"	2.0				
			M-38-24	24"x12"	2.0				
			M-2-24-2	24"x24"	4.0				
			M-2-24-2	24"x24"	4.0				
			M-26-21	21"x15"	2.2				
			M-24-21	21"x15"	2.2				
274	99+97	Rt.	Existing					1	1
275	100+16	Lt.	M-8-24	24"x12"	2.0		32.6		
			M-8-24	24"x12"	2.0				
			M-37-24	24"x12"	2.0				
			M-38-24	24"x12"	2.0				
			M-2-24-2	24"x24"	4.0				
			M-2-24-2	24"x24"	4.0				
			M-24-21	21"x15"	2.2				
			M-24-21	21"x15"	2.2				
276	100+88	Rt.	R-3L-36	36"x54"	13.5	30.3			
277	101+00	Rt.	Existing					1	1
278	103+20	Rt.	W-47-48	48"x48"	16.0		30.2		
279	104+45	Lt.	M-8-24	24"x12"	2.0		14.7		
			M-37-24	24"x12"	2.0				
			M-2-24-2	24"x24"	4.0				
280	105+20	Rt.	M-8-24	24"x12"	2.0		14.7		
			M-38-24	24"x12"	2.0				
			M-2-24-2	24"x24"	4.0				
	5th STREET								
281		Lt.	Existing					1	1
282		Lt.	R-41B-30	30"x30"	6.3	13.1			
283		℄	Existing					1	1
284		℄	R-37R-24	24"x30"	5.0	13.1			
	LINCOLN AVE.								
285	7+73	Rt.	Existing					3	1
286	7+73	Rt.	M-38-24	24"x12"	2.0		14.9		
			M-2-24-2	24"x24"	4.0				
			M-19-21	21"x15"	2.2				
287	9+62	Lt.	M-8-24	24"x12"	2.0		16.1		
			M-38-24	24"x12"	2.0				
			M-2-24-2	24"x24"	4.0				
			M-24-21	21"x15"	2.2				
	RAMP A								
288	6+20	Lt.	Existing					1	1
289	6+29	Lt.	W-71-36	36"x36"	9.0		13.7		
290	6+37	Rt.	Existing					1	
291	6+37	Rt.	R-1-36	36"x36"	9.0				
	RAMP B								
292	5+20	Lt.	Existing					1	
293	5+30	Lt.	R-41A-36	36"x24"	6.0	13.8			
294	5+30	Rt.	R-41A-36	36"x24"	6.0	13.5			
295	6+10	Rt.	Existing					2	1
296	6+10	Rt.	R-41B-36	36"x36"	9.0		13.5		
			R-120-36	36"x36"	9.0				
297	6+43	Lt.	R-120-36	36"x36"	9.0		13.5		
	TOTALS				171	84	196	12	7

LINCOLN AVE. ~ ESTIMATED QUANTITIES

W.E. QUICKSALL & ASSOCIATES INC. Consulting Engineers

Calc. By: L.D.B. Date: 12-21-78
Chkd. By: G.W. Date: 1-15-79

FHWA REGION	STATE	PROJECT	
5	OHIO		

120

JEF-7-11.80

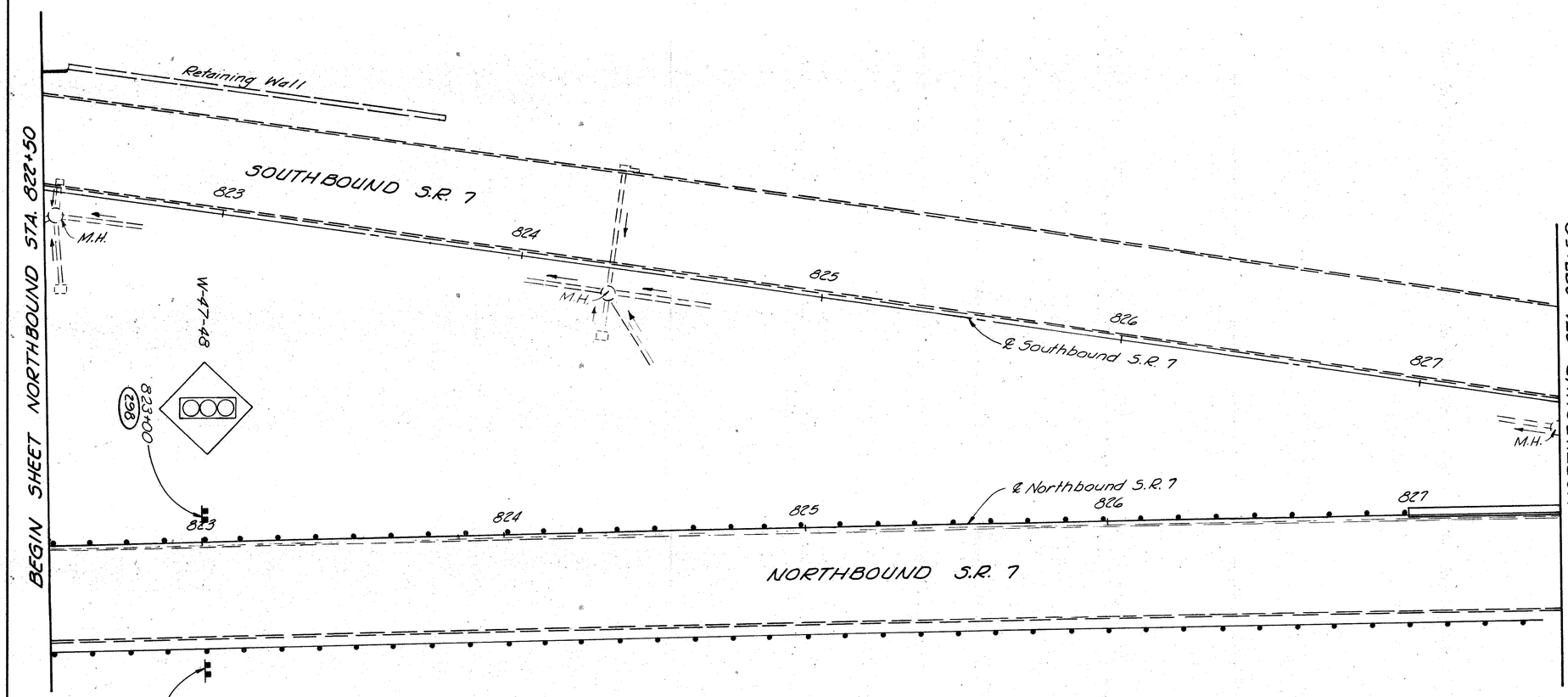

For Legend, See Sheet No. 90

STEUBENVILLE FUNDING

ESTIMATED QUANTITIES

REF. NO.	STATION	SIDE	CODE	SIDE	844+SIGNS Flat Sheet Sq. Ft.	844-GRD. MTD. SUPPORTS No. 4 Post Driven Lin. Ft.	SEE SHEET NO.
298	823+00	Rt.	W-47-48	48"x48"	16.0	35.9	
299	823+00	Rt.	W-47-48	48"x48"	16.0	35.9	
TOTALS					32	72	

W. E. QUICKSALL & ASSOCIATES INC. Consulting Engineers

STA. 822+50 TO STA. 827+50

Calc. By: L.D.B. Date: 12-21-78
Chkd. By: G.W. Date: 1-15-79

FHWA REGION	STATE	PROJECT	
5	OHIO		

121

JEF-7-11.80

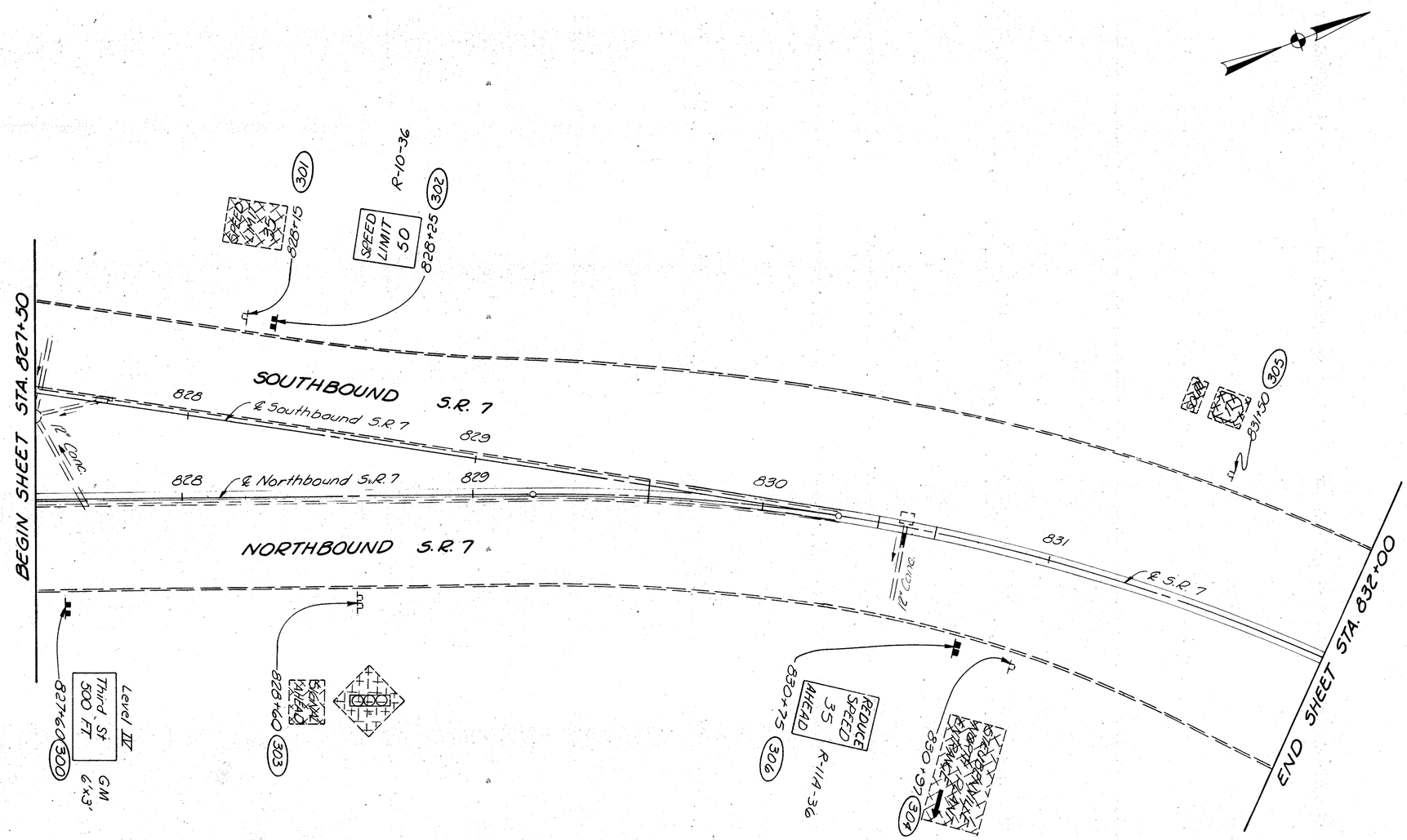

For Legend, See Sheet No. 90

STEUBENVILLE FUNDING

ESTIMATED QUANTITIES					844-SIGNS		844-GRD. MTD SUPPORTS						844-REMOVAL OF		
REF. NO.	STATION	SIDE	CODE	SIZE	Flat Sheet	Extra Sheet	No.3 Post Driven	No.4 Post Driven	54 lb.	Concrete For Embedded Foundation	Breakaway Beam Connection	SEE SHEET NO.	Ground Mounted Post Support	Ground Mounted Sign & Storage	
					Sq. Ft.	Sq. Ft.	Lin. Ft.	Lin. Ft.	Lin. Ft.	Cu. Yd.	Each		Each	Each	
300	827+60	NB	RT.	GM 6'x3'		18.0			38.0	0.54			1	1	
301	828+15	SB	LT.	EXISTING									1	2	
302	828+25	SB	LT.	R-10-36	12.0								2	1	
303	828+40	NB	RT.	EXISTING				29.3					1	2	
304	830+97	NB	RT.	EXISTING											
305	831+50	SB	LT.	EXISTING											
306	830+75	SB	RT.	R-11A-36	12.0		30.0								
TOTALS					24	18	30	29	38	0.54	2		5	6	

W. E. QUICKSALL & ASSOCIATES INC. Consulting Engineers

STA. 827+50 TO STA. 832+00

FHWA REGION	STATE	PROJECT	
5	OHIO		

122

JEF-7-11.80

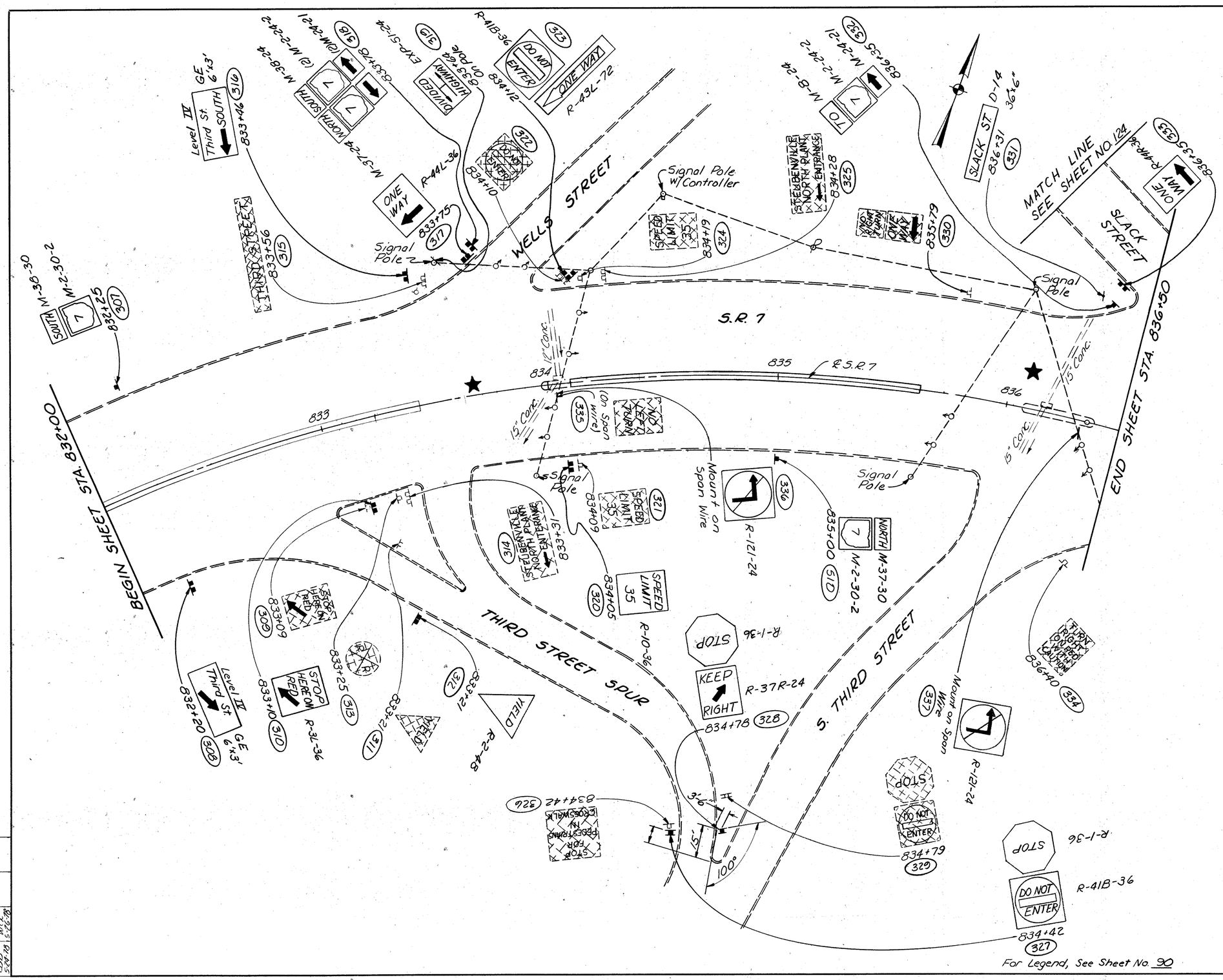

SEE SHEET NO.	

TRAFFIC CONTROL QUANTITIES

STEUBENVILLE FUNDING

Calc. By: L.D.B. Date: 12-21-78
Chkd. By: G.W. Date: 1-15-79

FED RD DIVISION	STATE	PROJECT	
	OHIO		

123

JEF-7-11.80

GROUND MOUNTED SIGNS

REF NO.	STATION	SIDE	CODE	SIZE	844 ~ SIGNS: Flat Sheet	844 ~ SIGNS: Extra Sheet		844 ~ GROUND MOUNTED SUPPORTS: No. 3 Post Driven	No. 4 Post Driven	No. 4 Post Driven as per plan		54x 7.7	Concrete For Embedded Foundation	Breakaway Beam Connection	Double Face Sign, Street Name	Street Name Sign Support	Pole Mounted Sign Attachment Assembly		844 ~ REMOVAL OF: Ground Mounted Sign & Storage	Ground Mounted Post Support				
					Sq. Ft.	Sq. Ft.		Lin. Ft.	Lin. Ft.	Lin. Ft.		Lin. Ft.	Cu. Yds.	Each	Each	Each	Each		Each	Each				
308	832+20	Rt.	GE	6'x3'		18.0						30.0	0.54	2										
309	833+09	Rt.	Existing																1	1				
310	833+10	Rt.	R-3L-36	36"x 54"	13.5			30.2																
311	833+21	Rt.	Existing																1	1				
312	833+21	Rt.	R-2-48	48"x48"x48"	6.9			28.0																
313	833+25	Rt.	Existing																1	1				
314	833+31	Rt.	Existing																1	2				
315	833+56	Lt.	Existing																1	2				
316	833+66	Lt.	GE	6'x3'		18.0						31.0	0.54	2										
317	833+75	Lt.	R-44L-36	36"x48"	12.0			30.0																
318	833+78	Lt.	M-37-24	24"x 12"	2.0				30.8															
			M-38-24	24"x 12"	2.0																			
			M-2-24-2	24"x 24"	4.0																			
			M-2-24-2	24"x 24"	4.0																			
			M-24-21	21"x 15"	2.2																			
			M-24-21	21"x15"	2.2																			
319	833+64	Lt.	EXP-51-24	24"x18"	3.0												1							
320	834+05	Rt.	R-10-36	36"x48"	12.0			30.5																
321	834+09	Rt.	Existing																1	1				
322	834+10	Lt.	Existing																1	2				
323	834+12	Lt.	R-41B-36	36"x 36"	9.0				29.5	15.5														
			R-48L-72	72"x 24"	12.0																			
324	834+19	Lt.	Existing																1	1				
325	834+28	Lt.	Existing																1	2				
326	834+42	Rt.	Existing																1	1				
327	834+42	Rt.	R-1-36	36"x36"	9.0				13.5															
			R-41B-36	36"x36"	9.0																			
328	834+78	Rt.	R-1-36	36"x36"	9.0				13.5															
			R-37R-24	24"x36"	6.0																			
329	834+79	Rt.	Existing																2	1				
330	835+79	Lt.	Existing																2	1				
331	836+31	Lt.	D-14	36"x6"											1	1								
332	836+35	Lt.	M-8-24	24"x12"	2.0				14.9															
			M-2-24-2	24"x24"	4.0																			
			M-24-21	21"x15"	2.2																			
333	836+35	Lt.	R-44R-36	36"x48"	12.0			29.0																
334	836+40	Rt.	Existing																1	1				
335	834+03	Rt	For Overhead Sign Quantities, See Sheet No. 82																					
336	834+03	Rt.																						
337	836+33	Rt.																						
307	832+25	Lt.	M-38-30	30"x15"	3.1				14.4															
			M-2-30-2	30"x30"	6.3																			
510	835+50	Rt.	M-37-30	30"x15"	3.1				14.7															
			M-2-30-2	30"x30"	6.3																			
	TOTALS				157	36		148	131	16		61	1.08	4	1	1	1		15	17				

FHWA REGION	STATE	PROJECT	
5	OHIO		

124

JEF-7-11.80

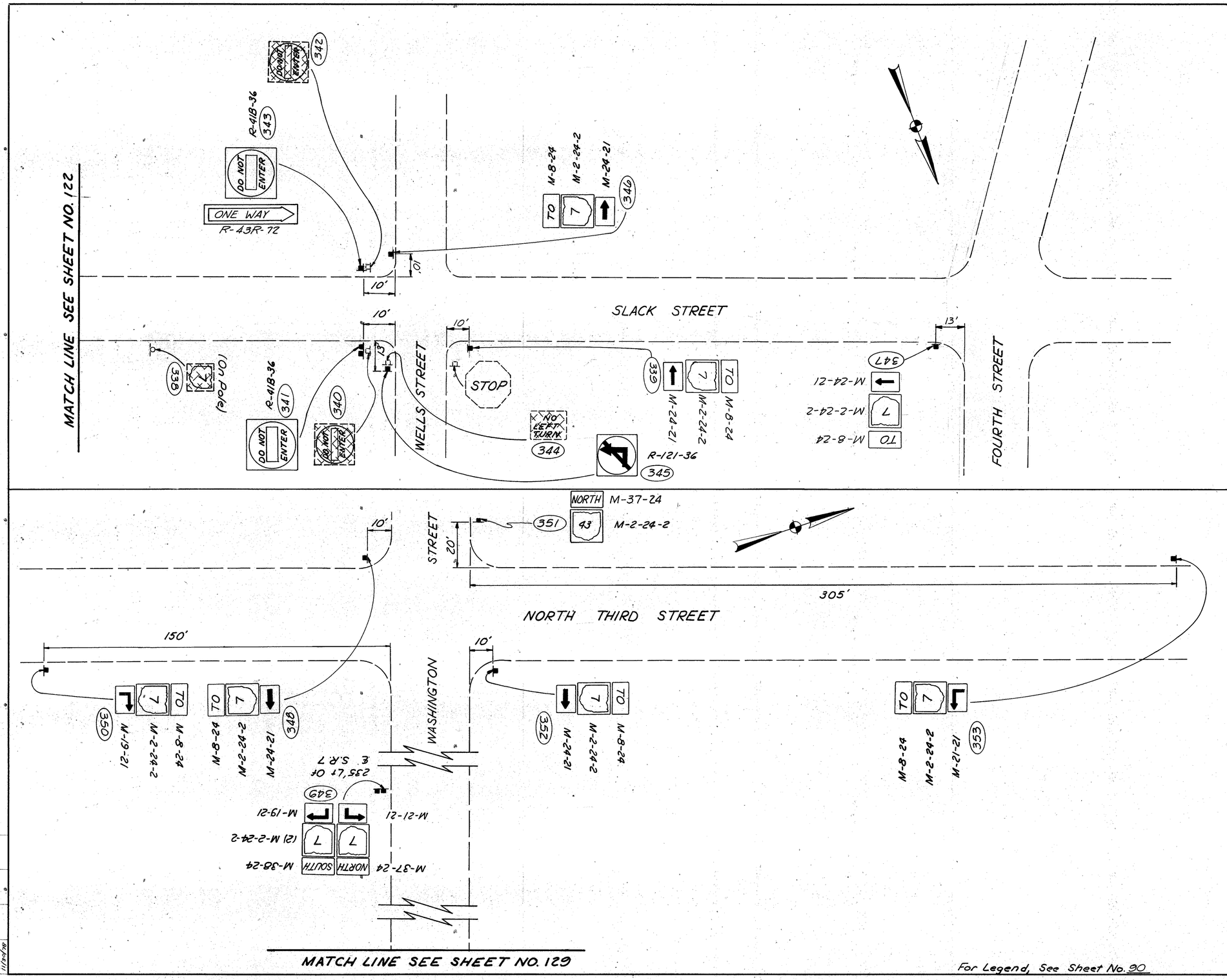

For Legend, See Sheet No. 90

ESTIMATED QUANTITIES				
REF. NO.	STATION	SIDE	CODE	SIZE
TOTALS				

SEE SHEET NO.

FOR QUANTITIES, SEE SHEET NO. 125

W. E. QUICKSALL & ASSOCIATES INC. Consulting Engineers

SIGNING PLAN ~ SLACK STREET & WASHINGTON STREET

TRAFFIC CONTROL QUANTITIES

Calc. By: L.D.B. Date: 12-22-78
Chkd. By: G.W. Date: 1-15-79

FED. RD. DIVISION	STATE	PROJECT	
	OHIO		

125

JEF-7-11.80

STEUBENVILLE FUNDING

GROUND MOUNTED SIGNS

REF NO.	STATION	SIDE	CODE	SIZE	844-SIGNS Flat Sheet Sq. Ft.	844-GROUND MOUNTED SUPPORTS No. 3 Post Driven Lin. Ft.	No. 4 Post Driven Lin. Ft.	No. 4 Post Driven, as per plan Lin. Ft.	844-REMOVAL OF Ground Mounted Sign & Storage Each	Ground Mounted Post Support Each
	SLACK ST.									
338	105' N.E. of Wells St.	Rt.	Existing						1	
339	10' N.W. of Wells St.	Rt.	M-8-24	24"x12"	2.0		15.1			
			M-2-24-2	24"x24"	4.0					
			M-24-21	21"x15"	2.2					
340	10' N.E. of Wells St.	Rt.	Existing						1	1
341	10' N.E. of Wells St.	Rt.	R-41B-36	36"x36"	9.0		13.7			
342	10' S.E. of Wells St.	Rt.	Existing						1	1
343	10' S.E. of Wells St.	Rt.	R-41B-36	36"x36"	9.0			16.5		
			R-43R-48	48"x18"	6.0					
344	13' N.E. of Slack St.	Rt.	Existing						1	1
345	13' N.E. of Slack St.	Rt.	R-121-36	36"x36"	9.0		13.7			
346	10' S.E. of Wells St.	Lt.	M-8-24	24"x12"	2.0		15.1			
			M-2-24-2	24"x24"	4.0					
			M-24-21	21"x15"	2.2					
347	13' N.E. of Fourth St.	Rt.	M-8-24	24"x12"	2.0		15.1			
			M-2-24-2	24"x24"	4.0					
			M-24-21	21"x15"	2.2					
	WASHINGTON ST.									
348	10' S.W. of Wash. St.	Lt.	M-8-24	24"x12"	2.0		15.1			
			M-2-24-2	24"x24"	4.0					
			M-24-21	21"x15"	2.2					
349	235' Lt. of E.S.R.7	Lt.	M-37-24	24"x12"	2.0		30.2			
			M-38-24	24"x12"	2.0					
			M-2-24-2	24"x24"	4.0					
			M-2-24-2	24"x24"	4.0					
			M-21-21	21"x15"	2.2					
			M-19-21	21"x15"	2.2					
350	150' S.E. of Wash. St.	Lt.	M-8-24	24"x12"	2.0		15.1			
			M-2-24-2	24"x24"	4.0					
			M-19-21	21"x15"	2.2					
351	10' N.W. of N. Third St.	Lt.	M-2-24-2	24"x24"	4.0	13.9				
			M-37-24	24"x12"	2.0					
352	10' N.E. of Wash. St.	Rt.	M-8-24	24"x12"	2.0		15.1			
			M-2-24-2	24"x24"	4.0					
			M-24-21	21"x15"	2.2					
353	305' N.W. of Wash. St.	Lt.	M-8-24	24"x12"	2.0		15.1			
			M-2-24-2	24"x24"	4.0					
			M-21-21	21"x15"	2.2					
	TOTALS				117	14	163	17	4	3

Calc. By: L.D.B. Date: 12-22-78
Chkd. By: G.W. Date: 1-16-79

FHWA REGION	STATE	PROJECT	
5	OHIO		

JEF-7-11.80

126

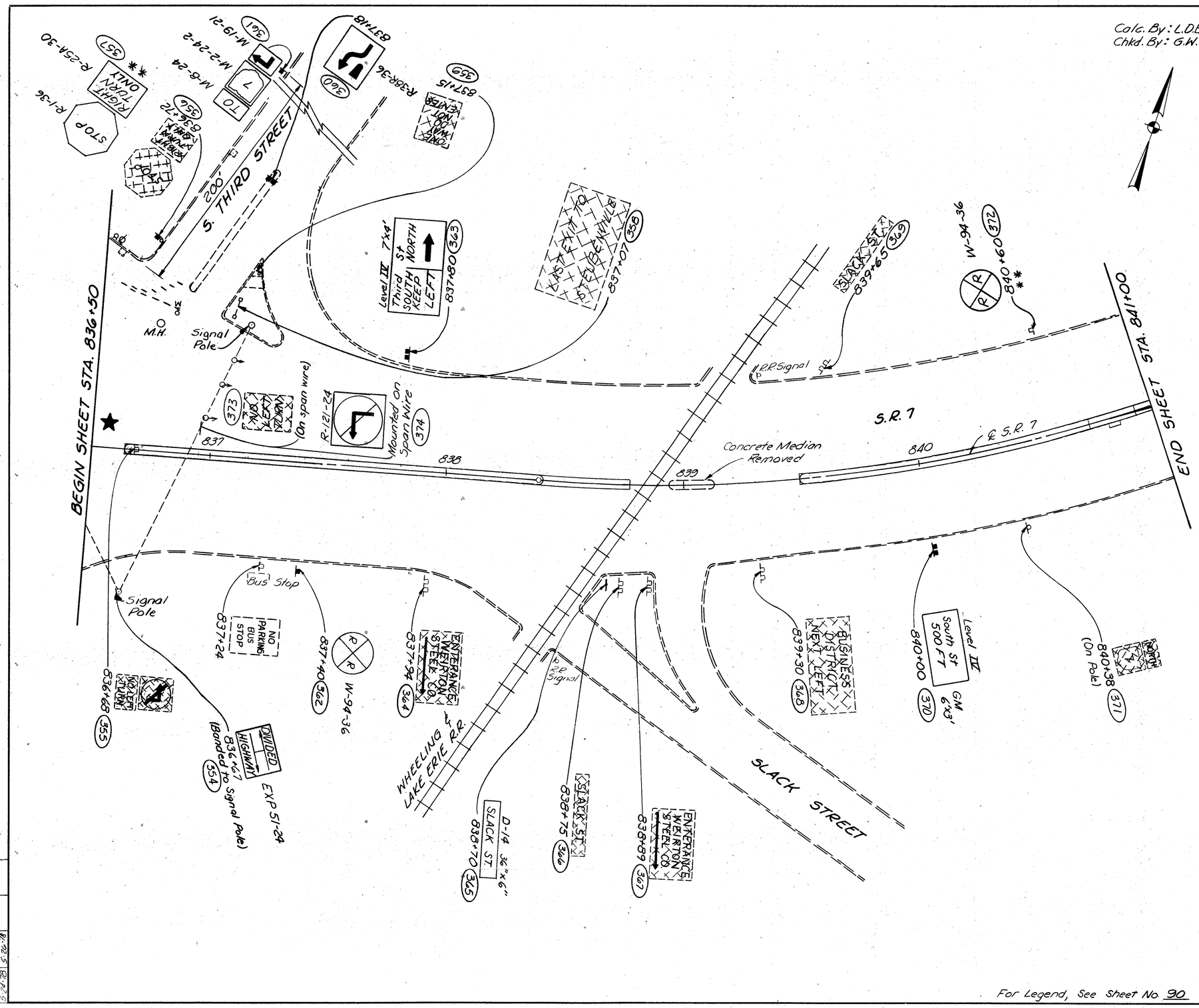

For Legend, See Sheet No. 90

STEUBENVILLE FUNDING

ESTIMATED QUANTITIES

REF. NO.	STATION	SIDE	CODE	SIZE	844-SIGNS Flat Sheet	844-SIGNS Extru Sheet	844-GRD MTD SUPPORTS No. 3 Post Driven	No. 4 Post Driven	54x77	Concrete for Embedded Foundation	Breakaway Beam Connection	Double Face Sign Street Name	Street Name Sign Support	Pole Mounted Sign Attachment Assembly	844-REMOVAL OF Ground Mounted Sign & Storage	Ground Mounted Major Sign & Support	Ground Mounted Post Support	Ground Mounted Beam Support	SEE SHEET NO.
					Sq. Ft.	Sq. Ft.	Lin. Ft.	Lin. Ft.	Lin. Ft.	Cu. Yd.	Each	Each	Each	Each	Each	Each	Each	Each	
354	836+67	Rt.	EXP-51-24	24"x18"	3.0									1	2				
355	836+68	Rt.	Existing																
356	836+72	Lt.	Existing																
357	836+72	Lt.	R-1-36	36"x36"	9.0														
			R-254-30	30"x36"	7.5														
358	837+07	Lt.	Existing																
359	837+15	Lt.	Existing																
360	837+18	Lt.	R-38R-36	36"x48"	12.0														
361	200' N. on 3rd St.		M-6-24	24"x12"	2.0														
			M-2-24-2	24"x24"	4.0														
			M-19-21	21"x15"	2.2														
362	837+40	Rt.	W-94-36	36"x36"	9.0														
363	837+80	Lt.					13.8												
364	837+94	Rt.	Existing	7'x4'		28.0			31.8	0.54	2								
365	838+70	Rt.	D-14	36"x6"															
366	838+75	Rt.	Existing																
367	838+89	Rt.	Existing																
368	839+30	Rt.	Existing																
369	839+65	Lt.	Existing																
370	840+00	Rt.	GM	6'x3'		18.0			30.0	0.54	2								
371	840+38	Rt.	Existing																
372	840+60	Lt.	W-94-36	36"x36"	9.0														
373	836+67	Lt.	For Overhead Sign Quantities, See Sheet No. 89																
374	836+95	Lt.	For Overhead Sign Quantities, See Sheet No. 89																
TOTALS					57	46	14	44	62	1.08	4	1	1	1	11	1	12	2	

Dwn. LDB 5-24-78	Chkd. RCC 5-26-78	

W. E. QUICKSALL & ASSOCIATES INC. Consulting Engineers

STA. 836+50 TO STA. 841+00

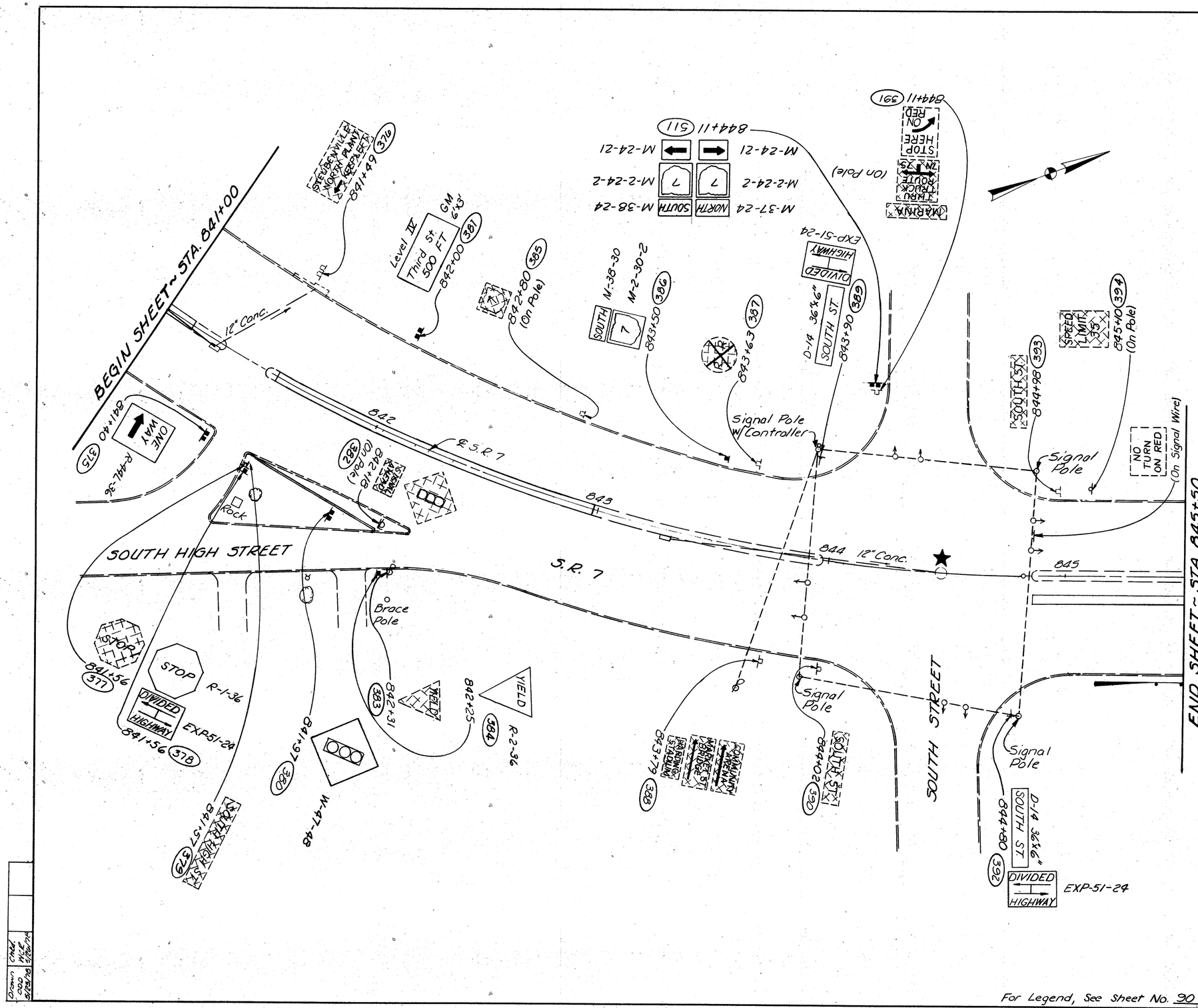

For Legend, See Sheet No. 90

ESTIMATED QUANTITIES			
REF. NO.	STATION TO STATION	SIDE	
TOTALS			

For Quantities, See Sheet No. 127-A

SEE SHEET NO.

STA 841+00 TO STA 845+50

Drawn CDD 5/28/75 Chkd. WEQ 5/28/75

TRAFFIC CONTROL QUANTITIES

Calc. By: L.D.B. Date: 12-22-78
Chkd. By: G.W. Date: 1-16-79

FED. RD. DIVISION	STATE	PROJECT	
	OHIO		

127-A

JEF-7-11.80

STEUBENVILLE FUNDING

GROUND MOUNTED SIGNS

REF NO.	STATION	SIDE	CODE	SIZE	844 ~ SIGNS Flat Sheet Sq. Ft.	Extru Sheet Sq. Ft.				844 ~ GROUND MOUNTED SUPPORTS No. 3 Post Driven Lin. Ft.	No. 4 Post Driven Lin. Ft.	54 x 7.7 Lin. Ft.	Concrete for Embedded Foundation Cu. Yd.	Breakaway Beam Connection Each	Double Face Sign Street Name Each	Street Name Sign Support Each	Pole Mounted Sign Attachment Assembly Each				844 ~ REMOVAL OF Ground Mounted Sign & Storage Each	Ground Mounted Post Support Each		
375	841+40	Rt.	R-44L-36	36"x48"	12.0					30.5														
376	841+49	Lt.	Existing																		1	2		
377	841+56	Rt.	Existing																		1	1		
378	841+56	Rt.	R-1-36	36"x36"	9.0						15.3													
			Exp-51-24	24"x18"	3.0																			
379	841+57	Rt.	Existing																		1	1		
380	841+97	Rt.	W-47-48	48"x48"	16.0						32.2													
381	842+00	Lt.	GM	6'x3'		18.0						29.5	0.54	2										
382	842+18	Rt.	Existing																		2			
383	842+31	Rt.	Existing																		1			
384	842+25	Rt.	R-2-36	36"x36"x36"	3.9					13.6														
385	842+80	Lt.	Existing																		1			
386	843+50	Lt.	M-38-30	30"x15"	3.1						14.4													
			M-2-30-2	30"x30"	6.3																			
387	843+63	Lt.	Existing																		1	1		
388	843+79	Rt.	Existing																		3	1		
389	843+90	Lt.	D-14	36"x6"											1	1								
			EXP-51-24	24"x18"	3.0												1							
390	844+02	Rt.	Existing																		1	1		
391	844+11	Lt.	Existing																		2			
392	844+80	Rt.	D-14	36"x6"											1	1								
			EXP-51-24	24"x18"	3.0												1							
393	844+98	Lt.	Existing																		1	1		
394	845+10	Lt.	Existing																		1			
511	844+11	Lt.	M-37-24	24"x12"	2.0						30.8													
			M-38-24	24"x12"	2.0																			
			M-2-24-2	24"x24"	4.0																			
			M-2-24-2	24"x24"	4.0																			
			M-24-21	21"x15"	2.2																			
			M-24-21	21"x15"	2.2																			
	TOTALS				76	18				44	93	30	0.54	2	2	2	2				16	8		

W.E. QUICKSALL & ASSOCIATES INC. Consulting Engineers

ESTIMATED QUANTITIES

Calc. By: L.D.B. Date: 12-22-78
Chkd. By: G.W. Date: 1-16-79

FHWA REGION	STATE	PROJECT	
5	OHIO		

JEF-7-11.80

128

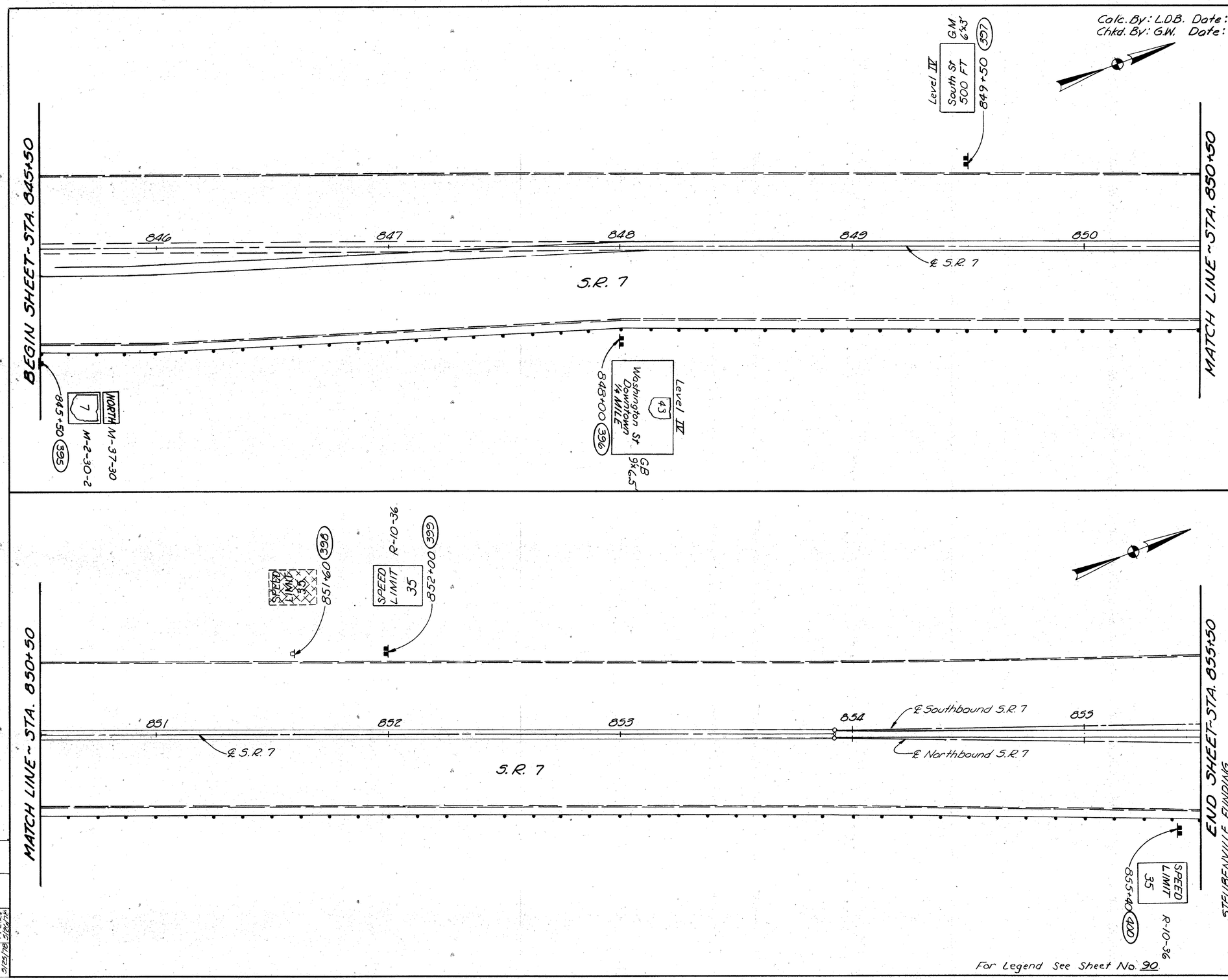

For Legend See Sheet No. 90

STEUBENVILLE FUNDING

ESTIMATED QUANTITIES

REF. NO.	STATION	SIDE	CODE	SIZE	844-516/15 Flat Sheet (Sq. Ft.)	844-516/15 Extra Sheet (Sq. Ft.)	844-GRD. MTD. SUPPORTS No. 3 Post Driven (Lin. Ft.)	No. 4 Post Driven (Lin. Ft.)	54x77 (Lin. Ft.)	W10x115 (Lin. Ft.)	Concrete for Embedded Foundation (Cu. Yd.)	Breakaway Beam Connection (Each)	844-REMOVAL OF Ground Mounted Post Support (Each)	Ground Mounted Sign & Storage (Each)	SEE SHEET NO.
395	845+50	Rt.	M-37-30	30"x15"	3.1			14.8							
396	848+00	Rt.	M-2-30-2	30"x30"	6.3										
397	849+50	Rt.	GB	9'x6.5'		58.5				51.7	2.80	2			
398	851+60	Lt.	GM	6'x3'		18.0					0.54				
399	852+00	Lt.	Existing						29.5				1	1	
399	852+00	Lt.	R-10-36	36"x48"	12.0		23.6								
400	855+40	Rt.	R-10-36	36"x48"	12.0		30.0								
TOTALS					33	77	60	15	30	52	2.74	2	1	1	

DRAWN	CHKD.
DDD 5/29/78	F.V.C.R. 5/30/78

W. E. QUICKSALL & ASSOCIATES INC. Consulting Engineers

STA. 845+50 TO STA. 855+50

FHWA REGION	STATE	PROJECT	
5	OHIO		

129

JEF-7-11.80

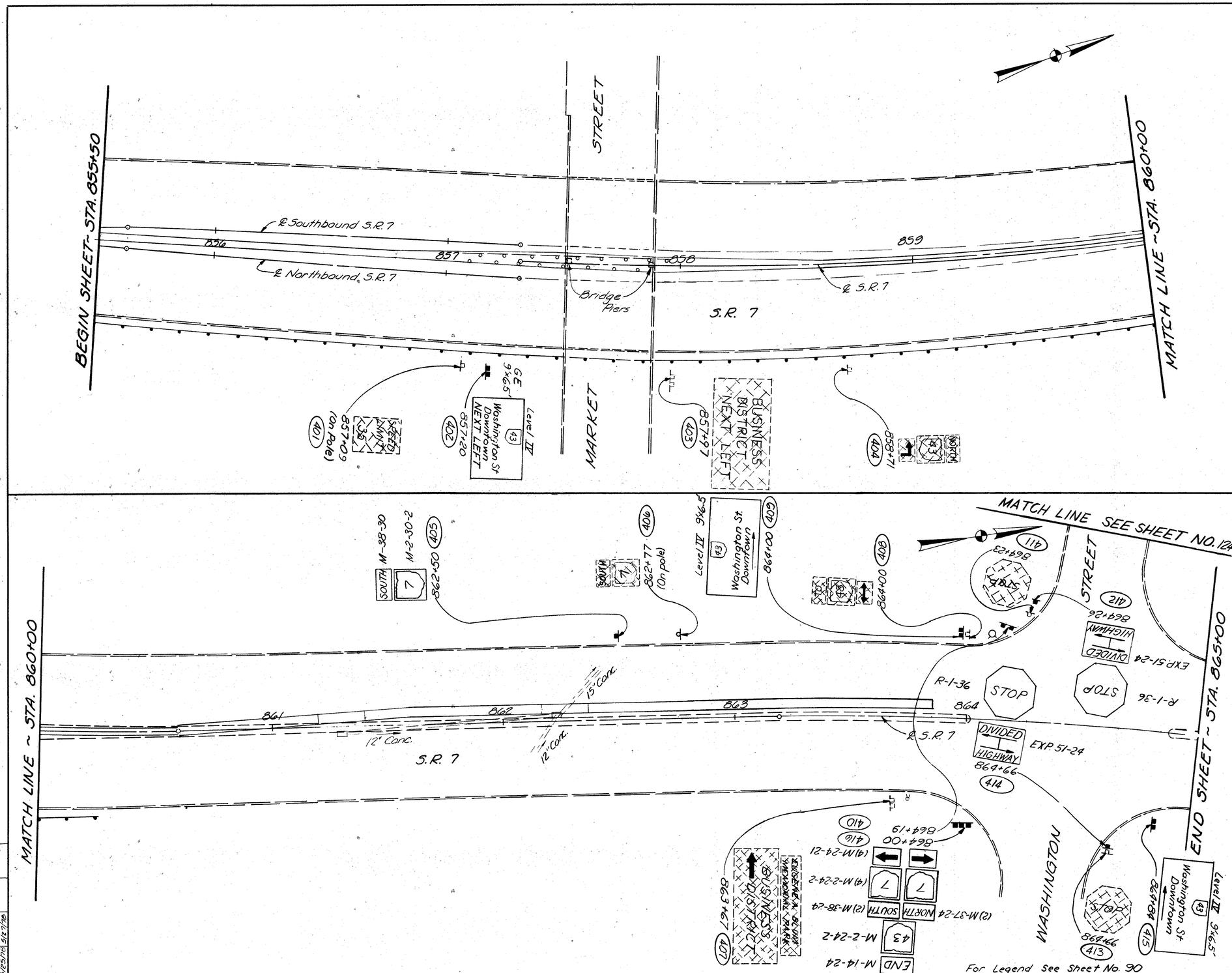

SEE SHEET NO.	

TRAFFIC CONTROL QUANTITIES

Calc. By: L.D.B. Date: 12-26-78
Chkd. By: G.W. Date: 1-16-79

FED. RD DIVISION	STATE	PROJECT	
	OHIO		

130

JEF-7-11.80

STEUBENVILLE FUNDING

GROUND MOUNTED SIGNS

REF NO.	STATION	SIDE	CODE	SIZE	844 ~ SIGNS Flat Sheet Sq. Ft.	844 ~ SIGNS Extru Sheet Sq. Ft.	844 ~ GROUND MOUNTED SUPPORTS No. 4 Post Driven Lin. Ft.	W10x11.5 Lin. Ft.	Concrete For Embedded Foundation Cu. Yd.	Breakaway Beam Connection Each	844 ~ REMOVAL OF Ground Mounted Sign & Storage Each	Ground Mounted Major Sign & Storage Each	Ground Mounted Post Support Each	Ground Mounted Beam Support Each
401	857+09	Rt.	Existing								1			
402	857+20	Rt.		9'x 6.5'		58.5		41.5	2.20					
403	857+37	Rt.	Existing									1		2
404	858+71	Rt.	Existing								3		1	
405	862+50	Lt.	M-38-30	30"x 15"	3.1		14.4							
			M-2-30-2	30"x 30"	6.3									
406	862+77	Lt.	Existing								2			
407	863+67	Rt.	Existing									2		2
408	864+00	Lt.	Existing								3		1	
409	864+00	Lt.		9'x 6.5'		58.5		41.5	2.20	2				
410	864+19	Lt.	M-37-24	24"x 12"	2.0		30.8							
			M-38-24	24"x 12"	2.0									
			M-2-24-2	24"x 24"	4.0									
			M-2-24-2	24"x 24"	4.0									
			M-24-21	21"x 15"	2.2									
			M-24-21	21"x 15"	2.2									
411	864+23	Lt.	Existing								1		1	
412	864+26	Lt.	R-1-36	36"x 36"	9.0		15.6							
			EXP-51-24	24"x 18"	3.0									
413	864+66	Rt.	Existing								1		1	
414	864+66	Rt.	R-1-36	36"x 36"	9.0		15.6							
			EXP-51-24	24"x 18"	3.0									
415	864+84	Rt.		9'x 6.5'		58.5		45.5	2.20	2				
416	864+00	Rt.	M-37-24	24"x 12"	2.0		48.3							
			M-38-24	24"x 12"	2.0									
			M-2-24-2	24"x 24"	4.0									
			M-2-24-2	24"x 24"	4.0									
			M-24-21	21"x 15"	2.2									
			M-24-21	21"x 15"	2.2									
			M-14-24	24"x 12"	2.0									
			M-2-24-2	24"x 24"	4.0									
TOTALS					72	176	125	129	6.60	4	11	3	4	4

W.E. QUICKSALL & ASSOCIATES INC. Consulting Engineers

ESTIMATED QUANTITIES

Calc. By: L.D.B. Date: 12-26-78
Chkd. By: G.W. Date: 1-16-79

FHWA REGION	STATE	PROJECT	
5	OHIO		

JEF-7-11.80

131

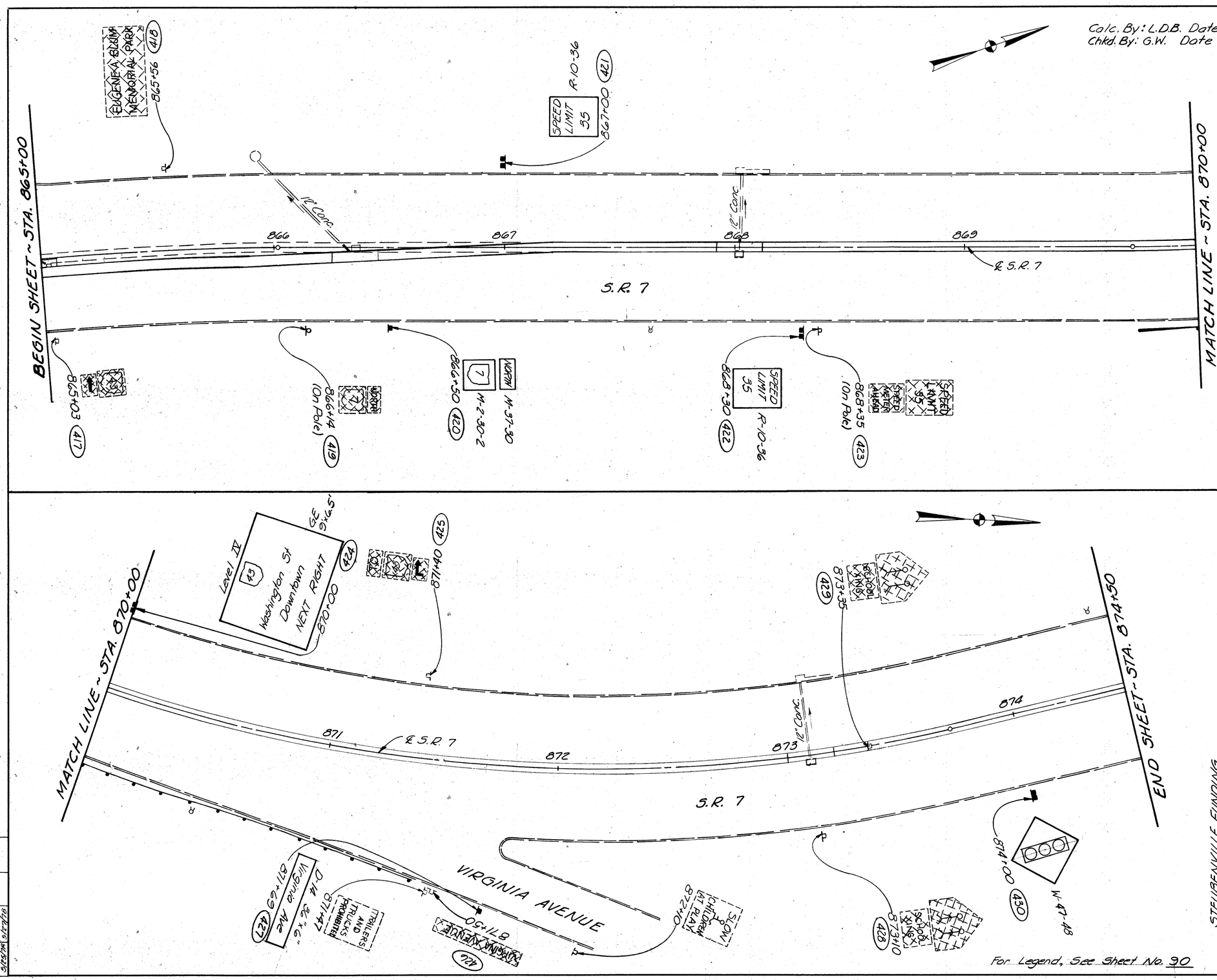

STEUBENVILLE FUNDING

ESTIMATED QUANTITIES

REF. NO.	STATION	SIDE	CODE	SIZE	844-SIGNS Flat Sheet Sq. Ft.	844-SIGNS Extra Sheet Sq. Ft.	844-GRD MTD SUPPORTS No. 3 Post Driven Lin. Ft.	844-GRD MTD SUPPORTS No. 4 Post Driven Lin. Ft.	844-GRD MTD SUPPORTS W10x11.5 Lin. Ft.	844-GRD MTD SUPPORTS Concrete For Embedded Foundation Cu. Yd.	844-GRD MTD SUPPORTS Breakaway Beam Support Each	844-GRD MTD SUPPORTS Street Name Sign Support Each	844-GRD MTD SUPPORTS Double Faced Sign, Street Name Each	844-GRD MTD SUPPORTS Ground Mounted Sign & Storage Each	844-GRD MTD SUPPORTS Ground Mounted Post Support Each	SEE SHEET NO.
417	865+03	Rt.	Existing											2	1	
418	865+56	Lt.	Existing											1	1	
419	866+14	Rt.	Existing											1		
420	866+50	Rt.	M-5-30	30"x15"	3.1									2		
421	867+00	Lt.	R-10-36	30"x30"	6.3									1		
422	868+30	Rt.	R-10-36	36"x48"	12.0									2		
423	868+35	Rt.	Existing	36"x48"	12.0									2		
424	870+00	Lt.	GE	9'x6.5'		58.5										
425	871+40	Lt.	Existing						41.5	2.20	2			3	1	
426	871+50	Rt.	Existing											1		
427	871+69	Rt.	D-14	36"x6'									1			
428	873+10	Rt.	Existing													
429	873+35	Lt.	Existing													
430	874+00	Rt.	W-47-48	48"x48"	16.0			31.0								
TOTALS					49	59	59	46	42	2.20	2	1	1	15	6	

DRAWN	CHKD.
DDD	WJH
3/29/79	3/29/79

W. E. QUICKSALL & ASSOCIATES INC. Consulting Engineers

STA. 865+00 TO STA. 874+50

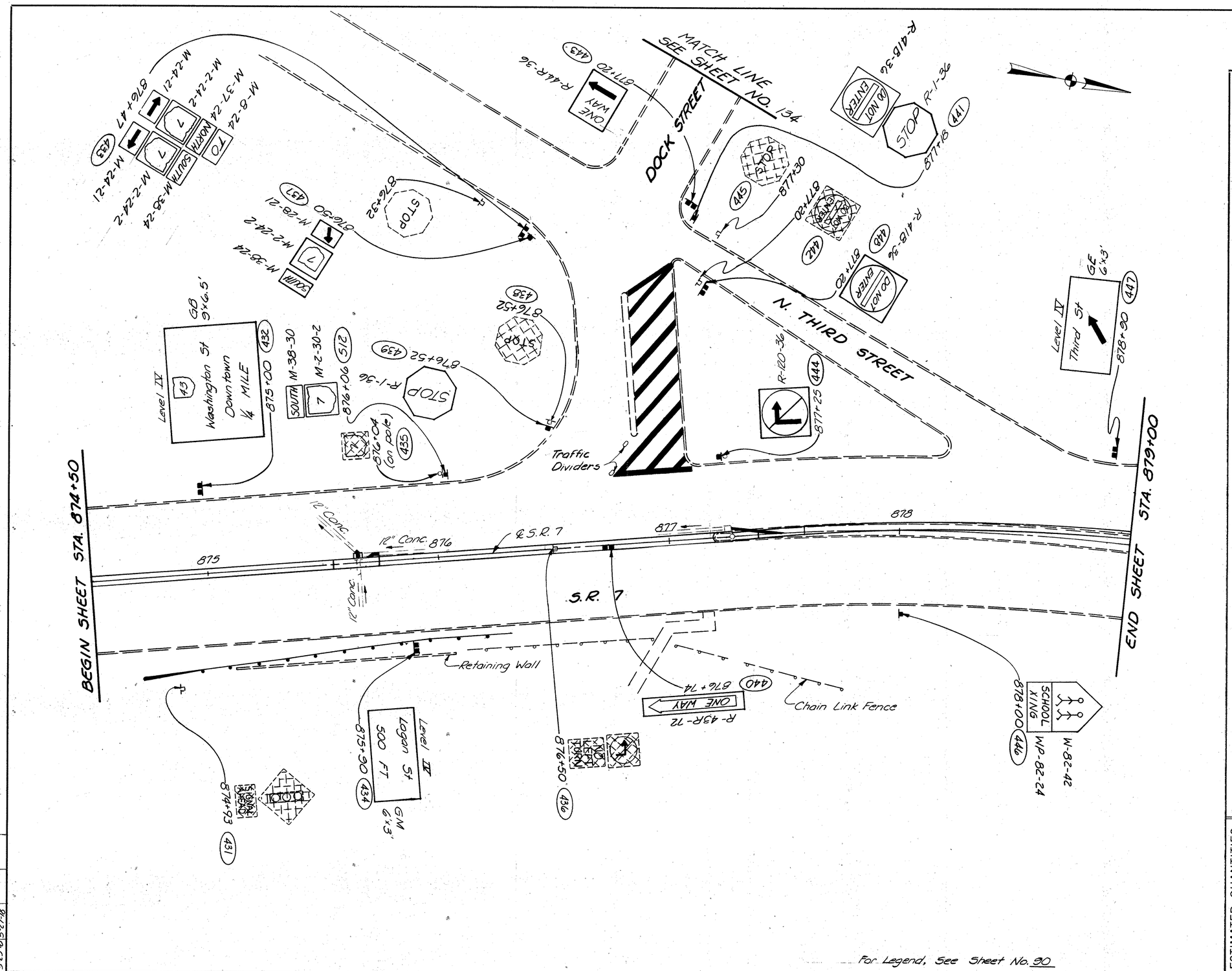

For Legend, See Sheet No. 90

ESTIMATED QUANTITIES

REF. NO.	STATION TO STATION	SIDE	SEE SHEET NO.
TOTALS			

FOR QUANTITIES, SEE SHEET NO. 133

STA. 874+50 TO STA. 879+00

TRAFFIC CONTROL QUANTITIES

Calc. By: L.D.B. Date: 12-26-78
Chkd. By: G.W. Date: 1-17-79

FED. RD. DIVISION	STATE	PROJECT	
	OHIO		

138

JEF-7-11.80

GROUND MOUNTED SIGNS

REF NO.	STATION	SIDE	CODE	SIZE	844~SIGNS Flat Sheet	844~SIGNS Extru Sheet			844~GROUND MOUNTED SUPPORTS No. 2 Post	No. 3 Post Driven	No. 4 Post Driven	5 4 x 7.7	W10x11.5	Concrete for Embedded Foundation	Breakaway Beam Connection	Concrete Barrier Insert, 3½ Inch Pipe				844~REMOVAL OF Ground Mounted Sign & Storage	Ground Mounted Post Support			
	STEUBENVILLE		FUNDING		Sq. Ft.	Sq. Ft.			Lin. Ft.	Lin. Ft.	Lin. Ft.	Lin. Ft.	Lin. Ft.	Cu. Yd.	Each	Each				Each	Each			
431	874+93	Rt.	Existing																	2	1			
432	875+00	Lt	GB	9'x6.5'		58.5							39.3	2.20	2									
433	876+47	Lt.	M-8-24	24"x12"	2.0						31.4			0.54	2									
			M-37-24	24"x12"	2.0																			
			M-2-24-2	24"x24"	4.0																			
			M-24-21	21"x15"	2.2																			
			M-38-24	24"x12"	2.0																			
			M-2-24-2	24"x24"	4.0																			
			M-24-21	21"x15"	2.2																			
434	875+90	Rt.	GM	6'x3'		18.0						28.6												
435	876+04	Lt.	Existing																	1				
436	876+50	℄	Existing																	2	1			
437	876+50	Lt.	M-38-24	24"x12"	2.0						15.4													
			M-2-24-2	24"x24"	4.0																			
			M-28-21	21"x15"	2.2																			
438	876+52	Lt.	Existing																	1	1			
439	876+52	Lt.	R-1-36	36"x36"	9.0					14.0														
440	876+74	Rt.	R-43R-72	72"x24"	12.0				17.0															
441	877+18	Lt.	R-41B-36	36"x36"	9.0					15.7						2								
			R-1-36	36"x36"	9.0																			
442	877+20	Lt.	Existing																	1	1			
443	877+20	Lt	R-44R-36	36"x48"	12.0					27.7														
444	877+25	Lt.	R-120-36	36"x36"	9.0						14.0													
445	877+30	Lt.	Existing																	1	1			
446	878+00	Rt.	W-82-42	42"x42"	12.3						15.8													
			WP-82-24	24"x18"	3.0																			
447	878+90	Lt.	GE	6'x3'		18.0						31.1		0.54	2									
448	877+20	Lt.	R-41B-36	36"x36"	9.0					27.8														
512	876+06	Lt.	M-38-30	30"x15"	3.1						14.3													
			M-2-30-2	30"x30"	6.3																			
	TOTALS				120	95			17	85	91	60	39	3.28	6	2				8	5			

Calc. By: L.D.B. Date: 12-27-78
Chkd. By: G.W. Date: 1-17-79

FHWA REGION	STATE	PROJECT	
5	OHIO		

134

JEF-7-11.80

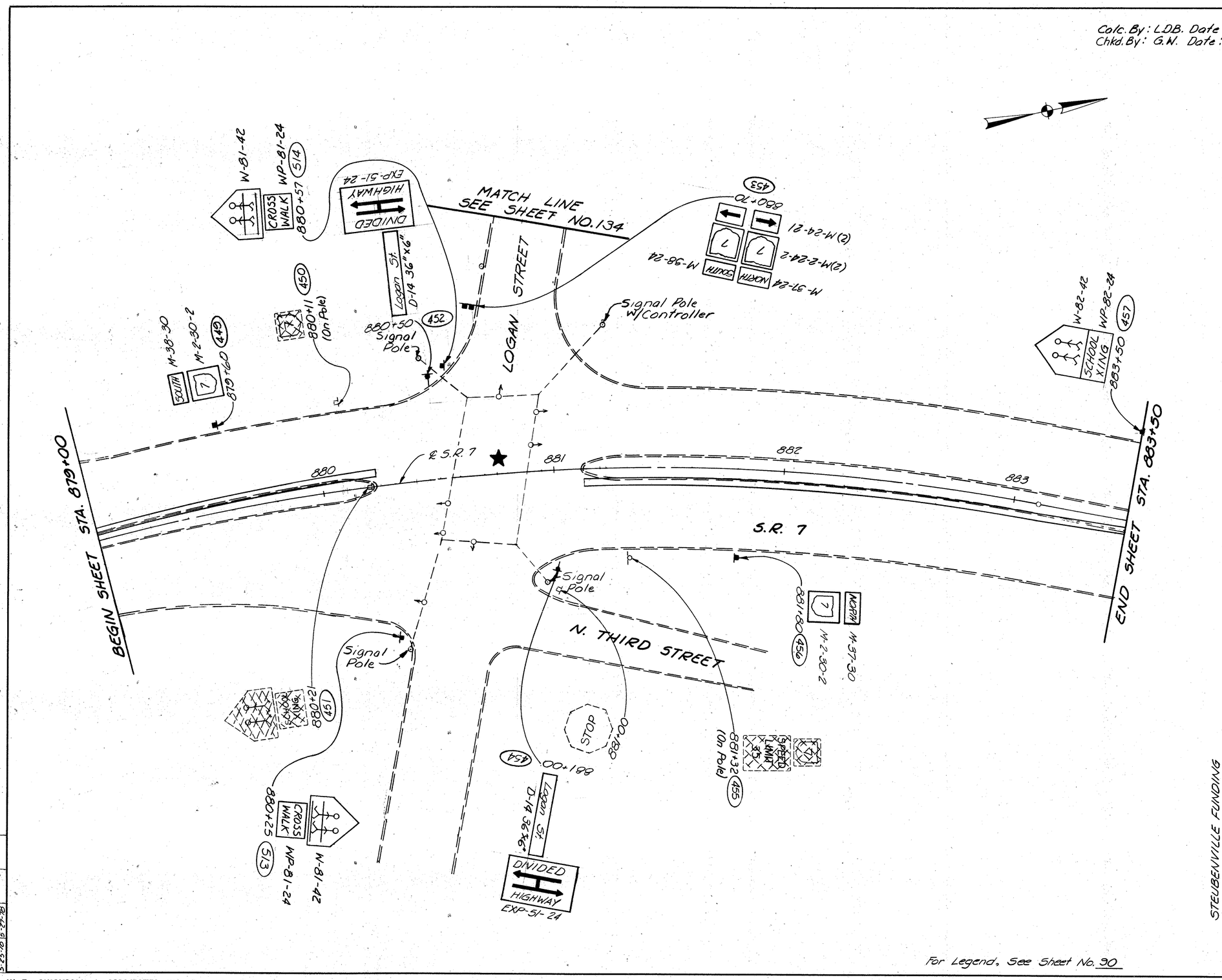

For Legend, See Sheet No. 90

STEUBENVILLE FUNDING

ESTIMATED QUANTITIES

REF. NO.	STATION	SIDE	CODE	SIZE	844-SIGNS Flat Sheets	844-GRD MTD SUPPORTS No. 4 Post Driven	Pole Mtd Sign Attachment Assembly	Street Name Sign Support	Double Face Sign Street Name	844-REMOVAL OF Ground Mounted Post Support	Ground Mounted Sign & Storage	SEE SHEET NO.
					Sq. Ft.	Lin. Ft.	Each	Each	Each	Each	Each	
449	879+60	Lt.	M-38-30	30"x15"	3.1	14.4						
			M-2-30-2	30"x30"	6.3							
450	880+11	Lt.	Existing									
451	880+21	℄	Existing									
452	880+50	Lt.	D-14	36"x6"								
453	880+70	Lt.	EXP-51-24	24"x18"	3.0							
			M-37-24	24"x12"	2.0	30.8						
			M-38-24	24"x12"	2.0							
			M-2-24-2	24"x24"	4.0							
			M-2-24-2	24"x24"	4.0							
			M-24-21	21"x15"	2.2							
			M-24-21	21"x15"	2.2							
454	881+00	Rt.	D-14	36"x6"			1	1	1			
			EXP-51-24	24"x18"	3.0							
455	881+32	Rt.	Existing									
456	881+80	Rt.	M-37-30	30"x15"	3.1	14.6						
			M-2-30-2	30"x30"	6.3							
457	883+50	Lt.	W-82-42	42"x42"	12.3	16.2						
			WP-82-24	24"x18"	3.0							
513	880+25	Rt.	W-81-42	42"x42"	12.3	16.0						
			WP-81-24	24"x18"	3.0							
514	880+57	Lt.	W-81-42	42"x42"	12.3	16.0						
			WP-81-24	24"x18"	3.0							
TOTALS					87	108	2	2	2	1	5	

Dwn.	Chkd.
LDB 5-25-78	WCC 5-25-78

W. E. QUICKSALL & ASSOCIATES INC. Consulting Engineers

STA. 879+00 TO STA. 883+50

Calc. By: L.D.B. Date: 12-27-78
Chkd. By: G.W. Date: 1-17-79

FHWA REGION	STATE	PROJECT	
5	OHIO		

JEF-7-11.80

135

0 50 100
SCALE IN FEET

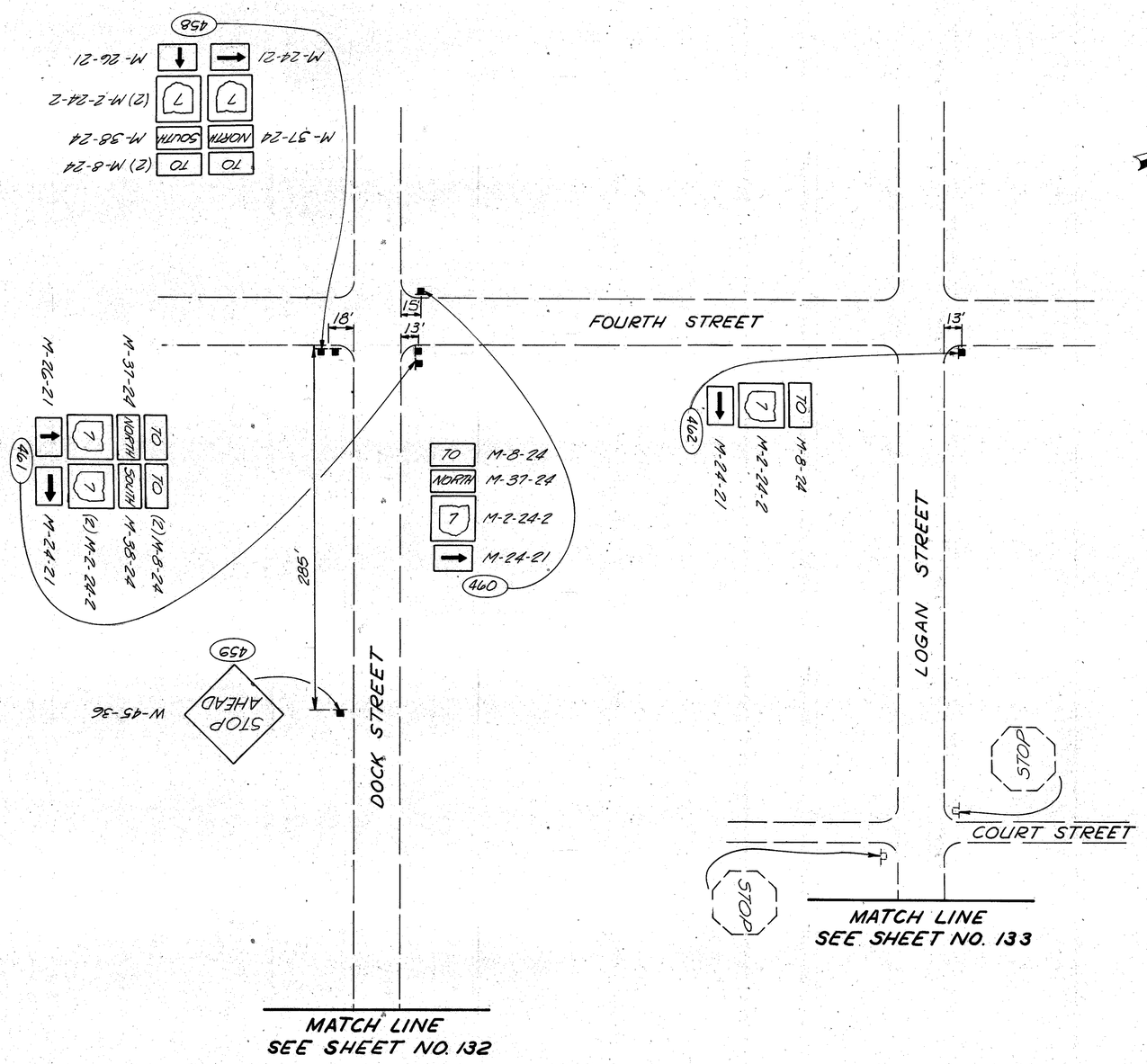

For Legend, See Sheet No. 90

STEUBENVILLE FUNDING

ESTIMATED QUANTITIES

REF. NO.	STATION	SIDE	CODE	SIZE	844-SIGNS Flat Sheet Sq. Ft.	844-GRD. MTD. SUPPORTS No. 3 Post Driven Lin. Ft.	No. 4 Post Driven Lin. Ft.	SEE SHEET NO.
458	18' S.E. of 4th St.		M-8-24	24"x12"	2.0			
			M-8-24	24"x12"	2.0			
			M-9-24-2	24"x24"	4.0			
			M-2-24-2	24"x24"	4.0			
			M-2-24-2	24"x24"	4.0			
			M-26-21	21"x15"	2.2			
			M-26-21	21"x15"	2.2			
			M-37-24	24"x12"	2.0			
			M-38-24	24"x12"	2.0			
459	285' SE of 4th St.		W-45-36	36"x36"	5.0			
460	15' NW of 4th St.		M-8-24	24"x12"	2.0			
			M-37-24	24"x12"	2.0			
			M-2-24-2	24"x24"	4.0			
461	13' NE of 4th St.		M-24-21	21"x15"	2.2			
			M-8-24	24"x12"	2.0			
			M-8-24	24"x12"	2.0			
			M-37-24	24"x12"	2.0			
			M-38-24	24"x12"	2.0			
			M-2-24-2	24"x24"	4.0			
			M-2-24-2	24"x24"	4.0			
			M-26-21	21"x15"	2.2			
			M-24-21	21"x15"	2.2			
462	13' NE of 4th St.		M-8-24	24"x12"	2.0	15.2		
			M-2-24-2	24"x24"	4.0			
			M-24-21	21"x15"	2.2			
TOTALS					68	15	95	
						32.8	32.8	
						14.6	14.6	

W. E. QUICKSALL & ASSOCIATES INC. Consulting Engineers

SIGNING PLAN-DOCK STREET & LOGAN STREET

Calc. By: L.D.B.
Date: 12-27-78
Chkd. By: G.W.
Date: 1-17-79

FHWA REGION	STATE	PROJECT	
5	OHIO		

JEF-7-11.80

136

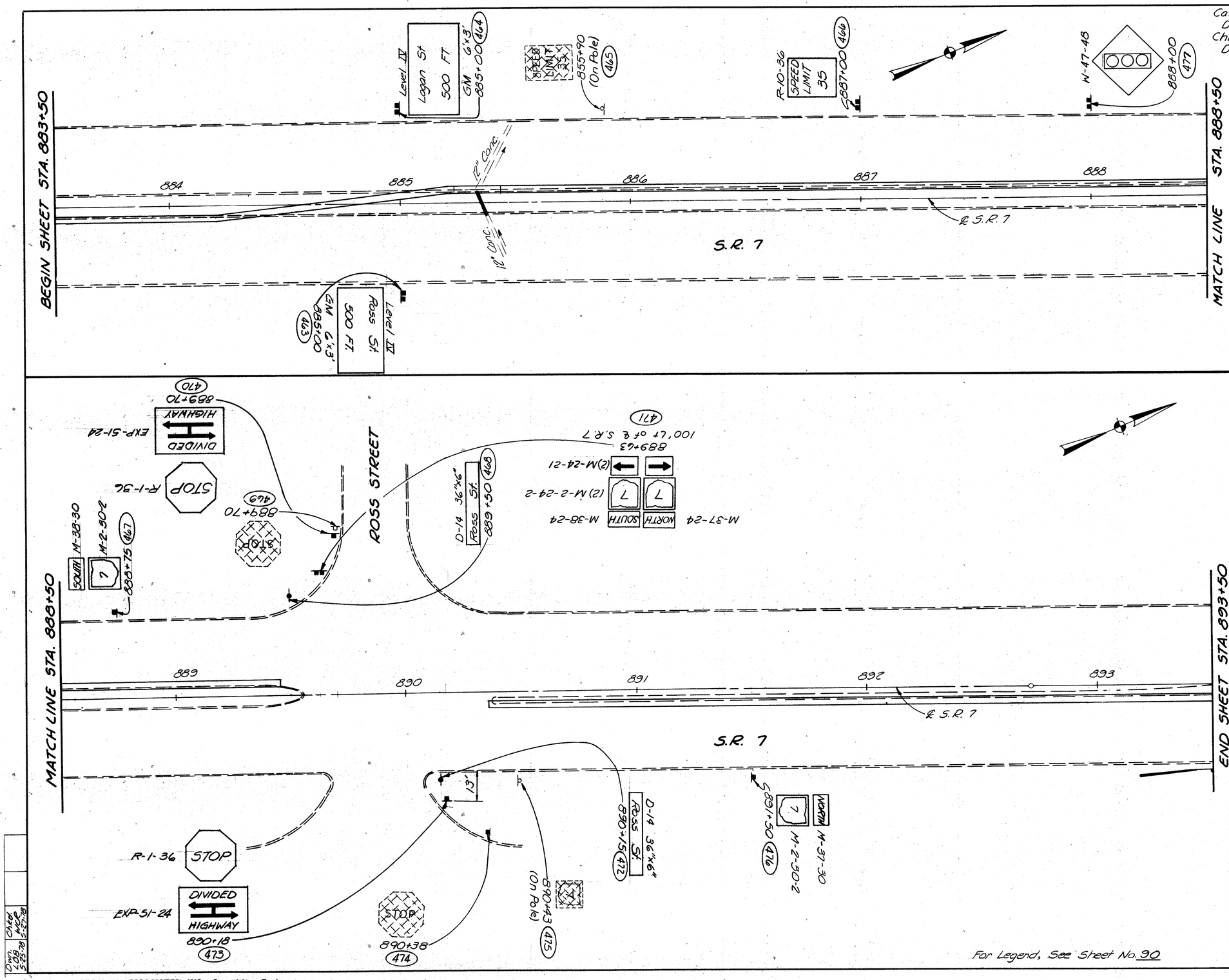

STEUBENVILLE FUNDING

ESTIMATED QUANTITIES

REF. NO.	STATION	SIDE	CODE	SIZE	844-SIGNS Flat Sheet (Sq. Ft.)	844-SIGNS Extra Sheet (Sq. Ft.)	844-GRD MTD. SUPPORTS No. 3 Post Driven (Lin. Ft.)	No. 4 Post Driven (Lin. Ft.)	54×77 (Lin. Ft.)	Concrete for Embedded Foundation (Cu. Yd.)	Breakaway Beam Connection (Each)	Double Faced Sign Street Name (Each)	Street Name Sign Support (Each)	844-REMOVAL OF Ground Mounted Sign & Storage (Each)	Ground Mounted Post Support (Each)	SEE SHEET NO.
463	885+00	Lt.	GM	6'x3'											1	
464	885+00	Rt.	GM	6'x3'		18.0										
465	885+90	Lt.	Existing			18.0										
466	887+00	Lt.	R10-36	36"x48"	12.0									1	1	
467	888+75	Lt.	M-38-30	30"x48"	3.1		29.3									
468	889+50	Lt.	D-14	36"x36"	6.3			14.4								
469	889+70	Lt.	R-1-36	36"x36"	9.0											
470	889+70	Lt.	EXP-51-24	24"x18"	3.0											
471	889+63	Lt.	M-37-24	24"x12"	2.0											
			M-38-24	24"x12"	2.0											
			M-2-24-2	24"x24"	4.0											
			M-2-30-2	24"x48"	4.0											
			M-24-21	21"x15"	2.2											
			M-24-21	21"x15"	2.2											
472	890+15	Rt.	D-14	36"x6"												
473	890+18	Rt.	R-1-36	36"x36"	9.0											
			EXP-51-24	24"x18"	3.0			15.4								
			M-37-24	24"x12"	2.0											
474	890+38	Rt.	Existing					30.6								
475	890+45	Rt.	Existing													
476	891+50	Rt.	M-37-30	30"x15"	3.1											
			M-2-30-2	30"x30"	6.3			14.6								
477	888+00	Lt.	W-47-48	48"x48"	16.0											
TOTALS					87	36	29	120	70	1.08	4	2	2	4	2	

STA. 883+50 TO STA. 893+50

W. E. QUICKSALL & ASSOCIATES INC. Consulting Engineers

Calc. By: L.D.B. Date: 12-27-78
Chkd. By: G.W. Date: 1-17-79

FHWA REGION	STATE	PROJECT	
5	OHIO		

JEF-7-11.80

137

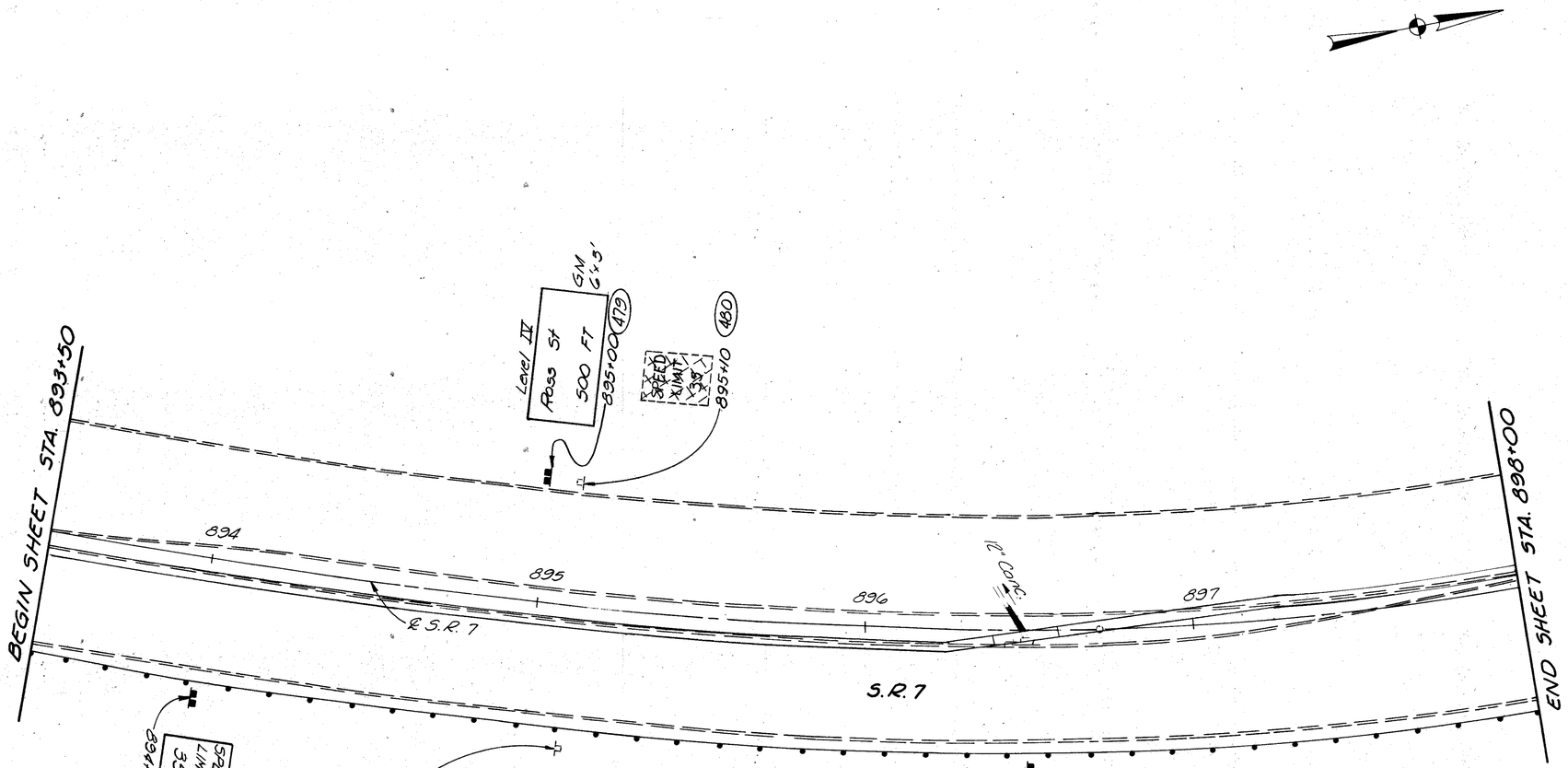

For Legend, See Sheet No. 90

STEUBENVILLE FUNDING

ESTIMATED QUANTITIES

REF. NO.	STATION	SIDE	CODE	SIZE	844-SIGNS Flat Sheet Sq. Ft.	844-SIGNS Extra Sheet Sq. Ft.	844-GRD MTD SUPPORTS No. 3 Post Driven Lin. Ft.	844-GRD MTD SUPPORTS 54.77 Lin. Ft.	844-GRD MTD SUPPORTS Breakaway Beam Connection Each	844-GRD MTD SUPPORTS Concrete For Embedded Foundation Cu. Yd.	844-REMOVAL OF Ground Mounted Sign & Storage Each	844-REMOVAL OF Ground Mounted Post Support Each	SEE SHEET NO.
478	894+00	Rt.	R-10-36	36"x48"	12.0		30.2						
479	895+00	Lt.	GM	6'x3'		18.0		91.1	0.54	2			
480	895+10	Lt.	Existing								1	1	
481	895+10	Rt.	Existing								1	1	
482	896+50	Rt.	GM	8'x3'		24.0		32.5	0.54				
TOTALS					12	42	30	64	1.08	2	2	2	

STA. 893+50 TO STA. 898+00

W. E. QUICKSALL & ASSOCIATES INC. Consulting Engineers

FHWA REGION	STATE	PROJECT	
5	OHIO		

138

JEF-7-11.80

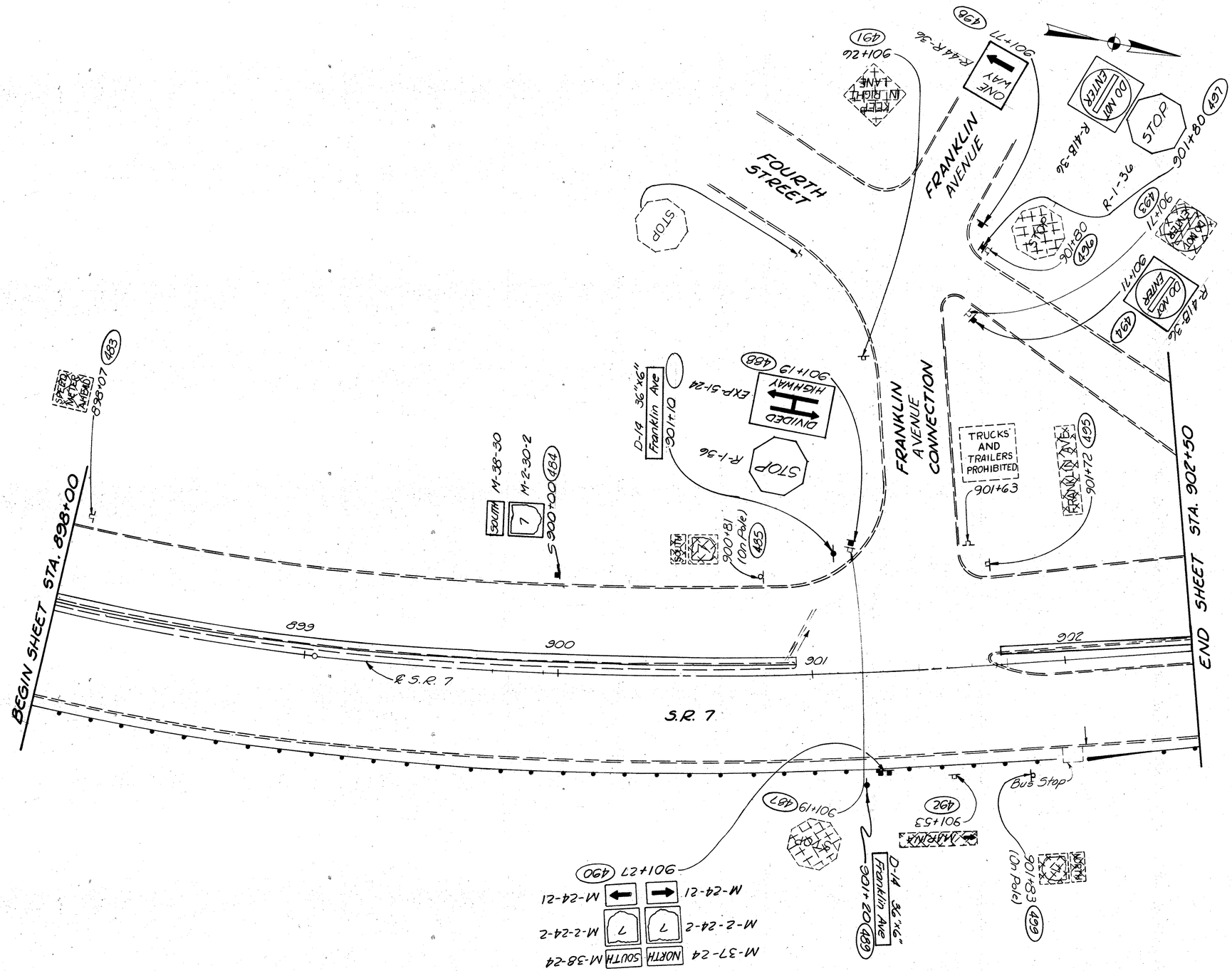

For Legend, See Sheet No. 90

ESTIMATED QUANTITIES			
REF. NO.	STATION TO STATION	SIDE	
TOTALS			

FOR QUANTITIES, SEE SHEET NO. 138

SEE SHEET NO.

CHKD.	W.K.	8-27-80
DWN.		

W. E. QUICKSALL & ASSOCIATES INC. Consulting Engineers

STA. 898+00 TO STA. 902+50

TRAFFIC CONTROL QUANTITIES

Calc. By: L.D.B. Date: 12-28-78
Chkd. By: G.W. Date: 1-17-79

FED. RD. DIVISION	STATE	PROJECT	
	OHIO		

139

JEF-7-11.80

STEUBENVILLE FUNDING

GROUND MOUNTED SIGNS

REF NO.	STATION	SIDE	CODE	SIZE	844 ~ SIGNS Flat Sheet	844 ~ GROUND MOUNTED SUPPORTS No. 4 Post Driven	Double Faced Sign Street Name	Street Name Sign Support	844 ~ REMOVAL OF Ground Mounted Sign & Storage	Ground Mounted Post Support
					Sq. Ft.	Lin. Ft.	Each	Each	Each	Each
483	898+07	Lt.	Existing						1	1
484	900+00	Lt.	M-3B-30	30" x 15"	3.1	14.4				
			M-2-30-2	30" x 30"	6.3					
485	900+81	Lt.	Existing						2	
486	901+10	Lt.	D-14	36" x 6"			1	1		
487	901+19	Lt.	Existing						1	1
488	901+19	Lt.	R-1-36	36" x 36"	9.0	15.1				
			EXP. 51-24	24" x 18"	3.0					
489	901+20	Rt.	D-14	36" x 6"			1	1		
490	901+27	Rt.	M-37-24	24" x 12"	2.0	31.8				
			M-2-24-2	24" x 24"	4.0					
			M-24-21	21" x 15"	2.2					
			M-3B-24	24" x 12"	2.0					
			M-2-24-2	24" x 24"	4.0					
			M-24-21	21" x 15"	2.2					
491	901+26	Lt.	Existing						1	1
492	901+53	Rt.	Existing						1	1
493	901+71	Lt.	Existing						1	1
494	901+71	Lt.	R-41B-36	36" x 36"	9.0	14.0				
495	901+72	Lt.	Existing						1	1
496	901+80	Lt.	Existing						1	1
497	901+80	Lt.	R-1-36	36" x 36"	9.0	14.0				
			R-41B-36	36" x 36"	9.0					
498	901+77	Lt.	R-44R-36	36" x 48"	12.0	30.5				
499	901+83	Rt.	Existing						1	
	TOTALS				77	120	2	2	10	7

W.E. QUICKSALL & ASSOCIATES INC. Consulting Engineers

ESTIMATED QUANTITIES

Calc. By: L.D.B. Date: 12-28-78
Chkd. By: G.W. Date: 1-18-79

FHWA REGION	STATE	PROJECT	
5	OHIO		

140

JEF-7-11.80

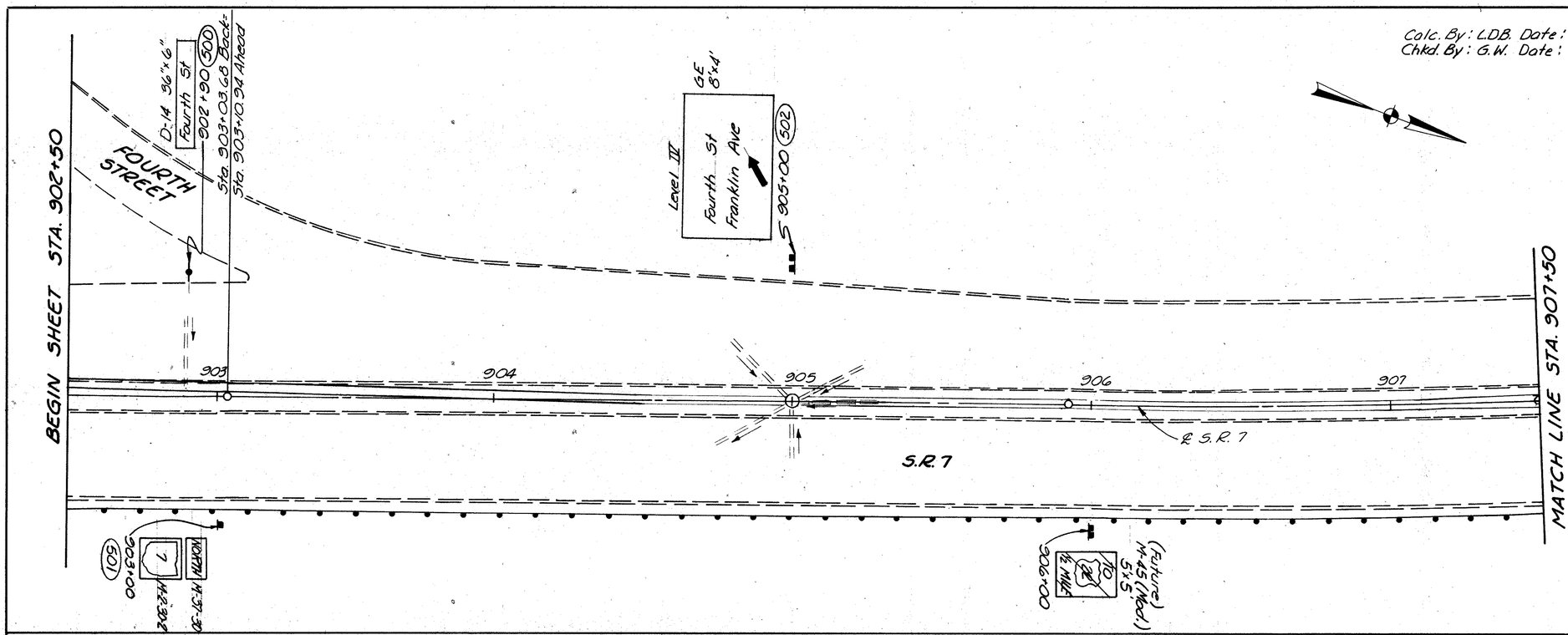

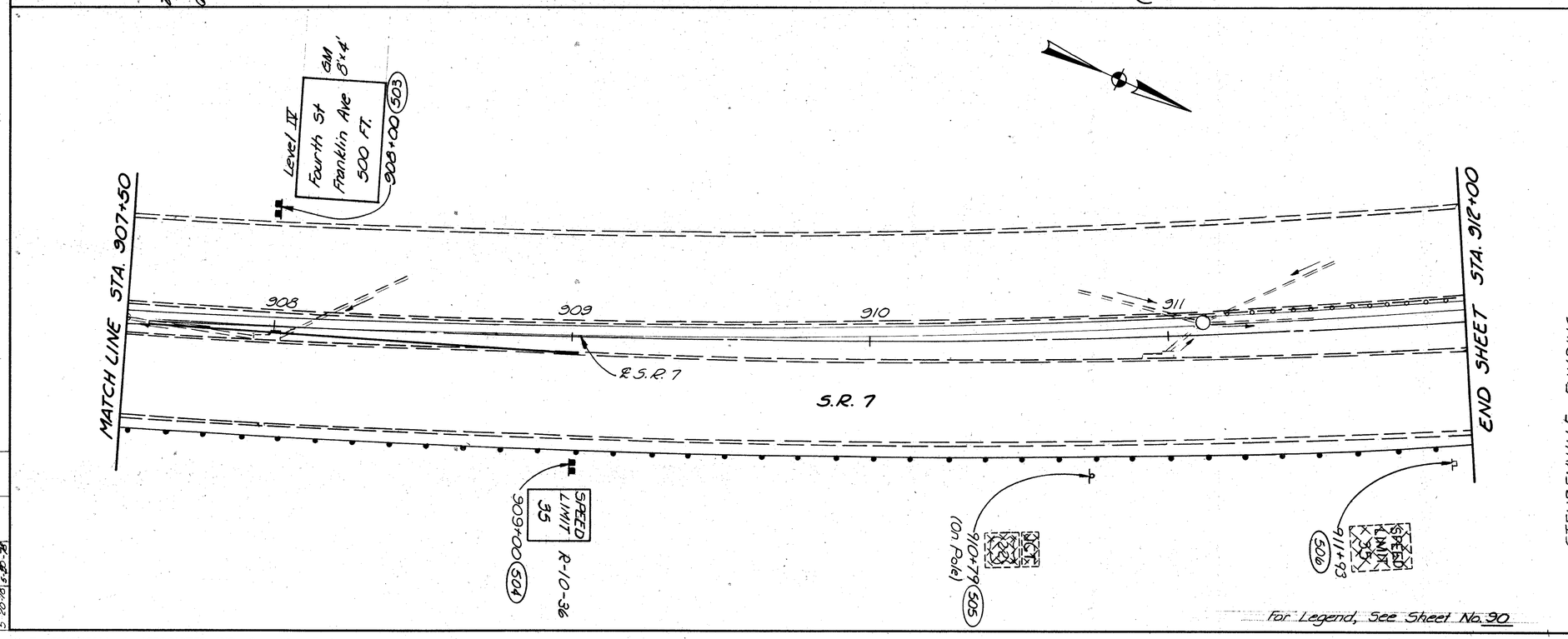

For Legend, See Sheet No. 90

STEUBENVILLE FUNDING

ESTIMATED QUANTITIES

REF. NO.	STATION	SIDE	CODE	SIZE	844-SIGNS Extru Sheet Sq. Ft.	844-SIGNS Flat Sheet Sq. Ft.	844-GRD. MTD. SUPPORTS No. 4 Post Driven Lin. Ft.	844-GRD. MTD. SUPPORTS 54x17 Lin. Ft.	844-GRD. MTD. SUPPORTS Concrete for Embedded Foundation Cu. Yd.	844-GRD. MTD. SUPPORTS Breakaway Beam Connection Each	844-GRD. MTD. SUPPORTS Double Faced Sign Street Name Each	844-GRD. MTD. SUPPORTS Street Name Sign Support Each	844 ~ REMOVAL OF Ground Mounted Post Support Each	844 ~ REMOVAL OF Ground Mounted Sign & Storage Each	SEE SHEET NO.
500	902+30	Lt.	D-14	36"x6"		1					1	1			
501	903+00	Rt.	M-37-30	30"x15"		31									
			M-2.2-30-2	30"x30"		16.3	14.8								
			GE	8'x4'						2					
502	905+00	Lt.	GM	8'x4'				34.0	0.54	2					
503	908+00	Lt.	GE	8'x4'				34.0	0.54	2					
504	909+00	Rt.	R-10-36	36"x48"	32.0	12.0	31.1								
505	910+79	Rt.	Existing										2	1	
506	911+33	Rt.	Existing										1	3	
TOTALS					64	21	46	68	1.08	4	1	1	3		

Date	Chkd.
5-20-78	8-25-78

W. E. QUICKSALL & ASSOCIATES INC. Consulting Engineers

STA. 902+50 TO STA. 912+00

Calc. By: L.D.B. Date: 12-28-78
Chkd. By: G.W. Date: 1-18-79

FHWA REGION	STATE	PROJECT	
5	OHIO		

141

JEF-7-11.80

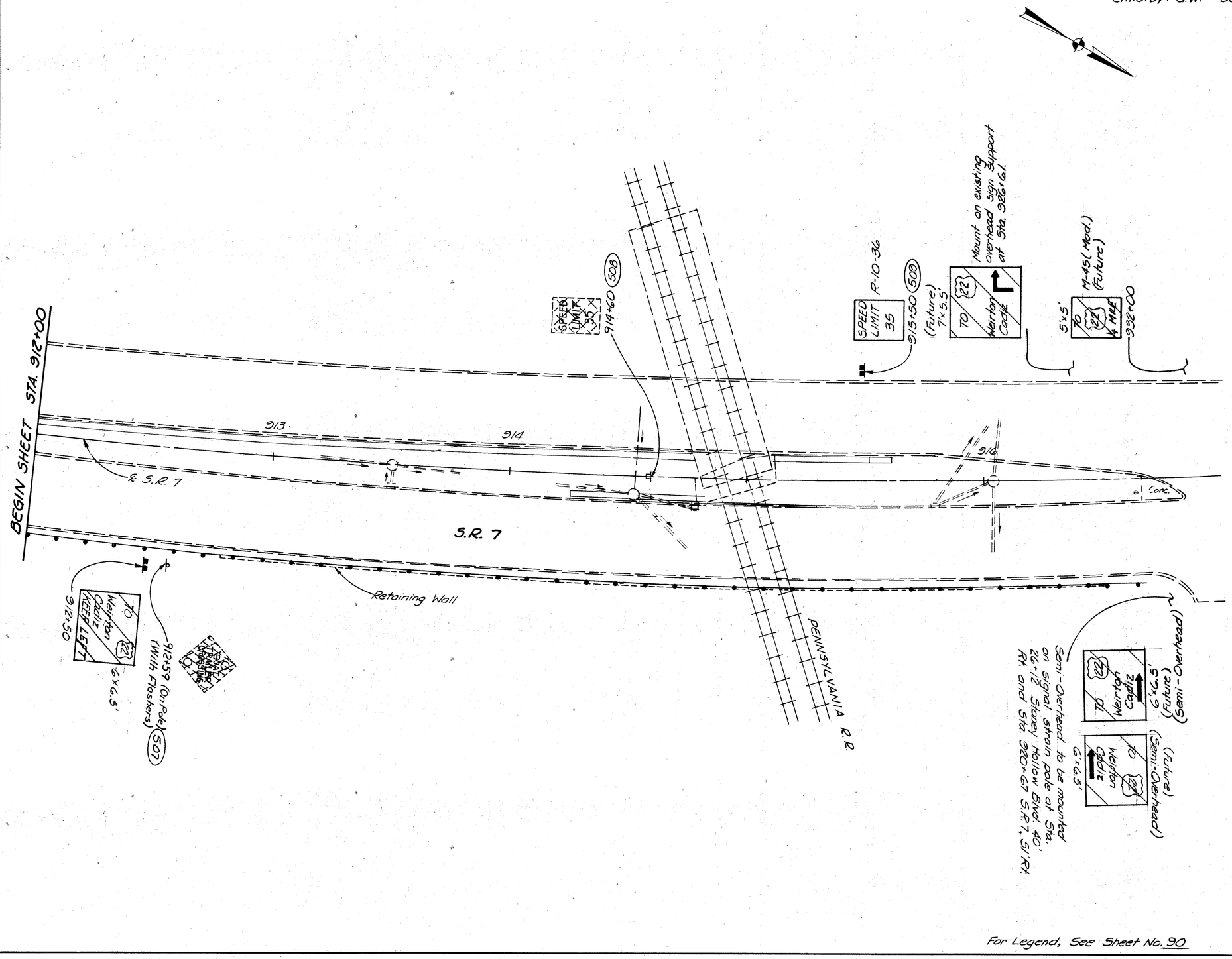

For Legend, See Sheet No. 90

STEUBENVILLE FUNDING

ESTIMATED QUANTITIES

REF. NO.	STATION	SIDE	CODE	SIZE	844~SIGNS Flat Sheet Sq. Ft.	844~GRD MTD. SUPPORTS No. 3 Post Driven Lin. Ft.	844~REMOVAL OF Ground Mounted Post Support Each	Ground Mounted Sign & Storage Each	SEE SHEET NO.
507	912+59	Rt.	Existing						
508	914+60	Lt.	Existing	36"x48"		29.3			
509	915+50	Lt.	R-10-36	36"x48"	12.0				
TOTALS					12	29	1	2	

Dwn. LDS 5-18-78 Chkd. WEF 5-18-78

W. E. QUICKSALL & ASSOCIATES INC. Consulting Engineers

STA. 912+00 TO STA. 916+77

FHWA REGION	STATE	PROJECT	
5	OHIO		

142

JEF-7-11.80

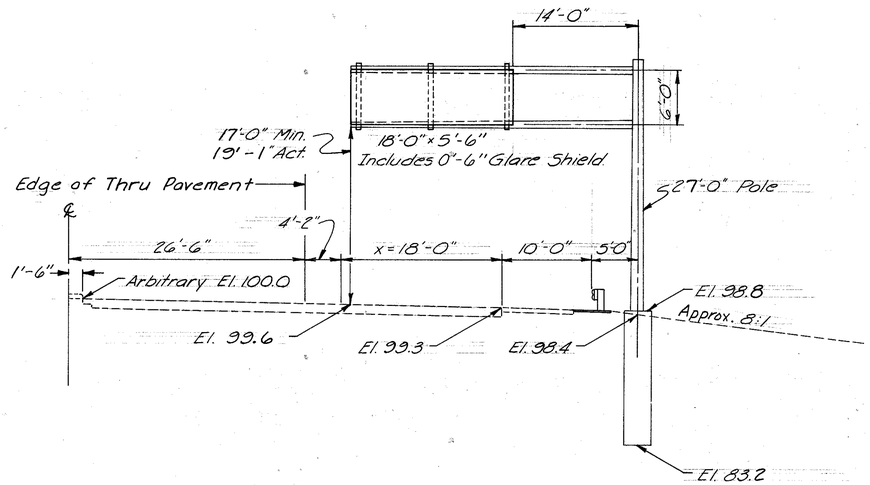

(97) STA. 657+50 AHEAD N.B.-S.R. 7
TC-12.30 Design No. 8 ~ 32'-0" Arm

Sign = 18'-0" x 5'-6"
Bracket Spacing = 8 5/8", 99 3/8", 99 3/8", 8 5/8"
No. of Brackets = 3 Height = 6'-0"

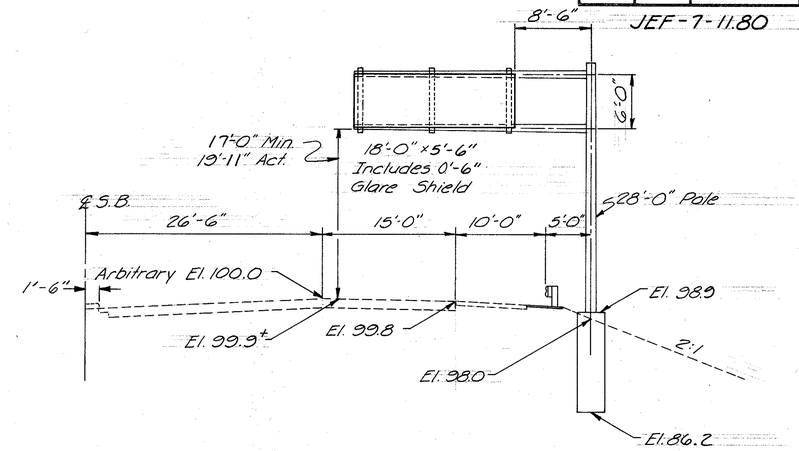

(120) STA. 663+00 AHEAD S.B.-S.R. 7
TC-12.30 Design No. 6 ~ 26'-0" Arm

Sign = 18'-0" x 5'-6"
Bracket Spacing = 8 5/8", 99 3/8", 99 3/8", 8 5/8"
No. of Brackets = 3 Height = 6'-0"

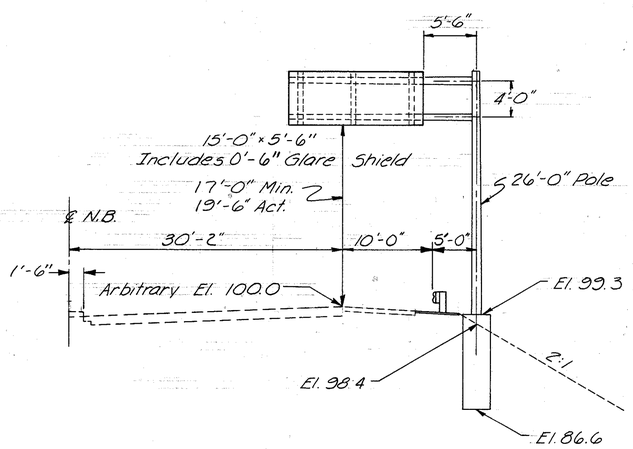

(168) STA. 683+00 N.B.-S.R. 7
TC-12.30 Design No. 4 ~ 20'-0" Arm

Sign = 15'-0" x 5'-6"
Bracket Spacing = 14 5/8", 75 3/8", 75 3/8", 14 5/8"
No. of Brackets = 3 Height = 6'-0"

GRADING NOTE:
The flowline horizontal alignment and elevation shall be smoothly transitioned to merge into the existing flowline at 50', either direction, from the sign support. This work is described further in the General Notes, Page No. 30-A. See "Item Special, Ditch Realignment."

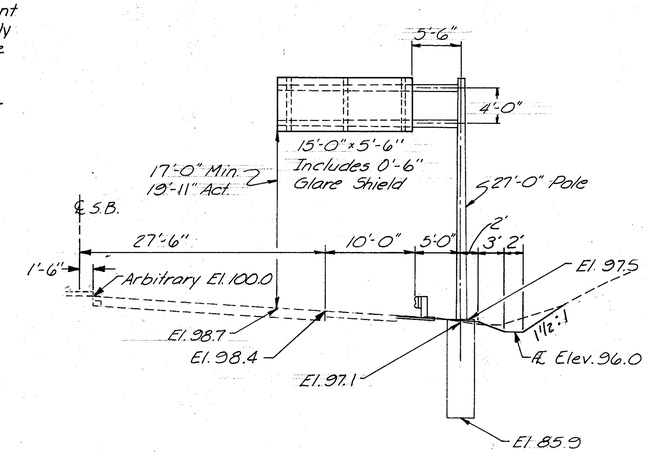

(171) STA. 687+55 S.B.-S.R. 7
TC-12.30 Design No. 4 ~ 20'-0" Arm

Sign = 15'-0" x 5'-6"
Bracket Spacing = 14 5/8", 75 3/8", 75 3/8", 14 5/8"
No. of Brackets = 3 Height = 6'-0"

Dwn. DDB
Ck. 12-15-78

SIGN ELEVATIONS

FHWA REGION	STATE	PROJECT	
5	OHIO		

143

JEF-7-11.80

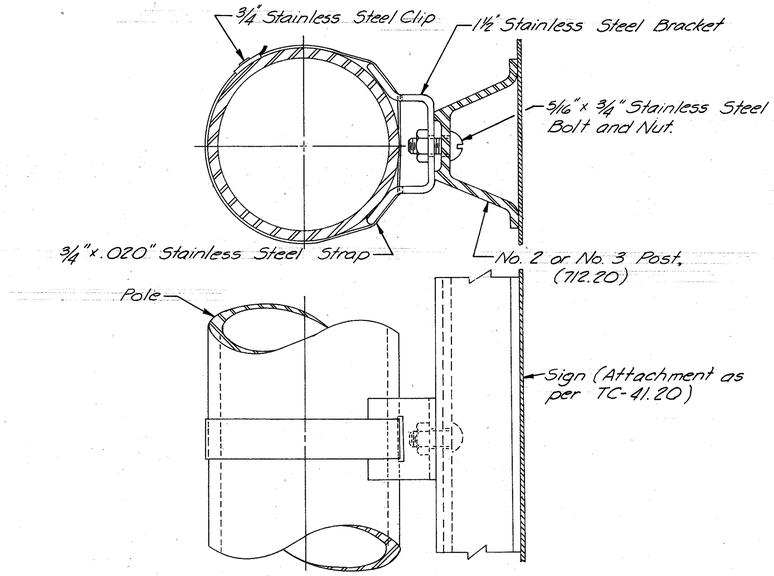

Note: Use minimum of 2 Bracket (Located 6" from top and bottom of sign) per installation with maximum spacing of 3'-0".

844 POLE MOUNTED SIGN ATTACHMENT ASSEMBLY

Not to Scale

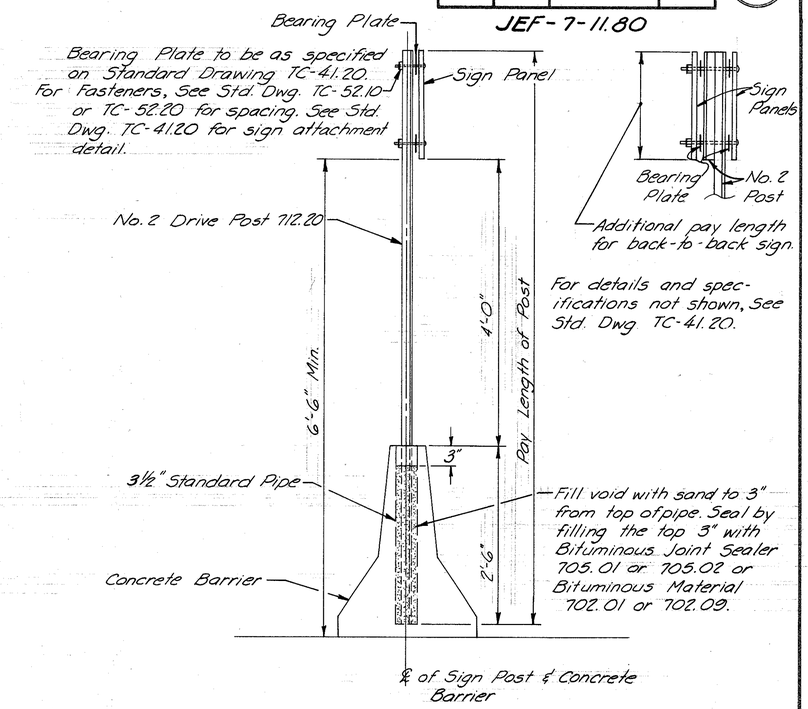

844 CONCRETE BARRIER MOUNTED SIGN SUPPORT

Not to Scale

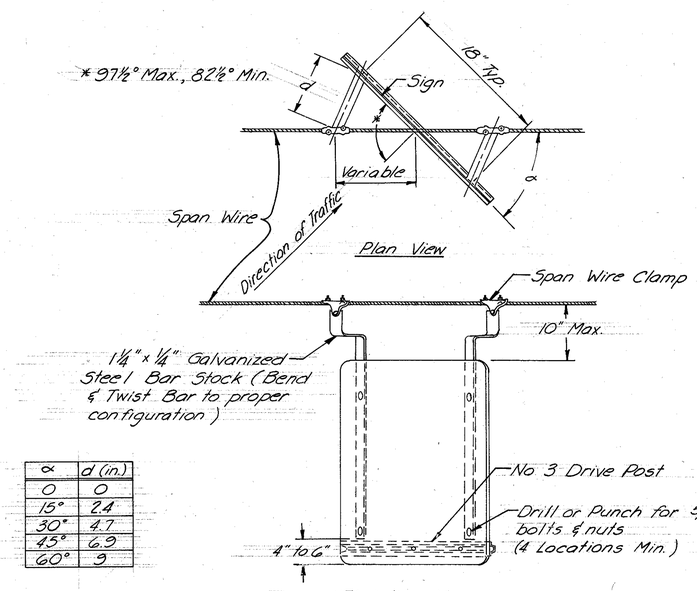

α	d (in.)
0	0
15°	2.4
30°	4.7
45°	6.9
60°	9

844 SPAN WIRE SIGN HANGER ASSEMBLY

Not to Scale

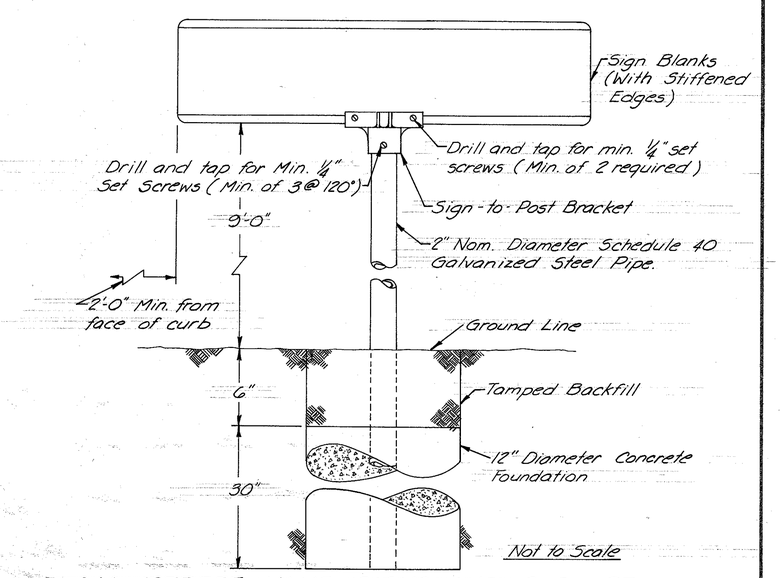

Not to Scale

844 STREET NAME SIGNS AND SUPPORT

Dwn LDB 2-9-78

W.E. QUICKSALL & ASSOCIATES INC. Consulting Engineers

MISCELLANEOUS SIGNING DETAILS

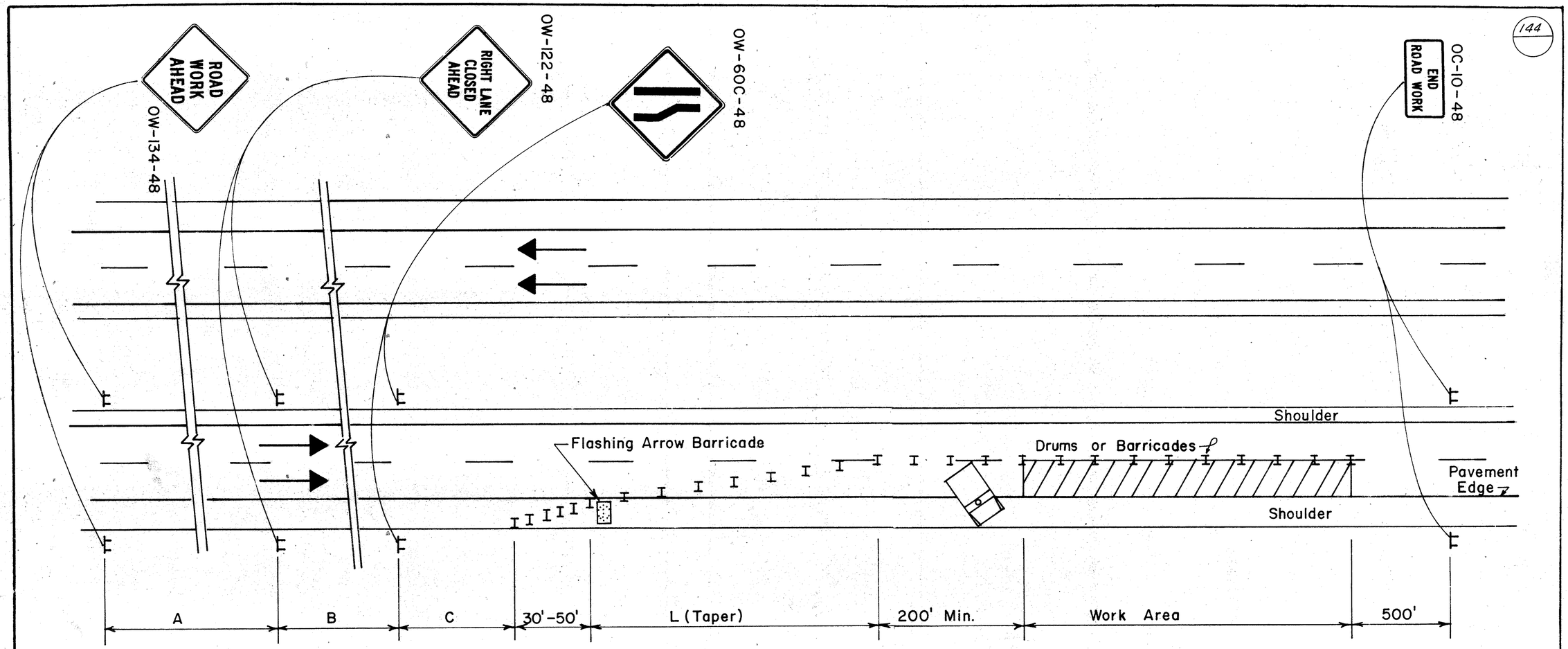

GENERAL NOTES

1. THIRTEEN (13) DRUMS OR BARRICADES SHALL BE USED TO FORM THE LANE TRANSITION TAPER IN ADVANCE OF THE WORK AREA. FIVE (5) CHANNELIZING DEVICES SHALL BE USED TO FORM THE TAPER ON THE SHOULDER. CONES, DRUMS, OR BARRICADES SHALL BE SPACED AT 50 FOOT CENTERS FOR THE FIRST 1000 FEET OF THE WORK AREA AND AT A MAXIMUM OF 100 FEET FOR THE BALANCE OF THE WORK AREA. CONES MAY BE SUBSTITUTED FOR THE BARRICADES OR STEEL DRUMS FOR THE LANE CLOSURES DURING DAYLIGHT HOURS ONLY.

2. WHEN WORK IS BEING PERFORMED IN THE LANE ADJACENT TO THE MEDIAN ON A DIVIDED HIGHWAY, "OW-123-48" SIGNS SHALL BE SUBSTITUTED FOR "OW-122-48" SIGNS AND THE OW-60D SIGNS SHALL BE SUBSTITUTED FOR THE OW-60C SIGNS.

3. THE WORK TRUCK SHOWN AT THE BEGINNING OF THE WORK AREA SHALL BE IN PLACE AND UNOCCUPIED WHENEVER MEN ARE WORKING WITHIN THE WORK AREA. THIS TRUCK SHALL BE MOVED FROM THE PAVEMENT WHENEVER WORKMEN ARE NOT IN THE WORK AREA. OTHER PROTECTIVE DEVICES MAY BE USED IN LIEU OF THE WORK TRUCK SHOWN WHEN APPROVED BY THE ENGINEER.

5. TYPE C STEADY BURNING BARRICADE WARNING LIGHTS SHALL BE ERECTED ON DRUMS OR BARRICADES FOR NIGHT LANE CLOSURES. MAXIMUM SPACING SHALL BE 50' CENTER TO CENTER IN ADVANCE OF THE WORK AREA AND 200' CENTER TO CENTER WITHIN THE LIMITS OF THE WORK AREA.

DISTANCE	A	B	C	L
URBAN	200	200	200	425
MAJOR STANDARD	500	500	500	600
FREEWAY AND EXPRESSWAY	2600	1600	1000	720

OHIO DEPARTMENT OF TRANSPORTATION

CLOSING ONE LANE OF A FOUR LANE DIVIDED HIGHWAY

DATE 4/77

DR. GRD CK. RLB.

TRAFFIC CONTROL QUANTITIES

CALCULATIONS
MADE BY ALM DATE 3-14-79
CHECKED JPH DATE 3-14-79
CITY OF STEUBENVILLE

FHWA	STATE	PROJECT	
5	OHIO		

PAVEMENT MARKINGS

ROADWAY	SIDE	STATION FROM	STATION TO	EDGE LINE (WHITE) LIN. FT.	EDGE LINE (YELLOW) LIN. FT.	4" LANE LINE LIN. FT.		CENTER LINE SOLID DOUBLE LIN. FT.				8" CHANNEL. LINE (WHITE) LIN. FT.	8" CHANNEL. LINE (YELLOW) LIN. FT.	24" STOP LINE LIN. FT.	24" BROAD TRANSVERSE LINE (WHITE) LIN. FT.	24" BROAD TRANSVERSE LINE (YELLOW) LIN. FT.	LANE ARROWS EACH	WORD "ONLY" ON PAVEMENT EACH	WORD "SCHOOL" ON PAVEMENT Each	DOTTED LINE 4" Lin. Ft.	CROSSWALK 12" (WHITE) Lin. Ft.
S.R. 7	RT.	770+81	809+50	3869	3869	3869															
	LT.	770+81	809+50	3869	3869	3869															
	RT.	809+50	814+00	450	450	450															
S.R. 7	LT.	809+50	814+00	450	450	450															
S.R. 7	RT.	814+00	818+00	60	400	400															
	LT.	814+00	818+45	316	445	445						214									
S.R. 7	RT.	818+00	822+50		314	450						143			41						
	LT.	818+46	822+40		394	394															
S.R. 7	RT.	822+50	827+50		500	500															
	LT.	822+40	827+47		507	507															
S.R. 7	RT.	827+50	832+00		450	450															
	LT.	827+47	832+00		450	450															
S.R. 7	RT.	832+00	836+50		320	260						80		103		486					
	LT.	832+00	836+50		282	290						115		63		154	1	1			
S.R. 7	RT.	836+50	841+00		388	595															
	LT.	836+50	841+00		404	345						75		40		381	1	1			
S.R. 7	RT.	841+00	845+50		364	377						130		98		97	1	1			
	LT	841+00	845+50		320	340						60		70		232	1				
S.R. 7	RT	845+50	855+50		1000	1000															
S.R. 7	LT.	845+50	855+50		1000	1000												1			
S.R. 7	RT.	855+50	865+00		850	850						232		67			2	1			
	LT.	855+50	865+00		850	850								62			1				
	RT.	865+00	874+50		950	950						62			19					145	
	LT.	865+00	874+50		950	950						40									
	RT.	874+50	879+00		450	450										116			1		
	LT.	874+50	879+00		450	450		20					57			185					
	RT.	879+00	883+50		375	365						60		83			1	1			
	LT.	879+00	883+50		375	365						165		53		10	2	1			237
	RT.	883+50	893+50		920	920						405		20			3	1			
	LT.	883+50	893+50		920	920						317		18			2	1	1		
	RT.	893+50	898+00		450	450						61									
	LT.	893+50	898+00		450	450						255					1				
	RT.	898+00	902+50		380	380										16	2				
	LT.	898+00	902+50		380	370								24							
	RT.	902+50	912+00		956	950										70					
	LT.	902+50	912+00		944	950										93					
	RT.	912+00	916+88		533	400															
	LT.	912+00	916+89		483	400										39					
Steubenville				2470' or 0.47 Mi.	2470' or 0.47 Mi.	2470' or 0.47 Mi.															
State				6544' or 1.24 Mi.	25,372' or 4.80 Mi.	25,391' or 4.81 Mi.		20' or 0.01 Mi.			1	2414	57	701	60	1879	18	9	2	145	237
TOTALS				9014 or 1.71 Mi.	27,842 or 5.27 Mi.	27,861 or 5.28 Mi.		20 or 0.01 Mi.				2414	57	701	60	1879	18	9	2	145	237

PAVEMENT MARKING QUANTITIES

FHWA REGION	STATE	PROJECT	
5	OHIO		

146

JEF-7-11.80

LEGEND

- (A) EDGE LINE (WHITE)
- (B) EDGE LINE (YELLOW)
- (C) LANE LINE, 4"
- (D) CENTERLINE, SOLID DOUBLE
- (E) CENTERLINE, BROKEN SINGLE
- (F) 8" CHANNELIZING LINE (WHITE)
- (G) 8" CHANNELIZING LINE (YELLOW)
- (H) 24" STOP LINE
- (J) 24" BROAD TRANSVERSE LINE (WHITE)
- (K) 24" BROAD TRANSVERSE LINE (YELLOW)
- (L) LANE ARROWS
- (M) WORD "ONLY" ON PAVEMENT
- (N) WORD "SCHOOL" ON PAVEMENT
- (O) DOTTED LINE, 4"
- (P) CROSSWALK 12" (WHITE)

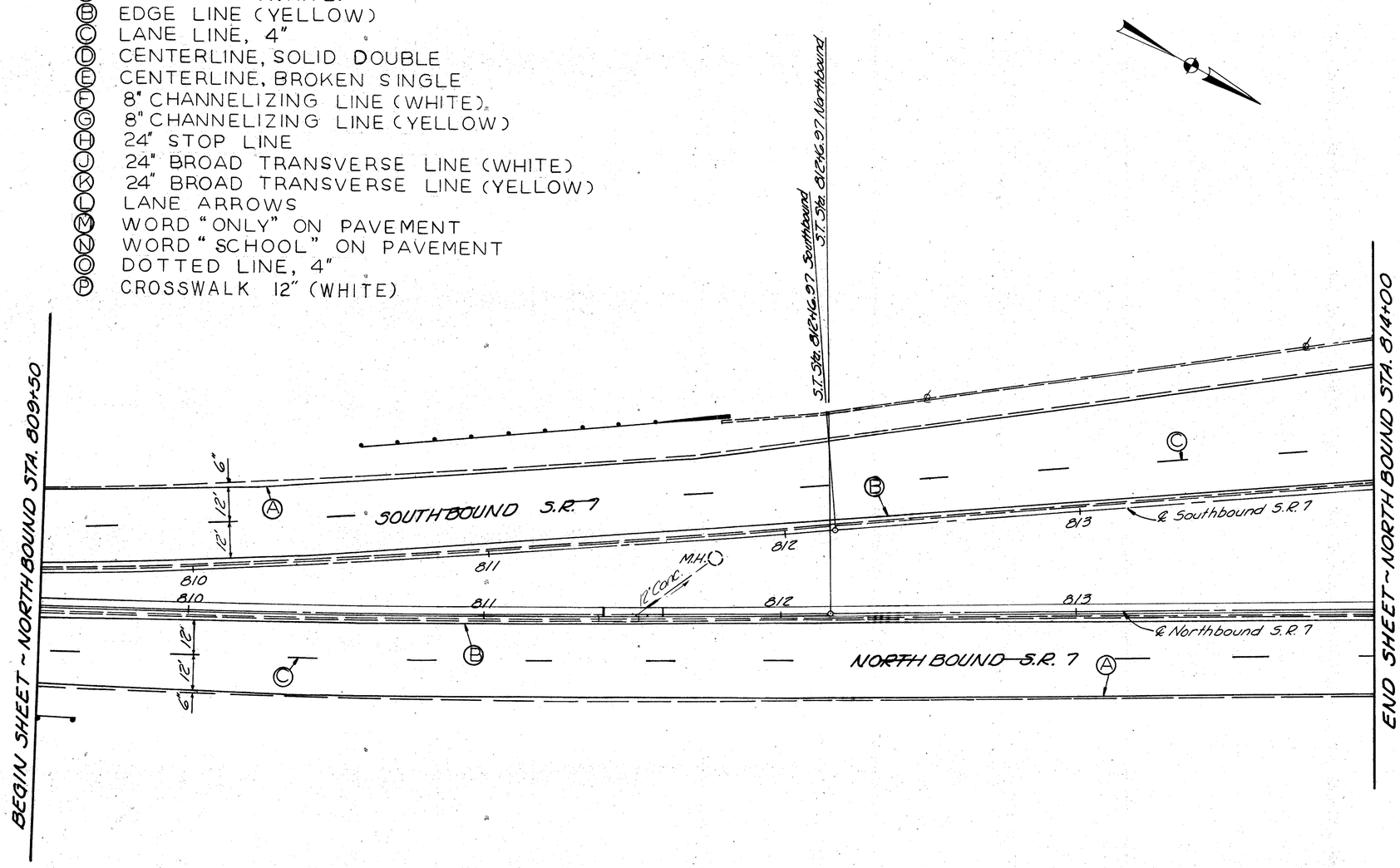

| SEE SHEET NO. | | |

FHWA REGION	STATE	PROJECT	
5	OHIO		

147

JEF-7-11.80

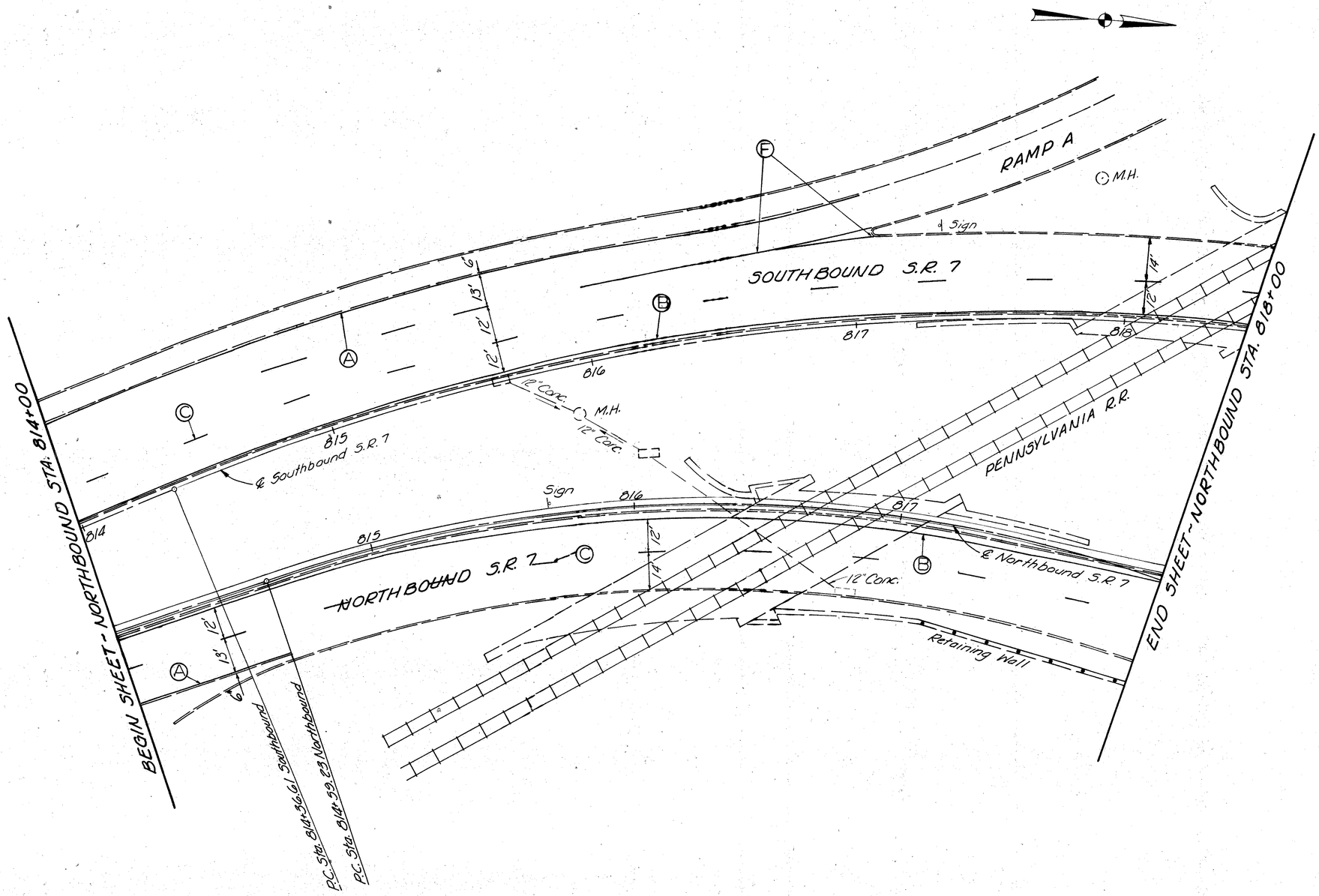

SEE SHEET NO.

ESTIMATED QUANTITIES

REF. NO.	STATION TO STATION	SIDE
TOTALS		

STA. 814+00 TO STA. 818+00

DRAWN DDD 01/24/78	CHKD. WCE 3/29/78	

FHWA REGION	STATE	PROJECT	
5	OHIO		

148

JEF-7-11.80

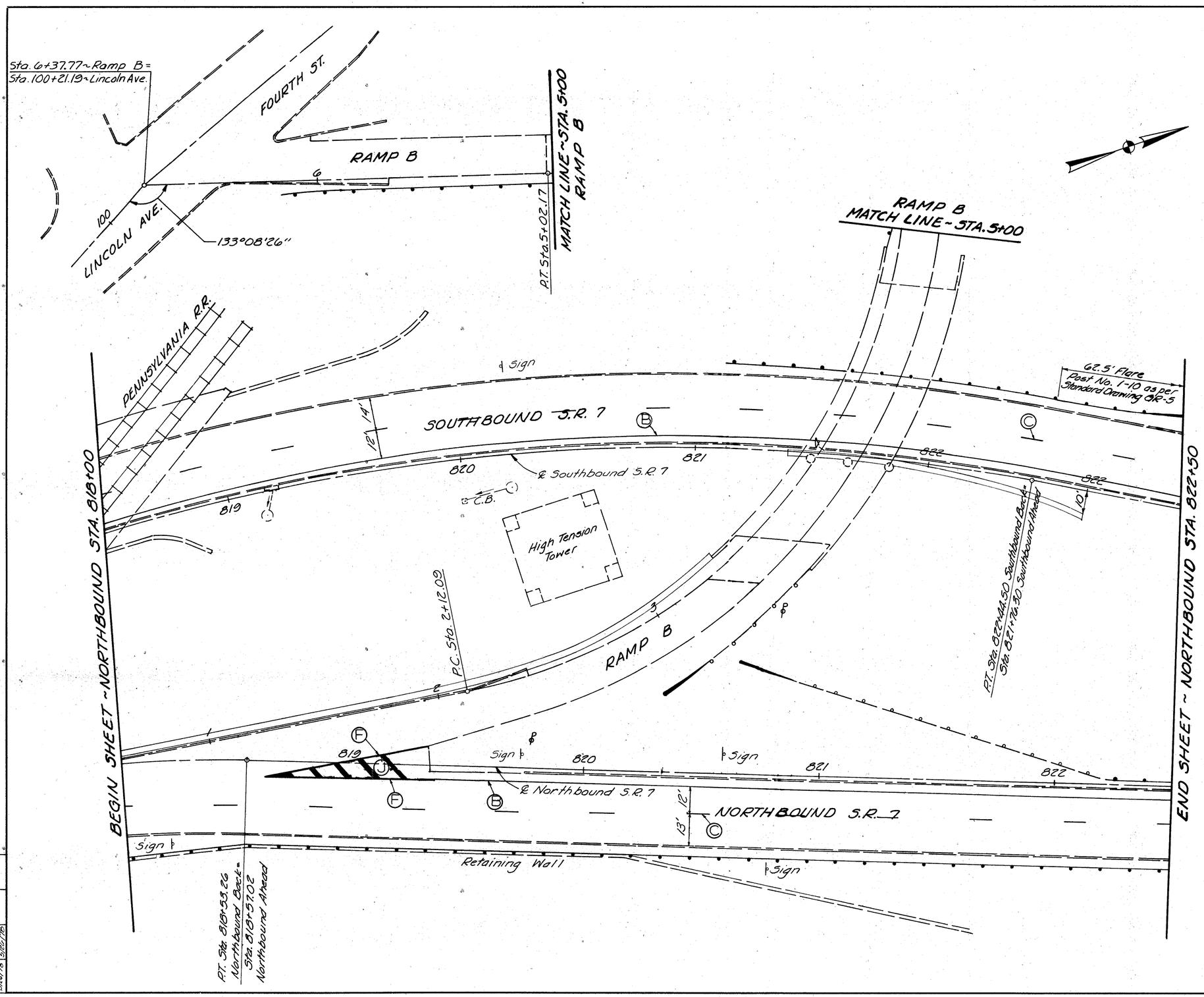

SEE SHEET NO.	

ESTIMATED QUANTITIES

REF. NO.	STATION TO STATION	SIDE
TOTALS		

STA. 818+00 TO STA. 822+50

DRAWN OJD 8/20/78 | CHKD. JVC 8/20/78

FHWA REGION	STATE	PROJECT	
5	OHIO		

149

JEF-7-11.80

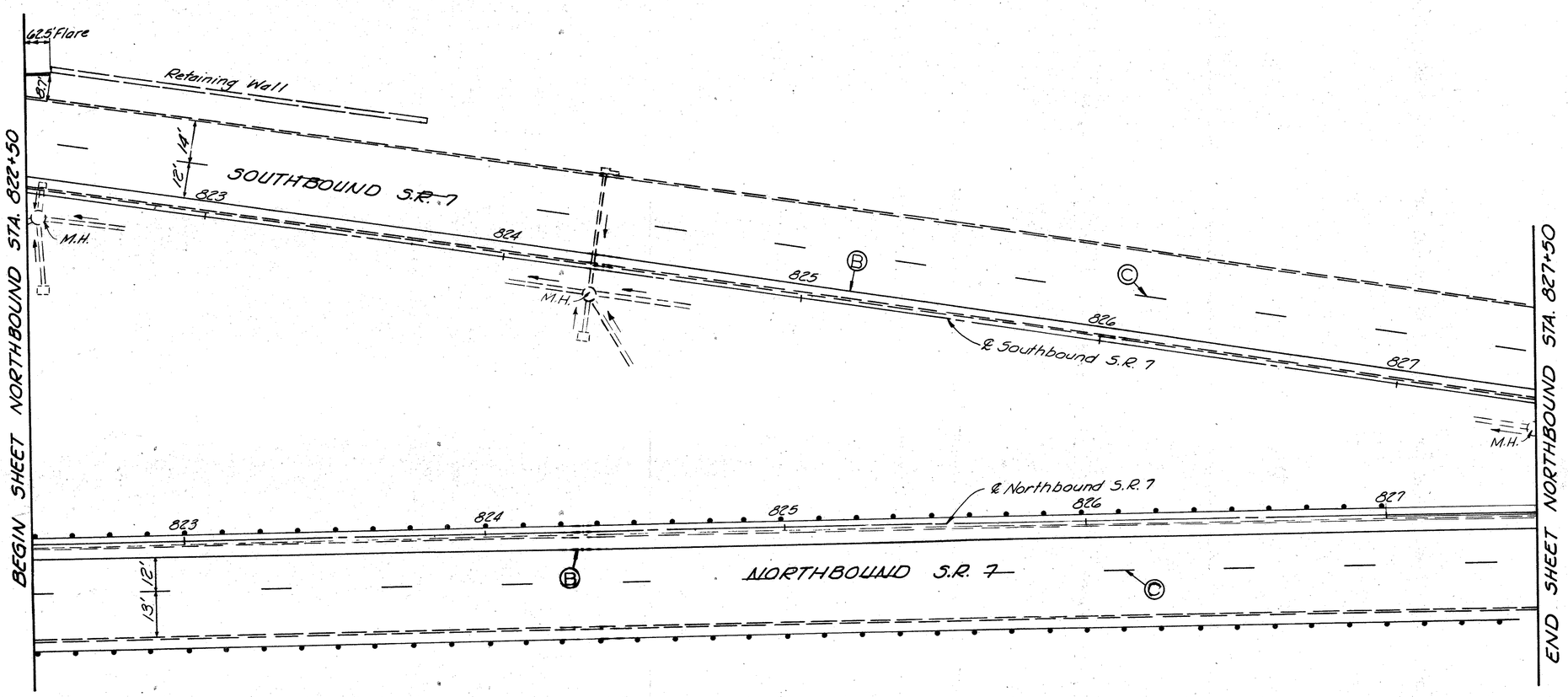

SEE SHEET NO.

ESTIMATED QUANTITIES

REF. NO.	STATION TO STATION	SIDE
		TOTALS

STA. 822+50 TO STA. 827+50

DWN. CHKD. 5-26-78 CHKD. 5-26-78

FHWA REGION	STATE	PROJECT	
5	OHIO		

150

JEF-7-11.80

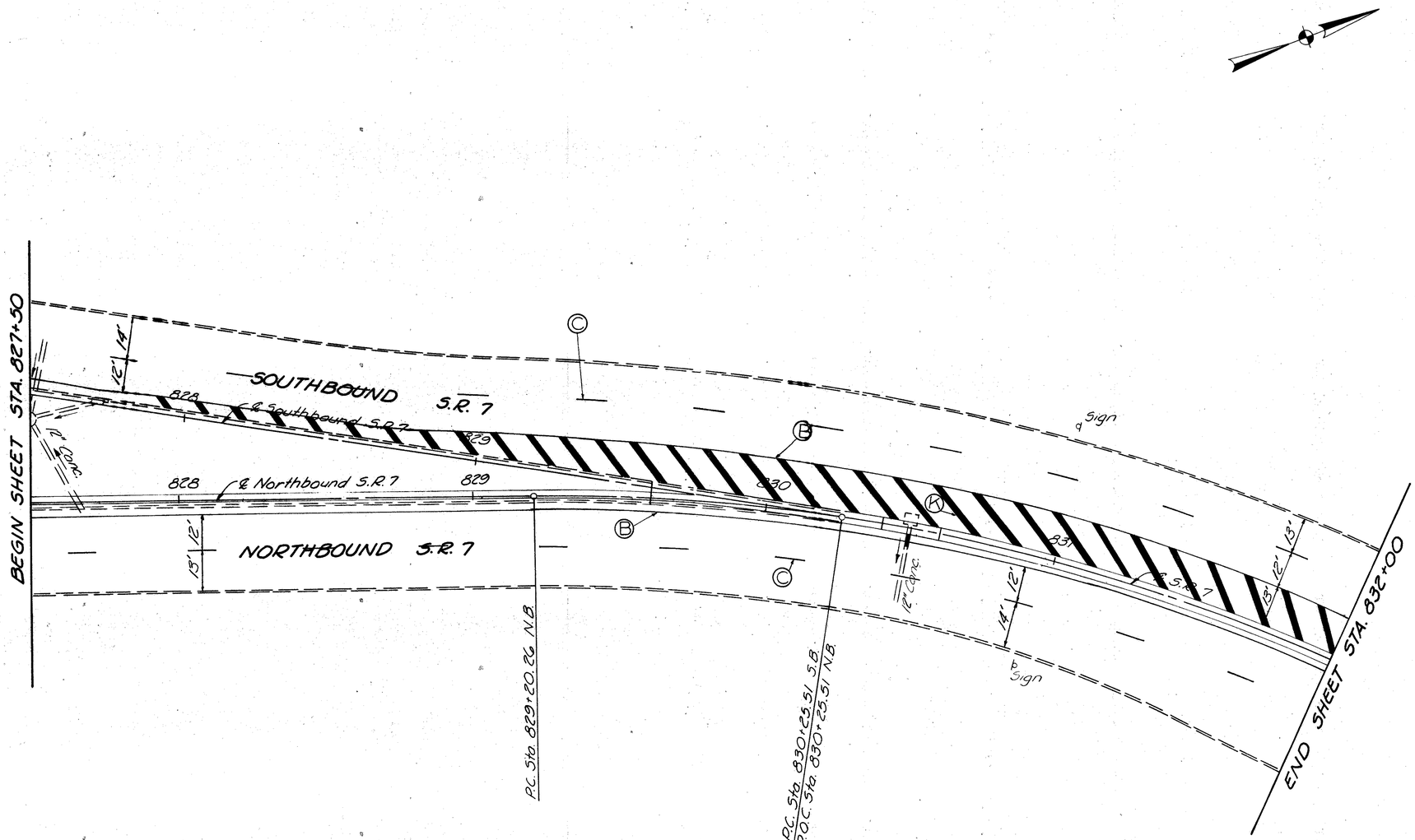

SEE SHEET NO.

ESTIMATED QUANTITIES

REF. NO.	STATION TO STATION	SIDE
TOTALS		

STA. 827+50 TO STA. 832+00

FHWA REGION	STATE	PROJECT	
5	OHIO		

151

JEF-7-11.80

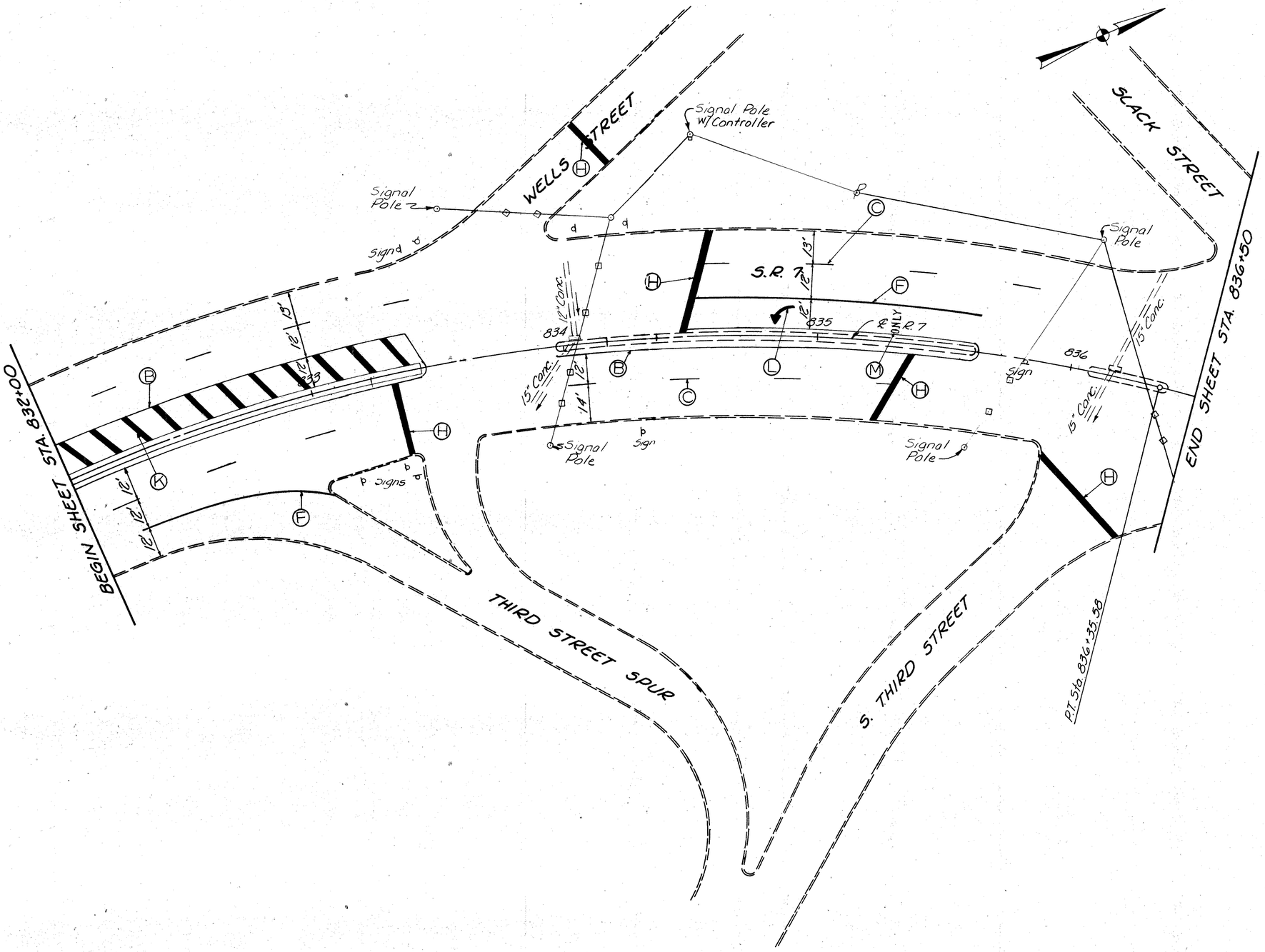

SEE SHEET NO.	

ESTIMATED QUANTITIES

REF. NO.	STATION TO STATION	SIDE
TOTALS		

Dwn.	Chkd.	
LDB 5-26-78	WCC 5-26-78	

STA. 832+00 TO STA. 836+50

FHWA REGION	STATE	PROJECT	
5	OHIO		

158

JEF-7-11.80

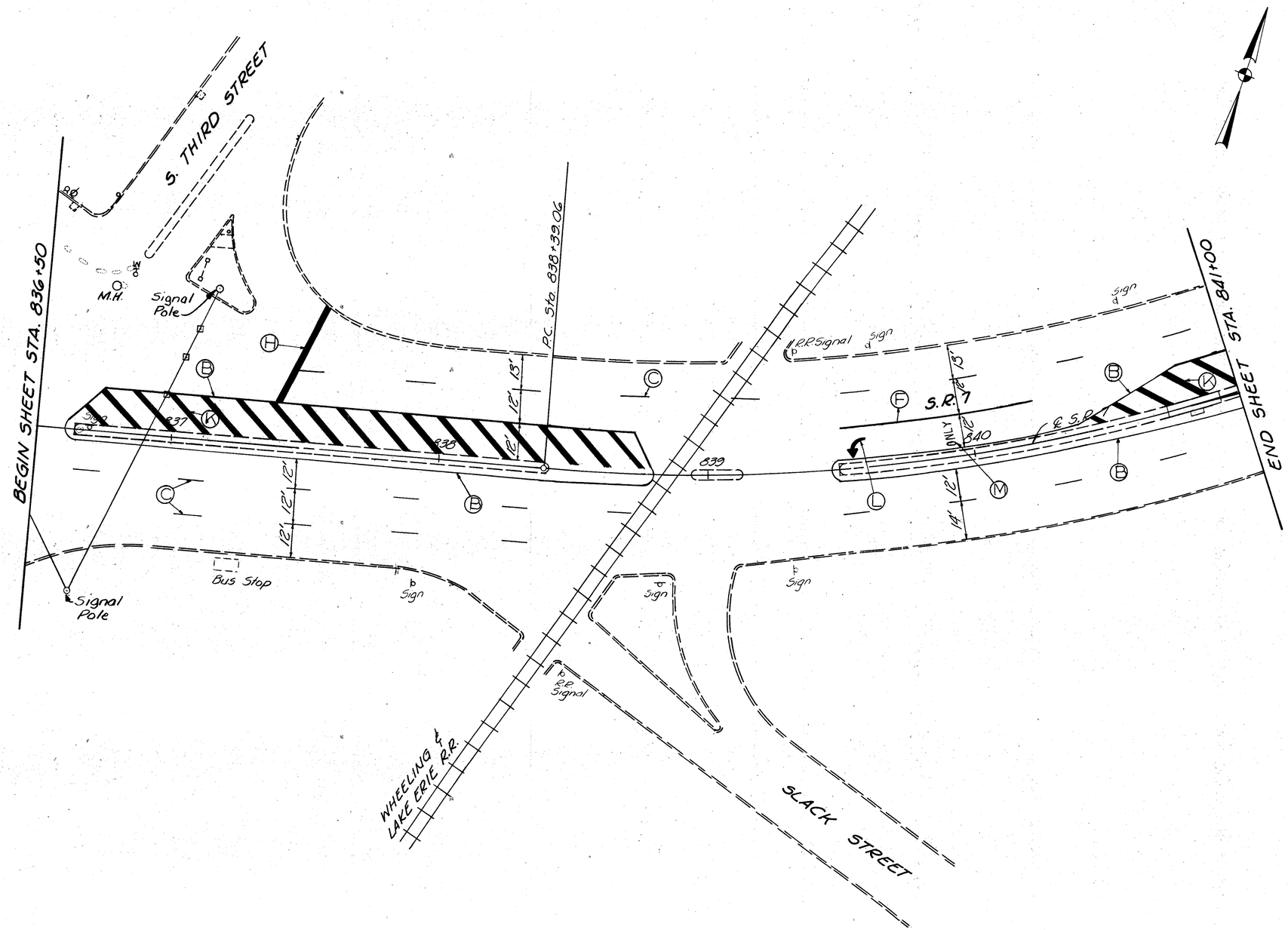

SEE SHEET NO.

ESTIMATED QUANTITIES

REF. NO.	STATION TO STATION	SIDE
TOTALS		

STA. 836+50 TO STA. 841+00

FHWA REGION	STATE	PROJECT	
5	OHIO		

153

JEF-7-11.80

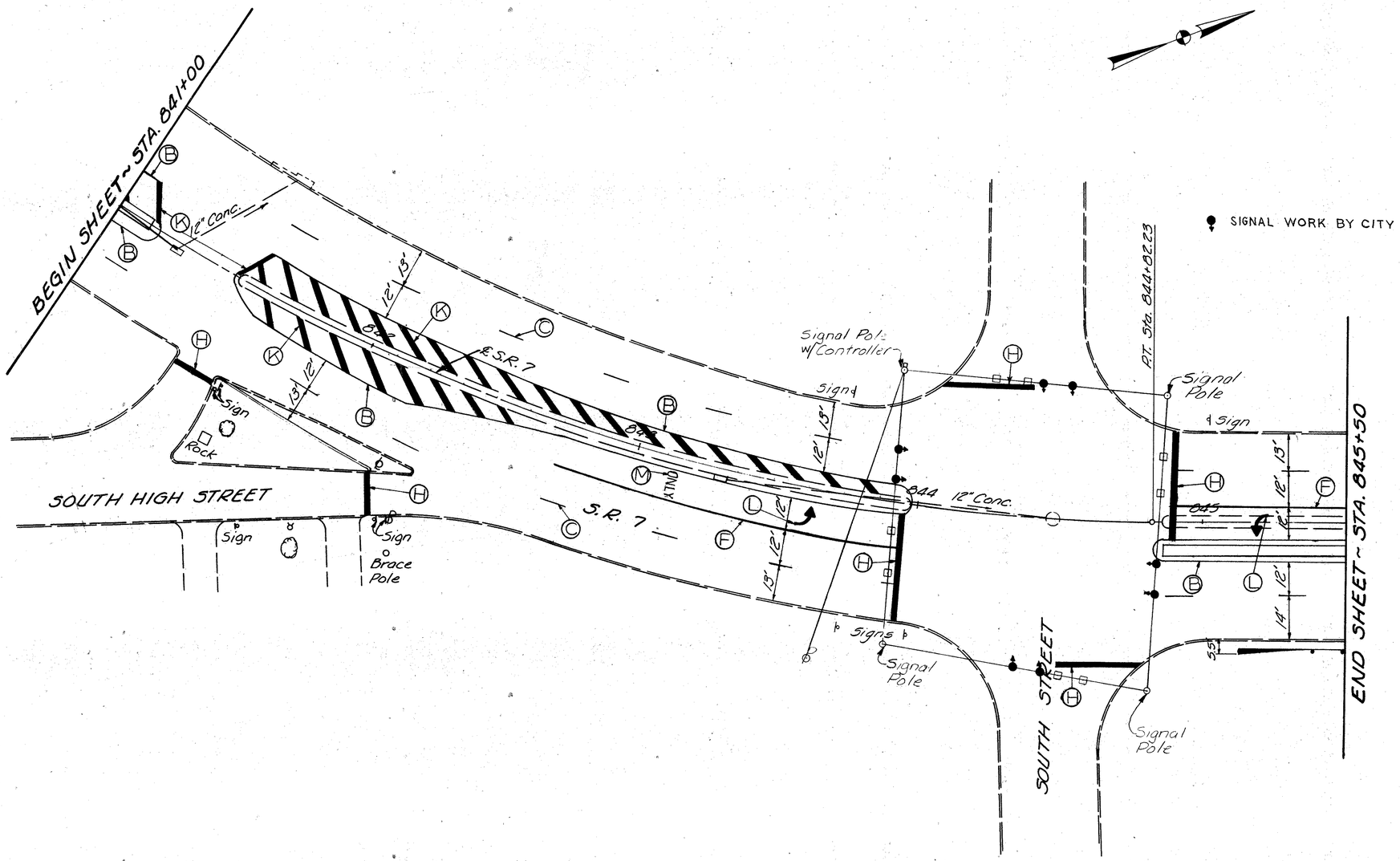

SEE SHEET NO.	

ESTIMATED QUANTITIES

REF. NO.	STATION TO STATION	SIDE
TOTALS		

STA. 841+00 TO STA. 845+50

FHWA REGION	STATE	PROJECT	
5	OHIO		

154

JEF-7-11.80

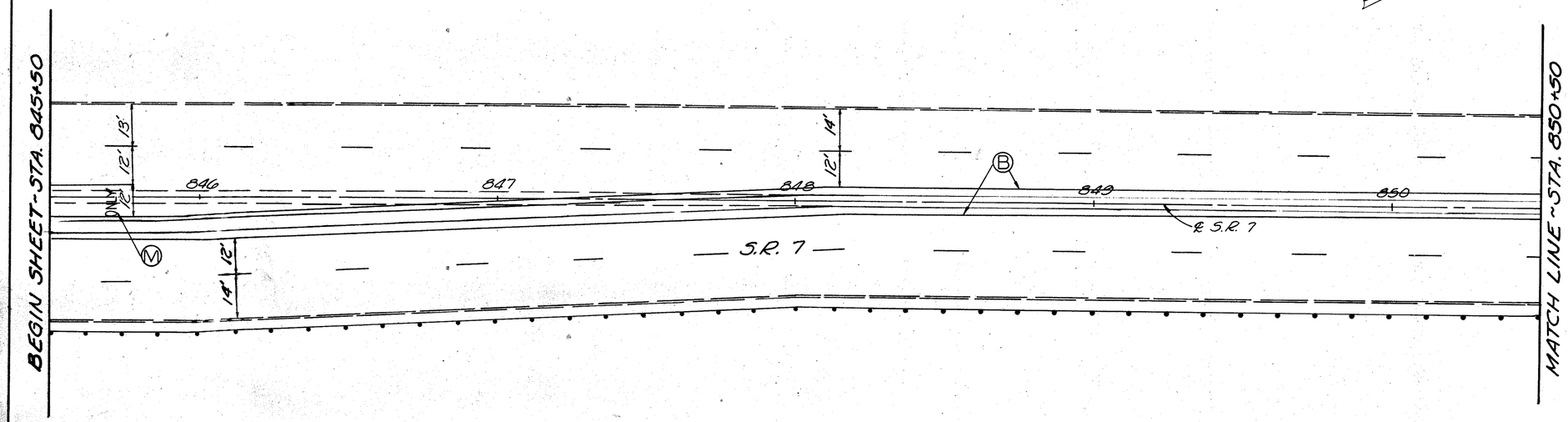

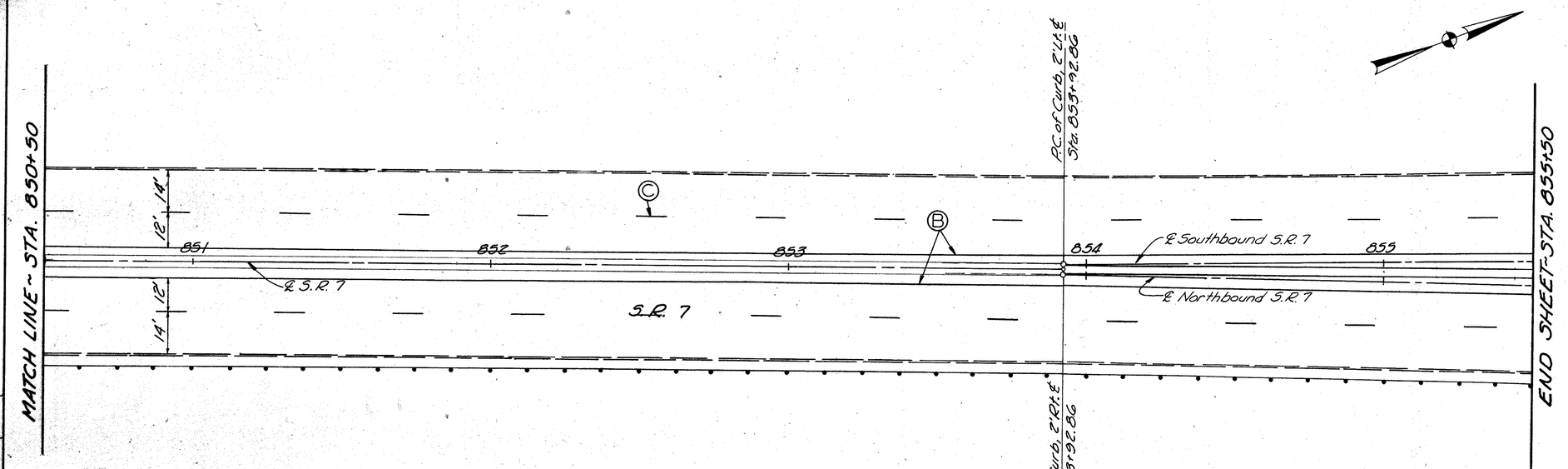

ESTIMATED QUANTITIES

REF. NO.	STATION TO STATION	SIDE	SEE SHEET NO.
TOTALS			

STA. 845+50 TO STA. 855+50

DRWN CLD 3/25/78
CHD DCD 3/28/78

FHWA REGION	STATE	PROJECT	
5	OHIO		

155

JEF-7-11.80

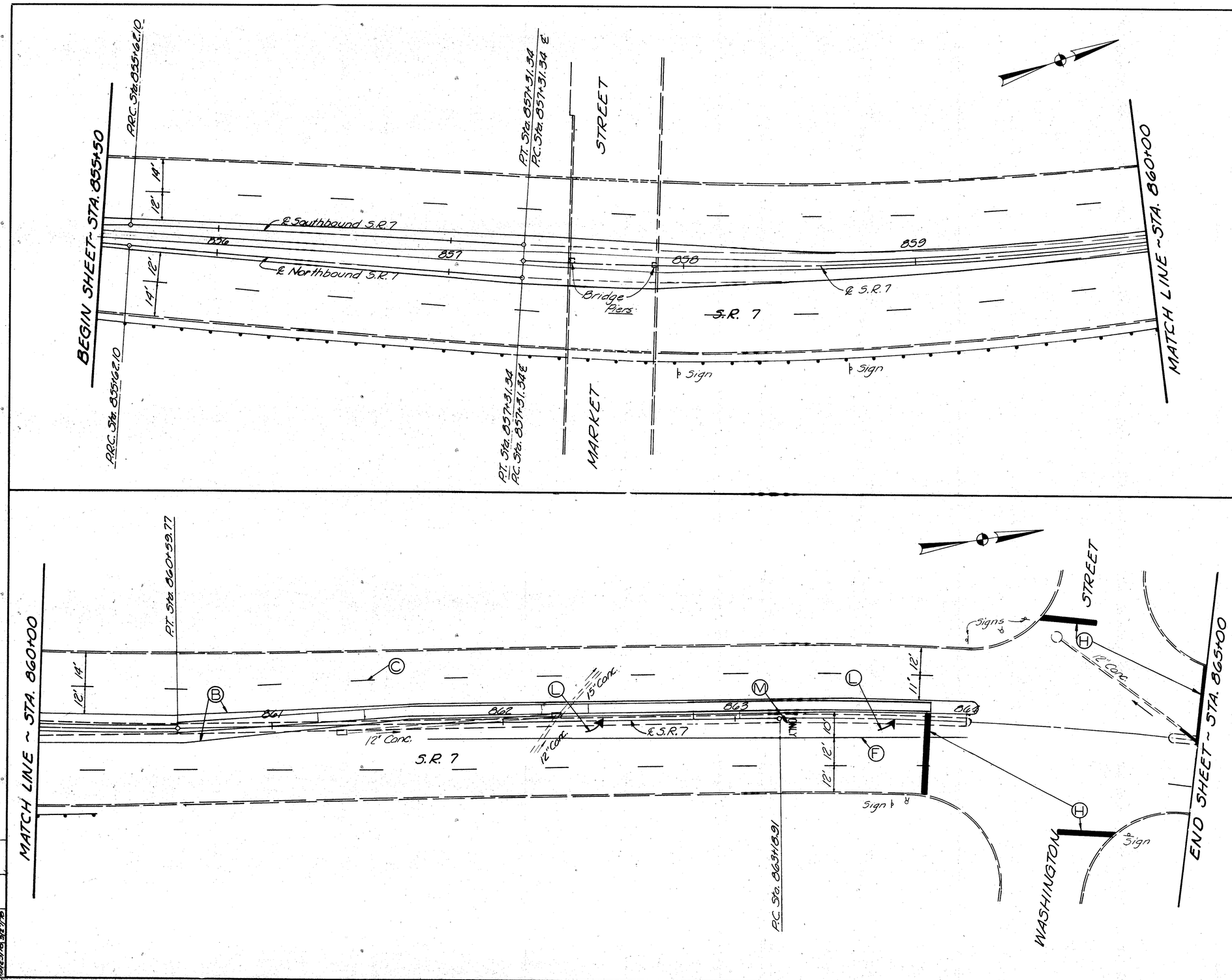

SEE SHEET NO.	

ESTIMATED QUANTITIES

REF. NO.	STATION TO STATION	SIDE
TOTALS		

STA. 855+50 TO STA. 865+00

FHWA REGION	STATE	PROJECT	
5	OHIO		

156

JEF-7-11.80

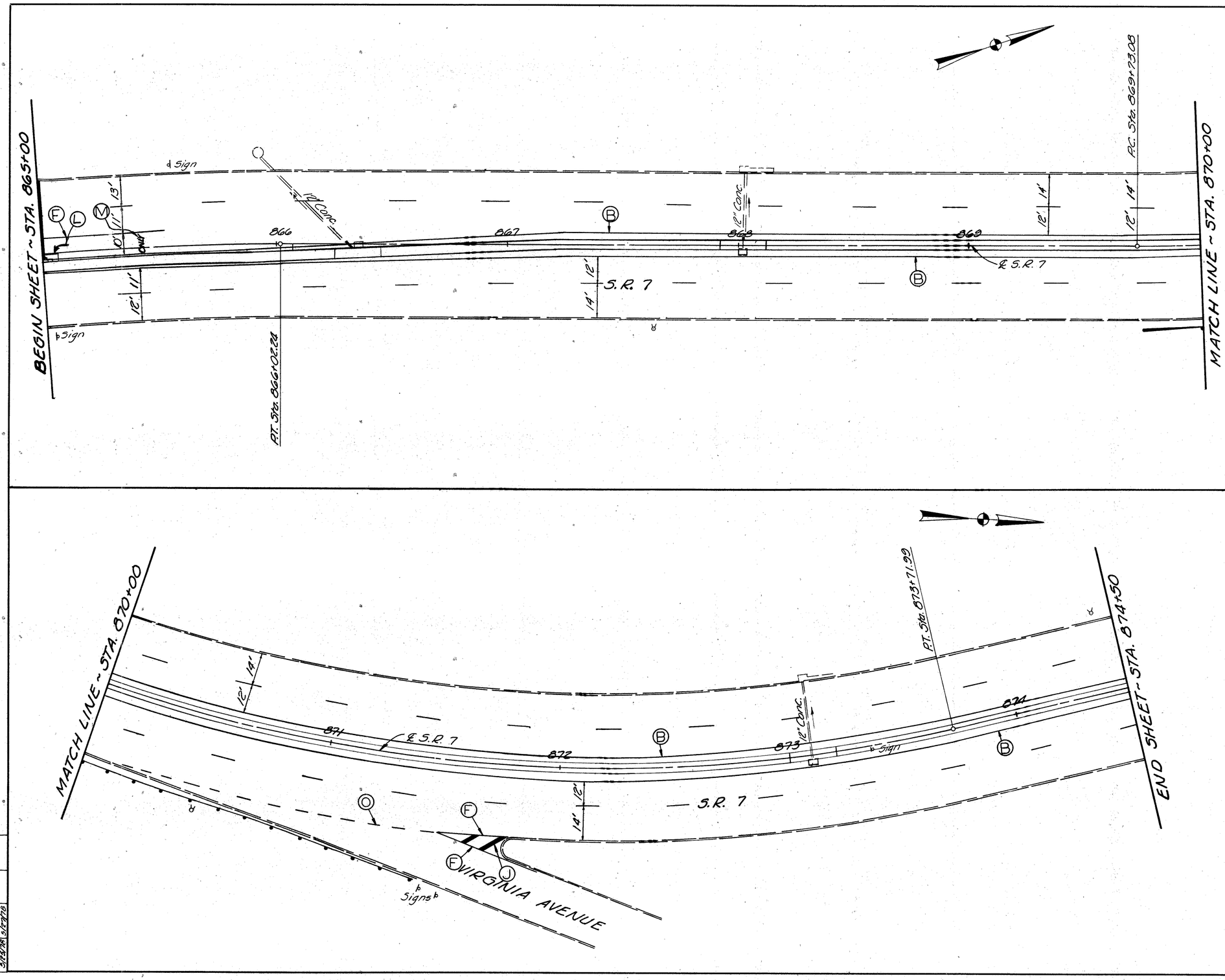

SEE SHEET NO.

ESTIMATED QUANTITIES

REF. NO.	STATION TO STATION	SIDE
		TOTALS

STA. 865+00 TO STA. 874+50

CONTROL CODE	CHECKED	DATE
0300	WCB	3/23/98

FHWA REGION	STATE	PROJECT	
5	OHIO		

157

JEF-7-11.80

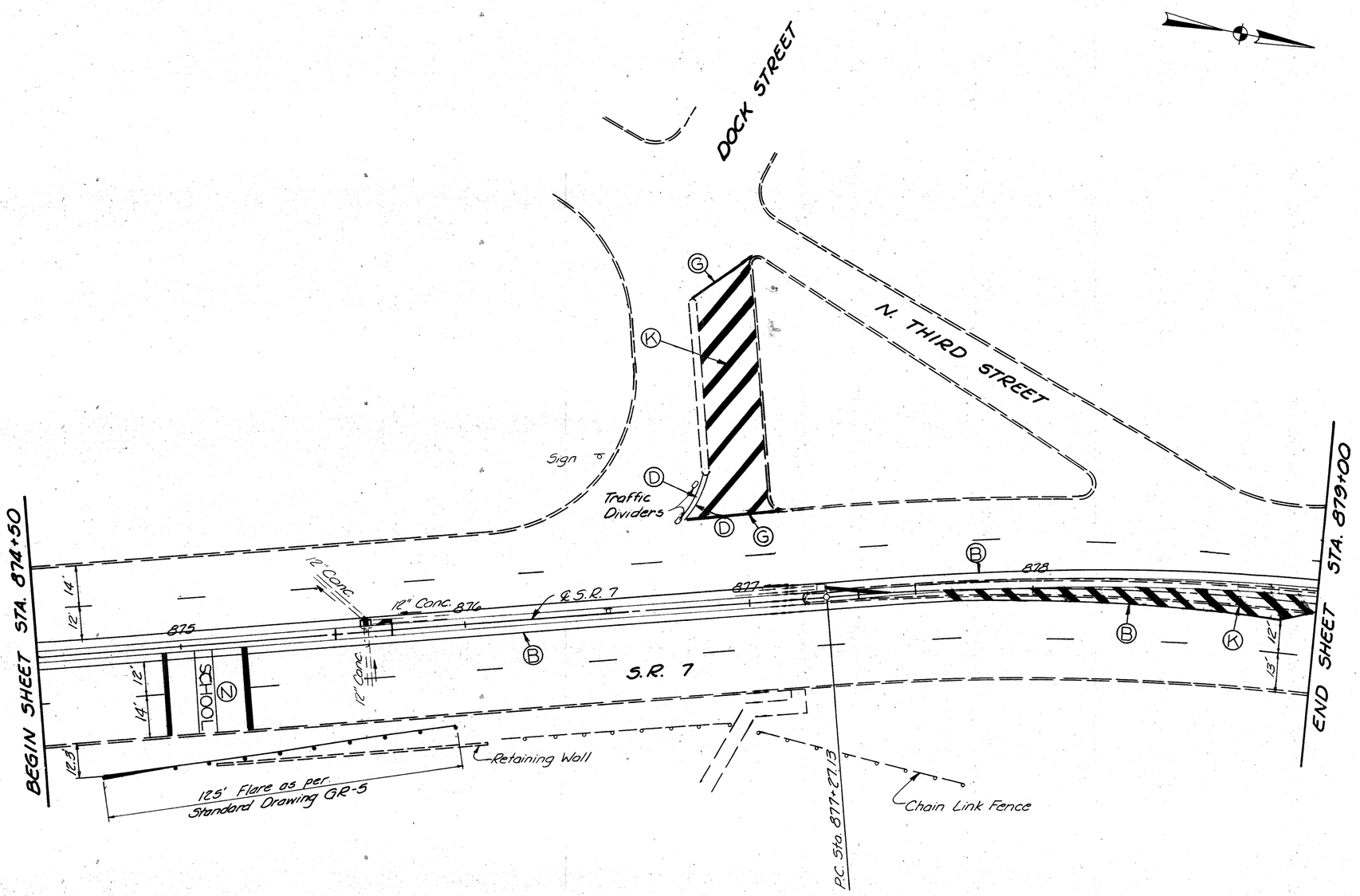

SEE SHEET NO.

ESTIMATED QUANTITIES

REF. NO.	STATION TO STATION	SIDE
TOTALS		

DWN. LGB 5-27-80 CKD. WEC 5-27-80

STA. 874+50 TO STA. 879+00

FHWA REGION	STATE	PROJECT	
5	OHIO		

158

JEF-7-11.80

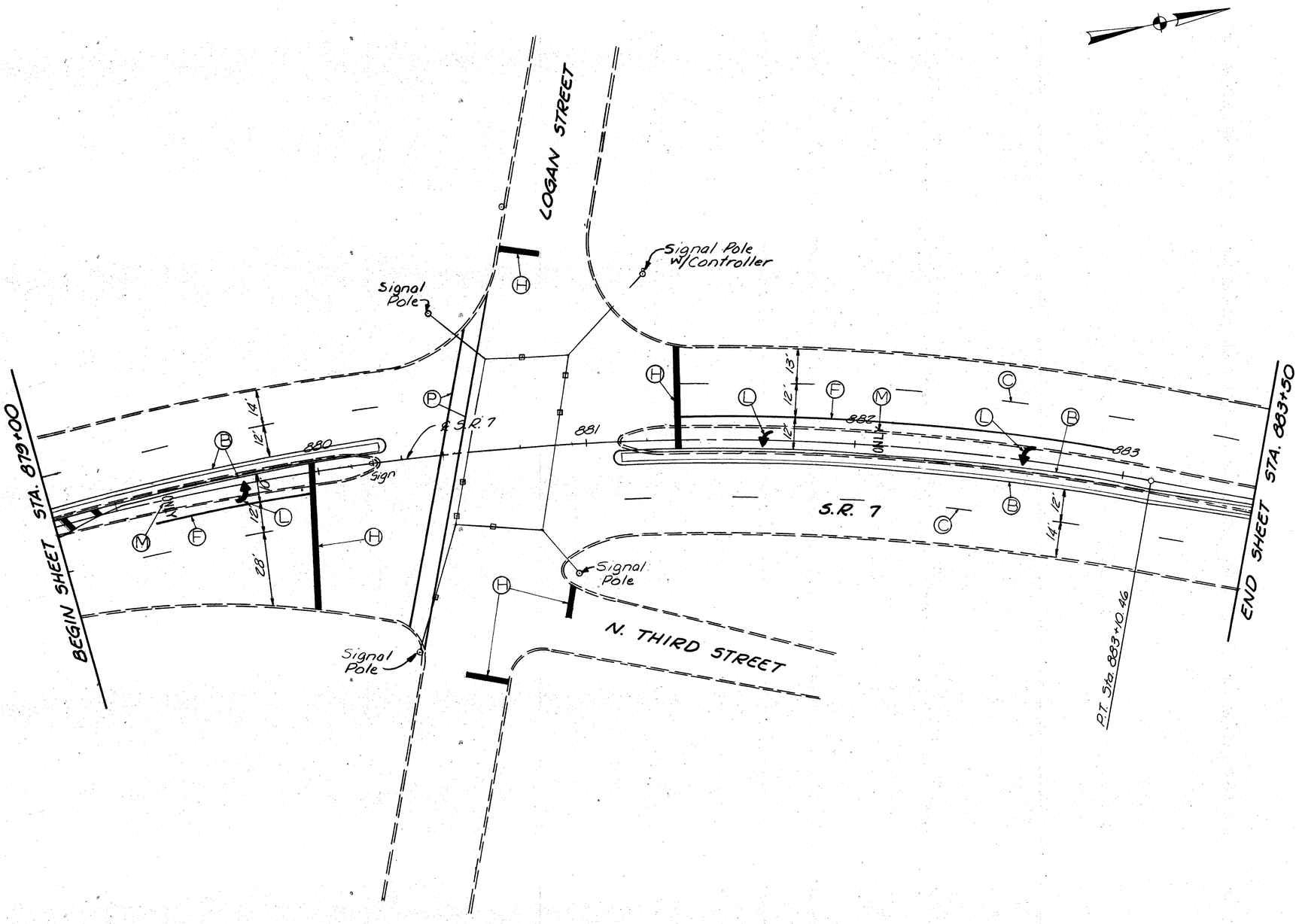

SEE SHEET NO.	

ESTIMATED QUANTITIES

REF. NO.	STATION TO STATION	SIDE
		TOTALS

STA. 879+00 TO STA. 883+50

DWN	CHKD	DATE
		8-23-95

FHWA REGION	STATE	PROJECT	
5	OHIO		

159

JEF-7-11.80

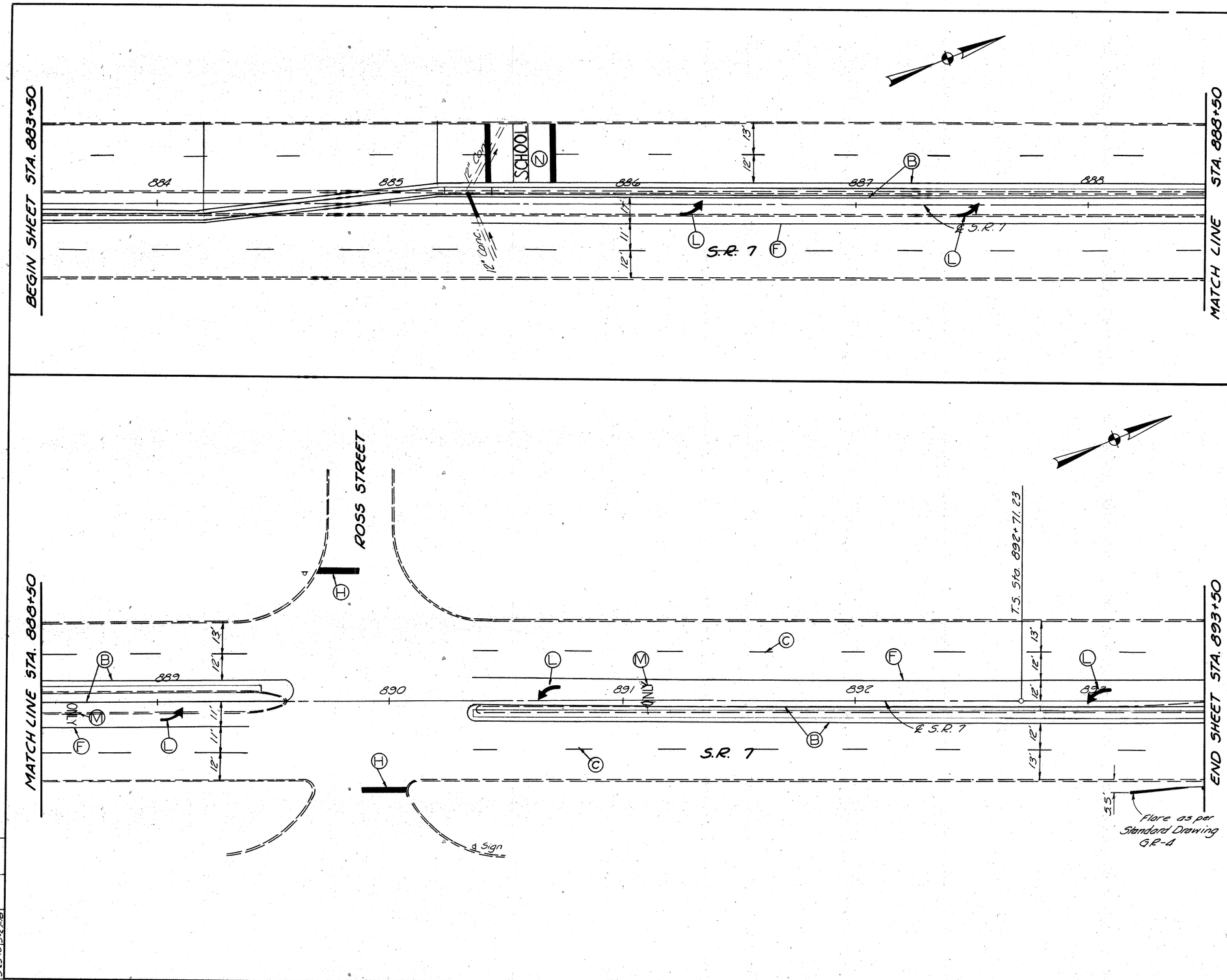

SEE SHEET NO.	

ESTIMATED QUANTITIES

REF. NO.	STATION TO STATION	SIDE
TOTALS		

STA. 883+50 TO STA. 893+50

Dwn. LOB 5-28-80 | Chkd. KGR 5-27-80

FHWA REGION	STATE	PROJECT	
5	OHIO		

160

JEF-7-11.80

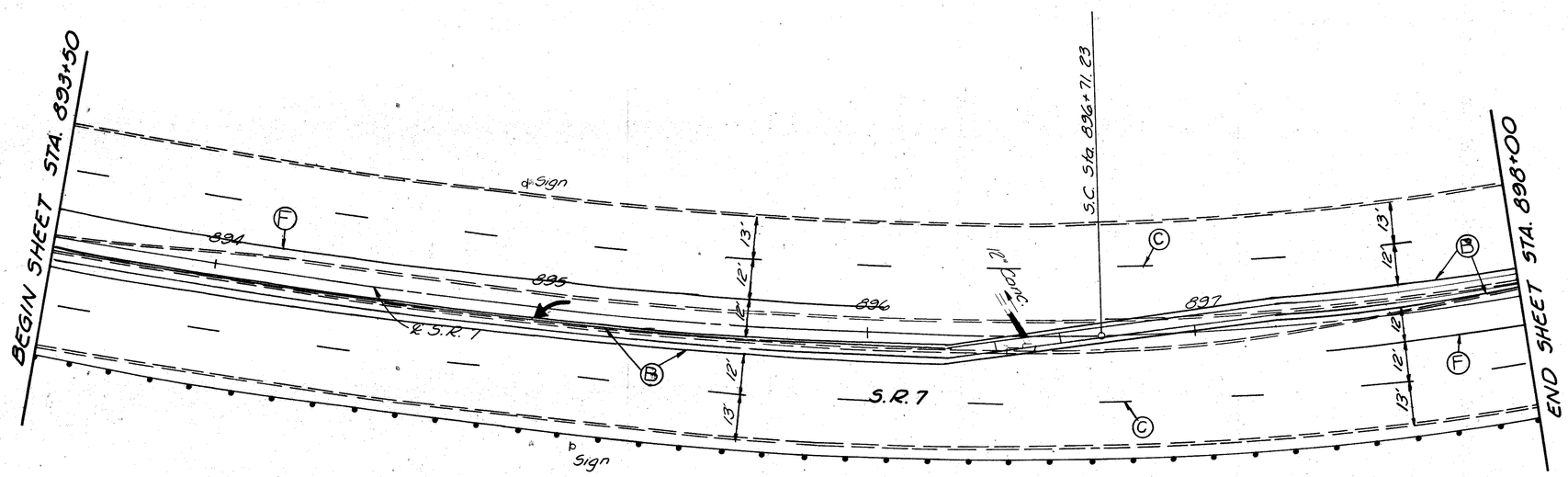

SEE SHEET NO.

FHWA REGION	STATE	PROJECT	
5	OHIO		

161

JEF-7-11.80

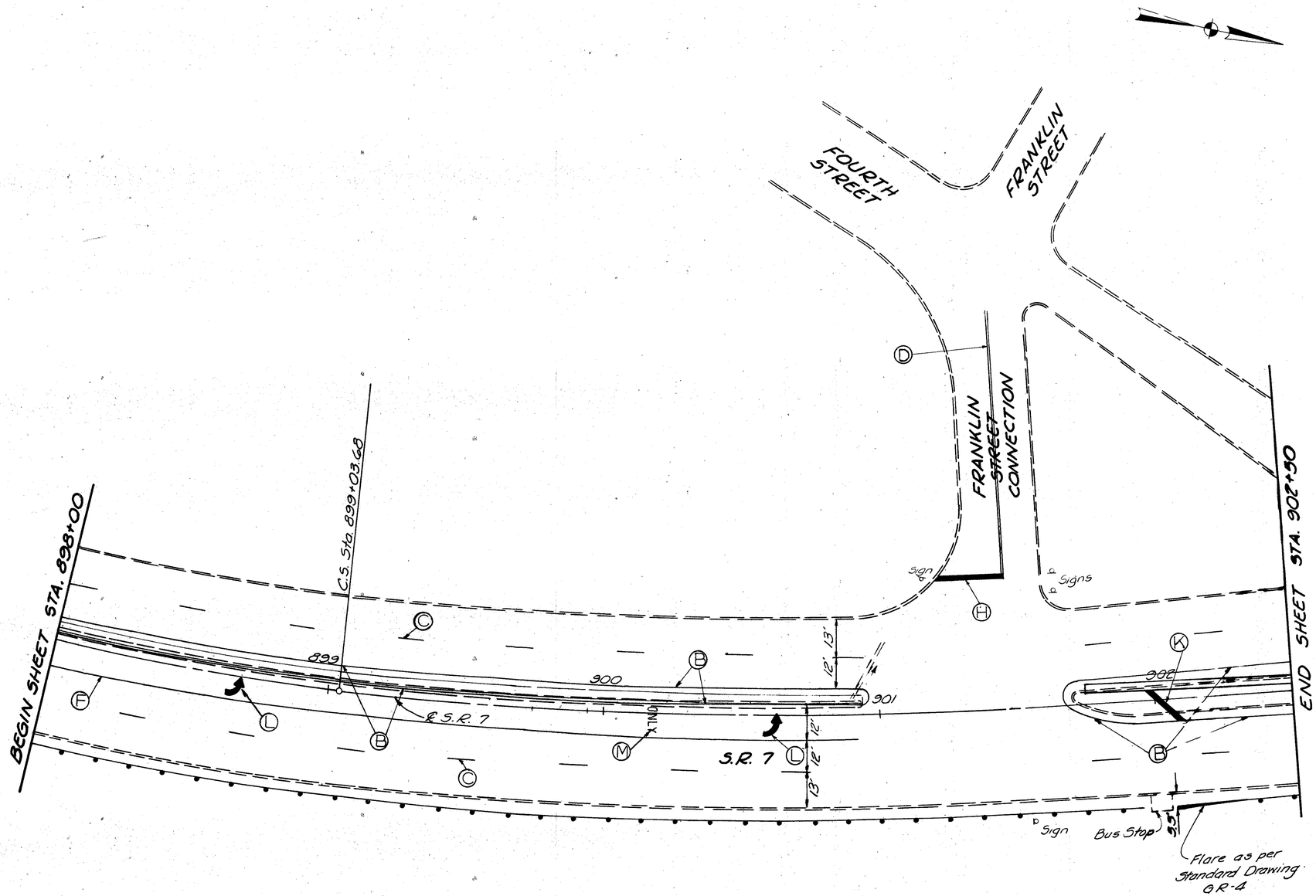

SEE SHEET NO.

ESTIMATED QUANTITIES

REF. NO.	STATION TO STATION	SIDE
TOTALS		

STA. 898+00 TO STA. 902+50

Chart Log 5-25-78 | Chk'd NCE 5-27-78

FHWA REGION	STATE	PROJECT	
5	OHIO		

162

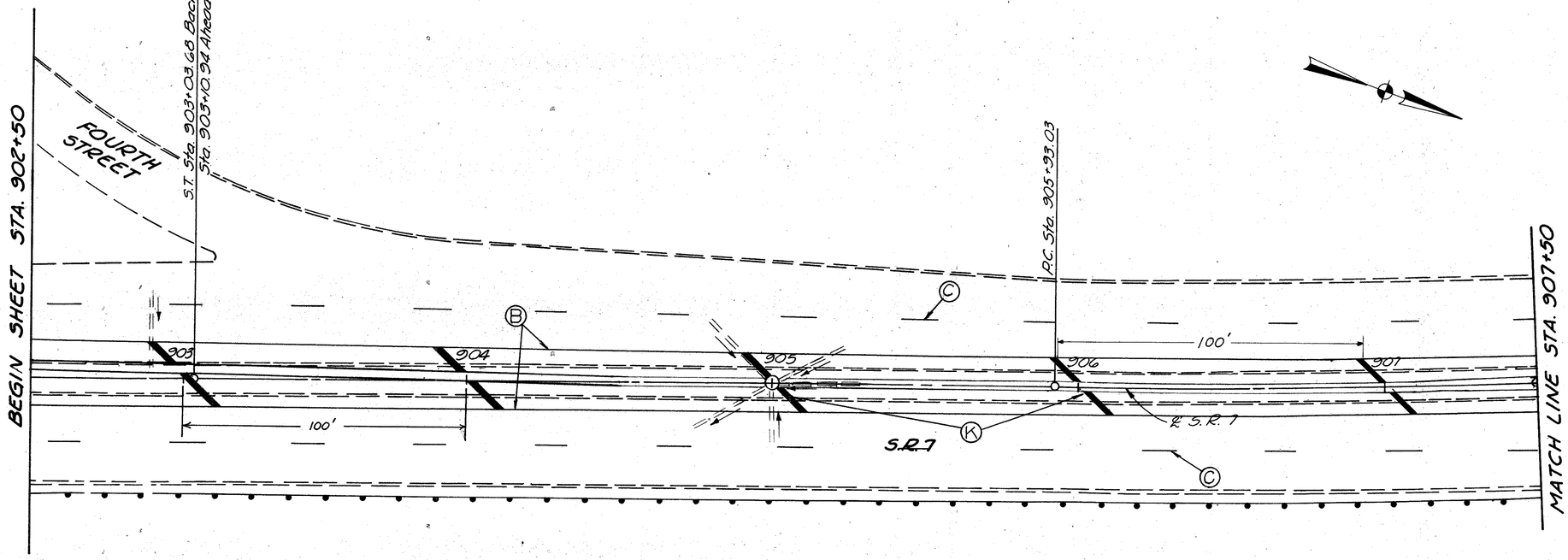

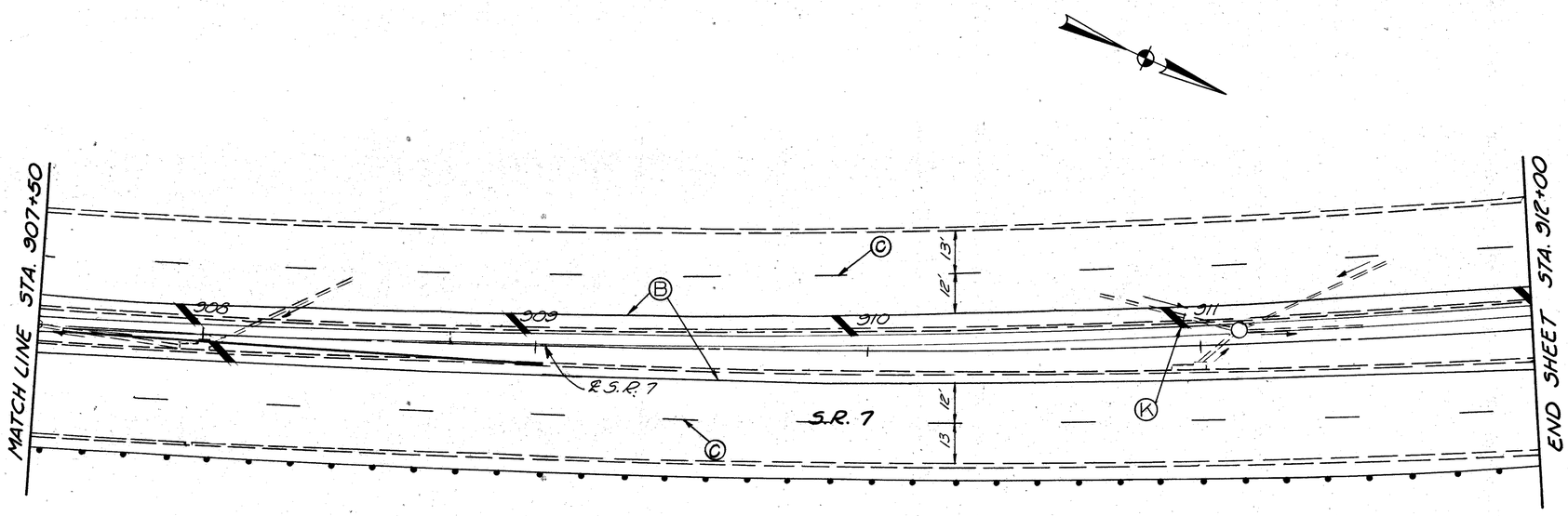

SEE SHEET NO.

ESTIMATED QUANTITIES

REF. NO.	STATION TO STATION	SIDE
TOTALS		

STA. 902+50 TO STA. 912+00

Dwn. LDJ 5-20-19 | Chkd. MCZ 5-20-19

FHWA REGION	STATE	PROJECT	
5	OHIO		

163

JEF-7-11.80

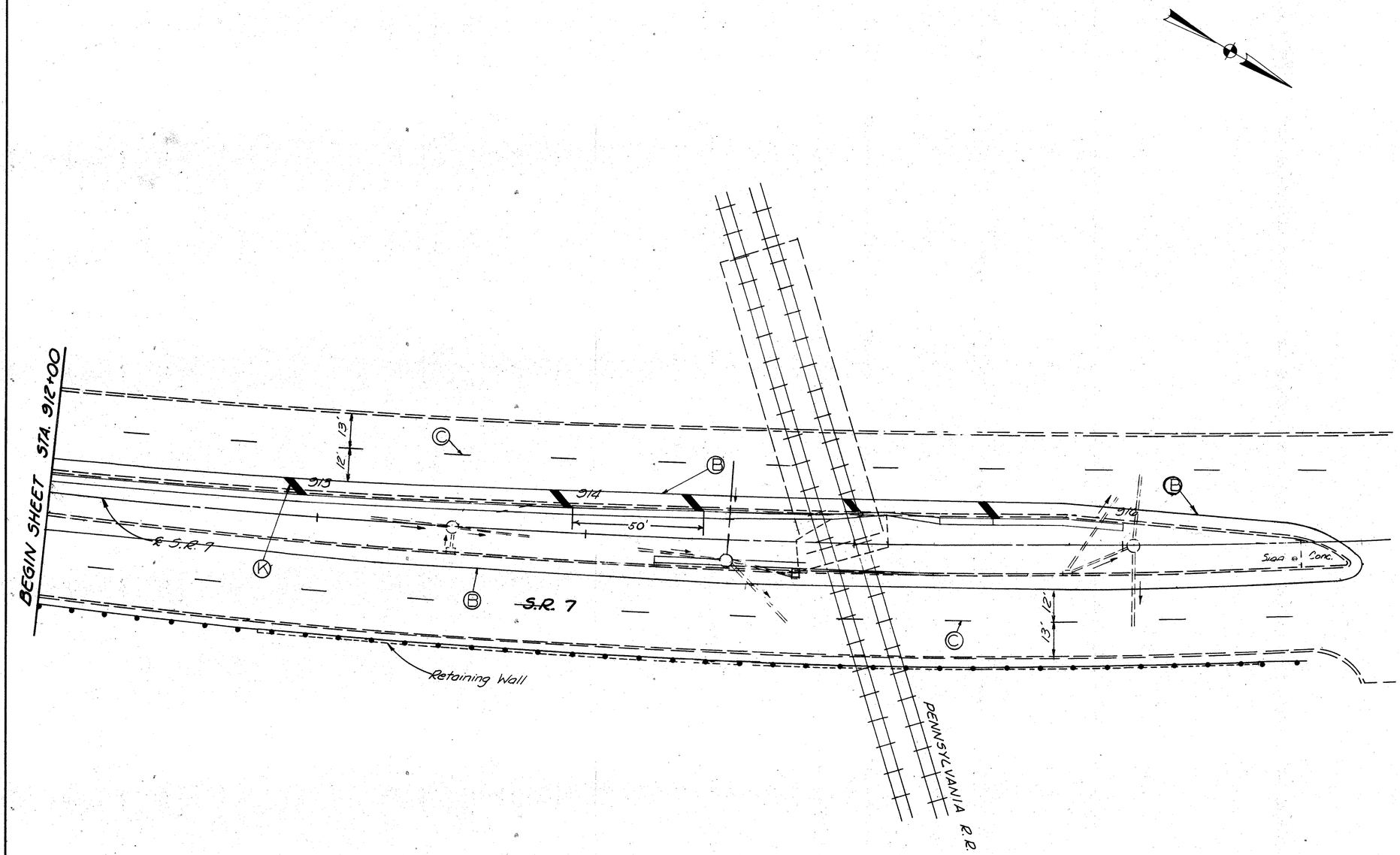

SEE SHEET NO.	

ESTIMATED QUANTITIES

REF. NO.	STATION TO STATION	SIDE
TOTALS		

STA. 912+00 TO STA. 916+77

DWG.	CHKD.
LDB 5-19-78	JEF 5-25-78

FHWA REGION	STATE	PROJECT	
5	OHIO		

164

JEF-7-11.80

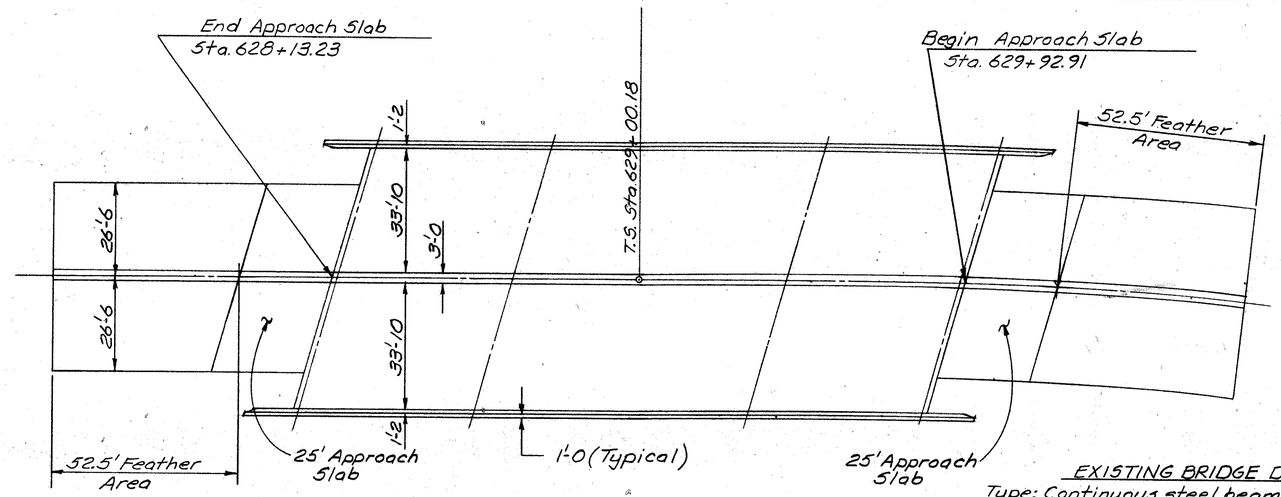

PROPOSED DECK WATERPROOFING

ALTERNATE "A" OR "B"

JEF-7-1185

EXISTING BRIDGE DATA

Type: Continuous steel beam with reinf. conc. deck and substructure.
Spans: 49' - 77' - 49' c/c Bearings.
Roadway: 73'-0 f/f parapets, 3'-0 median and 1'-2 curbs.
Wearing Surface: 1" Monolithic concrete.
Skew: 16° 15'-19" L.F.

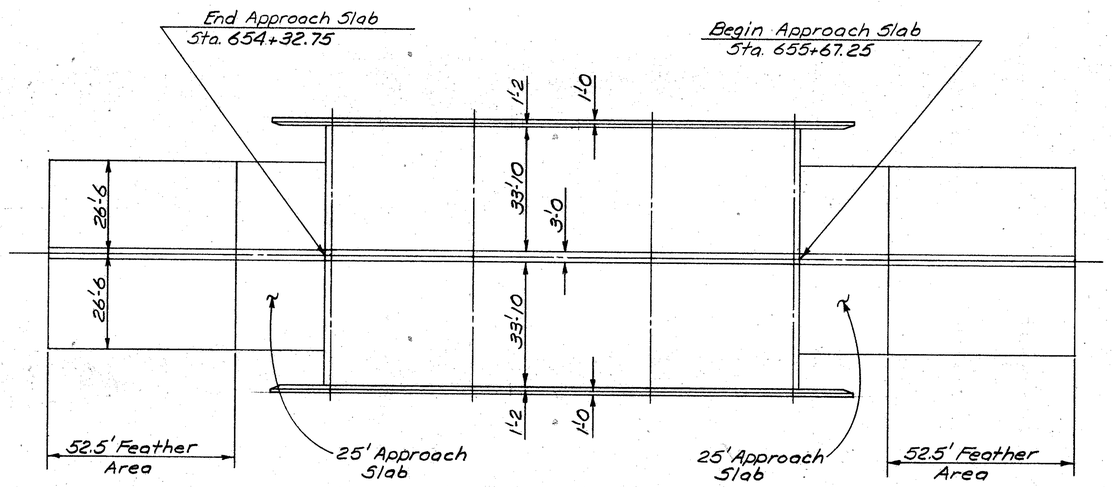

JEF-7-1235

PROPOSED DECK WATERPROOFING

ALTERNATE "A" OR "B"

EXISTING BRIDGE DATA

Type: Continuous steel beam with reinf. conc. deck and substructure.
Spans: 40' - 50' - 40' c/c bearings.
Roadway: 73'-0 f/f parapets, 3'-0 median and 1'-2 curbs.
Wearing Surface: 1" Monolithic concrete.
Skew: None

GENERAL NOTES

DESIGN SPECIFICATIONS: THESE DETAILS CONFORM TO "STANDARD SPECIFICATIONS FOR HIGHWAY BRIDGES" ADOPTED BY THE AMERICAN ASSOCIATION OF STATE HIGHWAY OFFICIALS, 1977, AND THE OHIO "SUPPLEMENT" TO THESE SPECIFICATIONS.

DESIGN DATA:

CONCRETE CLASS "S" - UNIT STRESS 1200 P.S.I. FOR SUPERSTRUCTURE.
STRUCTURAL STEEL - ASTM A36 - UNIT STRESS 20,000 P.S.I.
REINFORCING STEEL - ASTM A615, A616, or A617 - UNIT STRESS 20,000 P.S.I.

MAINTENANCE OF TRAFFIC: TRAFFIC SHALL BE MAINTAINED WHILE DECK REPAIRS AND RESURFACING IS BEING DONE. FOR MAINTENANCE OF TRAFFIC PROCEDURES, REFER TO ROADWAY PLAN GENERAL NOTES.

REFERENCE SHALL BE MADE TO :

STANDARD DRAWINGS	SUPPLEMENTAL SPECS
BP-5, DATED 8-11-75	
BR-1-67, DATED 10-15-71	836, DATED 3-12-75
	845, DATED 6-27-77
	850, DATED 6-27-77
	853, DATED 6-26-78
	933, DATED 7-06-73
	956, DATED 6-26-78
	1001, DATED 1-03-77
	953, DATED 3-8-79

REINFORCING STEEL SPLICES: UNLESS NOTED OTHERWISE, ALL REINFORCING SPLICES SHALL BE MADE BY OVERLAPPING THE ENDS OF THE BARS NOT LESS THAN 30 DIAMETERS.

ALTERNATE "A" AND "B":

ALTERNATE "A" SHALL CONSIST OF REPAIRING THE BRIDGE DECKS WITH LATEX MODIFIED CONCRETE AND ALL OTHER NECESSARY INCIDENTALS.

ALTERNATE "B" SHALL CONSIST OF REPAIRING THE BRIDGE DECKS WITH DENSE CONCRETE AND ALL OTHER NECESSARY INCIDENTALS.

THE CONTRACTOR SHALL SUBMIT A BID FOR ONE ALTERNATE ONLY.

EXISTING STRUCTURES: PLANS OF EXISTING STRUCTURES ARE ON FILE IN DISTRICT 11, WEST HIGH AVENUE EXTENSION, NEW PHILADELPHIA, OHIO 44663.

PLAN DIMENSIONS: ALL PLAN DIMENSIONS ARE BASED ON DIMENSIONS, STATIONS, AND SKEW ANGLES SHOWN ON THE ORIGINAL CONSTRUCTION DETAILS. PRIOR TO CONSTRUCTION, ALL DIMENSIONS SHALL BE VERIFIED IN THE FIELD BY THE CONTRACTOR.

SELECTIVE USE OF LATEX MODIFIED CONCRETE: If the contractor bids the dense concrete option, he may, at his additional option, use Latex Modified Concrete (LMC) on any of the bridges overlaid on this project. On any such bridges the LMC work shall be as specified hereon for the LMC option. The thickness shall be as specified for LMC. Payment for the LMC items shall be made at the unit prices bid for the respective dense concrete items: Item 850, dense concrete overlay (1 3/4 inches thick) and Item 850, dense concrete overlay (variable thickness). Payment for Item 516, vertical extension of structural expansion joints, sealed as per plan, shall be made at the unit price bid without adjustment for the thinner plates. Quantities of affected approach roadway items shall be adjusted at the time of construction.

Sheet 1 of 16

W. E. QUICKSALL AND ASSOCIATES, INC.
CONSULTING ENGINEERS • NEW PHILADELPHIA, OHIO

GENERAL PLAN &

GENERAL NOTES

JEF-7-1185

JEF-7-1235

DESIGNED	DRAWN	TRACED	CHECKED	REVIEWED	DATE	REVISED
PMZ	PMZ		FS	wde	8/78	

FHWA REGION	STATE	PROJECT	
5	OHIO		

165

JEF-7-11.80

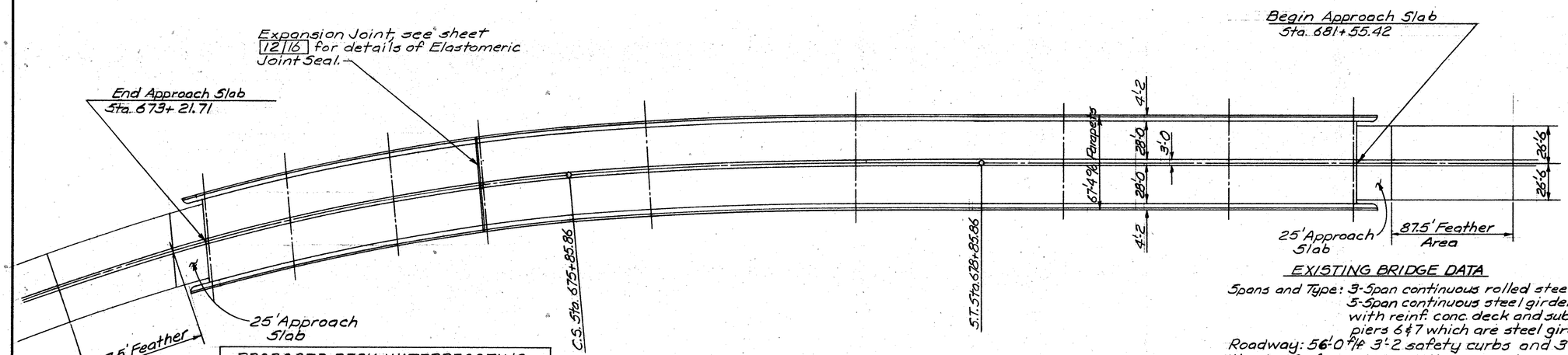

PROPOSED DECK WATERPROOFING

MEMBRANE WATERPROOFING WITH 404 ASPHALT CONCRETE

JEF-7-1293

EXISTING BRIDGE DATA

Spans and Type: 3-Span continuous rolled steel beam, 61'-76'-61'; 5-Span continuous steel girder, 120'-150'-150'-120'-89'-2, with reinf. conc. deck and substructure, except piers 6 & 7 which are steel girders.
Roadway: 56'-0 f/f 3'-2 safety curbs and 3'-0 median.
Wearing Surface: 1" Monolithic concrete.
Skew: Varies: 5° 27' 20" (R. Abut.) to 0° (Pier #6)

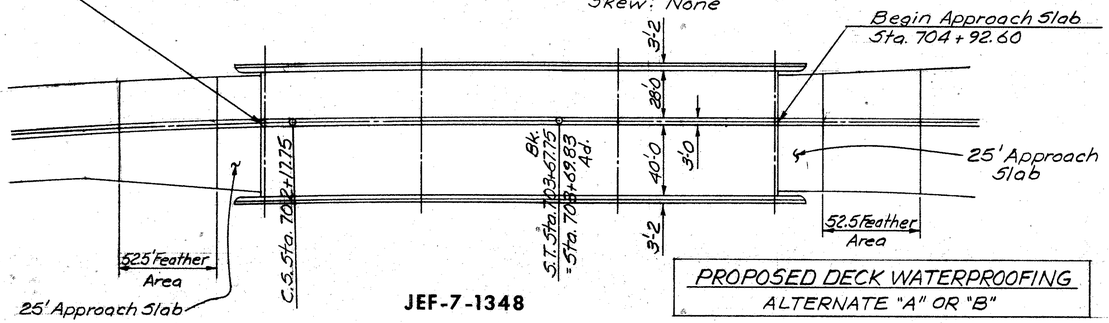

EXISTING BRIDGE DATA

Type: Continuous steel girder with reinf. conc. deck and substructure.
Spans: 88'-110'-88' c/c Brgs. along referance tangent.
Roadway: 75'-4 f/f parapets, 3'-0 median and 2'-2 safety curbs.
Wearing Surface: 1" Monolithic concrete.
Skew: None

PROPOSED DECK WATERPROOFING

ALTERNATE "A" OR "B"

JEF-7-1348

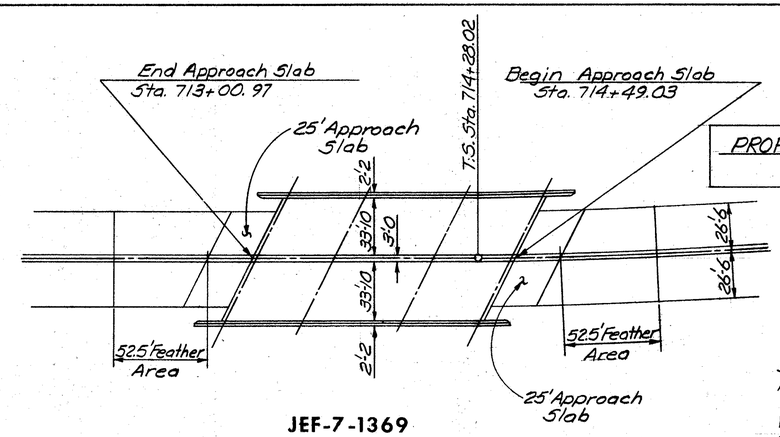

PROPOSED DECK WATERPROOFING

ALTERNATE "A" OR "B"

EXISTING BRIDGE DATA

Type: Continuous steel beams with reinf. conc. deck and substructure.
Spans: 44'-55'-44' c/c Brgs.
Roadway: 73'-0 f/f parapets, 3'-0 median and 1'-2 curbs.
Wearing Surface: 1" Monolithic concrete.
Skew: 27° 00' 00" L.F.

JEF-7-1369

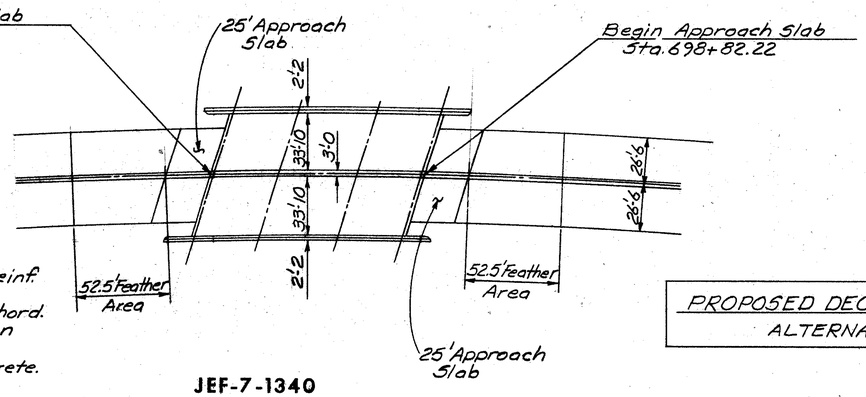

EXISTING BRIDGE DATA

Type: Continuous steel beams with reinf. conc. deck and substructure.
Spans: 36'-45'-1'-36' c/c Brgs. along ref. chord.
Roadway: 73'-0 f/f parapets, 3'-0 median and 1'-2 curbs.
Wearing Surface: 1" Monolithic concrete.
Skew: 17° 22' 43" L.F.

JEF-7-1340

PROPOSED DECK WATERPROOFING

ALTERNATE "A" OR "B"

Sheet 2 / 16

W. E. QUICKSALL AND ASSOCIATES, INC.
CONSULTING ENGINEERS • NEW PHILADELPHIA, OHIO

GENERAL PLAN

JEF-7-1293 JEF-7-1348
JEF-7-1340 JEF-7-1369

DESIGNED	DRAWN	TRACED	CHECKED	REVIEWED	DATE	REVISED
PMZ	PMZ		FS	wde	8/78	

FHWA REGION	STATE	PROJECT	
5	OHIO		

166

JEF-7-11.80

Federal & State	Federal, State, & Mingo Junction

ESTIMATED QUANTITIES

ITEM	TOTAL	UNIT	DESCRIPTION	JEF-7-1185	JEF-7-1235	JEF-7-1293	JEF-7-1340	JEF-7-1348	JEF-7-1369	JEF-7-1374	JEF-7-1387			
202	Lump	Sum	Portions of Structures Removed							Lump	Lump			
202	36	Cu. Yd.	Portions of Structures Removed	4	3	17	3	6	3					
202	1570	Sq. Yd.	Wearing Course Removed		525		470		575					
404	363	Cu. Yd.	Asphalt Concrete (AC20) Deck Surface, T=2½"			363								
404	20	Cu. Yd.	Asphalt Concrete (AC20) Approach Slab, T=2½"			20								
404	34	Cu. Yd.	Asphalt Concrete (AC20) Feathering Area			34								
407	1105	Gal.	Tack Coat: SS-1, SS-1h, MS-2, RS-1 or RC-250	89	89	643	89	106	89					
407	39	Ton	Cover Aggregate	3	3	23	3	4	3					
509	53,444	Lb.	Reinforcing Steel	5233	3922	24,234	3555	8456	4270	1885	1889			
510	3742	Each	Dowel Holes, as per plan.	372	286	1678	256	598	304	276	276			
511	309	Cu. Yd.	Class "S" Concrete, Superstructure	30	22	138	20	48	25	13	13			
516	113	Lin. Ft.	Vertical Extension of Structural			113								
			Expansion Joints, Sealed as per Plan,											
607	304	Lin Ft.	Fence, Type CL, as per plan.							151	153			
Special	240	Sq. Yd.	Patching Concrete Bridge Decks, Type II			240								
			(See Proposal Note)											
Special	5172	Sq. Yd.	Membrane Waterproofing (See Proposal Note)			5172								
Special	67	Lin. Ft.	Elastomeric Joint Seal			67								
			ALTERNATE 'A'											
404	42	Cu. Yd.	Asphalt Concrete (AC20) Approach Slab, T=1"	8	8		8	10	8					
404	46	Cu. Yd.	Asphalt Concrete (AC20) Feathering Area	9	9		9	10	9					
516	706	Lin. Ft.	Vertical Extension of Structural Expansion	141	135		142	136	152					
			Joints, Sealed as per Plan											
845	6605	Sq. Yd.	Latex Modified Concrete Overlay (1¼" Thick)	1353	1004		907	2236	1105					
845	271	Cu. Yd.	Latex Modified Concrete Overlay (Var. Thickness)	47	49		44	77	54					
845	106	Cu. Yd.	Full-Depth Repair	18	19		17	31	21					
			ALTERNATE 'B'											
404	63	Cu. Yd.	Asphalt Concrete (AC20) Approach Slab, T=1½"	12	12		12	15	12					
404	67	Cu. Yd.	Asphalt Concrete (AC20) Feathering Area	13	13		13	15	13					
516	706	Lin. Ft.	Vertical Extension of Structural Expansion	141	135		142	136	152					
			Joints, Sealed as per Plan											
850	6604	Sq. Yd.	Dense Concrete Overlay (1¾" Thick)	1353	1004		907	2235	1105					
850	271	Cu. Yd.	Dense Concrete Overlay (Var. Thickness)	47	49		44	77	54					
850	106	Cu. Yd.	Full-Depth Repair	18	19		17	31	21					

Sheet 3 / 16

W. E. QUICKSALL AND ASSOCIATES, INC.
CONSULTING ENGINEERS • NEW PHILADELPHIA, OHIO

ESTIMATED QUANTITIES

JEF-7-1185
JEF-7-1235
JEF-7-1293
JEF-7-1340
JEF-7-1348
JEF-7-1369
JEF-7-1374
JEF-7-1387

DESIGNED	DRAWN	TRACED	CHECKED	REVIEWED	DATE	REVISED
PMZ	PMZ		FS	wda	8/78	

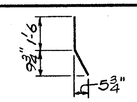

TYPE 1

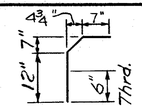

TYPE 2

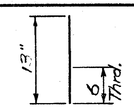

TYPE 3

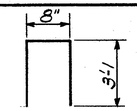

TYPE 4

MARK	TYPE	LENGTH	JEF-7-1185		JEF-7-1235		JEF-7-1293		JEF-7-1340		JEF-7-1348		JEF-7-1369		JEF-7-1374		JEF-7-1387		TOTAL	
			NO.	WGT.	NO.	WGT.	NO.	WGT.	NO.	WGT.	NO.	WGT.	NO.	WGT.	NO.	WGT.	NO.	WGT.	NO.	WGT.
R601	2	2'-2	248	807	190	618	1118	3638	170	553	398	1295	202	657	~	~	~	~	2326	7568
R602	3	1'-1	124	202	96	156	560	911	86	140	200	325	102	166	~	~	~	~	1168	1900
R501	Str.	30'-0	48	1502	32	1001	232	7259	32	1001	72	2253	32	1001	~	~	~	~	448	14,017
R502	Str.	6'-0	8	50	~	~	~	~	~	~	~	~	~	~	~	~	~	~	8	50
R503	1	2'-5	278	700	210	529	1268	3196	194	489	444	1119	228	575	~	~	~	~	2622	6608
R504	Str.	1'-11	278	556	210	420	1268	2535	194	388	444	888	228	456	~	~	~	~	2622	5243
R505	Str.	14'-8	56	857	24	367	256	3916	24	367	96	1469	32	490	36	551	36	551	560	8568
R506	Str.	4'-8	96	467	96	467	512	2492	96	467	144	701	96	467	~	~	~	~	1040	5061
R507	Str.	5'-6	16	92	~	~	~	~	~	~	~	~	~	~	~	~	~	~	16	92
R508	Str.	17'-8	~	~	8	147	~	~	~	~	~	~	~	~	~	~	~	~	8	147
R509	Str.	13'-0	~	~	16	217	~	~	~	~	~	~	~	~	~	~	~	~	16	217
R510	Str.	9'-6	~	~	~	~	16	159	~	~	~	~	~	~	~	~	~	~	16	159
R511	Str.	6'-7	~	~	~	~	~	~	16	110	~	~	~	~	~	~	~	~	16	110
R512	Str.	4'-10	~	~	~	~	~	~	8	40	~	~	~	~	~	~	~	~	8	40
R513	Str.	8'-6	~	~	~	~	~	~	~	~	16	142	~	~	~	~	~	~	16	142
R514	Str.	31'-7	~	~	~	~	~	~	~	~	8	264	~	~	~	~	~	~	8	264
R515	Str.	12'-0	~	~	~	~	~	~	~	~	~	~	16	200	~	~	~	~	16	200
R516	Str.	30'-11	~	~	~	~	~	~	~	~	~	~	8	258	~	~	~	~	8	258
R517	Str.	7'-8	~	~	~	~	16	128	~	~	~	~	~	~	~	~	~	~	16	128
R518	4	6'-7	~	~	~	~	~	~	~	~	~	~	~	~	138	948	138	948	276	1896
R519	Str.	15'-5	~	~	~	~	~	~	~	~	~	~	~	~	24	386	~	~	24	386
R520	Str.	15'-7	~	~	~	~	~	~	~	~	~	~	~	~	~	~	24	390	24	390
TOTAL WGTS.			5233		3922		24,234		3555		8456		4270		1885		1889		53,444	

FHWA REGION	STATE	PROJECT	
5	OHIO		

167

JEF-7-11.80

Refer to CMS Sections 106.03, 700, 709.01 through 709.05 and 709.08. Sufficient additional reinforcing steel shall be provided for sampling. Random samples shall be replaced in the structures by the additional steel, spliced in accordance with 509.08.

Type 2 & 3 bars shall be threaded and degreased. The threads shall be Uniform Standard Series for basic Major Diameter of ¾". Threading and degreasing of bars shall be included with Item 509 for payment.

Sheet 4 / 16

W. E. QUICKSALL AND ASSOCIATES, INC.
CONSULTING ENGINEERS • NEW PHILADELPHIA, OHIO

REINFORCING BAR SCHEDULE

JEF-7-1185
JEF-7-1235
JEF-7-1293
JEF-7-1340
JEF-7-1348
JEF-7-1369
JEF-7-1374
JEF-7-1387

DESIGNED	DRAWN	TRACED	CHECKED	REVIEWED	DATE	REVISED
PMZ	PMZ		FS	wda	8/78	

FHWA REGION	STATE	PROJECT	
5	OHIO		

168

JEF-7-11.80

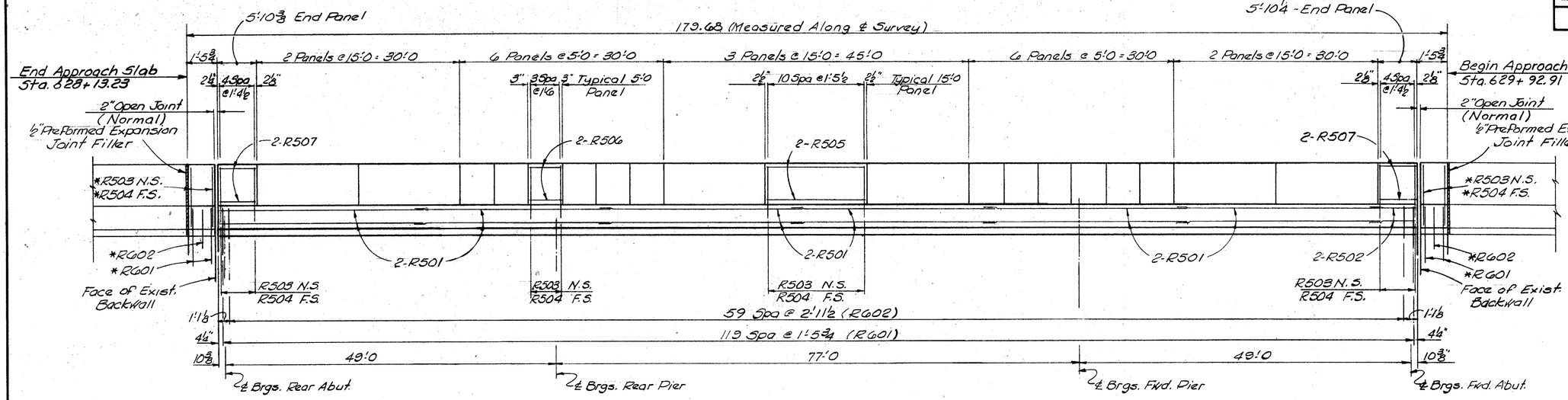

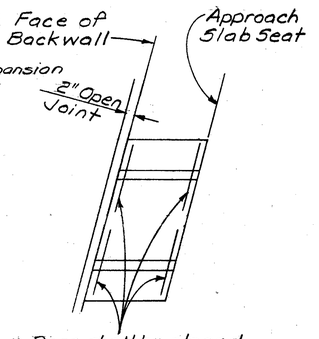

DETAIL C

Notes:
Minimum lap for R501 & R502 reinforcing bars is 1'-7.
For additional notes, see sheet 7/16

MEDIAN DETAILS

JEF-7-1185

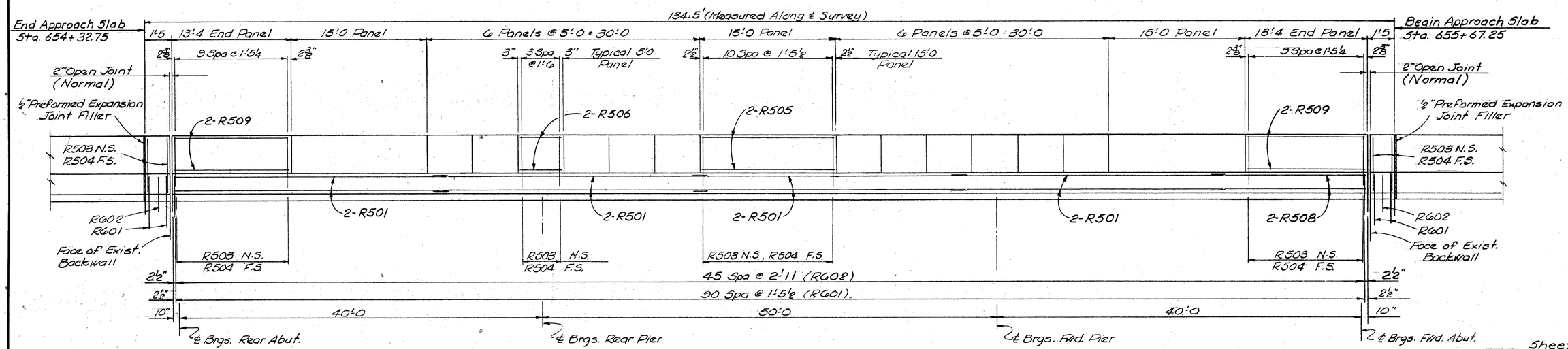

Sheet 5/16

Notes:
Minimum lap for R501 & R508 reinforcing bars is 1'-7.
For additional notes, see sheet 7/16

MEDIAN DETAILS

JEF-7-1235

W. E. QUICKSALL AND ASSOCIATES, INC.
CONSULTING ENGINEERS • NEW PHILADELPHIA, OHIO

MEDIAN DETAILS

JEF-7-1185
JEF-7-1235

DESIGNED	DRAWN	TRACED	CHECKED	REVIEWED	DATE	REVISED
RLB	RLB		PMZ	wda	8/78	

FHWA REGION	STATE	PROJECT	
5	OHIO		

169

JEF-7-11.80

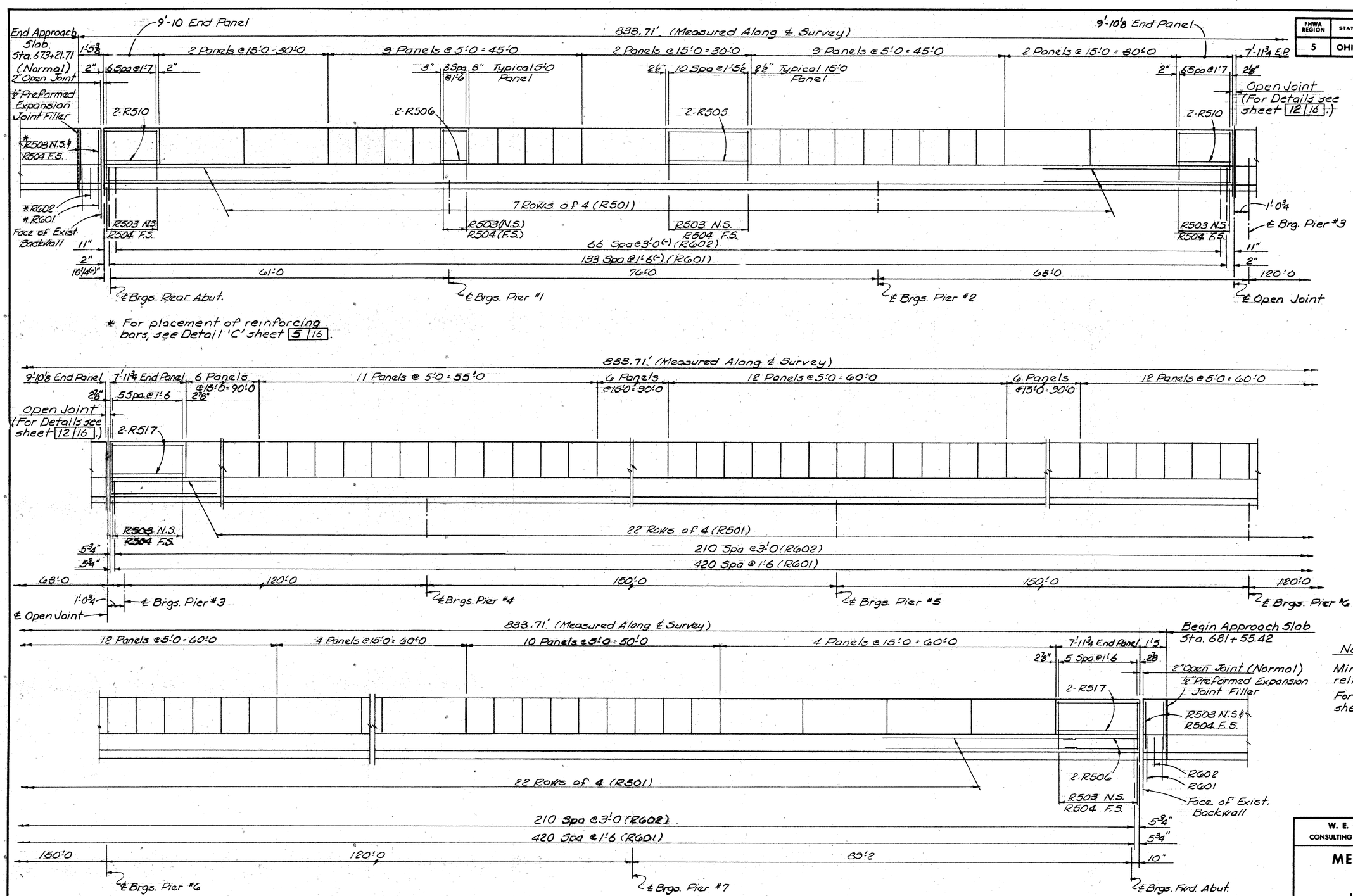

Notes:

Minimum lap for R501 & R506 reinforcing bars is 1'-7.

For additional notes, see sheet 7/16

Sheet 6/16

W. E. QUICKSALL AND ASSOCIATES, INC.
CONSULTING ENGINEERS • NEW PHILADELPHIA, OHIO

MEDIAN DETAILS

JEF-7-1293

DESIGNED	DRAWN	TRACED	CHECKED	REVIEWED	DATE	REVISED
RLB	rlb		PMZ	wda	8/78	

MEDIAN DETAILS

JEF-7-1293

FHWA REGION	STATE	PROJECT	
5	OHIO		

170

JEF-7-11.80

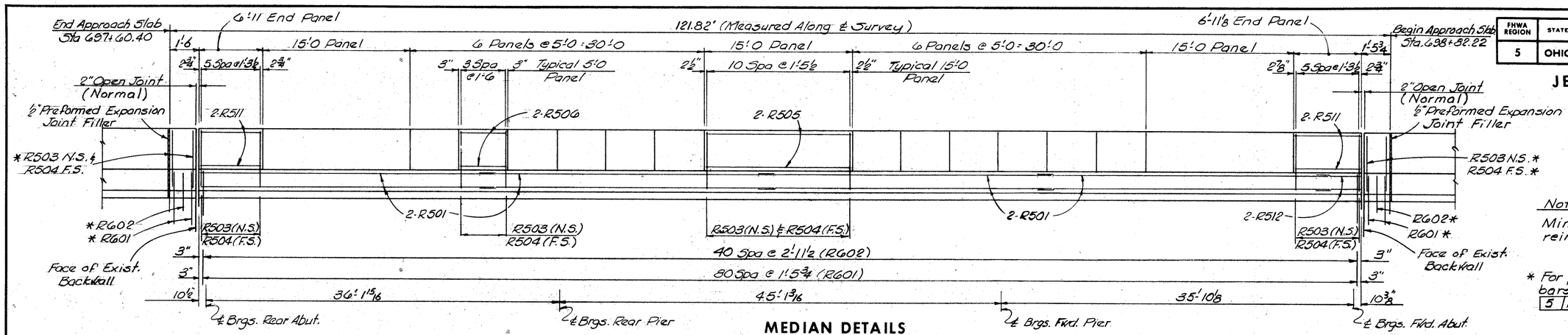

Note:
Minimum lap for R501 & R512 reinforcing bars is 1'-7.

* For placement of reinforcing bars, see Detail 'C' sheet 5/16.

MEDIAN DETAILS

JEF-7-1340

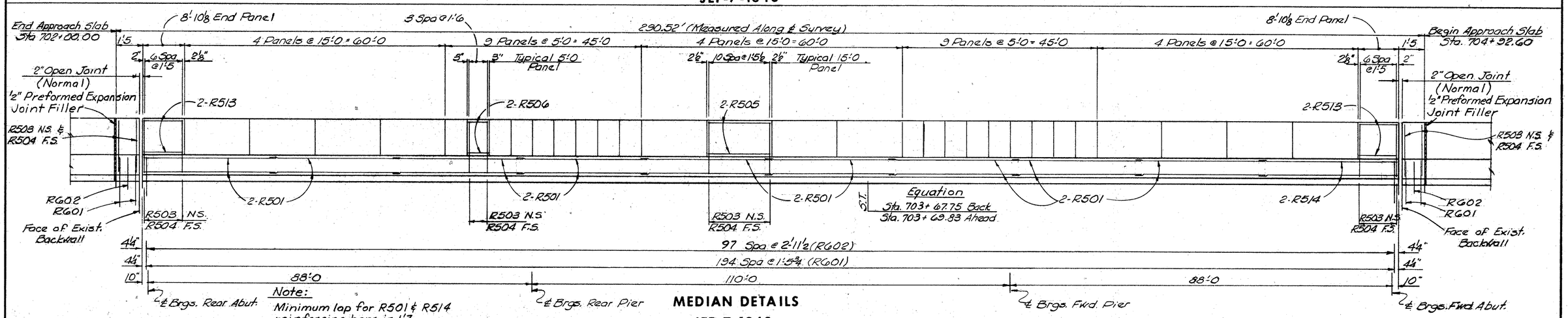

Note:
Minimum lap for R501 & R514 reinforcing bars is 1'7.

MEDIAN DETAILS

JEF-7-1348

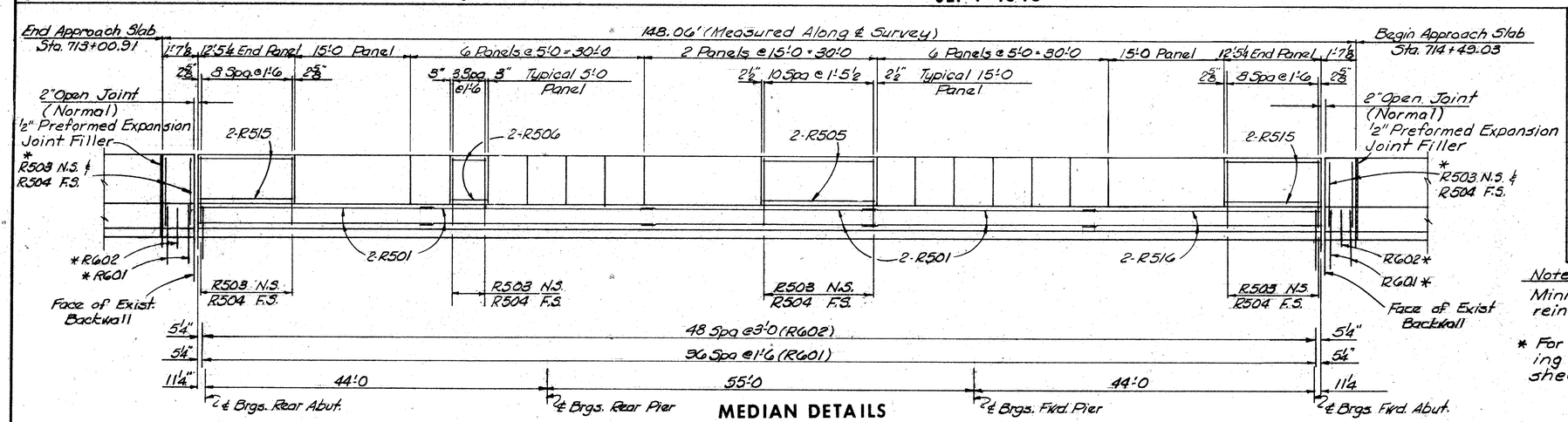

Note:
Minimum lap for R501 & R516 reinforcing bars is 1'-7.

* For placement of reinforcing bars, see Detail 'C' sheet 5/16.

MEDIAN DETAILS

JEF-7-1369

NOTES

For typical details of abutment curb plate and median revisions, see sheet 8/16

For Typical Section thru median, see sheet 8/16

For additional details, see sheet 8/16

All dimensions, unless otherwise noted, are measured along ℄ Survey.

½" Preformed Expansion Joint Filler shall be included with Item 511, Class 'C' Concrete, Superstructure for payment.

Median concrete placed between the approach slab and face of abutment backwall shall be included with Item 511, Class 'C' Concrete, Superstructure for payment.

Sheet 7/16

W. E. QUICKSALL AND ASSOCIATES, INC.
CONSULTING ENGINEERS • NEW PHILADELPHIA, OHIO

MEDIAN DETAILS

JEF-7-1340
JEF-7-1348
JEF-7-1369

DESIGNED	DRAWN	TRACED	CHECKED	REVIEWED	DATE	REVISED
RLB	RLB		PMZ	wda	8/78	

FHWA REGION	STATE	PROJECT	
5	OHIO		

171

JEF-7-11.80

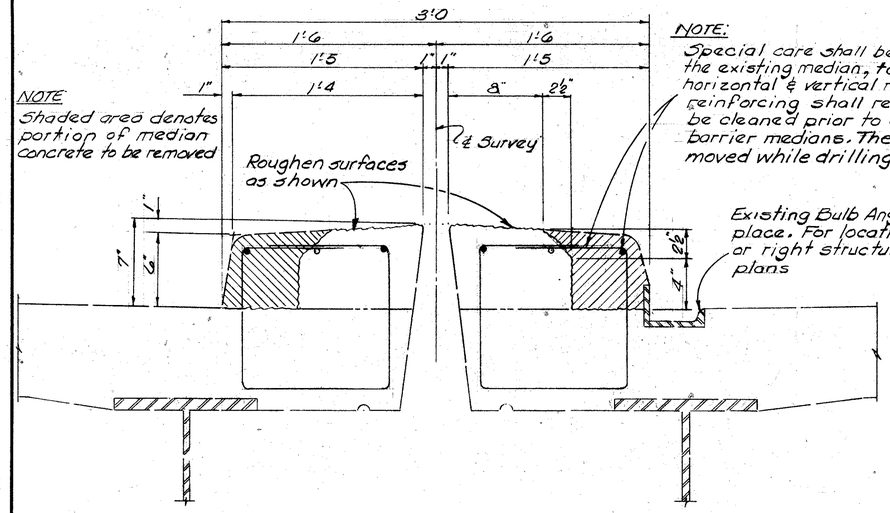

NOTE:
Shaded area denotes portion of median concrete to be removed

NOTE:
Special care shall be taken during removal of the existing median, to protect the existing horizontal & vertical reinforcing steel. This reinforcing shall remain in place and shall be cleaned prior to construction of the new barrier medians. The horizontal bar may be moved while drilling holes and placing dowels.

Existing Bulb Angle to remain in place. For location at either left or right structures see existing plans

SECTION THRU EXISTING MEDIAN

NOTE:
Shaded area denotes portion of median concrete to be removed.

Existing curb plates and anchors shall be removed. The existing bulb angles shall be removed to the limits required for installation of new curb plates. Removal of these items shall be included with the cost of Item 202 for payment.

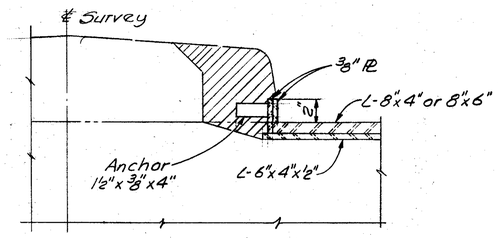

SECTION A-A

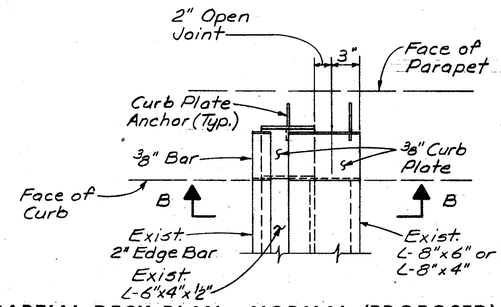

PARTIAL DECK PLAN - NORMAL (PROPOSED)

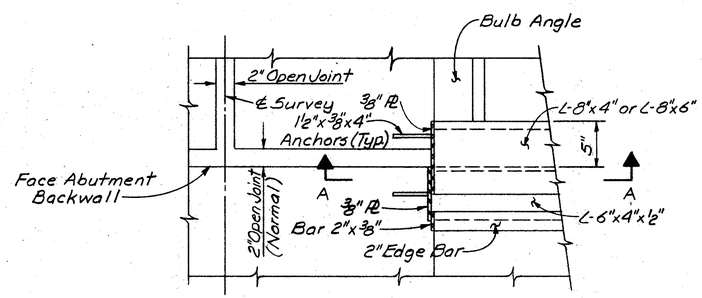

ABUTMENT MEDIAN DETAIL (EXISTING)

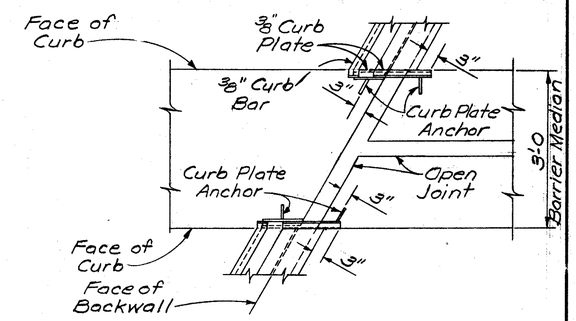

PARTIAL DECK PLAN - SKEWED (PROPOSED)

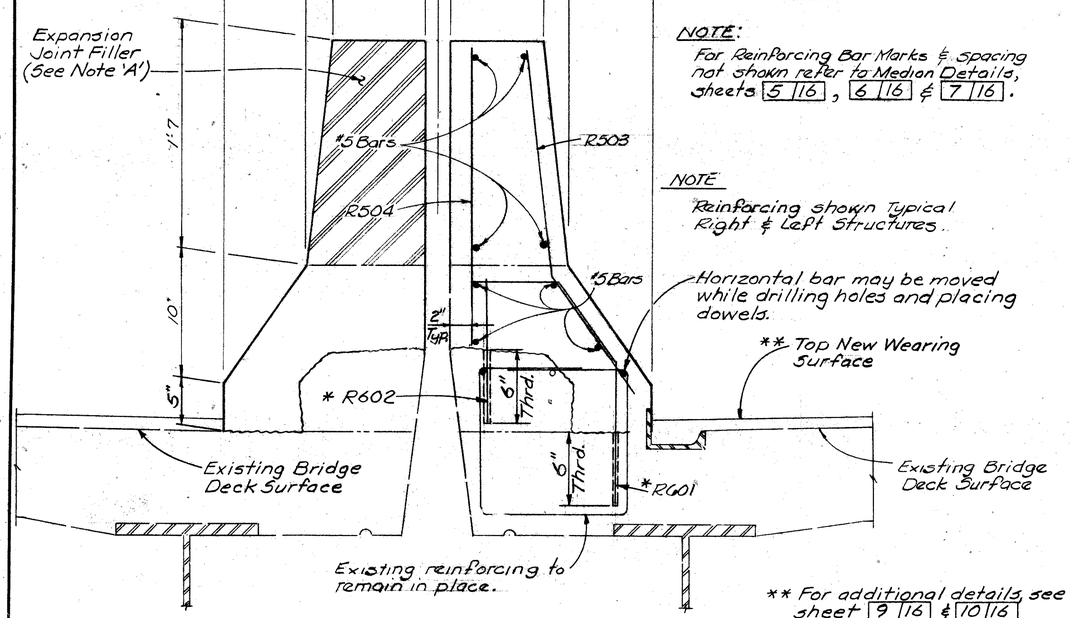

NOTE 'A':
Preformed expansion joint filler in the median deflection joints may be either ¼" gray sponge rubber or ¼" gray cellular polyvinyl chloride (PVC) sponge. If rubber is used it shall meet the requirements of AASHO M-153. To be included with Item 511, Superstructure Concrete for payment. For location of deflection panels, see sheets 5/16, 6/16 & 7/16.

NOTE:
For Reinforcing Bar Marks & Spacing not shown refer to Median Details, sheets 5/16, 6/16 & 7/16.

NOTE
Reinforcing shown Typical Right & Left Structures.

SECTION THRU PROPOSED MEDIAN

** For additional details, see sheet 9/16 & 10/16

* R601 & R602 bars shall be inserted into dowel holes to the depth shown. Dowel holes and grout anchoring shall be as per Supplemental Specification 853, and paid for under Item 510, Dowel Holes, as per plan.

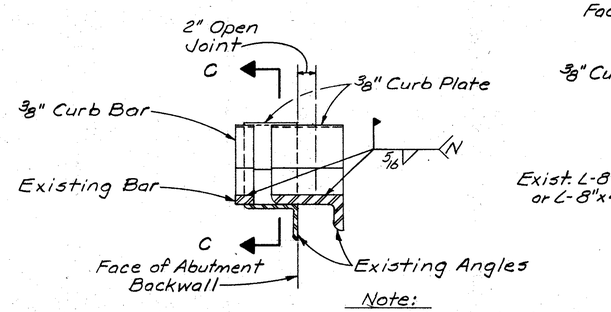

Note:
Vertical extension bars not shown.

SECTION B-B

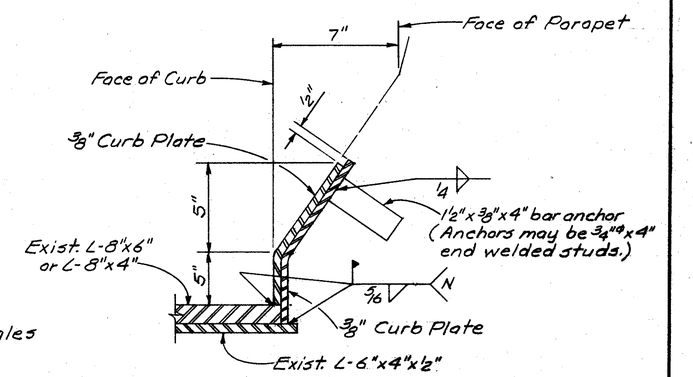

SECTION C-C

Sheet 8/16

W. E. QUICKSALL AND ASSOCIATES, INC.
CONSULTING ENGINEERS • NEW PHILADELPHIA, OHIO

MEDIAN DETAILS

JEF-7-1185	JEF-7-1340
JEF-7-1235	JEF-7-1348
JEF-7-1293	JEF-7-1369

DESIGNED	DRAWN	TRACED	CHECKED	REVIEWED	DATE	REVISED
RLB	RLB & PMZ		FS	wda	8/78	

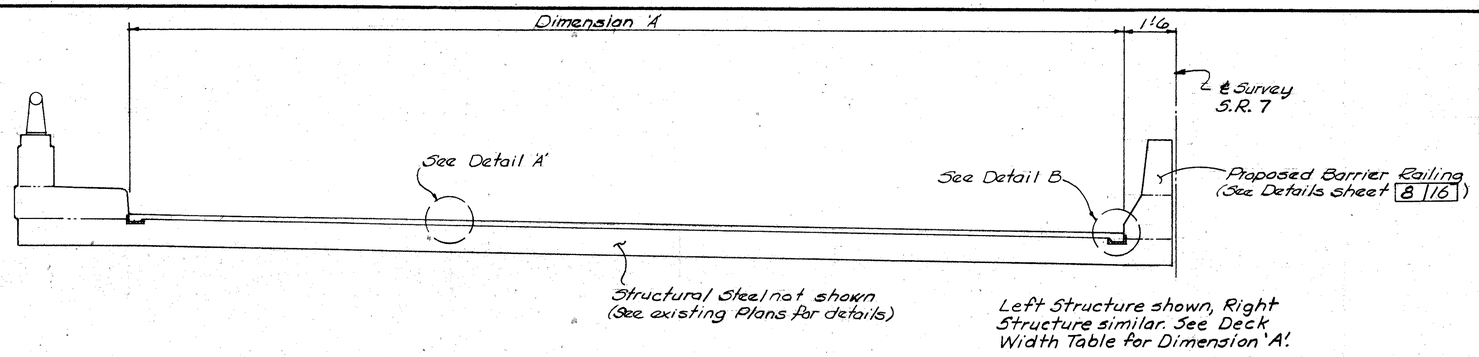

TYPICAL TRANSVERSE SECTION

BRIDGE No.	DIMENSION 'A' Left Structure	DIMENSION 'A' Right Structure
JEF-7-1185	33'-10"	33'-10"
JEF-7-1235	33'-10"	33'-10"
JEF-7-1293	28'-0"	28'-0"
JEF-7-1340	33'-10"	33'-10"
JEF-7-1348	28'-0"	40'-0"
JEF-7-1369	33'-10"	33'-10"

DECK WIDTH (f/f CURBS)

FHWA REGION	STATE	PROJECT	
5	OHIO		

JEF-7-11.80

172

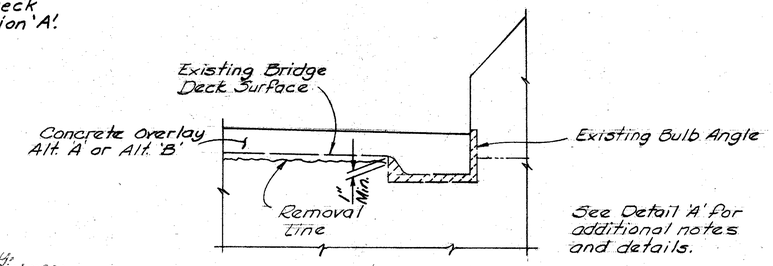

DETAIL B'

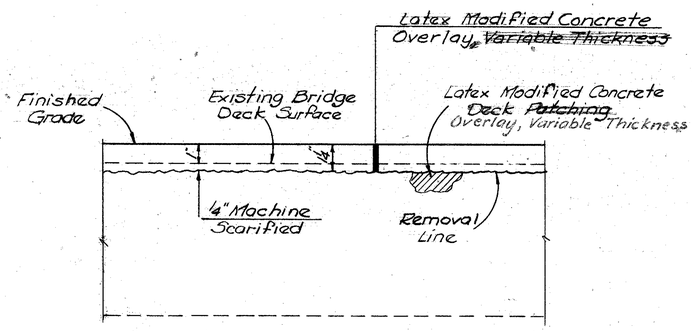

ALTERNATE 'A'

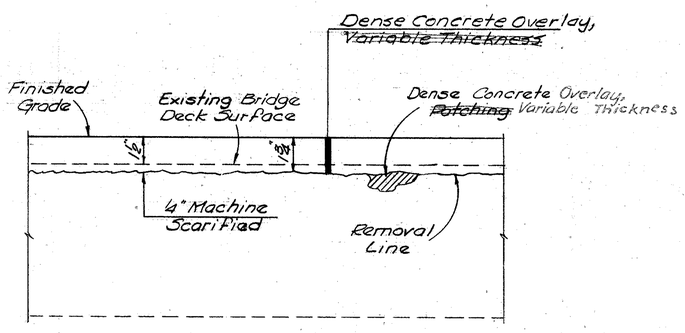

ALTERNATE 'B'

DETAIL 'A'

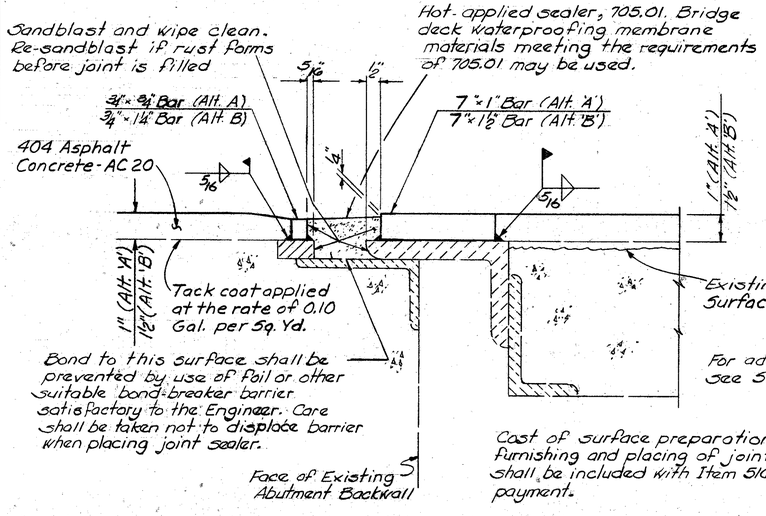

DETAIL OF VERTICAL EXTENSION OF ABUTMENT EXPANSION JOINT

Note:
Provide a hole in 3/8" plate on the uphill side of scupper to allow for deck subdrainage.

Sheet 172 revised 8-29-79

3/4" ~ Alt. 'A'
1 1/4" ~ Alt. 'B'
2 1/4" ~ Item 404

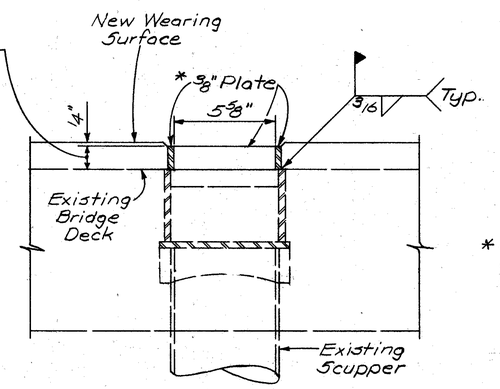

DETAIL OF VERTICAL EXTENSION OF EXISTING SCUPPERS

* Cost of vertical extension of scuppers shall be included with Item 516 for payment.

See existing bridge plans for details of existing scuppers.

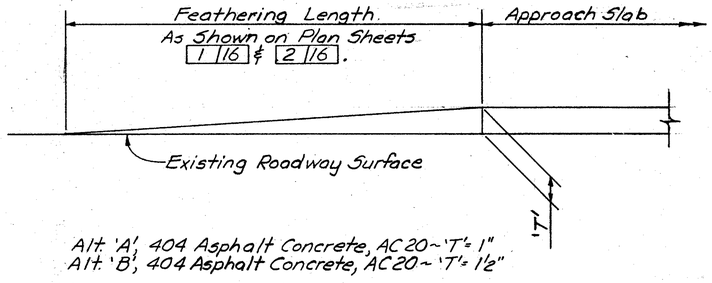

FEATHERING AREA DETAILS

REVISED 8-29-79 Sheet 9/16

W. E. QUICKSALL AND ASSOCIATES, INC.
CONSULTING ENGINEERS • NEW PHILADELPHIA, OHIO

WEARING SURFACE DETAIL

JEF-7-1185 JEF-7-1348
JEF-7-1235 JEF-7-1369
JEF-7-1340

DESIGNED	DRAWN	TRACED	CHECKED	REVIEWED	DATE	REVISED
RLB	RLB & PMZ		FS	wda	8/78	

FHWA REGION	STATE	PROJECT	
5	OHIO		

173

JEF-7-11.80

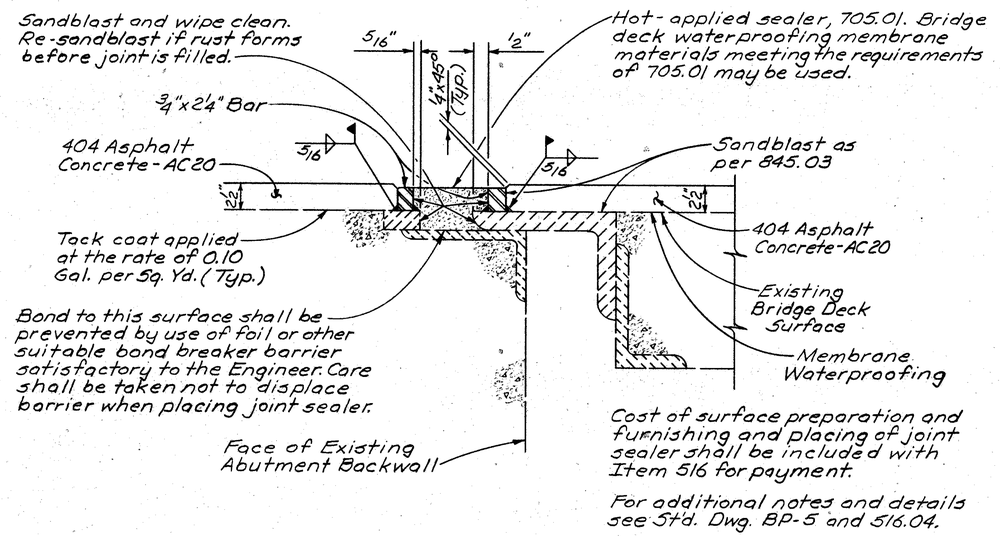

DETAIL OF VERTICAL EXTENSION OF ABUTMENT EXPANSION JOINT

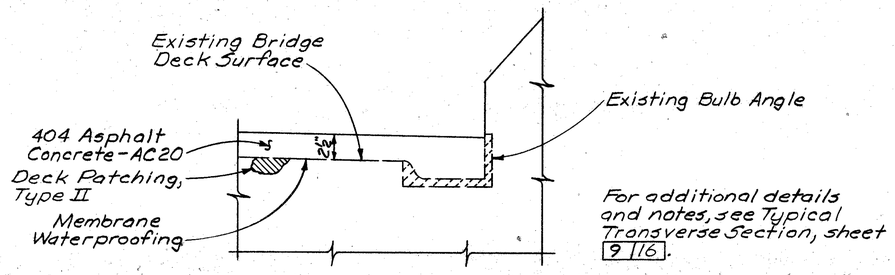

DETAIL B'

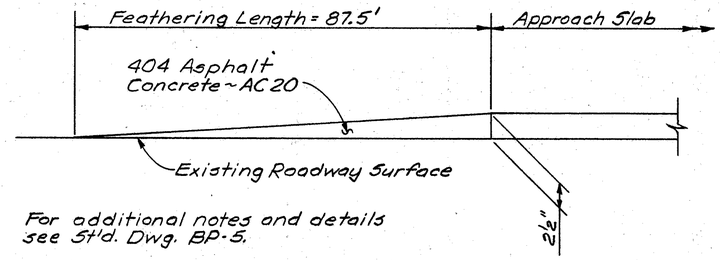

FEATHERING AREA DETAILS

Sheet 10/16

W. E. QUICKSALL AND ASSOCIATES, INC.
CONSULTING ENGINEERS • NEW PHILADELPHIA, OHIO

WEARING SURFACE DETAILS

JEF-7-1293

DESIGNED	DRAWN	TRACED	CHECKED	REVIEWED	DATE	REVISED
PMZ	PMZ		FS	wda	8/78	

FHWA REGION	STATE	PROJECT	
5	OHIO		

174

JEF-7-11.80

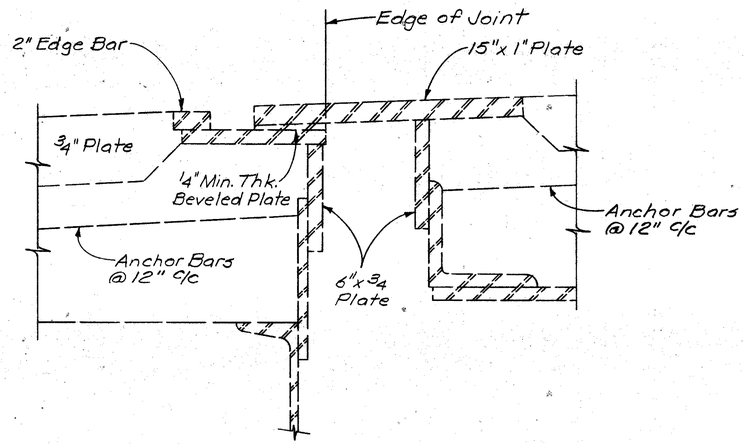

EXISTING

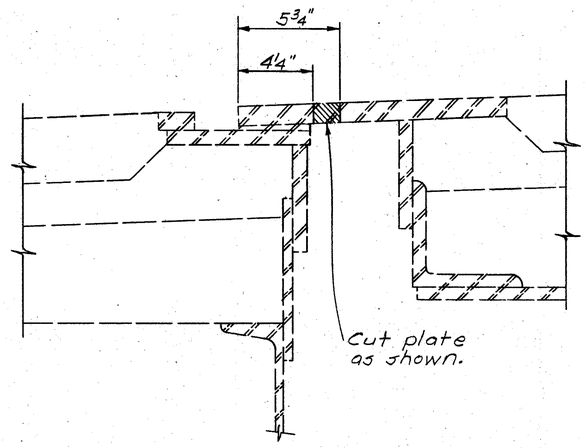

STEP 1

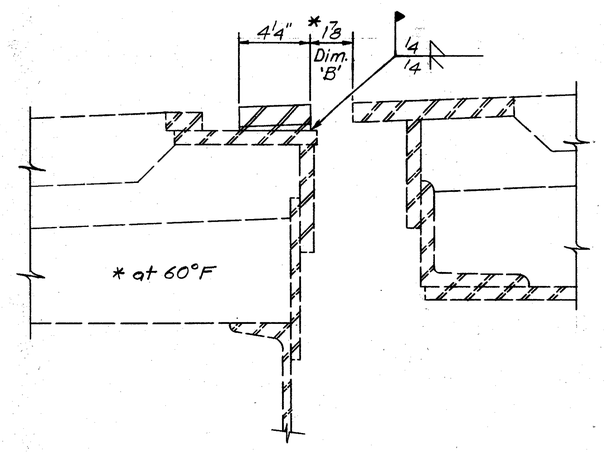

STEP 2

CONSTRUCTION PROCEDURE

STEP #1

CUT 15"x1" PLATE AS SHOWN FROM FACE OF EXISTING CURB TO EDGE OF PROPOSED MEDIAN. TYPICAL, NORTHBOUND AND SOUTHBOUND STRUCTURE.

STEP #2

POSITION CUT PORTION OF 15"x1" PLATE AND BEVELED PLATE IN ACCORDANCE WITH DIMENSIONS SHOWN ON DETAIL AND JOINT DIMENSION TABLE AND WELD AS SHOWN.

STEP #3

POSITION 3/4"x2¼" VERTICAL RETAINER BARS IN ACCORDANCE WITH DIMENSIONS SHOWN ON DETAIL AND JOINT DEMENSION TABLE AND WELD AS SHOWN.

STEP #4

INSTALL ELASTOMERIC SEAL IN ACCORDANCE WITH DIMENSIONS SHOWN ON DETAIL AND JOINT DIMENSION TABLE. FOR GENERAL NOTES, MATERIAL SPECIFICATION, AND INSTALLATION PROCEDURES, SEE SHEETS 13/16 AND 14/16.

ALL LABOR, EQUIPMENT, AND MATERIALS REQUIRED TO CUT AND REPOSITION THE EXISTING STRUCTURAL STEEL PLATE AND TO FURNISH AND INSTALL THE NEW STRUCTURAL STEEL RETAINER BARS SHALL BE INCLUDED IN THE COST OF THE ELASTOMERIC JOINT SEAL FOR PAYMENT.

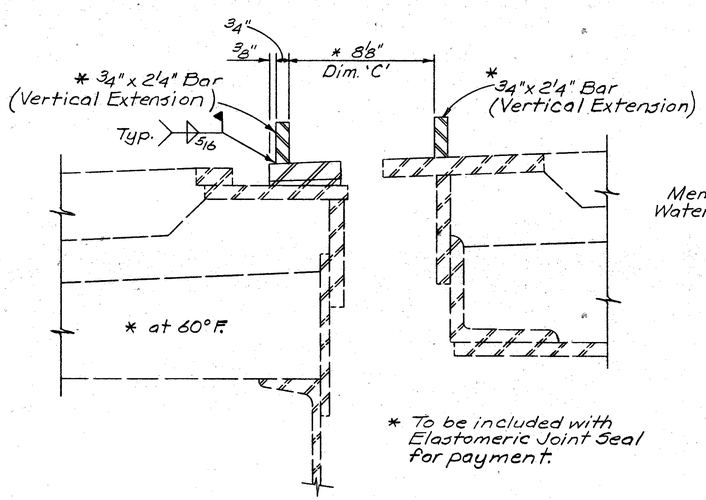

* To be included with Elastomeric Joint Seal for payment.

STEP 3

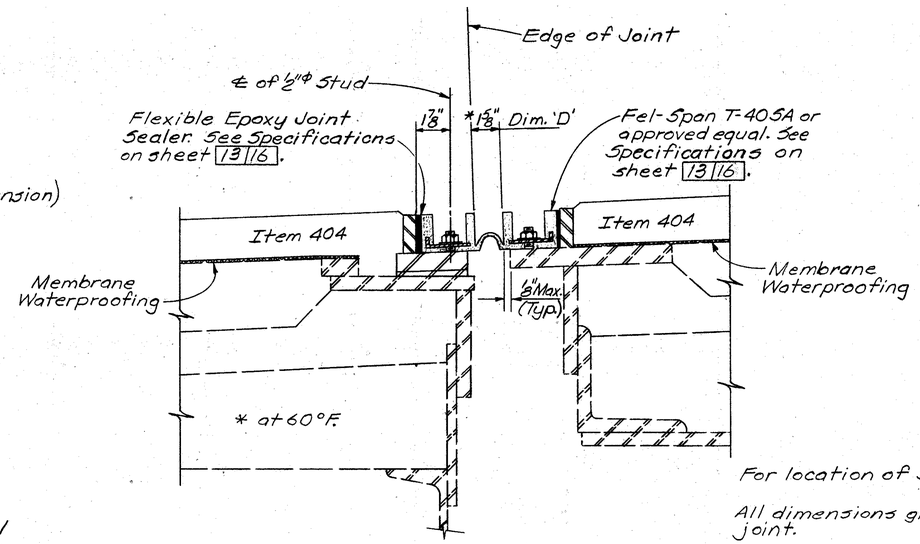

STEP 4
AND
SECTION A-A

For location of Section A-A see sheet 12/16.

All dimensions given are normal to edge of joint.

For location of Dimension 'A' see sheet 12/16.

JOINT DIMENSIONS

Dimension	Installation Temperature 30°	40°	50°	60°	70°	80°	90°
'A'	8 5/8	8 3/8	8 1/8	7 7/8	7 5/8	7 3/8	7 1/8
'B'	2 5/8	2 3/8	2 1/8	1 7/8	1 5/8	1 3/8	1 1/8
'C'	8 7/8	8 5/8	8 3/8	8 1/8	7 7/8	7 5/8	7 3/8
'D'	2 3/8	2 1/8	1 7/8	1 5/8	1 3/8	1 1/8	7/8

Sheet 11/16

W. E. QUICKSALL AND ASSOCIATES, INC.
CONSULTING ENGINEERS • NEW PHILADELPHIA, OHIO

JOINT SEAL DETAILS FOR INTERMEDIATE DECK EXPANSION JOINT

JEF-7-1293

DESIGNED	DRAWN	TRACED	CHECKED	REVIEWED	DATE	REVISED
PMZ	PMZ		wda			

FHWA REGION	STATE	PROJECT	
5	OHIO		

175

JEF-7-11.80

Notes:

Existing curb plates not shown. Existing curb plates to be removed where they interfere with the seal.

The contractor shall take care in the removal of concrete so as to avoid disturbing existing reinforcing steel.

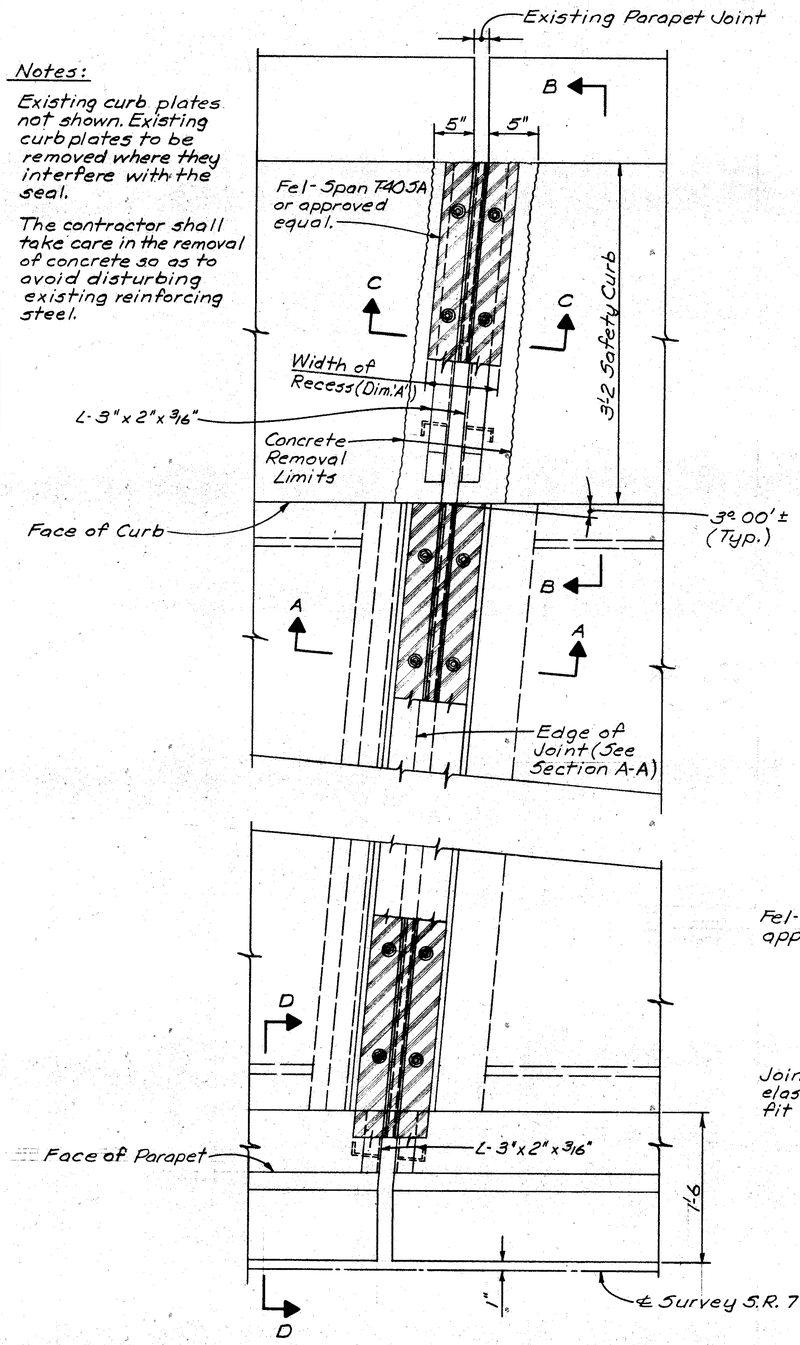

ELASTOMERIC JOINT PLAN
(Southbound Lane Shown, Northbound Lane Opp. Hand)

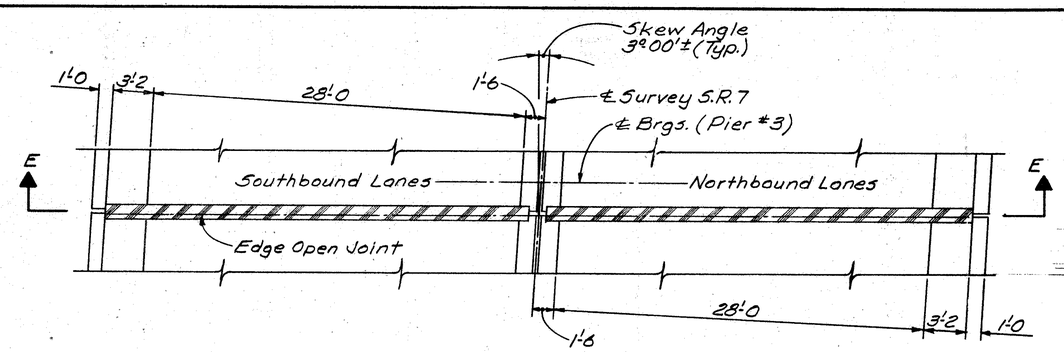

DECK PLAN

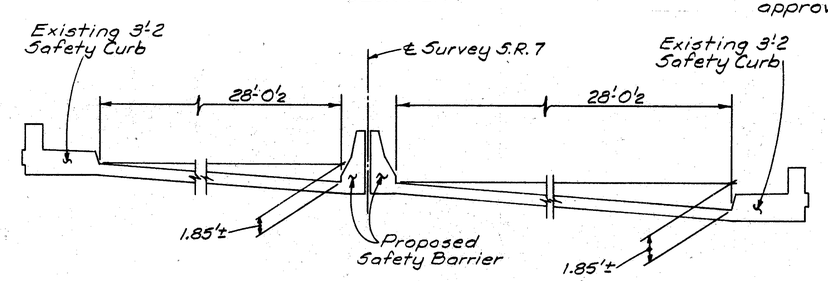

SECTION E-E

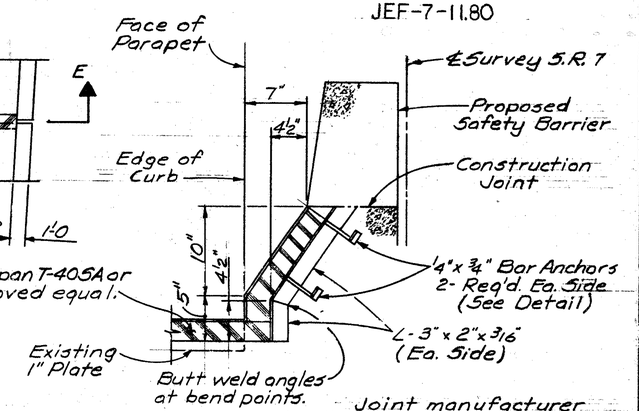

Joint manufacturer shall fabricate elastomeric joint in safety barrier area to fit dimensions shown.

SECTION D-D

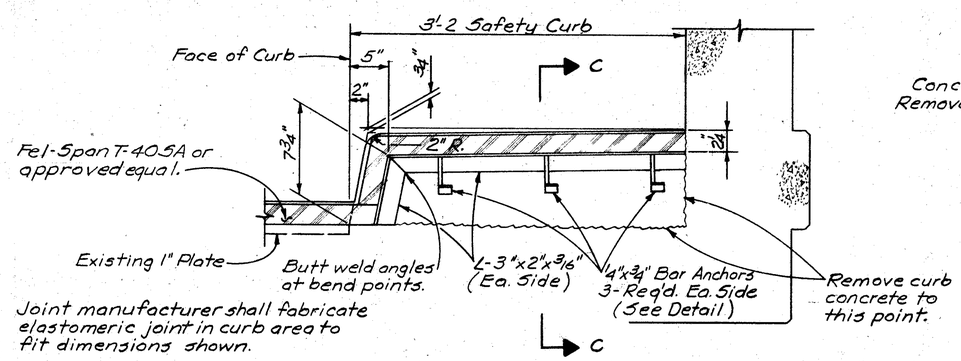

Joint manufacturer shall fabricate elastomeric joint in curb area to fit dimensions shown.

SECTION B-B

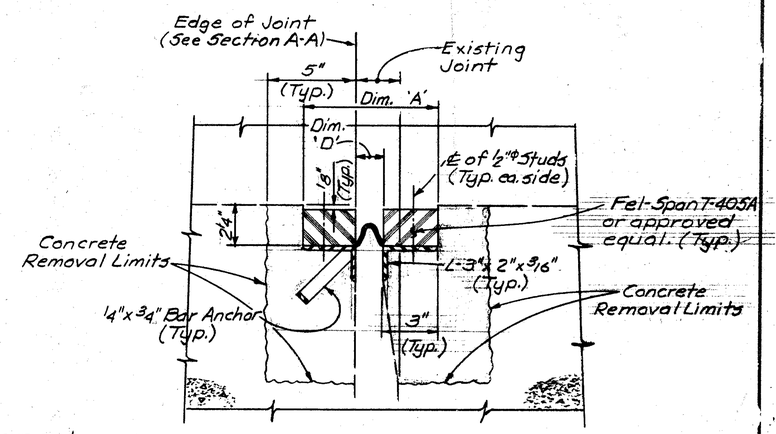

Shaded area indicates limits of new concrete. (To be poured after support angles are in place.)

SECTION C-C

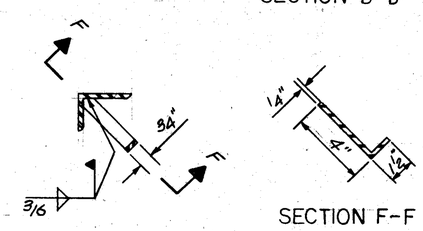

SECTION F-F

BAR ANCHOR DETAILS
(20 - Req'd.)

For Section A-A, Dim. 'A' & Dim. 'D' see sheet 11/16.

For Elastomeric Seal Notes and Installation Procedures see sheets 13/16 & 14/16.

Sheet 12/16

W. E. QUICKSALL AND ASSOCIATES, INC.
CONSULTING ENGINEERS • NEW PHILADELPHIA, OHIO

JOINT SEAL DETAILS FOR INTERMEDIATE DECK EXPANSION JOINT

JEF-7-1293

DESIGNED	DRAWN	TRACED	CHECKED	REVIEWED	DATE	REVISED
PMZ	PMZ		wde			

SPECIFICATIONS

WORK DESCRIPTION

THIS WORK WILL CONSIST OF SUPPLYING ALL EQUIPMENT, MATERIALS, AND LABOR REQUIRED TO INSTALL A STEEL-REINFORCED ELASTOMERIC JOINT, IN ACCORDANCE WITH THE DETAIL DRAWINGS. THE MANUFACTURER WILL PROVIDE THE PROPER LENGTH OF EXPANSION PAD AND THE NECESSARY HARDWARE FOR THE PROPER INSTALLATION OF THE ELASTOMERIC JOINT. THIS INCLUDES BOLT ASSEMBLIES, EPOXIES, SEALANTS, ACCESSORIES, CURB AND PARAPET SECTION, AND SHOP CUT PADS WHERE NECESSARY. THE JOINT SEAL SHALL BE PREFABRICATED IN ACCORDANCE WITH APPROVED SHOP DRAWINGS. ALL STUD WELDED BOLTS SHALL BE PLACED WITH THE AID OF TEMPLATES OR ACTUAL CURB OR PARAPET UNITS.

A REPRESENTATIVE OF THE JOINT SEAL MANUFACTURER SHALL BE PRESENT PRIOR TO AND DURING THE INITIAL JOINT SEAL INSTALLATION TO FURNISH TECHANICAL ASSISTANCE AND GUIDANCE TO THE CONTRACTOR AND ENGINEER. WHERE SPECIFIC INSTRUCTIONS ARE NOT CONTAINED HEREIN, THE USE OF SPECIALIZED MATERIALS AND COMPOUNDS SHALL BE ACCORDING TO MANUFACTURER'S RECOMMENDATIONS.

PRODUCT DESCRIPTION

THE ELASTOMERIC JOINT SHALL CONSIST OF INTEGRALLY MOLDED PADS OF ELESTOMER AND STEEL WITH A FLEXIBLE FABRIC REINFORCED CONVOLUTION CONNECTING THE PADS BY MEANS OF INTEGRAL MOLDING. THE CONVOLUTION WILL BE CAPABLE OF BRIDGING THE JOINT OPENING THROUGH EXPANSION MOVEMENT OF THE JOINT AND WILL SEAL THE DECK SURFACE, PARAPET, AND CURBS TO PREVENT MOISTURE AND OTHER FOREIGN MATERIALS FROM ENTERING THE EXPANSION JOINT. BUTT JOINTS OF SEGMENTED SEALS SHALL EITHER BE SHOP VULCANIZED OR FIELD BONDED TO FORM A CONTINUOUS SEALING SURFACE ACROSS THE LENGTH OF THE JOINT. THE CURB AND PARAPET JOINTS SHALL BE SHOP VULCANIZED UNDER HEAT AND PRESSURE. FIELD BONDING SHALL FURNISH ADEQUATE SPLICE STRENGTHS (AS DETERMINED BY CYCLE TESTING). FIELD BONDING, IF USED, SHALL CONSIST OF AN ADHESIVE SYSTEM OF RUBBERIZIED EPOXY. SEGMENTED UNITS SHALL HAVE PROVISIONS FOR AN OVERLAP AT THE JOINT BETWEEN UNITS, INCLUDING AN OVERLAP OF THE FLEXIBLE CONVOLUTIONS. THE PADS SHALL BE SECURED TO THE EPOXY BEDDED EXPANSION JOINT SURFACE BY MEANS OF CLOSELY SPACED, STUD-WELDED ANCHOR BOLTS.

THE ELASTOMERIC JOINT SEAL SHALL BE FURNISHED WITH EMBEDDED SNOW PLOW GUARDS.

FOR PARTICULAR JOINT SEAL DESIGNS AND DECK JOINT REQUIREMENTS, REFER TO APPROIATE DETAILS IN THE PROJECT PLANS. THE BOLT RECESSES AND THE SIDE JOINTS BETWEEN THE JOINT UNIT AND THE STRUCTURAL STEEL RETAINER BARS SHALL BE FILLED WITH A FLEXIBLE EPOXY SEALANT. BOLT WELL AND SIDE SEAMS ON THE VERTICAL CURB UNITS SHALL BE FILLED WITH A STRUCTURAL POLYSULFIDE SEALANT.

COORDINATION

THE CONTRACTOR SHALL INSURE THAT THE SHOP DRAWINGS OF THE VARIOUS PRODUCT FABRICATORS ARE COORDINATED PRIOR TO FABRICATION FOR SPECIFIC PRODUCT REQUIREMENTS. ALL NECESSARY MATERIAL CERTIFICATIONS AND SAMPLES SHALL HAVE BEEN SUBMITTED AND APPROVED PRIOR TO THE INCORPORATION OF SUCH MATERIAL INTO THE PROJECT.

MATERIAL SPECIFICATION

THE NEOPRENE COMPOUND FOR THIS EXPANSION DEVICE SHALL BE IN ACCORDANCE WITH ASTM D 2000.

PHYSICAL PROPERTIES	ASTM TEST	REQUIREMENTS
DUROMETER -SHORE A	D-2240-75	60 + 5
TENSILE STRENGTH	D-412-68	2000PSI.MIN.
ULTIMATE ELONGATION	D-412-68	350% MIN.
COMPRESSION SET 22 HOURS @ 212°F (METHOD "B")	D-395-69	35% MAX.
LOW TEMPERATURE FLEXIBILITY @ -40°F (METHOD "A")	D-2137-75	PASS (-40°F)
HEAT AGED 70 HOURS/212°F	D-573-67	
HARDNESS CHANGE, POINTS		+15 MAX.
OZONE RESISTINCE PROCEDURE "B" -D518	D-1149-64	NO CRACKS
100 PPRM OZONE FOR 70 HOURS @ 100°F SAMPLE UNDER 20% STRAIN		
OIL DETERIORATION: VOLUME INCREASE AFTER IMMERSION IN ASTM #3 OIL FOR 70 HOURS @ 212°F	D-471-75	120% MAX.
BOND DURING VULCANIZATION (METHOD "B")	D-429-73	80% R.
Z1=C12 TO BE RUN AS PER D-1149-64(PROCEDURE B-D518)		

WHEN TEST SPECIMENS ARE CUT FROM THE FINISHED PRODUCT, A 10% VARIATION IN "PHYSICAL PROPERTIES" WILL BE ALLOWED.

POLYSULFIDE BEDDING EPOXY

THE ADHESIVE/SEALANT BEDDING EPOXY FOR BONDING THE EXPANSION JOINT TO CONCRETE OR STEEL SHALL BE SUPPLIED IN PREMEASURED CONTAINERS AND SHALL CONSIST OF A GREY, TWO COMPONENT FLEXIBLE EPOXY HAVING THE FOLLOWING PHYSICAL PROPERTIES:

BASE MATERIAL	EPOXY RESIN
COLOR	CONCRETE GREY
WEIGHT PER GALLON(MIXED MATERIALS)	12 LBS. PER GALLON
SOLIDS CONTENT	98% MIN. BY WEIGHT
MIXING TIME	MIX 1½ - 2 MIN. PER MIXING INSTRUCTIONS ON LABEL
POT LIFE	25 - 30 MIN. @ 75°F
INITIAL CURE	4 HOURS @ 75°F
FINAL CURE	48 HOURS @ 75°F
SHELF LIFE	12 MONTHS (COMPONENTS SEPARATE
TENSILE STRENGTH, ASTM D-638	3000 PSI
ELONGATION, ASTM D-638	7% @ 75°F
WATER ABSORPTION, ASTM D-570-6.1 24 HOURS IMMERSION	1.0% MAX,
BOND STRENGTH TO CONCRETE	CONCRETE FAILS BEFORE BOND.

RUBBERIZED EPOXY - INTERCONNECT SEALANT

THE RUBBERIZED EPOXY FOR SEALING JOINTS BETWEEN EXPANSION DEVICES SHALL BE A TWO COMPONENT, BLACK, POLYMERIC CURING COMPOUND, FORMULATED TO GIVE A STRONG, ELASTIC BOND WHICH WILL RESIST VIBRATION AND ACCOMMODATE THE EXPANSION AND CONSTRUCTION CONDITIONS TYPICALLY ENCOUNTERED IN HIGHWAY CONSTRUCTION. THIS MATERIAL SHALL BE SUPPLIED PREMEASURED. THE COMPOUND USED SHALL MEET THE APPROVAL OF THE MANUFACTURER OF THE ELASTOMERIC EXPANSION JOINT AND SHALL POSSESS THE FOLLOWING PHYSICAL PROPERTIES:

UNCURED PHYSICAL PROPERTIES

POLYMER BASE	EPOXY RESIN/RUBBER
COLOR	BLACK
WEIGHT PER GALLON	8.5 LBS.
SOLIDS CONTENT	98% MIN. BY WEIGHT
VISCOSITY, BROOKFIELD, SPINDLE #7 @ 10 RPM	2400 POISES
VERTICAL FLOW, 3/4"x1/8" MASS	1 INCH
STORAGE LIFE	12 MONTHS WHEN STORED AT TEMPERATURES BELOW 80°F IN ORIGINAL CONTAINERS
POT LIFE @ 75°F	20 MINS.

CURED PHYSICAL PROPERTIES

ULTIMATE ELONGATION, ASTM D-412	75%
TENSIL STRENGTH ASTM D-412	600 PSI
FLUID RESISTANCE	EXCELLENT RESISTANCE TO AROMATIC FUELS, SALT WATER, PETROLEUM BASE, AND SYNTHETIC LUBRICATION OILS, ALCOHOLS, AND PETROLEUM BASE HYDRAULIC FLUIDS
FUNGUS RESISTANCE	NON-NUTRIENT

FLEXIBLE EPOXY - BOLT WELL SEALANT - DECK

THE FLEXIBLE EPOXY FOR FILLING THE VOID AROUND THE NUT FASTENERS IN THE DECK CONSISTS OF A BLACK, TWO COMPONENT, FLEXIBLE EPOXY SEALANT HAVING THE FOLLOWING PHYSICAL PROPERTIES:

BASE MATERIAL	FLEXIBILIZED EPOXY RESIN
COLOR	BLACK
WEIGHT PER GALLON	8.8 LBS. PER GALLON
MIXING TIME	FOR ONE QUART, COMBINE A & B COMPONENTS AND MIX 1½ MINS. USE WITHIN 12 MINS. NORMAL USE 50°F AND ABOVE
POT LIFE	10-15 MIN. @ 75°F
INITIAL CURE	4 HOURS @ 75°F
FINAL CURE	48 HOURS @ 75°F
SHELF LIFE	12 MONTHS (COMPONENTS SEPARATE)
HARDNESS DURO SHORE A ASTM D-2240	80 + 10
SOLIDS CONTENT	98% MIN. BY WEIGHT

STRUCTURAL POLYSULFIDE SEALANT - CURB AND PARAPET

THE BOLT WELLS AND THE SIDE JOINTS ON THE VERTICAL CURB AND PARAPET UNITS SHALL BE FILLED WITH A ONE PART, AIR-CURING, NONSAGGING, POLYSULFIDE, SEALING COMPOUND. THIS SEALANT WILL BEGIN TO CURE ONCE THE CONTAINER IS OPENED. HOWEVER, IF A THIN SKIN FORMS, IT MAY BE REMOVED AND THE MATERIAL MAY STILL BE USED. THE COMPOUND MEETS THE REQUIREMENTS OF FEDERAL SPECIFICATION TT-S-230a.

TECHANICAL DATA

CONSISTENCY	GUN GRADE
TACK FREE TIME	24 HOURS @ 75°F, 50% RH
CURE TIME	FOR 1/8" THICKNESS: 7 DAYS @ 75°F, 50% RH. FOR ¼" THICKNESS: 14 DAYS @ 75°F, 50% RH
HARDNESS	15 SHORE A (ASTM D-2240)
SHRINKAGE	NEGLIGIBLE
TEMPERATURE RANGE	-40°F TO 200°F

BOLT ANCHOR SYSTEM - TORQUE NUTS

THE HOLD DOWN NUTS SHALL CONSIST OF A SPECIAL TORQUE NUT, WHICH WHEN TIGHTENED DOWN, WILL AUTOMATICALLY TORQUE TO THE PROPER RATING WITHOUT USE OF A TORQUE WRENCH. THE UPPER PORTION OF THE NUT WILL SHEAR OFF, LEAVING THE LOWER PORTION OF THE NUT TO HOLD THE EXPANSION DEVICE IN PLACE. STUB WELDED BOLTS SHALL BE 1/2 INCH DIAMETER.

STEEL REINFORCEMENT

THE INTERNAL STEEL REINFORCEMENT WILL MEET THE REQUIREMENTS OF ASTM A570-D, A36, OR M-120 STRUCTURAL STEEL. THE REINFORCEMENT WILL BE BONDED TO THE RUBBER DURING THE VULCANIZATION PROCESS.

CERTIFICATION

CERTIFIED COPIES OF THE JOINT SEAL MANUFACTURER'S TEST REPORTS SHALL BE FURNISHED WHICH INDICATE THAT THE TESTED MATERIAL CONFORMS TO PROJECT REQUIREMENTS.

SAMPLING

IN PROJECTS WHERE THE PLANS REQUIRE THE USE OF PARTIAL JOINT SEAL UNITS, THE UNUSED PORTION OF A UNIT SHALL BE SUBMITTED BY THE CONTRACTOR AS A SAMPLE FOR DESTRUCTIVE TESTS. WHERE JOINT SEALS ARE CUSTOM CUT IN THE PLANT, A SEAL UNIT SHALL BE CHOSEN FOR SAMPLING PURPOSES PRIOR TO CUSTOM CUTTING. SEAL SAMPLES SHALL BE AT LEAST 6 INCHES LONG.

PACKAGING

THE JOINT SEAL UNITS SHALL BE PACKAGED, PALLETIZED, OR CRATED IN SUCH MANNER TO INSURE THEY WILL REMAIN CLEAN AND NOT BE DAMAGED PRIOR TO INCORPORATION INTO THE WORK. ANY DAMAGED UNIT SHALL BE REPLACED OR REPAIRED UNDER THE DIRECTION OF THE ENGINEER.

METHOD OF MEASUREMENT

THE LENGTH OF JOINT SEAL TO BE PAID FOR SHALL BE THE ACTUAL NUMBER OF LINEAR FEET OF JOINT SEAL AS MEASURED ON THE CENTERLINE OF THE JOINT, AND ON THE EXPOSED SURFACE OF THE ROADWAY, CURB, SIDEWALK, ETC.

BASIS OF PAYMENT

ACCEPTED QUANTITIES OF STEEL-REINFORCED ELASTOMERIC JOINT SEAL OF THE SIZES SPECIFIED WILL BE PAID FOR AT THE CONTRACT PRICE PER LINEAR FOOT, INCLUDING SPECIALS, COMPLETE AND IN PLACE.

PRECAUTIONARY NOTE

WHERE CHANGES IN DETAILS ARE NECESSITATED BY SITUATIONS WHICH WERE UNEXPECTED OR NOT ANTICIPATED BY THE DESIGN DETAILS, OR WHERE SIGNIFICANT CHANGES IN INSTALLATION PROCEDURES ARE REQUESTED BY THE CONTRACTOR, OR RECOMMENDED BY THE JOINT SEAL MANUFACTURER, APPROVAL OF THE DIRECTOR SHALL BE OBTAINED PRIOR TO MODIFICATION OF THE PROJECT REQUIREMENTS.

ALTERNATE DESIGNS

THE PLANS AND THESE PROVISIONS ARE BASED ON THE DESIGNS BY FEL-PRO, INC. OF SKOKIE, ILLINOIS. ALTERNATE DESIGNS BY OTHER JOINT SEAL MANUFACTURERS SUCH AS "ELASTO DAM" BY WATSON-BOWMAN ASSOCIATES, INC. OF BUFFALO, NEW YORK WILL BE CONSIDERED IN LIEU OF THE DESIGN PRESENTLY SPECIFIED;PROVIDED THE CONTRACTOR FURNISHES SUFFICIENT DOCUMENTATION UPON WHICH SUCH A CONSIDERATION CAN BE MADE. THESE DOCUMENTS SHALL INCLUDE NOT ONLY COMPARABLE PLAN DETAILS, MATERIAL SPECIFICATIONS, AND APPROPRIATE INSTALLATION PROCEDURES, BUT ALSO A MARKED SET OF PROJECT PLANS SHOWING ALL OF THE CHANGES IN PLAN DETAILS WHICH WOULD BE NECESSARY TO ACCOMMODATE THE PROPOSED ALTERNATE DESIGN.

THE APPROVAL OF AN ALTERNATE JOINT SEAL DESIGN AND THE ISSUANCE OF REVISED PROJECT PLANS SHALL BE BASED ON THE UNDERSTANDING THAT SUCH PROJECT MODIFICATIONS WILL BE DONE WITHOUT COST TO THE STATE. THE CONTRACTOR SHALL BE RESPONSIBLE FOR MAKING ANY CHANGES TO THE PROJECT TRACING WHICH MAY BE REQUIRED IN USING AN ALTERNATE DESIGN.

W. E. QUICKSALL AND ASSOCIATES, INC.
CONSULTING ENGINEERS • NEW PHILADELPHIA, OHIO

SPECIFICATIONS FOR JOINT SEAL FOR INTERMEDIATE DECK EXPANSION JOINT

JEF-7-1293

DESIGNED	DRAWN	TRACED	CHECKED	REVIEWED	DATE	REVISED
PMZ	PMZ		wdq			

FHWA REGION	STATE	PROJECT	
5	OHIO		

177

JEF-7-11.80

INSTALLATION PROCEDURE

JOINT SEAL RECESSES

STEP 1

THE CURB AND PARAPET MUST BE FORMED OUT TO THE DIMENSIONS SHOWN ON THE PROJECT PLANS. FOR THE WIDTH OF CURB AND PARAPET RECESSES, REFERENCE SHALL BE MADE TO THE TABLE OF DIMENSIONS FOR THE VARIOUS POSSIBLE INSTALLATION TEMPERATURES. BUT WHERE THESE DIMENSIONS ARE NOT GIVEN, OR WHERE THEY ARE NOT COMPREHENSIVE ENOUGH TO QUALIFY THE RECESS DIMENSIONS FOR THE VARIOUS POSSIBLE INSTALLATION TEMPERATURES, THEN REFERENCE SHALL BE MADE TO APPROVED JOINT SEAL DRAWINGS.

IMMEDIATELY AFTER THE REMOVAL OF RECESS FORMS, ALL CAVITIES, HOLES, DEPRESSIONS, OR HONEY-COMB SPOTS SHALL BE CLEANED, DAMPENED, AND COMPLETELY FILLED AND TRUED WITH MORTAR OF THE SAME PORPORTIONS AS USED IN THE CONCRETE BEING REPAIRED. ALL FINS AND PROJECTIONS SHALL BE REMOVED FROM RECESS SURFACES SO THE SURFACES ARE TRUE, FLAT, AND STRAIGHT. CURB AND PARAPET RECESS SHALL BE CONSTRUCTED PARALLEL TO THE CENTERLINE OF THE DECK JOINT.

SURFACES SHALL BE SOUND WITH NO LOOSE OR SPALLED CONCRETE. THE CONCRETE AND STRUCTURAL STEEL SURFACES SHALL BE ABRASIVELY BLAST CLEANED IMMEDIATELY PRIOR TO JOINT SEAL INSTALL-ATION. IF AFTER THE ABRASIVE CLEANING THE SEAL INSTALLATION MUST BE DELAYED OR POSTPONED, THE CLEAN AND DRY STEEL SURFACES SHALL BE COATED WITH AN APPROVED PRIMER TO PREVENT SUR-FACE OXIDATION OR THE SURFACES SHALL BE RE-CLEANED AS NOTED ABOVE PRIOR TO THE RESUMPTION OF JOINT SEAL INSTALLATION.

JOINT SEAL TEMPLATES

STEP 2

THE WIDTH OF THE DECK JOINT AND JOINT SEAL RECESS AND THE DISTANCE BETWEEN THE JOINT SEAL ANCHORS PERPENDICULAR TO THE DECK JOINT WILL CHANGE DUE TO CHANGES IN THE AMBIENT AND STRUCTURE TEMPERATURES. PRIOR TO THE INSTALLATION OF THE STUD WELDED ANCHOR BOLTS, THE CORRECT GAP OPENING AND ANCHOR BOLT SPACING SHALL BE BASED ON THE TABLE OF DIMENSIONS, SHEET 11/16 FOR THE VARIOUS POSSIBLE INSTALLATION TEMPERATURES.

ANCHOR BOLT INSTALLATION IN THE FIELD SHALL BE GUIDED BY THE USE OF DURABLE (METAL, WOOD OR CLOTH) ANCHOR BOLT TEMPLATES FURNISHED BY THE JOINT SEAL MANUFACTURER. TEMPLATES FOR FIELD INSTALLATIONS SHALL BE ADJUSTABLE FOR THE ACTUAL INSTALLATION TEMPERATURES.

ANCHOR BOLT INSTALLATIONS

STUD WELDING

STEP 3

STUD WELDING SHALL CONFORM TO THE PERTINENT PROVISIONS OF THE CONSTRUCTION AND MATERIAL SPECIFICATIONS AND THE AWS SPECIFICATIONS, CHAPTER 4, PART F.

REMOVE ALL RUST, PAINT, SCALE, OR OTHER FOREIGN MATERIAL FROM THE STEEL BEDDING BY GRIND-ING OR POWER WIRE BRUSHING. LOCATION OF THE STUDS FOR THE FIRST AND LAST UNIT SHALL BE DETERMINED BY POSITIONING THIS UNIT AND MARKING THE STEEL BEDDING THROUGH THE BOLT WELLS. THE TEMPLATE, SUPPLIED BY THE MANUFACTURER AND DESIGNED FOR USE WITH WELD SYSTEM, IS THEN LOCATED OVER THE MARKS AND THE STUD SHOT THROUGH THE BUSHING OF THE TEMPLATE. PROCEED BY PLACING THE SLEEVES LOCATED AT THE END OF THE TEMPLATE OVER THE LAST PAIR OF WELDED STUDS AND CONTINUE THE STUD SHOOTING - REPEATING THIS PROCEDURE ACROSS THE ROADWAY.

PREPARATION OF JOINT SEAL UNITS

STEP 4

AFTER MOLDING AND PRIOR TO INSTALLATION, THE JOINT SEAL UNITS SHALL BE CLEANED WITH SOL-VENTS(TOULENE, XYLOL, OR A CLEANER RECOMMENDED BY THE SEAL MANUFACTURER) TO REMOVE CONTAM-INANTS AND MOLD RELEASE AGENTS. MATING SURFACES SHALL THEN BE LIGHTLY BUFFED, AFTER WHICH THE UNITS SHALL BE PACKAGED OR COVERED AND KEPT CLEAN UNTIL IMMEDIATELY PRIOR TO INSTALL-ATION. DURING INSTALLATION, THE BOTTOM AND MATING ENDS SHALL AGAIN BE SOLVENT CLEANED AND WIPED DRY WITH CLEAN, DISPOSABLE CLOTHS PRIOR TO THEIR CONTACT WITH THE RUBBERIZED EPOXY AND POLYSULFIDE BEDDING EPOXY.

INSTALLATION OF JOINT SEAL UNITS

STEP 5

PRIOR TO JOINT SEAL INSTALLATION, THE RECESS SURFACES SHALL BE DRY AND IN ALL OTHER RESPECTS, MEET WITH THE APPROVAL OF THE ENGINEER.

MIX A ONE QUART KIT OF POLYSULFIDE BEDDING EPOXY IN ACCORDANCE WITH THE MANUFACTURER'S INSTRUCTIONS. THE BEDDING EPOXY SHALL THEN BE SPREAD OUT EVENLY ON BOTH SIDES OF THE JOINT FOR THE LENGTH OF ONE JOINT SEAL UNIT. FOR STEEL BEDDING, USE ABOUT 90% OF THE ONE QUART CAN. BEDDING EPOXY MUST NOT BE ALLOWED TO HARDEN PRIOR TO INSTALLATION OF UNITS.

MIX AND APPLY RUBBERIZED EPOXY TO THE MATING SURFACES AS PER THE SUPPLIED INSTRUCTIONS. APPLY SUFFICIENT QUANTITY OF THE SEALANT TO CLEAN MATING SURFACES OF THE "FLAP END" AND "BUTT END" OF THE JOINT UNIT, WORKING THE MIXED MATERIAL INTO THE PILE FABRIC. USE IMMEDIATELY AFTER MIXING THE COMPONENTS. LOCATE JOINT UNIT OVER THE BOLTS AND INSTALL WASHERS AND NUTS AND TIGHTEN THE UPPER PART OF THE HEX NUT UNTIL IT SHEARS OFF. REPEAT THIS PROCEDURE ACTOSS ROADWAY.

TO ACCOMMODATE SLIGHT VARIATIONS IN JOINT LENGTH AND JOINT SEAL LAYING LENGTHS, THE LAST JOINT SEAL UNIT SHALL BE CUT TO FIT.

FILLING BOLT WELLS AND SIDE JOINTS

STEP 6

THE BOLT WELLS AND THE SIDE JOINTS OF THE VERTICAL CURB AND PARAPET UNITS SHALL BE FILLED WITH A POLYSULFIDE SEALANT.

Sheet 14/16

W. E. QUICKSALL AND ASSOCIATES, INC.
CONSULTING ENGINEERS • NEW PHILADELPHIA, OHIO

INSTALLATION PROCEDURE FOR JOINT SEAL FOR INTERMEDIATE DECK EXPANSION JOINT

JEF-7-1293

DESIGNED	DRAWN	TRACED	CHECKED	REVIEWED	DATE	REVISED
PMZ	PMZ		wda			

FHWA REGION	STATE	PROJECT	
5	OHIO		

178

JEF-7-11.80

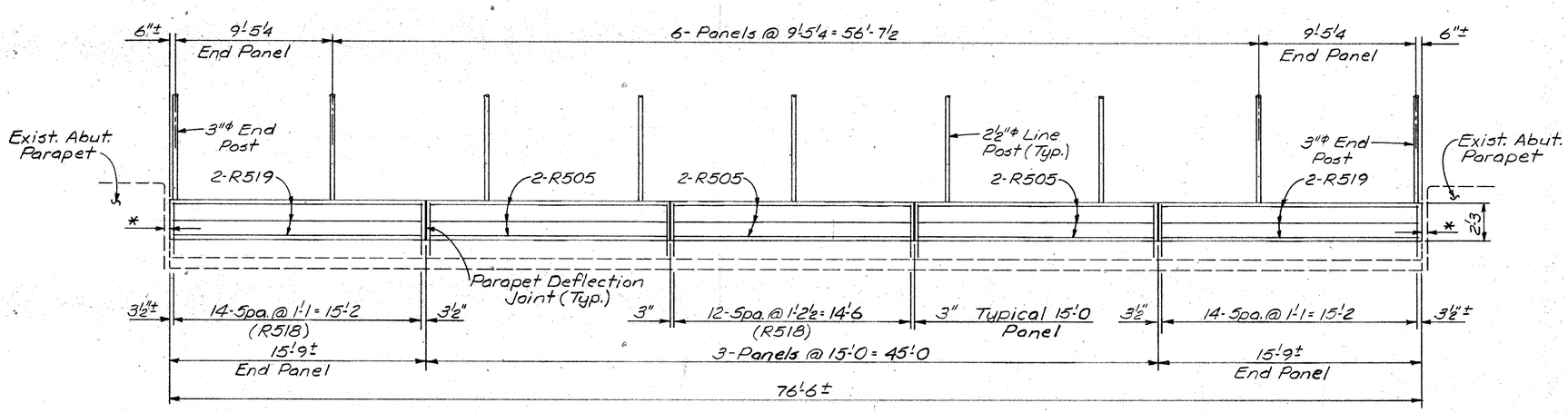

* Maintain 3" minimum open joint.

PARAPET DETAIL

JEF-7-1374

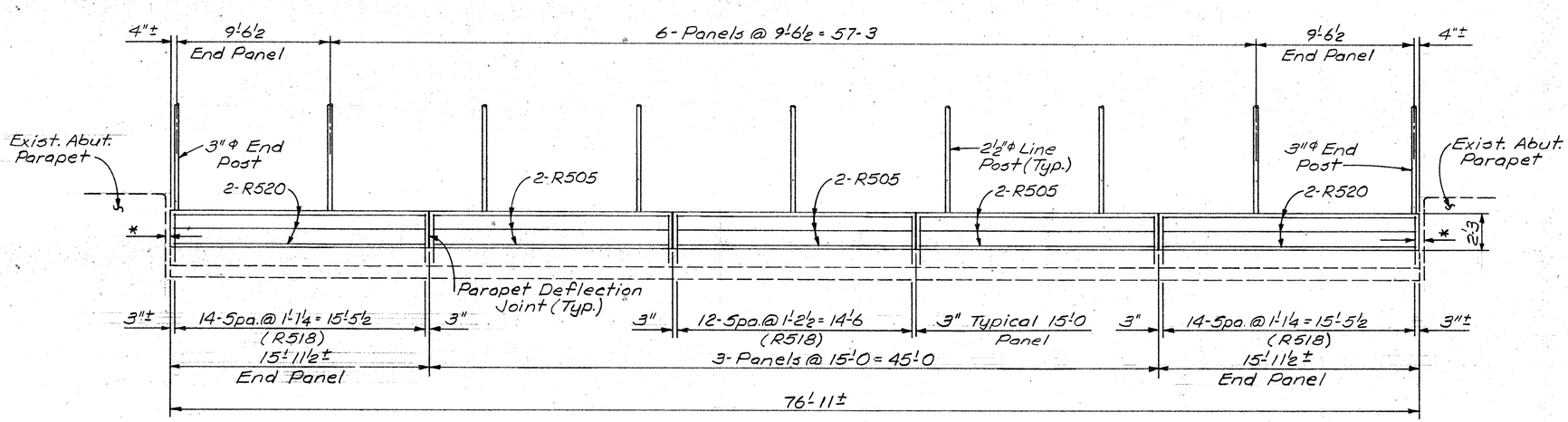

PARAPET DETAIL

JEF-7-1387

* Maintain 3" minimum open joint.

NOTES

TWO-WAY TRAFFIC SHALL BE MAINTAINED ON ST. CLAIR AVENUE AND LINCOLN AVENUE AT ALL TIMES. ANY DISRUPTION OF TRAFFIC FLOW SHALL BE UNDER THE DIRECTION OF THE PROJECT ENGINEER, AND SHALL NOT TAKE PLACE DURING PEAK HOURS.

MATERIALS FOR FENCING SHALL MEET THE REQUIREMENTS OF SECTION 710.03, TYPE 1 OR TYPE 2, OF THE STATE OF OHIO, CONSTRUCTION AND MATERIAL SPECIFICATIONS, EXCEPT AS OTHERWISE NOTED BELOW.

ALL POSTS AND PIPE SIZES ARE NOTED IN TERMS OF NOMINAL DIAMETER OF STANDARD WEIGHT AND WELL THICKNESS (SCHEDULE 40).

END AND PULL POSTS SHALL BE 3" INSIDE DIAMETER. LINE POSTS SHALL BE 2-1/2" INSIDE DIAMETER.

BRACE RAILS SHALL BE 1-1/4" INSIDE DIAMETER. INTERMEDIATE BRACE RAILS SHALL BE OF A LENGTH TO FIT BETWEEN END AND/OR LINE POSTS. TOP RAILS SHALL BE IN ACCORDANCE WITH THE ABOVE SPECIFICATION.

TENSION BANDS SHALL BE 12 GUAGE STEEL BY 7/8" WIDE ASSEMBLED WITH 5/16" DIAMETER BY 1-1/4" LONG GALVANIZED CARRIAGE BOLTS. ONE TENSION BAND SHALL BE REQUIRED FOR EACH FOOT OF FABRIC HEIGHT.

TERMINAL POST TOPS SHALL BE FITTED WITH A CAP.

LINE POST TOPS SHALL BE FITTED WITH A CAP SUITABLE FOR ACCOMMODATING A CONTINUOUS TOP RAIL.

PERFORMED EXPANSION JOINT FILLER IN THE PARAPET DEFLECTION JOINTS MAY BE EITHER 1/4" GRAY SPONGE RUBBER OR 1/4" GRAY CELLULAR POLY-VINYL CHLORIDE (PVC) SPONGE. IF RUBBER IS USED, IT SHALL MEET THE REQUIREMENTS OF AASHTO M-153. TO BE INCLUDED WITH ITEM 511, SUPER-STRUCTURE CONCRETE FOR PAYMENT.

FOR GENERAL NOTES AND DESIGN DATA SEE SHEET 1/16.

FOR TYPICAL SECTION THROUGH PROPOSED PARAPET SEE SHEET 16/16.

FOR ANCHORAGE DETAILS SEE SHEET 16/16.

FOR FENCE PANEL DETAILS SEE SHEET 16/16.

FOR ESTIMATED QUANTITIES SEE SHEET 3/16.

FOR REINFORCING STEEL LIST SEE SHEET 4/16.

Sheet 15/16

W. E. QUICKSALL AND ASSOCIATES, INC.
CONSULTING ENGINEERS • NEW PHILADELPHIA, OHIO

PARAPET DETAILS AND NOTES

JEF-7-1374 JEF-7-1387

DESIGNED	DRAWN	TRACED	CHECKED	REVIEWED	DATE	REVISED
PMZ	PMZ		wda	JMS	3/79	

FHWA REGION	STATE	PROJECT	
5	OHIO		

179/179

JEF-7-11.80

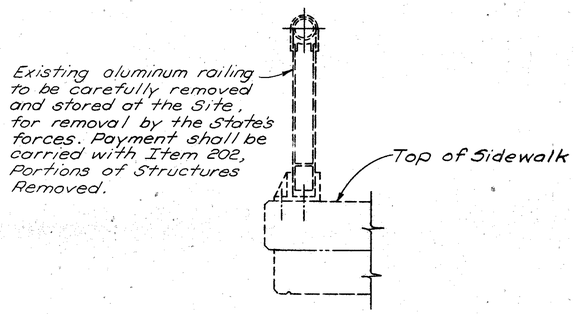

SECTION THRU EXISTING BRIDGE RAILING

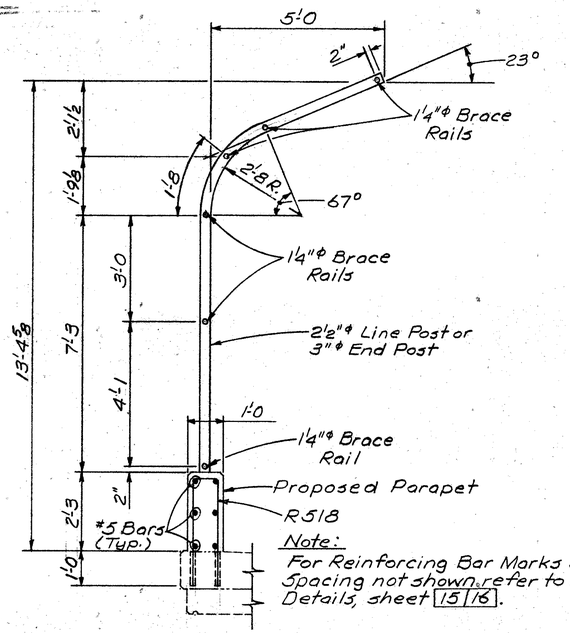

Note:
For Reinforcing Bar Marks and Spacing not shown, refer to Parapet Details, sheet 15/16.

R518 bars shall be inserted into dowel holes to the depth shown. Dowel holes and grout anchoring shall be in accordance with Supplemental Specification 853, and paid for under Item 510, Dowel Holes, as per plan.

Note:
All fence posts, sleeves, hardware and accessories shall be galvanized in accordance with ASTM A123 or ASTM A153.

TYPICAL SECTION THRU PROPOSED PARAPET

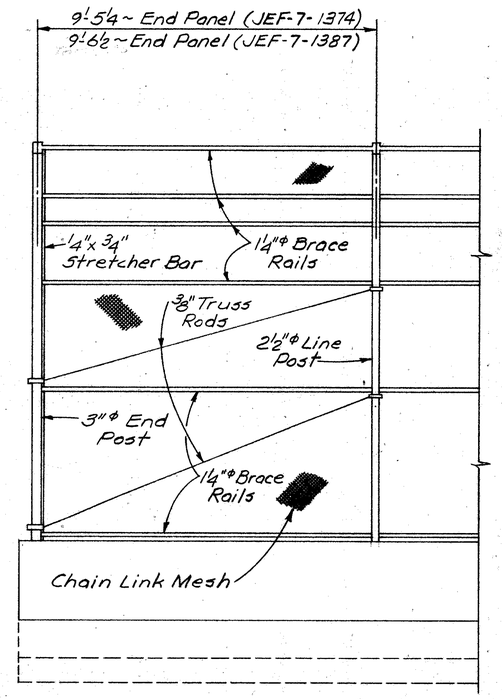

END PANEL DETAIL

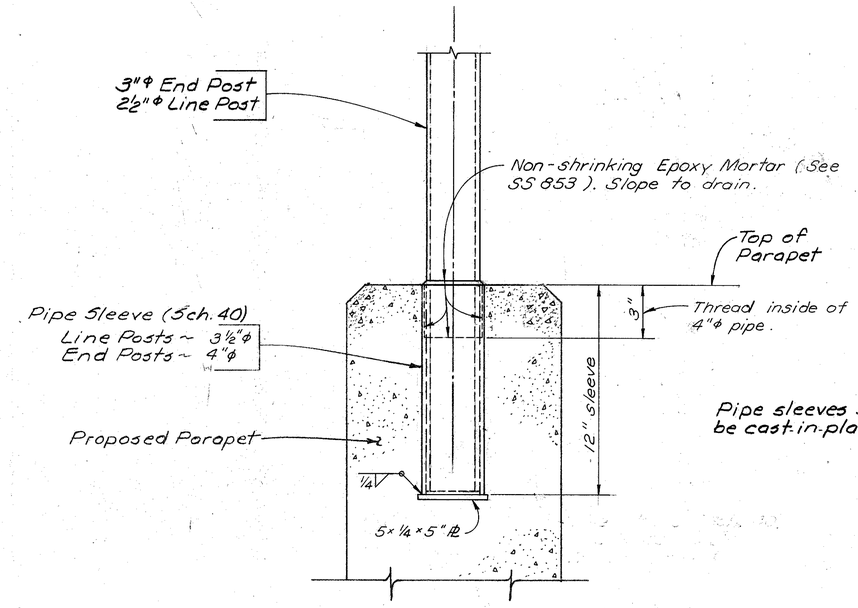

Pipe sleeves shall be cast-in-place.

FENCE POST ANCHORAGE DETAIL

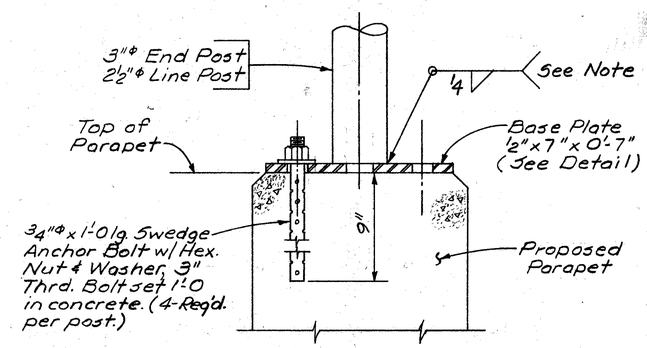

Welding Note:
Base plate shall be welded to posts prior to galvanizing.

Reinforcing steel in the parapet shall be accurately placed to avoid interference with the drilling of anchor bolt holes or the pre-setting of anchor bolts.

At the option of the Contractor, anchor bolts, located and supported by templates, may be cast-in-place.

ALTERNATE FENCE POST ANCHORAGE DETAIL

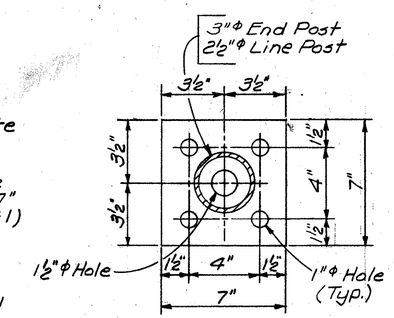

BASE PLATE DETAIL

Payment for all fence posts, sleeves, mortar, hardware and accessories shall be included with Item 607.

Sheet 16/16

W. E. QUICKSALL AND ASSOCIATES, INC.
CONSULTING ENGINEERS • NEW PHILADELPHIA, OHIO

PARAPET AND FENCE DETAILS

JEF-7-1374 JEF-7-1387

DESIGNED	DRAWN	TRACED	CHECKED	REVIEWED	DATE	REV'RED
PMZ	PMZ		wde	JMG	3/79	